PROJ. REFERENCE NO.	SHEET NO.
R-2519B	TMP-72

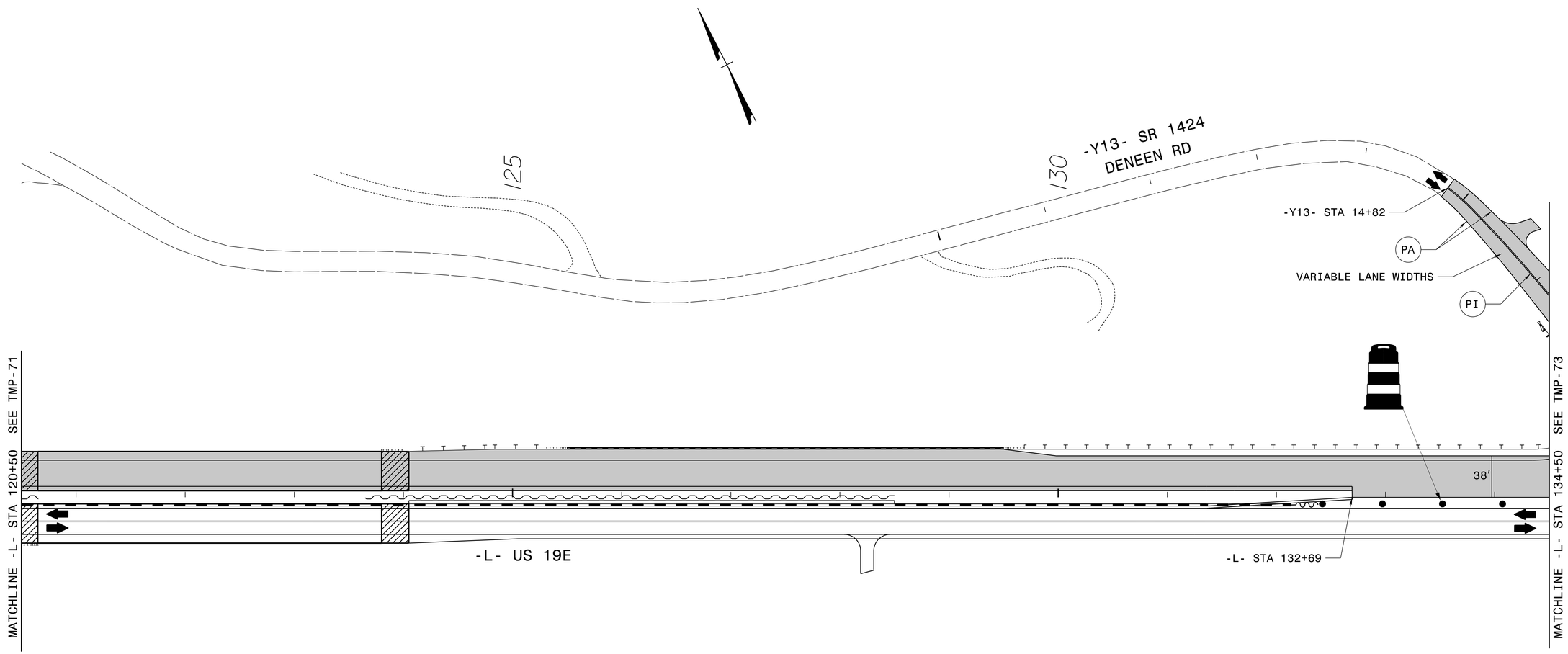

ALL PAVEMENT MARKINGS ARE EXISTING MARKINGS UNLESS OTHERWISE NOTED

PLAN PREPARED IN THE OFFICE OF:
PROGRESSIVE DESIGN GROUP, INC.
ENGINEERS • CONSULTANTS

APPROVED: Tim Arey DATE: 8/5/2014
DocuSigned by:
F4C4C380C49F4B2...

SEAL
NORTH CAROLINA PROFESSIONAL SEAL 025465 ENGINEER TIM AREY

DIVISION OF HIGHWAYS
STATE OF NORTH CAROLINA
DEPARTMENT OF TRANSPORTATION
WORK ZONE TRAFFIC CONTROL

TRANSPORTATION MANAGEMENT PLAN
PHASE II DETAILS

6/28/2014
R2519b_TMP_PSH72.dgn
TAREY