PROJ. REFERENCE NO.	SHEET NO.
R-2519B	TMP-7

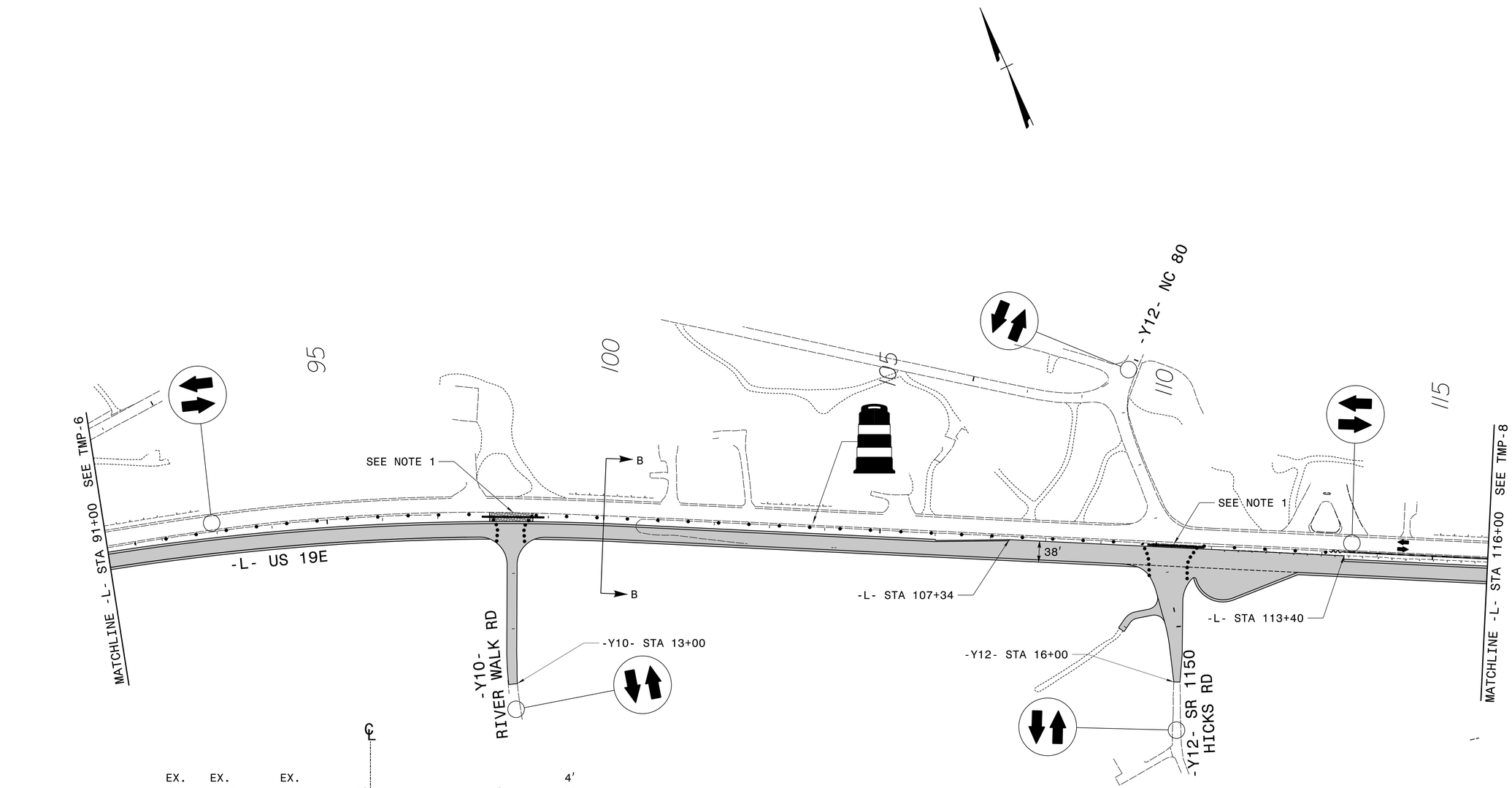

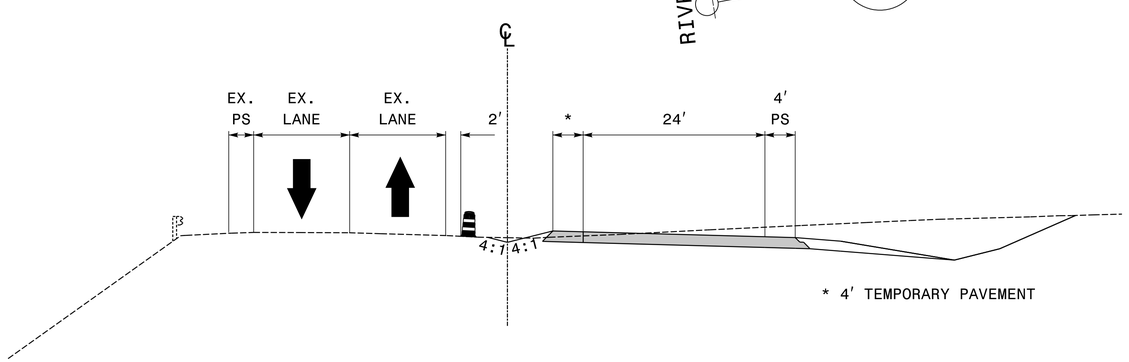

* 4' TEMPORARY PAVEMENT

SECTION B-B

NOTES:
1. CONSTRUCT TEMPORARY DRIVEWAY ACCESS AND DRIVEWAY PIPE AS DIRECTED BY THE ENGINEER.

ALL PAVEMENT MARKINGS ARE EXISTING MARKINGS UNLESS OTHERWISE NOTED

PLAN PREPARED IN THE OFFICE OF:
PROGRESSIVE DESIGN GROUP, INC.
ENGINEERS • CONSULTANTS

APPROVED: DocuSigned by: Jim Arey 7FC4C380C46F4BA... DATE: 8/5/2014

SEAL

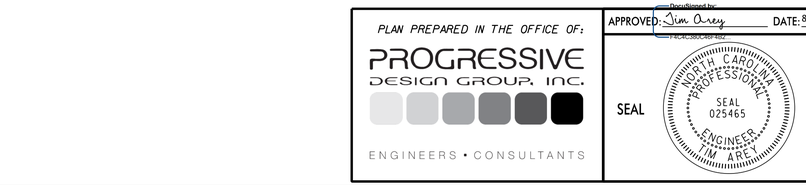

TRANSPORTATION MANAGEMENT PLAN
PHASE I OVERVIEWS

6/28/2014
R2519B_TMP_PSH07.dgn
TAREY