DocuSign Envelope ID: 55B72CA4-E932-41A3-93A1-8786D1C3F684

Fabrication Details – Strain Poles

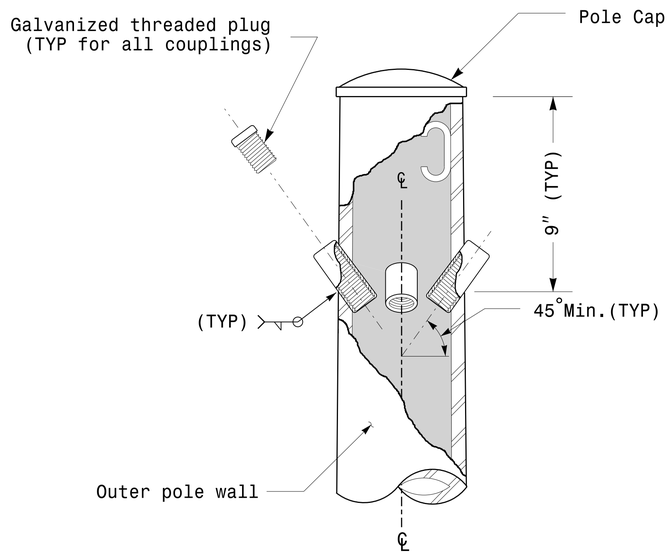

Cable Entrances at Top of Pole

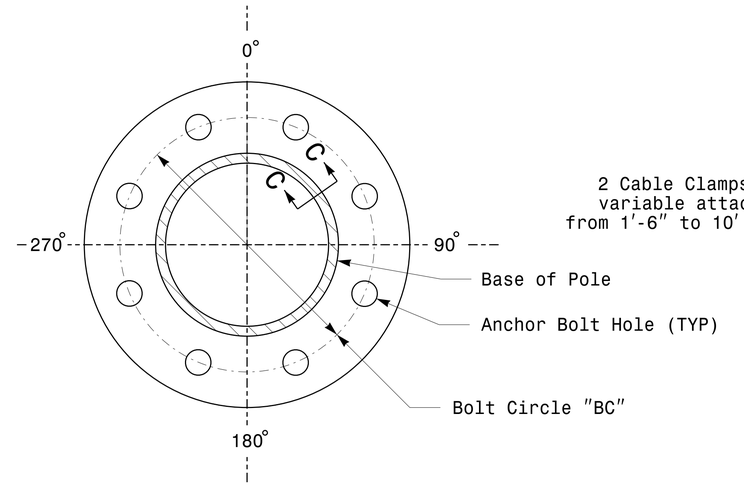

Section B-B

(See drawing M2)

Pole Base Plate

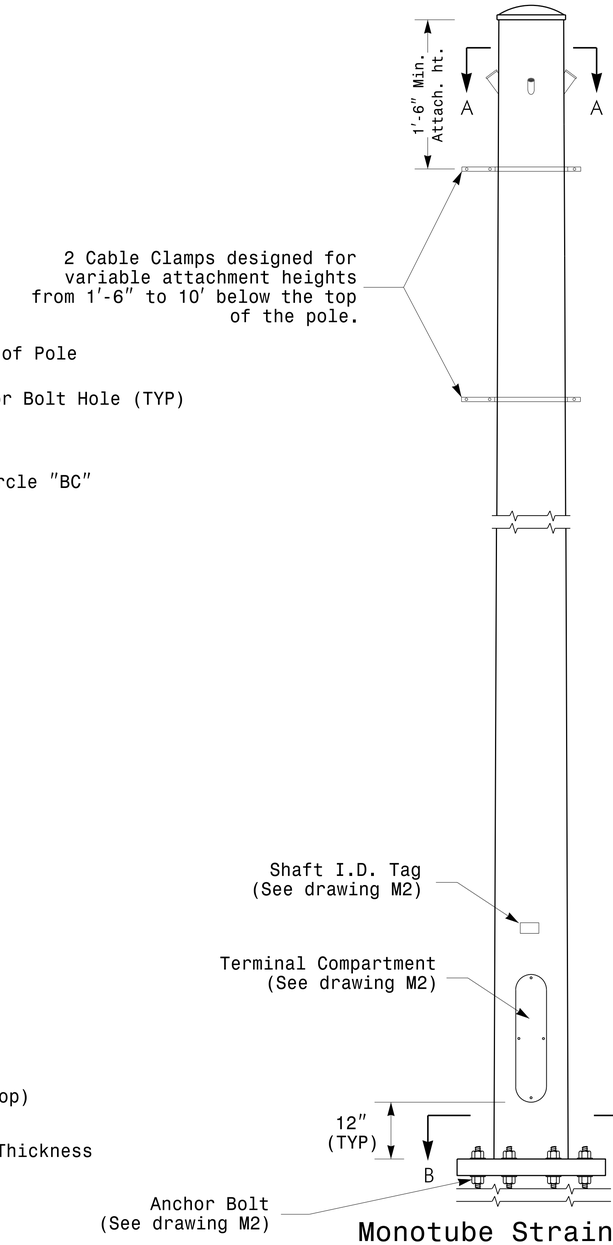

Monotube Strain Pole
(.14″/Foot Taper)

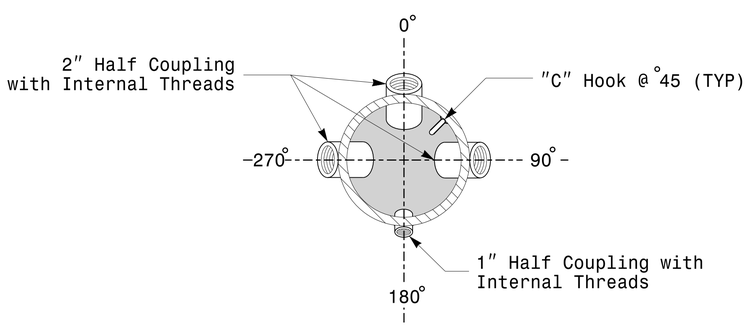

Section A-A

Radial Orientation for Factory Installed Accessories at Top of Pole

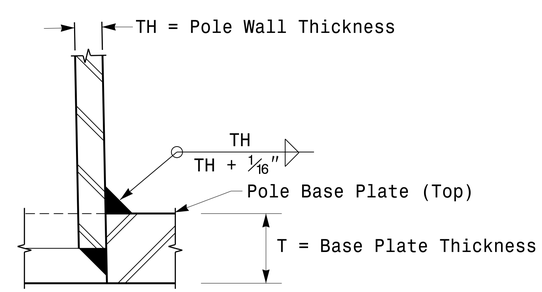

Section C-C

Socket Connection Weld Detail

Prepared in the Offices of:
Transportation Mobility and Safety Division
Signal Design Section
750 N.Greenfield Pkwy.Garner,NC 27529

SCALE
0 NA
NONE

Typical Fabrication Details
For Strain Poles

PLAN DATE:	AUGUST 2013	DESIGNED BY:	C.F. ANDREWS
PREPARED BY:	N. BITTING	REVIEWED BY:	D.C. SARKAR

REVISIONS	INIT.	DATE

SEAL
NORTH CAROLINA PROFESSIONAL SEAL 028094 ENGINEER DEBESH C. SARKAR

DocuSigned by:
Debesh C. Sarkar
44EBE32E147E4C4...
3/11/2014
SIGNATURE DATE

SIG. INVENTORY NO.

04-MAR-2014 12:56
S:\MTS\SIG\MTS Signals\Signal Design Section\Eastern Region\M Sheets\2012.M3.Fab Details Strain Poles.dgn
jgallaway