DocuSign Envelope ID: 55B72CA4-E932-41A3-93A1-8786D1C3F684

Welded Ring Stiffened Mast Arm Connection

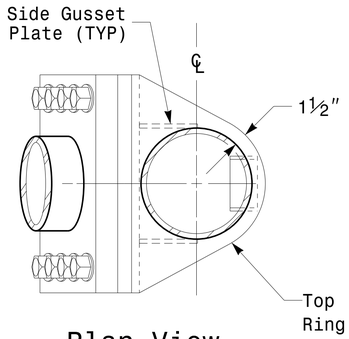

Plan View

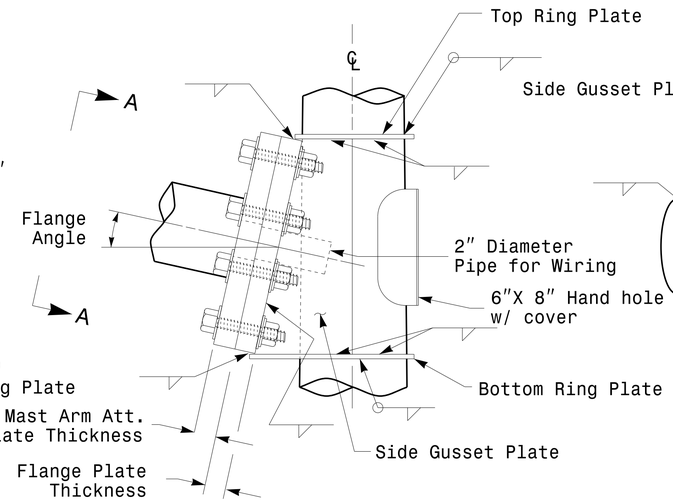

Side Elevation View

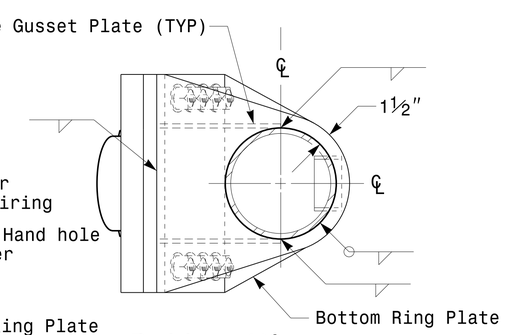

Bottom View

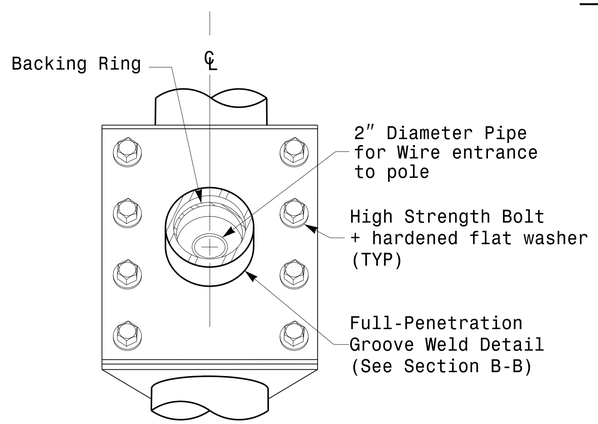

Front Elevation View

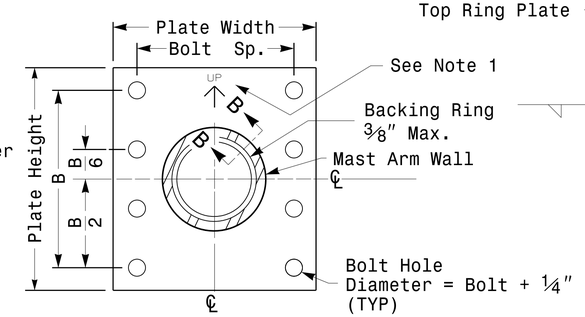

Section View A-A

Mast Arm Attachment Plate

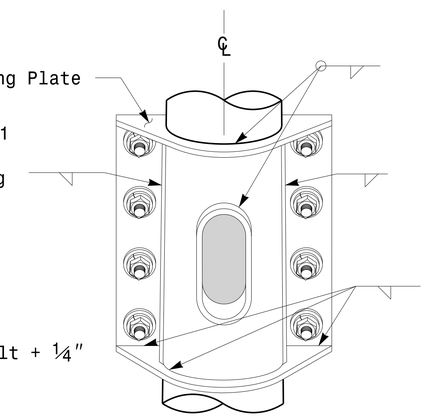

Back Elevation View

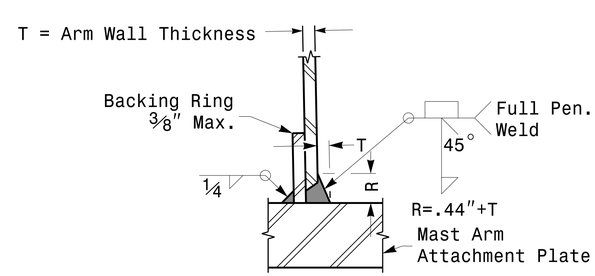

Section B-B

Full-Penetration Groove Weld Detail

Notes:

1. Provide a permanent means of identification above the mast arm to indicate proper attachment orientation of the mast arm.
2. Designer will determine the size of all structural components, plates, fasteners, and welds shown unless they are already specified.
3. Designer is responsible for providing appropriate drainage points.

Prepared in the Offices of:
Transportation Mobility and Safety Division
Signal Design Section
750 N.Greenfield Pkwy,Garner,NC 27529

Fabrication Details For
Mast Arm Connection To Pole

PLAN DATE:	AUGUST 2013	DESIGNED BY:	C.F. ANDREWS
PREPARED BY:	N. BITTING	REVIEWED BY:	D.C. SARKAR

SCALE: 0 NA — NONE

REVISIONS | INIT. | DATE

SEAL: NORTH CAROLINA PROFESSIONAL SEAL 028094 ENGINEER DEBESH C. SARKAR

DocuSigned by: Debesh C. Sarkar 44EBE3DE147EC4A 3/11/2014
SIGNATURE | DATE

SIG. INVENTORY NO.

SHEET NO.
Sig. M5
U-3465

Fabrication Details – Mast Arm Poles

04-MAR-2014 13:08
S:*TSG\U-3465\Signals\Signal Design Section\Eastern Region\MU Sheets\2012_M5_Fab Details Mastarms.dgn
jgalloway