PROJECT REFERENCE NO.	SHEET NO.
U-3465	Sig. 2.2

LOGICAL I/O PROCESSOR PROGRAMMING DETAIL
TO PRODUCE SPECIAL FYA-PPLT SIGNAL SEQUENCE

(program controller as shown below)

1. FROM MAIN MENU PRESS '2' (PHASE CONTROL), THEN '1' (PHASE CONTROL FUNCTIONS). SCROLL TO THE BOTTOM OF THE MENU AND ENABLE ACT LOGIC COMMANDS 1, 2, 3, 4, 5 and 6.

2. FROM MAIN MENU PRESS '6' (OUTPUTS), THEN '3' (LOGICAL I/O PROCESSOR).

```
LOGICAL I/O COMMAND #1  (+/-COMMAND#)
IF  ACTIVE PHASE       #3  IS ON
AND RED CLEAR ON PHASE #3  IS ON

SCROLL DOWN

THEN:
SET OUTPUT  ASSIGNMENT #6 ON
SET OUTPUT  ASSIGNMENT #7 OFF
```

NOTE: LOGIC FOR PHASE 3 RED CLEAR WHEN TRANSITIONING FROM PHASE 3 TO PHASE 4 (HEAD 31).

PRESS '+'

```
LOGICAL I/O COMMAND #2  (+/-COMMAND#)
IF  ACTIVE PHASE       #3  IS ON

SCROLL DOWN

THEN:
SET OUTPUT  ASSIGNMENT #8 OFF
```

NOTE: LOGIC FOR SWITCHING FLASHING YELLOW ARROW "OFF" DURING PHASE 3 (HEAD 31).

PRESS '+'

```
LOGICAL I/O COMMAND #3  (+/-COMMAND#)
IF  YELLOW ON PHASE    #3  IS ON

SCROLL DOWN

THEN:
SET OUTPUT  ASSIGNMENT #7 ON
```

NOTE: LOGIC FOR YELLOW ARROW CLEARANCE FROM PHASE 3 (HEAD 31).

PRESS '+'

```
LOGICAL I/O COMMAND #4 (+/-COMMAND#)
IF  ACTIVE PHASE       #7  IS ON
AND RED CLEAR ON PHASE #7  IS ON

SCROLL DOWN

THEN:
SET OUTPUT  ASSIGNMENT #22 ON
SET OUTPUT  ASSIGNMENT #23 OFF
```

NOTE: LOGIC FOR PHASE 7 RED CLEAR WHEN TRANSITIONING FROM PHASE 7 TO PHASE 8 (HEAD 71).

PRESS '+'

```
LOGICAL I/O COMMAND #5 (+/-COMMAND#)
IF  ACTIVE PHASE       #7  IS ON

SCROLL DOWN

THEN:
SET OUTPUT  ASSIGNMENT #24 OFF
```

NOTE: LOGIC FOR SWITCHING FLASHING YELLOW ARROW "OFF" DURING PHASE 7 (HEAD 71).

PRESS '+'

```
LOGICAL I/O COMMAND #6 (+/-COMMAND#)
IF  YELLOW ON PHASE    #7  IS ON

SCROLL DOWN

THEN:
SET OUTPUT  ASSIGNMENT #23 ON
```

NOTE: LOGIC FOR YELLOW ARROW CLEARANCE FROM PHASE 7 (HEAD 71).

LOGIC I/O PROCESSOR PROGRAMMING COMPLETE

OUTPUT REFERENCE SCHEDULE

OUTPUT 6 = Overlap B Red
OUTPUT 7 = Overlap B Yellow
OUTPUT 8 = Overlap B Green
OUTPUT 22 = Overlap D Red
OUTPUT 23 = Overlap D Yellow
OUTPUT 24 = Overlap D Green
OUTPUT 35 = Phase 3 Green
OUTPUT 36 = Phase 7 Green

Note: All outputs shown above have been remapped. See sheets 3 and 4 of this electrical detail.

OVERLAP PROGRAMMING DETAIL

(program controller as shown below)

FROM MAIN MENU PRESS '8' (OVERLAPS), THEN '1' (VEHICLE OVERLAP SETTINGS).

PRESS '+'

```
PAGE 1: VEHICLE OVERLAP 'B' SETTINGS
PHASE:          ¦123456789101112131415 16
VEH OVL PARENTS:¦  XX
VEH OVL NOT VEH:¦
VEH OVL NOT PED:¦
VEH OVL GRN EXT:¦
STARTUP COLOR: _ RED  _ YELLOW  _ GREEN
FLASH COLORS:  _ RED  _ YELLOW  X GREEN
SELECT VEHICLE OVERLAP OPTIONS:   (Y/N)
FLASH YELLOW IN CONTROLLER FLASH?...N
GREEN EXTENSION (0-255 SEC).........0
YELLOW CLEAR (0=PARENT,3-25.5 SEC)..0.0
RED CLEAR (0=PARENT,0.1-25.5 SEC)...0.0
OUTPUT AS PHASE # (0=NONE, 1-16)....0
```

← NOTICE GREEN FLASH

PRESS '+' TWICE

```
PAGE 1: VEHICLE OVERLAP 'D' SETTINGS
PHASE:          ¦123456789101112131415 16
VEH OVL PARENTS:¦     XX
VEH OVL NOT VEH:¦
VEH OVL NOT PED:¦
VEH OVL GRN EXT:¦
STARTUP COLOR: _ RED  _ YELLOW  _ GREEN
FLASH COLORS:  _ RED  _ YELLOW  X GREEN
SELECT VEHICLE OVERLAP OPTIONS:   (Y/N)
FLASH YELLOW IN CONTROLLER FLASH?...N
GREEN EXTENSION (0-255 SEC).........0
YELLOW CLEAR (0=PARENT,3-25.5 SEC)..0.0
RED CLEAR (0=PARENT,0.1-25.5 SEC)...0.0
OUTPUT AS PHASE # (0=NONE, 1-16)....0
```

← NOTICE GREEN FLASH

OVERLAP PROGRAMMING COMPLETE

PHASE OMIT NOTE

(program controller as shown below)

From Main Menu press '2' (Phase Control). Then '1' (Phase Control Functions). Program Phases 3 and 7 for 'Omit Phase' and Phases 2, 4, 6 and 8 for 'Startup Calls'. This is to prevent Phases 3 and 7 from being served at startup during "Normal" Phasing Operation mode.

RED MONITOR BOARD PROGRAMMING

(position jumpers as shown below)

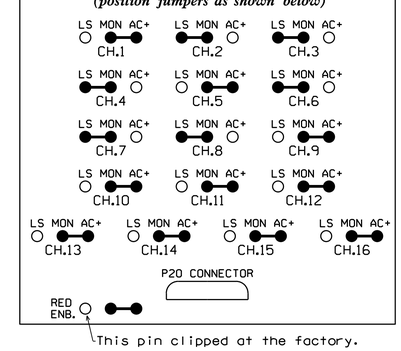

THIS ELECTRICAL DETAIL IS FOR THE SIGNAL DESIGN: 06-0642T1
DESIGNED: May 2014
SEALED: 6/20/2014
REVISED: N/A

Electrical Detail - Temporary Design 1 (Phase I - Step 2) - Sheet 2 of 5

ELECTRICAL AND PROGRAMMING DETAILS FOR:

Prepared in the Offices of:
Transportation Mobility and Safety Division
Traffic Management Section
750 N.Greenfield Pkwy,Garner,NC 27529

SR 1121 (Ray Road)
at
SR 1120 (Overhills Road)

Division 6 Harnett County DS Spring Lake

PLAN DATE:	June 2014	REVIEWED BY:	JTR
PREPARED BY:	S. Armstrong	REVIEWED BY:	

REVISIONS	INIT.	DATE

SEAL
NORTH CAROLINA PROFESSIONAL SEAL 008453 ENGINEER JOHN T. ROWE, JR.

DocuSigned by: John T. Rowe, Jr. 6/26/2014
641D00C145EE4F5... DATE

SIG. INVENTORY NO. 06-0642T1

26-JUN-2014 06:16
S:\TTSAGIM\TIS\Signals\Workgroups\Sig Mon\Armstrong\060642_sm_ele_xxx.dgn
sarmstrong