PROJ. REFERENCE NO.	SHEET NO.
U-3465	TMP- 27

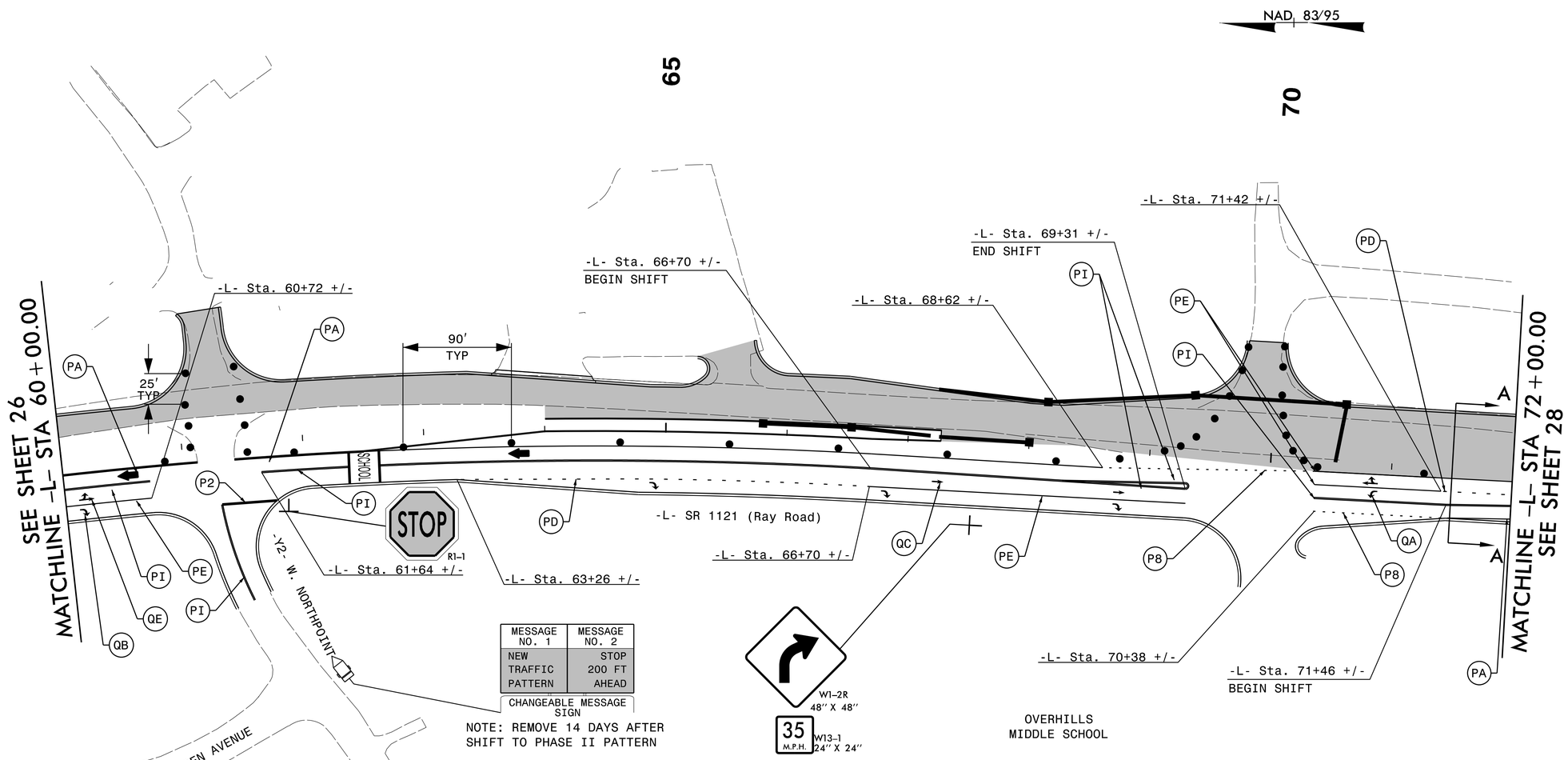

MESSAGE NO. 1	MESSAGE NO. 2
NEW TRAFFIC PATTERN	STOP 200 FT AHEAD

CHANGEABLE MESSAGE SIGN

NOTE: REMOVE 14 DAYS AFTER SHIFT TO PHASE II PATTERN

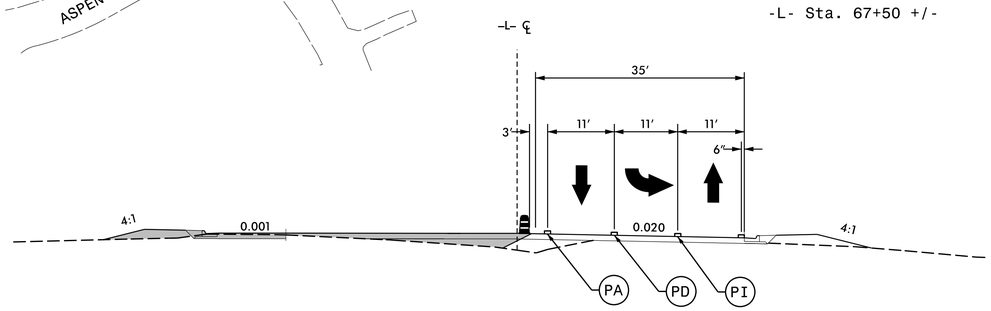

SECTION A–A

–L– STA. 71+50.00

Prepared in the offices of:

RAMEY KEMP & ASSOCIATES, INC.
Transportation Engineers
5808 Farlington Place, Suite 100
Raleigh, North Carolina 27609
919-872-5115 Tel. 919-876-5416 Fax.
www.rameykemp.com

APPROVED: DocuSigned by: Merrick A. Dugal, P.E. DATE: 9/25/2014
33B7F448DD564FE

SEAL

PHASE II

SCALE:	NONE
DATE:	8/14
DEVELOPED BY:	NEB
REVIEWED BY:	MAD
RKA PROJ. #:	12091

Prepared For:

REVISIONS

CADD FILE