PROJECT REFERENCE NO.	SHEET NO.
U-3465	2A-2

ROADWAY DESIGN ENGINEER
NORTH CAROLINA PROFESSIONAL SEAL 016378 ENGINEER REKHA V. PATEL
9/2/2014
DocuSigned by: Rekha V. Patel
95CF DEA85A0A4DE...

PAVEMENT DESIGN ENGINEER
NORTH CAROLINA PROFESSIONAL SEAL 039819 ENGINEER LAQUNYA T. HEYWARD
9/4/2014
DocuSigned by: LaQunya Heyward
C2F5F1008224473...

PAVEMENT SCHEDULE	
C1	3" TYPE S9.5B
D1	4" TYPE I19.0B
E1	4" TYPE B25.0B
J1	6" AGGREGATE BASE COURSE
R1	2'-6" CONCRETE CURB AND GUTTER
R2	1'-6" CONCRETE CURB AND GUTTER
R4	7" CONCRETE TRUCK APRON
S	4" CONCRETE SIDEWALK
T	EARTH MATERIAL
U	EXISTING PAVEMENT
W	WEDGING

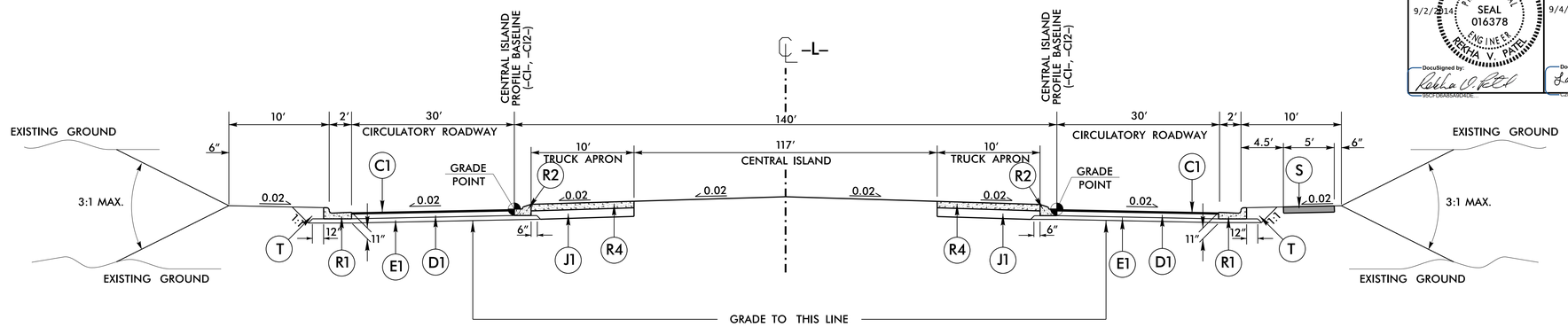

TYPICAL SECTION NO. 4

ROUNDABOUT

-L- STA. 30+25.00 TO -L- STA. 32+25.00
-L- STA. 41+50.00 TO -L- STA. 43+50.02

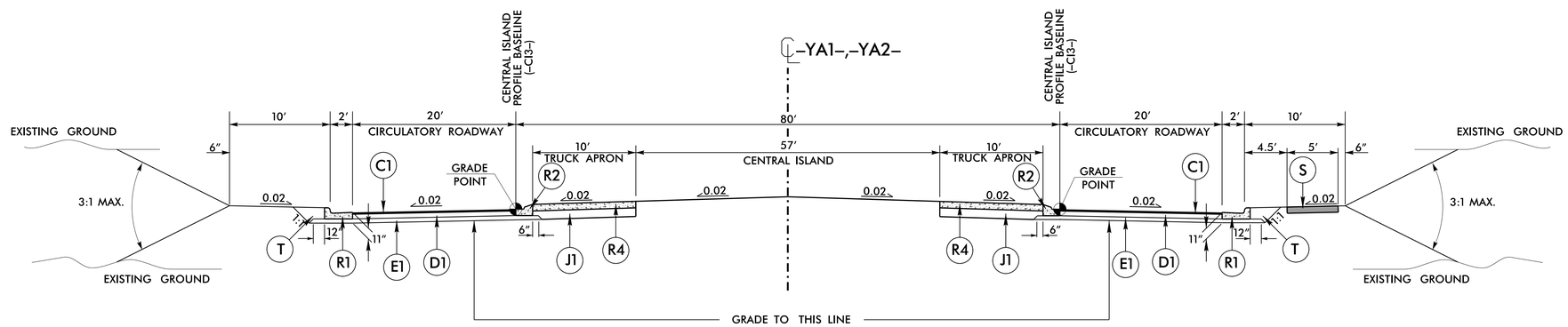

TYPICAL SECTION NO. 5

ROUNDABOUT

-YA1- STA. 13+67.00 TO -YA2- STA. 10+58.09

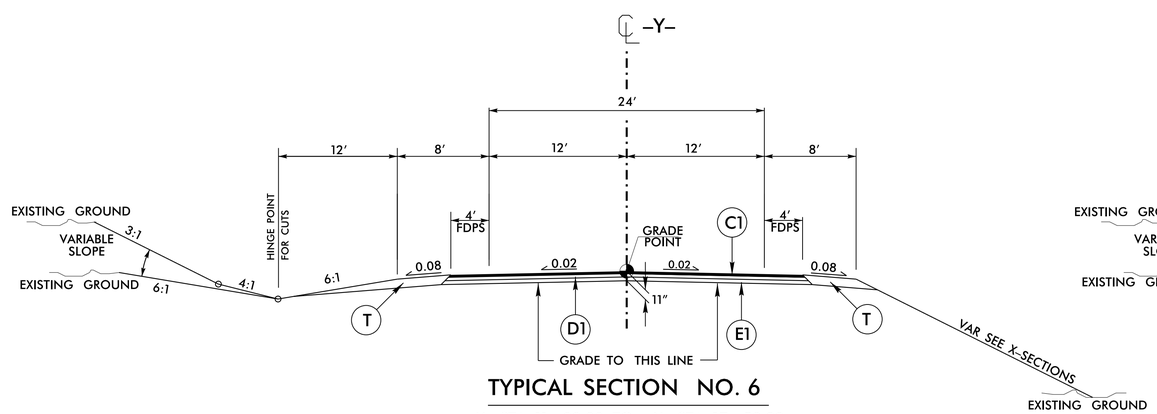

TYPICAL SECTION NO. 6

-Y- STA. 11+00.00 TO -Y- STA. 17+50.00

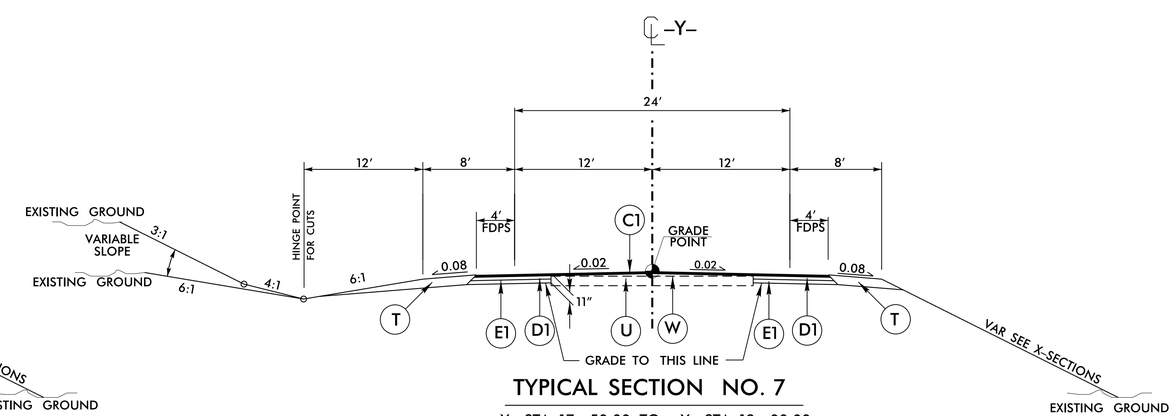

TYPICAL SECTION NO. 7

-Y- STA. 17+50.00 TO -Y- STA. 19+00.00

6/2/99

28-AUG-2014 12:00
R:\Roadway\Proj\U-3465_Rdy_typ.dgn
$$$$USERNAME$$$$