PROJECT REFERENCE NO.	SHEET NO.
U-3465	2C-3

STATE OF
NORTH CAROLINA
DEPT. OF TRANSPORTATION
DIVISION OF HIGHWAYS
RALEIGH, N.C.

ENGLISH DETAIL DRAWING FOR

METHOD FOR PLACEMENT OF DROP INLETS IN CONCRETE ISLANDS

SHEET 1 OF 1

852D06

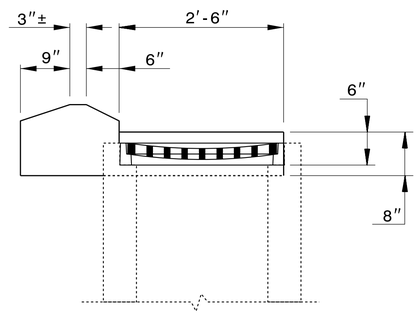

SECTION 'A-A'

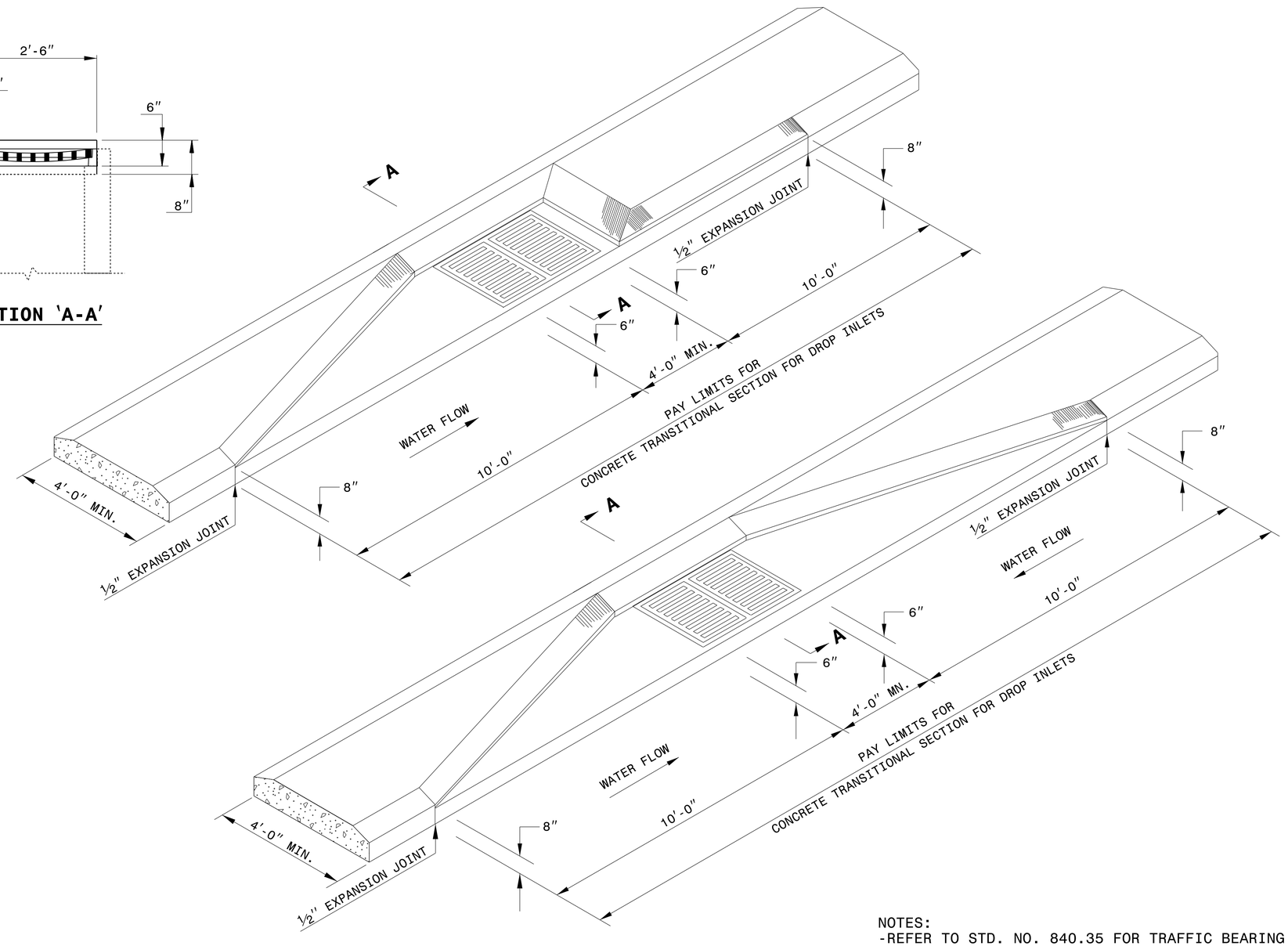

NOTES:
- REFER TO STD. NO. 840.35 FOR TRAFFIC BEARING DRAINAGE STRUCTURE.
- REFER TO STD. NO. 840.29 FOR GRATE AND FRAME.

STATE OF
NORTH CAROLINA
DEPT. OF TRANSPORTATION
DIVISION OF HIGHWAYS
RALEIGH, N.C.

ENGLISH DETAIL DRAWING FOR

METHOD FOR PLACEMENT OF DROP INLETS IN CONCRETE ISLANDS

SHEET 1 OF 1

852D06

NORTH CAROLINA PROFESSIONAL SEAL 022966 ENGINEER Joel S. Howerton

DocuSigned by: Joel Howerton
9/2/2014

CONTRACT STANDARDS AND DEVELOPMENT UNIT
Office 919-707-6950 FAX 919-250-4119

SEE TITLE PLATE

ORIGINAL BY: KKEMPF DATE: 8/2/10
MODIFIED BY: DATE:
CHECKED BY: DATE:
FILE SPEC.: KKEMPF\ENGLISH\852D0601.DGN

$$$$SYTIME$$$$
$$$$USERNAME$$$$
$$$$USERNAME$$$$