PROJECT REFERENCE NO.	SHEET
U-3465	2G-1

GEOTECHNICAL ENGINEER

NORTH CAROLINA PROFESSIONAL SEAL 22246 ENGINEER SCOTT A. HIDDEN

DocuSigned by: Scott A. Hidden 7/30/2014
F760CAE3C4C4F4... SIGNATURE DATE

ENGINEER

SIGNATURE DATE

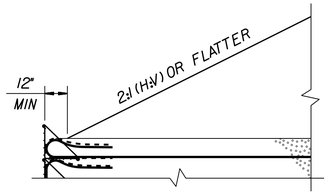

SLOPE CASE

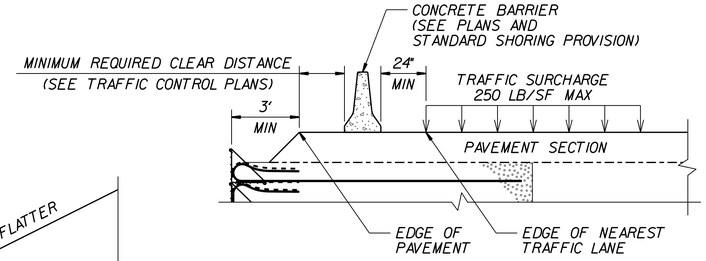

SURCHARGE CASE

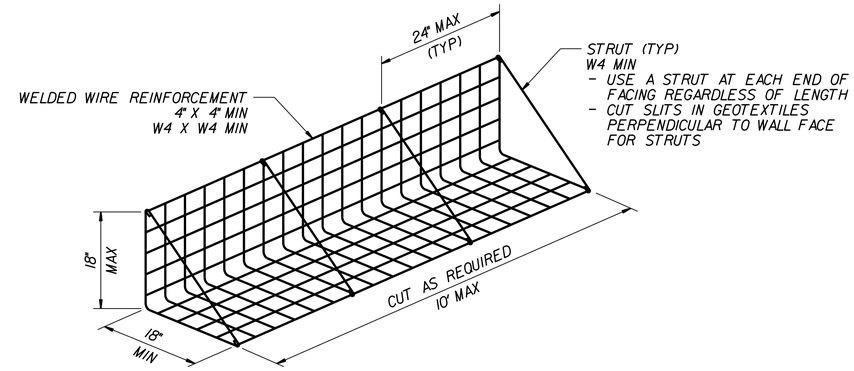

FACING DETAIL

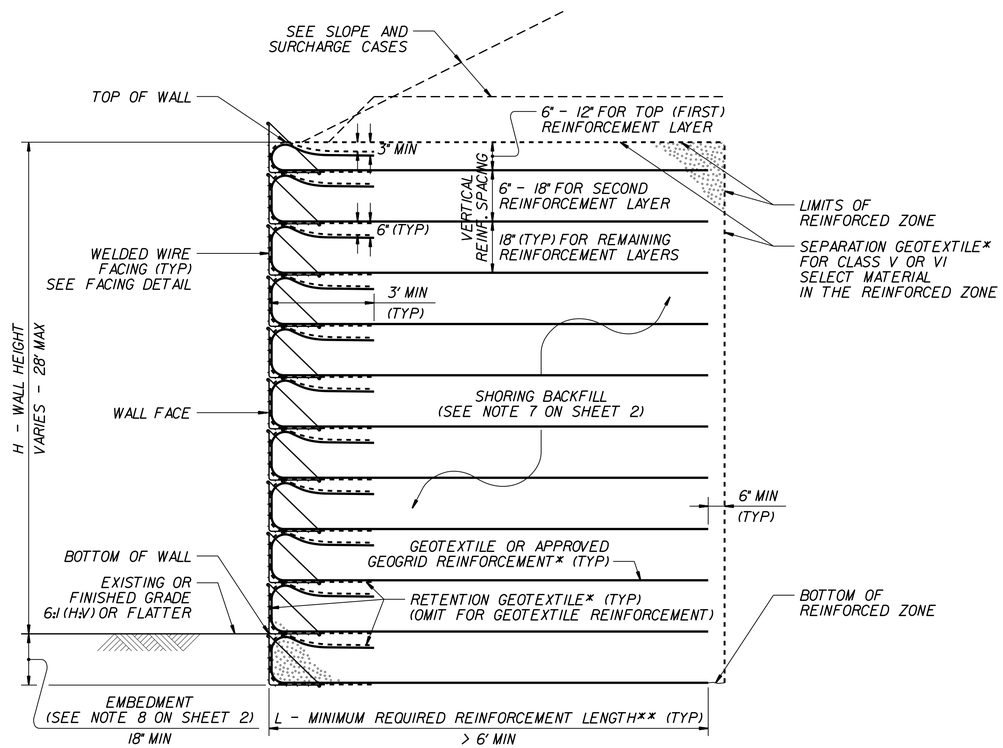

STANDARD TEMPORARY WALL

(FOR STANDARD TEMPORARY WALLS ON STRUCTURES, SEE TEMPORARY WALL ON STRUCTURE DETAIL ON SHEET 2.)
*SEE GEOSYNTHETIC PLACEMENT DETAILS ON SHEET 2.
**SEE REINFORCEMENT TABLES ON SHEET 3.

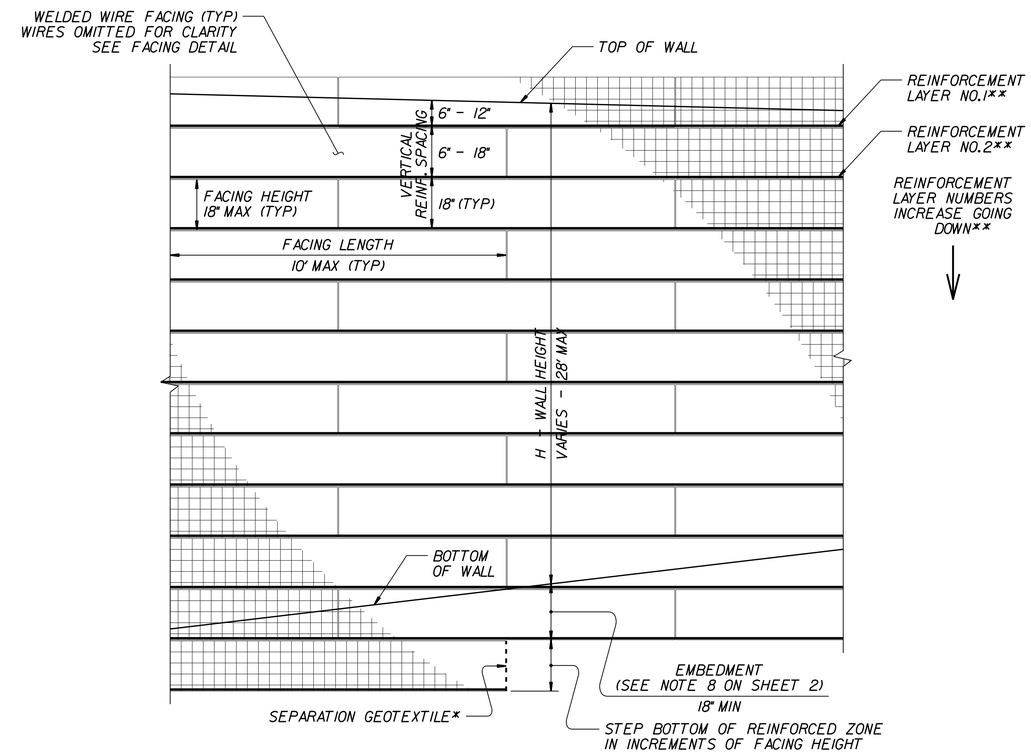

STANDARD TEMPORARY WALL – PARTIAL ELEVATION

*SEE GEOSYNTHETIC PLACEMENT DETAILS ON SHEET 2.
**SEE REINFORCEMENT TABLES ON SHEET 3.

STATE OF NORTH CAROLINA DEPARTMENT OF TRANSPORTATION

GEOTECHNICAL ENGINEERING UNIT

STATE OF NORTH CAROLINA
DEPARTMENT OF TRANSPORTATION
RALEIGH

STANDARD DRAWING NO. 1801.02

STANDARD TEMPORARY WALL
SHEET 1 OF 3

DATE: 11-19-13