PROJECT REFERENCE NO.	SHEET NO.
U-3465	2A-3

ROADWAY DESIGN ENGINEER
NORTH CAROLINA PROFESSIONAL SEAL 016378 ENGINEER REKHA V. PATEL
9/2/2014
DocuSigned by: Rekha V. Patel
B5CF DEAB5A1D4DE...

PAVEMENT DESIGN ENGINEER
NORTH CAROLINA PROFESSIONAL SEAL 039819 ENGINEER LAQUNYA T. HEYWARD
9/4/2014
DocuSigned by: LaQunya Heyward
C2F5F10B2C4413...

PAVEMENT SCHEDULE	
C1	3" TYPE S9.5B
D1	4" TYPE I19.0B
E1	4" TYPE B25.0B
R1	2'-6" CONCRETE CURB AND GUTTER
R3	5" MONO. CONCRETE ISLAND (KEYED IN)
T	EARTH MATERIAL
U	EXISTING PAVEMENT
W	WEDGING

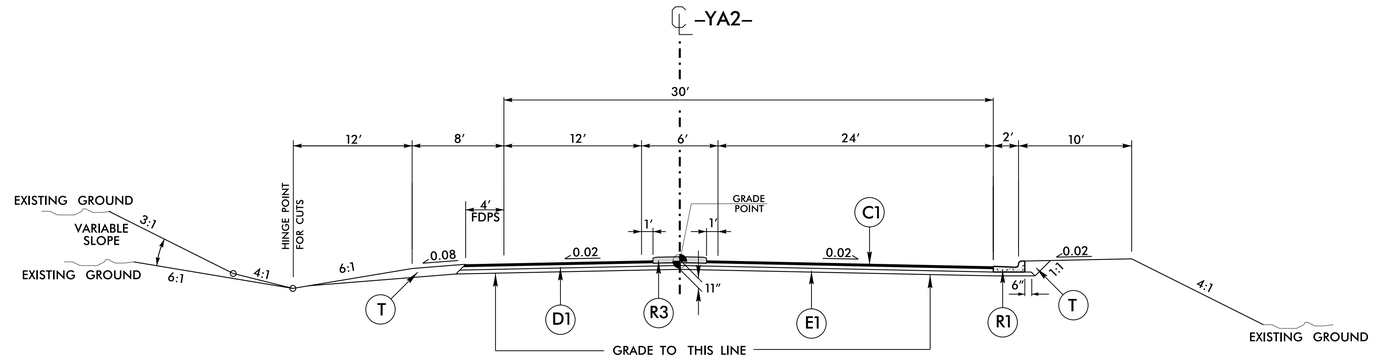

TYPICAL SECTION NO. 8

–YA2– STA. 16+00.00 TO –YA2– STA. 18+51.46

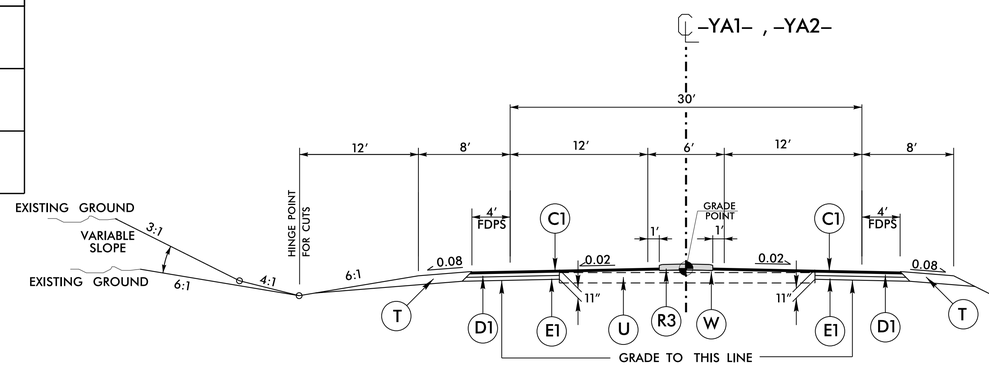

TYPICAL SECTION NO. 9

–YA1– STA. 10+70.00 TO –YA1– STA. 13+67.00
–YA2– STA. 10+58.09 TO –YA2– STA. 16+00.00

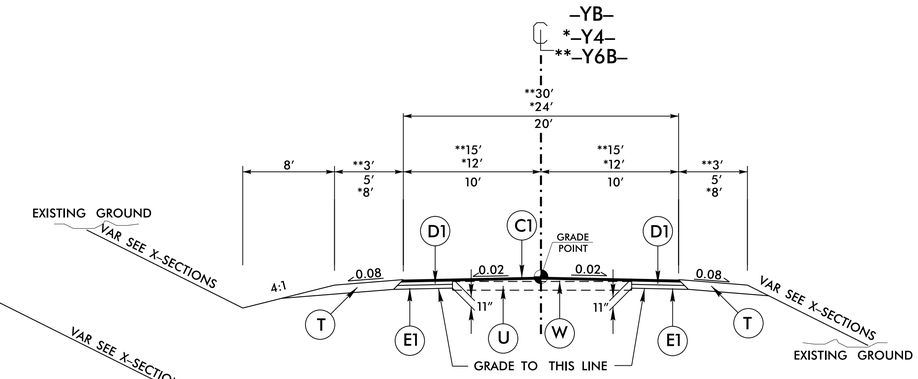

TYPICAL SECTION NO. 10

–YB– STA. 12+50.00 TO –YB– STA. 13+27.04
*–Y4– STA. 10+20.00 TO –Y4– STA. 11+50.00
**–Y6B STA. 10+37.67 TO –Y6B– STA. 11+70.00

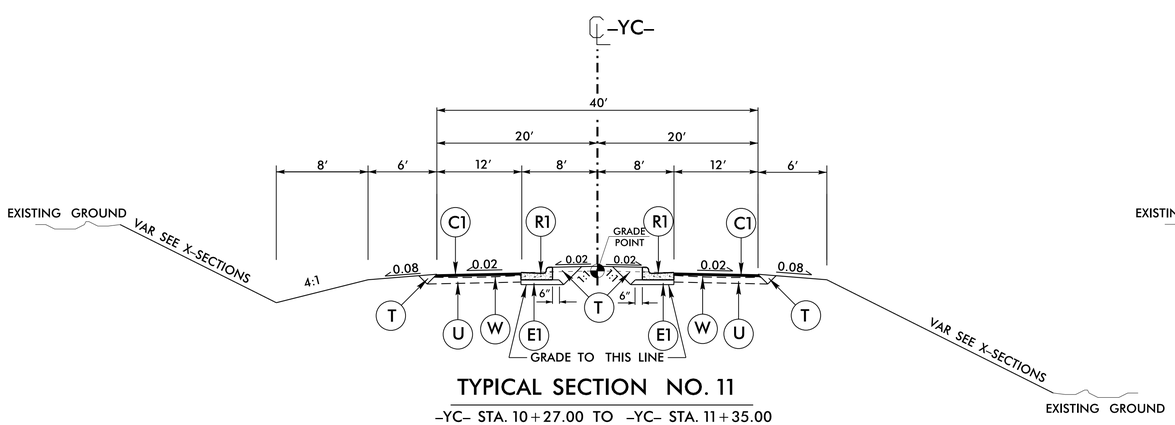

TYPICAL SECTION NO. 11

–YC– STA. 10+27.00 TO –YC– STA. 11+35.00

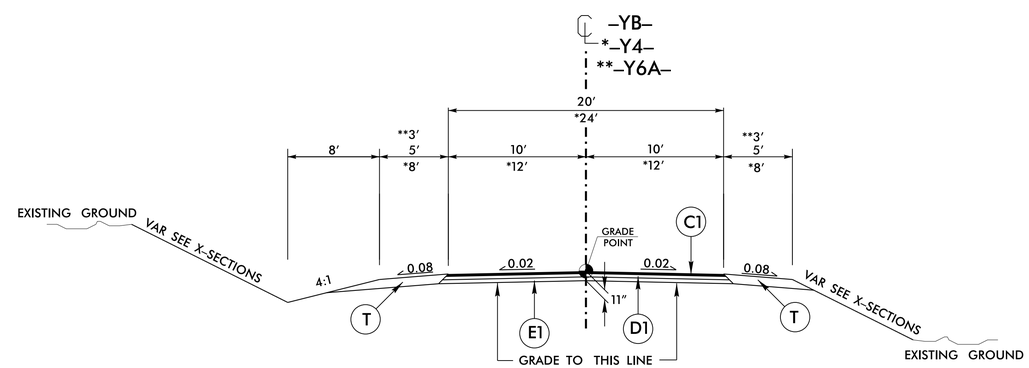

TYPICAL SECTION NO. 12

–YB– STA. 10+24.07 TO –YB– STA. 12+50.00
*–Y4– STA. 11+50.00 TO –Y4– STA. 16+88.46
**–Y6A– STA. 10+37.50 TO –Y6A– STA. 13+07.13

6/2/99

28-AUG-2014 12:00
R:\Roadway\Proj\U-3465_Rdy_typ.dgn
$$$$USERNAME$$$$