PROJECT REFERENCE NO.	SHEET NO.
U-3465	2A-4
ROADWAY DESIGN ENGINEER	PAVEMENT DESIGN ENGINEER

9/2/2014 NORTH CAROLINA PROFESSIONAL SEAL 016378 ENGINEER REKHA V. PATEL
DocuSigned by: Rekha V. Patel
95CF DEAB5A1D4DE...

9/4/2014 NORTH CAROLINA PROFESSIONAL SEAL 039819 ENGINEER LAQUNYA T. HEYWARD
DocuSigned by: LaQunya Heyward
C2F5F10B2C4413...

PAVEMENT SCHEDULE	
C1	3" TYPE S9.5B
D1	4" TYPE I19.0B
E1	4" TYPE B25.0B
R1	2'-6" CONCRETE CURB AND GUTTER
R2	1'-6" CONCRETE CURB AND GUTTER
T	EARTH MATERIAL
U	EXISTING PAVEMENT
W	WEDGING

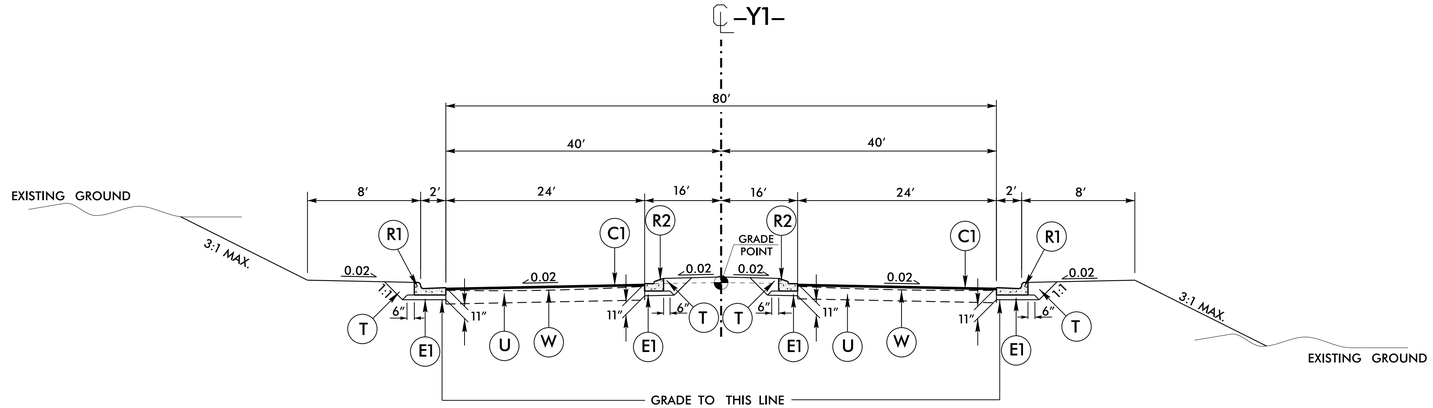

TYPICAL SECTION NO. 13

-Y1- STA. 11+50.00 TO -Y1- STA. 12+25.00

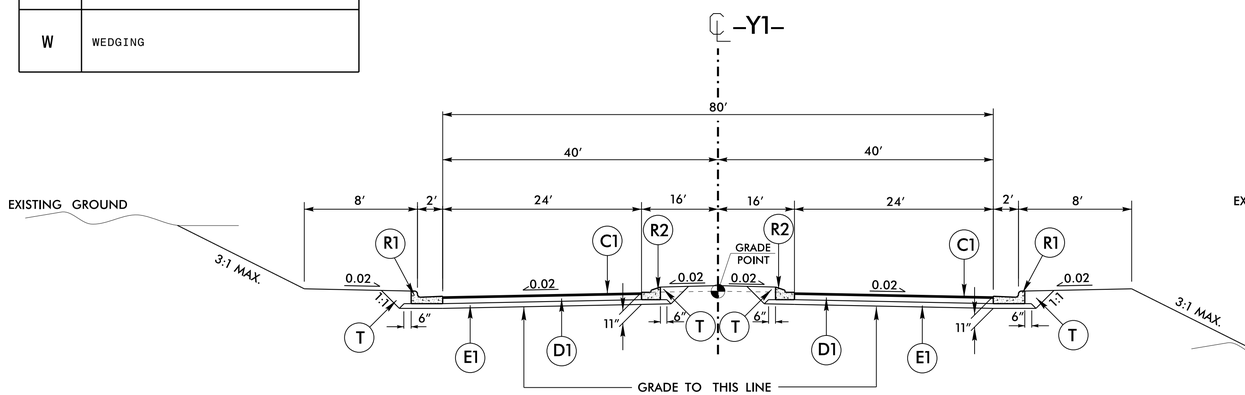

TYPICAL SECTION NO. 14

-Y1- STA. 10+49.50 TO -Y1- STA. 11+50.00

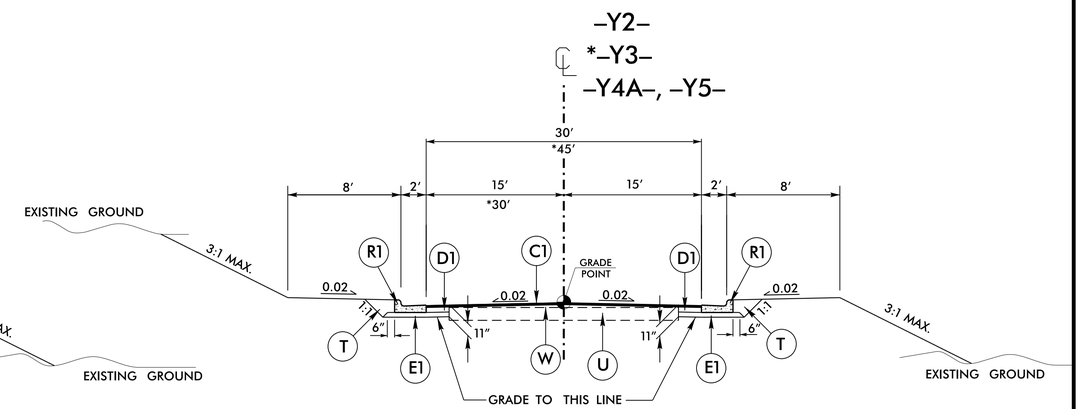

TYPICAL SECTION NO. 15

-Y2- STA. 10+80.00 TO -Y2- STA. 11+44.04
-Y2- STA. 12+75.00 TO -Y2- STA. 13+25.00
*-Y3- STA. 11+00.00 TO -Y3- STA. 12+00.00
-Y4A- STA. 10+50.00 TO -Y4A- STA. 11+25.00
-Y5- STA. 11+50.00 TO -Y5- STA. 12+66.76

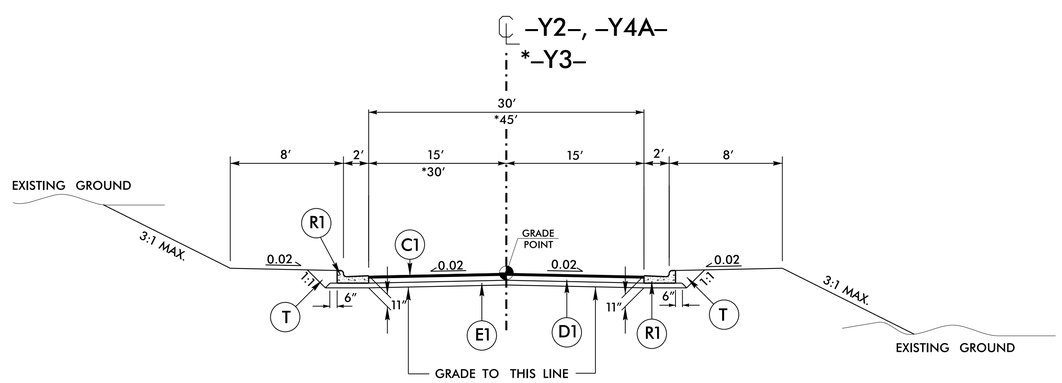

TYPICAL SECTION NO. 16

-Y2- STA. 12+43.14 TO -Y2- STA. 12+75.00
*-Y3- STA. 10+51.06 TO -Y3- STA. 11+00.00
-Y4A- STA. 11+25.00 TO -Y4A- STA. 11+68.43

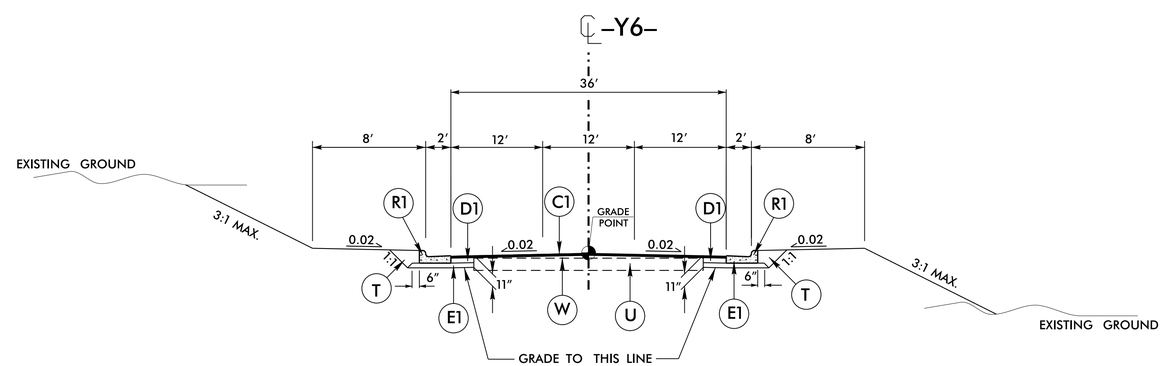

TYPICAL SECTION NO. 17

-Y6- STA. 11+75.00 TO -Y6- STA. 14+30.57

6/2/99

28-AUG-2014 12:00
R:\Roadway\Proj\u-3465_Rdy_typ.dgn
$$$$USERNAME$$$$