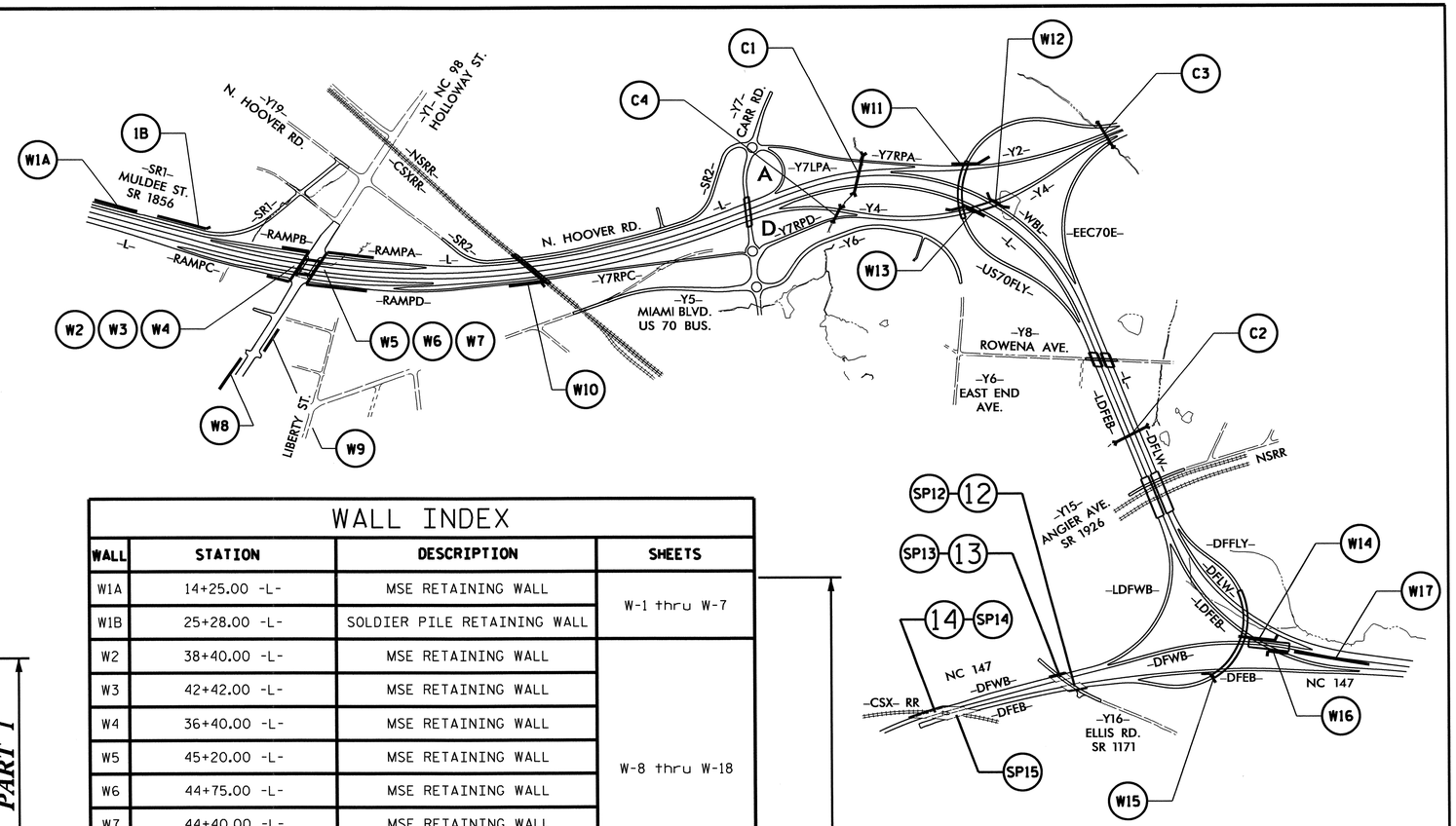

PART 3 OF 3

BRIDGE INDEX

STR	STATION	DESCRIPTION	SHEETS
1	44+08.60 -L-	BRIDGE ON EAST END CONNECTOR OVER NC98 (-Y1-)	S-1 thru S-37
2a	64+55.50 -L-	BRIDGE ON CSX RR OVER US70 BYPASS	S-38 thru S-80
2b	64+74.69 -L-	BRIDGE ON NSRR OVER US70 BYPASS	S-81 thru S-122
2c	65+21.79 -L-	DETOUR BRIDGE ON CSXT AND NSRR OVER US70	S-123 thru S-152
3	85+26.52 -L-	BRIDGE ON CARR RD. -(Y7-) OVER EAST END CONNECTOR	S-153 thru S-189
4	107+45.55 -L-	BRIDGE ON US70EB (-Y4-) OVER EAST END CONNECTOR	S-190 thru S-227
5	105+29.00 -L-	BRIDGE ON US70 FLYOVER OVER US70	S-228 thru S-272
6	125+91.57 -L-	BRIDGE ON EAST CONNECTOR OVER ROWENA AVE. (WBL)	S-273 thru S-300
7	125+91.57 -L-	BRIDGE ON EAST CONNECTOR OVER ROWENA AVE. (EBL)	S-301 thru S-330
8	17+97.57 -DFLW-	BRIDGE ON EAST END CONN OVER ANGIER AVE. (-Y15-) & NSRR	S-331 thru S-374
9	138+40.45 -LDFEB-	BRIDGE ON EAST END CONN OVER ANGIER AVE. (-Y15-) AND NSRR	S-375 thru S-419
10	157+33.78 -LDFEB-	BRIDGE ON EAST END CONNECTOR OVER NC 147	S-420 thru S-476
11	23+29.61 -DFFLY-	BRIDGE ON RAMP -DFFLY- OVER EAST END CONNECTOR AND NC147	S-477 thru S-538
12	36+69.26 -DFWB-	WIDENING ON WB NC147 OVER ELLIS RD. (-Y16-)	S-539 thru S-573
13	34+62.88 -DFEB-	WIDENING ON EB NC147 OVER ELLIS RD. (-Y16-)	S-574 thru S-610
14	24+70.18 -DFWB-	WIDENING ON WB NC147 OVER CSXT	S-611 thru S-671

PART 1

PART 2

PART 3

PRESERVATION AND REHAB INDEX

STR	STATION	DESCRIPTION	SHEETS
SP12	36+69.26 -DFWB-	REHABILITATION OF BRIDGE ON WB NC147 OVER ELLIS RD. (-Y16-)	SP-1 thru SP-10a
SP13	34+62.88 -DFEB-	REHABILITATION OF BRIDGE ON EB NC147 OVER ELLIS RD. (-Y16-)	SP-11 thru SP-21
SP14	24+70.18 -DFWB-	REHABILITATION OF BRIDGE ON WB NC147 OVER CSXT	SP-22 thru SP-50
SP15	23+44.51 -DFEB-	REHABILITATION OF BRIDGE ON EB NC147 OVER CSXT	SP-51 thru SP-83

PART 3

WALL INDEX

WALL	STATION	DESCRIPTION	SHEETS
W1A	14+25.00 -L-	MSE RETAINING WALL	W-1 thru W-7
W1B	25+28.00 -L-	SOLDIER PILE RETAINING WALL	
W2	38+40.00 -L-	MSE RETAINING WALL	W-8 thru W-18
W3	42+42.00 -L-	MSE RETAINING WALL	
W4	36+40.00 -L-	MSE RETAINING WALL	
W5	45+20.00 -L-	MSE RETAINING WALL	
W6	44+75.00 -L-	MSE RETAINING WALL	
W7	44+40.00 -L-	MSE RETAINING WALL	
W8	21+40.00 -Y1-	CAST IN PLACE GRAVITY WALL	
W9	24+00.00 -Y1-	SOLDIER PILE RETAINING WALL	
W10	14+80.00 -Y7RPC-	SOIL NAIL WALL	W-19 thru W-20
W11	10+00.00 -US70FLY RETW-	MSE RETAINING WALL	W-21 thru W-27
W12	10+00.00 -Y4 RETE-	MSE RETAINING WALL	
W13	10+00.00 -Y4 RETW-	MSE RETAINING WALL	
W14	52+84.32 -DFWB-	MSE RETAINING WALL	W-28 thru W-31
W15	46+50.00 -DFEB-	MSE RETAINING WALL	W-32 thru W-35
W16	157+72.04 -LDFEB-	MSE RETAINING WALL	W-28 thru W-31
W17	58+20.00 -DFWB-	MSE RETAINING WALL	W-36 thru W-38
-	N/A	CONCRETE DITCH DETAILS	W-39
-	N/A	CONCRETE BARRIER RAIL WITH MOMENT SLAB	W-40 thru W-41
W18	16+70.77 -US70FLY-	SOUND BARRIER WALL	W-42 thru W-44

PART 3

CULVERT INDEX

CULV	STATION	DESCRIPTION	SHEETS
C1	95+48.49 -L-	SINGLE 8' X 9' RCBC	C-1 thru C-6
C2	133+41.46 -L-	SINGLE 6' X 7' RCBC	C-7 thru C-11
C3	34+45.00 -Y3-	SINGLE 8' X 10' RCBC	C-12 thru C-19
C4	19+07.28 -Y4-	SINGLE 8' X 9' RCBC	C-20 thru C-26

PART 3

PROJECT NO. U-0071

DURHAM COUNTY

STATION:

STATE OF NORTH CAROLINA
DEPARTMENT OF TRANSPORTATION
RALEIGH

INDEX SHEET

REVISIONS					
NO.	BY:	DATE:	NO.	BY:	DATE:
1			3		
2			4		

DRAWN BY : W.D. CRUTCHER DATE : 6-19-14
CHECKED BY : R.D. MARTIN DATE : 6-23-14

12-NOV-2014 10:36
S:\PEF\ALL INDIVIDUAL FOLDERS\Darrell\u0071_title.dgn
dcrutcher

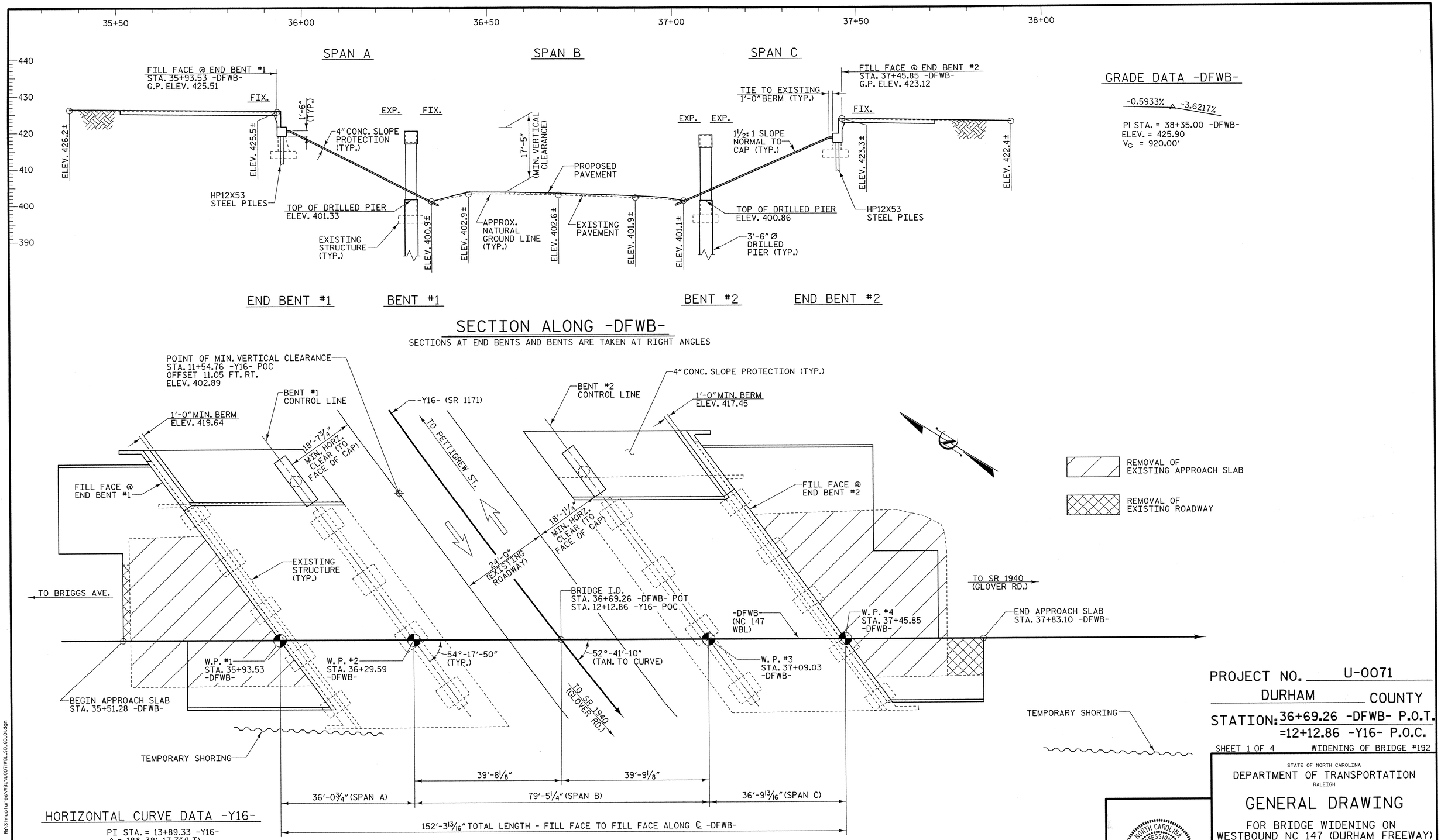

HORIZONTAL CURVE DATA -Y16-

PI STA. = 13+89.33 -Y16-
△ = 18°-38'-17.7" (LT)
D = 3°-22'-13.2"
L = 553.01'
T = 278.97'
R = 1,700.00'

DRAWN BY :	W. B. ALLEN	DATE :	5/12
CHECKED BY :	T. R. PETERSON	DATE :	6/12
DESIGN ENGINEER OF RECORD:	T. R. PETERSON	DATE :	2/12/14

PROJECT NO. U-0071
DURHAM COUNTY
STATION: 36+69.26 -DFWB- P.O.T.
=12+12.86 -Y16- P.O.C.

SHEET 1 OF 4 WIDENING OF BRIDGE #192

STATE OF NORTH CAROLINA
DEPARTMENT OF TRANSPORTATION
RALEIGH

GENERAL DRAWING

FOR BRIDGE WIDENING ON WESTBOUND NC 147 (DURHAM FREEWAY) OVER SR 1171 (ELLIS RD.) BETWEEN BRIGGS AVE. AND SR 1940

PLANS PREPARED BY:
MULKEY ENGINEERS & CONSULTANTS
PO Box 33127
RALEIGH, N.C. 27636
(919) 851-1912
(919) 851-1918 (FAX)
WWW.MULKEYINC.COM
NO LICENSE NO. C-1321

NORTH CAROLINA PROFESSIONAL SEAL 034352 ENGINEER TERRE R. PETERSON 2/12/14

STR #12

REVISIONS								SHEET NO.
NO.	BY:	DATE:	NO.	BY:	DATE:			S-539
1			3					TOTAL SHEETS
2			4					671

2/12/2014 10:56:11 AM R:\Structures\WBL\U0071WBL_SD_GD_01.dgn

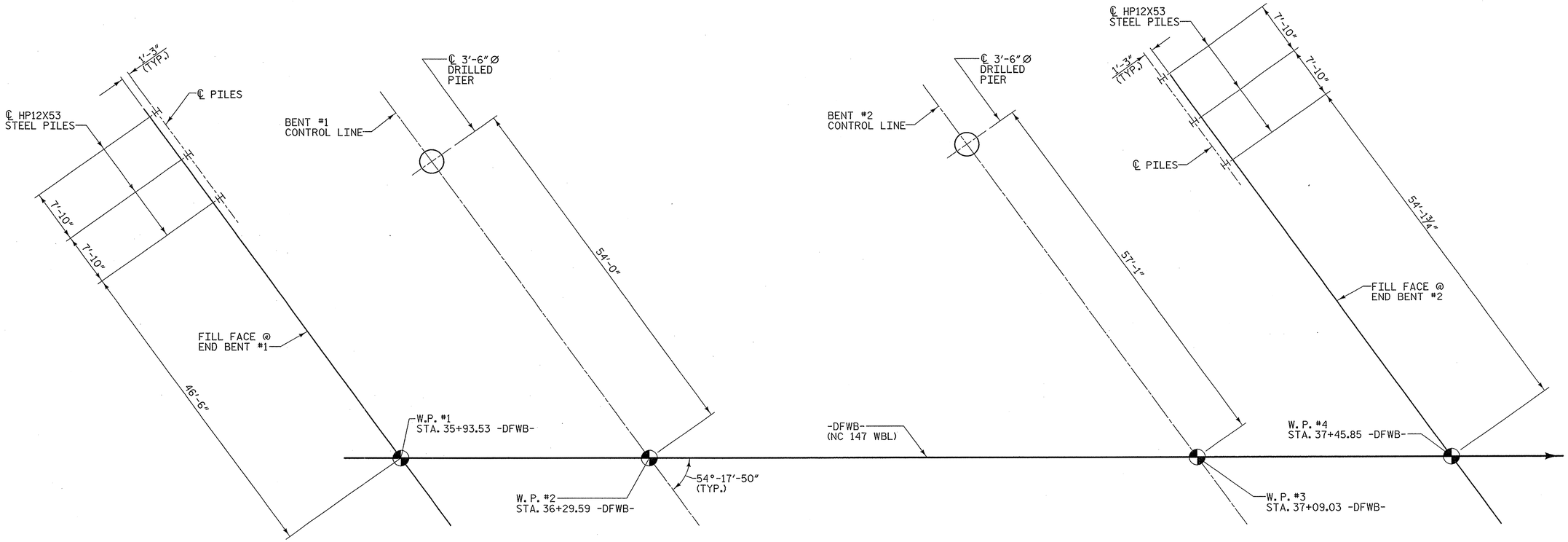

FOUNDATION LAYOUT

ALL PILES AT END BENT #1 AND END BENT #2 ARE HP12X53.

DIMENSIONS LOCATING PILES ARE SHOWN TO THE PILE CENTERLINE.

DIMENSIONS LOCATING DRILLED PIERS ARE SHOWN TO THE CENTERLINE OF DRILLED PIERS.

NOTES

FOR PILES, SEE SECTION 450 OF THE STANDARD SPECIFICATIONS.

PILES AT END BENT NO. 1 AND 2 ARE DESIGNED FOR A FACTORED RESISTANCE OR 95 TONS PER PILE.

DRIVE PILES AT END BENT NO. 1 AND 2 TO A REQUIRED DRIVING RESISTANCE OF 160 TONS PER PILE.

STEEL PILE POINTS ARE REQUIRED FOR STEEL H-PILES AT END BENT NO. 1 AND 2. FOR STEEL PILE POINTS, SEE SECTION 450 OF THE STANDARD SPECIFICATIONS.

IT HAS BEEN ESTIMATED THAT A HAMMER WITH AN EQUIVALENT RATED ENERGY IN THE RANGE OF 30 TO 45 FT-KIPS PER BLOW WILL BE REQUIRED TO DRIVE PILES AT END BENT NO. 1 AND 2. THIS ESTIMATED ENERGY RANGE DOES NOT RELEASE THE CONTRACTOR FROM PROVIDING DRIVING EQUIPMENT IN ACCORDANCE SUBARTICLE SECTION 450-3 OF THE STANDARD SPECIFICATIONS.

PILE EXCAVATION IS REQUIRED TO INSTALL PILES AT END BENT NO. 1. EXCAVATE HOLES AT PILE LOCATIONS TO ELEVATION 403 FT. FOR PILE EXCAVATION, SEE SECTION 450 OF THE STANDARD SPECIFICATIONS.

PILE EXCAVATION IS REQUIRED TO INSTALL PILES AT END BENT NO. 2. EXCAVATE HOLES AT PILE LOCATIONS TO ELEVATION 406 FT. FOR PILE EXCAVATION, SEE SECTION 450 OF THE STANDARD SPECIFICATIONS.

CONCRETE OR GROUT IS REQUIRED TO FILL HOLES FOR PILE EXCAVATION AT END BENT NO. 1 AND 2.

PILE EXCAVATION AT END BENT NO. 1 AND 2 WILL EXTEND INTO MATERIAL THAT DETERIORATES WHEN EXPOSED TO THE ELEMENTS. DRIVE PILES TO REQUIRED DRIVING RESISTANCE AND PLACE CONCRETE IMMEDIATELY AFTER EXCAVATION IS COMPLETED.

FOR DRILLED PIERS, SEE SECTION 411 OF THE STANDARD SPECIFICATIONS.

DRILLED PIERS AT BENT NO. 1 AND 2 ARE DESIGNED FOR A FACTORED RESISTANCE OF 290 TONS PER PIER.

CHECK FIELD CONDITIONS FOR THE REQUIRED TIP RESISTANCE OF 30 TSF.

INSTALL DRILLED PIERS AT BENT NO. 1 AND 2 TO A TIP ELEVATION NO HIGHER THAN 390 FT. AND 388 FT., RESPECTIVELY, WITH THE REQUIRED TIP RESISTANCE.

SPT MAY BE REQUIRED FOR DRILLED PIERS. THE ENGINEER WILL DETERMINE THE NEED FOR SPT. FOR SPT TESTING, SEE SECTION 411 OF THE STANDARD SPECIFICATIONS.

DO NOT USE SLURRY CONSTRUCTION FOR DRILLED PIERS AT BENT NO. 1 AND 2.

SID INSPECTIONS MAY BE REQUIRED FOR DRILLED PIERS. THE ENGINEER WILL DETERMINE THE NEED FOR SID INSPECTIONS. FOR SID INSPECTIONS, SEE SECTION 411 OF THE STANDARD SPECIFICATIONS.

CSL TUBES ARE REQUIRED AND CSL TESTING MAY BE REQUIRED FOR DRILLED PIERS. THE ENGINEER WILL DETERMINE THE THE NEED FOR CSL TESTING. FOR CSL TESTING, SEE SECTION 411 OF THE STANDARD SPECIFICATIONS.

DRILLED PIER EXCAVATION AT BENT NO. 1 AND 2 WILL EXTEND INTO MATERIAL THAT DETERIORATES WHEN EXPOSED TO THE ELEMENTS. CHECK FIELD CONDITIONS FOR THE REQUIRED TIP RESISTANCE AND PLACE CONCRETE IMMEDIATELY AFTER EVCAVATION IS COMPLETED.

PROJECT NO. U-0071
DURHAM COUNTY
STATION: 36+69.26 -DFWB-

SHEET 2 OF 4

STATE OF NORTH CAROLINA
DEPARTMENT OF TRANSPORTATION
RALEIGH

GENERAL DRAWING

FOR BRIDGE WIDENING ON WESTBOUND NC 147 (DURHAM FREEWAY) OVER SR 1171 (ELLIS RD.) BETWEEN BRIGGS AVE. AND SR 1940

PLANS PREPARED BY:
MULKEY ENGINEERS & CONSULTANTS
PO BOX 33127
RALEIGH, N.C. 27636
(919) 851-1912
(919) 851-1918 (FAX)
WWW.MULKEYINC.COM
NC LICENSE NO. C-1021

NORTH CAROLINA PROFESSIONAL SEAL 034352 ENGINEER TERRIE R. PETERSON
12/2/13

STR #12

REVISIONS						
NO.	BY:	DATE:	NO.	BY:	DATE:	
1			3			
2			4			

SHEET NO. S-540
TOTAL SHEETS 671

DRAWN BY : W. B. ALLEN DATE : 1/13
CHECKED BY : T. R. PETERSON DATE : 1/13
DESIGN ENGINEER OF RECORD: T. R. PETERSON DATE : 12/2/13

11/27/2013 9:44:02 AM R:\Structures\WBL\U0071WBL_SD_FL_01.dgn

BM #51: CHISELED SQUARE IN SE CONC. HW OF EB BRIDGE; 125.89' (RT.) STA. 36+87.64 -DFWB- ELEV. 424.46

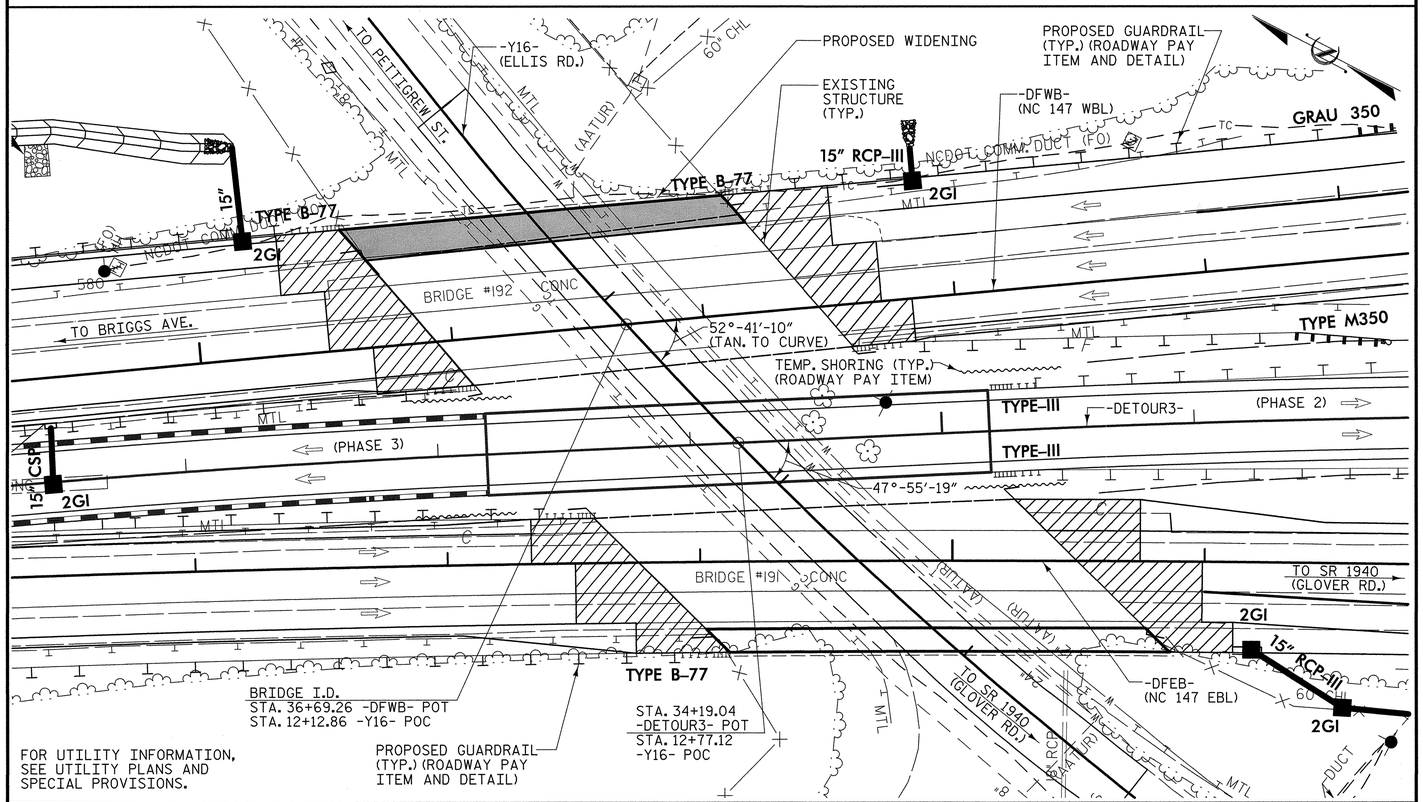

LOCATION SKETCH

NOTES

ASSUMED LIVE LOAD = HL-93 OR ALTERNATE LOADING.

THIS BRIDGE HAS BEEN DESIGNED IN ACCORDANCE WITH THE AASHTO BRIDGE DESIGN SPECIFICATIONS.

THIS BRIDGE IS LOCATED IN SEISMIC ZONE 1.

FOR OTHER DESIGN DATA AND GENERAL NOTES, SEE SHEET SN.

FOR SUBMITTAL OF WORKING DRAWINGS, SEE SPECIAL PROVISIONS.

FOR FALSEWORK AND FORMWORK, SEE SPECIAL PROVISIONS.

FOR CRANE SAFETY, SEE SPECIAL PROVISIONS.

FOR GROUT FOR STRUCTURES, SEE SPECIAL PROVISIONS.

THE ELEVATION AND CLEARANCE SHOWN ON THE PLANS AT THE POINT OF MINIMUM VERTICAL CLEARANCE ARE FROM THE BEST INFORMATION AVAILABLE. PRIOR TO BEGINNING BRIDGE CONSTRUCTION, VERIFY THE ELEVATION ON THE EXISTING PAVEMENT AND CHECK THE CLEARANCE. REPORT ANY VARIATIONS TO THE ENGINEER. ANY PLAN REVISIONS NECESSARY TO ACHIEVE THE REQUIRED MINIMUM VERTICAL CLEARANCE WILL BE PROVIDED BY THE DEPARTMENT.

FOR MAINTENANCE AND PROTECTION OF TRAFFIC BENEATH PROPOSED STRUCTURE, SEE SPECIAL PROVISIONS.

REMOVABLE FORMS MAY BE USED IN LIEU OF METAL STAY-IN-PLACE FORMS IN ACCORDANCE WITH ARTICLE 420-3 OF THE STANDARD SPECIFICATIONS.

NEEDLE BEAMS WILL NOT BE ALLOWED UNLESS OTHERWISE CALLED FOR ON THE PLANS OR APPROVED BY THE ENGINEER.

ALL STRUCTURAL STEEL SHALL BE AASHTO M270 GRADE 50W AND PAINTED IN ACCORDANCE WITH SYSTEM 4 OF ARTICLE 442-8 OF THE STANDARD SPECIFICATIONS UNLESS OTHERWISE NOTED ON THE PLANS.

THE CLASS AA CONCRETE IN THE BRIDGE DECK SHALL CONTAIN FLY ASH OR GROUND GRANULATED BLAST FURNACE SLAG AT THE SUBSTITUTION RATE SPECIFIED IN ARTICLE 1024-1 AND IN ACCORDANCE WITH ARTICLES 1024-5 AND 1024-6 OF THE STANDARD SPECIFICATIONS. NO PAYMENT WILL BE MADE FOR THIS SUBSTITUTION AS IT IS CONSIDERED INCIDENTAL TO THE COST OF THE REINFORCED CONCRETE DECK SLAB.

STEEL SHEET PILING REQUIRED FOR SHORING SHALL BE HOT ROLLED.

TEMPORARY SHORING SHALL BE REQUIRED IN THE AREA INDICATED IN THE PLAN VIEW.

FOR LIMITS OF TEMPORARY SHORING FOR MAINTENANCE OF TRAFFIC, SEE TRAFFIC CONTROL PLANS. FOR PAY ITEM FOR TEMPORARY SHORING FOR MAINTENANCE OF TRAFFIC, SEE ROADWAY PLANS.

THE SUBSTRUCTURE OF THE EXISTING BRIDGE INDICATED ON THE PLANS IS FROM THE BEST INFORMATION AVAILABLE. SINCE THIS INFORMATION IS SHOWN FOR THE CONVENIENCE OF THE CONTRACTOR, THE CONTRACTOR SHALL HAVE NO CLAIM WHATSOEVER AGAINST THE DEPARTMENT OF TRANSPORTATION FOR ANY DELAYS OR ADDITIONAL COST INCURRED BASE ON DIFFERENCES BETWEEN THE EXISTING BRIDGE SUBSTRUCTURE SHOWN ON THE PLANS AND THE ACTUAL CONDITIONS AT THE PROJECT SITE.

"REMOVAL OF EXISTING STRUCTURE" SHALL INCLUDE THE EXISTING OVERHANG, RAIL, SLAB, CURTAIN WALL APPROACH SLAB, EXISTING ROADWAY AND SLOPE PROTECTION TO THE LIMITS SHOWN ON THE PLANS. IT SHALL ALSO INCLUDE REMOVAL OF A PORTION OF THE END BENTS AND WING WALLS AS INDICATED ON THE PLANS.

FOR EROSION CONTROL MEASURES, SEE EROSION CONTROL PLANS.

THE LOCATION OF THE CONSTRUCTION JOINT IN THE DRILLED PIERS IS BASED ON AN APPROXIMATE GROUND LINE ELEVATION. IF THE CONSTRUCTION JOINT IS ABOVE THE ACTUAL GROUND ELEVATION, THE CONTRACTOR SHALL PLACE THE CONSTRUCTION JOINT 1 FT. BELOW THE GROUND LINE.

FOR PLACING LOAD ON STRUCTURAL MEMBERS, SEE SPECIAL PROVISIONS.

PAYMENT FOR FOAM JOINT SEALS AND GROOVING BRIDGE FLOORS IS PROVIDED IN THE BILL OF MATERIAL ON THE PRESERVATION PLANS OF THE EXISTING STRUCTURE.

TOTAL BILL OF MATERIAL

	REMOVAL OF EXISTING STRUCTURE	PILE EXCAVATION IN SOIL	PILE EXCAVATION NOT IN SOIL	3'-6" Ø DRILLED PIERS IN SOIL	3'-6" Ø DRILLED PIERS NOT IN SOIL	SID INSPECTIONS	SPT TESTING	CSL TESTING	REINFORCED CONCRETE DECK SLAB	CLASS A CONCRETE	BRIDGE APPROACH SLABS	REINFORCING STEEL
	LUMP SUM	LIN. FT.	LIN. FT.	LIN. FT.	LIN. FT.	EACH	EACH	EACH	SQ. FT.	CU. YDS.	LUMP SUM	LBS.
SUPERSTRUCTURE									2,297		LUMP SUM	
END BENT #1		37.0	9.0							7.9		1608
BENT #1				5.5	6.0	1	1	1		11.4		4475
BENT #2				6.0	7.0	1		1		11.2		4538
END BENT #2		22.0	9.0							7.6		1603
TOTAL	LUMP SUM	59.0	18.0	11.5	13.0	2	1	2	2,297	38.1	LUMP SUM	12,224

TOTAL BILL OF MATERIAL

	SPIRAL COLUMN REINFORCING STEEL	STRUCTURAL STEEL (APPROX.)	HP12X53 STEEL PILES		STEEL PILE POINTS	CONCRETE BARRIER RAIL	4" SLOPE PROTECTION	ELASTOMERIC BEARINGS
	LBS.	LBS.	NO.	LIN. FT.	EACH	LIN. FT.	SQ. YDS.	LUMP SUM
SUPERSTRUCTURE		51,100				148.94		LUMP SUM
END BENT #1			3	45	3		90	
BENT #1	594							
BENT #2	609							
END BENT #2			3	30	3		111	
TOTAL	1203	51,100	6	75	6	148.94	201	LUMP SUM

PROJECT NO. U-0071
DURHAM COUNTY
STATION: 36+69.26 -DFWB-

SHEET 3 OF 4

STATE OF NORTH CAROLINA
DEPARTMENT OF TRANSPORTATION
RALEIGH

GENERAL DRAWING

FOR BRIDGE WIDENING ON WESTBOUND NC 147 (DURHAM FREEWAY) OVER SR 1171 (ELLIS RD.) BETWEEN BRIGGS AVE. AND SR 1940

PLANS PREPARED BY:
MULKEY ENGINEERS & CONSULTANTS
PO Box 33127
RALEIGH, N.C. 27636
(919) 851-1912
(919) 851-1918 (FAX)
WWW.MULKEYINC.COM
NC LICENSE NO. C-1081

NORTH CAROLINA PROFESSIONAL ENGINEER SEAL 19661 L. KEVIN AUSTIN 9/16/14

STR #12

REVISIONS						SHEET NO.
NO.	BY:	DATE:	NO.	BY:	DATE:	S-541
1			3			TOTAL SHEETS
2			4			671

DRAWN BY :	W. B. ALLEN	DATE :	5/12
CHECKED BY :	T. R. PETERSON	DATE :	6/12
DESIGN ENGINEER OF RECORD:	T. R. PETERSON	DATE :	3/4/14

9/16/2014 3:26:52 PM R:\Structures\WBL\U0071WBL_S9_GD_02.dgn

LOAD AND RESISTANCE FACTOR RATING (LRFR) SUMMARY FOR STEEL GIRDERS

LEVEL		VEHICLE	WEIGHT (W) (TONS)	CONTROLLING LOAD RATING (#)	MINIMUM RATING FACTORS (RF)	TONS = W × RF	STRENGTH I LIMIT STATE											SERVICE III LIMIT STATE						COMMENT NUMBER
							LIVE-LOAD FACTORS (γ_{LL})	MOMENT					SHEAR					LIVE-LOAD FACTORS (γ_{LL})	MOMENT					
								DISTRIBUTION FACTORS (DF)	RATING FACTOR	SPAN	GIRDER LOCATION	DISTANCE FROM LEFT END OF SPAN (ft)	DISTRIBUTION FACTORS (DF)	RATING FACTOR	SPAN	GIRDER LOCATION	DISTANCE FROM LEFT END OF SPAN (ft)		DISTRIBUTION FACTORS (DF)	RATING FACTOR	SPAN	GIRDER LOCATION	DISTANCE FROM LEFT END OF SPAN (ft)	
DESIGN LOAD RATING		HL-93 (INVENTORY)	N/A	1	1.12	---	1.75	0.634	1.44	B	EL	38.09	1.01	1.81	B	I	0.00	1.30	0.627	1.12	B	I	38.09	1
		HL-93 (OPERATING)	N/A		1.45	---	1.35	0.634	1.86	B	EL	38.09	1.01	2.35	B	I	0.00	1.00	0.627	1.45	B	I	38.09	1
		HS-20 (INVENTORY)	36.000	2	1.47	52.92	1.75	0.634	1.90	B	EL	38.09	1.01	2.34	B	I	0.00	1.30	0.627	1.47	B	I	38.09	1
		HS-20 (OPERATING)	36.000		1.91	68.76	1.35	0.634	2.46	B	EL	38.09	1.01	3.03	B	I	0.00	1.00	0.627	1.91	B	I	38.09	1
LEGAL LOAD RATING	SINGLE VEHICLE (SV)	SNSH	13.500		3.35	45.23	1.40	0.634	5.39	B	EL	38.09	1.01	7.07	B	I	0.00	1.30	0.627	3.35	B	I	38.09	1
		SNGARBS2	20.000		2.49	49.80	1.40	0.634	4.00	B	EL	38.09	1.01	4.98	B	I	0.00	1.30	0.627	2.49	B	I	38.09	1
		SNAGRIS2	22.000		2.35	51.70	1.40	0.634	3.78	B	EL	38.09	1.01	4.61	B	I	0.00	1.30	0.627	2.35	B	I	38.09	1
		SNCOTTS3	27.250		1.67	45.51	1.40	0.634	2.68	B	EL	38.09	1.01	3.53	B	I	0.00	1.30	0.627	1.67	B	I	38.09	1
		SNAGGRS4	34.925		1.39	48.55	1.40	0.634	2.24	B	EL	38.09	1.01	2.90	B	I	0.00	1.30	0.627	1.39	B	I	38.09	1
		SNS5A	35.550		1.36	48.35	1.40	0.634	2.19	B	EL	38.09	1.01	2.92	B	I	0.00	1.30	0.627	1.36	B	I	38.09	1
		SNS6A	39.950		1.24	49.54	1.40	0.634	2.00	B	EL	38.09	1.01	2.66	B	I	0.00	1.30	0.627	1.24	B	I	38.09	1
		SNS7B	42.000		1.19	49.98	1.40	0.634	1.91	B	EL	38.09	1.01	2.60	B	I	0.00	1.30	0.627	1.19	B	I	38.09	1
	TRUCK TRACTOR SEMI-TRAILER (TTST)	TNAGRIT3	33.000		1.52	50.16	1.40	0.634	2.44	B	EL	38.09	1.01	3.17	B	I	0.00	1.30	0.627	1.52	B	I	38.09	1
		TNT4A	33.075		1.52	50.27	1.40	0.634	2.45	B	EL	38.09	1.01	3.09	B	I	0.00	1.30	0.627	1.52	B	I	38.09	1
		TNT6A	41.600		1.24	51.58	1.40	0.634	2.00	B	EL	38.09	1.01	2.73	B	I	0.00	1.30	0.627	1.24	B	I	38.09	1
		TNT7A	42.000		1.25	52.50	1.40	0.634	2.01	B	EL	38.09	1.01	2.68	B	I	0.00	1.30	0.627	1.25	B	I	38.09	1
		TNT7B	42.000		1.29	54.18	1.40	0.634	2.08	B	EL	38.09	1.01	2.55	B	I	0.00	1.30	0.627	1.29	B	I	38.09	1
		TNAGRIT4	43.000		1.23	52.89	1.40	0.634	1.98	B	EL	38.09	1.01	2.46	B	I	0.00	1.30	0.627	1.23	B	I	38.09	1
		TNAGT5A	45.000		1.16	52.20	1.40	0.634	1.86	B	EL	38.09	1.01	2.44	B	I	0.00	1.30	0.627	1.16	B	I	38.09	1
		TNAGT5B	45.000	3	1.15	51.75	1.40	0.634	1.84	B	EL	38.09	1.01	2.35	B	I	0.00	1.30	0.627	1.15	B	I	38.09	1

LOAD FACTORS:

DESIGN LOAD RATING FACTORS	LIMIT STATE	γ_{DC}	γ_{DW}
	STRENGTH I	1.25	1.50
	SERVICE III	1.00	1.00

NOTES:

MINIMUM RATING FACTORS ARE BASED ON THE STRENGTH I AND SERVICE III LIMIT STATES.

ALLOWABLE STRESSES FOR SERVICE III LIMIT STATE ARE AS REQUIRED FOR DESIGN.

COMMENTS:

1. FOR GIRDERS 1 & 2.
2.
3.
4.

(#) CONTROLLING LOAD RATING

(1) DESIGN LOAD RATING (HL-93)

(2) DESIGN LOAD RATING (HS-20)

(3) LEGAL LOAD RATING **

** SEE CHART FOR VEHICLE TYPE

GIRDER LOCATION

I - INTERIOR GIRDER
EL - EXTERIOR LEFT GIRDER

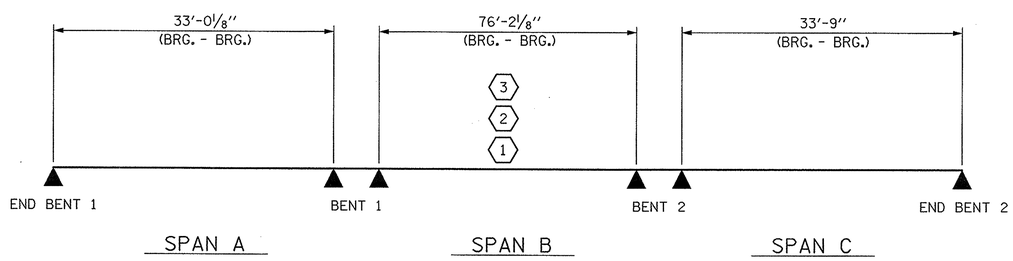

LRFR SUMMARY

PROJECT NO. U-0071
DURHAM COUNTY
STATION: 36+69.26 -DFWB-

SHEET 4 OF 4

PLANS PREPARED BY:
MULKEY ENGINEERS & CONSULTANTS
PO Box 33127 RALEIGH, N.C. 27636
(919) 851-1912
(919) 851-1918 (FAX)
WWW.MULKEYINC.COM
NC LICENSE NO. C-1321

THIS STANDARD DRAWING REVIEWED & ADOPTED FOR USE AT THE REFERENCED LOCATION BY THE UNDERSIGNED:

NORTH CAROLINA PROFESSIONAL SEAL 034352 ENGINEER JERRE R. PETERSON 12/2/13

STR #12

STATE OF NORTH CAROLINA
DEPARTMENT OF TRANSPORTATION
RALEIGH

STANDARD

LRFR SUMMARY FOR STEEL GIRDERS

(NON-INTERSTATE TRAFFIC)

REVISIONS						SHEET NO.
NO.	BY:	DATE:	NO.	BY:	DATE:	S-542
1			3			TOTAL SHEETS
2			4			671

STD. NO. LRFR3

ASSEMBLED BY : Z. H. BROWN	DATE : 11/12
CHECKED BY : T. R. PETERSON	DATE : 11/12
DRAWN BY : MAA 1/08	REV. 11/12/08 RR MAA/GM
CHECKED BY : GM/DI 2/08	REV. 10/1/11 MAA/GM

11/27/2013 9:13:29 AM R:\Structures\WBL\U0071WBL_SD_LRFR_01.dgn

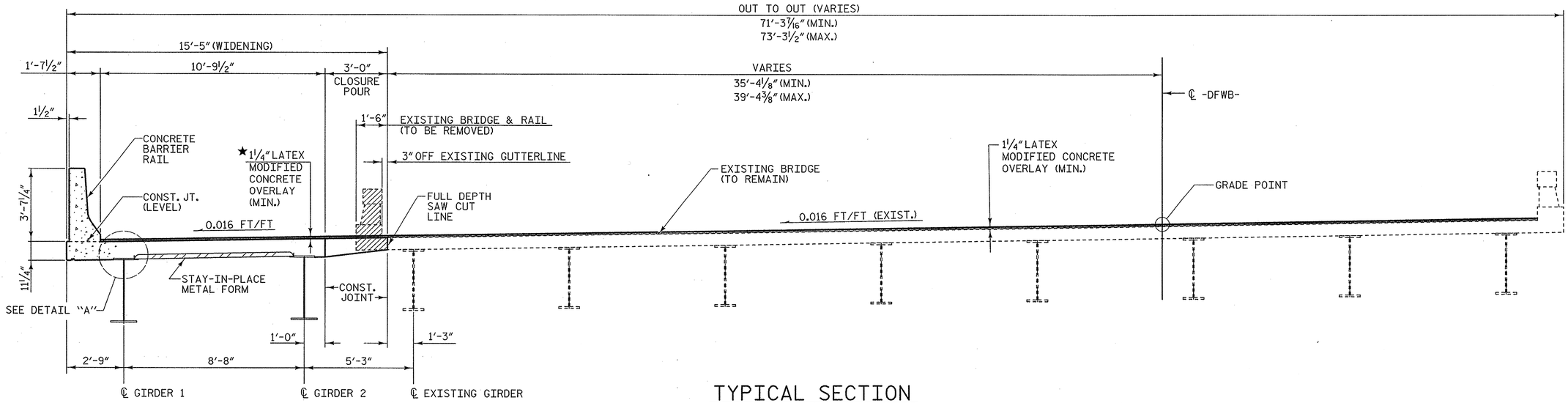

TYPICAL SECTION

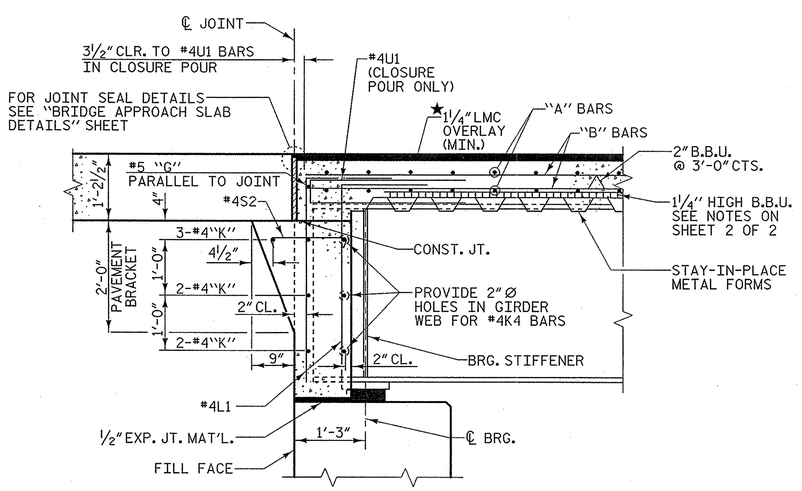

SECTION AT END BENT

#5 "G" BARS ARE PARALLEL TO JOINT

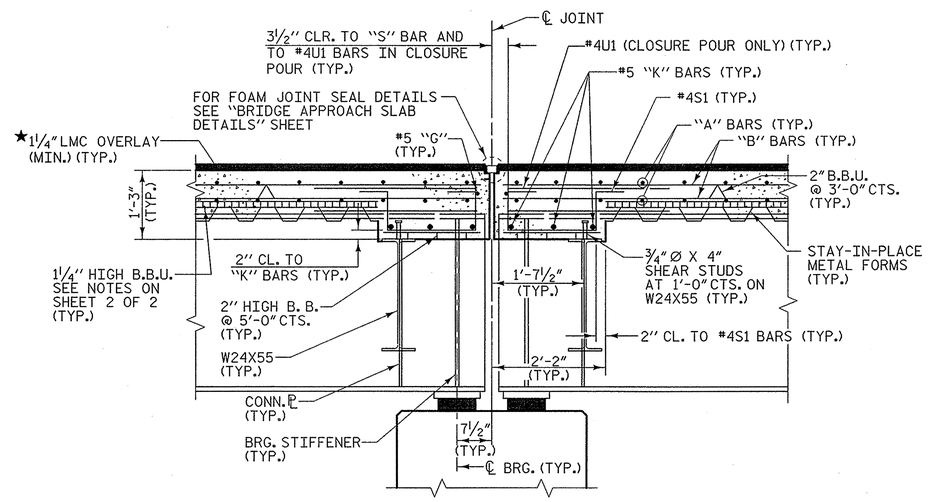

SECTION AT BENT

#5 "G" BARS ARE PARALLEL TO JOINT

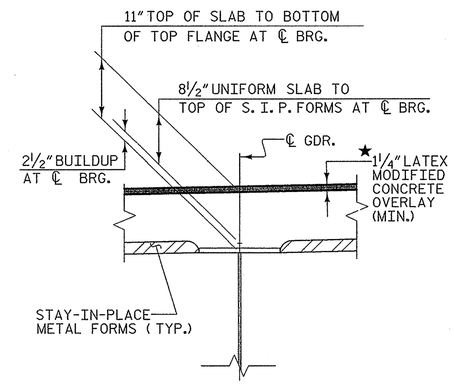

DETAIL "A"

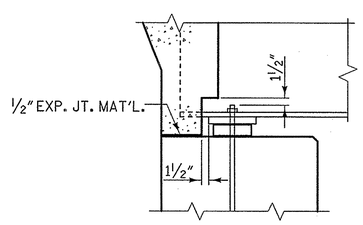

SECTION A-A

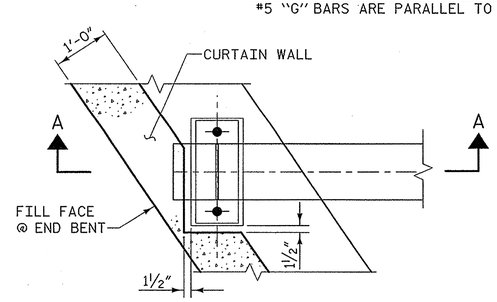

PART PLAN AT TOP OF ANCHOR BOLTS

★ 1 1/4" LATEX MODIFIED CONCRETE OVERLAY (MIN.) LOCATED IN THE PROPOSED WIDENING IS INCLUDED IN THE LMC OVERLAY QUANTITY ON THE PRESERVATION PLANS.

CURTAIN WALL BLOCKOUT FOR ELASTOMERIC BEARING PADS

PROJECT NO. U-0071
DURHAM COUNTY
STATION: 36+69.26 -DFWB-

SHEET 1 OF 2

STATE OF NORTH CAROLINA
DEPARTMENT OF TRANSPORTATION
RALEIGH

SUPERSTRUTURE
TYPICAL SECTION

PLANS PREPARED BY:
MULKEY ENGINEERS & CONSULTANTS
PO Box 33127
RALEIGH, N.C. 27636
(919) 851-1912
(919) 851-1918 (FAX)
WWW.MULKEYINC.COM
NC LICENSE NO. C-1621

NORTH CAROLINA PROFESSIONAL SEAL 034352 ENGINEER TERRY R. PETERSON
12/2/13

STR #12

REVISIONS						SHEET NO.
NO.	BY:	DATE:	NO.	BY:	DATE:	S-543
1			3			TOTAL SHEETS
2			4			671

DRAWN BY : W. B. ALLEN DATE : 8/12
CHECKED BY : T. R. PETERSON DATE : 10/12
DESIGN ENGINEER OF RECORD: T. R. PETERSON DATE : 12/2/13

11/27/2013 9:12:51 AM R:\Structures\WBL\U0071WBL_S0_TS_01.dgn

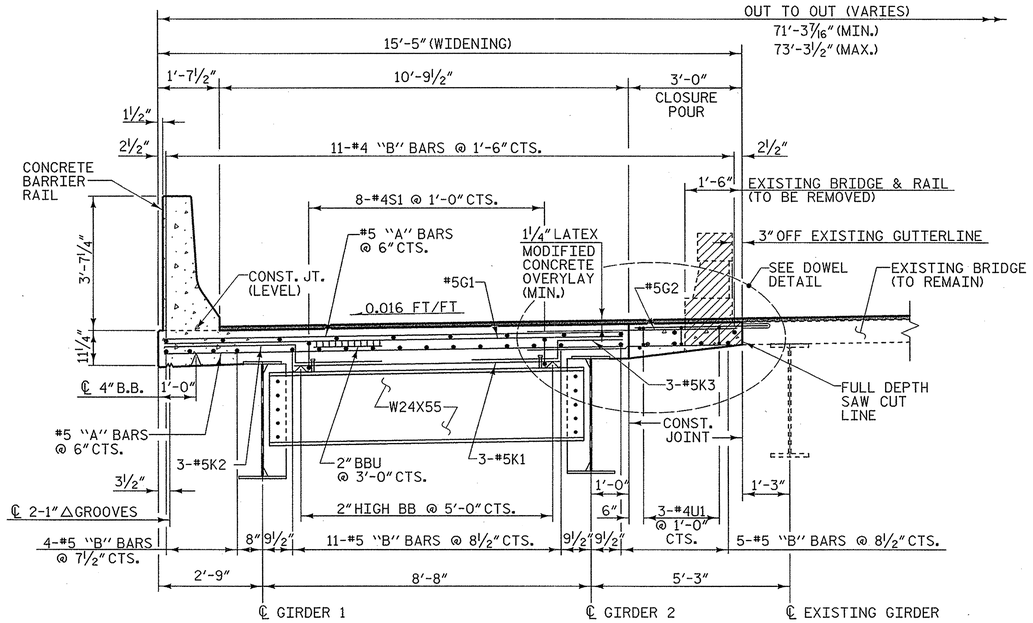

TYPICAL SECTION AT BENT DIAPHRAGM

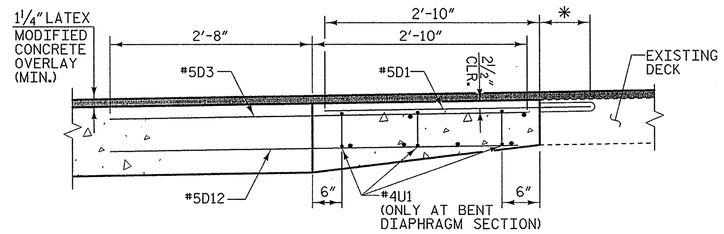

DOWEL DETAIL

* EMBEDMENT DEPTH SHALL BE DETERMINED BY MANUFACTURER
#5D1 BAR QUANTITY BASED ON AN 8" EMBEDMENT LENGTH (SEE "SUPERSTRUTURE BILL OF MATERIAL" SHEET)

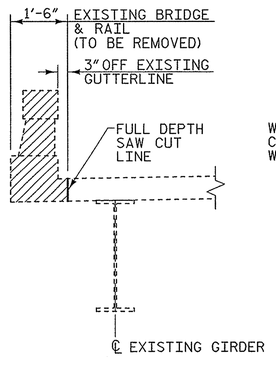

INTERMEDIATE SECTION

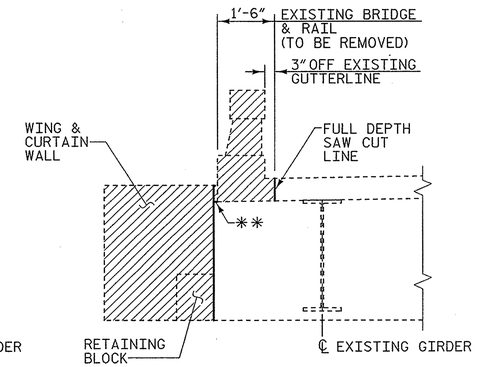

END ELEVATION

** REMOVE CURTAIN WALL PORTION BENEATH BARRIER RAIL.

CONCRETE REMOVAL DETAILS

(CONCRETE IN HATCHED AREA TO BE REMOVED)

NOTES

PROVIDE 1 1/4" HIGH BEAM BOLSTERS UPPER (BBU) AT 4'-0" CENTERS ATOP THE METAL STAY-IN-PLACE FORMS TO SUPPORT THE BOTTOM MAT OF "A" BARS. WHEN USING REMOVABLE FORMS, PROVIDE CONTINUOUS HIGH CHAIRS FOR METAL DECK (C.H.C.M.) @ 4'-0" CTS. WITH A HEIGHT TO SUPPORT THE BOTTOM MAT OF "A" BARS A CLEAR DISTANCE OF 2 1/2" ABOVE THE TOP OF THE REMOVABLE FORM.

#5D1, #5D4, #5D7, #5D8 & #5D11 DOWELS SHALL BE PLACED IN THE SAME HORIZONTAL PLANE AS THE TOP SLAB REINFORCING. #5D3, #5D5, #5D6, #5D7 & #5D10 DOWELS SHALL BE IN THE SAME HORIZONTAL PLANE AS THE TOP AND BOTTOM SLAB REINFORCING.

PREVIOUSLY CAST CONCRETE IN EACH SPAN SHALL HAVE ATTAINED A MINIMUM COMPRESSIVE STRENGTH OF 3000 PSI BEFORE ADDITIONAL CONCRETE IS CAST IN THAT SPAN.

BARRIER RAIL IN EACH SPAN SHALL NOT BE CAST UNTIL ALL SLAB CONCRETE IN THAT SPAN HAS BEEN CAST AND HAS REACHED A MINIMUM COMPRESSIVE STRENGTH OF 3000 PSI.

THE CONTRACTOR MAY, WHEN NECESSARY, PROPOSE A SCHEME FOR AVOIDING INTERFERENCE BETWEEN METAL STAY-IN-PLACE FORM SUPPORTS OR FORMS AND GIRDER STIFFENER OR CONNECTOR PLATES. THE PROPOSAL SHALL BE INDICATED, AS APPROPRIATE, ON EITHER THE STEEL WORKING DRAWINGS OR THE METAL STAY-IN-PLACE FORM WORKING DRAWINGS.

FOR REINFORCING STEEL BARS INDICATED, BUT NO MARK SHOWN, SEE PLAN OF SPANS.

#5 "G" BARS MAY BE SHIFTED SLIGHTLY AS NECESSARY TO CLEAR REINFORCING STEEL AND STIRRUPS.

#5D1, #5D4, #5D7, #5D8 & #5D11 BARS SHALL BE INSTALLED USING AN ADHESIVE ANCHORING SYSTEM. LEVEL 1 FIELD TESTING IS REQUIRED, AND THE YEILD LOAD OF THE DOWELS IS 18.6 KIPS. ADHESIVELY ANCHORED ANCHOR BOLT OR DOWEL TESTING SHALL BE IN ACCORDANCE WITH SECTION 420-13 OF THE STANDARD SPECIFICATIONS.

#4D2 BARS SHALL BE INSTALLED USING AN ADHESIVE ANCHORING SYSTEM. LEVEL 1 FIELD TESTING IS REQUIRED, AND THE YEILD LOAD OF THE DOWELS IS 12 KIPS. ADHESIVELY ANCHORED ANCHOR BOLT OR DOWEL TESTING SHALL BE IN ACCORDANCE WITH SECTION 420-13 OF THE STANDARD SPECIFICATIONS.

STRUCTURAL STEEL ERECTION IN EACH SPAN SHALL BE COMPLETE BEFORE FALSEWORK OR FORMS ARE PLACED ON THE UNIT.

FULL DEPTH SAW CUT SHALL BE MADE AND EXISTING CONCRETE REMOVED IN ACCORDANCE WITH PLAN DETAILS.

NOTE:

FOR THE NUMBER OF #4L1 & #4S2 NOT INDICATED, SEE PLAN OF SPANS.

*** EMBEDMENT DEPTH SHALL BE DETERMINED BY MANUFACTURER #4D2 BAR QUANTITY BASED ON AN 8" EMBEDMENT LENGTH.

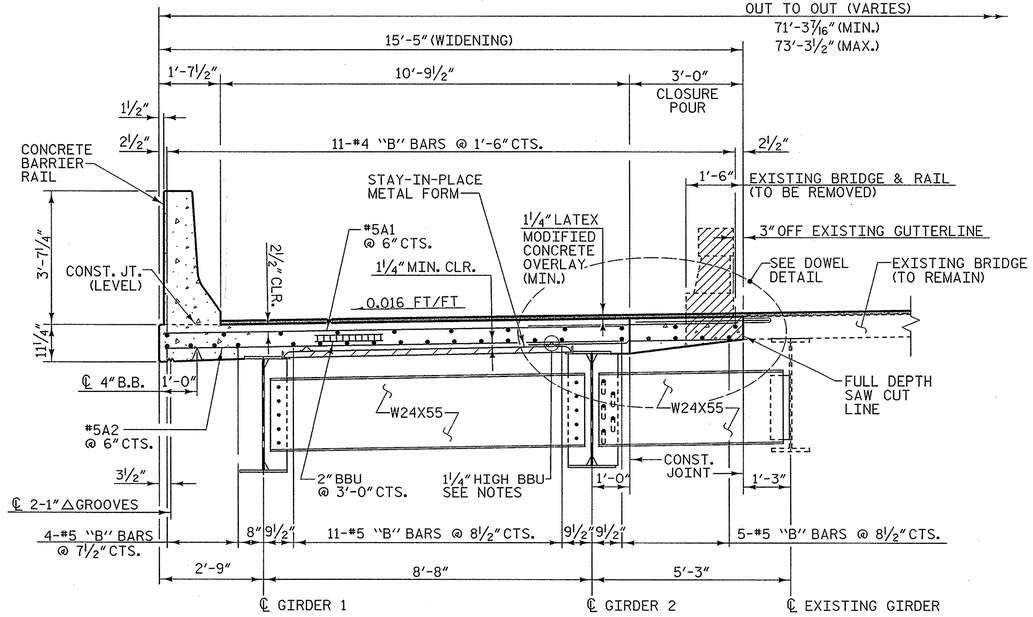

TYPICAL SECTION AT INTERMEDIATE DIAPHRAGM

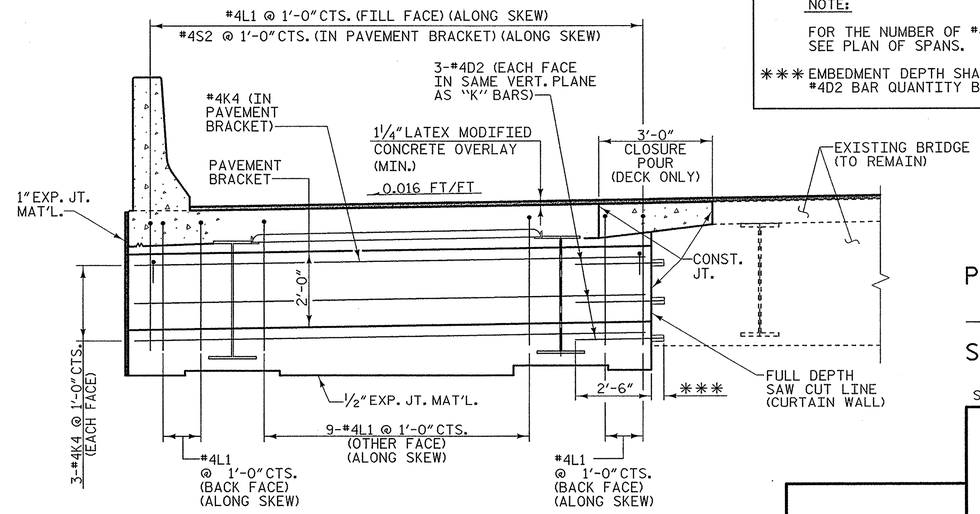

END ELEVATION

PROJECT NO. U-0071
DURHAM COUNTY
STATION: 36+69.26 -DFWB-

SHEET 2 OF 2

STATE OF NORTH CAROLINA
DEPARTMENT OF TRANSPORTATION
RALEIGH

SUPERSTRUCTURE
TYPICAL SECTION

PLANS PREPARED BY:
MULKEY ENGINEERS & CONSULTANTS
PO Box 33127
RALEIGH, N.C. 27636
(919) 851-1912
(919) 851-1918 (FAX)
WWW.MULKEYINC.COM
NC LICENSE NO. C-1021

NORTH CAROLINA PROFESSIONAL SEAL 034352 ENGINEER TERRY R. PETERSON 12/2/13

STR #12

REVISIONS						SHEET NO.
NO.	BY:	DATE:	NO.	BY:	DATE:	S-544
1			3			TOTAL SHEETS
2			4			671

DRAWN BY :	W. B. ALLEN	DATE :	8/12
CHECKED BY :	T. R. PETERSON	DATE :	1/13
DESIGN ENGINEER OF RECORD:	T. R. PETERSON	DATE :	12/2/13

11/27/2013 9:02:22 AM R:\Structures\VRB\U0071VRB_S0_TS_02.dgn

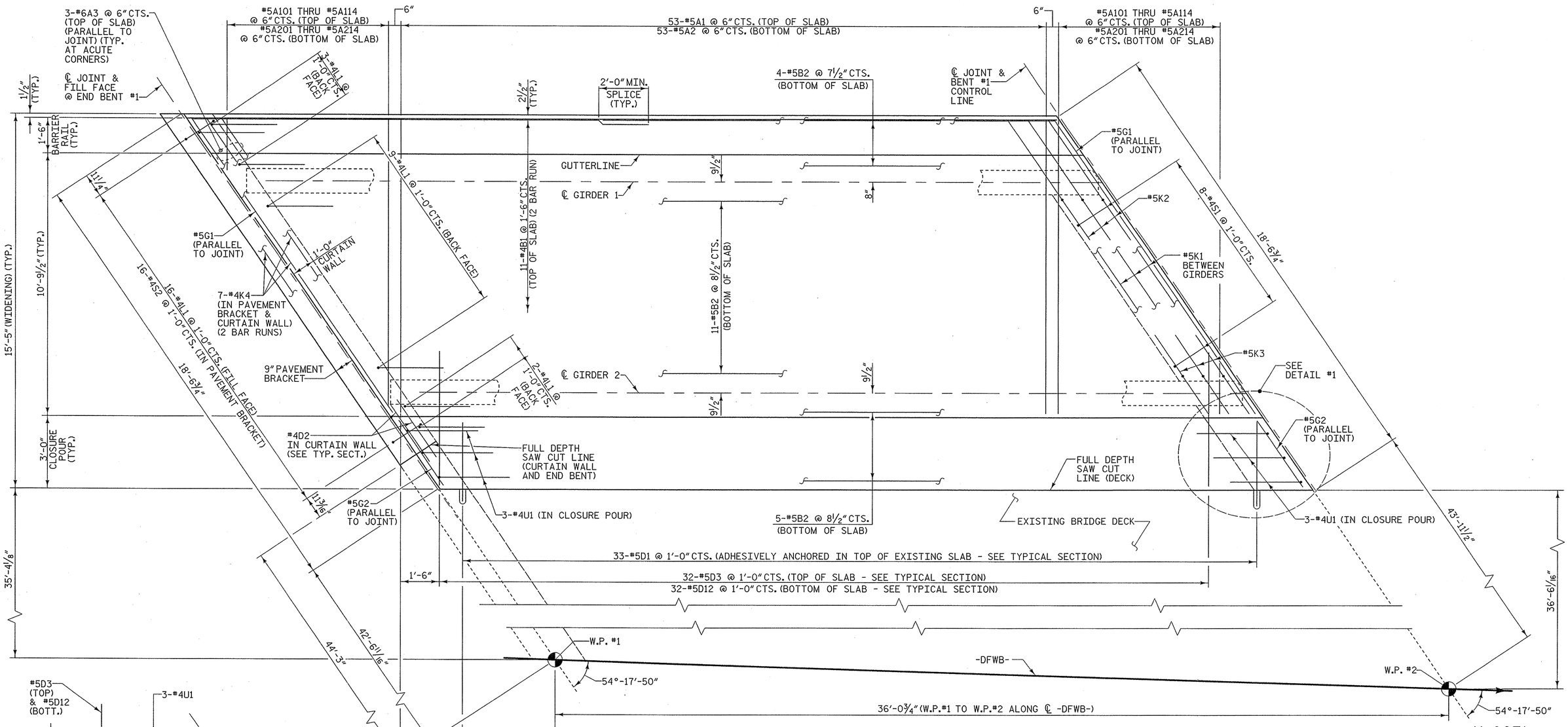

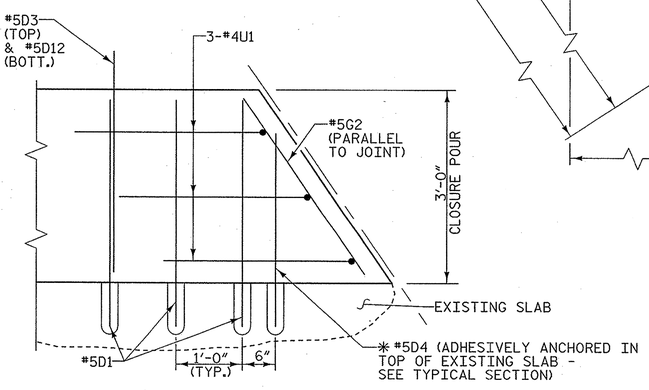

DETAIL #1

✳ PLACE IN SAME PLANE AS #5D1 BARS

PLAN - SPAN A

#5 "D" BARS MAY BE FIELD BENT AFTER INSTALLATION AS NECESSARY TO MAINTAIN 2" CLEARANCE TO FORMED JOINT OPENING.

FOR POUR SEQUENCE & TRANSVERSE CONSTRUCTION JOINT DETAILS, SEE "SUPERSTRUCTURE BILL OF MATERIAL" SHEET.

PROJECT NO. U-0071
DURHAM COUNTY
STATION: 36+69.26 -DFWB-

STATE OF NORTH CAROLINA
DEPARTMENT OF TRANSPORTATION
RALEIGH

SUPERSTRUCTURE

PLAN OF SPAN A

DRAWN BY : W. B. ALLEN	DATE : 8/12	
CHECKED BY : T. R. PETERSON	DATE : 10/12	
DESIGN ENGINEER OF RECORD: T. R. PETERSON	DATE : 12/2/13	

PLANS PREPARED BY:
MULKEY ENGINEERS & CONSULTANTS
PO Box 33127 RALEIGH, N.C. 27636
(919) 851-1912
(919) 851-1918 (FAX)
WWW.MULKEYINC.COM
NC LICENSE NO. C-1621

NORTH CAROLINA PROFESSIONAL SEAL 034352 ENGINEER TIERRE R. PETERSON
12/2/13

STR #12

REVISIONS								SHEET NO.
NO.	BY:	DATE:	NO.	BY:	DATE:			S-545
1			3					TOTAL SHEETS
2			4					671

11/27/2013 9:48:58 AM R:\Structures\WBL\U0071WBL_S01_SL01.dgn

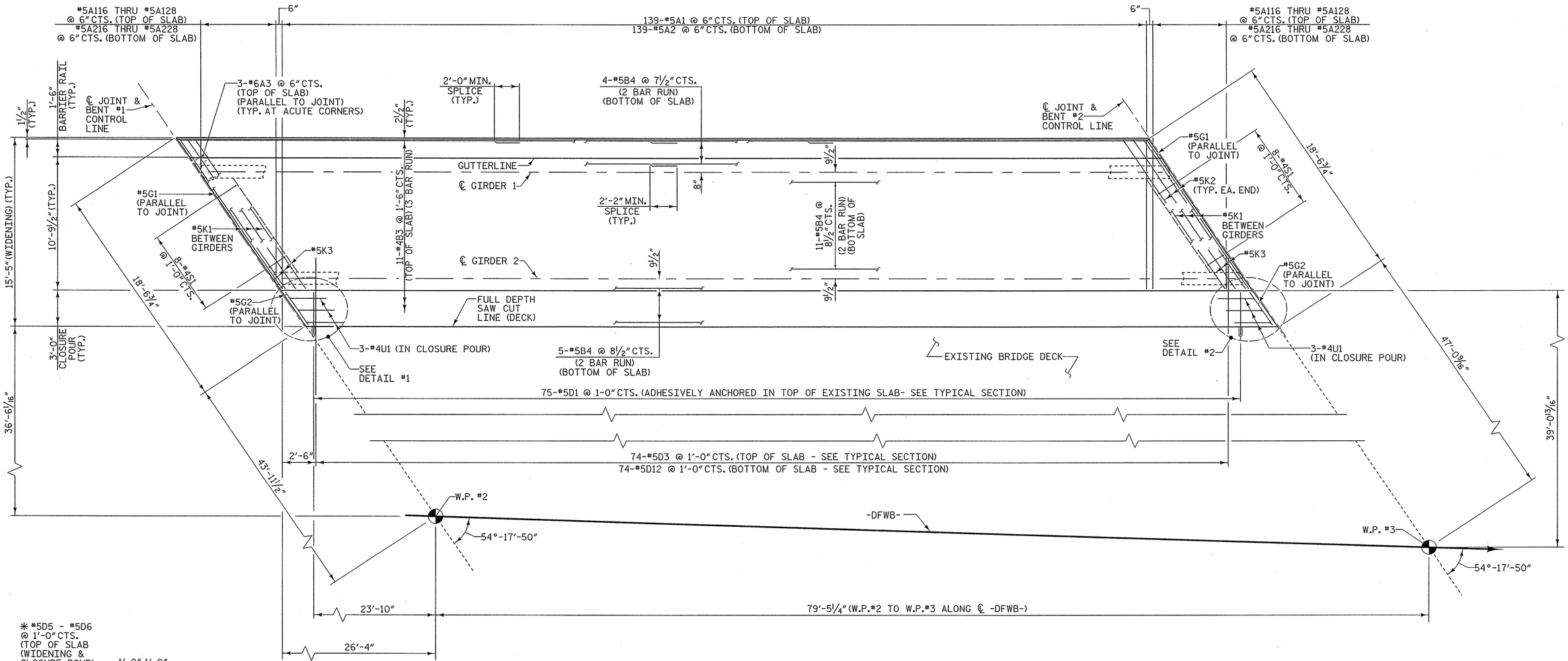

PLAN - SPAN B

#5 "D" BARS MAY BE FIELD BENT AFTER INSTALLATION AS NECESSARY TO MAINTAIN 2" CLEARANCE TO FORMED JOINT OPENING.

FOR POUR SEQUENCE & TRANSVERSE CONSTRUCTION JOINT DETAIL, SEE "SUPERSTRUCTURE BILL OF MATERIAL" SHEET.

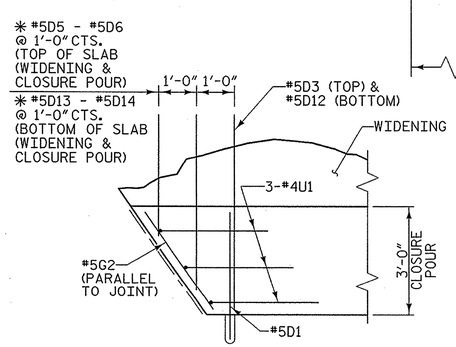

DETAIL #1

✱ PLACE IN SAME PLANE AS TOP & BOTTOM SLAB "B" BARS

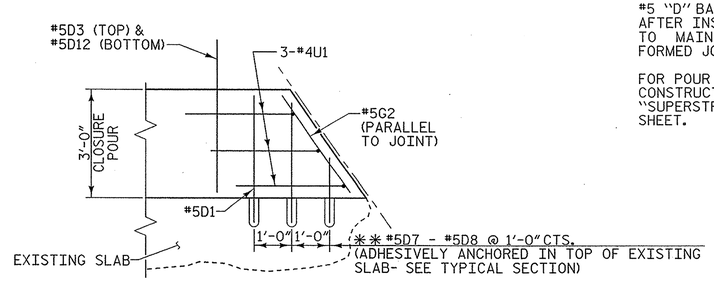

DETAIL #2

✱✱ PLACE IN SAME PLANE AS #5D1 BARS

PROJECT NO. U-0071
DURHAM COUNTY
STATION: 36+69.26 -DFWB-

STATE OF NORTH CAROLINA
DEPARTMENT OF TRANSPORTATION
RALEIGH

SUPERSTRUCTURE
PLAN OF SPAN B

PLANS PREPARED BY:
MULKEY ENGINEERS & CONSULTANTS
PO Box 33127
RALEIGH, N.C. 27636
(919) 851-1912
(919) 851-1918 (FAX)
WWW.MULKEYINC.COM
NC LICENSE NO. C-1021

NORTH CAROLINA PROFESSIONAL SEAL 034352 ENGINEER TERRY R. PETERSON
12/2/13

STR #12

REVISIONS						SHEET NO.
NO.	BY:	DATE:	NO.	BY:	DATE:	S-546
1			3			TOTAL SHEETS
2			4			671

DRAWN BY : W. B. ALLEN DATE : 8/12
CHECKED BY : T. R. PETERSON DATE : 10/12
DESIGN ENGINEER OF RECORD: T. R. PETERSON DATE : 12/2/13

11/27/2013 9:11:36 AM R:\Structures\WBL\U0071WBL_S0_S2_01.dgn

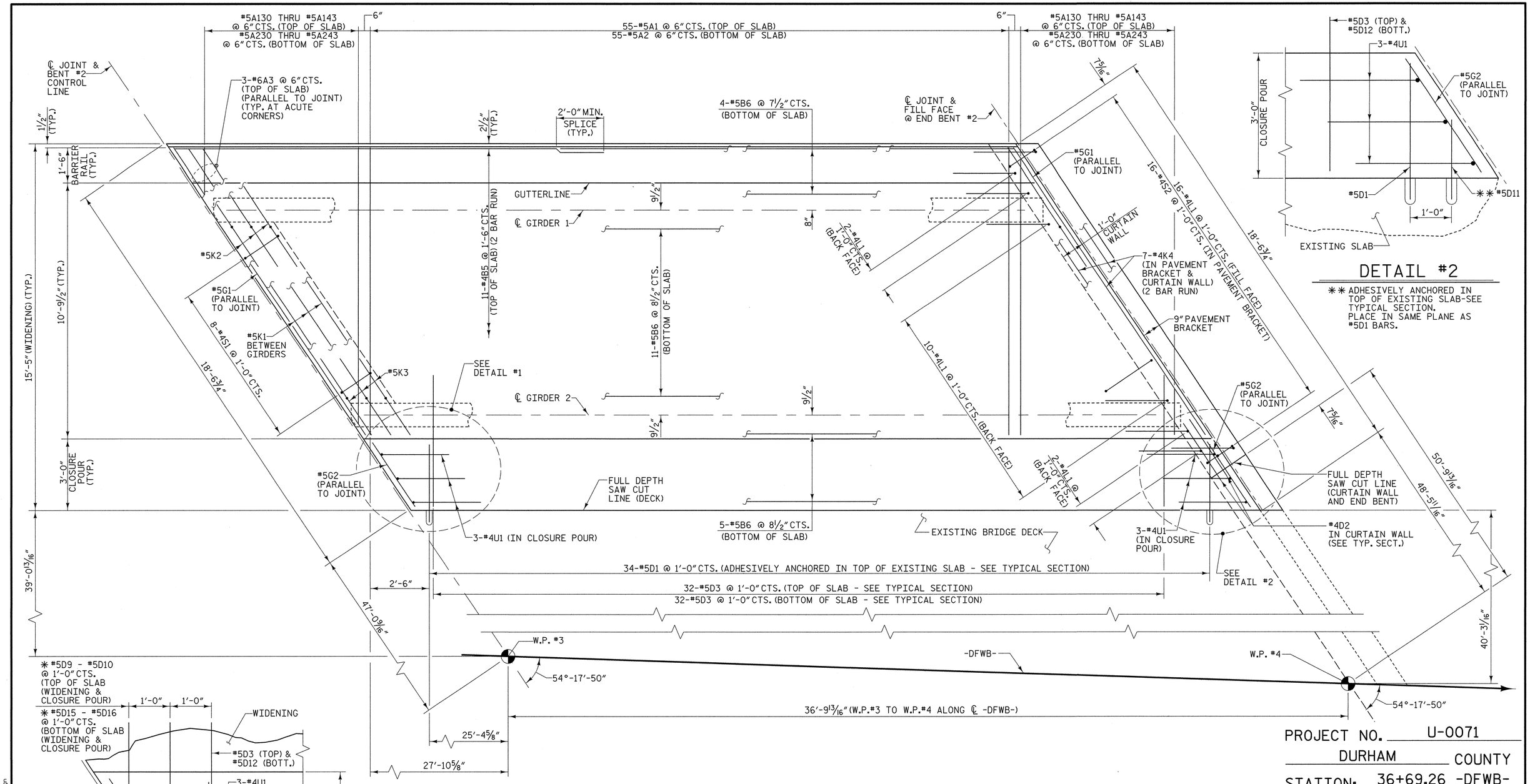

DETAIL #2

✱✱ ADHESIVELY ANCHORED IN TOP OF EXISTING SLAB-SEE TYPICAL SECTION. PLACE IN SAME PLANE AS #5D1 BARS.

DETAIL #1

✱ PLACE IN SAME PLANE AS TOP & BOTTOM SLAB "B" BARS

PLAN - SPAN C

#5 "D" BARS MAY BE FIELD BENT AFTER INSTALLATION AS NECESSARY TO MAINTAIN 2" CLEARANCE TO FORMED JOINT OPENING.

FOR POUR SEQUENCE & TRANSVERSE CONSTRUCTION JOINT DETAIL, SEE "SUPERSTRUCTURE BILL OF MATERIAL" SHEET.

PROJECT NO. U-0071

DURHAM COUNTY

STATION: 36+69.26 -DFWB-

STATE OF NORTH CAROLINA
DEPARTMENT OF TRANSPORTATION
RALEIGH

SUPERSTRUCTURE

PLAN OF SPAN C

PLANS PREPARED BY:

MULKEY ENGINEERS & CONSULTANTS
PO Box 33127
RALEIGH, N.C. 27636
(919) 851-1912
(919) 851-1918 (FAX)
WWW.MULKEYINC.COM
NC LICENSE NO. C-1031

NORTH CAROLINA PROFESSIONAL SEAL ENGINEER 19661 L. KEVIN AUSTIN 9/16/14

STR #12

REVISIONS						SHEET NO.
NO.	BY:	DATE:	NO.	BY:	DATE:	S-547
1			3			TOTAL SHEETS
2			4			671

DRAWN BY : W. B. ALLEN DATE : 8/12
CHECKED BY : T. R. PETERSON DATE : 10/12
DESIGN ENGINEER OF RECORD: T. R. PETERSON DATE : 3/4/14

9/17/2014 10:24:36 AM R:\Structures\WBL\U0071WBL_SD_S3_01.dgn

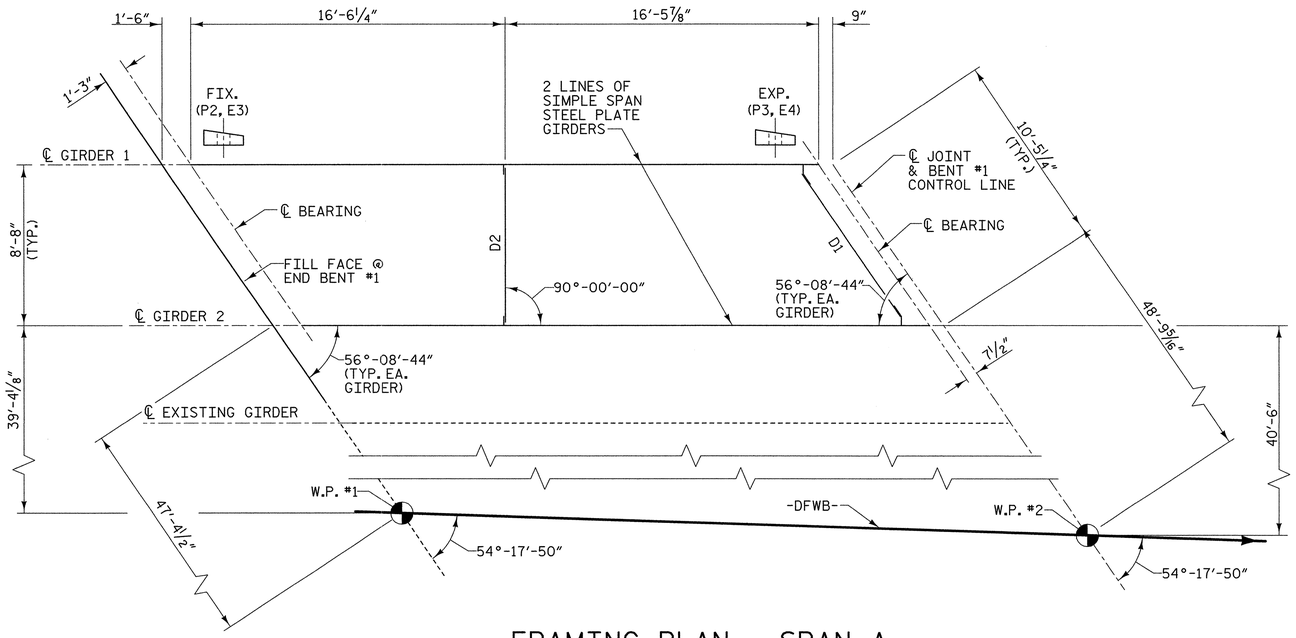

FRAMING PLAN - SPAN A

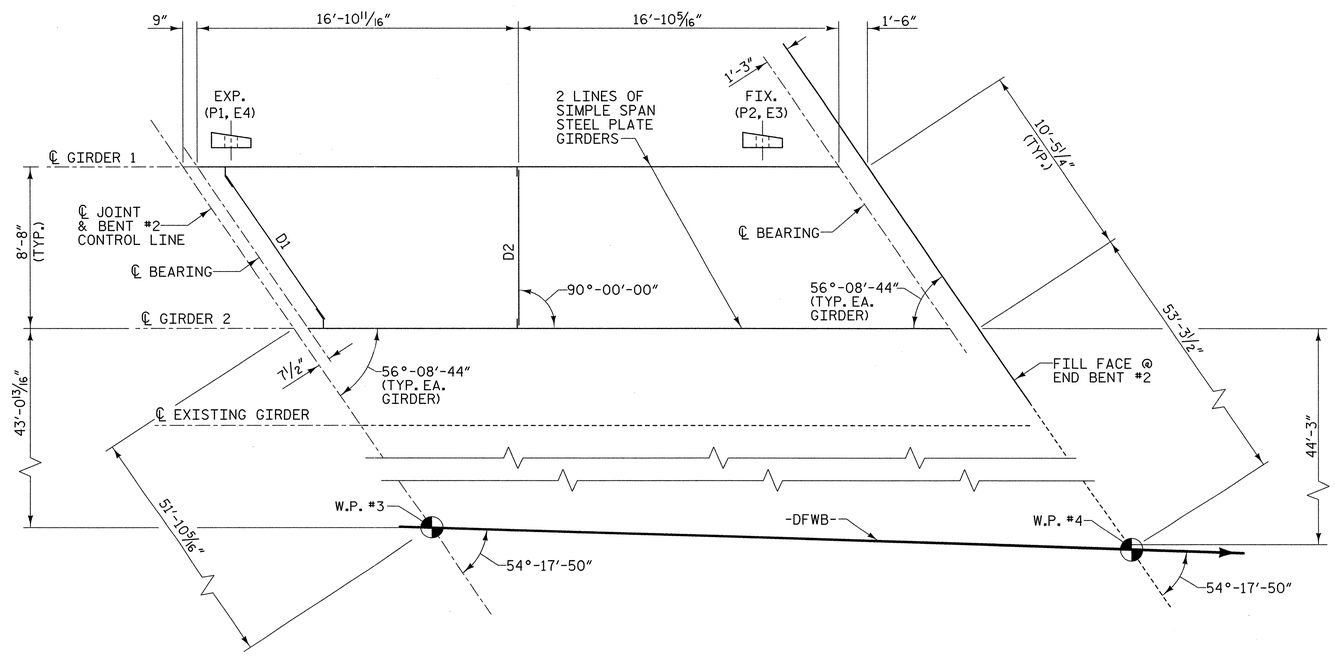

FRAMING PLAN - SPAN C

STRUCTURAL STEEL NOTES

ALL STRUCTURAL STEEL TO BE AASHTO M270 GRADE 50W AND PAINTED IN ACCORDANCE WITH SYSTEM 4 OF ARTICLE 442-8 OF THE STANDARD SPECIFICATIONS UNLESS OTHERWISE NOTED ON THE PLANS.

ALL DIMENSIONS SHOWN ARE HORIZONTAL OR VERTICAL UNLESS OTHERWISE NOTED.

ALL FIELD CONNECTIONS TO BE 7/8" DIA. HIGH STRENGTH BOLTS UNLESS OTHERWISE NOTED.

BEARING STIFFENERS ARE TO BE PLACED NORMAL TO THE WEB OF THE GIRDER AND SHALL BE PLUMB.

A CHARPY V-NOTCH TEST IS REQUIRED FOR WEB PLATES, BOTTOM FLANGE PLATES, BOTTOM FLANGE SPLICE PLATES AND WEB SPLICE PLATES (IF USED) FOR ALL GIRDERS IN ACCORDANCE WITH ARTICLE 1027-7 OF THE STANDARD SPECIFICATIONS.

WHERE DIAPHRAGMS ARE TO BE BOLTED TO EXISTING STEEL BEAMS, DO NOT REMOVE PAINT FROM THE CONTACT SURFACE.

CONNECTION BOLTS ARE TO BE LOCATED AT THE BOTTOM OF THE CONNECTION SLOTS AND TIGHTENED TO A SNUG FIT PRIOR TO FIELD WELDING OPPOSITE END OF DIAPHRAGM. AFTER WELDING DIAPHRAGM TO CONNECTION ANGLE AND PRIOR TO THE POURING OF THE SLAB, BACK OFF BOLTS 1/2 TURN TO ALLOW FOR VERTICAL DEFLECTION OF NEW BEAM. AFTER DEFLECTIONS HAVE OCCURED, TIGHTEN BOLTS AS REQUIRED BY THE STANDARD SPECIFICATIONS.

STUDS ON GIRDERS MAY BE SHIFTED UP TO 1" IF NECESSARY TO CLEAR FLANGE SPLICE WELD.

TENSION ON THE AASHTO M164 BOLTS SHALL BE CALIBRATED USING DIRECT TENSION INDICATOR WASHERS IN ACCORDANCE WITH ARTICLE 440-8 OF THE STANDARD SPECIFICATIONS.

BEARING STIFFENER MAY REQUIRE COPING IF WIDER THAN BOTTOM FLANGE.

FABRICATORS SHALL DETAIL DIAPHRAGM MEMBERS AND CONNECTIONS FOR STEEL DEAD LOAD FIT UP.

PROJECT NO. U-0071
DURHAM COUNTY
STATION: 36+69.26 -DFWB-

SHEET 1 OF 2

STATE OF NORTH CAROLINA
DEPARTMENT OF TRANSPORTATION
RALEIGH

SUPERSTRUCTURE
FRAMING PLAN

PLANS PREPARED BY:
MULKEY ENGINEERS & CONSULTANTS
PO Box 33127
RALEIGH, N.C. 27636
(919) 851-1912
(919) 851-1918 (FAX)
WWW.MULKEYINC.COM
NC LICENSE NO. C-1021

NORTH CAROLINA PROFESSIONAL SEAL 034352 ENGINEER THERON R. PETERSON 3/4/14

STR #12

REVISIONS							SHEET NO.
NO.	BY:	DATE:	NO.	BY:	DATE:		S-548
1			3				TOTAL SHEETS
2			4				571

DRAWN BY : W. B. ALLEN DATE : 8/12
CHECKED BY : T. R. PETERSON DATE : 10/12
DESIGN ENGINEER OF RECORD: T. R. PETERSON DATE : 3/4/14

3/4/2014 11:32:48 AM R:\Structures\WBL\U0071WBL_SD_FP_01.dgn

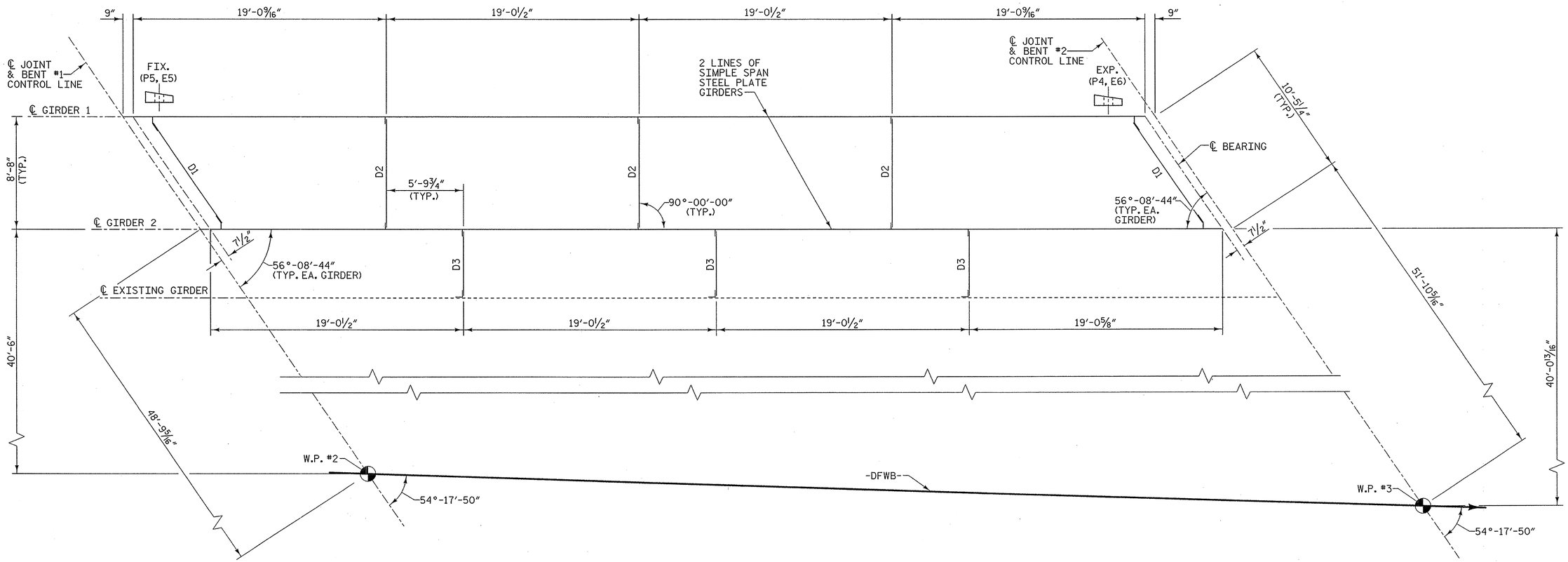

FRAMING PLAN - SPAN B

PROJECT NO. U-0071

DURHAM COUNTY

STATION: 36+69.26 -DFWB-

SHEET 2 OF 2

STATE OF NORTH CAROLINA
DEPARTMENT OF TRANSPORTATION
RALEIGH

SUPERSTRUCTURE

FRAMING PLAN

REVISIONS						SHEET NO.
NO.	BY:	DATE:	NO.	BY:	DATE:	S-59
1			3			TOTAL SHEETS
2			4			67

STR #12

NORTH CAROLINA PROFESSIONAL SEAL 034352 ENGINEER TERRY R. PETERSON 12/2/13

PLANS PREPARED BY:

MULKEY ENGINEERS & CONSULTANTS
PO Box 33127
RALEIGH, N.C. 27636
(919) 851-1912
(919) 851-1918 (FAX)
WWW.MULKEYINC.COM
NC LICENSE NO. C-1021

DRAWN BY :	W. B. ALLEN	DATE :	8/12
CHECKED BY :	T. R. PETERSON	DATE :	10/12
DESIGN ENGINEER OF RECORD:	T. R. PETERSON	DATE :	12/2/13

11/27/2013 9:00:15 AM R:\Structures\WBL\U0071WBL_SD_FP_02.dgn

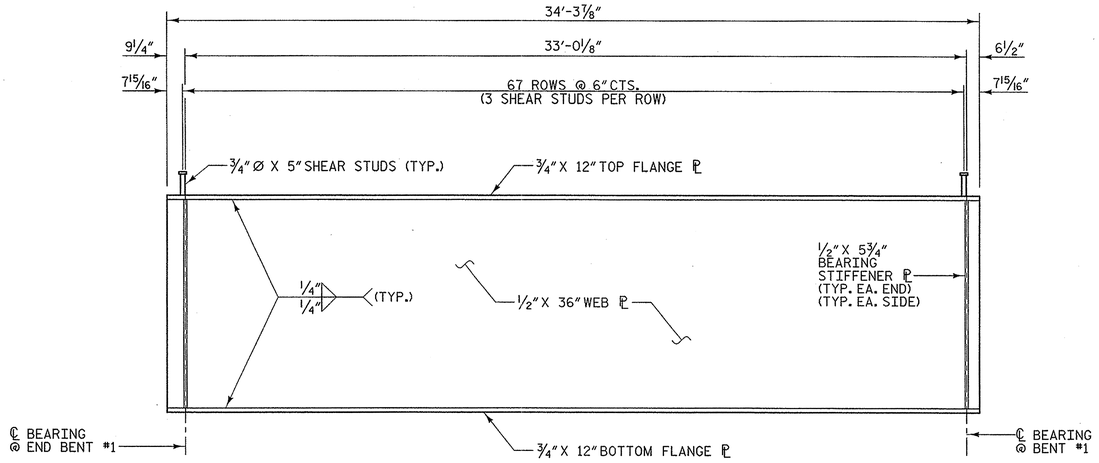

SPAN A

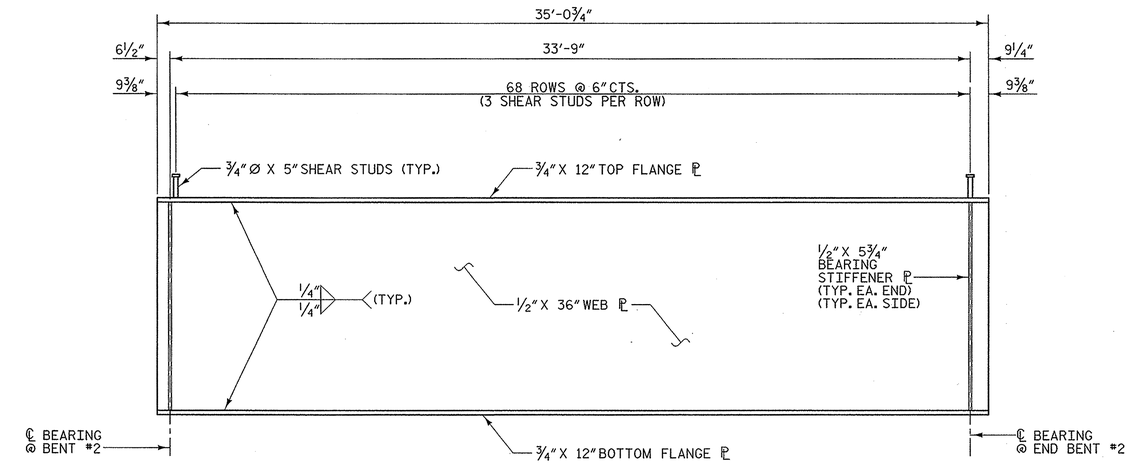

SPAN C

GIRDER ELEVATION

CONNECTOR PLATES NOT SHOWN. FOR PLACEMENT SEE "SUPERSTRUCTURE FRAMING PLAN SHEETS".

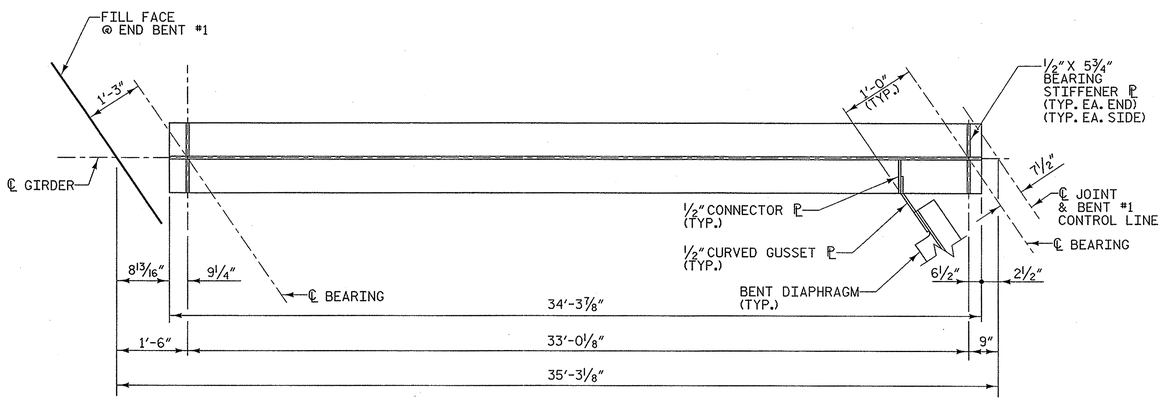

SPAN A

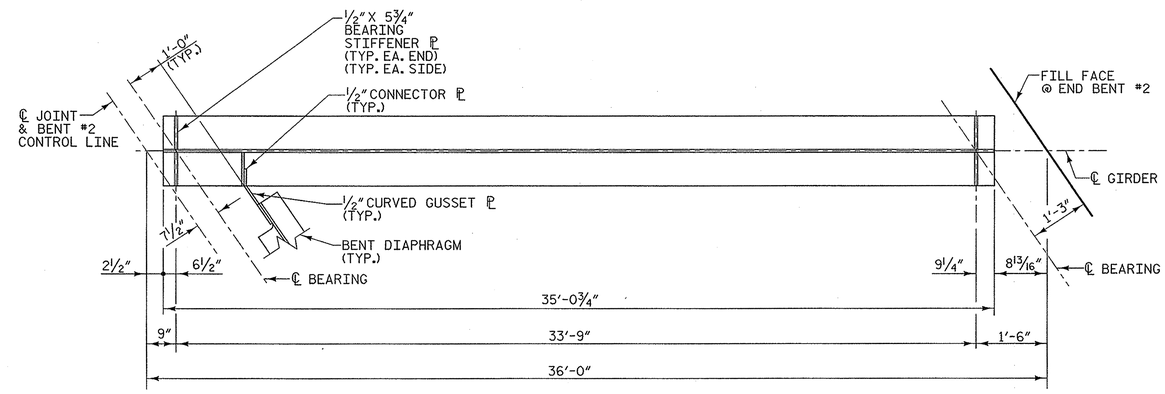

SPAN C

PLAN OF BOTTOM FLANGE

SEE "SUPERSTRUCTURE FRAMING PLAN" SHEET 1 OF 2 FOR "STRUCTURAL STEEL NOTES".
SEE SHEET 2 OF 3 FOR "DRIP BEAD DETAILS".

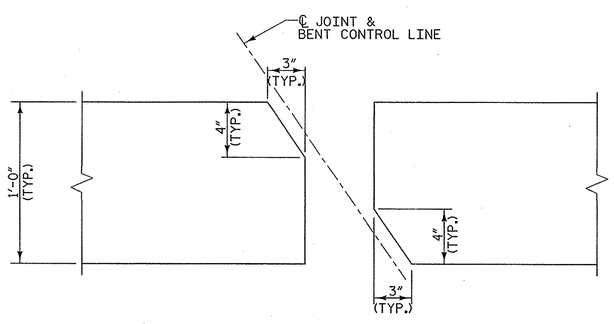

TOP FLANGE CLIP DETAILS

CLIP TOP FLANGE PLATES AT ALL JOINTS OVER BENTS.

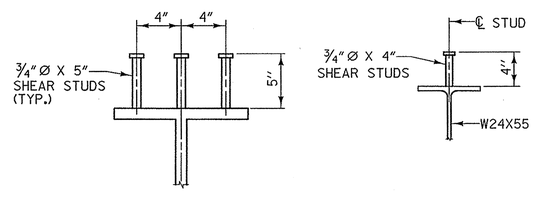

SHEAR STUD DETAILS

PROJECT NO. U-0071
DURHAM COUNTY
STATION: 36+69.26 -DFWB-

SHEET 1 OF 3

STATE OF NORTH CAROLINA
DEPARTMENT OF TRANSPORTATION
RALEIGH

SUPERSTRUCTURE

STRUCTURAL STEEL DETAILS

PLANS PREPARED BY:
MULKEY ENGINEERS & CONSULTANTS
PO BOX 33127
RALEIGH, N.C. 27636
(919) 851-1912
(919) 851-1918 (FAX)
WWW.MULKEYINC.COM
NC LICENSE NO. C-1021

NORTH CAROLINA PROFESSIONAL SEAL 034352 ENGINEER TERRE R. PETERSON 12/2/13

STR #12

REVISIONS						SHEET NO.
NO.	BY:	DATE:	NO.	BY:	DATE:	S-550
1			3			TOTAL SHEETS
2			4			67

DRAWN BY :	W. B. ALLEN	DATE :	8/12
CHECKED BY :	T. R. PETERSON	DATE :	10/12
DESIGN ENGINEER OF RECORD:	T. R. PETERSON	DATE :	12/2/13

W/27/2013 9:09:42 AM R:\Structures\VBL\U0071VBL_S9_SS_01.dgn

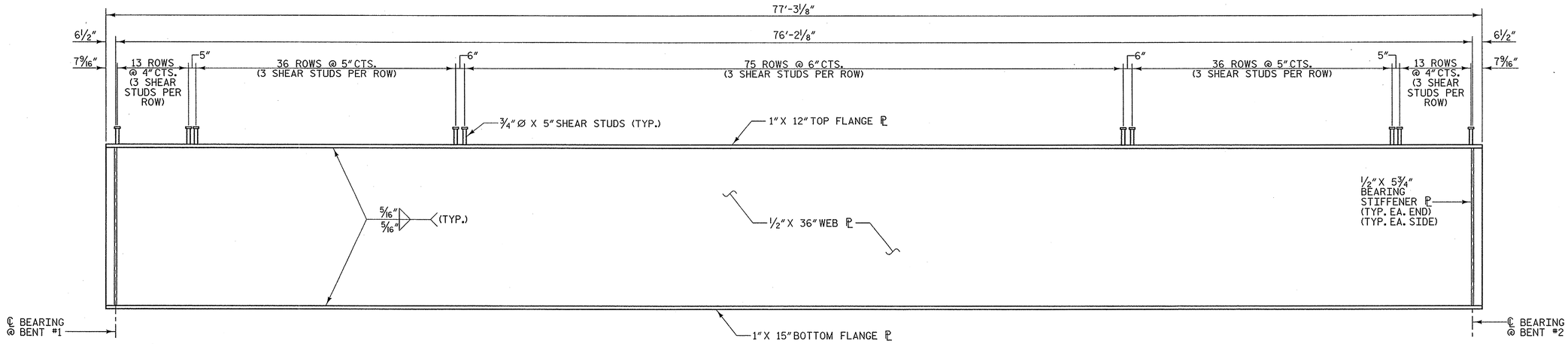

SPAN B

GIRDER ELEVATION

CONNECTOR PLATES NOT SHOWN, FOR PLACEMENT SEE "SUPERSTRUCTURE FRAMING PLAN" SHEETS.

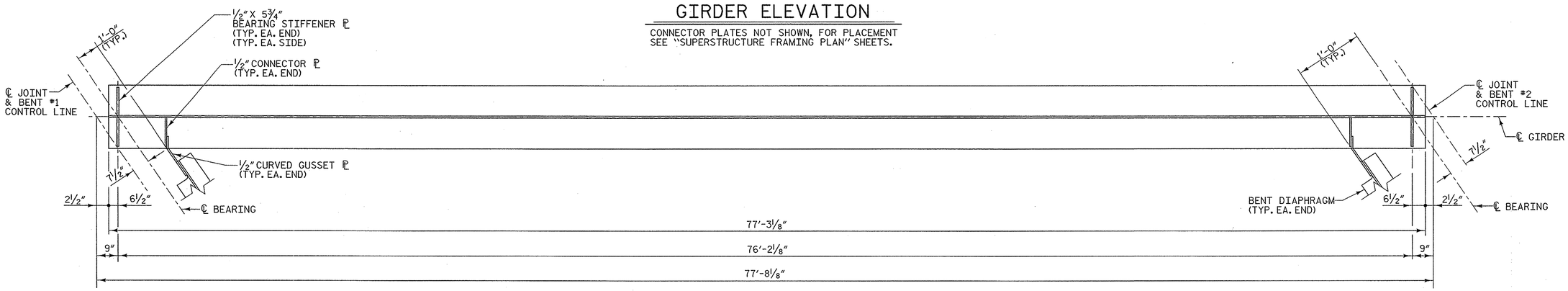

SPAN B

PLAN OF BOTTOM FLANGE

SEE "SUPERSTRUCTURE FRAMING PLAN" SHEET 1 OF 2 FOR "STRUCTURAL STEEL NOTES".
SEE SHEET 1 OF 3 FOR "SHEAR STUD DETAILS" AND "TOP FLANGE CLIP DETAILS".

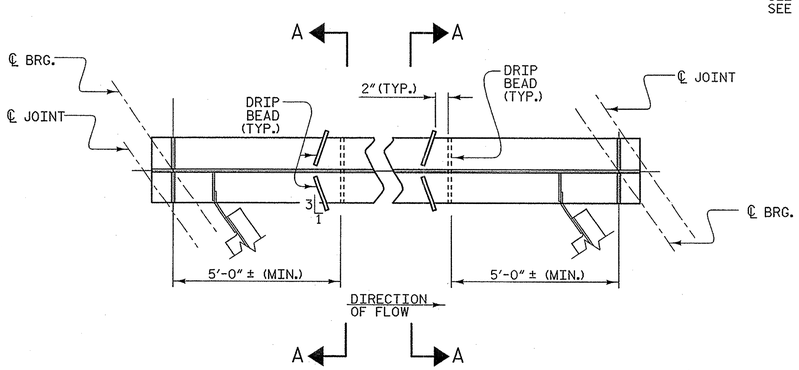

PART PLAN - BOTTOM FLANGE

TYPICAL AT EACH END OF EACH GIRDER

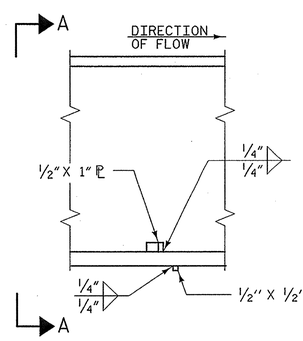

SECTION

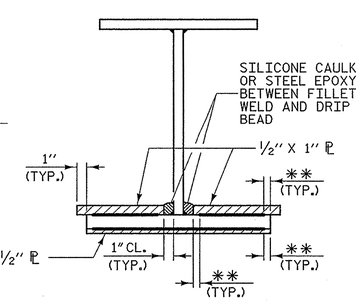

VIEW A-A

**SEE "WELD TERMINATION DETAILS" ON SHEET 3 OF 3.

DRIP BEAD DETAILS

PROJECT NO. U-0071
DURHAM COUNTY
STATION: 36+69.26 -DFWB-

SHEET 2 OF 3

STATE OF NORTH CAROLINA
DEPARTMENT OF TRANSPORTATION
RALEIGH

SUPERSTRUCTURE

STRUCTURAL STEEL DETAILS

PLANS PREPARED BY:
MULKEY ENGINEERS & CONSULTANTS
PO Box 33127 RALEIGH, N.C. 27636
(919) 851-1912
(919) 851-1918 (FAX)
WWW.MULKEYINC.COM
NC LICENSE NO. C-1021

NORTH CAROLINA PROFESSIONAL SEAL 034352 ENGINEER TERRE R. PETERSON
12/2/13

STR #12

REVISIONS						SHEET NO.
NO.	BY:	DATE:	NO.	BY:	DATE:	S-551
1			3			TOTAL SHEETS
2			4			671

DRAWN BY :	W. B. ALLEN	DATE :	8/12
CHECKED BY :	T. R. PETERSON	DATE :	10/12
DESIGN ENGINEER OF RECORD:	T. R. PETERSON	DATE :	12/2/13

12/27/2013 9:09:21 AM R:\Structures\WBL\U0071WBL_SD_SS_02.dgn

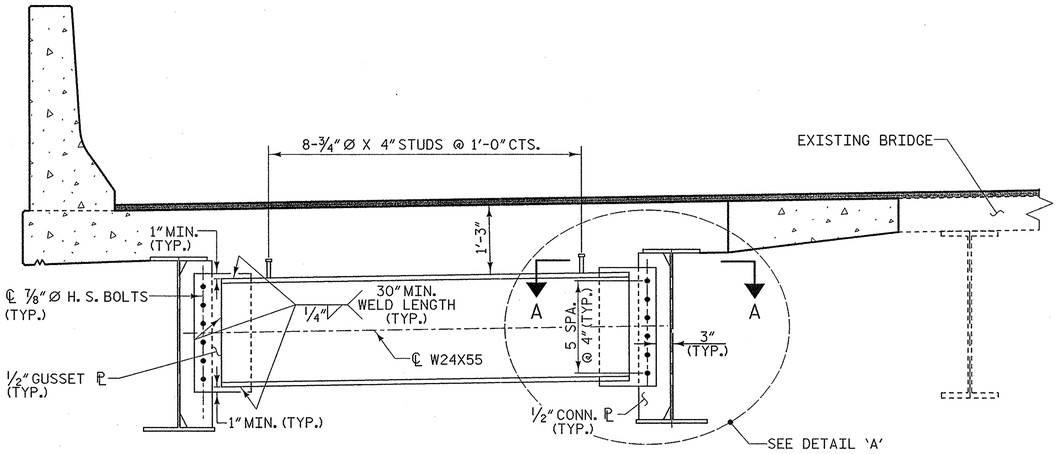

BENT DIAPHRAGM (D1)

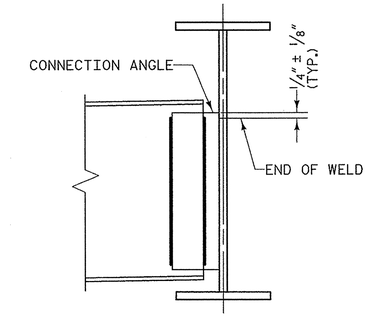

DIAPHRAGM AND ANGLE CONNECTIONS
(BOLTS NOT SHOWN, SEE SECTION B-B)

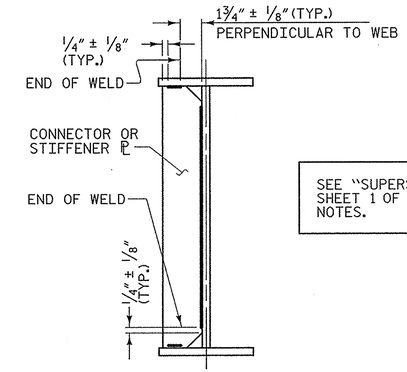

SEE "SUPERSTRUCTURE FRAMING PLAN" SHEET 1 OF 2 FOR STRUCTURAL STEEL NOTES.

TYPICAL STIFFENER OR CONNECTOR PLATE CONNECTIONS

WELD TERMINATION DETAILS

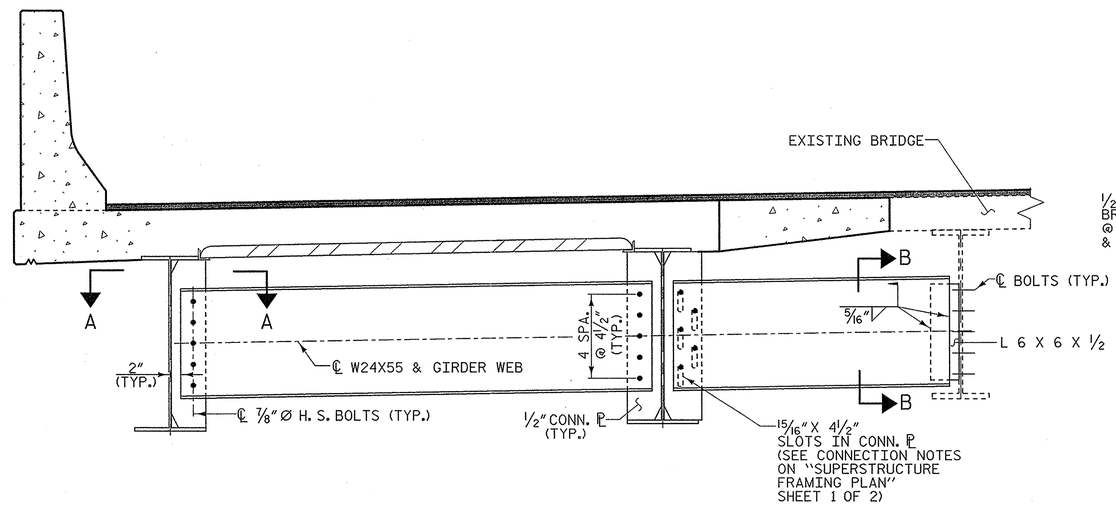

SPANS A, B & C (D2)

SPAN B ONLY (D3)

INTERMEDIATE DIAPHRAGM

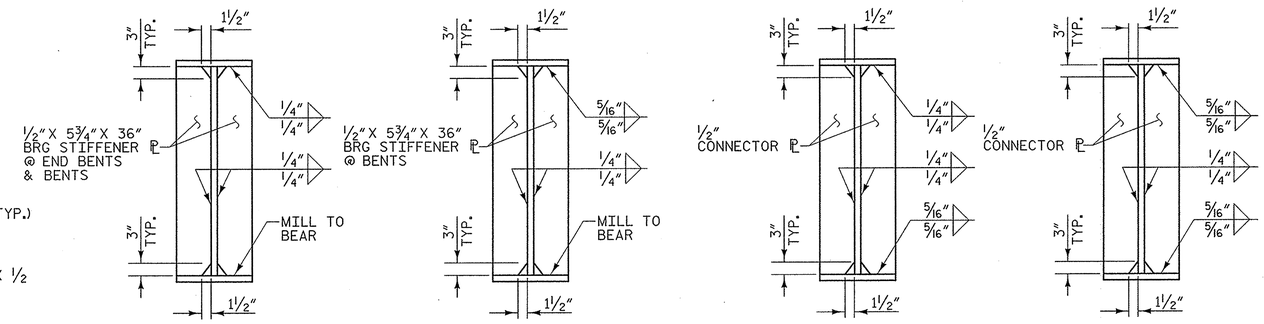

SPANS A & C

SPAN B

SPANS A & C

SPAN B

BEARING STIFFENER

CONNECTOR PLATE

PROJECT NO. U-0071

DURHAM COUNTY

STATION: 36+69.26 -DFWB-

SHEET 3 OF 3

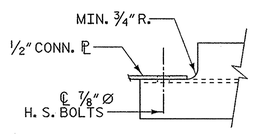

SECTION A-A

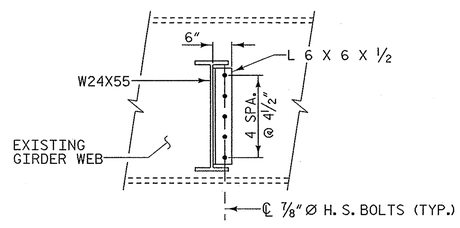

SECTION B-B

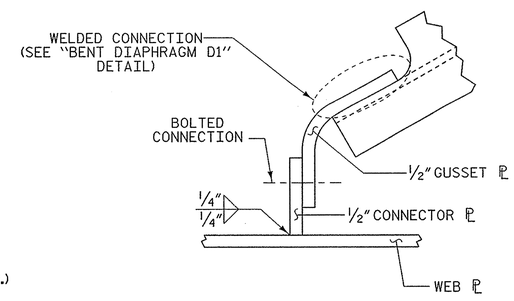

DETAIL 'A'

DRAWN BY :	W. B. ALLEN	DATE :	8/12
CHECKED BY :	T. R. PETERSON	DATE :	10/12
DESIGN ENGINEER OF RECORD:	T. R. PETERSON	DATE :	12/2/13

PLANS PREPARED BY:
MULKEY ENGINEERS & CONSULTANTS
PO Box 33127
Raleigh, N.C. 27636
(919) 851-1912
(919) 851-1918 (FAX)
WWW.MULKEYINC.COM
NC LICENSE NO. C-1921

NORTH CAROLINA PROFESSIONAL SEAL 034352 ENGINEER TERRY R. PETERSON
12/2/13

STR #12

REVISIONS						
NO.	BY:	DATE:	NO.	BY:	DATE:	
1			3			
2			4			

SHEET NO. S-552
TOTAL SHEETS 671

STATE OF NORTH CAROLINA
DEPARTMENT OF TRANSPORTATION
RALEIGH

SUPERSTRUCTURE

STRUCTURAL STEEL DETAILS

11/21/2013 9:08:59 AM R:\Structures\WBL\U0071WBL_SD_SS_03.dgn

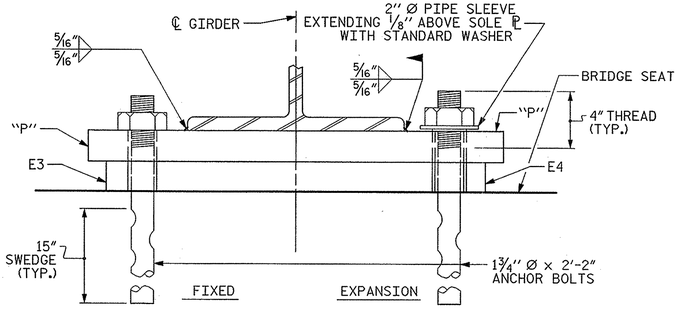

END VIEW

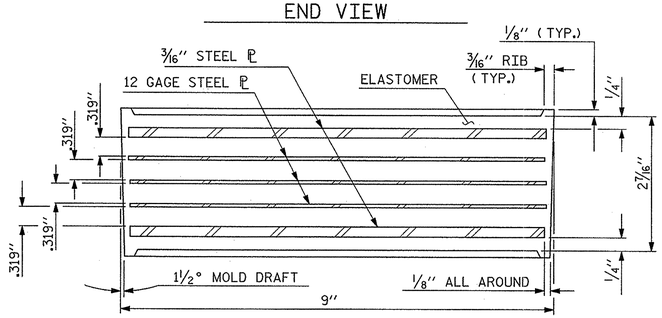

TYPICAL SECTION OF ELASTOMERIC BEARINGS

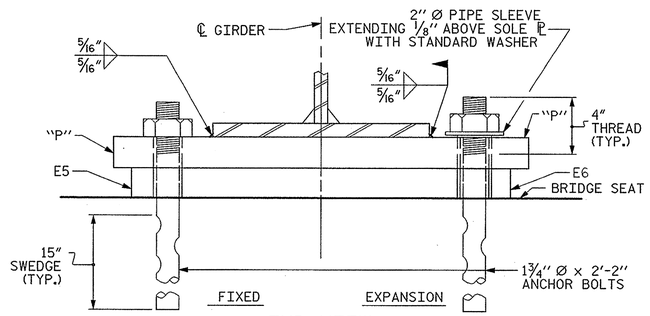

END VIEW

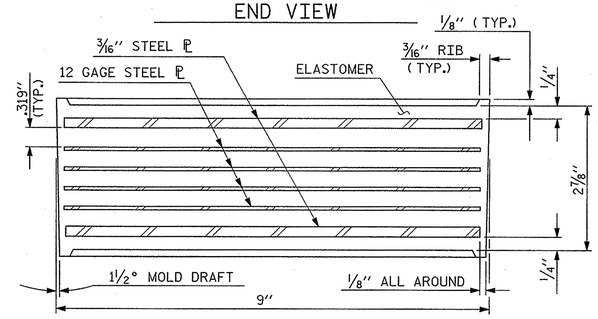

TYPICAL SECTION OF ELASTOMERIC BEARINGS

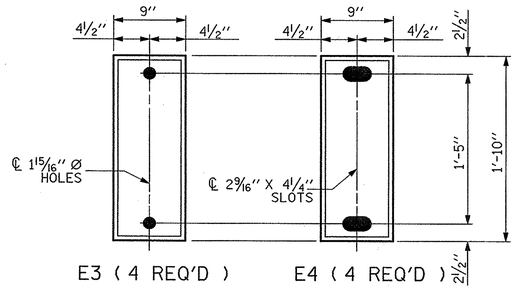

PLAN VIEW OF ELASTOMERIC BEARING

TYPE II

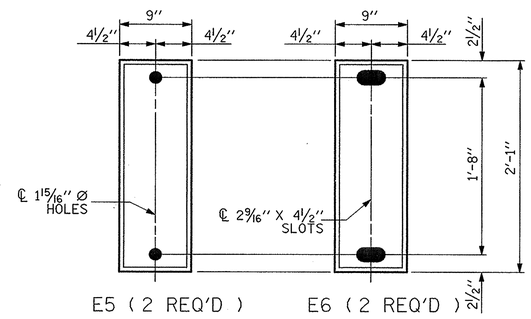

PLAN VIEW OF ELASTOMERIC BEARING

TYPE III

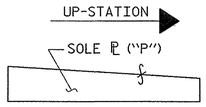

SOLE ℙ PLACEMENT DETAIL

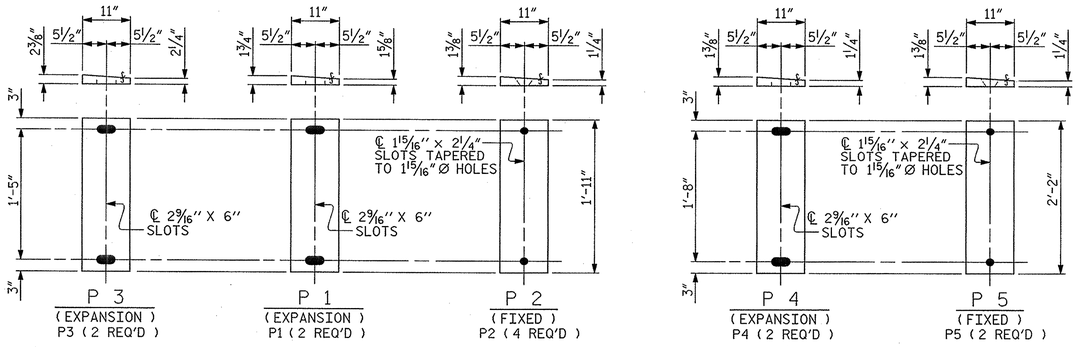

SOLE PLATE DETAILS ("P")

NOTES

AT ALL FIXED POINTS OF SUPPORT, NUTS FOR ANCHOR BOLTS ARE TO BE TIGHTENED FINGER TIGHT AND THEN BACKED OFF 1/2 TURN. THE THREAD OF THE NUT AND BOLT SHALL THEN BE BURRED WITH A SHARP POINTED TOOL.

THE 2" Ø PIPE SLEEVE SHALL BE CUT FROM SCHEDULE 40 PVC PLASTIC PIPE. THE PVC PLASTIC PIPE SHALL MEET THE REQUIREMENTS OF ASTM D1785.

THE PAYMENT FOR THE PIPE SLEEVES SHALL BE INCLUDED IN THE SEVERAL PAY ITEMS.

FOR PAINTED STRUCTURAL STEEL (EXCLUDING AASHTO M270 GRADE 50W), SOLE PLATES, ANCHOR BOLTS, NUTS AND WASHERS SHALL BE GALVANIZED IN ACCORDANCE WITH THE STANDARD SPECIFICATIONS.

FOR AASHTO M270 GRADE 50W STRUCTURAL STEEL, SOLE PLATE SHALL BE AASHTO M270 GRADE 50W AND SHALL NOT BE GALVANIZED. ANCHOR BOLTS, NUTS AND WASHERS SHALL BE GALVANIZED IN ACCORDANCE WITH THE STANDARD SPECIFICATIONS.

ANCHOR BOLTS SHALL MEET THE REQUIREMENTS OF ASTM A449. NUTS SHALL MEET THE REQUIREMENTS OF AASHTO M291-DH OR AASHTO M292-2H. WASHERS SHALL MEET THE REQUIREMENTS OF AASHTO M293. SHOP DRAWINGS ARE NOT REQUIRED FOR ANCHOR BOLTS, NUTS AND WASHERS. SHOP INSPECTION IS REQUIRED.

WHEN FIELD WELDING THE SOLE PLATE TO THE GIRDER FLANGE, USE TEMPERATURE INDICATING WAX PENS, OR OTHER SUITABLE MEANS, TO ENSURE THAT THE TEMPERATURE OF THE SOLE PLATE DOES NOT EXCEED 300°F. TEMPERATURES ABOVE THIS MAY DAMAGE THE ELASTOMER.

ALL SURFACES OF BEARING PLATES SHALL BE SMOOTH AND STRAIGHT.

THE ELASTOMER IN THE STEEL REINFORCED BEARINGS SHALL HAVE A SHEAR MODULUS OF 0.160 KSI, IN ACCORDANCE WITH AASHTO M251.

FOR STEEL REINFORCED ELASTOMERIC BEARINGS, SEE SPECIAL PROVISIONS.

THE CONTRACTOR'S ATTENTION IS CALLED TO THE FOLLOWING PROCEDURE, WHICH MAY BE REQUIRED BY THE ENGINEER, TO RESET ELASTOMERIC BEARINGS DUE TO GIRDER TRANSLATION AND END ROTATION:

1. ONCE THE DECK HAS CURED, THE GIRDERS SHALL BE JACKED AND THE ELASTOMERIC BEARING SLOTS CENTERED AS NEARLY AS PRACTICAL ABOUT THE BEARING STIFFENER. THIS OPERATION SHALL BE PERFORMED AT APPROXIMATELY 60° F.

THE CONTRACTOR MAY PROPOSE ALTERNATE METHODS, PROVIDED DETAILS ARE SUBMITTED TO THE ENGINEER FOR REVIEW AND APPROVAL.

MAXIMUM ALLOWABLE SERVICE LOADS	
D.L.+L.L. (NO IMPACT)	
TYPE II	180 k
TYPE III	255 k

PROJECT NO. U-0071

DURHAM COUNTY

STATION: 36+69.26 -DFWB-

PLANS PREPARED BY:

MULKEY ENGINEERS & CONSULTANTS
PO Box 33127
RALEIGH, N.C. 27636
(919) 851-1912
(919) 851-1918 (FAX)
WWW.MULKEYINC.COM
NC LICENSE NO. C-1021

THIS STANDARD DRAWING REVIEWED & ADOPTED FOR USE AT THE REFERENCED LOCATION BY THE UNDERSIGNED:

NORTH CAROLINA PROFESSIONAL SEAL 034352 ENGINEER JERRE R. PETERSON 12/2/13

STR #12

STATE OF NORTH CAROLINA
DEPARTMENT OF TRANSPORTATION
RALEIGH

STANDARD

ELASTOMERIC BEARING DETAILS

(STEEL SUPERSTRUCTURE)

REVISIONS						SHEET NO.
NO.	BY:	DATE:	NO.	BY:	DATE:	S-553
1			3			TOTAL SHEETS
2			4			671

STD. NO. EB1

ASSEMBLED BY : W. B. ALLEN		DATE :	12/12
CHECKED BY : T. R. PETERSON		DATE :	12/12
DRAWN BY : JMB 11/87	REV. 5/1/06	TLA/GM	
CHECKED BY : ARB 11/87	REV. 10/1/11	MAA/GM	
	REV. 10/24/12	AAC/MAA	

11/27/2013 9:07:49 AM R:\Structures\VBEL\U0071VBEL_SD_BG_01.dgn

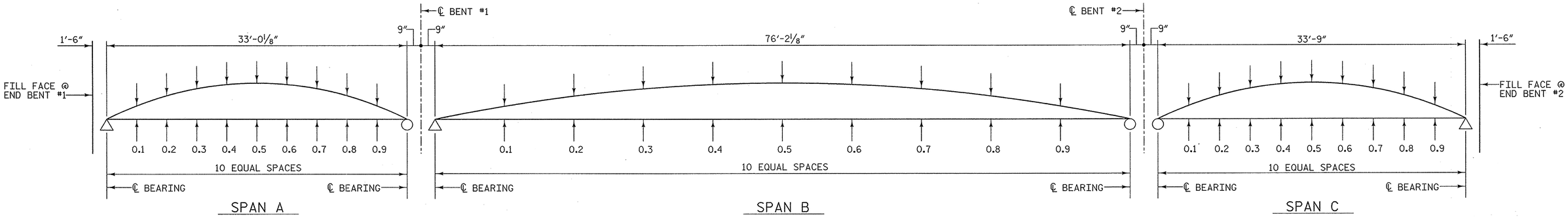

SCHEMATIC CAMBER ORDINATES

ALL DIMENSIONS MEASURED ALONG GIRDER

DEAD LOAD DEFLECTION TABLE FOR GIRDERS

	SPAN A GIRDER 1											SPAN A GIRDER 2										
TENTH POINTS	0	.1	.2	.3	.4	.5	.6	.7	.8	.9	0	0	.1	.2	.3	.4	.5	.6	.7	.8	.9	0
DEFLECTION DUE TO WEIGHT OF GIRDER ↓	0.000	0.000	0.001	0.001	0.001	0.001	0.001	0.001	0.001	0.000	0.000	0.000	0.000	0.001	0.001	0.001	0.001	0.001	0.001	0.001	0.000	0.000
DEFLECTION DUE TO WEIGHT OF SLAB ↓	0.000	0.003	0.006	0.008	0.010	0.010	0.010	0.008	0.006	0.003	0.000	0.000	0.004	0.007	0.010	0.012	0.012	0.012	0.010	0.007	0.004	0.000
DEFLECTION DUE TO WEIGHT OF BARRIER RAIL ↓	0.000	0.001	0.001	0.001	0.002	0.002	0.002	0.001	0.001	0.001	0.000	0.000	0.000	0.001	0.001	0.001	0.001	0.001	0.001	0.001	0.000	0.000
TOTAL DEAD LOAD DEFLECTION ↓	0.000	0.004	0.008	0.011	0.012	0.013	0.012	0.011	0.008	0.004	0.000	0.000	0.005	0.009	0.012	0.014	0.015	0.014	0.012	0.009	0.005	0.000
VERTICAL CURVE ORDINATE ↑	0.000	0.002	0.003	0.004	0.005	0.005	0.005	0.004	0.003	0.002	0.000	0.000	0.002	0.003	0.004	0.005	0.005	0.005	0.004	0.003	0.002	0.000
ORDINATE DUE TO SUPERELEVATION ↓	0.000	0.000	0.000	0.000	0.000	0.000	0.000	0.000	0.000	0.000	0.000	0.000	0.000	0.000	0.000	0.000	0.000	0.000	0.000	0.000	0.000	0.000
REQUIRED CAMBER ↑	0	1/16	1/8	3/16	3/16	3/16	3/16	3/16	1/8	1/16	0	0	1/16	1/8	3/16	1/4	1/4	1/4	3/16	1/8	1/16	0

	SPAN B GIRDER 1											SPAN B GIRDER 2										
TENTH POINTS	0	.1	.2	.3	.4	.5	.6	.7	.8	.9	0	0	.1	.2	.3	.4	.5	.6	.7	.8	.9	0
DEFLECTION DUE TO WEIGHT OF GIRDER ↓	0.000	0.011	0.021	0.029	0.034	0.036	0.034	0.029	0.021	0.011	0.000	0.000	0.011	0.021	0.029	0.034	0.036	0.034	0.029	0.021	0.011	0.000
DEFLECTION DUE TO WEIGHT OF SLAB ↓	0.000	0.064	0.121	0.166	0.194	0.204	0.194	0.166	0.121	0.064	0.000	0.000	0.080	0.151	0.207	0.242	0.254	0.242	0.207	0.151	0.008	0.000
DEFLECTION DUE TO WEIGHT OF BARRIER RAIL ↓	0.000	0.011	0.021	0.028	0.033	0.035	0.033	0.028	0.021	0.011	0.000	0.000	0.006	0.010	0.014	0.017	0.017	0.017	0.014	0.010	0.006	0.000
TOTAL DEAD LOAD DEFLECTION ↓	0.000	0.086	0.163	0.223	0.261	0.274	0.261	0.223	0.163	0.086	0.000	0.000	0.097	0.183	0.250	0.293	0.308	0.293	0.250	0.183	0.097	0.000
VERTICAL CURVE ORDINATE ↑	0.000	0.009	0.016	0.021	0.024	0.025	0.024	0.021	0.016	0.009	0.000	0.000	0.009	0.016	0.021	0.024	0.025	0.024	0.021	0.016	0.009	0.000
ORDINATE DUE TO SUPERELEVATION ↓	0.000	0.000	0.000	0.000	0.000	0.000	0.000	0.000	0.000	0.000	0.000	0.000	0.000	0.000	0.000	0.000	0.000	0.000	0.000	0.000	0.000	0.000
REQUIRED CAMBER ↑	0	1 1/8	2 1/8	2 15/16	3 7/16	3 9/16	3 7/16	2 15/16	2 1/8	1 1/8	0	0	1 1/4	2 3/8	3 1/4	3 13/16	4	3 13/16	3 1/4	2 3/8	1 1/4	0

	SPAN C GIRDER 1											SPAN C GIRDER 2										
TENTH POINTS	0	.1	.2	.3	.4	.5	.6	.7	.8	.9	0	0	.1	.2	.3	.4	.5	.6	.7	.8	.9	0
DEFLECTION DUE TO WEIGHT OF GIRDER ↓	0.000	0.001	0.001	0.001	0.002	0.002	0.002	0.001	0.001	0.001	0.000	0.000	0.001	0.001	0.001	0.002	0.002	0.002	0.001	0.001	0.001	0.000
DEFLECTION DUE TO WEIGHT OF SLAB ↓	0.000	0.003	0.006	0.009	0.010	0.011	0.010	0.009	0.006	0.003	0.000	0.000	0.004	0.008	0.011	0.013	0.013	0.013	0.011	0.008	0.004	0.000
DEFLECTION DUE TO WEIGHT OF BARRIER RAIL ↓	0.000	0.001	0.001	0.001	0.002	0.002	0.002	0.001	0.001	0.001	0.000	0.000	0.000	0.001	0.001	0.001	0.001	0.001	0.001	0.001	0.000	0.000
TOTAL DEAD LOAD DEFLECTION ↓	0.000	0.004	0.008	0.012	0.014	0.014	0.014	0.012	0.008	0.004	0.000	0.000	0.005	0.010	0.013	0.015	0.016	0.015	0.013	0.010	0.005	0.000
VERTICAL CURVE ORDINATE ↑	0.000	0.002	0.003	0.004	0.005	0.005	0.005	0.004	0.003	0.002	0.000	0.000	0.002	0.003	0.004	0.005	0.005	0.005	0.004	0.003	0.002	0.000
ORDINATE DUE TO SUPERELEVATION ↓	0.000	0.000	0.000	0.000	0.000	0.000	0.000	0.000	0.000	0.000	0.000	0.000	0.000	0.000	0.000	0.000	0.000	0.000	0.000	0.000	0.000	0.000
REQUIRED CAMBER ↑	0	1/16	1/8	3/16	3/16	1/4	3/16	3/16	1/8	1/16	0	0	1/16	1/8	3/16	3/16	1/4	3/16	3/16	1/8	1/16	0

* INCLUDES SLAB, BUILDUPS & STAY-IN-PLACE FORMS.
ALL VALUES ARE SHOWN IN FEET (DECIMAL FORM), EXCEPT " REQUIRED CAMBER ", WHICH IS GIVEN IN INCHES (FRACTION FORM).

PROJECT NO. U-0071
DURHAM COUNTY
STATION: 36+69.26 -DFWB-

STATE OF NORTH CAROLINA
DEPARTMENT OF TRANSPORTATION
RALEIGH

SUPERSTRUCTURE

GIRDER DEFLECTIONS & CAMBER DIAGRAM

PLANS PREPARED BY:
MULKEY ENGINEERS & CONSULTANTS
PO Box 33127
Raleigh, N.C. 27636
(919) 851-1912
(919) 851-1918 (FAX)
WWW.MULKEYINC.COM
NC LICENSE NO. C-1021

NORTH CAROLINA PROFESSIONAL SEAL 034352 ENGINEER TERRY R. PETERSON
12/2/13

STR #12

REVISIONS									SHEET NO.
NO.	BY:	DATE:	NO.	BY:	DATE:				S-554
1			3						TOTAL SHEETS
2			4						671

DRAWN BY : W. B. ALLEN DATE : 8/12
CHECKED BY : Z. H. BROWN DATE : 10/12
DESIGN ENGINEER OF RECORD: T. R. PETERSON DATE : 12/2/13

11/27/2013 9:07:13 AM R:\Structures\WBL\U0071WBL_SD_DL_01.dgn

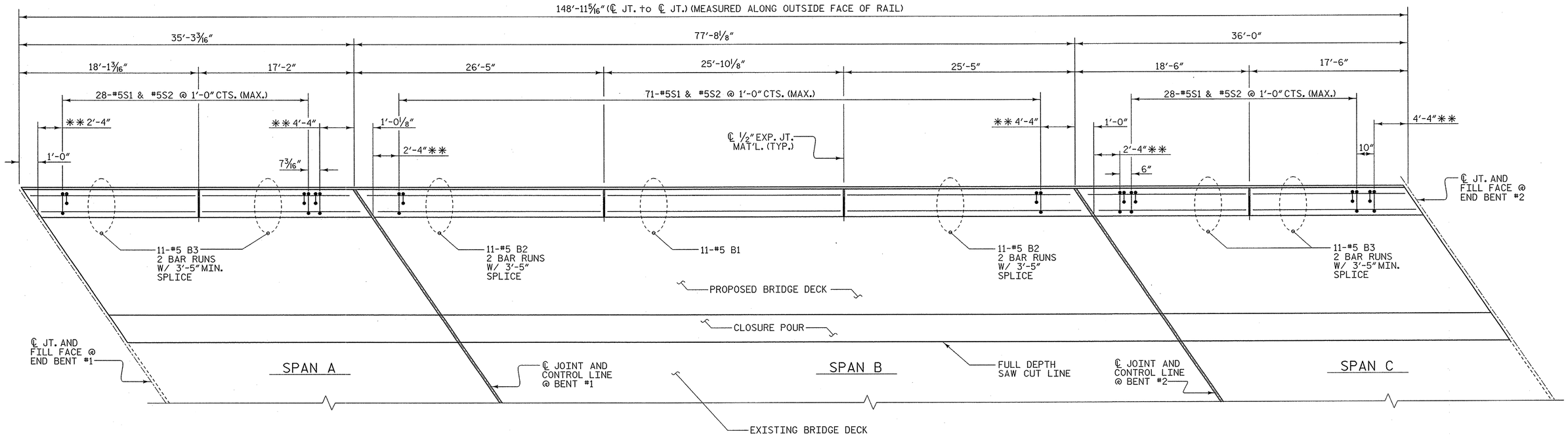

PLAN OF BARRIER RAIL

** SEE "END OF RAIL DETAILS" ON SHEET 2 OF 2

PROJECT NO. U-0071

DURHAM COUNTY

STATION: 36+69.26 -DFWB-

SHEET 1 OF 2

STATE OF NORTH CAROLINA
DEPARTMENT OF TRANSPORTATION
RALEIGH

CONCRETE BARRIER RAIL

REVISIONS						SHEET NO.
NO.	BY:	DATE:	NO.	BY:	DATE:	S-555
1			3			TOTAL SHEETS
2			4			671

PLANS PREPARED BY:
MULKEY ENGINEERS & CONSULTANTS
PO Box 33127
Raleigh, NC 27636
(919) 851-1912
(919) 851-1918 (FAX)
WWW.MULKEYINC.COM
NC LICENSE NO. C-1021

NORTH CAROLINA PROFESSIONAL SEAL 034352 ENGINEER TERRE R. PETERSON 12/2/13

STR #12

DRAWN BY :	W. B. ALLEN	DATE :	1/13
CHECKED BY :	T. R. PETERSON	DATE :	1/13
DESIGN ENGINEER OF RECORD:	T. R. PETERSON	DATE :	12/2/13

11/27/2013 9:06:43 AM R:\Structures\WBL\U0071WBL_SD_BR_01.dgn

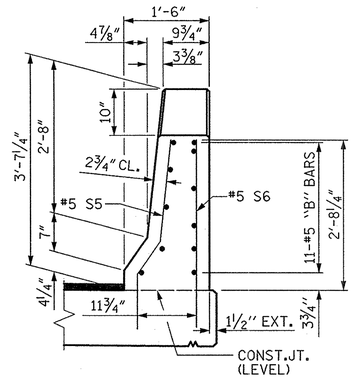

END VIEW
(AT END BENTS ONLY)

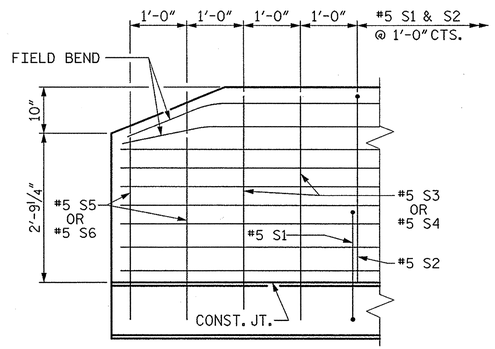

SIDE VIEW

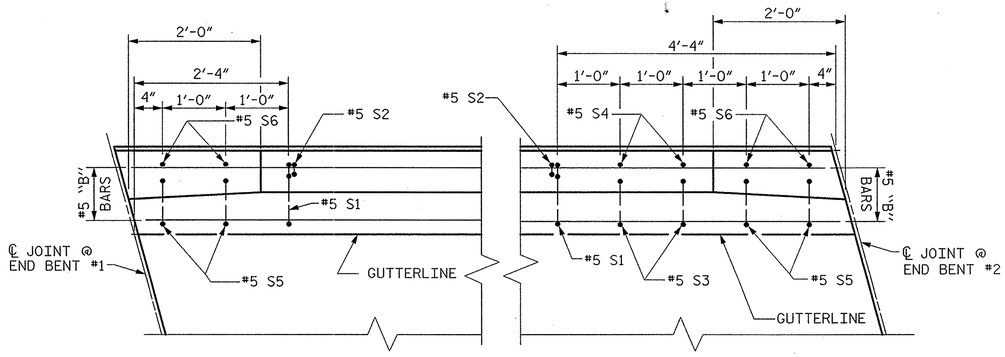

PLAN @ END BENTS

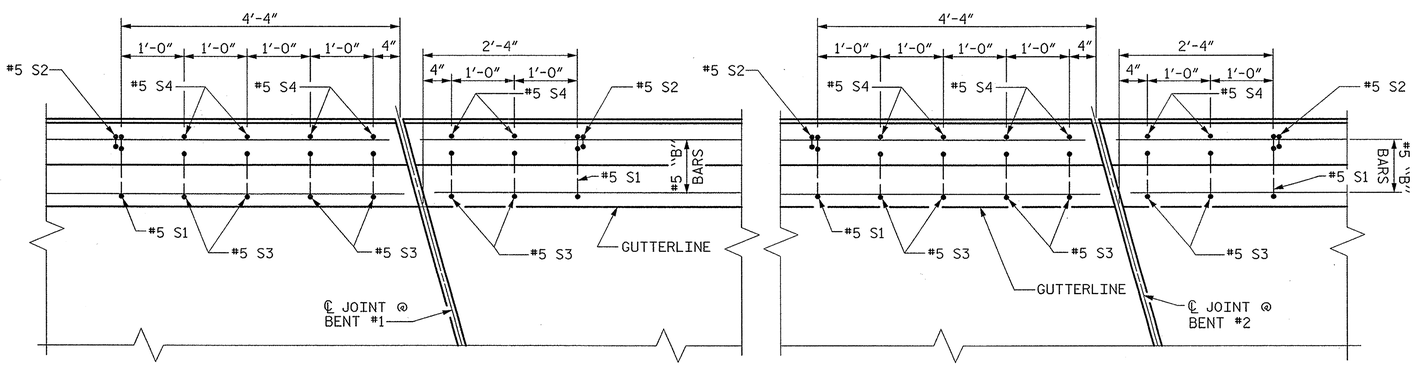

PLAN @ BENTS

END OF RAIL DETAILS

FOR ADHESIVE ANCHORING AT SAWED JOINTS

NOTES

THE BARRIER RAIL IN EACH SPAN SHALL NOT BE CAST UNTIL ALL SLAB CONCRETE IN THAT SPAN HAS BEEN CAST AND HAS REACHED A MINIMUM COMPRESSIVE STRENGTH OF 3,000 PSI.

WHEN FOAM JOINT SEAL IS REQUIRED, THE JOINT IN THE DECK SHALL BE SAWED PRIOR TO THE CASTING OF BARRIER RAIL.

ALL REINFORCING STEEL IN BARRIER RAILS SHALL BE EPOXY COATED.

THE #5 S3, S4, S5 AND S6 BARS SHALL BE INSTALLED, USING AN ADHESIVE ANCHORING SYSTEM, AFTER SAWING THE JOINT. THE YIELD LOAD FOR THE #5 S3, S4, S5 AND S6 BARS IS 18.6 KIPS. FIELD TESTING FOR THE ADHESIVE BONDING SYSTEM IS NOT REQUIRED.

GROOVED CONTRACTION JOINTS, ½" IN DEPTH, SHALL BE TOOLED IN ALL EXPOSED FACES OF THE BARRIER RAIL AND IN ACCORDANCE WITH ARTICLE 825-10(B) OF THE STANDARD SPECIFICATIONS. THE CONTRACTION JOINT SHALL BE LOCATED AT EACH THIRD POINT BETWEEN BARRIER RAIL EXPANSION JOINTS. ONLY ONE CONTRACTION JOINT IS REQUIRED AT MIDPOINT OF BARRIER RAIL SEGMENTS LESS THAN 20 FEET IN LENGTH AND NO CONTRACTION JOINTS ARE REQUIRED FOR THOSE SEGMENTS LESS THAN 10 FEET IN LENGTH.

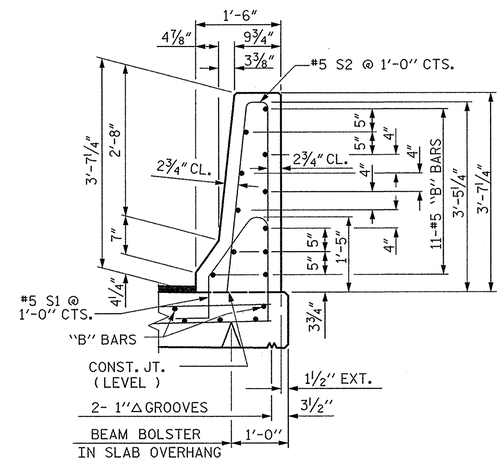

SECTION THRU RAIL

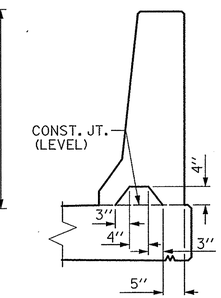

SECTION S-S
AT DAM IN OPEN JOINT
(THIS IS TO BE USED ONLY WHEN SLIP FORM IS USED)

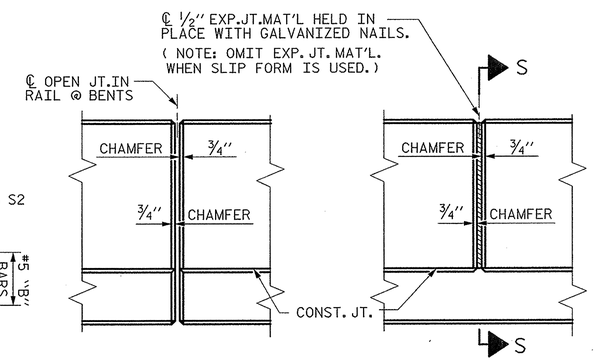

ELEVATION AT EXPANSION JOINTS

BARRIER RAIL DETAILS

BAR TYPES

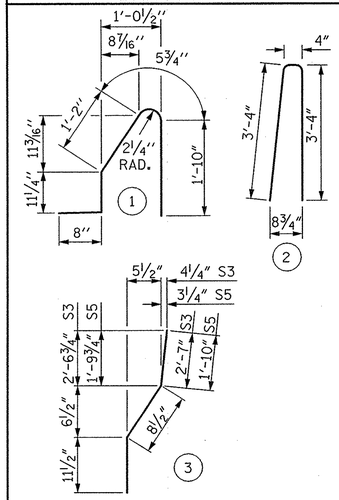

ALL BAR DIMENSIONS ARE OUT TO OUT

BILL OF MATERIAL

FOR CONCRETE BARRIER RAIL ONLY

BAR	NO.	SIZE	TYPE	LENGTH	WEIGHT
* B1	11	#5	STR	25'-5"	292
* B2	44	#5	STR	14'-8"	673
* B3	88	#5	STR	10'-8"	979
* S1	130	#5	1	5'-1"	689
* S2	130	#5	2	7'-0"	949
* S3	14	#5	3	4'-3"	62
* S4	14	#5	STR	4'-1"	60
* S5	4	#5	3	3'-6"	15
* S6	4	#5	STR	3'-4"	14

* EPOXY COATED REINFORCING STEEL	3733 LBS.
CLASS AA CONCRETE	21.1 CU. YDS.
CONCRETE BARRIER RAIL	148.94 LIN. FT.

PROJECT NO. U-0071
DURHAM COUNTY
STATION: 36+69.26 -DFWB-

SHEET 2 OF 2

STATE OF NORTH CAROLINA
DEPARTMENT OF TRANSPORTATION
RALEIGH

STANDARD
CONCRETE
BARRIER RAIL

THIS STANDARD DRAWING REVIEWED & ADOPTED FOR USE AT THE REFERENCED LOCATION BY THE UNDERSIGNED:

NORTH CAROLINA PROFESSIONAL SEAL 034352 ENGINEER TERRE R. PETERSON 12/2/18

STR #12

PLANS PREPARED BY:
MULKEY ENGINEERS & CONSULTANTS
PO Box 33127
RALEIGH, N.C. 27636
(919) 851-1912
(919) 851-1918 (FAX)
WWW.MULKEYINC.COM
NC LICENSE NO. C-1021

REVISIONS						SHEET NO.
NO.	BY:	DATE:	NO.	BY:	DATE:	S-556
1			3			TOTAL SHEETS
2			4			671

ASSEMBLED BY : W. B. ALLEN		DATE :	12/12
CHECKED BY : T. R. PETERSON		DATE :	12/12
DRAWN BY : ARB 5/87	REV. 10/1/11		MAA/GM
CHECKED BY : SJD 9/87	REV. 7/12		MAA/GM
	REV. 10/12		MAA/GM

STD. NO. CBR1

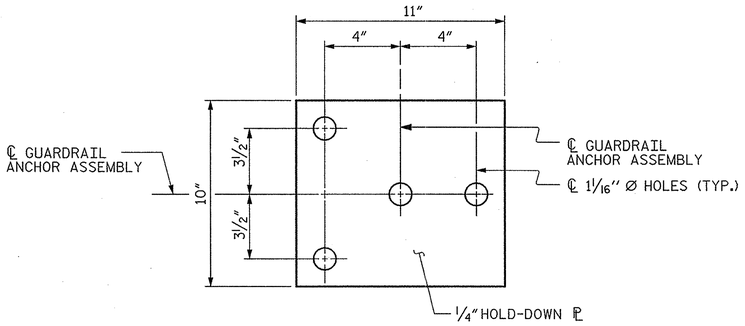

PLAN

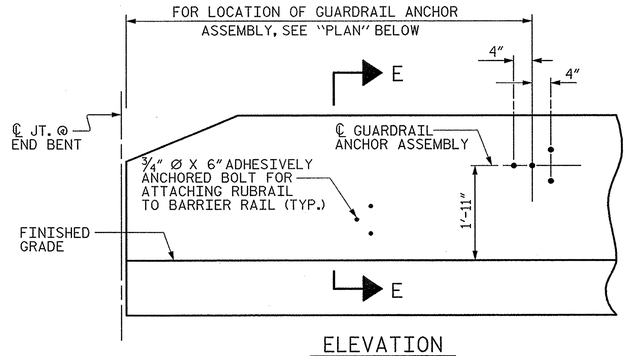

ELEVATION

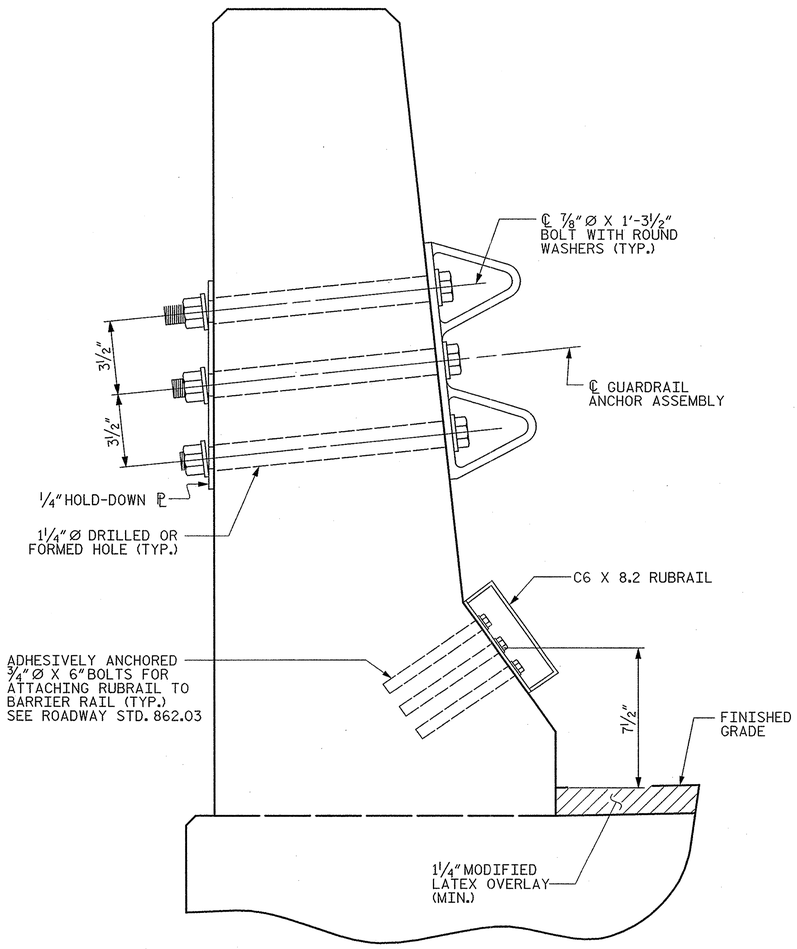

SECTION E-E

GUARDRAIL ANCHOR ASSEMBLY DETAILS

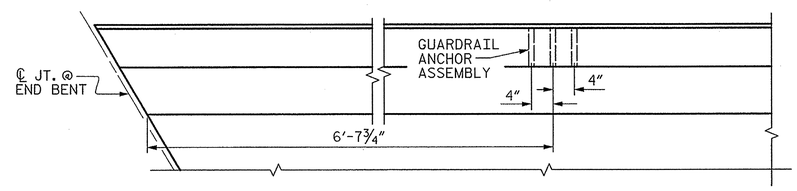

PLAN

LOCATION OF ANCHORS FOR GUARDRAIL

END BENT #1 SHOWN, END BENT #2 SIMILAR.

NOTES

THE GUARDRAIL ANCHOR ASSEMBLY SHALL CONSIST OF A ¼" HOLD-DOWN PLATE AND 4 - ⅞" Ø BOLTS WITH NUTS AND WASHERS, RUBRAIL, AND ADHESIVELY ANCHORED BOLTS.

THE HOLD-DOWN PLATE SHALL CONFORM TO AASHTO M270 GRADE 36. AFTER FABRICATION, THE HOLD-DOWN PLATE SHALL BE HOT-DIP GALVANIZED IN ACCORDANCE WITH AASHTO M111.

BOLTS SHALL CONFORM TO THE REQUIREMENTS OF ASTM A307 AND NUTS SHALL CONFORM TO THE REQUIREMENTS OF AASHTO M291. BOLTS, NUTS AND WASHERS SHALL BE GALVANIZED. (AT THE CONTRACTOR'S OPTION, STAINLESS STEEL BOLTS, NUTS AND WASHERS MAY BE USED AS AN ALTERNATE FOR THE ⅞" Ø GALVANIZED BOLTS, NUTS AND WASHERS. THEY SHALL CONFORM TO OR EXCEED THE MECHANICAL REQUIREMENTS OF ASTM A307. THE USE OF THIS ALTERNATE SHALL BE APPROVED BY THE ENGINEER.)

THE GUARDRAIL ANCHOR ASSEMBLY IS REQUIRED AT ALL POINTS WHERE APPROACH GUARDRAIL IS TO BE ATTACHED TO THE END OF BARRIER RAIL. FOR POINTS OF ATTACHMENT, SEE SKETCH.

AFTER INSTALLATION, THE EXPOSED THREAD OF THE BOLT SHALL BE BURRED WITH A SHARP POINTED TOOL.

THE COST OF THE GUARDRAIL ANCHOR ASSEMBLY SHALL BE INCLUDED IN THE UNIT CONTRACT PRICE BID FOR CONCRETE BARRIER RAIL.

THE 1¼" Ø HOLES SHALL BE FORMED OR DRILLED WITH A CORE BIT. IMPACT TOOLS WILL NOT BE PERMITTED. ANY CONCRETE DAMAGED BY THIS WORK SHALL BE REPAIRED TO THE SATISFACTION OF THE ENGINEER.

THE C6 X 8.2 RUBRAIL IS TO BE ADHESIVELY ANCHORED TO THE RAIL USING THREE ¾" Ø X 6" BOLTS WITH WASHERS. LEVEL ONE FIELD TESTING IS REQUIRED, AND THE YIELD LOAD OF THE ¾" Ø BOLT IS 12 KIPS. FOR ADHESIVELY ANCHORED ANCHOR BOLTS OR DOWELS, SEE STANDARD SPECIFICATIONS. SEE ROADWAY STANDARD 862.03 FOR DETAILS AND LOCATION OF THE RUBRAIL.

★ CONTRACTOR TO SALVAGE AND RETAIN EXISTNG ANCHOR ASSEMBLIES ON THE EXISTING BRIDGE RAIL AND RE-USE IN ATTACHING THE PROPOSED GUARDRAIL TO THE EXISTING BRIDGE RAIL.

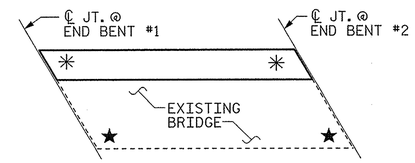

SKETCH SHOWING POINTS OF ATTACHMENTS

✳ DENOTES GUARDRAIL ANCHOR ASSEMBLY

★ DENOTES EXISTING GUARDRAIL ANCHOR ASSEMBLY

PROJECT NO. U-0071

DURHAM COUNTY

STATION: 36+69.26 -DFWB-

PLANS PREPARED BY:

MULKEY ENGINEERS & CONSULTANTS
PO Box 33127
RALEIGH, N.C. 27636
(919) 851-1912
(919) 851-1918 (FAX)
WWW.MULKEYINC.COM
NC LICENSE NO. C-1021

THIS STANDARD DRAWING REVIEWED & ADOPTED FOR USE AT THE REFERENCED LOCATION BY THE UNDERSIGNED:

NORTH CAROLINA PROFESSIONAL SEAL 034352 ENGINEER JERRE R. PETERSON 12/2/13

STR #12

STATE OF NORTH CAROLINA
DEPARTMENT OF TRANSPORTATION
RALEIGH

STANDARD

GUARDRAIL ANCHORAGE FOR BARRIER RAIL

REVISIONS							SHEET NO.
NO.	BY:	DATE:	NO.	BY:	DATE:		S-557
1			3				TOTAL SHEETS
2			4				671

STD. NO. GRA2

ASSEMBLED BY : W. B. ALLEN		DATE : 1/13	
CHECKED BY : T. R. PETERSON		DATE : ?/13	
DRAWN BY : TLA 5/06	REV. 10/1/11	MAA/GM	
CHECKED BY : GM 5/06	REV. 7/12	MAA/GM	
	REV. 10/12	MAA/GM	

11/27/2013 9:05:35 AM R:\Structures\WBL\U0071WBL_SD_GR_01.dgn

BAR SCHEDULE

SPAN A

BAR	NO.	SIZE	TYPE	LENGTH	WEIGHT
✱ A1	53	#5	STR	12'-1"	668
A2	53	#5	STR	12'-1"	668
✱ A3	6	#6	STR	14'-6"	131
✱ A101	2	#5	STR	11'-9"	25
✱ A102	2	#5	STR	11'-1"	23
✱ A103	2	#5	STR	10'-4"	22
✱ A104	2	#5	STR	9'-7"	20
✱ A105	2	#5	STR	8'-10"	18
✱ A106	2	#5	STR	8'-1"	17
✱ A107	2	#5	STR	7'-4"	15
✱ A108	2	#5	STR	6'-7"	14
✱ A109	2	#5	STR	5'-10"	12
✱ A110	2	#5	STR	5'-1"	11
✱ A111	2	#5	STR	4'-4"	9
✱ A112	2	#5	STR	3'-7"	7
✱ A113	2	#5	STR	2'-10"	6
✱ A114	2	#5	STR	2'-1"	4
A201	2	#5	STR	11'-9"	25
A202	2	#5	STR	11'-1"	23
A203	2	#5	STR	10'-4"	22
A204	2	#5	STR	9'-7"	20
A205	2	#5	STR	8'-10"	18
A206	2	#5	STR	8'-1"	17
A207	2	#5	STR	7'-4"	15
A208	2	#5	STR	6'-7"	14
A209	2	#5	STR	5'-10"	12
A210	2	#5	STR	5'-1"	11
A211	2	#5	STR	4'-4"	9
A212	2	#5	STR	3'-7"	7
A213	2	#5	STR	2'-10"	6
A214	2	#5	STR	2'-1"	4
✱ B1	22	#4	STR	18'-5"	271
B2	20	#5	STR	34'-9"	725
✱ D1	33	#5	STR	3'-6"	120
D2	6	#4	STR	3'-2"	13
✱ D3	32	#5	STR	5'-6"	184
✱ D4	1	#5	STR	2'-2"	2
D12	32	#5	STR	5'-6"	184
✱ G1	2	#5	STR	14'-6"	30
✱ G2	2	#5	STR	3'-2"	7
✱ K1	3	#5	STR	8'-10"	28
✱ K2	3	#5	1	7'-2"	22
✱ K3	3	#5	1	5'-1"	16
K4	14	#4	STR	9'-9"	91
✱ L1	30	#4	2	6'-5"	129
✱ S1	8	#4	3	4'-2"	22
S2	16	#4	4	2'-0"	21
✱ U1	6	#4	5	6'-1"	24
REINFORCING STEEL				LBS.	1905
✱ EPOXY COATED REINFORCING STEEL				LBS.	1857

SPAN B

BAR	NO.	SIZE	TYPE	LENGTH	WEIGHT
✱ A1	139	#5	STR	12'-1"	1752
A2	139	#5	STR	12'-1"	1752
✱ A3	6	#6	STR	14'-6"	131
✱ A116	2	#5	STR	11'-4"	24
✱ A117	2	#5	STR	10'-7"	22
✱ A118	2	#5	STR	9'-10"	21
✱ A119	2	#5	STR	9'-1"	19
✱ A120	2	#5	STR	8'-4"	17
✱ A121	2	#5	STR	7'-8"	16
✱ A122	2	#5	STR	6'-11"	14
✱ A123	2	#5	STR	6'-2"	13
✱ A124	2	#5	STR	5'-5"	11
✱ A125	2	#5	STR	4'-8"	10
✱ A126	2	#5	STR	3'-11"	8
✱ A127	2	#5	STR	3'-2"	7
✱ A128	2	#5	STR	2'-5"	5
A216	2	#5	STR	11'-4"	24
A217	2	#5	STR	10'-7"	22
A218	2	#5	STR	9'-10"	21
A219	2	#5	STR	9'-1"	19
A220	2	#5	STR	8'-4"	17
A221	2	#5	STR	7'-8"	16
A222	2	#5	STR	6'-11"	14
A223	2	#5	STR	6'-2"	13
A224	2	#5	STR	5'-5"	11
A225	2	#5	STR	4'-8"	10
A226	2	#5	STR	3'-11"	8
A227	2	#5	STR	3'-2"	7
A228	2	#5	STR	2'-5"	5
✱ B3	33	#4	STR	27'-1"	597
B4	40	#5	STR	39'-8"	1655
✱ D1	75	#5	STR	3'-6"	274
✱ D3	74	#5	STR	5'-6"	425
✱ D5	1	#5	STR	3'-4"	3
✱ D6	1	#5	STR	4'-10"	5
✱ D7	1	#5	STR	3'-3"	3
✱ D8	1	#5	STR	1'-9"	2
D12	74	#5	STR	5'-6"	425
D13	1	#5	STR	3'-4"	3
D14	1	#5	STR	4'-10"	5
✱ G1	2	#5	STR	14'-6"	30
✱ G2	2	#5	STR	3'-2"	7
✱ K1	6	#5	STR	8'-10"	55
✱ K2	6	#5	1	7'-2"	45
✱ K3	6	#5	1	5'-1"	32
✱ S1	16	#4	3	4'-2"	45
REINFORCING STEEL				LBS.	4027
✱ EPOXY COATED REINFORCING STEEL				LBS.	3617

SPAN C

BAR	NO.	SIZE	TYPE	LENGTH	WEIGHT
✱ A1	55	#5	STR	12'-1"	693
A2	55	#5	STR	12'-1"	693
✱ A3	6	#6	STR	14'-6"	131
✱ A130	2	#5	STR	11'-7"	24
✱ A131	2	#5	STR	10'-10"	23
✱ A132	2	#5	STR	10'-1"	21
✱ A133	2	#5	STR	9'-4"	19
✱ A134	2	#5	STR	8'-7"	18
✱ A135	2	#5	STR	7'-10"	16
✱ A136	2	#5	STR	7'-1"	15
✱ A137	2	#5	STR	6'-5"	13
✱ A138	2	#5	STR	5'-8"	12
✱ A139	2	#5	STR	4'-11"	10
✱ A140	2	#5	STR	4'-2"	9
✱ A141	2	#5	STR	3'-5"	7
✱ A142	2	#5	STR	2'-8"	6
✱ A143	2	#5	STR	1'-11"	4
A230	2	#5	STR	11'-7"	24
A231	2	#5	STR	10'-10"	23
A232	2	#5	STR	10'-1"	21
A233	2	#5	STR	9'-4"	19
A234	2	#5	STR	8'-7"	18
A235	2	#5	STR	7'-10"	16
A236	2	#5	STR	7'-1"	15
A237	2	#5	STR	6'-5"	13
A238	2	#5	STR	5'-8"	12
A239	2	#5	STR	4'-11"	10
A240	2	#5	STR	4'-2"	9
A241	2	#5	STR	3'-5"	7
A242	2	#5	STR	2'-8"	6
A243	2	#5	STR	1'-11"	4
✱ B5	22	#4	STR	18'-9"	276
B6	20	#5	STR	35'-6"	741
✱ D1	34	#5	STR	3'-6"	124
D2	6	#4	STR	3'-2"	13
✱ D3	32	#5	STR	5'-6"	184
✱ D9	1	#5	STR	3'-6"	4
✱ D10	1	#5	STR	5'-0"	5
✱ D11	1	#5	STR	2'-0"	2
D12	32	#5	STR	5'-6"	184
D15	1	#5	STR	3'-6"	4
D16	1	#5	STR	5'-0"	5
✱ G1	2	#5	STR	14'-6"	30
✱ G2	2	#5	STR	3'-2"	7
✱ K1	3	#5	STR	8'-10"	28
✱ K2	3	#5	1	7'-2"	22
✱ K3	3	#5	1	5'-1"	16
K5	14	#4	STR	9'-6"	89
✱ L1	30	#4	2	6'-5"	129
✱ S1	8	#4	3	4'-2"	22
S2	16	#4	4	2'-0"	21
✱ U1	6	#4	5	6'-1"	24
REINFORCING STEEL				LBS.	1947
✱ EPOXY COATED REINFORCING STEEL				LBS.	1894

SUPERSTRUCTURE REINFORCING STEEL LENGTHS ARE BASED ON THE FOLLOWING MINIMUM SPLICE LENGTHS

BAR SIZE	SUPERSTRUCTURE EXCEPT APPROACH SLABS, PARAPET, AND BARRIER RAIL		APPROACH SLABS		PARAPET AND BARRIER RAIL
	EPOXY COATED	UNCOATED	EPOXY COATED	UNCOATED	
#4	2'-0"	1'-9"	2'-0"	1'-9"	2'-9"
#5	2'-6"	2'-2"	2'-6"	2'-2"	3'-5"
#6	3'-0"	2'-7"	3'-10"	2'-7"	4'-4"
#7	5'-3"	3'-6"			
#8	6'-10"	4'-7"			

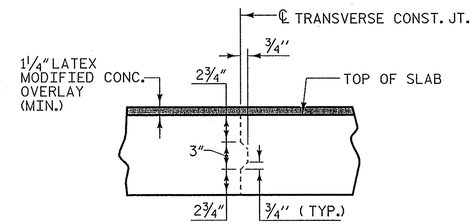

TRANSVERSE CONSTRUCTION JOINT DETAIL

NOTE: REINFORCING STEEL IN SLAB NOT SHOWN. LONGITUDINAL REINFORCING STEEL SHALL BE CONTINUOUS THRU JOINT

BAR TYPES

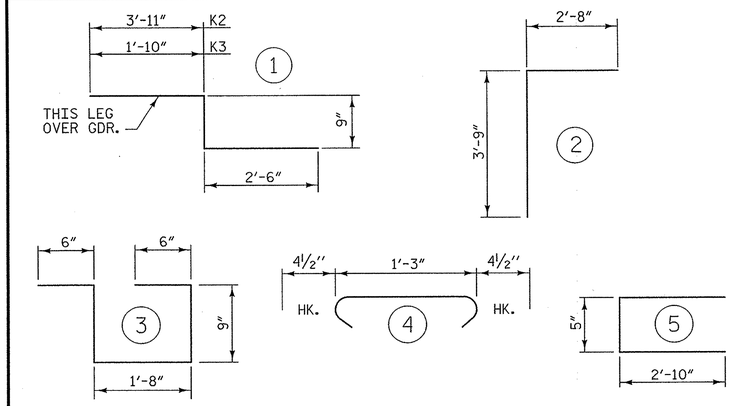

ALL BAR DIMENSIONS ARE OUT TO OUT

SUPERSTRUCTURE BILL OF MATERIAL

	CLASS AA CONCRETE	CLASS AA CONCRETE (CLOSURE POUR)	REINFORCING STEEL	✱EPOXY COATED REINFORCING STEEL
	(CU. YDS.)	(CU. YDS.)	(LBS.)	(LBS.)
SPAN A	16.0	3.0	1905	1857
SPAN B	30.3	6.6	4027	3617
SPAN C	16.2	3.1	1947	1894
✱✱ TOTALS	62.5	12.7	7879	7368

✱✱ QUANTITIES FOR BARRIER RAIL ARE NOT INCLUDED.

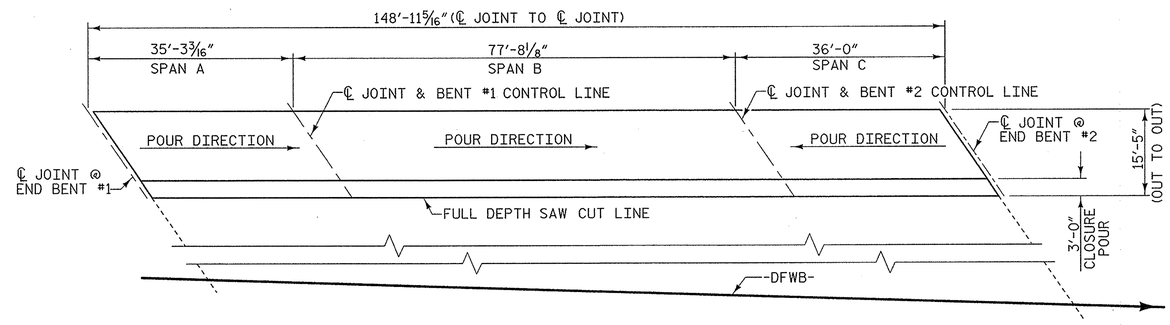

POURING SEQUENCE AND LAYOUT FOR COMPUTING AREA OF REINFORCED CONCRETE DECK SLAB

(SQ. FT. = 2297)

ALL DIMENSIONS ARE MEASURED ALONG PROPOSED OUTSIDE EDGE OF SUPERSRUCTURE UNLESS OTHERWISE NOTED.

PROJECT NO. U-0071
DURHAM COUNTY
STATION: 36+69.26 -DFWB-

GROOVING BRIDGE FLOORS

APPROACH SLABS	4306	SQ. FT.
BRIDGE DECK	✱ 9713	SQ. FT.
TOTAL	14,019	SQ. FT.

✱ INCLUDES ENTIRE BRIDGE

PLANS PREPARED BY:
MULKEY ENGINEERS & CONSULTANTS
PO Box 33127
Raleigh, N.C. 27636
(919) 851-1912
(919) 851-1918 (FAX)
WWW.MULKEYINC.COM
NC LICENSE NO. C-1021

NORTH CAROLINA PROFESSIONAL SEAL 034352 ENGINEER THERESE R. PETERSON
12/2/13

STR #12

STATE OF NORTH CAROLINA
DEPARTMENT OF TRANSPORTATION
RALEIGH

SUPERSTRUCTURE
BILL OF MATERIAL

REVISIONS						SHEET NO.
NO.	BY:	DATE:	NO.	BY:	DATE:	S-55B
1			3			TOTAL SHEETS
2			4			671

DRAWN BY :	W. B. ALLEN	DATE :	9/12
CHECKED BY :	T. R. PETERSON	DATE :	10/12
DESIGN ENGINEER OF RECORD:	T. R. PETERSON	DATE :	12/2/13

8/27/2003 9:04:51 AM R:\Structures\WBL\U0071WBL_SD_BM_01.dgn

NOTES

STIRRUPS IN THE CAP MAY BE SHIFTED AS NECESSARY TO CLEAR ANCHOR BOLTS.

THE TOP SURFACE AREA OF THE END BENT CAP SHALL BE CURED IN ACCORDANCE WITH THE STANDARD SPECIFICATIONS EXCEPT THAT THE MEMBRANE CURING COMPOUND METHOD SHALL NOT BE USED.

THE TOP SURFACE OF THE END BENT CAP EXCEPT THE BRIDGE SEAT BUILDUPS SHALL BE SLOPED TRANSVERSELY FROM THE FILL FACE TO THE BACK FACE AT THE RATE OF 2%.

THE CONCRETE IN THE SHADED AREA OF THE WING SHALL BE POURED AFTER THE JOINT BETWEEN THE DECK AND APPROACH SLAB HAS BEEN SAWED AND THE BARRIER RAIL IS CAST IF SLIP FORMING IS USED.

INSTALL THE 4"Ø DRAIN PIPE THROUGH THE WING WALL AS REQUIRED FOR REINFORCED BRIDGE APPROACH FILLS, SEE THE ROADWAY PLANS. REINFORCING STEEL IN THE WING WALL MAY BE SHIFED AS NECESSARY TO CLEAR THE DRAIN PIPE.

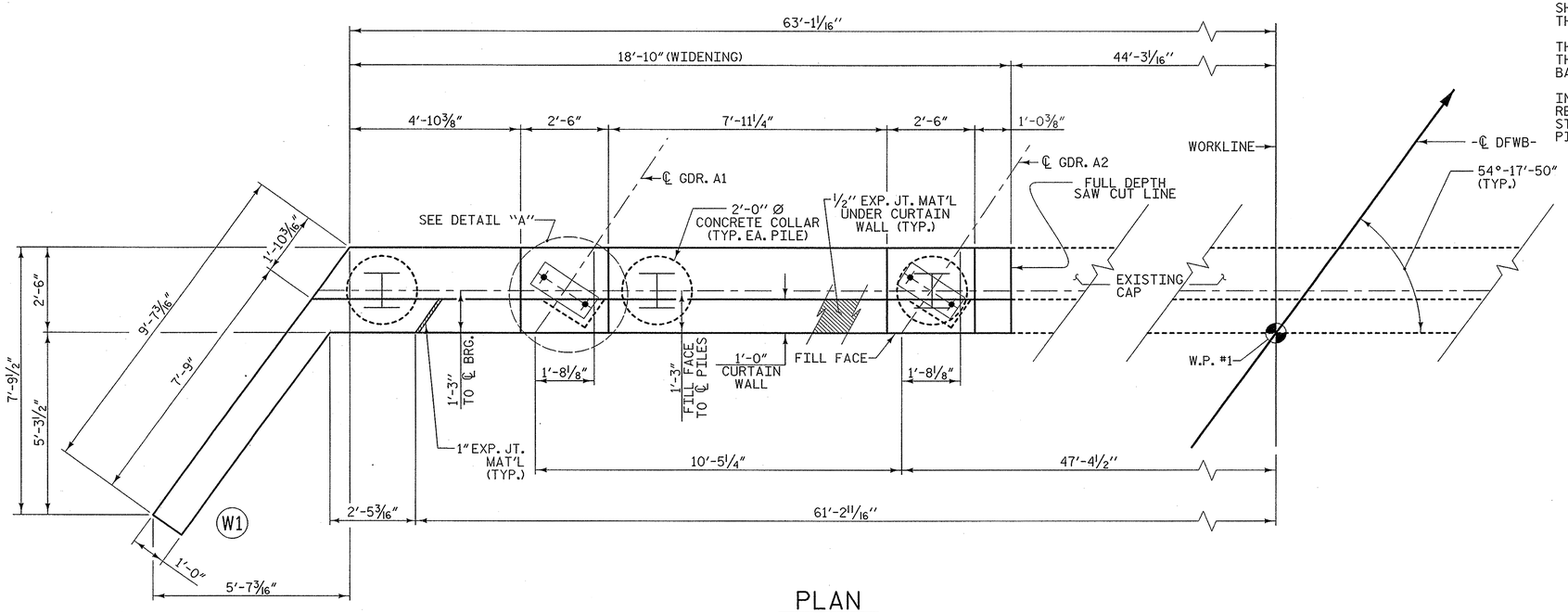

PLAN

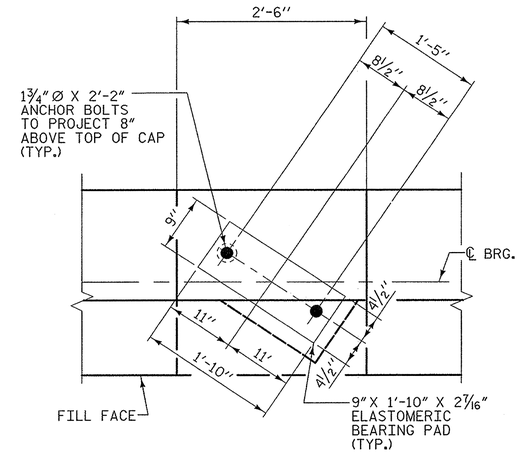

DETAIL "A"

(TYP. EACH GIRDER)

★FOR LOCATION OF ELEVATIONS BETWEEN BRIDGE SEAT BUILD-UPS, SEE "SECTION A-A" ON SHEET 2 OF 2.

✳SEE "CONCRETE REMOVAL DETAILS" ON SHEET 2 OF 2.

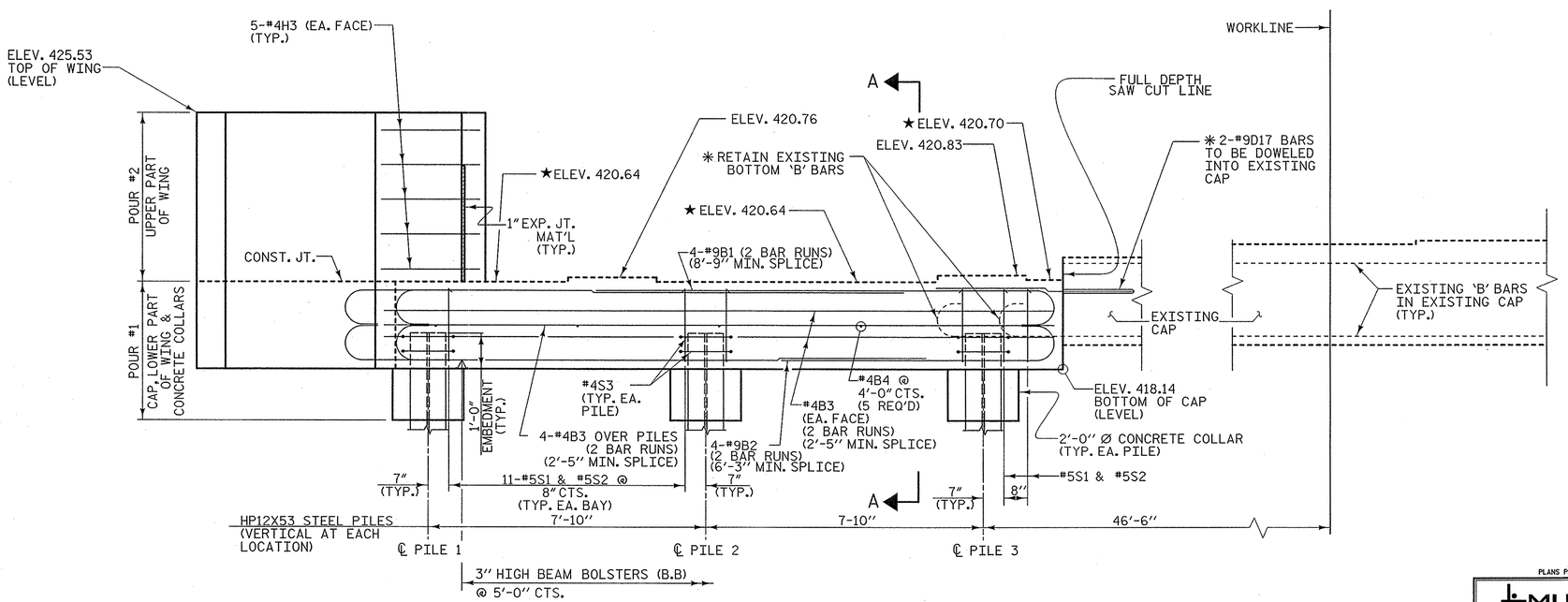

ELEVATION

PROJECT NO. U-0071

DURHAM COUNTY

STATION: 36+69.26 -DFWB-

SHEET 1 OF 2

STATE OF NORTH CAROLINA
DEPARTMENT OF TRANSPORTATION
RALEIGH

SUBSTRUCTURE

END BENT #1

PLANS PREPARED BY:
MULKEY ENGINEERS & CONSULTANTS
PO Box 33127 Raleigh, N.C. 27636
(919) 851-1912
(919) 851-1918 (FAX)
WWW.MULKEYINC.COM
NC LICENSE NO. C-1321

NORTH CAROLINA PROFESSIONAL SEAL 034352 ENGINEER JERRE R. PETERSON
12/2/13

STR #12

REVISIONS						SHEET NO.
NO.	BY:	DATE:	NO.	BY:	DATE:	S-559
1			3			TOTAL SHEETS
2			4			671

DRAWN BY :	Z. H. BROWN	DATE :	1/13
CHECKED BY :	T. R. PETERSON	DATE :	1/13
DESIGN ENGINEER OF RECORD:	T. R. PETERSON	DATE :	12/2/13

11/27/2013 8:39:58 AM R:\Structures\WBL\U0071WBL_SD_ELO1.dgn

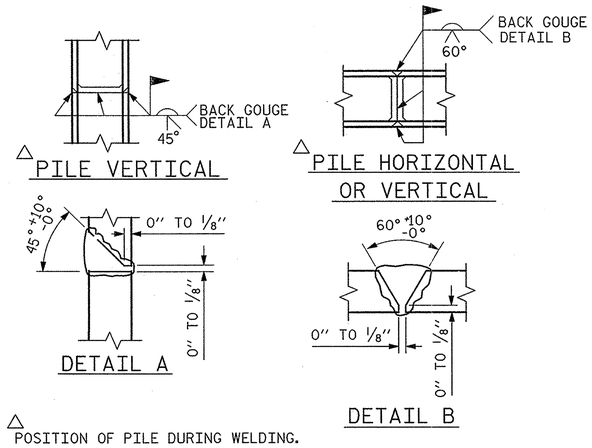

△ POSITION OF PILE DURING WELDING.

PILE SPLICE DETAILS

NOTES

#9D17 BARS SHALL BE INSTALLED USING AN ADHESIVE ANCHORING SYSTEM. LEVEL 1 FIELD TESTING IS REQUIRED, AND THE YIELD LOAD OF THE DOWELS IS 60 KIPS. ADHESIVELY ANCHORED ANCHOR BOLT OR DOWEL TESTING SHALL BE IN ACCORDANCE WITH SECTION 420-13 OF THE STANDARD SPECIFICATIONS.

▲ EMBEDMENT DEPTH SHALL BE DETERMINED BY MANUFACTURER. #9D17 BAR QUANTITY BASED ON AN 1'-6" EMBEDMENT DEPTH.

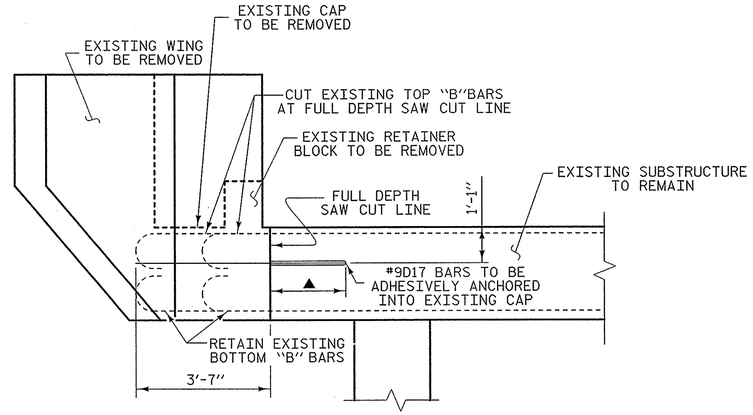

ELEVATION

RETAIN ALL "S" BARS IN EXISTING CAP UP TO THE FULL DEPTH SAW CUT LINE

CONCRETE REMOVAL DETAILS

BAR TYPES

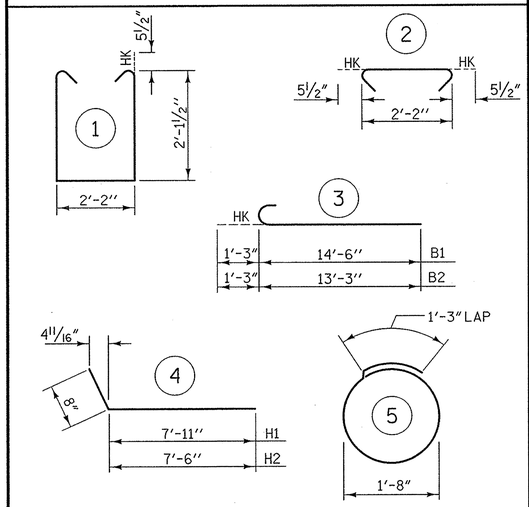

ALL DIMENSIONS ARE OUT TO OUT

BILL OF MATERIAL

END BENT #1

BAR	NO.	SIZE	TYPE	LENGTH	WEIGHT
B1	8	#9	3	15'-9"	428
B2	8	#9	3	14'-6"	394
B3	16	#4	STR	11'-4"	121
B4	5	#4	STR	2'-2"	7
H1	8	#5	4	8'-7"	72
H2	8	#5	4	8'-2"	68
H3	10	#4	STR	3'-2"	21
S1	24	#5	1	7'-4"	184
S2	24	#5	2	3'-1"	77
S3	6	#4	5	6'-6"	26
V1	24	#5	STR	7'-0"	175
D17	2	#9	STR	5'-1"	35

REINFORCING STEEL	1608 lbs.
CLASS "A" CONCRETE - CU. YARDS	
POUR 1 -CAP, LOWER WING & COLLARS	6.0 cu. yds.
POUR 2 - UPPER WING	1.9 cu. yds.
TOTAL	7.9 cu. yds.
HP12X53 STEEL PILES	
3 PILES REQUIRED - LIN. FEET	45
STEEL PILE POINTS	3 EACH
PILE EXCAVATION NOT IN SOIL - LIN. FEET	9
PILE EXCAVATION IN SOIL - LIN. FEET	37

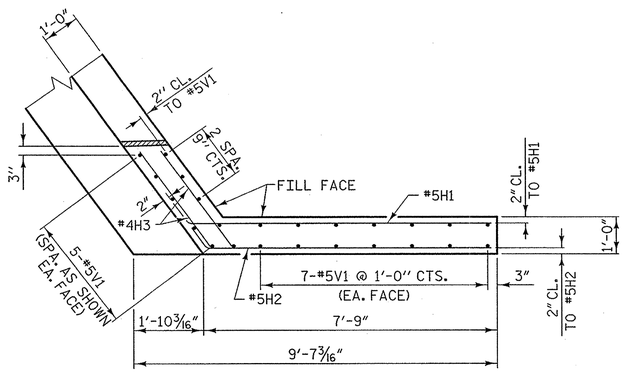

PLAN OF LEFT WING - W1

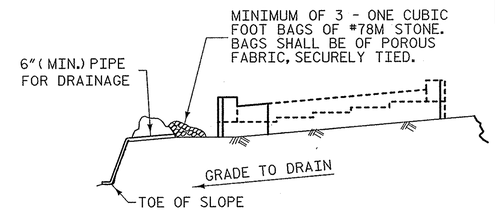

BAGGED STONE AND PIPE SHALL BE PLACED IMMEDIATELY AFTER COMPLETION OF END BENT EXCAVATION. PIPE MAY BE EITHER CONCRETE, CORRUGATED STEEL, CORRUGATED ALUMINUM ALLOY, OR CORRUGATED PLASTIC. PERFORATED PIPE WILL NOT BE ALLOWED.

BAGGED STONE SHALL REMAIN IN PLACE UNTIL THE ENGINEER DIRECTS THAT IT BE REMOVED. THE CONTRACTOR SHALL REMOVE AND DISPOSE OF SILT ACCUMULATIONS AT BAGGED STONE WHEN SO DIRECTED BY THE ENGINEER. BAGS SHALL BE REMOVED AND REPLACED WHENEVER THE ENGINEER DETERMINES THAT THEY HAVE DETERIORATED AND LOST THEIR EFFECTIVENESS.

NO SEPARATE PAYMENT WILL BE MADE FOR THIS WORK AND THE ENTIRE COST OF THIS WORK SHALL BE INCLUDED IN THE UNIT CONTRACT PRICE BID FOR THE SEVERAL PAY ITEMS.

TEMPORARY DRAINAGE AT END BENT

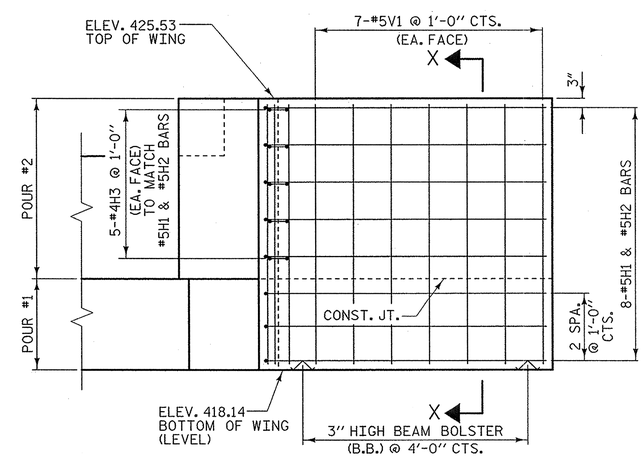

ELEVATION OF LEFT WING - W1

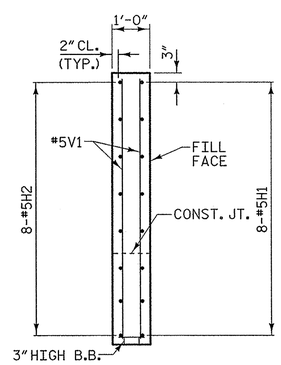

SECTION X-X

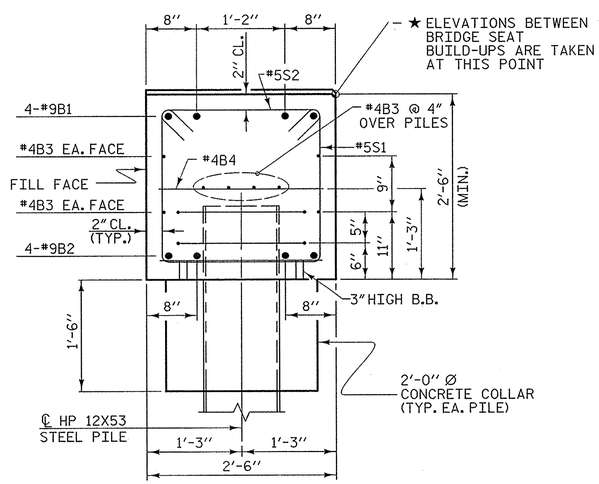

SECTION A-A

PROJECT NO. U-0071

DURHAM COUNTY

STATION: 36+69.26 -DFWB-

SHEET 2 OF 2

STATE OF NORTH CAROLINA
DEPARTMENT OF TRANSPORTATION
RALEIGH

SUBSTRUCTURE

END BENT #1

PLANS PREPARED BY:
MULKEY ENGINEERS & CONSULTANTS
PO Box 33127 Raleigh, N.C. 27636
(919) 851-1912
(919) 851-1918 (FAX)
WWW.MULKEYINC.COM
NC LICENSE NO. C-1021

NORTH CAROLINA PROFESSIONAL SEAL 034352 ENGINEER JEROME R. PETERSON
12/2/13

STR #12

REVISIONS						SHEET NO.
NO.	BY:	DATE:	NO.	BY:	DATE:	S-560
1			3			TOTAL SHEETS
2			4			671

DRAWN BY :	Z. H. BROWN	DATE :	1/13
CHECKED BY :	T. R. PETERSON	DATE :	1/13
DESIGN ENGINEER OF RECORD:	T. R. PETERSON	DATE :	12/2/13

11/27/2013 8:39:23 AM R:\Structures\WBL\U0071WBL_SD_E1_02.dgn

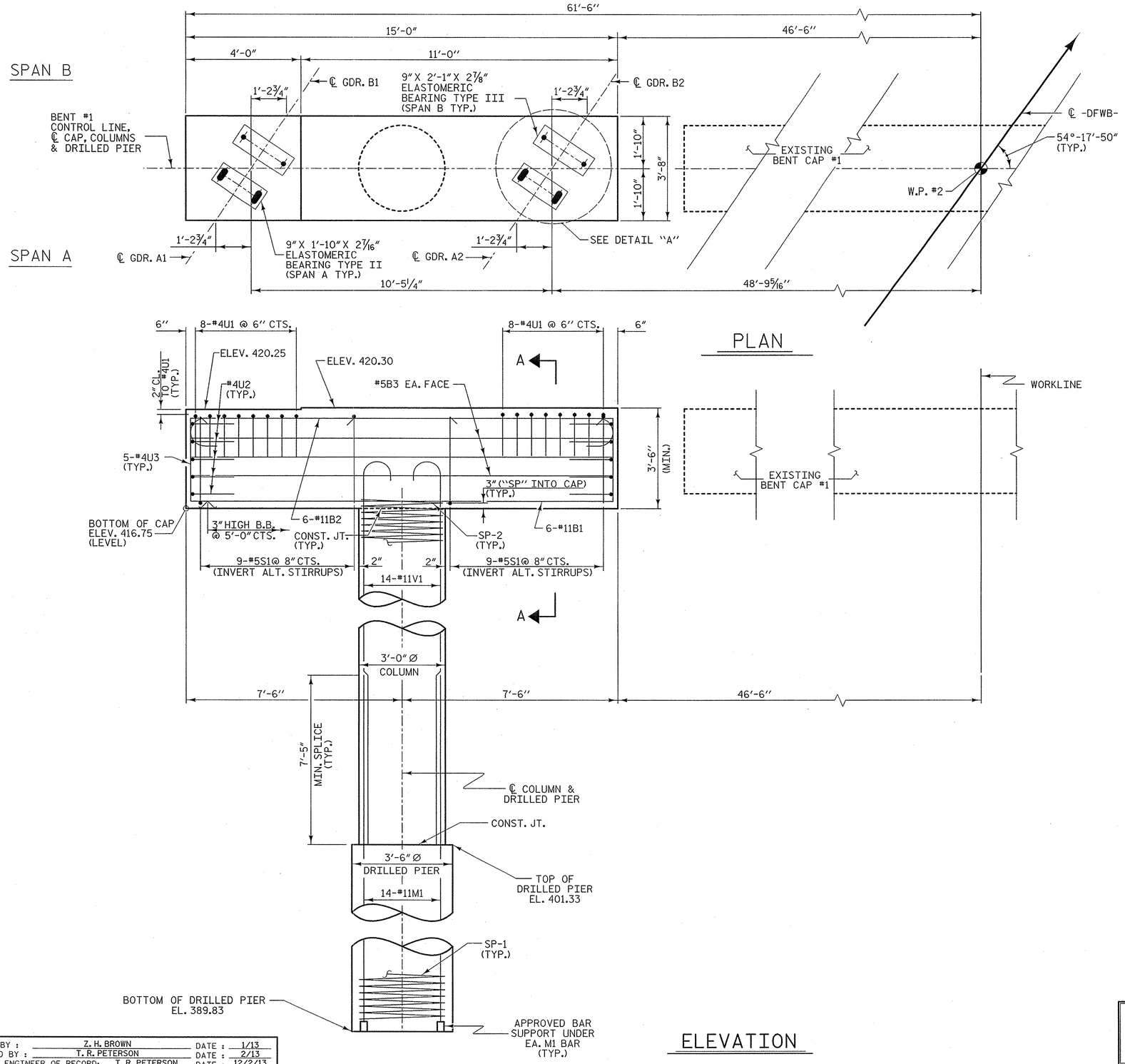

NOTES

STIRRUPS AND "U" BARS IN CAP MAY BE SHIFTED AS NECESSARY TO CLEAR ANCHOR BOLTS.

HOOKS ON "V" BARS MAY BE TURNED AS NECESSARY FOR PLACING REINFORCING STEEL.

ALL STEEL IN THE DRILLED PIERS IS INCLUDED IN THE PAY ITEMS FOR "REINFORCING STEEL" AND "SPIRAL COLUMN REINFORCING STEEL."

THE LOCATION OF THE CONSTRUCTION JOINT IN THE DRILLED PIERS IS BASED ON AN APPROXIMATE GROUND LINE ELEVATION. IF THE CONSTRUCTION JOINT IS ABOVE THE ACTUAL GROUND LINE ELEVATION, THE CONTRACTOR SHALL PLACE THE CONSTRUCTION JOINT ONE FOOT BELOW THE GROUND LINE.

THE CONTRACTOR'S ATTENTION IS CALLED TO THE FACT THAT THE LONGITUDINAL REINFORCEMENT FOR DRILLED PIERS IS DETAILED WITH 3 FEET OF EXTRA LENGTH.

EPOXY COAT THE BENT CAP AFTER ADJUSTMENTS ARE MADE TO BEARINGS AND ANCHOR BOLTS ARE GROUTED.

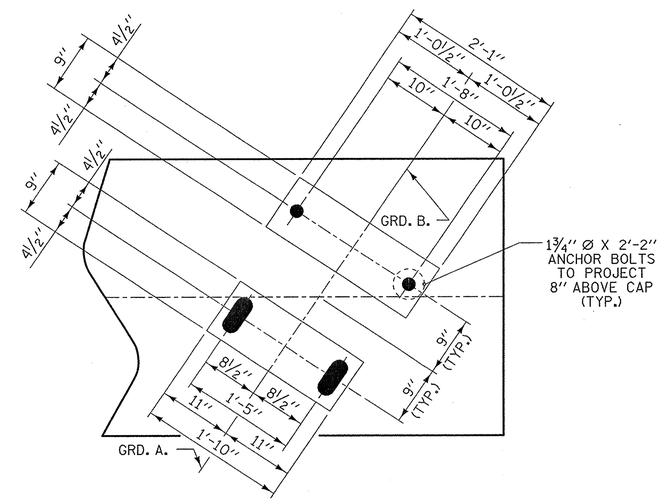

DETAIL "A"

(DIMENSIONS ARE TYPICAL EACH GIRDER)

PROJECT NO. U-0071

DURHAM COUNTY

STATION: 36+69.26 -DFWB-

SHEET 1 OF 2

STATE OF NORTH CAROLINA
DEPARTMENT OF TRANSPORTATION
RALEIGH

SUBSTRUCTURE

BENT #1

REVISIONS						SHEET NO.
NO.	BY:	DATE:	NO.	BY:	DATE:	S-561
1			3			TOTAL SHEETS
2			4			671

STR #12

NORTH CAROLINA PROFESSIONAL SEAL 034352 ENGINEER TIMOTHY R. PETERSON 12/2/13

PLANS PREPARED BY:
MULKEY ENGINEERS & CONSULTANTS
PO Box 33127
RALEIGH, N.C. 27636
(919) 851-1912
(919) 851-1918 (FAX)
WWW.MULKEYINC.COM
NC LICENSE NO. C-1621

DRAWN BY : Z. H. BROWN DATE : 1/13
CHECKED BY : T. R. PETERSON DATE : 2/13
DESIGN ENGINEER OF RECORD: T. R. PETERSON DATE : 12/2/13

11/27/2013 8:38:50 AM R:\Structures\WBL\U0071WBL_SD_BL01.dgn

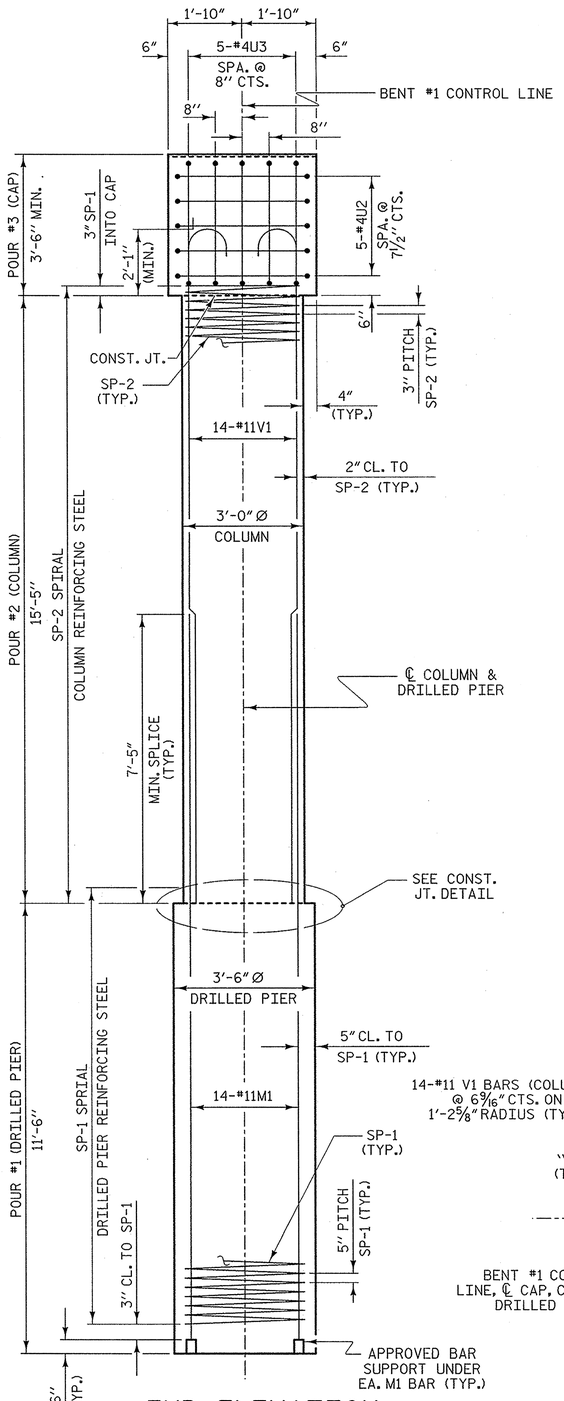

END ELEVATION

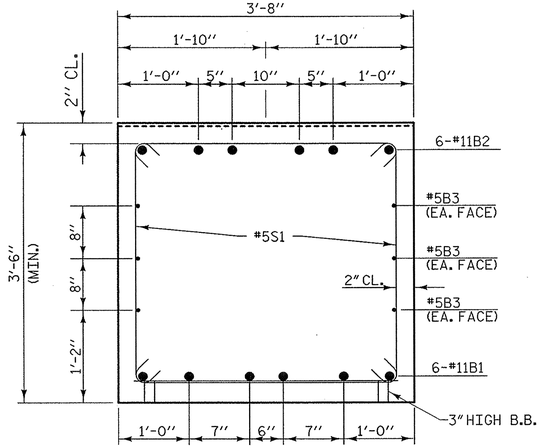

SECTION A-A

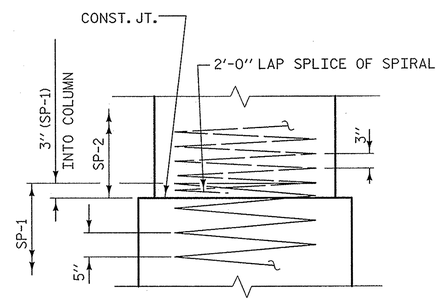

CONSTRUCTION JOINT DETAIL

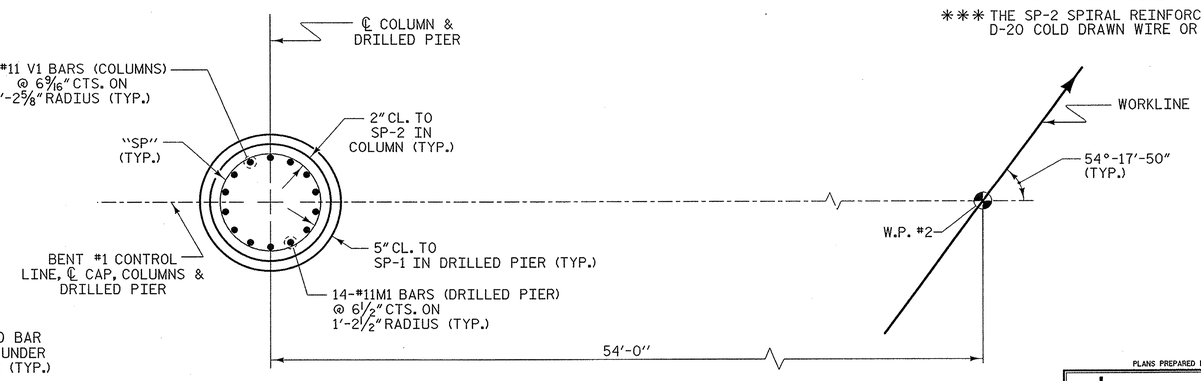

PLAN OF DRILLED PIER & COLUMN

BAR TYPES

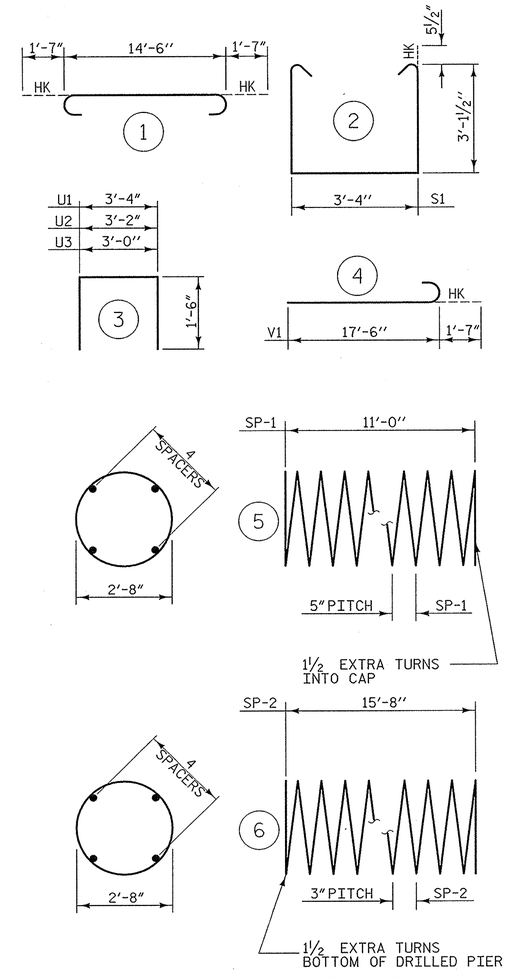

ALL BAR DIMENSIONS ARE OUT TO OUT

** THE SP-1 SPIRAL REINFORCING STEEL SHALL BE W31 OR D-31 COLD DRAWN WIRE OR #5 PLAIN OR DEFORMED BAR.

*** THE SP-2 SPIRAL REINFORCING STEEL SHALL BE W20 OR D-20 COLD DRAWN WIRE OR #4 PLAIN OR DEFORMED BAR.

BILL OF MATERIAL

BENT #1

BAR	NO.	SIZE	TYPE	LENGTH	WEIGHT
B1	6	#11	STR	14'-6"	462
B2	6	#11	1	17'-8"	563
B3	6	#5	STR	14'-8"	92
M1	14	#11	STR	21'-5"	1593
S1	18	#5	2	10'-6"	197
U1	16	#4	3	6'-4"	68
U2	10	#4	3	6'-2"	41
U3	10	#4	3	6'-0"	40
V1	14	#11	4	19'-1"	1419
TOTAL REINFORCING STEEL					4475 lbs.
SP-1	1	**	5	230'-4"	240
SP-2	1	***	6	530'-2"	354
SPIRAL COLUMN REINFORCING STEEL (SP)					594 lbs.

CLASS "A" CONCRETE - CU. YARDS

POUR 2 - COLUMN	4.1 cu. yds.
POUR 3 - CAP	7.3 cu. yds.
TOTAL	11.4 cu. yds.

DRILLED PIERS

DRILLED PIER CONCRETE POUR #1 (DRILLED PIERS)	4.1 C.Y.
3'-6" Ø DRILLED PIER IN SOIL	5.5 LIN. FT.
3'-6" Ø DRILLED PIER NOT IN SOIL	6.0 LIN. FT.
SID INSPECTION	1 EA.
SPT TESTING	1 EA.
CSL TESTING	1 EA.
CSL TUBES	52 LIN FT.

PROJECT NO. U-0071

DURHAM COUNTY

STATION: 36+69.26 -DFWB-

SHEET 2 OF 2

STATE OF NORTH CAROLINA
DEPARTMENT OF TRANSPORTATION
RALEIGH

SUBSTRUCTURE

BENT #1

REVISIONS						SHEET NO.
NO.	BY:	DATE:	NO.	BY:	DATE:	S-502
1			3			TOTAL SHEETS
2			4			671

STR #12

NORTH CAROLINA PROFESSIONAL SEAL 034352 ENGINEER TERRIE R. PETERSON
12/2/13

PLANS PREPARED BY:
MULKEY ENGINEERS & CONSULTANTS
PO Box 33127 Raleigh, NC 27636
(919) 851-1912
(919) 851-1918 (FAX)
WWW.MULKEYINC.COM
NC LICENSE NO. C-1321

DRAWN BY : Z. H. BROWN DATE : 1/13
CHECKED BY : T. R. PETERSON DATE : 2/13
DESIGN ENGINEER OF RECORD: T. R. PETERSON DATE : 12/2/13

11/27/2013 8:38:20 AM R:\Structures\WBL\U0071WBL_SD_B_02.dgn

NOTES

STIRRUPS AND "U" BARS IN CAP MAY BE SHIFTED AS NECESSARY TO CLEAR ANCHOR BOLTS.

HOOKS ON "V" BARS MAY BE TURNED AS NECESSARY FOR PLACING REINFORCING STEEL.

ALL STEEL IN THE DRILLED PIERS IS INCLUDED IN THE PAY ITEMS FOR "REINFORCING STEEL" AND "SPIRAL COLUMN REINFORCING STEEL."

THE LOCATION OF THE CONSTRUCTION JOINT IN THE DRILLED PIERS IS BASED ON AN APPROXIMATE GROUND LINE ELEVATION. IF THE CONSTRUCTION JOINT IS ABOVE THE ACTUAL GROUND LINE ELEVATION, THE CONTRACTOR SHALL PLACE THE CONSTRUCTION JOINT ONE FOOT BELOW THE GROUND LINE.

THE CONTRACTOR'S ATTENTION IS CALLED TO THE FACT THAT THE LONGITUDINAL REINFORCEMENT FOR DRILLED PIERS IS DETAILED WITH 3 FEET OF EXTRA LENGTH.

EPOXY COATED THE BENT CAP AFTER ADJUSTMENTS ARE MADE TO BEARINGS AND ANCHOR BOLTS ARE GROUTED.

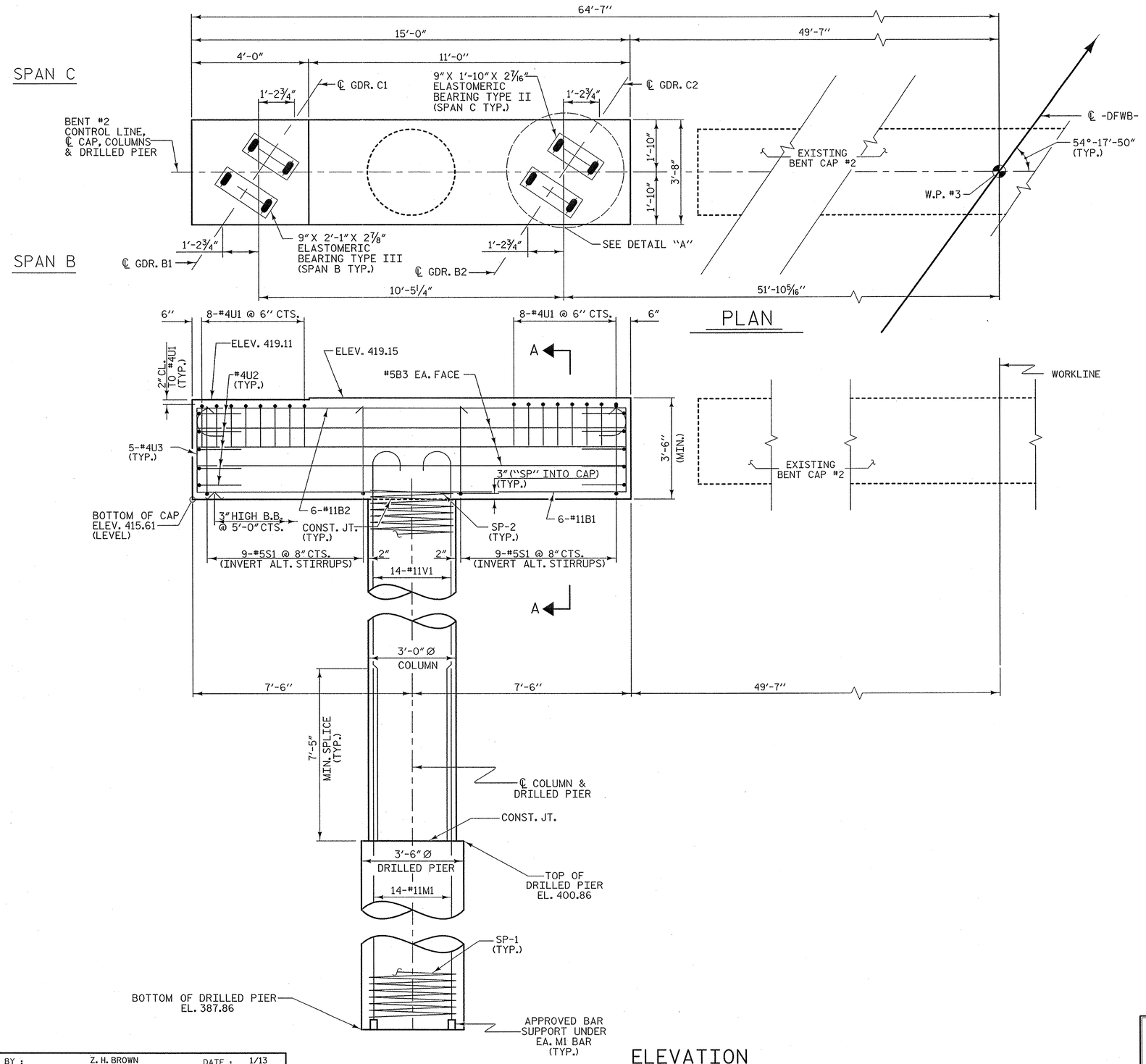

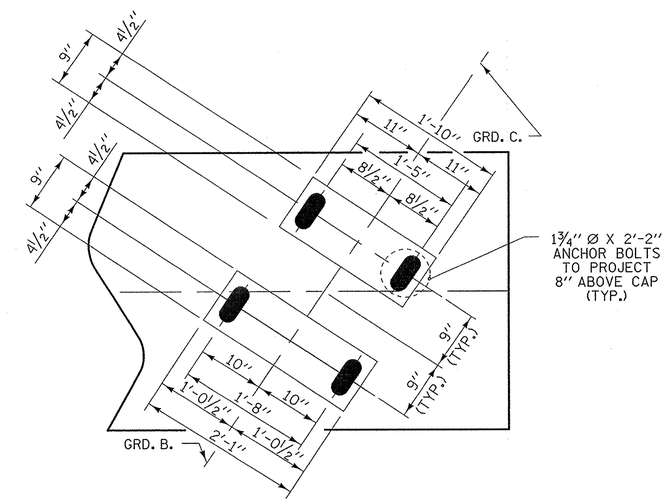

(DIMENSIONS ARE TYPICAL EACH GIRDER)

PROJECT NO. U-0071

DURHAM COUNTY

STATION: 36+69.26 -DFWB-

SHEET 1 OF 2

STATE OF NORTH CAROLINA
DEPARTMENT OF TRANSPORTATION
RALEIGH

SUBSTRUCTURE

BENT #2

REVISIONS						SHEET NO.
NO.	BY:	DATE:	NO.	BY:	DATE:	S-563
1			3			TOTAL SHEETS
2			4			671

STR #12

NORTH CAROLINA PROFESSIONAL SEAL 034352 ENGINEER JEREMY R. PETERSON 12/2/13

PLANS PREPARED BY:
MULKEY ENGINEERS & CONSULTANTS
PO Box 33127 RALEIGH, N.C. 27636
(919) 851-1912
(919) 851-1918 (FAX)
WWW.MULKEYINC.COM
NC LICENSE NO. C-1021

DRAWN BY :	Z. H. BROWN	DATE :	1/13
CHECKED BY :	T. R. PETERSON	DATE :	2/13
DESIGN ENGINEER OF RECORD:	T. R. PETERSON	DATE :	12/2/13

11/21/2013 8:37:51 AM R:\Structures\WBL\U071WBL_SD_B2_01.dgn

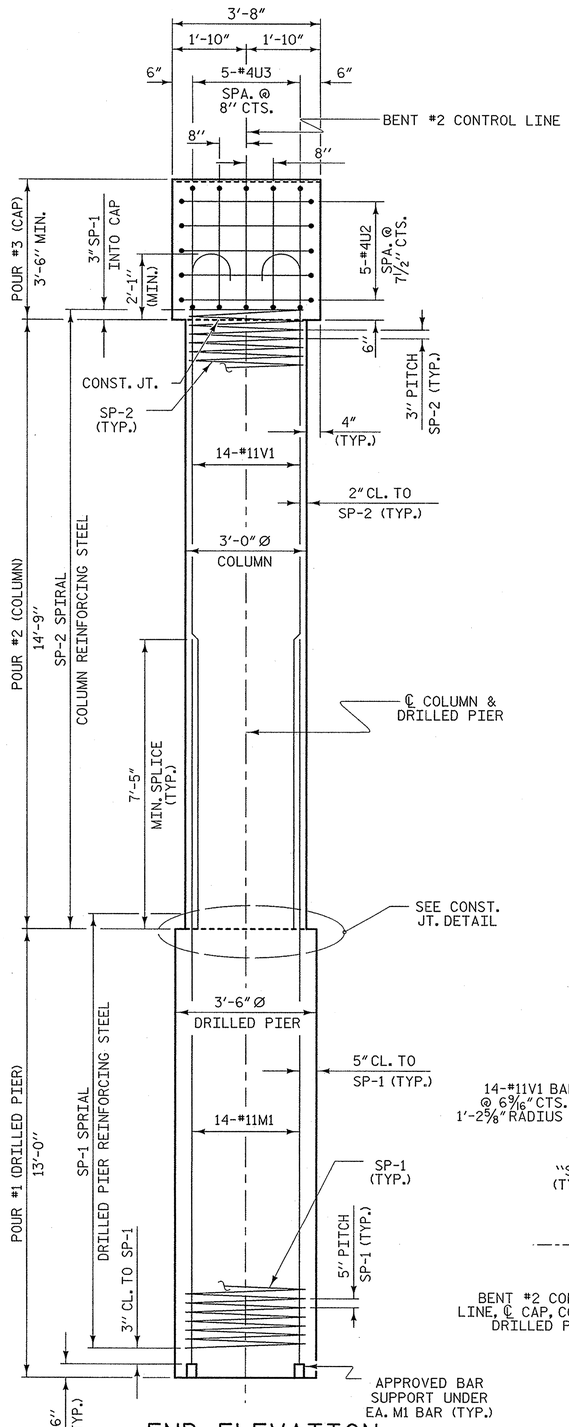

END ELEVATION

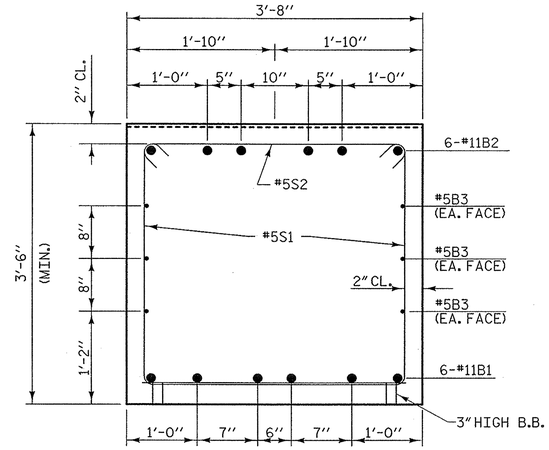

SECTION A-A

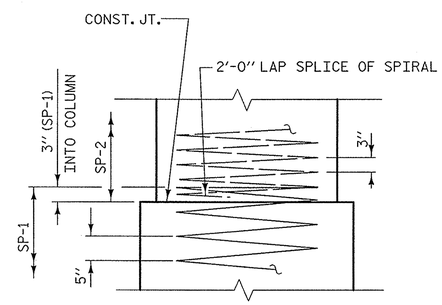

CONSTRUCTION JOINT DETAIL

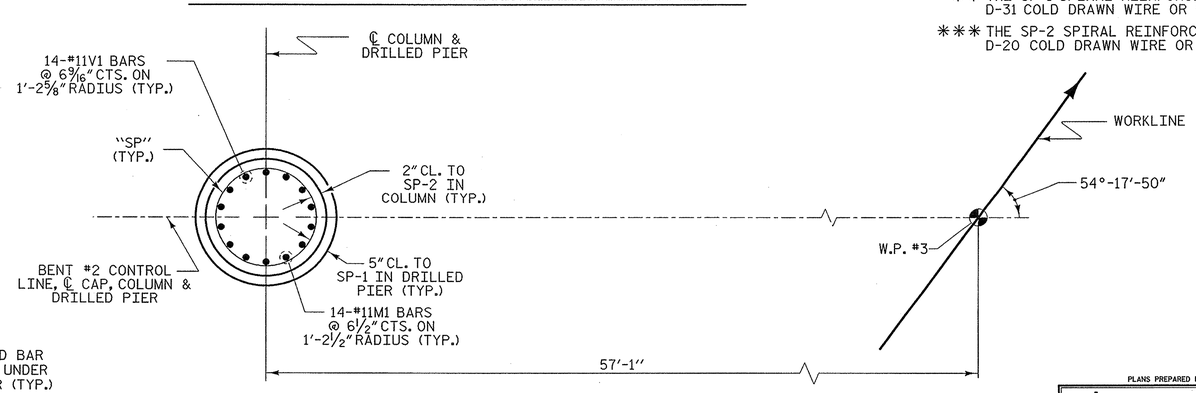

PLAN OF DRILLED PIER & COLUMN

BAR TYPES

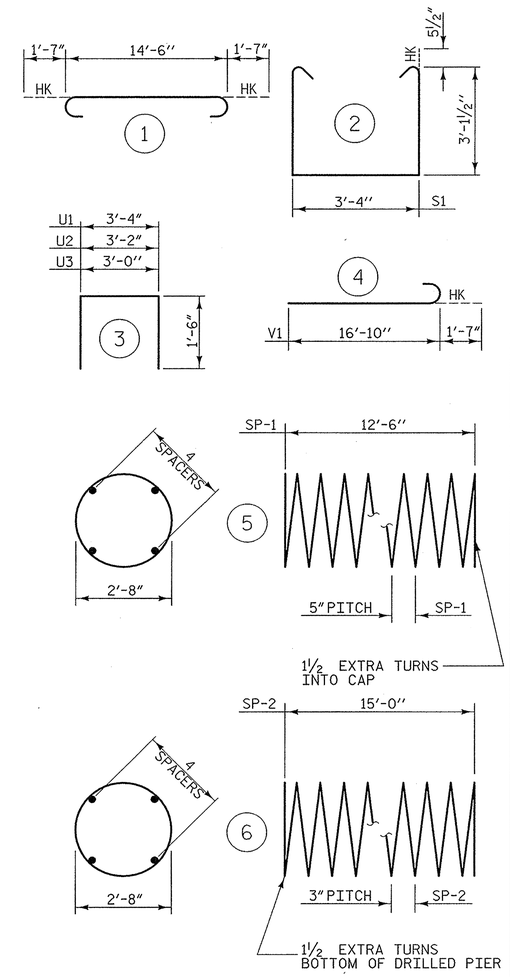

ALL BAR DIMENSIONS ARE OUT TO OUT

** THE SP-1 SPIRAL REINFORCING STEEL SHALL BE W31 OR D-31 COLD DRAWN WIRE OR #5 PLAIN OR DEFORMED BAR.

*** THE SP-2 SPIRAL REINFORCING STEEL SHALL BE W20 OR D-20 COLD DRAWN WIRE OR #4 PLAIN OR DEFORMED BAR.

BILL OF MATERIAL

BENT #2

BAR	NO.	SIZE	TYPE	LENGTH	WEIGHT
B1	6	#11	STR	14'-6"	462
B2	6	#11	1	17'-8"	563
B3	6	#5	STR	14'-8"	92
M1	14	#11	STR	22'-11"	1705
S1	18	#5	2	10'-6"	197
U1	16	#4	3	6'-4"	68
U2	10	#4	3	6'-2"	41
U3	10	#4	3	6'-0"	40
V1	14	#11	4	18'-5"	1370
TOTAL REINFORCING STEEL					4538 lbs.
SP-1	1	**	5	259'-1"	270
SP-2	1	***	6	507'-5"	339
SPIRAL COLUMN REINFORCING STEEL (SP)					609 lbs.

CLASS "A" CONCRETE - CU. YARDS

POUR 2 - COLUMN	3.9 cu. yds.
POUR 3 - CAP	7.3 cu. yds.
TOTAL	11.2 cu. yds.

DRILLED PIERS

DRILLED PIER CONCRETE POUR #1 (DRILLED PIERS)	4.7 C.Y.
3'-6" Ø DRILLED PIER IN SOIL	6.0 LIN. FT.
3'-6" Ø DRILLED PIER NOT IN SOIL	7.0 LIN. FT.
SID INSPECTION	1 EA.
CSL TESTING	1 EA.
CSL TUBES	58 LIN FT.

PROJECT NO. U-0071

DURHAM COUNTY

STATION: 36+69.26 -DFWB-

SHEET 2 OF 2

STATE OF NORTH CAROLINA
DEPARTMENT OF TRANSPORTATION
RALEIGH

SUBSTRUCTURE

BENT #2

DRAWN BY : Z. H. BROWN	DATE : 1/13		
CHECKED BY : T. R. PETERSON	DATE : 2/13		
DESIGN ENGINEER OF RECORD: T. R. PETERSON	DATE : 12/2/13		

PLANS PREPARED BY:
MULKEY ENGINEERS & CONSULTANTS
PO Box 33127
RALEIGH, N.C. 27636
(919) 851-1912
(919) 851-1918 (FAX)
WWW.MULKEYINC.COM
NC LICENSE NO. C-1021

NORTH CAROLINA PROFESSIONAL SEAL 034352 ENGINEER TERRY R. PETERSON 12/2/13

STR #12

REVISIONS							SHEET NO.
NO.	BY:	DATE:	NO.	BY:	DATE:		S-5A
1			3				TOTAL SHEETS
2			4				67

11/27/2013 8:37:23 AM R:\Structures\WBL\U0071WBL_SD_B2_02.dgn

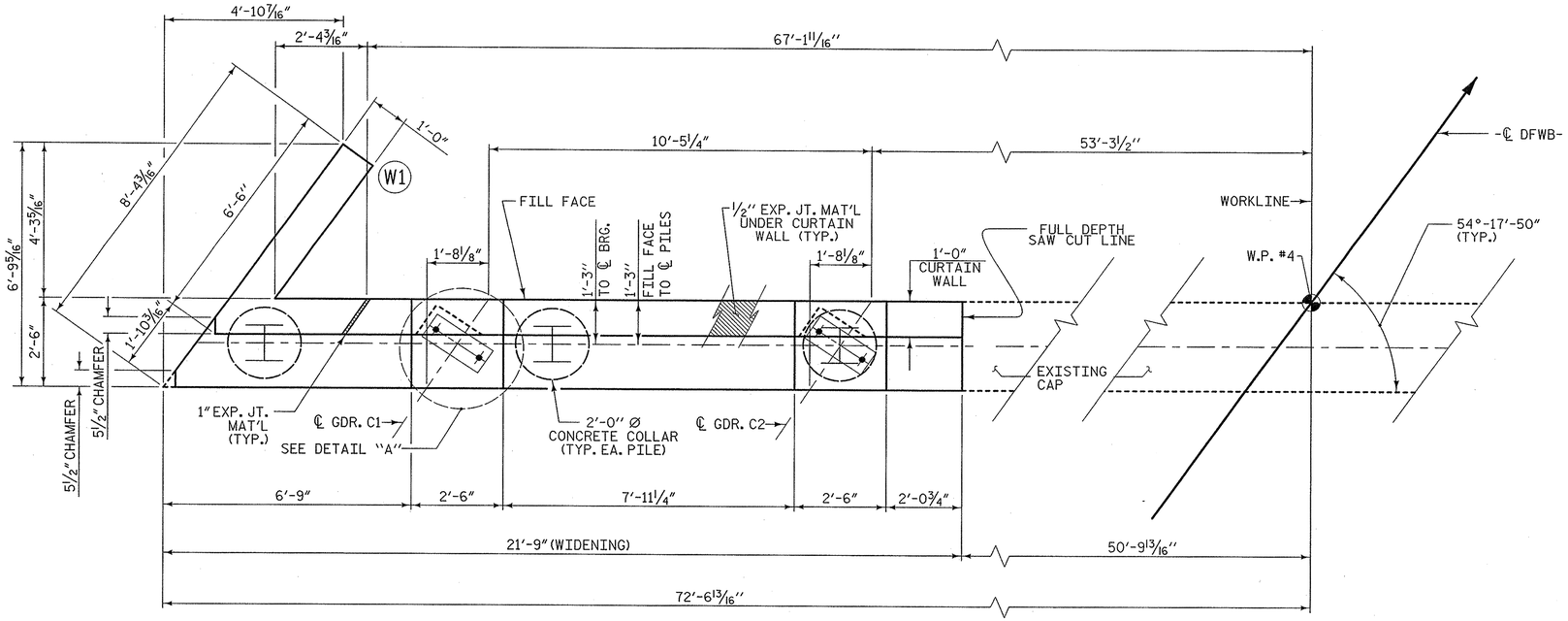

PLAN

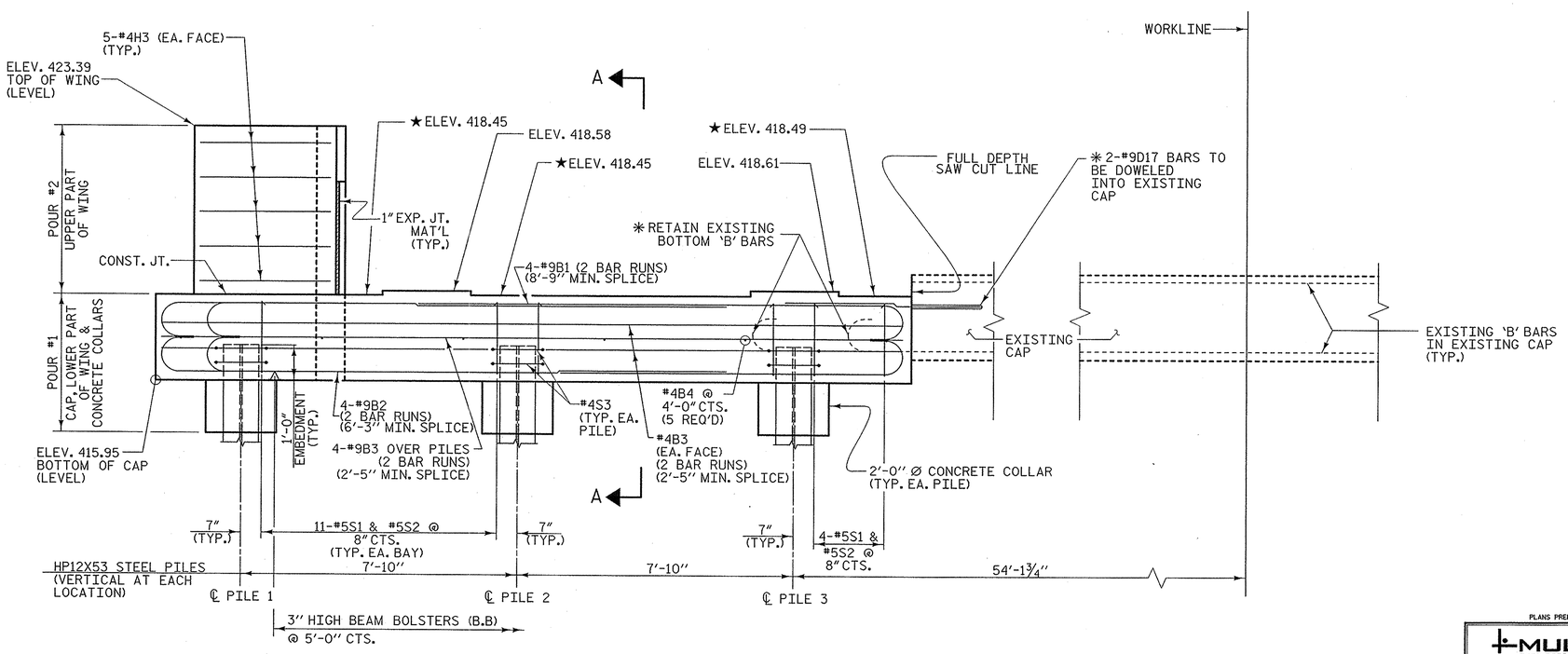

ELEVATION

NOTES

STIRRUPS IN THE CAP MAY BE SHIFTED AS NECESSARY TO CLEAR ANCHOR BOLTS.

THE TOP SURFACE AREA OF THE END BENT CAP SHALL BE CURED IN ACCORDANCE WITH THE STANDARD SPECIFICATIONS EXCEPT THAT THE MEMBRANE CURING COMPOUND METHOD SHALL NOT BE USED.

THE TOP SURFACE OF THE END BENT CAP EXCEPT THE BRIDGE SEAT BUILDUPS SHALL BE SLOPED TRANSVERSELY FROM THE FILL FACE TO THE BACK FACE AT THE RATE OF 2%.

THE CONCRETE IN THE SHADED AREA OF THE WING SHALL BE POURED AFTER THE JOINT BETWEEN THE DECK AND APPROACH SLAB HAS BEEN SAWED AND THE BARRIER RAIL IS CAST IF SLIP FORMING IS USED.

INSTALL THE 4"Ø DRAIN PIPE THROUGH THE WING WALL AS REQUIRED FOR REINFORCED BRIDGE APPROACH FILLS, SEE THE ROADWAY PLANS. REINFORCING STEEL IN THE WING WALL MAY BE SHIFED AS NECESSARY TO CLEAR THE DRAIN PIPE.

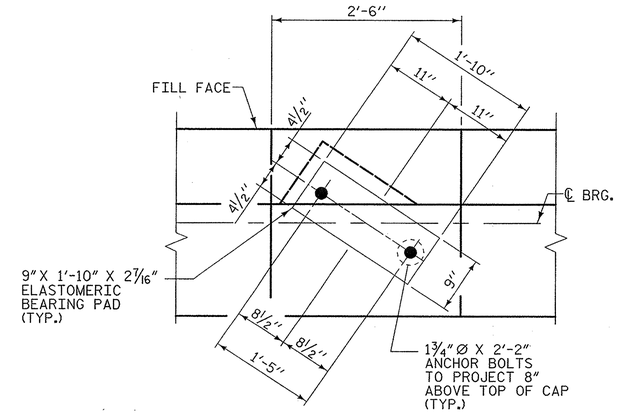

DETAIL "A"
(TYP. EACH GIRDER)

★FOR LOCATION OF ELEVATIONS BETWEEN BRIDGE SEAT BUILD-UPS. SEE "SECTION A-A" ON SHEET 2 OF 2.

✻SEE "CONCRETE REMOVAL DETAILS" ON SHEET 2 OF 2.

PROJECT NO. U-0071

DURHAM COUNTY

STATION: 36+69.26 -DFWB-

SHEET 1 OF 2

STATE OF NORTH CAROLINA
DEPARTMENT OF TRANSPORTATION
RALEIGH

SUBSTRUCTURE

END BENT #2

REVISIONS						SHEET NO.
NO.	BY:	DATE:	NO.	BY:	DATE:	S-565
1			3			TOTAL SHEETS
2			4			671

STR #12

NORTH CAROLINA PROFESSIONAL SEAL 034352 ENGINEER TERRE R. PETERSON 12/2/13

PLANS PREPARED BY:
MULKEY ENGINEERS & CONSULTANTS
PO Box 33127 Raleigh, N.C. 27636
(919) 851-1912 (919) 851-1918 (FAX)
WWW.MULKEYINC.COM
NC LICENSE NO. C-1621

DRAWN BY :	Z. H. BROWN	DATE :	1/13
CHECKED BY :	T. R. PETERSON	DATE :	2/13
DESIGN ENGINEER OF RECORD:	T. R. PETERSON	DATE :	12/2/13

11/27/2013 8:36:40 AM R:\Structures\WBL\U0071WBL_S0_E2_0.dgn

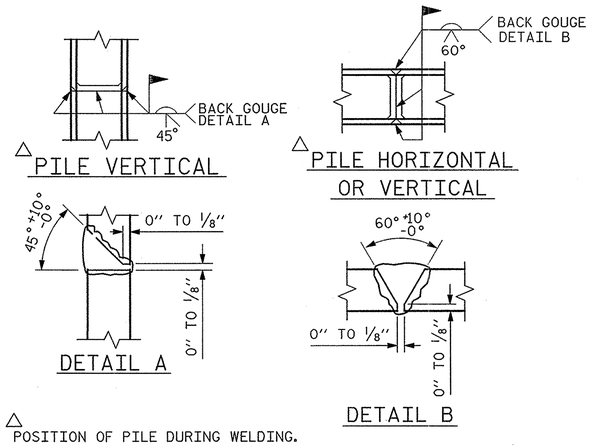

△ POSITION OF PILE DURING WELDING.

PILE SPLICE DETAILS

NOTES

#9D18 BARS SHALL BE INSTALLED USING AN ADHESIVE ANCHORING SYSTEM. LEVEL 1 FIELD TESTING IS REQUIRED, AND THE YIELD LOAD OF THE DOWELS IS 60 KIPS. ADHESIVELY ANCHORED ANCHOR BOLT OR DOWEL TESTING SHALL BE IN ACCORDANCE WITH SECTION 420-13 OF THE STANDARD SPECIFICATIONS.

▲ EMBEDMENT DEPTH SHALL BE DETERMINED BY MANUFACTURER #9D18 BAR QUANTITY BASED ON AN 1'-6" EMBEDMENT DEPTH.

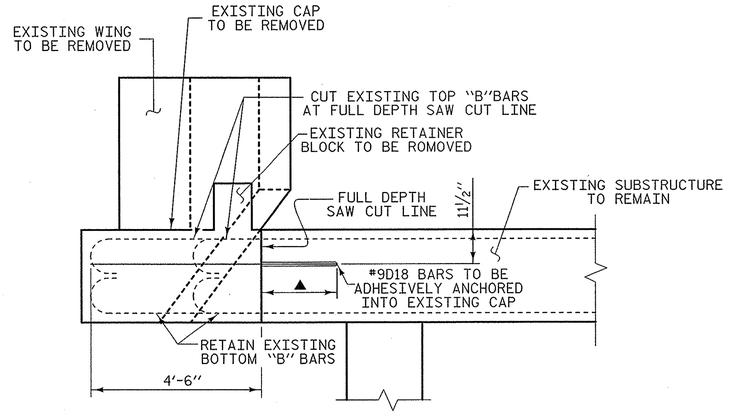

ELEVATION
RETAIN ALL "S" BARS IN EXISTING CAP UP TO THE FULL DEPTH SAW CUT LINE

CONCRETE REMOVAL DETAILS

BAR TYPES

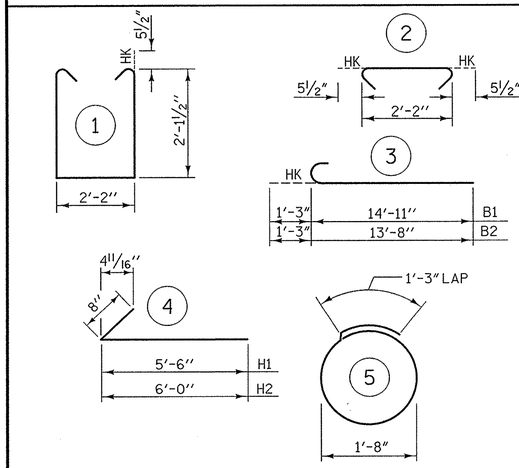

ALL DIMENSIONS ARE OUT TO OUT

BILL OF MATERIAL

END BENT #2

BAR	NO.	SIZE	TYPE	LENGTH	WEIGHT
B1	8	#9	3	16'-2"	440
B2	8	#9	3	14'-11"	406
B3	16	#4	STR	11'-9"	126
B4	5	#4	STR	2'-2"	7
H1	8	#5	4	6'-2"	51
H2	8	#5	4	6'-8"	56
H3	10	#4	STR	3'-2"	21
S1	26	#5	1	7'-4"	199
S2	26	#5	2	3'-1"	84
S3	6	#4	5	6'-6"	26
V1	20	#5	STR	7'-0"	146
D18	2	#9	STR	6'-0"	41

REINFORCING STEEL 1603 lbs.

CLASS "A" CONCRETE - CU. YARDS
POUR 1 - CAP, LOWER WING & COLLARS 6.0 cu. yds.
POUR 2 - UPPER WING 1.6 cu. yds.
TOTAL 7.6 cu. yds.

HP12X53 STEEL PILES
3 PILES REQUIRED - LIN. FEET 30

STEEL PILE POINTS 3 EACH

PILE EXCAVATION NOT IN SOIL - LIN. FEET 9
PILE EXCAVATION IN SOIL - LIN. FEET 22

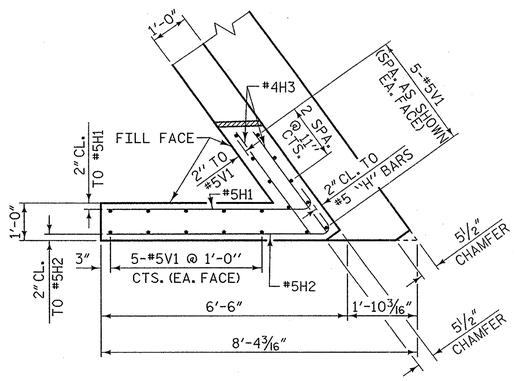

PLAN OF LEFT WING - W1

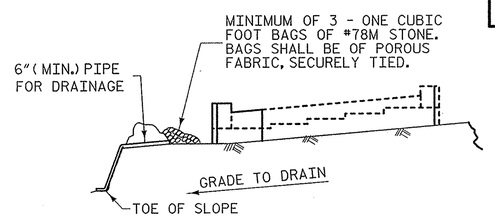

BAGGED STONE AND PIPE SHALL BE PLACED IMMEDIATELY AFTER COMPLETION OF END BENT EXCAVATION. PIPE MAY BE EITHER CONCRETE, CORRUGATED STEEL, CORRUGATED ALUMINUM ALLOY, OR CORRUGATED PLASTIC. PERFORATED PIPE WILL NOT BE ALLOWED.

BAGGED STONE SHALL REMAIN IN PLACE UNTIL THE ENGINEER DIRECTS THAT IT BE REMOVED. THE CONTRACTOR SHALL REMOVE AND DISPOSE OF SILT ACCUMULATIONS AT BAGGED STONE WHEN SO DIRECTED BY THE ENGINEER. BAGS SHALL BE REMOVED AND REPLACED WHENEVER THE ENGINEER DETERMINES THAT THEY HAVE DETERIORATED AND LOST THEIR EFFECTIVENESS.

NO SEPARATE PAYMENT WILL BE MADE FOR THIS WORK AND THE ENTIRE COST OF THIS WORK SHALL BE INCLUDED IN THE UNIT CONTRACT PRICE BID FOR THE SEVERAL PAY ITEMS.

TEMPORARY DRAINAGE AT END BENT

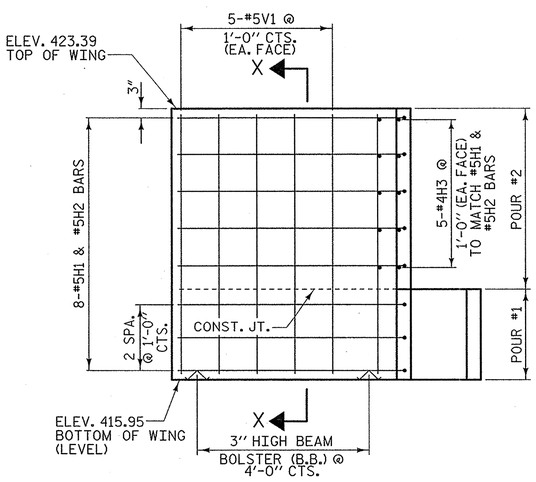

ELEVATION OF LEFT WING - W1

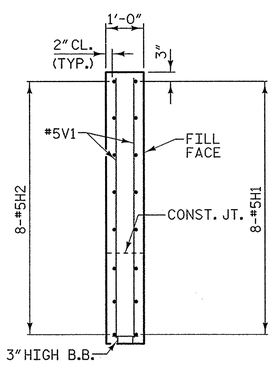

SECTION X-X

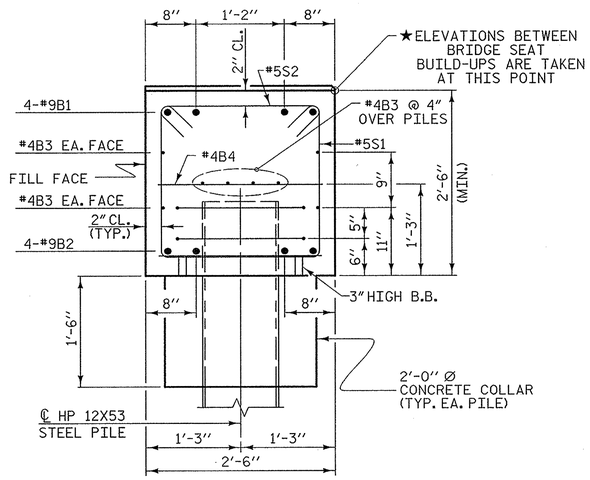

SECTION A-A

PROJECT NO. U-0071
DURHAM COUNTY
STATION: 36+69.26 -DFWB-

SHEET 2 OF 2

STATE OF NORTH CAROLINA
DEPARTMENT OF TRANSPORTATION
RALEIGH

SUBSTRUCTURE

END BENT #2

PLANS PREPARED BY:
MULKEY ENGINEERS & CONSULTANTS
PO Box 33127
Raleigh, N.C. 27636
(919) 851-1912
(919) 851-1918 (FAX)
WWW.MULKEYINC.COM
NC LICENSE NO. C-1821

NORTH CAROLINA PROFESSIONAL SEAL 034352 ENGINEER TERRY R. PETERSON
12/2/13

STR #12

REVISIONS							SHEET NO.
NO.	BY:	DATE:	NO.	BY:	DATE:		S-566
1			3				TOTAL SHEETS
2			4				671

DRAWN BY : Z. H. BROWN DATE : 1/13
CHECKED BY : T. R. PETERSON DATE : 2/13
DESIGN ENGINEER OF RECORD: T. R. PETERSON DATE : 12/2/13

11/27/2013 8:36:11 AM R:\Structures\VBL\U0071VBL_SD_E2_02.dgn

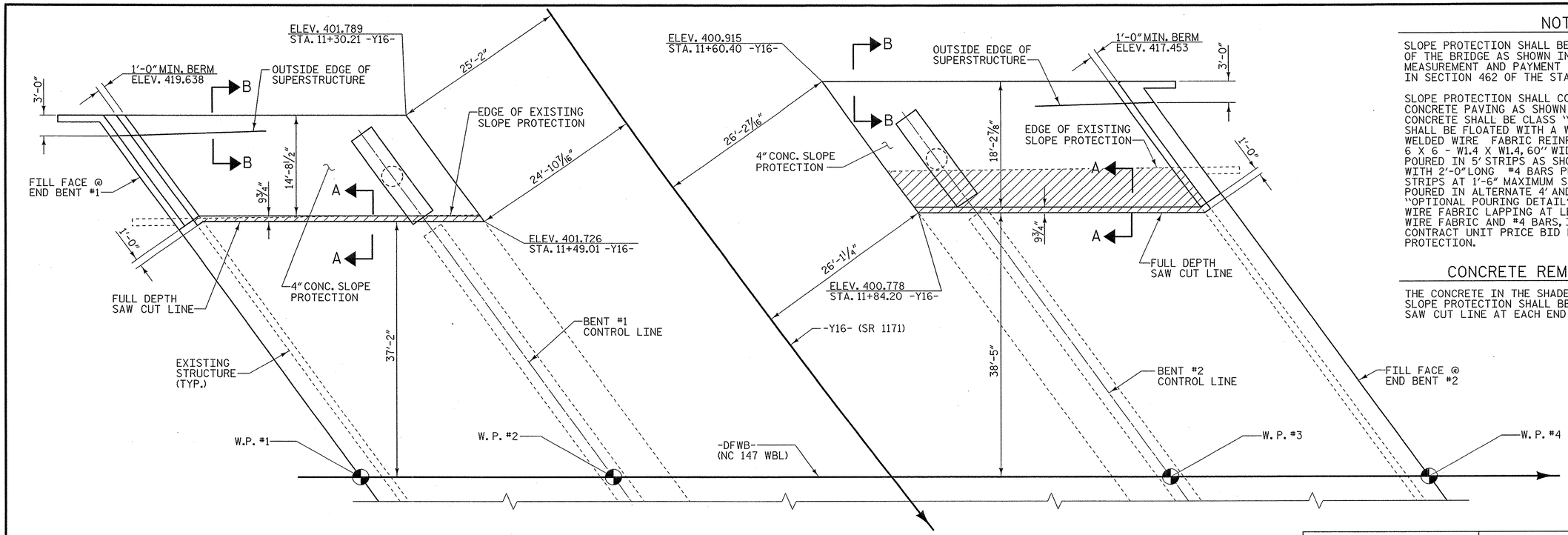

PLAN

NOTES

SLOPE PROTECTION SHALL BE PLACED UNDER THE ENDS OF THE BRIDGE AS SHOWN IN THE DETAILS. MEASUREMENT AND PAYMENT SHALL BE AS PRESCRIBED IN SECTION 462 OF THE STANDARD SPECIFICATIONS.

SLOPE PROTECTION SHALL CONSIST OF 4" POURED-IN-PLACE CONCRETE PAVING AS SHOWN IN THE DETAILS ON THIS SHEET. CONCRETE SHALL BE CLASS "B". THE CONCRETE SURFACE SHALL BE FLOATED WITH A WOODEN FLOAT AND FINISHED. WELDED WIRE FABRIC REINFORCING SHALL BE 6 X 6 - W1.4 X W1.4, 60" WIDE. SLOPE PROTECTION SHALL BE POURED IN 5' STRIPS AS SHOWN IN THE "POURING DETAIL" WITH 2'-0" LONG #4 BARS PLACED ALONG THE SLOPE BETWEEN STRIPS AT 1'-6" MAXIMUM SPACING. SLOPE PROTECTION MAY BE POURED IN ALTERNATE 4' AND 5' STRIPS AS SHOWN IN THE "OPTIONAL POURING DETAIL" WITH ADJACENT RUNS OF WELDED WIRE FABRIC LAPPING AT LEAST 6". THE COST OF THE WELDED WIRE FABRIC AND #4 BARS, IF USED, SHALL BE INCLUDED IN THE CONTRACT UNIT PRICE BID PER SQUARE YARD FOR SLOPE PROTECTION.

CONCRETE REMOVAL DETAILS

THE CONCRETE IN THE SHADED AREAS OF EXISTING 4" CONCRETE SLOPE PROTECTION SHALL BE REMOVED UP TO THE FULL DEPTH SAW CUT LINE AT EACH END BENT.

BRIDGE @ STA. 36+69.26 -DFWB-	4 INCH SLOPE PROTECTION	* WELDED WIRE FABRIC 60 INCHES WIDE
	SQUARE YARDS	APPROX. L.F.
END BENT #1	90	165
END BENT #2	111	205

* QUANTITY SHOWN IS BASED ON 5' POURS.

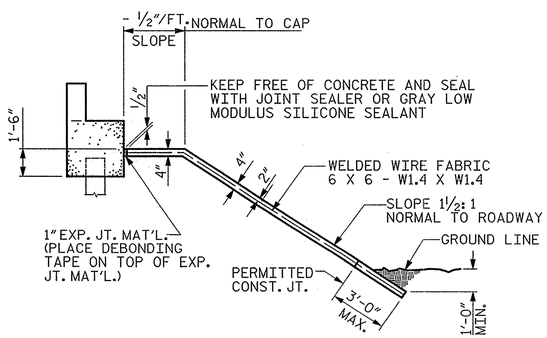

SECTION ALONG ℄ ROADWAY WHEN DITCH IS NOT PROVIDED

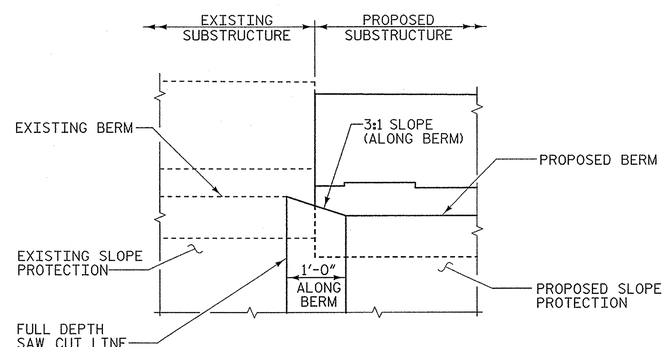

ELEVATION
(AT STEP UP FROM PROPOSED TO EXISTING BERM)

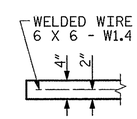

SECTION A-A

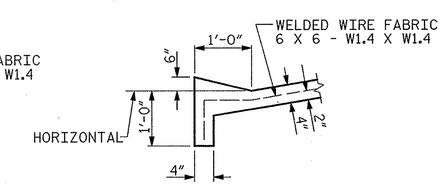

SECTION B-B

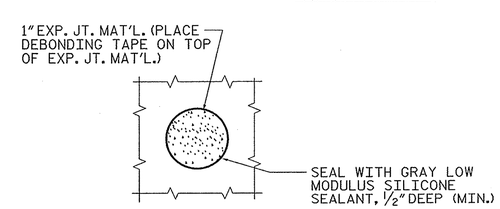

PLAN WHERE CONCRETE SLOPE PROTECTION MUST BE PLACED AROUND A BENT COLUMN

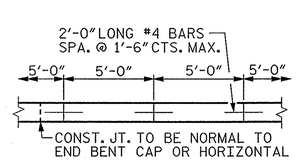

STRIP WIDTHS MAY VARY IN CURVED PORTION.

POURING DETAIL

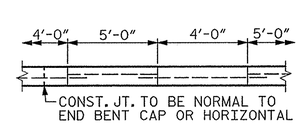

POUR A 4'-0" STRIP FIRST. STRIP WIDTHS MAY VARY IN CURVED PORTION.

OPTIONAL POURING DETAIL

PROJECT NO. U-0071
DURHAM COUNTY
STATION: 36+69.26 -DFWB-

STATE OF NORTH CAROLINA
DEPARTMENT OF TRANSPORTATION
RALEIGH

SLOPE PROTECTION DETAILS

PLANS PREPARED BY:
MULKEY ENGINEERS & CONSULTANTS
PO Box 33127
RALEIGH, N.C. 27636
(919) 851-1912
(919) 851-1918 (FAX)
WWW.MULKEYINC.COM
NC LICENSE NO. C-1621

NORTH CAROLINA PROFESSIONAL SEAL 034352 ENGINEER TERRY R. PETERSON 12/2/13

STR #12

REVISIONS						SHEET NO.
NO.	BY:	DATE:	NO.	BY:	DATE:	S-567
1			3			TOTAL SHEETS
2			4			C71

DRAWN BY : W. B. ALLEN DATE : 1/13
CHECKED BY : T. R. PETERSON DATE : 1/13
DESIGN ENGINEER OF RECORD: T. R. PETERSON DATE : 12/2/13

11/27/2013 8:35:19 AM R:\Structures\WBL\U0071WBL_SD_SP_01.dgn

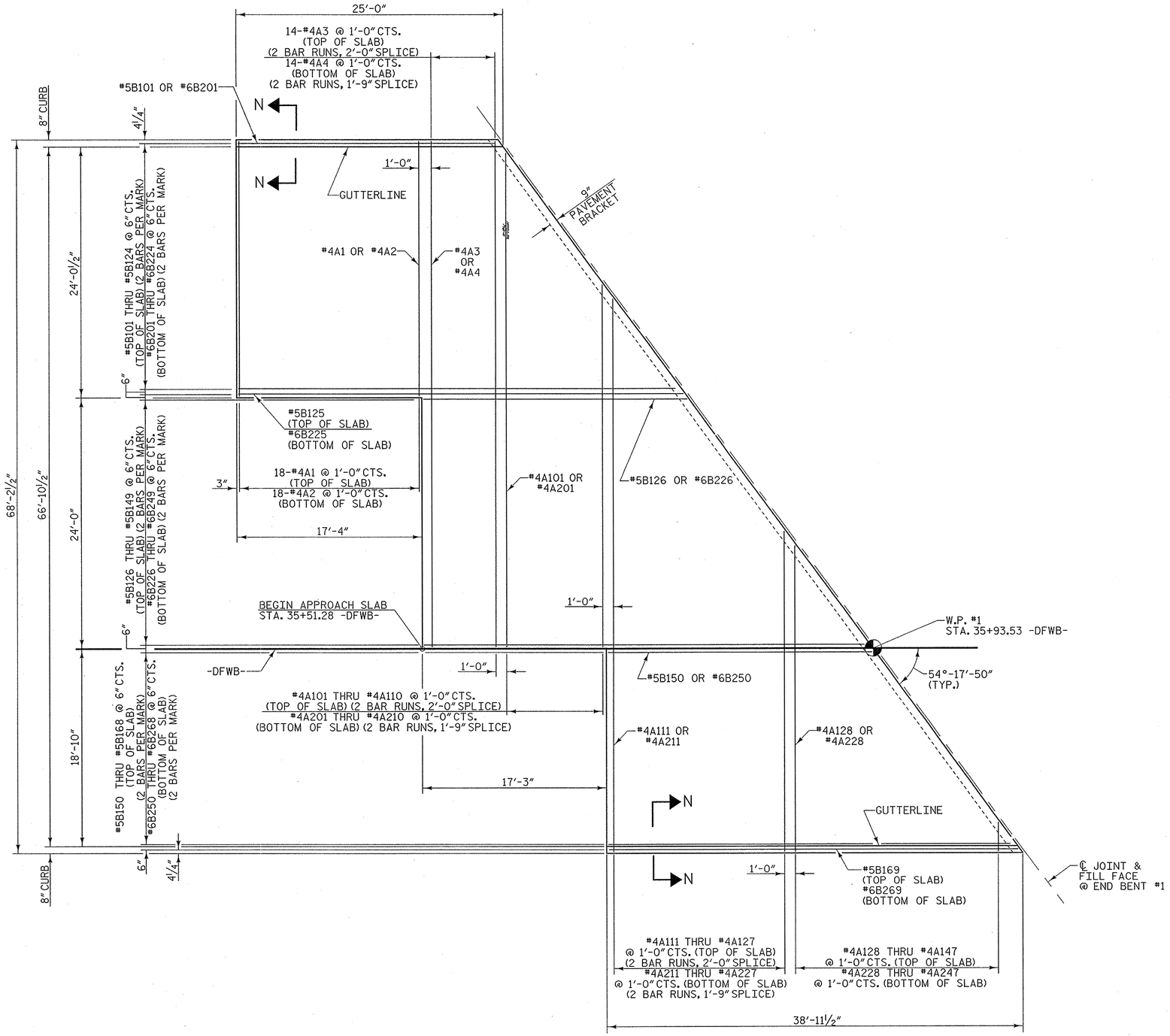

PLAN @ END BENT #1

PROJECT NO. U-0071

DURHAM COUNTY

STATION: 36+69.26 -DFWB-

SHEET 1 OF 6

STATE OF NORTH CAROLINA
DEPARTMENT OF TRANSPORTATION
RALEIGH

BRIDGE APPROACH SLAB FOR RIGID PAVEMENT

REVISIONS						SHEET NO.
NO.	BY:	DATE:	NO.	BY:	DATE:	S-5.8
1			3			TOTAL SHEETS
2			4			671

STR #12

NORTH CAROLINA PROFESSIONAL SEAL 034352 ENGINEER JERRE R. PETERSON 12/2/13

PLANS PREPARED BY:
MULKEY ENGINEERS & CONSULTANTS
PO Box 33127
RALEIGH, N.C. 27636
(919) 851-1912
(919) 851-1918 (FAX)
WWW.MULKEYINC.COM
NC LICENSE NO. C-1021

DRAWN BY :	W. B. ALLEN	DATE :	9/12
CHECKED BY :	T. R. PETERSON	DATE :	1/13
DESIGN ENGINEER OF RECORD:	T. R. PETERSON	DATE :	12/2/13

11/27/2013 8:34:47 AM R:\Structures\WBL\U0071WBL_SD_AS_01.dgn

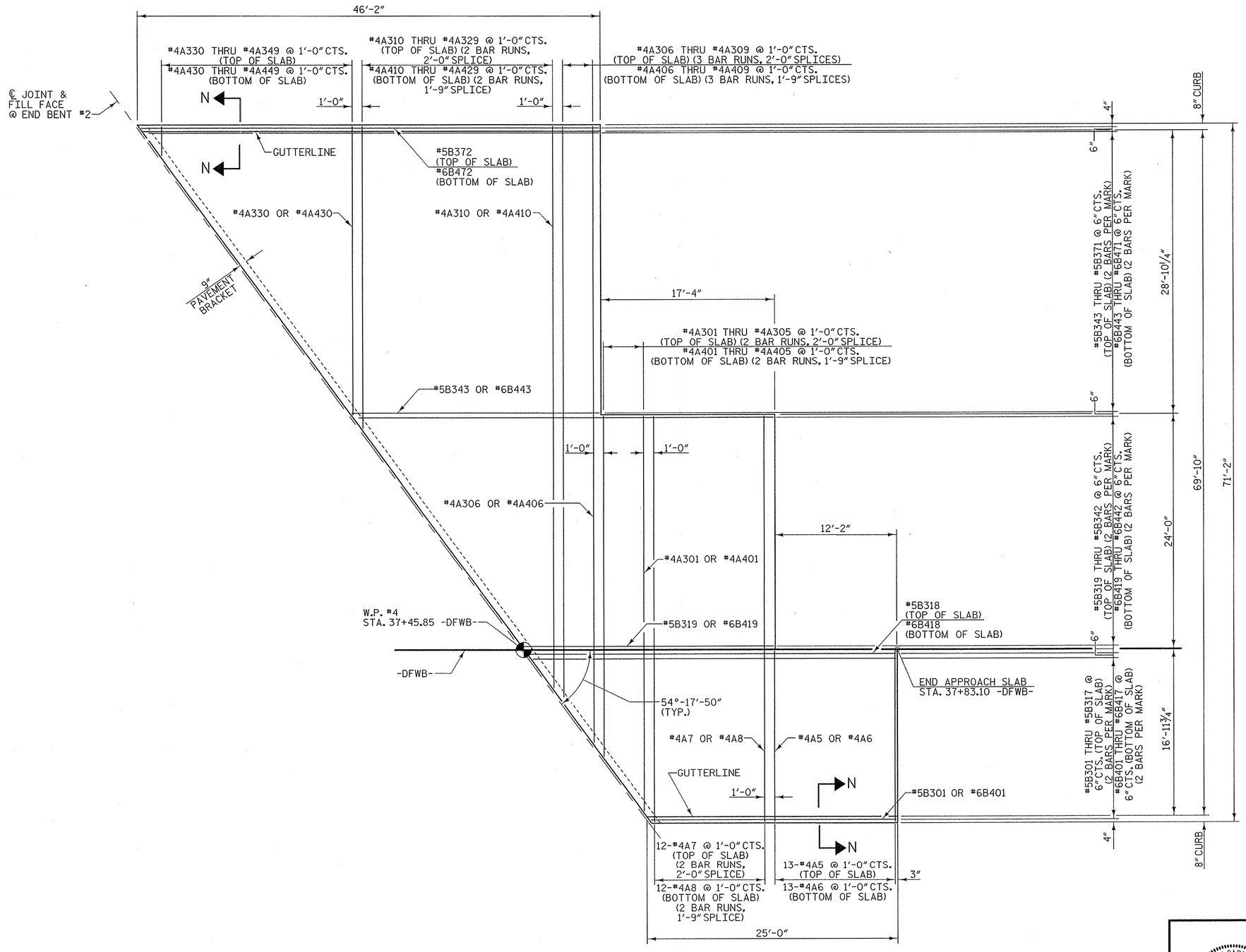

PLAN @ END BENT #2

PROJECT NO. U-0071

DURHAM COUNTY

STATION: 36+69.26 -DFWB-

SHEET 2 OF 6

STATE OF NORTH CAROLINA
DEPARTMENT OF TRANSPORTATION
RALEIGH

BRIDGE APPROACH SLAB FOR RIGID PAVEMENT

REVISIONS						SHEET NO.
NO.	BY:	DATE:	NO.	BY:	DATE:	S-629
1			3			TOTAL SHEETS
2			4			671

STR #12

NORTH CAROLINA PROFESSIONAL SEAL 034352 ENGINEER JERRE R. PETERSON 12/2/13

PLANS PREPARED BY:
MULKEY ENGINEERS & CONSULTANTS
PO Box 33127
Raleigh, N.C. 27636
(919) 851-1912
(919) 851-1918 (FAX)
WWW.MULKEYINC.COM
NC LICENSE NO. C-1321

DRAWN BY :	W. B. ALLEN	DATE :	9/12
CHECKED BY :	T. R. PETERSON	DATE :	1/13
DESIGN ENGINEER OF RECORD:	T. R. PETERSON	DATE :	12/2/13

11/27/2013 8:34:26 AM R:\Structures\WBL\U0071WBL_S0_AS_02.dgn

BILL OF MATERIAL

APPROACH SLAB AT END BENT #1

BAR	NO.	SIZE	TYPE	LENGTH	WEIGHT
✱ A1	18	#4	STR	24'-4"	293
A2	18	#4	STR	24'-4"	293
✱ A3	14	#4	STR	25'-3"	236
A4	14	#4	STR	25'-1"	235
✱ A101	2	#4	STR	24'-8"	33
✱ A102	2	#4	STR	24'-0"	32
✱ A103	2	#4	STR	23'-4"	31
✱ A104	2	#4	STR	22'-8"	30
✱ A105	2	#4	STR	21'-11"	29
✱ A106	2	#4	STR	21'-3"	28
✱ A107	2	#4	STR	20'-6"	27
✱ A108	2	#4	STR	19'-10"	26
✱ A109	2	#4	STR	19'-2"	26
✱ A110	2	#4	STR	18'-5"	25
✱ A111	2	#4	STR	27'-6"	37
✱ A112	2	#4	STR	26'-10"	36
✱ A113	2	#4	STR	26'-1"	35
✱ A114	2	#4	STR	25'-5"	34
✱ A115	2	#4	STR	24'-9"	33
✱ A116	2	#4	STR	24'-0"	32
✱ A117	2	#4	STR	23'-4"	31
✱ A118	2	#4	STR	22'-8"	30
✱ A119	2	#4	STR	21'-11"	29
✱ A120	2	#4	STR	21'-3"	28
✱ A121	2	#4	STR	20'-6"	27
✱ A122	2	#4	STR	19'-10"	26
✱ A123	2	#4	STR	19'-2"	26
✱ A124	2	#4	STR	18'-6"	25
✱ A125	2	#4	STR	17'-9"	24
✱ A126	2	#4	STR	17'-1"	23
✱ A127	2	#4	STR	16'-4"	22
✱ A128	1	#4	STR	29'-2"	19
✱ A129	1	#4	STR	27'-9"	19
✱ A130	1	#4	STR	26'-4"	18
✱ A131	1	#4	STR	25'-0"	17
✱ A132	1	#4	STR	23'-7"	16
✱ A133	1	#4	STR	22'-2"	15
✱ A134	1	#4	STR	20'-9"	14
✱ A135	1	#4	STR	19'-5"	13
✱ A136	1	#4	STR	18'-0"	12
✱ A137	1	#4	STR	16'-7"	11
✱ A138	1	#4	STR	15'-3"	10
✱ A139	1	#4	STR	13'-10"	9
✱ A140	1	#4	STR	12'-5"	8
✱ A141	1	#4	STR	11'-1"	7
✱ A142	1	#4	STR	9'-8"	6
✱ A143	1	#4	STR	8'-3"	6
✱ A144	1	#4	STR	6'-10"	5
✱ A145	1	#4	STR	5'-6"	4
✱ A146	1	#4	STR	4'-1"	3
✱ A147	1	#4	STR	2'-8"	2
A201	2	#4	STR	24'-6"	33
A202	2	#4	STR	23'-10"	32
A203	2	#4	STR	23'-2"	31
A204	2	#4	STR	22'-6"	30
A205	2	#4	STR	21'-9"	29
A206	2	#4	STR	21'-1"	28
A207	2	#4	STR	20'-4"	27
A208	2	#4	STR	19'-8"	26
A209	2	#4	STR	19'-0"	25
A210	2	#4	STR	18'-3"	24
A211	2	#4	STR	27'-4"	37
A212	2	#4	STR	26'-8"	36
A213	2	#4	STR	25'-11"	35
A214	2	#4	STR	25'-3"	34
A215	2	#4	STR	24'-7"	33
A216	2	#4	STR	23'-10"	32
A217	2	#4	STR	23'-2"	31
A218	2	#4	STR	22'-6"	30

BAR	NO.	SIZE	TYPE	LENGTH	WEIGHT
A219	2	#4	STR	21'-9"	29
A220	2	#4	STR	21'-1"	28
A221	2	#4	STR	20'-4"	27
A222	2	#4	STR	19'-8"	26
A223	2	#4	STR	19'-0"	25
A224	2	#4	STR	18'-4"	24
A225	2	#4	STR	17'-7"	23
A226	2	#4	STR	16'-11"	23
A227	2	#4	STR	16'-2"	22
A228	1	#4	STR	29'-2"	19
A229	1	#4	STR	27'-9"	19
A230	1	#4	STR	26'-4"	18
A231	1	#4	STR	25'-0"	17
A232	1	#4	STR	23'-7"	16
A233	1	#4	STR	22'-2"	15
A234	1	#4	STR	20'-9"	14
A235	1	#4	STR	19'-5"	13
A236	1	#4	STR	18'-0"	12
A237	1	#4	STR	16'-7"	11
A238	1	#4	STR	15'-3"	10
A239	1	#4	STR	13'-10"	9
A240	1	#4	STR	12'-5"	8
A241	1	#4	STR	11'-1"	7
A242	1	#4	STR	9'-8"	6
A243	1	#4	STR	8'-3"	6
A244	1	#4	STR	6'-10"	5
A245	1	#4	STR	5'-6"	4
A246	1	#4	STR	4'-1"	3
A247	1	#4	STR	2'-8"	2
✱ B101	2	#5	STR	24'-4"	51
✱ B102	2	#5	STR	25'-1"	52
✱ B103	2	#5	STR	25'-10"	54
✱ B104	2	#5	STR	26'-6"	55
✱ B105	2	#5	STR	27'-3"	57
✱ B106	2	#5	STR	27'-11"	58
✱ B107	2	#5	STR	28'-8"	60
✱ B108	2	#5	STR	29'-5"	61
✱ B109	2	#5	STR	30'-1"	63
✱ B110	2	#5	STR	30'-10"	64
✱ B111	2	#5	STR	31'-7"	66
✱ B112	2	#5	STR	32'-3"	67
✱ B113	2	#5	STR	33'-0"	69
✱ B114	2	#5	STR	33'-8"	70
✱ B115	2	#5	STR	34'-5"	72
✱ B116	2	#5	STR	35'-2"	73
✱ B117	2	#5	STR	35'-10"	75
✱ B118	2	#5	STR	36'-7"	76
✱ B119	2	#5	STR	37'-4"	78
✱ B120	2	#5	STR	38'-0"	79
✱ B121	2	#5	STR	38'-9"	81
✱ B122	2	#5	STR	39'-5"	82
✱ B123	2	#5	STR	40'-2"	84
✱ B124	2	#5	STR	40'-11"	85
✱ B125	1	#5	STR	41'-7"	43
✱ B126	2	#5	STR	24'-8"	51
✱ B127	2	#5	STR	25'-4"	53
✱ B128	2	#5	STR	26'-1"	54
✱ B129	2	#5	STR	26'-10"	56
✱ B130	2	#5	STR	27'-6"	57
✱ B131	2	#5	STR	28'-3"	59
✱ B132	2	#5	STR	28'-11"	60
✱ B133	2	#5	STR	29'-8"	62
✱ B134	2	#5	STR	30'-5"	63
✱ B135	2	#5	STR	31'-1"	65
✱ B136	2	#5	STR	31'-10"	66
✱ B137	2	#5	STR	32'-7"	68
✱ B138	2	#5	STR	33'-3"	69
✱ B139	2	#5	STR	34'-0"	71
✱ B140	2	#5	STR	34'-8"	72
✱ B141	2	#5	STR	35'-5"	74

BAR	NO.	SIZE	TYPE	LENGTH	WEIGHT
✱ B142	2	#5	STR	36'-2"	75
✱ B143	2	#5	STR	36'-10"	77
✱ B144	2	#5	STR	37'-7"	78
✱ B145	2	#5	STR	38'-4"	80
✱ B146	2	#5	STR	39'-0"	81
✱ B147	2	#5	STR	39'-9"	83
✱ B148	2	#5	STR	40'-5"	84
✱ B149	2	#5	STR	41'-2"	86
✱ B150	2	#5	STR	24'-8"	51
✱ B151	2	#5	STR	25'-4"	53
✱ B152	2	#5	STR	26'-1"	54
✱ B153	2	#5	STR	26'-10"	56
✱ B154	2	#5	STR	27'-6"	57
✱ B155	2	#5	STR	28'-3"	59
✱ B156	2	#5	STR	28'-11"	60
✱ B157	2	#5	STR	29'-8"	62
✱ B158	2	#5	STR	30'-5"	63
✱ B159	2	#5	STR	31'-1"	65
✱ B160	2	#5	STR	31'-10"	66
✱ B161	2	#5	STR	32'-7"	68
✱ B162	2	#5	STR	33'-3"	69
✱ B163	2	#5	STR	34'-0"	71
✱ B164	2	#5	STR	34'-8"	72
✱ B165	2	#5	STR	35'-5"	74
✱ B166	2	#5	STR	36'-2"	75
✱ B167	2	#5	STR	36'-10"	77
✱ B168	2	#5	STR	37'-7"	78
✱ B169	1	#5	STR	38'-4"	40
B201	2	#6	STR	24'-4"	73
B202	2	#6	STR	25'-1"	75
B203	2	#6	STR	25'-10"	78
B204	2	#6	STR	26'-6"	80
B205	2	#6	STR	27'-3"	82
B206	2	#6	STR	27'-11"	84
B207	2	#6	STR	28'-8"	86
B208	2	#6	STR	29'-5"	88
B209	2	#6	STR	30'-1"	90
B210	2	#6	STR	30'-10"	93
B211	2	#6	STR	31'-7"	95
B212	2	#6	STR	32'-3"	97
B213	2	#6	STR	33'-0"	99
B214	2	#6	STR	33'-8"	101
B215	2	#6	STR	34'-5"	103
B216	2	#6	STR	35'-2"	106
B217	2	#6	STR	35'-10"	108
B218	2	#6	STR	36'-7"	110
B219	2	#6	STR	37'-4"	112
B220	2	#6	STR	38'-0"	114
B221	2	#6	STR	38'-9"	116
B222	2	#6	STR	39'-5"	118
B223	2	#6	STR	40'-2"	121
B224	2	#6	STR	40'-11"	123
B225	1	#6	STR	41'-7"	62
B226	2	#6	STR	24'-8"	74
B227	2	#6	STR	25'-4"	76
B228	2	#6	STR	26'-1"	78
B229	2	#6	STR	26'-10"	81
B230	2	#6	STR	27'-6"	83
B231	2	#6	STR	28'-3"	85
B232	2	#6	STR	28'-11"	87
B233	2	#6	STR	29'-8"	89
B234	2	#6	STR	30'-5"	91
B235	2	#6	STR	31'-1"	93
B236	2	#6	STR	31'-10"	96
B237	2	#6	STR	32'-7"	98
B238	2	#6	STR	33'-3"	100
B239	2	#6	STR	34'-0"	102
B240	2	#6	STR	34'-8"	104
B241	2	#6	STR	35'-5"	106
B242	2	#6	STR	36'-2"	109

BAR	NO.	SIZE	TYPE	LENGTH	WEIGHT
B243	2	#6	STR	36'-10"	111
B244	2	#6	STR	37'-7"	113
B245	2	#6	STR	38'-4"	115
B246	2	#6	STR	39'-0"	117
B247	2	#6	STR	39'-9"	119
B248	2	#6	STR	40'-5"	121
B249	2	#6	STR	41'-2"	124
B250	2	#6	STR	24'-8"	74
B251	2	#6	STR	25'-4"	76
B252	2	#6	STR	26'-1"	78
B253	2	#6	STR	26'-10"	81
B254	2	#6	STR	27'-6"	83
B255	2	#6	STR	28'-3"	85
B256	2	#6	STR	28'-11"	87
B257	2	#6	STR	29'-8"	89
B258	2	#6	STR	30'-5"	91
B259	2	#6	STR	31'-1"	93
B260	2	#6	STR	31'-10"	96
B261	2	#6	STR	32'-7"	98
B262	2	#6	STR	33'-3"	100
B263	2	#6	STR	34'-0"	102
B264	2	#6	STR	34'-8"	104
B265	2	#6	STR	35'-5"	106
B266	2	#6	STR	36'-2"	109
B267	2	#6	STR	36'-10"	111
B268	2	#6	STR	37'-7"	113
B269	1	#6	STR	38'-4"	58

REINFORCING STEEL	LBS.	8142
✱ EPOXY COATED REINFORCING STEEL	LBS.	6117
CLASS AA CONCRETE	C.Y.	101.1

SPLICE LENGTHS

BAR SIZE	EPOXY COATED	UNCOATED
#4	2'-0"	1'-9"
#5	2'-6"	2'-2"
#6	3'-10"	2'-7"

PROJECT NO. U-0071

DURHAM COUNTY

STATION: 36+69.26 -DFWB-

SHEET 3 OF 6

STATE OF NORTH CAROLINA
DEPARTMENT OF TRANSPORTATION
RALEIGH

BRIDGE APPROACH SLAB FOR RIGID PAVEMENT

PLANS PREPARED BY:
MULKEY ENGINEERS & CONSULTANTS
PO Box 33127
RALEIGH, N.C. 27636
(919) 851-1912
(919) 851-1918 (FAX)
WWW.MULKEYINC.COM
NC LICENSE NO. C-1321

NORTH CAROLINA PROFESSIONAL SEAL 034352 ENGINEER TERRY R. PETERSON
12/2/13

STR #12

REVISIONS							SHEET NO.
NO.	BY:	DATE:	NO.	BY:	DATE:		S-570
1			3				TOTAL SHEETS
2			4				671

DRAWN BY : W. B. ALLEN DATE : 9/12
CHECKED BY : T. R. PETERSON DATE : 1/13
DESIGN ENGINEER OF RECORD: T. R. PETERSON DATE : 12/2/13

11/27/2013 8:33:52 AM R:\Structures\WBL\U0071WBL_SD_AS_03.dgn

BILL OF MATERIAL

APPROACH SLAB AT END BENT #2

BAR	NO.	SIZE	TYPE	LENGTH	WEIGHT
✱ A5	13	#4	STR	17'-3"	150
A6	13	#4	STR	17'-3"	150
✱ A7	24	#4	STR	21'-8"	347
A8	24	#4	STR	21'-7"	346
✱ A301	2	#4	STR	21'-2"	28
✱ A302	2	#4	STR	20'-6"	27
✱ A303	2	#4	STR	19'-9"	26
✱ A304	2	#4	STR	19'-1"	25
✱ A305	2	#4	STR	18'-5"	25
✱ A306	3	#4	STR	22'-3"	45
✱ A307	3	#4	STR	21'-10"	44
✱ A308	3	#4	STR	21'-4"	43
✱ A309	3	#4	STR	20'-11"	42
✱ A310	2	#4	STR	29'-8"	40
✱ A311	2	#4	STR	29'-0"	39
✱ A312	2	#4	STR	28'-3"	38
✱ A313	2	#4	STR	27'-7"	37
✱ A314	2	#4	STR	26'-11"	36
✱ A315	2	#4	STR	26'-2"	35
✱ A316	2	#4	STR	25'-6"	34
✱ A317	2	#4	STR	24'-10"	33
✱ A318	2	#4	STR	24'-1"	32
✱ A319	2	#4	STR	23'-5"	31
✱ A320	2	#4	STR	22'-9"	30
✱ A321	2	#4	STR	22'-0"	29
✱ A322	2	#4	STR	21'-4"	29
✱ A323	2	#4	STR	20'-7"	27
✱ A324	2	#4	STR	19'-11"	27
✱ A325	2	#4	STR	19'-3"	26
✱ A326	2	#4	STR	18'-6"	25
✱ A327	2	#4	STR	17'-10"	24
✱ A328	2	#4	STR	17'-2"	23
✱ A329	2	#4	STR	16'-5"	22
✱ A330	1	#4	STR	29'-4"	20
✱ A331	1	#4	STR	27'-11"	19
✱ A332	1	#4	STR	26'-6"	18
✱ A333	1	#4	STR	25'-2"	17
✱ A334	1	#4	STR	23'-9"	16
✱ A335	1	#4	STR	22'-4"	15
✱ A336	1	#4	STR	20'-11"	14
✱ A337	1	#4	STR	19'-7"	13
✱ A338	1	#4	STR	18'-2"	12
✱ A339	1	#4	STR	16'-9"	11
✱ A340	1	#4	STR	15'-5"	10
✱ A341	1	#4	STR	14'-0"	9
✱ A342	1	#4	STR	12'-7"	8
✱ A343	1	#4	STR	11'-3"	8
✱ A344	1	#4	STR	9'-10"	7
✱ A345	1	#4	STR	8'-5"	6
✱ A346	1	#4	STR	7'-0"	5
✱ A347	1	#4	STR	5'-8"	4
✱ A348	1	#4	STR	4'-3"	3
✱ A349	1	#4	STR	2'-10"	2
A401	2	#4	STR	21'-0"	28
A402	2	#4	STR	20'-4"	27
A403	2	#4	STR	19'-7"	26
A404	2	#4	STR	18'-11"	25
A405	2	#4	STR	18'-3"	24
A406	3	#4	STR	22'-1"	44
A407	3	#4	STR	21'-8"	43
A408	3	#4	STR	21'-2"	42
A409	3	#4	STR	20'-9"	42
A410	2	#4	STR	29'-6"	39
A411	2	#4	STR	28'-10"	39
A412	2	#4	STR	28'-1"	38
A413	2	#4	STR	27'-5"	37
A414	2	#4	STR	26'-9"	36
A415	2	#4	STR	26'-0"	35
A416	2	#4	STR	25'-4"	34

BAR	NO.	SIZE	TYPE	LENGTH	WEIGHT
A417	2	#4	STR	24'-8"	33
A418	2	#4	STR	23'-11"	32
A419	2	#4	STR	23'-3"	31
A420	2	#4	STR	22'-7"	30
A421	2	#4	STR	21'-10"	29
A422	2	#4	STR	21'-2"	28
A423	2	#4	STR	20'-5"	27
A424	2	#4	STR	19'-9"	26
A425	2	#4	STR	19'-1"	25
A426	2	#4	STR	18'-4"	24
A427	2	#4	STR	17'-8"	24
A428	2	#4	STR	17'-0"	23
A429	2	#4	STR	16'-3"	22
A430	1	#4	STR	29'-4"	20
A431	1	#4	STR	27'-11"	19
A432	1	#4	STR	26'-6"	18
A433	1	#4	STR	25'-2"	17
A434	1	#4	STR	23'-9"	16
A435	1	#4	STR	22'-4"	15
A436	1	#4	STR	20'-11"	14
A437	1	#4	STR	19'-7"	13
A438	1	#4	STR	18'-2"	12
A439	1	#4	STR	16'-9"	11
A440	1	#4	STR	15'-5"	10
A441	1	#4	STR	14'-0"	9
A442	1	#4	STR	12'-7"	8
A443	1	#4	STR	11'-3"	8
A444	1	#4	STR	9'-10"	7
A445	1	#4	STR	8'-5"	6
A446	1	#4	STR	7'-0"	5
A447	1	#4	STR	5'-8"	4
A448	1	#4	STR	4'-3"	3
A449	1	#4	STR	2'-10"	2
✱ B301	2	#5	STR	24'-4"	51
✱ B302	2	#5	STR	25'-1"	52
✱ B303	2	#5	STR	25'-9"	54
✱ B304	2	#5	STR	26'-6"	55
✱ B305	2	#5	STR	27'-3"	57
✱ B306	2	#5	STR	27'-11"	58
✱ B307	2	#5	STR	28'-8"	60
✱ B308	2	#5	STR	29'-5"	61
✱ B309	2	#5	STR	30'-1"	63
✱ B310	2	#5	STR	30'-10"	64
✱ B311	2	#5	STR	31'-6"	66
✱ B312	2	#5	STR	32'-3"	67
✱ B313	2	#5	STR	33'-0"	69
✱ B314	2	#5	STR	33'-8"	70
✱ B315	2	#5	STR	34'-5"	72
✱ B316	2	#5	STR	35'-2"	73
✱ B317	2	#5	STR	35'-10"	75
✱ B318	1	#5	STR	36'-7"	38
✱ B319	2	#5	STR	24'-9"	52
✱ B320	2	#5	STR	25'-6"	53
✱ B321	2	#5	STR	26'-2"	55
✱ B322	2	#5	STR	26'-11"	56
✱ B323	2	#5	STR	27'-8"	58
✱ B324	2	#5	STR	28'-4"	59
✱ B325	2	#5	STR	29'-1"	61
✱ B326	2	#5	STR	29'-10"	62
✱ B327	2	#5	STR	30'-6"	64
✱ B328	2	#5	STR	31'-3"	65
✱ B329	2	#5	STR	31'-11"	67
✱ B330	2	#5	STR	32'-8"	68
✱ B331	2	#5	STR	33'-5"	70
✱ B332	2	#5	STR	34'-1"	71
✱ B333	2	#5	STR	34'-10"	73
✱ B334	2	#5	STR	35'-7"	74
✱ B335	2	#5	STR	36'-3"	76
✱ B336	2	#5	STR	37'-0"	77
✱ B337	2	#5	STR	37'-8"	79

BAR	NO.	SIZE	TYPE	LENGTH	WEIGHT
✱ B338	2	#5	STR	38'-5"	80
✱ B339	2	#5	STR	39'-2"	82
✱ B340	2	#5	STR	39'-10"	83
✱ B341	2	#5	STR	40'-7"	85
✱ B342	2	#5	STR	41'-4"	86
✱ B343	2	#5	STR	24'-8"	51
✱ B344	2	#5	STR	25'-5"	53
✱ B345	2	#5	STR	26'-1"	54
✱ B346	2	#5	STR	26'-10"	56
✱ B347	2	#5	STR	27'-7"	58
✱ B348	2	#5	STR	28'-3"	59
✱ B349	2	#5	STR	29'-0"	60
✱ B350	2	#5	STR	29'-9"	62
✱ B351	2	#5	STR	30'-5"	63
✱ B352	2	#5	STR	31'-2"	65
✱ B353	2	#5	STR	31'-10"	66
✱ B354	2	#5	STR	32'-7"	68
✱ B355	2	#5	STR	33'-4"	70
✱ B356	2	#5	STR	34'-0"	71
✱ B357	2	#5	STR	34'-9"	72
✱ B358	2	#5	STR	35'-6"	74
✱ B359	2	#5	STR	36'-2"	75
✱ B360	2	#5	STR	36'-11"	77
✱ B361	2	#5	STR	37'-7"	78
✱ B362	2	#5	STR	38'-4"	80
✱ B363	2	#5	STR	39'-1"	82
✱ B364	2	#5	STR	39'-9"	83
✱ B365	2	#5	STR	40'-6"	84
✱ B366	2	#5	STR	41'-3"	86
✱ B367	2	#5	STR	41'-11"	87
✱ B368	2	#5	STR	42'-8"	89
✱ B369	2	#5	STR	43'-4"	90
✱ B370	2	#5	STR	44'-1"	92
✱ B371	2	#5	STR	44'-10"	94
✱ B372	1	#5	STR	45'-6"	47
B401	2	#6	STR	24'-4"	73
B402	2	#6	STR	25'-1"	75
B403	2	#6	STR	25'-9"	77
B404	2	#6	STR	26'-6"	80
B405	2	#6	STR	27'-3"	82
B406	2	#6	STR	27'-11"	84
B407	2	#6	STR	28'-8"	86
B408	2	#6	STR	29'-5"	88
B409	2	#6	STR	30'-1"	90
B410	2	#6	STR	30'-10"	93
B411	2	#6	STR	31'-6"	95
B412	2	#6	STR	32'-3"	97
B413	2	#6	STR	33'-0"	99
B414	2	#6	STR	33'-8"	101
B415	2	#6	STR	34'-5"	103
B416	2	#6	STR	35'-2"	106
B417	2	#6	STR	35'-10"	108
B418	1	#6	STR	36'-7"	55
B419	2	#6	STR	24'-9"	74
B420	2	#6	STR	25'-6"	77
B421	2	#6	STR	26'-2"	79
B422	2	#6	STR	26'-11"	81
B423	2	#6	STR	27'-8"	83
B424	2	#6	STR	28'-4"	85
B425	2	#6	STR	29'-1"	87
B426	2	#6	STR	29'-10"	90
B427	2	#6	STR	30'-6"	92
B428	2	#6	STR	31'-3"	94
B429	2	#6	STR	31'-11"	96
B430	2	#6	STR	32'-8"	98
B431	2	#6	STR	33'-5"	100
B432	2	#6	STR	34'-1"	102
B433	2	#6	STR	34'-10"	105
B434	2	#6	STR	35'-7"	107
B435	2	#6	STR	36'-3"	109

BAR	NO.	SIZE	TYPE	LENGTH	WEIGHT
B436	2	#6	STR	37'-0"	111
B437	2	#6	STR	37'-8"	113
B438	2	#6	STR	38'-5"	115
B439	2	#6	STR	39'-2"	118
B440	2	#6	STR	39'-10"	120
B441	2	#6	STR	40'-7"	122
B442	2	#6	STR	41'-4"	124
B443	2	#6	STR	24'-8"	74
B444	2	#6	STR	25'-5"	76
B445	2	#6	STR	26'-1"	78
B446	2	#6	STR	26'-10"	81
B447	2	#6	STR	27'-7"	83
B448	2	#6	STR	28'-3"	85
B449	2	#6	STR	29'-0"	87
B450	2	#6	STR	29'-9"	89
B451	2	#6	STR	30'-5"	91
B452	2	#6	STR	31'-2"	94
B453	2	#6	STR	31'-10"	96
B454	2	#6	STR	32'-7"	98
B455	2	#6	STR	33'-4"	100
B456	2	#6	STR	34'-0"	102
B457	2	#6	STR	34'-9"	104
B458	2	#6	STR	35'-6"	107
B459	2	#6	STR	36'-2"	109
B460	2	#6	STR	36'-11"	111
B461	2	#6	STR	37'-7"	113
B462	2	#6	STR	38'-4"	115
B463	2	#6	STR	39'-1"	117
B464	2	#6	STR	39'-9"	119
B465	2	#6	STR	40'-6"	122
B466	2	#6	STR	41'-3"	124
B467	2	#6	STR	41'-11"	126
B468	2	#6	STR	42'-8"	128
B469	2	#6	STR	43'-4"	130
B470	2	#6	STR	44'-1"	132
B471	2	#6	STR	44'-10"	135
B472	1	#6	STR	45'-6"	68

REINFORCING STEEL	LBS.	8694
✱EPOXY COATED REINFORCING STEEL	LBS.	6543
CLASS AA CONCRETE	C.Y.	107.8

PROJECT NO. U-0071

DURHAM COUNTY

STATION: 36+69.26 -DFWB-

SHEET 4 OF 6

STATE OF NORTH CAROLINA
DEPARTMENT OF TRANSPORTATION
RALEIGH

BRIDGE APPROACH SLAB FOR RIGID PAVEMENT

PLANS PREPARED BY:

MULKEY ENGINEERS & CONSULTANTS
PO BOX 33127
RALEIGH, N.C. 27636
(919) 851-1912
(919) 851-1918 (FAX)
WWW.MULKEYINC.COM
NC LICENSE NO. C-1021

NORTH CAROLINA PROFESSIONAL SEAL 034352 ENGINEER TERRENCE R. PETERSON
12/2/13

STR #12

REVISIONS						SHEET NO.
NO.	BY:	DATE:	NO.	BY:	DATE:	S-571
1			3			TOTAL SHEETS
2			4			671

DRAWN BY : W. B. ALLEN DATE : 9/12
CHECKED BY : T. R. PETERSON DATE : 1/13
DESIGN ENGINEER OF RECORD: T. R. PETERSON DATE : 12/2/13

11/27/2013 8:33:22 AM R:\Structures\WBL\U0071WBL_SD_AS_04.dgn

NOTES

APPROACH SLAB SHALL NOT BE CONSTRUCTED PRIOR TO COMPLETION OF THE BRIDGE DECK.

FOR REINFORCED BRIDGE APPROACH FILL INCLUDING GEOTEXTILE, IMPERMEABLE GEOMEMBRANE, 4" Ø DRAINAGE PIPE, #78M STONE, AND SELECT MATERIAL, SEE ROADWAY PLANS.

AREA BETWEEN THE WINGWALL AND APPROACH SLAB SHALL BE GRADED TO DRAIN THE WATER AWAY FROM THE FILL FACE OF THE BRIDGE AND SHALL BE PAVED. SEE ROADWAY PLANS.

FOR END BENT #1 PLAN VIEW
SEE SHEET 1 OF 6

FOR END BENT #2 PLAN VIEW
SEE SHEET 2 OF 6

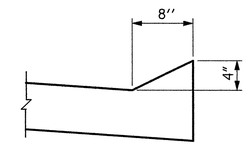

SECTION N-N

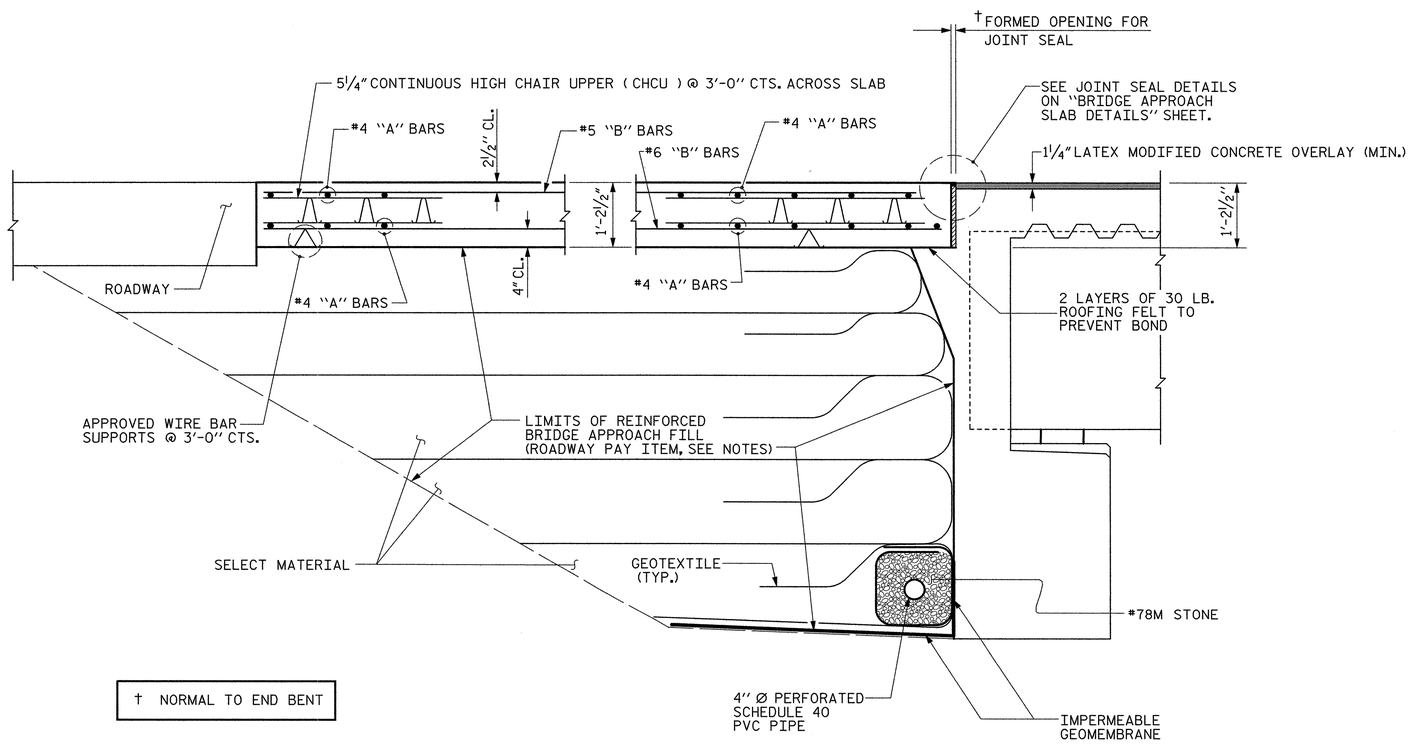

† NORMAL TO END BENT

SECTION THRU SLAB

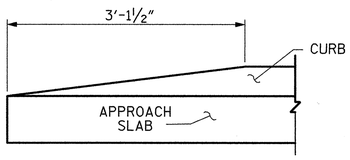

END OF CURB WITHOUT SHOULDER BERM GUTTER

CURB DETAILS

PROJECT NO. U-0071
DURHAM COUNTY
STATION: 36+69.26 -DFWB-

SHEET 5 OF 6

PLANS PREPARED BY:
MULKEY ENGINEERS & CONSULTANTS
PO Box 33127
RALEIGH, N.C. 27636
(919) 851-1912
(919) 851-1918 (FAX)
WWW.MULKEYINC.COM
NC LICENSE NO. C-1021

THIS STANDARD DRAWING REVIEWED & ADOPTED FOR USE AT THE REFERENCED LOCATION BY THE UNDERSIGNED:

NORTH CAROLINA PROFESSIONAL SEAL 034352 ENGINEER TERRY R. PETERSON
2/12/14

STR #12

STATE OF NORTH CAROLINA
DEPARTMENT OF TRANSPORTATION
RALEIGH

STANDARD

BRIDGE APPROACH SLAB FOR RIGID PAVEMENT

REVISIONS						SHEET NO.
NO.	BY:	DATE:	NO.	BY:	DATE:	S-572
1			3			TOTAL SHEETS
2			4			671

ASSEMBLED BY : W. B. ALLEN		DATE :	9/12
CHECKED BY : T. R. PETERSON		DATE :	1/13
DRAWN BY : RH 5/99	REV. 5/1/06RR		KMM/GM
CHECKED BY : RDR 5/99	REV. 10/1/11		MAA/GM
	REV. 12/21/11		MAA/GM

2/12/2014 10:57:07 AM R:\Structures\WBL\U0071WBL_SD_AS_05.dgn

STD. NO. BAS1 (SHT 2a)

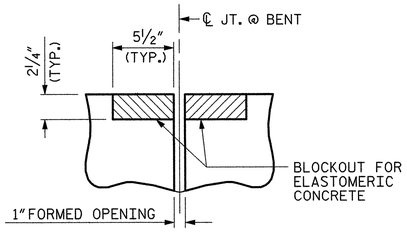

SECTION C-C
FOAM JOINT SEAL
(PRE-SAWED ELASTOMERIC CONCRETE DIMENSIONS)

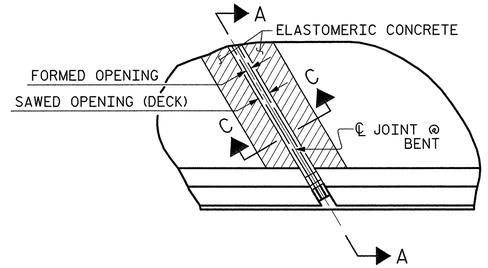

PLAN

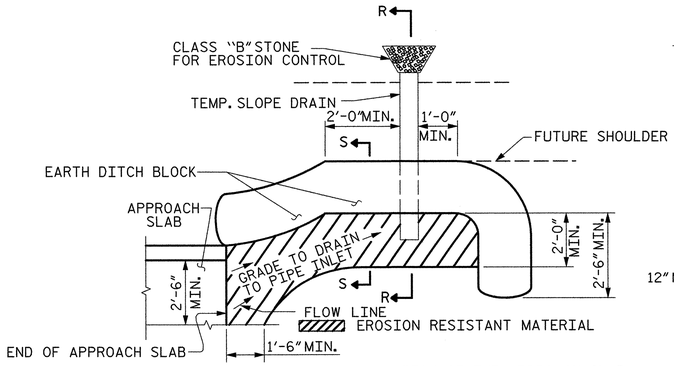

NOTE: IMMEDIATELY AFTER THE CONSTRUCTION OF THE APPROACH SLAB, THE CONTRACTOR SHALL PROVIDE TEMPORARY BERM AND SLOPE DRAIN. CONTRACTOR SHALL GRADE TO PIPE INLET AND PROVIDE EROSION RESISTANT MATERIAL AS SHOWN. THE EROSION RESISTANT MATERIAL SHALL BE EITHER 1) ASPHALT PLANT MIX, TYPE 1 OR TYPE 2, MIN. 2″ DEPTH, 2) EROSION CONTROL MAT, OR 3) CONCRETE, AS DIRECTED BY THE ENGINEER. THE SLOPE DRAIN SHALL CONSIST OF A NON-PERFORATED TEMPORARY DRAINAGE PIPE, 12 INCHES IN DIAMETER.

PLAN VIEW

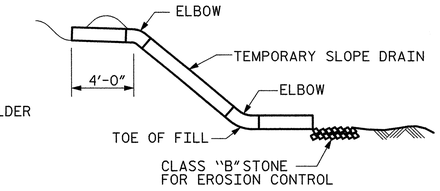

SECTION R-R

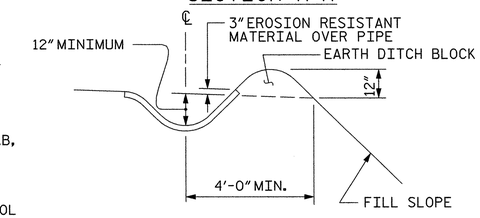

SECTION S-S

TEMPORARY BERM AND SLOPE DRAIN DETAILS

(TO BE USED WHEN SHOULDER BERM GUTTER IS REQUIRED)

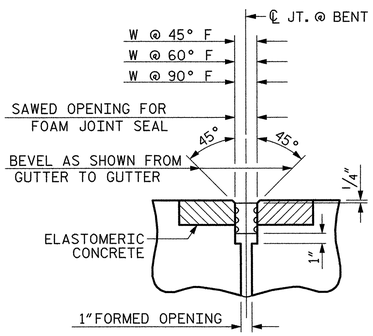

SECTION C-C
FOAM JOINT SEAL AT BENTS
(EXPANSION)

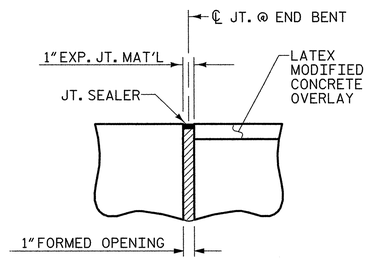

SECTION C-C
JOINT SEAL AT END BENTS
(FIXED)

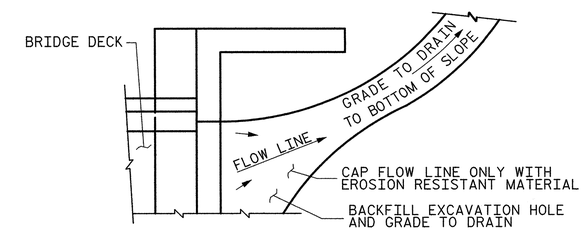

NOTE: IF THE APPROACH SLAB IS NOT CONSTRUCTED IMMEDIATELY AFTER THE BACKFILLING OF THE END BENT EXCAVATION, GRADE TO DRAIN TO THE BOTTOM OF THE SLOPE AND PROVIDE EROSION RESISTANT MATERIAL, SUCH AS FIBERGLASS ROVING OR AS DIRECTED BY THE ENGINEER TO PREVENT SOIL EROSION AND TO PROTECT THE AREA ADJACENT TO THE STRUCTURE. THE CONTRACTOR WILL BE REQUIRED TO REMOVE THESE MATERIALS PRIOR TO CONSTRUCTION OF THE APPROACH SLAB.

TEMPORARY DRAINAGE DETAIL

SAWED OPENING FOR FOAM JOINT SEALS			
BENT LOCATION	W @ 90° F	W @ 60° F	W @ 45° F
BT#1	1½″	1 9/16″	1⅝″
BT#2	1⅜″	1 9/16″	1 11/16″

ELASTOMERIC CONCRETE	
BENT LOCATION	ELASTOMERIC CONCRETE ✳ (CU. FT.)
BT#1	14.2
BT#2	14.6
TOTAL	28.8

✳ BASED ON THE MINIMUM BLOCKOUT SHOWN.

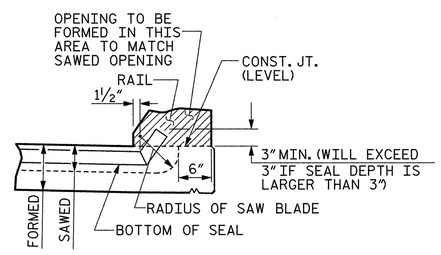

SECTION A-A

JOINT SEAL DETAILS @ BENT

THE JOINT SHALL BE SAWED PRIOR TO THE CASTING OF THE BARRIER RAIL.

FOR FOAM JOINT SEALS, SEE SPECIAL PROVISIONS.

THE NOMINAL UNCOMPRESSED SEAL WIDTH OF THE FOAM JOINT SEAL SHALL BE 2″AT INTERIOR BENTS.

FOR ELASTOMERIC CONCRETE, SEE SPECIAL PROVISIONS.

PAYMENT FOR FOAM JOINT SEALS IS PROVIDED IN THE BILL OF MATERIAL ON THE PRESERVATION PLANS OF THE EXISTING STRUCTURE.

PROJECT NO. U-0071
DURHAM COUNTY
STATION: 36+69.26 -DFWB-

SHEET 6 OF 6

PLANS PREPARED BY:
MULKEY ENGINEERS & CONSULTANTS
PO Box 33127
RALEIGH, N.C. 27636
(919) 851-1912
(919) 851-1918 (FAX)
WWW.MULKEYINC.COM
NC LICENSE NO. C-1021

THIS STANDARD DRAWING REVIEWED & ADOPTED FOR USE AT THE REFERENCED LOCATION BY THE UNDERSIGNED:

NORTH CAROLINA PROFESSIONAL SEAL 034352 ENGINEER TIMOTHY R. PETERSON
2/12/14

STR #12

STATE OF NORTH CAROLINA
DEPARTMENT OF TRANSPORTATION
RALEIGH

STANDARD

BRIDGE APPROACH SLAB DETAILS

REVISIONS						
NO.	BY:	DATE:	NO.	BY:	DATE:	
1			3			
2			4			

SHEET NO. S-573
TOTAL SHEETS 671

STD. NO. BAS4 (SHT 1a)

ASSEMBLED BY : W. B. ALLEN		DATE : 1/13	
CHECKED BY : T. R. PETERSON		DATE : 1/13	
DRAWN BY : FCJ 11/88	REV. 5/7/03	RWW/JTE	
CHECKED BY : ARB 11/88	REV. 5/1/06	RRR MAA/KMM	
	REV. 10/1/11	MAA/GM	

2/12/2014 10:57:34 AM R:\Structures\WBL\U0071WBL_SD_AS_06.dgn

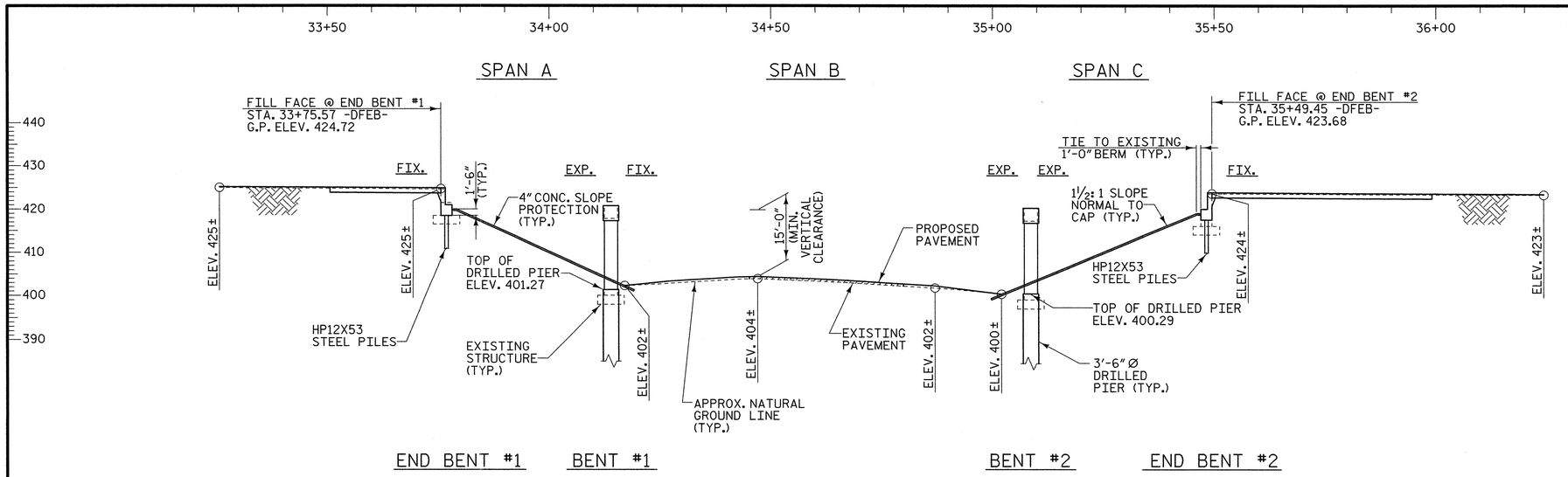

SECTION ALONG -DFEB-

SECTIONS AT END BENTS AND BENTS ARE TAKEN AT RIGHT ANGLES

GRADE DATA -DFEB-

-0.6000%

V.P.T. 31+22.00
ELEV. 426.24

V.P.C. 40+42.00
ELEV. 420.72

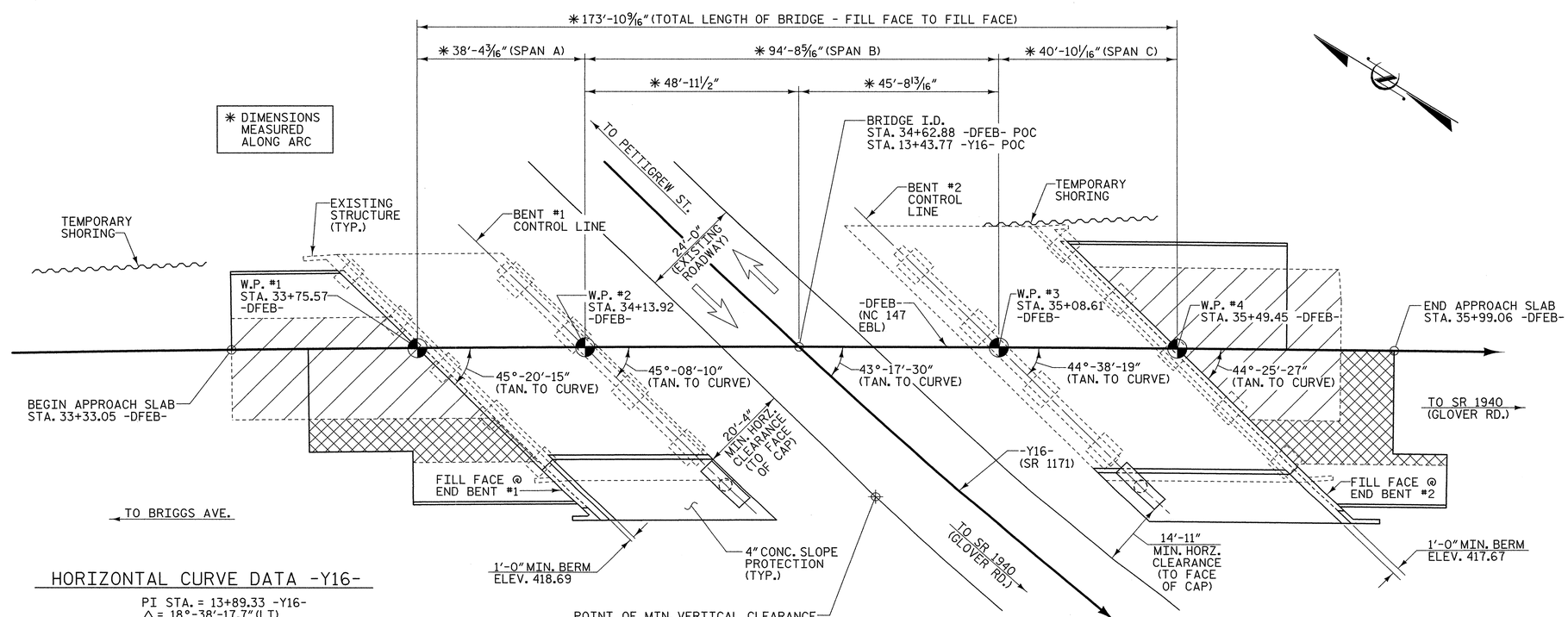

PLAN

PILES NOT SHOWN FOR CLARITY

HORIZONTAL CURVE DATA -DFEB-

PI STA. = 40+12.02 -DFEB-
△ = 8°-49'-31.9" (RT)
D = 0°-31'-31.0"
L = 1,680.20'
T = 841.76'
R = 10,907.93'

REMOVAL OF EXISTING APPROACH SLAB

REMOVAL OF EXISTING ROADWAY

HORIZONTAL CURVE DATA -Y16-

PI STA. = 13+89.33 -Y16-
△ = 18°-38'-17.7" (LT)
D = 3°-22'-13.2"
L = 553.01'
T = 278.97'
R = 1,700.00'

PROJECT NO. U-0071

DURHAM COUNTY

STATION: 34+62.88 -DFEB- P.O.C.
=13+43.77 -Y16- P.O.C.

SHEET 1 OF 5 WIDENING OF BRIDGE #191

STATE OF NORTH CAROLINA
DEPARTMENT OF TRANSPORTATION
RALEIGH

GENERAL DRAWING

FOR BRIDGE WIDENING ON EASTBOUND NC 147 (DURHAM FREEWAY) OVER SR 1171 (ELLIS RD.) BETWEEN BRIGGS AVE. AND SR 1940

PLANS PREPARED BY:
MULKEY ENGINEERS & CONSULTANTS
PO Box 33127
Raleigh, N.C. 27636
(919) 851-1912
(919) 851-1918 (FAX)
WWW.MULKEYINC.COM
NC LICENSE NO. C-1021

NORTH CAROLINA PROFESSIONAL SEAL 034352 ENGINEER TERRY R. PETERSON
2/12/14

STR #13

REVISIONS						SHEET NO.
NO.	BY:	DATE:	NO.	BY:	DATE:	S-574
1			3			TOTAL SHEETS
2			4			671

DRAWN BY : W. B. ALLEN DATE : 6/12
CHECKED BY : T. R. PETERSON DATE : 2/13
DESIGN ENGINEER OF RECORD: T. R. PETERSON DATE : 2/12/14

2/12/2014 10:59:01 AM R:\Structures\EBL\U0071EBL_S0_01.dgn

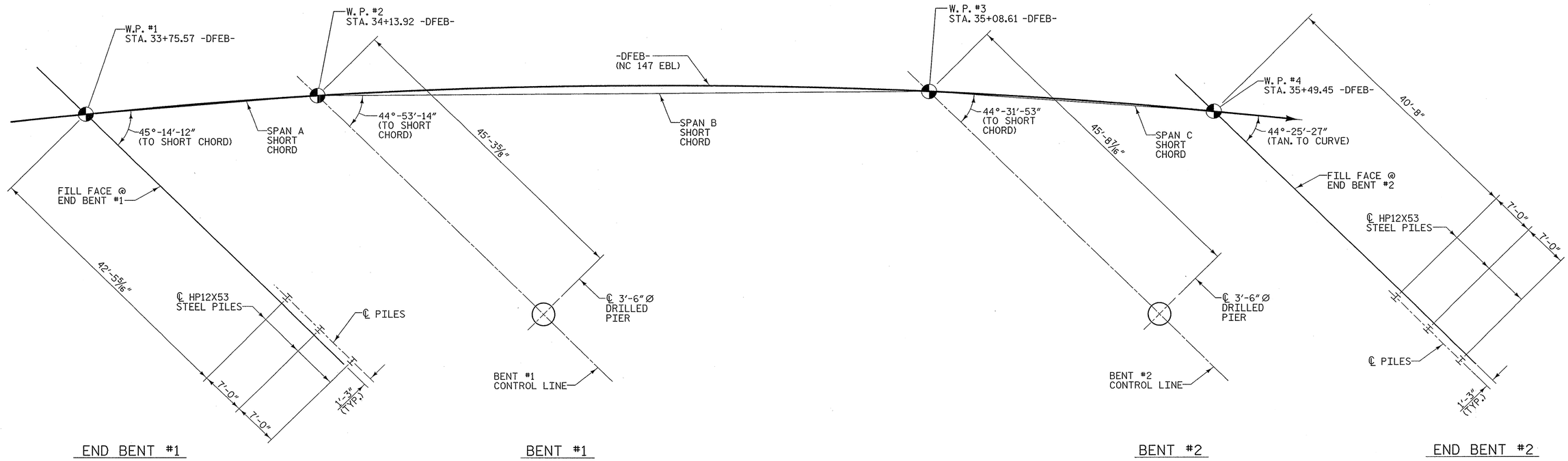

FOUNDATION LAYOUT

ALL PILES AT END BENT #1 AND END BENT #2 ARE HP12X53.

DIMENSIONS LOCATING PILES ARE SHOWN TO THE PILE CENTERLINE.

DIMENSIONS LOCATING DRILLED PIERS ARE SHOWN TO THE CENTERLINE OF DRILLED PIERS.

NOTES

FOR PILES, SEE SECTION 450 OF THE STANDARD SPECIFICATIONS.

PILES AT END BENT NO. 1 AND 2 ARE DESIGNED FOR A FACTORED RESISTANCE OR 95 TONS PER PILE.

DRIVE PILES AT END BENT NO. 1 AND 2 TO A REQUIRED DRIVING RESISTANCE OF 160 TONS PER PILE.

STEEL PILE POINTS ARE REQUIRED FOR STEEL H-PILES AT END BENT NO. 1 AND 2. FOR STEEL PILE POINTS, SEE SECTION 450 OF THE STANDARD SPECIFICATIONS.

IT HAS BEEN ESTIMATED THAT A HAMMER WITH AN EQUIVALENT RATED ENERGY IN THE RANGE OF 30 TO 45 FT-KIPS PER BLOW WILL BE REQUIRED TO DRIVE PILES AT END BENT NO. 1 AND 2. THIS ESTIMATED ENERGY RANGE DOES NOT RELEASE THE CONTRACTOR FROM PROVIDING DRIVING EQUIPMENT IN ACCORDANCE WITH SUBARTICLE SECTION 450-3 OF THE STANDARD SPECIFICATIONS.

PILE EXCAVATION IS REQUIRED TO INSTALL PILES AT END BENT NO. 1. EXCAVATE HOLES AT PILE LOCATIONS TO ELEVATION 407 FT. FOR PILE EXCAVATION, SEE SECTION 450 OF THE STANDARD SPECIFICATIONS.

PILE EXCAVATION IS REQUIRED TO INSTALL PILES AT END BENT NO. 2. EXCAVATE HOLES AT PILE LOCATIONS TO ELEVATION 406 FT. FOR PILE EXCAVATION, SEE SECTION 450 OF THE STANDARD SPECIFICATIONS.

CONCRETE OR GROUT IS REQUIRED TO FILL HOLES FOR PILE EXCAVATION AT END BENT NO. 1 AND 2.

PILE EXCAVATION AT END BENT NO. 1 AND 2 WILL EXTEND INTO MATERIAL THAT DETERIORATES WHEN EXPOSED TO THE ELEMENTS. DRIVE PILES TO REQUIRED DRIVING RESISTANCE AND PLACE CONCRETE IMMEDIATELY AFTER EXCAVATION IS COMPLETED.

FOR DRILLED PIERS, SEE SECTION 411 OF THE STANDARD SPECIFICATIONS.

DRILLED PIERS AT BENT NO. 1 AND 2 ARE DESIGNED FOR A FACTORED RESISTANCE OF 290 TONS PER PIER.

CHECK FIELD CONDITIONS FOR THE REQUIRED TIP RESISTANCE OF 30 TSF.

INSTALL DRILLED PIERS AT BENT NO. 1 AND 2 TO A TIP ELEVATION NO HIGHER THAN 386 FT. AND 389 FT., RESPECTIVELY, WITH THE REQUIRED TIP RESISTANCE.

SPT MAY BE REQUIRED FOR DRILLED PIERS. THE ENGINEER WILL DETERMINE THE NEED FOR SPT. FOR SPT TESTING, SEE SECTION 411 OF THE STANDARD SPECIFICATIONS.

DO NOT USE SLURRY CONSTRUCTION FOR DRILLED PIERS AT BENT NO. 1 AND 2.

SID INSPECTIONS MAY BE REQUIRED FOR DRILLED PIERS. THE ENGINEER WILL DETERMINE THE NEED FOR SID INSPECTIONS. FOR SID INSPECTIONS, SEE SECTION 411 OF THE STANDARD SPECIFICATIONS.

CSL TUBES ARE REQUIRED AND CSL TESTING MAY BE REQUIRED FOR DRILLED PIERS. THE ENGINEER WILL DETERMINE THE THE NEED FOR CSL TESTING. FOR CSL TESTING, SEE SECTION 411 OF THE STANDARD SPECIFICATIONS.

DRILLED PIER EXCAVATION AT BENT NO. 1 AND 2 WILL EXTEND INTO MATERIAL THAT DETERIORATES WHEN EXPOSED TO THE ELEMENTS. CHECK FIELD CONDITIONS FOR THE REQUIRED TIP RESISTANCE AND PLACE CONCRETE IMMEDIATELY AFTER EVCAVATION IS COMPLETED.

PROJECT NO. U-0071
DURHAM COUNTY
STATION: 34+62.88 -DFEB-

SHEET 2 OF 5

STATE OF NORTH CAROLINA
DEPARTMENT OF TRANSPORTATION
RALEIGH

GENERAL DRAWING

FOR BRIDGE WIDENING ON EASTBOUND NC 147 (DURHAM FREEWAY) OVER SR 1171 (ELLIS RD.) BETWEEN BRIGGS AVE. AND SR 1940

PLANS PREPARED BY:
MULKEY ENGINEERS & CONSULTANTS
PO Box 33127
Raleigh, N.C. 27636
(919) 851-1912
(919) 851-1918 (FAX)
WWW.MULKEYINC.COM
NC LICENSE NO. C-1021

NORTH CAROLINA PROFESSIONAL SEAL 034352 ENGINEER TIMOTHY R. PETERSON
12/2/13

STR #13

REVISIONS						SHEET NO.
NO.	BY:	DATE:	NO.	BY:	DATE:	S-575
1			3			TOTAL SHEETS
2			4			671

DRAWN BY : W. B. ALLEN DATE : 2/13
CHECKED BY : T. R. PETERSON DATE : 2/13
DESIGN ENGINEER OF RECORD: T. R. PETERSON DATE : 12/2/13

12/26/2013 10:39:34 AM R:\Structures\EBL\U0071EBL_S0_FL_01.dgn

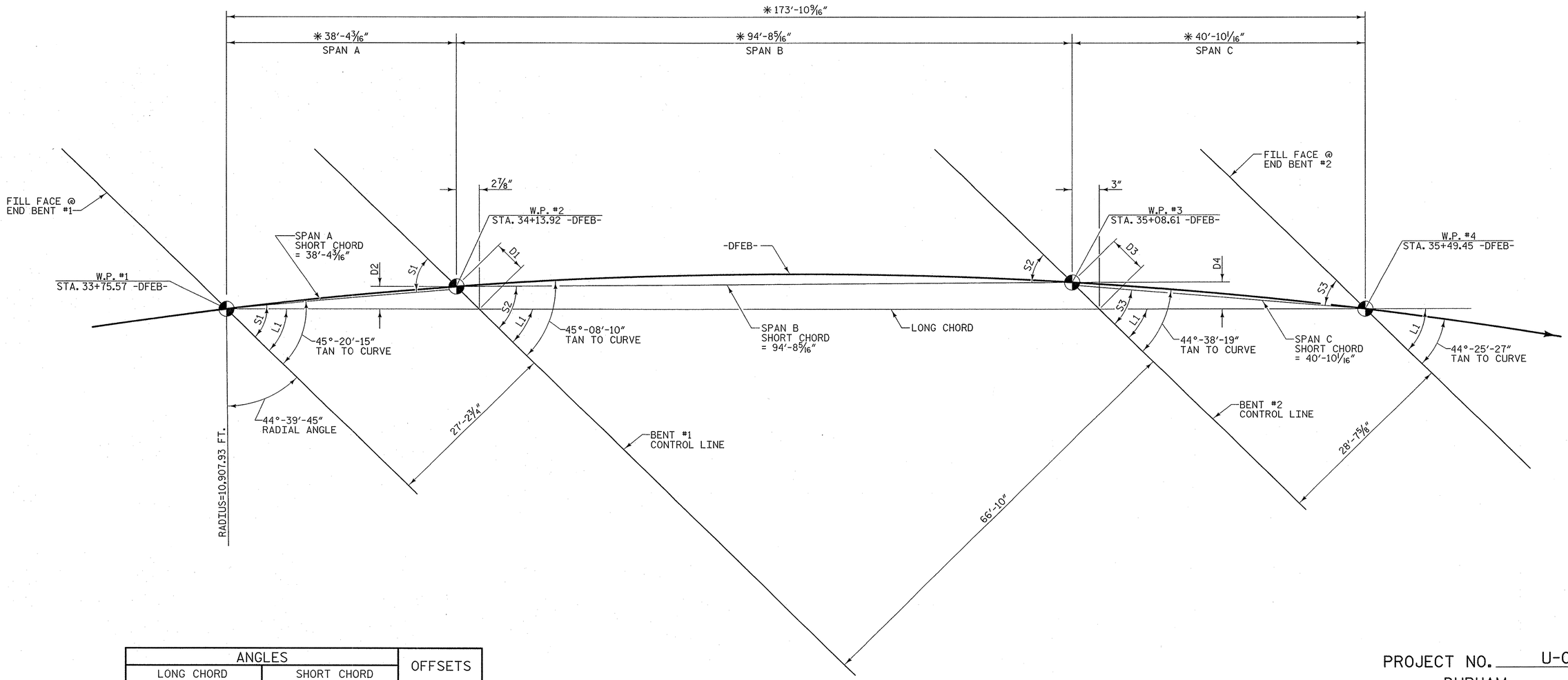

ANGLES				OFFSETS	
LONG CHORD		SHORT CHORD			
L1	44°-52'-51"	S1	45°-14'-12"	D1	4 1/16"
		S2	44°-53'-14"	D2	2 7/8"
		S3	44°-31'-53"	D3	4 1/4"
				D4	3"

LONG CHORD LAYOUT

✱ ALONG LONG CHORD

ALL BENTS ARE PARALLEL

PROJECT NO. U-0071

DURHAM COUNTY

STATION: 34+62.88 -DFEB-

SHEET 3 OF 5

STATE OF NORTH CAROLINA
DEPARTMENT OF TRANSPORTATION
RALEIGH

GENERAL DRAWING

FOR BRIDGE WIDENING ON EASTBOUND NC 147 (DURHAM FREEWAY) OVER SR 1171 (ELLIS RD.) BETWEEN BRIGGS AVE. AND SR 1940

PLANS PREPARED BY:
MULKEY ENGINEERS & CONSULTANTS
PO Box 33127
Raleigh, N.C. 27636
(919) 851-1912
(919) 851-1918 (FAX)
WWW.MULKEYINC.COM
NC LICENSE NO. C-1621

NORTH CAROLINA PROFESSIONAL SEAL 034352 ENGINEER TERRY R. PETERSON
12/2/13

STR #13

REVISIONS							SHEET NO.
NO.	BY:	DATE:	NO.	BY:	DATE:		S-57
1			3				TOTAL SHEETS
2			4				67

DRAWN BY :	W. B. ALLEN	DATE :	6/12
CHECKED BY :	T. R. PETERSON	DATE :	6/12
DESIGN ENGINEER OF RECORD:	T. R. PETERSON	DATE :	12/2/13

10:36:51 AM R:\Structures\ER_\U0071EB_S0_GD_02.dgn
11/26/2013

BM #51: CHISELED SQUARE IN SE CONC. HW OF EB BRIDGE; 30.29' (RT.) STA. 34+00.21 -DFEB- ELEV. 424.46

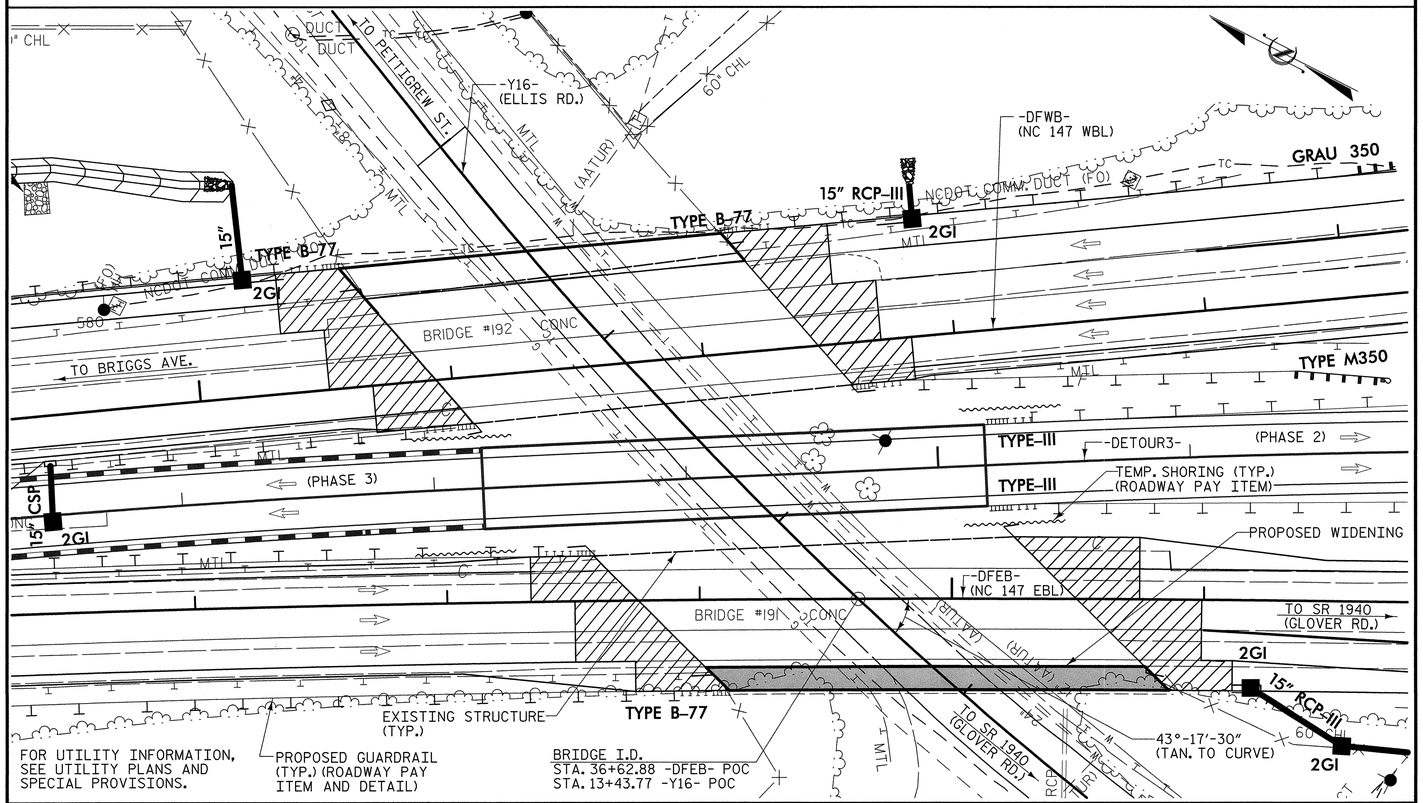

LOCATION SKETCH

NOTES

ASSUMED LIVE LOAD = HL-93 OR ALTERNATE LOADING.

THIS BRIDGE HAS BEEN DESIGNED IN ACCORDANCE WITH THE AASHTO BRIDGE DESIGN SPECIFICATIONS.

THIS BRIDGE IS LOCATED IN SEISMIC ZONE 1.

FOR OTHER DESIGN DATA AND GENERAL NOTES, SEE SHEET SN.

FOR SUBMITTAL OF WORKING DRAWINGS, SEE SPECIAL PROVISIONS.

FOR FALSEWORK AND FORMWORK, SEE SPECIAL PROVISIONS.

FOR CRANE SAFETY, SEE SPECIAL PROVISIONS.

FOR GROUT FOR STRUCTURES, SEE SPECIAL PROVISIONS.

THE ELEVATION AND CLEARANCE SHOWN ON THE PLANS AT THE POINT OF MINIMUM VERTICAL CLEARANCE ARE FROM THE BEST INFORMATION AVAILABLE. PRIOR TO BEGINNING BRIDGE CONSTRUCTION, VERIFY THE ELEVATION ON THE EXISTING PAVEMENT AND CHECK THE CLEARANCE. REPORT ANY VARIATIONS TO THE ENGINEER. ANY PLAN REVISIONS NECESSARY TO ACHIEVE THE REQUIRED MINIMUM VERTICAL CLEARANCE WILL BE PROVIDED BY THE DEPARTMENT.

FOR MAINTENANCE AND PROTECTION OF TRAFFIC BENEATH PROPOSED STRUCTURE, SEE SPECIAL PROVISIONS.

REMOVABLE FORMS MAY BE USED IN LIEU OF METAL STAY-IN-PLACE FORMS IN ACCORDANCE WITH ARTICLE 420-3 OF THE STANDARD SPECIFICATIONS.

NEEDLE BEAMS WILL NOT BE ALLOWED UNLESS OTHERWISE CALLED FOR ON THE PLANS OR APPROVED BY THE ENGINEER.

ALL STRUCTURAL STEEL SHALL BE AASHTO M270 GRADE 50W AND PAINTED IN ACCORDANCE WITH SYSTEM 4 OF ARTICLE 442-8 OF THE STANDARD SPECIFICATIONS UNLESS OTHERWISE NOTED ON THE PLANS.

THE CLASS AA CONCRETE IN THE BRIDGE DECK SHALL CONTAIN FLY ASH OR GROUND GRANULATED BLAST FURNACE SLAG AT THE SUBSTITUTION RATE SPECIFIED IN ARTICLE 1024-1 AND IN ACCORDANCE WITH ARTICLES 1024-5 AND 1024-6 OF THE STANDARD SPECIFICATIONS. NO PAYMENT WILL BE MADE FOR THIS SUBSTITUTION AS IT IS CONSIDERED INCIDENTAL TO THE COST OF THE REINFORCED CONCRETE DECK SLAB.

STEEL SHEET PILING REQUIRED FOR SHORING SHALL BE HOT ROLLED.

TEMPORARY SHORING SHALL BE REQUIRED IN THE AREA INDICATED IN THE PLAN VIEW.

FOR LIMITS OF TEMPORARY SHORING FOR MAINTENANCE OF TRAFFIC, SEE TRAFFIC CONTROL PLANS. FOR PAY ITEM FOR TEMPORARY SHORING FOR MAINTENANCE OF TRAFFIC, SEE ROADWAY PLANS.

THE CONTRACTOR WILL BE REQUIRED TO CONSTRUCT, MAINTAIN AND AFTERWARDS REMOVE A TEMPORARY STRUCTURE AT STATION 34+19.04 -DETOUR3- FOR USE DURING CONSTRUCTION OF THE PROPOSED STRUCTURE. FOR CONSTRUCTION, MAINTENANCE AND REMOVAL OF TEMPORARY STRUCTURE, SEE SPECIAL PROVISIONS.

THE BRIDGE RAILS ON THE TEMPORARY STRUCTURE SHALL BE DESIGNED FOR THE AASHTO LRFD TEST LEVEL 3 (TL-3) CRASH TEST CRITERIA. FOR CONSTRUCTION, MAINTENANCE AND REMOVAL OF TEMPORARY STRUCTURE, SEE SPECIAL PROVISIONS.

THE SUBSTRUCTURE OF THE EXISTING BRIDGE INDICATED ON THE PLANS IS FROM THE BEST INFORMATION AVAILABLE. SINCE THIS INFORMATION IS SHOWN FOR THE CONVENIENCE OF THE CONTRACTOR, THE CONTRACTOR SHALL HAVE NO CLAIM WHATSOEVER AGAINST THE DEPARTMENT OF TRANSPORTATION FOR ANY DELAYS OR ADDITIONAL COST INCURRED BASE ON DIFFERENCES BETWEEN THE EXISTING BRIDGE SUBSTRUCTURE SHOWN ON THE PLANS AND THE ACTUAL CONDITIONS AT THE PROJECT SITE.

"REMOVAL OF EXISTING STRUCTURE" SHALL INCLUDE THE EXISTING OVERHANG, RAIL, SLAB, CURTAIN WALL APPROACH SLAB, EXISTING ROADWAY AND SLOPE PROTECTION TO THE LIMITS SHOWN ON THE PLANS. IT SHALL ALSO INCLUDE REMOVAL OF A PORTION OF THE END BENTS AND WING WALLS AS INDICATED ON THE PLANS.

FOR EROSION CONTROL MEASURES, SEE EROSION CONTROL PLANS.

THE LOCATION OF THE CONSTRUCTION JOINT IN THE DRILLED PIERS IS BASED ON AN APPROXIMATE GROUND LINE ELEVATION. IF THE CONSTRUCTION JOINT IS ABOVE THE ACTUAL GROUND ELEVATION, THE CONTRACTOR SHALL PLACE THE CONSTRUCTION JOINT 1 FT. BELOW THE GROUND LINE.

FOR PLACING LOAD ON STRUCTURAL MEMBERS, SEE SPECIAL PROVISIONS.

PAYMENT FOR FOAM JOINT SEALS AND GROOVING BRIDGE FLOORS IS PROVIDED IN THE BILL OF MATERIAL ON THE PRESERVATION PLANS OF THE EXISTING STRUCTURE.

TOTAL BILL OF MATERIAL

	CONSTRUCTION, MAINTENANCE & REMOVAL OF TEMP. STRUCTURE AT 34+19.04 -DETOUR3-	REMOVAL OF EXISTING STRUCTURE	PILE EXCAVATION IN SOIL	PILE EXCAVATION NOT IN SOIL	3'-6" Ø DRILLED PIERS IN SOIL	3'-6" Ø DRILLED PIERS NOT IN SOIL	SID INSPECTIONS	SPT TESTING	CSL TESTING	REINFORCED CONCRETE DECK SLAB	CLASS A CONCRETE	BRIDGE APPROACH SLABS	REINFORCING STEEL
	LUMP SUM	LUMP SUM	LIN. FT.	LIN. FT.	LIN. FT.	LIN. FT.	EACH	EACH	EACH	SQ. FT.	CU. YDS.	LUMP SUM	LBS.
SUPERSTRUCTURE										1,973		LUMP SUM	
END BENT #1			15.0	15.0							6.9		1405
BENT #1					6.5	9.0	1	1	1		10.0		4966
BENT #2					0.5	11.0	1		1		10.1		4661
END BENT #2			17.0	14.0							7.7		1530
TOTAL	LUMP SUM	LUMP SUM	32.0	29.0	7.0	20.0	2	1	2	1,973	34.7	LUMP SUM	12,562

TOTAL BILL OF MATERIAL

	SPIRAL COLUMN REINFORCING STEEL	STRUCTURAL STEEL (APPROX.)	HP12X53 STEEL PILES		STEEL PILE POINTS	CONCRETE BARRIER RAIL	4" SLOPE PROTECTION	ELASTOMERIC BEARINGS
	LBS.	LBS.	NO.	LIN. FT.	EACH	LIN. FT.	SQ. YDS.	LUMP SUM
SUPERSTRUCTURE		57,600				174.49		LUMP SUM
END BENT #1			3	30	3		82	
BENT #1	661							
BENT #2	589							
END BENT #2			3	30	3		72	
TOTAL	1250	57,600	6	60	6	174.49	154	LUMP SUM

PROJECT NO. U-0071
DURHAM COUNTY
STATION: 34+62.88 -DFEB-

SHEET 4 OF 5

STATE OF NORTH CAROLINA
DEPARTMENT OF TRANSPORTATION
RALEIGH

GENERAL DRAWING

FOR BRIDGE WIDENING ON EASTBOUND NC 147 (DURHAM FREEWAY) OVER SR 1171 (ELLIS RD.) BETWEEN BRIGGS AVE. AND SR 1940

PLANS PREPARED BY:
MULKEY ENGINEERS & CONSULTANTS
PO BOX 33127
RALEIGH, N.C. 27636
(919) 851-1912
(919) 851-1918 (FAX)
WWW.MULKEYINC.COM
NC LICENSE NO. C-1021

NORTH CAROLINA PROFESSIONAL ENGINEER SEAL 19661 L. KEVIN AUSTIN 3/16/14

STR #13

REVISIONS						SHEET NO.
NO.	BY:	DATE:	NO.	BY:	DATE:	S-577
1			3			TOTAL SHEETS
2			4			671

DRAWN BY : W. B. ALLEN DATE : 4/13
CHECKED BY : T. R. PETERSON DATE : 4/13
DESIGN ENGINEER OF RECORD: T. R. PETERSON DATE : 3/4/14

9/16/2014 3:19:10 PM R:\Structures\EBL\U0071EBL_SD_GD_03.dgn

LOAD AND RESISTANCE FACTOR RATING (LRFR) SUMMARY FOR STEEL GIRDERS

LEVEL		VEHICLE	WEIGHT (W) (TONS)	CONTROLLING LOAD RATING (#)	MINIMUM RATING FACTORS (RF)	TONS = W × RF	STRENGTH I LIMIT STATE											SERVICE III LIMIT STATE						COMMENT NUMBER
								MOMENT					SHEAR						MOMENT					
							LIVE-LOAD FACTORS (γ_{LL})	DISTRIBUTION FACTORS (DF)	RATING FACTOR	SPAN	GIRDER LOCATION	DISTANCE FROM LEFT END OF SPAN (ft)	DISTRIBUTION FACTORS (DF)	RATING FACTOR	SPAN	GIRDER LOCATION	DISTANCE FROM LEFT END OF SPAN (ft)	LIVE-LOAD FACTORS (γ_{LL})	DISTRIBUTION FACTORS (DF)	RATING FACTOR	SPAN	GIRDER LOCATION	DISTANCE FROM LEFT END OF SPAN (ft)	
DESIGN LOAD RATING		HL-93 (INVENTORY)	N/A	1	1.06	---	1.75	0.49	1.08	B	ER	46.73	0.78	2.22	B	I	93.41	1.30	0.49	1.06	B	ER	46.73	1
		HL-93 (OPERATING)	N/A		1.38	---	1.35	0.49	1.40	B	ER	46.73	0.78	2.87	B	I	93.41	1.00	0.49	1.38	B	ER	46.73	1
		HS-20 (INVENTORY)	36.000	2	1.46	52.56	1.75	0.49	1.49	B	ER	46.73	0.78	2.98	B	I	93.41	1.30	0.49	1.46	B	ER	46.73	1
		HS-20 (OPERATING)	36.000		1.90	68.40	1.35	0.49	1.93	B	ER	46.73	0.78	3.87	B	I	93.41	1.00	0.49	1.90	B	ER	46.73	1
LEGAL LOAD RATING	SINGLE VEHICLE (SV)	SNSH	13.500		3.42	46.17	1.40	0.49	4.37	B	ER	46.73	0.78	9.21	B	I	93.41	1.30	0.49	3.42	B	ER	46.73	1
		SNGARBS2	20.000		2.49	49.80	1.40	0.49	3.18	B	ER	46.73	0.78	6.44	B	I	0.00	1.30	0.49	2.49	B	ER	46.73	1
		SNAGRIS2	22.000		2.33	51.26	1.40	0.49	2.98	B	ER	46.73	0.78	5.94	B	I	93.41	1.30	0.49	2.33	B	ER	46.73	1
		SNCOTTS3	27.250		1.70	46.33	1.40	0.49	2.18	B	ER	46.73	0.78	4.59	B	I	93.41	1.30	0.49	1.70	B	ER	46.73	1
		SNAGGRS4	34.925		1.40	48.90	1.40	0.49	1.79	B	ER	46.73	0.78	3.73	B	I	93.41	1.30	0.49	1.40	B	ER	46.73	1
		SNS5A	35.550		1.37	48.70	1.40	0.49	1.75	B	ER	46.73	0.78	3.74	B	I	0.00	1.30	0.49	1.37	B	ER	46.73	1
		SNS6A	39.950		1.25	49.94	1.40	0.49	1.59	B	ER	46.73	0.78	3.39	B	I	93.41	1.30	0.49	1.25	B	ER	46.73	1
		SNS7B	42.000		1.19	49.98	1.40	0.49	1.52	B	ER	46.73	0.78	3.29	B	I	0.00	1.30	0.49	1.19	B	ER	46.73	1
	TRUCK TRACTOR SEMI-TRAILER (TTST)	TNAGRIT3	33.000		1.52	50.16	1.40	0.49	1.94	B	ER	46.73	0.78	4.05	B	I	93.41	1.30	0.49	1.52	B	ER	46.73	1
		TNT4A	33.075		1.52	50.27	1.40	0.49	1.95	B	ER	46.73	0.78	3.98	B	I	0.00	1.30	0.49	1.52	B	ER	46.73	1
		TNT6A	41.600		1.24	51.58	1.40	0.49	1.58	B	ER	46.73	0.78	3.44	B	I	93.41	1.30	0.49	1.24	B	ER	46.73	1
		TNT7A	42.000		1.24	52.08	1.40	0.49	1.58	B	ER	46.73	0.78	3.38	B	I	0.00	1.30	0.49	1.24	B	ER	46.73	1
		TNT7B	42.000		1.27	53.34	1.40	0.49	1.62	B	ER	46.73	0.78	3.24	B	I	93.41	1.30	0.49	1.27	B	ER	46.73	1
		TNAGRIT4	43.000		1.22	52.46	1.40	0.49	1.55	B	ER	46.73	0.78	3.14	B	I	0.00	1.30	0.49	1.22	B	ER	46.73	1
		TNAGT5A	45.000		1.15	51.75	1.40	0.49	1.47	B	ER	46.73	0.78	3.08	B	I	93.41	1.30	0.49	1.15	B	ER	46.73	1
		TNAGT5B	45.000	3	1.14	51.30	1.40	0.49	1.45	B	ER	46.73	0.78	3.00	B	I	93.41	1.30	0.49	1.14	B	ER	46.73	1

LOAD FACTORS:

DESIGN LOAD RATING FACTORS	LIMIT STATE	γ_{DC}	γ_{DW}
	STRENGTH I	1.25	1.50
	SERVICE III	1.00	1.00

NOTES:

MINIMUM RATING FACTORS ARE BASED ON THE STRENGTH I AND SERVICE III LIMIT STATES.

ALLOWABLE STRESSES FOR SERVICE III LIMIT STATE ARE AS REQUIRED FOR DESIGN.

COMMENTS:

1. FOR GIRDERS 1 & 2
2.
3.
4.

(#) CONTROLLING LOAD RATING

(1) DESIGN LOAD RATING (HL-93)

(2) DESIGN LOAD RATING (HS-20)

(3) LEGAL LOAD RATING **

** SEE CHART FOR VEHICLE TYPE

GIRDER LOCATION

I - INTERIOR GIRDER

ER - EXTERIOR RIGHT GIRDER

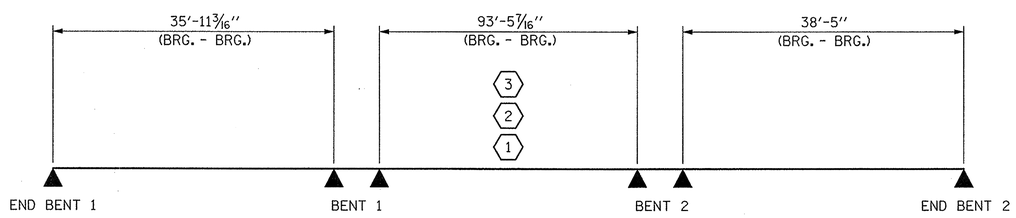

LRFR SUMMARY

PROJECT NO. U-0071

DURHAM COUNTY

STATION: 34+62.88 -DFEB-

SHEET 5 OF 5

PLANS PREPARED BY:

MULKEY ENGINEERS & CONSULTANTS
PO Box 33127
RALEIGH, N.C. 27636
(919) 851-1912
(919) 851-1918 (FAX)
WWW.MULKEYINC.COM
NC LICENSE NO. C-1021

THIS STANDARD DRAWING REVIEWED & ADOPTED FOR USE AT THE REFERENCED LOCATION BY THE UNDERSIGNED:

NORTH CAROLINA PROFESSIONAL SEAL 034352 ENGINEER THERON R. PETERSON

2/2/18

STR #13

STATE OF NORTH CAROLINA
DEPARTMENT OF TRANSPORTATION
RALEIGH

STANDARD

LRFR SUMMARY FOR STEEL GIRDERS

(NON-INTERSTATE TRAFFIC)

REVISIONS						SHEET NO.
NO.	BY:	DATE:	NO.	BY:	DATE:	S-578
1			3			TOTAL SHEETS
2			4			671

STD. NO. LRFR3

ASSEMBLED BY : Z. H. BROWN	DATE : 10/12
CHECKED BY : T. R. PETERSON	DATE : 10/12
DRAWN BY : MAA 1/08	REV. 11/12/08RR MAA/GM
CHECKED BY : GM/DI 2/08	REV. 10/1/11 MAA/GM

11/26/2013 10:33:22 AM R:\Structures\EBL\U0071EBL_SD_LRFR_01.dgn

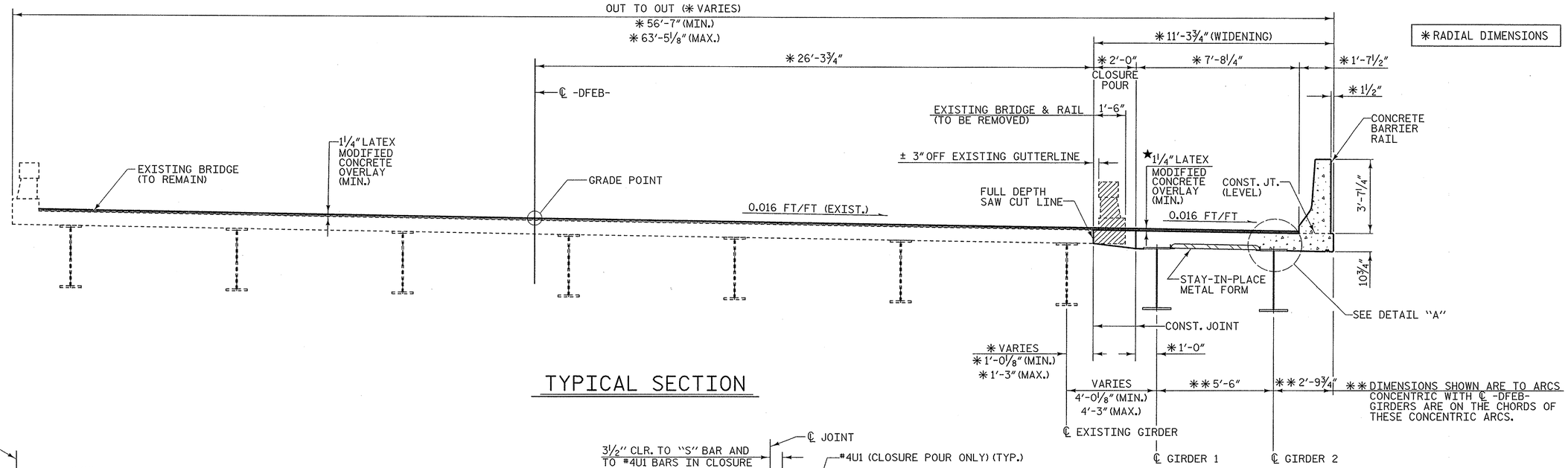

TYPICAL SECTION

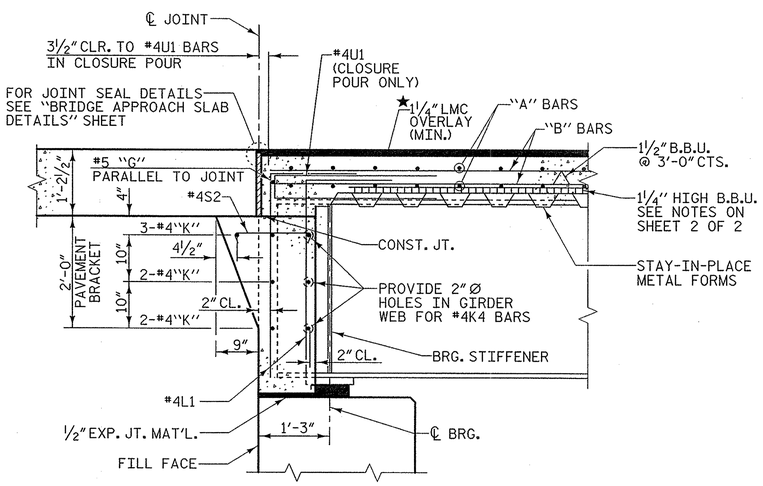

SECTION AT END BENT

#5 "G" BARS ARE PARALLEL TO JOINT

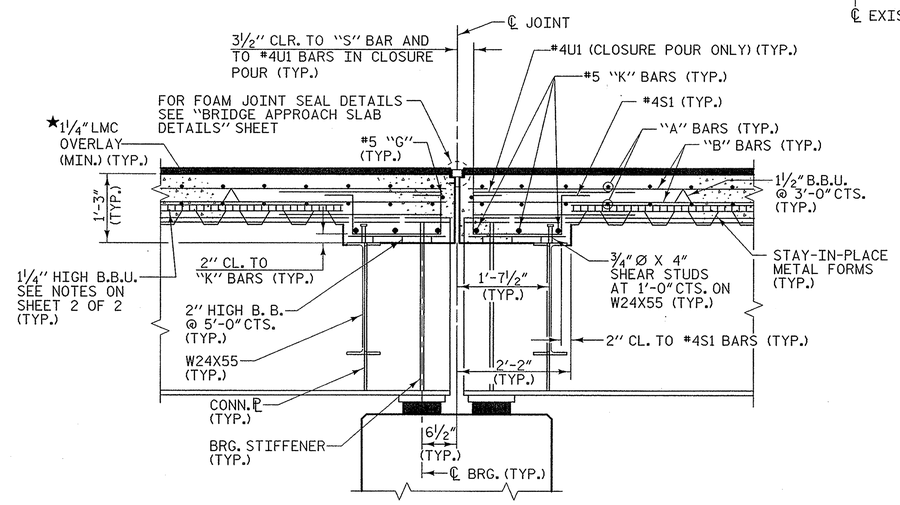

SECTION AT BENT

#5 "G" BARS ARE PARALLEL TO JOINT

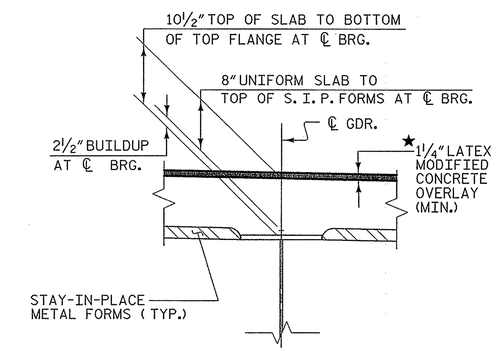

DETAIL "A"

★ 1 1/4" LATEX MODIFIED CONCRETE OVERLAY (MIN.) LOCATED IN THE PROPOSED WIDENING IS INCLUDED IN THE LMC QUANTITY ON THE PRESERVATION PLANS.

PROJECT NO. U-0071

DURHAM COUNTY

STATION: 34+62.88 -DFEB-

SHEET 1 OF 2

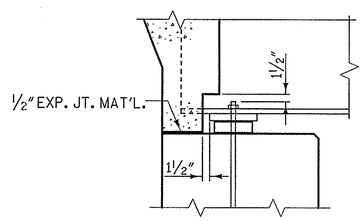

SECTION A-A

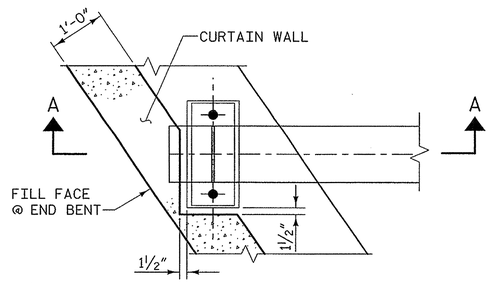

PART PLAN AT TOP OF ANCHOR BOLTS

CURTAIN WALL BLOCKOUT FOR ELASTOMERIC BEARING PADS

DRAWN BY :	W. B. ALLEN	DATE :	6/12
CHECKED BY :	T. R. PETERSON	DATE :	6/12
DESIGN ENGINEER OF RECORD:	T. R. PETERSON	DATE :	12/2/13

PLANS PREPARED BY:
MULKEY ENGINEERS & CONSULTANTS
PO Box 33127
RALEIGH, N.C. 27636
(919) 851-1912
(919) 851-1918 (FAX)
WWW.MULKEYINC.COM
NC LICENSE NO. C-1021

NORTH CAROLINA PROFESSIONAL SEAL 034352 ENGINEER TERRY R. PETERSON
12/2/13

STR #13

STATE OF NORTH CAROLINA
DEPARTMENT OF TRANSPORTATION
RALEIGH

SUPERSTRUTURE

TYPICAL SECTION

REVISIONS								SHEET NO.
NO.	BY:	DATE:	NO.	BY:	DATE:			S-579
1			3					TOTAL SHEETS
2			4					671

12/26/2013 10:31:59 AM R:\Structures\EBL\U0071EBL_SD_TS_01.dgn

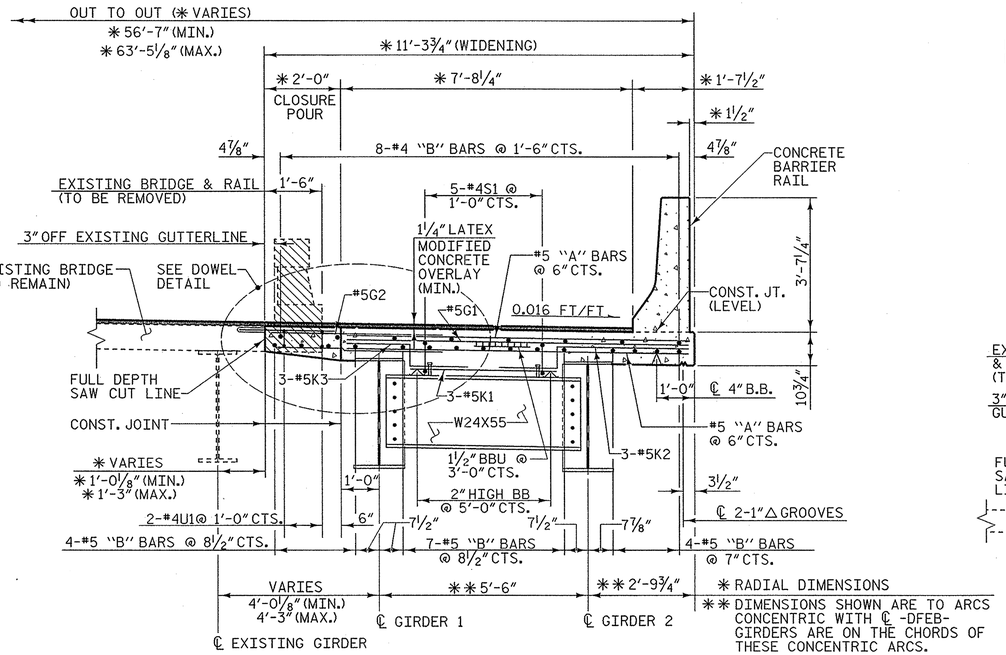

TYPICAL SECTION AT BENT DIAPHRAGM

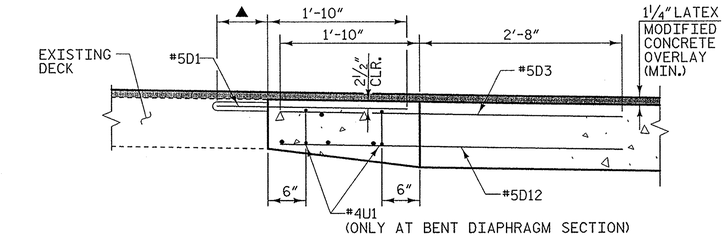

DOWEL DETAIL

▲ EMBEDMENT DEPTH SHALL BE DETERMINED BY MANUFACTURER
#5D1 BAR QUANTITY BASED ON AN 8" EMBEDMENT DEPTH
(SEE "SUPERSTRUTURE BILL OF MATERIAL" SHEET)

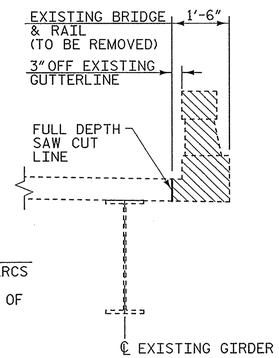

INTERMEDIATE SECTION

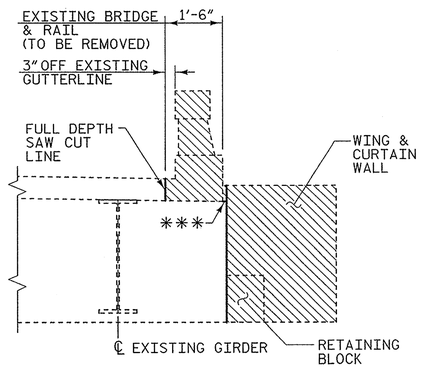

END ELEVATION

✱✱✱ REMOVE CURTAIN WALL PORTION BENEATH BARRIER RAIL.

CONCRETE REMOVAL DETAILS

(CONCRETE IN HATCHED AREA TO BE REMOVED)

NOTES

PROVIDE 1¼" HIGH BEAM BOLSTERS UPPER (BBU) AT 4'-0" CENTERS ATOP THE METAL STAY-IN-PLACE FORMS TO SUPPORT THE BOTTOM MAT OF "A" BARS. WHEN USING REMOVABLE FORMS, PROVIDE CONTINUOUS HIGH CHAIRS FOR METAL DECK (C.H.C.M.) @ 4'-0" CTS. WITH A HEIGHT TO SUPPORT THE BOTTOM MAT OF "A" BARS A CLEAR DISTANCE OF 2½" ABOVE THE TOP OF THE REMOVABLE FORM.

#5D1, #5D4, #5D6 & #5D9 DOWELS SHALL BE PLACED IN THE SAME HORIZONTAL PLANE AS THE TOP SLAB REINFORCING STEEL. #5D3, #5D5, #5D7, #5D8, #5D10 THROUGH #5D17 DOWELS SHALL BE PLACED IN THE SAME HORIZONTAL PLANE AS THE TOP AND BOTTOM SLAB REINFORCING STEEL.

PREVIOUSLY CAST CONCRETE IN EACH SPAN SHALL HAVE ATTAINED A MINIMUM COMPRESSIVE STRENGTH OF 3000 PSI BEFORE ADDITIONAL CONCRETE IS CAST IN THAT SPAN.

BARRIER RAIL IN EACH SPAN SHALL NOT BE CAST UNTIL ALL SLAB CONCRETE IN THAT SPAN HAS BEEN CAST AND HAS REACHED A MINIMUM COMPRESSIVE STRENGTH OF 3000 PSI.

THE CONTRACTOR MAY, WHEN NECESSARY, PROPOSE A SCHEME FOR AVOIDING INTERFERENCE BETWEEN METAL STAY-IN-PLACE FORM SUPPORTS OR FORMS AND GIRDER STIFFENER OR CONNECTOR PLATES. THE PROPOSAL SHALL BE INDICATED, AS APPROPRIATE, ON EITHER THE STEEL WORKING DRAWINGS OR THE METAL STAY-IN-PLACE FORM WORKING DRAWINGS.

FOR REINFORCING STEEL BARS INDICATED, BUT NO MARK SHOWN, SEE PLAN OF SPANS.

#5 "G" BARS MAY BE SHIFTED SLIGHTLY AS NECESSARY TO CLEAR REINFORCING STEEL AND STIRRUPS.

#5D1, #5D4, #5D6 & #5D9 BARS SHALL BE INSTALLED USING AN ADHESIVE ANCHORING SYSTEM. LEVEL 1 FIELD TESTING IS REQUIRED, AND THE YIELD LOAD OF THE DOWELS IS 18.6 KIPS. ADHESIVELY ANCHORED ANCHOR BOLT OR DOWEL TESTING SHALL BE IN ACCORDANCE WITH SECTION 420-13 OF THE STANDARD SPECIFICATIONS.

#4D2 BARS SHALL BE INSTALLED USING AN ADHESIVE ANCHORING SYSTEM. LEVEL 1 FIELD TESTING IS REQUIRED, AND THE YIELD LOAD OF THE DOWELS IS 12 KIPS. ADHESIVELY ANCHORED ANCHOR BOLT OR DOWEL TESTING SHALL BE IN ACCORDANCE WITH SECTION 420-13 OF THE STANDARD SPECIFICATIONS.

STRUCTURAL STEEL ERECTION IN EACH SPAN SHALL BE COMPLETE BEFORE FALSEWORK OR FORMS ARE PLACED ON THE UNIT.

FULL DEPTH SAW CUT SHALL BE MADE AND EXISTING CONCRETE REMOVED IN ACCORDANCE WITH PLAN DETAILS.

NOTE:

FOR THE NUMBER OF #4L1 & #4S2 NOT INDICATED, SEE PLAN OF SPANS.

★ EMBEDMENT DEPTH SHALL BE DETERMINED BY MANUFACTURER #4D2 BAR QUANTITY BASED ON AN 8" EMBEDMENT DEPTH.

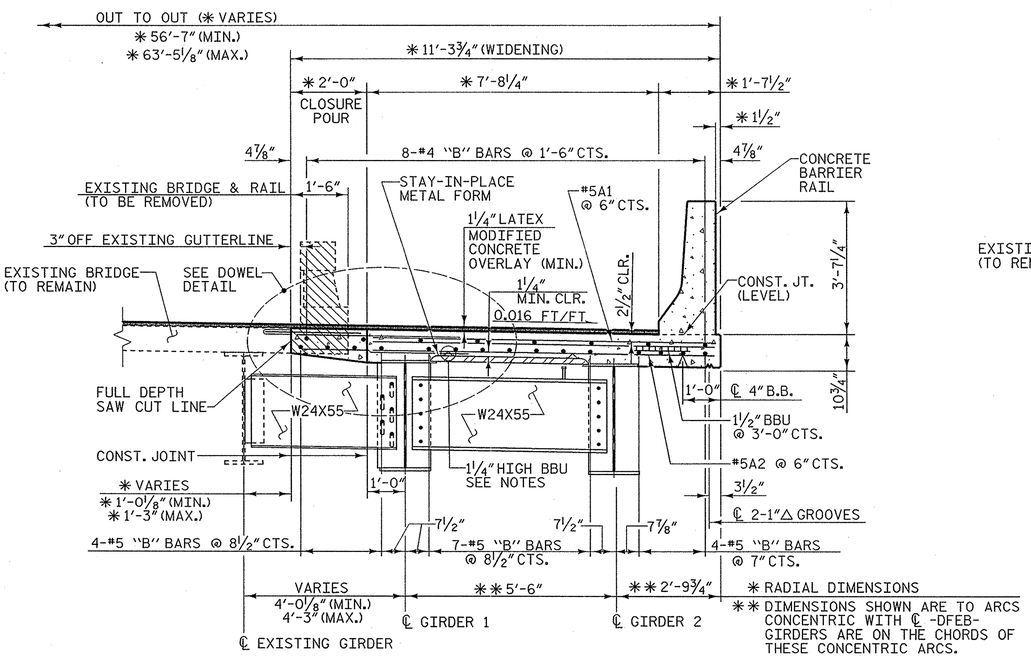

TYPICAL SECTION AT INTERMEDIATE DIAPHRAGM

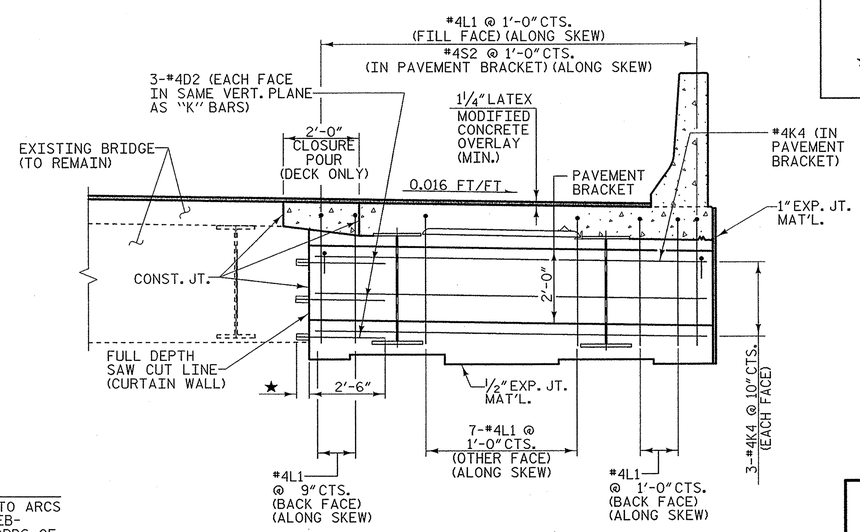

END ELEVATION

PROJECT NO. U-0071
DURHAM COUNTY
STATION: 34+62.88 -DFEB-

SHEET 2 OF 2

STATE OF NORTH CAROLINA
DEPARTMENT OF TRANSPORTATION
RALEIGH

SUPERSTRUCTURE
TYPICAL SECTION

PLANS PREPARED BY:
MULKEY ENGINEERS & CONSULTANTS
PO Box 33127
Raleigh, N.C. 27636
(919) 851-1912
(919) 851-1918 (FAX)
WWW.MULKEYINC.COM
NC LICENSE NO. C-1931

NORTH CAROLINA PROFESSIONAL SEAL 034352 ENGINEER TERRE R. PETERSON
12/2/13

STR #13

REVISIONS						SHEET NO.
NO.	BY:	DATE:	NO.	BY:	DATE:	S-580
1			3			TOTAL SHEETS
2			4			

DRAWN BY : W. B. ALLEN DATE : 1/13
CHECKED BY : T. R. PETERSON DATE : 2/13
DESIGN ENGINEER OF RECORD: T. R. PETERSON DATE : 12/2/13

11/26/2013 10:30:28 AM R:\Structures\EBL\U0071EBL_S0_TS_02.dgn

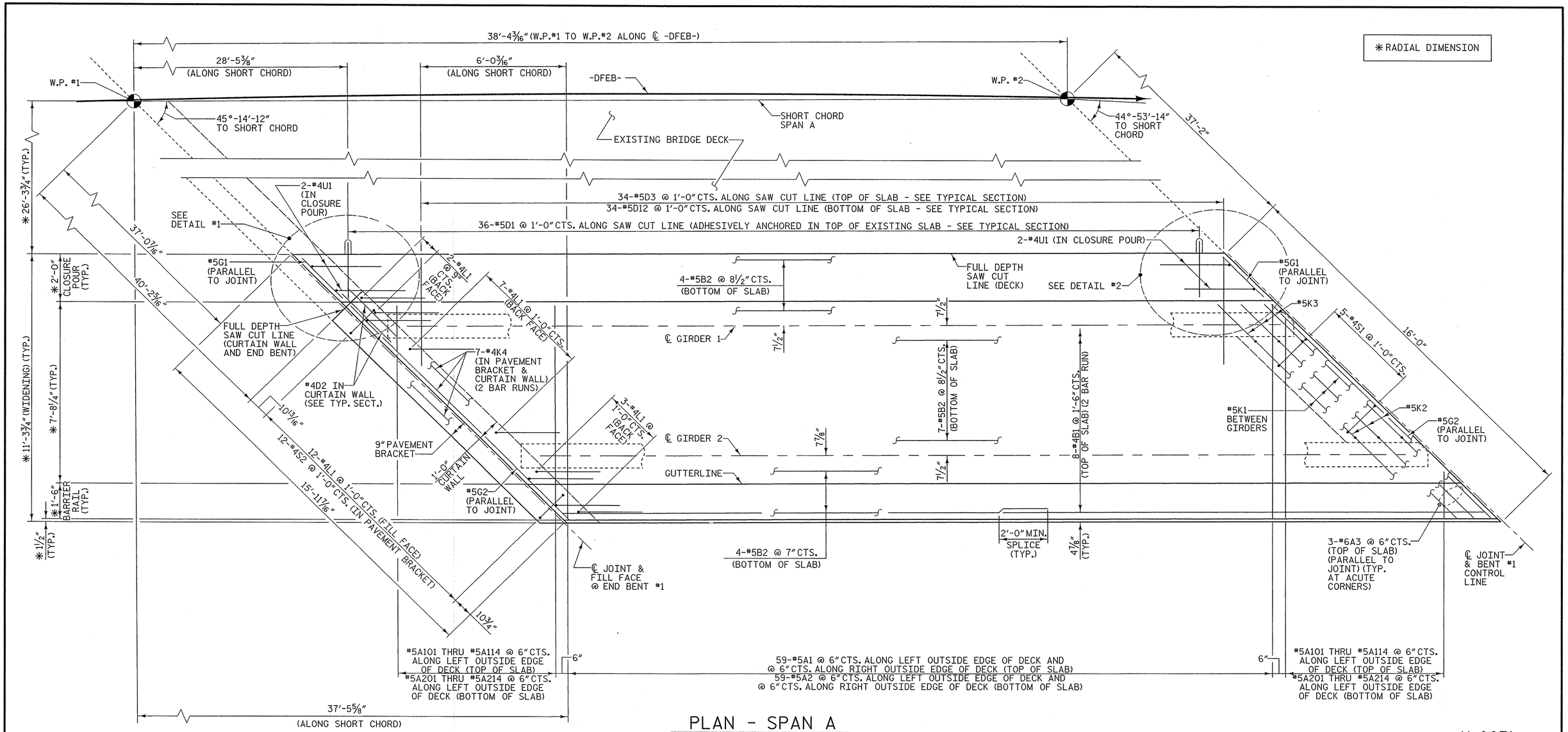

✱ RADIAL DIMENSION

PLAN - SPAN A

#5 "D" BARS MAY BE FIELD BENT AFTER INSTALLATION AS NECESSARY TO MAINTAIN 2" CLEARANCE TO FORMED JOINT OPENING.

FOR POUR SEQUENCE & TRANSVERSE CONSTRUCTION JOINT DETAILS, SEE "SUPERSTRUCTURE BILL OF MATERIAL" SHEET.

ARC OFFSETS ARE NEGLIGIBLE THEREFORE NOT SHOWN.

PROJECT NO. U-0071

DURHAM COUNTY

STATION: 34+62.88 -DFEB-

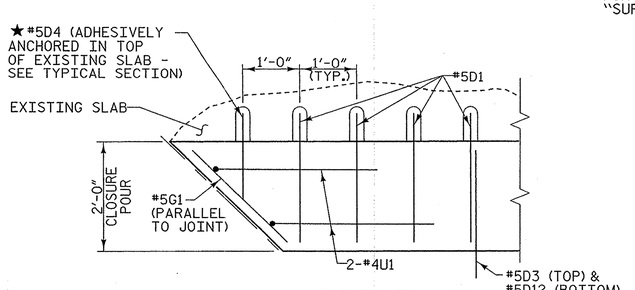

DETAIL #1

★ PLACE IN SAME PLANE AS #5D1 BARS

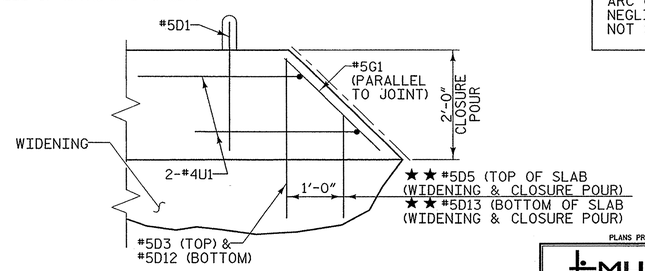

DETAIL #2

★★ PLACE IN SAME PLANE AS TOP & BOTTOM SLAB "B" BARS

PLANS PREPARED BY:

MULKEY ENGINEERS & CONSULTANTS
PO Box 33127
Raleigh, N.C. 27636
(919) 851-1912
(919) 851-1918 (FAX)
WWW.MULKEYINC.COM
NC LICENSE NO. C-1021

NORTH CAROLINA PROFESSIONAL SEAL 034352 ENGINEER TERRE R. PETERSON 12/2/13

STR #13

STATE OF NORTH CAROLINA
DEPARTMENT OF TRANSPORTATION
RALEIGH

SUPERSTRUCTURE

PLAN OF SPAN A

REVISIONS								SHEET NO.
NO.	BY:	DATE:	NO.	BY:	DATE:			S-581
1			3					TOTAL SHEETS
2			4					67

DRAWN BY :	W. B. ALLEN	DATE :	2/13
CHECKED BY :	T. R. PETERSON	DATE :	2/13
DESIGN ENGINEER OF RECORD:	T. R. PETERSON	DATE :	12/2/13

11/26/2013 10:25:59 AM R:\Structures\EB\U0071EB_S0_SL01.dgn

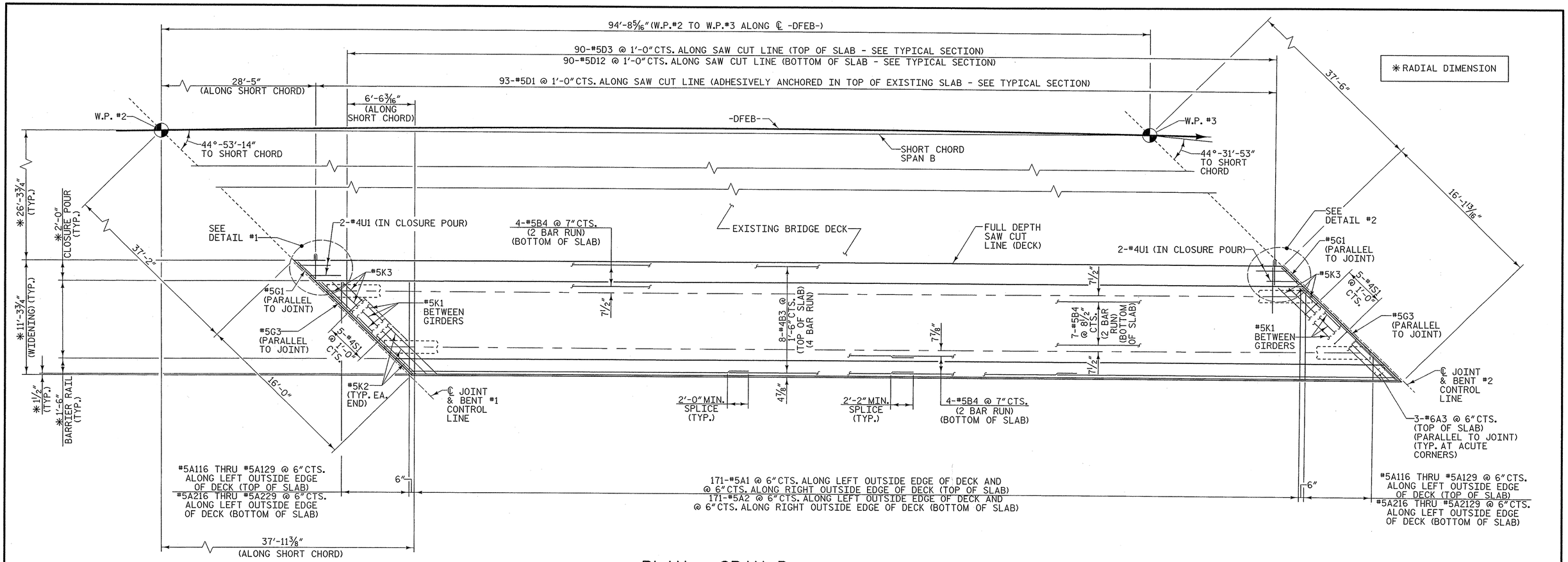

PLAN - SPAN B

#5 "D" BARS MAY BE FIELD BENT AFTER INSTALLATION AS NECESSARY TO MAINTAIN 2" CLEARANCE TO FORMED JOINT OPENING.

FOR POUR SEQUENCE & TRANSVERSE CONSTRUCTION JOINT DETAIL, SEE "SUPERSTRUCTURE BILL OF MATERIAL" SHEET.

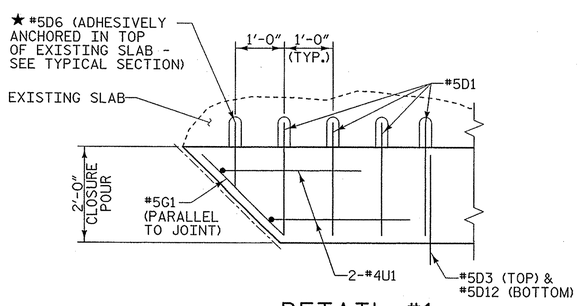

DETAIL #1

★ PLACE IN SAME PLANE AS #5D1 BARS

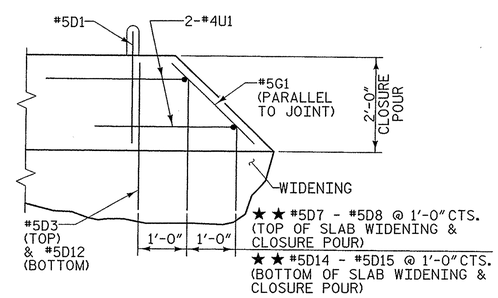

DETAIL #2

★★ PLACE IN SAME PLANE AS TOP & BOTTOM SLAB "B" BARS

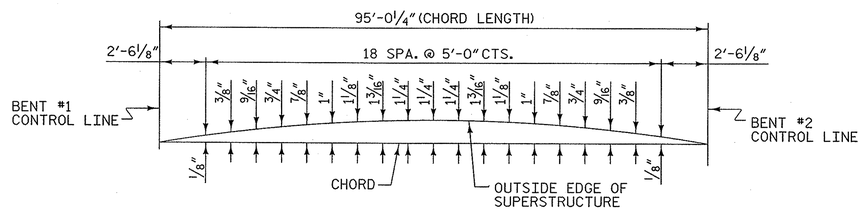

RIGHT OUTSIDE EDGE

ARC OFFSETS

PROJECT NO. U-0071

DURHAM COUNTY

STATION: 34+62.88 -DFEB-

STATE OF NORTH CAROLINA
DEPARTMENT OF TRANSPORTATION
RALEIGH

SUPERSTRUCTURE

PLAN OF SPAN B

PLANS PREPARED BY:
MULKEY ENGINEERS & CONSULTANTS
PO Box 33127 RALEIGH, N.C. 27636
(919) 851-1912 (919) 851-1918 (FAX)
WWW.MULKEYINC.COM
NC LICENSE NO. C-1051

NORTH CAROLINA PROFESSIONAL SEAL 034352 ENGINEER TERRY R. PETERSON
12/2/13

STR #13

REVISIONS							SHEET NO.
NO.	BY:	DATE:	NO.	BY:	DATE:		S-582
1			3				TOTAL SHEETS
2			4				671

DRAWN BY :	W. B. ALLEN	DATE :	2/13
CHECKED BY :	T. R. PETERSON	DATE :	2/13
DESIGN ENGINEER OF RECORD:	T. R. PETERSON	DATE :	12/2/13

11/26/2013 10:24:14 AM R:\Structures\EBL\U0071EBL_S3_S2_01.dgn

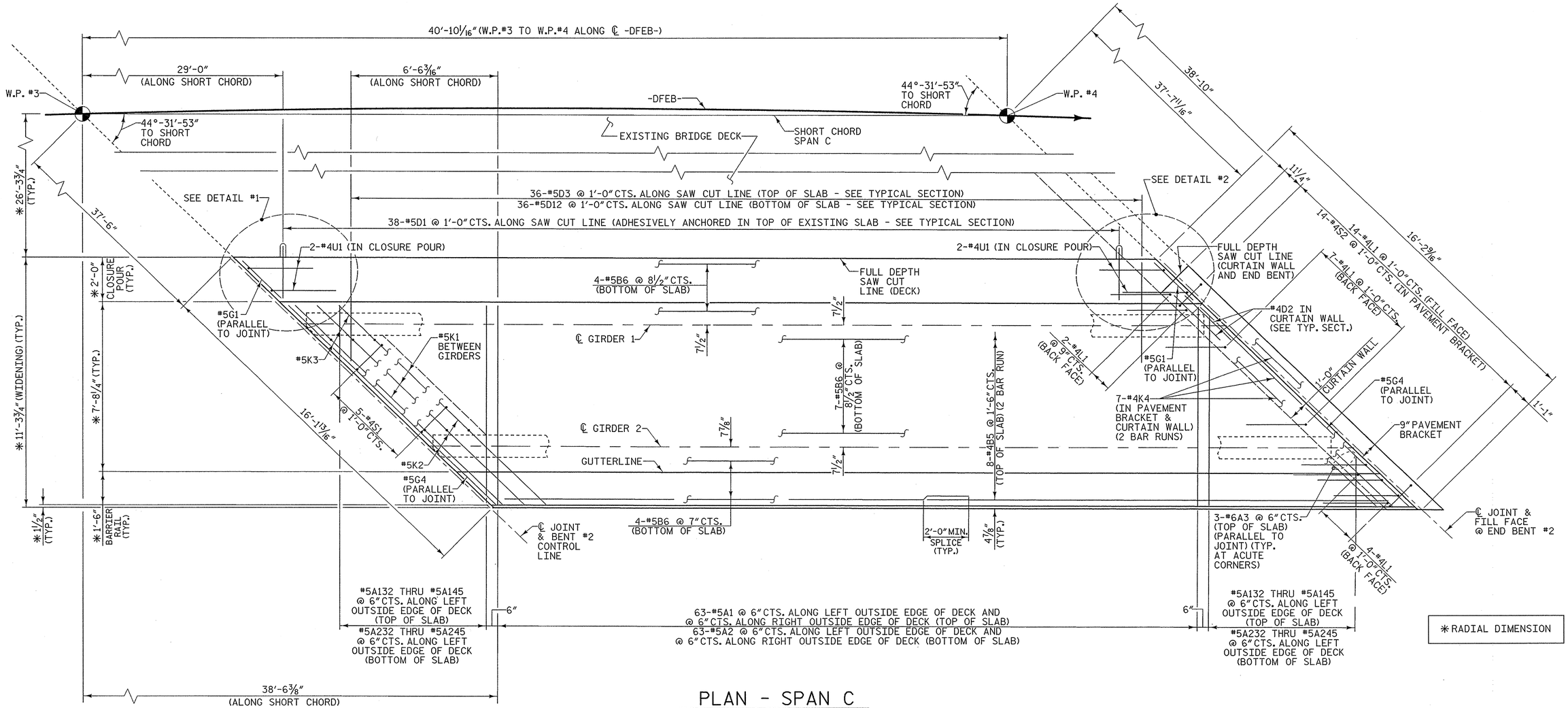

✱ RADIAL DIMENSION

PLAN - SPAN C

#5 "D" BARS MAY BE FIELD BENT AFTER INSTALLATION AS NECESSARY TO MAINTAIN 2" CLEARANCE TO FORMED JOINT OPENING.

FOR POUR SEQUENCE & TRANSVERSE CONSTRUCTION JOINT DETAILS, SEE "SUPERSTRUCTURE BILL OF MATERIAL" SHEET.

ARC OFFSETS ARE NEGLIGIBLE THEREFORE NOT SHOWN.

PROJECT NO. U-0071

DURHAM COUNTY

STATION: 34+62.88 -DFEB-

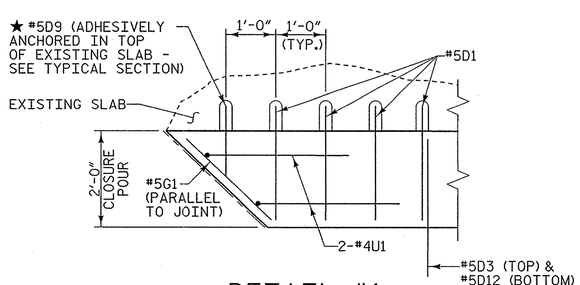

DETAIL #1

★ PLACE IN SAME PLANE AS #5D1 BARS

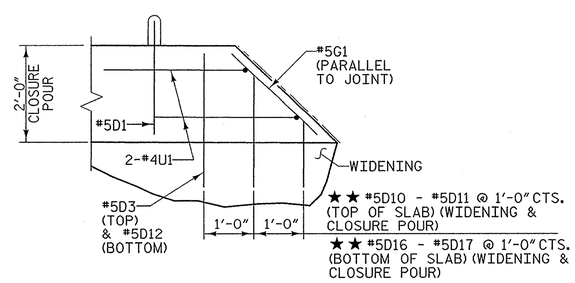

DETAIL #2

★★ PLACE IN SAME PLANE AS TOP & BOTTOM SLAB "B" BARS

DRAWN BY :	W. B. ALLEN	DATE :	2/13
CHECKED BY :	T. R. PETERSON	DATE :	2/13
DESIGN ENGINEER OF RECORD:	T. R. PETERSON	DATE :	12/2/13

PLANS PREPARED BY:
MULKEY ENGINEERS & CONSULTANTS
PO Box 33127
RALEIGH, N.C. 27636
(919) 851-1912
(919) 851-1918 (FAX)
WWW.MULKEYINC.COM
NC LICENSE NO. C-1621

NORTH CAROLINA PROFESSIONAL SEAL 034352 ENGINEER TERRY R. PETERSON
12/2/13

STR #13

STATE OF NORTH CAROLINA
DEPARTMENT OF TRANSPORTATION
RALEIGH

SUPERSTRUCTURE

PLAN OF SPAN C

REVISIONS						
NO.	BY:	DATE:	NO.	BY:	DATE:	
1			3			
2			4			

SHEET NO. S-583

TOTAL SHEETS 671

W/26/2013 10:20:58 AM R:\Structures\EBL\U0071EBL_SD_S3_01.dgn

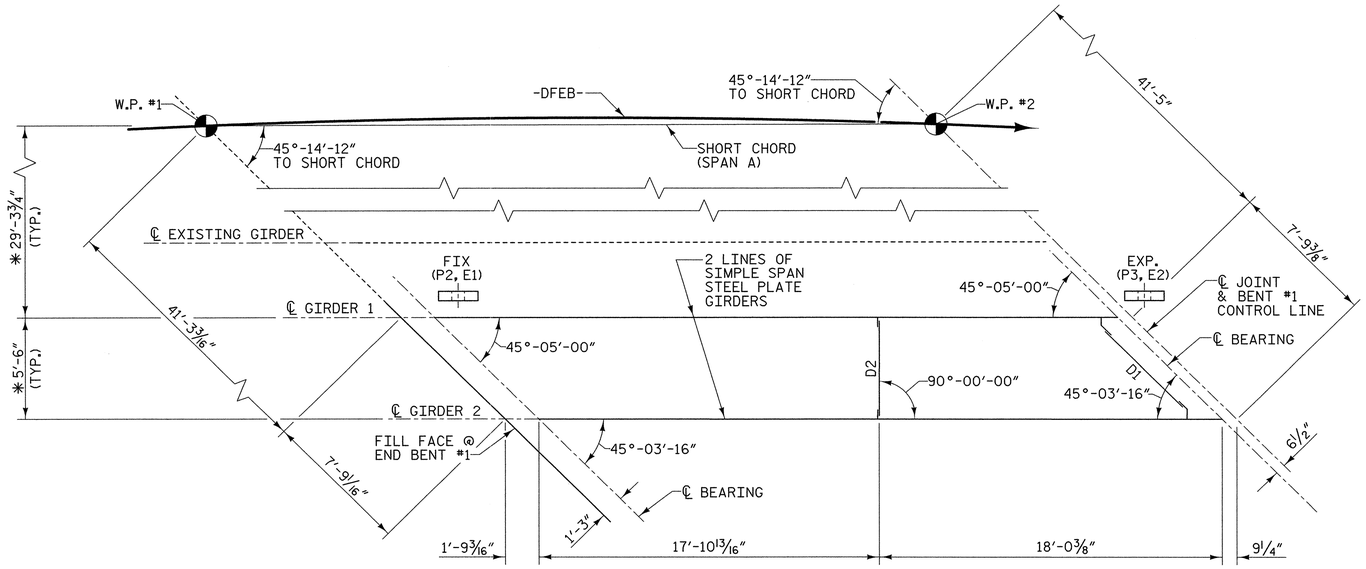

FRAMING PLAN - SPAN A

✱ RADIAL DIMENSION

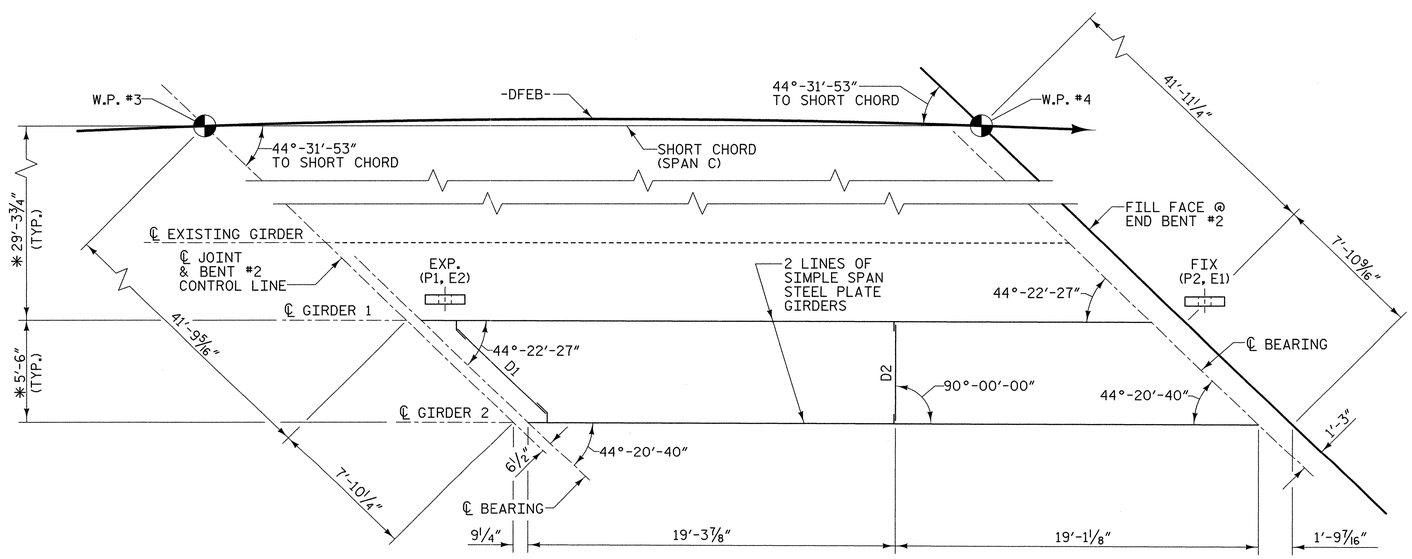

FRAMING PLAN - SPAN C

STRUCTURAL STEEL NOTES

ALL STRUCTURAL STEEL TO BE AASHTO M270 GRADE 50W AND PAINTED IN ACCORDANCE WITH SYSTEM 4 OF ARTICLE 442-8 OF THE STANDARD SPECIFICATIONS UNLESS OTHERWISE NOTED ON THE PLANS.

ALL DIMENSIONS SHOWN ARE HORIZONTAL OR VERTICAL UNLESS OTHERWISE NOTED.

ALL FIELD CONNECTIONS TO BE ⅞" DIA. HIGH STRENGTH BOLTS UNLESS OTHERWISE NOTED.

BEARING STIFFENERS ARE TO BE PLACED NORMAL TO THE WEB OF THE GIRDER AND SHALL BE PLUMB.

A CHARPY V-NOTCH TEST IS REQUIRED FOR WEB PLATES, BOTTOM FLANGE PLATES, BOTTOM FLANGE SPLICE PLATES AND WEB SPLICE PLATES (IF USED) FOR ALL GIRDERS IN ACCORDANCE WITH ARTICLE 1027-7 OF THE STANDARD SPECIFICATIONS.

WHERE DIAPHRAGMS ARE TO BE BOLTED TO EXISTING STEEL BEAMS, DO NOT REMOVE PAINT FROM THE CONTACT SURFACE.

CONNECTION BOLTS ARE TO BE LOCATED AT THE BOTTOM OF THE CONNECTION SLOTS AND TIGHTENED TO A SNUG FIT PRIOR TO FIELD WELDING OPPOSITE END OF DIAPHRAGM. AFTER WELDING DIAPHRAGM TO CONNECTION ANGLE AND PRIOR TO THE POURING OF THE SLAB, BACK OFF BOLTS ½ TURN TO ALLOW FOR VERTICAL DEFLECTION OF NEW BEAM. AFTER DEFLECTIONS HAVE OCCURED, TIGHTEN BOLTS AS REQUIRED BY THE STANDARD SPECIFICATIONS.

STUDS ON GIRDERS MAY BE SHIFTED UP TO 1" IF NECESSARY TO CLEAR FLANGE SPLICE WELD.

TENSION ON THE AASHTO M164 BOLTS SHALL BE CALIBRATED USING DIRECT TENSION INDICATOR WASHERS IN ACCORDANCE WITH ARTICLE 440-8 OF THE STANDARD SPECIFICATIONS.

BEARING STIFFENER MAY REQUIRE COPING IF WIDER THAN BOTTOM FLANGE.

FABRICATORS SHALL DETAIL DIAPHRAGM MEMBERS AND CONNECTIONS FOR STEEL DEAD LOAD FIT UP.

PROJECT NO. U-0071

DURHAM COUNTY

STATION: 34+62.88 -DFEB-

SHEET 1 OF 2

STATE OF NORTH CAROLINA
DEPARTMENT OF TRANSPORTATION
RALEIGH

SUPERSTRUCTURE

FRAMING PLAN

PLANS PREPARED BY:

MULKEY ENGINEERS & CONSULTANTS
PO Box 33127
RALEIGH, N.C. 27636
(919) 851-1912
(919) 851-1918 (FAX)
WWW.MULKEYINC.COM
NC LICENSE NO. C-1021

NORTH CAROLINA PROFESSIONAL SEAL 034352 ENGINEER TERRY R. PETERSON 3/4/14

STR #13

REVISIONS						SHEET NO.
NO.	BY:	DATE:	NO.	BY:	DATE:	S-58A
1			3			TOTAL SHEETS
2			4			71

DRAWN BY : W. B. ALLEN DATE : 2/13
CHECKED BY : T. R. PETERSON DATE : 2/13
DESIGN ENGINEER OF RECORD: T. R. PETERSON DATE : 3/4/14

3/4/2014 11:34:48 AM R:\Structures\EBL\U0071EBL_SD_FP_01.dgn

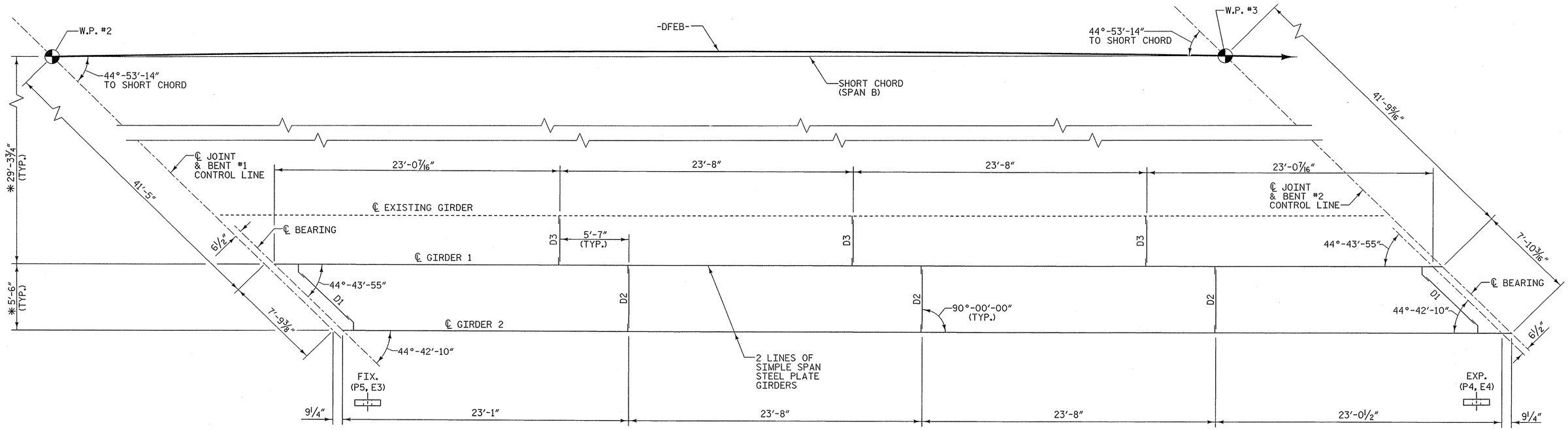

FRAMING PLAN - SPAN B

PROJECT NO. U-0071

DURHAM COUNTY

STATION: 34+62.88 -DFEB-

SHEET 2 OF 2

STATE OF NORTH CAROLINA
DEPARTMENT OF TRANSPORTATION
RALEIGH

SUPERSTRUCTURE

FRAMING PLAN

PLANS PREPARED BY:
MULKEY ENGINEERS & CONSULTANTS
PO Box 33127
Raleigh, NC 27636
(919) 851-1912
(919) 851-1918 (FAX)
WWW.MULKEYINC.COM
NC LICENSE NO. C-1021

NORTH CAROLINA PROFESSIONAL SEAL 034352 ENGINEER TERRE R. PETERSON
12/2/13

STR #13

REVISIONS						SHEET NO.
NO.	BY:	DATE:	NO.	BY:	DATE:	S-585
1			3			TOTAL SHEETS
2			4			671

DRAWN BY : W. B. ALLEN DATE : 2/13
CHECKED BY : T. R. PETERSON DATE : 2/13
DESIGN ENGINEER OF RECORD: T. R. PETERSON DATE : 12/2/13

11/26/2013 10:18:25 AM R:\Structures\EBL\U0071EBL_SD_FP_02.dgn

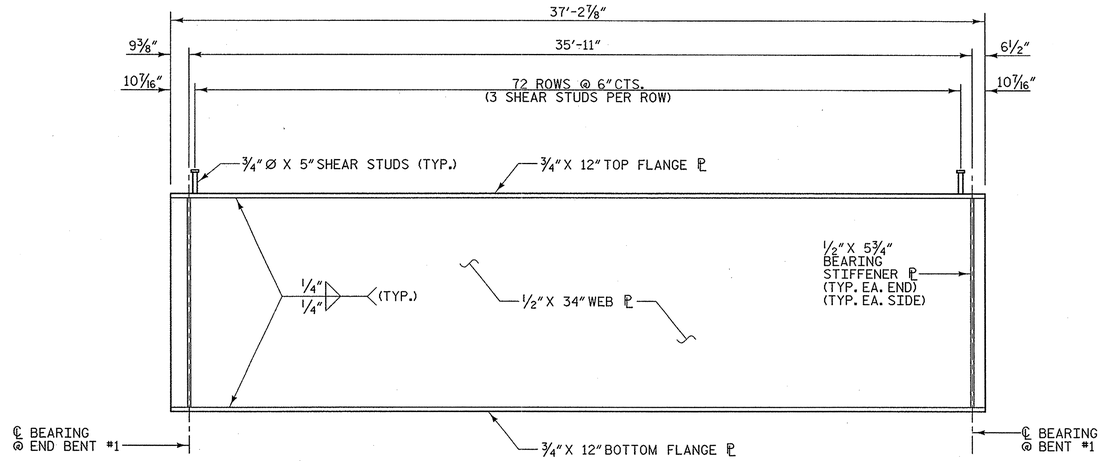

SPAN A
GIRDER 1

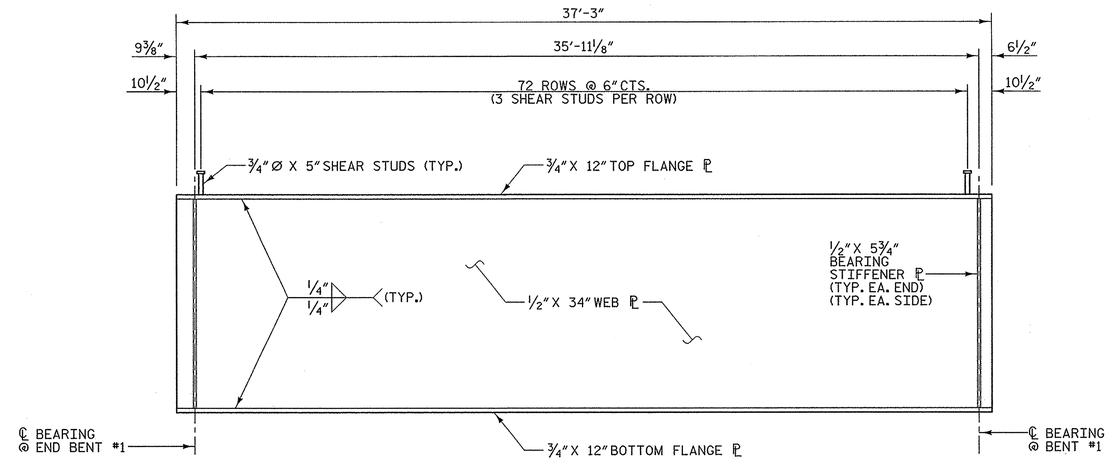

SPAN A
GIRDER 2

GIRDER ELEVATION

CONNECTOR PLATES NOT SHOWN, FOR PLACEMENT SEE "SUPERSTRUCTURE FRAMING PLAN" SHEETS.

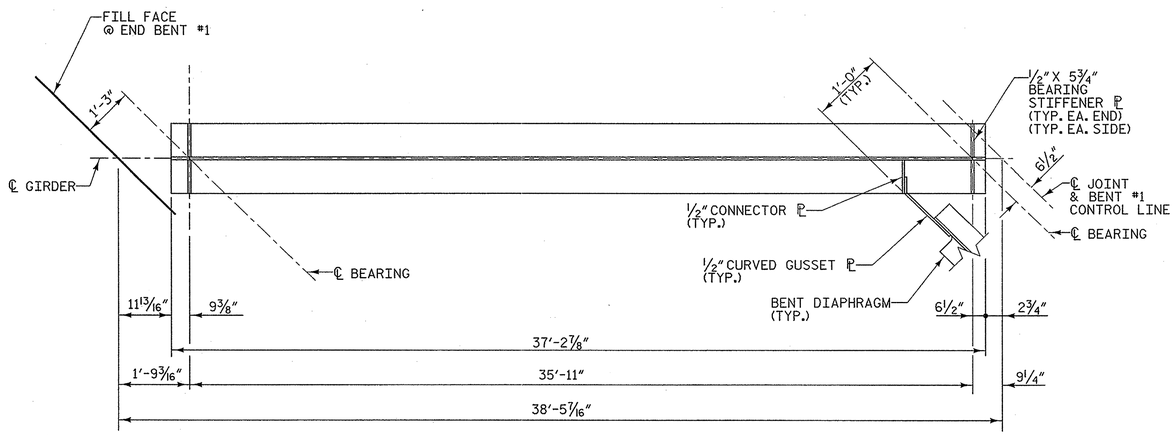

SPAN A
GIRDER 1

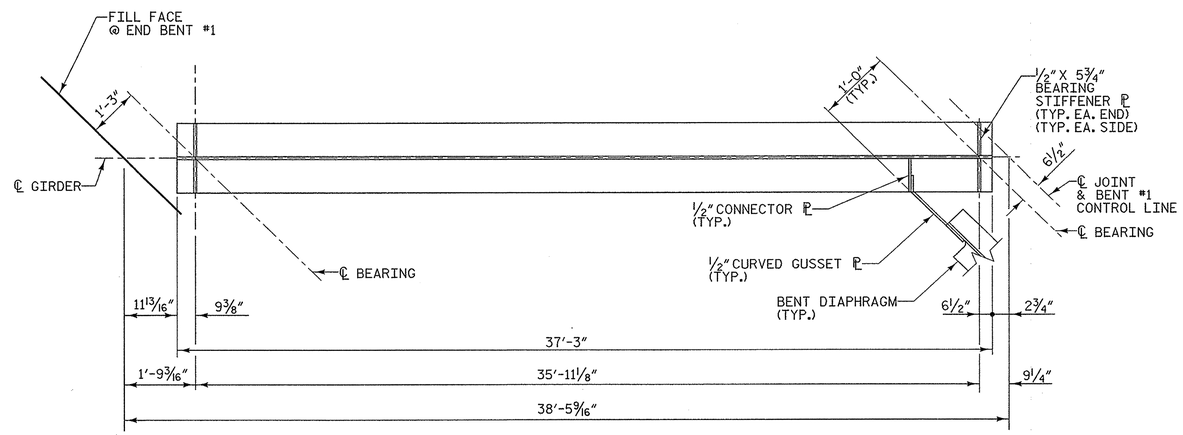

SPAN A
GIRDER 2

PLAN OF BOTTOM FLANGE

SEE "SUPERSTRUCTURE FRAMING PLAN" SHEET 1 OF 2 FOR "STRUCTURAL STEEL NOTES".
SEE SHEET 3 OF 4 FOR "DRIP BEAD DETAILS".

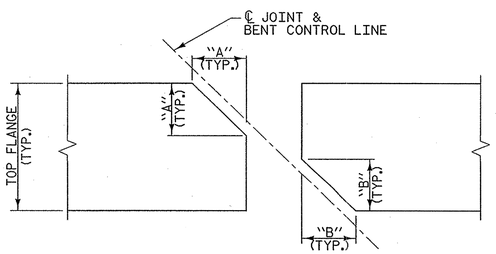

LOCATION	DIM. "A"	DIM. "B"
BENT #1	4 3/4"	6 1/2"
BENT #2	6 1/2"	4 3/4"

TOP FLANGE CLIP DETAILS

CLIP TOP FLANGE PLATES AT ALL JOINTS OVER BENTS.

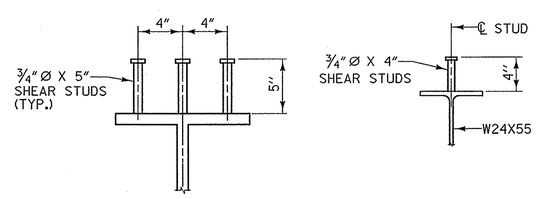

SHEAR STUD DETAILS

PROJECT NO. U-0071
DURHAM COUNTY
STATION: 34+62.88 -DFEB-

SHEET 1 OF 4

STATE OF NORTH CAROLINA
DEPARTMENT OF TRANSPORTATION
RALEIGH

SUPERSTRUCTURE

STRUCTURAL STEEL DETAILS

PLANS PREPARED BY:
MULKEY ENGINEERS & CONSULTANTS
PO Box 33127
RALEIGH, N.C. 27636
(919) 851-1912
(919) 851-1918 (FAX)
WWW.MULKEYINC.COM
NC LICENSE NO. C-1021

NORTH CAROLINA PROFESSIONAL SEAL 034352 ENGINEER JEROME R. PETERSON
12/2/13

STR #13

REVISIONS						SHEET NO.
NO.	BY:	DATE:	NO.	BY:	DATE:	S-506
1			3			TOTAL SHEETS
2			4			671

DRAWN BY : W. B. ALLEN DATE : 2/13
CHECKED BY : T. R. PETERSON DATE : 3/13
DESIGN ENGINEER OF RECORD: T. R. PETERSON DATE : 12/2/13

11/26/2013 10:26:26 AM R:\Structures\EBL\U0071EBL_S0_SS_01.dgn

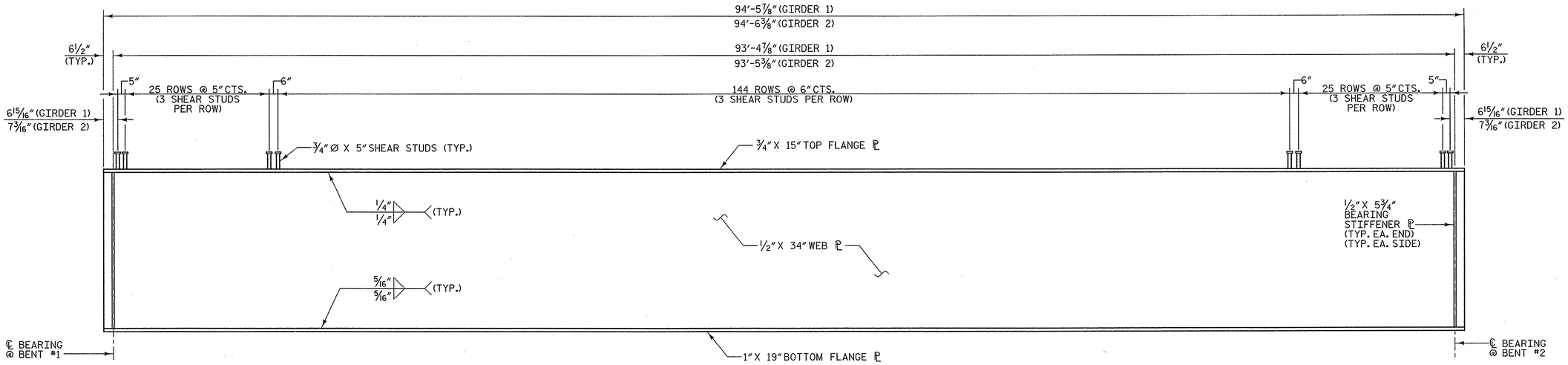

SPAN B

GIRDER ELEVATION

CONNECTOR PLATES NOT SHOWN, FOR PLACEMENT SEE "SUPERSTRUCTURE FRAMING PLAN SHEETS".

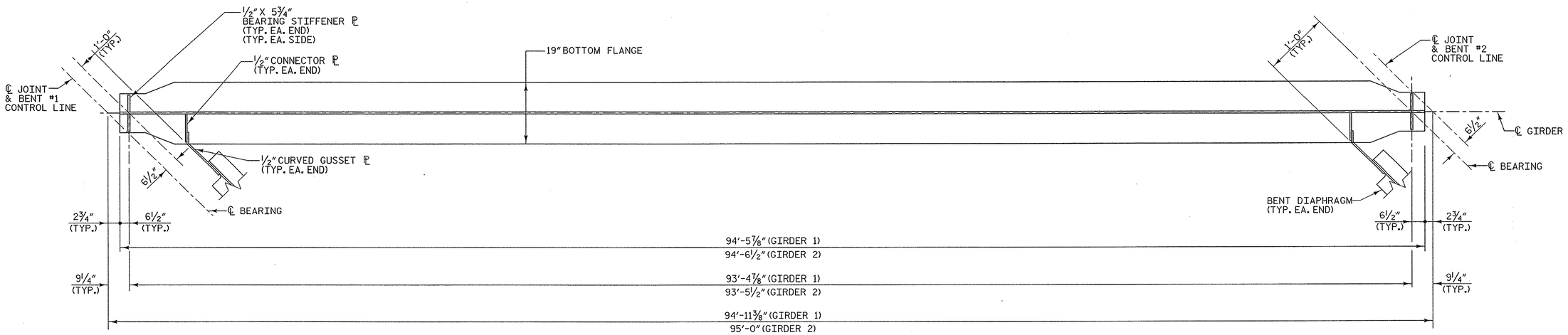

SPAN B

PLAN OF BOTTOM FLANGE

SEE "SUPERSTRUCTURE FRAMING PLAN" SHEET 1 OF 2 FOR "STRUCTURAL STEEL NOTES".
SEE SHEET 1 OF 4 FOR "SHEAR STUD DETAILS" AND "TOP FLANGE CLIP DETAILS".
SEE SHEET 3 OF 4 FOR "DRIP BEAD DETAILS".

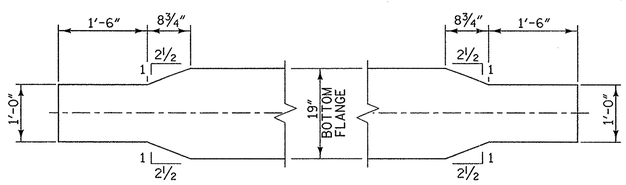

BOTTOM FLANGE END TAPERS

PROJECT NO. U-0071
DURHAM COUNTY
STATION: 34+62.88 -DFEB-

SHEET 2 OF 4

STATE OF NORTH CAROLINA
DEPARTMENT OF TRANSPORTATION
RALEIGH

SUPERSTRUCTURE

STRUCTURAL STEEL DETAILS

PLANS PREPARED BY:
MULKEY ENGINEERS & CONSULTANTS
PO Box 33127
Raleigh, NC 27636
(919) 851-1912
(919) 851-1918 (FAX)
WWW.MULKEYINC.COM
NC LICENSE NO. C-1021

NORTH CAROLINA PROFESSIONAL SEAL 034352 ENGINEER TERRY R. PETERSON
12/2/13

STR #13

REVISIONS						SHEET NO.
NO.	BY:	DATE:	NO.	BY:	DATE:	S-5337
1			3			TOTAL SHEETS
2			4			671

DRAWN BY : W. B. ALLEN DATE : 2/13
CHECKED BY : T. R. PETERSON DATE : 3/13
DESIGN ENGINEER OF RECORD: T. R. PETERSON DATE : 12/2/13

11/26/2013 10:08:59 AM R:\Structures\EBL\U0071EBL_SD_SS_02.dgn

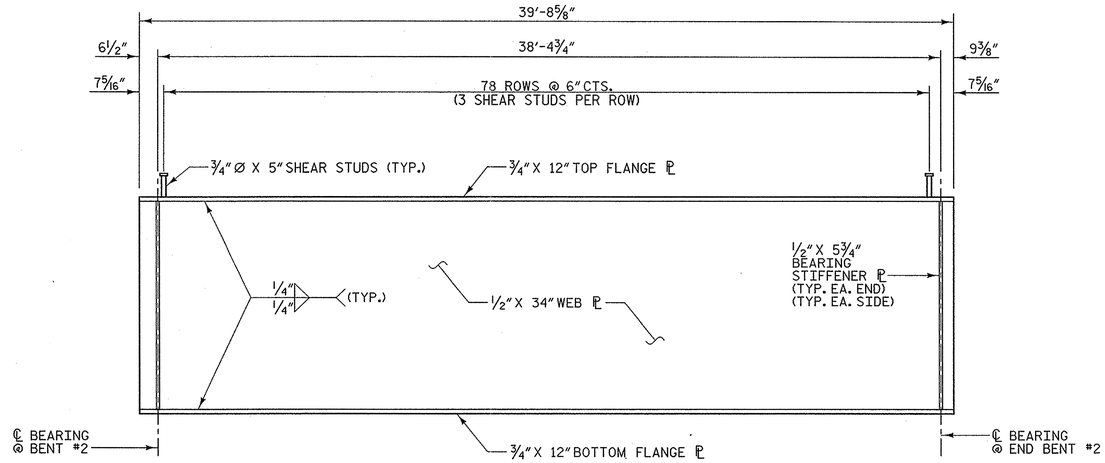

SPAN C
GIRDER 1

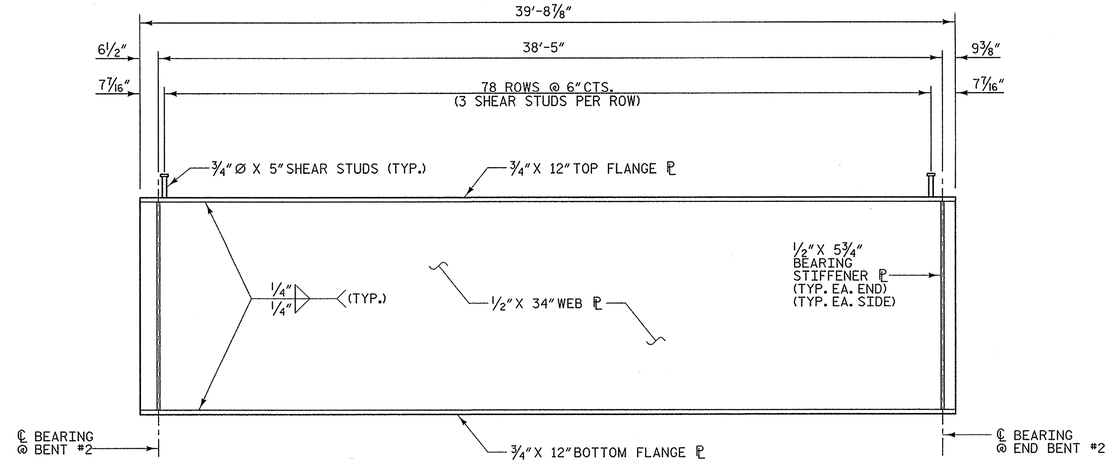

SPAN C
GIRDER 2

GIRDER ELEVATION

CONNECTOR PLATES NOT SHOWN, FOR PLACEMENT
SEE "SUPERSTRUCTURE FRAMING PLAN" SHEETS.

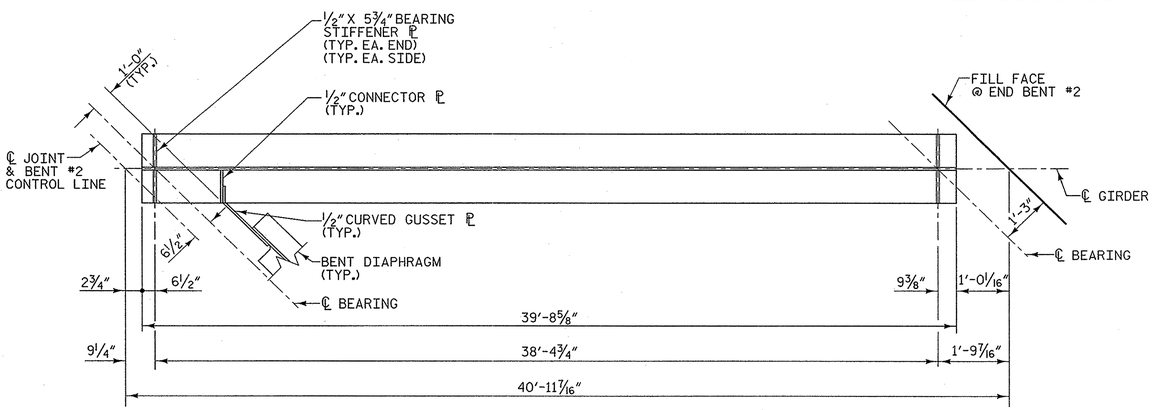

SPAN C
GIRDER 1

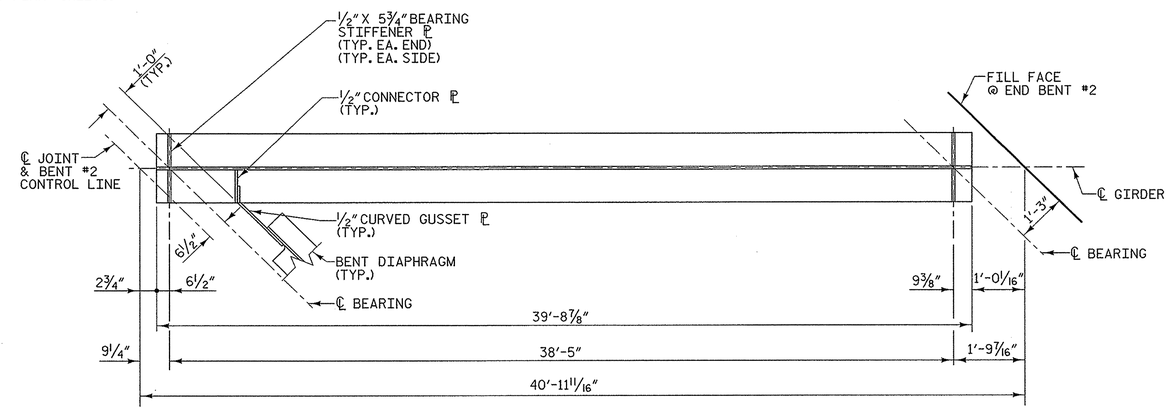

SPAN C
GIRDER 2

PLAN OF BOTTOM FLANGE

SEE "SUPERSTRUCTURE FRAMING PLAN" SHEET 1 OF 2 FOR "STRUCTURAL STEEL NOTES".
SEE SHEET 1 OF 4 FOR "TOP FLANGE CLIP DETAILS" & "SHEAR STUD DETAILS".

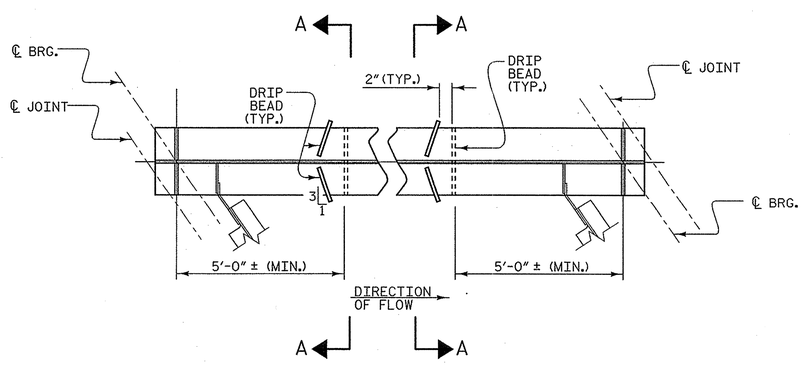

PART PLAN - BOTTOM FLANGE
TYPICAL AT EACH END OF EACH GIRDER

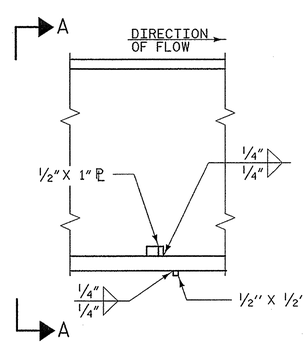

SECTION

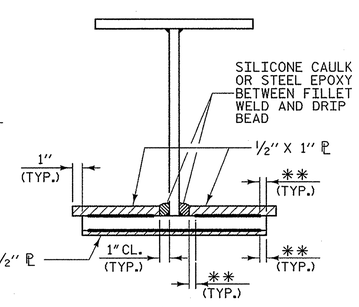

VIEW A-A

**SEE "WELD TERMINATION DETAILS"
ON SHEET 4 OF 4.

DRIP BEAD DETAILS

PROJECT NO. U-0071
DURHAM COUNTY
STATION: 34+62.88 -DFEB-

SHEET 3 OF 4

STATE OF NORTH CAROLINA
DEPARTMENT OF TRANSPORTATION
RALEIGH

SUPERSTRUCTURE

STRUCTURAL STEEL DETAILS

PLANS PREPARED BY:
MULKEY ENGINEERS & CONSULTANTS
PO Box 33127
RALEIGH, NC 27636
(919) 851-1912
(919) 851-1918 (FAX)
WWW.MULKEYINC.COM
NC LICENSE NO. C-1021

NORTH CAROLINA PROFESSIONAL SEAL 034352 ENGINEER JEROME R. PETERSON
12/2/13

STR #13

REVISIONS						SHEET NO.
NO.	BY:	DATE:	NO.	BY:	DATE:	S-588
1			3			TOTAL SHEETS
2			4			671

DRAWN BY : W. B. ALLEN DATE : 2/13
CHECKED BY : T. R. PETERSON DATE : 3/13
DESIGN ENGINEER OF RECORD: T. R. PETERSON DATE : 12/2/13

11/26/2013 10:07:33 AM R:\Structures\EBL\U0071EBL_SD_SS_03.dgn

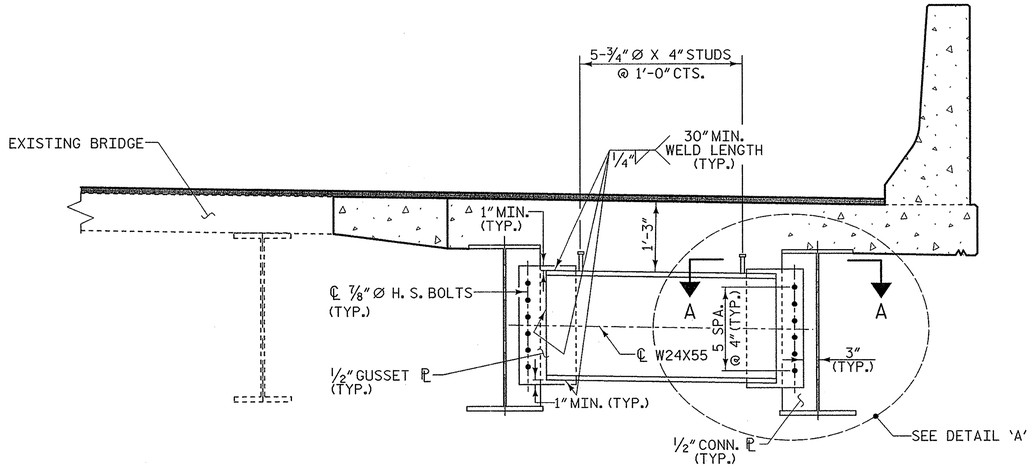

BENT DIAPHRAGM (D1)

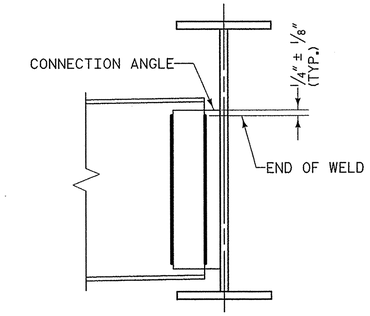

DIAPHRAGM AND ANGLE CONNECTIONS

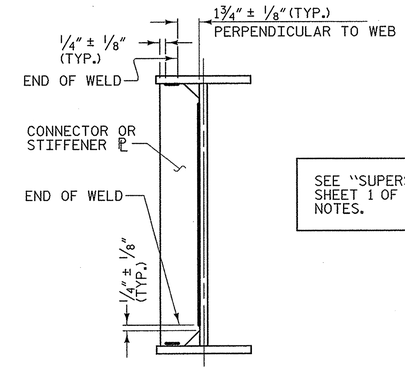

SEE "SUPERSTRUCTURE FRAMING PLAN" SHEET 1 OF 2 FOR STRUCTURAL STEEL NOTES.

TYPICAL STIFFENER OR CONNECTOR PLATE CONNECTIONS

WELD TERMINATION DETAILS

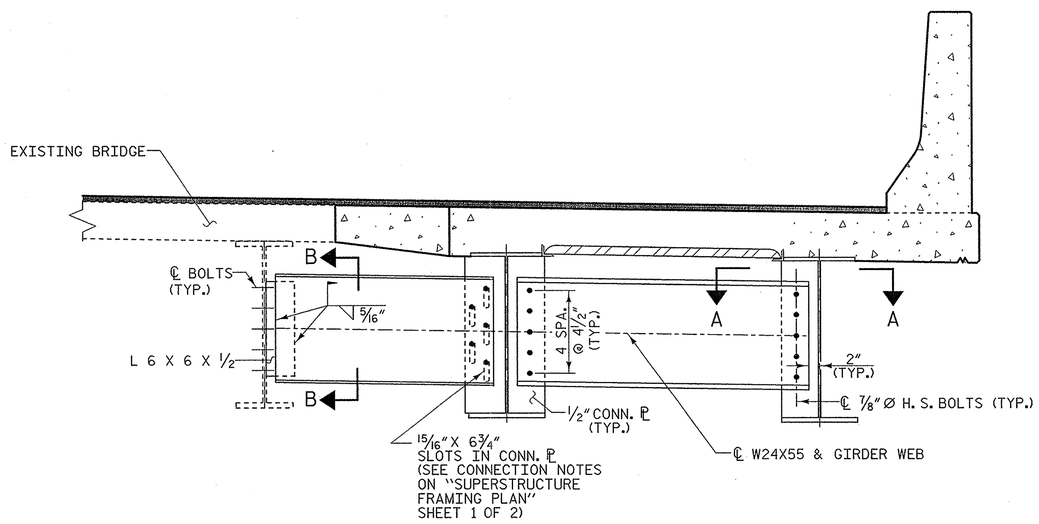

SPAN B ONLY (D3) SPANS A, B & C (D2)

INTERMEDIATE DIAPHRAGM

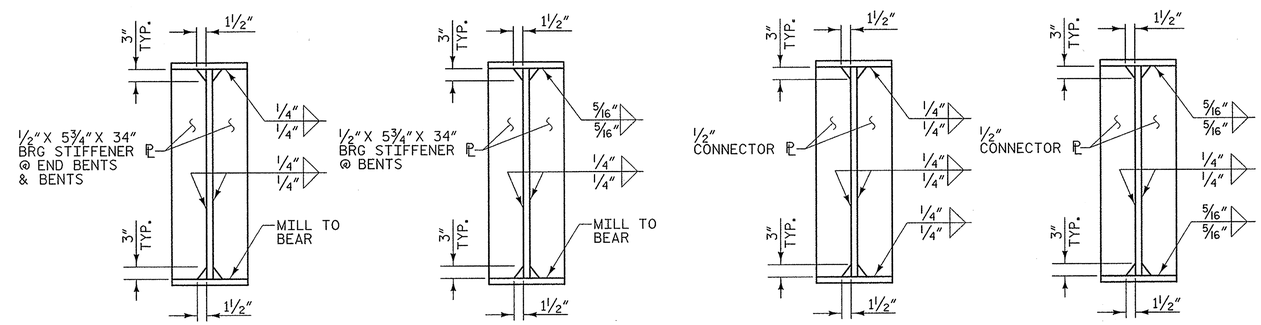

SPANS A & C SPAN B SPANS A & C SPAN B

BEARING STIFFENER

CONNECTOR PLATE

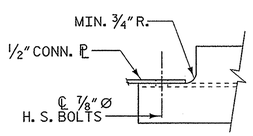

SECTION A-A

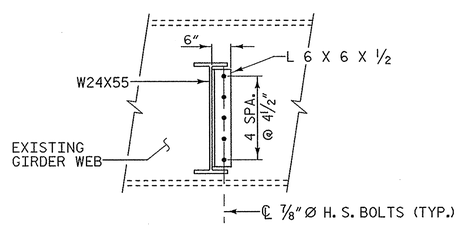

SECTION B-B

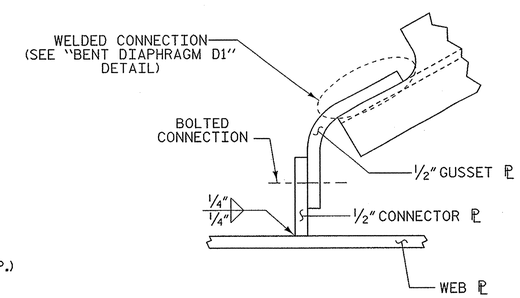

DETAIL 'A'

PROJECT NO. U-0071

DURHAM COUNTY

STATION: 34+62.88 -DFEB-

SHEET 4 OF 4

STATE OF NORTH CAROLINA
DEPARTMENT OF TRANSPORTATION
RALEIGH

SUPERSTRUCTURE

STRUCTURAL STEEL DETAILS

PLANS PREPARED BY:
MULKEY ENGINEERS & CONSULTANTS
PO Box 35137
Raleigh, N.C. 27636
(919) 851-1912
(919) 851-1918 (FAX)
WWW.MULKEYINC.COM
NC LICENSE NO. C-1021

NORTH CAROLINA PROFESSIONAL SEAL 034352 ENGINEER TERRY R. PETERSON
12/2/13

STR #13

REVISIONS							SHEET NO.
NO.	BY:	DATE:	NO.	BY:	DATE:		S-589
1			3				TOTAL SHEETS
2			4				671

DRAWN BY :	W. B. ALLEN	DATE :	2/13
CHECKED BY :	T. R. PETERSON	DATE :	3/13
DESIGN ENGINEER OF RECORD:	T. R. PETERSON	DATE :	12/2/13

11/26/2013 10:05:51 AM R:\Structures\EBL\U0071EBL_SD_SS_04.dgn

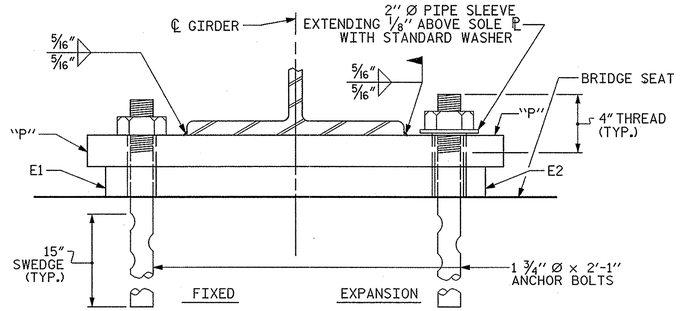

END VIEW

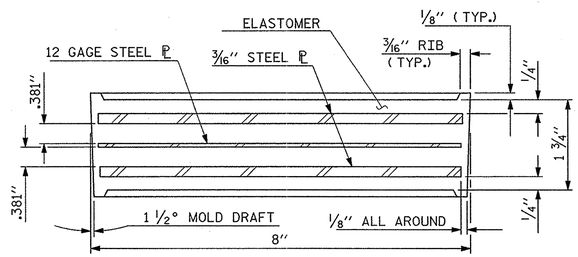

TYPICAL SECTION OF ELASTOMERIC BEARINGS

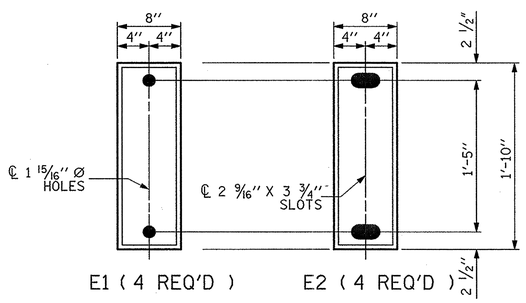

E1 (4 REQ'D) E2 (4 REQ'D)

PLAN VIEW OF ELASTOMERIC BEARING

TYPE I

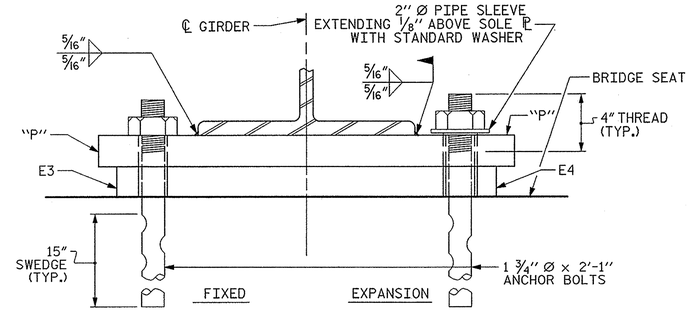

END VIEW

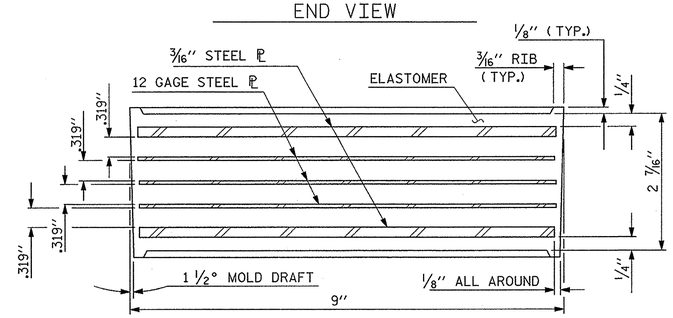

TYPICAL SECTION OF ELASTOMERIC BEARINGS

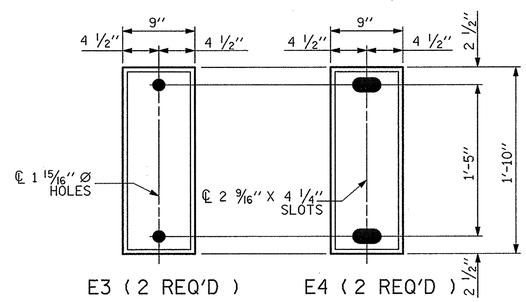

E3 (2 REQ'D) E4 (2 REQ'D)

PLAN VIEW OF ELASTOMERIC BEARING

TYPE II

NOTES

AT ALL FIXED POINTS OF SUPPORT, NUTS FOR ANCHOR BOLTS ARE TO BE TIGHTENED FINGER TIGHT AND THEN BACKED OFF 1/2 TURN. THE THREAD OF THE NUT AND BOLT SHALL THEN BE BURRED WITH A SHARP POINTED TOOL.

THE 2" Ø PIPE SLEEVE SHALL BE CUT FROM SCHEDULE 40 PVC PLASTIC PIPE. THE PVC PLASTIC PIPE SHALL MEET THE REQUIREMENTS OF ASTM D1785.

THE PAYMENT FOR THE PIPE SLEEVES SHALL BE INCLUDED IN THE SEVERAL PAY ITEMS.

FOR PAINTED STRUCTURAL STEEL (EXCLUDING AASHTO M270 GRADE 50W), SOLE PLATES, ANCHOR BOLTS, NUTS AND WASHERS SHALL BE GALVANIZED IN ACCORDANCE WITH THE STANDARD SPECIFICATIONS.

FOR AASHTO M270 GRADE 50W STRUCTURAL STEEL, SOLE PLATE SHALL BE AASHTO M270 GRADE 50W AND SHALL NOT BE GALVANIZED. ANCHOR BOLTS, NUTS AND WASHERS SHALL BE GALVANIZED IN ACCORDANCE WITH THE STANDARD SPECIFICATIONS.

ANCHOR BOLTS SHALL MEET THE REQUIREMENTS OF ASTM A449. NUTS SHALL MEET THE REQUIREMENTS OF AASHTO M291-DH OR AASHTO M292-2H. WASHERS SHALL MEET THE REQUIREMENTS OF AASHTO M293. SHOP DRAWINGS ARE NOT REQUIRED FOR ANCHOR BOLTS, NUTS AND WASHERS. SHOP INSPECTION IS REQUIRED.

WHEN FIELD WELDING THE SOLE PLATE TO THE GIRDER FLANGE, USE TEMPERATURE INDICATING WAX PENS, OR OTHER SUITABLE MEANS, TO ENSURE THAT THE TEMPERATURE OF THE SOLE PLATE DOES NOT EXCEED 300°F. TEMPERATURES ABOVE THIS MAY DAMAGE THE ELASTOMER.

ALL SURFACES OF BEARING PLATES SHALL BE SMOOTH AND STRAIGHT.

THE ELASTOMER IN THE STEEL REINFORCED BEARINGS SHALL HAVE A SHEAR MODULUS OF 0.160 KSI, IN ACCORDANCE WITH AASHTO M251.

FOR STEEL REINFORCED ELASTOMERIC BEARINGS, SEE SPECIAL PROVISIONS.

THE CONTRACTOR'S ATTENTION IS CALLED TO THE FOLLOWING PROCEDURE, WHICH MAY BE REQUIRED BY THE ENGINEER, TO RESET ELASTOMERIC BEARINGS DUE TO GIRDER TRANSLATION AND END ROTATION:

1. ONCE THE DECK HAS CURED, THE GIRDERS SHALL BE JACKED AND THE ELASTOMERIC BEARING SLOTS CENTERED AS NEARLY AS PRACTICAL ABOUT THE BEARING STIFFENER. THIS OPERATION SHALL BE PERFORMED AT APPROXIMATELY 60° F.

THE CONTRACTOR MAY PROPOSE ALTERNATE METHODS, PROVIDED DETAILS ARE SUBMITTED TO THE ENGINEER FOR REVIEW AND APPROVAL.

MAXIMUM ALLOWABLE SERVICE LOADS	
D.L.+L.L. (NO IMPACT)	
TYPE I	140 k
TYPE II	180 k

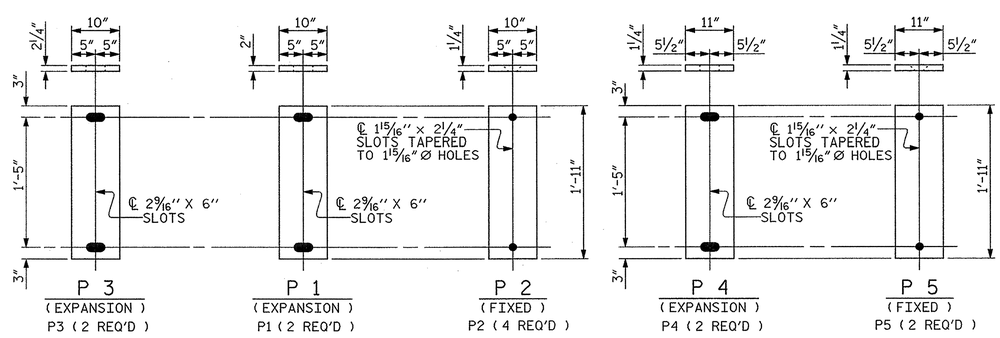

P 3 (EXPANSION) P3 (2 REQ'D)

P 1 (EXPANSION) P1 (2 REQ'D)

P 2 (FIXED) P2 (4 REQ'D)

P 4 (EXPANSION) P4 (2 REQ'D)

P 5 (FIXED) P5 (2 REQ'D)

SOLE PLATE DETAILS ("P")

PROJECT NO. U-0071

DURHAM COUNTY

STATION: 34+62.88 -DFEB-

PLANS PREPARED BY:

MULKEY ENGINEERS & CONSULTANTS
PO Box 33127
Raleigh, N.C. 27636
(919) 851-1912
(919) 851-1918 (FAX)
WWW.MULKEYINC.COM
NC LICENSE NO. C-1621

THIS STANDARD DRAWING REVIEWED & ADOPTED FOR USE AT THE REFERENCED LOCATION BY THE UNDERSIGNED:

NORTH CAROLINA PROFESSIONAL SEAL 034352 ENGINEER THERON R. PETERSON

12/2/13

STR #13

STATE OF NORTH CAROLINA
DEPARTMENT OF TRANSPORTATION
RALEIGH

STANDARD

ELASTOMERIC BEARING DETAILS

(STEEL SUPERSTRUCTURE)

REVISIONS						SHEET NO.
NO.	BY:	DATE:	NO.	BY:	DATE:	S-590
1			3			TOTAL SHEETS
2			4			671

STD. NO. EB1

ASSEMBLED BY : W. B. ALLEN		DATE : 2/13	
CHECKED BY : T. R. PETERSON		DATE : 3/13	
DRAWN BY : JMB 11/87	REV. 5/1/06	TLA/GM	
CHECKED BY : ARB 11/87	REV. 10/1/11	MAA/GM	
	REV. 10/24/12	AAC/MAA	

11/26/2013 10:04:20 AM R:\Structures\EBL\U0071EBL_SD_BC_01.dgn

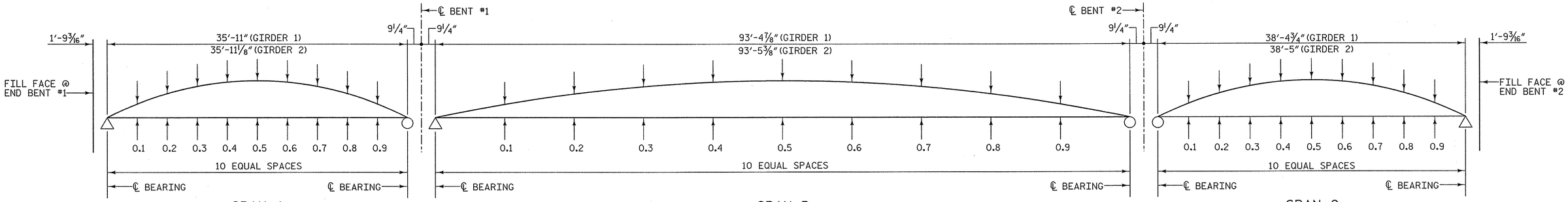

SCHEMATIC CAMBER ORDINATES

ALL DIMENSIONS MEASURED ALONG GIRDER

DEAD LOAD DEFLECTION TABLE FOR GIRDERS

	SPAN A GIRDER 1											SPAN A GIRDER 2										
TENTH POINTS	0	.1	.2	.3	.4	.5	.6	.7	.8	.9	0	0	.1	.2	.3	.4	.5	.6	.7	.8	.9	0
DEFLECTION DUE TO WEIGHT OF GIRDER ↓	0.000	0.001	0.001	0.002	0.002	0.002	0.002	0.002	0.001	0.001	0.000	0.000	0.001	0.001	0.002	0.002	0.002	0.002	0.002	0.001	0.001	0.000
DEFLECTION DUE TO WEIGHT OF SLAB ↓	0.000	0.004	0.007	0.010	0.012	0.012	0.012	0.010	0.007	0.004	0.000	0.000	0.004	0.007	0.010	0.011	0.012	0.011	0.010	0.007	0.004	0.000
DEFLECTION DUE TO WEIGHT OF BARRIER RAIL ↓	0.000	0.001	0.001	0.001	0.002	0.002	0.002	0.001	0.001	0.001	0.000	0.000	0.001	0.002	0.002	0.002	0.003	0.002	0.002	0.002	0.001	0.000
TOTAL DEAD LOAD DEFLECTION ↓	0.000	0.006	0.009	0.013	0.016	0.016	0.016	0.013	0.009	0.006	0.000	0.000	0.006	0.010	0.014	0.015	0.017	0.015	0.014	0.010	0.006	0.000
VERTICAL CURVE ORDINATE ↑	0.000	0.000	0.000	0.000	0.000	0.000	0.000	0.000	0.000	0.000	0.000	0.000	0.000	0.000	0.000	0.000	0.000	0.000	0.000	0.000	0.000	0.000
ORDINATE DUE TO SUPERELEVATION ↓	0.000	0.000	0.000	0.000	0.000	0.000	0.000	0.000	0.000	0.000	0.000	0.000	0.000	0.000	0.000	0.000	0.000	0.000	0.000	0.000	0.000	0.000
REQUIRED CAMBER ↑	0	1/16	1/8	3/16	3/16	1/4	3/16	3/16	1/8	1/16	0	0	1/16	1/8	3/16	3/16	3/16	3/16	3/16	1/8	1/16	0

	SPAN B GIRDER 1											SPAN B GIRDER 2										
TENTH POINTS	0	.1	.2	.3	.4	.5	.6	.7	.8	.9	0	0	.1	.2	.3	.4	.5	.6	.7	.8	.9	0
DEFLECTION DUE TO WEIGHT OF GIRDER ↓	0.000	0.029	0.054	0.074	0.087	0.091	0.087	0.074	0.054	0.029	0.000	0.000	0.029	0.054	0.074	0.087	0.091	0.087	0.074	0.054	0.029	0.000
DEFLECTION DUE TO WEIGHT OF SLAB ↓	0.000	0.119	0.226	0.309	0.362	0.380	0.362	0.309	0.226	0.119	0.000	0.000	0.116	0.220	0.301	0.353	0.371	0.353	0.301	0.220	0.116	0.000
DEFLECTION DUE TO WEIGHT OF BARRIER RAIL ↓	0.000	0.017	0.032	0.043	0.051	0.053	0.051	0.043	0.032	0.017	0.000	0.000	0.025	0.048	0.065	0.076	0.080	0.076	0.065	0.048	0.025	0.000
TOTAL DEAD LOAD DEFLECTION ↓	0.000	0.165	0.312	0.426	0.500	0.524	0.500	0.426	0.312	0.165	0.000	0.000	0.170	0.322	0.441	0.516	0.542	0.516	0.441	0.322	0.170	0.000
VERTICAL CURVE ORDINATE ↑	0.000	0.000	0.000	0.000	0.000	0.000	0.000	0.000	0.000	0.000	0.000	0.000	0.000	0.000	0.000	0.000	0.000	0.000	0.000	0.000	0.000	0.000
ORDINATE DUE TO SUPERELEVATION ↓	0.000	0.001	0.001	0.001	0.001	0.002	0.001	0.001	0.001	0.001	0.000	0.000	0.001	0.001	0.001	0.001	0.002	0.001	0.001	0.001	0.001	0.000
REQUIRED CAMBER ↑	0	2	3 3/4	5 1/8	6	6 5/16	6	5 1/8	3 3/4	2	0	0	2 1/16	3 7/8	5 5/16	6 3/16	6 1/2	6 3/16	5 5/16	3 7/8	2 1/16	0

	SPAN C GIRDER 1											SPAN C GIRDER 2										
TENTH POINTS	0	.1	.2	.3	.4	.5	.6	.7	.8	.9	0	0	.1	.2	.3	.4	.5	.6	.7	.8	.9	0
DEFLECTION DUE TO WEIGHT OF GIRDER ↓	0.000	0.001	0.002	0.002	0.003	0.003	0.003	0.002	0.002	0.001	0.000	0.000	0.001	0.002	0.002	0.003	0.003	0.003	0.002	0.002	0.001	0.000
DEFLECTION DUE TO WEIGHT OF SLAB ↓	0.000	0.005	0.010	0.013	0.015	0.016	0.015	0.013	0.010	0.005	0.000	0.000	0.005	0.009	0.013	0.015	0.016	0.015	0.013	0.009	0.005	0.000
DEFLECTION DUE TO WEIGHT OF BARRIER RAIL ↓	0.000	0.001	0.001	0.002	0.002	0.002	0.002	0.002	0.001	0.001	0.000	0.000	0.001	0.002	0.003	0.003	0.003	0.003	0.003	0.002	0.001	0.000
TOTAL DEAD LOAD DEFLECTION ↓	0.000	0.007	0.013	0.017	0.020	0.021	0.020	0.017	0.013	0.007	0.000	0.000	0.007	0.013	0.018	0.021	0.022	0.021	0.018	0.013	0.007	0.000
VERTICAL CURVE ORDINATE ↑	0.000	0.000	0.000	0.000	0.000	0.000	0.000	0.000	0.000	0.000	0.000	0.000	0.000	0.000	0.000	0.000	0.000	0.000	0.000	0.000	0.000	0.000
ORDINATE DUE TO SUPERELEVATION ↓	0.000	0.000	0.000	0.000	0.000	0.000	0.000	0.000	0.000	0.000	0.000	0.000	0.000	0.000	0.000	0.000	0.000	0.000	0.000	0.000	0.000	0.000
REQUIRED CAMBER ↑	0	1/16	1/8	3/16	1/4	1/4	1/4	3/16	1/8	1/16	0	0	1/16	1/8	3/16	1/4	1/4	1/4	3/16	1/8	1/16	0

* INCLUDES SLAB, BUILDUPS & STAY-IN-PLACE FORMS.
ALL VALUES ARE SHOWN IN FEET (DECIMAL FORM), EXCEPT " REQUIRED CAMBER ", WHICH IS GIVEN IN INCHES (FRACTION FORM).

PROJECT NO. U-0071
DURHAM COUNTY
STATION: 34+62.88 -DFEB-

PLANS PREPARED BY:
MULKEY ENGINEERS & CONSULTANTS
PO Box 33127
RALEIGH, N.C. 27636
(919) 851-1912
(919) 851-1918 (FAX)
WWW.MULKEYINC.COM
NC LICENSE NO. C-1021

NORTH CAROLINA PROFESSIONAL SEAL 034352 ENGINEER JEROME R. PETERSON
12/2/13

STR #13

STATE OF NORTH CAROLINA
DEPARTMENT OF TRANSPORTATION
RALEIGH

SUPERSTRUCTURE

GIRDER DEFLECTIONS & CAMBER DIAGRAM

REVISIONS						SHEET NO.
NO.	BY:	DATE:	NO.	BY:	DATE:	S-591
1			3			TOTAL SHEETS
2			4			671

DRAWN BY : W. B. ALLEN DATE : 2/13
CHECKED BY : Z. H. BROWN DATE : 4/13
DESIGN ENGINEER OF RECORD: T. R. PETERSON DATE : 12/2/13

11/26/2013 10:03:17 AM R:\Structures\EB1\U0071EB1_SD_DL_01.dgn

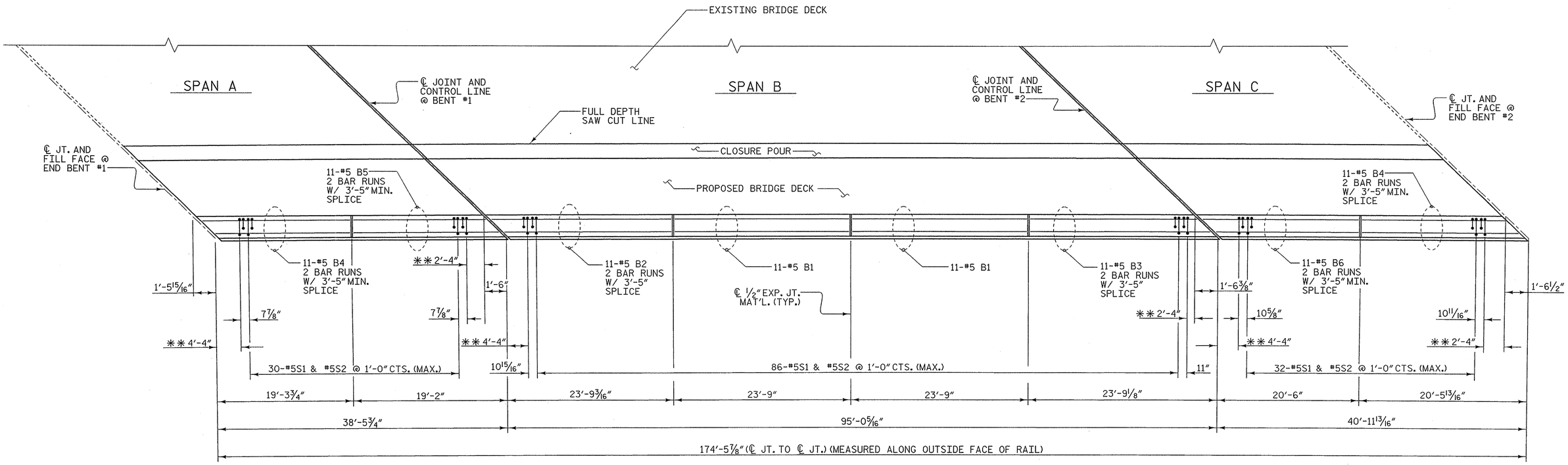

PLAN OF BARRIER RAIL

**SEE "END OF RAIL DETAILS" ON SHEET 2 OF 2

PROJECT NO. U-0071

DURHAM COUNTY

STATION: 34+62.88 -DFEB-

SHEET 1 OF 2

STATE OF NORTH CAROLINA
DEPARTMENT OF TRANSPORTATION
RALEIGH

CONCRETE BARRIER RAIL

PLANS PREPARED BY:
MULKEY ENGINEERS & CONSULTANTS
PO BOX 33127
RALEIGH, N.C. 27636
(919) 851-1912
(919) 851-1918 (FAX)
WWW.MULKEYINC.COM
NC LICENSE NO. C-1321

NORTH CAROLINA PROFESSIONAL SEAL 034352 ENGINEER TERRY R. PETERSON

STR #13

REVISIONS						SHEET NO.
NO.	BY:	DATE:	NO.	BY:	DATE:	S-592
1			3			TOTAL SHEETS
2			4			671

DRAWN BY :	W. B. ALLEN	DATE :	2/13
CHECKED BY :	T. R. PETERSON	DATE :	3/13
DESIGN ENGINEER OF RECORD:	T. R. PETERSON	DATE :	12/2/13

11/26/2013 10:06:35 AM R:\Structures\EBL\U0071EBL_SD_BRL01.dgn

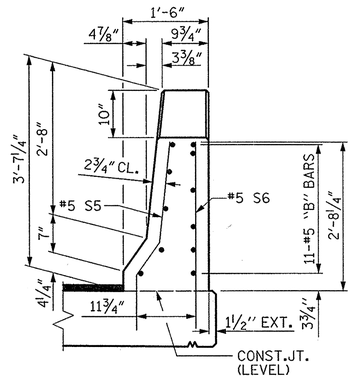

END VIEW
(AT END BENTS ONLY)

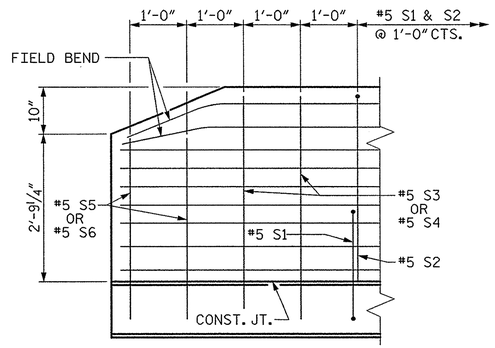

SIDE VIEW

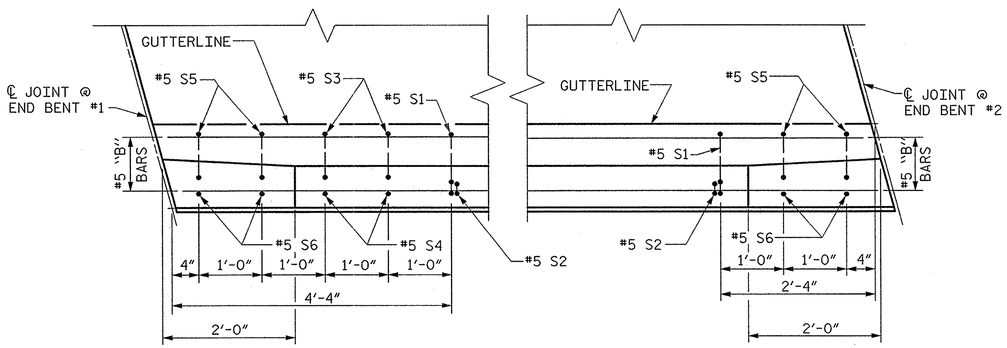

PLAN @ END BENTS

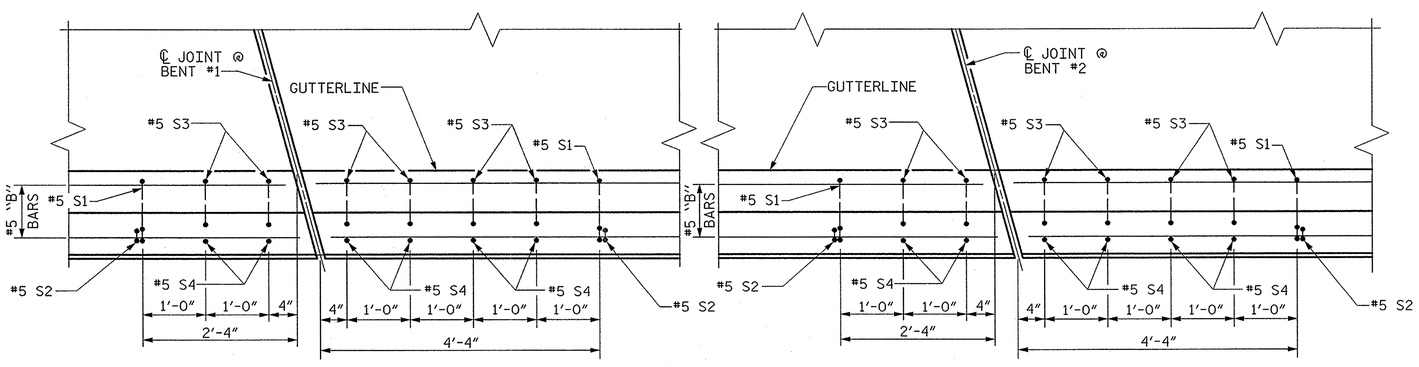

PLAN @ BENTS

END OF RAIL DETAILS

FOR ADHESIVE ANCHORING AT SAWED JOINTS

NOTES

THE BARRIER RAIL IN EACH SPAN SHALL NOT BE CAST UNTIL ALL SLAB CONCRETE IN THAT SPAN HAS BEEN CAST AND HAS REACHED A MINIMUM COMPRESSIVE STRENGTH OF 3,000 PSI.

WHEN FOAM JOINT SEAL IS REQUIRED, THE JOINT IN THE DECK SHALL BE SAWED PRIOR TO THE CASTING OF BARRIER RAIL.

ALL REINFORCING STEEL IN BARRIER RAILS SHALL BE EPOXY COATED.

THE #5 S3, S4, S5 AND S6 BARS SHALL BE INSTALLED, USING AN ADHESIVE ANCHORING SYSTEM, AFTER SAWING THE JOINT. THE YIELD LOAD FOR THE #5 S3, S4, S5 AND S6 BARS IS 18.6 KIPS. FIELD TESTING FOR THE ADHESIVE BONDING SYSTEM IS NOT REQUIRED.

GROOVED CONTRACTION JOINTS, ½" IN DEPTH, SHALL BE TOOLED IN ALL EXPOSED FACES OF THE BARRIER RAIL AND IN ACCORDANCE WITH ARTICLE 825-10(B) OF THE STANDARD SPECIFICATIONS. THE CONTRACTION JOINT SHALL BE LOCATED AT EACH THIRD POINT BETWEEN BARRIER RAIL EXPANSION JOINTS. ONLY ONE CONTRACTION JOINT IS REQUIRED AT MIDPOINT OF BARRIER RAIL SEGMENTS LESS THAN 20 FEET IN LENGTH AND NO CONTRACTION JOINTS ARE REQUIRED FOR THOSE SEGMENTS LESS THAN 10 FEET IN LENGTH.

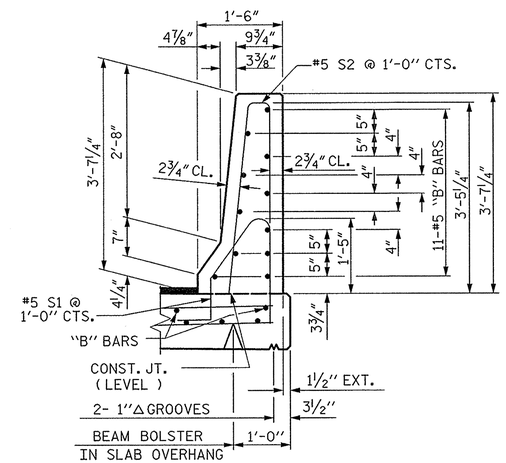

SECTION THRU RAIL

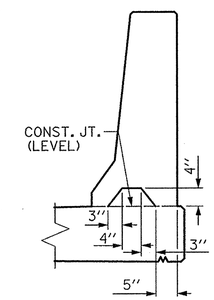

SECTION S-S
AT DAM IN OPEN JOINT
(THIS IS TO BE USED ONLY WHEN SLIP FORM IS USED)

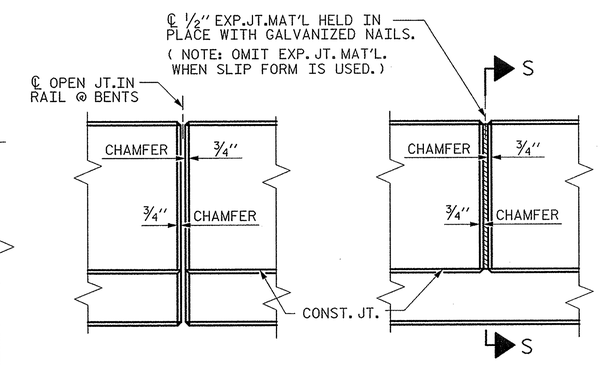

ELEVATION AT EXPANSION JOINTS

BARRIER RAIL DETAILS

BAR TYPES

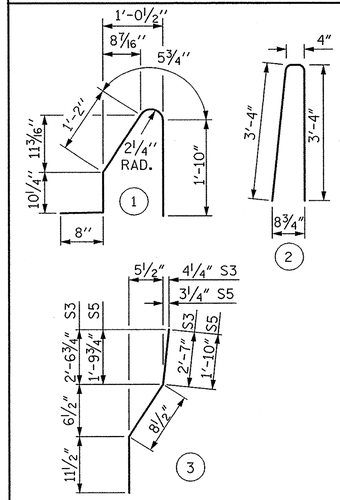

ALL BAR DIMENSIONS ARE OUT TO OUT

BILL OF MATERIAL

FOR CONCRETE BARRIER RAIL ONLY

BAR	NO.	SIZE	TYPE	LENGTH	WEIGHT
* B1	22	#5	STR	23'-4"	535
* B2	22	#5	STR	14'-0"	321
* B3	22	#5	STR	13'-3"	304
* B4	44	#5	STR	11'-10"	543
* B5	22	#5	STR	11'-0"	252
* B6	22	#5	STR	12'-5"	285
* S1	154	#5	1	5'-0"	803
* S2	154	#5	2	7'-0"	1124
* S3	14	#5	3	4'-3"	62
* S4	14	#5	STR	4'-1"	60
* S5	4	#5	3	3'-6"	15
* S6	4	#5	STR	3'-4"	14

* EPOXY COATED REINFORCING STEEL	4318 LBS.
CLASS AA CONCRETE	22.9 CU. YDS.
CONCRETE BARRIER RAIL	174.49 LIN. FT.

PROJECT NO. U-0071
DURHAM COUNTY
STATION: 34+62.88 -DFEB-

SHEET 2 OF 2

STATE OF NORTH CAROLINA
DEPARTMENT OF TRANSPORTATION
RALEIGH

STANDARD
CONCRETE BARRIER RAIL

ASSEMBLED BY : W. B. ALLEN	DATE : 2/13
CHECKED BY : T. R. PETERSON	DATE : 3/13

DRAWN BY : ARB 5/87	REV. 10/1/11	MAA/GM
CHECKED BY : SJD 9/87	REV. 7/12	MAA/GM
	REV. 10/12	MAA/GM

PLANS PREPARED BY:
MULKEY ENGINEERS & CONSULTANTS
PO Box 33127
RALEIGH, N.C. 27636
(919) 851-1912
(919) 851-1918 (FAX)
WWW.MULKEYINC.COM
NC LICENSE NO. C-1021

THIS STANDARD DRAWING REVIEWED & ADOPTED FOR USE AT THE REFERENCED LOCATION BY THE UNDERSIGNED:

NORTH CAROLINA PROFESSIONAL SEAL 034352 ENGINEER TERRY R. PETERSON
12/2/13

STR #13

REVISIONS							SHEET NO.
NO.	BY:	DATE:	NO.	BY:	DATE:		S-593
1			3				TOTAL SHEETS
2			4				671

STD. NO. CBR1

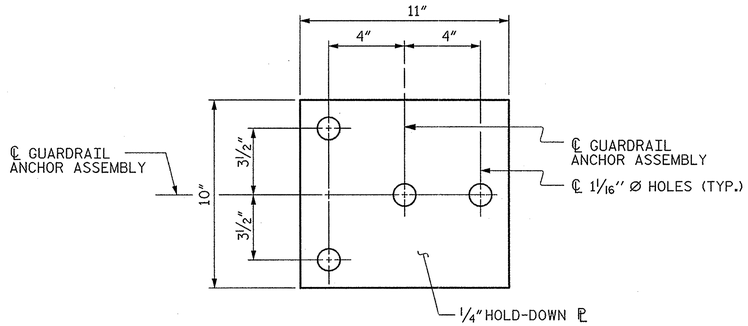

PLAN

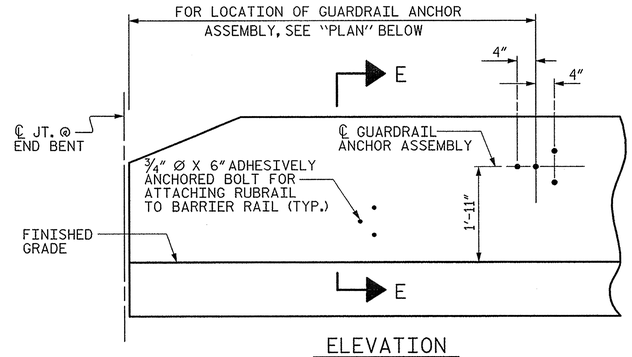

ELEVATION

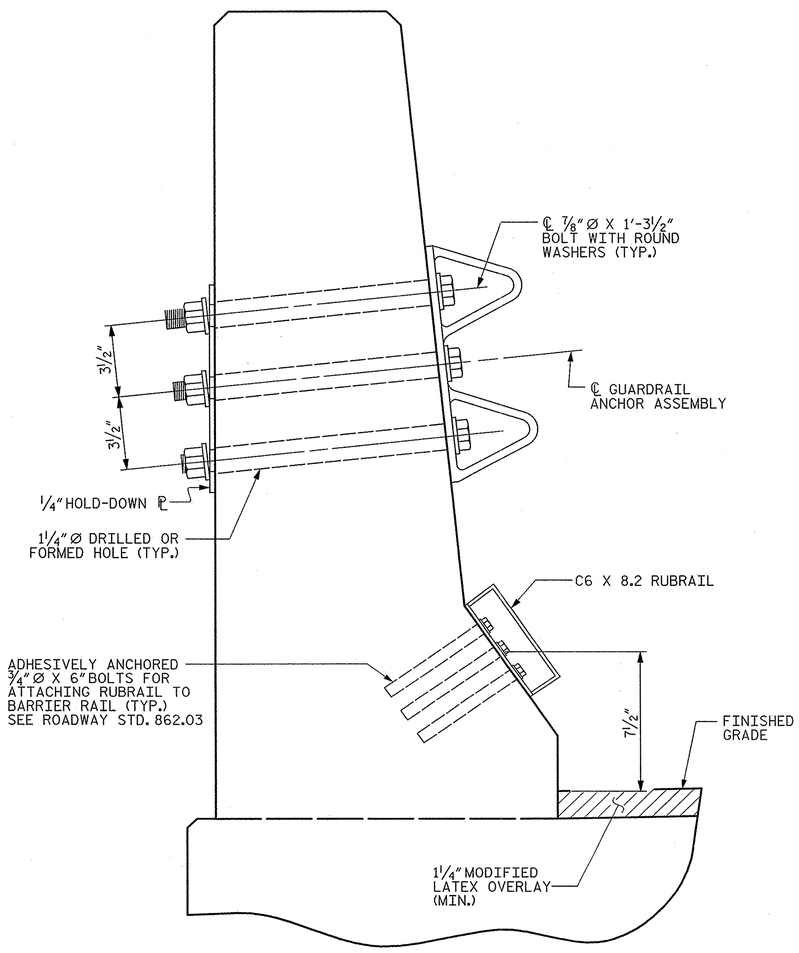

SECTION E-E

GUARDRAIL ANCHOR ASSEMBLY DETAILS

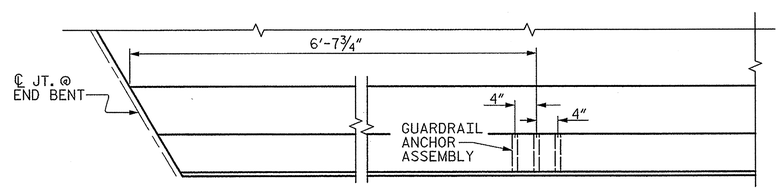

PLAN

LOCATION OF ANCHORS FOR GUARDRAIL

END BENT #1 SHOWN, END BENT #2 SIMILAR.

NOTES

THE GUARDRAIL ANCHOR ASSEMBLY SHALL CONSIST OF A 1/4" HOLD-DOWN PLATE AND 4 - 7/8" Ø BOLTS WITH NUTS AND WASHERS, RUBRAIL, AND ADHESIVELY ANCHORED BOLTS.

THE HOLD-DOWN PLATE SHALL CONFORM TO AASHTO M270 GRADE 36. AFTER FABRICATION, THE HOLD-DOWN PLATE SHALL BE HOT-DIP GALVANIZED IN ACCORDANCE WITH AASHTO M111.

BOLTS SHALL CONFORM TO THE REQUIREMENTS OF ASTM A307 AND NUTS SHALL CONFORM TO THE REQUIREMENTS OF AASHTO M291. BOLTS, NUTS AND WASHERS SHALL BE GALVANIZED. (AT THE CONTRACTOR'S OPTION, STAINLESS STEEL BOLTS, NUTS AND WASHERS MAY BE USED AS AN ALTERNATE FOR THE 7/8" Ø GALVANIZED BOLTS, NUTS AND WASHERS. THEY SHALL CONFORM TO OR EXCEED THE MECHANICAL REQUIREMENTS OF ASTM A307. THE USE OF THIS ALTERNATE SHALL BE APPROVED BY THE ENGINEER.)

THE GUARDRAIL ANCHOR ASSEMBLY IS REQUIRED AT ALL POINTS WHERE APPROACH GUARDRAIL IS TO BE ATTACHED TO THE END OF BARRIER RAIL. FOR POINTS OF ATTACHMENT, SEE SKETCH.

AFTER INSTALLATION, THE EXPOSED THREAD OF THE BOLT SHALL BE BURRED WITH A SHARP POINTED TOOL.

THE COST OF THE GUARDRAIL ANCHOR ASSEMBLY SHALL BE INCLUDED IN THE UNIT CONTRACT PRICE BID FOR CONCRETE BARRIER RAIL.

THE 1 1/4" Ø HOLES SHALL BE FORMED OR DRILLED WITH A CORE BIT. IMPACT TOOLS WILL NOT BE PERMITTED. ANY CONCRETE DAMAGED BY THIS WORK SHALL BE REPAIRED TO THE SATISFACTION OF THE ENGINEER.

THE C6 X 8.2 RUBRAIL IS TO BE ADHESIVELY ANCHORED TO THE RAIL USING THREE 3/4" Ø X 6" BOLTS WITH WASHERS. LEVEL ONE FIELD TESTING IS REQUIRED, AND THE YIELD LOAD OF THE 3/4" Ø BOLT IS 12 KIPS. FOR ADHESIVELY ANCHORED ANCHOR BOLTS OR DOWELS, SEE STANDARD SPECIFICATIONS. SEE ROADWAY STANDARD 862.03 FOR DETAILS AND LOCATION OF THE RUBRAIL.

★ CONTRACTOR TO SALVAGE AND RETAIN EXISTNG ANCHOR ASSEMBLIES ON THE EXISTING BRIDGE RAIL AND RE-USE IN ATTACHING THE PROPOSED GUARDRAIL TO THE EXISTING BRIDGE RAIL.

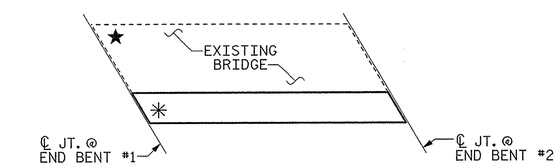

SKETCH SHOWING POINTS OF ATTACHMENTS

✳ DENOTES GUARDRAIL ANCHOR ASSEMBLY

★ DENOTES EXISTING GUARDRAIL ANCHOR ASSEMBLY

PROJECT NO. U-0071

DURHAM COUNTY

STATION: 34+62.88 -DFEB-

PLANS PREPARED BY:

MULKEY ENGINEERS & CONSULTANTS
PO Box 33127
RALEIGH, N.C. 27636
(919) 851-1912
(919) 851-1918 (FAX)
WWW.MULKEYINC.COM
NC LICENSE NO. C-1021

THIS STANDARD DRAWING REVIEWED & ADOPTED FOR USE AT THE REFERENCED LOCATION BY THE UNDERSIGNED:

NORTH CAROLINA PROFESSIONAL SEAL 034352 ENGINEER TERRY R. PETERSON

12/2/13

STR #13

STATE OF NORTH CAROLINA
DEPARTMENT OF TRANSPORTATION
RALEIGH

STANDARD

GUARDRAIL ANCHORAGE FOR BARRIER RAIL

REVISIONS						SHEET NO.
NO.	BY:	DATE:	NO.	BY:	DATE:	S-594
1			3			TOTAL SHEETS
2			4			671

STD. NO. GRA2

ASSEMBLED BY : W. B. ALLEN		DATE : 1/13	
CHECKED BY : T. R. PETERSON		DATE : 2/13	
DRAWN BY : TLA 5/06	REV. 10/1/11	MAA/GM	
CHECKED BY : GM 5/06	REV. 7/12	MAA/GM	
	REV. 10/12	MAA/GM	

11/26/2013 9:56:52 AM R:\Structures\EBL\U0071EBL_S0_GR_01.dgn

BAR SCHEDULE

SPAN A

BAR	NO.	SIZE	TYPE	LENGTH	WEIGHT
* A1	59	#5	STR	8'-11"	549
A2	59	#5	STR	8'-11"	549
* A3	6	#6	STR	12'-8"	114
* A101	2	#5	STR	8'-5"	18
* A102	2	#5	STR	7'-11"	17
* A103	2	#5	STR	7'-5"	15
* A104	2	#5	STR	6'-11"	14
* A105	2	#5	STR	6'-5"	13
* A106	2	#5	STR	5'-11"	12
* A107	2	#5	STR	5'-5"	11
* A108	2	#5	STR	4'-11"	10
* A109	2	#5	STR	4'-5"	9
* A110	2	#5	STR	3'-11"	8
* A111	2	#5	STR	3'-5"	7
* A112	2	#5	STR	2'-11"	6
* A113	2	#5	STR	2'-5"	5
* A114	2	#5	STR	1'-10"	4
A201	2	#5	STR	8'-5"	18
A202	2	#5	STR	7'-11"	17
A203	2	#5	STR	7'-5"	15
A204	2	#5	STR	6'-11"	14
A205	2	#5	STR	6'-5"	13
A206	2	#5	STR	5'-11"	12
A207	2	#5	STR	5'-5"	11
A208	2	#5	STR	4'-11"	10
A209	2	#5	STR	4'-5"	9
A210	2	#5	STR	3'-11"	8
A211	2	#5	STR	3'-5"	7
A212	2	#5	STR	2'-11"	6
A213	2	#5	STR	2'-5"	5
A214	2	#5	STR	1'-10"	4
* B1	16	#4	STR	20'-0"	214
B2	15	#5	STR	37'-10"	592
* D1	36	#5	STR	2'-6"	94
D2	6	#4	STR	3'-2"	13
* D3	34	#5	STR	4'-6"	160
* D4	1	#5	STR	1'-8"	2
* D5	1	#5	STR	3'-5"	4
D12	34	#5	STR	4'-6"	160
D13	1	#5	STR	3'-5"	4
* G1	2	#5	STR	2'-4"	5
* G2	2	#5	STR	12'-8"	26
* K1	3	#5	STR	7'-3"	23
* K2	3	#5	1	7'-11"	25
* K3	3	#5	1	5'-5"	17
K4	14	#4	STR	8'-10"	83
* L1	24	#4	2	6'-2"	99
* S1	5	#4	3	4'-2"	14
S2	12	#4	4	2'-0"	16
* U1	4	#4	5	6'-0"	16

REINFORCING STEEL LBS. 1566

* EPOXY COATED REINFORCING STEEL LBS. 1511

SPAN B

BAR	NO.	SIZE	TYPE	LENGTH	WEIGHT
* A1	171	#5	STR	8'-11"	1590
A2	171	#5	STR	8'-11"	1590
* A3	6	#6	STR	12'-8"	114
* A116	2	#5	STR	8'-7"	18
* A117	2	#5	STR	8'-2"	17
* A118	2	#5	STR	7'-8"	16
* A119	2	#5	STR	7'-2"	15
* A120	2	#5	STR	6'-8"	14
* A121	2	#5	STR	6'-2"	13
* A122	2	#5	STR	5'-8"	12
* A123	2	#5	STR	5'-2"	11
* A124	2	#5	STR	4'-8"	10
* A125	2	#5	STR	4'-2"	9
* A126	2	#5	STR	3'-8"	8
* A127	2	#5	STR	3'-2"	7
* A128	2	#5	STR	2'-8"	6
* A129	2	#5	STR	2'-2"	5
A216	2	#5	STR	8'-7"	18
A217	2	#5	STR	8'-2"	17
A218	2	#5	STR	7'-8"	16
A219	2	#5	STR	7'-2"	15
A220	2	#5	STR	6'-8"	14
A221	2	#5	STR	6'-2"	13
A222	2	#5	STR	5'-8"	12
A223	2	#5	STR	5'-2"	11
A224	2	#5	STR	4'-8"	10
A225	2	#5	STR	4'-2"	9
A226	2	#5	STR	3'-8"	8
A227	2	#5	STR	3'-2"	7
A228	2	#5	STR	2'-8"	6
A229	2	#5	STR	2'-2"	5
* B3	32	#4	STR	25'-2"	538
B4	30	#5	STR	48'-4"	1512
* D1	93	#5	STR	2'-6"	242
* D3	90	#5	STR	4'-6"	422
* D6	1	#5	STR	1'-6"	2
* D7	1	#5	STR	4'-2"	4
* D8	1	#5	STR	3'-2"	3
D12	90	#5	STR	4'-6"	422
D14	1	#5	STR	4'-2"	4
D15	1	#5	STR	3'-2"	3
* G1	2	#5	STR	2'-4"	5
* G3	2	#5	STR	12'-9"	27
* K1	6	#5	STR	7'-3"	45
* K2	6	#5	1	7'-11"	50
* K3	6	#5	1	5'-5"	34
* S1	10	#4	3	4'-2"	28
* U1	4	#4	5	6'-0"	16

REINFORCING STEEL LBS. 3692

* EPOXY COATED REINFORCING STEEL LBS. 3281

SPAN C

BAR	NO.	SIZE	TYPE	LENGTH	WEIGHT
* A1	63	#5	STR	8'-11"	586
A2	63	#5	STR	8'-11"	586
* A3	6	#6	STR	12'-8"	114
* A132	2	#5	STR	8'-7"	18
* A133	2	#5	STR	8'-1"	17
* A134	2	#5	STR	7'-7"	16
* A135	2	#5	STR	7'-1"	15
* A136	2	#5	STR	6'-7"	14
* A137	2	#5	STR	6'-1"	13
* A138	2	#5	STR	5'-7"	12
* A139	2	#5	STR	5'-2"	11
* A140	2	#5	STR	4'-8"	10
* A141	2	#5	STR	4'-2"	9
* A142	2	#5	STR	3'-8"	8
* A143	2	#5	STR	3'-2"	7
* A144	2	#5	STR	2'-8"	6
* A145	2	#5	STR	2'-2"	5
A232	2	#5	STR	8'-7"	18
A233	2	#5	STR	8'-1"	17
A234	2	#5	STR	7'-7"	16
A235	2	#5	STR	7'-1"	15
A236	2	#5	STR	6'-7"	14
A237	2	#5	STR	6'-1"	13
A238	2	#5	STR	5'-7"	12
A239	2	#5	STR	5'-2"	11
A240	2	#5	STR	4'-8"	10
A241	2	#5	STR	4'-2"	9
A242	2	#5	STR	3'-8"	8
A243	2	#5	STR	3'-2"	7
A244	2	#5	STR	2'-8"	6
A245	2	#5	STR	2'-2"	5
* B5	16	#4	STR	21'-3"	227
B6	15	#5	STR	40'-4"	631
* D1	38	#5	STR	2'-6"	99
D2	6	#4	STR	3'-2"	13
* D3	36	#5	STR	4'-6"	169
* D9	1	#5	STR	1'-7"	2
* D10	1	#5	STR	4'-0"	4
* D11	1	#5	STR	3'-0"	3
D12	36	#5	STR	4'-6"	169
D16	1	#5	STR	4'-0"	4
D17	1	#5	STR	3'-0"	3
* G1	2	#5	STR	2'-4"	5
* G4	2	#5	STR	12'-10"	27
* K1	3	#5	STR	7'-3"	23
* K2	3	#5	1	7'-11"	25
* K3	3	#5	1	5'-5"	17
K4	14	#4	STR	8'-10"	83
* L1	27	#4	2	6'-2"	111
* S1	5	#4	3	4'-2"	14
S2	14	#4	4	2'-0"	19
* U1	4	#4	5	6'-0"	16

REINFORCING STEEL LBS. 1669

* EPOXY COATED REINFORCING STEEL LBS. 1603

SUPERSTRUCTURE REINFORCING STEEL LENGTHS ARE BASED ON THE FOLLOWING MINIMUM SPLICE LENGTHS					
BAR SIZE	SUPERSTRUCTURE EXCEPT APPROACH SLABS, PARAPET, AND BARRIER RAIL		APPROACH SLABS		PARAPET AND BARRIER RAIL
	EPOXY COATED	UNCOATED	EPOXY COATED	UNCOATED	
#4	2'-0"	1'-9"	2'-0"	1'-9"	2'-9"
#5	2'-6"	2'-2"	2'-6"	2'-2"	3'-5"
#6	3'-0"	2'-7"	3'-10"	2'-7"	4'-4"
#7	5'-3"	3'-6"			
#8	6'-10"	4'-7"			

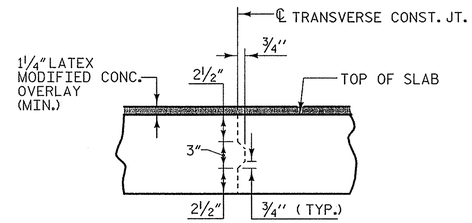

TRANSVERSE CONSTRUCTION JOINT DETAIL

NOTE: REINFORCING STEEL IN SLAB NOT SHOWN. LONGITUDINAL REINFORCING STEEL SHALL BE CONTINUOUS THRU JOINT

BAR TYPES

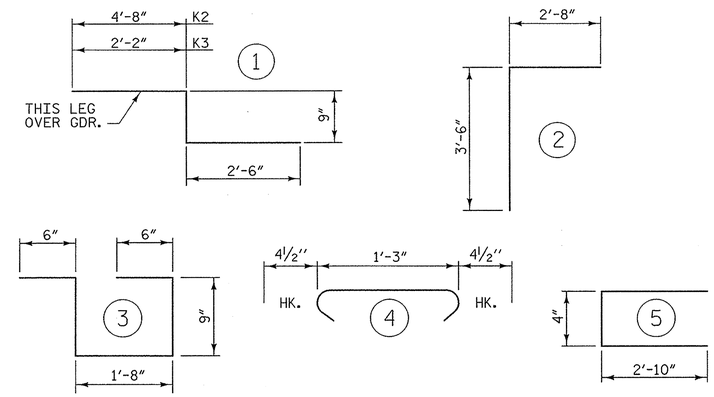

ALL BAR DIMENSIONS ARE OUT TO OUT

SUPERSTRUCTURE BILL OF MATERIAL

	CLASS AA CONCRETE	CLASS AA CONCRETE (CLOSURE POUR)	REINFORCING STEEL	* EPOXY COATED REINFORCING STEEL
	(CU. YDS.)	(CU. YDS.)	(LBS.)	(LBS.)
SPAN A	12.8	2.3	1566	1511
SPAN B	27.8	5.6	3692	3281
SPAN C	13.7	2.4	1669	1603
** TOTALS	54.3	10.3	6927	6395

** QUANTITIES FOR BARRIER RAIL ARE NOT INCLUDED.

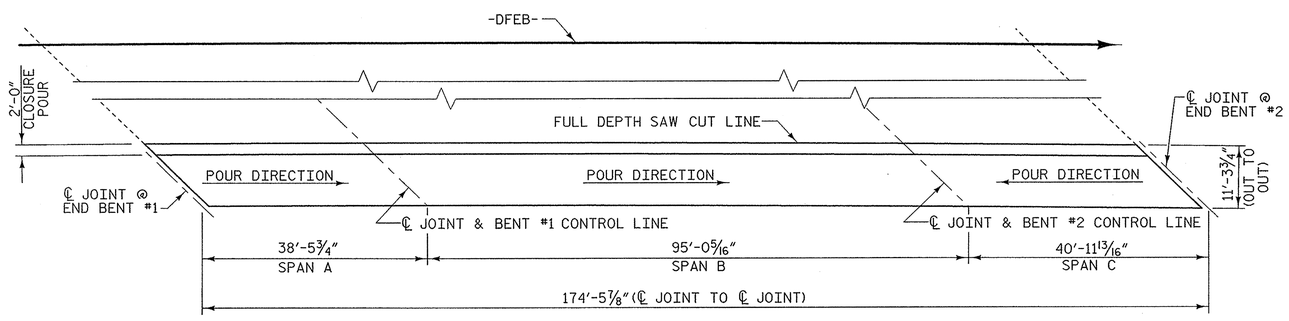

POURING SEQUENCE AND LAYOUT FOR COMPUTING AREA OF REINFORCED CONCRETE DECK SLAB

(SQ. FT. = 1973)

ALL DIMENSIONS ARE MEASURED ALONG PROPOSED OUTSIDE EDGE OF SUPERSRUCTURE UNLESS OTHERWISE NOTED.

PROJECT NO. U-0071

DURHAM COUNTY

STATION: 34+62.88 -DFEB-

GROOVING BRIDGE FLOORS		
APPROACH SLABS	3779	SQ. FT.
BRIDGE DECK	* 9168	SQ. FT.
TOTAL	12,947	SQ. FT.

* INCLUDES ENTIRE BRIDGE

PLANS PREPARED BY:

MULKEY ENGINEERS & CONSULTANTS
PO Box 33127
RALEIGH, N.C. 27636
(919) 851-1912
(919) 851-1918 (FAX)
WWW.MULKEYINC.COM
NC LICENSE NO. C-1221

NORTH CAROLINA PROFESSIONAL SEAL 034352 ENGINEER TERRE R. PETERSON
12/2/13

STR #13

STATE OF NORTH CAROLINA
DEPARTMENT OF TRANSPORTATION
RALEIGH

SUPERSTRUCTURE

BILL OF MATERIAL

REVISIONS							SHEET NO.
NO.	BY:	DATE:	NO.	BY:	DATE:		S-595
1			3				TOTAL SHEETS
2			4				671

DRAWN BY : W. B. ALLEN DATE : 2/13
CHECKED BY : T. R. PETERSON DATE : 2/13
DESIGN ENGINEER OF RECORD: T. R. PETERSON DATE : 12/2/13

10:49:18 AM R:\Structures\EBL\U0071EBL_SD_BM_01.dgn 11/26/2013

NOTES

STIRRUPS BARS IN THE CAP MAY BE SHIFTED AS NECESSARY TO CLEAR ANCHOR BOLTS.

THE TOP SURFACE AREA OF THE END BENT CAP SHALL BE CURED IN ACCORDANCE WITH THE STANDARD SPECIFICATIONS EXCEPT THAT THE MEMBRANE CURING COMPOUND METHOD SHALL NOT BE USED.

THE TOP SURFACE OF THE END BENT CAP EXCEPT THE BRIDGE SEAT BUILDUPS SHALL BE SLOPED TRANSVERSELY FROM THE FILL FACE TO THE BACK FACE AT THE RATE OF 2%.

THE CONCRETE IN THE SHADED AREA OF THE WING SHALL BE POURED AFTER THE JOINT BETWEEN THE DECK AND APPROACH SLAB HAS BEEN SAWED AND THE BARRIER RAIL IS CAST IF SLIP FORMING IS USED.

INSTALL THE 4"Ø DRAIN PIPE THROUGH THE WING WALL AS REQUIRED FOR REINFORCED BRIDGE APPROACH FILLS, SEE THE ROADWAY PLANS. REINFORCING STEEL IN THE WING WALL MAY BE SHIFED AS NECESSARY TO CLEAR THE DRAIN PIPE.

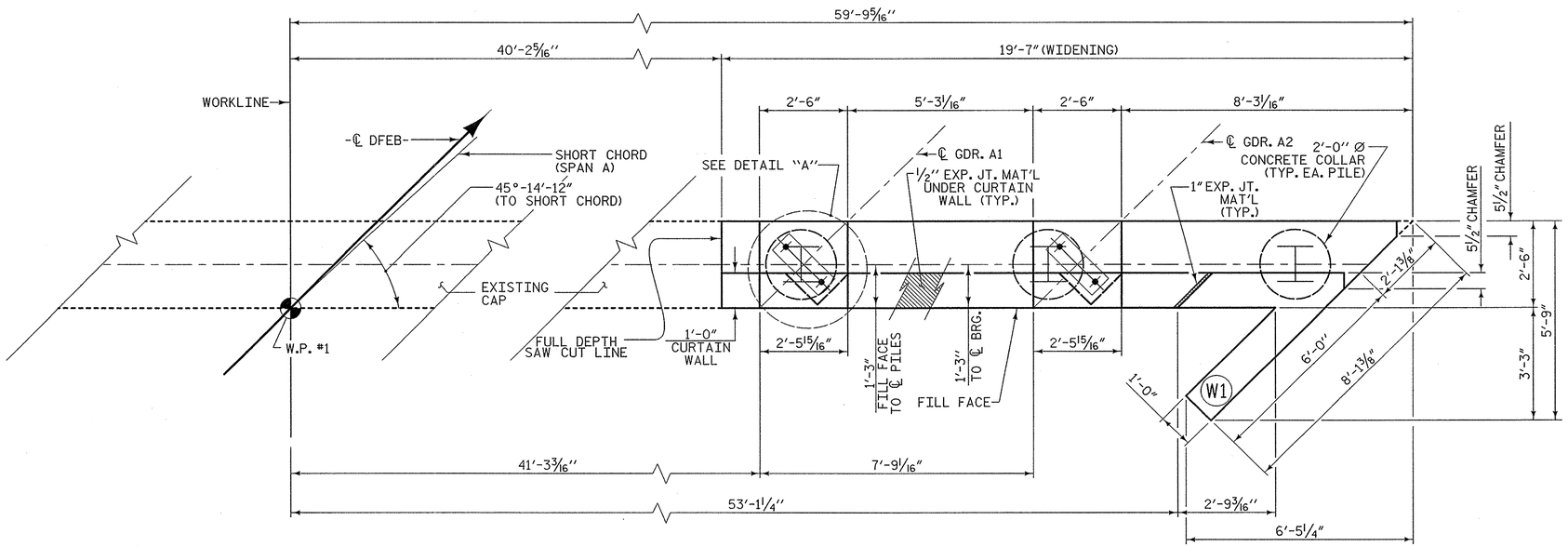

PLAN

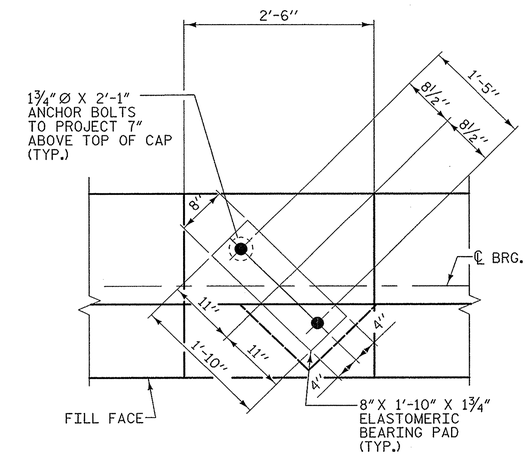

DETAIL "A"

(TYP. EACH GIRDER)

★ FOR LOCATION OF ELEVATIONS BETWEEN BRIDGE SEAT BUILD-UPS. SEE SECTION A-A ON SHEET 2 OF 2.

✻ SEE "CONCRETE REMOVAL DETAILS" ON SHEET 2 OF 2.

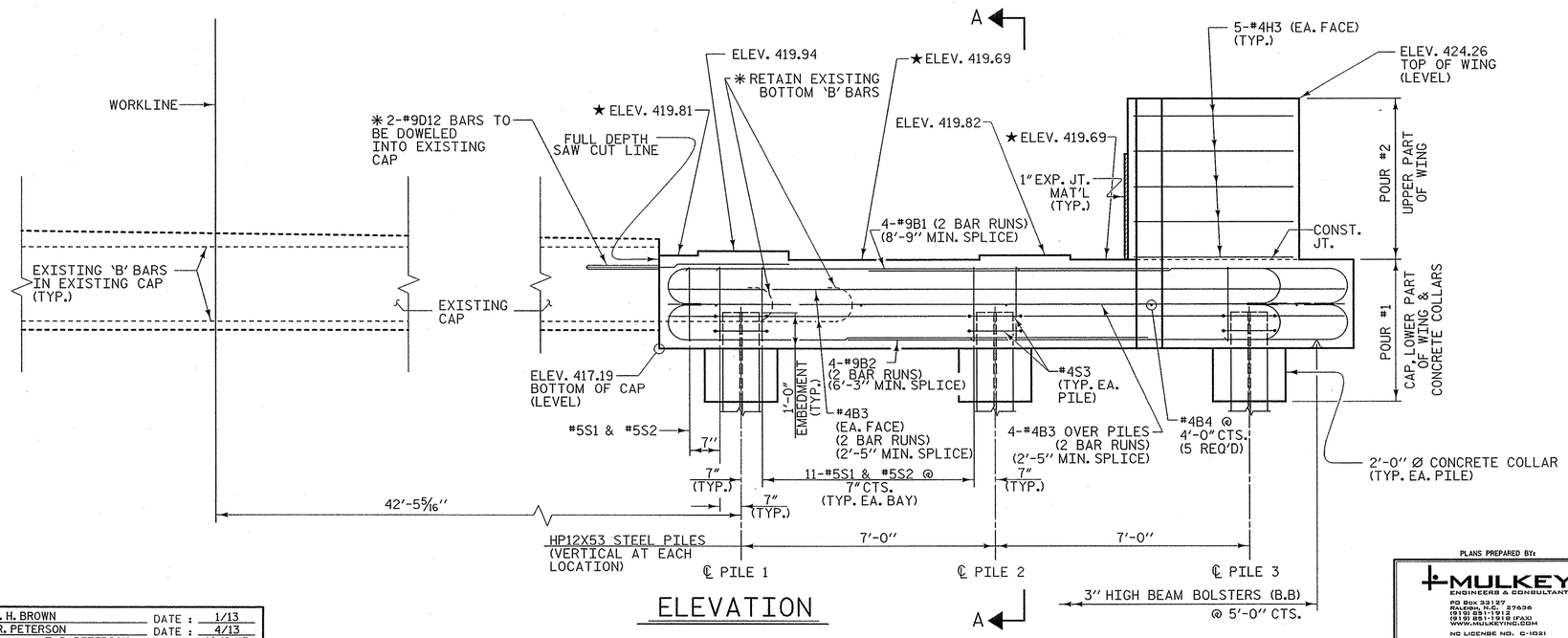

ELEVATION

PROJECT NO. U-0071

DURHAM COUNTY

STATION: 34+62.88 -DFEB-

SHEET 1 OF 2

STATE OF NORTH CAROLINA
DEPARTMENT OF TRANSPORTATION
RALEIGH

SUBSTRUCTURE

END BENT #1

PLANS PREPARED BY:
MULKEY ENGINEERS & CONSULTANTS
PO BOX 33127 RALEIGH, N.C. 27636 (919) 851-1912 (919) 851-1918 (FAX) WWW.MULKEYINC.COM
NC LICENSE NO. C-1321

NORTH CAROLINA PROFESSIONAL SEAL 034352 ENGINEER TERRE R. PETERSON 12/2/13

STR #13

REVISIONS						SHEET NO.
NO.	BY:	DATE:	NO.	BY:	DATE:	S-596
1			3			TOTAL SHEETS
2			4			671

DRAWN BY :	Z. H. BROWN	DATE :	1/13
CHECKED BY :	T. R. PETERSON	DATE :	4/13
DESIGN ENGINEER OF RECORD:	T. R. PETERSON	DATE :	12/2/13

11/26/2013 9:44:12 AM R:\Structures\EBL\U0071EBL_S0_EL01.dgn

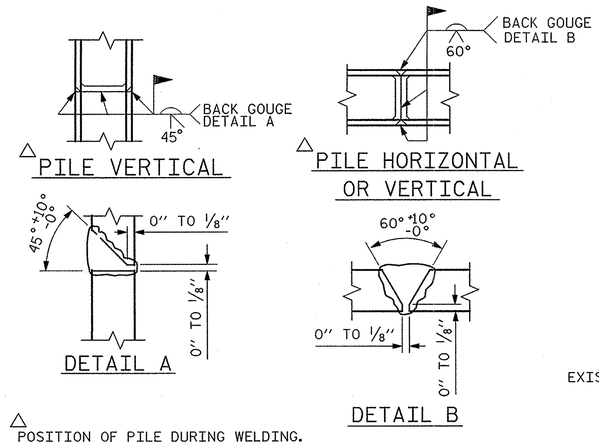

PILE SPLICE DETAILS

NOTES

#9D18 BARS SHALL BE INSTALLED USING AN ADHESIVE ANCHORING SYSTEM. LEVEL 1 FIELD TESTING IS REQUIRED, AND THE YIELD LOAD OF THE DOWELS IS 60 KIPS. ADHESIVELY ANCHORED ANCHOR BOLT OR DOWEL TESTING SHALL BE IN ACCORDANCE WITH SECTION 420-13 OF THE STANDARD SPECIFICATIONS.

▲ EMBEDMENT DEPTH SHALL BE DETERMINED BY MANUFACTURER. #9D18 BAR QUANTITY BASED ON AN 1'-6" EMBEDMENT DEPTH.

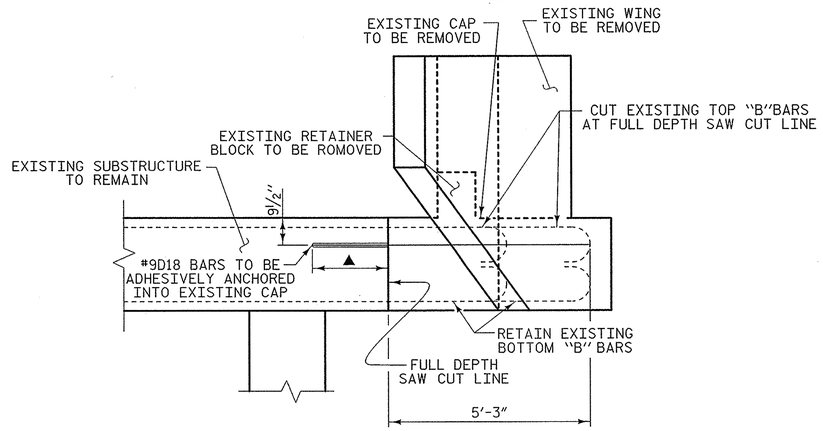

ELEVATION

RETAIN ALL "S" BARS IN EXISTING CAP UP TO THE FULL DEPTH SAW CUT LINE

CONCRETE REMOVAL DETAILS

BAR TYPES

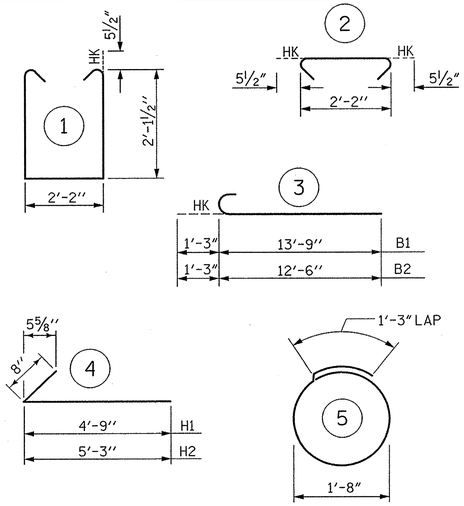

ALL DIMENSIONS ARE OUT TO OUT

BILL OF MATERIAL

END BENT #1

BAR	NO.	SIZE	TYPE	LENGTH	WEIGHT
B1	8	#9	3	15'-0"	408
B2	8	#9	3	13'-9"	374
B3	16	#4	STR	10'-7"	113
B4	5	#4	STR	2'-2"	7
H1	8	#4	4	5'-5"	29
H2	8	#4	4	5'-11"	32
H3	10	#4	STR	3'-7"	24
S1	24	#5	1	7'-4"	184
S2	24	#5	2	3'-1"	77
S3	6	#4	5	6'-6"	26
V1	19	#4	STR	6'-8"	85
D18	2	#9	STR	6'-9"	46

REINFORCING STEEL	1405 lbs.
CLASS "A" CONCRETE - CU. YARDS	
POUR 1 -CAP, LOWER WING & COLLARS	5.5 cu. yds.
POUR 2 - UPPER WING	1.4 cu. yds.
TOTAL	6.9 cu. yds.
HP12X53 STEEL PILES	
3 PILES REQUIRED - LIN. FEET	30
STEEL PILE POINTS	3 EACH
PILE EXCAVATION NOT IN SOIL - LIN. FEET	15
PILE EXCAVATION IN SOIL - LIN. FEET	15

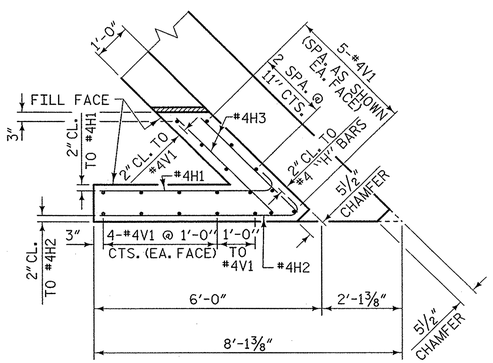

PLAN OF RIGHT WING - W1

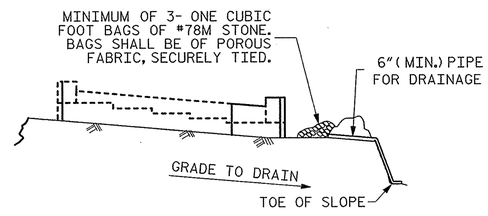

BAGGED STONE AND PIPE SHALL BE PLACED IMMEDIATELY AFTER COMPLETION OF END BENT EXCAVATION. PIPE MAY BE EITHER CONCRETE, CORRUGATED STEEL, CORRUGATED ALUMINUM ALLOY, OR CORRUGATED PLASTIC. PERFORATED PIPE WILL NOT BE ALLOWED.

BAGGED STONE SHALL REMAIN IN PLACE UNTIL THE ENGINEER DIRECTS THAT IT BE REMOVED. THE CONTRACTOR SHALL REMOVE AND DISPOSE OF SILT ACCUMULATIONS AT BAGGED STONE WHEN SO DIRECTED BY THE ENGINEER. BAGS SHALL BE REMOVED AND REPLACED WHENEVER THE ENGINEER DETERMINES THAT THEY HAVE DETERIORATED AND LOST THEIR EFFECTIVENESS.

NO SEPARATE PAYMENT WILL BE MADE FOR THIS WORK AND THE ENTIRE COST OF THIS WORK SHALL BE INCLUDED IN THE UNIT CONTRACT PRICE BID FOR THE SEVERAL PAY ITEMS.

TEMPORARY DRAINAGE AT END BENT

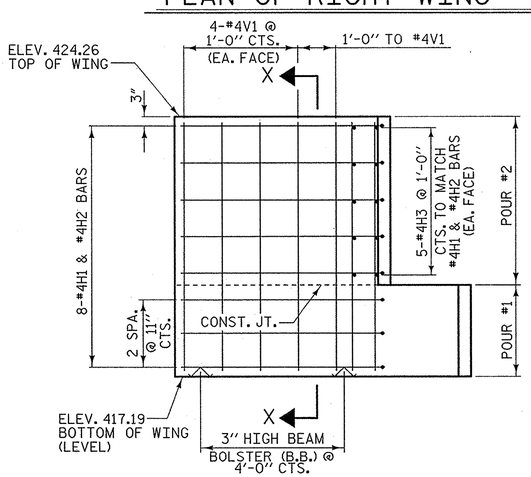

ELEVATION OF RIGHT WING - W1

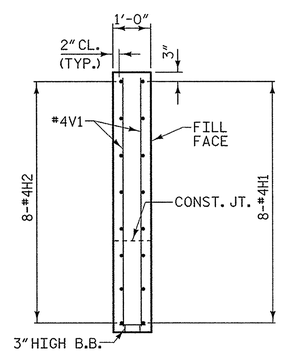

SECTION X-X

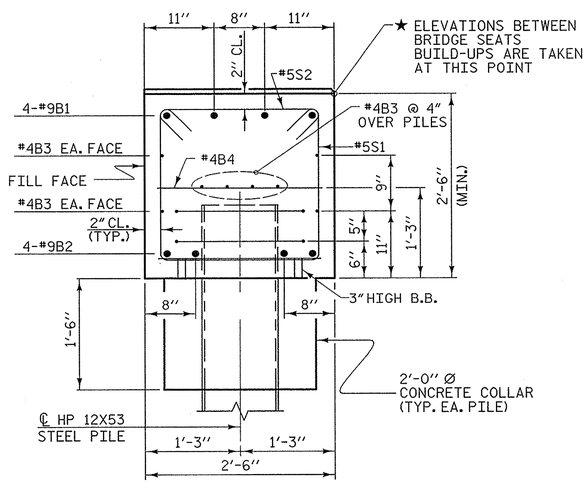

SECTION A-A

PROJECT NO. U-0071

DURHAM COUNTY

STATION: 34+62.88 -DFEB-

SHEET 2 OF 2

STATE OF NORTH CAROLINA
DEPARTMENT OF TRANSPORTATION
RALEIGH

SUBSTRUCTURE

END BENT #1

PLANS PREPARED BY:
MULKEY ENGINEERS & CONSULTANTS
PO Box 33127 RALEIGH, N.C. 27636
(919) 851-1912
(919) 851-1918 (FAX)
WWW.MULKEYINC.COM
NC LICENSE NO. C-1021

NORTH CAROLINA PROFESSIONAL SEAL 034352 ENGINEER TERRY R. PETERSON 12/2/13

STR #13

REVISIONS						SHEET NO.
NO.	BY:	DATE:	NO.	BY:	DATE:	S-597
1			3			TOTAL SHEETS
2			4			671

DRAWN BY :	Z. H. BROWN	DATE :	3/13
CHECKED BY :	T. R. PETERSON	DATE :	4/13
DESIGN ENGINEER OF RECORD:	T. R. PETERSON	DATE :	12/2/13

11/26/2013 9:45:37 AM R:\Structures\EBL\U0071EBL_S0_E1_02.dgn

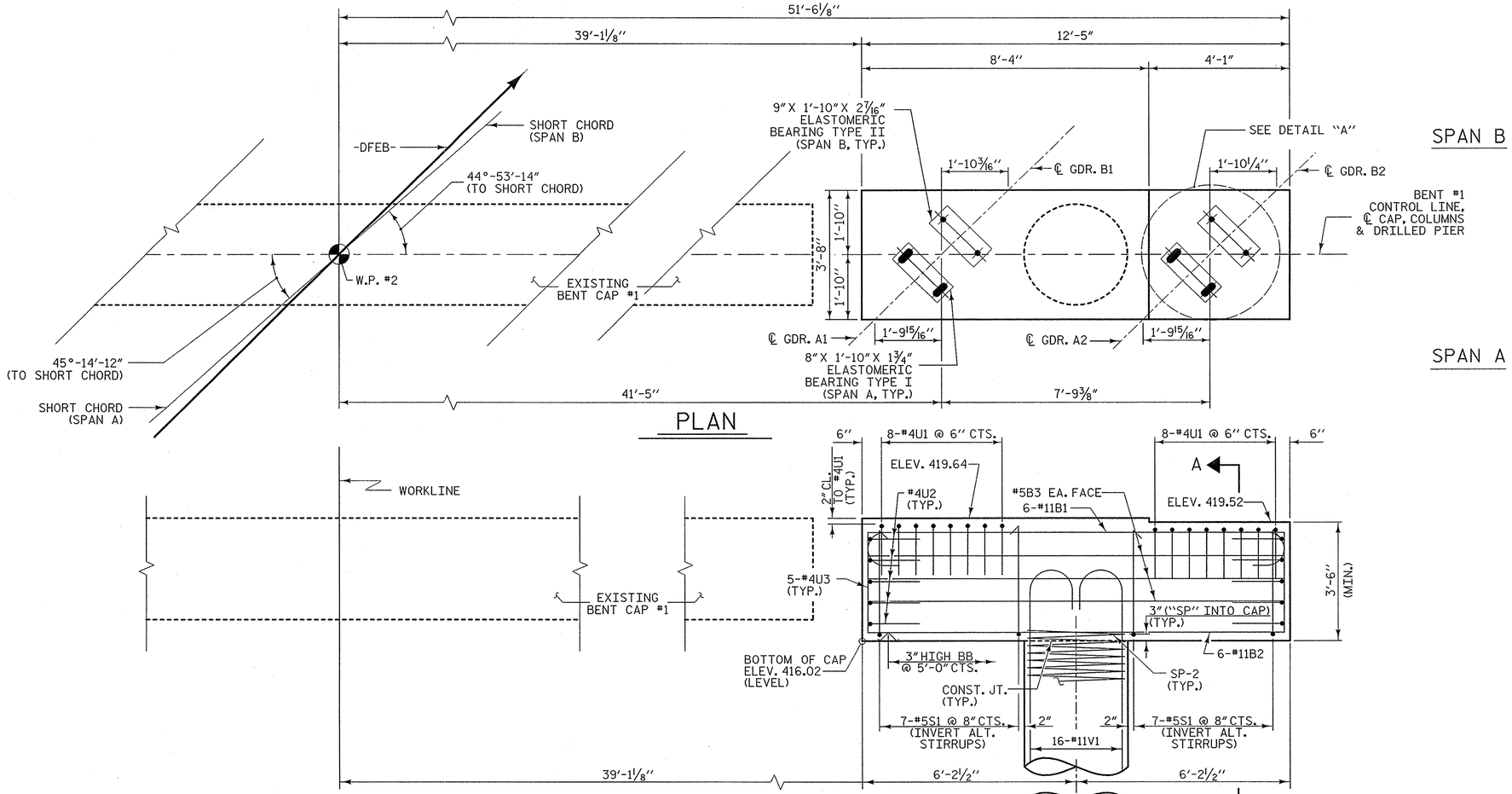

PLAN

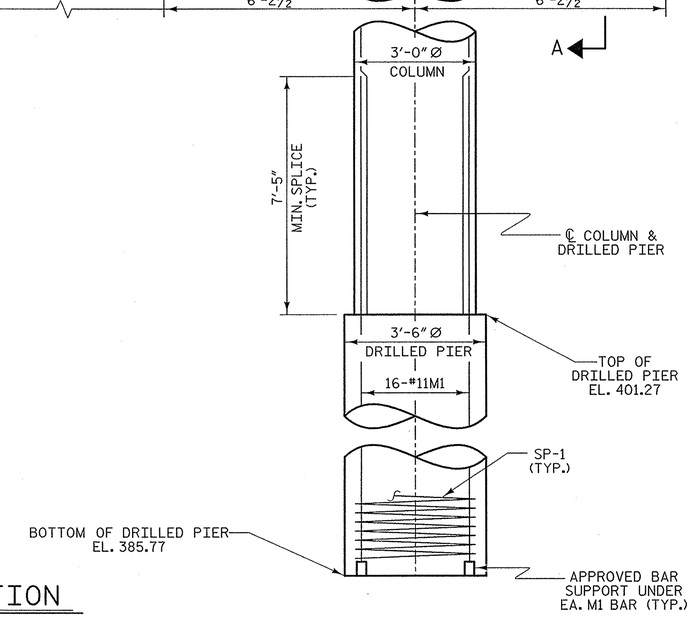

ELEVATION

NOTES

STIRRUPS AND "U" BARS IN CAP MAY BE SHIFTED AS NECESSARY TO CLEAR ANCHOR BOLTS.

HOOKS ON "V" BARS MAY BE TURNED AS NECESSARY FOR PLACING REINFORCING STEEL.

ALL STEEL IN THE DRILLED PIERS IS INCLUDED IN THE PAY ITEMS FOR "REINFORCING STEEL" AND "SPIRAL COLUMN REINFORCING STEEL."

THE LOCATION OF THE CONSTRUCTION JOINT IN THE DRILLED PIERS IS BASED ON AN APPROXIMATE GROUND LINE ELEVATION. IF THE CONSTRUCTION JOINT IS ABOVE THE ACTUAL GROUND LINE ELEVATION, THE CONTRACTOR SHALL PLACE THE CONSTRUCTION JOINT ONE FOOT BELOW THE GROUND LINE.

THE CONTRACTOR'S ATTENTION IS CALLED TO THE FACT THAT THE LONGITUDINAL REINFORCEMENT FOR DRILLED PIERS IS DETAILED WITH 3 FEET OF EXTRA LENGTH.

EPOXY COAT THE BENT CAP AFTER ADJUSTMENTS ARE MADE TO BEARINGS AND ANCHOR BOLTS ARE GROUTED.

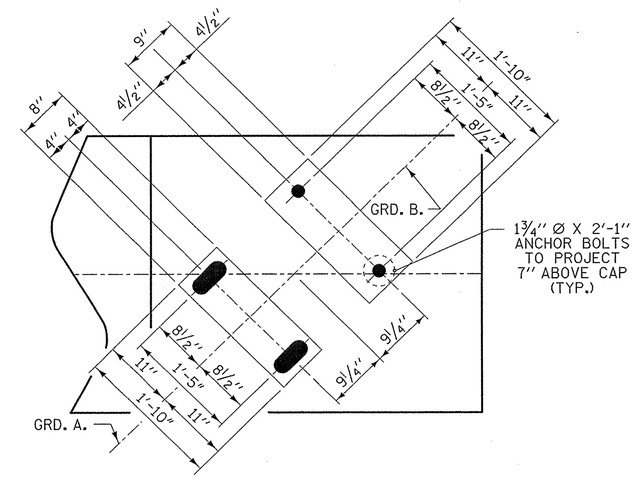

DETAIL "A"

(DIMENSIONS ARE TYPICAL EACH BEARING)

PROJECT NO. U-0071

DURHAM COUNTY

STATION: 34+62.88 -DFEB-

SHEET 1 OF 2

STATE OF NORTH CAROLINA
DEPARTMENT OF TRANSPORTATION
RALEIGH

SUBSTRUCTURE

BENT #1

PLANS PREPARED BY:

MULKEY ENGINEERS & CONSULTANTS
PO Box 33127
RALEIGH, N.C. 27636
(919) 851-1912
(919) 851-1918 (FAX)
WWW.MULKEYINC.COM
NC LICENSE NO. C-1021

NORTH CAROLINA PROFESSIONAL SEAL 034352 ENGINEER TERRY R. PETERSON
12/2/13

STR #13

REVISIONS						SHEET NO.
NO.	BY:	DATE:	NO.	BY:	DATE:	S-598
1			3			TOTAL SHEETS
2			4			671

DRAWN BY :	Z. H. BROWN	DATE :	3/13
CHECKED BY :	T. R. PETERSON	DATE :	4/13
DESIGN ENGINEER OF RECORD:	T. R. PETERSON	DATE :	12/2/13

11/26/2013 9:39:30 AM R:\Structures\EBL\U0071EBL_SD_B1_01.dgn

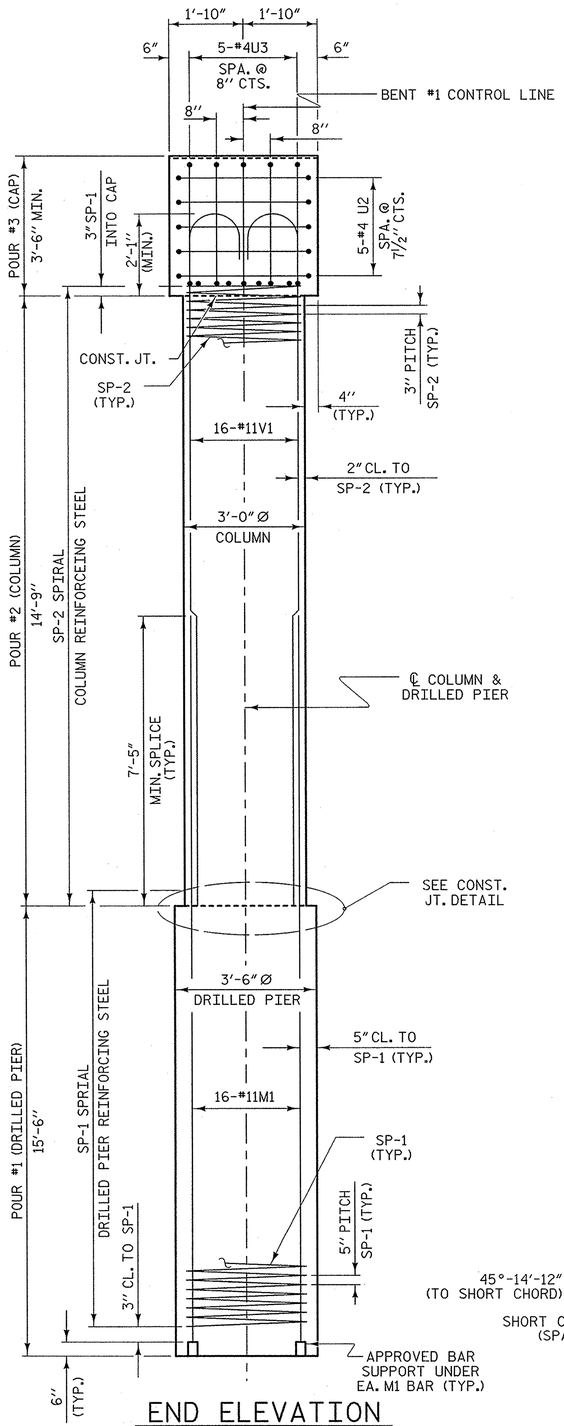

END ELEVATION

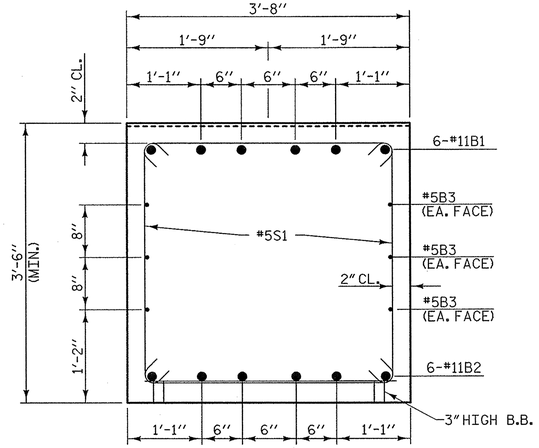

SECTION A-A

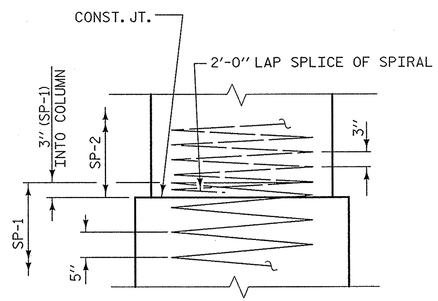

CONSTRUCTION JOINT DETAIL

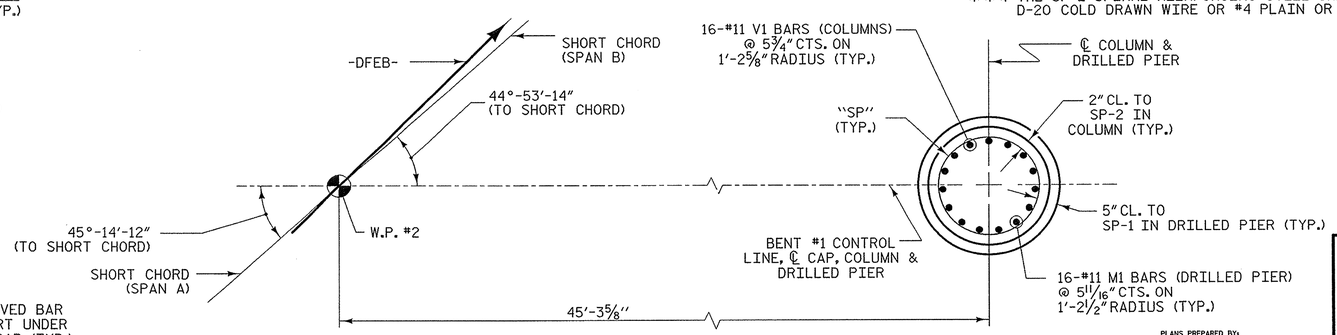

PLAN OF DRILLED PIER & COLUMN

BAR TYPES

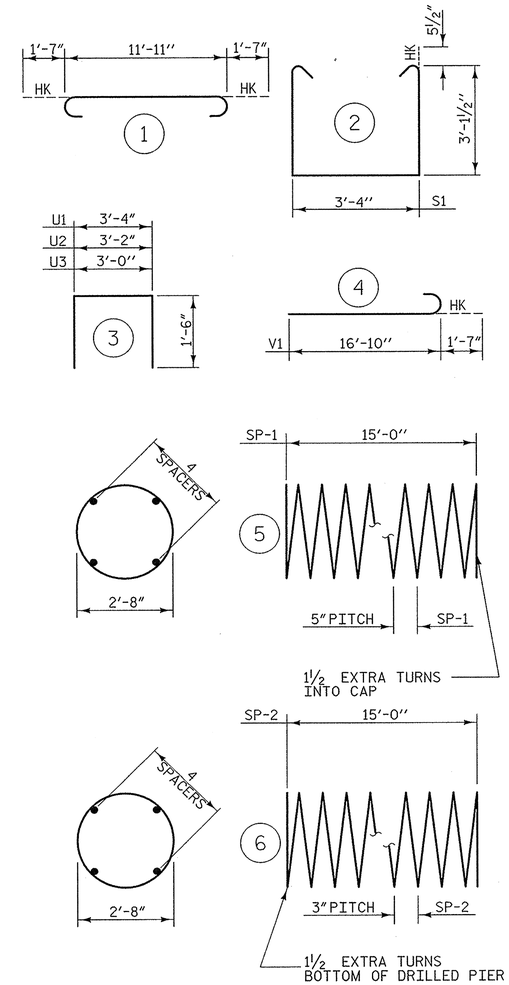

ALL BAR DIMENSIONS ARE OUT TO OUT

** THE SP-1 SPIRAL REINFORCING STEEL SHALL BE W31 OR D-31 COLD DRAWN WIRE OR #5 PLAIN OR DEFORMED BAR.

*** THE SP-2 SPIRAL REINFORCING STEEL SHALL BE W20 OR D-20 COLD DRAWN WIRE OR #4 PLAIN OR DEFORMED BAR.

BILL OF MATERIAL

BENT #1

BAR	NO.	SIZE	TYPE	LENGTH	WEIGHT
B1	6	#11	1	15'-1"	481
B2	6	#11	STR	11'-11"	380
B3	6	#5	STR	12'-1"	76
M1	16	#11	STR	25'-5"	2161
S1	14	#5	2	10'-6"	153
U1	16	#4	3	6'-4"	68
U2	10	#4	3	6'-2"	41
U3	10	#4	3	6'-0"	40
V1	16	#11	4	18'-5"	1566
TOTAL REINFORCING STEEL					4966 lbs.
SP-1	1	**	5	308'-6"	322
SP-2	1	***	6	507'-5"	339
SPIRAL COLUMN REINFORCING STEEL (SP)					661

CLASS "A" CONCRETE - CU. YARDS

POUR 2 - COLUMN	3.9 cu. yds.
POUR 3 - CAP	6.1 cu. yds.
TOTAL	10.0 cu. yds.

DRILLED PIERS

DRILLED PIER CONCRETE POUR #1 (DRILLED PIERS)	5.6 C.Y.
3'-6" Ø DRILLED PIER IN SOIL	6.5 LIN. FT.
3'-6" Ø DRILLED PIER NOT IN SOIL	9.0 LIN. FT.
SID INSPECTION	1 EA.
SPT TESTING	1 EA.
CSL TESTING	1 EA.
CSL TUBES	68 LIN FT.

PROJECT NO. U-0071

DURHAM COUNTY

STATION: 34+62.88 -DFEB-

SHEET 2 OF 2

STATE OF NORTH CAROLINA
DEPARTMENT OF TRANSPORTATION
RALEIGH

SUBSTRUCTURE

BENT #1

PLANS PREPARED BY:
MULKEY ENGINEERS & CONSULTANTS
PO BOX 33127 RALEIGH, N.C. 27636
(919) 851-1912
(919) 851-1918 (FAX)
WWW.MULKEYINC.COM
NC LICENSE NO. C-1821

NORTH CAROLINA PROFESSIONAL SEAL 034352 ENGINEER TERRE R. PETERSON 12/2/13

STR #13

REVISIONS							SHEET NO.
NO.	BY:	DATE:	NO.	BY:	DATE:		S-599
1			3				TOTAL SHEETS
2			4				671

DRAWN BY : Z. H. BROWN DATE : 3/13
CHECKED BY : T. R. PETERSON DATE : 4/13
DESIGN ENGINEER OF RECORD: T. R. PETERSON DATE : 12/2/13

11/26/2013 9:37:54 AM R:\Structures\EB1\U0071EB1_SD_B1_02.dgn

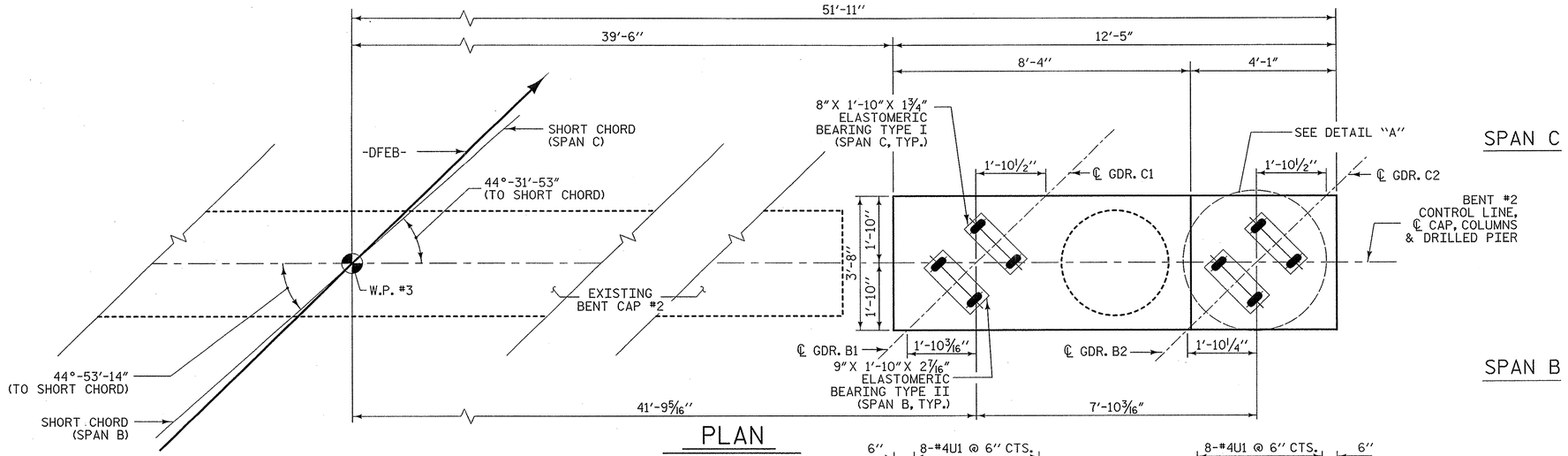

PLAN

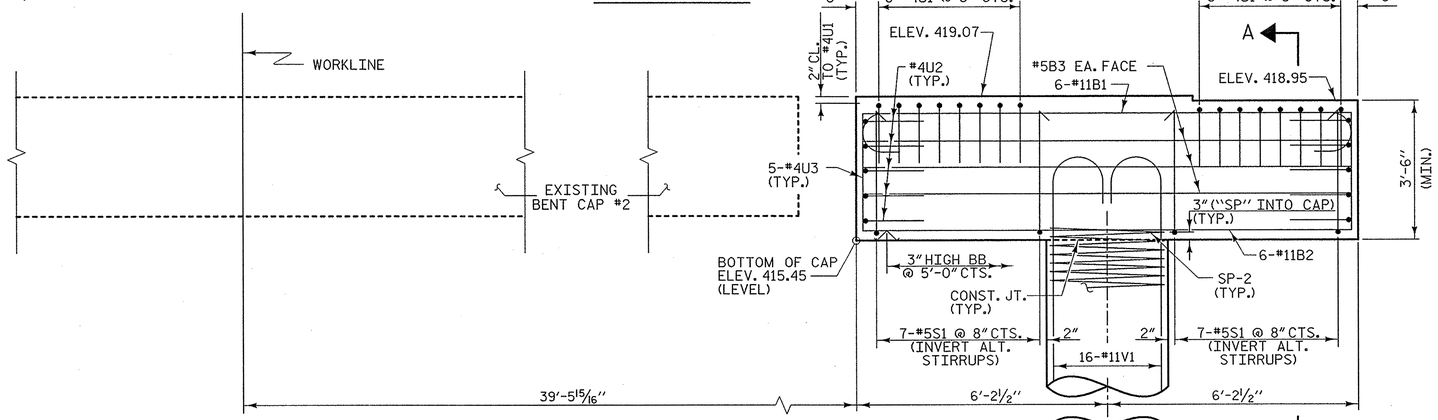

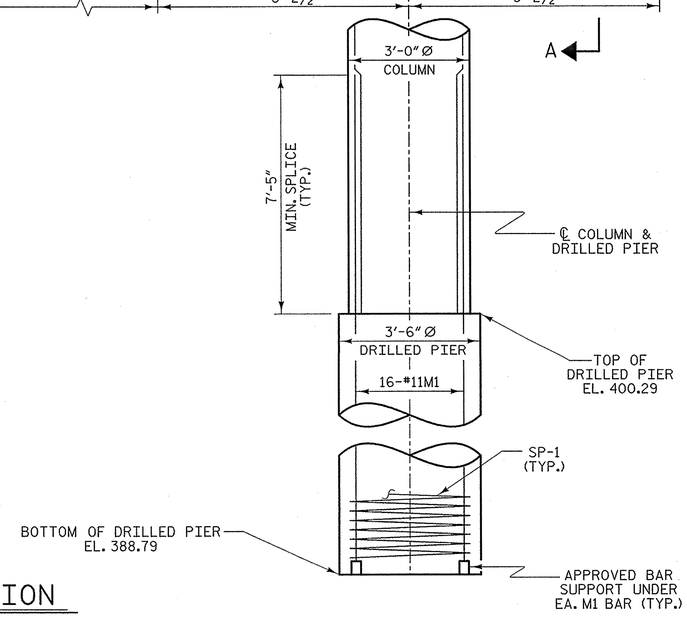

ELEVATION

NOTES

STIRRUPS AND "U" BARS IN CAP MAY BE SHIFTED AS NECESSARY TO CLEAR ANCHOR BOLTS.

HOOKS ON "V" BARS MAY BE TURNED AS NECESSARY FOR PLACING REINFORCING STEEL.

ALL STEEL IN THE DRILLED PIERS IS INCLUDED IN THE PAY ITEMS FOR "REINFORCING STEEL" AND "SPIRAL COLUMN REINFORCING STEEL."

THE LOCATION OF THE CONSTRUCTION JOINT IN THE DRILLED PIERS IS BASED ON AN APPROXIMATE GROUND LINE ELEVATION. IF THE CONSTRUCTION JOINT IS ABOVE THE ACTUAL GROUND LINE ELEVATION, THE CONTRACTOR SHALL PLACE THE CONSTRUCTION JOINT ONE FOOT BELOW THE GROUND LINE.

THE CONTRACTOR'S ATTENTION IS CALLED TO THE FACT THAT THE LONGITUDINAL REINFORCEMENT FOR DRILLED PIERS IS DETAILED WITH 3 FEET OF EXTRA LENGTH.

EPOXY COAT THE BENT CAP AFTER ADJUSTMENTS ARE MADE TO BEARINGS AND ANCHOR BOLTS ARE GROUTED.

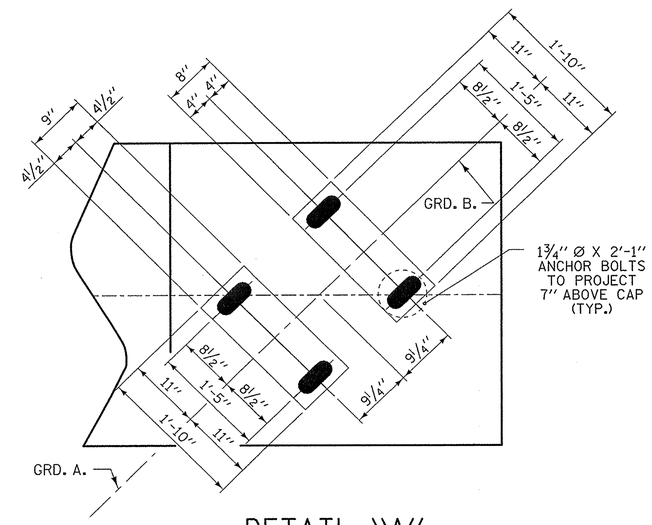

DETAIL "A"

(DIMENSIONS ARE TYPICAL EACH BEARING)

PROJECT NO. U-0071

DURHAM COUNTY

STATION: 34+62.88 -DFEB-

SHEET 1 OF 2

STATE OF NORTH CAROLINA
DEPARTMENT OF TRANSPORTATION
RALEIGH

SUBSTRUCTURE

BENT #2

DRAWN BY :	Z. H. BROWN	DATE :	3/13		
CHECKED BY :	T. R. PETERSON	DATE :	4/13		
DESIGN ENGINEER OF RECORD:	T. R. PETERSON	DATE :	12/2/13		

PLANS PREPARED BY:
MULKEY ENGINEERS & CONSULTANTS
PO Box 33127
RALEIGH, N.C. 27636
(919) 851-1912
(919) 851-1918 (FAX)
WWW.MULKEYINC.COM
NC LICENSE NO. C-1621

NORTH CAROLINA PROFESSIONAL SEAL 034352 ENGINEER TERRE R. PETERSON
12/2/13

STR #13

REVISIONS							SHEET NO.
NO.	BY:	DATE:	NO.	BY:	DATE:		S-600
1			3				TOTAL SHEETS
2			4				671

11/26/2013 9:36:06 AM R:\Structures\EB\U0071EB_S0_B2_01.dgn

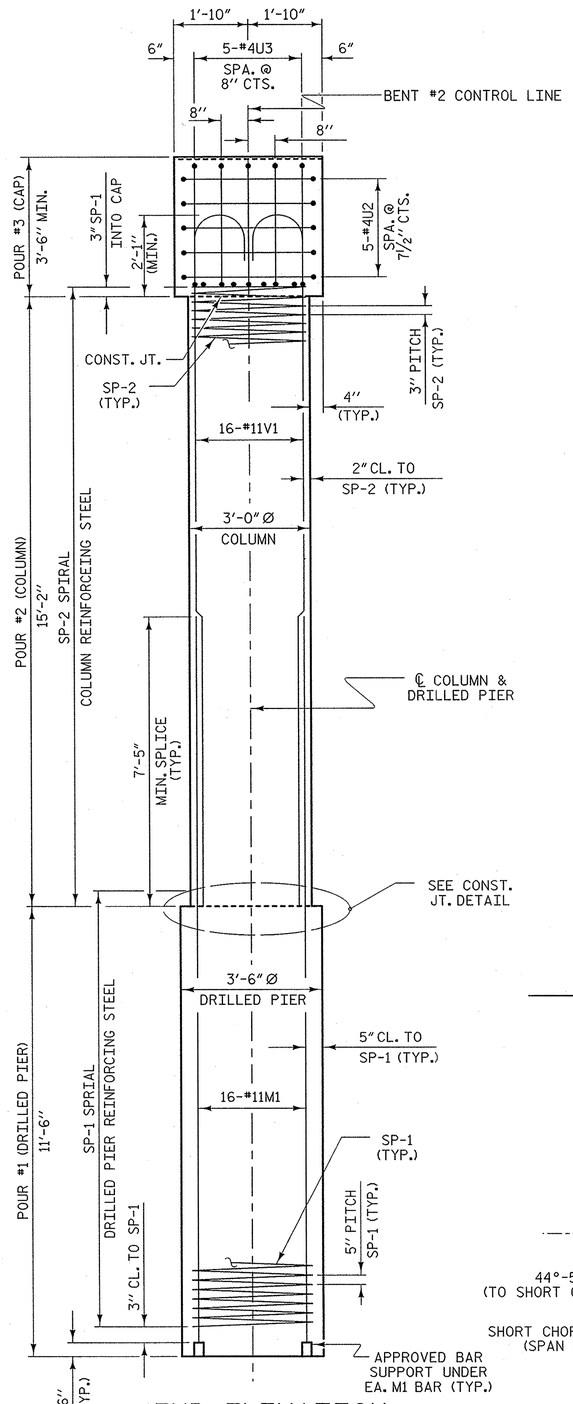

END ELEVATION

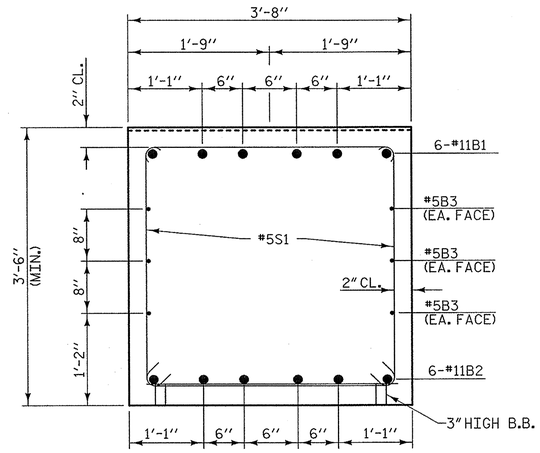

SECTION A-A

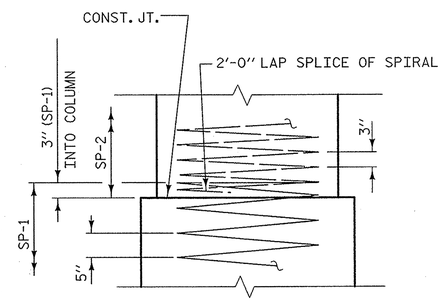

CONSTRUCTION JOINT DETAIL

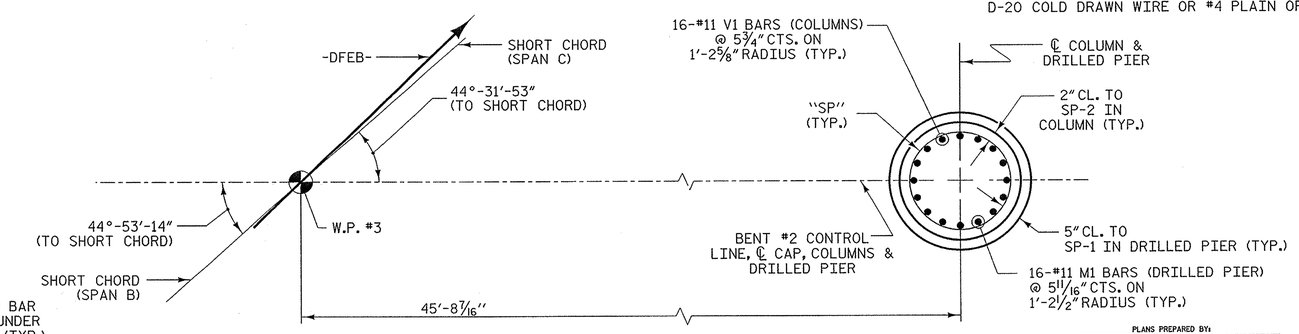

PLAN OF DRILLED PIER & COLUMN

BAR TYPES

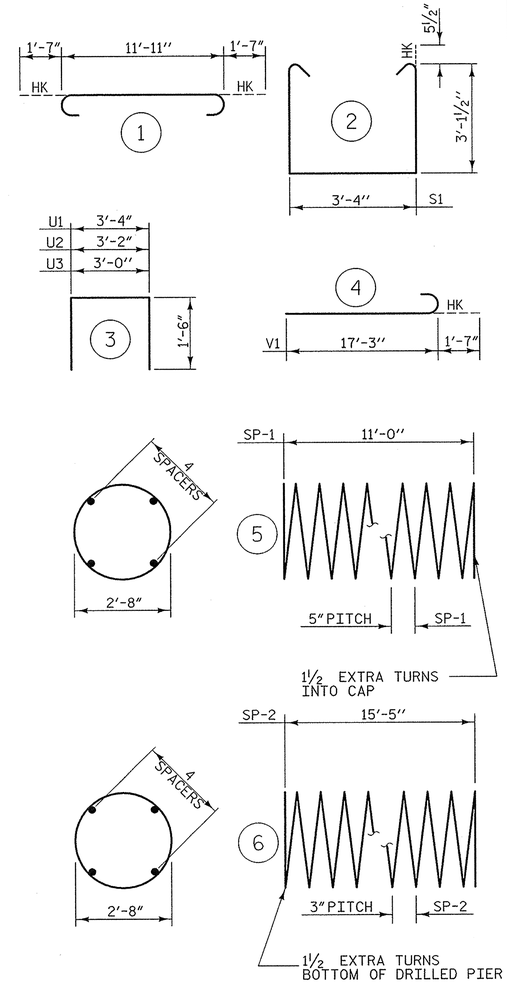

ALL BAR DIMENSIONS ARE OUT TO OUT

** THE SP-1 SPIRAL REINFORCING STEEL SHALL BE W31 OR D-31 COLD DRAWN WIRE OR #5 PLAIN OR DEFORMED BAR.

*** THE SP-2 SPIRAL REINFORCING STEEL SHALL BE W20 OR D-20 COLD DRAWN WIRE OR #4 PLAIN OR DEFORMED BAR.

BILL OF MATERIAL

BENT #2

BAR	NO.	SIZE	TYPE	LENGTH	WEIGHT
B1	6	#11	1	15'-1"	481
B2	6	#11	STR	11'-11"	380
B3	6	#5	STR	12'-1"	76
M1	16	#11	STR	21'-5"	1821
S1	14	#5	2	10'-6"	153
U1	16	#4	3	6'-4"	68
U2	10	#4	3	6'-2"	41
U3	10	#4	3	6'-0"	40
V1	16	#11	4	18'-10"	1601
TOTAL REINFORCING STEEL					4661 lbs.
SP-1	1	**	5	230'-4"	240
SP-2	1	***	6	521'-11"	349
SPIRAL COLUMN REINFORCING STEEL (SP)					589 lbs

CLASS "A" CONCRETE - CU. YARDS

POUR 2 - COLUMN	4.0 cu. yds.
POUR 3 - CAP	6.1 cu. yds.
TOTAL	10.1 cu. yds.

DRILLED PIERS

DRILLED PIER CONCRETE POUR #1 (DRILLED PIERS)	4.1 C.Y.
3'-6" Ø DRILLED PIER IN SOIL	0.5 LIN. FT.
3'-6" Ø DRILLED PIER NOT IN SOIL	11.0 LIN. FT.
SID INSPECTION	1 EA.
CSL TESTING	1 EA.
CSL TUBES	52 LIN FT.

PROJECT NO. U-0071

DURHAM COUNTY

STATION: 34+62.88 -DFEB-

SHEET 2 OF 2

STATE OF NORTH CAROLINA
DEPARTMENT OF TRANSPORTATION
RALEIGH

SUBSTRUCTURE

BENT #2

DRAWN BY :	Z. H. BROWN	DATE :	3/13
CHECKED BY :	T. R. PETERSON	DATE :	4/13
DESIGN ENGINEER OF RECORD:	T. R. PETERSON	DATE :	12/2/13

PLANS PREPARED BY:
MULKEY ENGINEERS & CONSULTANTS
PO Box 33127
RALEIGH, N.C. 27636
(919) 851-1912
(919) 851-1918 (FAX)
WWW.MULKEYINC.COM
NC LICENSE NO. C-1621

NORTH CAROLINA PROFESSIONAL SEAL 034352 ENGINEER TERRY R. PETERSON
12/2/13

STR #13

REVISIONS							
NO.	BY:	DATE:	NO.	BY:	DATE:	SHEET NO.	S-601
1			3			TOTAL SHEETS	671
2			4				

11/26/2013 9:33:40 AM R:\Structures\EBL\U0071EBL_S0_B2_02.dgn

NOTES

STIRRUPS BARS IN THE CAP MAY BE SHIFTED AS NECESSARY TO CLEAR ANCHOR BOLTS.

THE TOP SURFACE AREA OF THE END BENT CAP SHALL BE CURED IN ACCORDANCE WITH THE STANDARD SPECIFICATIONS EXCEPT THAT THE MEMBRANE CURING COMPOUND METHOD SHALL NOT BE USED.

THE TOP SURFACE OF THE END BENT CAP EXCEPT THE BRIDGE SEAT BUILDUPS SHALL BE SLOPED TRANSVERSELY FROM THE FILL FACE TO THE BACK FACE AT THE RATE OF 2%.

THE CONCRETE IN THE SHADED AREA OF THE WING SHALL BE POURED AFTER THE JOINT BETWEEN THE DECK AND APPROACH SLAB HAS BEEN SAWED AND THE BARRIER RAIL IS CAST IF SLIP FORMING IS USED.

INSTALL THE 4"Ø DRAIN PIPE THROUGH THE WING WALL AS REQUIRED FOR REINFORCED BRIDGE APPROACH FILLS. SEE THE ROADWAY PLANS. REINFORCING STEEL IN THE WING WALL MAY BE SHIFED AS NECESSARY TO CLEAR THE DRAIN PIPE.

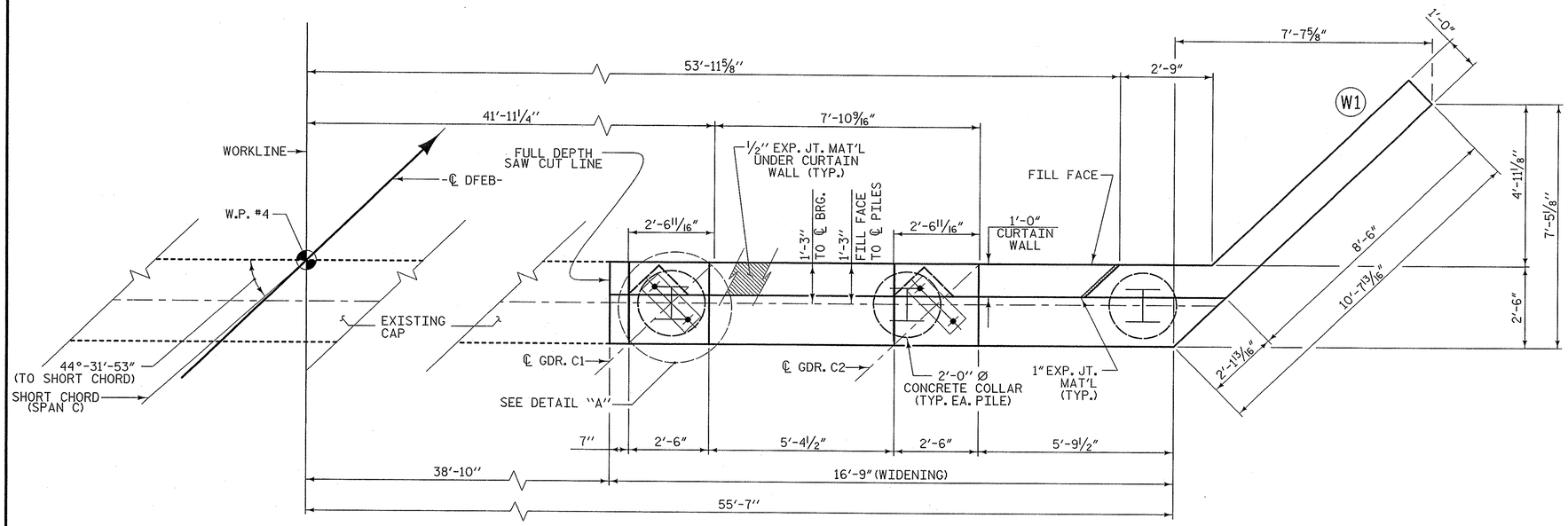

PLAN

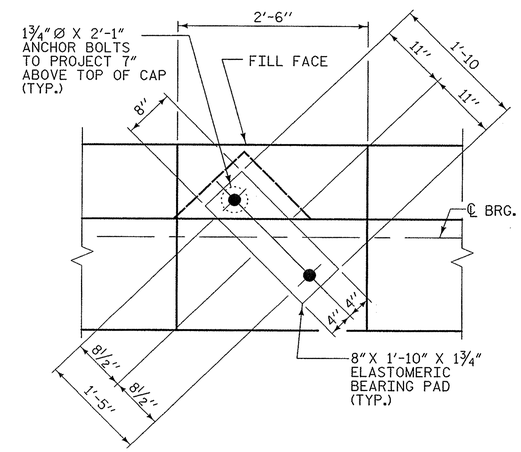

DETAIL "A"

(TYP. EACH GIRDER)

★FOR LOCATION OF ELEVATIONS BETWEEN BRIDGE SEAT BUILD-UPS. SEE SECTION A-A ON SHEET 2 OF 2.

✱SEE "CONCRETE REMOVAL DETAILS" ON SHEET 2 OF 2.

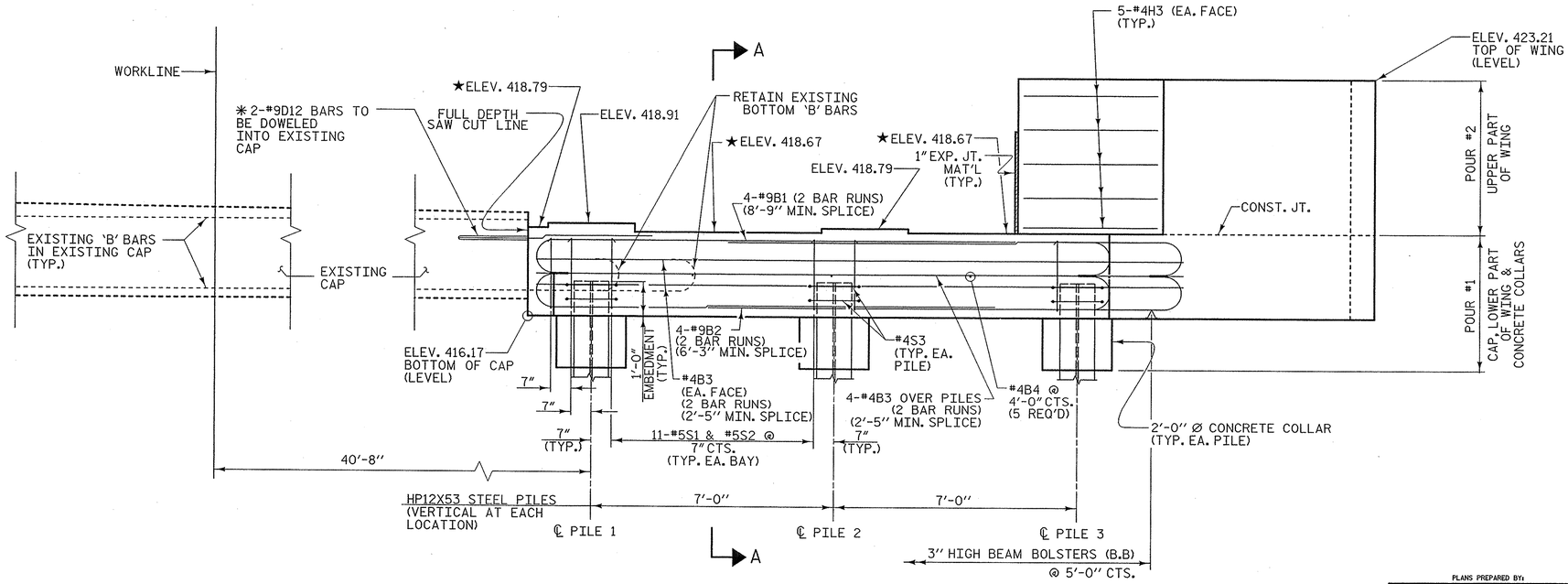

ELEVATION

PROJECT NO. U-0071

DURHAM COUNTY

STATION: 34+62.88 -DFEB-

SHEET 1 OF 2

STATE OF NORTH CAROLINA
DEPARTMENT OF TRANSPORTATION
RALEIGH

SUBSTRUCTURE

END BENT #2

PLANS PREPARED BY:
MULKEY ENGINEERS & CONSULTANTS
PO BOX 33127
RALEIGH, N.C. 27636
(919) 851-1912
(919) 851-1918 (FAX)
WWW.MULKEYINC.COM
NC LICENSE NO. C-1021

NORTH CAROLINA PROFESSIONAL SEAL 034352 ENGINEER TERRY R. PETERSON 12/2/13

STR #13

REVISIONS						SHEET NO.
NO.	BY:	DATE:	NO.	BY:	DATE:	S-602
1			3			TOTAL SHEETS
2			4			671

DRAWN BY :	Z. H. BROWN	DATE :	1/13
CHECKED BY :	T. R. PETERSON	DATE :	4/13
DESIGN ENGINEER OF RECORD:	T. R. PETERSON	DATE :	12/2/13

11/26/2013 9:30:35 AM R:\Structures\EBL\U0071EBL_SD_E2_01.dgn

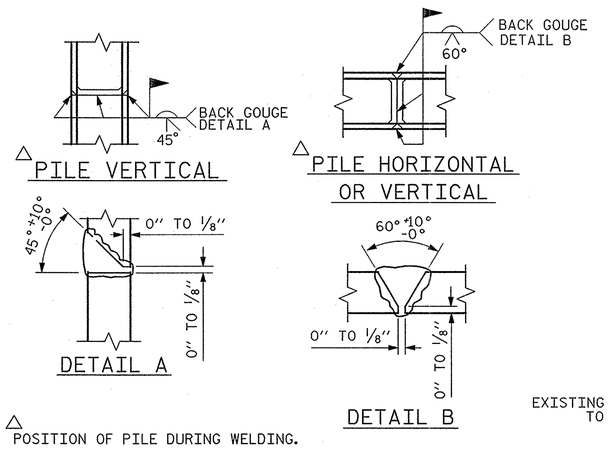

PILE SPLICE DETAILS

NOTES

#9D19 BARS SHALL BE INSTALLED USING AN ADHESIVE ANCHORING SYSYTEM. LEVEL 1 FIELD TESTING IS REQUIRED, AND THE YIELD LOAD OF THE DOWELS IS 60 KIPS. ADHESIVELY ANCHORED ANCHOR BOLT OR DOWEL TESTING SHALL BE IN ACCORDANCE WITH SECTION 420-13 OF THE STANDARD SPECIFICATIONS.

▲ EMBEDMENT DEPTH SHALL BE DETERMIND BY MANUFATURER. #9D19 BAR QUANTITY BASED ON AN 1'-6" EMBEDMENT DEPTH.

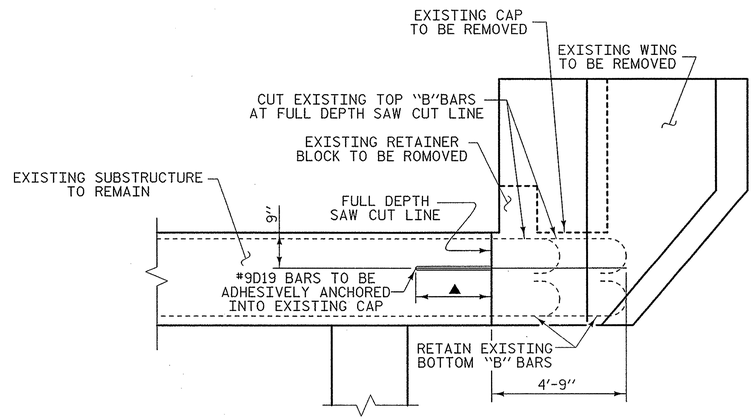

ELEVATION

RETAIN ALL "S" BARS IN EXISTING CAP UP TO THE FULL DEPTH SAW CUT LINE

CONCRETE REMOVAL DETAILS

BAR TYPES

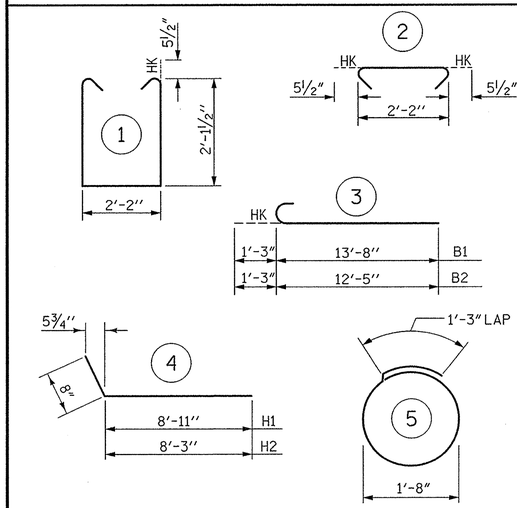

ALL DIMENSIONS ARE OUT TO OUT

BILL OF MATERIAL

END BENT #2

BAR	NO.	SIZE	TYPE	LENGTH	WEIGHT
B1	8	#9	3	14'-11"	406
B2	8	#9	3	13'-8"	372
B3	16	#4	STR	10'-6"	112
B4	5	#4	STR	2'-2"	7
H1	8	#5	4	9'-7"	80
H2	8	#5	4	8'-11"	74
H3	10	#4	STR	3'-8"	24
S1	24	#5	1	7'-4"	184
S2	24	#5	2	3'-1"	77
S3	6	#4	5	6'-6"	26
V1	28	#4	STR	6'-8"	125
D19	2	#9	STR	6'-3"	43

REINFORCING STEEL	1530 lbs.
CLASS "A" CONCRETE - CU. YARDS	
POUR 1 -CAP, LOWER WING & COLLARS	6.0 cu. yds.
POUR 2 - UPPER WING	1.7 cu. yds.
TOTAL	7.7 cu. yds.
HP12X53 STEEL PILES	
3 PILES REQUIRED - LIN. FEET	30
STEEL PILE POINTS	3 EACH
PILE EXCAVATION NOT IN SOIL - LIN. FEET	14
PILE EXCAVATION IN SOIL - LIN. FEET	17

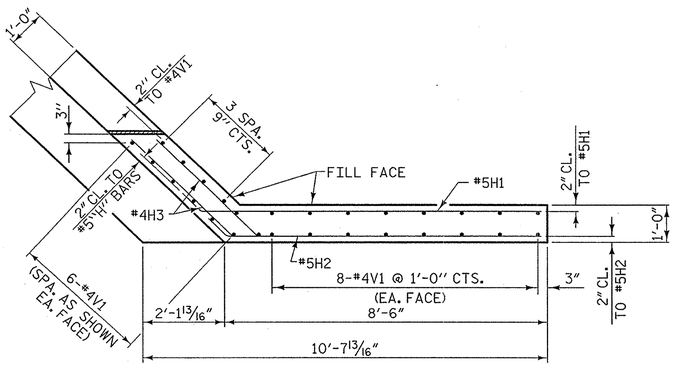

PLAN OF RIGHT WING - W1

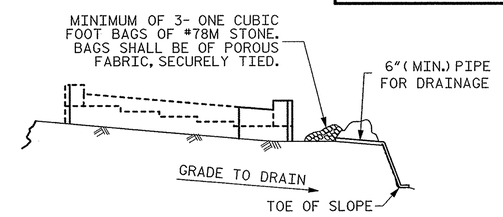

BAGGED STONE AND PIPE SHALL BE PLACED IMMEDIATELY AFTER COMPLETION OF END BENT EXCAVATION. PIPE MAY BE EITHER CONCRETE, CORRUGATED STEEL, CORRUGATED ALUMINUM ALLOY, OR CORRUGATED PLASTIC. PERFORATED PIPE WILL NOT BE ALLOWED.

BAGGED STONE SHALL REMAIN IN PLACE UNTIL THE ENGINEER DIRECTS THAT IT BE REMOVED. THE CONTRACTOR SHALL REMOVE AND DISPOSE OF SILT ACCUMULATIONS AT BAGGED STONE WHEN SO DIRECTED BY THE ENGINEER. BAGS SHALL BE REMOVED AND REPLACED WHENEVER THE ENGINEER DETERMINES THAT THEY HAVE DETERIORATED AND LOST THEIR EFFECTIVENESS.

NO SEPARATE PAYMENT WILL BE MADE FOR THIS WORK AND THE ENTIRE COST OF THIS WORK SHALL BE INCLUDED IN THE UNIT CONTRACT PRICE BID FOR THE SEVERAL PAY ITEMS.

TEMPORARY DRAINAGE AT END BENT

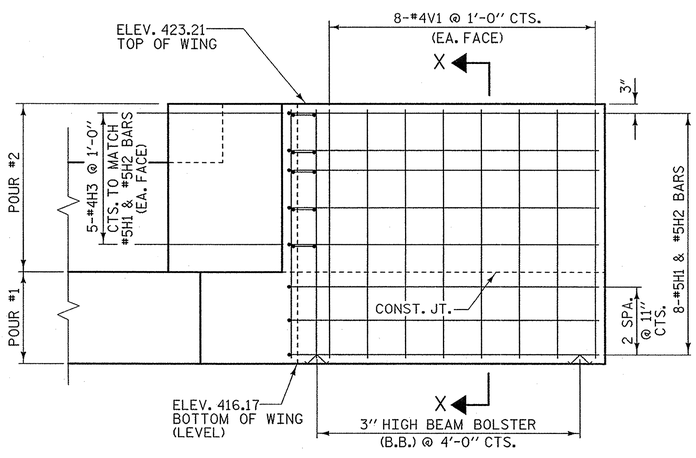

ELEVATION OF RIGHT WING - W1

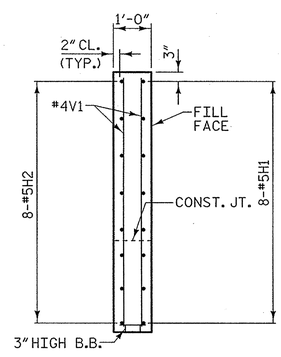

SECTION X-X

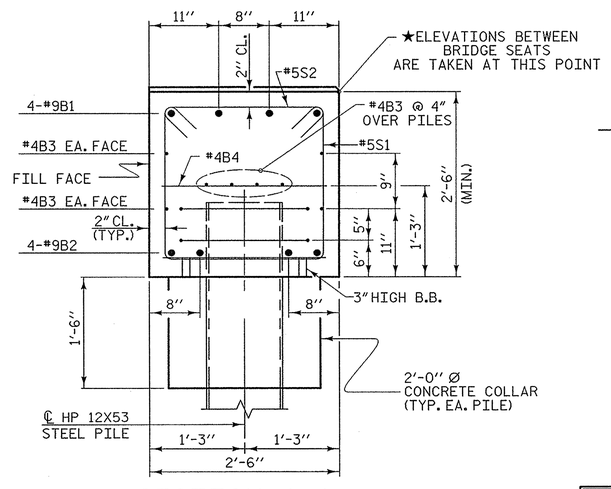

SECTION A-A

PROJECT NO. U-0071

DURHAM COUNTY

STATION: 34+62.88 -DFEB-

SHEET 2 OF 2

STATE OF NORTH CAROLINA
DEPARTMENT OF TRANSPORTATION
RALEIGH

SUBSTRUCTURE

END BENT #2

NORTH CAROLINA PROFESSIONAL SEAL 034352 ENGINEER JERRE R. PETERSON 12/2/13

PLANS PREPARED BY:
MULKEY ENGINEERS & CONSULTANTS
PO Box 33127 RALEIGH, N.C. 27636
(919) 851-1912
(919) 851-1918 (FAX)
WWW.MULKEVINC.COM
NC LICENSE NO. C-1021

REVISIONS						SHEET NO.
NO.	BY:	DATE:	NO.	BY:	DATE:	S-603
1			3			TOTAL SHEETS
2			4			671

STR #13

DRAWN BY :	Z. H. BROWN	DATE :	3/13
CHECKED BY :	T. R. PETERSON	DATE :	4/13
DESIGN ENGINEER OF RECORD:	T. R. PETERSON	DATE :	12/2/13

11/26/2013 9:26:31 AM R:\Structures\EBL\U0071EBL_SD_E2_02.dgn

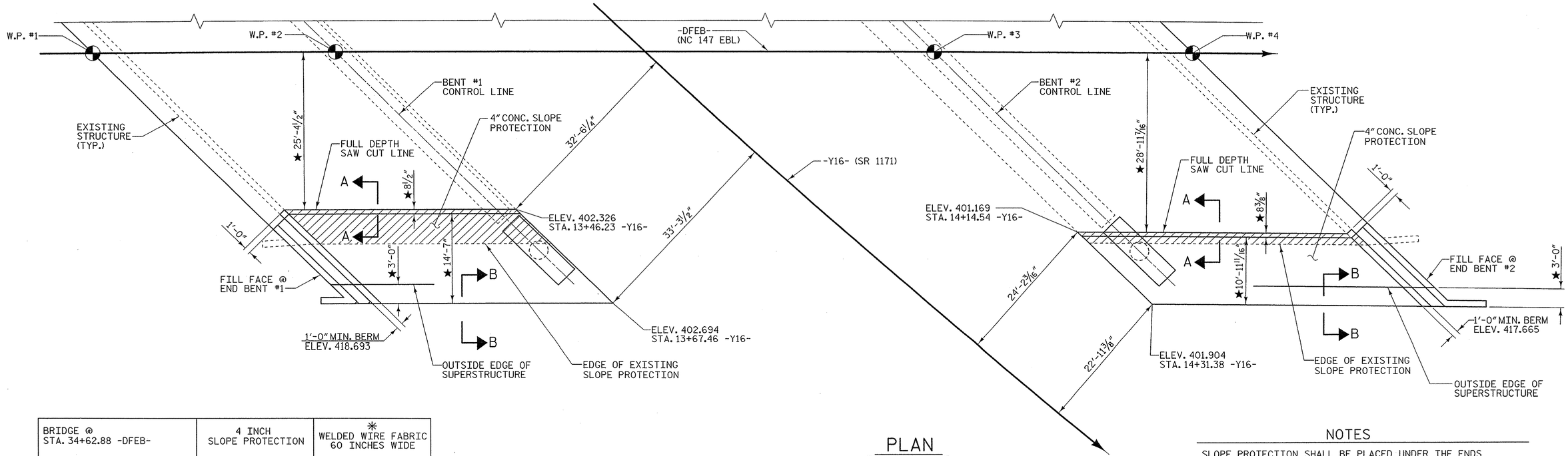

PLAN

★ RADIAL DIMENSION

BRIDGE @ STA. 34+62.88 -DFEB-	4 INCH SLOPE PROTECTION	✳ WELDED WIRE FABRIC 60 INCHES WIDE
	SQUARE YARDS	APPROX. L.F.
END BENT #1	82	150
END BENT #2	72	130

✳ QUANTITY SHOWN IS BASED ON 5' POURS.

NOTES

SLOPE PROTECTION SHALL BE PLACED UNDER THE ENDS OF THE BRIDGE AS SHOWN IN THE DETAILS. MEASUREMENT AND PAYMENT SHALL BE AS PRESCRIBED IN SECTION 462 OF THE STANDARD SPECIFICATIONS.

SLOPE PROTECTION SHALL CONSIST OF 4" POURED-IN-PLACE CONCRETE PAVING AS SHOWN IN THE DETAILS ON THIS SHEET. CONCRETE SHALL BE CLASS "B". THE CONCRETE SURFACE SHALL BE FLOATED WITH A WOODEN FLOAT AND FINISHED. WELDED WIRE FABRIC REINFORCING SHALL BE 6 X 6 - W1.4 X W1.4, 60" WIDE. SLOPE PROTECTION SHALL BE POURED IN 5' STRIPS AS SHOWN IN THE "POURING DETAIL" WITH 2'-0" LONG #4 BARS PLACED ALONG THE SLOPE BETWEEN STRIPS AT 1'-6" MAXIMUM SPACING. SLOPE PROTECTION MAY BE POURED IN ALTERNATE 4' AND 5' STRIPS AS SHOWN IN THE "OPTIONAL POURING DETAIL" WITH ADJACENT RUNS OF WELDED WIRE FABRIC LAPPING AT LEAST 6". THE COST OF THE WELDED WIRE FABRIC AND #4 BARS, IF USED, SHALL BE INCLUDED IN THE CONTRACT UNIT PRICE BID PER SQUARE YARD FOR SLOPE PROTECTION.

CONCRETE REMOVAL DETAILS

THE CONCRETE IN THE SHADED AREAS OF EXISTING 4" CONCRETE SLOPE PROTECTION SHALL BE REMOVED UP TO THE FULL DEPTH SAW CUT LINE AT EACH END BENT.

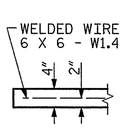

SECTION A-A

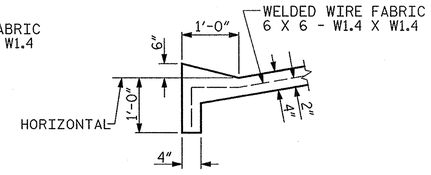

SECTION B-B

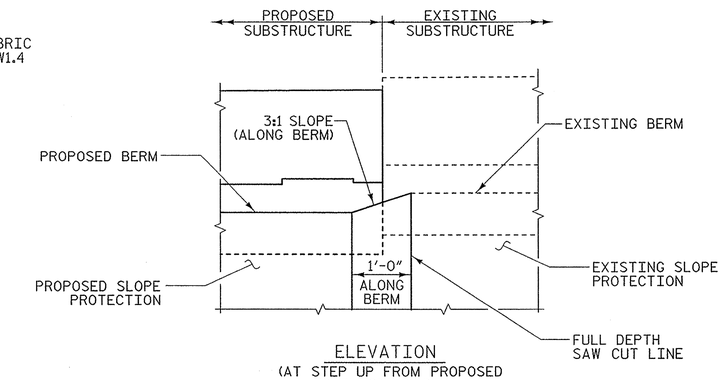

ELEVATION
(AT STEP UP FROM PROPOSED TO EXISTING BERM))

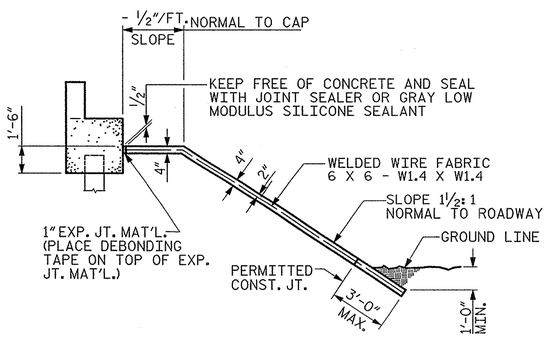

SECTION ALONG ℄ ROADWAY WHEN DITCH IS NOT PROVIDED

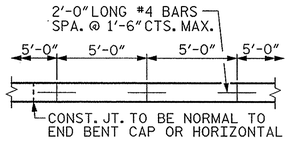

STRIP WIDTHS MAY VARY IN CURVED PORTION.

POURING DETAIL

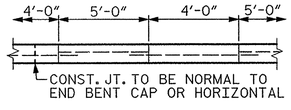

POUR A 4'-0" STRIP FIRST. STRIP WIDTHS MAY VARY IN CURVED PORTION.

OPTIONAL POURING DETAIL

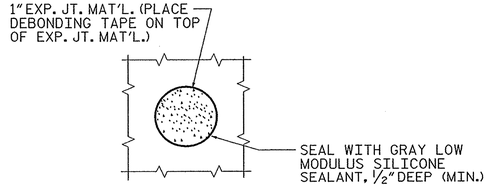

PLAN WHERE CONCRETE SLOPE PROTECTION MUST BE PLACED AROUND A BENT COLUMN

PROJECT NO. U-0071
DURHAM COUNTY
STATION: 34+62.88 -DFEB-

STATE OF NORTH CAROLINA
DEPARTMENT OF TRANSPORTATION
RALEIGH

SLOPE PROTECTION DETAILS

PLANS PREPARED BY:
MULKEY ENGINEERS & CONSULTANTS
PO Box 33127 Raleigh, N.C. 27636
(919) 851-1912
(919) 851-1918 (FAX)
WWW.MULKEYINC.COM
NC LICENSE NO. C-1321

NORTH CAROLINA PROFESSIONAL SEAL 034352 ENGINEER TERRE R. PETERSON
12/2/13

STR #13

REVISIONS						SHEET NO.
NO.	BY:	DATE:	NO.	BY:	DATE:	S-C04
1			3			TOTAL SHEETS
2			4			671

DRAWN BY :	W. B. ALLEN	DATE :	2/13
CHECKED BY :	T. R. PETERSON	DATE :	3/13
DESIGN ENGINEER OF RECORD:	T. R. PETERSON	DATE :	12/2/13

11/26/2013 9:20:39 AM R:\Structures\EBL\U0071EBL_S0_SP_01.dgn

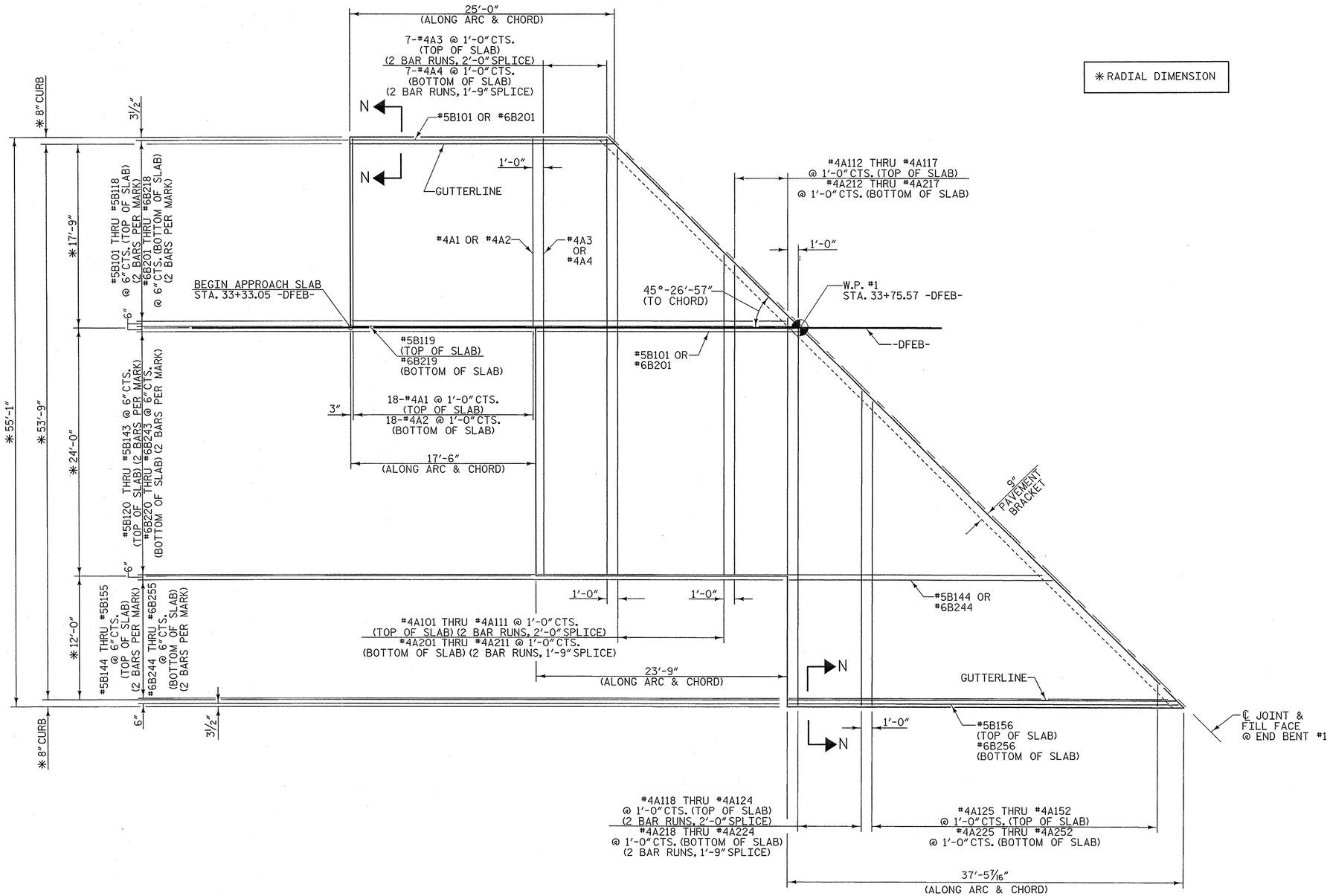

PLAN @ END BENT #1

NOTE: ARC OFFSETS ARE NEGLIGIBLE THEREFORE NOT SHOWN.

PROJECT NO. U-0071
DURHAM COUNTY
STATION: 34+62.88 -DFEB-

SHEET 1 OF 6

STATE OF NORTH CAROLINA
DEPARTMENT OF TRANSPORTATION
RALEIGH

BRIDGE APPROACH SLAB FOR RIGID PAVEMENT

PLANS PREPARED BY:
MULKEY ENGINEERS & CONSULTANTS
PO Box 33127
RALEIGH, N.C. 27636
(919) 851-1912
(919) 851-1918 (FAX)
WWW.MULKEYINC.COM
NC LICENSE NO. C-1621

NORTH CAROLINA PROFESSIONAL SEAL 034352 ENGINEER THERON R. PETERSON 12/2/13

STR #13

REVISIONS						SHEET NO.
NO.	BY:	DATE:	NO.	BY:	DATE:	S-605
1			3			TOTAL SHEETS
2			4			671

DRAWN BY :	W. B. ALLEN	DATE :	2/13
CHECKED BY :	T. R. PETERSON	DATE :	3/13
DESIGN ENGINEER OF RECORD:	T. R. PETERSON	DATE :	12/2/13

11/26/2013 9:15:01 AM R:\Structures\EBL\U0071EBL_SD_AS_01.dgn

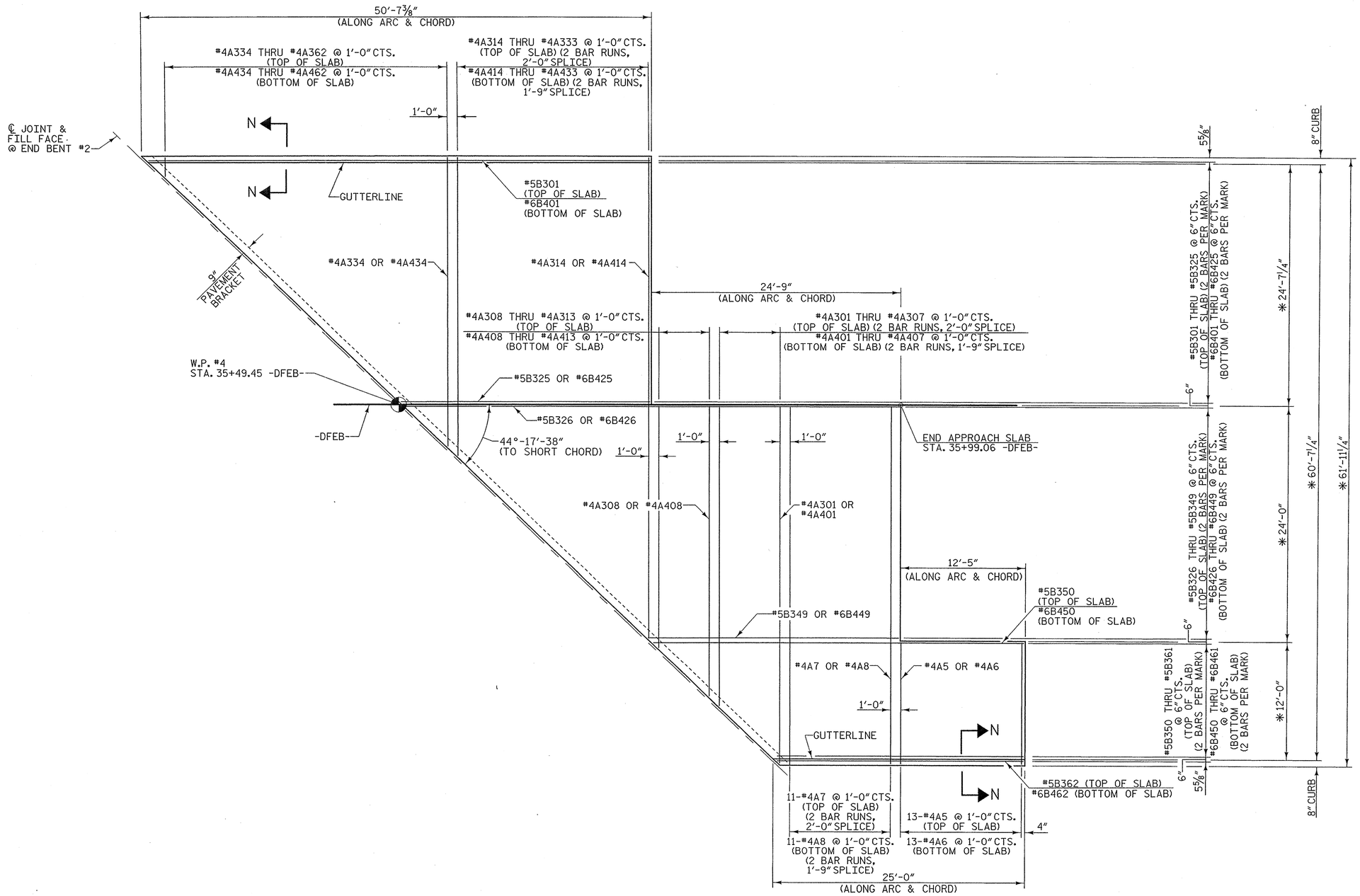

* RADIAL DIMENSION

PLAN @ END BENT #2

NOTE: ARC OFFSETS ARE NEGLIGIBLE THEREFORE NOT SHOWED.

PROJECT NO. U-0071

DURHAM COUNTY

STATION: 34+62.88 -DFEB-

SHEET 2 OF 6

STATE OF NORTH CAROLINA
DEPARTMENT OF TRANSPORTATION
RALEIGH

BRIDGE APPROACH SLAB FOR RIGID PAVEMENT

PLANS PREPARED BY:

MULKEY ENGINEERS & CONSULTANTS
PO Box 33127
RALEIGH, N.C. 27636
(919) 851-1912
(919) 851-1918 (FAX)
WWW.MULKEYINC.COM
NC LICENSE NO. C-1321

NORTH CAROLINA PROFESSIONAL SEAL 034352 ENGINEER PIERRE R. PETERSON
12/2/13

STR #13

REVISIONS						SHEET NO.
NO.	BY:	DATE:	NO.	BY:	DATE:	S-606
1			3			TOTAL SHEETS
2			4			671

DRAWN BY :	W. B. ALLEN	DATE :	2/13
CHECKED BY :	T. R. PETERSON	DATE :	3/13
DESIGN ENGINEER OF RECORD:	T. R. PETERSON	DATE :	12/2/13

11/26/2013 9:15:29 AM R:\Structures\EBL\U0071EBL_SD_AS_02.dgn

BILL OF MATERIAL

APPROACH SLAB AT END BENT #1

BAR	NO.	SIZE	TYPE	LENGTH	WEIGHT
✳ A1	18	#4	STR	18'-1"	217
A2	18	#4	STR	18'-1"	217
✳ A3	14	#4	STR	22'-1"	207
A4	14	#4	STR	21'-11"	205
✳ A101	2	#4	STR	21'-7"	29
✳ A102	2	#4	STR	21'-1"	28
✳ A103	2	#4	STR	20'-7"	27
✳ A104	2	#4	STR	20'-1"	27
✳ A105	2	#4	STR	19'-7"	26
✳ A106	2	#4	STR	19'-1"	25
✳ A107	2	#4	STR	18'-7"	25
✳ A108	2	#4	STR	18'-0"	24
✳ A109	2	#4	STR	17'-6"	23
✳ A110	2	#4	STR	17'-0"	23
✳ A111	2	#4	STR	16'-6"	22
✳ A112	1	#4	STR	29'-10"	20
✳ A113	1	#4	STR	28'-10"	19
✳ A114	1	#4	STR	27'-9"	19
✳ A115	1	#4	STR	26'-9"	18
✳ A116	1	#4	STR	25'-9"	17
✳ A117	1	#4	STR	24'-9"	17
✳ A118	2	#4	STR	19'-4"	26
✳ A119	2	#4	STR	18'-9"	25
✳ A120	2	#4	STR	18'-3"	24
✳ A121	2	#4	STR	17'-9"	24
✳ A122	2	#4	STR	17'-3"	23
✳ A123	2	#4	STR	16'-9"	22
✳ A124	2	#4	STR	16'-3"	22
✳ A125	1	#4	STR	29'-3"	20
✳ A126	1	#4	STR	28'-3"	19
✳ A127	1	#4	STR	27'-3"	18
✳ A128	1	#4	STR	26'-3"	18
✳ A129	1	#4	STR	25'-3"	17
✳ A130	1	#4	STR	24'-3"	16
✳ A131	1	#4	STR	23'-3"	16
✳ A132	1	#4	STR	22'-2"	15
✳ A133	1	#4	STR	21'-2"	14
✳ A134	1	#4	STR	20'-2"	13
✳ A135	1	#4	STR	19'-2"	13
✳ A136	1	#4	STR	18'-2"	12
✳ A137	1	#4	STR	17'-2"	11
✳ A138	1	#4	STR	16'-2"	11
✳ A139	1	#4	STR	15'-2"	10
✳ A140	1	#4	STR	14'-1"	9
✳ A141	1	#4	STR	13'-1"	9
✳ A142	1	#4	STR	12'-1"	8
✳ A143	1	#4	STR	11'-1"	7
✳ A144	1	#4	STR	10'-1"	7
✳ A145	1	#4	STR	9'-1"	6
✳ A146	1	#4	STR	8'-1"	5
✳ A147	1	#4	STR	7'-1"	5
✳ A148	1	#4	STR	6'-1"	4
✳ A149	1	#4	STR	5'-1"	3
✳ A150	1	#4	STR	4'-1"	3
✳ A151	1	#4	STR	3'-1"	2
✳ A152	1	#4	STR	2'-1"	1
A201	2	#4	STR	21'-5"	29
A202	2	#4	STR	20'-11"	28
A203	2	#4	STR	20'-5"	27
A204	2	#4	STR	19'-11"	27
A205	2	#4	STR	19'-5"	26
A206	2	#4	STR	18'-11"	25
A207	2	#4	STR	18'-5"	25
A208	2	#4	STR	17'-10"	24
A209	2	#4	STR	17'-4"	23
A210	2	#4	STR	16'-10"	22
A211	2	#4	STR	16'-4"	22
A212	1	#4	STR	29'-10"	20
A213	1	#4	STR	28'-10"	19

BAR	NO.	SIZE	TYPE	LENGTH	WEIGHT
A214	1	#4	STR	27'-9"	19
A215	1	#4	STR	26'-9"	18
A216	1	#4	STR	25'-9"	17
A217	1	#4	STR	24'-9"	17
A218	2	#4	STR	19'-2"	26
A219	2	#4	STR	18'-7"	25
A220	2	#4	STR	18'-1"	24
A221	2	#4	STR	17'-7"	23
A222	2	#4	STR	17'-1"	23
A223	2	#4	STR	16'-7"	22
A224	2	#4	STR	16'-1"	21
A225	1	#4	STR	29'-3"	20
A226	1	#4	STR	28'-3"	19
A227	1	#4	STR	27'-3"	18
A228	1	#4	STR	26'-3"	18
A229	1	#4	STR	25'-3"	17
A230	1	#4	STR	24'-3"	16
A231	1	#4	STR	23'-3"	16
A232	1	#4	STR	22'-2"	15
A233	1	#4	STR	21'-2"	14
A234	1	#4	STR	20'-2"	13
A235	1	#4	STR	19'-2"	13
A236	1	#4	STR	18'-2"	12
A237	1	#4	STR	17'-2"	11
A238	1	#4	STR	16'-2"	11
A239	1	#4	STR	15'-2"	10
A240	1	#4	STR	14'-1"	9
A241	1	#4	STR	13'-1"	9
A242	1	#4	STR	12'-1"	8
A243	1	#4	STR	11'-1"	7
A244	1	#4	STR	10'-1"	7
A245	1	#4	STR	9'-1"	6
A246	1	#4	STR	8'-1"	5
A247	1	#4	STR	7'-1"	5
A248	1	#4	STR	6'-1"	4
A249	1	#4	STR	5'-1"	3
A250	1	#4	STR	4'-1"	3
A251	1	#4	STR	3'-1"	2
A252	1	#4	STR	2'-1"	1
✳ B101	2	#5	STR	24'-2"	50
✳ B102	2	#5	STR	25'-2"	52
✳ B103	2	#5	STR	26'-2"	55
✳ B104	2	#5	STR	27'-2"	57
✳ B105	2	#5	STR	28'-2"	59
✳ B106	2	#5	STR	29'-1"	61
✳ B107	2	#5	STR	30'-1"	63
✳ B108	2	#5	STR	31'-1"	65
✳ B109	2	#5	STR	32'-1"	67
✳ B110	2	#5	STR	33'-1"	69
✳ B111	2	#5	STR	34'-0"	71
✳ B112	2	#5	STR	35'-0"	73
✳ B113	2	#5	STR	36'-0"	75
✳ B114	2	#5	STR	37'-0"	77
✳ B115	2	#5	STR	38'-0"	79
✳ B116	2	#5	STR	38'-11"	81
✳ B117	2	#5	STR	39'-11"	83
✳ B118	2	#5	STR	40'-11"	85
✳ B119	1	#5	STR	41'-11"	44
✳ B120	2	#5	STR	24'-11"	52
✳ B121	2	#5	STR	25'-11"	54
✳ B122	2	#5	STR	26'-10"	56
✳ B123	2	#5	STR	27'-10"	58
✳ B124	2	#5	STR	28'-10"	60
✳ B125	2	#5	STR	29'-10"	62
✳ B126	2	#5	STR	30'-10"	64
✳ B127	2	#5	STR	31'-10"	66
✳ B128	2	#5	STR	32'-9"	68
✳ B129	2	#5	STR	33'-9"	70
✳ B130	2	#5	STR	34'-9"	72
✳ B131	2	#5	STR	35'-9"	75

BAR	NO.	SIZE	TYPE	LENGTH	WEIGHT
✳ B132	2	#5	STR	36'-9"	77
✳ B133	2	#5	STR	37'-9"	79
✳ B134	2	#5	STR	38'-8"	81
✳ B135	2	#5	STR	39'-8"	83
✳ B136	2	#5	STR	40'-8"	85
✳ B137	2	#5	STR	41'-8"	87
✳ B138	2	#5	STR	42'-8"	89
✳ B139	2	#5	STR	43'-8"	91
✳ B140	2	#5	STR	44'-8"	93
✳ B141	2	#5	STR	45'-7"	95
✳ B142	2	#5	STR	46'-7"	97
✳ B143	2	#5	STR	47'-7"	99
✳ B144	2	#5	STR	24'-10"	52
✳ B145	2	#5	STR	25'-10"	54
✳ B146	2	#5	STR	26'-10"	56
✳ B147	2	#5	STR	27'-10"	58
✳ B148	2	#5	STR	28'-10"	60
✳ B149	2	#5	STR	29'-9"	62
✳ B150	2	#5	STR	30'-9"	64
✳ B151	2	#5	STR	31'-9"	66
✳ B152	2	#5	STR	32'-9"	68
✳ B153	2	#5	STR	33'-9"	70
✳ B154	2	#5	STR	34'-9"	72
✳ B155	2	#5	STR	35'-9"	75
✳ B156	1	#5	STR	36'-9"	38
B201	2	#6	STR	24'-2"	73
B202	2	#6	STR	25'-2"	76
B203	2	#6	STR	26'-2"	79
B204	2	#6	STR	27'-2"	82
B205	2	#6	STR	28'-2"	85
B206	2	#6	STR	29'-1"	87
B207	2	#6	STR	30'-1"	90
B208	2	#6	STR	31'-1"	93
B209	2	#6	STR	32'-1"	96
B210	2	#6	STR	33'-1"	99
B211	2	#6	STR	34'-0"	102
B212	2	#6	STR	35'-0"	105
B213	2	#6	STR	36'-0"	108
B214	2	#6	STR	37'-0"	111
B215	2	#6	STR	38'-0"	114
B216	2	#6	STR	38'-11"	117
B217	2	#6	STR	39'-11"	120
B218	2	#6	STR	40'-11"	123
B219	1	#6	STR	41'-11"	63
B220	2	#6	STR	24'-11"	75
B221	2	#6	STR	25'-11"	78
B222	2	#6	STR	26'-10"	81
B223	2	#6	STR	27'-10"	84
B224	2	#6	STR	28'-10"	87
B225	2	#6	STR	29'-10"	90
B226	2	#6	STR	30'-10"	93
B227	2	#6	STR	31'-10"	96
B228	2	#6	STR	32'-9"	98
B229	2	#6	STR	33'-9"	101
B230	2	#6	STR	34'-9"	104
B231	2	#6	STR	35'-9"	107
B232	2	#6	STR	36'-9"	110
B233	2	#6	STR	37'-9"	113
B234	2	#6	STR	38'-8"	116
B235	2	#6	STR	39'-8"	119
B236	2	#6	STR	40'-8"	122
B237	2	#6	STR	41'-8"	125
B238	2	#6	STR	42'-8"	128
B239	2	#6	STR	43'-8"	131
B240	2	#6	STR	44'-8"	134
B241	2	#6	STR	45'-7"	137
B242	2	#6	STR	46'-7"	140
B243	2	#6	STR	47'-7"	143
B244	2	#6	STR	24'-10"	75

BAR	NO.	SIZE	TYPE	LENGTH	WEIGHT
B245	2	#6	STR	25'-10"	78
B246	2	#6	STR	26'-10"	81
B247	2	#6	STR	27'-10"	84
B248	2	#6	STR	28'-10"	87
B249	2	#6	STR	29'-9"	89
B250	2	#6	STR	30'-9"	92
B251	2	#6	STR	31'-9"	95
B252	2	#6	STR	32'-9"	98
B253	2	#6	STR	33'-9"	101
B254	2	#6	STR	34'-9"	104
B255	2	#6	STR	35'-9"	107
B256	1	#6	STR	36'-9"	55

REINFORCING STEEL	LBS.	6847
✳EPOXY COATED REINFORCING STEEL	LBS.	5145
CLASS AA CONCRETE	C.Y.	84.8

SPLICE LENGTHS

BAR SIZE	EPOXY COATED	UNCOATED
#4	2'-0"	1'-9"
#5	2'-6"	2'-2"
#6	3'-10"	2'-7"

PROJECT NO. U-0071

DURHAM COUNTY

STATION: 34+62.88 -DFEB-

SHEET 3 OF 6

STATE OF NORTH CAROLINA
DEPARTMENT OF TRANSPORTATION
RALEIGH

BRIDGE APPROACH SLAB FOR RIGID PAVEMENT

PLANS PREPARED BY:
MULKEY ENGINEERS & CONSULTANTS
PO Box 33127
RALEIGH, N.C. 27636
(919) 851-1912
(919) 851-1918 (FAX)
WWW.MULKEYINC.COM
NC LICENSE NO. C-1621

NORTH CAROLINA PROFESSIONAL SEAL 034352 ENGINEER TERRE R. PETERSON
12/2/13

STR #13

REVISIONS								SHEET NO.
NO.	BY:	DATE:	NO.	BY:	DATE:			S-607
1			3					TOTAL SHEETS
2			4					671

DRAWN BY : W. B. ALLEN DATE : 2/13
CHECKED BY : T. R. PETERSON DATE : 3/13
DESIGN ENGINEER OF RECORD: T. R. PETERSON DATE : 12/2/13

11/27/2013 7:22:24 AM R:\Structures\EBL\U0071EBL_SD_AS_03.dgn

BILL OF MATERIAL

APPROACH SLAB AT END BENT #2

BAR	NO.	SIZE	TYPE	LENGTH	WEIGHT
✱ A5	13	#4	STR	12'-4"	107
A6	13	#4	STR	12'-4"	107
✱ A7	22	#4	STR	19'-2"	282
A8	22	#4	STR	19'-1"	280
✱ A301	2	#4	STR	19'-2"	26
✱ A302	2	#4	STR	18'-9"	25
✱ A303	2	#4	STR	18'-3"	24
✱ A304	2	#4	STR	17'-9"	24
✱ A305	2	#4	STR	17'-3"	23
✱ A306	2	#4	STR	16'-9"	22
✱ A307	2	#4	STR	16'-3"	22
✱ A308	1	#4	STR	29'-5"	20
✱ A309	1	#4	STR	28'-5"	19
✱ A310	1	#4	STR	27'-5"	18
✱ A311	1	#4	STR	26'-6"	18
✱ A312	1	#4	STR	25'-6"	17
✱ A313	1	#4	STR	24'-6"	16
✱ A314	2	#4	STR	25'-6"	34
✱ A315	2	#4	STR	25'-0"	33
✱ A316	2	#4	STR	24'-6"	33
✱ A317	2	#4	STR	24'-1"	32
✱ A318	2	#4	STR	23'-7"	32
✱ A319	2	#4	STR	23'-1"	31
✱ A320	2	#4	STR	22'-7"	30
✱ A321	2	#4	STR	22'-1"	30
✱ A322	2	#4	STR	21'-7"	29
✱ A323	2	#4	STR	21'-2"	28
✱ A324	2	#4	STR	20'-8"	28
✱ A325	2	#4	STR	20'-2"	27
✱ A326	2	#4	STR	19'-8"	26
✱ A327	2	#4	STR	19'-2"	26
✱ A328	2	#4	STR	18'-8"	25
✱ A329	2	#4	STR	18'-2"	24
✱ A330	2	#4	STR	17'-9"	24
✱ A331	2	#4	STR	17'-3"	23
✱ A332	2	#4	STR	16'-9"	22
✱ A333	2	#4	STR	16'-3"	22
✱ A334	1	#4	STR	29'-4"	20
✱ A335	1	#4	STR	28'-4"	19
✱ A336	1	#4	STR	27'-4"	18
✱ A337	1	#4	STR	26'-5"	18
✱ A338	1	#4	STR	25'-5"	17
✱ A339	1	#4	STR	24'-5"	16
✱ A340	1	#4	STR	23'-6"	16
✱ A341	1	#4	STR	22'-6"	15
✱ A342	1	#4	STR	21'-6"	14
✱ A343	1	#4	STR	20'-6"	14
✱ A344	1	#4	STR	19'-7"	13
✱ A345	1	#4	STR	18'-7"	12
✱ A346	1	#4	STR	17'-7"	12
✱ A347	1	#4	STR	16'-7"	11
✱ A348	1	#4	STR	15'-8"	10
✱ A349	1	#4	STR	14'-8"	10
✱ A350	1	#4	STR	13'-8"	9
✱ A351	1	#4	STR	12'-8"	8
✱ A352	1	#4	STR	11'-8"	8
✱ A353	1	#4	STR	10'-9"	7
✱ A354	1	#4	STR	9'-9"	7
✱ A355	1	#4	STR	8'-9"	6
✱ A356	1	#4	STR	7'-9"	5
✱ A357	1	#4	STR	6'-10"	5
✱ A358	1	#4	STR	5'-10"	4
✱ A359	1	#4	STR	4'-10"	3
✱ A360	1	#4	STR	3'-10"	3
✱ A361	1	#4	STR	2'-10"	2
✱ A362	1	#4	STR	1'-11"	1
A401	2	#4	STR	19'-0"	25
A402	2	#4	STR	18'-7"	25
A403	2	#4	STR	18'-1"	24

BAR	NO.	SIZE	TYPE	LENGTH	WEIGHT
A404	2	#4	STR	17'-7"	23
A405	2	#4	STR	17'-1"	23
A406	2	#4	STR	16'-7"	22
A407	2	#4	STR	16'-1"	21
A408	1	#4	STR	29'-5"	20
A409	1	#4	STR	28'-5"	19
A410	1	#4	STR	27'-5"	18
A411	1	#4	STR	26'-6"	18
A412	1	#4	STR	25'-6"	17
A413	1	#4	STR	24'-6"	16
A414	2	#4	STR	25'-4"	34
A415	2	#4	STR	24'-10"	33
A416	2	#4	STR	24'-4"	33
A417	2	#4	STR	23'-11"	32
A418	2	#4	STR	23'-5"	31
A419	2	#4	STR	22'-11"	31
A420	2	#4	STR	22'-5"	30
A421	2	#4	STR	21'-11"	29
A422	2	#4	STR	21'-5"	29
A423	2	#4	STR	21'-0"	28
A424	2	#4	STR	20'-6"	27
A425	2	#4	STR	20'-0"	27
A426	2	#4	STR	19'-6"	26
A427	2	#4	STR	19'-0"	25
A428	2	#4	STR	18'-6"	25
A429	2	#4	STR	18'-0"	24
A430	2	#4	STR	17'-7"	23
A431	2	#4	STR	17'-1"	23
A432	2	#4	STR	16'-7"	22
A433	2	#4	STR	16'-1"	21
A434	1	#4	STR	29'-4"	20
A435	1	#4	STR	28'-4"	19
A436	1	#4	STR	27'-4"	18
A437	1	#4	STR	26'-5"	18
A438	1	#4	STR	25'-5"	17
A439	1	#4	STR	24'-5"	16
A440	1	#4	STR	23'-6"	16
A441	1	#4	STR	22'-6"	15
A442	1	#4	STR	21'-6"	14
A443	1	#4	STR	20'-6"	14
A444	1	#4	STR	19'-7"	13
A445	1	#4	STR	18'-7"	12
A446	1	#4	STR	17'-7"	12
A447	1	#4	STR	16'-7"	11
A448	1	#4	STR	15'-8"	10
A449	1	#4	STR	14'-8"	10
A450	1	#4	STR	13'-8"	9
A451	1	#4	STR	12'-8"	8
A452	1	#4	STR	11'-8"	8
A453	1	#4	STR	10'-9"	7
A454	1	#4	STR	9'-9"	7
A455	1	#4	STR	8'-9"	6
A456	1	#4	STR	7'-9"	5
A457	1	#4	STR	6'-10"	5
A458	1	#4	STR	5'-10"	4
A459	1	#4	STR	4'-10"	3
A460	1	#4	STR	3'-10"	3
A461	1	#4	STR	2'-10"	2
A462	1	#4	STR	1'-11"	1
✱ B301	2	#5	STR	49'-2"	103
✱ B302	2	#5	STR	48'-2"	100
✱ B303	2	#5	STR	47'-2"	98
✱ B304	2	#5	STR	46'-2"	96
✱ B305	2	#5	STR	45'-1"	94
✱ B306	2	#5	STR	44'-1"	92
✱ B307	2	#5	STR	43'-1"	90
✱ B308	2	#5	STR	42'-1"	88
✱ B309	2	#5	STR	41'-0"	86
✱ B310	2	#5	STR	40'-0"	83
✱ B311	2	#5	STR	39'-0"	81

BAR	NO.	SIZE	TYPE	LENGTH	WEIGHT
✱ B312	2	#5	STR	38'-0"	79
✱ B313	2	#5	STR	36'-11"	77
✱ B314	2	#5	STR	35'-11"	75
✱ B315	2	#5	STR	34'-11"	73
✱ B316	2	#5	STR	33'-10"	71
✱ B317	2	#5	STR	32'-10"	68
✱ B318	2	#5	STR	31'-10"	66
✱ B319	2	#5	STR	30'-10"	64
✱ B320	2	#5	STR	29'-9"	62
✱ B321	2	#5	STR	28'-9"	60
✱ B322	2	#5	STR	27'-9"	58
✱ B323	2	#5	STR	26'-9"	56
✱ B324	2	#5	STR	25'-8"	54
✱ B325	2	#5	STR	24'-8"	51
✱ B326	2	#5	STR	48'-5"	101
✱ B327	2	#5	STR	47'-4"	99
✱ B328	2	#5	STR	46'-4"	97
✱ B329	2	#5	STR	45'-4"	95
✱ B330	2	#5	STR	44'-4"	92
✱ B331	2	#5	STR	43'-3"	90
✱ B332	2	#5	STR	42'-3"	88
✱ B333	2	#5	STR	41'-3"	86
✱ B334	2	#5	STR	40'-2"	84
✱ B335	2	#5	STR	39'-2"	82
✱ B336	2	#5	STR	38'-2"	80
✱ B337	2	#5	STR	37'-1"	77
✱ B338	2	#5	STR	36'-1"	75
✱ B339	2	#5	STR	35'-1"	73
✱ B340	2	#5	STR	34'-0"	71
✱ B341	2	#5	STR	33'-0"	69
✱ B342	2	#5	STR	32'-0"	67
✱ B343	2	#5	STR	31'-0"	65
✱ B344	2	#5	STR	29'-11"	62
✱ B345	2	#5	STR	28'-11"	60
✱ B346	2	#5	STR	27'-11"	58
✱ B347	2	#5	STR	26'-10"	56
✱ B348	2	#5	STR	25'-10"	54
✱ B349	2	#5	STR	24'-10"	52
✱ B350	2	#5	STR	36'-2"	75
✱ B351	2	#5	STR	35'-2"	73
✱ B352	2	#5	STR	34'-2"	71
✱ B353	2	#5	STR	33'-1"	69
✱ B354	2	#5	STR	32'-1"	67
✱ B355	2	#5	STR	31'-1"	65
✱ B356	2	#5	STR	30'-0"	63
✱ B357	2	#5	STR	29'-0"	60
✱ B358	2	#5	STR	27'-11"	58
✱ B359	2	#5	STR	26'-11"	56
✱ B360	2	#5	STR	25'-11"	54
✱ B361	2	#5	STR	24'-10"	52
✱ B362	1	#5	STR	24'-4"	25
B401	2	#6	STR	49'-2"	148
B402	2	#6	STR	48'-2"	145
B403	2	#6	STR	47'-2"	142
B404	2	#6	STR	46'-2"	139
B405	2	#6	STR	45'-1"	135
B406	2	#6	STR	44'-1"	132
B407	2	#6	STR	43'-1"	129
B408	2	#6	STR	42'-1"	126
B409	2	#6	STR	41'-0"	123
B410	2	#6	STR	40'-0"	120
B411	2	#6	STR	39'-0"	117
B412	2	#6	STR	38'-0"	114
B413	2	#6	STR	36'-11"	111
B414	2	#6	STR	35'-11"	108
B415	2	#6	STR	34'-11"	105
B416	2	#6	STR	33'-10"	102
B417	2	#6	STR	32'-10"	99
B418	2	#6	STR	31'-10"	96
B419	2	#6	STR	30'-10"	93

BAR	NO.	SIZE	TYPE	LENGTH	WEIGHT
B420	2	#6	STR	29'-9"	89
B421	2	#6	STR	28'-9"	86
B422	2	#6	STR	27'-9"	83
B423	2	#6	STR	26'-9"	80
B424	2	#6	STR	25'-8"	77
B425	2	#6	STR	24'-8"	74
B426	2	#6	STR	48'-5"	145
B427	2	#6	STR	47'-4"	142
B428	2	#6	STR	46'-4"	139
B429	2	#6	STR	45'-4"	136
B430	2	#6	STR	44'-4"	133
B431	2	#6	STR	43'-3"	130
B432	2	#6	STR	42'-3"	127
B433	2	#6	STR	41'-3"	124
B434	2	#6	STR	40'-2"	121
B435	2	#6	STR	39'-2"	118
B436	2	#6	STR	38'-2"	115
B437	2	#6	STR	37'-1"	111
B438	2	#6	STR	36'-1"	108
B439	2	#6	STR	35'-1"	105
B440	2	#6	STR	34'-0"	102
B441	2	#6	STR	33'-0"	99
B442	2	#6	STR	32'-0"	96
B443	2	#6	STR	31'-0"	93
B444	2	#6	STR	29'-11"	90
B445	2	#6	STR	28'-11"	87
B446	2	#6	STR	27'-11"	84
B447	2	#6	STR	26'-10"	81
B448	2	#6	STR	25'-10"	78
B449	2	#6	STR	24'-10"	75
B450	2	#6	STR	36'-2"	109
B451	2	#6	STR	35'-2"	106
B452	2	#6	STR	34'-2"	103
B453	2	#6	STR	33'-1"	99
B454	2	#6	STR	32'-1"	96
B455	2	#6	STR	31'-1"	93
B456	2	#6	STR	30'-0"	90
B457	2	#6	STR	29'-0"	87
B458	2	#6	STR	27'-11"	84
B459	2	#6	STR	26'-11"	81
B460	2	#6	STR	25'-11"	78
B461	2	#6	STR	24'-10"	75
B462	1	#6	STR	24'-4"	37

REINFORCING STEEL	LBS.	8064
✱EPOXY COATED REINFORCING STEEL	LBS.	6071
CLASS AA CONCRETE	C.Y.	100.4

PROJECT NO. U-0071

DURHAM COUNTY

STATION: 34+62.88 -DFEB-

SHEET 4 OF 6

STATE OF NORTH CAROLINA
DEPARTMENT OF TRANSPORTATION
RALEIGH

BRIDGE APPROACH SLAB FOR RIGID PAVEMENT

NORTH CAROLINA PROFESSIONAL SEAL 034352 ENGINEER TERRY R. PETERSON 12/2/13

STR #13

REVISIONS						SHEET NO.
NO.	BY:	DATE:	NO.	BY:	DATE:	S-608
1			3			TOTAL SHEETS
2			4			671

PLANS PREPARED BY:
MULKEY ENGINEERS & CONSULTANTS
PO BOX 33127
RALEIGH, N.C. 27636
(919)851-1912
(919)851-1918 (FAX)
WWW.MULKEYINC.COM
NC LICENSE NO. C-1321

DRAWN BY : W. B. ALLEN DATE : 2/13
CHECKED BY : T. R. PETERSON DATE : 3/13
DESIGN ENGINEER OF RECORD: T. R. PETERSON DATE : 12/2/13

R:\Structures\EBL\U0071EBL_SD_AS_04.dgn 7:34:41 AM 11/27/2013

NOTES

APPROACH SLAB SHALL NOT BE CONSTRUCTED PRIOR TO COMPLETION OF THE BRIDGE DECK.

FOR REINFORCED BRIDGE APPROACH FILL INCLUDING GEOTEXTILE, IMPERMEABLE GEOMEMBRANE, 4" Ø DRAINAGE PIPE, #78M STONE, AND SELECT MATERIAL, SEE ROADWAY PLANS.

AREA BETWEEN THE WINGWALL AND APPROACH SLAB SHALL BE GRADED TO DRAIN THE WATER AWAY FROM THE FILL FACE OF THE BRIDGE AND SHALL BE PAVED. SEE ROADWAY PLANS.

FOR END BENT #1 PLAN VIEW
SEE SHEET 1 OF 6

FOR END BENT #2 PLAN VIEW
SEE SHEET 2 OF 6

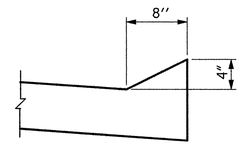

SECTION N-N

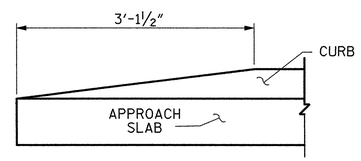

END OF CURB WITHOUT SHOULDER BERM GUTTER

CURB DETAILS

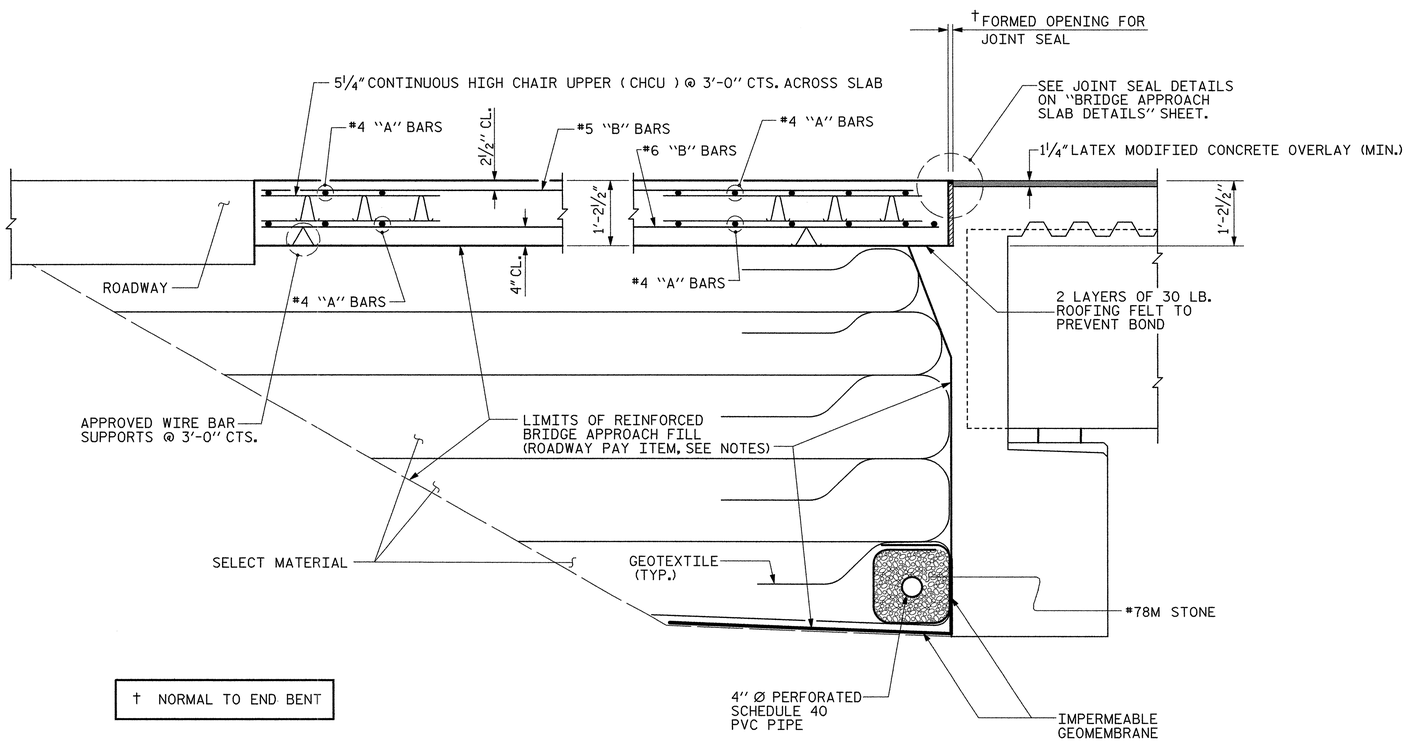

† NORMAL TO END BENT

SECTION THRU SLAB

PROJECT NO. U-0071
DURHAM COUNTY
STATION: 34+62.88 -DFEB-

SHEET 5 OF 6

PLANS PREPARED BY:
MULKEY ENGINEERS & CONSULTANTS
PO Box 33127
Raleigh, N.C. 27636
(919) 851-1912
(919) 851-1918 (FAX)
WWW.MULKEYINC.COM
NC LICENSE NO. C-1031

THIS STANDARD DRAWING REVIEWED & ADOPTED FOR USE AT THE REFERENCED LOCATION BY THE UNDERSIGNED:

NORTH CAROLINA PROFESSIONAL SEAL 034352 ENGINEER TERRY R. PETERSON 2/12/14

STR #13

STATE OF NORTH CAROLINA
DEPARTMENT OF TRANSPORTATION
RALEIGH

STANDARD

BRIDGE APPROACH SLAB FOR RIGID PAVEMENT

REVISIONS						SHEET NO.
NO.	BY:	DATE:	NO.	BY:	DATE:	S-609
1			3			TOTAL SHEETS
2			4			611

STD. NO. BAS1 (SHT 2a)

ASSEMBLED BY :	W. B. ALLEN	DATE :	2/13
CHECKED BY :	T. R. PETERSON	DATE :	3/13
DRAWN BY : RH 5/99	REV. 5/1/06RR	KMM/GM	
CHECKED BY : RDR 5/99	REV. 10/1/11	MAA/GM	
	REV. 12/21/11	MAA/GM	

2/10/2014 7:44:55 AM R:\Structures\EBL\U0071EBL_SD_AS_05.dgn

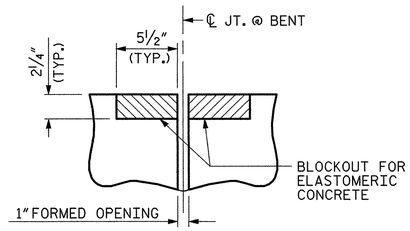

SECTION C-C
FOAM JOINT SEAL
(PRE-SAWED ELASTOMERIC
CONCRETE DIMENSIONS)

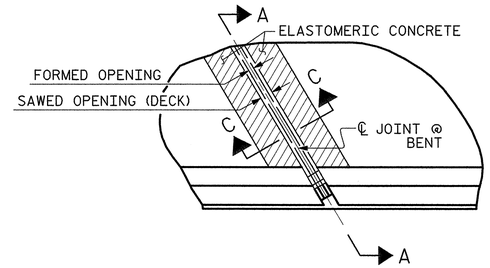

PLAN

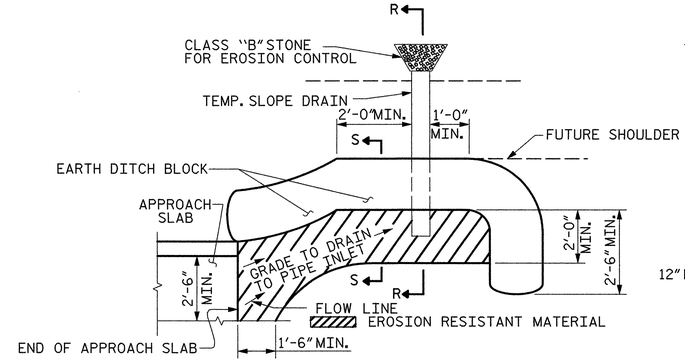

NOTE: IMMEDIATELY AFTER THE CONSTRUCTION OF THE APPROACH SLAB, THE CONTRACTOR SHALL PROVIDE TEMPORARY BERM AND SLOPE DRAIN. CONTRACTOR SHALL GRADE TO PIPE INLET AND PROVIDE EROSION RESISTANT MATERIAL AS SHOWN. THE EROSION RESISTANT MATERIAL SHALL BE EITHER 1) ASPHALT PLANT MIX, TYPE 1 OR TYPE 2, MIN. 2" DEPTH, 2) EROSION CONTROL MAT, OR 3) CONCRETE, AS DIRECTED BY THE ENGINEER. THE SLOPE DRAIN SHALL CONSIST OF A NON-PERFORATED TEMPORARY DRAINAGE PIPE, 12 INCHES IN DIAMETER.

PLAN VIEW

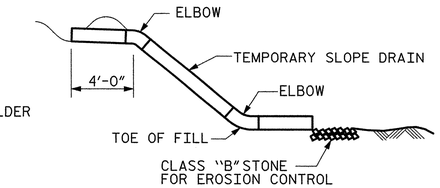

SECTION R-R

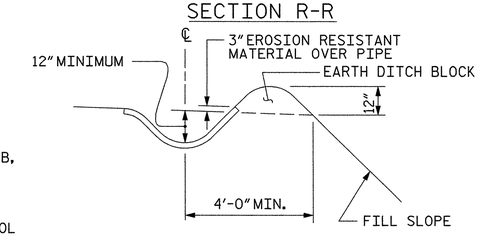

SECTION S-S

TEMPORARY BERM AND SLOPE DRAIN DETAILS

(TO BE USED WHEN SHOULDER BERM GUTTER IS REQUIRED)

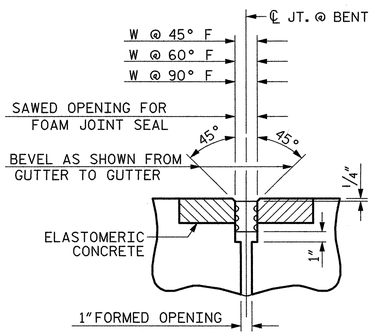

SECTION C-C
FOAM JOINT SEAL AT BENTS
(EXPANSION)

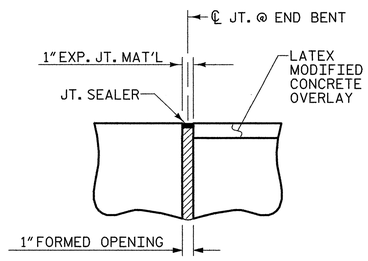

SECTION C-C
JOINT SEAL AT END BENTS
(FIXED)

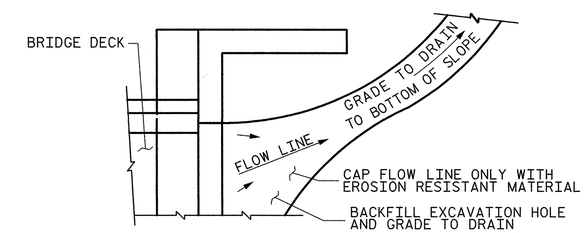

NOTE: IF THE APPROACH SLAB IS NOT CONSTRUCTED IMMEDIATELY AFTER THE BACKFILLING OF THE END BENT EXCAVATION, GRADE TO DRAIN TO THE BOTTOM OF THE SLOPE AND PROVIDE EROSION RESISTANT MATERIAL, SUCH AS FIBERGLASS ROVING OR AS DIRECTED BY THE ENGINEER TO PREVENT SOIL EROSION AND TO PROTECT THE AREA ADJACENT TO THE STRUCTURE. THE CONTRACTOR WILL BE REQUIRED TO REMOVE THESE MATERIALS PRIOR TO CONSTRUCTION OF THE APPROACH SLAB.

TEMPORARY DRAINAGE DETAIL

SAWED OPENING FOR FOAM JOINT SEALS			
BENT LOCATION	W @ 90° F	W @ 60° F	W @ 45° F
BT#1	1½"	1 9/16"	1⅝"
BT#2	1⅜"	1 9/16"	1 11/16"

ELASTOMERIC CONCRETE	
BENT LOCATION	ELASTOMERIC CONCRETE * (CU. FT.)
BT#1	13.4
BT#2	14.4
TOTAL	27.8

* BASED ON THE MINIMUM BLOCKOUT SHOWN.

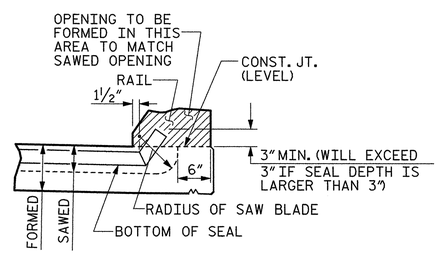

SECTION A-A

JOINT SEAL DETAILS @ BENT

THE JOINT SHALL BE SAWED PRIOR TO THE CASTING OF THE BARRIER RAIL.

FOR FOAM JOINT SEALS, SEE SPECIAL PROVISIONS.

THE NOMINAL UNCOMPRESSED SEAL WIDTH OF THE FOAM JOINT SEAL SHALL BE 2" AT INTERIOR BENTS.

FOR ELASTOMERIC CONCRETE, SEE SPECIAL PROVISIONS.

PAYMENT FOR FOAM JOINT SEALS IS PROVIDED IN THE BILL OF MATERIAL ON THE PRESERVATION PLANS OF THE EXISTING STRUCTURE.

PROJECT NO. U-0071
DURHAM COUNTY
STATION: 34+62.88 -DFEB-

SHEET 6 OF 6

PLANS PREPARED BY:
MULKEY ENGINEERS & CONSULTANTS
PO Box 33127
RALEIGH, N.C. 27636
(919) 851-1912
(919) 851-1918 (FAX)
WWW.MULKEYINC.COM
NC LICENSE NO. C-1321

THIS STANDARD DRAWING REVIEWED & ADOPTED FOR USE AT THE REFERENCED LOCATION BY THE UNDERSIGNED:

NORTH CAROLINA PROFESSIONAL SEAL 034352 ENGINEER GEORGE R. PETERSON 2/12/14

STR #13

STATE OF NORTH CAROLINA
DEPARTMENT OF TRANSPORTATION
RALEIGH

STANDARD

BRIDGE APPROACH
SLAB DETAILS

REVISIONS								SHEET NO.
NO.	BY:	DATE:	NO.	BY:	DATE:			S-610
1			3					TOTAL SHEETS
2			4					671

STD. NO. BAS4 (SHT 1a)

ASSEMBLED BY : W. B. ALLEN		DATE : 2/13	
CHECKED BY : T. R. PETERSON		DATE : 3/13	
DRAWN BY : FCJ	11/88	REV. 5/7/03	RWW/JTE
CHECKED BY : ARB	11/88	REV. 5/1/06RRR	MAA/KMM
		REV. 10/1/11	MAA/GM

2/12/2014 11:00:31 AM R:\Structures\EBL\U0071EBL_SD_A5_06.dgn

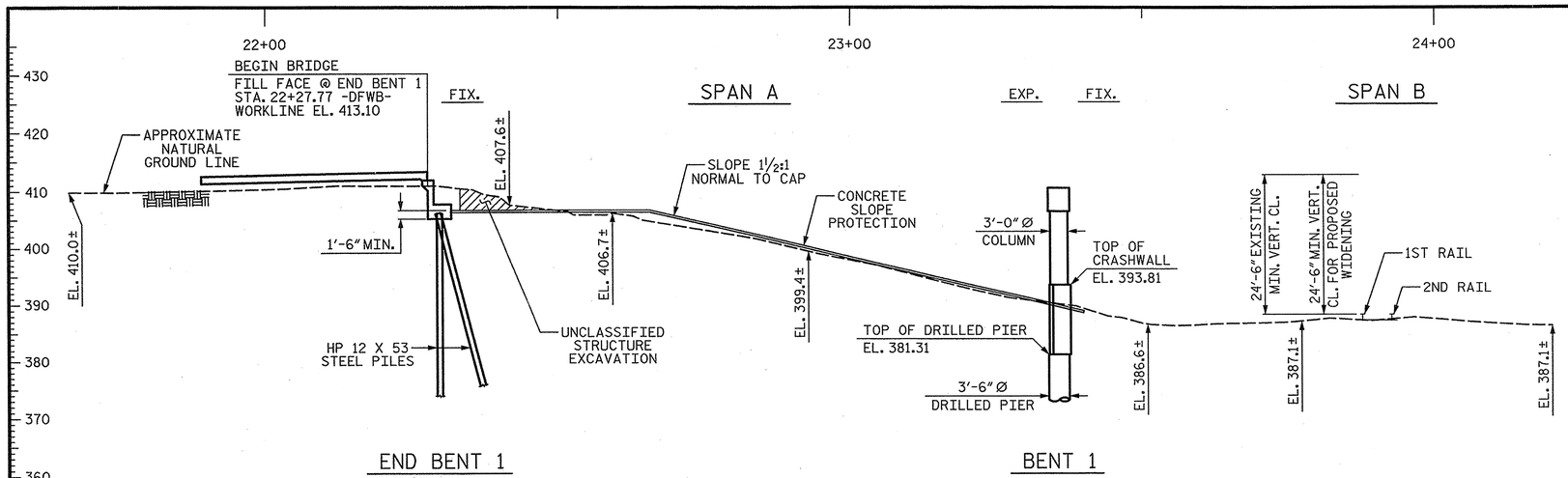

PART SECTION ALONG WBL WORKLINE

(SECTION @ END BENT AND BENT ARE @ RIGHT ANGLES)

(+)2.8667% △ (+)1.7304%

PVI STA. 25+10.00
EL. = 419.40
VC = 340'

GRADE DATA -DFWB-

HORIZONTAL CURVE DATA

PI STA. 19+23.00 -DFWB-
Δ = 18°-26'-16.5" (RT.)
D = 1°-28'-15.6"
L = 1,253.42'
T = 632.17'
R = 3,895.00'

PIs 25+97.58 -DFWB-
θs = 1°-10'-36.5"
Ls = 160.00'
LT = 106.67'
ST = 53.34'

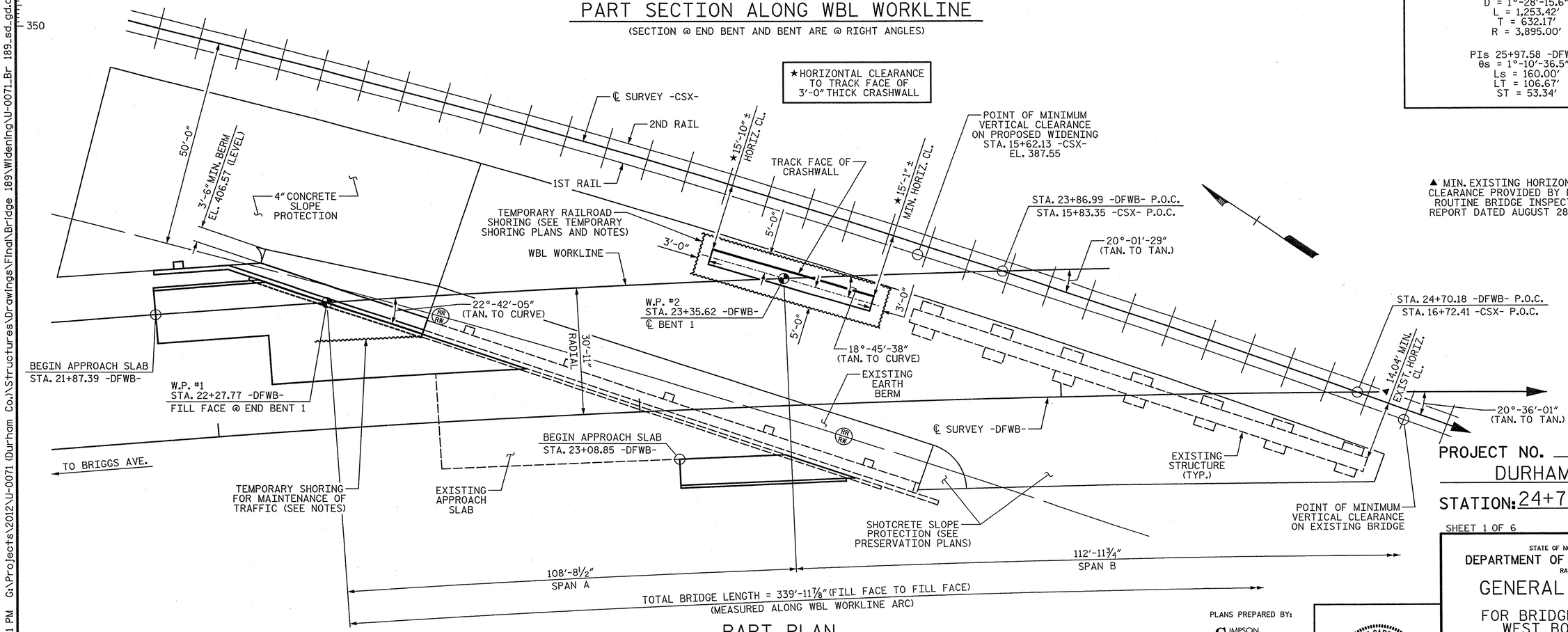

PART PLAN

(PILES AND DRILLED PIERS NOT SHOWN IN PLAN VIEW)

PROJECT NO. U-0071
DURHAM COUNTY
STATION: 24+70.18 -DFWB-

SHEET 1 OF 6 WIDENING BRIDGE #189
MILE POST SDS-2.85

STATE OF NORTH CAROLINA
DEPARTMENT OF TRANSPORTATION
RALEIGH

GENERAL DRAWING
FOR BRIDGE ON NC 147
WEST BOUND LANE
OVER CSXT RAILROAD

PLANS PREPARED BY:
SIMPSON ENGINEERS & ASSOCIATES
5640 Dillard Drive
Suite 200
Cary, NC 27518
(919) 852-0468
(919) 852-0598 (Fax)
www.simpsonengr.com
LICENSURE NO. C-2521

NORTH CAROLINA PROFESSIONAL SEAL 18056 ENGINEER JOHN A. BATTS
6/19/2014

REVISIONS								SHEET NO.
NO.	BY:	DATE:	NO.	BY:	DATE:			S-611
1			3					TOTAL SHEETS
2			4					611

STR. #14

DRAWN BY: T. BANKOVICH DATE: 12-13
CHECKED BY: B.S. COX DATE: 12-13
DESIGN ENGINEER OF RECORD: J.A. BATTS DATE: 12-13

6/19/2014 3:18:51 PM G:\Projects\2012\U-0071 (Durham Co.)\Structures\Drawings\Final\Bridge 189\Widening\U-0071_Br 189_sd_gd.dgn

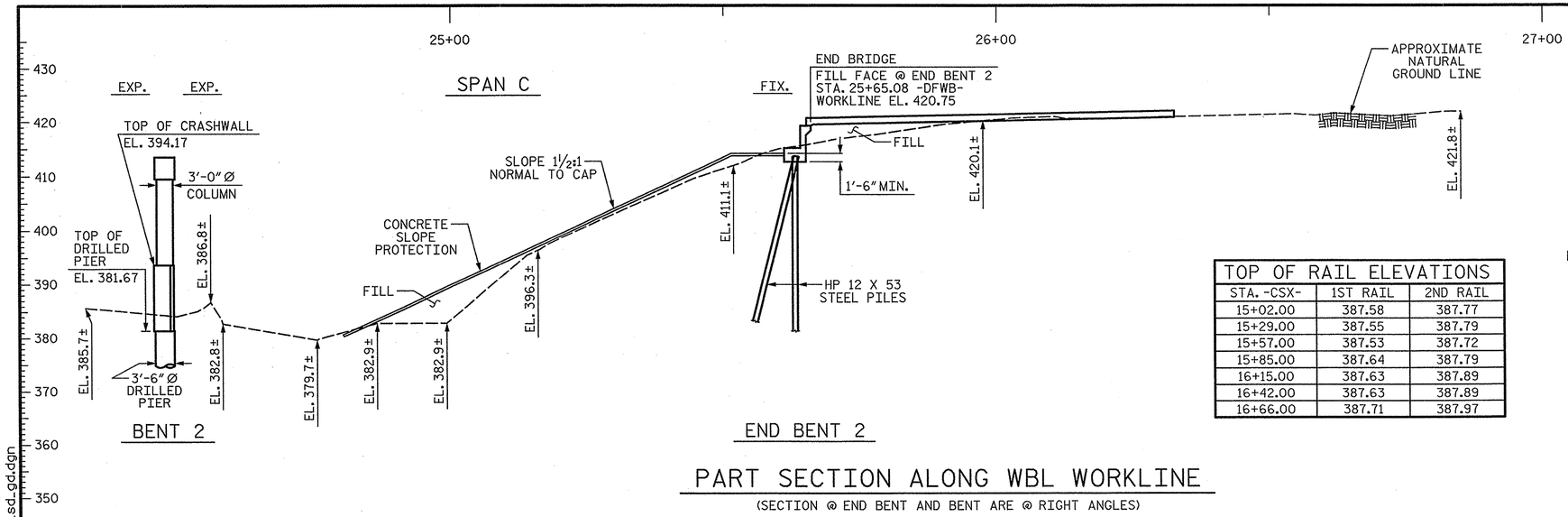

PART SECTION ALONG WBL WORKLINE

(SECTION @ END BENT AND BENT ARE @ RIGHT ANGLES)

TOP OF RAIL ELEVATIONS		
STA. -CSX-	1ST RAIL	2ND RAIL
15+02.00	387.58	387.77
15+29.00	387.55	387.79
15+57.00	387.53	387.72
15+85.00	387.64	387.79
16+15.00	387.63	387.89
16+42.00	387.63	387.89
16+66.00	387.71	387.97

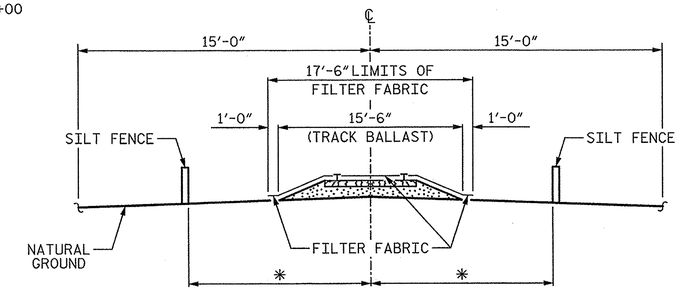

RAILROAD EROSION CONTROL DETAIL

* TO BE DETERMINED BY THE RESIDENT ENGINEER IN CONSULTATION WITH THE RAILROAD ENGINEER.

NOTES:

RAILROAD EROSION CONTROL MEASURES SHALL BE INSTALLED PRIOR TO PERFORMING ANY WORK IN THE RAIL RIGHT-OF-WAY.

ADDITIONAL EROSION CONTROL MEASURES FOR PROTECTION OF RAILROAD DITCHES MAY BE REQUIRED AS DIRECTED BY THE ENGINEER.

NO SEPARATE PAYMENT WILL BE MADE FOR RAILROAD EROSION CONTROL MEASURES.

LIMITS OF SILT FENCE AND FILTER FABRIC PARALLEL TO RAILROAD SHALL EXTEND A MINIMUM OF 25'-0" OUTSIDE EDGE OF SUPERSTRUCTURE, OR EXTEND 25'-0" BEYOND END OF RETAINING WALL, OR TOE OF SLOPE ON CONSTRUCTION. A GREATER LENGTH OF SILT FENCE OR FILTER FABRIC MAY BE REQUIRED IF SO DIRECTED BY THE ENGINEER.

FILTER FABRIC TO BE NAILED TO TIMBER RAIL TIES WITH PRIME SOURCE "GRIP CAP" OR EQUIVALENT. FILTER FABRIC ON SHOULDER TO BE SECURED AS DIRECTED BY THE ENGINEER AND RAILROAD.

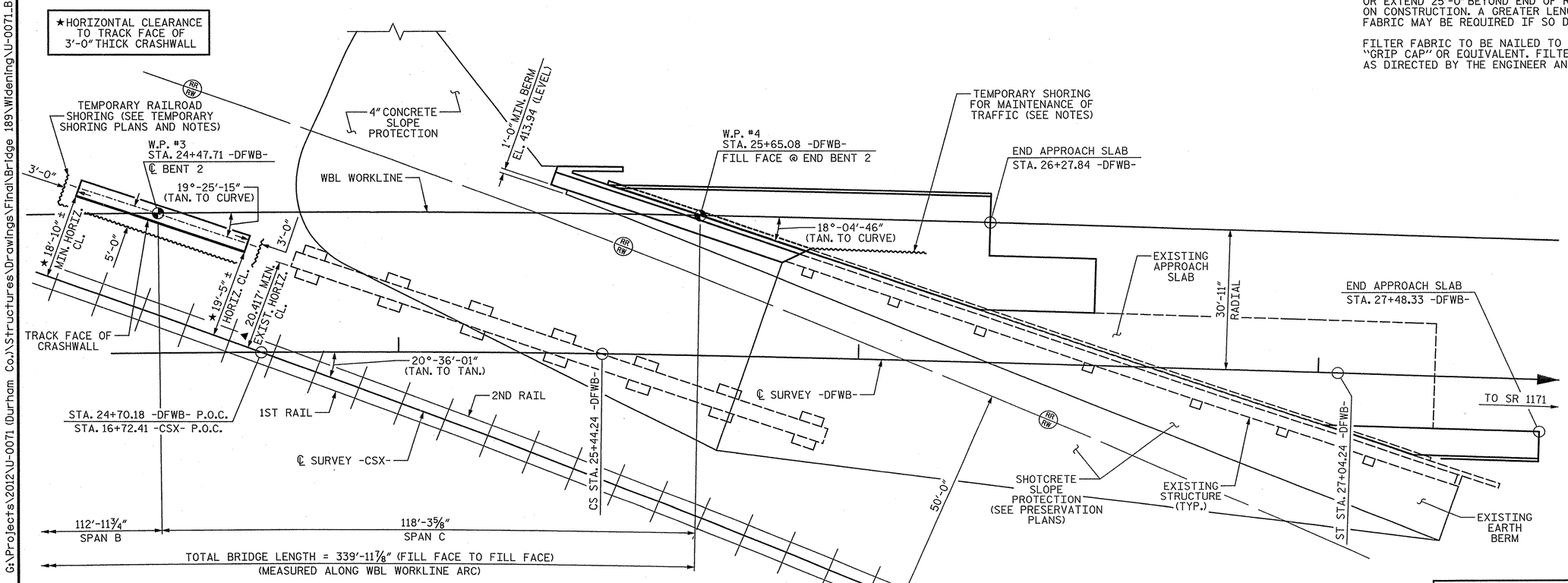

▲ MIN. EXISTING HORIZONTAL CLEARANCE PROVIDED BY NCDOT ROUTINE BRIDGE INSPECTION REPORT DATED AUGUST 28, 2013

PART PLAN

(PILES AND DRILLED PIERS NOT SHOWN IN PLAN VIEW)

PROJECT NO. U-0071
DURHAM COUNTY
STATION: 24+70.18 -DFWB-

SHEET 2 OF 6

STATE OF NORTH CAROLINA
DEPARTMENT OF TRANSPORTATION
RALEIGH

GENERAL DRAWING

FOR BRIDGE ON NC 147
WEST BOUND LANE
OVER CSXT RAILROAD

PLANS PREPARED BY:
SIMPSON ENGINEERS & ASSOCIATES
5640 Dillard Drive
Suite 200
Cary, NC 27518
(919) 852-0468
(919) 852-0598 (Fax)
www.simpsonengr.com
LICENSURE NO. C-2521

NORTH CAROLINA PROFESSIONAL SEAL ENGINEER 18056 JOHN A. BATTS 6/19/2014

REVISIONS						SHEET NO.
NO.	BY:	DATE:	NO.	BY:	DATE:	S-612
1			3			TOTAL SHEETS
2			4			671

STR. #14

DRAWN BY: T. BANKOVICH DATE: 12-13
CHECKED BY: B.S. COX DATE: 12-13
DESIGN ENGINEER OF RECORD: J.A. BATTS DATE: 12-13

6/19/2014 3:18:51 PM G:\Projects\2012\U-0071 (Durham Co.)\Structures\Drawings\Final\Bridge 189\Widening\U-0071_Br 189_sd_gd.dgn

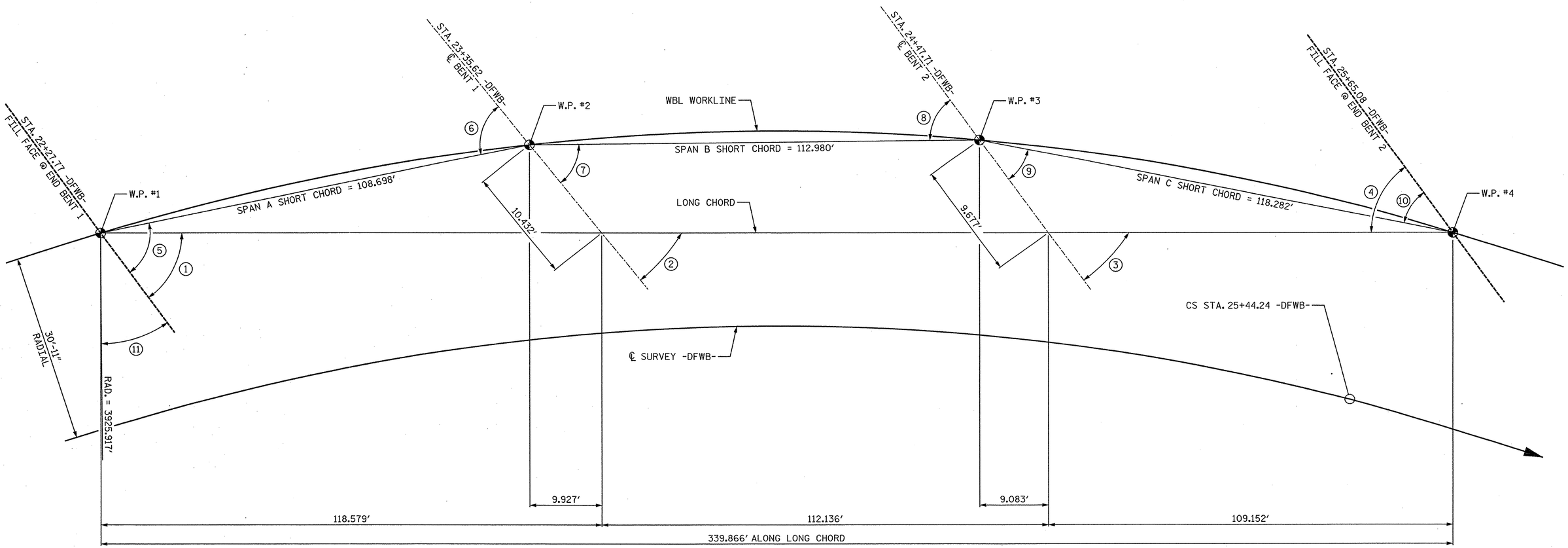

LONG CHORD LAYOUT

(WORK POINT STATIONS SHOWN ARE GIVEN ALONG ℄ SURVEY -DFWB-)

ANGLES

1. 20°-13′-15″ (TO LONG CHORD)
2. 17°-51′-59″ (TO LONG CHORD)
3. 20°-10′-33″ (TO LONG CHORD)
4. 20°-24′-27″ (TO LONG CHORD)
5. 21°-54′-29″ (TO SHORT CHORD - SPAN A)
6. 19°-33′-13″ (TO SHORT CHORD - SPAN A)
7. 17°-56′-10″ (TO SHORT CHORD - SPAN B)
8. 20°-14′-43″ (TO SHORT CHORD - SPAN B)
9. 18°-33′-32″ (TO SHORT CHORD - SPAN C)
10. 18°-47′-26″ (TO SHORT CHORD - SPAN C)
11. 67°-17′-55″

PROJECT NO. U-0071
DURHAM COUNTY
STATION: 24+70.18 -DFWB-

SHEET 3 OF 6

STATE OF NORTH CAROLINA
DEPARTMENT OF TRANSPORTATION
RALEIGH

GENERAL DRAWING

FOR BRIDGE ON NC 147
WEST BOUND LANE
OVER CSXT RAILROAD

PLANS PREPARED BY:

SIMPSON ENGINEERS & ASSOCIATES
5640 Dillard Drive
Suite 200
Cary, NC 27518
(919) 852-0468
(919) 852-0598 (Fax)
www.simpsonengr.com
LICENSURE NO. C-2521

NORTH CAROLINA PROFESSIONAL SEAL 18056 ENGINEER JOHN A. BATTS
1/16/2014

REVISIONS						
NO.	BY:	DATE:	NO.	BY:	DATE:	
1			3			
2			4			

SHEET NO. S-613
TOTAL SHEETS 671

DRAWN BY: T. BANKOVICH DATE: 12-13
CHECKED BY: B.S. COX DATE: 12-13
DESIGN ENGINEER OF RECORD: J.A. BATTS DATE: 12-13

STR. #14

1/15/2014 9:44:12 AM G:\Projects\2012\U-0071 (Durham Co.)\Structures\Drawings\Final\Bridge 189\Widening\U-0071_Br 189_sd_gd.dgn

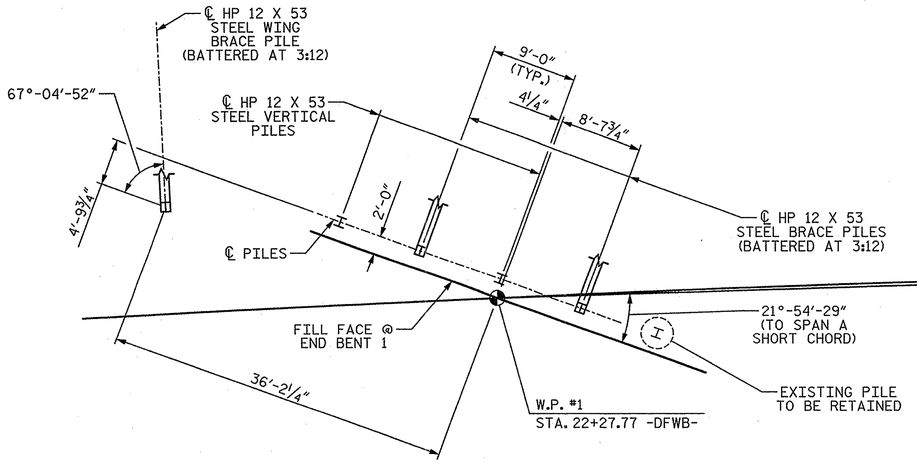

END BENT 1

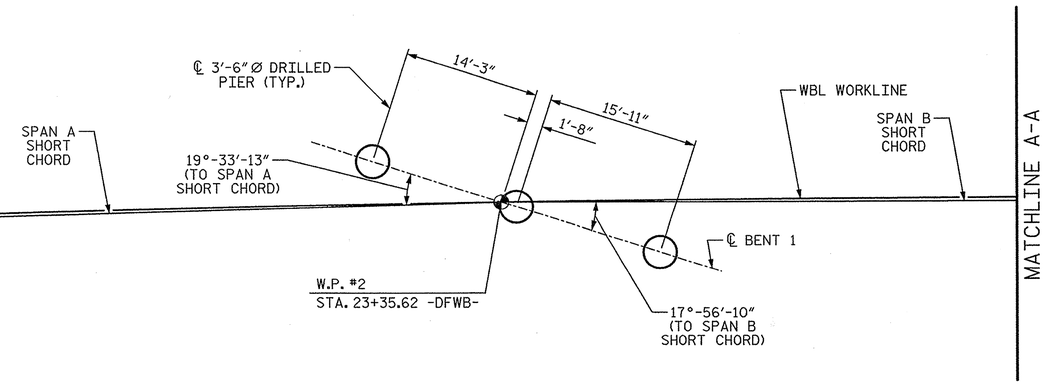

BENT 1

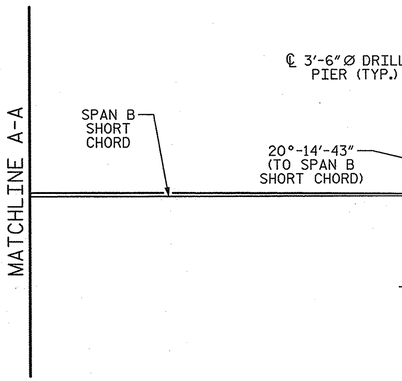

BENT 2

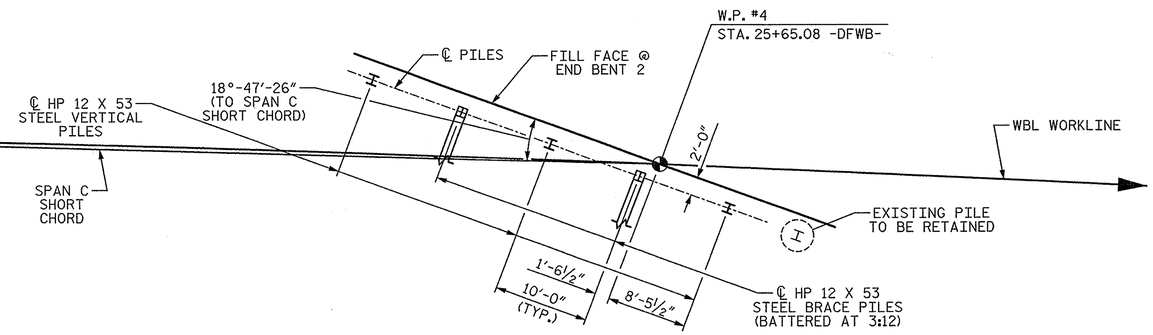

END BENT 2

FOUNDATION LAYOUT

DIMENSIONS LOCATING PILES ARE TO THE CENTERLINE OF THE PILES AT THE BOTTOM OF CAP OR WING.

FOUNDATION NOTES:

FOR PILES, SEE SECTION 450 OF THE STANDARD SPECIFICATIONS.

PILES AT END BENT 1 ARE DESIGNED FOR A FACTORED RESISTANCE OF 105 TONS PER PILE.

PILES AT END BENT 2 ARE DESIGNED FOR A FACTORED RESISTANCE OF 100 TONS PER PILE.

DRIVE PILES AT END BENT 1 TO A REQUIRED DRIVING RESISTANCE OF 175 TONS PER PILE.

DRIVE PILES AT END BENT 2 TO A REQUIRED DRIVING RESISTANCE OF 170 TONS PER PILE.

STEEL H-PILE POINTS ARE REQUIRED FOR STEEL H-PILES AT END BENT 1. FOR STEEL PILE POINTS, SEE SECTION 450 OF THE STANDARD SPECIFICATIONS.

FOR DRILLED PIERS, SEE SECTION 411 OF THE STANDARD SPECIFICATIONS.

DRILLED PIERS AT BENT 1 ARE DESIGNED FOR A FACTORED RESISTANCE OF 410 TONS PER PIER. CHECK FIELD CONDITIONS FOR THE REQUIRED TIP RESISTANCE OF 30 TSF.

INSTALL DRILLED PIERS AT BENT 1 TO A TIP ELEVATION NO HIGHER THAN 363 FT AND WITH THE REQUIRED TIP RESISTANCE.

DRILLED PIERS AT BENT 2 ARE DESIGNED FOR A FACTORED RESISTANCE OF 430 TONS PER PIER. CHECK FIELD CONDITIONS FOR THE REQUIRED TIP RESISTANCE OF 30 TSF (LEFT DRILLED PIER) AND 105 TSF (CENTER & RIGHT DRILLED PIERS).

INSTALL DRILLED PIER (LEFT) AT BENT 2 TO A TIP ELEVATION NO HIGHER THAN 358 FT AND WITH THE REQUIRED TIP RESISTANCE.

INSTALL DRILLED PIERS (CENTER & RIGHT) AT BENT 2 TO A TIP ELEVATION NO HIGHER THAN 349 FT, AND WITH THE REQUIRED TIP RESISTANCE AND PENETRATION OF AT LEAST 3 FT INTO ROCK AS DEFINED BY ARTICLE 411-1 OF THE STANDARD SPECIFICATIONS.

DRILLED PIER EXCAVATIONS AT BENT 1 AND BENT 2 WILL EXTEND INTO MATERIAL THAT DETERIORATES WHEN EXPOSED TO THE ELEMENTS. CHECK FIELD CONDITIONS FOR THE REQUIRED TIP RESISTANCE AND PLACE CONCRETE IMMEDIATELY AFTER THE EXCAVATION IS COMPLETED.

DO NOT USE SLURRY CONSTRUCTION FOR DRILLED PIERS AT BENT 1 AND BENT 2.

SPT IS REQUIRED FOR DRILLED PIERS AT BENT 1. FOR SPT TESTING, SEE SECTION 411 OF THE STANDARD SPECIFICATIONS.

SPT MAY BE REQUIRED FOR DRILLED PIERS AT BENT 2. THE ENGINEER WILL DETERMINE THE NEED FOR SPT. FOR SPT TESTING, SEE SECTION 411 OF THE STANDARD SPECIFICATIONS.

SID INSPECTIONS MAY BE REQUIRED FOR DRILLED PIERS. THE ENGINEER WILL DETERMINE THE NEED FOR SID INSPECTIONS. FOR SID INSPECTIONS, SEE SECTION 411 OF THE STANDARD SPECIFICATIONS.

CSL TUBES ARE REQUIRED AND CSL TESTING MAY BE REQUIRED FOR DRILLED PIERS. THE ENGINEER WILL DETERMINE THE NEED FOR CSL TESTING. FOR CSL TESTING, SEE SECTION 411 OF THE STANDARD SPECIFICATIONS.

PROJECT NO. U-0071
DURHAM COUNTY
STATION: 24+70.18 -DFWB-

SHEET 4 OF 6

STATE OF NORTH CAROLINA
DEPARTMENT OF TRANSPORTATION
RALEIGH

GENERAL DRAWING

FOR BRIDGE ON NC 147
WEST BOUND LANE
OVER CSXT RAILROAD

PLANS PREPARED BY:

SIMPSON ENGINEERS & ASSOCIATES
5640 Dillard Drive
Suite 200
Cary, NC 27518
(919) 852-0468
(919) 852-0598 (Fax)
www.simpsonengr.com
LICENSURE NO. C-2521

NORTH CAROLINA PROFESSIONAL SEAL 18056 ENGINEER JOHN A. BATTS
6/9/2014

REVISIONS						SHEET NO.
NO.	BY:	DATE:	NO.	BY:	DATE:	S-614
1			3			TOTAL SHEETS
2			4			671

STR. #14

DRAWN BY: T. BANKOVICH DATE: 12-13
CHECKED BY: B.S. COX DATE: 12-13
DESIGN ENGINEER OF RECORD: J.A. BATTS DATE: 12-13

6/9/2014 9:20:54 AM G:\Projects\2012\U-0071 (Durham Co.)\Structures\Drawings\Final\Bridge 189\Widening\U-0071_Br 189_sd_gd.dgn

BM #50 CHISELED SQUARE IN S.E. CONCRETE HW OF BRIDGE, STA. 25+52.14 -DFWB- 98.33' RT., EL. 416.16

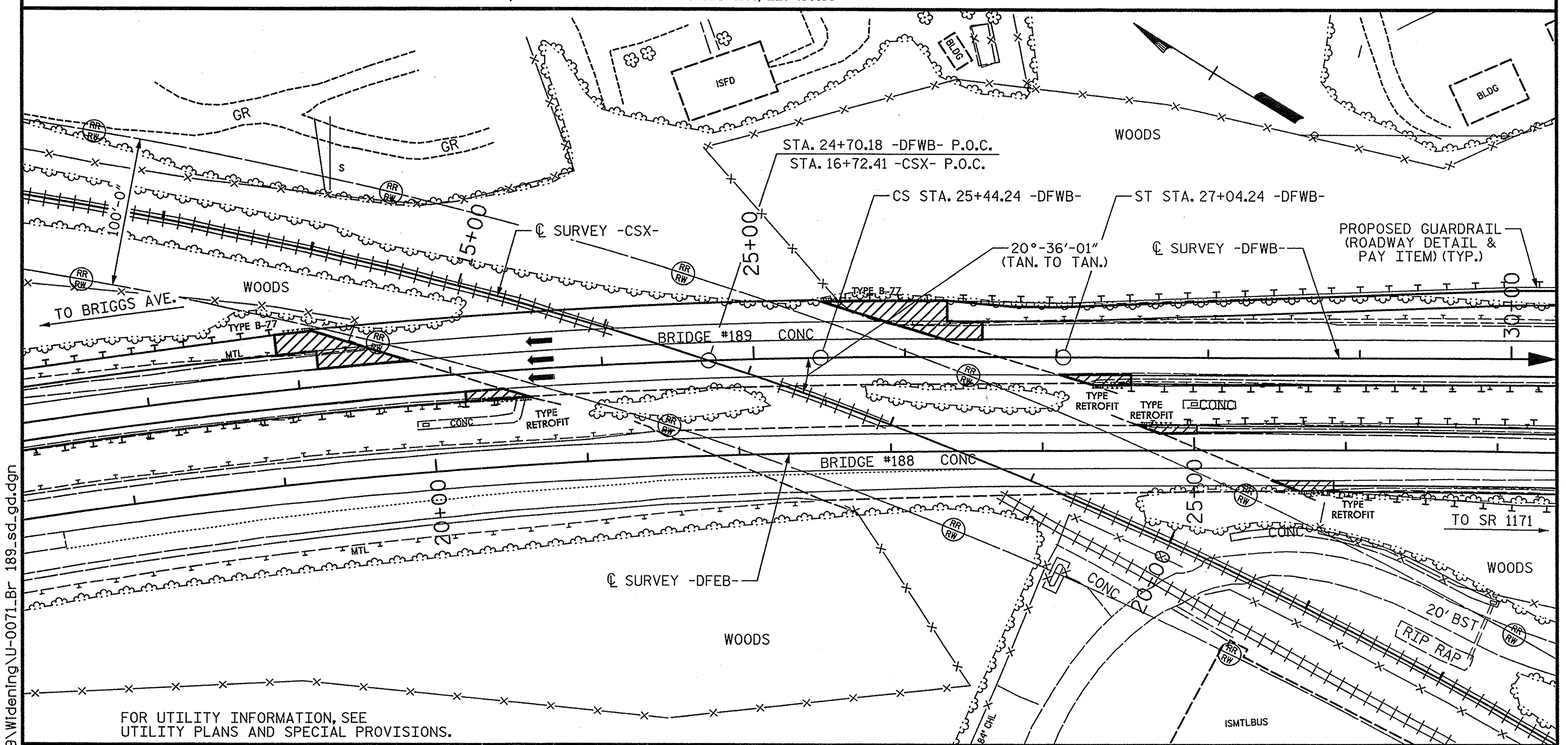

LOCATION SKETCH

TOTAL BILL OF MATERIAL

	TEMPORARY RAILROAD SHORING	REMOVAL OF EXISTING STRUCTURE	FOUNDATION EXCAVATION	3'-6" Ø DRILLED PIERS IN SOIL	3'-6" Ø DRILLED PIERS NOT IN SOIL	SID INSPECTION	SPT TESTING	CSL TESTING	UNCLASSIFIED STRUCTURE EXCAVATION	REINFORCED CONCRETE DECK SLAB
	LS	LS	LS	LF	LF	EA	EA	EA	LS	SF
SUPERSTRUCTURE										5,794
END BENT 1										
BENT 1	LS		LS	26.0	29		3	1		
BENT 2	LS		LS	59.7	30		1	1		
END BENT 2										
TOTAL	LS	LS	LS	85.7	59	1	4	2	LS	5,794

TOTAL BILL OF MATERIAL (CONT'D.)

	CLASS A CONCRETE	BRIDGE APPROACH SLABS	REINFORCING STEEL	SPIRAL COLUMN REINFORCING STEEL	APPROXIMATE STRUCTURAL STEEL	HP 12 X 53 STEEL PILES		STEEL PILE POINTS	CONCRETE BARRIER RAIL	72" CHAIN LINK FENCE	4" SLOPE PROTECTION	ELASTOMERIC BEARINGS
	CY	LS	LB	LB	LB	NO.	LF	NO.	LF	LF	SY	LS
SUPERSTRUCTURE					270,000				335.60	330.56		
END BENT 1	33.4		5,667			4	66	4			450	
BENT 1	92.1		20,861	2,878								
BENT 2	91.6		24,385	3,756								
END BENT 2	38.6		6,655			5	284				615	
TOTAL	255.7	LS	57,568	6,634	270,000	9	350	4	335.60	330.56	1,065	LS

NOTES:

ASSUMED LIVE LOAD = HL 93 OR ALTERNATE LOADING.

THIS BRIDGE HAS BEEN DESIGNED IN ACCORDANCE WITH THE AASHTO LRFD BRIDGE DESIGN SPECIFICATIONS.

THIS BRIDGE IS LOCATED IN SEISMIC ZONE 1.

FOR OTHER DESIGN DATA AND GENERAL NOTES, SEE SHEET SN.

FOR SUBMITTAL OF WORKING DRAWINGS, SEE SPECIAL PROVISIONS.

FOR FALSEWORK AND FORMWORK, SEE SPECIAL PROVISIONS.

FOR CRANE SAFETY, SEE SPECIAL PROVISIONS.

FOR GROUT FOR STRUCTURES, SEE SPECIAL PROVISIONS.

REMOVABLE FORMS MAY BE USED IN LIEU OF STAY-IN-PLACE METAL FORMS IN ACCORDANCE WITH ARTICLE 420-3 OF THE STANDARD SPECIFICATIONS.

THE RAILROAD TRACK TOP OF RAIL ELEVATIONS ON THE PLANS ARE FROM THE BEST INFORMATION AVAILABLE. PRIOR TO BEGINNING BRIDGE CONSTRUCTION, VERIFY THE TOP OF RAIL ELEVATIONS AND REPORT ANY VARIATIONS TO THE ENGINEER. ANY PLAN REVISIONS NECESSARY TO ACHIEVE THE REQUIRED MINIMUM CLEARANCE WILL BE PROVIDED BY THE DEPARTMENT.

NEEDLE BEAMS WILL NOT BE ALLOWED UNLESS OTHERWISE CALLED FOR ON THE PLANS OR APPROVED BY THE ENGINEER.

ALL STRUCTURAL STEEL SHALL BE AASHTO M270 GRADE 50 AND PAINTED IN ACCORDANCE WITH SYSTEM 1 OF ARTICLE 442-8 OF THE STANDARD SPECIFICATIONS UNLESS OTHERWISE NOTED ON THE PLANS.

FOR LIMITS OF TEMPORARY SHORING FOR MAINTENANCE OF TRAFFIC, SEE TRAFFIC CONTROL PLANS. FOR PAY ITEM FOR TEMPORARY SHORING FOR MAINTENANCE OF TRAFFIC, SEE ROADWAY PLANS.

THE SUBSTRUCTURE OF THE EXISTING BRIDGE INDICATED ON THE PLANS IS FROM THE BEST INFORMATION AVAILABLE. SINCE THIS INFORMATION IS SHOWN FOR THE CONVENIENCE OF THE CONTRACTOR, THE CONTRACTOR SHALL HAVE NO CLAIM WHATSOEVER AGAINST THE DEPARTMENT OF TRANSPORTATION FOR ANY DELAYS OR ADDITIONAL COST INCURRED BASED ON DIFFERENCES BETWEEN THE EXISTING BRIDGE SUBSTRUCTURE SHOWN ON THE PLANS AND THE ACTUAL CONDITIONS AT THE PROJECT SITE.

FOR LIMITS OF PARTIAL REMOVAL OF EXISTING STRUCTURE, SEE APPLICABLE SUPERSTRUCTURE AND SUBSTRUCTURE PLAN SHEETS. "REMOVAL OF EXISTING STRUCTURE" INCLUDES THE EXISTING OVERHANG, RAIL, SLAB AND PARTIAL REMOVAL OF END BENTS.

DIMENSIONS AND ELEVATIONS GIVEN FOR THE EXISTING STRUCTURE ARE FROM THE BEST INFORMATION AVAILABLE. IF FIELD CONDITIONS VARY FROM THE PLANS, MODIFICATIONS WILL BE MADE AS NECESSARY AS DIRECTED BY THE ENGINEER.

BERM AND SLOPE PROTECTION MAY BE ADJUSTED SLIGHTLY AS NECESSARY IN ORDER TO MATCH THE EXISTING SITE CONDITIONS. THE CONTRACTOR SHALL PROVIDE AS SMOOTH A TRANSITION AS POSSIBLE BETWEEN EXISTING AND PROPOSED SLOPE AS DIRECTED BY THE ENGINEER. SEE PRESERVATION PLANS FOR SHOTCRETE SLOPE PROTECTION.

INASMUCH AS THE PAINT SYSTEM ON THE EXISTING STRUCTURAL STEEL CONTAINS LEAD, THE CONTRACTOR'S ATTENTION IS DIRECTED TO ARTICLE 107-1 OF THE STANDARD SPECIFICATIONS. ANY COSTS RESULTING FROM COMPLIANCE WITH APPLICABLE STATE OR FEDERAL REGULATIONS PERTAINING TO HANDLING OF MATERIALS CONTAINING LEAD BASED PAINT SHALL BE INCLUDED IN THE BID PRICE FOR "REMOVAL OF EXISTING STRUCTURE AT STA. 24+70.18 -DFWB-".

THE CLASS AA CONCRETE IN THE BRIDGE DECK SHALL CONTAIN FLY ASH OR GROUND GRANULATED BLAST FURNACE SLAG AT THE SUBSTITUTION RATE SPECIFIED IN ARTICLE 1024-1 AND IN ACCORDANCE WITH ARTICLES 1024-5 AND 1024-6 OF THE STANDARD SPECIFICATIONS. NO PAYMENT WILL BE MADE FOR THIS SUBSTITUTION AS IT IS CONSIDERED INCIDENTAL TO THE COST OF THE REINFORCED CONCRETE DECK SLAB.

THE MATERIAL SHOWN IN THE CROSS-HATCHED AREA ON SHEET 1 OF 6 SHALL BE EXCAVATED FOR A DISTANCE OF 15 FT EACH SIDE OF WBL WORKLINE AS DIRECTED BY THE ENGINEER. THIS WORK WILL BE PAID FOR AT THE CONTRACT LUMP SUM PRICE FOR UNCLASSIFIED STRUCTURE EXCAVATION. SEE SECTION 412 OF THE STANDARD SPECIFICATIONS.

FOR PLACING LOAD ON STRUCTURAL MEMBERS, SEE SPECIAL PROVISIONS.

FOR TEMPORARY RAILROAD SHORING, SEE SPECIAL PROVISIONS.

PAYMENT FOR FOAM JOINT SEALS IS PROVIDED IN THE BILL OF MATERIAL ON THE PRESERVATION PLANS FOR THE EXISTING STRUCTURE.

FOR GROOVING BRIDGE FLOOR QUANTITY, SEE BRIDGE PRESERVATION PLANS "TOTAL BILL OF MATERIAL" SHEET.

PROJECT NO. U-0071
DURHAM COUNTY
STATION: 24+70.18 -DFWB-

SHEET 5 OF 6

STATE OF NORTH CAROLINA
DEPARTMENT OF TRANSPORTATION
RALEIGH

GENERAL DRAWING
FOR BRIDGE ON NC 147
WEST BOUND LANE
OVER CSXT RAILROAD

PLANS PREPARED BY:
SIMPSON ENGINEERS & ASSOCIATES
5640 Dillard Drive
Suite 200
Cary, NC 27518
(919) 852-0468
(919) 852-0598 (Fax)
www.simpsonengr.com
LICENSURE NO. C-2521

NORTH CAROLINA PROFESSIONAL SEAL 18056 ENGINEER JOHN A. BATTS 6/24/2014

REVISIONS								SHEET NO.
NO.	BY:	DATE:	NO.	BY:	DATE:			S-615
1			3					TOTAL SHEETS
2			4					671

STR. #14

DRAWN BY: T. BANKOVICH DATE: 12-13
CHECKED BY: B.S. COX DATE: 12-13
DESIGN ENGINEER OF RECORD: J.A. BATTS DATE: 12-13

6/24/2014 3:55:50 PM G:\Projects\2012\U-0071 (Durham Co.)\Structures\Drawings\Final\Bridge 189\WideningU-0071_Br 189_sd_gd.dgn

LOAD AND RESISTANCE FACTOR RATING (LRFR) SUMMARY FOR STEEL GIRDERS

LEVEL		VEHICLE	WEIGHT (W) (TONS)	CONTROLLING LOAD RATING (#)	MINIMUM RATING FACTORS (RF)	TONS = W × RF	STRENGTH I LIMIT STATE											SERVICE II LIMIT STATE						COMMENT NUMBER
							LIVE-LOAD FACTORS (γ_{LL})	MOMENT					SHEAR					LIVE-LOAD FACTORS (γ_{LL})	MOMENT					
								DISTRIBUTION FACTORS (DF)	RATING FACTOR	SPAN	GIRDER LOCATION	DISTANCE FROM LEFT END OF SPAN (ft)	DISTRIBUTION FACTORS (DF)	RATING FACTOR	SPAN	GIRDER LOCATION	DISTANCE FROM LEFT END OF SPAN (ft)		DISTRIBUTION FACTORS (DF)	RATING FACTOR	SPAN	GIRDER LOCATION	DISTANCE FROM LEFT END OF SPAN (ft)	
DESIGN LOAD RATING		HL-93 (INVENTORY)	N/A	1	1.81	- -	1.75	0.563	1.84	B	EL	55.58	0.634	1.81	C	I	110.5	1.30	0.563	2.55	B	EL	55.58	
		HL-93 (OPERATING)	N/A		2.34	- -	1.35	0.563	2.39	B	EL	55.58	0.634	2.34	C	I	110.5	1.00	0.563	3.32	B	EL	55.58	
		HS-20 (INVENTORY)	36.00	2	2.06	74.2	1.75	0.563	2.06	B	EL	55.58	0.634	2.48	C	I	110.5	1.30	0.563	3.93	B	EL	55.58	
		HS-20 (OPERATING)	36.00		2.67	96.1	1.35	0.563	2.67	B	EL	55.58	0.634	3.21	C	I	110.5	1.00	0.563	5.11	B	EL	55.58	
LEGAL LOAD RATING	SINGLE VEHICLE (SV)	SNSH	13.500		6.19	83.6	1.40	0.563	6.19	B	EL	55.58	0.634	6.19	C	I	0	1.30	0.563	8.79	B	EL	55.58	
		SNGARBS2	20.000		4.30	86.0	1.40	0.563	4.45	B	EL	55.58	0.634	4.30	C	I	0	1.30	0.563	6.31	B	EL	55.58	
		SNAGRIS2	22.000		3.96	87.1	1.40	0.563	4.15	B	EL	55.58	0.634	3.96	C	I	110.5	1.30	0.563	5.89	B	EL	55.58	
		SNCOTTS3	27.250		3.08	83.9	1.40	0.563	3.08	B	EL	55.58	0.634	3.08	C	I	110.5	1.30	0.563	4.37	B	EL	55.58	
		SNAGGRS4	34.925		2.49	87.0	1.40	0.563	2.51	B	EL	55.58	0.634	2.49	C	I	110.5	1.30	0.563	3.56	B	EL	55.58	
		SNS5A	35.550		2.46	87.5	1.40	0.563	2.46	B	EL	55.58	0.634	2.49	C	I	110.5	1.30	0.563	3.49	B	EL	55.58	
		SNS6A	39.950		2.23	89.1	1.40	0.563	2.23	B	EL	55.58	0.634	2.24	C	I	0	1.30	0.563	3.16	B	EL	55.58	
		SNS7B	42.000		2.12	89.0	1.40	0.563	2.12	B	EL	55.58	0.634	2.17	C	I	110.5	1.30	0.563	3.01	B	EL	55.58	
	TRUCK TRACTOR SEMI-TRAILER (TTST)	TNAGRIT3	33.000		2.69	88.8	1.40	0.563	2.71	B	EL	55.58	0.634	2.69	C	I	0	1.30	0.563	3.84	B	EL	55.58	
		TNT4A	33.075		2.65	87.6	1.40	0.563	2.71	B	EL	55.58	0.634	2.65	C	I	110.5	1.30	0.563	3.85	B	EL	55.58	
		TNT6A	41.600		2.19	91.1	1.40	0.563	2.19	B	EL	55.58	0.634	2.26	C	I	0	1.30	0.563	3.11	B	EL	55.58	
		TNT7A	42.000		2.19	92.0	1.40	0.563	2.19	B	EL	55.58	0.634	2.22	C	I	0	1.30	0.563	3.11	B	EL	55.58	
		TNT7B	42.000		2.15	90.3	1.40	0.563	2.24	B	EL	55.58	0.634	2.15	C	I	110.5	1.30	0.563	3.18	B	EL	55.58	
		TNAGRIT4	43.000		2.09	89.9	1.40	0.563	2.15	B	EL	55.58	0.634	2.09	C	I	0	1.30	0.563	3.05	B	EL	55.58	
		TNAGT5A	45.000		2.04	91.8	1.40	0.563	2.04	B	EL	55.58	0.634	2.04	C	I	0	1.30	0.563	2.89	B	EL	55.58	
		TNAGT5B	45.000	3	1.99	89.6	1.40	0.563	2.02	B	EL	55.58	0.634	1.99	C	I	0	1.30	0.563	2.87	B	EL	55.58	
FATIGUE		HL-93 (INVENTORY)	γ_{LL}=0.75		4.22																			

LOAD FACTORS:

DESIGN LOAD RATING FACTORS	LIMIT STATE	γ_{DC}	γ_{DW}
	STRENGTH I	1.25	1.50
	SERVICE II	1.00	1.00

NOTES:

MINIMUM RATING FACTORS ARE BASED ON THE STRENGTH I AND SERVICE II LIMIT STATES.

ALLOWABLE STRESS FOR SERVICE II LIMIT STATE ARE AS REQUIRED FOR DESIGN.

COMMENTS:

1. FOR GIRDERS 1 THRU 3 ONLY.
2. DISTANCE FROM LEFT END OF SPAN IS MEASURED FROM ℄ BEARING.

(#) CONTROLLING LOAD RATING

- (1) DESIGN LOAD RATING (HL-93)
- (2) DESIGN LOAD RATING (HS-20)
- (3) LEGAL LOAD RATING **
- ** SEE CHART FOR VEHICLE TYPE

GIRDER LOCATION

- I - INTERIOR GIRDER
- EL - EXTERIOR LEFT GIRDER
- ER - EXTERIOR RIGHT GIRDER

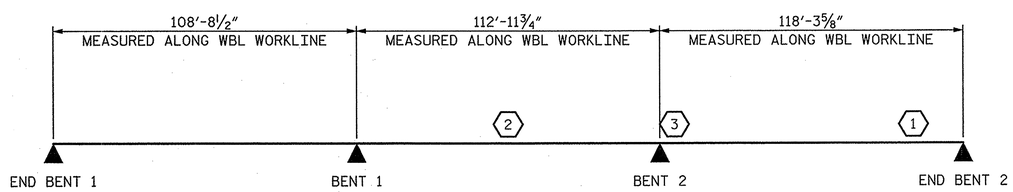

LRFR SUMMARY

PROJECT NO. U-0071
DURHAM COUNTY
STATION: 24+70.18 -DFWB-

SHEET 6 OF 6

STATE OF NORTH CAROLINA
DEPARTMENT OF TRANSPORTATION
RALEIGH

LRFR SUMMARY FOR STEEL GIRDERS

(NON-INTERSTATE TRAFFIC)

REVISIONS						SHEET NO.
NO.	BY:	DATE:	NO.	BY:	DATE:	S-666
1			3			TOTAL SHEETS
2			4			671

STR. #14

PLANS PREPARED BY:
SIMPSON ENGINEERS & ASSOCIATES
5640 Dillard Drive
Suite 200
Cary, NC 27518
(919) 852-0468
(919) 852-0598 (Fax)
www.simpsonengr.com
LICENSURE NO. C-2521

NORTH CAROLINA PROFESSIONAL SEAL 18056 ENGINEER JOHN A. BATTS
1/16/2014

DRAWN BY: T. BANKOVICH DATE: 12-13
CHECKED BY: B.S. COX DATE: 12-13
DESIGN ENGINEER OF RECORD: J.A. BATTS DATE: 12-13

1/14/2014 9:35:09 AM G:\Projects\2012\U-0071 (Durham Co.)\Structures\Drawings\Final\Bridge 189\Widening\U-0071_Br 189_sd_gd.dgn

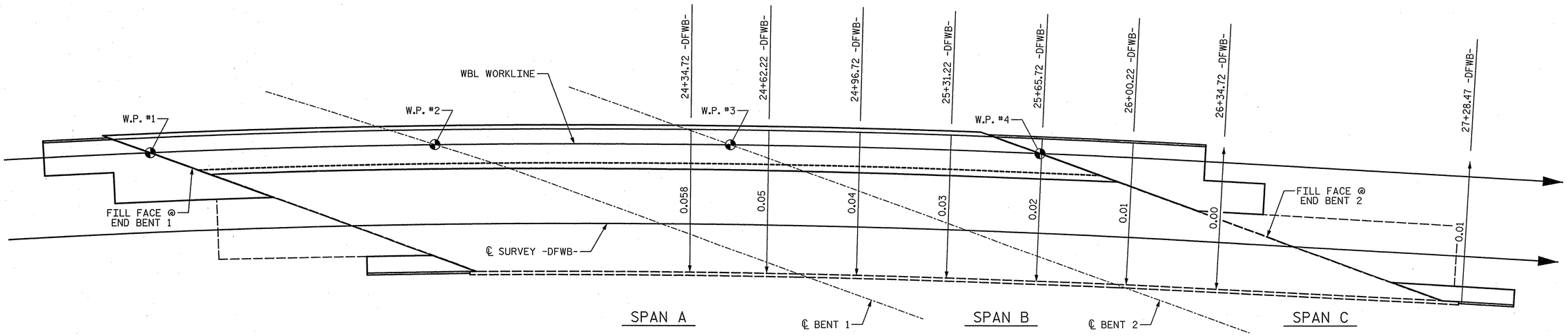

LAYOUT FOR SUPERELEVATION

MAXIMUM SUPERELEVATION IS 0.058 @ STA. 24+34.72 -DFWB-.

SUPERELEVATION IS 0.058 FROM BEGIN APPROACH SLAB TO STA. 24+34.72 -DFWB-.

PROJECT NO. U-0071

DURHAM COUNTY

STATION: 24+70.18 -DFWB-

STATE OF NORTH CAROLINA
DEPARTMENT OF TRANSPORTATION
RALEIGH
SUPERSTRUCTURE

LAYOUT FOR SUPERELEVATION

PLANS PREPARED BY:

SIMPSON ENGINEERS & ASSOCIATES
5640 Dillard Drive
Suite 200
Cary, NC 27518
(919) 852-0468
(919) 852-0598 (Fax)
www.simpsonengr.com
LICENSURE NO. C-2521

NORTH CAROLINA PROFESSIONAL SEAL 18056 ENGINEER JOHN A. BATTS
1/16/2014

REVISIONS						SHEET NO.
NO.	BY:	DATE:	NO.	BY:	DATE:	S-617
1			3			TOTAL SHEETS
2			4			671

STR. #14

DRAWN BY: T. BANKOVICH DATE: 12-13
CHECKED BY: B.S. COX DATE: 12-13
DESIGN ENGINEER OF RECORD: J.A. BATTS DATE: 12-13

1/14/2014 9:35:09 AM G:\Projects\2012\U-0071 (Durham Co.)\Structures\Drawings\Final\Bridge 189\Widening\U-0071_Br 189_sd_spel.dgn

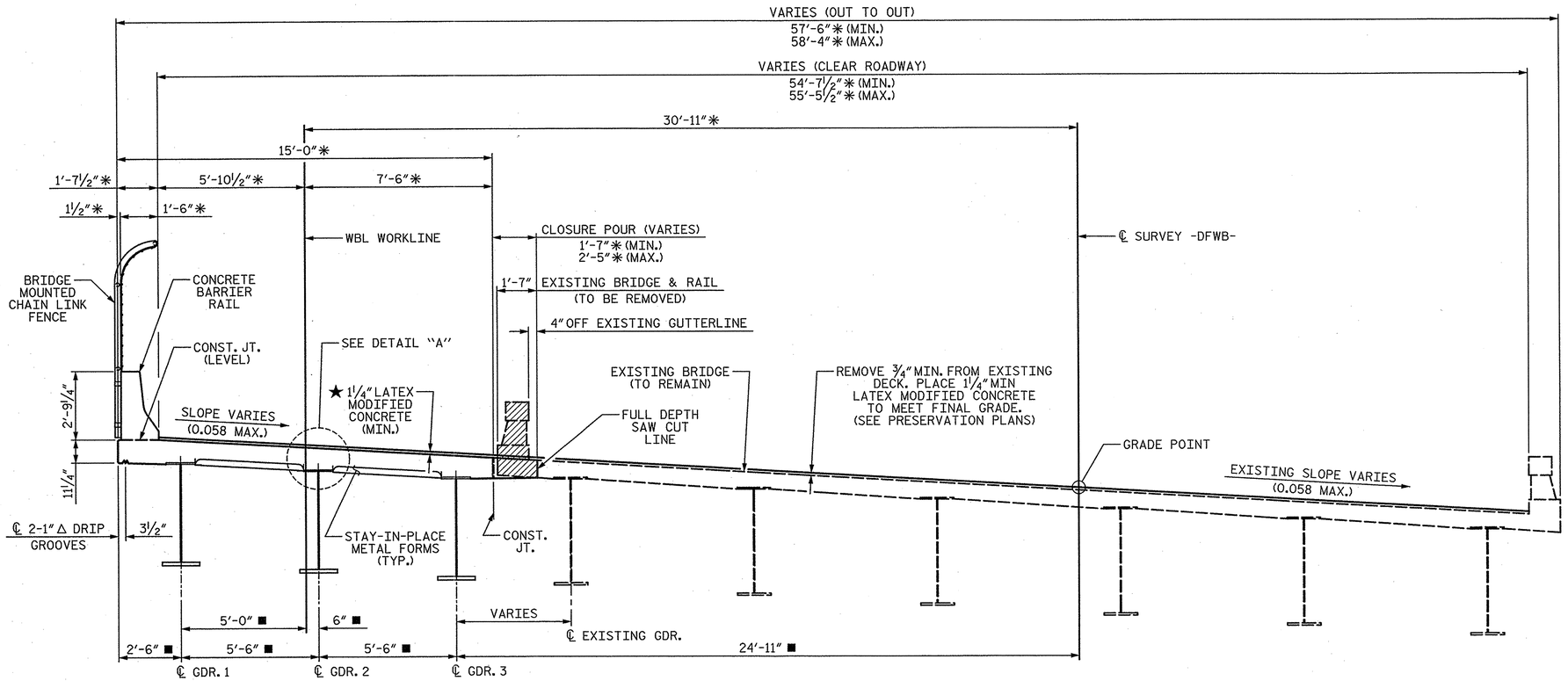

TYPICAL SECTION

NOTES:

■ RADIAL THROUGH WORK POINT

✱ RADIAL DIMENSION

★ 1¼" LATEX MODIFIED CONCRETE (MIN.) LOCATED IN THE PROPOSED WIDENING OF THE BRIDGE DECK AND APPROACH SLAB IS INCLUDED IN THE LMC QUANTITY ON THE PRESERVATION PLANS.

WORK POINTS AT END BENTS ARE LOCATED AT EDGE OF DECK AND FILL FACE ALONG WBL WORKLINE, SEE DETAIL "B".

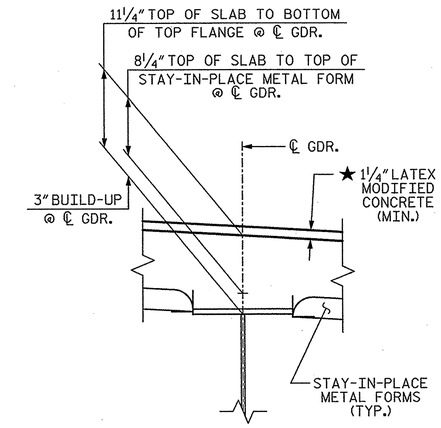

DETAIL "A"

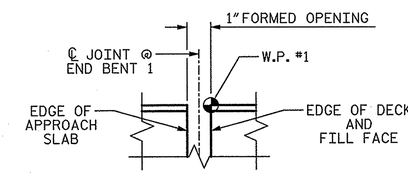

DETAIL "B"

(END BENT 1 SHOWN, END BENT 2 SIMILAR)
(PRE-SAWED JOINT DETAIL SHOWN)

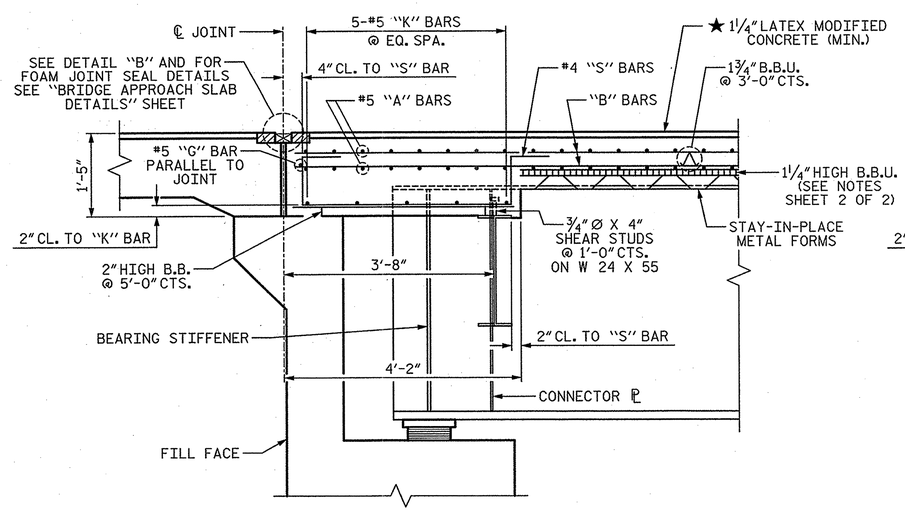

SECTION A-A

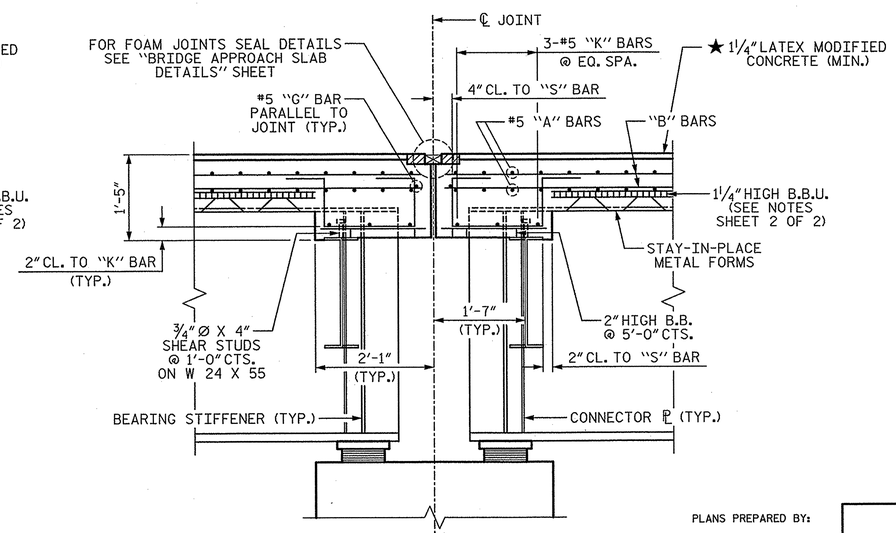

SECTION B-B

PROJECT NO. U-0071
DURHAM COUNTY
STATION: 24+70.18 -DFWB-

SHEET 1 OF 2

STATE OF NORTH CAROLINA
DEPARTMENT OF TRANSPORTATION
RALEIGH
SUPERSTRUCTURE

TYPICAL SECTION

REVISIONS						SHEET NO.
NO.	BY:	DATE:	NO.	BY:	DATE:	S-68
1			3			TOTAL SHEETS
2			4			671

PLANS PREPARED BY:
SIMPSON ENGINEERS & ASSOCIATES
5640 Dillard Drive
Suite 200
Cary, NC 27518
(919) 852-0468
(919) 852-0598 (Fax)
www.simpsonengr.com
LICENSURE NO. C-2521

NORTH CAROLINA PROFESSIONAL SEAL 18056 ENGINEER JOHN A. BATTS
1/16/2014

DRAWN BY: T. BANKOVICH DATE: 12-13
CHECKED BY: B.S. COX DATE: 12-13
DESIGN ENGINEER OF RECORD: J.A. BATTS DATE: 12-13

STR. #14

1/14/2014 9:35:10 AM G:\Projects\2012\U-0071 (Durham Co.)\Structures\Drawings\Final\Bridge 189\Widening\U-0071_Br 189_sd_ts.dgn

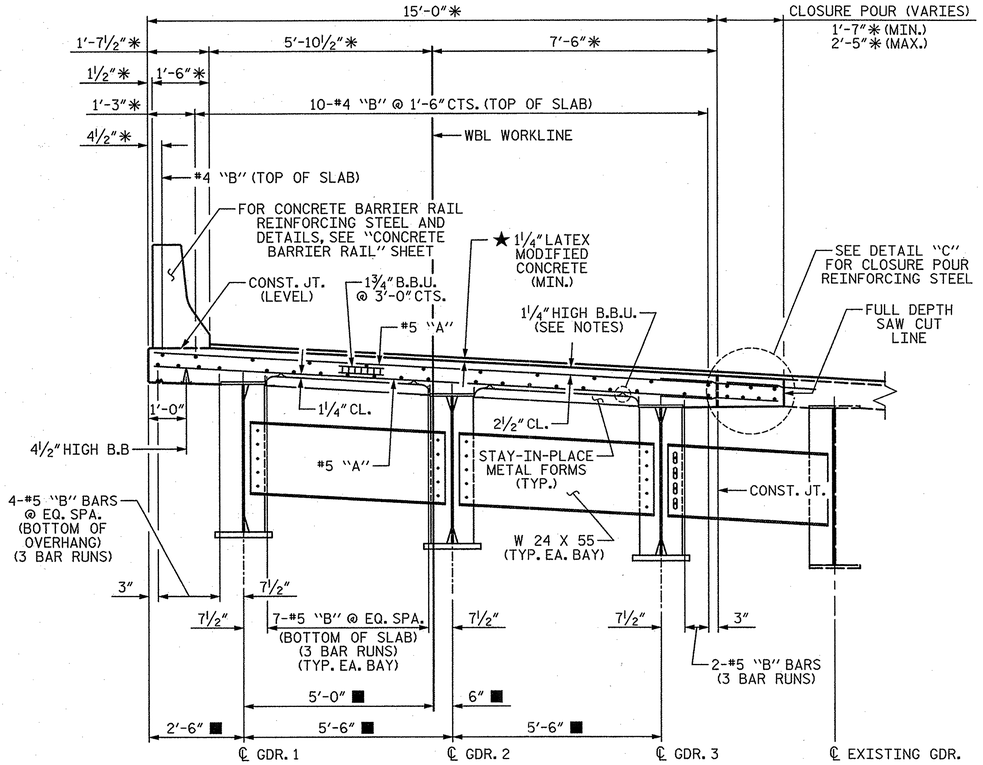

TYPICAL SECTION @ INTERMEDIATE DIAPHRAGMS

(BRIDGE MOUNTED CHAIN LINK FENCE NOT SHOWN IN TYPICAL SECTION)

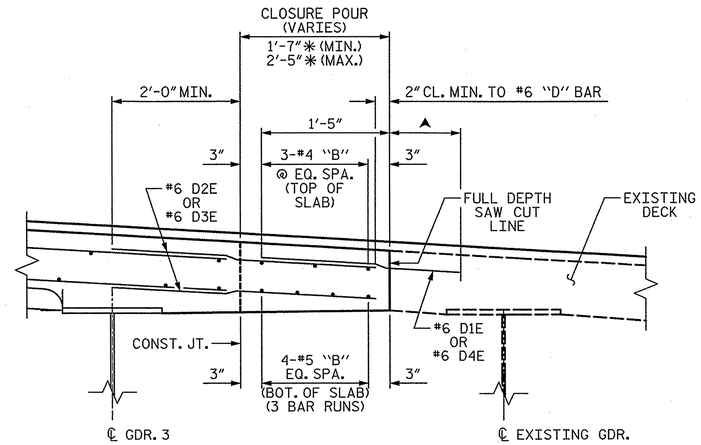

DETAIL "C"

NOTES:

■ RADIAL THROUGH THE WORK POINTS

✳ RADIAL DIMENSION

★ 1¼" LATEX MODIFIED CONCRETE (MIN.) LOCATED IN THE PROPOSED WIDENING OF BRIDGE DECK AND APPROACH SLAB IS INCLUDED IN THE LMC QUANTITY ON THE PRESERVATION PLANS.

▲ #6 "D" DOWELS PLACED IN THE EXISTING DECK SHALL BE INSTALLED USING AN ADHESIVE ANCHORING SYSTEM. LEVEL ONE FIELD TESTING IS REQUIRED AND THE YIELD LOAD OF THE DOWEL IS 13.2 KIPS. OVERALL LENGTH SHALL PROVIDE A 1'-5" MIN. EXTENSION INTO CLOSURE POUR. EMBEDMENT LENGTH TO BE DETERMINED BY THE MANUFACTUER OF THE ADHESIVELY ANCHORED ANCHOR SYSTEM. #6 "D" BAR LENGTH WAS BASED ON A 10" EMBEDMENT LENGTH. ADHESIVELY ANCHORED ANCHOR BOLT OR DOWEL TESTING SHALL BE IN ACCORDANCE WITH SECTION 420-13 OF THE STANDARD SPECIFICATIONS.

#6 D1E AND #6 D4E DOWELS SHALL BE PLACED IN THE SAME HORIZONTAL PLANE AS THE TOP SLAB REINFORCING STEEL. #6 D2E AND #6 D3E DOWELS SHALL BE PLACED IN SAME HORIZONTAL PLANE AS TOP AND BOTTOM SLAB REINFORCING STEEL.

PROVIDE 1¼" HIGH BEAM BOLSTERS UPPER AT 4'-0" CTS. ATOP THE STAY-IN-PLACE METAL FORMS TO SUPPORT THE BOTTOM MAT OF "A" BARS. WHEN USING REMOVABLE FORMS, PROVIDE CONTINUOUS HIGH CHAIRS FOR METAL DECK (C.H.C.M.) @ 4'-0" CTS. WITH A HEIGHT TO SUPPORT THE BOTTOM MAT OF "A" BARS A CLEAR DISTANCE OF 2½" ABOVE THE TOP OF THE REMOVABLE FORM.

A FULL DEPTH SAW CUT SHALL BE MADE AND EXISTING CONCRETE REMOVED IN ACCORDANCE WITH PLAN DETAILS.

METAL STAY-IN-PLACE FORMS SHALL NOT BE WELDED TO GIRDER FLANGES IN THE ZONES REQUIRING CHARPY V-NOTCH TEST. SEE STRUCTURAL STEEL DETAIL SHEETS.

#5 "G" BARS MAY BE SHIFTED SLIGHTLY, AS NECESSARY, TO CLEAR REINFORCING STEEL AND STIRRUPS.

PREVIOUSLY CAST CONCRETE IN EACH SPAN SHALL HAVE ATTAINED A MINIMUM COMPRESSIVE STRENGTH OF 3000 PSI BEFORE ADDITIONAL CONCRETE IS CAST IN THAT SPAN.

THE CONTRACTOR MAY, WHEN NECESSARY, PROPOSE A SCHEME FOR AVOIDING INTERFERENCE BETWEEN STAY-IN-PLACE METAL FORM SUPPORTS OR FORMS AND BEAM/GIRDER STIFFENERS OR CONNECTOR PLATES. THE PROPOSAL SHALL BE INDICATED, AS APPROPRIATE, ON EITHER THE STEEL WORKING DRAWINGS OR THE STAY-IN-PLACE METAL FORM WORKING DRAWINGS.

CONCRETE BARRIER RAIL IN EACH SPAN SHALL NOT BE CAST UNTIL ALL SLAB CONCRETE IN THAT SPAN HAS BEEN CAST AND HAS REACHED A MINIMUM COMPRESSIVE STRENGTH OF 3,000 PSI.

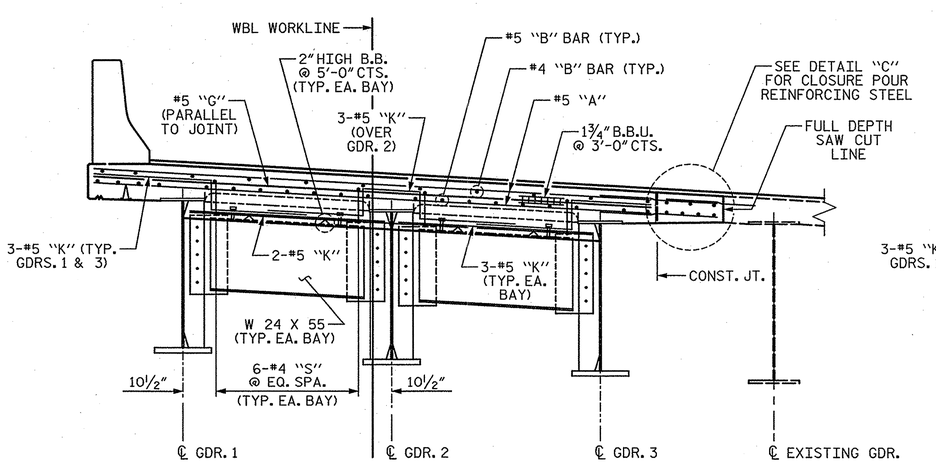

TYPICAL SECTION @ END BENT DIAPHRAGMS

(BRIDGE MOUNTED CHAIN LINK FENCE NOT SHOWN IN TYPICAL SECTION)

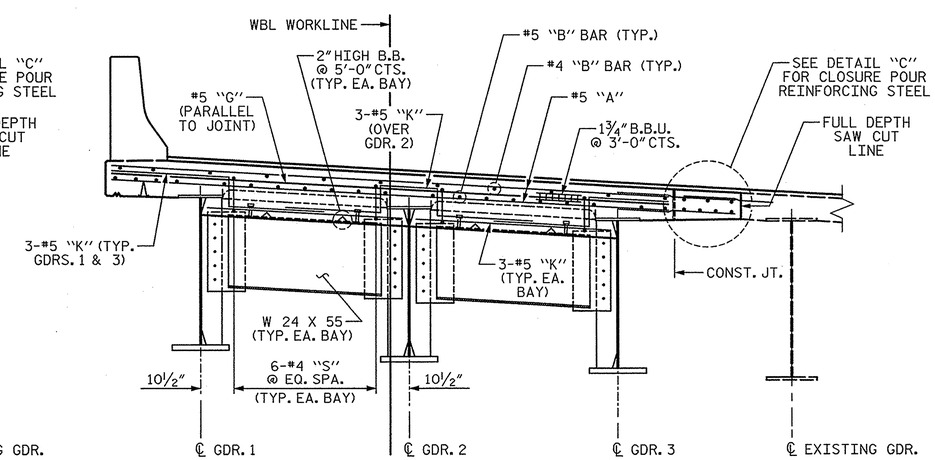

TYPICAL SECTION @ BENT DIAPHRAGMS

(BRIDGE MOUNTED CHAIN LINK FENCE NOT SHOWN IN TYPICAL SECTION)

PROJECT NO. U-0071

DURHAM COUNTY

STATION: 24+70.18 -DFWB-

SHEET 2 OF 2

STATE OF NORTH CAROLINA
DEPARTMENT OF TRANSPORTATION
RALEIGH

SUPERSTRUCTURE

TYPICAL SECTION

REVISIONS								SHEET NO.
NO.	BY:	DATE:	NO.	BY:	DATE:			S-6(a)
1			3					TOTAL SHEETS
2			4					671

STR. #14

PLANS PREPARED BY:

SIMPSON ENGINEERS & ASSOCIATES

5640 Dillard Drive
Suite 200
Cary, NC 27518
(919) 852-0468
(919) 852-0598 (Fax)
www.simpsonengr.com

LICENSURE NO. C-2521

NORTH CAROLINA PROFESSIONAL SEAL 18056 ENGINEER JOHN A. BATTS
1/16/2014

DRAWN BY:	T. BANKOVICH	DATE:	12-13
CHECKED BY:	B.S. COX	DATE:	12-13
DESIGN ENGINEER OF RECORD:	J.A. BATTS	DATE:	12-13

1/14/2014 9:35:10 AM G:\Projects\2012\U-0071 (Durham Co.)\Structures\Drawings\Final\Bridge 189\Widening\U-0071_Br 189_sd_ts.dgn

NOTES:

* RADIAL DIMENSION

FOR SECTION A-A, SEE "TYPICAL SECTION" SHEET 1 OF 2.

FOR REINFORCING STEEL AND DETAILS OF BARRIER RAIL, SEE "CONCRETE BARRIER RAIL DETAILS" SHEET.

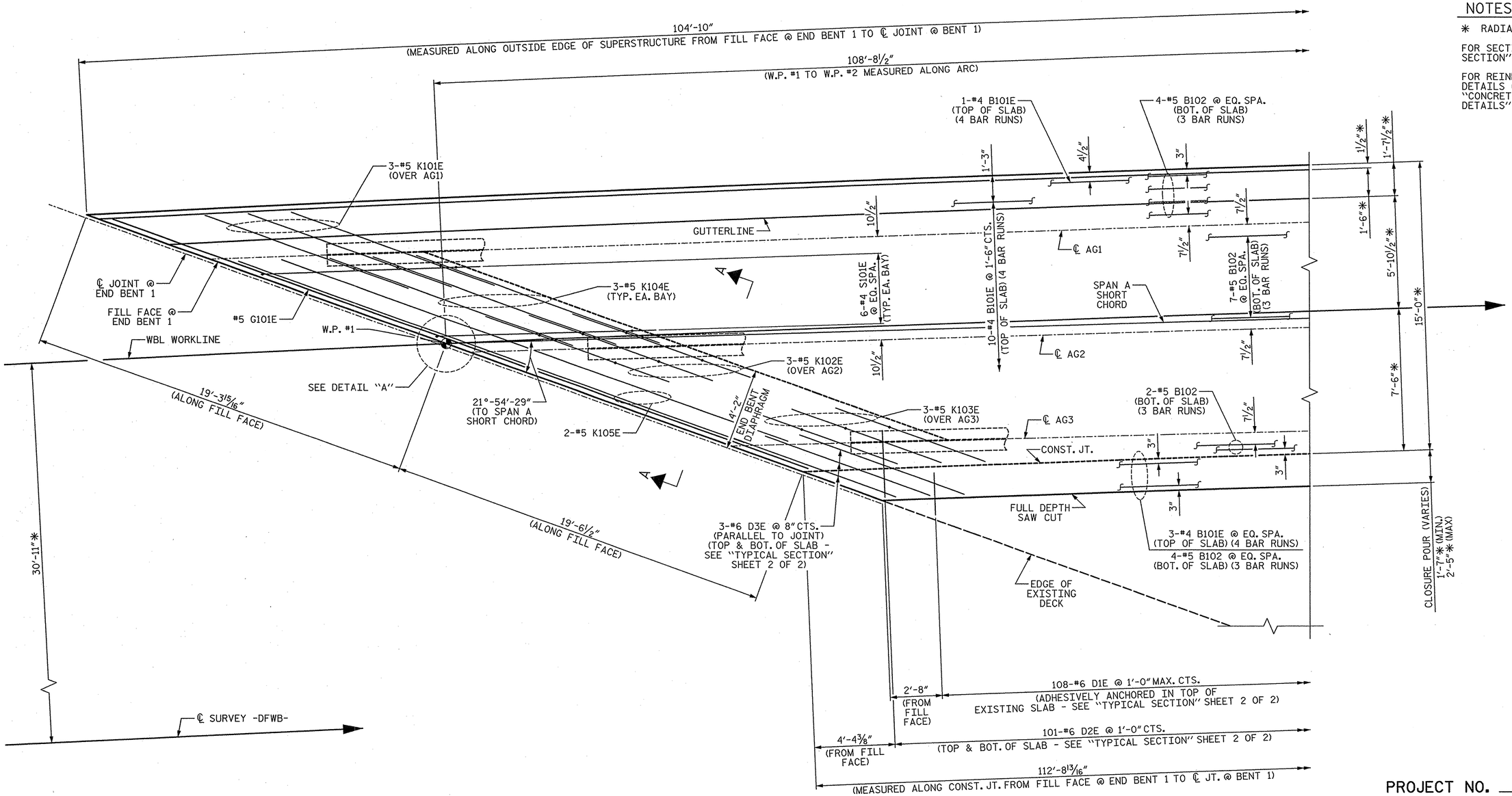

PARTIAL PLAN OF SPAN A

(FOR "A" BARS, SEE ""A" BAR LAYOUT" SHEETS.)

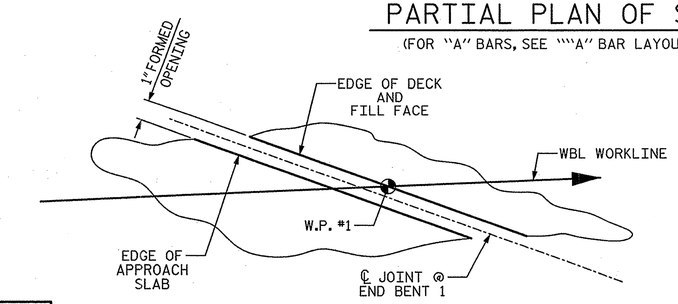

DETAIL "A"

PROJECT NO. U-0071

DURHAM COUNTY

STATION: 24+70.18 -DFWB-

SHEET 1 OF 6

STATE OF NORTH CAROLINA
DEPARTMENT OF TRANSPORTATION
RALEIGH

SUPERSTRUCTURE

PLAN OF SPAN

PLANS PREPARED BY:

SIMPSON ENGINEERS & ASSOCIATES
5640 Dillard Drive
Suite 200
Cary, NC 27518
(919) 852-0468
(919) 852-0598 (Fax)
www.simpsonengr.com
LICENSURE NO. C-2521

NORTH CAROLINA PROFESSIONAL SEAL 18056 ENGINEER JOHN A. BATTS
1/16/2014

REVISIONS						SHEET NO.
NO.	BY:	DATE:	NO.	BY:	DATE:	S-620
1			3			TOTAL SHEETS
2			4			671

STR. #14

DRAWN BY: T. BANKOVICH DATE: 12-13
CHECKED BY: B.S. COX DATE: 12-13
DESIGN ENGINEER OF RECORD: J.A. BATTS DATE: 12-13

1/14/2014 9:35:10 AM G:\Projects\2012\U-0071 (Durham Co.)\Structures\Drawings\Final\Bridge 189\Widening\U-0071_Br 189_sd_ps.dgn

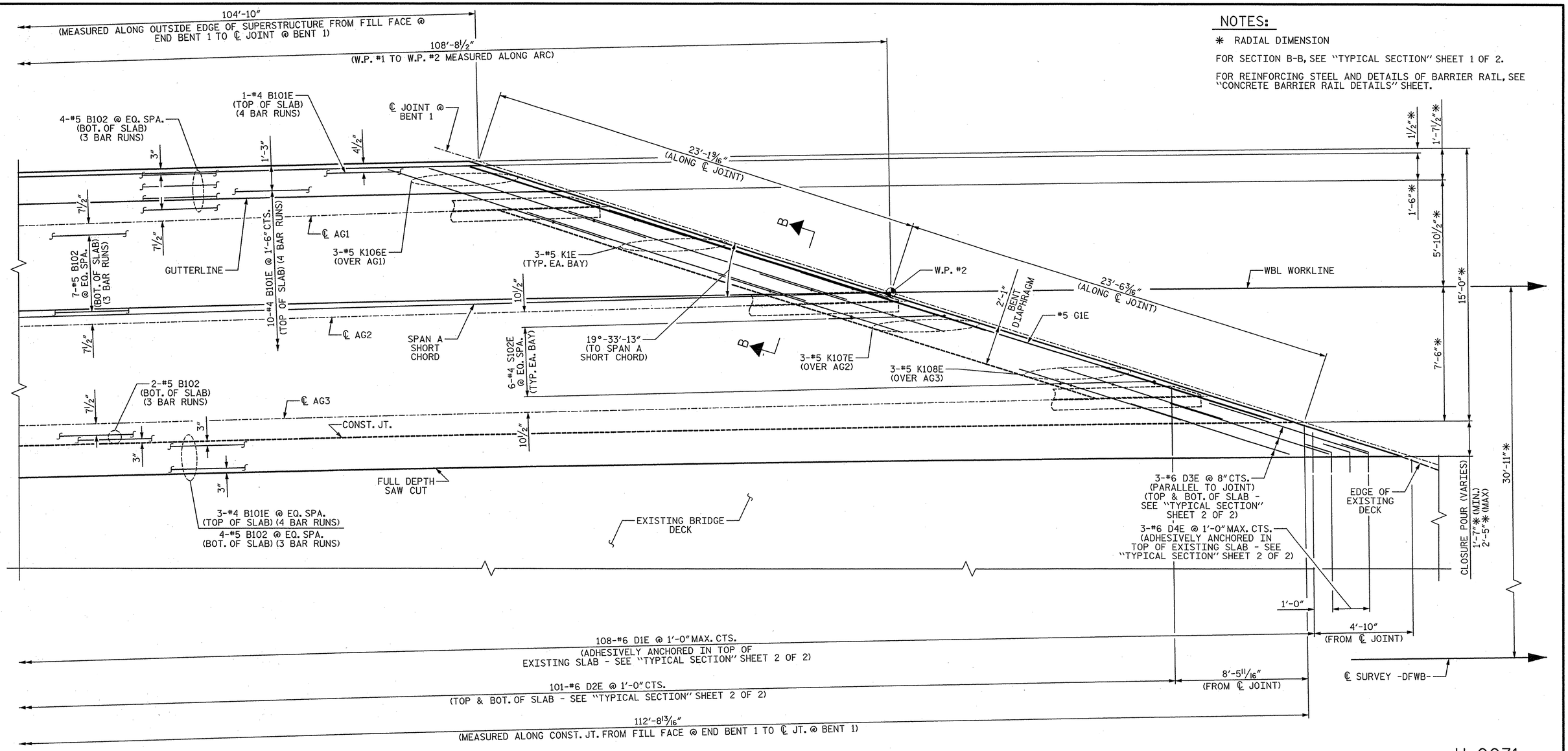

NOTES:

* RADIAL DIMENSION

FOR SECTION B-B, SEE "TYPICAL SECTION" SHEET 1 OF 2.

FOR REINFORCING STEEL AND DETAILS OF BARRIER RAIL, SEE "CONCRETE BARRIER RAIL DETAILS" SHEET.

PARTIAL PLAN OF SPAN A

(FOR "A" BARS, SEE "A" BAR LAYOUT" SHEETS.)

PROJECT NO. U-0071

DURHAM COUNTY

STATION: 24+70.18 -DFWB-

SHEET 2 OF 6

STATE OF NORTH CAROLINA
DEPARTMENT OF TRANSPORTATION
RALEIGH
SUPERSTRUCTURE

PLAN OF SPAN

PLANS PREPARED BY:

SIMPSON ENGINEERS & ASSOCIATES
5640 Dillard Drive
Suite 200
Cary, NC 27518
(919) 852-0468
(919) 852-0598 (Fax)
www.simpsonengr.com
LICENSURE NO. C-2521

NORTH CAROLINA PROFESSIONAL SEAL 18056 ENGINEER JOHN A. BATTS
1/16/2014

REVISIONS						SHEET NO.
NO.	BY:	DATE:	NO.	BY:	DATE:	S-621
1			3			TOTAL SHEETS
2			4			671

STR. #14

DRAWN BY:	T. BANKOVICH	DATE:	12-13
CHECKED BY:	B.S. COX	DATE:	12-13
DESIGN ENGINEER OF RECORD:	J.A. BATTS	DATE:	12-13

1/14/2014 9:35:10 AM G:\Projects\2012\U-0071 (Durham Co.)\Structures\Drawings\Final\Bridge 189\Widening\U-0071_Br 189_sd_ps.dgn

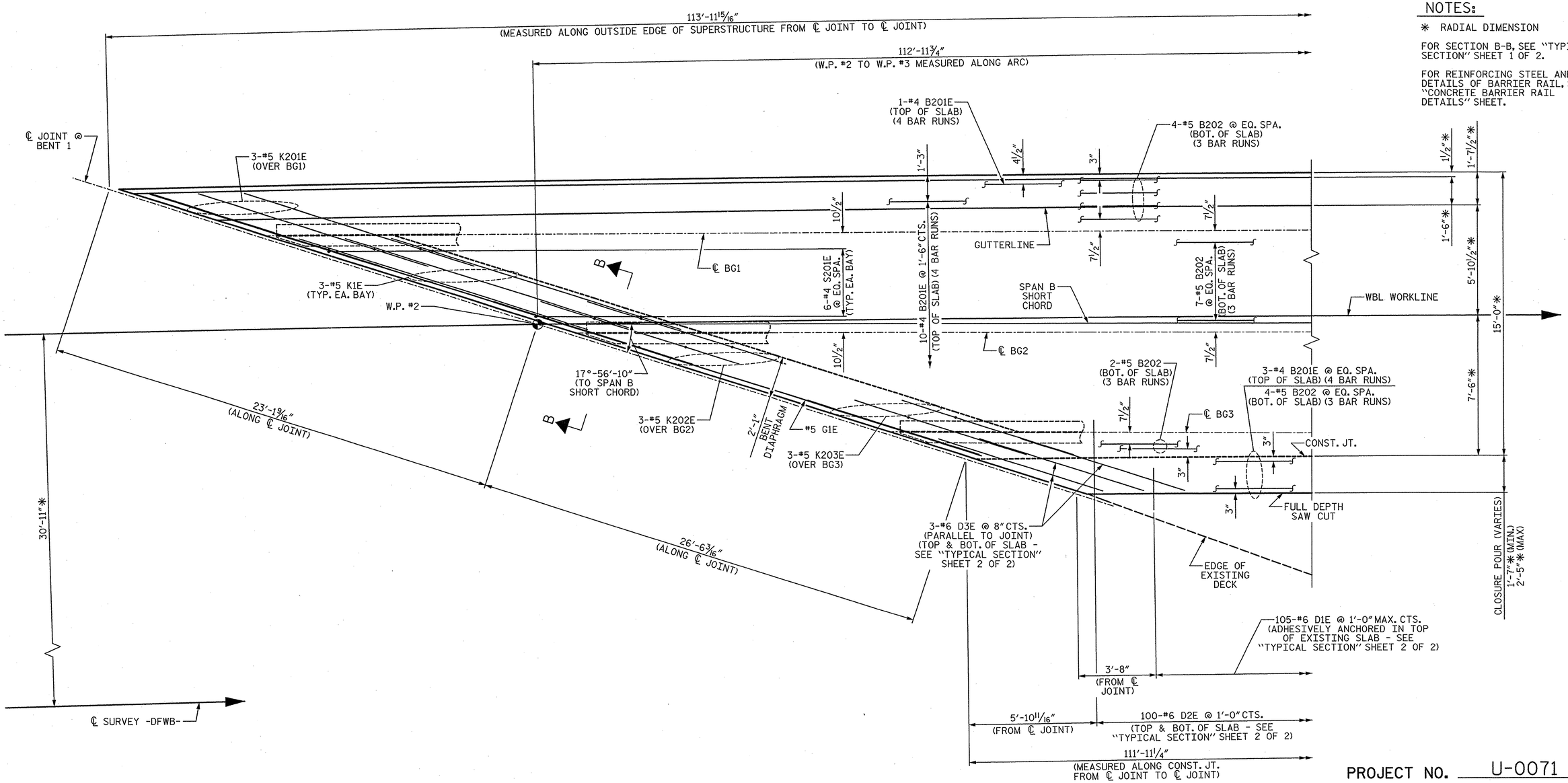

NOTES:

* RADIAL DIMENSION

FOR SECTION B-B, SEE "TYPICAL SECTION" SHEET 1 OF 2.

FOR REINFORCING STEEL AND DETAILS OF BARRIER RAIL, SEE "CONCRETE BARRIER RAIL DETAILS" SHEET.

PARTIAL PLAN OF SPAN B

(FOR "A" BARS, SEE "A" BAR LAYOUT" SHEETS.)

PROJECT NO. U-0071

DURHAM COUNTY

STATION: 24+70.18 -DFWB-

SHEET 3 OF 6

STATE OF NORTH CAROLINA
DEPARTMENT OF TRANSPORTATION
RALEIGH

SUPERSTRUCTURE

PLAN OF SPAN

PLANS PREPARED BY:

SIMPSON ENGINEERS & ASSOCIATES
5640 Dillard Drive
Suite 200
Cary, NC 27518
(919) 852-0468
(919) 852-0598 (Fax)
www.simpsonengr.com
LICENSURE NO. C-2521

NORTH CAROLINA PROFESSIONAL SEAL 18056 ENGINEER JOHN A. BATTS
1/14/2014

REVISIONS						SHEET NO.
NO.	BY:	DATE:	NO.	BY:	DATE:	S-622
1			3			TOTAL SHEETS
2			4			67

DRAWN BY: T. BANKOVICH DATE: 12-13
CHECKED BY: B.S. COX DATE: 12-13
DESIGN ENGINEER OF RECORD: J.A. BATTS DATE: 12-13

STR. #14

1/14/2014 9:35:10 AM G:\Projects\2012\U-0071 (Durham Co.)\Structures\Drawings\Final\Bridge 189\Widening\U-0071_Br 189_sd_ps.dgn

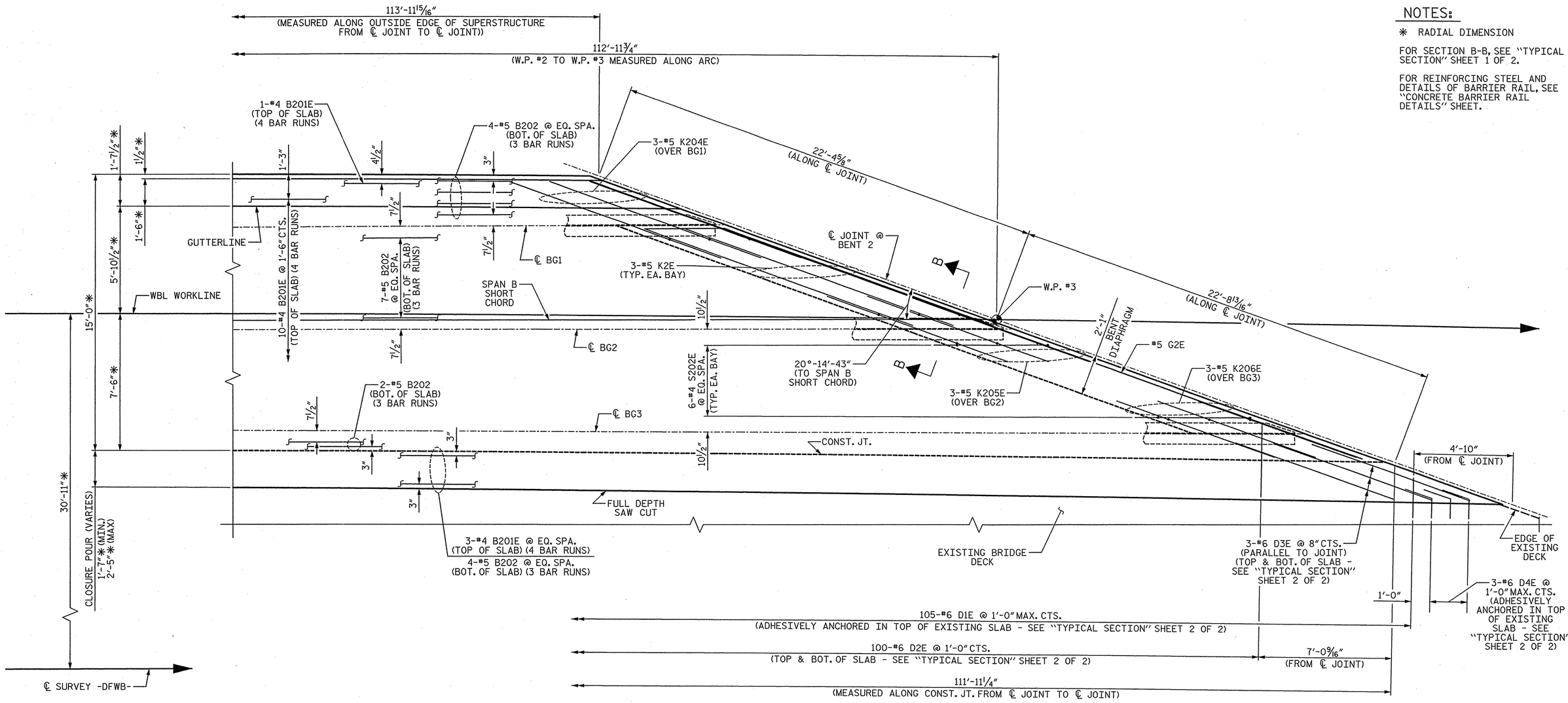

NOTES:

* RADIAL DIMENSION

FOR SECTION B-B, SEE "TYPICAL SECTION" SHEET 1 OF 2.

FOR REINFORCING STEEL AND DETAILS OF BARRIER RAIL, SEE "CONCRETE BARRIER RAIL DETAILS" SHEET.

PARTIAL PLAN OF SPAN B

(FOR "A" BARS, SEE "A" BAR LAYOUT" SHEETS.)

PROJECT NO. U-0071

DURHAM COUNTY

STATION: 24+70.18 -DFWB-

SHEET 4 OF 6

STATE OF NORTH CAROLINA
DEPARTMENT OF TRANSPORTATION
RALEIGH

SUPERSTRUCTURE

PLAN OF SPAN

PLANS PREPARED BY:

SIMPSON ENGINEERS & ASSOCIATES
5640 Dillard Drive
Suite 200
Cary, NC 27518
(919) 852-0468
(919) 852-0598 (Fax)
www.simpsonengr.com

LICENSURE NO. C-2521

NORTH CAROLINA PROFESSIONAL SEAL 18056 ENGINEER JOHN A. BATTS
1/16/2014

REVISIONS							SHEET NO.
NO.	BY:	DATE:	NO.	BY:	DATE:		S-623
1			3				TOTAL SHEETS
2			4				671

DRAWN BY: T. BANKOVICH DATE: 12-13
CHECKED BY: B.S. COX DATE: 12-13
DESIGN ENGINEER OF RECORD: J.A. BATTS DATE: 12-13

STR. #14

1/14/2014 9:35:11 AM G:\Projects\2012\U-0071 (Durham Co.)\Structures\Drawings\Final\Bridge 189\Widening\U-0071_Br 189_sd_ps.dgn

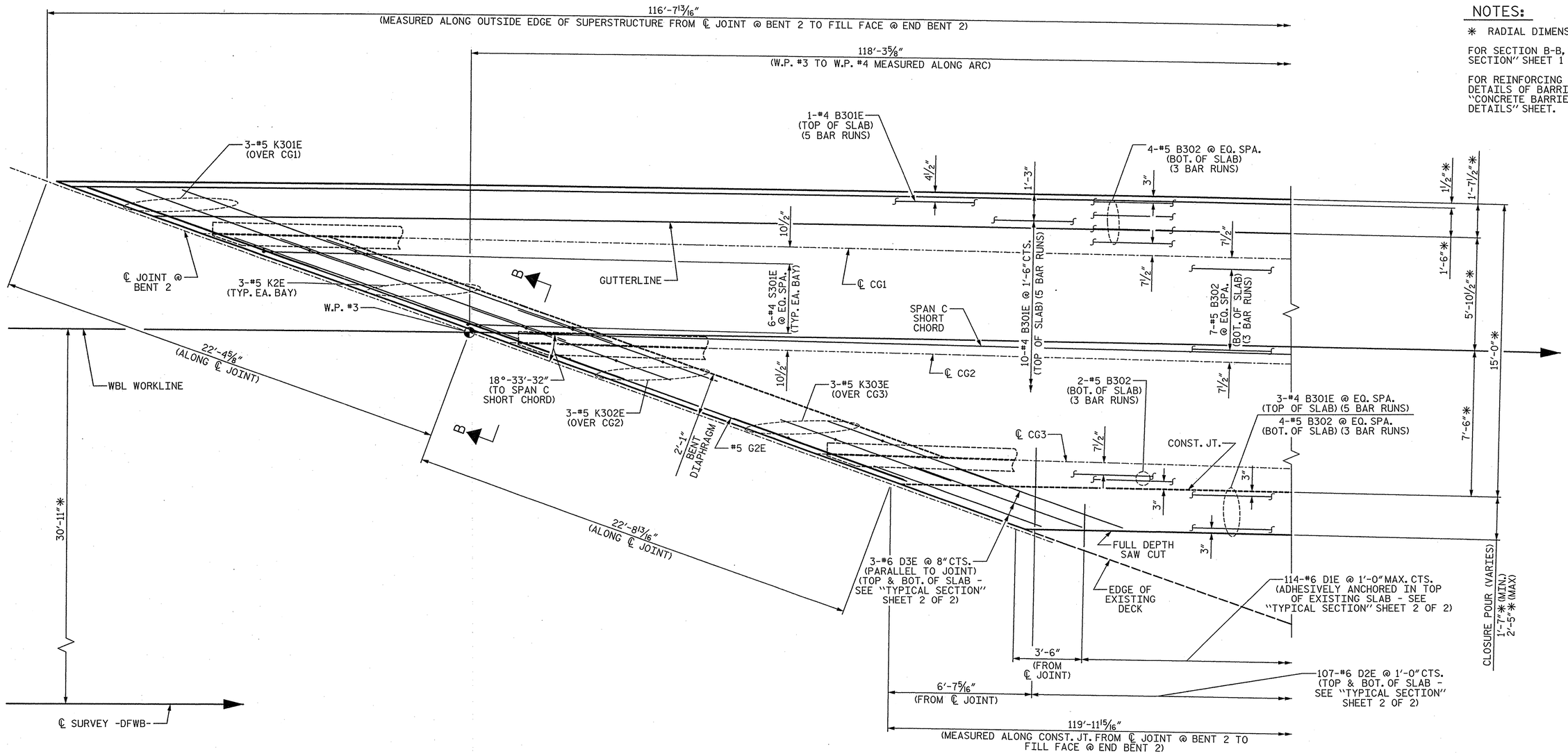

NOTES:

* RADIAL DIMENSION

FOR SECTION B-B, SEE "TYPICAL SECTION" SHEET 1 OF 2.

FOR REINFORCING STEEL AND DETAILS OF BARRIER RAIL, SEE "CONCRETE BARRIER RAIL DETAILS" SHEET.

PARTIAL PLAN OF SPAN C

(FOR "A" BARS, SEE ""A" BAR LAYOUT" SHEETS.)

PROJECT NO. U-0071

DURHAM COUNTY

STATION: 24+70.18 -DFWB-

SHEET 5 OF 6

STATE OF NORTH CAROLINA
DEPARTMENT OF TRANSPORTATION
RALEIGH

SUPERSTRUCTURE

PLAN OF SPAN

PLANS PREPARED BY:

SIMPSON ENGINEERS & ASSOCIATES
5640 Dillard Drive
Suite 200
Cary, NC 27518
(919) 852-0468
(919) 852-0598 (Fax)
www.simpsonengr.com
LICENSURE NO. C-2521

NORTH CAROLINA PROFESSIONAL SEAL 18056 ENGINEER JOHN A. BATTS
1/6/2014

REVISIONS						SHEET NO.
NO.	BY:	DATE:	NO.	BY:	DATE:	S-624
1			3			TOTAL SHEETS
2			4			671

STR. #14

DRAWN BY: T. BANKOVICH DATE: 12-13
CHECKED BY: B.S. COX DATE: 12-13
DESIGN ENGINEER OF RECORD: J.A. BATTS DATE: 12-13

1/14/2014 9:35:11 AM G:\Projects\2012\U-0071 (Durham Co.)\Structures\Drawings\Final\Bridge 189\Widening\U-0071_Br 189_sd_ps.dgn

NOTES:

* RADIAL DIMENSION

FOR SECTION A-A, SEE "TYPICAL SECTION" SHEET 1 OF 2.

FOR REINFORCING STEEL AND DETAILS OF BARRIER RAIL, SEE "CONCRETE BARRIER RAIL DETAILS" SHEET.

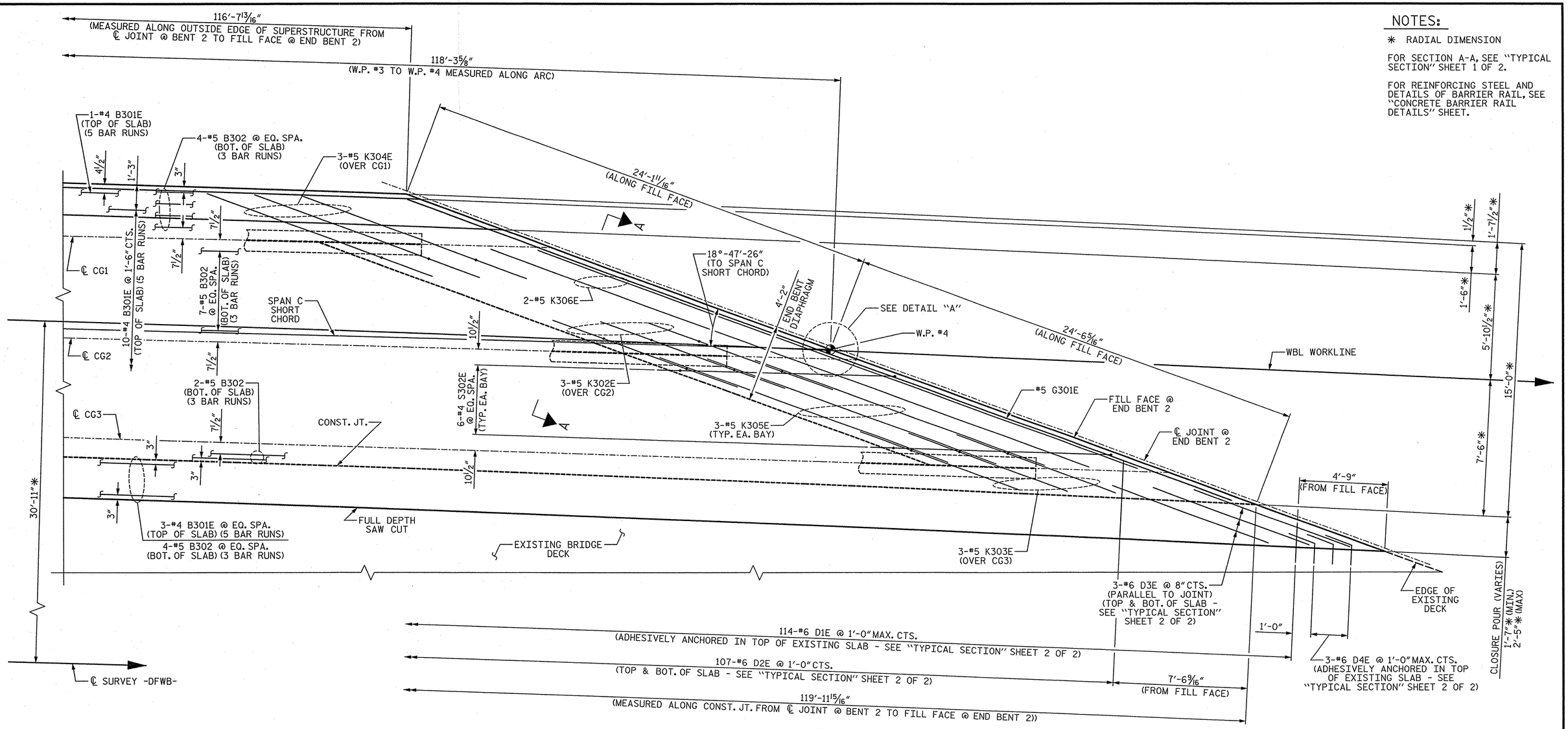

PARTIAL PLAN OF SPAN C

(FOR "A" BARS, SEE ""A" BAR LAYOUT" SHEETS.)

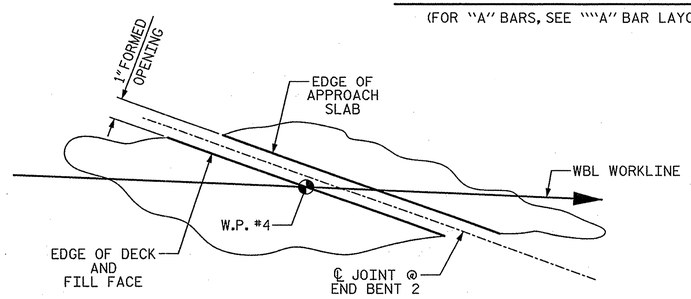

DETAIL "A"

PROJECT NO. U-0071

DURHAM COUNTY

STATION: 24+70.18 -DFWB-

SHEET 6 OF 6

STATE OF NORTH CAROLINA
DEPARTMENT OF TRANSPORTATION
RALEIGH

SUPERSTRUCTURE

PLAN OF SPAN

REVISIONS						SHEET NO.
NO.	BY:	DATE:	NO.	BY:	DATE:	S-625
1			3			TOTAL SHEETS
2			4			671

STR. #14

PLANS PREPARED BY:

SIMPSON ENGINEERS & ASSOCIATES
5640 Dillard Drive
Suite 200
Cary, NC 27518
(919) 852-0468
(919) 852-0598 (Fax)
www.simpsonengr.com
LICENSURE NO. C-2521

NORTH CAROLINA PROFESSIONAL SEAL 18056 ENGINEER JOHN A. BATTS
1/10/2014

DRAWN BY:	T. BANKOVICH	DATE:	12-13
CHECKED BY:	B.S. COX	DATE:	12-13
DESIGN ENGINEER OF RECORD:	J.A. BATTS	DATE:	12-13

1/14/2014 9:35:11 AM G:\Projects\2012\U-0071 (Durham Co.)\Structures\Drawings\Final\Bridge 189\Widening\U-0071_Br 189_sd_ps.dgn

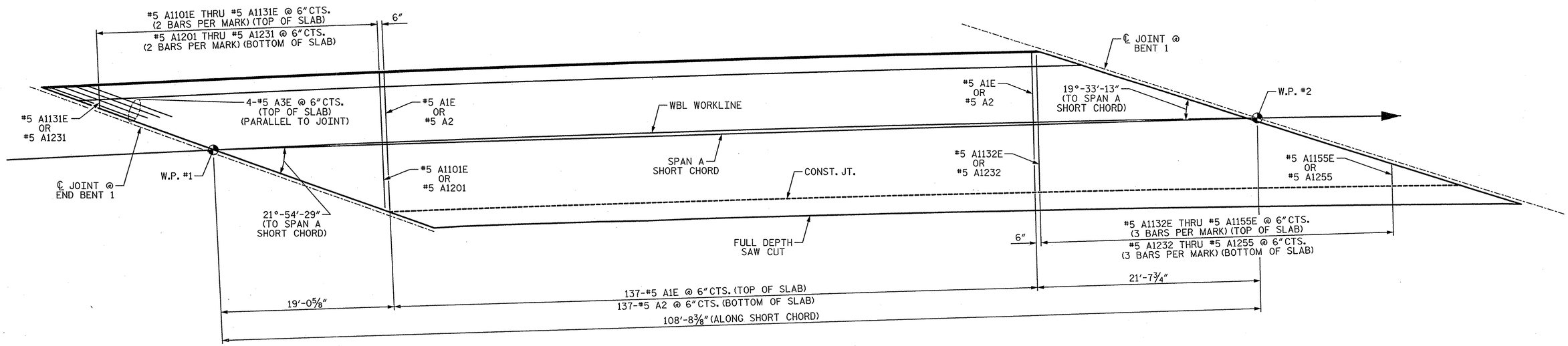

SPAN A

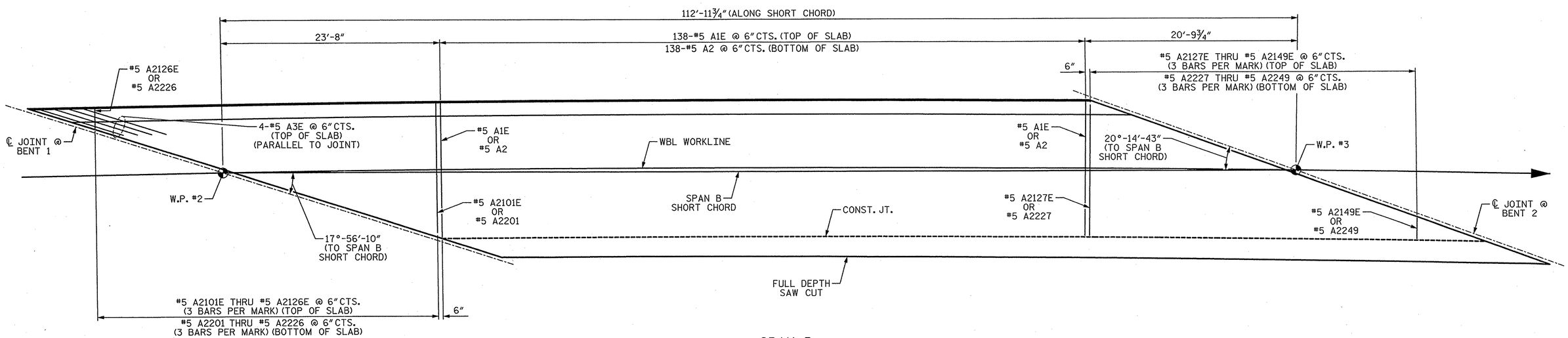

SPAN B

"A" BAR LAYOUT

("A" BARS ARE MEASURED ALONG SHORT CHORD AND PLACED PERPENDICULAR TO SHORT CHORD.)

PROJECT NO. U-0071
DURHAM COUNTY
STATION: 24+70.18 -DFWB-

SHEET 1 OF 2

STATE OF NORTH CAROLINA
DEPARTMENT OF TRANSPORTATION
RALEIGH
SUPERSTRUCTURE

"A" BAR LAYOUT

PLANS PREPARED BY:
SIMPSON ENGINEERS & ASSOCIATES
5640 Dillard Drive
Suite 200
Cary, NC 27518
(919) 852-0468
(919) 852-0598 (Fax)
www.simpsonengr.com
LICENSURE NO. C-2521

NORTH CAROLINA PROFESSIONAL SEAL 18056 ENGINEER JOHN A. BATTS
1/14/2014

REVISIONS						SHEET NO.
NO.	BY:	DATE:	NO.	BY:	DATE:	S-626
1			3			TOTAL SHEETS
2			4			671

STR. #14

DRAWN BY:	T. BANKOVICH	DATE:	12-13
CHECKED BY:	B.S. COX	DATE:	12-13
DESIGN ENGINEER OF RECORD:	J.A. BATTS	DATE:	12-13

1/14/2014 9:35:11 AM G:\Projects\2012\U-0071 (Durham Co.)\Structures\Drawings\Final\Bridge 189\Widening\U-0071_Br 189_sd_ps.dgn

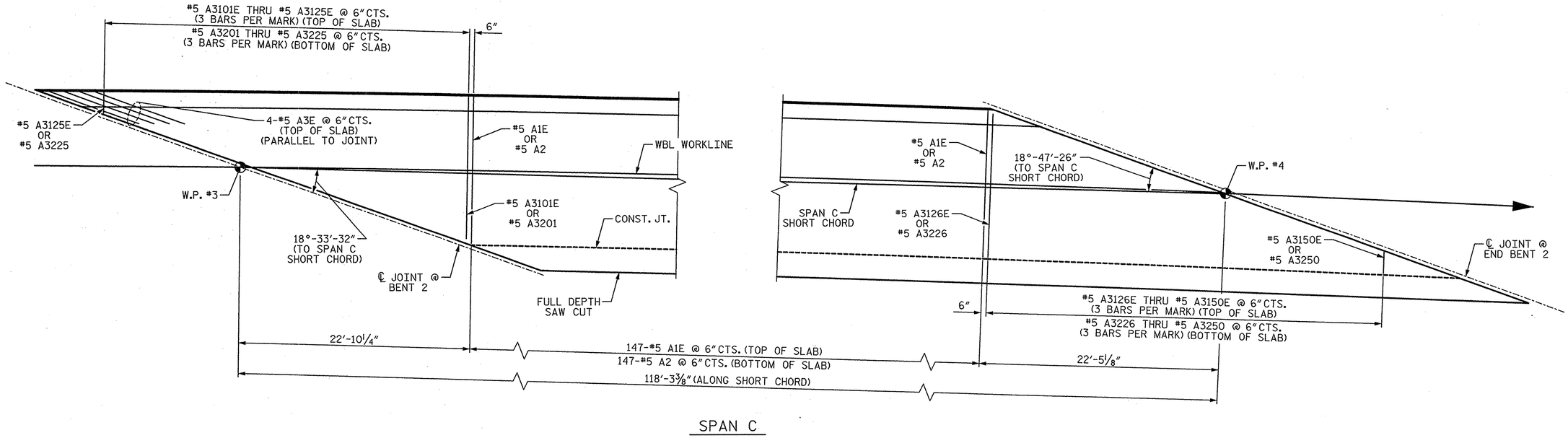

SPAN C

"A" BAR LAYOUT

("A" BARS ARE MEASURED ALONG SHORT CHORD AND PLACED PERPENDICULAR TO SHORT CHORD.)

PROJECT NO. U-0071

DURHAM COUNTY

STATION: 24+70.18 -DFWB-

SHEET 2 OF 2

STATE OF NORTH CAROLINA
DEPARTMENT OF TRANSPORTATION
RALEIGH
SUPERSTRUCTURE

"A" BAR LAYOUT

PLANS PREPARED BY:

SIMPSON ENGINEERS & ASSOCIATES
5640 Dillard Drive
Suite 200
Cary, NC 27518
(919) 852-0468
(919) 852-0598 (Fax)
www.simpsonengr.com
LICENSURE NO. C-2521

NORTH CAROLINA PROFESSIONAL SEAL 18056 ENGINEER JOHN A. BATTS
1/10/2014

REVISIONS						SHEET NO.
NO.	BY:	DATE:	NO.	BY:	DATE:	S-627
1			3			TOTAL SHEETS
2			4			671

STR. #14

DRAWN BY:	T. BANKOVICH	DATE:	12-13
CHECKED BY:	B.S. COX	DATE:	12-13
DESIGN ENGINEER OF RECORD:	J.A. BATTS	DATE:	12-13

1/14/2014 9:35:11 AM G:\Projects\2012\U-0071 (Durham Co.)\Structures\Drawings\Final\Bridge 189\Widening\U-0071_Br 189_sd_ps.dgn

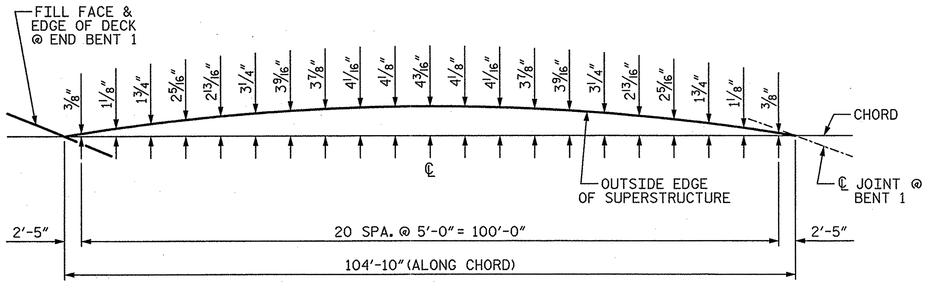

SPAN A ARC OFFSETS (LT SIDE)

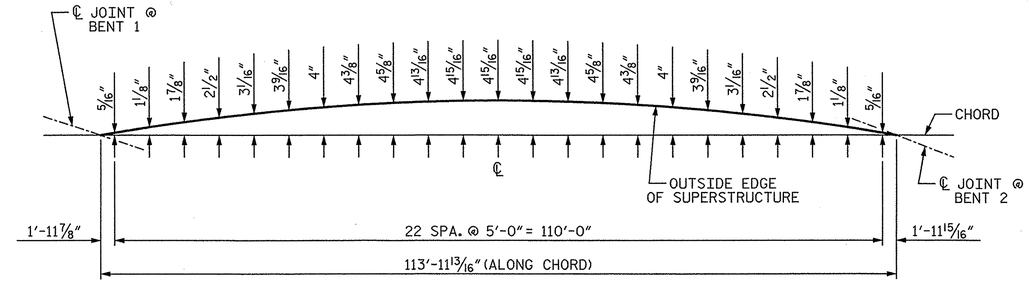

SPAN B ARC OFFSETS (LT SIDE)

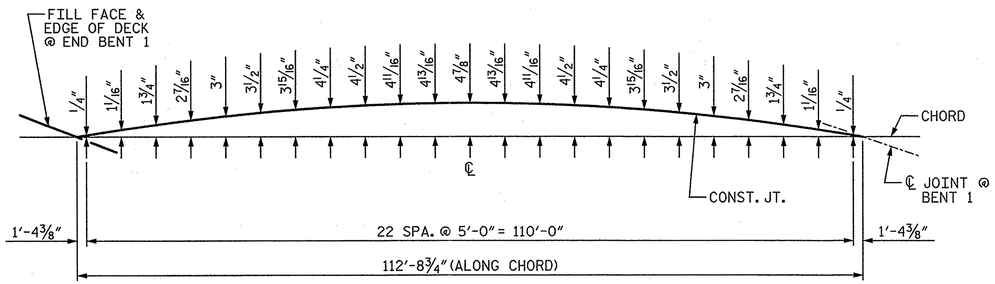

SPAN A ARC OFFSETS (CONST. JT.)

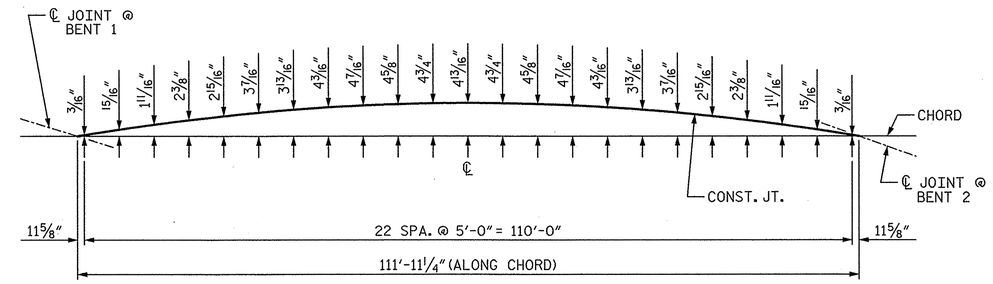

SPAN B ARC OFFSETS (CONST. JT.)

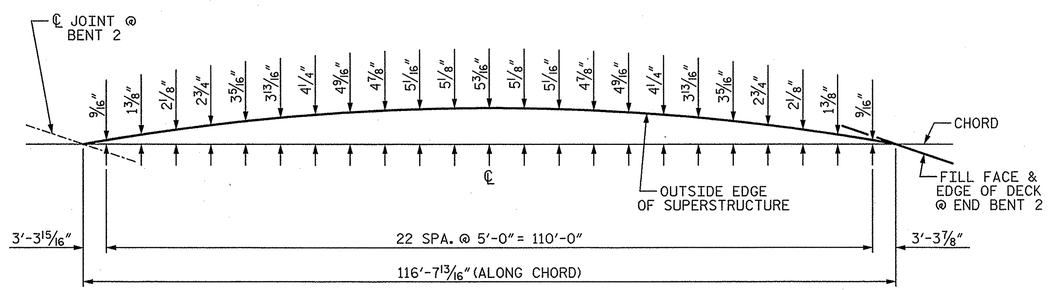

SPAN C ARC OFFSETS (LT SIDE)

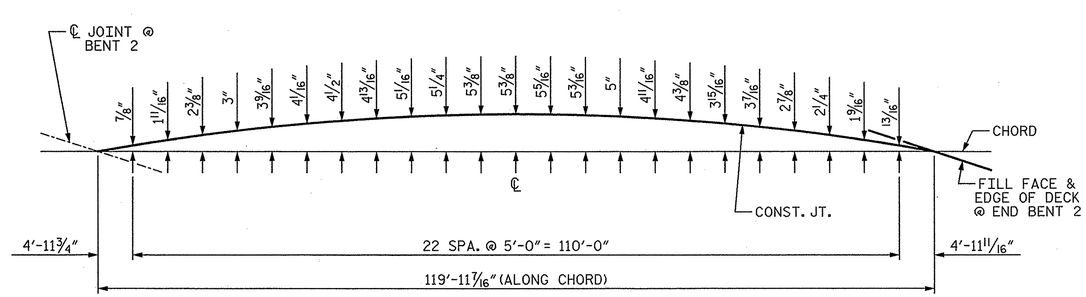

SPAN C ARC OFFSETS (CONST. JT.)

PROJECT NO. U-0071
DURHAM COUNTY
STATION: 24+70.18 -DFWB-

STATE OF NORTH CAROLINA
DEPARTMENT OF TRANSPORTATION
RALEIGH
SUPERSTRUCTURE

ARC OFFSETS

PLANS PREPARED BY:
SIMPSON ENGINEERS & ASSOCIATES
5640 Dillard Drive
Suite 200
Cary, NC 27518
(919) 852-0468
(919) 852-0598 (Fax)
www.simpsonengr.com
LICENSURE NO. C-2521

NORTH CAROLINA PROFESSIONAL SEAL 18056 ENGINEER JOHN A. BATTS
1/16/2014

REVISIONS						SHEET NO.
NO.	BY:	DATE:	NO.	BY:	DATE:	S-C28
1			3			TOTAL SHEETS
2			4			671

STR. #14

DRAWN BY: T. BANKOVICH DATE: 12-13
CHECKED BY: B.S. COX DATE: 12-13
DESIGN ENGINEER OF RECORD: J.A. BATTS DATE: 12-13

1/14/2014 9:35:11 AM G:\Projects\2012\U-0071 (Durham Co.)\Structures\Drawings\Final\Bridge 189\Widening\U-0071_Br 189_sd_arc.dgn

NOTES:

FOR DIAPHRAGM DETAILS, SEE "STRUCTURAL STEEL DETAILS" SHEETS.

FOR ELASTOMERIC BEARINGS, SEE "ELASTOMERIC BEARING DETAILS" SHEET.

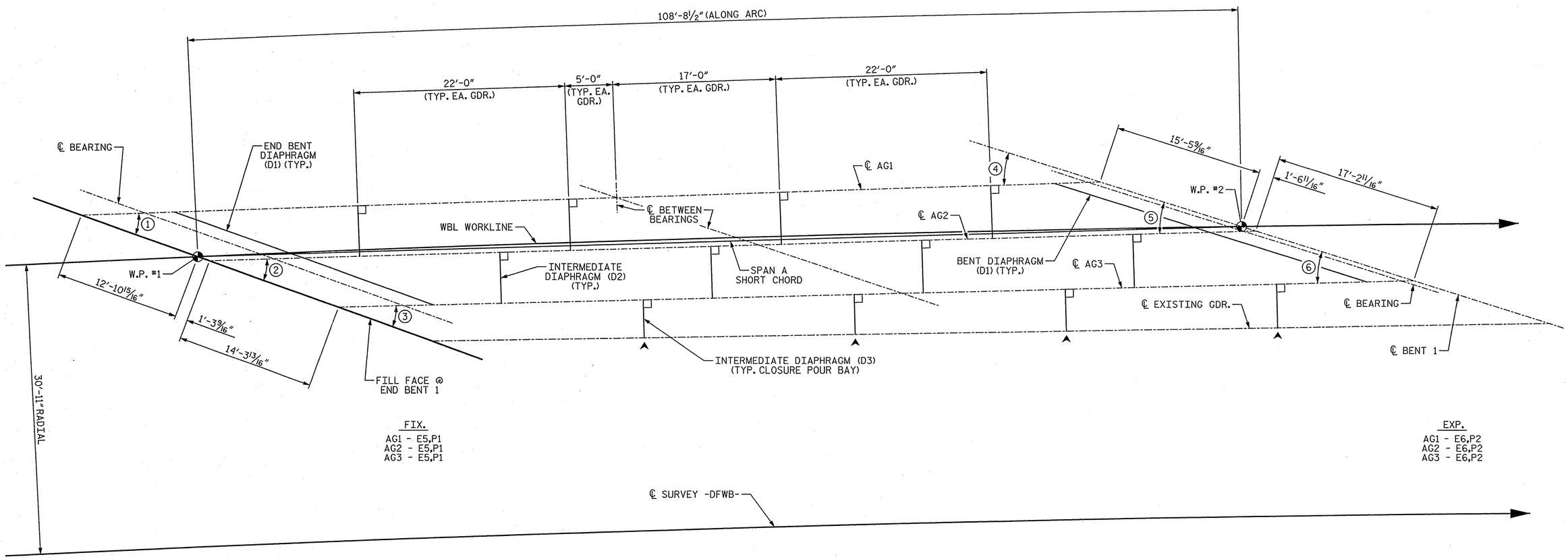

FRAMING PLAN - SPAN A

▲ CONNECTOR PLATES ON EXISTING EXTERIOR GIRDERS FOR INTERMEDIATE DIAPHRAGMS (D3) SHALL BE LOCATED BY THE CONTRACTOR AND CONTRACTOR IS RESPONSIBLE FOR PROVIDING ACCURATE DIAPHRAGM LENGTHS FOR INTERMEDIATE DIAPHRAGM (D3) IN CLOSURE BAY.

ANGLES

1. 22°-06'-06"
2. 21°-53'-19"
3. 21°-40'-22"
4. 19°-44'-50"
5. 19°-32'-03"
6. 19°-19'-06"

PROJECT NO. U-0071
DURHAM COUNTY
STATION: 24+70.18 -DFWB-

SHEET 1 OF 3

STATE OF NORTH CAROLINA
DEPARTMENT OF TRANSPORTATION
RALEIGH
SUPERSTRUCTURE

FRAMING PLAN

PLANS PREPARED BY:
SIMPSON ENGINEERS & ASSOCIATES
5640 Dillard Drive
Suite 200
Cary, NC 27518
(919) 852-0468
(919) 852-0598 (Fax)
www.simpsonengr.com
LICENSURE NO. C-2521

NORTH CAROLINA PROFESSIONAL SEAL 18056 ENGINEER JOHN A. BATTS
1/16/2014

REVISIONS							SHEET NO.
NO.	BY:	DATE:	NO.	BY:	DATE:		S-629
1			3				TOTAL SHEETS
2			4				671

DRAWN BY: T. BANKOVICH DATE: 12-13
CHECKED BY: B.S. COX DATE: 12-13
DESIGN ENGINEER OF RECORD: J.A. BATTS DATE: 12-13

STR. #14

1/14/2014 9:35:12 AM G:\Projects\2012\U-0071 (Durham Co.)\Structures\Drawings\Final\Bridge 189\Widening\U-0071_Br 189_sd_fp.dgn

NOTES:

FOR DIAPHRAGM DETAILS, SEE "STRUCTURAL STEEL DETAILS" SHEETS.

FOR ELASTOMERIC BEARINGS, SEE "ELASTOMERIC BEARING DETAILS" SHEET.

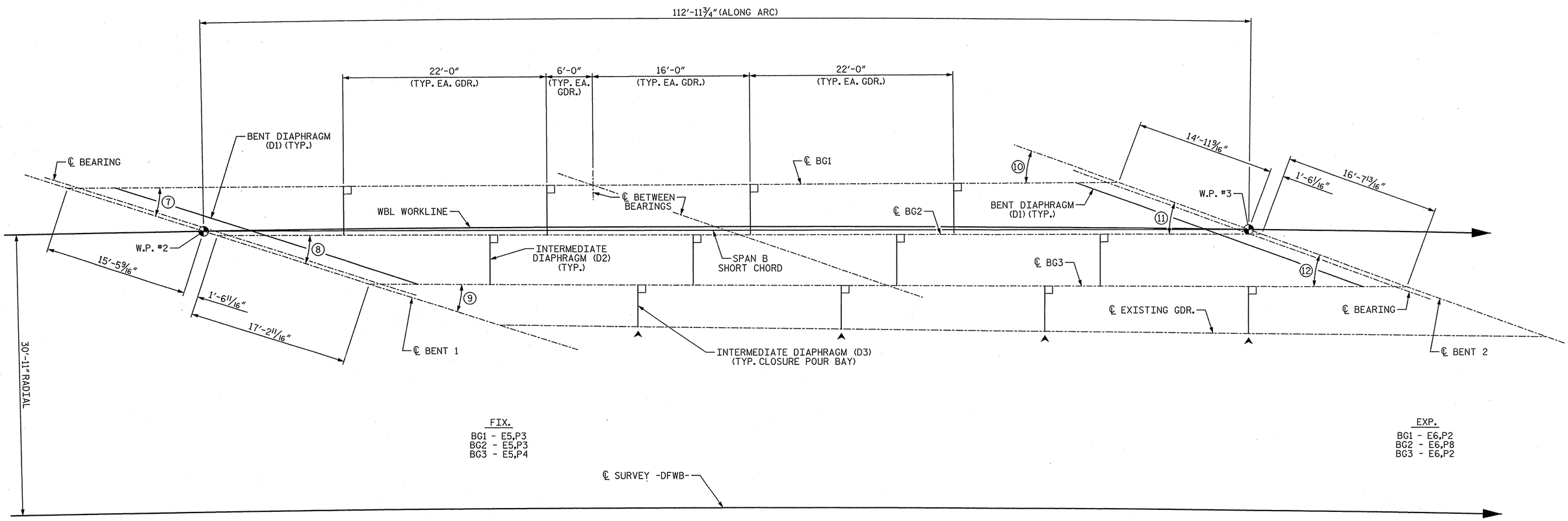

FRAMING PLAN - SPAN B

▲ CONNECTOR PLATES ON EXISTING EXTERIOR GIRDERS FOR INTERMEDIATE DIAPHRAGMS (D3) SHALL BE LOCATED BY THE CONTRACTOR AND CONTRACTOR IS RESPONSIBLE FOR PROVIDING ACCURATE DIAPHRAGM LENGTHS FOR INTERMEDIATE DIAPHRAGM (D3) IN CLOSURE BAY.

ANGLES

7	18°-08'-44"
8	17°-54'-54"
9	17°-40'-51"
10	20°-27'-17"
11	20°-13'-27"
12	19°-59'-25"

PROJECT NO. U-0071
DURHAM COUNTY
STATION: 24+70.18 -DFWB-

SHEET 2 OF 3

STATE OF NORTH CAROLINA
DEPARTMENT OF TRANSPORTATION
RALEIGH
SUPERSTRUCTURE

FRAMING PLAN

PLANS PREPARED BY:
SIMPSON ENGINEERS & ASSOCIATES
5640 Dillard Drive
Suite 200
Cary, NC 27518
(919) 852-0468
(919) 852-0598 (Fax)
www.simpsonengr.com
LICENSURE NO. C-2521

NORTH CAROLINA PROFESSIONAL SEAL 18056 ENGINEER JOHN A. BATTS
1/16/2014

REVISIONS						SHEET NO.
NO.	BY:	DATE:	NO.	BY:	DATE:	S-630
1			3			TOTAL SHEETS
2			4			67

STR. #14

DRAWN BY: T. BANKOVICH DATE: 12-13
CHECKED BY: B.S. COX DATE: 12-13
DESIGN ENGINEER OF RECORD: J.A. BATTS DATE: 12-13

1/14/2014 9:35:12 AM G:\Projects\2012\U-0071 (Durham Co.)\Structures\Drawings\Final\Bridge 189\Widening\U-0071_Br 189_sd_fp.dgn

NOTES:

FOR DIAPHRAGM DETAILS, SEE "STRUCTURAL STEEL DETAILS" SHEETS.

FOR ELASTOMERIC BEARINGS, SEE "ELASTOMERIC BEARING DETAILS" SHEET.

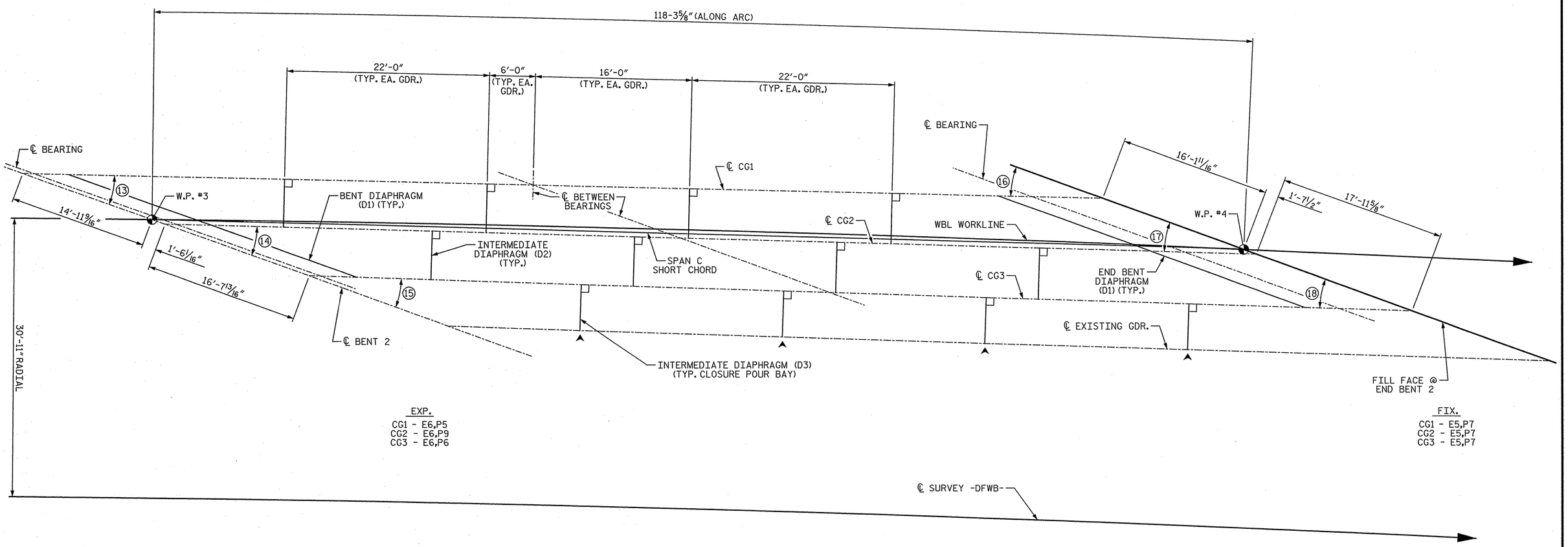

FRAMING PLAN - SPAN C

▲ CONNECTOR PLATES ON EXISTING EXTERIOR GIRDERS FOR INTERMEDIATE DIAPHRAGMS (D3) SHALL BE LOCATED BY THE CONTRACTOR AND CONTRACTOR IS RESPONSIBLE FOR PROVIDING ACCURATE DIAPHRAGM LENGTHS FOR INTERMEDIATE DIAPHRAGM (D3) IN CLOSURE BAY.

ANGLES

13	18°-46'-21"
14	18°-32'-15"
15	18°-18'-15"
16	19°-00'-15"
17	18°-46'-09"
18	18°-32'-09"

PROJECT NO. U-0071

DURHAM COUNTY

STATION: 24+70.18 -DFWB-

SHEET 3 OF 3

STATE OF NORTH CAROLINA
DEPARTMENT OF TRANSPORTATION
RALEIGH

SUPERSTRUCTURE

FRAMING PLAN

PLANS PREPARED BY:

SIMPSON ENGINEERS & ASSOCIATES
5640 Dillard Drive
Suite 200
Cary, NC 27518
(919) 852-0468
(919) 852-0598 (Fax)
www.simpsonengr.com
LICENSURE NO. C-2521

NORTH CAROLINA PROFESSIONAL SEAL 18056 ENGINEER JOHN A. BATTS
1/16/2014

REVISIONS						SHEET NO.
NO.	BY:	DATE:	NO.	BY:	DATE:	S-C31
1			3			TOTAL SHEETS
2			4			671

STR. #14

DRAWN BY:	T. BANKOVICH	DATE:	12-13
CHECKED BY:	B.S. COX	DATE:	12-13
DESIGN ENGINEER OF RECORD:	J.A. BATTS	DATE:	12-13

1/14/2014 9:35:12 AM G:\Projects\2012\U-0071 (Durham Co.)\Structures\Drawings\Final\Bridge 189\Widening\U-0071_Br 189_sd_fp.dgn

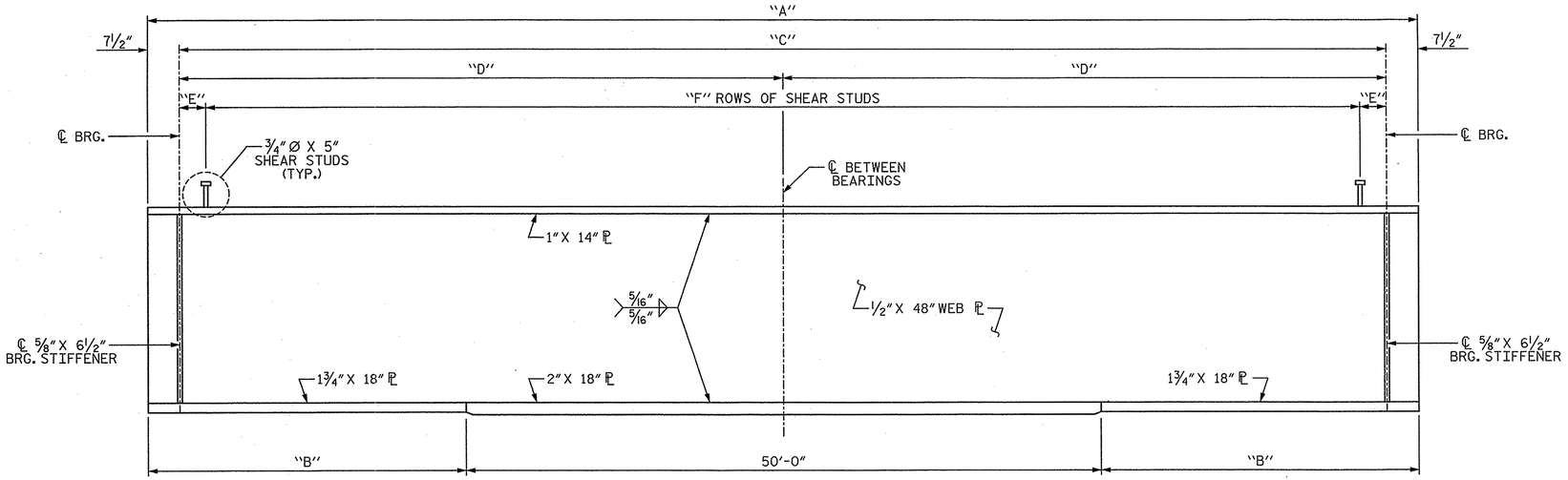

ELEVATION OF GIRDER

(FOR CLARITY, CONNECTOR PLATES FOR INTERMEDIATE DIAPHRAGMS NOT SHOWN. FOR PLACEMENT SEE "SUPERSTRUCTURE FRAMING PLAN" SHEETS.)
(SEE "GIRDER DIMENSION TABLE" FOR DIMENSIONS.)

GIRDER DIMENSION TABLE

GIRDER	"A"	"B"	"C"	"D"	"E"	"F"
AG1	99'-5½"	24'-8¾"	98'-2½"	49'-1¼"	1¾"	236 ROWS @ 5" CTS. (3 STUDS PER ROW)
AG2	102'-3"	26'-1½"	101'-0"	50'-6"	1"	243 ROWS @ 5" CTS. (3 STUDS PER ROW)
AG3	105'-1⅝"	27'-6 13/16"	103'-10⅝"	51'-11 5/16"	13/16"	250 ROWS @ 5" CTS. (3 STUDS PER ROW)
BG1	112'-4⅞"	31'-2 7/16"	111'-1⅞"	55'-6 15/16"	1 15/16"	267 ROWS @ 5" CTS. (3 STUDS PER ROW)
BG2	111'-8"	30'-10"	110'-5"	55'-2½"	0"	266 ROWS @ 5" CTS. (3 STUDS PER ROW)
BG3	110'-10¾"	30'-5⅜"	109'-7¾"	54'-9⅞"	⅜"	264 ROWS @ 5" CTS. (3 STUDS PER ROW)
CG1	109'-6⅛"	29'-9 1/16"	108'-3⅛"	54'-1 9/16"	2 1/16"	260 ROWS @ 5" CTS. (3 STUDS PER ROW)
CG2	110'-7½"	30'-3¾"	109'-4½"	54'-8¼"	1¼"	263 ROWS @ 5" CTS. (3 STUDS PER ROW)
CG3	111'-9"	30'-10½"	110'-6"	55'-3"	½"	266 ROWS @ 5" CTS. (3 STUDS PER ROW)

NOTES:

ALL STRUCTURAL STEEL SHALL BE AASHTO M270 GRADE 50 AND PAINTED IN ACCORDANCE WITH SYSTEM 1 OF ARTICLE 442-8 OF THE STANDARD SPECIFICATIONS UNLESS OTHERWISE NOTED ON THE PLANS.

ALL DIMENSIONS SHOWN ARE HORIZONTAL OR VERTICAL, UNLESS OTHERWISE NOTED.

ALL FIELD CONNECTIONS TO BE ⅞"DIA. HIGH STRENGTH BOLTS UNLESS OTHERWISE NOTED.

BEARING STIFFENERS ARE TO BE PLACED NORMAL TO THE WEB OF THE GIRDER AND SHALL BE PLUMB.

A CHARPY V-NOTCH TEST IS REQUIRED FOR WEB PLATES AND BOTTOM FLANGE PLATES FOR ALL GIRDERS AND IN ACCORDANCE WITH ARTICLE 1072-7 OF THE STANDARD SPECIFICATIONS.

PERMITTED FLANGE AND WEB SHOP SPLICES SHALL NOT BE LOCATED WITHIN 15 FEET OF MAXIMUM DEAD LOAD DEFLECTION. KEEP 2 FEET MINIMUM BETWEEN WEB AND FLANGE SHOP SPLICES. KEEP 6" MINIMUM BETWEEN CONNECTOR PLATE OR TRANSVERSE STIFFENER WELDS AND WEB OR FLANGE SHOP SPLICES.

STUDS ON GIRDERS MAY BE SHIFTED UP TO 1" IF NECESSARY TO CLEAR FLANGE SPLICE WELD.

TENSION ON THE AASHTO M164 BOLTS SHALL BE CALIBRATED USING DIRECT TENSION INDICATOR WASHERS IN ACCORDANCE WITH ARTICLE 440-8 OF THE STANDARD SPECIFICATIONS.

END OF GIRDERS SHALL BE PLUMB.

IN CLOSURE POUR BAY, CONNECTION BOLTS ARE TO BE LOCATED AT THE BOTTOM OF THE CONNECTION SLOTS AND TIGHTENED TO A SNUG FIT PRIOR TO FIELD WELDING OPPOSITE END OF DIAPHRAGM. AFTER WELDING DIAPHRAGM TO CONNECTION ANGLE AND PRIOR TO THE POURING OF THE SLAB, BACK OFF BOLTS 1/2 TURN TO ALLOW FOR VERTICAL DEFLECTION OF NEW BEAM. AFTER DEFLECTIONS HAVE OCCURRED, TIGHTEN BOLTS AS REQUIRED BY THE STANDARD SPECIFICATIONS.

FABRICATORS SHALL DETAIL DIAPHRAGM MEMBERS AND CONNECTIONS FOR FULL DEAD LOAD FIT UP. GIRDERS SHALL BE PLUMB AFTER THE FULL AMOUNT OF DEAD LOAD IS APPLIED.

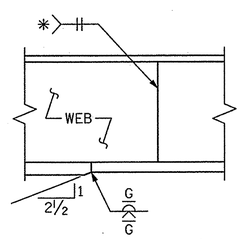

ELEVATION

TYPICAL FLANGE AND WEB BUTT JOINT

* GRIND SMOOTH AND FLUSH ON OUTER FACE OF EXTERIOR GIRDERS

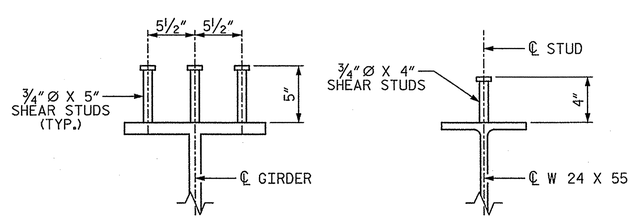

SHEAR STUD DETAILS

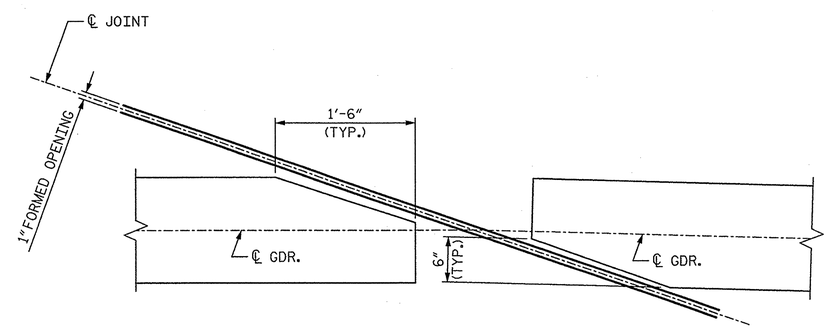

TOP FLANGE CLIP AT EXPANSION JOINT

PROJECT NO. U-0071
DURHAM COUNTY
STATION: 24+70.18 -DFWB-

SHEET 1 OF 4

STATE OF NORTH CAROLINA
DEPARTMENT OF TRANSPORTATION
RALEIGH
SUPERSTRUCTURE

STRUCTURAL STEEL DETAILS

PLANS PREPARED BY:
SIMPSON ENGINEERS & ASSOCIATES
5640 Dillard Drive
Suite 200
Cary, NC 27518
(919) 852-0468
(919) 852-0598 (Fax)
www.simpsonengr.com
LICENSURE NO. C-2521

NORTH CAROLINA PROFESSIONAL SEAL 18056 ENGINEER JOHN A. BATTS
1/16/2014

REVISIONS						SHEET NO.
NO.	BY:	DATE:	NO.	BY:	DATE:	S-632
1			3			TOTAL SHEETS
2			4			671

STR. #14

DRAWN BY: T. BANKOVICH DATE: 12-13
CHECKED BY: B.S. COX DATE: 12-13
DESIGN ENGINEER OF RECORD: J.A. BATTS DATE: 12-13

1/14/2014 9:35:12 AM G:\Projects\2012\U-0071 (Durham Co.)\Structures\Drawings\Final\Bridge 189\Widening\U-0071_Br 189_sd_ss.dgn

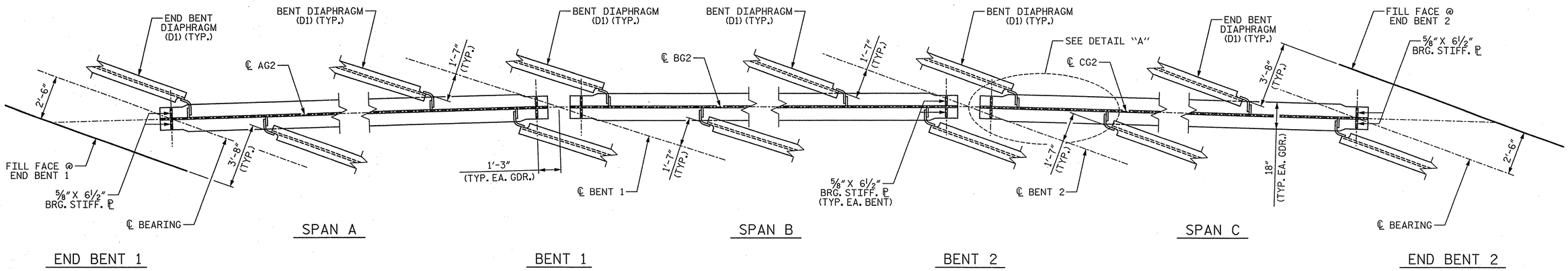

BOTTOM FLANGE DETAIL

(FOR PLACEMENT OF INTERMEDIATE DIAPHRAGMS, SEE "SUPERSTRUCTURE FRAMING PLAN" SHEETS.)
(℄ GIRDER 2 SHOWN, OTHER GIRDERS SIMILAR.)

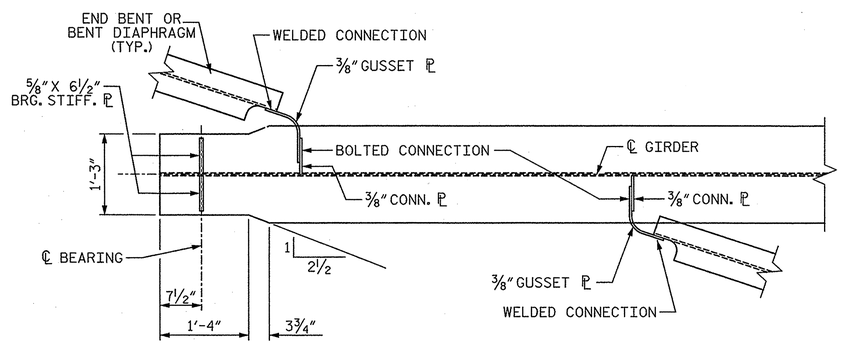

DETAIL "A"

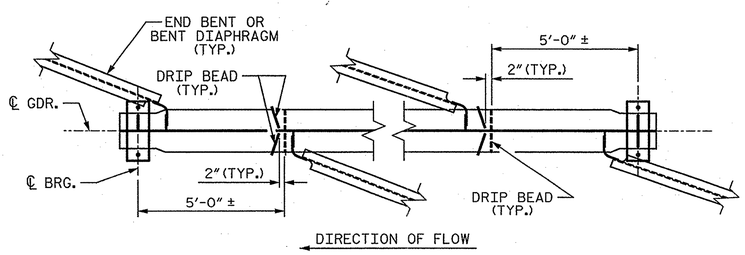

PART PLAN - BOTTOM FLANGE

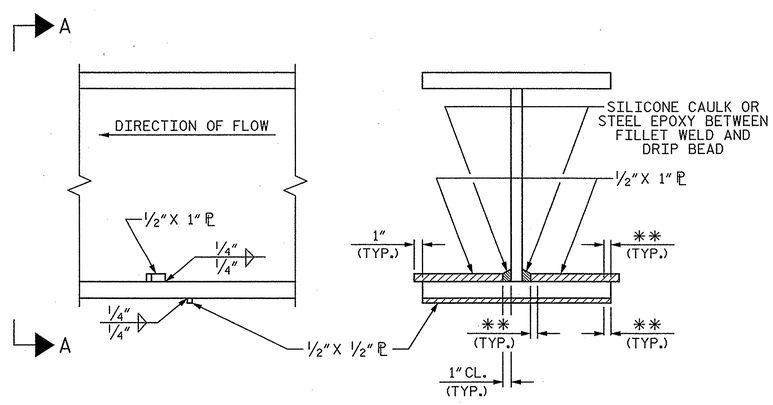

SECTION

VIEW A-A

** SEE "WELD TERMINATION DETAILS" ON SHEET 4 OF 4

DRIP BEAD DETAILS

PROJECT NO. U-0071
DURHAM COUNTY
STATION: 24+70.18 -DFWB-
SHEET 2 OF 4

STATE OF NORTH CAROLINA
DEPARTMENT OF TRANSPORTATION
RALEIGH
SUPERSTRUCTURE

STRUCTURAL STEEL DETAILS

PLANS PREPARED BY:
SIMPSON ENGINEERS & ASSOCIATES
5640 Dillard Drive
Suite 200
Cary, NC 27518
(919) 852-0468
(919) 852-0598 (Fax)
www.simpsonengr.com
LICENSURE NO. C-2521

NORTH CAROLINA PROFESSIONAL SEAL 18056 ENGINEER JOHN A. BATTS 1/16/2014

REVISIONS						SHEET NO.
NO.	BY:	DATE:	NO.	BY:	DATE:	S-633
1			3			TOTAL SHEETS
2			4			671

STR. #14

DRAWN BY: T. BANKOVICH DATE: 12-13
CHECKED BY: B.S. COX DATE: 12-13
DESIGN ENGINEER OF RECORD: J.A. BATTS DATE: 12-13

1/14/2014 9:35:12 AM G:\Projects\2012\U-0071 (Durham Co.)\Structures\Drawings\Final\Bridge 189\Widening\U-0071_Br 189_sd_ss.dgn

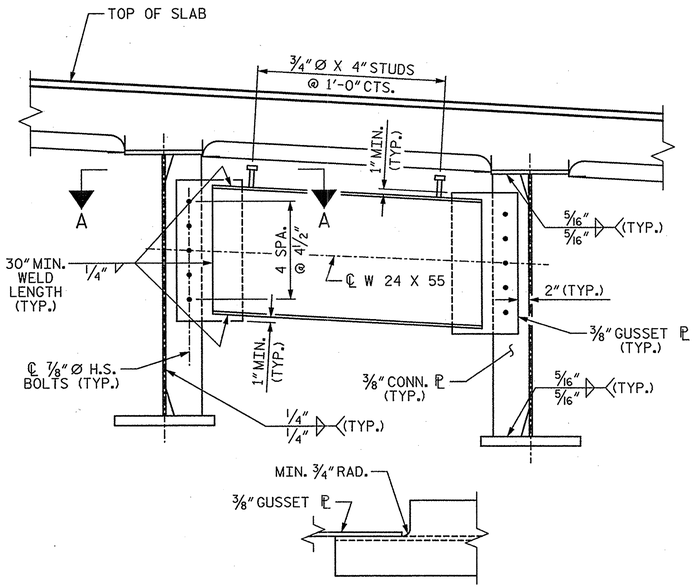

SECTION A-A

END BENT & BENT DIAPHRAGM (D1)

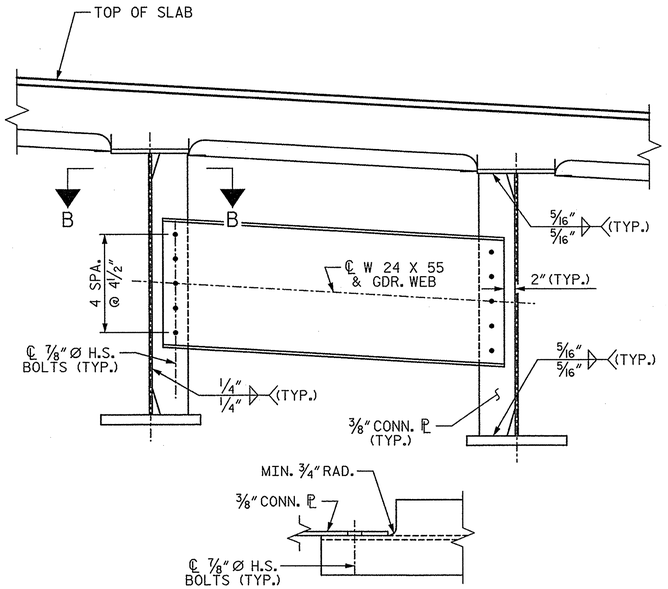

SECTION B-B

INTERMEDIATE DIAPHRAGM (D2)

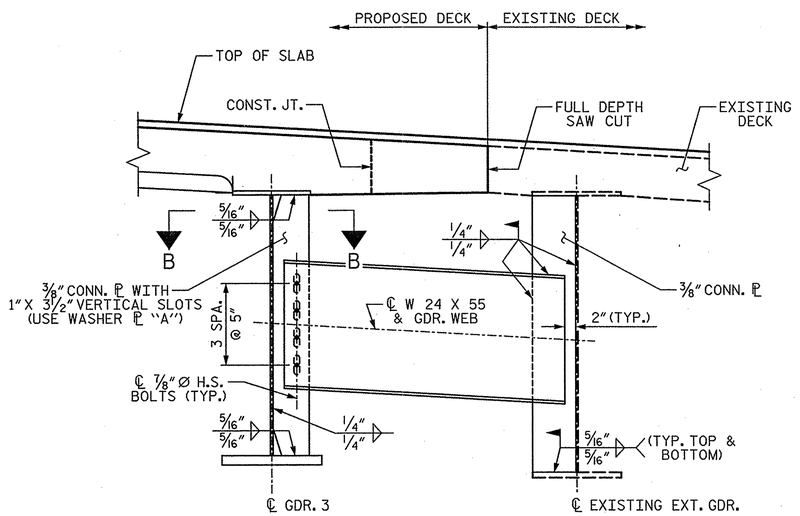

INTERMEDIATE DIAPHRAGM (D3)

(SEE NOTES SHEET 1 OF 4)

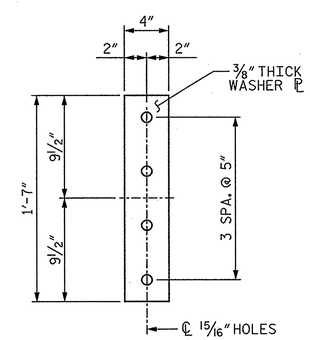

WASHER ℙ "A"

PROJECT NO. U-0071

DURHAM COUNTY

STATION: 24+70.18 -DFWB-

SHEET 3 OF 4

STATE OF NORTH CAROLINA
DEPARTMENT OF TRANSPORTATION
RALEIGH

SUPERSTRUCTURE

STRUCTURAL STEEL DETAILS

PLANS PREPARED BY:

SIMPSON ENGINEERS & ASSOCIATES
5640 Dillard Drive
Suite 200
Cary, NC 27518
(919) 852-0468
(919) 852-0598 (Fax)
www.simpsonengr.com
LICENSURE NO. C-2521

NORTH CAROLINA PROFESSIONAL SEAL 18056 ENGINEER JOHN A. BATTS
1/16/2014

REVISIONS								SHEET NO.
NO.	BY:	DATE:	NO.	BY:	DATE:			S-C34
1			3					TOTAL SHEETS
2			4					67

STR. #14

DRAWN BY: T. BANKOVICH DATE: 12-13
CHECKED BY: B.S. COX DATE: 12-13
DESIGN ENGINEER OF RECORD: J.A. BATTS DATE: 12-13

1/14/2014 9:35:12 AM G:\Projects\2012\U-0071 (Durham Co.)\Structures\Drawings\Final\Bridge 189\Widening\U-0071_Br 189_sd_ss.dgn

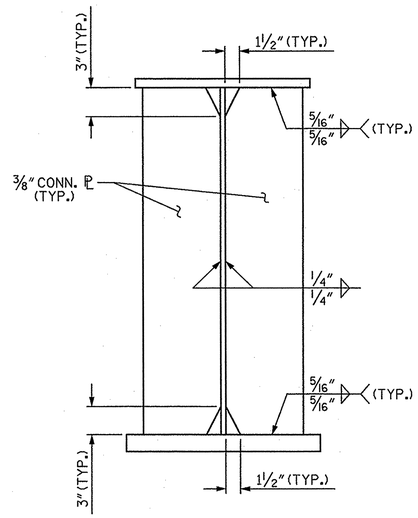

CONNECTOR PLATE

(CONNECTOR PLATES FOR END BENT AND BENT DIAPHRAGMS D1 OR INTERMEDIATE DIAPHRAGMS D2)

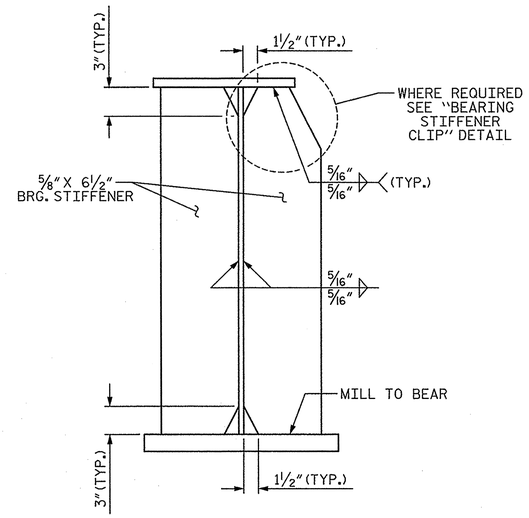

BEARING STIFFENER

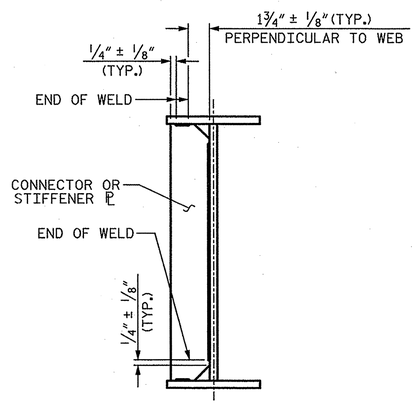

WELD TERMINATION DETAIL

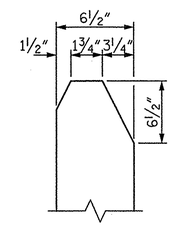

BEARING STIFFENER CLIP DETAIL

PROJECT NO. U-0071

DURHAM COUNTY

STATION: 24+70.18 -DFWB-

SHEET 4 OF 4

STATE OF NORTH CAROLINA
DEPARTMENT OF TRANSPORTATION
RALEIGH

SUPERSTRUCTURE

STRUCTURAL STEEL DETAILS

PLANS PREPARED BY:

SIMPSON ENGINEERS & ASSOCIATES
5640 Dillard Drive
Suite 200
Cary, NC 27518
(919) 852-0468
(919) 852-0598 (Fax)
www.simpsonengr.com
LICENSURE NO. C-2521

NORTH CAROLINA PROFESSIONAL SEAL 18056 ENGINEER JOHN A. BATTS
1/16/2014

REVISIONS								SHEET NO.
NO.	BY:	DATE:	NO.	BY:	DATE:			S-635
1			3					TOTAL SHEETS
2			4					671

STR. #14

DRAWN BY:	T. BANKOVICH	DATE:	12-13
CHECKED BY:	B.S. COX	DATE:	12-13
DESIGN ENGINEER OF RECORD:	J.A. BATTS	DATE:	12-13

1/14/2014 9:35:13 AM G:\Projects\2012\U-0071 (Durham Co.)\Structures\Drawings\Final\Bridge 189\Widening\U-0071_Br 189_sd_ss.dgn

DEAD LOAD DEFLECTION TABLE FOR GIRDERS

SPAN A — GIRDER 1

TWENTIETH POINTS	0	.05	.10	.15	.20	.25	.30	.35	.40	.45	.50	.55	.60	.65	.70	.75	.80	.85	.90	.95	1.0
DEFLECTION DUE TO WEIGHT OF GIRDER	0	-.009	-.017	-.025	-.032	-.039	-.044	-.049	-.052	-.054	-.054	-.054	-.052	-.049	-.044	-.039	-.032	-.025	-.017	-.009	0
✻ DEFLECTION DUE TO WEIGHT OF SLAB	0	-.025	-.049	-.072	-.092	-.111	-.126	-.139	-.148	-.153	-.155	-.153	-.148	-.139	-.126	-.111	-.092	-.072	-.049	-.025	0
DEFLECTION DUE TO WEIGHT OF BARRIER RAIL	0	-.007	-.013	-.019	-.024	-.029	-.033	-.036	-.039	-.040	-.041	-.040	-.039	-.036	-.033	-.029	-.024	-.019	-.013	-.007	0
TOTAL DEAD LOAD DEFLECTION	0	-.041	-.079	-.116	-.148	-.179	-.203	-.224	-.239	-.247	-.250	-.247	-.239	-.224	-.203	-.179	-.148	-.116	-.079	-.041	0
VERTICAL CURVE ORDINATE	0	.005	.004	.004	.004	.004	.004	.004	.003	.003	.003	.003	.003	.002	.002	.002	.002	.002	.001	.001	0
SUPERELEVATION ORDINATE	0	-.008	-.011	-.013	-.015	-.017	-.019	-.020	-.020	-.021	-.021	-.020	-.020	-.019	-.017	-.015	-.013	-.011	-.008	-.005	0
REQUIRED CAMBER	0	7/16"	7/8"	1 5/16"	1 5/8"	2"	2 1/4"	2 1/2"	2 11/16"	2 3/4"	2 13/16"	2 3/4"	2 11/16"	2 1/2"	2 1/4"	2"	1 5/8"	1 5/16"	7/8"	7/16"	0

SPAN A — GIRDER 2

TWENTIETH POINTS	0	.05	.10	.15	.20	.25	.30	.35	.40	.45	.50	.55	.60	.65	.70	.75	.80	.85	.90	.95	1.0
DEFLECTION DUE TO WEIGHT OF GIRDER	0	-.010	-.019	-.028	-.036	-.044	-.050	-.054	-.058	-.060	-.061	-.060	-.058	-.054	-.050	-.044	-.036	-.028	-.019	-.010	0
✻ DEFLECTION DUE TO WEIGHT OF SLAB	0	-.028	-.055	-.080	-.104	-.124	-.141	-.155	-.165	-.171	-.173	-.171	-.165	-.155	-.141	-.124	-.104	-.080	-.055	-.028	0
DEFLECTION DUE TO WEIGHT OF BARRIER RAIL	0	-.007	-.014	-.021	-.027	-.033	-.037	-.041	-.043	-.045	-.045	-.045	-.043	-.041	-.037	-.033	-.027	-.021	-.014	-.007	0
TOTAL DEAD LOAD DEFLECTION	0	-.045	-.088	-.129	-.167	-.201	-.228	-.250	-.266	-.276	-.279	-.276	-.266	-.250	-.228	-.201	-.167	-.129	-.088	-.045	0
VERTICAL CURVE ORDINATE	0	.005	.005	.004	.004	.004	.004	.004	.003	.003	.003	.003	.003	.002	.002	.002	.002	.002	.001	.001	0
SUPERELEVATION ORDINATE	0	-.008	-.011	-.014	-.016	-.018	-.020	-.021	-.022	-.022	-.022	-.021	-.021	-.020	-.018	-.016	-.014	-.011	-.008	-.005	0
REQUIRED CAMBER	0	1/2"	1"	1 7/16"	1 7/8"	2 1/4"	2 9/16"	2 13/16"	2 15/16"	3 1/16"	3 1/8"	3 1/8"	3"	2 13/16"	2 9/16"	2 1/4"	1 7/8"	1 7/16"	1"	1/2"	0

SPAN A — GIRDER 3

TWENTIETH POINTS	0	.05	.10	.15	.20	.25	.30	.35	.40	.45	.50	.55	.60	.65	.70	.75	.80	.85	.90	.95	1.0
DEFLECTION DUE TO WEIGHT OF GIRDER	0	-.011	-.022	-.032	-.041	-.049	-.055	-.061	-.065	-.067	-.068	-.067	-.065	-.061	-.055	-.049	-.041	-.032	-.022	-.011	0
✻ DEFLECTION DUE TO WEIGHT OF SLAB	0	-.027	-.054	-.079	-.102	-.122	-.139	-.152	-.162	-.168	-.170	-.168	-.162	-.152	-.139	-.122	-.102	-.079	-.054	-.027	0
DEFLECTION DUE TO WEIGHT OF BARRIER RAIL	0	-.008	-.016	-.024	-.030	-.036	-.042	-.046	-.049	-.050	-.051	-.050	-.049	-.046	-.042	-.036	-.030	-.024	-.016	-.008	0
TOTAL DEAD LOAD DEFLECTION	0	-.046	-.092	-.135	-.173	-.207	-.236	-.259	-.276	-.285	-.289	-.285	-.276	-.259	-.236	-.207	-.173	-.135	-.092	-.046	0
VERTICAL CURVE ORDINATE	0	.005	.005	.005	.005	.005	.005	.005	.005	.004	.004	.004	.004	.004	.004	.004	.004	.004	.004	.003	0
SUPERELEVATION ORDINATE	0	-.009	-.012	-.015	-.017	-.019	-.021	-.022	-.023	-.023	-.023	-.023	-.022	-.021	-.019	-.017	-.015	-.012	-.009	-.005	0
REQUIRED CAMBER	0	1/2"	1"	1 1/2"	1 15/16"	2 5/16"	2 5/8"	2 7/8"	3 1/8"	3 3/16"	3 1/4"	3 3/16"	3 1/8"	2 7/8"	2 5/8"	2 5/16"	1 15/16"	1 1/2"	1 1/16"	1/2"	0

✻ INCLUDES SLAB, BUILDUPS & STAY-IN-PLACE METAL FORMS.
ALL VALUES ARE SHOWN IN FEET (DECIMAL FORM), EXCEPT "REQUIRED CAMBER", WHICH IS GIVEN IN INCHES (FRACTION FORM).

SIGN CONVENTION FOR DEAD LOAD DEFLECTION ——— + ↑ - ↓ — 0

PROJECT NO. U-0071
DURHAM COUNTY
STATION: 24+70.18 -DFWB-

SHEET 1 OF 3

STATE OF NORTH CAROLINA
DEPARTMENT OF TRANSPORTATION
RALEIGH
SUPERSTRUCTURE

DEAD LOAD DEFLECTION AND GIRDER CAMBER

PLANS PREPARED BY:
SIMPSON ENGINEERS & ASSOCIATES
5640 Dillard Drive
Suite 200
Cary, NC 27518
(919) 852-0468
(919) 852-0598 (Fax)
www.simpsonengr.com
LICENSURE NO. C-2521

NORTH CAROLINA PROFESSIONAL SEAL 18056 ENGINEER JOHN A. BATTS 1/16/2014

REVISIONS						SHEET NO.
NO.	BY:	DATE:	NO.	BY:	DATE:	S-C36
1			3			TOTAL SHEETS
2			4			671

STR. #14

DRAWN BY: T. BANKOVICH DATE: 12-13
CHECKED BY: B.S. COX DATE: 12-13
DESIGN ENGINEER OF RECORD: J.A. BATTS DATE: 12-13

1/14/2014 9:35:13 AM G:\Projects\2012\U-0071 (Durham Co.)\Structures\Drawings\Final\Bridge 189\Widening\U-0071_Br 189_sd_dl.dgn

DEAD LOAD DEFLECTION TABLE FOR GIRDERS

SPAN B — GIRDER 1

TWENTIETH POINTS	0	.05	.10	.15	.20	.25	.30	.35	.40	.45	.50	.55	.60	.65	.70	.75	.80	.85	.90	.95	1.0
DEFLECTION DUE TO WEIGHT OF GIRDER	0	-.014	-.028	-.041	-.053	-.064	-.073	-.080	-.085	-.088	-.089	-.088	-.085	-.080	-.073	-.064	-.053	-.041	-.028	-.014	0
✻ DEFLECTION DUE TO WEIGHT OF SLAB	0	-.041	-.081	-.118	-.152	-.182	-.208	-.228	-.243	-.252	-.255	-.252	-.243	-.228	-.208	-.182	-.152	-.118	-.081	-.041	0
DEFLECTION DUE TO WEIGHT OF BARRIER RAIL	0	-.011	-.021	-.031	-.040	-.048	-.055	-.060	-.064	-.066	-.067	-.066	-.064	-.060	-.055	-.048	-.040	-.031	-.021	-.011	0
TOTAL DEAD LOAD DEFLECTION	0	-.066	-.130	-.190	-.245	-.294	-.336	-.368	-.392	-.406	-.411	-.406	-.392	-.368	-.336	-.294	-.245	-.190	-.130	-.066	0
VERTICAL CURVE ORDINATE	0	.008	.015	.022	.029	.035	.040	.044	.047	.048	.049	.049	.048	.045	.042	.038	.032	.026	.019	.010	0
SUPERELEVATION ORDINATE	0	-.005	-.009	-.013	-.016	-.018	-.020	-.022	-.023	-.024	-.024	-.024	-.023	-.022	-.020	-.018	-.016	-.013	-.009	-.005	0
REQUIRED CAMBER	0	13/16"	1 5/8"	2 3/8"	3 1/8"	3 3/4"	4 1/4"	4 11/16"	5"	5 3/16"	5 1/4"	5 3/16"	5"	4 11/16"	4 5/16"	3 3/4"	3 1/8"	2 7/16"	1 11/16"	7/8"	0

SPAN B — GIRDER 2

TWENTIETH POINTS	0	.05	.10	.15	.20	.25	.30	.35	.40	.45	.50	.55	.60	.65	.70	.75	.80	.85	.90	.95	1.0
DEFLECTION DUE TO WEIGHT OF GIRDER	0	-.014	-.028	-.040	-.052	-.062	-.071	-.078	-.083	-.086	-.087	-.086	-.083	-.078	-.071	-.062	-.052	-.040	-.028	-.014	0
✻ DEFLECTION DUE TO WEIGHT OF SLAB	0	-.035	-.069	-.101	-.130	-.156	-.178	-.195	-.208	-.215	-.218	-.215	-.208	-.195	-.178	-.156	-.130	-.101	-.069	-.035	0
DEFLECTION DUE TO WEIGHT OF BARRIER RAIL	0	-.011	-.021	-.030	-.039	-.047	-.053	-.058	-.062	-.064	-.065	-.064	-.062	-.058	-.053	-.047	-.039	-.030	-.021	-.011	0
TOTAL DEAD LOAD DEFLECTION	0	-.060	-.118	-.171	-.221	-.265	-.302	-.331	-.353	-.365	-.370	-.365	-.353	-.331	-.302	-.265	-.221	-.171	-.118	-.060	0
VERTICAL CURVE ORDINATE	0	.016	.031	.044	.056	.068	.078	.087	.096	.103	.109	.115	.119	.122	.125	.126	.126	.126	.104	.053	0
SUPERELEVATION ORDINATE	0	-.005	-.009	-.013	-.015	-.018	-.020	-.022	-.023	-.023	-.024	-.023	-.023	-.022	-.020	-.018	-.015	-.013	-.009	-.005	0
REQUIRED CAMBER	0	7/8"	1 11/16"	2 7/16"	3 1/8"	3 3/4"	4 5/16"	4 3/4"	5 1/8"	5 5/16"	5 7/16"	5 1/2"	5 3/8"	5 3/16"	4 7/8"	4 1/2"	4"	3 7/16"	2 9/16"	1 5/16"	0

SPAN B — GIRDER 3

TWENTIETH POINTS	0	.05	.10	.15	.20	.25	.30	.35	.40	.45	.50	.55	.60	.65	.70	.75	.80	.85	.90	.95	1.0
DEFLECTION DUE TO WEIGHT OF GIRDER	0	-.014	-.027	-.039	-.050	-.060	-.069	-.076	-.080	-.083	-.084	-.083	-.080	-.076	-.069	-.060	-.050	-.039	-.027	-.014	0
✻ DEFLECTION DUE TO WEIGHT OF SLAB	0	-.039	-.076	-.112	-.144	-.173	-.197	-.216	-.230	-.238	-.241	-.238	-.230	-.216	-.197	-.173	-.144	-.112	-.076	-.039	0
DEFLECTION DUE TO WEIGHT OF BARRIER RAIL	0	-.010	-.020	-.029	-.038	-.045	-.052	-.057	-.060	-.063	-.063	-.063	-.060	-.057	-.052	-.045	-.038	-.029	-.020	-.010	0
TOTAL DEAD LOAD DEFLECTION	0	-.063	-.123	-.180	-.232	-.278	-.318	-.349	-.370	-.384	-.388	-.384	-.370	-.349	-.318	-.278	-.232	-.180	-.123	-.063	0
VERTICAL CURVE ORDINATE	0	.021	.040	.058	.074	.090	.105	.119	.132	.144	.155	.165	.174	.182	.189	.183	.149	.113	.077	.039	0
SUPERELEVATION ORDINATE	0	-.005	-.009	-.012	-.015	-.018	-.020	-.021	-.022	-.023	-.023	-.023	-.022	-.021	-.020	-.018	-.015	-.012	-.008	-.005	0
REQUIRED CAMBER	0	15/16"	1 7/8"	2 11/16"	3 1/2"	4 3/16"	4 13/16"	5 3/8"	5 3/4"	6 1/16"	6 1/4"	6 5/16"	6 1/4"	6 1/8"	5 7/8"	5 5/16"	4 3/8"	3 3/8"	2 5/16"	1 3/16"	0

✻ INCLUDES SLAB, BUILDUPS & STAY-IN-PLACE METAL FORMS.
ALL VALUES ARE SHOWN IN FEET (DECIMAL FORM), EXCEPT "REQUIRED CAMBER", WHICH IS GIVEN IN INCHES (FRACTION FORM).

SIGN CONVENTION FOR DEAD LOAD DEFLECTION —— + / - —— 0

PROJECT NO. U-0071
DURHAM COUNTY
STATION: 24+70.18 -DFWB-
SHEET 2 OF 3

STATE OF NORTH CAROLINA
DEPARTMENT OF TRANSPORTATION
RALEIGH

DEAD LOAD DEFLECTION AND GIRDER CAMBER

PLANS PREPARED BY:
SIMPSON ENGINEERS & ASSOCIATES
5640 Dillard Drive
Suite 200
Cary, NC 27518
(919) 852-0468
(919) 852-0598 (Fax)
www.simpsonengr.com
LICENSURE NO. C-2521

NORTH CAROLINA PROFESSIONAL SEAL 18056 ENGINEER JOHN A. BATTS 1/16/2014

REVISIONS						SHEET NO.
NO.	BY:	DATE:	NO.	BY:	DATE:	S-C37
1			3			TOTAL SHEETS
2			4			671

STR. #14

DRAWN BY: T. BANKOVICH DATE: 12-13
CHECKED BY: B.S. COX DATE: 12-13
DESIGN ENGINEER OF RECORD: J.A. BATTS DATE: 12-13

1/14/2014 9:35:13 AM G:\Projects\2012\U-0071 (Durham Co.)\Structures\Drawings\Final\Bridge 189\Widening\U-0071_Br 189_sd_dl.dgn

DEAD LOAD DEFLECTION TABLE FOR GIRDERS

SPAN C — GIRDER 1

TWENTIETH POINTS	0	.05	.10	.15	.20	.25	.30	.35	.40	.45	.50	.55	.60	.65	.70	.75	.80	.85	.90	.95	1.0
DEFLECTION DUE TO WEIGHT OF GIRDER	0	-.013	-.025	-.037	-.048	-.057	-.065	-.072	-.077	-.079	-.080	-.079	-.077	-.072	-.065	-.057	-.048	-.037	-.025	-.013	0
✳DEFLECTION DUE TO WEIGHT OF SLAB	0	-.037	-.073	-.106	-.137	-.164	-.187	-.205	-.218	-.227	-.229	-.227	-.218	-.205	-.187	-.164	-.137	-.106	-.073	-.037	0
DEFLECTION DUE TO WEIGHT OF BARRIER RAIL	0	-.010	-.019	-.028	-.036	-.043	-.049	-.054	-.057	-.059	-.060	-.059	-.057	-.054	-.049	-.043	-.036	-.028	-.019	-.010	0
TOTAL DEAD LOAD DEFLECTION	0	-.060	-.117	-.171	-.221	-.264	-.301	-.331	-.352	-.365	-.369	-.365	-.352	-.331	-.301	-.264	-.221	-.171	-.117	-.060	0
VERTICAL CURVE ORDINATE	0	.010	.018	.025	.032	.037	.041	.045	.047	.049	.050	.049	.048	.046	.042	.038	.033	.027	.020	.012	0
SUPERELEVATION ORDINATE	0	-.005	-.009	-.012	-.014	-.016	-.017	-.018	-.019	-.019	-.018	-.018	-.017	-.016	-.014	-.013	-.011	-.009	-.007	-.005	0
REQUIRED CAMBER	0	3/4"	1 1/2"	2 3/16"	2 7/8"	3 7/16"	3 7/8"	4 5/16"	4 9/16"	4 3/4"	4 13/16"	4 3/4"	4 5/8"	4 5/16"	3 15/16"	3 7/16"	2 15/16"	2 1/4"	1 9/16"	13/16"	0

SPAN C — GIRDER 2

TWENTIETH POINTS	0	.05	.10	.15	.20	.25	.30	.35	.40	.45	.50	.55	.60	.65	.70	.75	.80	.85	.90	.95	1.0
DEFLECTION DUE TO WEIGHT OF GIRDER	0	-.013	-.026	-.039	-.050	-.060	-.068	-.075	-.080	-.083	-.084	-.083	-.080	-.075	-.068	-.060	-.050	-.039	-.026	-.013	0
✳DEFLECTION DUE TO WEIGHT OF SLAB	0	-.038	-.076	-.111	-.143	-.171	-.195	-.214	-.228	-.236	-.239	-.236	-.228	-.214	-.195	-.171	-.143	-.111	-.076	-.038	0
DEFLECTION DUE TO WEIGHT OF BARRIER RAIL	0	-.010	-.020	-.029	-.038	-.045	-.051	-.056	-.060	-.062	-.063	-.062	-.060	-.056	-.051	-.045	-.038	-.029	-.020	-.010	0
TOTAL DEAD LOAD DEFLECTION	0	-.061	-.122	-.179	-.231	-.276	-.314	-.345	-.368	-.381	-.386	-.381	-.368	-.345	-.314	-.276	-.231	-.179	-.122	-.061	0
VERTICAL CURVE ORDINATE	0	.010	.019	.026	.032	.038	.042	.046	.049	.050	.051	.050	.049	.047	.043	.039	.034	.027	.020	.012	0
SUPERELEVATION ORDINATE	0	-.005	-.008	-.011	-.013	-.015	-.016	-.017	-.017	-.017	-.017	-.016	-.015	-.014	-.013	-.011	-.009	-.008	-.006	-.004	0
REQUIRED CAMBER	0	13/16"	1 5/8"	2 5/16"	3"	3 9/16"	4 1/16"	4 1/2"	4 13/16"	4 15/16"	5 1/16"	5"	4 13/16"	4 9/16"	4 1/8"	3 5/8"	3 1/16"	2 3/8"	1 5/8"	13/16"	0

SPAN C — GIRDER 3

TWENTIETH POINTS	0	.05	.10	.15	.20	.25	.30	.35	.40	.45	.50	.55	.60	.65	.70	.75	.80	.85	.90	.95	1.0
DEFLECTION DUE TO WEIGHT OF GIRDER	0	-.014	-.028	-.040	-.052	-.062	-.071	-.078	-.083	-.086	-.087	-.086	-.083	-.078	-.071	-.062	-.052	-.040	-.028	-.014	0
✳DEFLECTION DUE TO WEIGHT OF SLAB	0	-.035	-.069	-.101	-.131	-.156	-.178	-.195	-.208	-.216	-.218	-.216	-.208	-.195	-.178	-.156	-.131	-.101	-.069	-.035	0
DEFLECTION DUE TO WEIGHT OF BARRIER RAIL	0	-.011	-.021	-.030	-.039	-.047	-.053	-.058	-.062	-.065	-.065	-.065	-.062	-.058	-.053	-.047	-.039	-.030	-.021	-.011	0
TOTAL DEAD LOAD DEFLECTION	0	-.060	-.118	-.171	-.222	-.265	-.302	-.331	-.353	-.367	-.370	-.367	-.353	-.331	-.302	-.265	-.222	-.171	-.118	-.060	0
VERTICAL CURVE ORDINATE	0	.011	.019	.027	.033	.039	.044	.047	.050	.051	.052	.051	.050	.047	.044	.039	.034	.027	.020	.011	0
SUPERELEVATION ORDINATE	0	-.005	-.008	-.010	-.012	-.014	-.015	-.015	-.015	-.015	-.015	-.014	-.013	-.012	-.011	-.009	-.008	-.006	-.005	-.003	0
REQUIRED CAMBER	0	13/16"	1 9/16"	2 1/4"	2 15/16"	3 1/2"	4"	4 3/8"	4 5/8"	4 13/16"	4 7/8"	4 7/8"	4 11/16"	4 3/8"	4"	3 9/16"	3"	2 5/16"	1 5/8"	13/16"	0

✳INCLUDES SLAB, BUILDUPS & STAY-IN-PLACE METAL FORMS.
ALL VALUES ARE SHOWN IN FEET (DECIMAL FORM), EXCEPT "REQUIRED CAMBER", WHICH IS GIVEN IN INCHES (FRACTION FORM).

SIGN CONVENTION FOR DEAD LOAD DEFLECTION + ↑ - ↓ 0

PROJECT NO. U-0071
DURHAM COUNTY
STATION: 24+70.18 -DFWB-

SHEET 3 OF 3

STATE OF NORTH CAROLINA
DEPARTMENT OF TRANSPORTATION
RALEIGH
SUPERSTRUCTURE

DEAD LOAD DEFLECTION AND GIRDER CAMBER

PLANS PREPARED BY:
SIMPSON ENGINEERS & ASSOCIATES
5640 Dillard Drive
Suite 200
Cary, NC 27518
(919) 852-0468
(919) 852-0598 (Fax)
www.simpsonengr.com
LICENSURE NO. C-2521

NORTH CAROLINA PROFESSIONAL SEAL 18056 ENGINEER JOHN A. BATTS
1/16/2014

REVISIONS						SHEET NO.
NO.	BY:	DATE:	NO.	BY:	DATE:	S-38
1			3			TOTAL SHEETS
2			4			67

DRAWN BY: T. BANKOVICH DATE: 12-13
CHECKED BY: B.S. COX DATE: 12-13
DESIGN ENGINEER OF RECORD: J.A. BATTS DATE: 12-13

STR. #14

1/14/2014 9:35:13 AM G:\Projects\2012\U-0071 (Durham Co.)\Structures\Drawings\Final\Bridge 189\Widening\U-0071_Br 189_sd_dl.dgn

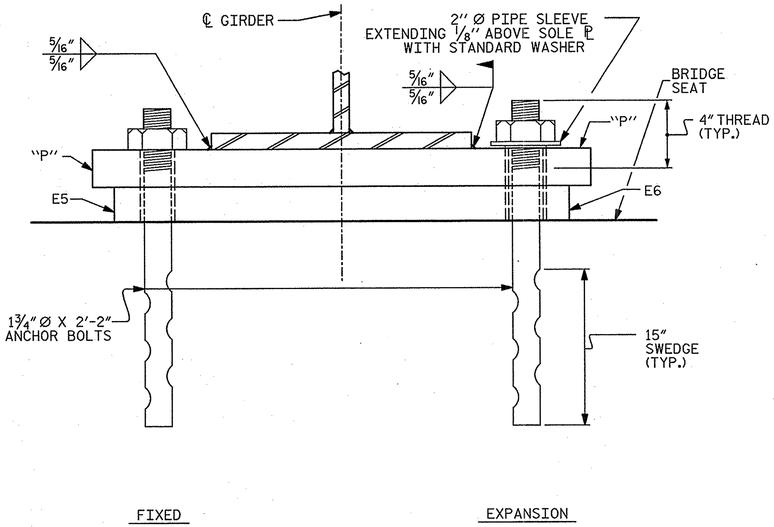

END VIEW

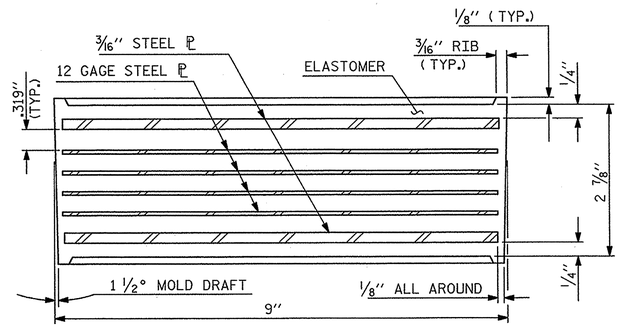

TYPICAL SECTION OF ELASTOMERIC BEARINGS

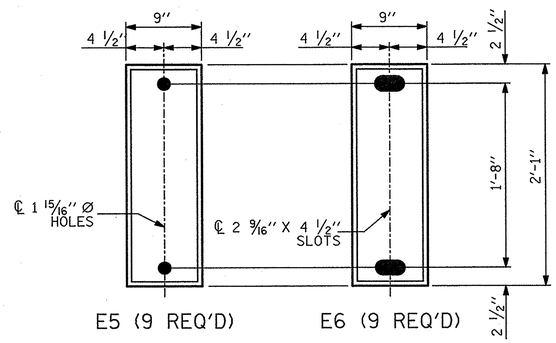

PLAN VIEW OF ELASTOMERIC BEARING

TYPE III

MAXIMUM ALLOWANCE SERVICE LOADS	
D.L. + L.L. (NO IMPACT)	
TYPE III	224 K

NOTES:

AT ALL FIXED POINTS OF SUPPORT, NUTS FOR ANCHOR BOLTS ARE TO BE TIGHTENED FINGER TIGHT AND THEN BACKED OFF 1/2 TURN. THE THREAD OF THE NUT AND BOLT SHALL THEN BE BURRED WITH A SHARP POINTED TOOL.

THE 2" Ø PIPE SLEEVE SHALL BE CUT FROM SCHEDULE 40 PVC PLASTIC PIPE. THE PVC PLASTIC PIPE SHALL MEET THE REQUIREMENTS OF ASTM D1785.

THE PAYMENT FOR THE PIPE SLEEVES SHALL BE INCLUDED IN THE SEVERAL PAY ITEMS.

FOR PAINTED STRUCTURAL STEEL (EXCLUDING AASHTO M270 GRADE 50W), SOLE PLATES, ANCHOR BOLTS, NUTS AND WASHERS SHALL BE GALVANIZED IN ACCORDANCE WITH THE STANDARD SPECIFICATIONS.

ANCHOR BOLTS SHALL MEET THE REQUIREMENTS OF ASTM A449. NUTS SHALL MEET THE REQUIREMENTS OF AASHTO M291-DH OR AASHTO M292-2H. WASHERS SHALL MEET THE REQUIREMENTS OF AASHTO M293. SHOP DRAWINGS ARE NOT REQUIRED FOR ANCHOR BOLTS, NUTS AND WASHERS. SHOP INSPECTION IS REQUIRED.

WHEN FIELD WELDING THE SOLE PLATE TO THE GIRDER FLANGE, USE TEMPERATURE INDICATING WAX PENS, OR OTHER SUITABLE MEANS, TO ENSURE THAT THE TEMPERATURE OF THE SOLE PLATE DOES NOT EXCEED 300°F. TEMPERATURES ABOVE THIS MAY DAMAGE THE ELASTOMER.

ALL SURFACES OF BEARING PLATES SHALL BE SMOOTH AND STRAIGHT.

THE ELASTOMER IN THE STEEL REINFORCED BEARINGS SHALL HAVE A SHEAR MODULUS OF 0.160 KSI, IN ACCORDANCE WITH AASHTO M251.

FOR STEEL REINFORCED ELASTOMERIC BEARINGS, SEE SPECIAL PROVISIONS.

THE CONTRACTOR'S ATTENTION IS CALLED TO THE FOLLOWING PROCEDURE, WHICH MAY BE REQUIRED BY THE ENGINEER, TO RESET ELASTOMERIC BEARINGS DUE TO GIRDER TRANSLATION AND END ROTATION:

1. ONCE THE DECK HAS CURED, THE GIRDERS SHALL BE JACKED AND THE ELASTOMERIC BEARING SLOTS CENTERED AS NEARLY AS PRACTICAL ABOUT THE BEARING STIFFENER. THIS OPERATION SHALL BE PERFORMED AT APPROXIMATELY 60°F.

THE CONTRACTOR MAY PROPOSE ALTERNATE METHODS, PROVIDED DETAILS ARE SUBMITTED TO THE ENGINEER FOR REVIEW AND APPROVAL.

ALL BEARING PLATES SHALL BE AASHTO M270 GRADE 50.

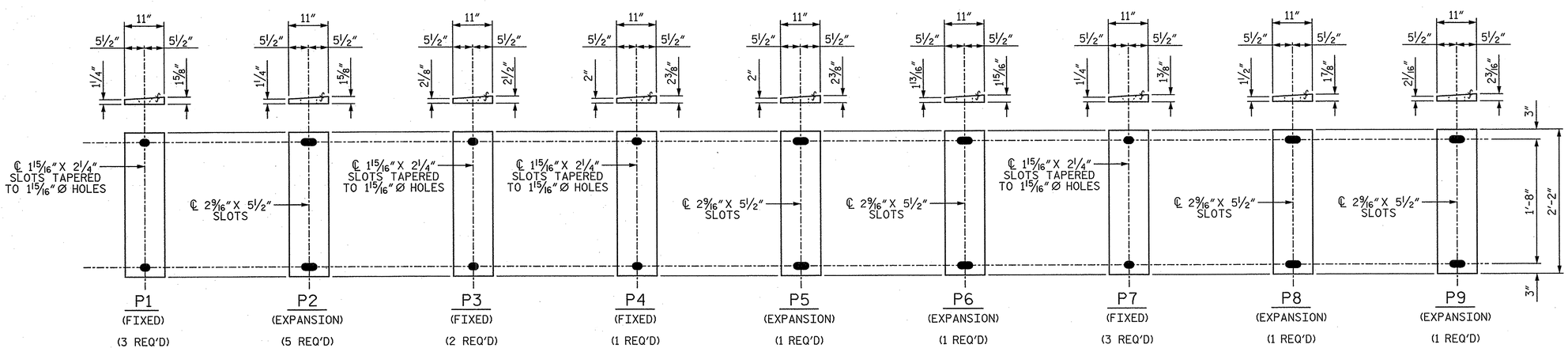

SOLE PLATE DETAILS ("P")

UP-STATION

PROJECT NO. U-0071
DURHAM COUNTY
STATION: 24+70.18 -DFWB-

STATE OF NORTH CAROLINA
DEPARTMENT OF TRANSPORTATION
RALEIGH
SUPERSTRUCTURE

ELASTOMERIC BEARING DETAILS

PLANS PREPARED BY:
SIMPSON ENGINEERS & ASSOCIATES
5640 Dillard Drive
Suite 200
Cary, NC 27518
(919) 852-0468
(919) 852-0598 (Fax)
www.simpsonengr.com
LICENSURE NO. C-2521

NORTH CAROLINA PROFESSIONAL SEAL 18056 ENGINEER JOHN A. BATTS
1/14/2014

REVISIONS						SHEET NO.
NO.	BY:	DATE:	NO.	BY:	DATE:	S-639
1			3			TOTAL SHEETS
2			4			671

STR. #14

DRAWN BY:	T. BANKOVICH	DATE:	12-13
CHECKED BY:	B.S. COX	DATE:	12-13
DESIGN ENGINEER OF RECORD:	J.A. BATTS	DATE:	12-13

1/14/2014 9:35:13 AM G:\Projects\2012\U-0071 (Durham Co.)\Structures\Drawings\Final\Bridge 189\Widening\U-0071_Br 189_sd_bg.dgn

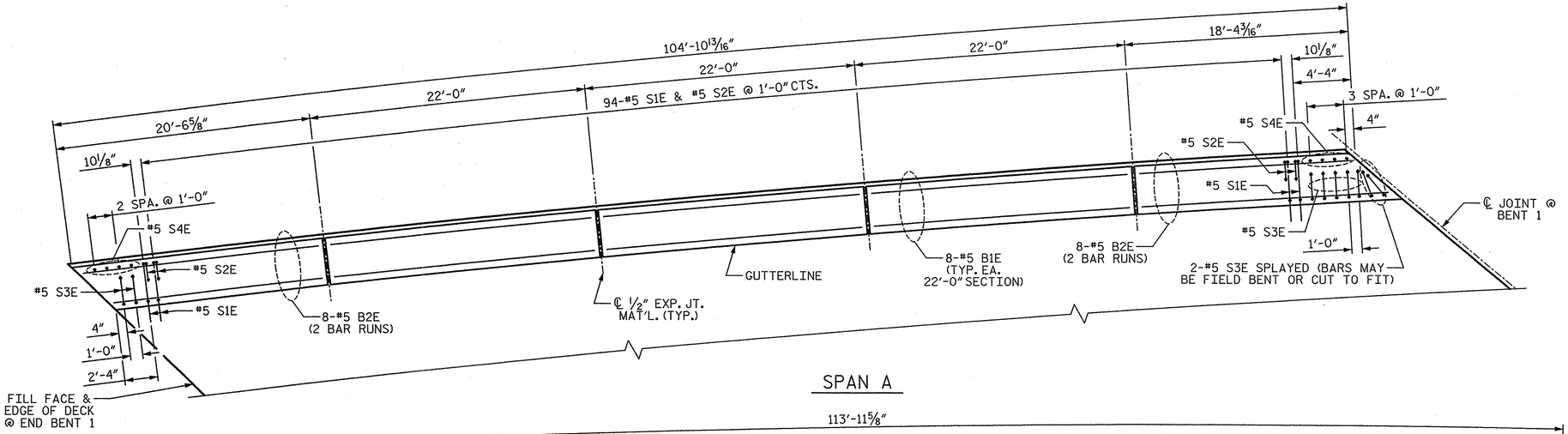

SPAN A

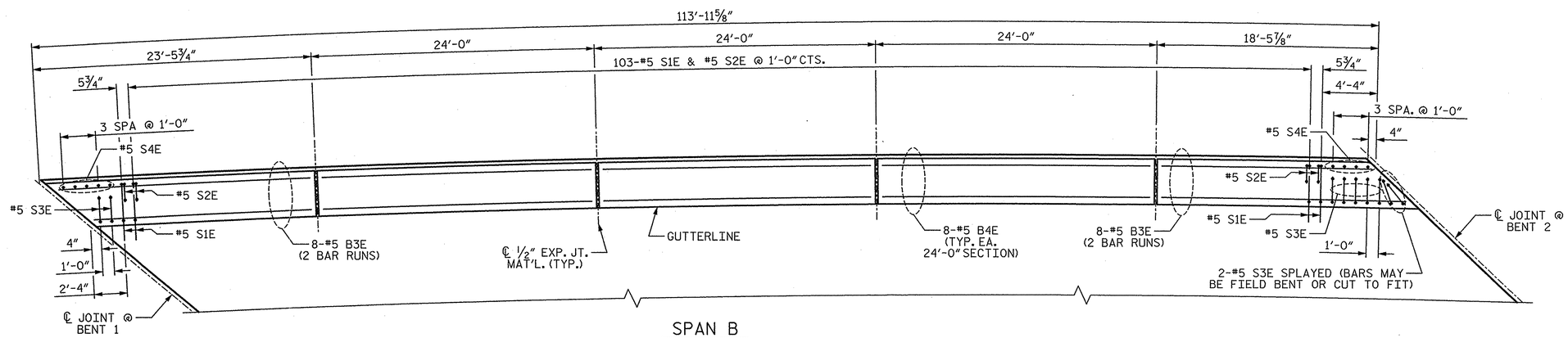

SPAN B

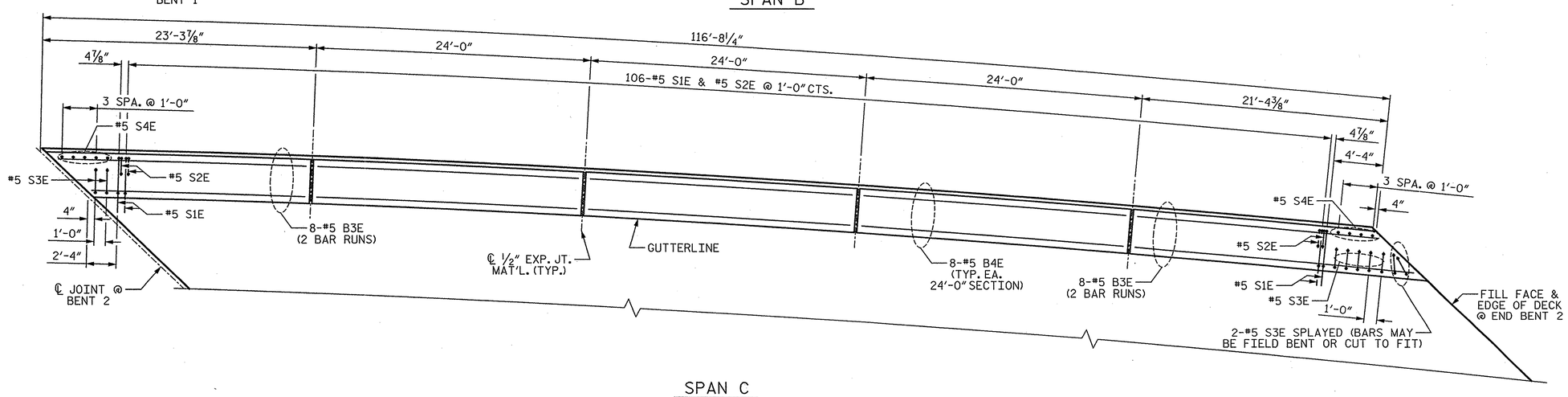

SPAN C

PLAN OF BARRIER RAIL

NOTE: ALL BARRIER RAIL DIMENSIONS ARE MEASURED ALONG THE ARC AT THE BACK FACE OF BARRIER RAIL.

PROJECT NO. U-0071
DURHAM COUNTY
STATION: 24+70.18 -DFWB-

SHEET 1 OF 2

STATE OF NORTH CAROLINA
DEPARTMENT OF TRANSPORTATION
RALEIGH
SUPERSTRUCTURE

CONCRETE BARRIER RAIL

PLANS PREPARED BY:
SIMPSON ENGINEERS & ASSOCIATES
5640 Dillard Drive
Suite 200
Cary, NC 27518
(919) 852-0468
(919) 852-0598 (Fax)
www.simpsonengr.com
LICENSURE NO. C-2521

NORTH CAROLINA PROFESSIONAL SEAL 18056 ENGINEER JOHN A. BATTS
1/14/2014

DRAWN BY:	T. BANKOVICH	DATE:	12-13
CHECKED BY:	B.S. COX	DATE:	12-13
DESIGN ENGINEER OF RECORD:	J.A. BATTS	DATE:	12-13

REVISIONS								SHEET NO.
NO.	BY:	DATE:	NO.	BY:	DATE:			S-640
1			3					TOTAL SHEETS
2			4					671

STR. #14

1/14/2014 9:35:14 AM G:\Projects\2012\U-0071 (Durham Co.)\Structures\Drawings\Final\Bridge 189\Widening\U-0071_Br 189_sd_br.dgn

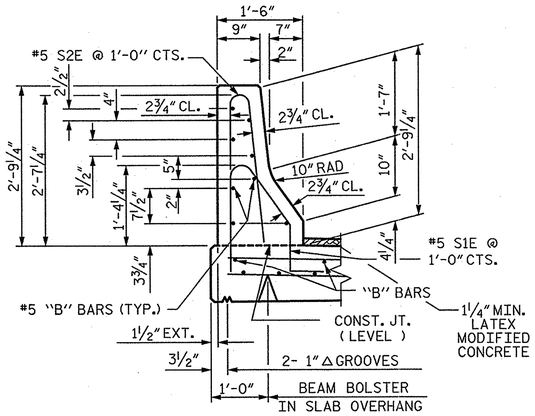

SECTION THRU RAIL

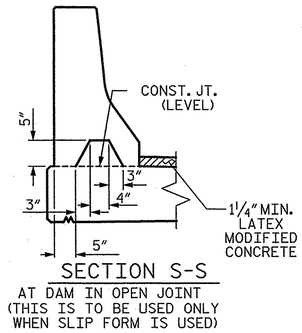

SECTION S-S

AT DAM IN OPEN JOINT
(THIS IS TO BE USED ONLY
WHEN SLIP FORM IS USED)

NOTES:

THE BARRIER RAIL IN EACH SPAN SHALL NOT BE CAST UNTIL ALL SLAB CONCRETE IN THAT SPAN HAS BEEN CAST AND HAS REACHED A MINIMUM COMPRESSIVE STRENGTH OF 3,000 PSI.

WHEN FOAM JOINT SEAL IS REQUIRED, THE JOINT IN THE DECK SHALL BE SAWED PRIOR TO THE CASTING OF BARRIER RAIL.

ALL REINFORCING STEEL IN BARRIER RAILS SHALL BE EPOXY COATED.

THE #5 S3E AND S4E BARS SHALL BE INSTALLED, USING AN ADHESIVE ANCHORING SYSTEM, AFTER SAWING THE JOINT. THE YIELD LOAD FOR THE #5 S3E AND S4E BARS IS 18.6 KIPS. FIELD TESTING FOR THE ADHESIVE BONDING SYSTEM IS NOT REQUIRED.

GROOVED CONTRACTION JOINTS, 1/2" IN DEPTH, SHALL BE TOOLED IN ALL EXPOSED FACES OF THE BARRIER RAIL AND IN ACCORDANCE WITH ARTICLE 825-10(B) OF THE STANDARD SPECIFICATIONS. THE CONTRACTION JOINT SHALL BE LOCATED AT EACH THIRD POINT BETWEEN BARRIER RAIL EXPANSION JOINTS. ONLY ONE CONTRACTION JOINT IS REQUIRED AT MIDPOINT OF BARRIER RAIL SEGMENTS LESS THAN 20 FEET IN LENGTH AND NO CONTRACTION JOINTS ARE REQUIRED FOR THOSE SEGMENTS LESS THAN 10 FEET IN LENGTH.

THE #5 S1E AND #5 S2E MAY BE SHIFTED SLIGHTLY IN ORDER TO MAINTAIN A 2" MINIMUM CLEARANCE TO THE 1/2" EXPANSION JOINT MATERIAL IN BARRIER RAIL.

BAR TYPES

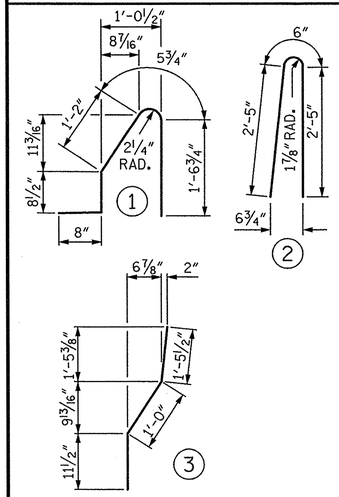

ALL BAR DIMENSIONS ARE OUT TO OUT

BILL OF MATERIAL
FOR CONCRETE BARRIER RAIL ONLY

BAR	NO.	SIZE	TYPE	LENGTH	WEIGHT
B1E	24	5	STR	21'-7"	540
B2E	32	5	STR	12'-7"	420
B3E	64	5	STR	14'-6"	968
B4E	48	5	STR	23'-7"	1181
S1E	309	5	1	4'-7"	1477
S2E	309	5	2	5'-4"	1719
S3E	27	5	3	3'-5"	96
S4E	26	5	STR	3'-3"	88
EPOXY COATED REINFORCING STEEL					6489 LB
CLASS AA CONCRETE					35.9 CY
CONCRETE BARRIER RAIL					335.6 LF

"E" INDICATES EPOXY COATED REINFORCING STEEL.

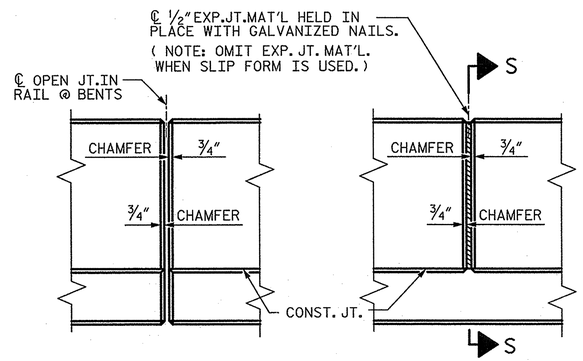

ELEVATION AT EXPANSION JOINTS

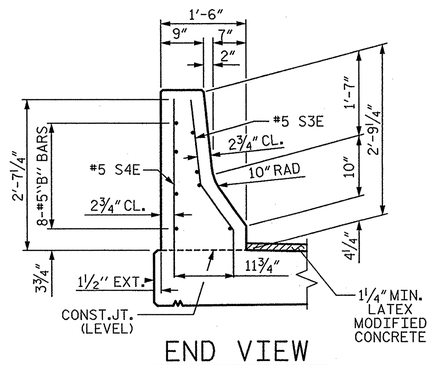

END VIEW

BARRIER RAIL DETAILS

PROJECT NO. U-0071
DURHAM COUNTY
STATION: 24+70.18 -DFWB-

SHEET 2 OF 2

STATE OF NORTH CAROLINA
DEPARTMENT OF TRANSPORTATION
RALEIGH
SUPERSTRUCTURE

CONCRETE
BARRIER RAIL

PLANS PREPARED BY:
SIMPSON ENGINEERS & ASSOCIATES
5640 Dillard Drive
Suite 200
Cary, NC 27518
(919) 852-0468
(919) 852-0598 (Fax)
www.simpsonengr.com
LICENSURE NO. C-2521

NORTH CAROLINA PROFESSIONAL SEAL 18056 ENGINEER JOHN A. BATTS
1/16/2014

REVISIONS						SHEET NO.
NO.	BY:	DATE:	NO.	BY:	DATE:	S-641
1			3			TOTAL SHEETS
2			4			671

STR. #14

DRAWN BY: T. BANKOVICH DATE: 12-13
CHECKED BY: B.S. COX DATE: 12-13
DESIGN ENGINEER OF RECORD: J.A. BATTS DATE: 12-13

1/14/2014 9:35:14 AM G:\Projects\2012\U-0071 (Durham Co.)\Structures\Drawings\Final\Bridge 189\Widening\U-0071_Br 189_sd_br.dgn

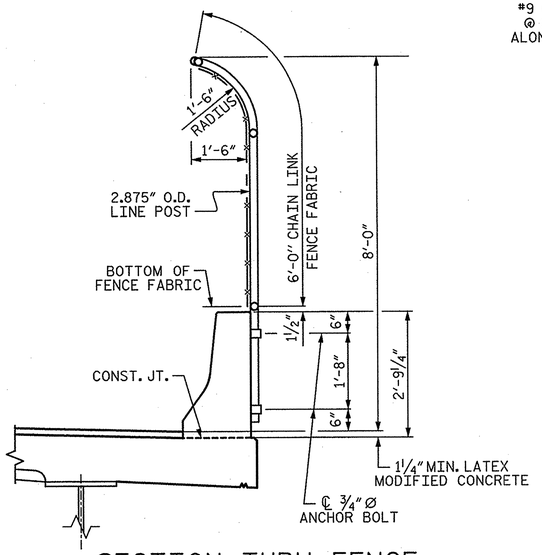

SECTION THRU FENCE

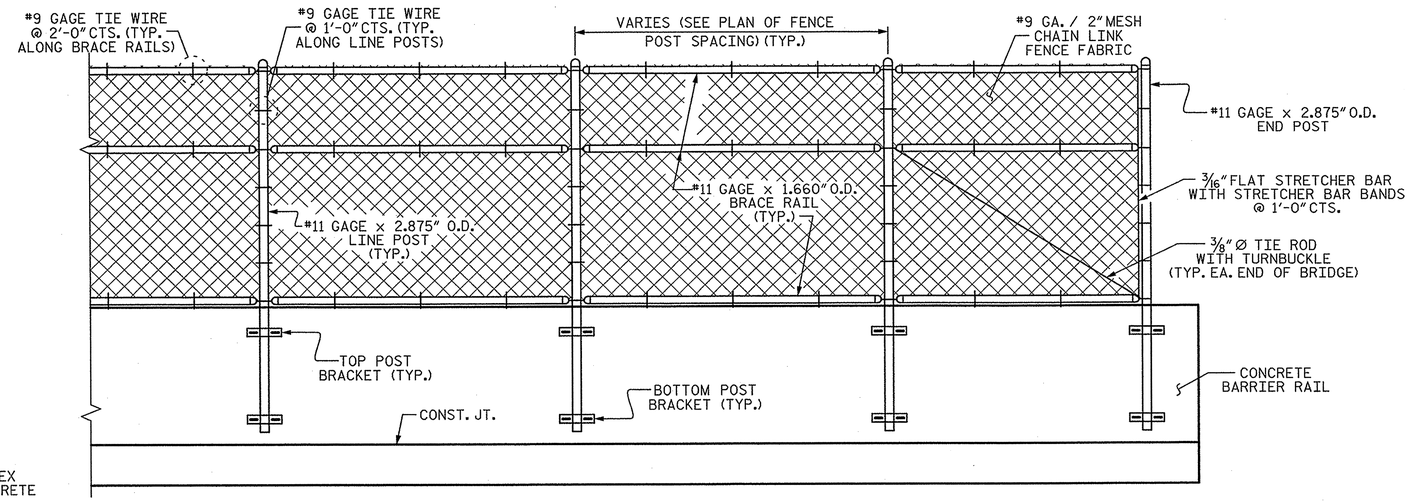

PARTIAL ELEVATION

NOTES:

FOR BRIDGE MOUNTED CHAIN LINK FENCE, SEE SPECIAL PROVISIONS.

MATERIAL FOR ANCHOR BOLTS SHALL BE TYPE 304 STAINLESS STEEL WITH A MINIMUM 9000 PSI ULTIMATE STRENGTH. NUTS AND WASHERS SHALL BE TYPE 304 STAINLESS STEEL. ANCHOR BOLTS SHALL BE EMBEDDED AS PER ADHESIVE BONDING SYSTEM MANUFACTURER SPECIFICATIONS. NUTS SHALL BE AMERICAN STANDARD FINISHED HEXAGON THICK NUTS, CLASS 2B THREADS.

FOR SETTING ANCHOR BOLTS, THE CONTRACTOR SHALL USE AN ADHESIVE BONDING SYSTEM. SEE SECTION 420-13 OF THE STANDARD SPECIFICATIONS FOR ADHESIVELY ANCHORED ANCHOR BOLTS OR DOWELS. LEVEL ONE FIELD TESTING OF BONDING SYSTEM IS REQUIRED.

ALL FENCE MATERIAL SHALL MEET THE REQUIREMENTS OF SECTION 1050 OF THE STANDARD SPECIFICATIONS, GALVANIZE ALL STEEL PARTS AND HARDWARE IN ACCORDANCE WITH ARTICLE 1076 OF THE STANDARD SPECIFICATIONS.

FENCE POST LOCATIONS SHALL BE SHIFTED, AS NECESSARY, TO MAINTAIN 1'-0" MINIMUM DISTANCE FROM ANCHOR BOLT TO JOINTS IN BARRIER RAIL.

WELDING SHALL BE DONE IN ACCORDANCE WITH ARTICLE 1072-18 OF STANDARD SPECIFICATIONS.

ADHESIVE BONDING SYSTEM SHALL HAVE MINIMUM PULLOUT STRENGTH OF 10 KIPS. THE ADHESIVE BONDING SYSTEM SHALL BE CHOSEN FROM THOSE ON THE NCDOT APPROVED PRODUCTS LIST.

72" CHAIN LINK FENCE	
TOTAL PAY LENGTH	330.56 LF

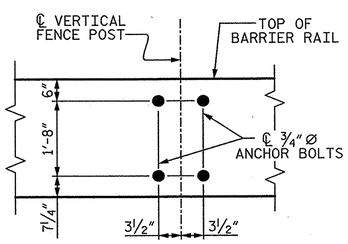

BOLT SETTING DETAIL

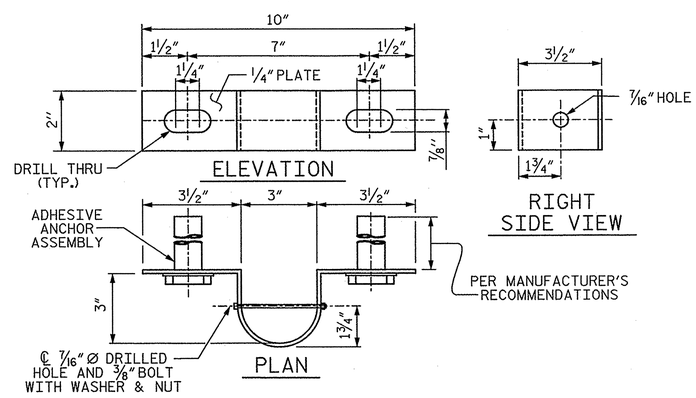

TOP POST BRACKET

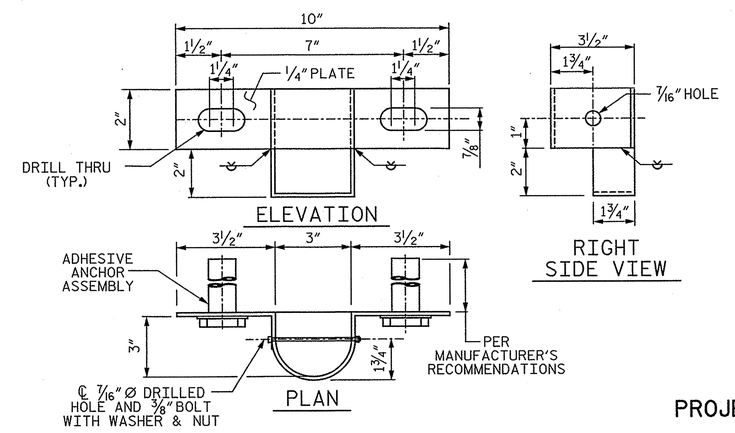

BOTTOM POST BRACKET

PROJECT NO. U-0071

DURHAM COUNTY

STATION: 24+70.18 -DFWB-

SHEET 1 OF 2

STATE OF NORTH CAROLINA
DEPARTMENT OF TRANSPORTATION
RALEIGH

SUPERSTRUCTURE

BRIDGE MOUNTED CHAIN LINK FENCE DETAILS

PLANS PREPARED BY:

SIMPSON ENGINEERS & ASSOCIATES
5640 Dillard Drive
Suite 200
Cary, NC 27518
(919) 852-0468
(919) 852-0598 (Fax)
www.simpsonengr.com
LICENSURE NO. C-2521

NORTH CAROLINA PROFESSIONAL SEAL 18056 ENGINEER JOHN A. BATTS
1/16/2014

REVISIONS						SHEET NO.
NO.	BY:	DATE:	NO.	BY:	DATE:	S-C42
1			3			TOTAL SHEETS
2			4			67

STR. #14

DRAWN BY:	T. BANKOVICH	DATE:	12-13
CHECKED BY:	B.S. COX	DATE:	12-13
DESIGN ENGINEER OF RECORD:	J.A. BATTS	DATE:	12-13

1/14/2014 9:35:14 AM G:\Projects\2012\U-0071 (Durham Co.)\Structures\Drawings\Final\Bridge 189\Widening\U-0071_Br 189_sd_bmclf.dgn

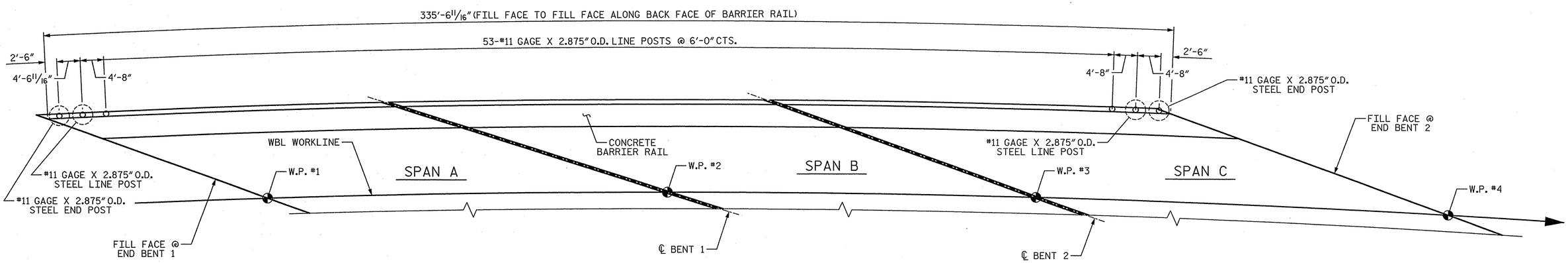

PLAN OF FENCE POST SPACING

PROJECT NO. U-0071

DURHAM COUNTY

STATION: 24+70.18 -DFWB-

SHEET 2 OF 2

STATE OF NORTH CAROLINA
DEPARTMENT OF TRANSPORTATION
RALEIGH

SUPERSTRUCTURE

BRIDGE MOUNTED CHAIN LINK FENCE DETAILS

PLANS PREPARED BY:

SIMPSON ENGINEERS & ASSOCIATES
5640 Dillard Drive
Suite 200
Cary, NC 27518
(919) 852-0468
(919) 852-0598 (Fax)
www.simpsonengr.com
LICENSURE NO. C-2521

NORTH CAROLINA PROFESSIONAL SEAL 18056 ENGINEER JOHN A. BATTS
1/16/2014

REVISIONS								SHEET NO.
NO.	BY:	DATE:	NO.	BY:	DATE:			S-CA3
1			3					TOTAL SHEETS
2			4					671

STR. #14

DRAWN BY: T. BANKOVICH DATE: 12-13
CHECKED BY: B.S. COX DATE: 12-13
DESIGN ENGINEER OF RECORD: J.A. BATTS DATE: 12-13

1/14/2014 9:35:14 AM G:\Projects\2012\U-0071 (Durham Co.)\Structures\Drawings\Final\Bridge 189\Widening\U-0071_Br 189_sd_bmolf.dgn

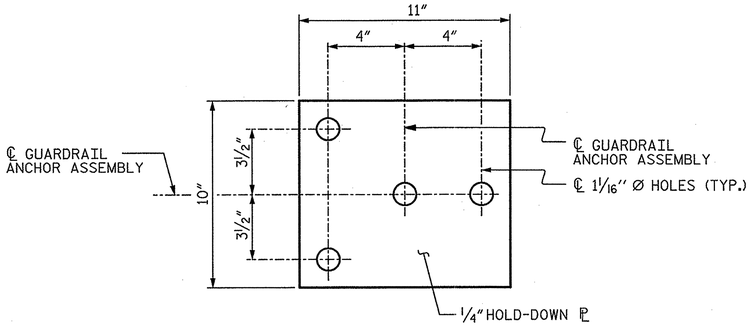

PLAN

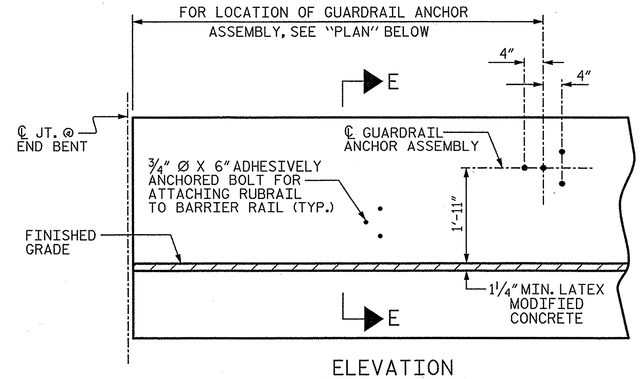

ELEVATION

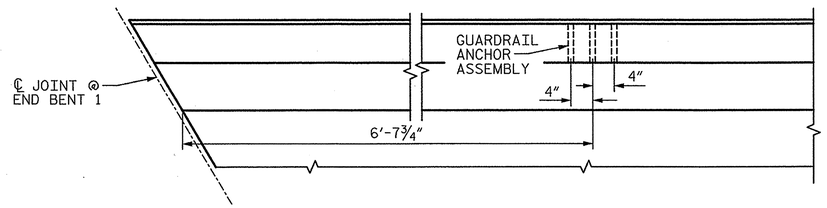

PLAN

LOCATION OF ANCHORS FOR GUARDRAIL

(END BENT 1 SHOWN, END BENT 2 SIMILAR)

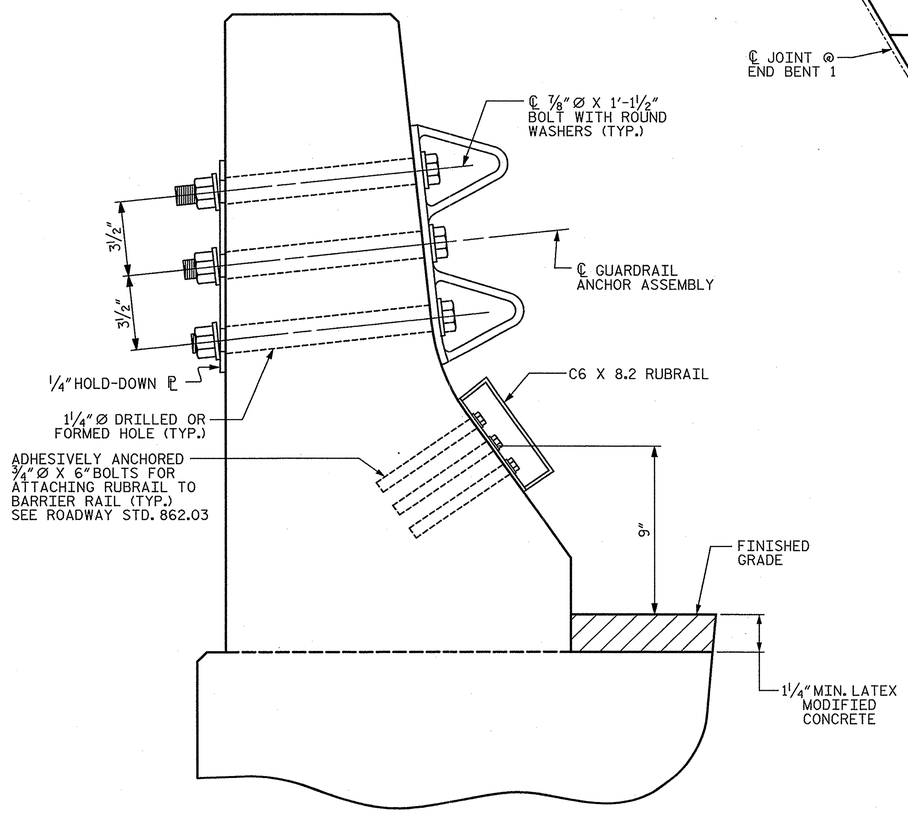

SECTION E-E

GUARDRAIL ANCHOR ASSEMBLY DETAILS

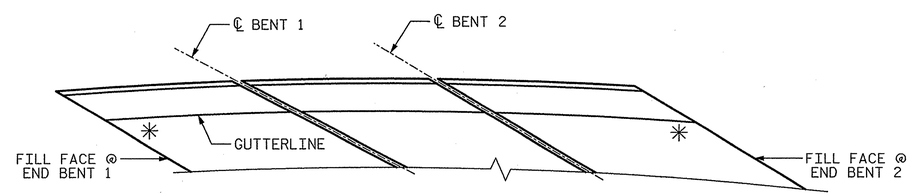

SKETCH SHOWING POINTS OF ATTACHMENTS

✳ DENOTES GUARDRAIL ANCHOR ASSEMBLY

NOTES:

THE GUARDRAIL ANCHOR ASSEMBLY SHALL CONSIST OF A 1/4" HOLD-DOWN PLATE AND 4 - 7/8" Ø BOLTS WITH NUTS AND WASHERS, RUBRAIL, AND ADHESIVELY ANCHORED BOLTS.

THE HOLD-DOWN PLATE SHALL CONFORM TO AASHTO M270 GRADE 36. AFTER FABRICATION, THE HOLD-DOWN PLATE SHALL BE HOT-DIP GALVANIZED IN ACCORDANCE WITH AASHTO M111.

BOLTS SHALL CONFORM TO THE REQUIREMENTS OF ASTM A307 AND NUTS SHALL CONFORM TO THE REQUIREMENTS OF AASHTO M291. BOLTS, NUTS AND WASHERS SHALL BE GALVANIZED. (AT THE CONTRACTOR'S OPTION, STAINLESS STEEL BOLTS, NUTS AND WASHERS MAY BE USED AS AN ALTERNATE FOR THE 7/8" Ø GALVANIZED BOLTS, NUTS AND WASHERS. THEY SHALL CONFORM TO OR EXCEED THE MECHANICAL REQUIREMENTS OF ASTM A307. THE USE OF THIS ALTERNATE SHALL BE APPROVED BY THE ENGINEER.)

THE GUARDRAIL ANCHOR ASSEMBLY IS REQUIRED AT ALL POINTS WHERE APPROACH GUARDRAIL IS TO BE ATTACHED TO THE END OF BARRIER RAIL. FOR POINTS OF ATTACHMENT, SEE SKETCH.

AFTER INSTALLATION, THE EXPOSED THREAD OF THE BOLT SHALL BE BURRED WITH A SHARP POINTED TOOL.

THE COST OF THE GUARDRAIL ANCHOR ASSEMBLY SHALL BE INCLUDED IN THE UNIT CONTRACT PRICE BID FOR CONCRETE BARRIER RAIL.

THE 1 1/4" Ø HOLES SHALL BE FORMED OR DRILLED WITH A CORE BIT. IMPACT TOOLS WILL NOT BE PERMITTED. ANY CONCRETE DAMAGED BY THIS WORK SHALL BE REPAIRED TO THE SATISFACTION OF THE ENGINEER.

THE C6 X 8.2 RUBRAIL IS TO BE ADHESIVELY ANCHORED TO THE RAIL USING THREE 3/4" Ø X 6" BOLTS WITH WASHERS. LEVEL ONE FIELD TESTING IS REQUIRED, AND THE YIELD LOAD OF THE 3/4" Ø BOLT IS 12 KIPS. FOR ADHESIVELY ANCHORED ANCHOR BOLTS OR DOWELS, SEE STANDARD SPECIFICATIONS. SEE ROADWAY STANDARD 862.03 FOR DETAILS AND LOCATION OF THE RUBRAIL.

PROJECT NO. U-0071
DURHAM COUNTY
STATION: 24+70.18 -DFWB-

STATE OF NORTH CAROLINA
DEPARTMENT OF TRANSPORTATION
RALEIGH
SUPERSTRUCTURE

GUARDRAIL ANCHORAGE FOR BARRIER RAIL

PLANS PREPARED BY:
SIMPSON ENGINEERS & ASSOCIATES
5640 Dillard Drive
Suite 200
Cary, NC 27518
(919) 852-0468
(919) 852-0598 (Fax)
www.simpsonengr.com
LICENSURE NO. C-2521

NORTH CAROLINA PROFESSIONAL SEAL 18056 ENGINEER JOHN A. BATTS 1/16/2014

REVISIONS						SHEET NO.
NO.	BY:	DATE:	NO.	BY:	DATE:	S-644
1			3			TOTAL SHEETS
2			4			671

STR. #14

DRAWN BY:	T. BANKOVICH	DATE:	12-13
CHECKED BY:	B.S. COX	DATE:	12-13
DESIGN ENGINEER OF RECORD:	J.A. BATTS	DATE:	12-13

1/14/2014 9:35:15 AM G:\Projects\2012\U-0071 (Durham Co.)\Structures\Drawings\Final\Bridge 189\Widening\U-0071_Br 189_sd_gra.dgn

BILL OF MATERIAL
SPAN A

BAR	NO.	SIZE	TYPE	LENGTH	WEIGHT	BAR	NO.	SIZE	TYPE	LENGTH	WEIGHT
A1E	137	5	STR	14′-8″	2096	A1215	2	5	STR	8′-9″	18
A2	137	5	STR	14′-8″	2096	A1216	2	5	STR	8′-4″	17
A3E	4	5	STR	9′-3″	39	A1217	2	5	STR	7′-11″	17
						A1218	2	5	STR	7′-6″	16
A1101E	2	5	STR	14′-4″	30	A1219	2	5	STR	7′-2″	15
A1102E	2	5	STR	14′-0″	29	A1220	2	5	STR	6′-9″	14
A1103E	2	5	STR	13′-7″	28	A1221	2	5	STR	6′-4″	13
A1104E	2	5	STR	13′-2″	27	A1222	2	5	STR	5′-11″	12
A1105E	2	5	STR	12′-9″	27	A1223	2	5	STR	5′-6″	11
A1106E	2	5	STR	12′-4″	26	A1224	2	5	STR	5′-1″	11
A1107E	2	5	STR	12′-0″	25	A1225	2	5	STR	4′-9″	10
A1108E	2	5	STR	11′-7″	24	A1226	2	5	STR	4′-4″	9
A1109E	2	5	STR	11′-2″	23	A1227	2	5	STR	3′-11″	8
A1110E	2	5	STR	10′-9″	22	A1228	2	5	STR	3′-6″	7
A1111E	2	5	STR	10′-4″	22	A1229	2	5	STR	3′-1″	6
A1112E	2	5	STR	9′-11″	21	A1230	2	5	STR	2′-9″	6
A1113E	2	5	STR	9′-7″	20	A1231	2	5	STR	2′-4″	5
A1114E	2	5	STR	9′-2″	19	A1232	3	5	STR	14′-3″	45
A1115E	2	5	STR	8′-9″	18	A1233	3	5	STR	13′-8″	43
A1116E	2	5	STR	8′-4″	17	A1234	3	5	STR	13′-2″	41
A1117E	2	5	STR	7′-11″	17	A1235	3	5	STR	12′-8″	40
A1118E	2	5	STR	7′-6″	16	A1236	3	5	STR	12′-1″	38
A1119E	2	5	STR	7′-2″	15	A1237	3	5	STR	11′-7″	36
A1120E	2	5	STR	6′-9″	14	A1238	3	5	STR	11′-0″	34
A1121E	2	5	STR	6′-4″	13	A1239	3	5	STR	10′-6″	33
A1122E	2	5	STR	5′-11″	12	A1240	3	5	STR	10′-0″	31
A1123E	2	5	STR	5′-6″	11	A1241	3	5	STR	9′-5″	29
A1124E	2	5	STR	5′-1″	11	A1242	3	5	STR	8′-11″	28
A1125E	2	5	STR	4′-9″	10	A1243	3	5	STR	8′-4″	26
A1126E	2	5	STR	4′-4″	9	A1244	3	5	STR	7′-10″	25
A1127E	2	5	STR	3′-11″	8	A1245	3	5	STR	7′-4″	23
A1128E	2	5	STR	3′-6″	7	A1246	3	5	STR	6′-9″	21
A1129E	2	5	STR	3′-1″	6	A1247	3	5	STR	6′-3″	20
A1130E	2	5	STR	2′-9″	6	A1248	3	5	STR	5′-8″	18
A1131E	2	5	STR	2′-4″	5	A1249	3	5	STR	5′-2″	16
A1132E	3	5	STR	14′-3″	45	A1250	3	5	STR	4′-8″	15
A1133E	3	5	STR	13′-8″	43	A1251	3	5	STR	4′-1″	13
A1134E	3	5	STR	13′-2″	41	A1252	3	5	STR	3′-7″	11
A1135E	3	5	STR	12′-8″	40	A1253	3	5	STR	3′-0″	9
A1136E	3	5	STR	12′-1″	38	A1254	3	5	STR	2′-6″	8
A1137E	3	5	STR	11′-7″	36	A1255	3	5	STR	2′-0″	6
A1138E	3	5	STR	11′-0″	34						
A1139E	3	5	STR	10′-6″	33	B101E	56	4	STR	29′-6″	1104
A1140E	3	5	STR	10′-0″	31	B102	72	5	STR	38′-9″	2910
A1141E	3	5	STR	9′-5″	29						
A1142E	3	5	STR	8′-11″	28	D1E	108	6	STR	2′-3″	365
A1143E	3	5	STR	8′-4″	26	D2E	202	6	STR	4′-3″	1289
A1144E	3	5	STR	7′-10″	25	D3E	12	6	STR	9′-0″	162
A1145E	3	5	STR	7′-4″	23	D4E	3	6	1	2′-7″	12
A1146E	3	5	STR	6′-9″	21						
A1147E	3	5	STR	6′-3″	20	G1E	1	5	STR	45′-6″	47
A1148E	3	5	STR	5′-8″	18	G101E	1	5	STR	38′-0″	40
A1149E	3	5	STR	5′-2″	16						
A1150E	3	5	STR	4′-8″	15	K1E	6	5	STR	15′-10″	99
A1151E	3	5	STR	4′-1″	13	K101E	3	5	2	11′-11″	37
A1152E	3	5	STR	3′-7″	11	K102E	3	5	3	11′-9″	37
A1153E	3	5	STR	3′-0″	9	K103E	3	5	2	9′-0″	28
A1154E	3	5	STR	2′-6″	8	K104E	6	5	STR	13′-3″	83
A1155E	3	5	STR	2′-0″	6	K105E	2	5	STR	27′-7″	58
						K106E	3	5	2	13′-2″	41
A1201	2	5	STR	14′-4″	30	K107E	3	5	3	12′-2″	38
A1202	2	5	STR	14′-0″	29	K108E	3	5	2	10′-0″	31
A1203	2	5	STR	13′-7″	28						
A1204	2	5	STR	13′-2″	27	S101E	12	4	4	14′-0″	112
A1205	2	5	STR	12′-9″	27	S102E	12	4	4	9′-0″	72
A1206	2	5	STR	12′-4″	26						
A1207	2	5	STR	12′-0″	25	REINFORCING STEEL					6153 LB
A1208	2	5	STR	11′-7″	24						
A1209	2	5	STR	11′-2″	23	EPOXY COATED					
A1210	2	5	STR	10′-9″	22	REINFORCING STEEL					6937 LB
A1211	2	5	STR	10′-4″	22						
A1212	2	5	STR	9′-11″	21						
A1213	2	5	STR	9′-7″	20						
A1214	2	5	STR	9′-2″	19						

"E" INDICATES EPOXY COATED REINFORCING STEEL.

BILL OF MATERIAL
SPAN B

BAR	NO.	SIZE	TYPE	LENGTH	WEIGHT	BAR	NO.	SIZE	TYPE	LENGTH	WEIGHT
A1E	138	5	STR	14′-8″	2111	A2208	3	5	STR	10′-10″	34
A2	138	5	STR	14′-8″	2111	A2209	3	5	STR	10′-4″	32
A3E	4	5	STR	9′-3″	39	A2210	3	5	STR	9′-11″	31
						A2211	3	5	STR	9′-5″	29
A2101E	3	5	STR	14′-3″	45	A2212	3	5	STR	8′-11″	28
A2102E	3	5	STR	13′-9″	43	A2213	3	5	STR	8′-5″	26
A2103E	3	5	STR	13′-3″	41	A2214	3	5	STR	7′-11″	25
A2104E	3	5	STR	12′-9″	40	A2215	3	5	STR	7′-5″	23
A2105E	3	5	STR	12′-4″	39	A2216	3	5	STR	7′-0″	22
A2106E	3	5	STR	11′-10″	37	A2217	3	5	STR	6′-6″	20
A2107E	3	5	STR	11′-4″	35	A2218	3	5	STR	6′-0″	19
A2108E	3	5	STR	10′-10″	34	A2219	3	5	STR	5′-6″	17
A2109E	3	5	STR	10′-4″	32	A2220	3	5	STR	5′-0″	16
A2110E	3	5	STR	9′-11″	31	A2221	3	5	STR	4′-6″	14
A2111E	3	5	STR	9′-5″	29	A2222	3	5	STR	4′-1″	13
A2112E	3	5	STR	8′-11″	28	A2223	3	5	STR	3′-7″	11
A2113E	3	5	STR	8′-5″	26	A2224	3	5	STR	3′-1″	10
A2114E	3	5	STR	7′-11″	25	A2225	3	5	STR	2′-7″	8
A2115E	3	5	STR	7′-5″	23	A2226	3	5	STR	2′-1″	7
A2116E	3	5	STR	7′-0″	22	A2227	3	5	STR	14′-2″	44
A2117E	3	5	STR	6′-6″	20	A2228	3	5	STR	13′-8″	43
A2118E	3	5	STR	6′-0″	19	A2229	3	5	STR	13′-1″	41
A2119E	3	5	STR	5′-6″	17	A2230	3	5	STR	12′-6″	39
A2120E	3	5	STR	5′-0″	16	A2231	3	5	STR	12′-0″	38
A2121E	3	5	STR	4′-6″	14	A2232	3	5	STR	11′-5″	36
A2122E	3	5	STR	4′-1″	13	A2233	3	5	STR	10′-10″	34
A2123E	3	5	STR	3′-7″	11	A2234	3	5	STR	10′-4″	32
A2124E	3	5	STR	3′-1″	10	A2235	3	5	STR	9′-9″	31
A2125E	3	5	STR	2′-7″	8	A2236	3	5	STR	9′-3″	29
A2126E	3	5	STR	2′-1″	7	A2237	3	5	STR	8′-8″	27
A2127E	3	5	STR	14′-2″	44	A2238	3	5	STR	8′-1″	25
A2128E	3	5	STR	13′-8″	43	A2239	3	5	STR	7′-7″	24
A2129E	3	5	STR	13′-1″	41	A2240	3	5	STR	7′-0″	22
A2130E	3	5	STR	12′-6″	39	A2241	3	5	STR	6′-5″	20
A2131E	3	5	STR	12′-0″	38	A2242	3	5	STR	5′-11″	19
A2132E	3	5	STR	11′-5″	36	A2243	3	5	STR	5′-4″	17
A2133E	3	5	STR	10′-10″	34	A2244	3	5	STR	4′-9″	15
A2134E	3	5	STR	10′-4″	32	A2245	3	5	STR	4′-3″	13
A2135E	3	5	STR	9′-9″	31	A2246	3	5	STR	3′-8″	11
A2136E	3	5	STR	9′-3″	29	A2247	3	5	STR	3′-2″	10
A2137E	3	5	STR	8′-8″	27	A2248	3	5	STR	2′-7″	8
A2138E	3	5	STR	8′-1″	25	A2249	3	5	STR	2′-0″	6
A2139E	3	5	STR	7′-7″	24						
A2140E	3	5	STR	7′-0″	22	B201E	56	4	STR	29′-9″	1113
A2141E	3	5	STR	6′-5″	20	B202	72	5	STR	39′-0″	2929
A2142E	3	5	STR	5′-11″	19						
A2143E	3	5	STR	5′-4″	17	D1E	105	6	STR	2′-3″	355
A2144E	3	5	STR	4′-9″	15	D2E	200	6	STR	4′-3″	1277
A2145E	3	5	STR	4′-3″	13	D3E	12	6	STR	9′-0″	162
A2146E	3	5	STR	3′-8″	11	D4E	3	6	1	2′-7″	12
A2147E	3	5	STR	3′-2″	10						
A2148E	3	5	STR	2′-7″	8	G1E	1	5	STR	45′-6″	47
A2149E	3	5	STR	2′-0″	6	G2E	1	5	STR	44′-1″	46
A2201	3	5	STR	14′-3″	45	K1E	6	5	STR	15′-10″	99
A2202	3	5	STR	13′-9″	43	K2E	6	5	STR	15′-4″	96
A2203	3	5	STR	13′-3″	41	K201E	3	5	2	13′-5″	42
A2204	3	5	STR	12′-9″	40	K202E	3	5	3	12′-7″	39
A2205	3	5	STR	12′-4″	39	K203E	3	5	2	10′-3″	32
A2206	3	5	STR	11′-10″	37	K204E	3	5	2	12′-11″	40
A2207	3	5	STR	11′-4″	35	K205E	3	5	3	12′-1″	38
						K206E	3	5	2	9′-10″	31
						S201E	12	4	4	9′-6″	76
						S202E	12	4	4	8′-11″	71
						REINFORCING STEEL					6289 LB
						EPOXY COATED					
						REINFORCING STEEL					6975 LB

"E" INDICATES EPOXY COATED REINFORCING STEEL.

PROJECT NO. U-0071
DURHAM COUNTY
STATION: 24+70.18 -DFWB-

SHEET 1 OF 2

STATE OF NORTH CAROLINA
DEPARTMENT OF TRANSPORTATION
RALEIGH
SUPERSTRUCTURE

BILL OF MATERIAL

PLANS PREPARED BY:
SIMPSON ENGINEERS & ASSOCIATES
5640 Dillard Drive
Suite 200
Cary, NC 27518
(919) 852-0468
(919) 852-0598 (Fax)
www.simpsonengr.com
LICENSURE NO. C-2521

NORTH CAROLINA PROFESSIONAL SEAL 18056 ENGINEER JOHN A. BATTS
1/16/2014

REVISIONS						SHEET NO.
NO.	BY:	DATE:	NO.	BY:	DATE:	S-645
1			3			TOTAL SHEETS
2			4			671

STR. #14

DRAWN BY: T. BANKOVICH DATE: 12-13
CHECKED BY: B.S. COX DATE: 12-13
DESIGN ENGINEER OF RECORD: J.A. BATTS DATE: 12-13

1/14/2014 9:35:15 AM G:\Projects\2012\U-0071 (Durham Co.)\Structures\Drawings\Final\Bridge 189\Widening\U-0071_Br 189_sd_bm.dgn

SUPERSTRUCTURE REINFORCING STEEL LENGTHS ARE BASED ON THE FOLLOWING MINIMUM SPLICE LENGTHS

BAR SIZE	SUPERSTRUCTURE EXCEPT APPROACH SLABS, PARAPET, AND BARRIER RAIL		APPROACH SLABS		PARAPET AND BARRIER RAIL
	EPOXY COATED	UNCOATED	EPOXY COATED	UNCOATED	
#4	2′-0″	1′-9″	2′-0″	1′-9″	2′-9″
#5	2′-6″	2′-2″	2′-6″	2′-2″	3′-5″
#6	3′-0″	2′-7″	3′-10″	2′-7″	4′-4″
#7	5′-3″	3′-6″			
#8	6′-10″	4′-7″			

GROOVING BRIDGE FLOOR

APPROACH SLABS ▲	5,169	SQ. FT.
BRIDGE DECK ▲	18,284	SQ. FT.
TOTAL ▲	23,453	SQ. FT.

▲ INCLUDES EXISTING AND NEW DECK AND APPROACH SLABS.

BAR TYPES

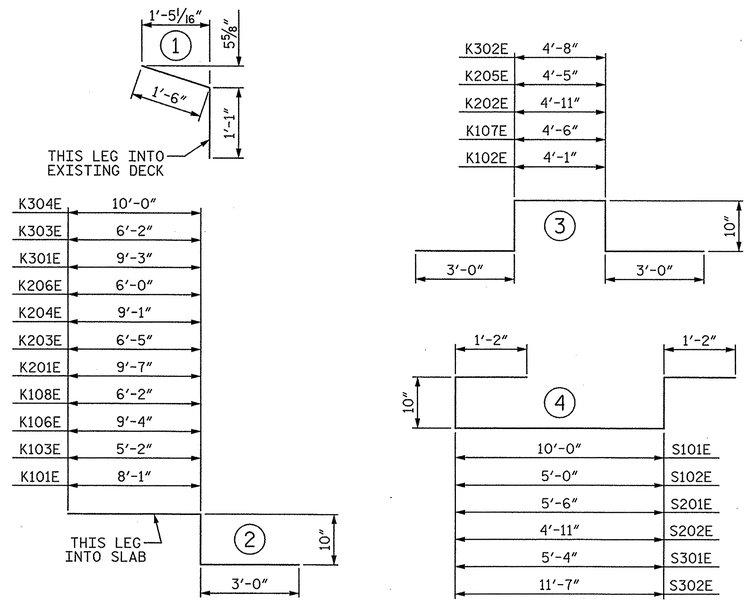

ALL BAR DIMENSIONS ARE OUT TO OUT.

BILL OF MATERIAL

SPAN C

BAR	NO.	SIZE	TYPE	LENGTH	WEIGHT
A1E	147	5	STR	14′-8″	2249
A2	147	5	STR	14′-8″	2249
A3E	4	5	STR	9′-3″	39
A3101E	3	5	STR	14′-3″	45
A3102E	3	5	STR	13′-9″	43
A3103E	3	5	STR	13′-3″	41
A3104E	3	5	STR	12′-9″	40
A3105E	3	5	STR	12′-3″	38
A3106E	3	5	STR	11′-9″	37
A3107E	3	5	STR	11′-3″	35
A3108E	3	5	STR	10′-9″	34
A3109E	3	5	STR	10′-3″	32
A3110E	3	5	STR	9′-9″	31
A3111E	3	5	STR	9′-2″	29
A3112E	3	5	STR	8′-8″	27
A3113E	3	5	STR	8′-2″	26
A3114E	3	5	STR	7′-8″	24
A3115E	3	5	STR	7′-2″	22
A3116E	3	5	STR	6′-8″	21
A3117E	3	5	STR	6′-2″	19
A3118E	3	5	STR	5′-8″	18
A3119E	3	5	STR	5′-2″	16
A3120E	3	5	STR	4′-8″	15
A3121E	3	5	STR	4′-2″	13
A3122E	3	5	STR	3′-8″	11
A3123E	3	5	STR	3′-2″	10
A3124E	3	5	STR	2′-8″	8
A3125E	3	5	STR	2′-2″	7
A3126E	3	5	STR	14′-3″	45
A3127E	3	5	STR	13′-9″	43
A3128E	3	5	STR	13′-3″	41
A3129E	3	5	STR	12′-8″	40
A3130E	3	5	STR	12′-2″	38
A3131E	3	5	STR	11′-8″	37
A3132E	3	5	STR	11′-2″	35
A3133E	3	5	STR	10′-8″	33
A3134E	3	5	STR	10′-2″	32
A3135E	3	5	STR	9′-8″	30
A3136E	3	5	STR	9′-2″	29
A3137E	3	5	STR	8′-7″	27
A3138E	3	5	STR	8′-1″	25
A3139E	3	5	STR	7′-7″	24
A3140E	3	5	STR	7′-1″	22
A3141E	3	5	STR	6′-7″	21
A3142E	3	5	STR	6′-1″	19
A3143E	3	5	STR	5′-7″	17
A3144E	3	5	STR	5′-1″	16
A3145E	3	5	STR	4′-6″	14
A3146E	3	5	STR	4′-0″	13
A3147E	3	5	STR	3′-6″	11
A3148E	3	5	STR	3′-0″	9
A3149E	3	5	STR	2′-6″	8
A3150E	3	5	STR	2′-0″	6
A3201	3	5	STR	14′-3″	45
A3202	3	5	STR	13′-9″	43
A3203	3	5	STR	13′-3″	41
A3204	3	5	STR	12′-9″	40
A3205	3	5	STR	12′-3″	38
A3206	3	5	STR	11′-9″	37
A3207	3	5	STR	11′-3″	35
A3208	3	5	STR	10′-9″	34
A3209	3	5	STR	10′-3″	32
A3210	3	5	STR	9′-9″	31
A3211	3	5	STR	9′-2″	29
A3212	3	5	STR	8′-8″	27
A3213	3	5	STR	8′-2″	26
A3214	3	5	STR	7′-8″	24
A3215	3	5	STR	7′-2″	22
A3216	3	5	STR	6′-8″	21
A3217	3	5	STR	6′-2″	19
A3218	3	5	STR	5′-8″	18
A3219	3	5	STR	5′-2″	16
A3220	3	5	STR	4′-8″	15
A3221	3	5	STR	4′-2″	13
A3222	3	5	STR	3′-8″	11
A3223	3	5	STR	3′-2″	10
A3224	3	5	STR	2′-8″	8
A3225	3	5	STR	2′-2″	7
A3226	3	5	STR	14′-3″	45

BAR	NO.	SIZE	TYPE	LENGTH	WEIGHT
A3227	3	5	STR	13′-9″	43
A3228	3	5	STR	13′-3″	41
A3229	3	5	STR	12′-8″	40
A3230	3	5	STR	12′-2″	38
A3231	3	5	STR	11′-8″	37
A3232	3	5	STR	11′-2″	35
A3233	3	5	STR	10′-8″	33
A3234	3	5	STR	10′-2″	32
A3235	3	5	STR	9′-8″	30
A3236	3	5	STR	9′-2″	29
A3237	3	5	STR	8′-7″	27
A3238	3	5	STR	8′-1″	25
A3239	3	5	STR	7′-7″	24
A3240	3	5	STR	7′-1″	22
A3241	3	5	STR	6′-7″	21
A3242	3	5	STR	6′-1″	19
A3243	3	5	STR	5′-7″	17
A3244	3	5	STR	5′-1″	16
A3245	3	5	STR	4′-6″	14
A3246	3	5	STR	4′-0″	13
A3247	3	5	STR	3′-6″	11
A3248	3	5	STR	3′-0″	9
A3249	3	5	STR	2′-6″	8
A3250	3	5	STR	2′-0″	6
B301E	70	4	STR	25′-5″	1188
B302	72	5	STR	41′-2″	3091
D1E	114	6	STR	2′-3″	385
D2E	214	6	STR	4′-3″	1366
D3E	12	6	STR	9′-0″	162
D4E	3	6	1	2′-7″	12
G2E	1	5	STR	44′-1″	46
G301E	1	5	STR	47′-3″	49
K2E	6	5	STR	15′-4″	96
K301E	3	5	2	13′-1″	41
K302E	6	5	3	12′-4″	77
K303E	6	5	2	10′-0″	63
K304E	3	5	2	13′-10″	43
K305E	6	5	STR	16′-5″	103
K306E	2	5	STR	34′-7″	72
S301E	12	4	4	9′-4″	75
S302E	12	4	4	15′-7″	125
REINFORCING STEEL					6617 LB
EPOXY COATED REINFORCING STEEL					7468 LB

"E" INDICATES EPOXY COATED REINFORCING STEEL.

CLASS AA CONCRETE BREAKDOWN

	SPAN A	SPAN B	SPAN C
	CY	CY	CY
DECK	54.2	55.0	59.2
CLOSURE POUR	6.9	8.1	7.3
TOTAL	61.1	63.1	66.5

SUPERSTRUCTURE BILL OF MATERIAL

	CLASS "AA" CONCRETE	REINFORCING STEEL	EPOXY COATED REINFORCING STEEL
	CY	LB	LB
SPAN A	61.1	6153	6937
SPAN B	63.1	6289	6975
SPAN C	66.5	6617	7468
TOTAL	190.7	19059	21380

** QUANTITIES FOR BARRIER RAIL ARE NOT INCLUDED.

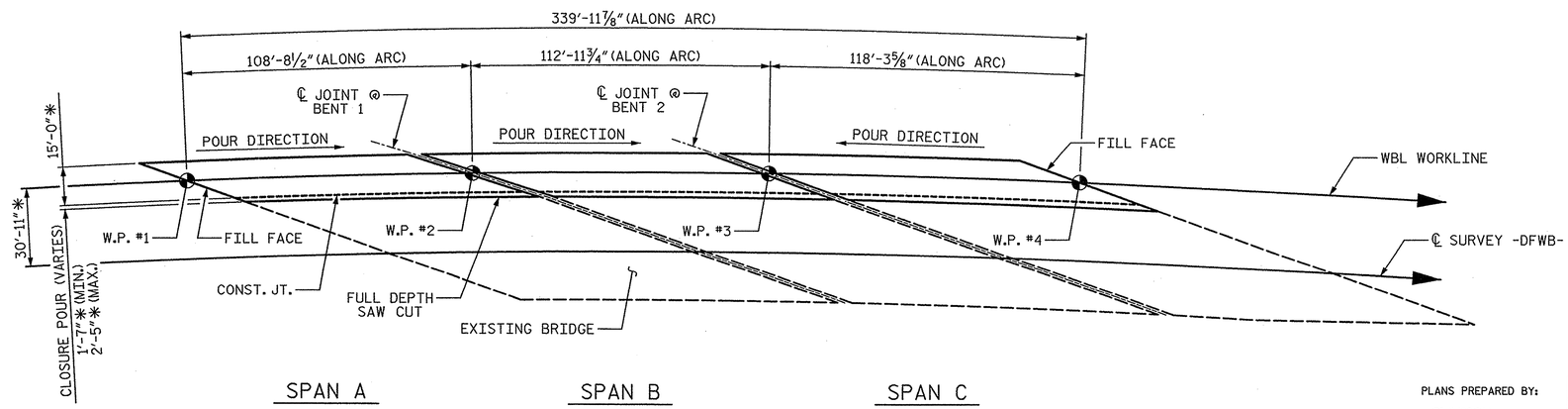

POUR SEQUENCE AND LAYOUT FOR COMPUTING REINFORCED CONCRETE DECK SLAB AREA

* RADIAL DIMENSION

(SQ. FT. = 5794)

PROJECT NO. U-0071
DURHAM COUNTY
STATION: 24+70.18 -DFWB-

SHEET 2 OF 2

STATE OF NORTH CAROLINA
DEPARTMENT OF TRANSPORTATION
RALEIGH
SUPERSTRUCTURE

BILL OF MATERIAL

PLANS PREPARED BY:
SIMPSON ENGINEERS & ASSOCIATES
5640 Dillard Drive
Suite 200
Cary, NC 27518
(919) 852-0468
(919) 852-0598 (Fax)
www.simpsonengr.com
LICENSURE NO. C-2521

NORTH CAROLINA PROFESSIONAL SEAL 18056 ENGINEER JOHN A. BATTS
1/16/2014

DRAWN BY:	T. BANKOVICH	DATE:	12-13
CHECKED BY:	B.S. COX	DATE:	12-13
DESIGN ENGINEER OF RECORD:	J.A. BATTS	DATE:	12-13

REVISIONS								SHEET NO.
NO.	BY:	DATE:	NO.	BY:	DATE:			S-6A6
1			3					TOTAL SHEETS
2			4					671

STR. #14

1/14/2014 9:35:15 AM G:\Projects\2012\U-0071 (Durham Co.)\Structures\Drawings\Final\Bridge 189\Widening\U-0071_Br 189_sd_bm.dgn

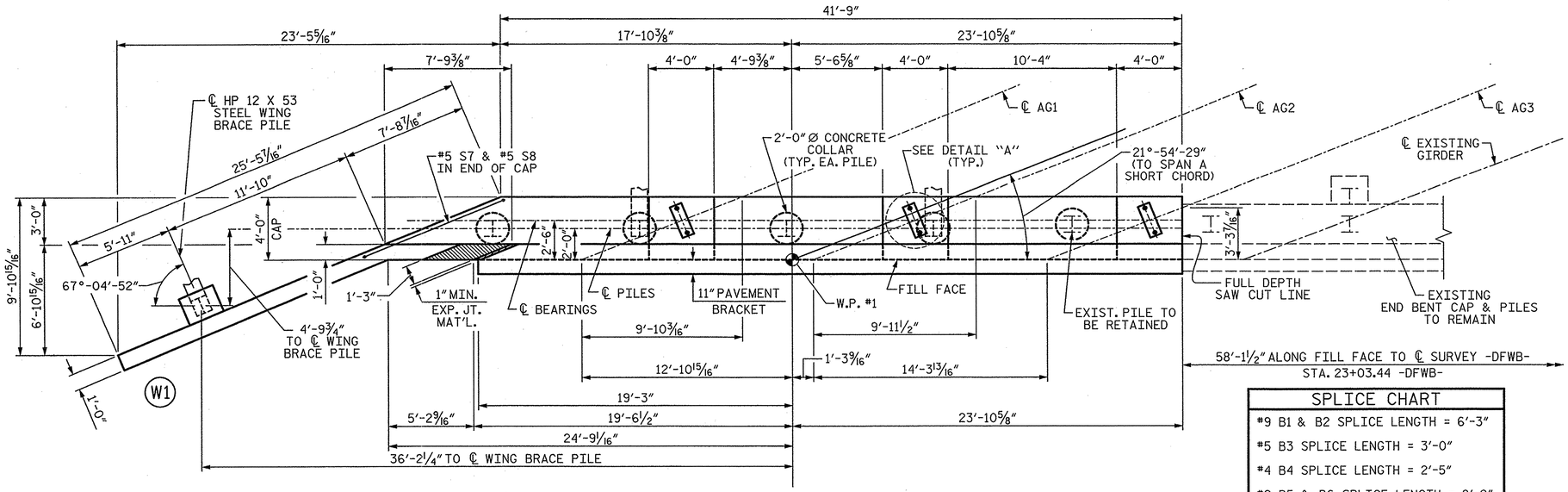

PLAN

SPLICE CHART
#9 B1 & B2 SPLICE LENGTH = 6'-3"
#5 B3 SPLICE LENGTH = 3'-0"
#4 B4 SPLICE LENGTH = 2'-5"
#9 B5 & B6 SPLICE LENGTH = 8'-9"
#4 K1 SPLICE LENGTH = 2'-5"

NOTES:

STIRRUPS IN CAP MAY BE SHIFTED AS NECESSARY TO CLEAR ANCHOR BOLTS.

BACKWALL SHALL BE PLACED BEFORE APPLYING THE EPOXY PROTECTIVE COATING.

THE CONCRETE IN THE SHADED AREA OF THE WING SHALL BE POURED AFTER THE BARRIER RAIL IS CAST IF SLIP FORMING IS USED.

THE TOP SURFACE AREAS OF THE END BENT CAPS SHALL BE CURED IN ACCORDANCE WITH THE STANDARD SPECIFICATIONS EXCEPT THE MEMBRANE CURING COMPOUND METHOD SHALL NOT BE USED.

THE TOP SURFACE OF THE CAP EXCEPT THE BRIDGE SEAT BUILDUPS SHALL BE SLOPED TRANSVERSELY FROM THE FILL FACE TO THE BACK FACE AT THE RATE OF 2%.

▲ #9 D1 DOWELS PLACED IN THE EXISTING CAP SHALL BE INSTALLED USING AN ADHESIVE ANCHORING SYSTEM. LEVEL ONE FIELD TESTING IS REQUIRED AND THE YIELD LOAD OF THE DOWEL IS 30.0 KIPS. EMBEDMENT LENGTH TO BE DETERMINED BY THE MANUFACTUER OF THE ADHESIVELY ANCHORED ANCHOR SYSTEM. #9 D1 BAR LENGTH WAS BASED ON A 1'-6" EMBEDMENT LENGTH. ADHESIVELY ANCHORED ANCHOR BOLT OR DOWEL TESTING SHALL BE IN ACCORDANCE WITH SECTION 420-13 OF THE STANDARD SPECIFICATIONS.

★ FOR LOCATION OF ELEVATIONS BETWEEN BRIDGE SEATS BUILD-UPS, SEE "SECTION A-A" ON SHEET 3 OF 3.

THE CONTRACTOR'S ATTENTION IS CALLED TO THE FACT THAT THE EXISITNG EXTERIOR PILE AND THE EXISTING #10 "B" BARS SHALL BE RETAINED PAST THE SAW CUT LINE AND WILL BECOME A PART OF THE WIDENED END BENT. THE EXISITNG REINFORCING STEEL MAY BE BENT AS REQUIRED FOR FITTING INTO THE PROPOSED END BENT CAP.

SEE GENERAL DRAWING "FOUNDATION LAYOUT" FOR ADDITIONAL NOTES FOR DRIVING PILES.

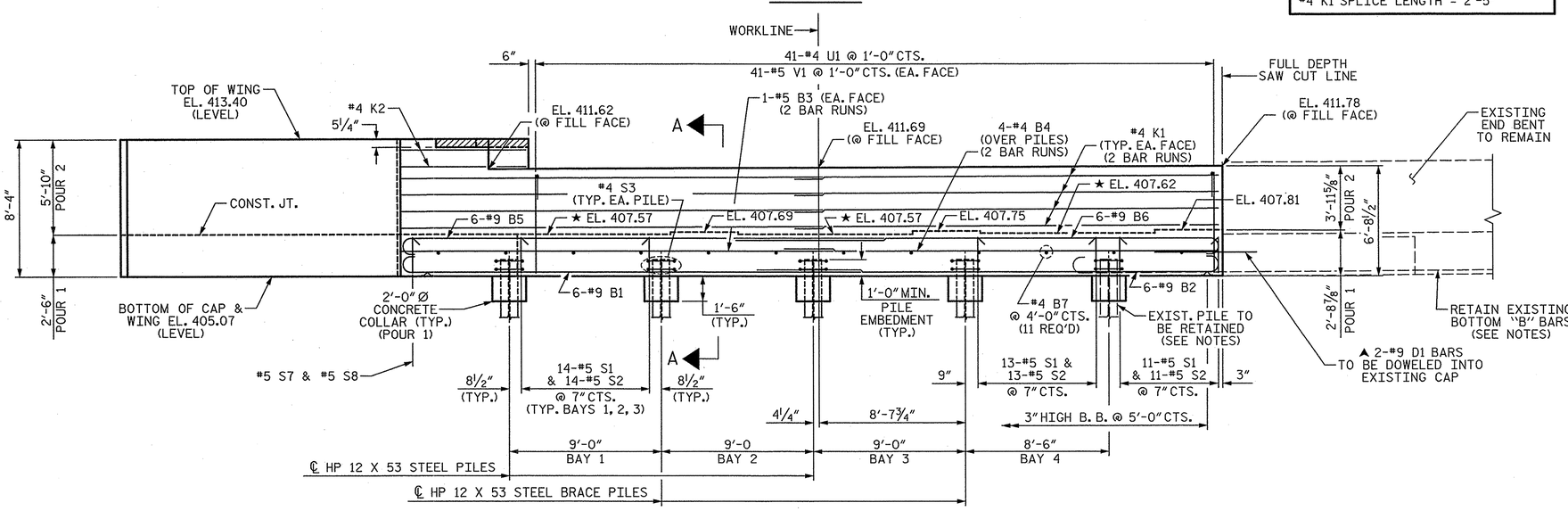

ELEVATION

(FOR CLARITY, WING BRACE PILE & PAVEMENT BRACKET NOT SHOWN)

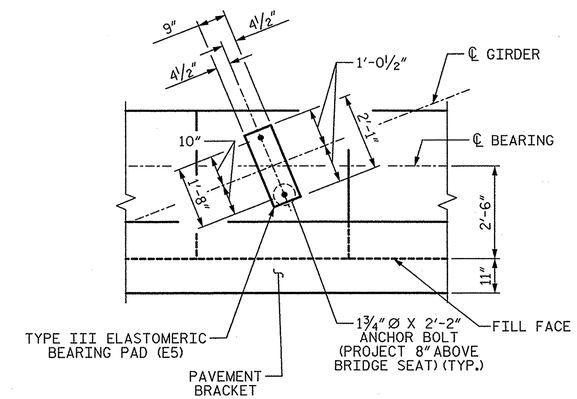

DETAIL "A"

(TYP. EA. GIRDER)

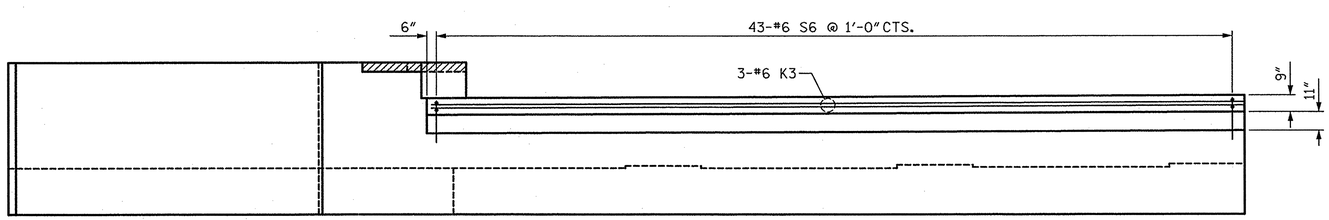

PAVEMENT BRACKET ELEVATION

PROJECT NO. U-0071

DURHAM COUNTY

STATION: 24+70.18 -DFWB-

SHEET 1 OF 3

STATE OF NORTH CAROLINA
DEPARTMENT OF TRANSPORTATION
RALEIGH

SUBSTRUCTURE

END BENT 1

PLANS PREPARED BY:

SIMPSON ENGINEERS & ASSOCIATES
5640 Dillard Drive
Suite 200
Cary, NC 27518
(919) 852-0468
(919) 852-0598 (Fax)
www.simpsonengr.com
LICENSURE NO. C-2521

NORTH CAROLINA PROFESSIONAL SEAL 18056 ENGINEER JOHN A. BATTS
1/14/2014

REVISIONS							SHEET NO.
NO.	BY:	DATE:	NO.	BY:	DATE:		S-CA7
1			3				TOTAL SHEETS
2			4				C71

STR. #14

DRAWN BY: R. SEALEY DATE: 12-13
CHECKED BY: B.S. COX DATE: 12-13
DESIGN ENGINEER OF RECORD: J.A. BATTS DATE: 12-13

1/14/2014 9:35:15 AM G:\Projects\2012\U-0071 (Durham Co.)\Structures\Drawings\Final\Bridge 189\Widening\U-0071_Br 189_sd_eb1.dgn

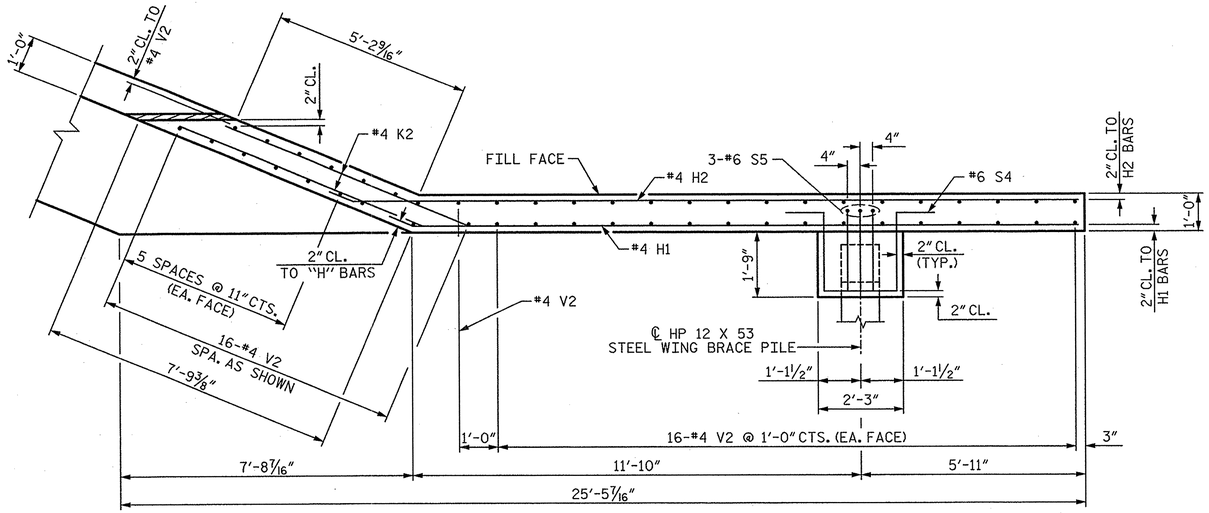

PLAN OF WING (W1)

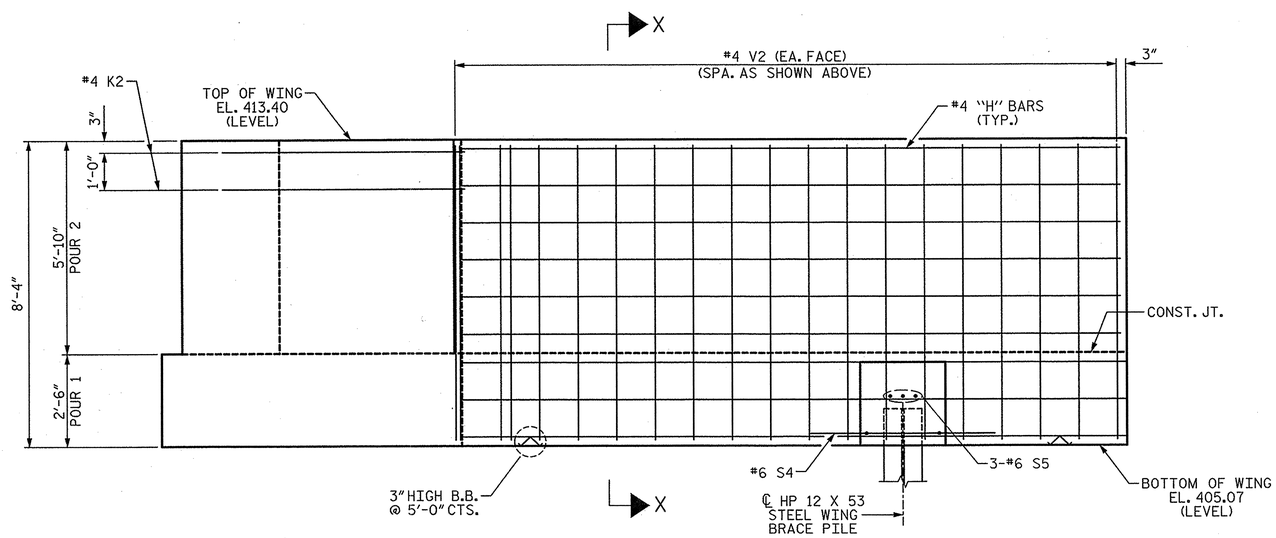

ELEVATION OF WING (W1)

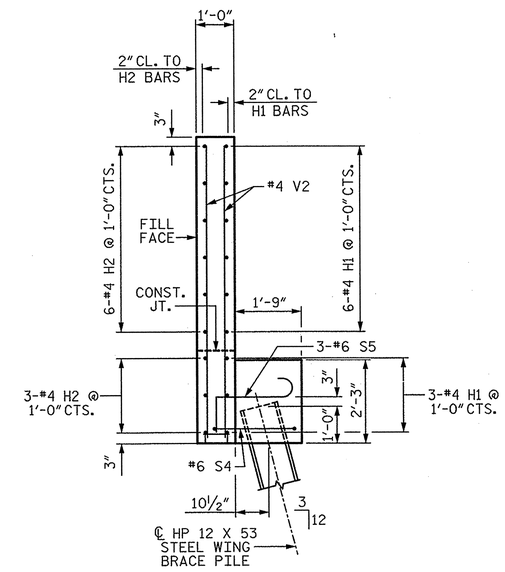

SECTION X-X

PROJECT NO. U-0071

DURHAM COUNTY

STATION: 24+70.18 -DFWB-

SHEET 2 OF 3

STATE OF NORTH CAROLINA
DEPARTMENT OF TRANSPORTATION
RALEIGH

SUBSTRUCTURE

END BENT 1

PLANS PREPARED BY:

SIMPSON ENGINEERS & ASSOCIATES
5640 Dillard Drive
Suite 200
Cary, NC 27518
(919) 852-0468
(919) 852-0598 (Fax)
www.simpsonengr.com
LICENSURE NO. C-2521

NORTH CAROLINA PROFESSIONAL SEAL 18056 ENGINEER JOHN A. BATTS
1/16/2014

REVISIONS						SHEET NO.
NO.	BY:	DATE:	NO.	BY:	DATE:	S-48
1			3			TOTAL SHEETS
2			4			67

STR. #14

DRAWN BY:	R. SEALEY	DATE:	12-13
CHECKED BY:	B.S. COX	DATE:	12-13
DESIGN ENGINEER OF RECORD:	J.A. BATTS	DATE:	12-13

1/14/2014 9:35:16 AM G:\Projects\2012\U-0071 (Durham Co.)\Structures\Drawings\Final\Bridge 189\Widening\U-0071_Br 189_sd_eb1.dgn

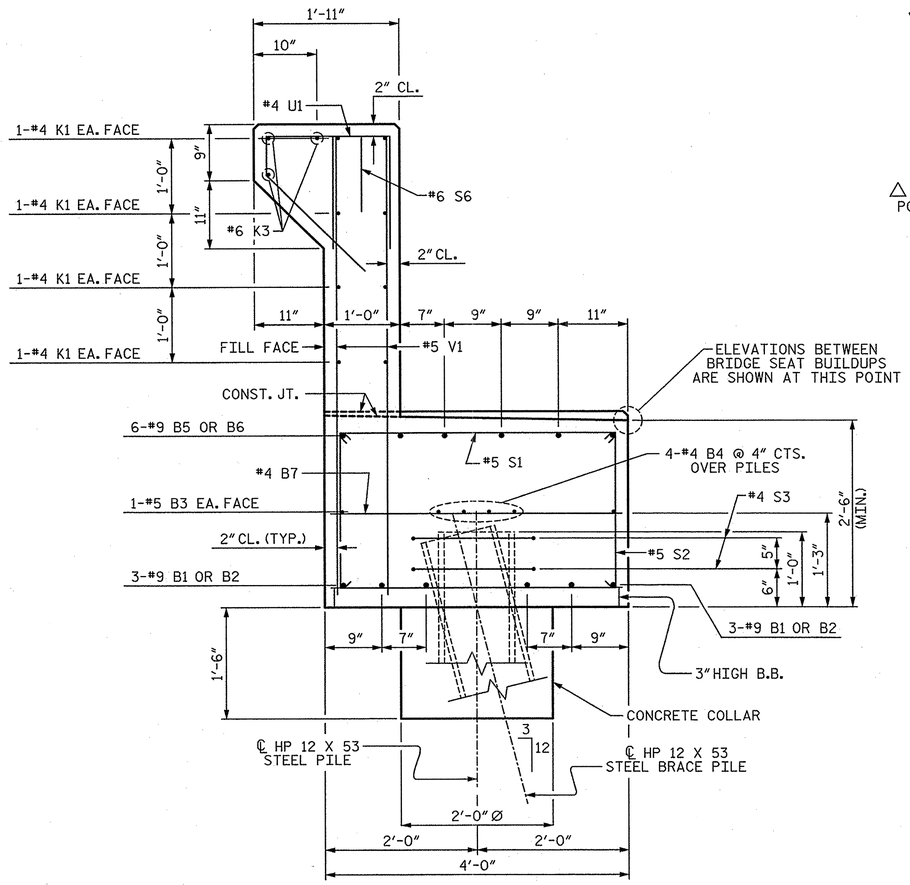

SECTION A-A

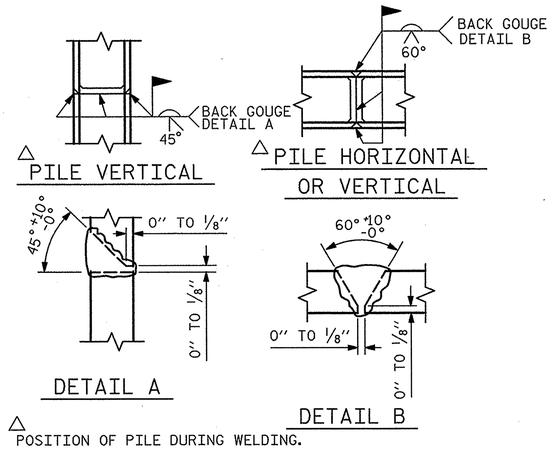

PILE SPLICE DETAILS

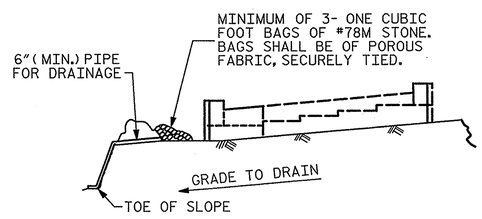

BAGGED STONE AND PIPE SHALL BE PLACED IMMEDIATELY AFTER COMPLETION OF END BENT EXCAVATION. PIPE MAY BE EITHER CONCRETE, CORRUGATED STEEL, CORRUGATED ALUMINUM ALLOY, OR CORRUGATED PLASTIC. PERFORATED PIPE WILL NOT BE ALLOWED.

BAGGED STONE SHALL REMAIN IN PLACE UNTIL THE ENGINEER DIRECTS THAT IT BE REMOVED. THE CONTRACTOR SHALL REMOVE AND DISPOSE OF SILT ACCUMULATIONS AT BAGGED STONE WHEN SO DIRECTED BY THE ENGINEER. BAGS SHALL BE REMOVED AND REPLACED WHENEVER THE ENGINEER DETERMINES THAT THEY HAVE DETERIORATED AND LOST THEIR EFFECTIVENESS.

NO SEPARATE PAYMENT WILL BE MADE FOR THIS WORK AND THE ENTIRE COST OF THIS WORK SHALL BE INCLUDED IN THE UNIT CONTRACT PRICE BID FOR THE SEVERAL PAY ITEMS.

TEMPORARY DRAINAGE AT END BENT

BAR TYPES

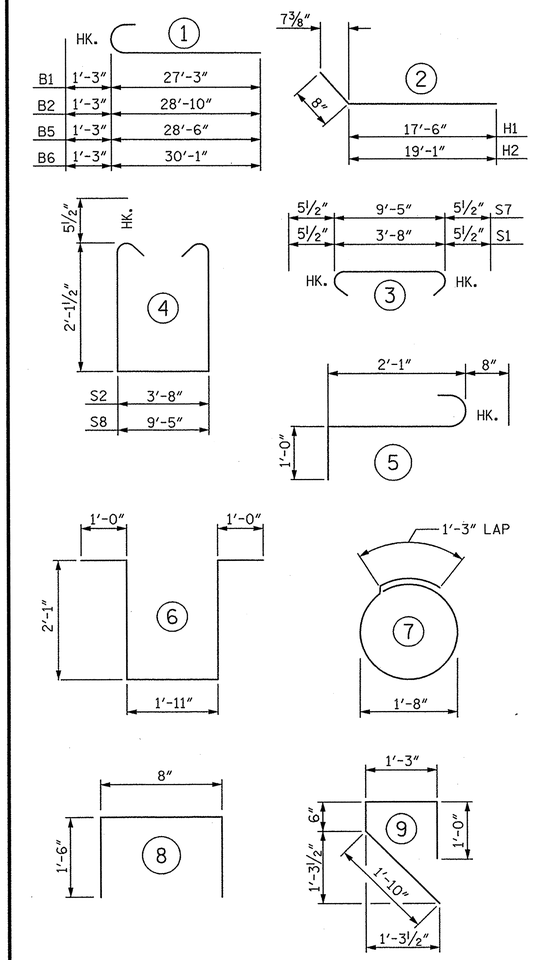

ALL BAR DIMENSIONS ARE OUT TO OUT

BILL OF MATERIAL

END BENT 1

BAR	NO.	SIZE	TYPE	LENGTH	WEIGHT
B1	6	9	1	28'-6"	581
B2	6	9	1	30'-1"	614
B3	4	5	STR	26'-6"	111
B4	8	4	STR	24'-9"	132
B5	6	9	1	29'-9"	607
B6	6	9	1	31'-4"	639
B7	11	4	STR	3'-8"	27
D1	2	9	STR	6'-0"	41
H1	9	4	2	18'-2"	109
H2	9	4	2	19'-9"	119
K1	16	4	STR	26'-1"	279
K2	4	4	STR	6'-11"	18
K3	3	6	STR	42'-9"	193
S1	66	5	3	4'-7"	316
S2	66	5	4	8'-10"	608
S3	10	4	7	6'-6"	43
S4	1	6	6	8'-1"	12
S5	3	6	5	3'-9"	17
S6	43	6	9	4'-7"	296
S7	1	5	3	10'-4"	11
S8	1	5	4	14'-7"	15
U1	41	4	8	3'-8"	100
V1	82	5	STR	6'-1"	520
V2	49	4	STR	7'-11"	259

TOTAL REINFORCING STEEL 5667 LB

CLASS "A" CONCRETE BREAKDOWN

POUR 1 (CAP, COLLARS, & LOWER WING) 20.2 CY

POUR 2 (BACKWALL & UPPER WING) 13.2 CY

TOTAL CLASS "A" CONCRETE 33.4 CY

HP 12 X53 STEEL PILES

NO. 4 66 LF

STEEL PILE POINTS NO. = 4

PROJECT NO. U-0071

DURHAM COUNTY

STATION: 24+70.18 -DFWB-

SHEET 3 OF 3

STATE OF NORTH CAROLINA
DEPARTMENT OF TRANSPORTATION
RALEIGH

SUBSTRUCTURE

END BENT 1

PLANS PREPARED BY:

SIMPSON ENGINEERS & ASSOCIATES
5640 Dillard Drive
Suite 200
Cary, NC 27518
(919) 852-0468
(919) 852-0598 (Fax)
www.simpsonengr.com
LICENSURE NO. C-2521

NORTH CAROLINA PROFESSIONAL SEAL 18056 ENGINEER JOHN A. BATTS 1/16/2014

REVISIONS						SHEET NO.
NO.	BY:	DATE:	NO.	BY:	DATE:	S-649
1			3			TOTAL SHEETS
2			4			671

STR. #14

DRAWN BY: R. SEALEY DATE: 12-13
CHECKED BY: B.S. COX DATE: 12-13
DESIGN ENGINEER OF RECORD: J.A. BATTS DATE: 12-13

1/14/2014 9:35:16 AM G:\Projects\2012\U-0071 (Durham Co.)\Structures\Drawings\Final\Bridge 189\Widening\U-0071_Br 189_sd_eb1.dgn

NOTES:

✱ INVERT ALTERNATE STIRRUPS.

STIRRUPS AND "U" BARS IN CAP MAY BE SHIFTED AS NECESSARY TO CLEAR ANCHOR BOLTS.

HOOKS ON "V" BARS MAY BE TURNED AS NECESSARY FOR PLACING REINFORCING STEEL.

ALL STEEL IN THE DRILLED PIERS IS INCLUDED IN THE PAY ITEMS FOR "REINFORCING STEEL" AND "SPIRAL COLUMN REINFORCING STEEL".

THE CONTRACTOR'S ATTENTION IS CALLED TO THE FACT THAT THE LONGITUDINAL REINFORCEMENT FOR THE DRILLED PIERS IS DETAILED WITH 3 FEET OF EXTRA LENGTH.

EPOXY COAT THE BENT CAP AFTER ADJUSTMENTS ARE MADE TO BEARINGS.

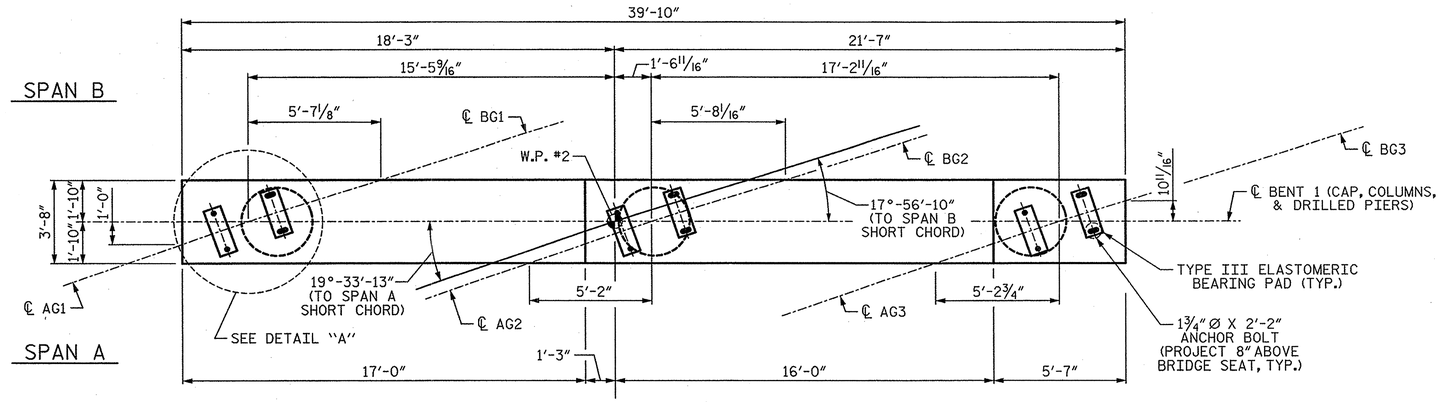

PLAN

(CRASHWALL NOT SHOWN FOR CLARITY)

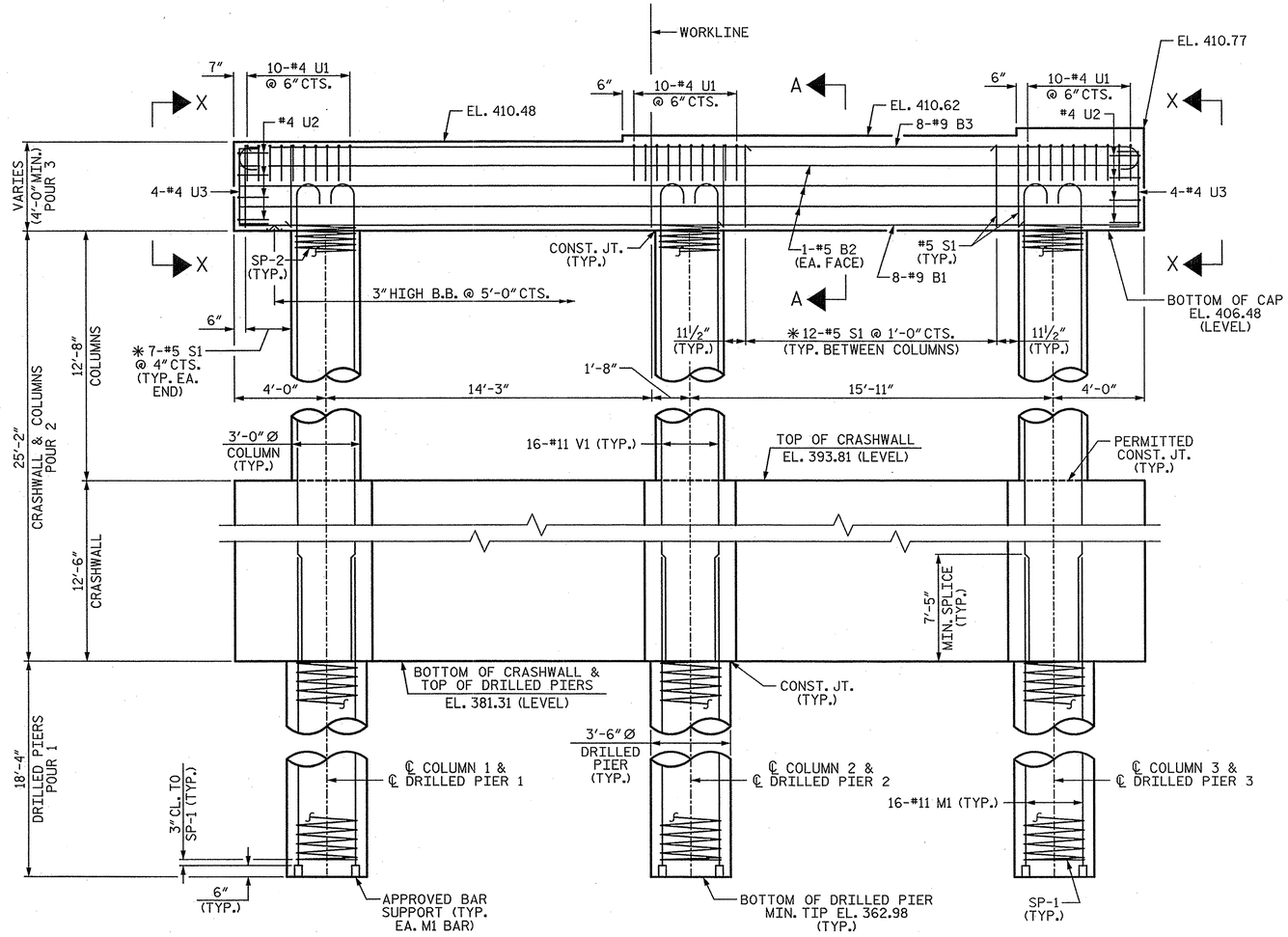

ELEVATION

(CRASHWALL REINFORCING NOT SHOWN FOR CLARITY)

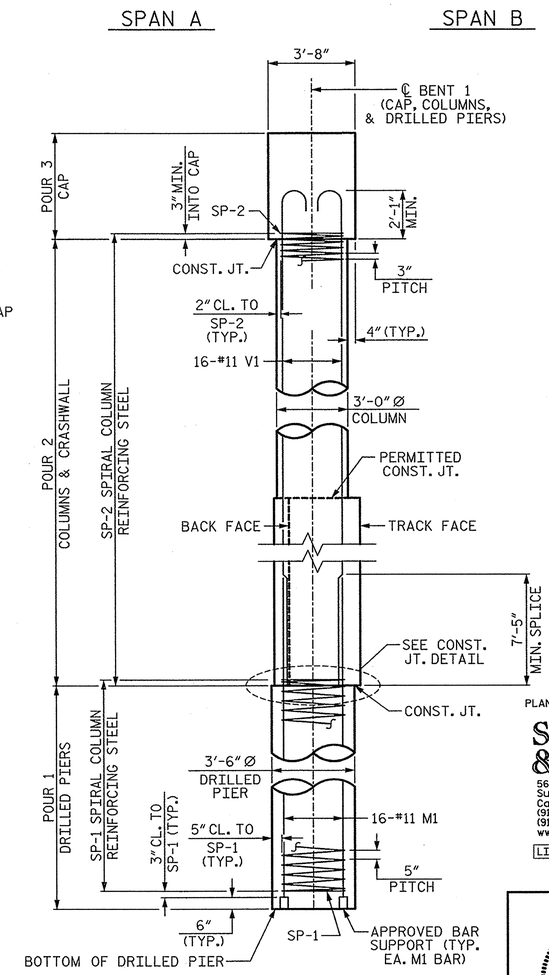

END ELEVATION

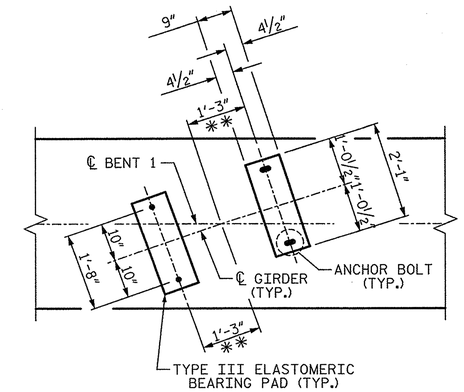

DETAIL "A"

(TYP. EA. GIRDER)
(✱✱ MEASURED ALONG ℄ GIRDER)

PLANS PREPARED BY:

SIMPSON ENGINEERS & ASSOCIATES
5640 Dillard Drive
Suite 200
Cary, NC 27518
(919) 852-0468
(919) 852-0598 (Fax)
www.simpsonengr.com
LICENSURE NO. C-2521

NORTH CAROLINA PROFESSIONAL SEAL 18056 ENGINEER JOHN A. BATTS 6/9/2014

PROJECT NO. U-0071
DURHAM COUNTY
STATION: 24+70.18 -DFWB-

SHEET 1 OF 3

STATE OF NORTH CAROLINA
DEPARTMENT OF TRANSPORTATION
RALEIGH

SUBSTRUCTURE

BENT 1

REVISIONS						SHEET NO.
NO.	BY:	DATE:	NO.	BY:	DATE:	S-650
1			3			TOTAL SHEETS
2			4			671

DRAWN BY: R. SEALEY DATE: 5-14
CHECKED BY: B.S. COX DATE: 5-14
DESIGN ENGINEER OF RECORD: J.A. BATTS DATE: 5-14

6/9/2014 9:20:55 AM G:\Projects\2012\U-0071 (Durham Co.)\Structures\Drawings\Final\Bridge 189\Widening\U-0071_Br 189_sd_bt1_4-23-2014.dgn

STR. #14

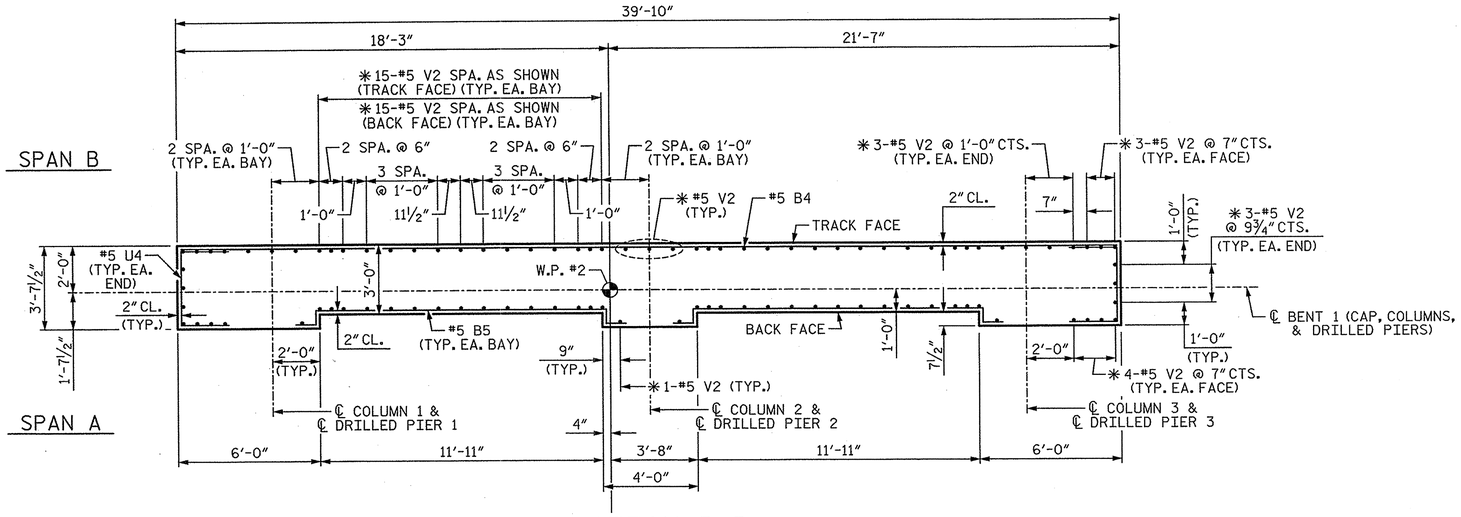

SECTION B-B

(COLUMN REINFORCING NOT SHOWN FOR CLARITY)

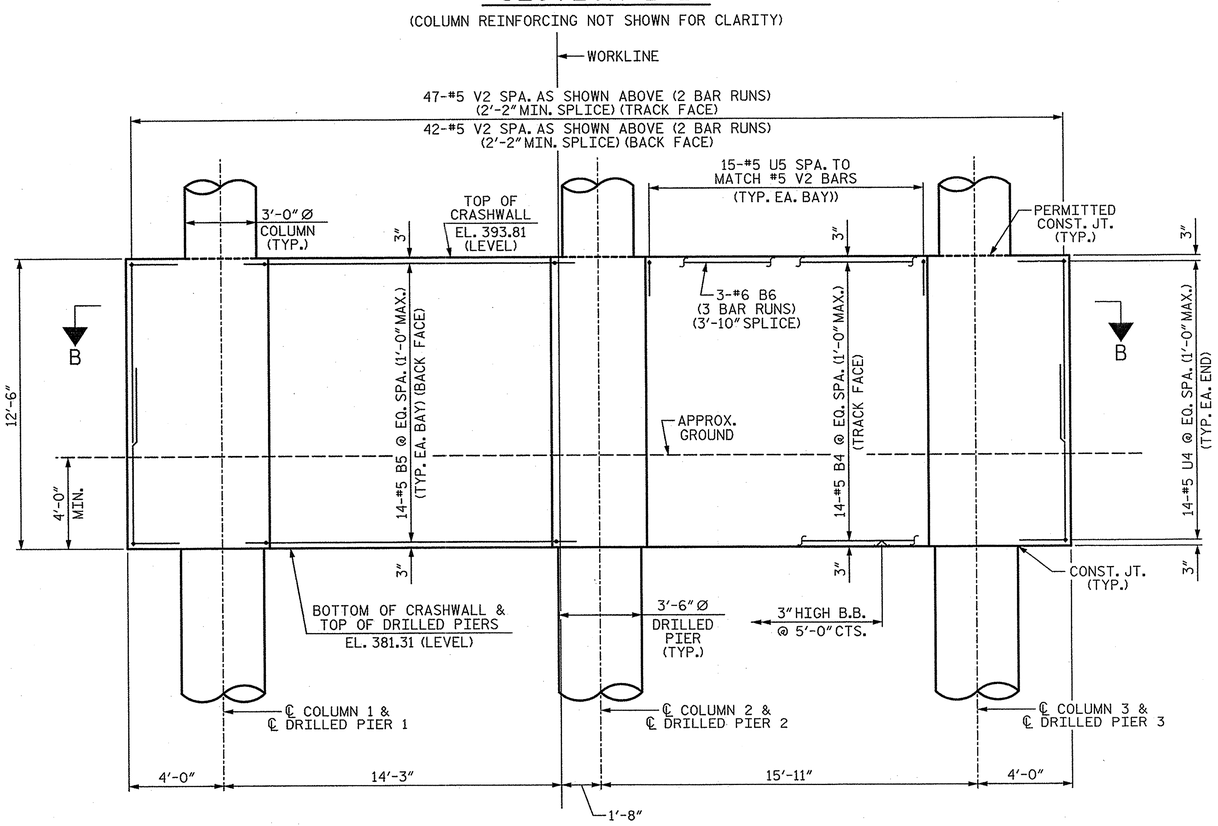

ELEVATION OF CRASHWALL

(COLUMN REINFORCING NOT SHOWN FOR CLARITY)

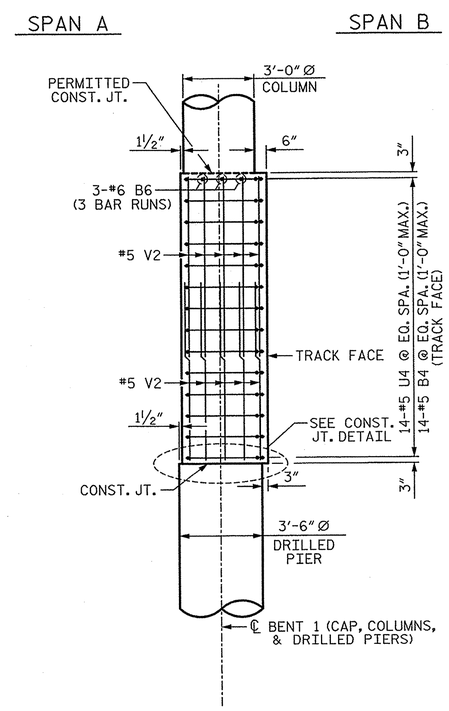

END ELEVATION

(COLUMN REINFORCING NOT SHOWN FOR CLARITY)

NOTES:

THE TOP OF CRASHWALL ELEVATION IS BASED ON THE 1ST RAIL ELEVATIONS (SEE "GENERAL DRAWING" SHEET 2 OF 6), AND THE BOTTOM OF CRASHWALL ELEVATION IS BASED ON APPROXIMATE GROUND ELEVATIONS. THE CONTRACTOR SHALL VERIFY THAT THE TOP OF CRASHWALL IS A MINIMUM OF 6 FT. ABOVE TOP OF 1ST RAIL AND THE BOTTOM OF CRASHWALL IS A MINIMUM OF 4 FT. BELOW THE ACTUAL GROUND LINE. IF THESE CONDITIONS ARE NOT MET, ANY PLAN MODIFICATIONS SHALL BE MADE AS DIRECTED BY THE ENGINEER.

IF THE ACTUAL HEIGHT OF THE CRASHWALL INCREASES BY MORE THAT 1 FT., ADDITIONAL "B" BARS AND U4 BARS MAY BE REQUIRED AS DIRECTED BY THE ENGINEER.

✱V2 BARS ARE 2 BAR RUNS.

PROJECT NO. U-0071
DURHAM COUNTY
STATION: 24+70.18 -DFWB-

SHEET 2 OF 3

STATE OF NORTH CAROLINA
DEPARTMENT OF TRANSPORTATION
RALEIGH
SUBSTRUCTURE

BENT 1

PLANS PREPARED BY:
SIMPSON ENGINEERS & ASSOCIATES
5640 Dillard Drive
Suite 200
Cary, NC 27518
(919) 852-0468
(919) 852-0598 (Fax)
www.simpsonengr.com
LICENSURE NO. C-2521

NORTH CAROLINA PROFESSIONAL SEAL 18056 ENGINEER JOHN A. BATTS
6/9/2014

REVISIONS								SHEET NO.
NO.	BY:	DATE:	NO.	BY:	DATE:			S-651
1			3					TOTAL SHEETS
2			4					671

STR. #14

DRAWN BY:	R. SEALEY	DATE:	5-14
CHECKED BY:	B.S. COX	DATE:	5-14
DESIGN ENGINEER OF RECORD:	J.A. BATTS	DATE:	5-14

6/9/2014 9:20:55 AM G:\Projects\2012\U-0071 (Durham Co.)\Structures\Drawings\Final\Bridge 189\Widening\U-0071_Br 189_sd_bt1_4-23-2014.dgn

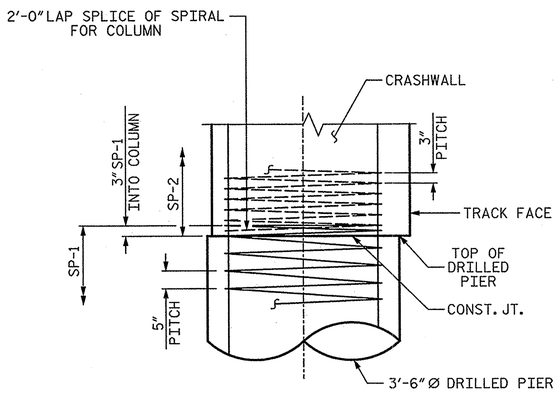

CONSTRUCTION JOINT DETAIL

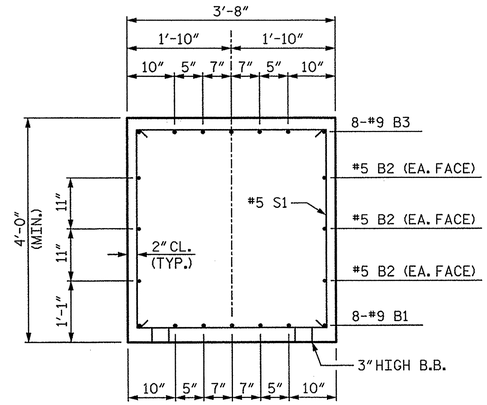

SECTION A-A

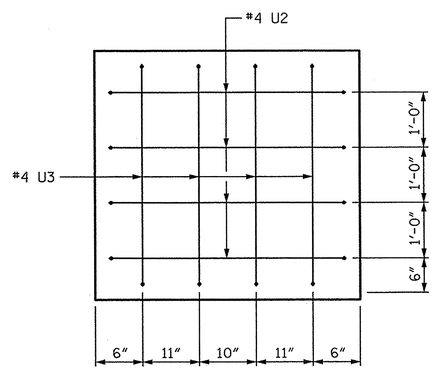

VIEW X-X

BAR TYPES

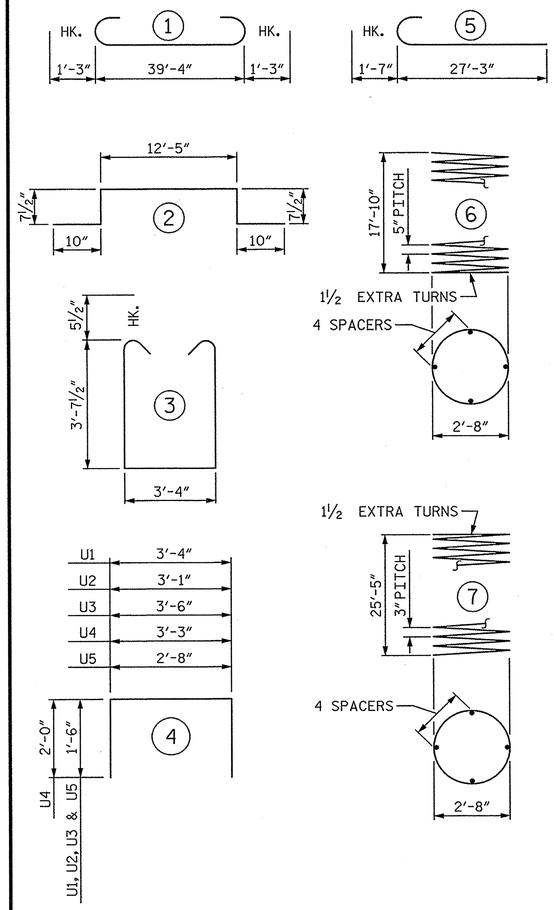

ALL BAR DIMENSIONS ARE OUT TO OUT

BILL OF MATERIAL

BENT 1

BAR	NO.	SIZE	TYPE	LENGTH	WEIGHT
B1	8	9	STR	39'-6"	1074
B2	6	5	STR	39'-6"	247
B3	8	9	1	41'-10"	1138
B4	14	5	STR	39'-6"	577
B5	28	5	2	15'-4"	448
B6	9	6	STR	15'-9"	213
M1	48	11	STR	28'-3"	7204
S1	42	5	3	11'-6"	504
U1	30	4	4	6'-4"	127
U2	8	4	4	6'-1"	33
U3	8	4	4	6'-6"	35
U4	28	5	4	7'-3"	212
U5	30	5	4	5'-8"	177
V1	48	11	5	28'-10"	7353
V2	190	5	STR	7'-8"	1519
SP-1	3	*	6	370'-2"	1158
SP-2	3	**	7	858'-1"	1720

REINFORCING STEEL	20861 LB
SPIRAL COL. REINF. STEEL	2878 LB
CLASS "A" CONCRETE BREAKDOWN	
POUR 2 (COLUMNS & CRASHWALL)	69.9 CY
POUR 3 (CAP)	22.2 CY
TOTAL	92.1 CY
DRILLED PIERS:	
DRILLED PIER CONCRETE POUR 1 (DRILLED PIERS)	19.6 CY
3'-6" Ø DRILLED PIER NOT IN SOIL	29.0 LF
3'-6" Ø DRILLED PIER IN SOIL	26.0 LF
CSL TUBES	238 LF

* THE "SP-1" SPIRAL REINFORCING STEEL SHALL BE W31 OR D-31 COLD DRAWN WIRE OR #5 PLAIN OR DEFORMED BAR.

** THE "SP-2" SPIRAL REINFORCING STEEL SHALL BE W20 OR D-20 COLD DRAWN WIRE OR #4 PLAIN OR DEFORMED BAR.

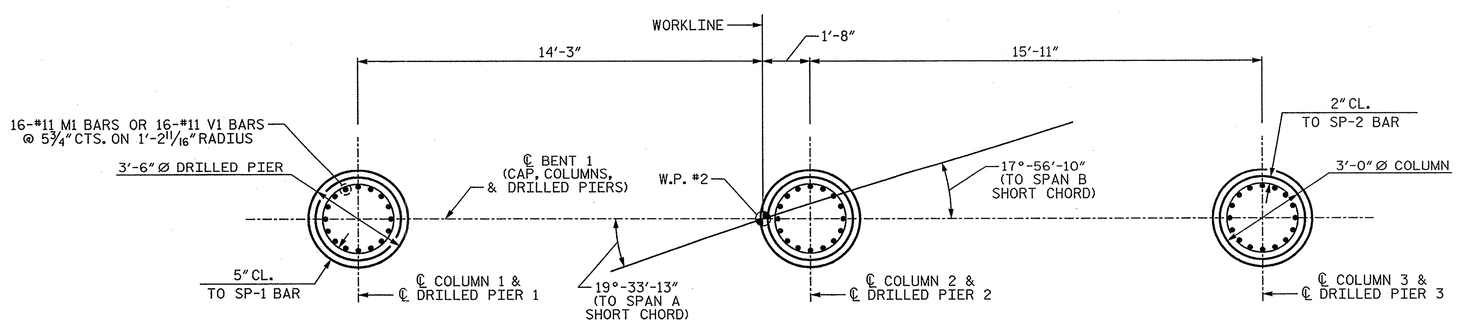

PLAN OF DRILLED PIERS & COLUMNS

(DIMENSIONS AND REINFORCING STEEL SHOWN ARE TYPICAL FOR EACH COLUMN AND DRILLED PIER)
(CRASHWALL NOT SHOWN FOR CLARITY)

PROJECT NO. U-0071
DURHAM COUNTY
STATION: 24+70.18 -DFWB-

SHEET 3 OF 3

STATE OF NORTH CAROLINA
DEPARTMENT OF TRANSPORTATION
RALEIGH

SUBSTRUCTURE

BENT 1

PLANS PREPARED BY:
SIMPSON ENGINEERS & ASSOCIATES
5640 Dillard Drive
Suite 200
Cary, NC 27518
(919) 852-0468
(919) 852-0598 (Fax)
www.simpsonengr.com
LICENSURE NO. C-2521

NORTH CAROLINA PROFESSIONAL SEAL 18056 ENGINEER JOHN A. BATTS 6/9/2014

REVISIONS						SHEET NO.
NO.	BY:	DATE:	NO.	BY:	DATE:	S-652
1			3			TOTAL SHEETS
2			4			671

STR. #14

DRAWN BY: R. SEALEY DATE: 5-14
CHECKED BY: B.S. COX DATE: 5-14
DESIGN ENGINEER OF RECORD: J.A. BATTS DATE: 5-14

6/9/2014 9:20:55 AM G:\Projects\2012\U-0071 (Durham Co.)\Structures\Drawings\Final\Bridge 189\Widening\U-0071_Br 189_sd_bt1_4-23-2014.dgn

NOTES:

✱ INVERT ALTERNATE STIRRUPS.

STIRRUPS AND "U" BARS IN CAP MAY BE SHIFTED AS NECESSARY TO CLEAR ANCHOR BOLTS.

HOOKS ON "V" BARS MAY BE TURNED AS NECESSARY FOR PLACING REINFORCING STEEL.

ALL STEEL IN THE DRILLED PIERS IS INCLUDED IN THE PAY ITEMS FOR "REINFORCING STEEL" AND "SPIRAL COLUMN REINFORCING STEEL".

THE CONTRACTOR'S ATTENTION IS CALLED TO THE FACT THAT THE LONGITUDINAL REINFORCEMENT FOR THE DRILLED PIERS IS DETAILED WITH 3 FEET OF EXTRA LENGTH.

EPOXY COAT THE BENT CAP AFTER ADJUSTMENTS ARE MADE TO BEARINGS.

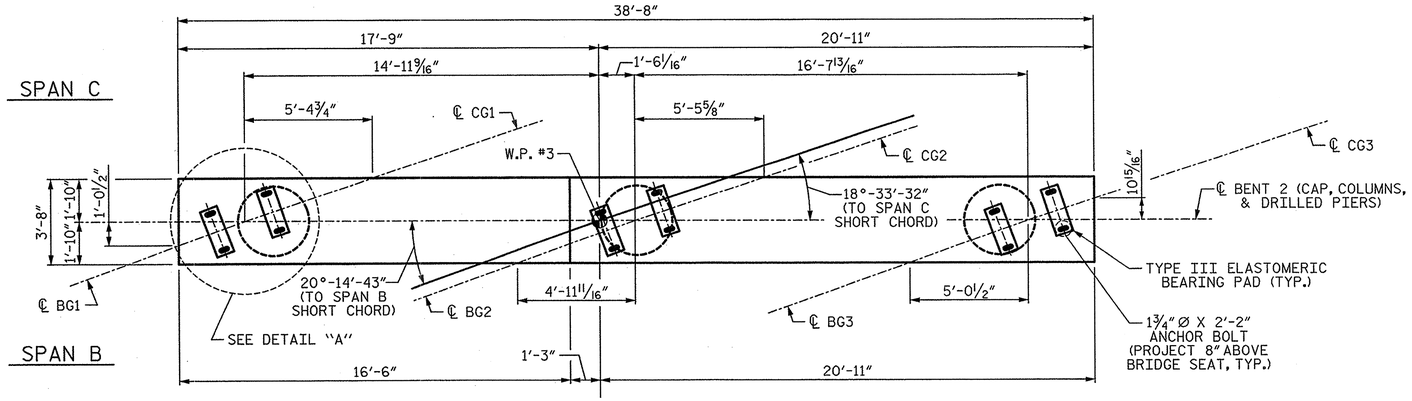

PLAN

(CRASHWALL NOT SHOWN FOR CLARITY)

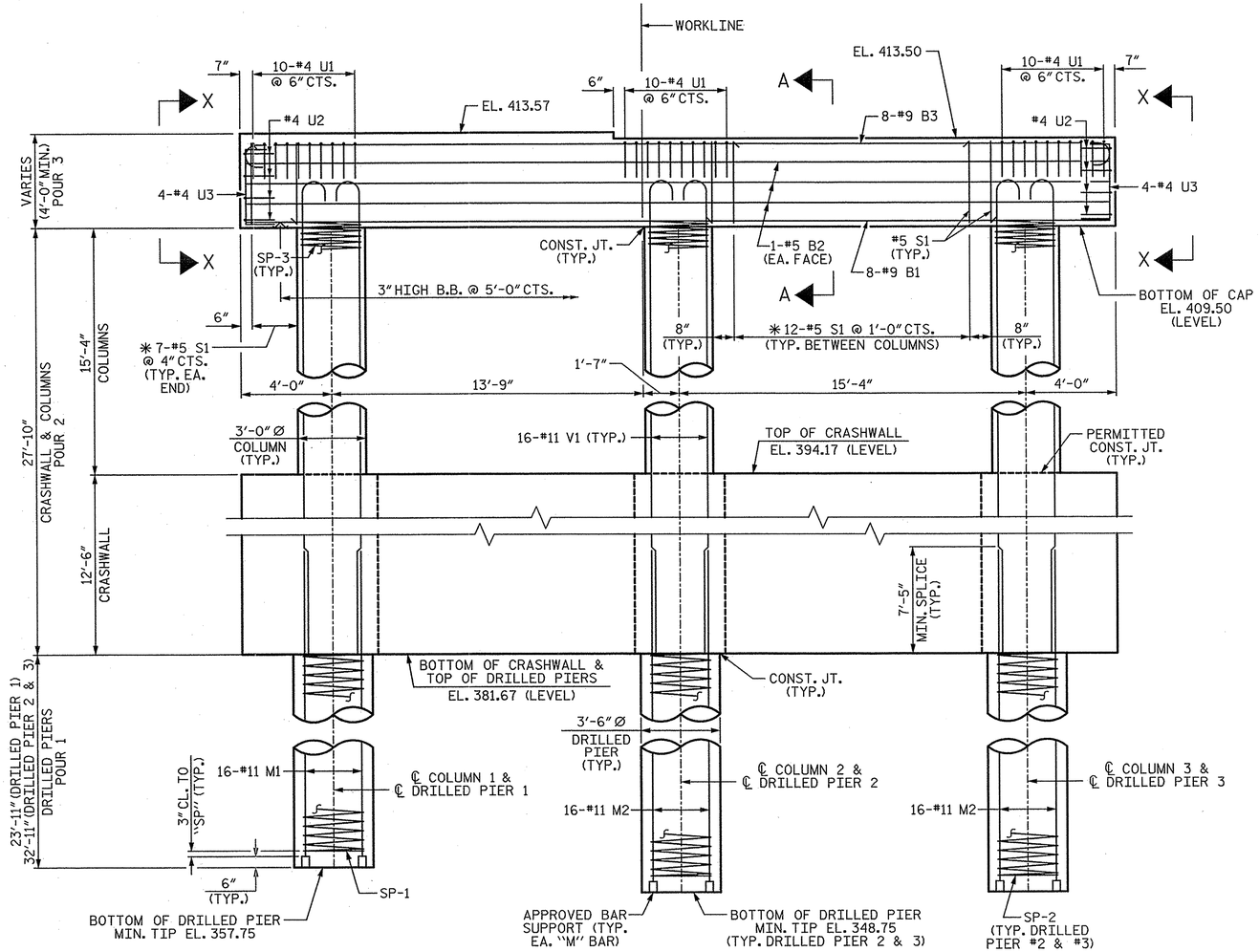

ELEVATION

(CRASHWALL REINFORCING NOT SHOWN FOR CLARITY)

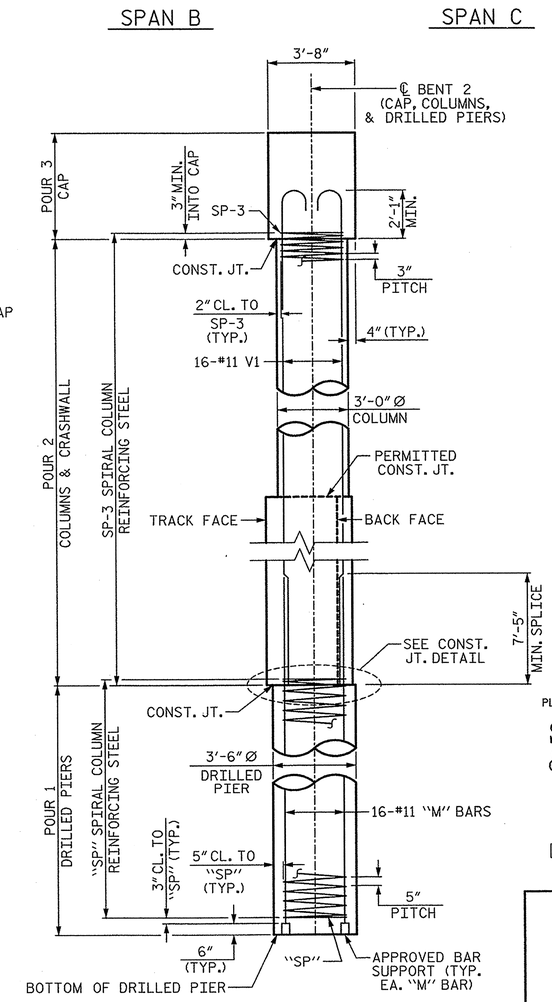

END ELEVATION

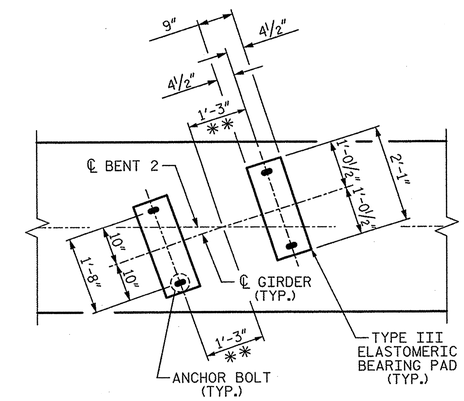

DETAIL "A"

(TYP. EA. GIRDER)
(✱✱ MEASURED ALONG ℄ GIRDER)

PROJECT NO. U-0071
DURHAM COUNTY
STATION: 24+70.18 -DFWB-

SHEET 1 OF 3

PLANS PREPARED BY:
SIMPSON ENGINEERS & ASSOCIATES
5640 Dillard Drive
Suite 200
Cary, NC 27518
(919) 852-0468
(919) 852-0598 (Fax)
www.simpsonengr.com
LICENSURE NO. C-2521

NORTH CAROLINA PROFESSIONAL SEAL 18056 ENGINEER JOHN A. BATTS
6/9/2014

STATE OF NORTH CAROLINA
DEPARTMENT OF TRANSPORTATION
RALEIGH

SUBSTRUCTURE

BENT 2

REVISIONS						SHEET NO.
NO.	BY:	DATE:	NO.	BY:	DATE:	S-653
1			3			TOTAL SHEETS
2			4			671

STR. #14

DRAWN BY:	R. SEALEY	DATE:	5-14
CHECKED BY:	B.S. COX	DATE:	5-14
DESIGN ENGINEER OF RECORD:	J.A. BATTS	DATE:	5-14

6/9/2014 9:20:55 AM G:\Projects\2012\U-0071 (Durham Co.)\Structures\Drawings\Final\Bridge 189\Widening\U-0071_Br 189_sd_bt2_4-28-2014.dgn

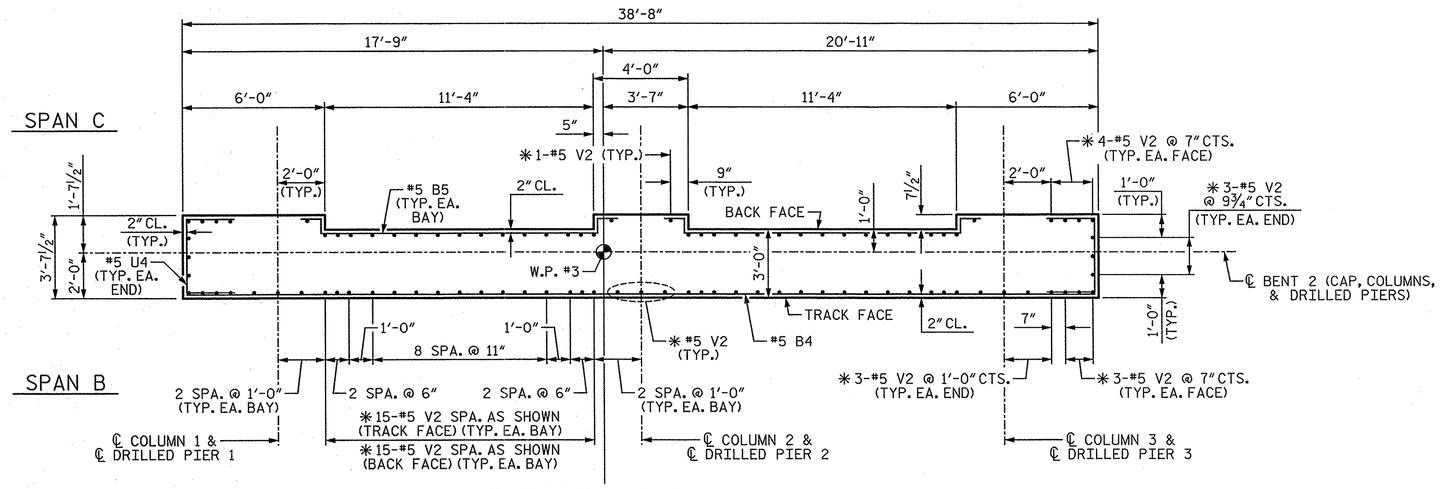

SECTION B-B

(COLUMN REINFORCING NOT SHOWN FOR CLARITY)

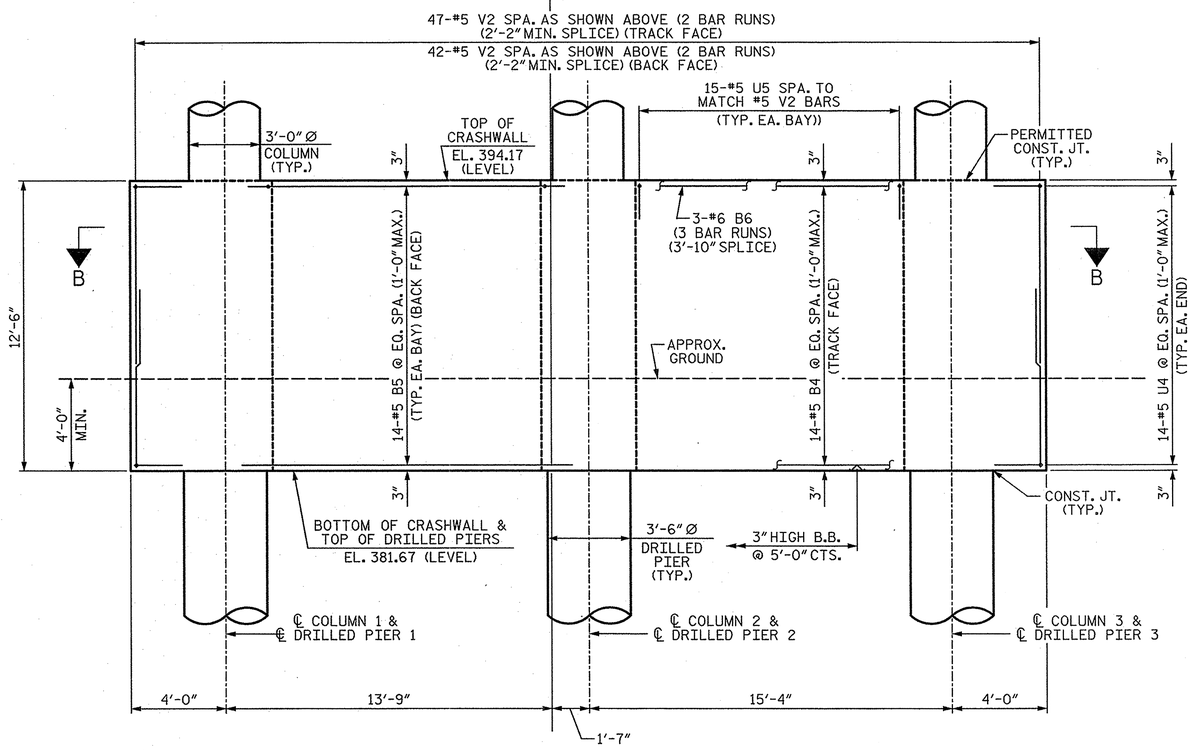

ELEVATION OF CRASHWALL

(COLUMN REINFORCING NOT SHOWN FOR CLARITY)

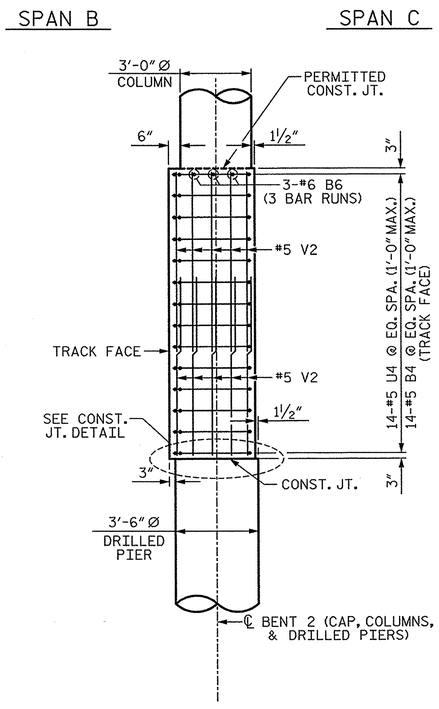

END ELEVATION

(COLUMN REINFORCING NOT SHOWN FOR CLARITY)

NOTES:

THE TOP OF CRASHWALL ELEVATION IS BASED ON THE 2ND RAIL ELEVATIONS (SEE "GENERAL DRAWING" SHEET 2 OF 6), AND THE BOTTOM OF CRASHWALL ELEVATION IS BASED ON APPROXIMATE GROUND ELEVATIONS. THE CONTRACTOR SHALL VERIFY THAT THE TOP OF CRASHWALL IS A MINIMUM OF 6 FT. ABOVE TOP OF 2ND RAIL AND THE BOTTOM OF CRASHWALL IS A MINIMUM OF 4 FT. BELOW THE ACTUAL GROUND LINE. IF THESE CONDITIONS ARE NOT MET, ANY PLAN MODIFICATIONS SHALL BE MADE AS DIRECTED BY THE ENGINEER.

IF THE ACTUAL HEIGHT OF THE CRASHWALL INCREASES BY MORE THAN 1 FT., ADDITIONAL "B" BARS AND U4 BARS MAY BE REQUIRED AS DIRECTED BY THE ENGINEER.

✱ V2 BARS ARE 2 BAR RUNS.

PROJECT NO. U-0071
DURHAM COUNTY
STATION: 24+70.18 -DFWB-

SHEET 2 OF 3

STATE OF NORTH CAROLINA
DEPARTMENT OF TRANSPORTATION
RALEIGH

SUBSTRUCTURE

BENT 2

REVISIONS						SHEET NO.
NO.	BY:	DATE:	NO.	BY:	DATE:	S-654
1			3			TOTAL SHEETS
2			4			671

PLANS PREPARED BY:
SIMPSON ENGINEERS & ASSOCIATES
5640 Dillard Drive
Suite 200
Cary, NC 27518
(919) 852-0468
(919) 852-0598 (Fax)
www.simpsonengr.com
LICENSURE NO. C-2521

NORTH CAROLINA PROFESSIONAL SEAL 18056 ENGINEER JOHN A. BATTS 6/9/2014

DRAWN BY:	R. SEALEY	DATE:	5-14
CHECKED BY:	B.S. COX	DATE:	5-14
DESIGN ENGINEER OF RECORD:	J.A. BATTS	DATE:	5-14

6/9/2014 9:20:56 AM G:\Projects\2012\U-0071 (Durham Co.)\Structures\Drawings\Final\Bridge 189\Widening\U-0071_Br 189_sd_bt2_4-28-2014.dgn

STR. #14

6/9/2014 9:20:56 AM G:\Projects\2012\U-0071 (Durham Co.)\Structures\Drawings\Final\Bridge 189\Widening\U-0071_Br 189_sd_bt2_4-28-2014.dgn

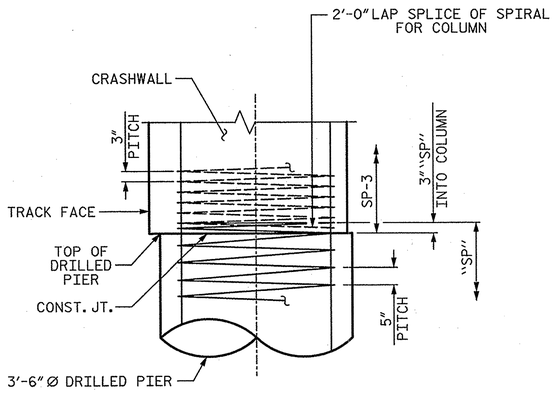

CONSTRUCTION JOINT DETAIL

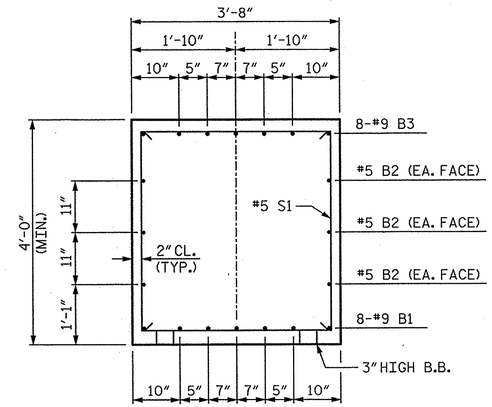

SECTION A-A

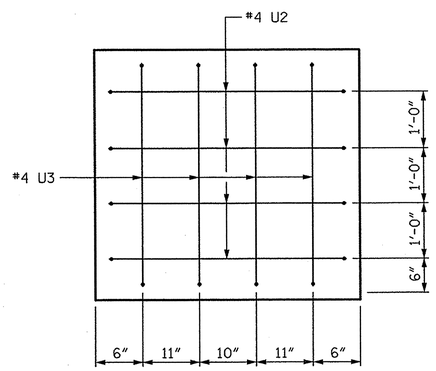

VIEW X-X

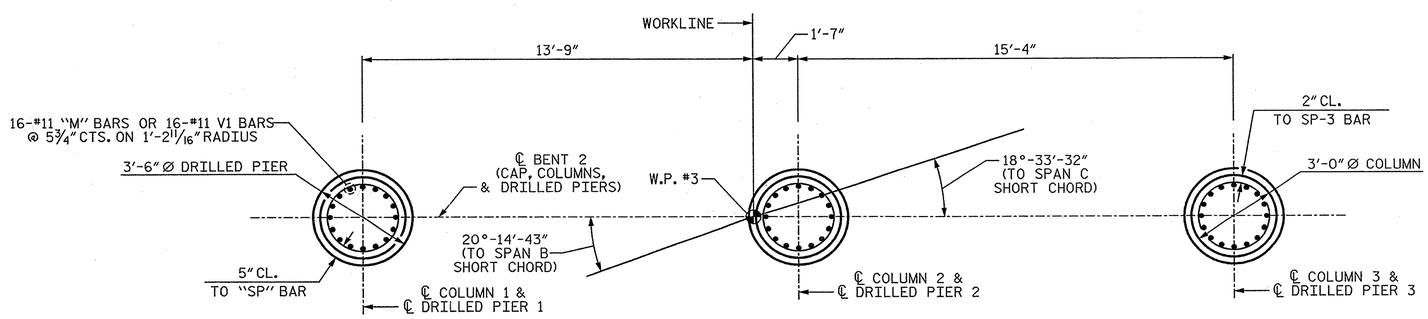

PLAN OF DRILLED PIERS & COLUMNS

(DIMENSIONS AND REINFORCING STEEL SHOWN ARE TYPICAL FOR EACH COLUMN AND DRILLED PIER)
(CRASHWALL NOT SHOWN FOR CLARITY)

BAR TYPES

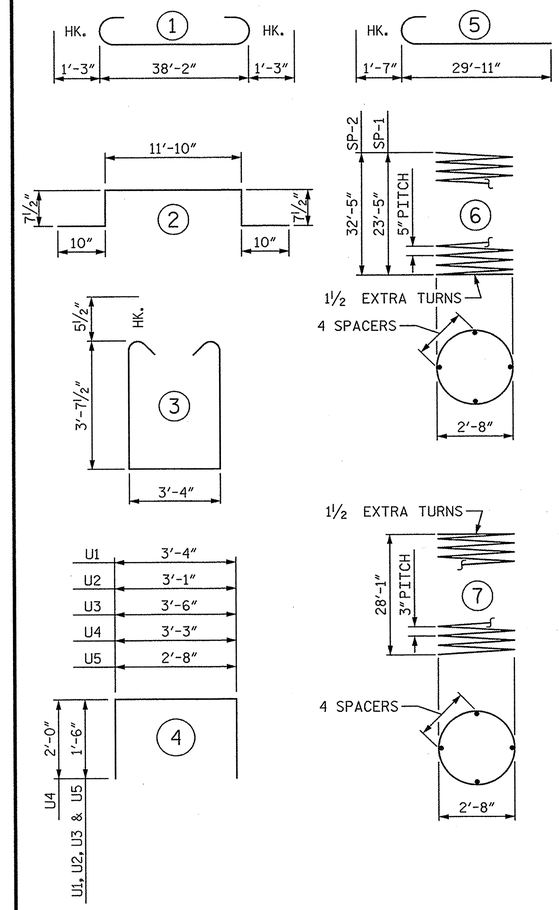

ALL BAR DIMENSIONS ARE OUT TO OUT

✳ THE "SP-1" & "SP-2" SPIRAL REINFORCING STEEL SHALL BE W31 OR D-31 COLD DRAWN WIRE OR #5 PLAIN OR DEFORMED BAR.

✳✳ THE "SP-3" SPIRAL REINFORCING STEEL SHALL BE W20 OR D-20 COLD DRAWN WIRE OR #4 PLAIN OR DEFORMED BAR.

BILL OF MATERIAL

BENT 2

BAR	NO.	SIZE	TYPE	LENGTH	WEIGHT
B1	8	9	STR	38'-4"	1043
B2	6	5	STR	38'-4"	240
B3	8	9	1	40'-8"	1106
B4	14	5	STR	38'-4"	560
B5	28	5	2	14'-9"	431
B6	9	6	STR	15'-4"	207
M1	16	11	STR	33'-10"	2876
M2	32	11	STR	42'-10"	7282
S1	42	5	3	11'-6"	504
U1	30	4	4	6'-4"	127
U2	8	4	4	6'-1"	33
U3	8	4	4	6'-6"	35
U4	28	5	4	7'-3"	212
U5	30	5	4	5'-8"	177
V1	48	11	5	31'-6"	8033
V2	190	5	STR	7'-8"	1519
SP-1	1	✳	6	477'-1"	498
SP-2	2	✳	6	658'-0"	1373
SP-3	3	✳✳	7	940'-7"	1885

REINFORCING STEEL	24385 LB
SPIRAL COL. REINF. STEEL	3756 LB
CLASS "A" CONCRETE BREAKDOWN	
POUR 2 (COLUMNS & CRASHWALL)	70.4 CY
POUR 3 (CAP)	21.2 CY
TOTAL	91.6 CY
DRILLED PIERS:	
DRILLED PIER CONCRETE POUR 1 (DRILLED PIERS)	32.0 CY
3'-6" Ø DRILLED PIER NOT IN SOIL	30.0 LF
3'-6" Ø DRILLED PIER IN SOIL	59.7 LF
CSL TUBES	377.1 LF

PROJECT NO. U-0071
DURHAM COUNTY
STATION: 24+70.18 -DFWB-

SHEET 3 OF 3

STATE OF NORTH CAROLINA
DEPARTMENT OF TRANSPORTATION
RALEIGH

SUBSTRUCTURE

BENT 2

DRAWN BY: R. SEALEY DATE: 5-14
CHECKED BY: B.S. COX DATE: 5-14
DESIGN ENGINEER OF RECORD: J.A. BATTS DATE: 5-14

PLANS PREPARED BY:
SIMPSON ENGINEERS & ASSOCIATES
5640 Dillard Drive
Suite 200
Cary, NC 27518
(919) 852-0468
(919) 852-0598 (Fax)
www.simpsonengr.com
LICENSURE NO. C-2521

NORTH CAROLINA PROFESSIONAL SEAL 18056 ENGINEER JOHN A. BATTS
6/9/2014

REVISIONS						SHEET NO.
NO.	BY:	DATE:	NO.	BY:	DATE:	S-655
1			3			TOTAL SHEETS
2			4			671

STR. #14

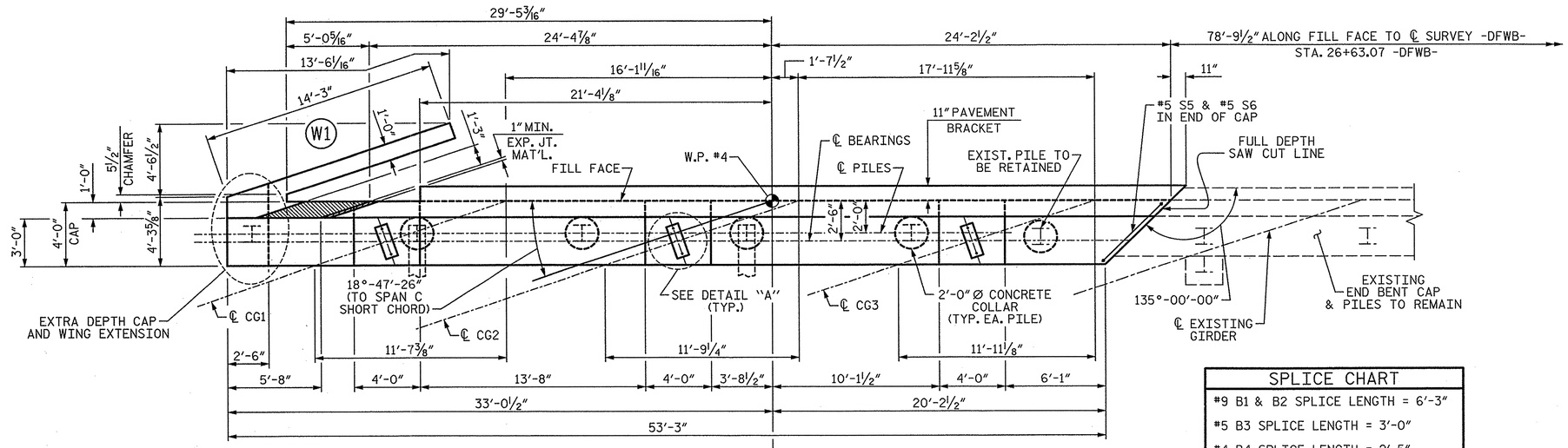

PLAN

SPLICE CHART
#9 B1 & B2 SPLICE LENGTH = 6'-3"
#5 B3 SPLICE LENGTH = 3'-0"
#4 B4 SPLICE LENGTH = 2'-5"
#9 B5 & B6 SPLICE LENGTH = 8'-9"
#4 K1 SPLICE LENGTH = 2'-5"

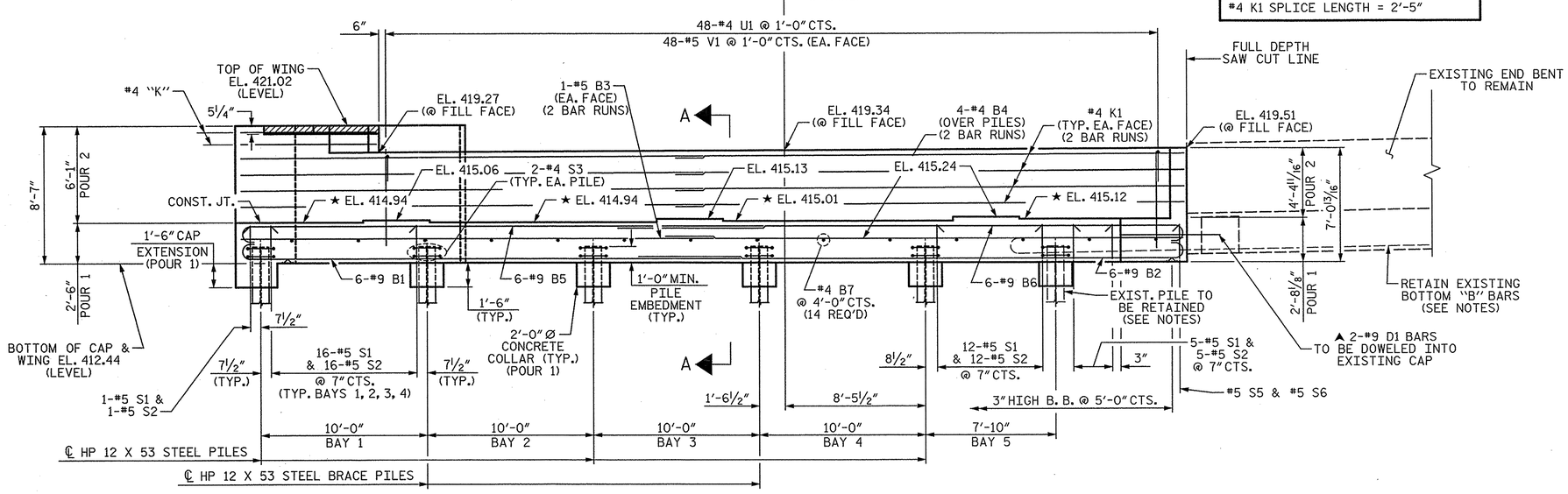

ELEVATION

(FOR CLARITY PAVEMENT BRACKET NOT SHOWN)

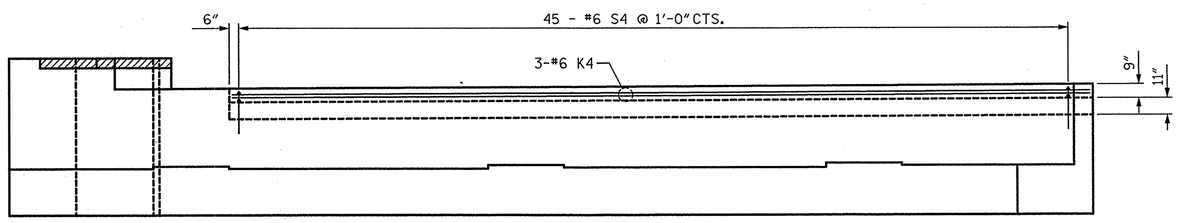

PAVEMENT BRACKET ELEVATION

NOTES:

STIRRUPS IN CAP MAY BE SHIFTED AS NECESSARY TO CLEAR ANCHOR BOLTS.

BACKWALL SHALL BE PLACED BEFORE APPLYING THE EPOXY PROTECTIVE COATING.

THE CONCRETE IN THE SHADED AREA OF THE WING SHALL BE POURED AFTER THE BARRIER RAIL IS CAST IF SLIP FORMING IS USED.

THE TOP SURFACE AREAS OF THE END BENT CAPS SHALL BE CURED IN ACCORDANCE WITH THE STANDARD SPECIFICATIONS EXCEPT THE MEMBRANE CURING COMPOUND METHOD SHALL NOT BE USED.

THE TOP SURFACE OF THE CAP EXCEPT THE BRIDGE SEAT BUILDUPS SHALL BE SLOPED TRANSVERSELY FROM THE FILL FACE TO THE BACK FACE AT THE RATE OF 2%.

▲ #9 D1 DOWELS PLACED IN THE EXISTING CAP SHALL BE INSTALLED USING AN ADHESIVE ANCHORING SYSTEM. LEVEL ONE FIELD TESTING IS REQUIRED AND THE YIELD LOAD OF THE DOWEL IS 30.0 KIPS. EMBEDMENT LENGTH TO BE DETERMINED BY THE MANUFACTUER OF THE ADHESIVELY ANCHORED ANCHOR SYSTEM. #9 D1 BAR LENGTH WAS BASED ON A 1'-6" EMBEDMENT LENGTH. ADHESIVELY ANCHORED ANCHOR BOLT OR DOWEL TESTING SHALL BE IN ACCORDANCE WITH SECTION 420-13 OF THE STANDARD SPECIFICATIONS.

★ FOR LOCATION OF ELEVATIONS BETWEEN BRIDGE SEATS BUILD-UPS, SEE "SECTION A-A" ON SHEET 3 OF 3.

THE CONTRACTOR'S ATTENTION IS CALLED TO THE FACT THAT THE EXISITNG EXTERIOR PILE AND THE EXISTING #10 "B" BARS SHALL BE RETAINED PAST THE SAW CUT LINE AND WILL BECOME A PART OF THE WIDENED END BENT. THE EXISITNG REINFORCING STEEL MAY BE BENT AS REQUIRED FOR FITTING INTO THE PROPOSED END BENT CAP.

SEE GENERAL DRAWING "FOUNDATION LAYOUT" FOR ADDITIONAL NOTES FOR DRIVING PILES.

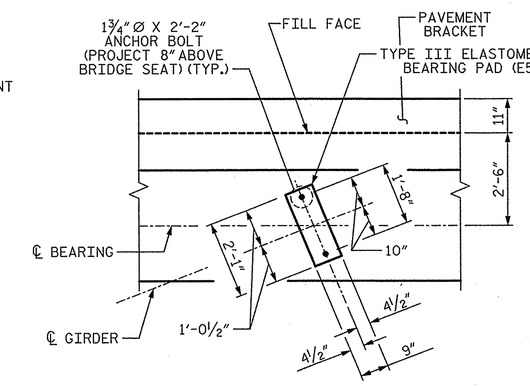

DETAIL "A"

(TYP. EA. GIRDER)

PROJECT NO. U-0071

DURHAM COUNTY

STATION: 24+70.18 -DFWB-

SHEET 1 OF 3

STATE OF NORTH CAROLINA
DEPARTMENT OF TRANSPORTATION
RALEIGH

SUBSTRUCTURE

END BENT 2

PLANS PREPARED BY:

SIMPSON ENGINEERS & ASSOCIATES
5640 Dillard Drive
Suite 200
Cary, NC 27518
(919) 852-0468
(919) 852-0598 (Fax)
www.simpsonengr.com
LICENSURE NO. C-2521

NORTH CAROLINA PROFESSIONAL SEAL 18056 ENGINEER JOHN A. BATTS
1/16/2014

REVISIONS						SHEET NO.
NO.	BY:	DATE:	NO.	BY:	DATE:	S-E&6
1			3			TOTAL SHEETS
2			4			67

DRAWN BY:	R. SEALEY	DATE:	12-13
CHECKED BY:	B.S. COX	DATE:	12-13
DESIGN ENGINEER OF RECORD:	J.A. BATTS	DATE:	12-13

STR. #14

1/14/2014 9:35:17 AM G:\Projects\2012\U-0071 (Durham Co.)\Structures\Drawings\Final\Bridge 189\Widening\U-0071_Br 189_sd_eb+2.dgn

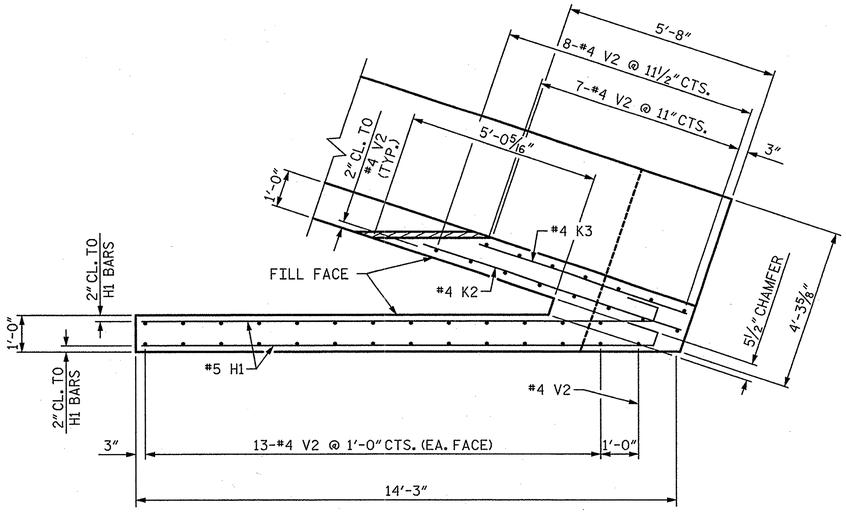

PLAN OF WING (W1)

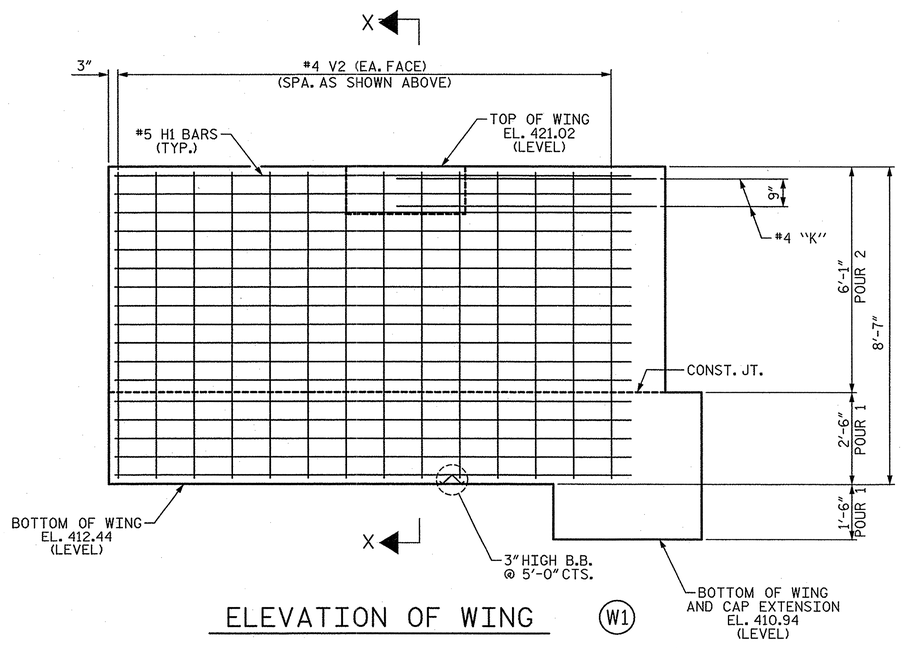

ELEVATION OF WING (W1)

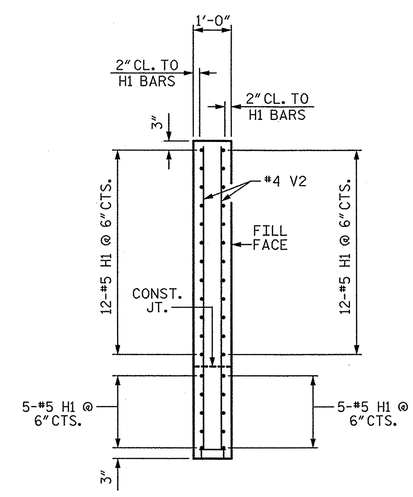

SECTION X-X

PROJECT NO. U-0071

DURHAM COUNTY

STATION: 24+70.18 -DFWB-

SHEET 2 OF 3

STATE OF NORTH CAROLINA
DEPARTMENT OF TRANSPORTATION
RALEIGH

SUBSTRUCTURE

END BENT 2

PLANS PREPARED BY:

SIMPSON ENGINEERS & ASSOCIATES
5640 Dillard Drive
Suite 200
Cary, NC 27518
(919) 852-0468
(919) 852-0598 (Fax)
www.simpsonengr.com
LICENSURE NO. C-2521

NORTH CAROLINA PROFESSIONAL SEAL 18056 ENGINEER JOHN A. BATTS
1/16/2014

REVISIONS							SHEET NO.
NO.	BY:	DATE:	NO.	BY:	DATE:		S-657
1			3				TOTAL SHEETS
2			4				671

STR. #14

DRAWN BY:	R. SEALEY	DATE:	12-13
CHECKED BY:	B.S. COX	DATE:	12-13
DESIGN ENGINEER OF RECORD:	J.A. BATTS	DATE:	12-13

1/14/2014 9:35:17 AM G:\Projects\2012\U-0071 (Durham Co.)\Structures\Drawings\Final\Bridge 189\Widening\U-0071_Br 189_sd_ebt2.dgn

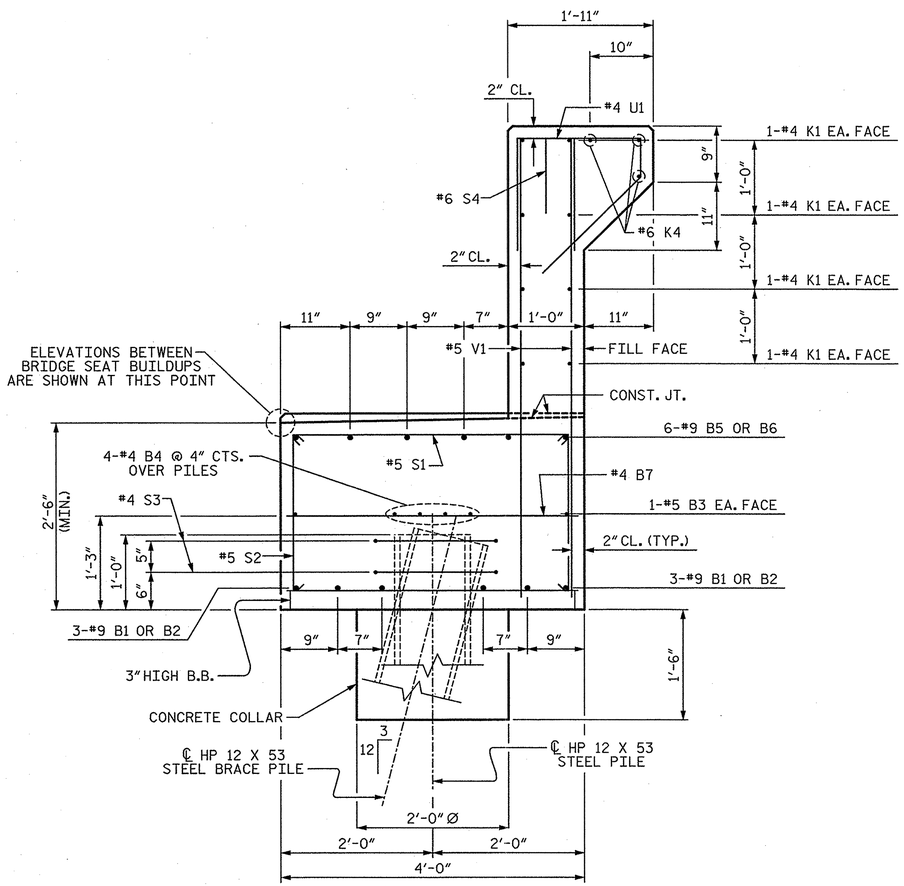

SECTION A-A

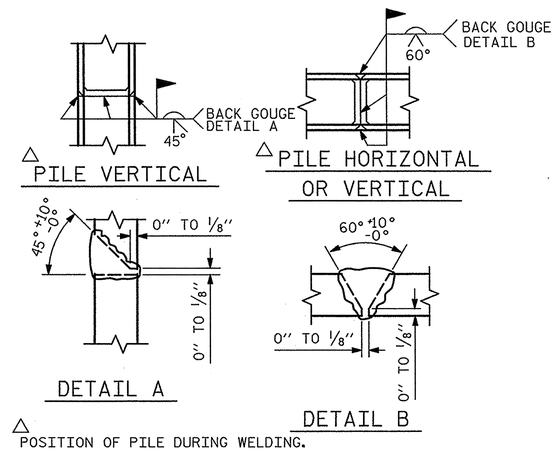

△ POSITION OF PILE DURING WELDING.

PILE SPLICE DETAILS

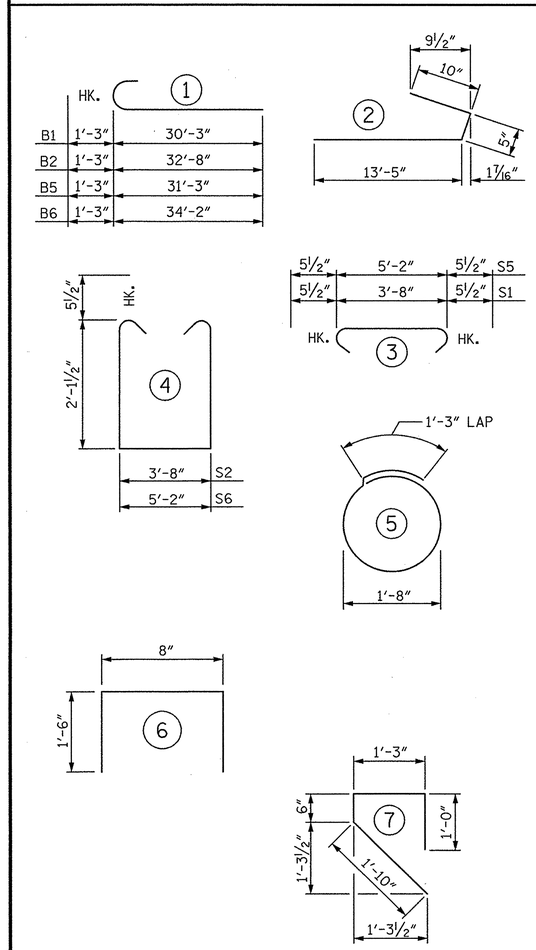

BILL OF MATERIAL
END BENT 2

BAR	NO.	SIZE	TYPE	LENGTH	WEIGHT
B1	6	9	1	31'-6"	643
B2	6	9	1	33'-11"	692
B3	4	5	STR	29'-11"	125
B4	8	4	STR	29'-0"	155
B5	6	9	1	32'-6"	663
B6	6	9	1	35'-5"	723
B7	14	4	STR	3'-8"	34
D1	2	9	STR	6'-0"	41
H1	34	5	2	14'-8"	520
K1	16	4	STR	29'-6"	315
K2	2	4	STR	7'-0"	9
K3	2	4	STR	5'-7"	7
K4	3	6	STR	45'-2"	204
S1	82	5	3	4'-7"	392
S2	82	5	4	8'-10"	755
S3	12	4	5	6'-6"	52
S4	45	6	7	4'-7"	310
S5	1	5	3	6'-1"	6
S6	1	5	4	10'-4"	11
U1	48	4	6	3'-8"	118
V1	96	5	STR	6'-6"	651
V2	42	4	STR	8'-2"	229
TOTAL REINFORCING STEEL					6655 LB

CLASS "A" CONCRETE BREAKDOWN
POUR 1
(CAP, COLLARS, & LOWER WING) 24.0 CY
POUR 2 (BACKWALL AND UPPER WING) 14.6 CY
TOTAL CLASS "A" CONCRETE 38.6 CY

HP 12 X 53 STEEL PILES
NO. 5 284 LF

BAGGED STONE AND PIPE SHALL BE PLACED IMMEDIATELY AFTER COMPLETION OF END BENT EXCAVATION. PIPE MAY BE EITHER CONCRETE, CORRUGATED STEEL, CORRUGATED ALUMINUM ALLOY, OR CORRUGATED PLASTIC. PERFORATED PIPE WILL NOT BE ALLOWED.

BAGGED STONE SHALL REMAIN IN PLACE UNTIL THE ENGINEER DIRECTS THAT IT BE REMOVED. THE CONTRACTOR SHALL REMOVE AND DISPOSE OF SILT ACCUMULATIONS AT BAGGED STONE WHEN SO DIRECTED BY THE ENGINEER. BAGS SHALL BE REMOVED AND REPLACED WHENEVER THE ENGINEER DETERMINES THAT THEY HAVE DETERIORATED AND LOST THEIR EFFECTIVENESS.

NO SEPARATE PAYMENT WILL BE MADE FOR THIS WORK AND THE ENTIRE COST OF THIS WORK SHALL BE INCLUDED IN THE UNIT CONTRACT PRICE BID FOR THE SEVERAL PAY ITEMS.

TEMPORARY DRAINAGE AT END BENT

PROJECT NO. U-0071
DURHAM COUNTY
STATION: 24+70.18 -DFWB-

SHEET 3 OF 3

STATE OF NORTH CAROLINA
DEPARTMENT OF TRANSPORTATION
RALEIGH
SUBSTRUCTURE

END BENT 2

PLANS PREPARED BY:
SIMPSON ENGINEERS & ASSOCIATES
5640 Dillard Drive
Suite 200
Cary, NC 27518
(919) 852-0468
(919) 852-0598 (Fax)
www.simpsonengr.com
LICENSURE NO. C-2521

NORTH CAROLINA PROFESSIONAL SEAL 18056 ENGINEER JOHN A. BATTS
1/14/2014

REVISIONS							SHEET NO.
NO.	BY:	DATE:	NO.	BY:	DATE:		S-58
1			3				TOTAL SHEETS
2			4				67

DRAWN BY: R. SEALEY DATE: 12-13
CHECKED BY: B.S. COX DATE: 12-13
DESIGN ENGINEER OF RECORD: J.A. BATTS DATE: 12-13

STR. #14

1/14/2014 9:35:17 AM G:\Projects\2012\U-0071 (Durham Co.)\Structures\Drawings\Final\Bridge 189\Widening\U-0071_Br 189_sd_eb+2.dgn

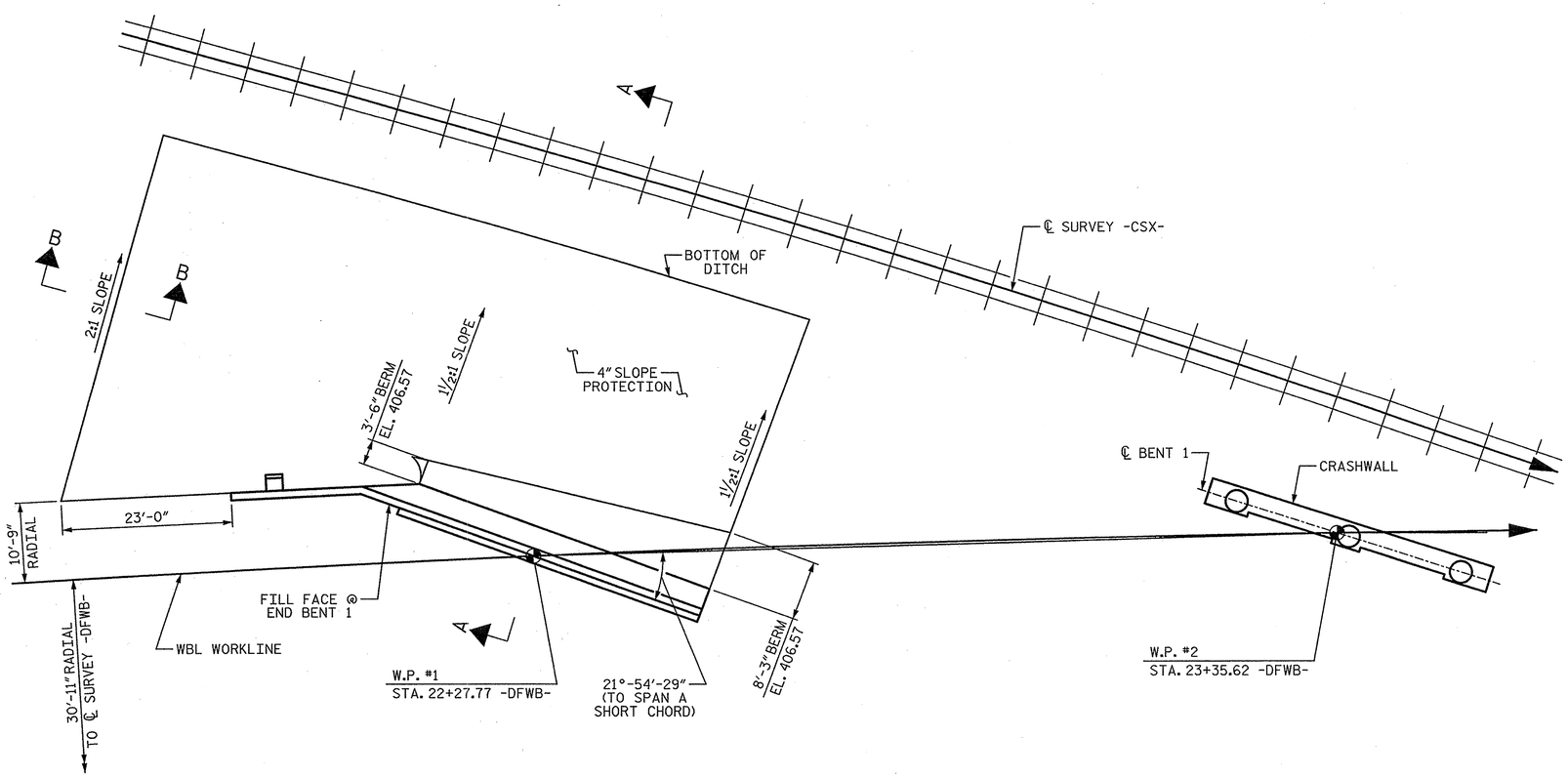

END BENT 1

GENERAL NOTES:

SLOPE PROTECTION SHALL BE PLACED UNDER THE ENDS OF THE BRIDGE AS SHOWN IN THE DETAILS. MEASUREMENT AND PAYMENT SHALL BE AS PRESCRIBED IN SECTION 462 OF THE STANDARD SPECIFICATIONS.

SLOPE PROTECTION NOTES:

SLOPE PROTECTION SHALL CONSIST OF 4" POURED-IN-PLACE CONCRETE PAVING AS SHOWN IN THE DETAILS ON THIS SHEET. CONCRETE SHALL BE CLASS "B". THE CONCRETE SURFACE SHALL BE FLOATED WITH A WOODEN FLOAT AND FINISHED. WELDED WIRE FABRIC REINFORCING SHALL BE 6 X 6 - W1.4 X W1.4, 60" WIDE. SLOPE PROTECTION SHALL BE POURED IN 5' STRIPS AS SHOWN IN THE "POURING DETAIL" WITH 2'-0" LONG #4 BARS PLACED ALONG THE SLOPE BETWEEN STRIPS AT 1'-6" MAXIMUM SPACING. SLOPE PROTECTION MAY BE POURED IN ALTERNATE 4' AND 5' STRIPS AS SHOWN IN THE "OPTIONAL POURING DETAIL" WITH ADJACENT RUNS OF WELDED WIRE FABRIC LAPPING AT LEAST 6". THE COST OF THE WELDED WIRE FABRIC AND #4 BARS, IF USED, SHALL BE INCLUDED IN THE CONTRACT UNIT PRICE BID PER SQUARE YARD FOR SLOPE PROTECTION.

SEE PRESERVATION PLANS FOR DETAILS AND PAY ITEMS FOR FINE GRADING AND SHOTCRETING THE EXISTING FILL SLOPES UNDER THE BRIDGE.

ESTIMATED QUANTITIES

BRIDGE @ STA. 24+70.18 -DFWB-	4" SLOPE PROTECTION	* WELDED WIRE FABRIC 60 INCHES WIDE
	SY	APPROX. LF
END BENT 1	450	805
END BENT 2	615	1110

* QUANTITY SHOWN BASED ON 5'-0" POURS

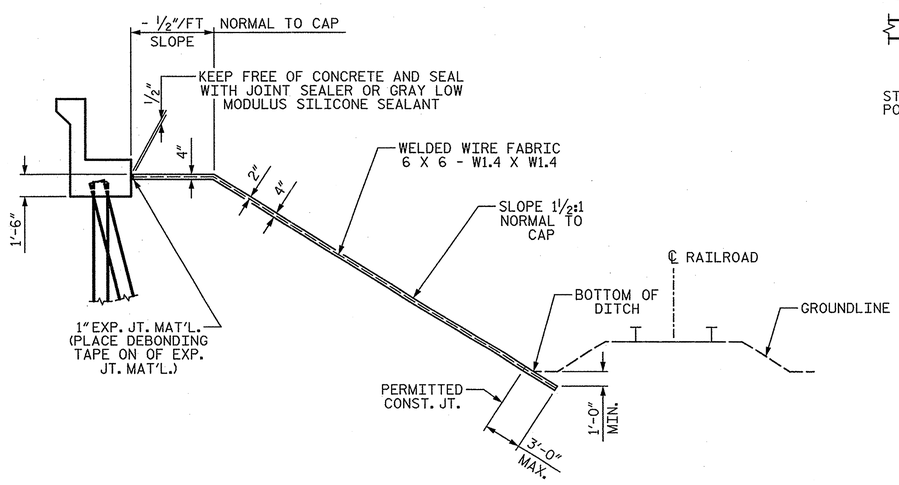

SECTION A-A

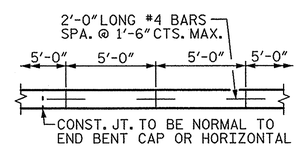

STRIP WIDTHS MAY VARY IN CURVED PORTION.

POUR DETAIL

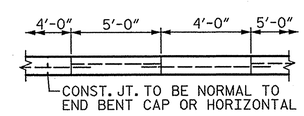

POUR A 4'-0" STRIP FIRST. STRIP WIDTHS MAY VARY IN CURVED PORTION.

OPTIONAL POUR DETAIL

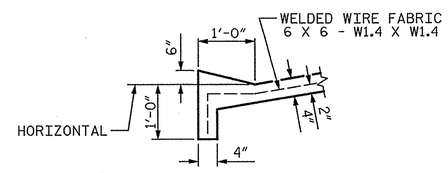

SECTION B-B

PROJECT NO. U-0071

DURHAM COUNTY

STATION: 24+70.18 -DFWB-

SHEET 1 OF 2

STATE OF NORTH CAROLINA
DEPARTMENT OF TRANSPORTATION
RALEIGH

SLOPE PROTECTION DETAILS

PLANS PREPARED BY:

SIMPSON ENGINEERS & ASSOCIATES
5640 Dillard Drive
Suite 200
Cary, NC 27518
(919) 852-0468
(919) 852-0598 (Fax)
www.simpsonengr.com
LICENSURE NO. C-2521

NORTH CAROLINA PROFESSIONAL SEAL 18056 ENGINEER JOHN A. BATTS
6/9/2014

REVISIONS							
NO.	BY:	DATE:	NO.	BY:	DATE:		
1			3				
2			4				

SHEET NO. S-659

TOTAL SHEETS 671

STR. #14

DRAWN BY: T. BANKOVICH DATE: 12-13
CHECKED BY: B.S. COX DATE: 12-13
DESIGN ENGINEER OF RECORD: J.A. BATTS DATE: 12-13

6/9/2014 9:20:56 AM G:\Projects\2012\U-0071 (Durham Co.)\Structures\Drawings\Final\Bridge 189\Widening\U-0071_Br 189_sd_sp.dgn

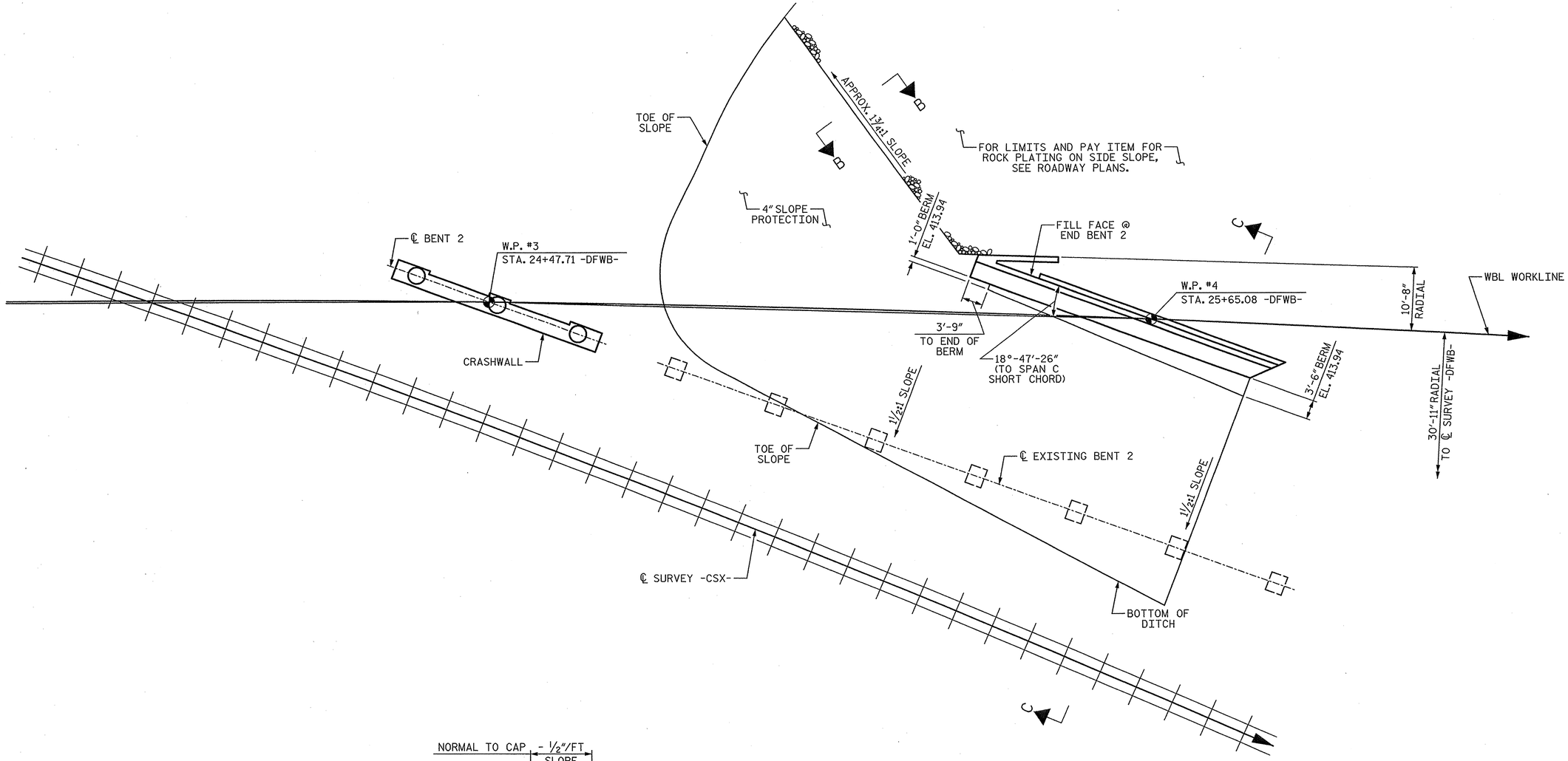

END BENT 2

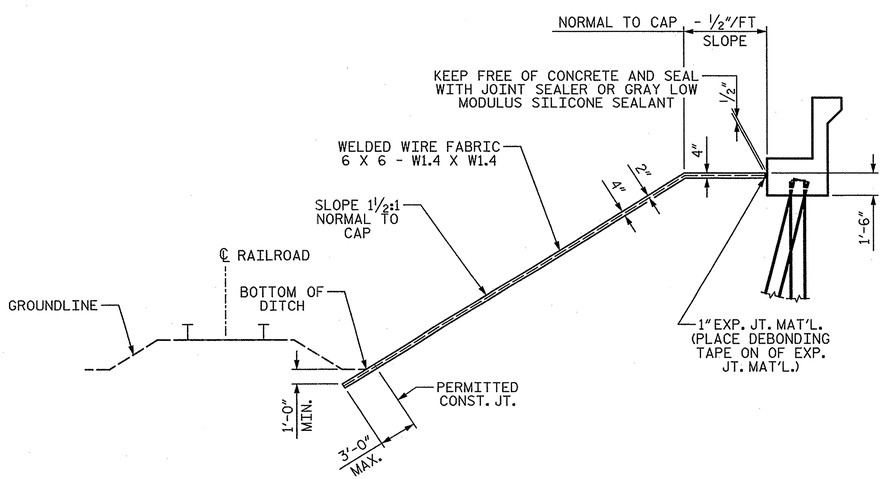

SECTION C-C

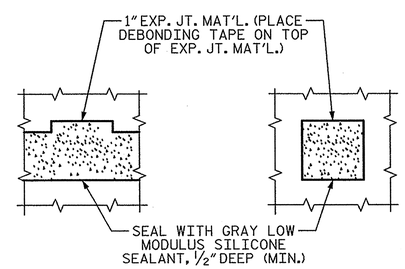

PLAN WHERE CONCRETE SLOPE PROTECTION MUST BE PLACED AROUND A BENT COLUMN OR CRASHWALL

PROJECT NO. U-0071
DURHAM COUNTY
STATION: 24+70.18 -DFWB-

SHEET 2 OF 2

STATE OF NORTH CAROLINA
DEPARTMENT OF TRANSPORTATION
RALEIGH

SLOPE PROTECTION DETAILS

REVISIONS						SHEET NO.
NO.	BY:	DATE:	NO.	BY:	DATE:	S-60
1			3			TOTAL SHEETS
2			4			671

PLANS PREPARED BY:
SIMPSON ENGINEERS & ASSOCIATES
5640 Dillard Drive
Suite 200
Cary, NC 27518
(919) 852-0468
(919) 852-0598 (Fax)
www.simpsonengr.com
LICENSURE NO. C-2521

NORTH CAROLINA PROFESSIONAL SEAL 18056 ENGINEER JOHN A. BATTS 6/9/2014

DRAWN BY: T. BANKOVICH DATE: 12-13
CHECKED BY: B.S. COX DATE: 12-13
DESIGN ENGINEER OF RECORD: J.A. BATTS DATE: 12-13

STR. #14

6/9/2014 9:20:56 AM G:\Projects\2012\U-0071 (Durham Co.)\Structures\Drawings\Final\Bridge 189\Widening\U-0071_Br 189_sd_sp.dgn

NOTES:

✳ RADIAL DIMENSIONS

1¼" LATEX MODIFIED CONCRETE (MIN.) LOCATED IN THE PROPOSED WIDENING OF APPROACH SLAB IS INCLUDED IN THE LMC QUANTITY ON THE PRESERVATION PLANS.

▲ #6 "D" DOWELS PLACED IN THE EXISTING APPROACH SLAB SHALL BE INSTALLED USING AN ADHESIVE ANCHORING SYSTEM. LEVEL ONE FIELD TESTING IS REQUIRED AND THE YIELD LOAD OF THE DOWEL IS 13.2 KIPS. EMBEDMENT LENGTH TO BE DETERMINED BY THE MANUFACTUER OF THE ADHESIVELY ANCHORED ANCHOR SYSTEM. #6 "D" BAR LENGTH WAS BASED ON A 10" EMBEDMENT LENGTH. ADHESIVELY ANCHORED ANCHOR BOLT OR DOWEL TESTING SHALL BE IN ACCORDANCE WITH SECTION 420-13 OF THE STANDARD SPECIFICATIONS.

"A" BARS ARE TO BE PLACED PERPENDICULAR TO THE APPROACH SLAB CHORD AND SPACED ALONG THE APPROACH SLAB CHORD.

"B" BARS ARE TO BE PLACED PARALLEL TO THE APPROACH SLAB CHORD.

THE EFFECTS OF THE HORIZONTAL CURVE ARE NEGLIGIBLE AND SHALL BE IGNORED IN THE CONSTRUCTION OF THE APPROACH SLAB.

FOR SECTION C-C, SEE SHEET 5 OF 7.

FOR SECTION D-D, SEE SHEET 6 OF 7.

FOR SECTION N-N, SEE SHEET 6 OF 7.

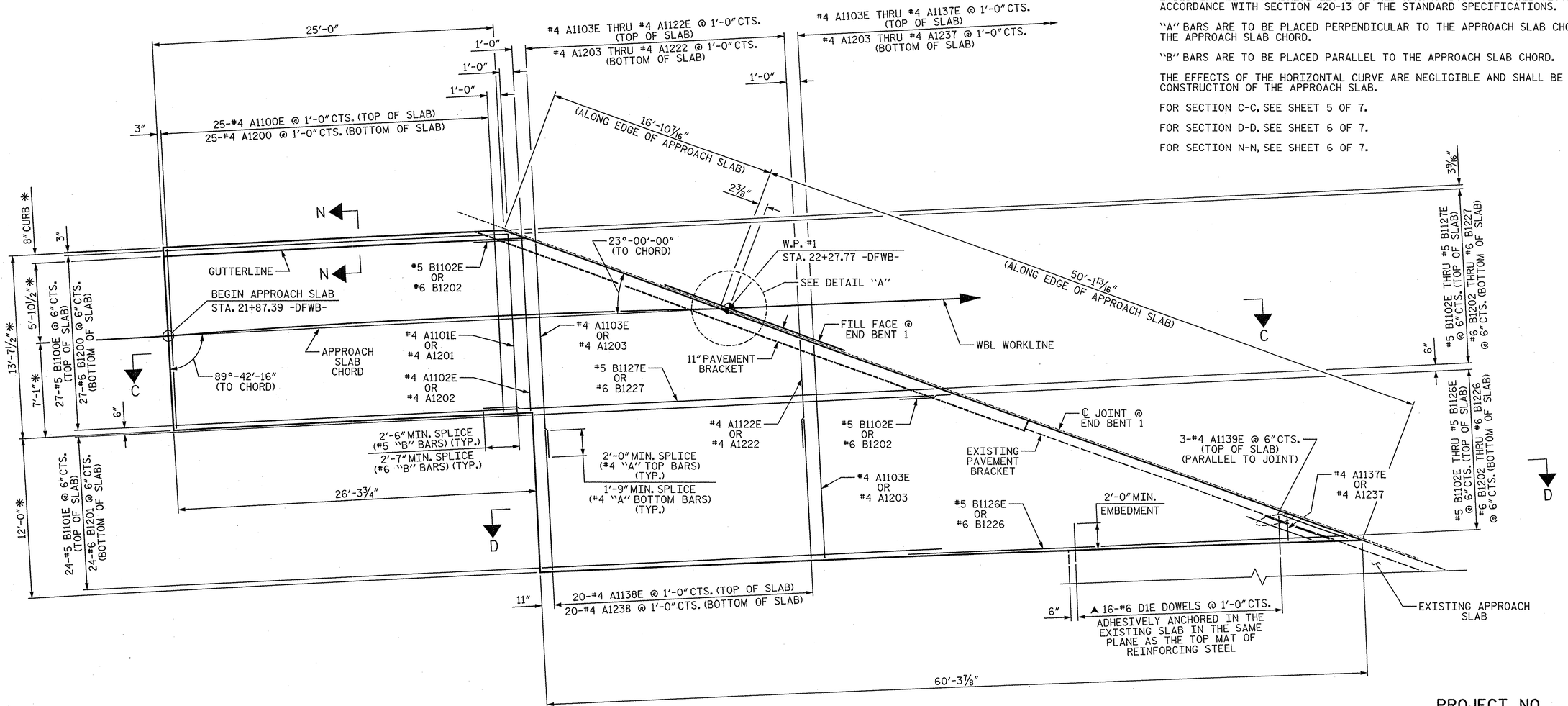

PLAN @ END BENT 1 WIDENING

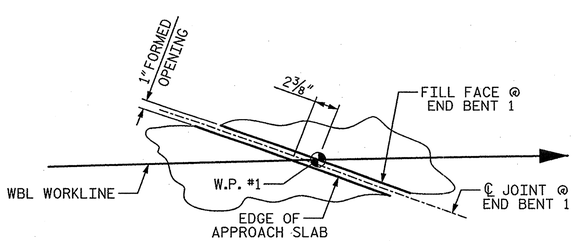

DETAIL "A"

PROJECT NO. U-0071

DURHAM COUNTY

STATION: 24+70.18 -DFWB-

SHEET 1 OF 7

STATE OF NORTH CAROLINA
DEPARTMENT OF TRANSPORTATION
RALEIGH

BRIDGE APPROACH SLAB FOR RIGID PAVEMENT END BENT 1

PLANS PREPARED BY:

SIMPSON ENGINEERS & ASSOCIATES
5640 Dillard Drive
Suite 200
Cary, NC 27518
(919) 852-0468
(919) 852-0598 (Fax)
www.simpsonengr.com
LICENSURE NO. C-2521

NORTH CAROLINA PROFESSIONAL SEAL 18056 ENGINEER JOHN A. BATTS
1/10/2014

REVISIONS						SHEET NO.
NO.	BY:	DATE:	NO.	BY:	DATE:	S-661
1			3			TOTAL SHEETS
2			4			671

STR. #14

DRAWN BY:	T. BANKOVICH	DATE:	12-13
CHECKED BY:	B.S. COX	DATE:	12-13
DESIGN ENGINEER OF RECORD:	J.A. BATTS	DATE:	12-13

1/14/2014 9:35:18 AM G:\Projects\2012\U-0071 (Durham Co.)\Structures\Drawings\Final\Bridge 189\Widening\U-0071_Br 189_sd_as.dgn

BILL OF MATERIAL

APPROACH SLAB @ END BENT 1 WIDENING

BAR	NO.	SIZE	TYPE	LENGTH	WEIGHT	BAR	NO.	SIZE	TYPE	LENGTH	WEIGHT	BAR	NO.	SIZE	TYPE	LENGTH	WEIGHT
A1100E	25	4	STR	13'-3"	221	A1205	2	4	STR	15'-0"	20	B1111E	2	5	STR	14'-3"	30
A1101E	1	4	STR	13'-1"	9	A1206	2	4	STR	14'-7"	19	B1112E	2	5	STR	15'-5"	32
A1102E	1	4	STR	12'-8"	8	A1207	2	4	STR	14'-2"	19	B1113E	2	5	STR	16'-7"	35
A1103E	2	4	STR	15'-10"	21	A1208	2	4	STR	13'-9"	18	B1114E	2	5	STR	17'-9"	37
A1104E	2	4	STR	15'-5"	21	A1209	2	4	STR	13'-4"	18	B1115E	2	5	STR	18'-11"	39
A1105E	2	4	STR	15'-0"	20	A1210	2	4	STR	12'-11"	17	B1116E	2	5	STR	20'-1"	42
A1106E	2	4	STR	14'-7"	19	A1211	2	4	STR	12'-6"	17	B1117E	2	5	STR	21'-4"	45
A1107E	2	4	STR	14'-2"	19	A1212	2	4	STR	12'-1"	16	B1118E	2	5	STR	22'-6"	47
A1108E	2	4	STR	13'-9"	18	A1213	2	4	STR	11'-8"	16	B1119E	2	5	STR	23'-8"	49
A1109E	2	4	STR	13'-4"	18	A1214	2	4	STR	11'-4"	15	B1120E	2	5	STR	24'-10"	52
A1110E	2	4	STR	12'-11"	17	A1215	2	4	STR	10'-11"	15	B1121E	2	5	STR	26'-0"	54
A1111E	2	4	STR	12'-6"	17	A1216	2	4	STR	10'-6"	14	B1122E	2	5	STR	27'-2"	57
A1112E	2	4	STR	12'-1"	16	A1217	2	4	STR	10'-1"	13	B1123E	2	5	STR	28'-4"	59
A1113E	2	4	STR	11'-8"	16	A1218	2	4	STR	9'-8"	13	B1124E	2	5	STR	29'-6"	62
A1114E	2	4	STR	11'-4"	15	A1219	2	4	STR	9'-3"	12	B1125E	2	5	STR	30'-8"	64
A1115E	2	4	STR	10'-11"	15	A1220	2	4	STR	8'-10"	12	B1126E	2	5	STR	31'-10"	66
A1116E	2	4	STR	10'-6"	14	A1221	2	4	STR	8'-5"	11	B1127E	1	5	STR	33'-1"	35
A1117E	2	4	STR	10'-1"	13	A1222	2	4	STR	8'-0"	11						
A1118E	2	4	STR	9'-8"	13	A1223	1	4	STR	7'-7"	5	B1200	27	6	STR	25'-2"	1021
A1119E	2	4	STR	9'-3"	12	A1224	1	4	STR	7'-2"	5	B1201	24	6	STR	29'-5"	1060
A1120E	2	4	STR	8'-10"	12	A1225	1	4	STR	6'-9"	5	B1202	2	6	STR	3'-8"	11
A1121E	2	4	STR	8'-5"	11	A1226	1	4	STR	6'-4"	4	B1203	2	6	STR	4'-10"	15
A1122E	2	4	STR	8'-0"	11	A1227	1	4	STR	5'-11"	4	B1204	2	6	STR	6'-0"	18
A1123E	1	4	STR	7'-7"	5	A1228	1	4	STR	5'-6"	4	B1205	2	6	STR	7'-2"	22
A1124E	1	4	STR	7'-2"	5	A1229	1	4	STR	5'-1"	3	B1206	2	6	STR	8'-4"	25
A1125E	1	4	STR	6'-9"	5	A1230	1	4	STR	4'-8"	3	B1207	2	6	STR	9'-6"	29
A1126E	1	4	STR	6'-4"	4	A1231	1	4	STR	4'-3"	3	B1208	2	6	STR	10'-9"	32
A1127E	1	4	STR	5'-11"	4	A1232	1	4	STR	3'-10"	3	B1209	2	6	STR	11'-11"	36
A1128E	1	4	STR	5'-6"	4	A1233	1	4	STR	3'-5"	2	B1210	2	6	STR	13'-1"	39
A1129E	1	4	STR	5'-1"	3	A1234	1	4	STR	3'-1"	2	B1211	2	6	STR	14'-3"	43
A1130E	1	4	STR	4'-8"	3	A1235	1	4	STR	2'-8"	2	B1212	2	6	STR	15'-5"	46
A1131E	1	4	STR	4'-3"	3	A1236	1	4	STR	2'-3"	2	B1213	2	6	STR	16'-7"	50
A1132E	1	4	STR	3'-10"	3	A1237	1	4	STR	1'-10"	1	B1214	2	6	STR	17'-9"	53
A1133E	1	4	STR	3'-5"	2	A1238	20	4	STR	10'-2"	136	B1215	2	6	STR	18'-11"	57
A1134E	1	4	STR	3'-1"	2							B1216	2	6	STR	20'-1"	60
A1135E	1	4	STR	2'-8"	2	B1100E	27	5	STR	25'-1"	706	B1217	2	6	STR	21'-4"	64
A1136E	1	4	STR	2'-3"	2	B1101E	24	5	STR	29'-4"	734	B1218	2	6	STR	22'-6"	68
A1137E	1	4	STR	1'-10"	1	B1102E	2	5	STR	3'-8"	8	B1219	2	6	STR	23'-8"	71
A1138E	20	4	STR	10'-5"	139	B1103E	2	5	STR	4'-10"	10	B1220	2	6	STR	24'-10"	75
A1139E	3	4	STR	5'-0"	10	B1104E	2	5	STR	6'-0"	13	B1221	2	6	STR	26'-0"	78
						B1105E	2	5	STR	7'-2"	15	B1222	2	6	STR	27'-2"	82
A1200	25	4	STR	13'-3"	221	B1106E	2	5	STR	8'-4"	17	B1223	2	6	STR	28'-4"	85
A1201	1	4	STR	13'-1"	9	B1107E	2	5	STR	9'-6"	20	B1224	2	6	STR	29'-6"	89
A1202	1	4	STR	12'-8"	8	B1108E	2	5	STR	10'-9"	22	B1225	2	6	STR	30'-8"	92
A1203	2	4	STR	15'-10"	21	B1109E	2	5	STR	11'-11"	25	B1226	2	6	STR	31'-10"	96
A1204	2	4	STR	15'-5"	21	B1110E	2	5	STR	13'-1"	27	B1227	1	6	STR	33'-1"	50
												D1E	16	6	STR	2'-10"	68

REINFORCING STEEL	4207 LB
EPOXY COATED REINFORCING STEEL	3223 LB
CLASS "AA" CONCRETE BREAKDOWN	
POUR 1 (SLAB & CURB)	45.9 CY

"E" INDICATES EPOXY COATED REINFORCING STEEL

SPLICE LENGTHS

BAR SIZE	EPOXY COATED	UNCOATED
#4	2'-0"	1'-9"
#5	2'-6"	2'-2"
#6	3'-10"	2'-7"

PROJECT NO. U-0071

DURHAM COUNTY

STATION: 24+70.18 -DFWB-

SHEET 2 OF 7

STATE OF NORTH CAROLINA
DEPARTMENT OF TRANSPORTATION
RALEIGH

BRIDGE APPROACH SLAB FOR RIGID PAVEMENT END BENT 1

PLANS PREPARED BY:

SIMPSON ENGINEERS & ASSOCIATES
5640 Dillard Drive
Suite 200
Cary, NC 27518
(919) 852-0468
(919) 852-0598 (Fax)
www.simpsonengr.com
LICENSURE NO. C-2521

NORTH CAROLINA PROFESSIONAL SEAL 18056 ENGINEER JOHN A. BATTS
1/14/2014

REVISIONS						SHEET NO.
NO.	BY:	DATE:	NO.	BY:	DATE:	S-662
1			3			TOTAL SHEETS
2			4			671

STR. #14

DRAWN BY: T. BANKOVICH DATE: 12-13
CHECKED BY: B.S. COX DATE: 12-13
DESIGN ENGINEER OF RECORD: J.A. BATTS DATE: 12-13

1/14/2014 9:35:18 AM G:\Projects\2012\U-0071 (Durham Co.)\Structures\Drawings\Final\Bridge 189\Widening\U-0071_Br 189_sd_as.dgn

NOTES:

FOR NOTES, SEE SHEET 1 OF 7.

✱ RADIAL DIMENSIONS

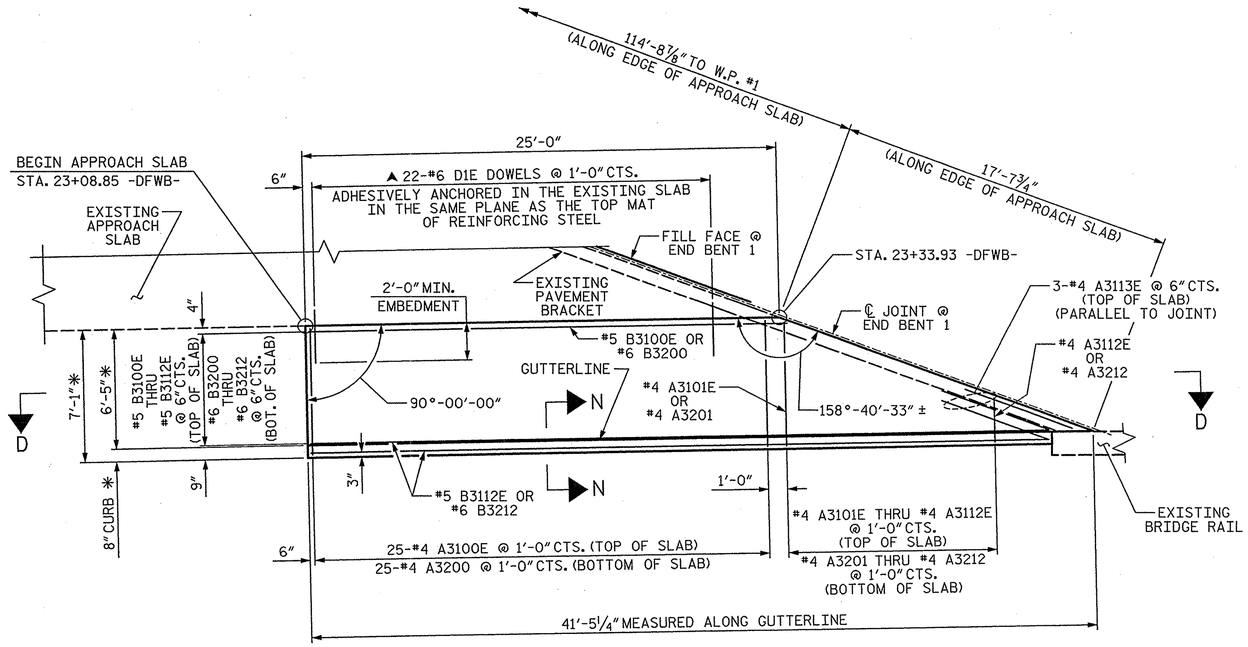

PLAN @ END BENT 1 MEDIAN

BILL OF MATERIAL

APPROACH SLAB @ END BENT 1 MEDIAN

BAR	NO.	SIZE	TYPE	LENGTH	WEIGHT
A3100E	25	4	STR	6'-9"	113
A3101E	1	4	STR	6'-7"	4
A3102E	1	4	STR	6'-3"	4
A3103E	1	4	STR	5'-10"	4
A3104E	1	4	STR	5'-5"	4
A3105E	1	4	STR	5'-0"	3
A3106E	1	4	STR	4'-8"	3
A3107E	1	4	STR	4'-3"	3
A3108E	1	4	STR	3'-10"	3
A3109E	1	4	STR	3'-6"	2
A3110E	1	4	STR	3'-1"	2
A3111E	1	4	STR	2'-8"	2
A3112E	1	4	STR	2'-4"	2
A3113E	3	4	STR	6'-0"	12
A3200	25	4	STR	6'-9"	113
A3201	1	4	STR	6'-7"	4
A3202	1	4	STR	6'-3"	4
A3203	1	4	STR	5'-10"	4
A3204	1	4	STR	5'-5"	4
A3205	1	4	STR	5'-0"	3
A3206	1	4	STR	4'-8"	3
A3207	1	4	STR	4'-3"	3
A3208	1	4	STR	3'-10"	3
A3209	1	4	STR	3'-6"	2
A3210	1	4	STR	3'-1"	2
A3211	1	4	STR	2'-8"	2
A3212	1	4	STR	2'-4"	2
B3100E	1	5	STR	25'-2"	26
B3101E	1	5	STR	26'-6"	28
B3102E	1	5	STR	27'-9"	29
B3103E	1	5	STR	29'-0"	30
B3104E	1	5	STR	30'-4"	32
B3105E	1	5	STR	31'-7"	33
B3106E	1	5	STR	32'-10"	34

BAR	NO.	SIZE	TYPE	LENGTH	WEIGHT
B3107E	1	5	STR	34'-2"	36
B3108E	1	5	STR	35'-5"	37
B3109E	1	5	STR	36'-9"	38
B3110E	1	5	STR	38'-0"	40
B3111E	1	5	STR	39'-3"	41
B3112E	2	5	STR	38'-11"	81
B3200	1	6	STR	25'-2"	38
B3201	1	6	STR	26'-6"	40
B3202	1	6	STR	27'-9"	42
B3203	1	6	STR	29'-0"	44
B3204	1	6	STR	30'-4"	46
B3205	1	6	STR	31'-7"	47
B3206	1	6	STR	32'-10"	49
B3207	1	6	STR	34'-2"	51
B3208	1	6	STR	35'-5"	53
B3209	1	6	STR	36'-9"	55
B3210	1	6	STR	38'-0"	57
B3211	1	6	STR	39'-3"	59
B3212	2	6	STR	38'-11"	117
D1E	22	6	STR	2'-10"	94

REINFORCING STEEL 847 LB

EPOXY COATED
REINFORCING STEEL 740 LB

CLASS "AA" CONCRETE BREAKDOWN
POUR 1 (SLAB & CURB) 10.2 CY

"E" INDICATES EPOXY COATED REINFORCING STEEL

SPLICE LENGTHS

BAR SIZE	EPOXY COATED	UNCOATED
#4	2'-0"	1'-9"
#5	2'-6"	2'-2"
#6	3'-10"	2'-7"

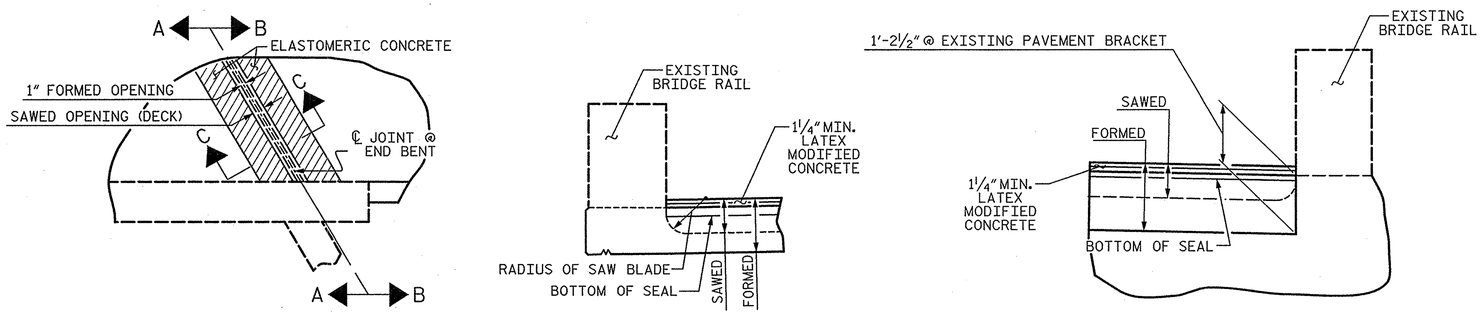

PLAN

(EXISTING END BENT 2 MEDIAN SHOWN. EXISTING END BENT 1 MEDIAN SIMILAR.)

SECTION A-A

SECTION B-B

JOINT SEAL DETAILS @ END BENT - MEDIAN

(FOR SECTION C-C, SEE SHEET 7 OF 7.)

PROJECT NO. U-0071
DURHAM COUNTY
STATION: 24+70.18 -DFWB-

SHEET 3 OF 7

STATE OF NORTH CAROLINA
DEPARTMENT OF TRANSPORTATION
RALEIGH

BRIDGE APPROACH SLAB
FOR RIGID PAVEMENT
END BENT 1

PLANS PREPARED BY:
SIMPSON ENGINEERS & ASSOCIATES
5640 Dillard Drive
Suite 200
Cary, NC 27518
(919) 852-0468
(919) 852-0598 (Fax)
www.simpsonengr.com
LICENSURE NO. C-2521

NORTH CAROLINA PROFESSIONAL SEAL 18056 ENGINEER JOHN A. BATTS
1/10/2014

REVISIONS							SHEET NO.
NO.	BY:	DATE:	NO.	BY:	DATE:		S-663
1			3				TOTAL SHEETS
2			4				671

DRAWN BY: T. BANKOVICH DATE: 12-13
CHECKED BY: B.S. COX DATE: 12-13
DESIGN ENGINEER OF RECORD: J.A. BATTS DATE: 12-13

STR. #14

1/14/2014 9:35:19 AM G:\Projects\2012\U-0071 (Durham Co.)\Structures\Drawings\Final\Bridge 189\Widening\U-0071_Br 189_sd_as.dgn

NOTES:

FOR NOTES, SEE SHEET 1 OF 7.

* RADIAL DIMENSIONS

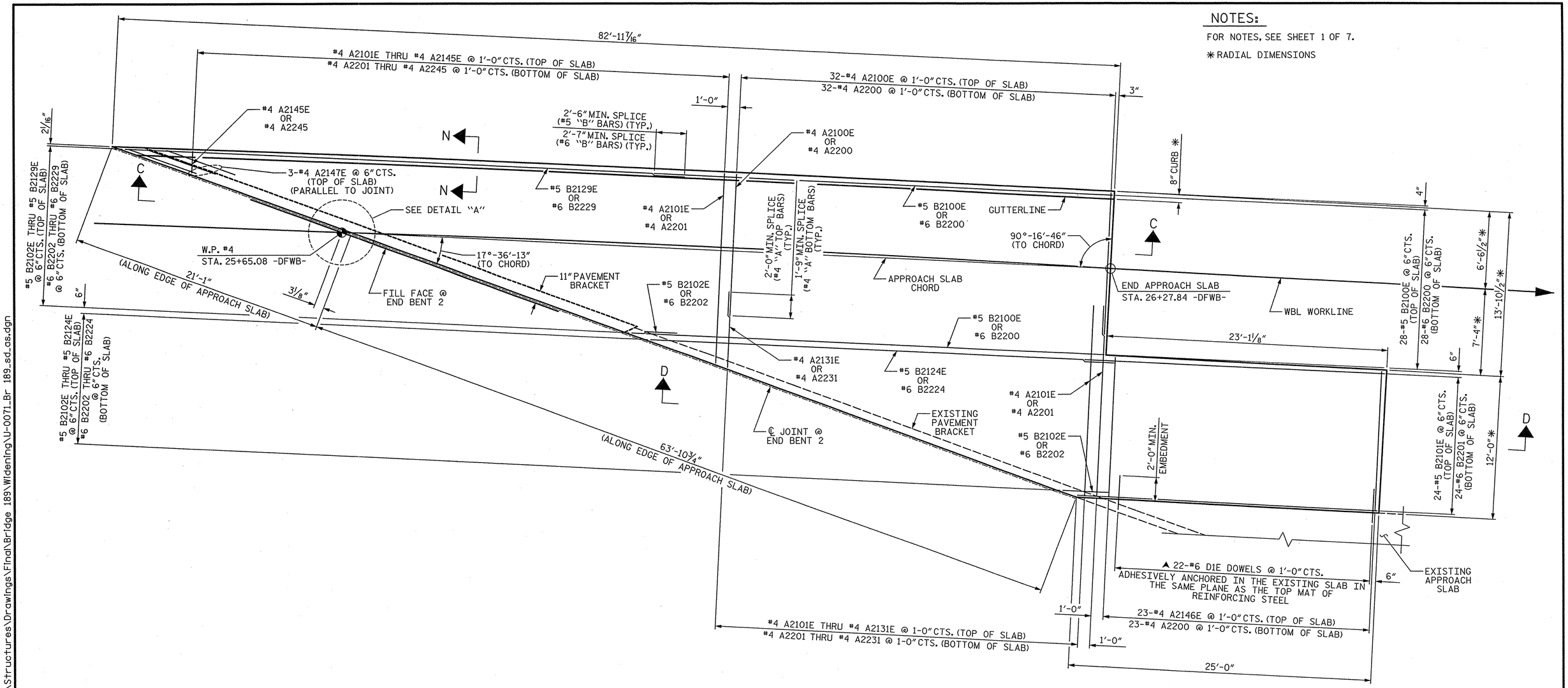

PLAN @ END BENT 2 WIDENING

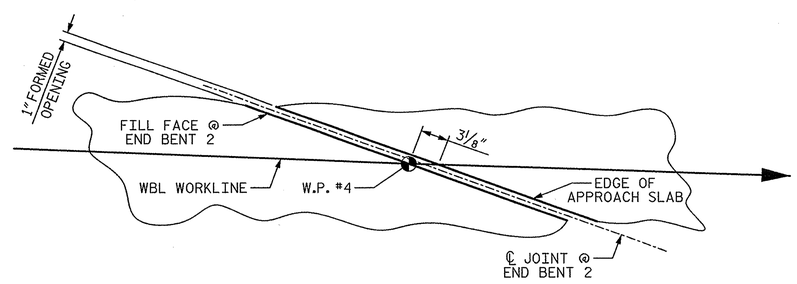

DETAIL "A"

PROJECT NO. U-0071

DURHAM COUNTY

STATION: 24+70.18 -DFWB-

SHEET 4 OF 7

STATE OF NORTH CAROLINA
DEPARTMENT OF TRANSPORTATION
RALEIGH

BRIDGE APPROACH SLAB FOR RIGID PAVEMENT END BENT 2

PLANS PREPARED BY:

SIMPSON ENGINEERS & ASSOCIATES
5640 Dillard Drive
Suite 200
Cary, NC 27518
(919) 852-0468
(919) 852-0598 (Fax)
www.simpsonengr.com
LICENSURE NO. C-2521

NORTH CAROLINA PROFESSIONAL SEAL 18056 ENGINEER JOHN A. BATTS
1/6/2014

REVISIONS						SHEET NO.
NO.	BY:	DATE:	NO.	BY:	DATE:	S-664
1			3			TOTAL SHEETS
2			4			671

STR. #14

DRAWN BY:	T. BANKOVICH	DATE:	12-13
CHECKED BY:	B.S. COX	DATE:	12-13
DESIGN ENGINEER OF RECORD:	J.A. BATTS	DATE:	12-13

1/14/2014 9:35:19 AM G:\Projects\2012\U-0071 (Durham Co.)\Structures\Drawings\Final\Bridge 189\Widening\U-0071_Br 189_sd_as.dgn

NOTES:

APPROACH SLAB SHALL NOT BE CONSTRUCTED PRIOR TO COMPLETION OF THE BRIDGE DECK.

FOR BRIDGE APPROACH FILL INCLUDING GEOTEXTILE, 4" Ø DRAINAGE PIPE, AND #78M STONE BACKFILL, SEE ROADWAY PLANS.

GEOTEXTILE SHALL BE TYPE 1 IN ACCORDANCE WITH THE STANDARD SPECIFICATIONS SECTION 1056.

#78M STONE BACKFILL (CLASS V SELECT MATERIAL) SHALL BE IN ACCORDANCE WITH STANDARD SPECIFICATIONS SECTION 1016.

#78M STONE BACKFILL IS TO BE CONTINUOUS ALONG FILL FACE OF BACKWALL FROM OUTSIDE EDGE TO OUTSIDE EDGE OF WIDENED APPROACH SLAB.

AREA BETWEEN THE WINGWALL AND APPROACH SLAB SHALL BE GRADED TO DRAIN THE WATER AWAY FROM THE FILL FACE OF THE BRIDGE AND SHALL BE PAVED. SEE ROADWAY PLANS.

THE JOINT SHALL BE SAWED PRIOR TO THE CASTING OF THE BARRIER RAIL.

FOR THE 4" Ø DRAINAGE PIPE OUTLET(S), SEE ROADWAY STANDARD DRAWINGS.

FOR FOAM JOINT SEALS, SEE SPECIAL PROVISIONS.

THE NONIMAL UNCOMPRESSED SEAL WIDTH OF THE FOAM JOINT SEAL SHALL BE 2½" AT END BENTS AND 2" AT INTERIOR BENTS.

FOR ELASTOMERIC CONCRETE, SEE SPECIAL PROVISIONS.

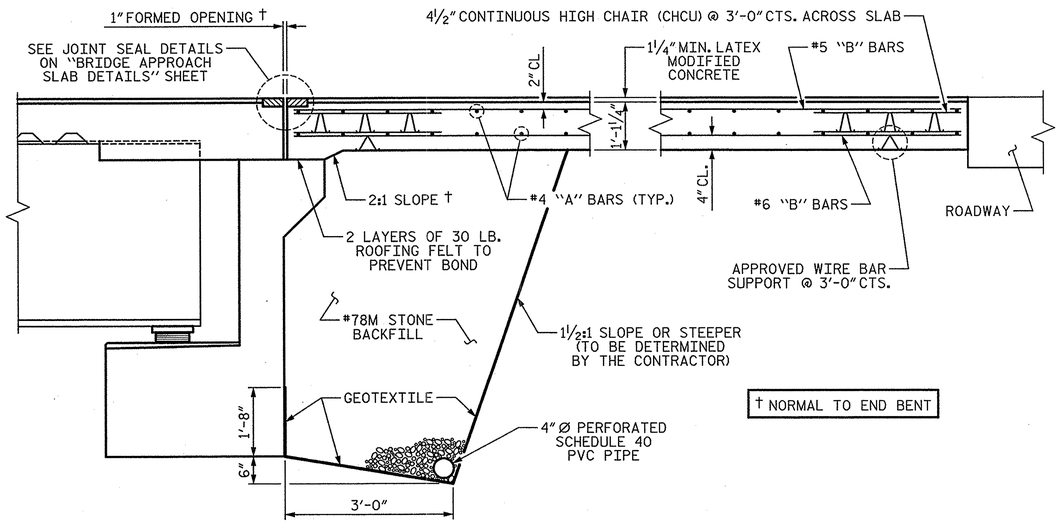

† NORMAL TO END BENT

SECTION C-C

BILL OF MATERIAL
APPROACH SLAB @ END BENT 2 WIDENING

BAR	NO.	SIZE	TYPE	LENGTH	WEIGHT	BAR	NO.	SIZE	TYPE	LENGTH	WEIGHT	BAR	NO.	SIZE	TYPE	LENGTH	WEIGHT
A2100E	32	4	STR	11'-11"	255	A2207	2	4	STR	14'-0"	19	B2116E	2	5	STR	25'-9"	54
A2101E	3	4	STR	15'-11"	32	A2208	2	4	STR	13'-9"	18	B2117E	2	5	STR	27'-4"	57
A2102E	2	4	STR	15'-8"	21	A2209	2	4	STR	13'-5"	18	B2118E	2	5	STR	28'-11"	60
A2103E	2	4	STR	15'-4"	20	A2210	2	4	STR	13'-1"	17	B2119E	2	5	STR	30'-6"	64
A2104E	2	4	STR	15'-0"	20	A2211	2	4	STR	12'-9"	17	B2120E	2	5	STR	32'-1"	67
A2105E	2	4	STR	14'-8"	20	A2212	2	4	STR	12'-5"	17	B2121E	2	5	STR	33'-8"	70
A2106E	2	4	STR	14'-4"	19	A2213	2	4	STR	12'-2"	16	B2122E	2	5	STR	35'-3"	74
A2107E	2	4	STR	14'-0"	19	A2214	2	4	STR	11'-10"	16	B2123E	2	5	STR	36'-10"	77
A2108E	2	4	STR	13'-9"	18	A2215	2	4	STR	11'-6"	15	B2124E	2	5	STR	38'-5"	80
A2109E	2	4	STR	13'-5"	18	A2216	2	4	STR	11'-2"	15	B2125E	1	5	STR	39'-11"	42
A2110E	2	4	STR	13'-1"	17	A2217	2	4	STR	10'-10"	14	B2126E	1	5	STR	41'-6"	43
A2111E	2	4	STR	12'-9"	17	A2218	2	4	STR	10'-6"	14	B2127E	1	5	STR	43'-1"	45
A2112E	2	4	STR	12'-5"	17	A2219	2	4	STR	10'-3"	14	B2128E	1	5	STR	44'-8"	47
A2113E	2	4	STR	12'-2"	16	A2220	2	4	STR	9'-10"	13	B2129E	1	5	STR	46'-3"	48
A2114E	2	4	STR	11'-10"	16	A2221	2	4	STR	9'-7"	13						
A2115E	2	4	STR	11'-6"	15	A2222	2	4	STR	9'-3"	12	B2200	28	6	STR	38'-0"	1598
A2116E	2	4	STR	11'-2"	15	A2223	2	4	STR	8'-11"	12	B2201	24	6	STR	24'-10"	895
A2117E	2	4	STR	10'-10"	14	A2224	2	4	STR	8'-7"	11	B2202	2	6	STR	3'-8"	11
A2118E	2	4	STR	10'-6"	14	A2225	2	4	STR	8'-3"	11	B2203	2	6	STR	5'-3"	16
A2119E	2	4	STR	10'-3"	14	A2226	2	4	STR	8'-0"	11	B2204	2	6	STR	6'-10"	21
A2120E	2	4	STR	9'-10"	13	A2227	2	4	STR	7'-8"	10	B2205	2	6	STR	8'-5"	25
A2121E	2	4	STR	9'-7"	13	A2228	2	4	STR	7'-4"	10	B2206	2	6	STR	10'-0"	30
A2122E	2	4	STR	9'-3"	12	A2229	2	4	STR	7'-0"	9	B2207	2	6	STR	11'-7"	35
A2123E	2	4	STR	8'-11"	12	A2230	2	4	STR	6'-8"	9	B2208	2	6	STR	13'-2"	40
A2124E	2	4	STR	8'-7"	11	A2231	2	4	STR	6'-4"	8	B2209	2	6	STR	14'-9"	44
A2125E	2	4	STR	8'-3"	11	A2232	1	4	STR	6'-0"	4	B2210	2	6	STR	16'-4"	49
A2126E	2	4	STR	8'-0"	11	A2233	1	4	STR	5'-8"	4	B2211	2	6	STR	17'-11"	54
A2127E	2	4	STR	7'-8"	10	A2234	1	4	STR	5'-5"	4	B2212	2	6	STR	19'-6"	59
A2128E	2	4	STR	7'-4"	10	A2235	1	4	STR	5'-1"	3	B2213	2	6	STR	21'-1"	63
A2129E	2	4	STR	7'-0"	9	A2236	1	4	STR	4'-9"	3	B2214	2	6	STR	22'-8"	68
A2130E	2	4	STR	6'-8"	9	A2237	1	4	STR	4'-5"	3	B2215	2	6	STR	24'-2"	73
A2131E	2	4	STR	6'-4"	8	A2238	1	4	STR	4'-1"	3	B2216	2	6	STR	25'-9"	77
A2132E	1	4	STR	6'-0"	4	A2239	1	4	STR	3'-9"	3	B2217	2	6	STR	27'-4"	82
A2133E	1	4	STR	5'-8"	4	A2240	1	4	STR	3'-5"	2	B2218	2	6	STR	28'-11"	87
A2134E	1	4	STR	5'-5"	4	A2241	1	4	STR	3'-1"	2	B2219	2	6	STR	30'-6"	92
A2135E	1	4	STR	5'-1"	3	A2242	1	4	STR	2'-9"	2	B2220	2	6	STR	32'-1"	96
A2136E	1	4	STR	4'-9"	3	A2243	1	4	STR	2'-5"	2	B2221	2	6	STR	33'-8"	101
A2137E	1	4	STR	4'-5"	3	A2244	1	4	STR	2'-2"	1	B2222	2	6	STR	35'-3"	106
A2138E	1	4	STR	4'-1"	3	A2245	1	4	STR	1'-10"	1	B2223	2	6	STR	36'-10"	111
A2139E	1	4	STR	3'-9"	3							B2224	2	6	STR	38'-5"	115
A2140E	1	4	STR	3'-5"	2	B2100E	28	5	STR	37'-11"	1107	B2225	1	6	STR	39'-11"	60
A2141E	1	4	STR	3'-1"	2	B2101E	24	5	STR	24'-9"	620	B2226	1	6	STR	41'-6"	62
A2142E	1	4	STR	2'-9"	2	B2102E	2	5	STR	3'-8"	8	B2227	1	6	STR	43'-1"	65
A2143E	1	4	STR	2'-5"	2	B2103E	2	5	STR	5'-3"	11	B2228	1	6	STR	44'-8"	67
A2144E	1	4	STR	2'-2"	1	B2104E	2	5	STR	6'-10"	14	B2229	1	6	STR	46'-3"	69
A2145E	1	4	STR	1'-10"	1	B2105E	2	5	STR	8'-5"	18						
A2146E	23	4	STR	11'-8"	179	B2106E	2	5	STR	10'-0"	21	D1E	22	6	STR	2'-10"	94
A2147E	3	4	STR	6'-0"	12	B2107E	2	5	STR	11'-7"	24						
						B2108E	2	5	STR	13'-2"	27	REINFORCING STEEL					5302 LB
A2200	55	4	STR	11'-8"	429	B2109E	2	5	STR	14'-9"	31						
A2201	3	4	STR	15'-11"	32	B2110E	2	5	STR	16'-4"	34	EPOXY COATED					
A2202	2	4	STR	15'-8"	21	B2111E	2	5	STR	17'-11"	37	REINFORCING STEEL					3916 LB
A2203	2	4	STR	15'-4"	20	B2112E	2	5	STR	19'-6"	41						
A2204	2	4	STR	15'-0"	20	B2113E	2	5	STR	21'-1"	44	CLASS "AA" CONCRETE BREAKDOWN					
A2205	2	4	STR	14'-8"	20	B2114E	2	5	STR	22'-8"	47	POUR 1 (SLAB & CURB)					57.6 CY
A2206	2	4	STR	14'-4"	19	B2115E	2	5	STR	24'-2"	50						

"E" INDICATES EPOXY COATED REINFORCING STEEL.

SPLICE LENGTHS

BAR SIZE	EPOXY COATED	UNCOATED
#4	2'-0"	1'-9"
#5	2'-6"	2'-2"
#6	3'-10"	2'-7"

PROJECT NO. U-0071
DURHAM COUNTY
STATION: 24+70.18 -DFWB-

SHEET 5 OF 7

STATE OF NORTH CAROLINA
DEPARTMENT OF TRANSPORTATION
RALEIGH

BRIDGE APPROACH SLAB FOR RIGID PAVEMENT END BENT 2

PLANS PREPARED BY:
SIMPSON ENGINEERS & ASSOCIATES
5640 Dillard Drive
Suite 200
Cary, NC 27518
(919) 852-0468
(919) 852-0598 (Fax)
www.simpsonengr.com
LICENSURE NO. C-2521

NORTH CAROLINA PROFESSIONAL SEAL 18056 ENGINEER JOHN A. BATTS
1/14/2014

REVISIONS						SHEET NO.
NO.	BY:	DATE:	NO.	BY:	DATE:	S-665
1			3			TOTAL SHEETS
2			4			67

STR. #14

DRAWN BY: T. BANKOVICH DATE: 12-13
CHECKED BY: B.S. COX DATE: 12-13
DESIGN ENGINEER OF RECORD: J.A. BATTS DATE: 12-13

1/14/2014 9:35:19 AM G:\Projects\2012\U-0071 (Durham Co.)\Structures\Drawings\Final\Bridge 189\Widening\U-0071_Br 189_sd_as.dgn

NOTES:

FOR NOTES, SEE SHEET 1 OF 7.

OUTSIDE EDGES OF APPROACH SLAB ARE TANGENT.

FOR NOTES APPLICABLE TO SECTION D-D, SEE SHEET 5 OF 7.

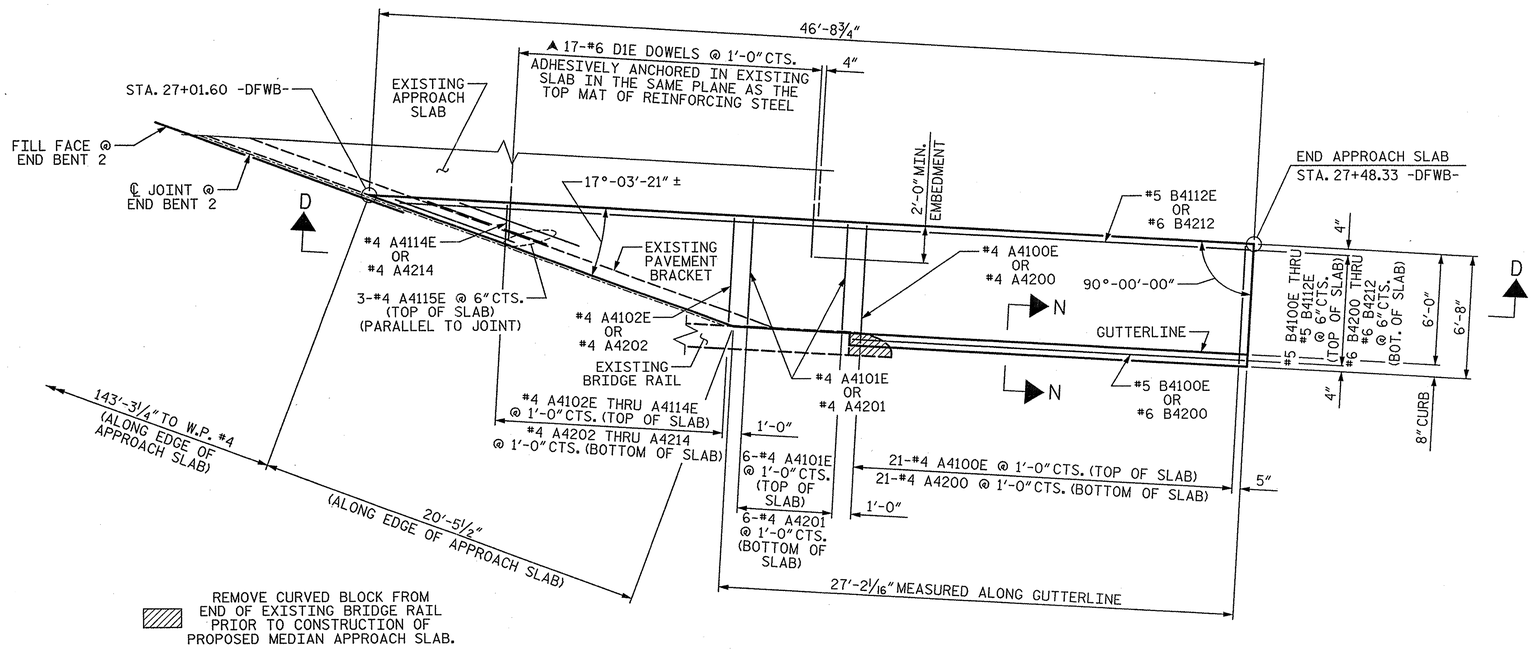

PLAN @ END BENT 2 MEDIAN

(FOR JOINT SEAL DETAILS SEE SHEET 3 OF 7.)

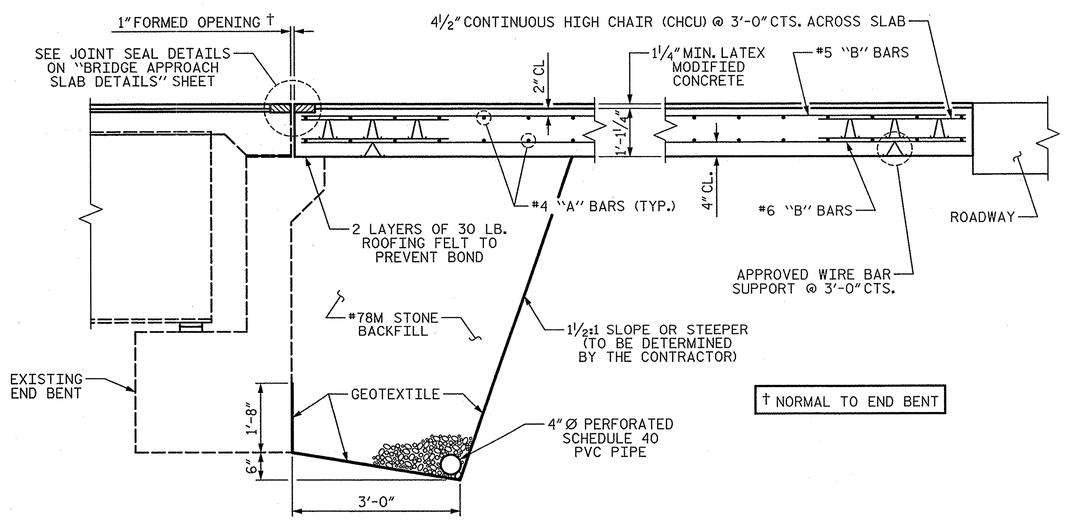

† NORMAL TO END BENT

SECTION D-D

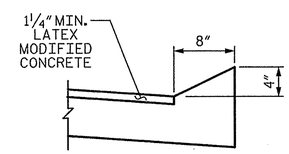

SECTION N-N

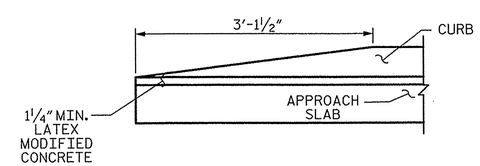

END OF CURB WITHOUT SHOULDER BERM GUTTER

BILL OF MATERIAL

APPROACH SLAB @ END BENT 2 MEDIAN

BAR	NO.	SIZE	TYPE	LENGTH	WEIGHT
A4100E	21	4	STR	6'-4"	89
A4101E	6	4	STR	5'-8"	23
A4102E	1	4	STR	5'-6"	4
A4103E	1	4	STR	5'-3"	4
A4104E	1	4	STR	4'-11"	3
A4105E	1	4	STR	4'-7"	3
A4106E	1	4	STR	4'-4"	3
A4107E	1	4	STR	4'-0"	3
A4108E	1	4	STR	3'-8"	2
A4109E	1	4	STR	3'-5"	2
A4110E	1	4	STR	3'-1"	2
A4111E	1	4	STR	2'-9"	2
A4112E	1	4	STR	2'-6"	2
A4113E	1	4	STR	2'-2"	1
A4114E	1	4	STR	1'-10"	1
A4115E	3	4	STR	6'-8"	13
A4200	21	4	STR	6'-4"	89
A4201	6	4	STR	5'-8"	23
A4202	1	4	STR	5'-6"	4
A4203	1	4	STR	5'-3"	4
A4204	1	4	STR	4'-11"	3
A4205	1	4	STR	4'-7"	3
A4206	1	4	STR	4'-4"	3
A4207	1	4	STR	4'-0"	3
A4208	1	4	STR	3'-8"	2
A4209	1	4	STR	3'-5"	2
A4210	1	4	STR	3'-1"	2
A4211	1	4	STR	2'-9"	2
A4212	1	4	STR	2'-6"	2
A4213	1	4	STR	2'-2"	1
A4214	1	4	STR	1'-10"	1
B4100E	1	5	STR	20'-8"	22
B4101E	1	5	STR	26'-11"	28
B4102E	1	5	STR	28'-7"	30

BAR	NO.	SIZE	TYPE	LENGTH	WEIGHT
B4103E	1	5	STR	30'-2"	31
B4104E	1	5	STR	31'-10"	33
B4105E	1	5	STR	33'-6"	35
B4106E	1	5	STR	35'-1"	37
B4107E	1	5	STR	36'-9"	38
B4108E	1	5	STR	38'-4"	40
B4109E	1	5	STR	40'-0"	42
B4110E	1	5	STR	41'-7"	43
B4111E	1	5	STR	43'-3"	45
B4112E	1	5	STR	44'-10"	47
B4200	1	6	STR	20'-8"	31
B4201	1	6	STR	26'-11"	40
B4202	1	6	STR	28'-7"	43
B4203	1	6	STR	30'-2"	45
B4204	1	6	STR	31'-10"	48
B4205	1	6	STR	33'-6"	50
B4206	1	6	STR	35'-1"	53
B4207	1	6	STR	36'-9"	55
B4208	1	6	STR	38'-4"	58
B4209	1	6	STR	40'-0"	60
B4210	1	6	STR	41'-7"	62
B4211	1	6	STR	43'-3"	65
B4212	1	6	STR	44'-10"	67
D1E	17	6	STR	2'-10"	72

REINFORCING STEEL 821 LB

EPOXY COATED REINFORCING STEEL 700 LB

CLASS "AA" CONCRETE BREAKDOWN

POUR 1 (SLAB & CURB) 10.1 CY

"E" INDICATES EPOXY COATED REINFORCING STEEL.

SPLICE LENGTHS

BAR SIZE	EPOXY COATED	UNCOATED
#4	2'-0"	1'-9"
#5	2'-6"	2'-2"
#6	3'-10"	2'-7"

PROJECT NO. U-0071

DURHAM COUNTY

STATION: 24+70.18 -DFWB-

SHEET 6 OF 7

STATE OF NORTH CAROLINA
DEPARTMENT OF TRANSPORTATION
RALEIGH

BRIDGE APPROACH SLAB FOR RIGID PAVEMENT END BENT 2

PLANS PREPARED BY:

SIMPSON ENGINEERS & ASSOCIATES
5640 Dillard Drive
Suite 200
Cary, NC 27518
(919) 852-0468
(919) 852-0598 (Fax)
www.simpsonengr.com
LICENSURE NO. C-2521

NORTH CAROLINA PROFESSIONAL SEAL 18056 ENGINEER JOHN A. BATTS
1/16/2014

REVISIONS								SHEET NO.
NO.	BY:	DATE:	NO.	BY:	DATE:			S-66
1			3					TOTAL SHEETS
2			4					671

STR. #14

DRAWN BY: T. BANKOVICH DATE: 12-13
CHECKED BY: B.S. COX DATE: 12-13
DESIGN ENGINEER OF RECORD: J.A. BATTS DATE: 12-13

1/14/2014 9:35:19 AM G:\Projects\2012\U-0071 (Durham Co.)\Structures\Drawings\Final\Bridge 189\Widening\U-0071_Br 189_sd_as.dgn

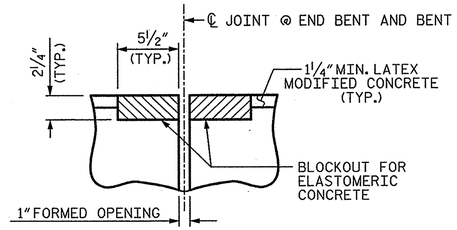

SECTION C-C

FOAM JOINT SEAL
(PRE-SAWED ELASTOMERIC CONCRETE DIMENSIONS)

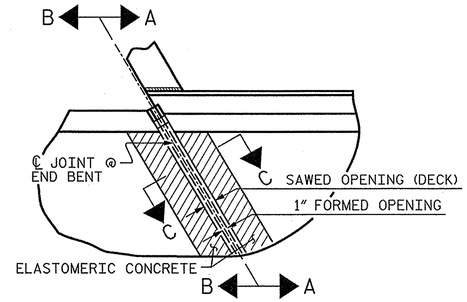

PLAN

(@ END BENT WIDENING)

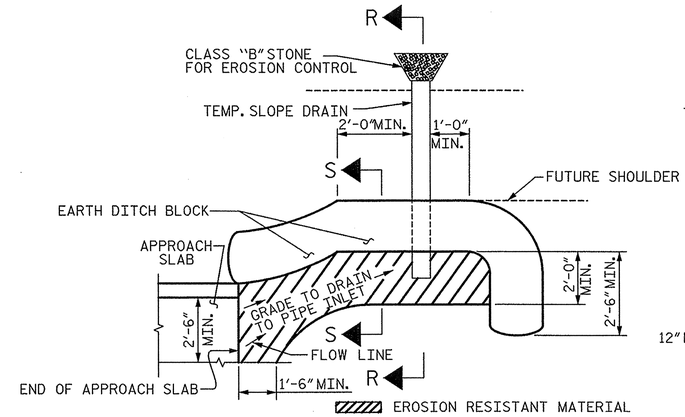

NOTE: IMMEDIATELY AFTER THE CONSTRUCTION OF THE APPROACH SLAB, THE CONTRACTOR SHALL PROVIDE TEMPORARY BERM AND SLOPE DRAIN. CONTRACTOR SHALL GRADE TO PIPE INLET AND PROVIDE EROSION RESISTANT MATERIAL AS SHOWN. THE EROSION RESISTANT MATERIAL SHALL BE EITHER 1) ASPHALT PLANT MIX, TYPE 1 OR TYPE 2, MIN. 2" DEPTH, 2) EROSION CONTROL MAT, OR 3) CONCRETE, AS DIRECTED BY THE ENGINEER. THE SLOPE DRAIN SHALL CONSIST OF A NON-PERFORATED TEMPORARY DRAINAGE PIPE, 12 INCHES IN DIAMETER.

PLAN VIEW

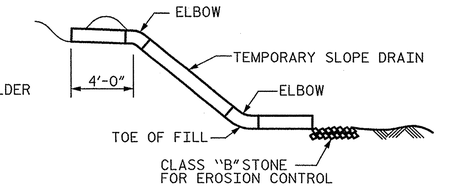

SECTION R-R

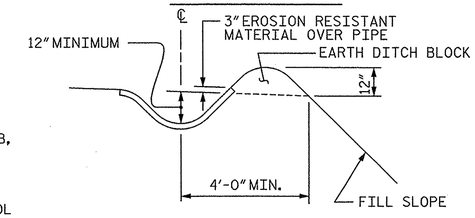

SECTION S-S

TEMPORARY BERM AND SLOPE DRAIN DETAILS

(TO BE USED WHEN SHOULDER BERM GUTTER IS REQUIRED)

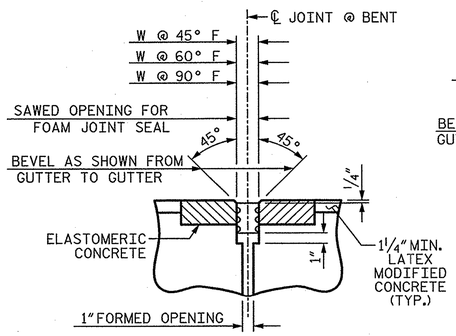

SECTION C-C @ INTERIOR BENT

FOAM JOINT SEAL
(EXPANSION)

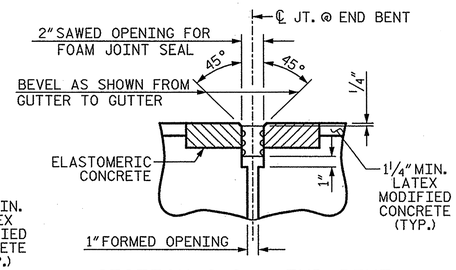

SECTION C-C @ END BENT

FOAM JOINT SEAL
(FIXED)

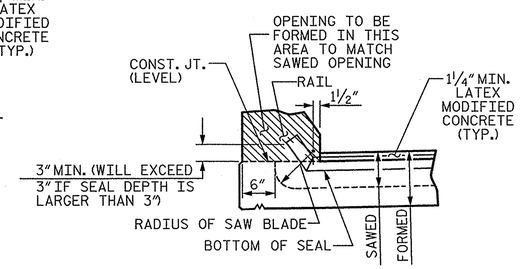

SECTION A-A

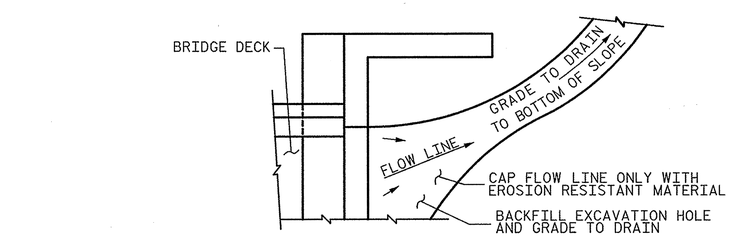

NOTE: IF THE APPROACH SLAB IS NOT CONSTRUCTED IMMEDIATELY AFTER THE BACKFILLING OF THE END BENT EXCAVATION, GRADE TO DRAIN TO THE BOTTOM OF THE SLOPE AND PROVIDE EROSION RESISTANT MATERIAL, SUCH AS FIBERGLASS ROVING OR AS DIRECTED BY THE ENGINEER TO PREVENT SOIL EROSION AND TO PROTECT THE AREA ADJACENT TO THE STRUCTURE. THE CONTRACTOR WILL BE REQUIRED TO REMOVE THESE MATERIALS PRIOR TO CONSTRUCTION OF THE APPROACH SLAB.

TEMPORARY DRAINAGE DETAIL

SAWED OPENING FOR FOAM JOINT SEALS

LOCATION	W @ 45° F	W @ 60° F	W @ 90° F
BENT 1	1⅝"	1 9/16"	1½"
BENT 2	1⅝"	1 9/16"	1⅜"

ELASTOMERIC CONCRETE

LOCATION	ELASTOMERIC CONCRETE * (CF)
END BENT 1	14.1
BENT 1	7.2
BENT 2	6.9
END BENT 2	17.9
TOTAL	46.1

* BASED ON THE MINIMUM BLOCKOUT SHOWN. FOR WIDENING AND MEDIAN PORTION ONLY.

FOR ELASTOMERIC CONCRETE FOR EXISTING APPROACH SLAB AND BRIDGE DECK JOINT REPLACEMENT AT END BENTS AND BENTS SEE PRESERVATION PLANS.

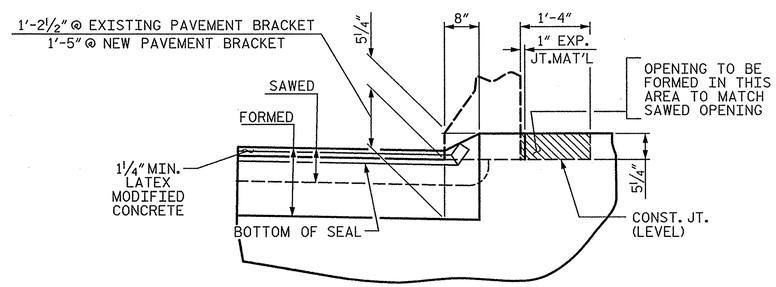

SECTION B-B

JOINT SEAL DETAILS @ END BENT - WIDENING

FOAM JOINT SEAL TO BE CUT, HEAT WELDED AND TURNED UP PARALLEL TO SLOPED FACE OF THE BARRIER RAIL.

THE JOINT SHALL BE SAWED PRIOR TO THE CASTING OF THE BARRIER RAIL.

PROJECT NO. U-0071
DURHAM COUNTY
STATION: 24+70.18 -DFWB-

SHEET 7 OF 7

STATE OF NORTH CAROLINA
DEPARTMENT OF TRANSPORTATION
RALEIGH

BRIDGE APPROACH SLAB DETAILS

PLANS PREPARED BY:
SIMPSON ENGINEERS & ASSOCIATES
5640 Dillard Drive
Suite 200
Cary, NC 27518
(919) 852-0468
(919) 852-0598 (Fax)
www.simpsonengr.com
LICENSURE NO. C-2521

NORTH CAROLINA PROFESSIONAL SEAL 18056 ENGINEER JOHN A. BATTS
1/16/2014

REVISIONS						SHEET NO.
NO.	BY:	DATE:	NO.	BY:	DATE:	S-667
1			3			TOTAL SHEETS
2			4			671

STR. #14

DRAWN BY: T. BANKOVICH DATE: 12-13
CHECKED BY: B.S. COX DATE: 12-13
DESIGN ENGINEER OF RECORD: J.A. BATTS DATE: 12-13

1/14/2014 9:35:19 AM G:\Projects\2012\U-0071 (Durham Co.)\Structures\Drawings\Final\Bridge 189\WideningU-0071_Br 189_sd_as.dgn

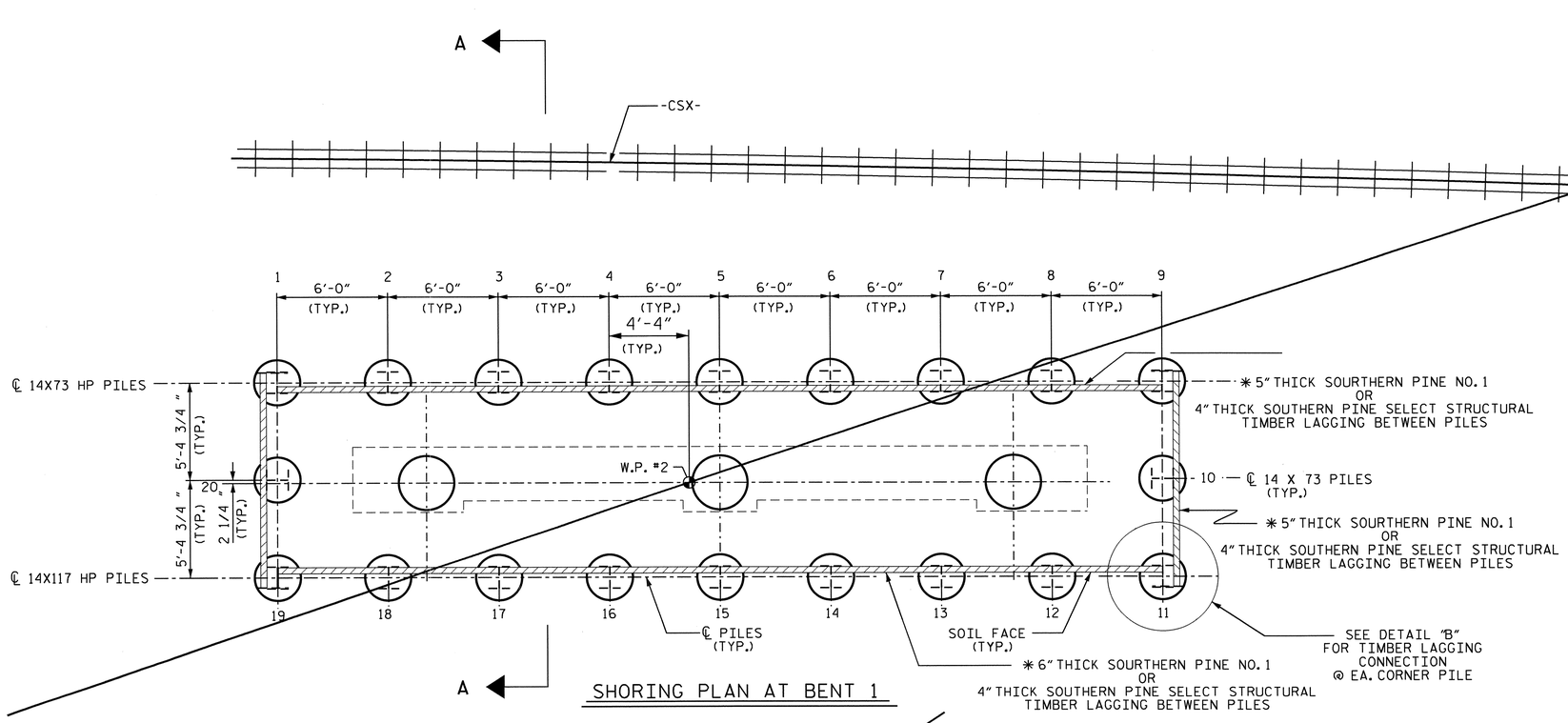

SHORING PLAN AT BENT 1

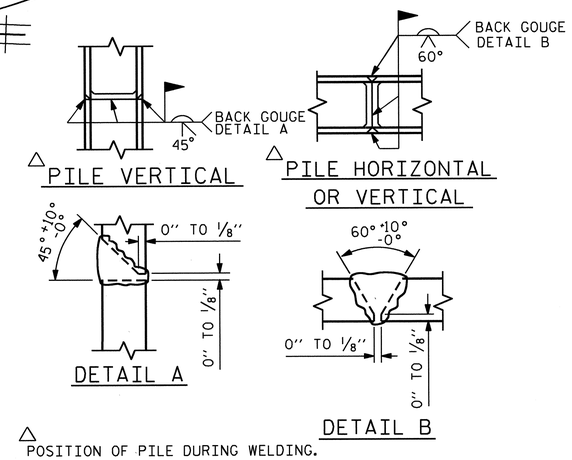

PILE SPLICE DETAILS

ESTIMATED QUANTITY	
TEMPORARY RAILROAD SHORING FOR BENT NO.	TEMPORARY RAILROAD SHORING
1	LUMP SUM

ESTIMATED PILE LENGTH/PILE			
TYPE	NO.	LENGTH/EA.	TOTAL
14X73 HP	7	17'	187'
14X73 HP	4	24'	96'
14X117 HP	9	28'	252'

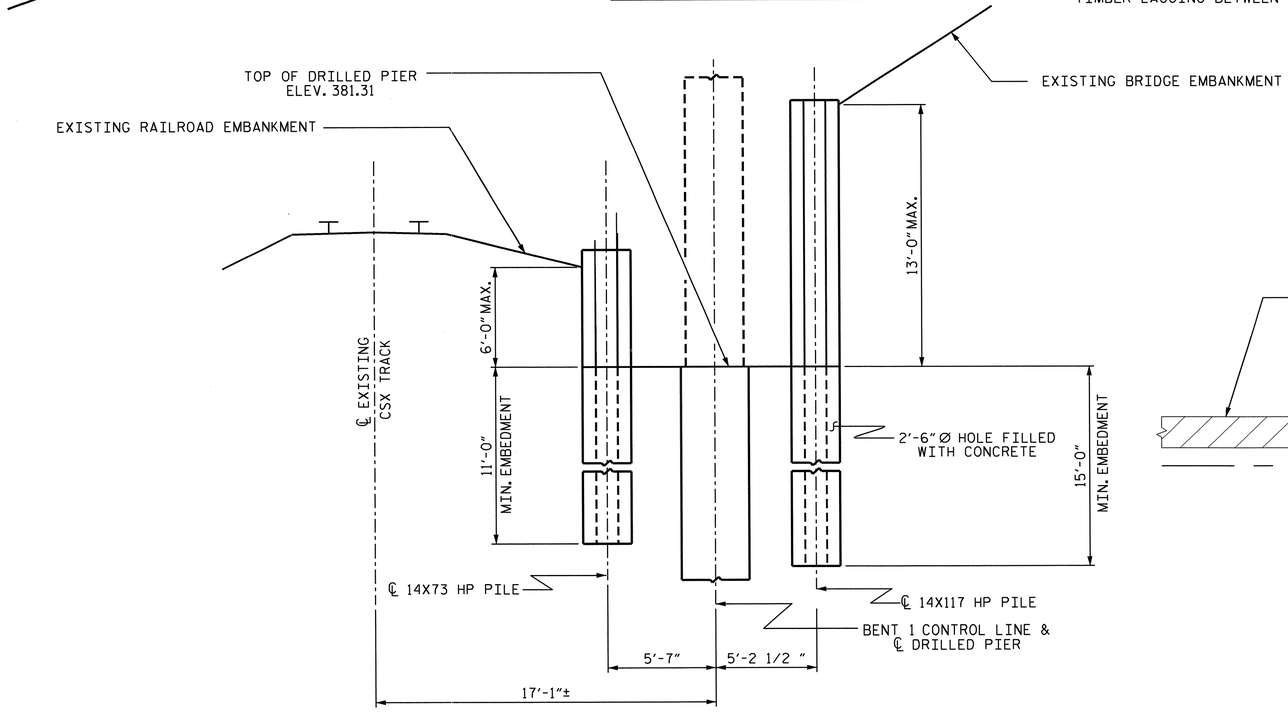

SECTION A-A
(NOT TO SCALE)

FOR DETAILS, SEE "DETAIL "A" IN SHEET 2 OF 2, TEMPORARY SHORING AT BENT 1

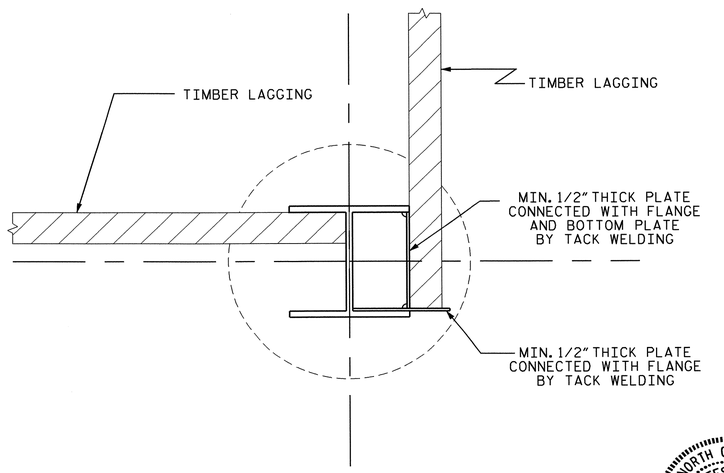

DETAIL "B"

PROJECT NO. U-0071
DURHAM COUNTY
STATION: 24+70.18 -DFWB-
SHEET 1 OF 2

STATE OF NORTH CAROLINA
DEPARTMENT OF TRANSPORTATION
RALEIGH

TEMPORARY SHORING AT BENT 1

NORTH CAROLINA PROFESSIONAL SEAL 031495 ENGINEER KAMAL K. PUROHIT

REVISIONS						SHEET NO.
NO.	BY:	DATE:	NO.	BY:	DATE:	S-68
1			3			TOTAL SHEETS
2			4			671

DRAWN BY :	K. K. PUROHIT	DATE :	06/10/14
CHECKED BY :	T. L. CLELLAND	DATE :	6/11/14
DESIGN ENGINEER OF RECORD:	K. K. PUROHIT	DATE :	6/11/14

13-JUN-2014 09:17
R:\Structures\Fischer\Temporary Shoring-KKP\U0071_SD_STR 14_Shoring.dgn
kpurohit

STR. #14

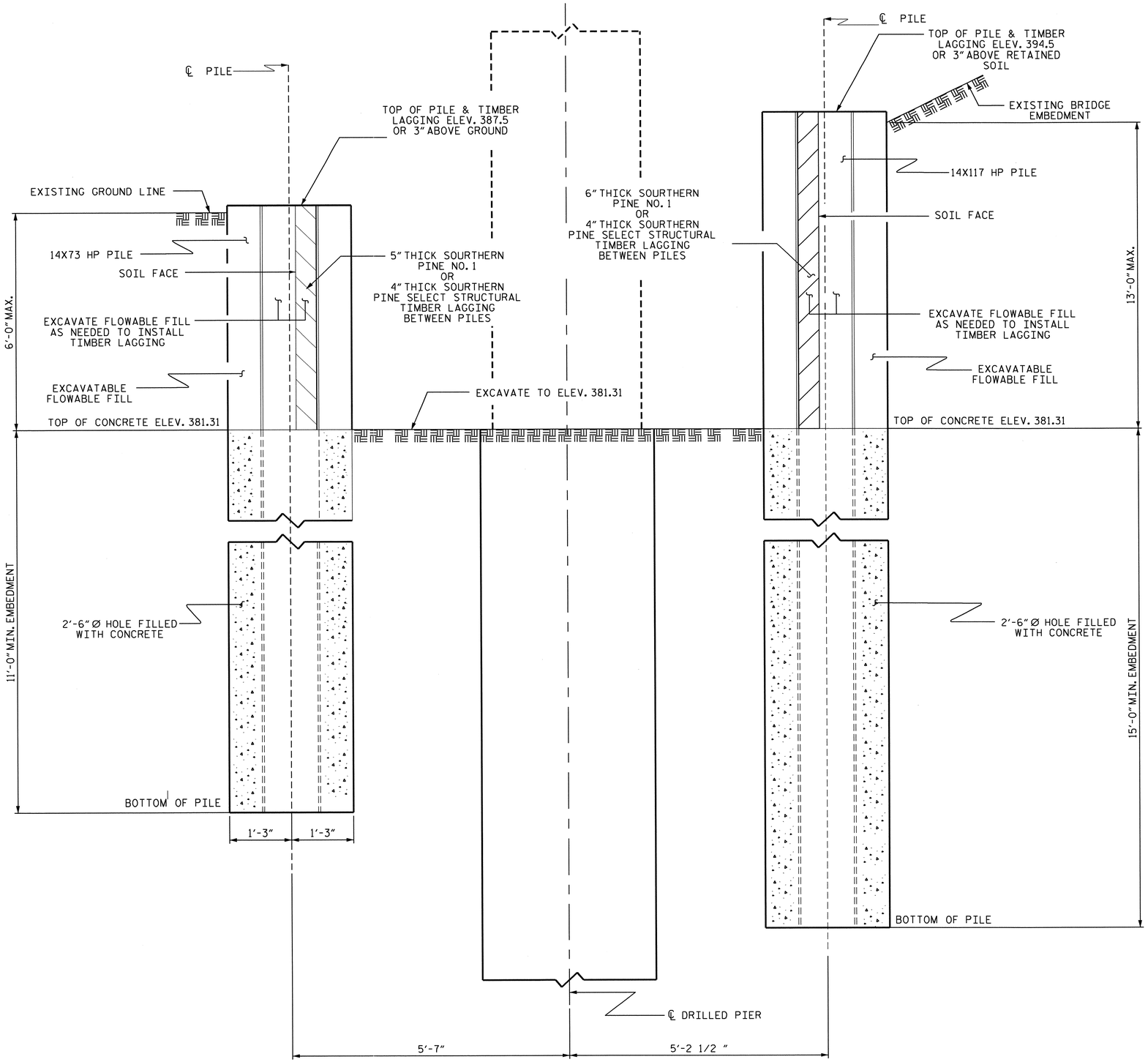

DETAIL "A"

NOTES

1. FOR TEMPORARY SHORING, SEE "TEMPORARY RAILROAD SHORING" SPECIAL PROVISION.
2. THE CONTRACTOR'S ATTENTION IS CALLED TO THE FACT THAT THE SHORING AND EXCAVATION PLANS HAVE BEEN SUBMITTED TO THE RAILROAD BY THE STATE. AS OF THE TIME OF PLAN PRINTING FOR ADVERTISEMENT FOR BIDS, RAILROAD APPROVAL HAS NOT BEEN RECEIVED. WHEN SUCH APPROVAL IS RECEIVED, THE CONTRACTOR WILL BE NOTIFIED BY ADDENDUM. IN THE EVENT RAILROAD APPROVAL IS NOT GIVEN PRIOR TO SUBMISSION OF BIDS, THE CONTRACTOR SHALL SUBMIT BIDS BASED ON THE CONTRACT PLANS. THE CONTRACTOR SHALL NOT BEGIN EXCAVATION AT THE LOCATIONS SHOWN ON THESE PLANS UNTIL NOTIFIED OF.
3. CONTROL DRAINAGE DURING CONSTRUCTION IN THE VICINITY OF SHORING. DIRECT RUNOFF AWAY FROM SHORING.
4. FOR EXCAVATABLE FLOWABLE FILL, SEE SUBARTICLE 1000-6 OF THE STANDARD SPECIFICATIONS.
5. THE TOP OF THE INSTALLED PILES SHALL BE WITHIN 1 INCH OF THEIR PLAN LOCATION IN ANY HORIZONTAL OR VERTICAL DIRECTION AND 1/8"/FT FROM VERTICAL.
6. NO SPLICES ARE PERMITTED IN H-PILES EXCEPT WHERE LOW VERTICAL CLERANCE IS AN ISSUE.
7. CONTACTOR ATTENTION HAS BEEN DRAWN THAT THERE MAY VERTICAL CLEARANCE ISSUE AT PILE NO. 9, 10, 11 & 12. IN SUCH CASE, ALTERNATE PILE INSTALLATION METHOD WILL BE ALLOWED.
8. DRILLED-IN H-PILES ARE REQUIRED. FOR DRILLED-IN H-PILES INSTALLATION, SEE SUBARTICLE 450-3(E) OF THE STANDARD SPECIFICATIONS EXCEPT EXCAVATABLE FLOWABLE FILL MUST BE USED ABOVE THE PROPOSED EXCAVATION ELEVATION.
9. THE EXCAVATED HOLE SHALL BE 30 INCH MINIMUM DIAMETER.
10. WITHIN 12 HOURS OF COMPLETING EACH HOLE, PLACE H-PILES, BACKFILL WITH CONCRETE AND EXCAVATABLE FLOWABLE FILL TO THE ELEVATIONS SHOWN IN DETAIL 'A'.
11. USE CLASS A CONCRETE THAT MEETS ARTICLE 1000-4 EXCEPT PROVIDING CONCRETE WITH A SLUMP OF 6" TO 8". AN APPROVED HIGH-RANGE WATER REDUCER MAY BE USED TO ACHIEVE THIS SLUMP.
12. DESIGN OF TEMPORARY SHORING IS IN ACCORDANCE WITH AREMA VOLUME 2, CHAPTER 8 AND CSXT AND NS SHORING REQUIREMENTS FOR COOPERS E-80 TRAIN LOADINGS.
13. TEMPORARY SHORING HAS BEEN DESIGNED FOR THE FOLLOWING SOIL PROPERTIES AND GROUNDWATER ELEVATION:
    ABOVE ELEVATION 387.0 FT
    EFFECTIVE UNIT WEIGHT = 120 PCF
    FRICTION ANGLE = 30 DEGREES
    COHESION = 0 PSF
    WALL FRICTION = 10 DEGREES
    BETWEEN ELEVATION 387.0 FT AND 381.0 FT
    EFFECTIVE UNIT WEIGHT = 120 PCF
    FRICTION ANGLE = 24 DEGREES
    COHESION = 0 PSF
    WALL FRICTION = 8 DEGREES
    BELOW ELEVATION 381 FT
    TOTAL UNIT WEIGHT = 130 PCF
    FRICTION ANGLE = 36 DEGREES
    COHESION = 0 PSF
    WALL FRICTION = 12 DEGREES
    GROUNDWATER ELEVATION = 359.0 FT
14. CURE CONCRETE AND EXCAVATABLE FLOWABLE FILL AT LEAST 7 DAYS BEFORE EXCAVATING IN FRONT OF TEMPORARY SHORING.
15. EXCAVATE IN FRONT OF PILES FROM THE TOP DOWN AND IMMEDIATELY INSTALL TIMBER LAGGING BETWEEN PILES TO RETAIN THE SOIL AS EXCAVATION PROGRESSES.
16. LIMIT OPEN EXCAVATION LIFT HEIGHT TO 6 FEET OR LESS IN HEIGHT.
17. POSITION LAGGING WITH AT LEAST 3" OF CONTACT IN THE HORIZONTAL DIRECTION BETWEEN LAGGING AND H-PILE FLANGES.
18 REMOVE TEMPORARY RAILROAD SHORING TO A MINIMUM OF TWO FEET BELOW PROPOSED GROUND.
19. ANY ALTERNATE DESIGN FOR TEMPORARY SHORING SHALL USE SOIL PARAMETERS NO BETTER THAN THOSE SHOWN ABOVE AND SHALL BE IN ACCORDANCE WITH AREMA VOLUME 2, CHAPTER 8 AND CSXT AND NS SHORING REQUIREMENTS FOR COOPERS E-80 TRAIN LOADINGS.
20. ANY ALTERNATE DESIGN FOR TEMPORARY SHORING SHALL HAVE A MAXIMUM DEFLECTION OF 1" AT THE PILE TOP.

PROJECT NO. U-0071
DURHAM COUNTY
STATION: 24+70.18 -DFWB-

SHEET 2 OF 2

STATE OF NORTH CAROLINA
DEPARTMENT OF TRANSPORTATION
RALEIGH

TEMPORARY SHORING AT BENT 1

NORTH CAROLINA PROFESSIONAL SEAL 031495 ENGINEER KANAK K. PUROHIT

REVISIONS						SHEET NO.
NO.	BY:	DATE:	NO.	BY:	DATE:	S-669
1			3			TOTAL SHEETS
2			4			671

DRAWN BY : K. K. PUROHIT DATE : 06/10/14
CHECKED BY : T. L. CLELLAND DATE : 6/11/14
DESIGN ENGINEER OF RECORD: K. K. PUROHIT DATE : 6/11/14

13-JUN-2014 09:17
R:\Structures\Fischer\Temporary Shoring-KKP\U0071_SD_STR 14_Shoring.dgn
kpurohit

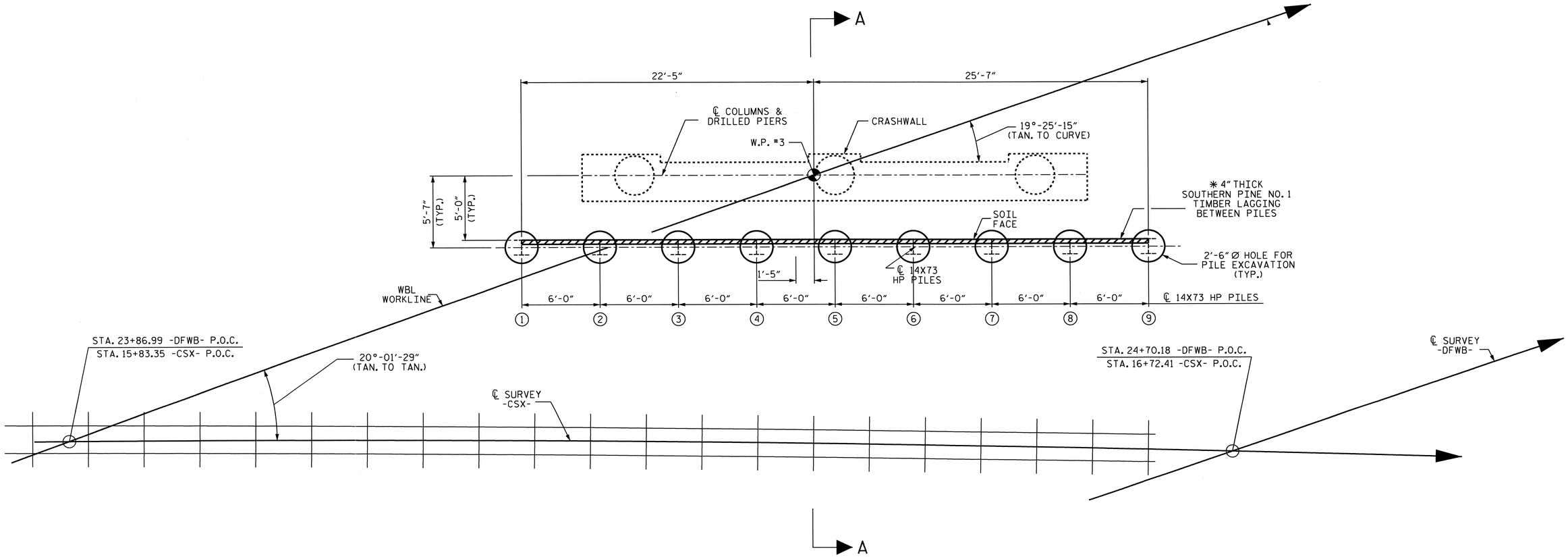

SHORING PLAN AT BENT 2

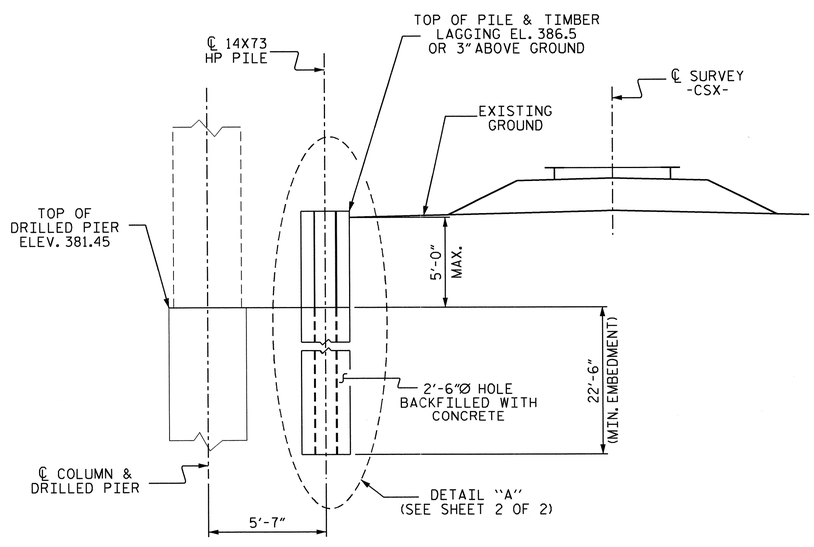

SECTION A-A

(NOT TO SCALE)

✱ LAGGING TO BE INSERTED BETWEEN PILES TO RETAIN THE SOIL AS EXCAVATION PROGRESSES

ESTIMATED QUANTITY	
TEMPORARY RAILROAD SHORING FOR BENT NO.	TEMPORARY RAILROAD SHORING
2	LUMP SUM

ESTIMATED PILE LENGTH/PILE = 28'
NO. OF PILES = 9

PROJECT NO. U-0071
DURHAM COUNTY
STATION: 24+70.18 -DFWB-

SHEET 1 OF 2

STATE OF NORTH CAROLINA
DEPARTMENT OF TRANSPORTATION
RALEIGH

TEMPORARY SHORING
BENT 2

NORTH CAROLINA PROFESSIONAL SEAL 031495 ENGINEER KANAK K. PUROHIT

REVISIONS							SHEET NO.
NO.	BY:	DATE:	NO.	BY:	DATE:		S-670
1			3				TOTAL SHEETS
2			4				67

DRAWN BY : H.T. DIEU DATE : 6/11/14
CHECKED BY : T.L. CLELLAND DATE : 6/12/14
DESIGN ENGINEER OF RECORD: K. PUROHIT DATE : 6/12/14

13-JUN-2014 09:18
R:\Structures\Fischer\Temporary Shoring-KKP\U-0071_Str14_Bent2_ TemporaryShoring.dgn
Kpurohit

STR. #14

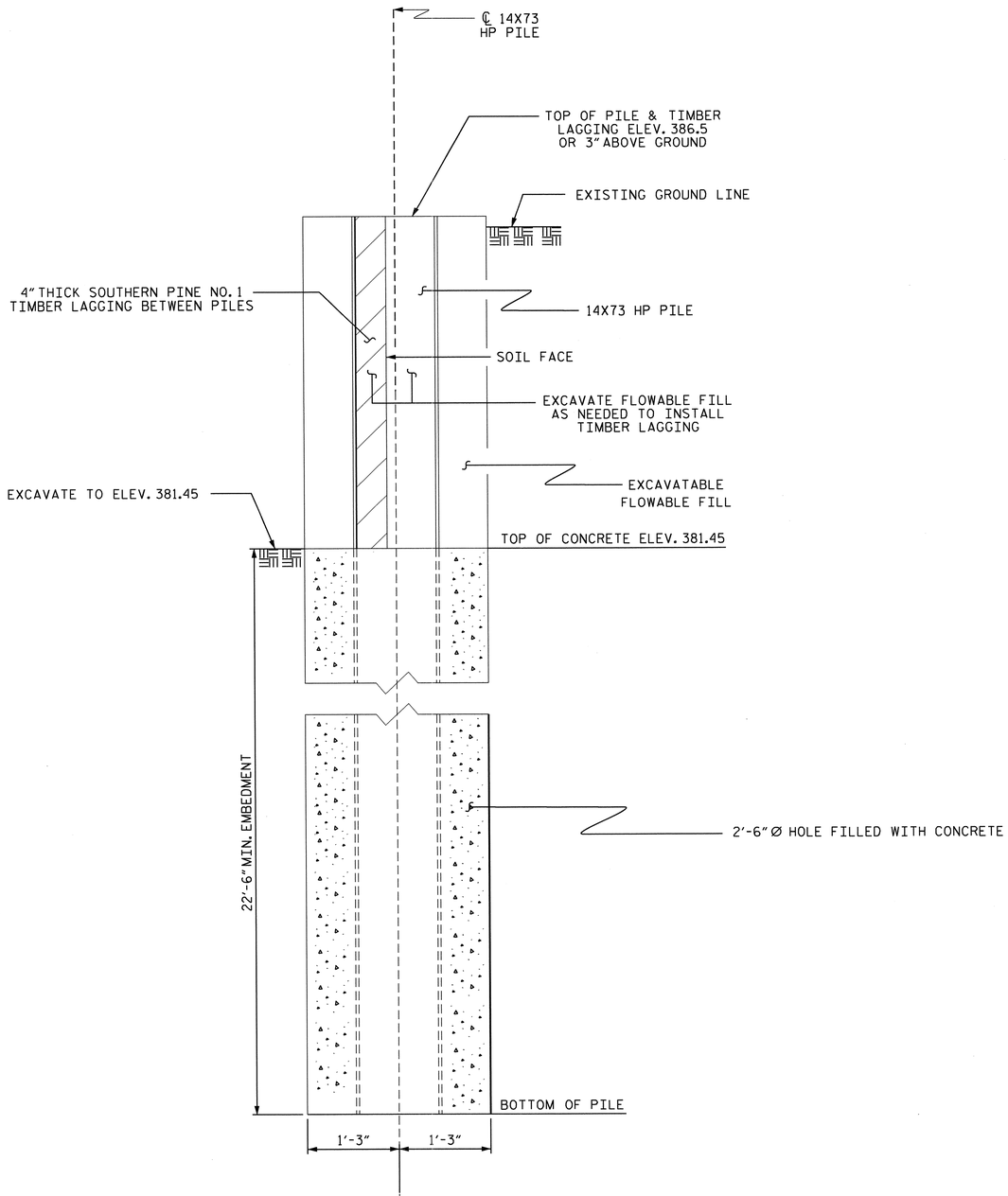

DETAIL "A"

NOTES

1. FOR TEMPORARY SHORING, SEE "TEMPORARY RAILROAD SHORING" SPECIAL PROVISION.
2. THE CONTRACTOR'S ATTENTION IS CALLED TO THE FACT THAT THE SHORING AND EXCAVATION PLANS HAVE BEEN SUBMITTED TO THE RAILROAD BY THE STATE. AS OF THE TIME OF PLAN PRINTING FOR ADVERTISEMENT FOR BIDS, RAILROAD APPROVAL HAS NOT BEEN RECEIVED. WHEN SUCH APPROVAL IS RECEIVED, THE CONTRACTOR WILL BE NOTIFIED BY ADDENDUM. IN THE EVENT RAILROAD APPROVAL IS NOT GIVEN PRIOR TO SUBMISSION OF BIDS, THE CONTRACTOR SHALL SUBMIT BIDS BASED ON THE CONTRACT PLANS. THE CONTRACTOR SHALL NOT BEGIN EXCAVATION AT THE LOCATIONS SHOWN ON THESE PLANS UNTIL NOTIFIED OF.
3. CONTROL DRAINAGE DURING CONSTRUCTION IN THE VICINITY OF SHORING. DIRECT RUNOFF AWAY FROM SHORING.
4. FOR EXCAVATABLE FLOWABLE FILL, SEE SUBARTICLE 1000-6 OF THE STANDARD SPECIFICATIONS.
5. THE TOP OF THE INSTALLED PILES SHALL BE WITHIN 1 INCH OF THEIR PLAN LOCATION IN ANY HORIZONTAL OR VERTICAL DIRECTION AND 1/8"/FT FROM VERTICAL.
6. NO SPLICES ARE PERMITTED IN H-PILES.
7. DRILLED-IN H-PILES ARE REQUIRED. FOR DRILLED-IN H-PILES INSTALLATION, SEE SUBARTICLE 450-3(E) OF THE STANDARD SPECIFICATIONS EXCEPT EXCAVATABLE FLOWABLE FILL MUST BE USED ABOVE THE PROPOSED EXCAVATION ELEVATION.
8. THE EXCAVATED HOLE SHALL BE 30 INCH MINIMUM DIAMETER.
9. WITHIN 12 HOURS OF COMPLETING EACH HOLE, PLACE H-PILES, BACKFILL WITH CONCRETE AND EXCAVATABLE FLOWABLE FILL TO THE ELEVATIONS SHOWN IN DETAIL 'A'.
10. USE CLASS A CONCRETE THAT MEETS ARTICLE 1000-4 EXCEPT PROVIDING CONCRETE WITH A SLUMP OF 6" TO 8". AN APPROVED HIGH-RANGE WATER REDUCER MAY BE USED TO ACHIEVE THIS SLUMP.
11. DESIGN OF TEMPORARY SHORING IS IN ACCORDANCE WITH AREMA VOLUME 2, CHAPTER 8 AND CSXT AND NS SHORING REQUIREMENTS FOR COOPERS E-80 TRAIN LOADINGS.
12. TEMPORARY SHORING HAS BEEN DESIGNED FOR THE FOLLOWING SOIL PROPERTIES AND GROUNDWATER ELEVATION:
    ABOVE ELEVATION 381.5 FT
    EFFECTIVE UNIT WEIGHT = 120 PCF
    FRICTION ANGLE = 30 DEGREES
    COHESION = 0 PSF
    WALL FRICTION = 10 DEGREES
    BETWEEN ELEVATION 381.5 AND 359.0 FT
    EFFECTIVE UNIT WEIGHT = 120 PCF
    FRICTION ANGLE = 24 DEGREES
    COHESION = 0 PSF
    WALL FRICTION = 8 DEGREES
    BELOW ELEVATION 359 FT
    EFFECTIVE UNIT WEIGHT = 70 PCF
    FRICTION ANGLE = 36 DEGREES
    COHESION = 0 PSF
    WALL FRICTION = 12 DEGREES
    GROUNDWATER ELEVATION = 359.0 FT
13. CURE CONCRETE AND EXCAVATABLE FLOWABLE FILL AT LEAST 7 DAYS BEFORE EXCAVATING IN FRONT OF TEMPORARY SHORING.
14. EXCAVATE IN FRONT OF PILES FROM THE TOP DOWN AND IMMEDIATELY INSTALL TIMBER LAGGING BETWEEN PILES TO RETAIN THE SOIL AS EXCAVATION PROGRESSES.
15. LIMIT OPEN EXCAVATION LIFT HEIGHT TO 5 FEET OR LESS IN HEIGHT.
16. POSITION LAGGING WITH AT LEAST 3" OF CONTACT IN THE HORIZONTAL DIRECTION BETWEEN LAGGING AND H-PILE FLANGES.
17. REMOVE TEMPORARY RAILROAD SHORING TO A MINIMUM OF TWO FEET BELOW PROPOSED GROUND.
18. ANY ALTERNATE DESIGN FOR TEMPORARY SHORING SHALL USE SOIL PARAMETERS NO BETTER THAN THOSE SHOWN ABOVE AND SHALL BE IN ACCORDANCE WITH AREMA VOLUME 2, CHAPTER 8 AND CSXT AND NS SHORING REQUIREMENTS FOR COOPERS E-80 TRAIN LOADINGS.
19. ANY ALTERNATE DESIGN FOR TEMPORARY SHORING SHALL HAVE A MAXIMUM DEFLECTION OF 1" AT THE PILE TOP.

PROJECT NO. U-0071
DURHAM COUNTY
STATION: 24+70.18 -DFWB-

SHEET 2 OF 2

STATE OF NORTH CAROLINA
DEPARTMENT OF TRANSPORTATION
RALEIGH

TMPORARY SHORING
BENT 2

NORTH CAROLINA PROFESSIONAL SEAL 031495 ENGINEER KANWAR K. PUROHIT

REVISIONS						SHEET NO.
NO.	BY:	DATE:	NO.	BY:	DATE:	S-671
1			3			TOTAL SHEETS
2			4			671

DRAWN BY : H.T. DIEU DATE : 6/11/14
CHECKED BY : T.L. CLELLAND DATE : 6/12/14
DESIGN ENGINEER OF RECORD: K. PUROHIT DATE : 6/12/14

13-JUN-2014 09:19
R:\Structures\Fischer\Temporary Shoring-KKP\U-0071_Str14_Bent2_ TemporaryShoring.dgn
kpurohit

STR. #14

BM #51: CHISELED SQUARE IN SE CONC. HW OF EB BRIDGE; 125.89' (RT.) STA. 36+87.64 -DFWB- ELEV. 424.46

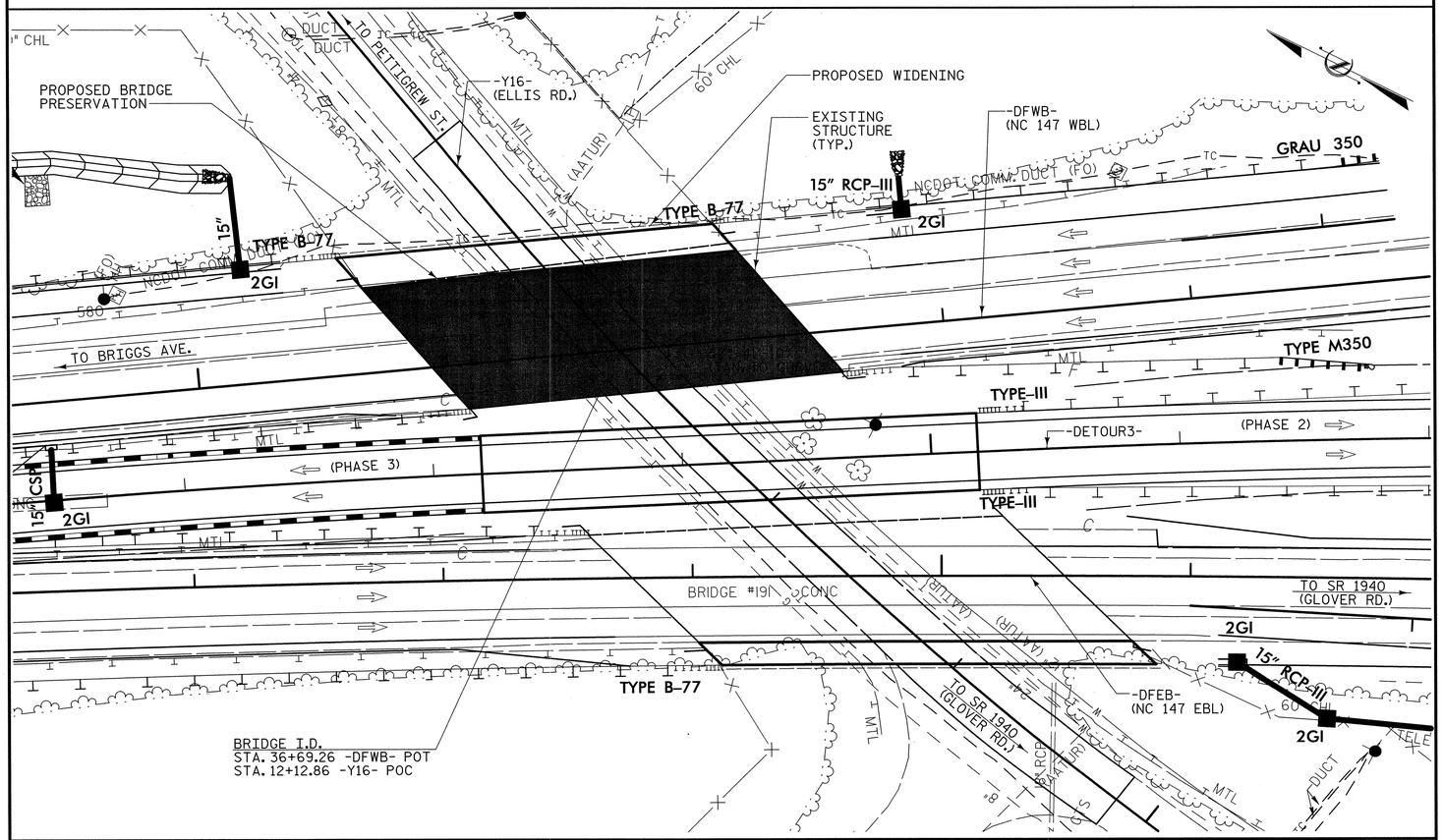

LOCATION SKETCH

NOTES

THE BOUNDARIES OF AREAS IDENTIFIED FOR CLASS III SURFACE PREPARATION ARE APPROXIMATE. IF ANY CLASS III LOCATIONS ARE ENCOUNTERED PRIOR TO OR DURING HYDRO-DEMOLITION, THE CONTRACTOR SHALL PROVIDE A METHOD OF HANDLING UNEXPECTED BLOW THROUGH WORK OF THE DECK.

THE NOMINAL UNCOMPRESSED SEAL WIDTH OF FOAM JOINT SEAL SHALL BE 2" AT INTERIOR BENTS. FOR "FOAM JOINT SEALS", SEE SPECIAL PROVISIONS.

PROVIDE 1" EXPANSION JOINT MATERIAL AT END BENTS.

FOR "ELASTOMERIC CONCRETE", SEE SPECIAL PROVISIONS.

EXISTING JOINTS AND BRIDGE DECK DRAINS SHALL BE SEALED PRIOR TO BEGINNING SURFACE PREPARATION OF THE BRIDGE DECK.

EXISTING DIMENSIONS AND BRIDGE CONDITION ARE FROM THE BEST INFORMATION AVAILABLE. THE CONTRACTOR SHALL VERIFY THE INFORMATION SHOWN ON THE PLANS AND NOTIFY THE ENGINEER IF ACTUAL DIMENSIONS AND CONDITIONS DIFFER.

IT IS THE CONTRACTOR'S RESPONSIBILITY TO FOLLOW ALL STATE AND FEDERAL SAFETY REQUIREMENTS.

FOR CONTROL OF TRAFFIC AND LIMITS ON PHASING OF CONSTRUCTION, SEE TRANSPORTATION MANAGEMENT PLAN SHEETS.

FOR SUBMITTAL OF WORKING DRAWINGS, SEE SPECIAL PROVISIONS.

FOR FALSEWORK AND FORMWORK, SEE SPECIAL PROVISIONS.

FOR CRANE SAFETY, SEE SPECIAL PROVISIONS.

FOR OVERLAY SURFACE PREPARATION, SEE SPECIAL PROVISIONS.

FOR CONCRETE FOR DECK REPAIR, SEE SPECIAL PROVISIONS.

FOR EPOXY RESIN INJECTION, SEE SPECIAL PROVISIONS.

FOR SHOTCRETE REPAIRS, SEE SPECIAL PROVISIONS.

FOR CONCRETE REPAIRS, SEE SPECIAL PROVISIONS.

FOR BRIDGE JOINT DEMOLITION, SEE SPECIAL PROVISIONS.

FOR HANDLING OF BRIDGE WASH WATER, SEE SPECIAL PROVISIONS.

FOR GROUT FOR STRUCTURES, SEE SPECIAL PROVISIONS.

THE LOCATION AND EXTENT OF REPAIRS SHOWN ON THE PLANS ARE GENERAL IN NATURE. THE ENGINEER WILL DETERMINE THE EXACT EXTENT OF REPAIR IN THE FIELD BASED ON AN EVALUATION OF THE CONDITION OF THE EXPOSED REPAIR SURFACES AFTER DEMOLITION.

REPLACEMENT OF DAMAGED REINFORCING STEEL AND DOWELS IN THE CONCRETE REPAIR SHALL BE CONSIDERED INCIDENTAL TO THE CONCRETE REPAIRS, NO ADDITIONAL PAYMENT OF MEASUREMENT SHALL BE MADE.

ALL REINFORCING STEEL SHALL BE GRADE 60.

THE CONTRACTOR SHALL EXERCISE CARE TO ENSURE THAT EXISTING STRUCTURAL ELEMENTS THAT ARE TO REMAIN IN PLACE ARE UNDAMAGED BY BRIDGE CONSTRUCTION ACTIVITITIES. ANY DAMAGE TO EXISTING STRUCTURAL ELEMENTS THAT ARE TO REMAIN SHALL BE REPAIRED BY THE CONTRACTOR TO THE SATISFACTION OF THE ENGINEER AT NO COST TO THE DEPARTMENT.

TOTAL BILL OF MATERIAL FOR PRESERVATION & REHABILITATION

SCARIFYING BRIDGE DECK	HYDRO-DEMOLITION OF BRIDGE DECK	CONCRETE FOR DECK REPAIR	LATEX MODIFIED CONCRETE	PLACING & FINISHING LATEX MODIFIED CONCRETE	BRIDGE JOINT DEMOLITION	▲ FOAM JOINT SEALS	GROOVING BRIDGE FLOOR	CONCRETE REPAIRS	SHOTCRETE REPAIRS	EPOXY RESIN INJECTION	EPOXY PROTECTIVE COATING
SQ. YDS.	SQ. YDS.	CU. FT.	CU. YDS.	SQ. YDS.	SQ. FT.	LUMP SUM	SQ. FT.	CU. FT.	CU. FT.	LIN. FT.	SQ. FT.
929	929	*	57	1157	149.0	LUMP SUM	14,019	114.9	74.3	265	589

* FOR INFORMATION ONLY, ACTUAL QUANTITY WILL BE DETERMINED IN THE FIELD.

▲ THE COST FOR MATERIALS AND INSTALLATION OF THE 1" EXPANSION JOINT MATERIAL AT END BENTS AND THE SILICONE SEALANT MATERIAL FOR CURTAIN WALLS AND BENT COLUMNS ARE TO BE INCLUDED IN THIS PAY ITEM.

PROJECT NO. U-0071
DURHAM COUNTY
STATION: 36+69.26 -DFWB-

PRESERVATION OF BRIDGE NO. 192

STATE OF NORTH CAROLINA
DEPARTMENT OF TRANSPORTATION
RALEIGH

LOCATION SKETCH AND TOTAL BILL OF MATERIAL

PLANS PREPARED BY:
MULKEY ENGINEERS & CONSULTANTS
PO Box 33127
Raleigh, N.C.
27636-3127
(919) 851-1912
(919) 851-1918 (FAX)
WWW.MULKEYINC.COM
NC LICENSE NO. C-1321

NORTH CAROLINA PROFESSIONAL SEAL 034352 ENGINEER TERRY R. PETERSON 1/9/14

STR #12

REVISIONS						SHEET NO.
NO.	BY:	DATE:	NO.	BY:	DATE:	SP-1
1			3			TOTAL SHEETS
2			4			83

DRAWN BY :	W. B. ALLEN	DATE :	3/13
CHECKED BY :	T. R. PETERSON	DATE :	4/13
DESIGN ENGINEER OF RECORD:	T. R. PETERSON	DATE :	1/9/14

1/9/2014 10:16:28 AM R:\Structures\WBL\Preservation Plans\U0071WBL_SD_LS_01.dgn

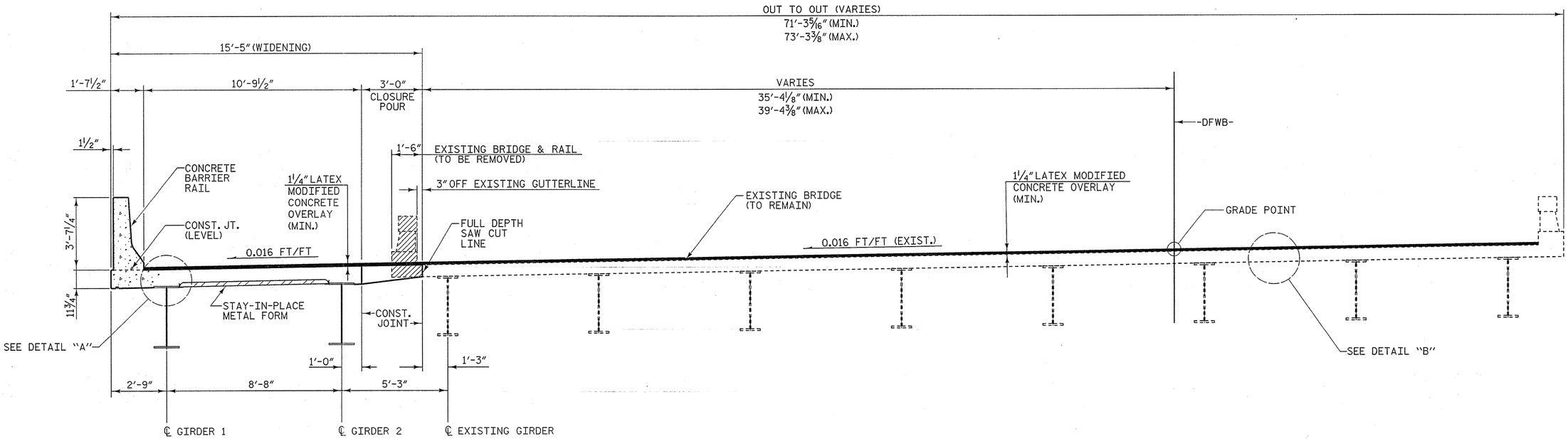

TYPICAL SECTION

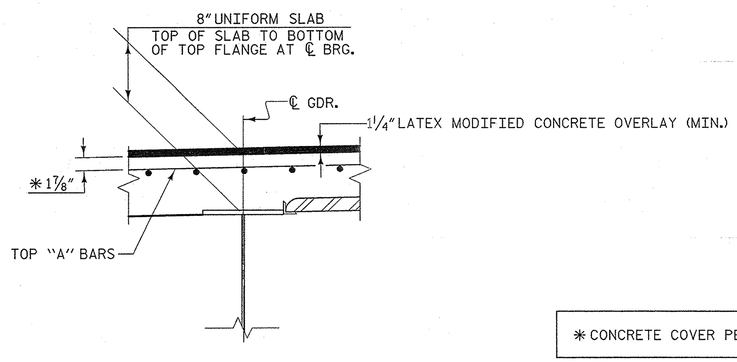

DETAIL "A"

(SHOWING DECK AT WIDENING PORTION OF BRIDGE)

BOTTOM MAT OF REINFORCING STEEL NOT SHOWN FOR CLARITY

* CONCRETE COVER PER "AS BUILT PLANS".

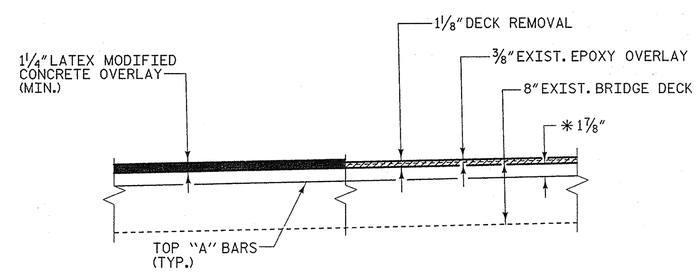

DETAIL "B"

(SHOWING EXISTING DECK)

SCARIFYING & HYDRO-DEMOLITION OF BRDIGE DECK

PROJECT NO. U-0071
DURHAM COUNTY
STATION: 36+69.26 -DFWB-

PRESERVATION OF BRIDGE NO. 192

STATE OF NORTH CAROLINA
DEPARTMENT OF TRANSPORTATION
RALEIGH

TYPICAL SECTION

PLANS PREPARED BY:
MULKEY ENGINEERS & CONSULTANTS
PO Box 33127
RALEIGH, N.C. 27636
(919) 851-1912
(919) 851-1918 (FAX)
WWW.MULKEYINC.COM
NC LICENSE NO. C-1021

NORTH CAROLINA PROFESSIONAL SEAL 034352 ENGINEER TERRY R. PETERSON
12/30/13

STR #12

REVISIONS						SHEET NO.
NO.	BY:	DATE:	NO.	BY:	DATE:	SP-2
1			3			TOTAL SHEETS
2			4			83

DRAWN BY :	W. B. ALLEN	DATE :	3/13
CHECKED BY :	T. R. PETERSON	DATE :	4/13
DESIGN ENGINEER OF RECORD:	T. R. PETERSON	DATE :	12/30/13

12/30/2013 7:38:07 AM R:\Structures\WBL\Preservation Plans\U0071WBL_SD_TS_01.dgn

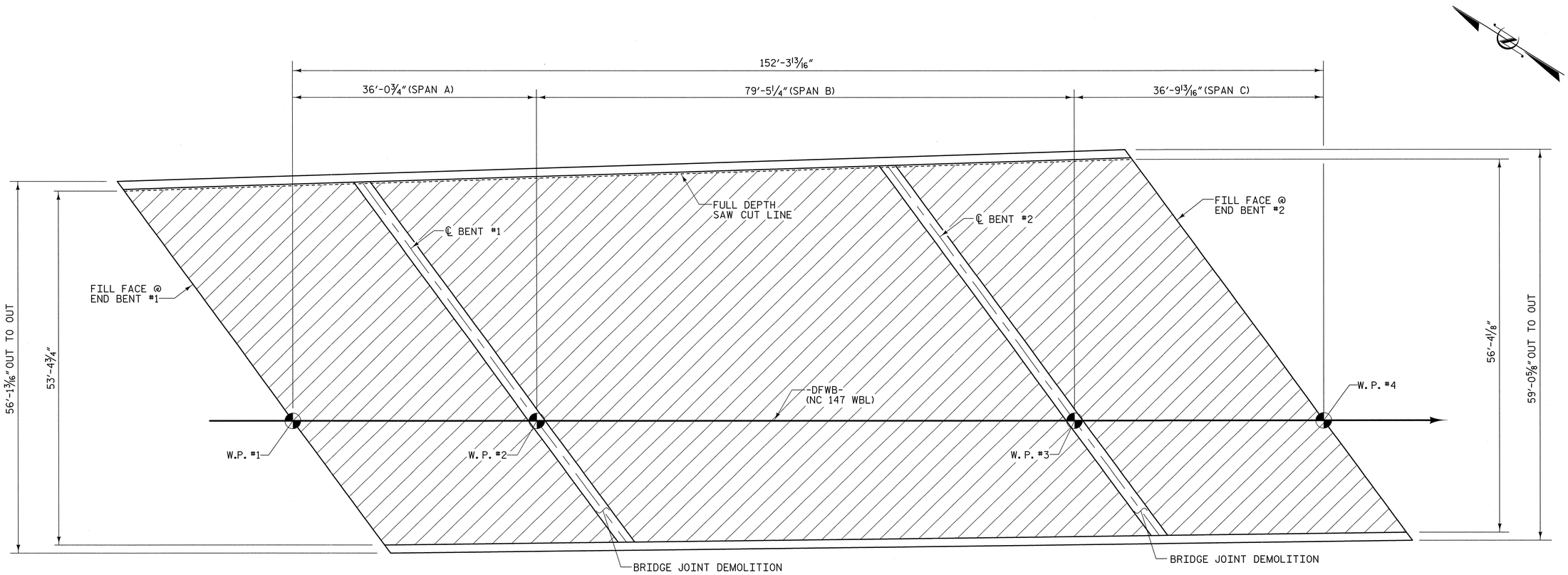

PLAN OF SPANS (SCARIFICATION & HYDRO-DEMOLITION)

SCARIFICATION & HYDRO-DEMOLITION OF BRIDGE DECK (8357 SQ. FT.)

PROJECT NO. U-0071

DURHAM COUNTY

STATION: 36+69.26 -DFWB-

PRESERVATION OF BRIDGE NO. 192

STATE OF NORTH CAROLINA
DEPARTMENT OF TRANSPORTATION
RALEIGH

SCARIFICATION & HYDRO-DEMOLITION OF BRIDGE DECK

PLANS PREPARED BY:

MULKEY ENGINEERS & CONSULTANTS
PO Box 33127
Raleigh, N.C. 27636
(919) 851-1912
(919) 851-1918 (FAX)
WWW.MULKEYINC.COM
NC LICENSE NO. C-1021

NORTH CAROLINA PROFESSIONAL SEAL 034352 ENGINEER TERRY R. PETERSON 1/7/14

STR #12

REVISIONS						SHEET NO.
NO.	BY:	DATE:	NO.	BY:	DATE:	SP-3
1			3			TOTAL SHEETS
2			4			83

DRAWN BY :	W. B. ALLEN	DATE :	3/13
CHECKED BY :	T. R. PETERSON	DATE :	4/13
DESIGN ENGINEER OF RECORD:	T. R. PETERSON	DATE :	1/9/14

1/9/2014 10:17:03 AM R:\Structures\WBL\Preservation Plans\U0071WBL_SD_SL01.dgn

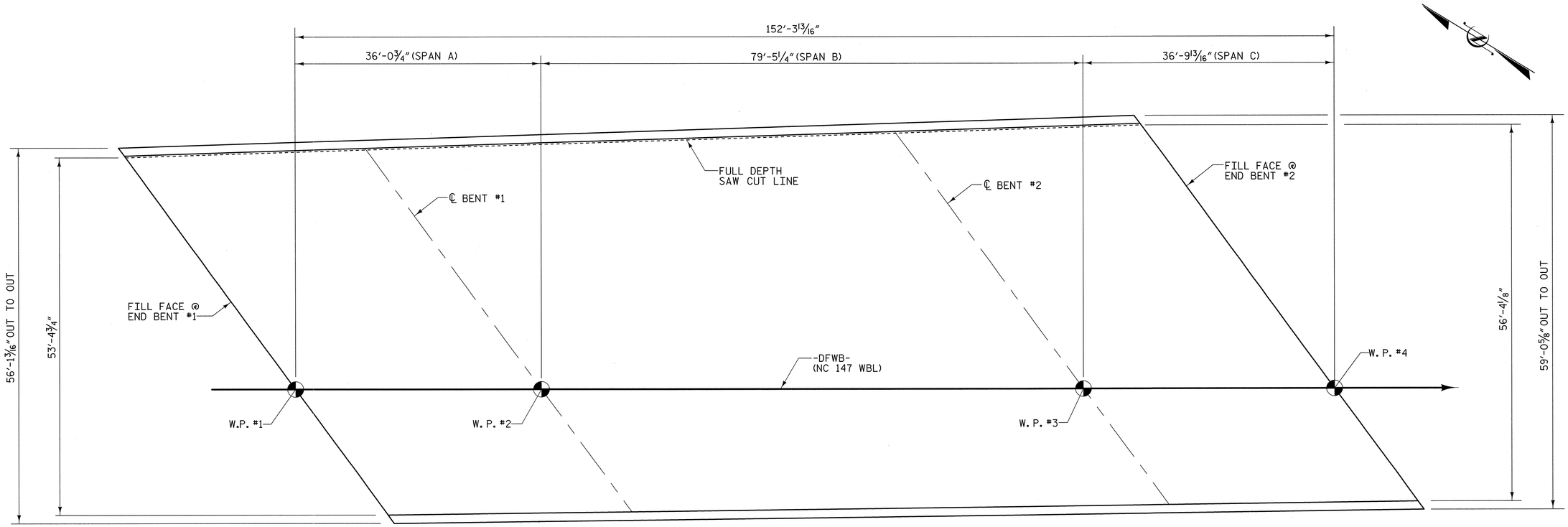

PLAN OF SPANS-DECK REPAIRS

NO DAMAGES WERE OBSERVED AT THE TIME OF THE BRIDGE INSPECTION

APPROX. AREA: CLASS II REPAIR

APPROX. AREA: CLASS III REPAIR

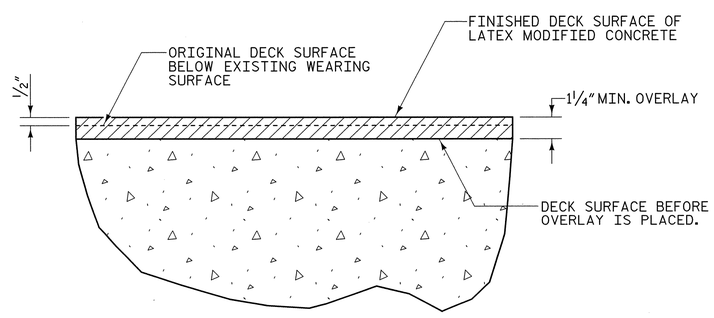

DETAIL FOR LATEX MODIFIED CONCRETE OVERLAY

PROJECT NO. U-0071

DURHAM COUNTY

STATION: 36+69.26 -DFWB-

PRESERVATION OF BRIDGE NO. 192

STATE OF NORTH CAROLINA
DEPARTMENT OF TRANSPORTATION
RALEIGH

DECK REPAIR DETAILS

PLANS PREPARED BY:
MULKEY ENGINEERS & CONSULTANTS
PO Box 33127
RALEIGH, N.C. 27636
(919) 851-1912
(919) 851-1918 (FAX)
WWW.MULKEYINC.COM
NC LICENSE NO. C-1021

NORTH CAROLINA PROFESSIONAL SEAL 034352 ENGINEER TERRY R. PETERSON 1/9/14

STR #12

REVISIONS						SHEET NO.
NO.	BY:	DATE:	NO.	BY:	DATE:	SP-4
1			3			TOTAL SHEETS
2			4			83

DRAWN BY :	W. B. ALLEN	DATE :	3/13
CHECKED BY :	T. R. PETERSON	DATE :	4/13
DESIGN ENGINEER OF RECORD:	T. R. PETERSON	DATE :	1/9/14

1/9/2014 10:20:44 AM R:\Structures\WBL\Preservation Plans\U0071WBL_SD_SL02.dgn

SAWED OPENING FOR FOAM JOINT			
BENT NO.	W @ 90°F	W @ 60°F	W @ 45°F
1	1 1/2"	1 9/16"	1 5/8"
2	1 3/8"	1 9/16"	1 11/16"

ELASTOMERIC CONCRETE	
BENT LOCATION	ELASTOMERIC CONCRETE ✱ (CU. FT.)
BT #1	14.2
BT #2	14.6
TOTAL	28.8

✱ BASED ON THE MINIMUM BLOCKOUT SHOWN AND INCLUDES PROPOSED BRIDGE WIDENING.

✱✱ SEE "BRIDGE APPROACH SLAB DETAILS" WITHIN DESIGN PLANS FOR FURTHER DETAILS.

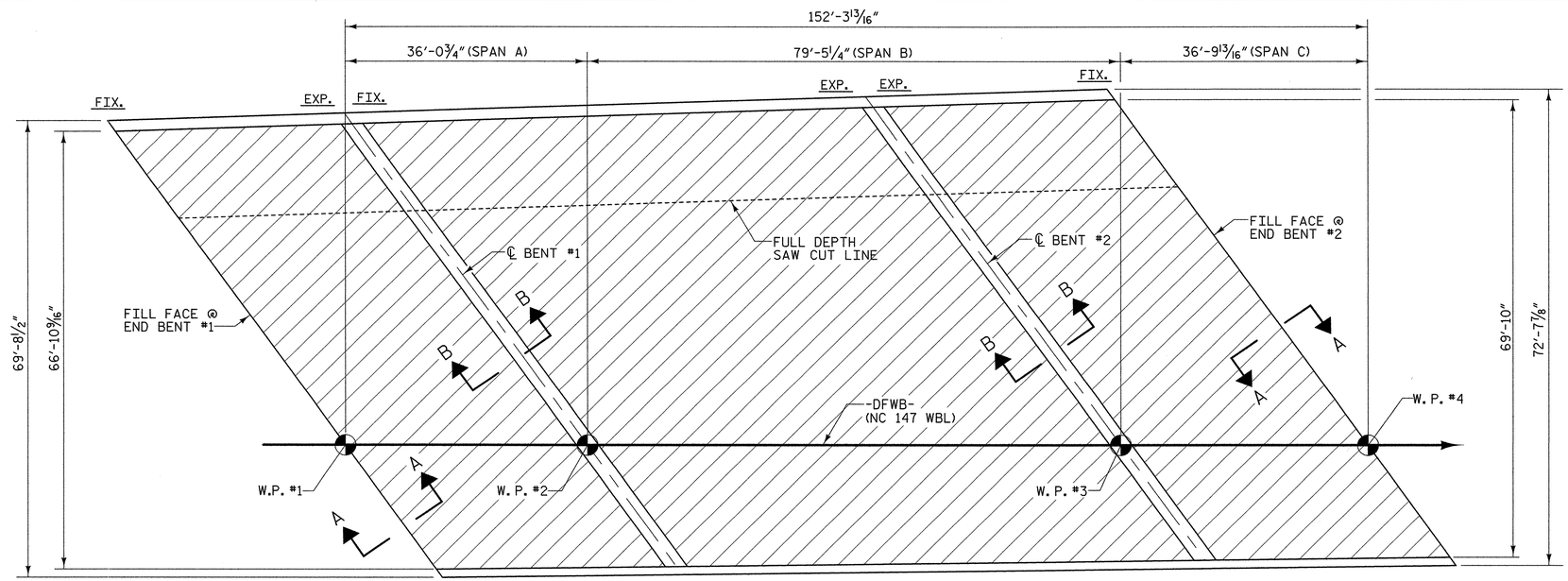

PLAN

LMC OVERLAY AREA

10,413 SQ. FT.

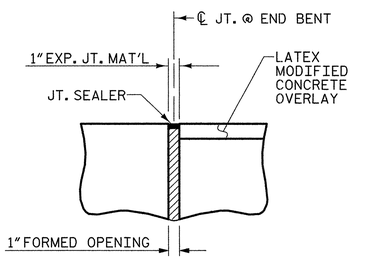

PROPOSED JOINT AT END BENTS

(FIXED)
SEE SECTION A-A

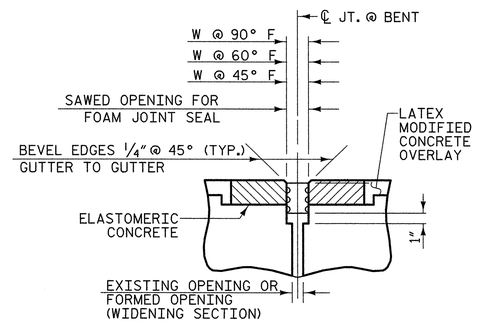

PROPOSED JOINT AT BENTS

✱✱ FOAM JOINT SEAL (EXPANSION)
SEE SECTION B-B

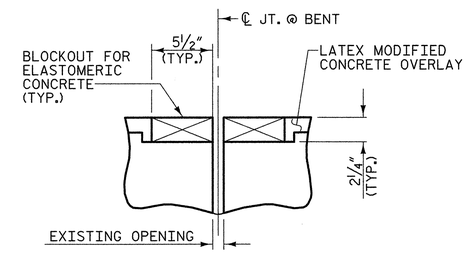

FOAM JOINT SEAL

✱✱ PRE-SAWED ELASTOMERIC CONCRETE DIMENSIONS

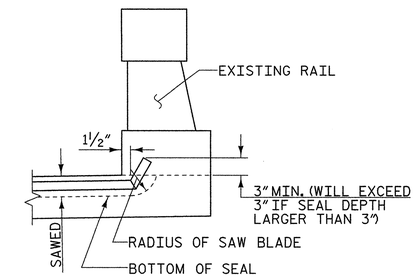

JOINT DETAIL AT RAIL

✱✱ SEE DESIGN PLANS FOR JOINT DETAIL AT PROPOSED RAIL.

NOTE:

PROPOSED WORK ON ALL JOINTS SHALL BE DONE ACROSS ENTIRE WIDTH OF BRIDGE.

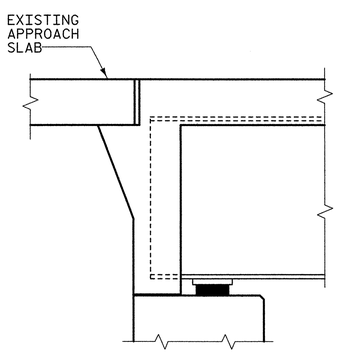

EXISTING SECTION AT END BENT

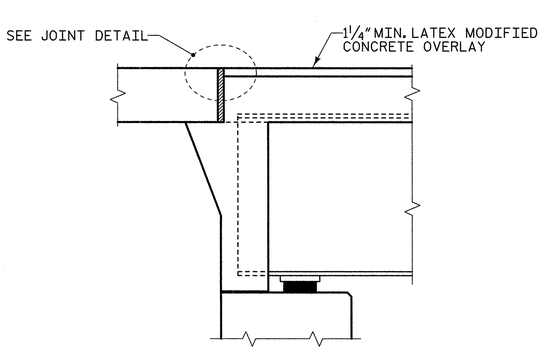

PROPOSED SECTION AT END BENT

SECTION A-A

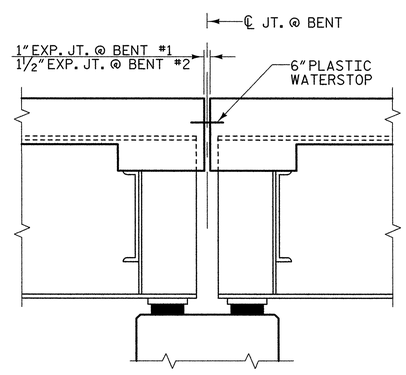

EXISTING JOINT AT BENTS

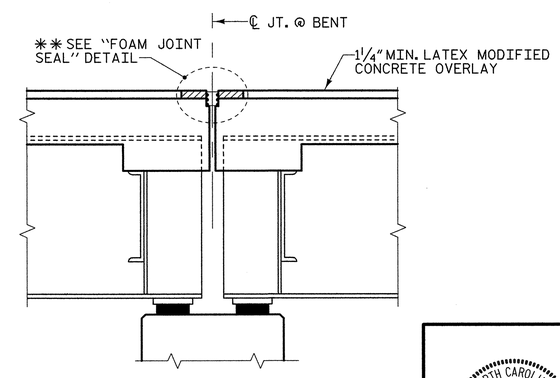

PROPOSED JOINT AT BENTS

SECTION B-B

✱✱✱ ALL LOOSE AND UNSOUND CONCRETE SHALL BE REMOVED. IF THE EMBEDDED PORTION OF THE EXISTING PLASTIC WATERSTOP IS EXPOSED DURING REMOVAL OF UNSOUND CONCRETE, THE ENTIRE WATERSTOP SHALL BE REMOVED. OTHERWISE TRIM WATERSTOP FLUSH WITH EXISTING CONCRETE SURFACE.

PROJECT NO. U-0071
DURHAM COUNTY
STATION: 36+69.26 -DFWB-

PRESERVATION OF BRIDGE NO. 192

STATE OF NORTH CAROLINA
DEPARTMENT OF TRANSPORTATION
RALEIGH

PLAN OF SPANS AND JOINT DETAILS

PLANS PREPARED BY:
MULKEY ENGINEERS & CONSULTANTS
PO Box 33127
RALEIGH, N.C. 27636
(919) 851-1912
(919) 851-1918 (FAX)
WWW.MULKEYINC.COM
NC LICENSE NO. C-1321

NORTH CAROLINA PROFESSIONAL SEAL 031352 ENGINEER TERRY R. PETERSON 6/16/14

STR #12

REVISIONS							SHEET NO.
NO.	BY:	DATE:	NO.	BY:	DATE:		SP-5
1			3				TOTAL SHEETS
2			4				83

DRAWN BY :	W. B. ALLEN	DATE :	3/13
CHECKED BY :	T. R. PETERSON	DATE :	4/13
DESIGN ENGINEER OF RECORD:	T. R. PETERSON	DATE :	1/9/14

6/16/2014 02:39:29 PM R:\Structures\WBL\Preservation Plans\U0071WBL_SD_SI_03.dgn

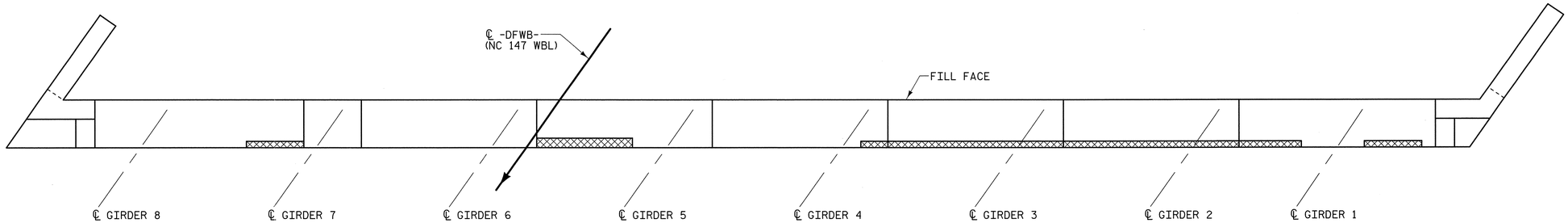

PLAN

CONCRETE REPAIR

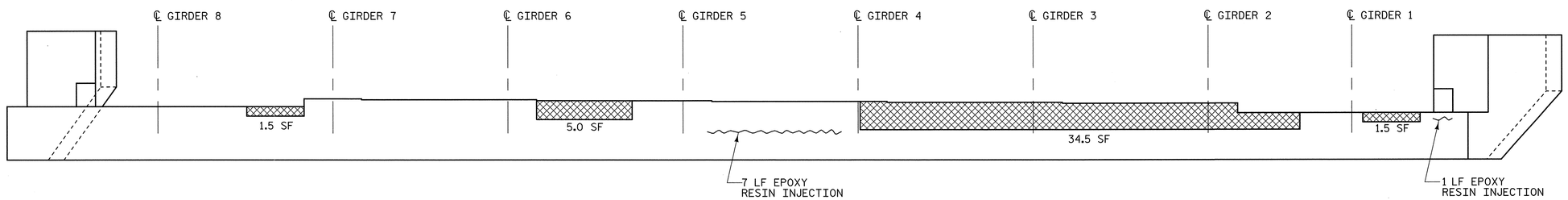

ELEVATION

REPAIR QUANTITY TABLE

REPAIRS END BENT #1	QUANTITIES					
	ESTIMATE			ACTUAL		
SHOTCRETE REPAIRS	AREA SF.	DEPTH FT.	VOLUME CF.	AREA SF.	DEPTH FT.	VOLUME CF.
CAP (VERTICAL FACE)	0.0	0.0	0.0			
CAP (HORIZONTAL FACE)	0.0	0.0	0.0			
CONCRETE REPAIRS	42.5	0.33	14.0			
EPOXY RESIN INJECTION			LN. FT.			LN. FT.
CAP			8			
CURTAIN WALL			0			
EPOXY PROTECTIVE COATING			SQ. FT.			SQ. FT.
TOP OF END BENT CAP			100			

VALUES IN CHART REPRESENT ESTIMATED REPAIR TOTALS AFTER REMOVAL OF UNSOUND CONCRETE, MIN. 1" BEHIND REBAR AND MIN. 1" CL. TO SAWCUT. SEE REPAIR DETAILS.

NOTE:

REPAIR LOCATIONS AND ESTIMATE OF QUANTITIES ARE GIVEN WITH THE BEST INFORMATION AVAILABLE. IF ADDITIONAL REPAIRS NOT SHOWN ON THE DRAWINGS ARE DEEMED NECESSARY BY THE ENGINEER, THE CONTRACTOR SHALL NOTE ON THE DRAWINGS THE APPROXIMATE LOCATION AND DESCRIPTION OF THE REPAIRS AND ADJUST THE ACTUAL QUANTITIES ENTERED INTO THE REPAIR QUANTITY TABLE.

FOR SUBSTRUCTURE REPAIRS, SEE "SUBSTRUCTURE REPAIR DETAILS" SHEETS.

EPOXY PROTECTIVE COATING SHALL BE APPLIED TO THE TOP FACE OF THE END BENT CAP.

PROJECT NO. U-0071
DURHAM COUNTY
STATION: 36+69.26 -DFWB-

PRESERVATION OF BRIDGE NO. 192

STATE OF NORTH CAROLINA
DEPARTMENT OF TRANSPORTATION
RALEIGH

SUBSTRUCTURE REPAIR END BENT #1

PLANS PREPARED BY:
MULKEY ENGINEERS & CONSULTANTS
PO Box 33127
RALEIGH, N.C. 27636
(919) 851-1912
(919) 851-1918 (FAX)
WWW.MULKEYINC.COM
NC LICENSE NO. C-1021

NORTH CAROLINA PROFESSIONAL SEAL 034352 ENGINEER PIERRE R. PETERSON
1/9/14

STR #12

REVISIONS						SHEET NO.
NO.	BY:	DATE:	NO.	BY:	DATE:	SP-6
1			3			TOTAL SHEETS
2			4			83

DRAWN BY : W. B. ALLEN DATE : 3/13
CHECKED BY : T. R. PETERSON DATE : 4/13
DESIGN ENGINEER OF RECORD: T. R. PETERSON DATE : 1/9/14

1/9/2014 10:05:30 AM R:\Structures\WBL\Preservation Plans\U0071WBL_SD_EL0.dgn

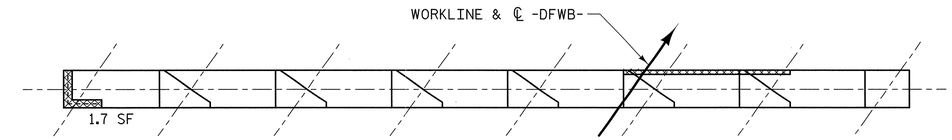

TOP OF CAP

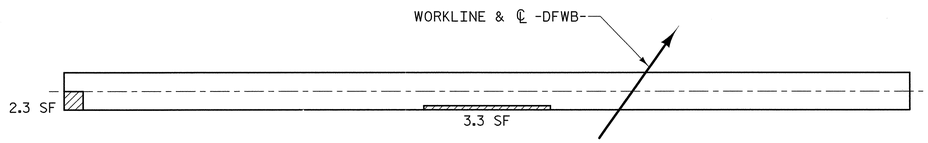

BOTTOM OF CAP

PLAN

REPAIR QUANTITY TABLE

REPAIRS BENT #1	QUANTITIES					
	ESTIMATE			ACTUAL		
SHOTCRETE REPAIRS	AREA SF.	DEPTH FT.	VOLUME CF.	AREA SF.	DEPTH FT.	VOLUME CF.
CAP (VERTICAL FACE)	0.0	0.0	0.0			
CAP (HORIZONTAL FACE)	5.6	0.33	1.9			
COLUMN (VERTICAL FACE)	39.5	0.33	13.0			
CONCRETE REPAIRS	49.4	0.33	16.3			
EPOXY RESIN INJECTION			LN. FT.			LN. FT.
CAP			14.5			
COLUMN			52			
EPOXY PROTECTIVE COATING			SQ. FT.			SQ. FT.
TOP OF CAP			189			

VALUES IN CHART REPRESENT ESTIMATED REPAIR TOTALS AFTER REMOVAL OF UNSOUND CONCRETE, MIN. 1" BEHIND REBAR AND MIN. 1" CL. TO SAWCUT. SEE REPAIR DETAILS.

CONCRETE REPAIR

SHOTCRETE REPAIR

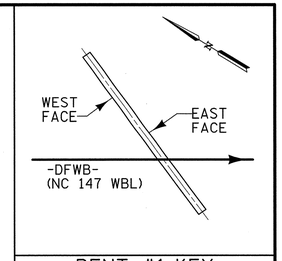

BENT #1 KEY

NOTE:

REPAIR LOCATIONS AND ESTIMATE OF QUANTITIES ARE GIVEN WITH THE BEST INFORMATION AVAILABLE. IF ADDITIONAL REPAIRS NOT SHOWN ON THE DRAWINGS ARE DEEMED NECESSARY BY THE ENGINEER, THE CONTRACTOR SHALL NOTE ON THE DRAWINGS THE APPROXIMATE LOCATION AND DESCRIPTION OF THE REPAIRS AND ADJUST THE ACTUAL QUANTITIES ENTERED INTO THE REPAIR QUANTITY TABLE.

FOR SUBSTRUCTURE REPAIRS, SEE "SUBSTRUCTURE REPAIR DETAILS" SHEETS.

EPOXY PROTECTIVE COATING SHALL BE APPLIED TO THE TOP FACE OF THE BENT CAP.

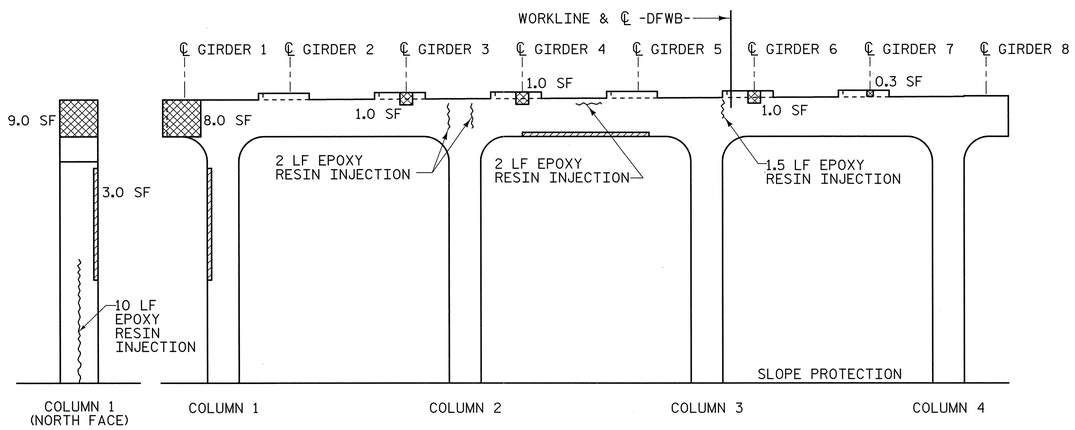

WEST FACE

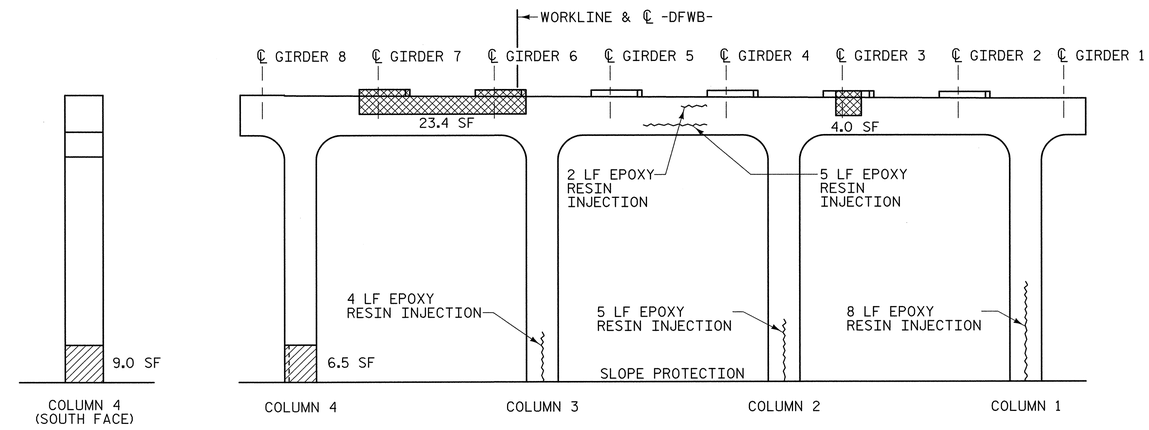

EAST FACE

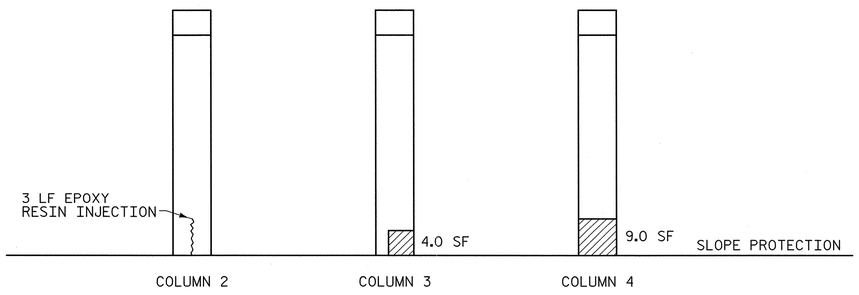

NORTH FACE

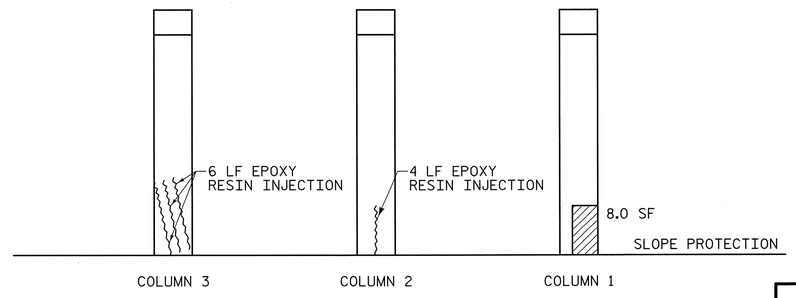

SOUTH FACE

PROJECT NO. U-0071

DURHAM COUNTY

STATION: 36+69.26 -DFWB-

PRESERVATION OF BRIDGE NO. 192

STATE OF NORTH CAROLINA
DEPARTMENT OF TRANSPORTATION
RALEIGH

SUBSTRUCTURE REPAIR BENT #1

PLANS PREPARED BY:

MULKEY ENGINEERS & CONSULTANTS
PO Box 33127
Raleigh, N.C. 27636
(919) 851-1912
(919) 851-1918 (FAX)
WWW.MULKEYINC.COM
NC LICENSE NO. C-1021

NORTH CAROLINA PROFESSIONAL SEAL 034352 ENGINEER TERRY R. PETERSON 1/9/14

STR #12

REVISIONS						SHEET NO.
NO.	BY:	DATE:	NO.	BY:	DATE:	SP-7
1			3			TOTAL SHEETS
2			4			83

DRAWN BY :	W. B. ALLEN	DATE :	3/13
CHECKED BY :	T. R. PETERSON	DATE :	4/13
DESIGN ENGINEER OF RECORD:	T. R. PETERSON	DATE :	1/9/14

1/9/2014 10:44:48 AM R:\Structures\WBL\Preservation Plans\U0071WBL_SD_B1_01.dgn

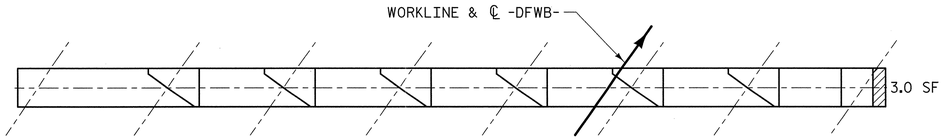

TOP OF CAP

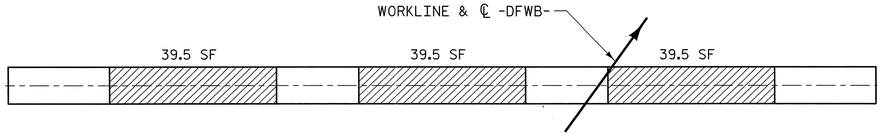

BOTTOM OF CAP

PLAN

REPAIR QUANTITY TABLE

REPAIRS BENT #2	QUANTITIES					
	ESTIMATE			ACTUAL		
SHOTCRETE REPAIRS	AREA SF.	DEPTH FT.	VOLUME CF.	AREA SF.	DEPTH FT.	VOLUME CF.
CAP (VERTICAL FACE)	9.0	0.33	3.0			
CAP (HORIZONTAL FACE)	121.5	0.33	40.1			
COLUMN (VERTICAL FACE)	49.5	0.33	16.3			
CONCRETE REPAIRS	14.0	0.33	4.6			
EPOXY RESIN INJECTION			LN. FT.			LN. FT.
CAP			67			
COLUMN			50			
EPOXY PROTECTIVE COATING			SQ. FT.			SQ. FT.
TOP OF CAP			195			

VALUES IN CHART REPRESENT ESTIMATED REPAIR TOTALS AFTER REMOVAL OF UNSOUND CONCRETE, MIN. 1" BEHIND REBAR AND MIN. 1" CL. TO SAWCUT. SEE REPAIR DETAILS.

CONCRETE REPAIR

SHOTCRETE REPAIR

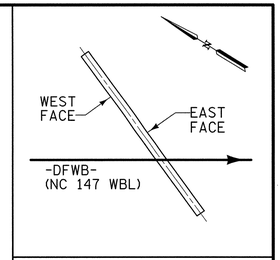

BENT #2 KEY

NOTE:

REPAIR LOCATIONS AND ESTIMATE OF QUANTITIES ARE GIVEN WITH THE BEST INFORMATION AVAILABLE. IF ADDITIONAL REPAIRS NOT SHOWN ON THE DRAWINGS ARE DEEMED NECESSARY BY THE ENGINEER, THE CONTRACTOR SHALL NOTE ON THE DRAWINGS THE APPROXIMATE LOCATION AND DESCRIPTION OF THE REPAIRS AND ADJUST THE ACTUAL QUANTITIES ENTERED INTO THE REPAIR QUANTITY TABLE.

FOR SUBSTRUCTURE REPAIRS, SEE "SUBSTRUCTURE REPAIR DETAILS" SHEETS.

EPOXY PROTECTIVE COATING SHALL BE APPLIED TO THE TOP FACE OF THE BENT CAP.

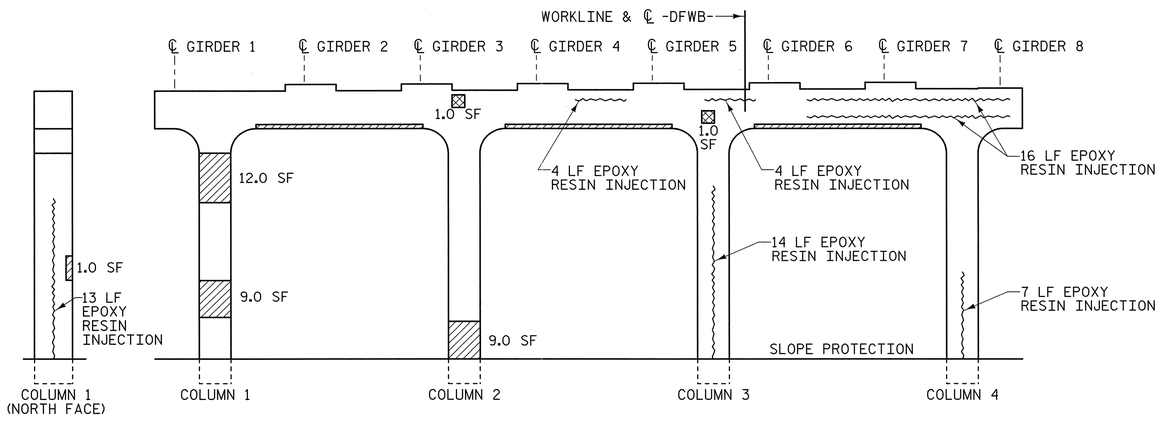

WEST FACE

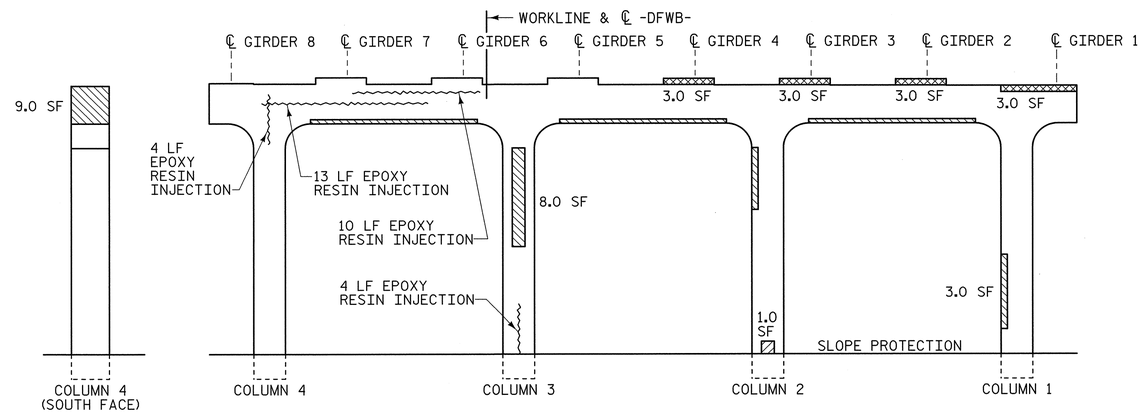

EAST FACE

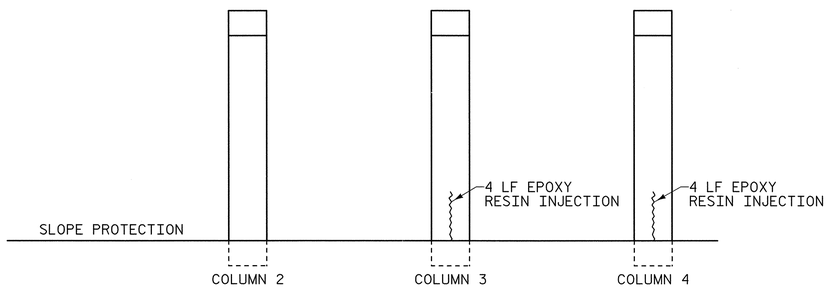

NORTH FACE

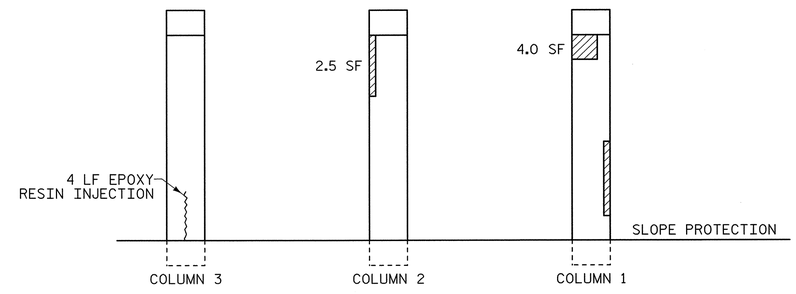

SOUTH FACE

PROJECT NO. U-0071

DURHAM COUNTY

STATION: 36+69.26 -DFWB-

PRESERVATION OF BRIDGE NO. 192

STATE OF NORTH CAROLINA
DEPARTMENT OF TRANSPORTATION
RALEIGH

SUBSTRUCTURE REPAIR BENT #2

PLANS PREPARED BY:
MULKEY ENGINEERS & CONSULTANTS
PO Box 33127
RALEIGH, NC 27636
(919) 851-1912
(919) 851-1918 (FAX)
WWW.MULKEYINC.COM
NC LICENSE NO. C-1321

NORTH CAROLINA PROFESSIONAL SEAL 024352 ENGINEER TERRY R. PETERSON 1/9/14

STR #12

REVISIONS						SHEET NO.
NO.	BY:	DATE:	NO.	BY:	DATE:	SP-8
1			3			TOTAL SHEETS
2			4			83

DRAWN BY :	W. B. ALLEN	DATE :	3/13
CHECKED BY :	T. R. PETERSON	DATE :	4/13
DESIGN ENGINEER OF RECORD:	T. R. PETERSON	DATE :	1/9/14

1/9/2014 10:55:09 AM R:\Structures\WBL\Preservation Plans\U0071WBL_SD_B2_01.dgn

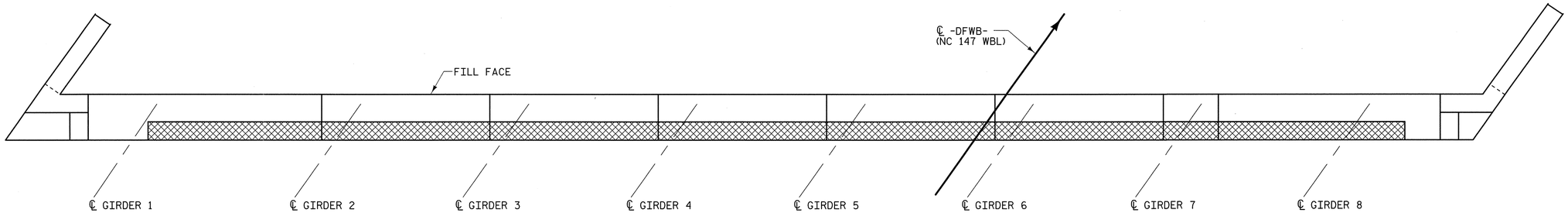

PLAN

CONCRETE REPAIR

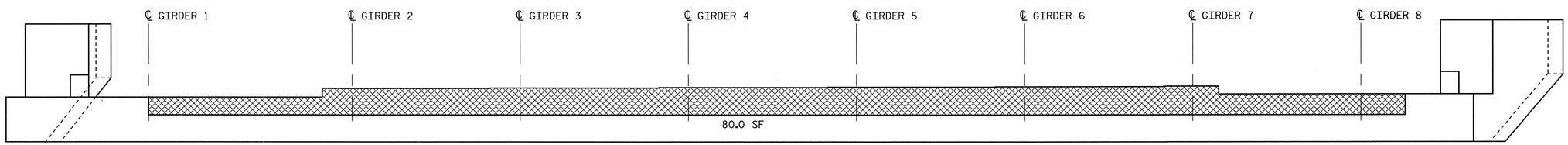

ELEVATION

REPAIR QUANTITY TABLE

REPAIRS END BENT #2	QUANTITIES					
	ESTIMATE			ACTUAL		
SHOTCRETE REPAIRS	AREA SF.	DEPTH FT.	VOLUME CF.	AREA SF.	DEPTH FT.	VOLUME CF.
CAP (VERTICAL FACE)	0.0	0.0	0.0			
CAP (HORIZONTAL FACE)	0.0	0.0	0.0			
CONCRETE REPAIRS	80.0	1.0	80.0			
EPOXY RESIN INJECTION			LN. FT.			LN. FT.
CAP			0			
CURTAIN WALL			73			
EPOXY PROTECTIVE COATING			SQ. FT.			SQ. FT.
TOP OF END BENT CAP			105			

VALUES IN CHART REPRESENT ESTIMATED REPAIR TOTALS AFTER REMOVAL OF UNSOUND CONCRETE, MIN. 1" BEHIND REBAR AND MIN. 1" CL. TO SAWCUT. SEE REPAIR DETAILS.

NOTE:

REPAIR LOCATIONS AND ESTIMATE OF QUANTITIES ARE GIVEN WITH THE BEST INFORMATION AVAILABLE. IF ADDITIONAL REPAIRS NOT SHOWN ON THE DRAWINGS ARE DEEMED NECESSARY BY THE ENGINEER, THE CONTRACTOR SHALL NOTE ON THE DRAWINGS THE APPROXIMATE LOCATION AND DESCRIPTION OF THE REPAIRS AND ADJUST THE ACTUAL QUANTITIES ENTERED INTO THE REPAIR QUANTITY TABLE.

FOR SUBSTRUCTURE REPAIRS, SEE "SUBSTRUCTURE REPAIR DETAILS" SHEETS.

EPOXY PROTECTIVE COATING SHALL BE APPLIED TO THE TOP FACE OF THE END BENT CAP.

EPOXY INJECT THE CURTAIN WALL THE ENTIRE LENGTH AS NEEDED.

PROJECT NO. U-0071
DURHAM COUNTY
STATION: 36+69.26 -DFWB-

PRESERVATION OF BRIDGE NO. 192

STATE OF NORTH CAROLINA
DEPARTMENT OF TRANSPORTATION
RALEIGH

SUBSTRUCTURE REPAIR END BENT #2

PLANS PREPARED BY:
MULKEY ENGINEERS & CONSULTANTS
PO Box 33127
Raleigh, N.C. 27636
(919) 851-1912
(919) 851-1918 (FAX)
WWW.MULKEYINC.COM
NC LICENSE NO. C-1821

NORTH CAROLINA PROFESSIONAL SEAL 034352 ENGINEER TERRY R. PETERSON 1/9/14

STR #12

REVISIONS						SHEET NO.
NO.	BY:	DATE:	NO.	BY:	DATE:	SP-9
1			3			TOTAL SHEETS
2			4			83

DRAWN BY :	W. B. ALLEN	DATE :	3/13
CHECKED BY :	T. R. PETERSON	DATE :	4/13
DESIGN ENGINEER OF RECORD:	T. R. PETERSON	DATE :	1/9/14

1/9/2014 10:16:01 AM R:\Structures\WBL\Preservation Plans\U0071WBL_SD_E2_04.dgn

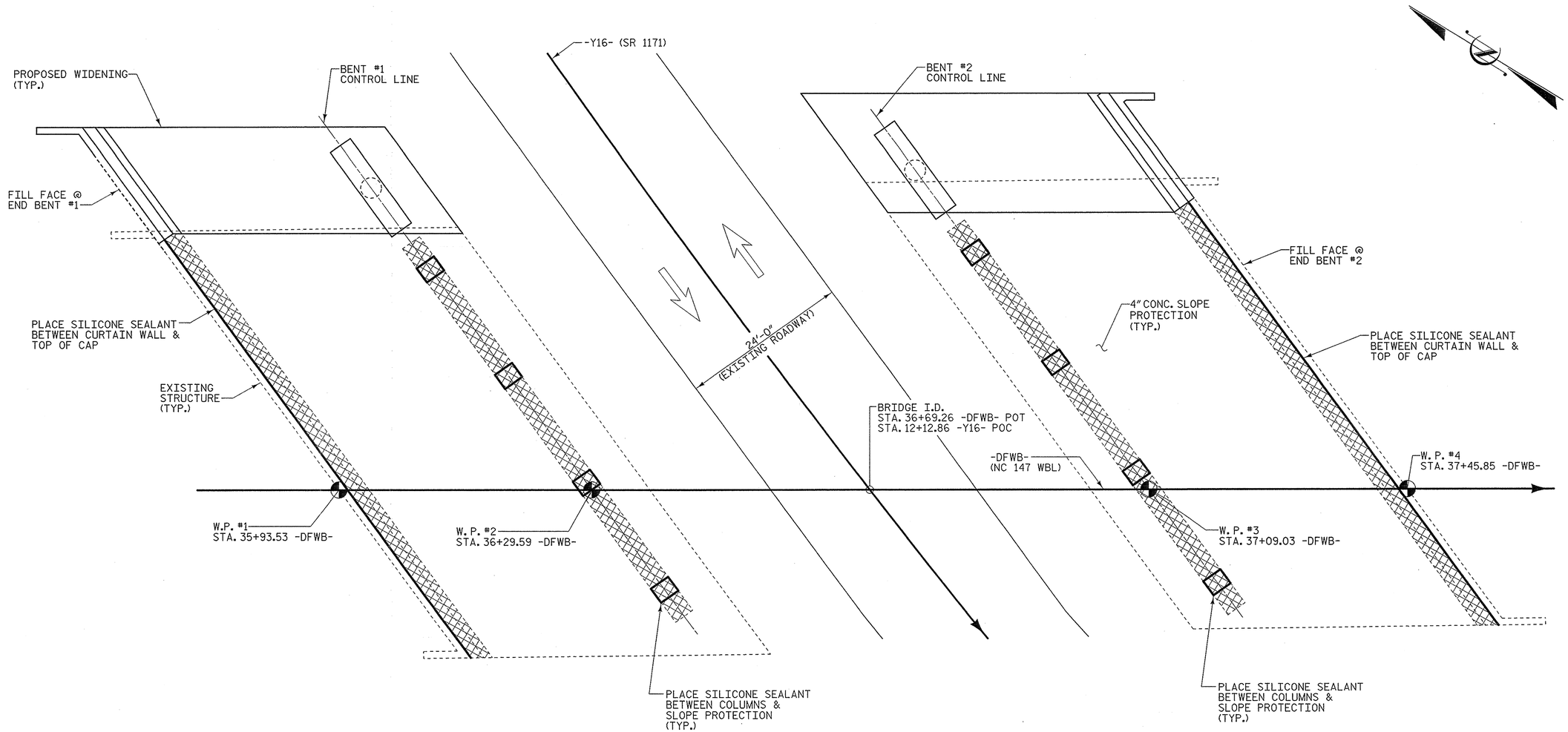

EPOXY TOP OF CAPS IN THESE AREAS

SILICONE SEALANT APPROX. 240 L.F.

PLAN

PROJECT NO. U-0071

DURHAM COUNTY

STATION: 36+69.26 -DFWB-

PRESERVATION OF BRIDGE NO. 192 SHEET 1 OF 2

STATE OF NORTH CAROLINA
DEPARTMENT OF TRANSPORTATION
RALEIGH

SUBSTRUCTURE REPAIR DETAILS

PLANS PREPARED BY:
MULKEY ENGINEERS & CONSULTANTS
PO BOX 33127
RALEIGH, N.C. 27636
(919) 851-1912
(919) 851-1918 (FAX)
WWW.MULKEYINC.COM
NC LICENSE NO. C-1021

NORTH CAROLINA PROFESSIONAL SEAL 034352 ENGINEER TERRY R. PETERSON 12/30/13

STR #12

REVISIONS						SHEET NO.
NO.	BY:	DATE:	NO.	BY:	DATE:	SP-10
1			3			TOTAL SHEETS
2			4			83

DRAWN BY :	W. B. ALLEN	DATE :	3/13
CHECKED BY :	T. R. PETERSON	DATE :	4/13
DESIGN ENGINEER OF RECORD:	T. R. PETERSON	DATE :	12/30/13

12/30/2013 7:36:00 AM R:\Structures\WBL\Preservation Plans\U0071WBL_SD_SD_01.dgn

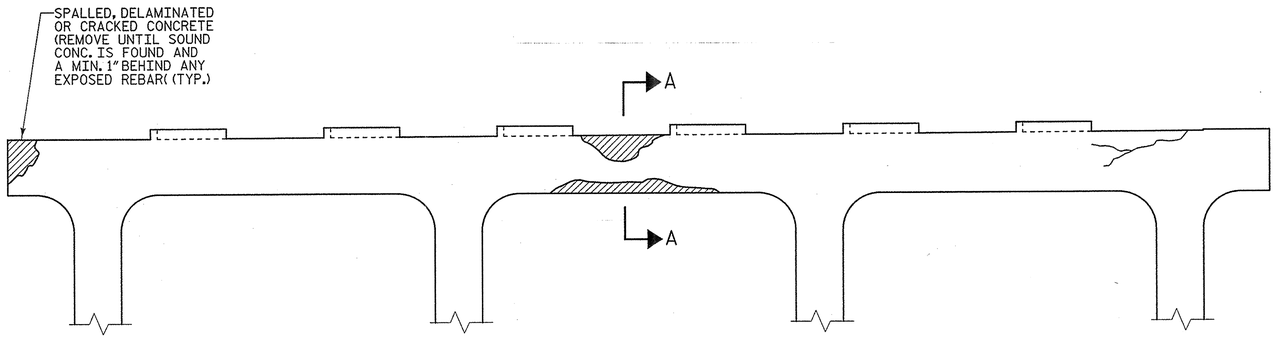

BENT CAP REPAIRS

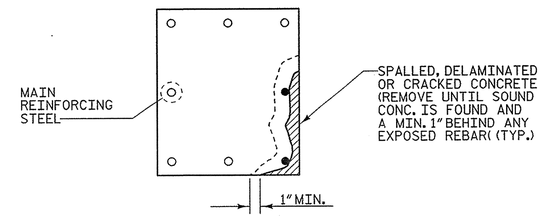

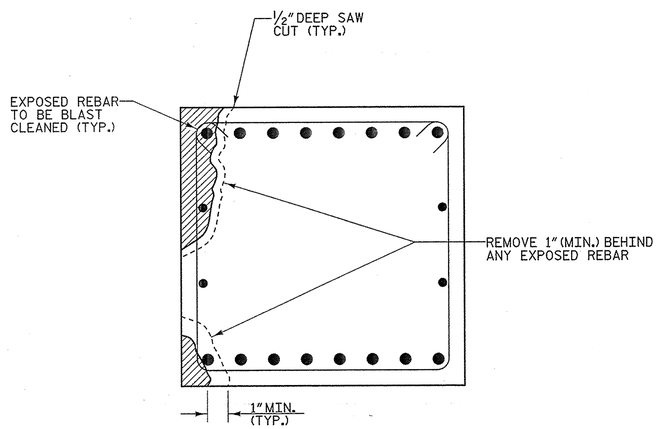

SECTION THRU CAP

CAP REPAIR

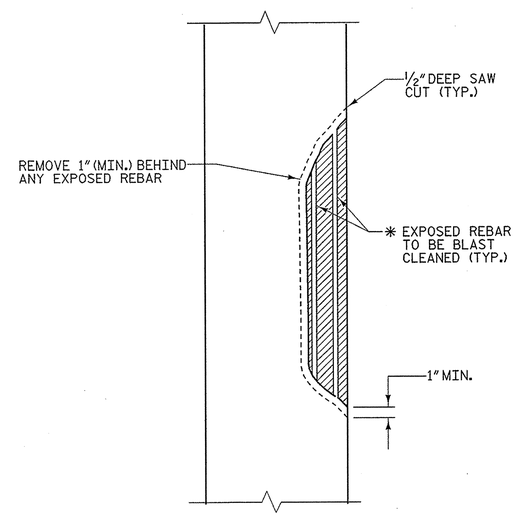

ELEVATION OF CAP

COLUMN REPAIR

* DUE TO LACK OF CONFINEMENT STEEL, REPAIR LENGTH SHALL NOT EXCEED 10 FEET.

PROJECT NO. U-0071

DURHAM COUNTY

STATION: 36+69.26 -DFWB-

PRESERVATION OF BRIDGE NO. 192 SHEET 2 OF 2

STATE OF NORTH CAROLINA
DEPARTMENT OF TRANSPORTATION
RALEIGH

SUBSTRUCTURE REPAIR DETAILS

PLANS PREPARED BY:
MULKEY ENGINEERS & CONSULTANTS
PO Box 33127
Raleigh, N.C. 27636
(919) 851-1912
(919) 851-1918 (FAX)
WWW.MULKEYINC.COM
NC LICENSE NO. C-1021

NORTH CAROLINA PROFESSIONAL SEAL 034352 ENGINEER TERRY R. PETERSON
12/30/13

STR #12

REVISIONS						SHEET NO.
NO.	BY:	DATE:	NO.	BY:	DATE:	SP-10a
1			3			TOTAL SHEETS
2			4			83

DRAWN BY :	W. B. ALLEN	DATE :	3/13
CHECKED BY :	T. R. PETERSON	DATE :	4/13
DESIGN ENGINEER OF RECORD:	T. R. PETERSON	DATE :	12/30/13

12/30/2013 7:34:43 AM R:\Structures\WBL\Preservation Plans\U0071WBL_SD_DET_01.dgn

BM #51: CHISELED SQUARE IN SE CONC. HW OF EB BRIDGE; 30.29' (RT.) STA. 34+00.21 -DFEB- ELEV. 424.46

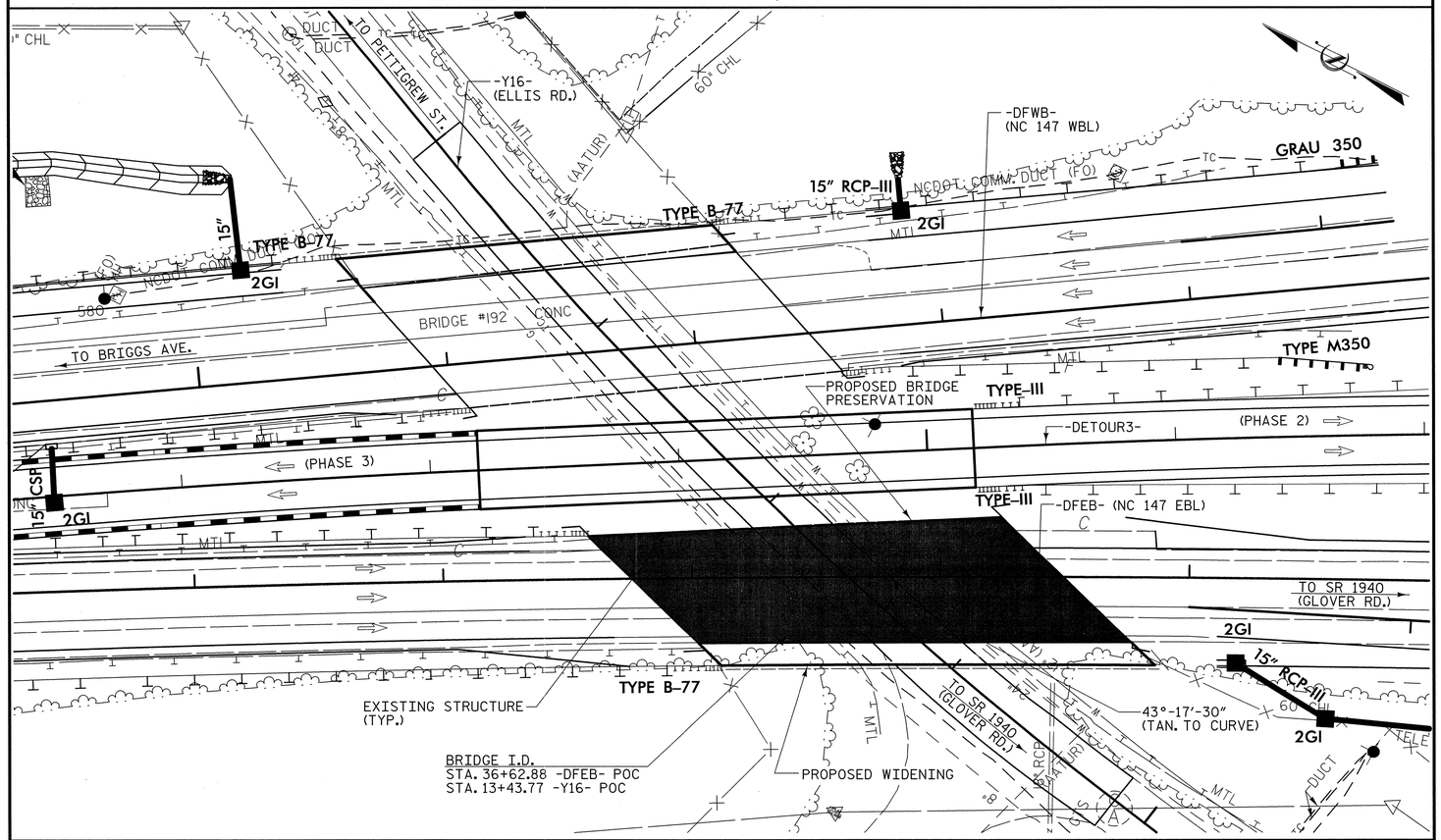

LOCATION SKETCH

NOTES

THE BOUNDARIES OF AREAS IDENTIFIED FOR CLASS III SURFACE PREPARATION ARE APPROXIMATE. IF ANY CLASS III LOCATIONS ARE ENCOUNTERED PRIOR TO OR DURING HYDRO-DEMOLITION, THE CONTRACTOR SHALL PROVIDE A METHOD OF HANDLING UNEXPECTED BLOW THROUGH WORK OF THE DECK.

THE NOMINAL UNCOMPRESSED SEAL WIDTH OF FOAM JOINT SEAL SHALL BE 2" AT INTERIOR BENTS. FOR "FOAM JOINT SEALS", SEE SPECIAL PROVISIONS.

PROVIDE 1" EXPANSION JOINT MATERIAL AT END BENTS.

FOR "ELASTOMERIC CONCRETE", SEE SPECIAL PROVISIONS.

EXISTING JOINTS AND BRIDGE DECK DRAINS SHALL BE SEALED PRIOR TO BEGINNING SURFACE PREPARATION OF THE BRIDGE DECK.

EXISTING DIMENSIONS AND BRIDGE CONDITION ARE FROM THE BEST INFORMATION AVAILABLE. THE CONTRACTOR SHALL VERIFY THE INFORMATION SHOWN ON THE PLANS AND NOTIFY THE ENGINEER IF ACTUAL DIMENSIONS AND CONDITIONS DIFFER.

IT IS THE CONTRACTOR'S RESPONSIBILITY TO FOLLOW ALL STATE AND FEDERAL SAFETY REQUIREMENTS.

FOR CONTROL OF TRAFFIC AND LIMITS ON PHASING OF CONSTRUCTION, SEE TRANSPORTATION MANAGEMENT PLAN SHEETS.

FOR SUBMITTAL OF WORKING DRAWINGS, SEE SPECIAL PROVISIONS.

FOR FALSEWORK AND FORMWORK, SEE SPECIAL PROVISIONS.

FOR CRANE SAFETY, SEE SPECIAL PROVISIONS.

FOR OVERLAY SURFACE PREPARATION, SEE SPECIAL PROVISIONS.

FOR CONCRETE FOR DECK REPAIR, SEE SPECIAL PROVISIONS.

FOR EPOXY RESIN INJECTION, SEE SPECIAL PROVISIONS.

FOR SHOTCRETE REPAIRS, SEE SPECIAL PROVISIONS.

FOR CONCRETE REPAIRS, SEE SPECIAL PROVISIONS.

FOR BRIDGE JOINT DEMOLITION, SEE SPECIAL PROVISIONS.

FOR HANDLING OF BRIDGE WASH WATER, SEE SPECIAL PROVISIONS.

FOR GROUT FOR STRUCTURES, SEE SPECIAL PROVISIONS.

THE LOCATION AND EXTENT OF REPAIRS SHOWN ON THE PLANS ARE GENERAL IN NATURE. THE ENGINEER WILL DETERMINE THE EXACT EXTENT OF REPAIR IN THE FIELD BASED ON AN EVALUATION OF THE CONDITION OF THE EXPOSED REPAIR SURFACES AFTER DEMOLITION.

REPLACEMENT OF DAMAGED REINFORCING STEEL AND DOWELS IN THE CONCRETE REPAIR SHALL BE CONSIDERED INCIDENTAL TO THE CONCRETE REPAIRS, NO ADDITIONAL PAYMENT OF MEASUREMENT SHALL BE MADE.

ALL REINFORCING STEEL SHALL BE GRADE 60.

THE CONTRACTOR SHALL EXERCISE CARE TO ENSURE THAT EXISTING STRUCTURAL ELEMENTS THAT ARE TO REMAIN IN PLACE ARE UNDAMAGED BY BRIDGE CONSTRUCTION ACTIVITITIES. ANY DAMAGE TO EXISTING STRUCTURAL ELEMENTS THAT ARE TO REMAIN SHALL BE REPAIRED BY THE CONTRACTOR TO THE SATISFACTION OF THE ENGINEER AT NO COST TO THE DEPARTMENT.

TOTAL BILL OF MATERIAL FOR PRESERVATION & REHABILITATION

SCARIFYING BRIDGE DECK	HYDRO-DEMOLITION OF BRIDGE DECK	CONCRETE FOR DECK REPAIR	LATEX MODIFIED CONCRETE	PLACING & FINISHING LATEX MODIFIED CONCRETE	BRIDGE JOINT DEMOLITION	▲FOAM JOINT SEALS	GROOVING BRIDGE FLOOR	CONCRETE REPAIRS	SHOTCRETE REPAIRS	EPOXY RESIN INJECTION	EPOXY PROTECTIVE COATING
SQ. YDS.	SQ. YDS.	CU. FT.	CU. YDS.	SQ. YDS.	SQ. FT.	LUMP SUM	SQ. FT.	CU. FT.	CU. FT.	LIN. FT.	SQ. FT.
919	919	*	54	1106	147.5	LUMP SUM	12,947	208.4	97.9	138	611

* FOR INFORMATION ONLY, ACTUAL QUANTITY WILL BE DETERMINED IN THE FIELD.

▲ THE COST FOR MATERIALS AND INSTALLATION OF THE 1" EXPANSION JOINT MATERIAL AT END BENTS AND THE SILICONE SEALANT MATERIAL FOR CURTAIN WALLS AND BENT COLUMNS ARE TO BE INCLUDED IN THIS PAY ITEM.

PROJECT NO. U-0071
DURHAM COUNTY
STATION: 34+62.88 -DFEB-

PRESERVATION OF BRIDGE NO. 191

STATE OF NORTH CAROLINA
DEPARTMENT OF TRANSPORTATION
RALEIGH

LOCATION SKETCH AND TOTAL BILL OF MATERIAL

PLANS PREPARED BY:
MULKEY ENGINEERS & CONSULTANTS
PO Box 33127
Raleigh, NC 27636
(919) 851-1912
(919) 851-1918 (FAX)
WWW.MULKEYINC.COM
NC LICENSE NO. C-1021

NORTH CAROLINA PROFESSIONAL SEAL 034352 ENGINEER TERRY R. PETERSON
1/9/14

STR #13

REVISIONS								SHEET NO.
NO.	BY:	DATE:	NO.	BY:	DATE:			SP-11
1			3					TOTAL SHEETS
2			4					83

DRAWN BY : W. B. ALLEN DATE : 4/13
CHECKED BY : T. R. PETERSON DATE : 5/13
DESIGN ENGINEER OF RECORD: T. R. PETERSON DATE : 1/9/14

1/9/2014 10:16:41 AM R:\Structures\EB1\Preservation Plans\U0071EB1_SD_LS_01.dgn

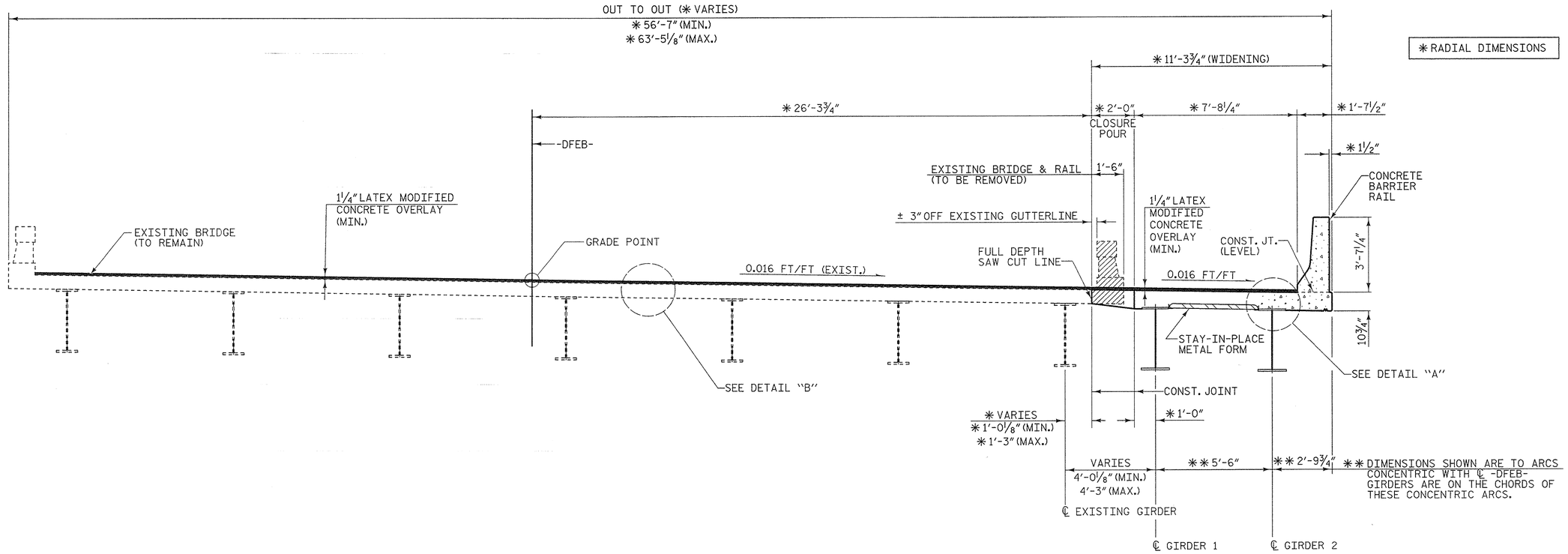

TYPICAL SECTION

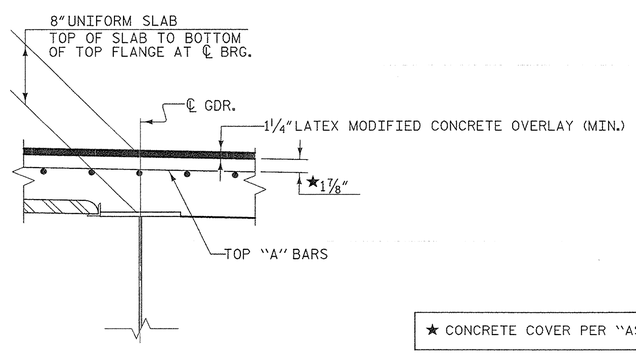

DETAIL "A"

(SHOWING DECK AT WIDENING PORTION OF BRIDGE)

BOTTOM MAT OF REINFORCING STEEL NOT SHOWN FOR CLARITY

★ CONCRETE COVER PER "AS BUILT PLANS".

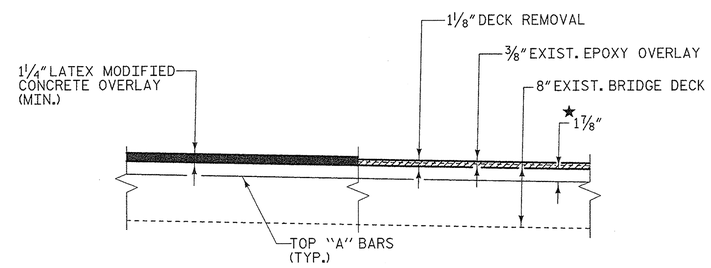

DETAIL "B"

(SHOWING EXISTING DECK)

SCARIFYING & HYDRO-DEMOLITION OF BRDIGE DECK

PROJECT NO. U-0071

DURHAM COUNTY

STATION: 34+62.88 -DFEB-

PRESERVATION OF BRIDGE NO. 191

STATE OF NORTH CAROLINA
DEPARTMENT OF TRANSPORTATION
RALEIGH

TYPICAL SECTION

PLANS PREPARED BY:
MULKEY ENGINEERS & CONSULTANTS
PO Box 33127
RALEIGH, N.C. 27636
(919) 851-1912
(919) 851-1918 (FAX)
WWW.MULKEYINC.COM
NC LICENSE NO. C-1621

NORTH CAROLINA PROFESSIONAL SEAL 034352 ENGINEER TERRY R. PETERSON
12/31/13

STR #13

REVISIONS						SHEET NO.
NO.	BY:	DATE:	NO.	BY:	DATE:	SP-12
1			3			TOTAL SHEETS
2			4			83

DRAWN BY : W. B. ALLEN DATE : 4/13
CHECKED BY : T. R. PETERSON DATE : 5/13
DESIGN ENGINEER OF RECORD: T. R. PETERSON DATE : 12/30/13

12/30/2013 7:26:22 AM R:\Structures\EBL\Preservation Plans\U0071EBL_SD_TS_01.dgn

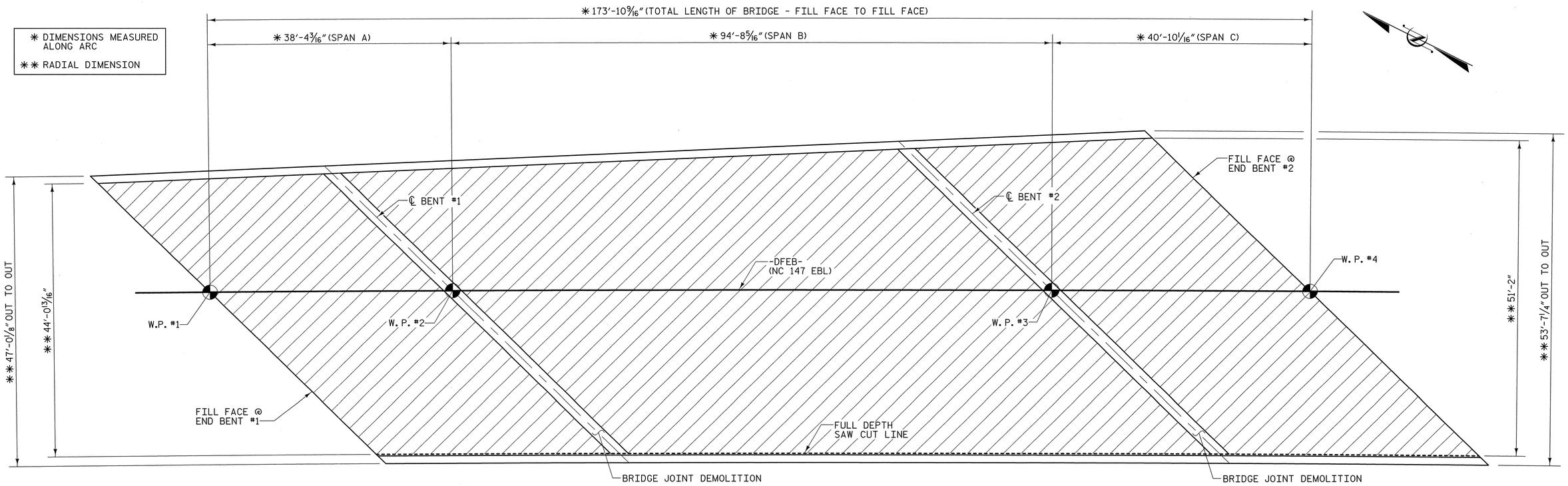

PLAN OF SPANS (SCARIFICATION & HYDRO-DEMOLITION)

SCARIFICATION & HYDRO-DEMOLITION OF BRIDGE DECK (8265 SQ. FT.)

PROJECT NO. U-0071

DURHAM COUNTY

STATION: 34+62.88 -DFEB-

PRESERVATION OF BRIDGE NO. 191

STATE OF NORTH CAROLINA
DEPARTMENT OF TRANSPORTATION
RALEIGH

SCARIFICATION & HYDRO-DEMOLITION OF BRIDGE DECK

PLANS PREPARED BY:

MULKEY ENGINEERS & CONSULTANTS
PO BOX 33127
RALEIGH, N.C. 27636
(919) 851-1912
(919) 851-1918 (FAX)
WWW.MULKEYINC.COM
NC LICENSE NO. C-1021

NORTH CAROLINA PROFESSIONAL SEAL 024352 ENGINEER TERRE R. PETERSON 1/7/14

STR #13

REVISIONS						
NO.	BY:	DATE:	NO.	BY:	DATE:	
1			3			
2			4			

SHEET NO. SP-13

TOTAL SHEETS 83

DRAWN BY :	W. B. ALLEN	DATE :	4/13
CHECKED BY :	T. R. PETERSON	DATE :	5/13
DESIGN ENGINEER OF RECORD:	T. R. PETERSON	DATE :	1/9/14

1/9/2014 10:49:49 AM R:\Structures\EBL\Preservation Plans\U0071EBL_SP_SL01.dgn

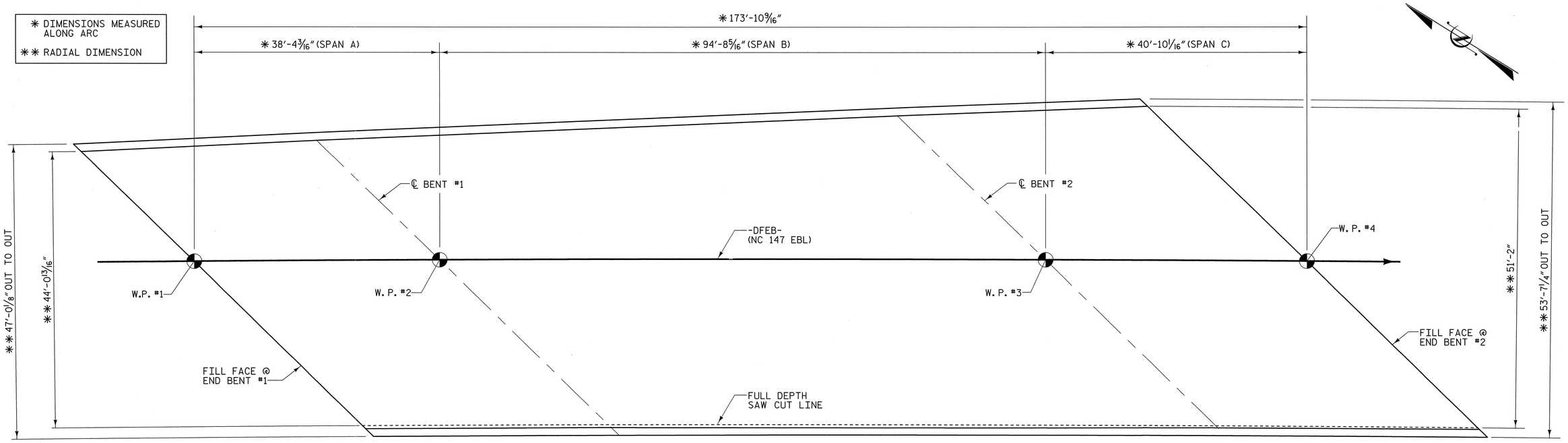

PLAN OF SPANS-DECK REPAIRS

NO DAMAGES WERE OBSERVED AT THE TIME OF THE BRIDGE INSPECTION

APPROX. AREA: CLASS II REPAIR

APPROX. AREA: CLASS III REPAIR

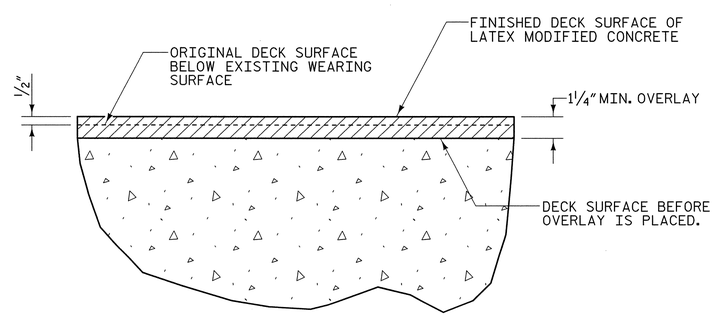

DETAIL FOR LATEX MODIFIED CONCRETE OVERLAY

PROJECT NO. U-0071

DURHAM COUNTY

STATION: 34+62.88 -DFEB-

PRESERVATION OF BRIDGE NO. 191

STATE OF NORTH CAROLINA
DEPARTMENT OF TRANSPORTATION
RALEIGH

DECK REPAIR DETAILS

PLANS PREPARED BY:
MULKEY ENGINEERS & CONSULTANTS
PO Box 33127
RALEIGH, N.C. 27636
(919) 851-1912
(919) 851-1918 (FAX)
WWW.MULKEYINC.COM
NC LICENSE NO. C-1231

NORTH CAROLINA PROFESSIONAL SEAL 034352 ENGINEER TERRE R. PETERSON 1/9/14

STR #13

REVISIONS						SHEET NO.
NO.	BY:	DATE:	NO.	BY:	DATE:	SP-14
1			3			TOTAL SHEETS
2			4			83

DRAWN BY :	W. B. ALLEN	DATE :	4/13
CHECKED BY :	T. R. PETERSON	DATE :	5/13
DESIGN ENGINEER OF RECORD:	T. R. PETERSON	DATE :	1/9/14

1/9/2014 10:26:21 AM R:\Structures\EBL\Preservation Plans\U0071EBL_SD_SL02.dgn

SAWED OPENING FOR FOAM JOINT			
BENT NO.	W @ 90°F	W @ 60°F	W @ 45°F
1	1 1/2"	1 9/16"	1 5/8"
2	1 5/16"	1 9/16"	1 11/16"

ELASTOMERIC CONCRETE	
BENT LOCATION	ELASTOMERIC CONCRETE ✱ (CU. FT.)
BT #1	13.4
BT #2	14.4
TOTAL	27.8

✱ BASED ON THE MINIMUM BLOCKOUT SHOWN AND INCLUDES PROPOSED BRIDGE WIDENING.

★ DIMENSIONS MEASURED ALONG ARC

★★ RADIAL DIMENSION

✱✱ SEE "BRIDGE APPROACH SLAB DETAILS" SHEET 6 OF 6 WITHIN DESIGN PLANS FOR FURTHER DETAILS.

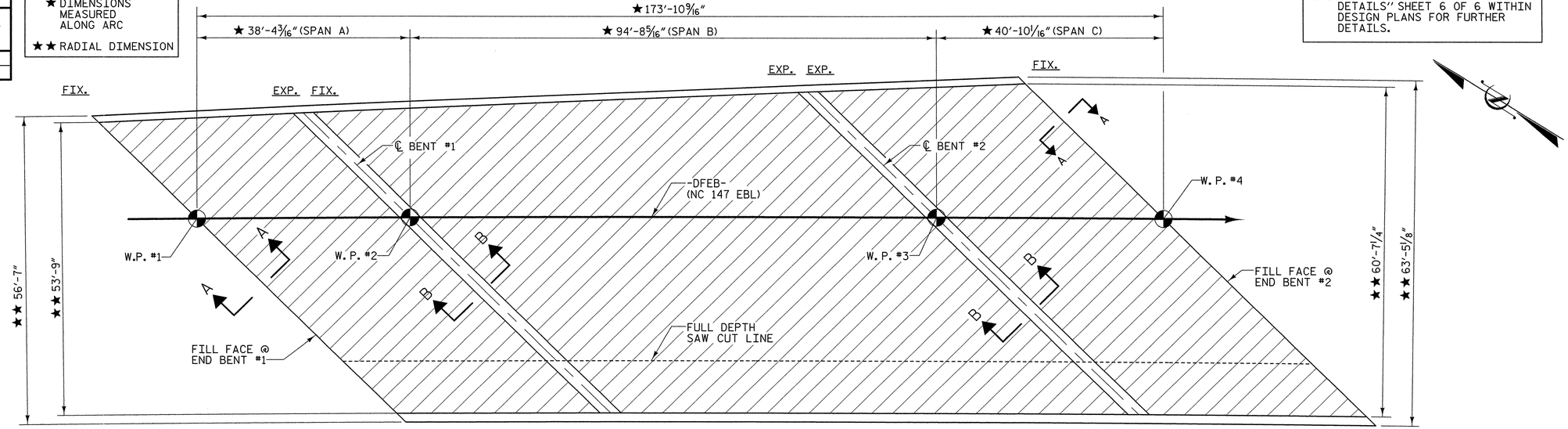

LMC OVERLAY AREA

9955 SQ. FT.

PLAN

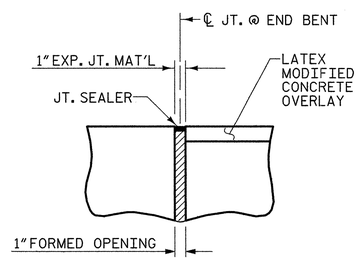

PROPOSED JOINT AT END BENTS

(FIXED)
SEE SECTION A-A

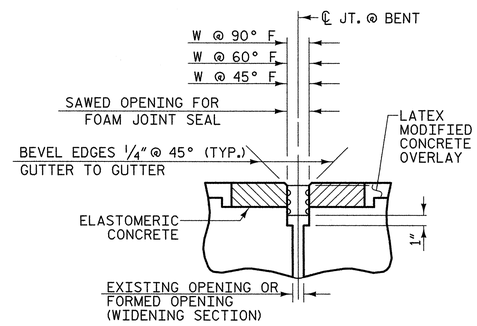

PROPOSED JOINT AT BENTS

✱✱ FOAM JOINT SEAL (EXPANSION)
SEE SECTION B-B

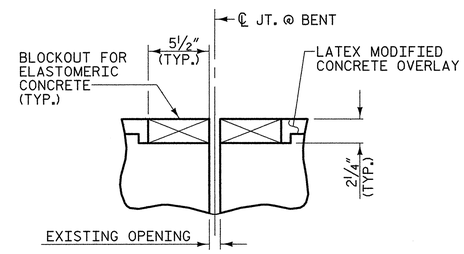

FOAM JOINT SEAL

✱✱ PRE-SAWED ELASTOMERIC CONCRETE DIMENSIONS

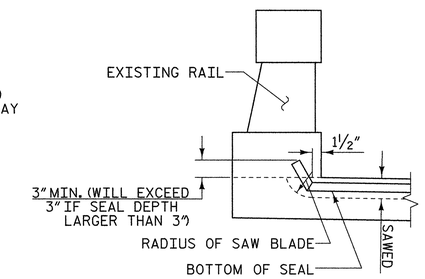

JOINT DETAIL AT RAIL

✱✱ SEE DESIGN PLANS FOR JOINT DETAIL AT PROPOSED RAIL.

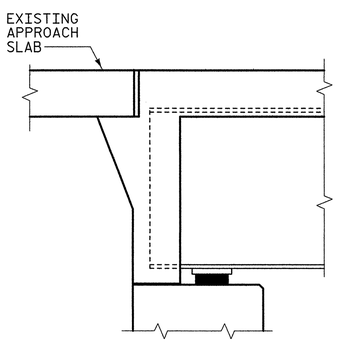

EXISTING SECTION AT END BENT

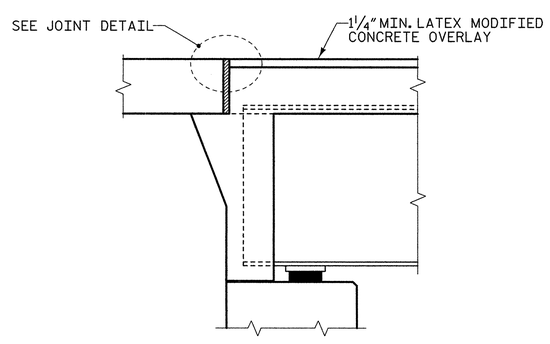

PROPOSED SECTION AT END BENT

SECTION A-A

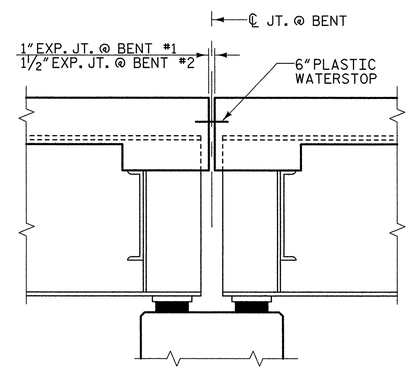

EXISTING JOINT AT BENTS

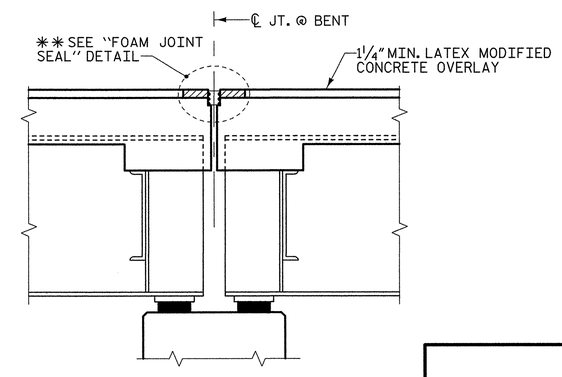

PROPOSED JOINT AT BENTS

SECTION B-B

✱✱✱ ALL LOOSE AND UNSOUND CONCRETE SHALL BE REMOVED. IF THE EMBEDDED PORTION OF THE EXISTING PLASTIC WATERSTOP IS EXPOSED DURING REMOVAL OF UNSOUND CONCRETE, THE ENTIRE WATERSTOP SHALL BE REMOVED. OTHERWISE TRIM WATERSTOP FLUSH WITH EXISTING CONCRETE SURFACE.

NOTE:

PROPOSED WORK ON ALL JOINTS SHALL BE DONE ACROSS ENTIRE WIDTH OF BRIDGE.

PROJECT NO. U-0071

DURHAM COUNTY

STATION: 34+62.88 -DFEB-

PRESERVATION OF BRIDGE NO. 191

STATE OF NORTH CAROLINA
DEPARTMENT OF TRANSPORTATION
RALEIGH

PLAN OF SPANS AND JOINT DETAILS

PLANS PREPARED BY:

MULKEY ENGINEERS & CONSULTANTS
PO Box 33127
RALEIGH, N.C. 27636
(919) 851-1912
(919) 851-1918 (FAX)
WWW.MULKEYINC.COM
NC LICENSE NO. C-1021

NORTH CAROLINA PROFESSIONAL SEAL 034352 ENGINEER TERRY R. PETERSON
6/16/14

STR #13

REVISIONS							SHEET NO.
NO.	BY:	DATE:	NO.	BY:	DATE:		SP-15
1			3				TOTAL SHEETS
2			4				83

DRAWN BY :	W. B. ALLEN	DATE :	4/13
CHECKED BY :	T. R. PETERSON	DATE :	5/13
DESIGN ENGINEER OF RECORD:	T. R. PETERSON	DATE :	1/9/14

6/16/2014 12:30:46 PM R:\Structures\EBL\P-Preservation Plans\U0071EBL_SD_SL03.dgn

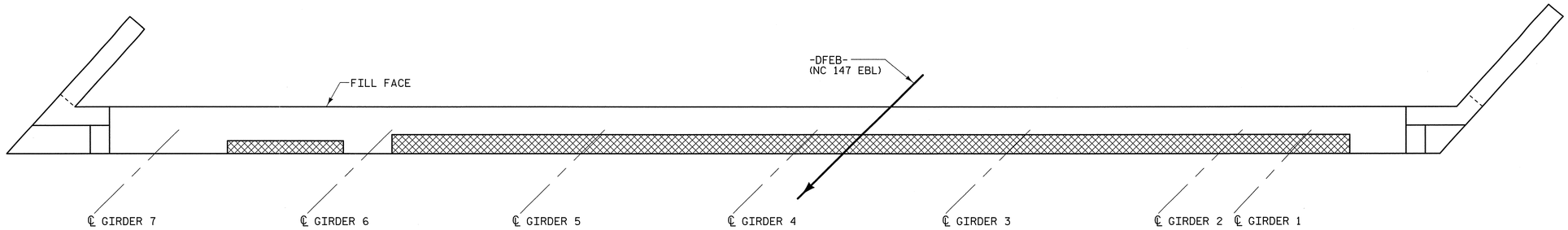

PLAN

CONCRETE REPAIR

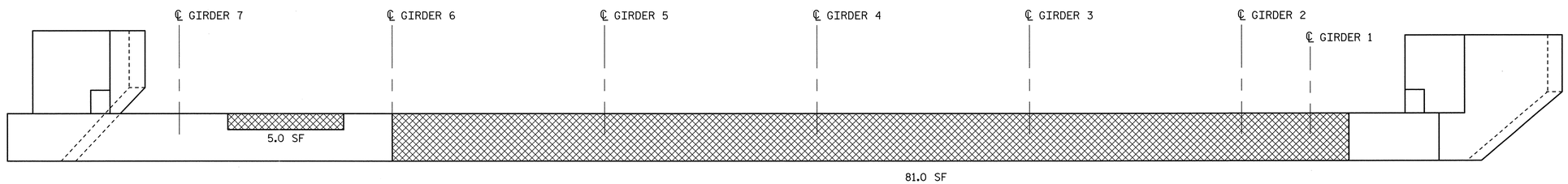

ELEVATION

REPAIR QUANTITY TABLE						
REPAIRS END BENT #1	QUANTITIES					
	ESTIMATE			ACTUAL		
SHOTCRETE REPAIRS	AREA SF.	DEPTH FT.	VOLUME CF.	AREA SF.	DEPTH FT.	VOLUME CF.
CAP (VERTICAL FACE)	0.0	0.0	0.0			
CAP (HORIZONTAL FACE)	0.0	0.0	0.0			
CONCRETE REPAIRS	86.0	1.00	86.0			
EPOXY RESIN INJECTION			LN. FT.			LN. FT.
CAP			0			
CURTAIN WALL			0			
EPOXY PROTECTIVE COATING			SQ. FT.			SQ. FT.
TOP OF END BENT CAP			100			

VALUES IN CHART REPRESENT ESTIMATED REPAIR TOTALS AFTER REMOVAL OF UNSOUND CONCRETE, MIN. 1" BEHIND REBAR AND MIN. 1" CL. TO SAWCUT. SEE REPAIR DETAILS.

NOTE:

REPAIR LOCATIONS AND ESTIMATE OF QUANTITIES ARE GIVEN WITH THE BEST INFORMATION AVAILABLE. IF ADDITIONAL REPAIRS NOT SHOWN ON THE DRAWINGS ARE DEEMED NECESSARY BY THE ENGINEER, THE CONTRACTOR SHALL NOTE ON THE DRAWINGS THE APPROXIMATE LOCATION AND DESCRIPTION OF THE REPAIRS AND ADJUST THE ACTUAL QUANTITIES ENTERED INTO THE REPAIR QUANTITY TABLE.

FOR SUBSTRUCTURE REPAIRS, SEE "SUBSTRUCTURE REPAIR DETAILS" SHEETS.

EPOXY PROTECTIVE COATING SHALL BE APPLIED TO THE TOP FACE OF THE END BENT CAP.

PROJECT NO. U-0071
DURHAM COUNTY
STATION: 34+62.88 -DFEB-

PRESERVATION OF BRIDGE NO. 191

STATE OF NORTH CAROLINA
DEPARTMENT OF TRANSPORTATION
RALEIGH

SUBSTRUCTURE REPAIR END BENT #1

PLANS PREPARED BY:
MULKEY ENGINEERS & CONSULTANTS
PO Box 33127
RALEIGH, N.C. 27636
(919) 851-1912
(919) 851-1918 (FAX)
WWW.MULKEYINC.COM
NC LICENSE NO. C-1021

NORTH CAROLINA PROFESSIONAL SEAL 034352 ENGINEER TERRE R. PETERSON 1/9/14

STR #13

REVISIONS						SHEET NO.
NO.	BY:	DATE:	NO.	BY:	DATE:	SP-16
1			3			TOTAL SHEETS
2			4			83

DRAWN BY :	W. B. ALLEN	DATE :	4/13
CHECKED BY :	T. R. PETERSON	DATE :	5/13
DESIGN ENGINEER OF RECORD:	T. R. PETERSON	DATE :	1/9/14

1/9/2014 10:35:20 AM R:\Structures\EBL\Preservation Plans\U0071EBL_SD_EL01.dgn

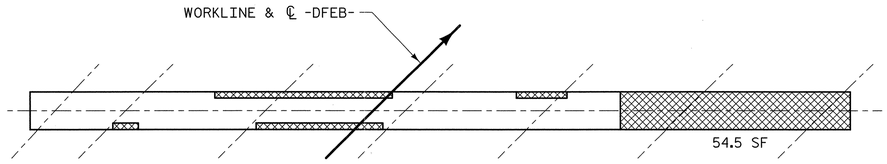

TOP OF CAP

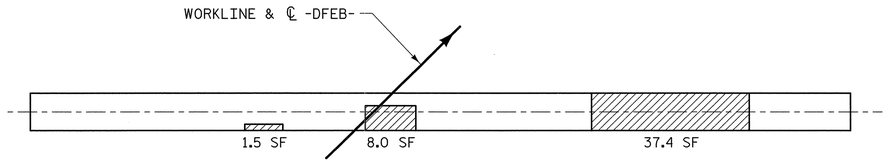

BOTTOM OF CAP

PLAN

REPAIR QUANTITY TABLE						
REPAIRS BENT #1	QUANTITIES					
	ESTIMATE			ACTUAL		
SHOTCRETE REPAIRS	AREA SF.	DEPTH FT.	VOLUME CF.	AREA SF.	DEPTH FT.	VOLUME CF.
CAP (VERTICAL FACE)	11.0	0.33	3.6			
CAP (HORIZONTAL FACE)	46.9	0.33	15.5			
COLUMN (VERTICAL FACE)	112.2	0.33	37.0			
CONCRETE REPAIRS	142.2	0.33	46.9			
EPOXY RESIN INJECTION			LN. FT.			LN. FT.
CAP			34			
COLUMN			3			
EPOXY PROTECTIVE COATING			SQ. FT.			SQ. FT.
TOP OF CAP			189			

VALUES IN CHART REPRESENT ESTIMATED REPAIR TOTALS AFTER REMOVAL OF UNSOUND CONCRETE, MIN. 1" BEHIND REBAR AND MIN. 1" CL. TO SAWCUT. SEE REPAIR DETAILS.

CONCRETE REPAIR

SHOTCRETE REPAIR

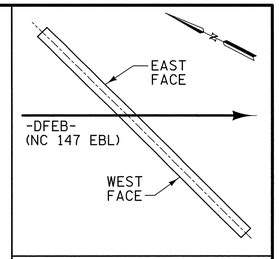

BENT #1 KEY

NOTE:

REPAIR LOCATIONS AND ESTIMATE OF QUANTITIES ARE GIVEN WITH THE BEST INFORMATION AVAILABLE. IF ADDITIONAL REPAIRS NOT SHOWN ON THE DRAWINGS ARE DEEMED NECESSARY BY THE ENGINEER, THE CONTRACTOR SHALL NOTE ON THE DRAWINGS THE APPROXIMATE LOCATION AND DESCRIPTION OF THE REPAIRS AND ADJUST THE ACTUAL QUANTITIES ENTERED INTO THE REPAIR QUANTITY TABLE.

FOR SUBSTRUCTURE REPAIRS, SEE "SUBSTRUCTURE REPAIR DETAILS" SHEETS.

EPOXY PROTECTIVE COATING SHALL BE APPLIED TO THE TOP FACE OF THE BENT CAP.

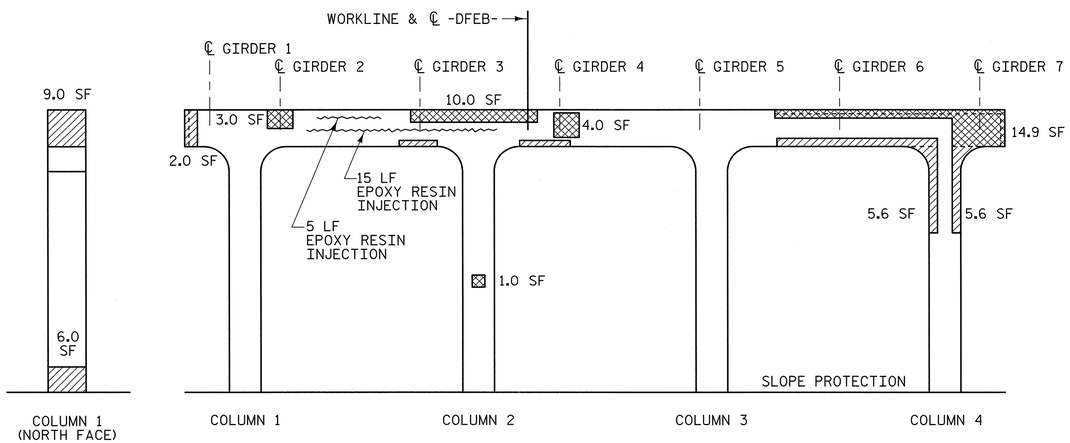

WEST FACE

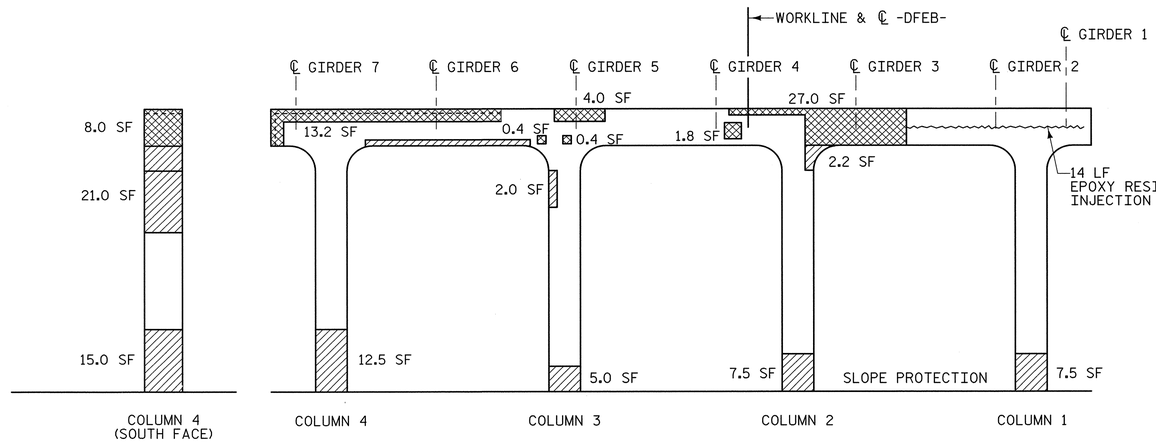

EAST FACE

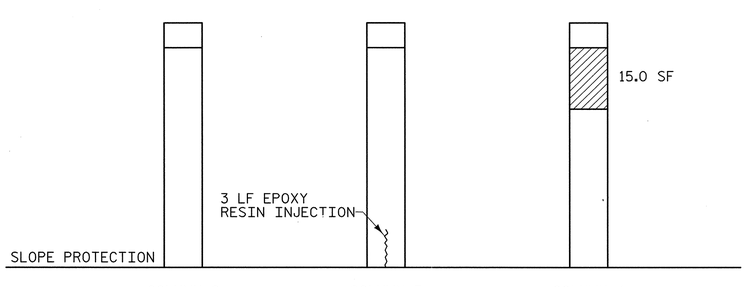

NORTH FACE

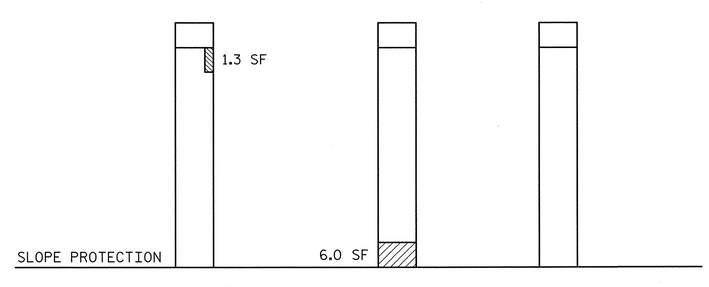

SOUTH FACE

PROJECT NO. U-0071

DURHAM COUNTY

STATION: 34+62.88 -DFEB-

PRESERVATION OF BRIDGE NO. 191

STATE OF NORTH CAROLINA
DEPARTMENT OF TRANSPORTATION
RALEIGH

SUBSTRUCTURE REPAIR BENT #1

PLANS PREPARED BY:

MULKEY ENGINEERS & CONSULTANTS
PO Box 33127
Raleigh, N.C. 27636
(919) 851-1912
(919) 851-1918 (FAX)
WWW.MULKEYINC.COM
NC LICENSE NO. C-1021

NORTH CAROLINA PROFESSIONAL SEAL 034352 ENGINEER TERRIE R. PETERSON 1/9/14

STR #13

REVISIONS						
NO.	BY:	DATE:	NO.	BY:	DATE:	
1			3			
2			4			

SHEET NO. SP-17

TOTAL SHEETS 83

DRAWN BY :	W. B. ALLEN	DATE :	4/13
CHECKED BY :	T. R. PETERSON	DATE :	5/13
DESIGN ENGINEER OF RECORD:	T. R. PETERSON	DATE :	1/9/14

1/9/2014 10:02:33 AM R:\Structures\EBL\Preservation Plans\U0071EBL_SD_BL01.dgn

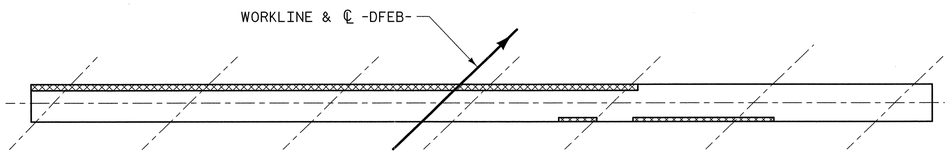

TOP OF CAP

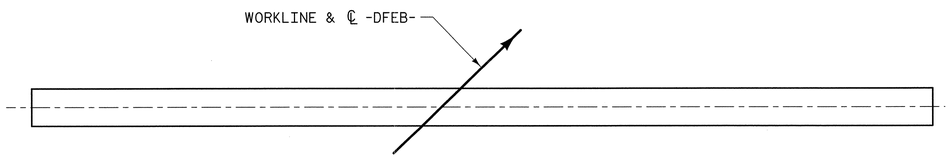

BOTTOM OF CAP

PLAN

REPAIR QUANTITY TABLE						
REPAIRS BENT #2	QUANTITIES					
	ESTIMATE			ACTUAL		
SHOTCRETE REPAIRS	AREA SF.	DEPTH FT.	VOLUME CF.	AREA SF.	DEPTH FT.	VOLUME CF.
CAP (VERTICAL FACE)	20.9	0.33	6.9			
CAP (HORIZONTAL FACE)	0	0	0			
COLUMN (VERTICAL FACE)	105.7	0.33	34.9			
CONCRETE REPAIRS	170	0.33	56.1			
EPOXY RESIN INJECTION			LN. FT.			LN. FT.
CAP			8			
COLUMN			28			
EPOXY PROTECTIVE COATING			SQ. FT.			SQ. FT.
TOP OF CAP			208			

VALUES IN CHART REPRESENT ESTIMATED REPAIR TOTALS AFTER REMOVAL OF UNSOUND CONCRETE, MIN. 1" BEHIND REBAR AND MIN. 1" CL. TO SAWCUT. SEE REPAIR DETAILS.

CONCRETE REPAIR

SHOTCRETE REPAIR

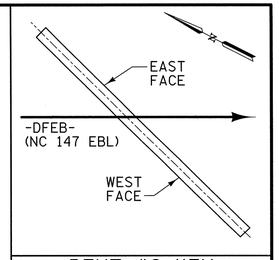

BENT #2 KEY

NOTE:

REPAIR LOCATIONS AND ESTIMATE OF QUANTITIES ARE GIVEN WITH THE BEST INFORMATION AVAILABLE. IF ADDITIONAL REPAIRS NOT SHOWN ON THE DRAWINGS ARE DEEMED NECESSARY BY THE ENGINEER, THE CONTRACTOR SHALL NOTE ON THE DRAWINGS THE APPROXIMATE LOCATION AND DESCRIPTION OF THE REPAIRS AND ADJUST THE ACTUAL QUANTITIES ENTERED INTO THE REPAIR QUANTITY TABLE.

FOR SUBSTRUCTURE REPAIRS, SEE "SUBSTRUCTURE REPAIR DETAILS" SHEETS.

EPOXY PROTECTIVE COATING SHALL BE APPLIED TO THE TOP FACE OF THE BENT CAP.

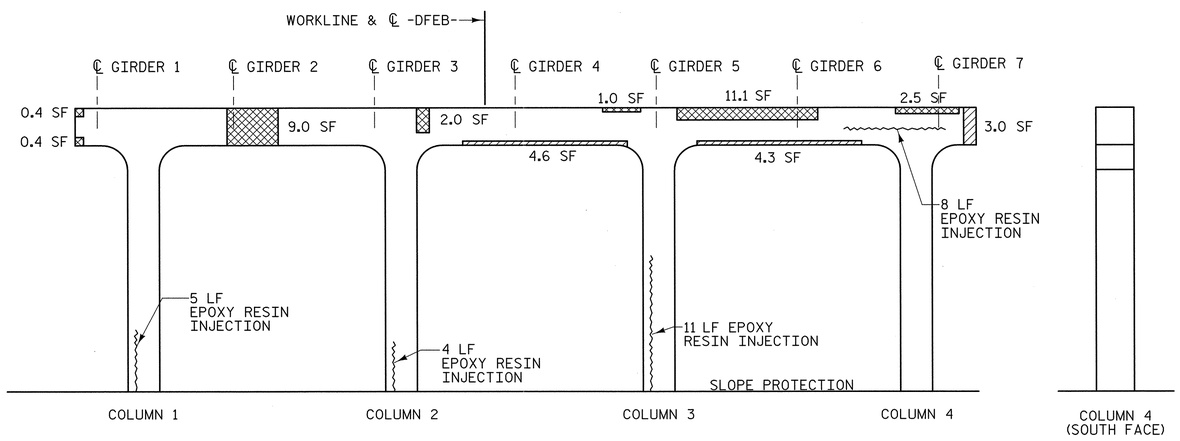

WEST FACE

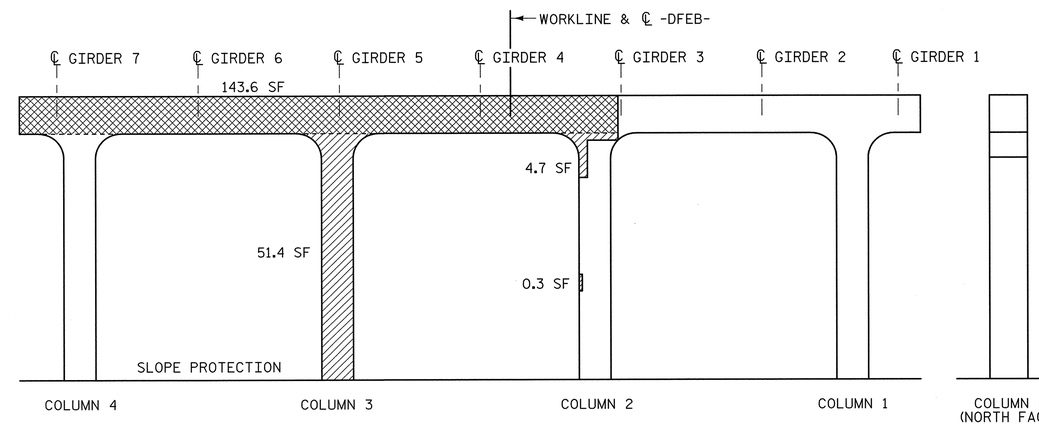

EAST FACE

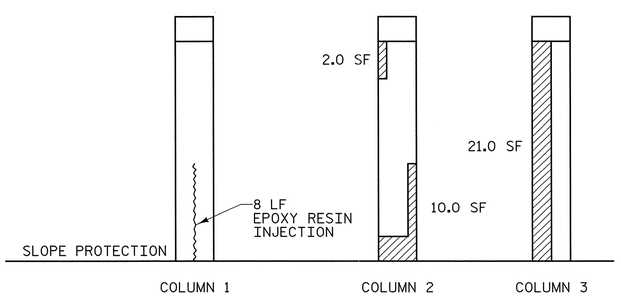

NORTH FACE

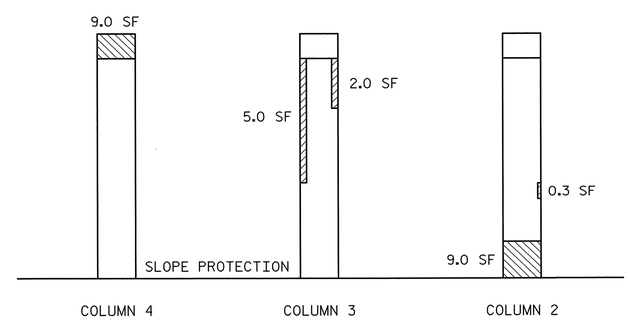

SOUTH FACE

PROJECT NO. U-0071

DURHAM COUNTY

STATION: 34+62.88 -DFEB-

PRESERVATION OF BRIDGE NO. 191

STATE OF NORTH CAROLINA
DEPARTMENT OF TRANSPORTATION
RALEIGH

SUBSTRUCTURE REPAIR BENT #2

PLANS PREPARED BY:

MULKEY ENGINEERS & CONSULTANTS
PO Box 33127
RALEIGH, N.C. 27636
(919) 851-1912
(919) 851-1918 (FAX)
WWW.MULKEYINC.COM
NC LICENSE NO. C-1021

NORTH CAROLINA PROFESSIONAL SEAL 034352 ENGINEER TERRY R. PETERSON 1/9/14

STR #13

REVISIONS						SHEET NO.
NO.	BY:	DATE:	NO.	BY:	DATE:	SP-18
1			3			TOTAL SHEETS
2			4			83

DRAWN BY :	W. B. ALLEN	DATE :	4/13
CHECKED BY :	T. R. PETERSON	DATE :	5/13
DESIGN ENGINEER OF RECORD:	T. R. PETERSON	DATE :	1/9/14

1/9/2014 10:42:59 AM R:\Structures\EBL\Preservation Plans\U0071EBL_SD_B2_01.dgn

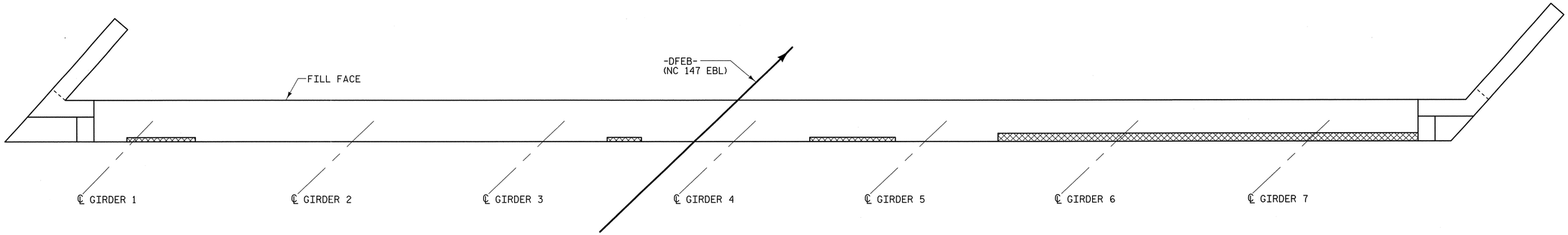

PLAN

CONCRETE REPAIR

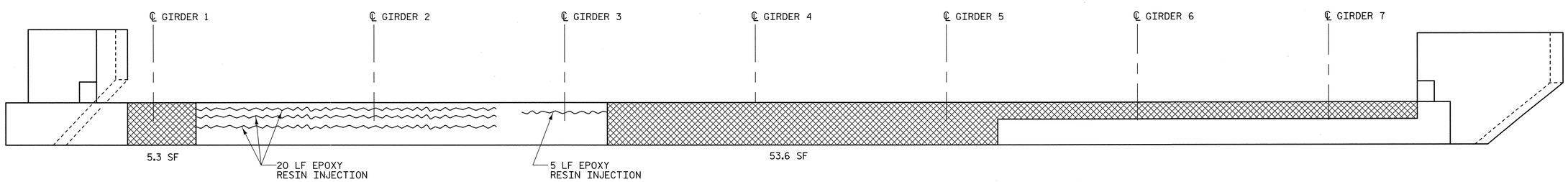

ELEVATION

REPAIR QUANTITY TABLE						
REPAIRS END BENT #2	QUANTITIES					
	ESTIMATE			ACTUAL		
SHOTCRETE REPAIRS	AREA SF.	DEPTH FT.	VOLUME CF.	AREA SF.	DEPTH FT.	VOLUME CF.
CAP (VERTICAL FACE)	0.0	0.0	0.0			
CAP (HORIZONTAL FACE)	0.0	0.0	0.0			
CONCRETE REPAIRS	58.9	0.33	19.4			
EPOXY RESIN INJECTION			LN. FT.			LN. FT.
CAP			65			
CURTAIN WALL			0			
EPOXY PROTECTIVE COATING			SQ. FT.			SQ. FT.
TOP OF END BENT CAP			114			

VALUES IN CHART REPRESENT ESTIMATED REPAIR TOTALS AFTER REMOVAL OF UNSOUND CONCRETE, MIN. 1" BEHIND REBAR AND MIN. 1" CL. TO SAWCUT. SEE REPAIR DETAILS.

NOTE:

REPAIR LOCATIONS AND ESTIMATE OF QUANTITIES ARE GIVEN WITH THE BEST INFORMATION AVAILABLE. IF ADDITIONAL REPAIRS NOT SHOWN ON THE DRAWINGS ARE DEEMED NECESSARY BY THE ENGINEER, THE CONTRACTOR SHALL NOTE ON THE DRAWINGS THE APPROXIMATE LOCATION AND DESCRIPTION OF THE REPAIRS AND ADJUST THE ACTUAL QUANTITIES ENTERED INTO THE REPAIR QUANTITY TABLE.

FOR SUBSTRUCTURE REPAIRS, SEE "SUBSTRUCTURE REPAIR DETAILS" SHEETS.

EPOXY PROTECTIVE COATING SHALL BE APPLIED TO THE TOP FACE OF THE END BENT CAP.

PROJECT NO. U-0071
DURHAM COUNTY
STATION: 34+62.88 -DFEB-

PRESERVATION OF BRIDGE NO. 191

STATE OF NORTH CAROLINA
DEPARTMENT OF TRANSPORTATION
RALEIGH

END BENT #2

PLANS PREPARED BY:
MULKEY ENGINEERS & CONSULTANTS
PO Box 33127
RALEIGH, N.C. 27636
(919) 851-1912
(919) 851-1918 (FAX)
WWW.MULKEYINC.COM
NC LICENSE NO. C-1021

NORTH CAROLINA PROFESSIONAL SEAL 034352 ENGINEER TERRY R. PETERSON 1/9/14

STR #13

REVISIONS						
NO.	BY:	DATE:	NO.	BY:	DATE:	
1			3			
2			4			

SHEET NO. SP-19
TOTAL SHEETS 83

DRAWN BY : W. B. ALLEN DATE : 4/13
CHECKED BY : T. R. PETERSON DATE : 5/13
DESIGN ENGINEER OF RECORD: T. R. PETERSON DATE : 1/9/14

1/9/2014 10:53:48 AM R:\Structures\EBL\Preservation Plans\U0071EBL_SD_E2_01.dgn

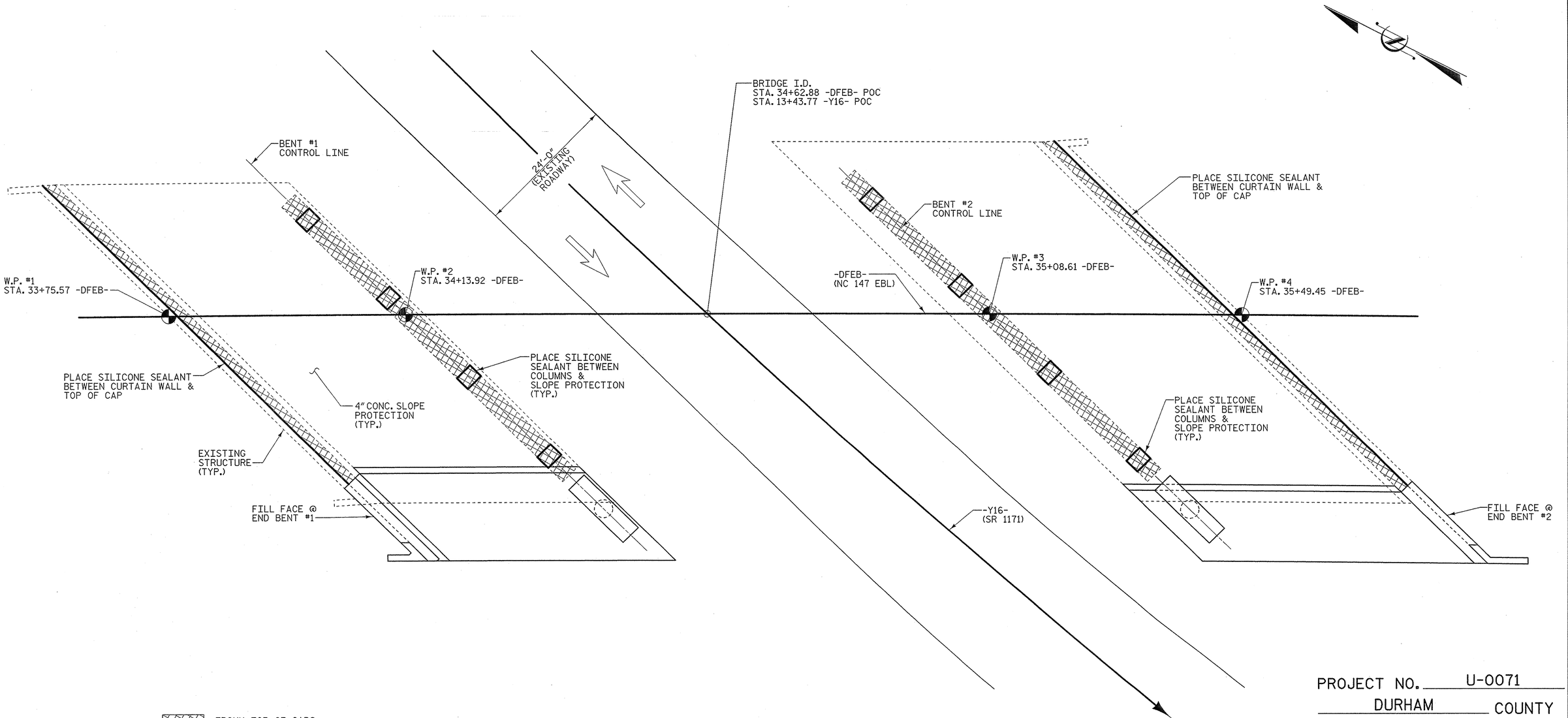

EPOXY TOP OF CAPS IN THESE AREAS

SILICONE SEALANT APPROX. 240 L.F.

PLAN

PROJECT NO. U-0071

DURHAM COUNTY

STATION: 34+62.88 -DFEB-

PRESERVATION OF BRIDGE NO. 191 SHEET 1 OF 2

STATE OF NORTH CAROLINA
DEPARTMENT OF TRANSPORTATION
RALEIGH

SUBSTRUCTURE REPAIR DETAILS

PLANS PREPARED BY:
MULKEY ENGINEERS & CONSULTANTS
PO BOX 33127
RALEIGH, NC 27636
(919) 851-1912
(919) 851-1918 (FAX)
WWW.MULKEYINC.COM
NC LICENSE NO. C-1021

NORTH CAROLINA PROFESSIONAL SEAL 034352 ENGINEER TERRY R. PETERSON
12/30/13

STR #13

REVISIONS						SHEET NO.
NO.	BY:	DATE:	NO.	BY:	DATE:	SP-20
1			3			TOTAL SHEETS
2			4			83

DRAWN BY :	W. B. ALLEN	DATE :	4/13
CHECKED BY :	T. R. PETERSON	DATE :	5/13
DESIGN ENGINEER OF RECORD:	T. R. PETERSON	DATE :	12/30/13

12/30/2013 7:23:40 AM R:\Structures\EBL\Preservation Plans\U0071EBL_SD_00_01.dgn

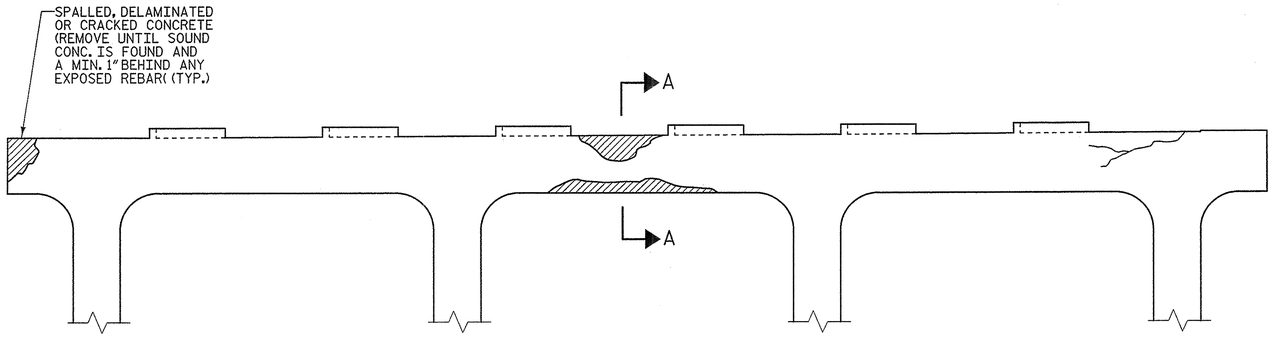

BENT CAP REPAIRS

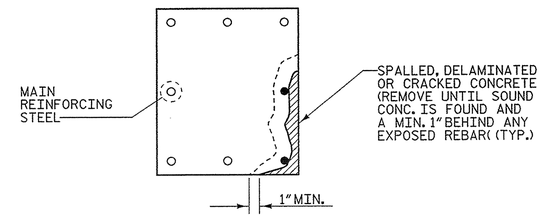

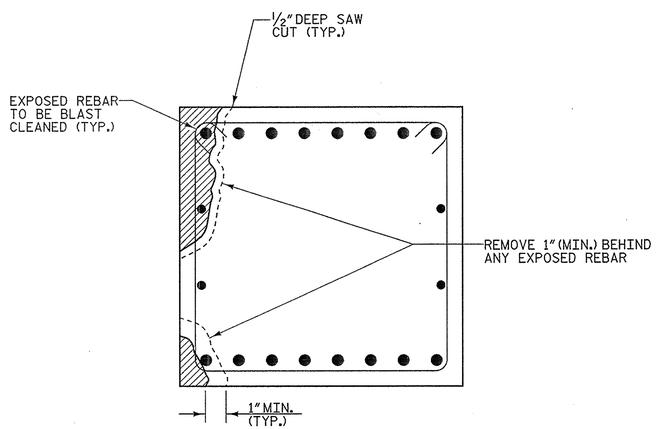

SECTION THRU CAP

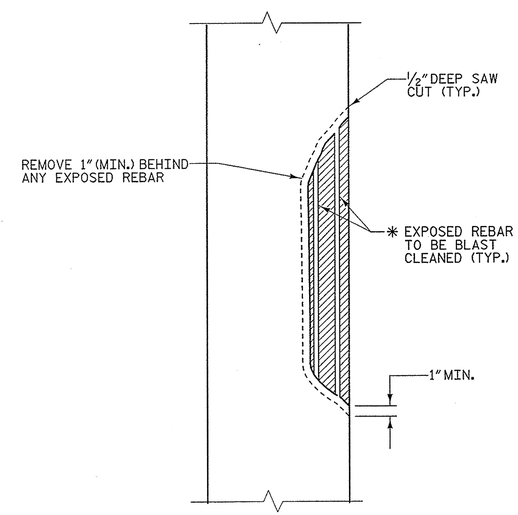

ELEVATION OF CAP

* DUE TO LACK OF CONFINEMENT STEEL, REPAIR LENGTH SHALL NOT EXCEED 10 FEET.

CAP REPAIR

COLUMN REPAIR

PROJECT NO. U-0071

DURHAM COUNTY

STATION: 34+62.88 -DFEB-

PRESERVATION OF BRIDGE NO. 191 SHEET 2 OF 2

STATE OF NORTH CAROLINA
DEPARTMENT OF TRANSPORTATION
RALEIGH

SUBSTRUCTURE REPAIR DETAILS

PLANS PREPARED BY:
MULKEY ENGINEERS & CONSULTANTS
PO Box 33127 27636
(919) 851-1912
(919) 851-1918 (FAX)
WWW.MULKEYINC.COM
NC LICENSE NO. C-1021

NORTH CAROLINA PROFESSIONAL SEAL 034352 ENGINEER TERRY R. PETERSON 12/30/13

STR #13

REVISIONS						SHEET NO.
NO.	BY:	DATE:	NO.	BY:	DATE:	SP-21
1			3			TOTAL SHEETS
2			4			83

DRAWN BY :	W. B. ALLEN	DATE :	3/13
CHECKED BY :	T. R. PETERSON	DATE :	4/13
DESIGN ENGINEER OF RECORD:	T. R. PETERSON	DATE :	12/30/13

12/30/2013 7:22:24 AM R:\Structures\EBL\Preservation Plans\U0071EBL_SD_DET_01.dgn

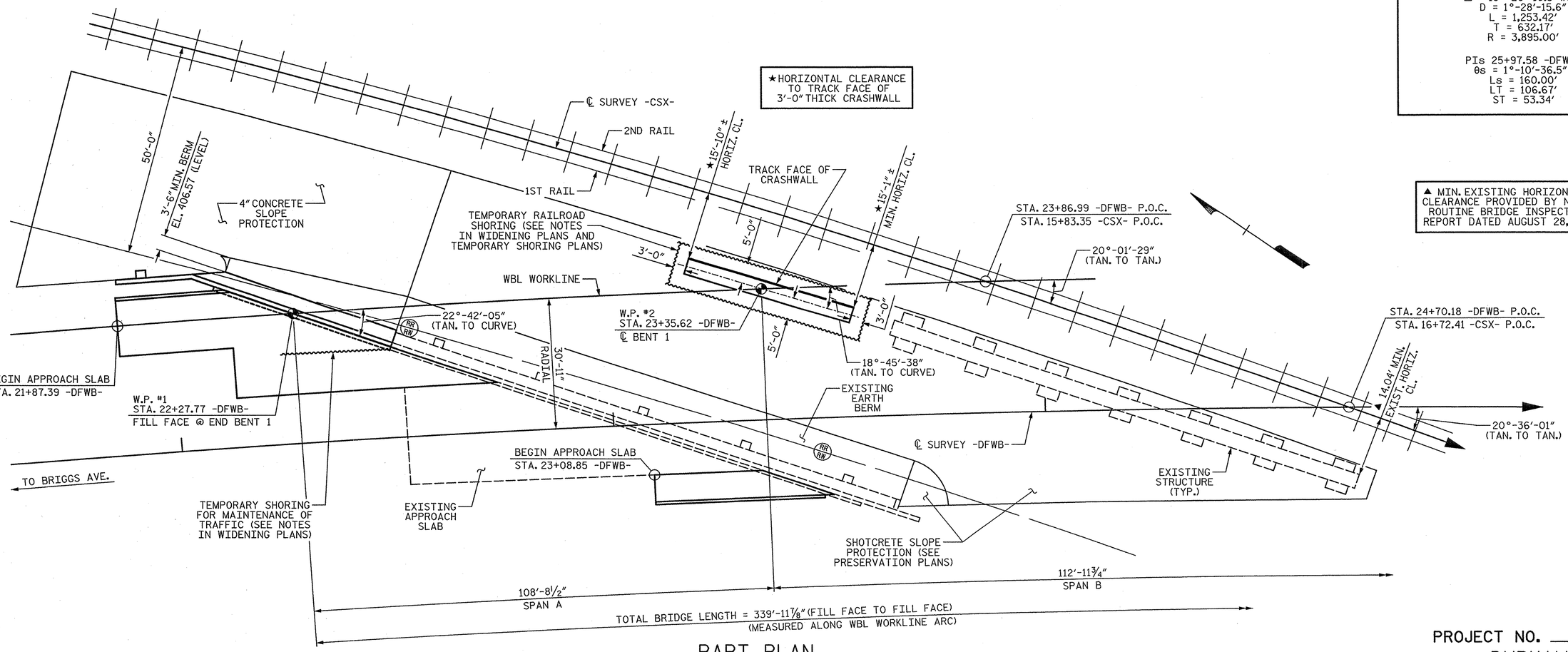

HORIZONTAL CURVE DATA

PI STA. 19+23.00 -DFWB-
Δ = 18°-26'-16.5" (RT.)
D = 1°-28'-15.6"
L = 1,253.42'
T = 632.17'
R = 3,895.00'

PIs 25+97.58 -DFWB-
θs = 1°-10'-36.5"
Ls = 160.00'
LT = 106.67'
ST = 53.34'

▲ MIN. EXISTING HORIZONTAL CLEARANCE PROVIDED BY NCDOT ROUTINE BRIDGE INSPECTION REPORT DATED AUGUST 28, 2013

PART PLAN

(PILES AND DRILLED PIERS NOT SHOWN IN PLAN VIEW)

PROJECT NO. U-0071
DURHAM COUNTY
STATION: 24+70.18 -DFWB-

SHEET 1 OF 4 PRESERVATION OF BRIDGE #189
MILE POST SDS-2.85

STATE OF NORTH CAROLINA
DEPARTMENT OF TRANSPORTATION
RALEIGH

GENERAL DRAWING

FOR BRIDGE ON NC 147
WEST BOUND LANE
OVER CSXT RAILROAD

REVISIONS								SHEET NO.
NO.	BY:	DATE:	NO.	BY:	DATE:			SP-22
1			3					TOTAL SHEETS
2			4					83

PLANS PREPARED BY:
SIMPSON ENGINEERS & ASSOCIATES
5640 Dillard Drive
Suite 200
Cary, NC 27518
(919) 852-0468
(919) 852-0598 (Fax)
www.simpsonengr.com
LICENSURE NO. C-2521

NORTH CAROLINA PROFESSIONAL SEAL 18056 ENGINEER JOHN A. BATTS 6/19/2014

DRAWN BY: T. BANKOVICH DATE: 12-13
CHECKED BY: T.J. BEACH DATE: 12-13
DESIGN ENGINEER OF RECORD: J.A. BATTS DATE: 12-13

STR. #14

6/19/2014 3:17:37 PM G:\Projects\2012\U-0071 (Durham Co.)\Structures\Drawings\Final\Bridge 189\Preservation\U-0071_Br 189_prs_gd.dgn

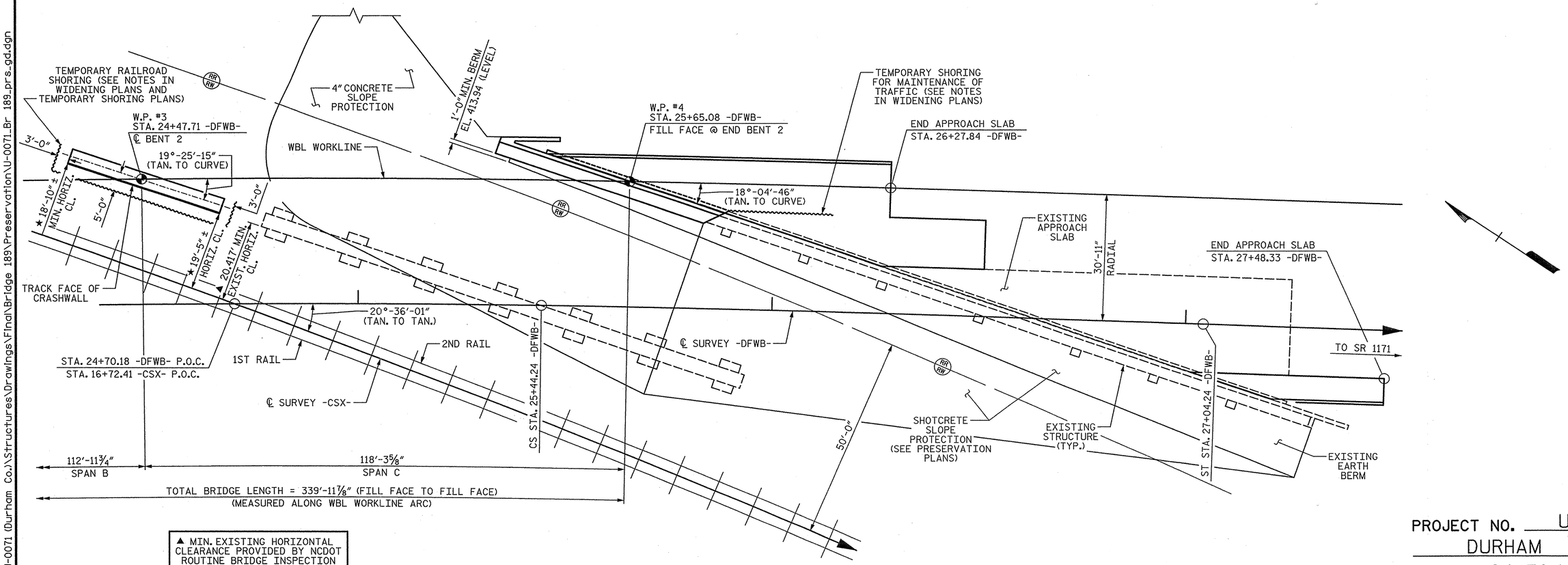

▲ MIN. EXISTING HORIZONTAL CLEARANCE PROVIDED BY NCDOT ROUTINE BRIDGE INSPECTION REPORT DATED AUGUST 28, 2013

PART PLAN

(PILES AND DRILLED PIERS NOT SHOWN IN PLAN VIEW)

PROJECT NO. U-0071
DURHAM COUNTY
STATION: 24+70.18 -DFWB-

SHEET 2 OF 4

STATE OF NORTH CAROLINA
DEPARTMENT OF TRANSPORTATION
RALEIGH

GENERAL DRAWING

FOR BRIDGE ON NC 147
WEST BOUND LANE
OVER CSXT RAILROAD

PLANS PREPARED BY:

SIMPSON ENGINEERS & ASSOCIATES
5640 Dillard Drive
Suite 200
Cary, NC 27518
(919) 852-0468
(919) 852-0598 (Fax)
www.simpsonengr.com
LICENSURE NO. C-2521

NORTH CAROLINA PROFESSIONAL SEAL 18056 ENGINEER JOHN A. BATTS
6/19/2014

REVISIONS								SHEET NO.
NO.	BY:	DATE:	NO.	BY:	DATE:			SP-23
1			3					TOTAL SHEETS
2			4					33

DRAWN BY: T. BANKOVICH DATE: 12-13
CHECKED BY: T.J. BEACH DATE: 12-13
DESIGN ENGINEER OF RECORD: J.A. BATTS DATE: 12-13

STR. #14

6/19/2014 3:17:37 PM G:\Projects\2012\U-0071 (Durham Co.)\Structures\Drawings\Final\Bridge 189\Preservation\U-0071_Br 189_prs_gd.dgn

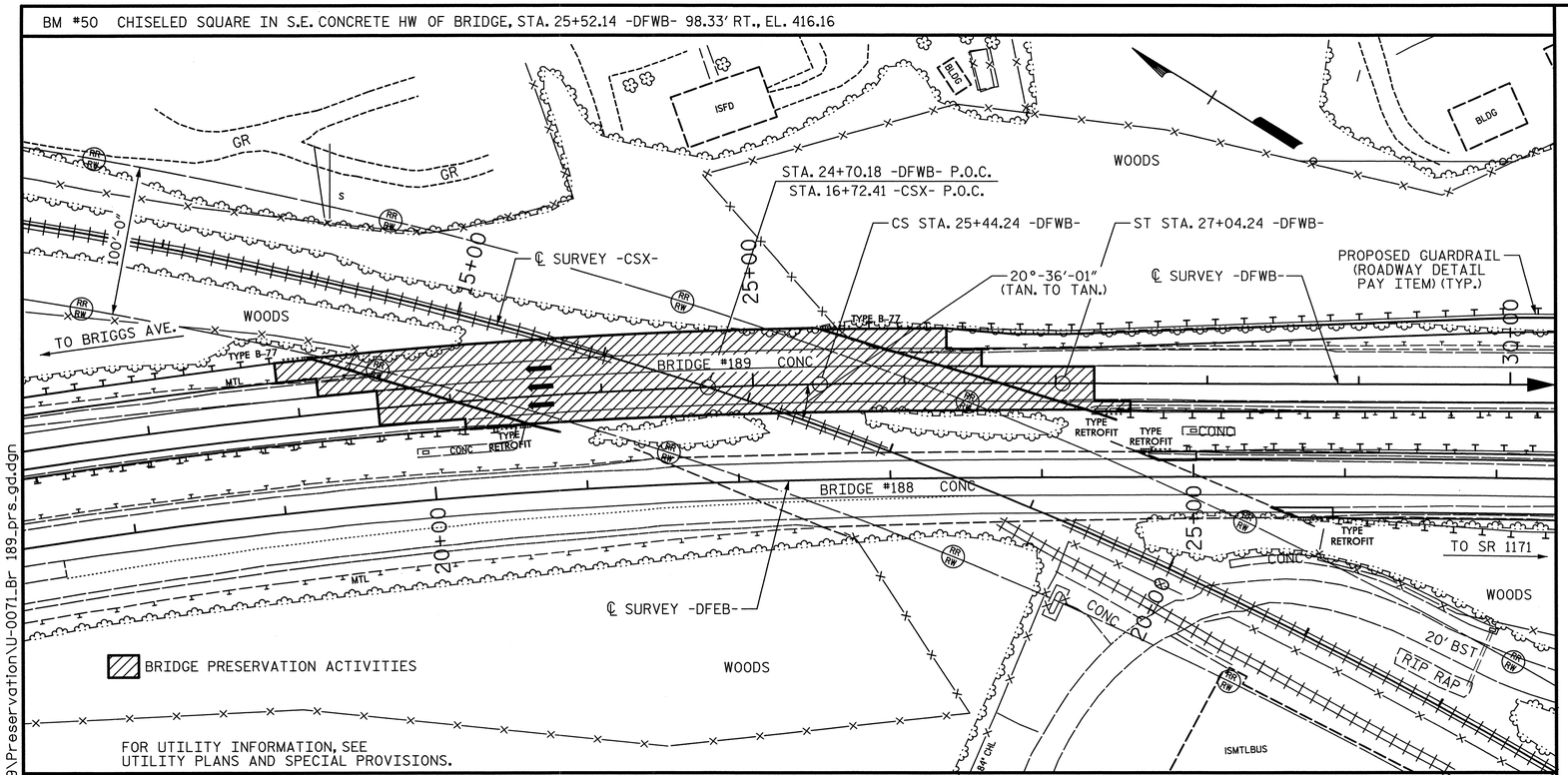

LOCATION SKETCH

TOTAL BILL OF MATERIAL

PAINTING EXISTING STRUCTURE	UNDER STRUCTURE WORK PLATFORM	POLLUTION CONTROL	GIRDER JACKING	SCARIFYING BRIDGE DECK	HYDRO-DEMOLITION OF BRIDGE DECK	BRIDGE JOINT DEMOLITION	JOINT REPAIR	CONCRETE FOR DECK REPAIR	LATEX MODIFIED CONCRETE - VERY EARLY STRENGTH	GROOVING BRIDGE FLOOR
LS	LS	LS	EA	SY	SY	SF	SF	CF	CY	SF
LS	LS	LS	10	1,806	1,806	335	243	145	132	23,453

TOTAL BILL OF MATERIAL (CONT'D.)

PLACING & FINISHING LATEX MODIFIED CONCRETE - VERY EARLY STRENGTH	VOLUMETRIC MIXER	FOAM JOINT SEALS	CONCRETE REPAIRS	EPOXY PROTECTIVE COATING	STRUCTURAL STEEL FOR GIRDER REPAIR	BEARING REPLACEMENT	SHOTCRETE SLOPE PROTECTION
SY	LS	LS	CF	SF	LB	EA	SY
2,713	LS	LS	46	1,550	24,500	4	1,820

NOTES:

THE BOUNDARIES OF AREAS IDENTIFIED FOR CLASS III SURFACE PREPARATION ARE APPROXIMATE. IF ANY CLASS III LOCATIONS ARE ENCOUNTERED PRIOR TO OR DURING HYDRO-DEMOLITION, THE CONTRACTOR SHALL PROVIDE A METHOD OF HANDLING UNEXPECTED BLOW THROUGH WORK OF THE DECK.

THE NOMINAL UNCOMPRESSED SEAL WIDTH OF FOAM JOINT SEAL SHALL BE 2½" AT END BENTS AND 2" AT INTERIOR BENTS. FOR "FOAM JOINT SEALS", SEE SPECIAL PROVISIONS.

FOR ELASTOMERIC CONCRETE, SEE SPECIAL PROVISIONS.

EXISTING JOINTS SHALL BE SEALED PRIOR TO BEGINNING SURFACE PREPARATION OF THE BRIDGE DECK.

EXISTING DIMENSIONS AND BRIDGE CONDITION ARE FROM THE BEST INFORMATION AVAILABLE. THE CONTRACTOR SHALL VERIFY THE INFORMATION SHOWN ON THE PLANS AND NOTIFY THE ENGINEER IF ACTUAL DIMENSIONS AND CONDITIONS DIFFER.

IT IS THE CONTRACTOR'S RESPONSIBILITY TO FOLLOW ALL STATE AND FEDERAL SAFETY REQUIREMENTS.

FOR CONTROL OF TRAFFIC AND LIMITS ON PHASING OF CONSTRUCTION, SEE TRAFFIC CONTROL PLANS.

FOR SUBMITTAL OF WORKING DRAWINGS, SEE SPECIAL PROVISIONS.

FOR FALSEWORK AND FORMWORK, SEE SPECIAL PROVISIONS.

FOR CRANE SAFETY, SEE SPECIAL PROVISIONS.

FOR OVERLAY SURFACE PREPARATION, SEE SPECIAL PROVISONS.

FOR CONCRETE FOR DECK REPAIR, SEE SPECIAL PROVISIONS.

FOR EPOXY RESIN INJECTION, SEE SPECIAL PROVISIONS.

FOR CLEANING AND PAINTING EXISTING BEARING PLATES, SEE SPECIAL PROVISIONS.

FOR JOINT REPAIR, SEE SPECIAL PROVISIONS.

FOR LATEX MODIFIED CONCRETE - VERY EARLY STRENGTH, SEE SPECIAL PROVISIONS.

FOR VOLUMETRIC MIXER, SEE SPECIAL PROVISIONS.

FOR STRUCTURAL STEEL FOR GIRDER REPAIR, SEE SPECIAL PROVISIONS.

FOR GIRDER JACKING, SEE SPECIAL PROVISIONS.

FOR SHOTCRETE SLOPE PROTECTION, SEE SPECIAL PROVISIONS.

FOR EPOXY PROTECTIVE COATING, SEE SPECIAL PROVISIONS.

FOR BEARING REPLACEMENT, SEE SPECIAL PROVISIONS.

DURING CONSTRUCTION, BERMS OR APPROPRIATE MEASURES SHALL BE USED TO ENSURE HYDRO-DEMOLITION WATER DOES NOT FLOW OR MIGRATE INTO ACTIVE TRAVEL LANES.

ALL VISUAL AND NON-DESTRUCTIVE TESTING WILL BE PERFORMED BY NCDOT.

INASMUCH AS THE PAINT SYSTEM ON THE EXISTING STRUCTURAL STEEL CONTAINS LEAD, THE CONTRACTOR'S ATTENTION IS DIRECTED TO ARTICLE 107-1 OF THE STANDARD SPECIFICATIONS. ANY COSTS RESULTING FROM COMPLIANCE WITH APPLICABLE STATE OR FEDERAL REGULATIONS PERTAINING TO HANDLING OF MATERIALS CONTAINING LEAD BASED PAINT SHALL BE INCLUDED IN THE LUMP SUM BID PRICE FOR "PAINTING EXISTING STRUCTURE".

FOR HANDLING OF BRIDGE WASH WATER, SEE SPECIAL PROVISIONS.

FOR PAINTING EXISTING STRUCTURE, SEE SPECIAL PROVISIONS.

FOR UNDER STRUCTURE WORK PLATFORM, SEE SPECIAL PROVISIONS.

THE LOCATION AND EXTENT OF REPAIRS SHOWN ON THE PLANS ARE GENERAL IN NATURE. THE ENGINEER WILL DETERMINE THE EXACT EXTENT OF REPAIR IN THE FIELD BASED ON AN EVALUATION OF THE CONDITION OF THE EXPOSED REPAIR SURFACES AFTER DEMOLITION.

REPLACEMENT OF DAMAGED REINFORCING STEEL AND DOWELS IN THE CONCRETE REPAIR SHALL BE CONSIDERED INCIDENTAL TO THE CONCRETE REPAIRS, NO ADDITIONAL PAYMENT OR MEASUREMENT WILL BE MADE.

ALL REINFORCING STEEL SHALL BE GRADE 60.

THE CONTRACTOR SHALL EXERCISE CARE TO ENSURE THAT EXISTING STRUCTURAL ELEMENTS THAT ARE TO REMAIN IN PLACE ARE UNDAMAGED BY BRIDGE CONSTRUCTION ACTIVITIES. ANY DAMAGE TO EXISTING STRUCTURAL ELEMENTS THAT ARE TO REMAIN SHALL BE REPAIRED BY THE CONTRACTOR TO THE SATISFACTION OF THE ENGINEER AT NO COST TO THE DEPARTMENT.

FOR GROUT FOR STRUCTURES, SEE SPECIAL PROVISIONS.

PROJECT NO. U-0071
DURHAM COUNTY
STATION: 24+70.18 -DFWB-

SHEET 3 OF 4

PLANS PREPARED BY:
SIMPSON ENGINEERS & ASSOCIATES
5640 Dillard Drive
Suite 200
Cary, NC 27518
(919) 852-0468
(919) 852-0598 (Fax)
www.simpsonengr.com
LICENSURE NO. C-2521

NORTH CAROLINA PROFESSIONAL SEAL 18056 ENGINEER JOHN A. BATTS
6/25/2014

STATE OF NORTH CAROLINA
DEPARTMENT OF TRANSPORTATION
RALEIGH
PRESERVATION

LOCATION SKETCH AND TOTAL BILL OF MATERIAL

REVISIONS								SHEET NO.
NO.	BY:	DATE:	NO.	BY:	DATE:			SP-24
1			3					TOTAL SHEETS
2			4					83

DRAWN BY: T. BANKOVICH DATE: 12-13
CHECKED BY: T.J. BEACH DATE: 12-13
DESIGN ENGINEER OF RECORD: J.A. BATTS DATE: 12-13

STR. #14

6/25/2014 2:47:14 PM G:\Projects\2012\U-0071 (Durham Co.)\Structures\Drawings\Final\Bridge 189\Preservation\U-0071_Br 189_prs_gd.dgn

LOAD AND RESISTANCE FACTOR RATING (LRFR) SUMMARY FOR EXISTING STEEL GIRDERS

LEVEL		VEHICLE	WEIGHT (W) (TONS)	CONTROLLING LOAD RATING (#)	MINIMUM RATING FACTORS (RF)	TONS = W × RF	STRENGTH I LIMIT STATE											SERVICE II LIMIT STATE						COMMENT NUMBER
							LIVE-LOAD FACTORS (γ_{LL})	MOMENT					SHEAR					LIVE-LOAD FACTORS (γ_{LL})	MOMENT					
								DISTRIBUTION FACTORS (DF)	RATING FACTOR	SPAN	GIRDER LOCATION	DISTANCE FROM LEFT END OF SPAN (ft)	DISTRIBUTION FACTORS (DF)	RATING FACTOR	SPAN	GIRDER LOCATION	DISTANCE FROM LEFT END OF SPAN (ft)		DISTRIBUTION FACTORS (DF)	RATING FACTOR	SPAN	GIRDER LOCATION	DISTANCE FROM LEFT END OF SPAN (ft)	
DESIGN LOAD RATING		HL-93 (INVENTORY)	N/A	1	1.04	- -	1.75	0.684	1.04	B	EL	59.5	0.768	1.66	B	I	0	1.30	0.684	1.17	B	EL	59.5	
		HL-93 (OPERATING)	N/A		1.34	- -	1.35	0.684	1.34	B	EL	59.5	0.768	2.15	B	I	0	1.00	0.684	1.52	B	EL	59.5	
		HS-20 (INVENTORY)	36.00	2	1.18	42.5	1.75	0.684	1.18	B	EL	59.5	0.768	2.31	B	I	0	1.30	0.684	1.83	B	EL	59.5	
		HS-20 (OPERATING)	36.00		1.53	55.1	1.35	0.684	1.53	B	EL	59.5	0.768	2.99	B	I	0	1.00	0.684	2.38	B	EL	59.5	
LEGAL LOAD RATING	SINGLE VEHICLE (SV)	SNSH	13.500		3.57	48.2	1.40	0.684	3.57	B	EL	59.5	0.768	5.81	B	I	0	1.30	0.684	4.12	B	EL	59.5	
		SNGARBS2	20.000		2.55	51.0	1.40	0.684	2.55	B	EL	59.5	0.768	4.03	B	I	0	1.30	0.684	2.94	B	EL	59.5	
		SNAGRIS2	22.000		2.38	52.4	1.40	0.684	2.38	B	EL	59.5	0.768	3.71	B	I	0	1.30	0.684	2.74	B	EL	59.5	
		SNCOTTS3	27.250		1.77	48.2	1.40	0.684	1.77	B	EL	59.5	0.768	2.89	B	I	0	1.30	0.684	2.05	B	EL	59.5	
		SNAGGRS4	34.925		1.44	50.3	1.40	0.684	1.44	B	EL	59.5	0.768	2.33	B	I	0	1.30	0.684	1.66	B	EL	59.5	
		SNS5A	35.550		1.41	50.1	1.40	0.684	1.41	B	EL	59.5	0.768	2.33	B	I	0	1.30	0.684	1.63	B	EL	59.5	
		SNS6A	39.950		1.28	51.1	1.40	0.684	1.28	B	EL	59.5	0.768	2.10	B	I	0	1.30	0.684	1.47	B	EL	59.5	
		SNS7B	42.000		1.22	51.2	1.40	0.684	1.22	B	EL	59.5	0.768	2.03	B	I	0	1.30	0.684	1.40	B	EL	59.5	
	TRUCK TRACTOR SEMI-TRAILER (TTST)	TNAGRIT3	33.000		1.55	51.2	1.40	0.684	1.55	B	EL	59.5	0.768	2.52	B	I	0	1.30	0.684	1.79	B	EL	59.5	
		TNT4A	33.075		1.56	51.6	1.40	0.684	1.56	B	EL	59.5	0.768	2.48	B	I	0	1.30	0.684	1.79	B	EL	59.5	
		TNT6A	41.600		1.26	52.4	1.40	0.684	1.26	B	EL	59.5	0.768	2.10	B	I	0	1.30	0.684	1.45	B	EL	59.5	
		TNT7A	42.000		1.26	52.9	1.40	0.684	1.26	B	EL	59.5	0.768	2.07	B	I	0	1.30	0.684	1.45	B	EL	59.5	
		TNT7B	42.000		1.28	53.8	1.40	0.684	1.28	B	EL	59.5	0.768	2.00	B	I	0	1.30	0.684	1.47	B	EL	59.5	
		TNAGRIT4	43.000		1.23	52.9	1.40	0.684	1.23	B	EL	59.5	0.768	1.95	B	I	0	1.30	0.684	1.42	B	EL	59.5	
		TNAGT5A	45.000		1.17	52.7	1.40	0.684	1.17	B	EL	59.5	0.768	1.90	B	I	0	1.30	0.684	1.35	B	EL	59.5	
		TNAGT5B	45.000	3	1.16	52.2	1.40	0.684	1.16	B	EL	59.5	0.768	1.86	B	I	0	1.30	0.684	1.34	B	EL	59.5	
FATIGUE		HL-93 (INVENTORY)	γ_{LL}=0.75		2.03																			

LOAD FACTORS:

DESIGN LOAD RATING FACTORS	LIMIT STATE	γ_{DC}	γ_{DW}
	STRENGTH I	1.25	1.50
	SERVICE II	1.00	1.00

NOTES:

MINIMUM RATING FACTORS ARE BASED ON THE STRENGTH I AND SERVICE II LIMIT STATES.

ALLOWABLE STRESS FOR SERVICE II LIMIT STATE ARE AS REQUIRED FOR DESIGN.

COMMENTS:

1. FOR EXISTING GIRDERS ONLY.
2. DISTANCE FROM LEFT END OF SPAN IS MEASURED FROM ℄ BEARING.
3. LRFR IS BASED ON GIRDER DIMENSIONS FROM EXISTING PLANS. NO FIELD MEASUREMENTS OR SECTION LOSS WERE TAKEN INTO ACCOUNT.

(#) CONTROLLING LOAD RATING

(1) DESIGN LOAD RATING (HL-93)

(2) DESIGN LOAD RATING (HS-20)

(3) LEGAL LOAD RATING **

** SEE CHART FOR VEHICLE TYPE

GIRDER LOCATION

I - INTERIOR GIRDER
EL - EXTERIOR LEFT GIRDER
ER - EXTERIOR RIGHT GIRDER

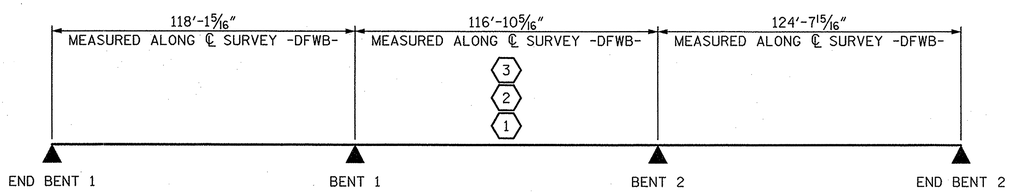

LRFR SUMMARY

PROJECT NO. U-0071
DURHAM COUNTY
STATION: 24+70.18 -DFWB-

SHEET 4 OF 4

STATE OF NORTH CAROLINA
DEPARTMENT OF TRANSPORTATION
RALEIGH
PRESERVATION

LRFR SUMMARY FOR EXISTING STEEL GIRDERS

(NON-INTERSTATE TRAFFIC)

PLANS PREPARED BY:
SIMPSON ENGINEERS & ASSOCIATES
5640 Dillard Drive
Suite 200
Cary, NC 27518
(919) 852-0468
(919) 852-0598 (Fax)
www.simpsonengr.com
LICENSURE NO. C-2521

NORTH CAROLINA PROFESSIONAL SEAL 18056 ENGINEER JOHN A. BATTS 1/16/2014

REVISIONS						SHEET NO.
NO.	BY:	DATE:	NO.	BY:	DATE:	SP-25
1			3			TOTAL SHEETS
2			4			83

STR. #14

DRAWN BY: T. BANKOVICH DATE: 12-13
CHECKED BY: T.J. BEACH DATE: 12-13
DESIGN ENGINEER OF RECORD: J.A. BATTS DATE: 12-13

1/15/2014 9:47:55 AM G:\Projects\2012\U-0071 (Durham Co.)\Structures\Drawings\Final\Bridge 189\Preservation\U-0071_Br 189_prs_lrfr.dgn

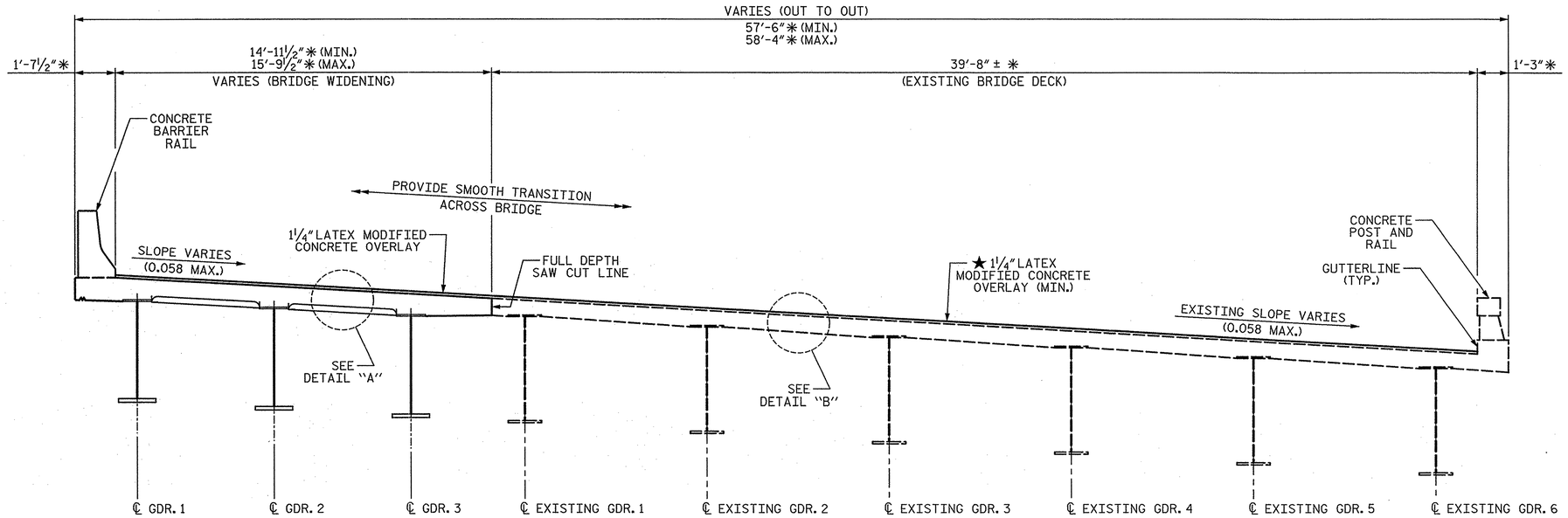

TYPICAL SECTION

BRIDGE MOUNTED CHAIN LINK FENCE ON CONCRETE BARRIER RAIL NOT SHOWN FOR CLARITY

NOTES:

✱ RADIAL DIMENSION

★ MATCH DECK PROFILE OF WIDENED PORTION AND PROVIDE SMOOTH TRANSITION ACROSS BRIDGE.

FOR CONTROL OF TRAFFIC AND LIMITS OF PHASING OF CONSTRUCTION, SEE TRAFFIC CONTROL PLANS.

THE CONTRACTOR MUST COLLECT, TREAT AND DISPOSE OF RUN-OFF WATER FROM HYDRO-DEMOLITION PROCESS, SEE OVERLAY SURFACE PREPARATION SPECIAL PROVISION.

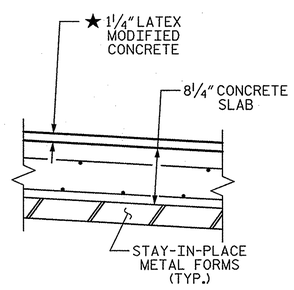

DETAIL "A"

(SHOWING DECK AT WIDENING PORTION OF BRIDGE)

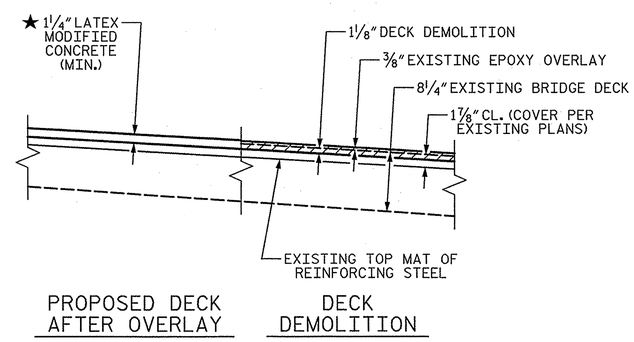

DETAIL "B"

(SHOWING EXISTING DECK)

SCARIFICATION AND HYDRO-DEMOLITION OF BRIDGE DECK

PROJECT NO. U-0071
DURHAM COUNTY
STATION: 24+70.18 -DFWB-

STATE OF NORTH CAROLINA
DEPARTMENT OF TRANSPORTATION
RALEIGH
PRESERVATION

TYPICAL SECTION

PLANS PREPARED BY:
SIMPSON ENGINEERS & ASSOCIATES
5640 Dillard Drive
Suite 200
Cary, NC 27518
(919) 852-0468
(919) 852-0598 (Fax)
www.simpsonengr.com
LICENSURE NO. C-2521

NORTH CAROLINA PROFESSIONAL SEAL 18056 ENGINEER JOHN A. BATTS
1/10/2014

REVISIONS							
NO.	BY:	DATE:	NO.	BY:	DATE:	SHEET NO. SP-26	
1			3			TOTAL SHEETS 83	
2			4				

STR. #14

DRAWN BY: T. BANKOVICH DATE: 12-13
CHECKED BY: T.J. BEACH DATE: 12-13
DESIGN ENGINEER OF RECORD: J.A. BATTS DATE: 12-13

1/14/2014 2:58:17 PM G:\Projects\2012\U-0071 (Durham Co.)\Structures\Drawings\Final\Bridge 189\Preservation\U-0071_Br 189_prs_ts.dgn

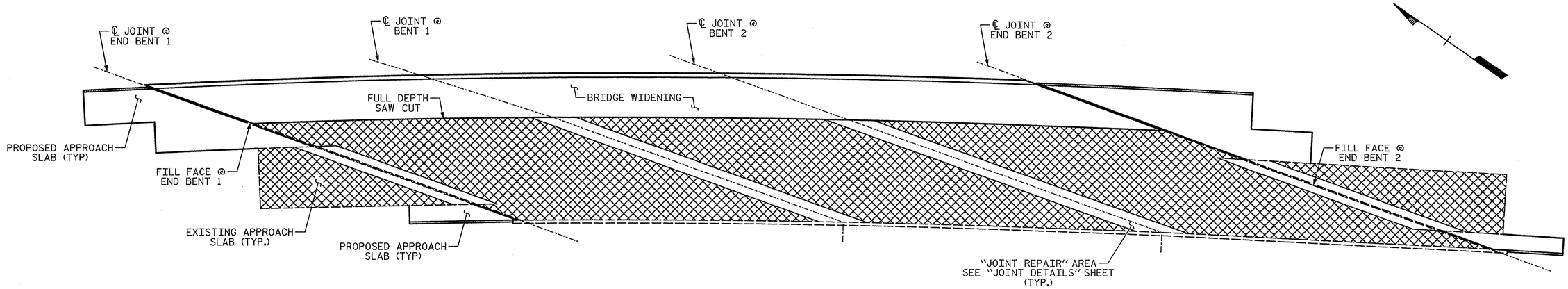

PLAN - SHOWING SCARIFICATION AND HYDRO-DEMOLITION AREA

SCARIFICATION AND HYDRO-DEMOLITION AREA

NO AREAS OF CLASS II OR CLASS III REPAIR WERE OBSERVED AT TIME OF BRIDGE INSPECTION.

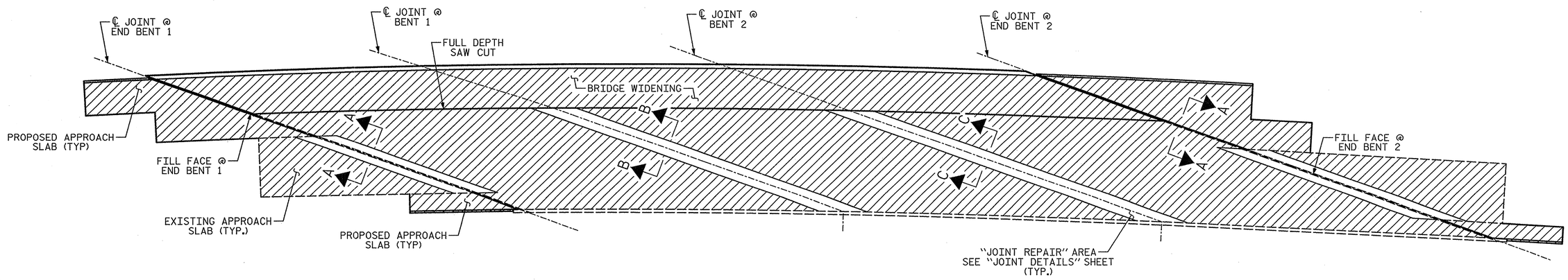

PLAN - SHOWING LATEX MODIFIED CONCRETE OVERLAY AREA

FOR SECTION VIEWS, SEE "JOINT DETAILS" SHEET

LATEX MODIFIED CONCRETE OVERLAY AREA

PROJECT NO. U-0071

DURHAM COUNTY

STATION: 24+70.18 -DFWB-

STATE OF NORTH CAROLINA
DEPARTMENT OF TRANSPORTATION
RALEIGH
PRESERVATION

SURFACE PRESERVATION

PLANS PREPARED BY:

SIMPSON ENGINEERS & ASSOCIATES
5640 Dillard Drive
Suite 200
Cary, NC 27518
(919) 852-0468
(919) 852-0598 (Fax)
www.simpsonengr.com
LICENSURE NO. C-2521

NORTH CAROLINA PROFESSIONAL SEAL 18056 ENGINEER JOHN A. BATTS
1/16/2014

REVISIONS						SHEET NO.
NO.	BY:	DATE:	NO.	BY:	DATE:	SP-27
1			3			TOTAL SHEETS
2			4			83

STR. #14

DRAWN BY:	T. BANKOVICH	DATE:	12-13
CHECKED BY:	T.J. BEACH	DATE:	12-13
DESIGN ENGINEER OF RECORD:	J.A. BATTS	DATE:	12-13

1/14/2014 2:58:17 PM G:\Projects\2012\U-0071 (Durham Co.)\Structures\Drawings\Final\Bridge 189\Preservation\U-0071_Br 189_prs_hydro lmc.dgn

NOTES:

FOR FOAM JOINT SEALS, SEE SPECIAL PROVISIONS.

FOR ELASTOMERIC CONCRETE, SEE SPECIAL PROVISIONS.

ELASTOMERIC CONCRETE QUANTITY BASED ON MINIMUM BLOCKOUT SHOWN.

FOR JOINT REPAIR, SEE SPECIAL PROVISIONS.

THE INSTALLED FOAM JOINT SEALS SHALL BE WATERTIGHT.

NOMINAL UNCOMPRESSED SEAL WIDTH OF FOAM JOINT SEAL SHALL BE 2½"

THE CONTRACTOR WILL NOT BE PERMITTED TO FORM THE JOINT FOR THE FOAM JOINT SEAL IN LIEU OF SAWING THE JOINT.

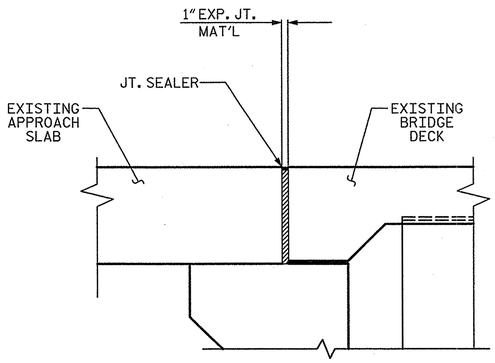

SECTION A-A
(EXISTING JOINT)

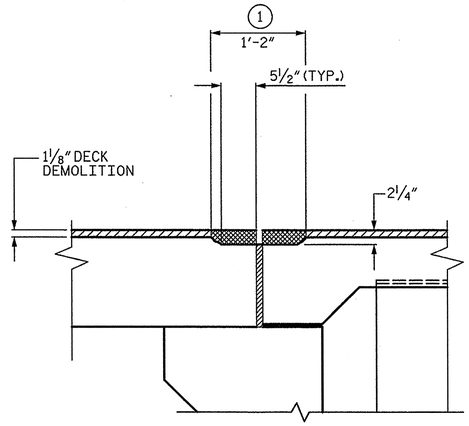

1 JOINT REPAIR AREA

SECTION A-A
(JOINT & DECK DEMOLITION)

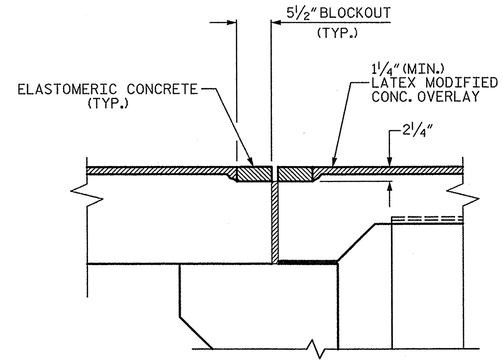

SECTION A-A
(SHOWING ELASTOMERIC HEADERS)

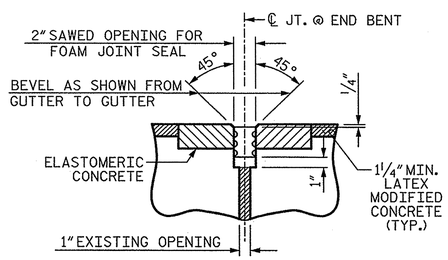

SECTION @ JOINT
FOAM JOINT SEAL
(FIXED)

NOTE:
PROPOSED WORK ON JOINTS SHALL BE DONE ACROSS ENTIRE WIDTH OF BRIDGE.

ELASTOMERIC CONCRETE	
END BENT 1	14.2 CF
END BENT 2	18.1 CF
BRIDGE JOINT DEMOLITION	
END BENT 1	94 SF
END BENT 2	114 SF

PROJECT NO. U-0071
DURHAM COUNTY
STATION: 24+70.18 -DFWB-

SHEET 1 OF 3

STATE OF NORTH CAROLINA
DEPARTMENT OF TRANSPORTATION
RALEIGH
PRESERVATION

JOINT DETAILS AT END BENTS

PLANS PREPARED BY:
SIMPSON ENGINEERS & ASSOCIATES
5640 Dillard Drive
Suite 200
Cary, NC 27518
(919) 852-0468
(919) 852-0598 (Fax)
www.simpsonengr.com
LICENSURE NO. C-2521

NORTH CAROLINA PROFESSIONAL SEAL 18056 ENGINEER JOHN A. BATTS
6/18/2014

REVISIONS						SHEET NO.
NO.	BY:	DATE:	NO.	BY:	DATE:	SP-28
1			3			TOTAL SHEETS
2			4			83

STR. #14

DRAWN BY: T. BANKOVICH DATE: 12-13
CHECKED BY: T.J. BEACH DATE: 12-13
DESIGN ENGINEER OF RECORD: J.A. BATTS DATE: 12-13

6/18/2014 4:28:20 PM G:\Projects\2012\U-0071 (Durham Co.)\Structures\Drawings\Final\Bridge 189\Preservation\U-0071_Br 189_prs_jtdt.dgn

NOTES:

FOR FOAM JOINT SEALS, SEE SPECIAL PROVISIONS.

FOR ELASTOMERIC CONCRETE, SEE SPECIAL PROVISIONS.

ELASTOMERIC CONCRETE QUANTITY BASED ON MINIMUM BLOCKOUT SHOWN.

FOR JOINT REPAIR, SEE SPECIAL PROVISIONS.

THE INSTALLED FOAM JOINT SEALS SHALL BE WATERTIGHT.

NOMINAL UNCOMPRESSED SEAL WIDTH OF FOAM JOINT SEAL SHALL BE 2".

THE CONTRACTOR WILL NOT BE PERMITTED TO FORM THE JOINT FOR THE FOAM JOINT SEAL IN LIEU OF SAWING THE JOINT.

* IF THE EMBEDDED PORTION OF THE EXISTING PLASTIC WATERSTOP IS EXPOSED DURING REMOVAL OF UNSOUND CONCRETE, THE ENTIRE WATERSTOP SHALL BE REMOVED.

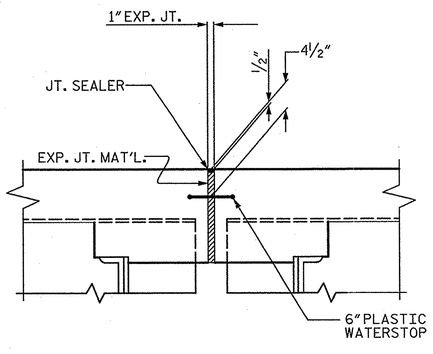

SECTION B-B
(EXISTING JOINT)

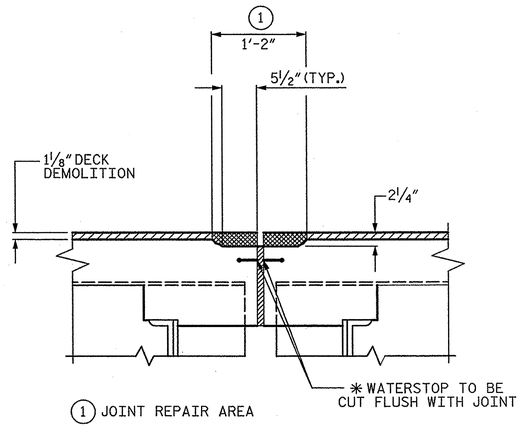

SECTION B-B
(JOINT & DECK DEMOLITION)

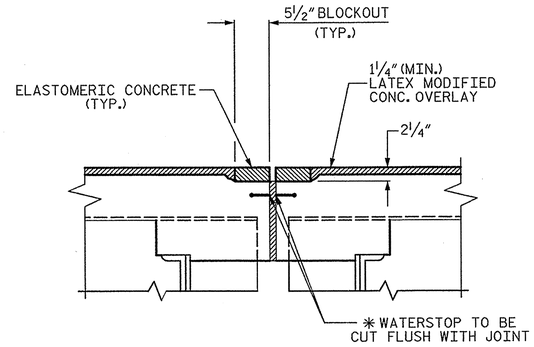

SECTION B-B
(SHOWING ELASTOMERIC HEADERS)

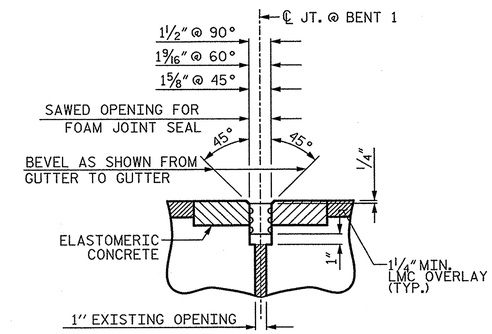

SECTION @ JOINT
FOAM JOINT SEAL
(EXPANSION)

NOTE:
PROPOSED WORK ON JOINT SHALL BE DONE ACROSS ENTIRE WIDTH OF BRIDGE.

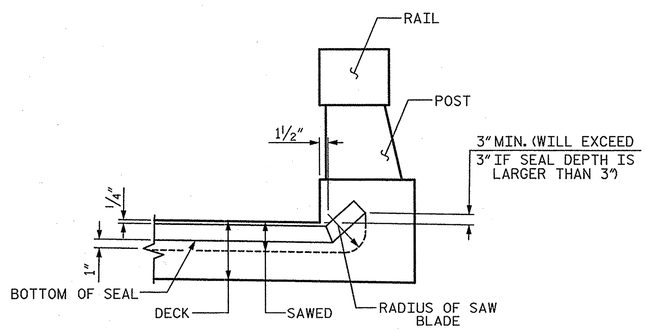

SECTION D-D

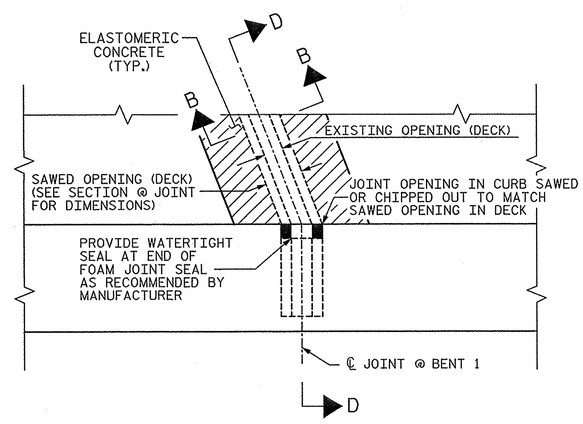

FOAM JOINT SEAL DETAILS

ELASTOMERIC CONCRETE	
BENT 1	20.2 CF
BRIDGE JOINT DEMOLITION	
BENT 1	127 SF

PROJECT NO. U-0071
DURHAM COUNTY
STATION: 24+70.18 -DFWB-

SHEET 2 OF 3

STATE OF NORTH CAROLINA
DEPARTMENT OF TRANSPORTATION
RALEIGH
PRESERVATION

JOINT DETAILS AT BENT 1

PLANS PREPARED BY:
SIMPSON ENGINEERS & ASSOCIATES
5640 Dillard Drive
Suite 200
Cary, NC 27518
(919) 852-0468
(919) 852-0598 (Fax)
www.simpsonengr.com
LICENSURE NO. C-2521

NORTH CAROLINA PROFESSIONAL SEAL 18056 ENGINEER JOHN A. BATTS
6/18/2014

REVISIONS						SHEET NO.
NO.	BY:	DATE:	NO.	BY:	DATE:	SP-29
1			3			TOTAL SHEETS
2			4			83

STR. #14

DRAWN BY: T. BANKOVICH DATE: 12-13
CHECKED BY: T.J. BEACH DATE: 12-13
DESIGN ENGINEER OF RECORD: J.A. BATTS DATE: 12-13

6/18/2014 4:28:20 PM G:\Projects\2012\U-0071 (Durham Co.)\Structures\Drawings\Final\Bridge 189\Preservation\U-0071_Br 189_prs_jtdt.dgn

NOTES:

FOR FOAM JOINT SEALS, SEE SPECIAL PROVISIONS.

FOR ELASTOMERIC CONCRETE, SEE SPECIAL PROVISIONS.

ELASTOMERIC CONCRETE QUANTITY BASED ON MINIMUM BLOCKOUT SHOWN.

FOR JOINT REPAIR, SEE SPECIAL PROVISIONS.

THE INSTALLED FOAM JOINT SEALS SHALL BE WATERTIGHT.

NOMINAL UNCOMPRESSED SEAL WIDTH OF FOAM JOINT SEAL SHALL BE 2".

THE CONTRACTOR WILL NOT BE PERMITTED TO FORM THE JOINT FOR THE FOAM JOINT SEAL IN LIEU OF SAWING THE JOINT.

DURING JOINT AND DECK DEMOLITION RETAIN REINFORCING STEEL IN THE DEMOLITION DECK AREA.

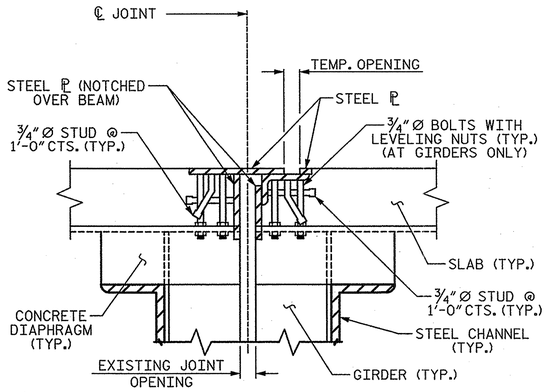

SECTION C-C

(EXISTING SLIDING ℙ JOINT)

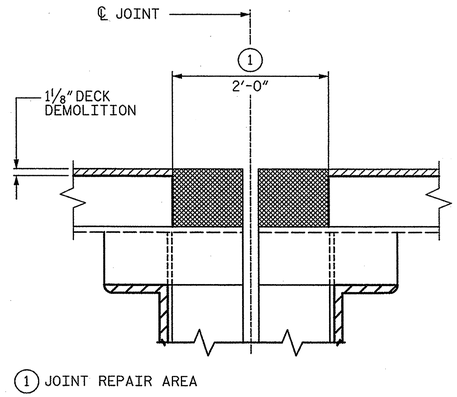

SECTION C-C

(JOINT & DECK DEMOLITION)

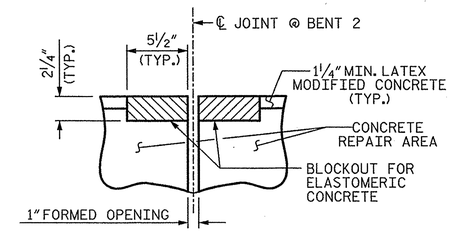

SECTION C-C

FOAM JOINT SEAL
(PRE-SAWED ELASTOMERIC CONCRETE DIMENSIONS)

ELASTOMERIC CONCRETE	
BENT 2	21.8 CF
JOINT REPAIR	
BENT 2	243 SF
CONCRETE FOR DECK REPAIR	
BENT 2	145 CF

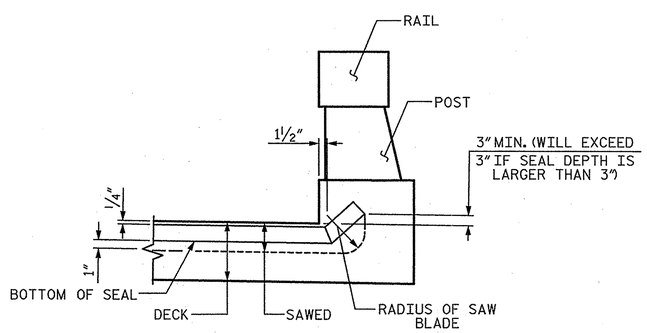

SECTION D-D

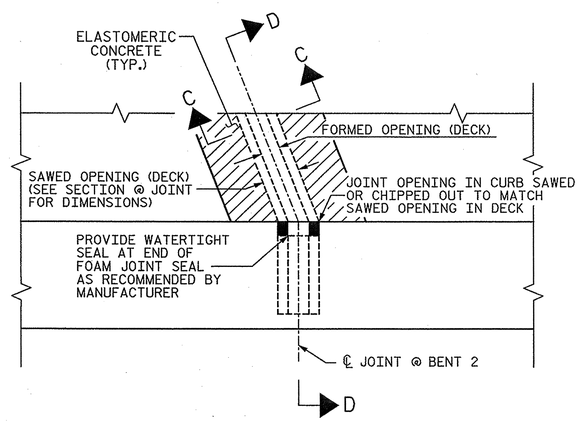

FOAM JOINT SEAL DETAILS

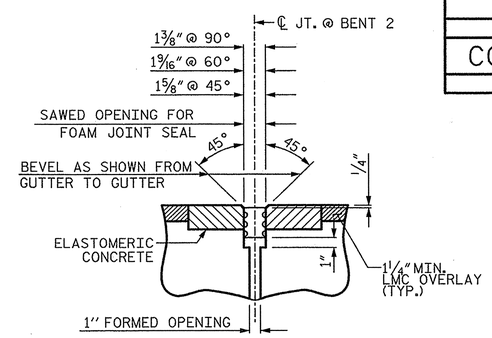

SECTION @ JOINT

FOAM JOINT SEAL
(EXPANSION)

NOTE:
PROPOSED WORK ON JOINT SHALL BE DONE ACROSS ENTIRE WIDTH OF BRIDGE.

PROJECT NO. U-0071

DURHAM COUNTY

STATION: 24+70.18 -DFWB-

SHEET 3 OF 3

STATE OF NORTH CAROLINA
DEPARTMENT OF TRANSPORTATION
RALEIGH
PRESERVATION

JOINT DETAILS AT BENT 2

PLANS PREPARED BY:

SIMPSON ENGINEERS & ASSOCIATES
5640 Dillard Drive
Suite 200
Cary, NC 27518
(919) 852-0468
(919) 852-0598 (Fax)
www.simpsonengr.com
LICENSURE NO. C-2521

NORTH CAROLINA PROFESSIONAL SEAL 18056 ENGINEER JOHN A. BATTS 6/18/2014

REVISIONS							SHEET NO.
NO.	BY:	DATE:	NO.	BY:	DATE:		SP-30
1			3				TOTAL SHEETS
2			4				83

STR. #14

DRAWN BY: T. BANKOVICH DATE: 12-13
CHECKED BY: T.J. BEACH DATE: 12-13
DESIGN ENGINEER OF RECORD: J.A. BATTS DATE: 12-13

6/18/2014 4:28:20 PM G:\Projects\2012\U-0071 (Durham Co.)\Structures\Drawings\Final\Bridge 189\Preservation\U-0071_Br 189_prs_jtdt.dgn

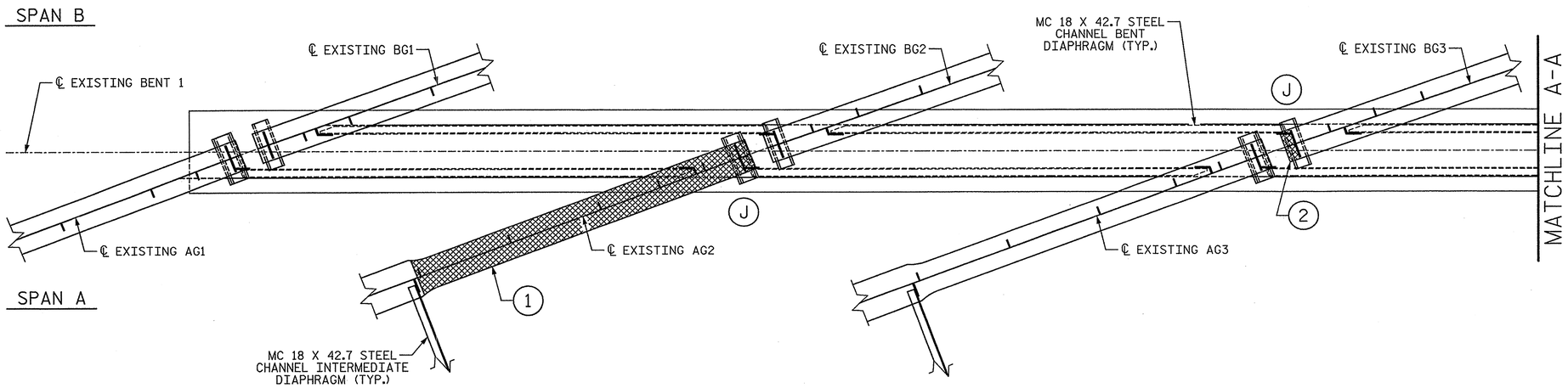

NOTES:

FOR STEEL REPAIRS, SEE "SUPERSTRUCTURE STEEL REPAIR DETAILS" SHEET.

REPAIR LOCATIONS:

1: REPAIR SECTION LOSS ON GIRDER FROM GIRDER END EXTENDING 13'-0" ALONG GIRDER AND FROM BOTTOM FLANGE TO APPROXIMATELY 1'-6" INTO THE WEB PLATE AND REPAIR CONNECTION PLATE.

2: REPAIR SECTION LOSS ON GIRDER FROM GIRDER END EXTENDING OUT APPROXIMATELY TO BEARING STIFFENER

3: REPAIR SECTION LOSS ON STIFFENER PLATE FROM BOTTOM FLANGE APPROXIMATELY 8" ALONG STIFFENER PLATE.

4: REPAIR SECTION LOSS ON STIFFENER PLATE FROM BOTTOM FLANGE APPROXIMATELY 1'-0" ALONG STIFFENER PLATE.

AFTER CLEANING EXISTING BEARING AND BEFORE PAINTING, THE ENGINEER SHALL INSPECT EACH STRUCTURAL PLATE FOR EXCESSIVE SECTION LOSS, STRUCTURAL CRACKS OR OTHER DEFICIENCIES TO DETERMINE IF BEARING REPLACEMENT IS REQUIRED. IF BEARING REPLACEMENT IS REQUIRED, THE CONTRACTOR SHALL REPLACE BEARING PLATES IN KIND EXCEPT ANY FILL PLATE THICKNESSES MAY BE INCLUDED IN THE VARIOUS PLATES TO ACHIEVE THE REQUIRED BEARING ASSEMBLY HEIGHT.

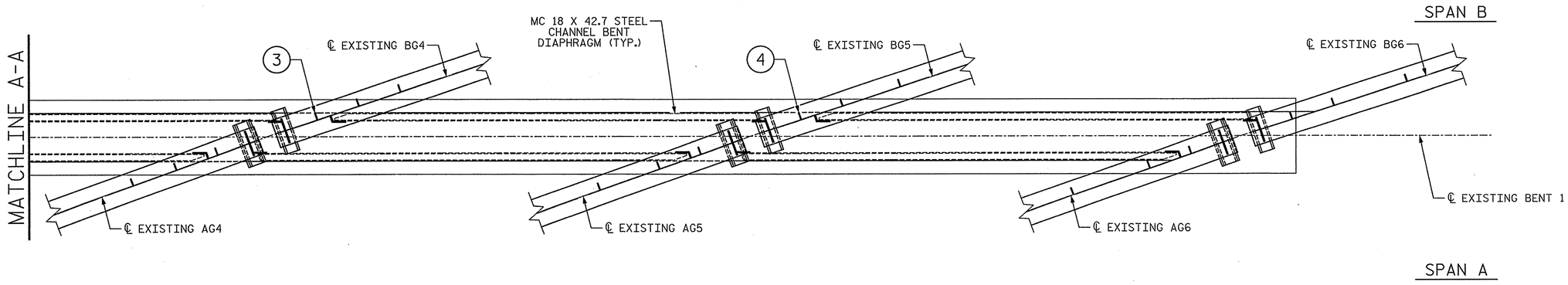

PLAN OF REPAIRS @ BENT 1

GIRDER FLANGE AND WEB REPAIR

(J) JACKING REQUIRED, SEE JACKING DETAILS SHEET.

PROJECT NO. U-0071

DURHAM COUNTY

STATION: 24+70.18 -DFWB-

SHEET 1 OF 3

STATE OF NORTH CAROLINA
DEPARTMENT OF TRANSPORTATION
RALEIGH

PRESERVATION

SUPERSTRUCTURE REPAIRS AT EXISTING BENT 1

PLANS PREPARED BY:

SIMPSON ENGINEERS & ASSOCIATES
5640 Dillard Drive
Suite 200
Cary, NC 27518
(919) 852-0468
(919) 852-0598 (Fax)
www.simpsonengr.com
LICENSURE NO. C-2521

NORTH CAROLINA PROFESSIONAL ENGINEER SEAL 18056 JOHN A. BATTS 1/16/2014

REVISIONS							SHEET NO.
NO.	BY:	DATE:	NO.	BY:	DATE:		SP-31
1			3				TOTAL SHEETS
2			4				83

STR. #14

DRAWN BY: T. BANKOVICH DATE: 12-13
CHECKED BY: T.J. BEACH DATE: 12-13
DESIGN ENGINEER OF RECORD: J.A. BATTS DATE: 12-13

1/14/2014 2:58:18 PM G:\Projects\2012\U-0071 (Durham Co.)\Structures\Drawings\Final\Bridge 189\Preservation\U-0071_Br 189_prs_fp.dgn

NOTES:

FOR STEEL REPAIRS, SEE "SUPERSTRUCTURE STEEL REPAIR DETAILS" SHEET.

REPAIR LOCATIONS:

5: REPAIR SECTION LOSS ON GIRDER FROM GIRDER END EXTENDING TO THE FIRST STIFFENER PAST INTERMEDIATE DIAPHRAGM AND FROM BOTTOM FLANGE TO APPROXIMATELY FULL HEIGHT OF WEB PLATE.

6: REPAIR SECTION WITH RUST PACKING IN BOTTOM FLANGE FROM BOTTOM FLANGE TRANSITION TO ADJACENT INTERMEDIATE DIAPHRAGM.

7: REPAIR SECTION LOSS ON GIRDER FROM GIRDER END EXTENDING 10'-0" ALONG GIRDER AND FROM BOTTOM FLANGE TO APPROXIMATELY FULL HEIGHT OF WEB PLATE.

8: REPAIR SECTION WITH RUST PACKING IN BOTTOM FLANGE FROM BOTTOM FLANGE TRANSITION TO ADJACENT INTERMEDIATE DIAPHRAGM.

9: REPAIR SECTION LOSS ON GIRDER FROM GIRDER END EXTENDING 10'-0" ALONG GIRDER AND FROM BOTTOM FLANGE TO APPROXIMATELY FULL HEIGHT OF WEB PLATE.

10: REPAIR LOSS ON STIFFENER PLATES.

18: REPAIR SPALLED, DELAMINATED OR CRACKED CONCRETE IN THE CONCRETE DIAPHRAGM AT BENT 2. SEE "CONCRETE DIAPHRAGM REPAIR DETAILS" SHEET.

AFTER CLEANING EXISTING BEARING AND BEFORE PAINTING, THE ENGINEER SHALL INSPECT EACH STRUCTURAL PLATE FOR EXCESSIVE SECTION LOSS, STRUCTURAL CRACKS OR OTHER DEFICIENCIES TO DETERMINE IF BEARING REPLACEMENT IS REQUIRED. IF BEARING REPLACEMENT IS REQUIRED, THE CONTRACTOR SHALL REPLACE BEARING PLATES IN KIND EXCEPT ANY FILL PLATE THICKNESSES MAY BE INCLUDED IN THE VARIOUS PLATES TO ACHIEVE THE REQUIRED BEARING ASSEMBLY HEIGHT.

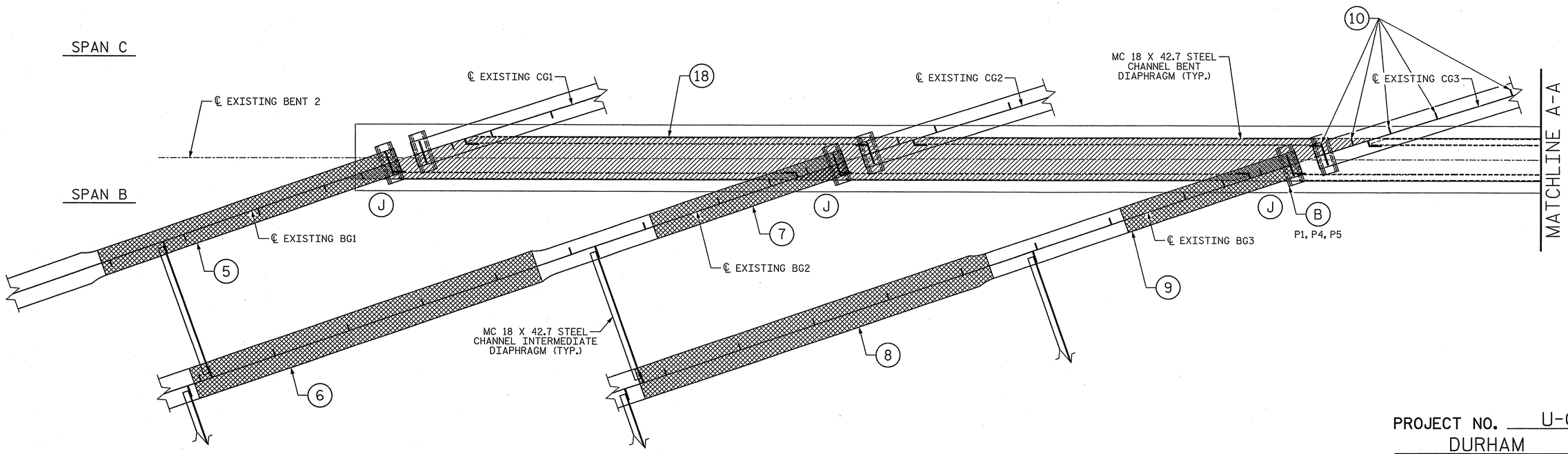

PLAN OF REPAIRS @ BENT 2

- GIRDER FLANGE AND WEB REPAIR
- DIAPHRAGM REPAIR
- (J) JACKING REQUIRED, SEE JACKING DETAILS SHEET.
- (B) BEARING REPLACEMENT, SEE BEARING REPLACEMENT DETAILS SHEET.

PROJECT NO. U-0071
DURHAM COUNTY
STATION: 24+70.18 -DFWB-

SHEET 2 OF 3

STATE OF NORTH CAROLINA
DEPARTMENT OF TRANSPORTATION
RALEIGH
PRESERVATION

SUPERSTRUCTURE REPAIRS AT EXISTING BENT 2

PLANS PREPARED BY:
SIMPSON ENGINEERS & ASSOCIATES
5640 Dillard Drive
Suite 200
Cary, NC 27518
(919) 852-0468
(919) 852-0598 (Fax)
www.simpsonengr.com
LICENSURE NO. C-2521

NORTH CAROLINA PROFESSIONAL SEAL 18056 ENGINEER JOHN A. BATTS
1/14/2014

REVISIONS								SHEET NO.
NO.	BY:	DATE:	NO.	BY:	DATE:			SP-32
1			3					TOTAL SHEETS
2			4					83

STR. #14

DRAWN BY:	T. BANKOVICH	DATE:	12-13
CHECKED BY:	T.J. BEACH	DATE:	12-13
DESIGN ENGINEER OF RECORD:	J.A. BATTS	DATE:	12-13

1/14/2014 2:58:18 PM G:\Projects\2012\U-0071 (Durham Co.)\Structures\Drawings\Final\Bridge 189\Preservation\U-0071_Br 189_prs_fp.dgn

NOTES:

FOR STEEL REPAIRS, SEE "SUPERSTRUCTURE STEEL REPAIR DETAILS" SHEET.

REPAIR LOCATIONS:

11: REPAIR SECTION WITH RUST PACKING IN BOTTOM FLANGE FROM BOTTOM FLANGE TRANSITION TO ADJACENT INTERMEDIATE DIAPHRAGM.

12: REPAIR SECTION LOSS ON GIRDER FROM GIRDER END EXTENDING 10'-0" ALONG GIRDER AND FROM BOTTOM FLANGE TO APPROXIMATELY FULL HEIGHT OF WEB PLATE.

13: REPAIR SECTION LOSS ON GIRDER FROM GIRDER END EXTENDING 10'-0" ALONG GIRDER AND FROM BOTTOM FLANGE TO APPROXIMATELY FULL HEIGHT OF WEB PLATE.

14: REPAIR SECTION WITH RUST PACKING IN BOTTOM FLANGE FROM BOTTOM FLANGE TRANSITION TO ADJACENT INTERMEDIATE DIAPHRAGM.

15: REPAIR SECTION LOSS ON GIRDER FROM GIRDER END EXTENDING 10'-0" ALONG GIRDER AND FROM BOTTOM FLANGE TO APPROXIMATELY FULL HEIGHT OF WEB PLATE.

16: REPAIR SECTION LOSS ON GIRDER FROM GIRDER END EXTENDING 10'-0" ALONG GIRDER AND FROM BOTTOM FLANGE TO APPROXIMATELY FULL HEIGHT OF WEB PLATE.

17: REPAIR SECTION LOSS ON BOTTOM OF TOP FLANGE FROM GIRDER END EXTENDING 6'-0" ALONG GIRDER.

AFTER CLEANING EXISTING BEARING AND BEFORE PAINTING, THE ENGINEER SHALL INSPECT EACH STRUCTURAL PLATE FOR EXCESSIVE SECTION LOSS, STRUCTURAL CRACKS OR OTHER DEFICIENCIES TO DETERMINE IF BEARING REPLACEMENT IS REQUIRED. IF BEARING REPLACEMENT IS REQUIRED, THE CONTRACTOR SHALL REPLACE BEARING PLATES IN KIND EXCEPT ANY FILL PLATE THICKNESSES MAY BE INCLUDED IN THE VARIOUS PLATES TO ACHIEVE THE REQUIRED BEARING ASSEMBLY HEIGHT.

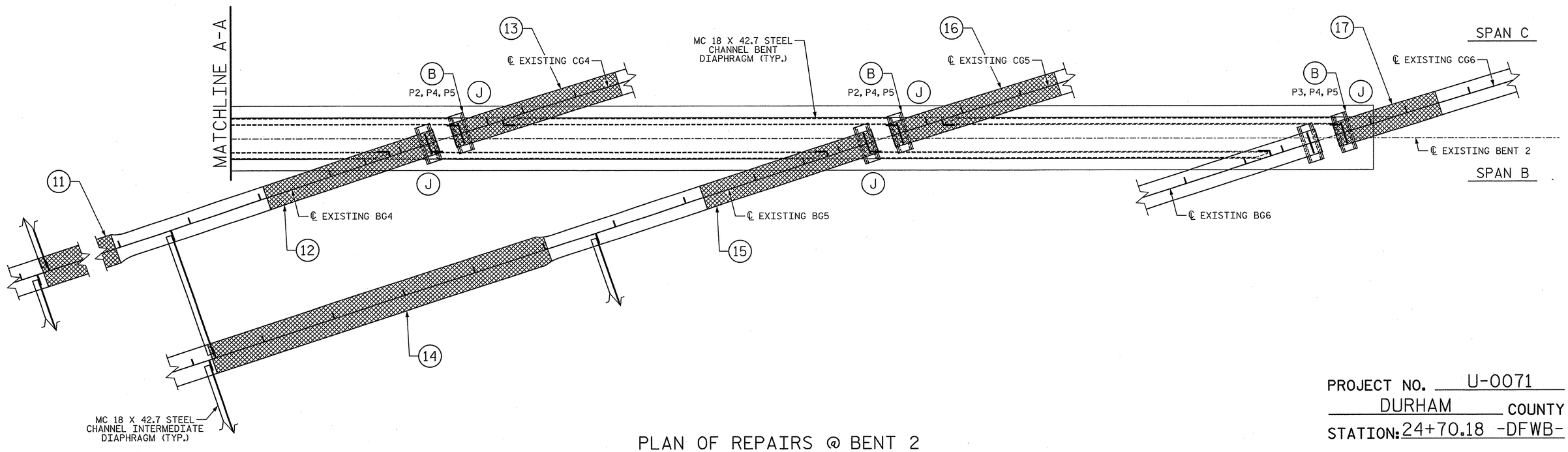

PLAN OF REPAIRS @ BENT 2

GIRDER FLANGE AND WEB REPAIR

DIAPHRAGM REPAIR

(J) JACKING REQUIRED, SEE JACKING DETAILS SHEET.

(B) BEARING REPLACEMENT, SEE BEARING REPLACEMENT DETAILS SHEET.

PROJECT NO. U-0071

DURHAM COUNTY

STATION: 24+70.18 -DFWB-

SHEET 3 OF 3

STATE OF NORTH CAROLINA
DEPARTMENT OF TRANSPORTATION
RALEIGH

PRESERVATION

SUPERSTRUCTURE REPAIRS AT EXISTING BENT 2

PLANS PREPARED BY:

SIMPSON ENGINEERS & ASSOCIATES
5640 Dillard Drive
Suite 200
Cary, NC 27518
(919) 852-0468
(919) 852-0598 (Fax)
www.simpsonengr.com
LICENSURE NO. C-2521

NORTH CAROLINA PROFESSIONAL SEAL 18056 ENGINEER JOHN A. BATTS 1/10/2014

REVISIONS						SHEET NO.
NO.	BY:	DATE:	NO.	BY:	DATE:	SP-33
1			3			TOTAL SHEETS
2			4			83

STR. #14

DRAWN BY:	T. BANKOVICH	DATE:	12-13
CHECKED BY:	T.J. BEACH	DATE:	12-13
DESIGN ENGINEER OF RECORD:	J.A. BATTS	DATE:	12-13

1/14/2014 2:58:18 PM G:\Projects\2012\U-0071 (Durham Co.)\Structures\Drawings\Final\Bridge 189\Preservation\U-0071_Br 189_prs_fp.dgn

NOTES:

GIRDER, BEARING STIFFENER AND INTERMEDIATE STIFFENER PLATE DIMENSIONS ARE BASED ON ORIGINAL PLANS. CONTRACTOR SHALL FIELD VERIFY PLATE DIMENSIONS FOR EACH REPAIR LOCATION PRIOR TO MATERIAL ACQUISITION AND FABRICATION.

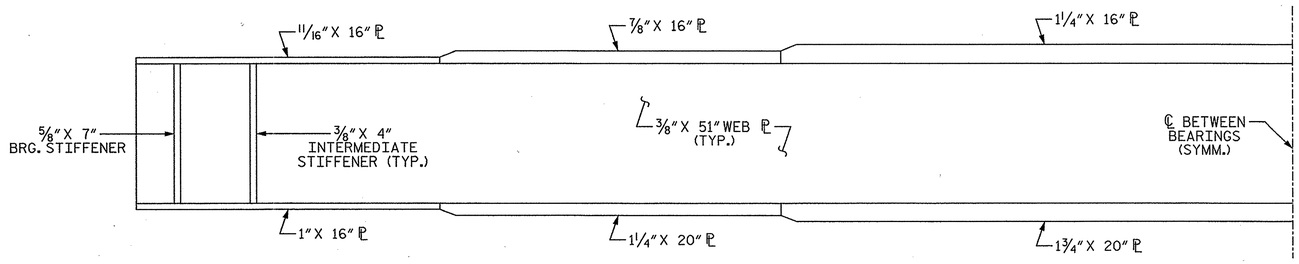

EXTERIOR GIRDER

(GIRDERS AG1, AG6, BG1, CG1, & CG6)

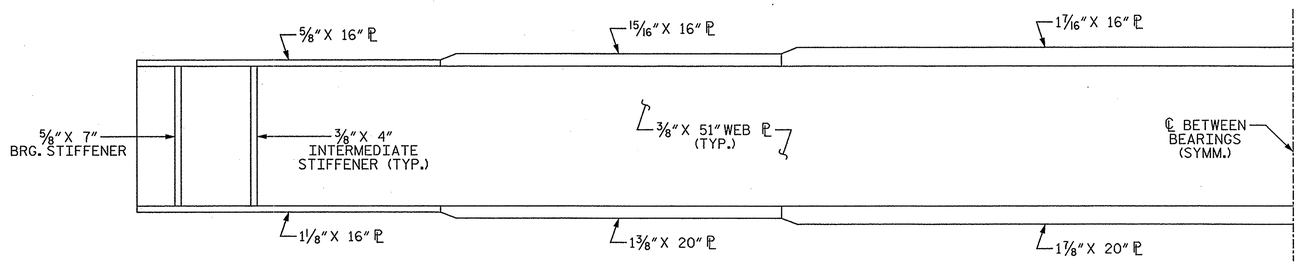

EXTERIOR GIRDER

(GIRDER BG6)

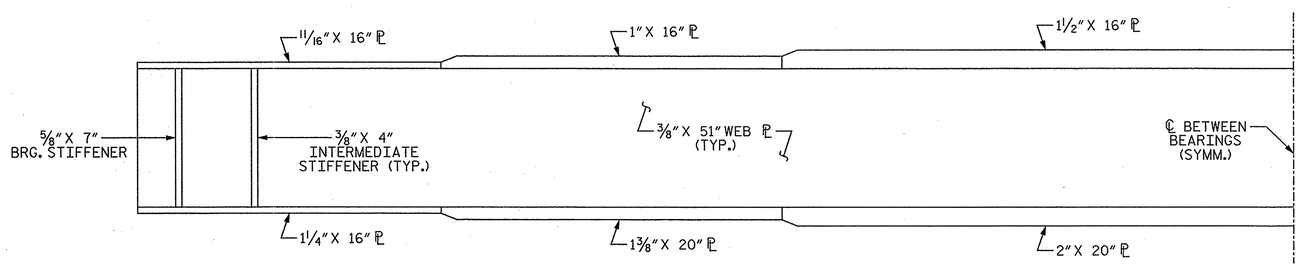

INTERIOR GIRDER

(GIRDERS AG2-AG5, BG2-BG5, & CG2-CG5)

PROJECT NO. U-0071

DURHAM COUNTY

STATION: 24+70.18 -DFWB-

STATE OF NORTH CAROLINA
DEPARTMENT OF TRANSPORTATION
RALEIGH
PRESERVATION

EXISTING GIRDER PLATE SIZES

PLANS PREPARED BY:

SIMPSON ENGINEERS & ASSOCIATES
5640 Dillard Drive
Suite 200
Cary, NC 27518
(919) 852-0468
(919) 852-0598 (Fax)
www.simpsonengr.com
LICENSURE NO. C-2521

NORTH CAROLINA PROFESSIONAL SEAL 18056 ENGINEER JOHN A. BATTS
1/16/2014

REVISIONS								SHEET NO.
NO.	BY:	DATE:	NO.	BY:	DATE:			SP-34
1			3					TOTAL SHEETS
2			4					83

STR. #14

DRAWN BY: T. BANKOVICH DATE: 12-13
CHECKED BY: T.J. BEACH DATE: 12-13
DESIGN ENGINEER OF RECORD: J.A. BATTS DATE: 12-13

1/14/2014 2:58:19 PM G:\Projects\2012\U-0071 (Durham Co.)\Structures\Drawings\Final\Bridge 189\Preservation\U-0071_Br 189_prs_egps.dgn

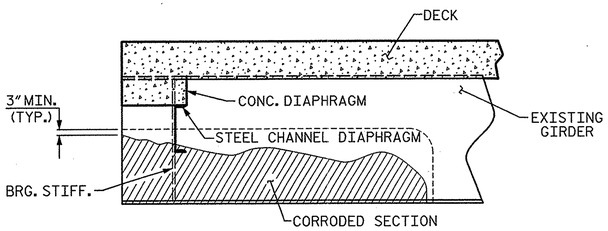

CORRODED GIRDER

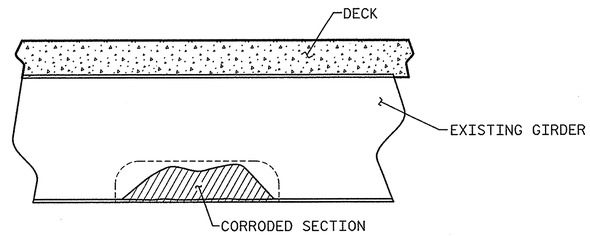

CORRODED GIRDER

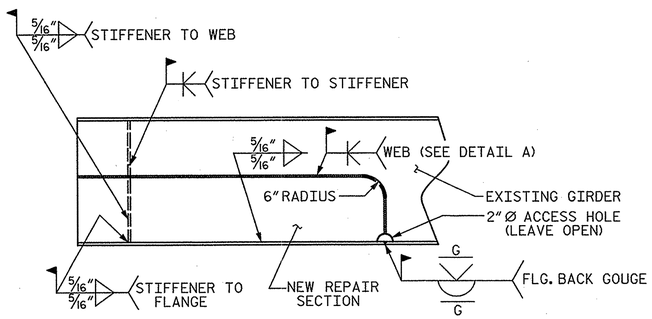

CUT OUT CORRODED SECTION

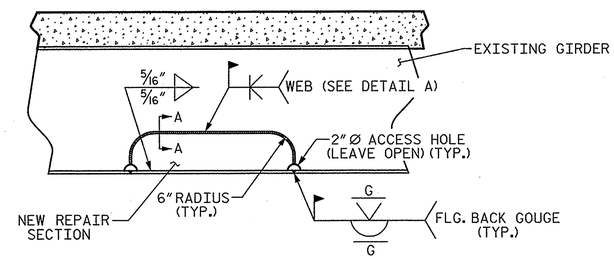

CUT OUT CORRODED SECTION

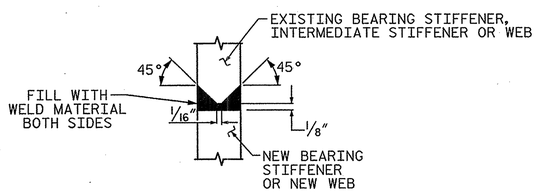

WELD DETAIL

END OF GIRDER REPAIR

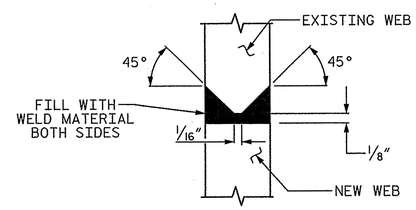

SECTION A-A

MIDDLE OF GIRDER REPAIR

GIRDER REPAIR NOTES:

SEE "SUPERSTRUCTURE REPAIRS @ EXISTING BENT" SHEETS FOR LOCATIONS OF ANTICIPATED GIRDER REPAIR. FOR AREA DETERMINED TO HAVE EXCESSIVE CORROSION AFTER CLEANING, SEE NOTES BELOW.

AFTER THE STRUCTURAL STEEL HAS BEEN BLASTED AND PRIMED, THE STRUCTURAL STEEL SHALL BE INSPECTED FOR EXCESSIVE SECTION LOSS. AREAS THAT EXHIBIT AN EXCESS OF 35% SECTION LOSS SHALL BE REVIEWED BY THE ENGINEER TO DETERMINE IF AREA OF SECTION LOSS SHOULD BE REPAIRED.

AS DETERMINED BY THE ENGINEER, AREAS WITH EXCESSIVE SECTION LOSS OR AREAS WITH TEMPORARY REPAIRS SHALL BE REMOVED AND THE GIRDER SHALL BE REPAIRED AS INDICATED ON THIS PLAN SHEET. CONTRACTOR AND ENGINEER TO DETERMINE ACTUAL DIMENSIONS OF AREA TO BE REMOVED AND REPLACED. REMOVE CONCRETE BENT DIAPHRAGMS AS NEEDED TO EVALUATE LIMITS OF REPAIR.

PAYMENT FOR THE SECTION REPAIR SHALL BE BASED ON THAT AMOUNT OF REPAIR ACTUALLY PERFORMED BY THE CONTRACTOR AND APPROVED BY THE ENGINEER.

GOUGES AND INDENTIONS FROM IMPACTS ON GIRDERS SHALL BE GROUND SMOOTH PRIOR TO BLASTING AND PAINTING OPERATION.

REPAIR SEQUENCE:

1. REMOVE DEAD LOAD FROM GIRDER BY JACKING AND BLOCKING.
2. STEEL DIAPHRAGM CHANNELS AND/OR STIFFENERS MAY BE TEMPORARILY REMOVED, IF NECESSARY, AND REPLACED AFTER GIRDER REPAIR.
3. IF GIRDER DETERIORATION EXTENDS INTO THE CONCRETE DIAPHRAGM THEN CHIP AWAY CONCRETE TO DETERMINE THE EXTENT OF THE DAMAGE, CUT OUT BY APPROPRIATE MEANS THE DAMAGED GIRDER AREA AND/OR BEARING STIFFENER.
4. MECHANICALLY CLEAN RUST, SCALE, AND EXISTING PAINT TO AT LEAST 3" BEYOND REPAIR AREA.
5. REPLACEMENT CUT-TO-FIT GIRDER SECTION SHALL BE NEW AND FROM SIMILAR SIZE STEEL PLATES. THE GRADE OF STEEL SHALL BE AASHTO M270, GRADE 50 OR APPROVED EQUIVALENT.
6. INSTALL THE CUT-TO-FIT SECTION, FULLY WELD ALONG TOP AND SIDES OF PLATE USING FULL PENETRATION WELDS.
7. ALL WELDING SHALL BE IN ACCORDANCE WITH CURRENT APPLICABLE AWS AND NCDOT STANDARD SPECIFICATIONS.
8. ALL WELDS WILL BE INSPECTED AND TESTED BY THE NCDOT MATERIALS AND TEST UNIT IN ACCORDANCE WITH THE CURRENT AWS BRIDGE WELDING CODE AND STANDARD SPECIFICATIONS.
9. IN ACCORDANCE WITH THE STANDARD SPECIFICATIONS, AFTER REPAIR, GRIND ALL WELDS FLUSH, THOROUGHLY CLEAN AREA TO REMOVE DEBRIS AND OILS FROM REPAIR PROCESS.
10. CLEANING AND PAINTING OF REPAIRED STRUCTURAL STEEL SHALL BE PERFORMED AS PART OF THE OVERALL PAINTING EXISTING STRUCTURE PAY ITEM.
11. FOR PAINTING EXISTING STRUCTURE, SEE PROJECT SPECIAL PROVISIONS.
12. AFTER GIRDERS ARE REPAIRED AND PAINTED, ANY CONCRETE REMOVED FROM THE BENT DIAPHRAGMS SHALL BE CAST BACK, AND REINFORCING STEEL CUT DURING THE REMOVAL PROCESS SHALL BE SPLICED WITH A SIMILAR SIZE BAR WITH AT LEAST A ONE FOOT SPLICE TO THE EXISTING STEEL. NO SEPARATE PAYMENT SHALL BE MADE FOR CONCRETE AND REINFORCING STEEL AS THIS IS CONSIDERED INCIDENTAL TO THE PAY ITEM "STRUCTURAL STEEL FOR GIRDER REPAIR."
13. REMOVE JACKING EQUIPMENT AND TEMPORARY SUPPORTS.

REPAIR DETAILS SHOWN ARE GENERAL IN NATURE AND MAY BE MODIFIED FOR EACH PARTICULAR GIRDER REPAIR CASE AS DIRECTED BY THE ENGINEER.

PROJECT NO. U-0071
DURHAM COUNTY
STATION: 24+70.18 -DFWB-

STATE OF NORTH CAROLINA
DEPARTMENT OF TRANSPORTATION
RALEIGH
PRESERVATION

SUPERSTRUCTURE STEEL REPAIR DETAILS

PLANS PREPARED BY:
SIMPSON ENGINEERS & ASSOCIATES
5640 Dillard Drive
Suite 200
Cary, NC 27518
(919) 852-0468
(919) 852-0598 (Fax)
www.simpsonengr.com
LICENSURE NO. C-2521

NORTH CAROLINA PROFESSIONAL SEAL 18056 ENGINEER JOHN A. BATTS
1/14/2014

REVISIONS						SHEET NO.
NO.	BY:	DATE:	NO.	BY:	DATE:	SP-35
1			3			TOTAL SHEETS
2			4			83

STR. #14

DRAWN BY: T. BANKOVICH DATE: 12-13
CHECKED BY: T.J. BEACH DATE: 12-13
DESIGN ENGINEER OF RECORD: J.A. BATTS DATE: 12-13

1/14/2014 2:58:19 PM G:\Projects\2012\U-0071 (Durham Co.)\Structures\Drawings\Final\Bridge 189\Preservation\U-0071_Br 189_prs_ss.dgn

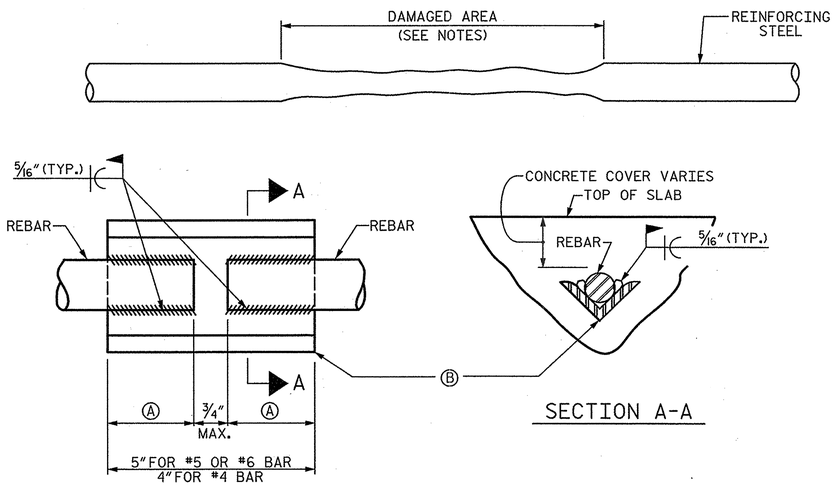

SECTION A-A

PLAN VIEW

PREHEAT/INTERPASS TEMPERTURE	
REBAR SIZE	MIN. TEMP.
#6 OR LESS	300°
#7 OR LARGER	500°

BAR SIZE	WELD LENGTH EACH SIDE Ⓐ	ANGLE SIZE Ⓑ
#4	2"	1" X 1" X 1/4"
#5 & #6	3"	1" X 1" X 1/4"
#7 & #8	4"	1 1/2" X 1 1/2" X 1/4"
#9 & #10	5"	1 3/4" X 1 3/4" X 1/4"

WELD DETAIL FOR SPLICING REINFORCING STEEL

REINFORCING STEEL SHALL BE SPLICED AS DETAILED AND ALL WELDING CONFORM TO THE LASTEST EDITION OF THE AMERICAN WELDING SOCIETY REINFORCED STEEL WELDING CODE (A.W.S.D12.1) CHEMICAL ANALYSIS OF THE EXISTING REINFORCING STEEL WILL NOT BE REQUIRED.

REBAR SPLICING DETAIL

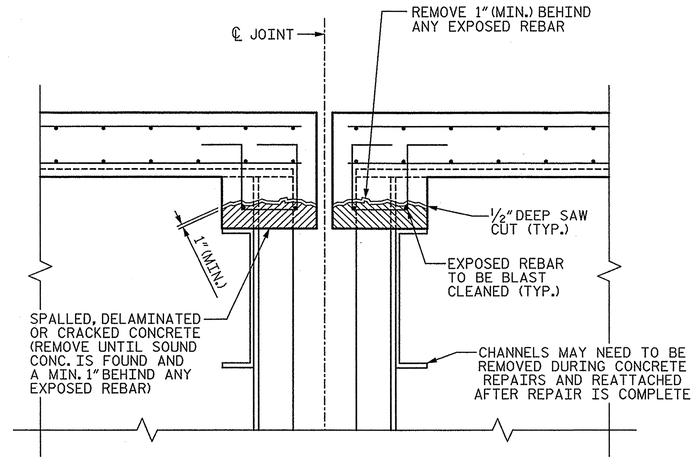

SECTION THRU DIAPRHAGM

DIAPRHAGM CONCRETE REPAIR

CONCRETE REPAIRS	
BENT 2	46 CF

NOTES:

FOR CONCRETE REPAIRS, SEE SPECIAL PROVISIONS.

AFTER REMOVING SPALLED, DELAMINATED OR CRACKED CONCRETE, IF ANY REINFORCING STEEL HAS A CROSS SECTION LOSS GREATER THAN 33% THEN SPLICE DAMAGED AREA OF REBAR WITH A SIMILAR SIZE REBAR AS SHOWN IN THE REBAR SPLICE DETAIL.

ALL REINFORCING STEEL TO BE PROVIDED IS INCIDENTAL TO CONCRETE REPAIR AND SHALL BE GRADE 60.

PROJECT NO. U-0071
DURHAM COUNTY
STATION: 24+70.18 -DFWB-

STATE OF NORTH CAROLINA
DEPARTMENT OF TRANSPORTATION
RALEIGH
PRESERVATION

CONCRETE DIAPHRAGM REPAIR DETAILS

PLANS PREPARED BY:
SIMPSON ENGINEERS & ASSOCIATES
5640 Dillard Drive
Suite 200
Cary, NC 27518
(919) 852-0468
(919) 852-0598 (Fax)
www.simpsonengr.com
LICENSURE NO. C-2521

NORTH CAROLINA PROFESSIONAL SEAL 18056 ENGINEER JOHN A. BATTS 1/16/2014

REVISIONS							SHEET NO.
NO.	BY:	DATE:	NO.	BY:	DATE:		SP-36
1			3				TOTAL SHEETS
2			4				83

STR. #14

DRAWN BY:	T. BANKOVICH	DATE:	12-13
CHECKED BY:	T.J. BEACH	DATE:	12-13
DESIGN ENGINEER OF RECORD:	J.A. BATTS	DATE:	12-13

1/14/2014 2:58:19 PM G:\Projects\2012\U-0071 (Durham Co.)\Structures\Drawings\Final\Bridge 189\Preservation\U-0071_Br 189_prs_crd.dgn

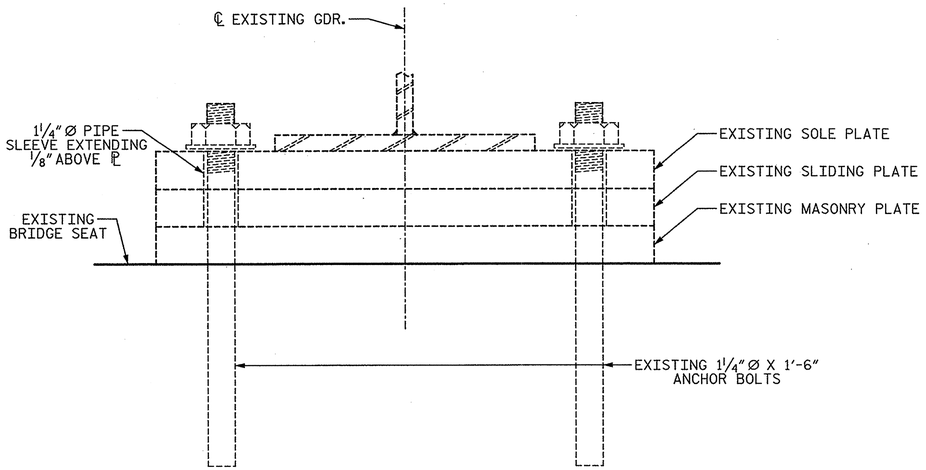

END VIEW

(SHOWING EXISTING BEARING)

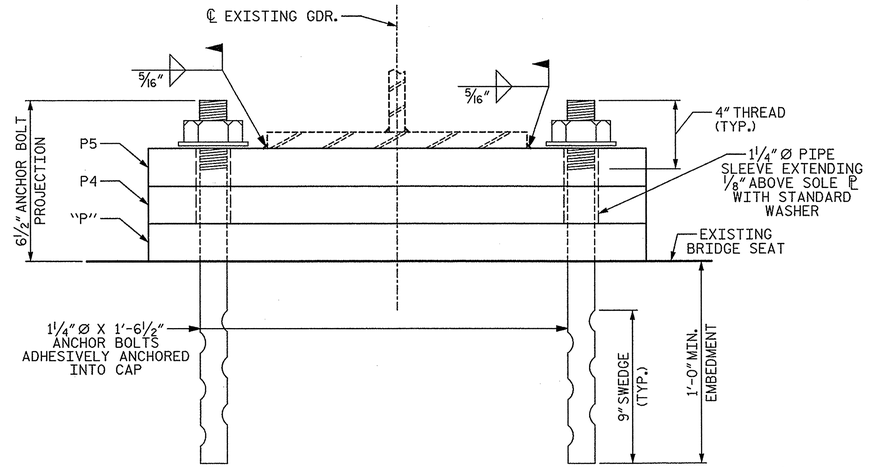

END VIEW

(SHOWING PROPOSED BEARING)

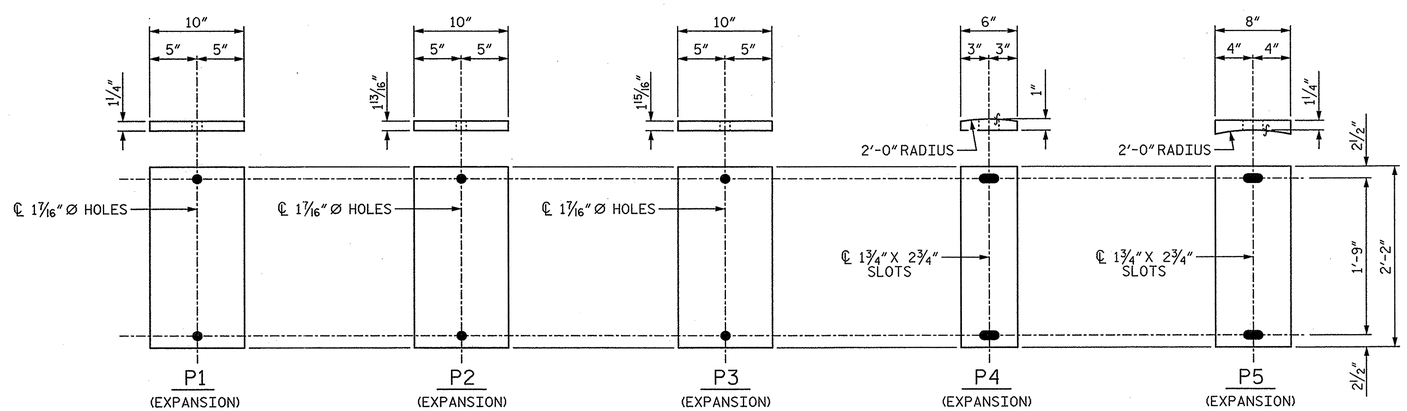

BEARING PLATE DETAILS ("P")

UP-STATION →

NOTES:

THE EXISTING BEARINGS DETERMINED FOR REPLACEMENT SHALL BE REMOVED AND REPLACED WITH BEARINGS AS SHOWN.

FOR BEARING REPLACEMENT LOCATIONS SEE SUPERSTRUCTURE REPAIRS SHEETS.

AT ALL POINTS OF SUPPORT, NUTS FOR ANCHOR BOLTS ARE TO BE TIGHTENED FINGER TIGHT AND THEN BACKED OFF ½ TURN. THE THREAD OF THE NUT AND BOLT SHALL BE THEN BURRED WITH A SHARP POINTED TOOL.

THE 1¼"Ø PIPE SLEEVE SHALL BE CUT FROM SCHEDULE 40 PVC PLASTIC PIPE. THE PVC PLASTIC PIPE SHALL MEET THE REQUIREMENTS OF ASTM D1785. NO SEPARATE PAYMENT WILL BE MADE FOR PIPE SLEEVES.

SOLE PLATES, MASONRY PLATES, SLIDING PLATES (EXCEPT SLIDING SURFACES), ANCHOR BOLTS, NUTS AND WASHERS SHALL BE GALVANIZED IN ACCORDANCE WITH THE STANDARD SPECIFICATIONS.

ANCHOR BOLTS SHALL MEET THE REQUIREMENTS OF ASTM A449. NUTS SHALL MEET THE REQUIREMENTS OF AASHTO M291-DH OR AASHTO M292-2H. WASHERS SHALL MEET THE REQUIREMENTS OF AASHTO M293. SHOP DRAWINGS ARE NOT REQUIRED FOR ANCHOR BOLTS, NUTS AND WASHERS. SHOP INSPECTION IS REQUIRED.

ALL WELDING SHALL BE IN ACCORDANCE WITH CURRENT APPLICABLE AWS AND NCDOT STANDARD SPECIFICATIONS.

ALL WELDS WILL BE INSPECTED AND TESTED BY THE NCDOT MATERIALS AND TEST UNIT IN ACCORDANCE WITH THE CURRENT AWS BRIDGE WELDING CODE AND STANDARD SPECIFICATIONS.

ALL SURFACES OF BEARING PLATES SHALL BE SMOOTH.

THE CONTRACTOR SHALL CUT EXISTING ANCHOR BOLTS FLUSH WITH BENT CAP AND CORE THROUGH EXISTING EMBEDDED ANCHOR BOLTS TO A 12" MINIMUM DEPTH. NEW 1¼"Ø ANCHOR BOLTS SHALL BE ADHESIVELY ANCHORED, SEE STANDARD SPECIFICATION. ADHESIVE FOR NEW ANCHOR BOLTS SHALL BE NCDOT APPROVED PRODUCT. FIELD TESTING WILL NOT BE REQUIRED FOR INSTALLATION OF ADHESIVELY ANCHORED BOLTS.

JACKING WILL BE REQUIRED FOR EACH BEARING REPLACEMENT.

FOR "BEARING REPLACEMENT", SEE SPECIAL PROVISIONS.

BEFORE BEARING PLATES ARE FABRICATED THE CONTRACTOR SHALL MEASURE THE CURRENT BEARING ASSEMBLY HEIGHT AND DETERMINE IF THE TOTAL HEIGHT OF THE PROPOSED BEARING PLATES SHOWN IN THE PLANS IS ADEQUATE. IF NOT, ADJUST THE PLATE THICKNESSES IN ORDER TO ACHIEVE THE PROPER BEARING ASSEMBLY HEIGHT.

AT ANY BEARING NOT BEING REPLACED, THE CONTRACTOR SHALL DETERMINE IF THE EXISTING BEARING ASSEMBLY IS CENTERED UNDER THE BEARING STIFFENER OF THE EXISTING GIRDER. IF THE BEARING ASSEMBLY IS NOT POSITIONED CORRECTLY UNDER THE BEARING STIFFENER, THE CONTRACTOR SHALL REALIGN THE BEARING PLATES. THIS REALIGNMENT MAY OR MAY NOT REQUIRE NEW ANCHOR BOLT LOCATIONS. AT A BEARING REALIGNMENT WHERE NEW ANCHOR BOLTS ARE REQUIRED AND THEIR NEW LOCATIONS DO NOT OVERLAP THE EXISTING ANCHOR BOLTS, THE CONTRACTOR SHALL CUT THE EXISTING ANCHOR BOLTS FLUSH WITH THE TOP OF CAP AND DRILL FOR NEW ADHESIVELY ANCHORED ANCHOR BOLTS. AT A BEARING REALIGNMENT WHERE NEW ANCHOR BOLTS ARE REQUIRED BUT THEIR NEW LOCATIONS OVERLAP THE EXISTING ANCHOR BOLTS, THE CONTRACTOR SHALL CORE THE EXISTING ANCHOR BOLT, FILL THE CORE HOLES WITH HIGH-STRENGTH NON-SHRINK GROUT, ALLOW THE GROUT TO CURE, AND DRILL FOR NEW ADHESIVELY ANCHORED ANCHOR BOLTS.

ALL BEARING PLATES SHALL BE AASHTO M270 GRADE 50.

PROJECT NO. U-0071
DURHAM COUNTY
STATION: 24+70.18 -DFWB-

STATE OF NORTH CAROLINA
DEPARTMENT OF TRANSPORTATION
RALEIGH
PRESERVATION

BEARING REPLACEMENT DETAILS

PLANS PREPARED BY:

SIMPSON ENGINEERS & ASSOCIATES
5640 Dillard Drive
Suite 200
Cary, NC 27518
(919) 852-0468
(919) 852-0598 (Fax)
www.simpsonengr.com
LICENSURE NO. C-2521

NORTH CAROLINA PROFESSIONAL SEAL 18056 ENGINEER JOHN A. BATTS
1/16/2014

REVISIONS						SHEET NO.
NO.	BY:	DATE:	NO.	BY:	DATE:	SP-37
1			3			TOTAL SHEETS
2			4			83

STR. #14

DRAWN BY: T. BANKOVICH DATE: 12-13
CHECKED BY: T.J. BEACH DATE: 12-13
DESIGN ENGINEER OF RECORD: J.A. BATTS DATE: 12-13

1/14/2014 2:58:20 PM G:\Projects\2012\U-0071 (Durham Co.)\Structures\Drawings\Final\Bridge 189\Preservation\U-0071_Br 189_prs_bg.dgn

1/14/2014 2:58:20 PM G:\Projects\2012\U-0071 (Durham Co.)\Structures\Drawings\Final\Bridge 189\Preservation\U-0071_Br 189_prs_jacking.dgn

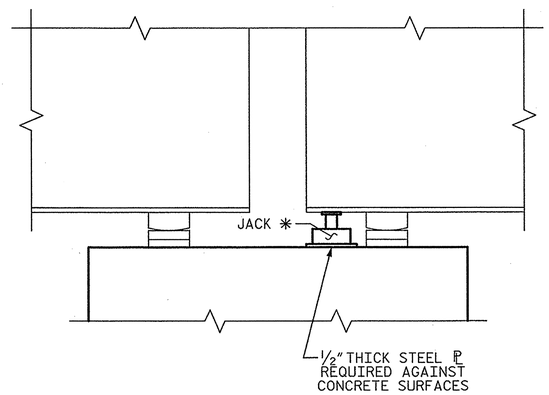

ELEVATION

NOTES:

THE CONTRACTOR SHALL SUBMIT JACKING PLANS AND CALCULATIONS TO THE ENGINEER FOR REVIEW AND APPROVAL PRIOR TO MATERIAL PURCHASE OR FABRICATION OF THE PROPOSED JACKING SYSTEM.

JACKING PLANS SHALL BE SIGNED AND SEALED BY A LICENSED PROFESSIONAL ENGINEER REGISTERED IN NORTH CAROLINA.

THE CONTRACTOR SHALL PROVIDE BLOCKING FOR ALL JACKS AS NECESSARY. A BLOCKING PLAN SHALL BE INCLUDED AS PART OF THE JACKING PLANS.

JACKING WITHOUT A MECHANICAL LOAD HOLDER (LOCK-OFF) SHALL BE SECURED BY BLOCKING IF JACKING OPERATION IN ANY LOCATION IS LONGER THAN 30 MINUTES IN DURATION.

PRIOR TO JACKING, THE CONTRACTOR SHALL ENSURE THERE ARE NO OBSTACLES PREVENTING THE GIRDER FROM BEING LIFTED.

FOR MULTIPLE LIFTING OPERATIONS, THE CONTRACTOR SHALL LIFT ALL GIRDERS IN A SPAN ON AN INDIVIDUAL BENT SIMULTANEOUSLY BY MEANS OF A DUAL-FLOW PRESSURIZED PUMP CONTROLLING THE JACKS.

DURING THE JACKING PROCESS OR WHILE THE SPAN IS BEING SUPPORTED, IF THE GIRDERS SHIFT FROM THEIR ORIGINAL POSITION ALL WORK WILL CEASE AND THE ENGINEER SHALL BE NOTIFIED IMMEDIATELY.

ALL ADJACENT ANCHOR BOLTS OF GIRDERS NOT BEING JACKED SHOULD BE LOOSENED TO DECREASE THE RESISTANCE OF THE BRIDGE DECK DURING JACKING. ALL ANCHOR BOLTS LOOSENED SHALL BE TIGHTENED BACK AFTER THE GIRDER IS REPAIRED AND THE JACKS AND BLOCKING HAVE BEEN REMOVED.

JACKING WILL BE DONE UNDER TRAFFIC AND SHALL BE LIMITED TO OFF PEAK HOURS AS DIRECTED BY THE ENGINEER.

ALL JACKS SHALL HAVE A CAPACITY OF 1.3 TIMES THE FACTORED REACTION ADJACENT TO THE POINT OF JACKING. SEE TABLE ON THIS SHEET FOR ANTICIPATED FACTORED REACTIONS FOR EACH GIRDER.

✳ FOR GIRDER REPAIRS, JACKS SHALL BE PLACED ADJACENT TO GIRDER TO RELIEVE LOAD FROM GIRDER DURING THE REPAIR. FOR BEARING REPLACEMENT AND REALIGNMENT, JACKS MAY BE PLACED UNDER GIRDER.

FOR "GIRDER JACKING", SEE SPECIAL PROVISIONS.

FACTORED REACTIONS PER BEARING (DL + LL + IMPACT)

	G1	G2	G3	G4	G5	G6
SPAN A (FAR)	287.8 K	287.8 K	287.8 K	287.8 K	287.8 K	261.2 K
SPAN B (NEAR)	287.8 K	287.8 K	287.8 K	287.8 K	287.8 K	261.2 K
SPAN B (FAR)	287.8 K	287.8 K	287.8 K	287.8 K	287.8 K	261.2 K
SPAN C (NEAR)	287.8 K	287.8 K	287.8 K	287.8 K	287.8 K	261.2 K

PROJECT NO. U-0071
DURHAM COUNTY
STATION: 24+70.18 -DFWB-

STATE OF NORTH CAROLINA
DEPARTMENT OF TRANSPORTATION
RALEIGH
PRESERVATION

JACKING DETAILS

PLANS PREPARED BY:
SIMPSON ENGINEERS & ASSOCIATES
5640 Dillard Drive
Suite 200
Cary, NC 27518
(919) 852-0468
(919) 852-0598 (Fax)
www.simpsonengr.com
LICENSURE NO. C-2521

NORTH CAROLINA PROFESSIONAL SEAL 18056 ENGINEER JOHN A. BATTS
1/14/2014

REVISIONS						SHEET NO.
NO.	BY:	DATE:	NO.	BY:	DATE:	SP-38
1			3			TOTAL SHEETS
2			4			83

DRAWN BY: T. BANKOVICH DATE: 12-13
CHECKED BY: T.J. BEACH DATE: 12-13
DESIGN ENGINEER OF RECORD: J.A. BATTS DATE: 12-13

STR. #14

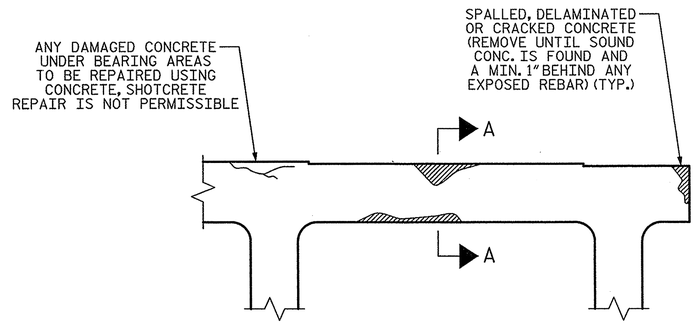

BENT CAP REPAIRS

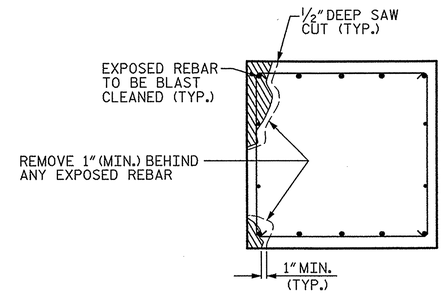

SECTION THRU CAP

CAP CONCRETE REPAIR

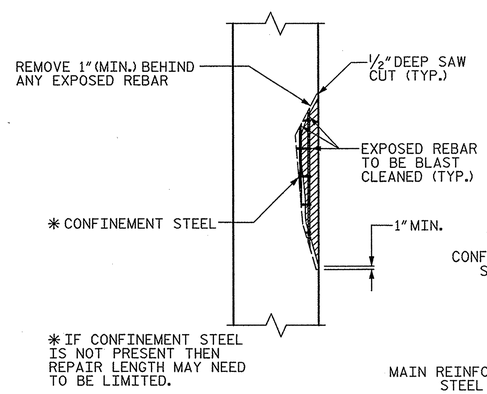

ELEVATION OF COLUMN

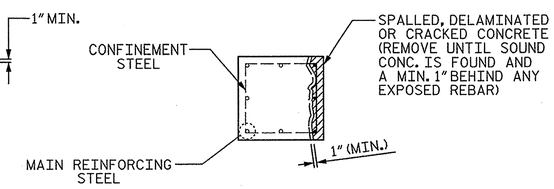

PLAN OF COLUMN

COLUMN CONCRETE REPAIR

NOTES:

FOR SHOTCRETE AND CONCRETE REPAIRS REFER TO SPECIAL PROVISIONS.

AFTER REMOVING SPALLED, DELAMINATED OR CRACKED CONCRETE, IF ANY REINFORCING STEEL HAS A CROSS SECTION LOSS GREATER THAN 33% THEN SPLICE DAMAGED AREA OF REBAR WITH A SIMILAR SIZE REBAR AS SHOWN IN THE REBAR SPLICE DETAIL.

ALL REINFORCING STEEL TO BE PROVIDED IS INCIDENTAL TO CONCRETE REPAIR AND SHALL BE GRADE 60.

FOR SUBSTRUCTURE REPAIR AREAS, SEE END BENT AND BENT SHEETS.

PROJECT NO. U-0071
DURHAM COUNTY
STATION: 24+70.18 -DFWB-

STATE OF NORTH CAROLINA
DEPARTMENT OF TRANSPORTATION
RALEIGH
PRESERVATION

SUBSTRUCTURE CONCRETE REPAIR DETAILS

REVISIONS						SHEET NO.
NO.	BY:	DATE:	NO.	BY:	DATE:	SP-39
1			3			TOTAL SHEETS
2			4			83

STR. #14

PLANS PREPARED BY:
SIMPSON ENGINEERS & ASSOCIATES
5640 Dillard Drive
Suite 200
Cary, NC 27518
(919) 852-0468
(919) 852-0598 (Fax)
www.simpsonengr.com
LICENSURE NO. C-2521

NORTH CAROLINA PROFESSIONAL SEAL 18056 ENGINEER JOHN A. BATTS
1/16/2014

DRAWN BY:	T. BANKOVICH	DATE:	12-13
CHECKED BY:	T.J. BEACH	DATE:	12-13
DESIGN ENGINEER OF RECORD:	J.A. BATTS	DATE:	12-13

1/14/2014 2:58:20 PM G:\Projects\2012\U-0071 (Durham Co.)\Structures\Drawings\Final\Bridge 189\Preservation\U-0071_Br 189_prs_crd.dgn

NOTES:

NO REPAIRS ARE ANTICIPATED AT END BENT 1 BASED ON THE BEST INFORMATION AVAILABLE. IF REPAIRS ARE DEEMED NECESSARY BY THE ENGINEER, THE CONTRACTOR SHALL NOTE ON THE DRAWINGS THE APPROXIMATE LOCATION AND DESCRIPTION OF THE REPAIRS AND ENTER THE ACTUAL QUANTITIES INTO THE REPAIR QUANTITY TABLE.

EPOXY PROTECTIVE COATING SHALL BE APPLIED TO THE TOP FACE OF THE ENTIRE END BENT CAP EXCEPT AREA UNDER THE BEARINGS.

FOR EPOXY PROTECTIVE COATING, SEE SPECIAL PROVISIONS.

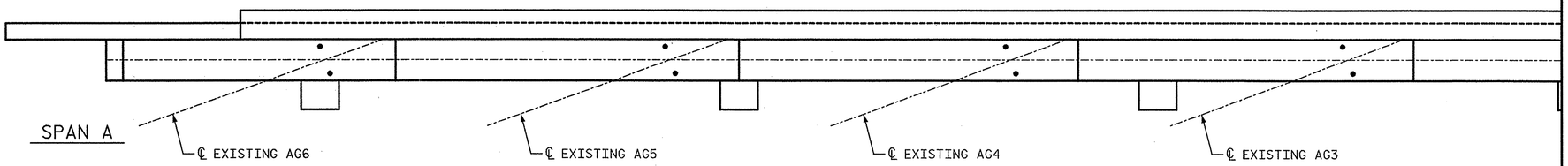

PLAN TOP OF CAP

(LOOKING DOWNSTATION)

MATCHLINE A-A

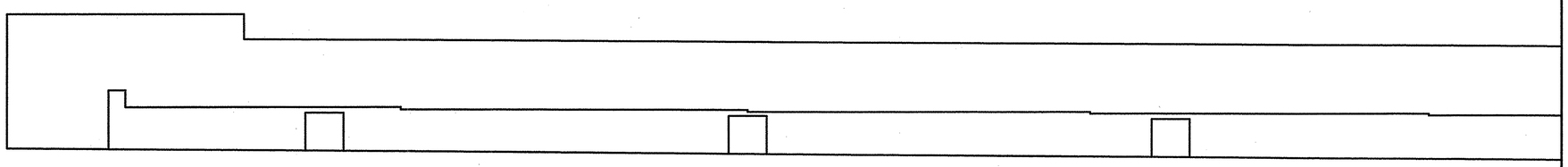

ELEVATION FRONT FACE OF CAP

(LOOKING DOWNSTATION)

REPAIR QUANTITY TABLE						
REPAIR END BENT 1	QUANTITIES					
	ESTIMATE			ACTUAL		
SHOTCRETE REPAIR	AREA SF	DEPTH FT	VOLUME CF	AREA SF	DEPTH FT	VOLUME CF
CAP (VERITCAL FACE)	0.00	0.00	0.00			
CAP (HORIZONTAL FACE)	0.00	0.00	0.00			
CONCRETE REPAIR	0.00	0.00	0.00			
EPOXY RESIN INJECTION			LF			LF
CAP			0.00			
EPOXY PROTECTIVE COATING			SF			SF
TOP OF CAP			326			

VALUES IN CHART REPRESENT ESTIMATED REPAIR TOTAL AFTER REMOVAL OF UNSOUND CONCRETE, MIN. OF 1" BEHIND REBAR AND MIN. 1" CL TO SAWCUT. SEE SUBSTRUCTURE CONCRETE REPAIR DETAILS.

CONCRETE REPAIR

SHOTCRETE REPAIR

ERI EPOXY RESIN INJECTION

PROJECT NO. U-0071

DURHAM COUNTY

STATION: 24+70.18 -DFWB-

SHEET 1 OF 2

STATE OF NORTH CAROLINA
DEPARTMENT OF TRANSPORTATION
RALEIGH
PRESERVATION

END BENT 1

PLANS PREPARED BY:

SIMPSON ENGINEERS & ASSOCIATES
5640 Dillard Drive
Suite 200
Cary, NC 27518
(919) 852-0468
(919) 852-0598 (Fax)
www.simpsonengr.com

LICENSURE NO. C-2521

NORTH CAROLINA PROFESSIONAL SEAL 18056 ENGINEER JOHN A. BATTS 1/14/2014

REVISIONS						
NO.	BY:	DATE:	NO.	BY:	DATE:	
1			3			
2			4			

SHEET NO. SP-40

TOTAL SHEETS 83

STR. #14

DRAWN BY: T. BANKOVICH DATE: 12-13

CHECKED BY: T.J. BEACH DATE: 12-13

DESIGN ENGINEER OF RECORD: J.A. BATTS DATE: 12-13

1/14/2014 2:58:21 PM G:\Projects\2012\U-0071 (Durham Co.)\Structures\Drawings\Final\Bridge 189\Preservation\U-0071_Br 189_prs_eb1.dgn

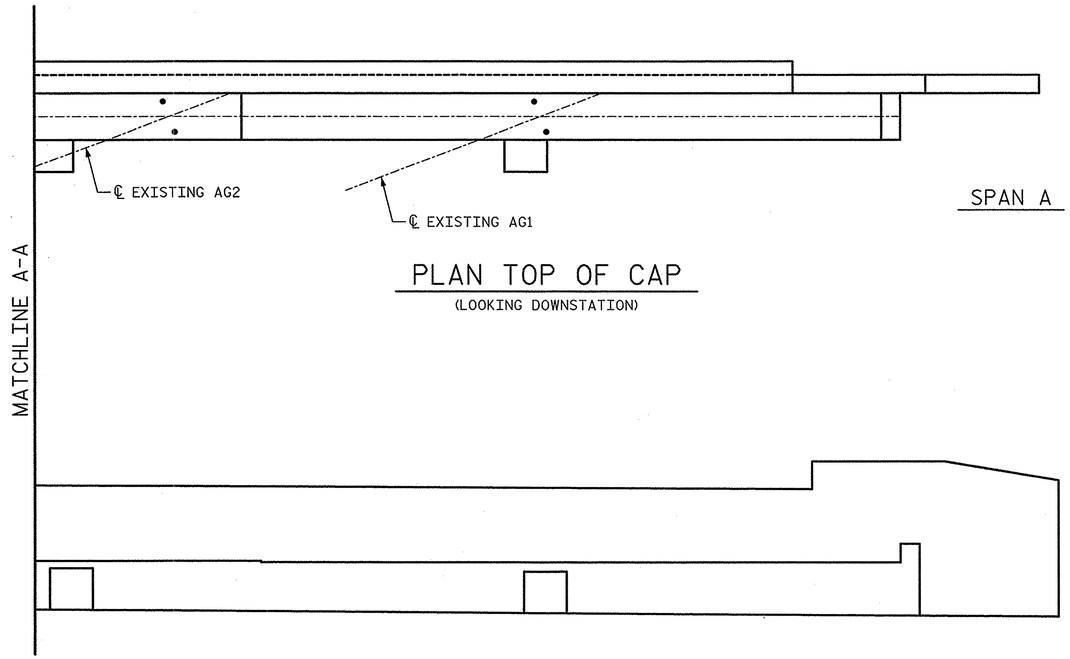

PLAN TOP OF CAP
(LOOKING DOWNSTATION)

ELEVATION FRONT FACE OF CAP
(LOOKING DOWNSTATION)

CONCRETE REPAIR

SHOTCRETE REPAIR

ERI EPOXY RESIN INJECTION

PROJECT NO. U-0071
DURHAM COUNTY
STATION: 24+70.18 -DFWB-

SHEET 2 OF 2

STATE OF NORTH CAROLINA
DEPARTMENT OF TRANSPORTATION
RALEIGH
PRESERVATION

END BENT 1

PLANS PREPARED BY:

SIMPSON ENGINEERS & ASSOCIATES
5640 Dillard Drive
Suite 200
Cary, NC 27518
(919) 852-0468
(919) 852-0598 (Fax)
www.simpsonengr.com
LICENSURE NO. C-2521

NORTH CAROLINA PROFESSIONAL SEAL 18056 ENGINEER JOHN A. BATTS
1/16/2014

REVISIONS						SHEET NO.
NO.	BY:	DATE:	NO.	BY:	DATE:	SP-41
1			3			TOTAL SHEETS
2			4			83

STR. #14

DRAWN BY: T. BANKOVICH DATE: 12-13
CHECKED BY: T.J. BEACH DATE: 12-13
DESIGN ENGINEER OF RECORD: J.A. BATTS DATE: 12-13

1/14/2014 2:58:21 PM G:\Projects\2012\U-0071 (Durham Co.)\Structures\Drawings\Final\Bridge 189\Preservation\U-0071_Br 189_prs_eb1.dgn

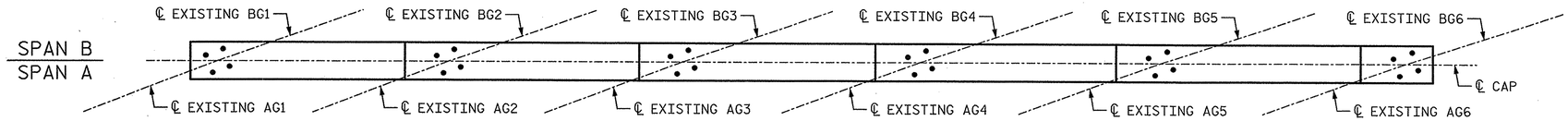

PLAN TOP OF CAP

NOTES:

NO REPAIRS ARE ANTICIPATED AT BENT 1 BASED ON THE BEST INFORMATION AVAILABLE. IF REPAIRS ARE DEEMED NECESSARY BY THE ENGINEER, THE CONTRACTOR SHALL NOTE ON THE DRAWINGS THE APPROXIMATE LOCATION AND DESCRIPTION OF THE REPAIRS AND ENTER THE ACTUAL QUANTITIES INTO THE REPAIR QUANTITY TABLE.

FOR REPAIR QUANTITY TABLE, SEE SHEET 2 OF 2.

EPOXY PROTECTIVE COATING SHALL BE APPLIED TO THE TOP FACE OF THE ENTIRE BENT CAP EXCEPT AREA UNDER THE BEARINGS.

FOR EPOXY PROTECTIVE COATING, SEE SPECIAL PROVISIONS.

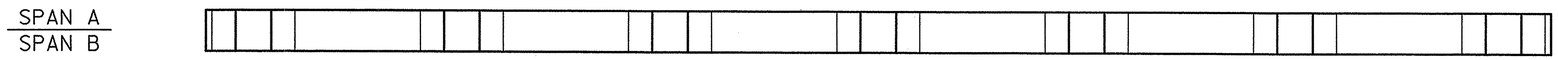

PLAN BOTTOM OF CAP

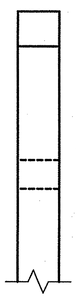

END ELEVATION

NORTH FACE

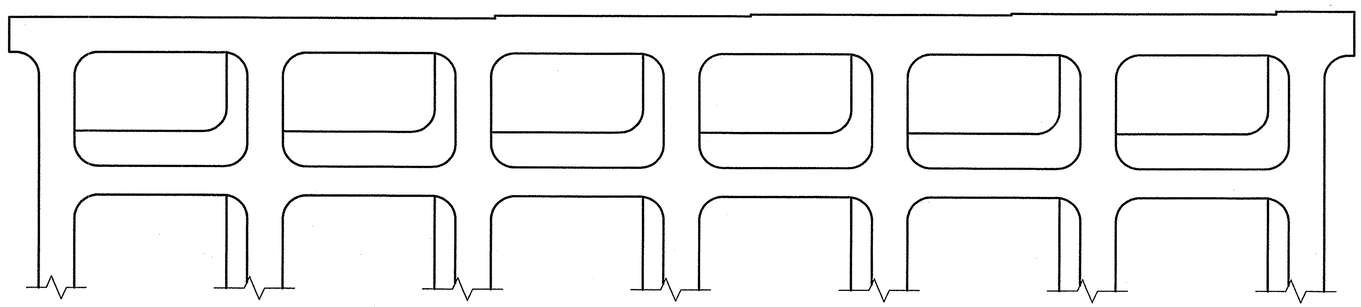

ELEVATION

WEST FACE

CONCRETE REPAIR

SHOTCRETE REPAIR

ERI EPOXY RESIN INJECTION

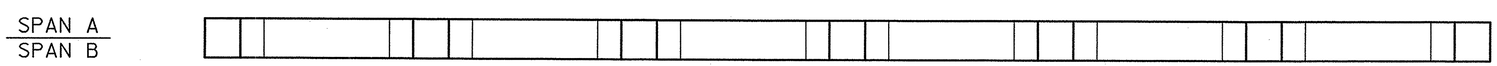

PLAN BOTTOM OF STRUT

PROJECT NO. U-0071

DURHAM COUNTY

STATION: 24+70.18 -DFWB-

SHEET 1 OF 2

STATE OF NORTH CAROLINA
DEPARTMENT OF TRANSPORTATION
RALEIGH

PRESERVATION

BENT 1

PLANS PREPARED BY:

SIMPSON ENGINEERS & ASSOCIATES
5640 Dillard Drive
Suite 200
Cary, NC 27518
(919) 852-0468
(919) 852-0598 (Fax)
www.simpsonengr.com
LICENSURE NO. C-2521

NORTH CAROLINA PROFESSIONAL SEAL 18056 ENGINEER JOHN A. BATTS
1/16/2014

REVISIONS								SHEET NO.
NO.	BY:	DATE:	NO.	BY:	DATE:			SP-42
1			3					TOTAL SHEETS
2			4					83

DRAWN BY: T. BANKOVICH DATE: 12-13
CHECKED BY: T.J. BEACH DATE: 12-13
DESIGN ENGINEER OF RECORD: J.A. BATTS DATE: 12-13

STR. #14

1/14/2014 2:58:21 PM G:\Projects\2012\U-0071 (Durham Co.)\Structures\Drawings\Final\Bridge 189\Preservation\U-0071_Br 189_prs_bt1.dgn

END ELEVATION

SOUTH FACE

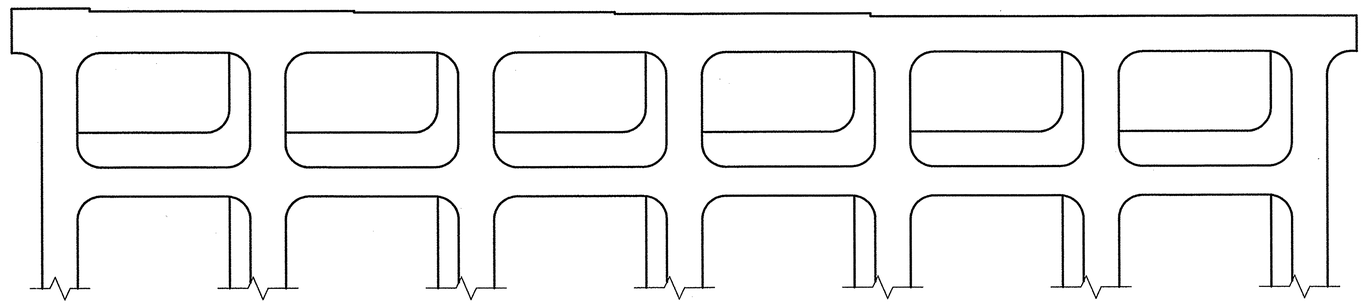

ELEVATION

EAST FACE

CONCRETE REPAIR

SHOTCRETE REPAIR

ERI EPOXY RESIN INJECTION

REPAIR QUANTITY TABLE

REPAIR BENT 1	QUANTITIES					
	ESTIMATE			ACTUAL		
SHOTCRETE REPAIR	AREA SF	DEPTH FT	VOLUME CF	AREA SF	DEPTH FT	VOLUME CF
CAP (VERITCAL FACE)	0.00	0.00	0.00			
CAP (HORIZONTAL FACE)	0.00	0.00	0.00			
COLUMN (VERTICAL FACE)	0.00	0.00	0.00			
STRUT (HORIZONTAL FACE)	0.00	0.00	0.00			
CONCRETE REPAIR	0.00	0.00	0.00			
EPOXY RESIN INJECTION			LF			LF
CAP			0.00			
COLUMN			0.00			
STRUT			0.00			
EPOXY PROTECTIVE COATING			SF			SF
TOP OF CAP			397			

VALUES IN CHART REPRESENT ESTIMATED REPAIR TOTAL AFTER REMOVAL OF UNSOUND CONCRETE, MIN. OF 1" BEHIND REBAR AND MIN. 1" CL TO SAWCUT. SEE SUBSTRUCTURE CONCRETE REPAIR DETAILS.

PROJECT NO. U-0071

DURHAM COUNTY

STATION: 24+70.18 -DFWB-

SHEET 2 OF 2

STATE OF NORTH CAROLINA
DEPARTMENT OF TRANSPORTATION
RALEIGH
PRESERVATION

BENT 1

PLANS PREPARED BY:

SIMPSON ENGINEERS & ASSOCIATES
5640 Dillard Drive
Suite 200
Cary, NC 27518
(919) 852-0468
(919) 852-0598 (Fax)
www.simpsonengr.com
LICENSURE NO. C-2521

NORTH CAROLINA PROFESSIONAL SEAL 18056 ENGINEER JOHN A. BATTS
1/10/2014

REVISIONS						SHEET NO.
NO.	BY:	DATE:	NO.	BY:	DATE:	SP-43
1			3			TOTAL SHEETS
2			4			83

STR. #14

DRAWN BY: T. BANKOVICH DATE: 12-13
CHECKED BY: T.J. BEACH DATE: 12-13
DESIGN ENGINEER OF RECORD: J.A. BATTS DATE: 12-13

1/14/2014 2:58:21 PM G:\Projects\2012\U-0071 (Durham Co.)\Structures\Drawings\Final\Bridge 189\Preservation\U-0071_Br 189_prs_bt1.dgn

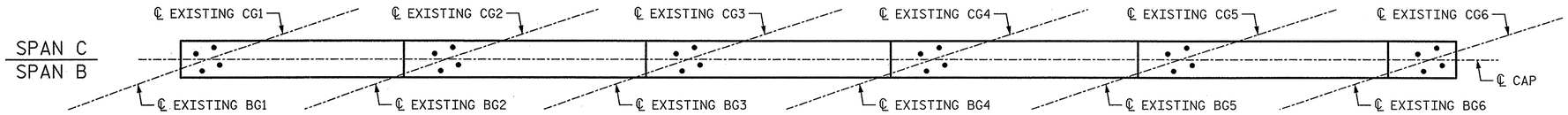

PLAN TOP OF CAP

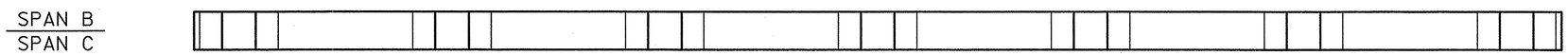

PLAN BOTTOM OF CAP

NOTES:

NO REPAIRS ARE ANTICIPATED AT BENT 2 BASED ON THE BEST INFORMATION AVAILABLE. IF REPAIRS ARE DEEMED NECESSARY BY THE ENGINEER, THE CONTRACTOR SHALL NOTE ON THE DRAWINGS THE APPROXIMATE LOCATION AND DESCRIPTION OF THE REPAIRS AND ENTER THE ACTUAL QUANTITIES INTO THE REPAIR QUANTITY TABLE.

FOR REPAIR QUANTITY TABLE, SEE SHEET 2 OF 2.

EPOXY PROTECTIVE COATING SHALL BE APPLIED TO THE TOP FACE OF THE ENTIRE BENT CAP EXCEPT AREA UNDER THE BEARINGS.

FOR EPOXY PROTECTIVE COATING, SEE SPECIAL PROVISIONS.

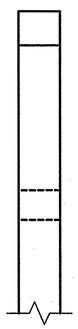

END ELEVATION

NORTH FACE

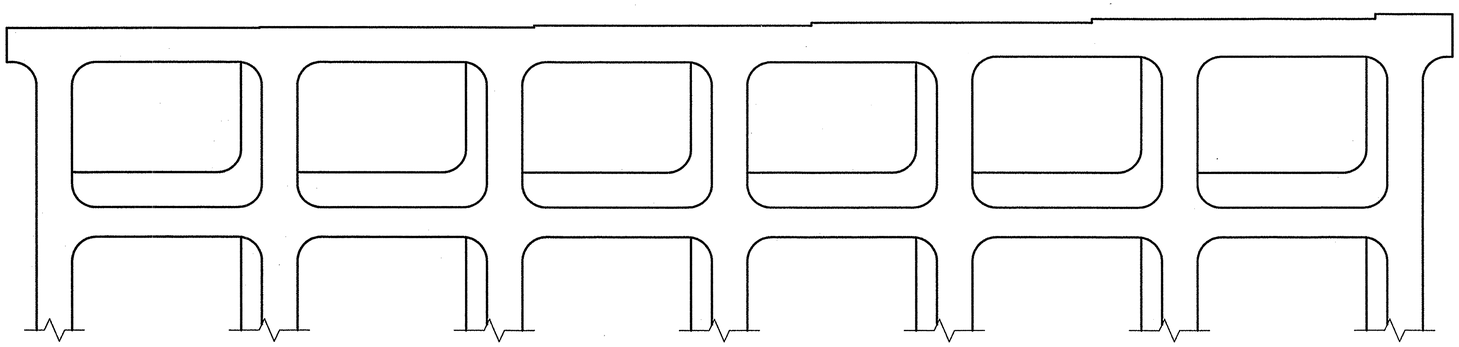

ELEVATION

WEST FACE

CONCRETE REPAIR

SHOTCRETE REPAIR

ERI EPOXY RESIN INJECTION

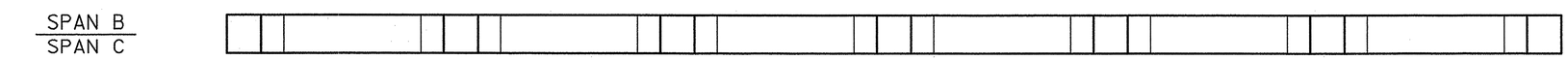

PLAN BOTTOM OF STRUT

PROJECT NO. U-0071

DURHAM COUNTY

STATION: 24+70.18 -DFWB-

SHEET 1 OF 2

STATE OF NORTH CAROLINA
DEPARTMENT OF TRANSPORTATION
RALEIGH
PRESERVATION

BENT 2

PLANS PREPARED BY:

SIMPSON ENGINEERS & ASSOCIATES
5640 Dillard Drive
Suite 200
Cary, NC 27518
(919) 852-0468
(919) 852-0598 (Fax)
www.simpsonengr.com
LICENSURE NO. C-2521

NORTH CAROLINA PROFESSIONAL SEAL 18056 ENGINEER JOHN A. BATTS
1/16/2014

REVISIONS						SHEET NO.
NO.	BY:	DATE:	NO.	BY:	DATE:	SP-44
1			3			TOTAL SHEETS
2			4			83

STR. #14

DRAWN BY: T. BANKOVICH DATE: 12-13
CHECKED BY: T.J. BEACH DATE: 12-13
DESIGN ENGINEER OF RECORD: J.A. BATTS DATE: 12-13

1/14/2014 2:58:22 PM G:\Projects\2012\U-0071 (Durham Co.)\Structures\Drawings\Final\Bridge 189\Preservation\U-0071_Br 189_prs_bt2.dgn

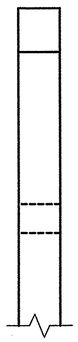

END ELEVATION

SOUTH FACE

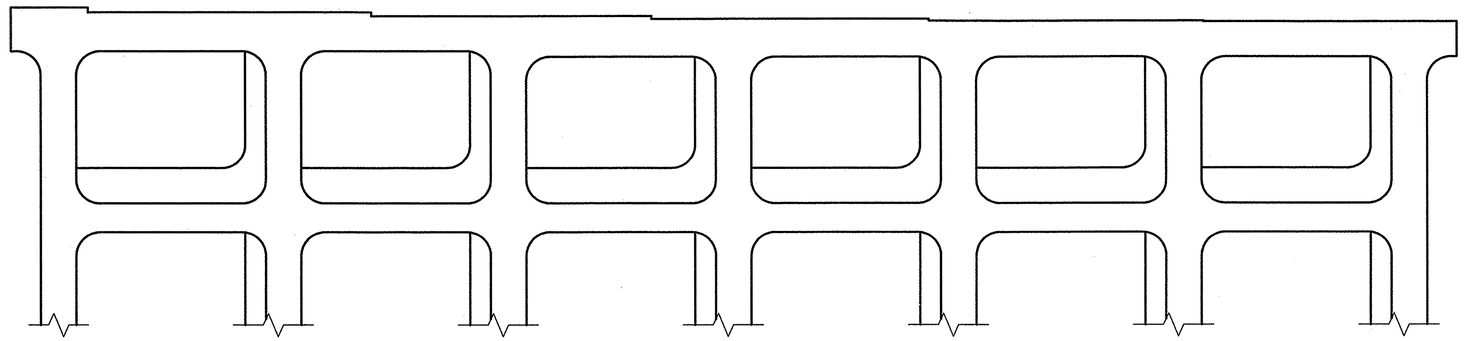

ELEVATION

EAST FACE

CONCRETE REPAIR

SHOTCRETE REPAIR

ERI EPOXY RESIN INJECTION

REPAIR QUANTITY TABLE

REPAIR BENT 2	QUANTITIES					
	ESTIMATE			ACTUAL		
SHOTCRETE REPAIR	AREA SF	DEPTH FT	VOLUME CF	AREA SF	DEPTH FT	VOLUME CF
CAP (VERITCAL FACE)	0.00	0.00	0.00			
CAP (HORIZONTAL FACE)	0.00	0.00	0.00			
COLUMN (VERTICAL FACE)	0.00	0.00	0.00			
STRUT (HORIZONTAL FACE)	0.00	0.00	0.00			
CONCRETE REPAIR	0.00	0.00	0.00			
EPOXY RESIN INJECTION			LF			LF
CAP			0.00			
COLUMN			0.00			
STRUT			0.00			
EPOXY PROTECTIVE COATING			SF			SF
TOP OF CAP			427			

VALUES IN CHART REPRESENT ESTIMATED REPAIR TOTAL AFTER REMOVAL OF UNSOUND CONCRETE, MIN. OF 1" BEHIND REBAR AND MIN. 1" CL TO SAWCUT. SEE SUBSTRUCTURE CONCRETE REPAIR DETAILS.

PROJECT NO. U-0071

DURHAM COUNTY

STATION: 24+70.18 -DFWB-

SHEET 2 OF 2

STATE OF NORTH CAROLINA
DEPARTMENT OF TRANSPORTATION
RALEIGH
PRESERVATION

BENT 2

PLANS PREPARED BY:

SIMPSON ENGINEERS & ASSOCIATES
5640 Dillard Drive
Suite 200
Cary, NC 27518
(919) 852-0468
(919) 852-0598 (Fax)
www.simpsonengr.com
LICENSURE NO. C-2521

NORTH CAROLINA PROFESSIONAL SEAL 18056 ENGINEER JOHN A. BATTS
1/16/2014

REVISIONS						SHEET NO.
NO.	BY:	DATE:	NO.	BY:	DATE:	SP-45
1			3			TOTAL SHEETS
2			4			83

STR. #14

DRAWN BY: T. BANKOVICH DATE: 12-13
CHECKED BY: T.J. BEACH DATE: 12-13
DESIGN ENGINEER OF RECORD: J.A. BATTS DATE: 12-13

1/14/2014 2:58:22 PM G:\Projects\2012\U-0071 (Durham Co.)\Structures\Drawings\Final\Bridge 189\Preservation\U-0071_Br 189_prs_bt2.dgn

NOTES:

NO REPAIRS ARE ANTICIPATED AT END BENT 2 BASED ON THE BEST INFORMATION AVAILABLE. IF REPAIRS ARE DEEMED NECESSARY BY THE ENGINEER, THE CONTRACTOR SHALL NOTE ON THE DRAWINGS THE APPROXIMATE LOCATION AND DESCRIPTION OF THE REPAIRS AND ENTER THE ACTUAL QUANTITIES INTO THE REPAIR QUANTITY TABLE.

EPOXY PROTECTIVE COATING SHALL BE APPLIED TO THE TOP FACE OF THE ENTIRE END BENT CAP EXCEPT AREA UNDER THE BEARINGS.

FOR EPOXY PROTECTIVE COATING, SEE SPECIAL PROVISIONS.

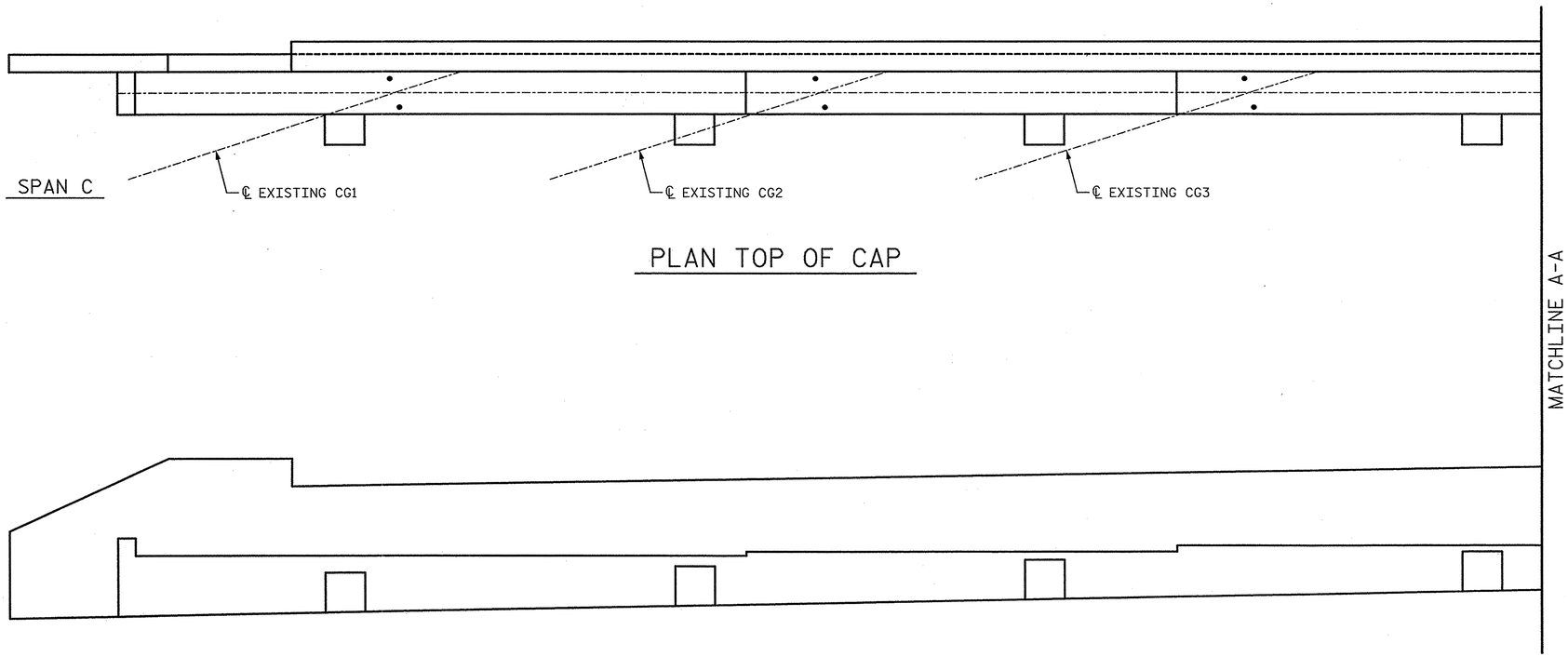

PLAN TOP OF CAP

ELEVATION FRONT FACE OF CAP

REPAIR QUANTITY TABLE						
REPAIR END BENT 2	QUANTITIES					
	ESTIMATE			ACTUAL		
SHOTCRETE REPAIR	AREA SF	DEPTH FT	VOLUME CF	AREA SF	DEPTH FT	VOLUME CF
CAP (VERITCAL FACE)	0.00	0.00	0.00			
CAP (HORIZONTAL FACE)	0.00	0.00	0.00			
CONCRETE REPAIR	0.00	0.00	0.00			
EPOXY RESIN INJECTION			LF			LF
CAP			0.00			
EPOXY PROTECTIVE COATING			SF			SF
TOP OF CAP			400			

VALUES IN CHART REPRESENT ESTIMATED REPAIR TOTAL AFTER REMOVAL OF UNSOUND CONCRETE, MIN. OF 1" BEHIND REBAR AND MIN. 1" CL TO SAWCUT. SEE SUBSTRUCTURE CONCRETE REPAIR DETAILS.

CONCRETE REPAIR

SHOTCRETE REPAIR

ERI EPOXY RESIN INJECTION

PROJECT NO. U-0071

DURHAM COUNTY

STATION: 24+70.18 -DFWB-

SHEET 1 OF 2

STATE OF NORTH CAROLINA
DEPARTMENT OF TRANSPORTATION
RALEIGH
PRESERVATION

END BENT 2

PLANS PREPARED BY:
SIMPSON ENGINEERS & ASSOCIATES
5640 Dillard Drive
Suite 200
Cary, NC 27518
(919) 852-0468
(919) 852-0598 (Fax)
www.simpsonengr.com
LICENSURE NO. C-2521

NORTH CAROLINA PROFESSIONAL SEAL 18056 ENGINEER JOHN A. BATTS
1/16/2014

REVISIONS						SHEET NO.
NO.	BY:	DATE:	NO.	BY:	DATE:	SP-46
1			3			TOTAL SHEETS
2			4			83

STR. #14

DRAWN BY: T. BANKOVICH DATE: 12-13
CHECKED BY: T.J. BEACH DATE: 12-13
DESIGN ENGINEER OF RECORD: J.A. BATTS DATE: 12-13

1/14/2014 2:58:22 PM G:\Projects\2012\U-0071 (Durham Co.)\Structures\Drawings\Final\Bridge 189\Preservation\U-0071_Br 189_prs_eb2.dgn

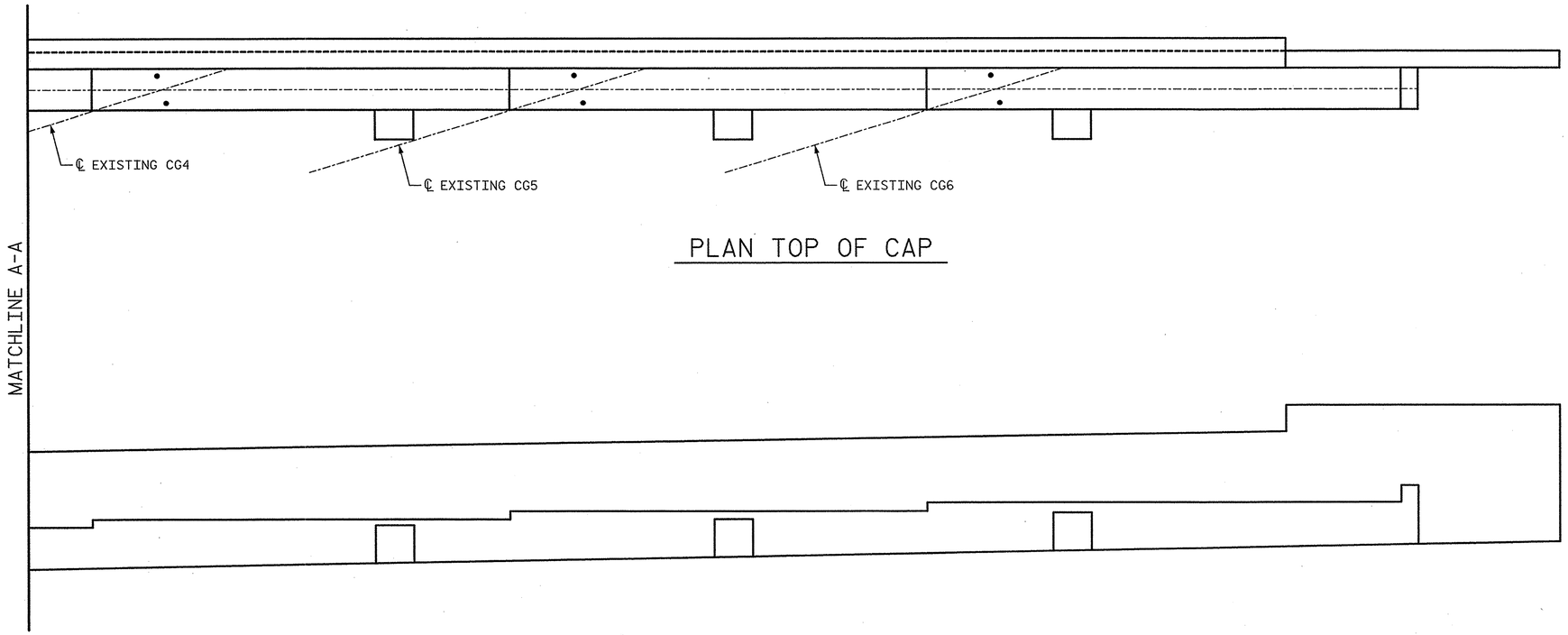

CONCRETE REPAIR

SHOTCRETE REPAIR

ERI EPOXY RESIN INJECTION

PROJECT NO. U-0071

DURHAM COUNTY

STATION: 24+70.18 -DFWB-

SHEET 2 OF 2

STATE OF NORTH CAROLINA
DEPARTMENT OF TRANSPORTATION
RALEIGH
PRESERVATION

END BENT 2

PLANS PREPARED BY:

SIMPSON ENGINEERS & ASSOCIATES
5640 Dillard Drive
Suite 200
Cary, NC 27518
(919) 852-0468
(919) 852-0598 (Fax)
www.simpsonengr.com
LICENSURE NO. C-2521

NORTH CAROLINA PROFESSIONAL SEAL 18056 ENGINEER JOHN A. BATTS
1/16/2014

REVISIONS							SHEET NO.
NO.	BY:	DATE:	NO.	BY:	DATE:		SP-47
1			3				TOTAL SHEETS
2			4				83

STR. #14

DRAWN BY: T. BANKOVICH DATE: 12-13
CHECKED BY: T.J. BEACH DATE: 12-13
DESIGN ENGINEER OF RECORD: J.A. BATTS DATE: 12-13

1/14/2014 2:58:22 PM G:\Projects\2012\U-0071 (Durham Co.)\Structures\Drawings\Final\Bridge 189\Preservation\U-0071_Br 189_prs_eb2.dgn

NOTES:

* FINE GRADE EXISTING SLOPE TO UNIFORM SURFACE.

FOR SECTION A-A, SEE SHEET 3 OF 3.

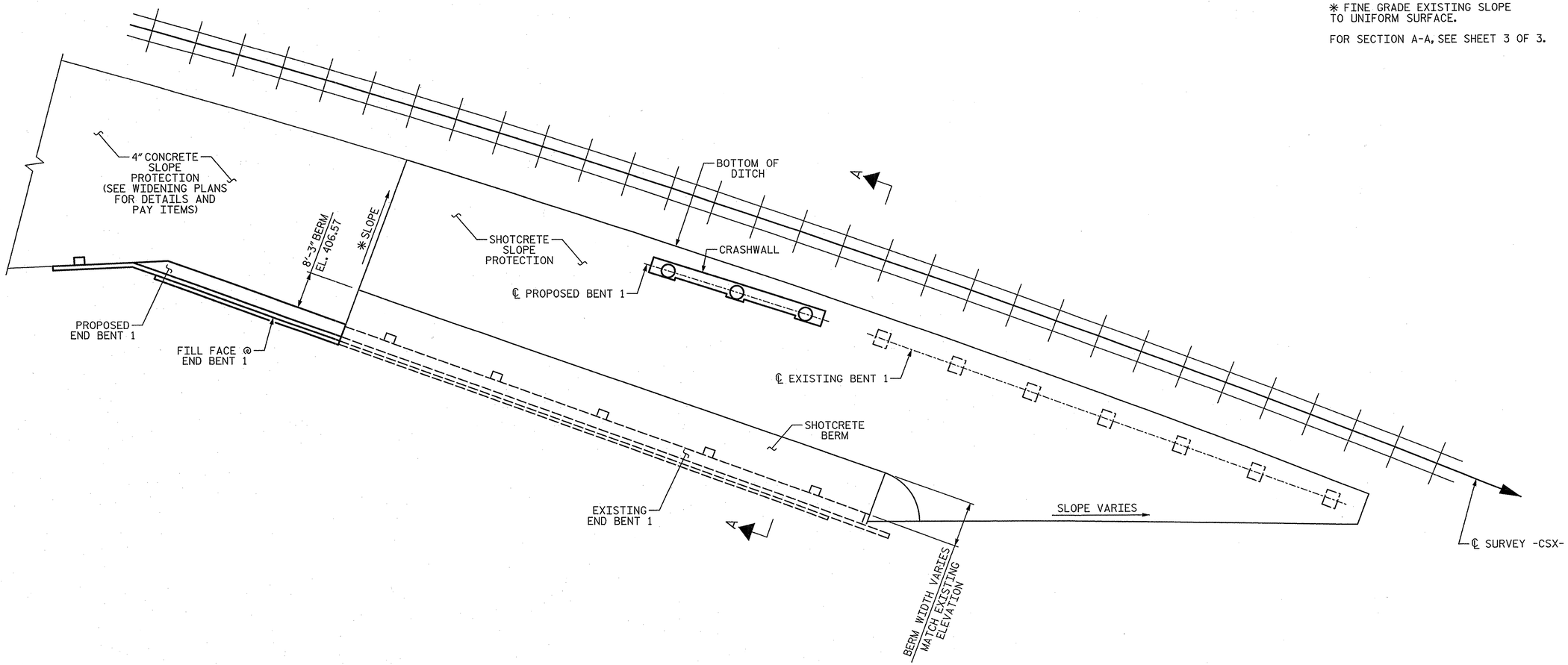

EXISTING END BENT 1

PROJECT NO. U-0071

DURHAM COUNTY

STATION: 24+70.18 -DFWB-

SHEET 1 OF 3

STATE OF NORTH CAROLINA
DEPARTMENT OF TRANSPORTATION
RALEIGH
PRESERVATION

SLOPE PROTECTION DETAILS

PLANS PREPARED BY:

SIMPSON ENGINEERS & ASSOCIATES
5640 Dillard Drive
Suite 200
Cary, NC 27518
(919) 852-0468
(919) 852-0598 (Fax)
www.simpsonengr.com
LICENSURE NO. C-2521

NORTH CAROLINA PROFESSIONAL SEAL 18056 ENGINEER JOHN A. BATTS 6/9/2014

REVISIONS						SHEET NO.
NO.	BY:	DATE:	NO.	BY:	DATE:	SP-48
1			3			TOTAL SHEETS
2			4			83

STR. #14

DRAWN BY: T. BANKOVICH DATE: 12-13
CHECKED BY: T.J. BEACH DATE: 12-13
DESIGN ENGINEER OF RECORD: J.A. BATTS DATE: 12-13

6/9/2014 9:33:15 AM G:\Projects\2012\U-0071 (Durham Co.)\Structures\Drawings\Final\Bridge 189\Preservation\U-0071_Br 189_prs_sp.dgn

NOTES:

✻ FINE GRADE EXISTING SLOPE TO UNIFORM SURFACE.

FOR SECTION A-A, SEE SHEET 3 OF 3.

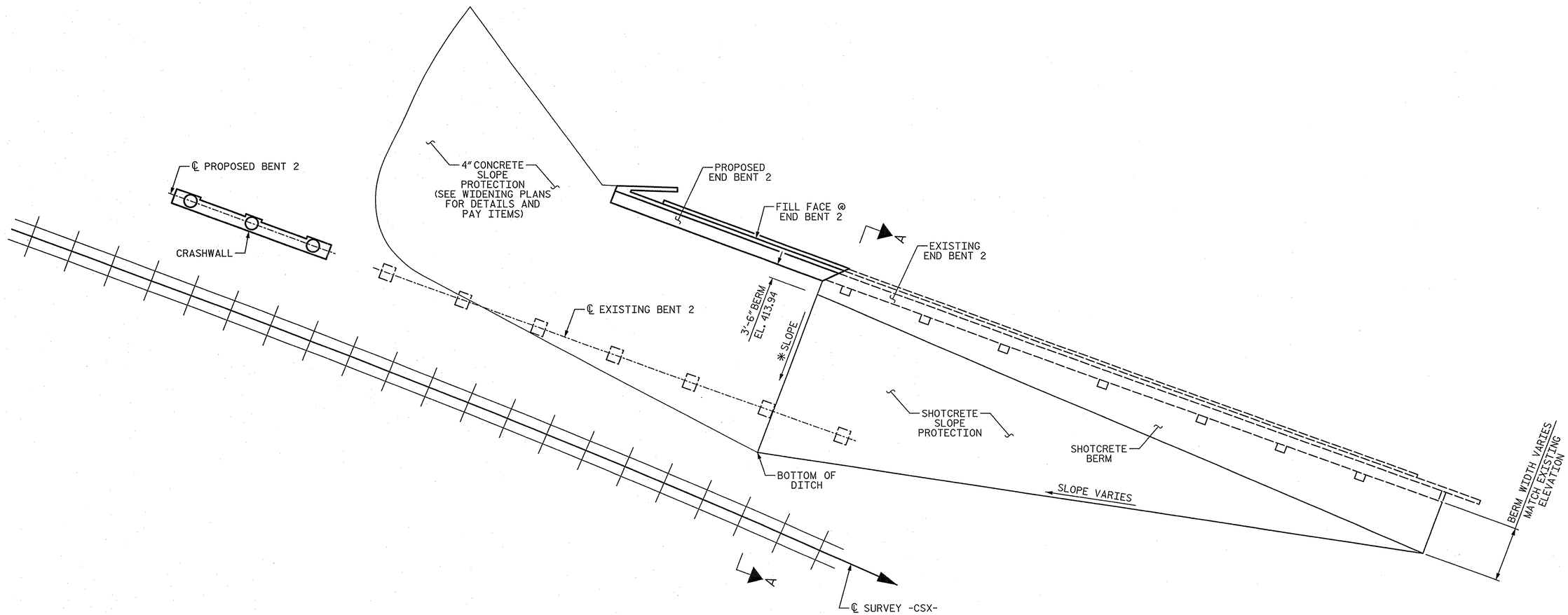

EXISTING END BENT 2

PROJECT NO. U-0071

DURHAM COUNTY

STATION: 24+70.18 -DFWB-

SHEET 2 OF 3

STATE OF NORTH CAROLINA
DEPARTMENT OF TRANSPORTATION
RALEIGH

PRESERVATION

SLOPE PROTECTION DETAILS

PLANS PREPARED BY:

SIMPSON ENGINEERS & ASSOCIATES
5640 Dillard Drive
Suite 200
Cary, NC 27518
(919) 852-0468
(919) 852-0598 (Fax)
www.simpsonengr.com
LICENSURE NO. C-2521

NORTH CAROLINA PROFESSIONAL SEAL 18056 ENGINEER JOHN A. BATTS
6/9/2014

REVISIONS						SHEET NO.
NO.	BY:	DATE:	NO.	BY:	DATE:	SP-49
1			3			TOTAL SHEETS
2			4			83

DRAWN BY:	T. BANKOVICH	DATE:	12-13
CHECKED BY:	T.J. BEACH	DATE:	12-13
DESIGN ENGINEER OF RECORD:	J.A. BATTS	DATE:	12-13

STR. #14

6/9/2014 9:23:33 AM G:\Projects\2012\U-0071 (Durham Co.)\Structures\Drawings\Final\Bridge 189\Preservation\U-0071_Br 189_prs_sp.dgn

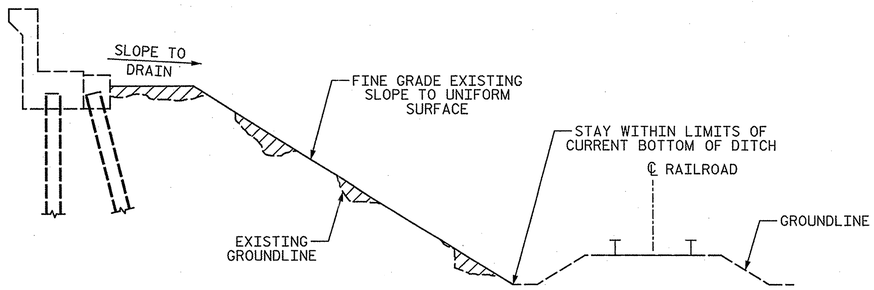

SECTION A-A

(SHOWING EXISTING CONDITION)

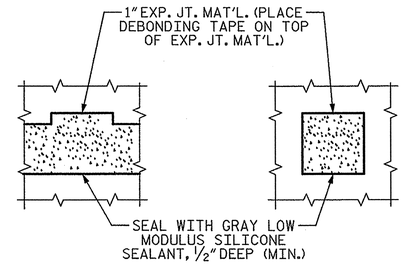

PLAN WHERE CONCRETE SLOPE PROTECTION MUST BE PLACED AROUND A BENT COLUMN OR CRASHWALL

NOTES:

SLOPE PROTECTION SHALL BE PLACED UNDER THE BRIDGE AS SHOW IN THE DETAILS. MEASUREMENT AND PAYMENT SHALL BE AS PRESCRIBED IN THE SPECIAL PROVISION "SHOTCRETE SLOPE PROTECTION".

FOR "SHOTCRETE SLOPE PROTECTION", SEE SPECIAL PROVISIONS.

SLOPE PROTECTION SHALL CONSIST OF SHOTCRETE PLACED AT A MINIMUM THICKNESS OF 4" AS SHOWN IN THE DETAILS ON THIS SHEET. WELDED WIRE FABRIC REINFORCING SHALL BE 6 X 6 - W1.4 X W1.4, 60" WIDE. THE COST OF THE WELDED WIRE FABRIC SHALL BE INCLUDED IN THE CONTRACT UNIT PRICE BID PER SQUARE YARD FOR SHOTCRETE SLOPE PROTECTION.

EXISTING BERM AND SLOPE UNDER BRIDGE SHALL BE FINE GRADED TO A UNIFORM SURFACE. THE COST OF GRADING THE EXISTING SLOPE SHALL BE INCLUDED IN THE CONTRACT UNIT PRICE BID PER SQUARE YARD FOR SHOTCRETE SLOPE PROTECTION.

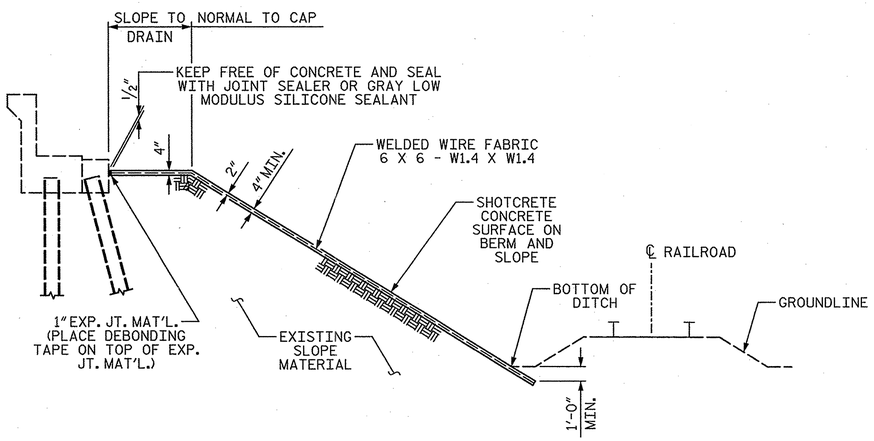

SECTION A-A

(SHOWING PROPOSED)

ESTIMATED QUANTITIES

BRIDGE @ STA. 24+70.18 -DFWB-	SHOTCRETE SLOPE PROTECTION	WELDED WIRE FABRIC 60 INCHES WIDE
	SY	APPROX. LF
END BENT 1	1180	2124
END BENT 2	640	1152

PROJECT NO. U-0071

DURHAM COUNTY

STATION: 24+70.18 -DFWB-

SHEET 3 OF 3

STATE OF NORTH CAROLINA
DEPARTMENT OF TRANSPORTATION
RALEIGH
PRESERVATION

SLOPE PROTECTION DETAILS

PLANS PREPARED BY:

SIMPSON ENGINEERS & ASSOCIATES
5640 Dillard Drive
Suite 200
Cary, NC 27518
(919) 852-0468
(919) 852-0598 (Fax)
www.simpsonengr.com
LICENSURE NO. C-2521

NORTH CAROLINA PROFESSIONAL SEAL 18056 ENGINEER JOHN A. BATTS 6/9/2014

REVISIONS								SHEET NO.
NO.	BY:	DATE:	NO.	BY:	DATE:			SP-50
1			3					TOTAL SHEETS
2			4					83

STR. #14

DRAWN BY: T. BANKOVICH DATE: 12-13
CHECKED BY: T.J. BEACH DATE: 12-13
DESIGN ENGINEER OF RECORD: J.A. BATTS DATE: 12-13

6/9/2014 9:23:33 AM G:\Projects\2012\U-0071 (Durham Co.)\Structures\Drawings\Final\Bridge 189\Preservation\U-0071_Br 189_prs_sp.dgn

HORIZONTAL CURVE DATA

PI STA. 15+92.86 -DFEB-
Δ = 17°-00′-00.0″(RT.)
D = 1°-30′-00.0″
L = 1,133.33′
T = 570.86′
R = 3819.72′

PIs 22+55.35 -DFEB-
θs = 2°-15′-00.0″
Ls = 300.00′
LT = 200.02′′
ST = 100.01′

PI STA. 28+49.07 -DFEB-
Δ = 3°-50′-07.3″(RT.)
D = 0°-35′-48.6″
L = 642.62′
T = 321.43′
R = 9,600.00′

▲ MIN. EXISTING HORIZONTAL CLEARANCE PROVIDED BY NCDOT ROUTINE BRIDGE INSPECTION REPORT DATED AUGUST 28, 2013

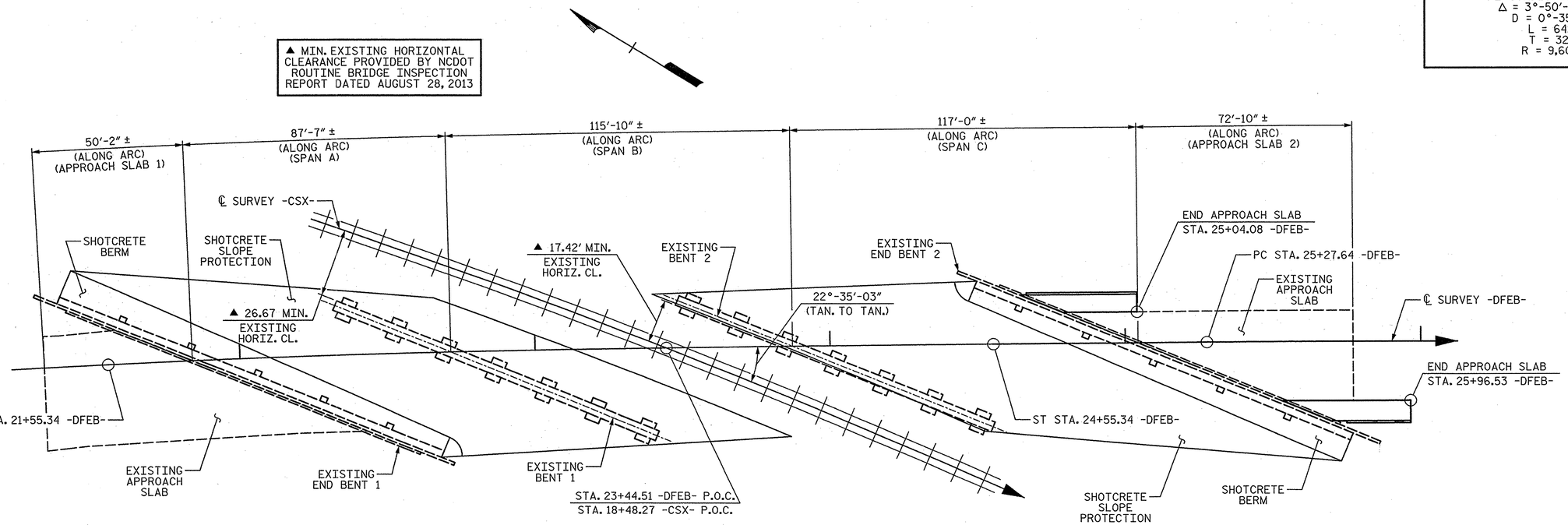

PLAN

(EXISTING PILES NOT SHOWN IN PLAN VIEW)

PROJECT NO. U-0071
DURHAM COUNTY
STATION: 23+44.51 -DFEB-

SHEET 1 OF 3 PRESERVATION OF BRIDGE #188

MILE POST 2.9
STATE OF NORTH CAROLINA
DEPARTMENT OF TRANSPORTATION
RALEIGH

GENERAL DRAWING

FOR BRIDGE ON NC 147
EAST BOUND LANE
OVER CSXT RAILROAD

PLANS PREPARED BY:
SIMPSON ENGINEERS & ASSOCIATES
5640 Dillard Drive
Suite 200
Cary, NC 27518
(919) 852-0468
(919) 852-0598 (Fax)
www.simpsonengr.com
LICENSURE NO. C-2521

NORTH CAROLINA PROFESSIONAL SEAL 18056 ENGINEER JOHN A. BATTS
1/16/2014

REVISIONS						SHEET NO.
NO.	BY:	DATE:	NO.	BY:	DATE:	SP-51
1			3			TOTAL SHEETS
2			4			83

STR. #15

DRAWN BY: T. BANKOVICH DATE: 12-13
CHECKED BY: T.J. BEACH DATE: 12-13
DESIGN ENGINEER OF RECORD: J.A. BATTS DATE: 12-13

1/15/2014 9:49:16 AM G:\Projects\2012\U-0071 (Durham Co.)\Structures\Drawings\Final\Bridge 188\Preservation\U-0071_Br188_prs_gd.dgn

BM #50 CHISELED SQUARE IN S.E. CONCRETE HW OF BRIDGE, STA. 25+52.14 -DFWB- 98.33' RT., EL. 416.16

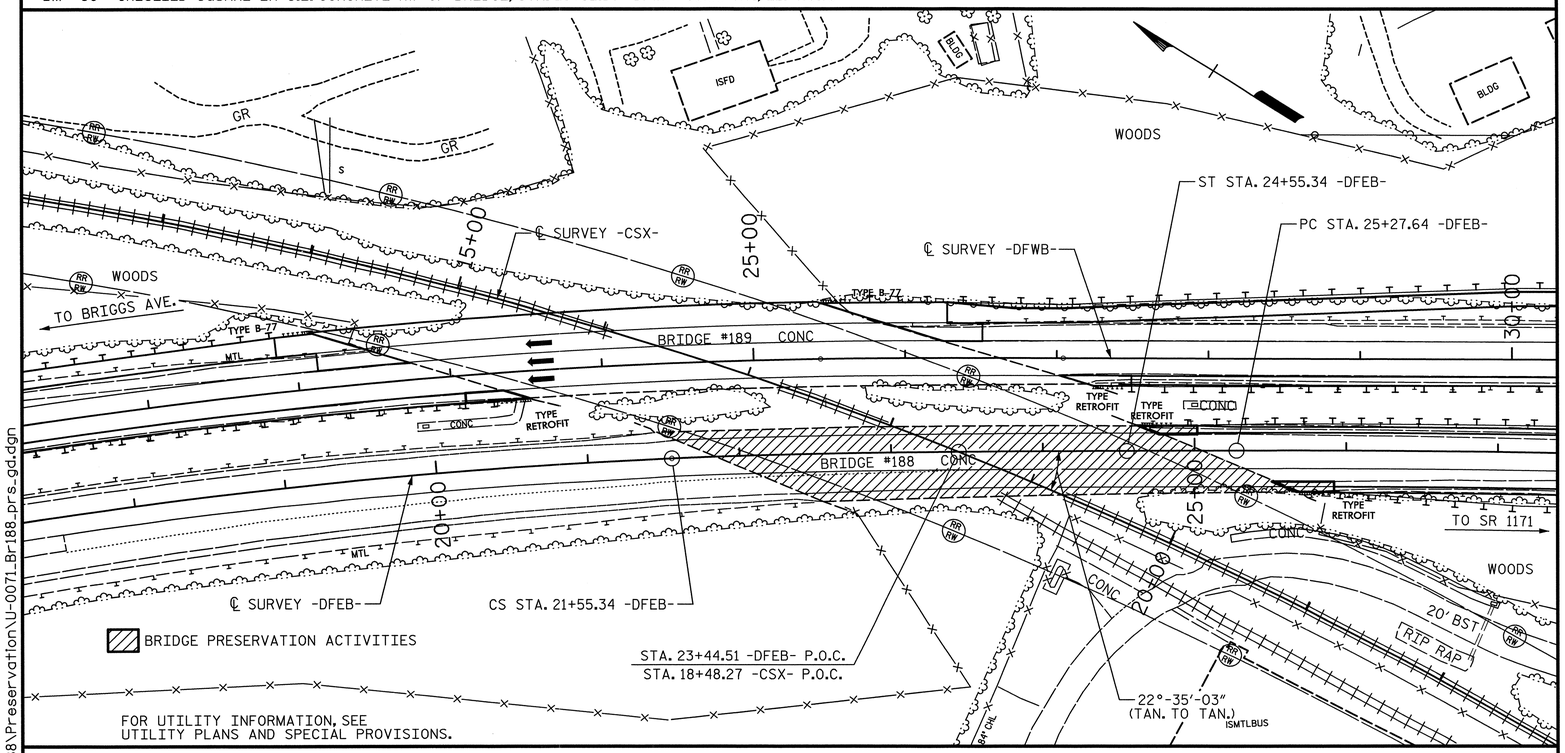

LOCATION SKETCH

TOTAL BILL OF MATERIAL

PAINTING EXISTING STRUCTURE	UNDER STRUCTURE WORK PLATFORM	POLLUTION CONTROL	GIRDER JACKING	SCARIFYING BRIDGE DECK	HYDRO-DEMOLITION OF BRIDGE DECK	BRIDGE JOINT DEMOLITION	JOINT REPAIR	CONCRETE FOR DECK REPAIR	LATEX MODIFIED CONCRETE - VERY EARLY STRENGTH	GROOVING BRIDGE FLOOR
LS	LS	LS	EA	SY	SY	SF	SF	CF	CY	SF
LS	LS	LS	16	2,102	2,102	351	227	136	120	18,739

TOTAL BILL OF MATERIAL (CONT'D.)

PLACING & FINISHING LATEX MODIFIED CONCRETE - VERY EARLY STRENGTH	VOLUMETRIC MIXER	FOAM JOINT SEALS	CONCRETE REPAIRS	SHOTCRETE REPAIRS	EPOXY RESIN INJECTION	EPOXY PROTECTIVE COATING	STRUCTURAL STEEL FOR GIRDER REPAIR	ANCHOR BOLT REPLACEMENT	BEARING REPLACEMENT	SHOTCRETE SLOPE PROTECTION
SY	LS	LS	CF	CF	LF	SF	LB	EA	EA	SY
2,175	LS	LS	66.2	18.33	6	1,489	17,500	4	5	2,030

NOTES:

THE BOUNDARIES OF AREAS IDENTIFIED FOR CLASS III SURFACE PREPARATION ARE APPROXIMATE. IF ANY CLASS III LOCATIONS ARE ENCOUNTERED PRIOR TO OR DURING HYDRO-DEMOLITION, THE CONTRACTOR SHALL PROVIDE A METHOD OF HANDLING UNEXPECTED BLOW THROUGH WORK OF THE DECK.

THE NOMINAL UNCOMPRESSED SEAL WIDTH OF FOAM JOINT SEAL SHALL BE 2½" AT END BENTS AND 2" AT INTERIOR BENTS. FOR "FOAM JOINT SEALS", SEE SPECIAL PROVISIONS.

FOR ELASTOMERIC CONCRETE, SEE SPECIAL PROVISIONS.

EXISTING JOINTS SHALL BE SEALED PRIOR TO BEGINNING SURFACE PREPARATION OF THE BRIDGE DECK.

EXISTING DIMENSIONS AND BRIDGE CONDITION ARE FROM THE BEST INFORMATION AVAILABLE. THE CONTRACTOR SHALL VERIFY THE INFORMATION SHOWN ON THE PLANS AND NOTIFY THE ENGINEER IF ACTUAL DIMENSIONS AND CONDITIONS DIFFER.

IT IS THE CONTRACTOR'S RESPONSIBILITY TO FOLLOW ALL STATE AND FEDERAL SAFETY REQUIREMENTS.

FOR CONTROL OF TRAFFIC AND LIMITS ON PHASING OF CONSTRUCTION, SEE TRAFFIC CONTROL PLANS.

FOR SUBMITTAL OF WORKING DRAWINGS, SEE SPECIAL PROVISIONS.

FOR FALSEWORK AND FORMWORK, SEE SPECIAL PROVISIONS.

FOR CRANE SAFETY, SEE SPECIAL PROVISIONS.

FOR OVERLAY SURFACE PREPARATION, SEE SPECIAL PROVISONS.

FOR CONCRETE FOR DECK REPAIR, SEE SPECIAL PROVISIONS.

FOR EPOXY RESIN INJECTION, SEE SPECIAL PROVISIONS.

FOR SHOTCRETE REPAIRS, SEE SPECIAL PROVISIONS.

FOR CONCRETE REPAIRS, SEE SPECIAL PROVISIONS.

FOR CLEANING AND PAINTING EXISTING BEARING PLATES, SEE SPECIAL PROVISIONS.

FOR JOINT REPAIR, SEE SPECIAL PROVISIONS.

FOR LATEX MODIFIED CONCRETE - VERY EARLY STRENGTH, SEE SPECIAL PROVISIONS.

FOR VOLUMETRIC MIXER, SEE SPECIAL PROVISIONS.

FOR STRUCTURAL STEEL FOR GIRDER REPAIR, SEE SPECIAL PROVISIONS.

FOR GIRDER JACKING, SEE SPECIAL PROVISIONS.

FOR SHOTCRETE SLOPE PROTECTION, SEE SPECIAL PROVISIONS.

FOR EPOXY PROTECTIVE COATING, SEE SPECIAL PROVISIONS.

FOR ANCHOR BOLT REPLACEMENT, SEE SPECIAL PROVISIONS.

FOR BEARING REPLACEMENT, SEE SPECIAL PROVISIONS.

DURING CONSTRUCTION, BERMS OR APPROPRIATE MEASURES SHALL BE USED TO ENSURE HYDRO-DEMOLITION WATER DOES NOT FLOW OR MIGRATE INTO ACTIVE TRAVEL LANES.

ALL VISUAL AND NON-DESTRUCTIVE TESTING WILL BE PERFORMED BY NCDOT.

INASMUCH AS THE PAINT SYSTEM ON THE EXISTING STRUCTURAL STEEL CONTAINS LEAD, THE CONTRACTOR'S ATTENTION IS DIRECTED TO ARTICLE 107-1 OF THE STANDARD SPECIFICATIONS. ANY COSTS RESULTING FROM COMPLIANCE WITH APPLICABLE STATE OR FEDERAL REGULATIONS PERTAINING TO HANDLING OF MATERIALS CONTAINING LEAD BASED PAINT SHALL BE INCLUDED IN THE LUMP SUM BID PRICE FOR "PAINTING EXISTING STRUCTURE".

FOR HANDLING OF BRIDGE WASH WATER, SEE SPECIAL PROVISIONS.

FOR PAINTING EXISTING STRUCTURE, SEE SPECIAL PROVISIONS.

FOR UNDER STRUCTURE WORK PLATFORM, SEE SPECIAL PROVISIONS.

THE LOCATION AND EXTENT OF REPAIRS SHOWN ON THE PLANS ARE GENERAL IN NATURE. THE ENGINEER WILL DETERMINE THE EXACT EXTENT OF REPAIR IN THE FIELD BASED ON AN EVALUATION OF THE CONDITION OF THE EXPOSED REPAIR SURFACES AFTER DEMOLITION.

REPLACEMENT OF DAMAGED REINFORCING STEEL AND DOWELS IN THE CONCRETE REPAIR SHALL BE CONSIDERED INCIDENTAL TO THE CONCRETE REPAIRS, NO ADDITIONAL PAYMENT OR MEASUREMENT WILL BE MADE.

ALL REINFORCING STEEL SHALL BE GRADE 60.

THE CONTRACTOR SHALL EXERCISE CARE TO ENSURE THAT EXISTING STRUCTURAL ELEMENTS THAT ARE TO REMAIN IN PLACE ARE UNDAMAGED BY BRIDGE CONSTRUCTION ACTIVITIES. ANY DAMAGE TO EXISTING STRUCTURAL ELEMENTS THAT ARE TO REMAIN SHALL BE REPAIRED BY THE CONTRACTOR TO THE SATISFACTION OF THE ENGINEER AT NO COST TO THE DEPARTMENT.

FOR GROUT FOR STRUCTURES, SEE SPECIAL PROVISIONS.

PROJECT NO. U-0071
DURHAM COUNTY
STATION: 23+44.51 -DFEB-

SHEET 2 OF 3

STATE OF NORTH CAROLINA
DEPARTMENT OF TRANSPORTATION
RALEIGH
PRESERVATION

LOCATION SKETCH AND TOTAL BILL OF MATERIAL

PLANS PREPARED BY:
SIMPSON ENGINEERS & ASSOCIATES
5640 Dillard Drive
Suite 200
Cary, NC 27518
(919) 852-0468
(919) 852-0598 (Fax)
www.simpsonengr.com
LICENSURE NO. C-2521

NORTH CAROLINA PROFESSIONAL SEAL 18056 ENGINEER JOHN A. BATTS
6/25/2014

REVISIONS						SHEET NO.
NO.	BY:	DATE:	NO.	BY:	DATE:	SP-52
1			3			TOTAL SHEETS
2			4			83

DRAWN BY: T. BANKOVICH DATE: 12-13
CHECKED BY: T.J. BEACH DATE: 12-13
DESIGN ENGINEER OF RECORD: J.A. BATTS DATE: 12-13

STR. #15

6/25/2014 2:32:15 PM G:\Projects\2012\U-0071 (Durham Co.)\Structures\Drawings\Final\Bridge 188\Preservation\U-0071_Br188_prs_gd.dgn

LOAD AND RESISTANCE FACTOR RATING (LRFR) SUMMARY FOR EXISTING STEEL GIRDERS

LEVEL		VEHICLE	WEIGHT (W) (TONS)	CONTROLLING LOAD RATING (#)	MINIMUM RATING FACTORS (RF)	TONS = W × RF	STRENGTH I LIMIT STATE											SERVICE II LIMIT STATE						COMMENT NUMBER
							LIVE-LOAD FACTORS (γ_{LL})	MOMENT					SHEAR					LIVE-LOAD FACTORS (γ_{LL})	MOMENT					
								DISTRIBUTION FACTORS (DF)	RATING FACTOR	SPAN	GIRDER LOCATION	DISTANCE FROM LEFT END OF SPAN (ft)	DISTRIBUTION FACTORS (DF)	RATING FACTOR	SPAN	GIRDER LOCATION	DISTANCE FROM LEFT END OF SPAN (ft)		DISTRIBUTION FACTORS (DF)	RATING FACTOR	SPAN	GIRDER LOCATION	DISTANCE FROM LEFT END OF SPAN (ft)	
DESIGN LOAD RATING		HL-93 (INVENTORY)	N/A	(1)	1.04	- -	1.75	0.695	1.04	B	G1	56.96	0.779	1.63	B	G6	116.44	1.30	0.611	1.10	C	G7	53.91	
		HL-93 (OPERATING)	N/A		1.35	- -	1.35	0.695	1.35	B	G1	56.96	0.779	2.12	B	G6	116.44	1.00	0.611	1.43	C	G7	53.91	
		HS-20 (INVENTORY)	36.00	(2)	1.47	52.9	1.75	0.695	1.47	B	G1	56.96	0.779	2.27	B	G6	116.44	1.30	0.611	1.56	C	G7	53.91	
		HS-20 (OPERATING)	36.00		1.91	68.6	1.35	0.695	1.91	B	G1	56.96	0.779	2.94	B	G6	116.44	1.00	0.611	2.03	C	G7	53.91	
LEGAL LOAD RATING	SINGLE VEHICLE (SV)	SNSH	13.500		3.48	47.0	1.40	0.695	3.48	A	G1	40	0.779	5.70	B	G6	0	1.30	0.695	3.64	A	G1	40	
		SNGARBS2	20.000		2.47	49.4	1.40	0.695	2.47	A	G1	40	0.779	3.96	B	G6	0	1.30	0.695	2.68	A	G1	40	
		SNAGRIS2	22.000		2.36	51.9	1.40	0.695	2.36	B	G1	56.96	0.779	3.64	B	G6	0	1.30	0.611	2.51	C	G7	53.91	
		SNCOTTS3	27.250		1.73	47.1	1.40	0.695	1.73	A	G1	40	0.779	2.83	B	G6	0	1.30	0.695	1.81	A	G1	40	
		SNAGGRS4	34.925		1.43	49.9	1.40	0.695	1.43	B	G1	56.96	0.779	2.29	B	G6	0	1.30	0.695	1.50	A	G1	40	
		SNS5A	35.550		1.40	49.8	1.40	0.695	1.40	B	G1	56.96	0.779	2.28	B	G6	0	1.30	0.695	1.47	A	G1	40	
		SNS6A	39.950		1.27	50.7	1.40	0.695	1.27	B	G1	56.96	0.779	2.06	B	G6	0	1.30	0.695	1.34	A	G1	40	
		SNS7B	42.000		1.21	50.8	1.40	0.695	1.21	B	G1	56.96	0.779	1.99	B	G6	116.44	1.30	0.695	1.28	A	G1	40	
	TRUCK TRACTOR SEMI-TRAILER (TTST)	TNAGRIT3	33.000		1.54	50.8	1.40	0.695	1.54	B	G1	56.96	0.779	2.47	B	G6	116.44	1.30	0.695	1.64	A	G1	40	
		TNT4A	33.075		1.55	51.3	1.40	0.695	1.55	B	G1	56.96	0.779	2.43	B	G6	0	1.30	0.695	1.64	A	G1	40	
		TNT6A	41.600		1.25	52.0	1.40	0.695	1.25	B	G1	56.96	0.779	2.07	B	G6	0	1.30	0.611	1.33	C	G7	53.91	
		TNT7A	42.000		1.25	52.5	1.40	0.695	1.25	B	G1	56.96	0.779	2.03	B	G6	116.44	1.30	0.611	1.33	C	G7	53.91	
		TNT7B	42.000		1.27	53.3	1.40	0.695	1.27	B	G1	56.96	0.779	1.97	B	G6	116.44	1.30	0.611	1.36	C	G7	53.91	
		TNAGRIT4	43.000		1.23	52.9	1.40	0.695	1.23	B	G1	56.96	0.779	1.91	B	G6	116.44	1.30	0.611	1.30	C	G7	53.91	
		TNAGT5A	45.000		1.16	52.2	1.40	0.695	1.16	B	G1	56.96	0.779	1.86	B	G6	0	1.30	0.611	1.24	C	G7	53.91	
		TNAGT5B	45.000	(3)	1.15	51.8	1.40	0.695	1.15	B	G1	56.96	0.779	1.82	B	G6	0	1.30	0.695	1.23	A	G1	40	
FATIGUE		HL-93 (INVENTORY)	γ_{LL}=0.75		2.06																			

LOAD FACTORS:

DESIGN LOAD RATING FACTORS	LIMIT STATE	γ_{DC}	γ_{DW}
	STRENGTH I	1.25	1.50
	SERVICE II	1.00	1.00

NOTES:

MINIMUM RATING FACTORS ARE BASED ON THE STRENGTH I AND SERVICE II LIMIT STATES.

ALLOWABLE STRESS FOR SERVICE II LIMIT STATE ARE AS REQUIRED FOR DESIGN.

COMMENTS:

1. FOR EXISTING GIRDERS ONLY.
2. DISTANCE FROM LEFT END OF SPAN IS MEASURED FROM ℄ BEARING.
3. LRFR IS BASED ON GIRDER DIMENSIONS FROM EXISTING PLANS. NO FIELD MEASUREMENTS OR SECTION LOSS WERE TAKEN INTO ACCOUNT.

(#) CONTROLLING LOAD RATING

(1) DESIGN LOAD RATING (HL-93)

(2) DESIGN LOAD RATING (HS-20)

(3) LEGAL LOAD RATING **

** SEE CHART FOR VEHICLE TYPE

GIRDER LOCATION

I - INTERIOR GIRDER
EL - EXTERIOR LEFT GIRDER
ER - EXTERIOR RIGHT GIRDER

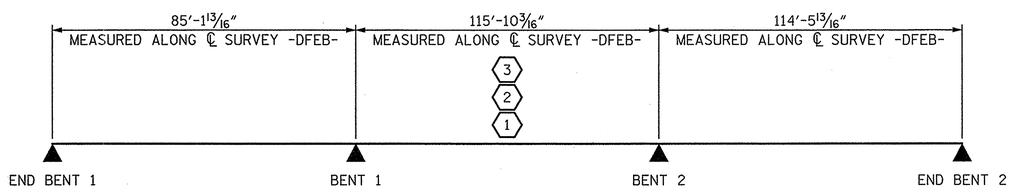

LRFR SUMMARY

PROJECT NO. U-0071
DURHAM COUNTY
STATION: 23+44.51 -DFEB-

SHEET 3 OF 3

STATE OF NORTH CAROLINA
DEPARTMENT OF TRANSPORTATION
RALEIGH
PRESERVATION

LRFR SUMMARY FOR EXISTING STEEL GIRDERS

(NON-INTERSTATE TRAFFIC)

REVISIONS						SHEET NO.
NO.	BY:	DATE:	NO.	BY:	DATE:	SP-53
1			3			TOTAL SHEETS
2			4			83

STR. #15

PLANS PREPARED BY:
SIMPSON ENGINEERS & ASSOCIATES
5640 Dillard Drive
Suite 200
Cary, NC 27518
(919) 852-0468
(919) 852-0598 (Fax)
www.simpsonengr.com
LICENSURE NO. C-2521

NORTH CAROLINA PROFESSIONAL SEAL 18056 ENGINEER JOHN A. BATTS
1/16/2014

DRAWN BY: T. BANKOVICH DATE: 12-13
CHECKED BY: T.J. BEACH DATE: 12-13
DESIGN ENGINEER OF RECORD: J.A. BATTS DATE: 12-13

1/15/2014 9:49:16 AM G:\Projects\2012\U-0071 (Durham Co.)\Structures\Drawings\Final\Bridge 188\Preservation\U-0071_Br188_prs_lrfr.dgn

NOTES:

FOR CONTROL OF TRAFFIC AND LIMITS OF PHASING OF CONSTRUCTION, SEE TRAFFIC CONTROL PLANS.

THE CONTRACTOR MUST COLLECT, TREAT AND DISPOSE OF RUN-OFF WATER FROM HYDRO-DEMOLITION PROCESS, SEE OVERLAY SURFACE PREPARATION SPECIAL PROVISION.

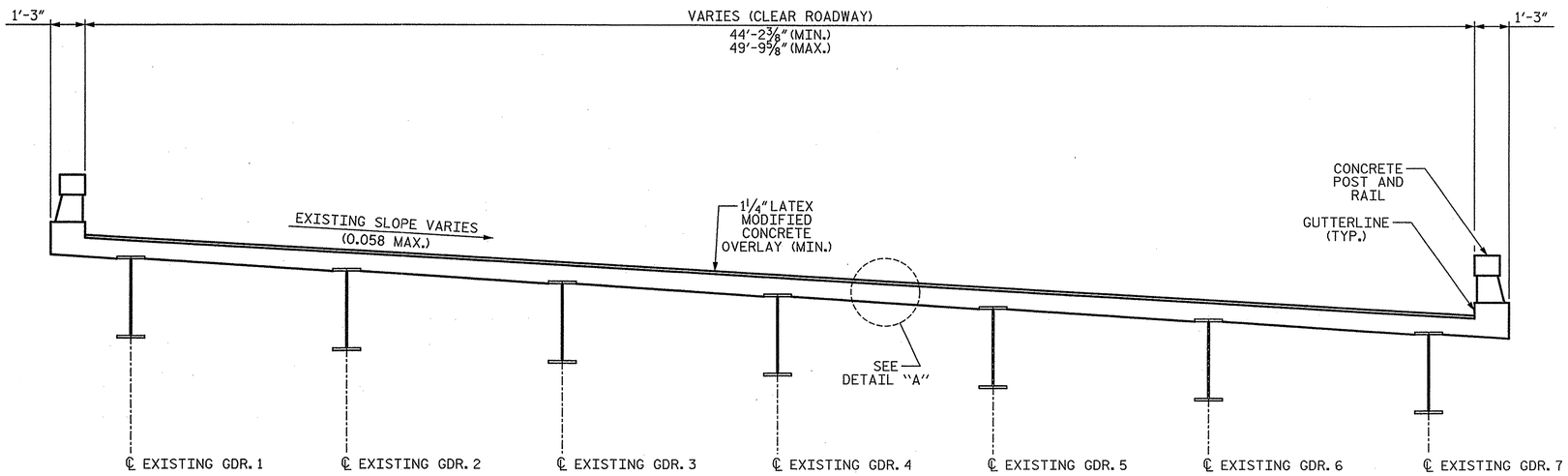

TYPICAL SECTION

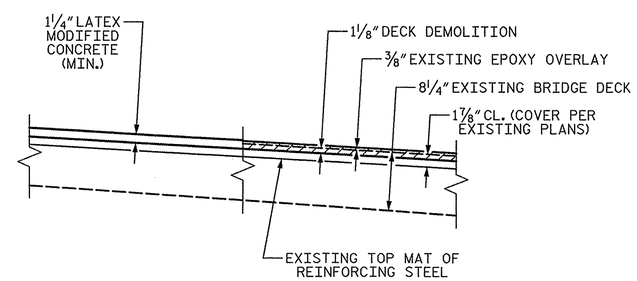

DETAIL "A"

SCARIFICATION AND HYDRO-DEMOLITION OF BRIDGE DECK

PROJECT NO. U-0071

DURHAM COUNTY

STATION: 23+44.51 -DFEB-

STATE OF NORTH CAROLINA
DEPARTMENT OF TRANSPORTATION
RALEIGH
PRESERVATION

TYPICAL SECTION

PLANS PREPARED BY:

SIMPSON ENGINEERS & ASSOCIATES
5640 Dillard Drive
Suite 200
Cary, NC 27518
(919) 852-0468
(919) 852-0598 (Fax)
www.simpsonengr.com
LICENSURE NO. C-2521

NORTH CAROLINA PROFESSIONAL SEAL 18056 ENGINEER JOHN A. BATTS
1/14/2014

REVISIONS								SHEET NO.
NO.	BY:	DATE:	NO.	BY:	DATE:			SP-54
1			3					TOTAL SHEETS
2			4					83

STR. #15

DRAWN BY: T. BANKOVICH DATE: 12-13
CHECKED BY: T.J. BEACH DATE: 12-13
DESIGN ENGINEER OF RECORD: J.A. BATTS DATE: 12-13

1/14/2014 3:12:54 PM G:\Projects\2012\U-0071 (Durham Co.)\Structures\Drawings\Final\Bridge 188\Preservation\U-0071_Br188_prs_ts.dgn

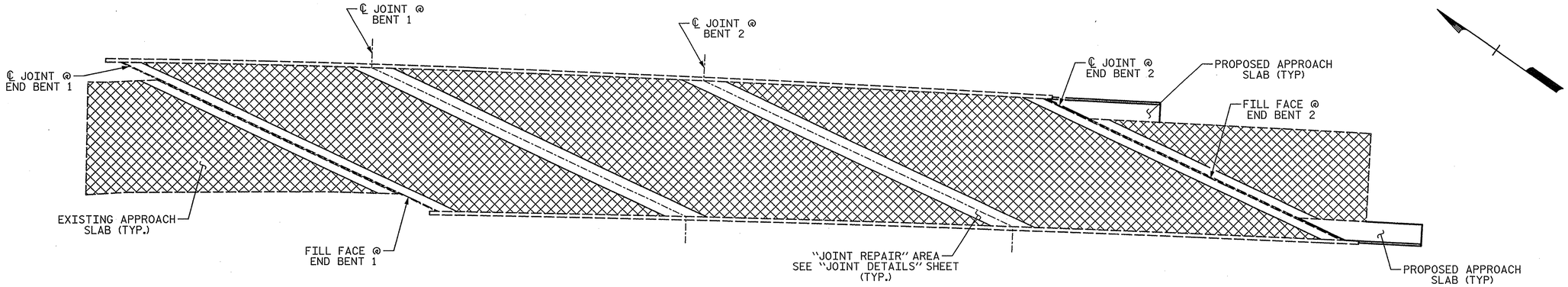

PLAN - SHOWING SCARIFICATION AND HYDRO-DEMOLITION AREA

SCARIFICATION AND HYDRO-DEMOLITION AREA

NO AREAS OF CLASS II OR CLASS III REPAIR WERE OBSERVED AT TIME OF BRIDGE INSPECTION.

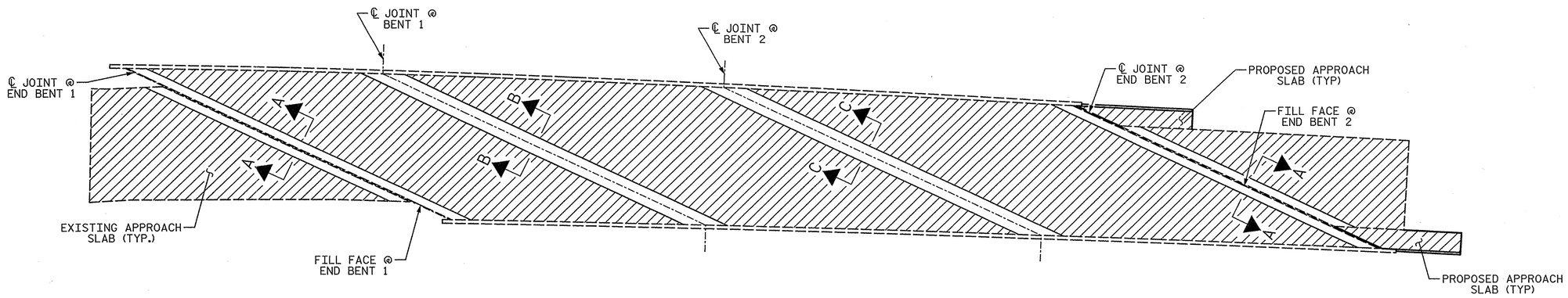

PLAN - SHOWING LATEX MODIFIED CONCRETE OVERLAY AREA

FOR SECTION VIEWS, SEE "JOINT DETAILS" SHEET

LATEX MODIFIED CONCRETE OVERLAY AREA

PROJECT NO. U-0071

DURHAM COUNTY

STATION: 23+44.51 -DFEB-

STATE OF NORTH CAROLINA
DEPARTMENT OF TRANSPORTATION
RALEIGH
PRESERVATION

SURFACE PRESERVATION

PLANS PREPARED BY:

SIMPSON ENGINEERS & ASSOCIATES
5640 Dillard Drive
Suite 200
Cary, NC 27518
(919) 852-0468
(919) 852-0598 (Fax)
www.simpsonengr.com
LICENSURE NO. C-2521

NORTH CAROLINA PROFESSIONAL SEAL 18056 ENGINEER JOHN A. BATTS
1/16/2014

REVISIONS						SHEET NO.
NO.	BY:	DATE:	NO.	BY:	DATE:	SP-55
1			3			TOTAL SHEETS
2			4			83

STR. #15

DRAWN BY: T. BANKOVICH DATE: 12-13
CHECKED BY: T.J. BEACH DATE: 12-13
DESIGN ENGINEER OF RECORD: J.A. BATTS DATE: 12-13

1/14/2014 3:12:55 PM G:\Projects\2012\U-0071 (Durham Co.)\Structures\Drawings\Final\Bridge 188\Preservation\U-0071_Br188_prs_hydro lmc.dgn

NOTES:

FOR FOAM JOINT SEALS, SEE SPECIAL PROVISIONS.

FOR ELASTOMERIC CONCRETE, SEE SPECIAL PROVISIONS.

ELASTOMERIC CONCRETE QUANTITY BASED ON MINIMUM BLOCKOUT SHOWN.

FOR JOINT REPAIR, SEE SPECIAL PROVISIONS.

THE INSTALLED FOAM JOINT SEALS SHALL BE WATERTIGHT.

NOMINAL UNCOMPRESSED SEAL WIDTH OF FOAM JOINT SEAL SHALL BE 2½"

THE CONTRACTOR WILL NOT BE PERMITTED TO FORM THE JOINT FOR THE FOAM JOINT SEAL IN LIEU OF SAWING THE JOINT.

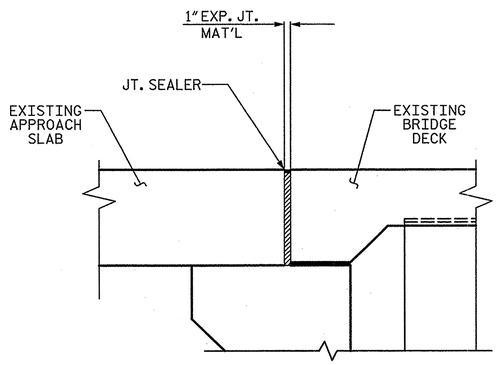

SECTION A-A
(EXISTING JOINT)

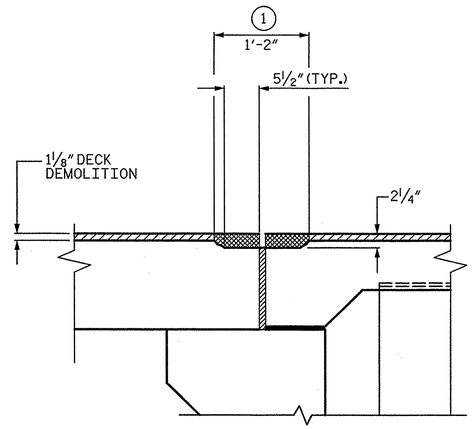

1 JOINT REPAIR AREA

SECTION A-A
(JOINT & DECK DEMOLITION)

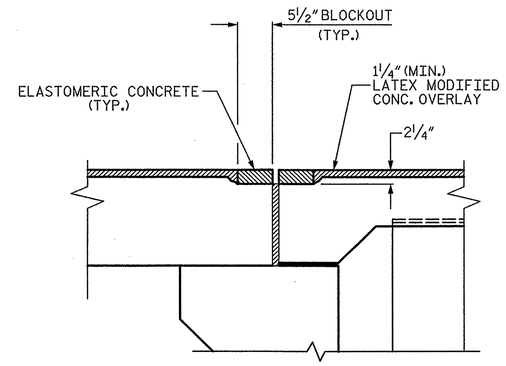

SECTION A-A
(SHOWING ELASTOMERIC HEADERS)

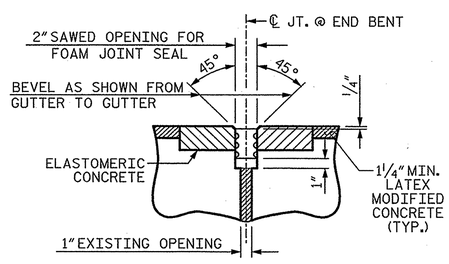

SECTION @ JOINT
FOAM JOINT SEAL
(FIXED)

ELASTOMERIC CONCRETE	
END BENT 1	18.3 CF
END BENT 2	13.8 CF
BRIDGE JOINT DEMOLITION	
END BENT 1	116 SF
END BENT 2	105 SF

PROJECT NO. U-0071
DURHAM COUNTY
STATION: 23+44.51 -DFEB-

SHEET 1 OF 3

STATE OF NORTH CAROLINA
DEPARTMENT OF TRANSPORTATION
RALEIGH
PRESERVATION

JOINT DETAILS AT END BENTS

PLANS PREPARED BY:
SIMPSON ENGINEERS & ASSOCIATES
5640 Dillard Drive
Suite 200
Cary, NC 27518
(919) 852-0468
(919) 852-0598 (Fax)
www.simpsonengr.com
LICENSURE NO. C-2521

NORTH CAROLINA PROFESSIONAL SEAL 18056 ENGINEER JOHN A. BATTS
1/16/2014

REVISIONS						
NO.	BY:	DATE:	NO.	BY:	DATE:	
1			3			
2			4			

SHEET NO. SP-5c
TOTAL SHEETS 83

STR. #15

DRAWN BY: T. BANKOVICH DATE: 12-13
CHECKED BY: T.J. BEACH DATE: 12-13
DESIGN ENGINEER OF RECORD: J.A. BATTS DATE: 12-13

1/14/2014 3:12:55 PM G:\Projects\2012\U-0071 (Durham Co.)\Structures\Drawings\Final\Bridge 188\Preservation\U-0071_Br 188_prs_jtdt.dgn

NOTES:

FOR FOAM JOINT SEALS, SEE SPECIAL PROVISIONS.

FOR ELASTOMERIC CONCRETE, SEE SPECIAL PROVISIONS.

ELASTOMERIC CONCRETE QUANTITY BASED ON MINIMUM BLOCKOUT SHOWN.

FOR JOINT REPAIR, SEE SPECIAL PROVISIONS.

THE INSTALLED FOAM JOINT SEALS SHALL BE WATERTIGHT.

NOMINAL UNCOMPRESSED SEAL WIDTH OF FOAM JOINT SEAL SHALL BE 2".

THE CONTRACTOR WILL NOT BE PERMITTED TO FORM THE JOINT FOR THE FOAM JOINT SEAL IN LIEU OF SAWING THE JOINT.

* IF THE EMBEDDED PORTION OF THE EXISTING PLASTIC WATERSTOP IS EXPOSED DURING REMOVAL OF UNSOUND CONCRETE, THE ENTIRE WATERSTOP SHALL BE REMOVED.

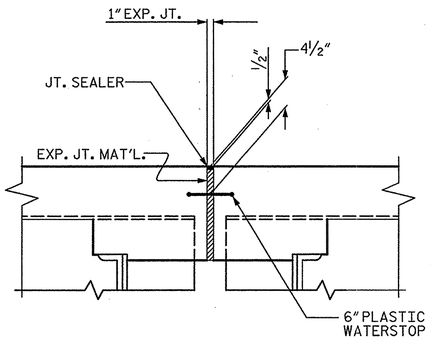

SECTION B-B
(EXISTING JOINT)

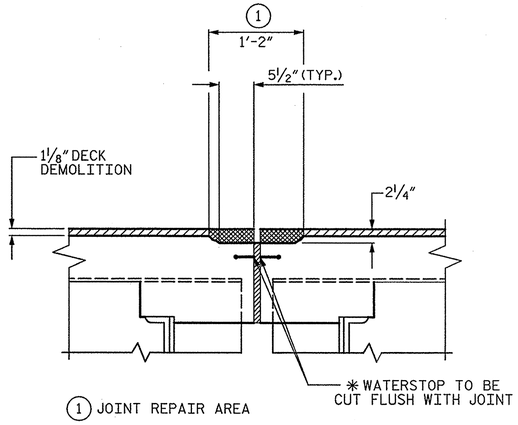

SECTION B-B
(JOINT & DECK DEMOLITION)

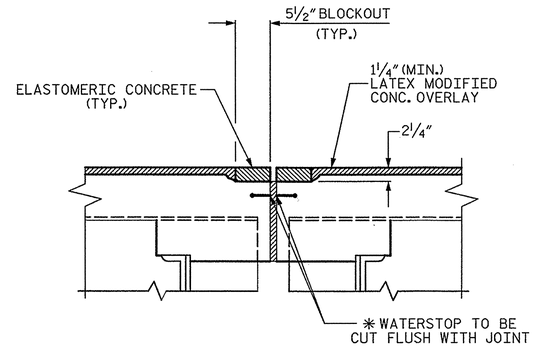

SECTION B-B
(SHOWING ELASTOMERIC HEADERS)

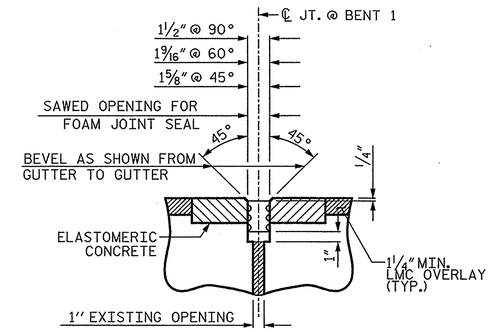

SECTION @ JOINT
FOAM JOINT SEAL
(EXPANSION)

ELASTOMERIC CONCRETE	
BENT 1	20.7 CF
BRIDGE JOINT DEMOLITION	
BENT 1	130 SF

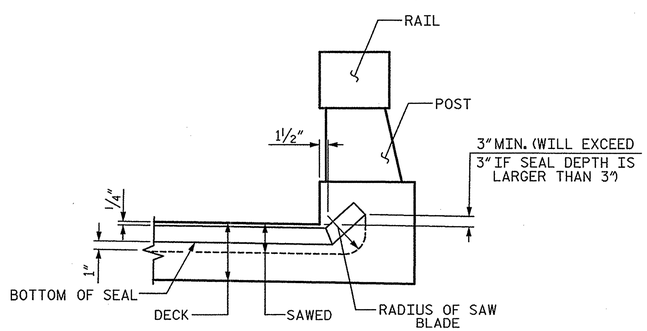

SECTION D-D

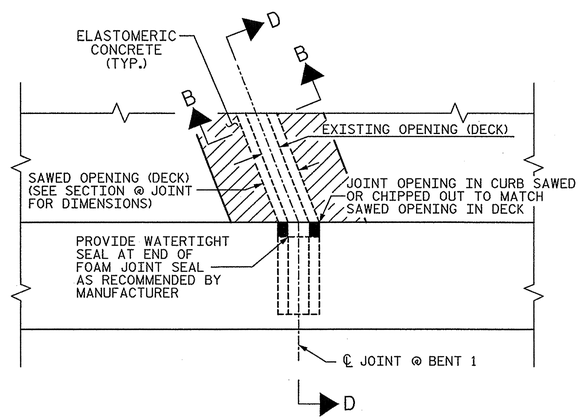

FOAM JOINT SEAL DETAILS

PROJECT NO. U-0071
DURHAM COUNTY
STATION: 23+44.51 -DFEB-

SHEET 2 OF 3

STATE OF NORTH CAROLINA
DEPARTMENT OF TRANSPORTATION
RALEIGH
PRESERVATION

JOINT DETAILS AT BENT 1

PLANS PREPARED BY:
SIMPSON ENGINEERS & ASSOCIATES
5640 Dillard Drive
Suite 200
Cary, NC 27518
(919) 852-0468
(919) 852-0598 (Fax)
www.simpsonengr.com
LICENSURE NO. C-2521

NORTH CAROLINA PROFESSIONAL SEAL 18056 ENGINEER JOHN A. BATTS
1/16/2014

REVISIONS						SHEET NO.
NO.	BY:	DATE:	NO.	BY:	DATE:	SP-57
1			3			TOTAL SHEETS
2			4			83

STR. #15

DRAWN BY: T. BANKOVICH DATE: 12-13
CHECKED BY: T.J. BEACH DATE: 12-13
DESIGN ENGINEER OF RECORD: J.A. BATTS DATE: 12-13

1/14/2014 3:12:55 PM G:\Projects\2012\U-0071 (Durham Co.)\Structures\Drawings\Final\Bridge 188\Preservation\U-0071_Br 188_prs_jtdt.dgn

NOTES:

FOR FOAM JOINT SEALS, SEE SPECIAL PROVISIONS.

FOR ELASTOMERIC CONCRETE, SEE SPECIAL PROVISIONS.

ELASTOMERIC CONCRETE QUANTITY BASED ON MINIMUM BLOCKOUT SHOWN.

FOR JOINT REPAIR, SEE SPECIAL PROVISIONS.

THE INSTALLED FOAM JOINT SEALS SHALL BE WATERTIGHT.

NOMINAL UNCOMPRESSED SEAL WIDTH OF FOAM JOINT SEAL SHALL BE 2".

THE CONTRACTOR WILL NOT BE PERMITTED TO FORM THE JOINT FOR THE FOAM JOINT SEAL IN LIEU OF SAWING THE JOINT.

DURING JOINT AND DECK DEMOLITION RETAIN REINFORCING STEEL IN THE DEMOLITION DECK AREA.

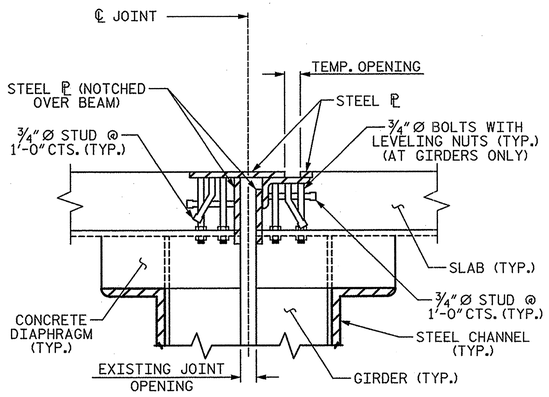

SECTION C-C

(EXISTING SLIDING ℙ JOINT)

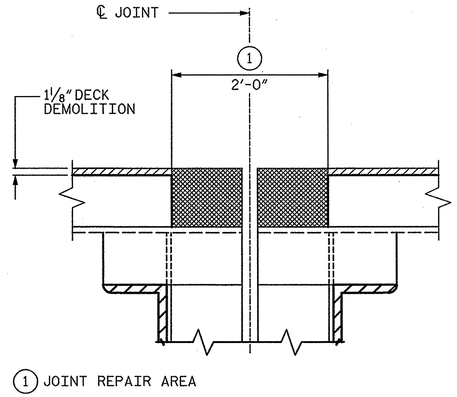

SECTION C-C

(JOINT & DECK DEMOLITION)

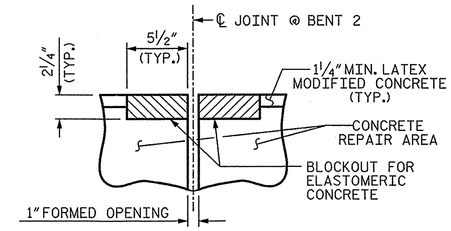

SECTION C-C

FOAM JOINT SEAL
(PRE-SAWED ELASTOMERIC CONCRETE DIMENSIONS)

ELASTOMERIC CONCRETE	
BENT 2	20.3 CF
JOINT REPAIR	
BENT 2	227 SF
CONCRETE FOR DECK REPAIR	
BENT 2	136 CF

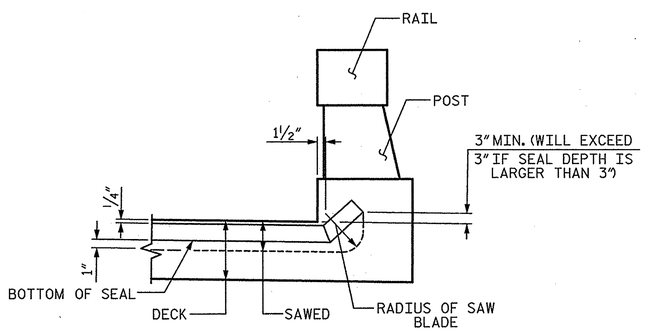

SECTION D-D

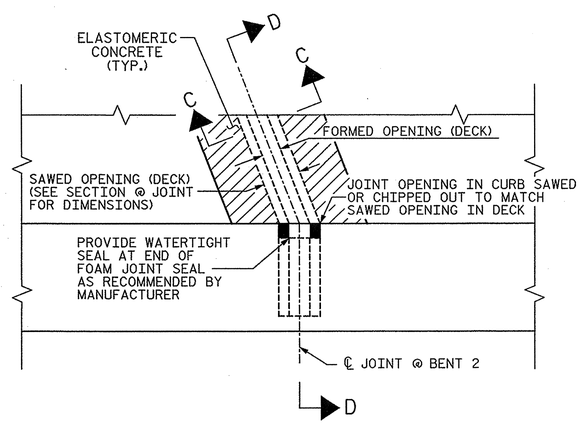

FOAM JOINT SEAL DETAILS

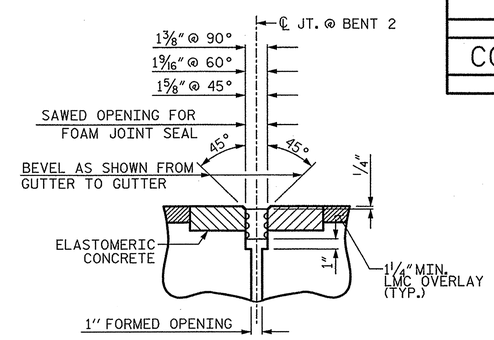

SECTION @ JOINT

FOAM JOINT SEAL
(EXPANSION)

PROJECT NO. U-0071

DURHAM COUNTY

STATION: 23+44.51 -DFEB-

SHEET 3 OF 3

STATE OF NORTH CAROLINA
DEPARTMENT OF TRANSPORTATION
RALEIGH
PRESERVATION

JOINT DETAILS AT BENT 2

PLANS PREPARED BY:

SIMPSON ENGINEERS & ASSOCIATES
5640 Dillard Drive
Suite 200
Cary, NC 27518
(919) 852-0468
(919) 852-0598 (Fax)
www.simpsonengr.com
LICENSURE NO. C-2521

NORTH CAROLINA PROFESSIONAL SEAL 18056 ENGINEER JOHN A. BATTS
1/16/2014

REVISIONS						SHEET NO.
NO.	BY:	DATE:	NO.	BY:	DATE:	SP-58
1			3			TOTAL SHEETS
2			4			83

STR. #15

DRAWN BY:	T. BANKOVICH	DATE:	12-13
CHECKED BY:	T.J. BEACH	DATE:	12-13
DESIGN ENGINEER OF RECORD:	J.A. BATTS	DATE:	12-13

1/14/2014 3:12:55 PM G:\Projects\2012\U-0071 (Durham Co.)\Structures\Drawings\Final\Bridge 188\Preservation\U-0071_Br 188_prs_jtdt.dgn

NOTES:

FOR STEEL REPAIRS, SEE "SUPERSTUCTURE STEEL REPAIR DETAILS" SHEET.

REPAIR LOCATIONS:

1: REPAIR SECTION LOSS ON GIRDER FROM GIRDER END EXTENDING 5'-0" ALONG GIRDER AND FROM BOTTOM FLANGE TO APPROXIMATELY 1'-0" INTO THE WEB PLATE.

2: REPAIR SECTION LOSS ON GIRDER FROM GIRDER END EXTENDING 10'-0" ALONG GIRDER FROM BOTTOM FLANGE TO APPROXIMATELY FULL HEIGHT OF WEB PLATE.

3: REPAIR SECTION LOSS ON GIRDER FROM GIRDER END TO CONNECTOR PLATE AND FROM BOTTOM FLANGE TO APPROXIMATELY 1'-0" INTO THE WEB PLATE.

4: REPAIR SECTION LOSS ON GIRDER FROM GIRDER END EXTENDING 6'-0" ALONG GIRDER FROM BOTTOM FLANGE TO APPROXIMATELY FULL HEIGHT OF WEB PLATE.

5: REPAIR SECTION LOSS ON GIRDER FROM GIRDER END EXTENDING 6'-0" ALONG GIRDER FROM BOTTOM FLANGE TO APPROXIMATELY FULL HEIGHT OF WEB PLATE.

6: REPAIR SPALLED, DELAMINATED OR CRACKED CONCRETE IN THE CONCRETE DIAPHRAGM AT BENT 1. SEE "CONCRETE DIAPHRAGM REPAIR DETAILS" SHEET.

20: REPAIR SECTION LOSS ON GIRDER FROM GIRDER END TO CONNECTOR PLATE AND FROM BOTTOM FLANGE TO APPROXIMATELY FULL HEIGHT OF WEB PLATE.

AFTER CLEANING EXISTING BEARING AND BEFORE PAINTING, THE ENGINEER SHALL INSPECT EACH STRUCTURAL PLATE FOR EXCESSIVE SECTION LOSS, STRUCTURAL CRACKS OR OTHER DEFICIENCIES TO DETERMINE IF BEARING REPLACEMENT IS REQUIRED. IF BEARING REPLACEMENT IS REQUIRED, THE CONTRACTOR SHALL REPLACE BEARING PLATES IN KIND EXCEPT ANY FILL PLATE THICKNESSES MAY BE INCLUDED IN THE VARIOUS PLATES TO ACHIEVE THE REQUIRED BEARING ASSEMBLY HEIGHT.

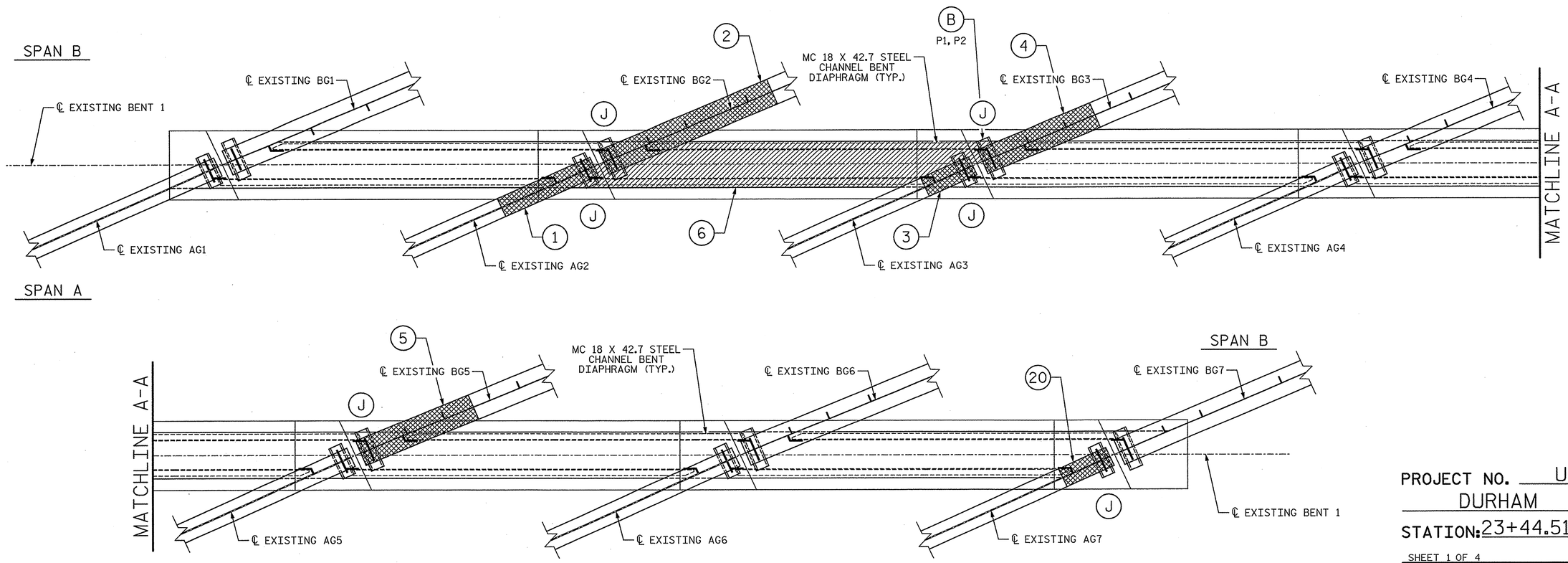

PLAN OF REPAIRS @ BENT 1

GIRDER FLANGE AND WEB REPAIR

DIAPHRAGM REPAIR

(J) JACKING REQUIRED, SEE JACKING DETAILS SHEET.

(B) BEARING REPLACEMENT, SEE BEARING REPLACEMENT DETAILS SHEET.

PROJECT NO. U-0071

DURHAM COUNTY

STATION: 23+44.51 -DFEB-

SHEET 1 OF 4

STATE OF NORTH CAROLINA
DEPARTMENT OF TRANSPORTATION
RALEIGH

PRESERVATION

SUPERSTRUCTURE REPAIRS AT EXISTING BENT 1

PLANS PREPARED BY:
SIMPSON ENGINEERS & ASSOCIATES
5640 Dillard Drive
Suite 200
Cary, NC 27518
(919) 852-0468
(919) 852-0598 (Fax)
www.simpsonengr.com
LICENSURE NO. C-2521

NORTH CAROLINA PROFESSIONAL SEAL 18056 ENGINEER JOHN A. BATTS 1/16/2014

REVISIONS							SHEET NO.
NO.	BY:	DATE:	NO.	BY:	DATE:		SP-59
1			3				TOTAL SHEETS
2			4				83

STR. #15

DRAWN BY: T. BANKOVICH DATE: 12-13
CHECKED BY: T.J. BEACH DATE: 12-13
DESIGN ENGINEER OF RECORD: J.A. BATTS DATE: 12-13

1/14/2014 3:12:56 PM G:\Projects\2012\U-0071 (Durham Co.)\Structures\Drawings\Final\Bridge 188\Preservation\U-0071_Br188_prs_fp.dgn

NOTES:

FOR STEEL REPAIRS, SEE "SUPERSTRUCTURE STEEL REPAIR DETAILS" SHEET.

REPAIR LOCATIONS:

7: REPAIR SECTION LOSS ON GIRDER FROM GIRDER END TO CONNECTOR PLATE AND FROM BOTTOM FLANGE TO APPROXIMATELY 1'-0" INTO THE WEB PLATE

8: REPAIR SECTION WITH RUST PACKING IN BOTTOM FLANGE FOR 10'-0" AT APPROXIMATELY MIDSPAN OF GIRDER. SEE SHEET 4 OF 4 FOR LOCATION.

9: REPAIR SECTION WITH RUST PACKING IN BOTTOM FLANGE FROM BOTTOM FLANGE TRANSITION TO ADJACENT INTERMEDIATE DIAPHRAGM.

10: REPAIR SECTION LOSS ON GIRDER FROM GIRDER END TO CONNECTOR PLATE AND FROM BOTTOM FLANGE TO APPROXIMATELY FULL HEIGHT OF WEB PLATE.

11: REPAIR SECTION WITH RUST PACKING IN BOTTOM FLANGE FOR 10'-0" AT APPROXIMATELY MIDSPAN OF GIRDER. SEE SHEET 4 OF 4 FOR LOCATION.

12: REPAIR SECTION WITH RUST PACKING IN BOTTOM FLANGE FROM BOTTOM FLANGE TRANSITION TO ADJACENT INTERMEDIATE DIAPHRAGM.

13: REPAIR SECTION LOSS ON GIRDER FROM GIRDER END EXTENDING 10'-0" ALONG GIRDER AND FROM BOTTOM FLANGE TO APPROXIMATELY FULL HEIGHT OF WEB PLATE.

14: REPAIR SPALLED, DELAMINATED OR CRACKED CONCRETE IN THE CONCRETE DIAPHRAGM AT BENT 2. SEE "CONCRETE DIAPHRAGM REPAIR DETAILS" SHEET.

15: REPAIR SECTION LOSS ON GIRDER FROM GIRDER END EXTENDING 10'-0" ALONG GIRDER AND FROM BOTTOM FLANGE APPROXIMATELY 2'-0" INTO THE WEB PLATE AND FULL HEIGHT OF WEB AT THE CONNECTOR PLATE.

AFTER CLEANING EXISTING BEARING AND BEFORE PAINTING, THE ENGINEER SHALL INSPECT EACH STRUCTURAL PLATE FOR EXCESSIVE SECTION LOSS, STRUCTURAL CRACKS OR OTHER DEFICIENCIES TO DETERMINE IF BEARING REPLACEMENT IS REQUIRED. IF BEARING REPLACEMENT IS REQUIRED, THE CONTRACTOR SHALL REPLACE BEARING PLATES IN KIND EXCEPT ANY FILL PLATE THICKNESSES MAY BE INCLUDED IN THE VARIOUS PLATES TO ACHIEVE THE REQUIRED BEARING ASSEMBLY HEIGHT.

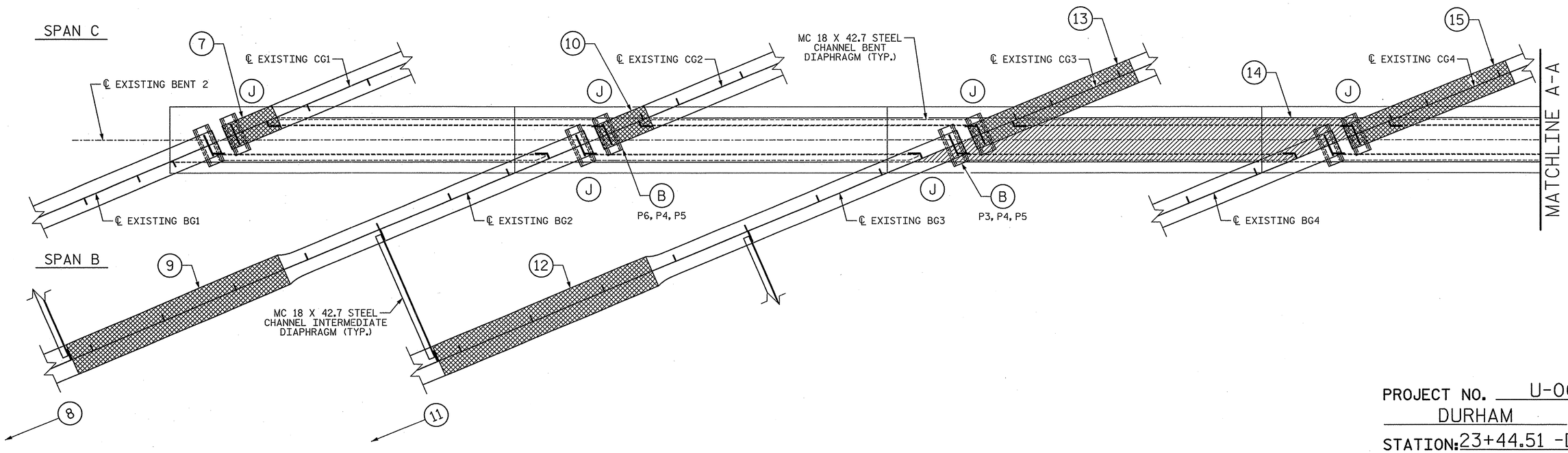

PLAN OF REPAIRS @ BENT 2

- GIRDER FLANGE AND WEB REPAIR
- DIAPHRAGM REPAIR
- (J) JACKING REQUIRED, SEE JACKING DETAILS SHEET.
- (B) BEARING REPLACEMENT, SEE BEARING REPLACEMENT DETAILS SHEET.

PROJECT NO. U-0071
DURHAM COUNTY
STATION: 23+44.51 -DFEB-

SHEET 2 OF 4

STATE OF NORTH CAROLINA
DEPARTMENT OF TRANSPORTATION
RALEIGH
PRESERVATION

SUPERSTRUCTURE REPAIRS AT EXISTING BENT 2

PLANS PREPARED BY:
SIMPSON ENGINEERS & ASSOCIATES
5640 Dillard Drive
Suite 200
Cary, NC 27518
(919) 852-0468
(919) 852-0598 (Fax)
www.simpsonengr.com
LICENSURE NO. C-2521

NORTH CAROLINA PROFESSIONAL SEAL 18056 ENGINEER JOHN A. BATTS
1/16/2014

REVISIONS						SHEET NO.
NO.	BY:	DATE:	NO.	BY:	DATE:	SP-60
1			3			TOTAL SHEETS
2			4			83

STR. #15

DRAWN BY:	T. BANKOVICH	DATE:	12-13
CHECKED BY:	T.J. BEACH	DATE:	12-13
DESIGN ENGINEER OF RECORD:	J.A. BATTS	DATE:	12-13

1/14/2014 3:12:56 PM G:\Projects\2012\U-0071 (Durham Co.)\Structures\Drawings\Final\Bridge 188\Preservation\U-0071_Br188_prs_fp.dgn

NOTES:

FOR STEEL REPAIRS, SEE "SUPERSTRUCTURE STEEL REPAIR DETAILS" SHEET.

REPAIR LOCATIONS:

16: REPAIR SECTION WITH RUST PACKING IN BOTTOM FLANGE FROM BOTTOM FLANGE TRANSITION TO ADJACENT INTERMEDIATE DIAPHRAGM.

17: REPAIR SECTION LOSS ON GIRDER FROM GIRDER END TO CONNECTOR PLATE AND FROM BOTTOM FLANGE TO APPROXIMATELY FULL HEIGHT OF WEB PLATE.

18: REPAIR SECTION WITH RUST PACKING IN BOTTOM FLANGE FROM BOTTOM FLANGE TRANSITION TO ADJACENT INTERMEDIATE DIAPHRAGM.

19: REPAIR SECTION LOSS ON STIFFENER PLATE FROM BOTTOM FLANGE APPROXIMATELY 1'-0" ALONG STIFFENER PLATE.

AFTER CLEANING EXISTING BEARING AND BEFORE PAINTING, THE ENGINEER SHALL INSPECT EACH STRUCTURAL PLATE FOR EXCESSIVE SECTION LOSS, STRUCTURAL CRACKS OR OTHER DEFICIENCIES TO DETERMINE IF BEARING REPLACEMENT IS REQUIRED. IF BEARING REPLACEMENT IS REQUIRED, THE CONTRACTOR SHALL REPLACE BEARING PLATES IN KIND EXCEPT ANY FILL PLATE THICKNESSES MAY BE INCLUDED IN THE VARIOUS PLATES TO ACHIEVE THE REQUIRED BEARING ASSEMBLY HEIGHT.

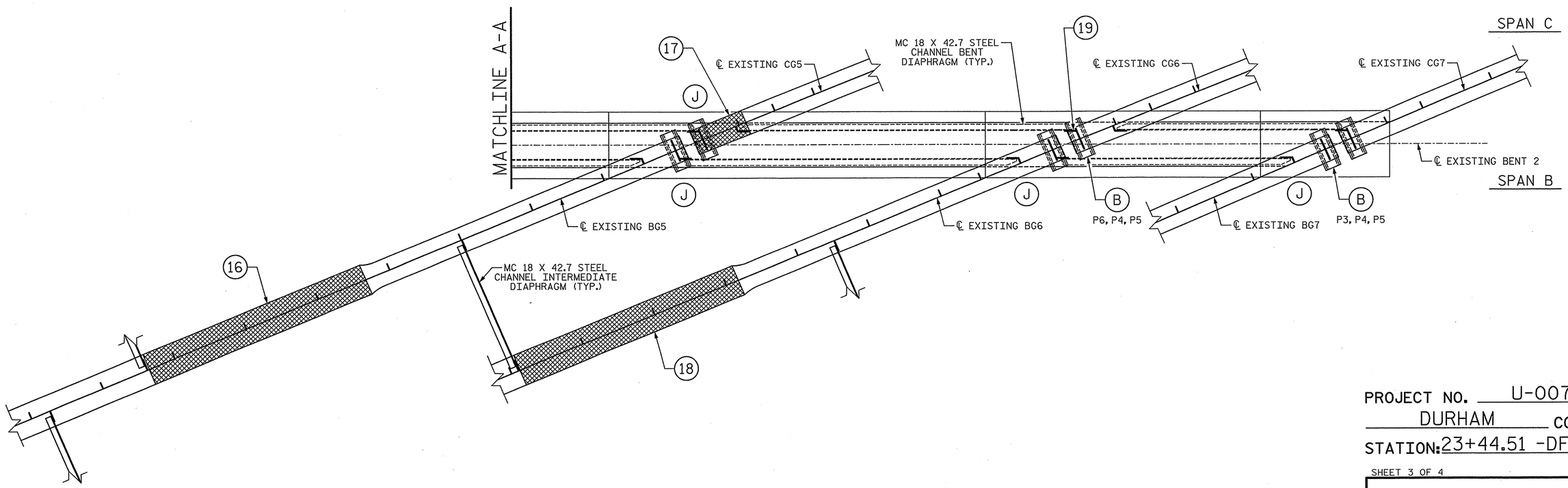

PLAN OF REPAIRS @ BENT 2

GIRDER FLANGE AND WEB REPAIR

(J) JACKING REQUIRED, SEE JACKING DETAILS SHEET.

(B) BEARING REPLACEMENT, SEE BEARING REPLACEMENT DETAILS SHEET.

PROJECT NO. U-0071

DURHAM COUNTY

STATION: 23+44.51 -DFEB-

SHEET 3 OF 4

STATE OF NORTH CAROLINA
DEPARTMENT OF TRANSPORTATION
RALEIGH

PRESERVATION

SUPERSTRUCTURE REPAIRS AT EXISTING BENT 2

PLANS PREPARED BY:
SIMPSON ENGINEERS & ASSOCIATES
5640 Dillard Drive
Suite 200
Cary, NC 27518
(919) 852-0468
(919) 852-0598 (Fax)
www.simpsonengr.com
LICENSURE NO. C-2521

NORTH CAROLINA PROFESSIONAL SEAL 18056 ENGINEER JOHN A. BATTS 1/14/2014

REVISIONS						SHEET NO.
NO.	BY:	DATE:	NO.	BY:	DATE:	SP-61
1			3			TOTAL SHEETS
2			4			83

STR. #15

DRAWN BY: T. BANKOVICH DATE: 12-13
CHECKED BY: T.J. BEACH DATE: 12-13
DESIGN ENGINEER OF RECORD: J.A. BATTS DATE: 12-13

1/14/2014 3:12:56 PM G:\Projects\2012\U-0071 (Durham Co.)\Structures\Drawings\Final\Bridge 188\Preservation\U-0071_Br188_prs_fp.dgn

NOTES:

FOR STEEL REPAIRS, SEE "SUPERSTRUCTURE STEEL REPAIR DETAILS" SHEET.

FOR (8) AND (11), SEE SHEET 2 OF 4.

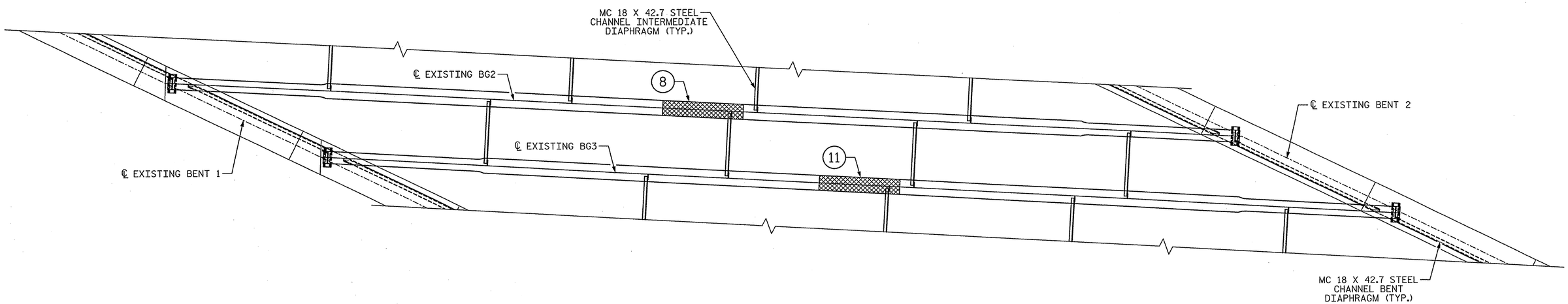

PLAN OF SPAN B

GIRDER FLANGE AND WEB REPAIR

PROJECT NO. U-0071

DURHAM COUNTY

STATION: 23+44.51 -DFEB-

SHEET 4 OF 4

STATE OF NORTH CAROLINA
DEPARTMENT OF TRANSPORTATION
RALEIGH
PRESERVATION

SUPERSTRUCTURE GIRDER REPAIRS

PLANS PREPARED BY:

SIMPSON ENGINEERS & ASSOCIATES
5640 Dillard Drive
Suite 200
Cary, NC 27518
(919) 852-0468
(919) 852-0598 (Fax)
www.simpsonengr.com
LICENSURE NO. C-2521

NORTH CAROLINA PROFESSIONAL SEAL 18056 ENGINEER JOHN A. BATTS 1/16/2014

REVISIONS							SHEET NO.
NO.	BY:	DATE:	NO.	BY:	DATE:		SP-62
1			3				TOTAL SHEETS
2			4				83

STR. #15

DRAWN BY: T. BANKOVICH DATE: 12-13
CHECKED BY: T.J. BEACH DATE: 12-13
DESIGN ENGINEER OF RECORD: J.A. BATTS DATE: 12-13

1/14/2014 3:12:56 PM G:\Projects\2012\U-0071 (Durham Co.)\Structures\Drawings\Final\Bridge 188\Preservation\U-0071_Br188_prs_fp.dgn

NOTES:

GIRDER, BEARING STIFFENER AND INTERMEDIATE STIFFENER PLATE DIMENSIONS ARE BASED ON ORIGINAL PLANS. CONTRACTOR SHALL FIELD VERIFY PLATE DIMENSIONS FOR EACH REPAIR LOCATION PRIOR TO MATERIAL ACQUISITION AND FABRICATION.

GIRDERS AG1 AND AG7 IN SPAN A ARE W 36 X 160 ROLLED BEAMS. GIRDERS AG2 THROUGH AG6 IN SPAN A ARE W 36 X 170 ROLLED BEAMS.

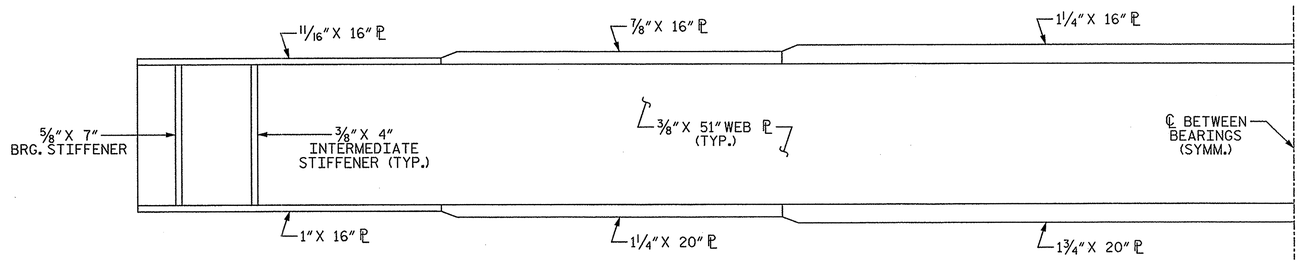

EXTERIOR GIRDER

(GIRDERS BG1, BG7, & CG1)

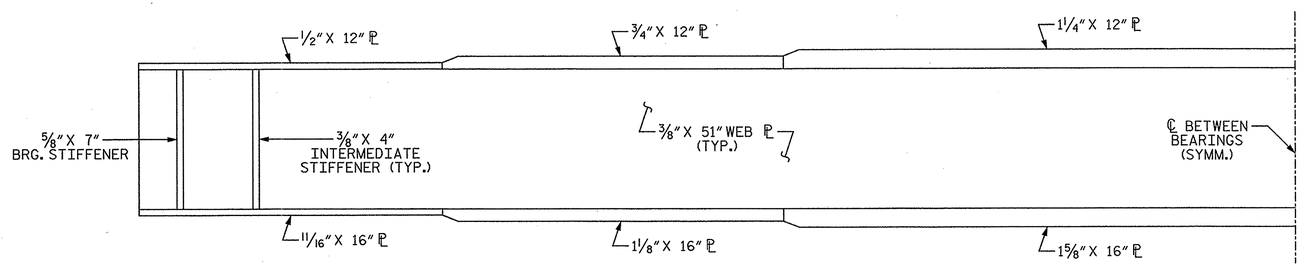

EXTERIOR GIRDER

(GIRDER CG7)

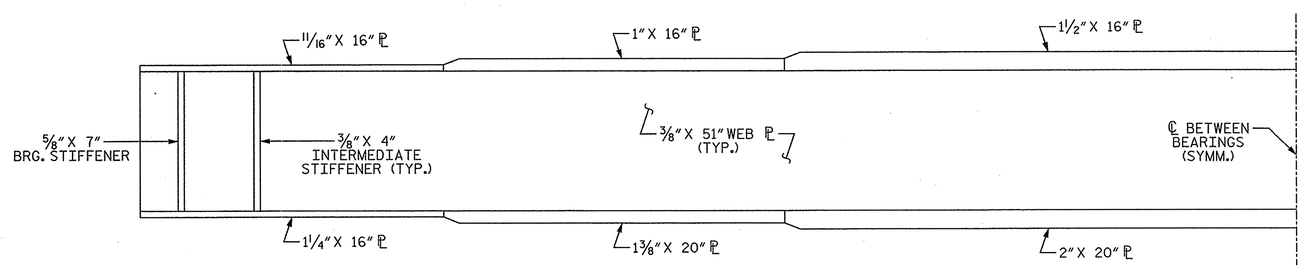

INTERIOR GIRDER

(GIRDERS BG2-BG6, & CG2-CG6)

PROJECT NO. U-0071

DURHAM COUNTY

STATION: 23+44.51 -DFEB-

STATE OF NORTH CAROLINA
DEPARTMENT OF TRANSPORTATION
RALEIGH
PRESERVATION

EXISTING GIRDER PLATE SIZES

PLANS PREPARED BY:

SIMPSON ENGINEERS & ASSOCIATES
5640 Dillard Drive
Suite 200
Cary, NC 27518
(919) 852-0468
(919) 852-0598 (Fax)
www.simpsonengr.com
LICENSURE NO. C-2521

NORTH CAROLINA PROFESSIONAL SEAL 18056 ENGINEER JOHN A. BATTS 1/16/2014

REVISIONS						SHEET NO.
NO.	BY:	DATE:	NO.	BY:	DATE:	SP-C3
1			3			TOTAL SHEETS
2			4			83

STR. #15

DRAWN BY:	T. BANKOVICH	DATE:	12-13
CHECKED BY:	T.J. BEACH	DATE:	12-13
DESIGN ENGINEER OF RECORD:	J.A. BATTS	DATE:	12-13

1/14/2014 3:12:56 PM G:\Projects\2012\U-0071 (Durham Co.)\Structures\Drawings\Final\Bridge 188\Preservation\U-0071_Br 188_prs_egps.dgn

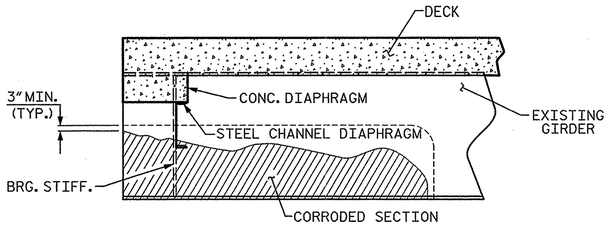

CORRODED GIRDER

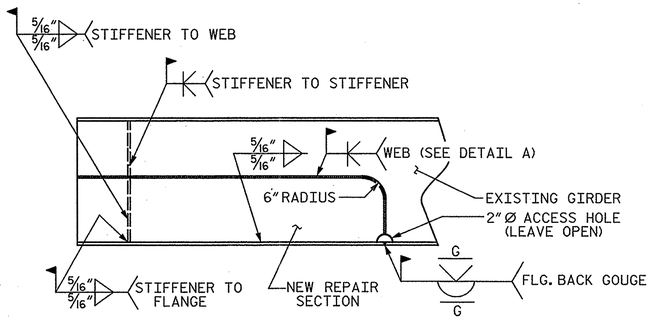

CUT OUT CORRODED SECTION

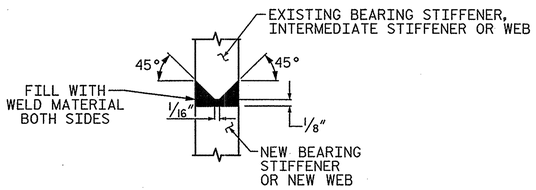

WELD DETAIL

END OF GIRDER REPAIR

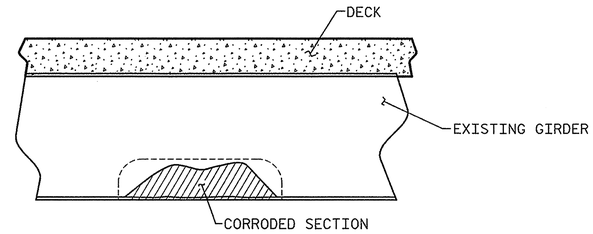

CORRODED GIRDER

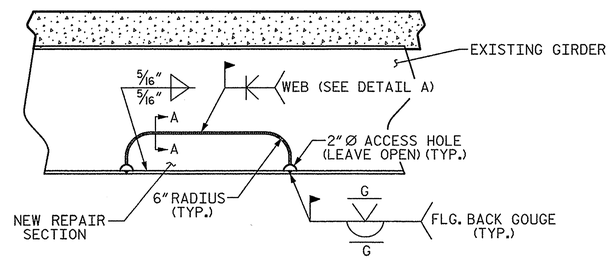

CUT OUT CORRODED SECTION

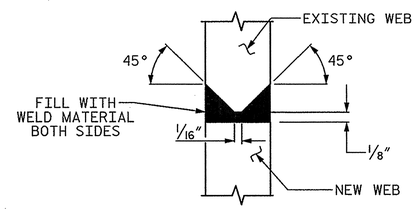

SECTION A-A

MIDDLE OF GIRDER REPAIR

GIRDER REPAIR NOTES:

SEE "SUPERSTRUCTURE REPAIRS @ EXISTING BENT" SHEETS FOR LOCATIONS OF ANTICIPATED GIRDER REPAIR. FOR AREAS DETERMINED TO HAVE EXCESSIVE CORROSION AFTER CLEANING, SEE NOTES BELOW.

AFTER THE STRUCTURAL STEEL HAS BEEN BLASTED AND PRIMED, THE STRUCTURAL STEEL SHALL BE INSPECTED FOR EXCESSIVE SECTION LOSS. AREAS THAT EXHIBIT AN EXCESS OF 35% SECTION LOSS SHALL BE REVIEWED BY THE ENGINEER TO DETERMINE IF AREA OF SECTION LOSS SHOULD BE REPAIRED.

AS DETERMINED BY THE ENGINEER, AREAS WITH EXCESSIVE SECTION LOSS OR AREAS WITH TEMPORARY REPAIRS SHALL BE REMOVED AND THE GIRDER SHALL BE REPAIRED AS INDICATED ON THIS PLAN SHEET. CONTRACTOR AND ENGINEER TO DETERMINE ACTUAL DIMENSIONS OF AREA TO BE REMOVED AND REPLACED. REMOVE CONCRETE BENT DIAPHRAGMS AS NEEDED TO EVALUATE LIMITS OF REPAIR.

PAYMENT FOR THE SECTION REPAIR SHALL BE BASED ON THAT AMOUNT OF REPAIR ACTUALLY PERFORMED BY THE CONTRACTOR AND APPROVED BY THE ENGINEER.

GOUGES AND INDENTIONS FROM IMPACTS ON GIRDERS SHALL BE GROUND SMOOTH PRIOR TO BLASTING AND PAINTING OPERATION.

REPAIR SEQUENCE:

1. REMOVE DEAD LOAD FROM GIRDER BY JACKING AND BLOCKING.
2. STEEL DIAPHRAGM CHANNELS AND/OR STIFFENERS MAY BE TEMPORARILY REMOVED, IF NECESSARY, AND REPLACED AFTER GIRDER REPAIR.
3. IF GIRDER DETERIORATION EXTENDS INTO THE CONCRETE DIAPHRAGM THEN CHIP AWAY CONCRETE TO DETERMINE THE EXTENT OF THE DAMAGE, CUT OUT BY APPROPRIATE MEANS THE DAMAGED GIRDER AREA AND/OR BEARING STIFFENER.
4. MECHANICALLY CLEAN RUST, SCALE, AND EXISTING PAINT TO AT LEAST 3" BEYOND REPAIR AREA.
5. REPLACEMENT CUT-TO-FIT GIRDER SECTION SHALL BE NEW AND FROM SIMILAR SIZE STEEL PLATES. THE GRADE OF STEEL SHALL BE AASHTO M270, GRADE 50 OR APPROVED EQUIVALENT.
6. INSTALL THE CUT-TO-FIT SECTION, FULLY WELD ALONG TOP AND SIDES OF PLATE USING FULL PENETRATION WELDS.
7. ALL WELDING SHALL BE IN ACCORDANCE WITH CURRENT APPLICABLE AWS AND NCDOT STANDARD SPECIFICATIONS.
8. ALL WELDS WILL BE INSPECTED AND TESTED BY THE NCDOT MATERIALS AND TEST UNIT IN ACCORDANCE WITH THE CURRENT AWS BRIDGE WELDING CODE AND STANDARD SPECIFICATIONS.
9. IN ACCORDANCE WITH THE STANDARD SPECIFICATIONS, AFTER REPAIR, GRIND ALL WELDS FLUSH, THOROUGHLY CLEAN AREA TO REMOVE DEBRIS AND OILS FROM REPAIR PROCESS.
10. CLEANING AND PAINTING OF REPAIRED STRUCTURAL STEEL SHALL BE PERFORMED AS PART OF THE OVERALL PAINTING EXISTING STRUCTURE PAY ITEM.
11. FOR PAINTING EXISTING STRUCTURE, SEE PROJECT SPECIAL PROVISIONS.
12. AFTER GIRDERS ARE REPAIRED AND PAINTED, ANY CONCRETE REMOVED FROM THE BENT DIAPHRAGMS SHALL BE CAST BACK, AND REINFORCING STEEL CUT DURING THE REMOVAL PROCESS SHALL BE SPLICED WITH A SIMILAR SIZE BAR WITH AT LEAST A ONE FOOT SPLICE TO THE EXISTING STEEL. NO SEPARATE PAYMENT SHALL BE MADE FOR CONCRETE AND REINFORCING STEEL AS THIS IS CONSIDERED INCIDENTAL TO THE PAY ITEM "STRUCTURAL STEEL FOR GIRDER REPAIR."
13. REMOVE JACKING EQUIPMENT AND TEMPORARY SUPPORTS.

REPAIR DETAILS SHOWN ARE GENERAL IN NATURE AND MAY BE MODIFIED FOR EACH PARTICULAR GIRDER REPAIR CASE AS DIRECTED BY THE ENGINEER.

PROJECT NO. U-0071
DURHAM COUNTY
STATION: 23+44.51 -DFEB-

STATE OF NORTH CAROLINA
DEPARTMENT OF TRANSPORTATION
RALEIGH
PRESERVATION

SUPERSTRUCTURE STEEL REPAIR DETAILS

PLANS PREPARED BY:
SIMPSON ENGINEERS & ASSOCIATES
5640 Dillard Drive
Suite 200
Cary, NC 27518
(919) 852-0468
(919) 852-0598 (Fax)
www.simpsonengr.com
LICENSURE NO. C-2521

NORTH CAROLINA PROFESSIONAL SEAL 18056 ENGINEER JOHN A. BATTS
1/16/2014

REVISIONS						
NO.	BY:	DATE:	NO.	BY:	DATE:	
1			3			
2			4			

SHEET NO. SP-CA
TOTAL SHEETS 83

STR. #15

DRAWN BY:	T. BANKOVICH	DATE:	12-13
CHECKED BY:	T.J. BEACH	DATE:	12-13
DESIGN ENGINEER OF RECORD:	J.A. BATTS	DATE:	12-13

1/14/2014 3:12:57 PM G:\Projects\2012\U-0071 (Durham Co.)\Structures\Drawings\Final\Bridge 188\Preservation\U-0071_Br 188_prs_ss.dgn

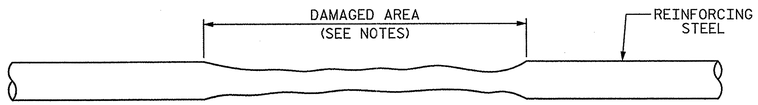

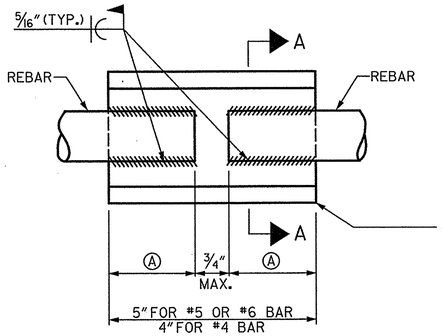

PLAN VIEW

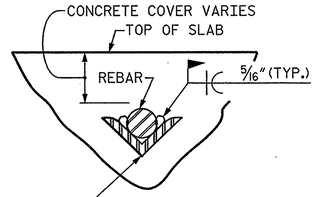

SECTION A-A

PREHEAT/INTERPASS TEMPERTURE	
REBAR SIZE	MIN. TEMP.
#6 OR LESS	300°
#7 OR LARGER	500°

BAR SIZE	WELD LENGTH EACH SIDE Ⓐ	ANGLE SIZE Ⓑ
#4	2"	1" X 1" X 1/4"
#5 & #6	3"	1" X 1" X 1/4"
#7 & #8	4"	1 1/2" X 1 1/2" X 1/4"
#9 & #10	5"	1 3/4" X 1 3/4" X 1/4"

WELD DETAIL FOR SPLICING REINFORCING STEEL

REINFORCING STEEL SHALL BE SPLICED AS DETAILED AND ALL WELDING CONFORM TO THE LASTEST EDITION OF THE AMERICAN WELDING SOCIETY REINFORCED STEEL WELDING CODE (A.W.S.D12.1) CHEMICAL ANALYSIS OF THE EXISTING REINFORCING STEEL WILL NOT BE REQUIRED.

REBAR SPLICING DETAIL

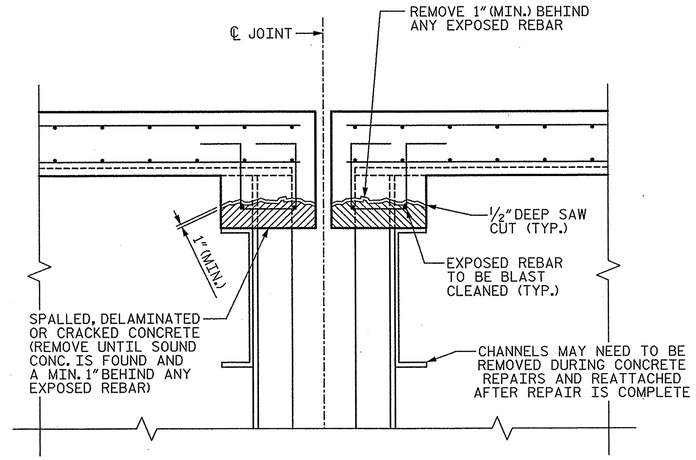

SECTION THRU DIAPRHAGM

DIAPRHAGM CONCRETE REPAIR

CONCRETE REPAIRS	
BENT 1	19 CF
BENT 2	18 CF

NOTES:

FOR CONCRETE REPAIRS, SEE SPECIAL PROVISIONS.

AFTER REMOVING SPALLED, DELAMINATED OR CRACKED CONCRETE, IF ANY REINFORCING STEEL HAS A CROSS SECTION LOSS GREATER THAN 33% THEN SPLICE DAMAGED AREA OF REBAR WITH A SIMILAR SIZE REBAR AS SHOWN IN THE REBAR SPLICE DETAIL.

ALL REINFORCING STEEL TO BE PROVIDED IS INCIDENTAL TO CONCRETE REPAIR AND SHALL BE GRADE 60.

PROJECT NO. U-0071
DURHAM COUNTY
STATION: 23+44.51 -DFEB-

STATE OF NORTH CAROLINA
DEPARTMENT OF TRANSPORTATION
RALEIGH
PRESERVATION

CONCRETE DIAPHRAGM REPAIR DETAILS

PLANS PREPARED BY:
SIMPSON ENGINEERS & ASSOCIATES
5640 Dillard Drive
Suite 200
Cary, NC 27518
(919) 852-0468
(919) 852-0598 (Fax)
www.simpsonengr.com
LICENSURE NO. C-2521

NORTH CAROLINA PROFESSIONAL SEAL 18056 ENGINEER JOHN A. BATTS
1/16/2014

REVISIONS						SHEET NO.
NO.	BY:	DATE:	NO.	BY:	DATE:	SP-65
1			3			TOTAL SHEETS
2			4			83

STR. #15

DRAWN BY: T. BANKOVICH DATE: 12-13
CHECKED BY: T.J. BEACH DATE: 12-13
DESIGN ENGINEER OF RECORD: J.A. BATTS DATE: 12-13

1/14/2014 3:12:57 PM G:\Projects\2012\U-0071 (Durham Co.)\Structures\Drawings\Final\Bridge 188\Preservation\U-0071_Br 188_prs_crd.dgn

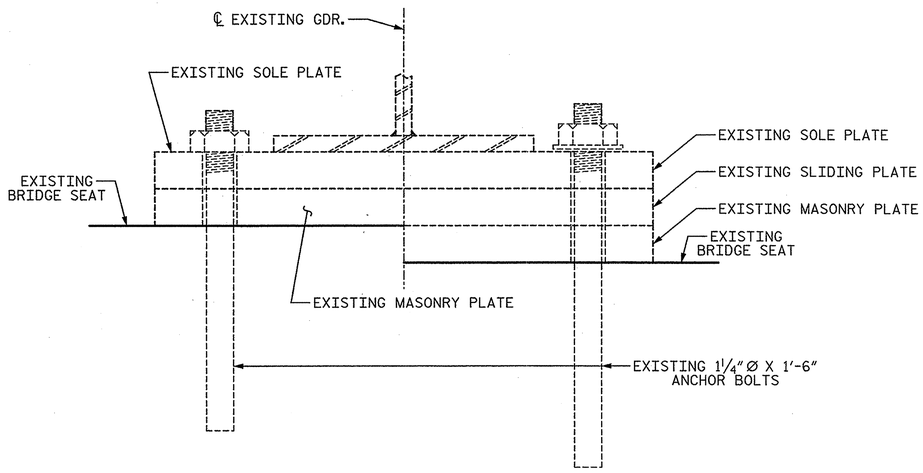

END VIEW

(SHOWING EXISTING BEARING)

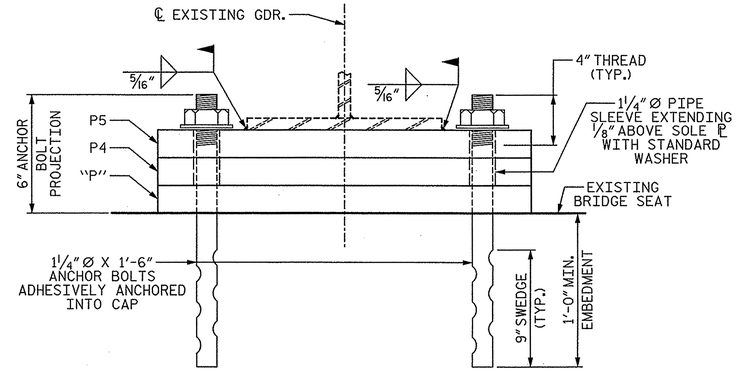

END VIEW

(SHOWING PROPOSED EXPANSION BEARING)

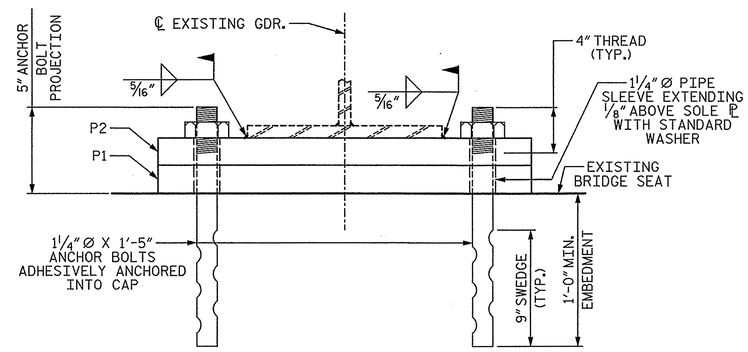

END VIEW

(SHOWING PROPOSED FIXED BEARING)

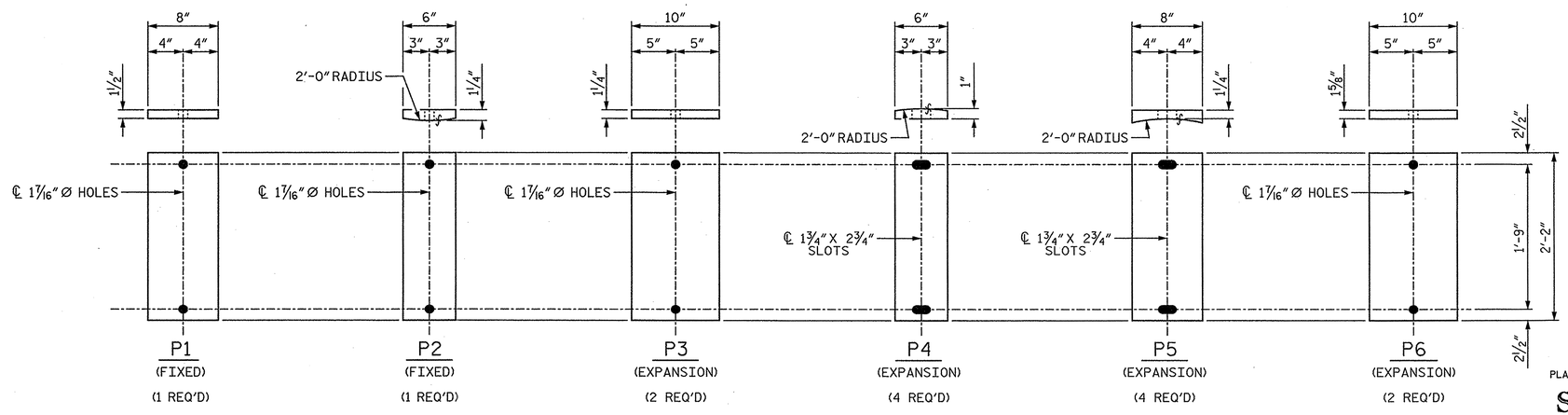

BEARING PLATE DETAILS ("P")

UP-STATION →

NOTES:

THE EXISTING BEARINGS DETERMINED FOR REPLACEMENT SHALL BE REMOVED AND REPLACED WITH BEARINGS AS SHOWN.

FOR BEARING REPLACEMENT LOCATIONS SEE SUPERSTRUCTURE REPAIRS SHEETS.

AT ALL POINTS OF SUPPORT, NUTS FOR ANCHOR BOLTS ARE TO BE TIGHTENED FINGER TIGHT AND THEN BACKED OFF ½ TURN. THE THREAD OF THE NUT AND BOLT SHALL BE THEN BURRED WITH A SHARP POINTED TOOL.

THE 1¼"Ø PIPE SLEEVE SHALL BE CUT FROM SCHEDULE 40 PVC PLASTIC PIPE. THE PVC PLASTIC PIPE SHALL MEET THE REQUIREMENTS OF ASTM D1785. NO SEPARATE PAYMENT WILL BE MADE FOR PIPE SLEEVES.

SOLE PLATES, MASONRY PLATES, SLIDING PLATES (EXCEPT SLIDING SURFACES), ANCHOR BOLTS, NUTS AND WASHERS SHALL BE GALVANIZED IN ACCORDANCE WITH THE STANDARD SPECIFICATIONS.

ANCHOR BOLTS SHALL MEET THE REQUIREMENTS OF ASTM A449. NUTS SHALL MEET THE REQUIREMENTS OF AASHTO M291-DH OR AASHTO M292-2H. WASHERS SHALL MEET THE REQUIREMENTS OF AASHTO M293. SHOP DRAWINGS ARE NOT REQUIRED FOR ANCHOR BOLTS, NUTS AND WASHERS. SHOP INSPECTION IS REQUIRED.

ALL WELDING SHALL BE IN ACCORDANCE WITH CURRENT APPLICABLE AWS AND NCDOT STANDARD SPECIFICATIONS.

ALL WELDS WILL BE INSPECTED AND TESTED BY THE NCDOT MATERIALS AND TEST UNIT IN ACCORDANCE WITH THE CURRENT AWS BRIDGE WELDING CODE AND STANDARD SPECIFICATIONS.

ALL SURFACES OF BEARING PLATES SHALL BE SMOOTH.

THE CONTRACTOR SHALL CUT EXISTING ANCHOR BOLTS FLUSH WITH BENT CAP AND CORE THROUGH EXISTING EMBEDDED ANCHOR BOLTS TO A 12" MINIMUM DEPTH. NEW 1¼"Ø ANCHOR BOLTS SHALL BE ADHESIVELY ANCHORED, SEE STANDARD SPECIFICATION. ADHESIVE FOR NEW ANCHOR BOLTS SHALL BE NCDOT APPROVED PRODUCT. FIELD TESTING WILL NOT BE REQUIRED FOR INSTALLATION OF ADHESIVELY ANCHORED BOLTS.

JACKING WILL BE REQUIRED FOR EACH BEARING REPLACEMENT.

FOR "BEARING REPLACEMENT", SEE SPECIAL PROVISIONS.

BEFORE BEARING PLATES ARE FABRICATED THE CONTRACTOR SHALL MEASURE THE CURRENT BEARING ASSEMBLY HEIGHT AND DETERMINE IF THE TOTAL HEIGHT OF THE PROPOSED BEARING PLATES SHOWN IN THE PLANS IS ADEQUATE. IF NOT, ADJUST THE PLATE THICKNESSES IN ORDER TO ACHIEVE THE PROPER BEARING ASSEMBLY HEIGHT.

AT ANY BEARING NOT BEING REPLACED, THE CONTRACTOR SHALL DETERMINE IF THE EXISTING BEARING ASSEMBLY IS CENTERED UNDER THE BEARING STIFFENER OF THE EXISTING GIRDER. IF THE BEARING ASSEMBLY IS NOT POSITIONED CORRECTLY UNDER THE BEARING STIFFENER, THE CONTRACTOR SHALL REALIGN THE BEARING PLATES. THIS REALIGNMENT MAY OR MAY NOT REQUIRE NEW ANCHOR BOLT LOCATIONS. AT A BEARING REALIGNMENT WHERE NEW ANCHOR BOLTS ARE REQUIRED AND THEIR NEW LOCATIONS DO NOT OVERLAP THE EXISTING ANCHOR BOLTS, THE CONTRACTOR SHALL CUT THE EXISTING ANCHOR BOLTS FLUSH WITH THE TOP OF CAP AND DRILL FOR NEW ADHESIVELY ANCHORED ANCHOR BOLTS. AT A BEARING REALIGNMENT WHERE NEW ANCHOR BOLTS ARE REQUIRED BUT THEIR NEW LOCATIONS OVERLAP THE EXISTING ANCHOR BOLTS, THE CONTRACTOR SHALL CORE THE EXISTING ANCHOR BOLT. FILL THE CORE HOLES WITH HIGH-STRENGTH NON-SHRINK GROUT, ALLOW THE GROUT TO CURE, AND DRILL FOR NEW ADHESIVELY ANCHORED ANCHOR BOLTS.

ALL BEARING PLATES SHALL BE AASHTO M270 GRADE 50.

PROJECT NO. U-0071
DURHAM COUNTY
STATION: 23+44.51 -DFEB-

STATE OF NORTH CAROLINA
DEPARTMENT OF TRANSPORTATION
RALEIGH
PRESERVATION

BEARING REPLACEMENT DETAILS

PLANS PREPARED BY:
SIMPSON ENGINEERS & ASSOCIATES
5640 Dillard Drive
Suite 200
Cary, NC 27518
(919) 852-0468
(919) 852-0598 (Fax)
www.simpsonengr.com
LICENSURE NO. C-2521

NORTH CAROLINA PROFESSIONAL SEAL 18056 ENGINEER JOHN A. BATTS
1/16/2014

REVISIONS							SHEET NO.
NO.	BY:	DATE:	NO.	BY:	DATE:		SP-66
1			3				TOTAL SHEETS
2			4				83

STR. #15

DRAWN BY: T. BANKOVICH DATE: 12-13
CHECKED BY: T.J. BEACH DATE: 12-13
DESIGN ENGINEER OF RECORD: J.A. BATTS DATE: 12-13

1/14/2014 3:12:58 PM G:\Projects\2012\U-0071 (Durham Co.)\Structures\Drawings\Final\Bridge 188\Preservation\U-0071_Br 188_prs_bg.dgn

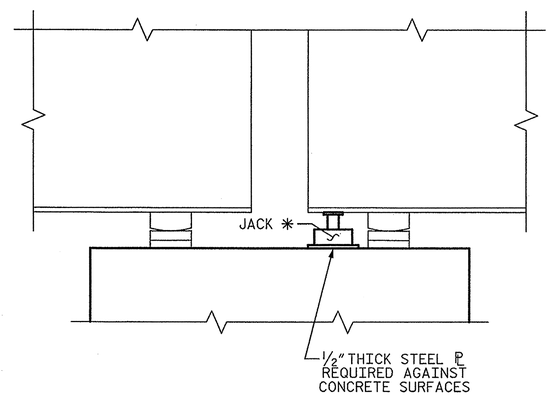

ELEVATION

FACTORED REACTIONS PER BEARING (DL + LL + IMPACT)							
	G1	G2	G3	G4	G5	G6	G7
SPAN A (FAR)	208.7 K	230.4 K	230.4 K	230.4 K	230.4 K	230.4 K	208.7 K
SPAN B (NEAR)	258.5 K	291.0 K	291.0 K	291.0 K	291.0 K	291.0 K	258.5 K
SPAN B (FAR)	258.5 K	291.0 K	291.0 K	291.0 K	291.0 K	291.0 K	258.5 K
SPAN C (NEAR)	258.5 K	291.0 K	291.0 K	291.0 K	291.0 K	291.0 K	218.4 K

NOTES:

THE CONTRACTOR SHALL SUBMIT JACKING PLANS AND CALCULATIONS TO THE ENGINEER FOR REVIEW AND APPROVAL PRIOR TO MATERIAL PURCHASE OR FABRICATION OF THE PROPOSED JACKING SYSTEM.

JACKING PLANS SHALL BE SIGNED AND SEALED BY A LICENSED PROFESSIONAL ENGINEER REGISTERED IN NORTH CAROLINA.

THE CONTRACTOR SHALL PROVIDE BLOCKING FOR ALL JACKS AS NECESSARY. A BLOCKING PLAN SHALL BE INCLUDED AS PART OF THE JACKING PLANS.

JACKING WITHOUT A MECHANICAL LOAD HOLDER (LOCK-OFF) SHALL BE SECURED BY BLOCKING IF JACKING OPERATION IN ANY LOCATION IS LONGER THAN 30 MINUTES IN DURATION.

PRIOR TO JACKING, THE CONTRACTOR SHALL ENSURE THERE ARE NO OBSTACLES PREVENTING THE GIRDER FROM BEING LIFTED.

FOR MULTIPLE LIFTING OPERATIONS, THE CONTRACTOR SHALL LIFT ALL GIRDERS IN A SPAN ON AN INDIVIDUAL BENT SIMULTANEOUSLY BY MEANS OF A DUAL-FLOW PRESSURIZED PUMP CONTROLLING THE JACKS.

DURING THE JACKING PROCESS OR WHILE THE SPAN IS BEING SUPPORTED, IF THE GIRDERS SHIFT FROM THEIR ORIGINAL POSITION ALL WORK WILL CEASE AND THE ENGINEER SHALL BE NOTIFIED IMMEDIATELY.

ALL ADJACENT ANCHOR BOLTS OF GIRDERS NOT BEING JACKED SHOULD BE LOOSENED TO DECREASE THE RESISTANCE OF THE BRIDGE DECK DURING JACKING. ALL ANCHOR BOLTS LOOSENED SHALL BE TIGHTENED BACK AFTER THE GIRDER IS REPAIRED AND THE JACKS AND BLOCKING HAVE BEEN REMOVED.

JACKING WILL BE DONE UNDER TRAFFIC AND SHALL BE LIMITED TO OFF PEAK HOURS AS DIRECTED BY THE ENGINEER.

ALL JACKS SHALL HAVE A CAPACITY OF 1.3 TIMES THE FACTORED REACTION ADJACENT TO THE POINT OF JACKING. SEE TABLE ON THIS SHEET FOR ANTICIPATED FACTORED REACTIONS FOR EACH GIRDER.

✳ FOR GIRDER REPAIRS, JACKS SHALL BE PLACED ADJACENT TO GIRDER TO RELIEVE LOAD FROM GIRDER DURING THE REPAIR. FOR BEARING REPLACEMENT AND REALIGNMENT, JACKS MAY BE PLACED UNDER GIRDER.

FOR "GIRDER JACKING", SEE SPECIAL PROVISIONS.

PROJECT NO. U-0071
DURHAM COUNTY
STATION: 23+44.51 -DFEB-

STATE OF NORTH CAROLINA
DEPARTMENT OF TRANSPORTATION
RALEIGH
PRESERVATION

JACKING DETAILS

PLANS PREPARED BY:
SIMPSON ENGINEERS & ASSOCIATES
5640 Dillard Drive
Suite 200
Cary, NC 27518
(919) 852-0468
(919) 852-0598 (Fax)
www.simpsonengr.com
LICENSURE NO. C-2521

NORTH CAROLINA PROFESSIONAL SEAL 18056 ENGINEER JOHN A. BATTS
1/16/2014

REVISIONS						SHEET NO.
NO.	BY:	DATE:	NO.	BY:	DATE:	SP-67
1			3			TOTAL SHEETS
2			4			83

STR. #15

DRAWN BY: T. BANKOVICH DATE: 12-13
CHECKED BY: T.J. BEACH DATE: 12-13
DESIGN ENGINEER OF RECORD: J.A. BATTS DATE: 12-13

1/14/2014 3:12:58 PM G:\Projects\2012\U-0071 (Durham Co.)\Structures\Drawings\Final\Bridge 188\Preservation\U-0071_Br 188_prs_jacking.dgn

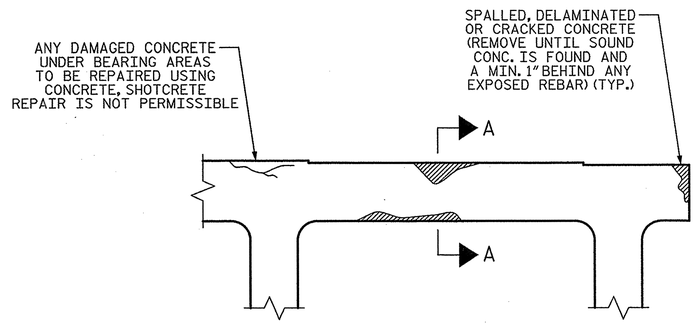

BENT CAP REPAIRS

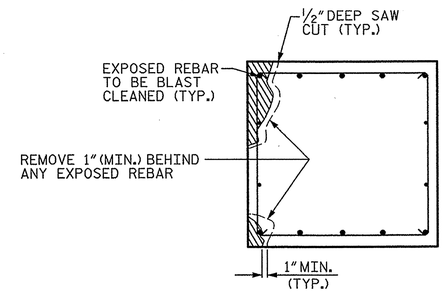

SECTION THRU CAP

CAP CONCRETE REPAIR

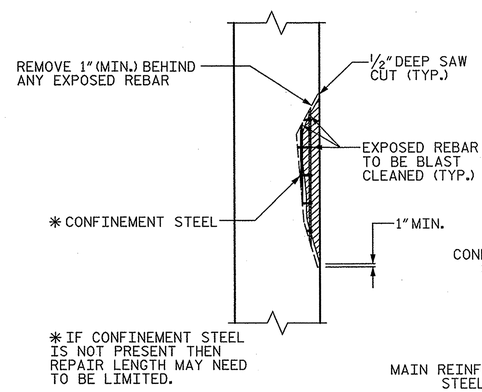

ELEVATION OF COLUMN

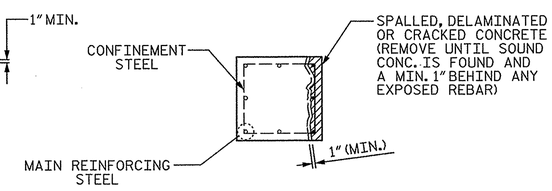

PLAN OF COLUMN

COLUMN CONCRETE REPAIR

NOTES:

FOR SHOTCRETE AND CONCRETE REPAIRS REFER TO SPECIAL PROVISIONS.

AFTER REMOVING SPALLED, DELAMINATED OR CRACKED CONCRETE, IF ANY REINFORCING STEEL HAS A CROSS SECTION LOSS GREATER THAN 33% THEN SPLICE DAMAGED AREA OF REBAR WITH A SIMILAR SIZE REBAR AS SHOWN IN THE REBAR SPLICE DETAIL.

ALL REINFORCING STEEL TO BE PROVIDED IS INCIDENTAL TO CONCRETE REPAIR AND SHALL BE GRADE 60.

FOR SUBSTRUCTURE REPAIR AREAS, SEE END BENT AND BENT SHEETS.

PROJECT NO. U-0071
DURHAM COUNTY
STATION: 23+44.51 -DFEB-

STATE OF NORTH CAROLINA
DEPARTMENT OF TRANSPORTATION
RALEIGH
PRESERVATION

SUBSTRUCTURE CONCRETE REPAIR DETAILS

PLANS PREPARED BY:
SIMPSON ENGINEERS & ASSOCIATES
5640 Dillard Drive
Suite 200
Cary, NC 27518
(919) 852-0468
(919) 852-0598 (Fax)
www.simpsonengr.com
LICENSURE NO. C-2521

NORTH CAROLINA PROFESSIONAL SEAL 18056 ENGINEER JOHN A. BATTS
1/16/2014

REVISIONS						
NO.	BY:	DATE:	NO.	BY:	DATE:	
1			3			
2			4			

SHEET NO. SP-68
TOTAL SHEETS 83

STR. #15

DRAWN BY:	T. BANKOVICH	DATE:	12-13
CHECKED BY:	T.J. BEACH	DATE:	12-13
DESIGN ENGINEER OF RECORD:	J.A. BATTS	DATE:	12-13

1/14/2014 3:12:58 PM G:\Projects\2012\U-0071 (Durham Co.)\Structures\Drawings\Final\Bridge 188\Preservation\U-0071_Br 188_prs_ord.dgn

NOTES:

NO REPAIRS ARE ANTICIPATED AT END BENT 1 BASED ON THE BEST INFORMATION AVAILABLE. IF REPAIRS ARE DEEMED NECESSARY BY THE ENGINEER, THE CONTRACTOR SHALL NOTE ON THE DRAWINGS THE APPROXIMATE LOCATION AND DESCRIPTION OF THE REPAIRS AND ENTER THE ACTUAL QUANTITIES INTO THE REPAIR QUANTITY TABLE.

EPOXY PROTECTIVE COATING SHALL BE APPLIED TO THE TOP FACE OF THE ENTIRE END BENT CAP EXCEPT AREA UNDER THE BEARINGS.

FOR EPOXY PROTECTIVE COATING, SEE SPECIAL PROVISIONS.

PLAN TOP OF CAP

(LOOKING DOWNSTATION)

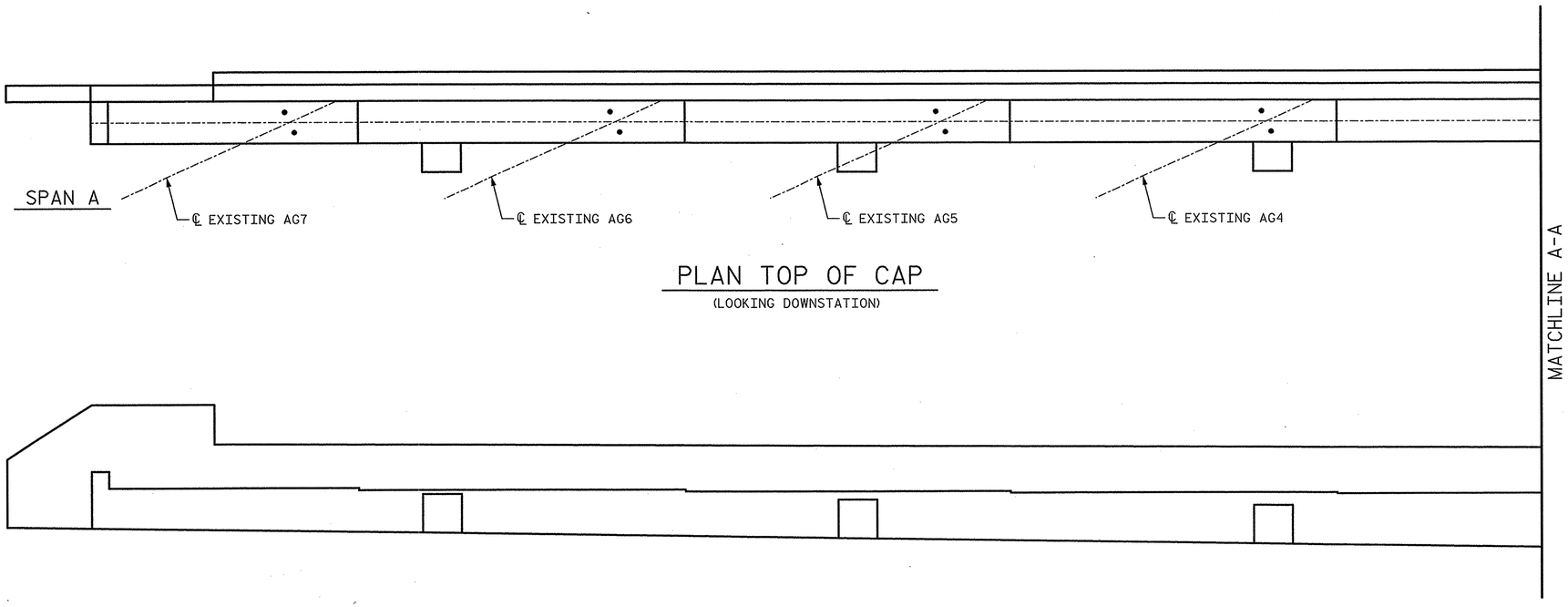

ELEVATION FRONT FACE OF CAP

(LOOKING DOWNSTATION)

REPAIR QUANTITY TABLE						
REPAIR END BENT 1	QUANTITIES					
	ESTIMATE			ACTUAL		
SHOTCRETE REPAIR	AREA SF	DEPTH FT	VOLUME CF	AREA SF	DEPTH FT	VOLUME CF
CAP (VERITCAL FACE)	0.00	0.00	0.00			
CAP (HORIZONTAL FACE)	0.00	0.00	0.00			
CONCRETE REPAIR	0.00	0.00	0.00			
EPOXY RESIN INJECTION			LF			LF
CAP			0.00			
EPOXY PROTECTIVE COATING			SF			SF
TOP OF CAP			351			

VALUES IN CHART REPRESENT ESTIMATED REPAIR TOTAL AFTER REMOVAL OF UNSOUND CONCRETE, MIN. OF 1" BEHIND REBAR AND MIN. 1" CL TO SAWCUT. SEE SUBSTRUCTURE CONCRETE REPAIR DETAILS.

CONCRETE REPAIR

SHOTCRETE REPAIR

ERI EPOXY RESIN INJECTION

PROJECT NO. U-0071

DURHAM COUNTY

STATION: 23+44.51 -DFEB-

SHEET 1 OF 2

STATE OF NORTH CAROLINA
DEPARTMENT OF TRANSPORTATION
RALEIGH
PRESERVATION

END BENT 1

PLANS PREPARED BY:

SIMPSON ENGINEERS & ASSOCIATES

5640 Dillard Drive
Suite 200
Cary, NC 27518
(919) 852-0468
(919) 852-0598 (Fax)
www.simpsonengr.com

LICENSURE NO. C-2521

NORTH CAROLINA PROFESSIONAL SEAL 18056 ENGINEER JOHN A. BATTS 1/6/2014

REVISIONS						SHEET NO.
NO.	BY:	DATE:	NO.	BY:	DATE:	SP-69
1			3			TOTAL SHEETS
2			4			83

STR. #15

DRAWN BY: T. BANKOVICH DATE: 12-13
CHECKED BY: T.J. BEACH DATE: 12-13
DESIGN ENGINEER OF RECORD: J.A. BATTS DATE: 12-13

1/14/2014 3:12:59 PM G:\Projects\2012\U-0071 (Durham Co.)\Structures\Drawings\Final\Bridge 188\Preservation\U-0071_Br188_prs_eb1.dgn

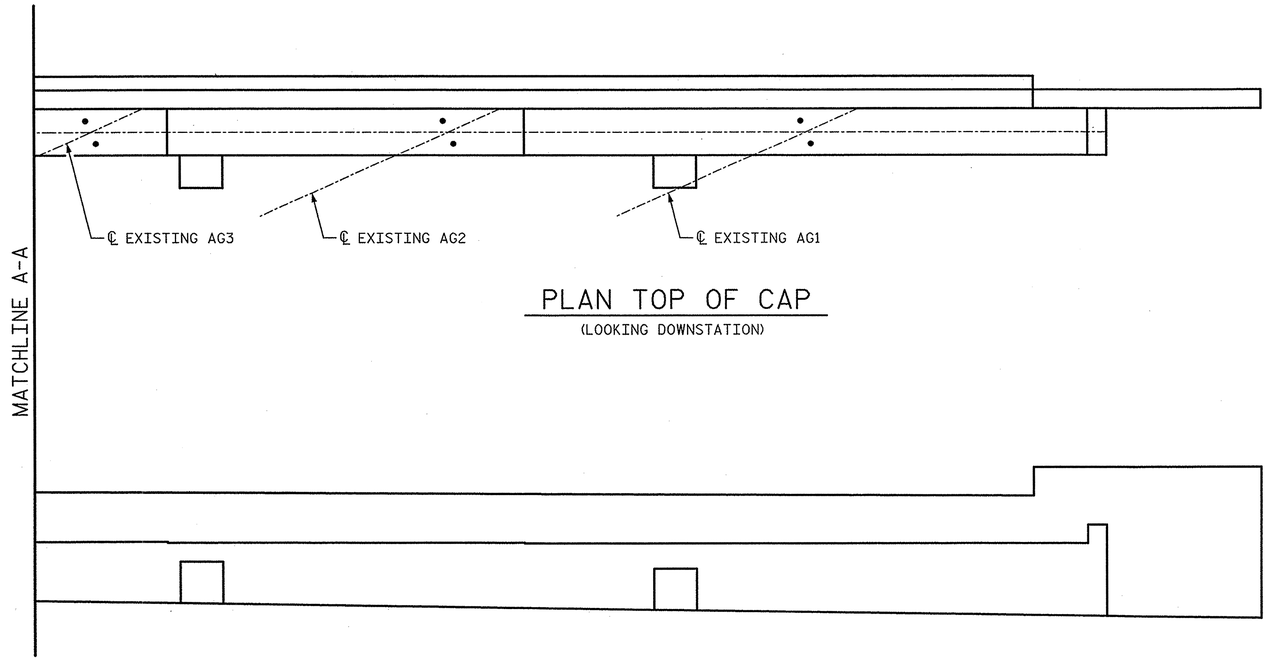

PLAN TOP OF CAP
(LOOKING DOWNSTATION)

ELEVATION FRONT FACE OF CAP
(LOOKING DOWNSTATION)

CONCRETE REPAIR

SHOTCRETE REPAIR

ERI EPOXY RESIN INJECTION

PROJECT NO. U-0071
DURHAM COUNTY
STATION: 23+44.51 -DFEB-

SHEET 2 OF 2

STATE OF NORTH CAROLINA
DEPARTMENT OF TRANSPORTATION
RALEIGH
PRESERVATION

END BENT 1

PLANS PREPARED BY:
SIMPSON ENGINEERS & ASSOCIATES
5640 Dillard Drive
Suite 200
Cary, NC 27518
(919) 852-0468
(919) 852-0598 (Fax)
www.simpsonengr.com
LICENSURE NO. C-2521

NORTH CAROLINA PROFESSIONAL SEAL 18056 ENGINEER JOHN A. BATTS
1/6/2014

REVISIONS						SHEET NO.
NO.	BY:	DATE:	NO.	BY:	DATE:	SP-70
1			3			TOTAL SHEETS
2			4			83

STR. #15

DRAWN BY: T. BANKOVICH DATE: 12-13
CHECKED BY: T.J. BEACH DATE: 12-13
DESIGN ENGINEER OF RECORD: J.A. BATTS DATE: 12-13

1/14/2014 3:12:59 PM G:\Projects\2012\U-0071 (Durham Co.)\Structures\Drawings\Final\Bridge 188\Preservation\U-0071_Br188_prs_eb1.dgn

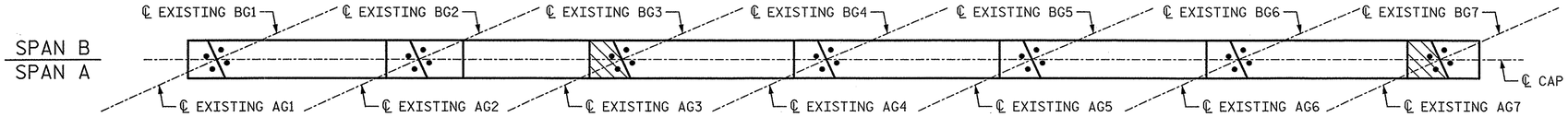

PLAN TOP OF CAP

PEDESTAL REPAIR, SEE SHEET 3 OF 3

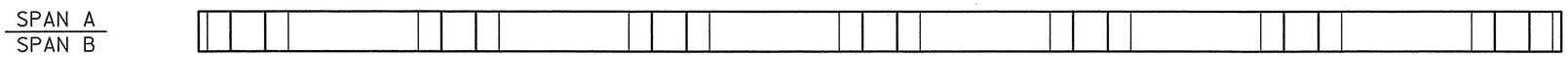

PLAN BOTTOM OF CAP

NOTES:

REPAIRS SHOWN AT BENT 1 ARE BASED ON THE BEST INFORMATION AVAILABLE. IF ADDITIONAL REPAIRS ARE DEEMED NECESSARY BY THE ENGINEER, THE CONTRACTOR SHALL NOTE ON THE DRAWINGS THE APPROXIMATE LOCATION AND DESCRIPTION OF THE REPAIRS AND ENTER THE ACTUAL QUANTITIES INTO THE REPAIR QUANTITY TABLE.

FOR REPAIR QUANTITY TABLE, SEE SHEET 2 OF 2.

EPOXY PROTECTIVE COATING SHALL BE APPLIED TO THE TOP FACE OF THE ENTIRE BENT CAP EXCEPT AREA UNDER THE BEARINGS.

FOR EPOXY PROTECTIVE COATING, SEE SPECIAL PROVISIONS.

END ELEVATION

NORTH FACE

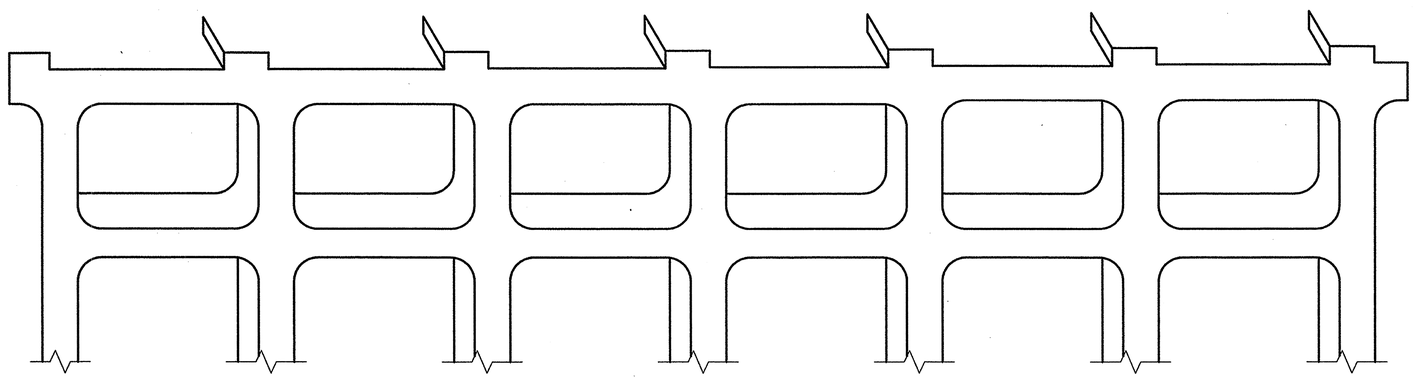

ELEVATION

WEST FACE

CONCRETE REPAIR

SHOTCRETE REPAIR

ERI EPOXY RESIN INJECTION

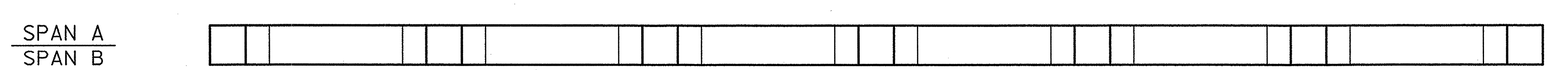

PLAN BOTTOM OF STRUT

PROJECT NO. U-0071

DURHAM COUNTY

STATION: 23+44.51 -DFEB-

SHEET 1 OF 3

STATE OF NORTH CAROLINA
DEPARTMENT OF TRANSPORTATION
RALEIGH
PRESERVATION

BENT 1

PLANS PREPARED BY:

SIMPSON ENGINEERS & ASSOCIATES
5640 Dillard Drive
Suite 200
Cary, NC 27518
(919) 852-0468
(919) 852-0598 (Fax)
www.simpsonengr.com
LICENSURE NO. C-2521

NORTH CAROLINA PROFESSIONAL SEAL 18056 ENGINEER JOHN A. BATTS 1/10/2014

REVISIONS						SHEET NO.
NO.	BY:	DATE:	NO.	BY:	DATE:	SP-71
1			3			TOTAL SHEETS
2			4			83

STR. #15

DRAWN BY: T. BANKOVICH DATE: 12-13
CHECKED BY: T.J. BEACH DATE: 12-13
DESIGN ENGINEER OF RECORD: J.A. BATTS DATE: 12-13

1/14/2014 3:12:59 PM G:\Projects\2012\U-0071 (Durham Co.)\Structures\Drawings\Final\Bridge 188\Preservation\U-0071_Br188_prs_bt1.dgn

END ELEVATION

SOUTH FACE

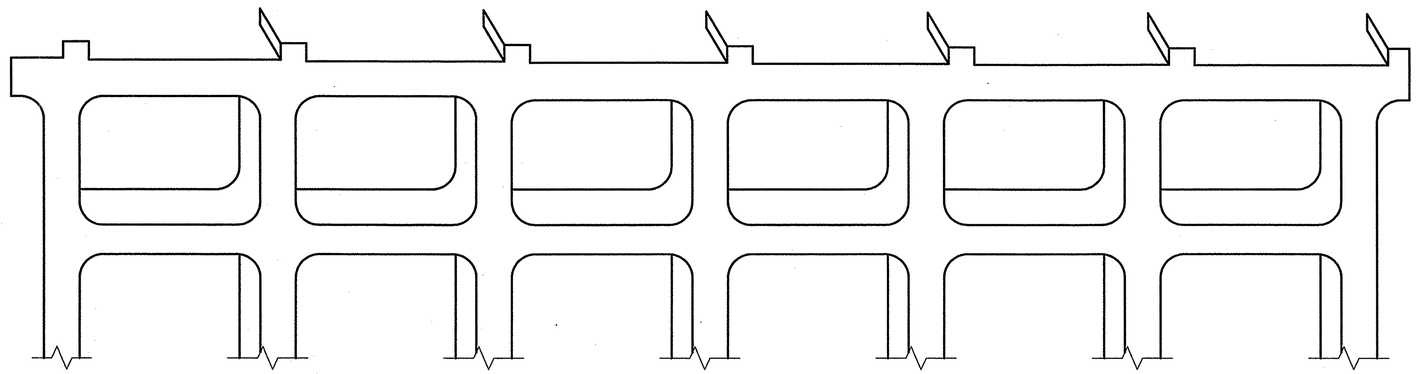

ELEVATION

EAST FACE

CONCRETE REPAIR

SHOTCRETE REPAIR

ERI EPOXY RESIN INJECTION

REPAIR QUANTITY TABLE						
REPAIR BENT 1	QUANTITIES					
	ESTIMATE			ACTUAL		
SHOTCRETE REPAIR	AREA SF	DEPTH FT	VOLUME CF	AREA SF	DEPTH FT	VOLUME CF
CAP (VERITCAL FACE)	0.00	0.00	0.00			
CAP (HORIZONTAL FACE)	0.00	0.00	0.00			
COLUMN (VERTICAL FACE)	0.00	0.00	0.00			
STRUT (HORIZONTAL FACE)	0.00	0.00	0.00			
CONCRETE REPAIR	0.00	0.00	0.00			
EPOXY RESIN INJECTION			LF			LF
CAP			0.00			
COLUMN			0.00			
STRUT			0.00			
EPOXY PROTECTIVE COATING			SF			SF
TOP OF CAP			413			

VALUES IN CHART REPRESENT ESTIMATED REPAIR TOTAL AFTER REMOVAL OF UNSOUND CONCRETE, MIN. OF 1" BEHIND REBAR AND MIN. 1" CL TO SAWCUT. SEE SUBSTRUCTURE CONCRETE REPAIR DETAILS.

PROJECT NO. U-0071

DURHAM COUNTY

STATION: 23+44.51 -DFEB-

SHEET 2 OF 3

STATE OF NORTH CAROLINA
DEPARTMENT OF TRANSPORTATION
RALEIGH
PRESERVATION

BENT 1

PLANS PREPARED BY:

SIMPSON ENGINEERS & ASSOCIATES
5640 Dillard Drive
Suite 200
Cary, NC 27518
(919) 852-0468
(919) 852-0598 (Fax)
www.simpsonengr.com
LICENSURE NO. C-2521

NORTH CAROLINA PROFESSIONAL SEAL 18056 ENGINEER JOHN A. BATTS
1/16/2014

REVISIONS						SHEET NO.
NO.	BY:	DATE:	NO.	BY:	DATE:	SP-72
1			3			TOTAL SHEETS
2			4			83

DRAWN BY: T. BANKOVICH DATE: 12-13
CHECKED BY: T.J. BEACH DATE: 12-13
DESIGN ENGINEER OF RECORD: J.A. BATTS DATE: 12-13

STR. #15

1/14/2014 3:12:59 PM G:\Projects\2012\U-0071 (Durham Co.)\Structures\Drawings\Final\Bridge 188\Preservation\U-0071_Br188_prs_bt1.dgn

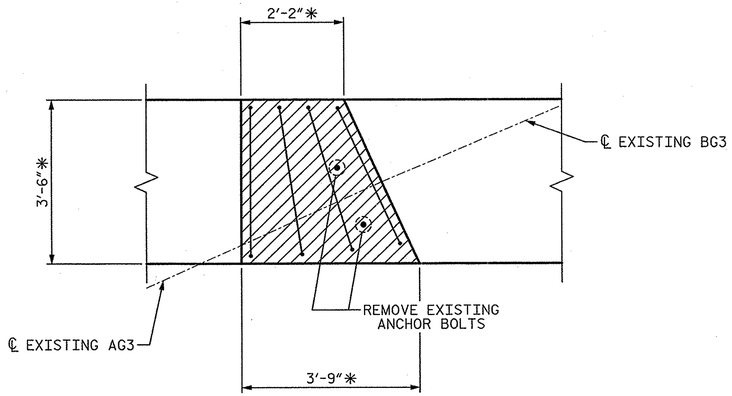

PLAN

(SHOWING GIRDER #3 PEDESTAL, GIRDER #7 SIMILAR)

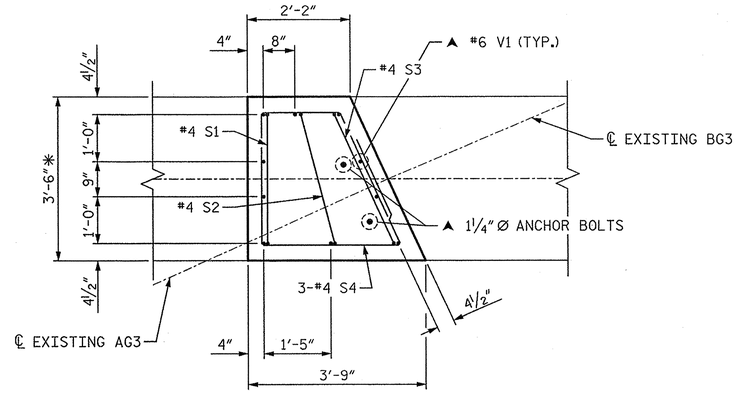

PLAN

(SHOWING GIRDER #3 PEDESTAL, GIRDER #7 SIMILAR)

BAR TYPES

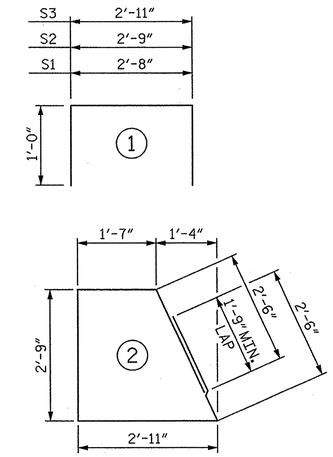

ALL BAR DIMENSIONS ARE OUT TO OUT

BILL OF MATERIAL

CONCRETE PEDESTAL REPAIR

BAR	NO.	SIZE	TYPE	LENGTH	WEIGHT
V1	20	6	STR	2'-1"	63
S1	2	4	1	4'-8"	6
S2	2	4	1	4'-9"	6
S3	2	4	1	4'-11"	7
S4	6	4	2	12'-3"	49
TOTAL REINFORCING STEEL					131 LB
CONCRETE REPAIRS (GIRDER #3 & GIRDER #7)					29.2 CF
ANCHOR BOLT REPLACEMENT					4 EA

DEMOLISH BRIDGE PEDESTAL DOWN TO ADJACENT BRIDGE SEAT ELEVATION, CUT EXISTING REINFORCING STEEL FLUSH WITH DEMOLISHED CONCRETE.

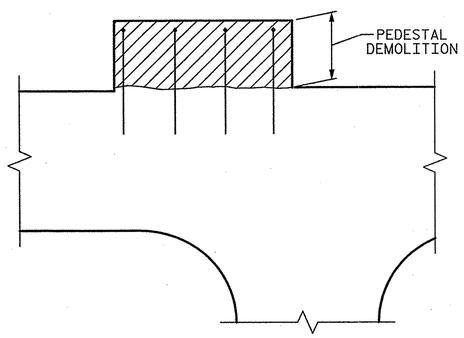

ELEVATION

(SHOWING GIRDER #3 PEDESTAL, GIRDER #7 SIMILAR)

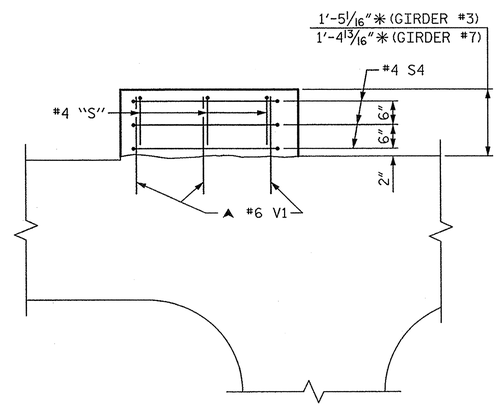

ELEVATION

(SHOWING GIRDER #3 PEDESTAL, GIRDER #7 SIMILAR)

NOTES:

▲ #6 V1 BARS AND 1¼"Ø ANCHOR BOLTS TO BE EMBEDDED IN THE EXISTING BENT CAP AND SHALL BE INSTALLED USING AN ADHESIVE ANCHORING SYSTEM. EMBEDMENT LENGTH INTO THE EXISTING CAP TO BE DETERMINED BY THE MANUFACTURER OF THE ADHESIVE ANCHOR SYSTEM.

#6 V1 BAR LENGTH BASED ON A 10" EMBEDDED LENGTH.

1¼"Ø ANCHOR BOLTS TO PROJECT 4½" ABOVE PEDESTAL.

* DIMENSIONS BASED ON ORIGINAL PLANS, CONTRACTOR TO FIELD VERIFY.

REINFORCING STEEL SHALL BE INCLUDED IN PAY ITEM FOR CONCRETE REPAIR AND NO SEPARATE PAYMENT WILL BE MADE.

CONCRETE PEDESTAL REPAIR

PROJECT NO. U-0071

DURHAM COUNTY

STATION: 23+44.51 -DFEB-

SHEET 3 OF 3

STATE OF NORTH CAROLINA
DEPARTMENT OF TRANSPORTATION
RALEIGH

PRESERVATION

BENT 1
(CONCRETE PEDESTAL REPAIR)

PLANS PREPARED BY:

SIMPSON ENGINEERS & ASSOCIATES
5640 Dillard Drive
Suite 200
Cary, NC 27518
(919) 852-0468
(919) 852-0598 (Fax)
www.simpsonengr.com
LICENSURE NO. C-2521

NORTH CAROLINA PROFESSIONAL SEAL 18056 ENGINEER JOHN A. BATTS 6/24/2014

REVISIONS							SHEET NO.
NO.	BY:	DATE:	NO.	BY:	DATE:		SP-73
1			3				TOTAL SHEETS
2			4				83

STR. #15

DRAWN BY: T. BANKOVICH DATE: 12-13
CHECKED BY: T.J. BEACH DATE: 12-13
DESIGN ENGINEER OF RECORD: J.A. BATTS DATE: 12-13

6/24/2014 3:54:18 PM G:\Projects\2012\U-0071 (Durham Co.)\Structures\Drawings\Final\Bridge 188\Preservation\U-0071_Br188_prs_bt1.dgn

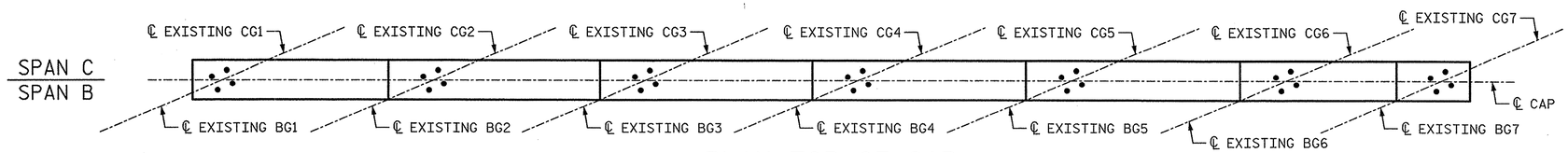

PLAN TOP OF CAP

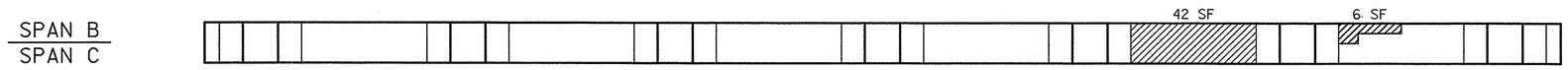

PLAN BOTTOM OF CAP

NOTES:

REPAIRS SHOWN AT BENT 2 ARE BASED ON THE BEST INFORMATION AVAILABLE. IF ADDITIONAL REPAIRS ARE DEEMED NECESSARY BY THE ENGINEER, THE CONTRACTOR SHALL NOTE ON THE DRAWINGS THE APPROXIMATE LOCATION AND DESCRIPTION OF THE REPAIRS AND ENTER THE ACTUAL QUANTITIES INTO THE REPAIR QUANTITY TABLE.

FOR REPAIR QUANTITY TABLE, SEE SHEET 2 OF 2.

EPOXY PROTECTIVE COATING SHALL BE APPLIED TO THE TOP FACE OF THE ENTIRE BENT CAP EXCEPT AREA UNDER THE BEARINGS.

FOR EPOXY PROTECTIVE COATING, SEE SPECIAL PROVISIONS.

END ELEVATION

NORTH FACE

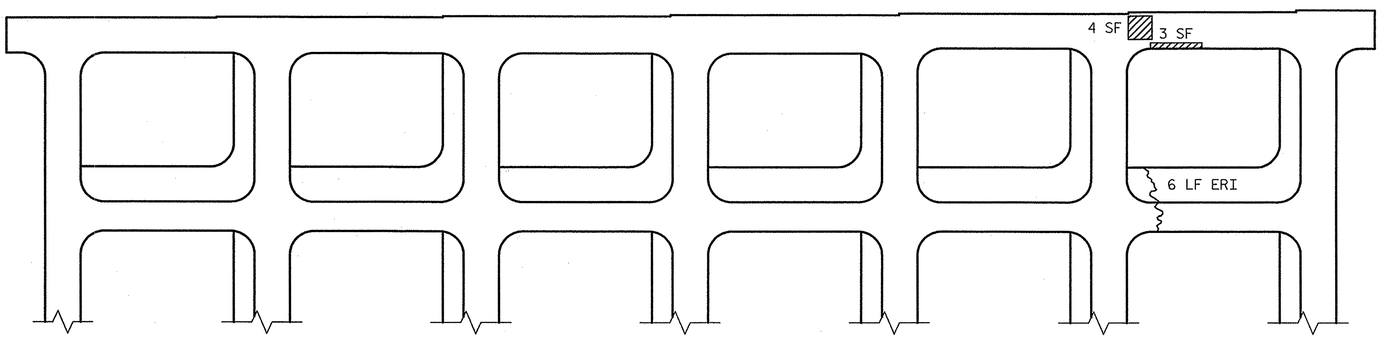

ELEVATION

WEST FACE

CONCRETE REPAIR

SHOTCRETE REPAIR

ERI EPOXY RESIN INJECTION

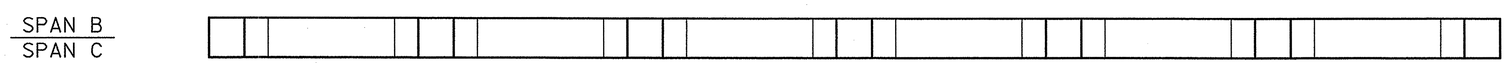

PLAN BOTTOM OF STRUT

PROJECT NO. U-0071

DURHAM COUNTY

STATION: 23+44.51 -DFEB-

SHEET 1 OF 2

STATE OF NORTH CAROLINA
DEPARTMENT OF TRANSPORTATION
RALEIGH
PRESERVATION

BENT 2

PLANS PREPARED BY:

SIMPSON ENGINEERS & ASSOCIATES
5640 Dillard Drive
Suite 200
Cary, NC 27518
(919) 852-0468
(919) 852-0598 (Fax)
www.simpsonengr.com
LICENSURE NO. C-2521

NORTH CAROLINA PROFESSIONAL SEAL 18056 ENGINEER JOHN A. BATTS 1/16/2014

REVISIONS						SHEET NO.
NO.	BY:	DATE:	NO.	BY:	DATE:	SP-74
1			3			TOTAL SHEETS
2			4			83

STR. #15

DRAWN BY: T. BANKOVICH DATE: 12-13
CHECKED BY: T.J. BEACH DATE: 12-13
DESIGN ENGINEER OF RECORD: J.A. BATTS DATE: 12-13

1/14/2014 3:13:00 PM G:\Projects\2012\U-0071 (Durham Co.)\Structures\Drawings\Final\Bridge 188\Preservation\U-0071_Br188_prs_bt2.dgn

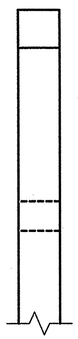

END ELEVATION

SOUTH FACE

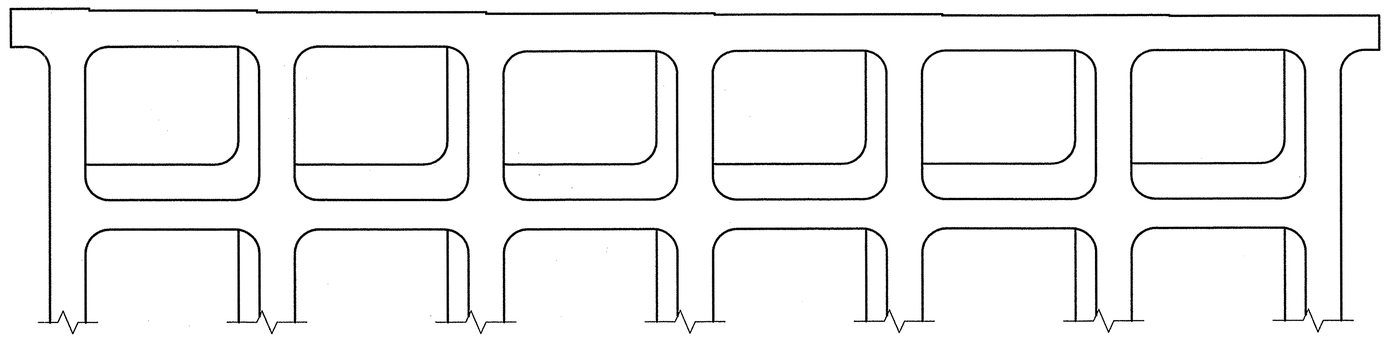

ELEVATION

EAST FACE

CONCRETE REPAIR

SHOTCRETE REPAIR

ERI EPOXY RESIN INJECTION

REPAIR QUANTITY TABLE						
REPAIR BENT 2	QUANTITIES					
	ESTIMATE			ACTUAL		
SHOTCRETE REPAIR	AREA SF	DEPTH FT	VOLUME CF	AREA SF	DEPTH FT	VOLUME CF
CAP (VERITCAL FACE)	7.00	0.33	2.33			
CAP (HORIZONTAL FACE)	48.00	0.33	16.00			
COLUMN (VERTICAL FACE)	0.00	0.00	0.00			
STRUT (HORIZONTAL FACE)	0.00	0.00	0.00			
CONCRETE REPAIR	0.00	0.00	0.00			
EPOXY RESIN INJECTION			LF			LF
CAP			0.00			
COLUMN			0.00			
STRUT			6.00			
EPOXY PROTECTIVE COATING			SF			SF
TOP OF CAP			413			

VALUES IN CHART REPRESENT ESTIMATED REPAIR TOTAL AFTER REMOVAL OF UNSOUND CONCRETE, MIN. OF 1" BEHIND REBAR AND MIN. 1" CL TO SAWCUT. SEE SUBSTRUCTURE CONCRETE REPAIR DETAILS.

PROJECT NO. U-0071

DURHAM COUNTY

STATION: 23+44.51 -DFEB-

SHEET 2 OF 2

STATE OF NORTH CAROLINA
DEPARTMENT OF TRANSPORTATION
RALEIGH
PRESERVATION

BENT 2

PLANS PREPARED BY:

SIMPSON ENGINEERS & ASSOCIATES
5640 Dillard Drive
Suite 200
Cary, NC 27518
(919) 852-0468
(919) 852-0598 (Fax)
www.simpsonengr.com
LICENSURE NO. C-2521

NORTH CAROLINA PROFESSIONAL SEAL 18056 ENGINEER JOHN A. BATTS
1/14/2014

REVISIONS						
NO.	BY:	DATE:	NO.	BY:	DATE:	
1			3			
2			4			

SHEET NO. SP-75

TOTAL SHEETS 83

STR. #15

DRAWN BY: T. BANKOVICH DATE: 12-13
CHECKED BY: T.J. BEACH DATE: 12-13
DESIGN ENGINEER OF RECORD: J.A. BATTS DATE: 12-13

1/14/2014 3:13:00 PM G:\Projects\2012\U-0071 (Durham Co.)\Structures\Drawings\Final\Bridge 188\Preservation\U-0071_Br188_prs_bt2.dgn

NOTES:

NO REPAIRS ARE ANTICIPATED AT END BENT 2 BASED ON THE BEST INFORMATION AVAILABLE. IF REPAIRS ARE DEEMED NECESSARY BY THE ENGINEER, THE CONTRACTOR SHALL NOTE ON THE DRAWINGS THE APPROXIMATE LOCATION AND DESCRIPTION OF THE REPAIRS AND ENTER THE ACTUAL QUANTITIES INTO THE REPAIR QUANTITY TABLE.

EPOXY PROTECTIVE COATING SHALL BE APPLIED TO THE TOP FACE OF THE ENTIRE END BENT CAP EXCEPT AREA UNDER THE BEARINGS.

FOR EPOXY PROTECTIVE COATING, SEE SPECIAL PROVISIONS.

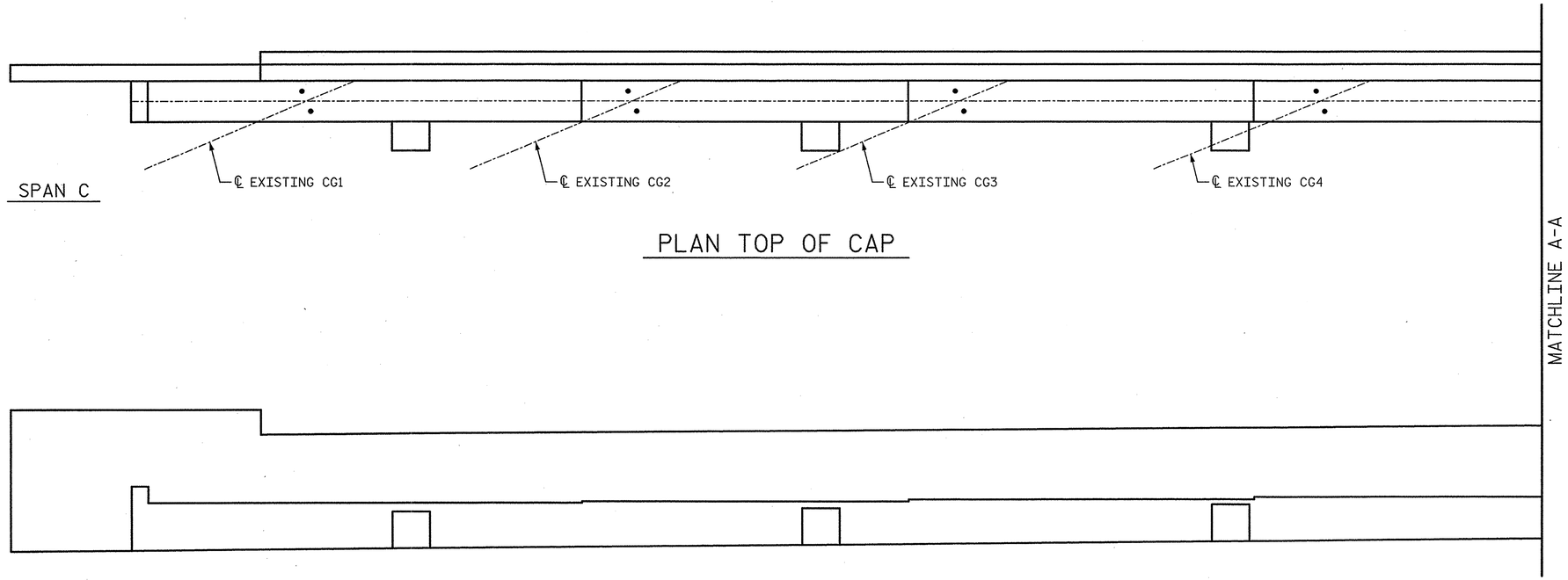

PLAN TOP OF CAP

ELEVATION FRONT FACE OF CAP

REPAIR QUANTITY TABLE						
REPAIR END BENT 2	QUANTITIES					
	ESTIMATE			ACTUAL		
SHOTCRETE REPAIR	AREA SF	DEPTH FT	VOLUME CF	AREA SF	DEPTH FT	VOLUME CF
CAP (VERITCAL FACE)	0.00	0.00	0.00			
CAP (HORIZONTAL FACE)	0.00	0.00	0.00			
CONCRETE REPAIR	0.00	0.00	0.00			
EPOXY RESIN INJECTION			LF			LF
CAP			0.00			
EPOXY PROTECTIVE COATING			SF			SF
TOP OF CAP			312			

VALUES IN CHART REPRESENT ESTIMATED REPAIR TOTAL AFTER REMOVAL OF UNSOUND CONCRETE, MIN. OF 1" BEHIND REBAR AND MIN. 1" CL TO SAWCUT. SEE SUBSTRUCTURE CONCRETE REPAIR DETAILS.

CONCRETE REPAIR

SHOTCRETE REPAIR

ERI EPOXY RESIN INJECTION

PROJECT NO. U-0071

DURHAM COUNTY

STATION: 23+44.51 -DFEB-

SHEET 1 OF 2

STATE OF NORTH CAROLINA
DEPARTMENT OF TRANSPORTATION
RALEIGH
PRESERVATION

END BENT 2

PLANS PREPARED BY:

SIMPSON ENGINEERS & ASSOCIATES
5640 Dillard Drive
Suite 200
Cary, NC 27518
(919) 852-0468
(919) 852-0598 (Fax)
www.simpsonengr.com
LICENSURE NO. C-2521

NORTH CAROLINA PROFESSIONAL SEAL 18056 ENGINEER JOHN A. BATTS
1/16/2014

REVISIONS						SHEET NO.
NO.	BY:	DATE:	NO.	BY:	DATE:	SP-76
1			3			TOTAL SHEETS
2			4			83

STR. #15

DRAWN BY: T. BANKOVICH DATE: 12-13
CHECKED BY: T.J. BEACH DATE: 12-13
DESIGN ENGINEER OF RECORD: J.A. BATTS DATE: 12-13

1/14/2014 3:13:00 PM G:\Projects\2012\U-0071 (Durham Co.)\Structures\Drawings\Final\Bridge 188\Preservation\U-0071_Br188_prs_eb2.dgn

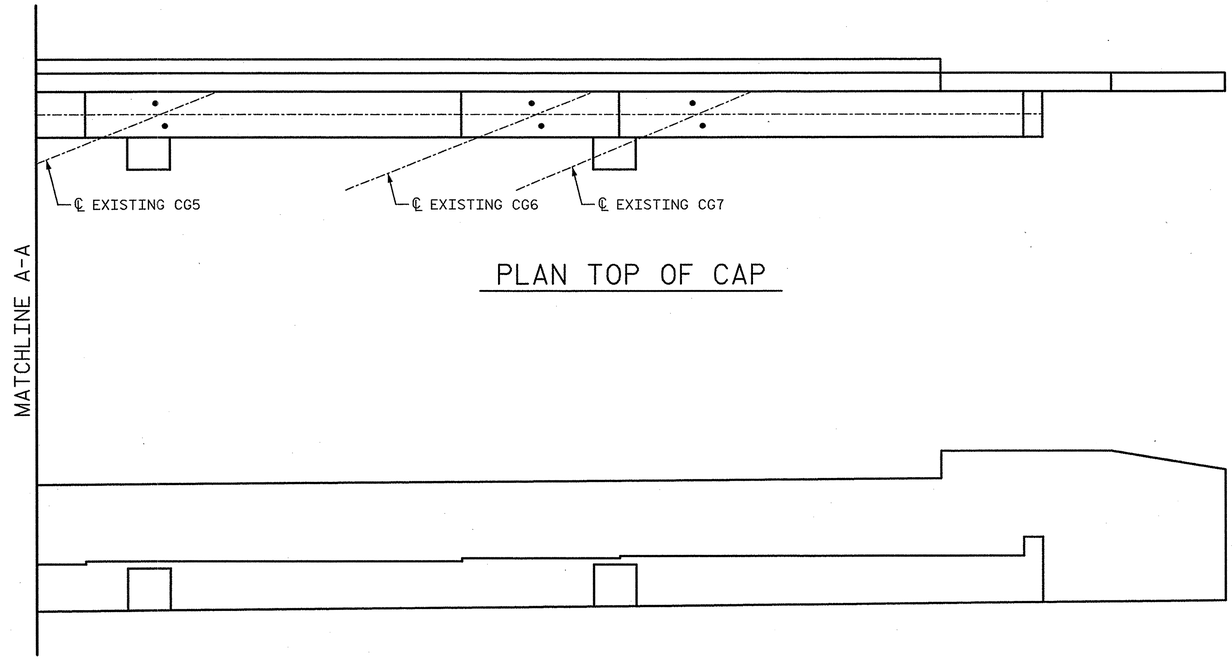

PLAN TOP OF CAP

ELEVATION FRONT FACE OF CAP

CONCRETE REPAIR

SHOTCRETE REPAIR

ERI EPOXY RESIN INJECTION

PROJECT NO. U-0071

DURHAM COUNTY

STATION: 23+44.51 -DFEB-

SHEET 2 OF 2

STATE OF NORTH CAROLINA
DEPARTMENT OF TRANSPORTATION
RALEIGH
PRESERVATION

END BENT 2

PLANS PREPARED BY:

SIMPSON ENGINEERS & ASSOCIATES
5640 Dillard Drive
Suite 200
Cary, NC 27518
(919) 852-0468
(919) 852-0598 (Fax)
www.simpsonengr.com

LICENSURE NO. C-2521

NORTH CAROLINA PROFESSIONAL SEAL 18056 ENGINEER JOHN A. BATTS
1/16/2014

REVISIONS						SHEET NO.
NO.	BY:	DATE:	NO.	BY:	DATE:	SP-77
1			3			TOTAL SHEETS
2			4			83

STR. #15

DRAWN BY: T. BANKOVICH DATE: 12-13
CHECKED BY: T.J. BEACH DATE: 12-13
DESIGN ENGINEER OF RECORD: J.A. BATTS DATE: 12-13

1/14/2014 3:13:00 PM G:\Projects\2012\U-0071 (Durham Co.)\Structures\Drawings\Final\Bridge 188\Preservation\U-0071_Br188_prs_eb2.dgn

NOTES:

* FINE GRADE EXISTING SLOPE TO UNIFORM SURFACE.

FOR SECTION A-A, SEE SHEET 3 OF 3.

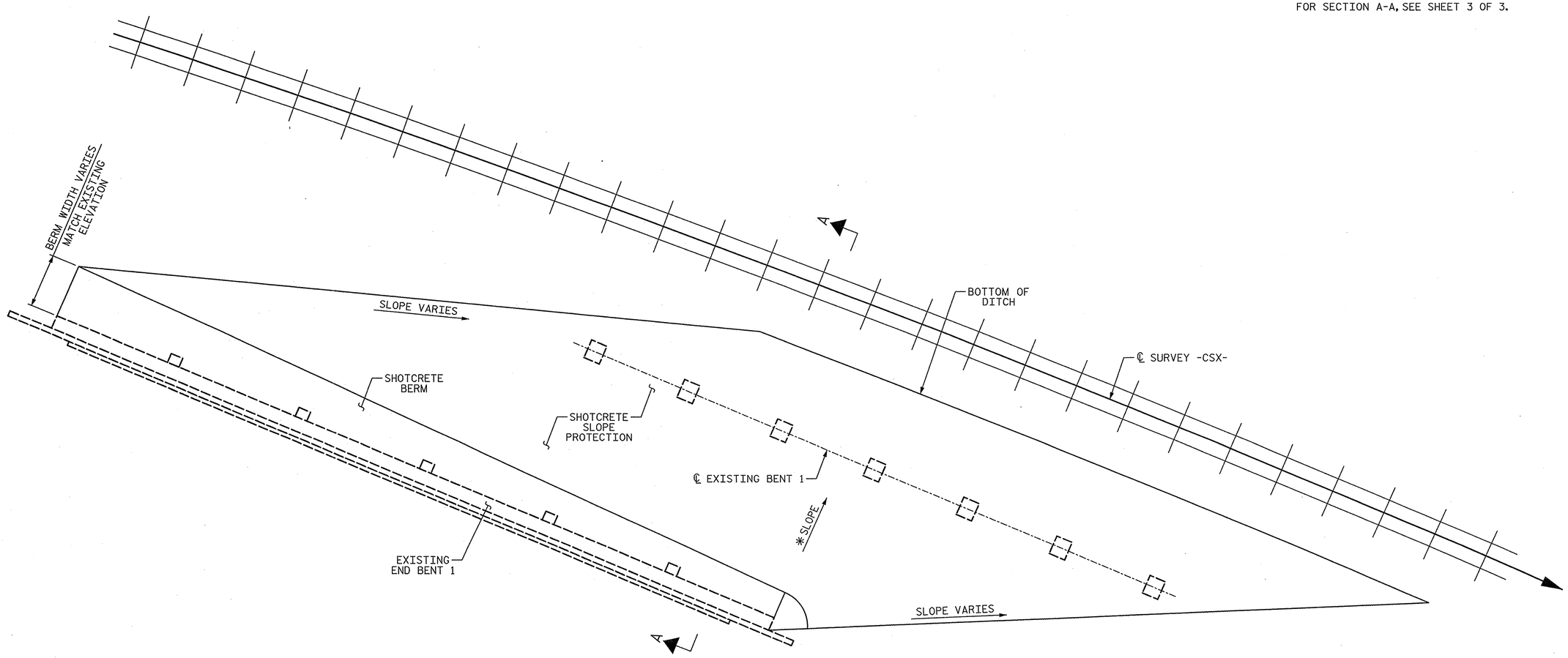

EXISTING END BENT 1

PROJECT NO. U-0071

DURHAM COUNTY

STATION: 23+44.51 -DFEB-

SHEET 1 OF 3

STATE OF NORTH CAROLINA
DEPARTMENT OF TRANSPORTATION
RALEIGH
PRESERVATION

SLOPE PROTECTION DETAILS

PLANS PREPARED BY:

SIMPSON ENGINEERS & ASSOCIATES
5640 Dillard Drive
Suite 200
Cary, NC 27518
(919) 852-0468
(919) 852-0598 (Fax)
www.simpsonengr.com
LICENSURE NO. C-2521

NORTH CAROLINA PROFESSIONAL SEAL 18056 ENGINEER JOHN A. BATTS
1/16/2014

REVISIONS						SHEET NO.
NO.	BY:	DATE:	NO.	BY:	DATE:	SP-78
1			3			TOTAL SHEETS
2			4			83

DRAWN BY: T. BANKOVICH DATE: 12-13
CHECKED BY: T.J. BEACH DATE: 12-13
DESIGN ENGINEER OF RECORD: J.A. BATTS DATE: 12-13

STR. #15

1/14/2014 3:13:01 PM G:\Projects\2012\U-0071 (Durham Co.)\Structures\Drawings\Final\Bridge 188\Preservation\U-0071_Br188_prs_sp.dgn

NOTES:

* FINE GRADE EXISTING SLOPE TO UNIFORM SURFACE.

FOR SECTION A-A, SEE SHEET 3 OF 3.

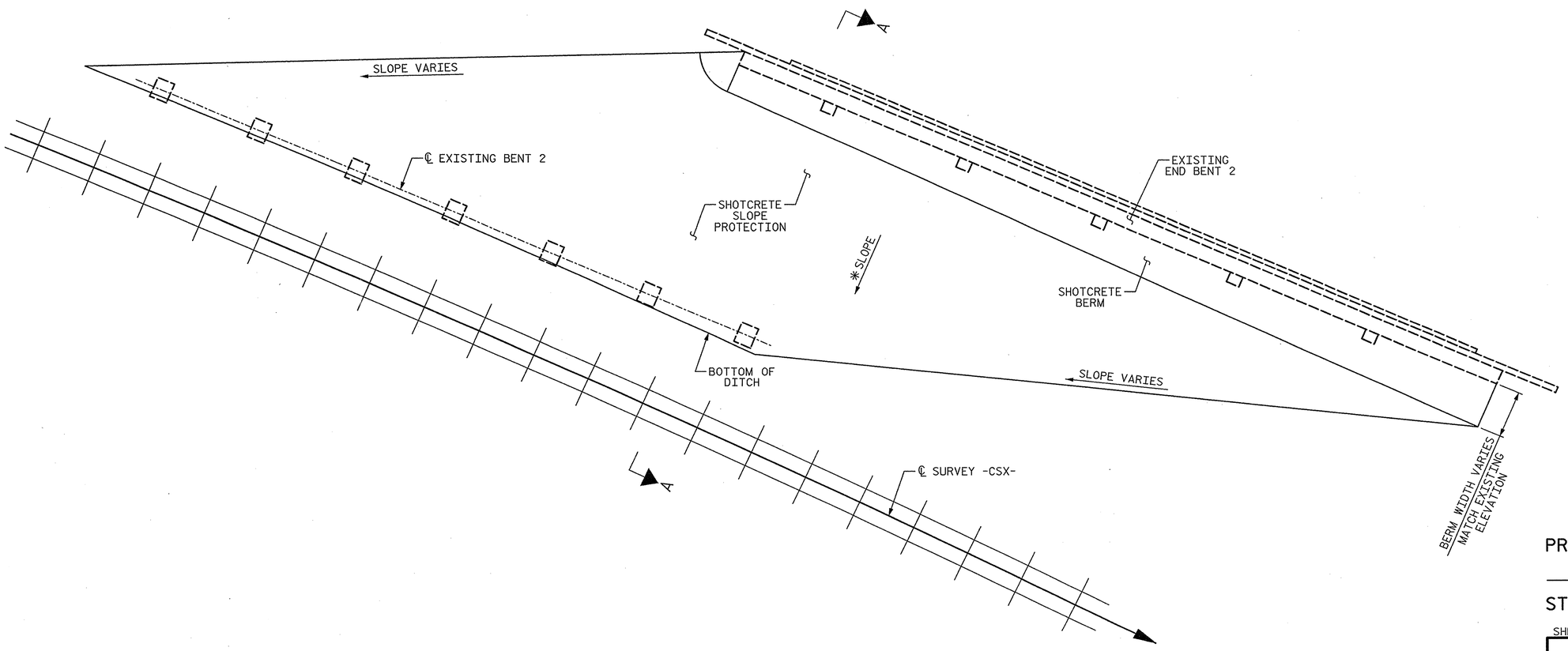

EXISTING END BENT 2

PROJECT NO. U-0071

DURHAM COUNTY

STATION: 23+44.51 -DFEB-

SHEET 2 OF 3

STATE OF NORTH CAROLINA
DEPARTMENT OF TRANSPORTATION
RALEIGH
PRESERVATION

SLOPE PROTECTION DETAILS

PLANS PREPARED BY:

SIMPSON ENGINEERS & ASSOCIATES
5640 Dillard Drive
Suite 200
Cary, NC 27518
(919) 852-0468
(919) 852-0598 (Fax)
www.simpsonengr.com
LICENSURE NO. C-2521

NORTH CAROLINA PROFESSIONAL SEAL 18056 ENGINEER JOHN A. BATTS
1/10/2014

REVISIONS							SHEET NO.
NO.	BY:	DATE:	NO.	BY:	DATE:		SP-79
1			3				TOTAL SHEETS
2			4				83

DRAWN BY: T. BANKOVICH DATE: 12-13
CHECKED BY: T.J. BEACH DATE: 12-13
DESIGN ENGINEER OF RECORD: J.A. BATTS DATE: 12-13

STR. #15

1/14/2014 3:13:01 PM G:\Projects\2012\U-0071 (Durham Co.)\Structures\Drawings\Final\Bridge 188\Preservation\U-0071_Br188_prs_sp.dgn

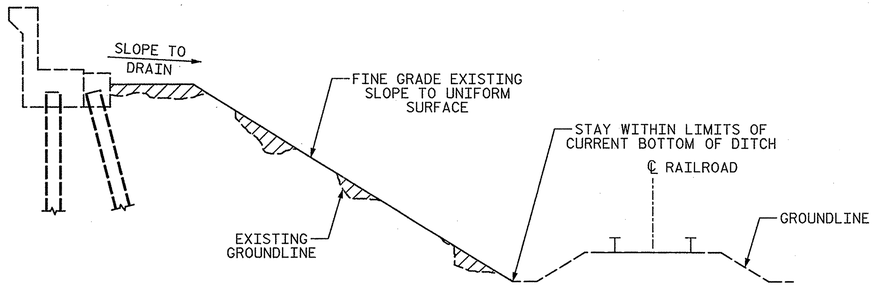

SECTION A-A

(SHOWING EXISTING CONDITION)

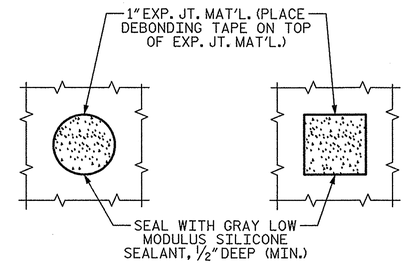

PLAN WHERE SHOTCRETE SLOPE PROTECTION MUST BE PLACED AROUND A BENT COLUMN

NOTES:

SLOPE PROTECTION SHALL BE PLACED UNDER THE BRIDGE AS SHOW IN THE DETAILS. MEASUREMENT AND PAYMENT SHALL BE AS PRESCRIBED IN THE SPECIAL PROVISION "SHOTCRETE SLOPE PROTECTION".

FOR "SHOTCRETE SLOPE PROTECTION", SEE SPECIAL PROVISIONS.

SLOPE PROTECTION SHALL CONSIST OF SHOTCRETE PLACED AT A MINIMUM THICKNESS OF 4" AS SHOWN IN THE DETAILS ON THIS SHEET. WELDED WIRE FABRIC REINFORCING SHALL BE 6 X 6 - W1.4 X W1.4, 60" WIDE. THE COST OF THE WELDED WIRE FABRIC SHALL BE INCLUDED IN THE CONTRACT UNIT PRICE BID PER SQUARE YARD FOR SHOTCRETE SLOPE PROTECTION.

EXISTING BERM AND SLOPE UNDER BRIDGE SHALL BE FINE GRADED TO A UNIFORM SURFACE. THE COST OF GRADING THE EXISTING SLOPE SHALL BE INCLUDED IN THE CONTRACT UNIT PRICE BID PER SQUARE YARD FOR SHOTCRETE SLOPE PROTECTION.

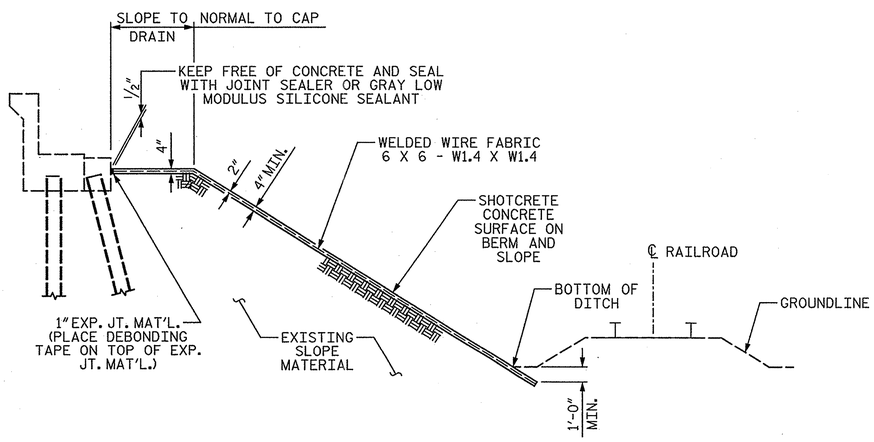

SECTION A-A

(SHOWING PROPOSED)

ESTIMATED QUANTITIES

BRIDGE @ STA. 23+44.51 -DFEB-	SHOTCRETE SLOPE PROTECTION	WELDED WIRE FABRIC 60 INCHES WIDE
	SY	APPROX. LF
END BENT 1	1085	1955
END BENT 2	945	1705

PROJECT NO. U-0071

DURHAM COUNTY

STATION: 23+44.51 -DFEB-

SHEET 3 OF 3

STATE OF NORTH CAROLINA
DEPARTMENT OF TRANSPORTATION
RALEIGH
PRESERVATION

SLOPE PROTECTION DETAILS

PLANS PREPARED BY:

SIMPSON ENGINEERS & ASSOCIATES
5640 Dillard Drive
Suite 200
Cary, NC 27518
(919) 852-0468
(919) 852-0598 (Fax)
www.simpsonengr.com
LICENSURE NO. C-2521

NORTH CAROLINA PROFESSIONAL SEAL 18056 ENGINEER JOHN A. BATTS
1/16/2014

REVISIONS								SHEET NO.
NO.	BY:	DATE:	NO.	BY:	DATE:			SP-80
1			3					TOTAL SHEETS
2			4					83

STR. #15

DRAWN BY: T. BANKOVICH DATE: 12-13
CHECKED BY: T.J. BEACH DATE: 12-13
DESIGN ENGINEER OF RECORD: J.A. BATTS DATE: 12-13

1/14/2014 3:13:01 PM G:\Projects\2012\U-0071 (Durham Co.)\Structures\Drawings\Final\Bridge 188\Preservation\U-0071_Br188_prs_sp.dgn

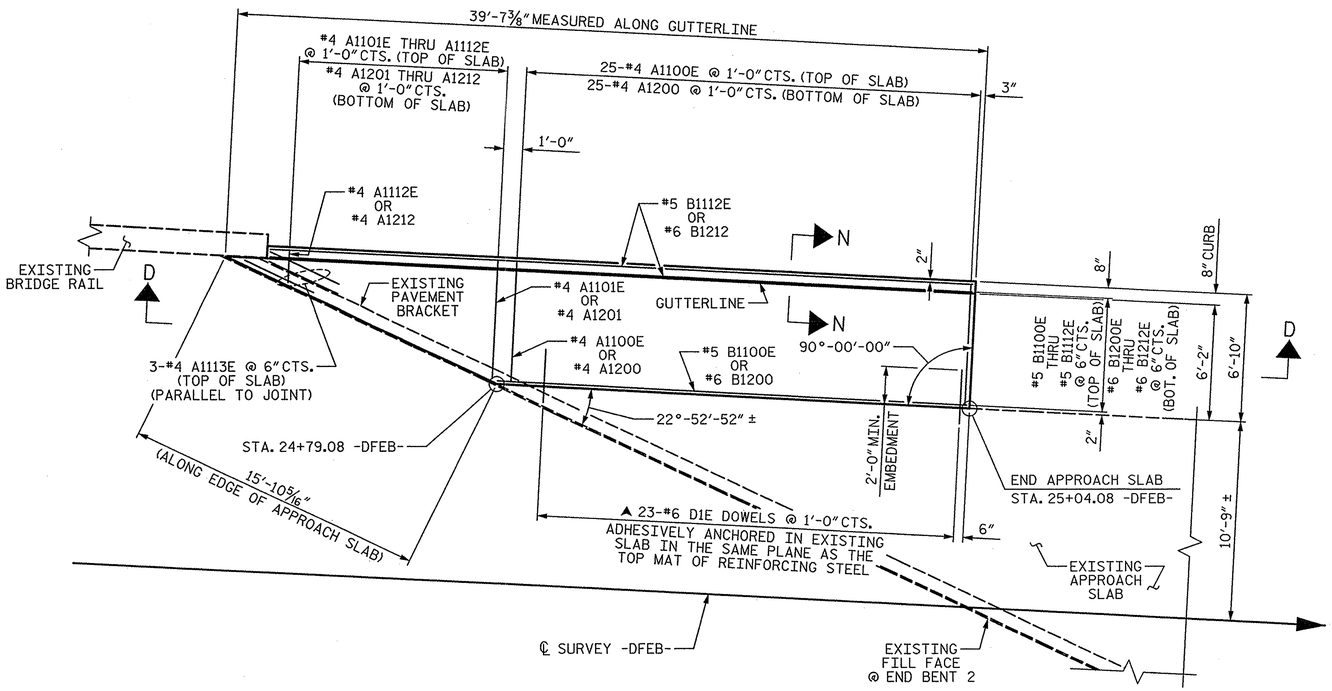

PLAN @ END BENT 2 MEDIAN

NOTES:

OUTSIDE EDGE OF APPROACH SLAB IS TANGENT.

1¼" LATEX MODIFIED CONCRETE (MIN.) LOCATED IN THE PROPOSED WIDENING OF APPROACH SLAB IS INCLUDED IN THE LMC QUANTITY ON THE PRESERVATION PLANS.

▲ #6 "D" DOWELS PLACED IN THE EXISTING APPROACH SLAB SHALL BE INSTALLED USING AN ADHESIVE ANCHORING SYSTEM. LEVEL ONE FIELD TESTING IS REQUIRED AND THE YIELD LOAD OF THE DOWEL IS 13.2 KIPS. EMBEDMENT LENGTH TO BE DETERMINED BY THE MANUFACTURER OF THE ADHESIVELY ANCHORED ANCHOR SYSTEM. #6 "D" BAR LENGTH WAS BASED ON A 10" EMBEDMENT LENGTH. ADHESIVELY ANCHORED ANCHOR BOLT OR DOWEL TESTING SHALL BE IN ACCORDANCE WITH SECTION 420-13 OF THE STANDARD SPECIFICATIONS.

BILL OF MATERIAL

WIDENING APPROACH SLAB @ END BENT 2 MEDIAN

BAR	NO.	SIZE	TYPE	LENGTH	WEIGHT
A1100E	25	4	STR	6'-6"	109
A1101E	1	4	STR	6'-4"	4
A1102E	1	4	STR	5'-11"	4
A1103E	1	4	STR	5'-6"	4
A1104E	1	4	STR	5'-1"	3
A1105E	1	4	STR	4'-8"	3
A1106E	1	4	STR	4'-3"	3
A1107E	1	4	STR	3'-10"	3
A1108E	1	4	STR	3'-5"	2
A1109E	1	4	STR	3'-0"	2
A1110E	1	4	STR	2'-7"	2
A1111E	1	4	STR	2'-1"	1
A1112E	1	4	STR	1'-8"	1
A1113E	3	4	STR	4'-0"	8
A1200	25	4	STR	6'-6"	109
A1201	1	4	STR	6'-4"	4
A1202	1	4	STR	5'-11"	4
A1203	1	4	STR	5'-6"	4
A1204	1	4	STR	5'-1"	3
A1205	1	4	STR	4'-8"	3
A1206	1	4	STR	4'-3"	3
A1207	1	4	STR	3'-10"	3
A1208	1	4	STR	3'-5"	2
A1209	1	4	STR	3'-0"	2
A1210	1	4	STR	2'-7"	2
A1211	1	4	STR	2'-1"	1
A1212	1	4	STR	1'-8"	1
B1100E	1	5	STR	24'-9"	26
B1101E	1	5	STR	25'-11"	27
B1102E	1	5	STR	27'-2"	28
B1103E	1	5	STR	28'-4"	30
B1104E	1	5	STR	29'-6"	31
B1105E	1	5	STR	30'-8"	32
B1106E	1	5	STR	31'-10"	33

BAR	NO.	SIZE	TYPE	LENGTH	WEIGHT
B1107E	1	5	STR	33'-1"	35
B1108E	1	5	STR	34'-3"	36
B1109E	1	5	STR	35'-5"	37
B1110E	1	5	STR	36'-7"	38
B1111E	1	5	STR	37'-10"	39
B1112E	2	5	STR	37'-1"	77
B1200	1	6	STR	24'-9"	37
B1201	1	6	STR	25'-11"	39
B1202	1	6	STR	27'-2"	41
B1203	1	6	STR	28'-4"	43
B1204	1	6	STR	29'-6"	44
B1205	1	6	STR	30'-8"	46
B1206	1	6	STR	31'-10"	48
B1207	1	6	STR	33'-1"	50
B1208	1	6	STR	34'-3"	51
B1209	1	6	STR	35'-5"	53
B1210	1	6	STR	36'-7"	55
B1211	1	6	STR	37'-10"	57
B1212	2	6	STR	37'-1"	111
D1E	23	6	STR	2'-10"	98

REINFORCING STEEL	816 LB
EPOXY COATED REINFORCING STEEL	716 LB
CLASS "AA" CONCRETE BREAKDOWN POUR 1 (SLAB & CURB)	9.4 CY

"E" INDICATES EPOXY COATED REINFORCING STEEL

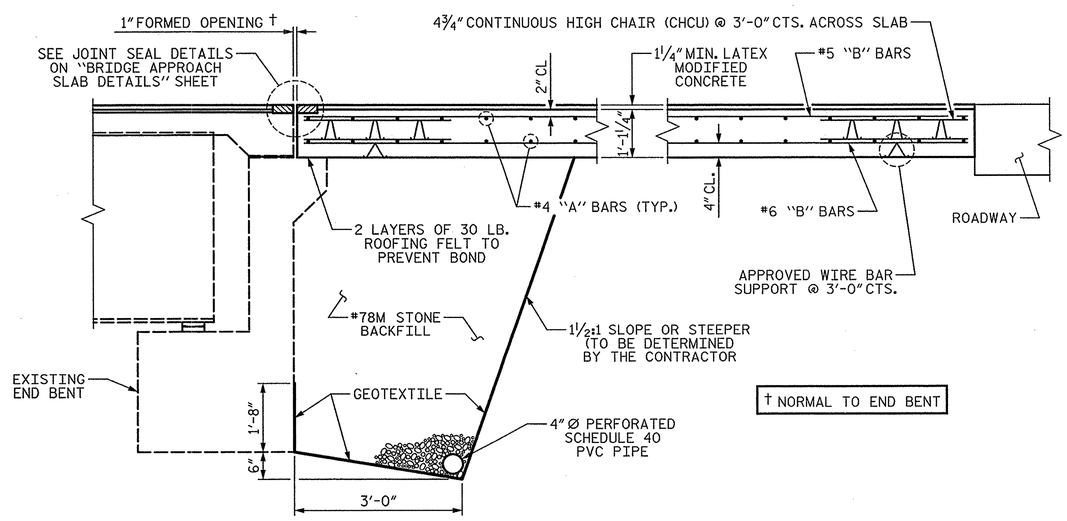

† NORMAL TO END BENT

SECTION D-D

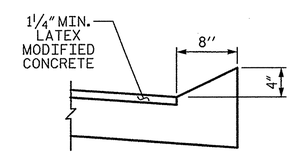

SECTION N-N

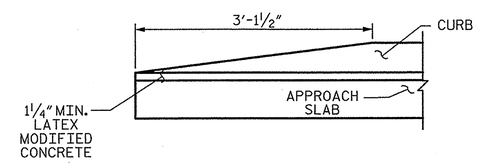

END OF CURB WITHOUT SHOULDER BERM GUTTER

SPLICE LENGTHS

BAR SIZE	EPOXY COATED	UNCOATED
#4	2'-0"	1'-9"
#5	2'-6"	2'-2"
#6	3'-10"	2'-7"

PROJECT NO. U-0071

DURHAM COUNTY

STATION: 23+44.51 -DFEB-

SHEET 1 OF 3

STATE OF NORTH CAROLINA
DEPARTMENT OF TRANSPORTATION
RALEIGH

BRIDGE APPROACH SLAB WIDENING FOR RIGID PAVEMENT END BENT 2

PLANS PREPARED BY:

SIMPSON ENGINEERS & ASSOCIATES
5640 Dillard Drive
Suite 200
Cary, NC 27518
(919) 852-0468
(919) 852-0598 (Fax)
www.simpsonengr.com
LICENSURE NO. C-2521

NORTH CAROLINA PROFESSIONAL SEAL 18056 ENGINEER JOHN A. BATTS
1/16/2014

REVISIONS						SHEET NO.
NO.	BY:	DATE:	NO.	BY:	DATE:	SP-81
1			3			TOTAL SHEETS
2			4			83

STR. #15

DRAWN BY: T. BANKOVICH DATE: 12-13
CHECKED BY: B.S. COX DATE: 12-13
DESIGN ENGINEER OF RECORD: J.A. BATTS DATE: 12-13

1/14/2014 3:13:01 PM G:\Projects\2012\U-0071 (Durham Co.)\Structures\Drawings\Final\Bridge 188\Preservation\U-0071_Br188_prs_as.dgn

NOTES:

FOR NOTES, SEE SHEET 1 OF 7.

FOR SECTION D-D, SEE SHEET 1 OF 3.

FOR SECTION N-N, SEE SHEET 1 OF 3.

* RADIAL DIMENSIONS

THE EFFECTS OF THE HORIZONTAL CURVE ARE NEGLIGIBLE AND SHALL BE IGNORED IN THE CONSTRUCTION OF THE APPROACH SLAB.

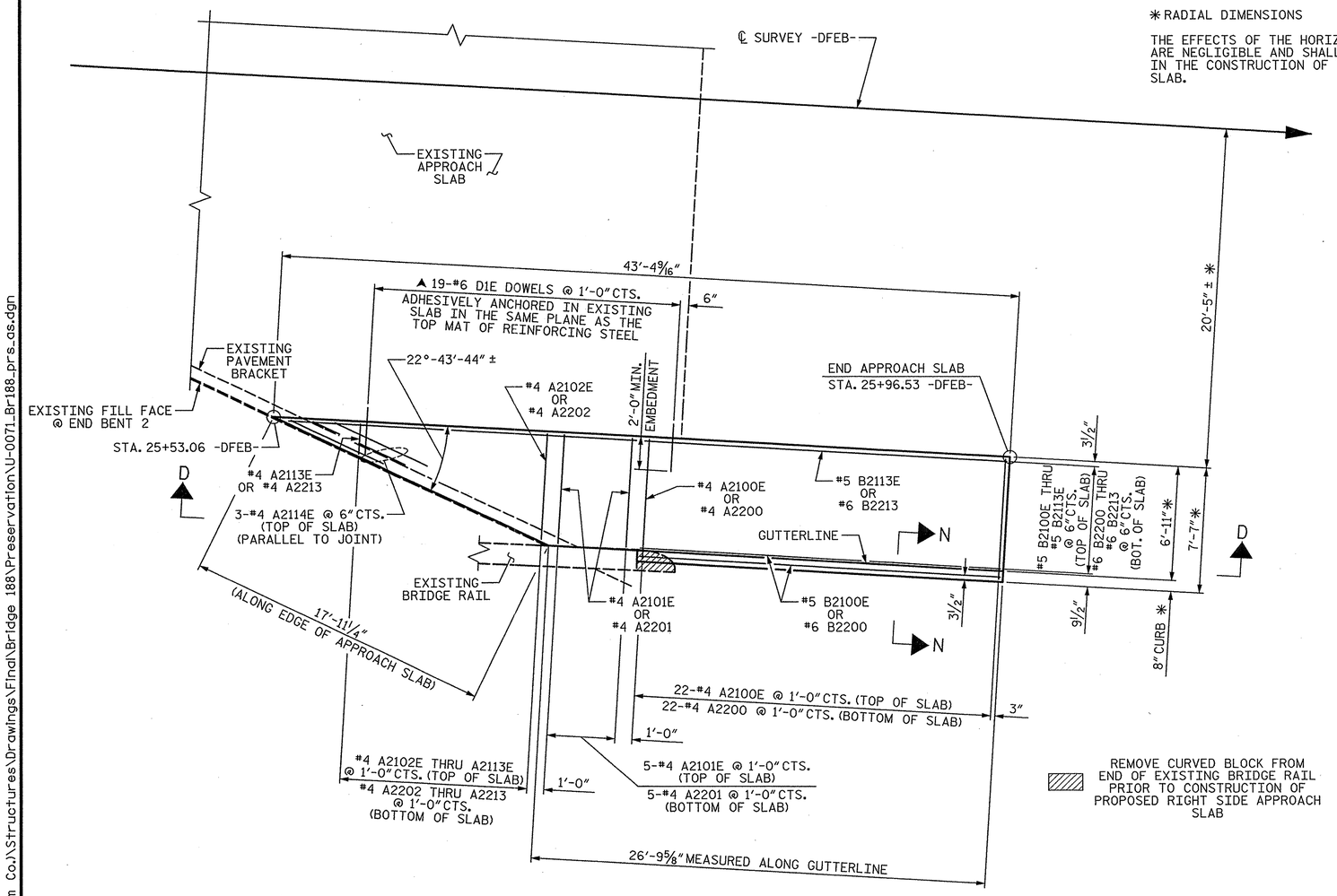

REMOVE CURVED BLOCK FROM END OF EXISTING BRIDGE RAIL PRIOR TO CONSTRUCTION OF PROPOSED RIGHT SIDE APPROACH SLAB

PLAN @ END BENT 2 RIGHT SIDE

BILL OF MATERIAL
WIDENING APPROACH SLAB @ END BENT 2 RIGHT SIDE

BAR	NO.	SIZE	TYPE	LENGTH	WEIGHT	BAR	NO.	SIZE	TYPE	LENGTH	WEIGHT
A2100E	22	4	STR	7'-3"	107	B2105E	1	5	STR	32'-7"	34
A2101E	5	4	STR	6'-7"	22	B2106E	1	5	STR	33'-10"	35
A2102E	1	4	STR	6'-4"	4	B2107E	1	5	STR	35'-0"	37
A2103E	1	4	STR	5'-11"	4	B2108E	1	5	STR	36'-3"	38
A2104E	1	4	STR	5'-6"	4	B2109E	1	5	STR	37'-5"	39
A2105E	1	4	STR	5'-1"	3	B2110E	1	5	STR	38'-8"	40
A2106E	1	4	STR	4'-8"	3	B2111E	1	5	STR	39'-10"	42
A2107E	1	4	STR	4'-3"	3	B2112E	1	5	STR	41'-1"	43
A2108E	1	4	STR	3'-10"	3	B2113E	1	5	STR	42'-3"	44
A2109E	1	4	STR	3'-5"	2						
A2110E	1	4	STR	3'-0"	2	B2200	2	6	STR	21'-2"	64
A2111E	1	4	STR	2'-7"	2	B2201	1	6	STR	27'-9"	42
A2112E	1	4	STR	2'-2"	1	B2202	1	6	STR	29'-0"	44
A2113E	1	4	STR	1'-9"	1	B2203	1	6	STR	30'-2"	45
A2114E	3	4	STR	6'-0"	12	B2204	1	6	STR	31'-5"	47
						B2205	1	6	STR	32'-7"	49
A2200	22	4	STR	7'-3"	107	B2206	1	6	STR	33'-10"	51
A2201	5	4	STR	6'-7"	22	B2207	1	6	STR	35'-0"	53
A2202	1	4	STR	6'-4"	4	B2208	1	6	STR	36'-3"	54
A2203	1	4	STR	5'-11"	4	B2209	1	6	STR	37'-5"	56
A2204	1	4	STR	5'-6"	4	B2210	1	6	STR	38'-8"	58
A2205	1	4	STR	5'-1"	3	B2211	1	6	STR	39'-10"	60
A2206	1	4	STR	4'-8"	3	B2212	1	6	STR	41'-1"	62
A2207	1	4	STR	4'-3"	3	B2213	1	6	STR	42'-3"	63
A2208	1	4	STR	3'-10"	3						
A2209	1	4	STR	3'-5"	2	D1E	19	6	STR	2'-10"	81
A2210	1	4	STR	3'-0"	2						
A2211	1	4	STR	2'-7"	2	REINFORCING STEEL					909 LB
A2212	1	4	STR	2'-2"	1						
A2213	1	4	STR	1'-9"	1	EPOXY COATED REINFORCING STEEL					773 LB
B2100E	2	5	STR	21'-2"	44						
B2101E	1	5	STR	27'-9"	29	CLASS "AA" CONCRETE BREAKDOWN					
B2102E	1	5	STR	29'-0"	30	POUR 1 (SLAB & CURB)					10.7 CY
B2103E	1	5	STR	30'-2"	31						
B2104E	1	5	STR	31'-5"	33						

"E" INDICATES EPOXY COATED REINFORCING STEEL

SPLICE LENGTHS

BAR SIZE	EPOXY COATED	UNCOATED
#4	2'-0"	1'-9"
#5	2'-6"	2'-2"
#6	3'-10"	2'-7"

PROJECT NO. U-0071
DURHAM COUNTY
STATION: 23+44.51 -DFEB-

SHEET 2 OF 3

STATE OF NORTH CAROLINA
DEPARTMENT OF TRANSPORTATION
RALEIGH

BRIDGE APPROACH SLAB WIDENING FOR RIGID PAVEMENT END BENT 2

PLANS PREPARED BY:
SIMPSON ENGINEERS & ASSOCIATES
5640 Dillard Drive
Suite 200
Cary, NC 27518
(919) 852-0468
(919) 852-0598 (Fax)
www.simpsonengr.com
LICENSURE NO. C-2521

NORTH CAROLINA PROFESSIONAL SEAL 18056 ENGINEER JOHN A. BATTS
1/10/2014

REVISIONS						SHEET NO.
NO.	BY:	DATE:	NO.	BY:	DATE:	SR-82
1			3			TOTAL SHEETS
2			4			83

STR. #15

DRAWN BY: T. BANKOVICH DATE: 12-13
CHECKED BY: B.S. COX DATE: 12-13
DESIGN ENGINEER OF RECORD: J.A. BATTS DATE: 12-13

1/14/2014 3:13:01 PM G:\Projects\2012\U-0071 (Durham Co.)\Structures\Drawings\Final\Bridge 188\Preservation\U-0071_Br188_prs_as.dgn

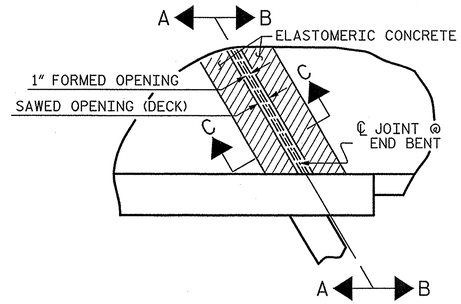

PLAN
(@ END BENT)

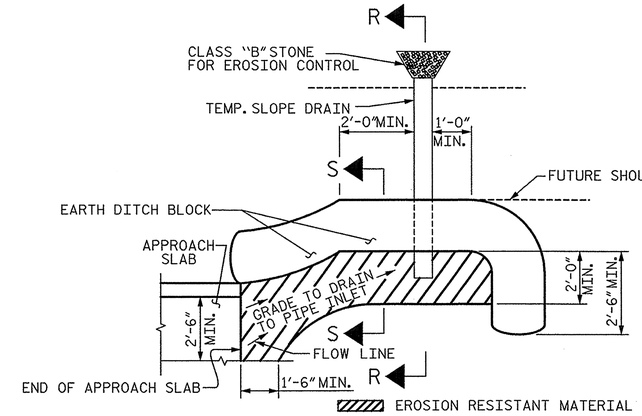

NOTE: IMMEDIATELY AFTER THE CONSTRUCTION OF THE APPROACH SLAB, THE CONTRACTOR SHALL PROVIDE TEMPORARY BERM AND SLOPE DRAIN. CONTRACTOR SHALL GRADE TO PIPE INLET AND PROVIDE EROSION RESISTANT MATERIAL AS SHOWN. THE EROSION RESISTANT MATERIAL SHALL BE EITHER 1) ASPHALT PLANT MIX, TYPE 1 OR TYPE 2, MIN. 2" DEPTH, 2) EROSION CONTROL MAT, OR 3) CONCRETE, AS DIRECTED BY THE ENGINEER. THE SLOPE DRAIN SHALL CONSIST OF A NON-PERFORATED TEMPORARY DRAINAGE PIPE, 12 INCHES IN DIAMETER.

PLAN VIEW

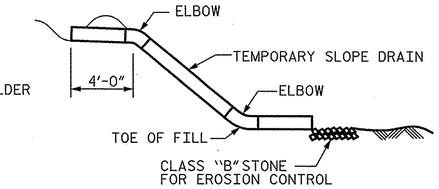

SECTION R-R

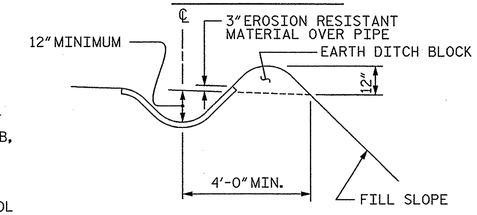

SECTION S-S

TEMPORARY BERM AND SLOPE DRAIN DETAILS

(TO BE USED WHEN SHOULDER BERM GUTTER IS REQUIRED)

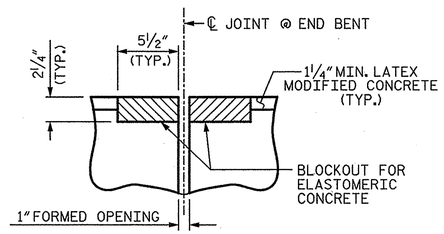

SECTION C-C

FOAM JOINT SEAL
(PRE-SAWED ELASTOMERIC CONCRETE DIMENSIONS)

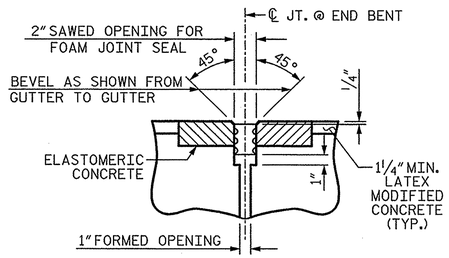

SECTION C-C @ END BENT

FOAM JOINT SEAL
(FIXED)

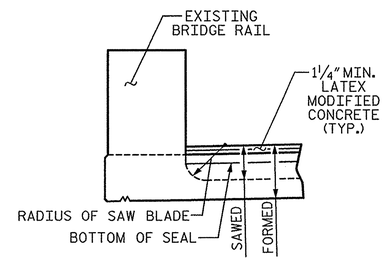

SECTION A-A - WIDENING APPROACH SLAB

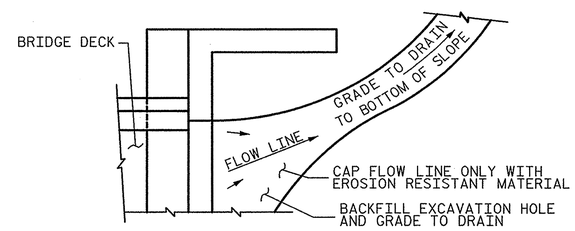

NOTE: IF THE APPROACH SLAB IS NOT CONSTRUCTED IMMEDIATELY AFTER THE BACKFILLING OF THE END BENT EXCAVATION, GRADE TO DRAIN TO THE BOTTOM OF THE SLOPE AND PROVIDE EROSION RESISTANT MATERIAL, SUCH AS FIBERGLASS ROVING OR AS DIRECTED BY THE ENGINEER TO PREVENT SOIL EROSION AND TO PROTECT THE AREA ADJACENT TO THE STRUCTURE. THE CONTRACTOR WILL BE REQUIRED TO REMOVE THESE MATERIALS PRIOR TO CONSTRUCTION OF THE APPROACH SLAB.

TEMPORARY DRAINAGE DETAIL

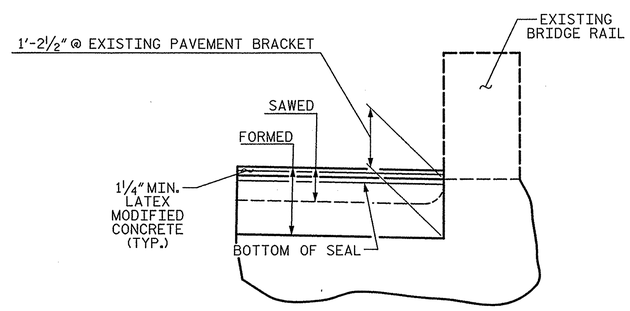

SECTION B-B

JOINT SEAL DETAILS @ END BENT

ELASTOMERIC CONCRETE	
LOCATION	ELASTOMERIC CONCRETE * (CF)
END BENT 2	5.8

* BASED ON THE MINIMUM BLOCKOUT SHOWN. FOR WIDENING OF APPROACH SLAB AT MEDIAN AND RIGHT SIDE ONLY.

FOR ELASTOMERIC CONCRETE FOR EXISTING APPROACH SLAB AND BRDIGE DECK JOINT REPLACEMENT AT END BENTS AND BENTS SEE PRESERVATION PLANS.

PROJECT NO. U-0071
DURHAM COUNTY
STATION: 23+44.51 -DFEB-

SHEET 3 OF 3

STATE OF NORTH CAROLINA
DEPARTMENT OF TRANSPORTATION
RALEIGH

BRIDGE APPROACH SLAB DETAILS

PLANS PREPARED BY:
SIMPSON ENGINEERS & ASSOCIATES
5640 Dillard Drive
Suite 200
Cary, NC 27518
(919) 852-0468
(919) 852-0598 (Fax)
www.simpsonengr.com
LICENSURE NO. C-2521

NORTH CAROLINA PROFESSIONAL SEAL 18056 ENGINEER JOHN A. BATTS
1/16/2014

REVISIONS								SHEET NO.
NO.	BY:	DATE:	NO.	BY:	DATE:			SP-83
1			3					TOTAL SHEETS
2			4					83

STR. #15

DRAWN BY: T. BANKOVICH DATE: 12-13
CHECKED BY: B.S. COX DATE: 12-13
DESIGN ENGINEER OF RECORD: J.A. BATTS DATE: 12-13

1/14/2014 3:13:02 PM G:\Projects\2012\U-0071 (Durham Co.)\Structures\Drawings\Final\Bridge 188\Preservation\U-0071_Br188_prs_as.dgn

GEOTECHNICAL ENGINEER

NORTH CAROLINA PROFESSIONAL SEAL 038176 ENGINEER SHIHAN ZHANG

1-22-2014

SIGNATURE DATE

ENGINEER

SIGNATURE DATE

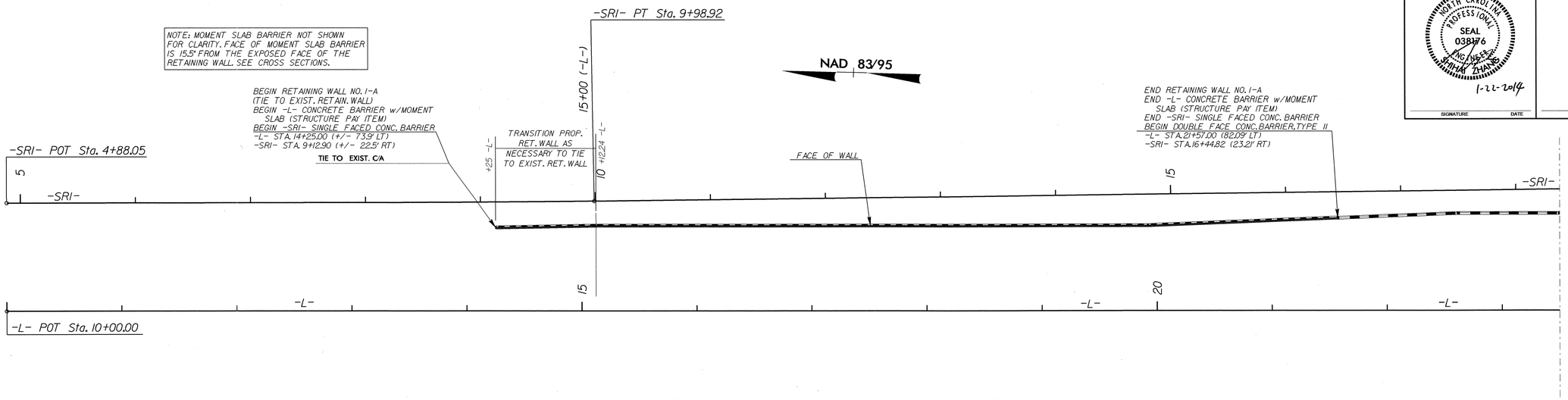

MSE RETAINING WALL NO. 1-A - PLAN VIEW (NTS)

ESTIMATED MSE WALL QUANTITY (SQUARE FEET)	
MSE RETAINING WALL NO. 1-A	5,730 SF

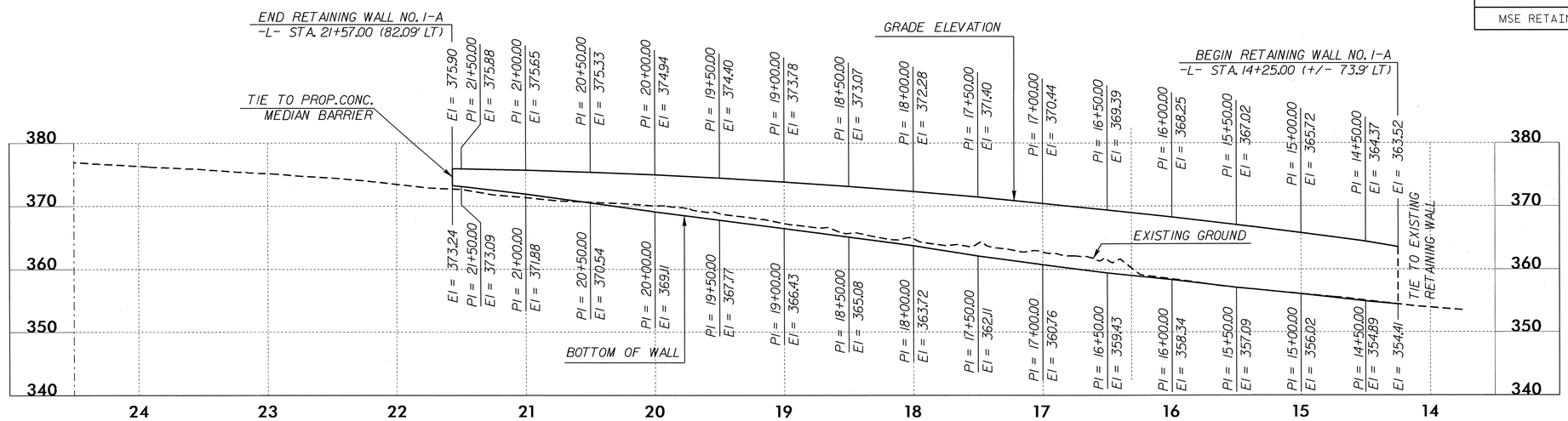

MSE RETAINING WALL NO. 1-A - WALL ENVELOPE (NTS)

RETAINING WALL 1-A					
ALIGNMENT	STATION	OFFSET	ALIGNMENT	STATION	OFFSET
-L-	14+25.00	73.9' LT +/-	-SRI-	9+12.90	22.5' RT +/-
-L-	15+12.24	75.50' LT	-SRI-	10+00.03	21.75' RT
-L-	19+92.14	75.50' LT	-SRI-	14+79.89	27.75' RT
-L-	21+57.00	82.09' LT	-SRI-	16+44.82	23.21' RT
NOTE: DIMENSIONS ARE SHOWN TO THE EXPOSED FACE OF THE RETAINING WALL					

PROJECT NO.: U-0071

DURHAM **COUNTY**

STATION: VARIES

SHEET 1 OF 7

GEOTECHNICAL ENGINEERING UNIT

[X] EASTERN REGIONAL OFFICE

[ ] WESTERN REGIONAL OFFICE

[ ] CONTRACT OFFICE

STATE OF NORTH CAROLINA
DEPARTMENT OF TRANSPORTATION
RALEIGH

MSE RETAINING WALL NO. 1-A PLAN VIEW & WALL ENVELOPE

REVISIONS						SHEET NO.
NO.	BY	DATE	NO.	BY	DATE	W-1
1			3			TOTAL SHEETS
2			4			44

PREPARED BY: S. ZHANG	DATE: 01/2014
REVIEWED BY: J. BATTS	DATE: 01/2014

GEOTECHNICAL ENGINEER	ENGINEER
NORTH CAROLINA PROFESSIONAL SEAL 038176 ENGINEER SHIHAI ZHANG	
SIGNATURE DATE	SIGNATURE DATE

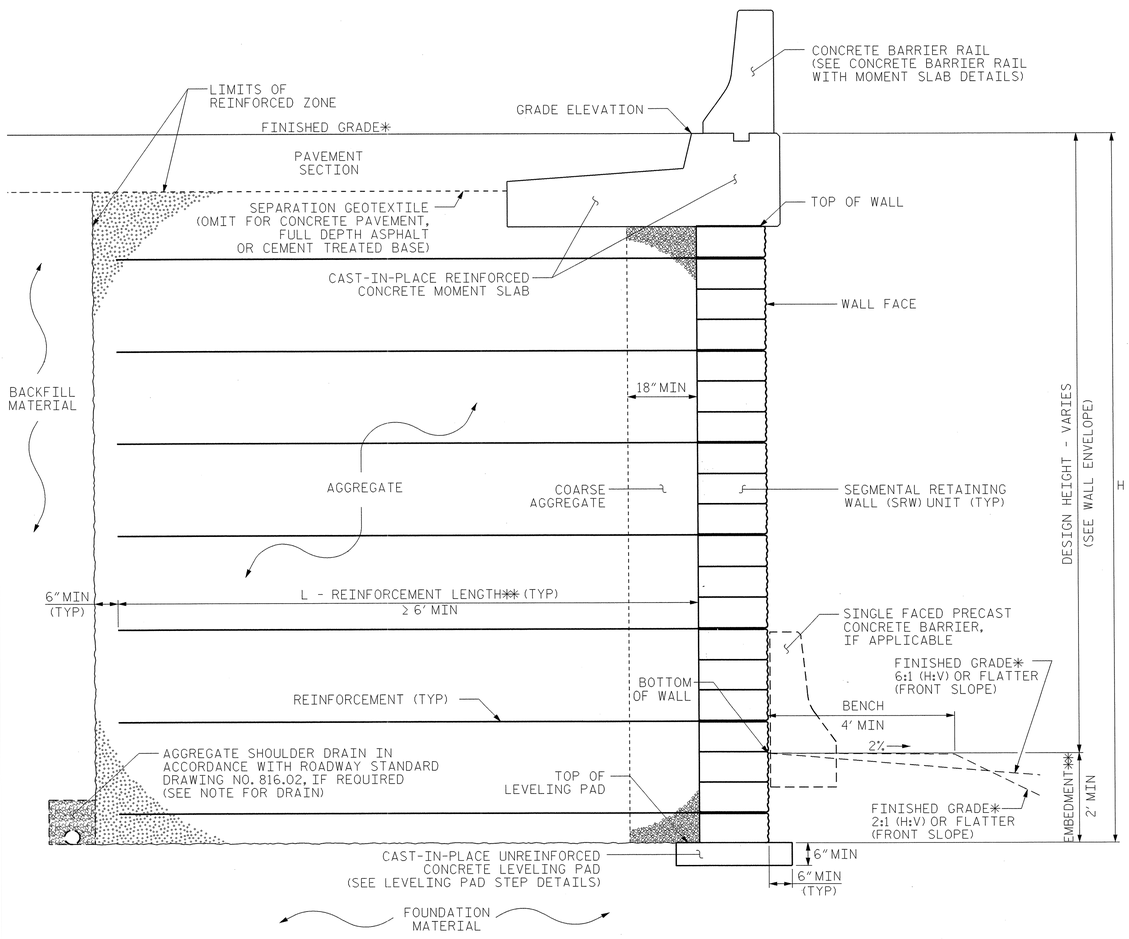

MSE WALL WITH SRW UNITS - TYPICAL SECTION

*SEE ROADWAY PLANS FOR FINISHED GRADE DETAILS.
**SEE MSE RETAINING WALLS PROVISION FOR EMBEDMENT AND REINFORCEMENT LENGTH REQUIREMENTS.

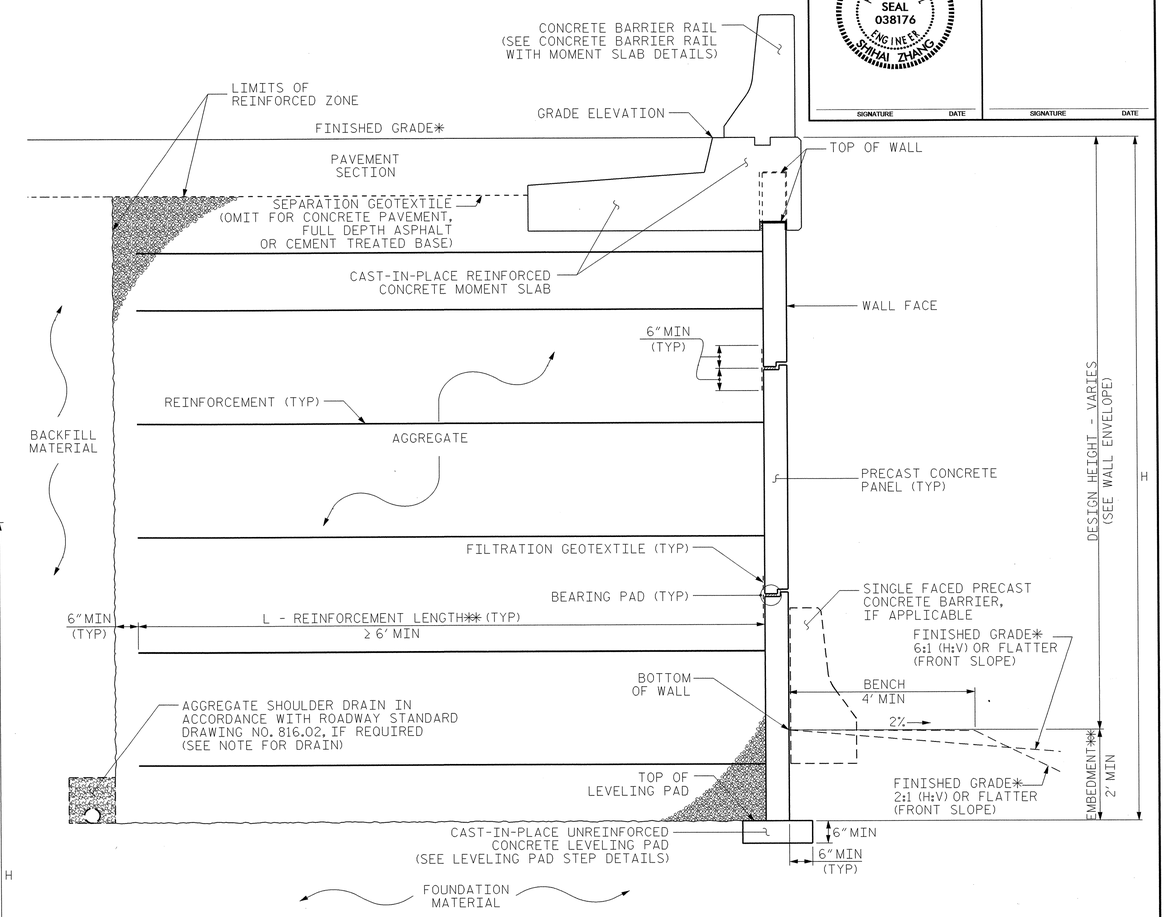

MSE WALL WITH PRECAST PANELS - TYPICAL SECTION

*SEE ROADWAY PLANS FOR FINISHED GRADE DETAILS.
**SEE MSE RETAINING WALLS PROVISION FOR EMBEDMENT AND REINFORCEMENT LENGTH REQUIREMENTS.

PREPARED BY: S. ZHANG	DATE: 01/2014
REVIEWED BY: J. BATTS	DATE: 01/2014

PROJECT NO.: U-0071
DURHAM ***COUNTY***
STATION: VARIES
SHEET 2 OF 7

GEOTECHNICAL ENGINEERING UNIT

☒ *EASTERN REGIONAL OFFICE*
☐ *WESTERN REGIONAL OFFICE*
☐ *CONTRACT OFFICE*

STATE OF NORTH CAROLINA
DEPARTMENT OF TRANSPORTATION
RALEIGH

MSE RETAINING WALL NO. 1-A
TYPICAL SECTION
-

REVISIONS							SHEET NO.
NO.	BY	DATE	NO.	BY	DATE		W-2
1	-	-	3	-	-		TOTAL SHEETS
2	-	-	4	-	-		44

GEOTECHNICAL ENGINEER	ENGINEER
NORTH CAROLINA PROFESSIONAL SEAL 038176 ENGINEER SHIHAI ZHANG 1-22-2014	
SIGNATURE DATE	SIGNATURE DATE

NOTES:

FOR MECHANICALLY STABILIZED EARTH (MSE) RETAINING WALLS, SEE MECHANICALLY STABILIZED EARTH RETAINING WALLS PROVISION.

AT THE CONTRACTOR'S OPTION, USE EITHER A PRECAST CONCRETE PANEL FACE OR SEGMENTAL RETAINING WALL (SRW) UNITS FACE FOR MSE RETAINING WALL NO. 1-A.

FOR SINGLE FACED PRECAST CONCRETE BARRIER, SEE ROADWAY PLANS AND SECTION 857 OF THE STANDARD SPECIFICATIONS.

A CONCRETE BARRIER RAIL WITH MOMENT SLAB IS REQUIRED ABOVE RETAINING WALL NO. 1A AND 1B. SEE PLANS FOR CONCRETE BARRIER RAIL WITH MOMENT SLAB DETAILS.

A DRAIN IS REQUIRED FOR RETAINING WALL NO. 1-A.

BEFORE BEGINNING MSE WALL DESIGN FOR RETAINING WALL NO. 1-A, SURVEY WALL LOCATION AND SUBMIT A REVISED WALL PROFILE VIEW (WALL ENVELOPE) FOR REVIEW. DO NOT START WALL DESIGN OR CONSTRUCTION UNTIL THE REVISED WALL ENVELOPE IS ACCEPTED.

DESIGN RETAINING WALL NO. 1-A FOR THE FOLLOWING:
1) H = DESIGN HEIGHT + EMBEDMENT .
2) DESIGN LIFE =75 YEARS
3) MINIMUM REINFORCEMENT LENGTH (L) TO WALL HEIGHT (H) RATIO = 0.8
4) AGGREGATE PARAMETERS:

AGGREGATE TYPE*	UNIT WEIGHT (γ) LB/CF	FRICTION ANGLE (ϕ) DEGREES	COHESION (c) LB/SF
COARSE	110	38	0
FINE	125	34	0
*SEE MSE RETAINING WALLS PROVISION FOR COARSE AND FINE AGGREGATE MATERIAL REQUIREMENTS.			

5) IN-SITU ASSUMED MATERIAL PARAMETERS:

MATERIAL TYPE	UNIT WEIGHT (γ) LB/CF	FRICTION ANGLE (ϕ) DEGREES	COHESION (c) LB/SF
BACKFILL	120	30	0
FOUNDATION	120	30	0

DESIGN RETAINING WALL NO. 1-A FOR A LIVE LOAD (TRAFFIC) SURCHARGE.

EXISTING OR FUTURE OBSTRUCTIONS SUCH AS FOUNDATIONS, GUARDRAIL, FENCE OR HANDRAIL POSTS, PAVEMENTS, PIPES, INLETS OR UTILITIES MAY INTERFERE WITH REINFORCEMENT FOR RETAINING WALL NO. 1-A.

DO NOT PLACE LEVELING PAD CONCRETE, AGGREGATE OR REINFORCEMENT FOR RETAINING WALL NO. 1-A UNTIL EXCAVATION DIMENSIONS AND FOUNDATION MATERIAL ARE APPROVED.

AT THE CONTRACTOR'S OPTION, "TEMPORARY SHORING FOR WALL CONSTRUCTION" MAY BE USED TO CONSTRUCT RETAINING WALL NO. 1-A. SEE MSE RETAINING WALLS PROVISION FOR TEMPORARY SHORING FOR WALL CONSTRUCTION.

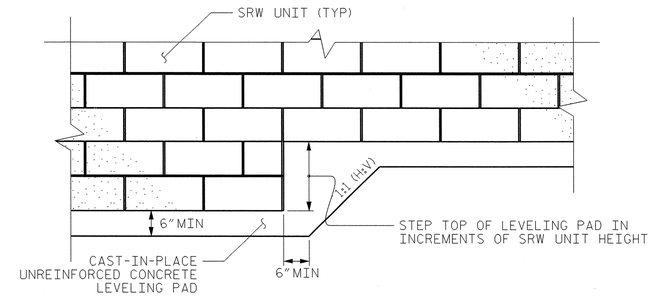

SEGMENTAL RETAINING WALL (SRW) UNITS

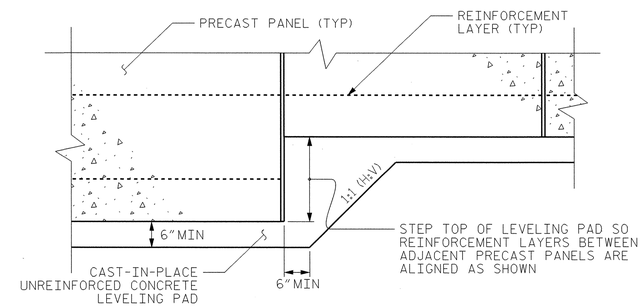

PRECAST CONCRETE PANELS

LEVELING PAD STEP DETAILS

PREPARED BY: S. ZHANG	DATE: 01/2014
REVIEWED BY: J. BATTS	DATE: 01/2014

PROJECT NO.: U-0071
DURHAM **COUNTY**
STATION: VARIES
SHEET 3 OF 7

GEOTECHNICAL ENGINEERING UNIT
[X] EASTERN REGIONAL OFFICE
[ ] WESTERN REGIONAL OFFICE
[ ] CONTRACT OFFICE
STATE OF NORTH CAROLINA DEPARTMENT OF TRANSPORTATION RALEIGH

MSE RETAINING WALL NO. 1-A
NOTES & DETAILS
–

REVISIONS						SHEET NO.
NO.	BY	DATE	NO.	BY	DATE	W-3
1	–	–	3	–	–	TOTAL SHEETS
2	–	–	4	–	–	44

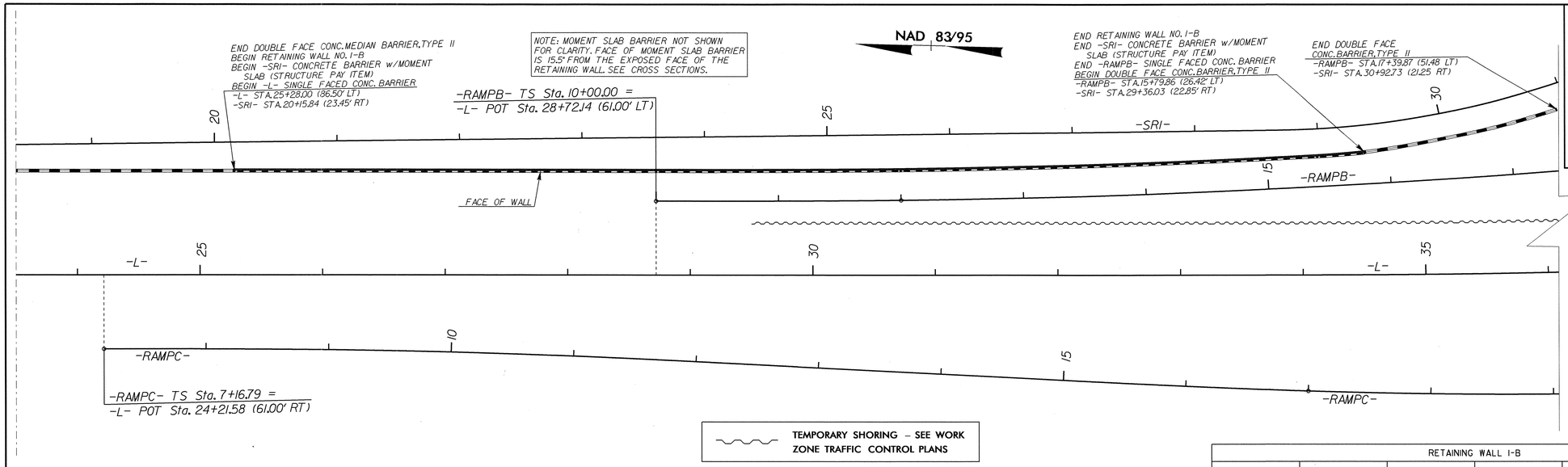

RETAINING WALL NO. 1-B - PLAN VIEW (NTS)

RETAINING WALL 1-B					
ALIGNMENT	STATION	OFFSET	ALIGNMENT	STATION	OFFSET
-L-	25+28.00	86.50' LT	-SRI-	20+15.85	23.45' RT
-L- -RAMPB-	28+72.14 LB = 10+00.00 LA	86.50' LT 25.50' LT	-SRI-	23+59.96	27.75' RT
-RAMPB-	15+40.92	25.50' LT	-SRI-	28+98.40	22.85' RT
-RAMPB-	15+79.86	26.42' LT	-SRI-	29+36.03	22.85' RT
NOTE: DIMENSIONS ARE SHOWN TO THE EXPOSED FACE OF THE RETAINING WALL					

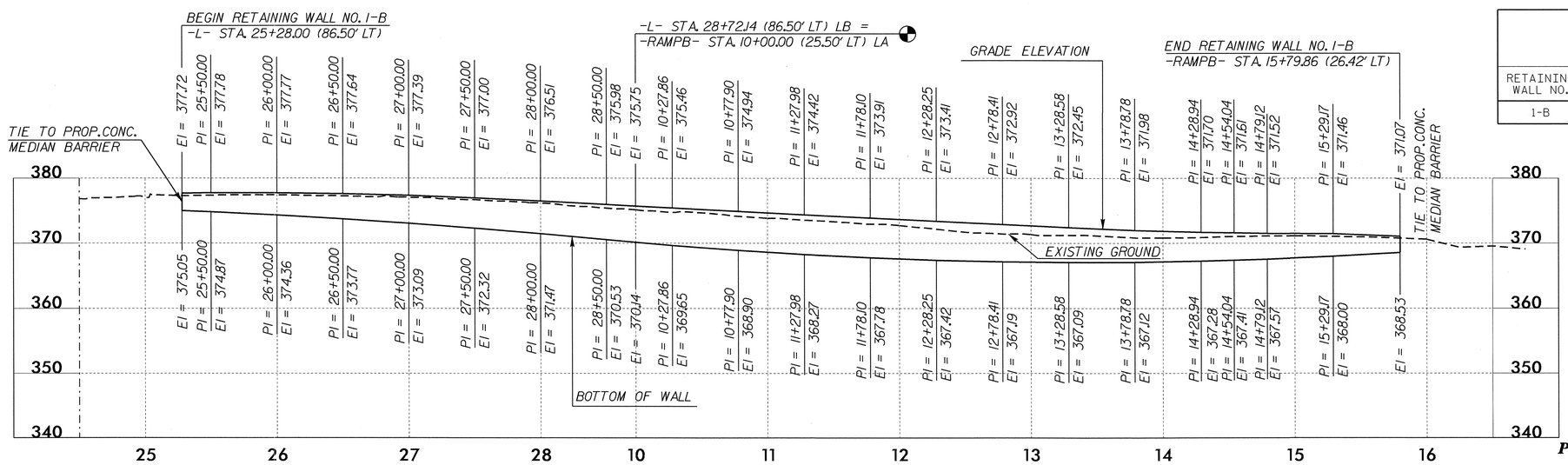

RETAINING WALL NO. 1-B - WALL ENVELOPE (NTS)

ESTIMATED WALL QUANTITY	
RETAINING WALL NO.	SOLDIER PILE RETAINING WALLS (SQUARE FEET)
1-B	4,440 SF

GEOTECHNICAL ENGINEER

NORTH CAROLINA PROFESSIONAL SEAL 038176 ENGINEER SHIHAO ZHANG 1-22-2014

SIGNATURE DATE

ENGINEER

SIGNATURE DATE

PROJECT NO.: U-0071

DURHAM COUNTY

STATION: VARIES

SHEET 4 OF 7

GEOTECHNICAL ENGINEERING UNIT

[X] EASTERN REGIONAL OFFICE

[ ] WESTERN REGIONAL OFFICE

[ ] CONTRACT OFFICE

STATE OF NORTH CAROLINA
DEPARTMENT OF TRANSPORTATION
RALEIGH

RETAINING WALL NO. 1-B
PLAN VIEW & WALL ENVELOPE

REVISIONS

NO.	BY	DATE	NO.	BY	DATE
1	-	-	3	-	-
2	-	-	4	-	-

SHEET NO. W-4

TOTAL SHEETS 44

PREPARED BY: S. ZHANG	DATE: 01/2014
REVIEWED BY: J. BATTS	DATE: 01/2014

GEOTECHNICAL ENGINEER	ENGINEER
NORTH CAROLINA PROFESSIONAL SEAL 038176 ENGINEER SHIHAI ZHANG 1-22-2014	
SIGNATURE DATE	SIGNATURE DATE

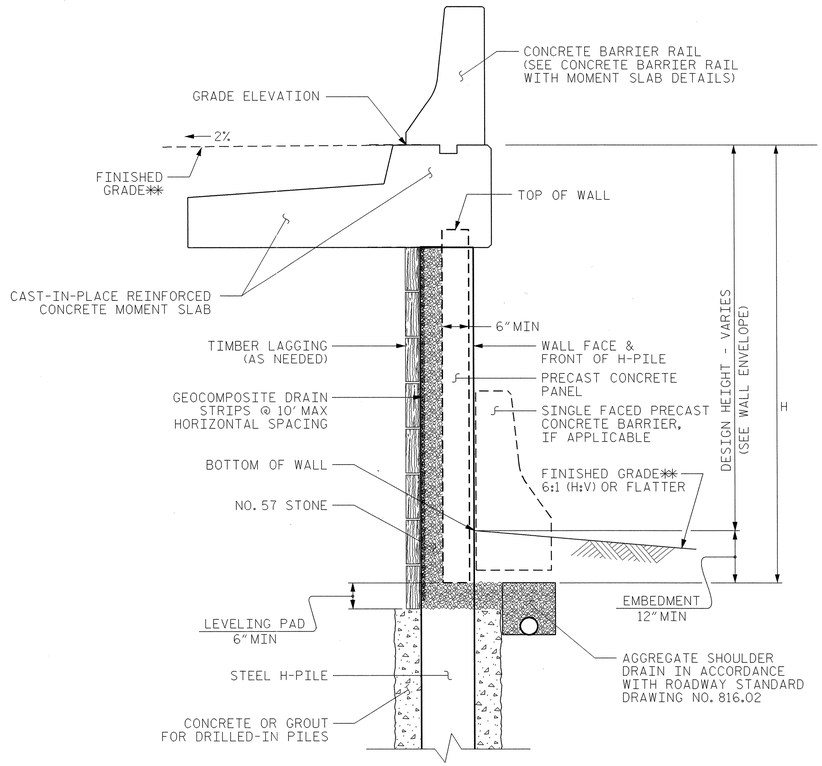

SOLDIER PILE WALL WITH PRECAST PANEL - TYPICAL SECTION

**SEE PLANS FOR FINISHED GRADE DETAILS.

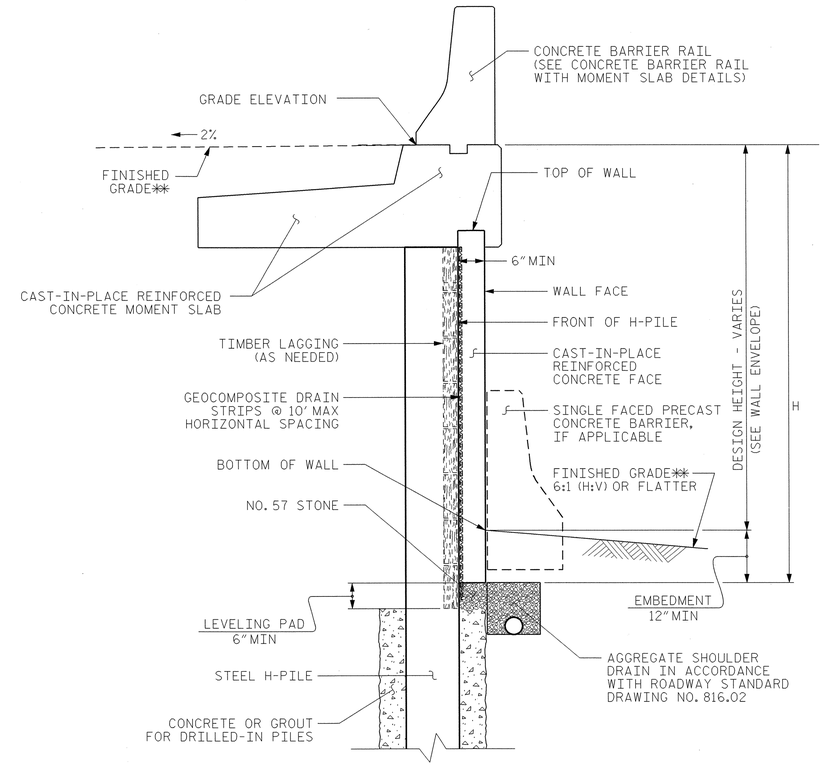

SOLDIER PILE WALL WITH CAST-IN-PLACE FACE - TYPICAL SECTION

**SEE PLANS FOR FINISHED GRADE DETAILS.

NOTES:

FOR SOLDIER PILE RETAINING WALLS, SEE SOLDIER PILE RETAINING WALLS PROVISION.

AT THE CONTRACTOR'S OPTION, USE EITHER A PRECAST CONCRETE PANEL FACE THAT MEET SECTION 1077 OF THE STANDARD SPECIFICATIONS OR A CAST-IN-PLACE REINFORCED CONCRETE FACE FOR RETAINING WALL NO. 1-B.

FOR SINGLE FACED PRECAST CONCRETE BARRIER, SEE ROADWAY PLANS AND SECTION 857 OF THE STANDARD SPECIFICATIONS.

A CONCRETE BARRIER RAIL WITH MOMENT SLAB IS REQUIRED ABOVE RETAINING WALL NO. 1-B. SEE PLANS FOR CONCRETE BARRIER RAIL WITH MOMENT SLAB DETAILS.

LIMITED SUBSURFACE INFORMATION IS AVAILABLE IN THE VICINITY OF RETAINING WALL NO. 1-B.

DRILLED-IN H-PILES ARE REQUIRED FOR RETAINING WALL NO. 1-B EXCEPT FOR AREAS WHERE NO ROCK IS ENCOUNTERED WITHIN THE PILE EMBEDMENT AND DRIVEN H-PILES CAN BE INSTALLED WITHIN PILE ALIGNMENT TOLERANCE WITHOUT DAMAGES.

PAINT GALVANIZED H-PILES GREY IN ACCORDANCE WITH ARTICLE 442-12 OF THE STANDARD SPECIFICATIONS FOR RETAINING WALL NO. 1-B IF A PRECAST CONCRETE PANEL FACE IS SELECTED.

BEFORE BEGINNING SOLDIER PILE WALL DESIGN FOR RETAINING WALL NO. 1-B, SURVEY WALL LOCATION AND SUBMIT A REVISED WALL PROFILE VIEW (WALL ENVELOPE) FOR REVIEW. DO NOT START WALL DESIGN OR CONSTRUCTION UNTIL THE REVISED WALL ENVELOPE IS ACCEPTED.

DESIGN RETAINING WALL NO. 1-B FOR THE FOLLOWING:
1) H = DESIGN HEIGHT + EMBEDMENT
2) DESIGN LIFE = 75 YEARS
3) IN-SITU ASSUMED MATERIAL PARAMETERS:
UNIT WEIGHT, γ = 120 LB/CF
FRICTION ANGLE, ϕ = 30 DEGREES
COHESION, c = 0 LB/SF

DESIGN RETAINING WALL NO. 1-B FOR A LIVE LOAD (TRAFFIC) SURCHARGE.

PREPARED BY: S. ZHANG	DATE: 01/2014
REVIEWED BY: J. BATTS	DATE: 01/2014

PROJECT NO.: U-0071
DURHAM ***COUNTY***
STATION: VARIES
SHEET 5 OF 7

GEOTECHNICAL ENGINEERING UNIT
☒ ***EASTERN REGIONAL OFFICE***
☐ ***WESTERN REGIONAL OFFICE***
☐ ***CONTRACT OFFICE***
STATE OF NORTH CAROLINA
DEPARTMENT OF TRANSPORTATION
RALEIGH

RETAINING WALL NO. 1-B
TYPICAL SECTIONS & NOTES
–

REVISIONS						
NO.	BY	DATE	NO.	BY	DATE	SHEET NO. W-5
1	–	–	3	–	–	TOTAL SHEETS 44
2	–	–	4	–	–	

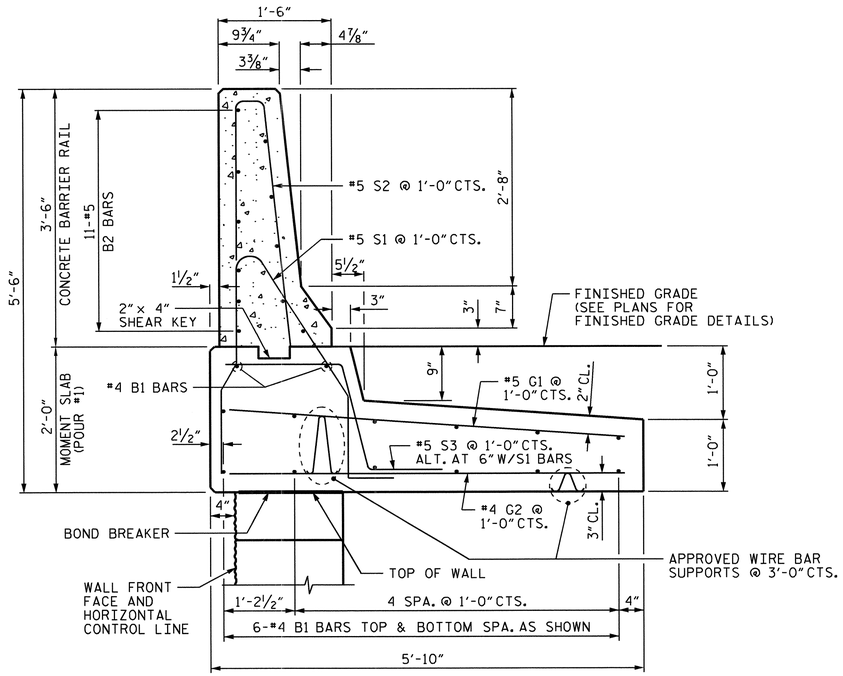

CONCRETE BARRIER RAIL WITH MOMENT SLAB

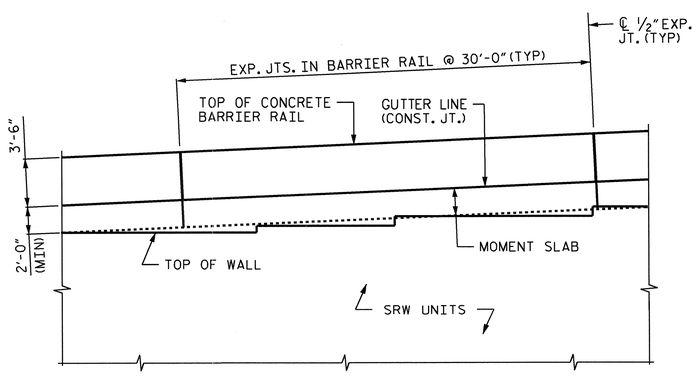

CONCRETE BARRIER RAIL WITH MOMENT SLAB - PARTIAL ELEVATION

NOTES:

FOR CONCRETE BARRIER RAIL WITH MOMENT SLAB, SEE CONCRETE BARRIER RAIL WITH MOMENT SLAB PROVISION.

CONCRETE BARRIER RAIL WITH MOMENT SLAB SHALL BE A MINIMUM OF 15' IN LENGTH.

EXPANSION JOINTS SHALL BE PLACED IN THE BARRIER RAIL AND MOMENT SLAB AT A MAXIMUM SPACING OF 30'.

GROOVED CONTRACTION JOINTS, 1/2" IN DEPTH, SHALL BE TOOLED IN ALL EXPOSED SURFACES OF THE BARRIER RAIL AND IN ACCORDANCE WITH ARTICLE 825-10(B) OF THE STANDARD SPECIFICATIONS. A CONTRACTION JOINT SHALL BE LOCATED AT EACH THIRD POINT BETWEEN BARRIER RAIL EXPANSION JOINTS. ONLY ONE CONTRACTION JOINT IS REQUIRED AT MID-POINT OF BARRIER RAIL SEGMENTS LESS THAN 20' IN LENGTH.

THE BARRIER RAIL SHALL NOT BE CAST UNTIL THE MOMENT SLAB HAS ATTAINED AN AGE OF THREE CURING DAYS OR A MINIMUM COMPRESSIVE STRENGTH OF 2,000 PSI. IN ADDITION, NO FILL MATERIAL, ASPHALT, OR CONSTRUCTION EQUIPMENT IS ALLOWED ON THE MOMENT SLAB PRIOR TO SATISFYING THE MINIMUM CONCRETE CURING AND STRENGTH REQUIREMENTS.

ALL REINFORCING STEEL IN THE BARRIER RAIL SHALL BE EPOXY COATED.

IF STEPS ARE REQUIRED AT TOP OF WALL, DETAILS SHOWING INTERFACE BETWEEN BOTTOM OF MOMENT SLAB AND STEPS SHALL BE SUBMITTED FOR APPROVAL.

IF EXISTING OR FUTURE OBSTRUCTIONS SUCH AS FOUNDATIONS, BARRIERS, PIPES, INLETS OR UTILITIES WILL INTERFERE WITH CONCRETE BARRIER RAIL WITH MOMENT SLAB, CONCRETE BARRIER RAIL WITH MOMENT SLAB DETAILS SHALL BE REVISED AND SUBMITTED FOR APPROVAL.

FOR GRATED DROP INLET THRU MOMENT SLAB DETAILS, SEE SHEET 2 OF 2.

CONCRETE BARRIER RAIL WITH MOMENT SLAB	
PAY LENGTH = 1,658	LIN FT

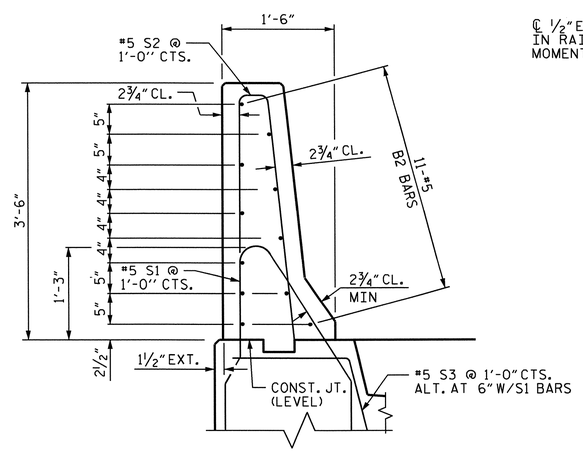

SECTION THRU RAIL

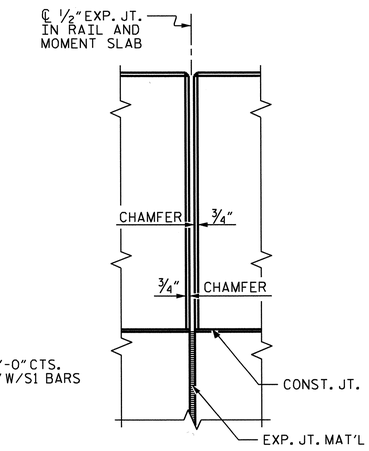

ELEV. @ EXP. JOINTS

BARRIER RAIL DETAILS

NORTH CAROLINA PROFESSIONAL SEAL 14855 ENGINEER DOUGLAS R. CALHOUN

Douglas R. Calhoun 6/24/14

SIGNATURE DATE SIGNATURE DATE

BAR TYPES

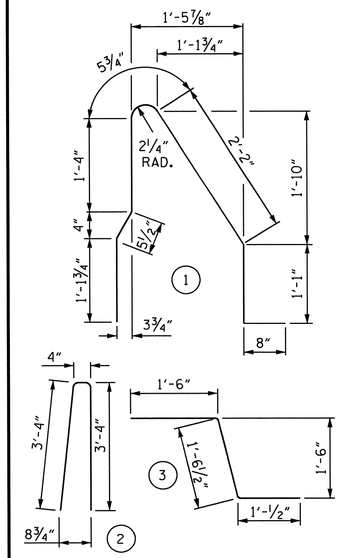

ALL BAR DIMENSIONS ARE OUT TO OUT

BILL OF MATERIAL

FOR ONE 30'-0" SECTION OF CONCRETE BARRIER RAIL WITH MOMENT SLAB

BAR	NO.	SIZE	TYPE	LENGTH	WEIGHT
B1	14	#4	STR	29'-7"	277
* B2	11	#5	STR	29'-7"	339
G1	31	#5	STR	5'-6"	178
G2	31	#4	STR	5'-6"	114
* S1	31	#5	1	7'-3"	234
* S2	31	#5	2	7'-0"	226
S3	30	#5	3	4'-1"	128

REINFORCING STEEL	697 LB
* EPOXY COATED REINFORCING STEEL	799 LB
CLASS AA CONCRETE BARRIER RAIL	4.1 CY
CLASS A CONCRETE MOMENT SLAB	9.1 CY
CONCRETE BARRIER RAIL WITH MOMENT SLAB	30 LIN FT

PROJECT NO.: U-0071

DURHAM ***COUNTY***

STATION: VARIES

SHEET 6 OF 7

GEOTECHNICAL ENGINEERING UNIT

☒ *EASTERN REGIONAL OFFICE*

☐ *WESTERN REGIONAL OFFICE*

☐ *CONTRACT OFFICE*

STATE OF NORTH CAROLINA
DEPARTMENT OF TRANSPORTATION
RALEIGH

CONCRETE BARRIER RAIL WITH MOMENT SLAB FOR SEGMENTAL RETAINING WALL (SRW) UNITS

REVISIONS

NO.	BY	DATE	NO.	BY	DATE
1			3		
2			4		

SHEET NO. W-6

TOTAL SHEETS 44

PREPARED BY: S. ZHANG	DATE: 01/2014
REVIEWED BY: J. BATTS	DATE: 01/2014

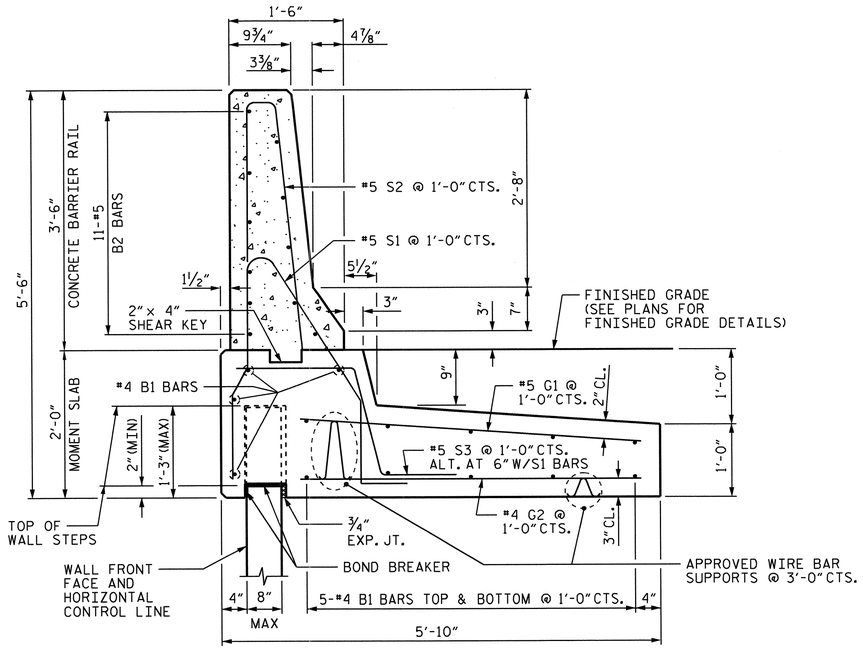

CONCRETE BARRIER RAIL WITH MOMENT SLAB

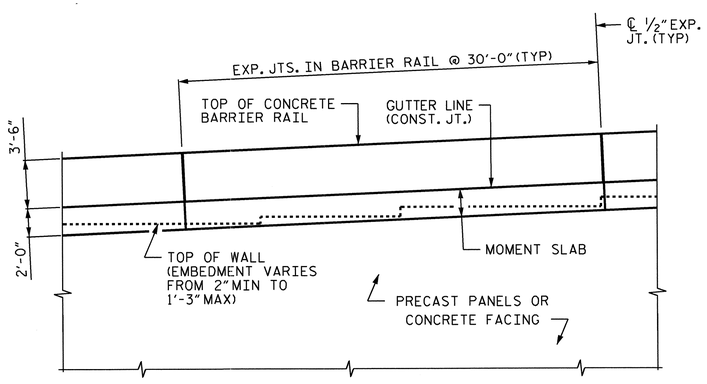

CONCRETE BARRIER RAIL WITH MOMENT SLAB - PARTIAL ELEVATION

NOTES:

FOR CONCRETE BARRIER RAIL WITH MOMENT SLAB, SEE CONCRETE BARRIER RAIL WITH MOMENT SLAB PROVISION.

CONCRETE BARRIER RAIL WITH MOMENT SLAB SHALL BE A MINIMUM OF 15' IN LENGTH.

EXPANSION JOINTS SHALL BE PLACED IN THE BARRIER RAIL AND MOMENT SLAB AT A MAXIMUM SPACING OF 30'.

GROOVED CONTRACTION JOINTS, 1/2" IN DEPTH, SHALL BE TOOLED IN ALL EXPOSED SURFACES OF THE BARRIER RAIL AND IN ACCORDANCE WITH ARTICLE 825-10(B) OF THE STANDARD SPECIFICATIONS. A CONTRACTION JOINT SHALL BE LOCATED AT EACH THIRD POINT BETWEEN BARRIER RAIL EXPANSION JOINTS. ONLY ONE CONTRACTION JOINT IS REQUIRED AT MID-POINT OF BARRIER RAIL SEGMENTS LESS THAN 20' IN LENGTH.

THE BARRIER RAIL SHALL NOT BE CAST UNTIL THE MOMENT SLAB HAS ATTAINED AN AGE OF THREE CURING DAYS OR A MINIMUM COMPRESSIVE STRENGTH OF 2,000 PSI. IN ADDITION, NO FILL MATERIAL, ASPHALT, OR CONSTRUCTION EQUIPMENT IS ALLOWED ON THE MOMENT SLAB PRIOR TO SATISFYING THE MINIMUM CONCRETE CURING AND STRENGTH REQUIREMENTS.

ALL REINFORCING STEEL IN THE BARRIER RAIL SHALL BE EPOXY COATED.

IF EXISTING OR FUTURE OBSTRUCTIONS SUCH AS FOUNDATIONS, BARRIERS, PIPES, INLETS OR UTILITIES WILL INTERFERE WITH CONCRETE BARRIER RAIL WITH MOMENT SLAB OR CONCRETE FACING FOR RETAINING WALL WILL BE THICKER THAN 8", CONCRETE BARRIER RAIL WITH MOMENT SLAB DETAILS SHALL BE REVISED AND SUBMITTED FOR APPROVAL.

FOR ESTIMATED PAY QUANTITY, SEE "CONCRETE BARRIER RAIL WITH MOMENT SLAB FOR SEGMENTAL RETAINING WALL (SRW) UNITS" SHEET.

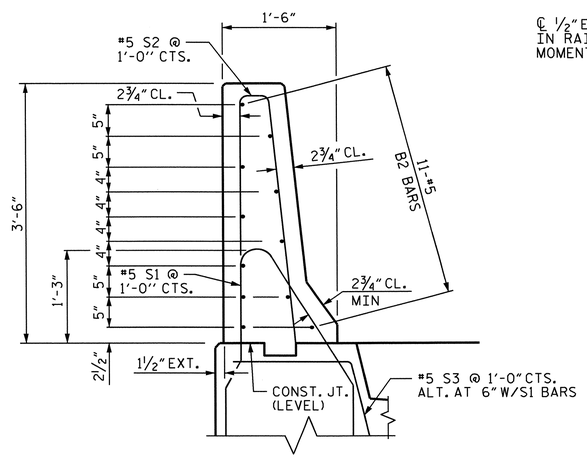

SECTION THRU RAIL

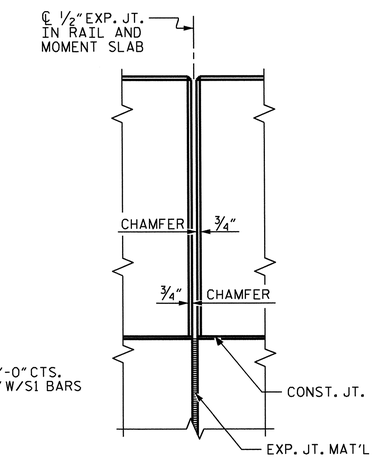

ELEV. @ EXP. JOINTS

BARRIER RAIL DETAILS

STRUCTURAL ENGINEER

NORTH CAROLINA PROFESSIONAL SEAL 14855 ENGINEER DOUGLAS R. COLHOUN

SIGNATURE DATE 6/24/14 SIGNATURE DATE

BAR TYPES

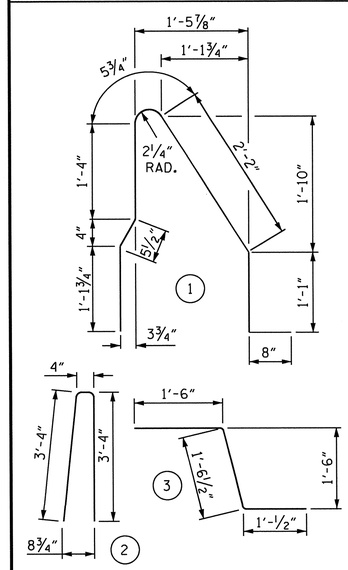

ALL BAR DIMENSIONS ARE OUT TO OUT

BILL OF MATERIAL

FOR ONE 30'-0" SECTION OF CONCRETE BARRIER RAIL WITH MOMENT SLAB

BAR	NO.	SIZE	TYPE	LENGTH	WEIGHT
B1	14	#4	STR	29'-7"	277
* B2	11	#5	STR	29'-7"	339
G1	31	#5	STR	4'-4"	140
G2	31	#4	STR	4'-4"	90
* S1	31	#5	1	7'-3"	234
* S2	31	#5	2	7'-0"	226
S3	30	#5	3	4'-1"	128
REINFORCING STEEL					635 LB
* EPOXY COATED REINFORCING STEEL					799 LB
CLASS AA CONCRETE BARRIER RAIL					4.1 CY
CLASS A CONCRETE MOMENT SLAB					9.1 CY
CONCRETE BARRIER RAIL WITH MOMENT SLAB					30 LIN FT

PROJECT NO.: U-0071

DURHAM ***COUNTY***

STATION: VARIES

SHEET 7 OF 7

PREPARED BY: S. ZHANG	DATE: 01/2014
REVIEWED BY: J. BATTS	DATE: 01/2014

GEOTECHNICAL ENGINEERING UNIT

☒ *EASTERN REGIONAL OFFICE*

☐ *WESTERN REGIONAL OFFICE*

☐ *CONTRACT OFFICE*

STATE OF NORTH CAROLINA
DEPARTMENT OF TRANSPORTATION
RALEIGH

CONCRETE BARRIER RAIL WITH MOMENT SLAB FOR PRECAST PANELS AND CONCRETE FACING

REVISIONS

NO.	BY	DATE	NO.	BY	DATE
1			3		
2			4		

SHEET NO. W-7

TOTAL SHEETS 44

GEOTECHNICAL ENGINEER	ENGINEER
NORTH CAROLINA PROFESSIONAL SEAL 030943 ENGINEER THEIN TUN ZAN	
SIGNATURE 1/22/14 DATE	SIGNATURE DATE

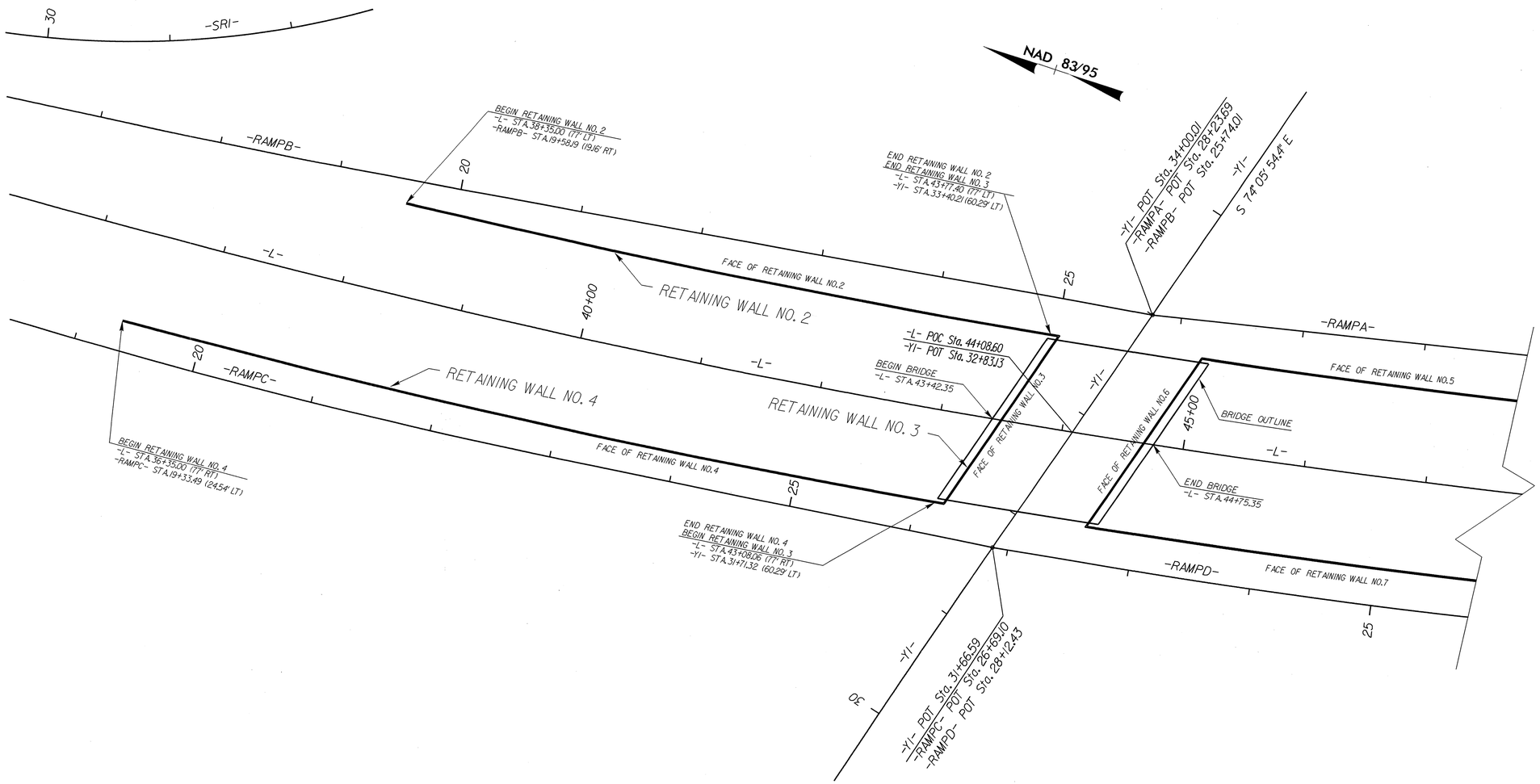

RETAINING WALL NO. 2, 3 & 4 PLAN VIEW

N.T.S.

PROJECT NO.: U-0071

DURHAM ***COUNTY***

STATION: -L- 38+40, 43+42 & 36+40

SHEET 1 OF 11

GEOTECHNICAL ENGINEERING UNIT

☒ ***EASTERN REGIONAL OFFICE***

☐ ***WESTERN REGIONAL OFFICE***

☐ ***CONTRACT OFFICE***

STATE OF NORTH CAROLINA
DEPARTMENT OF TRANSPORTATION
RALEIGH

RETAINING WALL NO. 2, 3 & 4
PLAN VIEW

REVISIONS						SHEET NO.
NO.	BY	DATE	NO.	BY	DATE	W-8
1			3			TOTAL SHEETS
2			4			44

PREPARED BY: T. T. ZAN	DATE: 01/2014
REVIEWED BY: J. R. BATTS	DATE: 01/2014

GEOTECHNICAL ENGINEER	ENGINEER
NORTH CAROLINA PROFESSIONAL SEAL 030943 ENGINEER THEIN TUN ZAN	
SIGNATURE 1/22/14 DATE	SIGNATURE DATE

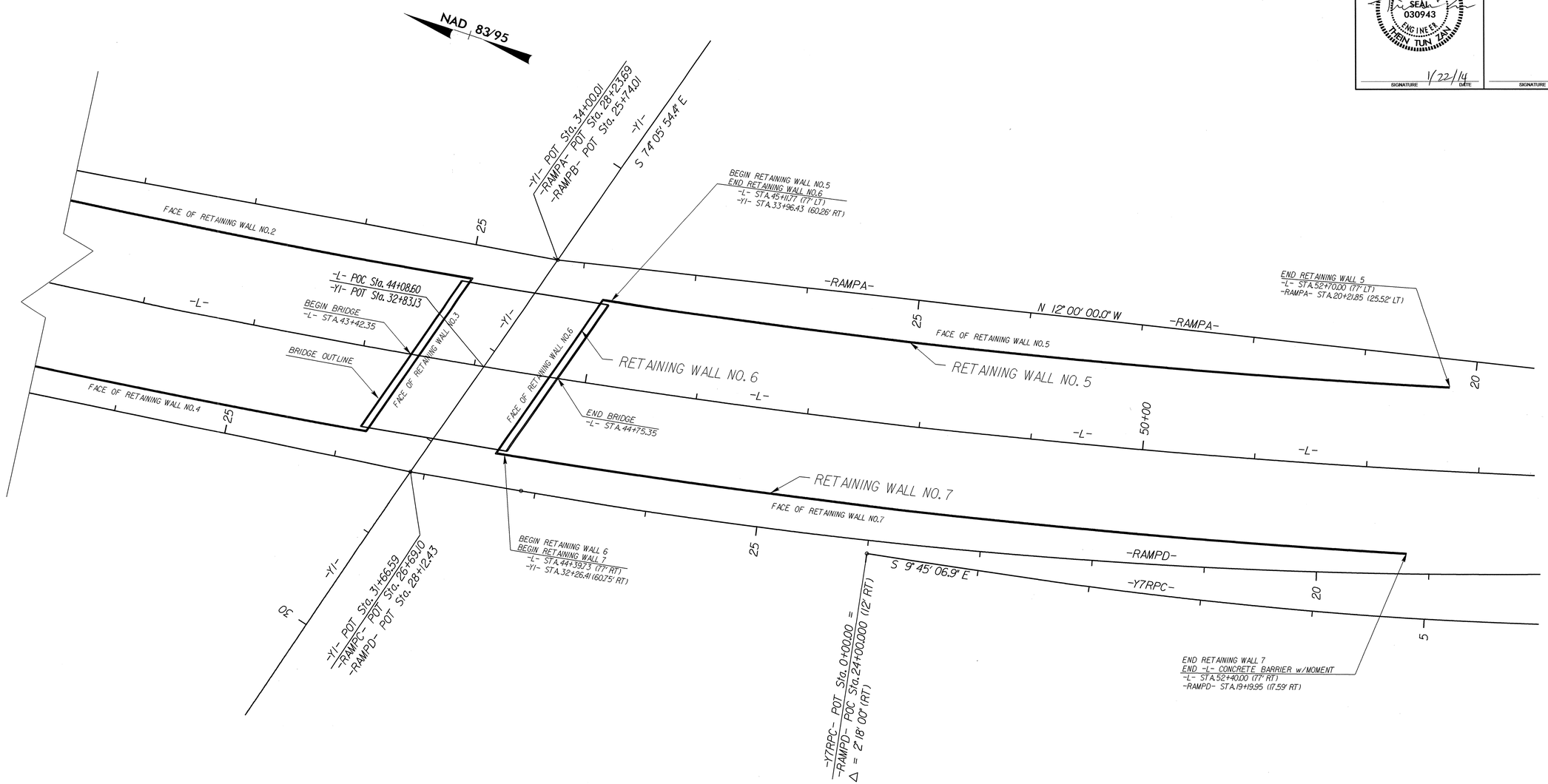

RETAINING WALL NO. 5, 6 & 7 PLAN VIEW

N.T.S.

PROJECT NO.: U-0071

DURHAM ***COUNTY***

STATION: -L- 45+20, 44+75 & 44+40

SHEET 2 OF 11

GEOTECHNICAL ENGINEERING UNIT

☒ ***EASTERN REGIONAL OFFICE***

☐ ***WESTERN REGIONAL OFFICE***

☐ ***CONTRACT OFFICE***

STATE OF NORTH CAROLINA
DEPARTMENT OF TRANSPORTATION
RALEIGH

RETAINING WALL NO. 5, 6 & 7
PLAN VIEW

REVISIONS						SHEET NO.
NO.	BY	DATE	NO.	BY	DATE	W-9
1			3			TOTAL SHEETS:
2			4			44

PREPARED BY: T. T. ZAN	DATE: 01/2014
REVIEWED BY: J. R. BATTS	DATE: 01/2014

GEOTECHNICAL ENGINEER

NORTH CAROLINA PROFESSIONAL SEAL 030945 ENGINEER THIN TUN ZAN

1/22/14

SIGNATURE DATE

ENGINEER

SIGNATURE DATE

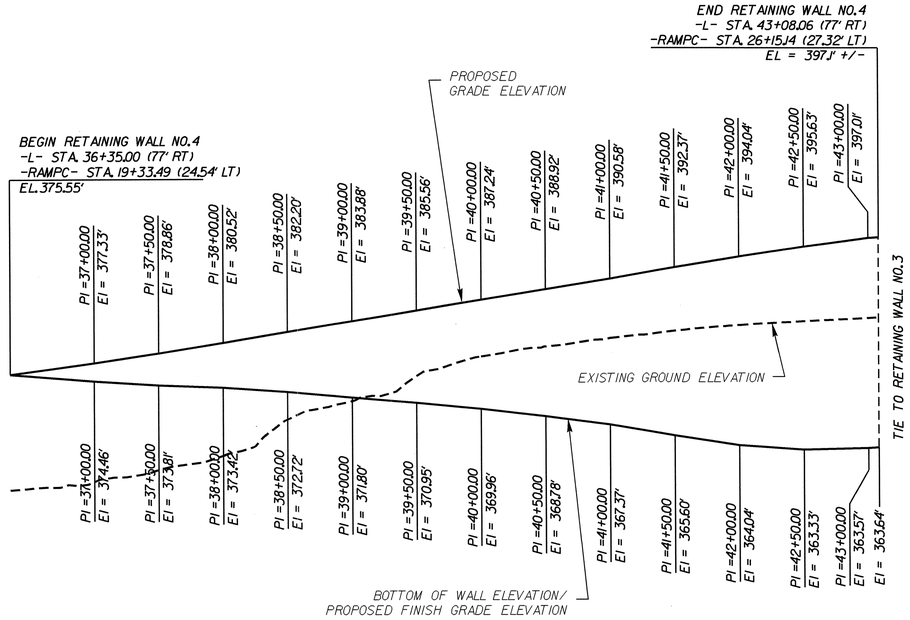

RETAINING WALL NO. 4 WALL ENVELOPE

N.T.S.

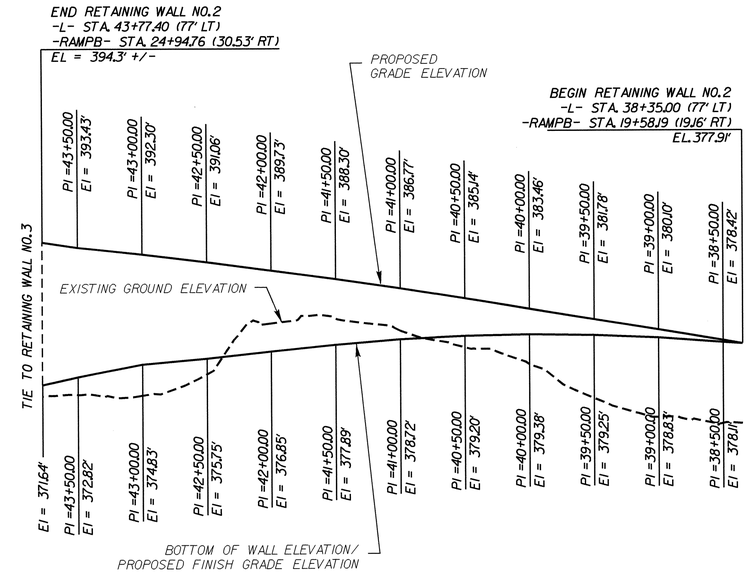

RETAINING WALL NO. 2 WALL ENVELOPE

N.T.S.

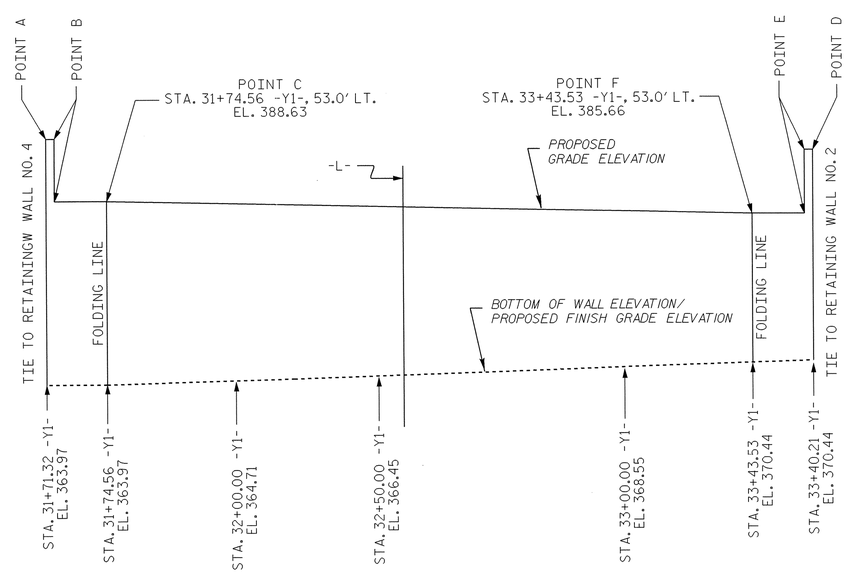

RETAINING WALL NO. 3 WALL ENVELOPE

N.T.S.

RETAINING WALL NO. 3 WALL POINT TABLE

POINT	-L- STATION	-L- OFFSET	ELEVATION
A	43+08.06	77'± RT	397.1±
B	43+09.15	77'± RT	397.1±/388.6±
C	43+15.96	77'± RT	388.6±
D	43+77.40	77'± LT	394.3±
E	43+78.51	77'± LT	394.3±/385.7±
F	43+85.50	77'± LT	385.7±

ESTIMATED MSE WALL QUANTITIES

(SQUARE FEET)

MSE RETAINING WALL NO. 2	5,020 SF
MSE RETAINING WALL NO. 3	3,740 SF
MSE RETAINING WALL NO. 4	11,180 SF

PROJECT NO.: U-0071

DURHAM ***COUNTY***

STATION: -L- 38+40, 43+42 & 36+40

SHEET 3 OF 11

GEOTECHNICAL ENGINEERING UNIT

STATE OF NORTH CAROLINA DEPARTMENT OF TRANSPORTATION

☒ ***EASTERN REGIONAL OFFICE***

☐ ***WESTERN REGIONAL OFFICE***

☐ ***CONTRACT OFFICE***

STATE OF NORTH CAROLINA
DEPARTMENT OF TRANSPORTATION
RALEIGH

RETAINING WALL NO. 2, 3 & 4 WALL ENVELOPES

REVISIONS						SHEET NO.
NO.	BY	DATE	NO.	BY	DATE	W-10
1			3			TOTAL SHEETS
2			4			44

PREPARED BY: T. T. ZAN	DATE: 01/2014
REVIEWED BY: J. R. BATTS	DATE: 01/2014

GEOTECHNICAL ENGINEER	ENGINEER
NORTH CAROLINA PROFESSIONAL SEAL 030943 ENGINEER THEIN TUN ZAN — 1/22/14	
SIGNATURE / DATE	SIGNATURE / DATE

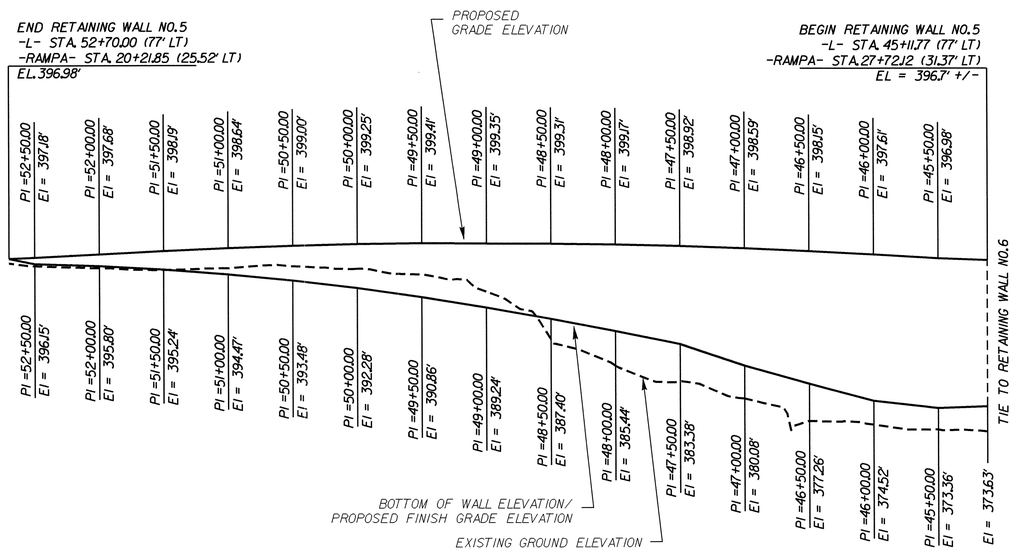

RETAINING WALL NO. 5 WALL ENVELOPE

N.T.S.

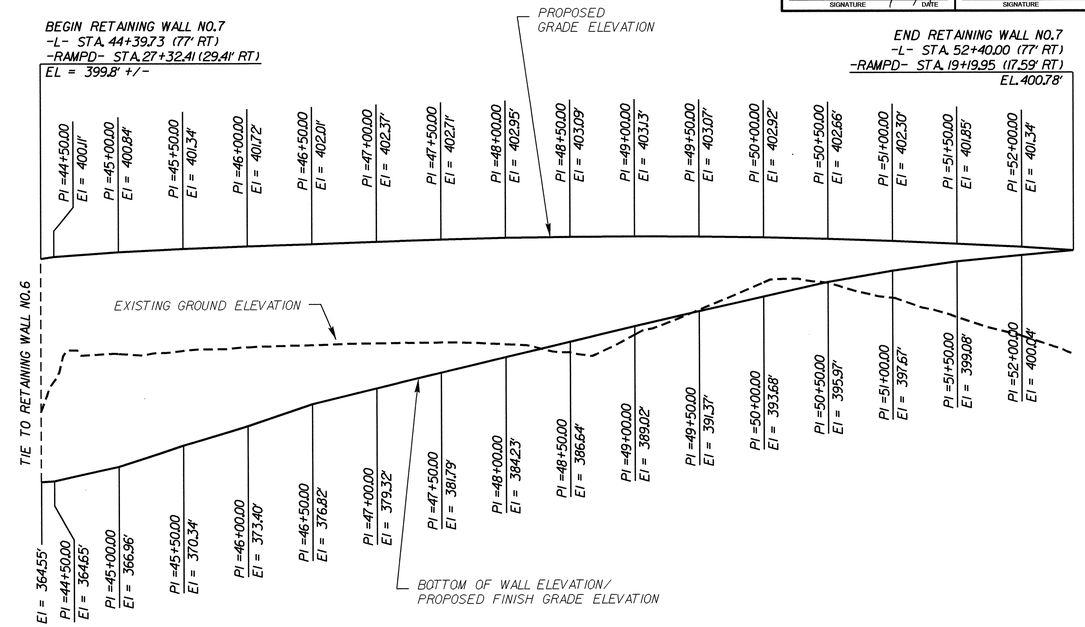

RETAINING WALL NO. 7 WALL ENVELOPE

N.T.S.

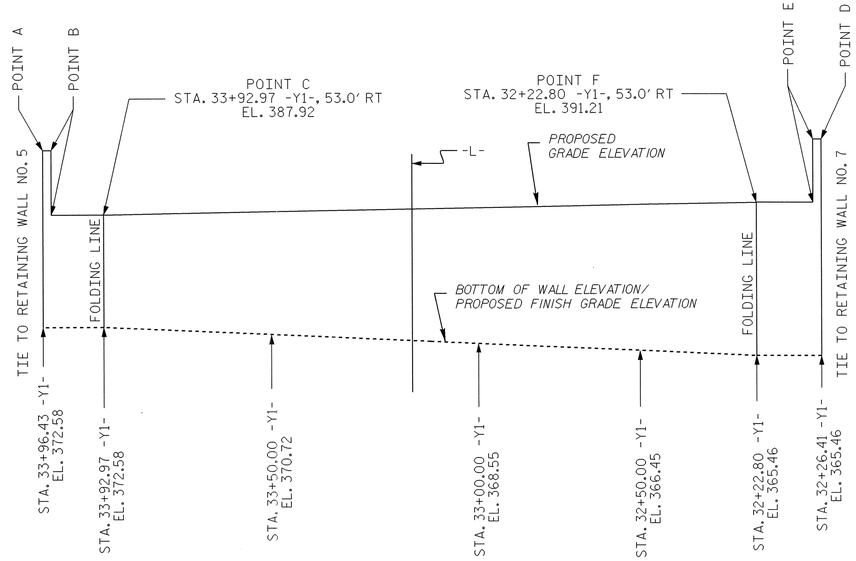

RETAINING WALL NO. 6 WALL ENVELOPE

N.T.S.

RETAINING WALL NO. 5 WALL POINT TABLE

POINT	-L- STATION	-L- OFFSET	ELEVATION
A	45+11.77	77'± LT	396.7±
B	45+10.66	77'± LT	396.7±/387.9±
C	45+03.65	77'± LT	387.9±
D	44+39.73	77'± RT	399.8±
E	44+38.64	77'± RT	399.8±/391.2±
F	44+31.27	77'± RT	391.2±

ESTIMATED MSE WALL QUANTITIES

(SQUARE FEET)

MSE RETAINING WALL NO. 5	8,710 SF
MSE RETAINING WALL NO. 6	3,880 SF
MSE RETAINING WALL NO. 7	13,650 SF

PROJECT NO.: U-0071

DURHAM ***COUNTY***

STATION: -L- 45+20, 44+75 & 44+40

SHEET 4 OF 11

PREPARED BY: T. T. ZAN	DATE: 01/2014
REVIEWED BY: J. R. BATTS	DATE: 01/2014

GEOTECHNICAL ENGINEERING UNIT

☒ ***EASTERN REGIONAL OFFICE***

☐ ***WESTERN REGIONAL OFFICE***

☐ ***CONTRACT OFFICE***

STATE OF NORTH CAROLINA
DEPARTMENT OF TRANSPORTATION
RALEIGH

RETAINING WALL NO. 5, 6 & 7 WALL ENVELOPES

REVISIONS

NO.	BY	DATE	NO.	BY	DATE
1	-	-	3	-	-
2	-	-	4	-	-

SHEET NO. W-11

TOTAL SHEETS 44

GEOTECHNICAL ENGINEER	ENGINEER
NORTH CAROLINA PROFESSIONAL SEAL 030943 ENGINEER TERIN TUN ZAN	
SIGNATURE / DATE 1/22/14	SIGNATURE / DATE

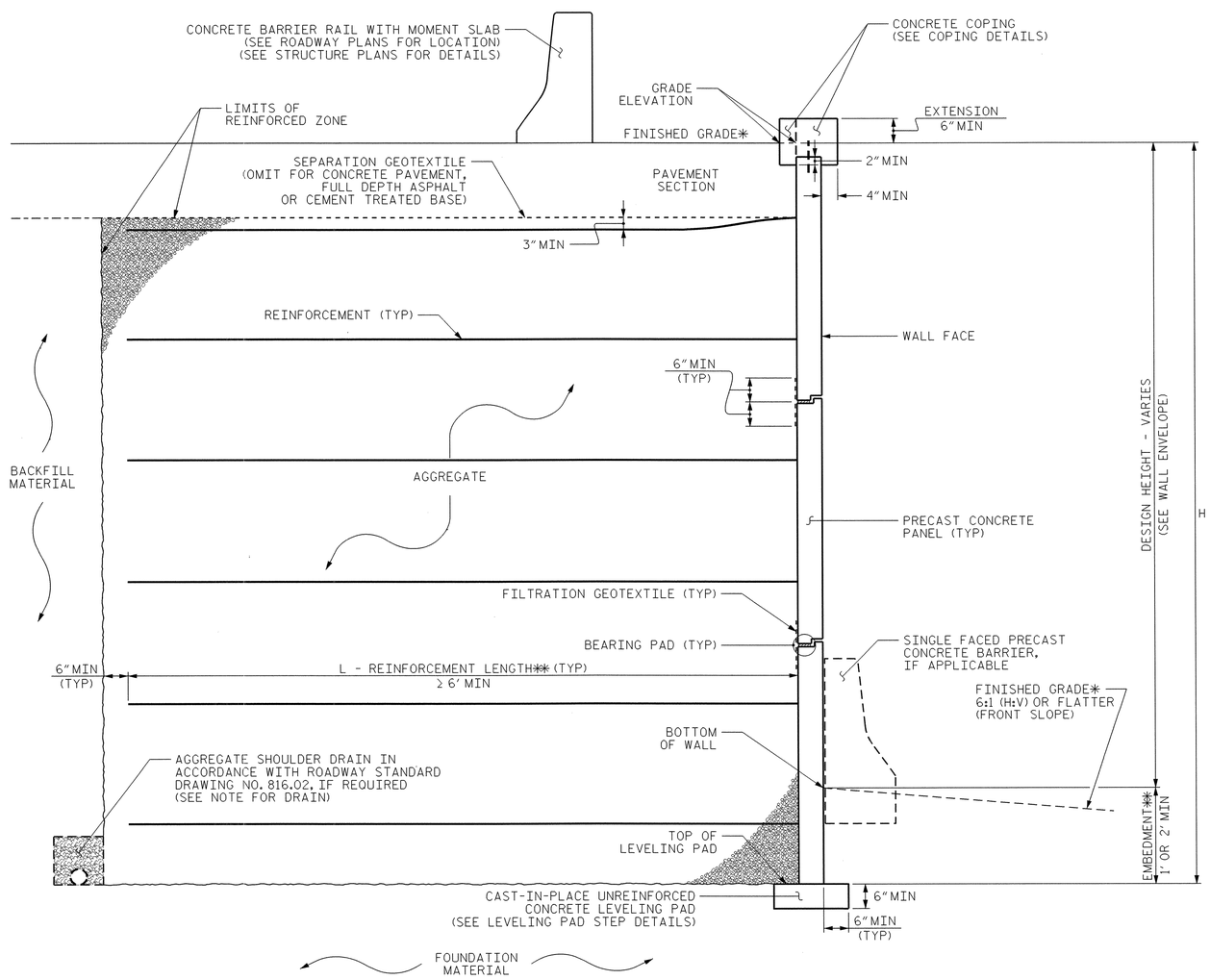

MSE WALL WITH PRECAST PANELS - TYPICAL SECTION

*SEE ROADWAY PLANS FOR FINISHED GRADE DETAILS.
**SEE MSE RETAINING WALLS PROVISION FOR EMBEDMENT AND REINFORCEMENT LENGTH REQUIREMENTS.

USE THIS TYPICAL SECTION AT:

FROM -L- STA. 38+35.00 (77' LT) TO STA. 43+77.40 (77' LT)
FROM -L- STA. 36+35.00 (77' RT) TO STA. 43+08.06 (77' RT)

FROM -L- STA. 45+11.77 (77' LT) TO STA. 52+70.00 (77' LT)
FROM -L- STA. 44+39.73 (77' RT) TO STA. 52+40.00 (77' RT)

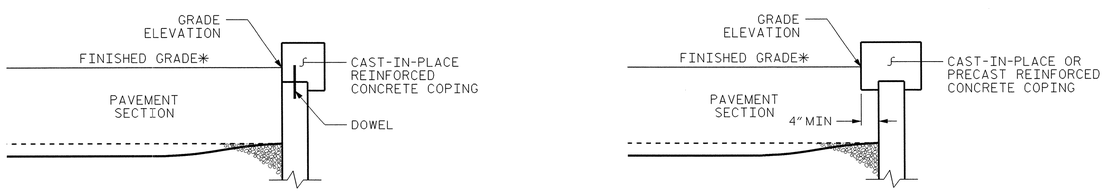

COPING DETAILS

AT THE CONTRACTOR'S OPTION, CONNECT COPING TO PANELS WITH DOWELS OR EXTEND COPING DOWN BACK OF PANELS.
*SEE ROADWAY PLANS FOR FINISHED GRADE DETAILS.

PREPARED BY: T. T. ZAN	DATE: 01/2014
REVIEWED BY: J. R. BATTS	DATE: 01/2014

PROJECT NO.: U-0071
DURHAM **COUNTY**
STATION: VARIES
SHEET 5 OF 11

GEOTECHNICAL ENGINEERING UNIT

STATE OF NORTH CAROLINA DEPARTMENT OF TRANSPORTATION

☒ EASTERN REGIONAL OFFICE
☐ WESTERN REGIONAL OFFICE
☐ CONTRACT OFFICE

STATE OF NORTH CAROLINA
DEPARTMENT OF TRANSPORTATION
RALEIGH

RETAINING WALL NO. 2, 4, 5 & 7
TYPICAL SECTION & DETAILS

REVISIONS						SHEET NO.
NO.	BY	DATE	NO.	BY	DATE	W-12
1	-	-	3	-	-	TOTAL SHEETS
2	-	-	4	-	-	44

GEOTECHNICAL ENGINEER	ENGINEER
NORTH CAROLINA PROFESSIONAL SEAL 030943 ENGINEER THEIN TUN ZAN	
SIGNATURE 1/22/14 DATE	SIGNATURE DATE

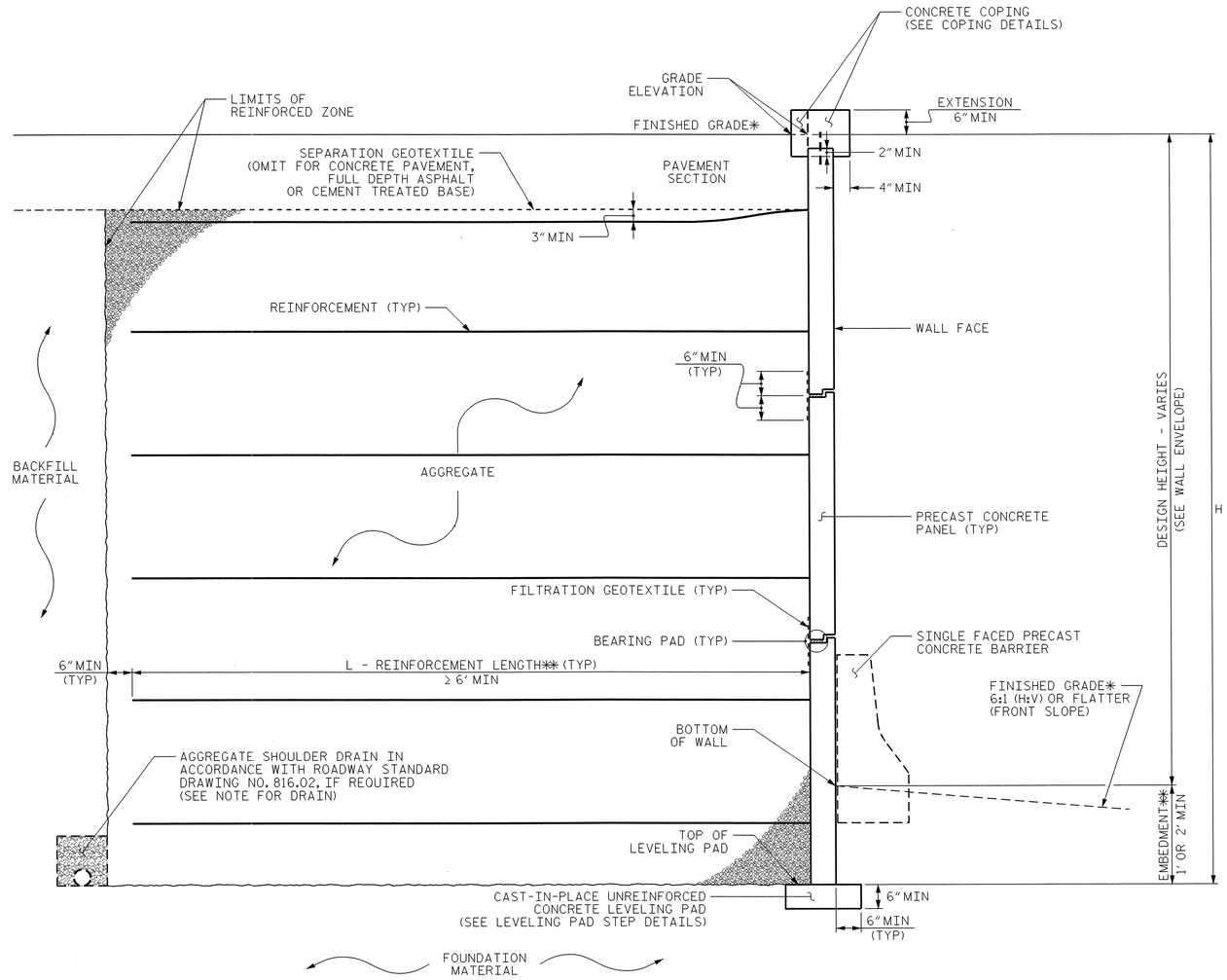

MSE WALL WITH PRECAST PANELS - TYPICAL SECTION

*SEE ROADWAY PLANS FOR FINISHED GRADE DETAILS.
**SEE MSE RETAINING WALLS PROVISION FOR EMBEDMENT AND REINFORCEMENT LENGTH REQUIREMENTS.

USE THIS TYPICAL SECTION AT:

FROM -L- STA. 43+08.06 (77' RT) TO STA. 43+15.96 (77' RT)
FROM -L- STA. 43+77.40 (77' LT) TO STA. 43+85.50 (77' LT)

FROM -L- STA. 44+31.27 (77' RT) TO STA. 44+39.73 (77' RT)
FROM -L- STA. 45+03.65 (77' LT) TO STA. 45+11.77 (77' LT)

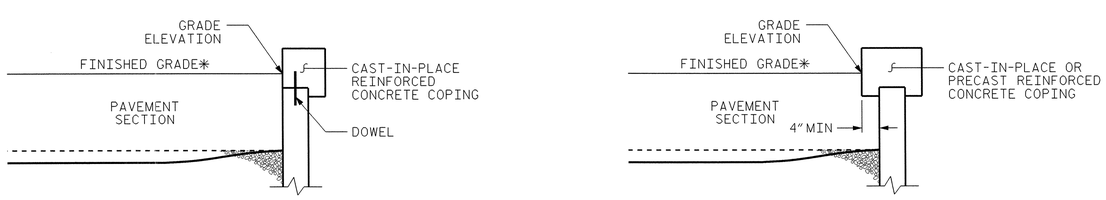

COPING DETAILS

AT THE CONTRACTOR'S OPTION, CONNECT COPING TO PANELS WITH DOWELS OR EXTEND COPING DOWN BACK OF PANELS.
*SEE ROADWAY PLANS FOR FINISHED GRADE DETAILS.

PREPARED BY: T. T. ZAN	DATE: 01/2014
REVIEWED BY: J. R. BATTS	DATE: 01/2014

PROJECT NO.: U-0071
DURHAM **COUNTY**
STATION: -L- 43+42 & 44+75
SHEET 6 OF 11

GEOTECHNICAL ENGINEERING UNIT

☒ EASTERN REGIONAL OFFICE
☐ WESTERN REGIONAL OFFICE
☐ CONTRACT OFFICE

STATE OF NORTH CAROLINA
DEPARTMENT OF TRANSPORTATION
RALEIGH

RETAINING WALL NO. 3 & 6
TYPICAL SECTION & DETAILS

REVISIONS							SHEET NO.
NO.	BY	DATE	NO.	BY	DATE		W-13
1	-	-	3	-	-		TOTAL SHEETS
2	-	-	4	-	-		44

GEOTECHNICAL ENGINEER	ENGINEER
NORTH CAROLINA PROFESSIONAL SEAL 030943 ENGINEER THEIN TUN ZAN	
SIGNATURE 1/22/14 DATE	SIGNATURE DATE

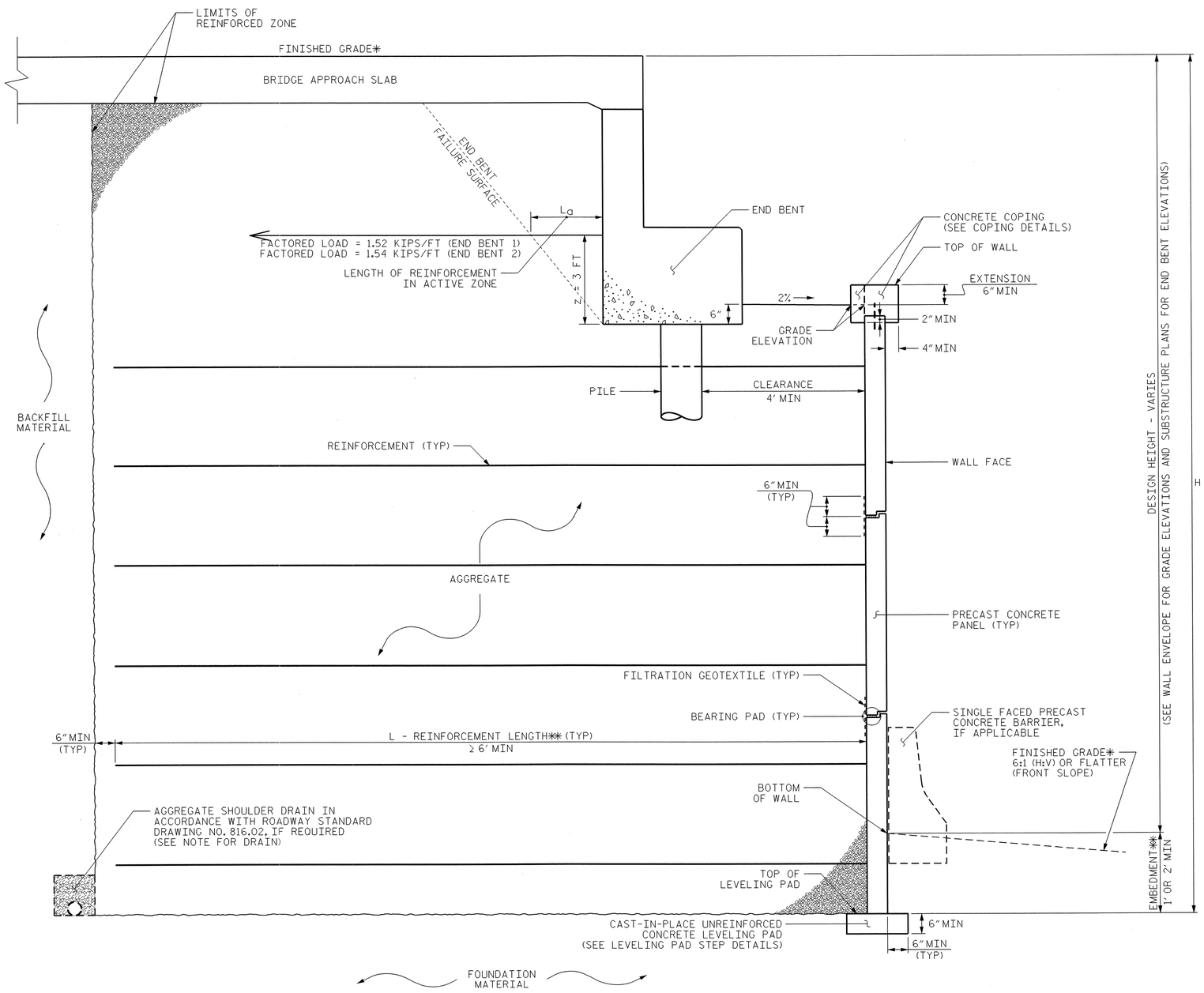

MSE ABUTMENT WALL WITH PRECAST PANELS - TYPICAL SECTION

*SEE ROADWAY PLANS FOR FINISHED GRADE DETAILS.
**SEE MSE RETAINING WALLS PROVISION FOR EMBEDMENT AND REINFORCEMENT LENGTH REQUIREMENTS.

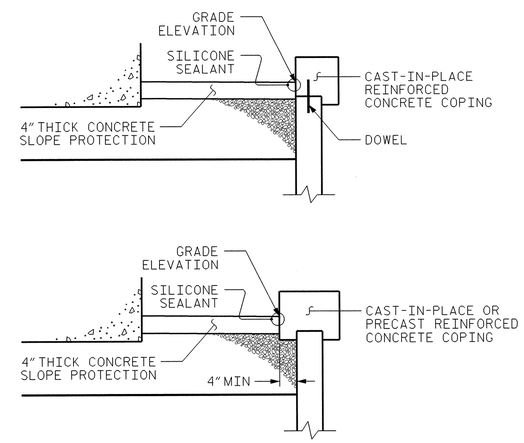

COPING DETAILS

AT THE CONTRACTOR'S OPTION, CONNECT COPING TO PANELS WITH DOWELS OR EXTEND COPING DOWN BACK OF PANELS.

USE THIS TYPICAL SECTION AT:

FROM -Y1- STA. 31+74.56 (53' LT) TO STA. 33+43.53 (53' LT)
FROM -Y1- STA. 32+22.80, (53' RT) TO STA. 33+92.97 (53' RT)

PROJECT NO.: U-0071
DURHAM ***COUNTY***
STATION: -L- 43+42 & 44+75

SHEET 7 OF 11

PREPARED BY: T. T. ZAN	DATE: 01/2014
REVIEWED BY: J. R. BATTS	DATE: 01/2014

GEOTECHNICAL ENGINEERING UNIT

☒ ***EASTERN REGIONAL OFFICE***
☐ ***WESTERN REGIONAL OFFICE***
☐ ***CONTRACT OFFICE***

STATE OF NORTH CAROLINA
DEPARTMENT OF TRANSPORTATION
RALEIGH

RETAINING WALL NO. 3 & 6
TYPICAL SECTION & DETAILS
FOR ABUTMENT WALLS

REVISIONS

NO.	BY	DATE	NO.	BY	DATE
1	-	-	3	-	-
2	-	-	4	-	-

SHEET NO. W-14
TOTAL SHEETS 44

GEOTECHNICAL ENGINEER	ENGINEER
NORTH CAROLINA PROFESSIONAL SEAL 030943 ENGINEER TSEIN TUN ZAN	
SIGNATURE 1/23/14 DATE	SIGNATURE DATE

NOTES:

FOR MECHANICALLY STABILIZED EARTH (MSE) RETAINING WALLS, SEE MECHANICALLY STABILIZED EARTH RETAINING WALLS PROVISION.

FOR SINGLE FACED PRECAST CONCRETE BARRIER, SEE ROADWAY PLANS AND SECTION 857 OF THE STANDARD SPECIFICATIONS.

A CONCRETE BARRIER RAIL WITH MOMENT SLAB IS REQUIRED ABOVE RETAINING WALL NO. 2, NO. 4. NO. 5 AND NO. 7. SEE PLANS FOR CONCRETE BARRIER RAIL WITH MOMENT SLAB DETAILS.

USE AN MSE WALL SYSTEM WITH PRECAST CONCRETE PANELS THAT MEET SECTION 1077 OF THE STANDARD SPECIFICATIONS FOR RETAINING WALL NO. 2 THROUGH RETAINING WALL NO. 7.

A DRAIN IS REQUIRED FOR RETAINING WALL NO. 2 THROUGH RETAINING WALL NO. 7.

BEFORE BEGINNING MSE WALL DESIGN FOR RETAINING WALL NO. 2 THROUGH RETAINING WALL NO. 7, SURVEY WALL LOCATION AND SUBMIT A REVISED WALL PROFILE VIEW (WALL ENVELOPE) FOR REVIEW. DO NOT START WALL DESIGN OR CONSTRUCTION UNTIL THE REVISED WALL ENVELOPE IS ACCEPTED.

DESIGN RETAINING WALL NO. _ FOR THE FOLLOWING:
1) H = DESIGN HEIGHT + EMBEDMENT
2) DESIGN LIFE = 100 YEARS
3) MINIMUM REINFORCEMENT LENGTH (L) = 0.8 X WALL HEIGHT
4) AGGREGATE PARAMETERS:

AGGREGATE TYPE*	UNIT WEIGHT (γ) LB/CF	FRICTION ANGLE (ϕ) DEGREES	COHESION (c) LB/SF
COARSE	110	38	0
FINE	125	34	0
*SEE MSE RETAINING WALLS PROVISION FOR COARSE AND FINE AGGREGATE MATERIAL REQUIREMENTS.			

7) IN-SITU ASSUMED MATERIAL PARAMETERS:

MATERIAL TYPE	UNIT WEIGHT (γ) LB/CF	FRICTION ANGLE (ϕ) DEGREES	COHESION (c) LB/SF
BACKFILL	120	30	0
FOUNDATION	120	30	0

DESIGN RETAINING WALL NO. 2 THROUGH RETAINING WALL NO. 7 FOR A LIVE LOAD (TRAFFIC) SURCHARGE.

DESIGN REINFORCEMENT CONNECTED TO END BENT CAPS FOR FACTORED LOAD AND LENGTH OF REINFORCEMENT IN ACTIVE ZONE (La) SHOWN. CAST REINFORCEMENT CONNECTORS INTO CAP BACKWALL FOR END BENT NO. 1 LOCATED AT STATION 43+42.35 -L-. MAINTAIN A CLEARANCE OF AT LEAST 3" BETWEEN CONNECTORS AND REINFORCING STEEL IN CAP.

DESIGN REINFORCEMENT CONNECTED TO END BENT CAPS FOR FACTORED LOAD AND LENGTH OF REINFORCEMENT IN ACTIVE ZONE (La) SHOWN. CAST REINFORCEMENT CONNECTORS INTO CAP BACKWALL FOR END BENT NO. 2 LOCATED AT STATION 44+75.35 -L-. MAINTAIN A CLEARANCE OF AT LEAST 3" BETWEEN CONNECTORS AND REINFORCING STEEL IN CAP.

EXISTING OR FUTURE OBSTRUCTIONS SUCH AS FOUNDATIONS, GUARDRAIL, FENCE OR HANDRAIL POSTS, PAVEMENTS, PIPES, INLETS OR UTILITIES MAY INTERFERE WITH REINFORCEMENT FOR RETAINING WALL NO. 2 THROUGH RETAINING WALL NO. 7.

FOUNDATIONS FOR END BENT NO. 1 LOCATED AT STATION 43+42.35 -L- WILL INTERFERE WITH REINFORCEMENT FOR RETAINING WALL NO. 2 THROUGH RETAINING WALL NO. 4. SEE "FOUNDATION LAYOUT" SHEET FOR FOUNDATION LOCATIONS.

FOUNDATIONS FOR END BENT NO. 2 LOCATED AT STATION 44+75.35 -L- WILL INTERFERE WITH REINFORCEMENT FOR RETAINING WALL NO. 5 THROUGH RETAINING WALL NO. 7. SEE "FOUNDATION LAYOUT" SHEET FOR FOUNDATION LOCATIONS.

DO NOT PLACE LEVELING PAD CONCRETE, AGGREGATE OR REINFORCEMENT FOR RETAINING WALL NO 2 THROUGH RETAINING WALL NO. 7 UNTIL EXCAVATION DIMENSIONS AND FOUNDATION MATERIAL ARE APPROVED.

"TEMPORARY SHORING" IS REQUIRED FOR RETAINING WALL NO. 3 AND RETAINING WALL NO. 6 IN ACCORDANCE WITH THE TEMPORARY SHORING PROVISION. SEE ROADWAY AND TRAFFIC CONTROL PLANS.

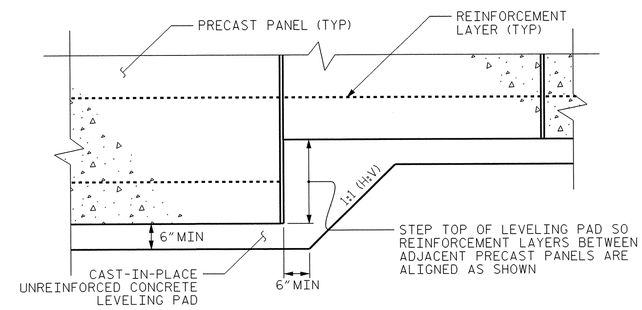

LEVELING PAD STEP DETAILS

PREPARED BY: T. T. ZAN	DATE: 01/2014
REVIEWED BY: J. R. BATTS	DATE: 01/2014

PROJECT NO.: U-0071
DURHAM **COUNTY**
STATION: VARIES
SHEET 8 OF 11

GEOTECHNICAL ENGINEERING UNIT

☒ EASTERN REGIONAL OFFICE
☐ WESTERN REGIONAL OFFICE
☐ CONTRACT OFFICE

STATE OF NORTH CAROLINA
DEPARTMENT OF TRANSPORTATION
RALEIGH

RETAINING WALL NO. 2, 3, 4, 5, 6 & 7
NOTES AND DETAILS

REVISIONS						SHEET NO.
NO.	BY	DATE	NO.	BY	DATE	W-15
1	–	–	3	–	–	TOTAL SHEETS
2	–	–	4	–	–	44

GEOTECHNICAL ENGINEER	ENGINEER
NORTH CAROLINA PROFESSIONAL SEAL 030943 ENGINEER TIEIN TUN ZAN — SIGNATURE 1/22/14 DATE	SIGNATURE DATE

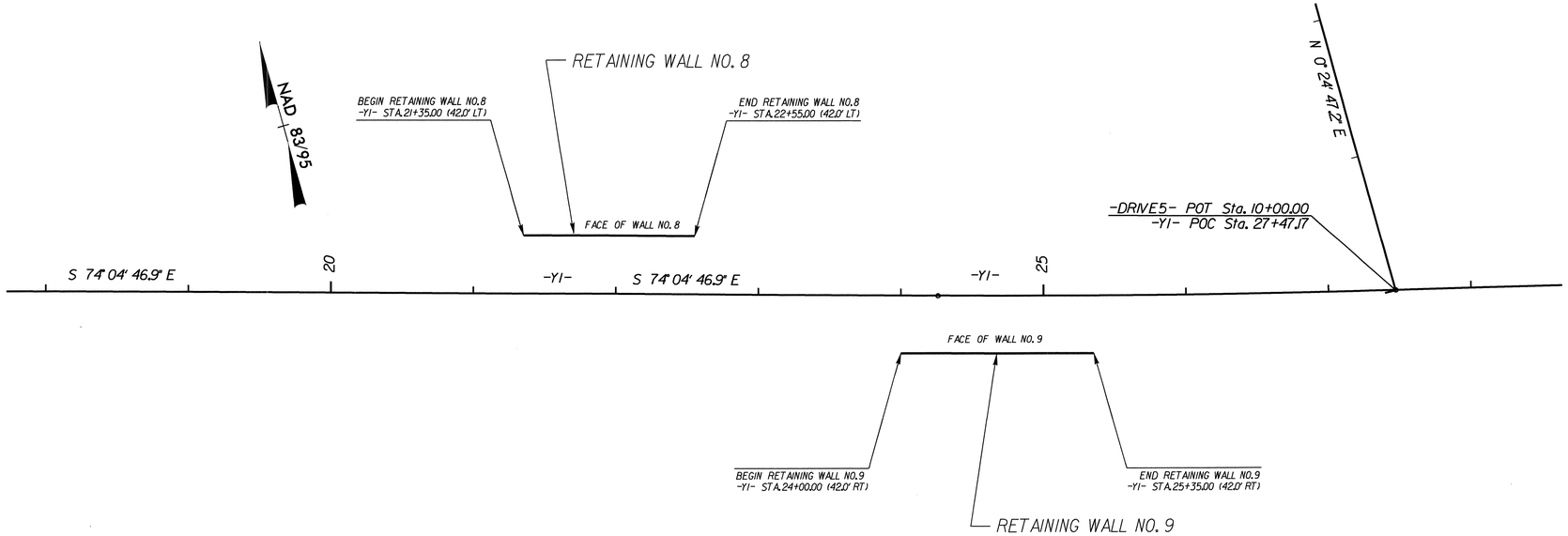

RETAINING WALL NO. 8 & 9 PLAN VIEW

N.T.S.

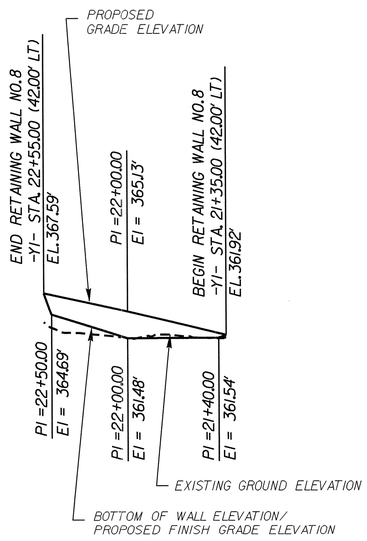

RETAINING WALL NO. 8
WALL ENVELOPE

N.T.S.

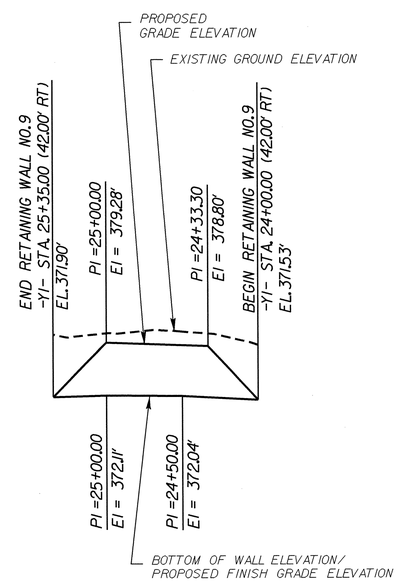

RETAINING WALL NO. 9
WALL ENVELOPE

N.T.S.

ESTIMATED WALL QUANTITIY	
RETAINING WALL NO.	STANDARD CAST-IN-PLACE GRAVITY RETAINING WALLS (SQUARE FEET)
8	300 SF

ESTIMATED WALL QUANTITIY	
RETAINING WALL NO.	SOLDIER PILE RETAINING WALLS (SQUARE FEET)
9	710 SF

PROJECT NO.: U-0071
DURHAM ***COUNTY***
STATION: -Y1- 21+40, 24+00

SHEET 9 OF 11

GEOTECHNICAL ENGINEERING UNIT

☒ *EASTERN REGIONAL OFFICE*
☐ *WESTERN REGIONAL OFFICE*
☐ *CONTRACT OFFICE*

STATE OF NORTH CAROLINA
DEPARTMENT OF TRANSPORTATION
RALEIGH

RETAINING WALL NO. 8 & 9
PLAN VIEW &
WALL ENVELOPES

REVISIONS						SHEET NO.
NO.	BY	DATE	NO.	BY	DATE	3-16
1	–	–	3	–	–	TOTAL SHEETS
2	–	–	4	–	–	44

PREPARED BY: T. T. ZAN	DATE: 01/2014
REVIEWED BY: J. R. BATTS	DATE: 01/2014

GEOTECHNICAL ENGINEER	ENGINEER
NORTH CAROLINA PROFESSIONAL SEAL 030943 ENGINEER HSIN TUN ZAN	
SIGNATURE 1/22/14 DATE	SIGNATURE DATE

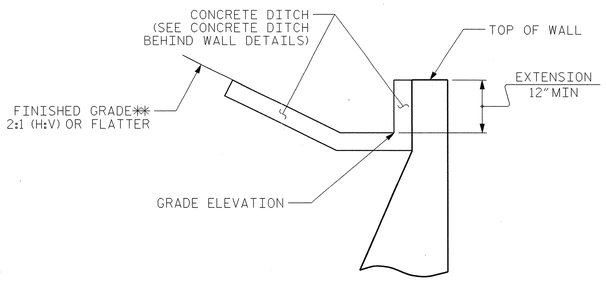

SLOPE CASE

**SEE ROADWAY PLANS FOR FINISHED GRADE AND DITCH DETAILS.

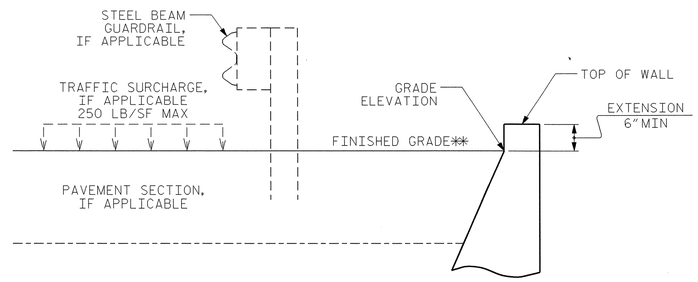

NO SLOPE CASE

**SEE ROADWAY PLANS FOR FINISHED GRADE DETAILS.

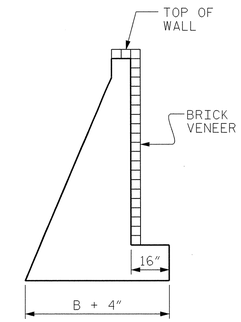

BRICK VENEER DETAIL

(WHEN APPLICABLE)

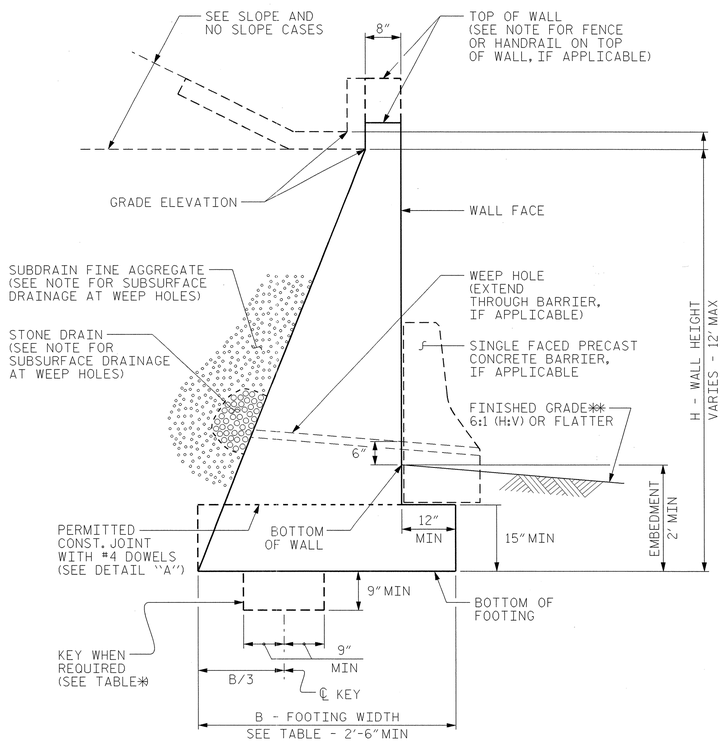

STANDARD CIP GRAVITY WALL

**SEE ROADWAY PLANS FOR FINISHED GRADE DETAILS.

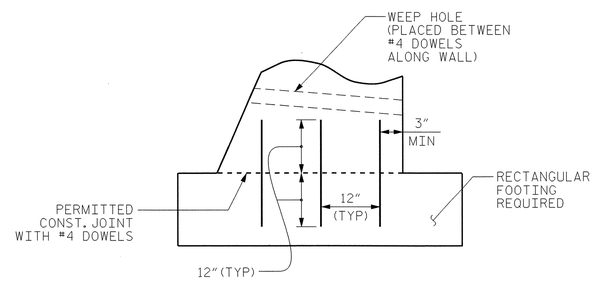

DETAIL "A"

H (FT)	3 - < 6	6 - 9	> 9 - 12
SLOPE CASE	.66	.70*	.75*
NO SLOPE CASE WITH TRAFFIC SURCHARGE	.80	.75*	.70*
NO SLOPE CASE WITHOUT TRAFFIC SURCHARGE	.60	.60	.60

B/H RATIO (B = 2'-6" MIN)

*KEY IS REQUIRED FOR "SLOPE CASE" OR "NO SLOPE CASE WITH TRAFFIC SURCHARGE" WHEN H IS 6' OR GREATER.

NOTES:

FOR STANDARD CAST-IN-PLACE (CIP) GRAVITY RETAINING WALLS, SEE CAST-IN-PLACE GRAVITY RETAINING WALLS PROVISION.

FOR STEEL BEAM GUARDRAIL, SEE ROADWAY PLANS AND SECTION 862 OF THE STANDARD SPECIFICATIONS.

FOR SINGLE FACED PRECAST CONCRETE BARRIER, SEE ROADWAY PLANS AND SECTION 857 OF THE STANDARD SPECIFICATIONS.

FOR FENCES OR HANDRAILS ON TOP OF WALLS, SEE ROADWAY PLANS FOR FENCE OR HANDRAIL ATTACHMENT DETAILS.

FOR SUBSURFACE DRAINAGE AT WEEP HOLES, SEE ARTICLE 414-8 OF THE STANDARD SPECIFICATIONS.

STANDARD CIP GRAVITY WALLS ARE BASED ON THE FOLLOWING IN-SITU ASSUMED SOIL PARAMETERS:
- UNIT WEIGHT, γ = 120 LB/CF
- FRICTION ANGLE, ϕ = 35 DEGREES (GROUNDWATER WITHIN 7' OF BOTTOM OF FOOTING)
- FRICTION ANGLE, ϕ = 30 DEGREES (GROUNDWATER MORE THAN 7' BELOW BOTTOM OF FOOTING)
- COHESION, c = 0 LB/SF

DO NOT USE STANDARD CIP GRAVITY WALLS IF ASSUMED SOIL PARAMETERS ARE NOT APPLICABLE OR GROUNDWATER IS ABOVE BOTTOM OF FOOTING.

DO NOT USE STANDARD CIP GRAVITY WALLS WHEN VERY LOOSE OR SOFT SOIL OR MUCK IS BELOW WALLS.

BEFORE BEGINNING STANDARD CIP GRAVITY WALL CONSTRUCTION, SURVEY WALL LOCATIONS AND SUBMIT WALL PROFILE VIEWS (WALL ENVELOPES) FOR REVIEW. FOR WALL ENVELOPES, INCLUDE BOTTOM OF WALL, EXISTING GROUND AND GRADE ELEVATIONS AND OTHER ELEVATIONS AS NEEDED AT INTERVALS OF 25' OR LESS ALONG WALLS. DO NOT START WALL CONSTRUCTION UNTIL WALL ENVELOPES ARE ACCEPTED.

FOR BRICK VENEERS, SUBMIT BRICK SAMPLES FOR APPROVAL BEFORE BEGINNING STANDARD CIP GRAVITY WALL CONSTRUCTION.

DO NOT PLACE CONCRETE FOR FOOTINGS UNTIL EXCAVATION DIMENSIONS AND FOUNDATION MATERIAL ARE APPROVED.

WHEN CONSTRUCTING STANDARD CIP GRAVITY WALLS WITH A CONSTRUCTION JOINT AS SHOWN IN DETAIL "A", PROVIDE A MINIMUM OF 3 EQUALLY SPACED #4 DOWELS AT INTERVALS OF 1'-6" ALONG WALLS.

PROJECT NO.: U-0071
DURHAM ***COUNTY***
STATION: -Y1- 21+40
SHEET 10 OF 11

GEOTECHNICAL ENGINEERING UNIT

STATE OF NORTH CAROLINA DEPARTMENT OF TRANSPORTATION RALEIGH

STANDARD DRAWING NO. 453.01

RETAINING WALL NO. 8
STANDARD
CAST-IN-PLACE (CIP)
GRAVITY RETAINING WALL
DATE: 1-21-14

SHEET NO. W-17
TOTAL SHEETS 44

GEOTECHNICAL ENGINEER	ENGINEER
NORTH CAROLINA PROFESSIONAL SEAL 030943 ENGINEER THEIN TUN ZAN	
1/22/14	
SIGNATURE DATE	SIGNATURE DATE

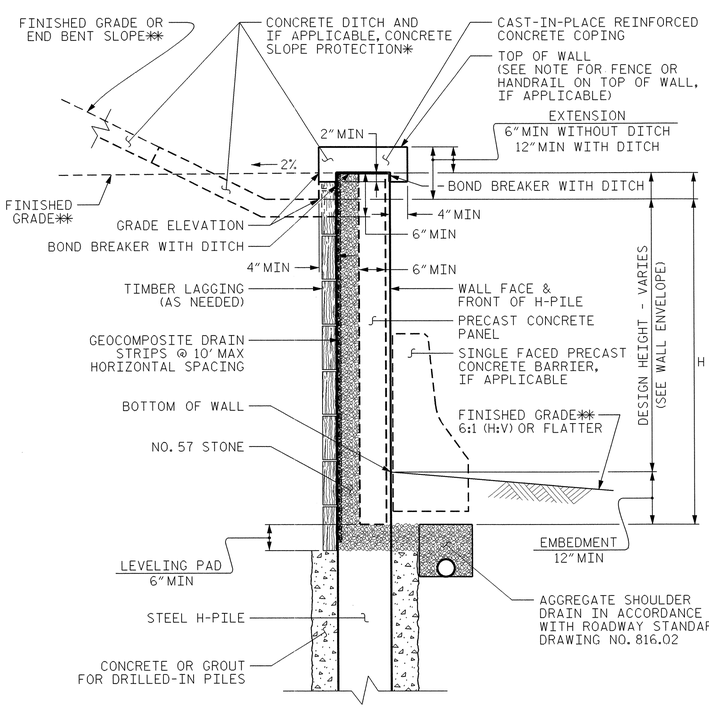

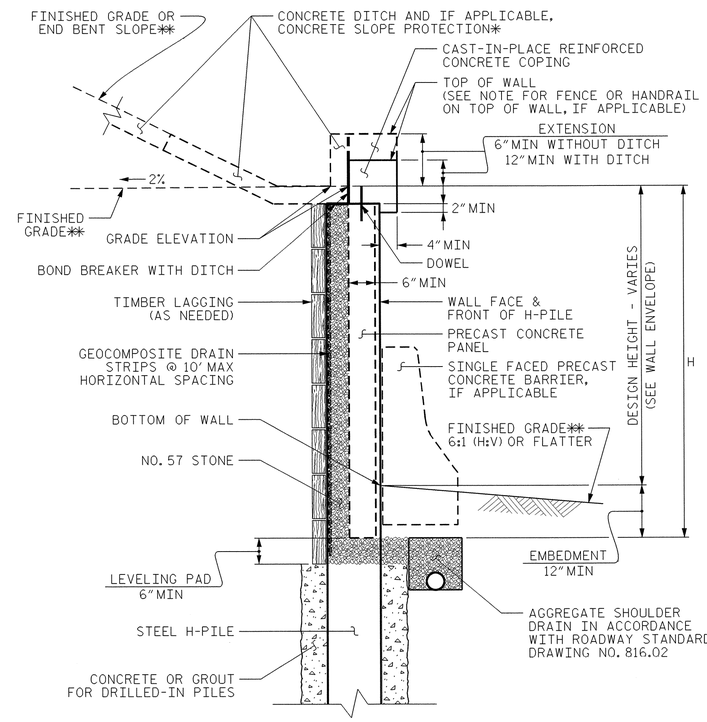

SOLDIER PILE WALL WITH PRECAST PANEL - TYPICAL SECTIONS

AT THE CONTRACTOR'S OPTION, CONNECT COPING TO PANELS WITH DOWELS OR EXTEND COPING DOWN BACK OF PANELS AND PILES.
*SEE CONCRETE DITCH BEHIND WALL DETAILS.
**SEE PLANS FOR FINISHED GRADE OR END BENT SLOPE DETAILS.

NOTES:

FOR SOLDIER PILE RETAINING WALLS, SEE SOLDIER PILE RETAINING WALLS PROVISION.

DRILLED-IN H-PILES ARE REQUIRED FOR RETAINING WALL NO. 9.

AT THE CONTRACTOR'S OPTION, USE DRIVEN H-PILES FOR RETAINING WALL NO. 9 IF ROCK IS NOT WITHIN PILE EMBEDMENT AND PILE INSTALLATION IS NOT A PROBLEM.

USE A SOLDIER PILE RETAINING WALL WITH PRECAST CONCRETE PANELS THAT MEET SECTION 1077 OF THE STANDARD SPECIFICATIONS FOR RETAINING WALL NO. 9.

AN EXPOSED AGGREGATE FINISH THAT MEETS ARTICLE 1077-12 OF THE STANDARD SPECIFICATIONS IS REQUIRED FOR PRECAST CONCRETE PANELS FOR RETAINING WALL NO. 9.

PAINT GALVANIZED H-PILES GRAY IN ACCORDANCE WITH ARTICLE 442-12 OF THE STANDARD SPECIFICATIONS FOR RETAINING WALL NO. 9.

BEFORE BEGINNING SOLDIER PILE WALL DESIGN FOR RETAINING WALL NO. 9, SURVEY WALL LOCATION AND SUBMIT A REVISED WALL PROFILE VIEW (WALL ENVELOPE) FOR REVIEW. DO NOT START WALL DESIGN OR CONSTRUCTION UNTIL THE REVISED WALL ENVELOPE IS ACCEPTED.

DESIGN RETAINING WALL NO. 9 FOR THE FOLLOWING:
1) H = DESIGN HEIGHT + EMBEDMENT
2) DESIGN LIFE = 75 YEARS
3) IN-SITU ASSUMED MATERIAL PARAMETERS
UNIT WEIGHT, γ = 120 LB/CF
FRICTION ANGLE, ϕ = 30 DEGREES
COHESION, c = 0 LB/SF

PROJECT NO.: U-0071
DURHAM ***COUNTY***
STATION: -Y1- 24+00
SHEET 11 OF 11

GEOTECHNICAL ENGINEERING UNIT
☒ ***EASTERN REGIONAL OFFICE***
☐ ***WESTERN REGIONAL OFFICE***
☐ ***CONTRACT OFFICE***
STATE OF NORTH CAROLINA DEPARTMENT OF TRANSPORTATION RALEIGH

RETAINING WALL NO. 9
SOLDIER PILE WALL
TYPICAL SECTION & DETAILS

REVISIONS						SHEET NO.
NO.	BY	DATE	NO.	BY	DATE	W-13
1	–	–	3	–	–	TOTAL SHEETS
2	–	–	4	–	–	44

PREPARED BY: T. T. ZAN	DATE: 01/2014
REVIEWED BY: J. R. BATTS	DATE: 01/2014

GEOTECHNICAL ENGINEER

NORTH CAROLINA PROFESSIONAL SEAL 32171 ENGINEER JINYOUNG PARK

SIGNATURE DATE

ENGINEER

SIGNATURE DATE

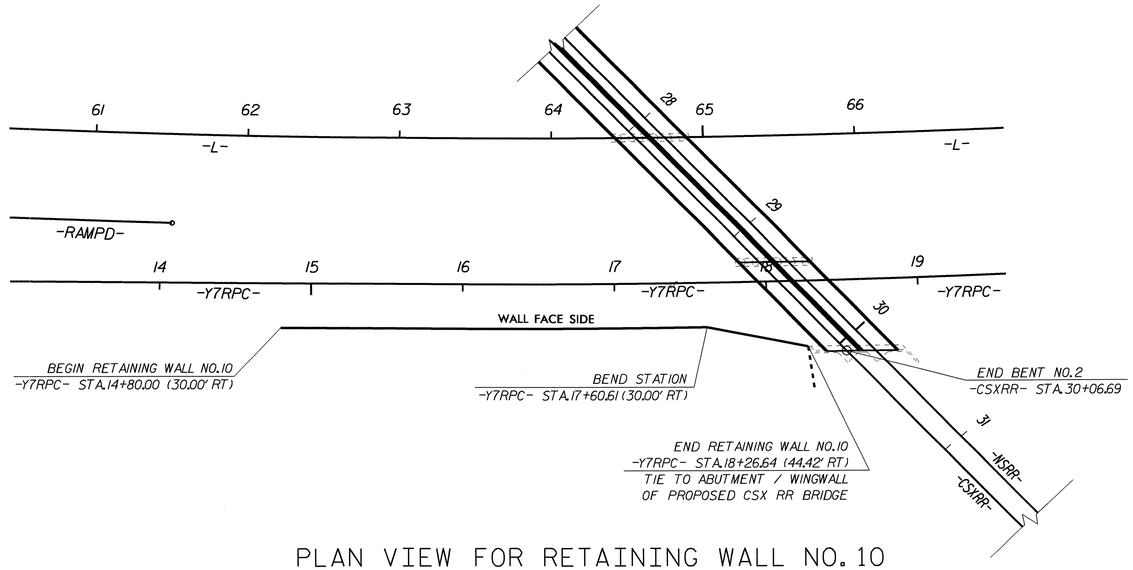

ASSUMED TEMPORARY SHORING LOCATION. FOR TEMPORARY SHORING ADJACENT TO RETAINING WALL NO.10, SEE STRUCTURE PLANS FOR CSXRR BRIDGE END BENT NO.2. SEE RETAINING WALL NO.10 PLAN NOTES FOR THE COST OF THE TEMPORARY SHORING.

PLAN VIEW FOR RETAINING WALL NO. 10

(N.T.S.)

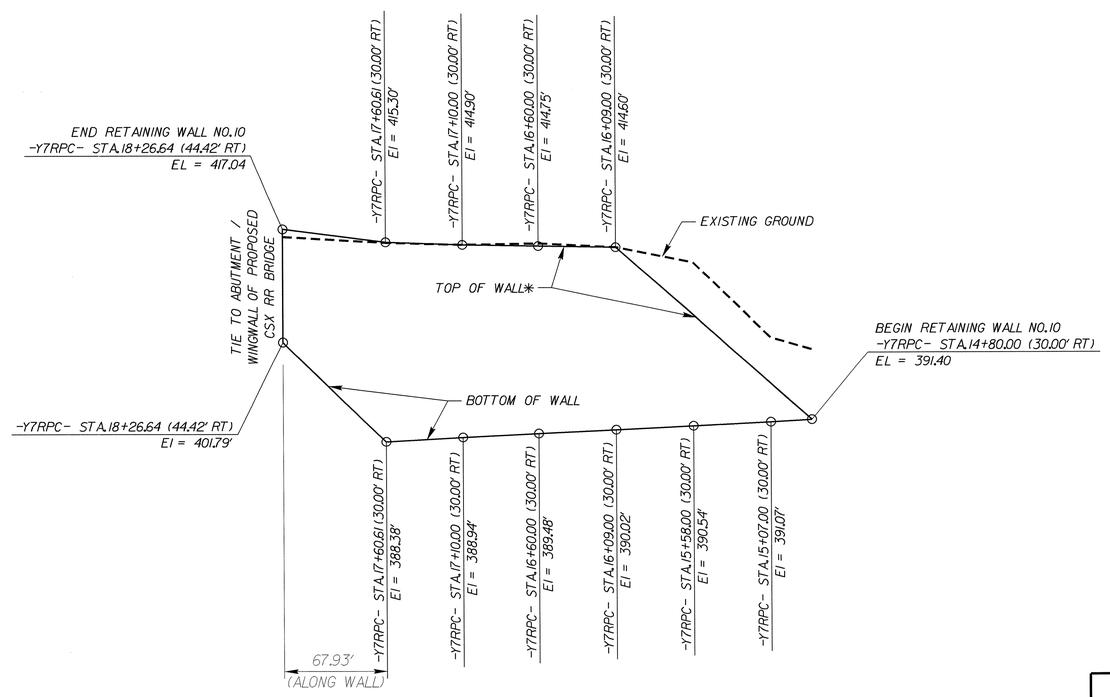

RETAINING WALL NO. 10 - EXPOSED WALL FACE ENVELOPE (N.T.S.)

* WALL ENVELOPE IS BASED ON TOP OF WALL ELEVATIONS

TOTAL BILL OF MATERIAL	
SOIL NAIL RETAINING WALLS	6,950 SF
SOIL NAIL VERIFICATION TESTS	3 EACH
SOIL NAIL PROOF TESTS	16 EACH

PROJECT NO.: U-0071

DURHAM **COUNTY**

STATION: 14+80.00 -Y7RPC-

SHEET 1 OF 2

PREPARED BY: J. PARK	DATE: 01 / 2014
REVIEWED BY: J. BATTS	DATE: 01 / 2014

GEOTECHNICAL ENGINEERING UNIT

☒ EASTERN REGIONAL OFFICE

☐ WESTERN REGIONAL OFFICE

☐ CONTRACT OFFICE

STATE OF NORTH CAROLINA
DEPARTMENT OF TRANSPORTATION
RALEIGH

RETAINING WALL NO. 10 - PLAN VIEW & WALL ENVELOPE

REVISIONS						
NO.	BY	DATE	NO.	BY	DATE	
1	J. PARK	06/2014	3	–	–	
2	–	–	4	–	–	

SHEET NO. W-19

TOTAL SHEETS 44

GEJ266089 6/25/2014 U0071_GEO_RWALL_10_Plans_Rev1 jpark RD-Oce860-34

GEOTECHNICAL ENGINEER	ENGINEER
NORTH CAROLINA PROFESSIONAL SEAL 32171 ENGINEER IN YOUNG PARK	
SIGNATURE DATE	SIGNATURE DATE

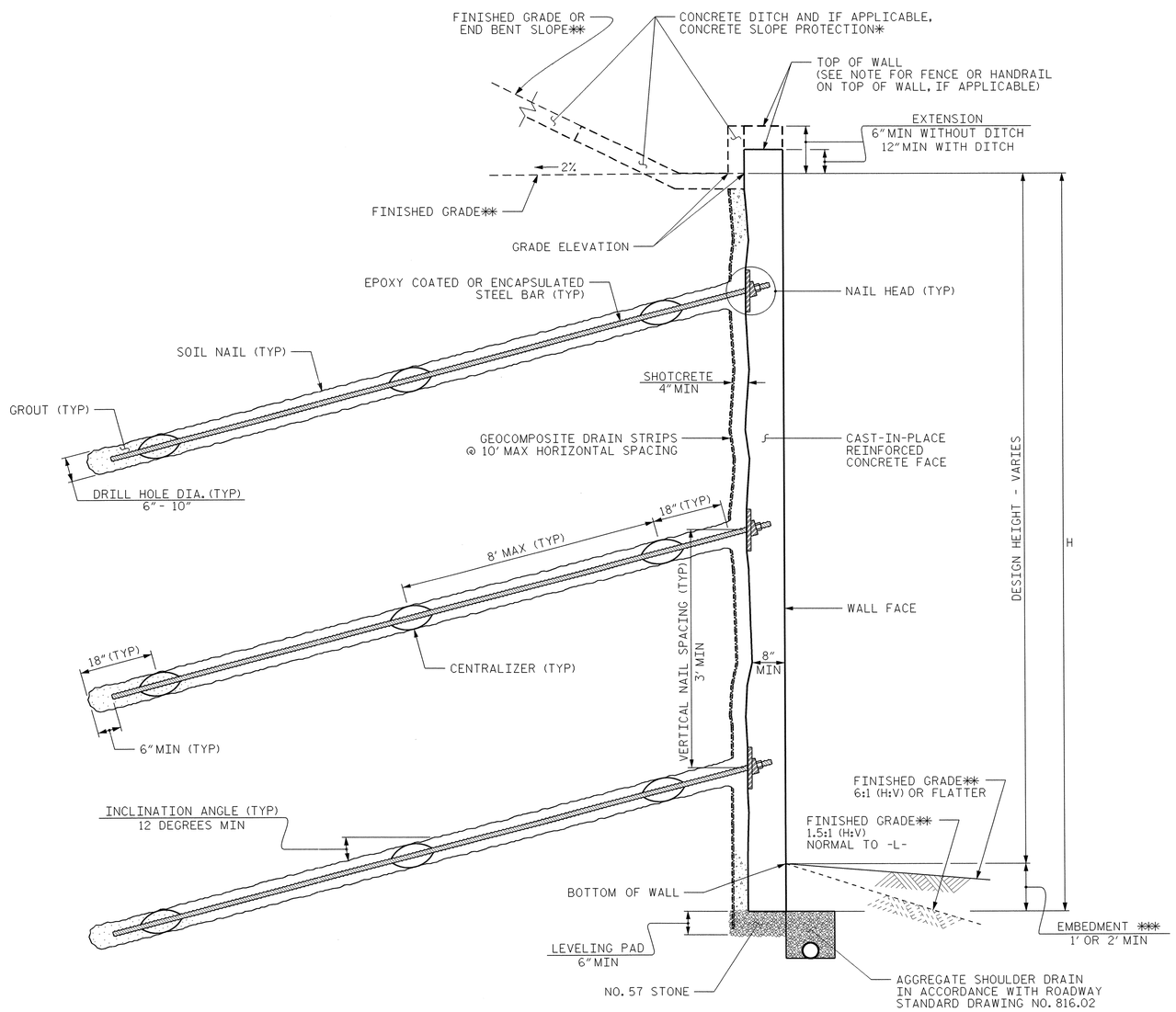

SOIL NAIL WALL - TYPICAL SECTION

* SEE CONCRETE DITCH BEHIND WALL DETAILS.
** SEE PLANS FOR FINISHED GRADE.
*** 1' MIN WHEN FRONT SLOPE IS 6:1 OR FLATTER, OTHERWISE 2' MIN

NOTES:

FOR SOIL NAIL RETAINING WALLS, SEE SOIL NAIL RETAINING WALLS PROVISION.

BEFORE BEGINNING SOIL NAIL WALL DESIGN FOR RETAINING WALL NO. 10, SURVEY WALL LOCATION AND SUBMIT A REVISED WALL PROFILE VIEW (WALL ENVELOPE) FOR REVIEW. DO NOT START WALL DESIGN OR CONSTRUCTION UNTIL THE REVISED WALL ENVELOPE IS ACCEPTED.

DESIGN RETAINING WALL NO. 10 FOR THE FOLLOWING:
1) H = DESIGN HEIGHT + EMBEDMENT
2) DESIGN LIFE = 100 YEARS
3) IN-SITU ASSUMED MATERIAL PARAMETERS ABOVE ELEVATION 400 FT:
   UNIT WEIGHT, γ = 120 LB/CF
   FRICTION ANGLE, ϕ = 28 DEGREES
   COHESION, c = 0 LB/SF
4) IN-SITU ASSUMED MATERIAL PARAMETERS BELOW ELEVATION 400 FT AND ABOVE 390 FT:
   UNIT WEIGHT, γ = 120 LB/CF
   FRICTION ANGLE, ϕ = 34 DEGREES
   COHESION, c = 0 LB/SF
5) IN-SITU ASSUMED MATERIAL PARAMETERS BELOW ELEVATION 390 FT:
   UNIT WEIGHT, γ = 130 LB/CF
   FRICTION ANGLE, ϕ = 42 DEGREES
   COHESION, c = 0 LB/SF

EXISTING OR FUTURE OBSTRUCTIONS SUCH AS FOUNDATIONS, GUARDRAIL, FENCE OR HANDRAIL POSTS, PAVEMENTS, PIPES, INLETS OR UTILITIES MAY INTERFERE WITH SOIL NAILS FOR RETAINING WALL NO. 10.

FOR TEMPORARY SHORING ADJACENT TO WALL NO. 10 AS SHOWN IN THE PLAN VIEW, SEE STRUCTURE PLANS FOR CSXRR BRIDGE END BENT NO. 2. THE TEMPORARY SHORING SHALL BE DESIGNED BY THE CONTRACTOR AND APPROVED BY NCDOT.

NO SEPARATE PAYMENT WILL BE MADE FOR THE TEMPORARY SHORING ADJACENT TO RETAINING WALL NO. 10. THE COST OF THE TEMPORARY SHORING ADJACENT TO RETAINING WALL NO. 10 IS INCIDENTAL TO THE CONTRACT UNIT PRICE FOR RETAINING WALL NO. 10.

PROJECT NO.: U-0071
DURHAM ***COUNTY***
STATION: 14+80.00 -Y7RPC-
SHEET 2 OF 2

GEOTECHNICAL ENGINEERING UNIT
☒ ***EASTERN REGIONAL OFFICE***
☐ ***WESTERN REGIONAL OFFICE***
☐ ***CONTRACT OFFICE***
STATE OF NORTH CAROLINA
DEPARTMENT OF TRANSPORTATION
RALEIGH

RETAINING WALL NO. 10 - TYPICAL & NOTES

REVISIONS						SHEET NO.
NO.	BY	DATE	NO.	BY	DATE	W-20
1	J. PARK	06/2014	3	–	–	TOTAL SHEETS
2	–	–	4	–	–	44

PREPARED BY: J. PARK	DATE: 01 / 2014
REVIEWED BY: J. BATTS	DATE: 01 / 2014

GEOTECHNICAL ENGINEER	ENGINEER
NORTH CAROLINA PROFESSIONAL SEAL 038176 ENGINEER SHUAI ZHANG 1-22-2014	
SIGNATURE DATE	SIGNATURE DATE

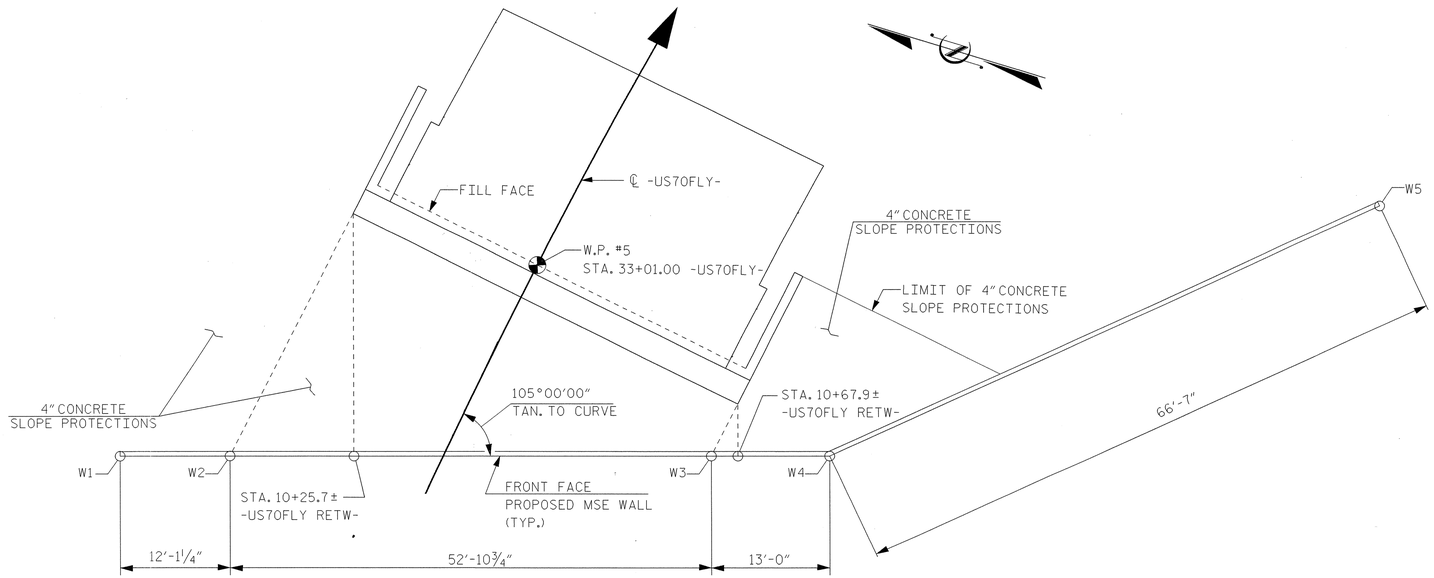

PLAN VIEW – RETAINING WALL NO. 11
–US70FLY RETW– @ END BENT 2, NTS

ESTIMATED MSE WALL QUANTITY (SQUARE FEET)	
MSE RETAINING WALL NO. 11	1,710 SF

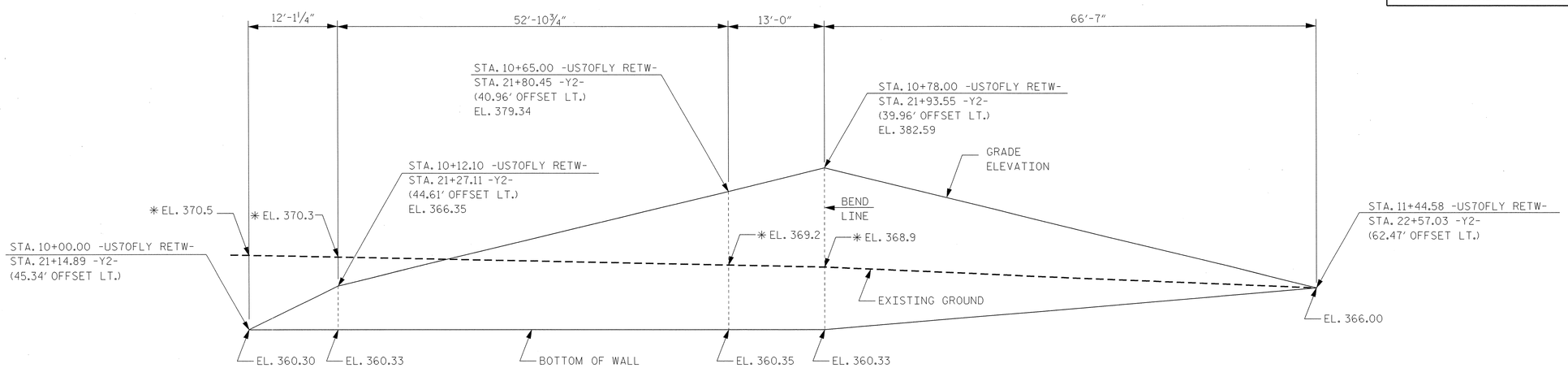

EXPOSED WALL FACE ENVELOPE – RETAINING WALL NO. 11
–US70FLY RETW– @ END BENT 2, NTS

* EXISTING GROUND ELEVATIONS ARE INTERPRETED FROM PROJECT CONTOUR LINE FILE.

PROJECT NO.: U-0071
DURHAM ***COUNTY***
STATION: VARIES
SHEET 1 OF 7

GEOTECHNICAL ENGINEERING UNIT

[X] ***EASTERN REGIONAL OFFICE***
[ ] ***WESTERN REGIONAL OFFICE***
[ ] ***CONTRACT OFFICE***

STATE OF NORTH CAROLINA
DEPARTMENT OF TRANSPORTATION
RALEIGH

MSE RETAINING WALL NO. 11
PLAN VIEW AND WALL ENVELOPE

PREPARED BY: S. ZHANG	DATE: 01/2014
REVIEWED BY: J. BATTS	DATE: 01/2014

REVISIONS						SHEET NO.
NO.	BY	DATE	NO.	BY	DATE	W-21
1			3			TOTAL SHEETS
2			4			44

GEOTECHNICAL ENGINEER	ENGINEER
NORTH CAROLINA PROFESSIONAL SEAL 038176 ENGINEER SHUAI ZHANG 1-22-2014	
SIGNATURE DATE	SIGNATURE DATE

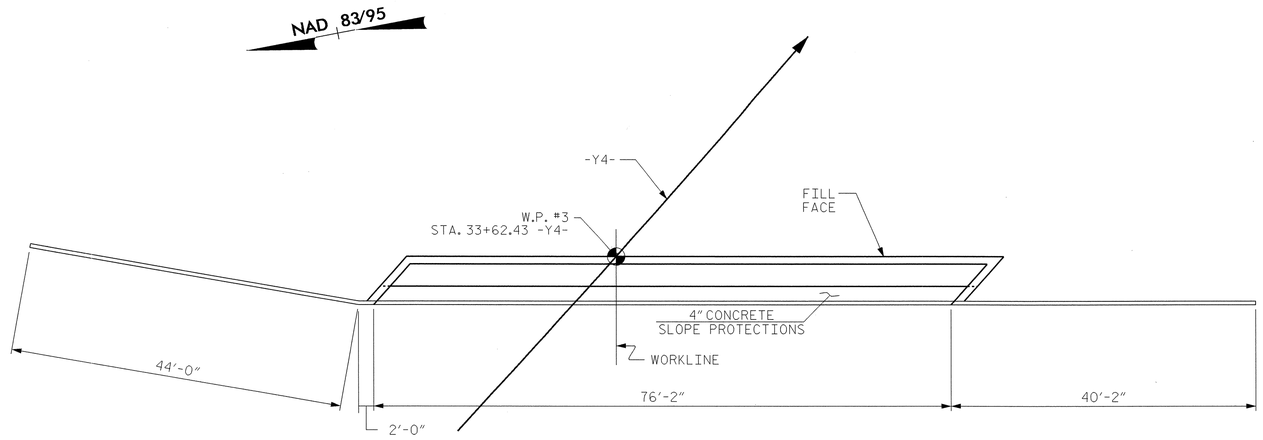

PLAN VIEW – RETAINING WALL NO. 12
–Y4 RETE– @ END BENT 2, NTS

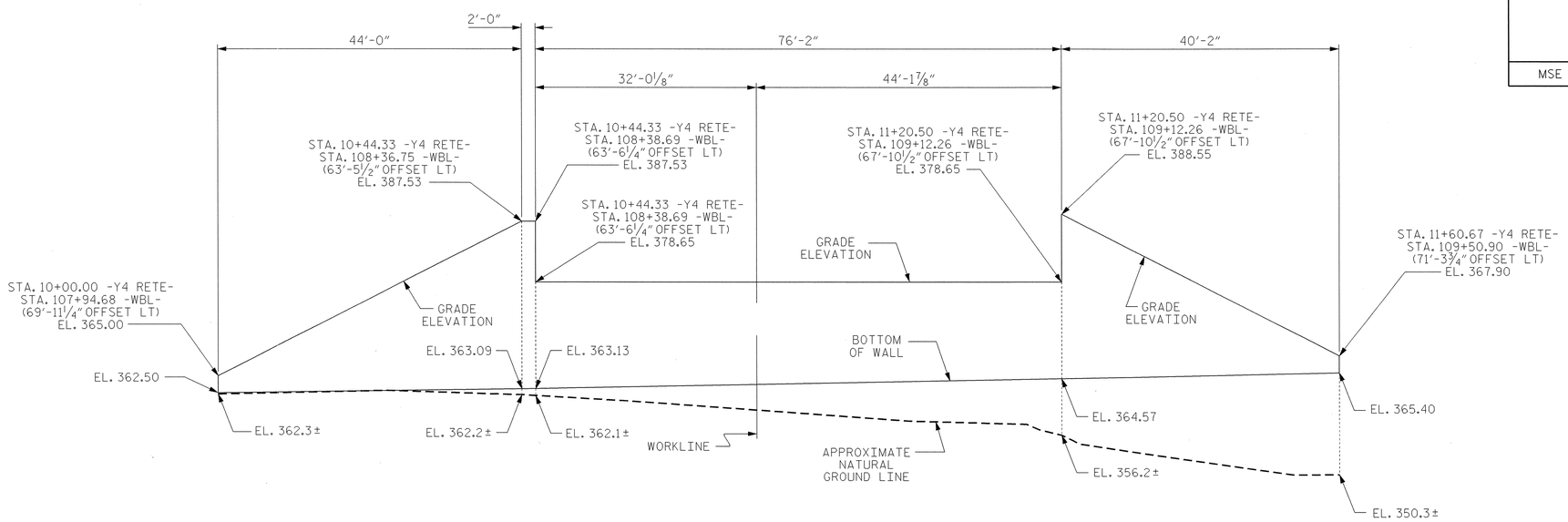

EXPOSED WALL FACE ENVELOPE – RETAINING WALL NO. 12
–Y4 RETE– @ END BENT 2, NTS

ESTIMATED MSE WALL QUANTITY (SQUARE FEET)	
MSE RETAINING WALL NO. 12	2,300 SF

PROJECT NO.: U-0071
DURHAM ***COUNTY***
STATION: VARIES
SHEET 2 OF 7

GEOTECHNICAL ENGINEERING UNIT
[X] *EASTERN REGIONAL OFFICE*
[ ] *WESTERN REGIONAL OFFICE*
[ ] *CONTRACT OFFICE*
STATE OF NORTH CAROLINA DEPARTMENT OF TRANSPORTATION RALEIGH

MSE RETAINING WALL NO. 12
PLAN VIEW AND WALL ENVELOPE
–
–

REVISIONS							SHEET NO.
NO.	BY	DATE	NO.	BY	DATE		W-22
1	–	–	3	–	–		TOTAL SHEETS
2	–	–	4	–	–		44

PREPARED BY: S. ZHANG	DATE: 01/2014
REVIEWED BY: J. BATTS	DATE: 01/2014

GEOTECHNICAL ENGINEER	ENGINEER
NORTH CAROLINA PROFESSIONAL SEAL 038176 ENGINEER SHUHAI ZHANG 1-22-2014	
SIGNATURE DATE	SIGNATURE DATE

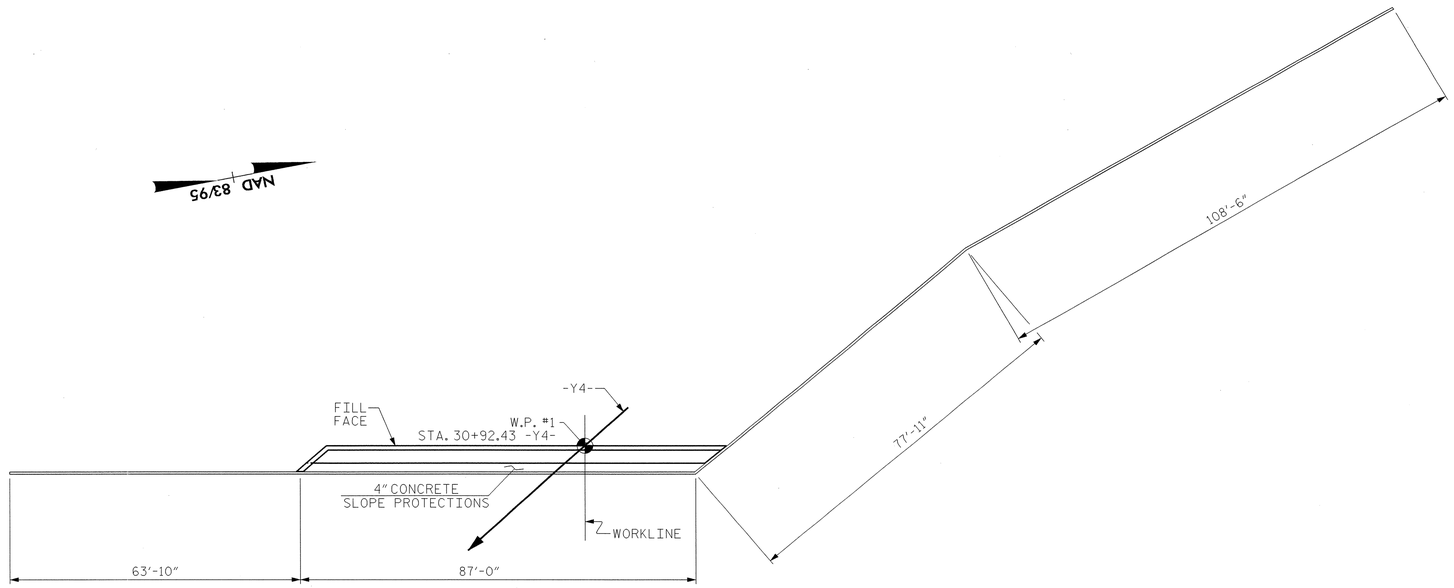

PLAN VIEW – RETAINING WALL NO. 13
–Y4 RETE– @ END BENT 1, NTS

ESTIMATED MSE WALL QUANTITY (SQUARE FEET)	
MSE RETAINING WALL NO. 13	6,700 SF

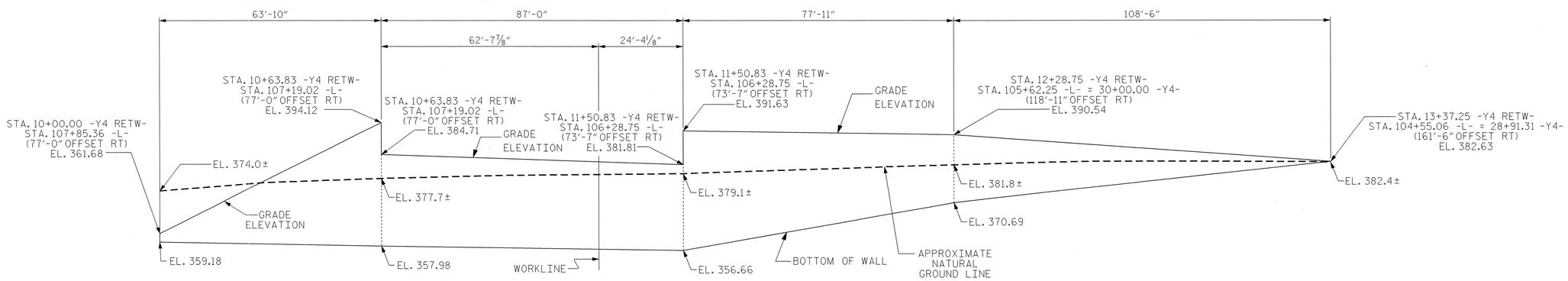

EXPOSED WALL FACE ENVELOPE – RETAINING WALL NO. 13
–Y4 RETE– @ END BENT 1, NTS

PROJECT NO.: U-0071
DURHAM ***COUNTY***
STATION: VARIES
SHEET 3 OF 7

GEOTECHNICAL ENGINEERING UNIT
[X] *EASTERN REGIONAL OFFICE*
[ ] *WESTERN REGIONAL OFFICE*
[ ] *CONTRACT OFFICE*
STATE OF NORTH CAROLINA DEPARTMENT OF TRANSPORTATION RALEIGH

MSE RETAINING WALL NO. 13
PLAN VIEW AND WALL ENVELOPE
–
–

REVISIONS						SHEET NO.
NO.	BY	DATE	NO.	BY	DATE	W-23
1	–	–	3	–	–	TOTAL SHEETS
2	–	–	4	–	–	44

PREPARED BY: S. ZHANG	DATE: 01/2014
REVIEWED BY: J. BATTS	DATE: 01/2014

GEOTECHNICAL ENGINEER	ENGINEER
NORTH CAROLINA PROFESSIONAL SEAL 038176 ENGINEER SHIHAI ZHANG 1-22-2014	
SIGNATURE DATE	SIGNATURE DATE

NOTES:

FOR MECHANICALLY STABILIZED EARTH (MSE) RETAINING WALLS, SEE MECHANICALLY STABILIZED EARTH RETAINING WALLS PROVISION.

FOR SINGLE FACED PRECAST CONCRETE BARRIER, SEE ROADWAY PLANS AND SECTION 857 OF THE STANDARD SPECIFICATIONS.

USE AN MSE WALL SYSTEM WITH PRECAST CONCRETE PANELS THAT MEET SECTION 1077 OF THE STANDARD SPECIFICATIONS FOR RETAINING WALL NO. 11, NO. 12 AND NO. 13.

COARSE AGGREGATE IS REQUIRED FOR WALL NO. 11 AND NO. 13.

A DRAIN IS REQUIRED FOR RETAINING WALL NO. 11, NO. 12 AND NO. 13.

BEFORE BEGINNING MSE WALL DESIGN FOR RETAINING WALL NO. 11, NO. 12 AND NO. 13, SURVEY WALL LOCATION AND SUBMIT A REVISED WALL PROFILE VIEW (WALL ENVELOPE) FOR REVIEW. DO NOT START WALL DESIGN OR CONSTRUCTION UNTIL THE REVISED WALL ENVELOPE IS ACCEPTED.

DESIGN RETAINING WALL NO. 11, NO. 12 AND NO. 13 FOR THE FOLLOWING:
1) H = DESIGN HEIGHT + EMBEDMENT
2) DESIGN LIFE = 100 YEARS
3) MINIMUM REINFORCEMENT LENGTH (L) TO WALL HEIGHT (H) RATIO = 0.7
4) AGGREGATE PARAMETERS:

AGGREGATE TYPE*	UNIT WEIGHT (γ) LB/CF	FRICTION ANGLE (ϕ) DEGREES	COHESION (c) LB/SF
COARSE	110	38	0
FINE	125	34	0
*SEE MSE RETAINING WALLS PROVISION FOR COARSE AND FINE AGGREGATE MATERIAL REQUIREMENTS.			

5) IN-SITU ASSUMED MATERIAL PARAMETERS:

MATERIAL TYPE	UNIT WEIGHT (γ) LB/CF	FRICTION ANGLE (ϕ) DEGREES	COHESION (c) LB/SF
BACKFILL	120	30	0
FOUNDATION	120	30	0

DESIGN RETAINING WALL NO. 11, NO. 12, AND NO. 13 FOR A LIVE LOAD (TRAFFIC) SURCHARGE.

DESIGN REINFORCEMENT CONNECTED TO END BENT CAPS FOR FACTORED LOAD AND LENGTH OF REINFORCEMENT IN ACTIVE ZONE (L_a) SHOWN. CAST REINFORCEMENT CONNECTORS INTO CAP BACKWALL FOR END BENT NO. 1 (STR. #5) LOCATED AT STATION 27+54.00 -US70FLY-, END BENT NO. 2 (STR. #5) LOCATED AT STATION 33+01.00 -US70FLY-, END BENT NO. 1 (STR. #4) LOCATED AT STATION 30+92.43 -Y4-, AND END BENT NO. 2 (STR. #4) LOCATED AT STATION 33+62.43 -Y4-, RESPECTIVELY. MAINTAIN A CLEARANCE OF AT LEAST 3" BETWEEN CONNECTORS AND REINFORCING STEEL IN CAP.

FOUNDATIONS FOR END BENT NO. 2 (STR. #5) LOCATED AT STATION 33+01.00 -US70FLY-, WILL INTERFERE WITH REINFORCEMENT FOR RETAINING WALL NO. 11. SEE "FOUNDATION LAYOUT" SHEET FOR FOUNDATION LOCATIONS.

FOUNDATIONS FOR END BENT NO. 1 (STR. #4) LOCATED AT STATION 30+92.43 -Y4-, WILL INTERFERE WITH REINFORCEMENT FOR RETAINING WALL NO. 13. SEE "FOUNDATION LAYOUT" SHEET FOR FOUNDATION LOCATIONS.

FOUNDATIONS FOR END BENT NO. 2 (STR. #4) LOCATED AT STATION 33+62.43 -Y4-, WILL INTERFERE WITH REINFORCEMENT FOR RETAINING WALL NO. 12. SEE "FOUNDATION LAYOUT" SHEET FOR FOUNDATION LOCATIONS.

DO NOT PLACE LEVELING PAD CONCRETE, AGGREGATE OR REINFORCEMENT FOR RETAINING WALL NO. 11, NO. 12, AND NO. 13 UNTIL EXCAVATION DIMENSIONS AND FOUNDATION MATERIAL ARE APPROVED.

AT THE CONTRACTOR'S OPTION, "TEMPORARY SHORING FOR WALL CONSTRUCTION" MAY BE USED TO CONSTRUCT RETAINING WALL NO. 11, NO. 12, AND NO. 13. SEE MSE RETAINING WALLS PROVISION FOR TEMPORARY SHORING FOR WALL CONSTRUCTION.

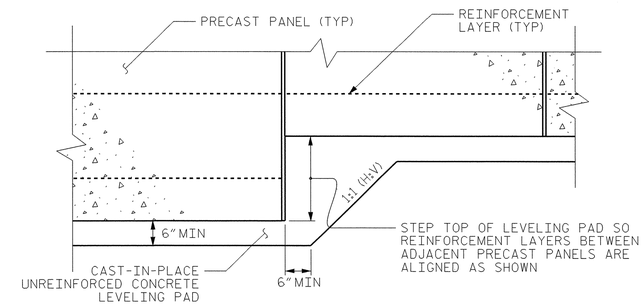

PRECAST CONCRETE PANELS

LEVELING PAD STEP DETAILS

PREPARED BY: S. ZHANG	DATE: 01/2014
REVIEWED BY: J. BATTS	DATE: 01/2014

PROJECT NO.: U-0071
DURHAM **COUNTY**
STATION: VARIES
SHEET 4 OF 7

GEOTECHNICAL ENGINEERING UNIT
[X] EASTERN REGIONAL OFFICE
[ ] WESTERN REGIONAL OFFICE
[ ] CONTRACT OFFICE
STATE OF NORTH CAROLINA
DEPARTMENT OF TRANSPORTATION
RALEIGH

MSE RETAINING WALL
NO. 11, NO. 12, & NO. 13
NOTES AND DETAIL

REVISIONS

NO.	BY	DATE	NO.	BY	DATE
1	-	-	3	-	-
2	-	-	4	-	-

SHEET NO. W-24
TOTAL SHEETS 44

GEOTECHNICAL ENGINEER	ENGINEER
NORTH CAROLINA PROFESSIONAL SEAL 038176 ENGINEER SHUHAI ZHANG 1-22-2014	
SIGNATURE DATE	SIGNATURE DATE

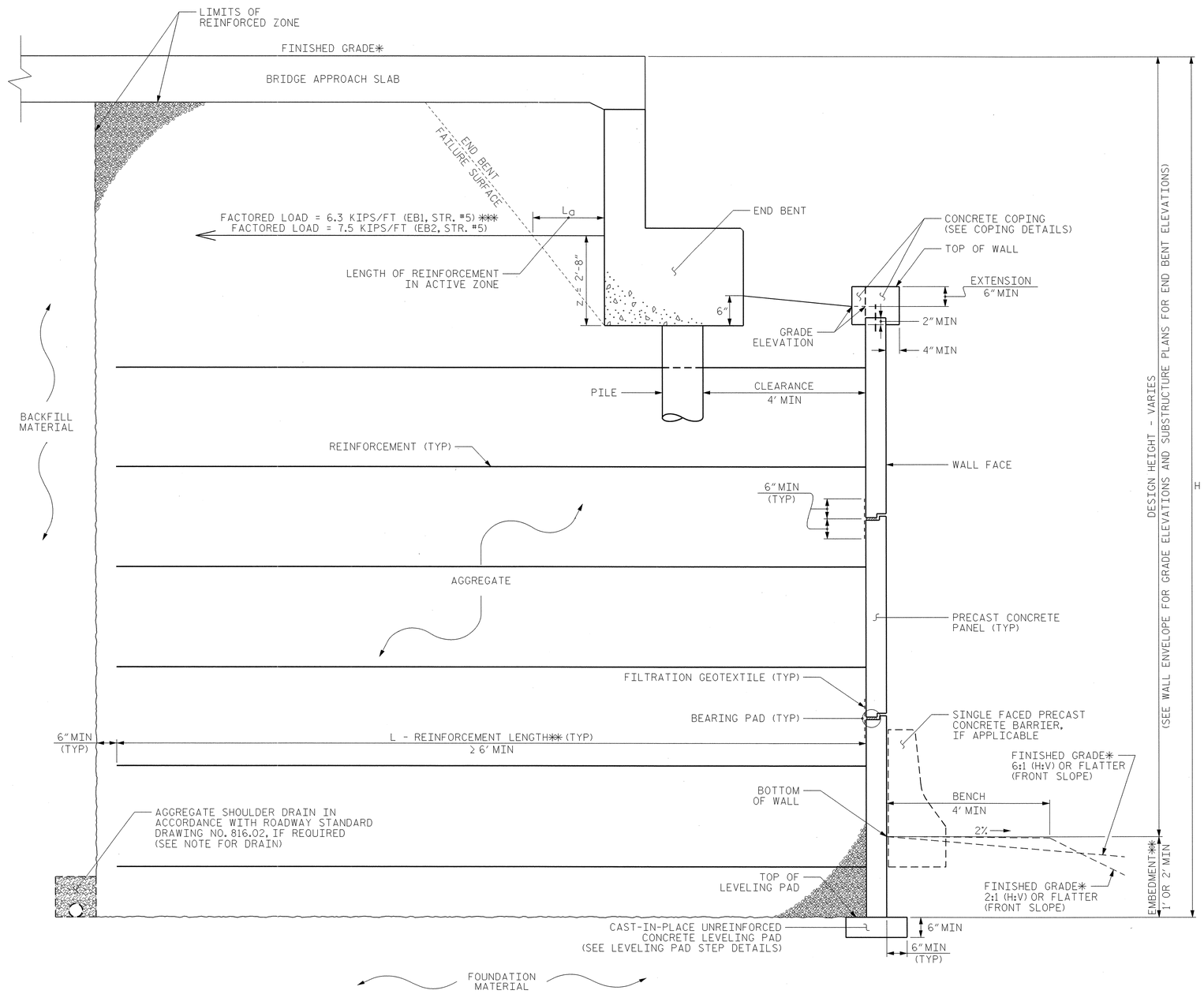

MSE ABUTMENT WALL WITH PRECAST PANELS - TYPICAL SECTION

TYPICAL SECTION BETWEEN 10+25.7± -US70FLY RETW- AND 10+67.9± -US70FLY RETW-
*SEE ROADWAY PLANS FOR FINISHED GRADE DETAILS.
**SEE MSE RETAINING WALLS PROVISION FOR EMBEDMENT AND REINFORCEMENT LENGTH REQUIREMENTS.
*** REINFORCEMENT BEHIND END BENT CAP ONLY. NO MSE RETAINING WALLS AT END BENT 1 (STR. #5)

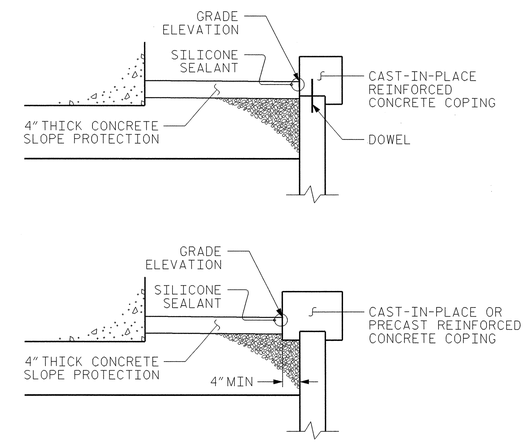

COPING DETAILS

AT THE CONTRACTOR'S OPTION, CONNECT COPING TO PANELS WITH DOWELS OR EXTEND COPING DOWN BACK OF PANELS.

PROJECT NO.: U-0071
DURHAM ***COUNTY***
STATION: VARIES
SHEET 5 OF 7

PREPARED BY: S. ZHANG	DATE: 01/2014
REVIEWED BY: J. BATTS	DATE: 01/2014

GEOTECHNICAL ENGINEERING UNIT

☒ ***EASTERN REGIONAL OFFICE***
☐ ***WESTERN REGIONAL OFFICE***
☐ ***CONTRACT OFFICE***

STATE OF NORTH CAROLINA
DEPARTMENT OF TRANSPORTATION
RALEIGH

MSE RETAINING WALL NO. 11
TYPICAL SECTION UNDER BRIDGE
–

REVISIONS						SHEET NO.
NO.	BY	DATE	NO.	BY	DATE	W-25
1	–	–	3	–	–	TOTAL SHEETS
2	–	–	4	–	–	44

GEJ266087 1/22/2014 U0071_GEO_RWAL_Wall 11 12 13.ips szhang2 GEC-Oce860-34bond

GEOTECHNICAL ENGINEER	ENGINEER
NORTH CAROLINA PROFESSIONAL SEAL 038176 ENGINEER SHIHAI ZHANG 1-22-2014	
SIGNATURE DATE	SIGNATURE DATE

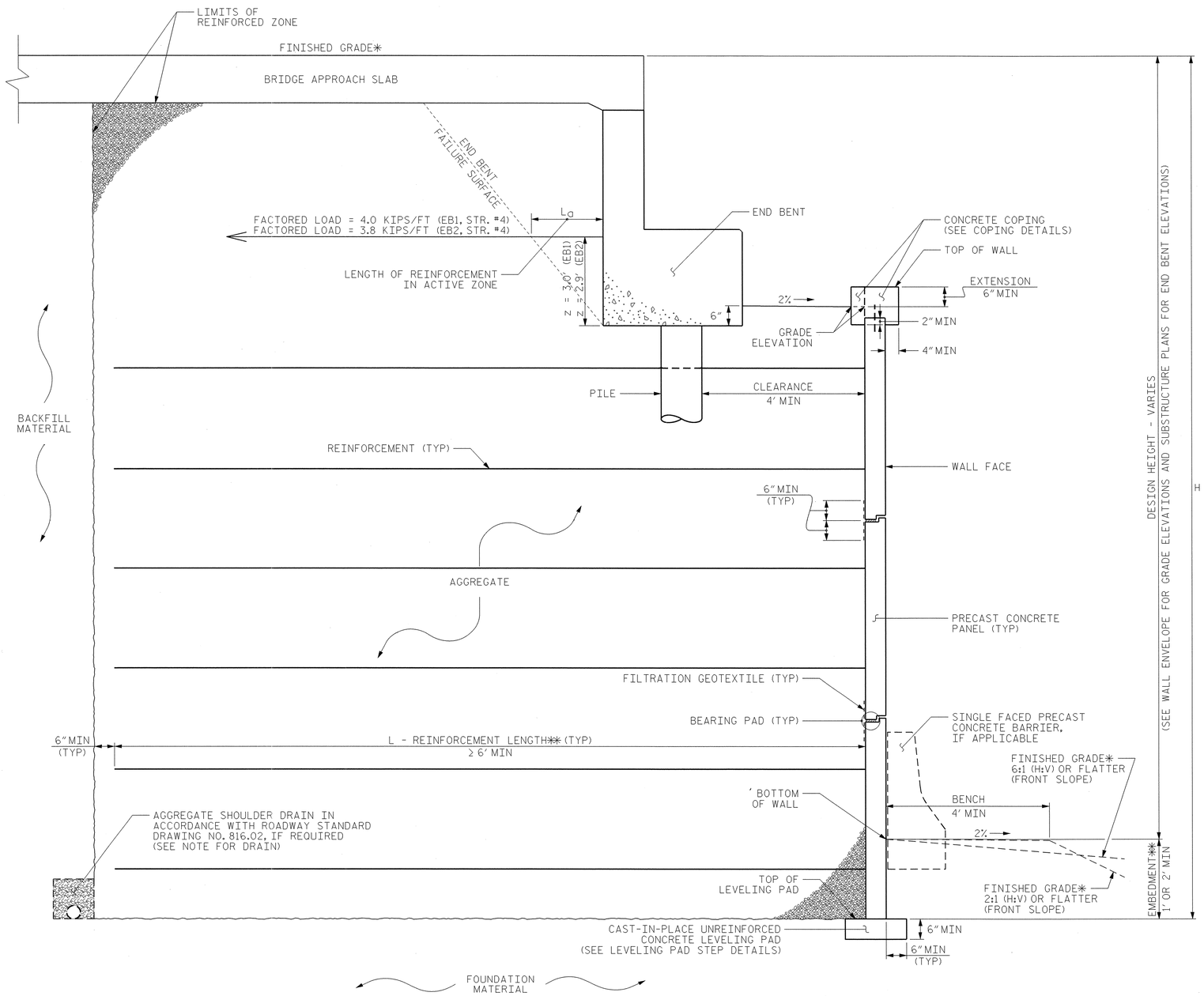

MSE ABUTMENT WALL WITH PRECAST PANELS - TYPICAL SECTION

TYPICAL SECTION FROM 10+44.33 -Y4 RETE- TO 11+20.50 -Y4 RETE-
AND FROM 10+63.83 -Y4 RETW- TO 11+50.83 -Y4 RETW-
*SEE ROADWAY PLANS FOR FINISHED GRADE DETAILS.
**SEE MSE RETAINING WALLS PROVISION FOR EMBEDMENT AND REINFORCEMENT LENGTH REQUIREMENTS.

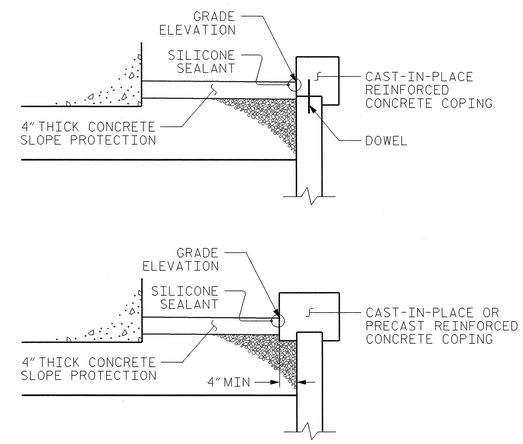

COPING DETAILS

AT THE CONTRACTOR'S OPTION, CONNECT COPING TO PANELS WITH DOWELS OR EXTEND COPING DOWN BACK OF PANELS.

PREPARED BY: S. ZHANG	DATE: 01/2014
REVIEWED BY: J. BATTS	DATE: 01/2014

GEOTECHNICAL ENGINEERING UNIT

- [X] EASTERN REGIONAL OFFICE
- [ ] WESTERN REGIONAL OFFICE
- [ ] CONTRACT OFFICE

STATE OF NORTH CAROLINA
DEPARTMENT OF TRANSPORTATION
RALEIGH

PROJECT NO.: U-0071
DURHAM COUNTY
STATION: VARIES
SHEET 6 OF 7

MSE RETAINING WALL
NO. 12 & NO. 13
TYPICAL SECTION UNDER BRIDGE

REVISIONS

NO.	BY	DATE	NO.	BY	DATE
1	-	-	3	-	-
2	-	-	4	-	-

SHEET NO. W-26
TOTAL SHEETS 44

GEOTECHNICAL ENGINEER	ENGINEER
NORTH CAROLINA PROFESSIONAL SEAL 038175 ENGINEER YIHAI ZHANG 1-22-2014	
SIGNATURE DATE	SIGNATURE DATE

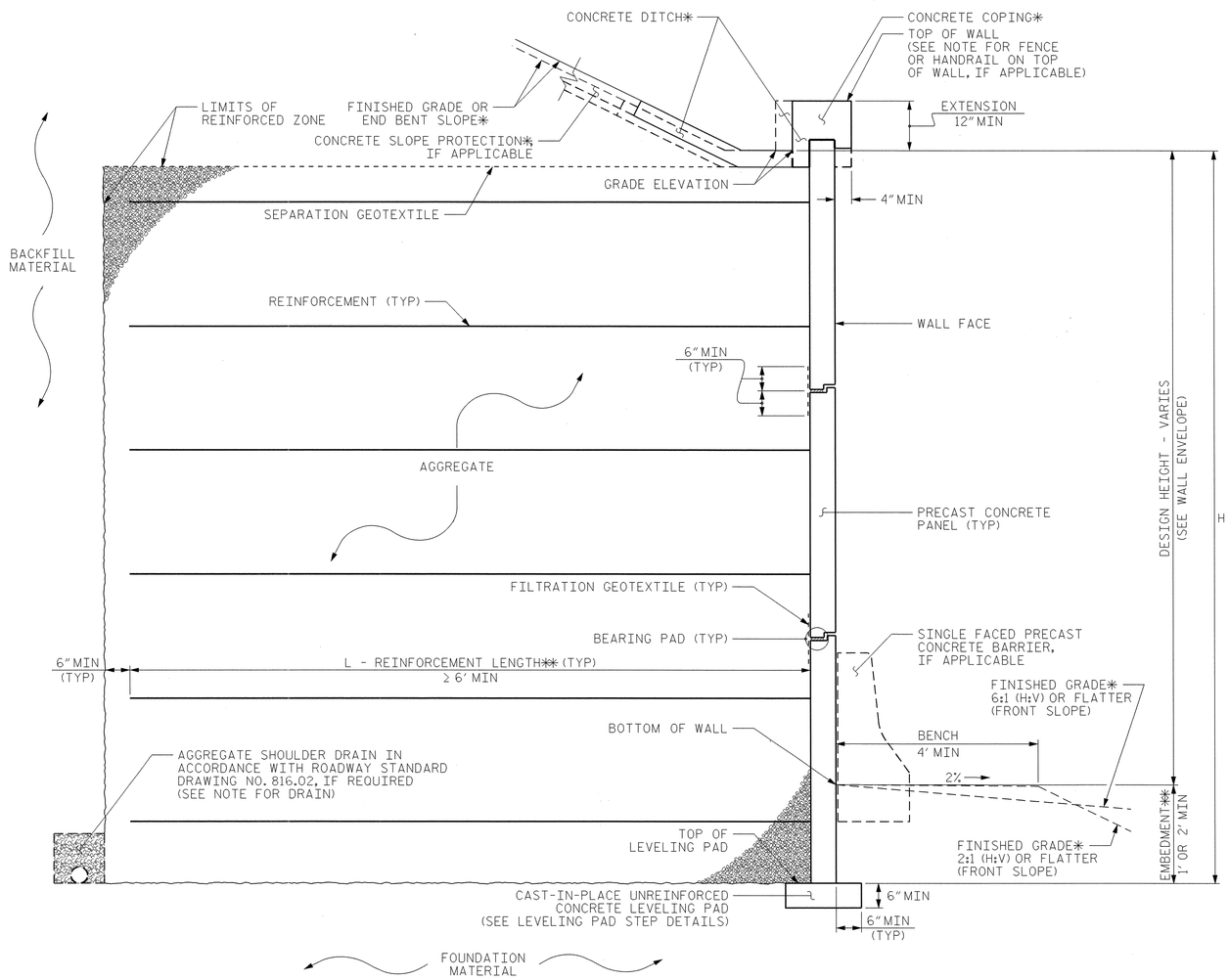

MSE WALL WITH PRECAST PANELS - TYPICAL SECTION

TYPICAL SECTION FROM 10+00.00 -US70FLY RETW- TO 10+25.7± -US70FLY RETW-, FROM 10+67.9± -US70FLY RETW- TO 11+44.58 -US70FLY RETW-, FROM 10+00.00 -Y4 RETE- TO 10+44.33 -Y4 RETE-, FROM 11+20.50 -Y4 RETE- TO 11+60.67 -Y4 RETE-, FROM 10+00.00 -Y4 RETW- TO 10+63.83 -Y4 RETW-, AND FROM 11+50.83 -Y4 RETW- TO 13+37.25 -Y4 RETW-

*SEE COPING DETAILS AND PLANS FOR FINISHED GRADE OR END BENT SLOPE DETAILS.

**SEE MSE RETAINING WALLS PROVISION FOR EMBEDMENT AND REINFORCEMENT LENGTH REQUIREMENTS.

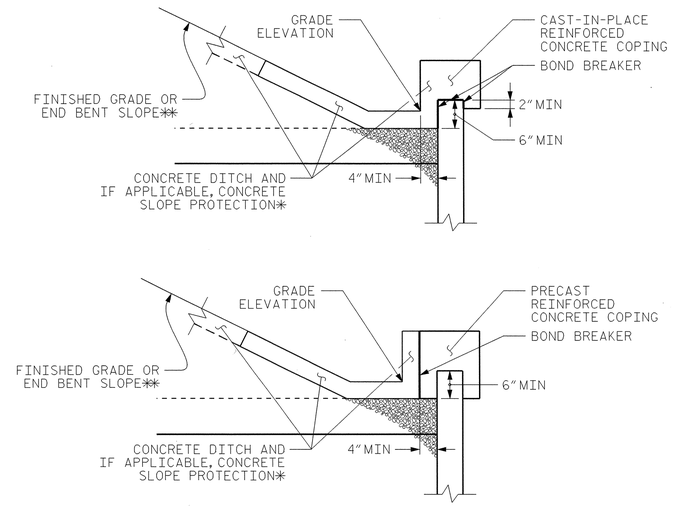

COPING DETAILS

*SEE CONCRETE DITCH BEHIND WALL DETAILS.

**SEE PLANS FOR FINISHED GRADE OR END BENT SLOPE DETAILS.

PREPARED BY: S. ZHANG	DATE: 01/2014
REVIEWED BY: J. BATTS	DATE: 01/2014

PROJECT NO.: U-0071

DURHAM **COUNTY**

STATION: VARIES

SHEET 7 OF 7

GEOTECHNICAL ENGINEERING UNIT

☒ *EASTERN REGIONAL OFFICE*

☐ *WESTERN REGIONAL OFFICE*

☐ *CONTRACT OFFICE*

STATE OF NORTH CAROLINA
DEPARTMENT OF TRANSPORTATION
RALEIGH

MSE RETAINING WALL
NO. 11, NO. 12 & NO. 13
TYPICAL SECTION OUTSIDE BRIDGE

REVISIONS						SHEET NO.
NO.	BY	DATE	NO.	BY	DATE	W-27
1	-	-	3	-	-	TOTAL SHEETS
2	-	-	4	-	-	44

GEOTECHNICAL ENGINEER	ENGINEER
NORTH CAROLINA PROFESSIONAL SEAL 32171 ENGINEER JINYOUNG PARK	
SIGNATURE DATE	SIGNATURE DATE

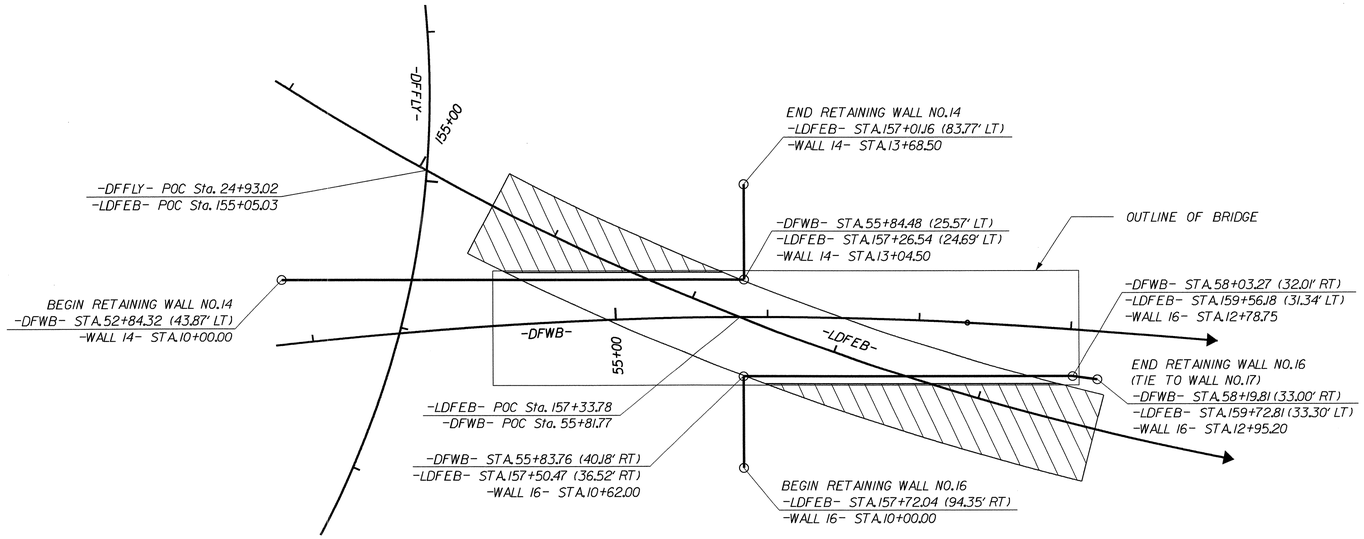

RETAINING WALL NOS. 14 & 16 PLAN

N.T.S.

WALL NO. 14 ENVELOPE TABLE

POINT	-DFWB-		-LDFEB-		-WALL 14-	ELEVATION
	STATION	OFFSET	STATION	OFFSET	STATION	
A	54+15.88	31.56'± LT	155+72.49	46.53'± RT	11+34.00	405.1±
B	54+18.84	31.36'± LT	155+75.09	45.16'± RT	11+37.00	405.1±/398.2±
C	55+84.48	25.57'± LT	157+26.54	24.69'± LT	13+04.50	389.6±
D	-	-	157+24.62	29.32'± LT	13+09.50	397.0±/389.6±
E	-	-	157+23.46	32.10'± LT	13+12.50	397.0±

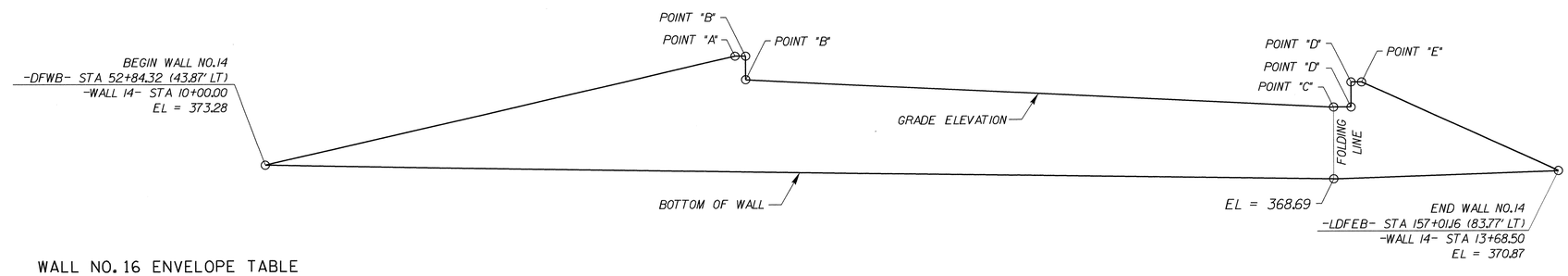

RETAINING WALL NO. 14 ELEVATION

N.T.S.

WALL NO. 16 ENVELOPE TABLE

POINT	-DFWB-		-LDFEB-		-WALL 16-	ELEVATION
	STATION	OFFSET	STATION	OFFSET	STATION	
A	-	-	157+53.33	43.97'± RT	10+54.00	401.9±
B	-	-	157+52.26	41.17'± RT	10+57.00	401.9±/394.5±
C	55+83.76	40.18'± RT	157+50.47	36.52'± RT	10+62.00	394.5±
D	58+03.27	32.01'± RT	159+56.18	31.34'± LT	12+78.75	385.5±
E	58+09.76	32.41'± RT	159+62.69	32.13'± LT	12+85.20	392.8±/385.2±

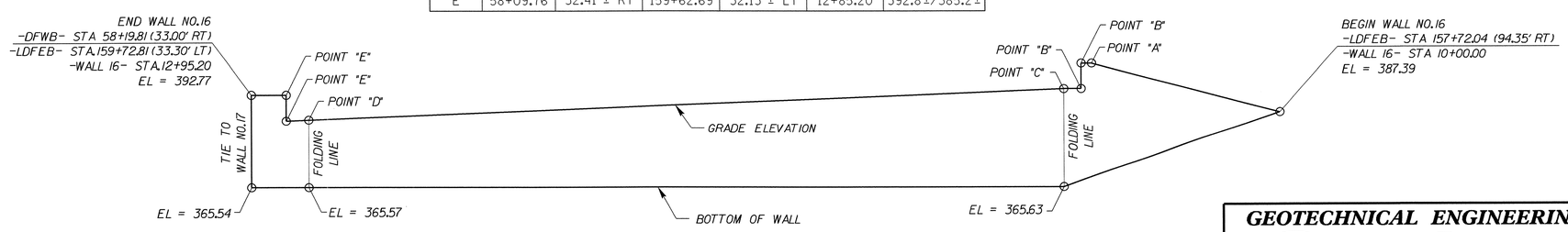

RETAINING WALL NO. 16 ELEVATION

N.T.S.

PROJECT NO.: U-0071

DURHAM **COUNTY**

STATION: 157+33.78 -LDFEB- (SITE 10)

SHEET 1 OF 4

PREPARED BY: J. PARK	DATE: 11 / 2013
REVIEWED BY: J. BATTS	DATE: 11 / 2013

GEOTECHNICAL ENGINEERING UNIT

☒ EASTERN REGIONAL OFFICE
☐ WESTERN REGIONAL OFFICE
☐ CONTRACT OFFICE

STATE OF NORTH CAROLINA
DEPARTMENT OF TRANSPORTATION
RALEIGH

MSE RETAINING WALL NO. 14 & WALL NO. 16 - PLAN VIEW & WALL ENVELOPE

REVISIONS						SHEET NO.
NO.	BY	DATE	NO.	BY	DATE	W-28
1	-	-	3	-	-	TOTAL SHEETS
2	-	-	4	-	-	44

GEJ266089 1/22/2014 U0071_GEO_RWALL_14 & 16_Plans jpark RD-Oce860-34

GEOTECHNICAL ENGINEER	ENGINEER
SIGNATURE DATE	SIGNATURE DATE

NOTES:

FOR MECHANICALLY STABILIZED EARTH (MSE) RETAINING WALLS, SEE MECHANICALLY STABILIZED EARTH RETAINING WALLS PROVISION.

FOR SINGLE FACED PRECAST CONCRETE BARRIER, SEE ROADWAY PLANS AND SECTION 857 OF THE STANDARD SPECIFICATIONS.

USE AN MSE WALL SYSTEM WITH PRECAST CONCRETE PANELS THAT MEET SECTION 1077 OF THE STANDARD SPECIFICATIONS FOR RETAINING WALL NO. 14 AND WALL NO. 16.

CAST-IN-PLACE REINFORCED CONCRETE COPING IS REQUIRED FOR RETAINING WALL NO. 14 AND WALL NO. 16.

A DRAIN IS REQUIRED FOR RETAINING WALL NO. 14 AND WALL NO. 16.

BEFORE BEGINNING MSE WALL DESIGN FOR RETAINING WALL NO. 14 AND WALL NO. 16, SURVEY WALL LOCATION AND SUBMIT A REVISED WALL PROFILE VIEW (WALL ENVELOPE) FOR REVIEW. DO NOT START WALL DESIGN OR CONSTRUCTION UNTIL THE REVISED WALL ENVELOPE IS ACCEPTED.

DESIGN RETAINING WALL NO. 14 AND WALL NO. 16 FOR THE FOLLOWING:
1) H = DESIGN HEIGHT + EMBEDMENT
2) DESIGN LIFE = 100 YEARS
3) AGGREGATE PARAMETERS:

AGGREGATE TYPE*	UNIT WEIGHT (γ) LB/CF	FRICTION ANGLE (ϕ) DEGREES	COHESION (c) LB/SF
COARSE	110	38	0
FINE	125	34	0
* SEE MSE RETAINING WALLS PROVISION FOR COARSE AND FINE AGGREGATE MATERIAL REQUIREMENTS.			

5) IN-SITU ASSUMED MATERIAL PARAMETERS:

MATERIAL TYPE	UNIT WEIGHT (γ) LB/CF	FRICTION ANGLE (ϕ) DEGREES	COHESION (c) LB/SF
BACKFILL	120	30	0
FOUNDATION	120	30	0

DESIGN RETAINING WALL NO. 14 AND WALL NO. 16 FOR A LIVE LOAD (TRAFFIC) SURCHARGE.

DESIGN REINFORCEMENT CONNECTED TO END BENT CAPS FOR FACTORED LOAD AND LENGTH OF REINFORCEMENT IN ACTIVE ZONE (L_a) SHOWN. CAST REINFORCEMENT CONNECTORS INTO CAP BACKWALL FOR END BENT NO. 1 LOCATED AT STATION 156+53.82 -LDFEB- AND END BENT NO. 2 LOCATED AT STATION 158+69.80 -LDFEB-. MAINTAIN A CLEARANCE OF AT LEAST 3" BETWEEN CONNECTORS AND REINFORCING STEEL IN CAP.

EXISTING OR FUTURE OBSTRUCTIONS SUCH AS FOUNDATIONS, GUARDRAIL, FENCE OR HANDRAIL POSTS, PAVEMENTS, PIPES, INLETS OR UTILITIES MAY INTERFERE WITH REINFORCEMENT FOR RETAINING WALL NO. 14 AND WALL NO. 16.

FOUNDATIONS FOR END BENT NO. 1 LOCATED AT STATION 156+53.82 -LDFEB- AND END BENT NO. 2 LOCATED AT STATION 158+69.80 -LDFEB- WILL INTERFERE WITH REINFORCEMENT FOR RETAINING WALL NO. 14 AND RETAINING WALL NO. 16. SEE "FOUNDATION LAYOUT" SHEET FOR FOUNDATION LOCATIONS.

DO NOT PLACE LEVELING PAD CONCRETE, AGGREGATE OR REINFORCEMENT FOR RETAINING WALL NO. 14 AND RETAINING WALL NO. 16 UNTIL EXCAVATION DIMENSIONS AND FOUNDATION MATERIAL ARE APPROVED.

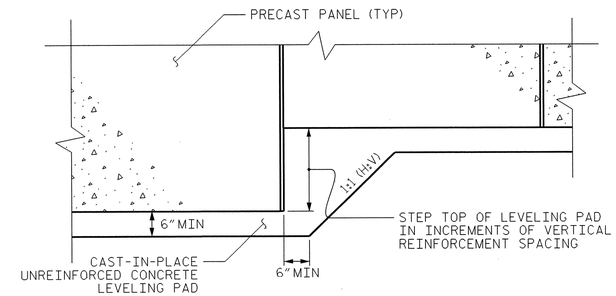

PRECAST CONCRETE PANELS

LEVELING PAD STEP DETAILS

MSE WALL ESTIMATED QUANTITY (SQUARE FOOT)	
MSE RETAINING WALL NO. 14	7,650 SF
MSE RETAINING WALL NO. 16	7,050 SF

PROJECT NO.: U-0071
DURHAM ***COUNTY***
STATION: 157+33.78 -LDFEB- (SITE 10)
SHEET 2 OF 4

GEOTECHNICAL ENGINEERING UNIT
☒ *EASTERN REGIONAL OFFICE*
☐ *WESTERN REGIONAL OFFICE*
☐ *CONTRACT OFFICE*
STATE OF NORTH CAROLINA DEPARTMENT OF TRANSPORTATION RALEIGH

MSE RETAINING WALL NO. 14 & WALL NO. 16 - NOTES & LEVELING PAD STEP DETAILS

REVISIONS						SHEET NO.
NO.	BY	DATE	NO.	BY	DATE	W-29
1	–	–	3	–	–	TOTAL SHEETS
2	–	–	4	–	–	44

PREPARED BY: J. PARK	DATE: 11 / 2013
REVIEWED BY: J. BATTS	DATE: 11 / 2013

GEOTECHNICAL ENGINEER	ENGINEER
NORTH CAROLINA PROFESSIONAL SEAL 32171 ENGINEER T. YOUNG PARK	
SIGNATURE DATE	SIGNATURE DATE

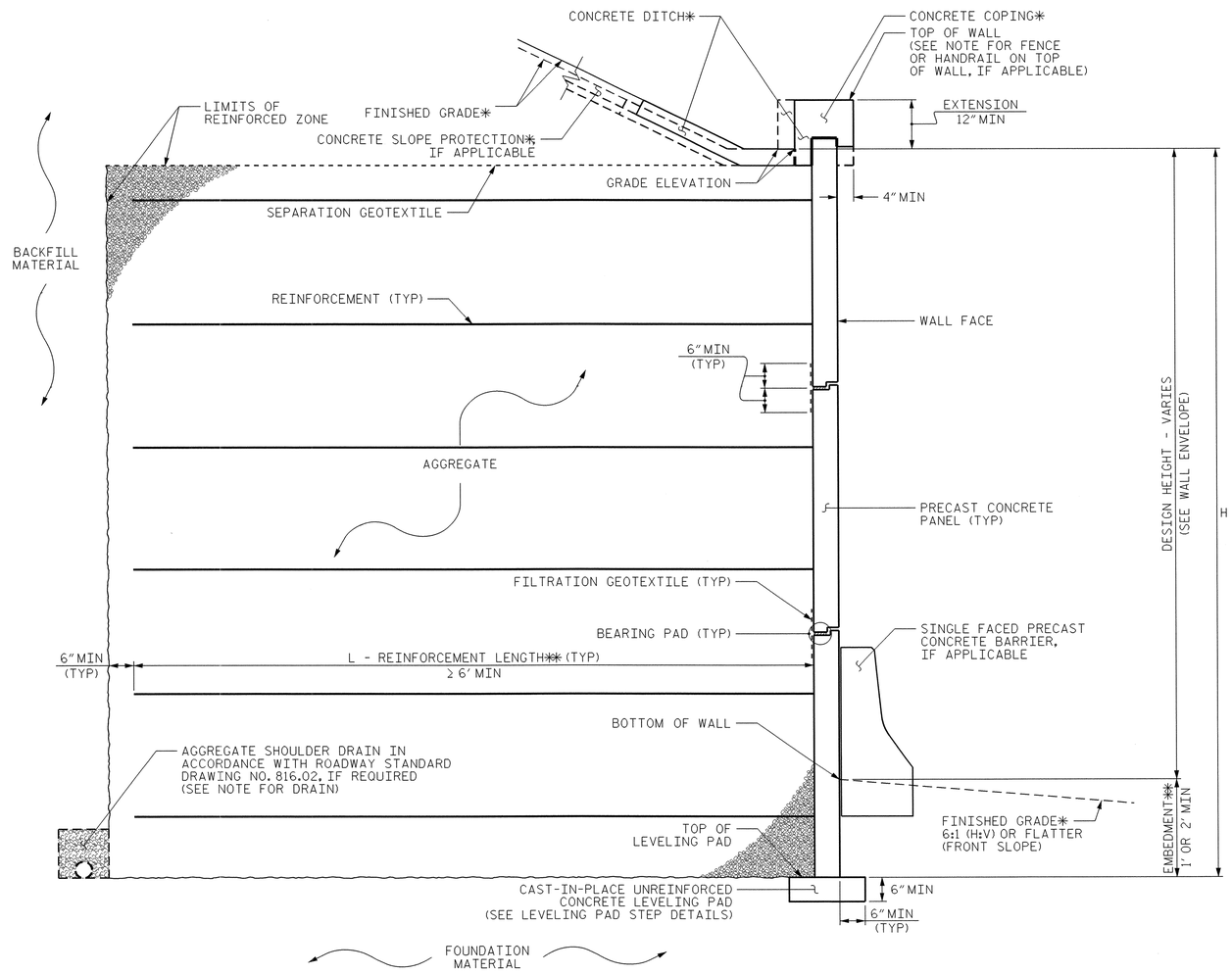

MSE WALL WITH PRECAST PANELS - TYPICAL SECTION

*SEE COPING DETAILS AND PLANS FOR FINISHED GRADE.
**SEE MSE RETAINING WALLS PROVISION FOR EMBEDMENT AND REINFORCEMENT LENGTH REQUIREMENTS.

FROM -WALL 14- STA. 10+00.00 TO -WALL 14- STA. 11+37.00
FROM -WALL 14- STA. 13+09.50 TO -WALL 14- STA. 13+68.50
FROM -WALL 16- STA. 10+00.00 TO -WALL 16- STA. 10+57.00
FROM -WALL 16- STA. 12+85.20 TO -WALL 16- STA. 12+95.20

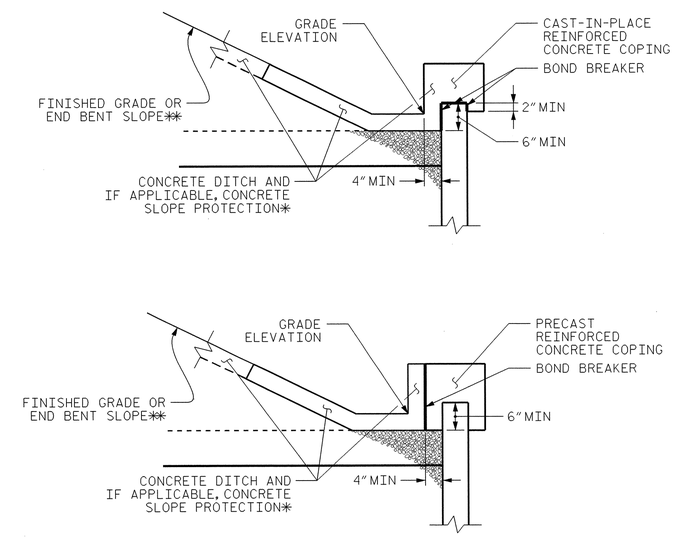

COPING DETAILS

*SEE CONCRETE DITCH BEHIND WALL DETAILS.
**SEE PLANS FOR FINISHED GRADE OR END BENT SLOPE DETAILS.

PROJECT NO.: U-0071
DURHAM ***COUNTY***
STATION: 157+33.78 -LDFEB- (SITE 10)

SHEET 3 OF 4

GEOTECHNICAL ENGINEERING UNIT

☒ ***EASTERN REGIONAL OFFICE***
☐ ***WESTERN REGIONAL OFFICE***
☐ ***CONTRACT OFFICE***

STATE OF NORTH CAROLINA
DEPARTMENT OF TRANSPORTATION
RALEIGH

MSE RETAINING WALL NO. 14 & WALL NO. 16 - TYPICAL SECTION

REVISIONS						SHEET NO.
NO.	BY	DATE	NO.	BY	DATE	W-30
1	–	–	3	–	–	TOTAL SHEETS
2	–	–	4	–	–	44

PREPARED BY: J. PARK	DATE: 11 / 2013
REVIEWED BY: J. BATTS	DATE: 11 / 2013

GEOTECHNICAL ENGINEER	ENGINEER
SIGNATURE DATE	SIGNATURE DATE

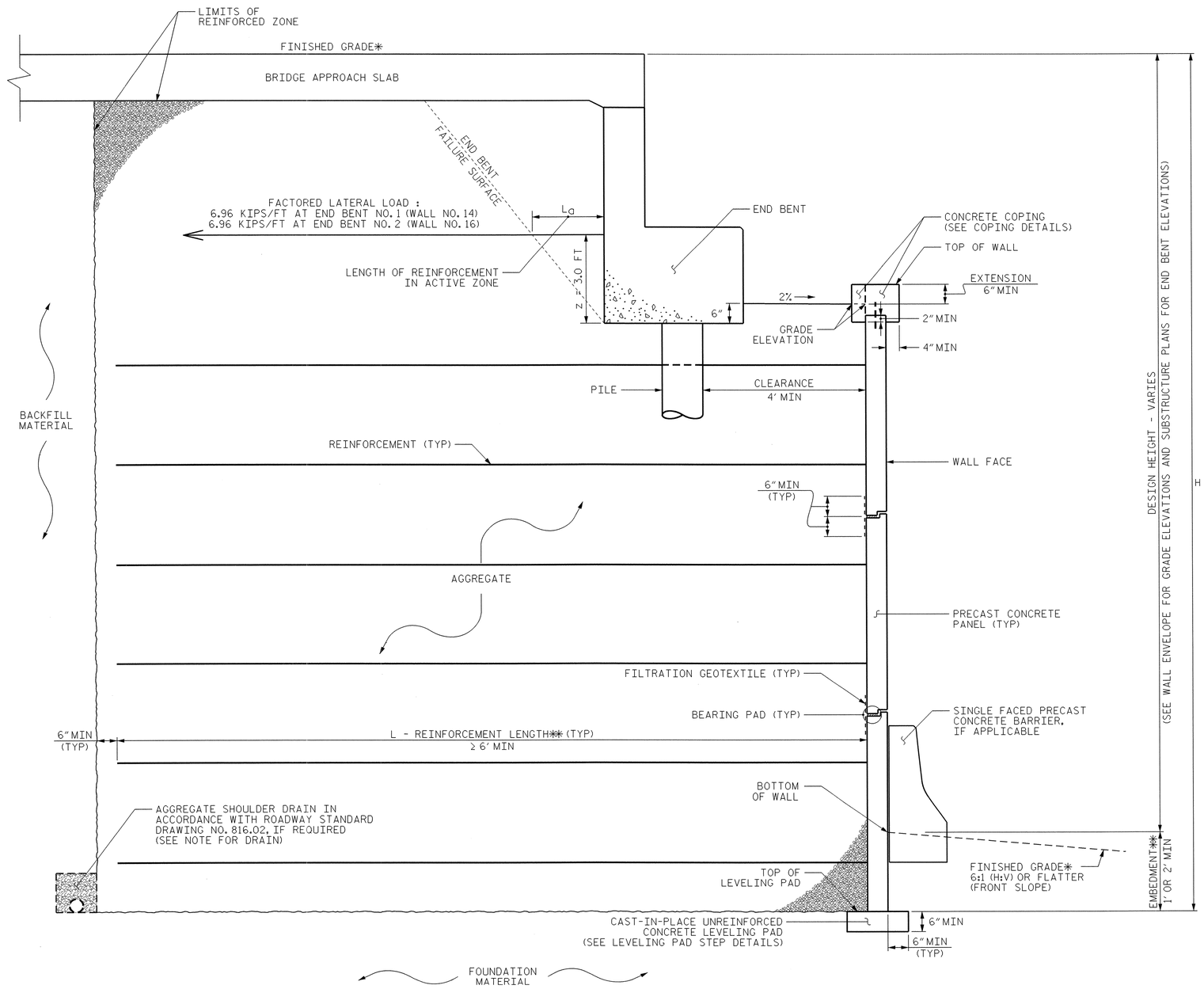

MSE ABUTMENT WALL WITH PRECAST PANELS - TYPICAL SECTION

*SEE ROADWAY PLANS FOR FINISHED GRADE DETAILS.
**SEE MSE RETAINING WALLS PROVISION FOR EMBEDMENT AND REINFORCEMENT LENGTH REQUIREMENTS.

FROM -WALL 14- STA. 11+37.00 TO -WALL 14- STA. 13+09.50
FROM -WALL 16- STA. 10+57.00 TO -WALL 16- STA. 12+85.20

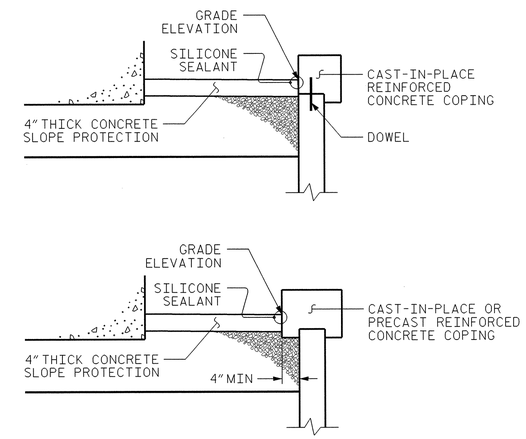

COPING DETAILS

AT THE CONTRACTOR'S OPTION, CONNECT COPING TO PANELS WITH DOWELS OR EXTEND COPING DOWN BACK OF PANELS.

PROJECT NO.: U-0071
DURHAM ***COUNTY***
STATION: 157+33.78 -LDFEB- (SITE 10)
SHEET 4 OF 4

PREPARED BY: J. PARK	DATE: 11 / 2013
REVIEWED BY: J. BATTS	DATE: 11 / 2013

GEOTECHNICAL ENGINEERING UNIT

- [X] ***EASTERN REGIONAL OFFICE***
- [ ] ***WESTERN REGIONAL OFFICE***
- [ ] ***CONTRACT OFFICE***

STATE OF NORTH CAROLINA
DEPARTMENT OF TRANSPORTATION
RALEIGH

MSE RETAINING WALL NO. 14 & WALL NO. 16 - TYPICAL SECTION

REVISIONS

NO.	BY	DATE	NO.	BY	DATE
1	-	-	3	-	-
2	-	-	4	-	-

SHEET NO. W-31
TOTAL SHEETS 44

GEJ266089 1/22/2014 U0071_GEO_RWALL_14 & 16_Plans jpark RD-Oce860-34

GEOTECHNICAL ENGINEER	ENGINEER
NORTH CAROLINA PROFESSIONAL SEAL 32171 ENGINEER JINYOUNG PARK	
SIGNATURE DATE	SIGNATURE DATE

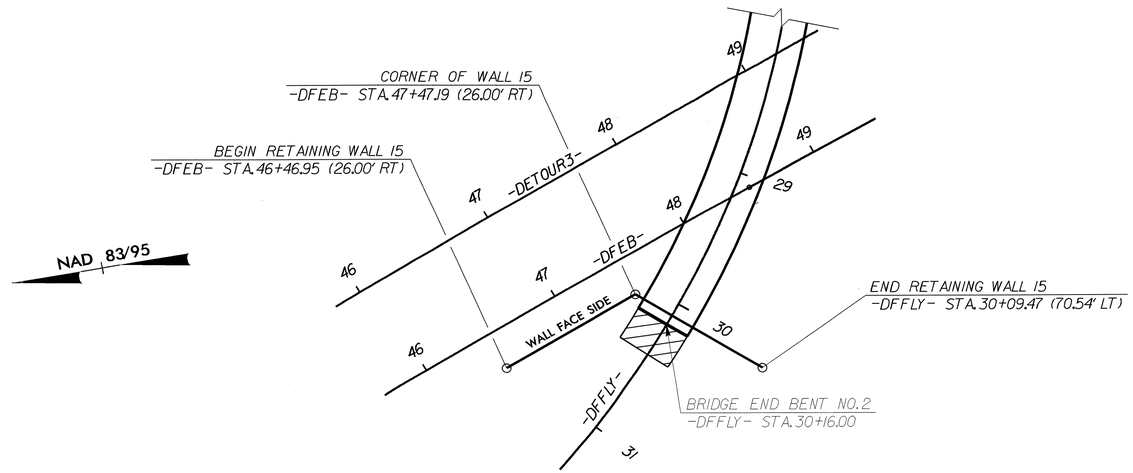

PLAN VIEW FOR RETAINING WALL NO. 15

(N.T.S.)

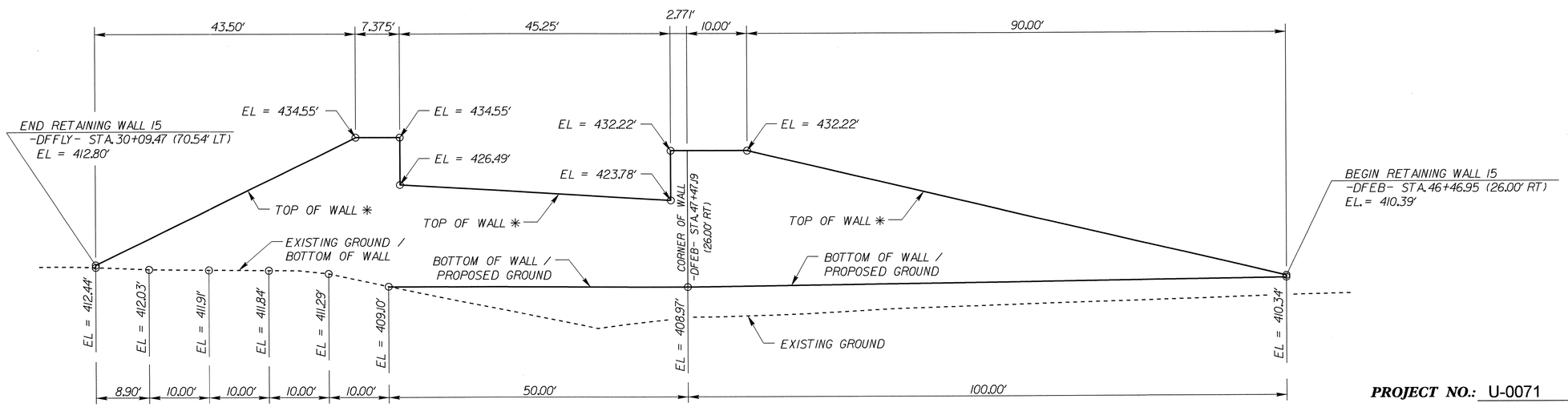

RETAINING WALL NO. 15 - EXPOSED WALL FACE ENVELOPE (N.T.S.)

✱ WALL ENVELOPE IS BASED ON TOP OF WALL ELEVATIONS

PROJECT NO.: U-0071

DURHAM ***COUNTY***

STATION: 46+50.00 -DFEB-

SHEET 1 OF 4

PREPARED BY: J. PARK	DATE: 01 / 2014
REVIEWED BY: J. BATTS	DATE: 01 / 2014

GEOTECHNICAL ENGINEERING UNIT

☒ ***EASTERN REGIONAL OFFICE***

☐ ***WESTERN REGIONAL OFFICE***

☐ ***CONTRACT OFFICE***

STATE OF NORTH CAROLINA
DEPARTMENT OF TRANSPORTATION
RALEIGH

RETAINING WALL NO. 15 -
PLAN VIEW & WALL ENVELOPE

REVISIONS

NO.	BY	DATE	NO.	BY	DATE
1	-	-	3	-	-
2	-	-	4	-	-

SHEET NO. W-32

TOTAL SHEETS 44

GEOTECHNICAL ENGINEER

NORTH CAROLINA PROFESSIONAL SEAL 32171 ENGINEER JINYOUNG PARK

SIGNATURE DATE

ENGINEER

SIGNATURE DATE

NOTES:

FOR MECHANICALLY STABILIZED EARTH (MSE) RETAINING WALLS, SEE MECHANICALLY STABILIZED EARTH RETAINING WALLS PROVISION.

FOR SINGLE FACED PRECAST CONCRETE BARRIER, SEE ROADWAY PLANS AND SECTION 857 OF THE STANDARD SPECIFICATIONS.

USE AN MSE WALL SYSTEM WITH PRECAST CONCRETE PANELS THAT MEET SECTION 1077 OF THE STANDARD SPECIFICATIONS FOR RETAINING WALL NO. 15.

A DRAIN IS REQUIRED FOR RETAINING WALL NO. 15.

BEFORE BEGINNING MSE WALL DESIGN FOR RETAINING WALL NO. 15, SURVEY WALL LOCATION AND SUBMIT A REVISED WALL PROFILE VIEW (WALL ENVELOPE) FOR REVIEW. DO NOT START WALL DESIGN OR CONSTRUCTION UNTIL THE REVISED WALL ENVELOPE IS ACCEPTED.

DESIGN RETAINING WALL NO. 15 FOR THE FOLLOWING:
1) H = DESIGN HEIGHT + EMBEDMENT
2) DESIGN LIFE = 100 YEARS
3) MINIMUM REINFORCEMENT LENGTH (L) = 0.8 X WALL HEIGHT (H)
4) AGGREGATE PARAMETERS:

AGGREGATE TYPE*	UNIT WEIGHT (γ) LB/CF	FRICTION ANGLE (ϕ) DEGREES	COHESION (c) LB/SF
COARSE	110	38	0
FINE	125	34	0
* SEE MSE RETAINING WALLS PROVISION FOR COARSE AND FINE AGGREGATE MATERIAL REQUIREMENTS.			

5) IN-SITU ASSUMED MATERIAL PARAMETERS:

MATERIAL TYPE	UNIT WEIGHT (γ) LB/CF	FRICTION ANGLE (ϕ) DEGREES	COHESION (c) LB/SF
BACKFILL	120	30	0
FOUNDATION	120	30	0

DESIGN RETAINING WALL NO. 15 FOR A LIVE LOAD (TRAFFIC) SURCHARGE.

DESIGN REINFORCEMENT CONNECTED TO END BENT CAPS FOR FACTORED LOAD AND LENGTH OF REINFORCEMENT IN ACTIVE ZONE (L_a) SHOWN. CAST REINFORCEMENT CONNECTORS INTO CAP BACKWALL FOR END BENT NO. 2 LOCATED AT STATION 30+16.00 -DFFLY-. MAINTAIN A CLEARANCE OF AT LEAST 3" BETWEEN CONNECTORS AND REINFORCING STEEL IN CAP.

EXISTING OR FUTURE OBSTRUCTIONS SUCH AS FOUNDATIONS, GUARDRAIL, FENCE OR HANDRAIL POSTS, PAVEMENTS, PIPES, INLETS OR UTILITIES MAY INTERFERE WITH REINFORCEMENT FOR RETAINING WALL NO. 15.

FOUNDATIONS FOR END BENT NO. 2 LOCATED AT STATION 30+16.00 -DFFLY- WILL INTERFERE WITH REINFORCEMENT FOR RETAINING WALL NO. 15. SEE "FOUNDATION LAYOUT" SHEET FOR FOUNDATION LOCATIONS.

DO NOT PLACE LEVELING PAD CONCRETE, AGGREGATE OR REINFORCEMENT FOR RETAINING WALL NO. 15 UNTIL EXCAVATION DIMENSIONS AND FOUNDATION MATERIAL ARE APPROVED.

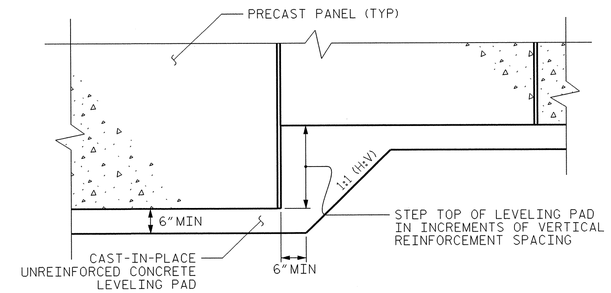

PRECAST CONCRETE PANELS

LEVELING PAD STEP DETAILS

MSE WALL ESTIMATED QUANTITY (SQUARE FOOT)	
MSE RETAINING WALL NO. 15	2,800 SF

PROJECT NO.: U-0071
DURHAM ***COUNTY***
STATION: 46+50.00 -DFEB-
SHEET 2 OF 4

GEOTECHNICAL ENGINEERING UNIT

☒ *EASTERN REGIONAL OFFICE*
☐ *WESTERN REGIONAL OFFICE*
☐ *CONTRACT OFFICE*

STATE OF NORTH CAROLINA
DEPARTMENT OF TRANSPORTATION
RALEIGH

RETAINING WALL NO. 15 - NOTES & LEVELING PAD STEP DETAILS

REVISIONS						SHEET NO.
NO.	BY	DATE	NO.	BY	DATE	W-33
1	-	-	3	-	-	TOTAL SHEETS
2	-	-	4	-	-	44

PREPARED BY: J. PARK	DATE: 01 / 2014
REVIEWED BY: J. BATTS	DATE: 01 / 2014

GEOTECHNICAL ENGINEER	ENGINEER
NORTH CAROLINA PROFESSIONAL SEAL 32171 ENGINEER IN YOUNG PARK	
SIGNATURE DATE	SIGNATURE DATE

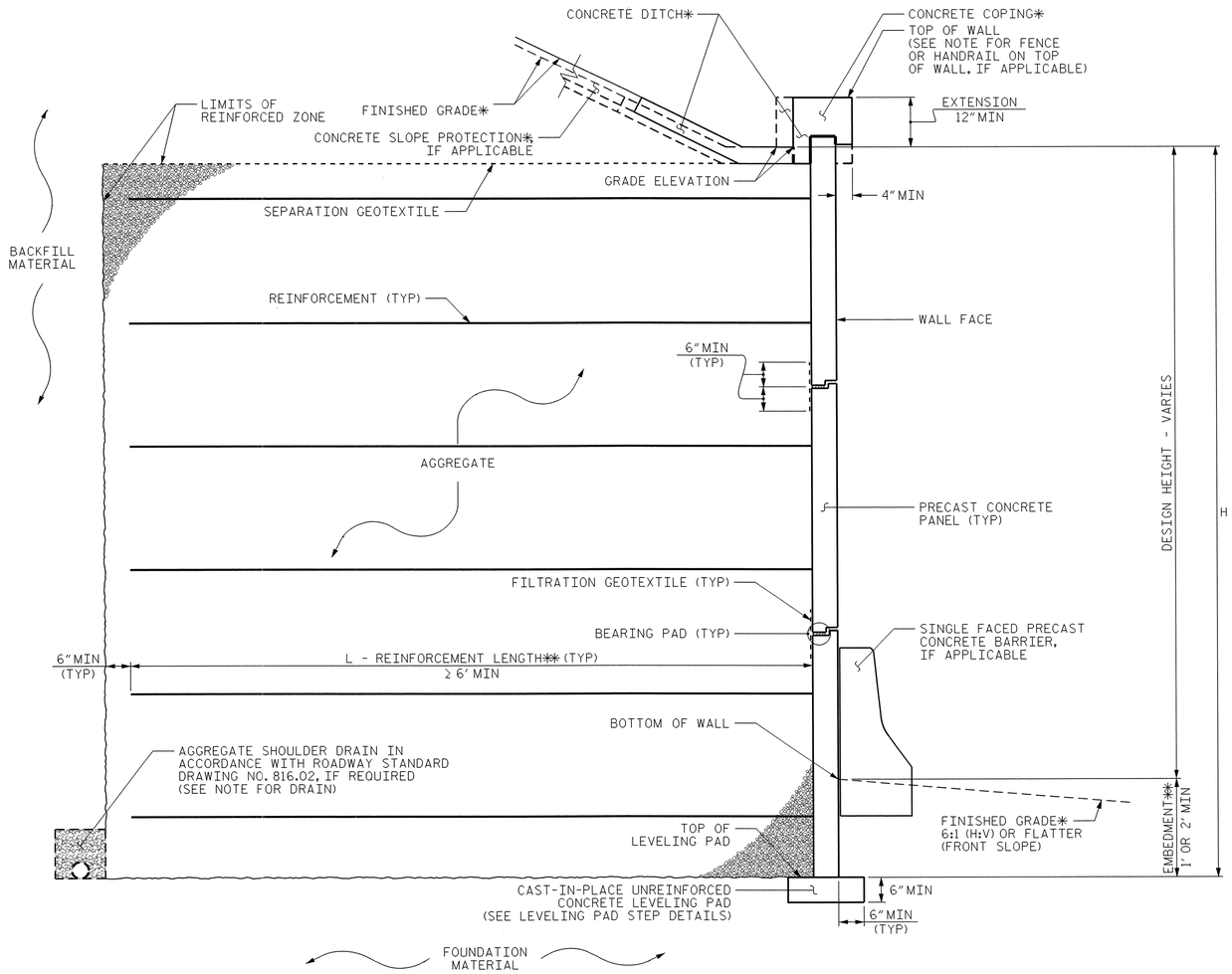

MSE WALL WITH PRECAST PANELS - TYPICAL SECTION

*SEE COPING DETAILS AND PLANS FOR FINISHED GRADE.
**SEE MSE RETAINING WALLS PROVISION FOR EMBEDMENT AND REINFORCEMENT LENGTH REQUIREMENTS.

FROM -DFEB- STA. 46+46.95 (26.00' RT) TO -DFFLY- STA. 30+08.45± (25.58'± RT)
FROM -DFFLY- STA. 30+08.97± (19.66'± LT) TO -DFFLY- STA. 30+09.47 (70.54' LT)

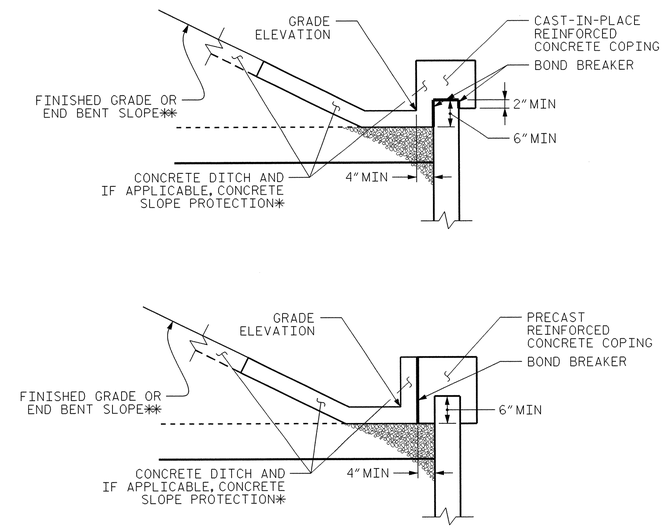

COPING DETAILS

*SEE CONCRETE DITCH BEHIND WALL DETAILS.
**SEE PLANS FOR FINISHED GRADE OR END BENT SLOPE DETAILS.

PREPARED BY: J. PARK	DATE: 01 / 2014		
REVIEWED BY: J. BATTS	DATE: 01 / 2014		

PROJECT NO.: U-0071
DURHAM **COUNTY**
STATION: 46+50.00 -DFEB-
SHEET 3 OF 4

GEOTECHNICAL ENGINEERING UNIT

☒ *EASTERN REGIONAL OFFICE*
☐ *WESTERN REGIONAL OFFICE*
☐ *CONTRACT OFFICE*

STATE OF NORTH CAROLINA
DEPARTMENT OF TRANSPORTATION
RALEIGH

RETAINING WALL NO. 15 - TYPICAL SECTION

REVISIONS						SHEET NO.
NO.	BY	DATE	NO.	BY	DATE	W-34
1			3			TOTAL SHEETS
2			4			44

GEJ266089 1/22/2014 U0071_GEO_RWALL_15_Plans jpark RD-Oce860-34

GEOTECHNICAL ENGINEER	ENGINEER
NORTH CAROLINA PROFESSIONAL SEAL 32171 ENGINEER JIN YOUNG PARK	
SIGNATURE DATE	SIGNATURE DATE

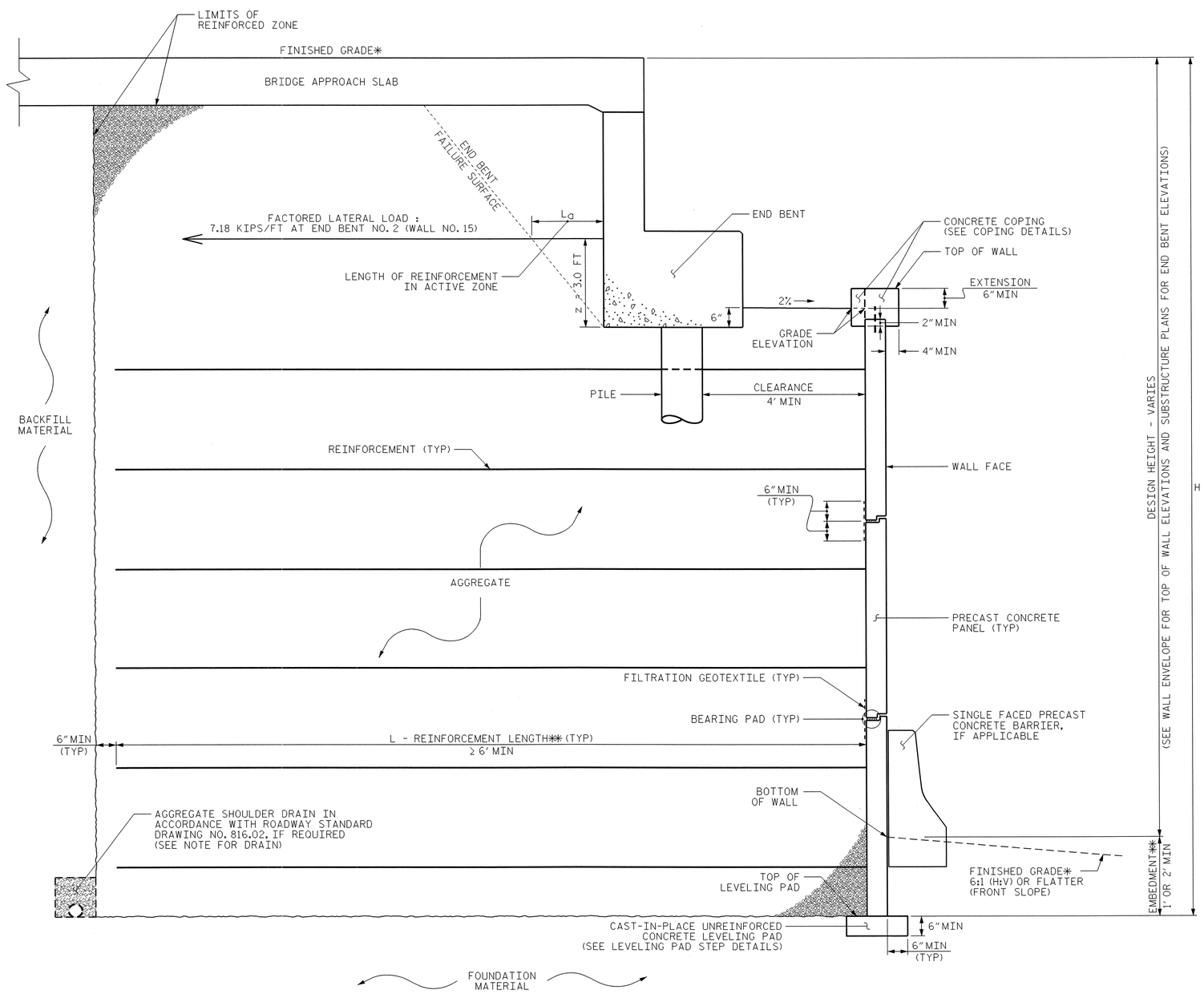

MSE ABUTMENT WALL WITH PRECAST PANELS - TYPICAL SECTION

*SEE ROADWAY PLANS FOR FINISHED GRADE DETAILS.
**SEE MSE RETAINING WALLS PROVISION FOR EMBEDMENT AND REINFORCEMENT LENGTH REQUIREMENTS.

FROM -DFFLY- STA. 30+08.45± (25.58'± RT) TO -DFFLY- STA. 30+08.97± (19.66'± LT)

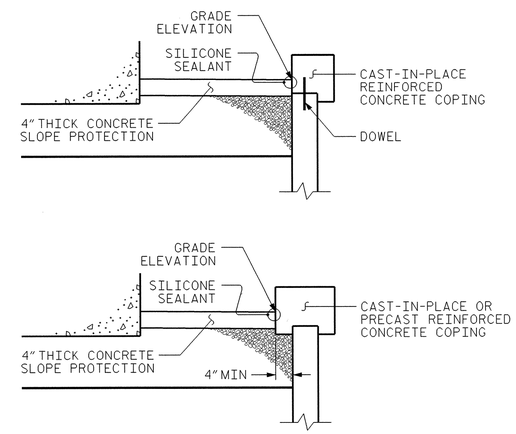

COPING DETAILS

AT THE CONTRACTOR'S OPTION, CONNECT COPING TO PANELS WITH DOWELS OR EXTEND COPING DOWN BACK OF PANELS.

PROJECT NO.: U-0071
DURHAM ***COUNTY***
STATION: 46+50.00 -DFEB-
SHEET 4 OF 4

PREPARED BY: J. PARK	DATE: 01 / 2014
REVIEWED BY: J. BATTS	DATE: 01 / 2014

GEOTECHNICAL ENGINEERING UNIT

[X] ***EASTERN REGIONAL OFFICE***
[ ] ***WESTERN REGIONAL OFFICE***
[ ] ***CONTRACT OFFICE***

STATE OF NORTH CAROLINA
DEPARTMENT OF TRANSPORTATION
RALEIGH

RETAINING WALL NO. 15 - TYPICAL SECTION

REVISIONS

NO.	BY	DATE	NO.	BY	DATE
1	-	-	3	-	-
2	-	-	4	-	-

SHEET NO. U-35
TOTAL SHEETS 44

GEJ266089 1/22/2014 U0071_GEO_RWALL_15_Plans jpark RD-Oce860-34

GEOTECHNICAL ENGINEER	ENGINEER
NORTH CAROLINA PROFESSIONAL SEAL 32171 ENGINEER JINYOUNG PARK	
SIGNATURE DATE	SIGNATURE DATE

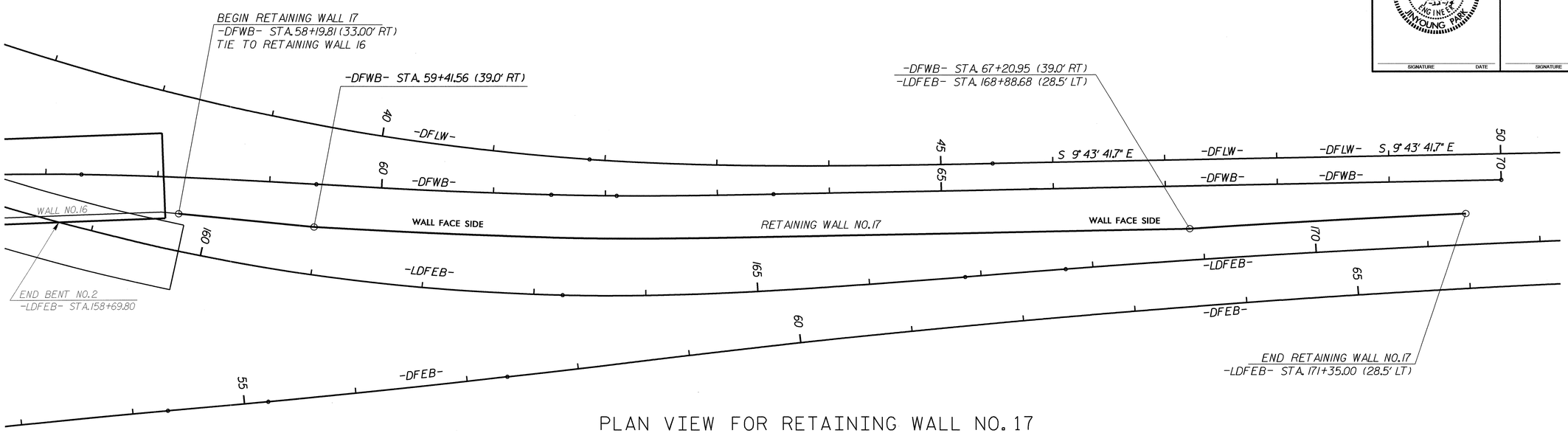

PLAN VIEW FOR RETAINING WALL NO. 17

(N.T.S.)

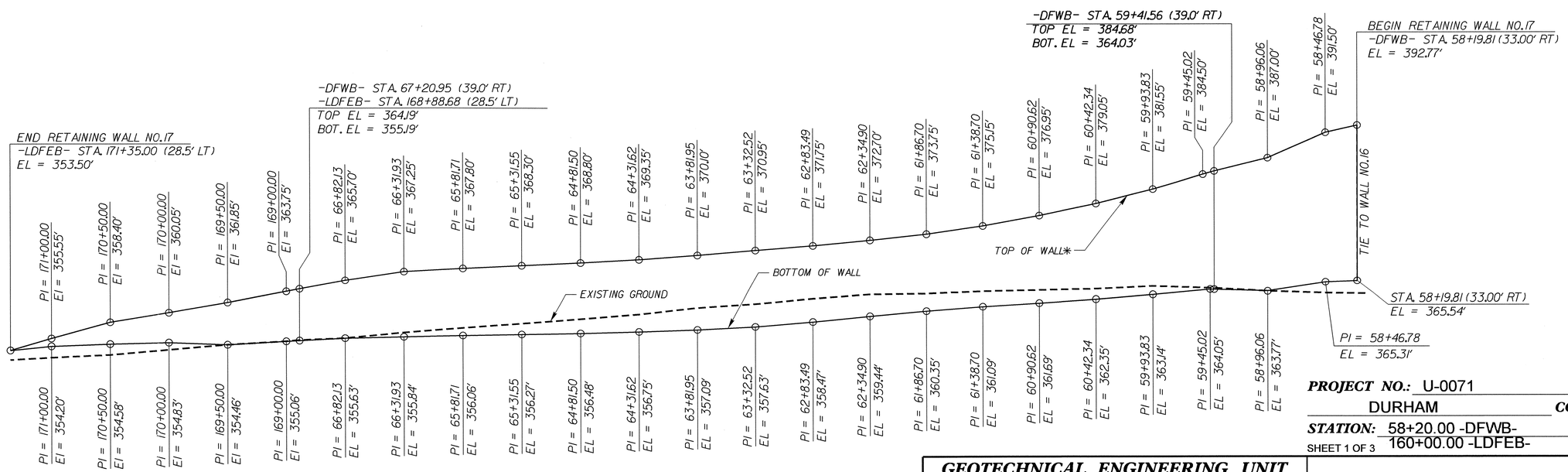

RETAINING WALL NO. 17 - EXPOSED WALL FACE ENVELOPE (N.T.S.)

* WALL ENVELOPE IS BASED ON TOP OF WALL ELEVATIONS

PROJECT NO.: U-0071

DURHAM **COUNTY**

STATION: 58+20.00 -DFWB-
160+00.00 -LDFEB-

SHEET 1 OF 3

PREPARED BY: J. PARK	DATE: 01 / 2014
REVIEWED BY: J. BATTS	DATE: 01 / 2014

GEOTECHNICAL ENGINEERING UNIT

- [X] EASTERN REGIONAL OFFICE
- [ ] WESTERN REGIONAL OFFICE
- [ ] CONTRACT OFFICE

STATE OF NORTH CAROLINA
DEPARTMENT OF TRANSPORTATION
RALEIGH

RETAINING WALL NO. 17 -
PLAN VIEW AND WALL ENVELOPE

REVISIONS						SHEET NO.
NO.	BY	DATE	NO.	BY	DATE	W-36
1			3			TOTAL SHEETS
2			4			44

GEJ266089 1/22/2014 U0071_GEO_RWALL_17_Plans jpark RD-Oce860-34

GEOTECHNICAL ENGINEER

NORTH CAROLINA PROFESSIONAL SEAL 32171 ENGINEER JINYOUNG PARK

SIGNATURE DATE

ENGINEER

SIGNATURE DATE

NOTES:

FOR MECHANICALLY STABILIZED EARTH (MSE) RETAINING WALLS, SEE MECHANICALLY STABILIZED EARTH RETAINING WALLS PROVISION.

USE AN MSE WALL SYSTEM WITH PRECAST CONCRETE PANELS THAT MEET SECTION 1077 OF THE STANDARD SPECIFICATIONS FOR RETAINING WALL NO. 17.

A DRAIN IS REQUIRED FOR RETAINING WALL NO. 17.

BEFORE BEGINNING MSE WALL DESIGN FOR RETAINING WALL NO. 17, SURVEY WALL LOCATION AND SUBMIT A REVISED WALL PROFILE VIEW (WALL ENVELOPE) FOR REVIEW. DO NOT START WALL DESIGN OR CONSTRUCTION UNTIL THE REVISED WALL ENVELOPE IS ACCEPTED.

DESIGN RETAINING WALL NO. 17 FOR THE FOLLOWING:
1) H = DESIGN HEIGHT + EMBEDMENT
2) DESIGN LIFE = 100 YEARS
3) MINIMUM REINFORCEMENT LENGTH (L) = 0.95 X WALL HEIGHT (H)
4) AGGREGATE PARAMETERS:

AGGREGATE TYPE*	UNIT WEIGHT (γ) LB/CF	FRICTION ANGLE (ϕ) DEGREES	COHESION (c) LB/SF
COARSE	110	38	0
FINE	125	34	0
* SEE MSE RETAINING WALLS PROVISION FOR COARSE AND FINE AGGREGATE MATERIAL REQUIREMENTS.			

5) IN-SITU ASSUMED MATERIAL PARAMETERS:

MATERIAL TYPE	UNIT WEIGHT (γ) LB/CF	FRICTION ANGLE (ϕ) DEGREES	COHESION (c) LB/SF
BACKFILL	120	30	0
FOUNDATION	120	30	0

DESIGN RETAINING WALL NO. 17 FOR A LIVE LOAD (TRAFFIC) SURCHARGE.

EXISTING OR FUTURE OBSTRUCTIONS SUCH AS FOUNDATIONS, GUARDRAIL, FENCE OR HANDRAIL POSTS, PAVEMENTS, PIPES, INLETS OR UTILITIES MAY INTERFERE WITH REINFORCEMENT FOR RETAINING WALL NO. 17.

DO NOT PLACE LEVELING PAD CONCRETE, AGGREGATE OR REINFORCEMENT FOR RETAINING WALL NO. 17 UNTIL EXCAVATION DIMENSIONS AND FOUNDATION MATERIAL ARE APPROVED.

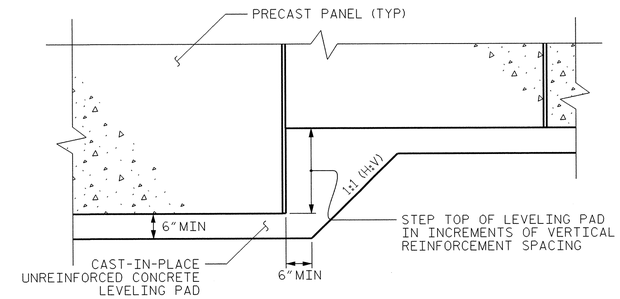

PRECAST CONCRETE PANELS

LEVELING PAD STEP DETAILS

MSE WALL ESTIMATED QUANTITY (SQUARE FOOT)	
MSE RETAINING WALL NO. 17	14,700 SF

PROJECT NO.: U-0071

DURHAM ***COUNTY***

STATION: 58+20.00 -DFWB-
160+00.00 -LDFEB-

SHEET 2 OF 3

GEOTECHNICAL ENGINEERING UNIT

☒ ***EASTERN REGIONAL OFFICE***
☐ ***WESTERN REGIONAL OFFICE***
☐ ***CONTRACT OFFICE***

STATE OF NORTH CAROLINA
DEPARTMENT OF TRANSPORTATION
RALEIGH

RETAINING WALL NO. 17 -
PLAN VIEW AND WALL ENVELOPE

REVISIONS

NO.	BY	DATE	NO.	BY	DATE
1	-	-	3	-	-
2	-	-	4	-	-

SHEET NO. W-37
TOTAL SHEETS 44

PREPARED BY: J. PARK	DATE: 01 / 2014
REVIEWED BY: J. BATTS	DATE: 01 / 2014

GEOTECHNICAL ENGINEER	ENGINEER
NORTH CAROLINA PROFESSIONAL SEAL 32171 ENGINEER JINOUNG PARK	
SIGNATURE DATE	SIGNATURE DATE

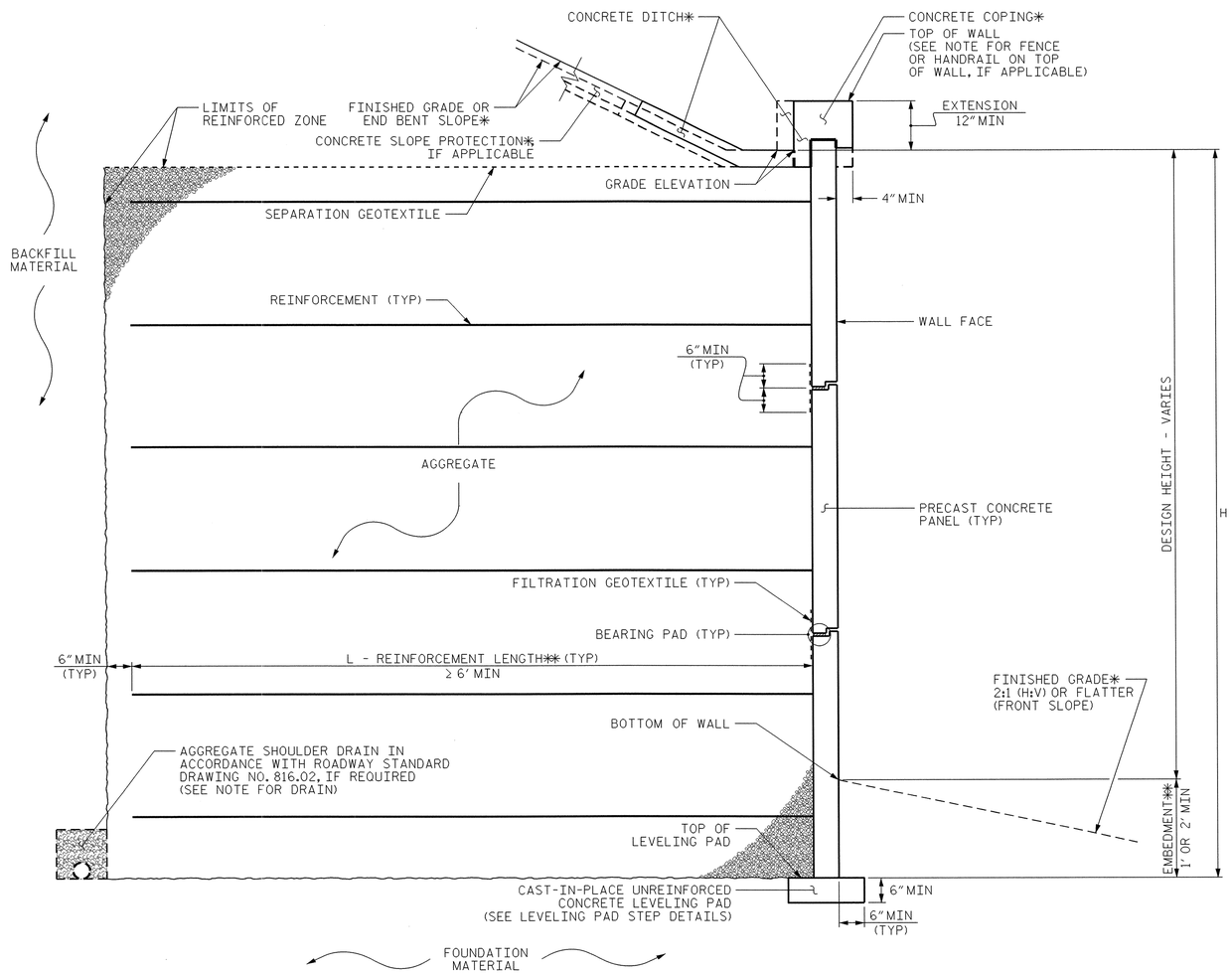

MSE WALL WITH PRECAST PANELS - TYPICAL SECTION

*SEE COPING DETAILS AND PLANS FOR FINISHED GRADE OR END BENT SLOPE DETAILS.
**SEE MSE RETAINING WALLS PROVISION FOR EMBEDMENT AND REINFORCEMENT LENGTH REQUIREMENTS.

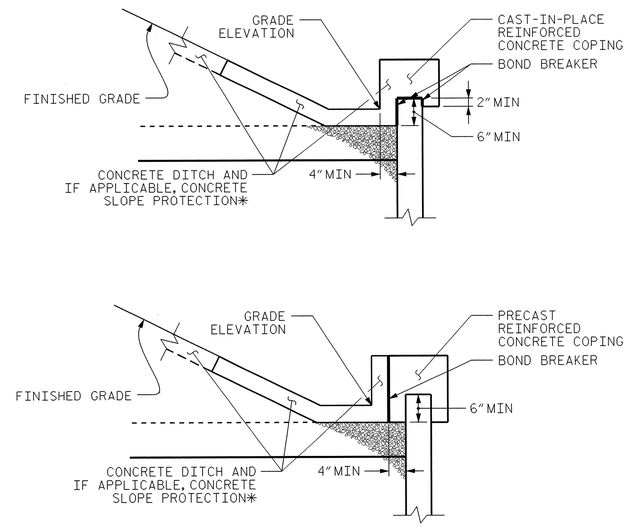

COPING DETAILS

*SEE CONCRETE DITCH BEHIND WALL DETAILS.
**SEE PLANS FOR FINISHED GRADE.

PROJECT NO.: U-0071
DURHAM **COUNTY**
STATION: 58+20.00 -DFWB-
160+00.00 -LDFEB-
SHEET 3 OF 3

GEOTECHNICAL ENGINEERING UNIT

☒ EASTERN REGIONAL OFFICE
☐ WESTERN REGIONAL OFFICE
☐ CONTRACT OFFICE

STATE OF NORTH CAROLINA DEPARTMENT OF TRANSPORTATION RALEIGH

RETAINING WALL NO. 17 - TYPICAL SECTION

REVISIONS							SHEET NO.
NO.	BY	DATE	NO.	BY	DATE		W-38
1	–	–	3	–	–		TOTAL SHEETS
2	–	–	4	–	–		44

PREPARED BY: J. PARK	DATE: 01 / 2014
REVIEWED BY: J. BATTS	DATE: 01 / 2014

GEJ266089 1/22/2014 U0071_GEO_RWALL_17_Plans jpark RD-Oce860-34

GEOTECHNICAL ENGINEER

NORTH CAROLINA PROFESSIONAL SEAL 32477 ENGINEER JINYOUNG PARK

SIGNATURE DATE

ENGINEER

SIGNATURE DATE

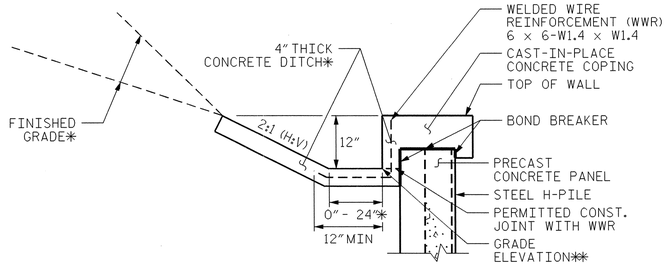

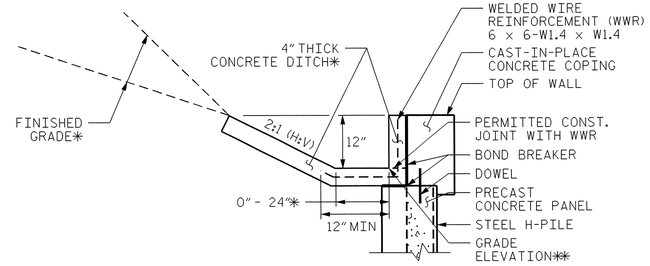

SOLDIER PILE WALL WITH PRECAST PANELS

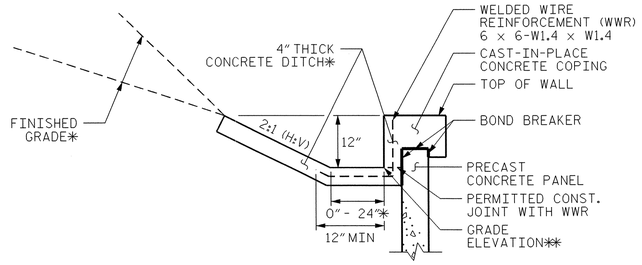

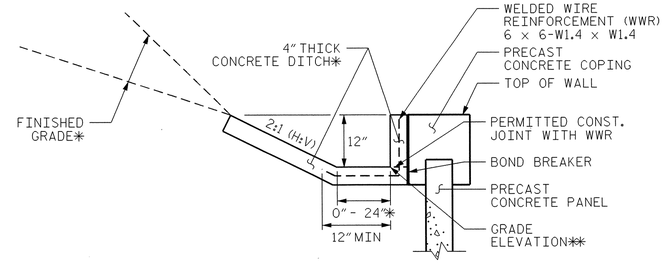

MSE WALL WITH PRECAST PANELS

CONCRETE DITCH BEHIND WALL WITH CONCRETE COPING

*SEE ROADWAY PLANS FOR FINISHED GRADE AND DITCH DETAILS.
**SEE WALL ENVELOPE FOR GRADE ELEVATIONS.

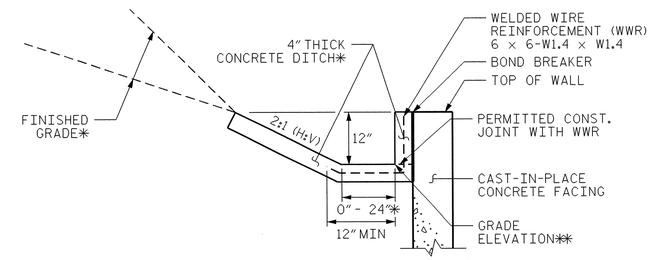

CONCRETE DITCH BEHIND WALL WITH CONCRETE FACING

*SEE ROADWAY PLANS FOR FINISHED GRADE AND DITCH DETAILS.
**SEE WALL ENVELOPE FOR GRADE ELEVATIONS.

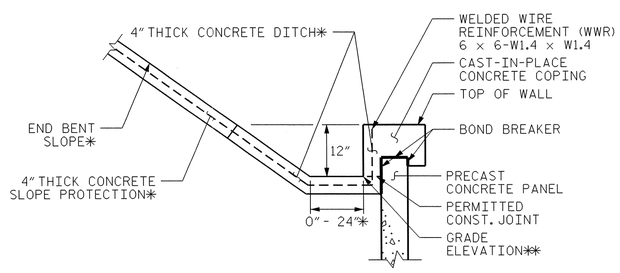

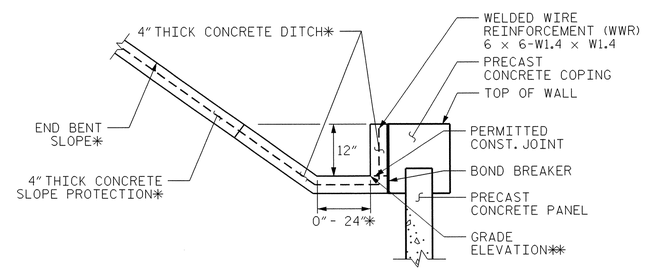

MSE WALL WITH PRECAST PANELS

CONCRETE DITCH BEHIND WALL WITH CONCRETE SLOPE PROTECTION AND COPING

*SEE PLANS FOR END BENT SLOPE AND DITCH DETAILS.
**SEE WALL ENVELOPE FOR GRADE ELEVATIONS.

FOR CONCRETE DITCHES, SEE SECTION 850 OF THE STANDARD SPECIFICATIONS.
FOR CONCRETE SLOPE PROTECTION, SEE SECTION 462 OF THE STANDARD SPECIFICATIONS.

PROJECT NO.: U-0071
DURHAM ***COUNTY***
STATION: VARIES
SHEET 1 OF 1

PREPARED BY: J. PARK	DATE: 01 /2014		
REVIEWED BY: J. BATTS	DATE: 01 /2014		

GEOTECHNICAL ENGINEERING UNIT

STATE OF NORTH CAROLINA DEPARTMENT OF TRANSPORTATION

☒ ***EASTERN REGIONAL OFFICE***
☐ ***WESTERN REGIONAL OFFICE***
☐ ***CONTRACT OFFICE***

STATE OF NORTH CAROLINA
DEPARTMENT OF TRANSPORTATION
RALEIGH

CONCRETE DITCH BEHIND WALL DETAILS

REVISIONS

NO.	BY	DATE	NO.	BY	DATE
1			3		
2			4		

SHEET NO. W-39
TOTAL SHEETS 44

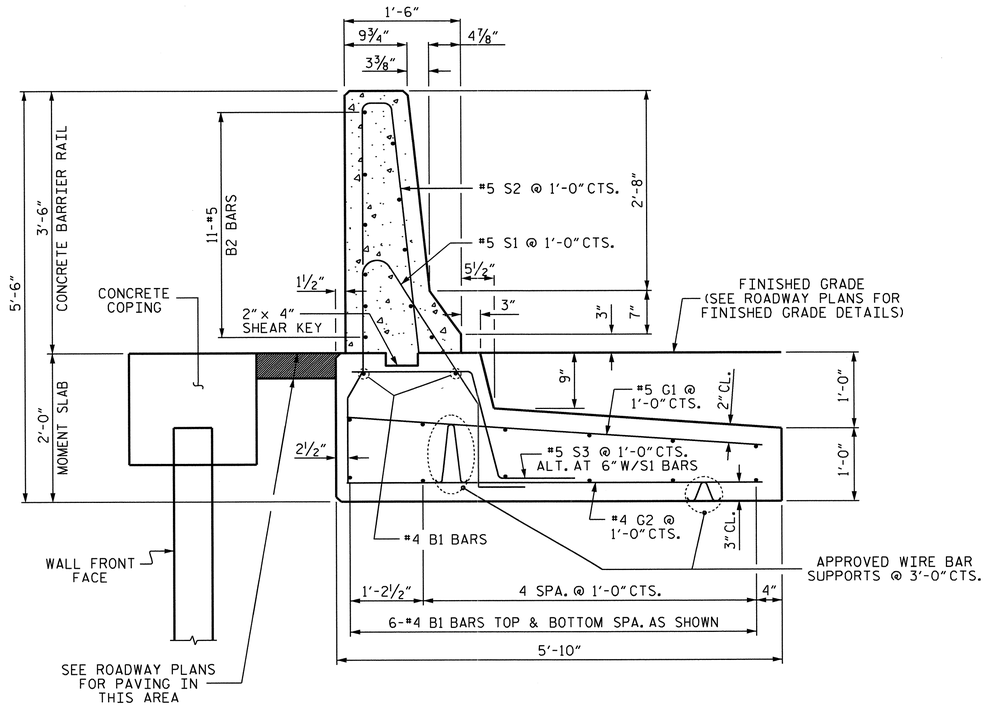

CONCRETE BARRIER RAIL WITH MOMENT SLAB

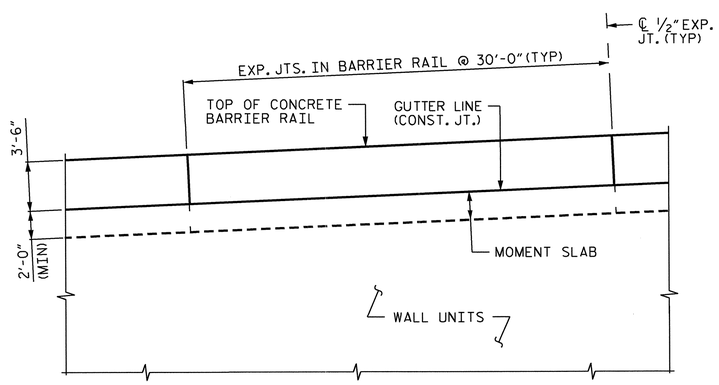

CONCRETE BARRIER RAIL WITH MOMENT SLAB - PARTIAL ELEVATION

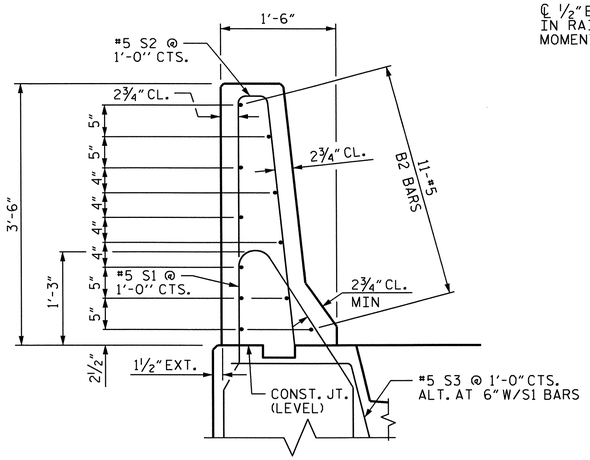

SECTION THRU RAIL

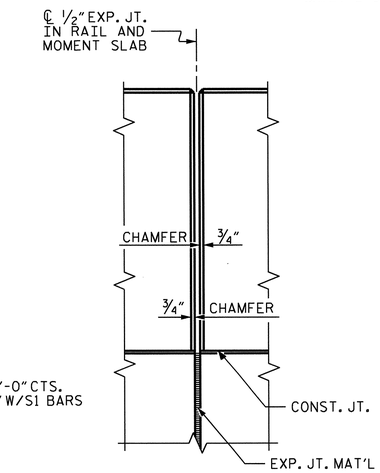

ELEV. @ EXP. JOINTS

BARRIER RAIL DETAILS

NOTES:

FOR CONCRETE BARRIER RAIL WITH MOMENT SLAB, SEE CONCRETE BARRIER RAIL WITH MOMENT SLAB PROVISION.

CONCRETE BARRIER RAIL WITH MOMENT SLAB SHALL BE A MINIMUM OF 15' IN LENGTH.

EXPANSION JOINTS SHALL BE PLACED IN THE BARRIER RAIL AND MOMENT SLAB AT A MAXIMUM SPACING OF 30'.

GROOVED CONTRACTION JOINTS, 1/2" IN DEPTH, SHALL BE TOOLED IN ALL EXPOSED SURFACES OF THE BARRIER RAIL AND IN ACCORDANCE WITH ARTICLE 825-10(B) OF THE STANDARD SPECIFICATIONS. A CONTRACTION JOINT SHALL BE LOCATED AT EACH THIRD POINT BETWEEN BARRIER RAIL EXPANSION JOINTS. ONLY ONE CONTRACTION JOINT IS REQUIRED AT MID-POINT OF BARRIER RAIL SEGMENTS LESS THAN 20' IN LENGTH.

THE BARRIER RAIL SHALL NOT BE CAST UNTIL THE MOMENT SLAB HAS ATTAINED AN AGE OF THREE CURING DAYS OR A MINIMUM COMPRESSIVE STRENGTH OF 2,000 PSI. IN ADDITION, NO FILL MATERIAL, ASPHALT, OR CONSTRUCTION EQUIPMENT IS ALLOWED ON THE MOMENT SLAB PRIOR TO SATISFYING THE MINIMUM CONCRETE CURING AND STRENGTH REQUIREMENTS.

ALL REINFORCING STEEL IN THE BARRIER RAIL SHALL BE EPOXY COATED.

IF EXISTING OR FUTURE OBSTRUCTIONS SUCH AS FOUNDATIONS, BARRIERS, PIPES, INLETS OR UTILITIES WILL INTERFERE WITH CONCRETE BARRIER RAIL WITH MOMENT SLAB, CONCRETE BARRIER RAIL WITH MOMENT SLAB DETAILS SHALL BE REVISED AND SUBMITTED FOR APPROVAL.

FOR GRATED DROP INLET THRU MOMENT SLAB DETAILS, SEE SHEET 2 OF 2.

PROJECT NO. U-0071

DURHAM COUNTY

STATION: VARIES

SHEET 1 OF 2

STATE OF NORTH CAROLINA
DEPARTMENT OF TRANSPORTATION
RALEIGH

CONCRETE BARRIER RAIL WITH MOMENT SLAB

NORTH CAROLINA PROFESSIONAL SEAL 14855 ENGINEER DOUGLAS R. CALHOUN
06/13/14

REVISIONS							SHEET NO.
NO.	BY:	DATE:	NO.	BY:	DATE:		W-40
1			3				TOTAL SHEETS
2			4				44

DRAWN BY :	A. SORSENGINH	DATE :	11/2013
CHECKED BY :	D. R. CALHOUN	DATE :	6/2014
DESIGN ENGINEER OF RECORD:	D. R. CALHOUN	DATE :	6/2014

18-JUN-2014 11:54
Z:\TIPProjects-U\U0071\Structures\Plans\Str*1-L-over-Y1-\Misc\U0071_SD_ConcBarrierMomentSlab.dgn
asorsenginh

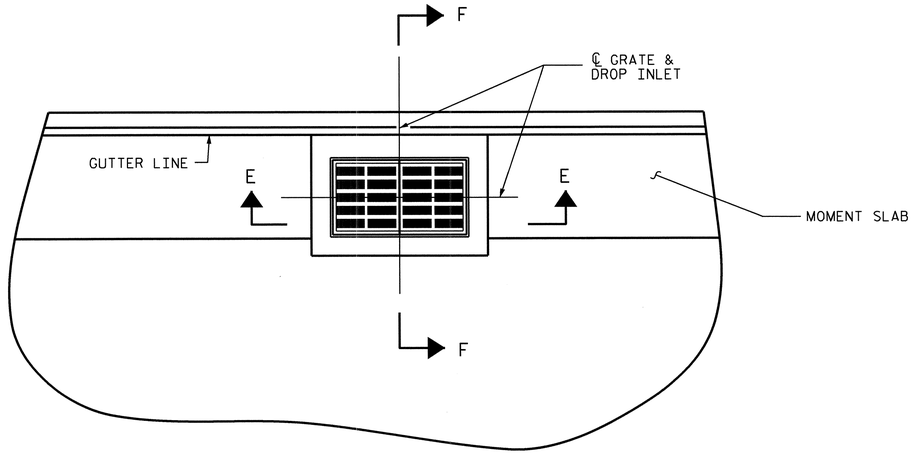

PLAN

NOTES:

REINFORCING STEEL MAY BE BENT OR FIELD CUT TO MAINTAIN 2" CLEARANCE TO THE DROP INLET. DROP INLET AND GRATE ARE ROADWAY PAY ITEMS. SEE ROADWAY PLANS AND STANDARDS FOR LOCATION AND DETAILS.

CONCRETE BARRIER RAIL WITH MOMENT SLAB	
@ WALL 2	512 LIN FT.
@ WALL 4	658 LIN FT.
@ WALL 5	729 LIN FT.
@ WALL 7	783 LIN FT.
TOTAL PAY LENGTH	2682 LIN FT.

BAR TYPES

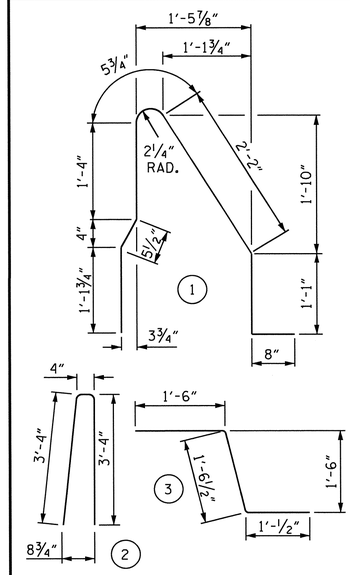

ALL BAR DIMENSIONS ARE OUT TO OUT

BILL OF MATERIAL

FOR ONE 30'-0" SECTION OF CONCRETE BARRIER RAIL WITH MOMENT SLAB

BAR	NO.	SIZE	TYPE	LENGTH	WEIGHT
B1	14	#4	STR	29'-7"	277
* B2	11	#5	STR	29'-7"	339
G1	31	#5	STR	5'-6"	178
G2	31	#4	STR	5'-6"	114
* S1	31	#5	1	7'-3"	234
* S2	31	#5	2	7'-0"	226
S3	30	#5	3	4'-1"	128

REINFORCING STEEL	697 LBS.
* EPOXY COATED REINFORCING STEEL	799 LBS.
CLASS AA CONCRETE BARRIER RAIL	4.1 C.Y.
CLASS A CONCRETE MOMENT SLAB	9.1 C.Y.
CONCRETE BARRIER RAIL WITH MOMENT SLAB	30 LIN. FT.

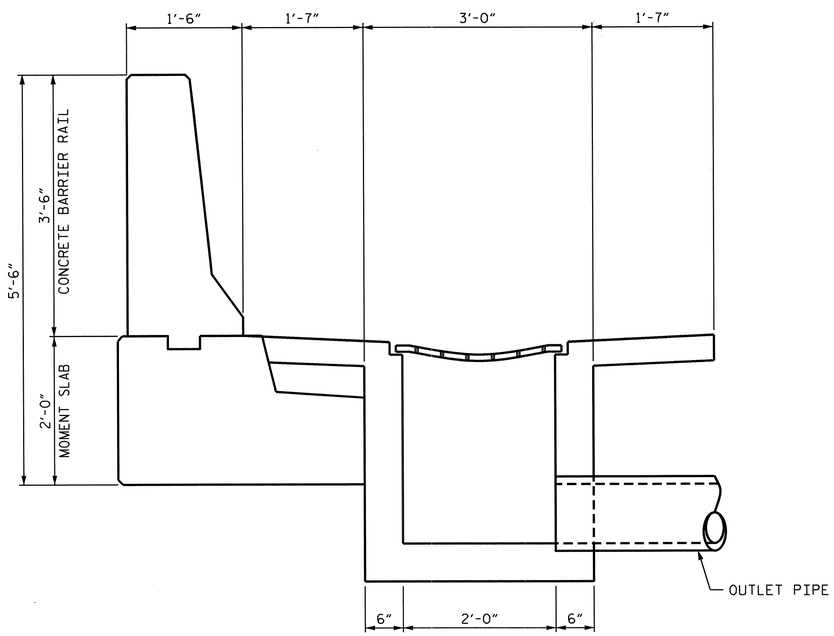

SECTION F-F

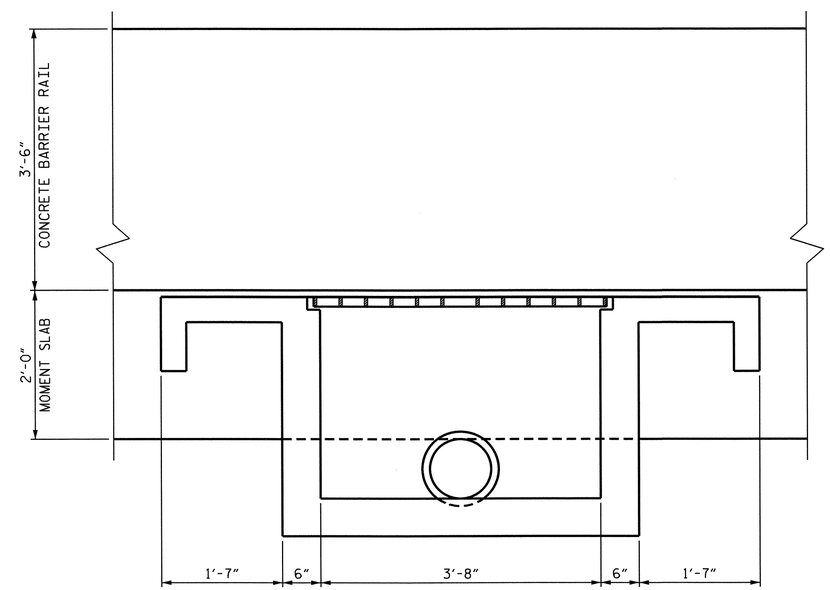

SECTION E-E

GRATED DROP INLET THRU MOMENT SLAB DETAILS

PROJECT NO. U-0071

DURHAM COUNTY

STATION: VARIES

SHEET 2 OF 2

STATE OF NORTH CAROLINA
DEPARTMENT OF TRANSPORTATION
RALEIGH

CONCRETE BARRIER RAIL WITH MOMENT SLAB

NORTH CAROLINA PROFESSIONAL SEAL 14855 ENGINEER DARIUS R. CALHOUN
6/18/14

REVISIONS							
NO.	BY:	DATE:	NO.	BY:	DATE:	SHEET NO.	
1			3			W-41	
2			4			TOTAL SHEETS	
						44	

DRAWN BY :	A. SORSENGINH	DATE :	11/2013
CHECKED BY :	D. R. CALHOUN	DATE :	6/2014
DESIGN ENGINEER OF RECORD:	D. R. CALHOUN	DATE :	6/2014

18-JUN-2014 11:54
Z:\TIPProjects-U\U0071\Structures\Plans\Str*1-L-over-Y1-\Misc\U0071_SD_ConcBarrierMomentSlab.dgn
asorsenginh

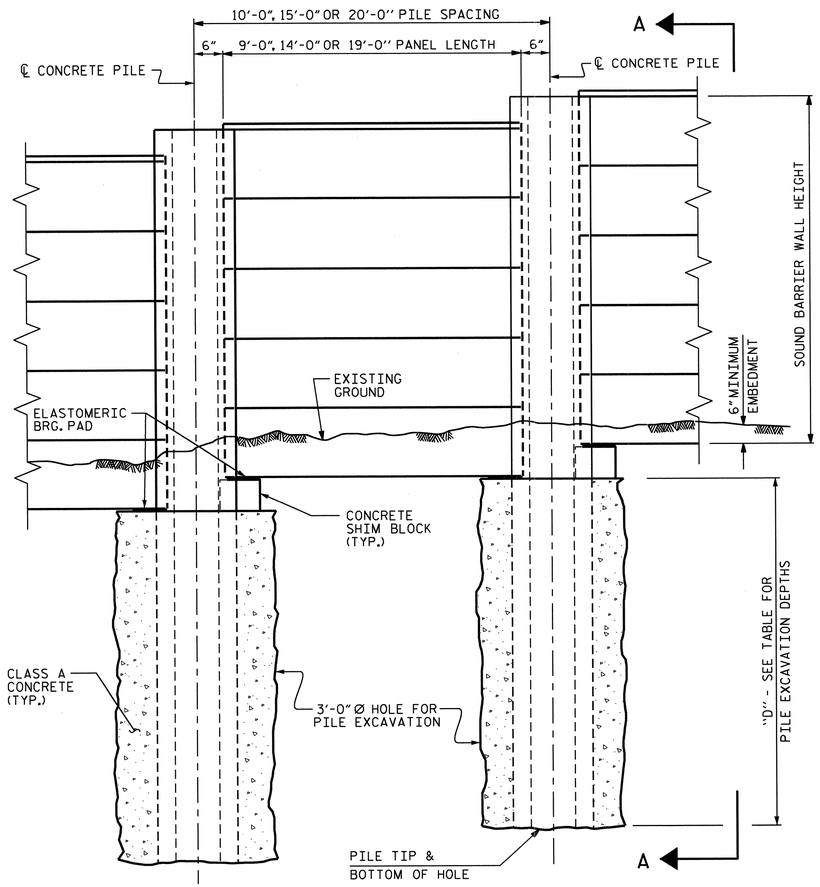

ELEVATION

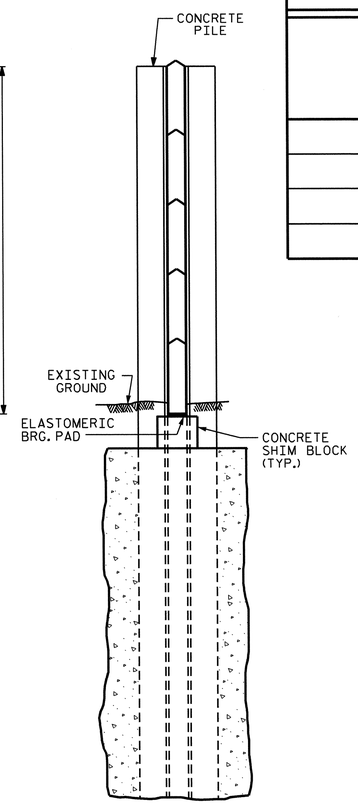

SECTION A-A

STANDARD SOUND BARRIER WALL FOUNDATION TABLE
(PILE EXCAVATION DEPTHS, "D" FOR 36" Ø HOLE

SOUND BARRIER WALL FOUNDATION TABLE No. 1
(Ø = 30°, c = 0 psf, γ = 120 pcf, GROUNDWATER BETWEEN FINISHED GRADE AND BOTTOM OF HOLE WITH FRONT SLOPE/FINISHED GRADE 6:1 OR FLATTER OR GROUNDWATER BELOW BOTTOM OF HOLE WITH FRONT SLOPE/FINISHED GRADE 2:1 OR FLATTER AND STEEPER THAN 3:1)

PILE SPACING (S)	DEPTH "D"
S ≤ 10 FT.	12 FT.
10 FT. < S ≤ 15 FT.	13 FT.
15 FT. < S ≤ 20 FT.	15 FT.

SOUND BARRIER WALL	BEGIN STATION & OFFSET	END STATION & OFFSET	ESTIMATED MAXIMUM WALL HEIGHT	STANDARD SOUND BARRIER WALL FOUNDATION TABLE
No. 1	16+70.77 -US70FLY- 23' LT	124+66.24 -L- 90' RT	17 FT.	No. 1
	124+66.24 -L- 90' RT	126+51.06 -L- 90' RT		SEE BRIDGE PLANS FOR SOUND BARRIER WALL, BRIDGE MOUNTED
	126+51.06 -L- 90' RT	130+94.92 -L- 86.50' RT		

NOTES

FOR SOUND BARRIER WALL, SEE SPECIAL PROVISIONS.

CONSTRUCT SOUND BARRIER WALL TO LINES AND GRADES SHOWN ON THE ROADWAY PLANS.

PROVIDE PANELS WITH A FLAT BOTTOM.

VERIFY THE LOCATION OF UNDERGROUND UTILITIES BEFORE DRILLING HOLES TO ENSURE SUFFICIENT CLEARANCE IS AVAILABLE.

ADJUST PILE EXCAVATION ELEVATIONS TO MAINTAIN 6" MINIMUM EMBEDMENT OF THE BOTTOM PANEL.

USE CLASS AA FOR PANELS AND CLASS A CONCRETE PILE EXCAVATION BACKFILL, IN ACCORDANCE WITH ARTICLE 1000-4 OF THE STANDARD SPECIFICATIONS.

AT THE CONTRACTOR'S OPTION, USE 10 FOOT, 15 FOOT, OR 20 FOOT PILE SPACINGS. STANDARD PRECAST CONCRETE PANELS MAY BE USED WITH THE 10 FOOT AND 15 FOOT PILE SPACING. FOR 20 FOOT PILE SPACING, PANELS DESIGNED AND MANUFACTURED BY A THIRD PARTY VENDER SHALL BE USED.

FOR SOUND BARRIER WALL STATIONS, OFFSETS, AND WALL ENVELOPE, SEE ROADWAY PLANS.

PLACE 1" Ø BACKER RODS FULL HEIGHT ON EACH SIDE OF THE PRECAST PANELS. SET AND SEAL THE BACKER ROD IN PLACE WITH SEALANT THAT CONFORMS WITH ARTICLE 1028-3 OF THE STANDARD SPECIFICATIONS.

FOR SUBMITTAL OF WORKING DRAWINGS, SEE SPECIAL PROVISIONS.

FOR FALSEWORK AND FORMWORK, SEE SPECIAL PROVISIONS.

FOR CONTINUOUS FLIGHT AUGER PILES FOR SOUND BARRIER WALLS, SEE SPECIAL PROVISIONS.

FOR ARCHITECTURAL CONCRETE SURFACE TREATMENT, SEE SPECIAL PROVISIONS.

PILE REINFORCING STEEL
DESIGN WIND PRESSURE = 40 PSF

PILE TYPE I

PILE SPACING	MAXIMUM WALL HEIGHT (H)	VERTICAL REINFORCING STEEL	TIES
10'-0"	H ≤ 25'	4 - #8 EA. FACE	#3 @ 1'-4" CTS.
15'-0"	H ≤ 20'	4 - #8 EA. FACE	#3 @ 1'-4" CTS.
	20' < H ≤ 25'	4 - #10 EA. FACE	#3 @ 1'-4" CTS.
20'-0"	H ≤ 20'	4 - #9 EA. FACE	#3 @ 1'-4" CTS.
	20' < H ≤ 25'	4 - #11 EA. FACE	#3 @ 1'-4" CTS.

PILE TYPE III

PILE SPACING	MAXIMUM WALL HEIGHT (H)	VERTICAL REINFORCING STEEL	TIES
10'-0"	H ≤ 25'	3 - #9 SHORT FACE 4 - #9 LONG FACE	#3 @ 1'-4" CTS.
15'-0"	H ≤ 20'	3 - #9 SHORT FACE 4 - #9 LONG FACE	#3 @ 1'-4" CTS.
	20' < H ≤ 25'	3 - #11 SHORT FACE 4 - #11 LONG FACE	#3 @ 1'-4" CTS.
20'-0"	H ≤ 20'	3 - #10 SHORT FACE 4 - #10 LONG FACE	#3 @ 1'-4" CTS.

PILE TYPE II

PILE SPACING	MAXIMUM WALL HEIGHT (H)	VERTICAL REINFORCING STEEL	TIES
10'-0"	H ≤ 25'	4 - #6 EA. FACE	#3 @ 1'-4" CTS.
15'-0"	H ≤ 20'	4 - #6 EA. FACE	#3 @ 1'-4" CTS.
	20' < H ≤ 25'	4 - #7 EA. FACE	#3 @ 1'-4" CTS.
20'-0"	H ≤ 20'	4 - #6 EA. FACE	#3 @ 1'-4" CTS.
	20' < H ≤ 25'	4 - #8 EA. FACE	#3 @ 1'-4" CTS.

PILE TYPE III ALT.

PILE SPACING	MAXIMUM WALL HEIGHT (H)	VERTICAL REINFORCING STEEL	TIES
10'-0"	H ≤ 25'	3 - #9 SHORT FACE 4 - #9 LONG FACE	#3 @ 1'-4" CTS.
15'-0"	H ≤ 20'	3 - #9 SHORT FACE 4 - #9 LONG FACE	#3 @ 1'-4" CTS.
	20' < H ≤ 25'	3 - #11 SHORT FACE 4 - #11 LONG FACE	#3 @ 1'-4" CTS.
20'-0"	H ≤ 20'	3 - #10 SHORT FACE 4 - #10 LONG FACE	#3 @ 1'-4" CTS.

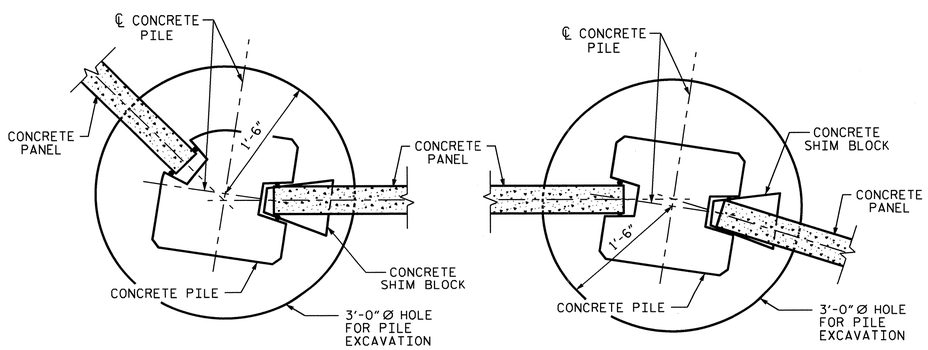

15° TO 45° TURNS
(PILE TYPE III)

0° TO 15° TURNS
(PILE TYPE I)

TYPICAL WALL TURN DETAILS

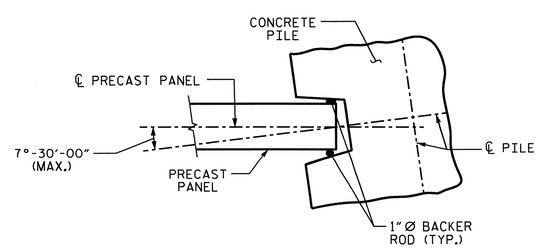

PILE ROTATION LIMIT FOR WALL TURN

(ROTATE THE CONCRETE PILE ±7°-30'-00" TO ACCOMMODATE WALL TURN.)

BILL OF MATERIAL	
SOUND BARRIER WALL	S.F. = 17,895
QUANTITIES PROVIDED ARE APPROXIMATE AND ARE FOR BID PURPOSES ONLY.	

PROJECT NO. U-0071
DURHAM COUNTY
STATION: 16+70.77 -US70FLY-
SHEET 1 OF 3

STATE OF NORTH CAROLINA
DEPARTMENT OF TRANSPORTATION
RALEIGH

STANDARD
SOUND BARRIER WALL

NORTH CAROLINA PROFESSIONAL SEAL 022506 ENGINEER JESSE McARTHUR BAILEY
6/15/14

NORTH CAROLINA PROFESSIONAL SEAL 14855 ENGINEER DOUGLAS R. CALHOUN
6/15/14

REVISIONS						SHEET NO.
NO.	BY:	DATE:	NO.	BY:	DATE:	W-42
1			3			TOTAL SHEETS
2			4			44

ASSEMBLED BY :	A. SORSENGINH	DATE :	11/2013
CHECKED BY :	D.R. CALHOUN	DATE :	12/2013
DRAWN BY :	MAA 6/11	ADDED	10/1/11
CHECKED BY :	GM 6/11	REV. 1/15/14	RWW/TMG

05-JUN-2014 16:34
R:\Structures\Plans\Str#7-L-over-Y8-\Noise Wall\U0071_SD_SBW.dgn
asorsenginh

STD. NO. SBW1

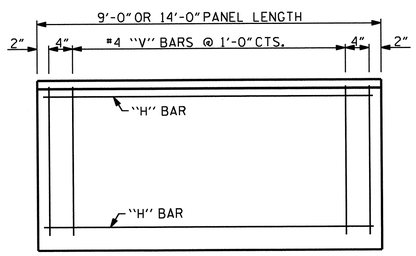

FRONT ELEVATION OF UPPER PRECAST PANELS

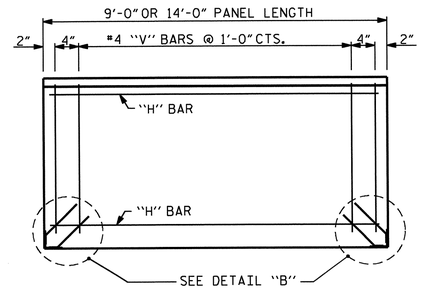

FRONT ELEVATION OF BOTTOM PRECAST PANEL

QUANTITIES FOR ONE PRECAST PANEL (FOR 10'-0" PILE SPACING)

PANEL HEIGHT	CLASS AA CONCRETE	BAR TYPES											
		HORIZONTAL						VERTICAL					
	C.Y.	NO.	BAR	SIZE	TYPE	LENGTH	WEIGHT (lb)	NO.	BAR	SIZE	TYPE	LENGTH	WEIGHT (lb)
2'-0"	0.22	3	H1	#4	STR	8'-8"	17	11	V1	#4	STR	1'-8"	12
3'-0"	0.33	4	H2	#4	STR	8'-8"	23	11	V2	#4	STR	2'-8"	20
4'-0"	0.44	5	H3	#4	STR	8'-8"	29	11	V3	#4	STR	3'-8"	27

QUANTITIES FOR ONE PRECAST PANEL (FOR 15'-0" PILE SPACING)

PANEL HEIGHT	CLASS AA CONCRETE	BAR TYPES											
		HORIZONTAL						VERTICAL					
	C.Y.	NO.	BAR	SIZE	TYPE	LENGTH	WEIGHT (lb)	NO.	BAR	SIZE	TYPE	LENGTH	WEIGHT (lb)
3'-0"	0.52	5	H1	#4	STR	13'-8"	46	16	V1	#4	STR	2'-8"	29
4'-0"	0.69	6	H2	#4	STR	13'-8"	55	16	V2	#4	STR	3'-8"	39
5'-0"	0.86	7	H3	#4	STR	13'-8"	64	16	V3	#4	STR	4'-8"	50
6'-0"	1.04	8	H4	#4	STR	13'-8"	73	16	V4	#4	STR	5'-8"	61

ADDITIONAL BARS FOR ONE BOTTOM PANEL

NO.	BAR	SIZE	TYPE	LENGTH	WEIGHT (lb)
4	S1	#5	1	1'-6"	6

BAR TYPE

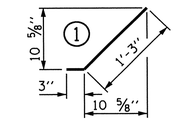

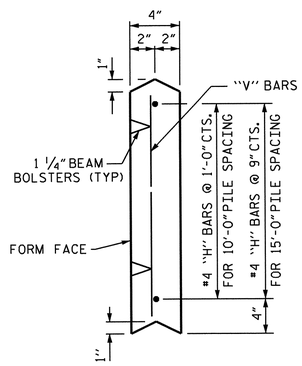

UPPER PANEL

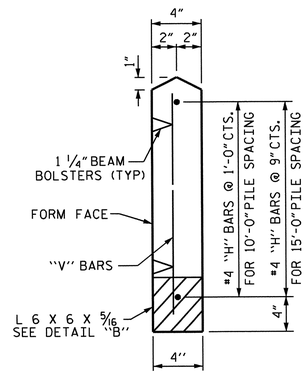

BOTTOM PANEL

SECTION THROUGH PRECAST PANELS

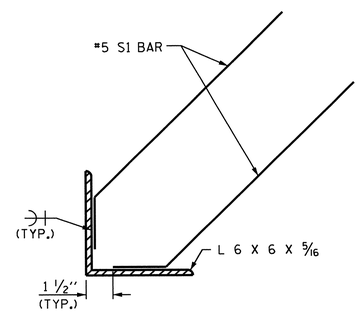

DETAIL "B"

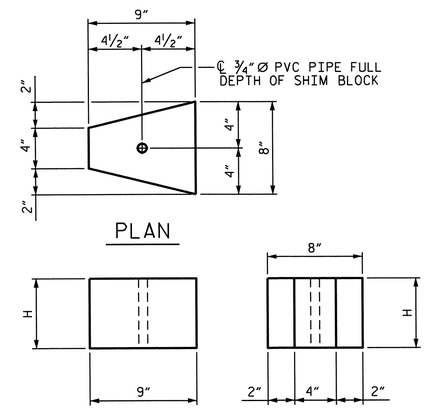

CONCRETE SHIM BLOCK

H = 3", 6" or 1'-0"

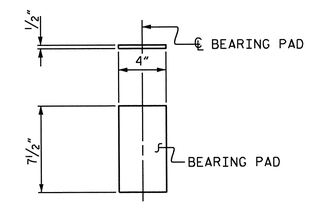

ELASTOMERIC BEARING DETAILS

ELASTOMER IN BEARINGS SHALL BE 50 DUROMETER HARDNESS.

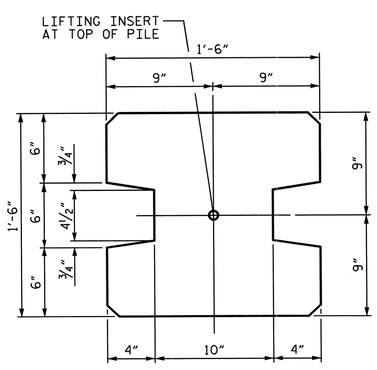

TYPE - I
(AREA = 1.9444 SQ. FT.)

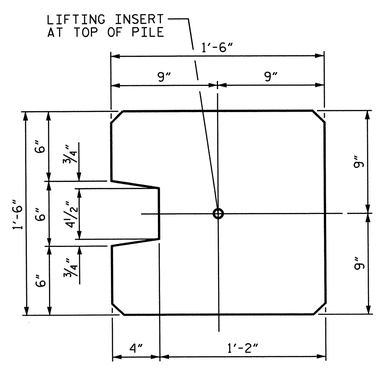

TYPE - II
(AREA = 2.0903 SQ. FT.)

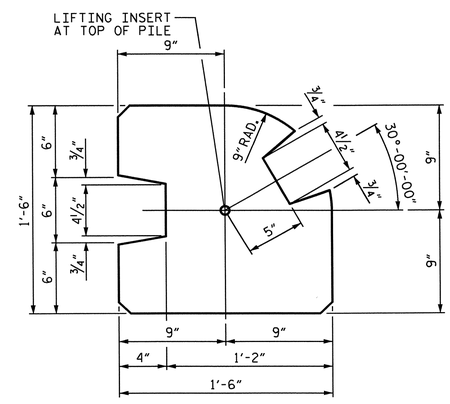

TYPE - III
(AREA = 1.8336 SQ. FT.)

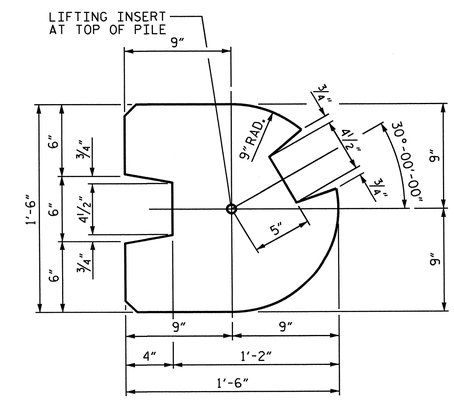

TYPE - III (ALT.)
(AREA = 1.7163 SQ. FT.)

PILE DETAIL

(ALL CORNERS TO BE CHAMFERED 1")

NORTH CAROLINA PROFESSIONAL SEAL 14855 ENGINEER DAVID A. R. CALHOUN
6/5/14

PROJECT NO. U-0071
DURHAM COUNTY
STATION: 16+70.77
-US70FLY-

SHEET 2 OF 3

STATE OF NORTH CAROLINA
DEPARTMENT OF TRANSPORTATION
RALEIGH
STANDARD

SOUND BARRIER WALL DETAILS

ASSEMBLED BY : A. SORSENGINH	DATE : 11/2013
CHECKED BY : D.R. CALHOUN	DATE : 12/2013
DRAWN BY : MAA 6/11	ADDED 8/31/11
CHECKED BY : GM 6/11	REV. 1/15/14 RWW/TMG

REVISIONS								SHEET NO.
NO.	BY:	DATE:	NO.	BY:	DATE:			W-43
1			3					TOTAL SHEETS
2			4					44

STD. NO. SBW2

05-JUN-2014 16:34
R:\Structures\Plans\Str*7-L-over-Y8-\Noise Wall\U0071_SD_SBW.dgn
asorsenginh

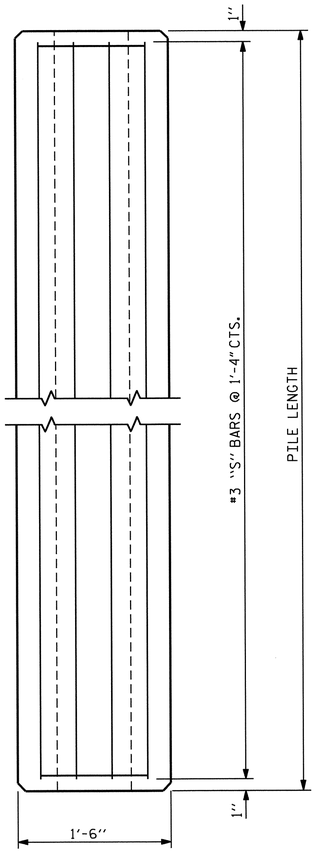

ELEVATION

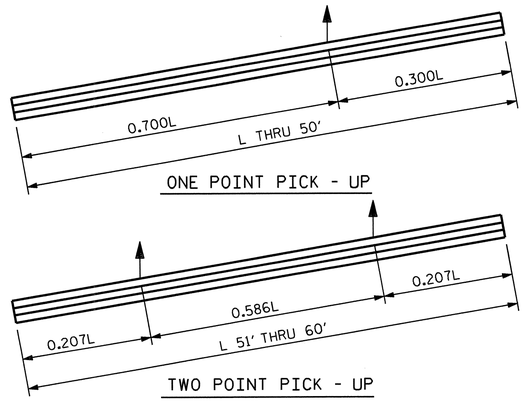

PICK - UP POINTS

NOTES

CONCRETE DESIGN DATA : f'c = 5,000 PSI

PROPOSED DEVICES FOR LIFTING PILES, RECESS DETAILS, AND PATCHING MATERIAL SHALL BE DETAILED IN SHOP DRAWINGS. AFTER ATTACHMENTS HAVE BEEN REMOVED, OPENINGS SHALL BE REPAIRED SUCH THAT THE APPEARANCE OF THE PILE IS UNIFORM.

WHERE CAST-IN-PLACE LIFTING DEVICES ARE NOT USED, PICK-UP POINTS TO BE INDICATED WITH A BLACK MARK 2" WIDE.

THE SLIP-FORM METHOD OF CASTING PILES WILL NOT BE PERMITTED.

ALL CORNERS TO BE CHAMFERED 1".

QUANTITIES FOR ONE PRECAST CONCRETE PILE

LENGTH	APPROX. PILE WT. TONS	ONE PICK-UP POINT		TWO PICK-UP POINT	
		0.300L	0.700L	0.207L	0.586L
10'-0"	1.56	3'-0"	7'-0"		
15'-0"	2.35	4'-6"	10'-6"		
20'-0"	3.14	6'-0"	14'-0"		
25'-0"	3.93	7'-6"	17'-6"		
30'-0"	4.70	9'-0"	21'-0"		
35'-0"	5.49	10'-6"	24'-6"		
40'-0"	6.28	12'-0"	28'-0"		
45'-0"	7.05	13'-6"	31'-6"		
50'-0"	7.84	15'-0"	35'-0"		
55'-0"	8.63			11'-4½"	32'-3"
60'-0"	9.42			12'-5"	35'-2"

BAR TYPES

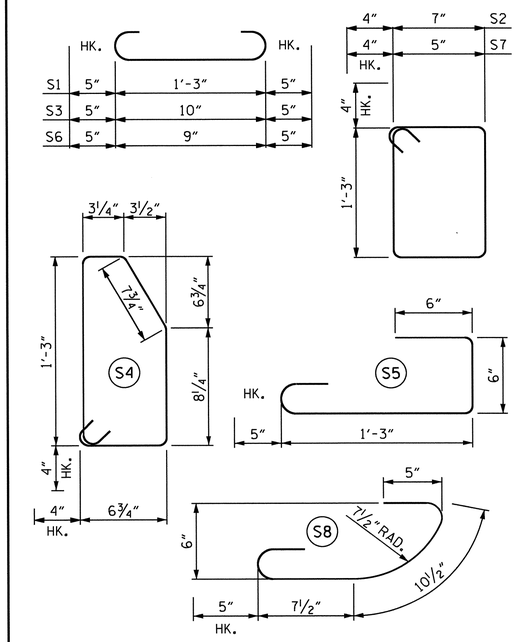

ALL BAR DIMENSIONS ARE OUT TO OUT.

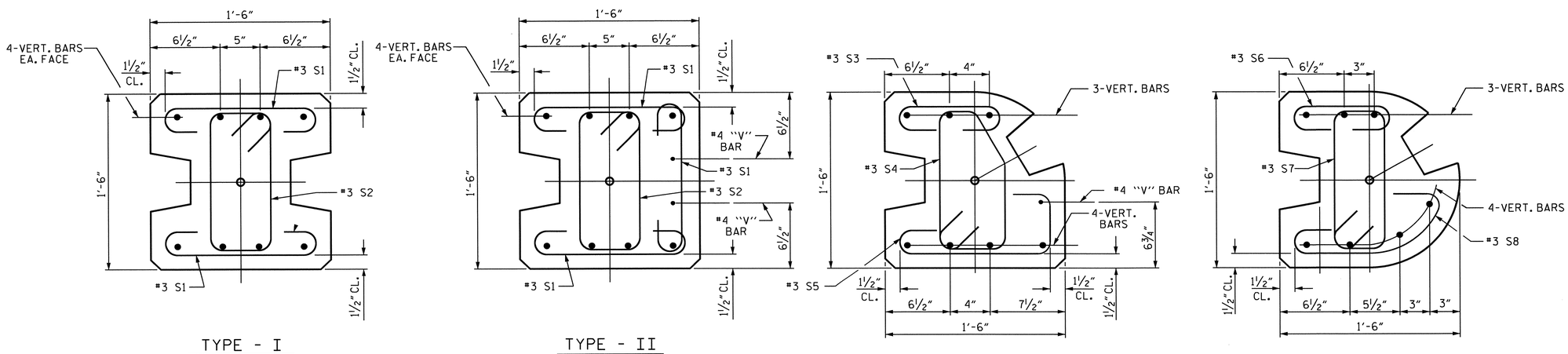

PILE DETAIL

FOR VERTICAL BAR PILE REINFORCING, SEE SHEET 1 OF 3

NORTH CAROLINA PROFESSIONAL SEAL 14855 ENGINEER DOUGLAS R. CALHOUN
6/5/14

PROJECT NO. U-0071
DURHAM COUNTY
STATION: 16+70.77
-US70FLY-
SHEET 3 OF 3

STATE OF NORTH CAROLINA
DEPARTMENT OF TRANSPORTATION
RALEIGH

STANDARD

SOUND BARRIER WALL DETAILS

ASSEMBLED BY : A. SORSENGINH	DATE : 11/2013	DRAWN BY : MAA 6/11	ADDED 8/31/11
CHECKED BY : D.R. CALHOUN	DATE : 12/2013	CHECKED BY : GM 6/11	REV. 1/15/14 RWW/TMG

REVISIONS							SHEET NO.
NO.	BY:	DATE:	NO.	BY:	DATE:		W-44
1			3				TOTAL SHEETS
2			4				44

STD. NO. SBW3

05-JUN-2014 16:35
R:\Structures\Plans\Str*7-L-over-Y8-\Noise Wall\U0071_SD_SBW.dgn
osorsenginh

BM #59 RR SPIKE IN 24" OAK, STA. 95+95.85 -L- 155.11' LT. EL. 325.43

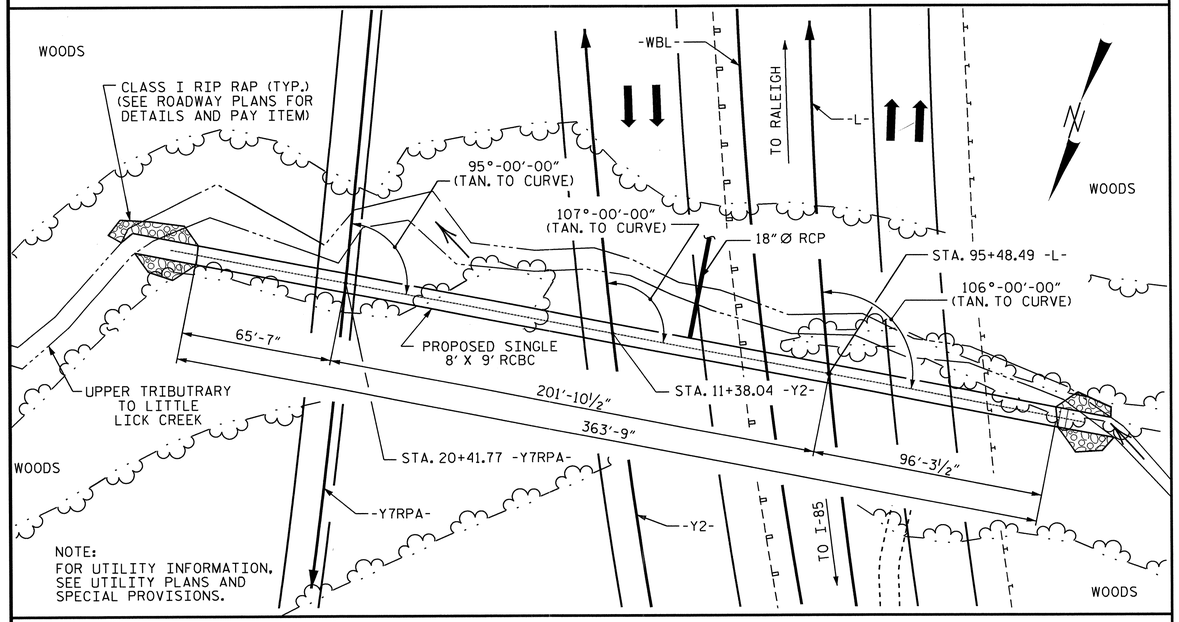

LOCATION SKETCH

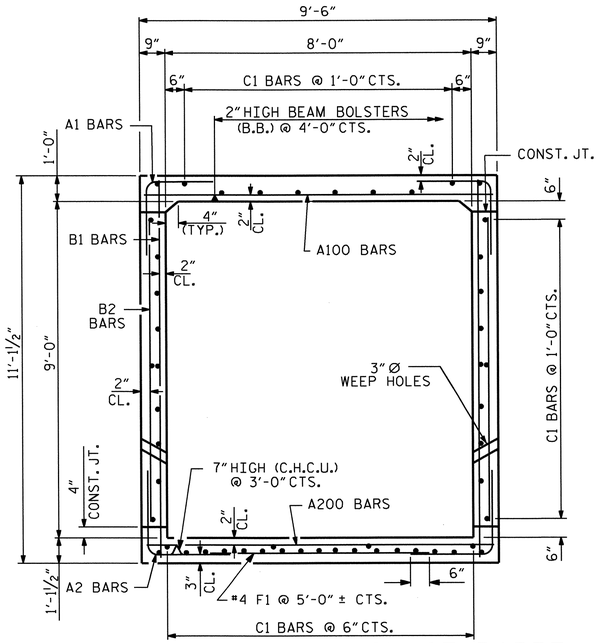

RIGHT ANGLE SECTION OF BARREL

THERE ARE 51 C1 BARS IN SECTION OF BARREL.

NOTES

ASSUMED LIVE LOAD ----------HL-93 OR ALTERNATE LOADING.

DESIGN FILL----------25.13'

FOR OTHER DESIGN DATA AND NOTES SEE STANDARD NOTE SHEET.

3" Ø WEEP HOLES INDICATED TO BE IN ACCORDANCE WITH THE SPECIFICATIONS.

CONCRETE IN CULVERTS TO BE POURED IN THE FOLLOWING ORDER:

1. WING FOOTINGS AND FLOOR SLAB INCLUDING 4" OF ALL VERTICAL WALLS.
2. THE REMAINING PORTIONS OF THE WALLS AND WINGS FULL HEIGHT FOLLOWED BY ROOF SLAB AND HEADWALLS.

THE RESIDENT ENGINEER SHALL CHECK THE LENGTH OF CULVERT BEFORE STAKING IT OUT TO MAKE CERTAIN THAT IT WILL PROPERLY TAKE CARE OF THE FILL.

DIMENSIONS FOR WING LAYOUT AS WELL AS ADDITIONAL REINFORCING STEEL EMBEDDED IN BARREL ARE SHOWN ON WING SHEETS.

TRANSVERSE CONSTRUCTION JOINTS SHALL BE USED IN THE BARREL. SPACED TO LIMIT THE POURS TO A MAXIMUM OF 70 FT. LOCATION OF JOINTS SHALL BE SUBJECT TO APPROVAL OF THE ENGINEER.

AT THE CONTRACTOR'S OPTION, HE MAY SPLICE THE VERTICAL REINFORCING STEEL IN THE INTERIOR FACE OF EXTERIOR WALL ABOVE LOWER WALL CONSTRUCTION JOINT. THE SPLICE LENGTH SHALL BE AS PROVIDED IN THE SPLICE LENGTH CHART SHOWN ON THE PLANS. EXTRA WEIGHT OF STEEL DUE TO THE SPLICES SHALL BE PAID FOR BY THE CONTRACTOR.

A 3 FOOT STRIP OF FILTER FABRIC SHALL BE ATTACHED TO THE FILL FACE OF THE WING COVERING THE ENTIRE LENGTH OF THE EXPANSION JOINT.

FOR CRANE SAFETY, SEE SPECIAL PROVISIONS.

FOR FALSEWORK AND FORMWORK, SEE SPECIAL PROVISIONS.

FOR CULVERT DIVERSION DETAILS AND PAY ITEM, SEE EROSION CONTROL PLANS.

THE 18" Ø PIPE THROUGH THE SIDEWALL OF THE CULVERT SHALL BE LOCATED BY THE ENGINEER. THE REINFORCING STEEL SHALL BE FIELD BENT AS NECESSARY TO CLEAR PIPE.

FOR SUBMITTAL OF WORKING DRAWINGS, SEE SPECIAL PROVISIONS.

FOR GROUT FOR STRUCTURES, SEE SPECIAL PROVISIONS.

NO PRECAST REINFORCED BOX CULVERT OPTION WILL BE ALLOWED.

HYDRAULIC DATA

DESIGN DISCHARGE	= 611 CFS
FREQUENCY OF DESIGN FLOOD	= 50 YRS.
DESIGN HIGH WATER ELEVATION	= 327.70
DRAINAGE AREA	= 0.39 SQ. MI.
BASE DISCHARGE (Q100)	= 689 CFS
BASE HIGH WATER ELEVATION	= 329.00

OVERTOPPING FLOOD DATA

OVERTOPPING DISCHARGE	= 1400 CFS
FREQUENCY OF OVERTOPPING FLOOD	= 500 YRS.
OVERTOPPING FLOOD ELEVATION	= 343.10
OVERTOPPING LOCATION @ STA. 92+96.77 -L-	

GRADE DATA

GRADE POINT ELEVATION @ STA. 95+48.49 -L-	= 344.41'
GRADE POINT ELEVATION @ STA. 11+38.04 -Y2-	= 349.86'
GRADE POINT ELEVATION @ STA. 20+41.77 -Y7RPA-	= 345.99'
BED ELEVATION @ STA. 95+48.49 -L-	= 317.15'
BED ELEVATION @ STA. 11+38.04 -Y2-	= 316.75'
BED ELEVATION @ STA. 20+41.77 -Y7RPA-	= 316.24'
ROADWAY FILL SLOPES	
LEFT	= 2 : 1
RIGHT	= 2 : 1

TOTAL STRUCTURE QUANTITIES

CLASS A CONCRETE				
BARREL @	1.252	CY/FT	455.4	C.Y.
WING ETC.			28.7	C.Y.
TOTAL			484.1	C.Y.
REINFORCING STEEL				
BARREL			48,978	LBS.
WINGS ETC.			1880	LBS.
TOTAL			50,858	LBS.
FOUNDATION CONDITIONING MAT'L.			346	TONS
CULVERT EXCAVATION			LUMP SUM	

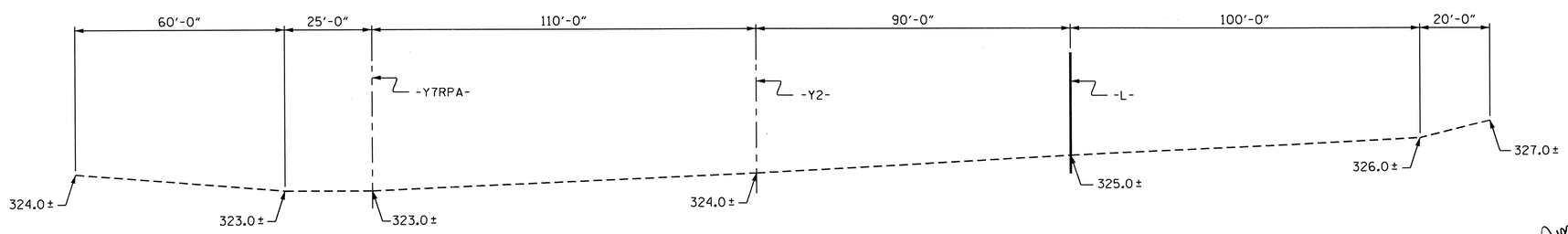

PROFILE ALONG ℄ CULVERT

PROJECT NO. U-0071
DURHAM COUNTY
STATION: 95+48.49 -L-

SHEET 1 OF 6

STATE OF NORTH CAROLINA
DEPARTMENT OF TRANSPORTATION
RALEIGH

SINGLE 8 FT. X 9 FT.
CONCRETE BOX CULVERT
106° SKEW

REVISIONS								SHEET NO.
NO.	BY:	DATE:	NO.	BY:	DATE:			C-1
1			3					TOTAL SHEETS
2			4					26

ASSEMBLED BY : D. G. ELY DATE : 6/2012
CHECKED BY : S. B. WILLIAMS DATE : 6/2013
DESIGN ENGINEER OF RECORD: A. SORSENGINH DATE : 11/2013
DRAWN BY : R. WRIGHT DATE : AUG. 1989
CHECKED BY : C.R.K. DATE : AUG. 1989

SPECIAL STANDARD

REVISED 11-13-91 BY E.L.R. CHECKED BY G.R.P.
ADDED 8-22-89

NORTH CAROLINA PROFESSIONAL SEAL 022506 ENGINEER JESSE McARTHUR BAILEY
5/30/14

NORTH CAROLINA PROFESSIONAL SEAL 14855 ENGINEER DOUGLAS R. GALLIGAN
5/13/14

CULVERT 1 STD. NO. CB221A

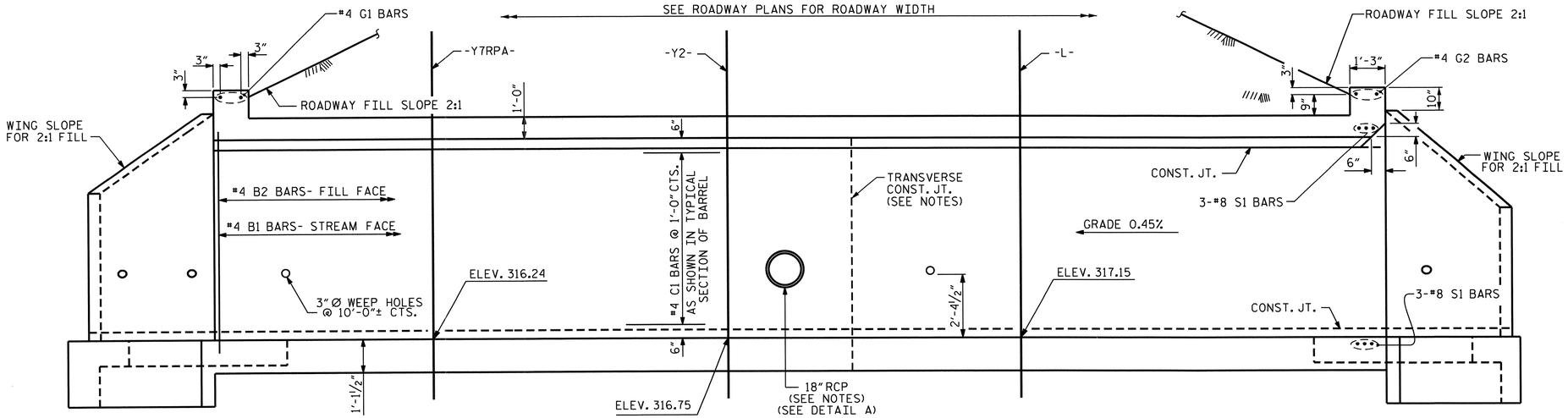

CULVERT SECTION NORMAL TO ROADWAY

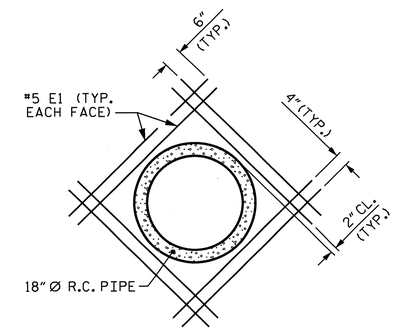

DETAIL A

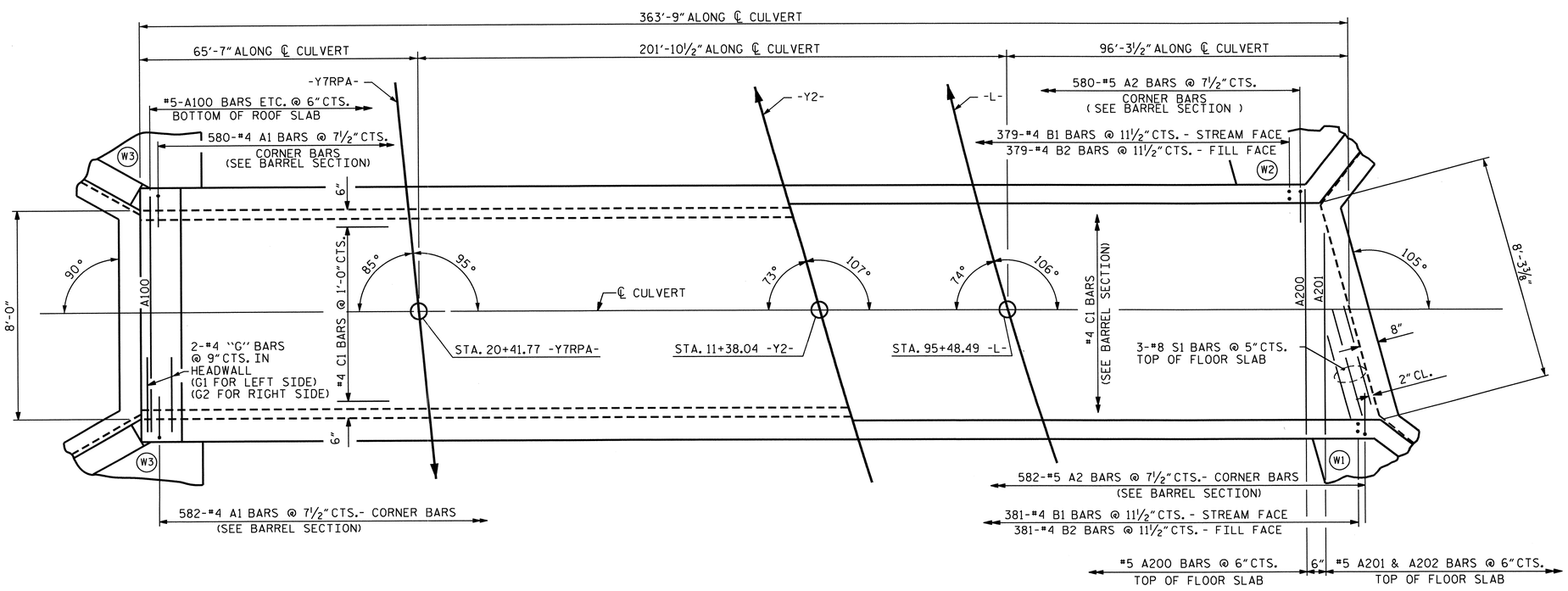

PART PLAN - ROOF SLAB

PART PLAN - FLOOR SLAB

PROJECT NO. U-0071
DURHAM COUNTY
STATION: 95+48.49 -L-

SHEET 2 OF 6

STATE OF NORTH CAROLINA
DEPARTMENT OF TRANSPORTATION
RALEIGH

SINGLE 8 FT. X 9 FT. CONCRETE BOX CULVERT 106° SKEW

NORTH CAROLINA PROFESSIONAL SEAL 14855 ENGINEER DOUGLAS B. CALHOUN
5/13/14

REVISIONS							SHEET NO.
NO.	BY:	DATE:	NO.	BY:	DATE:		C-2
1			3				TOTAL SHEETS
2			4				26

ASSEMBLED BY : D. G. ELY	DATE : 6/2012	SPECIAL STANDARD	
CHECKED BY : S. B. WILLIAMS	DATE : 6/2013		
DESIGN ENGINEER OF RECORD: A. SORSENGINH	DATE : 11/2013		
DRAWN BY : R.W. WRIGHT	DATE : AUG. 1989	STANDARD	
CHECKED BY : A.R. BISSETTE	DATE : AUG. 1989		

REVISED 8-28-92 BY E.L.R. CHECKED BY G.R.P.
REVISED 8-22-89 BY A.R.B. CHECKED BY C.R.K.
REDRAWN 8-22-89
REVISED 11-19-99 BY M.M. CHECKED BY R.W.W.

CULVERT 1 STD. NO. CB221

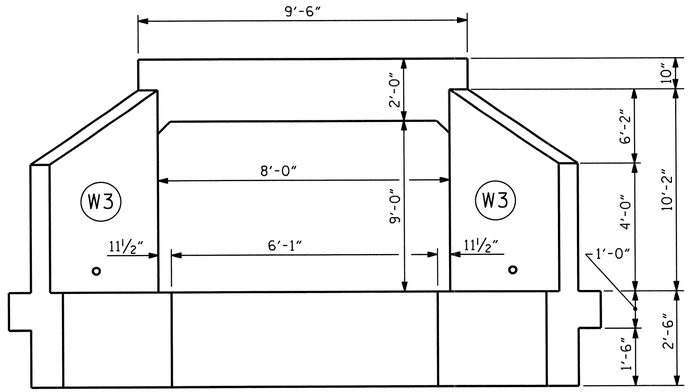

OUTLET END ELEVATION

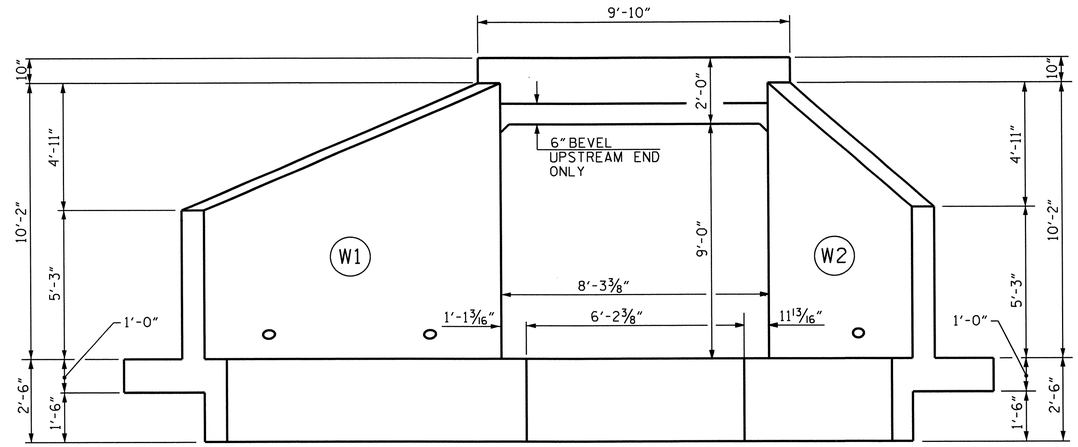

INLET END ELEVATION NORMAL TO SKEW

(LOOKING DOWNSTREAM)

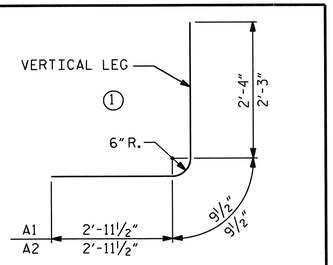

BAR TYPE

DIMENSIONS ARE OUT TO OUT

SPLICE LENGTH CHART

BAR	SIZE	SPLICE LENGTH
C1	4	1'-11"

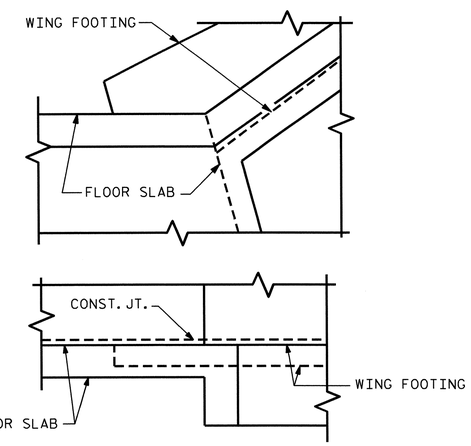

DETAIL

CONNECTION OF WING FOOTING AND FLOOR SLAB WHEN SLAB IS THICKER THAN FOOTING

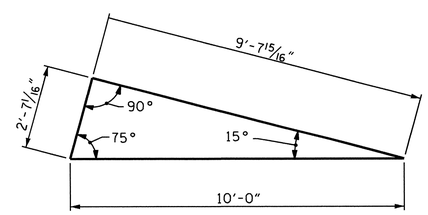

SKEW TRIANGLE

(105°-00'-00")

BAR SCHEDULE

BAR	NO.	SIZE	TYPE	LENGTH	WEIGHT	BAR	NO.	SIZE	TYPE	LENGTH	WEIGHT
A1	1162	#4	1	6'-1"	4722	C1	663	#4	STR	29'-10"	13213
A2	1162	#5	1	6'-0"	7272						
						E1	16	#5	STR	4-0"	67
A100	725	#5	STR	9'-1"	6869						
A101	1	#5	STR	7'-8"	8	F1	73	#4	STR	3'-3"	158
A102	1	#5	STR	5'-10"	6						
						G1	2	#4	STR	9'-2"	12
A200	725	#5	STR	9'-1"	6869	G2	2	#4	STR	9'-5"	13
A201	1	#5	STR	7'-8"	8						
A202	1	#5	STR	5'-10"	6	S1	6	#8	STR	9'-5"	151
B1	760	#4	STR	10'-7"	5373	REINFORCING STEEL = 48,978 LBS					
B2	760	#4	STR	8'-4"	4231						

REVISED 11-19-99 BY M.M. CHECKED BY R.W.W.
REVISED 8-28-92 BY E.L.R. CHECKED BY C.R.P.
REVISED 8-22-89 BY A.R.B. CHECKED BY C.R.K.
REDRAWN 8-22-89

ASSEMBLED BY : D. G. ELY DATE : 6/2012
CHECKED BY : S. B. WILLIAMS DATE : 6/2013
DESIGN ENGINEER OF RECORD: A. SORSENGINH DATE : 11/2013
DRAWN BY : R.W. WRIGHT DATE : AUG. 1989
CHECKED BY : A.R. BISSETTE DATE : AUG. 1989

SPECIAL STANDARD

STANDARD

PROJECT NO. U-0071
DURHAM COUNTY
STATION: 95+48.49 -L-

SHEET 3 OF 6

STATE OF NORTH CAROLINA
DEPARTMENT OF TRANSPORTATION
RALEIGH

SINGLE 8 FT. X 9 FT. CONCRETE BOX CULVERT 106° SKEW

NORTH CAROLINA PROFESSIONAL SEAL 14855 ENGINEER DOUGLAS B. CAMPBELL
5/13/14

REVISIONS							SHEET NO.
NO.	BY:	DATE:	NO.	BY:	DATE:		C-3
1			3				TOTAL SHEETS
2			4				26

CULVERT 1 STD. NO. CB221

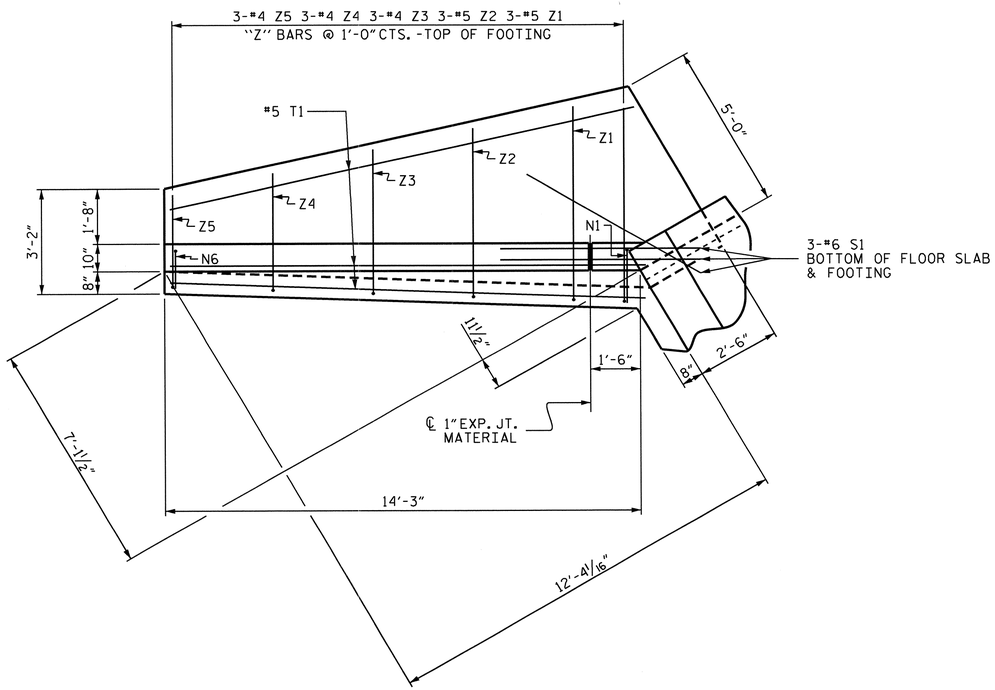

PLAN W3

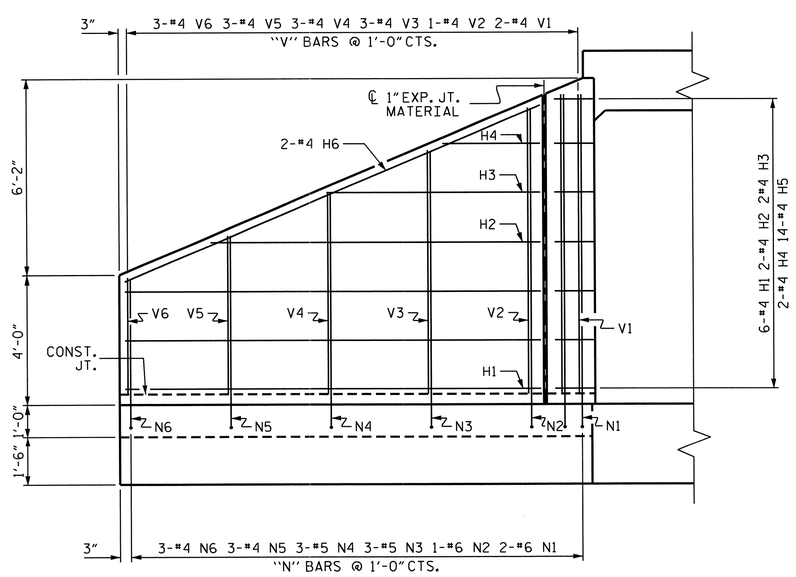

ELEVATION W3

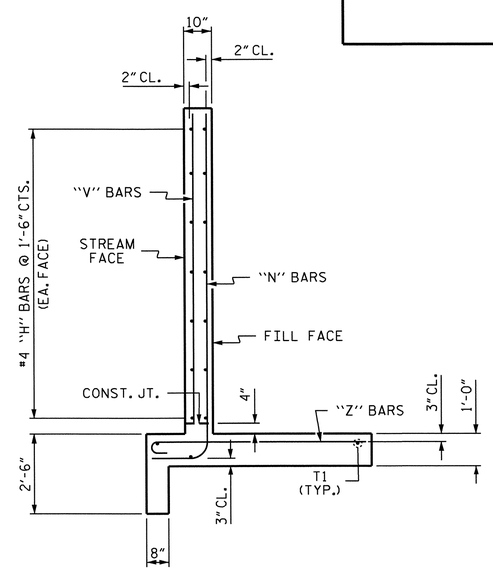

TYPICAL WING SECTION

BAR TYPES

ALL BAR DIMENSIONS ARE OUT TO OUT.

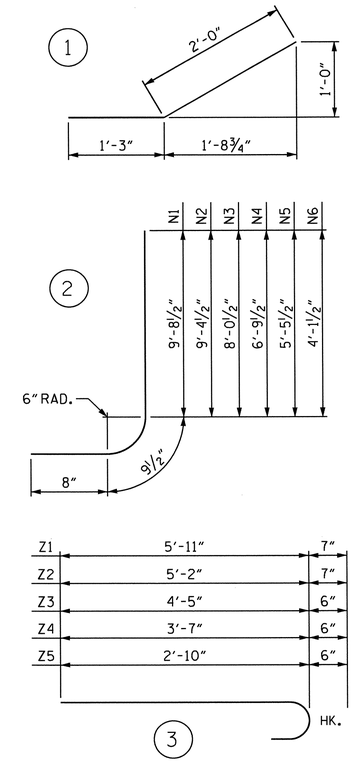

BILL OF MATERIAL

BAR	NO.	SIZE	TYPE	LENGTH	WEIGHT
H1	12	#4	STR	12'-5"	100
H2	4	#4	STR	9'-10"	26
H3	4	#4	STR	6'-5"	17
H4	4	#4	STR	2'-11"	8
H5	28	#4	1	3'-3"	61
H6	4	#4	STR	13'-6"	36
N1	4	#6	2	11'-2"	67
N2	2	#6	2	10'-10"	33
N3	6	#5	2	9'-6"	59
N4	6	#5	2	8'-3"	52
N5	6	#4	2	6'-11"	28
N6	6	#4	2	5'-7"	22
S1	6	#6	STR	6'-0"	54
T1	6	#5	STR	14'-3"	89
V1	4	#4	STR	9'-2"	24
V2	2	#4	STR	8'-9"	12
V3	6	#4	STR	7'-5"	30
V4	6	#4	STR	6'-2"	25
V5	6	#4	STR	4'-10"	19
V6	6	#4	STR	3'-7"	14
Z1	6	#5	3	6'-6"	41
Z2	6	#5	3	5'-9"	36
Z3	6	#4	3	4'-11"	20
Z4	6	#4	3	4'-1"	16
Z5	6	#4	3	3'-4"	13

REINFORCING STEEL
FOR 2 WINGS 902 LBS

CLASS A CONCRETE
2 WINGS 13.1 CY
1 HEADWALL 0.4 CY
1 END CURTAIN WALL 0.4 CY
TOTAL 13.9 CY

PROJECT NO. U-0071
DURHAM COUNTY
STATION: 95+48.49 -L-

SHEET 4 OF 6

STATE OF NORTH CAROLINA
DEPARTMENT OF TRANSPORTATION
RALEIGH

OUTLET WINGS FOR CONCRETE BOX CULVERT

H = 9'-0" SLOPE = 2:1
90° SKEW

NORTH CAROLINA PROFESSIONAL SEAL 14855 ENGINEER DOUGLAS B. CALHOUN
5/13/14

REVISIONS						SHEET NO.
NO.	BY:	DATE:	NO.	BY:	DATE:	C-4
1			3			TOTAL SHEETS
2			4			26

ASSEMBLED BY : D. G. ELY DATE : 6/2012
CHECKED BY : S. B. WILLIAMS DATE : 6/2013
DESIGN ENGINEER OF RECORD: DATE :
A. SORSENGINH DATE : 11/2013

DRAWN BY : CCJ 10/99
CHECKED BY : RWW 03/00

CULVERT 1 STD. NO. CW9009

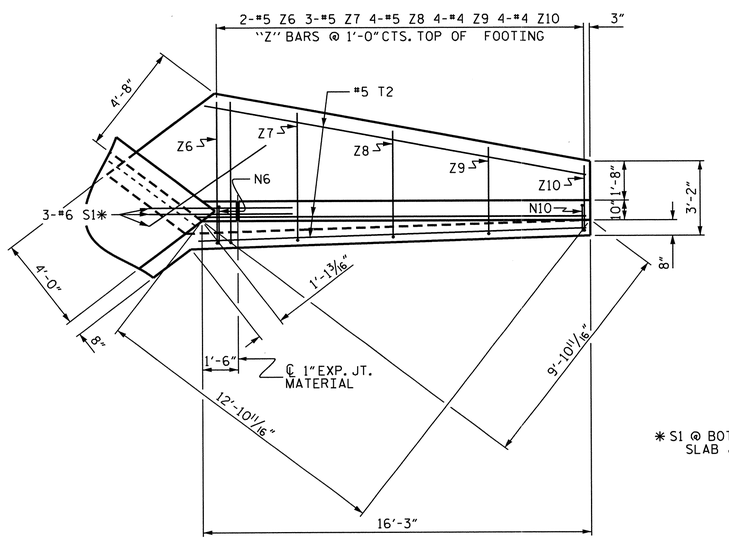

* S1 @ BOTTOM OF FLOOR SLAB & FOOTING

PLAN W1

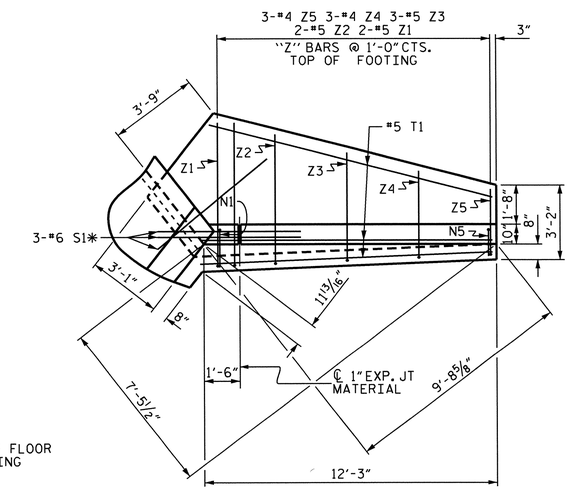

PLAN W2

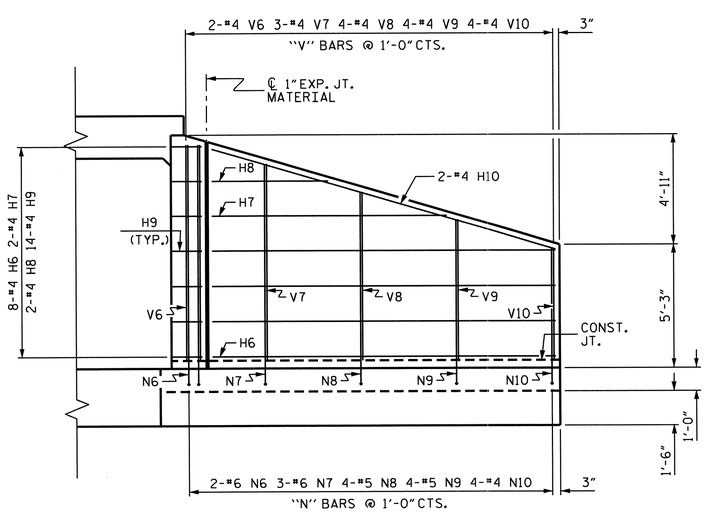

ELEVATION W1

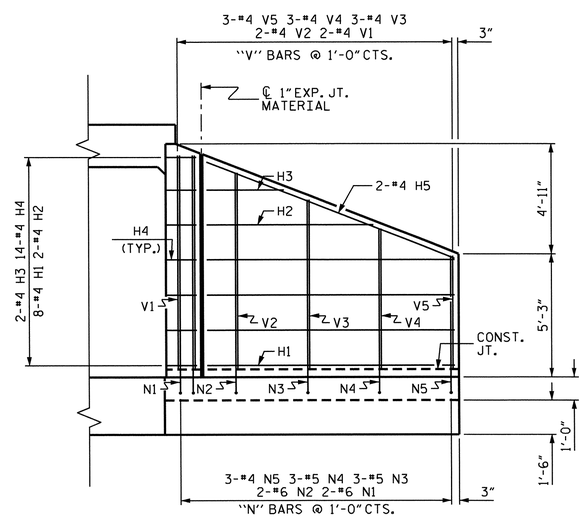

ELEVATION W2

BAR TYPES

ALL BAR DIMENSIONS ARE OUT TO OUT.

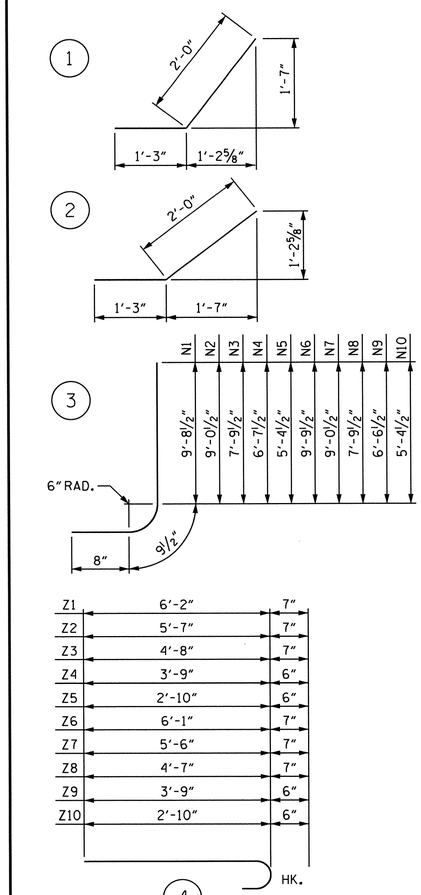

BILL OF MATERIAL

BAR	NO.	SIZE	TYPE	LENGTH	WEIGHT
H1	8	#4	STR	10'-4"	55
H2	2	#4	STR	6'-11"	9
H3	2	#4	STR	3'-3"	4
H4	14	#4	1	3'-3"	30
H5	2	#4	STR	11'-2"	15
H6	8	#4	STR	14'-4"	77
H7	2	#4	STR	9'-10"	13
H8	2	#4	STR	4'-10"	6
H9	14	#4	2	3'-3"	30
H10	2	#4	STR	15'-0"	20
N1	2	#6	3	11'-2"	34
N2	2	#6	3	10'-6"	32
N3	3	#5	3	9'-3"	29
N4	3	#5	3	8'-1"	25
N5	3	#4	3	6'-10"	14
N6	2	#6	3	11'-3"	34
N7	3	#6	3	10'-6"	47
N8	4	#5	3	9'-3"	39
N9	4	#5	3	8'-0"	33
N10	4	#4	3	6'-10"	18
S1	6	#6	STR	6'-0"	54
T1	3	#5	STR	12'-3"	38
T2	3	#5	STR	16'-3"	51
V1	2	#4	STR	9'-2"	12
V2	2	#4	STR	8'-5"	11
V3	3	#4	STR	7'-3"	15
V4	3	#4	STR	6'-0"	12
V5	3	#4	STR	4'-10"	10
V6	2	#4	STR	9'-3"	12
V7	3	#4	STR	8'-5"	17
V8	4	#4	STR	7'-2"	19
V9	4	#4	STR	6'-0"	16
V10	4	#4	STR	4'-9"	13
Z1	2	#5	4	6'-9"	14
Z2	2	#5	4	6'-2"	13
Z3	3	#5	4	5'-3"	16
Z4	3	#4	4	4'-3"	9
Z5	3	#4	4	3'-4"	7
Z6	2	#5	4	6'-8"	14
Z7	3	#5	4	6'-1"	19
Z8	4	#5	4	5'-2"	22
Z9	4	#4	4	4'-3"	11
Z10	4	#4	4	3'-4"	9

REINFORCING STEEL FOR 2 WINGS 978 LBS

CLASS A CONCRETE

2 WINGS	13.9	CY
1 HEADWALL	0.5	CY
1 END CURTAIN WALL	0.4	CY
TOTAL	14.8	CY

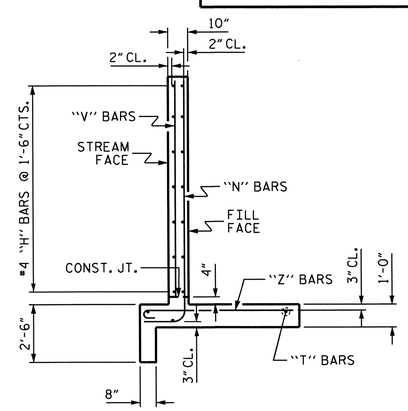

TYPICAL WING SECTION

PROJECT NO. U-0071

DURHAM COUNTY

STATION: 95+48.49 -L-

SHEET 5 OF 6

STATE OF NORTH CAROLINA
DEPARTMENT OF TRANSPORTATION
RALEIGH

INLET WINGS FOR CONCRETE BOX CULVERT

H = 9'-0" SLOPE = 2:1

105° SKEW

NORTH CAROLINA PROFESSIONAL SEAL 14855 ENGINEER DOUGLAS B. CALHOUN
5/13/14

REVISIONS						SHEET NO.
NO.	BY:	DATE:	NO.	BY:	DATE:	C-5
1			3			TOTAL SHEETS
2			4			26

ASSEMBLED BY : D. G. ELY DATE : 6/2012
CHECKED BY : S. B. WILLIAMS DATE : 6/2013
DESIGN ENGINEER OF RECORD: A. SORSENGINH DATE : 11/2013

DRAWN BY : CCJ 01/00
CHECKED BY : RWW 03/00

CULVERT 1 STD. NO. CW7509

LOAD AND RESISTANCE FACTOR RATING (LRFR) SUMMARY FOR REINFORCED CONCRETE BOX CULVERTS

LEVEL		VEHICLE	WEIGHT (W) (TONS)	CONTROLLING LOAD RATING (#)	MINIMUM RATING FACTORS (RF)	TONS = W × RF	STRENGTH I LIMIT STATE									COMMENT NUMBER
							LIVE-LOAD FACTORS $\gamma_{(LL)}$	MOMENT				SHEAR				
								RATING FACTOR	BOX NO.	ELEMENT TYPE	DISTANCE FROM LEFT END OF ELEMENT (ft)	RATING FACTOR	BOX NO.	ELEMENT TYPE	DISTANCE FROM LEFT END OF ELEMENT (ft)	
DESIGN LOAD RATING		HL-93 (INVENTORY)	N/A	1	1.17	--	1.75	1.17	1	EXTERIOR WALL	5.03	1.89	1	EXTERIOR WALL	8.96	
		HL-93 (OPERATING)	N/A		1.52	--	1.35	1.52	1	EXTERIOR WALL	5.03	2.45	1	EXTERIOR WALL	8.96	
		HS-20 (INVENTORY)	36.000	2	1.17	42.21	1.75	1.17	1	EXTERIOR WALL	5.03	1.89	1	EXTERIOR WALL	8.96	
		HS-20 (OPERATING)	36.000		1.52	54.72	1.35	1.52	1	EXTERIOR WALL	5.03	2.45	1	EXTERIOR WALL	8.96	
LEGAL LOAD RATING	SINGLE VEHICLE (SV)	SNSH	13.500	3	1.47	19.79	1.40	1.47	1	EXTERIOR WALL	5.03	2.37	1	EXTERIOR WALL	8.96	
		SNGARBS2	20.000		1.47	29.31	1.40	1.47	1	EXTERIOR WALL	5.03	2.37	1	EXTERIOR WALL	8.96	
		SNAGRIS2	22.000		1.47	32.24	1.40	1.47	1	EXTERIOR WALL	5.03	2.37	1	EXTERIOR WALL	8.96	
		SNCOTTS3	27.250		1.47	39.94	1.40	1.47	1	EXTERIOR WALL	5.03	2.37	1	EXTERIOR WALL	8.96	
		SNAGGRS4	34.930		1.47	51.19	1.40	1.47	1	EXTERIOR WALL	5.03	2.37	1	EXTERIOR WALL	8.96	
		SNS5A	35.550		1.47	52.10	1.40	1.47	1	EXTERIOR WALL	5.03	2.37	1	EXTERIOR WALL	8.96	
		SNS6A	39.950		1.47	58.55	1.40	1.47	1	EXTERIOR WALL	5.03	2.37	1	EXTERIOR WALL	8.96	
		SNS7B	42.000		1.47	61.56	1.40	1.47	1	EXTERIOR WALL	5.03	2.37	1	EXTERIOR WALL	8.96	
	TRUCK TRACTOR SEMI-TRAILER (TTST)	TNAGRIT3	33.000		1.47	48.37	1.40	1.47	1	EXTERIOR WALL	5.03	2.37	1	EXTERIOR WALL	8.96	
		TNT4A	33.080		1.47	48.48	1.40	1.47	1	EXTERIOR WALL	5.03	2.37	1	EXTERIOR WALL	8.96	
		TNT6A	41.600		1.47	60.97	1.40	1.47	1	EXTERIOR WALL	5.03	2.37	1	EXTERIOR WALL	8.96	
		TNT7A	42.000		1.47	61.56	1.40	1.47	1	EXTERIOR WALL	5.03	2.37	1	EXTERIOR WALL	8.96	
		TNT7B	42.000		1.47	61.56	1.40	1.47	1	EXTERIOR WALL	5.03	2.37	1	EXTERIOR WALL	8.96	
		TNAGRIT4	43.000		1.47	63.02	1.40	1.47	1	EXTERIOR WALL	5.03	2.37	1	EXTERIOR WALL	8.96	
		TNAGRIT5A	45.000		1.47	65.95	1.40	1.47	1	EXTERIOR WALL	5.03	2.37	1	EXTERIOR WALL	8.96	
		TNAGRIT5B	45.000		1.47	65.95	1.40	1.47	1	EXTERIOR WALL	5.03	2.37	1	EXTERIOR WALL	8.96	

LOAD FACTORS:

DESIGN LOAD RATING FACTORS

LOAD TYPE	MAX FACTOR	MIN FACTOR
DC	1.25	0.90
DW	1.50	0.65
EV	1.30	0.90
EH	1.35	0.50 OR 0.90
ES	1.35	0.50 OR 0.90
LS	1.75	--
WA	1.00	--

NOTE:

RATING FACTORS ARE BASED ON THE STRENGTH I LIMIT STATE.

COMMENTS:

1.
2.
3.
4.

(#) CONTROLLING LOAD RATING

(1) DESIGN LOAD RATING (HL-93)

(2) DESIGN LOAD RATING (HS-20)

(3) LEGAL LOAD RATING **

** SEE CHART FOR VEHICLE TYPE

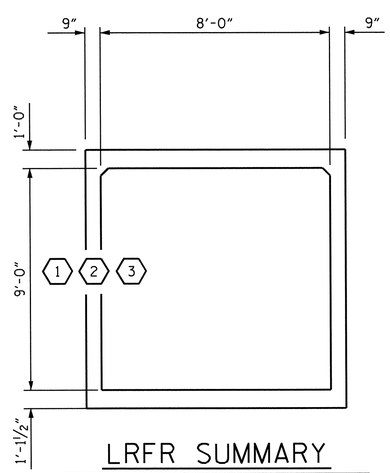

LRFR SUMMARY

(LOOKING DOWNSTREAM)

PROJECT NO. U-0071

DURHAM COUNTY

STATION: 95+48.49 -L-

SHEET 6 OF 6

STATE OF NORTH CAROLINA
DEPARTMENT OF TRANSPORTATION
RALEIGH

STANDARD

LRFR SUMMARY FOR REINFORCED CONCRETE BOX CULVERTS
(NON-INTERSTATE TRAFFIC)

NORTH CAROLINA PROFESSIONAL SEAL 14855 ENGINEER DOUGLAS B. CALHOUN
5/13/14

REVISIONS						SHEET NO.
NO.	BY:	DATE:	NO.	BY:	DATE:	C-6
1			3			TOTAL SHEETS
2			4			26

CULVERT 1 STD. NO. LRFR6

ASSEMBLED BY : D. G. ELY		DATE :	6/2012
CHECKED BY : S. B. WILLIAMS		DATE :	6/2013
DESIGN ENGINEER OF RECORD: A. SORSENGINH		DATE :	11/2013
DRAWN BY : WMC 7/11	REV. 10/1/11		MAA/GM
CHECKED BY : GM 7/11			

13-MAY-2014 09:56
Z:\TIPProjects-U\U0071\Structures\Plans\Culverts\CarrRoad_Culvert 1\Drawings\U0071_SD_CULV01_CARR RD.dgn
asorsenginh

BM #54 STA. 130+35.04 -LDFEB- 979.40' LT. EL. 377.68

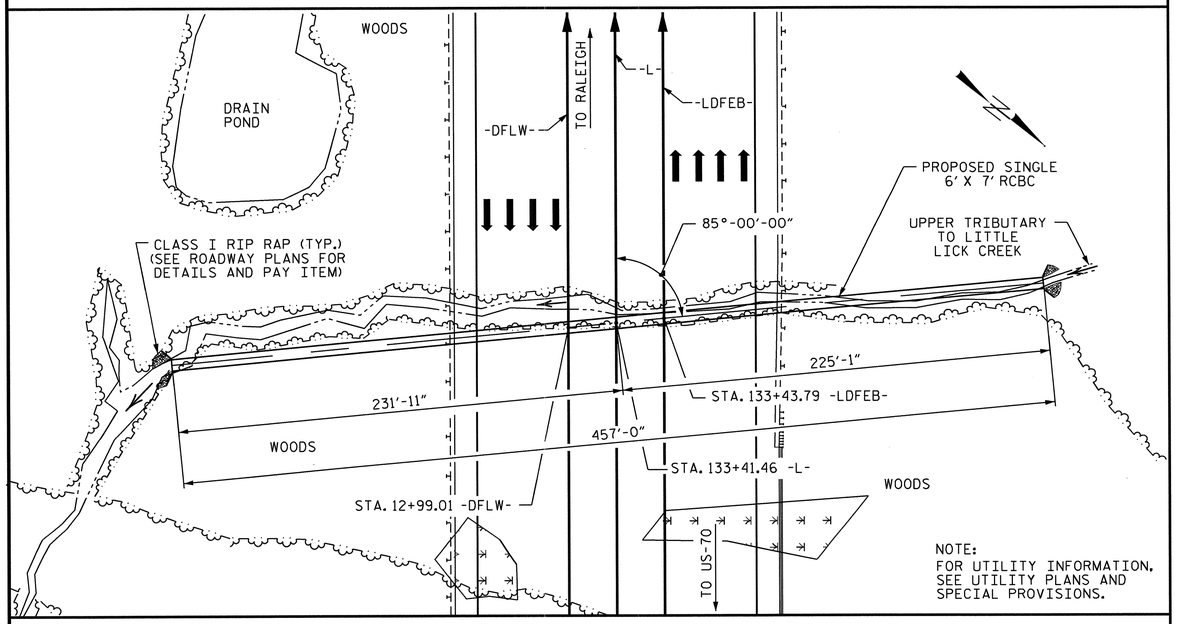

LOCATION SKETCH

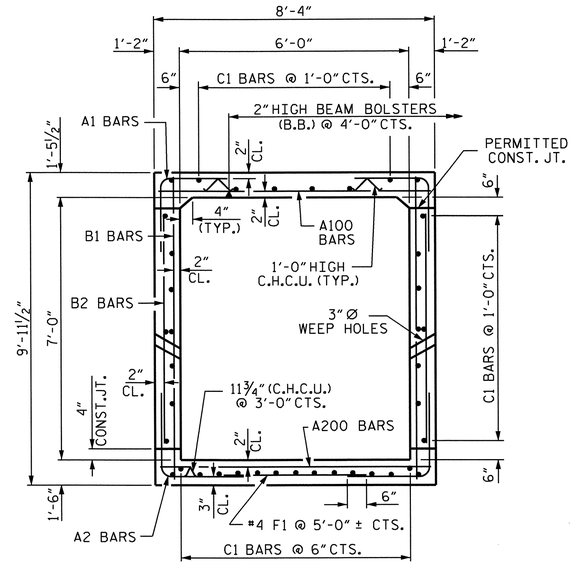

RIGHT ANGLE SECTION OF BARREL

THERE ARE 40 C1 BARS IN SECTION OF BARREL.

NOTES

ASSUMED LIVE LOAD ----------HL-93 OR ALTERNATE LOADING.

DESIGN FILL----------72.14'

FOR OTHER DESIGN DATA AND NOTES SEE STANDARD NOTE SHEET.

3" Ø WEEP HOLES INDICATED TO BE IN ACCORDANCE WITH THE SPECIFICATIONS.

CONCRETE IN CULVERTS TO BE POURED IN THE FOLLOWING ORDER:

1. WING FOOTINGS AND FLOOR SLAB INCLUDING 4" OF ALL VERTICAL WALLS.
2. THE REMAINING PORTIONS OF THE WALLS AND WINGS FULL HEIGHT FOLLOWED BY ROOF SLAB AND HEADWALLS.

THE RESIDENT ENGINEER SHALL CHECK THE LENGTH OF CULVERT BEFORE STAKING IT OUT TO MAKE CERTAIN THAT IT WILL PROPERLY TAKE CARE OF THE FILL.

DIMENSIONS FOR WING LAYOUT AS WELL AS ADDITIONAL REINFORCING STEEL EMBEDDED IN BARREL ARE SHOWN ON WING SHEET.

TRANSVERSE CONSTRUCTION JOINTS SHALL BE USED IN THE BARREL, SPACED TO LIMIT THE POURS TO A MAXIMUM OF 70 FT. LOCATION OF JOINTS SHALL BE SUBJECT TO APPROVAL OF THE ENGINEER.

AT THE CONTRACTOR'S OPTION, HE MAY SPLICE THE VERTICAL REINFORCING STEEL IN THE INTERIOR FACE OF EXTERIOR WALL ABOVE LOWER WALL CONSTRUCTION JOINT. THE SPLICE LENGTH SHALL BE AS PROVIDED IN THE SPLICE LENGTH CHART SHOWN ON THE PLANS. EXTRA WEIGHT OF STEEL DUE TO THE SPLICES SHALL BE PAID FOR BY THE CONTRACTOR.

A 3 FOOT STRIP OF FILTER FABRIC SHALL BE ATTACHED TO THE FILL FACE OF THE WING COVERING THE ENTIRE LENGTH OF THE EXPANSION JOINT.

FOR CRANE SAFETY, SEE SPECIAL PROVISIONS.

FOR FALSEWORK AND FORMWORK, SEE SPECIAL PROVISIONS.

FOR CULVERT DIVERSION DETAILS AND PAY ITEM, SEE EROSION CONTROL PLANS.

FOR SUBMITTAL OF WORKING DRAWINGS, SEE SPECIAL PROVISIONS.

FOR GROUT FOR STRUCTURES, SEE SPECIAL PROVISIONS.

THE REINFORCED CONCRETE BOX CULVERT SHALL BE CONSTRUCTED WITH 6 INCHES OF CAMBER TO ACCOUNT FOR ANTICIPATED SETTLEMENT.

NO PRECAST REINFORCED BOX CULVERT OPTION WILL BE ALLOWED.

HYDRAULIC DATA

DESIGN DISCHARGE	= 280 CFS
FREQUENCY OF DESIGN FLOOD	= 50 YRS.
DESIGN HIGH WATER ELEVATION	= 358.00
DRAINAGE AREA	= 0.125 SQ. MI.
BASE DISCHARGE (Q100)	= 330 CFS
BASE HIGH WATER ELEVATION	= 358.80

OVERTOPPING FLOOD DATA

OVERTOPPING DISCHARGE	= N/A
FREQUENCY OF OVERTOPPING FLOOD	= 500 YRS.
OVERTOPPING FLOOD ELEVATION	= N/A

GRADE DATA

GRADE POINT ELEVATION @ STA. 133+41.46 -L-	= 426.95'
GRADE POINT ELEVATION @ STA. 133+43.79 -LDFEB-	= 426.98'
GRADE POINT ELEVATION @ STA. 12+99.01 -DFLW-	= 426.73'
BED ELEVATION @ STA. 133+41.46 -L-	= 347.89'
BED ELEVATION @ STA. 133+43.79 -LDFEB-	= 348.14'
BED ELEVATION @ STA. 12+99.01 -DFLW-	= 347.65'
ROADWAY FILL SLOPES	= 2 : 1

TOTAL STRUCTURE QUANTITIES

CLASS A CONCRETE			
BARREL @ 1.522 CY/FT	695.6	C.Y.	
WING ETC.	18.5	C.Y.	
TOTAL	714.1	C.Y.	
REINFORCING STEEL			
BARREL	49,181	LBS.	
WINGS ETC.	1151	LBS.	
TOTAL	50,332	LBS.	
FOUNDATION CONDITIONING MAT'L.	397 TONS		
CULVERT EXCAVATION	LUMP SUM		

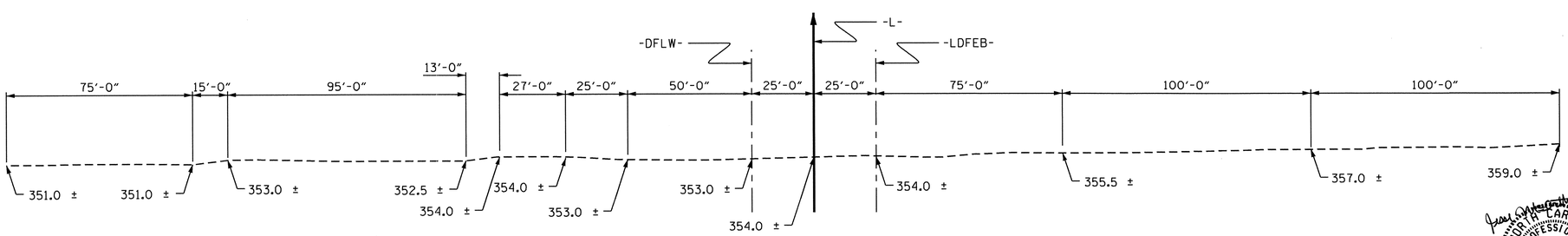

PROFILE ALONG ℄ CULVERT

PROJECT NO. U-0071
DURHAM COUNTY
STATION: 133+41.46 -L-

SHEET 1 OF 5

STATE OF NORTH CAROLINA
DEPARTMENT OF TRANSPORTATION
RALEIGH

SINGLE 6 FT. X 7 FT. CONCRETE BOX CULVERT 85° SKEW

NORTH CAROLINA PROFESSIONAL SEAL 022506 ENGINEER JESSE McARTHUR BAILEY 4/16/14

NORTH CAROLINA PROFESSIONAL SEAL 14855 ENGINEER DOUGLAS R. CALHOUN 5/13/14

REVISIONS								SHEET NO.
NO.	BY:	DATE:	NO.	BY:	DATE:			C-7
1			3					TOTAL SHEETS
2			4					26

ASSEMBLED BY : D. G. ELY DATE : 6/2012
CHECKED BY : S. B. WILLIAMS DATE : 6/2013
DESIGN ENGINEER OF RECORD: A. SORSENGINH DATE : 11/2013
DRAWN BY : R. WRIGHT DATE : AUG. 1989
CHECKED BY : C.R.K. DATE : AUG. 1989

SPECIAL STANDARD

REVISED 11-13-91 BY E.L.R. CHECKED BY G.R.P.
ADDED 8-22-89

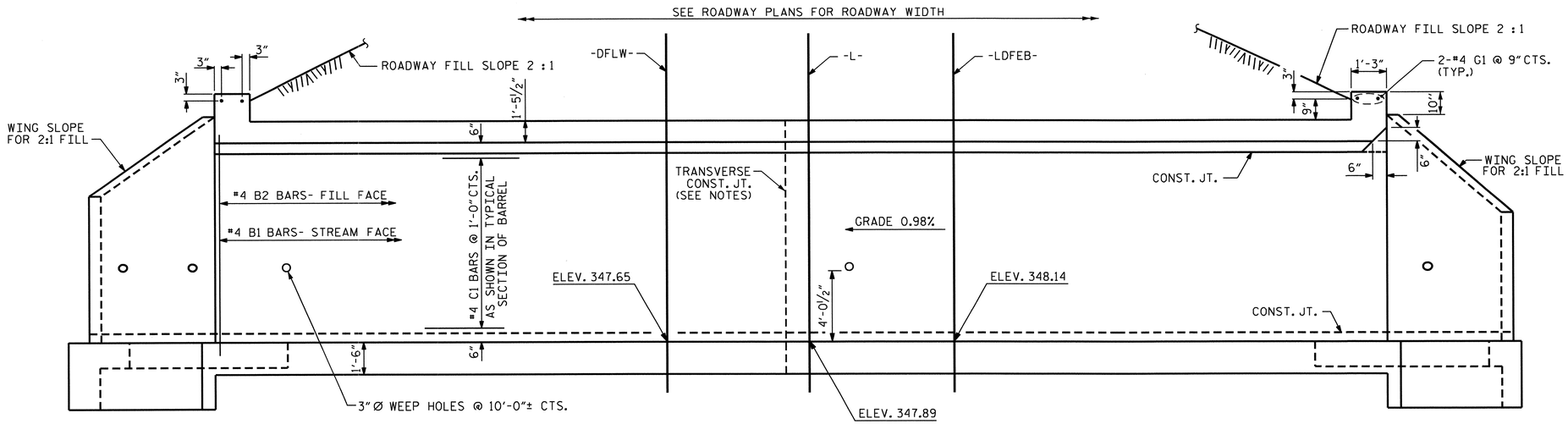

CULVERT SECTION NORMAL TO ROADWAY

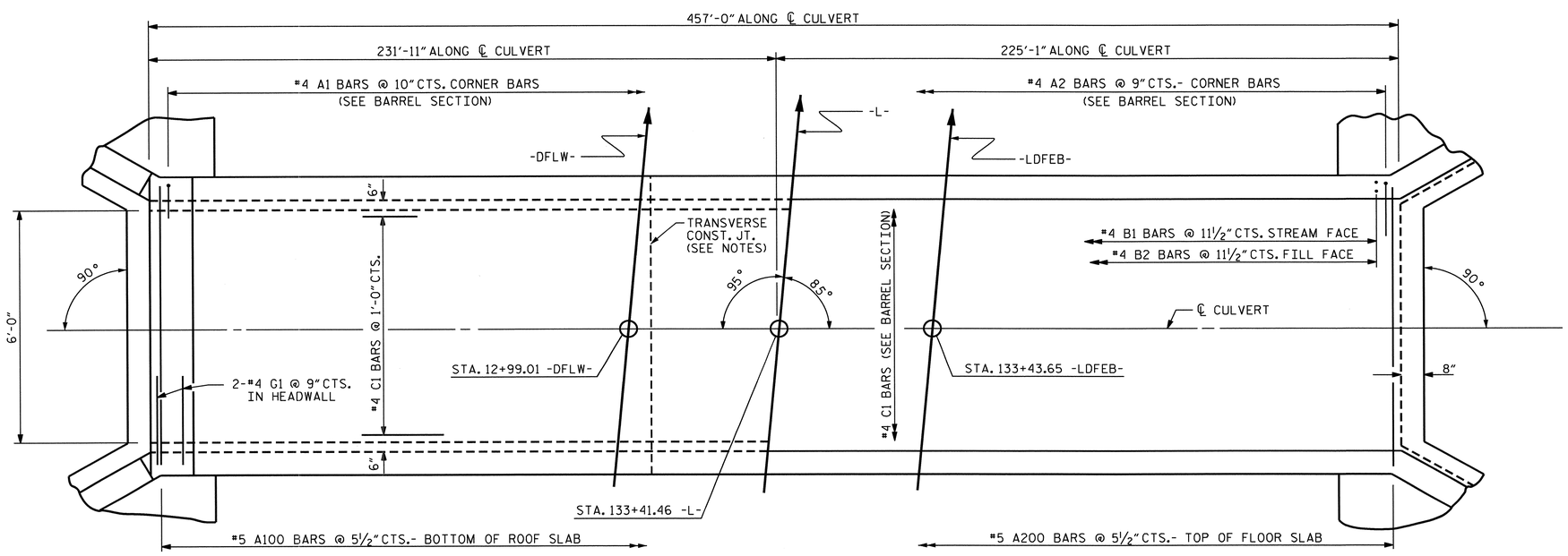

PART PLAN - ROOF SLAB

PART PLAN - FLOOR SLAB

PROJECT NO. U-0071
DURHAM COUNTY
STATION: 133+41.46 -L-

SHEET 2 OF 5

STATE OF NORTH CAROLINA
DEPARTMENT OF TRANSPORTATION
RALEIGH

SINGLE 6 FT. X 7 FT. CONCRETE BOX CULVERT 85° SKEW

NORTH CAROLINA PROFESSIONAL SEAL 14855 ENGINEER DOUGLAS B. CALDWELL
05/13/14

REVISIONS						
NO.	BY:	DATE:	NO.	BY:	DATE:	
1			3			
2			4			

SHEET NO. C-8
TOTAL SHEETS 26

ASSEMBLED BY : D. G. ELY	DATE : 6/2012	SPECIAL STANDARD	
CHECKED BY : S. B. WILLIAMS	DATE : 6/2013		
DESIGN ENGINEER OF RECORD: A. SORSENGINH	DATE : 11/2013		
DRAWN BY : R.W. WRIGHT	DATE : AUG. 1989		
CHECKED BY : A.R. BISSETTE	DATE : AUG. 1989		

REVISED 8-28-92 BY E.L.R. CHECKED BY C.R.P.
REVISED 8-22-93 BY A.R.B. CHECKED BY C.R.K.
REDRAWN 8-22-99
REVISED 11-19-99 BY M.M. CHECKED BY R.W.W.

CULVERT 2 STD. NO. CB11

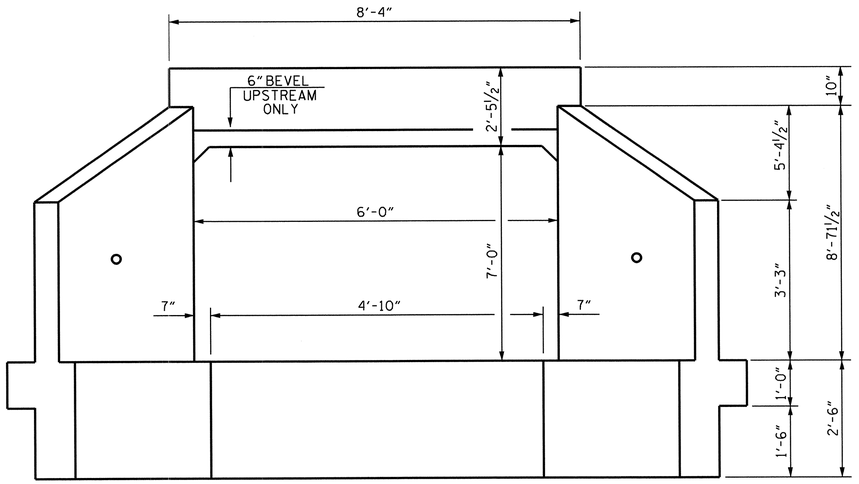

END ELEVATION

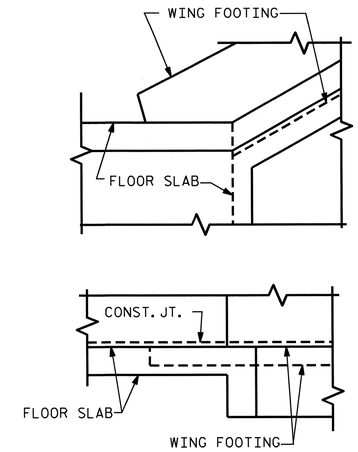

DETAIL

CONNECTION OF WING FOOTING AND FLOOR SLAB WHEN SLAB IS THICKER THAN FOOTING

BAR SCHEDULE

BAR	NO.	SIZE	TYPE	LENGTH	WEIGHT
A1	1098	#4	1	6'-6"	4768
A2	1220	#4	1	5'-8"	4618
A100	997	#5	STR	7'-11"	8232
A200	997	#5	STR	7'-11"	8232
B1	954	#4	STR	9'-5"	6001
B2	954	#4	STR	6'-4"	4036
C1	680	#4	STR	28'-8"	13022
F1	92	#4	STR	4'-1"	251
G1	4	#4	STR	8'-0"	21
					49,181 LBS

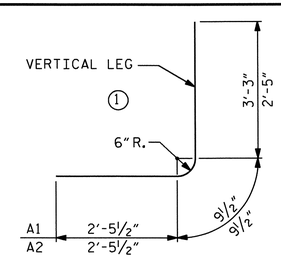

BAR TYPE

DIMENSIONS ARE OUT TO OUT

SPLICE LENGTH CHART

BAR	SIZE	SPLICE LENGTH
C1	4	1'-11"

PROJECT NO. U-0071
DURHAM COUNTY
STATION: 133+41.46 -L-

SHEET 3 OF 5

STATE OF NORTH CAROLINA
DEPARTMENT OF TRANSPORTATION
RALEIGH

SINGLE 6 FT. X 7 FT. CONCRETE BOX CULVERT 85° SKEW

NORTH CAROLINA PROFESSIONAL SEAL 14855 ENGINEER DOUGLAS R. CALLISON
5/15/14

REVISIONS						SHEET NO.
NO.	BY:	DATE:	NO.	BY:	DATE:	C-9
1			3			TOTAL SHEETS
2			4			26

ASSEMBLED BY : D. G. ELY DATE : 6/2012
CHECKED BY : S. B. WILLIAMS DATE : 6/2013
DESIGN ENGINEER OF RECORD: A. SORSENGINH DATE : 11/2013

DRAWN BY : R.W. WRIGHT DATE : AUG. 1989
CHECKED BY : A.R. BISSETTE DATE : AUG. 1989

SPECIAL STANDARD

REVISED 8-28-92 BY E.L.R. CHECKED BY G.R.P.
REVISED 8-22-89 BY A.R.B. CHECKED BY C.R.K.
REDRAWN 8-22-89

REVISED 11-19-99 BY M.M. CHECKED BY R.W.W.

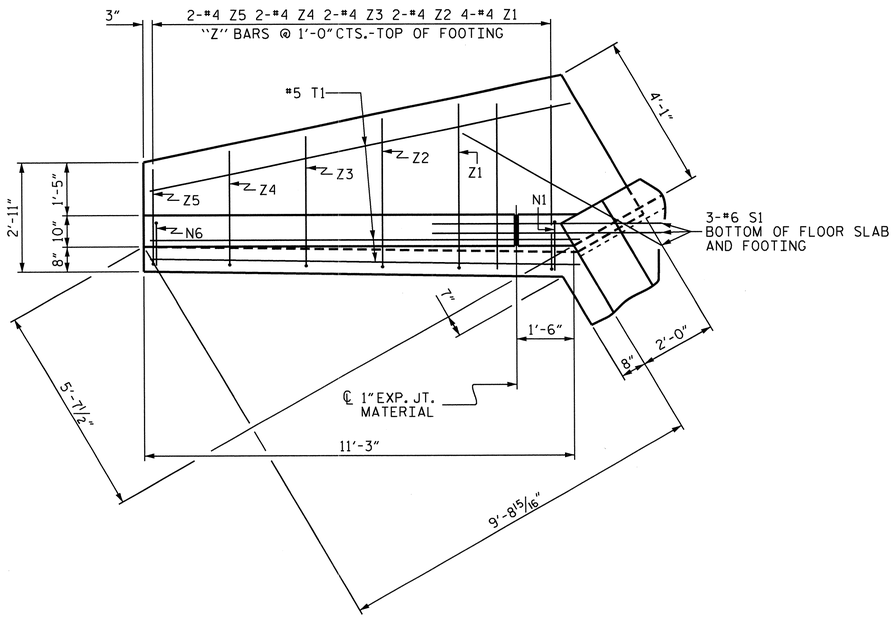

PLAN

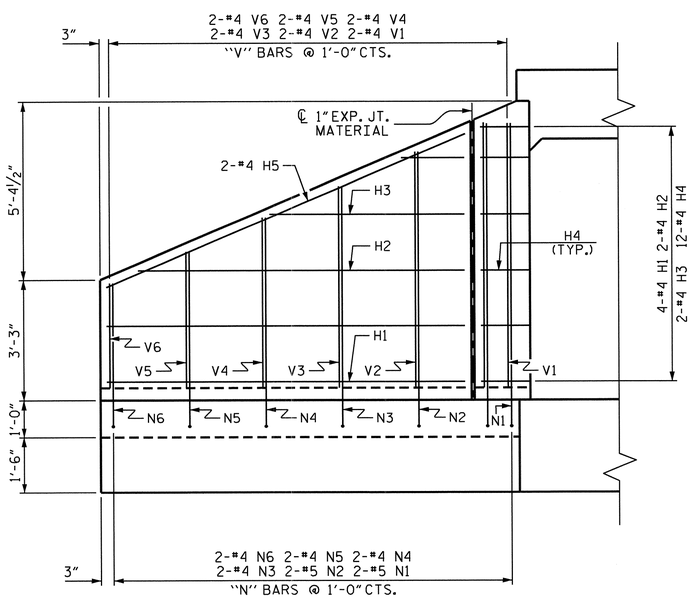

ELEVATION

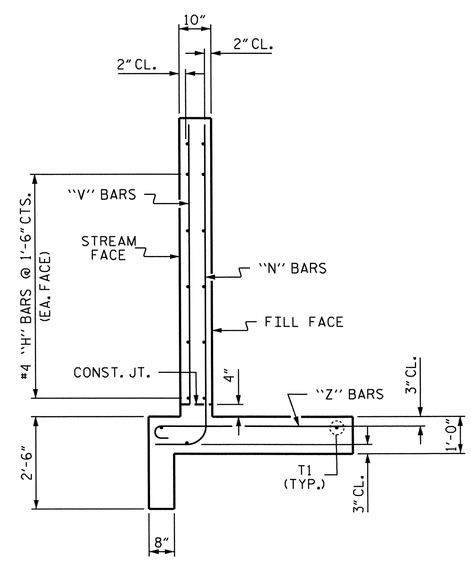

TYPICAL WING SECTION

BAR TYPES

ALL BAR DIMENSIONS ARE OUT TO OUT.

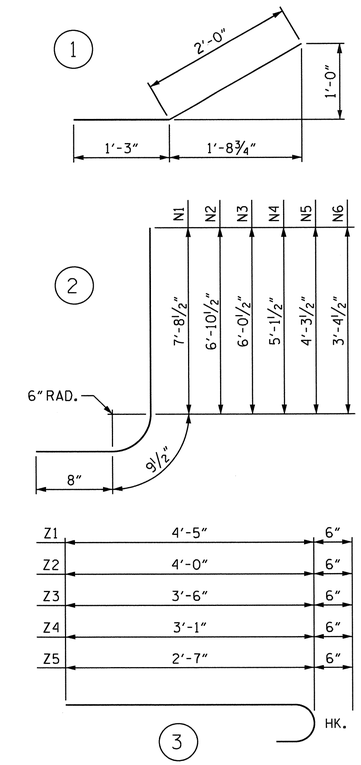

BILL OF MATERIAL

BAR	NO.	SIZE	TYPE	LENGTH	WEIGHT
H1	16	#4	STR	9'-4"	100
H2	8	#4	STR	8'-6"	45
H3	8	#4	STR	5'-1"	27
H4	48	#4	1	3'-3"	104
H5	8	#4	STR	10'-3"	55
N1	8	#5	2	9'-2"	76
N2	8	#5	2	8'-4"	70
N3	8	#4	2	7'-6"	40
N4	8	#4	2	6'-7"	35
N5	8	#4	2	5'-9"	31
N6	8	#4	2	4'-10"	26
S1	12	#6	STR	6'-0"	108
T1	12	#5	STR	11'-3"	141
V1	8	#4	STR	7'-1"	38
V2	8	#4	STR	6'-4"	34
V3	8	#4	STR	5'-5"	29
V4	8	#4	STR	4'-7"	24
V5	8	#4	STR	3'-8"	20
V6	8	#4	STR	2'-10"	15
Z1	16	#4	3	4'-11"	53
Z2	8	#4	3	4'-6"	24
Z3	8	#4	3	4'-0"	21
Z4	8	#4	3	3'-7"	19
Z5	8	#4	3	3'-1"	16

TOTAL REINFORCING STEEL
FOR 4 WINGS 1151 LBS

CLASS A CONCRETE
4 WINGS 17.1 CY
2 HEADWALLS 0.8 CY
2 END CURTAIN WALLS 0.6 CY
TOTAL 18.5 CY

PROJECT NO. U-0071
DURHAM COUNTY
STATION: 133+41.46 -L-

SHEET 4 OF 5

STATE OF NORTH CAROLINA
DEPARTMENT OF TRANSPORTATION
RALEIGH

STANDARD WINGS FOR CONCRETE BOX CULVERT

H = 7'-0" SLOPE = 2:1
90° SKEW

NORTH CAROLINA PROFESSIONAL SEAL 14855 ENGINEER DOUGLAS B. CALHOUN
5/13/14

REVISIONS						SHEET NO.
NO.	BY:	DATE:	NO.	BY:	DATE:	C-10
1			3			TOTAL SHEETS
2			4			26

ASSEMBLED BY : D. G. ELY DATE : 6/2012
CHECKED BY : S. B. WILLIAMS DATE : 6/2013
DESIGN ENGINEER OF RECORD:
A. SORSENGINH DATE : 11/2013

DRAWN BY : CCJ 10/99
CHECKED BY : RWW 03/00

CULVERT 2 STD. NO. CW9007

LOAD AND RESISTANCE FACTOR RATING (LRFR) SUMMARY FOR REINFORCED CONCRETE BOX CULVERTS

LEVEL		VEHICLE	WEIGHT (W) (TONS)	CONTROLLING LOAD RATING (#)	MINIMUM RATING FACTORS (RF)	TONS = W × RF	STRENGTH I LIMIT STATE									COMMENT NUMBER
							LIVE-LOAD FACTORS $\gamma_{(LL)}$	MOMENT				SHEAR				
								RATING FACTOR	BOX NO.	ELEMENT TYPE	DISTANCE FROM LEFT END OF ELEMENT (ft)	RATING FACTOR	BOX NO.	ELEMENT TYPE	DISTANCE FROM LEFT END OF ELEMENT (ft)	
DESIGN LOAD RATING		HL-93 (INVENTORY)	N/A	1	6.56	--	1.75	9.18	1	EXTERIOR WALL	4.24	6.56	1	EXTERIOR WALL	6.85	
		HL-93 (OPERATING)	N/A		8.50	--	1.35	11.90	1	EXTERIOR WALL	4.24	8.50	1	EXTERIOR WALL	6.85	
		HS-20 (INVENTORY)	36.000	2	6.56	236.10	1.75	9.18	1	EXTERIOR WALL	4.24	6.56	1	EXTERIOR WALL	6.85	
		HS-20 (OPERATING)	36.000		8.50	306.06	1.35	11.90	1	EXTERIOR WALL	4.24	8.50	1	EXTERIOR WALL	6.85	
LEGAL LOAD RATING	SINGLE VEHICLE (SV)	SNSH	13.500	3	8.20	110.67	1.40	11.48	1	EXTERIOR WALL	4.24	8.20	1	EXTERIOR WALL	6.85	
		SNGARBS2	20.000		8.20	163.96	1.40	11.48	1	EXTERIOR WALL	4.24	8.20	1	EXTERIOR WALL	6.85	
		SNAGRIS2	22.000		8.20	180.35	1.40	11.48	1	EXTERIOR WALL	4.24	8.20	1	EXTERIOR WALL	6.85	
		SNCOTTS3	27.250		8.20	223.39	1.40	11.48	1	EXTERIOR WALL	4.24	8.20	1	EXTERIOR WALL	6.85	
		SNAGGRS4	34.930		8.20	286.31	1.40	11.48	1	EXTERIOR WALL	4.24	8.20	1	EXTERIOR WALL	6.85	
		SNS5A	35.550		8.20	291.44	1.40	11.48	1	EXTERIOR WALL	4.24	8.20	1	EXTERIOR WALL	6.85	
		SNS6A	39.950		8.20	327.51	1.40	11.48	1	EXTERIOR WALL	4.24	8.20	1	EXTERIOR WALL	6.85	
		SNS7B	42.000		8.20	344.31	1.40	11.48	1	EXTERIOR WALL	4.24	8.20	1	EXTERIOR WALL	6.85	
	TRUCK TRACTOR SEMI-TRAILER (TTST)	TNAGRIT3	33.000		8.20	270.53	1.40	11.48	1	EXTERIOR WALL	4.24	8.20	1	EXTERIOR WALL	6.85	
		TNT4A	33.080		8.20	271.15	1.40	11.48	1	EXTERIOR WALL	4.24	8.20	1	EXTERIOR WALL	6.85	
		TNT6A	41.600		8.20	341.03	1.40	11.48	1	EXTERIOR WALL	4.24	8.20	1	EXTERIOR WALL	6.85	
		TNT7A	42.000		8.20	344.31	1.40	11.48	1	EXTERIOR WALL	4.24	8.20	1	EXTERIOR WALL	6.85	
		TNT7B	42.000		8.20	344.31	1.40	11.48	1	EXTERIOR WALL	4.24	8.20	1	EXTERIOR WALL	6.85	
		TNAGRIT4	43.000		8.20	352.51	1.40	11.48	1	EXTERIOR WALL	4.24	8.20	1	EXTERIOR WALL	6.85	
		TNAGRIT5A	45.000		8.20	368.91	1.40	11.48	1	EXTERIOR WALL	4.24	8.20	1	EXTERIOR WALL	6.85	
		TNAGRIT5B	45.000		8.20	368.91	1.40	11.48	1	EXTERIOR WALL	4.24	8.20	1	EXTERIOR WALL	6.85	

LOAD FACTORS:

DESIGN LOAD RATING FACTORS

LOAD TYPE	MAX FACTOR	MIN FACTOR
DC	1.25	0.90
DW	1.50	0.65
EV	1.30	0.90
EH	1.35	0.50 OR 0.90
ES	1.35	0.50 OR 0.90
LS	1.75	--
WA	1.00	--

NOTE:

RATING FACTORS ARE BASED ON THE STRENGTH I LIMIT STATE.

COMMENTS:

1.
2.
3.
4.

(#) CONTROLLING LOAD RATING

(1) DESIGN LOAD RATING (HL-93)

(2) DESIGN LOAD RATING (HS-20)

(3) LEGAL LOAD RATING **

** SEE CHART FOR VEHICLE TYPE

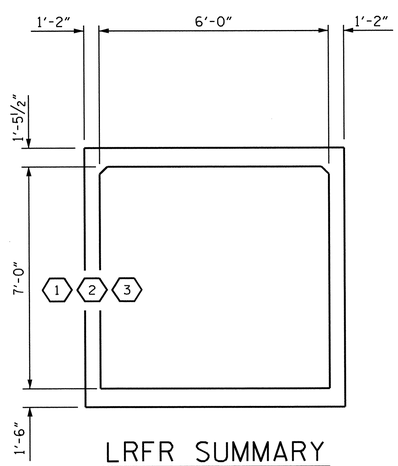

LRFR SUMMARY

(LOOKING DOWNSTREAM)

PROJECT NO. U-0071

DURHAM COUNTY

STATION: 133+41.46 -L-

SHEET 5 OF 5

STATE OF NORTH CAROLINA
DEPARTMENT OF TRANSPORTATION
RALEIGH

STANDARD

LRFR SUMMARY FOR REINFORCED CONCRETE BOX CULVERTS
(NON-INTERSTATE TRAFFIC)

NORTH CAROLINA PROFESSIONAL SEAL 14855 ENGINEER DOUGLAS R. CALHOUN
5/13/14

REVISIONS						SHEET NO.
NO.	BY:	DATE:	NO.	BY:	DATE:	C-11
1			3			TOTAL SHEETS
2			4			26

ASSEMBLED BY : D. G. ELY DATE : 6/2012
CHECKED BY : S. B. WILLIAMS DATE : 6/2013
DESIGN ENGINEER OF RECORD: A. SORSENGINH DATE : 6/2013

DRAWN BY : WMC 7/11
CHECKED BY : GM 7/11

REV. 10/1/11 MAA/GM

13-MAY-2014 09:54
Z:\TIPProjects-U\U0071\Structures\Plans\Culverts\RowenaRoad_Culvert 2\Drawings\U0071_SD_CULV02_ROWENA RD.dgn
asorsenginh

CULVERT 2 STD. NO. LRFR6

BM #59 RR SPIKE IN 24" OAK, STA. 95+95.85 -L- 155.11' LT. EL. 325.43

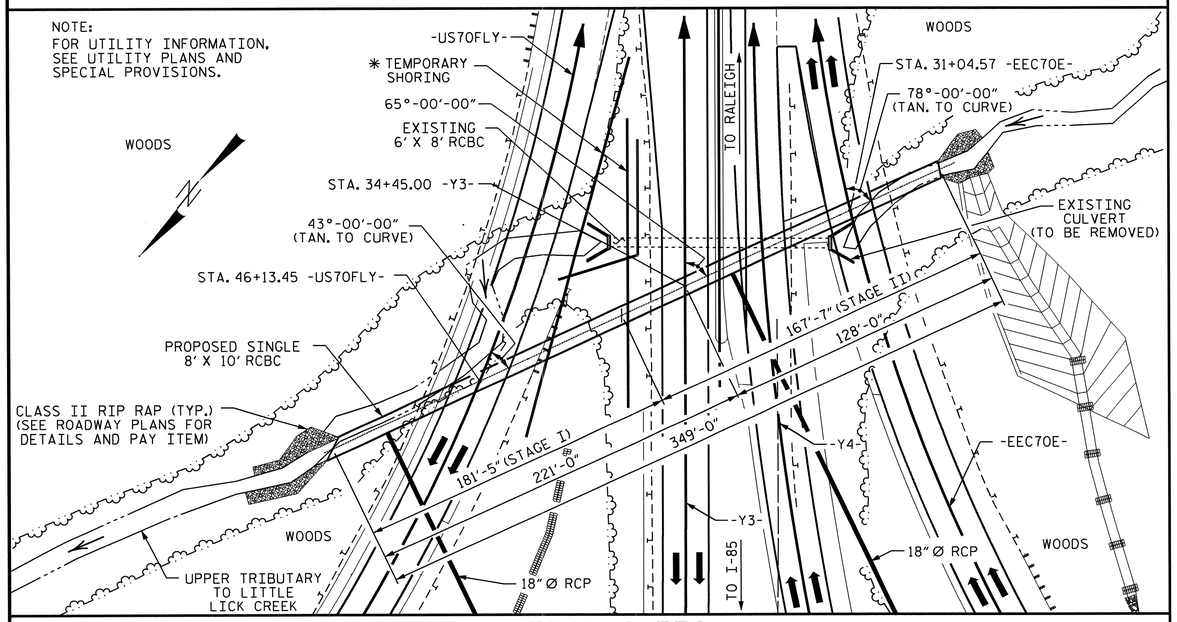

LOCATION SKETCH

NOTES

ASSUMED LIVE LOAD ----------HL-93 OR ALTERNATE LOADING.

DESIGN FILL----------19.50'

FOR OTHER DESIGN DATA AND NOTES SEE STANDARD NOTE SHEET.

3" Ø WEEP HOLES INDICATED TO BE IN ACCORDANCE WITH THE SPECIFICATIONS.

CONCRETE IN CULVERTS TO BE POURED IN THE FOLLOWING ORDER:

1. WING FOOTINGS AND FLOOR SLAB INCLUDING 4" OF ALL VERTICAL WALLS.
2. THE REMAINING PORTIONS OF THE WALLS AND WINGS FULL HEIGHT FOLLOWED BY ROOF SLAB AND HEADWALLS.

THE RESIDENT ENGINEER SHALL CHECK THE LENGTH OF CULVERT BEFORE STAKING IT OUT TO MAKE CERTAIN THAT IT WILL PROPERLY TAKE CARE OF THE FILL.

DIMENSIONS FOR WING LAYOUT AS WELL AS ADDITIONAL REINFORCING STEEL EMBEDDED IN BARREL ARE SHOWN ON WING SHEETS.

TRANSVERSE CONSTRUCTION JOINTS SHALL BE USED IN THE BARREL, SPACED TO LIMIT THE POURS TO A MAXIMUM OF 70 FT. LOCATION OF JOINTS SHALL BE SUBJECT TO APPROVAL OF THE ENGINEER.

AT THE CONTRACTOR'S OPTION, HE MAY SPLICE THE VERTICAL REINFORCING STEEL IN THE INTERIOR FACE OF EXTERIOR WALL ABOVE LOWER WALL CONSTRUCTION JOINT. THE SPLICE LENGTH SHALL BE AS PROVIDED IN THE SPLICE LENGTH CHART SHOWN ON THE PLANS. EXTRA WEIGHT OF STEEL DUE TO THE SPLICES SHALL BE PAID FOR BY THE CONTRACTOR.

THE EXISTING STRUCTURE CONSISTING OF A REINFORCED CONCRETE CULVERT 6'(W) X 8'(D) SIZE, 115'± LONG AND LOCATED AT THE PROPOSED STRUCTURE, SHALL BE REMOVED.

A 3 FOOT STRIP OF FILTER FABRIC SHALL BE ATTACHED TO THE FILL FACE OF THE WING COVERING THE ENTIRE LENGTH OF THE EXPANSION JOINT.

FOR CRANE SAFETY, SEE SPECIAL PROVISIONS.

FOR FALSEWORK AND FORMWORK, SEE SPECIAL PROVISIONS.

FOR CULVERT DIVERSION DETAILS AND PAY ITEM, SEE EROSION CONTROL PLANS.

THE 18" Ø PIPES THROUGH THE SIDEWALL OF THE CULVERT SHALL BE LOCATED BY THE ENGINEER. THE REINFORCING STEEL SHALL BE FIELD BENT AS NECESSARY TO CLEAR PIPES.

FOR SUBMITTAL OF WORKING DRAWINGS, SEE SPECIAL PROVISIONS.

FOR GROUT FOR STRUCTURES, SEE SPECIAL PROVISIONS.

AT THE CONTRACTOR'S OPTION HE MAY SUBMIT, TO THE ENGINEER FOR APPROVAL, DESIGN AND DETAIL DRAWINGS FOR A PRECAST REINFORCED CONCRETE BOX CULVERT IN LIEU OF THE CAST-IN-PLACE CULVERT SHOWN ON THE PLANS. THE DESIGN SHALL PROVIDE THE SAME SIZE AND NUMBER OF BARRELS AS USED ON THE CAST-IN-PLACE DESIGN. FOR OPTIONAL PRECAST REINFORCED CONCRETE BOX CULVERT, SEE SPECIAL PROVISIONS.

* FOR LIMITS OF TEMPORARY SHORING FOR MAINTENANCE OF TRAFFIC, SEE TRAFFIC CONTROL PLANS. FOR PAY ITEM FOR TEMPORARY SHORING FOR MAINTENANCE OF TRAFFIC, SEE ROADWAY PLANS.

FOR MAINTENANCE OF TRAFFIC, SEE TRAFFIC CONTROL PLANS.

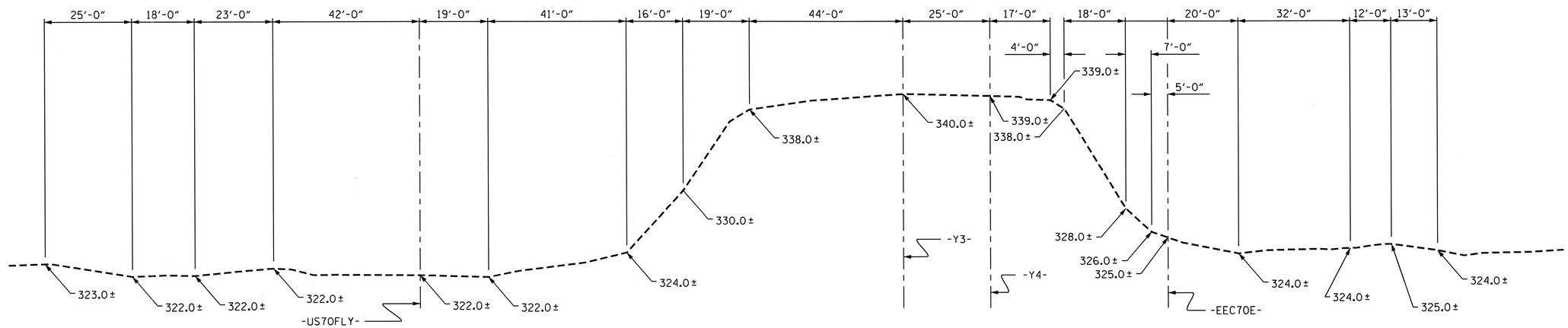

PROFILE ALONG ℄ CULVERT

HYDRAULIC DATA

DESIGN DISCHARGE	= 662 CFS
FREQUENCY OF DESIGN FLOOD	= 50 YRS.
DESIGN HIGH WATER ELEVATION	= 328.50
DRAINAGE AREA	= 0.45 SQ. MI.
BASE DISCHARGE (Q100)	= 746 CFS
BASE HIGH WATER ELEVATION	= 329.30

OVERTOPPING FLOOD DATA

OVERTOPPING DISCHARGE	= 1650 CFS
FREQUENCY OF OVERTOPPING FLOOD	= 500+ YRS.
OVERTOPPING FLOOD ELEVATION	= 344.90
OVERTOPPING LOCATION @ STA. 33+71.33 -Y3-	

GRADE DATA

GRADE POINT ELEVATION @ STA. 34+45.00 -Y3-	= 345.39'
GRADE POINT ELEVATION @ STA. 46+13.45 -US70FLY-	= 341.42'
GRADE POINT ELEVATION @ STA. 31+04.57 -EEC70E-	= 342.28'
BED ELEVATION @ STA. 34+45.00 -Y3-	= 316.61'
BED ELEVATION @ STA. 46.13.45 -US70FLY-	= 315.43'
BED ELEVATION @ STA. 31+04.57 -EEC70E-	= 317.26'
ROADWAY FILL SLOPES	
LEFT	= 2 : 1
RIGHT	= 2 : 1

TOTAL STRUCTURE QUANTITIES

CLASS A CONCRETE			
BARREL @ 1.154 CY/FT		402.8	C.Y.
WINGS ETC.		39.8	C.Y.
EDGE BEAM		1.6	C.Y.
TOTAL		444.2	C.Y.
REINFORCING STEEL			
BARREL		62,339	LBS.
WINGS ETC.		2839	LBS.
TOTAL		65,178	LBS.
FOUNDATION CONDITIONING MAT'L.		331	TONS
CULVERT EXCAVATION		LUMP SUM	
REMOVAL OF EXISTING STRUCTURE		LUMP SUM	

PROJECT NO. U-0071
DURHAM COUNTY
STATION: 34+45.00 -Y3-

SHEET 1 OF 8

STATE OF NORTH CAROLINA
DEPARTMENT OF TRANSPORTATION
RALEIGH

SINGLE 8 FT. X 10 FT. CONCRETE BOX CULVERT 65° SKEW

NORTH CAROLINA PROFESSIONAL SEAL 022506 ENGINEER JESSE McARTHUR BAILEY 6/6/14

NORTH CAROLINA PROFESSIONAL SEAL 14855 ENGINEER DOUGLAS R. CALHOUN 6/6/14

REVISIONS						SHEET NO.
NO.	BY:	DATE:	NO.	BY:	DATE:	C-12
1			3			TOTAL SHEETS
2			4			26

ASSEMBLED BY : D. G. ELY	DATE : 8/2012	SPECIAL STANDARD
CHECKED BY : A. K. PATEL, PE	DATE : 6/2013	
DESIGN ENGINEER OF RECORD: W. S. ARAFAT	DATE : 6/2013	
DRAWN BY : R. WRIGHT	DATE : AUG.1989	
CHECKED BY : A. R. BISSETTE	DATE : AUG.1989	

REVISED 11-13-91 BY E.L.R. CHECKED BY G.R.P.
ADDED 8-22-89

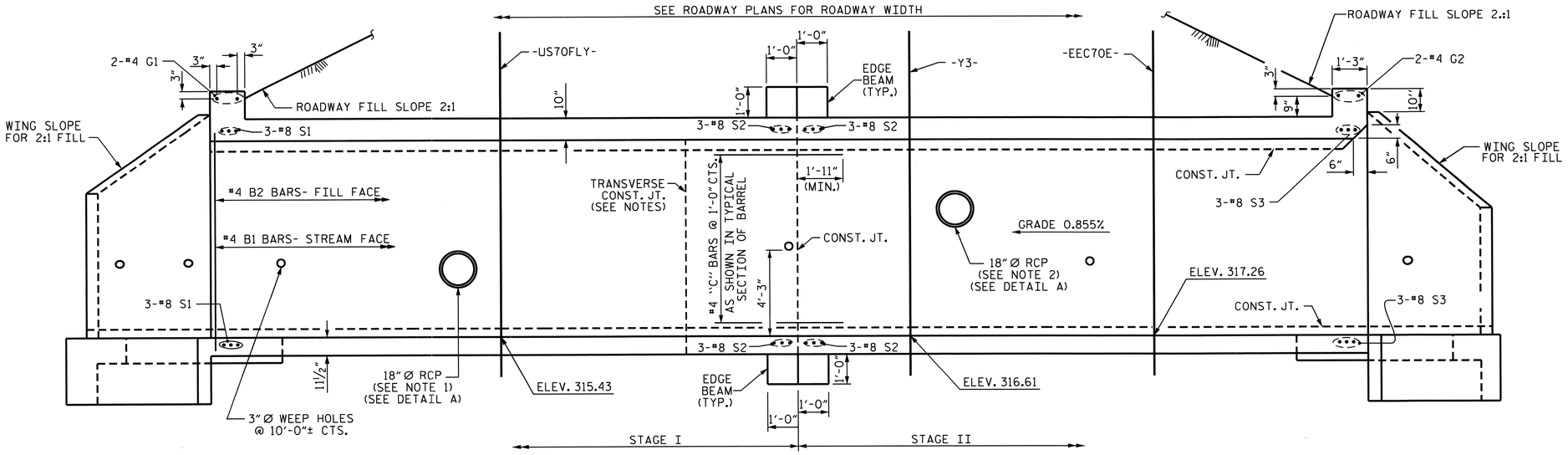

CULVERT SECTION NORMAL TO ROADWAY

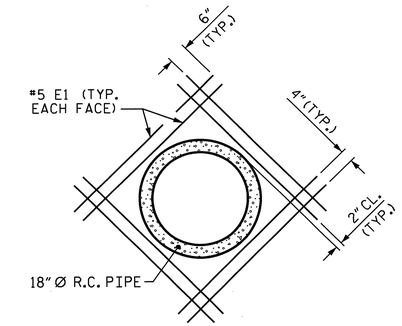

DETAIL A

NOTES:

1. TIE 18" Ø RCP TO RCBC
   INV. (18" Ø RCP) EL. 318.00, INV. (RCBC) EL. 315.00
2. TIE 18" Ø RCP TO RCBC
   INV. (18" Ø RCP) EL. 323.00, INV. (RCBC) EL. 316.74

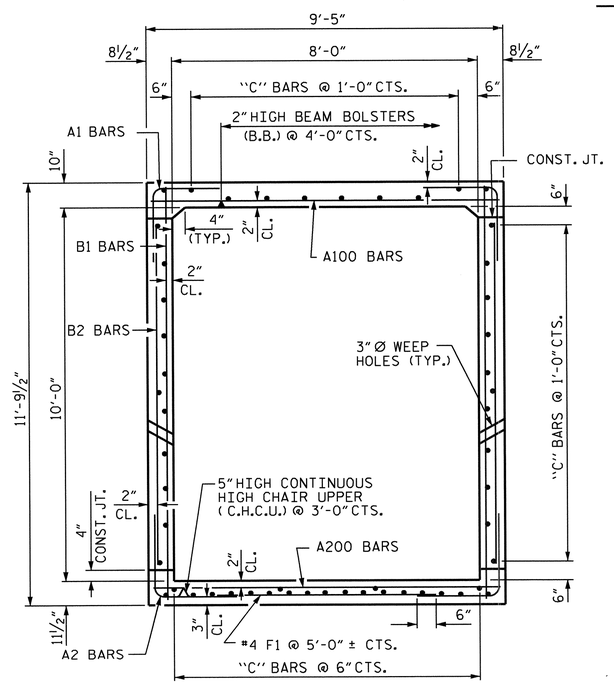

RIGHT ANGLE SECTION OF BARREL

THERE ARE 53 "C" BARS IN SECTION OF BARREL.

BAR SCHEDULE

STAGE I

BAR	NO.	SIZE	TYPE	LENGTH	WEIGHT
A1	858	#4	1	6'-1"	3487
A2	781	#5	1	6'-3"	5091
A100	419	#5	STR	9'-0"	3933
A101	2	#5	STR	8'-4"	17
A102	2	#5	STR	7'-6"	16
A103	2	#5	STR	6'-8"	14
A104	2	#5	STR	5'-10"	12
A105	2	#5	STR	5'-0"	10
A106	2	#5	STR	4'-2"	9
A107	2	#5	STR	7'-2"	15
A108	2	#5	STR	5'-4"	11
A200	419	#5	STR	9'-0"	3933
A201	2	#5	STR	8'-4"	17
A202	2	#5	STR	7'-6"	16
A203	2	#5	STR	6'-8"	14
A204	2	#5	STR	5'-10"	12
A205	2	#5	STR	5'-0"	10
A206	2	#5	STR	4'-2"	9
A207	2	#5	STR	7'-2"	15
A208	2	#5	STR	5'-4"	11
B1	622	#4	STR	11'-3"	4674
B2	581	#4	STR	9'-4"	3622
C1	371	#4	STR	28'-2"	6980
E1	16	#5	STR	4-0"	67
F1	36	#4	STR	3-3"	78
G1	2	#4	STR	12'-9"	17
S1	6	#8	STR	12'-9"	204
S2	6	#8	STR	9'-11"	159

REINFORCING STEEL = 32,453 LBS

STAGE II

BAR	NO.	SIZE	TYPE	LENGTH	WEIGHT
A1	797	#4	1	6'-1"	3239
A2	725	#5	1	6'-3"	4726
A100	394	#5	STR	9'-0"	3698
A151	2	#5	STR	7'-2"	15
A152	2	#5	STR	5'-4"	11
A153	1	#5	STR	7'-11"	8
A154	1	#5	STR	6'-4"	7
A155	1	#5	STR	4'-10"	5
A200	394	#5	STR	9'-0"	3698
A251	2	#5	STR	7'-2"	15
A252	2	#5	STR	5'-4"	11
A253	1	#5	STR	7'-11"	8
A254	1	#5	STR	6'-4"	7
A255	1	#5	STR	4'-10"	5
B1	575	#4	STR	11'-3"	4321
B2	537	#4	STR	9'-4"	3348
C2	318	#4	STR	29'-8"	6302
E1	16	#5	STR	4-0"	67
F1	34	#4	STR	3-3"	74
G2	2	#4	STR	9'-4"	12
S2	6	#8	STR	9'-11"	159
S3	6	#8	STR	9'-4"	150

REINFORCING STEEL = 29,886 LBS

STRUCTURE QUANTITIES

STAGE I

CLASS A CONCRETE			
BARREL @	1.154 CY/FT	209.4	C.Y.
WINGS ETC.		22.5	C.Y.
EDGE BEAM		0.8	C.Y.
TOTAL		232.7	C.Y.
REINFORCING STEEL			
BARREL		32,453	LBS.
WINGS ETC.		1604	LBS.
TOTAL		34,057	LBS.
FOUNDATION CONDITIONING MAT'L.		172	TONS
CULVERT EXCAVATION		LUMP SUM	

STAGE II

CLASS A CONCRETE			
BARREL @	1.154 CY/FT	193.4	C.Y.
WINGS ETC.		17.3	C.Y.
EDGE BEAM		0.8	C.Y.
TOTAL		211.5	C.Y.
REINFORCING STEEL			
BARREL		29,886	LBS.
WINGS ETC.		1235	LBS.
TOTAL		31,121	LBS.
FOUNDATION CONDITIONING MAT'L.		159	TONS
CULVERT EXCAVATION		LUMP SUM	

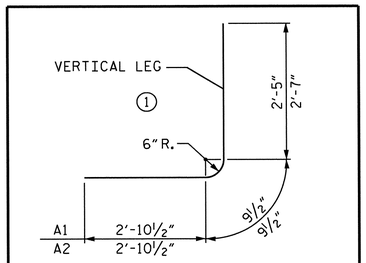

BAR TYPE

DIMENSIONS ARE OUT TO OUT

SPLICE LENGTH CHART

BAR	SIZE	SPLICE LENGTH
C1	4	1'-11"

PROJECT NO. U-0071
DURHAM COUNTY
STATION: 34+45.00 -Y3-

SHEET 2 OF 8

STATE OF NORTH CAROLINA
DEPARTMENT OF TRANSPORTATION
RALEIGH

SINGLE 8 FT. X 10 FT. CONCRETE BOX CULVERT 65° SKEW

NORTH CAROLINA PROFESSIONAL SEAL 14855 ENGINEER DOUGLAS B. CALLAWAY
5/13/14

REVISIONS								SHEET NO.
NO.	BY:	DATE:	NO.	BY:	DATE:			C-13
1			3					TOTAL SHEETS
2			4					26

ASSEMBLED BY : D. G. ELY DATE : 8/2012
CHECKED BY : A. K. PATEL, PE DATE : 6/2013
DESIGN ENGINEER OF RECORD: W. S. ARAFAT DATE : 6/2013
DRAWN BY : R.W. WRIGHT DATE : AUG. 1989
CHECKED BY : A.R. BISSETTE DATE : AUG. 1989

SPECIAL STANDARD

REVISED 11-19-99 BY M.M. CHECKED BY R.W.W.
REVISED 8-28-92 BY E.L.R. CHECKED BY G.R.P.
REVISED 8-22-89 BY A.R.B. CHECKED BY C.R.K.
REDRAWN 8-22-89

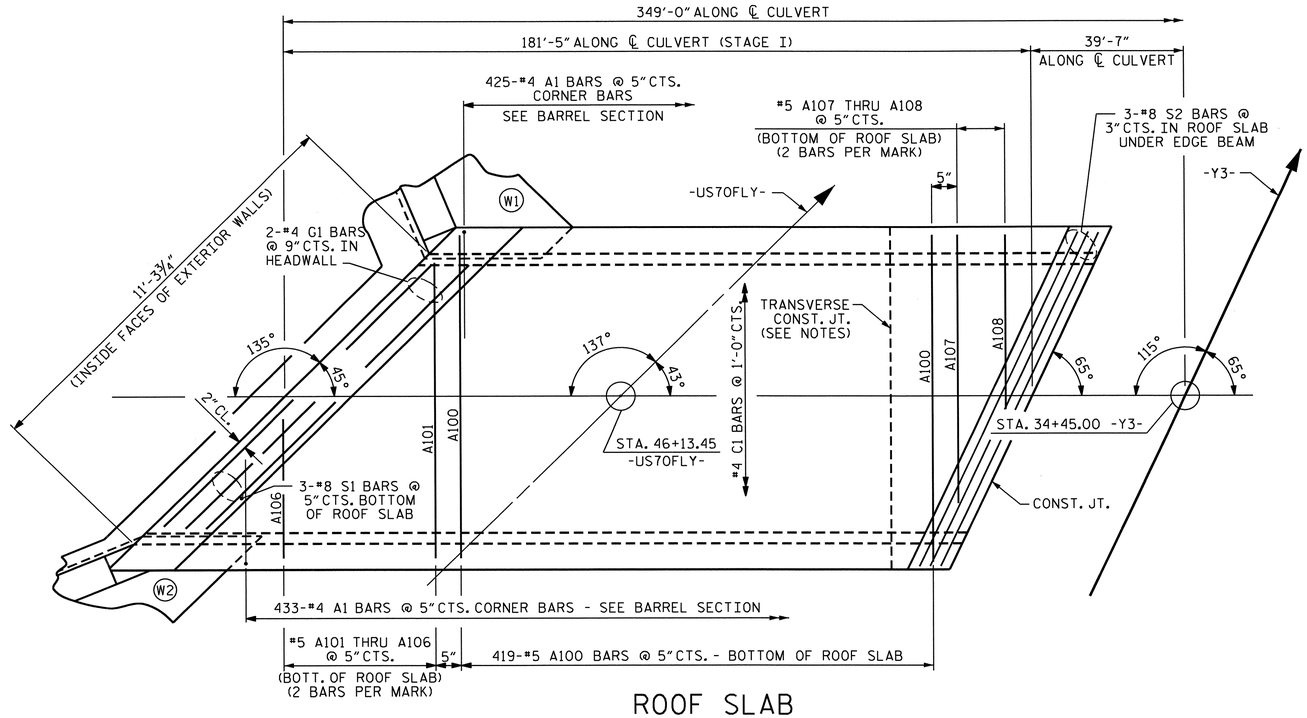

ROOF SLAB

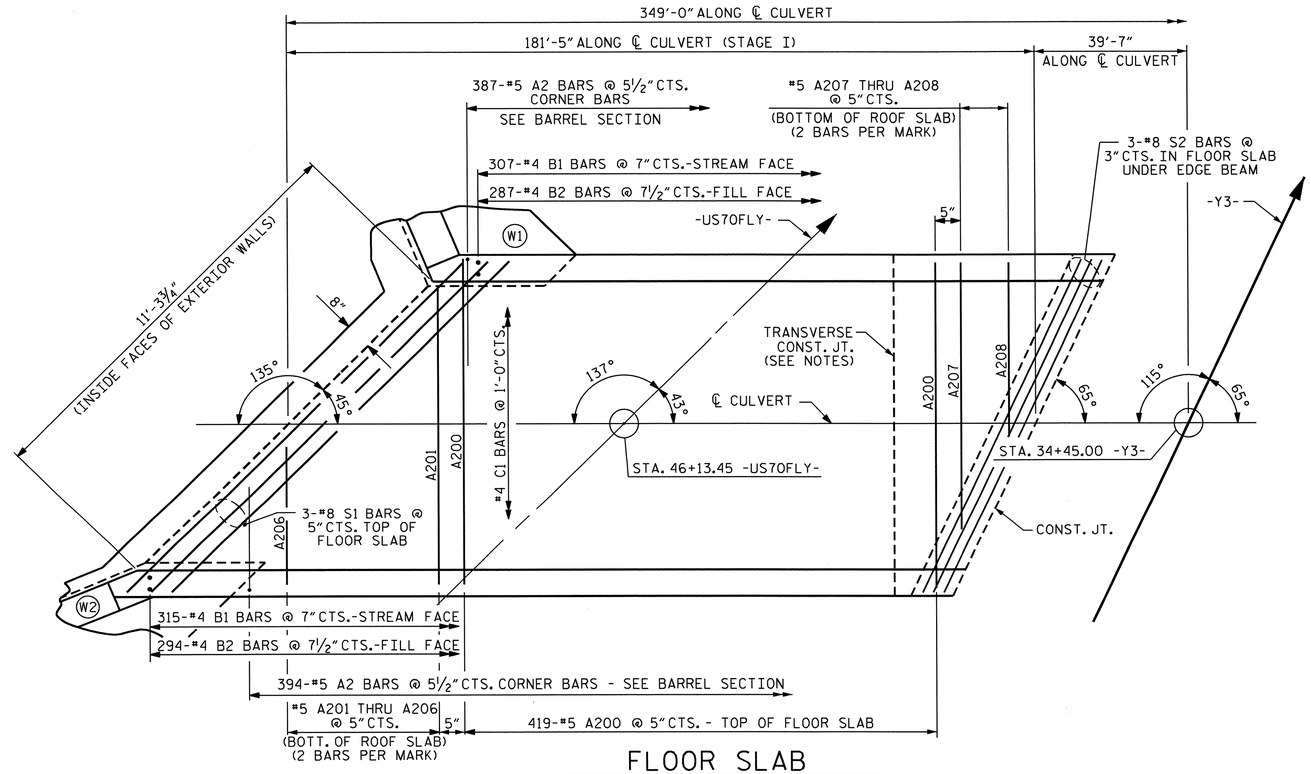

FLOOR SLAB

PROJECT NO. U-0071
DURHAM COUNTY
STATION: 34+45.00 -Y3-

SHEET 3 OF 8

STATE OF NORTH CAROLINA
DEPARTMENT OF TRANSPORTATION
RALEIGH

SINGLE 8 FT. X 10 FT. CONCRETE BOX CULVERT 65° SKEW STAGE I

NORTH CAROLINA PROFESSIONAL SEAL 14855 ENGINEER DOUGLAS R. EALHAN
5/13/14

REVISIONS								SHEET NO.
NO.	BY:	DATE:	NO.	BY:	DATE:			C-14
1			3					TOTAL SHEETS
2			4					26

ASSEMBLED BY : D. G. ELY	DATE : 8/2012	SPECIAL STANDARD	
CHECKED BY : A. K. PATEL, PE	DATE : 6/2013		
DESIGN ENGINEER OF RECORD: W. S. ARAFAT	DATE : 6/2013		
DRAWN BY : R.W. WRIGHT	DATE : AUG. 1989		
CHECKED BY : A.R. BISSETTE	DATE : AUG. 1989		

REVISED 8-28-92 BY E.L.R. CHECKED BY C.R.P.
REVISED 8-22-88 BY A.R.B. CHECKED BY C.R.K.
REDRAWN 8-22-89
REVISED 11-19-99 BY M.M. CHECKED BY R.W.W.

13-MAY-2014 09:52
Z:\TIPProjects-U\U0071\Structures\Plans\Culverts\US70_Y3.
asorsenginh

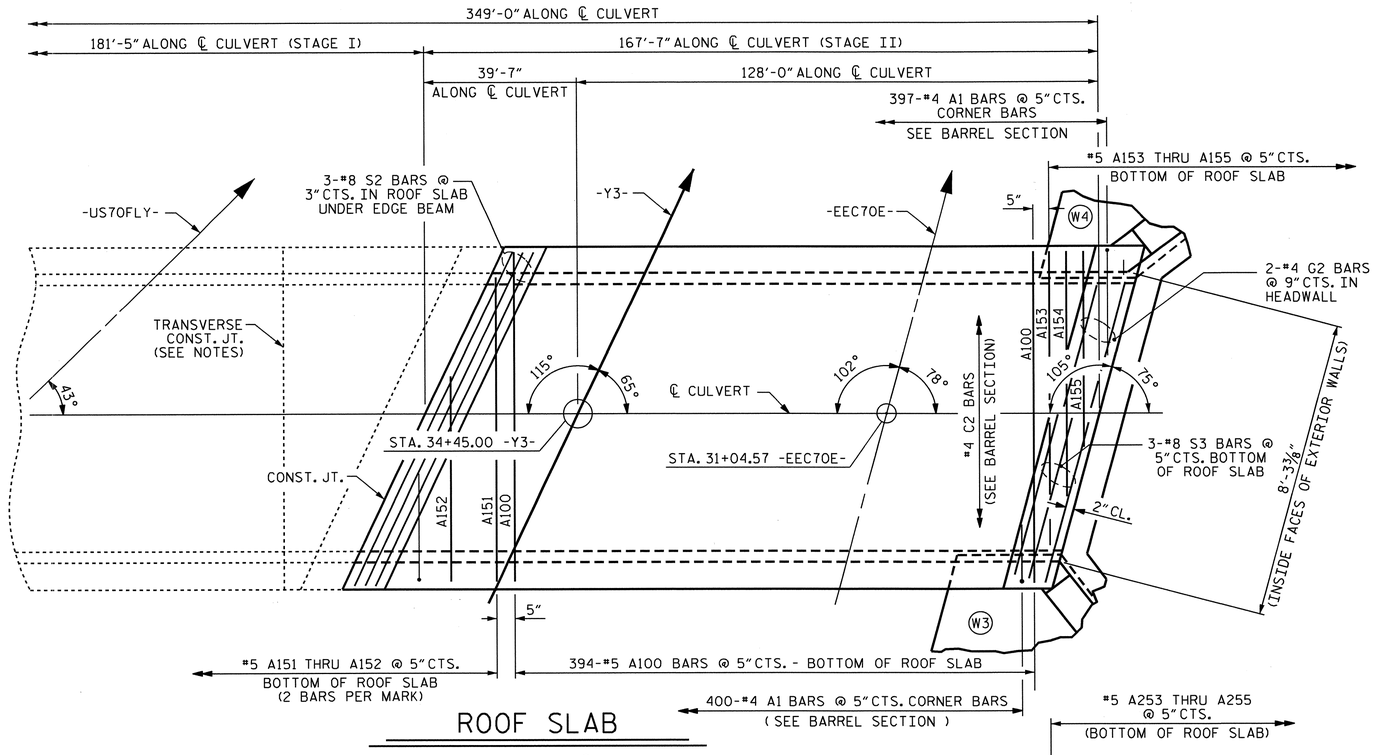

ROOF SLAB

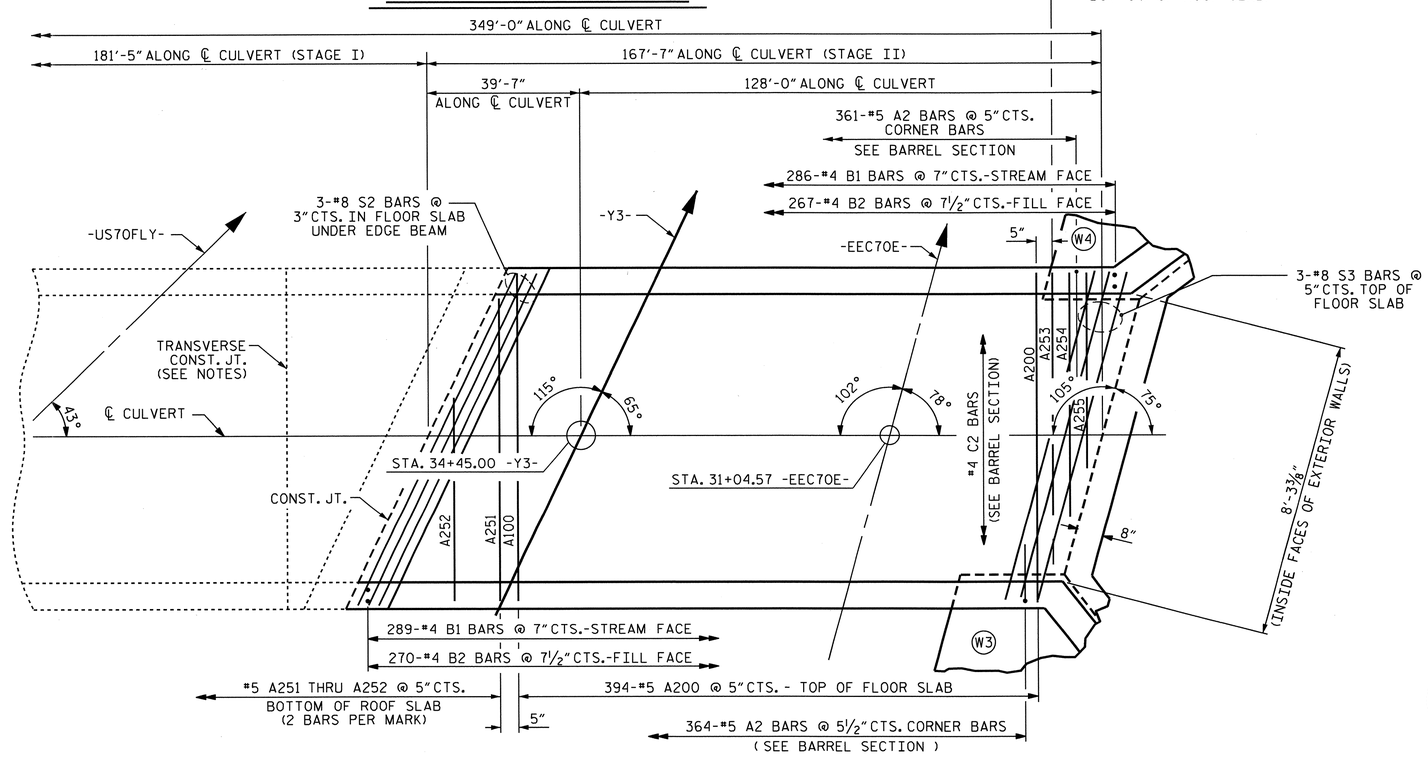

FLOOR SLAB

REVISED 8-28-92 BY F.L.R. CHECKED BY C.R.P.
REVISED 8-22-89 BY A.R.B. CHECKED BY C.R.K.
REDRAWN 8-22-89

REVISED 11-19-99 BY M.M. CHECKED BY R.W.W.

ASSEMBLED BY : D. G. ELY	DATE : 8/2012	SPECIAL STANDARD	
CHECKED BY : A. K. PATEL, PE	DATE : 6/2013		
DESIGN ENGINEER OF RECORD: W. S. ARAFAT	DATE : 6/2013		
DRAWN BY : R.W. WRIGHT	DATE : AUG. 1989		
CHECKED BY : A.R. BISSETTE	DATE : AUG. 1989		

PROJECT NO. U-0071
DURHAM COUNTY
STATION: 34+45.00 -Y3-

SHEET 4 OF 8

STATE OF NORTH CAROLINA
DEPARTMENT OF TRANSPORTATION
RALEIGH

SINGLE 8 FT. X 10 FT.
CONCRETE BOX CULVERT
65° SKEW
STAGE II

NORTH CAROLINA PROFESSIONAL SEAL 14855 ENGINEER DOUGLAS R. CALDWELL
5/13/14

REVISIONS						
NO.	BY:	DATE:	NO.	BY:	DATE:	
1			3			
2			4			

SHEET NO. C-15
TOTAL SHEETS 26

CULVERT 3

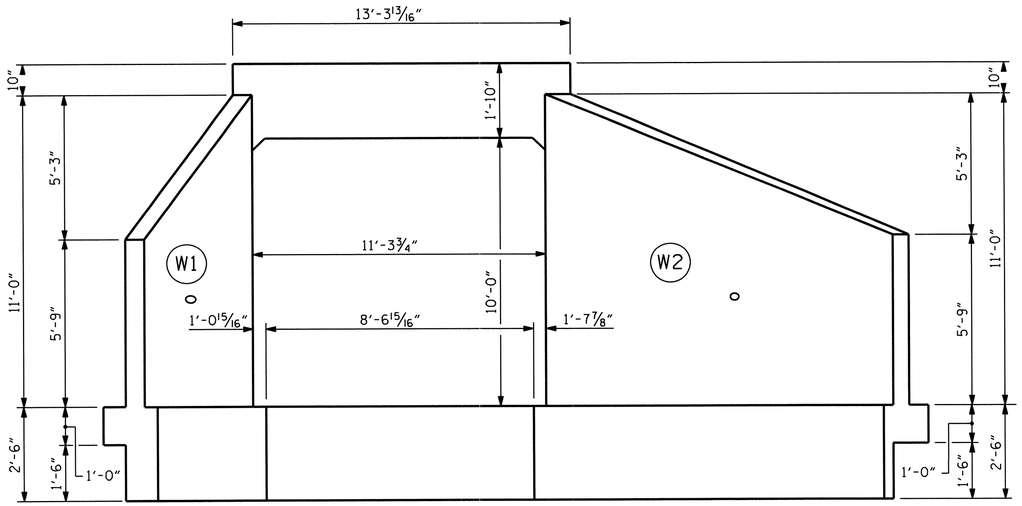

OUTLET END ELEVATION NORMAL TO SKEW

(45°-00'-00")

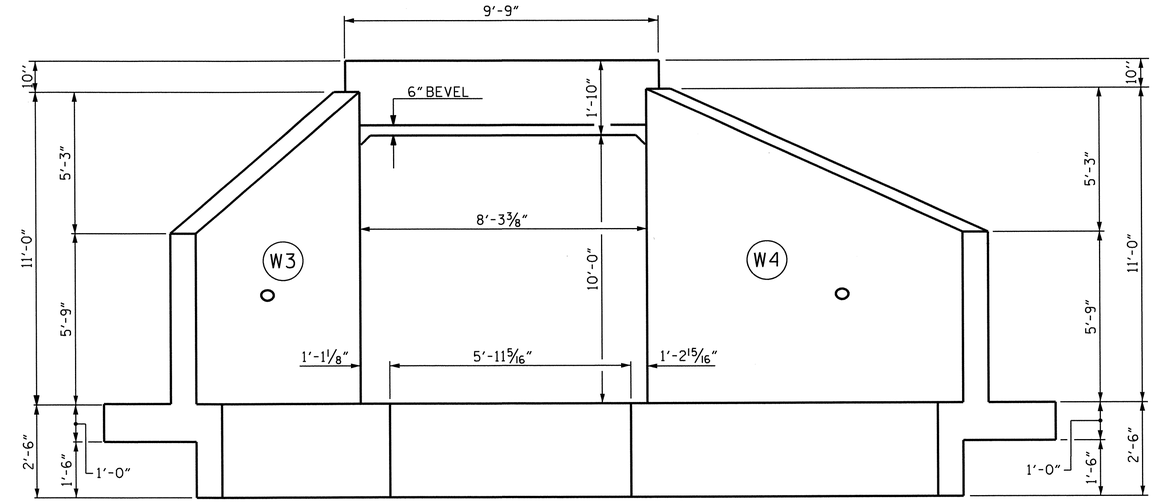

INLET END ELEVATION NORMAL TO SKEW

(75°-00'-00")

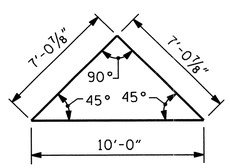

SKEW TRIANGLE

(45°-00'-00")

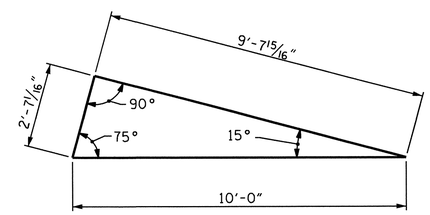

SKEW TRIANGLE

(75°-00'-00")

PROJECT NO. U-0071

DURHAM COUNTY

STATION: 34+45.00 -Y3-

SHEET 5 OF 8

STATE OF NORTH CAROLINA
DEPARTMENT OF TRANSPORTATION
RALEIGH

SINGLE 8 FT. X 10 FT. CONCRETE BOX CULVERT 65° SKEW

NORTH CAROLINA PROFESSIONAL SEAL 14855 ENGINEER DOUGLAS B. CALHOUN
05/13/14

REVISIONS						SHEET NO.
NO.	BY:	DATE:	NO.	BY:	DATE:	C-16
1			3			TOTAL SHEETS
2			4			26

ASSEMBLED BY : D. G. ELY DATE : 8/2012		SPECIAL STANDARD
CHECKED BY : A. K. PATEL, PE DATE : 6/2013		
DESIGN ENGINEER OF RECORD: W. S. ARAFAT DATE : 6/2013		
DRAWN BY : R.W. WRIGHT DATE : AUG. 1989		
CHECKED BY : A.R. BISSETTE DATE : AUG. 1989		

REVISED 8-28-92 BY E.L.R. CHECKED BY G.R.P.
REVISED 8-22-89 BY A.R.B. CHECKED BY C.R.K.
REDRAWN 8-22-89
REVISED 11-19-99 BY M.M. CHECKED BY R.W.W.

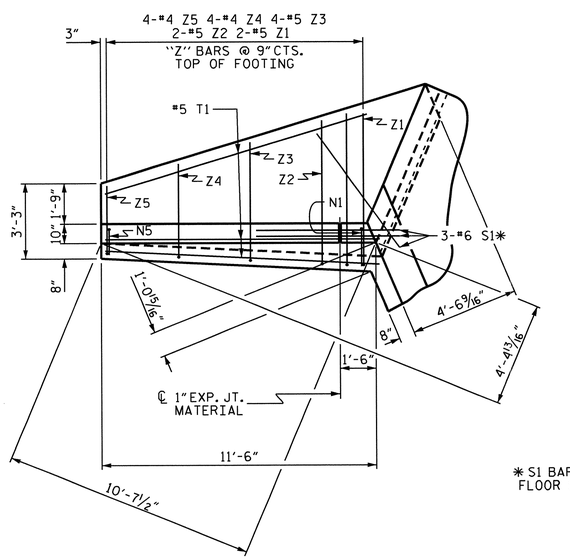

PLAN W1

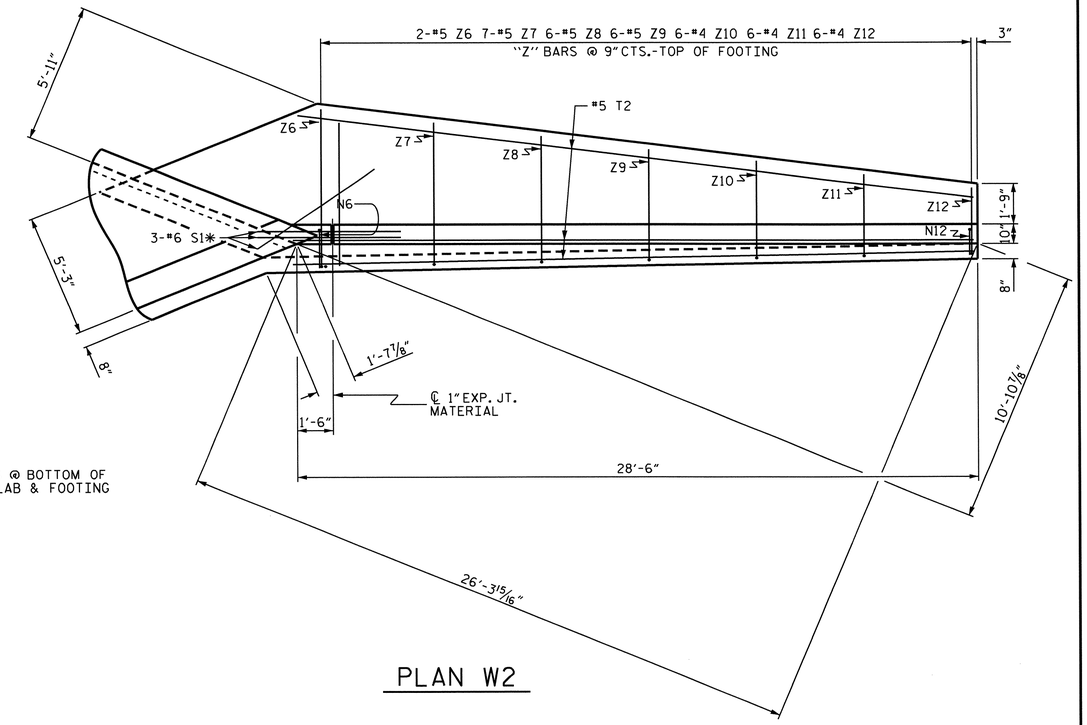

PLAN W2

* S1 BARS @ BOTTOM OF FLOOR SLAB & FOOTING

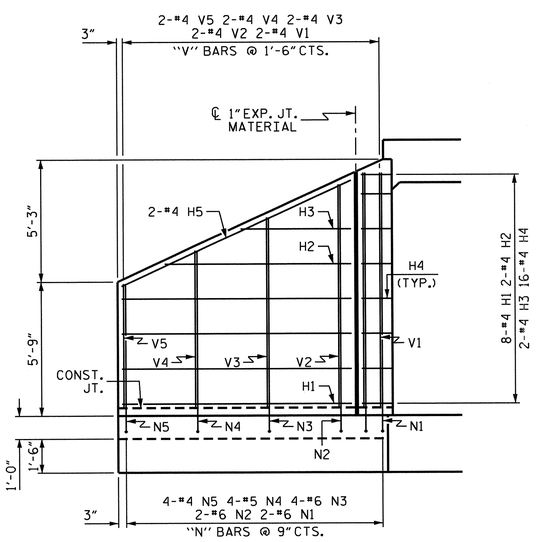

ELEVATION W1

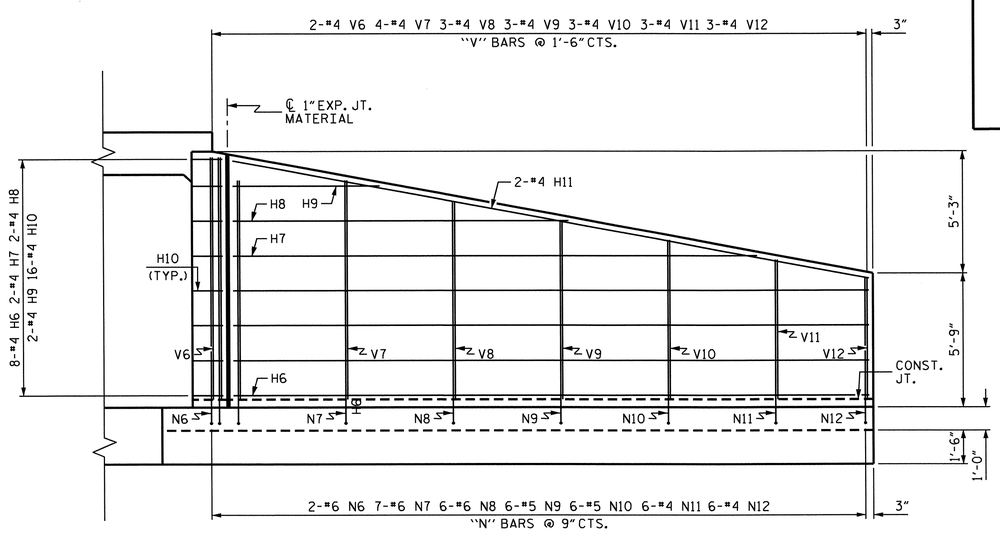

ELEVATION W2

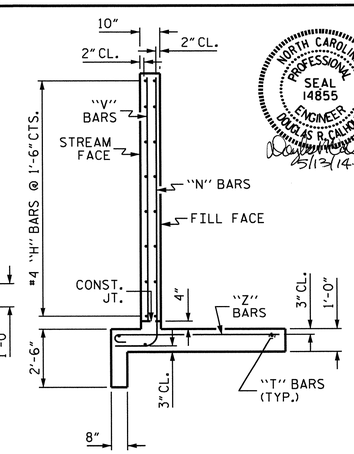

TYPICAL WING SECTION

BAR TYPES

ALL BAR DIMENSIONS ARE OUT TO OUT.

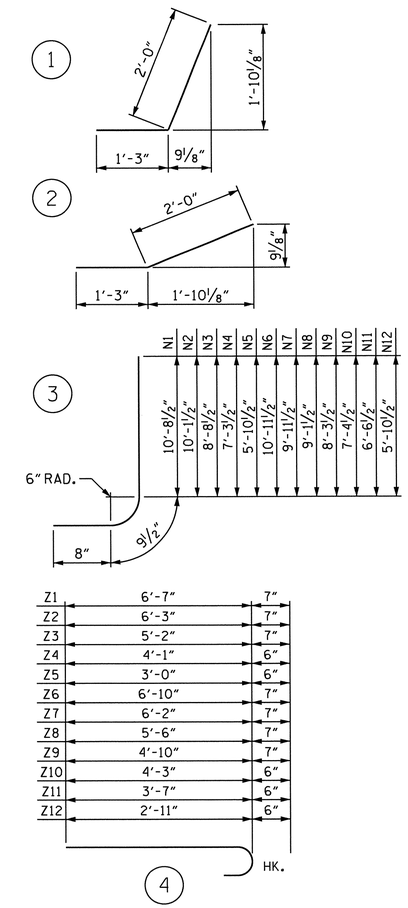

BILL OF MATERIAL

BAR	NO.	SIZE	TYPE	LENGTH	WEIGHT
H1	8	#4	STR	9'-7"	51
H2	2	#4	STR	7'-9"	10
H3	2	#4	STR	4'-7"	6
H4	16	#4	1	3'-3"	35
H5	2	#4	STR	10'-7"	14
H6	8	#4	STR	26'-7"	142
H7	2	#4	STR	21'-11"	29
H8	2	#4	STR	14'-0"	19
H9	2	#4	STR	6'-2"	8
H10	16	#4	2	3'-3"	35
H11	2	#4	STR	27'-11"	37
N1	2	#6	3	12'-2"	37
N2	2	#6	3	11'-7"	35
N3	4	#6	3	10'-2"	61
N4	4	#5	3	8'-9"	37
N5	4	#4	3	7'-4"	20
N6	2	#6	3	12'-5"	37
N7	7	#6	3	11'-5"	120
N8	6	#6	3	10'-7"	95
N9	6	#5	3	9'-9"	61
N10	6	#5	3	8'-10"	55
N11	6	#4	3	8'-0"	32
N12	6	#4	3	7'-4"	29
S1	6	#6	STR	6'-0"	54
T1	3	#5	STR	11'-6"	36
T2	3	#5	STR	28'-6"	89
V1	2	#4	STR	10'-1"	13
V2	2	#4	STR	9'-7"	13
V3	2	#4	STR	8'-2"	11
V4	2	#4	STR	6'-9"	9
V5	2	#4	STR	5'-4"	7
V6	2	#4	STR	10'-5"	14
V7	4	#4	STR	9'-5"	25
V8	3	#4	STR	8'-6"	17
V9	3	#4	STR	7'-8"	15
V10	3	#4	STR	6'-10"	14
V11	3	#4	STR	6'-0"	12
V12	3	#4	STR	5'-3"	11
Z1	2	#5	4	7'-2"	15
Z2	2	#5	4	6'-10"	14
Z3	4	#5	4	5'-9"	24
Z4	4	#4	4	4'-7"	12
Z5	4	#4	4	3'-6"	9
Z6	2	#5	4	7'-5"	15
Z7	7	#5	4	6'-9"	49
Z8	6	#5	4	6'-1"	38
Z9	6	#5	4	5'-5"	34
Z10	6	#4	4	4'-9"	19
Z11	6	#4	4	4'-1"	16
Z12	6	#4	4	3'-5"	14

REINFORCING STEEL FOR 2 WINGS 1604 LBS

CLASS A CONCRETE

2 WINGS	21.4	CY
1 HEADWALL	0.6	CY
1 END CURTAIN WALL	0.5	CY
TOTAL	22.5	CY

NORTH CAROLINA PROFESSIONAL SEAL 14855 ENGINEER DOUGLAS R. CALHOUN 05/13/14

PROJECT NO. U-0071

DURHAM COUNTY

STATION: 34+45.00 -Y3-

SHEET 6 OF 8

STATE OF NORTH CAROLINA
DEPARTMENT OF TRANSPORTATION
RALEIGH

STANDARD WINGS FOR CONCRETE BOX CULVERT

H = 10'-0" SLOPE = 2:1

45° SKEW

ASSEMBLED BY : D. C. ELY	DATE : 8/2012
CHECKED BY : A. K. PATEL	DATE : 6/2013
DESIGN ENGINEER OF RECORD: W. S. ARAFAT	DATE : 6/2013
DRAWN BY : CCJ 01/00	
CHECKED BY : RWW 03/00	

REVISIONS							SHEET NO.
NO.	BY:	DATE:	NO.	BY:	DATE:		C-17
1			3				TOTAL SHEETS
2			4				26

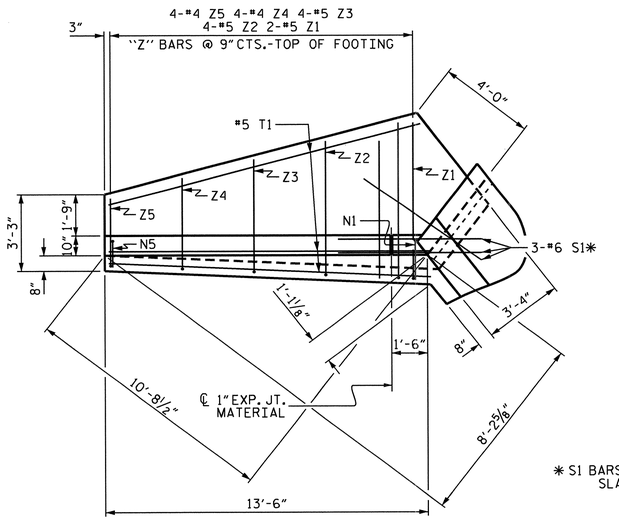

PLAN W3

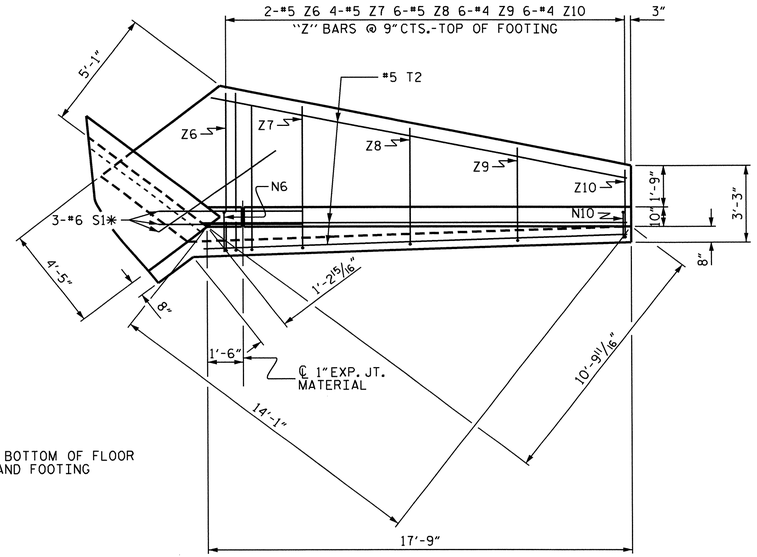

PLAN W4

* S1 BARS @ BOTTOM OF FLOOR SLAB AND FOOTING

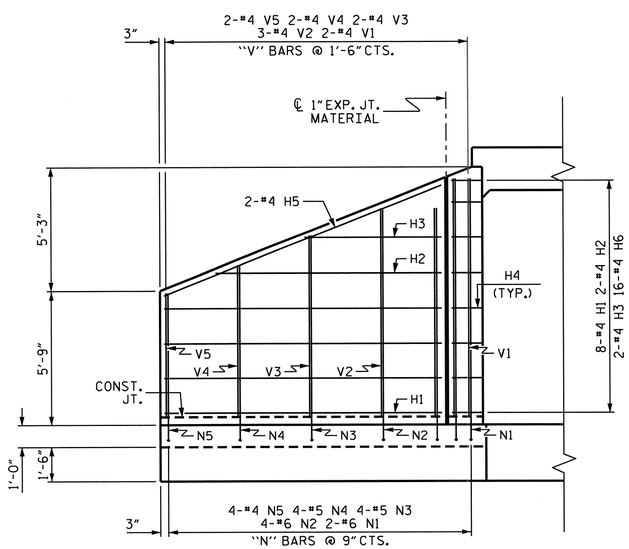

ELEVATION W3

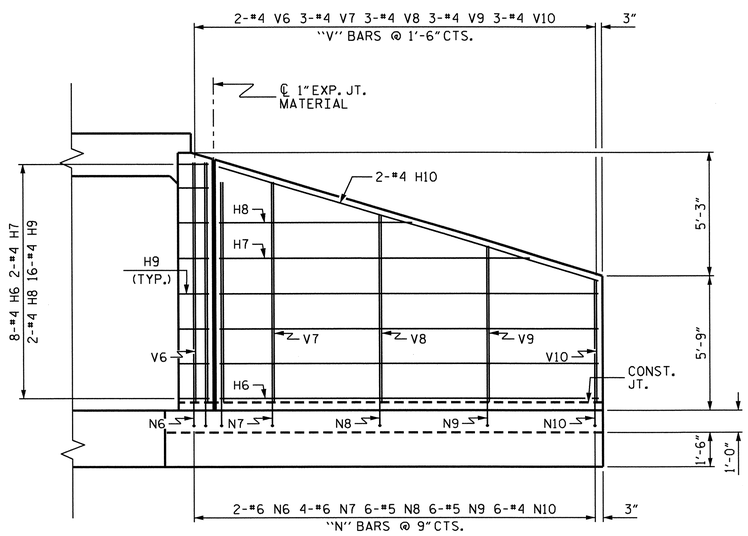

ELEVATION W4

BAR TYPES

ALL BAR DIMENSIONS ARE OUT TO OUT.

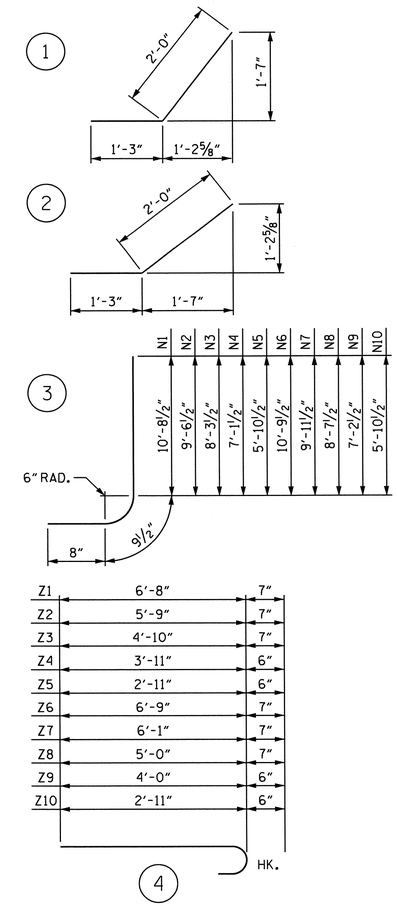

BILL OF MATERIAL

BAR	NO.	SIZE	TYPE	LENGTH	WEIGHT
H1	8	#4	STR	11'-7"	62
H2	2	#4	STR	9'-5"	13
H3	2	#4	STR	5'-8"	8
H4	16	#4	1	3'-3"	35
H5	2	#4	STR	12'-6"	17
H6	8	#4	STR	15'-10"	85
H7	2	#4	STR	13'-0"	17
H8	2	#4	STR	8'-1"	11
H9	16	#4	2	3'-3"	35
H10	2	#4	STR	16'-7"	22
N1	2	#6	3	12'-2"	37
N2	4	#6	3	11'-0"	66
N3	4	#5	3	9'-9"	41
N4	4	#5	3	8'-7"	36
N5	4	#4	3	7'-4"	20
N6	2	#6	3	12'-3"	37
N7	4	#6	3	11'-5"	69
N8	6	#5	3	10'-1"	63
N9	6	#5	3	8'-8"	54
N10	6	#4	3	7'-4"	29
S1	6	#6	STR	6'-0"	54
T1	3	#5	STR	13'-6"	42
T2	3	#5	STR	17'-9"	56
V1	2	#4	STR	10'-2"	14
V2	3	#4	STR	8'-11"	18
V3	2	#4	STR	7'-9"	10
V4	2	#4	STR	6'-6"	9
V5	2	#4	STR	5'-4"	7
V6	2	#4	STR	10'-3"	14
V7	3	#4	STR	9'-5"	19
V8	3	#4	STR	8'-0"	16
V9	3	#4	STR	6'-8"	13
V10	3	#4	STR	5'-3"	11
Z1	2	#5	4	7'-3"	15
Z2	4	#5	4	6'-4"	26
Z3	4	#5	4	5'-5"	23
Z4	4	#4	4	4'-5"	12
Z5	4	#4	4	3'-5"	9
Z6	2	#5	4	7'-4"	15
Z7	4	#5	4	6'-8"	28
Z8	6	#5	4	5'-7"	35
Z9	6	#4	4	4'-6"	18
Z10	6	#4	4	3'-5"	14

REINFORCING STEEL FOR 2 WINGS 1235 LBS

CLASS A CONCRETE

2 WINGS	16.4	CY
1 HEADWALL	0.5	CY
1 END CURTAIN WALL	0.4	CY
TOTAL	17.3	CY

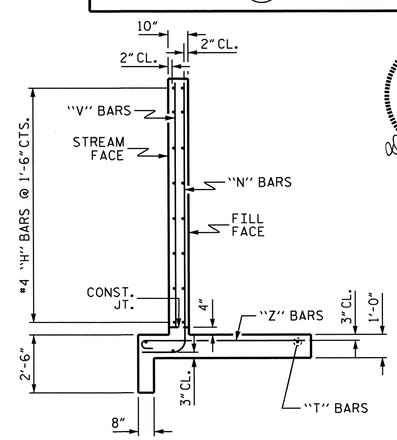

TYPICAL WING SECTION

NORTH CAROLINA PROFESSIONAL SEAL 14855 ENGINEER DOUGLAS B. CALHOUN
5/13/14

PROJECT NO. U-0071
DURHAM COUNTY
STATION: 34+45.00 -Y3

SHEET 7 OF 8

STATE OF NORTH CAROLINA
DEPARTMENT OF TRANSPORTATION
RALEIGH

STANDARD WINGS FOR CONCRETE BOX CULVERT

H = 10'-0" SLOPE = 2:1
75° SKEW

REVISIONS							SHEET NO.
NO.	BY:	DATE:	NO.	BY:	DATE:		C-18
1			3				TOTAL SHEETS
2			4				26

ASSEMBLED BY :	D. G. ELY	DATE :	8/2012
CHECKED BY :	A. K. PATEL	DATE :	6/2013
DESIGN ENGINEER OF RECORD:	W. S. ARAFAT	DATE :	6/2013
DRAWN BY :	CCJ	01/00	
CHECKED BY :	RWW	03/00	

LOAD AND RESISTANCE FACTOR RATING (LRFR) SUMMARY FOR REINFORCED CONCRETE BOX CULVERT

LEVEL		VEHICLE	WEIGHT (W) (TONS)	CONTROLLING LOAD RATING (#)	MINIMUM RATING FACTORS (RF)	TONS = W × RF	STRENGTH I LIMIT STATE									COMMENT NUMBER
							LIVE-LOAD FACTORS $\gamma_{(LL)}$	MOMENT				SHEAR				
								RATING FACTOR	BOX NO.	ELEMENT TYPE	DISTANCE FROM LEFT END OF ELEMENT (ft)	RATING FACTOR	BOX NO.	ELEMENT TYPE	DISTANCE FROM LEFT END OF ELEMENT (ft)	
DESIGN LOAD RATING		HL-93 (INVENTORY)	N/A	(1)	1.19	--	1.75	1.44	1	EXTERIOR WALL	5.45	1.19	1	EXTERIOR WALL	9.91	
		HL-93 (OPERATING)	N/A		1.54	--	1.35	1.87	1	EXTERIOR WALL	5.45	1.54	1	EXTERIOR WALL	9.91	
		HS-20 (INVENTORY)	36.000	(2)	1.19	42.79	1.75	1.44	1	EXTERIOR WALL	5.45	1.19	1	EXTERIOR WALL	9.91	
		HS-20 (OPERATING)	36.000		1.54	55.47	1.35	1.87	1	EXTERIOR WALL	5.45	1.54	1	EXTERIOR WALL	9.91	
LEGAL LOAD RATING	SINGLE VEHICLE (SV)	SNSH	13.500	(3)	1.49	20.06	1.40	1.80	1	EXTERIOR WALL	5.45	1.49	1	EXTERIOR WALL	9.91	
		SNGARBS2	20.000		1.49	29.72	1.40	1.80	1	EXTERIOR WALL	5.45	1.49	1	EXTERIOR WALL	9.91	
		SNAGRIS2	22.000		1.49	32.69	1.40	1.80	1	EXTERIOR WALL	5.45	1.49	1	EXTERIOR WALL	9.91	
		SNCOTTS3	27.250		1.49	40.49	1.40	1.80	1	EXTERIOR WALL	5.45	1.49	1	EXTERIOR WALL	9.91	
		SNAGGRS4	34.930		1.49	51.90	1.40	1.80	1	EXTERIOR WALL	5.45	1.49	1	EXTERIOR WALL	9.91	
		SNS5A	35.550		1.49	52.82	1.40	1.80	1	EXTERIOR WALL	5.45	1.49	1	EXTERIOR WALL	9.91	
		SNS6A	39.950		1.49	59.36	1.40	1.80	1	EXTERIOR WALL	5.45	1.49	1	EXTERIOR WALL	9.91	
		SNS7B	42.000		1.49	62.41	1.40	1.80	1	EXTERIOR WALL	5.45	1.49	1	EXTERIOR WALL	9.91	
	TRUCK TRACTOR SEMI-TRAILER (TTST)	TNAGRIT3	33.000		1.49	49.03	1.40	1.80	1	EXTERIOR WALL	5.45	1.49	1	EXTERIOR WALL	9.91	
		TNT4A	33.080		1.49	49.15	1.40	1.80	1	EXTERIOR WALL	5.45	1.49	1	EXTERIOR WALL	9.91	
		TNT6A	41.600		1.49	61.81	1.40	1.80	1	EXTERIOR WALL	5.45	1.49	1	EXTERIOR WALL	9.91	
		TNT7A	42.000		1.49	62.41	1.40	1.80	1	EXTERIOR WALL	5.45	1.49	1	EXTERIOR WALL	9.91	
		TNT7B	42.000		1.49	62.41	1.40	1.80	1	EXTERIOR WALL	5.45	1.49	1	EXTERIOR WALL	9.91	
		TNAGRIT4	43.000		1.49	63.89	1.40	1.80	1	EXTERIOR WALL	5.45	1.49	1	EXTERIOR WALL	9.91	
		TNAGRIT5A	45.000		1.49	66.87	1.40	1.80	1	EXTERIOR WALL	5.45	1.49	1	EXTERIOR WALL	9.91	
		TNAGRIT5B	45.000		1.49	66.87	1.40	1.80	1	EXTERIOR WALL	5.45	1.49	1	EXTERIOR WALL	9.91	

LOAD FACTORS:

DESIGN LOAD RATING FACTORS

LOAD TYPE	MAX FACTOR	MIN FACTOR
DC	1.25	0.90
DW	1.50	0.65
EV	1.30	0.90
EH	1.35	0.50 OR 0.90
ES	1.35	0.50 OR 0.90
LS	1.75	--
WA	1.00	--

NOTE:

RATING FACTORS ARE BASED ON THE STRENGTH I LIMIT STATE.

COMMENTS:

1.
2.
3.
4.

(#) CONTROLLING LOAD RATING

(1) DESIGN LOAD RATING (HL-93)

(2) DESIGN LOAD RATING (HS-20)

(3) LEGAL LOAD RATING **

** SEE CHART FOR VEHICLE TYPE

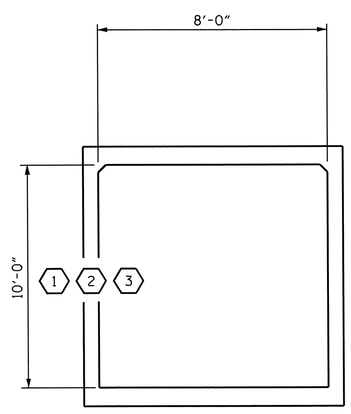

LRFR SUMMARY

(LOOKING DOWNSTREAM)

PROJECT NO. U-0071

DURHAM COUNTY

STATION: 34+45.00 -Y3-

SHEET 8 OF 8

STATE OF NORTH CAROLINA
DEPARTMENT OF TRANSPORTATION
RALEIGH

STANDARD

LRFR SUMMARY FOR REINFORCED CONCRETE BOX CULVERT
(NON-INTERSTATE TRAFFIC)

NORTH CAROLINA PROFESSIONAL SEAL 14855 ENGINEER DOUGLAS R. CALHOUN 05/13/14

REVISIONS						SHEET NO.
NO.	BY:	DATE:	NO.	BY:	DATE:	C-19
1			3			TOTAL SHEETS
2			4			26

CULVERT 3 STD. NO. LRFR5

ASSEMBLED BY : D. G. ELY		DATE : 8/2012	
CHECKED BY : A. K. PATEL, PE		DATE : 6/2013	
DESIGN ENGINEER OF RECORD : W. S. ARAFAT		DATE : 6/2013	
DRAWN BY : WMC 7/11	REV. 10/1/11	MAA/GM	
CHECKED BY : GM 7/11			

13-MAY-2014 09:51
Z:\TIPProjects-U\U0071\Structures\Plans\Culverts\US70_Y3_Culvert 3\Drawings\U0071_SD_CULV03_US70 Y3.dgn
asorsenginh

BM #59 RR SPIKE IN 24" OAK, STA. 95+95.85 -L- 155.11' LT. EL. 325.43

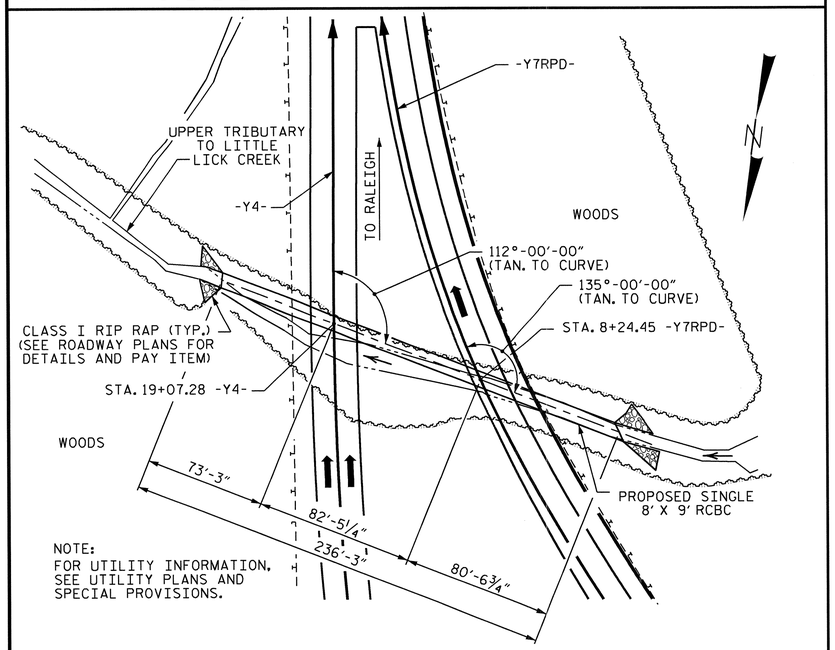

LOCATION SKETCH

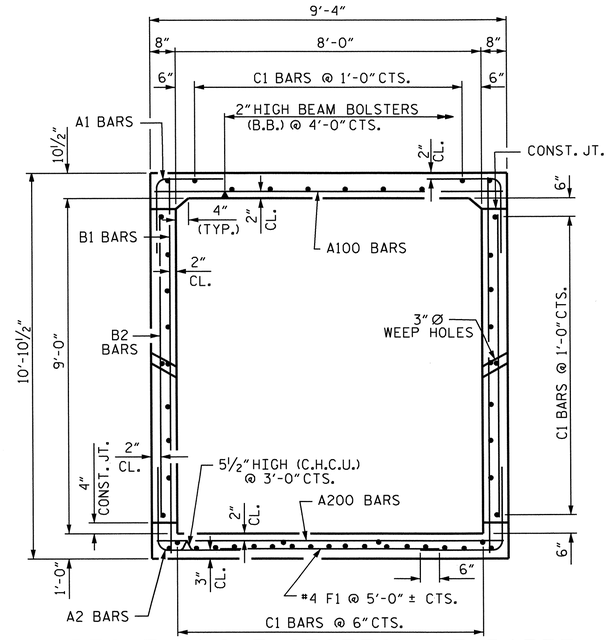

RIGHT ANGLE SECTION OF BARREL

THERE ARE 51 C1 BARS IN SECTION OF BARREL.

NOTES

ASSUMED LIVE LOAD ----------HL-93 OR ALTERNATE LOADING.

DESIGN FILL----------20.53'

FOR OTHER DESIGN DATA AND NOTES SEE STANDARD NOTE SHEET.

3" Ø WEEP HOLES INDICATED TO BE IN ACCORDANCE WITH THE SPECIFICATIONS.

CONCRETE IN CULVERTS TO BE POURED IN THE FOLLOWING ORDER:

1. WING FOOTINGS AND FLOOR SLAB INCLUDING 4" OF ALL VERTICAL WALLS.
2. THE REMAINING PORTIONS OF THE WALLS AND WINGS FULL HEIGHT FOLLOWED BY ROOF SLAB AND HEADWALLS.

THE RESIDENT ENGINEER SHALL CHECK THE LENGTH OF CULVERT BEFORE STAKING IT OUT TO MAKE CERTAIN THAT IT WILL PROPERLY TAKE CARE OF THE FILL.

DIMENSIONS FOR WING LAYOUT AS WELL AS ADDITIONAL REINFORCING STEEL EMBEDDED IN BARREL ARE SHOWN ON WING SHEETS.

TRANSVERSE CONSTRUCTION JOINTS SHALL BE USED IN THE BARREL, SPACED TO LIMIT THE POURS TO A MAXIMUM OF 70 FT. LOCATION OF JOINTS SHALL BE SUBJECT TO APPROVAL OF THE ENGINEER.

AT THE CONTRACTOR'S OPTION, HE MAY SPLICE THE VERTICAL REINFORCING STEEL IN THE INTERIOR FACE OF EXTERIOR WALL ABOVE LOWER WALL CONSTRUCTION JOINT. THE SPLICE LENGTH SHALL BE AS PROVIDED IN THE SPLICE LENGTH CHART SHOWN ON THE PLANS. EXTRA WEIGHT OF STEEL DUE TO THE SPLICES SHALL BE PAID FOR BY THE CONTRACTOR.

A 3 FOOT STRIP OF FILTER FABRIC SHALL BE ATTACHED TO THE FILL FACE OF THE WING COVERING THE ENTIRE LENGTH OF THE EXPANSION JOINT.

FOR CRANE SAFETY, SEE SPECIAL PROVISIONS.

FOR FALSEWORK AND FORMWORK, SEE SPECIAL PROVISIONS.

FOR CULVERT DIVERSION DETAILS AND PAY ITEM, SEE EROSION CONTROL PLANS.

FOR SUBMITTAL OF WORKING DRAWINGS, SEE SPECIAL PROVISIONS.

FOR GROUT FOR STRUCTURES, SEE SPECIAL PROVISIONS.

NO PRECAST REINFORCED BOX CULVERT OPTION WILL BE ALLOWED.

HYDRAULIC DATA

DESIGN DISCHARGE	= 611 CFS
FREQUENCY OF DESIGN FLOOD	= 50 YRS.
DESIGN HIGH WATER ELEVATION	= 336.20
DRAINAGE AREA	= 0.39 SQ. MI.
BASE DISCHARGE (Q100)	= 689 CFS
BASE HIGH WATER ELEVATION	= 337.10

OVERTOPPING FLOOD DATA

OVERTOPPING DISCHARGE	= 1000 CFS
FREQUENCY OF OVERTOPPING FLOOD	= 500+ YRS.
OVERTOPPING FLOOD ELEVATION	= 344.00
OVERTOPPING LOCATION @ STA. 15+83.75 -L-	

GRADE DATA

GRADE POINT ELEVATION @ STA. 19+07.28 -Y4-	= 347.85'
GRADE POINT ELEVATION @ STA. 8+24.45 -Y7RPD-	= 346.43'
BED ELEVATION @ STA. 19+07.28 -Y4-	= 319.00'
BED ELEVATION @ STA. 8+24.45 -Y7RPD-	= 319.96'
ROADWAY FILL SLOPES	
LEFT	= 2 : 1
RIGHT	= 2 : 1

TOTAL STRUCTURE QUANTITIES

CLASS A CONCRETE				
BARREL @	1.097	CY/FT	259.2	C.Y.
WING ETC.			34.1	C.Y.
TOTAL			293.3	C.Y.
REINFORCING STEEL				
BARREL			35,892	LBS.
WINGS ETC.			2237	LBS.
TOTAL			38,129	LBS.
FOUNDATION CONDITIONING MAT'L.			222	TONS
CULVERT EXCAVATION			LUMP SUM	

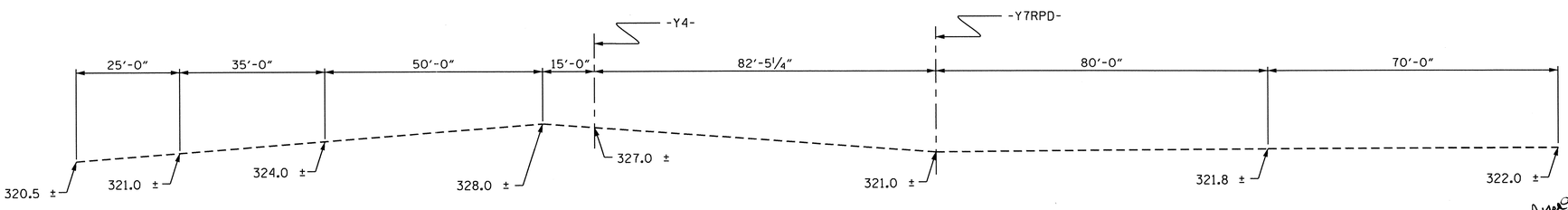

PROFILE ALONG ℄ CULVERT

PROJECT NO. U-0071
DURHAM COUNTY
STATION: 19+07.28 -Y4-

SHEET 1 OF 7

STATE OF NORTH CAROLINA
DEPARTMENT OF TRANSPORTATION
RALEIGH

SINGLE 8 FT. X 9 FT.
CONCRETE BOX CULVERT
112° SKEW

ASSEMBLED BY : D. G. ELY	DATE : 6/2012	SPECIAL STANDARD	
CHECKED BY : S. B. WILLIAMS	DATE : 6/2013		
DESIGN ENGINEER OF RECORD: A. SORSENGINH	11/2013		
DRAWN BY : R. WRIGHT	DATE : AUG. 1989		
CHECKED BY : C.R.K.	DATE : AUG. 1989		

REVISED 11-13-91 BY E.L.R. CHECKED BY G.R.P.
ADDED 8-22-89

REVISIONS						SHEET NO.
NO.	BY:	DATE:	NO.	BY:	DATE:	C-20
1			3			TOTAL SHEETS
2			4			26

NORTH CAROLINA PROFESSIONAL SEAL 022506 ENGINEER JESSE McARTHUR BAILEY 4/14/14

NORTH CAROLINA PROFESSIONAL SEAL 14855 ENGINEER DOUGLAS B. CALHOUN 5/13/14

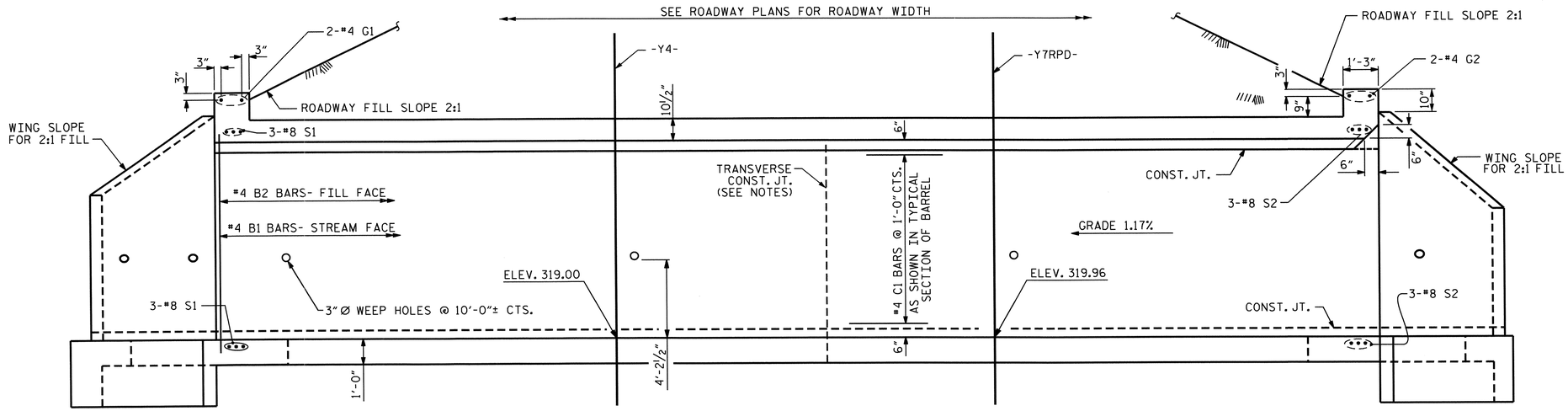

CULVERT SECTION NORMAL TO ROADWAY

PROJECT NO. U-0071
DURHAM COUNTY
STATION: 19+07.28 -Y4-

SHEET 2 OF 7

STATE OF NORTH CAROLINA
DEPARTMENT OF TRANSPORTATION
RALEIGH

SINGLE 8 FT. X 9 FT.
CONCRETE BOX CULVERT
112° SKEW

NORTH CAROLINA PROFESSIONAL SEAL 14855 ENGINEER DOUGLAS R. CALHOUN
5/13/14

REVISIONS						SHEET NO.
NO.	BY:	DATE:	NO.	BY:	DATE:	C-21
1			3			TOTAL SHEETS
2			4			26

CULVERT 4 STD. NO. CB221

ASSEMBLED BY : D. G. ELY DATE : 6/2012 CHECKED BY : S. B. WILLIAMS DATE : 6/2013 DESIGN ENGINEER OF RECORD: A. SORSENGINH DATE : 11/2013		SPECIAL STANDARD
DRAWN BY : R.W. WRIGHT DATE : AUG. 1989 CHECKED BY : A.R. BISSETTE DATE : AUG. 1989		

REVISED 8-28-92 BY E.L.R. CHECKED BY G.R.P.
REVISED 8-22-89 BY A.R.B. CHECKED BY C.R.K.
REDRAWN 8-22-89

REVISED 11-19-99 BY M.M. CHECKED BY R.W.W.

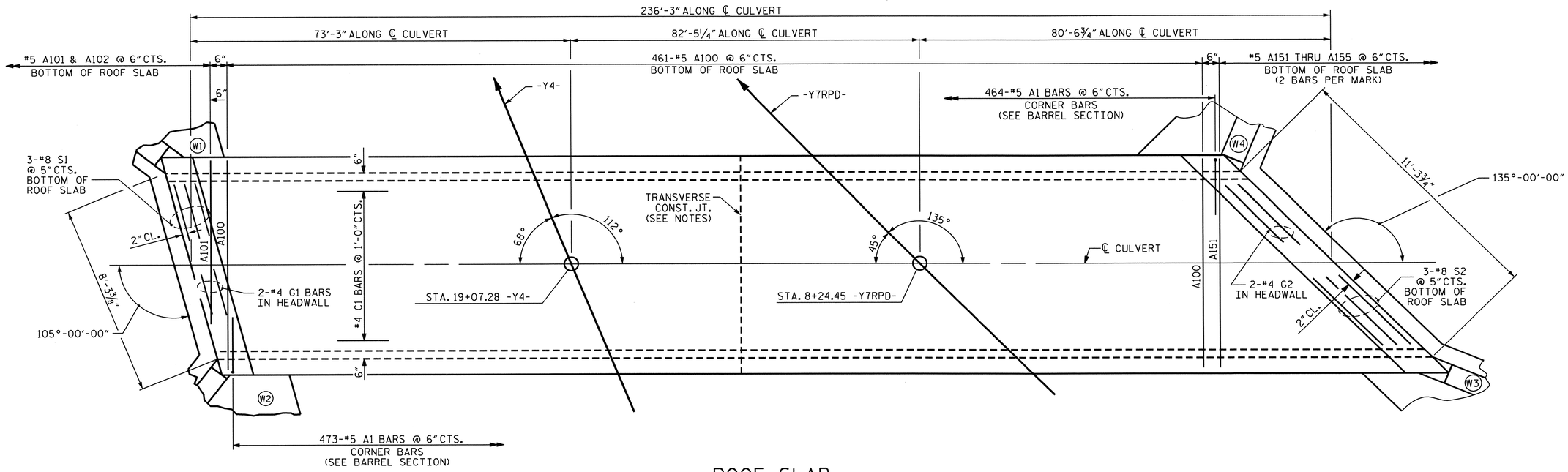

ROOF SLAB

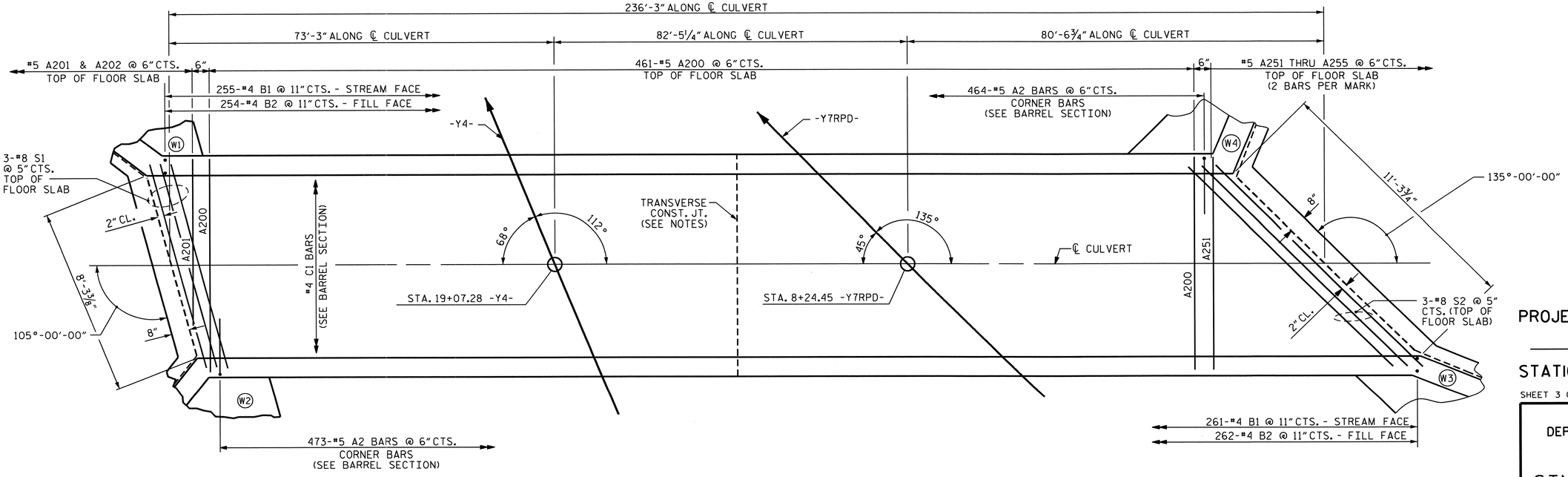

FLOOR SLAB

REVISED 11-19-99 BY M.M. CHECKED BY R.W.W.
REVISED 8-28-92 BY E.L.R. CHECKED BY G.R.P.
REVISED 8-22-89 BY A.R.B. CHECKED BY C.R.K.
REDRAWN 8-22-89

ASSEMBLED BY : D. G. ELY	DATE : 6/2012	SPECIAL STANDARD	
CHECKED BY : S. B. WILLIAMS	DATE : 11/2012		
DESIGN ENGINEER OF RECORD: A. SORSENGINH	DATE : 11/2013		
DRAWN BY : R.W. WRIGHT	DATE : AUG. 1989		
CHECKED BY : A.R. BISSETTE	DATE : AUG. 1989		

PROJECT NO. U-0071
DURHAM COUNTY
STATION: 19+07.28 -Y4-

SHEET 3 OF 7

STATE OF NORTH CAROLINA
DEPARTMENT OF TRANSPORTATION
RALEIGH

SINGLE 8 FT. X 9 FT. CONCRETE BOX CULVERT 112° SKEW

NORTH CAROLINA PROFESSIONAL SEAL 14855 ENGINEER DANIEL B. CALHOUN
5/13/14

REVISIONS						SHEET NO.
NO.	BY:	DATE:	NO.	BY:	DATE:	C-22
1			3			TOTAL SHEETS
2			4			26

CULVERT 4 STD. NO. CB221

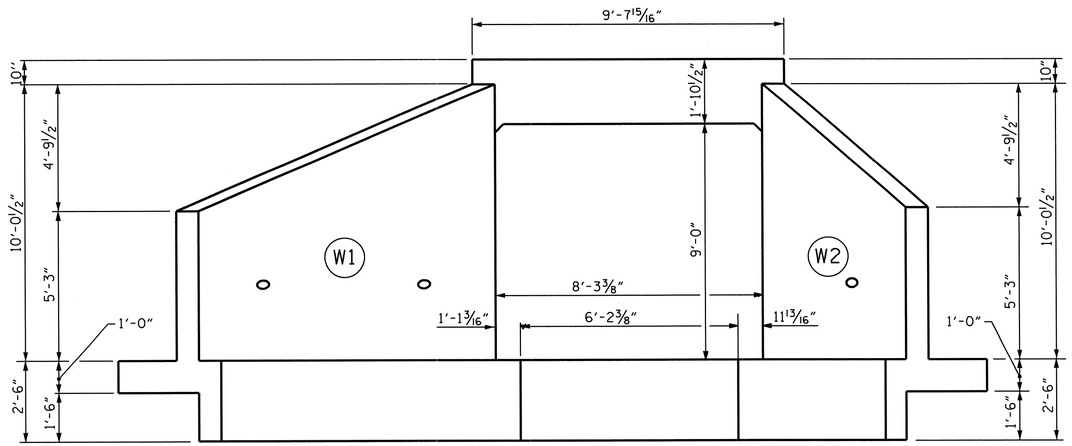

OUTLET END ELEVATION
(105°-00'-00")

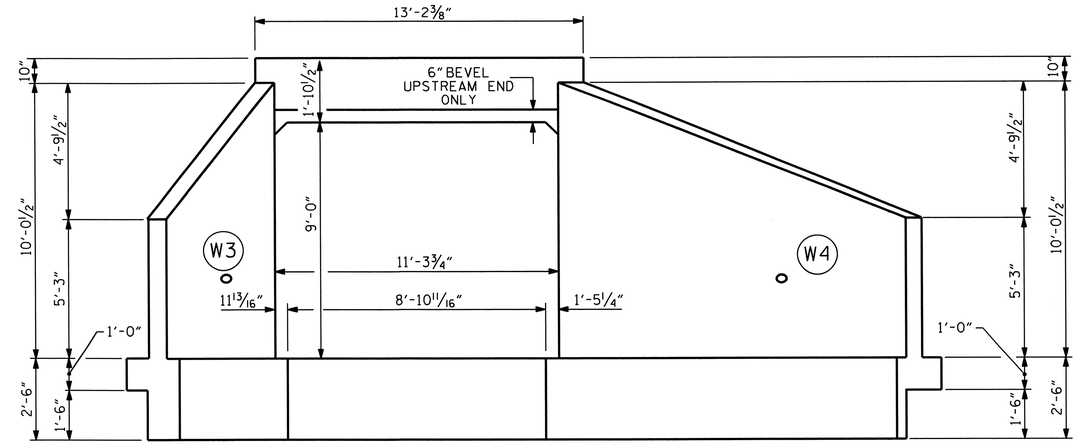

INLET END ELEVATION
(135°-00'-00")

BAR SCHEDULE

BAR	NO.	SIZE	TYPE	LENGTH	WEIGHT	BAR	NO.	SIZE	TYPE	LENGTH	WEIGHT
A1	937	#5	6	6'-1"	5945	B1	516	#4	STR	10'-4"	3562
A2	937	#5	6	5'-9"	5619	B2	516	#4	STR	8'-4"	2872
A100	461	#5	STR	8'-11"	4287	C1	459	#4	STR	28'-4"	8687
A101	1	#5	STR	7'-2"	7						
A102	1	#5	STR	5'-4"	6	F1	47	#4	STR	3'-3"	102
A151	2	#5	STR	8'-0"	17						
A152	2	#5	STR	7'-0"	15	G1	2	#4	STR	9'-3"	12
A153	2	#5	STR	6'-0"	13	G2	2	#4	STR	12-8"	17
A154	2	#5	STR	5'-0"	10						
A155	2	#5	STR	4'-0"	8	S1	6	#8	STR	9'-3"	148
						S2	6	#8	STR	12'-7"	202
A200	461	#5	STR	8'-11"	4287						
A201	1	#5	STR	7'-2"	7						
A202	1	#5	STR	5'-4"	6						
A251	2	#5	STR	8'-0"	17						
A252	2	#5	STR	7'-0"	15						
A253	2	#5	STR	6'-0"	13						
A254	2	#5	STR	5'-0"	10						
A255	2	#5	STR	4'-0"	8						

REINFORCING STEEL = 35,892 LBS

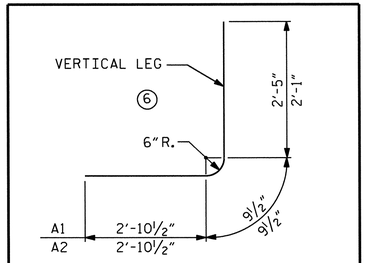

BAR TYPE
DIMENSIONS ARE OUT TO OUT

SPLICE LENGTH CHART

BAR	SIZE	SPLICE LENGTH
C1	4	1'-11"

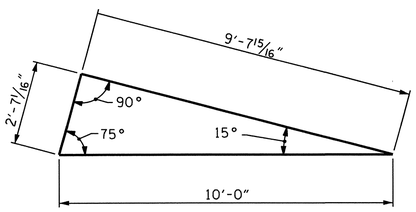

SKEW TRIANGLE
(105°-00'-00")

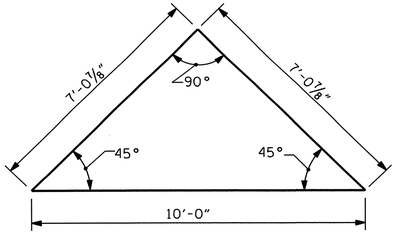

SKEW TRIANGLE
(135°-00'-00")

PROJECT NO. U-0071
DURHAM COUNTY
STATION: 19+07.28 -Y4-

SHEET 4 OF 7

STATE OF NORTH CAROLINA
DEPARTMENT OF TRANSPORTATION
RALEIGH

SINGLE 8 FT. X 9 FT. CONCRETE BOX CULVERT 112° SKEW

NORTH CAROLINA PROFESSIONAL SEAL 14855 ENGINEER DOUGLAS R. CRUMPLER
5/13/14

REVISIONS							SHEET NO.
NO.	BY:	DATE:	NO.	BY:	DATE:		C-23
1			3				TOTAL SHEETS
2			4				26

ASSEMBLED BY : D. G. ELY DATE : 6/2012
CHECKED BY : S. B. WILLIAMS DATE : 11/2012
DESIGN ENGINEER OF RECORD: A. SORSENGINH DATE : 11/2013
DRAWN BY : R.W. WRIGHT DATE : AUG. 1989
CHECKED BY : A.R. BISSETTE DATE : AUG. 1989

SPECIAL STANDARD

REVISED 8-28-92 BY E.L.R. CHECKED BY C.R.P.
REVISED 8-22-89 BY A.R.B. CHECKED BY C.R.K.
REDRAWN 8-22-89
REVISED 11-19-99 BY M.M. CHECKED BY R.W.W.

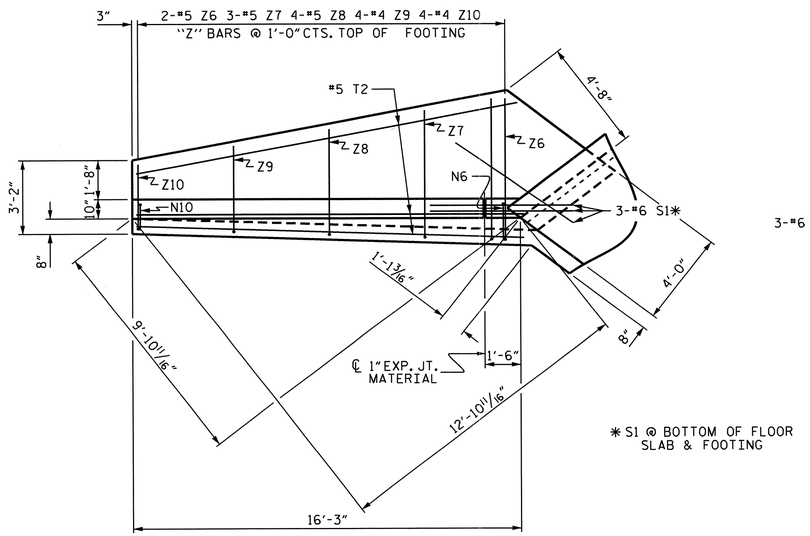

* S1 @ BOTTOM OF FLOOR SLAB & FOOTING

PLAN W1

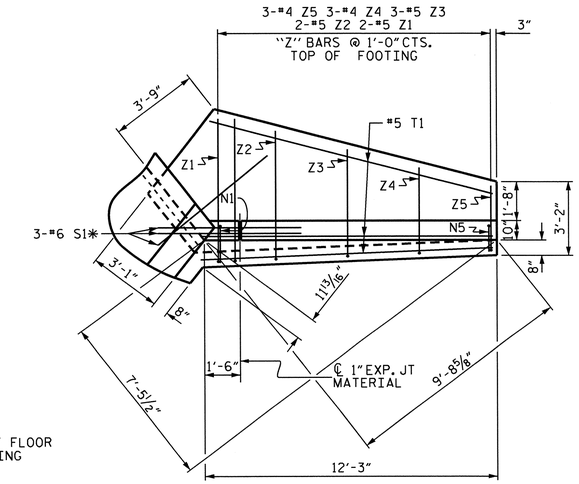

PLAN W2

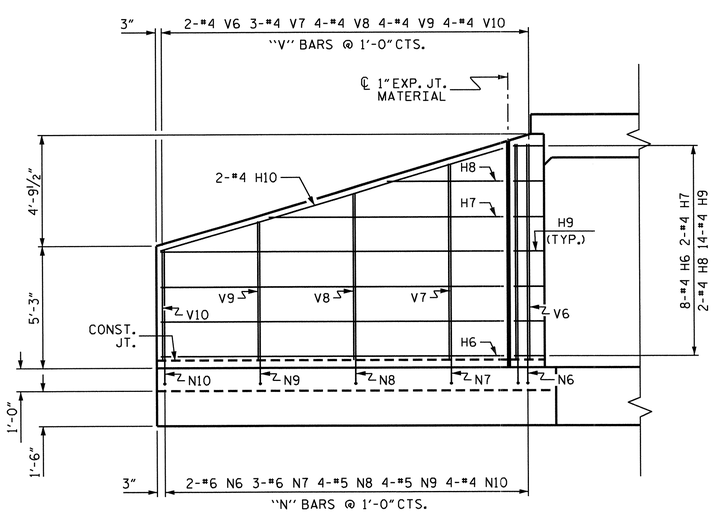

ELEVATION W1

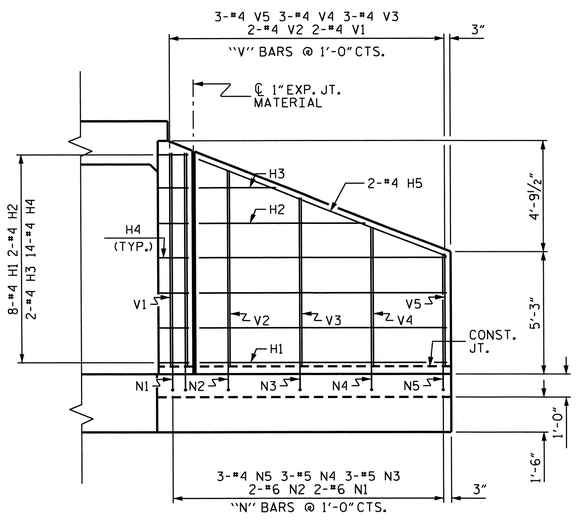

ELEVATION W2

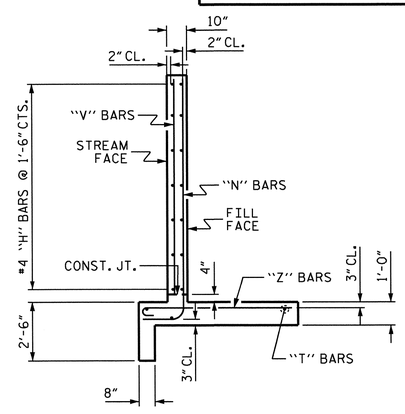

TYPICAL WING SECTION

BAR TYPES

ALL BAR DIMENSIONS ARE OUT TO OUT.

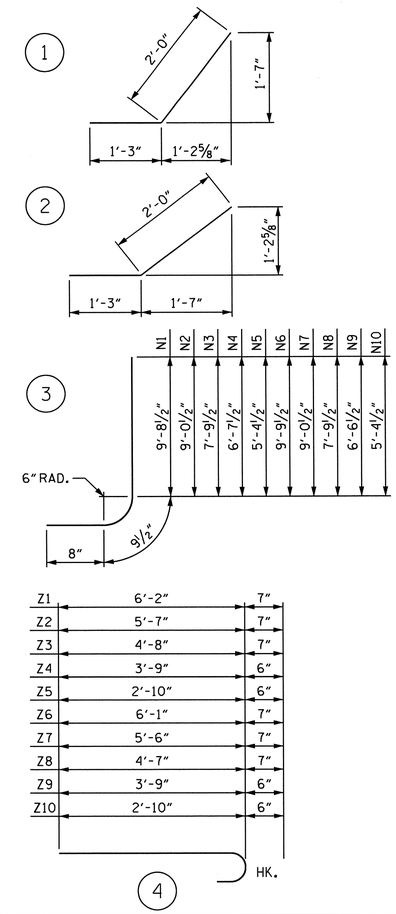

BILL OF MATERIAL

BAR	NO.	SIZE	TYPE	LENGTH	WEIGHT
H1	8	#4	STR	10'-4"	55
H2	2	#4	STR	6'-11"	9
H3	2	#4	STR	3'-3"	4
H4	14	#4	1	3'-3"	30
H5	2	#4	STR	11'-2"	15
H6	8	#4	STR	14'-4"	77
H7	2	#4	STR	9'-10"	13
H8	2	#4	STR	4'-10"	6
H9	14	#4	2	3'-3"	30
H10	2	#4	STR	15'-0"	20
N1	2	#6	3	11'-2"	34
N2	2	#6	3	10'-6"	32
N3	3	#5	3	9'-3"	29
N4	3	#5	3	8'-1"	25
N5	3	#4	3	6'-10"	14
N6	2	#6	3	11'-3"	34
N7	3	#6	3	10'-6"	47
N8	4	#5	3	9'-3"	39
N9	4	#5	3	8'-0"	33
N10	4	#4	3	6'-10"	18
S1	6	#6	STR	6'-0"	54
T1	3	#5	STR	12'-3"	38
T2	3	#5	STR	16'-3"	51
V1	2	#4	STR	9'-2"	12
V2	2	#4	STR	8'-5"	11
V3	3	#4	STR	7'-3"	15
V4	3	#4	STR	6'-0"	12
V5	3	#4	STR	4'-10"	10
V6	2	#4	STR	9'-3"	12
V7	3	#4	STR	8'-5"	17
V8	4	#4	STR	7'-2"	19
V9	4	#4	STR	6'-0"	16
V10	4	#4	STR	4'-9"	13
Z1	2	#5	4	6'-9"	14
Z2	2	#5	4	6'-2"	13
Z3	3	#5	4	5'-3"	16
Z4	3	#4	4	4'-3"	9
Z5	3	#4	4	3'-4"	7
Z6	2	#5	4	6'-8"	14
Z7	3	#5	4	6'-1"	19
Z8	4	#5	4	5'-2"	22
Z9	4	#4	4	4'-3"	11
Z10	4	#4	4	3'-4"	9

REINFORCING STEEL FOR 2 WINGS 978 LBS

CLASS A CONCRETE

2 WINGS	13.9	CY
1 HEADWALL	0.5	CY
1 END CURTAIN WALL	0.4	CY
TOTAL	14.8	CY

PROJECT NO. U-0071
DURHAM COUNTY
STATION: 19+07.28 -Y4-

SHEET 5 OF 7

STATE OF NORTH CAROLINA
DEPARTMENT OF TRANSPORTATION
RALEIGH

OUTLET WINGS FOR CONCRETE BOX CULVERT

H = 9'-0" SLOPE = 2:1
105° SKEW

NORTH CAROLINA PROFESSIONAL SEAL 14855 ENGINEER DOUGLAS R. CALLOWAY
5/13/14

REVISIONS								SHEET NO.
NO.	BY:	DATE:	NO.	BY:	DATE:			C-2A
1			3					TOTAL SHEETS
2			4					26

CULVERT 4

STD. NO. CW7509

ASSEMBLED BY :	D. G. ELY	DATE :	6/2012
CHECKED BY :	S. B. WILLIAMS	DATE :	11/2012
DESIGN ENGINEER OF RECORD:	A. SORSENGINH	DATE :	11/2013
DRAWN BY :	CCJ	01/00	
CHECKED BY :	RWW	03/00	

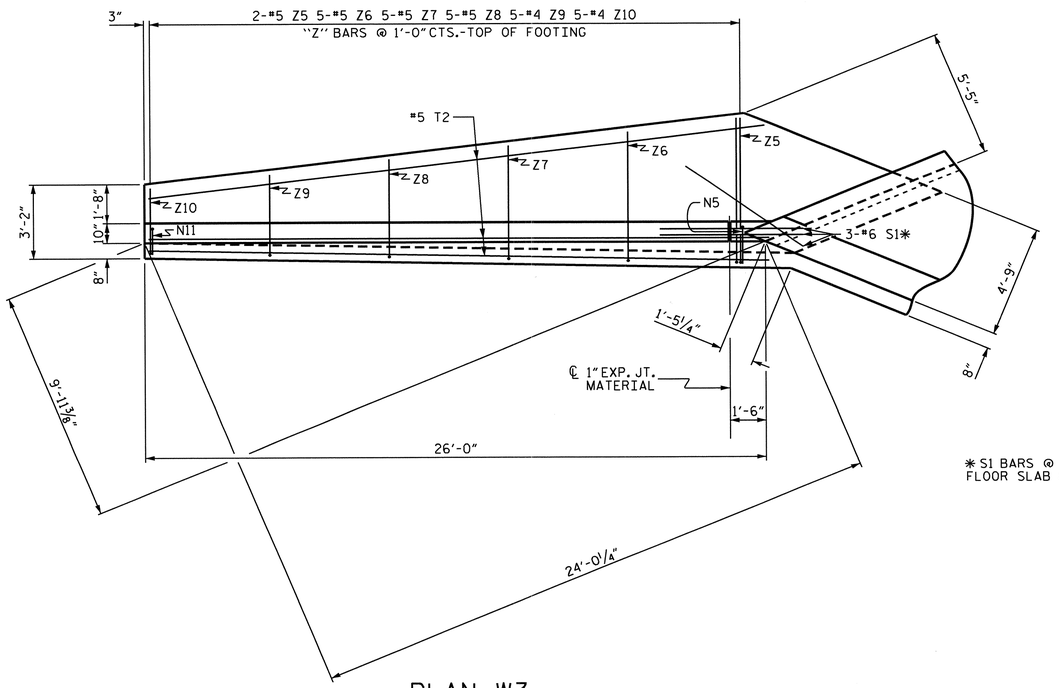

PLAN W3

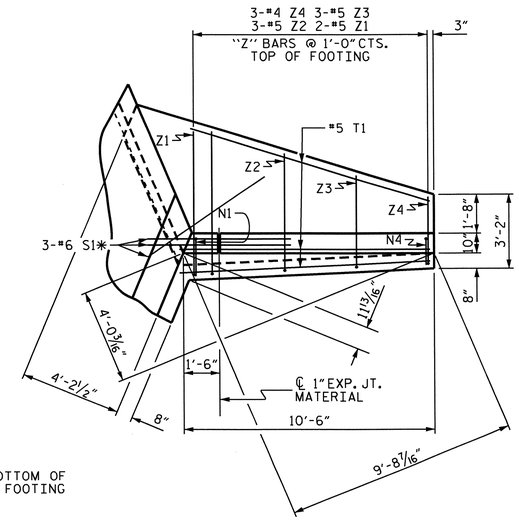

PLAN W4

* S1 BARS @ BOTTOM OF FLOOR SLAB & FOOTING

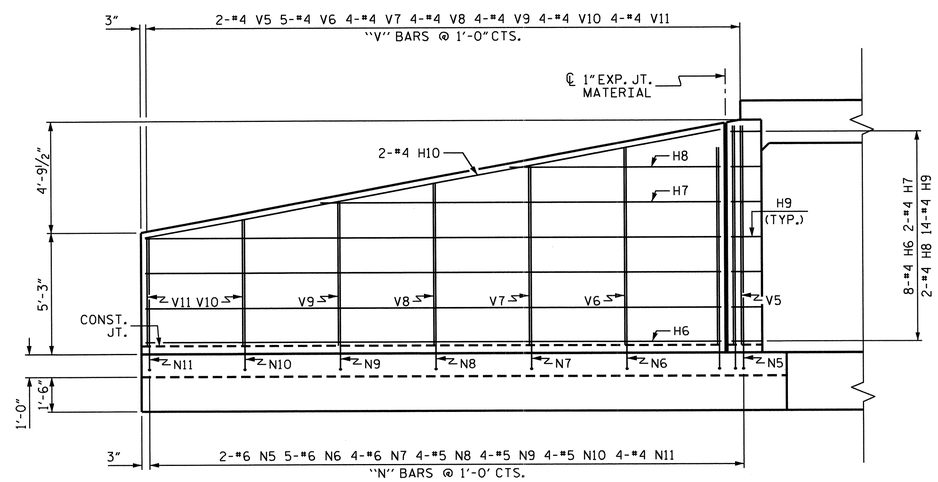

ELEVATION W3

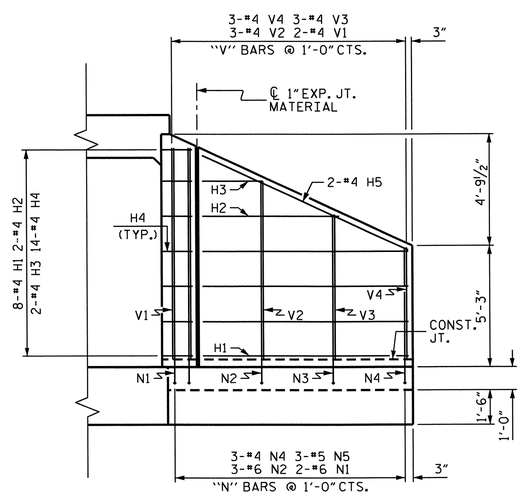

ELEVATION W4

BAR TYPES

ALL BAR DIMENSIONS ARE OUT TO OUT.

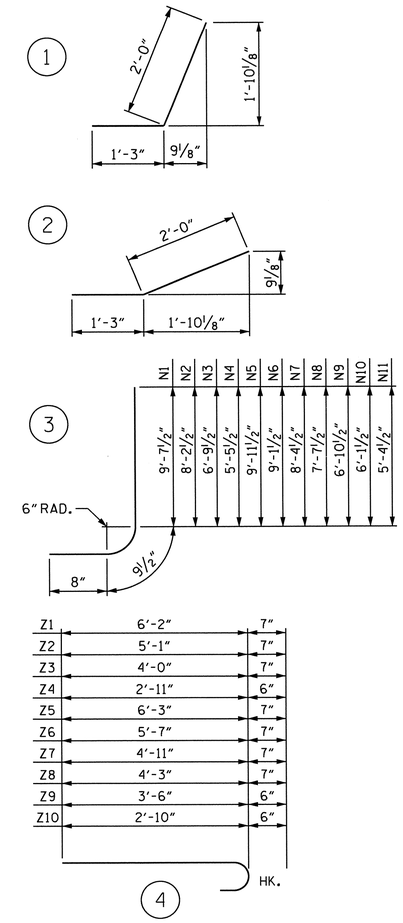

BILL OF MATERIAL

BAR	NO.	SIZE	TYPE	LENGTH	WEIGHT
H1	8	#4	STR	8'-7"	46
H2	2	#4	STR	5'-8"	8
H3	2	#4	STR	2'-6"	3
H4	14	#4	1	3'-3"	30
H5	2	#4	STR	9'-6"	13
H6	8	#4	STR	24'-1"	129
H7	2	#4	STR	16'-9"	22
H8	2	#4	STR	8'-10"	12
H9	14	#4	2	3'-3"	30
H10	2	#4	STR	24'-6"	33
N1	2	#6	3	11'-1"	33
N2	3	#6	3	9'-8"	44
N3	3	#5	3	8'-3"	26
N4	3	#4	3	6'-11"	14
N5	2	#6	3	11'-5"	34
N6	5	#6	3	10'-7"	79
N7	4	#6	3	9'-10"	59
N8	4	#5	3	9'-1"	38
N9	4	#5	3	8'-4"	35
N10	4	#5	3	7'-7"	32
N11	4	#4	3	6'-10"	18
S1	6	#6	STR	6'-0"	54
T1	3	#5	STR	10'-6"	33
T2	3	#5	STR	26'-0"	81
V1	2	#4	STR	9'-1"	12
V2	3	#4	STR	7'-8"	15
V3	3	#4	STR	6'-3"	13
V4	3	#4	STR	4'-10"	10
V5	2	#4	STR	9'-5"	13
V6	5	#4	STR	8'-6"	28
V7	4	#4	STR	7'-9"	21
V8	4	#4	STR	7'-0"	19
V9	4	#4	STR	6'-3"	17
V10	4	#4	STR	5'-6"	15
V11	4	#4	STR	4'-9"	13
Z1	2	#5	4	6'-9"	14
Z2	3	#5	4	5'-8"	18
Z3	3	#5	4	4'-7"	14
Z4	3	#4	4	3'-5"	7
Z5	2	#5	4	6'-10"	14
Z6	5	#5	4	6'-2"	32
Z7	5	#5	4	5'-6"	29
Z8	5	#5	4	4'-10"	25
Z9	5	#4	4	4'-0"	13
Z10	5	#4	4	3'-4"	11
REINFORCING STEEL FOR 2 WINGS					1259 LBS
CLASS A CONCRETE					
2 WINGS					18.1 CY
1 HEADWALL					0.6 CY
1 END CURTAIN WALL					0.6 CY
TOTAL					19.3 CY

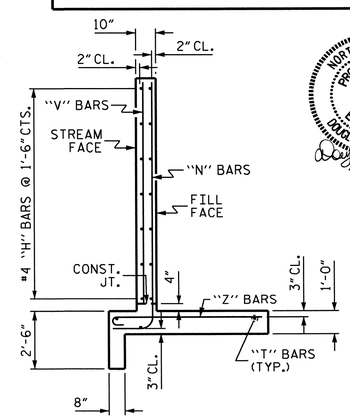

TYPICAL WING SECTION

NORTH CAROLINA PROFESSIONAL SEAL 14855 ENGINEER DOUGLAS R. CALHOUN
5-13-14

PROJECT NO. U-0071
DURHAM COUNTY
STATION: 19+07.28 -Y4-

SHEET 6 OF 7

STATE OF NORTH CAROLINA
DEPARTMENT OF TRANSPORTATION
RALEIGH

INLET WINGS FOR CONCRETE BOX CULVERT

H = 9'-0" SLOPE = 2:1
135° SKEW

REVISIONS						SHEET NO.
NO.	BY:	DATE:	NO.	BY:	DATE:	C-25
1			3			TOTAL SHEETS
2			4			26

ASSEMBLED BY : D. G. ELY DATE : 6/2012
CHECKED BY : S. B. WILLIAMS DATE : 11/2012
DESIGN ENGINEER OF RECORD: A. SORSENGINH DATE : 11/2013

DRAWN BY : CCJ 01/00
CHECKED BY : RWW 03/00

CULVERT 4

STD. NO. CW4509

LOAD AND RESISTANCE FACTOR RATING (LRFR) SUMMARY FOR REINFORCED CONCRETE BOX CULVERTS

LEVEL		VEHICLE	WEIGHT (W) (TONS)	CONTROLLING LOAD RATING (#)	MINIMUM RATING FACTORS (RF)	TONS = W × RF	STRENGTH I LIMIT STATE									COMMENT NUMBER
							LIVE-LOAD FACTORS $\gamma_{(LL)}$	MOMENT				SHEAR				
								RATING FACTOR	BOX NO.	ELEMENT TYPE	DISTANCE FROM LEFT END OF ELEMENT (ft)	RATING FACTOR	BOX NO.	ELEMENT TYPE	DISTANCE FROM LEFT END OF ELEMENT (ft)	
DESIGN LOAD RATING		HL-93 (INVENTORY)	N/A	1	1.16	--	1.75	1.16	1	EXTERIOR WALL	4.97	1.42	1	EXTERIOR WALL	8.96	
		HL-93 (OPERATING)	N/A		1.50	--	1.35	1.50	1	EXTERIOR WALL	4.97	1.84	1	EXTERIOR WALL	8.96	
		HS-20 (INVENTORY)	36.000	2	1.16	41.66	1.75	1.16	1	EXTERIOR WALL	4.97	1.42	1	EXTERIOR WALL	8.96	
		HS-20 (OPERATING)	36.000		1.50	54.00	1.35	1.50	1	EXTERIOR WALL	4.97	1.84	1	EXTERIOR WALL	8.96	
LEGAL LOAD RATING	SINGLE VEHICLE (SV)	SNSH	13.500	3	1.45	19.53	1.40	1.45	1	EXTERIOR WALL	4.97	1.78	1	EXTERIOR WALL	8.96	
		SNGARBS2	20.000		1.45	28.93	1.40	1.45	1	EXTERIOR WALL	4.97	1.78	1	EXTERIOR WALL	8.96	
		SNAGRIS2	22.000		1.45	31.82	1.40	1.45	1	EXTERIOR WALL	4.97	1.78	1	EXTERIOR WALL	8.96	
		SNCOTTS3	27.250		1.45	39.42	1.40	1.45	1	EXTERIOR WALL	4.97	1.78	1	EXTERIOR WALL	8.96	
		SNAGGRS4	34.930		1.45	50.52	1.40	1.45	1	EXTERIOR WALL	4.97	1.78	1	EXTERIOR WALL	8.96	
		SNS5A	35.550		1.45	51.42	1.40	1.45	1	EXTERIOR WALL	4.97	1.78	1	EXTERIOR WALL	8.96	
		SNS6A	39.950		1.45	57.79	1.40	1.45	1	EXTERIOR WALL	4.97	1.78	1	EXTERIOR WALL	8.96	
		SNS7B	42.000		1.45	60.75	1.40	1.45	1	EXTERIOR WALL	4.97	1.78	1	EXTERIOR WALL	8.96	
	TRUCK TRACTOR SEMI-TRAILER (TTST)	TNAGRIT3	33.000		1.45	47.73	1.40	1.45	1	EXTERIOR WALL	4.97	1.78	1	EXTERIOR WALL	8.96	
		TNT4A	33.080		1.45	47.84	1.40	1.45	1	EXTERIOR WALL	4.97	1.78	1	EXTERIOR WALL	8.96	
		TNT6A	41.600		1.45	60.17	1.40	1.45	1	EXTERIOR WALL	4.97	1.78	1	EXTERIOR WALL	8.96	
		TNT7A	42.000		1.45	60.75	1.40	1.45	1	EXTERIOR WALL	4.97	1.78	1	EXTERIOR WALL	8.96	
		TNT7B	42.000		1.45	60.75	1.40	1.45	1	EXTERIOR WALL	4.97	1.78	1	EXTERIOR WALL	8.96	
		TNAGRIT4	43.000		1.45	62.20	1.40	1.45	1	EXTERIOR WALL	4.97	1.78	1	EXTERIOR WALL	8.96	
		TNAGRIT5A	45.000		1.45	65.09	1.40	1.45	1	EXTERIOR WALL	4.97	1.78	1	EXTERIOR WALL	8.96	
		TNAGRIT5B	45.000		1.45	65.09	1.40	1.45	1	EXTERIOR WALL	4.97	1.78	1	EXTERIOR WALL	8.96	

LOAD FACTORS:

DESIGN LOAD RATING FACTORS

LOAD TYPE	MAX FACTOR	MIN FACTOR
DC	1.25	0.90
DW	1.50	0.65
EV	1.30	0.90
EH	1.35	0.50 OR 0.90
ES	1.35	0.50 OR 0.90
LS	1.75	--
WA	1.00	--

NOTE:

RATING FACTORS ARE BASED ON THE STRENGTH I LIMIT STATE.

COMMENTS:

1.
2.
3.
4.

(#) CONTROLLING LOAD RATING

(1) DESIGN LOAD RATING (HL-93)

(2) DESIGN LOAD RATING (HS-20)

(3) DESIGN LOAD RATING **

** SEE CHART FOR VEHICLE TYPE

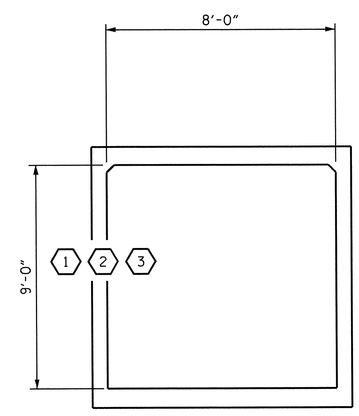

LRFR SUMMARY

(LOOKING DOWNSTREAM)

PROJECT NO. U-0071

DURHAM COUNTY

STATION: 19+07.28 -Y4-

SHEET 7 OF 7

STATE OF NORTH CAROLINA
DEPARTMENT OF TRANSPORTATION
RALEIGH

STANDARD

LRFR SUMMARY FOR REINFORCED CONCRETE BOX CULVERTS (NON-INTERSTATE TRAFFIC)

NORTH CAROLINA PROFESSIONAL SEAL 14855 ENGINEER DOUGLAS B. CALHOUN 5/13/14

REVISIONS						SHEET NO.
NO.	BY:	DATE:	NO.	BY:	DATE:	C-26
1			3			TOTAL SHEETS
2			4			26

CULVERT 4 STD. NO. LRFR6

ASSEMBLED BY : D. G. ELY		DATE : 6/2012	
CHECKED BY : S. B. WILLIAMS		DATE : 11/2012	
DESIGN ENGINEER OF RECORD: A. SORSENGINH		DATE : 11/2013	
DRAWN BY : WMC 7/11	REV. 10/1/11	MAA/GM	
CHECKED BY : GM 7/11			

13-MAY-2014 09:48
Z:\TIPProjects-U\U0071\Structures\Plans\Culverts\SR1919_Culvert 4\Drawings\U0071_SD_CULV04_SR1919.dgn
asorsenginh

STANDARD NOTES

DESIGN DATA:

SPECIFICATIONS	A.A.S.H.T.O. (CURRENT)
LIVE LOAD	SEE PLANS
IMPACT ALLOWANCE	SEE A.A.S.H.T.O.
STRESS IN EXTREME FIBER OF	
STRUCTURAL STEEL - AASHTO M270 GRADE 36	20,000 LBS. PER SQ. IN.
- AASHTO M270 GRADE 50W	27,000 LBS. PER SQ. IN.
- AASHTO M270 GRADE 50	27,000 LBS. PER SQ. IN.
REINFORCING STEEL IN TENSION	
GRADE 60	24,000 LBS. PER SQ. IN.
CONCRETE IN COMPRESSION	1,200 LBS. PER SQ. IN.
CONCRETE IN SHEAR	SEE A.A.S.H.T.O.
STRUCTURAL TIMBER - TREATED OR	
UNTREATED - EXTREME FIBER STRESS	1,800 LBS. PER SQ. IN.
COMPRESSION PERPENDICULAR TO GRAIN OF TIMBER	375 LBS. PER SQ. IN.
EQUIVALENT FLUID PRESSURE OF EARTH	30 LBS. PER CU. FT. (MINIMUM)

MATERIAL AND WORKMANSHIP:

EXCEPT AS MAY OTHERWISE BE SPECIFIED ON PLANS OR IN THE SPECIAL PROVISIONS, ALL MATERIAL AND WORKMANSHIP SHALL BE IN ACCORDANCE WITH THE 2012 "STANDARD SPECIFICATIONS FOR ROADS AND STRUCTURES" OF THE N. C. DEPARTMENT OF TRANSPORTATION.

STEEL SHEET PILING FOR PERMANENT OR TEMPORARY APPLICATIONS SHALL BE HOT ROLLED.

CONCRETE:

UNLESS OTHERWISE REQUIRED ON PLANS, CLASS A CONCRETE SHALL BE USED FOR ALL PORTIONS OF ALL STRUCTURES WITH THE EXCEPTION THAT: CLASS AA CONCRETE SHALL BE USED IN BRIDGE SUPERSTRUCTURES, ABUTMENT BACKWALLS, AND APPROACH SLABS; AND CLASS B CONCRETE SHALL BE USED FOR SLOPE PROTECTION AND RIP RAP.

CONCRETE CHAMFERS:

UNLESS OTHERWISE NOTED ON THE PLANS, ALL EXPOSED CORNERS ON STRUCTURES SHALL BE CHAMFERED 3/4" WITH THE FOLLOWING EXCEPTIONS: TOP CORNERS OF CURBS MAY BE ROUNDED TO 1-1/2" RADIUS WHICH IS BUILT INTO CURB FORMS; CORNERS OF TRANSVERSE FLOOR EXPANSION JOINTS SHALL BE ROUNDED WITH A 1/4" FINISHING TOOL UNLESS OTHERWISE REQUIRED ON PLANS; AND CORNERS OF EXPANSION JOINTS IN THE ROADWAY FACES AND TOPS OF CURBS AND SIDEWALKS SHALL BE ROUNDED TO A 1/4" RADIUS WITH A FINISHING STONE OR TOOL UNLESS OTHERWISE REQUIRED ON PLANS.

DOWELS:

DOWELS WHEN INDICATED ON PLANS AS FOR CULVERT EXTENSIONS, SHALL BE EMBEDDED AT LEAST 12" INTO THE OLD CONCRETE AND GROUTED INTO PLACE WITH 1:2 CEMENT MORTAR.

ALLOWANCE FOR DEAD LOAD DEFLECTION, SETTLEMENT, ETC. IN CASTING SUPERSTRUCTURES:

BRIDGES SHALL BE BUILT ON THE GRADE OR VERTICAL CURVE SHOWN ON PLANS. SLABS, CURBS AND PARAPETS SHALL CONFORM TO THE GRADE OR CURVE.

ALL DIMENSIONS WHICH ARE GIVEN IN SECTION AND ARE AFFECTED BY DEAD LOAD DEFLECTIONS ARE DIMENSIONS AT CENTER LINE OF BEARING UNLESS OTHERWISE NOTED ON PLANS. IN SETTING FORMS FOR STEEL BEAM BRIDGES AND PRESTRESSED CONCRETE GIRDER BRIDGES, ADJUSTMENTS SHALL BE MADE DUE TO THE DEAD LOAD DEFLECTIONS FOR THE ELEVATIONS SHOWN. WHERE BLOCKS ARE SHOWN OVER BEAMS FOR BUILDING UP TO THE SLAB, THE VERTICAL DIMENSIONS OF THE BLOCKS SHALL BE ADJUSTED BETWEEN BEARINGS TO COMPENSATE FOR DEAD LOAD DEFLECTIONS, VERTICAL CURVE ORDINATE, AND ACTUAL BEAM CAMBER. WHERE BOTTOM OF SLAB IS IN LINE WITH BOTTOM OF TOP FLANGES, DEPTH OF SLAB BETWEEN BEARINGS SHALL BE ADJUSTED TO COMPENSATE FOR DEAD LOAD DEFLECTION, VERTICAL CURVE ORDINATE, AND ACTUAL BEAM CAMBER.

IN SETTING FALSEWORK AND FORMS FOR REINFORCED CONCRETE SPANS, AN ALLOWANCE SHALL BE MADE FOR DEAD LOAD DEFLECTIONS, SETTLEMENT OF FALSEWORK, AND PERMANENT CAMBER WHICH SHALL BE PROVIDED FOR IN ADDITION TO THE ELEVATIONS SHOWN. AFTER REMOVAL OF THE FALSEWORK, THE FINISHED STRUCTURES SHALL CONFORM TO THE PROFILE AND ELEVATIONS SHOWN ON THE PLANS AND CONSTRUCTION ELEVATIONS FURNISHED BY THE ENGINEER.

DETAILED DRAWINGS FOR FALSEWORK OR FORMS FOR BRIDGE SUPERSTRUCTURE AND ANY STRUCTURE OR PARTS OF A STRUCTURE AS NOTED ON THE PLANS SHALL BE SUBMITTED TO THE ENGINEER FOR APPROVAL BEFORE CONSTRUCTION OF THE FALSEWORK OR FORMS IS STARTED.

REINFORCING STEEL:

ALL REINFORCING STEEL SHALL BE DEFORMED. DIMENSIONS RELATIVE TO PLACEMENT OF REINFORCING ARE TO CENTERS OF BARS UNLESS OTHERWISE INDICATED IN THE PLANS. DIMENSIONS ON BAR DETAILS ARE TO CENTERS OF BARS OR ARE OUT TO OUT AS INDICATED ON PLANS.

WIRE BAR SUPPORTS SHALL BE PROVIDED FOR REINFORCING STEEL WHERE INDICATED ON THE PLANS. WHEN BAR SUPPORT PIECES ARE PLACED IN CONTINUOUS LINES, THEY SHALL BE SO PLACED THAT THE ENDS OF THE SUPPORTING WIRES SHALL BE LAPPED TO LOCK LEGS ON ADJOINING PIECES.

STRUCTURAL STEEL:

AT THE CONTRACTOR'S OPTION, HE MAY SUBSTITUTE 7/8" Ø SHEAR STUDS FOR THE ¾" Ø STUDS SPECIFIED ON THE PLANS. THIS SUBSTITUTION SHALL BE MADE AT THE RATE OF 3 - 7/8" Ø STUDS FOR 4 - 3/4" Ø STUDS, AND STUD SPACING CHANGES SHALL BE MADE AS NECESSARY TO PROVIDE THE SAME EQUIVALENT NUMBER OF 7/8" Ø STUDS ALONG THE BEAM AS SHOWN FOR 3/4" Ø STUDS BASED ON THE RATIO OF 3 - 7/8" Ø STUDS FOR 4 - 3/4" Ø STUDS. STUDS OF THE LENGTH SPECIFIED ON THE PLANS MUST BE PROVIDED. THE MAXIMUM SPACING SHALL BE 2'-0".

EXCEPT AT THE INTERIOR SUPPORTS OF CONTINUOUS BEAMS WHERE THE COVER PLATE IS IN CONTACT WITH BEARING PLATE, THE CONTRACTOR MAY, AT HIS OPTION, SUBSTITUTE FOR THE COVER PLATES DESIGNATED ON THE PLANS COVER PLATES OF THE EQUIVALENT AREA PROVIDED THESE PLATES ARE AT LEAST 5/16" IN THICKNESS AND DO NOT EXCEED A WIDTH EQUAL TO THE FLANGE WIDTH LESS 2" OR A THICKNESS EQUAL TO 2 TIMES THE FLANGE THICKNESS. THE SIZE OF FILLET WELDS SHALL CONFORM TO THE REQUIREMENTS OF THE CURRENT ANSI/AASHTO/AWS "BRIDGE WELDING CODE". ELECTROSLAG WELDING WILL NOT BE PERMITTED.

WITH THE SOLE EXCEPTION OF EDGES AT SURFACES WHICH BEAR ON OTHER SURFACES, ALL SHARP EDGES AND ENDS OF SHAPES AND PLATES SHALL BE SLIGHTLY ROUNDED BY SUITABLE MEANS TO A RADIUS OF APPROXIMATELY 1/16 INCH OR EQUIVALENT FLAT SURFACE AT A SUITABLE ANGLE PRIOR TO PAINTING, GALVANIZING, OR METALLIZING.

HANDRAILS AND POSTS:

METAL STANDARDS AND FACES OF THE CONCRETE END POSTS FOR THE METAL RAIL SHALL BE SET NORMAL TO THE GRADE OF THE CURB, UNLESS OTHERWISE SHOWN ON PLANS. THE METAL RAIL AND TOPS OF CONCRETE POSTS USED WITH THE ALUMINUM RAIL SHALL BE BUILT PARALLEL TO THE GRADE OF THE CURB.

METAL HANDRAILS SHALL BE IN ACCORDANCE WITH THE PLANS. RAILS SHALL BE AS MANUFACTURED FOR BRIDGE RAILING. CASTINGS SHALL BE OF A UNIFORM APPEARANCE. FINS AND OTHER DEFORMATIONS RESULTING FROM CASTING OR OTHERWISE SHALL BE REMOVED IN A MANNER SO THAT A UNIFORM COLORING OF THE COMPLETED CASTING SHALL BE OBTAINED. CASTINGS WITH DISCOLORATIONS OR OF NON-UNIFORM COLORING WILL NOT BE ACCEPTED. CERTIFIED MILL REPORTS ARE REQUIRED FOR METAL RAILS AND POSTS.

SPECIAL NOTES:

GENERALLY, IN CASE OF DISCREPANCY, THIS STANDARD SHEET OF NOTES SHALL GOVERN OVER THE SPECIFICATIONS, BUT THE REMAINDER OF THE PLANS SHALL GOVERN OVER NOTES HEREON, AND SPECIAL PROVISIONS SHALL GOVERN OVER ALL. SEE SPECIFICATIONS ARTICLE 105-4.

ENGLISH

JANUARY, 1990