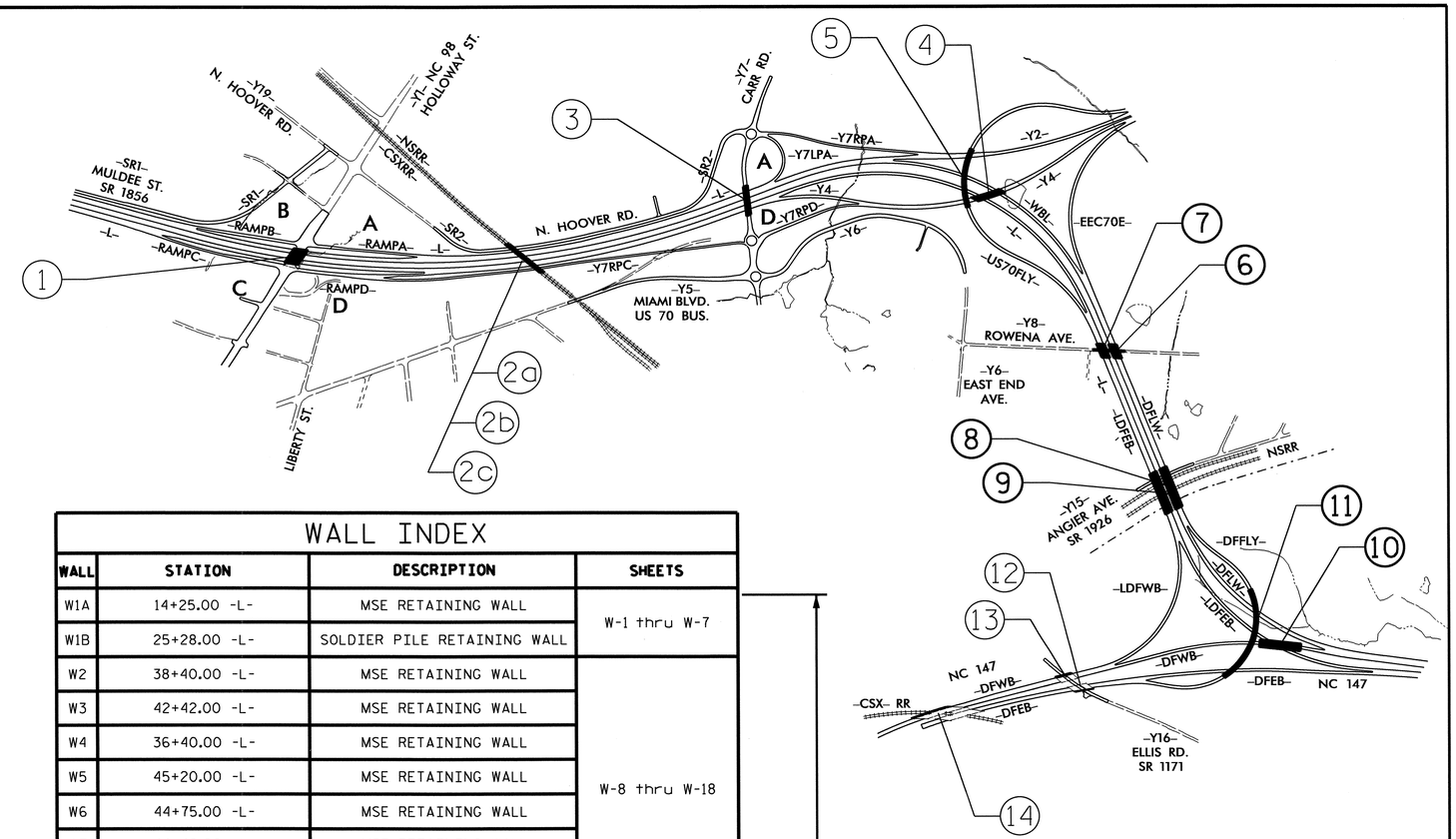

PART 2 OF 3

BRIDGE INDEX

STR	STATION	DESCRIPTION	SHEETS
1	44+08.60 -L-	BRIDGE ON EAST END CONNECTOR OVER NC98 (-Y1-)	S-1 thru S-37
2a	64+55.50 -L-	BRIDGE ON CSX RR OVER US70 BYPASS	S-38 thru S-80
2b	64+74.69 -L-	BRIDGE ON NSRR OVER US70 BYPASS	S-81 thru S-122
2c	65+21.79 -L-	DETOUR BRIDGE ON CSXT AND NSRR OVER US70	S-123 thru S-152
3	85+26.52 -L-	BRIDGE ON CARR RD. -(Y7-) OVER EAST END CONNECTOR	S-153 thru S-189
4	107+45.55 -L-	BRIDGE ON US70EB (-Y4-) OVER EAST END CONNECTOR	S-190 thru S-227
5	105+29.00 -L-	BRIDGE ON US70 FLYOVER OVER US70	S-228 thru S-272
6	**125+91.57 -L-**	**BRIDGE ON EAST CONNECTOR OVER ROWENA AVE. (WBL)**	**S-273 thru S-300**
7	**125+91.57 -L-**	**BRIDGE ON EAST CONNECTOR OVER ROWENA AVE. (EBL)**	**S-301 thru S-330**
8	**17+97.57 -DFLW-**	**BRIDGE ON EAST END CONN OVER ANGIER AVE. (-Y15-) & NSRR**	**S-331 thru S-374**
9	**138+40.45 -LDFEB-**	**BRIDGE ON EAST END CONN OVER ANGIER AVE. (-Y15-) AND NSRR**	**S-375 thru S-419**
10	**157+33.78 -LDFEB-**	**BRIDGE ON EAST END CONNECTOR OVER NC 147**	**S-420 thru S-476**
11	**23+29.61 -DFFLY-**	**BRIDGE ON RAMP -DFFLY- OVER EAST END CONNECTOR AND NC147**	**S-477 thru S-538**
12	36+69.26 -DFWB-	BRIDGE WIDENING ON WB NC147 OVER ELLIS RD. (-Y16-)	S-539 thru S-573
13	34+62.88 -DFEB-	BRIDGE WIDENING ON EB NC147 OVER ELLIS RD. (-Y16-)	S-574 thru S-610
14	24+70.18 -DFWB-	BRIDGE WIDENING ON WB NC147 OVER CSXT	S-611 thru S-671

PART 1

PART 2

PART 3

PRESERVATION AND REHAB INDEX

STR	STATION	DESCRIPTION	SHEETS
SP12	36+69.26 -DFWB-	REHABILITATION OF BRIDGE ON WB NC147 OVER ELLIS RD. (-Y16-)	SP-1 thru SP-10a
SP13	34+62.88 -DFEB-	REHABILITATION OF BRIDGE ON EB NC147 OVER ELLIS RD. (-Y16-)	SP-11 thru SP-21
SP14	24+70.18 -DFWB-	REHABILITATION OF BRIDGE ON WB NC147 OVER CSXT	SP-22 thru SP-50
SP15	23+44.51 -DFEB-	REHABILITATION OF BRIDGE ON EB NC147 OVER CSXT	SP-51 thru SP-83

PART 3

WALL INDEX

WALL	STATION	DESCRIPTION	SHEETS
W1A	14+25.00 -L-	MSE RETAINING WALL	W-1 thru W-7
W1B	25+28.00 -L-	SOLDIER PILE RETAINING WALL	
W2	38+40.00 -L-	MSE RETAINING WALL	W-8 thru W-18
W3	42+42.00 -L-	MSE RETAINING WALL	
W4	36+40.00 -L-	MSE RETAINING WALL	
W5	45+20.00 -L-	MSE RETAINING WALL	
W6	44+75.00 -L-	MSE RETAINING WALL	
W7	44+40.00 -L-	MSE RETAINING WALL	
W8	21+40.00 -Y1-	CAST IN PLACE GRAVITY WALL	
W9	24+00.00 -Y1-	SOLDIER PILE RETAINING WALL	
W10	14+80.00 -Y7RPC-	SOIL NAIL WALL	W-19 thru W-20
W11	10+00.00 -US70FLY RETW-	MSE RETAINING WALL	W-21 thru W-27
W12	10+00.00 -Y4 RETE-	MSE RETAINING WALL	
W13	10+00.00 -Y4 RETW-	MSE RETAINING WALL	
W14	52+84.32 -DFWB-	MSE RETAINING WALL	W-28 thru W-31
W15	46+50.00 -DFEB-	MSE RETAINING WALL	W-32 thru W-35
W16	157+72.04 -LDFEB-	MSE RETAINING WALL	W-28 thru W-31
W17	58+20.00 -DFWB-	MSE RETAINING WALL	W-36 thru W-38
-	N/A	CONCRETE DITCH DETAILS	W-39
-	N/A	CONCRETE BARRIER RAIL WITH MOMENT SLAB	W-40 thru W-41
W18	16+70.77 -US70FLY-	SOUND BARRIER WALL	W-42 thru W-44

CULVERT INDEX

CULV	STATION	DESCRIPTION	SHEETS
C1	95+48.49 -L-	SINGLE 8' X 9' RCBC	C-1 thru C-6
C2	133+41.46 -L-	SINGLE 6' X 7' RCBC	C-7 thru C-11
C3	34+45.00 -Y3-	SINGLE 8' X 10' RCBC	C-12 thru C-19
C4	19+07.28 -Y4-	SINGLE 8' X 9' RCBC	C-20 thru C-26

PROJECT NO. U-0071
DURHAM COUNTY
STATION:

STATE OF NORTH CAROLINA
DEPARTMENT OF TRANSPORTATION
RALEIGH

INDEX SHEET

REVISIONS					
NO.	BY:	DATE:	NO.	BY:	DATE:
1			3		
2			4		

DRAWN BY : W.D. CRUTCHER DATE : 6-19-14
CHECKED BY : R.D. MARTIN DATE : 6-23-14

12-NOV-2014 10:37
S:\PEF\ALL INDIVIDUAL FOLDERS\Darrell\u0071_title.dgn
dcrutcher

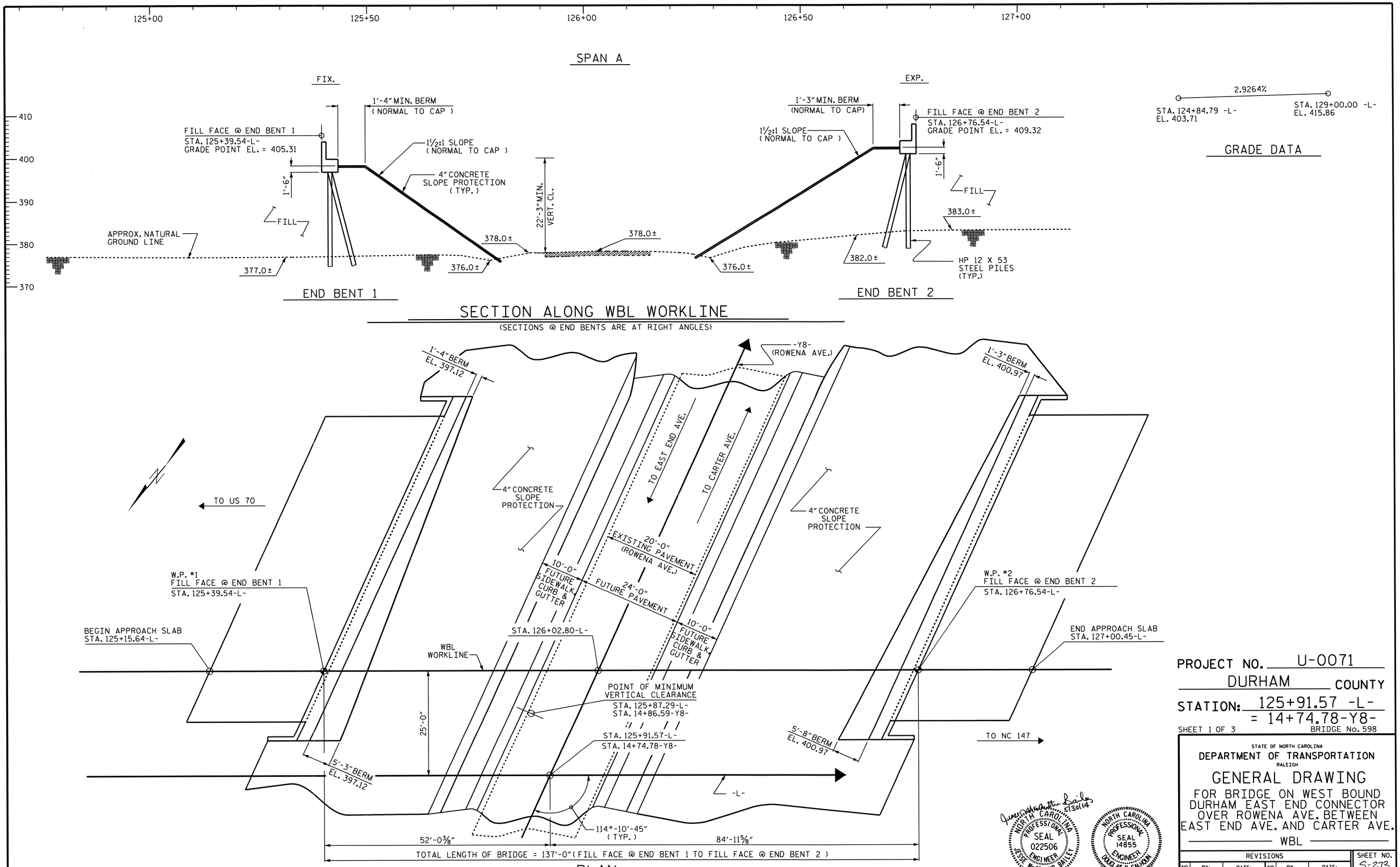
125+00
125+50
126+00
126+50
127+00
SPAN A
FIX.
EXP.
1'-4" MIN. BERM
(NORMAL TO CAP)
FILL FACE @ END BENT 1
STA. 125+39.54-L-
GRADE POINT EL. = 405.31
1½:1 SLOPE
(NORMAL TO CAP)
4" CONCRETE
SLOPE PROTECTION
(TYP.)
1'-6"
FILL
22'-3" MIN.
VERT. CL.
APPROX. NATURAL
GROUND LINE
378.0±
378.0±
377.0±
376.0±
376.0±
1'-3" MIN. BERM
(NORMAL TO CAP)
1½:1 SLOPE
(NORMAL TO CAP)
FILL FACE @ END BENT 2
STA. 126+76.54-L-
GRADE POINT EL. = 409.32
1'-6"
FILL
383.0±
382.0±
HP 12 X 53
STEEL PILES
(TYP.)
410
400
390
380
370
END BENT 1
END BENT 2
SECTION ALONG WBL WORKLINE
(SECTIONS @ END BENTS ARE AT RIGHT ANGLES)
2.9264%
STA. 124+84.79 -L-
EL. 403.71
STA. 129+00.00 -L-
EL. 415.86
GRADE DATA
1'-4" BERM
EL. 397.12
-Y8-
(ROWENA AVE.)
1'-3" BERM
EL. 400.97
TO EAST END AVE.
TO CARTER AVE.
TO US 70
4" CONCRETE
SLOPE
PROTECTION
4" CONCRETE
SLOPE
PROTECTION
20'-0"
EXISTING PAVEMENT
(ROWENA AVE.)
10'-0"
FUTURE
SIDEWALK,
CURB &
GUTTER
24'-0"
FUTURE PAVEMENT
10'-0"
FUTURE
SIDEWALK,
CURB &
GUTTER
W.P. #1
FILL FACE @ END BENT 1
STA. 125+39.54-L-
W.P. #2
FILL FACE @ END BENT 2
STA. 126+76.54-L-
BEGIN APPROACH SLAB
STA. 125+15.64-L-
END APPROACH SLAB
STA. 127+00.45-L-
STA. 126+02.80-L-
WBL
WORKLINE
POINT OF MINIMUM
VERTICAL CLEARANCE
STA. 125+87.29-L-
STA. 14+86.59-Y8-
STA. 125+91.57-L-
STA. 14+74.78-Y8-
25'-0"
5'-3" BERM
EL. 397.12
5'-8" BERM
EL. 400.97
TO NC 147
-L-
114°-10'-45"
(TYP.)
52'-0⅜"
84'-11⅝"
TOTAL LENGTH OF BRIDGE = 137'-0" (FILL FACE @ END BENT 1 TO FILL FACE @ END BENT 2)
PLAN
(PILES ARE NOT SHOWN IN PLAN VIEW FOR CLARITY)
NORTH CAROLINA PROFESSIONAL SEAL 022506 ENGINEER JESSE McARTHUR BAILEY
NORTH CAROLINA PROFESSIONAL SEAL 14855 ENGINEER DOUGLAS R. CALHOUN
5/8/14
DRAWN BY : D. G. ELY DATE : 06/2013
CHECKED BY : W. F. PARKER DATE : 11/2013
08-MAY-2014 11:08
Z:\TIPProjects-U\U0071\Structures\Plans\Str#6-L-over-Y8-\Gen_Draw\U-0071_SD_GD_06.dgn
asorsenginh
PROJECT NO. U-0071
DURHAM COUNTY
STATION: 125+91.57 -L-
= 14+74.78-Y8-
SHEET 1 OF 3
BRIDGE No. 598
STATE OF NORTH CAROLINA
DEPARTMENT OF TRANSPORTATION
RALEIGH
GENERAL DRAWING
FOR BRIDGE ON WEST BOUND
DURHAM EAST END CONNECTOR
OVER ROWENA AVE. BETWEEN
EAST END AVE. AND CARTER AVE.
WBL
REVISIONS
NO. BY: DATE: NO. BY: DATE:
1
2
3
4
SHEET NO. S-273
TOTAL SHEETS 671
STR. #6

FOUNDATION NOTES

FOR PILES, SEE SECTION 450 OF THE STANDARD SPECIFICATIONS.

PILES AT END BENT 1 AND END BENT 2 ARE DESIGNED FOR A FACTORED RESISTANCE OF 110 TONS PER PILE.

DRIVE PILES AT END BENT 1 AND END BENT 2 TO A REQUIRED DRIVING RESISTANCE OF 185 TONS PER PILE.

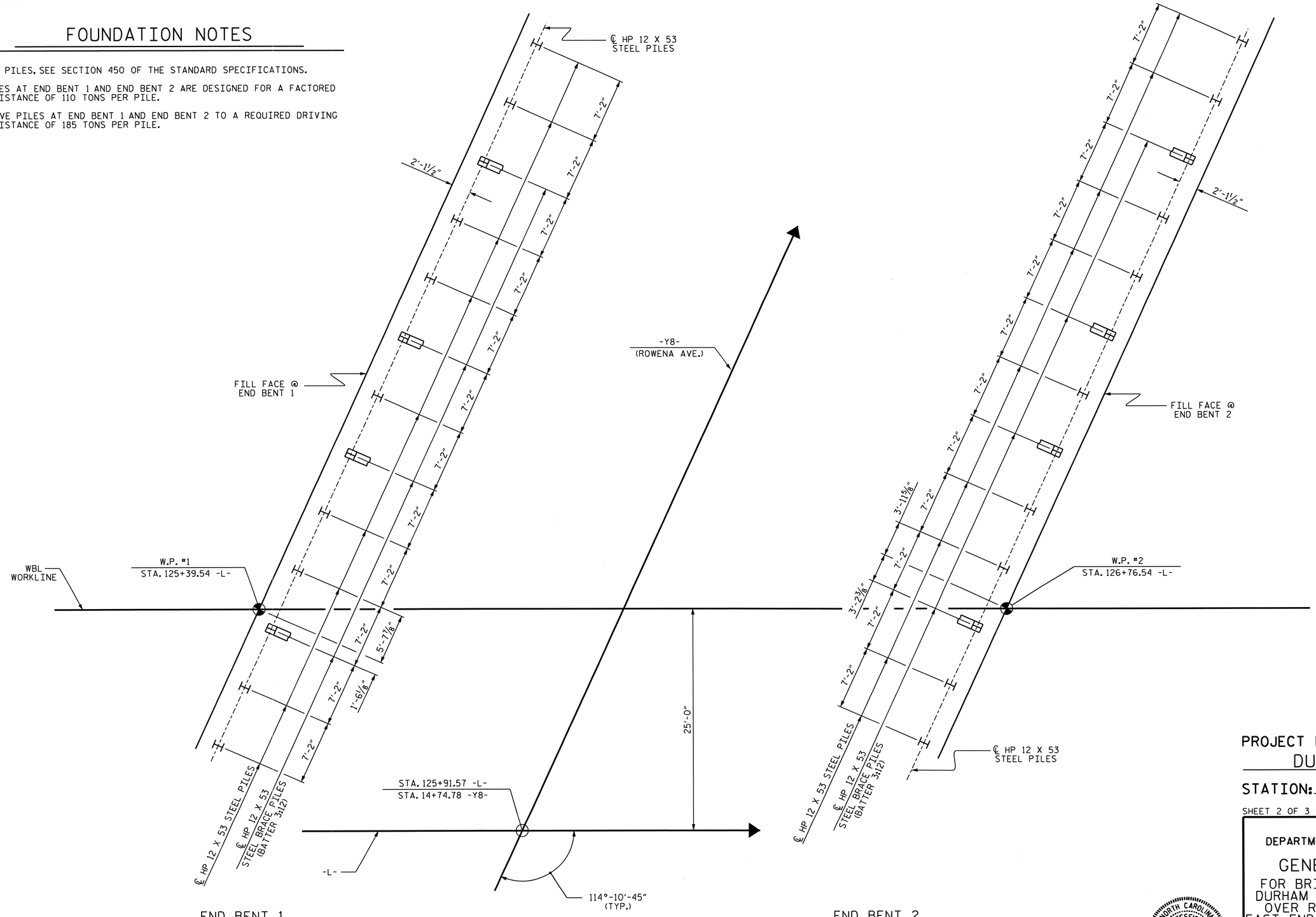

FOUNDATION LAYOUT

(DIMENSIONS LOCATING PILES ARE SHOWN TO PILE CENTERLINE AT THE BOTTOM OF CAP).

PROJECT NO. U-0071
DURHAM COUNTY
STATION: 125+91.57 -L-

SHEET 2 OF 3

STATE OF NORTH CAROLINA
DEPARTMENT OF TRANSPORTATION
RALEIGH

GENERAL DRAWING
FOR BRIDGE ON WEST BOUND DURHAM EAST END CONNECTOR OVER ROWENA AVE. BETWEEN EAST END AVE. AND CARTER AVE.
WBL

NORTH CAROLINA PROFESSIONAL SEAL 14855 ENGINEER DOUGLAS R. CALLOUN
5/9/14

REVISIONS						SHEET NO.
NO.	BY:	DATE:	NO.	BY:	DATE:	S-274
1			3			TOTAL SHEETS
2			4			671

DRAWN BY : D. G. ELY DATE : 07/2013
CHECKED BY : W. F. PARKER DATE : 11/2013

08-MAY-2014 11:07
Z:\TIPProjects-U\U0071\Structures\Plans\Str#6-L-over-Y8-\Gen_Draw\U-0071_SD_GD_06.dgn
asorsenginh

STR. #6

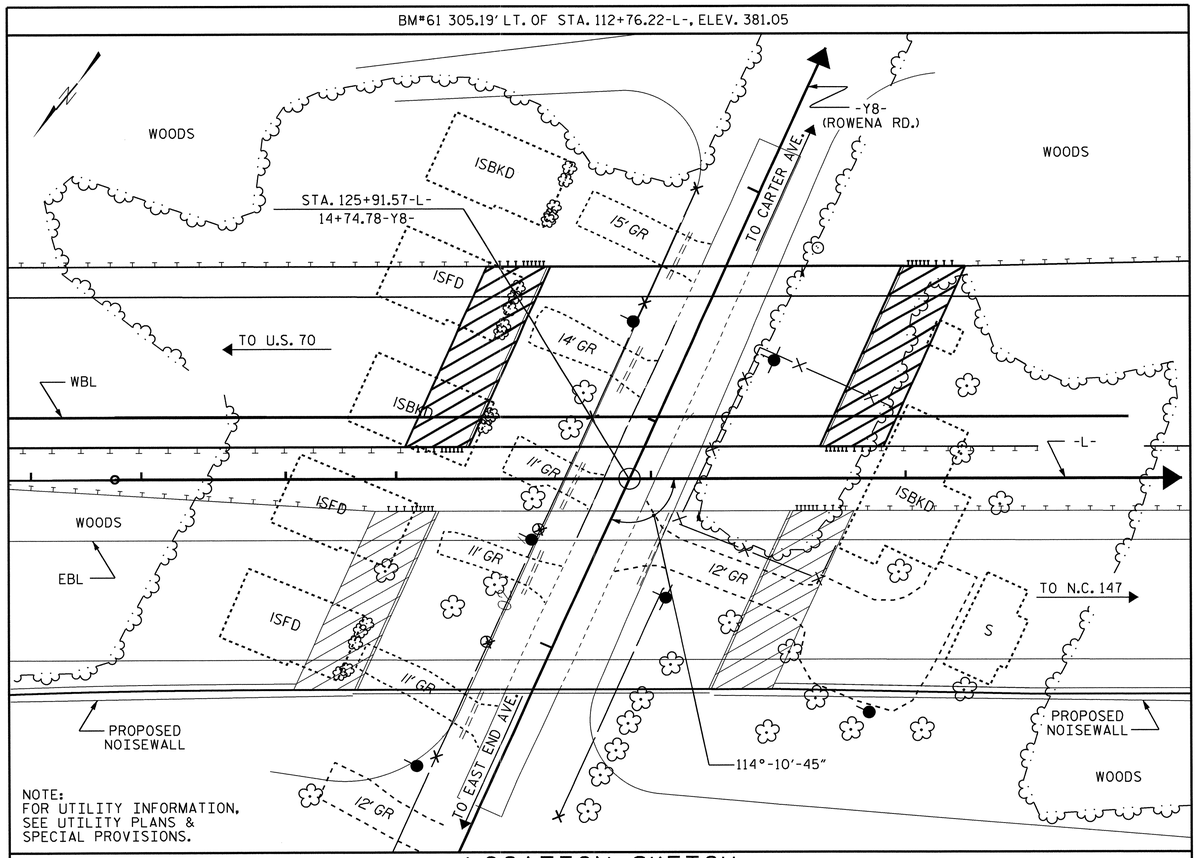

NOTE:
FOR UTILITY INFORMATION, SEE UTILITY PLANS & SPECIAL PROVISIONS.

LOCATION SKETCH

NOTES

ASSUMED LIVE LOAD = HL-93 OR ALTERNATE LOADING.

FOR OTHER DESIGN DATA AND GENERAL NOTES, SEE SHEET SN.

FOR EROSION CONTROL MEASURES, SEE EROSION CONTROL PLANS.

THIS BRIDGE HAS BEEN DESIGNED IN ACCORDANCE WITH THE AASHTO LRFD BRIDGE DESIGN SPECIFICATIONS.

ALL STRUCTURAL STEEL SHALL BE AASHTO M270 GRADE 50W AND PAINTED IN ACCORDANCE WITH SYSTEM 4 OF ARTICLE 442-8 OF THE STANDARD SPECIFICATIONS UNLESS OTHERWISE NOTED ON THE PLANS.

THE CLASS AA CONCRETE IN THE BRIDGE DECK SHALL CONTAIN FLY ASH OR GROUND GRANULATED BLAST FURNACE SLAG AT THE SUBSTITUTION RATE SPECIFIED IN ARTICLE 1024-1 AND IN ACCORDANCE WITH ARTICLES 1024-5 AND 1024-6 OF THE STANDARD SPECIFICATIONS. NO PAYMENT WILL BE MADE FOR THIS SUBSTITUTION AS IT IS CONSIDERED INCIDENTAL TO THE COST OF THE REINFORCED CONCRETE DECK SLAB.

FOR MAINTENANCE AND PROTECTION OF TRAFFIC BENEATH PROPOSED STRUCTURE, SEE SPECIAL PROVISIONS.

REMOVABLE FORMS MAY BE USED IN LIEU OF METAL STAY-IN-PLACE FORMS IN ACCORDANCE WITH ARTICLE 420-3 OF THE STANDARD SPECIFICATIONS.

FOR PLACING LOAD ON STRUCTURE MEMBERS, SEE SPECIAL PROVISIONS.

THIS BRIDGE IS LOCATED IN SEISMIC ZONE 1.

FOR SUBMITTAL OF WORKING DRAWINGS, SEE SPECIAL PROVISIONS.

FOR FALSEWORK AND FORMWORK, SEE SPECIAL PROVISIONS.

FOR CRANE SAFETY, SEE SPECIAL PROVISIONS.

FOR GROUT FOR STRUCTURES, SEE SPECIAL PROVISIONS.

THE ELEVATION(S) AND CLEARANCE(S) SHOWN ON THE PLANS AT THE POINT(S) OF MINIMUM VERTICAL CLEARANCE ARE FROM THE BEST INFORMATION AVAILABLE. PRIOR TO BEGINNING BRIDGE CONSTRUCTION, VERIFY THE ELEVATION(S) ON THE EXISTING PAVEMENT AND CHECK THE CLEARANCE. REPORT ANY VARIATIONS TO THE ENGINEER. ANY PLAN REVISIONS NECESSARY TO ACHIEVE THE REQUIRED MINIMUM VERTICAL CLEARANCE WILL BE PROVIDED BY THE DEPARTMENT.

NEEDLE BEAMS WILL NOT BE ALLOWED UNLESS OTHERWISE CALLED FOR ON THE PLANS OR APPROVED BY THE ENGINEER.

FOR ELECTRICAL CONDUIT SYSTEM, SEE SPECIAL PROVISIONS.

FOR STEEL REINFORCED ELASTOMERIC BEARINGS, SEE SPECIAL PROVISIONS.

TOTAL BILL OF MATERIAL

	REINFORCED CONCRETE DECK SLAB	GROOVING BRIDGE FLOORS	CLASS A CONCRETE	BRIDGE APPROACH SLABS	REINFORCING STEEL	STRUCTURAL STEEL	HP 12 X 53 STEEL PILES		CONCRETE BARRIER RAIL	4" SLOPE PROTECTION	ELASTOMERIC BEARINGS	EXPANSION JOINT SEALS	ELECTRICAL CONDUIT SYSTEM
	SQ. FT.	SQ. FT.	CU. YDS.	LUMP SUM	LBS.	APPROX. LBS.	NO.	LIN. FT.	LIN. FT.	SQ. YDS.	LUMP SUM	LUMP SUM	LUMP SUM
SUPERSTRUCTURE	10,135	12,481		LUMP SUM		355,700			309.4		LUMP SUM	LUMP SUM	LUMP SUM
END BENT 1			65.7		10,052		13	490		620			
END BENT 2			64.7		10,056		13	490		805			
TOTAL	10,135	12,481	130.4	LUMP SUM	20,108	355,700	26	980	309.4	1425	LUMP SUM	LUMP SUM	LUMP SUM

PROJECT NO. U-0071
DURHAM COUNTY
STATION: 125+91.57 -L-

SHEET 3 OF 3

STATE OF NORTH CAROLINA
DEPARTMENT OF TRANSPORTATION
RALEIGH

GENERAL DRAWING
FOR BRIDGE ON WEST BOUND DURHAM EAST END CONNECTOR OVER ROWENA AVE. BETWEEN EAST END AVE. AND CARTER AVE.
WBL

NORTH CAROLINA PROFESSIONAL SEAL 14855 ENGINEER DOUGLAS R. CALHOUN
5/9/14

REVISIONS						SHEET NO.
NO.	BY:	DATE:	NO.	BY:	DATE:	S-275
1			3			TOTAL SHEETS
2			4			671

DRAWN BY : D. G. ELY DATE : 07/2013
CHECKED BY : W. F. PARKER DATE : 11/2013

08-MAY-2014 11:07
Z:\TIPProjects-U\U0071\Structures\Plans\Str#6-L-over-Y8-\Gen_Draw\U-0071_SD_GD_06.dgn
asorsenglnh

STR. #6

LOAD AND RESISTANCE FACTOR RATING (LRFR) SUMMARY FOR STEEL GIRDERS

LEVEL		VEHICLE	WEIGHT (W) (TONS)	CONTROLLING LOAD RATING (#)	MINIMUM RATING FACTORS (RF)	TONS = W × RF	STRENGTH I LIMIT STATE											SERVICE II LIMIT STATE						COMMENT NUMBER
							LIVE-LOAD FACTORS (γ_{LL})	MOMENT					SHEAR					LIVE-LOAD FACTORS (γ_{LL})	MOMENT					
								DISTRIBUTION FACTORS (DF)	RATING FACTOR	SPAN	GIRDER LOCATION	DISTANCE FROM LEFT END OF SPAN (ft)	DISTRIBUTION FACTORS (DF)	RATING FACTOR	SPAN	GIRDER LOCATION	DISTANCE FROM LEFT END OF SPAN (ft)		DISTRIBUTION FACTORS (DF)	RATING FACTOR	SPAN	GIRDER LOCATION	DISTANCE FROM LEFT END OF SPAN (ft)	
DESIGN LOAD RATING		HL-93 (INVENTORY)	N/A	1	1.12	--	1.75	0.815	1.52	A	E	65.76	0.935	1.12	A	I	131.52	1.30	0.708	1.61	A	E	65.76	
		HL-93 (OPERATING)	N/A		1.45	--	1.35	0.815	1.97	A	E	65.76	0.935	1.45	A	I	131.52	1.00	0.708	2.09	A	E	65.76	
		HS-20 (INVENTORY)	36.00	2	1.65	59.4	1.75	0.815	2.27	A	E	65.76	0.935	1.65	A	I	131.52	1.30	0.708	2.41	A	E	65.76	
		HS-20 (OPERATING)	36.00		2.14	77.0	1.35	0.815	2.95	A	E	65.76	0.935	2.14	A	I	131.52	1.00	0.708	3.13	A	E	65.76	
LEGAL LOAD RATING	SINGLE VEHICLE (SV)	SNSH	13.500		5.20	70.2	1.40	0.815	6.96	A	E	65.76	0.935	5.20	A	I	131.52	1.30	0.708	5.89	A	E	65.76	
		SNGARBS2	20.000		3.60	72.0	1.40	0.815	4.95	A	E	65.76	0.935	3.60	A	I	131.52	1.30	0.708	4.19	A	E	65.76	
		SNAGRIS2	22.000		3.30	72.6	1.40	0.815	4.59	A	E	65.76	0.935	3.30	A	I	131.52	1.30	0.708	3.89	A	E	65.76	
		SNCOTTS3	27.250		2.59	70.6	1.40	0.815	3.46	A	E	65.76	0.935	2.59	A	I	131.52	1.30	0.708	2.93	A	E	65.76	
		SNAGGRS4	34.925		2.08	72.6	1.40	0.815	2.80	A	E	65.76	0.935	2.08	A	I	131.52	1.30	0.708	2.37	A	E	65.76	
		SNS5A	35.550		2.07	73.6	1.40	0.815	2.74	A	E	65.76	0.935	2.07	A	I	131.52	1.30	0.708	2.32	A	E	65.76	
		SNS6A	39.950		1.86	74.3	1.40	0.815	2.48	A	E	65.76	0.935	1.86	A	I	131.52	1.30	0.708	2.10	A	E	65.76	
		SNS7B	42.000		1.80	75.6	1.40	0.815	2.36	A	E	65.76	0.935	1.80	A	I	131.52	1.30	0.708	2.00	A	E	65.76	
	TRUCK TRACTOR SEMI-TRAILER (TTST)	TNAGRIT3	33.000		2.24	73.9	1.40	0.815	3.01	A	E	65.76	0.935	2.24	A	I	131.52	1.30	0.708	2.55	A	E	65.76	
		TNT4A	33.075		2.21	73.1	1.40	0.815	3.01	A	E	65.76	0.935	2.21	A	I	131.52	1.30	0.708	2.55	A	E	65.76	
		TNT6A	41.600		1.86	77.4	1.40	0.815	2.43	A	E	65.76	0.935	1.86	A	I	131.52	1.30	0.708	2.06	A	E	65.76	
		TNT7A	42.000		1.83	76.9	1.40	0.815	2.42	A	E	65.76	0.935	1.83	A	I	131.52	1.30	0.708	2.05	A	E	65.76	
		TNT7B	42.000		1.78	74.8	1.40	0.815	2.47	A	E	65.76	0.935	1.78	A	I	131.52	1.30	0.708	2.09	A	E	65.76	
		TNAGRIT4	43.000		1.73	74.4	1.40	0.815	2.38	A	E	65.76	0.935	1.73	A	I	131.52	1.30	0.708	2.01	A	E	65.76	
		TNAGT5A	45.000		1.68	75.6	1.40	0.815	2.26	A	E	65.76	0.935	1.68	A	I	131.52	1.30	0.708	1.91	A	E	65.76	
		TNAGT5B	45.000	3	1.65	74.3	1.40	0.815	2.24	A	E	65.76	0.935	1.65	A	I	131.52	1.30	0.708	1.90	A	E	65.76	
FATIGUE		HL-93 (INVENTORY)	γ_{LL}=0.75																					

LOAD FACTORS:

DESIGN LOAD RATING FACTORS	LIMIT STATE	γ_{DC}	γ_{DW}
	STRENGTH I	1.25	1.50
	SERVICE II	1.00	1.00

NOTES:

MINIMUM RATING FACTORS ARE BASED ON THE STRENGTH I AND SERVICE II LIMIT STATES.

ALLOWABLE STRESS FOR SERVICE II LIMIT STATE ARE AS REQUIRED FOR DESIGN.

(#) CONTROLLING LOAD RATING
(1) DESIGN LOAD RATING (HL-93) **
(2) DESIGN LOAD RATING (HS-20) **
(3) LEGAL LOAD RATING **
** SEE CHART FOR VEHICLE TYPE
GIRDER LOCATION
I - INTERIOR GIRDER
EL - EXTERIOR LEFT GIRDER
ER - EXTERIOR RIGHT GIRDER

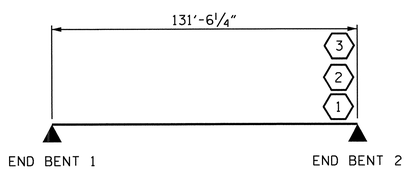

LRFR SUMMARY

PROJECT NO. U-0071
DURHAM COUNTY
STATION: 125+91.57 -L-

STATE OF NORTH CAROLINA
DEPARTMENT OF TRANSPORTATION
RALEIGH

STANDARD

LRFR SUMMARY FOR STEEL GIRDERS
(NON-INTERSTATE TRAFFIC)

NORTH CAROLINA PROFESSIONAL SEAL 14855 ENGINEER DOUGLAS R. CALHOUN
5/9/14

REVISIONS						SHEET NO.
NO.	BY:	DATE:	NO.	BY:	DATE:	S-276
1			3			TOTAL SHEETS
2			4			671

ASSEMBLED BY : A.C. OUTLAW DATE : 6/14/13
CHECKED BY : A. SORSENGINH DATE : 06/2013
DRAWN BY : MAA 1/08
CHECKED BY : GM/DI 2/08
REV. 11/12/08RR MAA/GM
REV. 10/1/11 MAA/GM

08-MAY-2014 11:07
Z:\TIPProjects-U\U0071\Structures\Plans\Str#6-L-over-Y8-\Super_Draw\U0071_SD_RATINGS_STR 6.dgn
asorsenginh

STR. #6 STD. NO. LRFR3

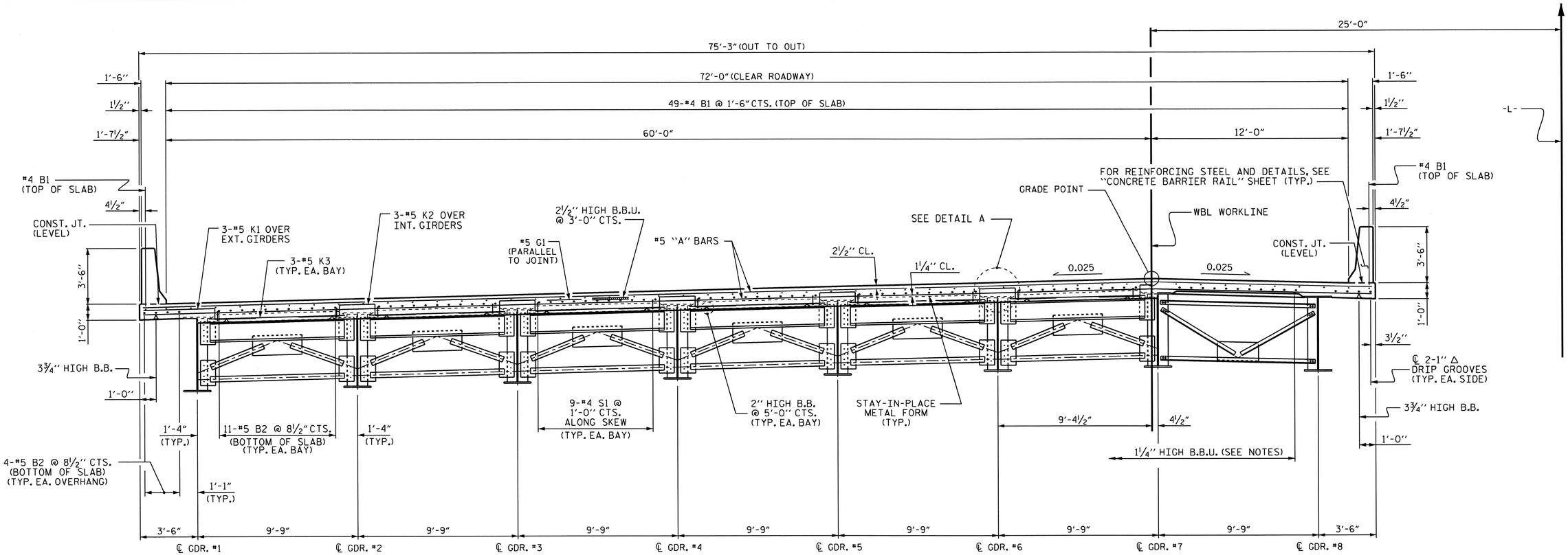

PARTIAL TYPICAL SECTION

(SHOWING END BENT DIAPHRAGMS)

PARTIAL TYPICAL SECTION

(SHOWING INTERMEDIATE DIAPHRAGMS)

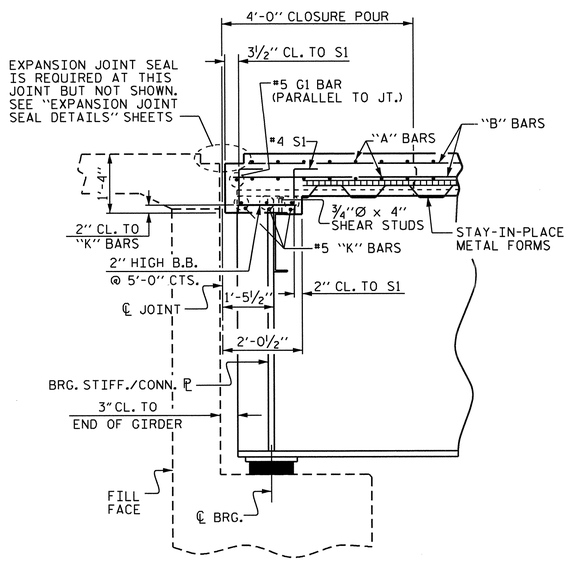

SECTION @ END BENT

(SECTION TAKEN NORMAL TO FILL FACE)

NOTES

PROVIDE 1¼" HIGH BEAM BOLSTERS UPPER AT 4'-0" CTS. ATOP THE METAL STAY-IN-PLACE FORMS TO SUPPORT THE BOTTOM MAT OF "A" BARS. WHEN USING REMOVABLE FORMS, PROVIDE CONTINUOUS HIGH CHAIRS FOR METAL DECK (C.H.C.M.) @ 4'-0" CTS. WITH A HEIGHT TO SUPPORT THE BOTTOM MAT OF "A" BARS A CLEAR DISTANCE OF 2½" ABOVE THE TOP OF THE REMOVABLE FORM.

BARRIER RAIL IN EACH SPAN SHALL NOT BE CAST UNTIL ALL SLAB CONCRETE IN THAT SPAN HAS BEEN CAST AND HAS REACHED A MINIMUM COMPRESSIVE STRENGTH OF 3,000 PSI.

#5 G1 BAR MAY BE SHIFTED SLIGHTLY, AS NECESSARY, TO CLEAR REINFORCING STEEL AND STIRRUPS.

THE CONTRACTOR MAY, WHEN NECESSARY, PROPOSE A SCHEME FOR AVOIDING INTERFERENCE BETWEEN METAL STAY-IN-PLACE FORM SUPPORTS OR FORMS AND BEAM/GIRDER STIFFENERS OR CONNECTOR PLATES. THE PROPOSAL SHALL BE INDICATED, AS APPROPRIATE, ON EITHER THE STEEL WORKING DRAWINGS OR THE METAL STAY-IN-PLACE FORM WORKING DRAWINGS.

FOR ATTACHMENT OF CONDUIT FOR LIGHTING TO BRIDGE DECK, SEE "BRIDGE LIGHTING CONDUIT ATTACHMENT" SHEETS.

METAL STAY-IN-PLACE FORMS SHALL NOT BE WELDED TO BEAM OR GIRDER FLANGES IN THE ZONES REQUIRING CHARPY V-NOTCH TEST. SEE STRUCTURAL STEEL DETAIL SHEETS.

PREVIOUSLY CAST CONCRETE IN A CONTINUOUS UNIT SHALL HAVE ATTAINED A MINIMUM COMPRESSIVE STRENGTH OF 3,000 PSI BEFORE ADDITIONAL CONCRETE IS CAST IN THE UNIT.

THE CONTRACTOR MAY, WHEN NECESSARY, PROPOSE A SCHEME FOR AVOIDING INTERFERENCE BETWEEN METAL STAY-IN-PLACE FORM SUPPORTS OR FORMS AND BEAM/GIRDER STIFFENERS OR CONNECTOR PLATES. THE PROPOSAL SHALL BE INDICATED, AS APPROPRIATE, ON EITHER THE STEEL WORKING DRAWINGS OR THE METAL STAY-IN-PLACE FORM WORKING DRAWINGS.

ALL REINFORCING STEEL IN BARRIER RAILS SHALL BE EPOXY COATED.

FOR EXPANSION JOINT SEALS, SEE SPECIAL PROVISIONS.

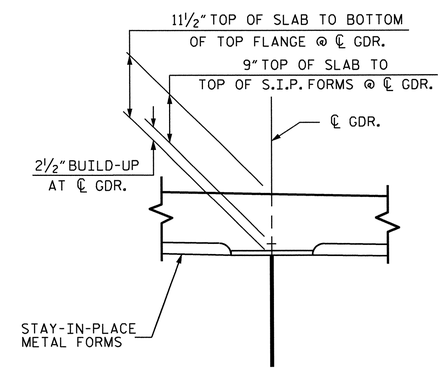

DETAIL A

PROJECT NO. U-0071

DURHAM COUNTY

STATION: 125+91.57 -L-

STATE OF NORTH CAROLINA
DEPARTMENT OF TRANSPORTATION
RALEIGH

SUPERSTRUCTURE

TYPICAL SECTION

WBL

REVISIONS								SHEET NO.
NO.	BY:	DATE:	NO.	BY:	DATE:			S-277
1			3					TOTAL SHEETS
2			4					671

NORTH CAROLINA PROFESSIONAL SEAL 14855 ENGINEER
DOUGLAS R. CALHOUN
5/9/14

DRAWN BY :	D.G. ELY	DATE :	7/2012
CHECKED BY :	W. F. PARKER	DATE :	9/2012
DESIGN ENGINEER OF RECORD:	D. R. CALHOUN	DATE :	11/2013

08-MAY-2014 11:06
Z:\TIPProjects-U\U0071\Structures\Plans\Str#6-L-over-Y8-\Super_Draw\U0071_SD_TS_STR 6.dgn
asorsenjhn

STR.#6

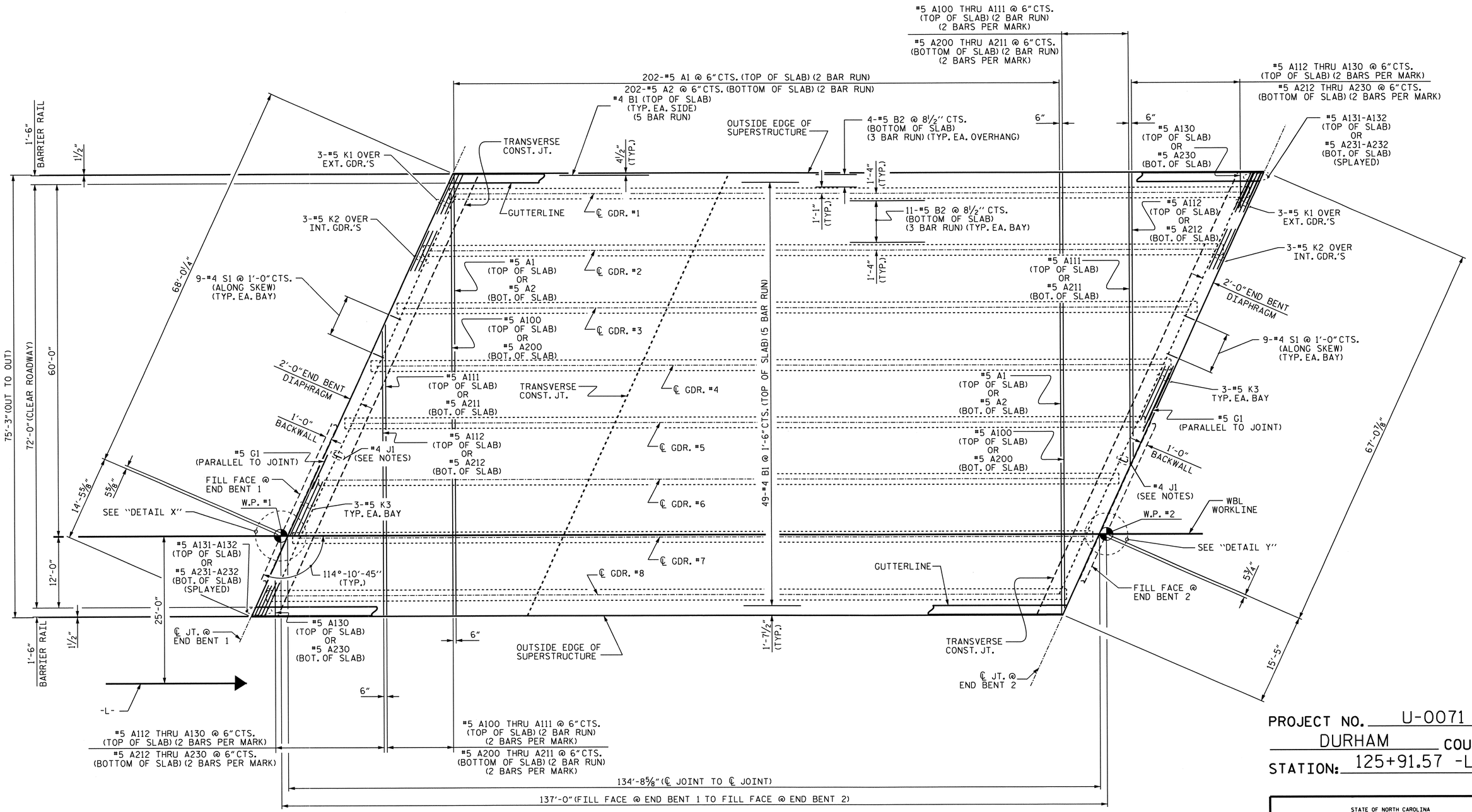

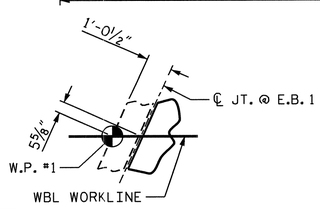

DETAIL X

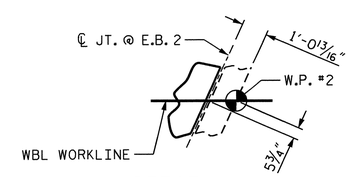

DETAIL Y

PLAN OF SPAN

NOTES

FOR LOCATION OF TRANSVERSE CONSTRUCTION JOINTS, SEE "BILL OF MATERIAL" SHEET.

FOR BARRIER RAIL DETAILS AND REINFORCING STEEL, SEE "CONCRETE BARRIER RAIL" SHEETS.

FOR PLACEMENT OF #4 J1 BARS, SEE "EXPANSION JOINT SEAL DETAILS" SHEETS.

PROJECT NO. U-0071
DURHAM COUNTY
STATION: 125+91.57 -L-

STATE OF NORTH CAROLINA
DEPARTMENT OF TRANSPORTATION
RALEIGH

SUPERSTRUCTURE

PLAN OF SPAN

WBL

NORTH CAROLINA PROFESSIONAL SEAL 14855 ENGINEER DOUGLAS R. CALHOUN
5/9/14

REVISIONS						SHEET NO.
NO.	BY:	DATE:	NO.	BY:	DATE:	S-278
1			3			TOTAL SHEETS
2			4			671

DRAWN BY : D.G. ELY DATE : 7-2012
CHECKED BY : W. F. PARKER DATE : 10-2012
DESIGN ENGINEER OF RECORD: D. R. CALHOUN DATE : 11-2013

08-MAY-2014 11:05
Z:\TIPProjects-U\U0071\Structures\Plans\Str#6-L-over-Y8-\Super_Draw\U0071_SD_S#_STR 6.dgn
asorsenginh

STR. #6

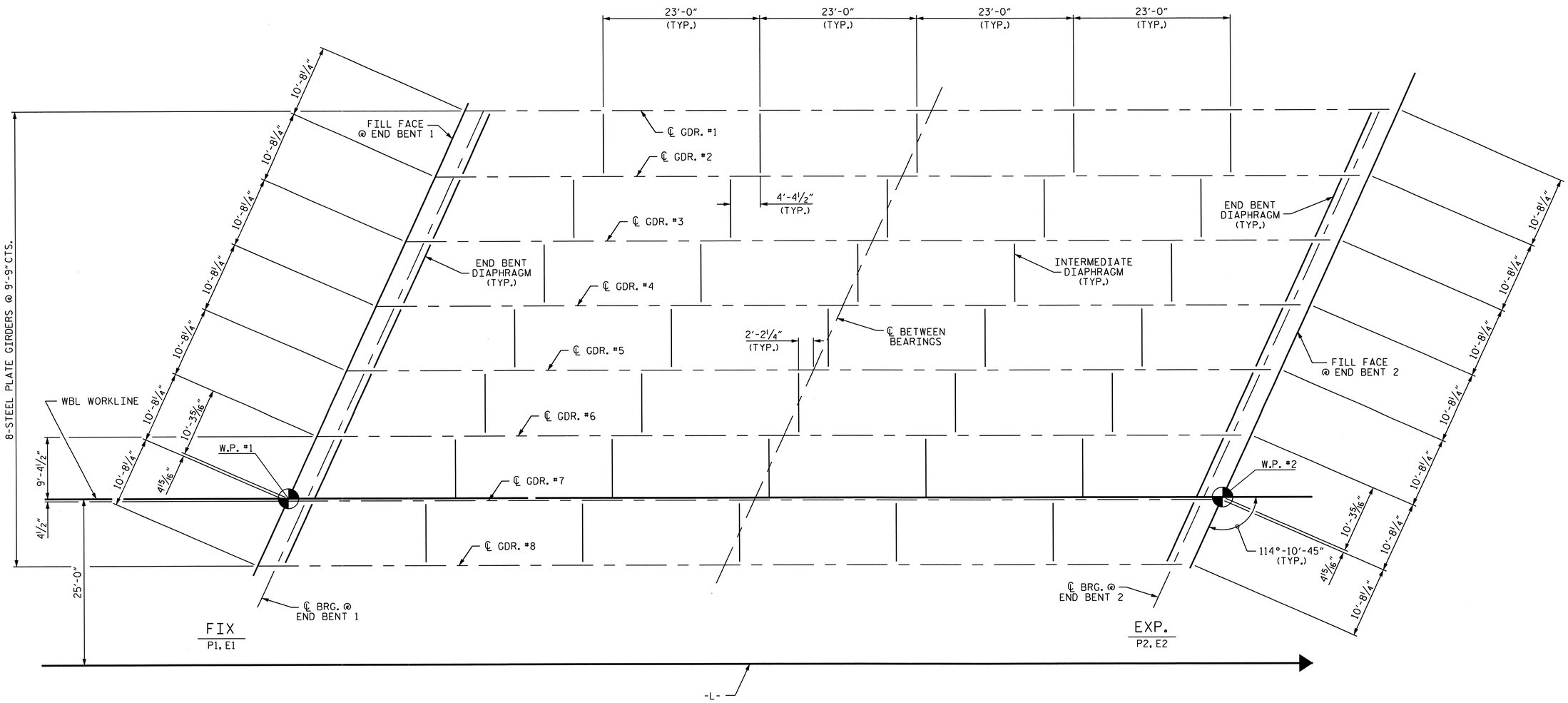

FRAMING PLAN

PROJECT NO. U-0071

DURHAM COUNTY

STATION: 125+91.57 -L-

STATE OF NORTH CAROLINA
DEPARTMENT OF TRANSPORTATION
RALEIGH

SUPERSTRUCTURE

FRAMING PLAN

WBL

NORTH CAROLINA PROFESSIONAL SEAL 14855 ENGINEER DOUGLAS R. CALHOUN
5/9/14

REVISIONS						SHEET NO.
NO.	BY:	DATE:	NO.	BY:	DATE:	S-279
1			3			TOTAL SHEETS
2			4			671

DRAWN BY : D.G. ELY DATE : 8-2012
CHECKED BY : W.F. PARKER DATE : 10-2012
DESIGN ENGINEER OF RECORD: D.R. CALHOUN DATE : 11-2013

08-MAY-2014 11:04
Z:\TIPProjects-U\U0071\Structures\Plans\Str#6-L-over-Y8-\Super_Draw\U0071_SD_FP_STR 6.dgn
asorsenginh

STR. #6

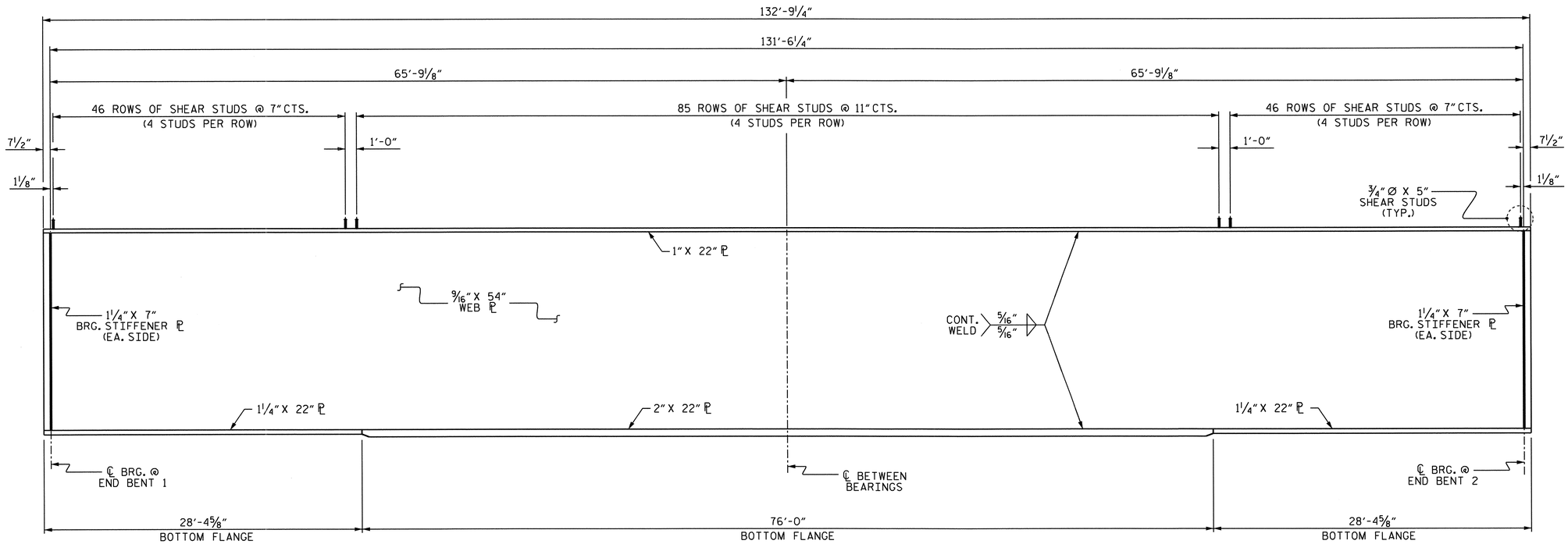

PLATE GIRDER ELEVATION

(INTERMEDIATE DIAPHRAGMS NOT SHOWN FOR CLARITY)

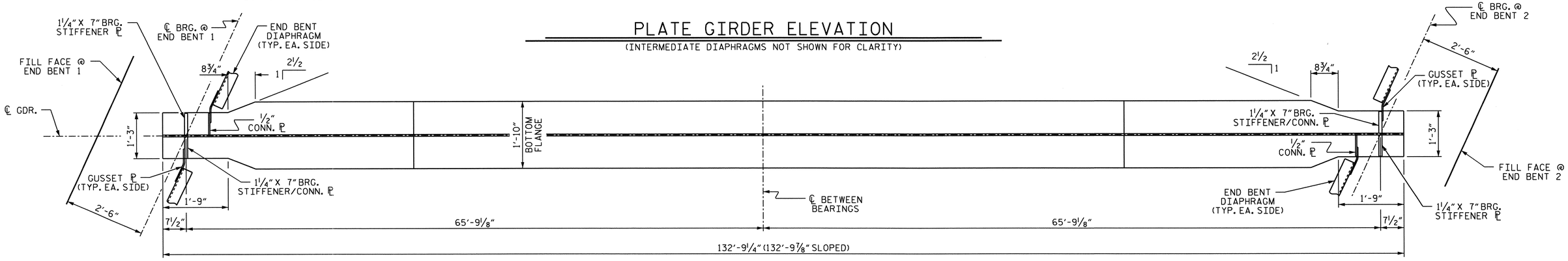

BOTTOM FLANGE DETAIL

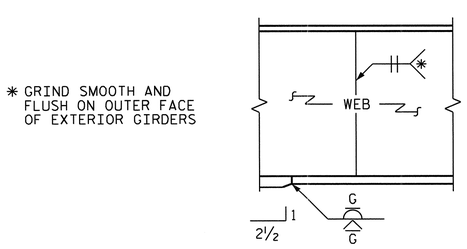

ELEVATION

TYPICAL FLANGE AND WEB BUTT JOINT

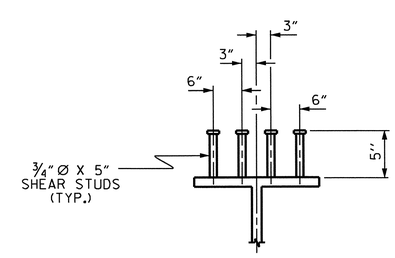

SHEAR STUD DETAIL

PROJECT NO. U-0071

DURHAM COUNTY

STATION: 125+91.57 -L-

SHEET 1 OF 3

STATE OF NORTH CAROLINA
DEPARTMENT OF TRANSPORTATION
RALEIGH

SUPERSTRUCTURE

STRUCTURAL STEEL DETAILS

WBL

NORTH CAROLINA PROFESSIONAL SEAL 14855 ENGINEER DOUGLAS R. CALHOUN
5/9/14

REVISIONS						SHEET NO.
NO.	BY:	DATE:	NO.	BY:	DATE:	S-280
1			3			TOTAL SHEETS
2			4			671

DRAWN BY : D. G. ELY DATE : 8/2012
CHECKED BY : W. F. PARKER DATE : 10/2012
DESIGN ENGINEER OF RECORD : D. R. CALHOUN DATE : 11/2013

08-MAY-2014 11:04
Z:\TIPProjects-U\U0071\Structures\Plans\Str#6-L-over-Y8-\Super_Draw\U0071_SD_SS_STR 6.dgn
osorsenginh

STR. #6

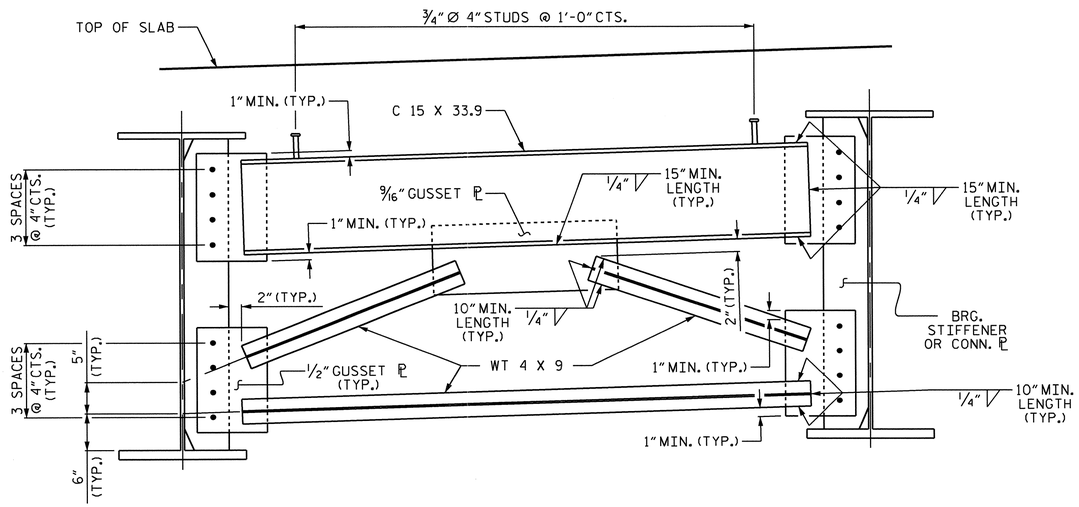

TYPICAL END BENT DIAPHRAGM

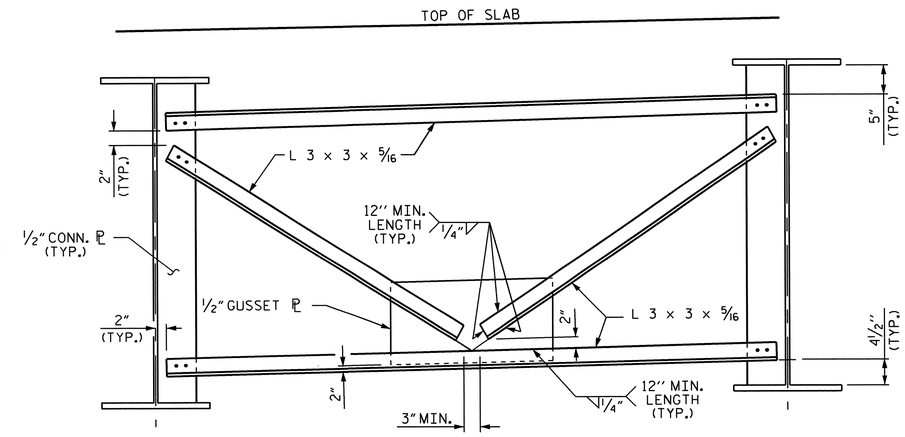

TYPICAL INTERMEDIATE DIAPHRAGM

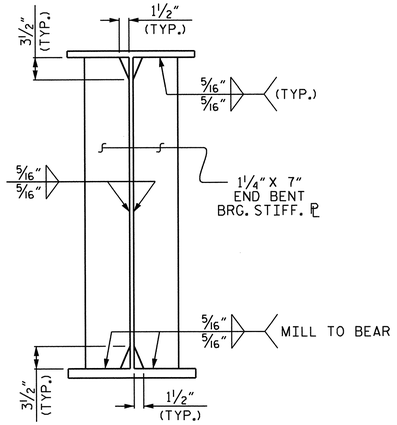

BEARING STIFFENER

THE BEARING STIFFENER SHALL BE WELDED TO THE BOTTOM FLANGE ONLY WHEN USED AS A CONNECTOR PLATE.

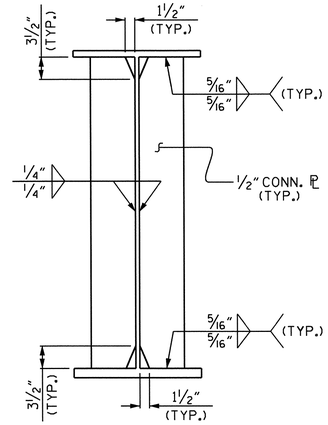

CONNECTOR PLATE

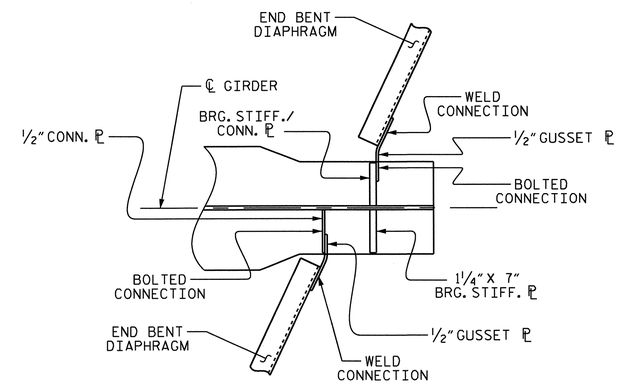

CONNECTOR PL DETAIL

(EACH END SIMILAR)

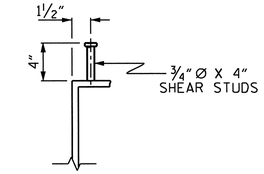

SHEAR STUD DETAIL

(TYP. EA. END BENT DIAPHRAGM)

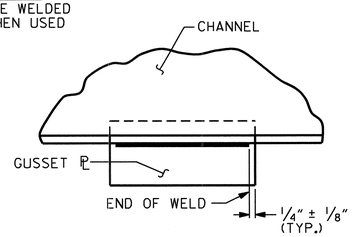

TYPICAL GUSSET PLATE CONNECTION

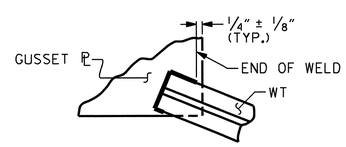

TYPICAL "TEE" TO GUSSET PLATE CONNECTION

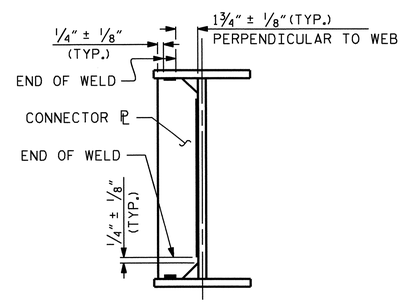

TYPICAL STIFFENER OR CONNECTOR PLATE CONNECTIONS

WELD TERMINATION DETAILS

PROJECT NO. U-0071

DURHAM COUNTY

STATION: 125+91.57 -L-

SHEET 2 OF 3

STATE OF NORTH CAROLINA
DEPARTMENT OF TRANSPORTATION
RALEIGH

SUPERSTRUCTURE

STRUCTURAL STEEL DETAILS

WBL

REVISIONS						SHEET NO.
NO.	BY:	DATE:	NO.	BY:	DATE:	S-281
1			3			TOTAL SHEETS
2			4			671

NORTH CAROLINA PROFESSIONAL SEAL 14855 ENGINEER THOMAS R. CALHOUN
5/9/14

DRAWN BY :	D. G. ELY	DATE :	8/2012
CHECKED BY :	W. F. PARKER	DATE :	10/2012
DESIGN ENGINEER OF RECORD :	D. R. CALHOUN	DATE :	11/2013

08-MAY-2014 11:03
Z:\TIPProjects-U\U0071\Structures\Plans\Str#6-L-over-Y8-\Super_Draw\U0071_SD_SS_STR 6.dgn
osorsenginh

STR. #6

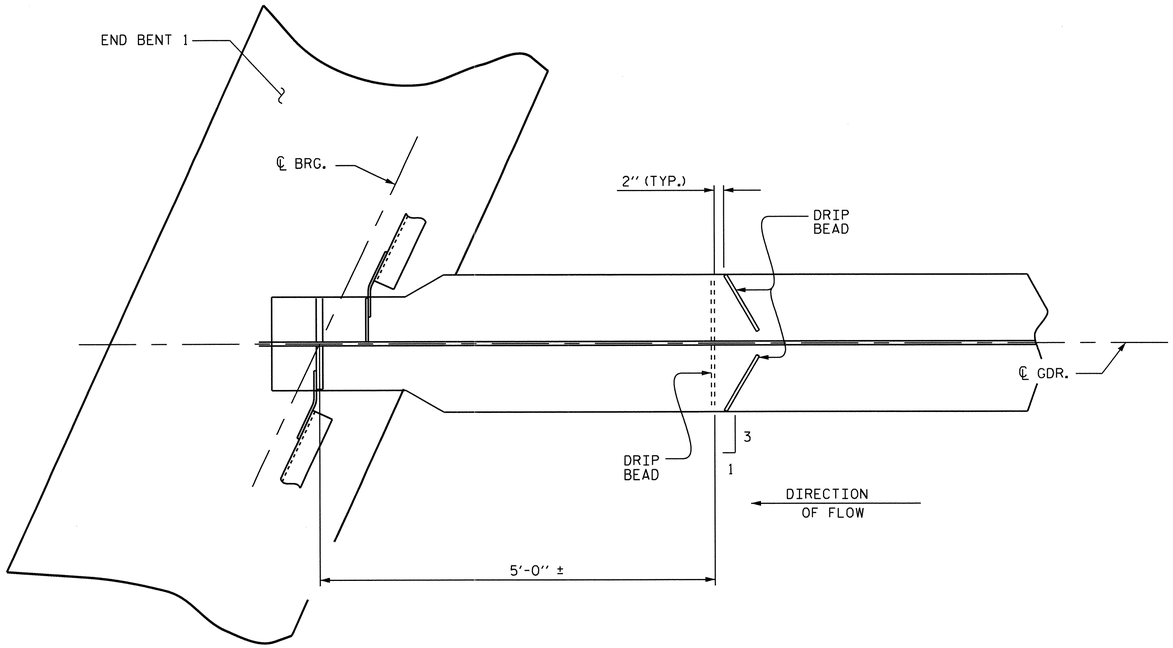

PART PLAN - BOTTOM FLANGE

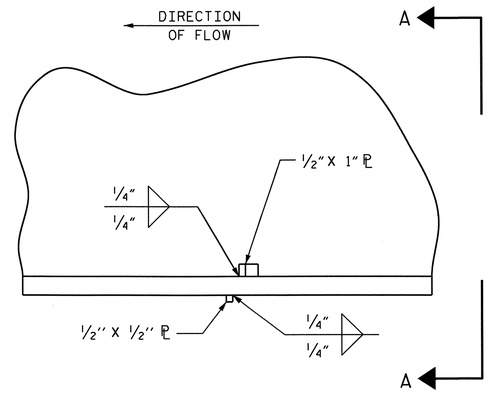

SECTION

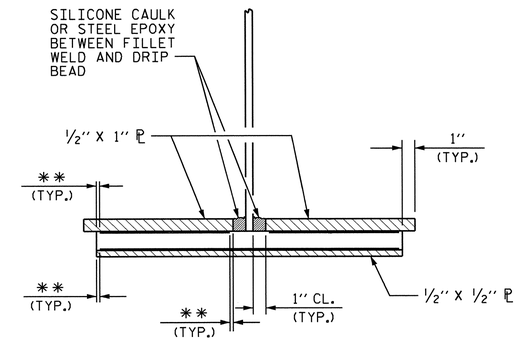

VIEW A-A

**SEE "WELD TERMINATION DETAILS" SHEET 2 OF 3

DRIP BEAD DETAILS

NOTES

ALL STRUCTURAL STEEL SHALL BE AASHTO M270 GRADE 50W AND PAINTED IN ACCORDANCE WITH SYSTEM 4 OF ARTICLE 442-8 OF THE STANDARD SPECIFICATIONS UNLESS OTHERWISE NOTED ON THE PLANS.

ALL DIMENSIONS SHOWN ARE HORIZONTAL OR VERTICAL, UNLESS OTHERWISE NOTED.

ALL FIELD CONNECTIONS TO BE ⅞"DIA. HIGH STRENGTH BOLTS UNLESS OTHERWISE NOTED.

BEARING STIFFENERS ARE TO BE PLACED NORMAL TO THE WEB OF THE GIRDER AND SHALL BE PLUMB.

A CHARPY V-NOTCH TEST IS REQUIRED FOR WEB PLATES AND BOTTOM FLANGE PLATES FOR ALL GIRDERS AND IN ACCORDANCE WITH ARTICLE 1072-7 OF THE STANDARD SPECIFICATIONS.

BEARING STIFFENER PLATE WIDTHS SHOWN ON THE PLANS ARE A MINIMUM WIDTH. THE BEARING STIFFENER PLATE WIDTHS MAY BE INCREASED AS NECESSARY IN ORDER TO CONNECT THE DIAPHRAGM MEMBER.

BEARING STIFFENER MAY REQUIRE COPING IF WIDER THAN BOTTOM FLANGE.

PERMITTED FLANGE AND WEB SHOP SPLICES SHALL NOT BE LOCATED WITHIN 15 FEET OF MAXIMUM DEAD LOAD DEFLECTION. KEEP 2 FEET MINIMUM BETWEEN WEB AND FLANGE SHOP SPLICES. KEEP 6"MINIMUM BETWEEN CONNECTOR PLATE OR TRANSVERSE STIFFENER WELDS AND WEB OR FLANGE SHOP SPLICES.

STUDS ON GIRDERS MAY BE SHIFTED UP TO 1"IF NECESSARY TO CLEAR FLANGE SPLICE WELD.

TENSION ON THE ASTM A325 BOLTS SHALL BE CALIBRATED USING DIRECT TENSION INDICATOR WASHERS IN ACCORDANCE WITH ARTICLE 440-8 OF THE STANDARD SPECIFICATIONS.

END OF GIRDERS SHALL BE PLUMB.

FABRICATORS SHALL DETAIL DIAPHRAGM MEMBERS AND CONNECTIONS FOR STEEL DEAD LOAD FIT UP.

PROJECT NO. U-0071
DURHAM COUNTY
STATION: 125+91.57 -L-

SHEET 3 OF 3

STATE OF NORTH CAROLINA
DEPARTMENT OF TRANSPORTATION
RALEIGH

SUPERSTRUCTURE

STRUCTURAL STEEL DETAILS

WBL

NORTH CAROLINA PROFESSIONAL SEAL 14855 ENGINEER DOUGLAS R. CALHOUN
5/9/14

REVISIONS						SHEET NO.
NO.	BY:	DATE:	NO.	BY:	DATE:	S-282
1			3			TOTAL SHEETS
2			4			671

DRAWN BY : D. G. ELY DATE : 8-2012
CHECKED BY : W. F. PARKER DATE : 10-2012
DESIGN ENGINEER OF RECORD : D. R. CALHOUN DATE : 11-2013

08-MAY-2014 11:03
Z:\TIPProjects-U\U0071\Structures\Plans\Str#6-L-over-Y8-\Super_Draw\U0071_SD_SS_STR 6.dgn
asorsenginh

STR. #6

DEAD LOAD DEFLECTION TABLE FOR GIRDERS

	GIRDERS #1 & #8																				
TWENTIETH POINTS	0	.05	.10	.15	.20	.25	.30	.35	.40	.45	.50	.55	.60	.65	.70	.75	.80	.85	.90	.95	0
DEFLECTION DUE TO WEIGHT OF GIRDER ↓	0	0.020	0.039	0.057	0.073	0.087	0.099	0.109	0.116	0.120	0.122	0.120	0.116	0.109	0.099	0.087	0.073	0.057	0.039	0.020	0
DEFLECTION DUE TO WEIGHT OF SLAB * ↓	0	0.045	0.081	0.116	0.147	0.173	0.196	0.215	0.228	0.236	0.239	0.236	0.228	0.215	0.196	0.173	0.147	0.116	0.081	0.045	0
DEFLECTION DUE TO WEIGHT OF BARRIER RAIL ↓	0	0.008	0.016	0.023	0.029	0.035	0.040	0.044	0.046	0.048	0.049	0.048	0.046	0.044	0.040	0.035	0.029	0.023	0.016	0.008	0
TOTAL DEAD LOAD DEFLECTION ↓	0	0.073	0.136	0.196	0.249	0.296	0.335	0.367	0.390	0.404	0.409	0.404	0.390	0.367	0.335	0.296	0.249	0.196	0.136	0.073	0
REQUIRED CAMBER ↑	0	7/8"	1 5/8"	2 3/8"	3"	3 9/16"	4"	4 3/8"	4 11/16"	4 7/8"	4 7/8"	4 7/8"	4 11/16"	4 3/8"	4"	3 9/16"	3"	2 3/8"	1 5/8"	7/8"	0

DEAD LOAD DEFLECTION TABLE FOR GIRDERS

	GIRDERS #2 & #7																				
TWENTIETH POINTS	0	.05	.10	.15	.20	.25	.30	.35	.40	.45	.50	.55	.60	.65	.70	.75	.80	.85	.90	.95	0
DEFLECTION DUE TO WEIGHT OF GIRDER ↓	0	0.020	0.039	0.057	0.073	0.087	0.099	0.109	0.116	0.120	0.122	0.120	0.116	0.109	0.099	0.087	0.073	0.057	0.039	0.020	0
DEFLECTION DUE TO WEIGHT OF SLAB * ↓	0	0.036	0.063	0.089	0.113	0.133	0.150	0.164	0.174	0.180	0.182	0.180	0.174	0.164	0.150	0.133	0.113	0.089	0.063	0.036	0
DEFLECTION DUE TO WEIGHT OF BARRIER RAIL ↓	0	0.006	0.011	0.016	0.021	0.025	0.029	0.031	0.033	0.034	0.035	0.034	0.033	0.031	0.029	0.025	0.021	0.016	0.011	0.006	0
TOTAL DEAD LOAD DEFLECTION ↓	0	0.061	0.114	0.163	0.207	0.245	0.278	0.304	0.323	0.335	0.338	0.335	0.323	0.304	0.278	0.245	0.207	0.163	0.114	0.061	0
REQUIRED CAMBER ↑	0	3/4"	1 3/8"	1 15/16"	2 1/2"	2 15/16"	3 5/16"	3 5/8"	3 7/8"	4"	4 1/16"	4"	3 7/8"	3 5/8"	3 5/16"	2 15/16"	2 1/2"	1 15/16"	1 3/8"	3/4"	0

DEAD LOAD DEFLECTION TABLE FOR GIRDERS

	GIRDERS #3 & #6																				
TWENTIETH POINTS	0	.05	.10	.15	.20	.25	.30	.35	.40	.45	.50	.55	.60	.65	.70	.75	.80	.85	.90	.95	0
DEFLECTION DUE TO WEIGHT OF GIRDER ↓	0	0.020	0.039	0.057	0.073	0.087	0.099	0.109	0.116	0.120	0.122	0.120	0.116	0.109	0.099	0.087	0.073	0.057	0.039	0.020	0
DEFLECTION DUE TO WEIGHT OF SLAB * ↓	0	0.026	0.045	0.063	0.078	0.092	0.104	0.113	0.120	0.124	0.125	0.124	0.120	0.113	0.104	0.092	0.078	0.063	0.045	0.026	0
DEFLECTION DUE TO WEIGHT OF BARRIER RAIL ↓	0	0.004	0.008	0.011	0.015	0.018	0.020	0.022	0.023	0.024	0.024	0.024	0.023	0.022	0.020	0.018	0.015	0.011	0.008	0.004	0
TOTAL DEAD LOAD DEFLECTION ↓	0	0.050	0.092	0.131	0.166	0.197	0.223	0.244	0.259	0.268	0.271	0.268	0.259	0.244	0.223	0.197	0.166	0.131	0.092	0.050	0
REQUIRED CAMBER ↑	0	5/8"	1 1/8"	1 9/16"	2"	2 3/8"	2 11/16"	2 15/16"	3 1/8"	3 1/4"	3 1/4"	3 1/4"	3 1/8"	2 15/16"	2 11/16"	2 3/8"	2"	1 9/16"	1 1/8"	5/8"	0

DEAD LOAD DEFLECTION TABLE FOR GIRDERS

	GIRDERS #4 & #5																				
TWENTIETH POINTS	0	.05	.10	.15	.20	.25	.30	.35	.40	.45	.50	.55	.60	.65	.70	.75	.80	.85	.90	.95	0
DEFLECTION DUE TO WEIGHT OF GIRDER ↓	0	0.020	0.039	0.057	0.073	0.087	0.099	0.109	0.116	0.120	0.122	0.120	0.116	0.109	0.099	0.087	0.073	0.057	0.039	0.020	0
DEFLECTION DUE TO WEIGHT OF SLAB * ↓	0	0.026	0.045	0.063	0.078	0.092	0.104	0.113	0.120	0.124	0.125	0.124	0.120	0.113	0.104	0.092	0.078	0.063	0.045	0.026	0
DEFLECTION DUE TO WEIGHT OF BARRIER RAIL ↓	0	0.000	0.000	0.000	0.000	0.000	0.000	0.000	0.000	0.000	0.000	0.000	0.000	0.000	0.000	0.000	0.000	0.000	0.000	0.000	0
TOTAL DEAD LOAD DEFLECTION ↓	0	0.046	0.084	0.120	0.152	0.179	0.203	0.222	0.236	0.244	0.247	0.244	0.236	0.222	0.203	0.179	0.152	0.120	0.084	0.046	0
REQUIRED CAMBER ↑	0	9/16"	1"	1 7/16"	1 13/16"	2 1/8"	2 7/16"	2 11/16"	2 13/16"	2 15/16"	2 15/16"	2 15/16"	2 13/16"	2 11/16"	2 7/16"	2 1/8"	1 13/16"	1 7/16"	1"	9/16"	0

* INCLUDES SLAB, BUILDUPS & STAY-IN-PLACE FORMS.
ALL VALUES ARE SHOWN IN FEET (DECIMAL FORM), EXCEPT "REQUIRED CAMBER", WHICH IS GIVEN IN INCHES (FRACTION FORM).
DEFLECTIONS ARE TAKEN AT TWENTIETH POINTS BETWEEN BEARINGS.

NORTH CAROLINA PROFESSIONAL SEAL 14855 ENGINEER DALE A. R. CALHOUN
5/9/14

PROJECT NO. U-0071
DURHAM COUNTY
STATION: 125+91.57 -L-

STATE OF NORTH CAROLINA
DEPARTMENT OF TRANSPORTATION
RALEIGH

SUPERSTRUCTURE
DEAD LOAD DEFLECTIONS
WBL

REVISIONS						SHEET NO.
NO.	BY:	DATE:	NO.	BY:	DATE:	S-283
1			3			TOTAL SHEETS
2			4			671

DRAWN BY : D. G. ELY DATE : 8/2012
CHECKED BY : W. F. PARKER DATE : 10/2012
DESIGN ENGINEER OF RECORD : D. R. CALHOUN DATE : 10/2013

08-MAY-2014 11:02
Z:\TIPProjects-U\U0071\Structures\Plans\Str#6-L-over-Y8-\Super_Draw\U0071_SD_DL_STR 6.dgn
asorsenginh

STR. #6

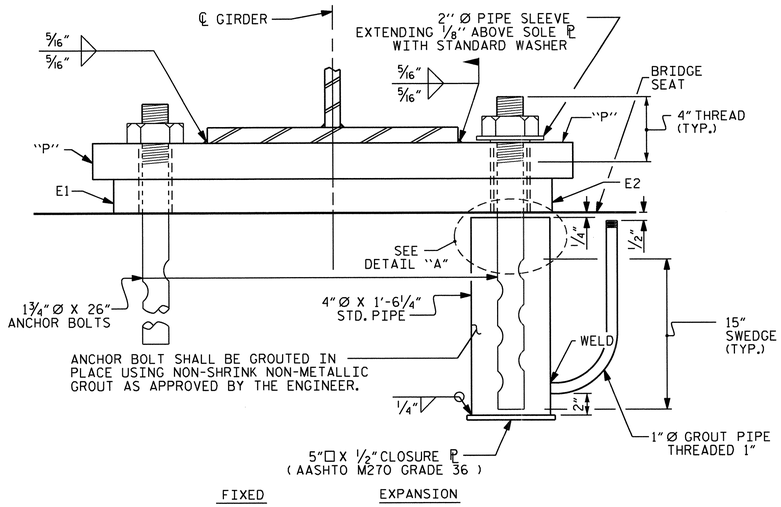

END VIEW

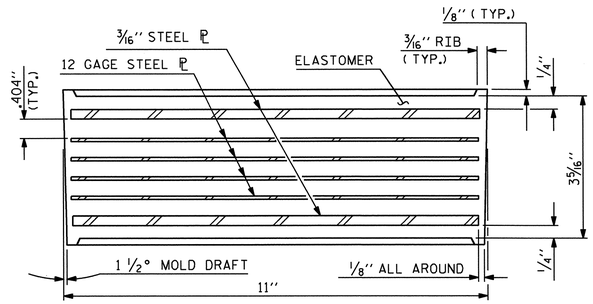

TYPICAL SECTION OF ELASTOMERIC BEARING

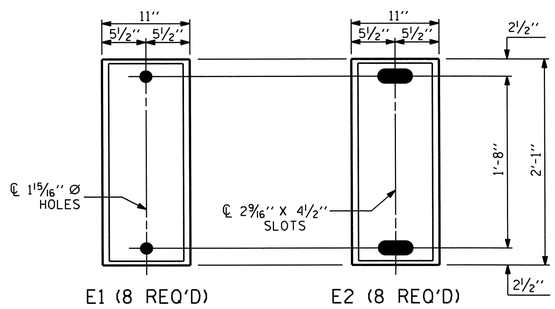

PLAN VIEW OF ELASTOMERIC BEARING

TYPE IV

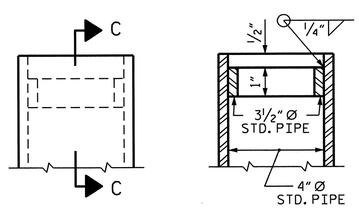

SECTION C-C

DETAIL "A"

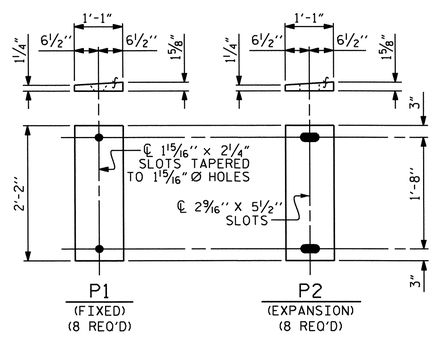

SOLE PLATE DETAILS ("P")

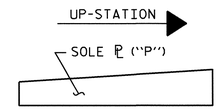

SOLE ℙ PLACEMENT DETAIL

NOTES

AT ALL FIXED POINTS OF SUPPORT, NUTS FOR ANCHOR BOLTS ARE TO BE TIGHTENED FINGER TIGHT AND THEN BACKED OFF 1/2 TURN. THE THREAD OF THE NUT AND BOLT SHALL THEN BE BURRED WITH A SHARP POINTED TOOL.

THE 2" Ø PIPE SLEEVE SHALL BE CUT FROM SCHEDULE 40 PVC PLASTIC PIPE. THE PVC PLASTIC PIPE SHALL MEET THE REQUIREMENTS OF ASTM D1785.

THE PAYMENT FOR THE PIPE SLEEVES SHALL BE INCLUDED IN THE SEVERAL PAY ITEMS.

FOR PAINTED STRUCTURAL STEEL (EXCLUDING AASHTO M270 GRADE 50W), SOLE PLATES, ANCHOR BOLTS, NUTS AND WASHERS SHALL BE GALVANIZED IN ACCORDANCE WITH THE STANDARD SPECIFICATIONS.

FOR AASHTO M270 GRADE 50W STRUCTURAL STEEL, SOLE PLATE SHALL BE AASHTO M270 GRADE 50W AND SHALL NOT BE GALVANIZED. ANCHOR BOLTS, NUTS AND WASHERS SHALL BE GALVANIZED IN ACCORDANCE WITH THE STANDARD SPECIFICATIONS.

ANCHOR BOLTS SHALL MEET THE REQUIREMENTS OF ASTM A449. NUTS SHALL MEET THE REQUIREMENTS OF AASHTO M291-DH OR AASHTO M292-2H. WASHERS SHALL MEET THE REQUIREMENTS OF AASHTO M293. SHOP DRAWINGS ARE NOT REQUIRED FOR ANCHOR BOLTS, NUTS AND WASHERS. SHOP INSPECTION IS REQUIRED.

WHEN FIELD WELDING THE SOLE PLATE TO THE GIRDER FLANGE, USE TEMPERATURE INDICATING WAX PENS, OR OTHER SUITABLE MEANS, TO ENSURE THAT THE TEMPERATURE OF THE SOLE PLATE DOES NOT EXCEED 300°F. TEMPERATURES ABOVE THIS MAY DAMAGE THE ELASTOMER.

ALL SURFACES OF BEARING PLATES SHALL BE SMOOTH AND STRAIGHT.

THE ELASTOMER IN THE STEEL REINFORCED BEARINGS SHALL HAVE A SHEAR MODULUS OF 0.160 KSI, IN ACCORDANCE WITH AASHTO M251.

FOR STEEL REINFORCED ELASTOMERIC BEARINGS, SEE SPECIAL PROVISIONS.

THE CLOSURE PLATE, GROUT PIPE AND STANDARD PIPE FOR THE EXPANSION ASSEMBLY NEED NOT BE GALVANIZED.

THE CONTRACTOR'S ATTENTION IS CALLED TO THE FOLLOWING PROCEDURE, WHICH MAY BE REQUIRED BY THE ENGINEER, TO RESET ELASTOMERIC BEARINGS DUE TO GIRDER TRANSLATION AND END ROTATION:

1. ONCE THE DECK HAS CURED, THE GIRDERS SHALL BE JACKED AND THE ANCHOR BOLTS AND ELASTOMERIC BEARING SLOTS CENTERED AS NEARLY AS PRACTICAL ABOUT THE BEARING STIFFENER. THIS OPERATION SHALL BE PERFORMED AT APPROXIMATELY 60°F.
2. AFTER CENTERING THE ELASTOMERIC BEARING SLOTS AND ANCHOR BOLTS, THE ANCHOR BOLTS SHALL BE GROUTED.

THE CONTRACTOR MAY PROPOSE ALTERNATE METHODS, PROVIDED DETAILS ARE SUBMITTED TO THE ENGINEER FOR REVIEW AND APPROVAL.

MAXIMUM ALLOWABLE SERVICE LOADS	
D.L.+L.L. (NO IMPACT)	
TYPE IV	310 K

PROJECT NO. U-0071
DURHAM COUNTY
STATION: 125+91.57 -L-

STATE OF NORTH CAROLINA
DEPARTMENT OF TRANSPORTATION
RALEIGH

STANDARD

ELASTOMERIC BEARING DETAILS

WBL

NORTH CAROLINA PROFESSIONAL SEAL 14855 ENGINEER TEXAS R. CALVIN
5/9/14

REVISIONS						SHEET NO.
NO.	BY:	DATE:	NO.	BY:	DATE:	S-28A
1			3			TOTAL SHEETS
2			4			671

ASSEMBLED BY : D. G. ELY		DATE : 8/2012	
CHECKED BY : W. F. PARKER		DATE : 10/2012	
DRAWN BY : EEM 10/95	REV. 5/1/06	TLA/GM	
CHECKED BY : PEK 10/95	REV. 10/1/11	MAA/GM	
	REV. 6/13	AAC/MAA	

08-MAY-2014 11:02
Z:\TIPProjects-U\U0071\Structures\Plans\Str#6-L-over-Y8-\Super_Draw\U0071_SD_BG_STR 6.dgn
asorsenginh

STD. NO. EB2

STR. #6

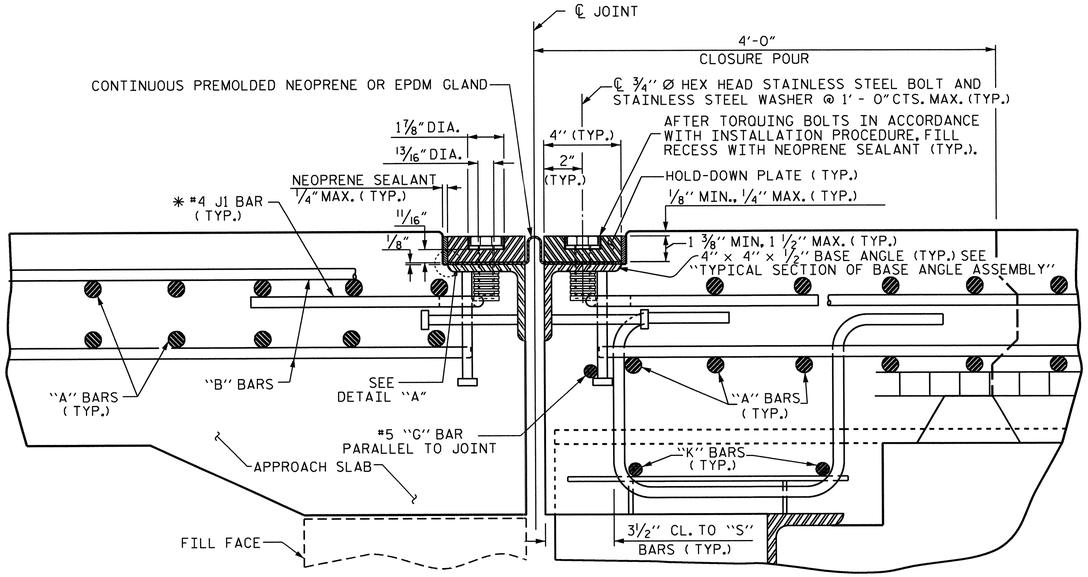

EXPANSION JOINT DETAILS

SECTION NORMAL TO JOINT -- STEEL SUPERSTRUCTURE

* THE QUANTITY OF #4 J1 BARS ON THE BILL OF MATERIAL IS BASED ON 1'-0" CENTERS. J1 BARS SHALL BE PLACED AT EACH VERTICAL STUD ANCHOR BOLT. IN THE EVENT THAT THE NUMBER OF VERTICAL STUD ANCHORS EXCEEDS THE NUMBER OF J1 BARS SPECIFIED, ADDITIONAL J1 BARS WILL NOT BE REQUIRED.

INSTALLATION PROCEDURE

1. A TEMPLATE OR OTHER SUITABLE DEVICE SHALL BE USED TO FORM THE TOP OF THE EXPANSION JOINT SEAL BLOCKOUT TO THE PROPER DEPTH AND WIDTH. THE TEMPLATE SHALL BE 4 1/8" TO 4 1/4" WIDE AND OF SUCH THICKNESS AS TO PROVIDE FOR CORRECT FINAL ELEVATION OF TOP OF HOLD-DOWN PLATES. THE TEMPLATE SHALL BE ATTACHED TO THE BASE ANGLE ASSEMBLY WITH THE 3/4" Ø HEX HEAD BOLTS PROVIDED FOR THE HOLD-DOWN PLATES. A 1" Ø HOLE SHALL BE PROVIDED IN THE TEMPLATE CENTERED OVER EACH WEEP HOLE IN THE 4" X 4" X 1/2" BASE ANGLE. OTHER METHODS OF INSURING DRAINAGE THROUGH WEEP HOLES MAY BE EMPLOYED SUBJECT TO ENGINEER'S APPROVAL.
2. AFTER THE CONCRETE HAS BEEN CAST ON BOTH SIDES OF THE JOINT, REMOVE THE TEMPLATE. THOROUGHLY CLEAN THE BOLT HOLES AND THE ANGLE PLATE. REMOVE ANY EXCESS CONCRETE THAT COMES OUT OF THE WEEP HOLES. ANY DAMAGED STEEL SHALL BE COATED WITH A MINIMUM THICKNESS OF 4 DRY MILS OF ZINC-RICH PAINT IN ACCORDANCE WITH THE STANDARD SPECIFICATIONS.
3. LAY THE GLAND ON THE BASE ANGLE AND FIELD MARK THE GLAND FOR THE BOLT HOLES. HOLES IN THE GLAND SHALL BE PUNCHED 7/8" IN DIAMETER WITH A HAND PUNCH.
4. IN ORDER TO CHECK FOR PROPER ALIGNMENT, PLACE THE GLAND AND HOLD-DOWN PLATES ON THE BASE ANGLE. DO NOT APPLY NEOPRENE SEALANT. BOLT THE HOLD-DOWN PLATES TO THE BASE ANGLE BUT DO NOT TIGHTEN. THE ENGINEER SHALL INSPECT THE JOINT SEAL DEVICE FOR PROPER ALIGNMENT.
5. AFTER INSPECTION, REMOVE THE HOLD-DOWN PLATES AND GLAND. APPLY NEOPRENE SEALANT TO THE BASE ANGLE IN ACCORDANCE WITH THE "INSTALLATION SKETCH". PLACE GLAND AND HOLD-DOWN PLATES ON THE BASE ANGLE. BOLT THE HOLD-DOWN PLATES TO THE BASE ANGLE ASSEMBLY AND TORQUE THE BOLTS TO 88 FT-LBS WITH A TORQUE WRENCH. CHECK THE TORQUE AFTER THREE (3) HOURS AND, IF NECESSARY, RETIGHTEN TO 88 FT-LBS. A FINAL CHECK SHALL BE MADE AT SEVEN (7) DAYS. TORQUE SHALL NOT BE LESS THAN 80 FT-LBS AFTER SEVEN (7) DAYS.
6. AFTER PROPER TORQUING, CLEAN THE BOLT HOLE RECESSES AND THE RECESS BETWEEN THE JOINT SEAL DEVICE AND CONCRETE, COMPLETELY FILL THESE RECESSES WITH NEOPRENE SEALANT.

GENERAL NOTES

1. FOR EXPANSION JOINT SEALS, SEE SPECIAL PROVISIONS.
2. ALL PLATES AND ANGLES SHALL CONFORM TO AASHTO M270 GRADE 36 STEEL OR APPROVED EQUAL. ALL HOLD-DOWN BOLTS SHALL CONFORM TO ASTM F593 ALLOY 304 STAINLESS STEEL AND WASHERS SHALL CONFORM TO ASTM F844 EXCEPT THEY SHALL BE MADE FROM ALLOY 304 STAINLESS STEEL. ALL STUD ANCHORS SHALL CONFORM TO AASHTO M169, GRADES 1010 THRU 1020 OR APPROVED EQUAL. ALL CONCRETE INSERTS SHALL BE CLOSED END AND SHALL CONFORM TO AASHTO M169, GRADE 12L14. TENSILE CAPACITY SHALL BE 3000 LBS. MIN.
3. A PREMOLDED CORRUGATED OR NON-CORRUGATED GLAND SHALL BE USED FOR JOINTS SKEWED BETWEEN 50° THRU 130°. FOR JOINTS SKEWED LESS THAN 50° OR MORE THAN 130°, ONLY A CORRUGATED GLAND SHALL BE USED.
4. CLOSED END FERRULES AND STUD ANCHORS SHALL BE SHOP WELDED AND ALL HOLES SHALL BE SHOP DRILLED AS SHOWN ON PLANS. STUD ANCHORS SHALL BE ELECTRIC ARC END WELDED WITH COMPLETE FUSION.
5. SURFACES COMING IN CONTACT WITH NEOPRENE SHALL BE GROUND SMOOTH PRIOR TO METALLIZING.
6. UPON COMPLETION OF SHOP FABRICATION, THE HOLD DOWN PLATE AND BASE ANGLE ASSEMBLY, AS SHOWN IN THE "TYPICAL SECTION OF BASE ANGLE ASSEMBLY", SHALL BE METALLIZED. SEE SPECIAL PROVISION FOR THERMAL SPRAYED COATINGS (METALLIZATION).
7. BASE ANGLE ASSEMBLY SHALL BE CONTINUOUS FOR THE LENGTH OF THE JOINT. AT CROWN BREAKS, THE ENDS OF THE BASE ANGLE ASSEMBLY SHALL BE CUT PARALLEL TO THE BRIDGE CENTERLINE FOR SKEWS LESS THAN 80° AND GREATER THAN 100°. FINISHED WELD SHALL BE GROUND SMOOTH AND COATED WITH A MINIMUM THICKNESS OF 4 DRY MILS OF ZINC-RICH PAINT IN ACCORDANCE WITH THE STANDARD SPECIFICATIONS.
8. FIELD SPLICES OF HOLD-DOWN PLATES SHALL BE KEPT TO A MINIMUM. CONTRACTOR SHALL FURNISH DETAILED PLANS SHOWING PROPOSED SPLICE LOCATIONS FOR APPROVAL. HOLD-DOWN PLATES SHALL NOT EXCEED 20' LENGTHS UNLESS APPROVED BY THE ENGINEER.
9. NO ALTERNATE JOINT DETAILS SHALL BE PERMITTED IN LIEU OF THOSE SHOWN ON THESE PLANS.
10. THE CONTRACTOR MAY, AT HIS OPTION, USE ADHESIVELY ANCHORED ANCHOR BOLTS IN PLACE OF CONCRETE INSERTS FOR COVER PLATES. THE YIELD LOAD OF THE 3/4" Ø BOLT IS 10 KIPS. FIELD TESTING OF THE ADHESIVE BONDING SYSTEM IS NOT REQUIRED.

MOVEMENT AND SETTING AT JOINT					
	SKEW ANGLE	TOTAL MOVEMENT (ALONG ℄ RDWY)	PERPENDICULAR JOINT OPENING AT 45° F	PERPENDICULAR JOINT OPENING AT 60° F	PERPENDICULAR JOINT OPENING AT 90° F
END BENT 1	114°-10'-45"	0	1"	1"	1"
END BENT 2	114°-10'-45"	1 5/16"	1 13/16"	1 5/8"	1 1/4"

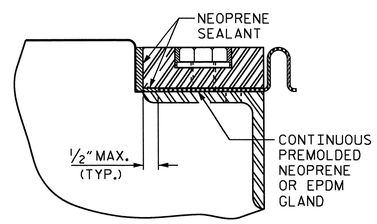

DETAIL "A"

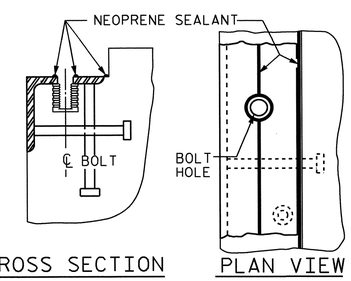

INSTALLATION SKETCH

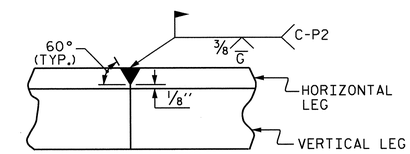

DETAIL- FIELD WELD SPLICE OF BASE ANGLE

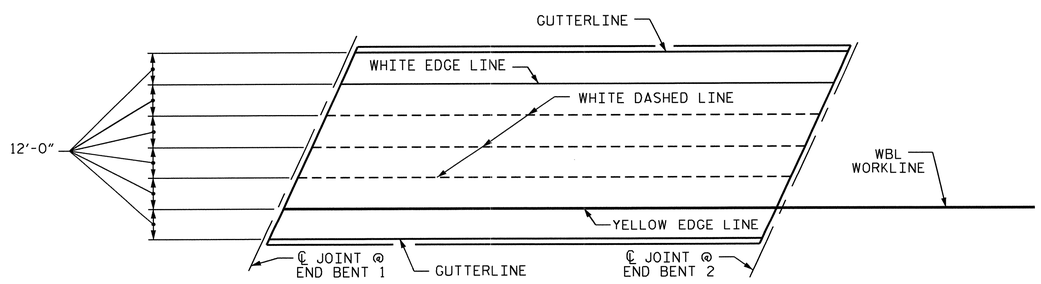

PAVEMENT MARKING ALIGNMENT

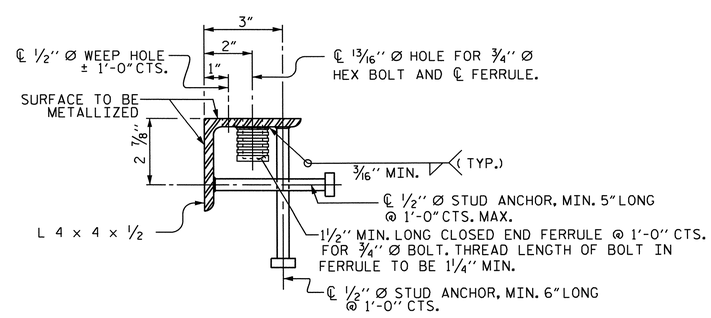

TYPICAL SECTION OF BASE ANGLE ASSEMBLY

PROJECT NO. U-0071
DURHAM COUNTY
STATION: 125+91.57 -L-

SHEET 1 OF 2

STATE OF NORTH CAROLINA
DEPARTMENT OF TRANSPORTATION
RALEIGH

STANDARD

EXPANSION JOINT SEAL DETAILS

WBL

NORTH CAROLINA PROFESSIONAL SEAL 14855 ENGINEER DOUGLAS R. CALHOUN
5/9/14

REVISIONS								SHEET NO.
NO.	BY:	DATE:	NO.	BY:	DATE:			S-285
1			3					TOTAL SHEETS
2			4					671

ASSEMBLED BY : D. G. ELY DATE : 8/2012
CHECKED BY : W. F. PARKER DATE : 10/2012
DESIGN ENGINEER OF RECORD : D. R. CALHOUN DATE : 11/2013
DRAWN BY : REK 9/87
CHECKED BY : CRK 10/87
REV. 5/7/03R RWW/JTE
REV. 5/1/06R TLA/GM
REV. 10/1/11 MAA/GM

08-MAY-2014 11:01
Z:\TIPProjects-U\U0071\Structures\Plans\Str#6-L-over-Y8-\Super_Draw\U0071_SD_EJS_STR 6.dgn
asorsenginh

STD. NO. EJS1

STR. #6

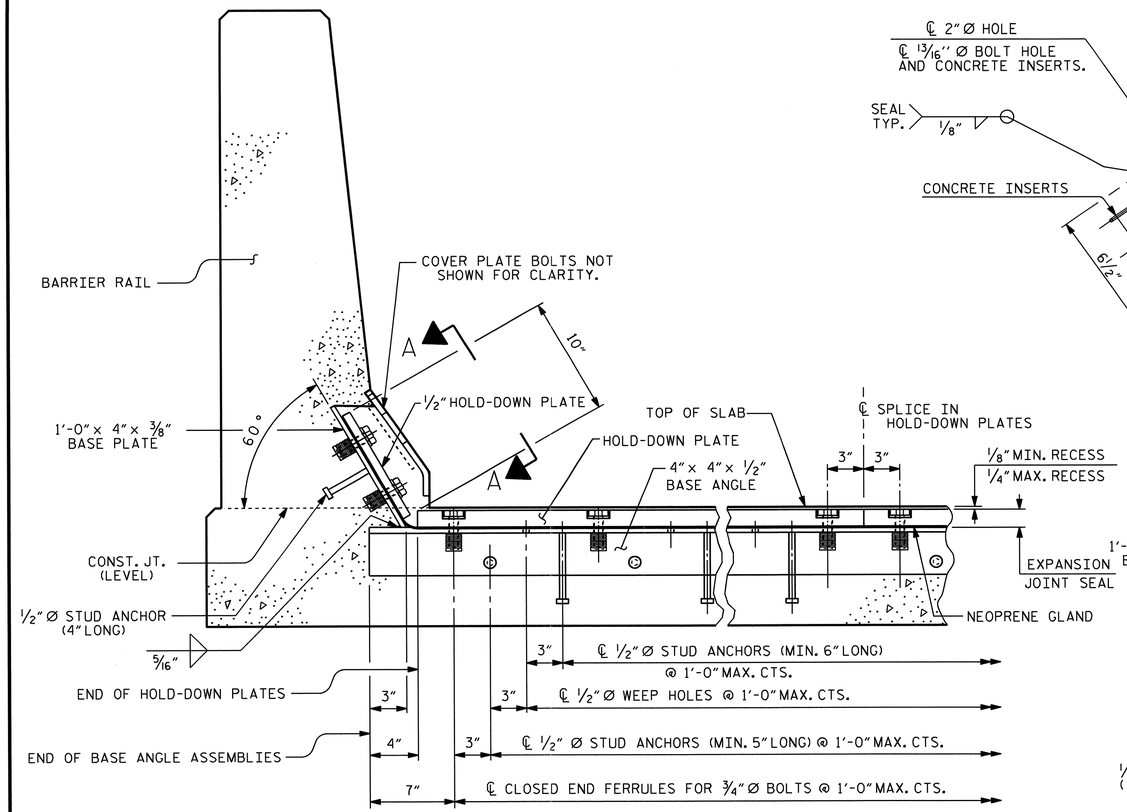

SECTION THRU RAIL NORMAL TO JOINT

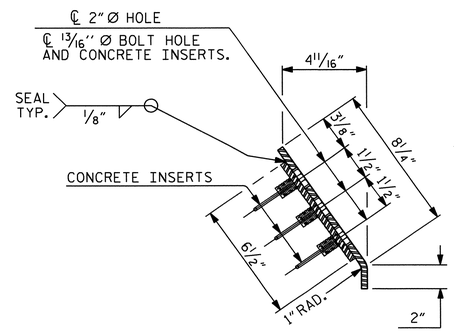

END VIEW

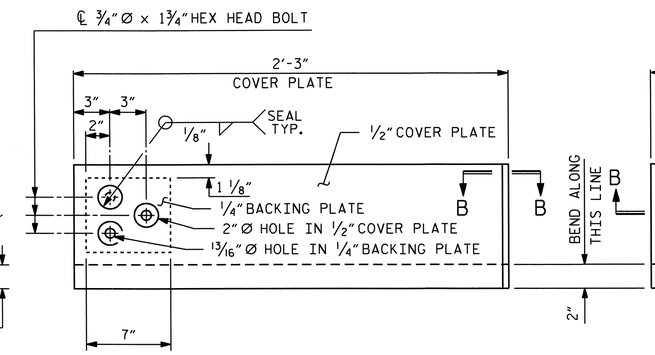

TYPE I - ELEVATION VIEW

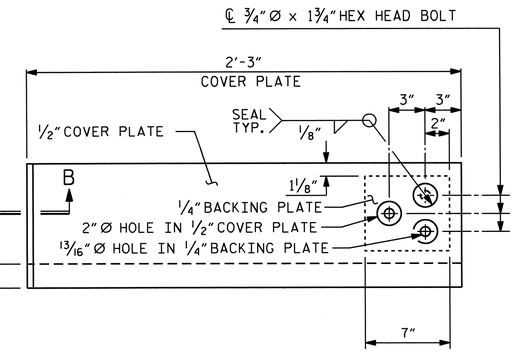

TYPE II - ELEVATION VIEW

COVER PLATE DETAILS

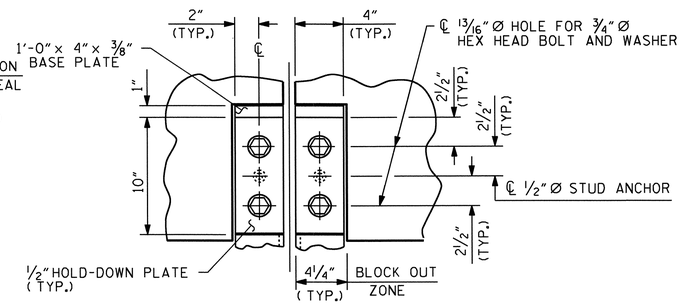

SECTION A - A

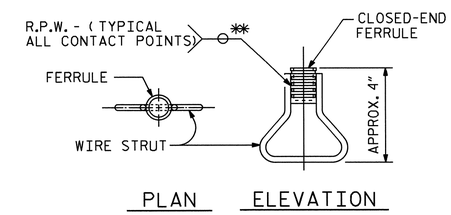

CONCRETE INSERT

** EACH WELDED ATTACHMENT OF WIRE TO FERRULE SHALL DEVELOP THE TENSILE STRENGTH OF THE WIRE.

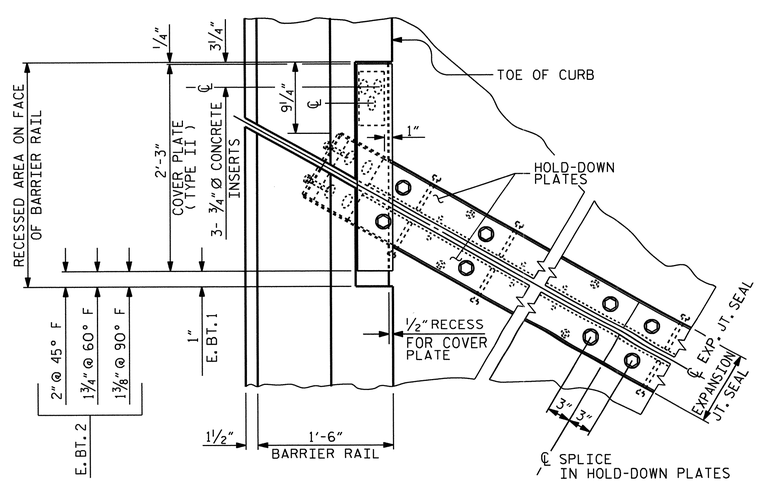

PLAN OF EXPANSION JOINT SEAL

FLOW OF TRAFFIC

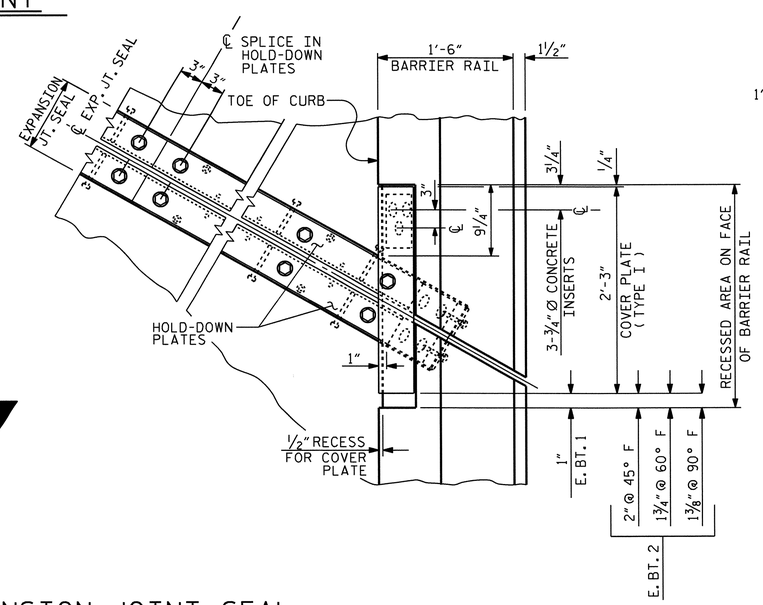

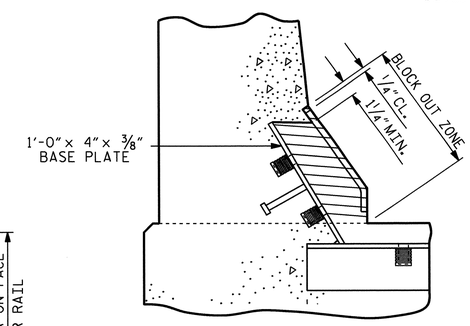

BLOCK OUT DETAIL

SEE "SECTION A - A" FOR OTHER DETAILS.

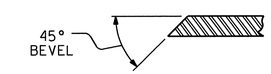

SECTION B - B

PROJECT NO. U-0071

DURHAM COUNTY

STATION: 125+91.57 -L-

SHEET 2 OF 2

STATE OF NORTH CAROLINA
DEPARTMENT OF TRANSPORTATION
RALEIGH

STANDARD

EXPANSION JOINT SEAL DETAILS FOR BARRIER RAIL

WBL

NORTH CAROLINA PROFESSIONAL SEAL 14855 ENGINEER DOUGLAS R. CALHOUN
5/9/14

ASSEMBLED BY : D. G. ELY		DATE : 8-2012	
CHECKED BY : W. F. PARKER		DATE : 10-2012	
DESIGN ENGINEER OF RECORD : D. R. CALHOUN		DATE : 11-2013	
DRAWN BY : REK 9/87	REV. 10/1/11	MAA/GM	
CHECKED BY : CRK 10/87	REV. 7/12	MAA/GM	
	REV. 6/13	MAA/GM	

REVISIONS						SHEET NO.
NO.	BY:	DATE:	NO.	BY:	DATE:	S-286
1			3			TOTAL SHEETS
2			4			671

SHT 2a STD. NO. EJS2 STR. #6

08-MAY-2014 11:00
Z:\TIPProjects-U\U0071\Structures\Plans\Str#6-L-over-Y8-\Super_Draw\U0071_SD_EJS_STR 6.dgn
asorsenginh

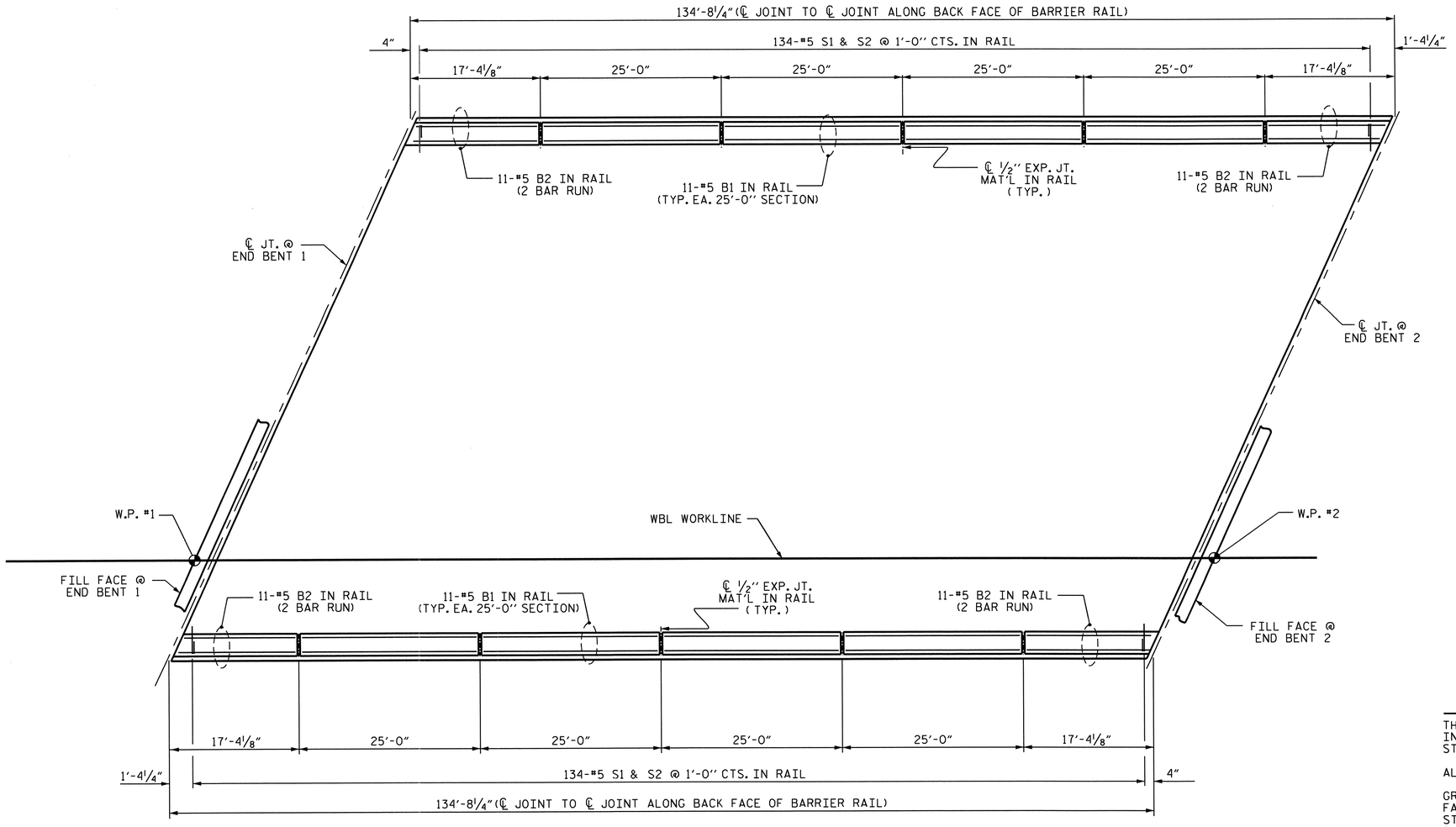

PLAN OF BARRIER RAIL

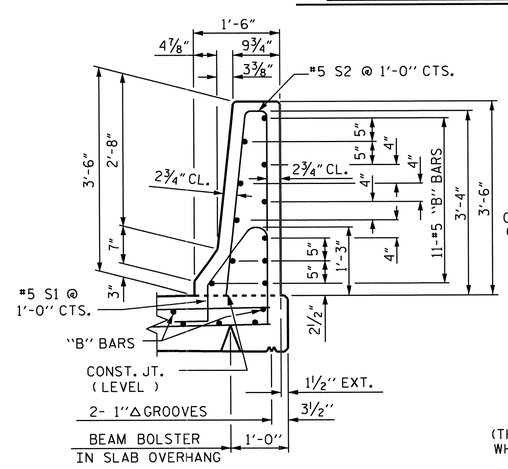

SECTION THRU RAIL

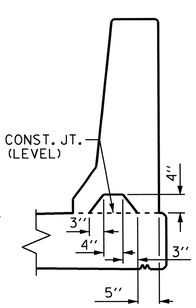

SECTION S-S

AT DAM IN OPEN JOINT (THIS IS TO BE USED ONLY WHEN SLIP FORM IS USED)

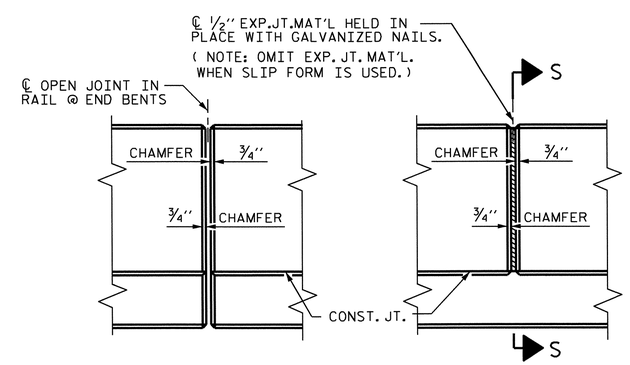

ELEVATION AT EXPANSION JOINTS

BARRIER RAIL DETAILS

BAR TYPES

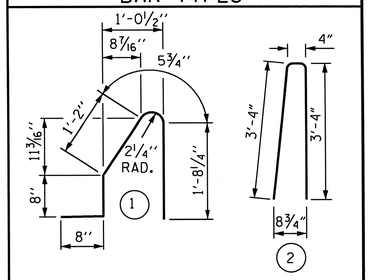

ALL BAR DIMENSIONS ARE OUT TO OUT

BILL OF MATERIAL

FOR CONCRETE BARRIER RAIL ONLY

BAR	NO.	SIZE	TYPE	LENGTH	WEIGHT
* S1	268	#5	1	4'-8"	1304
* S2	268	#5	2	7'-0"	1957
* B1	88	#5	STR	24'-7"	2256
* B2	88	#5	STR	10'-2"	933

* EPOXY COATED REINFORCING STEEL	6450 LBS.
CLASS AA CONCRETE	36.6 CU. YDS.
▲CONCRETE BARRIER RAIL	269.4 LIN. FT.

▲ THE QUANTITIES FOR BARRIER RAIL ON THE APPROACH SLABS ARE NOT INCLUDED. FOR BARRIER RAIL ON THE APPROACH SLABS, SEE "APPROACH SLAB DETAILS" SHEET.

NOTES

THE BARRIER RAIL IN EACH SPAN SHALL NOT BE CAST UNTIL ALL SLAB CONCRETE IN THAT SPAN HAS BEEN CAST AND HAS REACHED A MINIMUM COMPRESSIVE STRENGTH OF 3,000 PSI.

ALL REINFORCING STEEL IN BARRIER RAILS SHALL BE EPOXY COATED.

GROOVED CONTRACTION JOINTS, ½" IN DEPTH, SHALL BE TOOLED IN ALL EXPOSED FACES OF THE BARRIER RAIL AND IN ACCORDANCE WITH ARTICLE 825-10(B) OF THE STANDARD SPECIFICATIONS. THE CONTRACTION JOINT SHALL BE LOCATED AT EACH THIRD POINT BETWEEN BARRIER RAIL EXPANSION JOINTS. ONLY ONE CONTRACTION JOINT IS REQUIRED AT MIDPOINT OF BARRIER RAIL SEGMENTS LESS THAN 20 FEET IN LENGTH AND NO CONTRACTION JOINTS ARE REQUIRED FOR THOSE SEGMENTS LESS THAN 10 FEET IN LENGTH.

PROJECT NO. U-0071

DURHAM COUNTY

STATION: 125+91.57 -L-

STATE OF NORTH CAROLINA
DEPARTMENT OF TRANSPORTATION
RALEIGH

STANDARD

CONCRETE BARRIER RAIL

WBL

NORTH CAROLINA PROFESSIONAL SEAL 14855 ENGINEER DOUGLAS B. CALLAHAN
5/9/14

REVISIONS							SHEET NO.
NO.	BY:	DATE:	NO.	BY:	DATE:		S-287
1			3				TOTAL SHEETS
2			4				671

ASSEMBLED BY : D. G. ELY		DATE : 8/2012	
CHECKED BY : W. F. PARKER		DATE : 10/2012	
DRAWN BY : ARB 5/87	REV. 10/1/11	MAA/GM	
CHECKED BY : SJD 9/87	REV. 7/12	MAA/GM	
	REV. 6/13	MAA/GM	

08-MAY-2014 11:00
Z:\TIPProjects-U\U0071\Structures\Plans\Str*6-L-over-Y8-\Super_Draw\U0071_SD_BR_STR 6.dgn
asorsenginh

STD. NO. CBR1 STR. #6

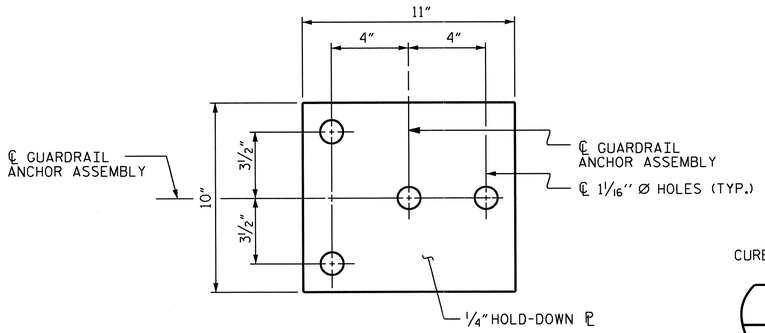

PLAN

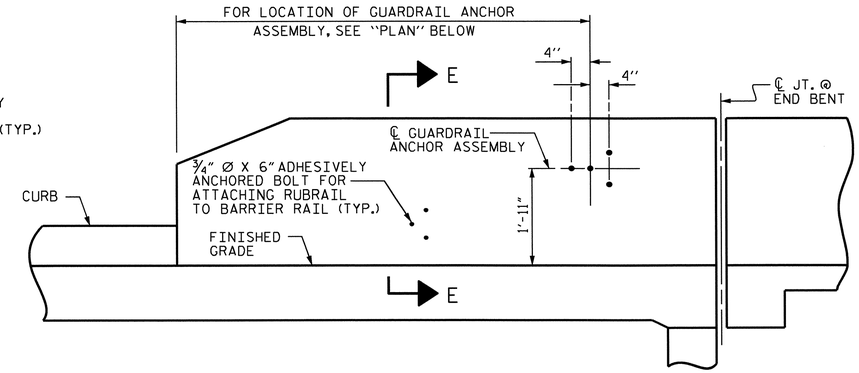

ELEVATION

FOR LOCATION OF RUBRAIL, SEE ROADWAY STD. 862.03

NOTES

THE GUARDRAIL ANCHOR ASSEMBLY SHALL CONSIST OF A ¼" HOLD-DOWN PLATE AND 4 - ⅞" Ø BOLTS WITH NUTS AND WASHERS, RUBRAIL, AND ADHESIVELY ANCHORED BOLTS.

THE HOLD-DOWN PLATE SHALL CONFORM TO AASHTO M270 GRADE 36. AFTER FABRICATION, THE HOLD-DOWN PLATE SHALL BE HOT-DIP GALVANIZED IN ACCORDANCE WITH AASHTO M111.

BOLTS SHALL CONFORM TO THE REQUIREMENTS OF ASTM A307 AND NUTS SHALL CONFORM TO THE REQUIREMENTS OF AASHTO M291. BOLTS, NUTS AND WASHERS SHALL BE GALVANIZED. (AT THE CONTRACTOR'S OPTION, STAINLESS STEEL BOLTS, NUTS AND WASHERS MAY BE USED AS AN ALTERNATE FOR THE ⅞" Ø GALVANIZED BOLTS, NUTS AND WASHERS. THEY SHALL CONFORM TO OR EXCEED THE MECHANICAL REQUIREMENTS OF ASTM A307. THE USE OF THIS ALTERNATE SHALL BE APPROVED BY THE ENGINEER.)

THE GUARDRAIL ANCHOR ASSEMBLY IS REQUIRED AT ALL POINTS WHERE APPROACH GUARDRAIL IS TO BE ATTACHED TO THE END OF BARRIER RAIL. FOR POINTS OF ATTACHMENT, SEE SKETCH.

AFTER INSTALLATION, THE EXPOSED THREAD OF THE BOLT SHALL BE BURRED WITH A SHARP POINTED TOOL.

THE COST OF THE GUARDRAIL ANCHOR ASSEMBLY SHALL BE INCLUDED IN THE UNIT CONTRACT PRICE BID FOR CONCRETE BARRIER RAIL.

THE 1¼" Ø HOLES SHALL BE FORMED OR DRILLED WITH A CORE BIT. IMPACT TOOLS WILL NOT BE PERMITTED. ANY CONCRETE DAMAGED BY THIS WORK SHALL BE REPAIRED TO THE SATISFACTION OF THE ENGINEER.

THE C6 X 8.2 RUBRAIL IS TO BE ADHESIVELY ANCHORED TO THE RAIL USING THREE ¾" Ø X 6" BOLTS WITH WASHERS. LEVEL ONE FIELD TESTING IS REQUIRED, AND THE YIELD LOAD OF THE ¾" Ø BOLT IS 12 KIPS. FOR ADHESIVELY ANCHORED ANCHOR BOLTS OR DOWELS, SEE STANDARD SPECIFICATIONS. SEE ROADWAY STANDARD 862.03 FOR DETAILS AND LOCATION OF THE RUBRAIL.

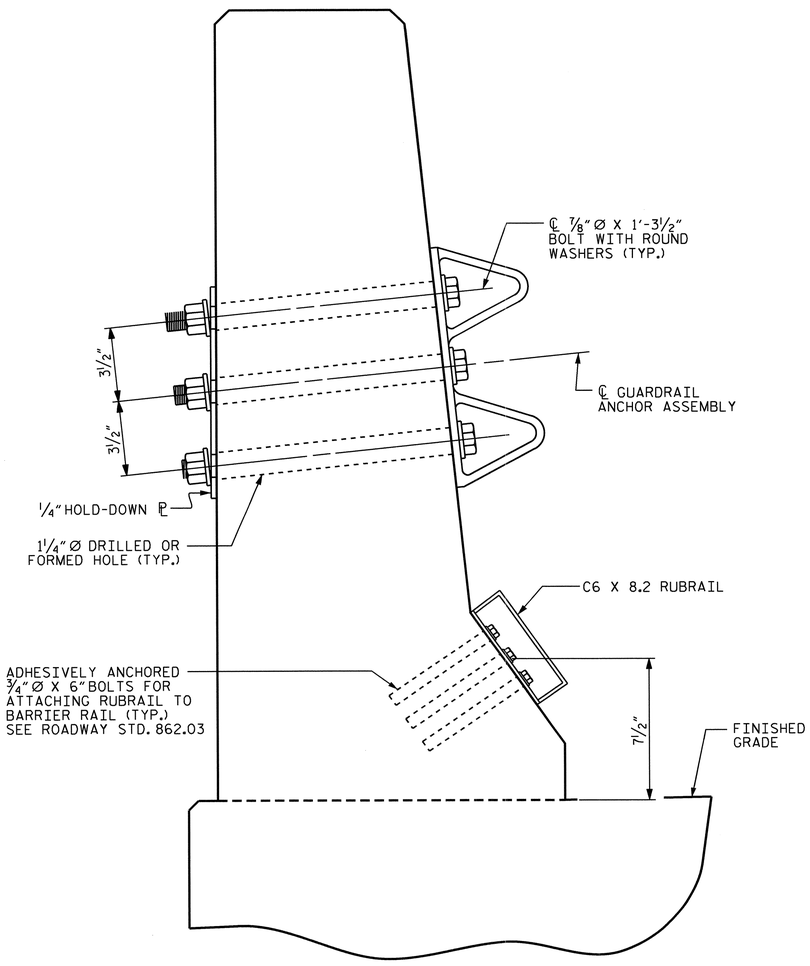

SECTION E-E

GUARDRAIL ANCHOR ASSEMBLY DETAILS

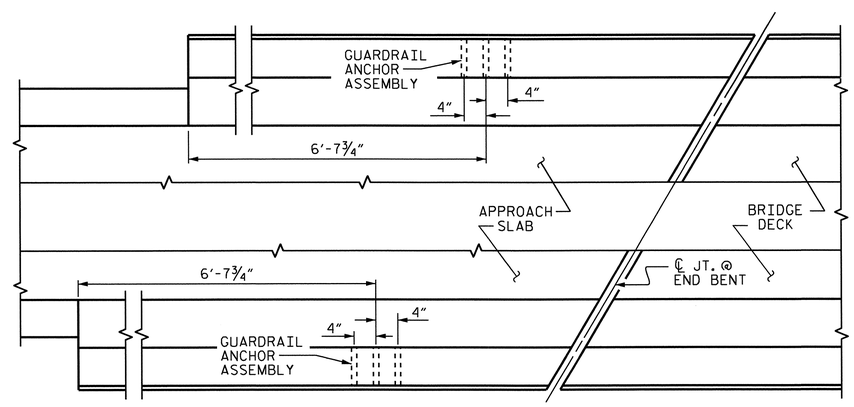

PLAN

LOCATION OF ANCHORS FOR GUARDRAIL

END BENT #1 SHOWN, END BENT #2 SIMILAR.

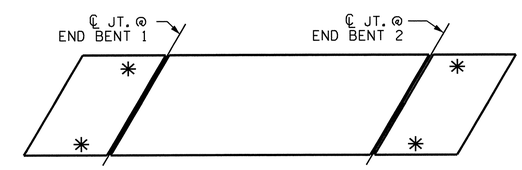

SKETCH SHOWING POINTS OF ATTACHMENTS

✳ DENOTES GUARDRAIL ANCHOR ASSEMBLY

PROJECT NO. U-0071

DURHAM COUNTY

STATION: 125+91.57 -L-

STATE OF NORTH CAROLINA
DEPARTMENT OF TRANSPORTATION
RALEIGH

STANDARD

GUARDRAIL ANCHORAGE FOR BARRIER RAIL

WBL

NORTH CAROLINA PROFESSIONAL SEAL 14855 ENGINEER DOUGLAS R. CALHOUN
5/9/14

REVISIONS						SHEET NO.
NO.	BY:	DATE:	NO.	BY:	DATE:	S-288
1			3			TOTAL SHEETS
2			4			671

ASSEMBLED BY : D. G. ELY		DATE : 8/2012	
CHECKED BY : W. F. PARKER		DATE : 10/2012	
DRAWN BY : TLA 5/06	REV. 10/1/11	MAA/GM	
CHECKED BY : GM 5/06	REV. 7/12	MAA/GM	
	REV. 6/13	MAA/GM	

08-MAY-2014 10:59
Z:\TIPProjects-U\U0071\Structures\Plans\Str#6-L-over-Y8-\Super_Draw\U0071_SD_BR_STR 6.dgn
asorsenginh

STD. NO. GRA2 STR. #6

SUPERSTRUCTURE REINFORCING STEEL LENGTHS ARE BASED ON THE FOLLOWING MINIMUM SPLICE LENGTHS					
BAR SIZE	SUPERSTRUCTURE EXCEPT APPROACH SLABS, PARAPET, AND BARRIER RAIL		APPROACH SLABS		PARAPET AND BARRIER RAIL
	EPOXY COATED	UNCOATED	EPOXY COATED	UNCOATED	
#4	2'-0"	1'-9"	2'-0"	1'-9"	2'-9"
#5	2'-6"	2'-2"	2'-6"	2'-2"	3'-5"
#6	3'-0"	2'-7"	3'-10"	2'-7"	4'-4"
#7	5'-3"	3'-6"			
#8	6'-10"	4'-7"			

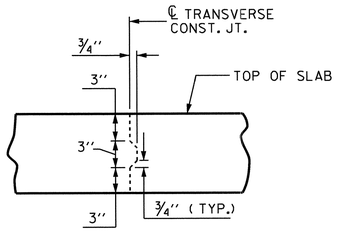

TRANSVERSE CONSTRUCTION JOINT DETAIL

NOTE: REINFORCING STEEL IN SLAB NOT SHOWN. LONGITUDINAL REINFORCING STEEL SHALL BE CONTINUOUS THRU JOINT.

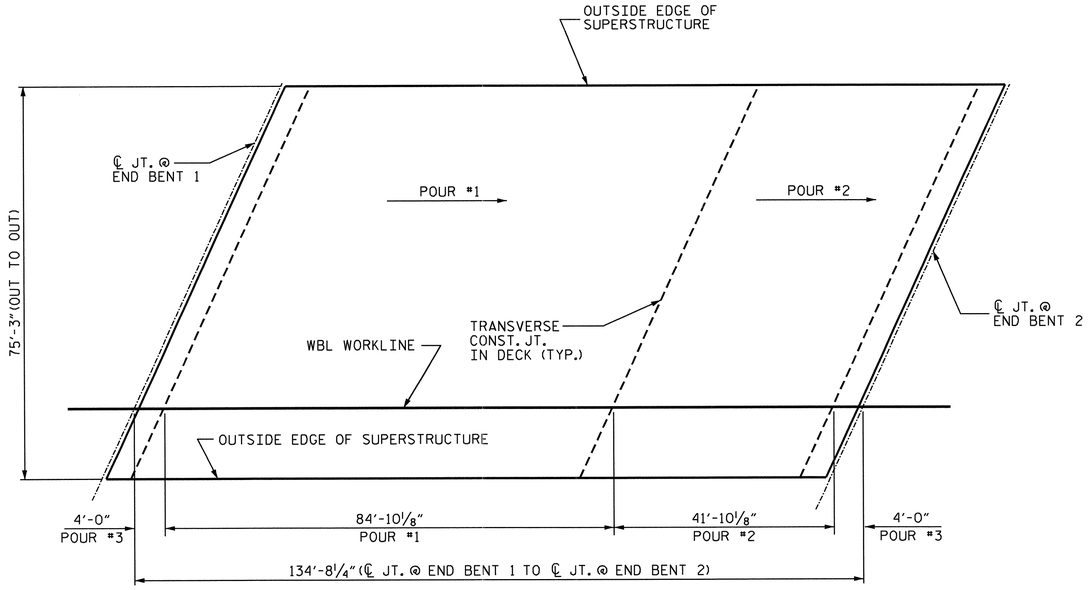

CONCRETE POURING SEQUENCE AND LAYOUT FOR COMPUTING AREA OF REINFORCED CONCRETE DECK SLAB

(SQ. FT. = 10,135)

BILL OF MATERIAL

BAR	No.	SIZE	TYPE	LENGTH	WEIGHT
* A1	404	#5	STR.	38'-9"	16328
A2	404	#5	STR.	38'-7"	16258
* A100	8	#5	STR.	37'-8"	314
* A101	8	#5	STR.	36'-7"	305
* A102	8	#5	STR.	35'-6"	296
* A103	8	#5	STR.	34'-4"	286
* A104	8	#5	STR.	33'-3"	277
* A105	8	#5	STR.	32'-1"	268
* A106	8	#5	STR.	31'-0"	259
* A107	8	#5	STR.	29'-11"	250
* A108	8	#5	STR.	28'-9"	240
* A109	8	#5	STR.	27'-8"	231
* A110	8	#5	STR.	26'-7"	222
* A111	8	#5	STR.	25'-5"	212
* A112	4	#5	STR.	46'-1"	192
* A113	4	#5	STR.	43'-10"	183
* A114	4	#5	STR.	41'-7"	173
* A115	4	#5	STR.	39'-5"	164
* A116	4	#5	STR.	37'-2"	155
* A117	4	#5	STR.	34'-11"	146
* A118	4	#5	STR.	32'-8"	136
* A119	4	#5	STR.	30'-6"	127
* A120	4	#5	STR.	28'-3"	118
* A121	4	#5	STR.	26'-0"	108
* A122	4	#5	STR.	23'-10"	99
* A123	4	#5	STR.	21'-7"	90
* A124	4	#5	STR.	19'-4"	81
* A125	4	#5	STR.	17'-1"	71
* A126	4	#5	STR.	14'-11"	62
* A127	4	#5	STR.	12'-8"	53
* A128	4	#5	STR.	10'-5"	43
* A129	4	#5	STR.	8'-2"	34
* A130	4	#5	STR.	6'-0"	25
* A131	4	#5	STR.	5'-6"	23
* A132	4	#5	STR.	5'-0"	21
A200	8	#5	STR.	37'-6"	313
A201	8	#5	STR.	36'-5"	304
A202	8	#5	STR.	35'-4"	295
A203	8	#5	STR.	34'-2"	285
A204	8	#5	STR.	33'-1"	276
A205	8	#5	STR.	31'-11"	266
A206	8	#5	STR.	30'-10"	257
A207	8	#5	STR.	29'-9"	248
A208	8	#5	STR.	28'-7"	239
A209	8	#5	STR.	27'-6"	229
A210	8	#5	STR.	26'-5"	220
A211	8	#5	STR.	25'-3"	211
A212	4	#5	STR.	46'-1"	192
A213	4	#5	STR.	43'-10"	183
A214	4	#5	STR.	41'-7"	173
A215	4	#5	STR.	39'-5"	164
A216	4	#5	STR.	37'-2"	155
A217	4	#5	STR.	34'-11"	146
A218	4	#5	STR.	32'-8"	136
A219	4	#5	STR.	30'-6"	127
A220	4	#5	STR.	28'-3"	118
A221	4	#5	STR.	26'-0"	108
A222	4	#5	STR.	23'-10"	99
A223	4	#5	STR.	21'-7"	90
A224	4	#5	STR.	19'-4"	81
A225	4	#5	STR.	17'-1"	71
A226	4	#5	STR.	14'-11"	62
A227	4	#5	STR.	12'-8"	53
A228	4	#5	STR.	10'-5"	43
A229	4	#5	STR.	8'-2"	34
A230	4	#5	STR.	6'-0"	25
A231	4	#5	STR.	5'-6"	23
A232	4	#5	STR.	5'-0"	21
* B1	255	#4	STR.	28'-6"	4855
B2	255	#5	STR.	46'-3"	12301
* G1	4	#5	STR.	42'-4"	177
* J1	160	#4	4	1'-5"	151
* K1	12	#5	1	8'-1"	101
* K2	36	#5	2	9'-1"	341
* K3	42	#5	STR.	10'-3"	449
* S1	126	#4	3	3'-11"	330

REINFORCING STEEL 33,806 LBS.

* EPOXY COATED REINFORCING STEEL 27,996 LBS.

* THESE BARS ARE EPOXY COATED

BAR TYPES

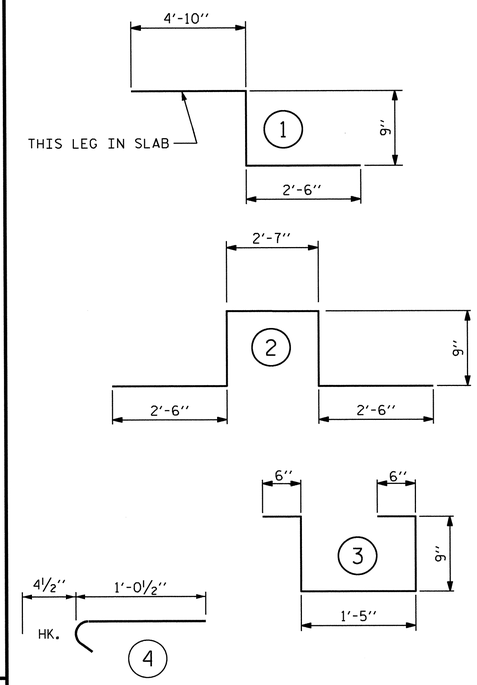

ALL BAR DIMENSIONS ARE OUT TO OUT

SUPERSTRUCTURE BILL OF MATERIAL

	CLASS AA CONCRETE	REINFORCING STEEL	EPOXY COATED REINFORCING STEEL
	(CU.YDS.)	(LBS.)	(LBS.)
TOTALS**	325.9	33,806	27,996

** QUANTITIES FOR CONCRETE BARRIER RAIL ARE NOT INCLUDED

99.3 CU. YDS.

CLASS AA CONCRETE BREAKDOWN	
POUR #1	201.4 CU. YDS.
POUR #2	99.3 CU. YDS.
POUR #3	25.2 CU. YDS.
TOTAL	325.9 CU. YDS.

GROOVING BRIDGE FLOORS		
APPROACH SLABS	3268	SQ.FT.
BRIDGE DECK	9213	SQ.FT.
TOTAL	12,481	SQ.FT.

PROJECT NO. U-0071

DURHAM COUNTY

STATION: 125+91.57 -L-

STATE OF NORTH CAROLINA
DEPARTMENT OF TRANSPORTATION
RALEIGH

STANDARD

SUPERSTRUCTURE BILL OF MATERIAL

WBL

NORTH CAROLINA PROFESSIONAL SEAL 14855 ENGINEER DOUGLAS R. CALHOUN
5/9/14

REVISIONS						SHEET NO.
NO.	BY:	DATE:	NO.	BY:	DATE:	S-289
1			3			TOTAL SHEETS
2			4			671

STD. NO. BOM1

STR. #6

ASSEMBLED BY : D. G. ELY		DATE : 8/2012
CHECKED BY : W. F. PARKER		DATE : 10/2012
DESIGN ENGINEER OF RECORD: D. R. CALHOUN		DATE : 11/2013
DRAWN BY : JMB 5/87	REV. 6/1/94	EEM/GRP
CHECKED BY : SJD 9/87	REV. 8/16/99	RWW/LES
	REV. 10/1/11	MMA/GM

08-MAY-2014 10:59
Z:\TIPProjects-U\U0071\Structures\Plans\Str#6-L-over-Y8-\Super_Draw\U0071_SD_BM_STR#6.dgn
asorsenginh

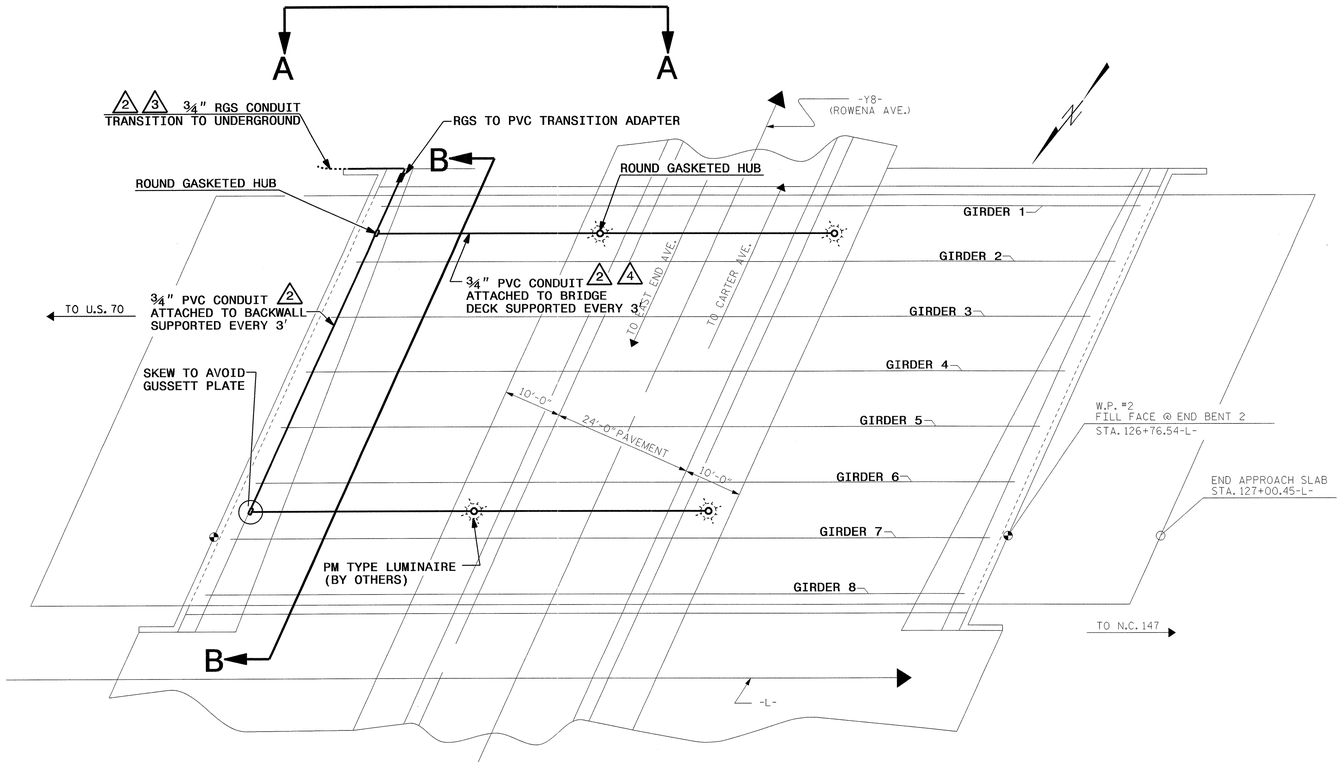

UNDERPASS CONDUIT LAYOUT (WBL) ECS-1

BEGIN LAYOUT AT BACKWALL

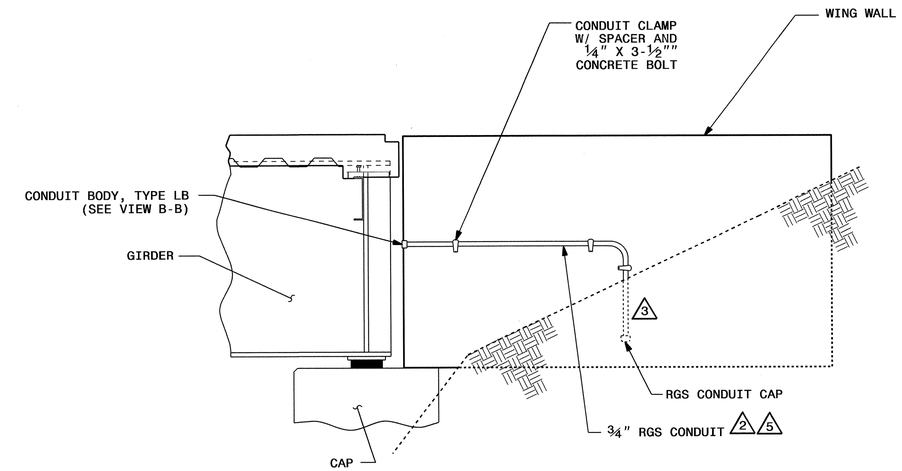

VIEW A-A

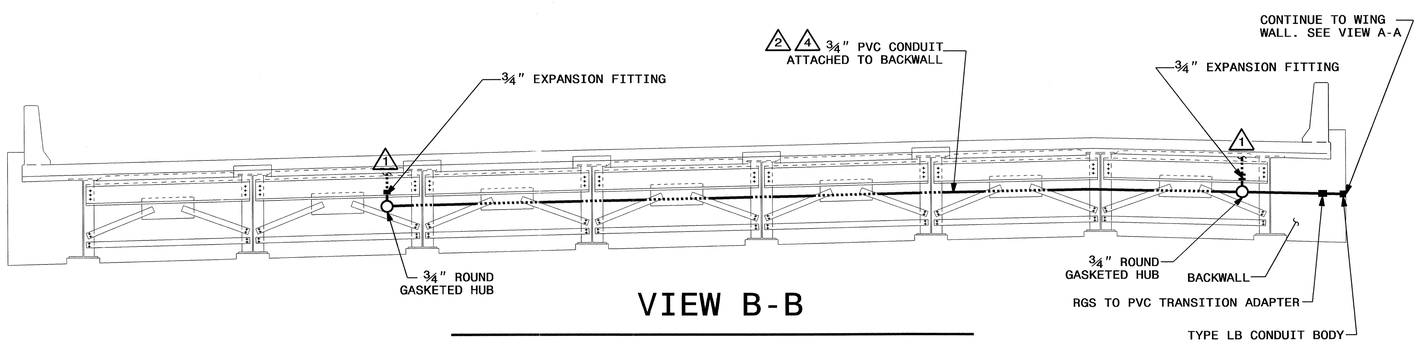

VIEW B-B

ESTIMATED BILL OF MATERIALS			
ITEM	QTY	UNITS	DESCRIPTION
1	6	EA	¾" PVC ROUND GASKETED HUB
2	15	LF	¾" RGS CONDUIT
3	240	LF	¾" PVC CONDUIT
4	7	EA	¾" PVC CONDUIT EXPANSION FITTING
5	80	EA	¾" CONDUIT CLAMPS W/ SPACERS AND ¼" SS WEDGE ANCHORS
6	1	EA	¾" RGS TO PVC TRANSITION ADAPTER
7	1	EA	¾" RGS CONDUIT CAP
8	1	EA	¾" GALVANIZED LB CONDUIT BODY WITH COVER AND GASKET
9	8	EA	⅜" SS THREADED ROD
10	8	EA	⅜" SS FLAT WASHER AND HEX NUT
11	400	LF	PULL LINE
12	2	EA	¾" PVC 90 DEGREE ELBOW
13	1	QT	PVC CEMENT
14	8	EA	⅜" CONCRETE INSERTS

1. SEE STANDARD DRAWING 1412.01 AND DETAIL SHEET 1412D01 (SHEET NO. ECS_E3) FOR BRIDGE DECK ATTACHMENT DETAILS. INSTALL EXPANSION FITTING BETWEEN HUB AND BRIDGE DECK.
2. INSTALL PULL LINES IN ALL CONDUITS. SEE STANDARD SPECIFICATION 1400-2(I).
3. TERMINATE AND CAP CONDUIT AT LEAST 18" BELOW FINISHED GRADE.
4. PROVIDE AT LEAST ONE CONDUIT EXPANSION JOINT IN SECTIONS OF CONDUIT GREATER THAN 20' IN LENGTH BETWEEN JUNCTION BOXES AND/OR LIGHT FIXTURES, AND ONE CONDUIT EXPANSION JOINT EVERY 80' FOR LONGER RUNS.
5. USE FIELD BENDS OR SWEEPS AS REQUIRED FOR EASE OF CONDUIT INSTALLATION.
6. SEE LIGHTING PROJECT SPECIAL PROVISIONS SECTION 4.00 "ELECTRICAL CONDUIT SYSTEM" FOR ADDITIONAL DETAILS.

PROJECT NO. U-0071
DURHAM COUNTY
STATION: 125+91.57-L-
= 14+74.78-Y8-
SHEET 1 OF 2

STATE OF NORTH CAROLINA
DEPARTMENT OF TRANSPORTATION
RALEIGH

BRIDGE LIGHTING CONDUIT ATTACHMENT

FOR BRIDGE ON WEST BOUND DURHAM EAST END CONNECTOR OVER ROWENA AVE. BETWEEN EAST END AVE. AND CARTER AVE.

WBL

NORTH CAROLINA PROFESSIONAL SEAL 022582 ENGINEER PAUL KI-SUN CHAN
8-23-13

REVISIONS						
NO.	BY:	DATE:	NO.	BY:	DATE:	
1			3			
2			4			

SHEET NO. S-290
TOTAL SHEETS 671

DRAWN BY : G. HALL DATE : 08-13
CHECKED BY : P. CHAN DATE : 08-13

STR. #6

16-MAY-2014 12:21
$$$$$$$$$$$$$$$$$$$$$$$$DGN$$$$$$$$$$$$$$$$$$$$$$$$
$$$$USERNAME$$$$

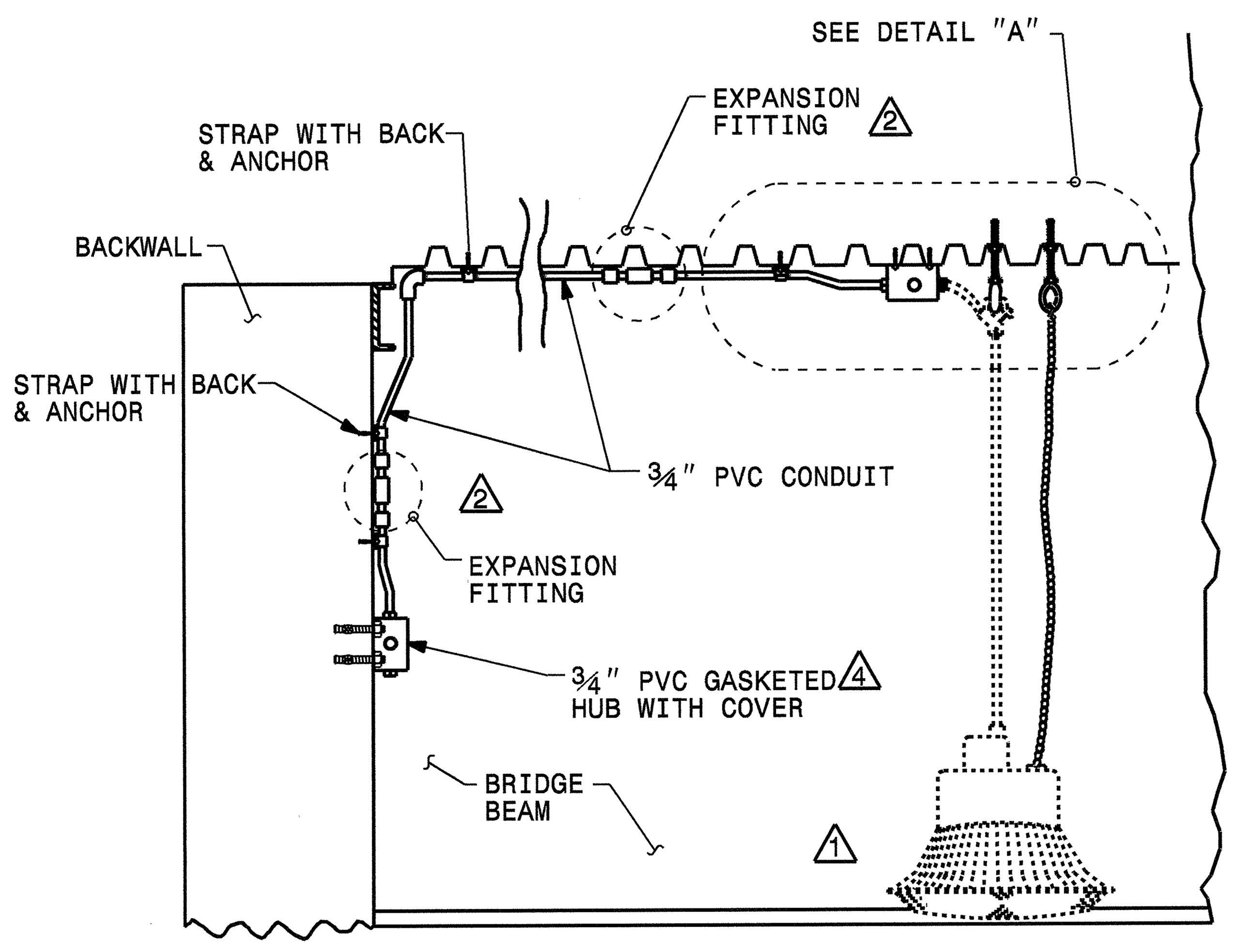

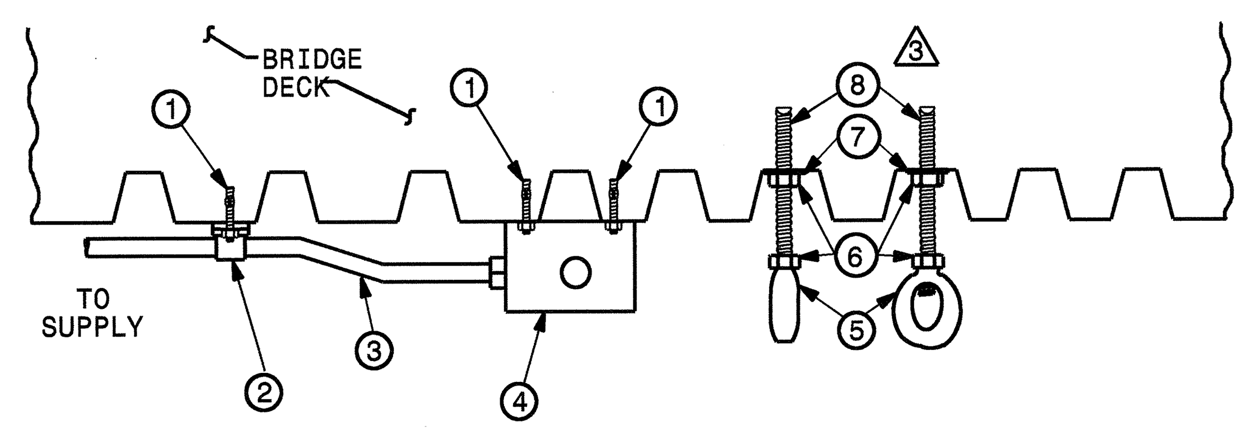

DETAIL "A"

COMPONENTS

1. ¼" SS WEDGE ANCHOR
2. STRAP WITH BACK
3. ¾" PVC CONDUIT
4. ROUND PVC BOX W/4-3/4" HUBS AND GASKETED COVER
5. 3/8" GALV. EYE NUT
6. 3/8" SS HEX NUT
7. 3/8" SS FLAT WASHER
8. 3/8" SS THREADED ROD AND DROP IN OR EXPANSION ANCHOR

NOTES

1. PM LUMIANIRE AND COMPONENTS BY OTHERS. NOT PART OF THIS CONTRACT.
2. PROVIDE EXPANSION FITTINGS AT EACH BRIDGE EXPANSION JOINT. PROVIDE AT LEAST 1 EXPANSION JOINT IN SECTIONS OF CONDUIT GREATER THAN 20' BETWEEN JUNCTION BOXES OR LIGHT FIXTURES, AND 1 EXPANSION JOINT EVERY 80' FOR LONGER RUNS.
3. REFER TO STANDARD SPECIFICATION 1074-2 FOR EXPANSION ANCHOR UNITS.
4. PLUG ANY UNUSED CONDUIT OPENINGS IN HUB.
5. CENTER THREADED ROD AND EYE NUTS BETWEEN GIRDERS.
6. SEE LIGHTING PROJECT SPECIAL PROVIDSIONS SECTION 4.00 "UNDERPASS CONDUIT SYSTEM" FOR ADDITIONAL DETAILS.

STATE OF NORTH CAROLINA
DEPT. OF TRANSPORTATION
DIVISION OF HIGHWAYS
RALEIGH, N.C.
1-12

ENGLISH STANDARD DRAWING FOR
UNDERPASS LIGHTING

SHEET 1 OF 2
1412D01

STATE OF NORTH CAROLINA
DEPT. OF TRANSPORTATION
DIVISION OF HIGHWAYS
RALEIGH, N.C.
1-12

ENGLISH STANDARD DRAWING FOR
UNDERPASS LIGHTING

SHEET 1 OF 2
1412D01

DRAWN BY : G. HALL DATE : 08-13
CHECKED BY : P. CHAN DATE : 08-13

16-MAY-2014 12:02
$$$$$$$$$$$$$$$$$$$$$DGN$$$$$$$$$$$$$$$$$$$$$$$
$$$$USERNAME$$$$

PROJECT NO. U-0071
DURHAM COUNTY
STATION: 125+91.57-L- = 14+74.78-Y8-
SHEET 2 OF 2

STATE OF NORTH CAROLINA
DEPARTMENT OF TRANSPORTATION
RALEIGH

BRIDGE LIGHTING
CONDUIT ATTACHMENT
FOR BRIDGE ON WEST BOUND DURHAM EAST END CONNECTOR OVER ROWENA AVE. BETWEEN EAST END AVE. AND CARTER AVE.
WBL

SEAL 022582 ENGINEER PAUL KI-BUN CHAN 8-23-13

REVISIONS						SHEET NO.
NO.	BY:	DATE:	NO.	BY:	DATE:	S-291
1			3			TOTAL SHEETS
2			4			671

NOTES

STIRRUPS IN CAP MAY BE SHIFTED AS NECESSARY TO CLEAR ANCHOR BOLTS.

BACKWALL SHALL BE PLACED BEFORE APPLYING THE EPOXY PROTECTIVE COATING.

THE TOP SURFACE AREAS OF THE END BENT CAPS SHALL BE CURED IN ACCORDANCE WITH THE STANDARD SPECIFICATIONS EXCEPT THE MEMBRANE CURING COMPOUND METHOD SHALL NOT BE USED.

THE TOP SURFACE OF THE CAP EXCEPT THE BRIDGE SEAT BUILDUPS SHALL BE SLOPED TRANSVERSELY FROM THE FILL FACE TO THE BACK FACE AT THE RATE OF 2%.

THE CONTRACTOR SHALL PROVIDE FOR INSTALLATION OF THE 4"DIAMETER DRAIN PIPE THROUGH THE WING WALL AS REQUIRED FOR REINFORCED BRIDGE APPROACH FILLS. SEE THE ROADWAY PLANS. REINFORCING STEEL IN THE WING WALL MAY BE SHIFTED AS NECESSARY TO CLEAR THE DRAIN PIPE.

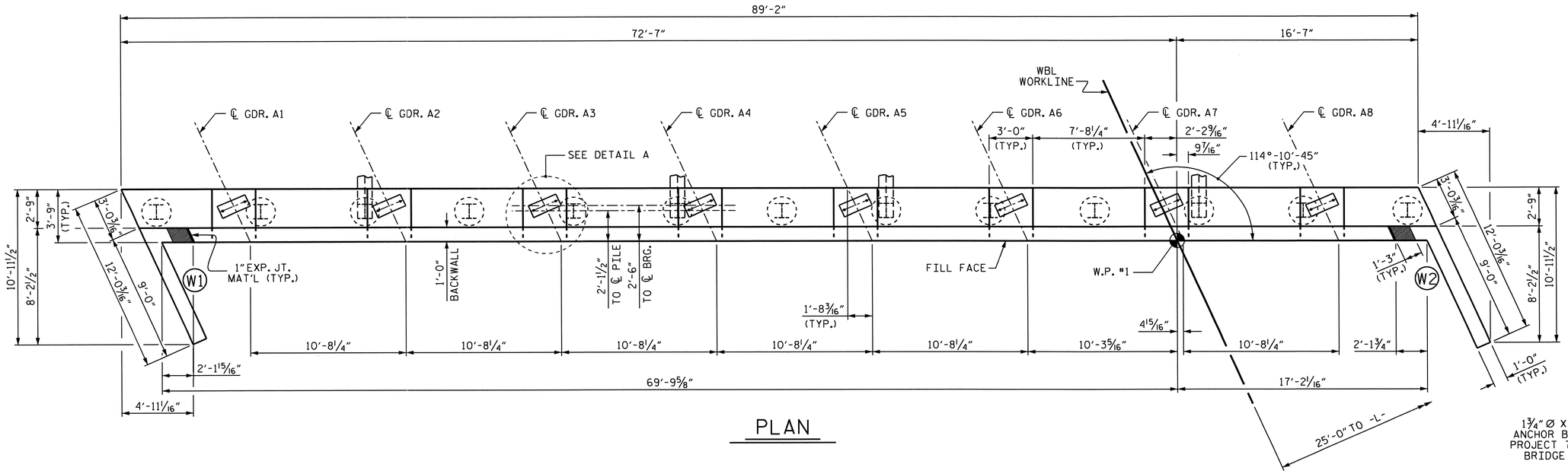

PLAN

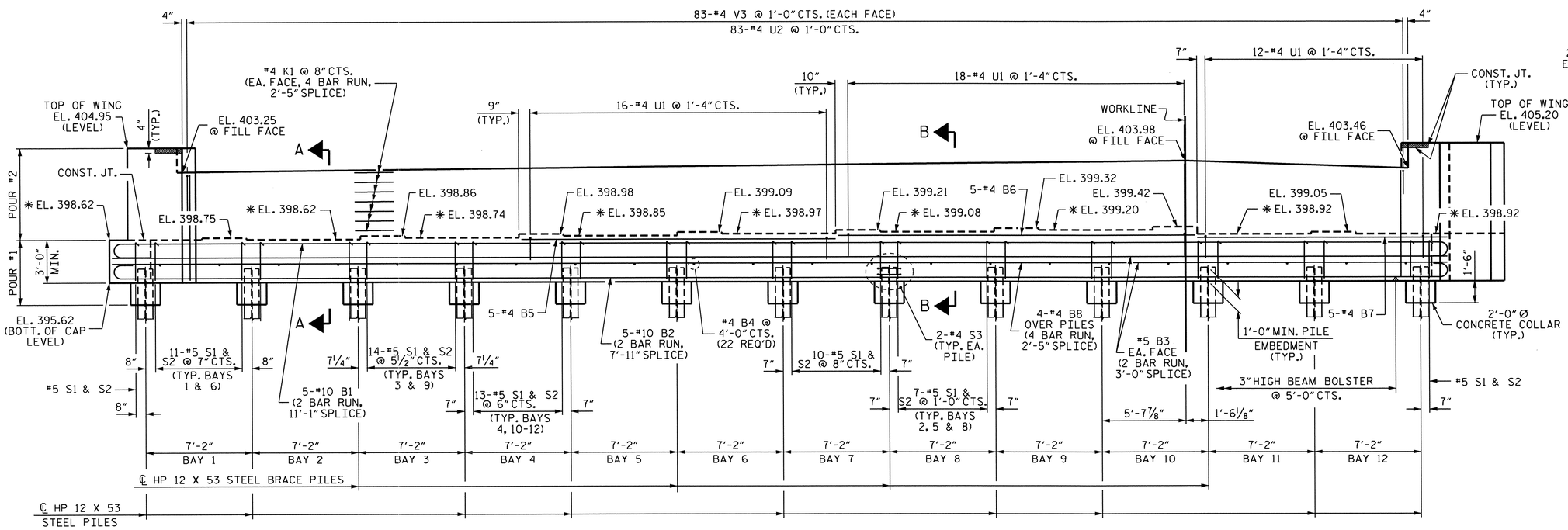

ELEVATION

✱ SEE SECTION A-A SHEET 3 OF 3 FOR LOCATION OF ELEVATIONS

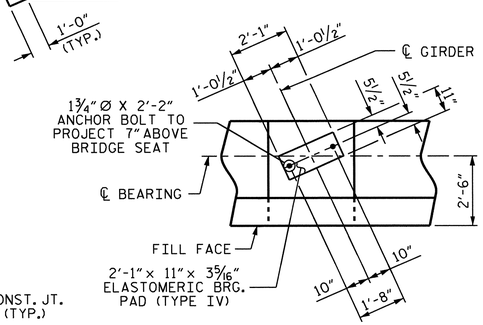

DETAIL A

(TYP. EA. BEARING)

PROJECT NO. U-0071

DURHAM COUNTY

STATION: 125+91.57 -L-

SHEET 1 OF 3

STATE OF NORTH CAROLINA
DEPARTMENT OF TRANSPORTATION
RALEIGH

SUBSTRUCTURE
END BENT 1

NORTH CAROLINA PROFESSIONAL SEAL 14855 ENGINEER DOUGLAS R. CALHOUN 5/9/14

REVISIONS								SHEET NO.
NO.	BY:	DATE:	NO.	BY:	DATE:			S-292
1			3					TOTAL SHEETS
2			4					671

STR. #6

DRAWN BY :	A.S. / William T. Parker	DATE :	03/12/13
CHECKED BY :	ASHVIN PATEL	DATE :	04/2013
DESIGN ENGINEER OF RECORD:	WAEL ARAFAT	DATE :	05/2013

08-MAY-2014 10:58
Z:\TIPProjects-U\U0071\Structures\Plans\Str#6-L-over-Y8-\Sub_Draw\U0071_SD_EB_06.dgn
asorsenginh

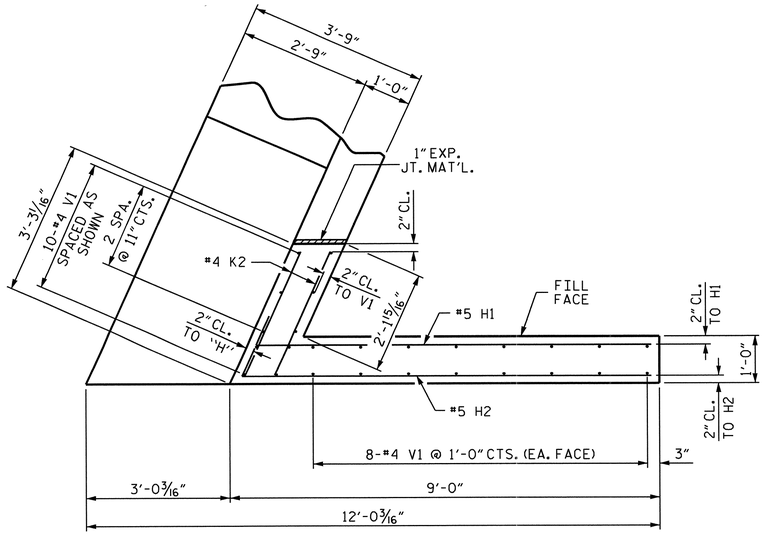

PLAN OF LEFT WING - W1

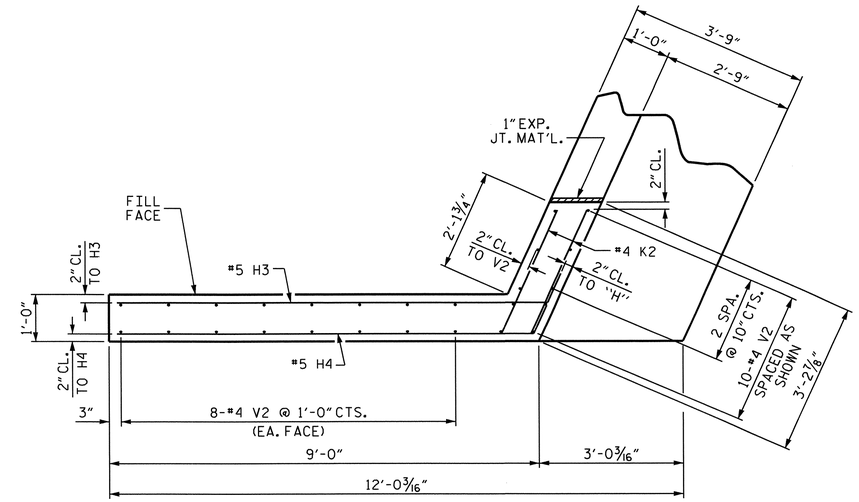

PLAN OF RIGHT WING - W2

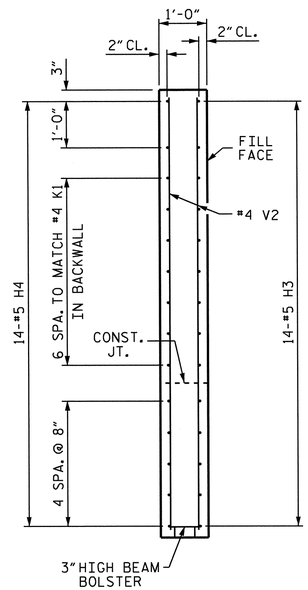

SECTION Y-Y

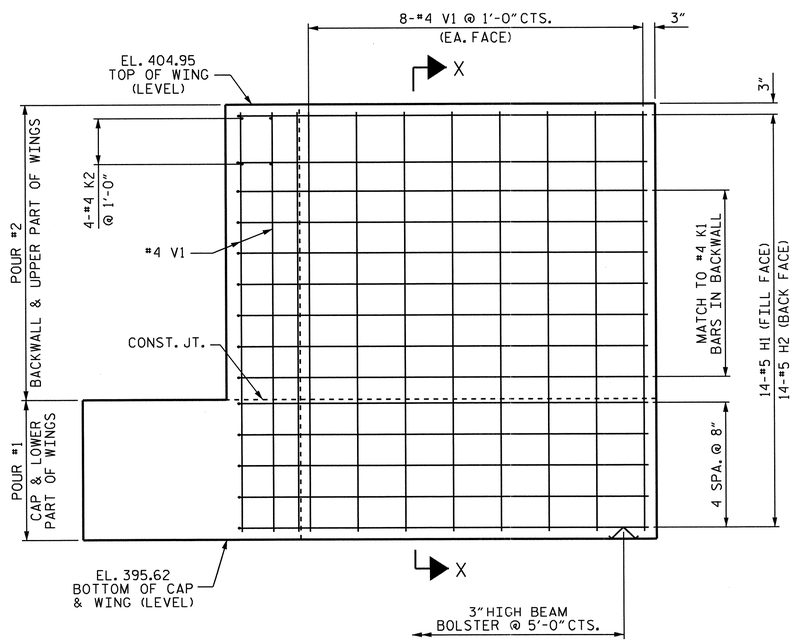

ELEVATION OF LEFT WING - W1

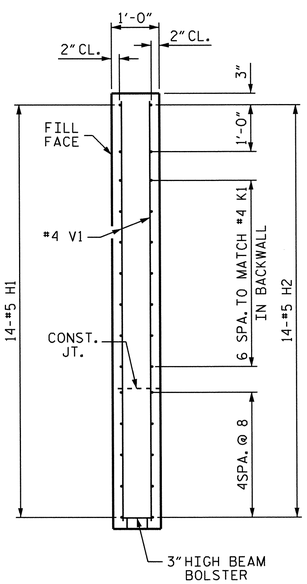

SECTION X-X

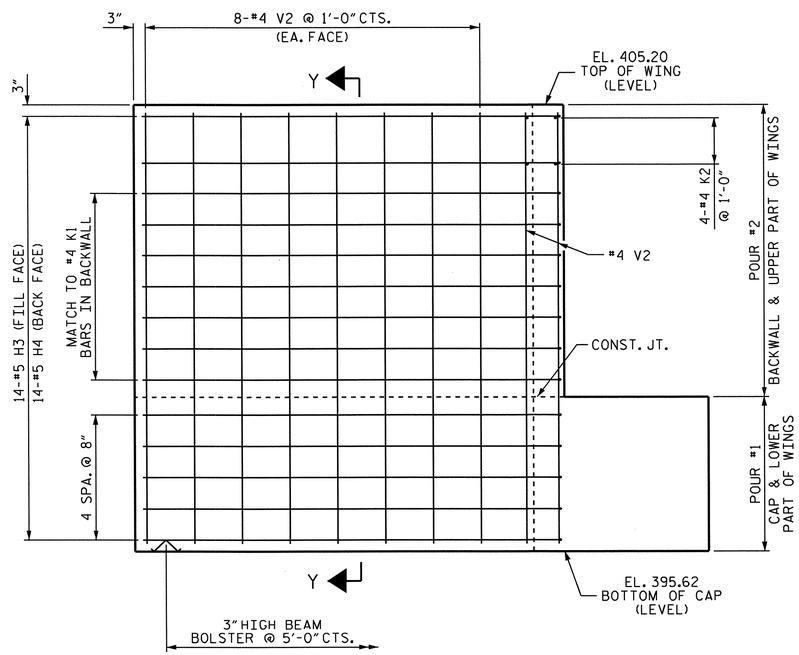

ELEVATION OF RIGHT WING - W2

PROJECT NO. U-0071

DURHAM COUNTY

STATION: 125+91.57 -L-

SHEET 2 OF 3

STATE OF NORTH CAROLINA
DEPARTMENT OF TRANSPORTATION
RALEIGH

SUBSTRUCTURE
END BENT 1

NORTH CAROLINA PROFESSIONAL SEAL 14855 ENGINEER DOUGLAS B. CALHOUN
5/9/14

REVISIONS								SHEET NO.
NO.	BY:	DATE:	NO.	BY:	DATE:			S-293
1			3					TOTAL SHEETS
2			4					671

STR. #6

DRAWN BY : A.S. / William T. Parker DATE : 03/12/13
CHECKED BY : ASHVIN PATEL DATE : 04/2013
DESIGN ENGINEER OF RECORD: WAEL ARAFAT DATE : 05/2013

08-MAY-2014 10:58
Z:\TIPProjects-U\U0071\Structures\Plans\Str#6-L-over-Y8-\Sub_Draw\U0071_SD_EB_06.dgn
asorsenginh

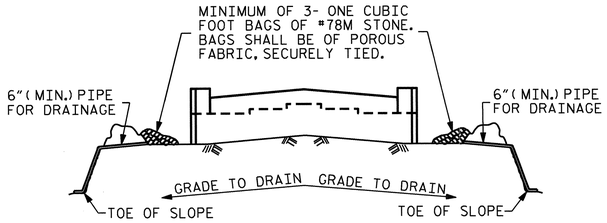

BAGGED STONE AND PIPE SHALL BE PLACED IMMEDIATELY AFTER COMPLETION OF END BENT EXCAVATION. PIPE MAY BE EITHER CONCRETE, CORRUGATED STEEL, CORRUGATED ALUMINUM ALLOY, OR CORRUGATED PLASTIC. PERFORATED PIPE WILL NOT BE ALLOWED.

BAGGED STONE SHALL REMAIN IN PLACE UNTIL THE ENGINEER DIRECTS THAT IT BE REMOVED. THE CONTRACTOR SHALL REMOVE AND DISPOSE OF SILT ACCUMULATIONS AT BAGGED STONE WHEN SO DIRECTED BY THE ENGINEER. BAGS SHALL BE REMOVED AND REPLACED WHENEVER THE ENGINEER DETERMINES THAT THEY HAVE DETERIORATED AND LOST THEIR EFFECTIVENESS.

NO SEPARATE PAYMENT WILL BE MADE FOR THIS WORK AND THE ENTIRE COST OF THIS WORK SHALL BE INCLUDED IN THE UNIT CONTRACT PRICE BID FOR THE SEVERAL PAY ITEMS.

TEMPORARY DRAINAGE AT END BENT

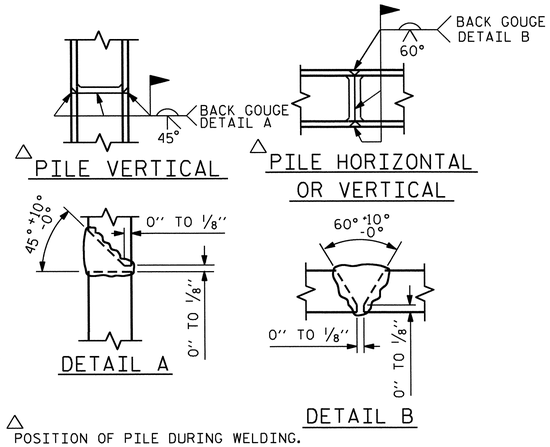

△ POSITION OF PILE DURING WELDING.

PILE SPLICE DETAILS

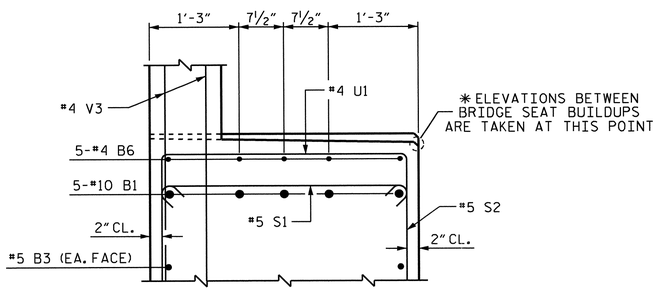

PARTIAL SECTION B-B

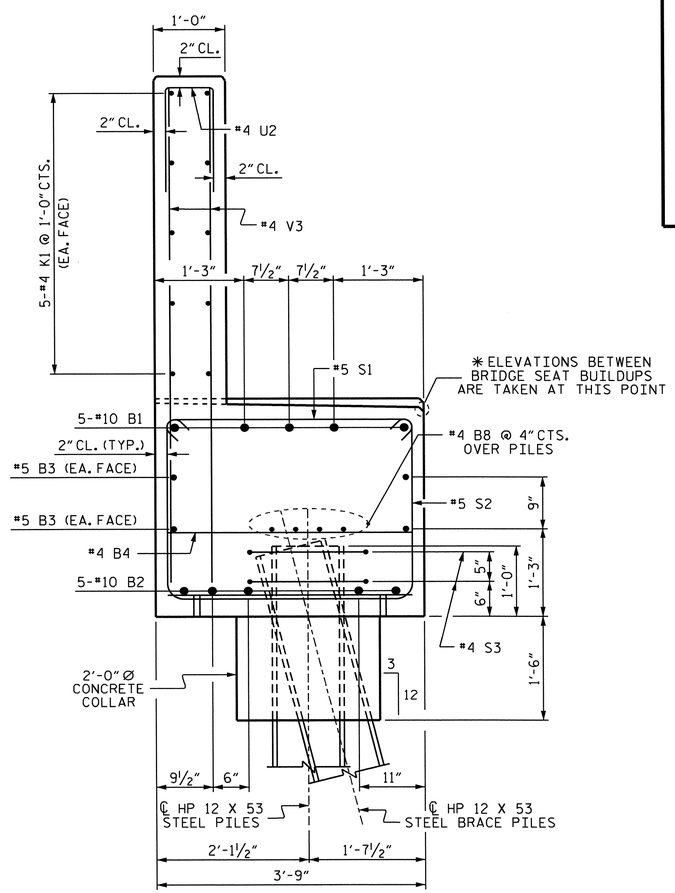

SECTION A-A

BAR TYPES

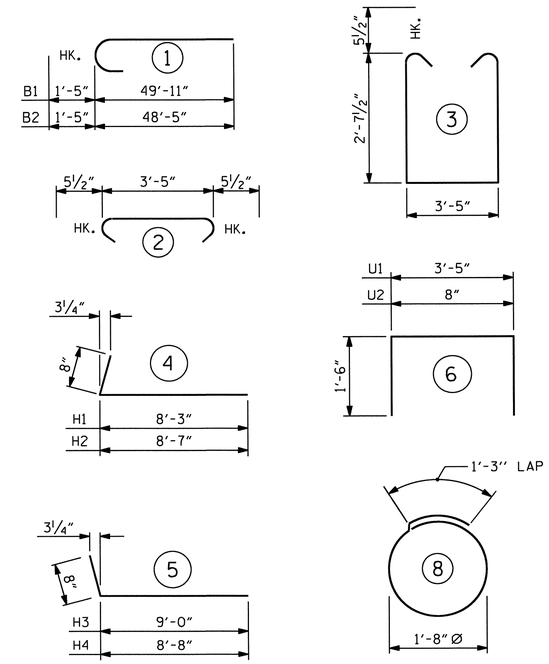

ALL BAR DIMENSIONS ARE OUT TO OUT.

BILL OF MATERIAL

END BENT 1

BAR	NO.	SIZE	TYPE	LENGTH	WEIGHT
B1	10	#10	1	51'-4"	2209
B2	10	#10	1	49'-10"	2144
B3	8	#5	STR	45'-11"	383
B4	22	#4	STR	3'-5"	50
B5	5	#4	STR	21'-2"	71
B6	5	#4	STR	24'-0"	80
B7	5	#4	STR	17'-3"	58
B8	16	#4	STR	24'-1"	257
H1	14	#5	4	8'-11"	130
H2	14	#5	4	9'-3"	135
H3	14	#5	5	9'-8"	141
H4	14	#5	5	9'-4"	136
K1	40	#4	STR	24'-0"	641
K2	8	#4	STR	2'-10"	15
S1	135	#5	2	4'-4"	610
S2	135	#5	3	9'-7"	1349
S3	26	#4	8	6'-6"	113
U1	46	#4	6	6'-5"	197
U2	83	#4	6	3'-8"	203
V1	26	#4	STR	9'-0"	156
V2	26	#4	STR	9'-3"	161
V3	166	#4	STR	7'-4"	813

REINFORCING STEEL = 10,052 LBS

CLASS "A" CONCRETE

POUR #1 - CAP, LOWER PART OF WINGS, & COLLARS 45.3 C.Y.

POUR #2 - BACKWALL & UPPER PART OF WINGS 20.4 C.Y.

TOTAL CLASS "A" CONCRETE 65.7 C.Y.

HP 12 X 53 STEEL PILES

NO. 13 LIN. FT. 490

PROJECT NO. U-0071

DURHAM COUNTY

STATION: 125+91.57 -L-

SHEET 3 OF 3

STATE OF NORTH CAROLINA
DEPARTMENT OF TRANSPORTATION
RALEIGH

SUBSTRUCTURE
END BENT 1

NORTH CAROLINA PROFESSIONAL SEAL 14855 ENGINEER DOUGLAS R. CALHOUN
5/9/14

REVISIONS						SHEET NO.
NO.	BY:	DATE:	NO.	BY:	DATE:	S-294
1			3			TOTAL SHEETS
2			4			671

STR. #6

DRAWN BY : A.S. / William T. Parker DATE : 03/12/13
CHECKED BY : ASHVIN PATEL DATE : 04/2013
DESIGN ENGINEER OF RECORD: WAEL ARAFAT DATE : 05/2013

08-MAY-2014 10:57
Z:\TIPProjects-U\U0071\Structures\Plans\Str#6-L-over-Y8-\Sub_Draw\U0071_SD_EB_06.dgn
asorsenginh

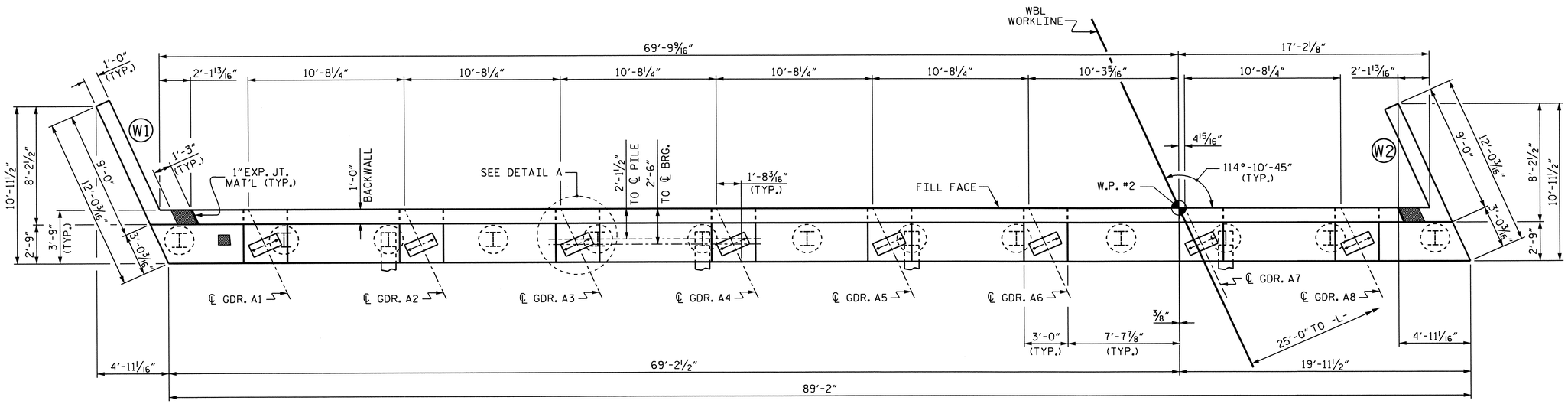

PLAN

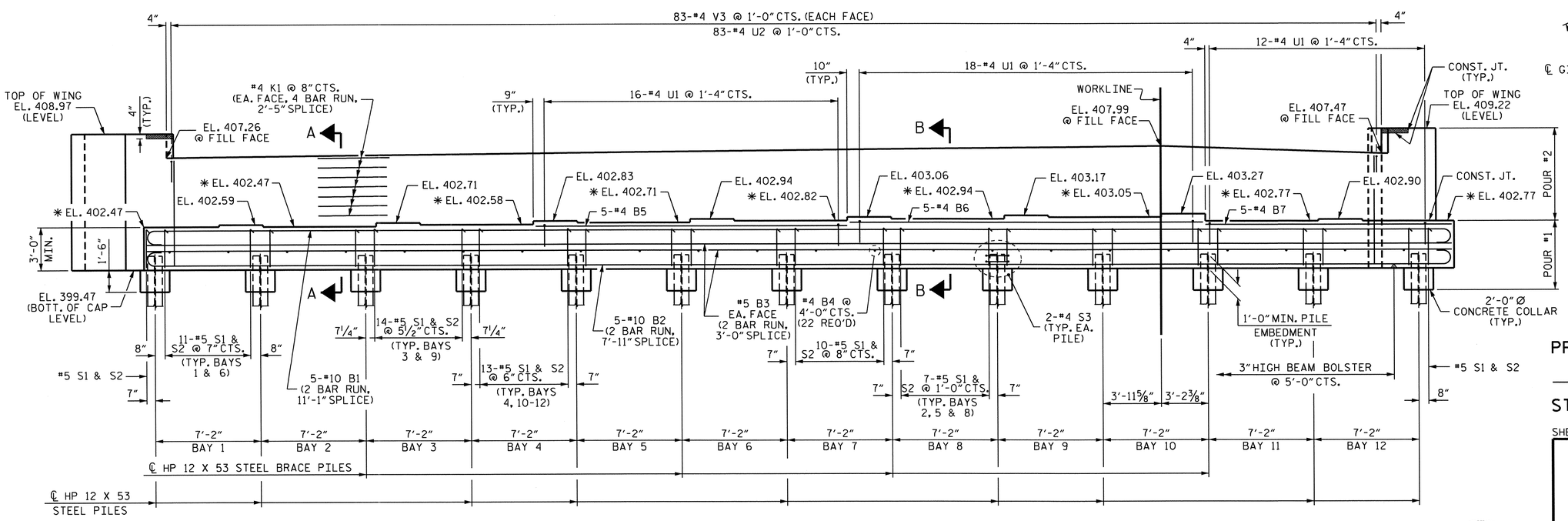

ELEVATION

* SEE SECTION A-A SHEET 3 OF 3 FOR LOCATION OF ELEVATIONS

NOTES

STIRRUPS IN CAP MAY BE SHIFTED AS NECESSARY TO CLEAR ANCHOR BOLTS.

BACKWALL SHALL BE PLACED BEFORE APPLYING THE EPOXY PROTECTIVE COATING.

THE TOP SURFACE AREAS OF THE END BENT CAPS SHALL BE CURED IN ACCORDANCE WITH THE STANDARD SPECIFICATIONS EXCEPT THE MEMBRANE CURING COMPOUND METHOD SHALL NOT BE USED.

THE TOP SURFACE OF THE CAP EXCEPT THE BRIDGE SEAT BUILDUPS SHALL BE SLOPED TRANSVERSELY FROM THE FILL FACE TO THE BACK FACE AT THE RATE OF 2%.

THE CONTRACTOR SHALL PROVIDE FOR INSTALLATION OF THE 4" DIAMETER DRAIN PIPE THROUGH THE WING WALL AS REQUIRED FOR REINFORCED BRIDGE APPROACH FILLS. SEE THE ROADWAY PLANS. REINFORCING STEEL IN THE WING WALL MAY BE SHIFTED AS NECESSARY TO CLEAR THE DRAIN PIPE.

FOR PIPE INSERT DETAILS, SEE BEARINGS SHEET.

EPOXY COAT THE END BENT CAP AFTER ADJUSTMENTS ARE MADE TO BEARINGS AND ANCHOR BOLTS ARE GROUTED.

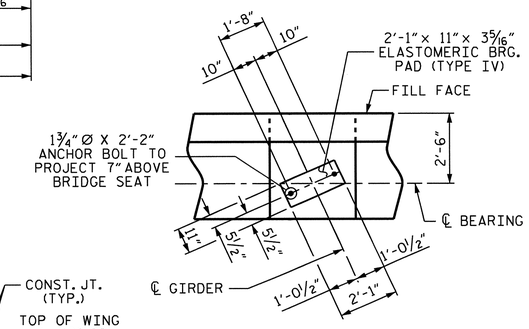

DETAIL A

(TYP. EA. BEARING)

PROJECT NO. U-0071

DURHAM COUNTY

STATION: 125+91.57 -L-

SHEET 1 OF 3

STATE OF NORTH CAROLINA
DEPARTMENT OF TRANSPORTATION
RALEIGH

SUBSTRUCTURE
END BENT 2

NORTH CAROLINA PROFESSIONAL SEAL 14855 ENGINEER DOUGLAS R. CALHOUN
5/9/14

REVISIONS						SHEET NO.
NO.	BY:	DATE:	NO.	BY:	DATE:	S-295
1			3			TOTAL SHEETS
2			4			671

DRAWN BY :	A. SORSENGINH	DATE :	05/2013
CHECKED BY :	ASHVIN PATEL	DATE :	05/2013
DESIGN ENGINEER OF RECORD:	WAEL ARAFAT	DATE :	06/2013

08-MAY-2014 10:57
Z:\TIPProjects-U\U0071\Structures\Plans\Str#6-L-over-Y8-\Sub_Draw\U0071_SD_EB_06.dgn
asorsenginh

STR. #6

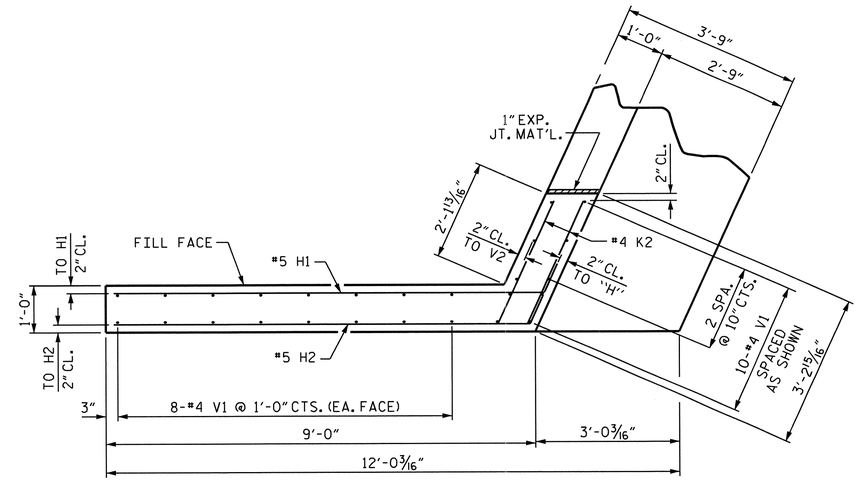

PLAN OF LEFT WING - W1

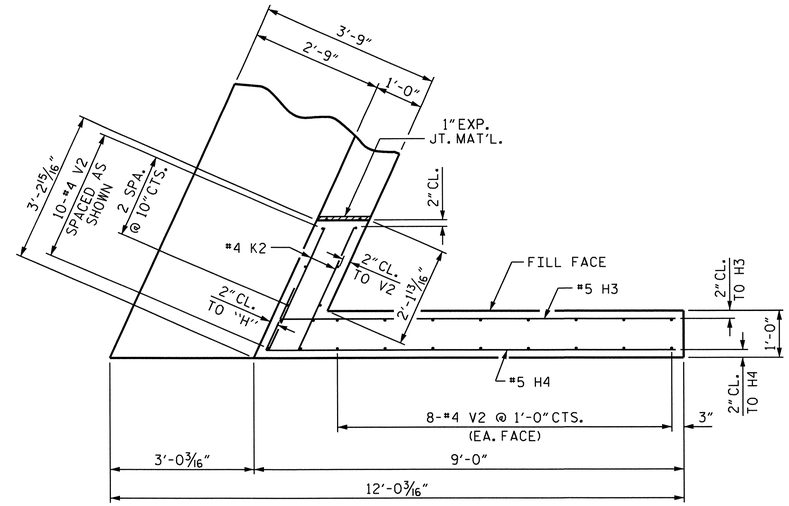

PLAN OF RIGHT WING - W2

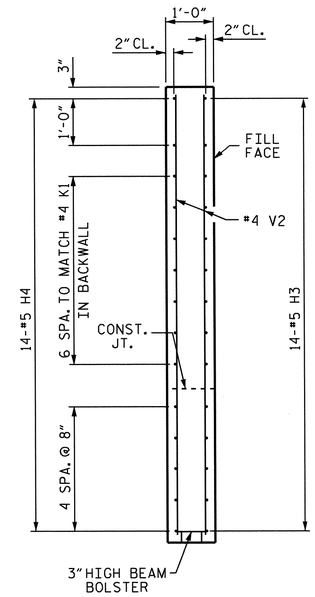

SECTION X-X

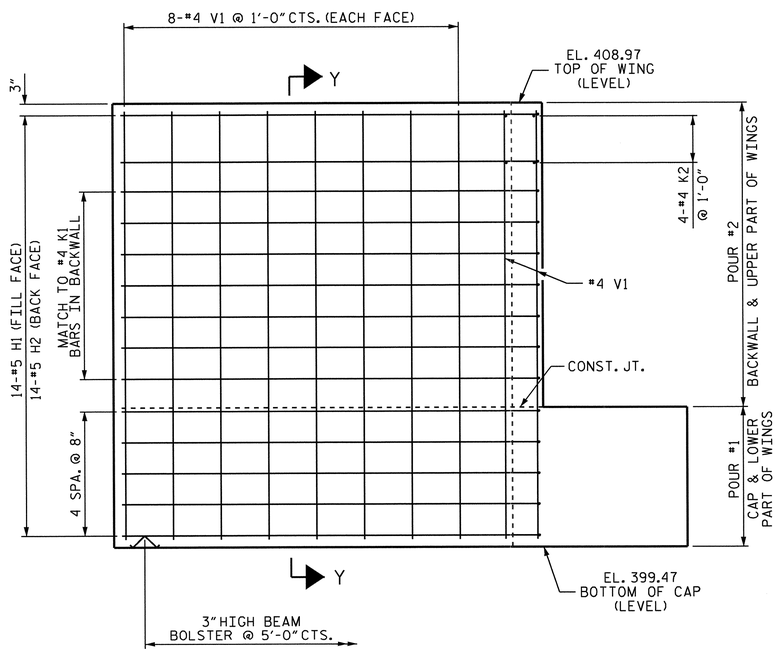

ELEVATION OF LEFT WING - W1

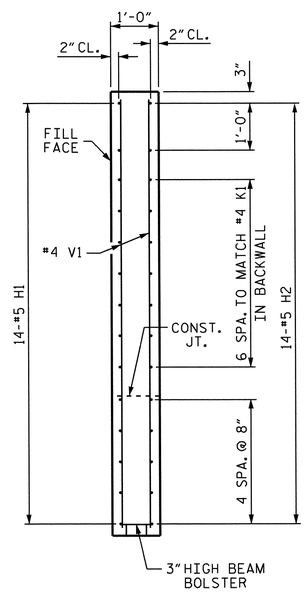

SECTION Y-Y

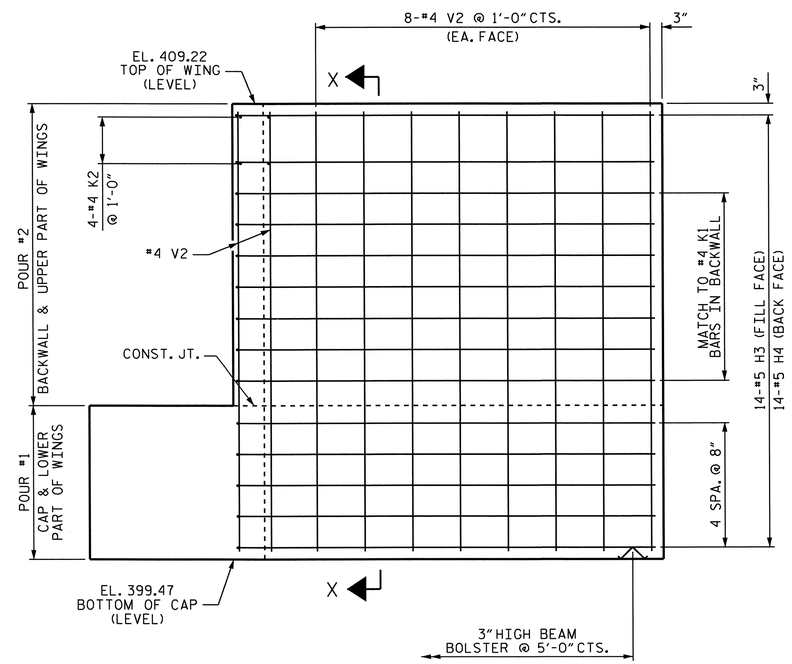

ELEVATION OF RIGHT WING - W2

PROJECT NO. U-0071

DURHAM COUNTY

STATION: 125+91.57 -L-

SHEET 2 OF 3

STATE OF NORTH CAROLINA
DEPARTMENT OF TRANSPORTATION
RALEIGH

SUBSTRUCTURE
END BENT 2

NORTH CAROLINA PROFESSIONAL SEAL 14855 ENGINEER DOUGLAS R. CALHOUN
5/9/14

REVISIONS						SHEET NO.
NO.	BY:	DATE:	NO.	BY:	DATE:	S-296
1			3			TOTAL SHEETS
2			4			671

STR. #6

DRAWN BY : A. SORSENGINH DATE : 05/2013
CHECKED BY : ASHVIN PATEL DATE : 05/2013
DESIGN ENGINEER OF RECORD: WAEL ARAFAT DATE : 06/2013

08-MAY-2014 10:57
Z:\TIPProjects-U\U0071\Structures\Plans\Str#6-L-over-Y8-\Sub_Draw\U0071_SD_EB_06.dgn
asorsenginh

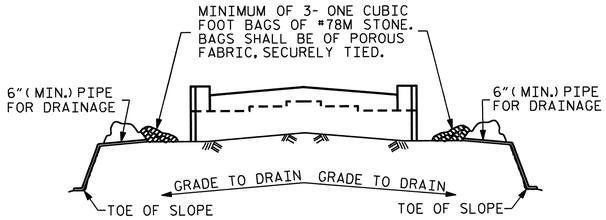

BAGGED STONE AND PIPE SHALL BE PLACED IMMEDIATELY AFTER COMPLETION OF END BENT EXCAVATION. PIPE MAY BE EITHER CONCRETE, CORRUGATED STEEL, CORRUGATED ALUMINUM ALLOY, OR CORRUGATED PLASTIC. PERFORATED PIPE WILL NOT BE ALLOWED.

BAGGED STONE SHALL REMAIN IN PLACE UNTIL THE ENGINEER DIRECTS THAT IT BE REMOVED. THE CONTRACTOR SHALL REMOVE AND DISPOSE OF SILT ACCUMULATIONS AT BAGGED STONE WHEN SO DIRECTED BY THE ENGINEER. BAGS SHALL BE REMOVED AND REPLACED WHENEVER THE ENGINEER DETERMINES THAT THEY HAVE DETERIORATED AND LOST THEIR EFFECTIVENESS.

NO SEPARATE PAYMENT WILL BE MADE FOR THIS WORK AND THE ENTIRE COST OF THIS WORK SHALL BE INCLUDED IN THE UNIT CONTRACT PRICE BID FOR THE SEVERAL PAY ITEMS.

TEMPORARY DRAINAGE AT END BENT

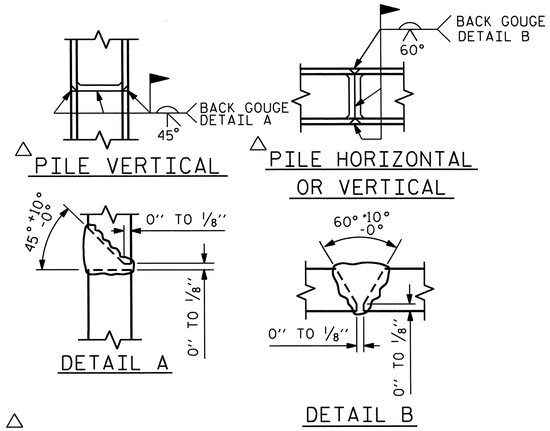

△ POSITION OF PILE DURING WELDING.

PILE SPLICE DETAILS

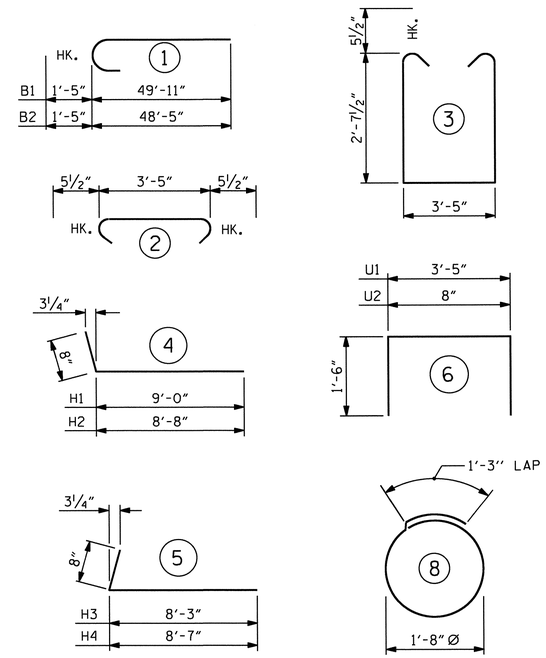

ALL BAR DIMENSIONS ARE OUT TO OUT.

BILL OF MATERIAL
END BENT 2

BAR	NO.	SIZE	TYPE	LENGTH	WEIGHT
B1	10	#10	1	51'-4"	2209
B2	10	#10	1	49'-10"	2144
B3	8	#5	STR	45'-11"	383
B4	22	#4	STR	3'-5"	50
B5	5	#4	STR	21'-2"	71
B6	5	#4	STR	24'-0"	80
B7	5	#4	STR	16'-9"	56
B8	16	#4	STR	24'-1"	257
H1	14	#5	4	9'-8"	141
H2	14	#5	4	9'-4"	136
H3	14	#5	5	8'-11"	130
H4	14	#5	5	9'-3"	135
K1	40	#4	STR	24'-0"	641
K2	8	#4	STR	2'-10"	15
S1	135	#5	2	4'-4"	610
S2	135	#5	3	9'-7"	1349
S3	26	#4	8	6'-6"	113
U1	46	#4	6	6'-5"	197
U2	83	#4	6	3'-8"	203
V1	26	#4	STR	9'-2"	159
V2	26	#4	STR	9'-5"	164
V3	166	#4	STR	7'-4"	813

REINFORCING STEEL = 10,056 LBS

CLASS "A" CONCRETE

POUR #1 - CAP, LOWER PART OF WINGS, & COLLARS 45.2 C.Y.

POUR #2 - BACKWALL & UPPER PART OF WINGS 19.5 C.Y.

TOTAL CLASS "A" CONCRETE 64.7 C.Y.

HP 12 X 53 STEEL PILES

NO. 13 LIN. FT. 490

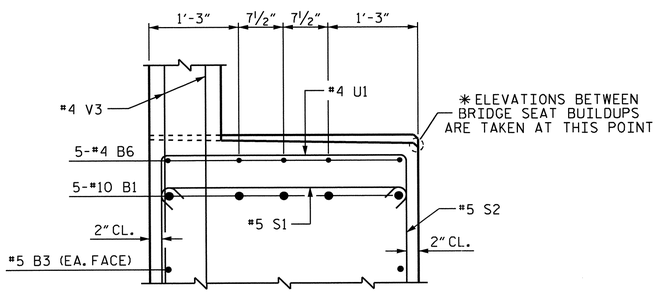

PARTIAL SECTION B-B

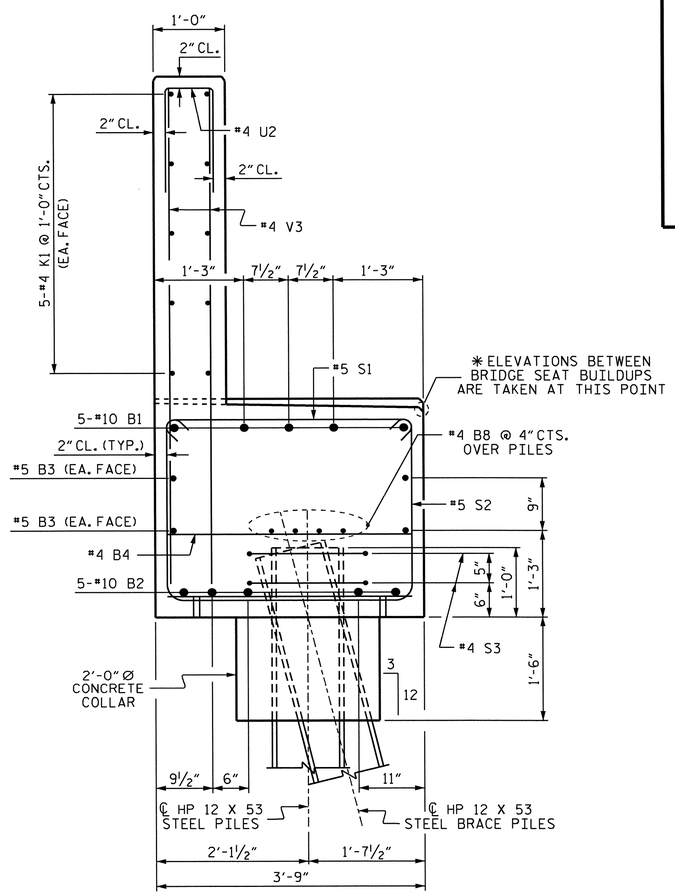

SECTION A-A

PROJECT NO. U-0071

DURHAM COUNTY

STATION: 125+91.57 -L-

SHEET 3 OF 3

STATE OF NORTH CAROLINA
DEPARTMENT OF TRANSPORTATION
RALEIGH

SUBSTRUCTURE
END BENT 2

NORTH CAROLINA PROFESSIONAL SEAL 14855 ENGINEER DOUGLAS R. CALHOUN
5/9/14

REVISIONS						SHEET NO.
NO.	BY:	DATE:	NO.	BY:	DATE:	S-297
1			3			TOTAL SHEETS
2			4			671

STR. #6

DRAWN BY : A. SORSENGINH DATE : 05/2013
CHECKED BY : ASHVIN PATEL DATE : 05/2013
DESIGN ENGINEER OF RECORD: WAEL ARAFAT DATE : 06/2013

08-MAY-2014 10:56
Z:\TIPProjects-U\U0071\Structures\Plans\Str#6-L-over-Y8-\Sub_Draw\U0071_SD_EB_06.dgn
asorsenginh

GENERAL NOTES

SLOPE PROTECTION SHALL BE PLACED UNDER THE ENDS OF THE BRIDGE AS SHOWN IN THE DETAILS. STRAIGHT EDGING WILL NOT BE REQUIRED UNLESS, IN THE OPINION OF THE ENGINEER, VISUAL INSPECTION INDICATES A NEED FOR IT. MEASUREMENT AND PAYMENT SHALL BE AS PRESCRIBED IN SECTION 462 OF THE STANDARD SPECIFICATIONS. FOR BERM WIDTH, SEE GENERAL DRAWING.

THE SLOPE PROTECTION SHALL CONSIST OF 4" POURED-IN-PLACE CONCRETE PAVING AS SHOWN IN THE DETAILS ON THIS SHEET. CONCRETE SHALL BE CLASS "B". THE CONCRETE SURFACE SHALL BE FLOATED WITH A WOODEN FLOAT AND FINISHED. WELDED WIRE FABRIC REINFORCING SHALL BE 6 X 6 - W1.4 X W1.4, 60" WIDE. SLOPE PROTECTION SHALL BE POURED IN 5' STRIPS AS SHOWN IN THE "POURING DETAIL" WITH 2'-0" LONG #4 BARS PLACED ALONG THE SLOPE BETWEEN STRIPS AT 1'-6" MAXIMUM SPACING. SLOPE PROTECTION MAY BE POURED IN ALTERNATE 4' AND 5' STRIPS AS SHOWN IN THE "OPTIONAL POURING DETAIL" WITH ADJACENT RUNS OF WELDED WIRE FABRIC LAPPING AT LEAST 6". THE COST OF THE WELDED WIRE FABRIC AND #4 BARS, IF USED, SHALL BE INCLUDED IN THE CONTRACT UNIT PRICE BID PER SQUARE YARD FOR SLOPE PROTECTION.

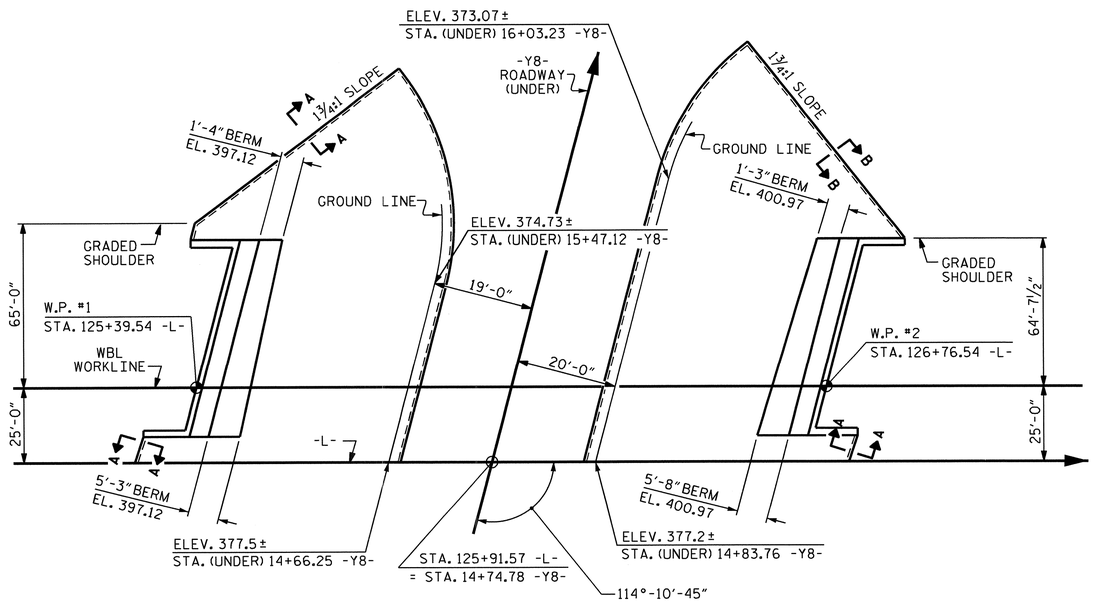

PLAN

BRIDGE @ STA. 125+91.57 -L- (WBL)	4 INCH SLOPE PROTECTION	* WELDED WIRE FABRIC 60 INCHES WIDE
	SQUARE YARDS	APPROX. L.F.
END BENT 1	670	1210
END BENT 2	850	1530

* QUANTITY SHOWN IS BASED ON 5' POURS.

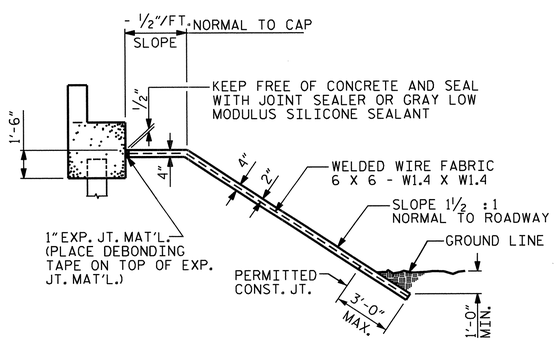

SECTION ALONG ℄ ROADWAY WHEN DITCH IS NOT PROVIDED

SLOPE PROTECTION

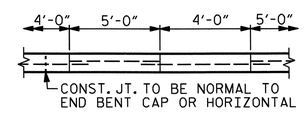

POUR A 4'-0" STRIP FIRST. STRIP WIDTHS MAY VARY IN CURVED PORTION.

OPTIONAL POURING DETAIL

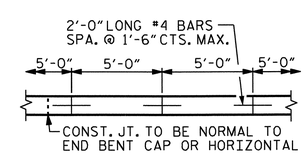

STRIP WIDTHS MAY VARY IN CURVED PORTION.

POURING DETAIL

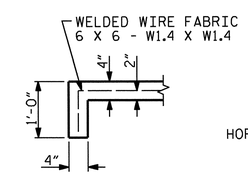

SECTION A-A

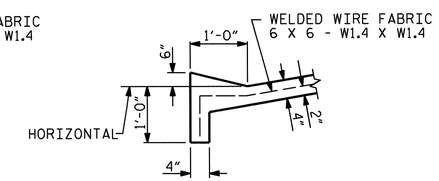

SECTION B-B

PROJECT NO. U-0071
DURHAM COUNTY
STATION: 125+91.57 -L-

STATE OF NORTH CAROLINA
DEPARTMENT OF TRANSPORTATION
RALEIGH

STANDARD
SLOPE PROTECTION DETAILS
WBL

NORTH CAROLINA PROFESSIONAL SEAL 14855 ENGINEER DOUGLAS R. CALLISON
5/9/14

REVISIONS						SHEET NO.
NO.	BY:	DATE:	NO.	BY:	DATE:	S-298
1			3			TOTAL SHEETS
2			4			671

ASSEMBLED BY : A. K. PATEL	DATE : 11/2013	
CHECKED BY : S. B. WILLIAMS	DATE : 11/2013	
DRAWN BY : ELR 5/92	REV. 5/1/06	TLA/GM
CHECKED BY : GRP 6/92	REV. 10/1/11	MAA/GM
	REV. 12/21/11	MAA/GM

08-MAY-2014 10:55
Z:\TIPProjects-U\U0071\Structures\Plans\Str#6-L-over-Y8-\Misc_Draw\U-0071_SD_SP_06.dgn
asorsenginh

STR. #6

STD. NO. SP1

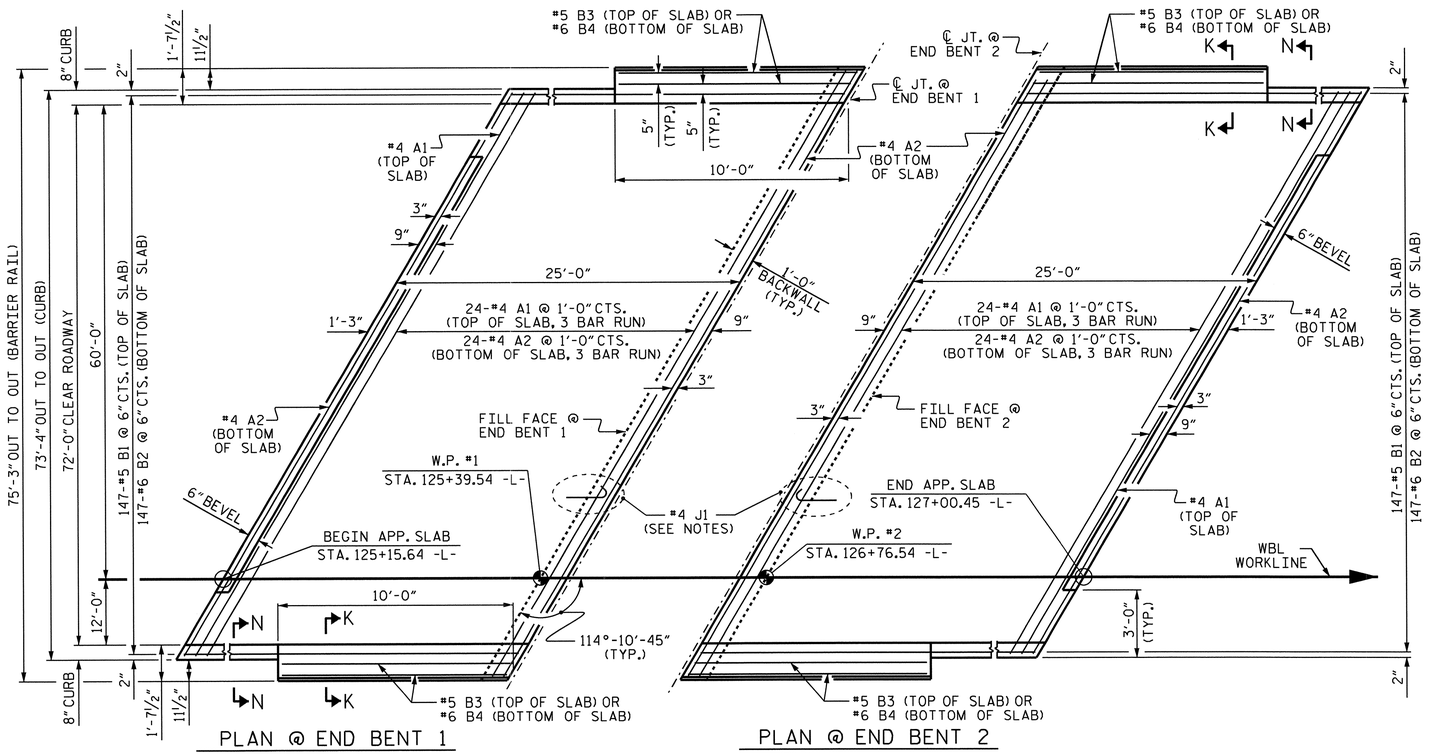

PLAN @ END BENT 1

PLAN @ END BENT 2

DIMENSIONS SHOWN ARE TYPICAL FOR BOTH APPROACH SLABS

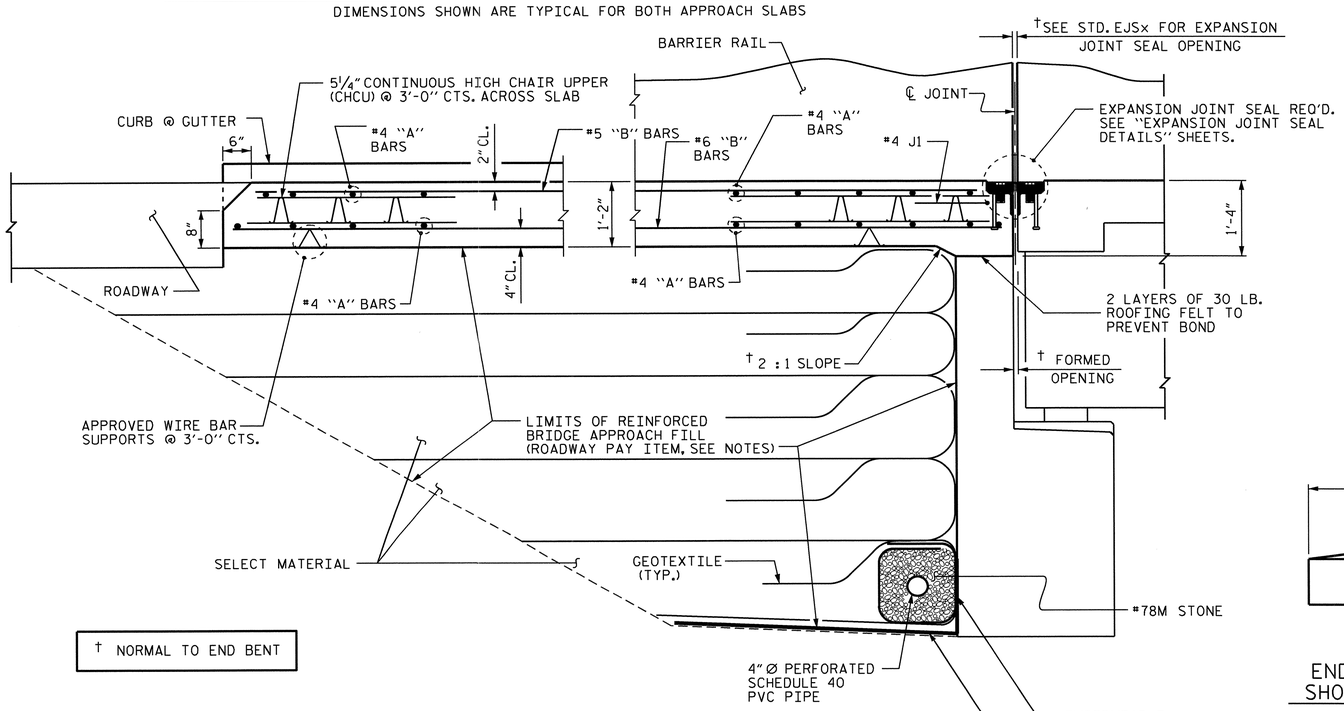

† NORMAL TO END BENT

SECTION THRU SLAB

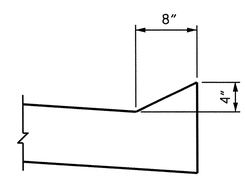

SECTION N-N

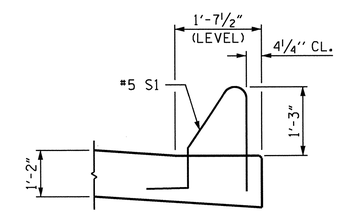

SECTION K-K

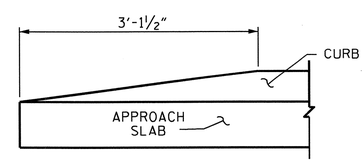

END OF CURB WITHOUT SHOULDER BERM GUTTER

CURB DETAILS

NOTES

APPROACH SLAB SHALL NOT BE CONSTRUCTED PRIOR TO COMPLETION OF THE BRIDGE DECK.

FOR REINFORCED BRIDGE APPROACH FILL INCLUDING GEOTEXTILE, IMPERMEABLE GEOMEMBRANE, 4" Ø DRAINAGE PIPE, #78M STONE, AND SELECT MATERIAL, SEE ROADWAY PLANS.

AREA BETWEEN THE WINGWALL AND APPROACH SLAB SHALL BE GRADED TO DRAIN THE WATER AWAY FROM THE FILL FACE OF THE BRIDGE AND SHALL BE PAVED. SEE ROADWAY PLANS.

FOR EXPANSION JOINT SEALS, SEE SPECIAL PROVISIONS.

FOR #4 J1 BARS, SEE "EXPANSION JOINT SEAL DETAILS" SHEET.

BILL OF MATERIAL
FOR ONE APPROACH SLAB (2 REQ'D)

BAR	NO.	SIZE	TYPE	LENGTH	WEIGHT
* A1	75	#4	STR	29'-0"	1453
A2	78	#4	STR	28'-6"	1485
* B1	147	#5	STR	23'-10"	3654
B2	147	#6	STR	24'-8"	5446
* B3	4	#5	STR	9'-8"	40
B4	4	#6	STR	9'-8"	58
* J1	78	#4	1	1'-5"	74
REINFORCING STEEL **				LBS.	6989
* EPOXY COATED REINFORCING STEEL				** LBS.	5221
CLASS AA CONCRETE **				C.Y.	80.4

BAR TYPE

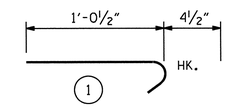

ALL BAR DIMENSIONS ARE OUT TO OUT

** QUANTITIES FOR BARRIER RAIL ARE NOT INCLUDED. SEE SHEET 2 OF 2.

THE QUANTITY OF #4 J1 BARS ON THE BILL OF MATERIAL IS BASED ON 1'-0" CENTERS. J1 BARS SHALL BE PLACED AT EACH VERTICAL STUD ANCHOR BOLT. IN THE EVENT THAT THE NUMBER OF VERTICAL STUD ANCHORS EXCEEDS THE NUMBER OF J1 BARS SPECIFIED, ADDITIONAL J1 BARS WILL NOT BE REQUIRED.

SPLICE LENGTHS

BAR SIZE	EPOXY COATED	UNCOATED
#4	2'-0"	1'-9"
#5	2'-6"	2'-2"
#6	3'-10"	2'-7"

PROJECT NO. U-0071

DURHAM COUNTY

STATION: 125+91.57 -L-

SHEET 1 OF 2

STATE OF NORTH CAROLINA
DEPARTMENT OF TRANSPORTATION
RALEIGH

STANDARD

BRIDGE APPROACH SLAB FOR FLEXIBLE PAVEMENT

WBL

NORTH CAROLINA PROFESSIONAL SEAL 14855 ENGINEER DOUGLAS B. CALHOUN 5/9/14

REVISIONS						SHEET NO.
NO.	BY:	DATE:	NO.	BY:	DATE:	S-299
1			3			TOTAL SHEETS
2			4			671

ASSEMBLED BY : D. G. ELY		DATE : 06/2013	
CHECKED BY : W. F. PARKER		DATE : 11/2013	
DRAWN BY : EEM 3/95	REV. 10/1/11	MAA/GM	
CHECKED BY : VAP 3/95	REV. 12/21/11	MAA/GM	
	REV. 6/13	MAA/GM	

08-MAY-2014 10:55
Z:\TIPProjects-U\U0071\Structures\Plans\Str#6-L-over-Y8-\Misc_Draw\U0071_SD_AS_06.dgn
asorsenginh

STD. NO. BAS2

STR. #6

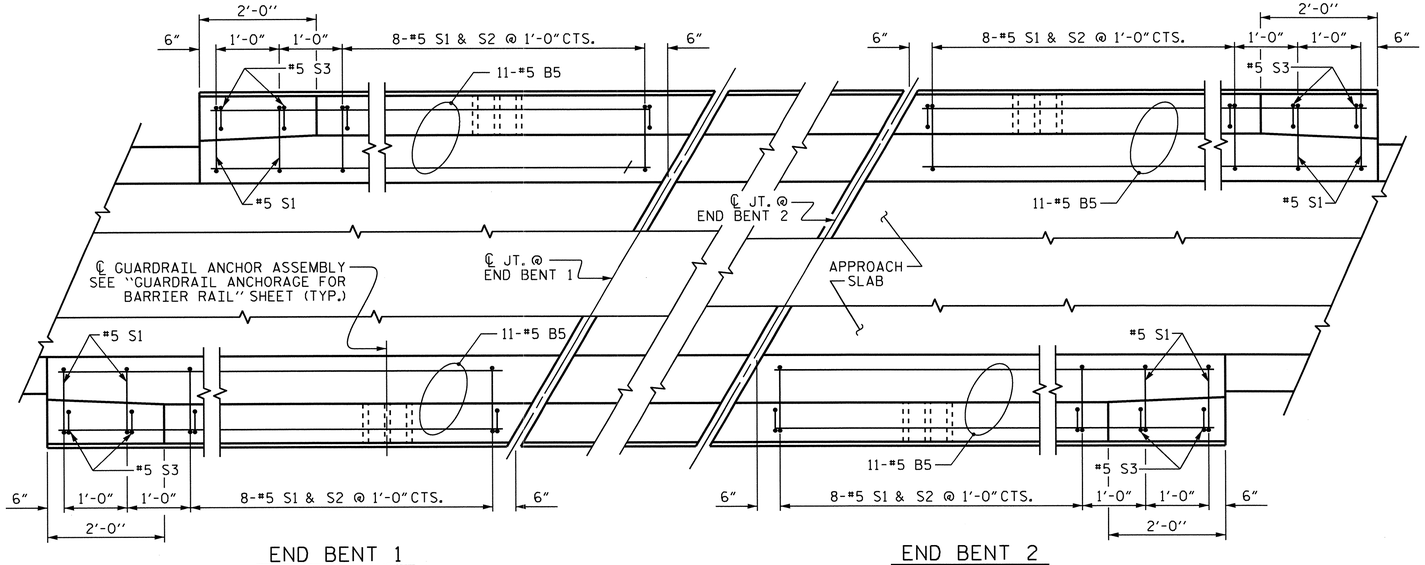

END BENT 1

END BENT 2

PLAN OF BARRIER RAIL

NOTES

THE COST OF THE BARRIER RAIL ON THE APPROACH SLAB SHALL BE INCLUDED IN THE LINEAR FOOT CONTRACT PRICE BID FOR "CONCRETE BARRIER RAIL".

THE BARRIER RAIL ON EACH APPROACH SLAB SHALL NOT BE CAST UNTIL ALL APPROACH SLAB CONCRETE HAS BEEN CAST AND HAS REACHED A MINIMUM COMPRESSIVE STRENGTH OF 3,000 PSI.

ALL REINFORCING STEEL IN BARRIER RAILS SHALL BE EPOXY COATED.

FOR BARRIER RAIL COVER PLATES, SEE "EXPANSION JOINT SEAL DETAILS" SHEETS.

BAR TYPES

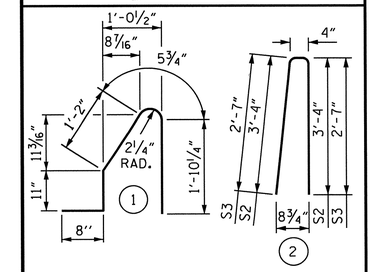

ALL BAR DIMENSIONS ARE OUT TO OUT

BILL OF MATERIAL

BARRIER RAIL ONLY

BAR	NO.	SIZE	TYPE	LENGTH	WEIGHT
* B5	44	#5	STR	9'-8"	444
* S1	40	#5	1	5'-1"	212
* S2	32	#5	2	7'-0"	234
* S3	8	#5	2	5'-6"	46

* EPOXY COATED REINFORCING STEEL	LBS.	936
CLASS AA CONCRETE	C. Y.	5.5
CONCRETE BARRIER RAIL	40.0	LIN. FT.

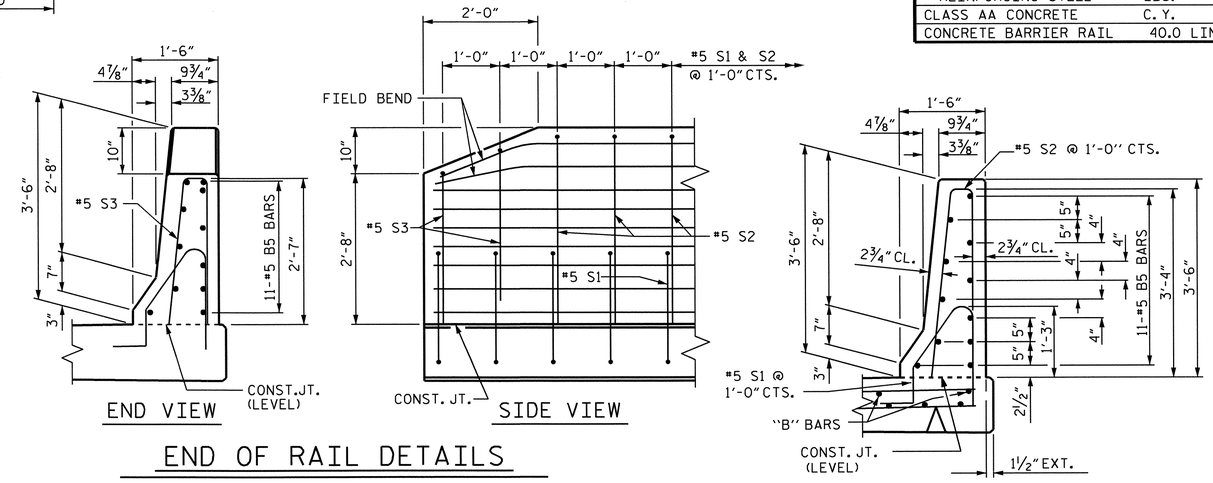

END VIEW

SIDE VIEW

END OF RAIL DETAILS

SECTION THRU RAIL

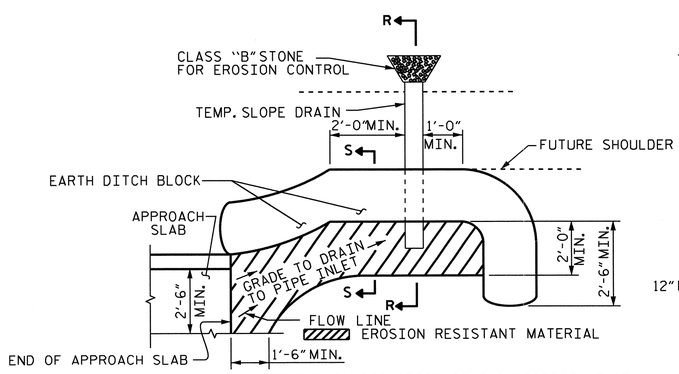

NOTE: IMMEDIATELY AFTER THE CONSTRUCTION OF THE APPROACH SLAB, THE CONTRACTOR SHALL PROVIDE TEMPORARY BERM AND SLOPE DRAIN. CONTRACTOR SHALL GRADE TO PIPE INLET AND PROVIDE EROSION RESISTANT MATERIAL AS SHOWN. THE EROSION RESISTANT MATERIAL SHALL BE EITHER 1) ASPHALT PLANT MIX, TYPE 1 OR TYPE 2, MIN. 2" DEPTH, 2) EROSION CONTROL MAT, OR 3) CONCRETE, AS DIRECTED BY THE ENGINEER. THE SLOPE DRAIN SHALL CONSIST OF A NON-PERFORATED TEMPORARY DRAINAGE PIPE, 12 INCHES IN DIAMETER.

PLAN VIEW

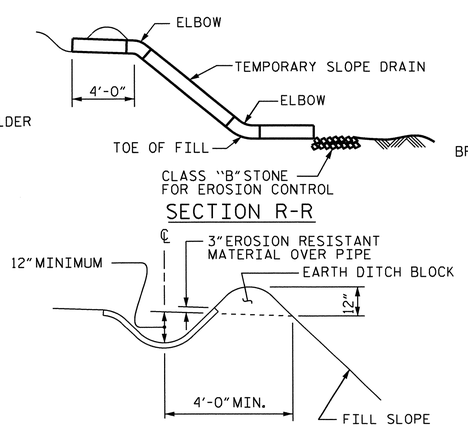

SECTION R-R

SECTION S-S

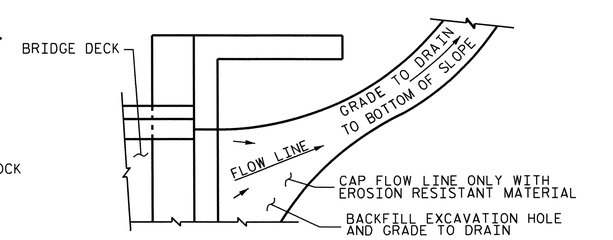

NOTE: IF THE APPROACH SLAB IS NOT CONSTRUCTED IMMEDIATELY AFTER THE BACKFILLING OF THE END BENT EXCAVATION, GRADE TO DRAIN TO THE BOTTOM OF THE SLOPE AND PROVIDE EROSION RESISTANT MATERIAL, SUCH AS FIBERGLASS ROVING OR AS DIRECTED BY THE ENGINEER TO PREVENT SOIL EROSION AND TO PROTECT THE AREA ADJACENT TO THE STRUCTURE. THE CONTRACTOR WILL BE REQUIRED TO REMOVE THESE MATERIALS PRIOR TO CONSTRUCTION OF THE APPROACH SLAB.

TEMPORARY DRAINAGE DETAIL

TEMPORARY BERM AND SLOPE DRAIN DETAILS

(TO BE USED WHEN SHOULDER BERM GUTTER IS REQUIRED)

PROJECT NO. U-0071

DURHAM COUNTY

STATION: 125+91.57 -L-

SHEET 2 OF 2

STATE OF NORTH CAROLINA
DEPARTMENT OF TRANSPORTATION
RALEIGH

STANDARD

BRIDGE APPROACH SLAB DETAILS

WBL

NORTH CAROLINA PROFESSIONAL SEAL 14855 ENGINEER DOUGLAS R. CALHOUN
5/9/14

ASSEMBLED BY : D. G. ELY	DATE : 06/2013
CHECKED BY : W. F. PARKER	DATE : 11/2013

DRAWN BY : FCJ	11/88	REV. 10/1/11	MAA/GM
CHECKED BY : ARB	11/88	REV. 7/12	MAA/GM
		REV. 6/13	MAA/GM

REVISIONS							SHEET NO.
NO.	BY:	DATE:	NO.	BY:	DATE:		S-300
1			3				TOTAL SHEETS
2			4				671

08-MAY-2014 10:54
Z:\TIPProjects-U\U0071\Structures\Plans\Str#6-L-over-Y8-\Misc_Draw\U0071_SD_AS_06.dgn
asorsenglnh

STD. NO. BAS4

STR. #6

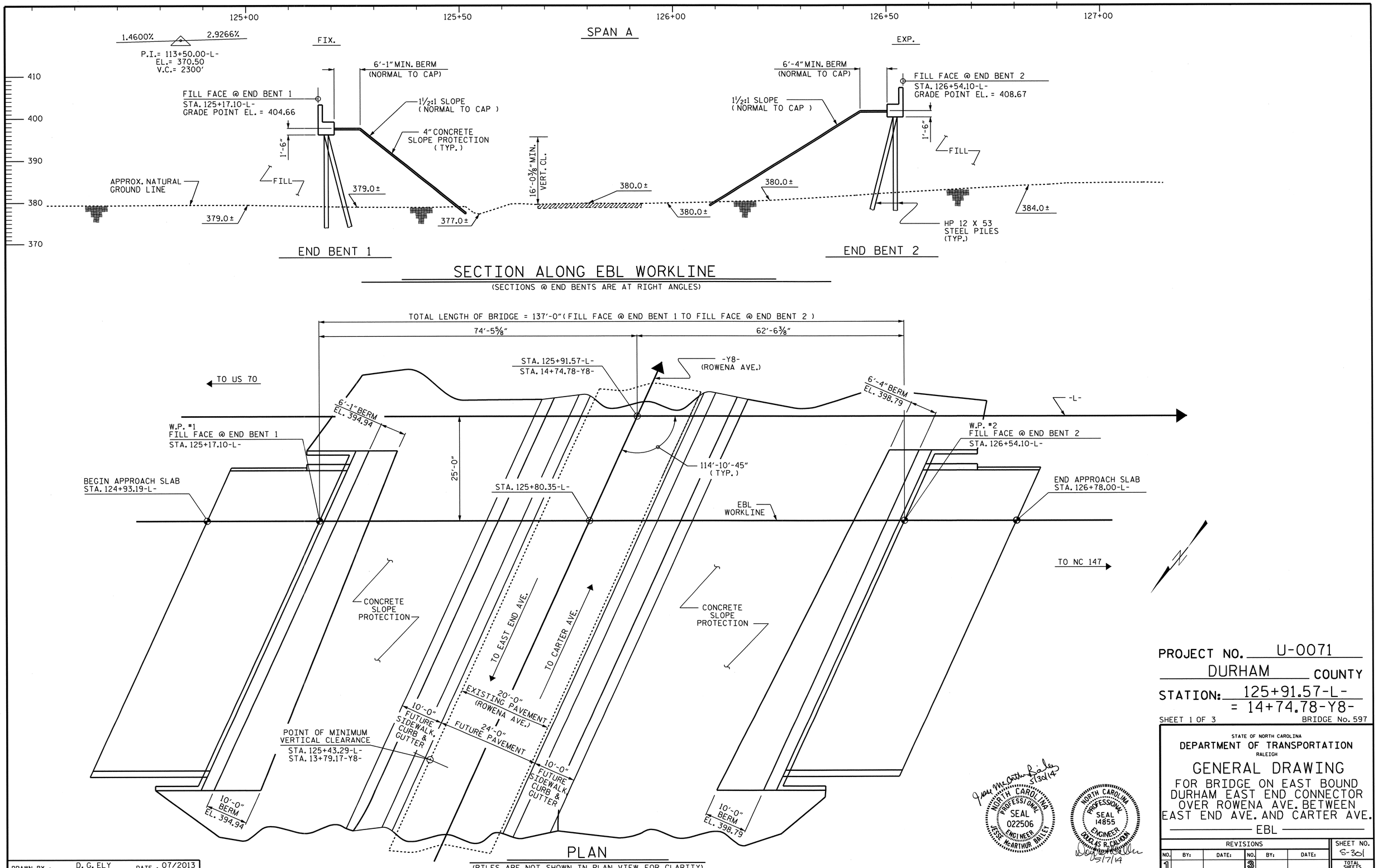

PROJECT NO. U-0071

DURHAM COUNTY

STATION: 125+91.57-L-
= 14+74.78-Y8-

SHEET 1 OF 3

BRIDGE No. 597

STATE OF NORTH CAROLINA
DEPARTMENT OF TRANSPORTATION
RALEIGH

GENERAL DRAWING

FOR BRIDGE ON EAST BOUND DURHAM EAST END CONNECTOR OVER ROWENA AVE. BETWEEN EAST END AVE. AND CARTER AVE.

EBL

REVISIONS						SHEET NO.
NO.	BY:	DATE:	NO.	BY:	DATE:	S-301
1			3			TOTAL SHEETS
2			4			671

DRAWN BY : D. C. ELY DATE : 07/2013
CHECKED BY : W. F. PARKER DATE : 11/2013

06-MAY-2014 15:50
Z:\TIPProjects-U\U0071\Structures\Plans\Str#7-L-over-Y8-\Gen_Draw\U-0071_SD_GD_07 .dgn
asorsenginh

STR. #7

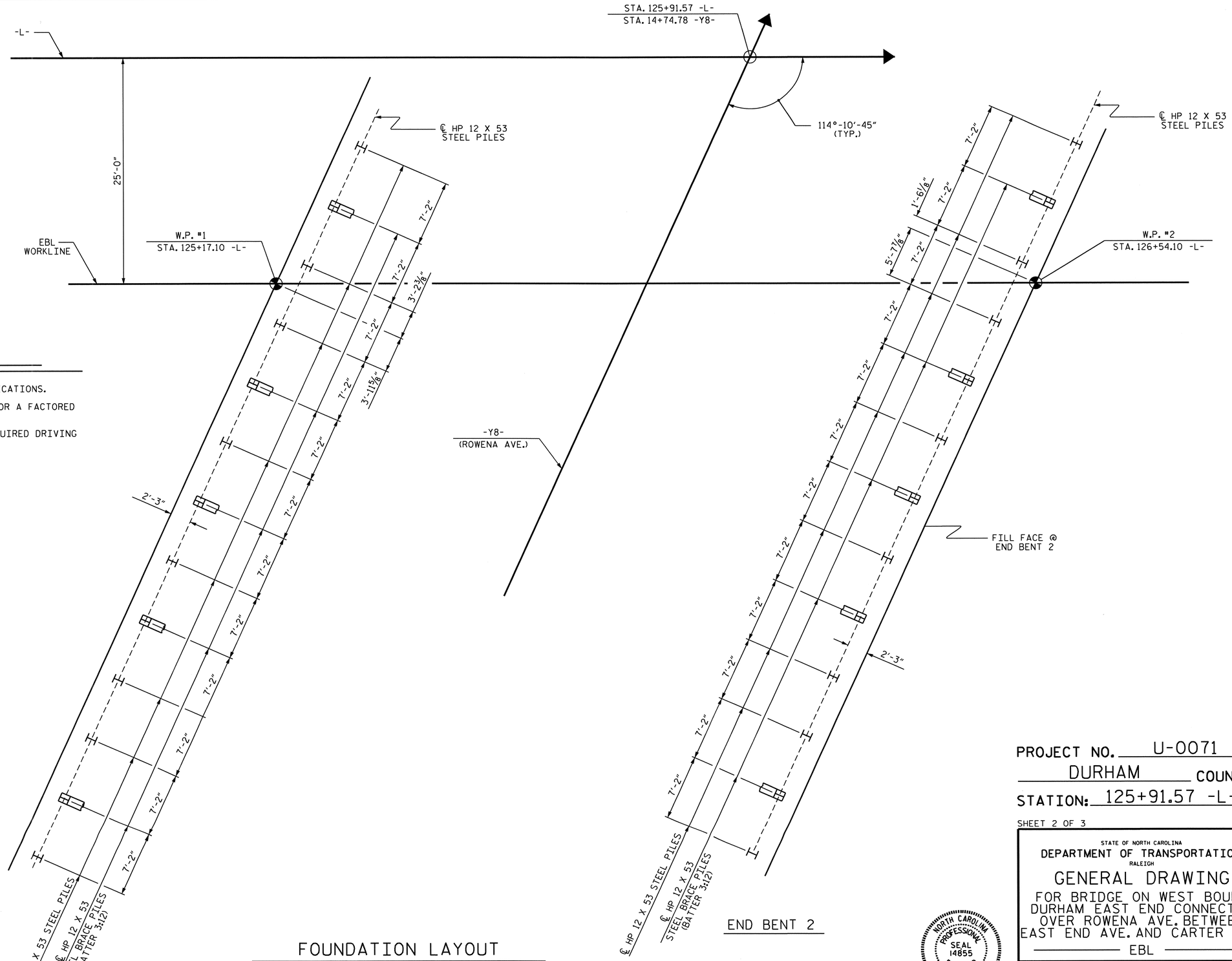

FOUNDATION NOTES

FOR PILES, SEE SECTION 450 OF THE STANDARD SPECIFICATIONS.

PILES AT END BENT 1 AND END BENT 2 ARE DESIGNED FOR A FACTORED RESISTANCE OF 115 TONS PER PILE.

DRIVE PILES AT END BENT 1 AND END BENT 2 TO A REQUIRED DRIVING RESISTANCE OF 190 TONS PER PILE.

FOUNDATION LAYOUT

(DIMENSIONS LOCATING PILES ARE TO PILE CENTERLINE AT THE BOTTOM OF CAP.)

PROJECT NO. U-0071

DURHAM COUNTY

STATION: 125+91.57 -L-

SHEET 2 OF 3

STATE OF NORTH CAROLINA
DEPARTMENT OF TRANSPORTATION
RALEIGH

GENERAL DRAWING

FOR BRIDGE ON WEST BOUND DURHAM EAST END CONNECTOR OVER ROWENA AVE. BETWEEN EAST END AVE. AND CARTER AVE.

EBL

NORTH CAROLINA PROFESSIONAL SEAL 14855 ENGINEER DOUGLAS R. CALLOUN
5/7/14

REVISIONS						SHEET NO.
NO.	BY:	DATE:	NO.	BY:	DATE:	S-302
1			3			TOTAL SHEETS
2			4			571

DRAWN BY : D. C. ELY DATE : 07/2013
CHECKED BY : W. F. PARKER DATE : 11/2013

06-MAY-2014 15:50
Z:\TIPProjects-U\U0071\Structures\Plans\Str#7-L-over-Y8-\Gen_Draw\U-0071_SD_GD_07 .dgn
asorsenginh

STR. #7

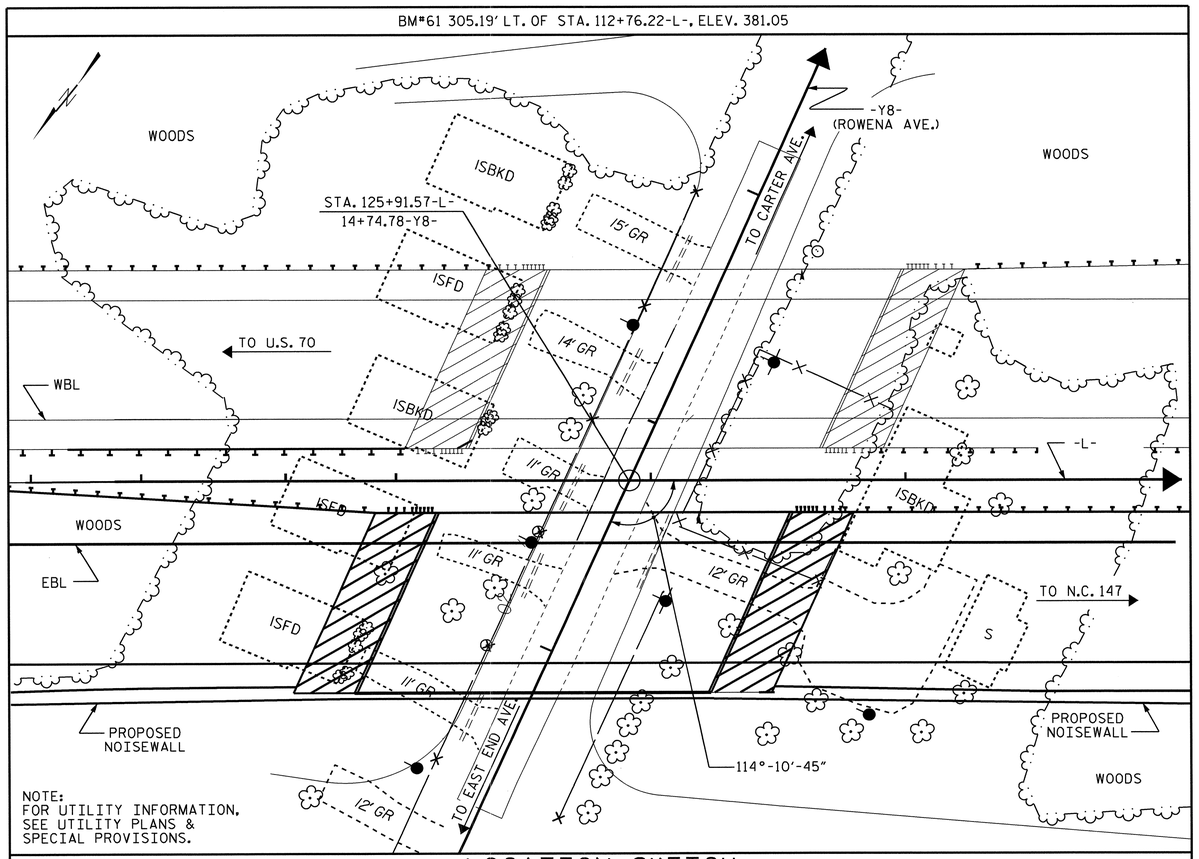

LOCATION SKETCH

NOTES

ASSUMED LIVE LOAD = HL-93 OR ALTERNATE LOADING.

FOR OTHER DESIGN DATA AND GENERAL NOTES, SEE SHEET SN.

FOR EROSION CONTROL MEASURES, SEE EROSION CONTROL PLANS.

THIS BRIDGE HAS BEEN DESIGNED IN ACCORDANCE WITH THE AASHTO LRFD BRIDGE DESIGN SPECIFICATIONS.

ALL STRUCTURAL STEEL SHALL BE AASHTO M270 GRADE 50W AND PAINTED IN ACCORDANCE WITH SYSTEM 4 OF ARTICLE 442-8 OF THE STANDARD SPECIFICATIONS UNLESS OTHERWISE NOTED ON THE PLANS.

THE CLASS AA CONCRETE IN THE BRIDGE DECK SHALL CONTAIN FLY ASH OR GROUND GRANULATED BLAST FURNACE SLAG AT THE SUBSTITUTION RATE SPECIFIED IN ARTICLE 1024-1 AND IN ACCORDANCE WITH ARTICLES 1024-5 AND 1024-6 OF THE STANDARD SPECIFICATIONS. NO PAYMENT WILL BE MADE FOR THIS SUBSTITUTION AS IT IS CONSIDERED INCIDENTAL TO THE COST OF THE REINFORCED CONCRETE DECK SLAB.

FOR MAINTENANCE AND PROTECTION OF TRAFFIC BENEATH PROPOSED STRUCTURE, SEE SPECIAL PROVISIONS.

REMOVABLE FORMS MAY BE USED IN LIEU OF METAL STAY-IN-PLACE FORMS IN ACCORDANCE WITH ARTICLE 420-3 OF THE STANDARD SPECIFICATIONS.

FOR PLACING LOAD ON STRUCTURE MEMBERS, SEE SPECIAL PROVISIONS.

THIS BRIDGE IS LOCATED IN SEISMIC ZONE 1.

FOR SUBMITTAL OF WORKING DRAWINGS, SEE SPECIAL PROVISIONS.

FOR FALSEWORK AND FORMWORK, SEE SPECIAL PROVISIONS.

FOR CRANE SAFETY, SEE SPECIAL PROVISIONS.

FOR GROUT FOR STRUCTURES, SEE SPECIAL PROVISIONS.

THE ELEVATION(S) AND CLEARANCE(S) SHOWN ON THE PLANS AT THE POINT(S) OF MINIMUM VERTICAL CLEARANCE ARE FROM THE BEST INFORMATION AVAILABLE. PRIOR TO BEGINNING BRIDGE CONSTRUCTION, VERIFY THE ELEVATION(S) ON THE EXISTING PAVEMENT AND CHECK THE CLEARANCE. REPORT ANY VARIATIONS TO THE ENGINEER. ANY PLAN REVISIONS NECESSARY TO ACHIEVE THE REQUIRED MINIMUM VERTICAL CLEARANCE WILL BE PROVIDED BY THE DEPARTMENT.

NEEDLE BEAMS WILL NOT BE ALLOWED UNLESS OTHERWISE CALLED FOR ON THE PLANS OR APPROVED BY THE ENGINEER.

FOR ELECTRICAL CONDUIT SYSTEM, SEE SPECIAL PROVISIONS.

FOR SOUND BARRIER WALL, BRIDGE MOUNTED, SEE SPECIAL PROVISIONS.

FOR STEEL REINFORCED ELASTOMERIC BEARINGS, SEE SPECIAL PROVISIONS.

NORTH CAROLINA PROFESSIONAL SEAL 14855 ENGINEER DOUGLAS R. CALHOUN
5/7/14

TOTAL BILL OF MATERIAL

	REINFORCED CONCRETE DECK SLAB	GROOVING BRIDGE FLOORS	CLASS A CONCRETE	BRIDGE APPROACH SLABS	REINFORCING STEEL	STRUCTURAL STEEL	HP 12 X 53 STEEL PILES		CONCRETE BARRIER RAIL	4" SLOPE PROTECTION	ELASTOMERIC BEARINGS	EXPANSION JOINT SEALS	SOUND BARRIER WALL (BRIDGE MOUNTED)	ELECTRICAL CONDUIT SYSTEM
	SQ. FT.	SQ. FT.	CU. YDS.	LUMP SUM	LBS.	APPROX. LBS.	NO.	LIN. FT.	LIN. FT.	SQ. YDS.	LUMP SUM	LUMP SUM	LUMP SUM	LUMP SUM
SUPERSTRUCTURE	10,135	12,481		LUMP SUM		356,300			339.4		LUMP SUM	LUMP SUM	LUMP SUM	LUMP SUM
END BENT 1			74.2		10,712		13	630		506				
END BENT 2			74.7		10,786		13	715		675				
TOTAL	10,135	12,481	148.9	LUMP SUM	21,498	356,300	26	1345	339.4	1181	LUMP SUM	LUMP SUM	LUMP SUM	LUMP SUM

PROJECT NO. U-0071
DURHAM COUNTY
STATION: 125+91.57-L-

SHEET 3 OF 3

STATE OF NORTH CAROLINA
DEPARTMENT OF TRANSPORTATION
RALEIGH

GENERAL DRAWING
FOR BRIDGE ON WEST BOUND DURHAM EAST END CONNECTOR OVER ROWENA AVE. BETWEEN EAST END AVE. AND CARTER AVE.

EBL

REVISIONS						SHEET NO.
NO.	BY:	DATE:	NO.	BY:	DATE:	S-303
1			3			TOTAL SHEETS
2			4			671

DRAWN BY : D. G. ELY DATE : 7/2013
CHECKED BY : W. F. PARKER DATE : 11/2013

06-MAY-2014 15:50
Z:\TIPProjects-U\U0071\Structures\Plans\Str#7-L-over-Y8-\Gen_Draw\U-0071_SD_GD_07.dgn
asorsenginh

STR. #7

LOAD AND RESISTANCE FACTOR RATING (LRFR) SUMMARY FOR STEEL GIRDERS

LEVEL		VEHICLE	WEIGHT (W) (TONS)	CONTROLLING LOAD RATING (#)	MINIMUM RATING FACTORS (RF)	TONS = W × RF	STRENGTH I LIMIT STATE											SERVICE II LIMIT STATE						COMMENT NUMBER
							LIVE-LOAD FACTORS $\gamma_{(LL)}$	MOMENT					SHEAR					LIVE-LOAD FACTORS $\gamma_{(LL)}$	MOMENT					
								DISTRIBUTION FACTORS (DF)	RATING FACTOR	SPAN	GIRDER LOCATION	DISTANCE FROM LEFT END OF SPAN (ft)	DISTRIBUTION FACTORS (DF)	RATING FACTOR	SPAN	GIRDER LOCATION	DISTANCE FROM LEFT END OF SPAN (ft)		DISTRIBUTION FACTORS (DF)	RATING FACTOR	SPAN	GIRDER LOCATION	DISTANCE FROM LEFT END OF SPAN (ft)	
DESIGN LOAD RATING		HL-93 (INVENTORY)	N/A	1	1.11	--	1.75	0.815	1.51	A	E	65.76	0.935	1.11	A	I	131.52	1.30	0.708	1.60	A	E	65.76	
		HL-93 (OPERATING)	N/A		1.44	--	1.35	0.815	1.96	A	E	65.76	0.935	1.44	A	I	131.52	1.00	0.708	2.07	A	E	65.76	
		HS-20 (INVENTORY)	36.00	2	1.63	58.7	1.75	0.815	2.26	A	E	65.76	0.935	1.63	A	I	131.52	1.30	0.708	2.39	A	E	65.76	
		HS-20 (OPERATING)	36.00		2.12	76.3	1.35	0.815	2.93	A	E	65.76	0.935	2.12	A	I	131.52	1.00	0.708	3.11	A	E	65.76	
LEGAL LOAD RATING	SINGLE VEHICLE (SV)	SNSH	13.500		5.17	69.8	1.40	0.815	6.92	A	E	65.76	0.935	5.17	A	I	131.52	1.30	0.708	5.85	A	E	65.76	
		SNGARBS2	20.000		3.58	71.6	1.40	0.815	4.92	A	E	65.76	0.935	3.58	A	I	131.52	1.30	0.708	4.16	A	E	65.76	
		SNAGRIS2	22.000		3.28	72.2	1.40	0.815	4.57	A	E	65.76	0.935	3.28	A	I	131.52	1.30	0.708	3.86	A	E	65.76	
		SNCOTTS3	27.250		2.57	70.0	1.40	0.815	3.44	A	E	65.76	0.815	2.57	A	I	131.52	1.30	0.815	2.91	A	E	65.76	
		SNAGGRS4	34.925		2.06	71.9	1.40	0.815	2.78	A	E	65.76	0.935	2.06	A	I	131.52	1.30	0.708	2.35	A	E	65.76	
		SNS5A	35.550		2.06	73.2	1.40	0.815	2.72	A	E	65.76	0.935	2.06	A	I	131.52	1.30	0.708	2.30	A	E	65.76	
		SNS6A	39.950		1.85	73.9	1.40	0.815	2.46	A	E	65.76	0.935	1.85	A	I	131.52	1.30	0.708	2.08	A	E	65.76	
		SNS7B	42.000		1.79	75.2	1.40	0.815	2.34	A	E	65.76	0.935	1.79	A	I	131.52	1.30	0.708	1.98	A	E	65.76	
	TRUCK TRACTOR SEMI-TRAILER (TTST)	TNAGRIT3	33.000		2.22	73.3	1.40	0.815	2.99	A	E	65.76	0.935	2.22	A	I	131.52	1.30	0.708	2.53	A	E	65.76	
		TNT4A	33.075		2.20	72.8	1.40	0.815	3.00	A	E	65.76	0.935	2.20	A	I	131.52	1.30	0.708	2.53	A	E	65.76	
		TNT6A	41.600		1.85	77.0	1.40	0.815	2.42	A	E	65.76	0.935	1.85	A	I	131.52	1.30	0.708	2.04	A	E	65.76	
		TNT7A	42.000		1.82	76.4	1.40	0.815	2.41	A	E	65.76	0.935	1.82	A	I	131.52	1.30	0.708	2.04	A	E	65.76	
		TNT7B	42.000		1.77	74.3	1.40	0.815	2.45	A	E	65.76	0.935	1.77	A	I	131.52	1.30	0.708	2.07	A	E	65.76	
		TNAGRIT4	43.000		1.72	74.0	1.40	0.815	2.36	A	E	65.76	0.935	1.72	A	I	131.52	1.30	0.708	2.00	A	E	65.76	
		TNAGT5A	45.000		1.67	75.2	1.40	0.815	2.24	A	E	65.76	0.935	1.67	A	I	131.52	1.30	0.708	1.90	A	E	65.76	
		TNAGT5B	45.000	3	1.64	73.8	1.40	0.815	2.23	A	E	65.76	0.935	1.64	A	I	131.52	1.30	0.708	1.89	A	E	65.76	
FATIGUE		HL-93 (INVENTORY)	γ_{LL}=0.75																					

LOAD FACTORS:

DESIGN LOAD RATING FACTORS	LIMIT STATE	γ_{DC}	γ_{DW}
	STRENGTH I	1.25	1.50
	SERVICE II	1.00	1.00

NOTES:

MINIMUM RATING FACTORS ARE BASED ON THE STRENGTH I AND SERVICE II LIMIT STATES.

ALLOWABLE STRESS FOR SERVICE II LIMIT STATE ARE AS REQUIRED FOR DESIGN.

(#) CONTROLLING LOAD RATING

(1) DESIGN LOAD RATING (HL-93) **

(2) DESIGN LOAD RATING (HS-20) **

(3) LEGAL LOAD RATING **

** SEE CHART FOR VEHICLE TYPE

GIRDER LOCATION

I - INTERIOR GIRDER
EL - EXTERIOR LEFT GIRDER
ER - EXTERIOR RIGHT GIRDER

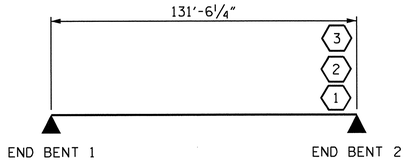

LRFR SUMMARY

PROJECT NO. U-0071
DURHAM COUNTY
STATION: 125+91.57 -L-

STATE OF NORTH CAROLINA
DEPARTMENT OF TRANSPORTATION
RALEIGH

STANDARD

LRFR SUMMARY FOR STEEL GIRDERS
(NON-INTERSTATE TRAFFIC)

NORTH CAROLINA PROFESSIONAL SEAL 14855 ENGINEER DOUGLAS B. GALLOWAY
5/7/14

REVISIONS						SHEET NO.
NO.	BY:	DATE:	NO.	BY:	DATE:	S-304
1			3			TOTAL SHEETS
2			4			671

ASSEMBLED BY : A.C. OUTLAW DATE : 6/18/13
CHECKED BY : A. SORSENGINH DATE : 06/2013
DRAWN BY : MAA 1/08
CHECKED BY : GM/DI 2/08
REV. 11/12/08RR MAA/GM
REV. 10/1/11 MAA/GM

06-MAY-2014 15:49
Z:\TIPProjects-U\U0071\Structures\Plans\Str*7-L-over-Y8-\Super_Draw\U0071_SD_RATINGS_STR 7.dgn
asorsenginh

STR. #7 STD. NO. LRFR3

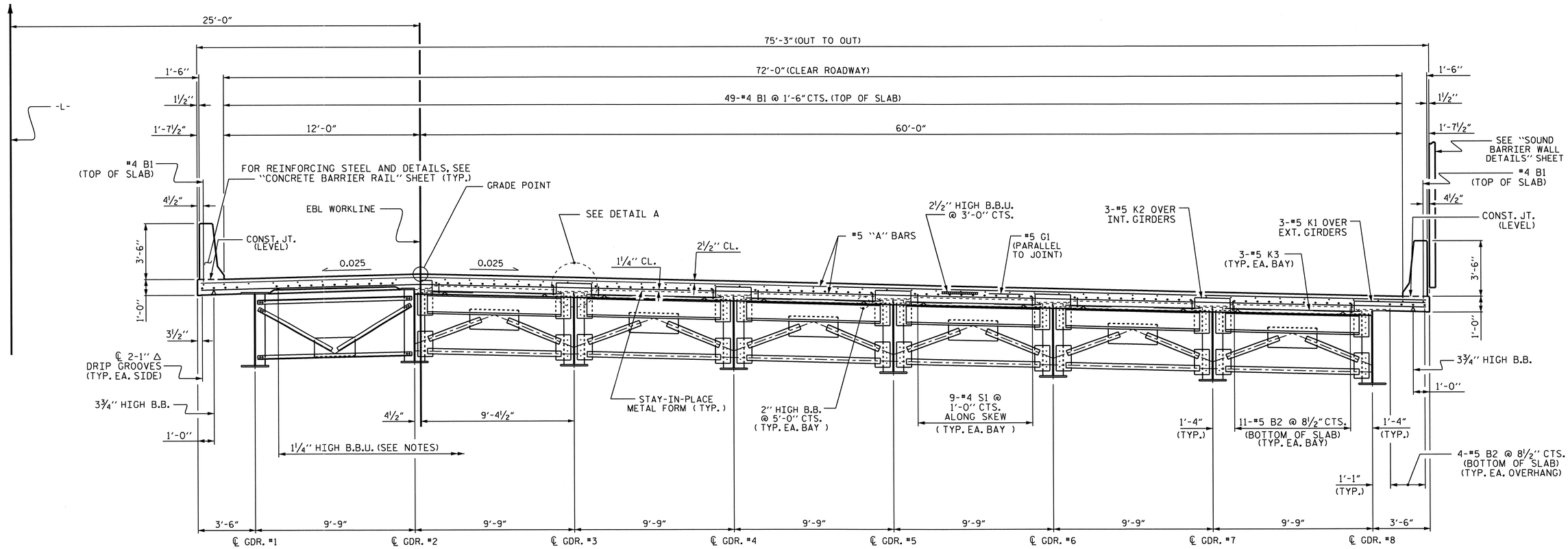

PARTIAL TYPICAL SECTION

(SHOWING INTERMEDIATE DIAPHRAGMS)

PARTIAL TYPICAL SECTION

(SHOWING END BENT DIAPHRAGMS)

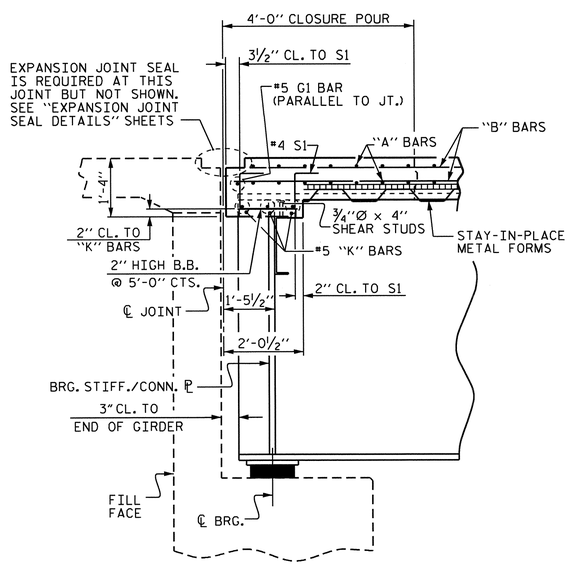

SECTION @ END BENT

(SECTION TAKEN NORMAL TO FILL FACE)

NOTES

PROVIDE 1¼" HIGH BEAM BOLSTERS UPPER AT 4'-0" CTS. ATOP THE METAL STAY-IN-PLACE FORMS TO SUPPORT THE BOTTOM MAT OF "A" BARS. WHEN USING REMOVABLE FORMS, PROVIDE CONTINUOUS HIGH CHAIRS FOR METAL DECK (C.H.C.M.) @ 4'-0" CTS. WITH A HEIGHT TO SUPPORT THE BOTTOM MAT OF "A" BARS A CLEAR DISTANCE OF 2½" ABOVE THE TOP OF THE REMOVABLE FORM.

BARRIER RAIL IN EACH SPAN SHALL NOT BE CAST UNTIL ALL SLAB CONCRETE IN THAT SPAN HAS BEEN CAST AND HAS REACHED A MINIMUM COMPRESSIVE STRENGTH OF 3,000 PSI.

#5 G1 BAR MAY BE SHIFTED SLIGHTLY, AS NECESSARY, TO CLEAR REINFORCING STEEL AND STIRRUPS.

THE CONTRACTOR MAY, WHEN NECESSARY, PROPOSE A SCHEME FOR AVOIDING INTERFERENCE BETWEEN METAL STAY-IN-PLACE FORM SUPPORTS OR FORMS AND BEAM/GIRDER STIFFENERS OR CONNECTOR PLATES. THE PROPOSAL SHALL BE INDICATED, AS APPROPRIATE, ON EITHER THE STEEL WORKING DRAWINGS OR THE METAL STAY-IN-PLACE FORM WORKING DRAWINGS.

FOR ATTACHMENT OF CONDUIT FOR LIGHTING TO BRIDGE DECK, SEE "BRIDGE LIGHTING CONDUIT ATTACHMENT" SHEETS.

METAL STAY-IN-PLACE FORMS SHALL NOT BE WELDED TO BEAM OR GIRDER FLANGES IN THE ZONES REQUIRING CHARPY V-NOTCH TEST. SEE STRUCTURAL STEEL DETAIL SHEETS.

PREVIOUSLY CAST CONCRETE IN A CONTINUOUS UNIT SHALL HAVE ATTAINED A MINIMUM COMPRESSIVE STRENGTH OF 3,000 PSI BEFORE ADDITIONAL CONCRETE IS CAST IN THE UNIT.

THE CONTRACTOR MAY, WHEN NECESSARY, PROPOSE A SCHEME FOR AVOIDING INTERFERENCE BETWEEN METAL STAY-IN-PLACE FORM SUPPORTS OR FORMS AND BEAM/GIRDER STIFFENERS OR CONNECTOR PLATES. THE PROPOSAL SHALL BE INDICATED, AS APPROPRIATE, ON EITHER THE STEEL WORKING DRAWINGS OR THE METAL STAY-IN-PLACE FORM WORKING DRAWINGS.

ALL REINFORCING STEEL IN BARRIER RAILS SHALL BE EPOXY COATED.

FOR EXPANSION JOINT SEALS, SEE SPECIAL PROVISIONS.

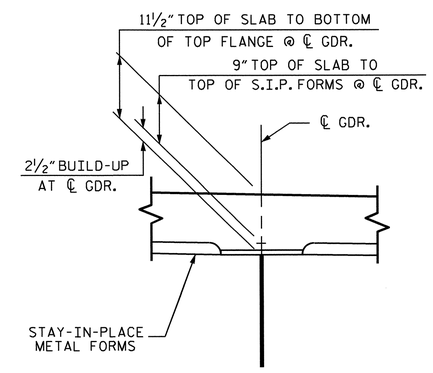

DETAIL A

PROJECT NO. U-0071
DURHAM COUNTY
STATION: 125+91.57 -L-

STATE OF NORTH CAROLINA
DEPARTMENT OF TRANSPORTATION
RALEIGH

SUPERSTRUCTURE

TYPICAL SECTION

EBL

NORTH CAROLINA PROFESSIONAL SEAL 14855 ENGINEER DOUGLAS R. CALHOUN 5/7/14

REVISIONS							
NO.	BY:	DATE:	NO.	BY:	DATE:	SHEET NO.	S-305
1			3			TOTAL SHEETS	671
2			4				

DRAWN BY : D.G. ELY DATE : 7/2012
CHECKED BY : W. F. PARKER DATE : 10/2012
DESIGN ENGINEER OF RECORD : D. R. CALHOUN DATE : 11/2013

06-MAY-2014 15:48
Z:\TIPProjects-U\U0071\Structures\Plans\Str#7-L-over-Y8-\Super_Draw\U0071_SD_TS_STR 7.dgn
asorsenginh

STR.#7

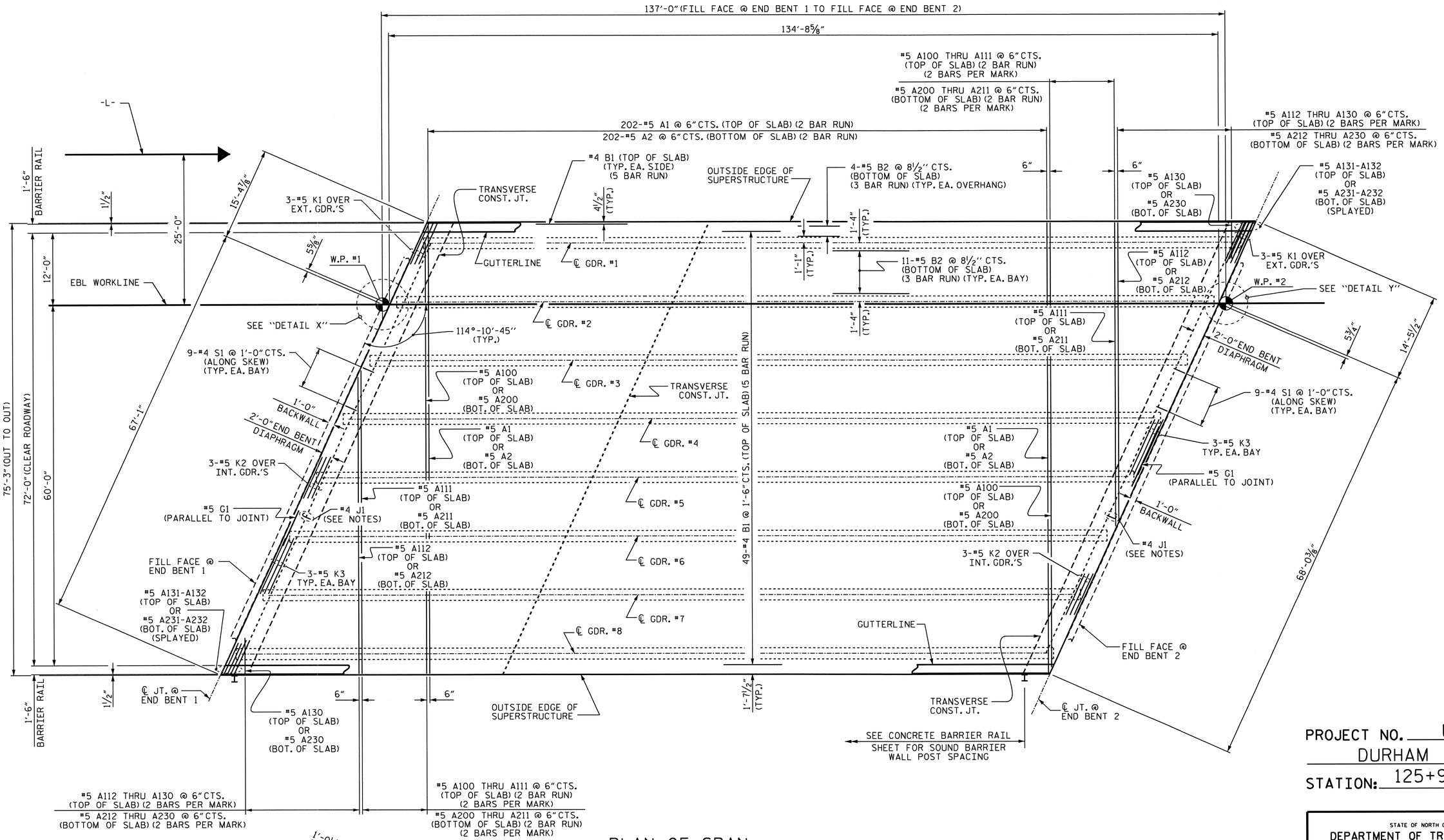

PLAN OF SPAN

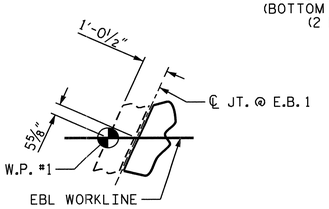

DETAIL X

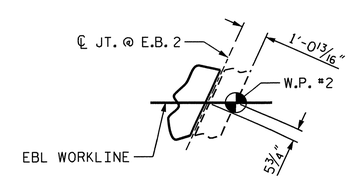

DETAIL Y

NOTES

FOR LOCATION OF TRANSVERSE CONSTRUCTION JOINTS, SEE "BILL OF MATERIAL" SHEET.

FOR BARRIER RAIL DETAILS AND REINFORCING STEEL, SEE "CONCRETE BARRIER RAIL" SHEETS.

FOR PLACEMENT OF #4 J1 BARS, SEE "EXPANSION JOINT SEAL DETAILS" SHEETS.

NORTH CAROLINA PROFESSIONAL SEAL 14855 ENGINEER DONALD R. CALHOUN
5/7/14

PROJECT NO. U-0071
DURHAM COUNTY
STATION: 125+91.57 -L-

STATE OF NORTH CAROLINA
DEPARTMENT OF TRANSPORTATION
RALEIGH

SUPERSTRUCTURE

PLAN OF SPAN

EBL

REVISIONS								SHEET NO.
NO.	BY:	DATE:	NO.	BY:	DATE:			S-306
1			3					TOTAL SHEETS
2			4					671

DRAWN BY :	D.G. ELY	DATE :	7-2012
CHECKED BY :	W. F. PARKER	DATE :	10-2012
DESIGN ENGINEER OF RECORD :	D. R. CALHOUN	DATE :	11-2013

06-MAY-2014 15:47
Z:\TIPProjects-U\U0071\Structures\Plans\Str*7-L-over-Y8-\Super_Draw\U0071_SD_S*_STR 7.dgn
asorsenglnh

STR. #7

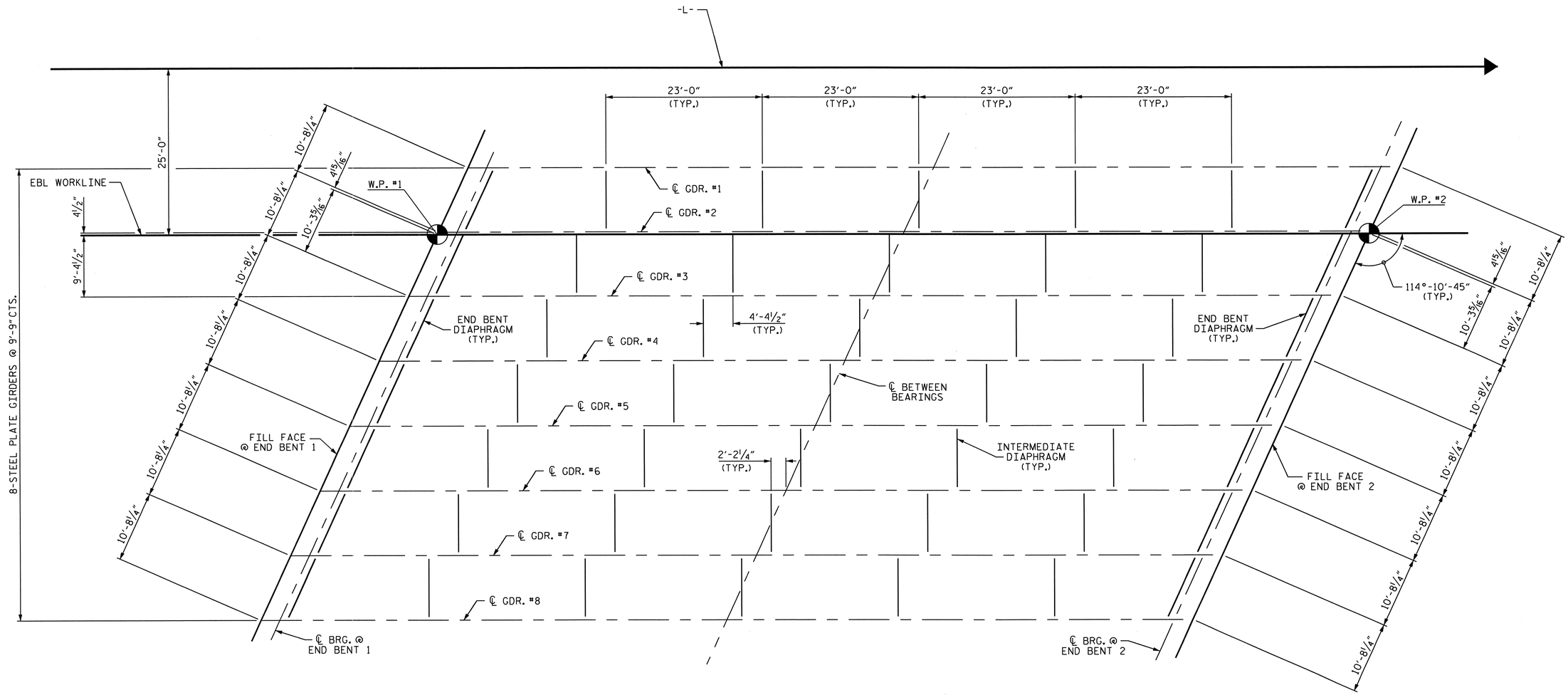

FIX
P1, E1

EXP.
P2, E2

FRAMING PLAN

PROJECT NO. U-0071
DURHAM COUNTY
STATION: 125+91.57 -L-

STATE OF NORTH CAROLINA
DEPARTMENT OF TRANSPORTATION
RALEIGH

SUPERSTRUCTURE

FRAMING PLAN

EBL

NORTH CAROLINA PROFESSIONAL SEAL 14855 ENGINEER DOUGLAS R. CALHOUN
5/7/14

REVISIONS							
NO.	BY:	DATE:	NO.	BY:	DATE:		
1			3				
2			4				

SHEET NO. S-307
TOTAL SHEETS 671

DRAWN BY : D.G. ELY DATE : 8-2012
CHECKED BY : W. F. PARKER DATE : 10-2012
DESIGN ENGINEER OF RECORD: D. R. CALHOUN DATE : 11-2013

06-MAY-2014 15:46
Z:\TIPProjects-U\U0071\Structures\Plans\Str#7-L-over-Y8-\Super_Draw\U0071_SD_FP_STR 7.dgn
asorsenginh

STR. #7

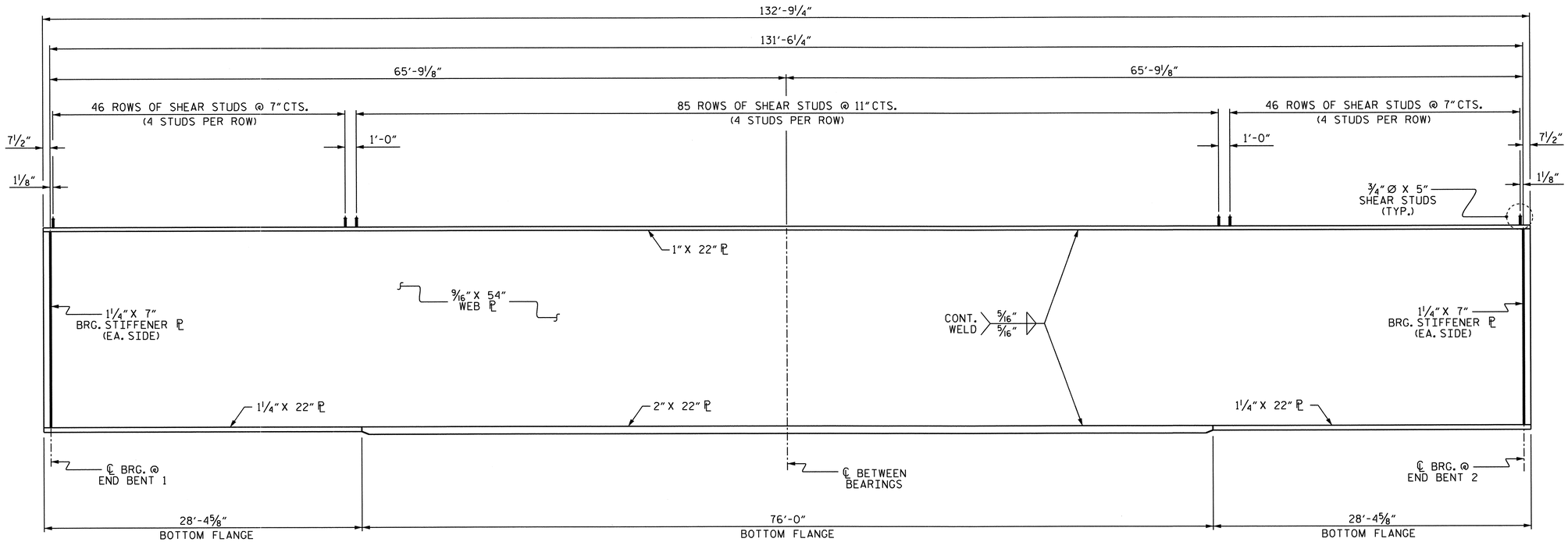

PLATE GIRDER ELEVATION

(INTERMEDIATE DIAPHRAGMS NOT SHOWN FOR CLARITY)

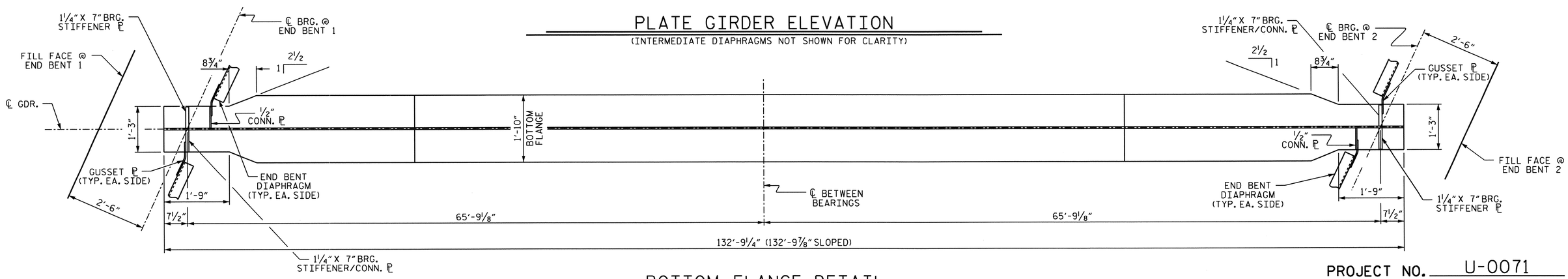

BOTTOM FLANGE DETAIL

* GRIND SMOOTH AND FLUSH ON OUTER FACE OF EXTERIOR GIRDERS

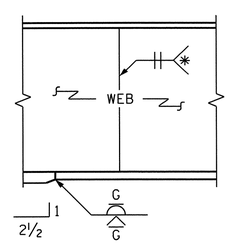

ELEVATION

TYPICAL FLANGE AND WEB BUTT JOINT

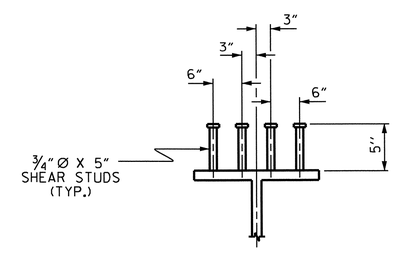

SHEAR STUD DETAIL

PROJECT NO. U-0071

DURHAM COUNTY

STATION: 125+91.57 -L-

SHEET 1 OF 3

STATE OF NORTH CAROLINA
DEPARTMENT OF TRANSPORTATION
RALEIGH

SUPERSTRUCTURE

STRUCTURAL STEEL DETAILS

EBL

NORTH CAROLINA PROFESSIONAL SEAL 14855 ENGINEER DOUGLAS R. CALHOUN
6/7/14

REVISIONS							SHEET NO.
NO.	BY:	DATE:	NO.	BY:	DATE:		S-308
1			3				TOTAL SHEETS
2			4				671

DRAWN BY :	D. G. ELY	DATE :	8/2012
CHECKED BY :	W. F. PARKER	DATE :	10/2012
DESIGN ENGINEER OF RECORD :	D. R. CALHOUN	DATE :	11/2013

06-MAY-2014 15:45
Z:\TIPProjects-U\U0071\Structures\Plans\Str#7-L-over-Y8-\Super_Draw\U0071_SD_SS_STR 7.dgn
asorsenginh

STR. #7

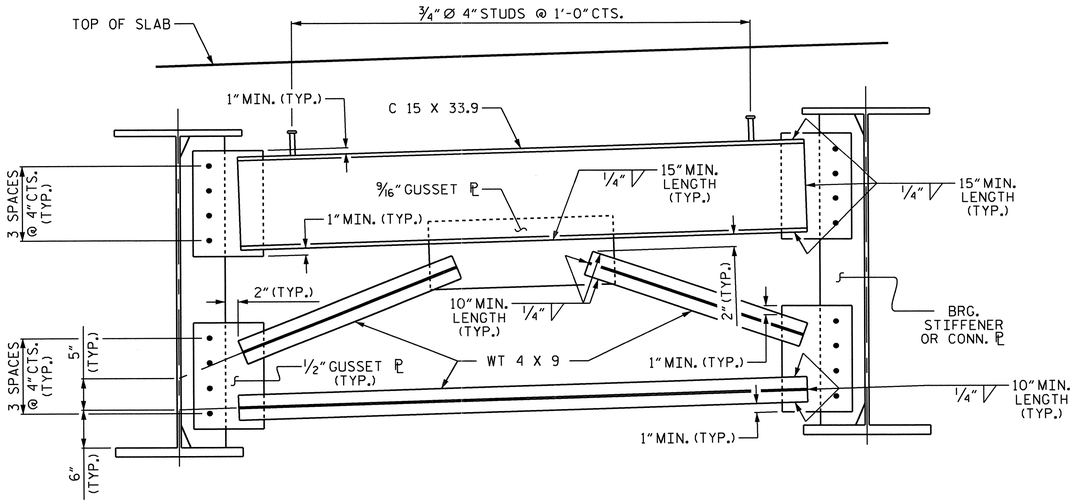

TYPICAL END BENT DIAPHRAGM

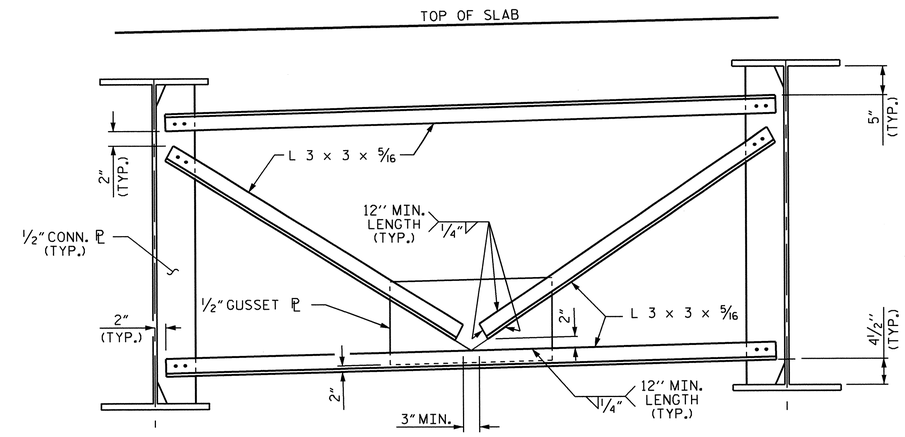

TYPICAL INTERMEDIATE DIAPHRAGM

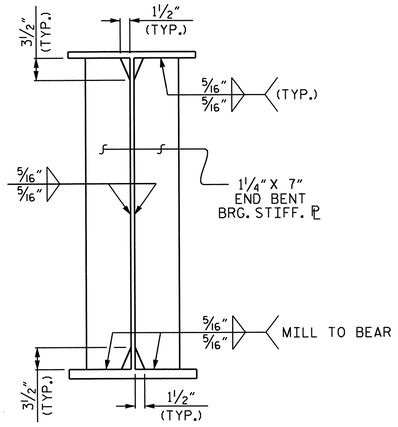

BEARING STIFFENER

THE BEARING STIFFENER SHALL BE WELDED TO THE BOTTOM FLANGE ONLY WHEN USED AS A CONNECTOR PLATE.

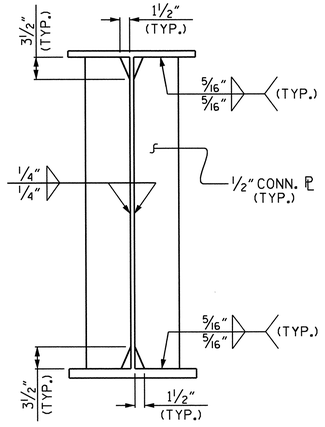

CONNECTOR PLATE

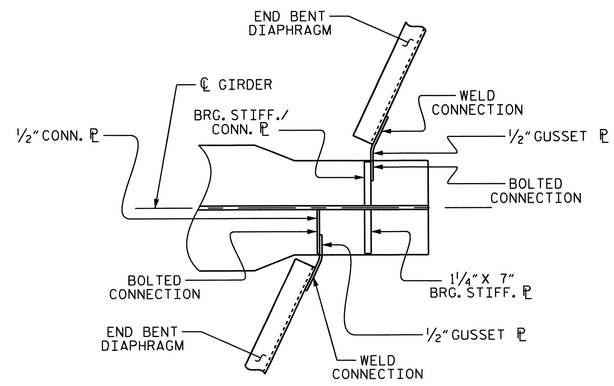

CONNECTOR PL DETAIL

(EACH END SIMILAR)

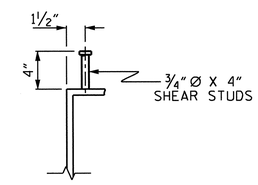

SHEAR STUD DETAIL

(TYP. EA. END BENT DIAPHRAGM)

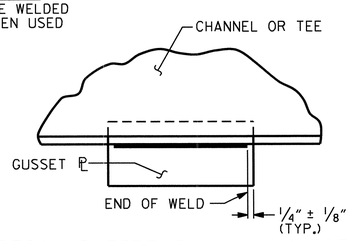

TYPICAL GUSSET PLATE CONNECTION

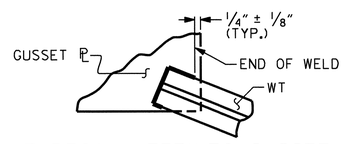

TYPICAL "TEE" TO GUSSET PLATE CONNECTION

WELD TERMINATION DETAILS

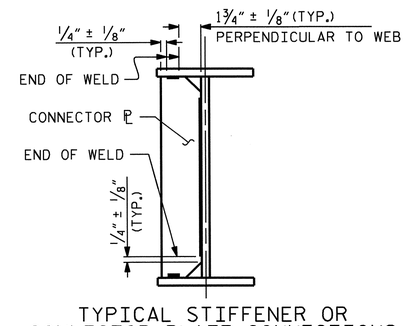

TYPICAL STIFFENER OR CONNECTOR PLATE CONNECTIONS

PROJECT NO. U-0071

DURHAM COUNTY

STATION: 125+91.57 -L-

SHEET 2 OF 3

STATE OF NORTH CAROLINA
DEPARTMENT OF TRANSPORTATION
RALEIGH

SUPERSTRUCTURE

STRUCTURAL STEEL DETAILS

EBL

REVISIONS						SHEET NO.
NO.	BY:	DATE:	NO.	BY:	DATE:	S-309
1			3			TOTAL SHEETS
2			4			671

STR. #7

NORTH CAROLINA PROFESSIONAL SEAL 14855 ENGINEER DOUGLAS R. CALHOUN
5/7/14

DRAWN BY :	D. G. ELY	DATE :	8/2012
CHECKED BY :	W. F. PARKER	DATE :	10/2012
DESIGN ENGINEER OF RECORD :	D. R. CALHOUN	DATE :	11/2013

06-MAY-2014 15:45
Z:\TIPProjects-U\U0071\Structures\Plans\Str#7-L-over-Y8-\Super_Draw\U0071_SD_SS_STR 7.dgn
asorsenginh

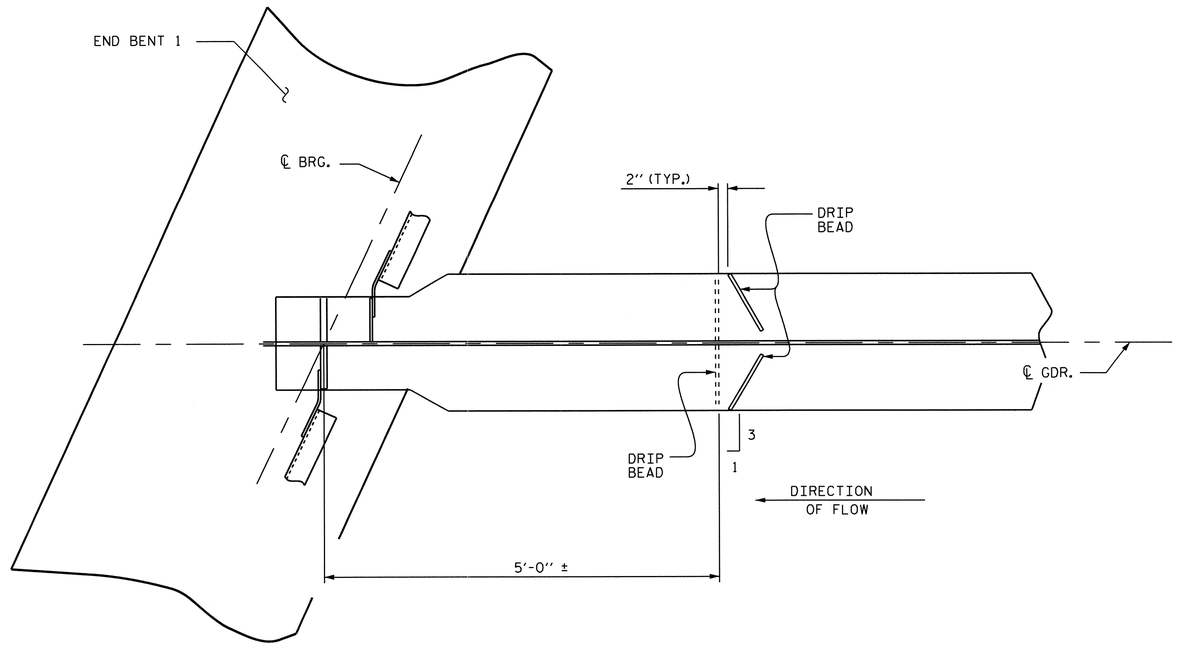

PART PLAN - BOTTOM FLANGE

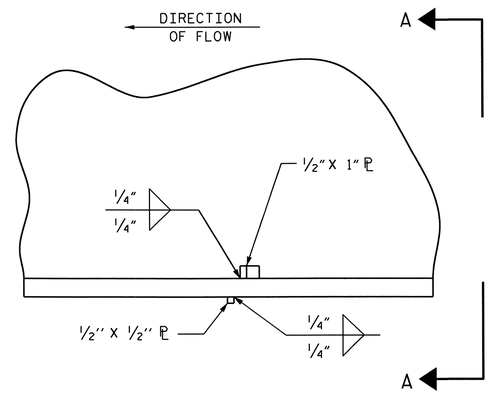

SECTION

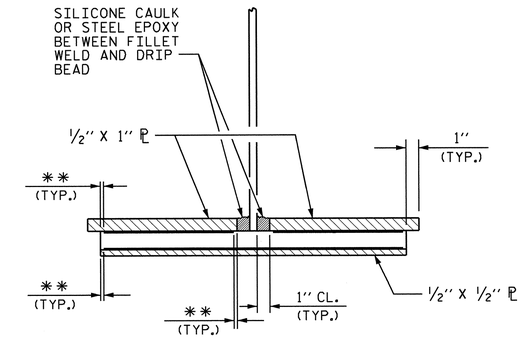

VIEW A-A

** SEE "WELD TERMINATION DETAILS" SHEET 2 OF 3

DRIP BEAD DETAILS

NOTES

ALL STRUCTURAL STEEL SHALL BE AASHTO M270 GRADE 50W AND PAINTED IN ACCORDANCE WITH SYSTEM 4 OF ARTICLE 442-8 OF THE STANDARD SPECIFICATIONS UNLESS OTHERWISE NOTED ON THE PLANS.

ALL DIMENSIONS SHOWN ARE HORIZONTAL OR VERTICAL, UNLESS OTHERWISE NOTED.

ALL FIELD CONNECTIONS TO BE 7/8" DIA. HIGH STRENGTH BOLTS UNLESS OTHERWISE NOTED.

BEARING STIFFENERS ARE TO BE PLACED NORMAL TO THE WEB OF THE GIRDER AND SHALL BE PLUMB.

A CHARPY V-NOTCH TEST IS REQUIRED FOR WEB PLATES AND BOTTOM FLANGE PLATES, FOR ALL GIRDERS AND IN ACCORDANCE WITH ARTICLE 1072-7 OF THE STANDARD SPECIFICATIONS.

BEARING STIFFENER PLATE WIDTHS SHOWN ON THE PLANS ARE A MINIMUM WIDTH. THE BEARING STIFFENER PLATE WIDTHS MAY BE INCREASED AS NECESSARY IN ORDER TO CONNECT THE DIAPHRAGM MEMBER.

BEARING STIFFENER MAY REQUIRE COPING IF WIDER THAN BOTTOM FLANGE.

PERMITTED FLANGE AND WEB SHOP SPLICES SHALL NOT BE LOCATED WITHIN 15 FEET OF MAXIMUM DEAD LOAD DEFLECTION. KEEP 2 FEET MINIMUM BETWEEN WEB AND FLANGE SHOP SPLICES. KEEP 6" MINIMUM BETWEEN CONNECTOR PLATE OR TRANSVERSE STIFFENER WELDS AND WEB OR FLANGE SHOP SPLICES.

STUDS ON GIRDERS MAY BE SHIFTED UP TO 1" IF NECESSARY TO CLEAR FLANGE SPLICE WELD.

TENSION ON THE ASTM A325 BOLTS SHALL BE CALIBRATED USING DIRECT TENSION INDICATOR WASHERS IN ACCORDANCE WITH ARTICLE 440-8 OF THE STANDARD SPECIFICATIONS.

END OF GIRDERS SHALL BE PLUMB.

FABRICATORS SHALL DETAIL DIAPHRAGM MEMBERS AND CONNECTIONS FOR STEEL DEAD LOAD FIT UP.

PROJECT NO. U-0071
DURHAM COUNTY
STATION: 125+91.57 -L-

SHEET 3 OF 3

STATE OF NORTH CAROLINA
DEPARTMENT OF TRANSPORTATION
RALEIGH

SUPERSTRUCTURE

STRUCTURAL STEEL DETAILS

EBL

NORTH CAROLINA PROFESSIONAL SEAL 14855 ENGINEER DOUGLAS R. CALHOUN
5/7/14

REVISIONS						SHEET NO.
NO.	BY:	DATE:	NO.	BY:	DATE:	S-310
1			3			TOTAL SHEETS
2			4			671

DRAWN BY : D. G. ELY DATE : 8/2012
CHECKED BY : W. F. PARKER DATE : 10/2012
DESIGN ENGINEER OF RECORD : D. R. CALHOUN DATE : 11/2013

06-MAY-2014 15:45
Z:\TIPProjects-U\U0071\Structures\Plans\Str#7-L-over-Y8-\Super_Draw\U0071_SD_SS_STR 7.dgn
asorsenginn

STR. #7

DEAD LOAD DEFLECTION TABLE FOR GIRDERS

	GIRDER #1																				
TWENTIETH POINTS	0	.05	.10	.15	.20	.25	.30	.35	.40	.45	.50	.55	.60	.65	.70	.75	.80	.85	.90	.95	0
DEFLECTION DUE TO WEIGHT OF GIRDER ↓	0	0.020	0.039	0.057	0.073	0.087	0.099	0.109	0.116	0.120	0.122	0.120	0.116	0.109	0.099	0.087	0.073	0.057	0.039	0.020	0
DEFLECTION DUE TO WEIGHT OF SLAB * ↓	0	0.045	0.081	0.116	0.147	0.173	0.196	0.215	0.228	0.236	0.239	0.236	0.228	0.215	0.196	0.173	0.147	0.116	0.081	0.045	0
DEFLECTION DUE TO WEIGHT OF BARRIER RAIL ↓	0	0.008	0.016	0.023	0.029	0.035	0.040	0.044	0.046	0.048	0.049	0.048	0.046	0.044	0.040	0.035	0.029	0.023	0.016	0.008	0
TOTAL DEAD LOAD DEFLECTION ↓	0	0.073	0.136	0.196	0.249	0.296	0.335	0.367	0390	0.404	0.409	0.404	0.390	0.367	0.335	0.296	0.249	0.196	0.136	0.073	0
REQUIRED CAMBER ↑	0	7/8"	1 5/8"	2 3/8"	3"	3 9/16"	4"	4 3/8"	4 11/16"	4 7/8"	4 7/8"	4 7/8"	4 11/16"	4 3/8"	4"	3 9/16"	3"	2 3/8"	1 5/8"	7/8"	0

DEAD LOAD DEFLECTION TABLE FOR GIRDERS

	GIRDER #2																				
TWENTIETH POINTS	0	.05	.10	.15	.20	.25	.30	.35	.40	.45	.50	.55	.60	.65	.70	.75	.80	.85	.90	.95	0
DEFLECTION DUE TO WEIGHT OF GIRDER ↓	0	0.020	0.039	0.057	0.073	0.087	0.099	0.109	0.116	0.120	0.122	0.120	0.116	0.109	0.099	0.087	0.073	0.057	0.039	0.020	0
DEFLECTION DUE TO WEIGHT OF SLAB * ↓	0	0.036	0.063	0.089	0.113	0.133	0.150	0.164	0.174	0.180	0.182	0.180	0.174	0.164	0.150	0.133	0.113	0.089	0.063	0.036	0
DEFLECTION DUE TO WEIGHT OF BARRIER RAIL ↓	0	0.006	0.011	0.016	0.021	0.025	0.029	0.031	0.033	0.034	0.035	0.034	0.033	0.031	0.029	0.025	0.021	0.016	0.011	0.006	0
TOTAL DEAD LOAD DEFLECTION ↓	0	0.061	0.114	0.163	0.207	0.245	0.278	0.304	0.323	0.335	0.338	0.335	0.323	0.304	0.278	0.245	0.207	0.163	0.114	0.061	0
REQUIRED CAMBER ↑	0	3/4"	1 3/8"	1 15/16"	2 1/2"	2 15/16"	3 5/16"	3 5/8"	3 7/8"	4"	4 1/16"	4"	3 7/8"	3 5/8"	3 5/16"	2 15/16"	2 1/2"	1 15/16"	1 3/8"	3/4"	0

DEAD LOAD DEFLECTION TABLE FOR GIRDERS

	GIRDERS #3																				
TWENTIETH POINTS	0	.05	.10	.15	.20	.25	.30	.35	.40	.45	.50	.55	.60	.65	.70	.75	.80	.85	.90	.95	0
DEFLECTION DUE TO WEIGHT OF GIRDER ↓	0	0.020	0.039	0.057	0.073	0.087	0.099	0.109	0.116	0.120	0.122	0.120	0.116	0.109	0.099	0.087	0.073	0.057	0.039	0.020	0
DEFLECTION DUE TO WEIGHT OF SLAB * ↓	0	0.026	0.045	0.063	0.078	0.092	0.104	0.113	0.120	0.124	0.125	0.124	0.120	0.113	0.104	0.092	0.078	0.063	0.045	0.026	0
DEFLECTION DUE TO WEIGHT OF BARRIER RAIL ↓	0	0.004	0.008	0.011	0.015	0.018	0.020	0.022	0.023	0.024	0.024	0.024	0.023	0.022	0.020	0.018	0.015	0.011	0.008	0.004	0
TOTAL DEAD LOAD DEFLECTION ↓	0	0.050	0.092	0.131	0.166	0.197	0.223	0.244	0.259	0.268	0.271	0.268	0.259	0.244	0.223	0.197	0.166	0.131	0.092	0.050	0
REQUIRED CAMBER ↑	0	5/8"	1 1/8"	1 9/16"	2"	2 3/8"	2 11/16"	2 15/16"	3 1/8"	3 1/4"	3 1/4"	3 1/4"	3 1/8"	2 15/16"	2 11/16"	2 3/8"	2"	1 9/16"	1 1/8"	5/8"	0

DEAD LOAD DEFLECTION TABLE FOR GIRDERS

	GIRDERS #4 & #5																				
TWENTIETH POINTS	0	.05	.10	.15	.20	.25	.30	.35	.40	.45	.50	.55	.60	.65	.70	.75	.80	.85	.90	.95	0
DEFLECTION DUE TO WEIGHT OF GIRDER ↓	0	0.020	0.039	0.057	0.073	0.087	0.099	0.109	0.116	0.120	0.122	0.120	0.116	0.109	0.099	0.087	0.073	0.057	0.039	0.020	0
DEFLECTION DUE TO WEIGHT OF SLAB * ↓	0	0.026	0.045	0.063	0.078	0.092	0.104	0.113	0.120	0.124	0.125	0.124	0.120	0.113	0.104	0.092	0.078	0.063	0.045	0.026	0
DEFLECTION DUE TO WEIGHT OF BARRIER RAIL ↓	0	0.000	0.000	0.000	0.000	0.000	0.000	0.000	0.000	0.000	0.000	0.000	0.000	0.000	0.000	0.000	0.000	0.000	0.000	0.000	0
TOTAL DEAD LOAD DEFLECTION ↓	0	0.046	0.084	0.120	0.152	0.179	0.203	0.222	0.236	0.244	0.247	0.244	0.236	0.222	0.203	0.179	0.152	0.120	0.084	0.046	0
REQUIRED CAMBER ↑	0	9/16"	1"	1 7/16"	1 13/16"	2 1/8"	2 7/16"	2 11/16"	2 13/16"	2 15/16"	2 15/16"	2 15/16"	2 13/16"	2 11/16"	2 7/16"	2 1/8"	1 13/16"	1 7/16"	1"	9/16"	0

* INCLUDES SLAB, BUILDUPS & STAY-IN-PLACE FORMS.
ALL VALUES ARE SHOWN IN FEET (DECIMAL FORM), EXCEPT "REQUIRED CAMBER", WHICH IS GIVEN IN INCHES (FRACTION FORM).
DEFLECTIONS ARE TAKEN AT TWENTIETH POINTS BETWEEN BEARINGS.

NORTH CAROLINA PROFESSIONAL SEAL 14855 ENGINEER DOUGLAS R. CALHOUN
5/7/14

PROJECT NO. U-0071
DURHAM COUNTY
STATION: 125+91.57 -L-

SHEET 1 OF 2

STATE OF NORTH CAROLINA
DEPARTMENT OF TRANSPORTATION
RALEIGH

SUPERSTRUCTURE
DEAD LOAD DEFLECTIONS
EBL

REVISIONS						SHEET NO.
NO.	BY:	DATE:	NO.	BY:	DATE:	S-311
1			3			TOTAL SHEETS
2			4			671

DRAWN BY : D. G. ELY DATE : 8/2012
CHECKED BY : W. F. PARKER DATE : 10/2012
DESIGN ENGINEER OF RECORD : D. R. CALHOUN DATE : 11/2013

06-MAY-2014 15:44
Z:\TIPProjects-U\U0071\Structures\Plans\Str*7-L-over-Y8-\Super_Draw\U0071_SD_DL_STR 7.dgn
asorsenginh

STR. #7

DEAD LOAD DEFLECTION TABLE FOR GIRDERS

	GIRDER #6																				
TWENTIETH POINTS	0	.05	.10	.15	.20	.25	.30	.35	.40	.45	.50	.55	.60	.65	.70	.75	.80	.85	.90	.95	0
DEFLECTION DUE TO WEIGHT OF GIRDER ↓	0	0.020	0.039	0.057	0.073	0.087	0.099	0.109	0.116	0.120	0.122	0.120	0.116	0.109	0.099	0.087	0.073	0.057	0.039	0.020	0
DEFLECTION DUE TO WEIGHT OF SLAB * ↓	0	0.026	0.045	0.063	0.078	0.092	0.104	0.113	0.120	0.124	0.125	0.124	0.120	0.113	0.104	0.092	0.078	0.063	0.045	0.026	0
DEFLECTION DUE TO WEIGHT OF BARRIER RAIL ↓	0	0.005	0.009	0.013	0.017	0.020	0.023	0.025	0.027	0.028	0.028	0.028	0.027	0.025	0.023	0.020	0.017	0.013	0.009	0.005	0
TOTAL DEAD LOAD DEFLECTION ↓	0	0.051	0.093	0.133	0.169	0.200	0.226	0.247	0.263	0.272	0.275	0.272	0.263	0.247	0.226	0.200	0.169	0.133	0.093	0.051	0
REQUIRED CAMBER ↑	0	5/8"	1 1/8"	1 5/8"	2"	2 3/8"	2 11/16"	2 15/16"	3 1/8"	3 1/4"	3 5/16"	3 1/4"	3 1/8"	2 15/16"	2 11/16"	2 3/8"	2"	1 5/8"	1 1/8"	5/8"	0

DEAD LOAD DEFLECTION TABLE FOR GIRDERS

	GIRDER #7																				
TWENTIETH POINTS	0	.05	.10	.15	.20	.25	.30	.35	.40	.45	.50	.55	.60	.65	.70	.75	.80	.85	.90	.95	0
DEFLECTION DUE TO WEIGHT OF GIRDER ↓	0	0.020	0.039	0.057	0.073	0.087	0.099	0.109	0.116	0.120	0.122	0.120	0.116	0.109	0.099	0.087	0.073	0.057	0.039	0.020	0
DEFLECTION DUE TO WEIGHT OF SLAB * ↓	0	0.036	0.063	0.089	0.113	0.133	0.150	0.164	0.174	0.180	0.182	0.180	0.174	0.164	0.150	0.133	0.113	0.089	0.063	0.036	0
DEFLECTION DUE TO WEIGHT OF BARRIER RAIL ↓	0	0.006	0.013	0.018	0.023	0.028	0.032	0.035	0.037	0.038	0.039	0.038	0.037	0.035	0.032	0.028	0.023	0.018	0.013	0.006	0
TOTAL DEAD LOAD DEFLECTION ↓	0	0.062	0.115	0.164	0.209	0.248	0.281	0.307	0.327	0.338	0.342	0.338	0.327	0.307	0.281	0.248	0.209	0.164	0.115	0.062	0
REQUIRED CAMBER ↑	0	3/4"	1 3/8"	2"	2 1/2"	3"	3 3/8"	3 11/16"	3 15/16"	4 1/16"	4 1/8"	4 1/16"	3 15/16"	3 11/16"	3 3/8"	3"	2 1/2"	2"	1 3/8"	3/4"	0

DEAD LOAD DEFLECTION TABLE FOR GIRDERS

	GIRDER #8																				
TWENTIETH POINTS	0	.05	.10	.15	.20	.25	.30	.35	.40	.45	.50	.55	.60	.65	.70	.75	.80	.85	.90	.95	0
DEFLECTION DUE TO WEIGHT OF GIRDER ↓	0	0.020	0.039	0.057	0.073	0.087	0.099	0.109	0.116	0.120	0.122	0.120	0.116	0.109	0.099	0.087	0.073	0.057	0.039	0.020	0
DEFLECTION DUE TO WEIGHT OF SLAB * ↓	0	0.045	0.081	0.116	0.147	0.173	0.196	0.215	0.228	0.236	0.239	0.236	0.228	0.215	0.196	0.173	0.147	0.116	0.081	0.045	0
DEFLECTION DUE TO WEIGHT OF BARRIER RAIL ↓	0	0.009	0.017	0.025	0.032	0.038	0.043	0.047	0.050	0.052	0.053	0.052	0.050	0.047	0.043	0.038	0.032	0.025	0.017	0.009	0
TOTAL DEAD LOAD DEFLECTION ↓	0	0.075	0.138	0.198	0.252	0.299	0.339	0.371	0.394	0.408	0.413	0.408	0.394	0.371	0.339	0.299	0.252	0.198	0.138	0.075	0
REQUIRED CAMBER ↑	0	7/8"	1 5/8"	2 3/8"	3"	3 9/16"	4 1/16"	4 7/16"	4 3/4"	4 7/8"	4 15/16"	4 7/8"	4 3/4"	4 7/16"	4 1/16"	3 9/16"	3"	2 3/8"	1 5/8"	7/8"	0

* INCLUDES SLAB, BUILDUPS & STAY-IN-PLACE FORMS.
ALL VALUES ARE SHOWN IN FEET (DECIMAL FORM), EXCEPT "REQUIRED CAMBER", WHICH IS GIVEN IN INCHES (FRACTION FORM).
DEFLECTIONS ARE TAKEN AT TWENTIETH POINTS BETWEEN BEARINGS.

NORTH CAROLINA PROFESSIONAL SEAL 14855 ENGINEER DOUGLAS R. CALHOUN
05/7/14

PROJECT NO. U-0071
DURHAM COUNTY
STATION: 125+91.57 -L-

SHEET 2 OF 2

STATE OF NORTH CAROLINA
DEPARTMENT OF TRANSPORTATION
RALEIGH

SUPERSTRUCTURE
DEAD LOAD DEFLECTIONS
EBL

REVISIONS						SHEET NO.
NO.	BY:	DATE:	NO.	BY:	DATE:	S-312
1			3			TOTAL SHEETS
2			4			67

DRAWN BY : D. G. ELY DATE : 8/2012
CHECKED BY : W. F. PARKER DATE : 10/2012
DESIGN ENGINEER OF RECORD : D. R. CALHOUN DATE : 11/2013

06-MAY-2014 15:43
Z:\TIPProjects-U\U0071\Structures\Plans\Str#7-L-over-Y8-\Super_Draw\U0071_SD_DL_STR 7.dgn
asorsenglnh

STR. #7

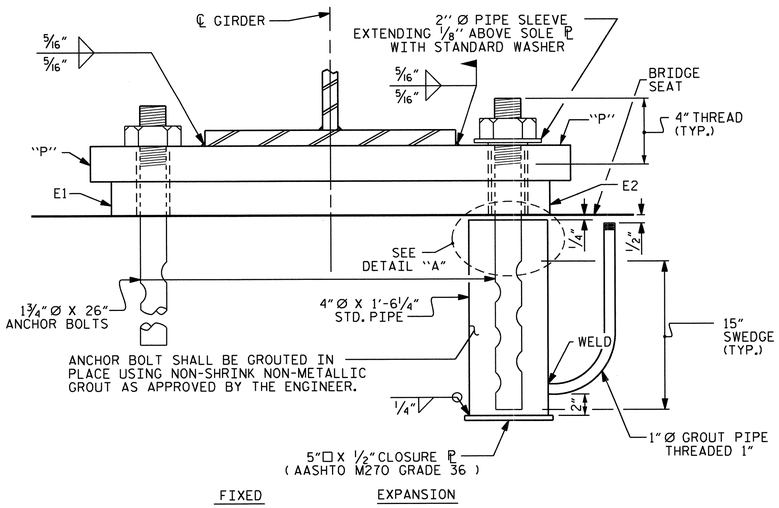

END VIEW

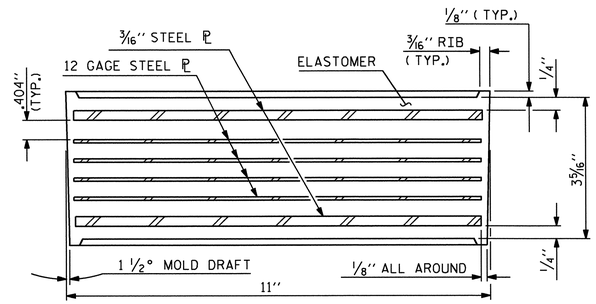

TYPICAL SECTION OF ELASTOMERIC BEARING

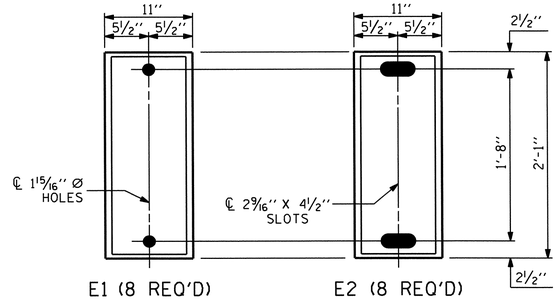

PLAN VIEW OF ELASTOMERIC BEARING

TYPE IV

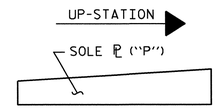

SOLE ℙ PLACEMENT DETAIL

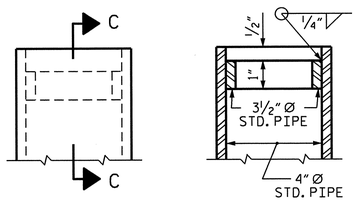

SECTION C-C

DETAIL "A"

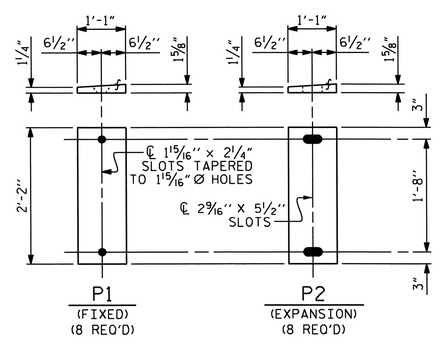

SOLE PLATE DETAILS ("P")

NOTES

AT ALL FIXED POINTS OF SUPPORT, NUTS FOR ANCHOR BOLTS ARE TO BE TIGHTENED FINGER TIGHT AND THEN BACKED OFF 1/2 TURN. THE THREAD OF THE NUT AND BOLT SHALL THEN BE BURRED WITH A SHARP POINTED TOOL.

THE 2" Ø PIPE SLEEVE SHALL BE CUT FROM SCHEDULE 40 PVC PLASTIC PIPE. THE PVC PLASTIC PIPE SHALL MEET THE REQUIREMENTS OF ASTM D1785.

THE PAYMENT FOR THE PIPE SLEEVES SHALL BE INCLUDED IN THE SEVERAL PAY ITEMS.

FOR PAINTED STRUCTURAL STEEL (EXCLUDING AASHTO M270 GRADE 50W), SOLE PLATES, ANCHOR BOLTS, NUTS AND WASHERS SHALL BE GALVANIZED IN ACCORDANCE WITH THE STANDARD SPECIFICATIONS.

FOR AASHTO M270 GRADE 50W STRUCTURAL STEEL, SOLE PLATE SHALL BE AASHTO M270 GRADE 50W AND SHALL NOT BE GALVANIZED. ANCHOR BOLTS, NUTS AND WASHERS SHALL BE GALVANIZED IN ACCORDANCE WITH THE STANDARD SPECIFICATIONS.

ANCHOR BOLTS SHALL MEET THE REQUIREMENTS OF ASTM A449. NUTS SHALL MEET THE REQUIREMENTS OF AASHTO M291-DH OR AASHTO M292-2H. WASHERS SHALL MEET THE REQUIREMENTS OF AASHTO M293. SHOP DRAWINGS ARE NOT REQUIRED FOR ANCHOR BOLTS, NUTS AND WASHERS. SHOP INSPECTION IS REQUIRED.

WHEN FIELD WELDING THE SOLE PLATE TO THE GIRDER FLANGE, USE TEMPERATURE INDICATING WAX PENS, OR OTHER SUITABLE MEANS, TO ENSURE THAT THE TEMPERATURE OF THE SOLE PLATE DOES NOT EXCEED 300°F. TEMPERATURES ABOVE THIS MAY DAMAGE THE ELASTOMER.

ALL SURFACES OF BEARING PLATES SHALL BE SMOOTH AND STRAIGHT.

THE ELASTOMER IN THE STEEL REINFORCED BEARINGS SHALL HAVE A SHEAR MODULUS OF 0.160 KSI, IN ACCORDANCE WITH AASHTO M251.

FOR STEEL REINFORCED ELASTOMERIC BEARINGS, SEE SPECIAL PROVISIONS.

THE CLOSURE PLATE, GROUT PIPE AND STANDARD PIPE FOR THE EXPANSION ASSEMBLY NEED NOT BE GALVANIZED.

THE CONTRACTOR'S ATTENTION IS CALLED TO THE FOLLOWING PROCEDURE, WHICH MAY BE REQUIRED BY THE ENGINEER, TO RESET ELASTOMERIC BEARINGS DUE TO GIRDER TRANSLATION AND END ROTATION:

1. ONCE THE DECK HAS CURED, THE GIRDERS SHALL BE JACKED AND THE ANCHOR BOLTS AND ELASTOMERIC BEARING SLOTS CENTERED AS NEARLY AS PRACTICAL ABOUT THE BEARING STIFFENER. THIS OPERATION SHALL BE PERFORMED AT APPROXIMATELY 60°F.
2. AFTER CENTERING THE ELASTOMERIC BEARING SLOTS AND ANCHOR BOLTS, THE ANCHOR BOLTS SHALL BE GROUTED.

THE CONTRACTOR MAY PROPOSE ALTERNATE METHODS, PROVIDED DETAILS ARE SUBMITTED TO THE ENGINEER FOR REVIEW AND APPROVAL.

MAXIMUM ALLOWABLE SERVICE LOADS	
D.L.+L.L. (NO IMPACT)	
TYPE IV	310 k

PROJECT NO. U-0071
DURHAM COUNTY
STATION: 125+91.57 -L-

STATE OF NORTH CAROLINA
DEPARTMENT OF TRANSPORTATION
RALEIGH

STANDARD

ELASTOMERIC BEARING DETAILS

EBL

NORTH CAROLINA PROFESSIONAL SEAL 14855 ENGINEER DOUGLAS R. CALDWELL
5/7/14

ASSEMBLED BY : D. G. ELY	DATE : 8/2012
CHECKED BY : W. F. PARKER	DATE : 10/2012
DRAWN BY : EEM 10/95	REV. 5/1/06 TLA/GM
CHECKED BY : PEK 10/95	REV. 10/1/11 MAA/GM
	REV. 6/13 AAC/MAA

REVISIONS						SHEET NO.
NO.	BY:	DATE:	NO.	BY:	DATE:	S-313
1			3			TOTAL SHEETS
2			4			671

STD. NO. EB2

STR. #7

06-MAY-2014 15:43
Z:\TIPProjects-U\U0071\Structures\Plans\Str#7-L-over-Y8-\Super_Draw\U0071_SD_BG_STR 7.dgn
asorsenginh

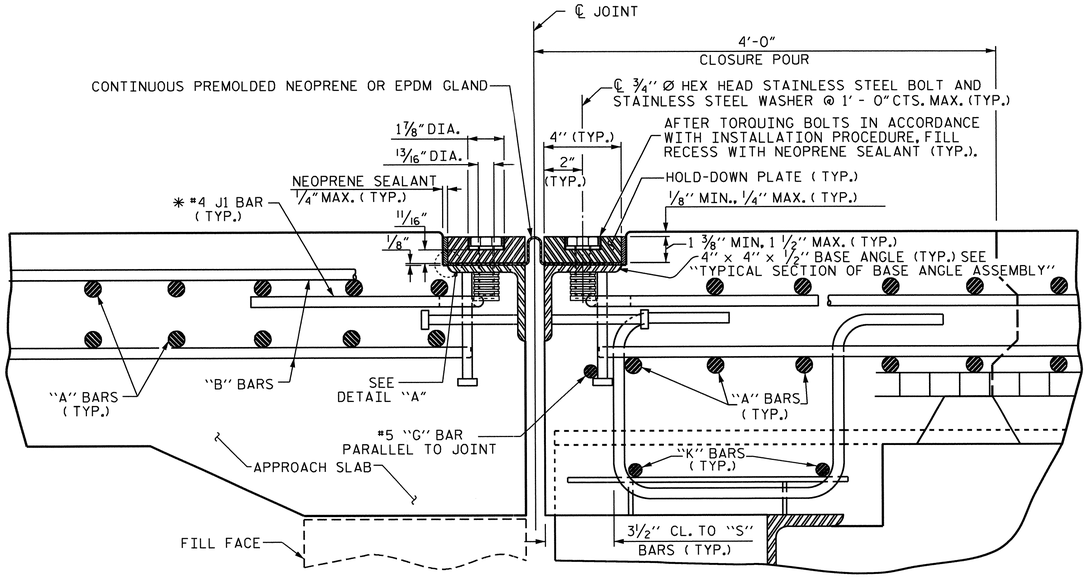

EXPANSION JOINT DETAILS

SECTION NORMAL TO JOINT -- STEEL SUPERSTRUCTURE

* THE QUANTITY OF #4 J1 BARS ON THE BILL OF MATERIAL IS BASED ON 1'-0" CENTERS. J1 BARS SHALL BE PLACED AT EACH VERTICAL STUD ANCHOR BOLT. IN THE EVENT THAT THE NUMBER OF VERTICAL STUD ANCHORS EXCEEDS THE NUMBER OF J1 BARS SPECIFIED, ADDITIONAL J1 BARS WILL NOT BE REQUIRED.

INSTALLATION PROCEDURE

1. A TEMPLATE OR OTHER SUITABLE DEVICE SHALL BE USED TO FORM THE TOP OF THE EXPANSION JOINT SEAL BLOCKOUT TO THE PROPER DEPTH AND WIDTH. THE TEMPLATE SHALL BE 4⅛" TO 4¼" WIDE AND OF SUCH THICKNESS AS TO PROVIDE FOR CORRECT FINAL ELEVATION OF TOP OF HOLD-DOWN PLATES. THE TEMPLATE SHALL BE ATTACHED TO THE BASE ANGLE ASSEMBLY WITH THE ¾" Ø HEX HEAD BOLTS PROVIDED FOR THE HOLD-DOWN PLATES. A 1" Ø HOLE SHALL BE PROVIDED IN THE TEMPLATE CENTERED OVER EACH WEEP HOLE IN THE 4" X 4" X ½" BASE ANGLE. OTHER METHODS OF INSURING DRAINAGE THROUGH WEEP HOLES MAY BE EMPLOYED SUBJECT TO ENGINEER'S APPROVAL.
2. AFTER THE CONCRETE HAS BEEN CAST ON BOTH SIDES OF THE JOINT, REMOVE THE TEMPLATE. THOROUGHLY CLEAN THE BOLT HOLES AND THE ANGLE PLATE. REMOVE ANY EXCESS CONCRETE THAT COMES OUT OF THE WEEP HOLES. ANY DAMAGED STEEL SHALL BE COATED WITH A MINIMUM THICKNESS OF 4 DRY MILS OF ZINC-RICH PAINT IN ACCORDANCE WITH THE STANDARD SPECIFICATIONS.
3. LAY THE GLAND ON THE BASE ANGLE AND FIELD MARK THE GLAND FOR THE BOLT HOLES. HOLES IN THE GLAND SHALL BE PUNCHED ⅞" IN DIAMETER WITH A HAND PUNCH.
4. IN ORDER TO CHECK FOR PROPER ALIGNMENT, PLACE THE GLAND AND HOLD-DOWN PLATES ON THE BASE ANGLE. DO NOT APPLY NEOPRENE SEALANT. BOLT THE HOLD-DOWN PLATES TO THE BASE ANGLE BUT DO NOT TIGHTEN. THE ENGINEER SHALL INSPECT THE JOINT SEAL DEVICE FOR PROPER ALIGNMENT.
5. AFTER INSPECTION, REMOVE THE HOLD-DOWN PLATES AND GLAND. APPLY NEOPRENE SEALANT TO THE BASE ANGLE IN ACCORDANCE WITH THE "INSTALLATION SKETCH". PLACE GLAND AND HOLD-DOWN PLATES ON THE BASE ANGLE. BOLT THE HOLD-DOWN PLATES TO THE BASE ANGLE ASSEMBLY AND TORQUE THE BOLTS TO 88 FT-LBS WITH A TORQUE WRENCH. CHECK THE TORQUE AFTER THREE (3) HOURS AND, IF NECESSARY, RETIGHTEN TO 88 FT-LBS. A FINAL CHECK SHALL BE MADE AT SEVEN (7) DAYS. TORQUE SHALL NOT BE LESS THAN 80 FT-LBS AFTER SEVEN (7) DAYS.
6. AFTER PROPER TOROUING, CLEAN THE BOLT HOLE RECESSES AND THE RECESS BETWEEN THE JOINT SEAL DEVICE AND CONCRETE, COMPLETELY FILL THESE RECESSES WITH NEOPRENE SEALANT.

GENERAL NOTES

1. FOR EXPANSION JOINT SEALS, SEE SPECIAL PROVISIONS.
2. ALL PLATES AND ANGLES SHALL CONFORM TO AASHTO M270 GRADE 36 STEEL OR APPROVED EQUAL. ALL HOLD-DOWN BOLTS SHALL CONFORM TO ASTM F593 ALLOY 304 STAINLESS STEEL AND WASHERS SHALL CONFORM TO ASTM F844 EXCEPT THEY SHALL BE MADE FROM ALLOY 304 STAINLESS STEEL. ALL STUD ANCHORS SHALL CONFORM TO AASHTO M169, GRADES 1010 THRU 1020 OR APPROVED EQUAL. ALL CONCRETE INSERTS SHALL BE CLOSED END AND SHALL CONFORM TO AASHTO M169, GRADE 12L14. TENSILE CAPACITY SHALL BE 3000 LBS. MIN.
3. A PREMOLDED CORRUGATED OR NON-CORRUGATED GLAND SHALL BE USED FOR JOINTS SKEWED BETWEEN 50° THRU 130°. FOR JOINTS SKEWED LESS THAN 50° OR MORE THAN 130°, ONLY A CORRUGATED GLAND SHALL BE USED.
4. CLOSED END FERRULES AND STUD ANCHORS SHALL BE SHOP WELDED AND ALL HOLES SHALL BE SHOP DRILLED AS SHOWN ON PLANS. STUD ANCHORS SHALL BE ELECTRIC ARC END WELDED WITH COMPLETE FUSION.
5. SURFACES COMING IN CONTACT WITH NEOPRENE SHALL BE GROUND SMOOTH PRIOR TO METALLIZING.
6. UPON COMPLETION OF SHOP FABRICATION, THE HOLD DOWN PLATE AND BASE ANGLE ASSEMBLY, AS SHOWN IN THE "TYPICAL SECTION OF BASE ANGLE ASSEMBLY", SHALL BE METALLIZED. SEE SPECIAL PROVISION FOR THERMAL SPRAYED COATINGS (METALLIZATION).
7. BASE ANGLE ASSEMBLY SHALL BE CONTINUOUS FOR THE LENGTH OF THE JOINT. AT CROWN BREAKS, THE ENDS OF THE BASE ANGLE ASSEMBLY SHALL BE CUT PARALLEL TO THE BRIDGE CENTERLINE FOR SKEWS LESS THAN 80° AND GREATER THAN 100°. FINISHED WELD SHALL BE GROUND SMOOTH AND COATED WITH A MINIMUM THICKNESS OF 4 DRY MILS OF ZINC-RICH PAINT IN ACCORDANCE WITH THE STANDARD SPECIFICATIONS.
8. FIELD SPLICES OF HOLD-DOWN PLATES SHALL BE KEPT TO A MINIMUM. CONTRACTOR SHALL FURNISH DETAILED PLANS SHOWING PROPOSED SPLICE LOCATIONS FOR APPROVAL. HOLD-DOWN PLATES SHALL NOT EXCEED 20' LENGTHS UNLESS APPROVED BY THE ENGINEER.
9. NO ALTERNATE JOINT DETAILS SHALL BE PERMITTED IN LIEU OF THOSE SHOWN ON THESE PLANS.
10. THE CONTRACTOR MAY, AT HIS OPTION, USE ADHESIVELY ANCHORED ANCHOR BOLTS IN PLACE OF CONCRETE INSERTS FOR COVER PLATES. THE YIELD LOAD OF THE ¾" Ø BOLT IS 10 KIPS. FIELD TESTING OF THE ADHESIVE BONDING SYSTEM IS NOT REQUIRED.

MOVEMENT AND SETTING AT JOINT					
	SKEW ANGLE	TOTAL MOVEMENT (ALONG ℄ RDWY)	PERPENDICULAR JOINT OPENING AT 45° F	PERPENDICULAR JOINT OPENING AT 60° F	PERPENDICULAR JOINT OPENING AT 90° F
END BENT 1	114°-10'-45"	0	1"	1"	1"
END BENT 2	114°-10'-45"	1⁵⁄₁₆"	1¹³⁄₁₆"	1⅝"	1¼"

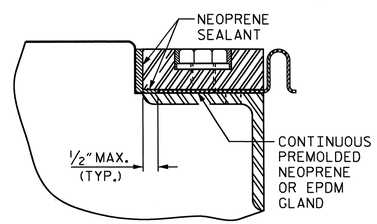

DETAIL "A"

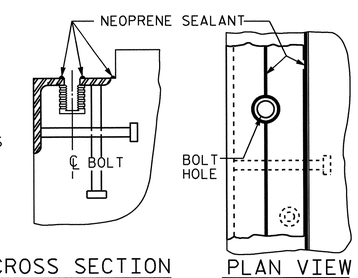

CROSS SECTION PLAN VIEW

INSTALLATION SKETCH

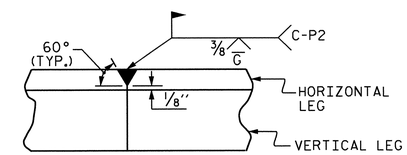

DETAIL- FIELD WELD SPLICE OF BASE ANGLE

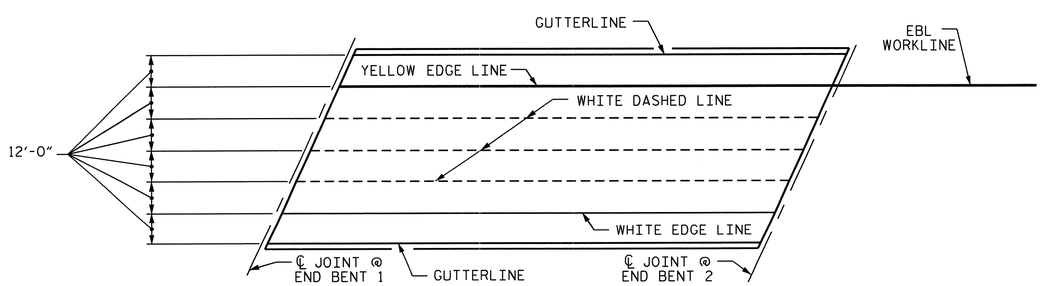

PAVEMENT MARKING ALIGNMENT

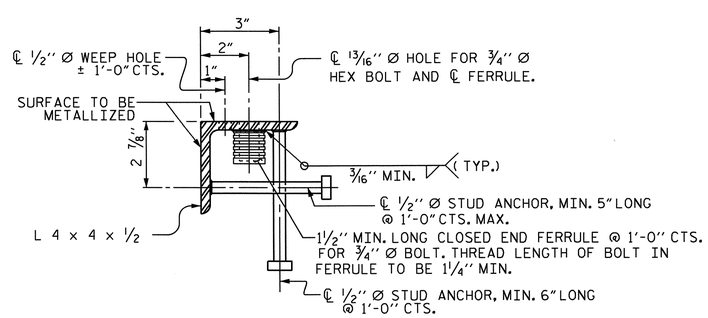

TYPICAL SECTION OF BASE ANGLE ASSEMBLY

PROJECT NO. U-0071
DURHAM COUNTY
STATION: 125+91.57 -L-

SHEET 1 OF 2

STATE OF NORTH CAROLINA
DEPARTMENT OF TRANSPORTATION
RALEIGH

STANDARD

EXPANSION JOINT SEAL DETAILS

EBL

NORTH CAROLINA PROFESSIONAL SEAL 14855 ENGINEER DOUGLAS R. CALHOUN
5/7/14

REVISIONS								SHEET NO.
NO.	BY:	DATE:	NO.	BY:	DATE:			S-314
1			3					TOTAL SHEETS
2			4					671

ASSEMBLED BY : D. G. ELY DATE : 8/2012
CHECKED BY : W. F. PARKER DATE : 10/2012
DESIGN ENGINEER OF RECORD: D. R. CALHOUN DATE : 11/2013
DRAWN BY : REK 9/87 | REV. 5/7/03R RWW/JTE
CHECKED BY : CRK 10/87 | REV. 5/1/06R TLA/GM
REV. 10/1/11 MAA/GM

06-MAY-2014 15:42
Z:\TIPProjects-U\U0071\Structures\Plans\Str#7-L-over-Y8-\Super_Draw\U0071_SD_EJS_STR7.dgn
asorsenglnh

STD. NO. EJS1

STR. #7

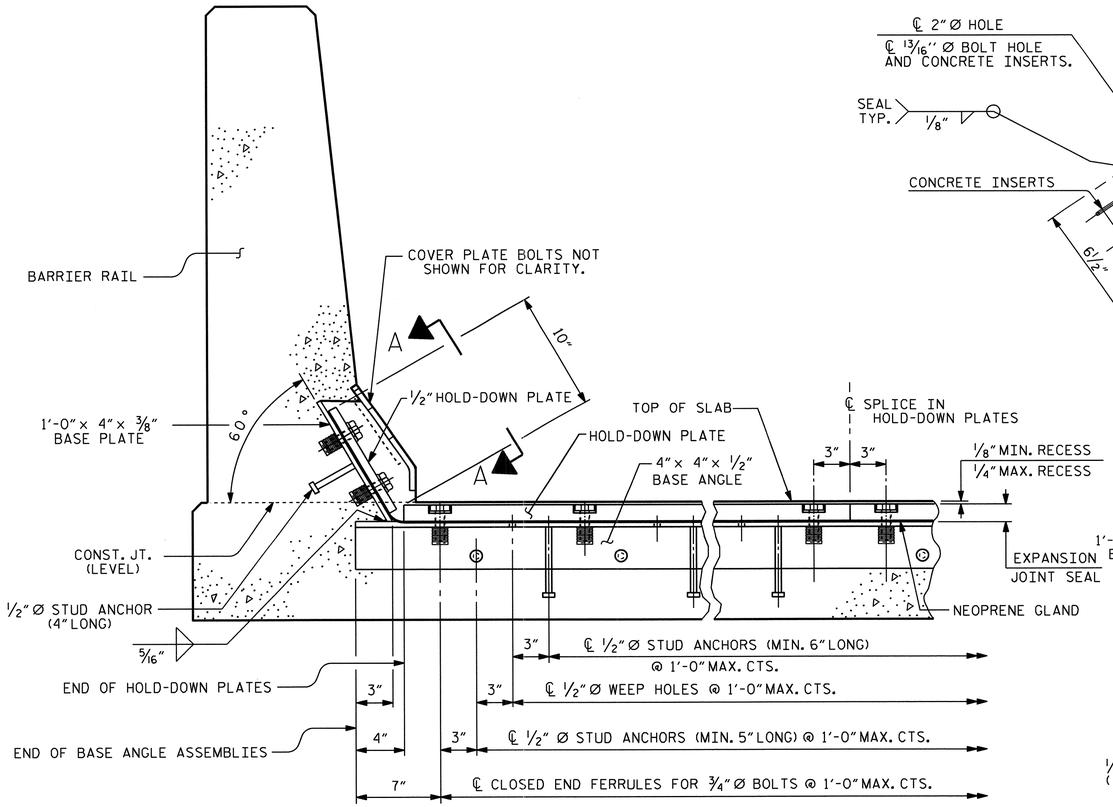

SECTION THRU RAIL NORMAL TO JOINT

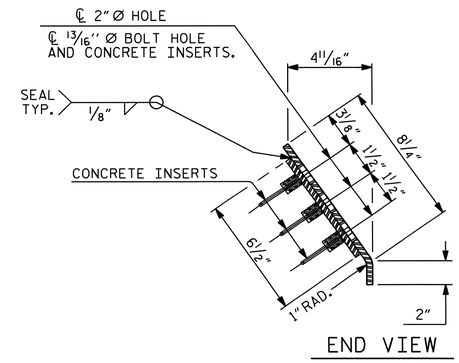

END VIEW

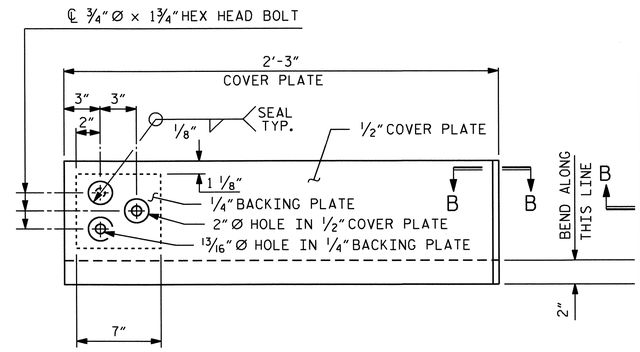

TYPE I - ELEVATION VIEW

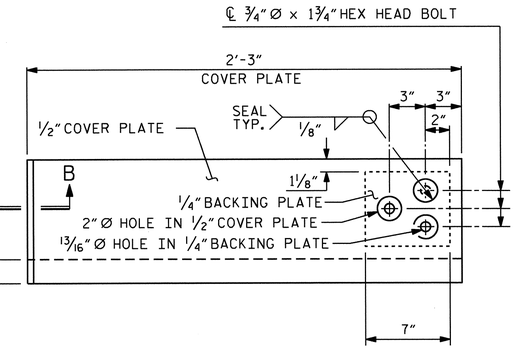

TYPE II - ELEVATION VIEW

COVER PLATE DETAILS

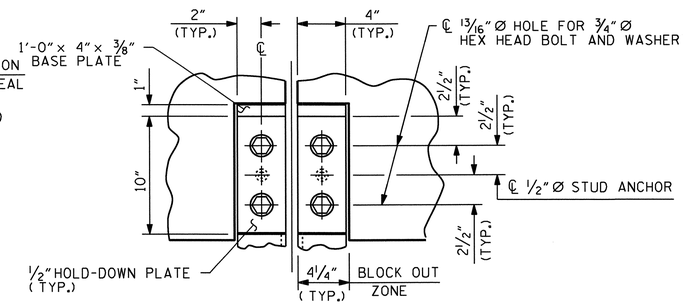

SECTION A - A

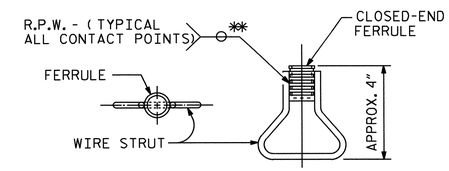

PLAN ELEVATION

CONCRETE INSERT

** EACH WELDED ATTACHMENT OF WIRE TO FERRULE SHALL DEVELOP THE TENSILE STRENGTH OF THE WIRE.

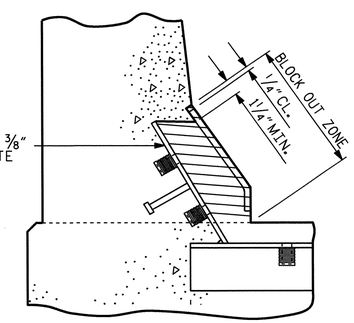

BLOCK OUT DETAIL

SEE " SECTION A - A " FOR OTHER DETAILS.

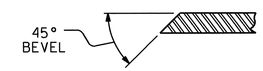

SECTION B - B

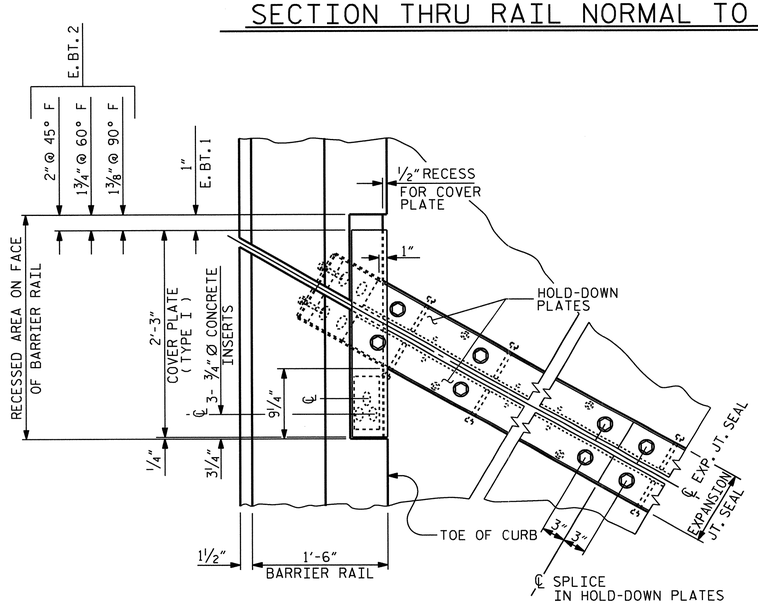

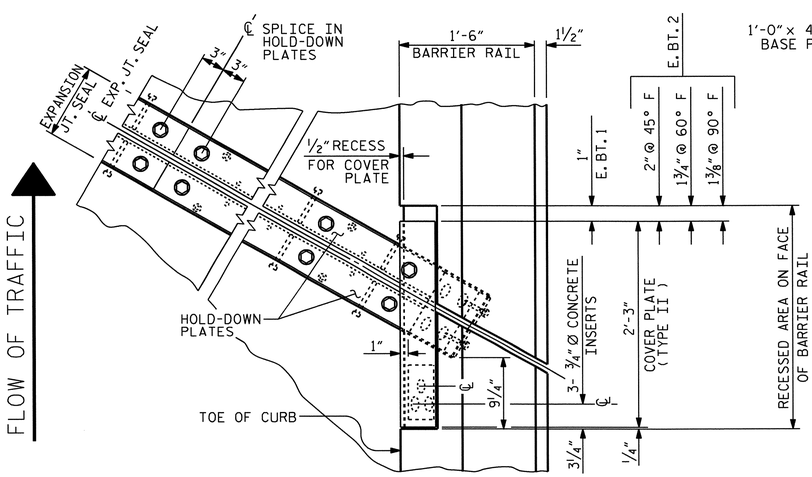

PLAN OF EXPANSION JOINT SEAL

PROJECT NO. U-0071

DURHAM COUNTY

STATION: 125+91.57 -L-

SHEET 2 OF 2

STATE OF NORTH CAROLINA
DEPARTMENT OF TRANSPORTATION
RALEIGH

STANDARD

EXPANSION JOINT SEAL DETAILS FOR BARRIER RAIL

EBL

NORTH CAROLINA PROFESSIONAL SEAL 14855 ENGINEER DOUGLAS R. CALLOWAY
5/7/14

ASSEMBLED BY : D. G. ELY	DATE : 8-2012
CHECKED BY : W. F. PARKER	DATE : 10-2012

DRAWN BY : REK 9/87	REV. 10/1/11	MAA/GM
CHECKED BY : CRK 10/87	REV. 7/12	MAA/GM
	REV. 6/13	MAA/GM

REVISIONS

NO.	BY:	DATE:	NO.	BY:	DATE:
1			3		
2			4		

SHEET NO. S-315

TOTAL SHEETS 671

SHT 2b STD. NO. EJS2 STR. #7

06-MAY-2014 15:41
Z:\TIPProjects-U\U0071\Structures\Plans\Str#7-L-over-Y8-\Super_Draw\U0071_SD_EJS_STR7.dgn
asorsenginh

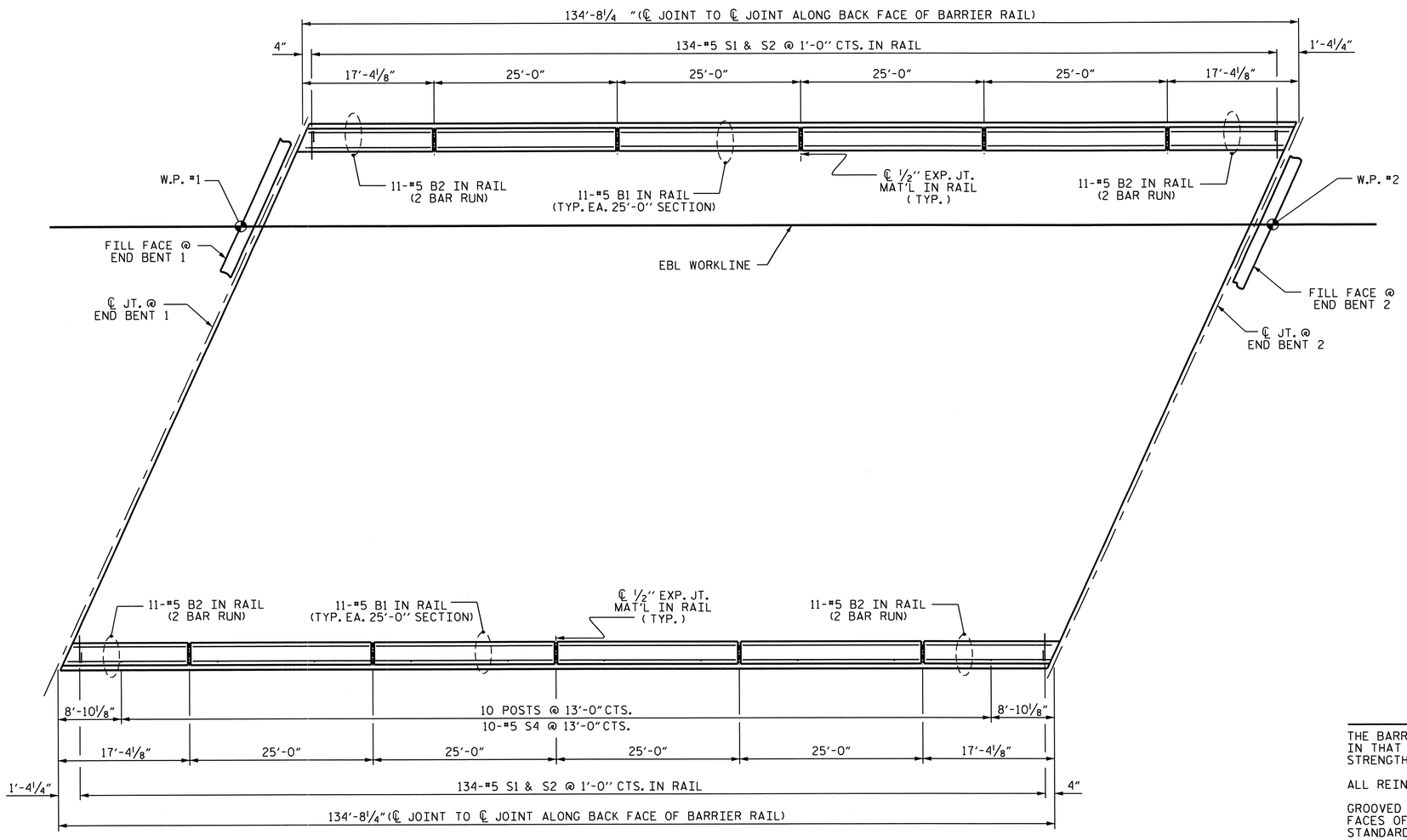

PLAN OF BARRIER RAIL

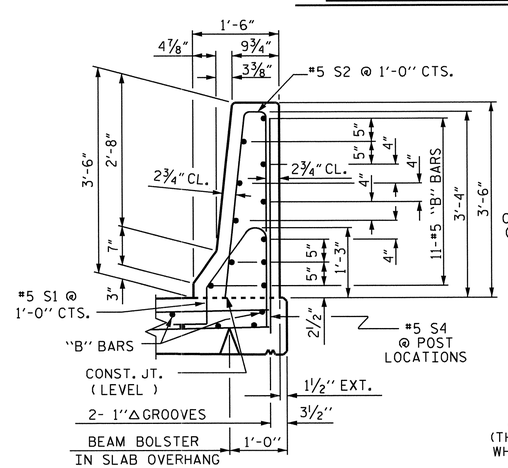

SECTION THRU RAIL

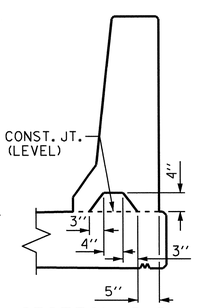

SECTION S-S

AT DAM IN OPEN JOINT (THIS IS TO BE USED ONLY WHEN SLIP FORM IS USED)

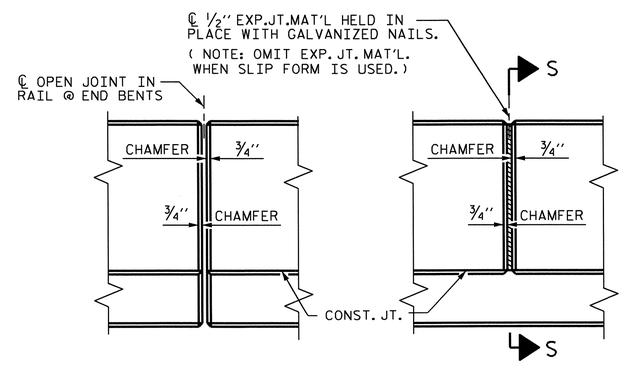

ELEVATION AT EXPANSION JOINTS

BARRIER RAIL DETAILS

BAR TYPES

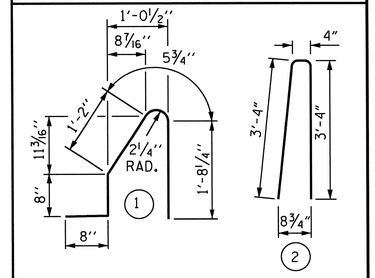

ALL BAR DIMENSIONS ARE OUT TO OUT

BILL OF MATERIAL

FOR CONCRETE BARRIER RAIL ONLY

BAR	NO.	SIZE	TYPE	LENGTH	WEIGHT
* S1	268	#5	1	4'-8"	1304
* S2	268	#5	2	7'-0"	1957
* S4	10	#5	STR	3'-10"	40
* B1	88	#5	STR	24'-7"	2256
* B2	88	#5	STR	10'-2"	933

* EPOXY COATED REINFORCING STEEL	6490 LBS.
CLASS AA CONCRETE	36.6 CU. YDS.
▲CONCRETE BARRIER RAIL	269.4 LIN. FT.

▲ THE QUANTITIES FOR BARRIER RAIL ON THE APPROACH SLABS ARE NOT INCLUDED. FOR BARRIER RAIL ON THE APPROACH SLABS, SEE "APPROACH SLAB DETAILS" SHEET.

NOTES

THE BARRIER RAIL IN EACH SPAN SHALL NOT BE CAST UNTIL ALL SLAB CONCRETE IN THAT SPAN HAS BEEN CAST AND HAS REACHED A MINIMUM COMPRESSIVE STRENGTH OF 3,000 PSI.

ALL REINFORCING STEEL IN BARRIER RAILS SHALL BE EPOXY COATED.

GROOVED CONTRACTION JOINTS, ½" IN DEPTH, SHALL BE TOOLED IN ALL EXPOSED FACES OF THE BARRIER RAIL AND IN ACCORDANCE WITH ARTICLE 825-10(B) OF THE STANDARD SPECIFICATIONS. THE CONTRACTION JOINT SHALL BE LOCATED AT EACH THIRD POINT BETWEEN BARRIER RAIL EXPANSION JOINTS. ONLY ONE CONTRACTION JOINT IS REQUIRED AT MIDPOINT OF BARRIER RAIL SEGMENTS LESS THAN 20 FEET IN LENGTH AND NO CONTRACTION JOINTS ARE REQUIRED FOR THOSE SEGMENTS LESS THAN 10 FEET IN LENGTH.

FOR SOUND BARRIER WALL DETAILS, SEE "SOUND BARRIER WALL" SHEET.

PROJECT NO. U-0071
DURHAM COUNTY
STATION: 125+91.57 -L-

STATE OF NORTH CAROLINA
DEPARTMENT OF TRANSPORTATION
RALEIGH

STANDARD
CONCRETE BARRIER RAIL

EBL

NORTH CAROLINA PROFESSIONAL SEAL 14855 ENGINEER DOUGLAS R. CALHOUN
5/7/14

REVISIONS								SHEET NO.
NO.	BY:	DATE:	NO.	BY:	DATE:			S-316
1			3					TOTAL SHEETS
2			4					671

ASSEMBLED BY : D. G. ELY		DATE : 8/2012	
CHECKED BY : W. F. PARKER		DATE : 10/2012	
DRAWN BY : ARB 5/87	REV. 10/1/11	MAA/GM	
CHECKED BY : SJD 9/87	REV. 7/12	MAA/GM	
	REV. 6/13	MAA/GM	

06-MAY-2014 15:40
Z:\TIPProjects-U\U0071\Structures\Plans\Str*7-L-over-Y8-\Super_Draw\U0071_SD_BR_STR 7.dgn
asorsenginh

STD. NO. CBR1 STR. #7

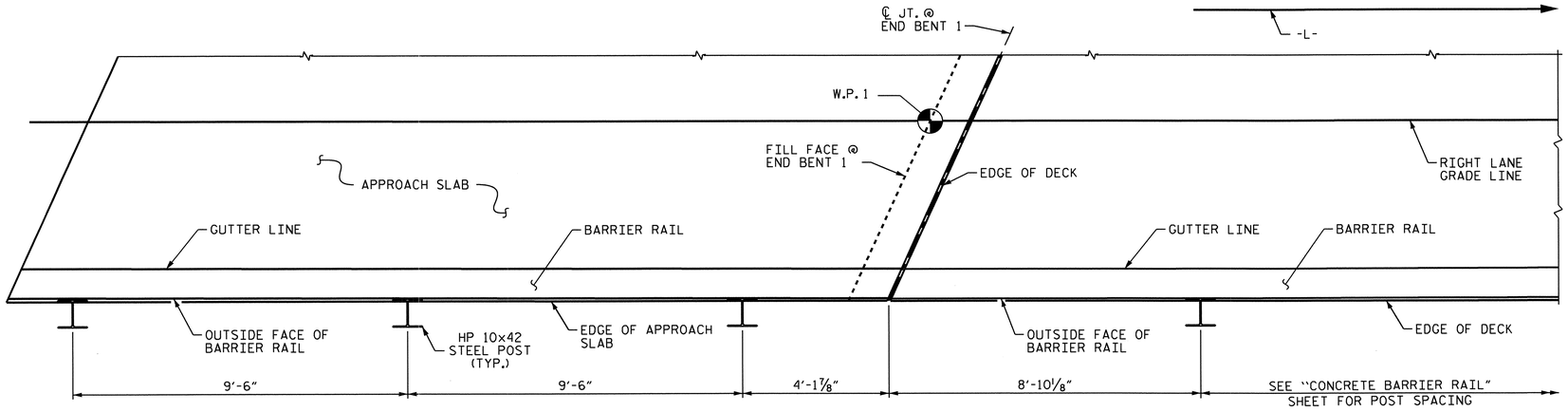

PLAN OF SOUND BARRIER WALL LAYOUT

(RIGHT SIDE ONLY, PANEL NOT SHOWN FOR CLARITY)

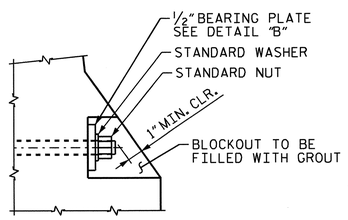

DETAIL "A"

(GROUT SHALL BE IN ACCORDANCE WITH STANDARD SPECIFICATIONS) (LOWER BLOCKOUT SHOWN, UPPER BLOCKOUT SIMILAR)

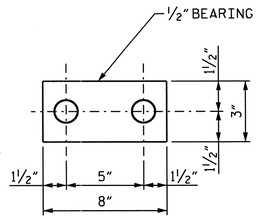

DETAIL "B"

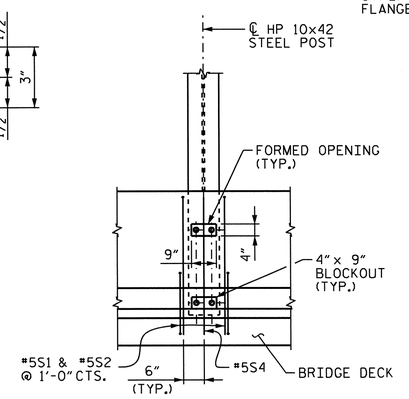

VIEW A-A

(ADJUST #5S1 & #5S2 BAR SPACING AS NECESSARY TO ACCOMMODATE POSTS)

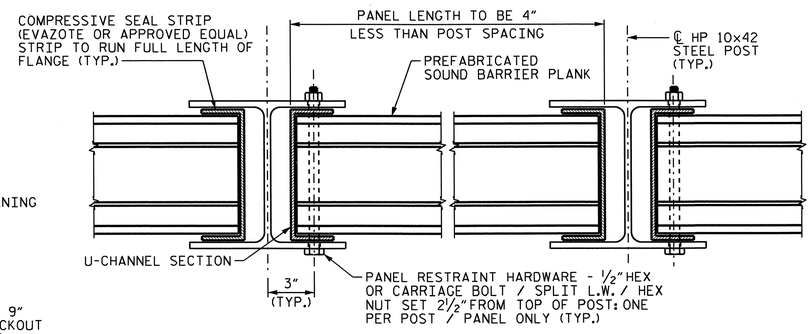

MOUNTING DETAIL - PANEL TYPE 1

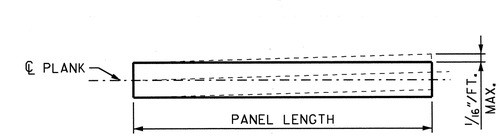

PLANK BOW TOLERANCE

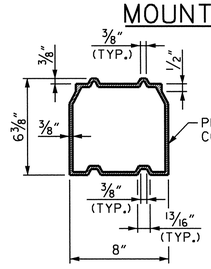

PLANK SECTION

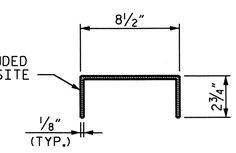

U-CHANNEL SECTION

PANEL TYPE 1

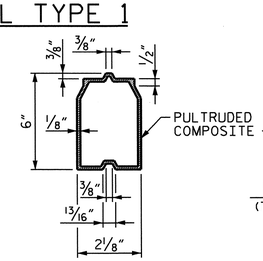

PLANK SECTION

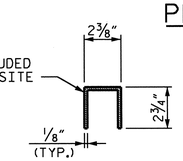

U-CHANNEL SECTION

PANEL TYPE 2

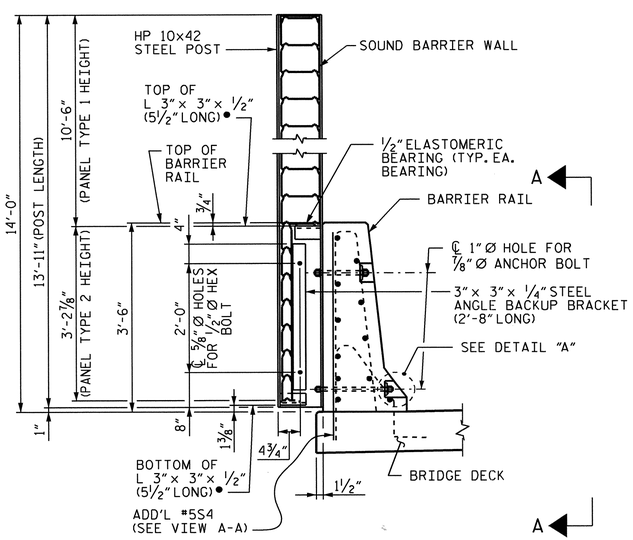

POST ELEVATION

● SEE "SECTION THRU POST" FOR WELD.

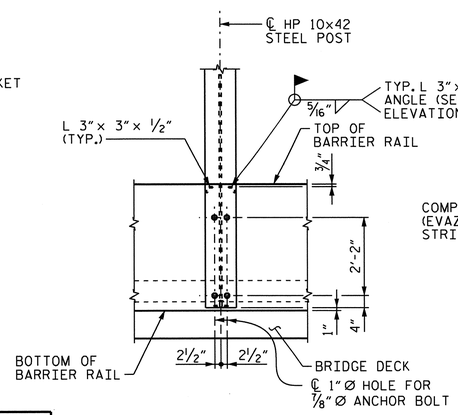

SECTION THRU POST

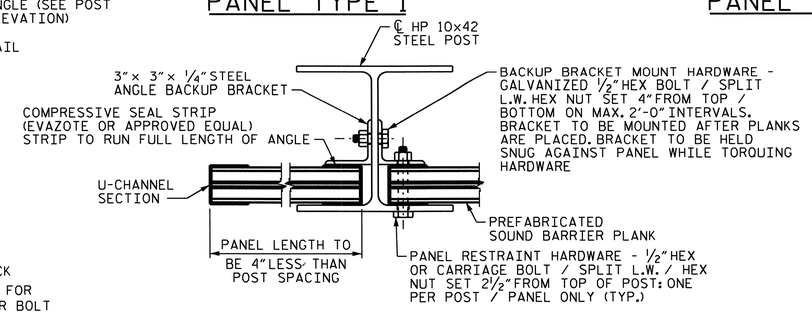

MOUNTING DETAIL - PANEL TYPE 2

NOTES

WALL SUPPORT SYSTEM

POSTS SHALL BE AASHTO 270 GRADE 36 STRUCTURAL STEEL - GALVANIZED TO AASHTO M111 AND IN ACCORDANCE TO SECTION 1076 OF THE STANDARD SPECIFICATIONS.

BEARING PLATES, BOLTS, NUTS AND WASHERS (EXCLUDING ⅞" Ø ANCHOR BOLTS) SHALL CONFORM TO THE REQUIREMENTS OF ASTM A325 AND SHALL BE GALVANIZED IN ACCORDANCE TO AASHTO M111.

ALL POSTS SHALL BE PLUMB.

SOUND BARRIER WALL

COLOR AND TEXTURE OF THE SOUND BARRIER WALL PANEL SHALL BE UNIFORM THROUGHOUT THE PULTRUDED COMPOSITE AND IS TO BE APPROVED BY THE ENGINEER.

SOUND BARRIER WALL SHALL BE DESIGNED TO WITHSTAND A MINIMUM WIND VELOCITY OF 100 MPH AND A MINIMUM WIND PRESSURE OF 0.04 KSF.

WEIGHT OF SOUND BARRIER WALL SHALL NOT EXCEED 150 LBS/FT.

SOUND BARRIER WALL SHALL CONSIST OF STACKED TONGUE AND GROOVE STRUCTURAL PLANKS AS DETAILED ON PLANS. THE PLANKS SHALL BE COMPRISED OF A PULTRUDED GLASS REINFORCED THERMOSET COMPOSITE STRUCTURAL BOX FILLED WITH RECYCLED TIRE RUBBER OR ANOTHER SUBSTANCE OF COMPARABLE DENSITY AND NOISE REDUCTION CAPABILITY. ENDS SHALL BE CAPPED TO NOT ALLOW FILL MATERIAL TO FALL OUT.

THE MINIMUM LENGTH OF PLANKS SHALL BE 4" LESS THAN THE CLEAR SPACING PROVIDED BETWEEN SUPPORT POSTS. THE MAXIMUM LENGTH OF PLANKS SHALL BE 3" LESS THAN THE CLEAR SPACING PROVIDED BETWEEN SUPPORT POSTS.

PLANKS SHALL BE CUT SO THAT THE ENDS ARE SMOOTH AND PERPENDICULAR TO EACH PLANK'S BASE AND SHALL BE APPROVED BY THE ENGINEER.

EACH PANEL SHALL BE PLACED SO THAT THE TOP OF THE FINISHED PANEL MEETS FLUSH WITH THE TOP OF EACH SUPPORT POST.

FOR ELASTOMERIC BEARINGS, SEE SECTION 1079 OF THE STANDARD SPECIFICATIONS.

FOR SOUND BARRIER WALL (BRIDGE MOUNTED), SEE SPECIAL PROVISIONS.

PROJECT NO. U-0071
DURHAM COUNTY
STATION: 125+91.57 -L-

STATE OF NORTH CAROLINA
DEPARTMENT OF TRANSPORTATION
RALEIGH

SOUND BARRIER WALL LAYOUT & DETAILS

EBL

NORTH CAROLINA PROFESSIONAL SEAL 14855 ENGINEER DOUGLAS R. CALHOUN
5/21/14

REVISIONS							SHEET NO.
NO.	BY:	DATE:	NO.	BY:	DATE:		S-317
1			3				TOTAL SHEETS
2			4				671

DRAWN BY : A. SORSENGINH DATE : 11/2013
CHECKED BY : D.R. CALHOUN DATE : 12/2013
DESIGN ENGINEER OF RECORD: D.R. CALHOUN DATE : 12/2013

$FILE$
$TIME$
$DATE$

STR. #7

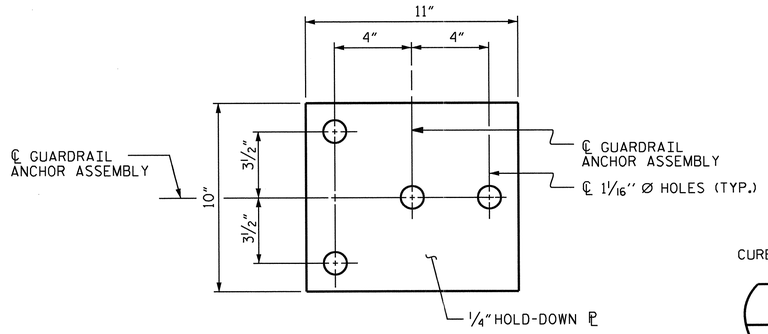

PLAN

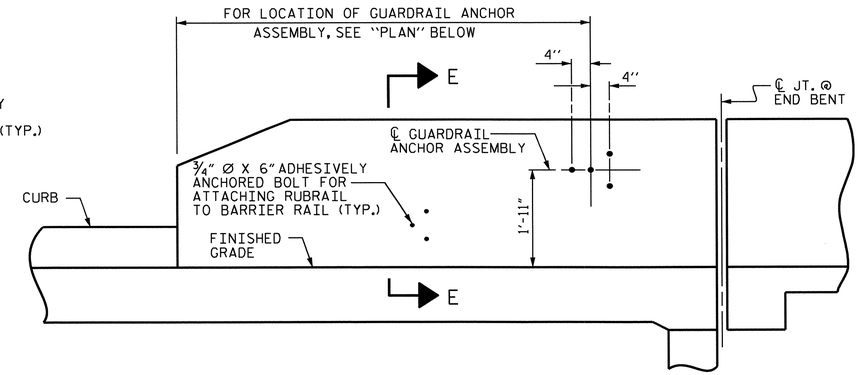

ELEVATION

FOR LOCATION OF RUBRAIL, SEE ROADWAY STD. 862.03

NOTES

THE GUARDRAIL ANCHOR ASSEMBLY SHALL CONSIST OF A 1/4" HOLD-DOWN PLATE AND 4 - 7/8" Ø BOLTS WITH NUTS AND WASHERS, RUBRAIL, AND ADHESIVELY ANCHORED BOLTS.

THE HOLD-DOWN PLATE SHALL CONFORM TO AASHTO M270 GRADE 36. AFTER FABRICATION, THE HOLD-DOWN PLATE SHALL BE HOT-DIP GALVANIZED IN ACCORDANCE WITH AASHTO M111.

BOLTS SHALL CONFORM TO THE REQUIREMENTS OF ASTM A307 AND NUTS SHALL CONFORM TO THE REQUIREMENTS OF AASHTO M291. BOLTS, NUTS AND WASHERS SHALL BE GALVANIZED. (AT THE CONTRACTOR'S OPTION, STAINLESS STEEL BOLTS, NUTS AND WASHERS MAY BE USED AS AN ALTERNATE FOR THE 7/8" Ø GALVANIZED BOLTS, NUTS AND WASHERS. THEY SHALL CONFORM TO OR EXCEED THE MECHANICAL REQUIREMENTS OF ASTM A307. THE USE OF THIS ALTERNATE SHALL BE APPROVED BY THE ENGINEER.)

THE GUARDRAIL ANCHOR ASSEMBLY IS REQUIRED AT ALL POINTS WHERE APPROACH GUARDRAIL IS TO BE ATTACHED TO THE END OF BARRIER RAIL. FOR POINTS OF ATTACHMENT, SEE SKETCH.

AFTER INSTALLATION, THE EXPOSED THREAD OF THE BOLT SHALL BE BURRED WITH A SHARP POINTED TOOL.

THE COST OF THE GUARDRAIL ANCHOR ASSEMBLY SHALL BE INCLUDED IN THE UNIT CONTRACT PRICE BID FOR CONCRETE BARRIER RAIL.

THE 1 1/4" Ø HOLES SHALL BE FORMED OR DRILLED WITH A CORE BIT. IMPACT TOOLS WILL NOT BE PERMITTED. ANY CONCRETE DAMAGED BY THIS WORK SHALL BE REPAIRED TO THE SATISFACTION OF THE ENGINEER.

THE C6 X 8.2 RUBRAIL IS TO BE ADHESIVELY ANCHORED TO THE RAIL USING THREE 3/4" Ø X 6" BOLTS WITH WASHERS. LEVEL ONE FIELD TESTING IS REQUIRED, AND THE YIELD LOAD OF THE 3/4" Ø BOLT IS 12 KIPS. FOR ADHESIVELY ANCHORED ANCHOR BOLTS OR DOWELS, SEE STANDARD SPECIFICATIONS. SEE ROADWAY STANDARD 862.03 FOR DETAILS AND LOCATION OF THE RUBRAIL.

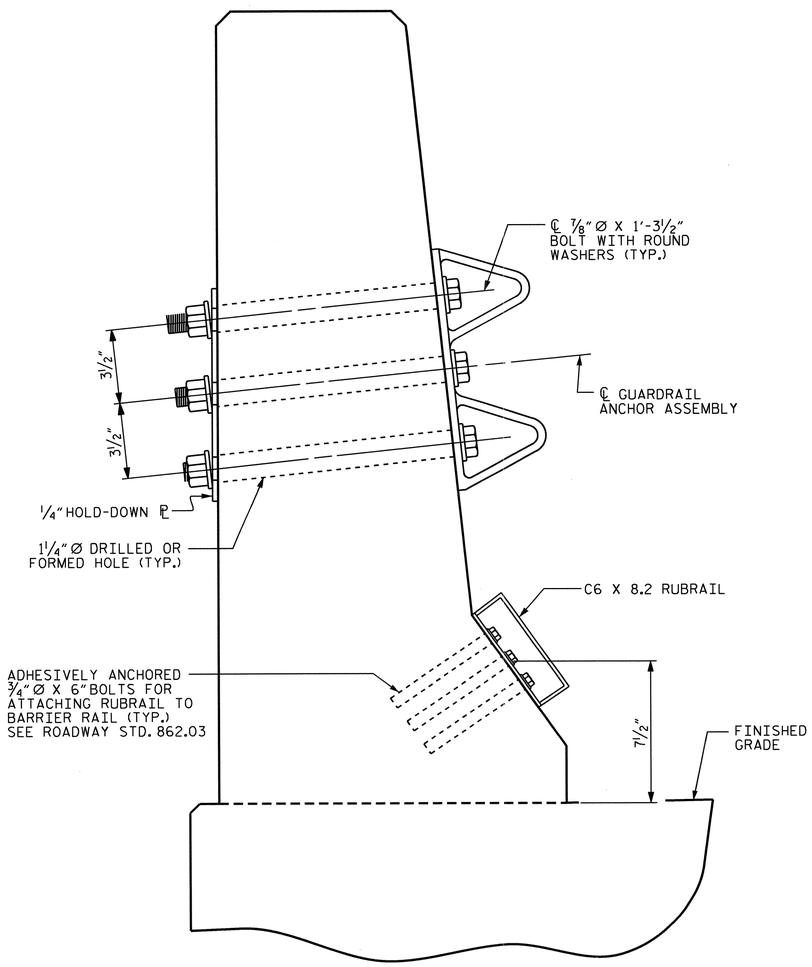

SECTION E-E

GUARDRAIL ANCHOR ASSEMBLY DETAILS

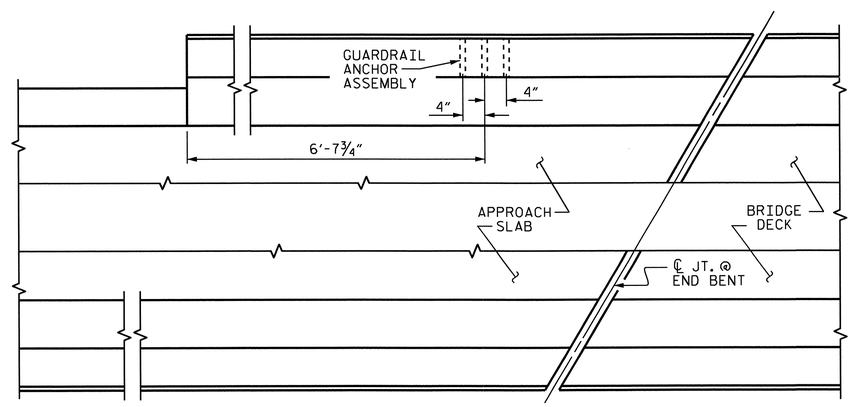

PLAN

LOCATION OF ANCHORS FOR GUARDRAIL

END BENT #1 SHOWN, END BENT #2 SIMILAR.

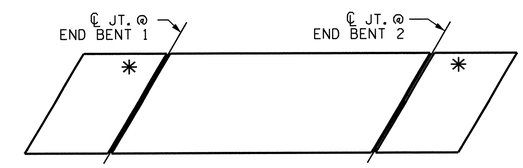

SKETCH SHOWING POINTS OF ATTACHMENTS

* DENOTES GUARDRAIL ANCHOR ASSEMBLY

PROJECT NO. U-0071

DURHAM COUNTY

STATION: 125+91.57 -L-

STATE OF NORTH CAROLINA
DEPARTMENT OF TRANSPORTATION
RALEIGH

STANDARD

GUARDRAIL ANCHORAGE FOR BARRIER RAIL

EBL

NORTH CAROLINA PROFESSIONAL SEAL 14855 ENGINEER DOUGLAS R. CALHOUN
5/7/14

REVISIONS						SHEET NO.
NO.	BY:	DATE:	NO.	BY:	DATE:	S-318
1			3			TOTAL SHEETS
2			4			671

ASSEMBLED BY : D. G. ELY		DATE : 8/2012	
CHECKED BY : W. F. PARKER		DATE : 10/2012	
DRAWN BY : TLA 5/06	REV. 10/1/11	MAA/GM	
CHECKED BY : GM 5/06	REV. 7/12	MAA/GM	
	REV. 6/13	MAA/GM	

06-MAY-2014 15:40
Z:\TIPProjects-U\U0071\Structures\Plans\Str*7-L-over-Y8-\Super_Draw\U0071_SD_BR_STR 7.dgn
asorsenginh

STD. NO. GRA2 STR. #7

SUPERSTRUCTURE REINFORCING STEEL LENGTHS ARE BASED ON THE FOLLOWING MINIMUM SPLICE LENGTHS					
BAR SIZE	SUPERSTRUCTURE EXCEPT APPROACH SLABS, PARAPET, AND BARRIER RAIL		APPROACH SLABS		PARAPET AND BARRIER RAIL
	EPOXY COATED	UNCOATED	EPOXY COATED	UNCOATED	
#4	2'-0"	1'-9"	2'-0"	1'-9"	2'-9"
#5	2'-6"	2'-2"	2'-6"	2'-2"	3'-5"
#6	3'-0"	2'-7"	3'-10"	2'-7"	4'-4"
#7	5'-3"	3'-6"			
#8	6'-10"	4'-7"			

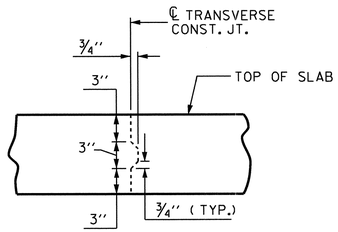

TRANSVERSE CONSTRUCTION JOINT DETAIL

NOTE: REINFORCING STEEL IN SLAB NOT SHOWN. LONGITUDINAL REINFORCING STEEL SHALL BE CONTINUOUS THRU JOINT.

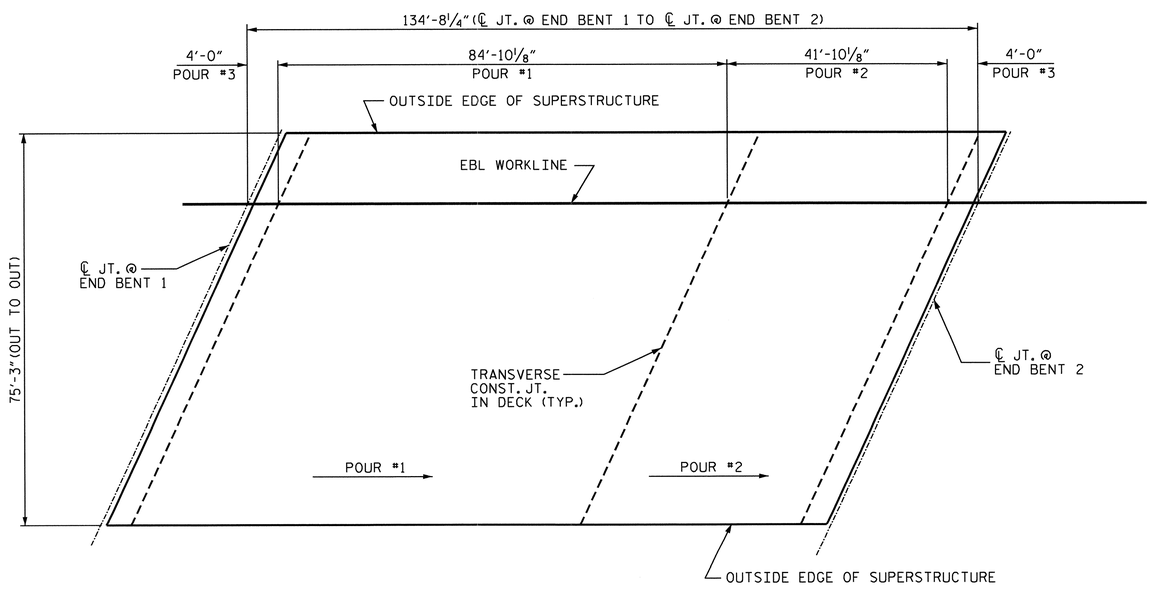

CONCRETE POURING SEQUENCE AND LAYOUT FOR COMPUTING AREA OF REINFORCED CONCRETE DECK SLAB (SQ. FT. = 10,135)

BILL OF MATERIAL

BAR	No.	SIZE	TYPE	LENGTH	WEIGHT
* A1	404	#5	STR.	38'-9"	16328
A2	404	#5	STR.	38'-7"	16258
* A100	8	#5	STR.	37'-8"	314
* A101	8	#5	STR.	36'-7"	305
* A102	8	#5	STR.	35'-6"	296
* A103	8	#5	STR.	34'-4"	286
* A104	8	#5	STR.	33'-3"	277
* A105	8	#5	STR.	32'-1"	268
* A106	8	#5	STR.	31'-0"	259
* A107	8	#5	STR.	29'-11"	250
* A108	8	#5	STR.	28'-9"	240
* A109	8	#5	STR.	27'-8"	231
* A110	8	#5	STR.	26'-7"	222
* A111	8	#5	STR.	25'-5"	212
* A112	4	#5	STR.	46'-1"	192
* A113	4	#5	STR.	43'-10"	183
* A114	4	#5	STR.	41'-7"	173
* A115	4	#5	STR.	39'-5"	164
* A116	4	#5	STR.	37'-2"	155
* A117	4	#5	STR.	34'-11"	146
* A118	4	#5	STR.	32'-8"	136
* A119	4	#5	STR.	30'-6"	127
* A120	4	#5	STR.	28'-3"	118
* A121	4	#5	STR.	26'-0"	108
* A122	4	#5	STR.	23'-10"	99
* A123	4	#5	STR.	21'-7"	90
* A124	4	#5	STR.	19'-4"	81
* A125	4	#5	STR.	17'-1"	71
* A126	4	#5	STR.	14'-11"	62
* A127	4	#5	STR.	12'-8"	53
* A128	4	#5	STR.	10'-5"	43
* A129	4	#5	STR.	8'-2"	34
* A130	4	#5	STR.	6'-0"	25
* A131	4	#5	STR.	5'-6"	23
* A132	4	#5	STR.	5'-0"	21
A200	8	#5	STR.	37'-6"	313
A201	8	#5	STR.	36'-5"	304
A202	8	#5	STR.	35'-4"	295
A203	8	#5	STR.	34'-2"	285
A204	8	#5	STR.	33'-1"	276
A205	8	#5	STR.	31'-11"	266
A206	8	#5	STR.	30'-10"	257
A207	8	#5	STR.	29'-9"	248
A208	8	#5	STR.	28'-7"	239
A209	8	#5	STR.	27'-6"	229
A210	8	#5	STR.	26'-5"	220
A211	8	#5	STR.	25'-3"	211
A212	4	#5	STR.	46'-1"	192
A213	4	#5	STR.	43'-10"	183
A214	4	#5	STR.	41'-7"	173
A215	4	#5	STR.	39'-5"	164
A216	4	#5	STR.	37'-2"	155
A217	4	#5	STR.	34'-11"	146
A218	4	#5	STR.	32'-8"	136
A219	4	#5	STR.	30'-6"	127
A220	4	#5	STR.	28'-3"	118
A221	4	#5	STR.	26'-0"	108
A222	4	#5	STR.	23'-10"	99
A223	4	#5	STR.	21'-7"	90
A224	4	#5	STR.	19'-4"	81
A225	4	#5	STR.	17'-1"	71
A226	4	#5	STR.	14'-11"	62
A227	4	#5	STR.	12'-8"	53
A228	4	#5	STR.	10'-5"	43
A229	4	#5	STR.	8'-2"	34
A230	4	#5	STR.	6'-0"	25
A231	4	#5	STR.	5'-6"	23
A232	4	#5	STR.	5'-0"	21
* B1	255	#4	STR.	28'-6"	4855
B2	255	#5	STR.	46'-3"	12301
* G1	4	#5	STR.	42'-4"	177
* J1	160	#4	4	1'-5"	151
* K1	12	#5	1	8'-1"	101
* K2	36	#5	2	9'-1"	341
* K3	42	#5	STR.	10'-3"	449
* S1	126	#4	3	3'-11"	330

REINFORCING STEEL 33,806 LBS.

* EPOXY COATED REINFORCING STEEL 27,996 LBS.

* THESE BARS ARE EPOXY COATED

BAR TYPES

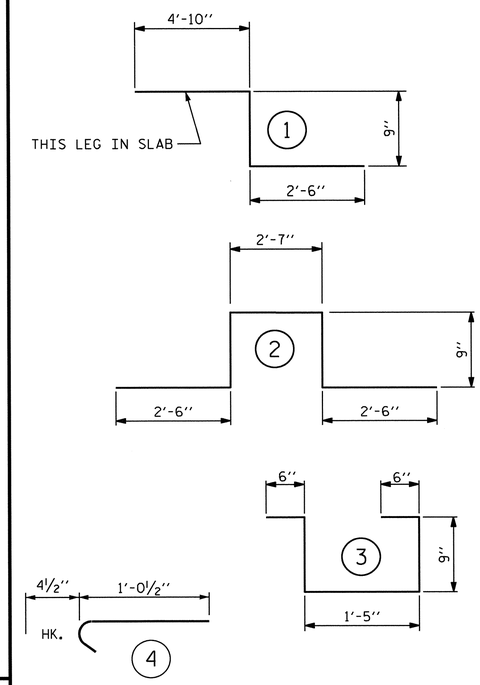

ALL BAR DIMENSIONS ARE OUT TO OUT

SUPERSTRUCTURE BILL OF MATERIAL

	CLASS AA CONCRETE (CU.YDS.)	REINFORCING STEEL (LBS.)	EPOXY COATED REINFORCING STEEL (LBS.)
TOTALS**	325.9	33,806	27,996

** QUANTITIES FOR CONCRETE BARRIER RAIL ARE NOT INCLUDED

CLASS AA CONCRETE BREAKDOWN	
POUR #1	201.4 CU. YDS.
POUR #2	99.3 CU. YDS.
POUR #3	25.2 CU. YDS.
TOTAL	325.9 CU. YDS.

GROOVING BRIDGE FLOORS		
APPROACH SLABS	3268	SQ.FT.
BRIDGE DECK	9213	SQ.FT.
TOTAL	12,481	SQ.FT.

PROJECT NO. U-0071
DURHAM COUNTY
STATION: 125+91.57 -L-

STATE OF NORTH CAROLINA
DEPARTMENT OF TRANSPORTATION
RALEIGH

STANDARD
SUPERSTRUCTURE BILL OF MATERIAL
EBL

NORTH CAROLINA PROFESSIONAL SEAL 14855 ENGINEER DOUGLAS R. CALHOUN
5/7/14

REVISIONS						
NO.	BY:	DATE:	NO.	BY:	DATE:	
1			3			
2			4			

SHEET NO. S-319
TOTAL SHEETS 671

ASSEMBLED BY : D. G. ELY		DATE : 8/2012
CHECKED BY : W. F. PARKER		DATE : 10/2012
DESIGN ENGINEER OF RECORD : D. R. CALHOUN		DATE : 10/2012
DRAWN BY : JMB 5/87	REV. 6/1/94	EEM/GRP
CHECKED BY : SJD 9/87	REV. 8/16/99	RWW/LES
	REV. 10/1/11	MMA/GM

06-MAY-2014 15:39
Z:\TIPProjects-U\U0071\Structures\Plans\Str#7-L-over-Y8-\Super_Draw\U0071_SD_BM_S01.dgn
asorsenginh

STD. NO. BOM1

STR. #7

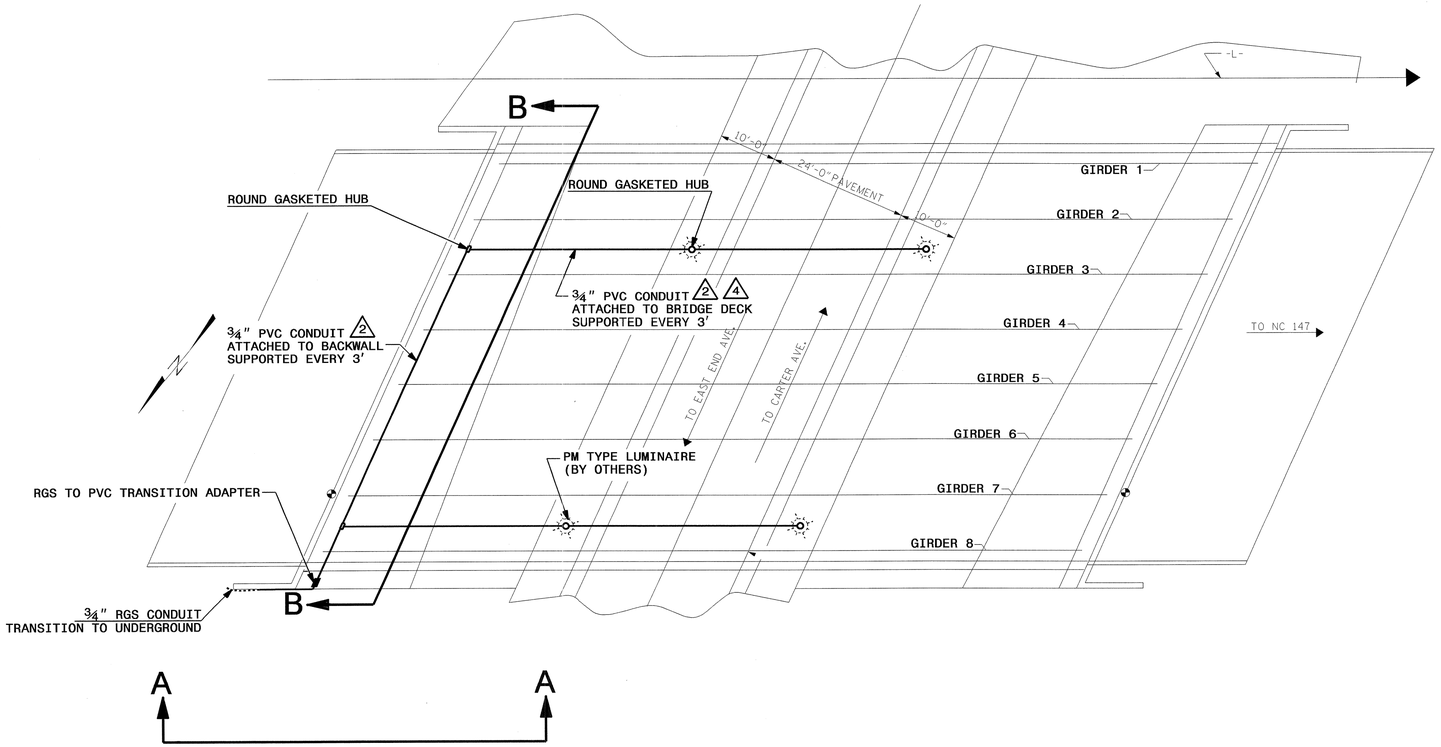

UNDERPASS CONDUIT LAYOUT (EBL) ECS-2

BEGIN LAYOUT AT BACKWALL

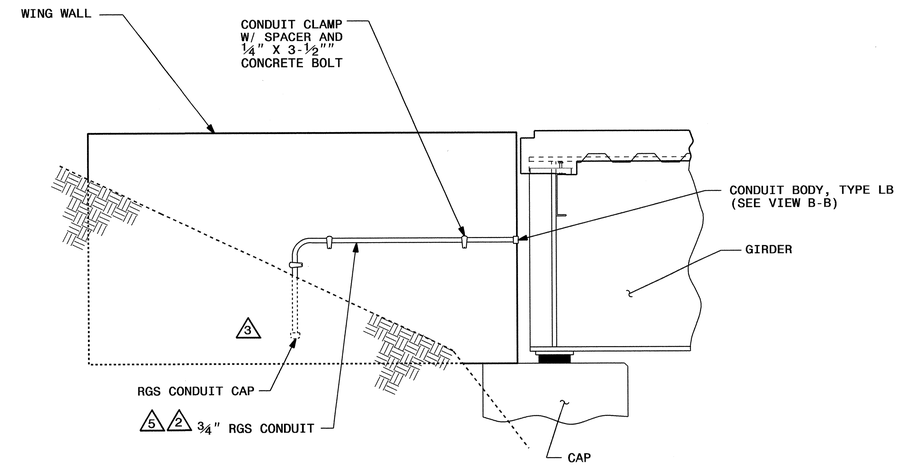

VIEW A-A

ESTIMATED BILL OF MATERIALS			
ITEM	QTY	UNITS	DESCRIPTION
1	6	EA	3/4" PVC ROUND GASKETED HUB
2	15	LF	3/4" RGS CONDUIT
3	240	LF	3/4" PVC CONDUIT
4	7	EA	3/4" PVC CONDUIT EXPANSION FITTING
5	80	EA	3/4" CONDUIT CLAMPS W/ SPACERS AND 1/4" SS WEDGE ANCHORS
6	1	EA	3/4" RGS TO PVC TRANSITION ADAPTER
7	1	EA	3/4" RGS CONDUIT CAP
8	1	EA	3/4" GALVANIZED LB CONDUIT BODY WITH COVER AND GASKET
9	8	EA	3/8" SS THREADED ROD
10	8	EA	3/8" SS FLAT WASHER AND HEX NUT
11	400	LF	PULL LINE
12	2	EA	3/4" PVC 90 DEGREE ELBOW
13	1	QT	PVC CEMENT
14	8	EA	3/8" CONCRETE INSERTS

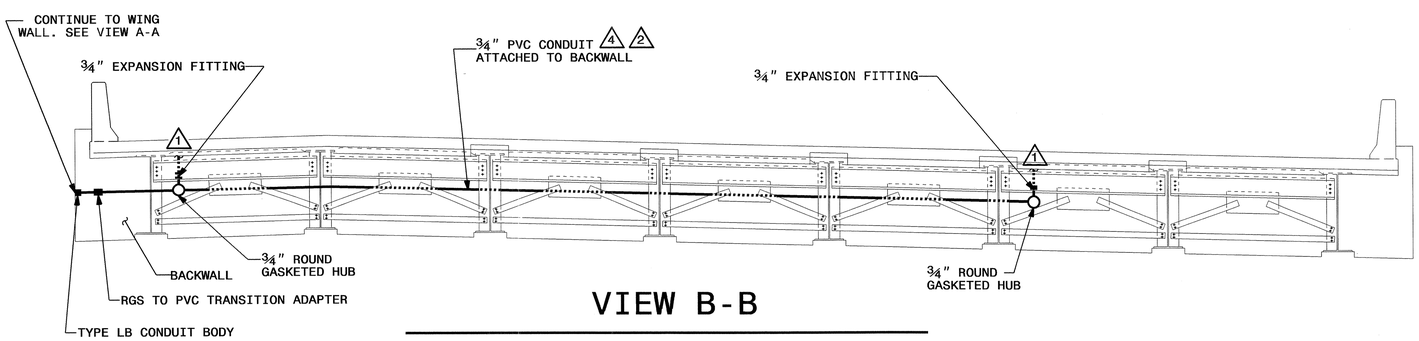

VIEW B-B

1. SEE STANDARD DRAWING 1412.01 AND DETAIL SHEET 1412D01 (SHEET NO. ECS_E3) FOR BRIDGE DECK ATTACHMENT DETAILS. INSTALL EXPANSION FITTING BETWEEN HUB AND BRIDGE DECK.
2. INSTALL PULL LINES IN ALL CONDUITS. SEE STANDARD SPECIFICATION 1400-2(I).
3. TERMINATE AND CAP CONDUIT AT LEAST 18" BELOW FINISHED GRADE.
4. PROVIDE AT LEAST ONE CONDUIT EXPANSION JOINT IN SECTIONS OF CONDUIT GREATER THAN 20' IN LENGTH BETWEEN JUNCTION BOXES AND/OR LIGHT FIXTURES, AND ONE CONDUIT EXPANSION JOINT EVERY 80' FOR LONGER RUNS.
5. USE FIELD BENDS OR SWEEPS AS REQUIRED FOR EASE OF CONDUIT INSTALLATION.
6. SEE LIGHTING PROJECT SPECIAL PROVISIONS SECTION 4.00 "ELECTRICAL CONDUIT SYSTEM" FOR ADDITIONAL DETAILS.

PROJECT NO. U-0071
DURHAM COUNTY
STATION: 125+91.57-L-
= 14+74.78-Y8-
SHEET 1 OF 2

STATE OF NORTH CAROLINA
DEPARTMENT OF TRANSPORTATION
RALEIGH

BRIDGE LIGHTING
CONDUIT ATTACHMENT

FOR BRIDGE ON EAST BOUND
DURHAM EAST END CONNECTOR
OVER ROWENA AVE. BETWEEN
EAST END AVE. AND CARTER AVE.
EBL

NORTH CAROLINA PROFESSIONAL SEAL 022582 ENGINEER PAUL KI-BUN CHAN
8-23-13

REVISIONS						SHEET NO.
NO.	BY:	DATE:	NO.	BY:	DATE:	S-320
1			3			TOTAL SHEETS
2			4			671

STR. #7

DRAWN BY : G. HALL DATE : 08-13
CHECKED BY : P. CHAN DATE : 08-13

16-MAY-2014 12:04
$$$$$$$$$$$$$$$$$$$$$$DGN$$$$$$$$$$$$$$$$$$$$$$
$$$$USERNAME$$$$

STATE OF
NORTH CAROLINA
DEPT. OF TRANSPORTATION
DIVISION OF HIGHWAYS
RALEIGH, N.C.

1-12

ENGLISH STANDARD DRAWING FOR
UNDERPASS LIGHTING

SHEET 1 OF 2
1412D01

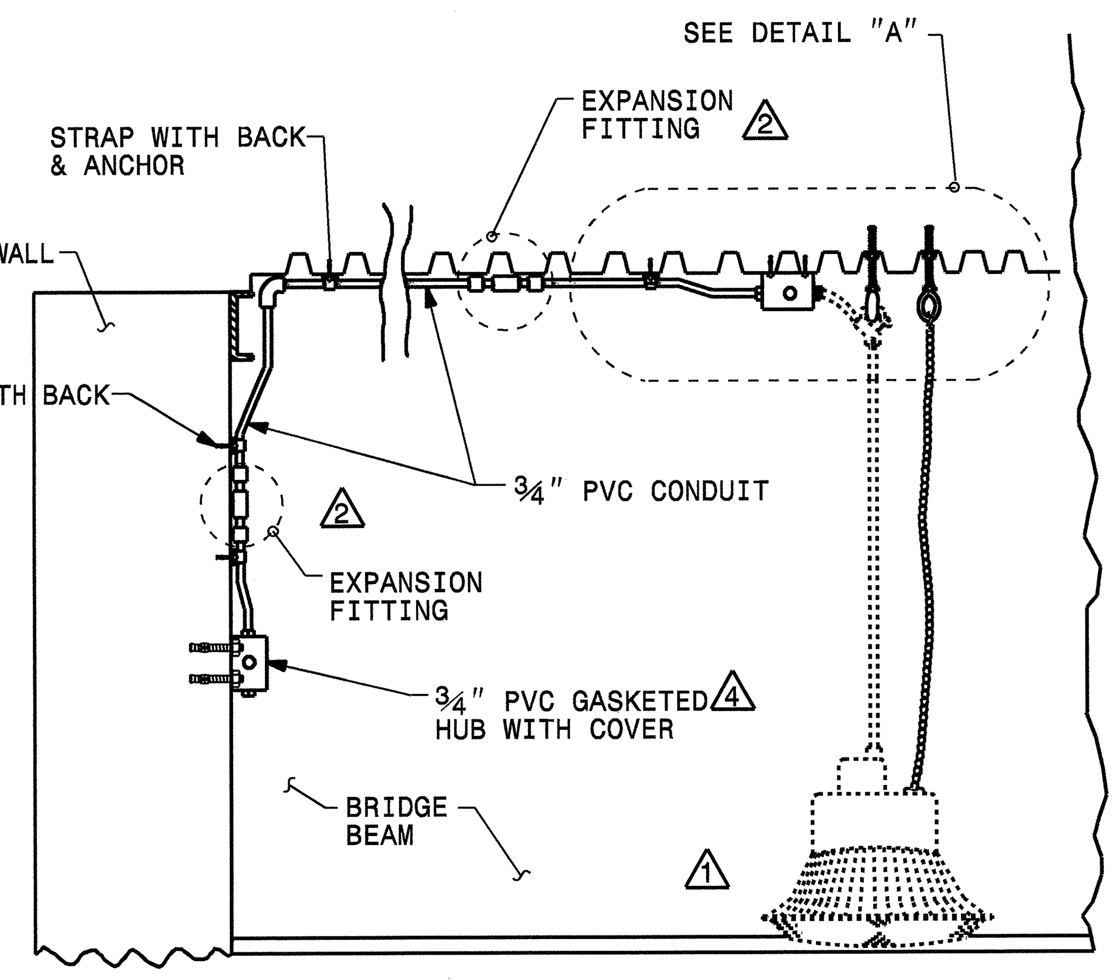

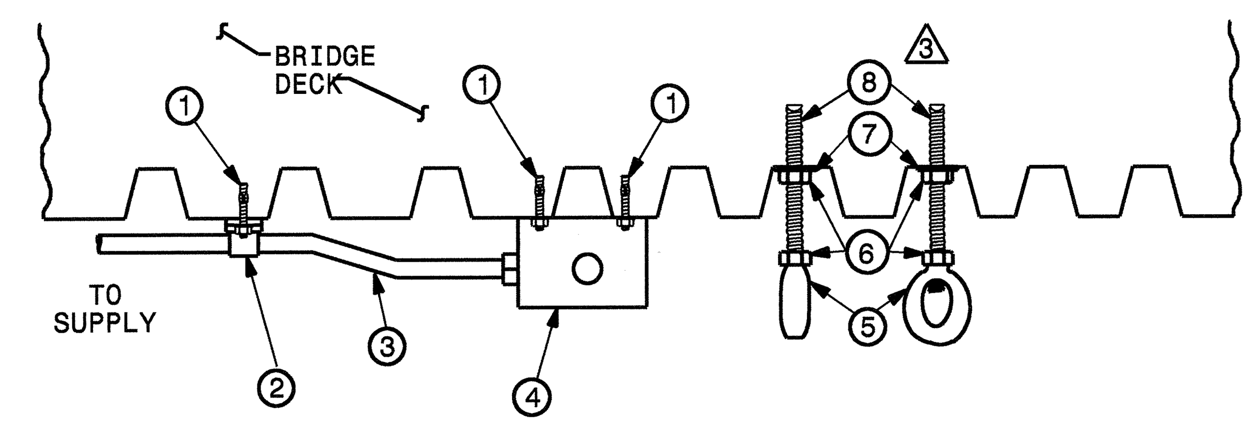

DETAIL "A"

COMPONENTS

1. 1/4" SS WEDGE ANCHOR
2. STRAP WITH BACK
3. 3/4" PVC CONDUIT
4. ROUND PVC BOX W/4-3/4" HUBS AND GASKETED COVER
5. 3/8" GALV. EYE NUT
6. 3/8" SS HEX NUT
7. 3/8" SS FLAT WASHER
8. 3/8" SS THREADED ROD AND DROP IN OR EXPANSION ANCHOR

NOTES

1. PM LUMIANIRE AND COMPONENTS BY OTHERS. NOT PART OF THIS CONTRACT.
2. PROVIDE EXPANSION FITTINGS AT EACH BRIDGE EXPANSION JOINT. PROVIDE AT LEAST 1 EXPANSION JOINT IN SECTIONS OF CONDUIT GREATER THAN 20' BETWEEN JUNCTION BOXES OR LIGHT FIXTURES, AND 1 EXPANSION JOINT EVERY 80' FOR LONGER RUNS.
3. REFER TO STANDARD SPECIFICATION 1074-2 FOR EXPANSION ANCHOR UNITS.
4. PLUG ANY UNUSED CONDUIT OPENINGS IN HUB.
5. CENTER THREADED ROD AND EYE NUTS BETWEEN GIRDERS.
6. SEE LIGHTING PROJECT SPECIAL PROVIDSIONS SECTION 4.00 "UNDERPASS CONDUIT SYSTEM" FOR ADDITIONAL DETAILS.

STATE OF
NORTH CAROLINA
DEPT. OF TRANSPORTATION
DIVISION OF HIGHWAYS
RALEIGH, N.C.

1-12

ENGLISH STANDARD DRAWING FOR
UNDERPASS LIGHTING

SHEET 1 OF 2
1412D01

DRAWN BY : G. HALL DATE : 08-13
CHECKED BY : P. CHAN DATE : 08-13

16-MAY-2014 12:03
$$$$$$$$$$$$$$$$$$$$$$$$$DGN$$$$$$$$$$$$$$$$$$$$$$$$$
$$$$USERNAME$$$$

PROJECT NO. U-0071
DURHAM COUNTY
STATION: 125+91.57-L- = 14+74.78-Y8-
SHEET 2 OF 2

STATE OF NORTH CAROLINA
DEPARTMENT OF TRANSPORTATION
RALEIGH

BRIDGE LIGHTING
CONDUIT ATTACHMENT
FOR BRIDGE ON EAST BOUND
DURHAM EAST END CONNECTOR
OVER ROWENA AVE. BETWEEN
EAST END AVE. AND CARTER AVE.
EBL

NORTH CAROLINA PROFESSIONAL ENGINEER SEAL 022582 PAUL KI-BUN CHAN
8-23-13

REVISIONS						SHEET NO.
NO.	BY:	DATE:	NO.	BY:	DATE:	S-321
1			3			TOTAL SHEETS
2			4			671

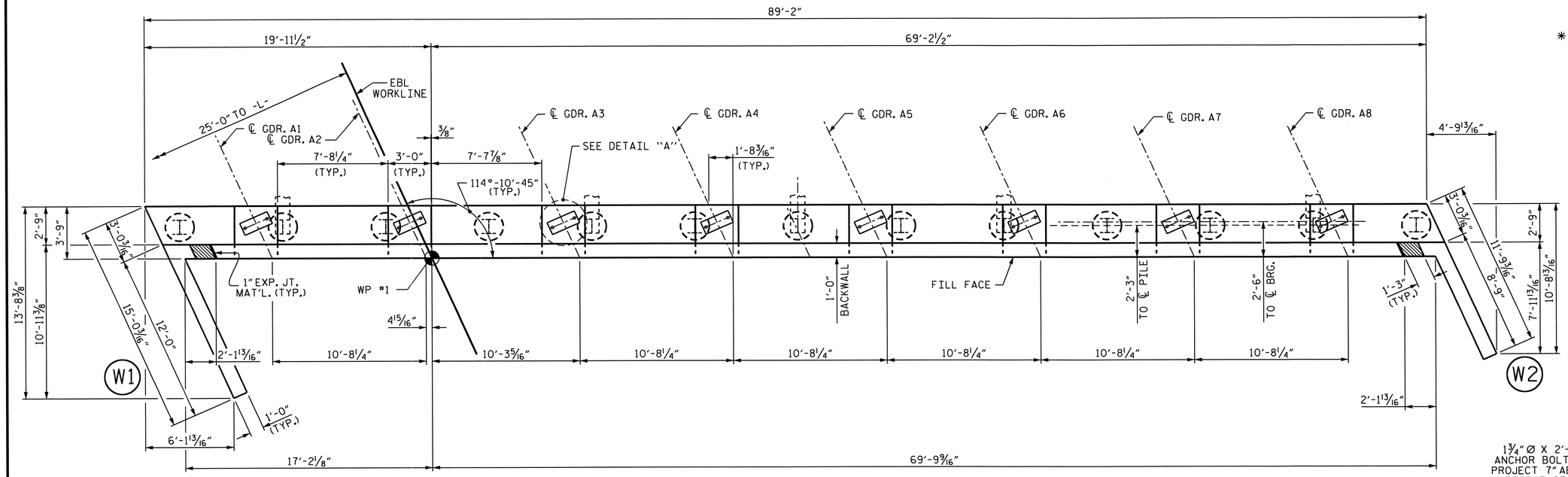

PLAN

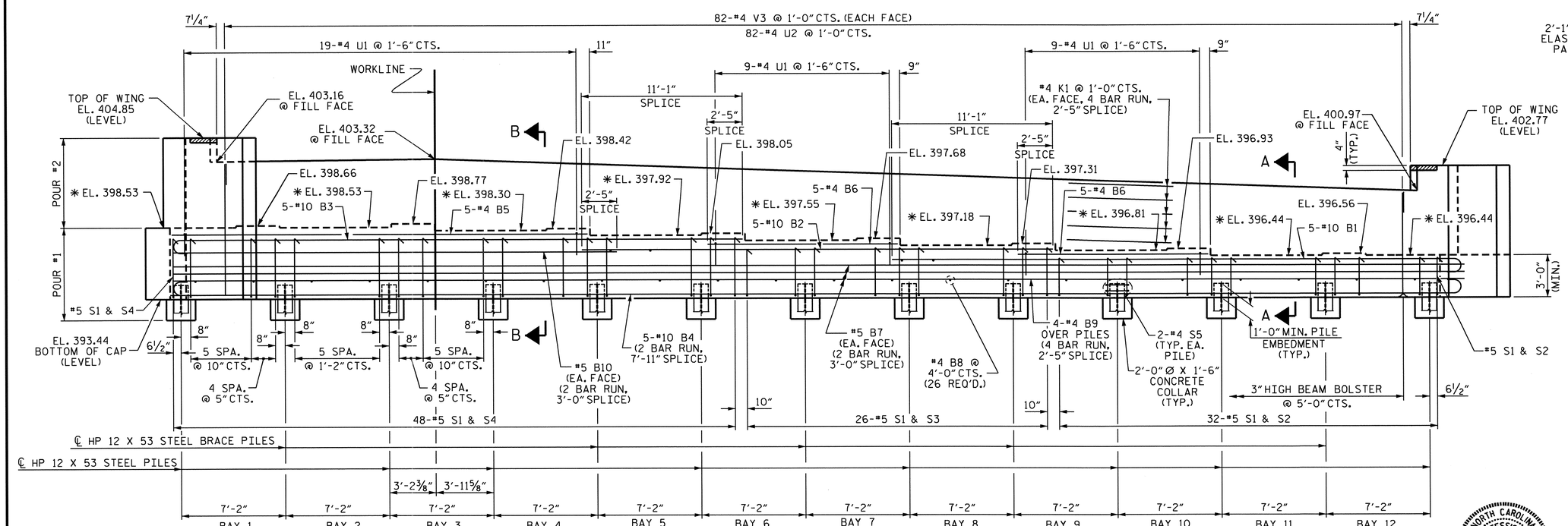

ELEVATION

"S" BAR SPACINGS IN BAYS 1, 4, 7, & 10 ARE TYPICAL.
"S" BAR SPACINGS IN BAYS 2, 5, 8, & 11 ARE TYPICAL.
"S" BAR SPACINGS IN BAYS 3, 6, 9, & 12 ARE TYPICAL.

NOTES

✳ FOR LOCATION OF ELEVATIONS BETWEEN BUILDUPS, SEE SECTION A-A, ON SHEET 3 OF 3.

STIRRUPS IN CAP MAY BE SHIFTED AS NECESSARY TO CLEAR ANCHOR BOLTS.

FOR PILE SPLICE DETAILS, SEE SHEET 3 OF 3.

BACKWALL SHALL BE PLACED BEFORE APPLYING THE EPOXY PROTECTIVE COATING.

THE TOP SURFACE AREAS OF THE END BENT CAPS SHALL BE CURED IN ACCORDANCE WITH THE STANDARD SPECIFICATIONS EXCEPT THE MEMBRANE CURING COMPOUND METHOD SHALL NOT BE USED.

THE TOP SURFACE OF THE CAP EXCEPT THE BRIDGE SEAT BUILDUPS SHALL BE SLOPED TRANSVERSELY FROM THE FILL FACE TO THE BACK FACE AT THE RATE OF 2%.

THE CONTRACTOR SHALL PROVIDE FOR INSTALLATION OF THE 4" DIAMETER DRAIN PIPE THROUGH THE WING WALL AS REQUIRED FOR REINFORCED BRIDGE APPROACH FILLS. SEE THE ROADWAY PLANS. REINFORCING STEEL IN THE WING WALL MAY BE SHIFTED AS NECESSARY TO CLEAR THE DRAIN PIPE.

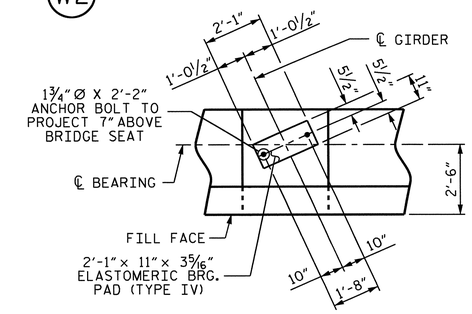

DETAIL "A"

(TYP. EA. BEARING)

PROJECT NO. U-0071
DURHAM COUNTY
STATION: 125+91.57 -L-

SHEET 1 OF 3

STATE OF NORTH CAROLINA
DEPARTMENT OF TRANSPORTATION
RALEIGH

SUBSTRUCTURE

END BENT 1

REVISIONS						SHEET NO.
NO.	BY:	DATE:	NO.	BY:	DATE:	S-322
1			3			TOTAL SHEETS
2			4			671

NORTH CAROLINA PROFESSIONAL SEAL 14855 ENGINEER DOUGLAS R. CALHOUN
5/7/14

DRAWN BY: A.C. OUTLAW DATE: 11/2013
CHECKED BY: A.K.PATEL DATE: 11/2013
DESIGN ENGINEER OF RECORD: A.C. OUTLAW DATE: 11/2013

06-MAY-2014 15:38
Z:\TIPProjects-U\U0071\Structures\Plans\Str#7-L-over-Y8-\Sub_Draw\U0071_SD_EB_07.dgn
asorsenginh

STR. #7

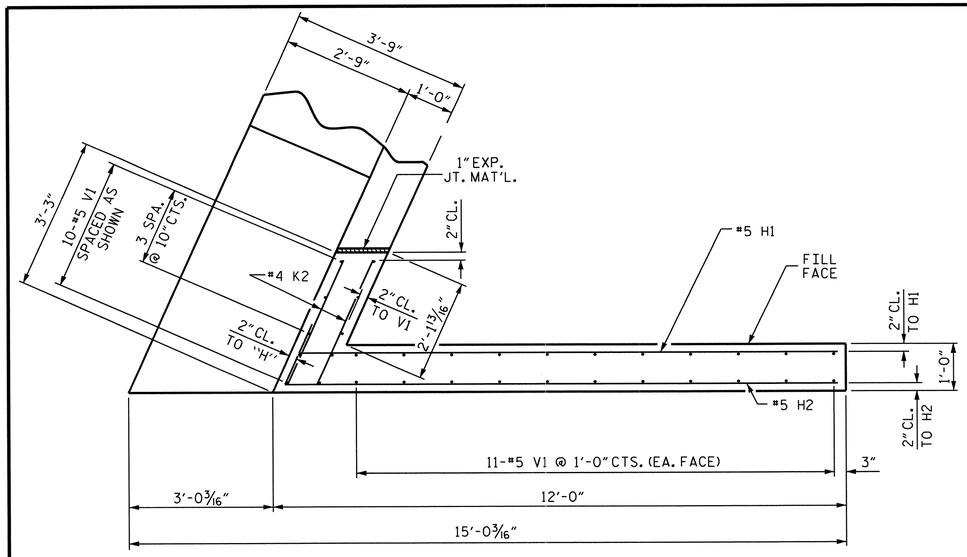

PLAN OF LEFT WING - W1

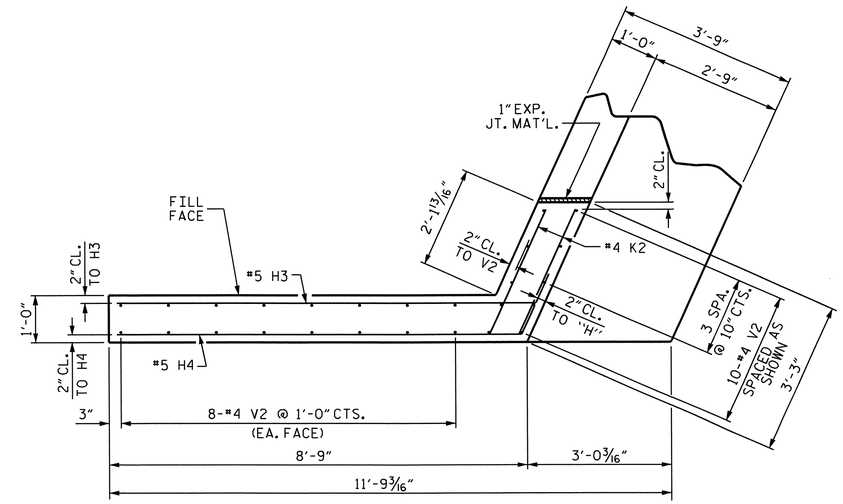

PLAN OF RIGHT WING - W2

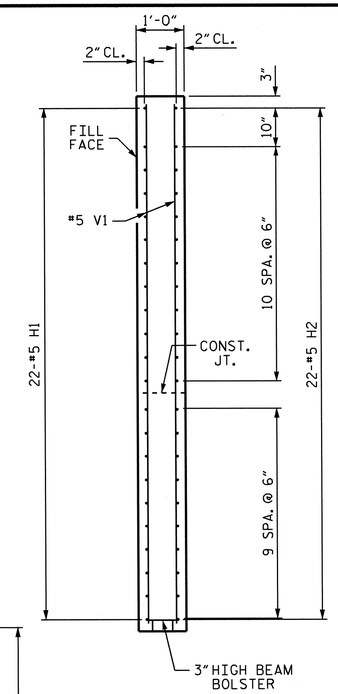

SECTION X-X

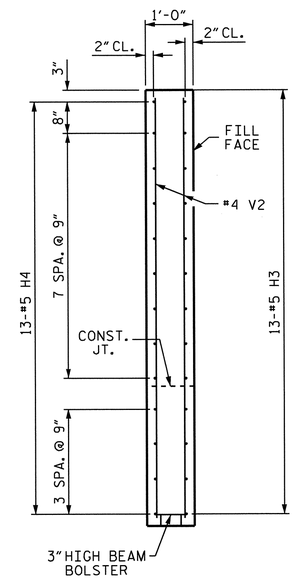

SECTION Y-Y

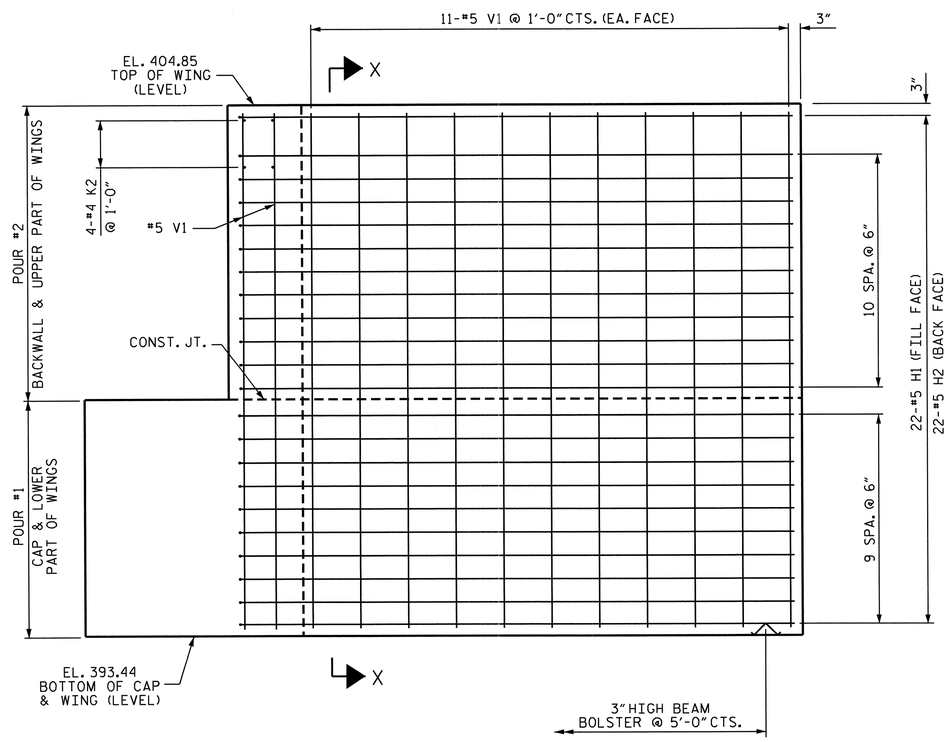

ELEVATION OF LEFT WING - W1

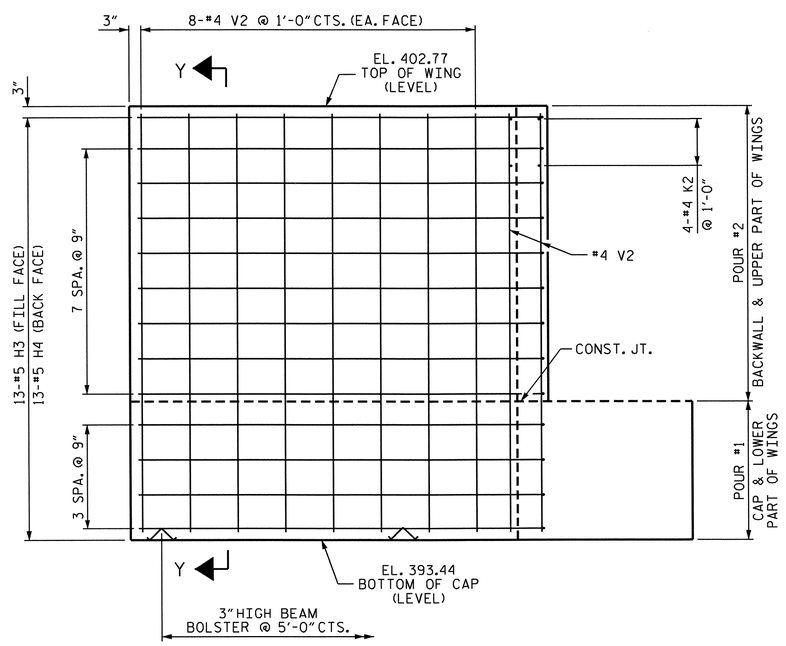

ELEVATION OF RIGHT WING - W2

PROJECT NO. U-0071

DURHAM COUNTY

STATION: 125+91.57 -L-

SHEET 2 OF 3

STATE OF NORTH CAROLINA
DEPARTMENT OF TRANSPORTATION
RALEIGH

SUBSTRUCTURE
END BENT 1

NORTH CAROLINA PROFESSIONAL SEAL 14855 ENGINEER DOUGLAS R. CALHOUN
5/7/14

REVISIONS						SHEET NO.
NO.	BY:	DATE:	NO.	BY:	DATE:	S-323
1			3			TOTAL SHEETS
2			4			671

STR. #7

DRAWN BY : A.C. OUTLAW DATE : 11/2013
CHECKED BY : A.K.PATEL DATE : 11/2013
DESIGN ENGINEER OF RECORD: A.C. OUTLAW DATE : 11/2013

06-MAY-2014 15:38
Z:\TIPProjects-U\U0071\Structures\Plans\Str#7-L-over-Y8-\Sub_Draw\U0071_SD_EB_07.dgn
asorsenginh

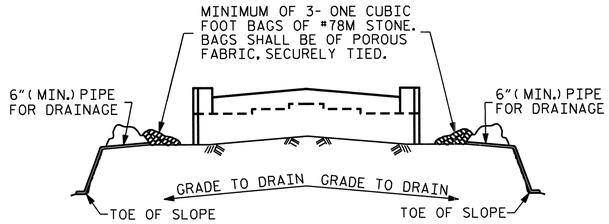

BAGGED STONE AND PIPE SHALL BE PLACED IMMEDIATELY AFTER COMPLETION OF END BENT EXCAVATION. PIPE MAY BE EITHER CONCRETE, CORRUGATED STEEL, CORRUGATED ALUMINUM ALLOY, OR CORRUGATED PLASTIC. PERFORATED PIPE WILL NOT BE ALLOWED.

BAGGED STONE SHALL REMAIN IN PLACE UNTIL THE ENGINEER DIRECTS THAT IT BE REMOVED. THE CONTRACTOR SHALL REMOVE AND DISPOSE OF SILT ACCUMULATIONS AT BAGGED STONE WHEN SO DIRECTED BY THE ENGINEER. BAGS SHALL BE REMOVED AND REPLACED WHENEVER THE ENGINEER DETERMINES THAT THEY HAVE DETERIORATED AND LOST THEIR EFFECTIVENESS.

NO SEPARATE PAYMENT WILL BE MADE FOR THIS WORK AND THE ENTIRE COST OF THIS WORK SHALL BE INCLUDED IN THE UNIT CONTRACT PRICE BID FOR THE SEVERAL PAY ITEMS.

TEMPORARY DRAINAGE AT END BENT

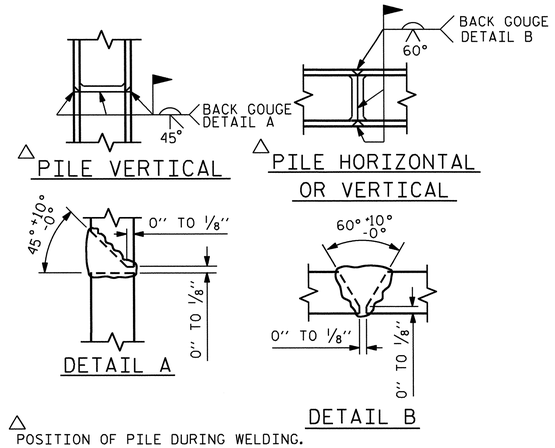

PILE SPLICE DETAILS

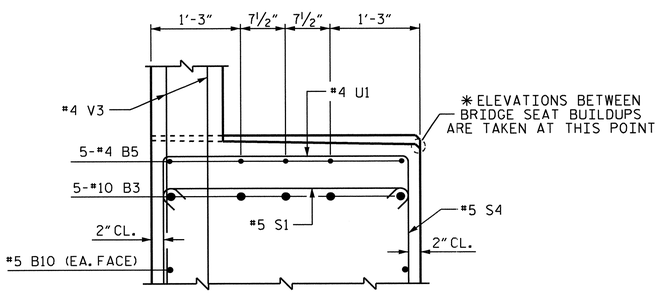

PARTIAL SECTION B-B

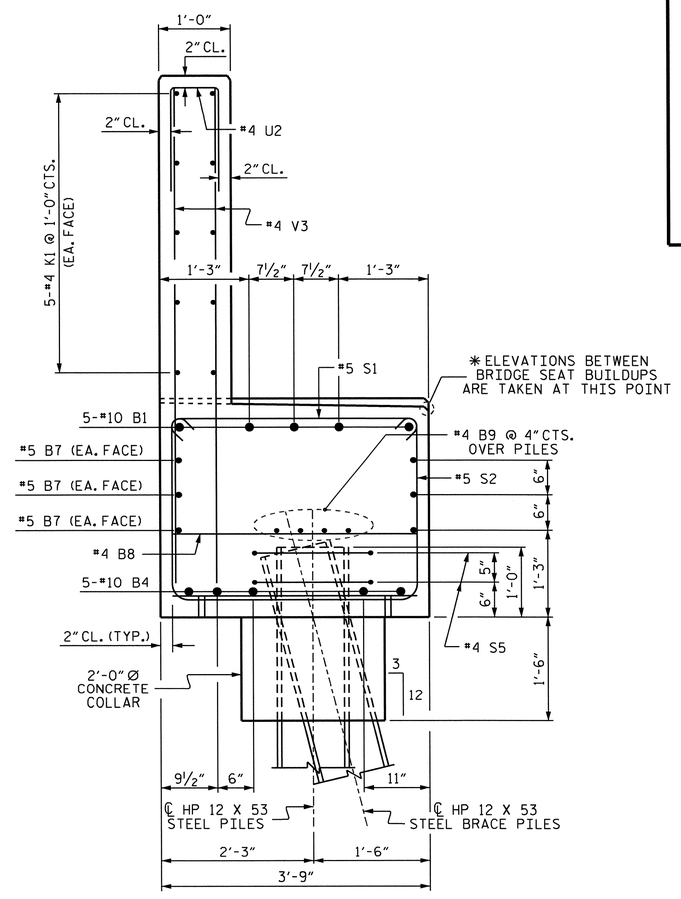

SECTION A-A

BAR TYPES

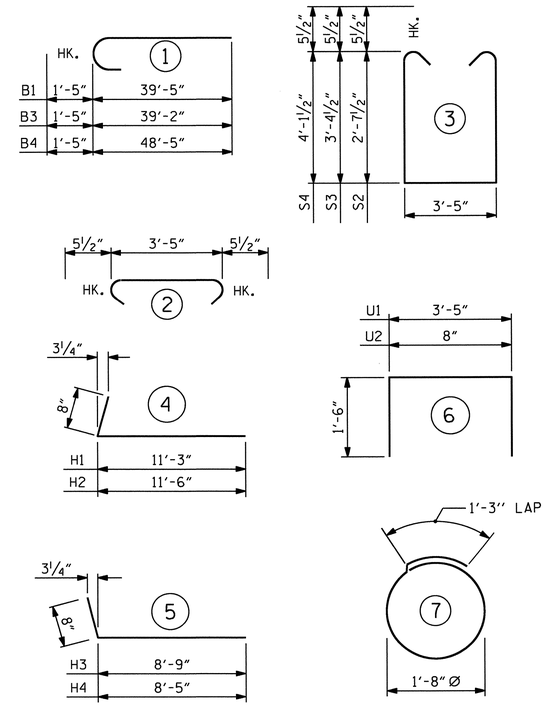

ALL BAR DIMENSIONS ARE OUT TO OUT.

BILL OF MATERIAL

END BENT 1

BAR	NO.	SIZE	TYPE	LENGTH	WEIGHT
B1	5	#10	1	40'-10"	879
B2	5	#10	STR	32'-6"	699
B3	5	#10	1	40'-7"	873
B4	10	#10	1	49'-10"	2144
B5	5	#4	STR	28'-9"	96
B6	10	#4	STR	13'-2"	88
B7	12	#5	STR	45'-11"	575
B8	26	#4	STR	3'-5"	59
B9	16	#4	STR	24'-1"	257
B10	2	#5	STR	32'-11"	69
H1	22	#5	4	11'-11"	273
H2	22	#5	4	12'-2"	279
H3	13	#5	5	9'-5"	128
H4	13	#5	5	9'-1"	123
K1	40	#4	STR	24'-0"	641
K2	8	#4	STR	2'-10"	15
S1	106	#5	2	4'-4"	479
S2	32	#5	3	9'-7"	320
S3	26	#5	3	11'-1"	301
S4	48	#5	3	12'-7"	630
S5	26	#4	7	6'-6"	113
U1	37	#4	6	6'-5"	159
U2	82	#4	6	3'-8"	201
V1	32	#5	STR	11'-1"	370
V2	26	#4	STR	9'-0"	156
V3	164	#4	STR	7'-2"	785

REINFORCING STEEL = 10,712 LBS

CLASS "A" CONCRETE

POUR #1 - CAP, LOWER PART OF WINGS, & COLLARS 53.7 C.Y.

POUR #2 - BACKWALL & UPPER PART OF WINGS 20.5 C.Y.

TOTAL CLASS "A" CONCRETE 74.2 C.Y.

HP 12 X 52 STEEL PILES

NO. 13 LN FT. 630

PROJECT NO. U-0071

DURHAM COUNTY

STATION: 125+91.57 -L-

SHEET 3 OF 3

STATE OF NORTH CAROLINA
DEPARTMENT OF TRANSPORTATION
RALEIGH

SUBSTRUCTURE
END BENT 1

NORTH CAROLINA PROFESSIONAL SEAL 14855 ENGINEER DOUGLAS R. CALHOUN
3/7/14

REVISIONS							SHEET NO.
NO.	BY:	DATE:	NO.	BY:	DATE:		S-324
1			3				TOTAL SHEETS
2			4				671

DRAWN BY : A.C. OUTLAW DATE : 11/2013
CHECKED BY : A.K.PATEL DATE : 11/2013
DESIGN ENGINEER OF RECORD: A.C. OUTLAW DATE : 11/2013

06-MAY-2014 15:37
Z:\TIPProjects-U\U0071\Structures\Plans\Str#7-L-over-Y8-\Sub_Draw\U0071_SD_EB_07.dgn
asorsenginh

STR. #7

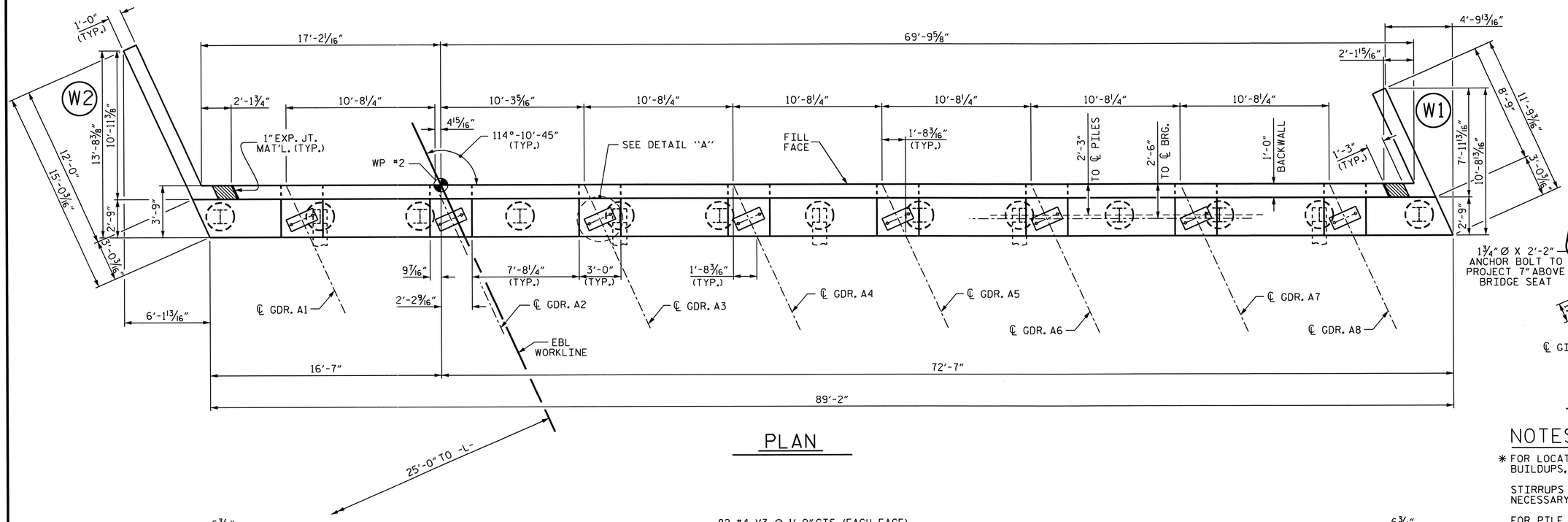

PLAN

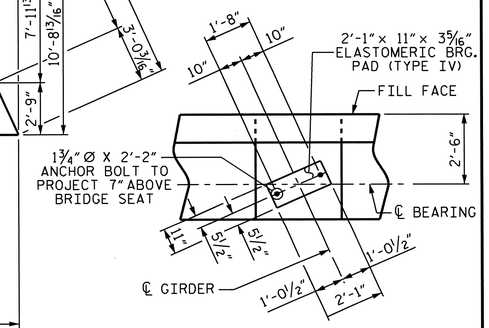

DETAIL "A"

(TYP. EA. BEARING)

NOTES

* FOR LOCATION OF ELEVATIONS BETWEEN BUILDUPS, SEE SECTION A-A, ON SHEET 3 OF 3.

STIRRUPS IN CAP MAY BE SHIFTED AS NECESSARY TO CLEAR ANCHOR BOLTS.

FOR PILE SPLICE DETAILS, SEE SHEET 3 OF 3.

BACKWALL SHALL BE PLACED BEFORE APPLYING THE EPOXY PROTECTIVE COATING.

THE TOP SURFACE AREAS OF THE END BENT CAPS SHALL BE CURED IN ACCORDANCE WITH THE STANDARD SPECIFICATIONS EXCEPT THE MEMBRANE CURING COMPOUND METHOD SHALL NOT BE USED.

THE TOP SURFACE OF THE CAP EXCEPT THE BRIDGE SEAT BUILDUPS SHALL BE SLOPED TRANSVERSELY FROM THE FILL FACE TO THE BACK FACE AT THE RATE OF 2%.

THE CONTRACTOR SHALL PROVIDE FOR INSTALLATION OF THE 4" DIAMETER DRAIN PIPE THROUGH THE WING WALL AS REQUIRED FOR REINFORCED BRIDGE APPROACH FILLS, SEE THE ROADWAY PLANS. REINFORCING STEEL IN THE WING WALL MAY BE SHIFTED AS NECESSARY TO CLEAR THE DRAIN PIPE.

FOR PIPE INSERT DETAILS, SEE BEARINGS SHEET.

EPOXY COAT THE END BENT CAP AFTER ADJUSTMENTS ARE MADE TO BEARINGS AND ANCHOR BOLTS ARE GROUTED.

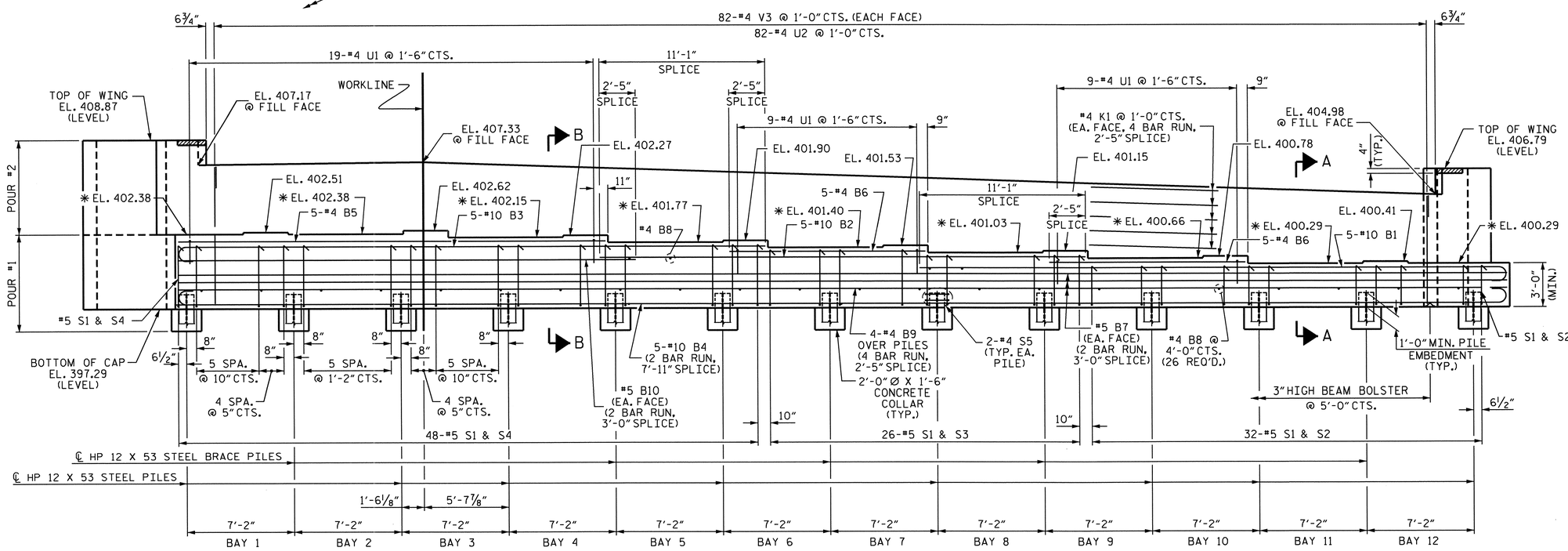

ELEVATION

"S" BAR SPACINGS IN BAYS 1, 4, 7, & 10 ARE TYPICAL.
"S" BAR SPACINGS IN BAYS 2, 5, 8, & 11 ARE TYPICAL.
"S" BAR SPACINGS IN BAYS 3, 6, 9, & 12 ARE TYPICAL.

PROJECT NO. U-0071
DURHAM COUNTY
STATION: 125+91.57 -L-

SHEET 1 OF 3

STATE OF NORTH CAROLINA
DEPARTMENT OF TRANSPORTATION
RALEIGH

SUBSTRUCTURE

END BENT 2

NORTH CAROLINA PROFESSIONAL SEAL 14855 ENGINEER DOUGLAS R. CALHOUN
5/7/14

REVISIONS						SHEET NO.
NO.	BY:	DATE:	NO.	BY:	DATE:	S-325
1			3			TOTAL SHEETS
2			4			471

DRAWN BY : A.C. OUTLAW DATE : 11/2013
CHECKED BY : A.K.PATEL DATE : 11/2013
DESIGN ENGINEER OF RECORD: A.C. OUTLAW DATE : 11/2013

06-MAY-2014 15:37
Z:\TIPProjects-U\U0071\Structures\Plans\Str#7-L-over-Y8-\Sub_Draw\U0071_SD_EB_07.dgn
asorsenginh

STR. #7

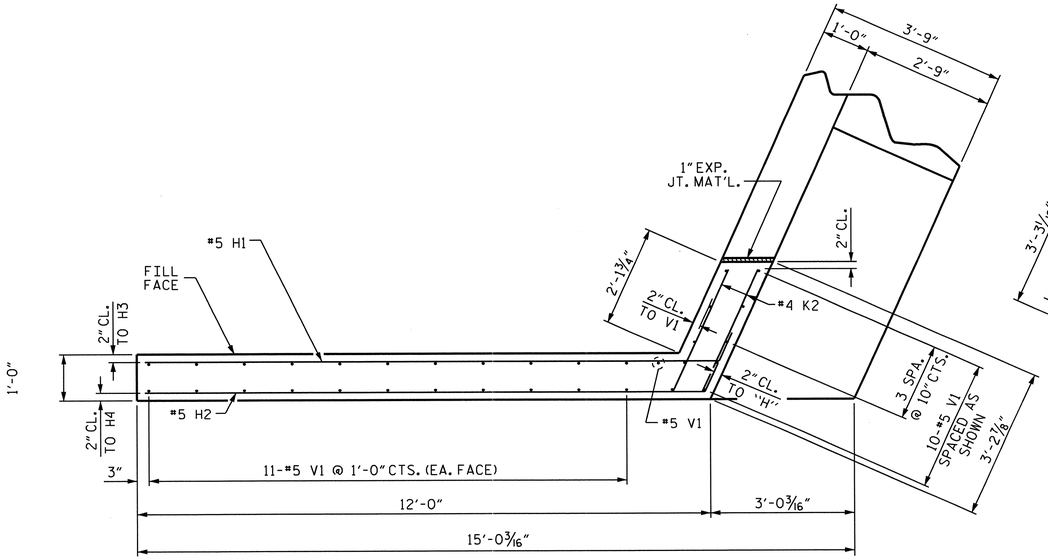

PLAN OF RIGHT WING - W2

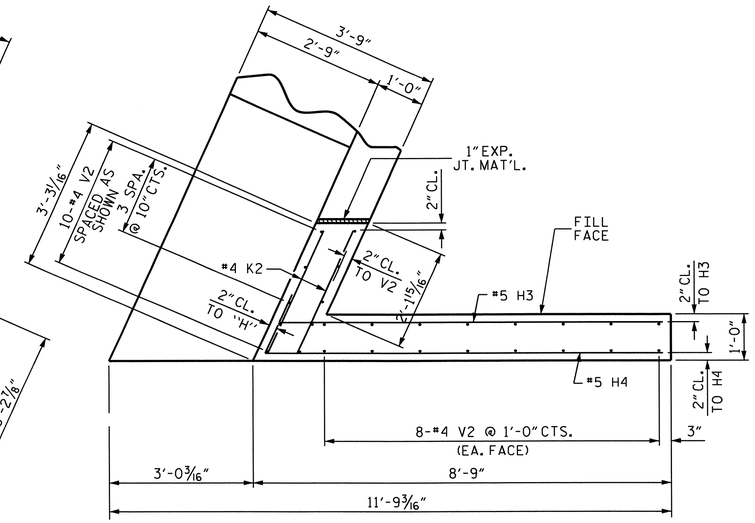

PLAN OF LEFT WING - W1

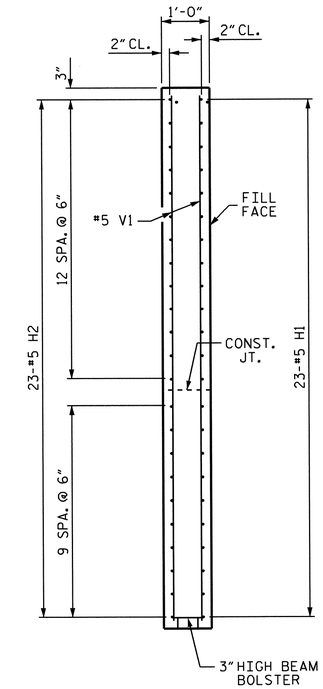

SECTION X-X

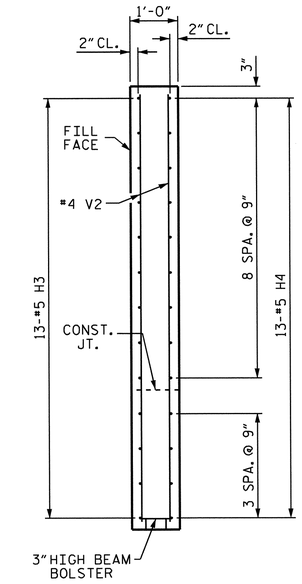

SECTION Y-Y

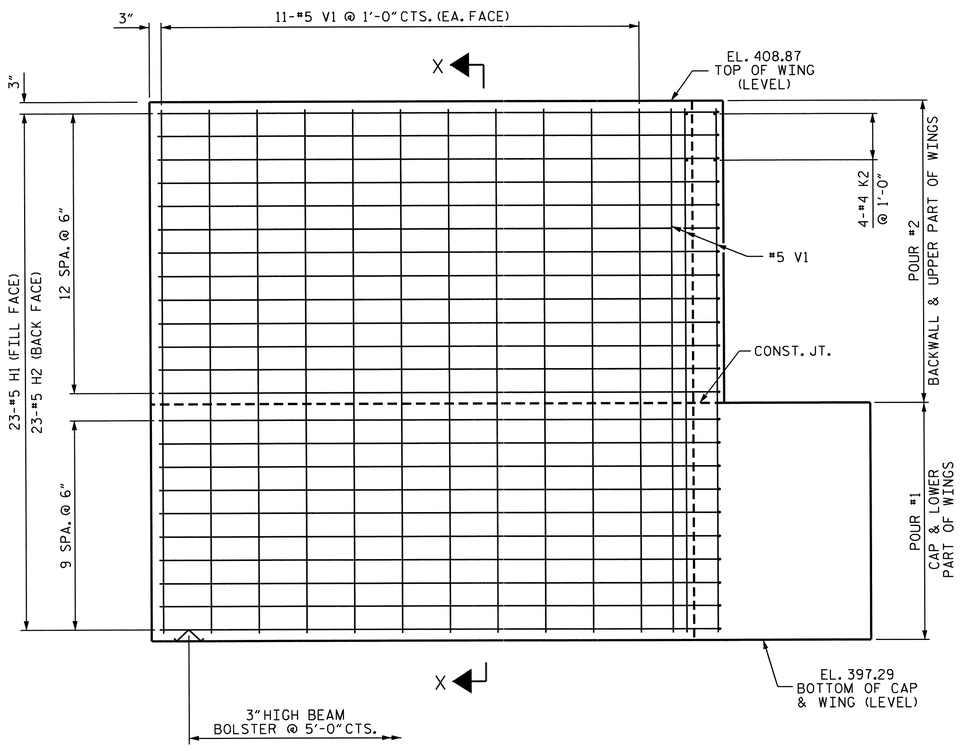

ELEVATION OF RIGHT WING - W2

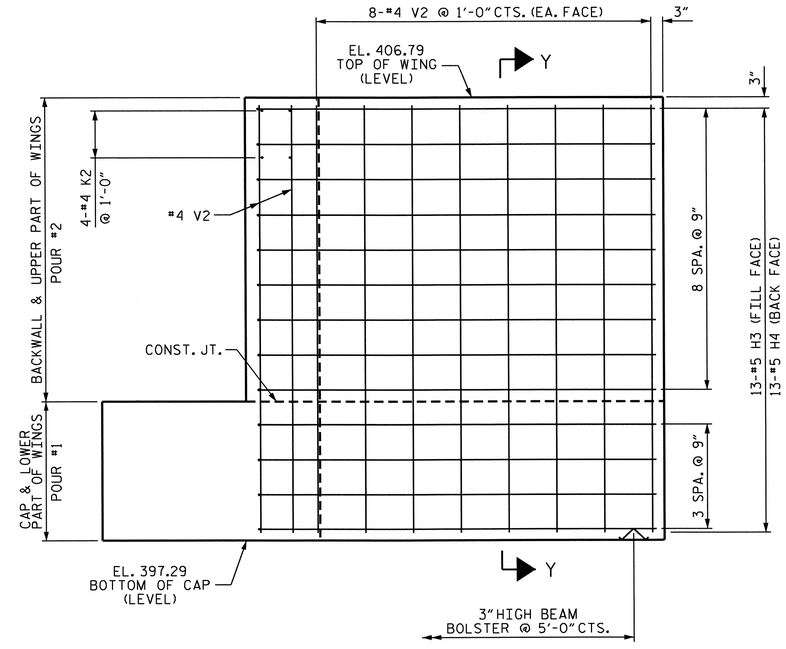

ELEVATION OF LEFT WING - W1

PROJECT NO. U-0071
DURHAM COUNTY
STATION: 125+91.57 -L-

SHEET 2 OF 3

STATE OF NORTH CAROLINA
DEPARTMENT OF TRANSPORTATION
RALEIGH

SUBSTRUCTURE
END BENT 2

NORTH CAROLINA PROFESSIONAL SEAL 14855 ENGINEER DOUGLAS R. CALHOUN
5/7/14

REVISIONS							SHEET NO.
NO.	BY:	DATE:	NO.	BY:	DATE:		S-326
1			3				TOTAL SHEETS
2			4				676

DRAWN BY : A.C. OUTLAW DATE : 11/2013
CHECKED BY : A.K.PATEL DATE : 11/2013
DESIGN ENGINEER OF RECORD: A.C. OUTLAW DATE : 11/2013

06-MAY-2014 15:36
Z:\TIPProjects-U\U0071\Structures\Plans\Str#7-L-over-Y8-\Sub_Draw\U0071_SD_EB_07.dgn
asorsenglnh

STR. #7

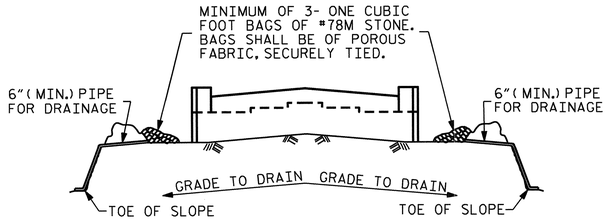

BAGGED STONE AND PIPE SHALL BE PLACED IMMEDIATELY AFTER COMPLETION OF END BENT EXCAVATION. PIPE MAY BE EITHER CONCRETE, CORRUGATED STEEL, CORRUGATED ALUMINUM ALLOY, OR CORRUGATED PLASTIC. PERFORATED PIPE WILL NOT BE ALLOWED.

BAGGED STONE SHALL REMAIN IN PLACE UNTIL THE ENGINEER DIRECTS THAT IT BE REMOVED. THE CONTRACTOR SHALL REMOVE AND DISPOSE OF SILT ACCUMULATIONS AT BAGGED STONE WHEN SO DIRECTED BY THE ENGINEER. BAGS SHALL BE REMOVED AND REPLACED WHENEVER THE ENGINEER DETERMINES THAT THEY HAVE DETERIORATED AND LOST THEIR EFFECTIVENESS.

NO SEPARATE PAYMENT WILL BE MADE FOR THIS WORK AND THE ENTIRE COST OF THIS WORK SHALL BE INCLUDED IN THE UNIT CONTRACT PRICE BID FOR THE SEVERAL PAY ITEMS.

TEMPORARY DRAINAGE AT END BENT

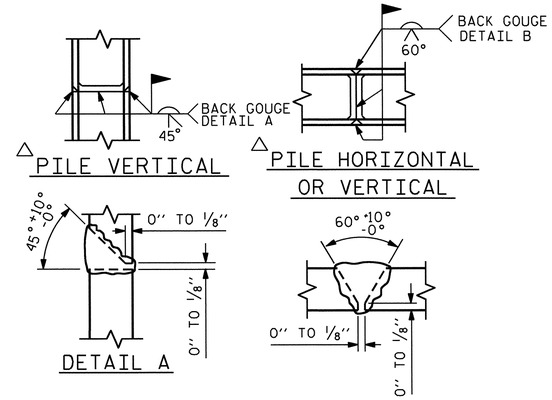

△ POSITION OF PILE DURING WELDING.

PILE SPLICE DETAILS

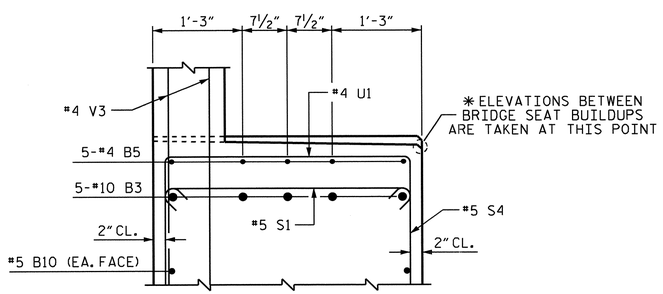

PARTIAL SECTION B-B

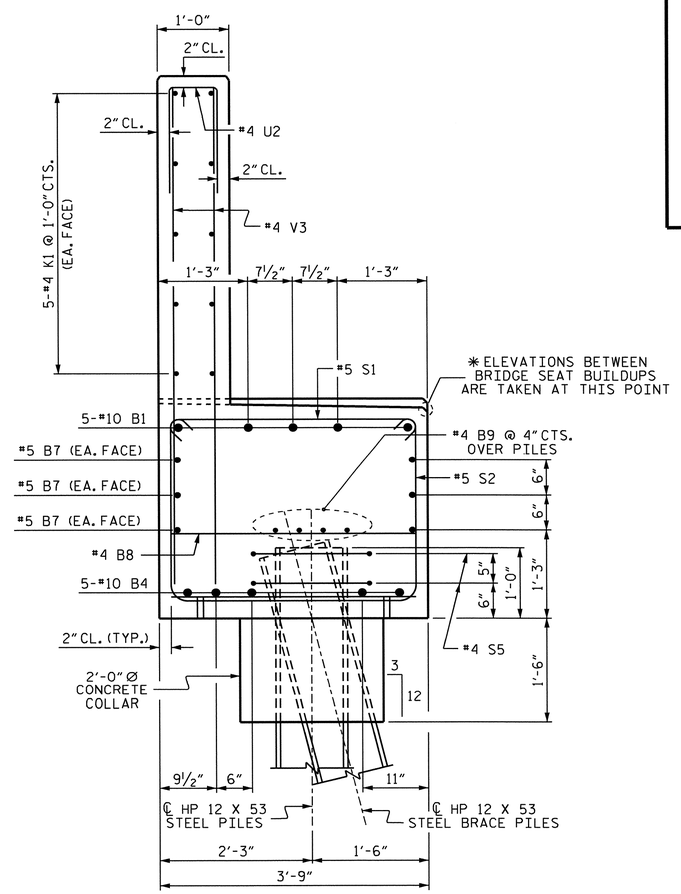

SECTION A-A

BAR TYPES

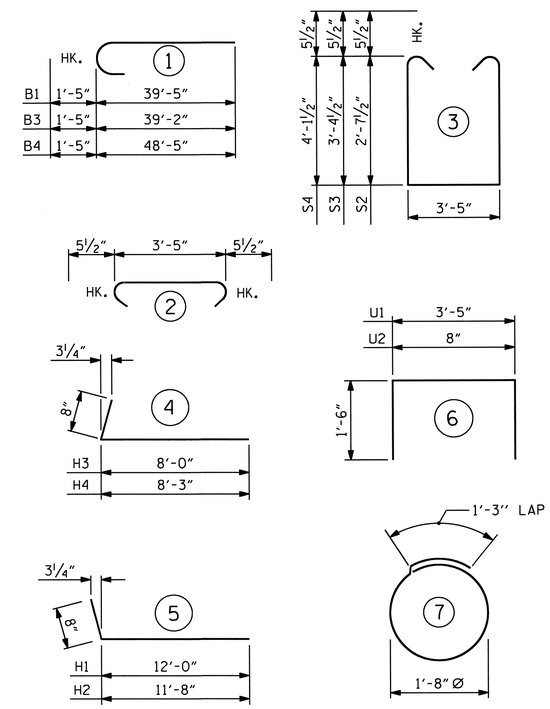

ALL BAR DIMENSIONS ARE OUT TO OUT.

BILL OF MATERIAL
END BENT 2

BAR	NO.	SIZE	TYPE	LENGTH	WEIGHT
B1	5	#10	1	40'-10"	879
B2	5	#10	STR	32'-6"	699
B3	5	#10	1	40'-7"	873
B4	10	#10	1	49'-10"	2144
B5	5	#4	STR	28'-9"	96
B6	10	#4	STR	13'-2"	88
B7	12	#5	STR	45'-11"	575
B8	26	#4	STR	3'-5"	59
B9	16	#4	STR	24'-1"	257
B10	2	#5	STR	32'-11"	69
H1	23	#5	5	4'-4"	304
H2	23	#5	5	4'-8"	296
H3	13	#5	4	4'-4"	118
H4	13	#5	4	4'-8"	121
K1	40	#4	STR	24'-0"	641
K2	8	#4	STR	2'-10"	15
S1	106	#5	2	4'-4"	479
S2	32	#5	3	9'-7"	320
S3	26	#5	3	11'-1"	301
S4	48	#5	3	12'-7"	630
S5	26	#4	7	6'-6"	113
U1	37	#4	6	6'-5"	159
U2	82	#4	6	3'-8"	201
V1	32	#5	STR	11'-3"	387
V2	26	#4	STR	9'-2"	159
V3	164	#4	STR	7'-4"	803

REINFORCING STEEL = 10,786 LBS

CLASS "A" CONCRETE

POUR #1 - CAP, LOWER PART OF WINGS, & COLLARS 53.7 C.Y.

POUR #2 - BACKWALL & UPPER PART OF WINGS 21.0 C.Y.

TOTAL CLASS "A" CONCRETE 74.7 C.Y.

HP 12 X 52 STEEL PILES

NO. 13 LN FT. 715

PROJECT NO. U-0071

DURHAM COUNTY

STATION: 125+91.57 -L-

SHEET 3 OF 3

STATE OF NORTH CAROLINA
DEPARTMENT OF TRANSPORTATION
RALEIGH

SUBSTRUCTURE
END BENT 2

NORTH CAROLINA PROFESSIONAL SEAL 14855 ENGINEER DOUGLAS R. CALHOUN
5/7/14

REVISIONS						SHEET NO.
NO.	BY:	DATE:	NO.	BY:	DATE:	S-327
1			3			TOTAL SHEETS
2			4			671

DRAWN BY : A.C. OUTLAW DATE : 11/2013
CHECKED BY : A.K.PATEL DATE : 11/2013
DESIGN ENGINEER OF RECORD: A.C. OUTLAW DATE : 11/2013

06-MAY-2014 15:36
Z:\TIPProjects-U\U0071\Structures\Plans\Str#7-L-over-Y8-\Sub_Draw\U0071_SD_EB_07.dgn
asorsenginh

STR. #7

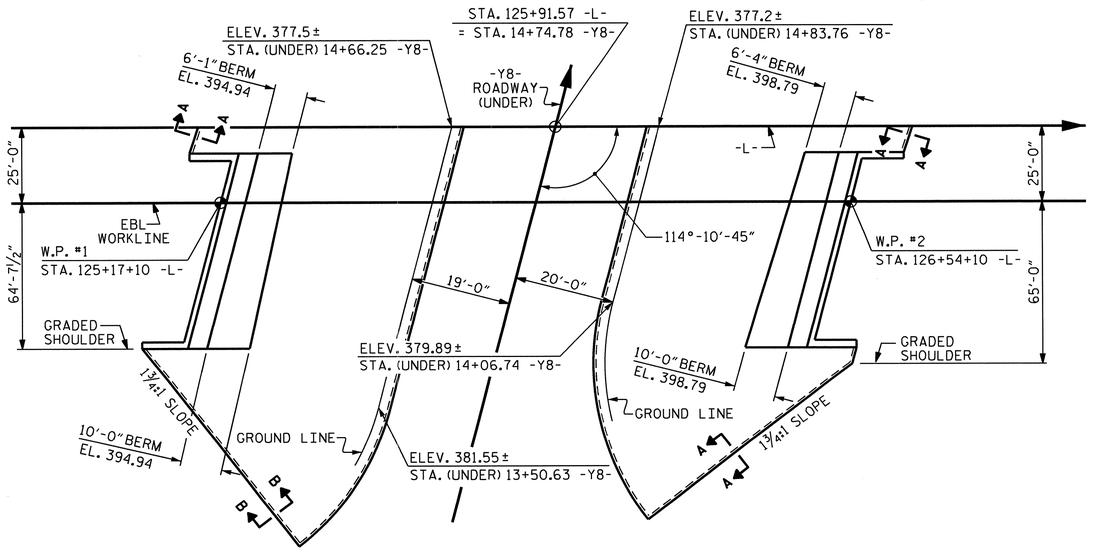

PLAN

GENERAL NOTES

SLOPE PROTECTION SHALL BE PLACED UNDER THE ENDS OF THE BRIDGE AS SHOWN IN THE DETAILS. STRAIGHT EDGING WILL NOT BE REQUIRED UNLESS, IN THE OPINION OF THE ENGINEER, VISUAL INSPECTION INDICATES A NEED FOR IT. MEASUREMENT AND PAYMENT SHALL BE AS PRESCRIBED IN SECTION 462 OF THE STANDARD SPECIFICATIONS. FOR BERM WIDTH, SEE GENERAL DRAWING.

THE SLOPE PROTECTION SHALL CONSIST OF 4" POURED-IN-PLACE CONCRETE PAVING AS SHOWN IN THE DETAILS ON THIS SHEET. CONCRETE SHALL BE CLASS "B". THE CONCRETE SURFACE SHALL BE FLOATED WITH A WOODEN FLOAT AND FINISHED. WELDED WIRE FABRIC REINFORCING SHALL BE 6 X 6 - W1.4 X W1.4, 60" WIDE. SLOPE PROTECTION SHALL BE POURED IN 5' STRIPS AS SHOWN IN THE "POURING DETAIL" WITH 2'-0" LONG #4 BARS PLACED ALONG THE SLOPE BETWEEN STRIPS AT 1'-6" MAXIMUM SPACING. SLOPE PROTECTION MAY BE POURED IN ALTERNATE 4' AND 5' STRIPS AS SHOWN IN THE "OPTIONAL POURING DETAIL" WITH ADJACENT RUNS OF WELDED WIRE FABRIC LAPPING AT LEAST 6". THE COST OF THE WELDED WIRE FABRIC AND #4 BARS, IF USED, SHALL BE INCLUDED IN THE CONTRACT UNIT PRICE BID PER SQUARE YARD FOR SLOPE PROTECTION.

BRIDGE @ STA. 125+91.57 -L- (EBL)	4 INCH SLOPE PROTECTION	* WELDED WIRE FABRIC 60 INCHES WIDE
	SQUARE YARDS	APPROX. L.F.
END BENT 1	515	930
END BENT 2	670	1210

* QUANTITY SHOWN IS BASED ON 5' POURS.

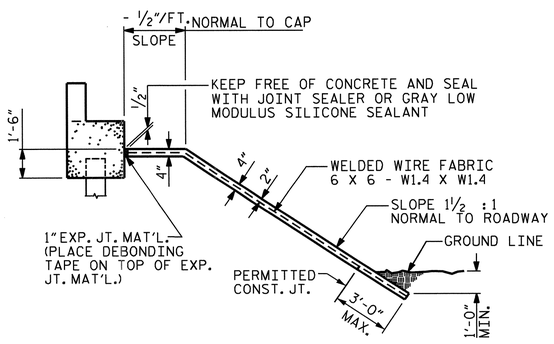

SECTION ALONG ℄ ROADWAY WHEN DITCH IS NOT PROVIDED

SLOPE PROTECTION

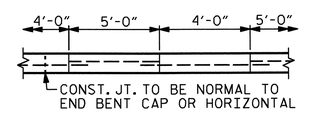

POUR A 4'-0" STRIP FIRST. STRIP WIDTHS MAY VARY IN CURVED PORTION.

OPTIONAL POURING DETAIL

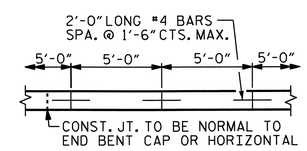

STRIP WIDTHS MAY VARY IN CURVED PORTION.

POURING DETAIL

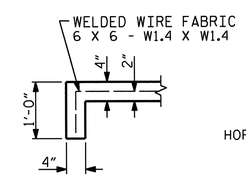

SECTION A-A

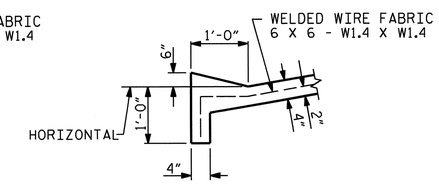

SECTION B-B

PROJECT NO. U-0071
DURHAM COUNTY
STATION: 125+91.57 -L-

STATE OF NORTH CAROLINA
DEPARTMENT OF TRANSPORTATION
RALEIGH

STANDARD
SLOPE PROTECTION DETAILS
EBL

NORTH CAROLINA PROFESSIONAL SEAL 14855 ENGINEER DOUGLAS R. CALHOUN
5/7/14

REVISIONS						SHEET NO.
NO.	BY:	DATE:	NO.	BY:	DATE:	S-328
1			3			TOTAL SHEETS
2			4			671

ASSEMBLED BY : A. K. PATEL	DATE : 11/2013		
CHECKED BY : S. B. WILLIAMS	DATE : 11/2013		
DRAWN BY : ELR 5/92	REV. 5/1/06	TLA/GM	
CHECKED BY : GRP 6/92	REV. 10/1/11	MAA/GM	
	REV. 12/21/11	MAA/GM	

06-MAY-2014 15:35
Z:\TIPProjects-U\U0071\Structures\Plans\Str#7-L-over-Y8-\Misc_Draw\U-0071_SD_SP_07.dgn
asorsenginh

STR. #7

STD. NO. SP1

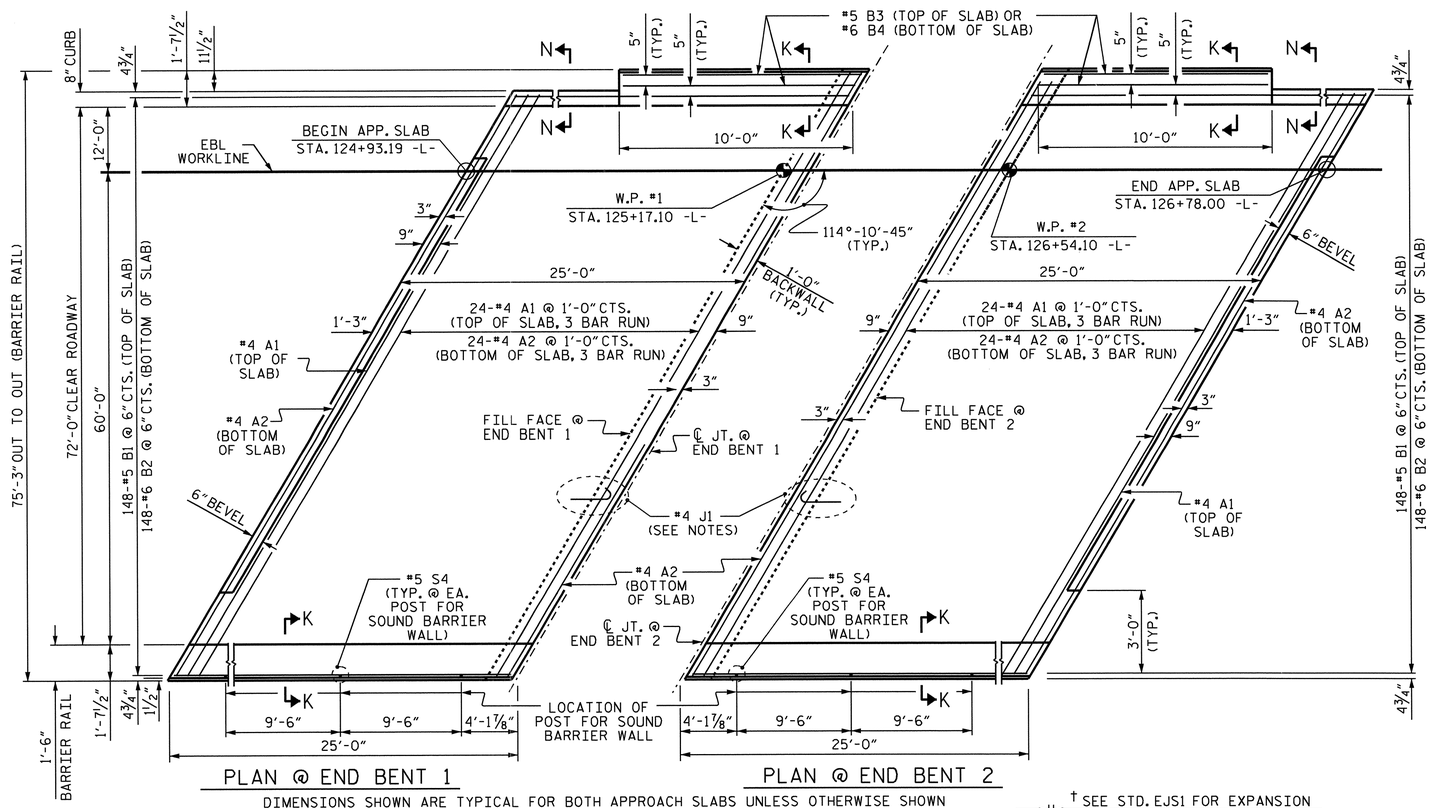

DIMENSIONS SHOWN ARE TYPICAL FOR BOTH APPROACH SLABS UNLESS OTHERWISE SHOWN

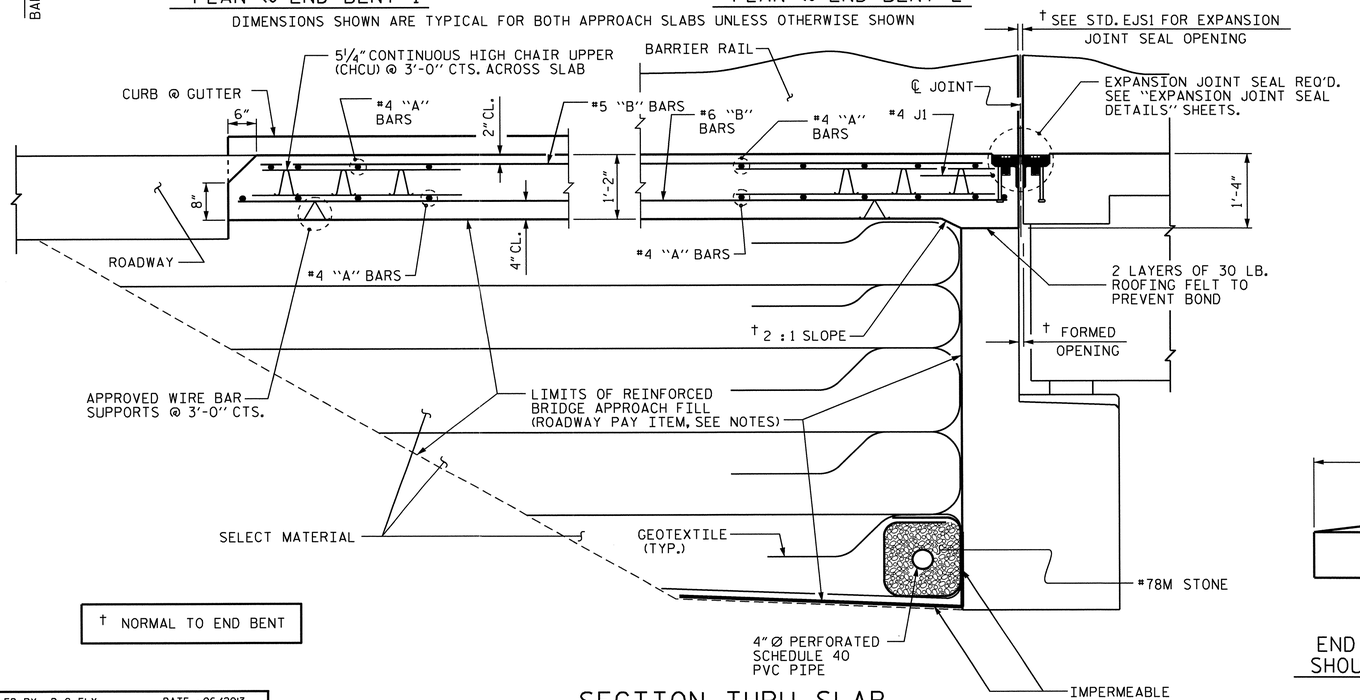

† NORMAL TO END BENT

SECTION THRU SLAB

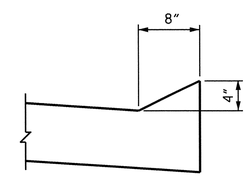

SECTION N-N

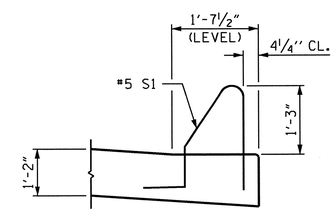

SECTION K-K

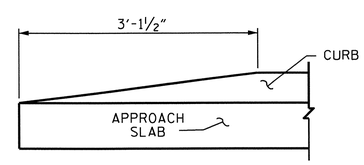

END OF CURB WITHOUT SHOULDER BERM GUTTER

CURB DETAILS

NOTES

APPROACH SLAB SHALL NOT BE CONSTRUCTED PRIOR TO COMPLETION OF THE BRIDGE DECK.

FOR REINFORCED BRIDGE APPROACH FILL INCLUDING GEOTEXTILE, IMPERMEABLE GEOMEMBRANE, 4" Ø DRAINAGE PIPE, #78M STONE, AND SELECT MATERIAL, SEE ROADWAY PLANS.

AREA BETWEEN THE WINGWALL AND APPROACH SLAB SHALL BE GRADED TO DRAIN THE WATER AWAY FROM THE FILL FACE OF THE BRIDGE AND SHALL BE PAVED. SEE ROADWAY PLANS.

FOR EXPANSION JOINT SEALS, SEE SPECIAL PROVISIONS.

FOR #4 J1 BARS, SEE "EXPANSION JOINT SEAL DETAILS" SHEET.

FOR SOUND BARRER WALL DETAILS, SEE "SOUND BARRIER WALL" SHEET.

BILL OF MATERIAL
FOR ONE APPROACH SLAB (2 REQ'D)

BAR	NO.	SIZE	TYPE	LENGTH	WEIGHT
✱ A1	75	#4	STR	29'-0"	1453
A2	78	#4	STR	28'-6"	1485
✱ B1	148	#5	STR	23'-10"	3679
B2	148	#6	STR	24'-8"	5483
✱ B3	2	#5	STR	9'-8"	20
B4	2	#6	STR	9'-8"	29
✱ J1	78	#4	1	1'-5"	74
REINFORCING STEEL ✱✱				LBS.	6997
✱ EPOXY COATED REINFORCING STEEL ✱✱				LBS.	5226
CLASS AA CONCRETE ✱✱				C.Y.	81.4

BAR TYPE

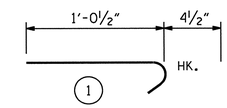

ALL BAR DIMENSIONS ARE OUT TO OUT

✱✱ QUANTITIES FOR BARRIER RAIL ARE NOT INCLUDED. SEE SHEET 2 OF 2.

THE QUANTITY OF #4 J1 BARS ON THE BILL OF MATERIAL IS BASED ON 1'-0" CENTERS. J1 BARS SHALL BE PLACED AT EACH VERTICAL STUD ANCHOR BOLT. IN THE EVENT THAT THE NUMBER OF VERTICAL STUD ANCHORS EXCEEDS THE NUMBER OF J1 BARS SPECIFIED, ADDITIONAL J1 BARS WILL NOT BE REQUIRED.

SPLICE LENGTHS

BAR SIZE	EPOXY COATED	UNCOATED
#4	2'-0"	1'-9"
#5	2'-6"	2'-2"
#6	3'-10"	2'-7"

PROJECT NO. U-0071
DURHAM COUNTY
STATION: 125+91.57 -L-

SHEET 1 OF 2

STATE OF NORTH CAROLINA
DEPARTMENT OF TRANSPORTATION
RALEIGH

STANDARD

BRIDGE APPROACH SLAB FOR FLEXIBLE PAVEMENT

EBL

NORTH CAROLINA PROFESSIONAL SEAL 14855 ENGINEER DOUGLAS R. CLAYTON 5/7/14

REVISIONS								SHEET NO.
NO.	BY:	DATE:	NO.	BY:	DATE:			S-329
1			3					TOTAL SHEETS
2			4					671

ASSEMBLED BY : D. G. ELY	DATE : 06/2013
CHECKED BY : W. F. PARKER	DATE : 11/2013
DRAWN BY : EEM 3/95	REV. 5/7/03R RWW/JTE
CHECKED BY : VAP 3/95	REV. 5/1/06RR KMM/GM
	REV. 10/1/11 MAA/GM

06-MAY-2014 15:34
Z:\TIPProjects-U\U0071\Structures\Plans\Str#7-L-over-Y8-\Misc_Draw\U0071_SD_AS_07.dgn
asorsenginh

STD. NO. BAS2

STR. #7

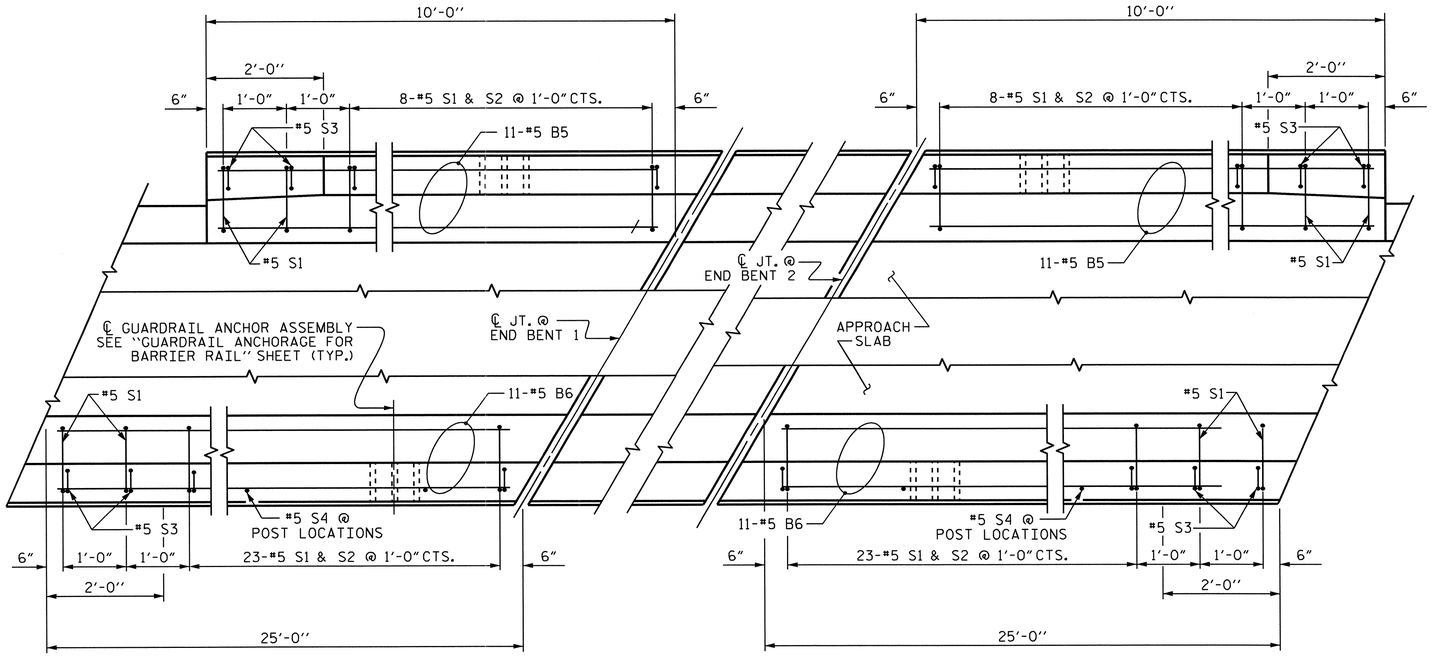

END BENT 1

END BENT 2

PLAN OF BARRIER RAIL

NOTES

THE COST OF THE BARRIER RAIL ON THE APPROACH SLAB SHALL BE INCLUDED IN THE LINEAR FOOT CONTRACT PRICE BID FOR "CONCRETE BARRIER RAIL".

THE BARRIER RAIL ON EACH APPROACH SLAB SHALL NOT BE CAST UNTIL ALL APPROACH SLAB CONCRETE HAS BEEN CAST AND HAS REACHED A MINIMUM COMPRESSIVE STRENGTH OF 3,000 PSI.

ALL REINFORCING STEEL IN BARRIER RAILS SHALL BE EPOXY COATED.

FOR BARRIER RAIL COVER PLATES, SEE "EXPANSION JOINT SEAL DETAILS" SHEETS.

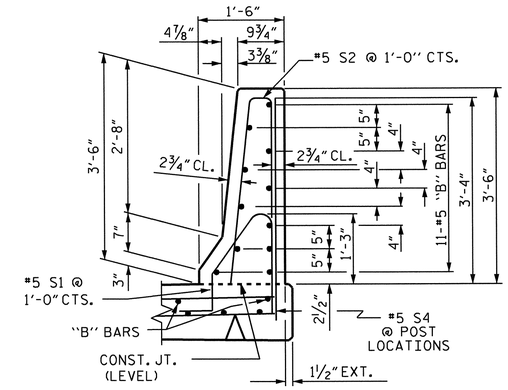

SECTION THRU RAIL

BAR TYPES

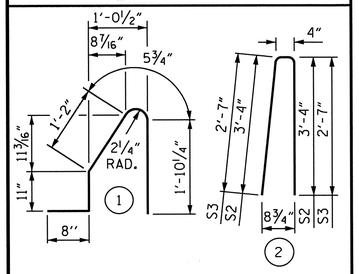

ALL BAR DIMENSIONS ARE OUT TO OUT

BILL OF MATERIAL

BARRIER RAIL ONLY

BAR	NO.	SIZE	TYPE	LENGTH	WEIGHT
* B5	22	#5	STR	9'-8"	222
* B6	22	#5	STR	24'-8"	566
* S1	70	#5	1	5'-1"	371
* S2	62	#5	2	7'-0"	453
* S3	8	#5	2	5'-6"	46
* S4	6	#5	STR	3'-10"	24
* EPOXY COATED REINFORCING STEEL				LBS.	1682
CLASS AA CONCRETE				C. Y.	9.5
CONCRETE BARRIER RAIL				70.0	LIN. FT.

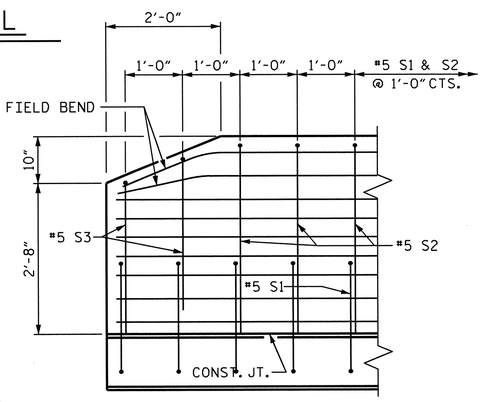

END VIEW

SIDE VIEW

END OF RAIL DETAILS

(LEFT SIDE)

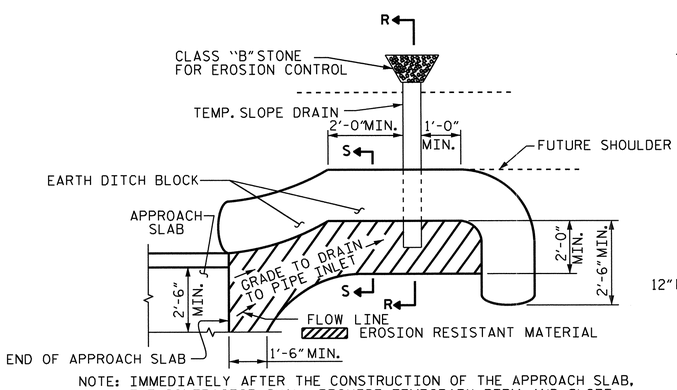

NOTE: IMMEDIATELY AFTER THE CONSTRUCTION OF THE APPROACH SLAB, THE CONTRACTOR SHALL PROVIDE TEMPORARY BERM AND SLOPE DRAIN. CONTRACTOR SHALL GRADE TO PIPE INLET AND PROVIDE EROSION RESISTANT MATERIAL AS SHOWN. THE EROSION RESISTANT MATERIAL SHALL BE EITHER 1) ASPHALT PLANT MIX, TYPE 1 OR TYPE 2, MIN. 2" DEPTH, 2) EROSION CONTROL MAT, OR 3) CONCRETE, AS DIRECTED BY THE ENGINEER. THE SLOPE DRAIN SHALL CONSIST OF A NON-PERFORATED TEMPORARY DRAINAGE PIPE, 12 INCHES IN DIAMETER.

PLAN VIEW

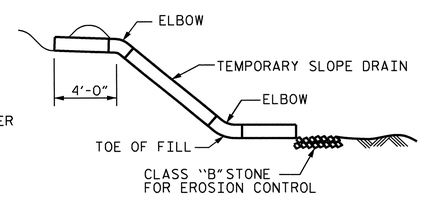

SECTION R-R

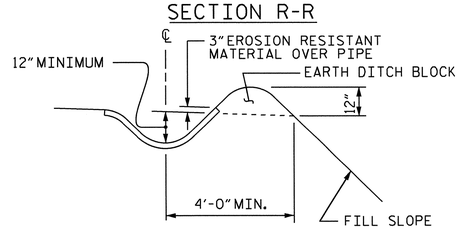

SECTION S-S

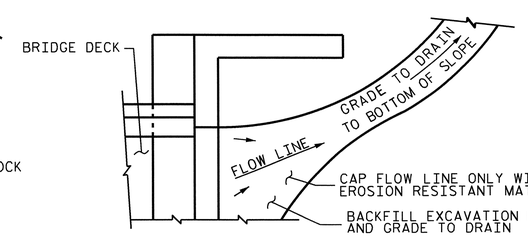

NOTE: IF THE APPROACH SLAB IS NOT CONSTRUCTED IMMEDIATELY AFTER THE BACKFILLING OF THE END BENT EXCAVATION, GRADE TO DRAIN TO THE BOTTOM OF THE SLOPE AND PROVIDE EROSION RESISTANT MATERIAL, SUCH AS FIBERGLASS ROVING OR AS DIRECTED BY THE ENGINEER TO PREVENT SOIL EROSION AND TO PROTECT THE AREA ADJACENT TO THE STRUCTURE. THE CONTRACTOR WILL BE REQUIRED TO REMOVE THESE MATERIALS PRIOR TO CONSTRUCTION OF THE APPROACH SLAB.

TEMPORARY DRAINAGE DETAIL

TEMPORARY BERM AND SLOPE DRAIN DETAILS

(TO BE USED WHEN SHOULDER BERM GUTTER IS REQUIRED)

PROJECT NO. U-0071

DURHAM COUNTY

STATION: 125+91.57 -L-

SHEET 2 OF 2

STATE OF NORTH CAROLINA
DEPARTMENT OF TRANSPORTATION
RALEIGH

STANDARD

BRIDGE APPROACH SLAB DETAILS

EBL

NORTH CAROLINA PROFESSIONAL SEAL 14855 ENGINEER DOUGLAS R. CALHOUN
5/7/14

ASSEMBLED BY : D. G. ELY		DATE : 06/2013
CHECKED BY : W. F. PARKER		DATE : 11/2013
DRAWN BY : FCJ 11/88	REV. 10/1/11	MAA/GM
CHECKED BY : ARB 11/88	REV. 7/12	MAA/GM
	REV. 10/12	MAA/GM

REVISIONS						SHEET NO.
NO.	BY:	DATE:	NO.	BY:	DATE:	S-330
1			3			TOTAL SHEETS
2			4			671

STD. NO. BAS4

STR. #7

06-MAY-2014 15:33
Z:\TIPProjects-U\U0071\Structures\Plans\Str#7-L-over-Y8-\Misc_Draw\U0071_SD_AS_07.dgn
asorsenglnh

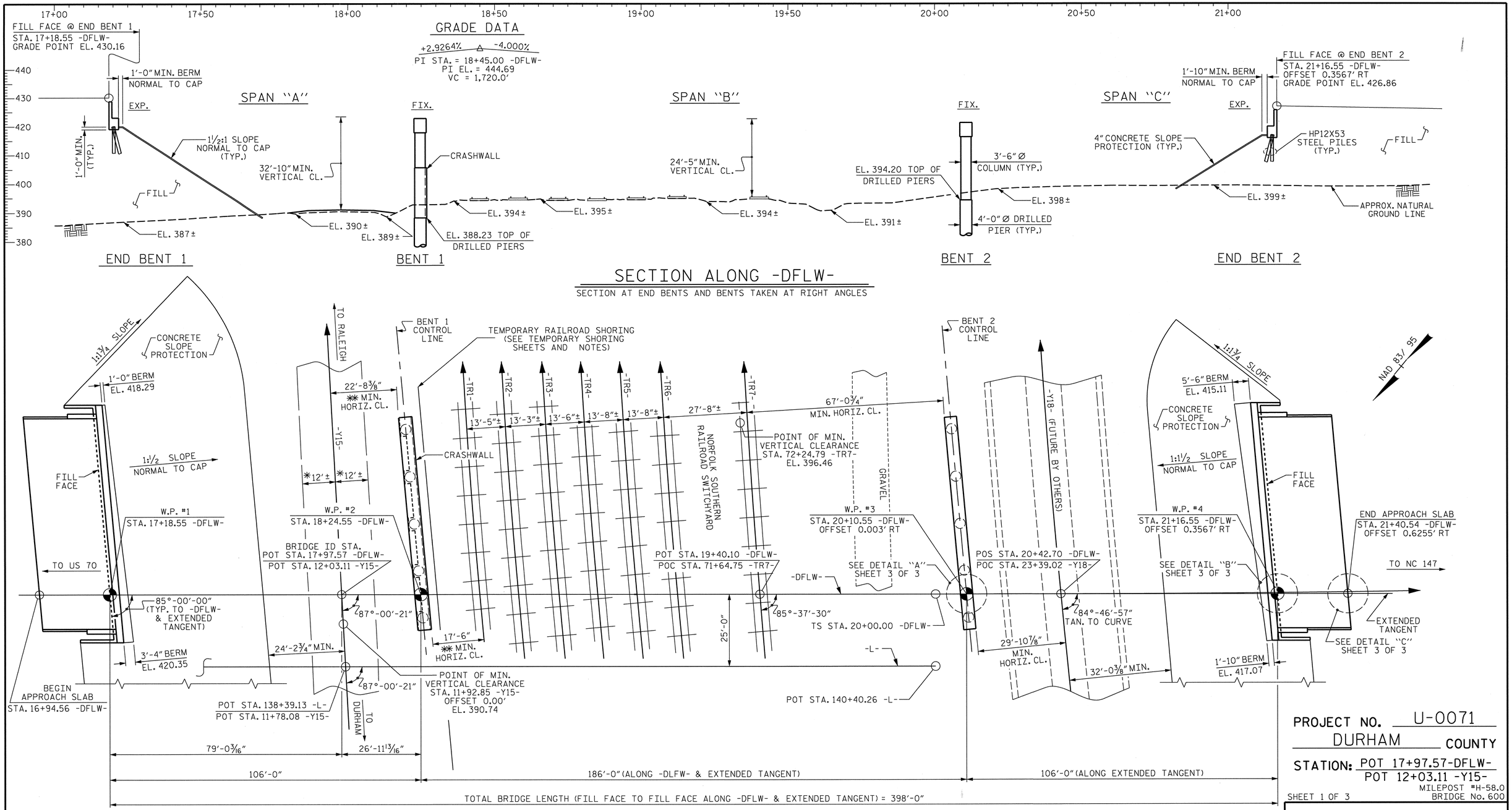

✱ - FUTURE WIDTH WITH CURB AND GUTTER.

✱✱ - MEASURED TO FACE OF CRASHWALL

PLAN

PILES NOT SHOWN FOR CLARITY

HORIZONTAL CURVE DATA -DFLW-

PIs = 22+40.10 -DFLW-
Θs = 5°-01'-07" (LT)
Ls = 360.00'
LT = 240.10'
ST = 120.09'

TOP OF RAIL ELEVATIONS			
STATION	LT. RAIL	STATION	RT. RAIL
72+24.79 -TR7-	396.46	72+24.49 -TR7-	396.11
71+54.66 -TR7-	395.99	71+54.27 -TR7-	395.66

NORTH CAROLINA PROFESSIONAL SEAL 37400 ENGINEER GREGORY M. GILLAND 6-16-14

WETHERILL ENGINEERING
559 Jones Franklin Rd. Suite 164
Raleigh, N.C. 27606
Bus: 919 851 8077
Fax: 919 851 8107
License: F-0377
TRANSPORTATION PLANNING/DESIGN - BRIDGE/STRUCTURE DESIGN
CIVIL/SITE DESIGN - GIS/GPS - CONSTRUCTION OBSERVATION

PROJECT NO. U-0071
DURHAM COUNTY
STATION: POT 17+97.57-DFLW-
POT 12+03.11 -Y15-
MILEPOST #H-58.0
BRIDGE No. 600
SHEET 1 OF 3

STATE OF NORTH CAROLINA
DEPARTMENT OF TRANSPORTATION
RALEIGH

GENERAL DRAWING

BRIDGE ON -DFLW- (EAST END CONNECTOR) OVER -Y15- (ANGIER AVE.) AND NSRR SWITCHYARD BETWEEN US 70 AND NC 147

REVISIONS						SHEET NO.
NO.	BY:	DATE:	NO.	BY:	DATE:	S-331
1			3			TOTAL SHEETS
2			4			671

STR. #8

DRAWN BY : G.M. GILLAND DATE : 3-13-13
CHECKED BY : T.V. ROUNTREE DATE : 5-21-13
DESIGN ENGINEER OF RECORD: G.M. GILLAND DATE : 5-13

P:\2012\U-0071_Sites 3,8 & 9\Structures\DWG_Bru0071_SD_STR8_GD_WEI.dgn
6/16/2014 11:20:41 AM

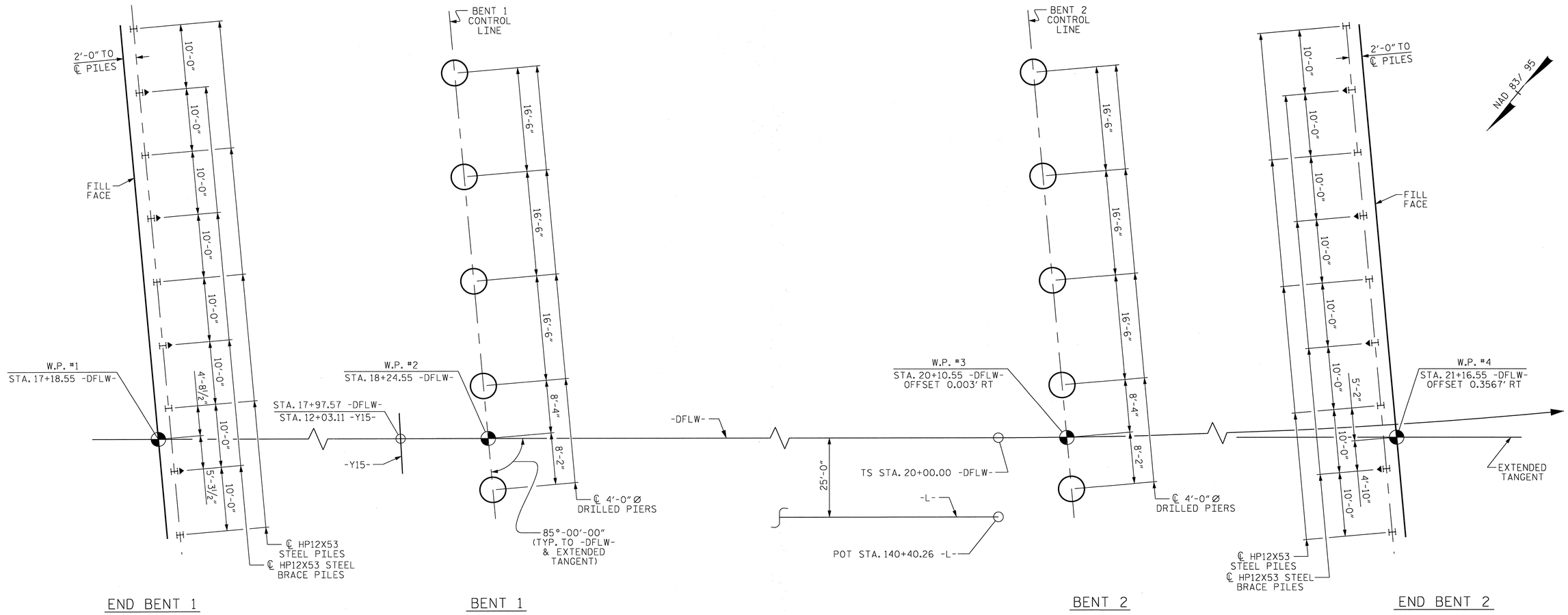

FOUNDATION LAYOUT

DIMENSIONS LOCATING PILES ARE SHOWN TO THE PILE CENTERLINE

▲ INDICATES BATTER DIRECTION FOR BATTERED PILES

FOUNDATION NOTES

FOR PILES, SEE SECTION 450 OF THE STANDARD SPECIFICATIONS.

PILES AT END BENTS 1 & 2 ARE DESIGNED FOR A FACTORED RESISTANCE OF 90 TONS PER PILE.

DRIVE PILES AT END BENTS 1 & 2 TO A REQUIRED DRIVING RESISTANCE OF 150 TONS PER PILE.

STEEL H-PILE POINTS ARE REQUIRED FOR STEEL H-PILES AT END BENTS 1 & 2. FOR STEEL PILE POINTS, SEE SECTION 450 OF THE STANDARD SPECIFICATIONS.

FOR DRILLED PIERS, SEE SECTION 411 OF THE STANDARD SPECIFICATIONS.

DRILLED PIERS AT BENT 1 ARE DESIGNED FOR A FACTORED RESISTANCE OF 745 TONS PER PIER. CHECK FIELD CONDITIONS FOR THE REQUIRED TIP RESISTANCE OF 41 TSF (LEFT AND CENTER) AND 24 TSF (RIGHT).

INSTALL DRILLED PIERS AT BENT 1 TO A TIP ELEVATION NO HIGHER THAN 350 FT (LEFT AND CENTER) AND 357 FEET (RIGHT) AND WITH THE REQUIRED TIP RESISTANCE.

SPT IS REQUIRED FOR DRILLED PIERS AT BENT 1. FOR SPT TESTING, SEE SECTION 411 OF THE STANDARD SPECIFICATIONS.

DRILLED PIERS AT BENT 2 ARE DESIGNED FOR A FACTORED RESISTANCE OF 745 TONS PER PIER. CHECK FIELD CONDITIONS FOR THE REQUIRED TIP RESISTANCE OF 68 TSF (LEFT) AND 49 TSF (CENTER AND RIGHT).

INSTALL DRILLED PIERS AT BENT 2 TO A TIP ELEVATION NO HIGHER THAN 369.5 FEET (LEFT) AND 364.0 FEET (CENTER AND RIGHT) AND WITH THE REQUIRED TIP RESISTANCE.

SPT IS REQUIRED FOR DRILLED PIERS AT BENT 2. FOR SPT TESTING, SEE SECTION 411 OF THE STANDARD SPECIFICATIONS.

CSL TUBES ARE REQUIRED AND CSL TESTING MAY BE REQUIRED FOR DRILLED PIERS. THE ENGINEER WILL DETERMINE THE NEED FOR CSL TESTING. FOR CSL TESTING, SEE SECTION 411 OF THE STANDARD SPECIFICATIONS.

SID INSPECTIONS MAY BE REQUIRED FOR DRILLED PIERS. THE ENGINEER WILL DETERMINE THE NEED FOR SID INSPECTIONS. FOR SID INSPECTIONS, SEE SECTION 411 OF THE STANDARD SPECIFICATIONS.

DRILLED PIER EXCAVATIONS AT BENTS 1 & 2 WILL EXTEND INTO MATERIAL THAT DETERIORATES WHEN EXPOSED TO THE ELEMENTS. CHECK FIELD CONDITIONS FOR THE REQUIRED TIP RESISTANCE AND PLACE CONCRETE IMMEDIATELY AFTER THE EXCAVATION IS COMPLETED.

FOR DRILLED PIERS AT BENTS 1 AND 2, THE REQUIRED SPT N-60 VALUE IS 100 BLOWS PER 0.3 FOOT OR LESS.

NOTE THAT DRILLED PIER EXCAVATIONS MAY ENCOUNTER BOULDERS.

PROJECT NO. U-0071
DURHAM COUNTY
STATION: 17+97.57-DFLW-

SHEET 2 OF 3

STATE OF NORTH CAROLINA
DEPARTMENT OF TRANSPORTATION
RALEIGH

GENERAL DRAWING
BRIDGE ON -DFLW- (EAST END CONNECTOR) OVER -Y15- (ANGIER AVE.) AND NSRR SWITCHYARD BETWEEN US 70 AND NC 147

NORTH CAROLINA PROFESSIONAL SEAL 37400 ENGINEER GREGORY M. GILLAND 6/18/13

WETHERILL ENGINEERING
559 Jones Franklin Rd. Suite 164
Raleigh, N.C. 27606
Bus: 919 851 8077
Fax: 919 851 8107
License: F-0377
TRANSPORTATION PLANNING/DESIGN - BRIDGE/STRUCTURE DESIGN
CIVIL/SITE DESIGN - GIS/GPS - CONSTRUCTION OBSERVATION

REVISIONS								SHEET NO.
NO.	BY:	DATE:	NO.	BY:	DATE:			S-332
1			3					TOTAL SHEETS
2			4					671

STR. #8

DRAWN BY : G.M. GILLAND	DATE : 3-13-13		
CHECKED BY : T.V. ROUNTREE	DATE : 5-21-13		
DESIGN ENGINEER OF RECORD: G.M. GILLAND	DATE : 5-13		

P:\2012\U-0071 Sites 3,8 & 9\Structures\DWG_8\u0071_SD_STR8_GD_WE1.dgn
7/8/2013 4:37:33 PM

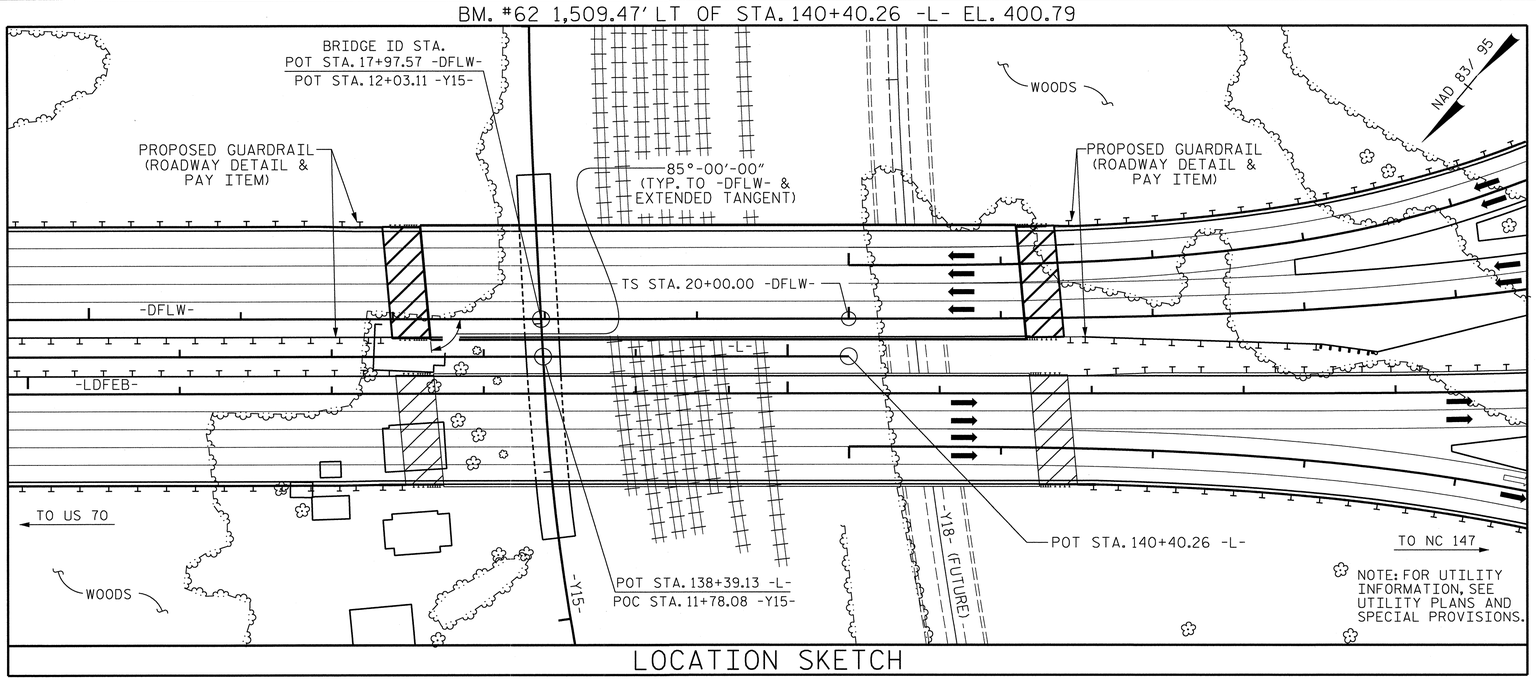

LOCATION SKETCH

NOTES

ASSUMED LIVE LOAD = HL-93 OR ALTERNATE LOADING.

THIS BRIDGE HAS BEEN DESIGNED IN ACCORDANCE WITH THE AASHTO LRFD BRIDGE DESIGN SPECIFICATIONS.

THIS BRIDGE IS LOCATED IN SEISMIC ZONE 1.

FOR OTHER DESIGN DATA AND GENERAL NOTES, SEE SHEET SN.

FOR SUBMITTAL OF WORKING DRAWINGS, SEE SPECIAL PROVISIONS.

FOR FALSEWORK AND FORMWORK, SEE SPECIAL PROVISIONS.

FOR CRANE SAFETY, SEE SPECIAL PROVISIONS.

FOR GROUT FOR STRUCTURES, SEE SPECIAL PROVISIONS.

THE ELEVATION(S) AND CLEARANCE(S) SHOWN ON THE PLANS AT THE POINT(S) OF MINIMUM VERTICAL CLEARANCE ARE FROM THE BEST INFORMATION AVAILABLE. PRIOR TO BEGINNING BRIDGE CONSTRUCTION, VERIFY THE ELEVATION(S) ON THE EXISTING PAVEMENT AND CHECK THE CLEARANCE. REPORT ANY VARIATIONS TO THE ENGINEER. ANY PLAN REVISIONS NECESSARY TO ACHIEVE THE REQUIRED MINIMUM VERTICAL CLEARANCE WILL BE PROVIDED BY THE DEPARTMENT.

THE RAILROAD TRACK TOP OF RAIL ELEVATIONS ON THE PLANS ARE FROM THE BEST INFORMATION AVAILABLE. PRIOR TO BEGINNING BRIDGE CONSTRUCTION, VERIFY THE TOP OF RAIL ELEVATIONS AND REPORT ANY VARIATIONS TO THE ENGINEER. ANY PLAN REVISIONS NECESSARY TO ACHIEVE THE REQUIRED MINIMUM CLEARANCE WILL BE PROVIDED BY THE DEPARTMENT.

FOR TEMPORARY RAILROAD SHORING, SEE SPECIAL PROVISIONS.

THE STRUCTURAL STEEL SHALL BE SUPPORTED DURING ERECTION IN ITS CAMBERED POSITION. ONE EXTERIOR GIRDER AND ITS ADJACENT INTERIOR GIRDER SHALL BE ERECTED WITH ALL DIAPHRAGMS AND LATERAL BRACING BETWEEN THE GIRDERS IN PLACE AND ALL BOLTS TIGHTENED PRIOR TO RELEASE OF THE GIRDERS. THE REMAINING GIRDERS SHALL THEN BE ERECTED WITH DIAPHRAGMS CONNECTING THE GIRDER TO THE ADJACENT ERECTED GIRDER AND ALL BOLTS TIGHTENED BEFORE RELEASING THE GIRDER.

FOR MAINTENANCE AND PROTECTION OF TRAFFIC BENEATH PROPOSED STRUCTURE, SEE SPECIAL PROVISIONS.

REMOVABLE FORMS MAY BE USED IN LIEU OF METAL STAY-IN-PLACE FORMS IN ACCORDANCE WITH ARTICLE 420-3 OF THE STANDARD SPECIFICATIONS.

NEEDLE BEAMS WILL NOT BE ALLOWED UNLESS OTHERWISE CALLED FOR ON THE PLANS OR APPROVED BY THE ENGINEER.

ALL STRUCTURAL STEEL SHALL BE AASHTO M270 GRADE 50W AND PAINTED IN ACCORDANCE WITH SYSTEM 4 OF ARTICLE 442-8 OF THE STANDARD SPECIFICATIONS UNLESS OTHERWISE NOTED ON THE PLANS.

THE CLASS AA CONCRETE IN THE BRIDGE DECK SHALL CONTAIN FLY ASH OR GROUND GRANULATED BLAST FURNACE SLAG AT THE SUBSTITUTION RATE SPECIFIED IN ARTICLE 1024-1 AND IN ACCORDANCE WITH ARTICLES 1024-5 AND 1024-6 OF THE STANDARD SPECIFICATIONS. NO PAYMENT WILL BE MADE FOR THIS SUBSTITUTION AS IT IS CONSIDERED INCIDENTAL TO THE COST OF THE REINFORCED CONCRETE DECK SLAB.

FOR EROSION CONTROL MEASURES SEE EROSION CONTROL PLANS.

FOR PLACING LOAD ON STRUCTURE MEMBERS, SEE SPECIAL PROVISIONS.

TOTAL BILL OF MATERIAL

	FOUNDATION EXCAVATION	4'-0" Ø DRILLED PIER IN SOIL	4'-0" Ø DRILLED PIER NOT IN SOIL	SID INSPECTION	SPT TESTING	CSL TESTING	REINFORCED CONCRETE DECK SLAB	GROOVING BRIDGE FLOORS	CLASS A CONCRETE	BRIDGE APPROACH SLABS	REINFORCING STEEL
	LUMP SUM	LIN. FT.	LIN. FT.	EACH	EACH	EACH	SQ. FT.	SQ. FT.	CU. YDS.	LUMP SUM	LBS.
SUPERSTRUCTURE							30,381	31,149		LUMP SUM	
END BENT 1									70.8		9,688
BENT 1	LUMP SUM	138.30	39		5				231.0		39,187
BENT 2		103.25	37		5				96.6		28,050
END BENT 2									68.6		8,956
TOTAL	LUMP SUM	241.55	76	5	10	1	30,381	31,149	467.0	LUMP SUM	85,881

TOTAL BILL OF MATERIAL

	SPIRAL COLUMN REINFORCING STEEL	APPROXIMATE STRUCTURAL STEEL	HP 12 X 53 STEEL PILES		STEEL PILE POINTS	CONCRETE BARRIER RAIL	4" SLOPE PROTECTION	POT BEARINGS	ELASTOMERIC BEARINGS	EXPANSION JOINT SEALS	TEMPORARY RAILROAD SHORING
	LBS.	APPROX. LBS.	NO.	LIN. FT.	EACH	LIN. FT.	SQ. YDS.	LUMP SUM	LUMP SUM	LUMP SUM	LUMP SUM
SUPERSTRUCTURE		1,371,700				831.69		LUMP SUM	LUMP SUM	LUMP SUM	
END BENT 1			9	405	9		812				
BENT 1	8,205										LUMP SUM
BENT 2	6,316										
END BENT 2			9	249	9		536				
TOTAL	14,521	1,371,700	18	654	18	831.69	1,348	LUMP SUM	LUMP SUM	LUMP SUM	LUMP SUM

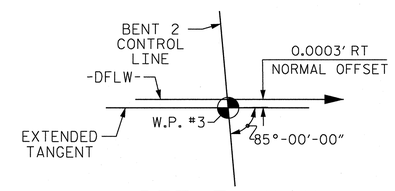

DETAIL "A"

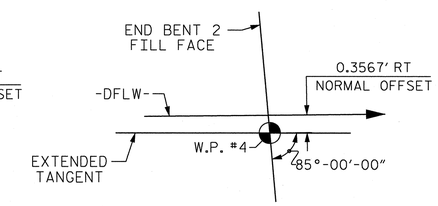

DETAIL "B"

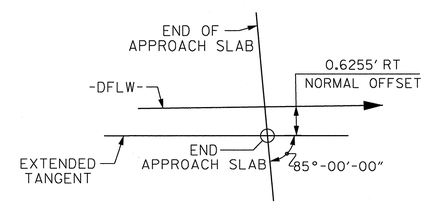

DETAIL "C"

PROJECT NO. U-0071
DURHAM COUNTY
STATION: 17+97.57-DFLW-

SHEET 3 OF 3

STATE OF NORTH CAROLINA
DEPARTMENT OF TRANSPORTATION
RALEIGH

GENERAL DRAWING
BRIDGE ON -DFLW- (EAST END CONNECTOR) OVER -Y15- (ANGIER AVE.) AND NSRR SWITCHYARD BETWEEN US 70 AND NC 147

NORTH CAROLINA PROFESSIONAL SEAL 37400 ENGINEER GREGORY M. GILLAND 1-28-14

WETHERILL ENGINEERING
559 Jones Franklin Rd. Suite 164
Raleigh, N.C. 27606
Bus: 919 851 8077
Fax: 919 851 8107
License: F-0377

TRANSPORTATION PLANNING/DESIGN - BRIDGE/STRUCTURE DESIGN
CIVIL/SITE DESIGN - GIS/GPS - CONSTRUCTION OBSERVATION

REVISIONS						SHEET NO.
NO.	BY:	DATE:	NO.	BY:	DATE:	S-333
1			3			TOTAL SHEETS
2			4			671

DRAWN BY : G.M. GILLAND DATE : 5-20-13
CHECKED BY : T.V. ROUNTREE DATE : 5-21-13
DESIGN ENGINEER OF RECORD: G.M. GILLAND DATE : 5-13

P:\2012\U-0071 Sites 3,8 & 9\Structures\DWG_B\U0071_SD_STR8_GD_WEI.dgn
1/28/2014 1:15:29 PM

STR. #8

LOAD AND RESISTANCE FACTOR RATING (LRFR) SUMMARY FOR STEEL GIRDERS

LEVEL		VEHICLE	WEIGHT (W) (TONS)	CONTROLLING LOAD RATING (#)	MINIMUM RATING FACTORS (RF) *	TONS = W x RF *	STRENGTH I LIMIT STATE											SERVICE II LIMIT STATE						COMMENT NUMBER
								MOMENT					SHEAR						MOMENT					
							LIVE-LOAD FACTORS (γ_{LL})	DISTRIBUTION FACTORS (DF) *	RATING FACTOR *	SPAN	GIRDER LOCATION	DISTANCE FROM LEFT END OF SPAN (ft) *	DISTRIBUTION FACTORS (DF) *	RATING FACTOR *	SPAN	GIRDER LOCATION	DISTANCE FROM LEFT END OF SPAN (ft) *	LIVE-LOAD FACTORS (γ_{LL})	DISTRIBUTION FACTORS (DF) *	RATING FACTOR *	SPAN	GIRDER LOCATION	DISTANCE FROM LEFT END OF SPAN (ft) *	
DESIGN LOAD RATING		HL-93 (INVENTORY)	N/A	1	1.07	--	1.75	0.810	1.41	B	E	0.00	0.952	1.07	B	I	9.30	1.30	0.810	1.55	B	E	0.00	
		HL-93 (OPERATING)	N/A		1.39	--	1.35	0.810	1.82	B	E	0.00	0.952	1.39	B	I	9.30	1.00	0.810	2.01	B	E	0.00	
		HS-20 (INVENTORY)	36.000	2	1.74	62.64	1.75	0.810	3.02	B	E	93.00	0.952	1.74	B	I	9.30	1.30	0.810	2.93	B	E	93.00	
		HS-20 (OPERATING)	36.000		2.26	81.36	1.35	0.810	3.91	B	E	93.00	0.952	2.26	B	I	9.30	1.00	0.810	3.81	B	E	93.00	
LEGAL LOAD RATING	SINGLE VEHICLE (SV)	SH	12.500		6.11	76.38	1.40	0.810	9.91	B	E	93.00	0.952	6.11	B	I	9.30	1.30	0.810	7.70	B	E	93.00	
		S3C	21.500		3.56	76.54	1.40	0.810	5.80	B	E	93.00	0.952	3.56	B	I	176.70	1.30	0.810	4.50	B	E	93.00	
		S3A	22.750		3.37	76.67	1.40	0.810	5.49	B	E	93.00	0.952	3.37	B	I	9.30	1.30	0.810	4.27	B	E	93.00	
		S4A	26.750		2.89	77.31	1.40	0.810	4.79	B	E	93.00	0.952	2.89	B	I	9.30	1.30	0.810	3.72	B	E	93.00	
		S5A	30.500		2.56	78.08	1.40	0.810	4.22	B	E	93.00	0.952	2.56	B	I	9.30	1.30	0.810	3.28	B	E	93.00	
		S6A	34.500		2.28	78.66	1.40	0.810	3.79	B	E	93.00	0.952	2.28	B	I	9.30	1.30	0.810	2.95	B	E	93.00	
		S7B	38.500		2.07	79.70	1.40	0.810	3.44	B	E	93.00	0.952	2.07	B	I	9.30	1.30	0.810	2.67	B	E	93.00	
		S7A	40.000		2.03	81.20	1.40	0.810	3.37	B	E	93.00	0.952	2.03	B	I	9.30	1.30	0.810	2.62	B	E	93.00	
	TRUCK TRACTOR SEMI-TRAILER (TTST)	T4A	28.250		2.76	77.97	1.40	0.810	4.66	B	E	93.00	0.952	2.76	B	I	176.70	1.30	0.810	3.62	B	E	93.00	
		T5B	32.000		2.48	79.36	1.40	0.810	4.10	B	E	93.00	0.952	2.48	B	I	9.30	1.30	0.810	3.19	B	E	93.00	
		T6A	36.000		2.23	80.28	1.40	0.810	3.72	B	E	93.00	0.952	2.23	B	I	9.30	1.30	0.810	2.89	B	E	93.00	
		T7A	40.000		2.03	81.20	1.40	0.810	3.42	B	E	93.00	0.952	2.03	B	I	9.30	1.30	0.810	2.66	B	E	93.00	
		T7B	40.000	3	2.00	80.00	1.40	0.810	3.54	B	E	0.00	0.952	2.00	B	I	9.30	1.30	0.810	2.77	B	E	93.00	
FATIGUE		HL-93 (INVENTORY)	γ_{LL}=0.75	--	--																			

LOAD FACTORS:

	LIMIT STATE	γ_{DC}	γ_{DW}
DESIGN LOAD RATING FACTORS	STRENGTH I	1.25	1.50
	SERVICE II	1.00	1.00

NOTES:

MINIMUM RATING FACTORS ARE BASED ON THE STRENGTH I AND SERVICE II LIMIT STATES.

ALLOWABLE STRESS FOR SERVICE II LIMIT STATE ARE AS REQUIRED FOR DESIGN.

CONTROLLING LOAD RATING
1 DESIGN LOAD RATING (HL-93)
2 DESIGN LOAD RATING (HS-20)
3 LEGAL LOAD RATING **
** SEE CHART FOR VEHICLE TYPE
GIRDER LOCATION
I - INTERIOR GIRDER
E - EXTERIOR GIRDER

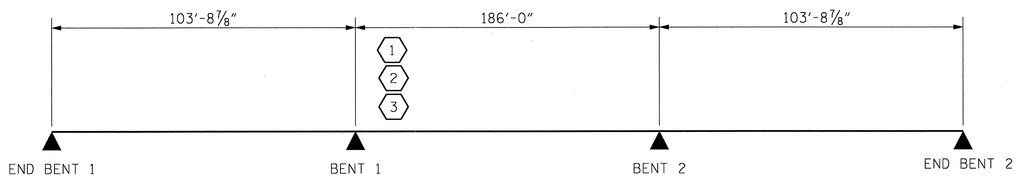

LRFR SUMMARY

PROJECT NO. U-0071
DURHAM COUNTY
STATION: 17+97.57-DFLW-

STATE OF NORTH CAROLINA
DEPARTMENT OF TRANSPORTATION
RALEIGH

STANDARD
LRFR SUMMARY FOR STEEL GIRDERS
(INTERSTATE TRAFFIC)

REVISIONS						SHEET NO.
NO.	BY:	DATE:	NO.	BY:	DATE:	S-334
1			3			TOTAL SHEETS
2			4			671

STD. NO. LRFR4 STR #8

WETHERILL ENGINEERING
559 Jones Franklin Rd. Suite 164
Raleigh, N.C. 27606
Bus: 919 851 8077
Fax: 919 851 8107
License: F-0377
TRANSPORTATION PLANNING/DESIGN - BRIDGE/STRUCTURE DESIGN
CIVIL/SITE DESIGN - GIS/GPS - CONSTRUCTION OBSERVATION

NORTH CAROLINA PROFESSIONAL SEAL 037400 ENGINEER GREGORY M. GILLAND 8/14/13

ASSEMBLED BY : J. PENDERGRAFT	DATE : 5-8-13
CHECKED BY : G. M. GILLAND	DATE : 5-9-13
DESIGN ENGINEER OF RECORD : GMG	DATE : 5-13
DRAWN BY : MAA 1/08	REV. 11/12/08RR MAA/GM
CHECKED BY : GM/DI 2/08	REV. 10/1/11 MAA/GM

P:\2012\U-0071 Sites 3,8 & 9\Structures\DMG_8\U0071_SD_STR8_LRFR_WE1.dgn
7/8/2013 4:40:20 PM

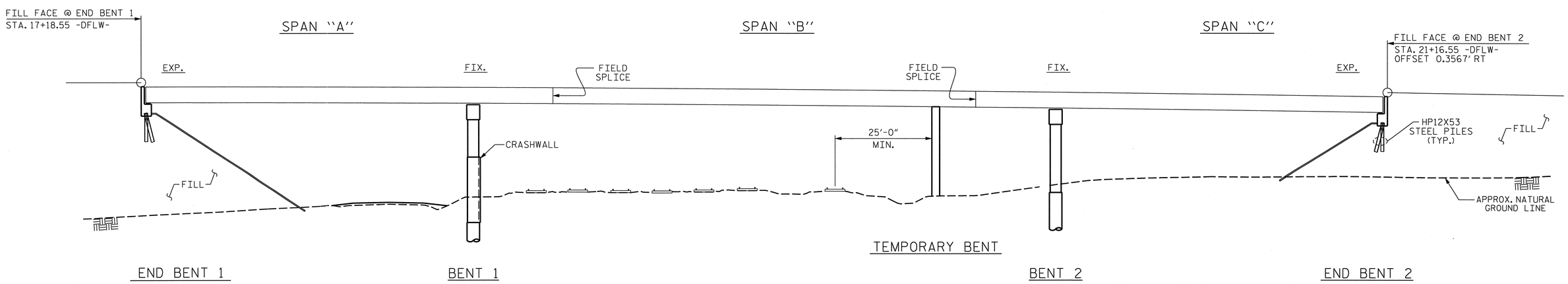

SECTION ALONG -DFLW-

SCHEMATIC ELEVATION VIEW

ERECTION NOTES

THE STRUCTURAL STEEL SHALL BE SUPPORTED DURING ERECTION IN ITS CAMBERED POSITION. ONE EXTERIOR GIRDER AND ITS ADJACENT INTERIOR GIRDER SHALL BE ERECTED WITH ALL DIAPHRAGMS AND LATERAL BRACING BETWEEN THE GIRDERS IN PLACE AND ALL BOLTS TIGHTENED PRIOR TO RELEASE OF THE GIRDERS. THE REMAINING GIRDERS SHALL THEN BE ERECTED WITH DIAPHRAGMS CONNECTING THE GIRDER TO THE ADJACENT ERECTED GIRDER AND ALL BOLTS TIGHTENED BEFORE RELEASING THE GIRDER.

A MINIMUM OF ONE TEMPORARY BENTS SHALL BE USED.

TEMPORARY BENTS SHALL REMAIN IN PLACE UNTIL ALL CROSSFRAMES AND LATERAL BRACING ARE IN PLACE AND HIGH STRENGTH BOLTS TIGHTENED.

TEMPORARY BENTS SHALL PROVIDE BEARING AT CONNECTOR PLATE LOCATIONS.

FOR TEMPORARY BENT, SEE SPECIAL PROVISIONS.

PLANS FOR TEMPORARY BENTS, ERECTION SEQUENCE AND TEMPORARY BENT REMOVAL SHALL BE SUBMITTED TO THE ENGINEER FOR REVIEW.

TEMPORARY BENTS SHALL BE DESIGNED BY A PROFESSIONAL ENGINEER REGISTERED IN THE STATE OF NORTH CAROLINA.

DURING THE GIRDER ERECTION PROCEDURE, THE CONTRACTOR IS RESPONSIBLE FOR PROVIDING TEMPORARY LATERAL BRACING AND OTHER MEANS OF SUPPORT, AS REQUIRED, TO ENSURE STABILITY OF THE GIRDERS, AVOID UPLIFT OF THE GIRDERS AT THE TEMPORARY ERECTION BENTS AND MAINTAIN PLUMBNESS OF THE GIRDER WEBS.

THE CONTRACTOR'S ERECTION PLAN SHALL INCLUDE A METHOD OF TEMPORARY BENT REMOVAL THAT WILL UNIFORMLY APPLY THE STRUCTURAL STEEL WEIGHT TO THE BRIDGE CROSSFRAMES.

THE CONTRACTOR MAY SUBMIT ALTERNATE ERECTION METHODS. PLANS FOR SUCH ERECTION METHODS SHALL BE APPROVED BY THE ENGINEER.

PROJECT NO. U-0071
DURHAM COUNTY
STATION: 17+97.57-DFLW-

STATE OF NORTH CAROLINA
DEPARTMENT OF TRANSPORTATION
RALEIGH

GIRDER ERECTION DETAILS

NORTH CAROLINA PROFESSIONAL SEAL 037400 ENGINEER GREGORY M. GILLAND 1-28-14

WETHERILL ENGINEERING
559 Jones Franklin Rd. Suite 164
Raleigh, N.C. 27606
Bus: 919 851 8077
Fax: 919 851 8107
License: F-0377
TRANSPORTATION PLANNING/DESIGN - BRIDGE/STRUCTURE DESIGN
CIVIL/SITE DESIGN - GIS/GPS - CONSTRUCTION OBSERVATION

REVISIONS						SHEET NO.
NO.	BY:	DATE:	NO.	BY:	DATE:	S-335
1			3			TOTAL SHEETS
2			4			671

STR. #8

DRAWN BY :	G.M. GILLAND	DATE :	1-18-14
CHECKED BY :	CHARLES HUNT	DATE :	1-27-14
DESIGN ENGINEER OF RECORD:	G.M. GILLAND	DATE :	1-14

P:\2012\U-0071 Sites 3,8 & 9\Structures\DWG_8\U0071_SD_STR8_ED_WEI.dgn
1/28/2014 1:17:03 PM

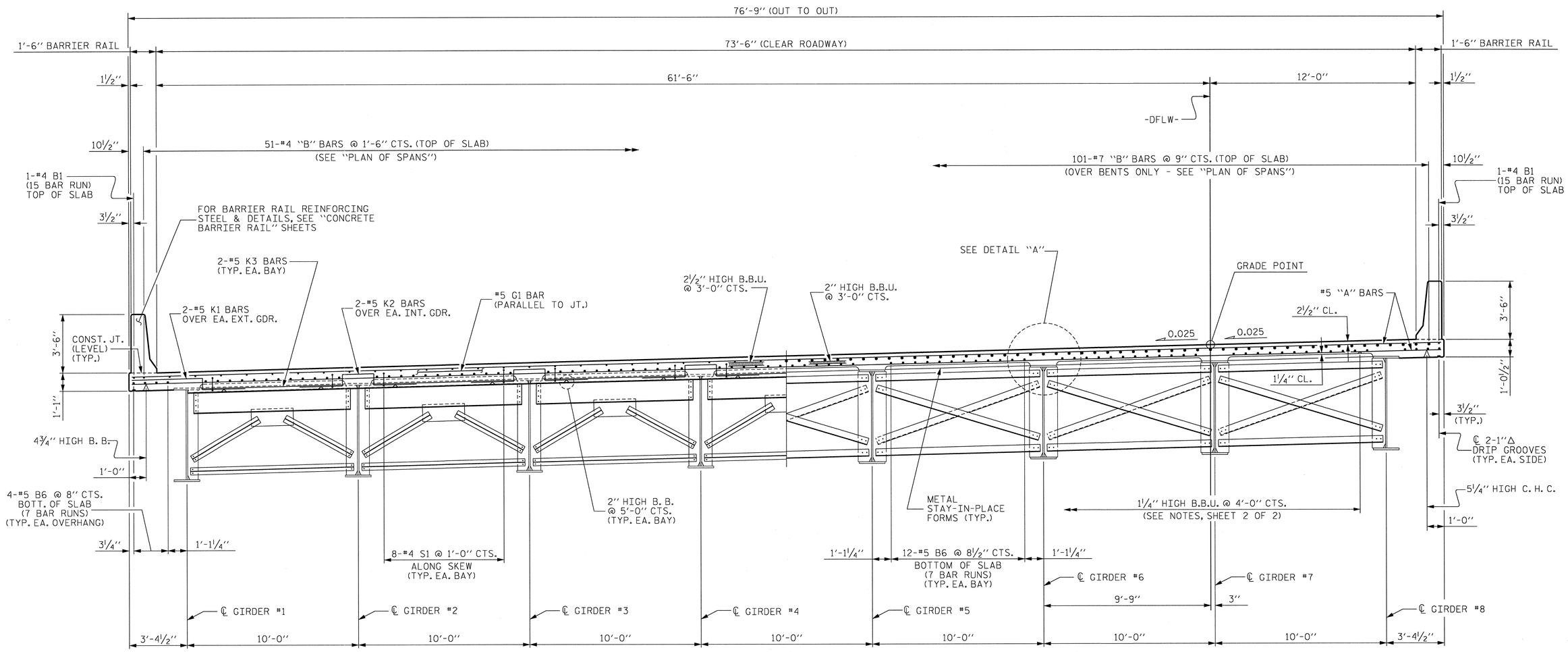

HALF TYPICAL SECTION

SHOWING END BENT DIAPHRAGMS (D1)

HALF TYPICAL SECTION

SHOWING BENT DIAPHRAGMS (D2)

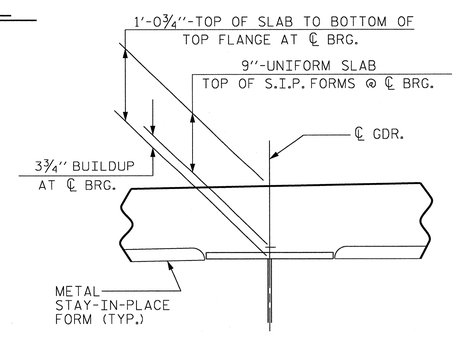

DETAIL "A"

PROJECT NO. U-0071

DURHAM COUNTY

STATION: 17+97.57-DFLW-

SHEET 1 OF 2

STATE OF NORTH CAROLINA
DEPARTMENT OF TRANSPORTATION
RALEIGH

SUPERSTRUCTURE

TYPICAL SECTION

NORTH CAROLINA PROFESSIONAL SEAL 037400 ENGINEER GREGORY M. GILLAND 6/10/15

WETHERILL ENGINEERING
559 Jones Franklin Rd. Suite 164
Raleigh, N.C. 27606
Bus: 919 851 8077
Fax: 919 851 8107
License: F-0377

TRANSPORTATION PLANNING/DESIGN - BRIDGE/STRUCTURE DESIGN
CIVIL/SITE DESIGN - GIS/GPS - CONSTRUCTION OBSERVATION

REVISIONS						SHEET NO.
NO.	BY:	DATE:	NO.	BY:	DATE:	S-336
1			3			TOTAL SHEETS
2			4			671

STR. #8

DRAWN BY : J.M. BRITT	DATE : 1-17-13		
CHECKED BY : G.M. GILLAND	DATE : 5-8-13		
DESIGN ENGINEER OF RECORD: G.M. GILLAND	DATE : 5-13		

P:\2012\U-0071 Sites 3,8 & 9\Structures\DWG_BU\0071_SD_STR8_TS_WE1.dgn
7/8/2013 4:42:33 PM

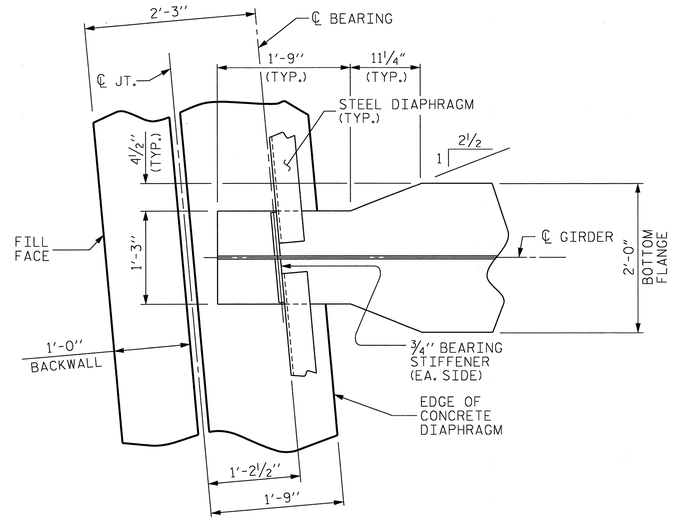

PLAN @ END BENT

END BENT 1 SHOWN, END BENT 2 SIMILAR

NOTES :

PROVIDE 1¼" HIGH BEAM BOLSTERS UPPER AT 4'-0" CTS. ATOP THE METAL STAY-IN-PLACE FORMS TO SUPPORT THE BOTTOM MAT OF "A" BARS. WHEN USING REMOVABLE FORMS, PROVIDE CONTINUOUS HIGH CHAIRS FOR METAL DECK (C.H.C.M.) @ 4'-0" CTS. WITH A HEIGHT TO SUPPORT THE BOTTOM MAT OF "A" BARS A CLEAR DISTANCE OF 2½" ABOVE THE TOP OF THE REMOVABLE FORM.

METAL STAY-IN-PLACE FORMS SHALL NOT BE WELDED TO GIRDER FLANGES IN THE ZONES REQUIRING CHARPY V-NOTCH TEST. SEE STRUCTURAL STEEL DETAIL SHEETS.

PREVIOUSLY CAST CONCRETE IN A CONTINUOUS UNIT SHALL HAVE ATTAINED A MINIMUM COMPRESSIVE STRENGTH OF 3,000 PSI BEFORE ADDITIONAL CONCRETE IS CAST IN THE UNIT.

BARRIER RAIL IN A CONTINUOUS UNIT SHALL NOT BE CAST UNTIL ALL SLAB CONCRETE IN THE UNIT HAS BEEN CAST AND HAS REACHED A MINIMUM COMPRESSIVE STRENGTH OF 3,000 PSI.

STRUCTURAL STEEL ERECTION IN A CONTINUOUS UNIT SHALL BE COMPLETE BEFORE FALSEWORK OR FORMS ARE PLACED ON THE UNIT.

#5 G1 BAR MAY BE SHIFTED SLIGHTLY, AS NECESSARY, TO CLEAR REINFORCING STEEL AND STIRRUPS.

THE CONTRACTOR MAY, WHEN NECESSARY, PROPOSE A SCHEME FOR AVOIDING INTERFERENCE BETWEEN METAL STAY-IN-PLACE FORM SUPPORTS OR FORMS AND GIRDER STIFFENERS OR CONNECTOR PLATES. THE PROPOSAL SHALL BE INDICATED, AS APPROPRIATE, ON EITHER THE STEEL WORKING DRAWINGS OR THE METAL STAY-IN-PLACE FORM WORKING DRAWINGS.

THE CONTRACTOR SHALL ADJUST THE GIRDER BUILDUPS AS NECESSARY TO INCORPORATE A MAXIMUM PERMISSIBLE VARIATION IN POT BEARING DEPTH OF ½", SEE SPECIAL PROVISION FOR POT BEARINGS.

FOR EXPANSION JOINT SEAL AT END BENTS, SEE SPECIAL PROVISIONS.

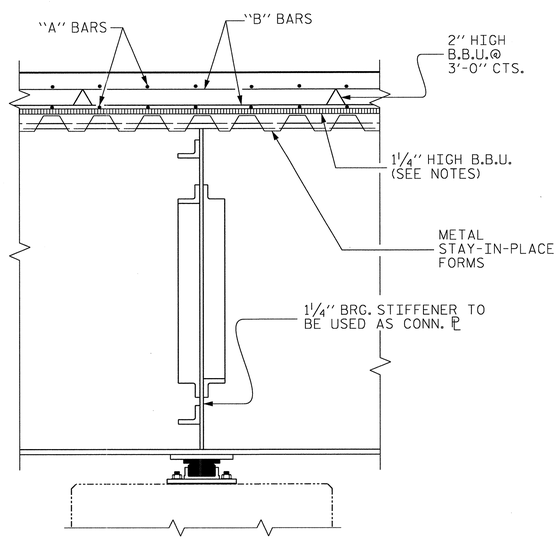

SECTION THRU BENT DIAPHRAGM (D2)

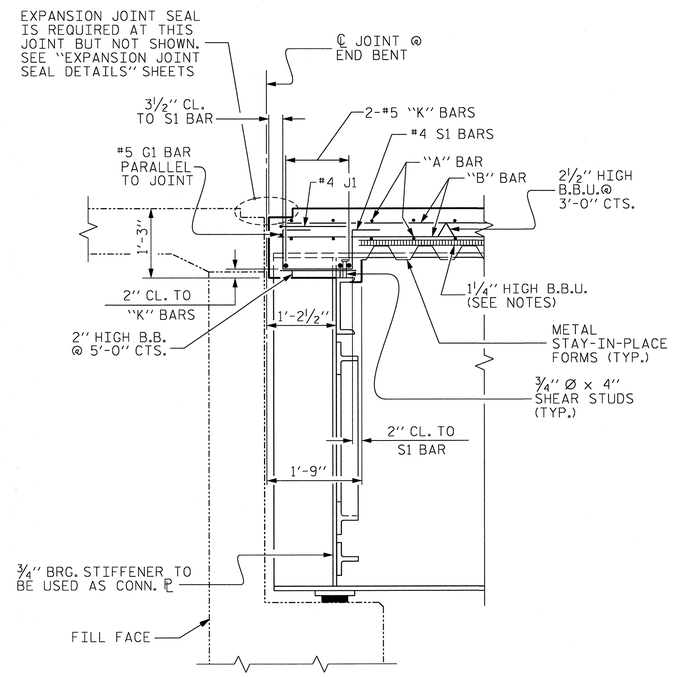

SECTION THRU END BENT DIAPHRAGM (D1)

SECTION TAKEN NORMAL TO FILL FACE

PROJECT NO. U-0071
DURHAM COUNTY
STATION: 17+97.57-DFLW-

SHEET 2 OF 2

STATE OF NORTH CAROLINA
DEPARTMENT OF TRANSPORTATION
RALEIGH

SUPERSTRUCTURE

TYPICAL SECTION

NORTH CAROLINA PROFESSIONAL SEAL 37400 ENGINEER GREGORY M. GILLAND 6/19/13

WETHERILL ENGINEERING
559 Jones Franklin Rd. Suite 164
Raleigh, N.C. 27606
Bus: 919 851 8077
Fax: 919 851 8107
License: F-0377
TRANSPORTATION PLANNING/DESIGN - BRIDGE/STRUCTURE DESIGN
CIVIL/SITE DESIGN - GIS/GPS - CONSTRUCTION OBSERVATION

REVISIONS						SHEET NO.
NO.	BY:	DATE:	NO.	BY:	DATE:	S-337
1			3			TOTAL SHEETS
2			4			671

STR. #8

DRAWN BY : J.M. BRITT DATE : 1-22-13
CHECKED BY : G.M. GILLAND DATE : 5-8-13
DESIGN ENGINEER OF RECORD: G.M. GILLAND DATE : 5-13

P:\2012\U-0071 Sites 3,8 & 9\Structures\DWG_BU0071_SO_STR8_TS_WE1.dgn
7/8/2013 4:42:10 PM

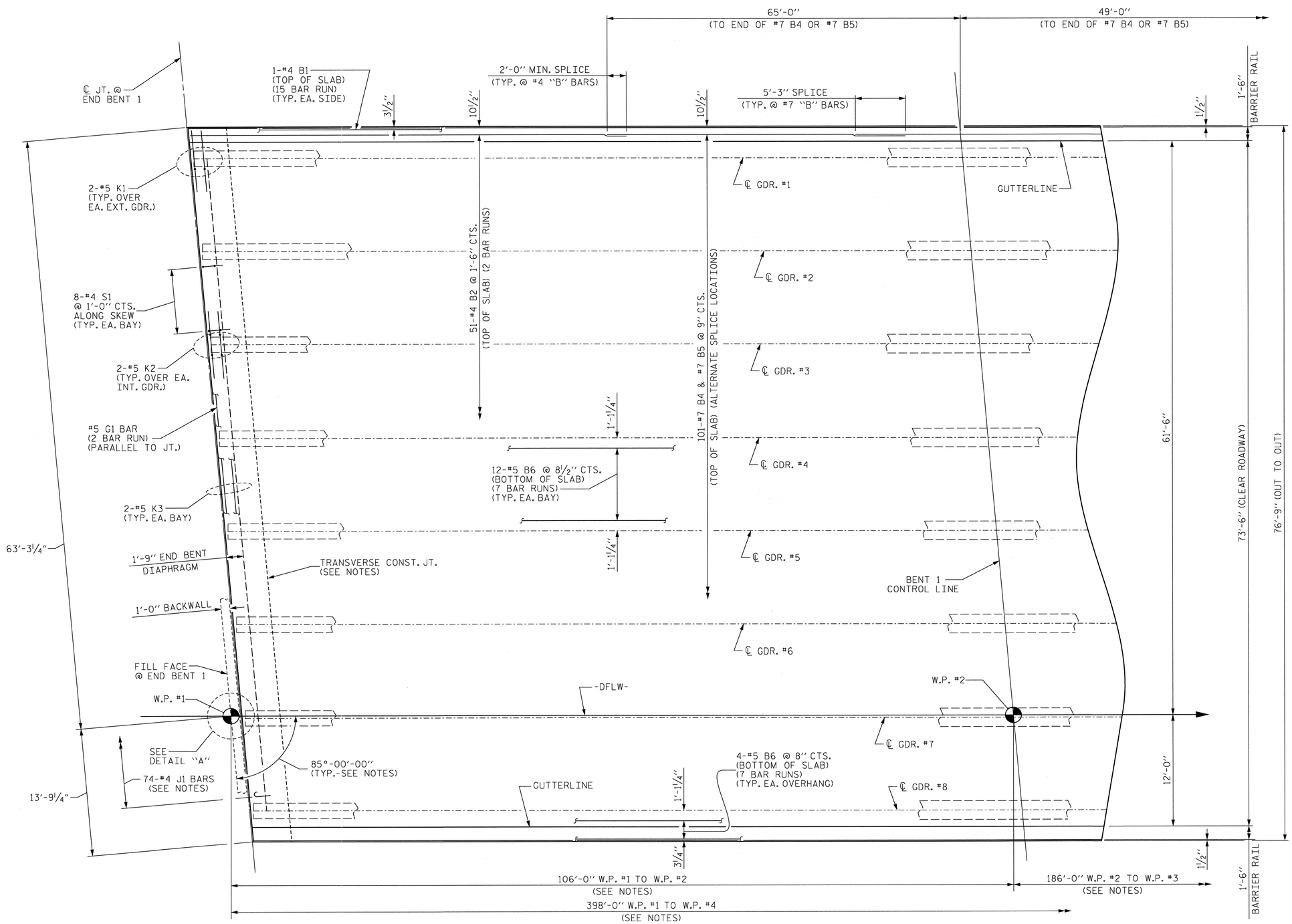

PARTIAL PLAN OF SPAN

NOTES :

FOR BARRIER RAIL REINFORCING STEEL, SEE "CONCRETE BARRIER RAIL" SHEETS.

FOR TRANSVERSE CONSTRUCTION JOINT LOCATIONS, SEE "BILL OF MATERIAL" SHEET.

FOR PLACEMENT OF TOP & BOTTOM "A" BARS, SEE "A" BAR PLACEMENT DETAILS" SHEET.

BRIDGE IS MEASURED ALONG -DFLW- AND EXTENDED TANGENT @ TS STATION 20+00.00 -DFLW-. SEE "GENERAL DRAWING" SHEETS FOR DETAILS.

THE QUANTITY OF #4 J1 BARS ON THE BILL OF MATERIAL IS BASED ON 1'-0" CENTERS. J1 BARS SHALL BE PLACED AT EACH VERTICAL STUD ANCHOR BOLT. IN THE EVENT THAT THE NUMBER OF VERTICAL STUD ANCHORS EXCEEDS THE NUMBER OF J1 BARS SPECIFIED, ADDITIONAL J1 BARS WILL NOT BE REQUIRED.

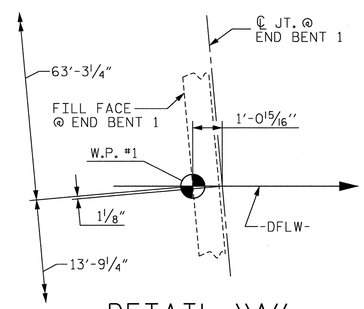

DETAIL "A"

PROJECT NO. U-0071
DURHAM COUNTY
STATION: 17+97.57-DFLW-

SHEET 1 OF 3

STATE OF NORTH CAROLINA
DEPARTMENT OF TRANSPORTATION
RALEIGH

SUPERSTRUCTURE
PLAN OF SPANS
(SPAN "A")

REVISIONS						SHEET NO.
NO.	BY:	DATE:	NO.	BY:	DATE:	S-338
1			3			TOTAL SHEETS
2			4			671

STR. #8

WETHERILL ENGINEERING
559 Jones Franklin Rd. Suite 164
Raleigh, N.C. 27606
Bus: 919 851 8077
Fax: 919 851 8107
License: F-0377
TRANSPORTATION PLANNING/DESIGN - BRIDGE/STRUCTURE DESIGN
CIVIL/SITE DESIGN - GIS/GPS - CONSTRUCTION OBSERVATION

NORTH CAROLINA PROFESSIONAL SEAL 37400 ENGINEER GREGORY M. GILLAND 8/18/15

DRAWN BY : J.M. BRITT DATE : 1-23-13
CHECKED BY : G.M. GILLAND DATE : 5-8-13
DESIGN ENGINEER OF RECORD: G.M. GILLAND DATE : 5-13

P:\2012\U-0071_Sites 3,8 & 9\Structures\DWG_BU0071_SD_STR8_PS_WE1.dgn
7/8/2013 4:44:25 PM

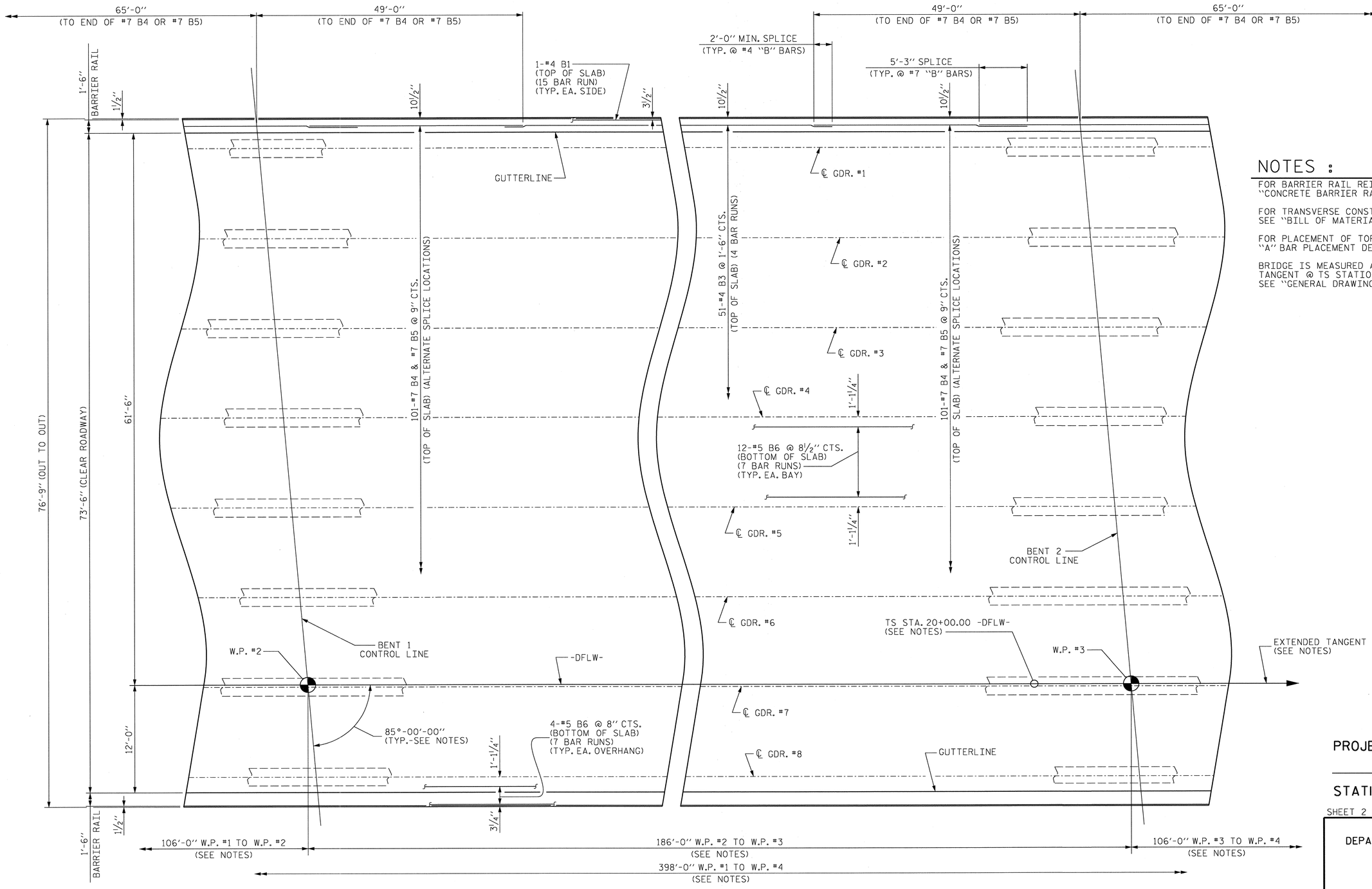

NOTES :

FOR BARRIER RAIL REINFORCING STEEL, SEE "CONCRETE BARRIER RAIL" SHEETS.

FOR TRANSVERSE CONSTRUCTION JOINT LOCATIONS, SEE "BILL OF MATERIAL" SHEET.

FOR PLACEMENT OF TOP & BOTTOM "A" BARS, SEE "A" BAR PLACEMENT DETAILS" SHEET.

BRIDGE IS MEASURED ALONG -DFLW- AND EXTENDED TANGENT @ TS STATION 20+00.00 -DFLW-. SEE "GENERAL DRAWING" SHEETS FOR DETAILS.

PARTIAL PLAN OF SPAN

PROJECT NO. U-0071
DURHAM COUNTY
STATION: 17+97.57-DFLW-

SHEET 2 OF 3

STATE OF NORTH CAROLINA
DEPARTMENT OF TRANSPORTATION
RALEIGH

SUPERSTRUCTURE

PLAN OF SPANS

(SPAN "B")

NORTH CAROLINA PROFESSIONAL SEAL 37400 ENGINEER GREGORY M. GILLAND 8/9/13

WETHERILL ENGINEERING
559 Jones Franklin Rd. Suite 164
Raleigh, N.C. 27606
Bus: 919 851 8077
Fax: 919 851 8107
License: F-0377
TRANSPORTATION PLANNING/DESIGN - BRIDGE/STRUCTURE DESIGN
CIVIL/SITE DESIGN - GIS/GPS - CONSTRUCTION OBSERVATION

REVISIONS								SHEET NO.
NO.	BY:	DATE:	NO.	BY:	DATE:			8-339
1			3					TOTAL SHEETS
2			4					671

DRAWN BY : J.M. BRITT DATE : 1-23-13
CHECKED BY : G.M. GILLAND DATE : 5-8-13
DESIGN ENGINEER OF RECORD: G.M. GILLAND DATE : 5-13

P:\2012\U-0071 Sites 3,8 & 9\Structures\DWG_BU0071_SD_STR8_PS_WE1.dgn
7/8/2013 4:44:42 PM

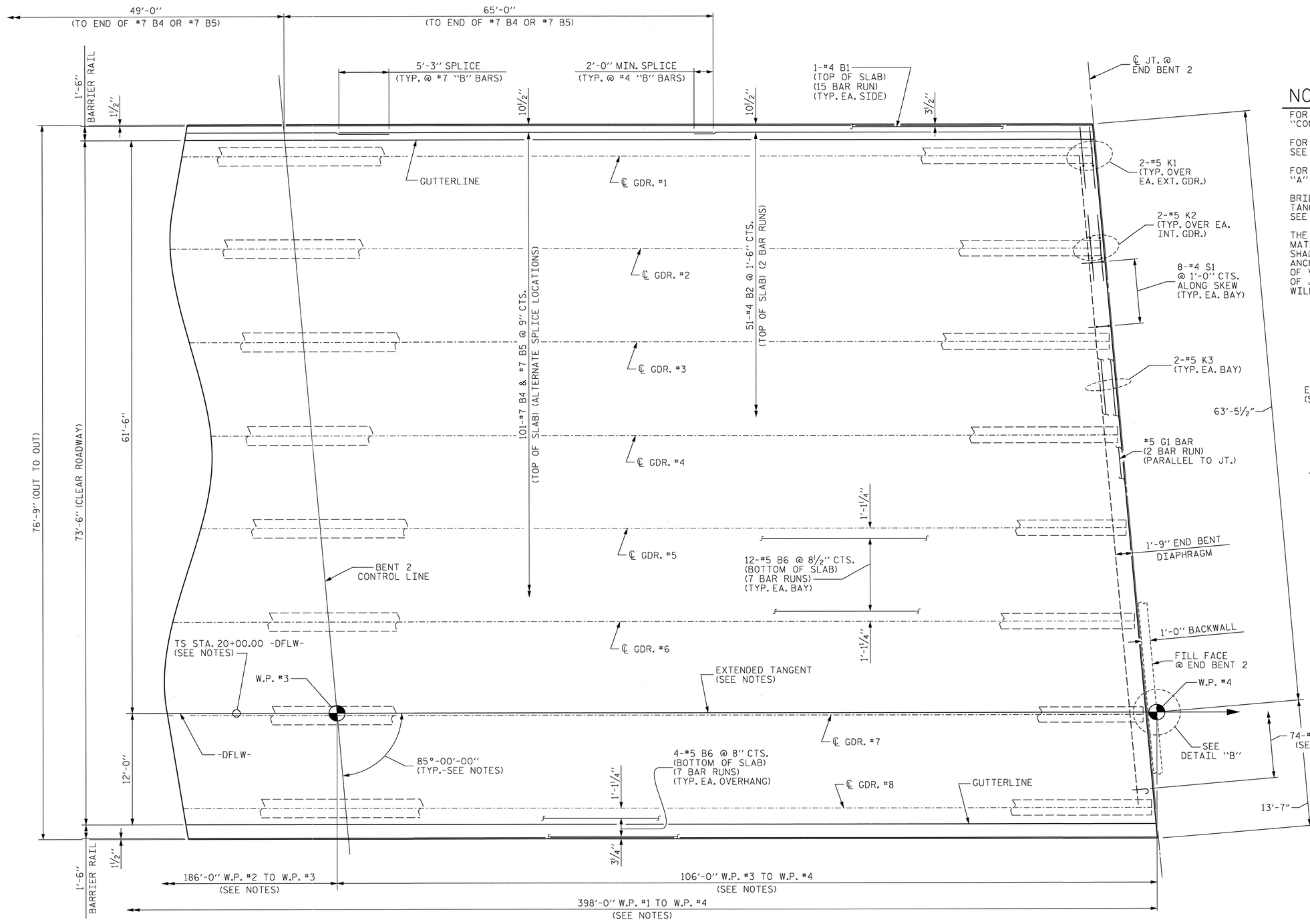

PARTIAL PLAN OF SPAN

NOTES :

FOR BARRIER RAIL REINFORCING STEEL, SEE "CONCRETE BARRIER RAIL" SHEETS.

FOR TRANSVERSE CONSTRUCTION JOINT LOCATIONS, SEE "BILL OF MATERIAL" SHEET.

FOR PLACEMENT OF TOP & BOTTOM "A" BARS, SEE "A" BAR PLACEMENT DETAILS" SHEET.

BRIDGE IS MEASURED ALONG -DFLW- AND EXTENDED TANGENT @ TS STATION 20+00.00 -DFLW-. SEE "GENERAL DRAWING" SHEETS FOR DETAILS.

THE QUANTITY OF #4 J1 BARS ON THE BILL OF MATERIAL IS BASED ON 1'-0" CENTERS. J1 BARS SHALL BE PLACED AT EACH VERTICAL STUD ANCHOR BOLT. IN THE EVENT THAT THE NUMBER OF VERTICAL STUD ANCHORS EXCEEDS THE NUMBER OF J1 BARS SPECIFIED, ADDITIONAL J1 BARS WILL NOT BE REQUIRED.

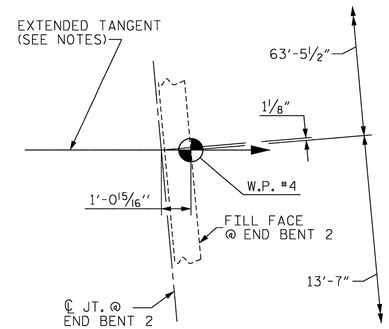

DETAIL "B"

PROJECT NO. U-0071

DURHAM COUNTY

STATION: 17+97.57-DFLW-

SHEET 3 OF 3

STATE OF NORTH CAROLINA
DEPARTMENT OF TRANSPORTATION
RALEIGH

SUPERSTRUCTURE

PLAN OF SPANS

(SPAN "C")

NORTH CAROLINA PROFESSIONAL SEAL 37400 ENGINEER GREGORY M. GILLAND 8/16/13

WETHERILL ENGINEERING
559 Jones Franklin Rd. Suite 164
Raleigh, N.C. 27606
Bus: 919 851 8077
Fax: 919 851 8107
License: F-0377
TRANSPORTATION PLANNING/DESIGN - BRIDGE/STRUCTURE DESIGN
CIVIL/SITE DESIGN - GIS/GPS - CONSTRUCTION OBSERVATION

REVISIONS							SHEET NO.
NO.	BY:	DATE:	NO.	BY:	DATE:		S-340
1			3				TOTAL SHEETS
2			4				671

DRAWN BY : J.M. BRITT DATE : 1-24-13
CHECKED BY : G.M. GILLAND DATE : 5-8-13
DESIGN ENGINEER OF RECORD: G.M. GILLAND DATE : 5-13

P:\2012\U-0071 Sites 3,8 & 9\Structures\DWG_BU\0071_SD_STR8_PS_WE1.dgn
7/8/2013 4:44:59 PM

STR. #8

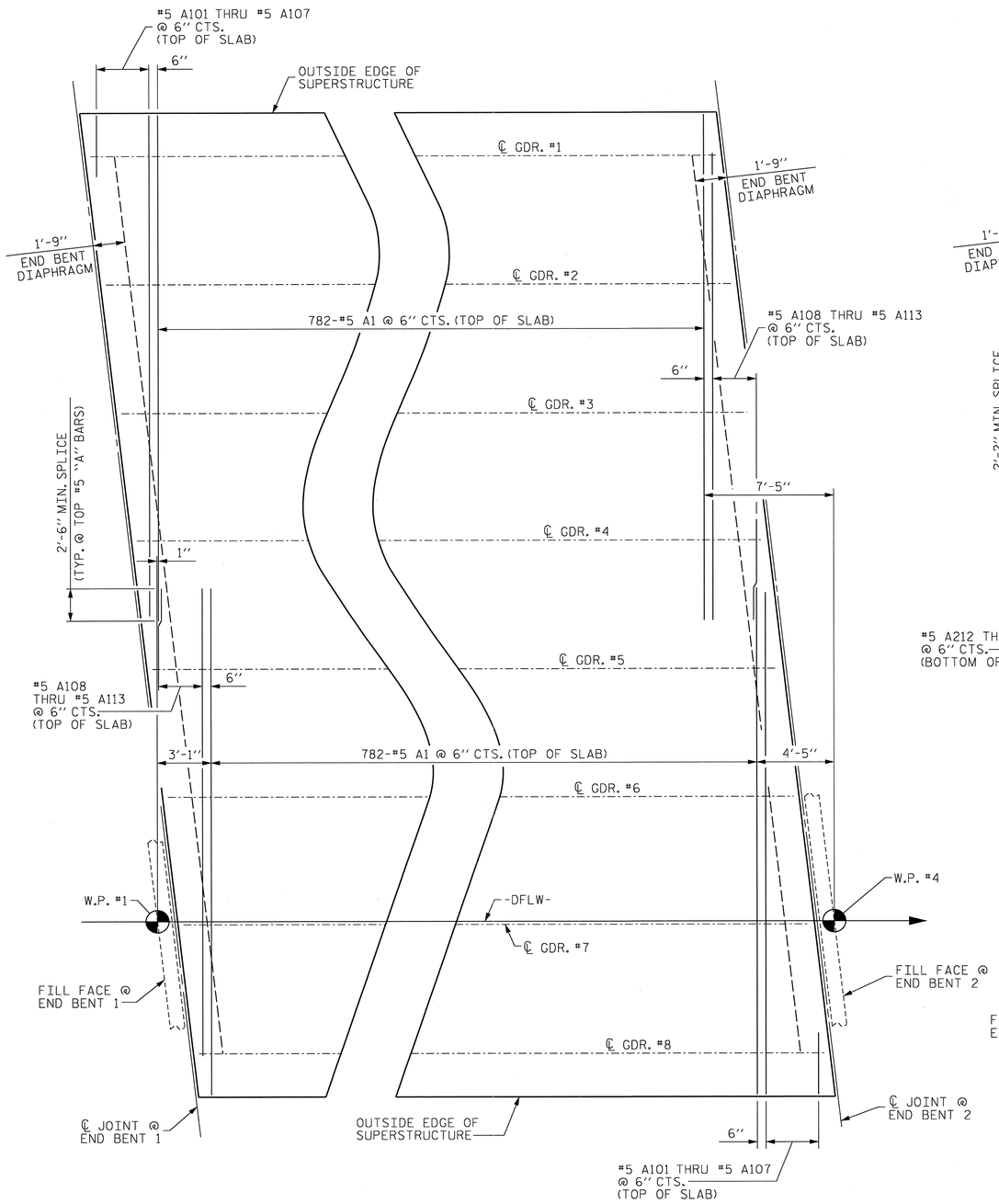

TOP "A" BAR PLACEMENT DETAIL

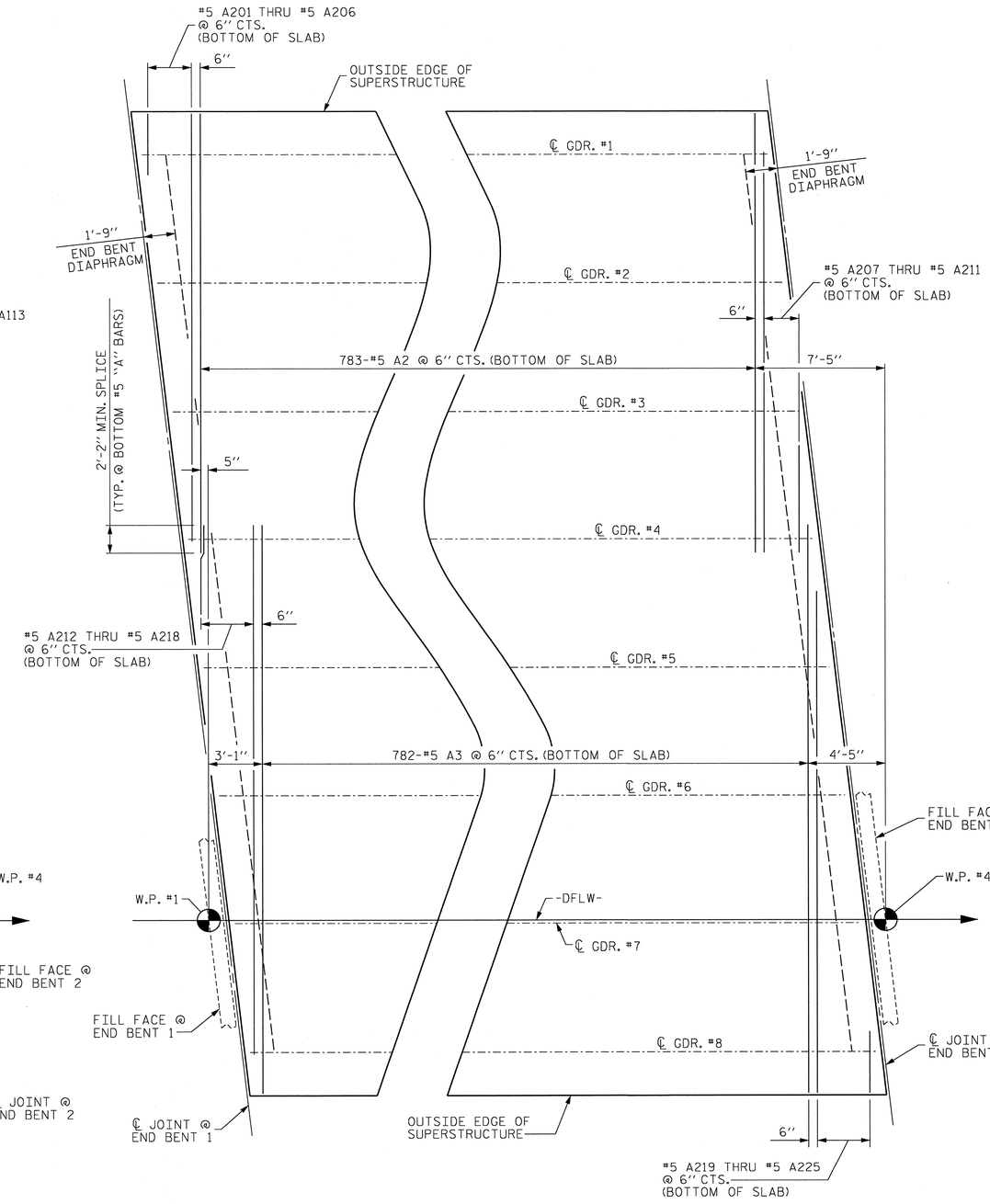

BOTTOM "A" BAR PLACEMENT DETAIL

PROJECT NO. U-0071
DURHAM COUNTY
STATION: 17+97.57-DFLW-

STATE OF NORTH CAROLINA
DEPARTMENT OF TRANSPORTATION
RALEIGH

SUPERSTRUCTURE

"A" BAR PLACEMENT DETAILS

NORTH CAROLINA PROFESSIONAL SEAL ENGINEER 37400 GREGORY M. GILLAND 6/18/13

WETHERILL ENGINEERING
559 Jones Franklin Rd. Suite 164
Raleigh, N.C. 27606
Bus: 919 851 8077
Fax: 919 851 8107
License: F-0377
TRANSPORTATION PLANNING/DESIGN - BRIDGE/STRUCTURE DESIGN
CIVIL/SITE DESIGN - GIS/GPS - CONSTRUCTION OBSERVATION

REVISIONS						SHEET NO.
NO.	BY:	DATE:	NO.	BY:	DATE:	S-341
1			3			TOTAL SHEETS
2			4			671

STR. #8

DRAWN BY : J.M. BRITT DATE : 1-23-13
CHECKED BY : G.M. GILLAND DATE : 5-8-13
DESIGN ENGINEER OF RECORD: G.M. GILLAND DATE : 5-13

P:\2012\U-0071_Sites 3,8 & 9\Structures\DWG_BU0071_SD_STR8_PS_WE1.dgn
7/8/2013 4:45:19 PM

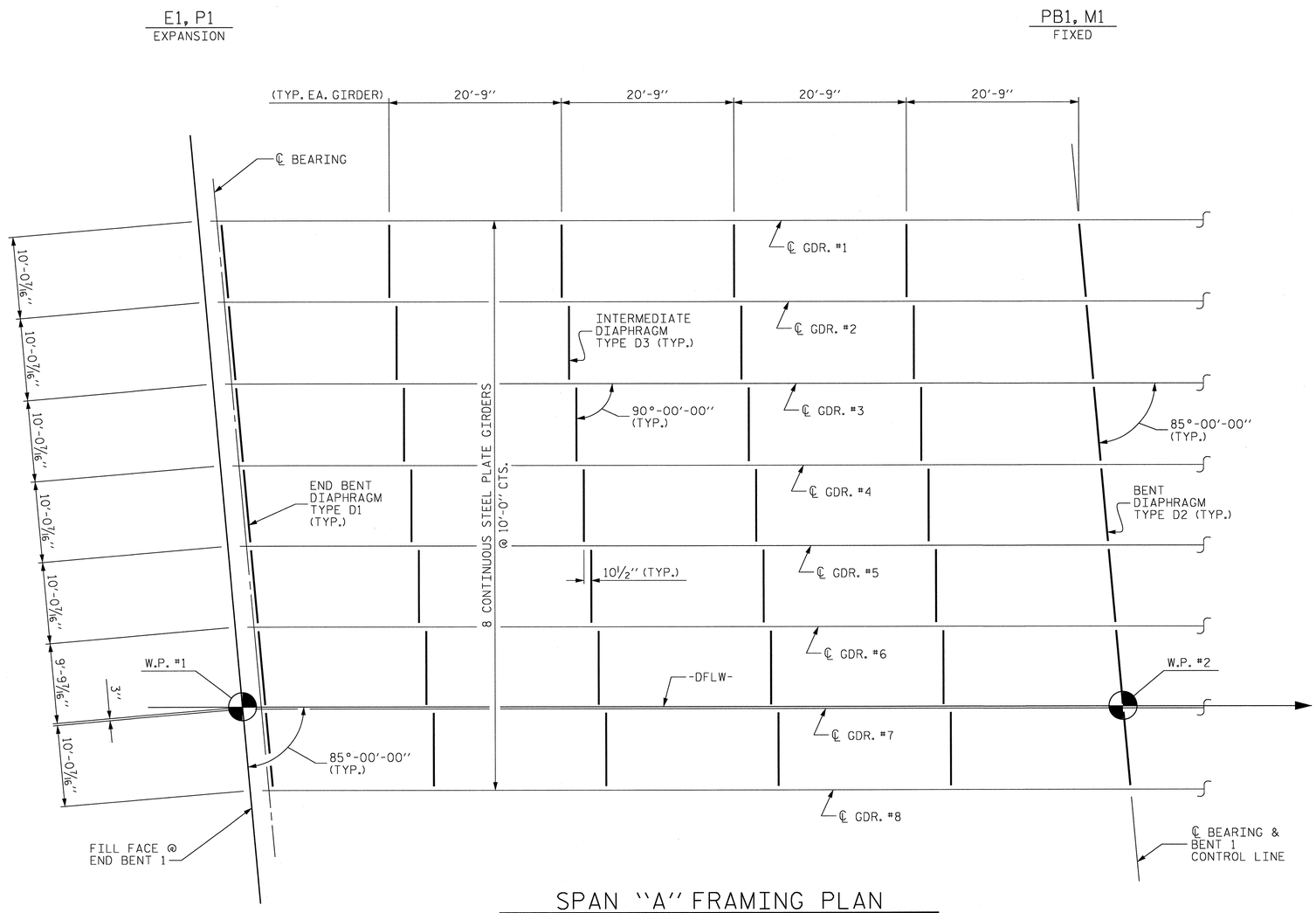

SPAN "A" FRAMING PLAN

PROJECT NO. U-0071
DURHAM COUNTY
STATION: 17+97.57-DFLW-

SHEET 1 OF 3

STATE OF NORTH CAROLINA
DEPARTMENT OF TRANSPORTATION
RALEIGH

SUPERSTRUCTURE

FRAMING PLAN

REVISIONS							SHEET NO.
NO.	BY:	DATE:	NO.	BY:	DATE:		S-342
1			3				TOTAL SHEETS
2			4				671

NORTH CAROLINA PROFESSIONAL SEAL 37400 ENGINEER GREGORY M. GILLAND 8/8/13

WETHERILL ENGINEERING
559 Jones Franklin Rd. Suite 164
Raleigh, N.C. 27606
Bus: 919 851 8077
Fax: 919 851 8107
License: F-0377

TRANSPORTATION PLANNING/DESIGN - BRIDGE/STRUCTURE DESIGN
CIVIL/SITE DESIGN - GIS/GPS - CONSTRUCTION OBSERVATION

DRAWN BY : J.M. BRITT DATE : 4-16-13
CHECKED BY : G.M. GILLAND DATE : 4-30-13
DESIGN ENGINEER OF RECORD: G.M. GILLAND DATE : 5-13

P:\2012\U-0071 Sites 3,8 & 9\Structures\DWG_8\U0071_SD_STR8_FP_WE1.dgn
7/8/2013 4:46:35 PM

STR. #8

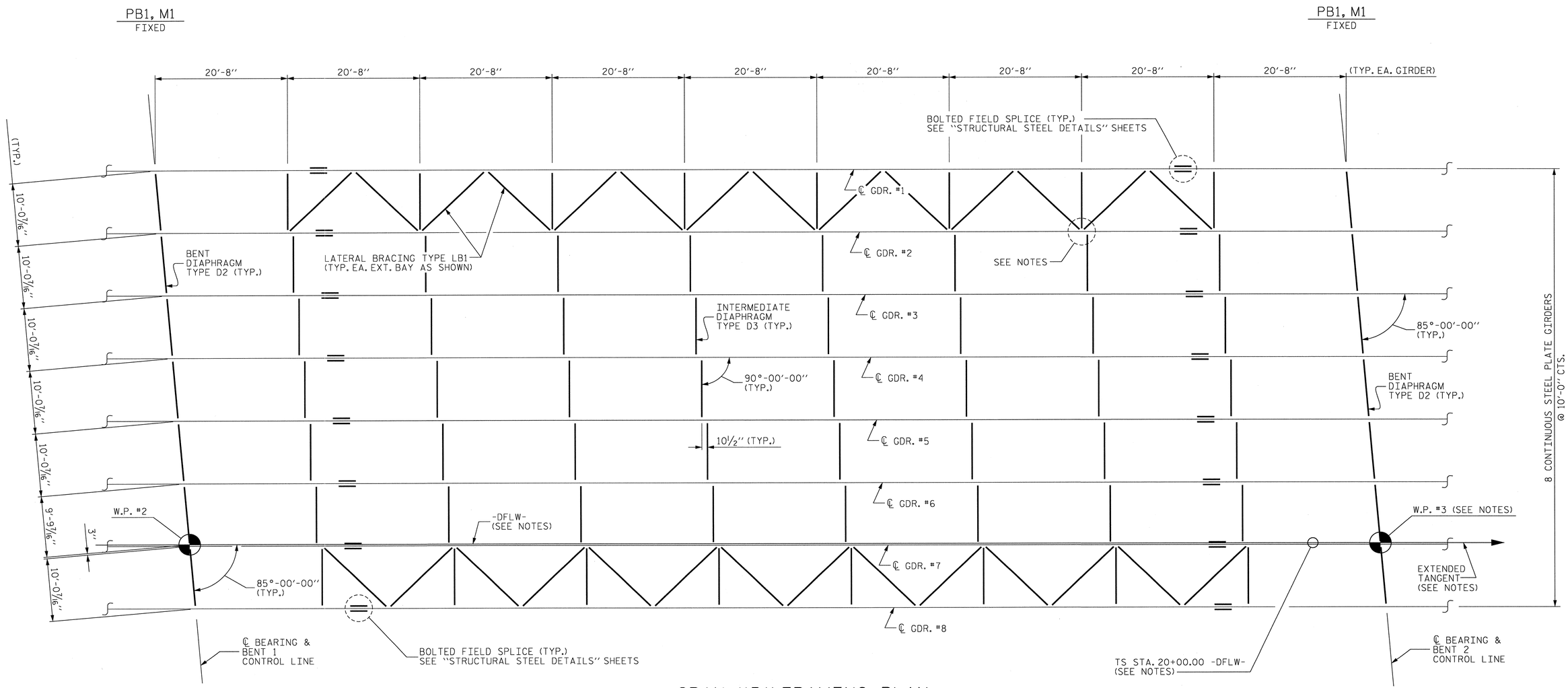

SPAN "B" FRAMING PLAN

NOTES :

BRIDGE IS MEASURED ALONG -DFLW- AND EXTENDED TANGENT @ TS STATION 20+00.00 -DFLW-.
SEE "GENERAL DRAWING" SHEETS FOR DETAILS.

THE LATERAL BRACING GUSSET PLATE MAY BE ADJUSTED AS NECESSARY TO CLEAR THE INTERMEDIATE DIAPHRAGM CONNECTOR PLATE. SEE "STRUCTURAL STEEL DETAILS" SHEETS.

PROJECT NO. U-0071
DURHAM COUNTY
STATION: 17+97.57-DFLW-

SHEET 2 OF 3

STATE OF NORTH CAROLINA
DEPARTMENT OF TRANSPORTATION
RALEIGH

SUPERSTRUCTURE

FRAMING PLAN

NORTH CAROLINA PROFESSIONAL SEAL 37400 ENGINEER GREGORY M. GILLAND 7/18/13

WETHERILL ENGINEERING
559 Jones Franklin Rd. Suite 164
Raleigh, N.C. 27606
Bus: 919 851 8077
Fax: 919 851 8107
License: F-0377
TRANSPORTATION PLANNING/DESIGN - BRIDGE/STRUCTURE DESIGN
CIVIL/SITE DESIGN - GIS/GPS - CONSTRUCTION OBSERVATION

REVISIONS							SHEET NO.
NO.	BY:	DATE:	NO.	BY:	DATE:		S-343
1			3				TOTAL SHEETS
2			4				671

DRAWN BY : J.M. BRITT DATE : 4-16-13
CHECKED BY : G.M. GILLAND DATE : 4-30-13
DESIGN ENGINEER OF RECORD: G.M. GILLAND DATE : 5-13

P:\2012\U-0071 Sites 3,8 & 9\Structures\DWG_BU0071_SD_STR8_FP_WE.dgn
7/18/2013 4:46:54 PM

STR. #8

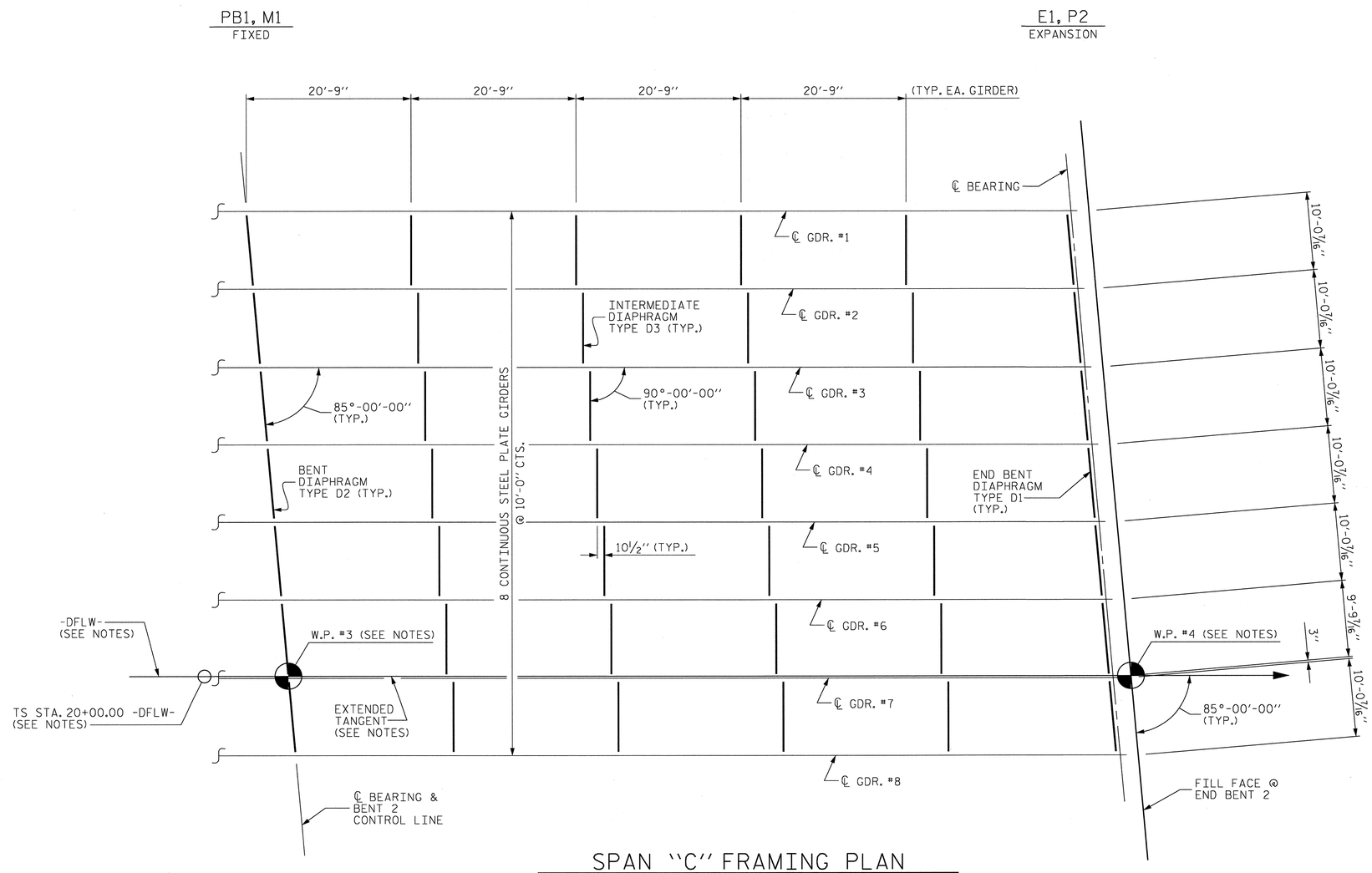

SPAN "C" FRAMING PLAN

NOTES :

BRIDGE IS MEASURED ALONG -DFLW- AND EXTENDED TANGENT @ TS STATION 20+00.00 -DFLW-.
SEE "GENERAL DRAWING" SHEETS FOR DETAILS.

PROJECT NO. U-0071
DURHAM COUNTY
STATION: 17+97.57-DFLW-

SHEET 3 OF 3

STATE OF NORTH CAROLINA
DEPARTMENT OF TRANSPORTATION
RALEIGH

SUPERSTRUCTURE

FRAMING PLAN

NORTH CAROLINA PROFESSIONAL SEAL 37400 ENGINEER GREGORY M. GILLAND 6/19/13

WETHERILL ENGINEERING
559 Jones Franklin Rd. Suite 164
Raleigh, N.C. 27606
Bus: 919 851 8077
Fax: 919 851 8107
License: F-0377
TRANSPORTATION PLANNING/DESIGN - BRIDGE/STRUCTURE DESIGN
CIVIL/SITE DESIGN - GIS/GPS - CONSTRUCTION OBSERVATION

REVISIONS						
NO.	BY:	DATE:	NO.	BY:	DATE:	
1			3			
2			4			

SHEET NO. S-344
TOTAL SHEETS 671

DRAWN BY : J.M. BRITT DATE : 4-16-13
CHECKED BY : G.M. GILLAND DATE : 4-30-13
DESIGN ENGINEER OF RECORD: G.M. GILLAND DATE : 5-13

P:\2012\U-0071 Sites 3,8 & 9\Structures\DWG_BN\0071_SD_STR8_FP_WE1.dgn
7/8/2013 4:47:10 PM

STR. #8

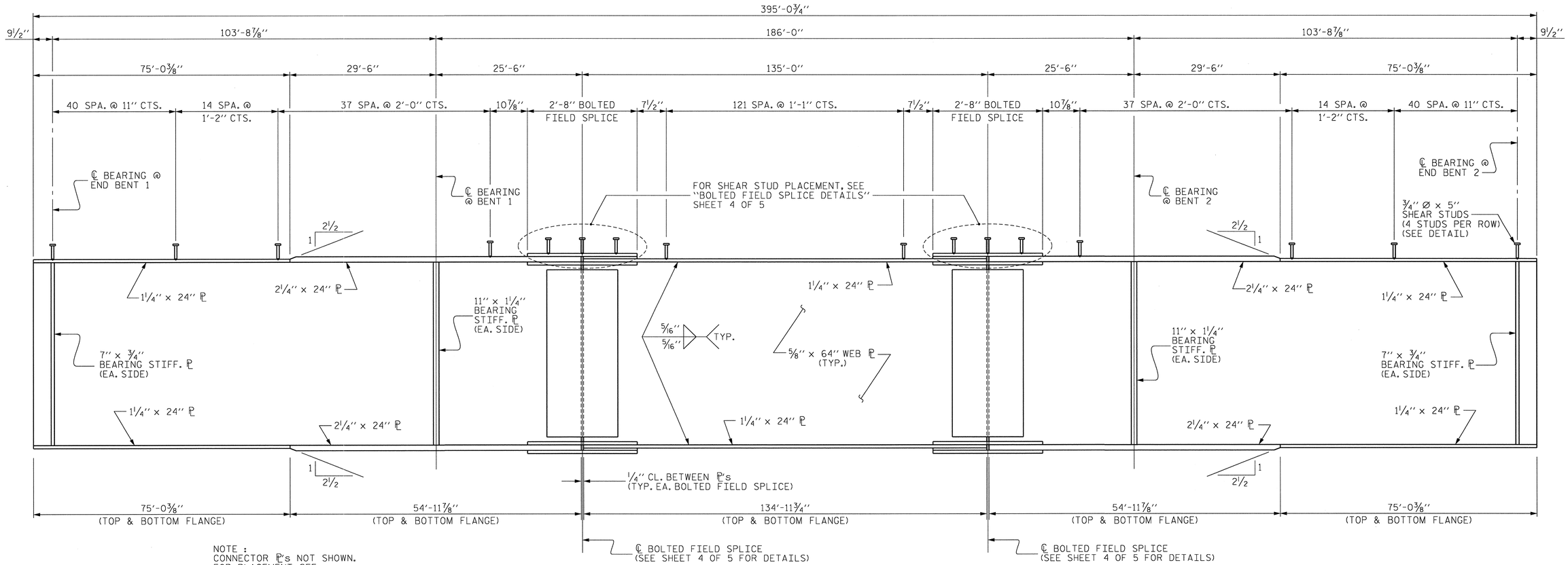

NOTE :
CONNECTOR ℙ's NOT SHOWN.
FOR PLACEMENT, SEE "FRAMING PLAN" SHEETS.

PLATE GIRDER ELEVATION

(TYPICAL EACH GIRDER)

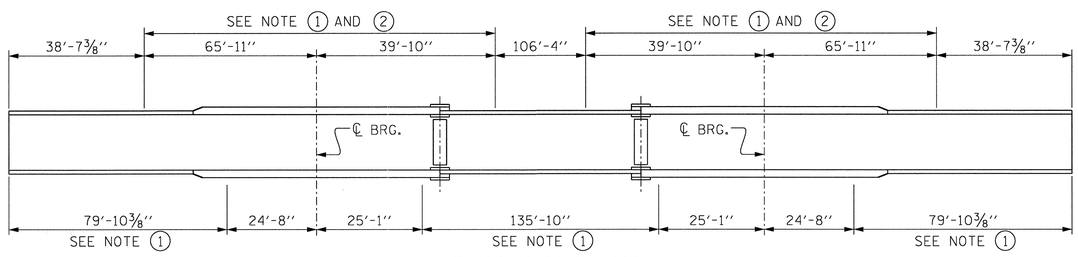

GIRDER MAKE UP

NOTE ① : CHARPY V-NOTCH TESTS ARE REQUIRED FOR ALL TOP OR BOTTOM FLANGE PLATES WHICH FALL WITHIN THESE LIMITS, ALL WEB PLATES, AND ALL SPLICE PLATES. IF A PERMITTED SHOP FLANGE SPLICE IS NOT USED, CHARPY V-NOTCH TESTS WILL BE REQUIRED FOR THE ENTIRE FLANGE PLATE. FOR CHARPY V-NOTCH TESTS, SEE ARTICLE 1072-7 OF THE STANDARD SPECIFICATIONS.

NOTE ② : NO WELDING OF FORMS OR FALSEWORK TO THE TOP FLANGE WILL BE PERMITTED IN THIS REGION.

CHARPY V-NOTCH TESTS FOR CONTINUOUS PLATE GIRDERS

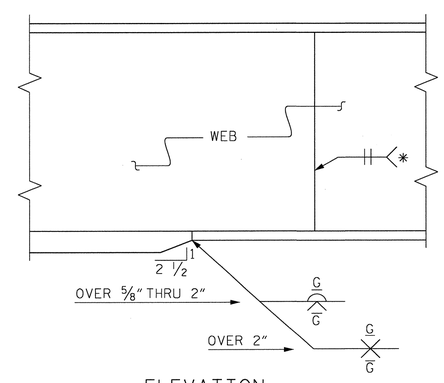

ELEVATION

TYPICAL FLANGE AND WEB BUTT JOINT

* GRIND SMOOTH AND FLUSH ON OUTSIDE OF EXTERIOR GIRDER

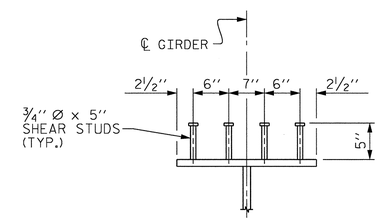

SHEAR STUD DETAIL

(TYPICAL AS SHOWN EXCEPT @ SPLICE ℙ)

PROJECT NO. U-0071
DURHAM COUNTY
STATION: 17+97.57-DFLW-

SHEET 1 OF 5

STATE OF NORTH CAROLINA
DEPARTMENT OF TRANSPORTATION
RALEIGH

SUPERSTRUCTURE

STRUCTURAL STEEL DETAILS

NORTH CAROLINA PROFESSIONAL SEAL 15400 ENGINEER GREGORY M. GILLAND 6/11/13

WETHERILL ENGINEERING
559 Jones Franklin Rd. Suite 164
Raleigh, N.C. 27606
Bus: 919 851 8077
Fax: 919 851 8107
License: F-0377

TRANSPORTATION PLANNING/DESIGN - BRIDGE/STRUCTURE DESIGN
CIVIL/SITE DESIGN - GIS/GPS - CONSTRUCTION OBSERVATION

REVISIONS								SHEET NO.
NO.	BY:	DATE:	NO.	BY:	DATE:			S-345
1			3					TOTAL SHEETS
2			4					671

STR. #8

DRAWN BY : J.M. BRITT DATE : 4-26-13
CHECKED BY : G.M. GILLAND DATE : 5-13-13
DESIGN ENGINEER OF RECORD: G.M. GILLAND DATE : 5-13

P:\2012\U-0071 Sites 3,8 & 9\Structures\DWG_BU\Dur 1_SD_STRB_SS_WE1.dgn
7/11/2013 9:25:05 AM

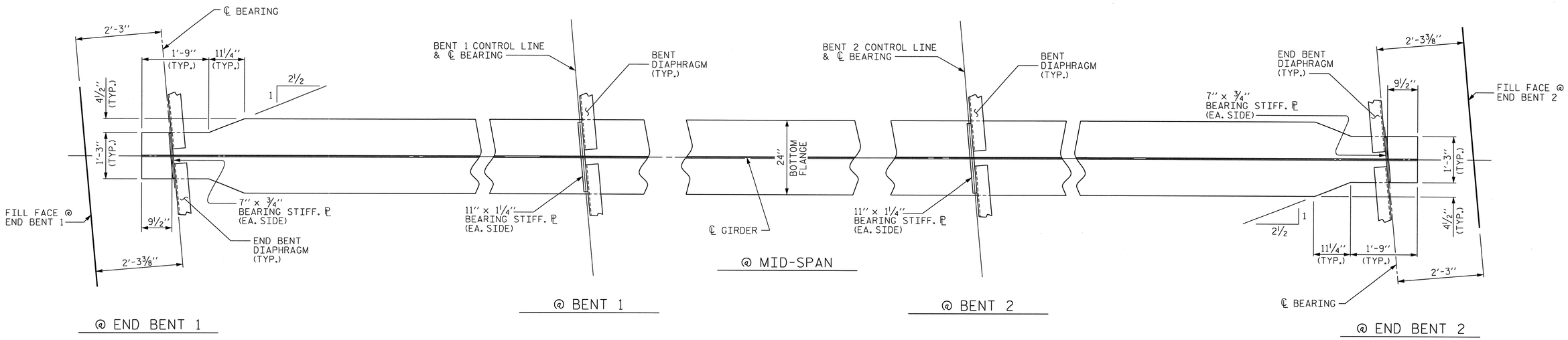

SPAN "A-B-C" BOTTOM FLANGE DETAIL

SEE FRAMING PLAN SHEETS FOR INTERMEDIATE DIAPHRAGM LOCATIONS
(FIELD SPLICES NOT SHOWN)

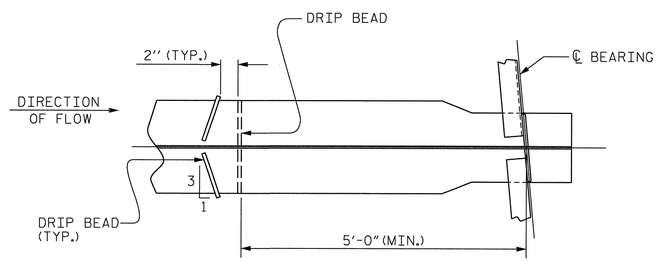

PART PLAN - BOTTOM FLANGE

END BENT 2 SHOWN, END BENT 1 SIMILAR

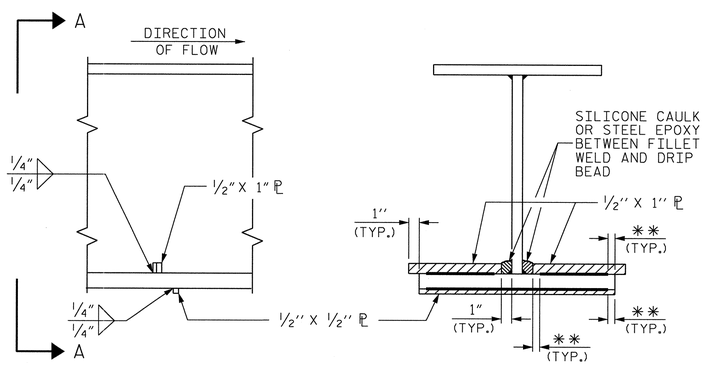

SECTION

VIEW A-A

** SEE "WELD TERMINATION DETAILS" SHEET 3 OF 5

DRIP BEAD DETAILS

STRUCTURAL STEEL NOTES :

STRUCTURAL STEEL SHALL BE AASHTO M270 GRADE 50W AND PAINTED IN ACCORDANCE WITH SYSTEM 4 OF ARTICLE 442-8 OF THE STANDARD SPECIFICATIONS UNLESS OTHERWISE NOTED ON THE PLANS.

ALL DIMENSIONS SHOWN ARE HORIZONTAL OR VERTICAL, UNLESS OTHERWISE NOTED.

ALL FIELD CONNECTIONS TO BE ⅞" DIA. HIGH STRENGTH BOLTS UNLESS OTHERWISE NOTED.

BEARING STIFFENERS ARE TO BE PLACED NORMAL TO THE WEB OF THE GIRDER AND SHALL BE PLUMB.

PERMITTED FLANGE AND WEB SHOP SPLICES SHALL NOT BE LOCATED WITHIN 15 FEET OF MAXIMUM DEAD LOAD DEFLECTION (NOR WITHIN 15 FEET OF INTERMEDIATE BEARINGS OF CONTINUOUS UNITS). KEEP 2 FEET MINIMUM BETWEEN WEB AND FLANGE SHOP SPLICES. KEEP 6" MINIMUM BETWEEN CONNECTOR PLATE OR TRANSVERSE STIFFENER WELDS AND WEB OR FLANGE SHOP SPLICES.

STUDS ON GIRDERS MAY BE SHIFTED UP TO 1" IF NECESSARY TO CLEAR FLANGE SPLICE WELD.

TENSION ON THE AASHTO M164 BOLTS SHALL BE CALIBRATED USING DIRECT TENSION INDICATOR WASHERS IN ACCORDANCE WITH ARTICLE 440-8 OF THE STANDARD SPECIFICATIONS.

END OF GIRDERS SHALL BE PLUMB.

BEARING STIFFENERS MAY REQUIRE COPING IF WIDER THAN BOTTOM FLANGE.

FABRICATORS SHALL DETAIL DIAPHRAGM MEMBERS AND CONNECTIONS FOR STEEL DEAD LOAD FIT UP.

STRUCTURAL STEEL ERECTION IN A CONTINUOUS UNIT SHALL BE COMPLETE BEFORE FALSEWORK OR FORMS ARE PLACED ON THE UNIT.

PROJECT NO. U-0071
DURHAM COUNTY
STATION: 17+97.57-DFLW-

SHEET 2 OF 5

STATE OF NORTH CAROLINA
DEPARTMENT OF TRANSPORTATION
RALEIGH

SUPERSTRUCTURE

STRUCTURAL STEEL DETAILS

NORTH CAROLINA PROFESSIONAL SEAL 37400 ENGINEER GREGORY M. GILLAND 5-2-14

WETHERILL ENGINEERING
559 Jones Franklin Rd. Suite 164
Raleigh, N.C. 27606
Bus: 919 851 8077
Fax: 919 851 8107
License: F-0377
TRANSPORTATION PLANNING/DESIGN - BRIDGE/STRUCTURE DESIGN
CIVIL/SITE DESIGN - GIS/GPS - CONSTRUCTION OBSERVATION

REVISIONS							
NO.	BY:	DATE:	NO.	BY:	DATE:	SHEET NO.	
1			3			S-346	
2			4			TOTAL SHEETS	
						671	

DRAWN BY : J.M. BRITT DATE : 4-17-13
CHECKED BY : G.M. GILLAND DATE : 5-13-13
DESIGN ENGINEER OF RECORD: G.M. GILLAND DATE : 5-13

P:\2012\U-0071 Sites 3,8 & 9\Structures\DWG_BU0071_SD_STR8_SS_WE1.dgn
3/3/2014 2:53:27 PM

STR. #8

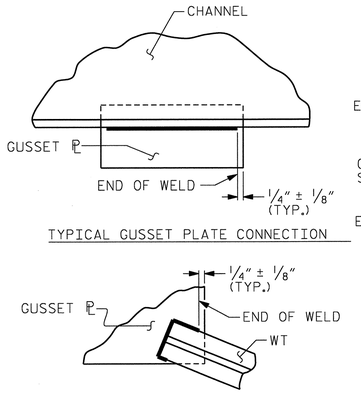

TYPICAL GUSSET PLATE CONNECTION

TYPICAL "TEE" TO GUSSET PLATE CONNECTION

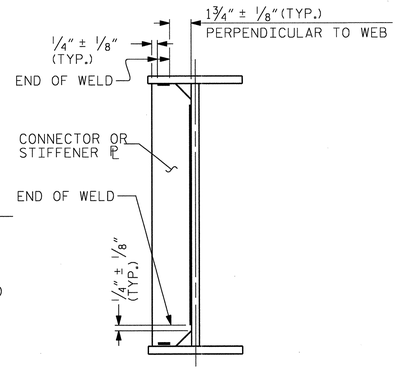

TYPICAL STIFFENER OR CONNECTOR PLATE CONNECTIONS

WELD TERMINATION DETAILS

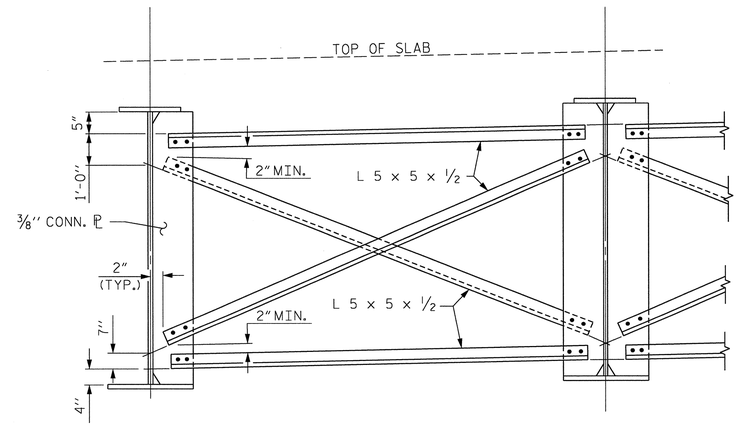

TYPICAL INTERMEDIATE DIAPHRAGM (TYPE D3)

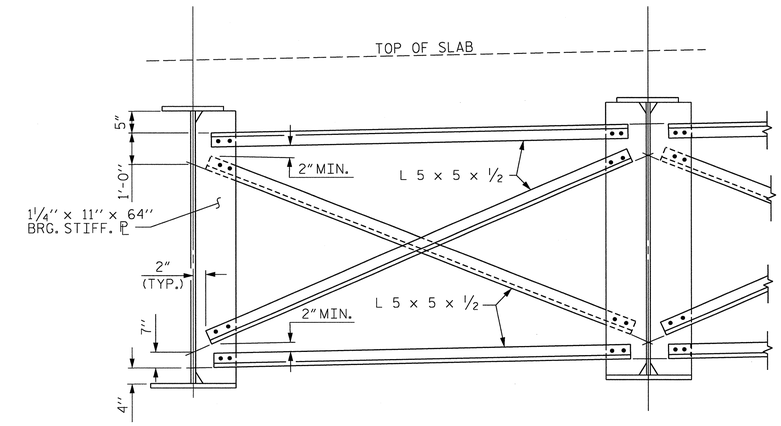

TYPICAL BENT DIAPHRAGM (TYPE D2)

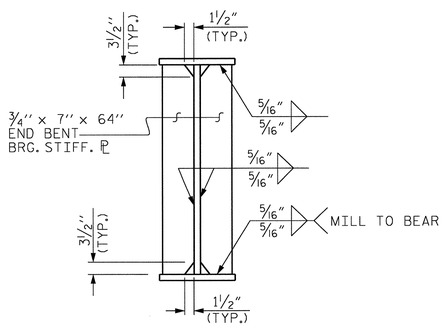

BEARING STIFFENER

(AT END BENTS)

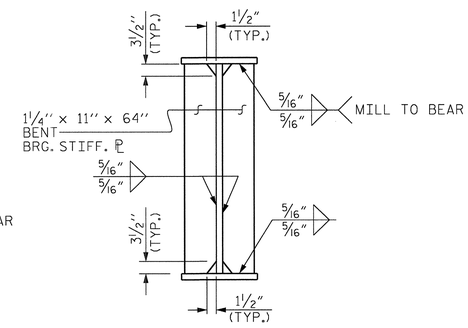

BEARING STIFFENER

(AT INTERIOR BENTS)

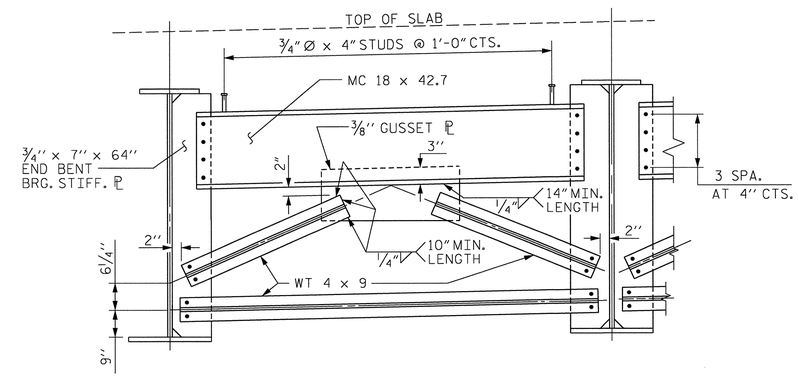

TYPICAL END BENT DIAPHRAGM (TYPE D1)

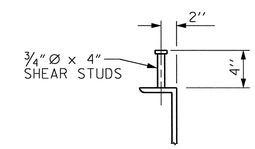

SHEAR STUD DETAILS

(TYP. EA. END BENT DIAPHRAGM)

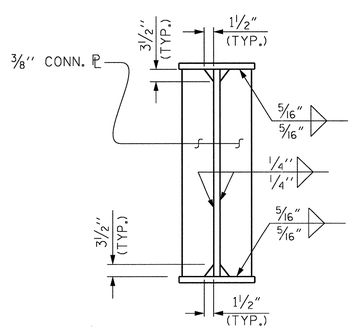

CONNECTOR PL

(AT INTERMEDIATE DIAPHRAGMS)

PROJECT NO. U-0071

DURHAM COUNTY

STATION: 17+97.57-DFLW-

SHEET 3 OF 5

STATE OF NORTH CAROLINA
DEPARTMENT OF TRANSPORTATION
RALEIGH

SUPERSTRUCTURE

STRUCTURAL STEEL DETAILS

NORTH CAROLINA PROFESSIONAL SEAL ENGINEER 037400 GREGORY M. GILLAND 5/8/13

WETHERILL ENGINEERING
559 Jones Franklin Rd. Suite 164
Raleigh, N.C. 27606
Bus: 919 851 8077
Fax: 919 851 8107
License: F-0377

TRANSPORTATION PLANNING/DESIGN - BRIDGE/STRUCTURE DESIGN
CIVIL/SITE DESIGN - GIS/GPS - CONSTRUCTION OBSERVATION

REVISIONS								SHEET NO.
NO.	BY:	DATE:	NO.	BY:	DATE:			S-347
1			3					TOTAL SHEETS
2			4					671

DRAWN BY : J.M. BRITT DATE : 4-17-13
CHECKED BY : G.M. GILLAND DATE : 5-13-13
DESIGN ENGINEER OF RECORD: G.M. GILLAND DATE : 5-13

P:\2012\U-0071 Sites 3,8 & 9\Structures\DWG_BVUOur1_SD_STR8_SS_WE1.dgn
7/11/2013 9:25:44 AM

STR. #8

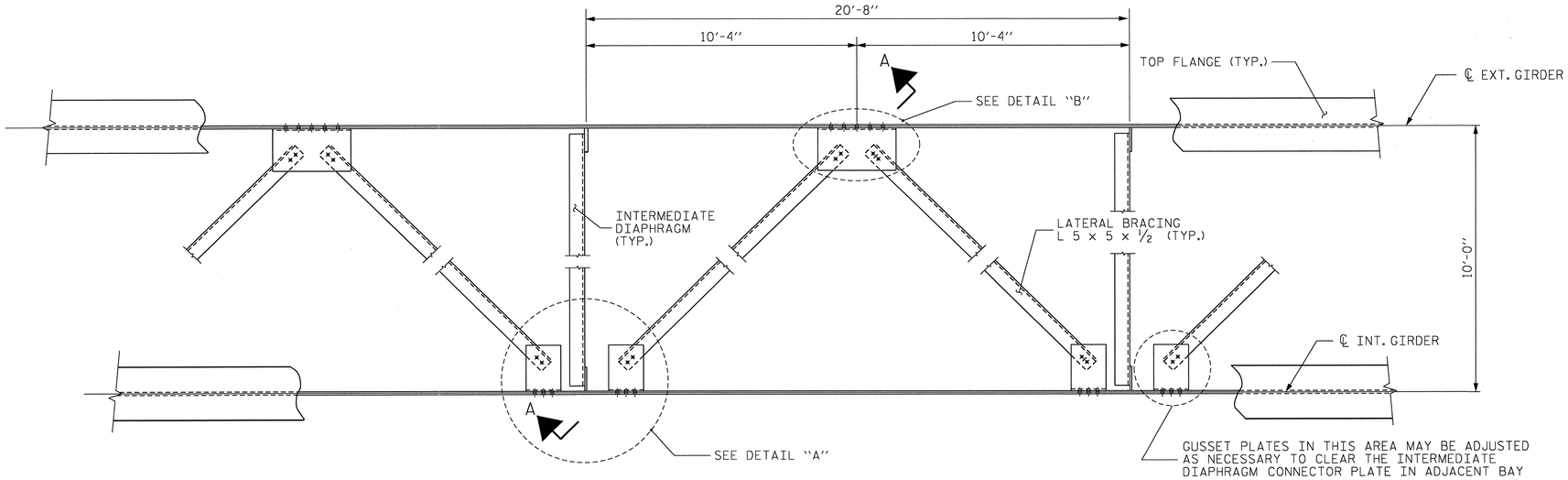

PART PLAN - NEAR TOP FLANGE LATERAL BRACING

(THROUGHOUT EXTERIOR BAYS ONLY AS SHOWN ON "FRAMING PLAN" SHEETS)

LATERAL BRACING NOTES

LATERAL BRACING ASSEMBLY SHALL COMPLY WITH SECTION 1072 OF THE STANDARD SPECIFICATIONS.

ALL STRUCTURAL STEEL SHALL BE AASHTO M270 GRADE 50W AND PAINTED IN ACCORDANCE WITH SYSTEM 4 OF ARTICLE 442-7 OF THE STANDARD SPECIFICATIONS UNLESS OTHERWISE NOTED ON THE PLANS.

TENSION ON THE ASTM A325 BOLTS SHALL BE CALIBRATED USING DIRECT TENSION INDICATOR WASHERS IN ACCORDANCE WITH THE STANDARD SPECIFICATIONS.

ALL BOLTED CONNECTIONS SHALL BE 7/8" Ø HIGH STRENGTH BOLTS.

THE CONTRACTOR HAS THE OPTION TO CLIP THE PROTRUDING CORNERS OF THE GUSSET PLATES, AT NO ADDITIONAL COST TO THE DEPARTMENT.

BENT GUSSET PLATES OR ROLLED ANGLE SHAPES MAY BE SUBSTITUTED FOR THE WELDED GUSSET PLATES DETAILED IF APPROVED BY THE ENGINEER, AT NO ADDITIONAL COST TO THE DEPARTMENT.

INSTALL THE LATERAL BRACING AFTER ERECTING THE EXTERIOR GIRDER AND THE ADJACENT INTERIOR GIRDER AND INSTALLING THE INTERMEDIATE DIAPHRAGMS.

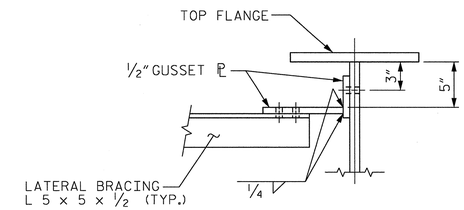

SECTION THRU CONNECTION

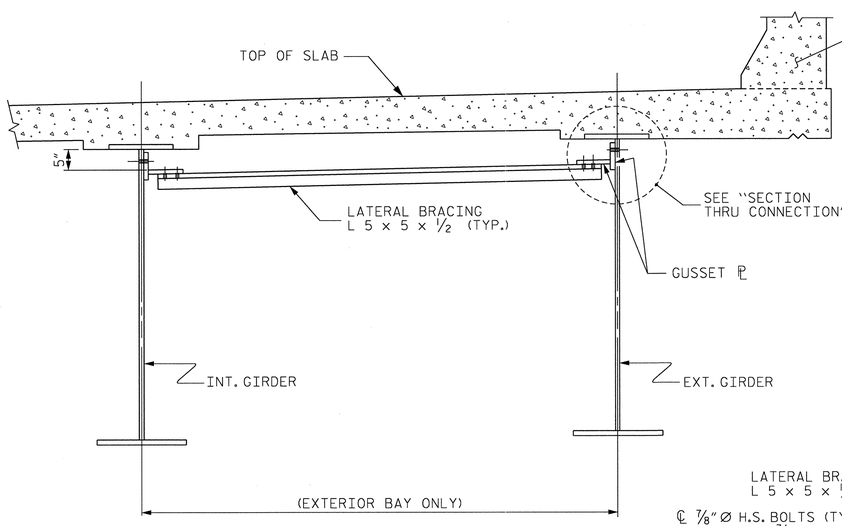

SECTION A-A

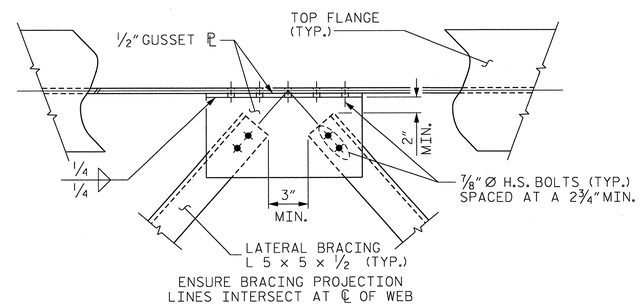

DETAIL "B"

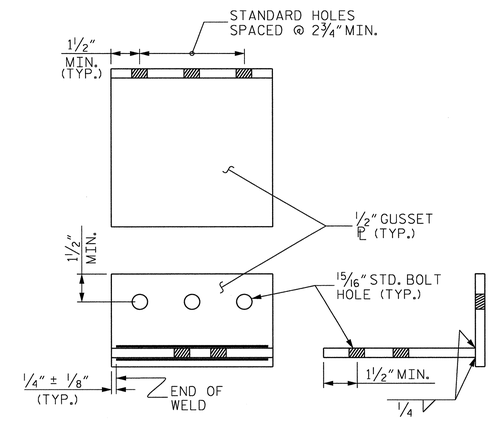

CONNECTION DETAIL

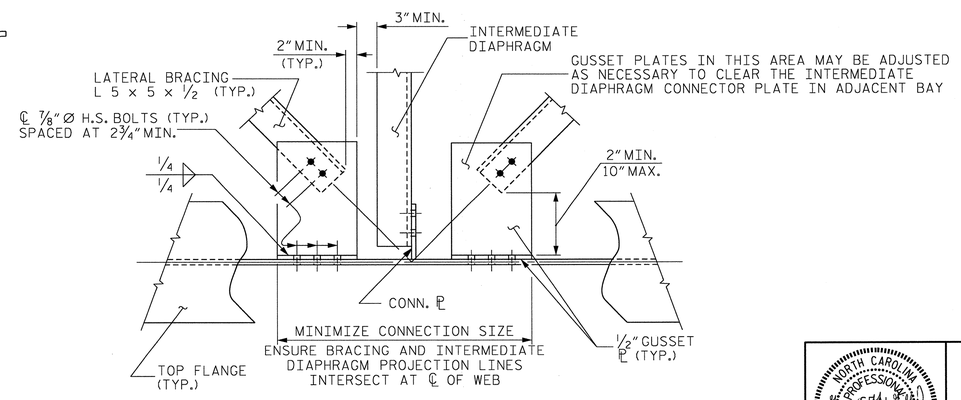

DETAIL "A"

PROJECT NO. U-0071

DURHAM COUNTY

STATION: 17+97.57-DFLW-

SHEET 4 OF 5

STATE OF NORTH CAROLINA
DEPARTMENT OF TRANSPORTATION
RALEIGH

STANDARD
STRUCTURAL STEEL DETAILS
(LATERAL BRACING DETAILS)

ASSEMBLED BY: J.M. BRITT	DATE : 4-17-13
CHECKED BY : G.M. GILLAND	DATE : 5-13-13
DESIGN ENGINEER OF RECORD : GMG	DATE : 5-13
DRAWN BY : WMC 6/11	ADDED: 10/31/11
CHECKED BY : GM 6/11	

NORTH CAROLINA PROFESSIONAL SEAL 37400 ENGINEER GREGORY M. GILLAND 9/19/12

WETHERILL ENGINEERING
559 Jones Franklin Rd. Suite 164
Raleigh, N.C. 27606
Bus: 919 851 8077
Fax: 919 851 8107
License: F-0377
TRANSPORTATION PLANNING/DESIGN - BRIDGE/STRUCTURE DESIGN
CIVIL/SITE DESIGN - GIS/GPS - CONSTRUCTION OBSERVATION

REVISIONS						
NO.	BY:	DATE:	NO.	BY:	DATE:	
1			3			
2			4			

SHEET NO. S-348

TOTAL SHEETS 671

STD. NO. LB1 STR. #8

P:\2012\U-0071 Sites 3,8 & 9\Structures\DWG_BU\0071_SD_STR8_SS_WE1.dgn
7/8/2013 4:50:23 PM

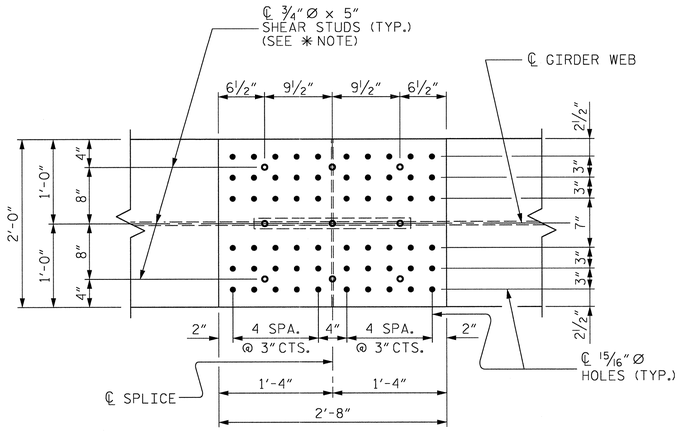

PLAN (TOP OF TOP FLANGE)

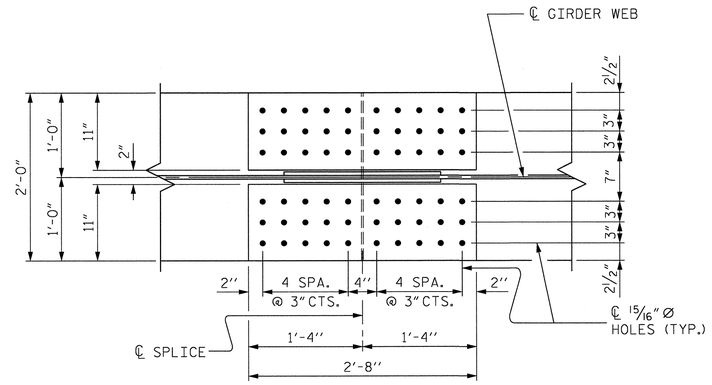

PLAN (TOP OF BOTTOM FLANGE)

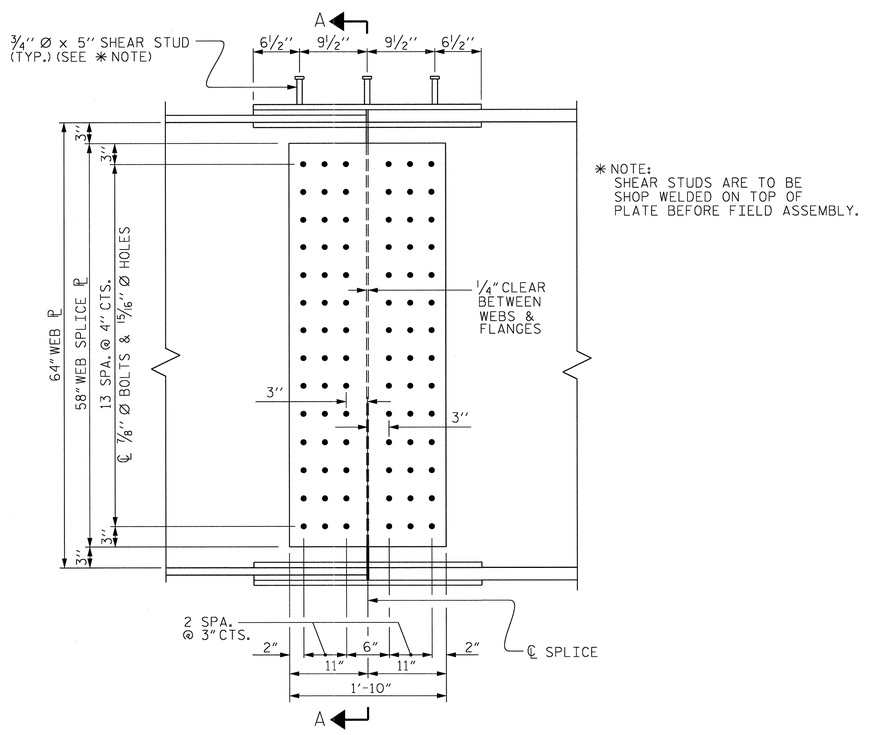

✳ NOTE:
SHEAR STUDS ARE TO BE SHOP WELDED ON TOP OF PLATE BEFORE FIELD ASSEMBLY.

ELEVATION

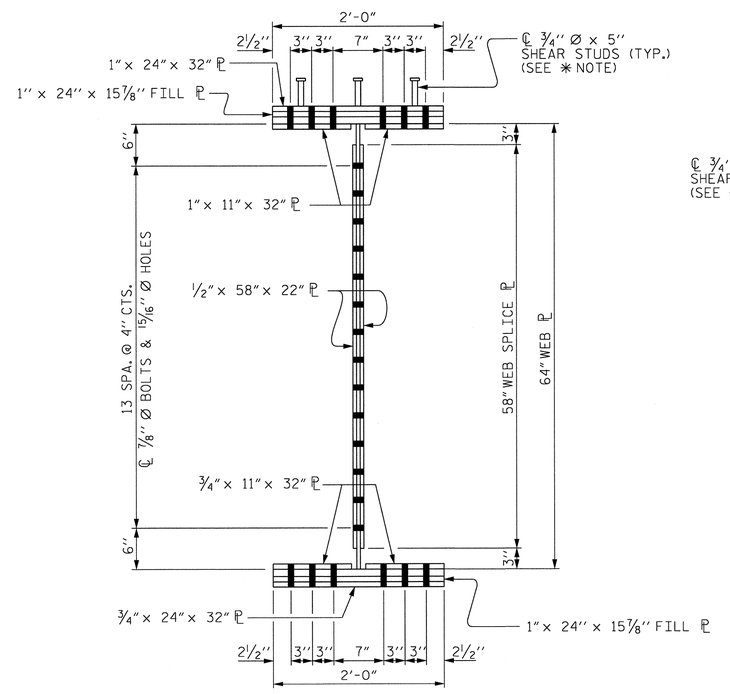

SECTION A-A

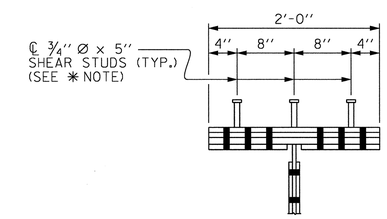

SHEAR STUD DETAIL
FOR TOP FLANGE SPLICE PLATE

BOLTED FIELD SPLICE DETAILS

(ALL BOLTED FIELD SPLICES ARE TYPICAL)

PROJECT NO. U-0071
DURHAM COUNTY
STATION: 17+97.57-DFLW-

SHEET 5 OF 5

STATE OF NORTH CAROLINA
DEPARTMENT OF TRANSPORTATION
RALEIGH

SUPERSTRUCTURE
STRUCTURAL STEEL DETAILS
(FIELD SPLICE DETAILS)

NORTH CAROLINA PROFESSIONAL SEAL 037400 ENGINEER GREGORY M. GILLAND 5/13/13

WETHERILL ENGINEERING
559 Jones Franklin Rd. Suite 164
Raleigh, N.C. 27606
Bus: 919 851 8077
Fax: 919 851 8107
License: F-0377
TRANSPORTATION PLANNING/DESIGN - BRIDGE/STRUCTURE DESIGN
CIVIL/SITE DESIGN - GIS/GPS - CONSTRUCTION OBSERVATION

REVISIONS								
NO.	BY:	DATE:	NO.	BY:	DATE:			
1			3					
2			4					

SHEET NO. S-349
TOTAL SHEETS 671

DRAWN BY : J.M. BRITT DATE : 4-18-13
CHECKED BY : G.M. GILLAND DATE : 5-13-13
DESIGN ENGINEER OF RECORD: G.M. GILLAND DATE : 5-13

P:\2012\U-0071 Sites 3,8 & 9\Structures\DWG_BR\0071_SD_STR8_SS_WEI.dgn
7/8/2013 4:50:42 PM

STR. #8

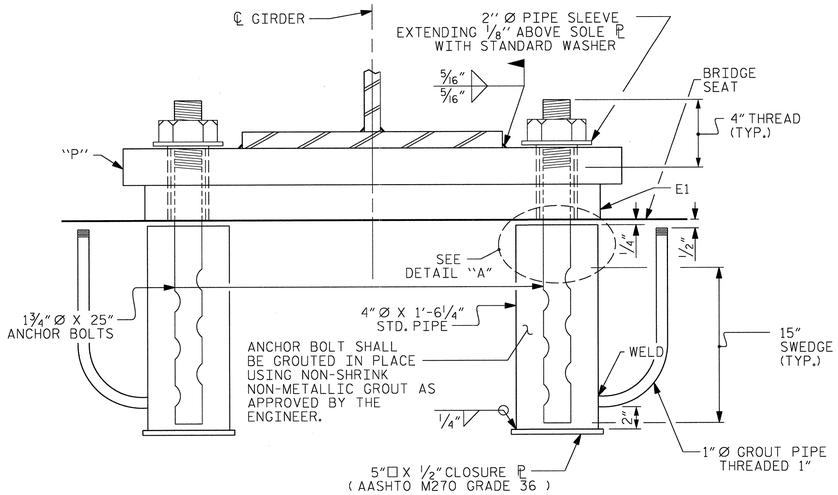

EXPANSION END VIEW

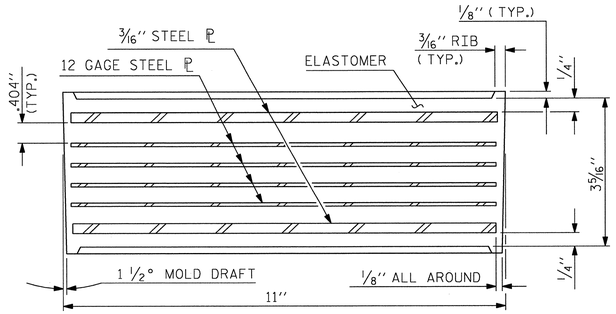

TYPICAL SECTION OF ELASTOMERIC BEARING

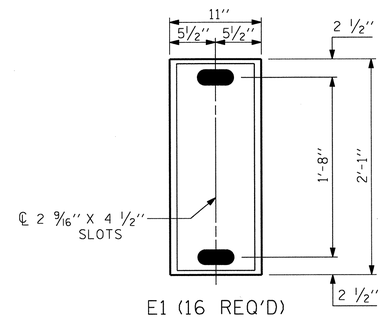

E1 (16 REQ'D)

PLAN VIEW OF ELASTOMERIC BEARING

TYPE IV

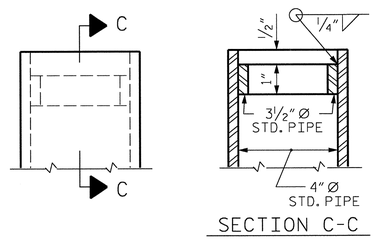

SECTION C-C

DETAIL "A"

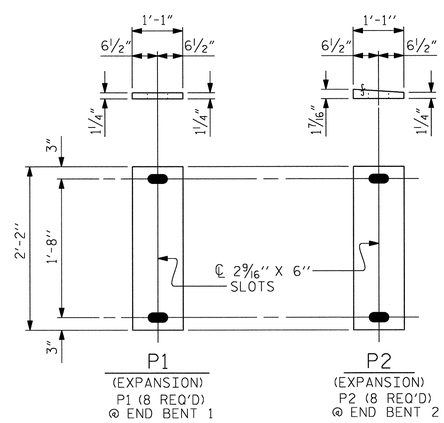

SOLE PLATE DETAILS

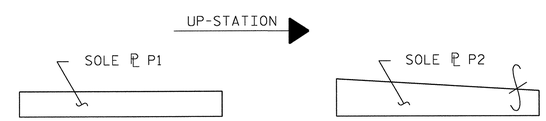

SOLE ℙ PLACEMENT DETAIL

NOTES

AT ALL FIXED POINTS OF SUPPORT, NUTS FOR ANCHOR BOLTS ARE TO BE TIGHTENED FINGER TIGHT AND THEN BACKED OFF 1/2 TURN. THE THREAD OF THE NUT AND BOLT SHALL THEN BE BURRED WITH A SHARP POINTED TOOL.

THE 2" Ø PIPE SLEEVE SHALL BE CUT FROM SCHEDULE 40 PVC PLASTIC PIPE. THE PVC PLASTIC PIPE SHALL MEET THE REQUIREMENTS OF ASTM D1785.

THE PAYMENT FOR THE PIPE SLEEVES SHALL BE INCLUDED IN THE SEVERAL PAY ITEMS.

FOR AASHTO M270 GRADE 50W STRUCTURAL STEEL, SOLE PLATE SHALL BE AASHTO M270 GRADE 50W AND SHALL NOT BE GALVANIZED. ANCHOR BOLTS, NUTS AND WASHERS SHALL BE GALVANIZED IN ACCORDANCE WITH THE STANDARD SPECIFICATIONS.

ANCHOR BOLTS SHALL MEET THE REQUIREMENTS OF ASTM A449. NUTS SHALL MEET THE REQUIREMENTS OF AASHTO M291-DH OR AASHTO M292-2H. WASHERS SHALL MEET THE REQUIREMENTS OF AASHTO M293. SHOP DRAWINGS ARE NOT REQUIRED FOR ANCHOR BOLTS, NUTS AND WASHERS. SHOP INSPECTION IS REQUIRED.

WHEN FIELD WELDING THE SOLE PLATE TO THE GIRDER FLANGE, USE TEMPERATURE INDICATING WAX PENS, OR OTHER SUITABLE MEANS, TO ENSURE THAT THE TEMPERATURE OF THE SOLE PLATE DOES NOT EXCEED 300°F. TEMPERATURES ABOVE THIS MAY DAMAGE THE ELASTOMER.

ALL SURFACES OF BEARING PLATES SHALL BE SMOOTH AND STRAIGHT.

THE ELASTOMER IN THE STEEL REINFORCED BEARINGS SHALL HAVE A SHEAR MODULUS OF 0.160 KSI, IN ACCORDANCE WITH AASHTO M251.

THE CLOSURE PLATE, GROUT PIPE AND STANDARD PIPE FOR THE EXPANSION ASSEMBLY NEED NOT BE GALVANIZED.

THE CONTRACTOR'S ATTENTION IS CALLED TO THE FOLLOWING PROCEDURE, WHICH MAY BE REQUIRED BY THE ENGINEER, TO RESET ELASTOMERIC BEARINGS DUE TO GIRDER TRANSLATION AND END ROTATION:

1. ONCE THE DECK HAS CURED, THE GIRDERS SHALL BE JACKED THEN THE ANCHOR BOLTS AND ELASTOMERIC BEARING SLOTS CENTERED AS NEARLY AS PRACTICAL ABOUT THE BEARING STIFFENER. THIS OPERATION SHALL BE PERFORMED AT APPROXIMATELY 60°F.

2. AFTER CENTERING THE ELASTOMERIC BEARING SLOTS AND ANCHOR BOLTS, THE ANCHOR BOLTS SHALL BE GROUTED.

THE CONTRACTOR MAY PROPOSE ALTERNATE METHODS, PROVIDED DETAILS ARE SUBMITTED TO THE ENGINEER FOR REVIEW AND APPROVAL.

FOR STEEL REINFORCED ELASTOMERIC BEARINGS, SEE SPECIAL PROVISIONS.

MAXIMUM ALLOWABLE SERVICE LOADS	
D.L.+L.L. (NO IMPACT)	
TYPE V	310 k

PROJECT NO. U-0071
DURHAM COUNTY
STATION: 17+97.57-DFLW-

STATE OF NORTH CAROLINA
DEPARTMENT OF TRANSPORTATION
RALEIGH

STANDARD

ELASTOMERIC BEARING DETAILS

NORTH CAROLINA PROFESSIONAL SEAL 37400 ENGINEER GREGORY M. GILLAND

WETHERILL ENGINEERING
559 Jones Franklin Rd. Suite 164
Raleigh, N.C. 27606
Bus: 919 851 8077
Fax: 919 851 8107
License: F-0377

TRANSPORTATION PLANNING/DESIGN - BRIDGE/STRUCTURE DESIGN
CIVIL/SITE DESIGN - GIS/GPS - CONSTRUCTION OBSERVATION

REVISIONS						SHEET NO.
NO.	BY:	DATE:	NO.	BY:	DATE:	S-350
1			3			TOTAL SHEETS
2			4			671

STD. NO. EB2 STR. #8

ASSEMBLED BY : E. R. BONNEY		DATE : 3-14-13	
CHECKED BY : G. M. GILLAND		DATE : 4-29-13	
DESIGN ENGINEER OF RECORD : GMG		DATE : 5-13	
DRAWN BY : EEM 10/95	REV. 5/1/06	TLA/GM	
CHECKED BY : PEK 10/95	REV. 10/1/11	MAA/GM	
	REV. 10/24/12	AAC/MAA	

P:\2012\U-0071 Sites 3,8 & 9\Structures\DWG_BU0071_SD_STR8_BG_WE1.dgn
7/8/2013 4:51:41 PM

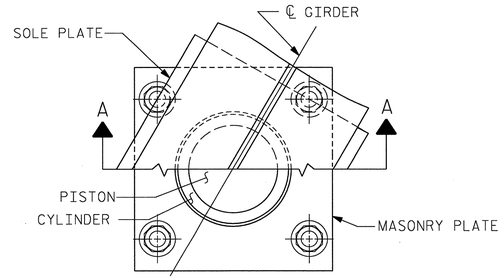

CUT-AWAY PLAN

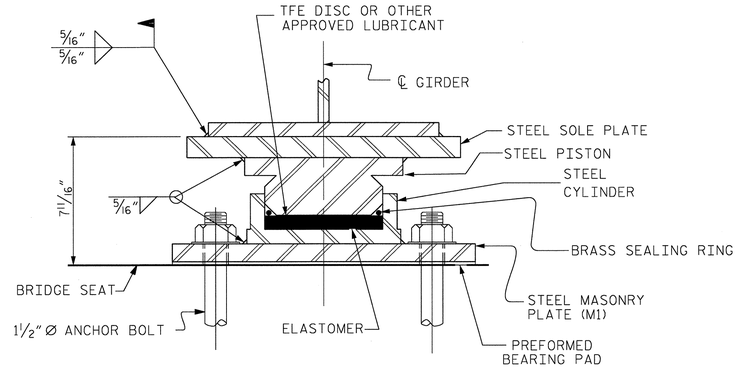

SECTION A-A

PB1, FIXED
(8 REQ'D. @ BENT 1 &
8 REQ'D @ BENT 2)

POT BEARING DETAILS

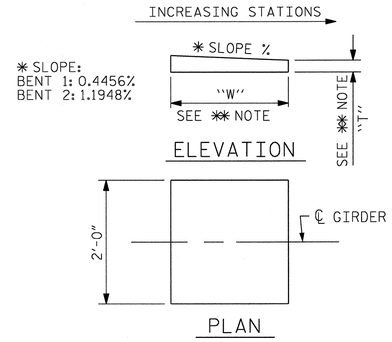

✳✳ NOTE:
DIMENSIONS "W" AND "T" ARE TO BE DETERMINED BY THE MANUFACTURER.

SOLE PLATE DETAILS

NOTES

FOR POT BEARINGS, SEE SPECIAL PROVISIONS.

AT ALL POINTS OF SUPPORT AT BENT 1 & BENT 2, NUTS FOR ANCHOR BOLTS SHALL BE TIGHTENED FINGER TIGHT AND GIVEN AN ADDITIONAL 1/4 TURN. THE THREAD OF THE NUT AND BOLT SHALL THEN BE BURRED WITH A SHARP POINTED TOOL.

WHEN WELDING THE SOLE PLATE TO THE GIRDER, USE TEMPERATURE INDICATING WAX PENS, OR OTHER SUITABLE MEANS, TO ENSURE THAT THE TEMPERATURE OF THE BEARING DOES NOT EXCEED 250°F TEMPERATURES ABOVE THIS MAY DAMAGE THE TFE OR ELASTOMER.

SOLE PLATES SHOULD BE WELDED TO BEAM FLANGES AND ANCHOR BOLTS SHOULD BE GROUTED BEFORE FALSEWORK IS PLACED.

ALL SURFACES OF BEARING PLATES SHALL BE SMOOTH AND STRAIGHT.

FOR THERMAL SPRAYED COATINGS (METALLIZATION), SEE SPECIAL PROVISIONS.

THE CONTRACTOR MAY SUBSTITUTE DISC BEARINGS FOR THE POT BEARINGS SHOWN. FOR OPTIONAL DISC BEARINGS, SEE SPECIAL PROVISIONS.

TABLE FOR LOADS AND MOVEMENT

BEARING	LOCATION	UNFACTORED VERTICAL LOAD (KIPS)				FACTORED LATERAL LOAD (KIPS)	TOTAL MOVEMENT (INCHES)
		DEAD		LIVE	TOTAL		
		DC	DW	LL+IM			
PB1 (FIXED)	BENT 1	341	48	241	630	127	0.00
PB1 (FIXED)	BENT 2	341	48	241	630	127	0.00

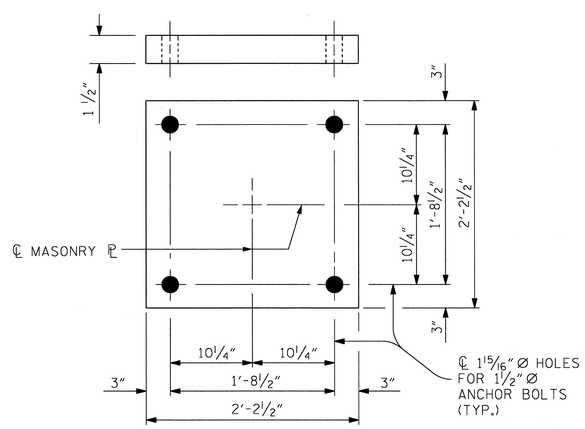

PLAN
M1 (16 REQ'D.)

MASONRY PLATE DETAILS

PROJECT NO. U-0071
DURHAM COUNTY
STATION: 17+97.57-DFLW-

STATE OF NORTH CAROLINA
DEPARTMENT OF TRANSPORTATION
RALEIGH

STANDARD

POT BEARING DETAILS

NORTH CAROLINA PROFESSIONAL SEAL 037400 ENGINEER GREGORY M. GILLAND 1/18/13

WETHERILL ENGINEERING
559 Jones Franklin Rd. Suite 164
Raleigh, N.C. 27606
Bus: 919 851 8077
Fax: 919 851 8107
License: F-0377

TRANSPORTATION PLANNING/DESIGN - BRIDGE/STRUCTURE DESIGN
CIVIL/SITE DESIGN - GIS/GPS - CONSTRUCTION OBSERVATION

REVISIONS						SHEET NO.
NO.	BY:	DATE:	NO.	BY:	DATE:	S-351
1			3			TOTAL SHEETS
2			4			671

ASSEMBLED BY : E. R. BONNEY		DATE : 4-4-13	
CHECKED BY : G. M. GILLAND		DATE : 4-29-13	
DESIGN ENGINEER OF RECORD : GMG		DATE : 5-13	
DRAWN BY : RWW 8/99	REV. 5/7/03	RWW/JTE	
CHECKED BY : LES 8/99	REV. 5/1/06R	TLA/GM	
	REV. 10/1/11	MAA/GM	

P:\2012\U-0071 Sites 3,8 & 9\Structures\DWG_BU00\1_SD_STR8_PB_WE1.dgn
7/8/2013 4:52:35 PM

STD. NO. PB1 STR. #8

DEAD LOAD DEFLECTION TABLE FOR GIRDER

SPAN "A" - GIRDERS #1 & #8

TWENTIETH POINTS	0	1	2	3	4	5	6	7	8	9	10	11	12	13	14	15	16	17	18	19	20
DEFLECTION DUE TO WEIGHT OF GIRDER	0.000	0.000	0.000	0.000	0.000	0.000	0.001	0.002	0.003	0.004	0.006	0.007	0.008	0.009	0.009	0.009	0.009	0.008	0.006	0.004	0.000
DEFLECTION DUE TO WEIGHT OF SLAB ✳	0.000	-0.001	-0.001	-0.001	0.000	0.001	0.003	0.006	0.009	0.013	0.016	0.020	0.023	0.026	0.027	0.027	0.026	0.023	0.018	0.010	0.000
DEFLECTION DUE TO WEIGHT OF BARRIER RAIL	0.000	0.000	0.000	0.000	0.000	0.000	0.000	0.001	0.001	0.002	0.002	0.003	0.003	0.004	0.004	0.004	0.004	0.003	0.003	0.002	0.000
TOTAL DEAD LOAD DEFLECTION	0.000	-0.001	-0.001	-0.001	0.000	0.002	0.005	0.009	0.013	0.019	0.024	0.030	0.035	0.038	0.041	0.041	0.039	0.034	0.027	0.015	0.000
VERTICAL CURVE ORDINATE	0.000	0.010	0.020	0.028	0.035	0.041	0.046	0.049	0.052	0.054	0.054	0.054	0.052	0.049	0.046	0.041	0.035	0.028	0.020	0.010	0.000
REQUIRED CAMBER	0	1/8	1/4	3/8	7/16	7/16	1/2	1/2	7/16	7/16	3/8	5/16	3/16	1/8	1/16	0	-1/16	-1/16	-1/16	-1/16	0

✳ INCLUDES SLAB, BUILDUPS & STAY-IN-PLACE FORMS

ALL VALUES ARE SHOWN IN FEET (DECIMAL FORM), EXCEPT "FINAL CAMBER", WHICH IS GIVEN IN INCHES (FRACTION FORM).

DEAD LOAD DEFLECTION TABLE FOR GIRDER

SPAN "A" - GIRDERS #2 & #7

TWENTIETH POINTS	0	1	2	3	4	5	6	7	8	9	10	11	12	13	14	15	16	17	18	19	20
DEFLECTION DUE TO WEIGHT OF GIRDER	0.000	0.000	0.000	0.000	0.000	0.000	0.001	0.002	0.003	0.005	0.006	0.007	0.008	0.009	0.010	0.010	0.009	0.008	0.007	0.004	0.000
DEFLECTION DUE TO WEIGHT OF SLAB ✳	0.000	-0.001	-0.001	-0.001	0.000	0.002	0.004	0.007	0.010	0.014	0.018	0.023	0.026	0.029	0.031	0.031	0.029	0.026	0.020	0.012	0.000
DEFLECTION DUE TO WEIGHT OF BARRIER RAIL	0.000	0.000	0.000	0.000	0.000	0.000	0.000	0.000	0.001	0.001	0.002	0.002	0.002	0.003	0.003	0.003	0.003	0.002	0.002	0.001	0.000
TOTAL DEAD LOAD DEFLECTION	0.000	-0.001	-0.001	-0.001	0.000	0.002	0.005	0.009	0.014	0.020	0.026	0.032	0.037	0.041	0.043	0.043	0.041	0.036	0.028	0.017	0.000
VERTICAL CURVE ORDINATE	0.000	0.010	0.020	0.028	0.035	0.041	0.046	0.049	0.052	0.054	0.054	0.054	0.052	0.049	0.046	0.041	0.035	0.028	0.020	0.010	0.000
REQUIRED CAMBER	0	1/8	1/4	3/8	7/16	7/16	1/2	1/2	7/16	3/8	5/16	1/4	3/16	1/8	0	-1/16	-1/16	-1/8	-1/8	-1/16	0

DEAD LOAD DEFLECTION TABLE FOR GIRDER

SPAN "A" - GIRDERS #3 & #6

TWENTIETH POINTS	0	1	2	3	4	5	6	7	8	9	10	11	12	13	14	15	16	17	18	19	20
DEFLECTION DUE TO WEIGHT OF GIRDER	0.000	0.000	0.000	0.000	0.000	0.000	0.001	0.002	0.003	0.005	0.006	0.007	0.008	0.009	0.010	0.010	0.009	0.008	0.007	0.004	0.000
DEFLECTION DUE TO WEIGHT OF SLAB ✳	0.000	-0.001	-0.001	-0.001	0.000	0.002	0.004	0.007	0.010	0.014	0.018	0.023	0.026	0.029	0.031	0.031	0.029	0.026	0.020	0.012	0.000
DEFLECTION DUE TO WEIGHT OF BARRIER RAIL	0.000	0.000	0.000	0.000	0.000	0.000	0.000	0.000	0.001	0.001	0.001	0.001	0.002	0.002	0.002	0.002	0.002	0.002	0.001	0.001	0.000
TOTAL DEAD LOAD DEFLECTION	0.000	-0.001	-0.001	-0.001	0.000	0.002	0.005	0.009	0.014	0.020	0.025	0.031	0.036	0.040	0.043	0.043	0.040	0.036	0.028	0.016	0.000
VERTICAL CURVE ORDINATE	0.000	0.010	0.020	0.028	0.035	0.041	0.046	0.049	0.052	0.054	0.054	0.054	0.052	0.049	0.046	0.041	0.035	0.028	0.020	0.010	0.000
REQUIRED CAMBER	0	1/8	1/4	3/8	7/16	7/16	1/2	1/2	7/16	7/16	3/8	1/4	3/16	1/8	1/16	0	-1/16	-1/8	-1/8	-1/16	0

DEAD LOAD DEFLECTION TABLE FOR GIRDER

SPAN "A" - GIRDERS #4 & #5

TWENTIETH POINTS	0	1	2	3	4	5	6	7	8	9	10	11	12	13	14	15	16	17	18	19	20
DEFLECTION DUE TO WEIGHT OF GIRDER	0.000	0.000	0.000	0.000	0.000	0.000	0.001	0.002	0.003	0.005	0.006	0.007	0.008	0.009	0.010	0.010	0.009	0.008	0.007	0.004	0.000
DEFLECTION DUE TO WEIGHT OF SLAB ✳	0.000	-0.001	-0.001	-0.001	0.000	0.002	0.004	0.007	0.010	0.014	0.018	0.023	0.026	0.029	0.031	0.031	0.029	0.026	0.020	0.012	0.000
DEFLECTION DUE TO WEIGHT OF BARRIER RAIL	0.000	0.000	0.000	0.000	0.000	0.000	0.000	0.000	0.000	0.000	0.000	0.000	0.000	0.000	0.000	0.000	0.000	0.000	0.000	0.000	0.000
TOTAL DEAD LOAD DEFLECTION	0.000	-0.001	-0.001	-0.001	0.000	0.002	0.005	0.009	0.013	0.019	0.024	0.030	0.035	0.039	0.041	0.041	0.039	0.034	0.027	0.015	0.000
VERTICAL CURVE ORDINATE	0.000	0.010	0.020	0.028	0.035	0.041	0.046	0.049	0.052	0.054	0.054	0.054	0.052	0.049	0.046	0.041	0.035	0.028	0.020	0.010	0.000
REQUIRED CAMBER	0	1/8	1/4	3/8	7/16	7/16	1/2	1/2	7/16	7/16	3/8	5/16	3/16	1/8	1/16	0	-1/16	-1/16	-1/16	-1/16	0

DEAD LOAD DEFLECTION TABLE FOR GIRDER

SPAN "B" - GIRDERS #1 & #8

TWENTIETH POINTS	0	1	2	3	4	5	6	7	8	9	10	11	12	13	14	15	16	17	18	19	20
DEFLECTION DUE TO WEIGHT OF GIRDER	0.000	-0.009	-0.021	-0.035	-0.049	-0.064	-0.077	-0.088	-0.097	-0.102	-0.104	-0.102	-0.097	-0.088	-0.077	-0.064	-0.049	-0.035	-0.021	-0.009	0.000
DEFLECTION DUE TO WEIGHT OF SLAB ✳	0.000	-0.026	-0.060	-0.099	-0.140	-0.182	-0.220	-0.252	-0.277	-0.292	-0.297	-0.292	-0.277	-0.252	-0.220	-0.182	-0.140	-0.099	-0.060	-0.026	0.000
DEFLECTION DUE TO WEIGHT OF BARRIER RAIL	0.000	-0.004	-0.009	-0.015	-0.021	-0.027	-0.032	-0.037	-0.041	-0.043	-0.044	-0.043	-0.041	-0.037	-0.032	-0.027	-0.021	-0.015	-0.009	-0.004	0.000
TOTAL DEAD LOAD DEFLECTION	0.000	-0.039	-0.090	-0.148	-0.210	-0.272	-0.329	-0.378	-0.415	-0.437	-0.445	-0.437	-0.415	-0.378	-0.329	-0.272	-0.210	-0.148	-0.090	-0.039	0.000
VERTICAL CURVE ORDINATE	0.000	0.033	0.063	0.089	0.111	0.131	0.146	0.158	0.167	0.172	0.174	0.172	0.167	0.158	0.146	0.131	0.111	0.089	0.063	0.033	0.000
REQUIRED CAMBER	0	7/8	1 13/16	2 13/16	3 7/8	4 13/16	5 11/16	6 7/16	7	7 5/16	7 7/16	7 5/16	7	6 7/16	5 11/16	4 13/16	3 7/8	2 13/16	1 13/16	7/8	0

SIGN CONVENTION FOR DEAD LOAD DEFLECTION + 0 -

DRAWN BY : E.R. BONNEY DATE : 3-25-13
CHECKED BY : G.M. GILLAND DATE : 5-2-13
DESIGN ENGINEER OF RECORD: G.M. GILLAND DATE : 5-13

NORTH CAROLINA PROFESSIONAL SEAL 37400 ENGINEER GREGORY M. GILLAND 9/18/13

WETHERILL ENGINEERING
559 Jones Franklin Rd. Suite 164
Raleigh, N.C. 27606
Bus: 919 851 8077
Fax: 919 851 8107
License: F-0377
TRANSPORTATION PLANNING/DESIGN - BRIDGE/STRUCTURE DESIGN
CIVIL/SITE DESIGN - GIS/GPS - CONSTRUCTION OBSERVATION

PROJECT NO. U-0071
DURHAM COUNTY
STATION: 17+97.57-DFLW-

SHEET 1 OF 3

STATE OF NORTH CAROLINA
DEPARTMENT OF TRANSPORTATION
RALEIGH

SUPERSTRUCTURE

DEAD LOAD DEFLECTION

REVISIONS						SHEET NO.
NO.	BY:	DATE:	NO.	BY:	DATE:	S-352
1			3			TOTAL SHEETS
2			4			671

STR #8

P:\2012\U-0071 Sites 3,8 & 9\Structures\DWG_8\U0071_SD_STR8_DD_WEI.dgn
7/8/2013 4:54:40 PM

DEAD LOAD DEFLECTION TABLE FOR GIRDER

SPAN "B" - GIRDERS #2 & #7

TWENTIETH POINTS	0	1	2	3	4	5	6	7	8	9	10	11	12	13	14	15	16	17	18	19	20
DEFLECTION DUE TO WEIGHT OF GIRDER	0.000	-0.010	-0.022	-0.036	-0.051	-0.067	-0.081	-0.092	-0.102	-0.107	-0.109	-0.107	-0.102	-0.092	-0.081	-0.067	-0.051	-0.036	-0.022	-0.010	0.000
DEFLECTION DUE TO WEIGHT OF SLAB ✳	0.000	-0.030	-0.068	-0.111	-0.158	-0.205	-0.248	-0.285	-0.312	-0.330	-0.335	-0.330	-0.312	-0.285	-0.248	-0.205	-0.158	-0.111	-0.068	-0.030	0.000
DEFLECTION DUE TO WEIGHT OF BARRIER RAIL	0.000	-0.003	-0.006	-0.011	-0.015	-0.019	-0.023	-0.027	-0.029	-0.031	-0.031	-0.031	-0.029	-0.027	-0.023	-0.019	-0.015	-0.011	-0.006	-0.003	0.000
TOTAL DEAD LOAD DEFLECTION	0.000	-0.042	-0.096	-0.158	-0.224	-0.291	-0.352	-0.404	-0.443	-0.468	-0.476	-0.468	-0.443	-0.404	-0.352	-0.291	-0.224	-0.158	-0.096	-0.042	0.000
VERTICAL CURVE ORDINATE	0.000	0.033	0.063	0.089	0.111	0.131	0.146	0.158	0.167	0.172	0.174	0.172	0.167	0.158	0.146	0.131	0.111	0.089	0.063	0.033	0.000
REQUIRED CAMBER	0	7/8	1 7/8	2 15/16	4	5 1/16	6	6 3/4	7 5/16	7 11/16	7 13/16	7 11/16	7 5/16	6 3/4	6	5 1/16	4	2 15/16	1 7/8	7/8	0

✳ INCLUDES SLAB, BUILDUPS & STAY-IN-PLACE FORMS

ALL VALUES ARE SHOWN IN FEET (DECIMAL FORM), EXCEPT "FINAL CAMBER", WHICH IS GIVEN IN INCHES (FRACTION FORM).

DEAD LOAD DEFLECTION TABLE FOR GIRDER

SPAN "B" - GIRDERS #3 & #6

TWENTIETH POINTS	0	1	2	3	4	5	6	7	8	9	10	11	12	13	14	15	16	17	18	19	20
DEFLECTION DUE TO WEIGHT OF GIRDER	0.000	-0.010	-0.022	-0.036	-0.051	-0.067	-0.081	-0.092	-0.102	-0.107	-0.109	-0.107	-0.102	-0.092	-0.081	-0.067	-0.051	-0.036	-0.022	-0.010	0.000
DEFLECTION DUE TO WEIGHT OF SLAB ✳	0.000	-0.030	-0.068	-0.111	-0.158	-0.205	-0.248	-0.285	-0.312	-0.330	-0.335	-0.330	-0.312	-0.285	-0.248	-0.205	-0.158	-0.111	-0.068	-0.030	0.000
DEFLECTION DUE TO WEIGHT OF BARRIER RAIL	0.000	-0.002	-0.005	-0.007	-0.010	-0.014	-0.016	-0.019	-0.020	-0.022	-0.022	-0.022	-0.020	-0.019	-0.016	-0.014	-0.010	-0.007	-0.005	-0.002	0.000
TOTAL DEAD LOAD DEFLECTION	0.000	-0.041	-0.094	-0.155	-0.220	-0.285	-0.345	-0.396	-0.434	-0.458	-0.466	-0.458	-0.434	-0.396	-0.345	-0.285	-0.220	-0.155	-0.094	-0.041	0.000
VERTICAL CURVE ORDINATE	0.000	0.033	0.063	0.089	0.111	0.131	0.146	0.158	0.167	0.172	0.174	0.172	0.167	0.158	0.146	0.131	0.111	0.089	0.063	0.033	0.000
REQUIRED CAMBER	0	7/8	1 7/8	2 15/16	4	5	5 7/8	6 5/8	7 3/16	7 9/16	7 11/16	7 9/16	7 3/16	6 5/8	5 7/8	5	4	2 15/16	1 7/8	7/8	0

DEAD LOAD DEFLECTION TABLE FOR GIRDER

SPAN "B" - GIRDERS #4 & #5

TWENTIETH POINTS	0	1	2	3	4	5	6	7	8	9	10	11	12	13	14	15	16	17	18	19	20
DEFLECTION DUE TO WEIGHT OF GIRDER	0.000	-0.010	-0.022	-0.036	-0.051	-0.067	-0.081	-0.092	-0.102	-0.107	-0.109	-0.107	-0.102	-0.092	-0.081	-0.067	-0.051	-0.036	-0.022	-0.010	0.000
DEFLECTION DUE TO WEIGHT OF SLAB ✳	0.000	-0.030	-0.068	-0.111	-0.158	-0.205	-0.248	-0.285	-0.312	-0.330	-0.335	-0.330	-0.312	-0.285	-0.248	-0.205	-0.158	-0.111	-0.068	-0.030	0.000
DEFLECTION DUE TO WEIGHT OF BARRIER RAIL	0.000	0.000	0.000	0.000	0.000	0.000	0.000	0.000	0.000	0.000	0.000	0.000	0.000	0.000	0.000	0.000	0.000	0.000	0.000	0.000	0.000
TOTAL DEAD LOAD DEFLECTION	0.000	-0.039	-0.090	-0.147	-0.209	-0.271	-0.329	-0.377	-0.414	-0.437	-0.444	-0.437	-0.414	-0.377	-0.329	-0.271	-0.209	-0.147	-0.090	-0.039	0.000
VERTICAL CURVE ORDINATE	0.000	0.033	0.063	0.089	0.111	0.131	0.146	0.158	0.167	0.172	0.174	0.172	0.167	0.158	0.146	0.131	0.111	0.089	0.063	0.033	0.000
REQUIRED CAMBER	0	7/8	1 13/16	2 13/16	3 7/8	4 13/16	5 11/16	6 7/16	7	7 5/16	7 7/16	7 5/16	7	6 7/16	5 11/16	4 13/16	3 7/8	2 13/16	1 13/16	7/8	0

DEAD LOAD DEFLECTION TABLE FOR GIRDER

SPAN "C" - GIRDERS #1 & #8

TWENTIETH POINTS	0	1	2	3	4	5	6	7	8	9	10	11	12	13	14	15	16	17	18	19	20
DEFLECTION DUE TO WEIGHT OF GIRDER	0.000	0.004	0.006	0.008	0.009	0.009	0.009	0.009	0.008	0.007	0.006	0.004	0.003	0.002	0.001	0.000	0.000	0.000	0.000	0.000	0.000
DEFLECTION DUE TO WEIGHT OF SLAB ✳	0.000	0.010	0.018	0.023	0.026	0.027	0.027	0.026	0.023	0.020	0.016	0.013	0.009	0.006	0.003	0.001	0.000	-0.001	-0.001	-0.001	0.000
DEFLECTION DUE TO WEIGHT OF BARRIER RAIL	0.000	0.002	0.003	0.003	0.004	0.004	0.004	0.004	0.003	0.003	0.002	0.002	0.001	0.001	0.000	0.000	0.000	0.000	0.000	0.000	0.000
TOTAL DEAD LOAD DEFLECTION	0.000	0.015	0.027	0.034	0.039	0.041	0.041	0.038	0.035	0.030	0.024	0.019	0.013	0.009	0.005	0.002	0.00	-0.001	-0.001	-0.001	0.000
VERTICAL CURVE ORDINATE	0.000	0.010	0.020	0.028	0.035	0.041	0.046	0.049	0.052	0.054	0.054	0.054	0.052	0.049	0.046	0.041	0.035	0.028	0.020	0.010	0.000
REQUIRED CAMBER	0	-1/16	-1/16	-1/16	-1/16	0	1/16	1/8	3/16	5/16	3/8	7/16	7/16	1/2	1/2	7/16	7/16	3/8	1/4	1/8	0

DEAD LOAD DEFLECTION TABLE FOR GIRDER

SPAN "C" - GIRDERS #2 & #7

TWENTIETH POINTS	0	1	2	3	4	5	6	7	8	9	10	11	12	13	14	15	16	17	18	19	20
DEFLECTION DUE TO WEIGHT OF GIRDER	0.000	0.004	0.007	0.008	0.009	0.010	0.010	0.009	0.008	0.007	0.006	0.005	0.003	0.002	0.001	0.000	0.000	0.000	0.000	0.000	0.000
DEFLECTION DUE TO WEIGHT OF SLAB ✳	0.000	0.012	0.020	0.026	0.029	0.031	0.031	0.029	0.026	0.023	0.018	0.014	0.010	0.007	0.004	0.002	0.000	-0.001	-0.001	-0.001	0.000
DEFLECTION DUE TO WEIGHT OF BARRIER RAIL	0.000	0.001	0.002	0.002	0.003	0.003	0.003	0.003	0.002	0.002	0.002	0.001	0.001	0.000	0.000	0.000	0.000	0.000	0.000	0.000	0.000
TOTAL DEAD LOAD DEFLECTION	0.000	0.017	0.028	0.036	0.041	0.043	0.043	0.041	0.037	0.032	0.026	0.020	0.014	0.009	0.005	0.002	0.000	-0.001	-0.001	-0.001	0.000
VERTICAL CURVE ORDINATE	0.000	0.010	0.020	0.028	0.035	0.041	0.046	0.049	0.052	0.054	0.054	0.054	0.052	0.049	0.046	0.041	0.035	0.028	0.020	0.010	0.000
REQUIRED CAMBER	0	-1/16	-1/8	-1/8	-1/16	-1/16	0	1/8	3/16	1/4	5/16	3/8	7/16	1/2	1/2	7/16	7/16	3/8	1/4	1/8	0

SIGN CONVENTION FOR DEAD LOAD DEFLECTION + 0 -

PROJECT NO. U-0071
DURHAM COUNTY
STATION: 17+97.57-DFLW-

SHEET 2 OF 3

STATE OF NORTH CAROLINA
DEPARTMENT OF TRANSPORTATION
RALEIGH

SUPERSTRUCTURE

DEAD LOAD DEFLECTION

REVISIONS						SHEET NO.
NO.	BY:	DATE:	NO.	BY:	DATE:	S-353
1			3			TOTAL SHEETS
2			4			671

STR #8

WETHERILL ENGINEERING
559 Jones Franklin Rd. Suite 164
Raleigh, N.C. 27606
Bus: 919 851 8077
Fax: 919 851 8107
License: F-0377
TRANSPORTATION PLANNING/DESIGN - BRIDGE/STRUCTURE DESIGN
CIVIL/SITE DESIGN - GIS/GPS - CONSTRUCTION OBSERVATION

NORTH CAROLINA PROFESSIONAL SEAL 037400 ENGINEER GREGORY M. GILLAND 7/8/13

DRAWN BY : E.R. BONNEY DATE : 3-25-13
CHECKED BY : G.M. GILLAND DATE : 5-2-13
DESIGN ENGINEER OF RECORD: G.M. GILLAND DATE : 5-13

P:\2012\U-0071_Sites 3,8 & 9\Structures\DWG_8\U0071_SD_STR8_DD_WE1.dgn
7/8/2013 4:55:13 PM

DEAD LOAD DEFLECTION TABLE FOR GIRDER

	SPAN "C" - GIRDERS #3 & #6																				
TWENTIETH POINTS	0	1	2	3	4	5	6	7	8	9	10	11	12	13	14	15	16	17	18	19	20
DEFLECTION DUE TO WEIGHT OF GIRDER	0.000	0.004	0.007	0.008	0.009	0.010	0.010	0.009	0.008	0.007	0.006	0.005	0.003	0.002	0.001	0.000	0.000	0.000	0.000	0.000	0.000
DEFLECTION DUE TO WEIGHT OF SLAB ✱	0.000	0.012	0.020	0.026	0.029	0.031	0.031	0.029	0.026	0.023	0.018	0.014	0.010	0.007	0.004	0.002	0.000	-0.001	-0.001	-0.001	0.000
DEFLECTION DUE TO WEIGHT OF BARRIER RAIL	0.000	0.001	0.001	0.002	0.002	0.002	0.002	0.002	0.002	0.001	0.001	0.001	0.001	0.000	0.000	0.000	0.000	0.000	0.000	0.000	0.000
TOTAL DEAD LOAD DEFLECTION	0.000	0.016	0.028	0.036	0.040	0.043	0.043	0.040	0.036	0.031	0.025	0.020	0.014	0.009	0.005	0.002	0.000	-0.001	-0.001	-0.001	0.000
VERTICAL CURVE ORDINATE	0.000	0.010	0.020	0.028	0.035	0.041	0.046	0.049	0.052	0.054	0.054	0.054	0.052	0.049	0.046	0.041	0.035	0.028	0.020	0.010	0.000
REQUIRED CAMBER	0	-1/16	-1/8	-1/8	-1/16	0	1/16	1/8	3/16	1/4	3/8	7/16	7/16	1/2	1/2	7/16	7/16	3/8	1/4	1/8	0

✱ INCLUDES SLAB, BUILDUPS & STAY-IN-PLACE FORMS

ALL VALUES ARE SHOWN IN FEET (DECIMAL FORM), EXCEPT "FINAL CAMBER", WHICH IS GIVEN IN INCHES (FRACTION FORM).

DEAD LOAD DEFLECTION TABLE FOR GIRDER

	SPAN "C" - GIRDERS #4 & #5																				
TWENTIETH POINTS	0	1	2	3	4	5	6	7	8	9	10	11	12	13	14	15	16	17	18	19	20
DEFLECTION DUE TO WEIGHT OF GIRDER	0.000	0.004	0.007	0.008	0.009	0.010	0.010	0.009	0.008	0.007	0.006	0.005	0.003	0.002	0.001	0.000	0.000	0.000	0.000	0.000	0.000
DEFLECTION DUE TO WEIGHT OF SLAB ✱	0.000	0.012	0.020	0.026	0.029	0.031	0.031	0.029	0.026	0.023	0.018	0.014	0.010	0.007	0.004	0.002	0.000	-0.001	-0.001	-0.001	0.000
DEFLECTION DUE TO WEIGHT OF BARRIER RAIL	0.000	0.000	0.000	0.000	0.000	0.000	0.000	0.000	0.000	0.000	0.000	0.000	0.000	0.000	0.000	0.000	0.000	0.000	0.000	0.000	0.000
TOTAL DEAD LOAD DEFLECTION	0.000	0.015	0.027	0.034	0.039	0.041	0.041	0.039	0.035	0.030	0.024	0.019	0.013	0.009	0.005	0.002	0.000	-0.001	-0.001	-0.001	0.000
VERTICAL CURVE ORDINATE	0.000	0.010	0.020	0.028	0.035	0.041	0.046	0.049	0.052	0.054	0.054	0.054	0.052	0.049	0.046	0.041	0.035	0.028	0.020	0.010	0.000
REQUIRED CAMBER	0	-1/16	-1/16	-1/16	-1/16	0	1/16	1/8	3/16	5/16	3/8	7/16	7/16	1/2	1/2	7/16	7/16	3/8	1/4	1/8	0

SIGN CONVENTION FOR DEAD LOAD DEFLECTION + 0 -

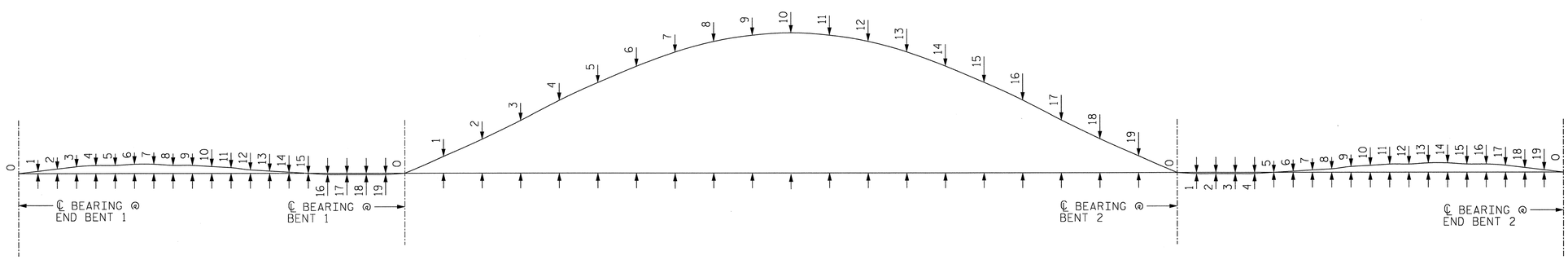

TYPICAL SCHEMATIC CAMBER ORDINATES

SLOPE FOR THE ZERO CAMBER BASE LINE VARIES

PROJECT NO. U-0071
DURHAM COUNTY
STATION: 17+97.57-DFLW-

SHEET 3 OF 3

STATE OF NORTH CAROLINA
DEPARTMENT OF TRANSPORTATION
RALEIGH

SUPERSTRUCTURE

DEAD LOAD DEFLECTION

NORTH CAROLINA PROFESSIONAL SEAL 37400 ENGINEER GREGORY M. GILLAND 6/4/13

WETHERILL ENGINEERING
559 Jones Franklin Rd. Suite 164
Raleigh, N.C. 27606
Bus: 919 851 8077
Fax: 919 851 8107
License: F-0377
TRANSPORTATION PLANNING/DESIGN - BRIDGE/STRUCTURE DESIGN
CIVIL/SITE DESIGN - GIS/GPS - CONSTRUCTION OBSERVATION

REVISIONS						SHEET NO.
NO.	BY:	DATE:	NO.	BY:	DATE:	S-364
1			3			TOTAL SHEETS
2			4			671

DRAWN BY : E.R. BONNEY DATE : 3-25-13
CHECKED BY : G.M. GILLAND DATE : 5-2-13
DESIGN ENGINEER OF RECORD: G.M. GILLAND DATE : 5-13

P:\2012\U-0071 Sites 3,8 & 9\Structures\DWG_BV\0071_SD_STR8_DD_WE1.dgn
7/8/2013 4:55:37 PM

STR #8

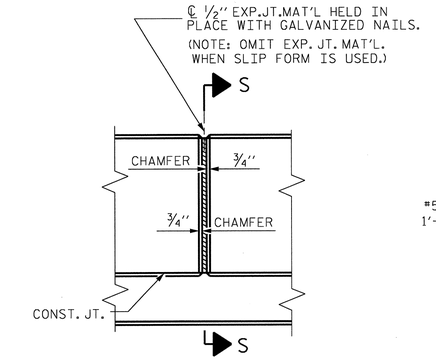

ELEVATION AT EXPANSION JOINTS

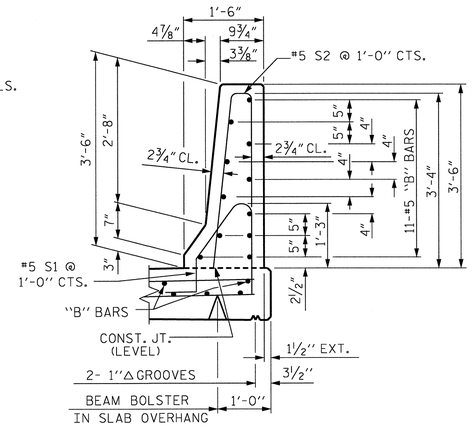

SECTION THRU RAIL

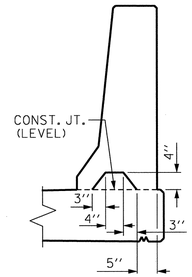

SECTION S-S

AT DAM IN OPEN JOINT
(THIS IS TO BE USED ONLY WHEN SLIP FORM IS USED)

BARRIER RAIL DETAILS

NOTES

THE BARRIER RAIL IN EACH CONTINUOUS UNIT SHALL NOT BE CAST UNTIL ALL SLAB CONCRETE IN THAT UNIT HAS BEEN CAST AND HAS REACHED A MINIMUM COMPRESSIVE STRENGTH OF 3,000 PSI.

ALL REINFORCING STEEL IN BARRIER RAILS SHALL BE EPOXY COATED.

GROOVED CONTRACTION JOINTS, 1/2" IN DEPTH, SHALL BE TOOLED IN ALL EXPOSED FACES OF THE BARRIER RAIL AND IN ACCORDANCE WITH ARTICLE 825-10(B) OF THE STANDARD SPECIFICATIONS. THE CONTRACTION JOINT SHALL BE LOCATED AT EACH THIRD POINT BETWEEN BARRIER RAIL EXPANSION JOINTS. ONLY ONE CONTRACTION JOINT IS REQUIRED AT MIDPOINT OF BARRIER RAIL SEGMENTS LESS THAN 20 FEET IN LENGTH AND NO CONTRACTION JOINTS ARE REQUIRED FOR THOSE SEGMENTS LESS THAN 10 FEET IN LENGTH.

THE #5 S1 AND S2 BARS MAY BE SHIFTED SLIGHTLY IN ORDER TO MAINTAIN A 2" MINIMUM CLEARANCE TO THE 1/2" EXPANSION JOINT MATERIAL IN THE RAIL.

BAR TYPES

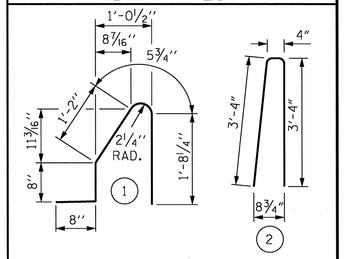

ALL BAR DIMENSIONS ARE OUT TO OUT

BILL OF MATERIAL

FOR CONCRETE BARRIER RAIL ONLY

BAR	No.	SIZE	TYPE	LENGTH	WEIGHT
* S1	790	#5	1	4'-8"	3845
* S2	790	#5	2	7'-0"	5768
* B1	286	#5	STR	26'-2"	7805
* B2	44	#5	STR	24'-7"	1128

* EPOXY COATED REINFORCING STEEL	18,546 LBS.
** CLASS AA CONCRETE	107.6 CU. YDS.
** CONCRETE BARRIER RAIL	791.69 LIN. FT.

** NOTE :
QUANTITIES FOR BARRIER RAIL ON APPROACH SLAB ARE NOT INCLUDED. FOR QUANTITIES OF BARRIER RAIL ON APPROACH SLAB, SEE "APPROACH SLAB DETAILS" SHEETS.

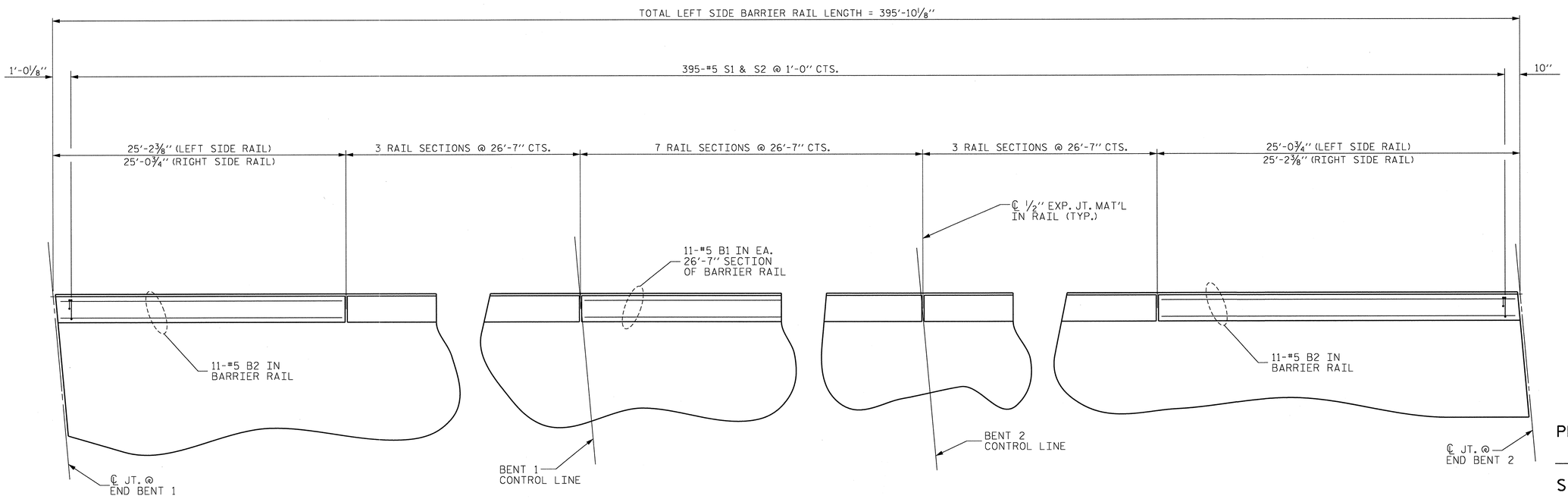

PLAN OF BARRIER RAIL - LEFT SIDE

ALL DIMENSIONS ARE MEASURED ALONG OUTSIDE FACE OF BARRIER RAIL
(RIGHT SIDE BARRIER RAIL SIMILAR BY ROTATION, EXCEPT AS NOTED)

PROJECT NO. U-0071
DURHAM COUNTY
STATION: 17+97.57-DFLW-

STATE OF NORTH CAROLINA
DEPARTMENT OF TRANSPORTATION
RALEIGH

STANDARD

CONCRETE BARRIER RAIL

ASSEMBLED BY : J.M. BRITT	DATE : 3-5-13
CHECKED BY : G.M. GILLAND	DATE : 5-9-13
DESIGN ENGINEER OF RECORD : GMG	DATE : 5-13
DRAWN BY : ARB 5/87	REV. 10/1/11 MAA/GM
CHECKED BY : SJD 9/87	REV. 7/12 MAA/GM
	REV. 10/12 MAA/GM

NORTH CAROLINA PROFESSIONAL SEAL 37400 ENGINEER GREGORY M. GILLAND 01/08/13

WETHERILL ENGINEERING
559 Jones Franklin Rd. Suite 164
Raleigh, N.C. 27606
Bus: 919 851 8077
Fax: 919 851 8107
License: F-0377
TRANSPORTATION PLANNING/DESIGN - BRIDGE/STRUCTURE DESIGN
CIVIL/SITE DESIGN - GIS/GPS - CONSTRUCTION OBSERVATION

REVISIONS								SHEET NO.
NO.	BY:	DATE:	NO.	BY:	DATE:			S-355
1			3					TOTAL SHEETS
2			4					671

STR #8

STD. NO. CBR1 (SHT 3)

P:\2012\U-0071 Sites 3,8 & 9\Structures\DWG_8\U0071_SD_STR8_BR_WEI.dgn
7/8/2013 4:56:36 PM

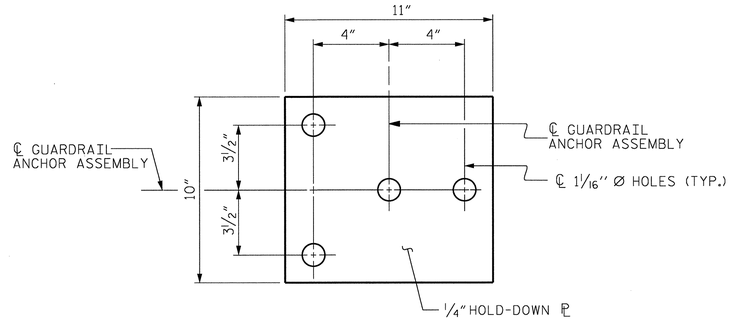

PLAN

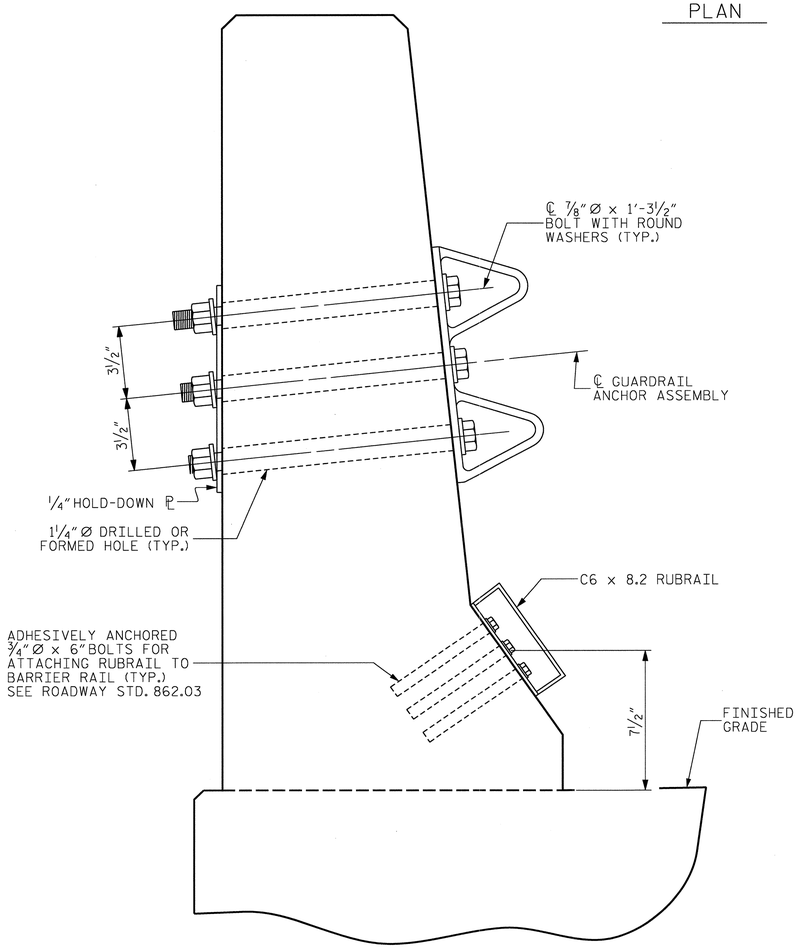

SECTION E-E

GUARDRAIL ANCHOR ASSEMBLY DETAILS

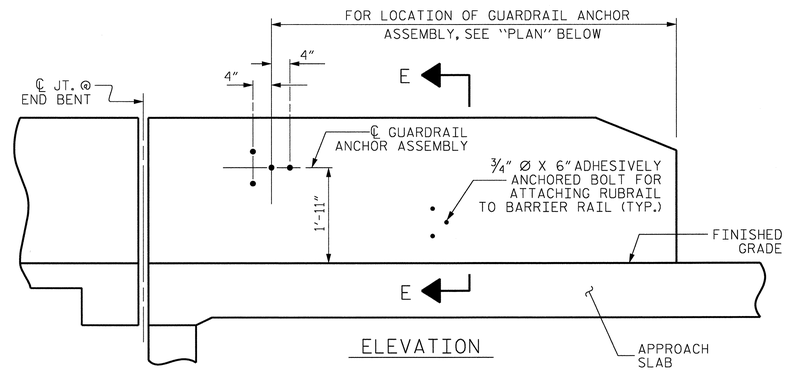

ELEVATION

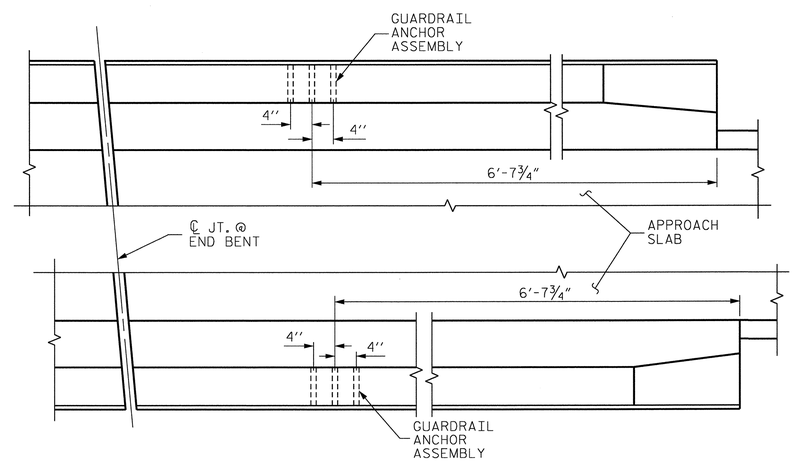

PLAN

LOCATION OF ANCHORS FOR GUARDRAIL

END BENT 2 SHOWN, END BENT 1 SIMILAR.

NOTES

THE GUARDRAIL ANCHOR ASSEMBLY SHALL CONSIST OF A 1/4" HOLD-DOWN PLATE AND 4 - 7/8" Ø BOLTS WITH NUTS AND WASHERS, RUBRAIL, AND ADHESIVELY ANCHORED BOLTS.

THE HOLD-DOWN PLATE SHALL CONFORM TO AASHTO M270 GRADE 36. AFTER FABRICATION, THE HOLD-DOWN PLATE SHALL BE HOT-DIP GALVANIZED IN ACCORDANCE WITH AASHTO M111.

BOLTS SHALL CONFORM TO THE REQUIREMENTS OF ASTM A307 AND NUTS SHALL CONFORM TO THE REQUIREMENTS OF AASHTO M291. BOLTS, NUTS AND WASHERS SHALL BE GALVANIZED. (AT THE CONTRACTOR'S OPTION, STAINLESS STEEL BOLTS, NUTS AND WASHERS MAY BE USED AS AN ALTERNATE FOR THE 7/8" Ø GALVANIZED BOLTS, NUTS AND WASHERS. THEY SHALL CONFORM TO OR EXCEED THE MECHANICAL REQUIREMENTS OF ASTM A307. THE USE OF THIS ALTERNATE SHALL BE APPROVED BY THE ENGINEER.)

THE GUARDRAIL ANCHOR ASSEMBLY IS REQUIRED AT ALL POINTS WHERE APPROACH GUARDRAIL IS TO BE ATTACHED TO THE END OF BARRIER RAIL. FOR POINTS OF ATTACHMENT, SEE SKETCH.

AFTER INSTALLATION, THE EXPOSED THREAD OF THE BOLT SHALL BE BURRED WITH A SHARP POINTED TOOL.

THE COST OF THE GUARDRAIL ANCHOR ASSEMBLY SHALL BE INCLUDED IN THE UNIT CONTRACT PRICE BID FOR CONCRETE BARRIER RAIL.

THE 1 1/4" Ø HOLES SHALL BE FORMED OR DRILLED WITH A CORE BIT. IMPACT TOOLS WILL NOT BE PERMITTED. ANY CONCRETE DAMAGED BY THIS WORK SHALL BE REPAIRED TO THE SATISFACTION OF THE ENGINEER.

THE C6 x 8.2 RUBRAIL IS TO BE ADHESIVELY ANCHORED TO THE RAIL USING THREE 3/4" Ø x 6" BOLTS WITH WASHERS. LEVEL ONE FIELD TESTING IS REQUIRED, AND THE YIELD LOAD OF THE 3/4" Ø BOLT IS 12 KIPS. FOR ADHESIVELY ANCHORED ANCHOR BOLTS OR DOWELS, SEE STANDARD SPECIFICATIONS. SEE ROADWAY STANDARD 862.03 FOR DETAILS AND LOCATION OF THE RUBRAIL.

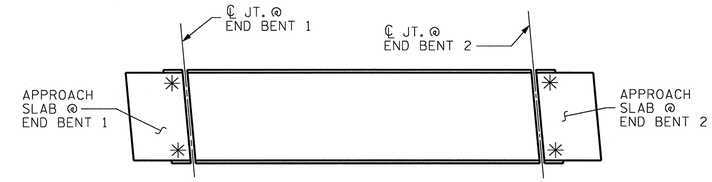

SKETCH SHOWING POINTS OF ATTACHMENTS

✳ DENOTES GUARDRAIL ANCHOR ASSEMBLY

PROJECT NO. U-0071
DURHAM COUNTY
STATION: 17+97.57-DFLW-

STATE OF NORTH CAROLINA
DEPARTMENT OF TRANSPORTATION
RALEIGH

STANDARD

GUARDRAIL ANCHORAGE FOR BARRIER RAIL

ASSEMBLED BY : J.M. BRITT	DATE : 1-29-13
CHECKED BY : G.M. GILLAND	DATE : 5-9-13
DESIGN ENGINEER OF RECORD : GMG	DATE : 5-13
DRAWN BY : TLA 5/06	REV. 10/1/11 MAA/GM
CHECKED BY : GM 5/06	REV. 7/12 MAA/GM
	REV. 10/12 MAA/GM

NORTH CAROLINA PROFESSIONAL SEAL 037400 ENGINEER GREGORY M. GILLAND 9/18/13

WETHERILL ENGINEERING
559 Jones Franklin Rd. Suite 164
Raleigh, N.C. 27606
Bus: 919 851 8077
Fax: 919 851 8107
License: F-0377
TRANSPORTATION PLANNING/DESIGN - BRIDGE/STRUCTURE DESIGN
CIVIL/SITE DESIGN - GIS/GPS - CONSTRUCTION OBSERVATION

REVISIONS								SHEET NO.
NO.	BY:	DATE:	NO.	BY:	DATE:			S-25
1			3					TOTAL SHEETS
2			4					671

STD. NO. GRA2 STR. #8

P:\2012\U-0071_Sites 3,8 & 9\Structures\DWG_BU0071_SD_STR8_GRA_WE1.dgn
7/8/2013 4:57:28 PM

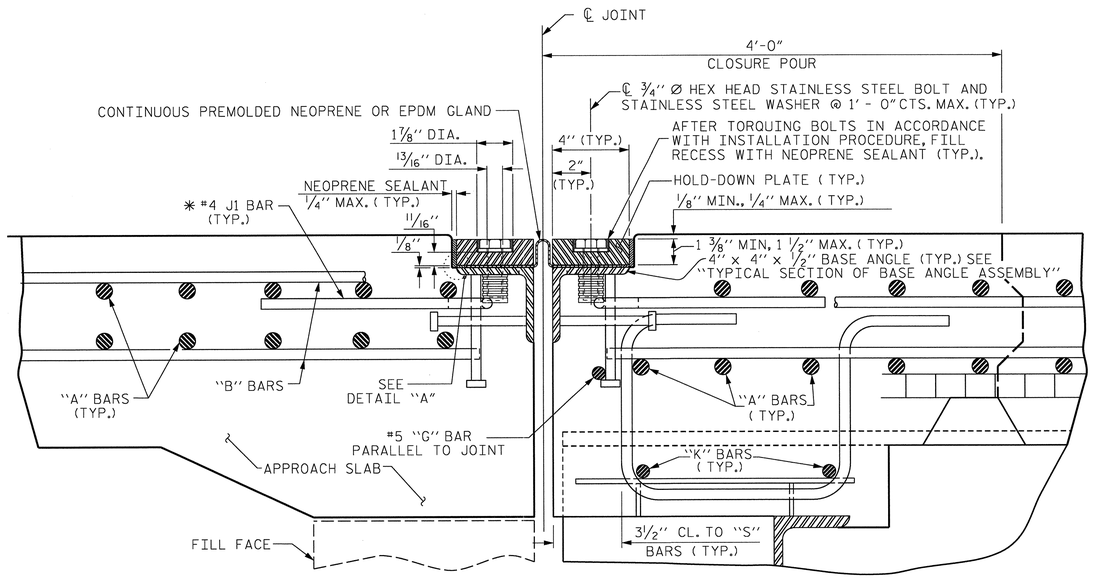

EXPANSION JOINT DETAILS

SECTION NORMAL TO JOINT -- STEEL SUPERSTRUCTURE

✱ THE QUANTITY OF #4 J1 BARS ON THE BILL OF MATERIAL IS BASED ON 1'-0" CENTERS. J1 BARS SHALL BE PLACED AT EACH VERTICAL STUD ANCHOR BOLT. IN THE EVENT THAT THE NUMBER OF VERTICAL STUD ANCHORS EXCEEDS THE NUMBER OF J1 BARS SPECIFIED, ADDITIONAL J1 BARS WILL NOT BE REQUIRED.

INSTALLATION PROCEDURE

1. A TEMPLATE OR OTHER SUITABLE DEVICE SHALL BE USED TO FORM THE TOP OF THE EXPANSION JOINT SEAL BLOCKOUT TO THE PROPER DEPTH AND WIDTH. THE TEMPLATE SHALL BE 4⅛" TO 4¼" WIDE AND OF SUCH THICKNESS AS TO PROVIDE FOR CORRECT FINAL ELEVATION OF TOP OF HOLD-DOWN PLATES. THE TEMPLATE SHALL BE ATTACHED TO THE BASE ANGLE ASSEMBLY WITH THE ¾" Ø HEX HEAD BOLTS PROVIDED FOR THE HOLD-DOWN PLATES. A 1" Ø HOLE SHALL BE PROVIDED IN THE TEMPLATE CENTERED OVER EACH WEEP HOLE IN THE 4" X 4" X ½" BASE ANGLE. OTHER METHODS OF INSURING DRAINAGE THROUGH WEEP HOLES MAY BE EMPLOYED SUBJECT TO ENGINEER'S APPROVAL.
2. AFTER THE CONCRETE HAS BEEN CAST ON BOTH SIDES OF THE JOINT, REMOVE THE TEMPLATE. THOROUGHLY CLEAN THE BOLT HOLES AND THE ANGLE PLATE. REMOVE ANY EXCESS CONCRETE THAT COMES OUT OF THE WEEP HOLES. ANY DAMAGED STEEL SHALL BE COATED WITH A MINIMUM THICKNESS OF 4 DRY MILS OF ZINC-RICH PAINT IN ACCORDANCE WITH THE STANDARD SPECIFICATIONS.
3. LAY THE GLAND ON THE BASE ANGLE AND FIELD MARK THE GLAND FOR THE BOLT HOLES. HOLES IN THE GLAND SHALL BE PUNCHED ⅞" IN DIAMETER WITH A HAND PUNCH.
4. IN ORDER TO CHECK FOR PROPER ALIGNMENT, PLACE THE GLAND AND HOLD-DOWN PLATES ON THE BASE ANGLE. DO NOT APPLY NEOPRENE SEALANT. BOLT THE HOLD-DOWN PLATES TO THE BASE ANGLE BUT DO NOT TIGHTEN. THE ENGINEER SHALL INSPECT THE JOINT SEAL DEVICE FOR PROPER ALIGNMENT.
5. AFTER INSPECTION, REMOVE THE HOLD-DOWN PLATES AND GLAND. APPLY NEOPRENE SEALANT TO THE BASE ANGLE IN ACCORDANCE WITH THE "INSTALLATION SKETCH". PLACE GLAND AND HOLD-DOWN PLATES ON THE BASE ANGLE. BOLT THE HOLD-DOWN PLATES TO THE BASE ANGLE ASSEMBLY AND TORQUE THE BOLTS TO 88 FT-LBS WITH A TORQUE WRENCH. CHECK THE TORQUE AFTER THREE (3) HOURS AND, IF NECESSARY, RETIGHTEN TO 88 FT-LBS. A FINAL CHECK SHALL BE MADE AT SEVEN (7) DAYS. TORQUE SHALL NOT BE LESS THAN 80 FT-LBS AFTER SEVEN (7) DAYS.
6. AFTER PROPER TORQUING, CLEAN THE BOLT HOLE RECESSES AND THE RECESS BETWEEN THE JOINT SEAL DEVICE AND CONCRETE, COMPLETELY FILL THESE RECESSES WITH NEOPRENE SEALANT.

GENERAL NOTES

1. FOR EXPANSION JOINT SEALS, SEE SPECIAL PROVISIONS.
2. ALL PLATES AND ANGLES SHALL CONFORM TO AASHTO M270 GRADE 36 STEEL OR APPROVED EQUAL. ALL HOLD-DOWN BOLTS SHALL CONFORM TO ASTM F593 ALLOY 304 STAINLESS STEEL AND WASHERS SHALL CONFORM TO ASTM F844 EXCEPT THEY SHALL BE MADE FROM ALLOY 304 STAINLESS STEEL. ALL STUD ANCHORS SHALL CONFORM TO AASHTO M169, GRADES 1010 THRU 1020 OR APPROVED EQUAL. ALL CONCRETE INSERTS SHALL BE CLOSED END AND SHALL CONFORM TO AASHTO M169, GRADE 12L14. TENSILE CAPACITY SHALL BE 3000 LBS. MIN.
3. A PREMOLDED CORRUGATED OR NON-CORRUGATED GLAND SHALL BE USED FOR JOINTS SKEWED BETWEEN 50° THRU 130°. FOR JOINTS SKEWED LESS THAN 50° OR MORE THAN 130°, ONLY A CORRUGATED GLAND SHALL BE USED.
4. CLOSED END FERRULES AND STUD ANCHORS SHALL BE SHOP WELDED AND ALL HOLES SHALL BE SHOP DRILLED AS SHOWN ON PLANS. STUD ANCHORS SHALL BE ELECTRIC ARC END WELDED WITH COMPLETE FUSION.
5. SURFACES COMING IN CONTACT WITH NEOPRENE SHALL BE GROUND SMOOTH PRIOR TO METALLIZING.
6. UPON COMPLETION OF SHOP FABRICATION, THE HOLD DOWN PLATE AND BASE ANGLE ASSEMBLY, AS SHOWN IN THE "TYPICAL SECTION OF BASE ANGLE ASSEMBLY", SHALL BE METALLIZED. SEE SPECIAL PROVISION FOR THERMAL SPRAYED COATINGS (METALLIZATION).
7. BASE ANGLE ASSEMBLY SHALL BE CONTINUOUS FOR THE LENGTH OF THE JOINT. AT CROWN BREAKS, THE ENDS OF THE BASE ANGLE ASSEMBLY SHALL BE CUT PARALLEL TO THE BRIDGE CENTERLINE FOR SKEWS LESS THAN 80° AND GREATER THAN 100°. FINISHED WELD SHALL BE GROUND SMOOTH AND COATED WITH A MINIMUM THICKNESS OF 4 DRY MILS OF ZINC-RICH PAINT IN ACCORDANCE WITH THE STANDARD SPECIFICATIONS.
8. FIELD SPLICES OF HOLD-DOWN PLATES SHALL BE KEPT TO A MINIMUM. CONTRACTOR SHALL FURNISH DETAILED PLANS SHOWING PROPOSED SPLICE LOCATIONS FOR APPROVAL. HOLD-DOWN PLATES SHALL NOT EXCEED 20' LENGTHS UNLESS APPROVED BY THE ENGINEER.
9. NO ALTERNATE JOINT DETAILS SHALL BE PERMITTED IN LIEU OF THOSE SHOWN ON THESE PLANS.
10. THE CONTRACTOR MAY, AT HIS OPTION, USE ADHESIVELY ANCHORED ANCHOR BOLTS IN PLACE OF CONCRETE INSERTS FOR COVER PLATES. THE YIELD LOAD OF THE ¾" Ø BOLT IS 10 KIPS. FIELD TESTING OF THE ADHESIVE BONDING SYSTEM IS NOT REQUIRED.

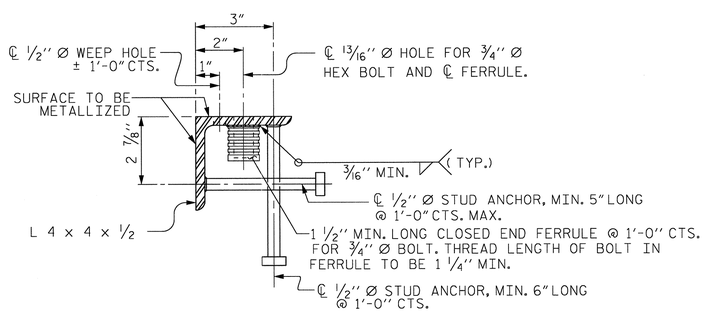

TYPICAL SECTION OF BASE ANGLE ASSEMBLY

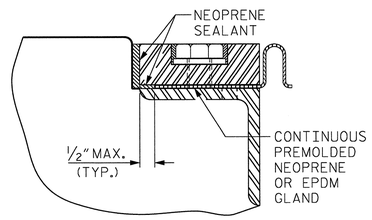

DETAIL "A"

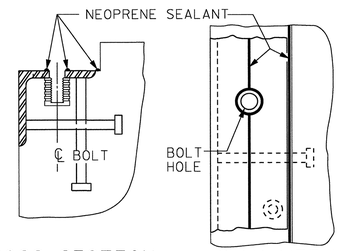

CROSS SECTION PLAN VIEW

INSTALLATION SKETCH

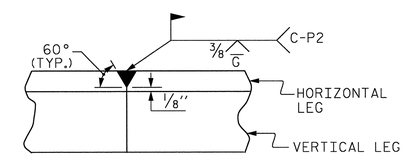

DETAIL- FIELD WELD SPLICE OF BASE ANGLE

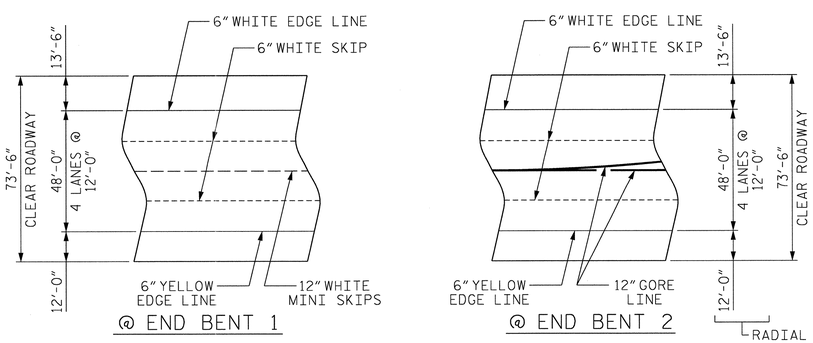

PAVEMENT MARKING ALIGNMENT

BRIDGE IS MEASURED ALONG -DFLW- AND EXTENDED TANGENT @ TS STATION 20+00.00 -DFLW-. SEE "GENERAL DRAWING" SHEETS FOR DETAILS.

MOVEMENT AND SETTING AT JOINT

LOCATION	SKEW ANGLE	TOTAL MOVEMENT (ALONG ℄ RDWY)	PERPENDICULAR JOINT OPENING AT 45° F	PERPENDICULAR JOINT OPENING AT 60° F	PERPENDICULAR JOINT OPENING AT 90° F
END BENT 1	85°-00'-00"	1 9/16"	2"	1¾"	1 5/16"
END BENT 2	85°-00'-00"	1 9/16"	2"	1¾"	1 5/16"

PROJECT NO. U-0071
DURHAM COUNTY
STATION: 17+97.57-DFLW-

SHEET 1 OF 2

STATE OF NORTH CAROLINA
DEPARTMENT OF TRANSPORTATION
RALEIGH

STANDARD

EXPANSION JOINT SEAL DETAILS

NORTH CAROLINA PROFESSIONAL SEAL 037400 ENGINEER GREGORY M. GILLAND 6/14/13

WETHERILL ENGINEERING
559 Jones Franklin Rd. Suite 164
Raleigh, N.C. 27606
Bus: 919 851 8077
Fax: 919 851 8107
License: F-0377
TRANSPORTATION PLANNING/DESIGN - BRIDGE/STRUCTURE DESIGN
CIVIL/SITE DESIGN - GIS/GPS - CONSTRUCTION OBSERVATION

REVISIONS							
NO.	BY:	DATE:	NO.	BY:	DATE:	SHEET NO.	8357
1			3			TOTAL SHEETS	671
2			4				

STD. NO. EJS1 STR #8

ASSEMBLED BY : G.M. GILLAND		DATE : 5-3-13
CHECKED BY : T.J. DIFFEE		DATE : 5-7-13
DESIGN ENGINEER OF RECORD : GMG		DATE : 5-13
DRAWN BY : REK 9/87	REV. 5/7/03R	RWW/JTE
CHECKED BY : CRK 10/87	REV. 5/1/06R	TLA/GM
	REV. 10/1/11	MAA/GM

P:\2012\U-0071 Sites 3,8 & 9\Structures\DWG_Bridge\1_SD_STR8_EJS_WE1.dgn
7/8/2013 4:58:40 PM

SUPERSTRUCTURE REINFORCING STEEL LENGTHS ARE BASED ON THE FOLLOWING MINIMUM SPLICE LENGTHS					
BAR SIZE	SUPERSTRUCTURE EXCEPT APPROACH SLABS, PARAPET, AND BARRIER RAIL		APPROACH SLABS		PARAPET AND BARRIER RAIL
	EPOXY COATED	UNCOATED	EPOXY COATED	UNCOATED	
#4	2'-0"	1'-9"	2'-0"	1'-9"	2'-9"
#5	2'-6"	2'-2"	2'-6"	2'-2"	3'-5"
#6	3'-0"	2'-7"	3'-10"	2'-7"	4'-4"
#7	5'-3"	3'-6"			
#8	6'-10"	4'-7"			

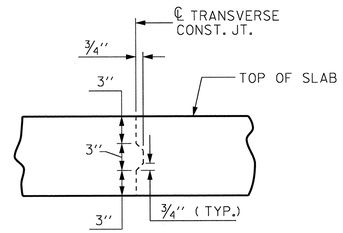

TRANSVERSE CONSTRUCTION JOINT DETAIL

NOTE: REINFORCING STEEL IN SLAB NOT SHOWN. LONGITUDINAL REINFORCING STEEL SHALL BE CONTINUOUS THRU JOINT.

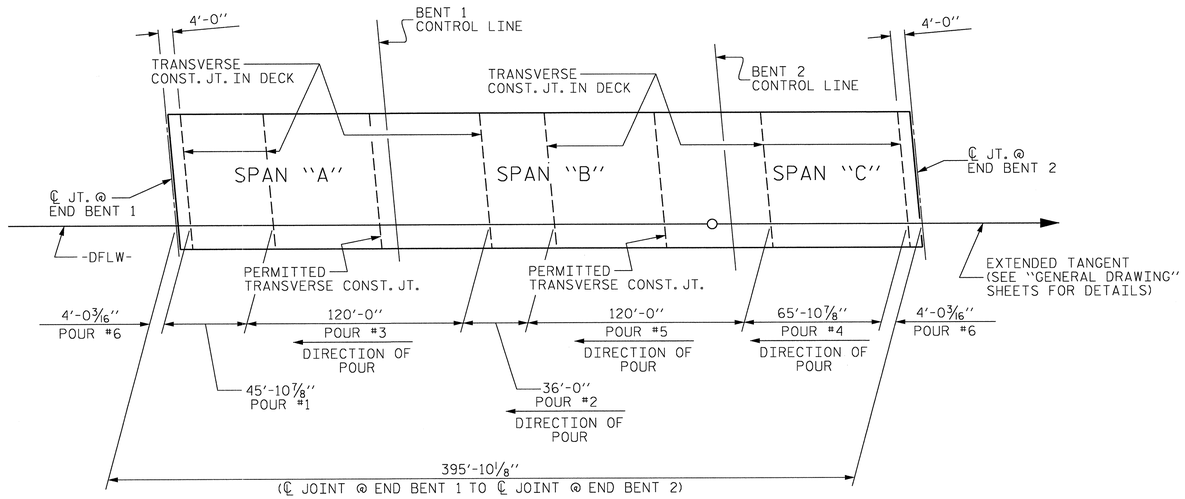

CONCRETE DECK POUR DETAIL

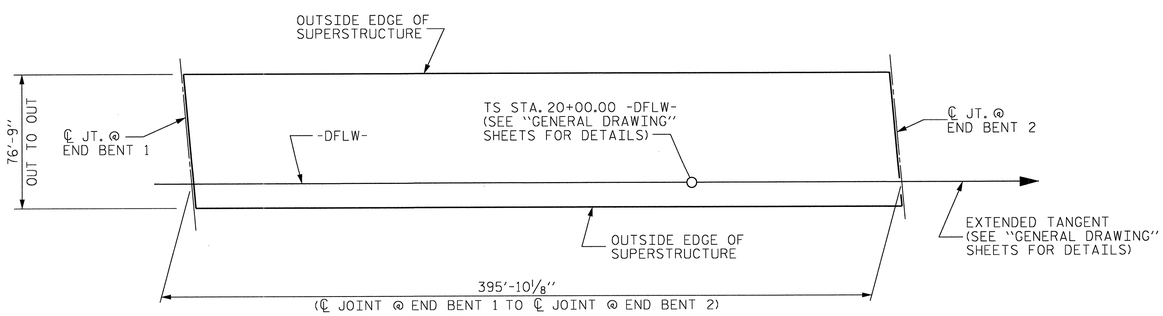

LAYOUT FOR COMPUTING AREA REINFORCED CONCRETE DECK SLAB
(SQ. FT. = 30,381)

BILL OF MATERIAL

SPAN "A-B-C"

BAR	No.	SIZE	TYPE	LENGTH	WEIGHT
* A1	1564	#5	STR.	39'-6"	64434
A2	783	#5	STR.	34'-4"	28039
A3	782	#5	STR.	44'-4"	36159
* A101	2	#5	STR.	39'-1"	82
* A102	2	#5	STR.	33'-4"	70
* A103	2	#5	STR.	27'-7"	58
* A104	2	#5	STR.	21'-11"	46
* A105	2	#5	STR.	16'-2"	34
* A106	2	#5	STR.	10'-6"	22
* A107	2	#5	STR.	4'-9"	10
* A108	2	#5	STR.	36'-5"	76
* A109	2	#5	STR.	30'-8"	64
* A110	2	#5	STR.	24'-11"	52
* A111	2	#5	STR.	19'-3"	40
* A112	2	#5	STR.	13'-6"	28
* A113	2	#5	STR.	7'-10"	16
A201	1	#5	STR.	33'-4"	35
A202	1	#5	STR.	27'-8"	29
A203	1	#5	STR.	21'-11"	23
A204	1	#5	STR.	16'-2"	17
A205	1	#5	STR.	10'-6"	11
A206	1	#5	STR.	4'-9"	5
A207	1	#5	STR.	31'-3"	33
A208	1	#5	STR.	25'-6"	27
A209	1	#5	STR.	19'-9"	21
A210	1	#5	STR.	14'-1"	15
A211	1	#5	STR.	8'-4"	9
A212	1	#5	STR.	41'-3"	43
A213	1	#5	STR.	35'-6"	37
A214	1	#5	STR.	29'-10"	31
A215	1	#5	STR.	24'-1"	25
A216	1	#5	STR.	18'-4"	19
A217	1	#5	STR.	12'-8"	13
A218	1	#5	STR.	6'-11"	7
A219	1	#5	STR.	39'-1"	41
A220	1	#5	STR.	33'-4"	35
A221	1	#5	STR.	27'-7"	29
A222	1	#5	STR.	21'-11"	23
A223	1	#5	STR.	16'-2"	17
A224	1	#5	STR.	10'-6"	11
A225	1	#5	STR.	4'-9"	5
* B1	30	#4	STR.	28'-3"	566
* B2	204	#4	STR.	21'-10"	2975
* B3	204	#4	STR.	24'-6"	3339
* B4	202	#7	STR.	59'-3"	24464
* B5	202	#7	STR.	60'-0"	24773
B6	644	#5	STR.	58'-4"	39182
* G1	4	#5	STR.	39'-7"	165
* J1	148	#4	4	1'-5"	140
* K1	8	#5	1	7'-6"	63
* K2	24	#5	2	8'-7"	215
* K3	28	#5	STR.	8'-4"	243
* S1	112	#4	3	3'-8"	274

REINFORCING STEEL 103,941 LBS.

* EPOXY COATED REINFORCING STEEL 122,249 LBS.

BAR TYPES

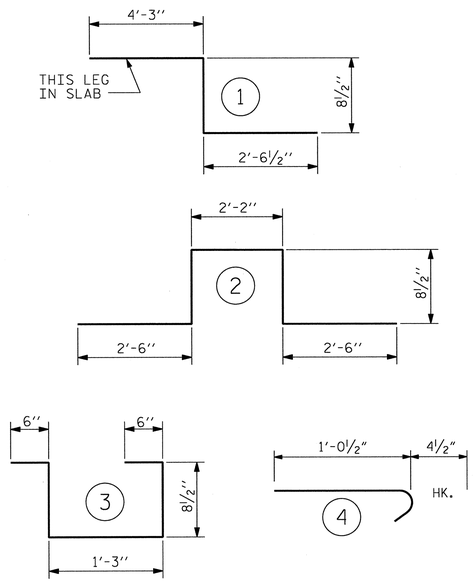

ALL BAR DIMENSIONS ARE OUT TO OUT

SUPERSTRUCTURE BILL OF MATERIAL

	CLASS AA CONCRETE	REINFORCING STEEL	EPOXY COATED REINFORCING STEEL
	(CU. YDS.)	(LBS.)	(LBS.)
TOTALS **	975.4	103,941	122,249

** QUANTITIES FOR CONCRETE BARRIER RAIL ARE NOT INCLUDED

GROOVING BRIDGE FLOORS		
APPROACH SLABS	3,341	SQ.FT.
BRIDGE DECK	27,808	SQ.FT.
TOTAL	31,149	SQ.FT.

CLASS AA CONCRETE BREAKDOWN	
POUR #1	113.1 CU. YDS.
POUR #2	88.7 CU. YDS.
POUR #3	294.0 CU. YDS.
POUR #4	162.3 CU. YDS.
POUR #5	294.0 CU. YDS.
POUR #6	23.3 CU. YDS.
TOTAL	975.4 CU. YDS.

PROJECT NO. U-0071
DURHAM COUNTY
STATION: 17+97.57-DFLW-

STATE OF NORTH CAROLINA
DEPARTMENT OF TRANSPORTATION
RALEIGH

SUPERSTRUCTURE
BILL OF MATERIAL

NORTH CAROLINA PROFESSIONAL SEAL 37400 ENGINEER GREGORY M. GILLAND 6/18/13

WETHERILL ENGINEERING
559 Jones Franklin Rd. Suite 164
Raleigh, N.C. 27606
Bus: 919 851 8077
Fax: 919 851 8107
License: F-0377
TRANSPORTATION PLANNING/DESIGN - BRIDGE/STRUCTURE DESIGN
CIVIL/SITE DESIGN - GIS/GPS - CONSTRUCTION OBSERVATION

REVISIONS						SHEET NO.
NO.	BY:	DATE:	NO.	BY:	DATE:	S-358
1			3			TOTAL SHEETS
2			4			671

STR. #8

DRAWN BY : J.M. BRITT DATE : 4-24-13
CHECKED BY : G.M. GILLAND DATE : 5-8-13
DESIGN ENGINEER OF RECORD: G.M. GILLAND DATE : 5-13

P:\2012\U-0071 Sites 3,8 & 9\Structures\DWG_BN\0071_SD_STR8_BM_WEI.dgn
7/8/2013 5:00:16 PM

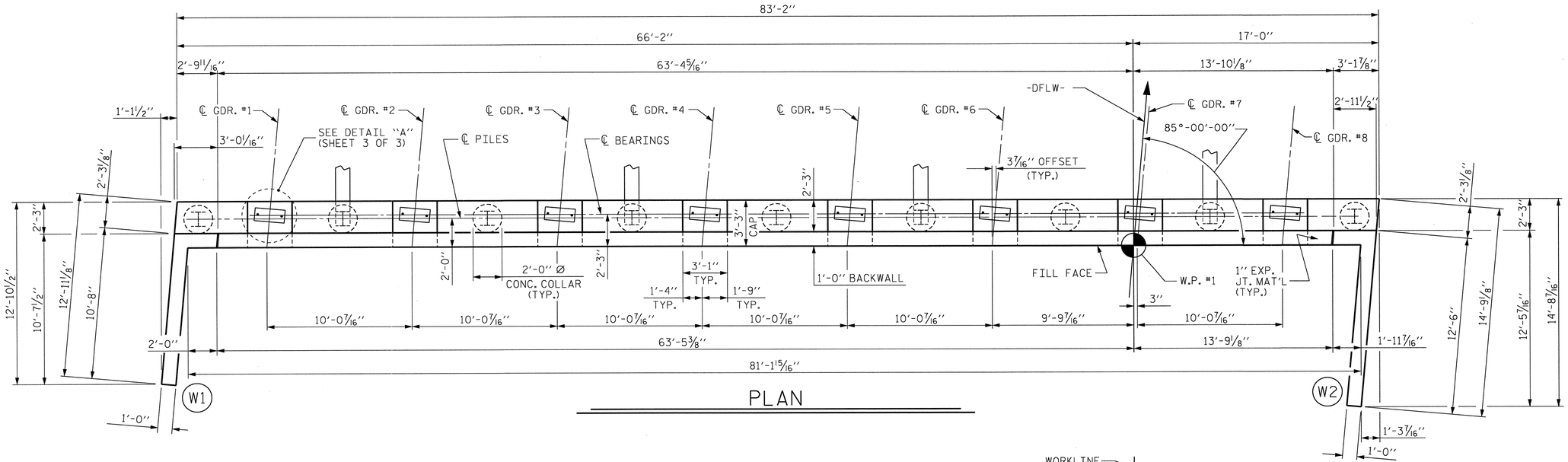

PLAN

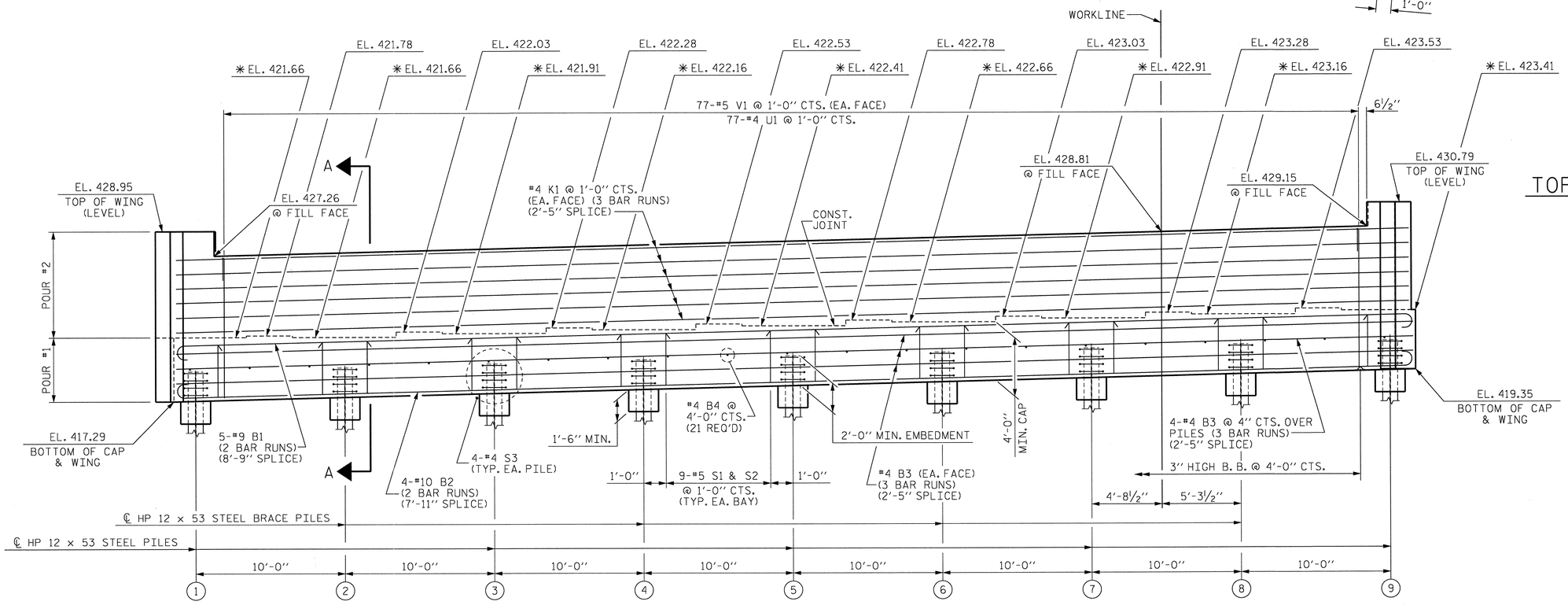

ELEVATION

TOP OF PILE ELEVATIONS

1	EL. 419.33	6	EL. 420.58
2	EL. 419.58	7	EL. 420.83
3	EL. 419.83	8	EL. 421.08
4	EL. 420.08	9	EL. 421.33
5	EL. 420.33		

PROJECT NO. U-0071
DURHAM COUNTY
STATION: 17+97.57-DFLW-

SHEET 1 OF 3

STATE OF NORTH CAROLINA
DEPARTMENT OF TRANSPORTATION
RALEIGH

SUBSTRUCTURE

END BENT 1

NORTH CAROLINA PROFESSIONAL SEAL 37400 ENGINEER GREGORY M. GILLAND 6/14/13

WETHERILL ENGINEERING
559 Jones Franklin Rd. Suite 164
Raleigh, N.C. 27606
Bus: 919 851 8077
Fax: 919 851 8107
License: F-0377
TRANSPORTATION PLANNING/DESIGN - BRIDGE/STRUCTURE DESIGN
CIVIL/SITE DESIGN - GIS/GPS - CONSTRUCTION OBSERVATION

REVISIONS						SHEET NO.
NO.	BY:	DATE:	NO.	BY:	DATE:	S-359
1			3			TOTAL SHEETS
2			4			671

STR. #8

DRAWN BY : J.M. BRITT DATE : 3-13-13
CHECKED BY : T. DIFFEE DATE : 5-20-13
DESIGN ENGINEER OF RECORD: G.M. GILLAND DATE : 5-13

P:\2012\U-0071 Sites 3,8 & 9\Structures\DWG_BU\U071_SD_STR8_EB1_WEI.dgn
7/8/2013 5:32:18 PM

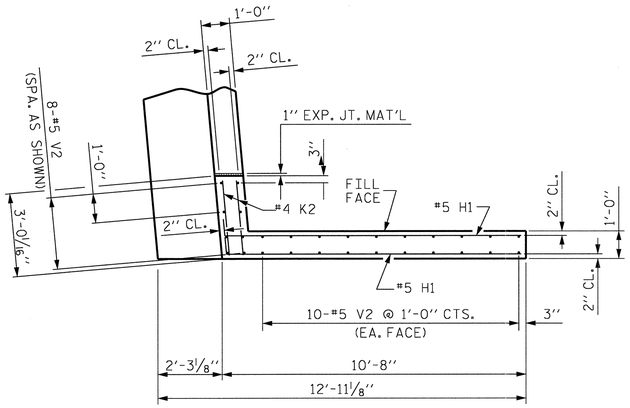

PLAN OF WING (W1)

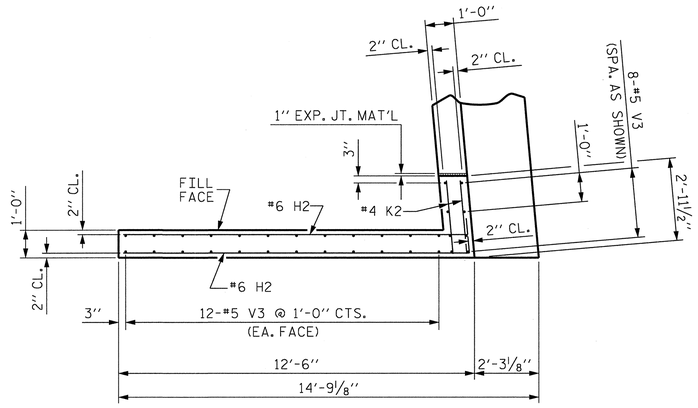

PLAN OF WING (W2)

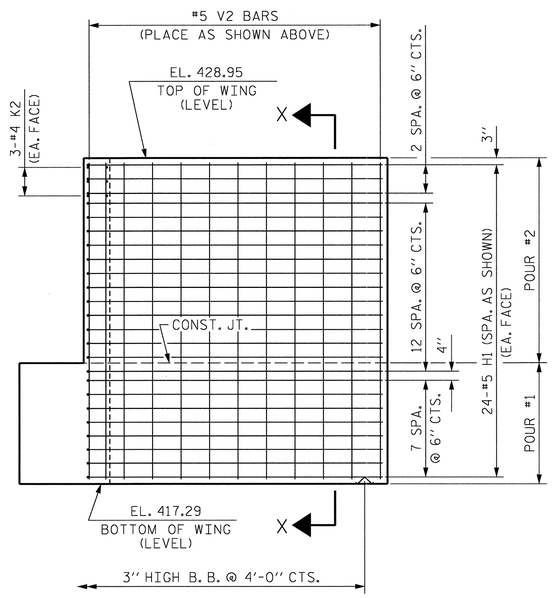

ELEVATION OF WING (W1)

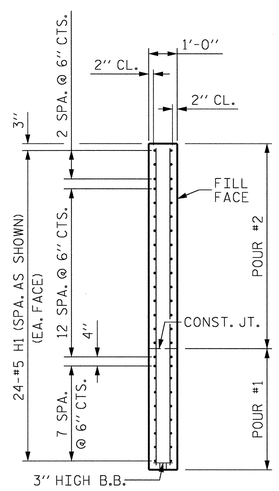

SECTION X-X

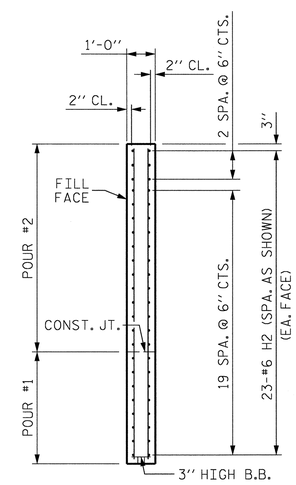

SECTION Y-Y

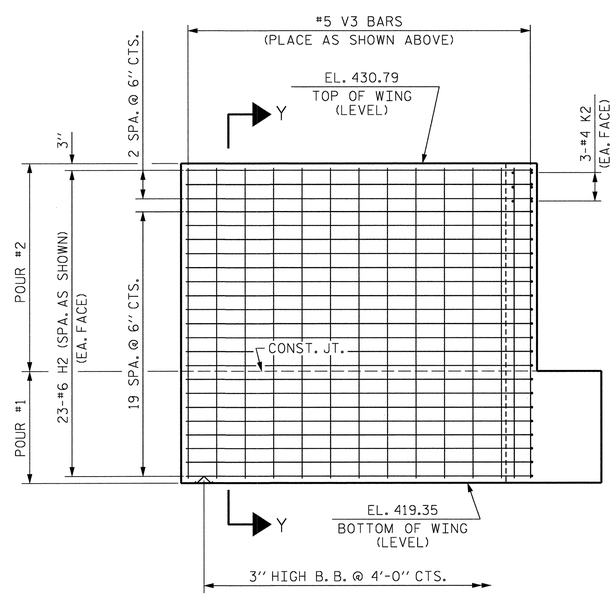

ELEVATION OF WING (W2)

PROJECT NO. U-0071
DURHAM COUNTY
STATION: 17+97.57-DFLW-

SHEET 2 OF 3

STATE OF NORTH CAROLINA
DEPARTMENT OF TRANSPORTATION
RALEIGH

SUBSTRUCTURE

END BENT 1

NORTH CAROLINA PROFESSIONAL SEAL 37400 ENGINEER GREGORY M. GILLAND 8/8/13

WETHERILL ENGINEERING
559 Jones Franklin Rd. Suite 164
Raleigh, N.C. 27606
Bus: 919 851 8077
Fax: 919 851 8107
License: F-0377
TRANSPORTATION PLANNING/DESIGN - BRIDGE/STRUCTURE DESIGN
CIVIL/SITE DESIGN - GIS/GPS - CONSTRUCTION OBSERVATION

REVISIONS						SHEET NO.
NO.	BY:	DATE:	NO.	BY:	DATE:	S-360
1			3			TOTAL SHEETS
2			4			671

DRAWN BY : J.M. BRITT DATE : 3-19-13
CHECKED BY : T. DIFFEE DATE : 5-21-13
DESIGN ENGINEER OF RECORD: G.M. GILLAND DATE : 5-13

P:\2012\U-0071 Sites 3,8 & 9\Structures\DWG_BU\0071_SD_STR8_EB1_WE1.dgn
7/8/2013 5:32:36 PM

NOTES :

STIRRUPS IN CAP MAY BE SHIFTED AS NECESSARY TO CLEAR ANCHOR BOLTS.

BACKWALL SHALL BE PLACED BEFORE APPLYING THE EPOXY PROTECTIVE COATING.

THE TOP SURFACE AREAS OF THE END BENT CAPS SHALL BE CURED IN ACCORDANCE WITH THE STANDARD SPECIFICATIONS EXCEPT THE MEMBRANE CURING COMPOUND METHOD SHALL NOT BE USED.

✱ THE TOP SURFACE OF THE CAP EXCEPT THE BRIDGE SEAT BUILDUPS SHALL BE SLOPED TRANSVERSELY FROM THE FILL FACE TO THE BACK FACE AT THE RATE OF 2%.

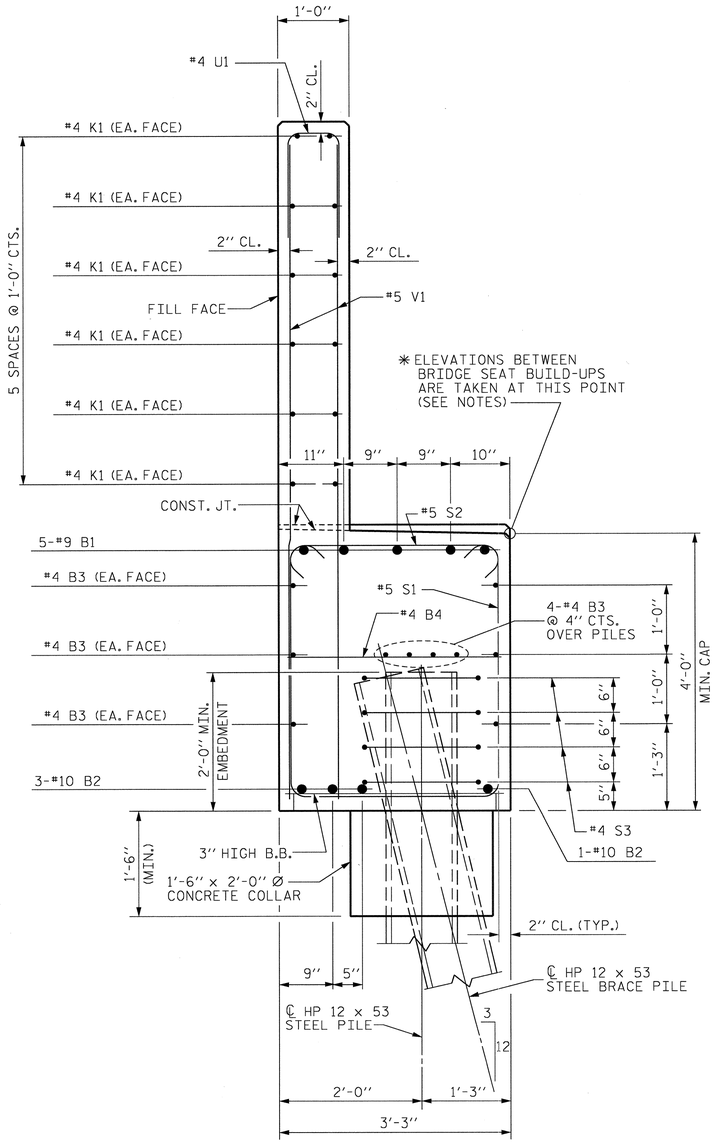

SECTION A-A

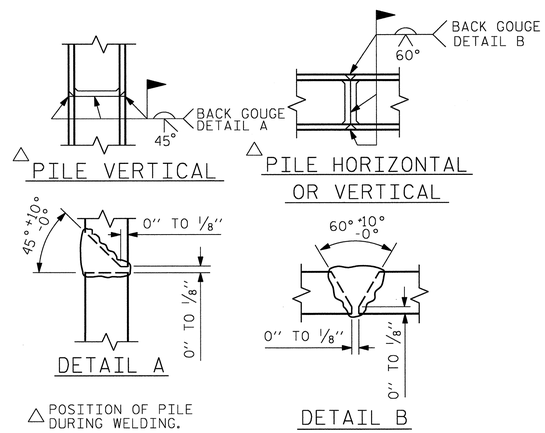

PILE SPLICE DETAIL

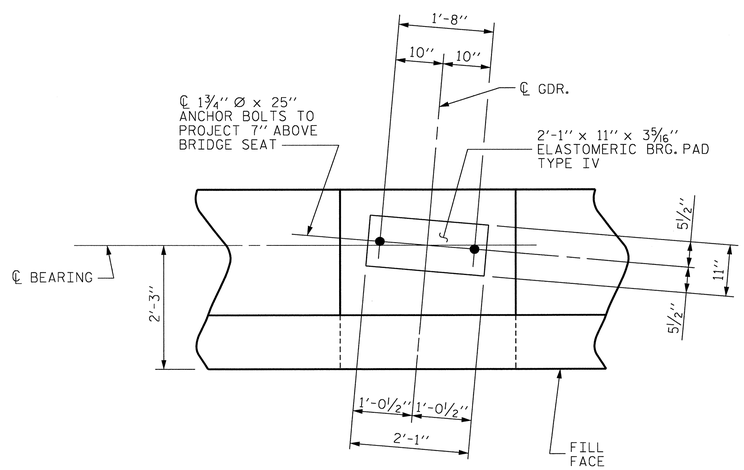

DETAIL "A"

(TYP. EA. GDR.)

BAR TYPES

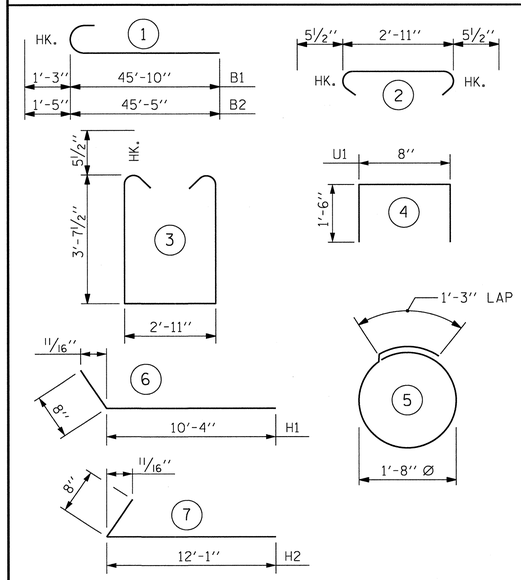

ALL BAR DIMENSIONS ARE OUT TO OUT.

BILL OF MATERIAL

END BENT 1

BAR	NO.	SIZE	TYPE	LENGTH	WEIGHT
B1	10	#9	1	47'-1"	1,601
B2	8	#10	1	46'-10"	1,612
B3	30	#4	STR	29'-3"	586
B4	21	#4	STR	2'-11"	41
H1	48	#5	6	11'-0"	551
H2	46	#6	7	12'-9"	881
K1	36	#4	STR	29'-3"	703
K2	12	#4	STR	2'-7"	21
S1	72	#5	3	11'-1"	832
S2	72	#5	2	3'-10"	288
S3	36	#4	5	6'-6"	156
U1	77	#4	4	3'-8"	189
V1	154	#5	STR	9'-6"	1,526
V2	28	#5	STR	11'-4"	331
V3	32	#5	STR	11'-1"	370

REINFORCING STEEL 9,688 LBS.

CLASS A CONCRETE BREAKDOWN :

POUR #1 47.0 CU. YDS.

POUR #2 23.8 CU. YDS.

TOTAL CLASS A CONCRETE 70.8 CU. YDS.

HP 12 x 53 STEEL PILES No. 9 405 LIN. FT.

STEEL PILE POINTS 9 EACH

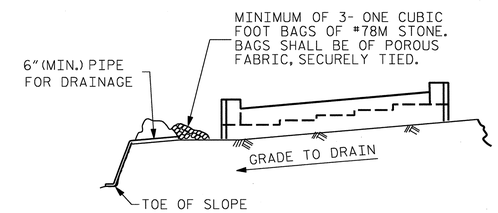

BAGGED STONE AND PIPE SHALL BE PLACED IMMEDIATELY AFTER COMPLETION OF END BENT EXCAVATION. PIPE MAY BE EITHER CONCRETE, CORRUGATED STEEL, CORRUGATED ALUMINUM ALLOY, OR CORRUGATED PLASTIC. PERFORATED PIPE WILL NOT BE ALLOWED.

BAGGED STONE SHALL REMAIN IN PLACE UNTIL THE ENGINEER DIRECTS THAT IT BE REMOVED. THE CONTRACTOR SHALL REMOVE AND DISPOSE OF SILT ACCUMULATIONS AT BAGGED STONE WHEN SO DIRECTED BY THE ENGINEER. BAGS SHALL BE REMOVED AND REPLACED WHENEVER THE ENGINEER DETERMINES THAT THEY HAVE DETERIORATED AND LOST THEIR EFFECTIVENESS.

NO SEPARATE PAYMENT WILL BE MADE FOR THIS WORK AND THE ENTIRE COST OF THIS WORK SHALL BE INCLUDED IN THE UNIT CONTRACT PRICE BID FOR THE SEVERAL PAY ITEMS.

TEMPORARY DRAINAGE AT END BENT 1

PROJECT NO. U-0071

DURHAM COUNTY

STATION: 17+97.57-DFLW-

SHEET 3 OF 3

STATE OF NORTH CAROLINA
DEPARTMENT OF TRANSPORTATION
RALEIGH

SUBSTRUCTURE

END BENT 1

DRAWN BY : J.M. BRITT DATE : 3-14-13
CHECKED BY : T. DIFFEE DATE : 5-21-13
DESIGN ENGINEER OF RECORD: G.M. GILLAND DATE : 5-13

NORTH CAROLINA PROFESSIONAL SEAL 037400 ENGINEER GREGORY M. GILLAND 6/19/13

WETHERILL ENGINEERING
559 Jones Franklin Rd. Suite 164
Raleigh, N.C. 27606
Bus: 919 851 8077
Fax: 919 851 8107
License: F-0377
TRANSPORTATION PLANNING/DESIGN - BRIDGE/STRUCTURE DESIGN
CIVIL/SITE DESIGN - GIS/GPS - CONSTRUCTION OBSERVATION

REVISIONS								SHEET NO.
NO.	BY:	DATE:	NO.	BY:	DATE:			S-261
1			3					TOTAL SHEETS
2			4					571

P:\2012\U-0071_Sites 3,8 & 9\Structures\DWG_BU\0071_SD_STR8_EB1_WE1.dgn
7/8/2013 5:32:58 PM

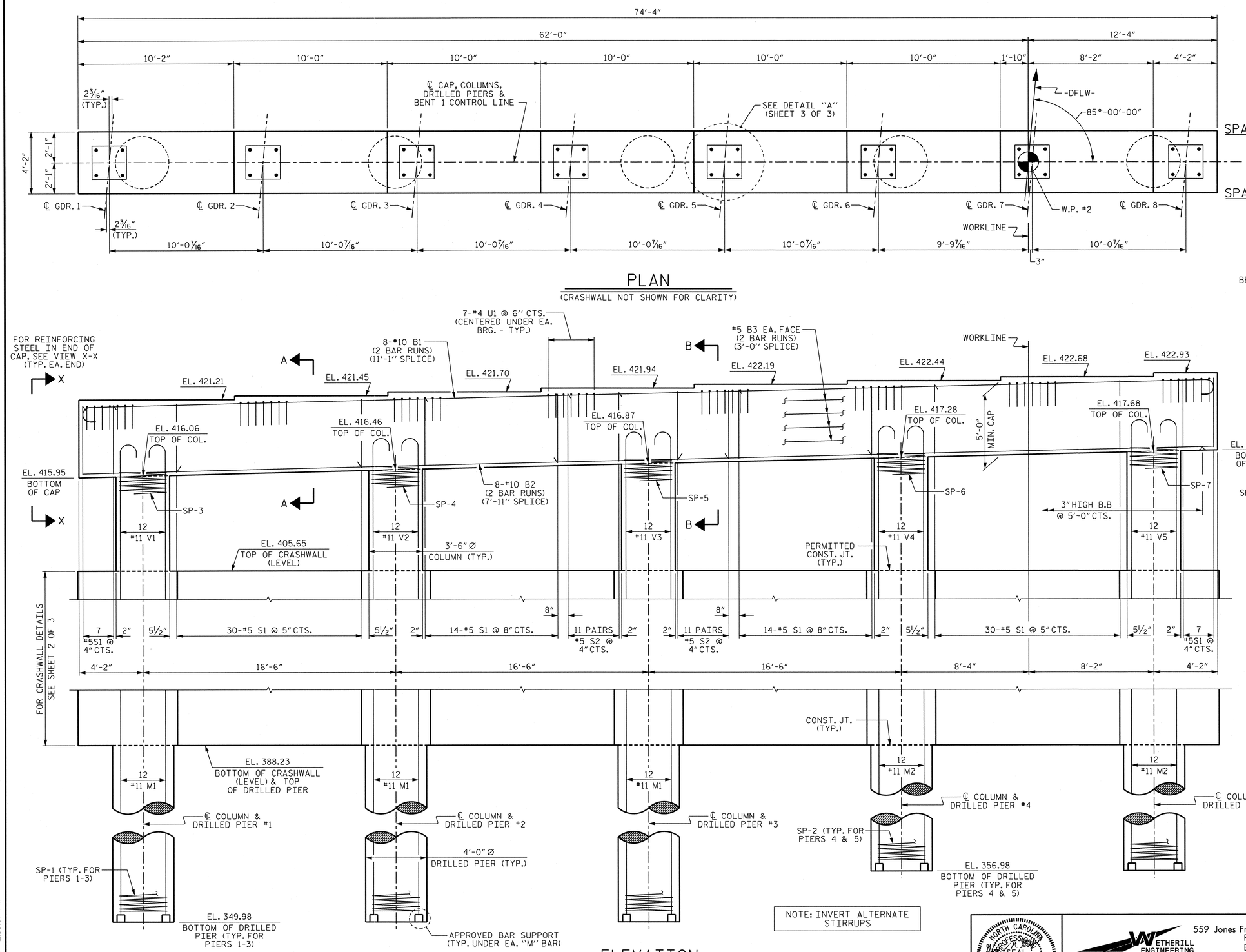

NOTE: INVERT ALTERNATE STIRRUPS

PROJECT NO. U-0071
DURHAM COUNTY
STATION: 17+97.57-DFLW-

SHEET 1 OF 3

STATE OF NORTH CAROLINA
DEPARTMENT OF TRANSPORTATION
RALEIGH

SUBSTRUCTURE
BENT 1

DRAWN BY : G.M. GILLAND DATE : 4-25-13
CHECKED BY : T. DIFFEE DATE : 5-2-13
DESIGN ENGINEER OF RECORD: G.M. GILLAND DATE : 1-14

NORTH CAROLINA PROFESSIONAL SEAL 37400 ENGINEER GREGORY M. GILLAND 1/27/14

WETHERILL ENGINEERING
559 Jones Franklin Rd. Suite 164
Raleigh, N.C. 27606
Bus: 919 851 8077
Fax: 919 851 8107
License: F-0377
TRANSPORTATION PLANNING/DESIGN - BRIDGE/STRUCTURE DESIGN
CIVIL/SITE DESIGN - GIS/GPS - CONSTRUCTION OBSERVATION

REVISIONS						SHEET NO.
NO.	BY:	DATE:	NO.	BY:	DATE:	S-3.2
1			3			TOTAL SHEETS
2			4			67

STR #8

P:\2012\U-0071 Sites 3,8 & 9\Structures\DWG_BU\0071_SD_STR8_B1_WE1.dgn
1/27/2014 2:59:07 PM

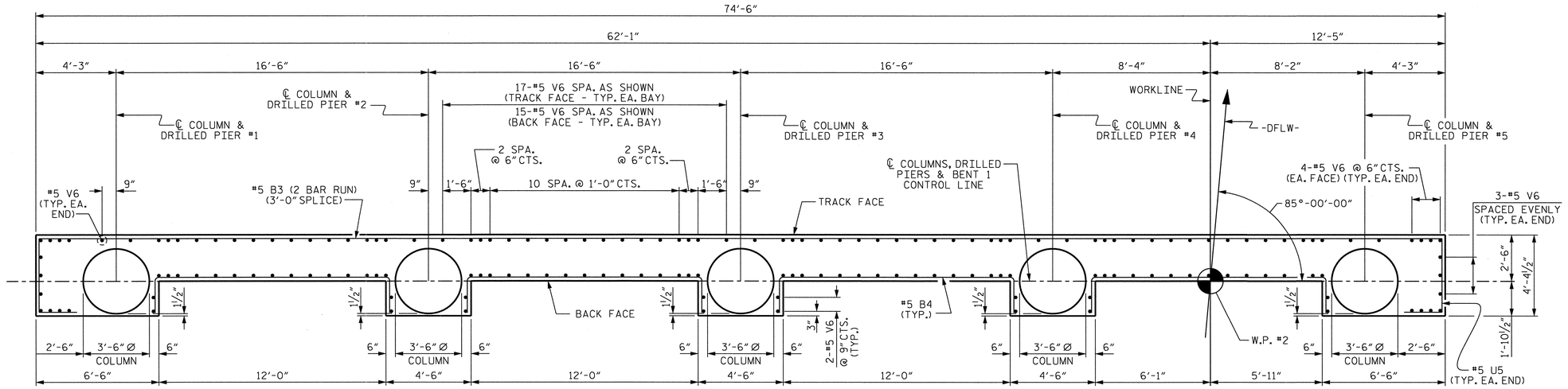

PLAN OF CRASHWALL

(COLUMN REINFORCING NOT SHOWN FOR CLARITY)

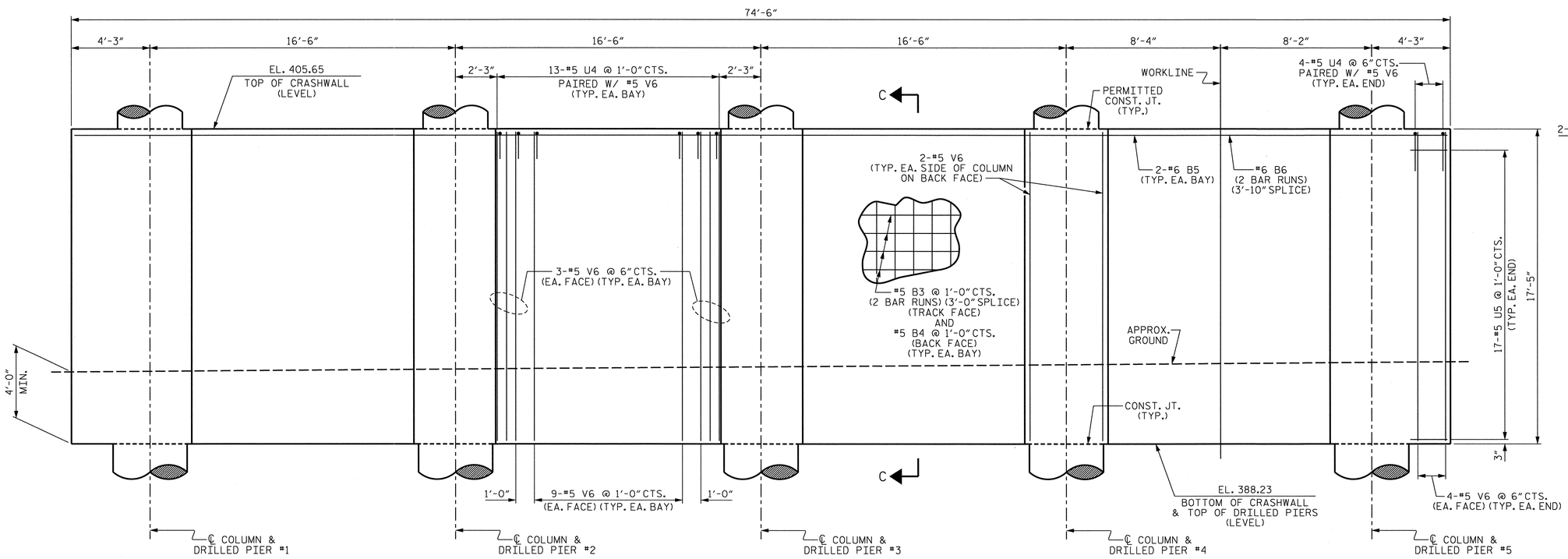

ELEVATION OF CRASHWALL

(COLUMN REINFORCING NOT SHOWN FOR CLARITY)

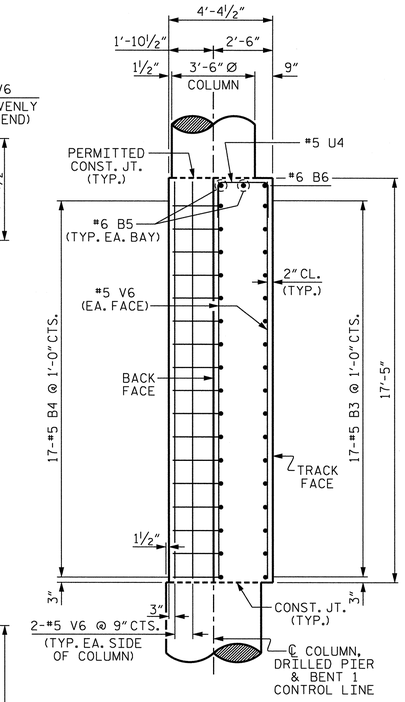

SECTION C-C

(COLUMN REINFORCING NOT SHOWN FOR CLARITY)

PROJECT NO. U-0071

DURHAM COUNTY

STATION: 17+97.57-DFLW-

SHEET 2 OF 3

STATE OF NORTH CAROLINA
DEPARTMENT OF TRANSPORTATION
RALEIGH

SUBSTRUCTURE

BENT 1

NORTH CAROLINA PROFESSIONAL SEAL 37400 ENGINEER GREGORY M. GILLAND 1/27/14

WETHERILL ENGINEERING
559 Jones Franklin Rd. Suite 164
Raleigh, N.C. 27606
Bus: 919 851 8077
Fax: 919 851 8107
License: F-0377

TRANSPORTATION PLANNING/DESIGN - BRIDGE/STRUCTURE DESIGN
CIVIL/SITE DESIGN - GIS/GPS - CONSTRUCTION OBSERVATION

REVISIONS							SHEET NO.
NO.	BY:	DATE:	NO.	BY:	DATE:		S-363
1			3				TOTAL SHEETS
2			4				671

DRAWN BY : G.M. GILLAND DATE : 4-25-13
CHECKED BY : T. DIFFEE DATE : 5-2-13
DESIGN ENGINEER OF RECORD: G.M. GILLAND DATE : 1-14

P:\2012\U-0071 Sites 3,8 & 9\Structures\DWG_BU0071_SD_STR8_B1_WE1.dgn
1/27/2014 2:59:22 PM

STR #8

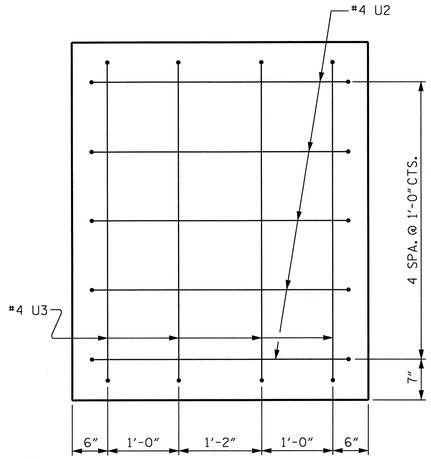

VIEW X-X

(TYP. @ EA. END)

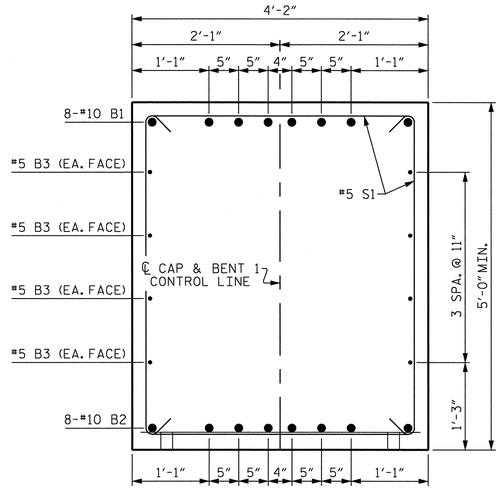

SECTION A-A

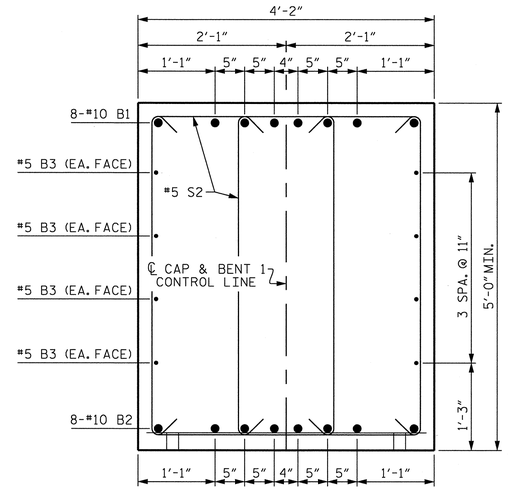

SECTION B-B

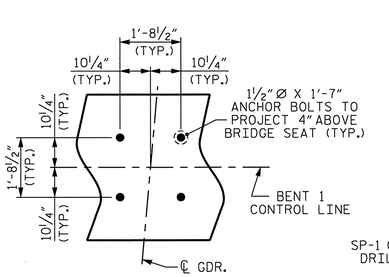

DETAIL "A"

(TYP. @ EA. BEARING)

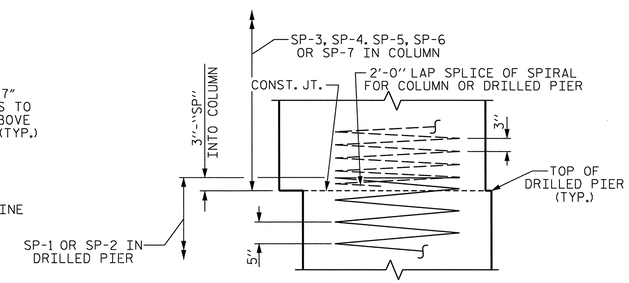

CONSTRUCTION JOINT DETAIL

NOTES :

HOOKS ON "V" BARS MAY BE TURNED AS NECESSARY FOR PLACING REINFORCING STEEL.

STIRRUPS IN CAP MAY BE SHIFTED AS NECESSARY TO CLEAR ANCHOR BOLTS.

ALL STEEL IN THE DRILLED PIERS IS INCLUDED IN THE PAY ITEMS FOR "REINFORCING STEEL" AND "SPIRAL COLUMN REINFORCING STEEL".

THE LOCATION OF THE CONSTRUCTION JOINT IN THE DRILLED PIERS AND BOTTOM OF CRASHWALL IS BASED ON AN APPROXIMATE GROUND LINE ELEVATION. IF THE CONSTRUCTION JOINT IS ABOVE THE ACTUAL GROUND ELEVATION, THE CONTRACTOR SHALL PLACE THE CONSTRUCTION JOINT 4 FOOT BELOW THE GROUND LINE.

THE CONTRACTOR SHALL ADJUST THE GIRDER BUILD-UPS AS NECESSARY TO INCORPORATE A MAXIMUM PERMISSIBLE VARIATION IN POT BEARING DEPTH OF ½". SEE SPECIAL PROVISION FOR POT BEARINGS.

USE CONCRETE DOWEL DOBIES AS REQUIRED TO SUPPORT REINFORCING FOR CRASHWALL.

BAR TYPES

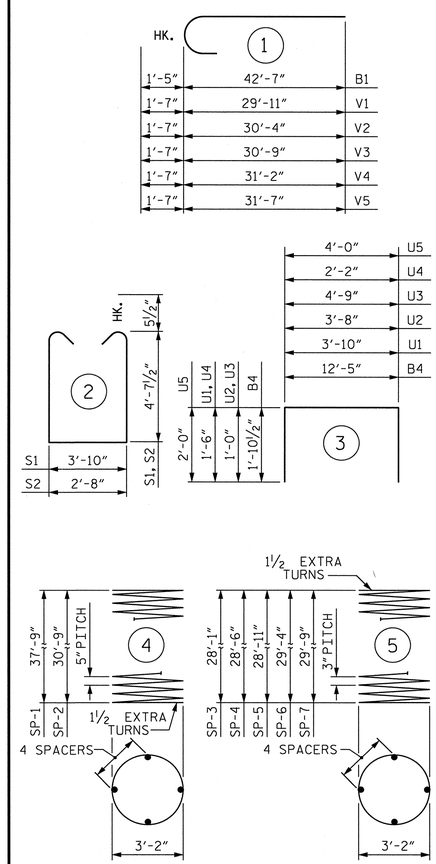

ALL BAR DIMENSIONS ARE OUT TO OUT.

BILL OF MATERIAL

BENT #1

BAR	NO.	SIZE	TYPE	LENGTH	WEIGHT
B1	16	#10	1	44'-0"	3,029
B2	16	#10	STR	41'-0"	2,823
B3	50	#5	STR	38'-7"	2,012
B4	68	#5	3	16'-2"	1,147
B5	8	#6	STR	13'-2"	158
B6	2	#6	STR	39'-0"	117
M1	36	#11	STR	45'-5"	8,687
M2	24	#11	STR	38'-5"	4,899
S1	102	#5	2	14'-0"	1,489
S2	44	#5	2	12'-10"	589
U1	56	#4	3	6'-10"	256
U2	10	#4	3	5'-8"	38
U3	8	#4	3	6'-9"	36
U4	60	#5	3	5'-2"	323
U5	34	#5	3	8'-0"	284
V1	12	#11	1	31'-6"	2,008
V2	12	#11	1	31'-11"	2,035
V3	12	#11	1	32'-4"	2,061
V4	12	#11	1	32'-9"	2,088
V5	12	#11	1	33'-2"	2,115
V6	168	#5	STR	17'-1"	2,993
TOTAL REINFORCING STEEL LBS.					39,187
SP-1	3	*	4	902'-0"	2,822
SP-2	2	*	4	737'-6"	1,538
SP-3	1	**	5	1,118'-0"	747
SP-4	1	**	5	1,134'-4"	758
SP-5	1	**	5	1,150'-8"	769
SP-6	1	**	5	1,167'-1"	780
SP-7	1	**	5	1,183'-5"	791
SPIRAL COLUMN REINFORCING STEEL LBS.					8,205

CLASS A CONCRETE BREAKDOWN	
POUR #2 (COLUMNS & CRASHWALL)	172.2 C.Y.
POUR #3 (BENT CAP)	58.8 C.Y.
TOTAL	231.0 C.Y.
DRILLED PIER QUANTITIES	
DRILLED PIER CONCRETE	
POUR #1 (DRILLED PIERS)	82.5 C.Y.
4'-0" DIA. DRILLED PIERS IN SOIL	138.3 LIN. FT.
4'-0" DIA. DRILLED PIERS NOT IN SOIL	39 LIN. FT.
CSL TUBES ♦	739 LIN. FT.

* THIS "SP" SPIRAL REINFORCING STEEL SHALL BE W31 OR D-31 COLD DRAWN WIRE OR #5 PLAIN OR DEFORMED BAR.

** THIS "SP" SPIRAL REINFORCING STEEL SHALL BE W20 OR D-20 COLD DRAWN WIRE OR #4 PLAIN OR DEFORMED BAR.

♦ NO SEPARATE PAYMENT WILL BE MADE FOR CSL TUBES. CSL TUBES WILL BE INCLUDED IN THE DRILLED PIER PAY ITEMS.

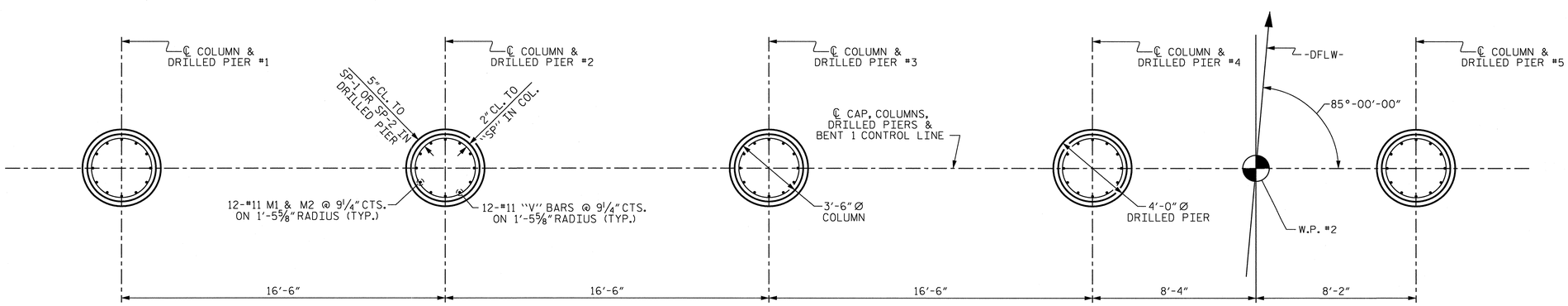

PLAN OF COLUMNS AND DRILLED PIERS

REINFORCING STEEL AND DIMENSIONS ARE TYPICAL FOR ALL COLUMNS AND DRILLED PIERS SHOWN

PROJECT NO. U-0071

DURHAM COUNTY

STATION: 17+97.57-DFLW-

SHEET 3 OF 3

STATE OF NORTH CAROLINA
DEPARTMENT OF TRANSPORTATION
RALEIGH

SUBSTRUCTURE

BENT 1

NORTH CAROLINA PROFESSIONAL SEAL 037400 ENGINEER GREGORY M. GILLAND 1/27/14

WETHERILL ENGINEERING
559 Jones Franklin Rd. Suite 164
Raleigh, N.C. 27606
Bus: 919 851 8077
Fax: 919 851 8107
License: F-0377
TRANSPORTATION PLANNING/DESIGN - BRIDGE/STRUCTURE DESIGN
CIVIL/SITE DESIGN - GIS/GPS - CONSTRUCTION OBSERVATION

REVISIONS							SHEET NO.
NO.	BY:	DATE:	NO.	BY:	DATE:		S-3A
1			3				TOTAL SHEETS
2			4				671

DRAWN BY :	G.M. GILLAND	DATE :	4-25-13
CHECKED BY :	T. DIFFEE	DATE :	5-2-13
DESIGN ENGINEER OF RECORD:	G.M. GILLAND	DATE :	1-14

P:\2012\U-0071 Sites 3,8 & 9\Structures\DNG_BU07_1_SD_STR8_B1_WE1.dgn
1/27/2014 2:59:43 PM

STR #8

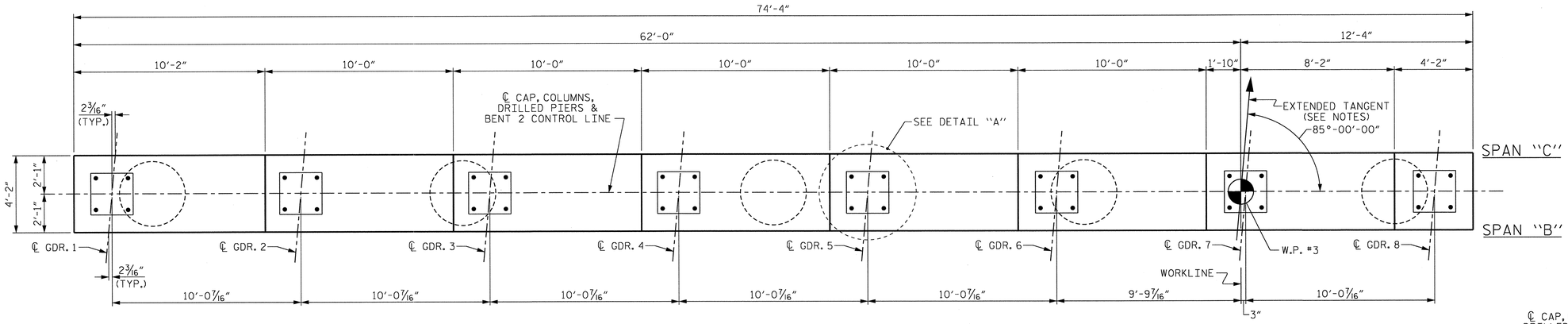

PLAN

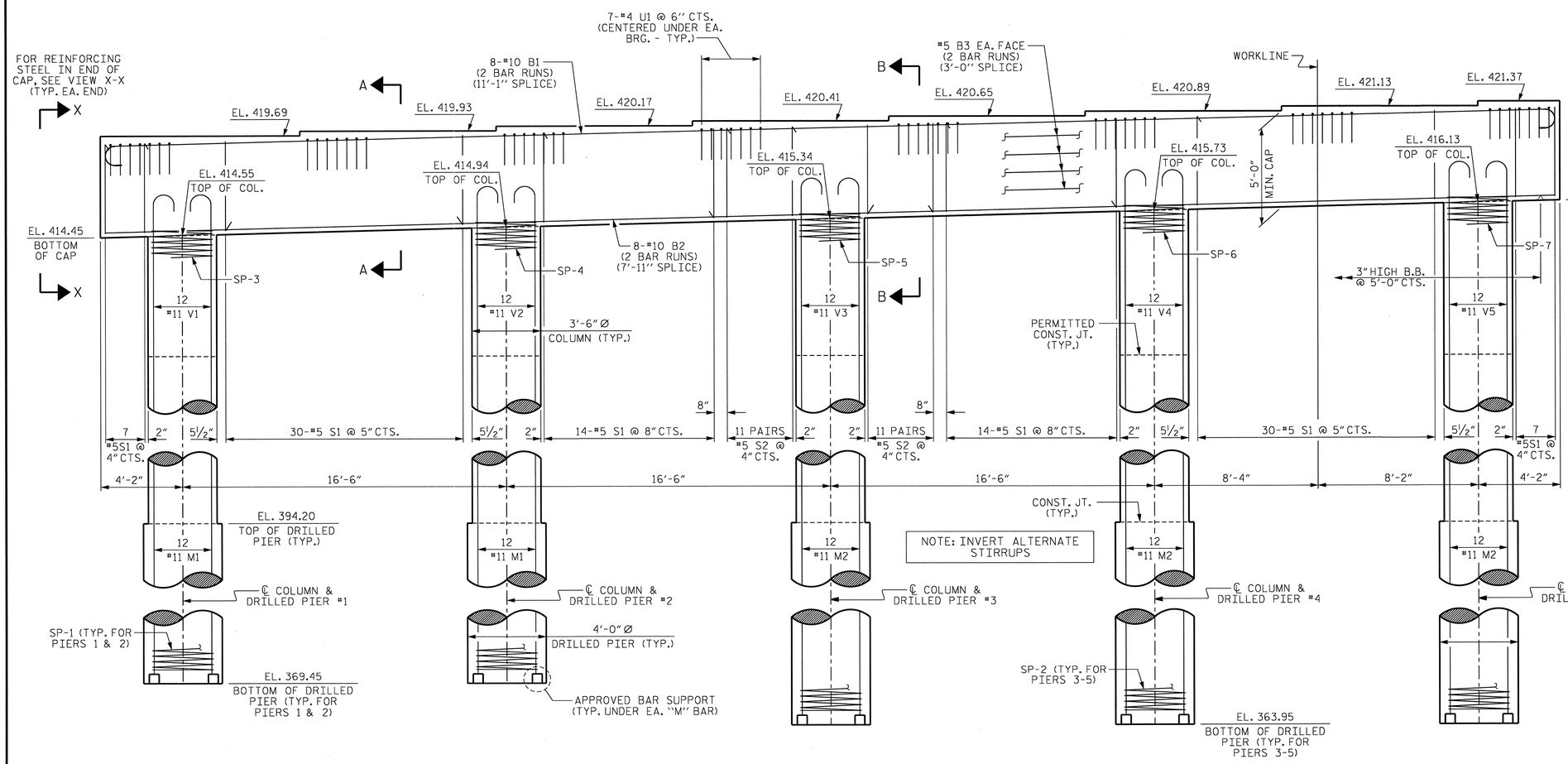

ELEVATION

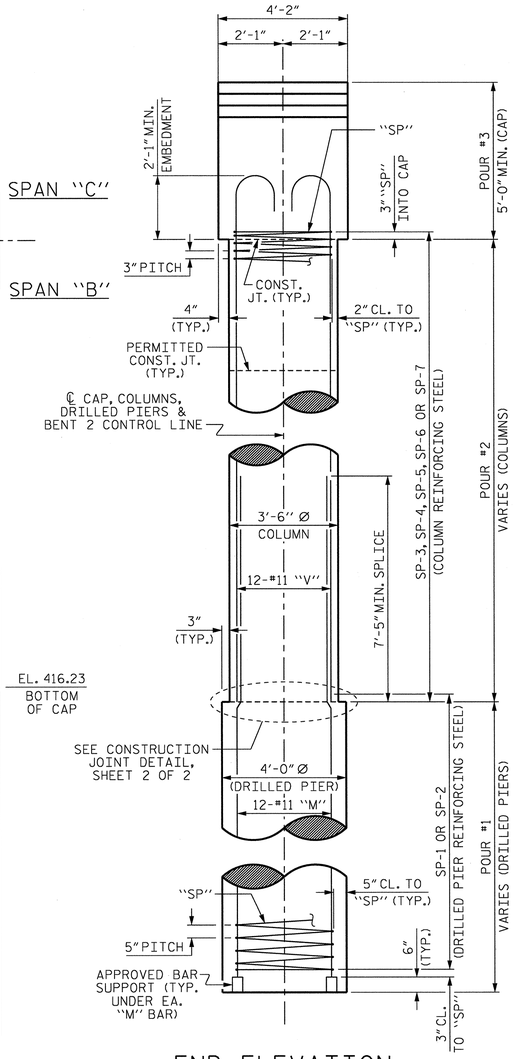

END ELEVATION

PROJECT NO. U-0071

DURHAM COUNTY

STATION: 17+97.57-DFLW-

SHEET 1 OF 2

STATE OF NORTH CAROLINA
DEPARTMENT OF TRANSPORTATION
RALEIGH

SUBSTRUCTURE

BENT 2

NORTH CAROLINA PROFESSIONAL SEAL 37400 ENGINEER GREGORY M. GILLAND 9/19/13

WETHERILL ENGINEERING
559 Jones Franklin Rd. Suite 164
Raleigh, N.C. 27606
Bus: 919 851 8077
Fax: 919 851 8107
License: F-0377

TRANSPORTATION PLANNING/DESIGN - BRIDGE/STRUCTURE DESIGN
CIVIL/SITE DESIGN - GIS/GPS - CONSTRUCTION OBSERVATION

REVISIONS						SHEET NO.
NO.	BY:	DATE:	NO.	BY:	DATE:	S-365
1			3			TOTAL SHEETS
2			4			671

DRAWN BY : G.M. GILLAND DATE : 4-25-13
CHECKED BY : T. DIFFEE DATE : 5-14-13
DESIGN ENGINEER OF RECORD: G.M. GILLAND DATE : 5-13

P:\2012\U-0071_Sites 3,8 & 9\Structures\DWG_BU\U071_SD_STR8_B2_WE1.dgn
7/9/2013 7:55:27 AM

STR #8

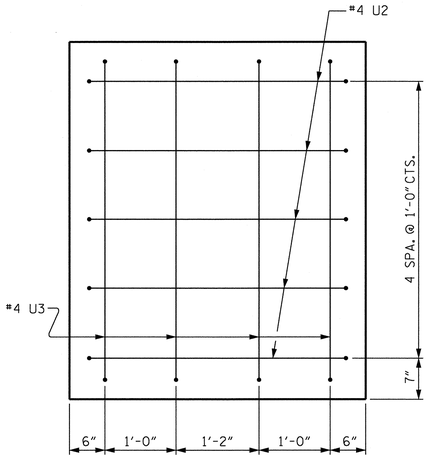

VIEW X-X

(TYP. @ EA. END)

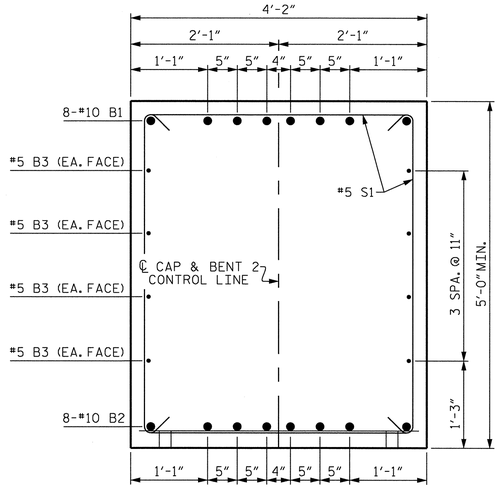

SECTION A-A

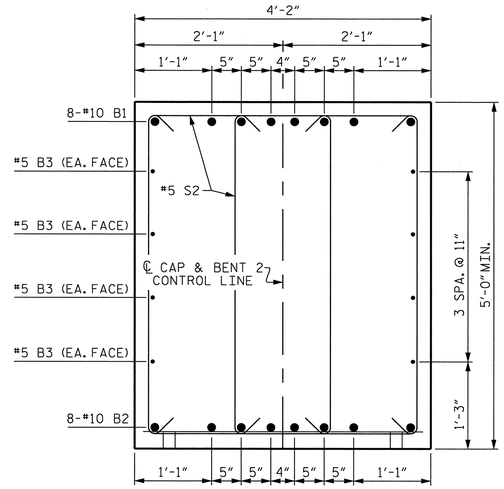

SECTION B-B

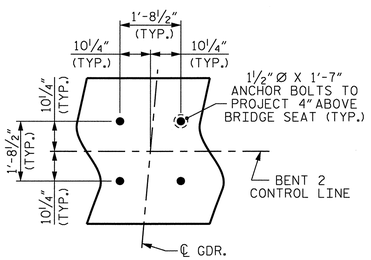

DETAIL "A"

(TYP. @ EA. BEARING)

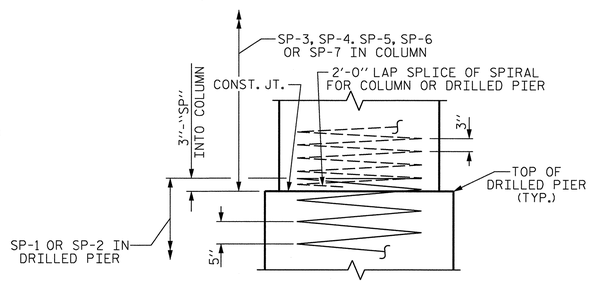

CONSTRUCTION JOINT DETAIL

NOTES :

HOOKS ON "V" BARS MAY BE TURNED AS NECESSARY FOR PLACING REINFORCING STEEL.

STIRRUPS IN CAP MAY BE SHIFTED AS NECESSARY TO CLEAR ANCHOR BOLTS.

ALL STEEL IN THE DRILLED PIERS IS INCLUDED IN THE PAY ITEMS FOR "REINFORCING STEEL" AND "SPIRAL COLUMN REINFORCING STEEL".

THE LOCATION OF THE CONSTRUCTION JOINT IN THE DRILLED PIERS IS BASED ON AN APPROXIMATE GROUND LINE ELEVATION. IF THE CONSTRUCTION JOINT IS ABOVE THE ACTUAL GROUND ELEVATION, THE CONTRACTOR SHALL PLACE THE CONSTRUCTION JOINT 1 FOOT BELOW THE GROUND LINE.

THE CONTRACTOR SHALL ADJUST THE GIRDER BUILD-UPS AS NECESSARY TO INCORPORATE A MAXIMUM PERMISSIBLE VARIATION IN POT BEARING DEPTH OF ½". SEE SPECIAL PROVISION FOR POT BEARINGS.

BRIDGE IS MEASURED ALONG -DFLW- AND EXTENDED TANGENT @ TS STATION 20+00.00 -DFLW-. SEE "GENERAL DRAWING" SHEETS FOR WORK POINT #3 LOCATION AND DETAILS.

BAR TYPES

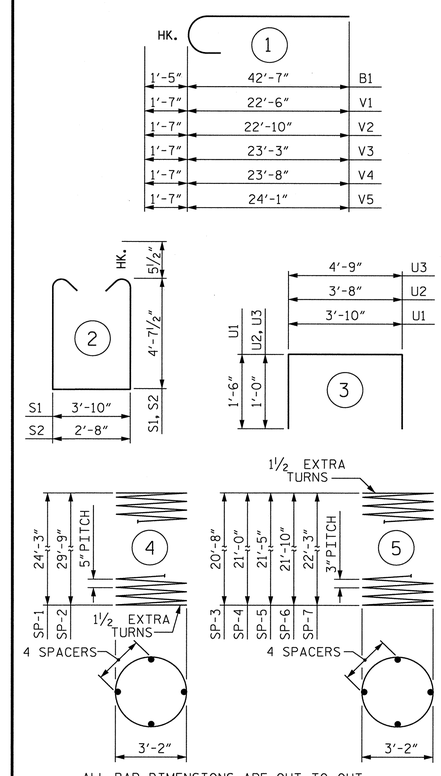

ALL BAR DIMENSIONS ARE OUT TO OUT.

BILL OF MATERIAL

BENT #2

BAR	NO.	SIZE	TYPE	LENGTH	WEIGHT
B1	16	#10	1	44'-0"	3,029
B2	16	#10	STR	41'-0"	2,823
B3	16	#5	STR	38'-6"	642
M1	24	#11	STR	31'-11"	4,070
M2	36	#11	STR	37'-5"	7,157
S1	102	#5	2	14'-0"	1,489
S2	44	#5	2	12'-10"	589
U1	56	#4	3	6'-10"	256
U2	10	#4	3	5'-8"	38
U3	8	#4	3	6'-9"	36
V1	12	#11	1	24'-1"	1,535
V2	12	#11	1	24'-5"	1,557
V3	12	#11	1	24'-10"	1,583
V4	12	#11	1	25'-3"	1,610
V5	12	#11	1	25'-8"	1,636
TOTAL REINFORCING STEEL LBS.					28,050
SP-1	2	*	4	584'-9"	1,220
SP-2	3	*	4	714'-0"	2,234
SP-3	1	**	5	827'-5"	552
SP-4	1	**	5	839'-8"	561
SP-5	1	**	5	856'-11"	572
SP-6	1	**	5	874'-1"	583
SP-7	1	**	5	888'-10"	594
SPIRAL COLUMN REINFORCING STEEL LBS.					6,316

CLASS A CONCRETE BREAKDOWN	
POUR #2 (COLUMNS)	37.7 C.Y.
POUR #3 (BENT CAP)	58.8 C.Y.
TOTAL	96.6 C.Y.
DRILLED PIER QUANTITIES	
DRILLED PIER CONCRETE	
POUR #1 (DRILLED PIERS)	65.3 C.Y.
4'-0" DIA. DRILLED PIERS IN SOIL	103.25 LIN. FT.
4'-0" DIA. DRILLED PIERS NOT IN SOIL	37 LIN. FT.
CSL TUBES ♦	591 LIN. FT.

* THIS "SP" SPIRAL REINFORCING STEEL SHALL BE W31 OR D31 COLD DRAWN WIRE OR #5 PLAIN OR DEFORMED BAR.

** THIS "SP" SPIRAL REINFORCING STEEL SHALL BE W20 OR D20 COLD DRAWN WIRE OR #4 PLAIN OR DEFORMED BAR.

♦ NO SEPARATE PAYMENT WILL BE MADE FOR CSL TUBES. CSL TUBES WILL BE INCLUDED IN THE DRILLED PIER PAY ITEMS.

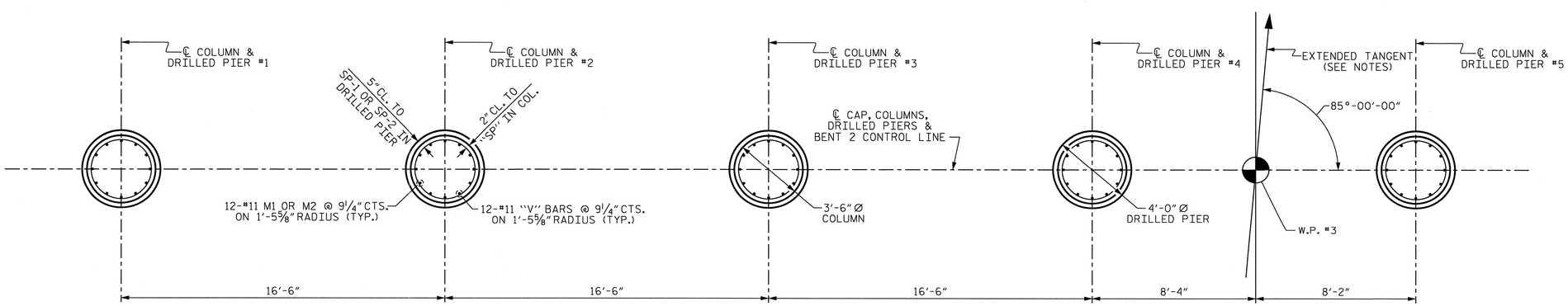

PLAN OF COLUMNS AND DRILLED PIERS

REINFORCING STEEL AND DIMENSIONS ARE TYPICAL FOR ALL COLUMNS AND DRILLED PIERS SHOWN

PROJECT NO. U-0071

DURHAM COUNTY

STATION: 17+97.57-DFLW-

SHEET 2 OF 2

STATE OF NORTH CAROLINA
DEPARTMENT OF TRANSPORTATION
RALEIGH

SUBSTRUCTURE

BENT 2

NORTH CAROLINA PROFESSIONAL SEAL 37400 ENGINEER GREGORY M. GILLAND 1/27/14

WETHERILL ENGINEERING
559 Jones Franklin Rd. Suite 164
Raleigh, N.C. 27606
Bus: 919 851 8077
Fax: 919 851 8107
License: F-0377
TRANSPORTATION PLANNING/DESIGN - BRIDGE/STRUCTURE DESIGN
CIVIL/SITE DESIGN - GIS/GPS - CONSTRUCTION OBSERVATION

REVISIONS						SHEET NO.
NO.	BY:	DATE:	NO.	BY:	DATE:	S-3666
1			3			TOTAL SHEETS
2			4			671

STR #8

DRAWN BY :	G.M. GILLAND	DATE :	4-25-13
CHECKED BY :	T. DIFFEE	DATE :	5-14-13
DESIGN ENGINEER OF RECORD:	G.M. GILLAND	DATE :	5-13

P:\2012\U-0071 Sites 3,8 & 9\Structures\DWG_BVU0071_SD_STR8_B2_WE1.dgn
1/27/2014 3:00:39 PM

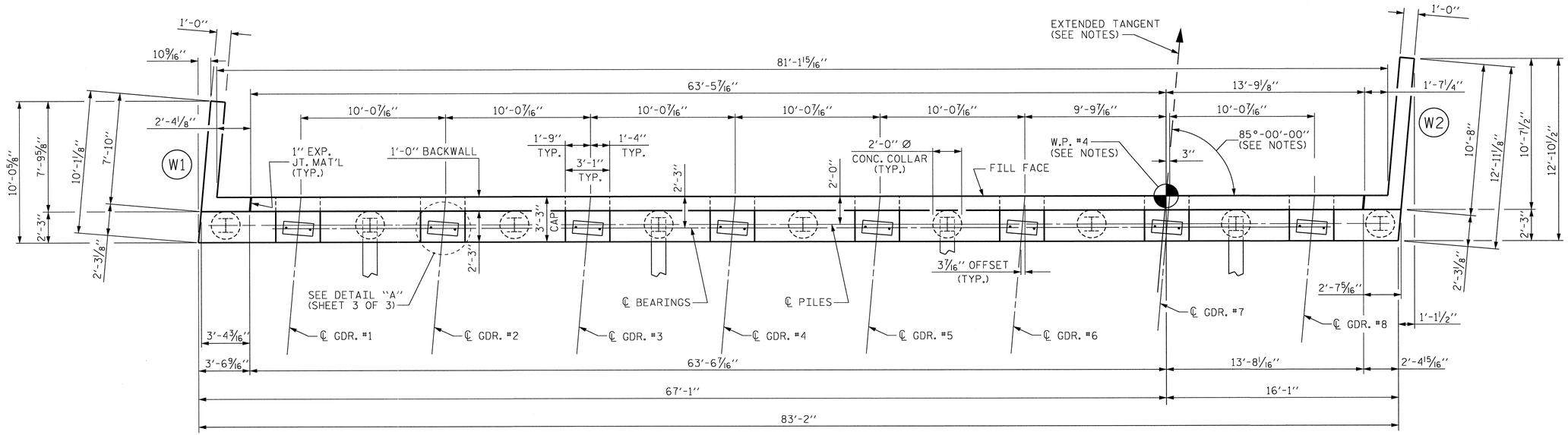

PLAN

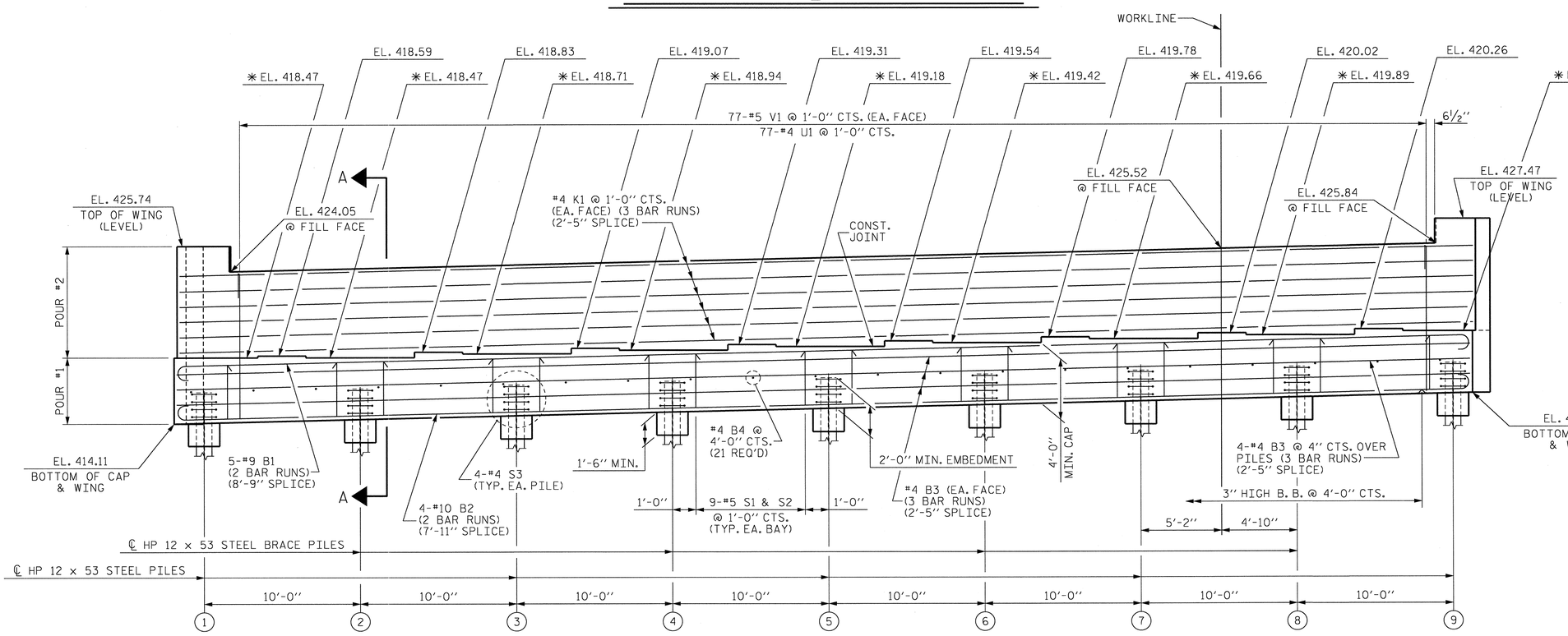

ELEVATION

✱ SEE NOTES (SHEET 3 OF 3)

TOP OF PILE ELEVATIONS

1	EL. 416.16	6	EL. 417.34
2	EL. 416.40	7	EL. 417.58
3	EL. 416.63	8	EL. 417.82
4	EL. 416.87	9	EL. 418.05
5	EL. 417.11		

PROJECT NO. U-0071
DURHAM COUNTY
STATION: 17+97.57-DFLW-

SHEET 1 OF 3

STATE OF NORTH CAROLINA
DEPARTMENT OF TRANSPORTATION
RALEIGH

SUBSTRUCTURE

END BENT 2

NORTH CAROLINA PROFESSIONAL SEAL 037400 ENGINEER GREGORY M. GILLAND 9/19/12

WETHERILL ENGINEERING
559 Jones Franklin Rd. Suite 164
Raleigh, N.C. 27606
Bus: 919 851 8077
Fax: 919 851 8107
License: F-0377
TRANSPORTATION PLANNING/DESIGN - BRIDGE/STRUCTURE DESIGN
CIVIL/SITE DESIGN - GIS/GPS - CONSTRUCTION OBSERVATION

REVISIONS						SHEET NO.
NO.	BY:	DATE:	NO.	BY:	DATE:	S-367
1			3			TOTAL SHEETS
2			4			671

STR. #8

DRAWN BY : J.M. BRITT DATE : 4-2-13
CHECKED BY : T. DIFFEE DATE : 5-21-13
DESIGN ENGINEER OF RECORD: G.M. GILLAND DATE : 5-13

P:\2012\U-0071 Sites 3,8 & 9\Structures\DNG_BU0071_SD_STR8_EB2_WE1.dgn
7/9/2013 9:31:02 AM

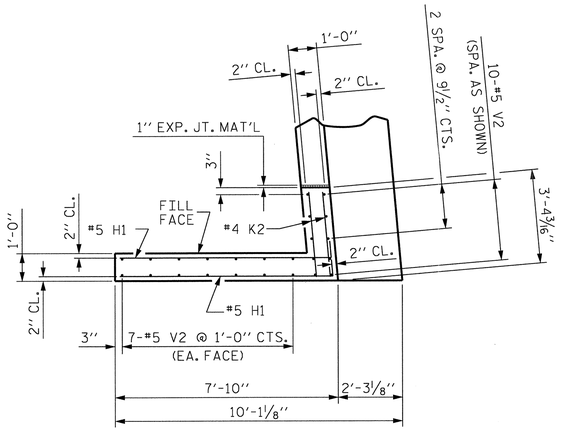

PLAN OF WING (W1)

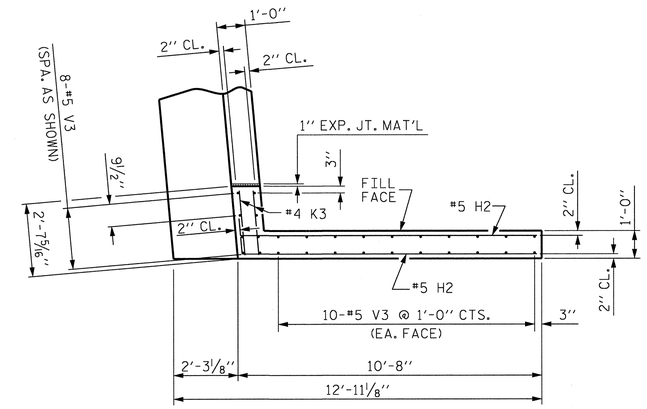

PLAN OF WING (W2)

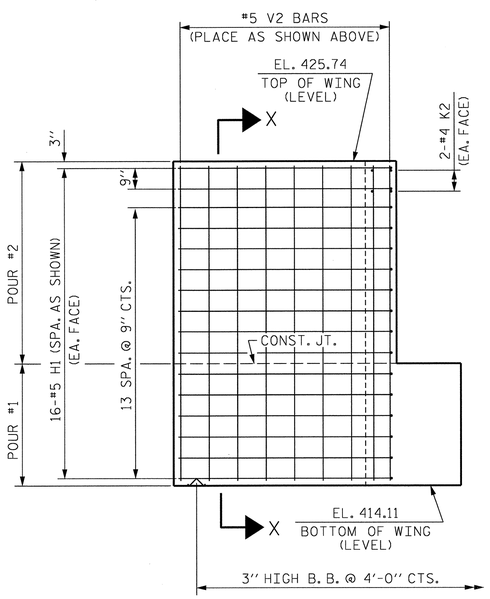

ELEVATION OF WING (W1)

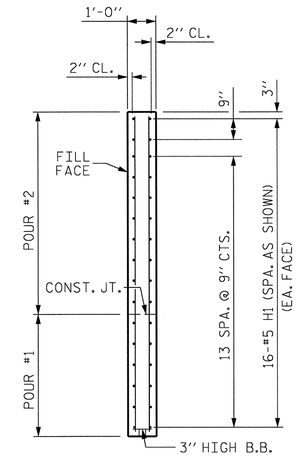

SECTION X-X

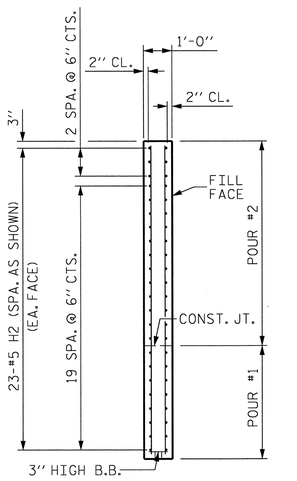

SECTION Y-Y

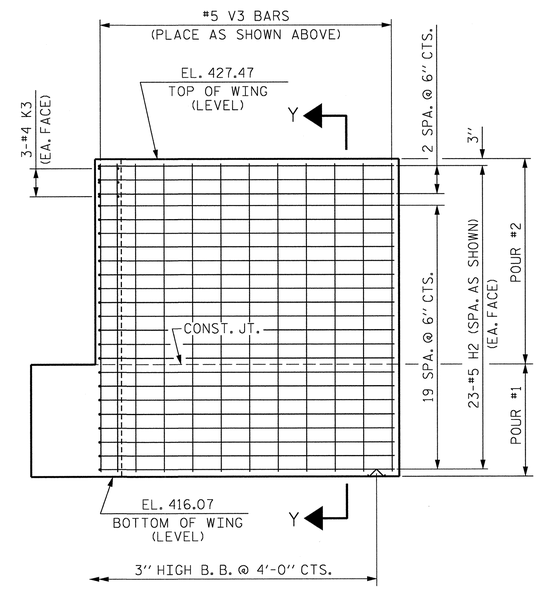

ELEVATION OF WING (W2)

PROJECT NO. U-0071
DURHAM COUNTY
STATION: 17+97.57-DFLW-

SHEET 2 OF 3

STATE OF NORTH CAROLINA
DEPARTMENT OF TRANSPORTATION
RALEIGH

SUBSTRUCTURE

END BENT 2

NORTH CAROLINA PROFESSIONAL SEAL 037400 ENGINEER GREGORY M. GILLAND 9/19/14

WETHERILL ENGINEERING
559 Jones Franklin Rd. Suite 164
Raleigh, N.C. 27606
Bus: 919 851 8077
Fax: 919 851 8107
License: F-0377
TRANSPORTATION PLANNING/DESIGN - BRIDGE/STRUCTURE DESIGN
CIVIL/SITE DESIGN - GIS/GPS - CONSTRUCTION OBSERVATION

REVISIONS						SHEET NO.
NO.	BY:	DATE:	NO.	BY:	DATE:	S-328
1			3			TOTAL SHEETS
2			4			671

DRAWN BY : J.M. BRITT DATE : 4-2-13
CHECKED BY : T. DIFFEE DATE : 5-21-13
DESIGN ENGINEER OF RECORD: G.M. GILLAND DATE : 5-13

P:\2012\U-0071 Sites 3,8 & 9\Structures\DWG_BU\U0071_SD_STR8_EB2_WE1.dgn
7/9/2013 9:31:21 AM

NOTES :

STIRRUPS IN CAP MAY BE SHIFTED AS NECESSARY TO CLEAR ANCHOR BOLTS.

BACKWALL SHALL BE PLACED BEFORE APPLYING THE EPOXY PROTECTIVE COATING.

THE TOP SURFACE AREAS OF THE END BENT CAPS SHALL BE CURED IN ACCORDANCE WITH THE STANDARD SPECIFICATIONS EXCEPT THE MEMBRANE CURING COMPOUND METHOD SHALL NOT BE USED.

✱ THE TOP SURFACE OF THE CAP EXCEPT THE BRIDGE SEAT BUILDUPS SHALL BE SLOPED TRANSVERSELY FROM THE FILL FACE TO THE BACK FACE AT THE RATE OF 2%.

BRIDGE IS MEASURED ALONG ℄ SURVEY -DFLW- AND EXTENDED TANGENT @ TS STATION 20+00.00 -DLFW-. SEE "GENERAL DRAWING" SHEETS FOR WORK POINT #4 LOCATION AND DETAILS.

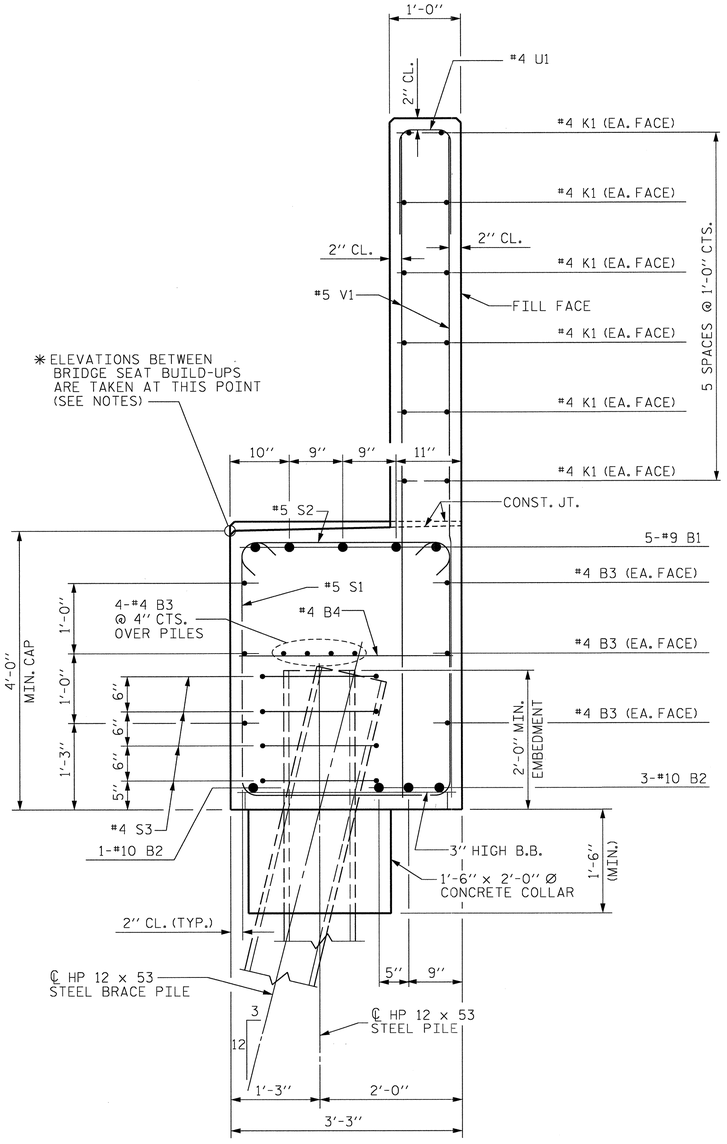

SECTION A-A

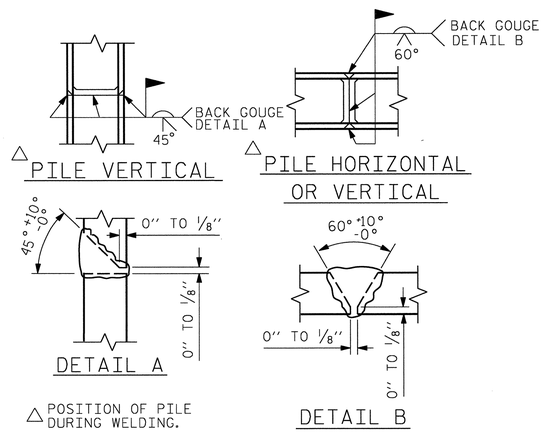

PILE SPLICE DETAIL

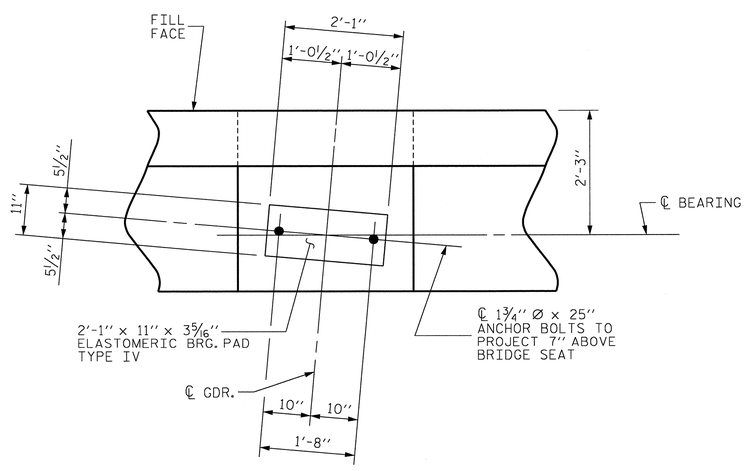

DETAIL "A"

(TYP. EA. GDR.)

BAR TYPES

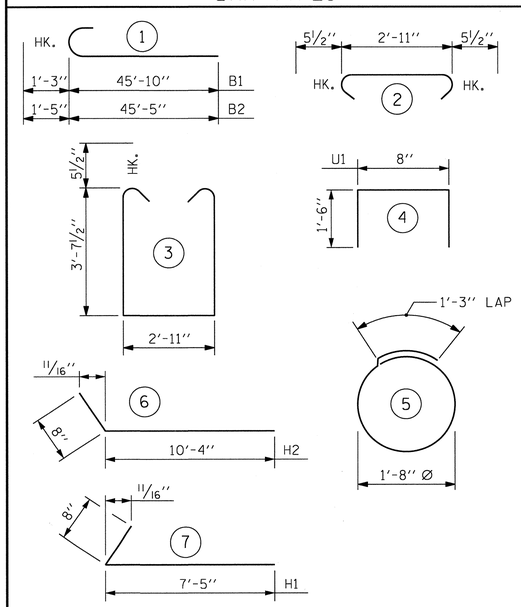

ALL BAR DIMENSIONS ARE OUT TO OUT.

BILL OF MATERIAL

END BENT 2

BAR	NO.	SIZE	TYPE	LENGTH	WEIGHT
B1	10	#9	1	47'-1"	1,601
B2	8	#10	1	46'-10"	1,612
B3	30	#4	STR	29'-3"	586
B4	21	#4	STR	2'-11"	41
H1	32	#5	7	8'-1"	270
H2	46	#6	6	11'-0"	528
K1	36	#4	STR	29'-3"	703
K2	4	#4	STR	3'-0"	8
K3	6	#4	STR	2'-3"	9
S1	72	#5	3	11'-1"	832
S2	72	#5	2	3'-10"	288
S3	36	#4	5	6'-6"	156
U1	77	#4	4	3'-8"	189
V1	154	#5	STR	9'-6"	1,526
V2	22	#5	STR	11'-3"	286
V3	28	#5	STR	11'-0"	321

REINFORCING STEEL 8,956 LBS.

CLASS A CONCRETE BREAKDOWN :

POUR #1 46.3 CU. YDS.

POUR #2 22.3 CU. YDS.

TOTAL CLASS A CONCRETE 68.6 CU. YDS.

HP 12 x 53 STEEL PILES No. 9 249 LIN. FT.

STEEL PILE POINTS 9 EACH

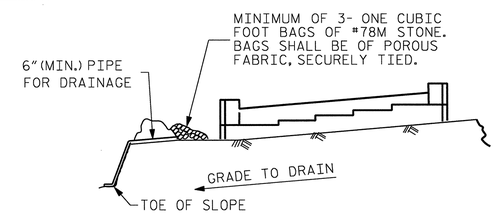

BAGGED STONE AND PIPE SHALL BE PLACED IMMEDIATELY AFTER COMPLETION OF END BENT EXCAVATION. PIPE MAY BE EITHER CONCRETE, CORRUGATED STEEL, CORRUGATED ALUMINUM ALLOY, OR CORRUGATED PLASTIC. PERFORATED PIPE WILL NOT BE ALLOWED.

BAGGED STONE SHALL REMAIN IN PLACE UNTIL THE ENGINEER DIRECTS THAT IT BE REMOVED. THE CONTRACTOR SHALL REMOVE AND DISPOSE OF SILT ACCUMULATIONS AT BAGGED STONE WHEN SO DIRECTED BY THE ENGINEER. BAGS SHALL BE REMOVED AND REPLACED WHENEVER THE ENGINEER DETERMINES THAT THEY HAVE DETERIORATED AND LOST THEIR EFFECTIVENESS.

NO SEPARATE PAYMENT WILL BE MADE FOR THIS WORK AND THE ENTIRE COST OF THIS WORK SHALL BE INCLUDED IN THE UNIT CONTRACT PRICE BID FOR THE SEVERAL PAY ITEMS.

TEMPORARY DRAINAGE AT END BENT 2

PROJECT NO. U-0071

DURHAM COUNTY

STATION: 17+97.57-DFLW-

SHEET 3 OF 3

STATE OF NORTH CAROLINA
DEPARTMENT OF TRANSPORTATION
RALEIGH

SUBSTRUCTURE

END BENT 2

NORTH CAROLINA PROFESSIONAL SEAL 37400 ENGINEER GREGORY M. GILLAND 8/19/15

WETHERILL ENGINEERING
559 Jones Franklin Rd. Suite 164
Raleigh, N.C. 27606
Bus: 919 851 8077
Fax: 919 851 8107
License: F-0377

TRANSPORTATION PLANNING/DESIGN - BRIDGE/STRUCTURE DESIGN
CIVIL/SITE DESIGN - GIS/GPS - CONSTRUCTION OBSERVATION

REVISIONS						SHEET NO.
NO.	BY:	DATE:	NO.	BY:	DATE:	8-369
1			3			TOTAL SHEETS
2			4			671

DRAWN BY : J.M. BRITT DATE : 4-2-13
CHECKED BY : T. DIFFEE DATE : 5-21-13
DESIGN ENGINEER OF RECORD: G.M. GILLAND DATE : 5-13

P:\2012\U-0071_Sites 3,8 & 9\Structures\DWG_BU\0071_SD_STR8_EB2_WEI.dgn
7/9/2013 9:32:23 AM

STR. #8

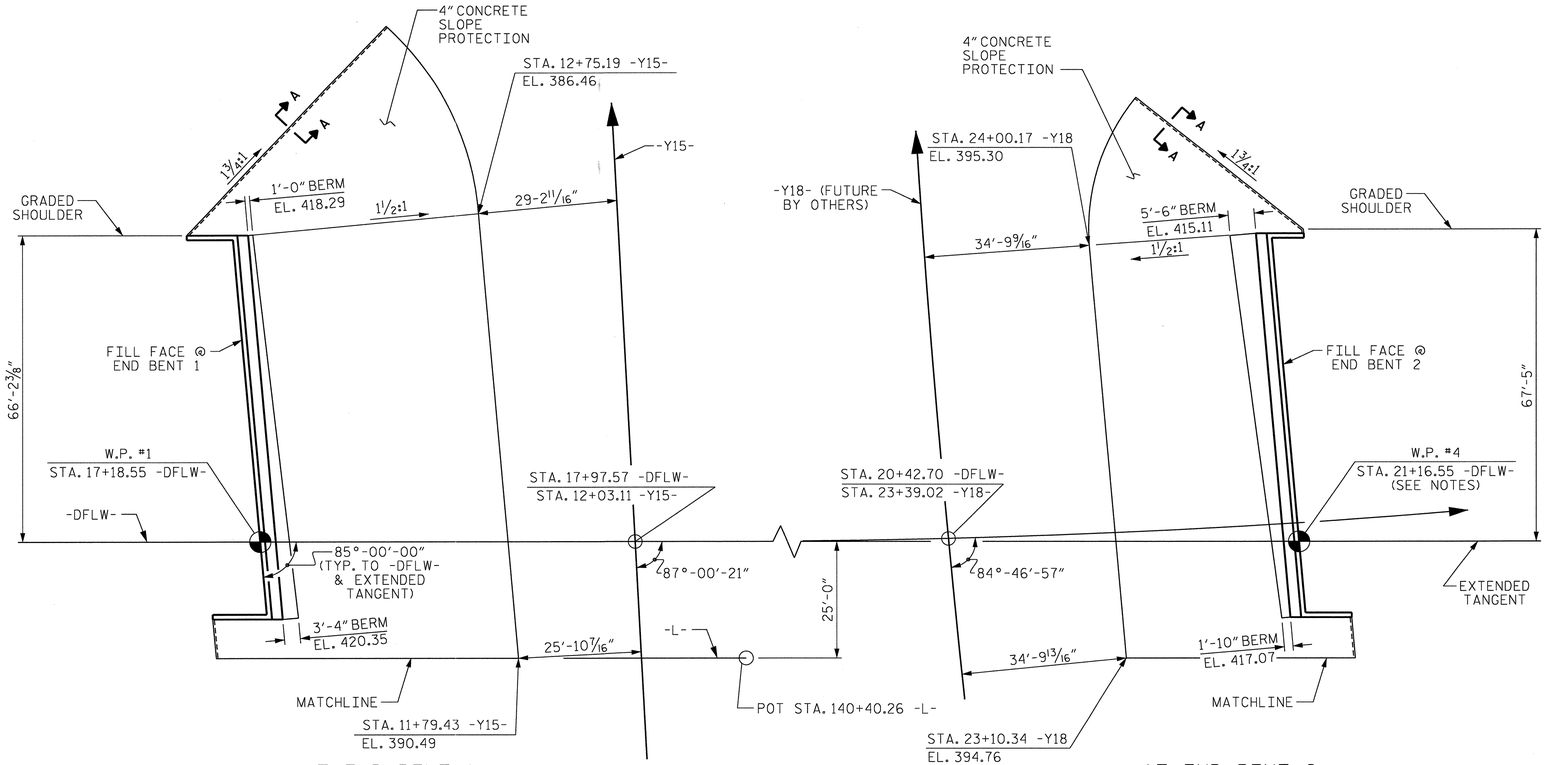

AT END BENT 1

PLAN

AT END BENT 2

NOTES

SLOPE PROTECTION SHALL CONSIST OF 4" POURED-IN-PLACE CONCRETE PAVING AS SHOWN IN THE DETAILS ON THIS SHEET. CONCRETE SHALL BE CLASS "B". THE CONCRETE SURFACE SHALL BE FLOATED WITH A WOODEN FLOAT AND FINISHED. WELDED WIRE FABRIC REINFORCING SHALL BE 6 X 6 - W1.4 X W1.4, 60" WIDE. SLOPE PROTECTION SHALL BE POURED IN 5' STRIPS AS SHOWN IN THE "POURING DETAIL" WITH 2'-0" LONG #4 BARS PLACED ALONG THE SLOPE BETWEEN STRIPS AT 1'-6" MAXIMUM SPACING. SLOPE PROTECTION MAY BE POURED IN ALTERNATE 4' AND 5' STRIPS AS SHOWN IN THE "OPTIONAL POURING DETAIL" WITH ADJACENT RUNS OF WELDED WIRE FABRIC LAPPING AT LEAST 6". THE COST OF THE WELDED WIRE FABRIC AND #4 BARS, IF USED, SHALL BE INCLUDED IN THE CONTRACT UNIT PRICE BID PER SQUARE YARD FOR SLOPE PROTECTION.

BRIDGE IS MEASURED ALONG -DFLW- AND EXTENDED TANGENT @ TS STATION 20+00.00 -DFLW-. SEE "GENERAL DRAWING" SHEETS FOR DETAILS.

BRIDGE ID STA. 17+97.57 -DFLW-	4" SLOPE PROTECTION	* WELDED WIRE FABRIC 60 INCHES WIDE
	SQUARE YARDS	APPROX. L.F.
END BENT 1	812	1625
END BENT 2	536	1072

* QUANTITY SHOWN IS BASED ON 5' POURS.

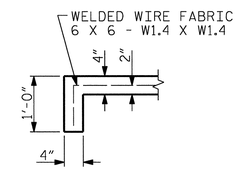

SECTION A-A

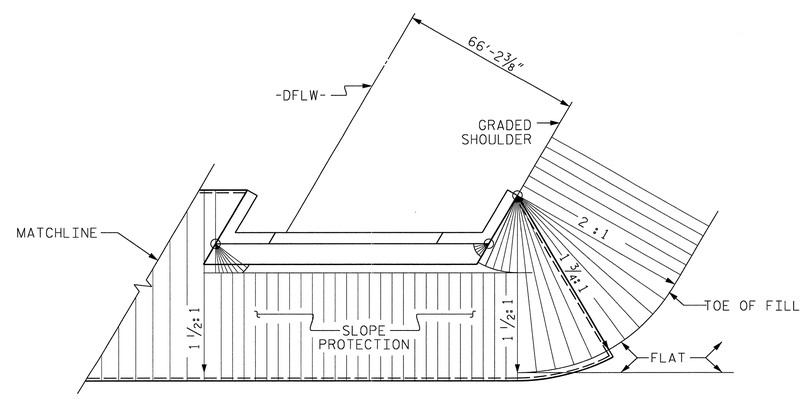

PLAN - END BENT WITH SWEPT BACK WINGS - SKEWED

(END BENT 1 SHOWN, END BENT 2 SIMILAR)

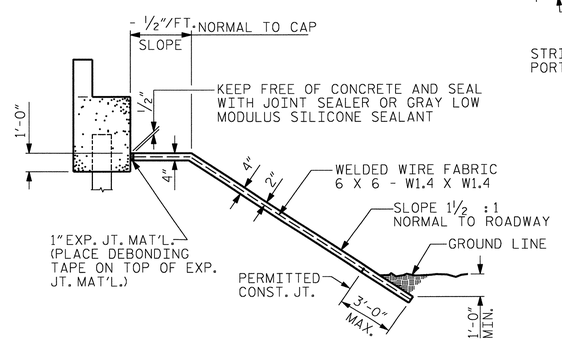

SECTION ALONG ℄ ROADWAY WHEN DITCH IS NOT PROVIDED

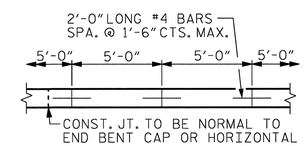

STRIP WIDTHS MAY VARY IN CURVED PORTION.

POURING DETAIL

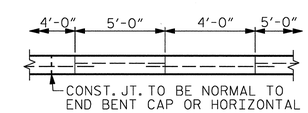

POUR A 4'-0" STRIP FIRST. STRIP WIDTHS MAY VARY IN CURVED PORTION.

OPTIONAL POURING DETAIL

PROJECT NO. U-0071
DURHAM COUNTY
STATION: 17+97.57-DFLW-

STATE OF NORTH CAROLINA
DEPARTMENT OF TRANSPORTATION
RALEIGH

STANDARD
SLOPE PROTECTION DETAILS

NORTH CAROLINA PROFESSIONAL SEAL 37400 ENGINEER GREGORY M. GILLAND 6/13/13

WETHERILL ENGINEERING
559 Jones Franklin Rd. Suite 164
Raleigh, N.C. 27606
Bus: 919 851 8077
Fax: 919 851 8107
License: F-0377
TRANSPORTATION PLANNING/DESIGN - BRIDGE/STRUCTURE DESIGN
CIVIL/SITE DESIGN - GIS/GPS - CONSTRUCTION OBSERVATION

REVISIONS								SHEET NO.
NO.	BY:	DATE:	NO.	BY:	DATE:			S-310
1			3					TOTAL SHEETS
2			4					671

STR #8

STD. NO. SP1 (SHT 5)

ASSEMBLED BY : G. WILSON		DATE : 5-18-13	
CHECKED BY : G.M. GILLAND		DATE : 5-23-13	
DESIGN ENGINEER OF RECORD : GMG		DATE : 5-13	
DRAWN BY : ELR 5/92	REV. 5/1/06	TLA/GM	
CHECKED BY : GRP 6/92	REV. 10/1/11	MAA/GM	
	REV. 12/21/11	MAA/GM	

P:\2012\U-0071 Sites 3,8 & 9\Structures\DWG_&\U00r1_SD_STR8_SP_WE1.dgn
7/10/2013 3:18:49 PM

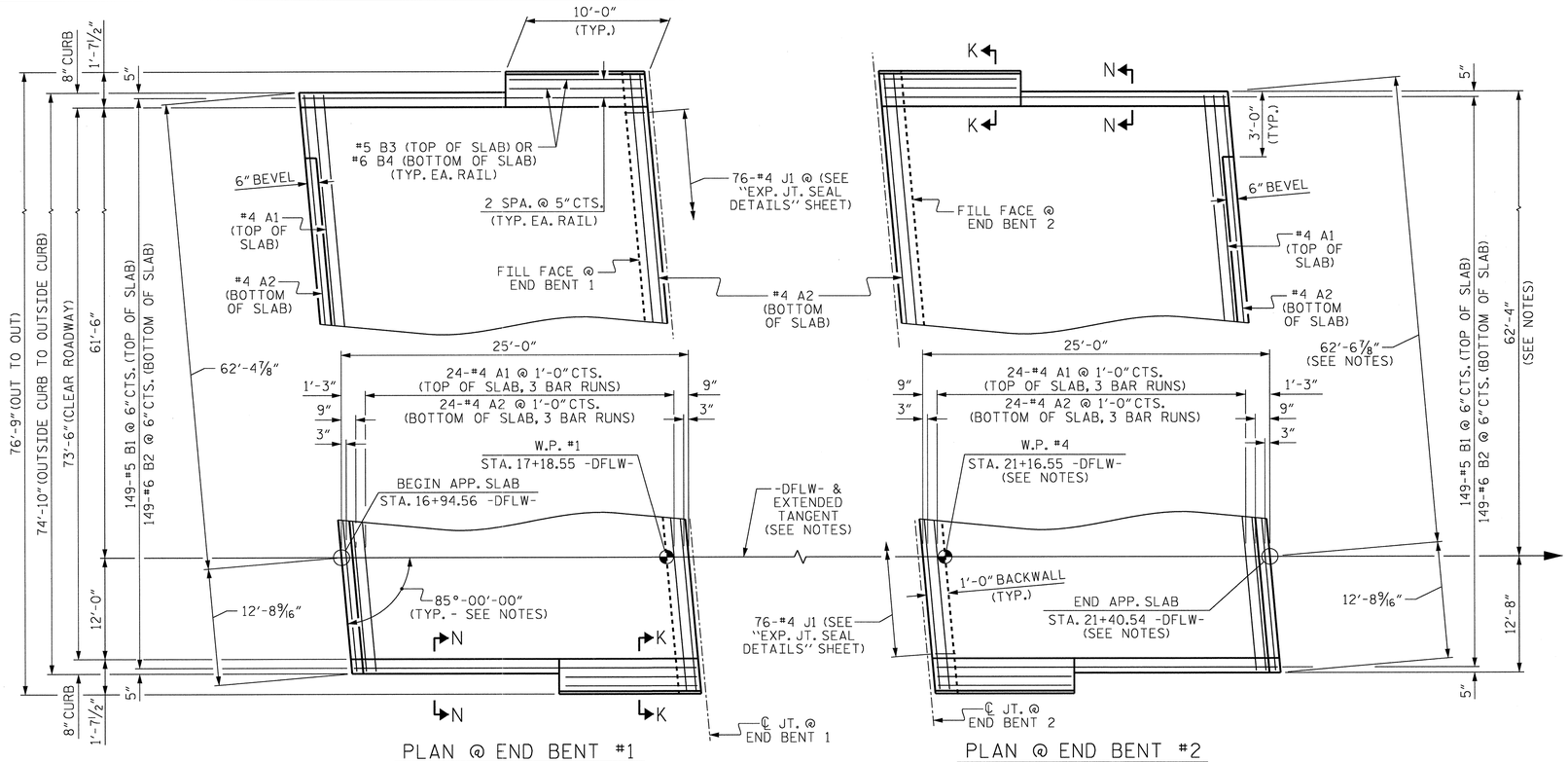

NOTES

APPROACH SLAB SHALL NOT BE CONSTRUCTED PRIOR TO COMPLETION OF THE BRIDGE DECK.

FOR REINFORCED BRIDGE APPROACH FILL INCLUDING GEOTEXTILE, IMPERMEABLE GEOMEMBRANE, 4" Ø DRAINAGE PIPE, #78M STONE, AND SELECT MATERIAL, SEE ROADWAY PLANS.

AREA BETWEEN THE WINGWALL AND APPROACH SLAB SHALL BE GRADED TO DRAIN THE WATER AWAY FROM THE FILL FACE OF THE BRIDGE AND SHALL BE PAVED. SEE ROADWAY PLANS.

BRIDGE IS MEASURED ALONG -DFLW- AND EXTENDED TANGENT @ TS STATION 20+00.00 -DFLW-. SEE "GENERAL DRAWING" SHEETS FOR DETAILS.

LEFT SIDE OF APPROACH SLAB AT END BENT 2 IS FLARED OUT 2" TO ACCOMODATE CURVE @ TS STATION 20+00.00 -DFLW.

FOR EXPANSION JOINT SEALS, SEE SPECIAL PROVISIONS.

THE QUANTITY OF #4 J1 BARS ON THE BILL OF MATERIAL IS BASED ON 1'-0" CENTERS. J1 BARS SHALL BE PLACED AT EACH VERTICAL STUD ANCHOR BOLT. IN THE EVENT THAT THE NUMBER OF VERTICAL STUD ANCHORS EXCEEDS THE NUMBER OF J1 BARS SPECIFIED, ADDITIONAL J1 BARS WILL NOT BE REQUIRED.

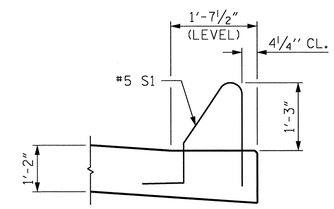

SECTION K-K

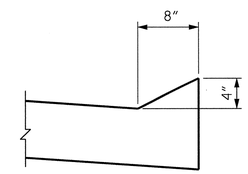

SECTION N-N

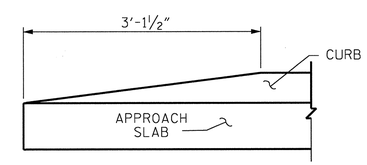

END OF CURB WITHOUT SHOULDER BERM GUTTER

CURB DETAILS

BILL OF MATERIAL

APPROACH SLAB @ EB 1

BAR	NO.	SIZE	TYPE	LENGTH	WEIGHT
✳ A1	75	#4	STR	26'-11"	1,349
A2	78	#4	STR	26'-9"	1,394
✳ B1	149	#5	STR	23'-10"	3,704
B2	149	#6	STR	24'-8"	5,520
✳ B3	4	#5	STR	9'-8"	40
B4	4	#6	STR	9'-8"	58
✳ J1	76	#4	1	1'-5"	72
REINFORCING STEEL				LBS.	6,972
✳ EPOXY COATED REINFORCING STEEL				LBS.	5,165
CLASS AA CONCRETE				C. Y.	81.9

APPROACH SLAB @ EB 2

BAR	NO.	SIZE	TYPE	LENGTH	WEIGHT
✳ A1	75	#4	STR	26'-11"	1,349
A2	78	#4	STR	26'-9"	1,394
✳ B1	149	#5	STR	23'-10"	3,704
B2	149	#6	STR	24'-8"	5,520
✳ B3	4	#5	STR	9'-8"	40
B4	4	#6	STR	9'-8"	58
✳ J1	76	#4	1	1'-5"	72
REINFORCING STEEL				LBS.	6,972
✳ EPOXY COATED REINFORCING STEEL				LBS.	5,165
CLASS AA CONCRETE				C. Y.	82.1

BAR TYPE

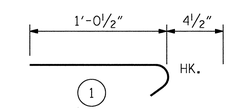

ALL BAR DIMENSIONS ARE OUT TO OUT

✳✳ QUANTITIES FOR BARRIER RAIL ARE NOT INCLUDED. SEE SHEET 2 OF 2.

SPLICE LENGTHS		
BAR SIZE	EPOXY COATED	UNCOATED
#4	2'-0"	1'-9"
#5	2'-6"	2'-2"
#6	3'-10"	2'-7"

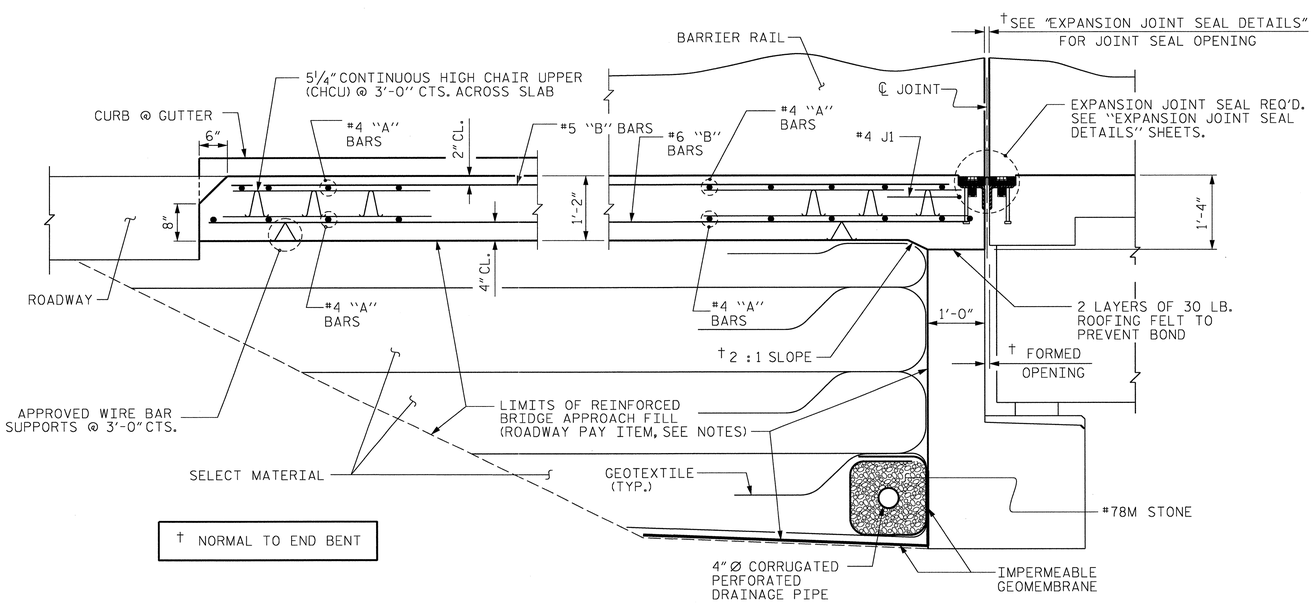

† NORMAL TO END BENT

SECTION THRU SLAB

PROJECT NO. U-0071
DURHAM COUNTY
STATION: 17+97.57-DFLW-

SHEET 1 OF 2

STATE OF NORTH CAROLINA
DEPARTMENT OF TRANSPORTATION
RALEIGH

STANDARD

BRIDGE APPROACH SLAB FOR FLEXIBLE PAVEMENT

NORTH CAROLINA PROFESSIONAL SEAL 037400 ENGINEER GREGORY M. GILLAND 8/19/13

WETHERILL ENGINEERING
559 Jones Franklin Rd. Suite 164
Raleigh, N.C. 27606
Bus: 919 851 8077
Fax: 919 851 8107
License: F-0377

TRANSPORTATION PLANNING/DESIGN - BRIDGE/STRUCTURE DESIGN
CIVIL/SITE DESIGN - GIS/GPS - CONSTRUCTION OBSERVATION

REVISIONS							SHEET NO.
NO.	BY:	DATE:	NO.	BY:	DATE:		S-371
1			3				TOTAL SHEETS
2			4				671

ASSEMBLED BY : G.M. GILLAND DATE : 5-6-13
CHECKED BY : R. ASCENCIO DATE : 5-20-13
DESIGN ENGINEER OF RECORD : GMG DATE : 5-13

DRAWN BY : EEM 3/95
CHECKED BY : VAP 3/95

REV. 5/7/03R RWW/JTE
REV. 5/1/06RR KMM/GM
REV. 10/1/11 MAA/GM

P:\2012\U-0071 Sites 3,8 & 9\Structures\DWG_BVUOI 1_SD_STRB_AS_WE1.dgn
7/10/2013 3:23:04 PM

STR. #8

STD. NO. BAS2 (SHT 4a)

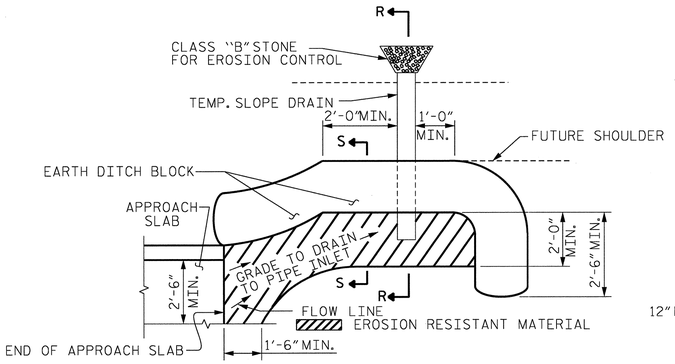

NOTE: IMMEDIATELY AFTER THE CONSTRUCTION OF THE APPROACH SLAB, THE CONTRACTOR SHALL PROVIDE TEMPORARY BERM AND SLOPE DRAIN. CONTRACTOR SHALL GRADE TO PIPE INLET AND PROVIDE EROSION RESISTANT MATERIAL AS SHOWN. THE EROSION RESISTANT MATERIAL SHALL BE EITHER 1) ASPHALT PLANT MIX, TYPE 1 OR TYPE 2, MIN. 2" DEPTH, 2) EROSION CONTROL MAT, OR 3) CONCRETE, AS DIRECTED BY THE ENGINEER. THE SLOPE DRAIN SHALL CONSIST OF A NON-PERFORATED TEMPORARY DRAINAGE PIPE, 12 INCHES IN DIAMETER.

PLAN VIEW

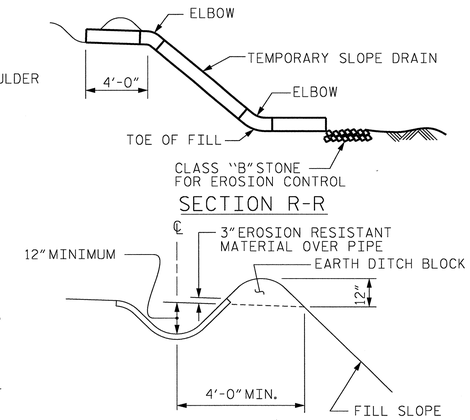

SECTION S-S

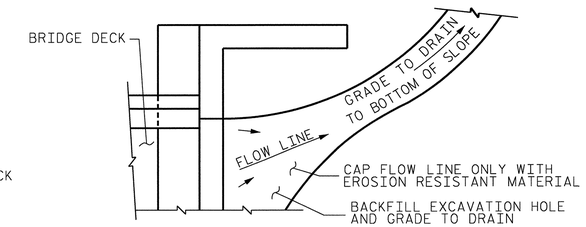

NOTE: IF THE APPROACH SLAB IS NOT CONSTRUCTED IMMEDIATELY AFTER THE BACKFILLING OF THE END BENT EXCAVATION, GRADE TO DRAIN TO THE BOTTOM OF THE SLOPE AND PROVIDE EROSION RESISTANT MATERIAL, SUCH AS FIBERGLASS ROVING OR AS DIRECTED BY THE ENGINEER TO PREVENT SOIL EROSION AND TO PROTECT THE AREA ADJACENT TO THE STRUCTURE. THE CONTRACTOR WILL BE REQUIRED TO REMOVE THESE MATERIALS PRIOR TO CONSTRUCTION OF THE APPROACH SLAB.

TEMPORARY DRAINAGE DETAIL

NOTES

THE COST OF THE BARRIER RAIL ON THE APPROACH SLAB SHALL BE INCLUDED IN THE LINEAR FOOT CONTRACT PRICE BID FOR "CONCRETE BARRIER RAIL".

THE BARRIER RAIL ON EACH APPROACH SLAB SHALL NOT BE CAST UNTIL ALL APPROACH SLAB CONCRETE HAS BEEN CAST AND HAS REACHED A MINIMUM COMPRESSIVE STRENGTH OF 3,000 PSI.

ALL REINFORCING STEEL IN BARRIER RAILS SHALL BE EPOXY COATED.

BAR TYPES

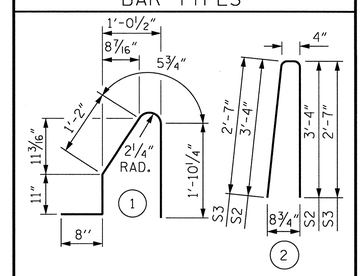

ALL BAR DIMENSIONS ARE OUT TO OUT

BILL OF MATERIAL

BARRIER RAIL ONLY					
BAR	NO.	SIZE	TYPE	LENGTH	WEIGHT
✳B3	44	#5	STR	9'-8"	444
✳S1	40	#5	1	5'-1"	212
✳S2	32	#5	2	7'-0"	234
✳S3	8	#5	2	5'-6"	46
✳EPOXY COATED REINFORCING STEEL				LBS.	936
CLASS AA CONCRETE				C.Y.	5.4
CONCRETE BARRIER RAIL				40 LIN. FT.	

TEMPORARY BERM AND SLOPE DRAIN DETAILS

(TO BE USED WHEN SHOULDER BERM GUTTER IS REQUIRED)

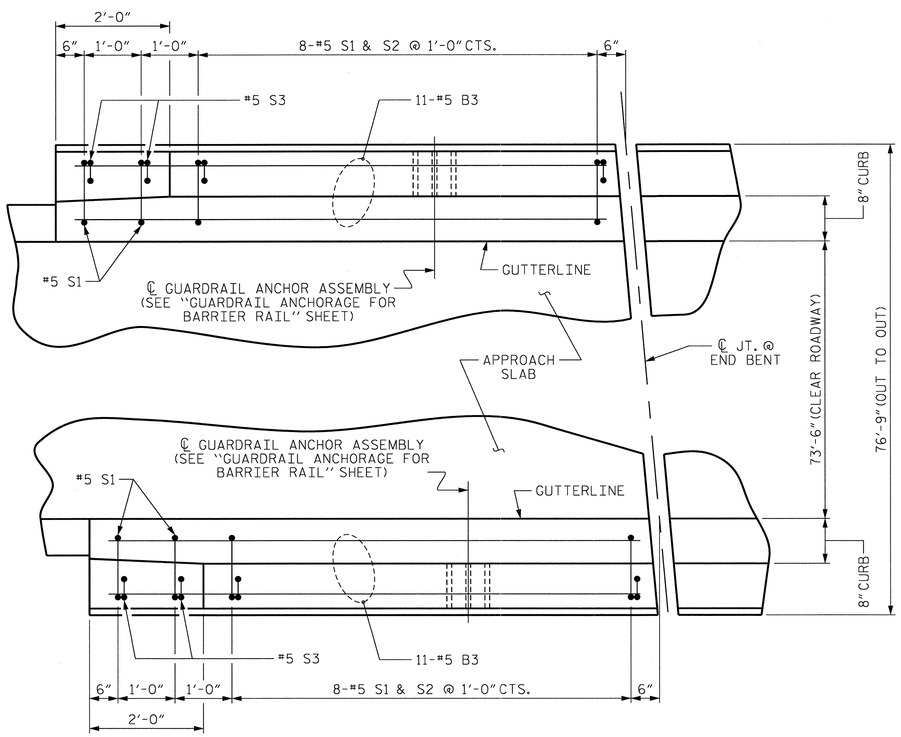

PLAN OF BARRIER RAIL

(APPROACH SLAB @ END BENT 1 SHOWN - APPROACH SLAB @ END BENT 2 SIMILAR BY ROTATION)

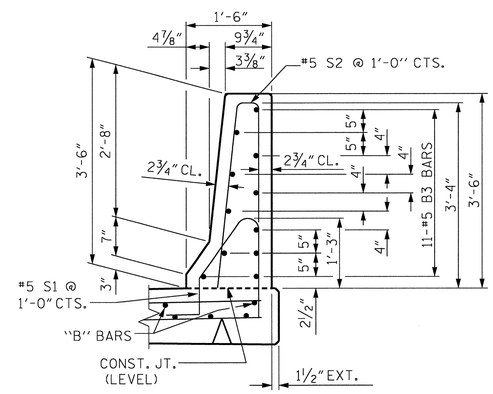

SECTION THRU RAIL

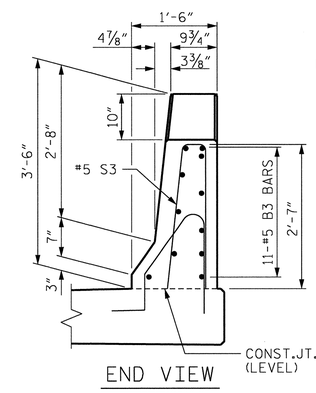

END VIEW

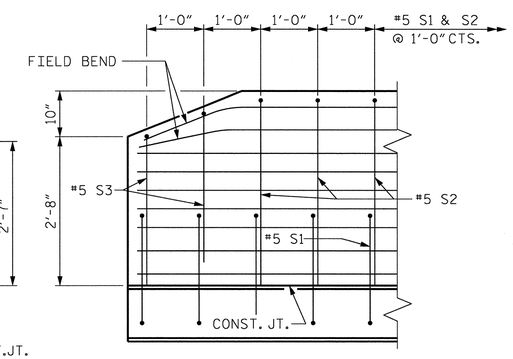

SIDE VIEW

END OF RAIL DETAILS

PROJECT NO. U-0071

DURHAM COUNTY

STATION: 17+97.57-DFLW-

SHEET 2 OF 2

STATE OF NORTH CAROLINA
DEPARTMENT OF TRANSPORTATION
RALEIGH

STANDARD

BRIDGE APPROACH SLAB DETAILS

REVISIONS							SHEET NO.
NO.	BY:	DATE:	NO.	BY:	DATE:		S-372
1			3				TOTAL SHEETS
2			4				671

STR. #8

STD. NO. BAS4 (SHT 3a)

ASSEMBLED BY : G.M. GILLAND		DATE : 5-6-13	
CHECKED BY : R. ASCENCIO		DATE : 5-20-13	
DESIGN ENGINEER OF RECORD : GMG		DATE : 5-13	
DRAWN BY : FCJ 11/88	REV. 10/1/11	MAA/GM	
CHECKED BY : ARB 11/88	REV. 7/12	MAA/GM	
	REV. 10/12	MAA/GM	

NORTH CAROLINA PROFESSIONAL SEAL 057400 ENGINEER GREGORY M. GILLAND 8/19/13

WETHERILL ENGINEERING
559 Jones Franklin Rd. Suite 164
Raleigh, N.C. 27606
Bus: 919 851 8077
Fax: 919 851 8107
License: F-0377
TRANSPORTATION PLANNING/DESIGN - BRIDGE/STRUCTURE DESIGN
CIVIL/SITE DESIGN - GIS/GPS - CONSTRUCTION OBSERVATION

P:\2012\U-0071 Sites 3,8 & 9\Structures\DWG_Bu0071_SD_STR8_AS_WE1.dgn
7/9/2013 11:01:12 AM

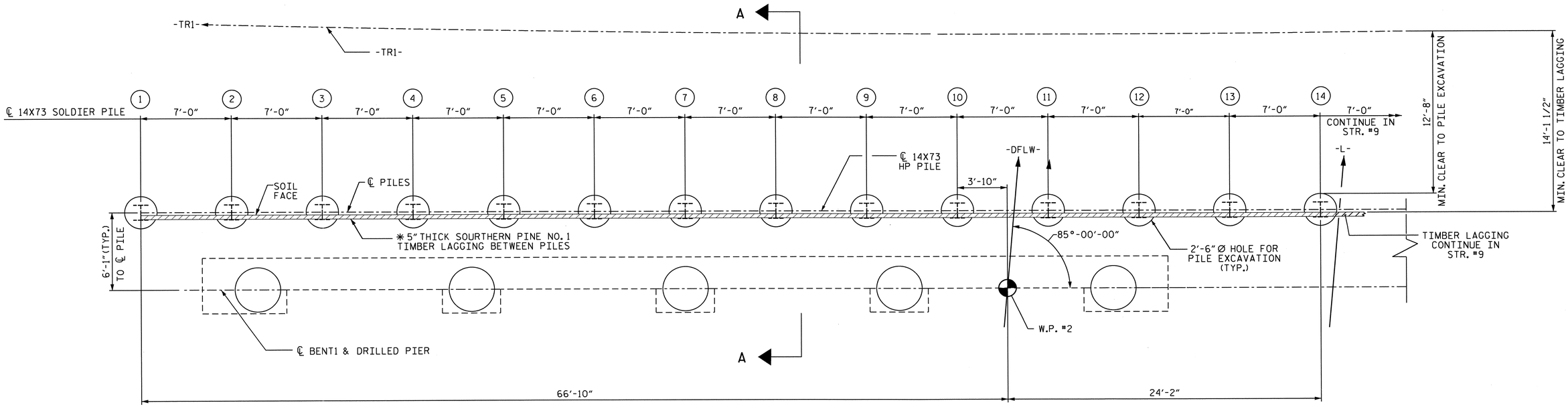

SHORING PLAN AT BENT 1

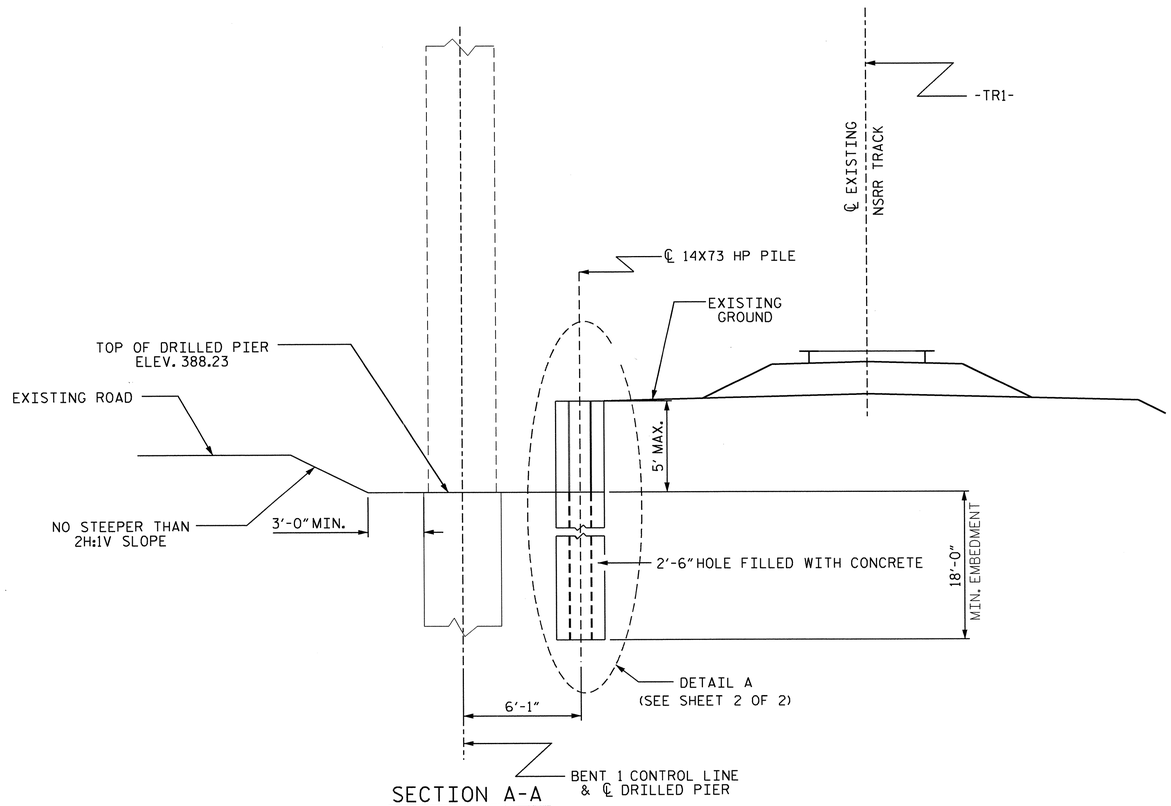

SECTION A-A

(NOT TO SCALE)

✱LAGGING ARE INSERTED BETWEEN PILES TO RETAIN THE SOIL AS EXCAVATION PROGRESSES

ESTIMATED QUANTITY	
TEMPORARY RAILROAD SHORING FOR BENT NO.	TEMPORARY RAILROAD SHORING
1	LUMP SUM

ESTIMATED PILE LENGTH/PILE = 23'
NO. OF PILES = 14

PROJECT NO. U-0071
DURHAM COUNTY
STATION: 17+97.57 -DFLW-

SHEET 1 OF 2

STATE OF NORTH CAROLINA
DEPARTMENT OF TRANSPORTATION
RALEIGH

TEMPORARY SHORING
BENT 1

NORTH CAROLINA PROFESSIONAL SEAL 031495 ENGINEER KANAK K. PUROHIT

REVISIONS							SHEET NO.
NO.	BY:	DATE:	NO.	BY:	DATE:		S-373
1			3				TOTAL SHEETS
2			4				671

DRAWN BY : K. K. PUROHIT DATE : 06/14
CHECKED BY : T. L. CLELLAND DATE : 6/14
DESIGN ENGINEER OF RECORD: K. K. PUROHIT DATE : 6/14

13-JUN-2014 09:06
R:\Structures\Fischer\Temporary Shoring-KKP\u0071_SD_STR8 & 9_Shoring.dgn
kpurohit

STR. #8

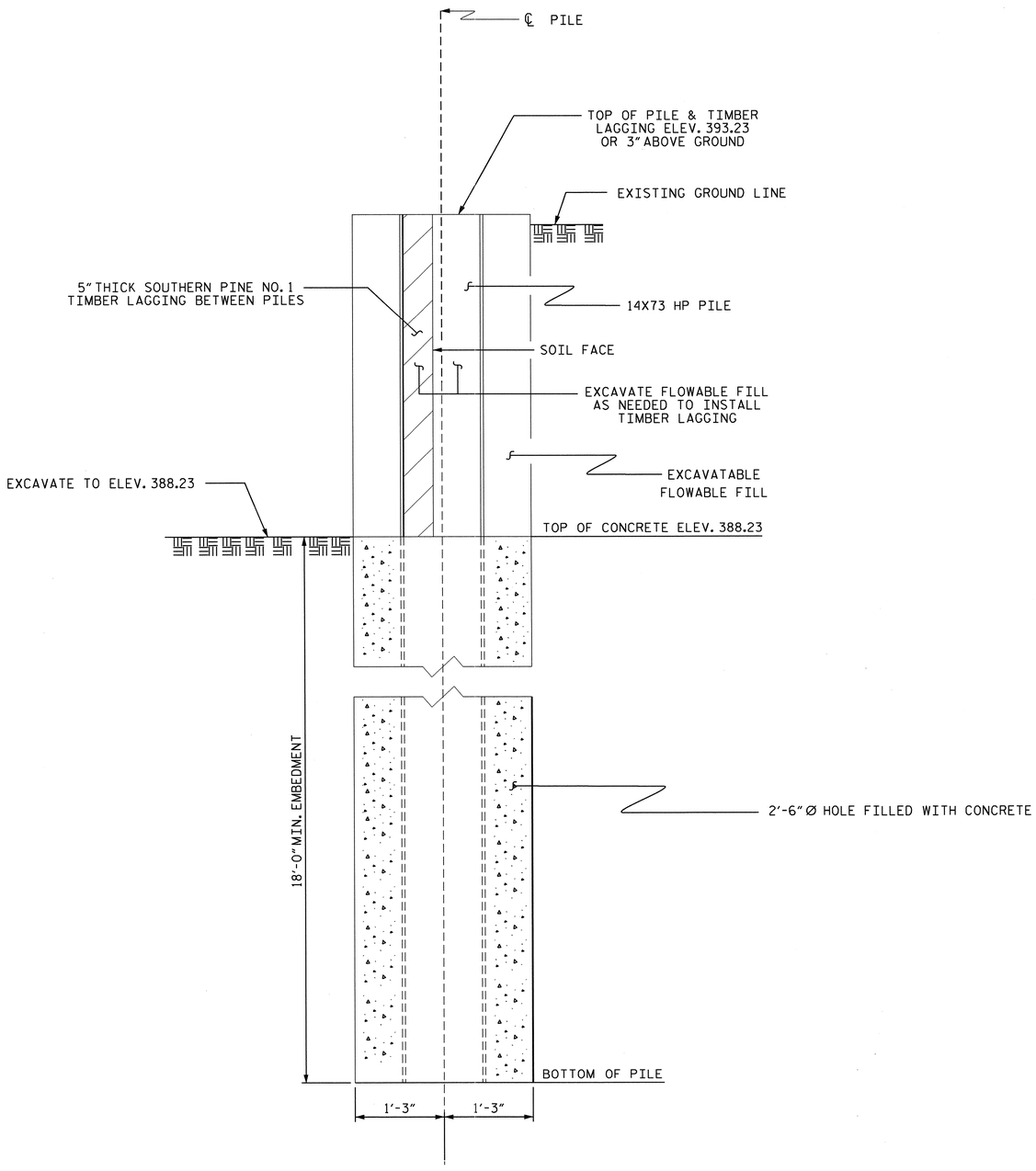

DETAIL "A"

NOTES

1. FOR TEMPORARY SHORING, SEE "TEMPORARY RAILROAD SHORING" SPECIAL PROVISION.
2. NOTE HAS BEEN OMMITED.
3. CONTROL DRAINAGE DURING CONSTRUCTION IN THE VICINITY OF SHORING. DIRECT RUNOFF AWAY FROM SHORING.
4. FOR EXCAVATABLE FLOWABLE FILL, SEE SUBARTICLE 1000-6 OF THE STANDARD SPECIFICATIONS.
5. THE TOP OF THE INSTALLED PILES SHALL BE WITHIN 1 INCH OF THEIR PLAN LOCATION IN ANY HORIZONTAL OR VERTICAL DIRECTION AND 1/8"/FT FROM VERTICAL.
6. NO SPLICES ARE PERMITTED IN H-PILES.
7. DRILLED-IN H-PILES ARE REQUIRED. FOR DRILLED-IN H-PILES INSTALLATION, SEE SUBARTICLE 450-3(E) OF THE STANDARD SPECIFICATIONS EXCEPT EXCAVATABLE FLOWABLE FILL MUST BE USED ABOVE THE PROPOSED EXCAVATION ELEVATION.
8. THE EXCAVATED HOLE SHALL BE 30 INCH MINIMUM DIAMETER.
9. WITHIN 12 HOURS OF COMPLETING EACH HOLE, PLACE H-PILES, BACKFILL WITH CONCRETE AND EXCAVATABLE FLOWABLE FILL TO THE ELEVATIONS SHOWN IN DETAIL 'A'.
10. USE CLASS A CONCRETE THAT MEETS ARTICLE 1000-4 EXCEPT PROVIDING CONCRETE WITH A SLUMP OF 6" TO 8". AN APPROVED HIGH-RANGE WATER REDUCER MAY BE USED TO ACHIEVE THIS SLUMP.
11. DESIGN OF TEMPORARY SHORING IS IN ACCORDANCE WITH AREMA VOLUME 2, CHAPTER 8 AND CSXT AND NS SHORING REQUIREMENTS FOR COOPERS E-80 TRAIN LOADINGS.
12. TEMPORARY SHORING HAS BEEN DESIGNED FOR THE FOLLOWING SOIL PROPERTIES AND GROUNDWATER ELEVATION:
    ABOVE ELEVATION 372.0 FT
    EFFECTIVE UNIT WEIGHT = 120 PCF
    FRICTION ANGLE = 24 DEGREES
    COHESION = 0 PSF
    WALL FRICTION = 8 DEGREES
    BELOW ELEVATION 372.0 FT
    EFFECTIVE UNIT WEIGHT = 70 PCF
    FRICTION ANGLE = 36 DEGREES
    COHESION = 0 PSF
    WALL FRICTION = 12 DEGREES
    GROUNDWATER ELEVATION = 372.0 FT
13. CURE CONCRETE AND EXCAVATABLE FLOWABLE FILL AT LEAST 7 DAYS BEFORE EXCAVATING IN FRONT OF TEMPORARY SHORING.
14. EXCAVATE IN FRONT OF PILES FROM THE TOP DOWN AND IMMEDIATELY INSTALL TIMBER LAGGING BETWEEN PILES TO RETAIN THE SOIL AS EXCAVATION PROGRESSES.
15. LIMIT OPEN EXCAVATION LIFT HEIGHT TO 5 FEET OR LESS IN HEIGHT.
16. POSITION LAGGING WITH AT LEAST $3\frac{9}{32}$ OF CONTACT IN THE HORIZONTAL DIRECTION BETWEEN LAGGING AND H-PILE FLANGES.
17. REMOVE TEMPORARY RAILROAD SHORING TO A MINIMUM OF TWO FEET BELOW PROPOSED GROUND.
18. ANY ALTERNATE DESIGN FOR TEMPORARY SHORING SHALL USE SOIL PARAMETERS NO BETTER THAN THOSE SHOWN ABOVE AND SHALL BE IN ACCORDANCE WITH AREMA VOLUME 2, CHAPTER 8 AND CSXT AND NS SHORING REQUIREMENTS FOR COOPERS E-80 TRAIN LOADINGS.
19. ANY ALTERNATE DESIGN FOR TEMPORARY SHORING SHALL HAVE A MAXIMUM DEFLECTION OF 1" AT THE PILE TOP.

PROJECT NO. U-0071
DURHAM COUNTY
STATION: 17+97.57 -DFLW-

SHEET 2 OF 2

STATE OF NORTH CAROLINA
DEPARTMENT OF TRANSPORTATION
RALEIGH

TEMPORARY SHORING
BENT 1

NORTH CAROLINA PROFESSIONAL SEAL 031495 ENGINEER KANAK K. PUROHIT

REVISIONS						SHEET NO.
NO.	BY:	DATE:	NO.	BY:	DATE:	S-374
1			3			TOTAL SHEETS
2			4			671

DRAWN BY : K. K. PUROHIT DATE : 6/14
CHECKED BY : T. L. CLELLAND DATE : 6/14
DESIGN ENGINEER OF RECORD: K. K. PUROHIT DATE : 6/14

13-JUN-2014 09:15
R:\Structures\Fischer\Temporary Shoring-KKP\u0071_SD_STR8 & 9_Shoring.dgn
Kpurohit

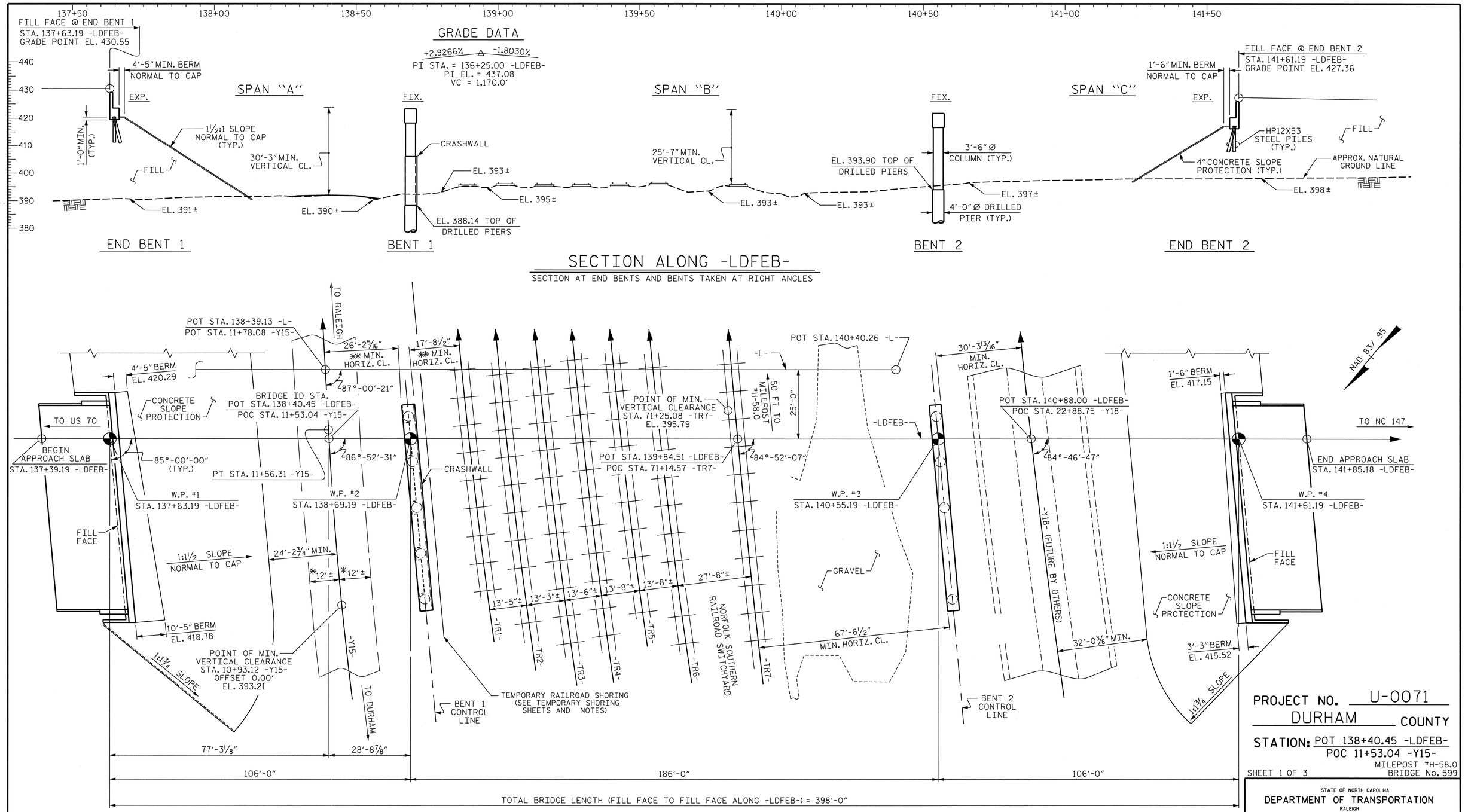

✱ - FUTURE WIDTH WITH CURB AND GUTTER.

✱✱ - MEASURED TO FACE OF CRASHWALL

PLAN

PILES NOT SHOWN FOR CLARITY

TOP OF RAIL ELEVATIONS			
STATION	LT. RAIL	STATION	RT. RAIL
71+25.08 -TR7-	395.79	71+24.65 -TR7-	395.46
70+54.80 -TR7-	395.32	70+54.27 -TR7-	394.97

DRAWN BY : G.M. GILLAND DATE : 3-13-13
CHECKED BY : T.V. ROUNTREE DATE : 5-21-13
DESIGN ENGINEER OF RECORD: G.M. GILLAND DATE : 5-13

NORTH CAROLINA PROFESSIONAL SEAL 37400 ENGINEER GREGORY M. GILLAND 6-16-14

WETHERILL ENGINEERING
559 Jones Franklin Rd. Suite 164
Raleigh, N.C. 27606
Bus: 919 851 8077
Fax: 919 851 8107
License: F-0377

TRANSPORTATION PLANNING/DESIGN - BRIDGE/STRUCTURE DESIGN
CIVIL/SITE DESIGN - GIS/GPS - CONSTRUCTION OBSERVATION

PROJECT NO. U-0071
DURHAM COUNTY
STATION: POT 138+40.45 -LDFEB-
POC 11+53.04 -Y15-
MILEPOST #H-58.0
BRIDGE No. 599
SHEET 1 OF 3

STATE OF NORTH CAROLINA
DEPARTMENT OF TRANSPORTATION
RALEIGH

GENERAL DRAWING

BRIDGE ON -LDFEB- (EAST END CONNECTOR) OVER -Y15- (ANGIER AVE.) AND NSRR SWITCHYARD BETWEEN US 70 AND NC 147

REVISIONS							SHEET NO.
NO.	BY:	DATE:	NO.	BY:	DATE:		S-375
1			3				TOTAL SHEETS
2			4				671

STR. #9

P:\2012\U-0071 Sites 3,8 & 9\Structures\DWG_9\u0071_SD_STR9_GD_WE1.dgn
6/16/2014 11:21:33 AM

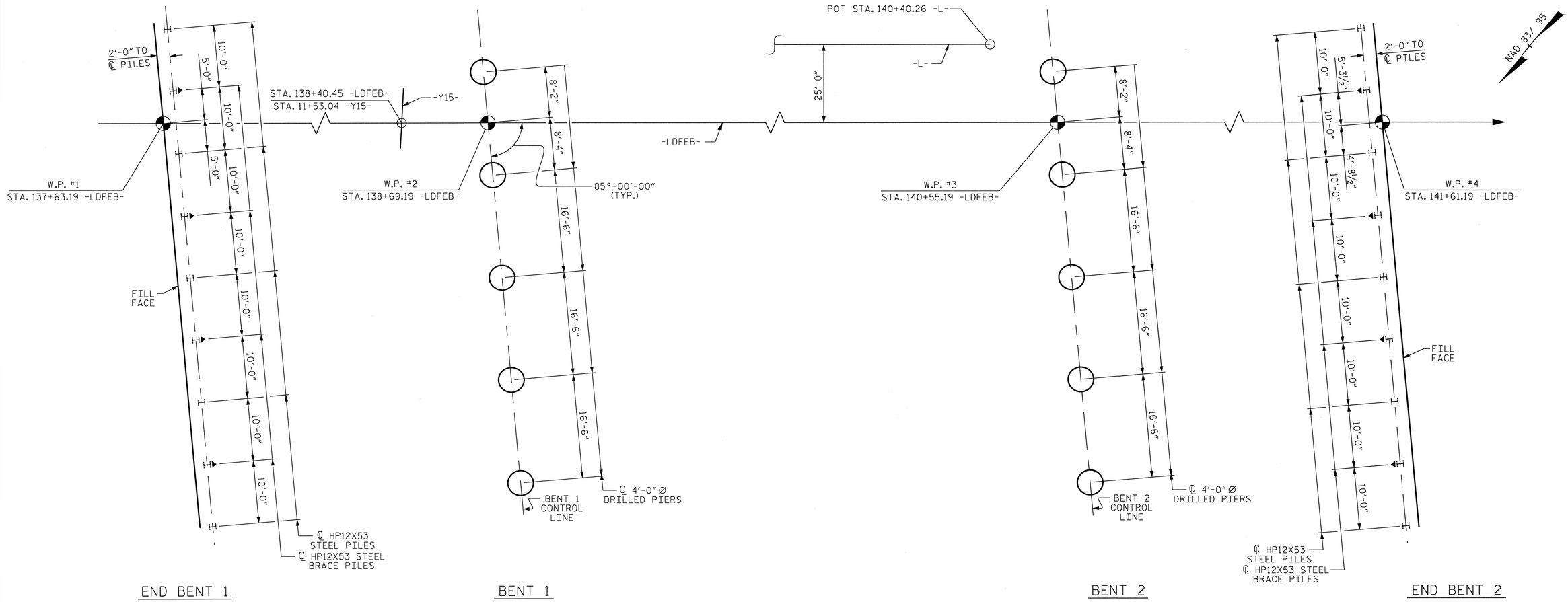

FOUNDATION LAYOUT

DIMENSIONS LOCATING PILES ARE SHOWN TO THE PILE CENTERLINE

▲ INDICATES BATTER DIRECTION FOR BATTERED PILES

FOUNDATION NOTES

FOR PILES, SEE SECTION 450 OF THE STANDARD SPECIFICATIONS.

PILES AT END BENTS 1 & 2 ARE DESIGNED FOR A FACTORED RESISTANCE OF 90 TONS PER PILE.

DRIVE PILES AT END BENTS 1 & 2 TO A REQUIRED DRIVING RESISTANCE OF 150 TONS PER PILE.

STEEL H-PILE POINTS ARE REQUIRED FOR STEEL H-PILES AT END BENTS 1 & 2. FOR STEEL PILE POINTS, SEE SECTION 450 OF THE STANDARD SPECIFICATIONS.

FOR DRILLED PIERS, SEE SECTION 411 OF THE STANDARD SPECIFICATIONS.

DRILLED PIERS AT BENT 1 ARE DESIGNED FOR A FACTORED RESISTANCE OF 745 TONS PER PIER. CHECK FIELD CONDITIONS FOR THE REQUIRED TIP RESISTANCE OF 79 TSF (LEFT) AND 17 TSF (CENTER AND RIGHT).

INSTALL DRILLED PIERS AT BENT 1 TO A TIP ELEVATION NO HIGHER THAN 357 FEET (LEFT) AND 355 FEET (CENTER AND RIGHT) AND WITH THE REQUIRED TIP RESISTANCE.

SPT IS REQUIRED FOR DRILLED PIERS AT BENT 1. FOR SPT TESTING, SEE SECTION 411 OF THE STANDARD SPECIFICATIONS.

DRILLED PIERS AT BENT 2 ARE DESIGNED FOR A FACTORED RESISTANCE OF 745 TONS PER PIER. CHECK FIELD CONDITIONS FOR THE REQUIRED TIP RESISTANCE OF 58 TSF (LEFT) AND 34 TSF (CENTER AND RIGHT).

INSTALL DRILLED PIERS AT BENT 2 TO A TIP ELEVATION NO HIGHER THAN 363 FEET (LEFT) AND 356 FEET (CENTER AND RIGHT) AND WITH THE REQUIRED TIP RESISTANCE.

SPT IS REQUIRED FOR DRILLED PIERS AT BENT 2. FOR SPT TESTING, SEE SECTION 411 OF THE STANDARD SPECIFICATIONS.

CSL TUBES ARE REQUIRED AND CSL TESTING MAY BE REQUIRED FOR DRILLED PIERS. THE ENGINEER WILL DETERMINE THE NEED FOR CSL TESTING. FOR CSL TESTING, SEE SECTION 411 OF THE STANDARD SPECIFICATIONS.

SID INSPECTIONS MAY BE REQUIRED FOR DRILLED PIERS. THE ENGINEER WILL DETERMINE THE NEED FOR SID INSPECTIONS. FOR SID INSPECTIONS, SEE SECTION 411 OF THE STANDARD SPECIFICATIONS.

DRILLED PIER EXCAVATIONS AT BENTS 1 & 2 WILL EXTEND INTO MATERIAL THAT DETERIORATES WHEN EXPOSED TO THE ELEMENTS. CHECK FIELD CONDITIONS FOR THE REQUIRED TIP RESISTANCE AND PLACE CONCRETE IMMEDIATELY AFTER THE EXCAVATION IS COMPLETED.

FOR DRILLED PIERS AT BENTS 1 AND 2, THE REQUIRED SPT N-60 VALUE IS 100 BLOWS PER 0.3 FOOT OR LESS.

NOTE THAT DRILLED PIER EXCAVATIONS MAY ENCOUNTER BOULDERS.

PROJECT NO. U-0071
DURHAM COUNTY
STATION: 138+40.45-LDFEB-

SHEET 2 OF 3

STATE OF NORTH CAROLINA
DEPARTMENT OF TRANSPORTATION
RALEIGH

GENERAL DRAWING
BRIDGE ON -LDFEB- (EAST END CONNECTOR) OVER -Y15- (ANGIER AVE.) AND NSRR SWITCHYARD BETWEEN US 70 AND NC 147

NORTH CAROLINA PROFESSIONAL SEAL 37400 ENGINEER GREGORY M. GILLAND 8/28/13

WETHERILL ENGINEERING
559 Jones Franklin Rd. Suite 164
Raleigh, N.C. 27606
Bus: 919 851 8077
Fax: 919 851 8107
License: F-0377
TRANSPORTATION PLANNING/DESIGN - BRIDGE/STRUCTURE DESIGN
CIVIL/SITE DESIGN - GIS/GPS - CONSTRUCTION OBSERVATION

REVISIONS						SHEET NO.
NO.	BY:	DATE:	NO.	BY:	DATE:	S-376
1			3			TOTAL SHEETS
2			4			671

STR. #9

DRAWN BY : G.M. GILLAND DATE : 3-13-13
CHECKED BY : T.V. ROUNTREE DATE : 5-21-13
DESIGN ENGINEER OF RECORD: G.M. GILLAND DATE : 5-13

P:\2012\U-0071_Sites 3,8 & 9\Structures\DWG_9\U0071_SD_STR9_GD_WEI.dgn
7/8/2013 5:04:19 PM

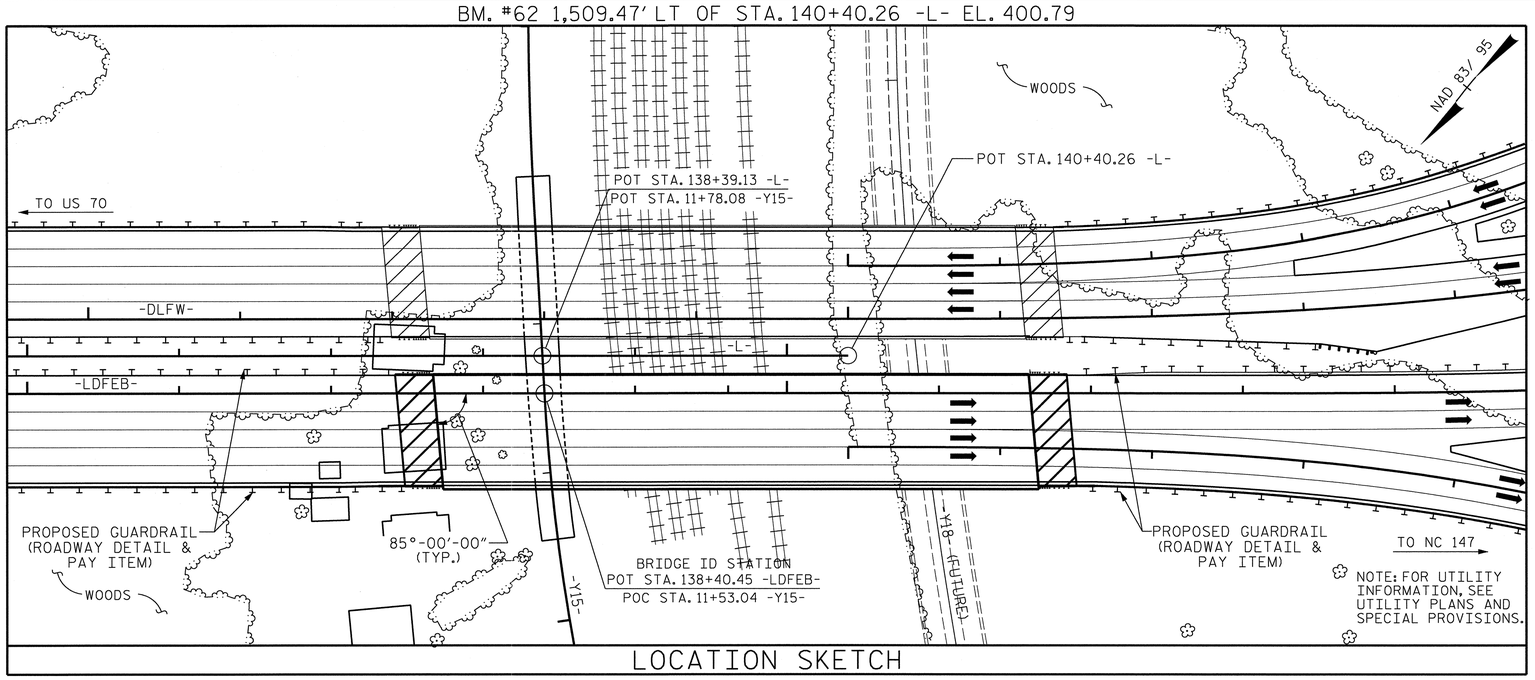

LOCATION SKETCH

NOTES

ASSUMED LIVE LOAD = HL-93 OR ALTERNATE LOADING.

THIS BRIDGE HAS BEEN DESIGNED IN ACCORDANCE WITH THE AASHTO LRFD BRIDGE DESIGN SPECIFICATIONS.

THIS BRIDGE IS LOCATED IN SEISMIC ZONE 1.

FOR OTHER DESIGN DATA AND GENERAL NOTES, SEE SHEET SN.

FOR SUBMITTAL OF WORKING DRAWINGS, SEE SPECIAL PROVISIONS.

FOR FALSEWORK AND FORMWORK, SEE SPECIAL PROVISIONS.

FOR CRANE SAFETY, SEE SPECIAL PROVISIONS.

FOR GROUT FOR STRUCTURES, SEE SPECIAL PROVISIONS.

THE ELEVATION(S) AND CLEARANCE(S) SHOWN ON THE PLANS AT THE POINT(S) OF MINIMUM VERTICAL CLEARANCE ARE FROM THE BEST INFORMATION AVAILABLE. PRIOR TO BEGINNING BRIDGE CONSTRUCTION, VERIFY THE ELEVATION(S) ON THE EXISTING PAVEMENT AND CHECK THE CLEARANCE. REPORT ANY VARIATIONS TO THE ENGINEER. ANY PLAN REVISIONS NECESSARY TO ACHIEVE THE REQUIRED MINIMUM VERTICAL CLEARANCE WILL BE PROVIDED BY THE DEPARTMENT.

THE RAILROAD TRACK TOP OF RAIL ELEVATIONS ON THE PLANS ARE FROM THE BEST INFORMATION AVAILABLE. PRIOR TO BEGINNING BRIDGE CONSTRUCTION, VERIFY THE TOP OF RAIL ELEVATIONS AND REPORT ANY VARIATIONS TO THE ENGINEER. ANY PLAN REVISIONS NECESSARY TO ACHIEVE THE REQUIRED MINIMUM CLEARANCE WILL BE PROVIDED BY THE DEPARTMENT.

FOR TEMPORARY RAILROAD SHORING, SEE SPECIAL PROVISIONS.

THE STRUCTURAL STEEL SHALL BE SUPPORTED DURING ERECTION IN ITS CAMBERED POSITION. ONE EXTERIOR GIRDER AND ITS ADJACENT INTERIOR GIRDER SHALL BE ERECTED WITH ALL DIAPHRAGMS AND LATERAL BRACING BETWEEN THE GIRDERS IN PLACE AND ALL BOLTS TIGHTENED PRIOR TO RELEASE OF THE GIRDERS. THE REMAINING GIRDERS SHALL THEN BE ERECTED WITH DIAPHRAGMS CONNECTING THE GIRDER TO THE ADJACENT ERECTED GIRDER AND ALL BOLTS TIGHTENED BEFORE RELEASING THE GIRDER.

FOR MAINTENANCE AND PROTECTION OF TRAFFIC BENEATH PROPOSED STRUCTURE, SEE SPECIAL PROVISIONS.

REMOVABLE FORMS MAY BE USED IN LIEU OF METAL STAY-IN-PLACE FORMS IN ACCORDANCE WITH ARTICLE 420-3 OF THE STANDARD SPECIFICATIONS.

NEEDLE BEAMS WILL NOT BE ALLOWED UNLESS OTHERWISE CALLED FOR ON THE PLANS OR APPROVED BY THE ENGINEER.

ALL STRUCTURAL STEEL SHALL BE AASHTO M270 GRADE 50W AND PAINTED IN ACCORDANCE WITH SYSTEM 4 OF ARTICLE 442-8 OF THE STANDARD SPECIFICATIONS UNLESS OTHERWISE NOTED ON THE PLANS.

THE CLASS AA CONCRETE IN THE BRIDGE DECK SHALL CONTAIN FLY ASH OR GROUND GRANULATED BLAST FURNACE SLAG AT THE SUBSTITUTION RATE SPECIFIED IN ARTICLE 1024-1 AND IN ACCORDANCE WITH ARTICLES 1024-5 AND 1024-6 OF THE STANDARD SPECIFICATIONS. NO PAYMENT WILL BE MADE FOR THIS SUBSTITUTION AS IT IS CONSIDERED INCIDENTAL TO THE COST OF THE REINFORCED CONCRETE DECK SLAB.

FOR EROSION CONTROL MEASURES SEE EROSION CONTROL PLANS.

FOR PLACING LOAD ON STRUCTURE MEMBERS, SEE SPECIAL PROVISIONS.

TOTAL BILL OF MATERIAL

	FOUNDATION EXCAVATION	4'-0" Ø DRILLED PIER IN SOIL	4'-0" Ø DRILLED PIER NOT IN SOIL	SID INSPECTION	SPT TESTING	CSL TESTING	REINFORCED CONCRETE DECK SLAB	GROOVING BRIDGE FLOORS	CLASS A CONCRETE	BRIDGE APPROACH SLABS	REINFORCING STEEL	SPIRAL COLUMN REINFORCING STEEL	APPROXIMATE STRUCTURAL STEEL	HP 12 X 53 STEEL PILES		STEEL PILE POINTS	CONCRETE BARRIER RAIL	4" SLOPE PROTECTION	POT BEARINGS	ELASTOMERIC BEARINGS	EXPANSION JOINT SEALS	TEMPORARY RAILROAD SHORING
	LUMP SUM	LIN. FT.	LIN. FT.	EACH	EACH	EACH	SQ. FT.	SQ. FT.	CU. YDS.	LUMP SUM	LBS.	LBS.	APPROX. LBS.	NO.	LIN. FT.	EACH	LIN. FT.	SQ. YDS.	LUMP SUM	LUMP SUM	LUMP SUM	LUMP SUM
SUPERSTRUCTURE							30,381	31,149		LUMP SUM			1,371,700				831.69		LUMP SUM	LUMP SUM	LUMP SUM	
END BENT 1									70.9		9,346			9	386	9		768				
BENT 1	LUMP SUM	115.8	46		5				230.5		38,511	7,876										LUMP SUM
BENT 2		109.6	66		5				98.8		30,743	7,256										
END BENT 2									72.3		9,934			9	280	9		575				
TOTAL	LUMP SUM	225.4	112	5	10	1	30,381	31,149	472.5	LUMP SUM	88,534	15,132	1,371,700	18	666	18	831.69	1,343	LUMP SUM	LUMP SUM	LUMP SUM	LUMP SUM

PROJECT NO. U-0071
DURHAM COUNTY
STATION: 138+40.45-LDFEB-

SHEET 3 OF 3

STATE OF NORTH CAROLINA
DEPARTMENT OF TRANSPORTATION
RALEIGH

GENERAL DRAWING
BRIDGE ON -LDFEB- (EAST END CONNECTOR) OVER -Y15- (ANGIER AVE.) AND NSRR SWITCHYARD BETWEEN US 70 AND NC 147

NORTH CAROLINA PROFESSIONAL SEAL 37400 ENGINEER GREGORY M. GILLAND 1-23-14

WETHERILL ENGINEERING
559 Jones Franklin Rd. Suite 164
Raleigh, N.C. 27606
Bus: 919 851 8077
Fax: 919 851 8107
License: F-0377
TRANSPORTATION PLANNING/DESIGN - BRIDGE/STRUCTURE DESIGN
CIVIL/SITE DESIGN - GIS/GPS - CONSTRUCTION OBSERVATION

REVISIONS						SHEET NO.
NO.	BY:	DATE:	NO.	BY:	DATE:	S-377
1			3			TOTAL SHEETS
2			4			671

DRAWN BY : G.M. GILLAND DATE : 5-20-13
CHECKED BY : T.V. ROUNTREE DATE : 5-21-13
DESIGN ENGINEER OF RECORD: G.M. GILLAND DATE : 5-13

STR. #9

P:\2012\U-0071 Sites 3,8 & 9\Structures\DWG_9\U0071_SD_STR9_GD_WE1.dgn
1/28/2014 1:18:27 PM

LOAD AND RESISTANCE FACTOR RATING (LRFR) SUMMARY FOR STEEL GIRDERS

LEVEL		VEHICLE	WEIGHT (W) (TONS)	CONTROLLING LOAD RATING (#)	MINIMUM RATING FACTORS (RF) *	TONS = W × RF *	STRENGTH I LIMIT STATE											SERVICE II LIMIT STATE						COMMENT NUMBER
								MOMENT					SHEAR						MOMENT					
							LIVE-LOAD FACTORS (γ_{LL})	DISTRIBUTION FACTORS (DF) *	RATING FACTOR *	SPAN	GIRDER LOCATION	DISTANCE FROM LEFT END OF SPAN (ft) *	DISTRIBUTION FACTORS (DF)	RATING FACTOR *	SPAN	GIRDER LOCATION	DISTANCE FROM LEFT END OF SPAN (ft) *	LIVE-LOAD FACTORS (γ_{LL})	DISTRIBUTION FACTORS (DF)	RATING FACTOR *	SPAN	GIRDER LOCATION	DISTANCE FROM LEFT END OF SPAN (ft) *	
DESIGN LOAD RATING		HL-93 (INVENTORY)	N/A	1	1.07	--	1.75	0.810	1.41	B	E	0.00	0.952	1.07	B	I	9.30	1.30	0.810	1.55	B	E	0.00	
		HL-93 (OPERATING)	N/A		1.39	--	1.35	0.810	1.82	B	E	0.00	0.952	1.39	B	I	9.30	1.00	0.810	2.01	B	E	0.00	
		HS-20 (INVENTORY)	36.000	2	1.74	62.64	1.75	0.810	3.02	B	E	93.00	0.952	1.74	B	I	9.30	1.30	0.810	2.93	B	E	93.00	
		HS-20 (OPERATING)	36.000		2.26	81.36	1.35	0.810	3.91	B	E	93.00	0.952	2.26	B	I	9.30	1.00	0.810	3.81	B	E	93.00	
LEGAL LOAD RATING	SINGLE VEHICLE (SV)	SH	12.500		6.11	76.38	1.40	0.810	9.91	B	E	93.00	0.952	6.11	B	I	9.30	1.30	0.810	7.70	B	E	93.00	
		S3C	21.500		3.56	76.54	1.40	0.810	5.80	B	E	93.00	0.952	3.56	B	I	176.70	1.30	0.810	4.50	B	E	93.00	
		S3A	22.750		3.37	76.67	1.40	0.810	5.49	B	E	93.00	0.952	3.37	B	I	9.30	1.30	0.810	4.27	B	E	93.00	
		S4A	26.750		2.89	77.31	1.40	0.810	4.79	B	E	93.00	0.952	2.89	B	I	9.30	1.30	0.810	3.72	B	E	93.00	
		S5A	30.500		2.56	78.08	1.40	0.810	4.22	B	E	93.00	0.952	2.56	B	I	9.30	1.30	0.810	3.28	B	E	93.00	
		S6A	34.500		2.28	78.66	1.40	0.810	3.79	B	E	93.00	0.952	2.28	B	I	9.30	1.30	0.810	2.95	B	E	93.00	
		S7B	38.500		2.07	79.70	1.40	0.810	3.44	B	E	93.00	0.952	2.07	B	I	9.30	1.30	0.810	2.67	B	E	93.00	
		S7A	40.000		2.03	81.20	1.40	0.810	3.37	B	E	93.00	0.952	2.03	B	I	9.30	1.30	0.810	2.62	B	E	93.00	
	TRUCK TRACTOR SEMI-TRAILER (TTST)	T4A	28.250		2.76	77.97	1.40	0.810	4.66	B	E	93.00	0.952	2.76	B	I	176.70	1.30	0.810	3.62	B	E	93.00	
		T5B	32.000		2.48	79.36	1.40	0.810	4.10	B	E	93.00	0.952	2.48	B	I	9.30	1.30	0.810	3.19	B	E	93.00	
		T6A	36.000		2.23	80.28	1.40	0.810	3.72	B	E	93.00	0.952	2.23	B	I	9.30	1.30	0.810	2.89	B	E	93.00	
		T7A	40.000		2.03	81.20	1.40	0.810	3.42	B	E	93.00	0.952	2.03	B	I	9.30	1.30	0.810	2.66	B	E	93.00	
		T7B	40.000	3	2.00	80.00	1.40	0.810	3.54	B	E	0.00	0.952	2.00	B	I	9.30	1.30	0.810	2.77	B	E	93.00	
FATIGUE		HL-93 (INVENTORY)	γ_{LL}=0.75	--	--																			

LOAD FACTORS:

DESIGN LOAD RATING FACTORS	LIMIT STATE	γ_{DC}	γ_{DW}
	STRENGTH I	1.25	1.50
	SERVICE II	1.00	1.00

NOTES:

MINIMUM RATING FACTORS ARE BASED ON THE STRENGTH I AND SERVICE II LIMIT STATES.

ALLOWABLE STRESS FOR SERVICE II LIMIT STATE ARE AS REQUIRED FOR DESIGN.

(#) CONTROLLING LOAD RATING

(1) DESIGN LOAD RATING (HL-93)

(2) DESIGN LOAD RATING (HS-20)

(3) LEGAL LOAD RATING **

** SEE CHART FOR VEHICLE TYPE

GIRDER LOCATION

I - INTERIOR GIRDER
E - EXTERIOR GIRDER

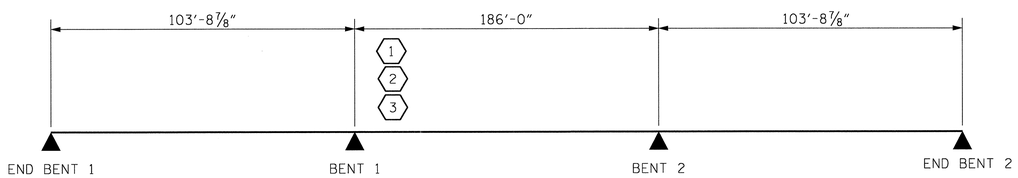

LRFR SUMMARY

PROJECT NO. U-0071
DURHAM COUNTY
STATION: 138+40.45-LDFEB-

STATE OF NORTH CAROLINA
DEPARTMENT OF TRANSPORTATION
RALEIGH

STANDARD

LRFR SUMMARY FOR STEEL GIRDERS
(INTERSTATE TRAFFIC)

REVISIONS						SHEET NO.
NO.	BY:	DATE:	NO.	BY:	DATE:	S-378
1			3			TOTAL SHEETS
2			4			671

NORTH CAROLINA PROFESSIONAL SEAL 37400 ENGINEER GREGORY M. GILLAND 9/18/13

WETHERILL ENGINEERING
559 Jones Franklin Rd. Suite 164
Raleigh, N.C. 27606
Bus: 919 851 8077
Fax: 919 851 8107
License: F-0377

TRANSPORTATION PLANNING/DESIGN - BRIDGE/STRUCTURE DESIGN
CIVIL/SITE DESIGN - GIS/GPS - CONSTRUCTION OBSERVATION

ASSEMBLED BY : J. PENDERGRAFT		DATE : 5-8-13	
CHECKED BY : G. M. GILLAND		DATE : 5-9-13	
DESIGN ENGINEER OF RECORD : GMG		DATE : 5-13	
DRAWN BY : MAA 1/08	REV. 11/12/08RR	MAA/GM	
CHECKED BY : GM/DI 2/08	REV. 10/1/11	MAA/GM	

P:\2012\U-0071 Sites 3,8 & 9\Structures\DWG_9\U0071_SD_STR9_LRFR_WE1.dgn
7/8/2013 5:05:17 PM

STD. NO. LRFR4 STR #9

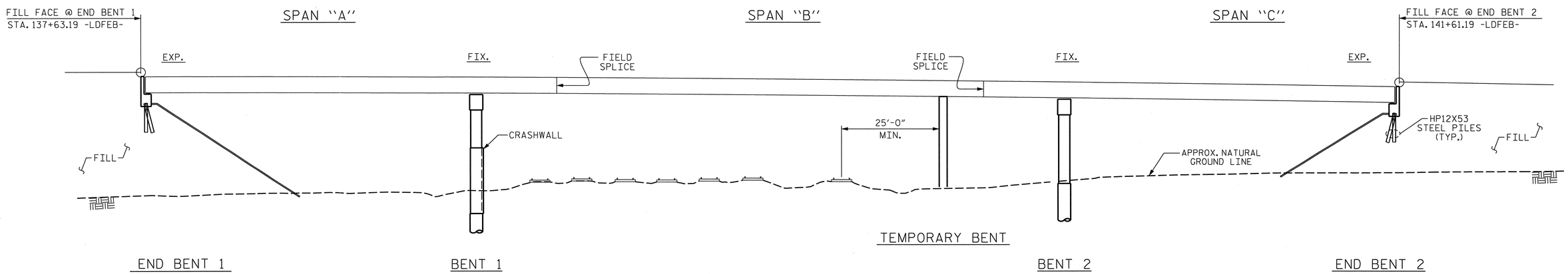

SECTION ALONG -LDFEB-

SCHEMATIC ELEVATION VIEW

ERECTION NOTES

THE STRUCTURAL STEEL SHALL BE SUPPORTED DURING ERECTION IN ITS CAMBERED POSITION. ONE EXTERIOR GIRDER AND ITS ADJACENT INTERIOR GIRDER SHALL BE ERECTED WITH ALL DIAPHRAGMS AND LATERAL BRACING BETWEEN THE GIRDERS IN PLACE AND ALL BOLTS TIGHTENED PRIOR TO RELEASE OF THE GIRDERS. THE REMAINING GIRDERS SHALL THEN BE ERECTED WITH DIAPHRAGMS CONNECTING THE GIRDER TO THE ADJACENT ERECTED GIRDER AND ALL BOLTS TIGHTENED BEFORE RELEASING THE GIRDER.

A MINIMUM OF ONE TEMPORARY BENTS SHALL BE USED.

TEMPORARY BENTS SHALL REMAIN IN PLACE UNTIL ALL CROSSFRAMES AND LATERAL BRACING ARE IN PLACE AND HIGH STRENGTH BOLTS TIGHTENED.

TEMPORARY BENTS SHALL PROVIDE BEARING AT CONNECTOR PLATE LOCATIONS.

FOR TEMPORARY BENT, SEE SPECIAL PROVISIONS.

PLANS FOR TEMPORARY BENTS, ERECTION SEQUENCE AND TEMPORARY BENT REMOVAL SHALL BE SUBMITTED TO THE ENGINEER FOR REVIEW.

TEMPORARY BENTS SHALL BE DESIGNED BY A PROFESSIONAL ENGINEER REGISTERED IN THE STATE OF NORTH CAROLINA.

DURING THE GIRDER ERECTION PROCEDURE, THE CONTRACTOR IS RESPONSIBLE FOR PROVIDING TEMPORARY LATERAL BRACING AND OTHER MEANS OF SUPPORT, AS REQUIRED, TO ENSURE STABILITY OF THE GIRDERS, AVOID UPLIFT OF THE GIRDERS AT THE TEMPORARY ERECTION BENTS AND MAINTAIN PLUMBNESS OF THE GIRDER WEBS.

THE CONTRACTOR'S ERECTION PLAN SHALL INCLUDE A METHOD OF TEMPORARY BENT REMOVAL THAT WILL UNIFORMLY APPLY THE STRUCTURAL STEEL WEIGHT TO THE BRIDGE CROSSFRAMES.

THE CONTRACTOR MAY SUBMIT ALTERNATE ERECTION METHODS. PLANS FOR SUCH ERECTION METHODS SHALL BE APPROVED BY THE ENGINEER.

PROJECT NO. U-0071
DURHAM COUNTY
STATION: 138+40.45-LDFEB-

STATE OF NORTH CAROLINA
DEPARTMENT OF TRANSPORTATION
RALEIGH

GIRDER ERECTION DETAILS

NORTH CAROLINA PROFESSIONAL SEAL 37400 ENGINEER GREGORY M. GILLAND 1-28-14

WETHERILL ENGINEERING
559 Jones Franklin Rd. Suite 164
Raleigh, N.C. 27606
Bus: 919 851 8077
Fax: 919 851 8107
License: F-0377
TRANSPORTATION PLANNING/DESIGN - BRIDGE/STRUCTURE DESIGN
CIVIL/SITE DESIGN - GIS/GPS - CONSTRUCTION OBSERVATION

REVISIONS						
NO.	BY:	DATE:	NO.	BY:	DATE:	
1			3			
2			4			

SHEET NO. S-379
TOTAL SHEETS 671

STR. #9

DRAWN BY :	G.M. GILLAND	DATE :	1-18-14
CHECKED BY :	CHARLES HUNT	DATE :	1-27-14
DESIGN ENGINEER OF RECORD:	G.M. GILLAND	DATE :	1-14

P:\2012\U-0071 Sites 3,8 & 9\Structures\DWG_9\U0071_SD_STR9_ED_WEI.dgn
1/28/2014 1:19:17 PM

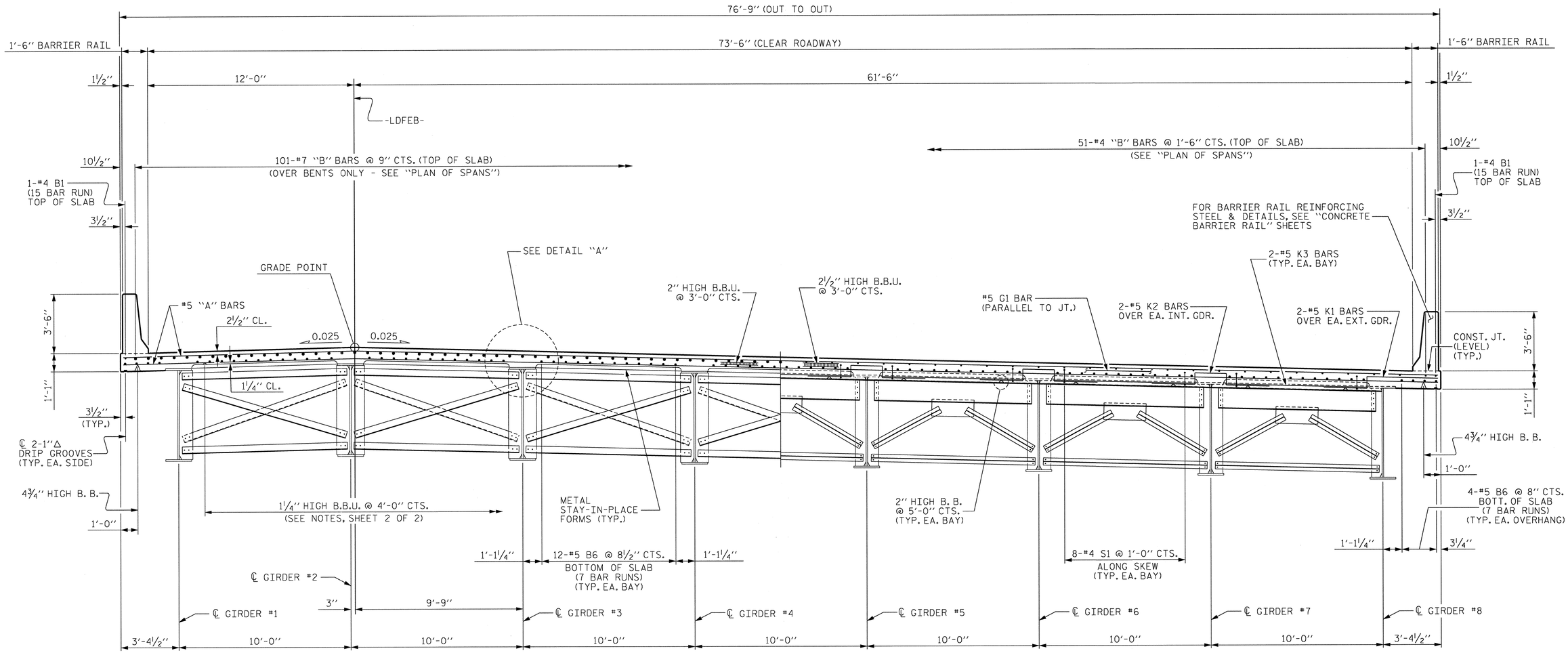

HALF TYPICAL SECTION

SHOWING BENT DIAPHRAGMS (D2)

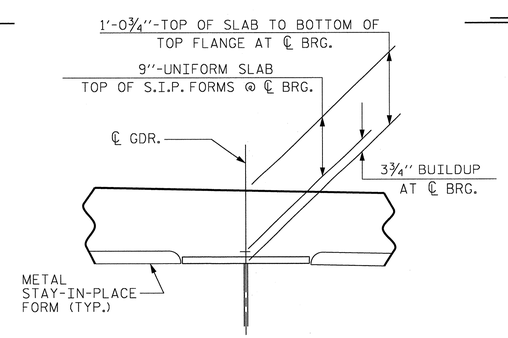

DETAIL "A"

HALF TYPICAL SECTION

SHOWING END BENT DIAPHRAGMS (D1)

PROJECT NO. U-0071

DURHAM COUNTY

STATION: 138+40.45-LDFEB-

SHEET 1 OF 2

STATE OF NORTH CAROLINA
DEPARTMENT OF TRANSPORTATION
RALEIGH

SUPERSTRUCTURE

TYPICAL SECTION

REVISIONS						SHEET NO.
NO.	BY:	DATE:	NO.	BY:	DATE:	S-388
1			3			TOTAL SHEETS
2			4			671

STR. #9

DRAWN BY : J.M. BRITT DATE : 1-17-13
CHECKED BY : G.M. GILLAND DATE : 5-8-13
DESIGN ENGINEER OF RECORD: G.M. GILLAND DATE : 5-13

NORTH CAROLINA PROFESSIONAL SEAL 037400 ENGINEER GREGORY M. GILLAND 7/10/13

WETHERILL ENGINEERING
559 Jones Franklin Rd. Suite 164
Raleigh, N.C. 27606
Bus: 919 851 8077
Fax: 919 851 8107
License: F-0377

TRANSPORTATION PLANNING/DESIGN - BRIDGE/STRUCTURE DESIGN
CIVIL/SITE DESIGN - GIS/GPS - CONSTRUCTION OBSERVATION

P:\2012\U-0071 Sites 3,8 & 9\Structures\DWG_9\U00r1_SD_STR9_TS_WE1.dgn
7/8/2013 5:06:15 PM

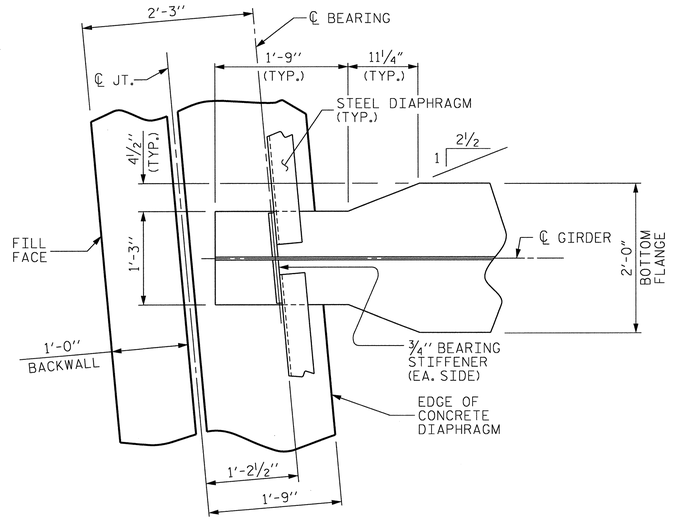

PLAN @ END BENT

END BENT 1 SHOWN, END BENT 2 SIMILAR

NOTES :

PROVIDE 1¼" HIGH BEAM BOLSTERS UPPER AT 4'-0" CTS. ATOP THE METAL STAY-IN-PLACE FORMS TO SUPPORT THE BOTTOM MAT OF "A" BARS. WHEN USING REMOVABLE FORMS, PROVIDE CONTINUOUS HIGH CHAIRS FOR METAL DECK (C.H.C.M.) @ 4'-0" CTS. WITH A HEIGHT TO SUPPORT THE BOTTOM MAT OF "A" BARS A CLEAR DISTANCE OF 2½" ABOVE THE TOP OF THE REMOVABLE FORM.

METAL STAY-IN-PLACE FORMS SHALL NOT BE WELDED TO GIRDER FLANGES IN THE ZONES REQUIRING CHARPY V-NOTCH TEST. SEE STRUCTURAL STEEL DETAIL SHEETS.

PREVIOUSLY CAST CONCRETE IN A CONTINUOUS UNIT SHALL HAVE ATTAINED A MINIMUM COMPRESSIVE STRENGTH OF 3,000 PSI BEFORE ADDITIONAL CONCRETE IS CAST IN THE UNIT.

BARRIER RAIL IN A CONTINUOUS UNIT SHALL NOT BE CAST UNTIL ALL SLAB CONCRETE IN THE UNIT HAS BEEN CAST AND HAS REACHED A MINIMUM COMPRESSIVE STRENGTH OF 3,000 PSI.

STRUCTURAL STEEL ERECTION IN A CONTINUOUS UNIT SHALL BE COMPLETE BEFORE FALSEWORK OR FORMS ARE PLACED ON THE UNIT.

#5 G1 BAR MAY BE SHIFTED SLIGHTLY, AS NECESSARY, TO CLEAR REINFORCING STEEL AND STIRRUPS.

THE CONTRACTOR MAY, WHEN NECESSARY, PROPOSE A SCHEME FOR AVOIDING INTERFERENCE BETWEEN METAL STAY-IN-PLACE FORM SUPPORTS OR FORMS AND GIRDER STIFFENERS OR CONNECTOR PLATES. THE PROPOSAL SHALL BE INDICATED, AS APPROPRIATE, ON EITHER THE STEEL WORKING DRAWINGS OR THE METAL STAY-IN-PLACE FORM WORKING DRAWINGS.

THE CONTRACTOR SHALL ADJUST THE GIRDER BUILDUPS AS NECESSARY TO INCORPORATE A MAXIMUM PERMISSIBLE VARIATION IN POT BEARING DEPTH OF ½", SEE SPECIAL PROVISION FOR POT BEARINGS.

FOR EXPANSION JOINT SEAL AT END BENTS, SEE SPECIAL PROVISIONS.

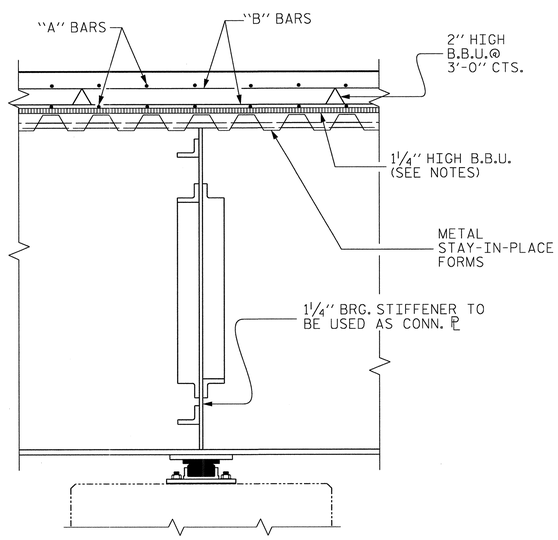

SECTION THRU BENT DIAPHRAGM (D2)

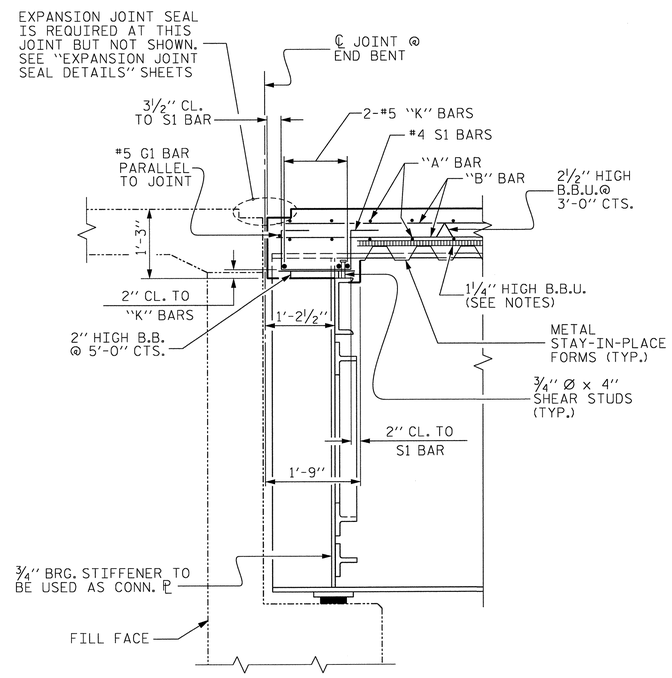

SECTION THRU END BENT DIAPHRAGM (D1)

SECTION TAKEN NORMAL TO FILL FACE

PROJECT NO. U-0071
DURHAM COUNTY
STATION: 138+40.45-LDFEB-

SHEET 2 OF 2

STATE OF NORTH CAROLINA
DEPARTMENT OF TRANSPORTATION
RALEIGH

SUPERSTRUCTURE
TYPICAL SECTION

NORTH CAROLINA PROFESSIONAL SEAL 037400 ENGINEER GREGORY M. GILLAND 8/8/13

WETHERILL ENGINEERING
559 Jones Franklin Rd. Suite 164
Raleigh, N.C. 27606
Bus: 919 851 8077
Fax: 919 851 8107
License: F-0377
TRANSPORTATION PLANNING/DESIGN ~ BRIDGE/STRUCTURE DESIGN
CIVIL/SITE DESIGN ~ GIS/GPS ~ CONSTRUCTION OBSERVATION

REVISIONS						SHEET NO.
NO.	BY:	DATE:	NO.	BY:	DATE:	S-381
1			3			TOTAL SHEETS
2			4			671

DRAWN BY : J.M. BRITT DATE : 1-22-13
CHECKED BY : G.M. GILLAND DATE : 5-8-13
DESIGN ENGINEER OF RECORD: G.M. GILLAND DATE : 5-13

P:\2012\U-0071 Sites 3,8 & 9\Structures\DWG_9\U0071_SD_STR9_TS_WEI.dgn
7/8/2013 5:06:34 PM

STR. #9

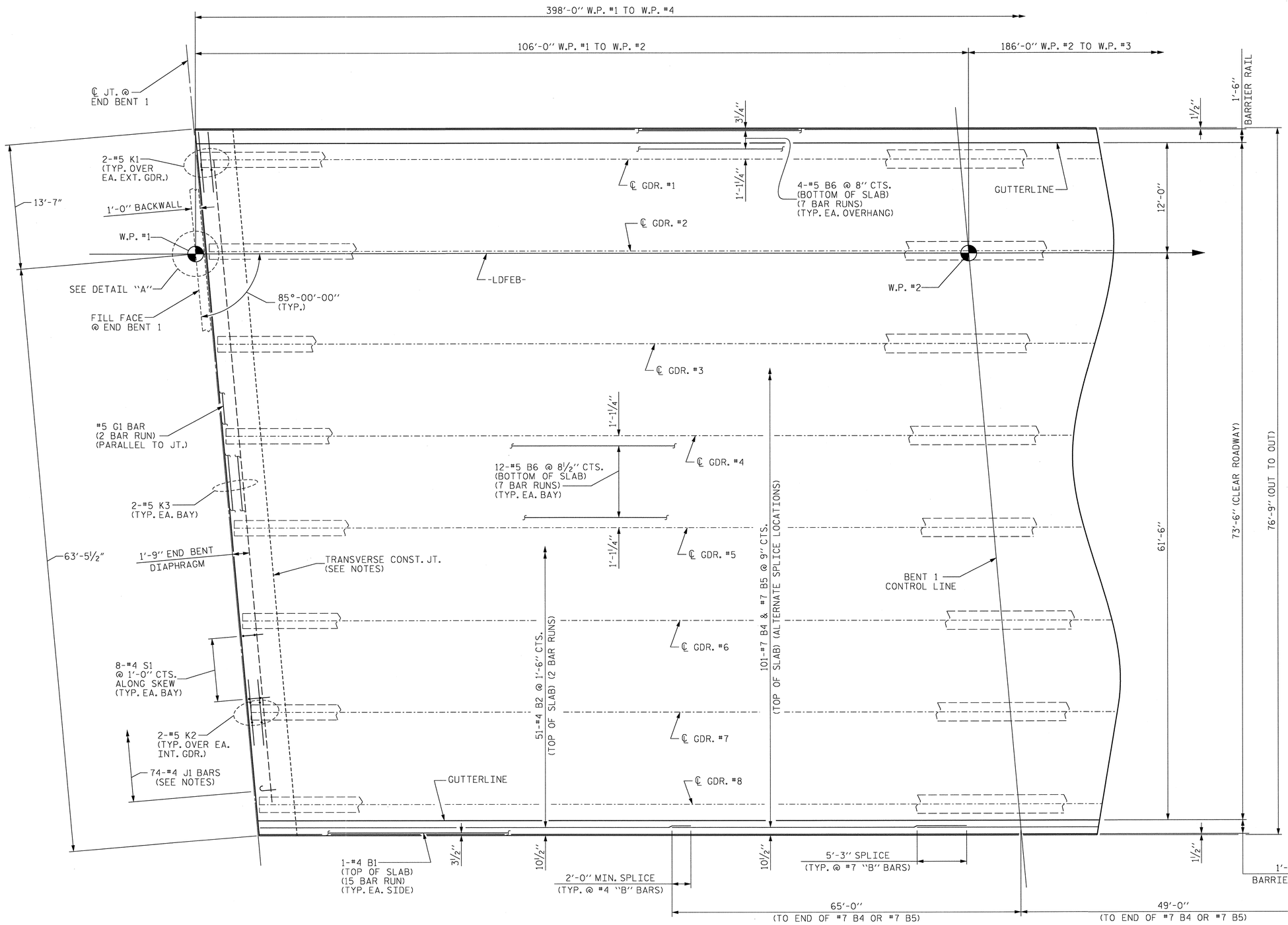

PARTIAL PLAN OF SPAN

NOTES :

FOR BARRIER RAIL REINFORCING STEEL, SEE "CONCRETE BARRIER RAIL" SHEETS.

FOR TRANSVERSE CONSTRUCTION JOINT LOCATIONS, SEE "BILL OF MATERIAL" SHEET.

FOR PLACEMENT OF TOP & BOTTOM "A" BARS, SEE "A" BAR PLACEMENT DETAILS" SHEET.

THE QUANTITY OF #4 J1 BARS ON THE BILL OF MATERIAL IS BASED ON 1'-0" CENTERS. J1 BARS SHALL BE PLACED AT EACH VERTICAL STUD ANCHOR BOLT. IN THE EVENT THAT THE NUMBER OF VERTICAL STUD ANCHORS EXCEEDS THE NUMBER OF J1 BARS SPECIFIED, ADDITIONAL J1 BARS WILL NOT BE REQUIRED.

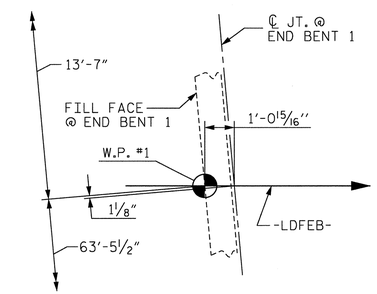

DETAIL "A"

PROJECT NO. U-0071

DURHAM COUNTY

STATION: 138+40.45-LDFEB-

SHEET 1 OF 3

STATE OF NORTH CAROLINA
DEPARTMENT OF TRANSPORTATION
RALEIGH

SUPERSTRUCTURE

PLAN OF SPANS

(SPAN "A")

REVISIONS						SHEET NO.
NO.	BY:	DATE:	NO.	BY:	DATE:	S-382
1			3			TOTAL SHEETS
2			4			671

STR. #9

NORTH CAROLINA PROFESSIONAL SEAL 037400 ENGINEER GREGORY M. GILLAND 6/18/13

WETHERILL ENGINEERING
559 Jones Franklin Rd. Suite 164
Raleigh, N.C. 27606
Bus: 919 851 8077
Fax: 919 851 8107
License: F-0377

TRANSPORTATION PLANNING/DESIGN - BRIDGE/STRUCTURE DESIGN
CIVIL/SITE DESIGN - GIS/GPS - CONSTRUCTION OBSERVATION

DRAWN BY : J.M. BRITT DATE : 3-6-13
CHECKED BY : G.M. GILLAND DATE : 4-30-13
DESIGN ENGINEER OF RECORD: G.M. GILLAND DATE : 5-13

P:\2012\U-0071 Sites 3,8 & 9\Structures\DWG_9\U0071_SD_STR9_PS_WE1.dgn
7/8/2013 5:07:39 PM

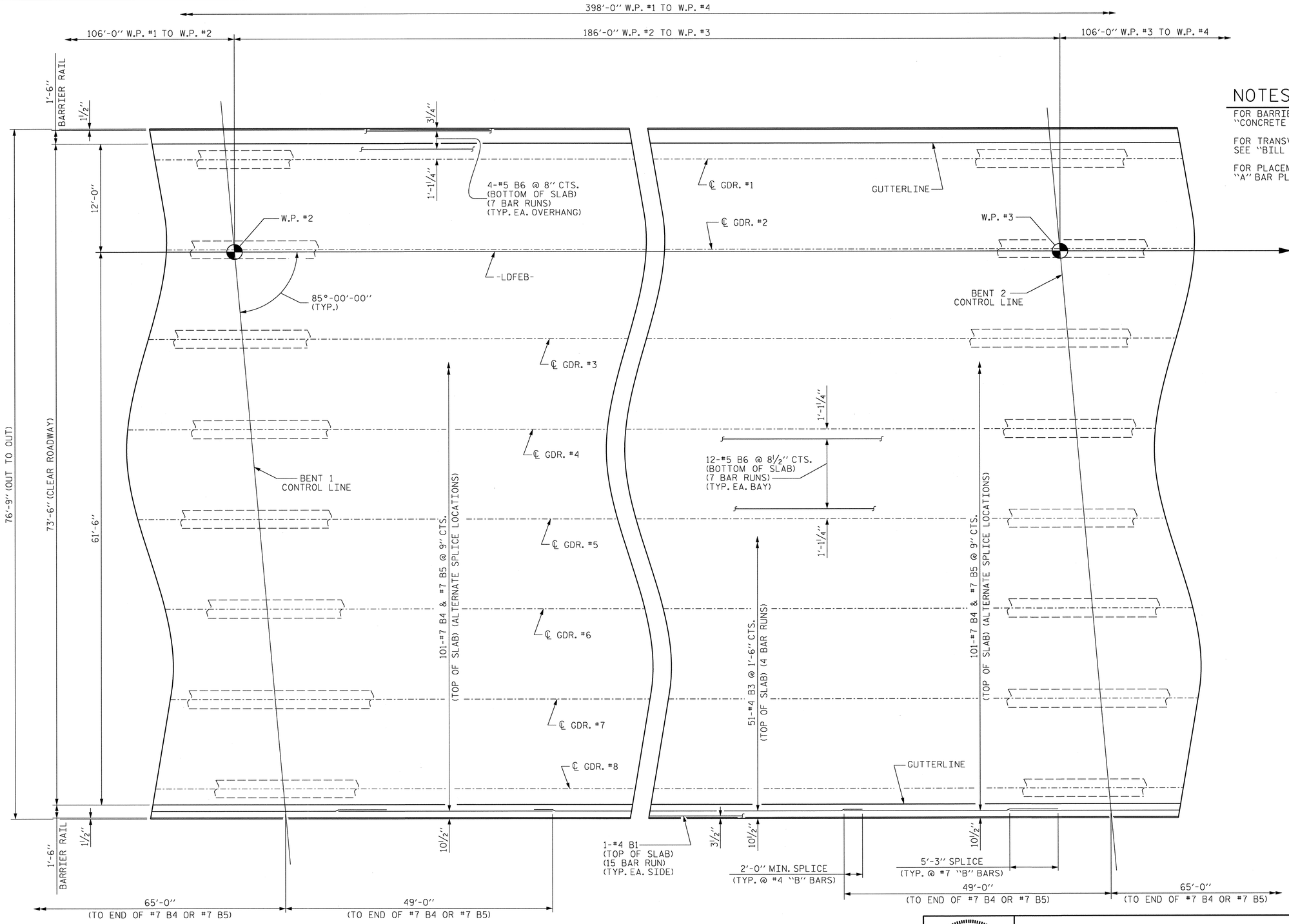

NOTES :

FOR BARRIER RAIL REINFORCING STEEL, SEE "CONCRETE BARRIER RAIL" SHEETS.

FOR TRANSVERSE CONSTRUCTION JOINT LOCATIONS, SEE "BILL OF MATERIAL" SHEET.

FOR PLACEMENT OF TOP & BOTTOM "A" BARS, SEE "A" BAR PLACEMENT DETAILS" SHEET.

PROJECT NO. U-0071
DURHAM COUNTY
STATION: 138+40.45-LDFEB-

SHEET 2 OF 3

STATE OF NORTH CAROLINA
DEPARTMENT OF TRANSPORTATION
RALEIGH

SUPERSTRUCTURE

PLAN OF SPANS

(SPAN "B")

PARTIAL PLAN OF SPAN

NORTH CAROLINA PROFESSIONAL SEAL 037400 ENGINEER GREGORY M. GILLAND 5/13/13

WETHERILL ENGINEERING
559 Jones Franklin Rd. Suite 164
Raleigh, N.C. 27606
Bus: 919 851 8077
Fax: 919 851 8107
License: F-0377

TRANSPORTATION PLANNING/DESIGN - BRIDGE/STRUCTURE DESIGN
CIVIL/SITE DESIGN - GIS/GPS - CONSTRUCTION OBSERVATION

DRAWN BY : J.M. BRITT	DATE : 3-6-13		
CHECKED BY : G.M. GILLAND	DATE : 4-30-13		
DESIGN ENGINEER OF RECORD: G.M. GILLAND	DATE : 5-13		

REVISIONS						SHEET NO.
NO.	BY:	DATE:	NO.	BY:	DATE:	S-383
1			3			TOTAL SHEETS
2			4			671

STR. #9

P:\2012\U-0071 Sites 3,8 & 9\Structures\DWG_9\U0071_SD_STR9_PS_WE1.dgn
7/8/2013 5:07:56 PM

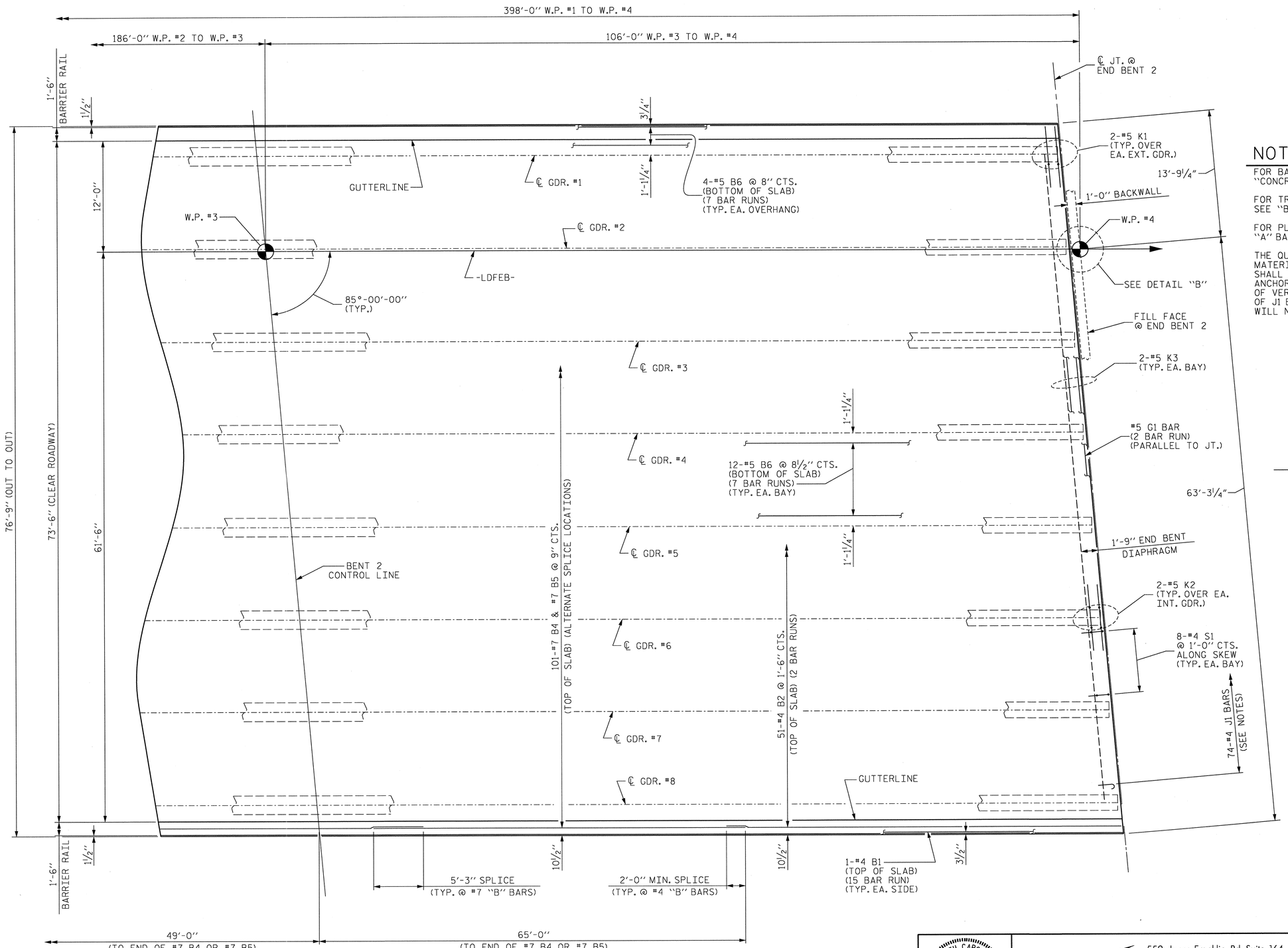

PARTIAL PLAN OF SPAN

NOTES :

FOR BARRIER RAIL REINFORCING STEEL, SEE "CONCRETE BARRIER RAIL" SHEETS.

FOR TRANSVERSE CONSTRUCTION JOINT LOCATIONS, SEE "BILL OF MATERIAL" SHEET.

FOR PLACEMENT OF TOP & BOTTOM "A" BARS, SEE "A" BAR PLACEMENT DETAILS" SHEET.

THE QUANTITY OF #4 J1 BARS ON THE BILL OF MATERIAL IS BASED ON 1'-0" CENTERS. J1 BARS SHALL BE PLACED AT EACH VERTICAL STUD ANCHOR BOLT. IN THE EVENT THAT THE NUMBER OF VERTICAL STUD ANCHORS EXCEEDS THE NUMBER OF J1 BARS SPECIFIED, ADDITIONAL J1 BARS WILL NOT BE REQUIRED.

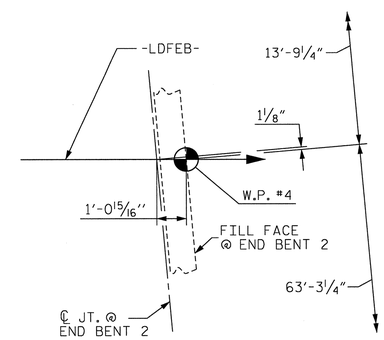

DETAIL "B"

PROJECT NO. U-0071

DURHAM COUNTY

STATION: 138+40.45-LDFEB-

SHEET 3 OF 3

STATE OF NORTH CAROLINA
DEPARTMENT OF TRANSPORTATION
RALEIGH

SUPERSTRUCTURE

PLAN OF SPANS

(SPAN "C")

REVISIONS						SHEET NO.
NO.	BY:	DATE:	NO.	BY:	DATE:	S-384
1			3			TOTAL SHEETS
2			4			671

STR. #9

NORTH CAROLINA PROFESSIONAL SEAL 037400 ENGINEER GREGORY M. GILLAND 7/18/13

WETHERILL ENGINEERING
559 Jones Franklin Rd. Suite 164
Raleigh, N.C. 27606
Bus: 919 851 8077
Fax: 919 851 8107
License: F-0377

TRANSPORTATION PLANNING/DESIGN - BRIDGE/STRUCTURE DESIGN
CIVIL/SITE DESIGN - GIS/GPS - CONSTRUCTION OBSERVATION

DRAWN BY : J.M. BRITT DATE : 3-6-13
CHECKED BY : G.M. GILLAND DATE : 4-30-13
DESIGN ENGINEER OF RECORD: G.M. GILLAND DATE : 5-13

P:\2012\U-0071 Sites 3,8 & 9\Structures\DWG_9\U001_SD_STR9_PS_WE1.dgn
7/18/2013 5:08:20 PM

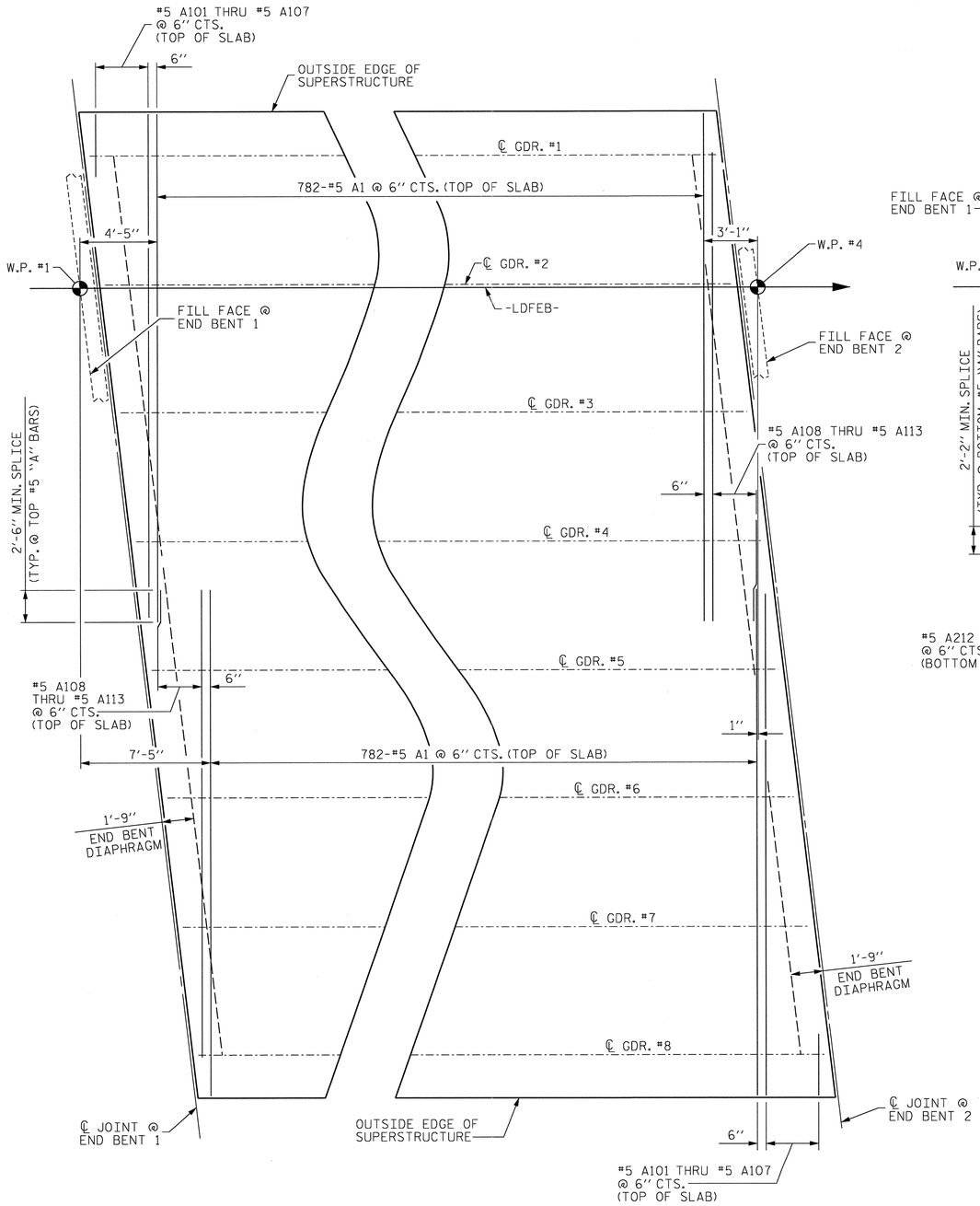

TOP "A" BAR PLACEMENT DETAIL

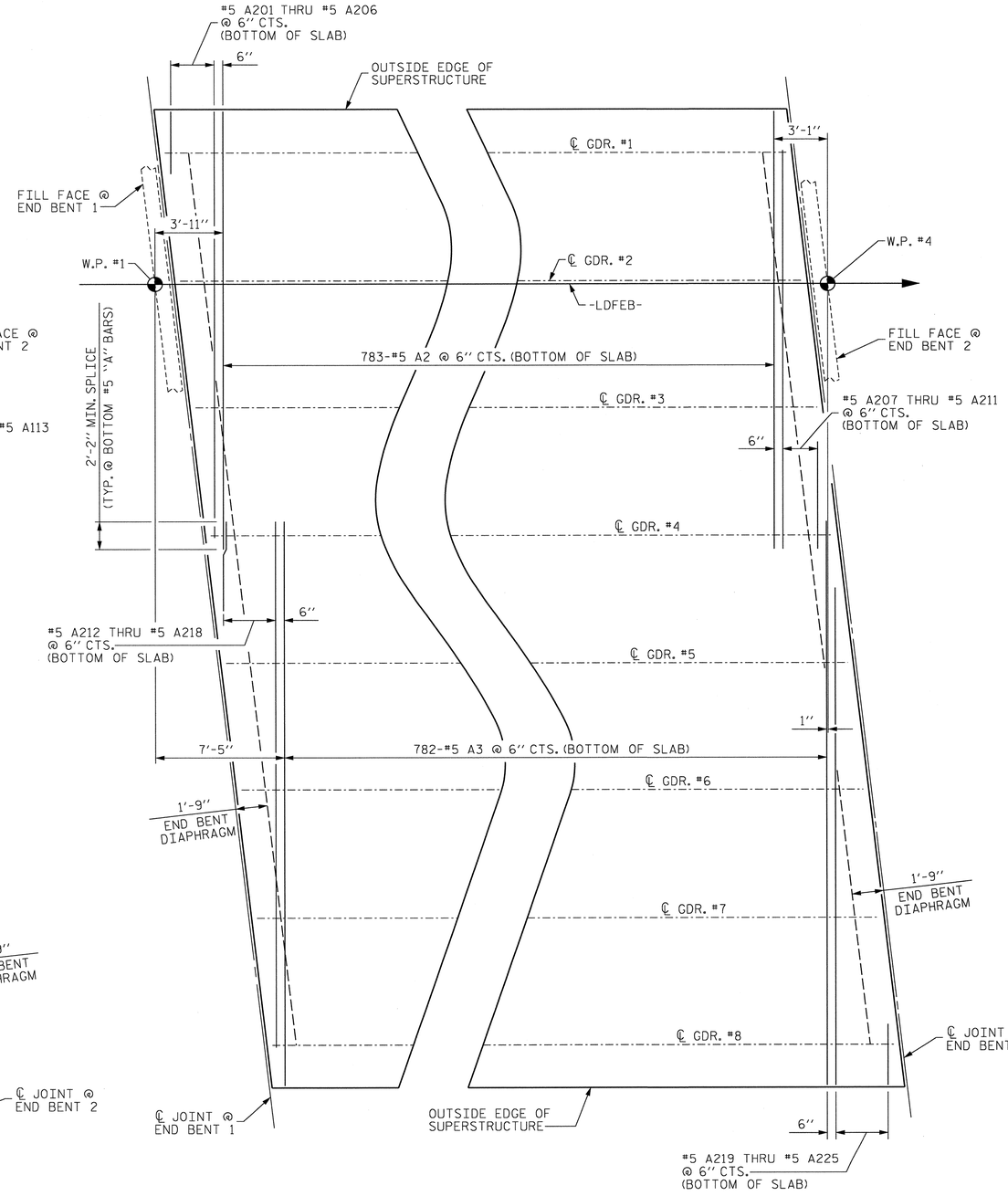

BOTTOM "A" BAR PLACEMENT DETAIL

PROJECT NO. U-0071
DURHAM COUNTY
STATION: 138+40.45-LDFEB-

STATE OF NORTH CAROLINA
DEPARTMENT OF TRANSPORTATION
RALEIGH

SUPERSTRUCTURE

"A" BAR PLACEMENT DETAILS

NORTH CAROLINA PROFESSIONAL SEAL 037400 ENGINEER GREGORY M. GILLAND 6/19/13

WETHERILL ENGINEERING
559 Jones Franklin Rd. Suite 164
Raleigh, N.C. 27606
Bus: 919 851 8077
Fax: 919 851 8107
License: F-0377
TRANSPORTATION PLANNING/DESIGN - BRIDGE/STRUCTURE DESIGN
CIVIL/SITE DESIGN - GIS/GPS - CONSTRUCTION OBSERVATION

REVISIONS						SHEET NO.
NO.	BY:	DATE:	NO.	BY:	DATE:	S-385
1			3			TOTAL SHEETS
2			4			671

STR. #9

DRAWN BY : J.M. BRITT DATE : 3-6-13
CHECKED BY : G.M. GILLAND DATE : 4-29-13
DESIGN ENGINEER OF RECORD: G.M. GILLAND DATE : 5-13

P:\2012\U-0071_Sites 3,8 & 9\Structures\DWG_9\U0071_SD_STR9_PS_WE1.dgn
7/8/2013 5:08:40 PM

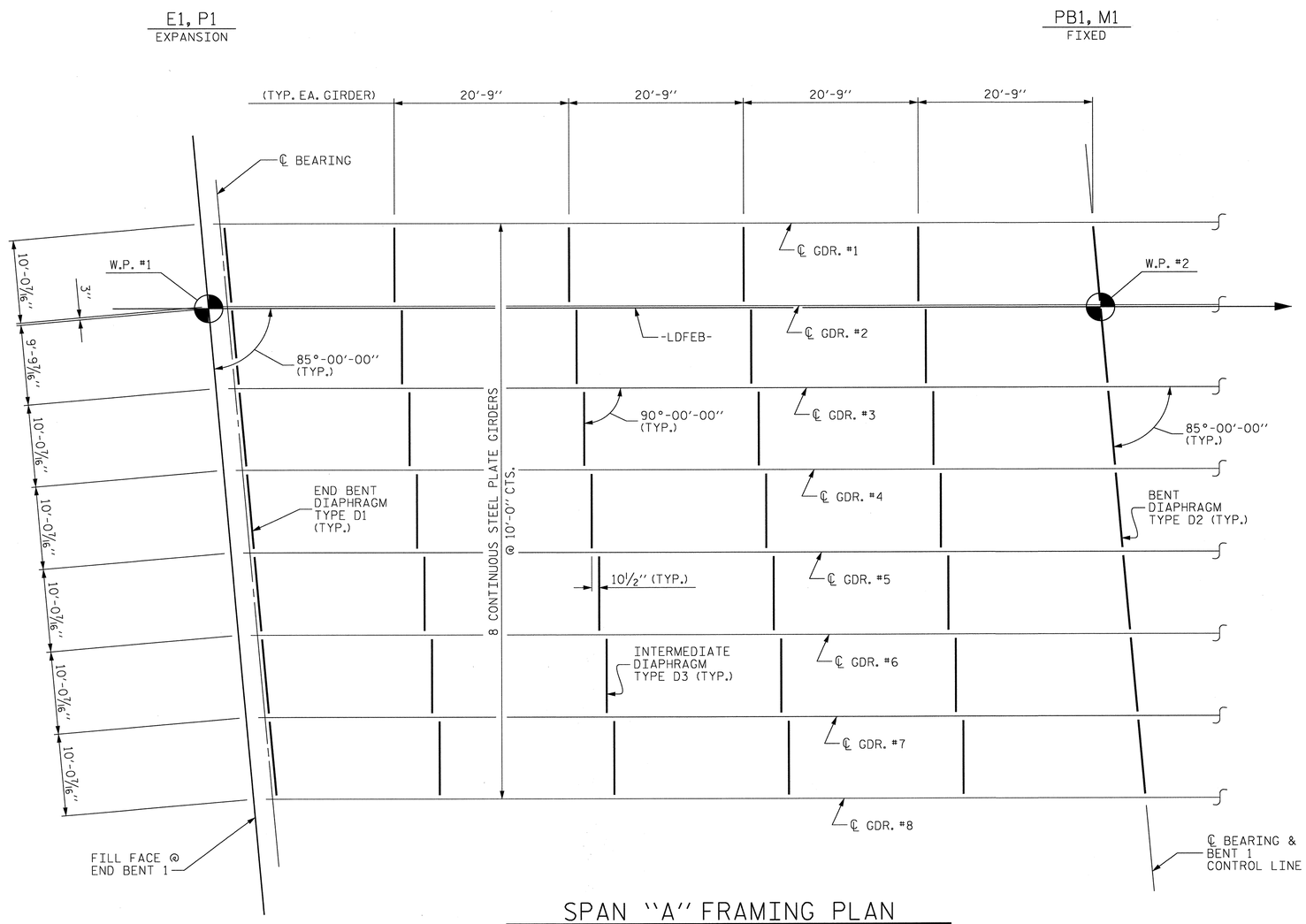

SPAN "A" FRAMING PLAN

PROJECT NO. U-0071
DURHAM COUNTY
STATION: 138+40.45-LDFEB-

SHEET 1 OF 3

STATE OF NORTH CAROLINA
DEPARTMENT OF TRANSPORTATION
RALEIGH

SUPERSTRUCTURE

FRAMING PLAN

NORTH CAROLINA PROFESSIONAL SEAL 37400 ENGINEER GREGORY M. GILLAND 6/6/13

WETHERILL ENGINEERING
559 Jones Franklin Rd. Suite 164
Raleigh, N.C. 27606
Bus: 919 851 8077
Fax: 919 851 8107
License: F-0377

TRANSPORTATION PLANNING/DESIGN - BRIDGE/STRUCTURE DESIGN
CIVIL/SITE DESIGN - GIS/GPS - CONSTRUCTION OBSERVATION

REVISIONS							SHEET NO.
NO.	BY:	DATE:	NO.	BY:	DATE:		S-386
1			3				TOTAL SHEETS
2			4				671

DRAWN BY : J.M. BRITT DATE : 4-18-13
CHECKED BY : G.M. GILLAND DATE : 4-30-13
DESIGN ENGINEER OF RECORD: G.M. GILLAND DATE : 5-13

P:\2012\U-0071 Sites 3,8 & 9\Structures\DWG_9\U0071_SD_STR9_FP_WEI.dgn
7/8/2013 5:09:45 PM

STR. #9

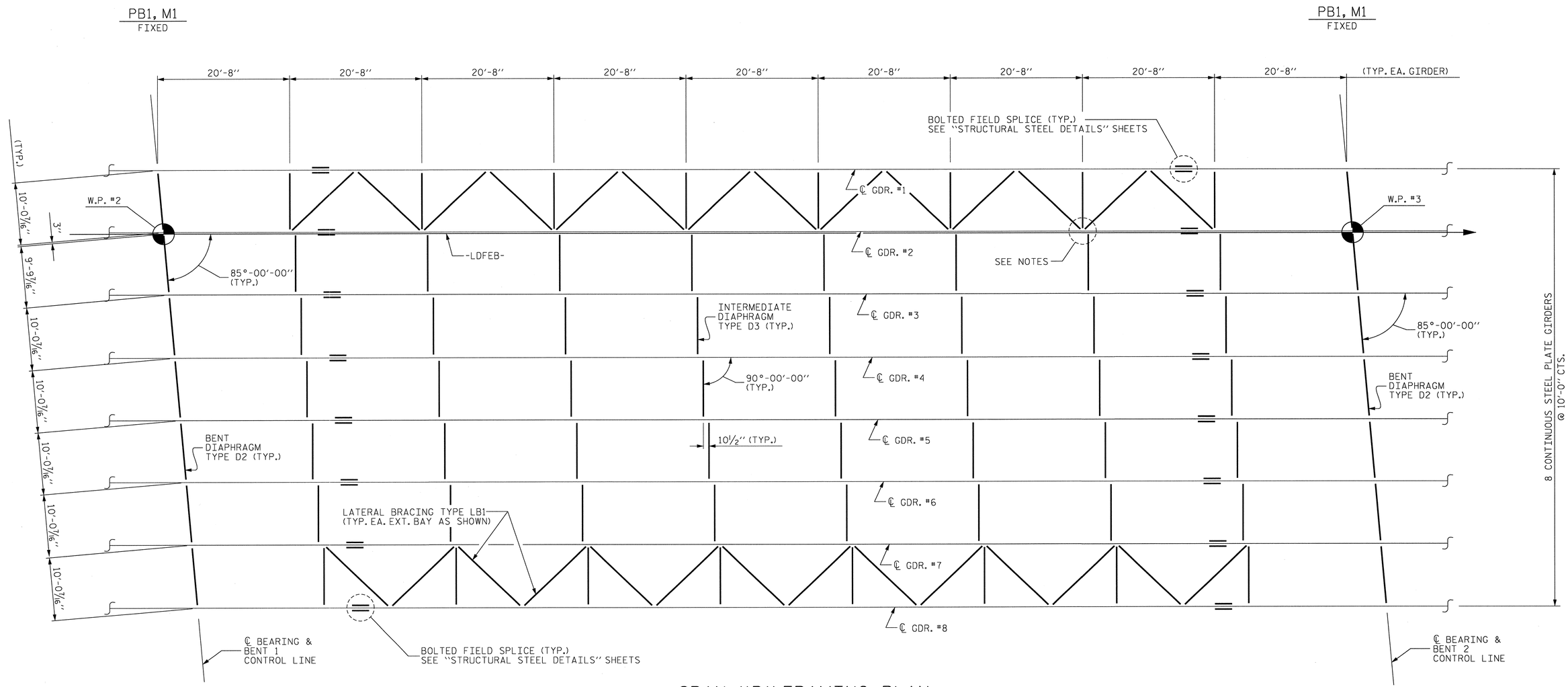

SPAN "B" FRAMING PLAN

NOTES :

THE LATERAL BRACING GUSSET PLATE MAY BE ADJUSTED AS NECESSARY TO CLEAR THE INTERMEDIATE DIAPHRAGM CONNECTOR PLATE. SEE "STRUCTURAL STEE DETAILS" SHEETS.

PROJECT NO. U-0071
DURHAM COUNTY
STATION: 138+40.45-LDFEB-

SHEET 2 OF 3

STATE OF NORTH CAROLINA
DEPARTMENT OF TRANSPORTATION
RALEIGH

SUPERSTRUCTURE

FRAMING PLAN

REVISIONS						SHEET NO.
NO.	BY:	DATE:	NO.	BY:	DATE:	S-387
1			3			TOTAL SHEETS
2			4			671

NORTH CAROLINA PROFESSIONAL SEAL 37400 ENGINEER GREGORY M. GILLAND 4/18/13

WETHERILL ENGINEERING
559 Jones Franklin Rd. Suite 164
Raleigh, N.C. 27606
Bus: 919 851 8077
Fax: 919 851 8107
License: F-0377

TRANSPORTATION PLANNING/DESIGN - BRIDGE/STRUCTURE DESIGN
CIVIL/SITE DESIGN - GIS/GPS - CONSTRUCTION OBSERVATION

DRAWN BY : J.M. BRITT DATE : 4-18-13
CHECKED BY : G.M. GILLAND DATE : 4-30-13
DESIGN ENGINEER OF RECORD: G.M. GILLAND DATE : 5-13

P:\2012\U-0071 Sites 3,8 & 9\Structures\DWG_9\U001_SD_STR9_FP_WEI.dgn
7/18/2013 5:10:00 PM

STR. #9

SPAN "C" FRAMING PLAN

PROJECT NO. U-0071
DURHAM COUNTY
STATION: 138+40.45-LDFEB-

SHEET 3 OF 3

STATE OF NORTH CAROLINA
DEPARTMENT OF TRANSPORTATION
RALEIGH

SUPERSTRUCTURE

FRAMING PLAN

NORTH CAROLINA PROFESSIONAL SEAL 37400 ENGINEER GREGORY M. GILLAND 6/18/13

WETHERILL ENGINEERING
559 Jones Franklin Rd. Suite 164
Raleigh, N.C. 27606
Bus: 919 851 8077
Fax: 919 851 8107
License: F-0377

TRANSPORTATION PLANNING/DESIGN - BRIDGE/STRUCTURE DESIGN
CIVIL/SITE DESIGN - GIS/GPS - CONSTRUCTION OBSERVATION

REVISIONS						SHEET NO.
NO.	BY:	DATE:	NO.	BY:	DATE:	S-328
1			3			TOTAL SHEETS
2			4			671

DRAWN BY : J.M. BRITT DATE : 4-18-13
CHECKED BY : G.M. GILLAND DATE : 4-30-13
DESIGN ENGINEER OF RECORD: G.M. GILLAND DATE : 5-13

P:\2012\U-0071 Sites 3,8 & 9\Structures\DWG_9\U00r1_SD_STR9_FP_WE1.dgn
7/8/2013 5:10:16 PM

STR. #9

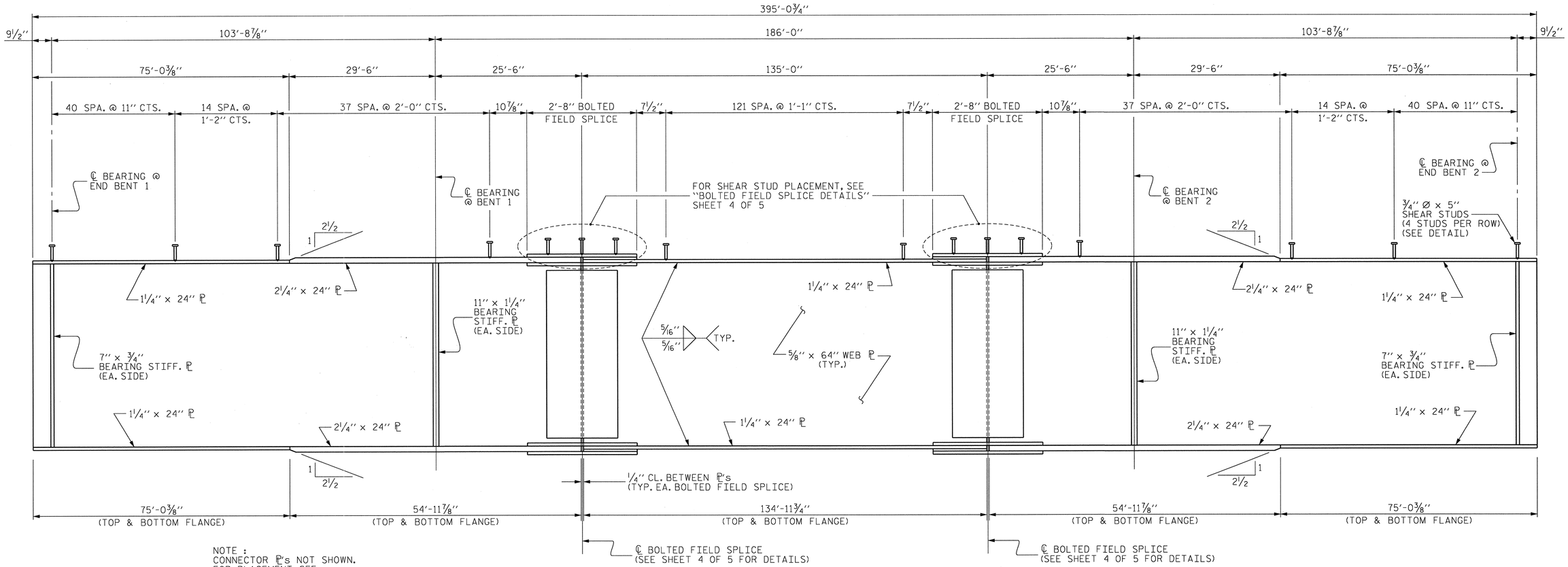

NOTE :
CONNECTOR ℙ's NOT SHOWN.
FOR PLACEMENT, SEE "FRAMING PLAN" SHEETS.

PLATE GIRDER ELEVATION

(TYPICAL EACH GIRDER)

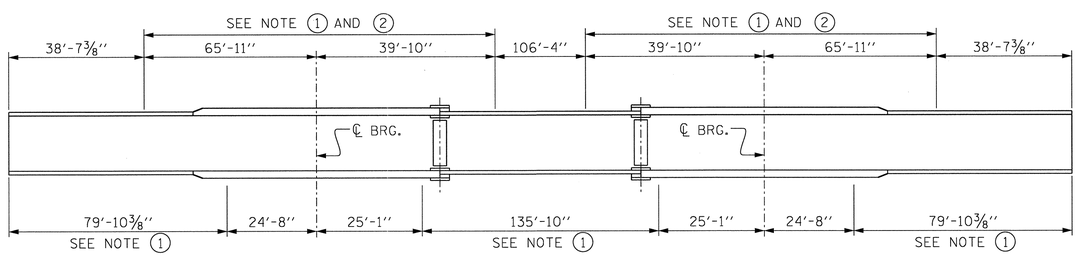

GIRDER MAKE UP

NOTE 1 : CHARPY V-NOTCH TESTS ARE REQUIRED FOR ALL TOP OR BOTTOM FLANGE PLATES WHICH FALL WITHIN THESE LIMITS, ALL WEB PLATES, AND ALL SPLICE PLATES. IF A PERMITTED SHOP FLANGE SPLICE IS NOT USED, CHARPY V-NOTCH TESTS WILL BE REQUIRED FOR THE ENTIRE FLANGE PLATE. FOR CHARPY V-NOTCH TESTS, SEE ARTICLE 1072-7 OF THE STANDARD SPECIFICATIONS.

NOTE 2 : NO WELDING OF FORMS OR FALSEWORK TO THE TOP FLANGE WILL BE PERMITTED IN THIS REGION.

CHARPY V-NOTCH TESTS FOR CONTINUOUS PLATE GIRDERS

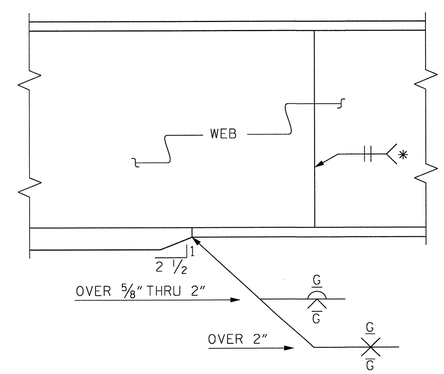

ELEVATION

TYPICAL FLANGE AND WEB BUTT JOINT

* GRIND SMOOTH AND FLUSH ON OUTSIDE OF EXTERIOR GIRDER

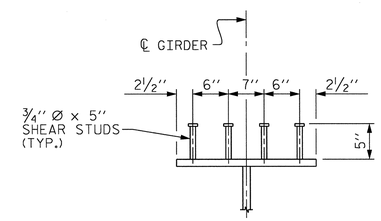

SHEAR STUD DETAIL

(TYPICAL AS SHOWN EXCEPT @ SPLICE ℙ)

PROJECT NO. U-0071
DURHAM COUNTY
STATION: 138+40.45-LDFEB-

SHEET 1 OF 5

STATE OF NORTH CAROLINA
DEPARTMENT OF TRANSPORTATION
RALEIGH

SUPERSTRUCTURE

STRUCTURAL STEEL DETAILS

NORTH CAROLINA PROFESSIONAL SEAL ENGINEER 037400 GREGORY M. GILLAND 7/16/13

WETHERILL ENGINEERING
559 Jones Franklin Rd. Suite 164
Raleigh, N.C. 27606
Bus: 919 851 8077
Fax: 919 851 8107
License: F-0377
TRANSPORTATION PLANNING/DESIGN - BRIDGE/STRUCTURE DESIGN
CIVIL/SITE DESIGN - GIS/GPS - CONSTRUCTION OBSERVATION

REVISIONS						SHEET NO.
NO.	BY:	DATE:	NO.	BY:	DATE:	S-389
1			3			TOTAL SHEETS
2			4			671

DRAWN BY :	J.M. BRITT	DATE :	4-26-13
CHECKED BY :	G.M. GILLAND	DATE :	5-13-13
DESIGN ENGINEER OF RECORD:	G.M. GILLAND	DATE :	5-13

P:\2012\U-0071 Sites 3,8 & 9\Structures\DWG_9\U0071_SD_STR9_SS_WE1.dgn
7/11/2013 9:30:00 AM

STR. #9

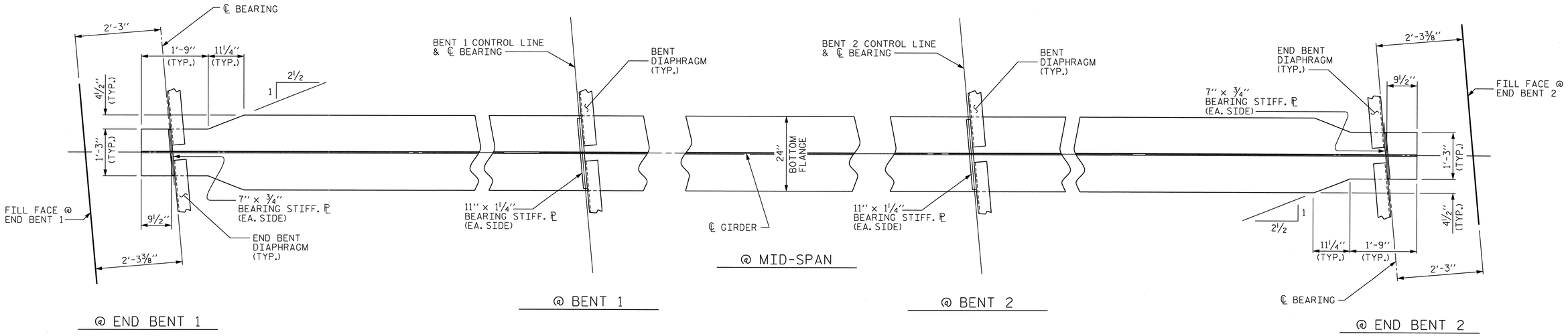

SPAN "A-B-C" BOTTOM FLANGE DETAIL

SEE FRAMING PLAN SHEETS FOR INTERMEDIATE DIAPHRAGM LOCATIONS
(FIELD SPLICES NOT SHOWN)

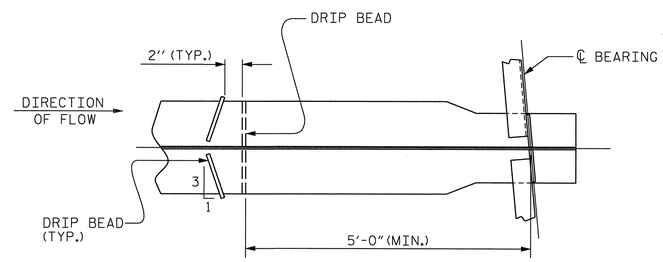

PART PLAN - BOTTOM FLANGE

END BENT 2 SHOWN, END BENT 1 SIMILAR

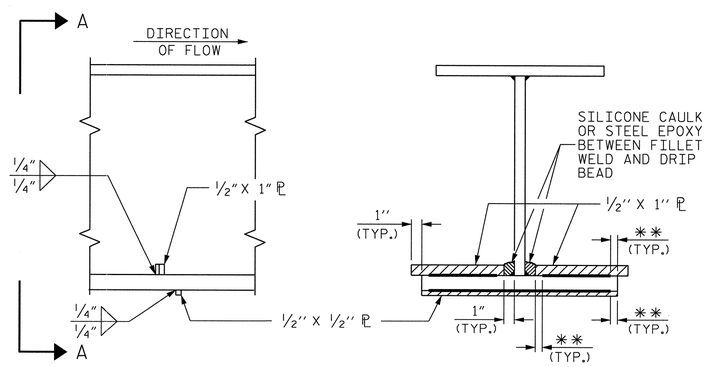

SECTION

VIEW A-A

** SEE "WELD TERMINATION DETAILS" SHEET 3 OF 5

DRIP BEAD DETAILS

STRUCTURAL STEEL NOTES :

STRUCTURAL STEEL SHALL BE AASHTO M270 GRADE 50W AND PAINTED IN ACCORDANCE WITH SYSTEM 4 OF ARTICLE 442-8 OF THE STANDARD SPECIFICATIONS UNLESS OTHERWISE NOTED ON THE PLANS.

ALL DIMENSIONS SHOWN ARE HORIZONTAL OR VERTICAL, UNLESS OTHERWISE NOTED.

ALL FIELD CONNECTIONS TO BE ⅞" DIA. HIGH STRENGTH BOLTS UNLESS OTHERWISE NOTED.

BEARING STIFFENERS ARE TO BE PLACED NORMAL TO THE WEB OF THE GIRDER AND SHALL BE PLUMB.

PERMITTED FLANGE AND WEB SHOP SPLICES SHALL NOT BE LOCATED WITHIN 15 FEET OF MAXIMUM DEAD LOAD DEFLECTION (NOR WITHIN 15 FEET OF INTERMEDIATE BEARINGS OF CONTINUOUS UNITS). KEEP 2 FEET MINIMUM BETWEEN WEB AND FLANGE SHOP SPLICES. KEEP 6" MINIMUM BETWEEN CONNECTOR PLATE OR TRANSVERSE STIFFENER WELDS AND WEB OR FLANGE SHOP SPLICES.

STUDS ON GIRDERS MAY BE SHIFTED UP TO 1" IF NECESSARY TO CLEAR FLANGE SPLICE WELD.

TENSION ON THE AASHTO M164 BOLTS SHALL BE CALIBRATED USING DIRECT TENSION INDICATOR WASHERS IN ACCORDANCE WITH ARTICLE 440-8 OF THE STANDARD SPECIFICATIONS.

END OF GIRDERS SHALL BE PLUMB.

BEARING STIFFENERS MAY REQUIRE COPING IF WIDER THAN BOTTOM FLANGE.

FABRICATORS SHALL DETAIL DIAPHRAGM MEMBERS AND CONNECTIONS FOR STEEL DEAD LOAD FIT UP.

STRUCTURAL STEEL ERECTION IN A CONTINUOUS UNIT SHALL BE COMPLETE BEFORE FALSEWORK OR FORMS ARE PLACED ON THE UNIT.

PROJECT NO. U-0071
DURHAM COUNTY
STATION: 138+40.45-LDFEB-

SHEET 2 OF 5

STATE OF NORTH CAROLINA
DEPARTMENT OF TRANSPORTATION
RALEIGH

SUPERSTRUCTURE

STRUCTURAL STEEL DETAILS

NORTH CAROLINA PROFESSIONAL SEAL 37400 ENGINEER GREGORY M. GILLAND 5-2-14

WETHERILL ENGINEERING
559 Jones Franklin Rd. Suite 164
Raleigh, N.C. 27606
Bus: 919 851 8077
Fax: 919 851 8107
License: F-0377
TRANSPORTATION PLANNING/DESIGN - BRIDGE/STRUCTURE DESIGN
CIVIL/SITE DESIGN - GIS/GPS - CONSTRUCTION OBSERVATION

REVISIONS						SHEET NO.
NO.	BY:	DATE:	NO.	BY:	DATE:	S-390
1			3			TOTAL SHEETS
2			4			671

DRAWN BY : J.M. BRITT DATE : 4-17-13
CHECKED BY : G.M. GILLAND DATE : 5-13-13
DESIGN ENGINEER OF RECORD: G.M. GILLAND DATE : 5-13

P:\2012\U-0071_Sites 3,8 & 9\Structures\DWG_9\U0071_SD_STR9_SS_WE1.dgn
3/3/2014 2:52:40 PM

STR. #9

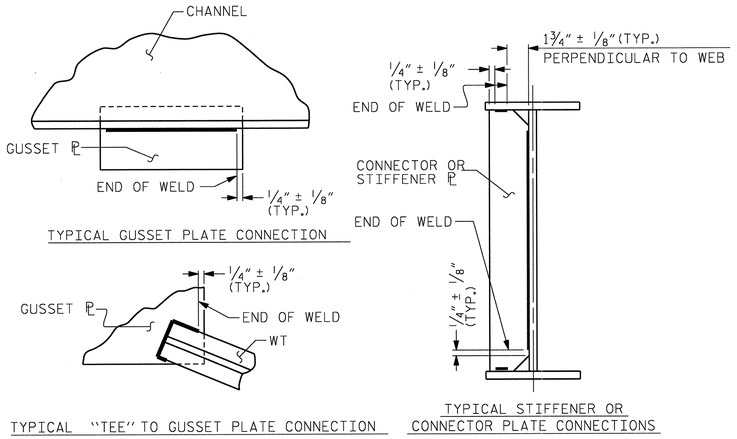

WELD TERMINATION DETAILS

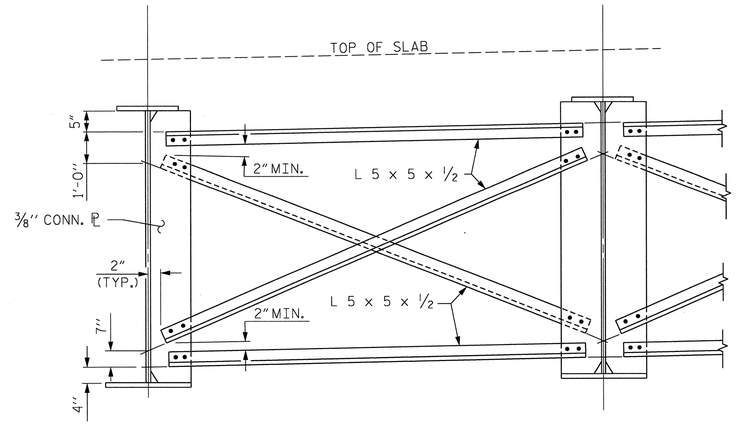

TYPICAL INTERMEDIATE DIAPHRAGM (TYPE D3)

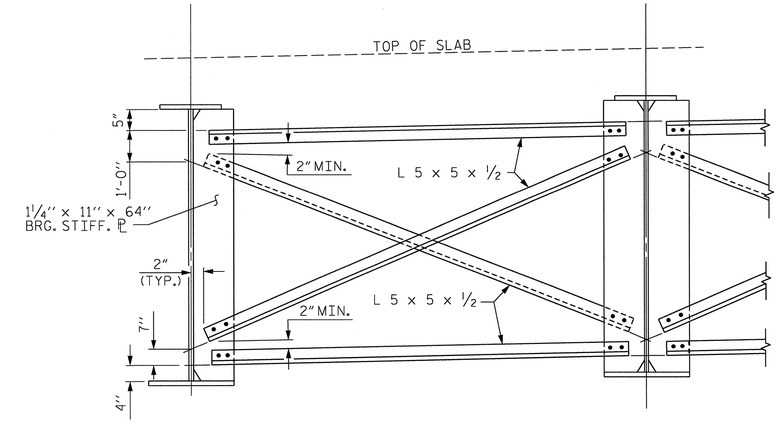

TYPICAL BENT DIAPHRAGM (TYPE D2)

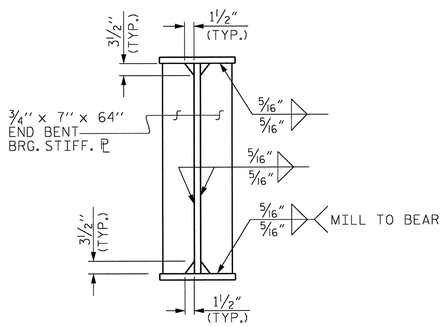

BEARING STIFFENER

(AT END BENTS)

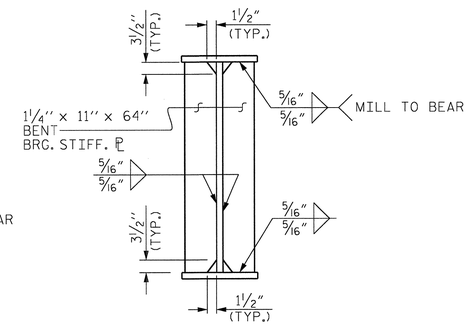

BEARING STIFFENER

(AT INTERIOR BENTS)

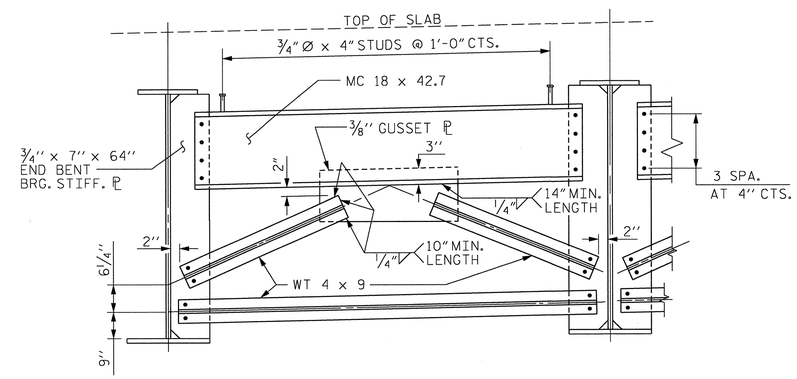

TYPICAL END BENT DIAPHRAGM (TYPE D1)

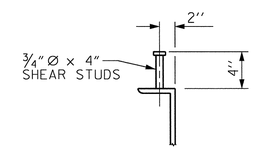

SHEAR STUD DETAILS

(TYP. EA. END BENT DIAPHRAGM)

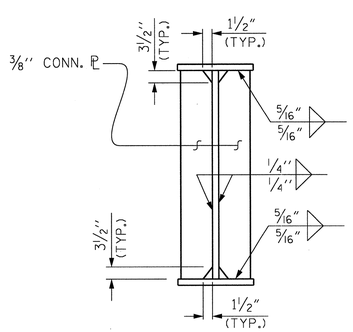

CONNECTOR PL

(AT INTERMEDIATE DIAPHRAGMS)

PROJECT NO. U-0071
DURHAM COUNTY
STATION: 138+40.45-LDFEB-

SHEET 3 OF 5

STATE OF NORTH CAROLINA
DEPARTMENT OF TRANSPORTATION
RALEIGH

SUPERSTRUCTURE

STRUCTURAL STEEL DETAILS

NORTH CAROLINA PROFESSIONAL SEAL 37400 ENGINEER GREGORY M. GILLAND 5/9/13

WETHERILL ENGINEERING
559 Jones Franklin Rd. Suite 164
Raleigh, N.C. 27606
Bus: 919 851 8077
Fax: 919 851 8107
License: F-0377
TRANSPORTATION PLANNING/DESIGN - BRIDGE/STRUCTURE DESIGN
CIVIL/SITE DESIGN - GIS/GPS - CONSTRUCTION OBSERVATION

REVISIONS								SHEET NO.
NO.	BY:	DATE:	NO.	BY:	DATE:			S-391
1			3					TOTAL SHEETS
2			4					671

DRAWN BY : J.M. BRITT DATE : 4-17-13
CHECKED BY : G.M. GILLAND DATE : 5-13-13
DESIGN ENGINEER OF RECORD: G.M. GILLAND DATE : 5-13

P:\2012\U-0071 Sites 3,8 & 9\Structures\DWG_9\U00-1_SD_STR9_SS_WE1.dgn
7/11/2013 9:30:26 AM

STR. #9

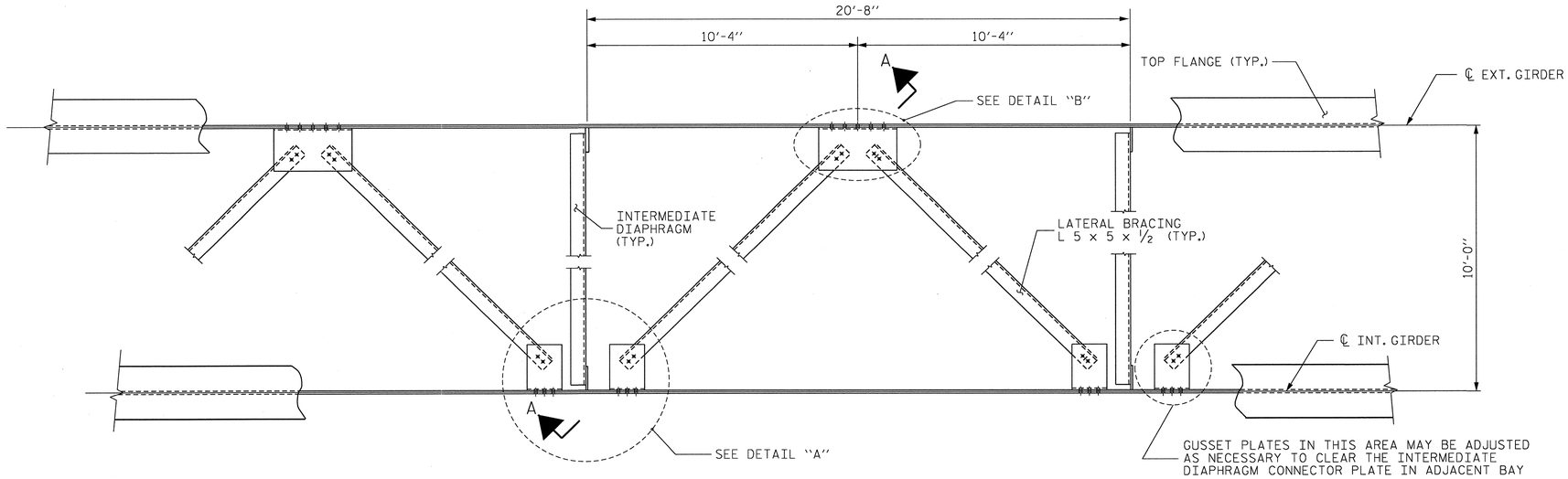

PART PLAN - NEAR TOP FLANGE LATERAL BRACING

(THROUGHOUT EXTERIOR BAYS ONLY AS SHOWN ON "FRAMING PLAN" SHEETS)

LATERAL BRACING NOTES

LATERAL BRACING ASSEMBLY SHALL COMPLY WITH SECTION 1072 OF THE STANDARD SPECIFICATIONS.

ALL STRUCTURAL STEEL SHALL BE AASHTO M270 GRADE 50W AND PAINTED IN ACCORDANCE WITH SYSTEM 4 OF ARTICLE 442-7 OF THE STANDARD SPECIFICATIONS UNLESS OTHERWISE NOTED ON THE PLANS.

TENSION ON THE ASTM A325 BOLTS SHALL BE CALIBRATED USING DIRECT TENSION INDICATOR WASHERS IN ACCORDANCE WITH THE STANDARD SPECIFICATIONS.

ALL BOLTED CONNECTIONS SHALL BE 7/8" Ø HIGH STRENGTH BOLTS.

THE CONTRACTOR HAS THE OPTION TO CLIP THE PROTRUDING CORNERS OF THE GUSSET PLATES, AT NO ADDITIONAL COST TO THE DEPARTMENT.

BENT GUSSET PLATES OR ROLLED ANGLE SHAPES MAY BE SUBSTITUTED FOR THE WELDED GUSSET PLATES DETAILED IF APPROVED BY THE ENGINEER, AT NO ADDITIONAL COST TO THE DEPARTMENT.

INSTALL THE LATERAL BRACING AFTER ERECTING THE EXTERIOR GIRDER AND THE ADJACENT INTERIOR GIRDER AND INSTALLING THE INTERMEDIATE DIAPHRAGMS.

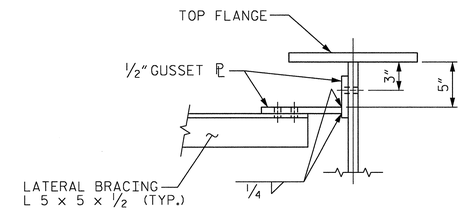

SECTION THRU CONNECTION

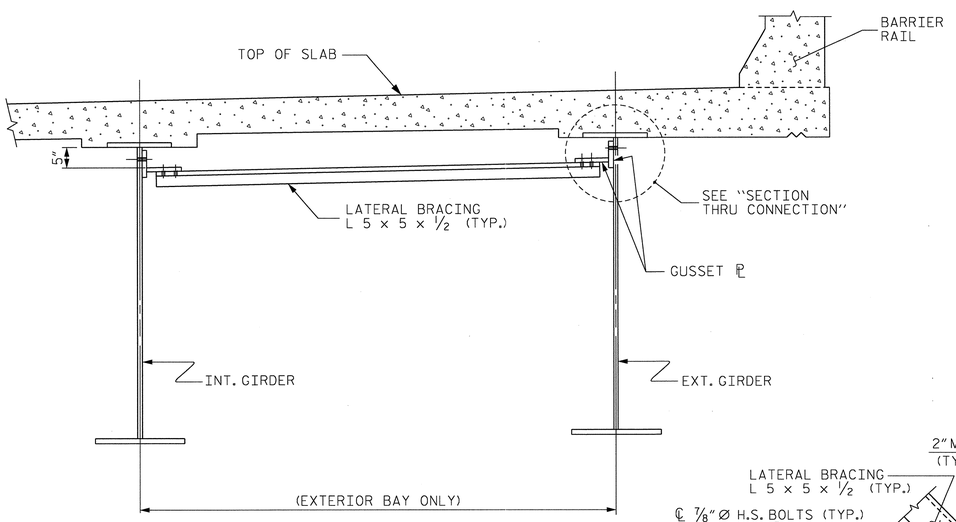

SECTION A-A

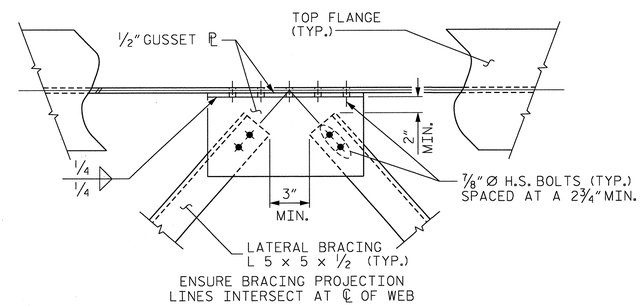

DETAIL "B"

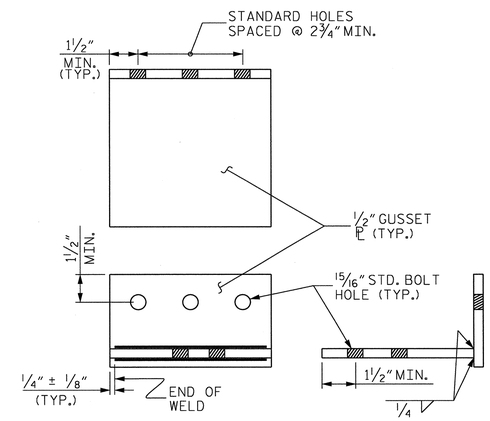

CONNECTION DETAIL

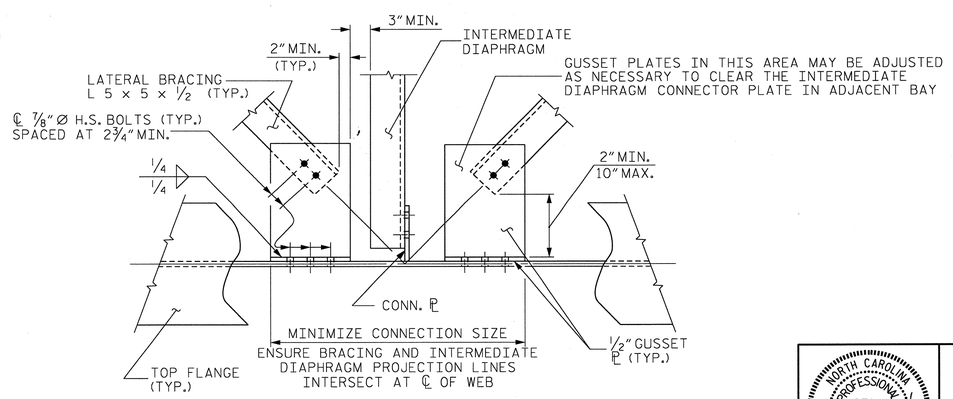

DETAIL "A"

PROJECT NO. U-0071

DURHAM COUNTY

STATION: 138+40.45-LDFEB-

SHEET 4 OF 5

STATE OF NORTH CAROLINA
DEPARTMENT OF TRANSPORTATION
RALEIGH

STANDARD
STRUCTURAL STEEL DETAILS
(LATERAL BRACING DETAILS)

REVISIONS						SHEET NO.
NO.	BY:	DATE:	NO.	BY:	DATE:	S-392
1			3			TOTAL SHEETS
2			4			671

WETHERILL ENGINEERING
559 Jones Franklin Rd. Suite 164
Raleigh, N.C. 27606
Bus: 919 851 8077
Fax: 919 851 8107
License: F-0377
TRANSPORTATION PLANNING/DESIGN - BRIDGE/STRUCTURE DESIGN
CIVIL/SITE DESIGN - GIS/GPS - CONSTRUCTION OBSERVATION

NORTH CAROLINA PROFESSIONAL SEAL 037400 ENGINEER GREGORY M. GILLAND 5/9/13

ASSEMBLED BY: J.M. BRITT		DATE : 4-17-13	
CHECKED BY : G.M. GILLAND		DATE : 5-13-13	
DESIGN ENGINEER OF RECORD : GMG		DATE : 5-13	
DRAWN BY : WMC	6/11	ADDED: 10/31/11	
CHECKED BY : GM	6/11		

P:\2012\U-0071 Sites 3,8 & 9\Structures\DWG_9\U0071_SD_STR9_SS_WE.dgn
7/8/2013 5:12:45 PM

STD. NO. LB1 STR. #9

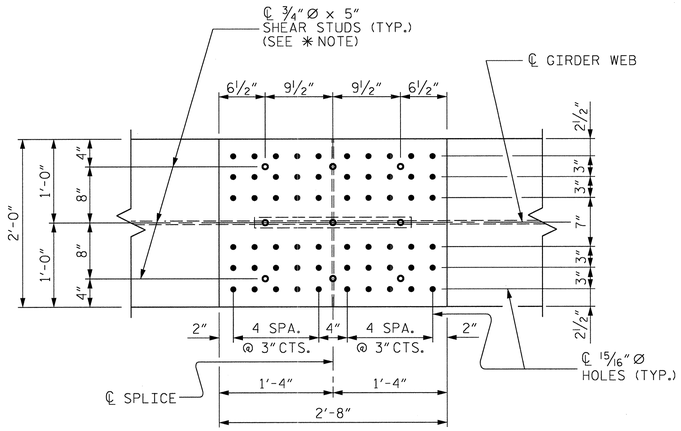

PLAN (TOP OF TOP FLANGE)

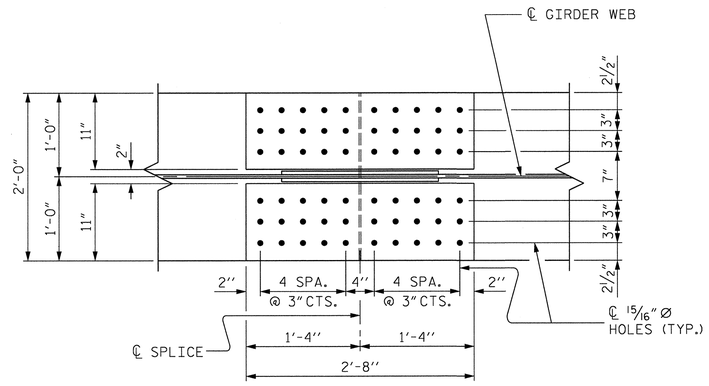

PLAN (TOP OF BOTTOM FLANGE)

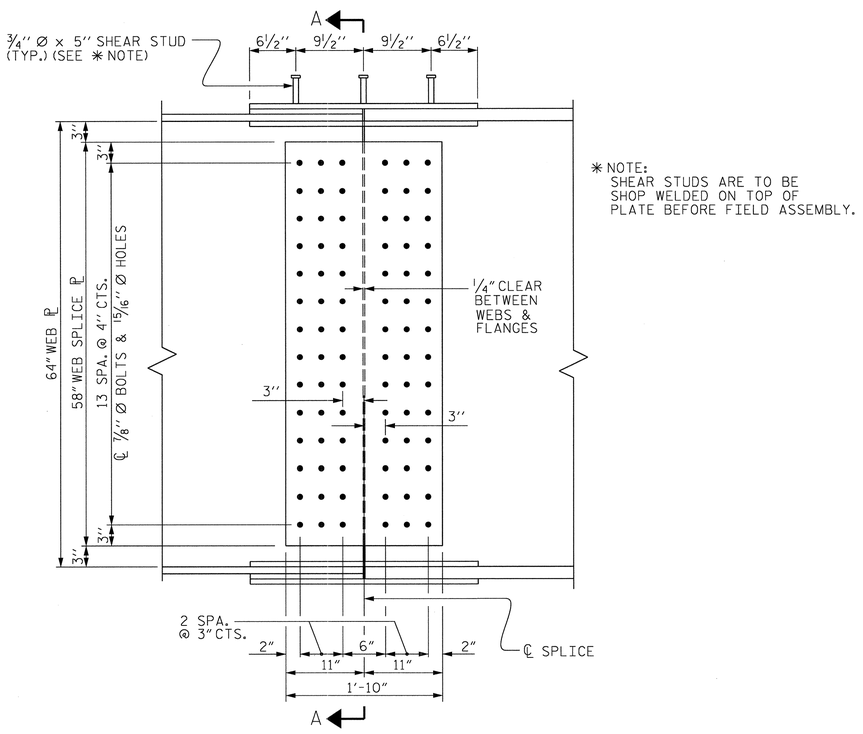

✱ NOTE:
SHEAR STUDS ARE TO BE
SHOP WELDED ON TOP OF
PLATE BEFORE FIELD ASSEMBLY.

ELEVATION

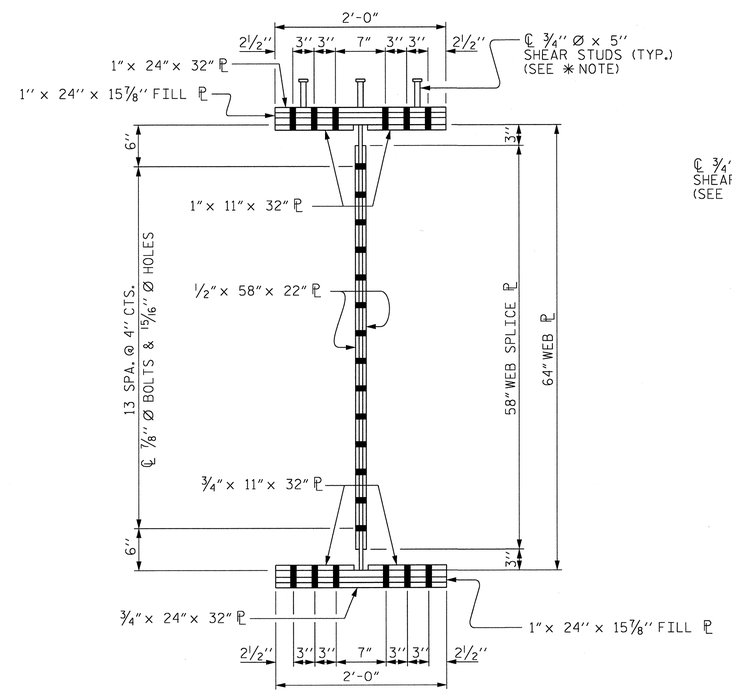

SECTION A-A

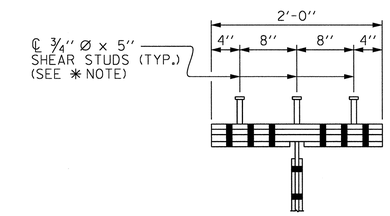

SHEAR STUD DETAIL
FOR TOP FLANGE SPLICE PLATE

BOLTED FIELD SPLICE DETAILS

(ALL BOLTED FIELD SPLICES ARE TYPICAL)

PROJECT NO. U-0071
DURHAM COUNTY
STATION: 138+40.45-LDFEB-

SHEET 5 OF 5

STATE OF NORTH CAROLINA
DEPARTMENT OF TRANSPORTATION
RALEIGH

SUPERSTRUCTURE
STRUCTURAL STEEL
DETAILS
(FIELD SPLICE DETAILS)

REVISIONS						SHEET NO.
NO.	BY:	DATE:	NO.	BY:	DATE:	S-393
1			3			TOTAL SHEETS
2			4			671

WETHERILL ENGINEERING
559 Jones Franklin Rd. Suite 164
Raleigh, N.C. 27606
Bus: 919 851 8077
Fax: 919 851 8107
License: F-0377
TRANSPORTATION PLANNING/DESIGN - BRIDGE/STRUCTURE DESIGN
CIVIL/SITE DESIGN - GIS/GPS - CONSTRUCTION OBSERVATION

NORTH CAROLINA PROFESSIONAL SEAL 37400 ENGINEER GREGORY M. GILLAND 8/8/13

DRAWN BY : J.M. BRITT DATE : 4-18-13
CHECKED BY : G.M. GILLAND DATE : 5-13-13
DESIGN ENGINEER OF RECORD: G.M. GILLAND DATE : 5-13

P:\2012\U-0071 Sites 3,8 & 9\Structures\DWG_9\U0071_SD_STR9_SS_WE1.dgn
7/8/2013 5:13:14 PM

STR. #9

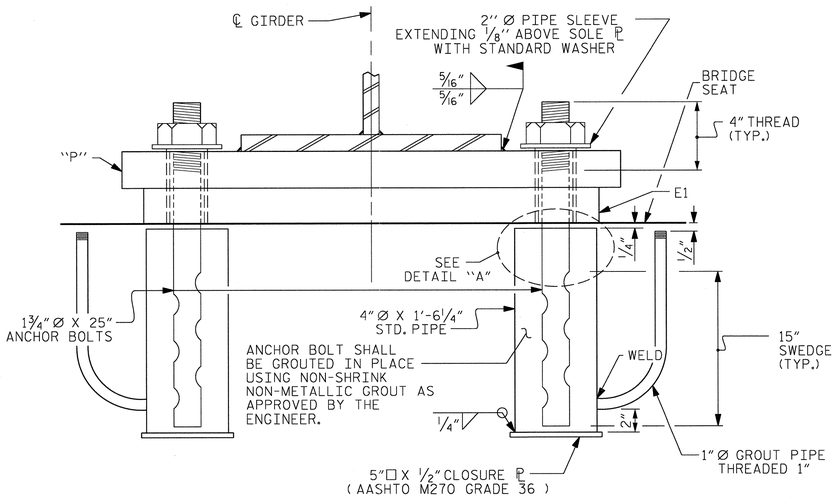

EXPANSION END VIEW

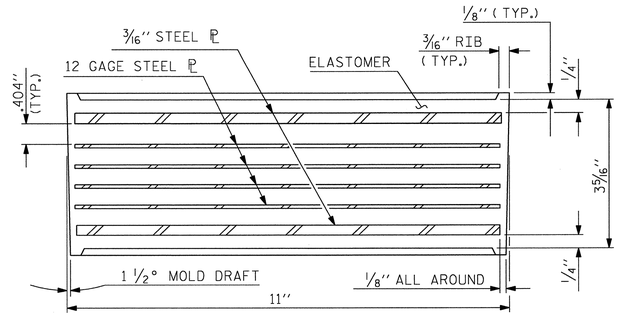

TYPICAL SECTION OF ELASTOMERIC BEARING

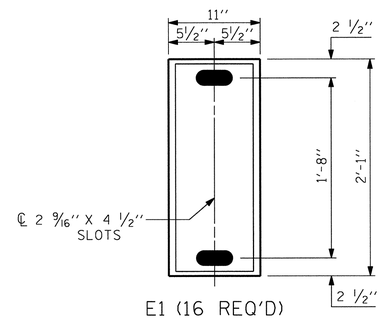

E1 (16 REQ'D)

PLAN VIEW OF ELASTOMERIC BEARING

TYPE IV

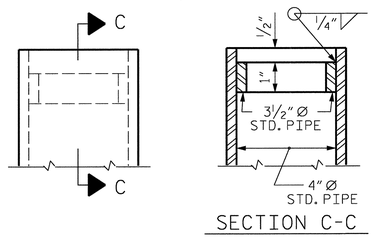

SECTION C-C

DETAIL "A"

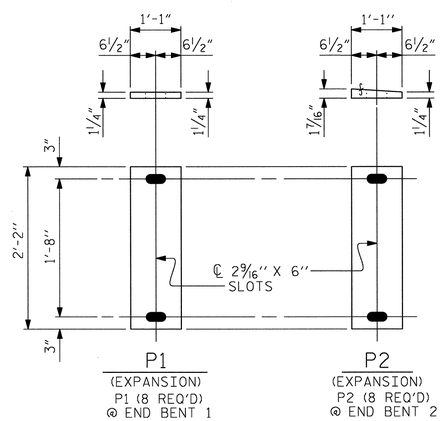

SOLE PLATE DETAILS

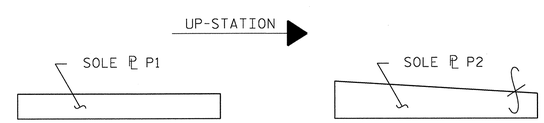

SOLE ℙ PLACEMENT DETAIL

NOTES

AT ALL FIXED POINTS OF SUPPORT, NUTS FOR ANCHOR BOLTS ARE TO BE TIGHTENED FINGER TIGHT AND THEN BACKED OFF 1/2 TURN. THE THREAD OF THE NUT AND BOLT SHALL THEN BE BURRED WITH A SHARP POINTED TOOL.

THE 2" Ø PIPE SLEEVE SHALL BE CUT FROM SCHEDULE 40 PVC PLASTIC PIPE. THE PVC PLASTIC PIPE SHALL MEET THE REQUIREMENTS OF ASTM D1785.

THE PAYMENT FOR THE PIPE SLEEVES SHALL BE INCLUDED IN THE SEVERAL PAY ITEMS.

FOR AASHTO M270 GRADE 50W STRUCTURAL STEEL, SOLE PLATE SHALL BE AASHTO M270 GRADE 50W AND SHALL NOT BE GALVANIZED. ANCHOR BOLTS, NUTS AND WASHERS SHALL BE GALVANIZED IN ACCORDANCE WITH THE STANDARD SPECIFICATIONS.

ANCHOR BOLTS SHALL MEET THE REQUIREMENTS OF ASTM A449. NUTS SHALL MEET THE REQUIREMENTS OF AASHTO M291-DH OR AASHTO M292-2H. WASHERS SHALL MEET THE REQUIREMENTS OF AASHTO M293. SHOP DRAWINGS ARE NOT REQUIRED FOR ANCHOR BOLTS, NUTS AND WASHERS. SHOP INSPECTION IS REQUIRED.

WHEN FIELD WELDING THE SOLE PLATE TO THE GIRDER FLANGE, USE TEMPERATURE INDICATING WAX PENS, OR OTHER SUITABLE MEANS, TO ENSURE THAT THE TEMPERATURE OF THE SOLE PLATE DOES NOT EXCEED 300°F. TEMPERATURES ABOVE THIS MAY DAMAGE THE ELASTOMER.

ALL SURFACES OF BEARING PLATES SHALL BE SMOOTH AND STRAIGHT.

THE ELASTOMER IN THE STEEL REINFORCED BEARINGS SHALL HAVE A SHEAR MODULUS OF 0.160 KSI, IN ACCORDANCE WITH AASHTO M251.

THE CLOSURE PLATE, GROUT PIPE AND STANDARD PIPE FOR THE EXPANSION ASSEMBLY NEED NOT BE GALVANIZED.

THE CONTRACTOR'S ATTENTION IS CALLED TO THE FOLLOWING PROCEDURE, WHICH MAY BE REQUIRED BY THE ENGINEER, TO RESET ELASTOMERIC BEARINGS DUE TO GIRDER TRANSLATION AND END ROTATION:

1. ONCE THE DECK HAS CURED, THE GIRDERS SHALL BE JACKED THEN THE ANCHOR BOLTS AND ELASTOMERIC BEARING SLOTS CENTERED AS NEARLY AS PRACTICAL ABOUT THE BEARING STIFFENER. THIS OPERATION SHALL BE PERFORMED AT APPROXIMATELY 60°F.
2. AFTER CENTERING THE ELASTOMERIC BEARING SLOTS AND ANCHOR BOLTS, THE ANCHOR BOLTS SHALL BE GROUTED.

THE CONTRACTOR MAY PROPOSE ALTERNATE METHODS, PROVIDED DETAILS ARE SUBMITTED TO THE ENGINEER FOR REVIEW AND APPROVAL.

FOR STEEL REINFORCED ELASTOMERIC BEARINGS, SEE SPECIAL PROVISIONS.

MAXIMUM ALLOWABLE SERVICE LOADS	
D.L.+L.L. (NO IMPACT)	
TYPE V	310 k

PROJECT NO. U-0071
DURHAM COUNTY
STATION: 138+40.45-LDFEB-

STATE OF NORTH CAROLINA
DEPARTMENT OF TRANSPORTATION
RALEIGH

STANDARD

ELASTOMERIC BEARING DETAILS

NORTH CAROLINA PROFESSIONAL SEAL 037400 ENGINEER GREGORY M. GILLAND 6/18/13

WETHERILL ENGINEERING
559 Jones Franklin Rd. Suite 164
Raleigh, N.C. 27606
Bus: 919 851 8077
Fax: 919 851 8107
License: F-0377
TRANSPORTATION PLANNING/DESIGN - BRIDGE/STRUCTURE DESIGN
CIVIL/SITE DESIGN - GIS/GPS - CONSTRUCTION OBSERVATION

REVISIONS							
NO.	BY:	DATE:	NO.	BY:	DATE:	SHEET NO.	S-394
1			3			TOTAL SHEETS	671
2			4				

ASSEMBLED BY : E. R. BONNEY		DATE : 3-14-13	
CHECKED BY : G. M. GILLAND		DATE : 4-29-13	
DESIGN ENGINEER OF RECORD : GMG		DATE : 5-13	
DRAWN BY : EEM 10/95	REV. 5/1/06	TLA/GM	
CHECKED BY : PEK 10/95	REV. 10/1/11	MAA/GM	
	REV. 10/24/12	AAC/MAA	

P:\2012\U-0071 Sites 3,8 & 9\Structures\DNG_9\U0071_SD_STR9_BG_WEI.dgn
7/8/2013 5:14:11 PM

STD. NO. EB2 STR. #9

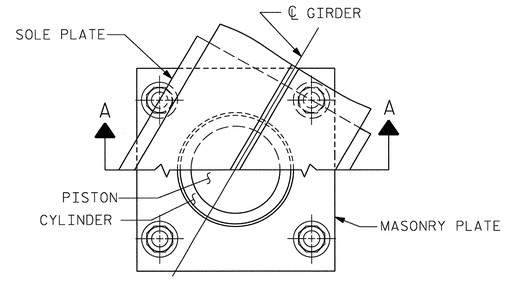

CUT-AWAY PLAN

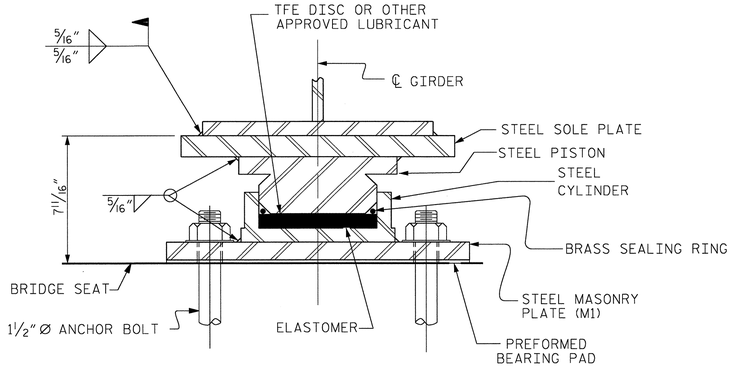

SECTION A-A

PB1, FIXED
(8 REQ'D. @ BENT 1 &
8 REQ'D @ BENT 2)

POT BEARING DETAILS

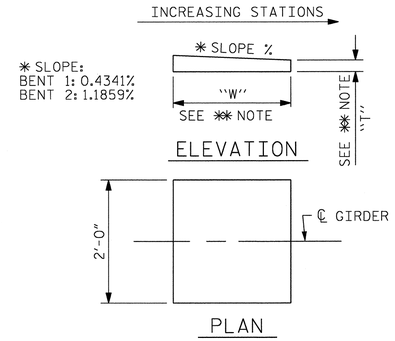

✳✳ NOTE:
DIMENSIONS "W" AND "T" ARE TO BE DETERMINED BY THE MANUFACTURER.

SOLE PLATE DETAILS

NOTES

FOR POT BEARINGS, SEE SPECIAL PROVISIONS.

AT ALL POINTS OF SUPPORT AT BENT 1 & BENT 2, NUTS FOR ANCHOR BOLTS SHALL BE TIGHTENED FINGER TIGHT AND GIVEN AN ADDITIONAL 1/4 TURN. THE THREAD OF THE NUT AND BOLT SHALL THEN BE BURRED WITH A SHARP POINTED TOOL.

WHEN WELDING THE SOLE PLATE TO THE GIRDER, USE TEMPERATURE INDICATING WAX PENS, OR OTHER SUITABLE MEANS, TO ENSURE THAT THE TEMPERATURE OF THE BEARING DOES NOT EXCEED 250°F TEMPERATURES ABOVE THIS MAY DAMAGE THE TFE OR ELASTOMER.

SOLE PLATES SHOULD BE WELDED TO BEAM FLANGES AND ANCHOR BOLTS SHOULD BE GROUTED BEFORE FALSEWORK IS PLACED.

ALL SURFACES OF BEARING PLATES SHALL BE SMOOTH AND STRAIGHT.

FOR THERMAL SPRAYED COATINGS (METALLIZATION), SEE SPECIAL PROVISIONS.

THE CONTRACTOR MAY SUBSTITUTE DISC BEARINGS FOR THE POT BEARINGS SHOWN. FOR OPTIONAL DISC BEARINGS, SEE SPECIAL PROVISIONS.

TABLE FOR LOADS AND MOVEMENT

BEARING	LOCATION	UNFACTORED VERTICAL LOAD (KIPS)				FACTORED LATERAL LOAD (KIPS)	TOTAL MOVEMENT (INCHES)
		DEAD		LIVE	TOTAL		
		DC	DW	LL+IM			
PB1 (FIXED)	BENT 1	341	48	241	630	127	0.00
PB1 (FIXED)	BENT 2	341	48	241	630	127	0.00

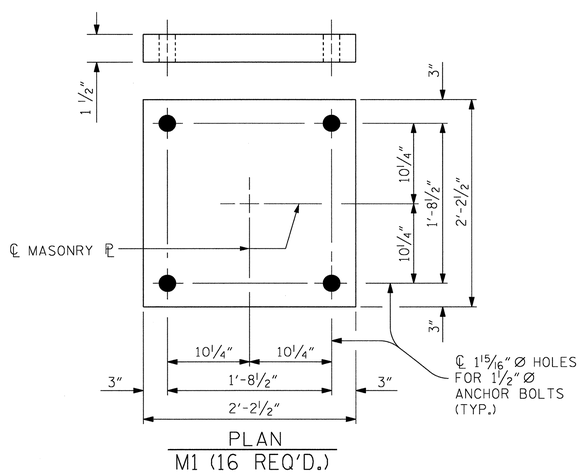

PLAN
M1 (16 REQ'D.)

MASONRY PLATE DETAILS

PROJECT NO. U-0071
DURHAM COUNTY
STATION: 138+40.45-LDFEB-

STATE OF NORTH CAROLINA
DEPARTMENT OF TRANSPORTATION
RALEIGH

STANDARD

POT BEARING DETAILS

NORTH CAROLINA PROFESSIONAL SEAL 037400 ENGINEER GREGORY M. GILLAND 8/15/13

WETHERILL ENGINEERING
559 Jones Franklin Rd. Suite 164
Raleigh, N.C. 27606
Bus: 919 851 8077
Fax: 919 851 8107
License: F-0377
TRANSPORTATION PLANNING/DESIGN - BRIDGE/STRUCTURE DESIGN
CIVIL/SITE DESIGN - GIS/GPS - CONSTRUCTION OBSERVATION

REVISIONS						SHEET NO.
NO.	BY:	DATE:	NO.	BY:	DATE:	S-395
1			3			TOTAL SHEETS
2			4			671

STD. NO. PB1 STR. #9

ASSEMBLED BY : E. R. BONNEY		DATE : 4-4-13
CHECKED BY : G. M. GILLAND		DATE : 4-29-13
DESIGN ENGINEER OF RECORD : GMG		DATE : 5-13
DRAWN BY : RWW 8/99	REV. 5/7/03	RWW/JTE
CHECKED BY : LES 8/99	REV. 5/1/06R	TLA/GM
	REV. 10/1/11	MAA/GM

P:\2012\U-0071 Sites 3,8 & 9\Structures\DWG_9\U0071_SD_STR9_PB_WE1.dgn
7/8/2013 5:15:23 PM

DEAD LOAD DEFLECTION TABLE FOR GIRDER

SPAN "A" - GIRDERS #1 & #8

TWENTIETH POINTS	0	1	2	3	4	5	6	7	8	9	10	11	12	13	14	15	16	17	18	19	20
DEFLECTION DUE TO WEIGHT OF GIRDER	0.000	0.000	0.000	0.000	0.000	0.000	0.001	0.002	0.003	0.004	0.006	0.007	0.008	0.009	0.009	0.009	0.009	0.008	0.006	0.004	0.000
DEFLECTION DUE TO WEIGHT OF SLAB ✳	0.000	-0.001	-0.001	-0.001	0.000	0.001	0.003	0.006	0.009	0.013	0.016	0.020	0.023	0.026	0.027	0.027	0.026	0.023	0.018	0.010	0.000
DEFLECTION DUE TO WEIGHT OF BARRIER RAIL	0.000	0.000	0.000	0.000	0.000	0.000	0.000	0.001	0.001	0.002	0.002	0.003	0.003	0.004	0.004	0.004	0.004	0.003	0.003	0.002	0.000
TOTAL DEAD LOAD DEFLECTION	0.000	-0.001	-0.001	-0.001	0.000	0.002	0.005	0.009	0.013	0.019	0.024	0.030	0.035	0.038	0.041	0.041	0.039	0.034	0.027	0.015	0.000
VERTICAL CURVE ORDINATE	0.000	0.011	0.021	0.030	0.038	0.044	0.049	0.053	0.056	0.058	0.059	0.058	0.056	0.053	0.049	0.044	0.038	0.030	0.021	0.011	0.000
REQUIRED CAMBER	0	1/8	1/4	3/8	7/16	1/2	9/16	9/16	1/2	1/2	7/16	5/16	1/4	3/16	1/8	1/16	0	-1/16	-1/16	-1/16	0

DEAD LOAD DEFLECTION TABLE FOR GIRDER

SPAN "A" - GIRDERS #2 & #7

TWENTIETH POINTS	0	1	2	3	4	5	6	7	8	9	10	11	12	13	14	15	16	17	18	19	20
DEFLECTION DUE TO WEIGHT OF GIRDER	0.000	0.000	0.000	0.000	0.000	0.000	0.001	0.002	0.003	0.005	0.006	0.007	0.008	0.009	0.010	0.010	0.009	0.008	0.007	0.004	0.000
DEFLECTION DUE TO WEIGHT OF SLAB ✳	0.000	-0.001	-0.001	-0.001	0.000	0.002	0.004	0.007	0.010	0.014	0.018	0.023	0.026	0.029	0.031	0.031	0.029	0.026	0.020	0.012	0.000
DEFLECTION DUE TO WEIGHT OF BARRIER RAIL	0.000	0.000	0.000	0.000	0.000	0.000	0.000	0.000	0.001	0.001	0.002	0.002	0.002	0.003	0.003	0.003	0.003	0.002	0.002	0.001	0.000
TOTAL DEAD LOAD DEFLECTION	0.000	-0.001	-0.001	-0.001	0.000	0.002	0.005	0.009	0.014	0.020	0.026	0.032	0.037	0.041	0.043	0.043	0.041	0.036	0.028	0.017	0.000
VERTICAL CURVE ORDINATE	0.000	0.011	0.021	0.030	0.038	0.044	0.049	0.053	0.056	0.058	0.059	0.058	0.056	0.053	0.049	0.044	0.038	0.030	0.021	0.011	0.000
REQUIRED CAMBER	0	1/8	1/4	3/8	7/16	1/2	1/2	1/2	1/2	7/16	3/8	5/16	1/4	1/8	1/16	0	-1/16	-1/16	-1/16	-1/16	0

DEAD LOAD DEFLECTION TABLE FOR GIRDER

SPAN "A" - GIRDERS #3 & #6

TWENTIETH POINTS	0	1	2	3	4	5	6	7	8	9	10	11	12	13	14	15	16	17	18	19	20
DEFLECTION DUE TO WEIGHT OF GIRDER	0.000	0.000	0.000	0.000	0.000	0.000	0.001	0.002	0.003	0.005	0.006	0.007	0.008	0.009	0.010	0.010	0.009	0.008	0.007	0.004	0.000
DEFLECTION DUE TO WEIGHT OF SLAB ✳	0.000	-0.001	-0.001	-0.001	0.000	0.002	0.004	0.007	0.010	0.014	0.018	0.023	0.026	0.029	0.031	0.031	0.029	0.026	0.020	0.012	0.000
DEFLECTION DUE TO WEIGHT OF BARRIER RAIL	0.000	0.000	0.000	0.000	0.000	0.000	0.000	0.000	0.001	0.001	0.001	0.001	0.002	0.002	0.002	0.002	0.002	0.002	0.001	0.001	0.000
TOTAL DEAD LOAD DEFLECTION	0.000	-0.001	-0.001	-0.001	0.000	0.002	0.005	0.009	0.014	0.020	0.025	0.031	0.036	0.040	0.043	0.043	0.040	0.036	0.028	0.016	0.000
VERTICAL CURVE ORDINATE	0.000	0.011	0.021	0.030	0.038	0.044	0.049	0.053	0.056	0.058	0.059	0.058	0.056	0.053	0.049	0.044	0.038	0.030	0.021	0.011	0.000
REQUIRED CAMBER	0	1/8	1/4	3/8	7/16	1/2	1/2	9/16	1/2	7/16	3/8	5/16	1/4	1/8	1/16	0	-1/16	-1/16	-1/16	-1/16	0

DEAD LOAD DEFLECTION TABLE FOR GIRDER

SPAN "A" - GIRDERS #4 & #5

TWENTIETH POINTS	0	1	2	3	4	5	6	7	8	9	10	11	12	13	14	15	16	17	18	19	20
DEFLECTION DUE TO WEIGHT OF GIRDER	0.000	0.000	0.000	0.000	0.000	0.000	0.001	0.002	0.003	0.005	0.006	0.007	0.008	0.009	0.010	0.010	0.009	0.008	0.007	0.004	0.000
DEFLECTION DUE TO WEIGHT OF SLAB ✳	0.000	-0.001	-0.001	-0.001	0.000	0.002	0.004	0.007	0.010	0.014	0.018	0.023	0.026	0.029	0.031	0.031	0.029	0.026	0.020	0.012	0.000
DEFLECTION DUE TO WEIGHT OF BARRIER RAIL	0.000	0.000	0.000	0.000	0.000	0.000	0.000	0.000	0.000	0.000	0.000	0.000	0.000	0.000	0.000	0.000	0.000	0.000	0.000	0.000	0.000
TOTAL DEAD LOAD DEFLECTION	0.000	-0.001	-0.001	-0.001	0.000	0.002	0.005	0.009	0.013	0.019	0.024	0.030	0.035	0.039	0.041	0.041	0.039	0.034	0.027	0.015	0.000
VERTICAL CURVE ORDINATE	0.000	0.011	0.021	0.030	0.038	0.044	0.049	0.053	0.056	0.058	0.059	0.058	0.056	0.053	0.049	0.044	0.038	0.030	0.021	0.011	0.000
REQUIRED CAMBER	0	1/8	1/4	3/8	7/16	1/2	9/16	9/16	1/2	1/2	7/16	5/16	1/4	3/16	1/8	1/16	0	-1/16	-1/16	-1/16	0

DEAD LOAD DEFLECTION TABLE FOR GIRDER

SPAN "B" - GIRDERS #1 & #8

TWENTIETH POINTS	0	1	2	3	4	5	6	7	8	9	10	11	12	13	14	15	16	17	18	19	20
DEFLECTION DUE TO WEIGHT OF GIRDER	0.000	-0.009	-0.021	-0.035	-0.049	-0.064	-0.077	-0.088	-0.097	-0.102	-0.104	-0.102	-0.097	-0.088	-0.077	-0.064	-0.049	-0.035	-0.021	-0.009	0.000
DEFLECTION DUE TO WEIGHT OF SLAB ✳	0.000	-0.026	-0.060	-0.099	-0.140	-0.182	-0.220	-0.252	-0.277	-0.292	-0.297	-0.292	-0.277	-0.252	-0.220	-0.182	-0.140	-0.099	-0.060	-0.026	0.000
DEFLECTION DUE TO WEIGHT OF BARRIER RAIL	0.000	-0.004	-0.009	-0.015	-0.021	-0.027	-0.032	-0.037	-0.041	-0.043	-0.044	-0.043	-0.041	-0.037	-0.032	-0.027	-0.021	-0.015	-0.009	-0.004	0.000
TOTAL DEAD LOAD DEFLECTION	0.000	-0.039	-0.090	-0.148	-0.210	-0.272	-0.329	-0.378	-0.415	-0.437	-0.445	-0.437	-0.415	-0.378	-0.329	-0.272	-0.210	-0.148	-0.090	-0.039	0.000
VERTICAL CURVE ORDINATE	0.000	0.033	0.063	0.089	0.112	0.131	0.147	0.159	0.168	0.173	0.175	0.173	0.168	0.159	0.147	0.131	0.112	0.089	0.063	0.033	0.000
REQUIRED CAMBER	0	7/8	1 13/16	2 13/16	3 7/8	4 13/16	5 11/16	6 7/16	7	7 5/16	7 7/16	7 5/16	7	6 7/16	5 11/16	4 13/16	3 7/8	2 13/16	1 13/16	7/8	0

✳ INCLUDES SLAB, BUILDUPS & STAY-IN-PLACE FORMS

ALL VALUES ARE SHOWN IN FEET (DECIMAL FORM), EXCEPT "FINAL CAMBER", WHICH IS GIVEN IN INCHES (FRACTION FORM).

SIGN CONVENTION FOR DEAD LOAD DEFLECTION + 0 -

DRAWN BY : E.R. BONNEY DATE : 3-25-13
CHECKED BY : G.M. GILLAND DATE : 5-2-13
DESIGN ENGINEER OF RECORD: G.M. GILLAND DATE : 5-13

NORTH CAROLINA PROFESSIONAL SEAL 37400 ENGINEER GREGORY M. GILLAND 9/18/13

WETHERILL ENGINEERING
559 Jones Franklin Rd. Suite 164
Raleigh, N.C. 27606
Bus: 919 851 8077
Fax: 919 851 8107
License: F-0377
TRANSPORTATION PLANNING/DESIGN - BRIDGE/STRUCTURE DESIGN
CIVIL/SITE DESIGN - GIS/GPS - CONSTRUCTION OBSERVATION

PROJECT NO. U-0071
DURHAM COUNTY
STATION: 138+40.45-LDFEB-

SHEET 1 OF 3

STATE OF NORTH CAROLINA
DEPARTMENT OF TRANSPORTATION
RALEIGH

SUPERSTRUCTURE

DEAD LOAD DEFLECTION

REVISIONS						SHEET NO.
NO.	BY:	DATE:	NO.	BY:	DATE:	S-3916
1			3			TOTAL SHEETS
2			4			671

STR #9

P:\2012\U-0071 Sites 3,8 & 9\Structures\DWG_9\U0071_SD_STR9_DD_WE1.dgn
7/18/2013 5:16:25 PM

DEAD LOAD DEFLECTION TABLE FOR GIRDER

SPAN "B" - GIRDERS #2 & #7

TWENTIETH POINTS	0	1	2	3	4	5	6	7	8	9	10	11	12	13	14	15	16	17	18	19	20
DEFLECTION DUE TO WEIGHT OF GIRDER	0.000	-0.010	-0.022	-0.036	-0.051	-0.067	-0.081	-0.092	-0.102	-0.107	-0.109	-0.107	-0.102	-0.092	-0.081	-0.067	-0.051	-0.036	-0.022	-0.010	0.000
DEFLECTION DUE TO WEIGHT OF SLAB *	0.000	-0.030	-0.068	-0.111	-0.158	-0.205	-0.248	-0.285	-0.312	-0.330	-0.335	-0.330	-0.312	-0.285	-0.248	-0.205	-0.158	-0.111	-0.068	-0.030	0.000
DEFLECTION DUE TO WEIGHT OF BARRIER RAIL	0.000	-0.003	-0.006	-0.011	-0.015	-0.019	-0.023	-0.027	-0.029	-0.031	-0.031	-0.031	-0.029	-0.027	-0.023	-0.019	-0.015	-0.011	-0.006	-0.003	0.000
TOTAL DEAD LOAD DEFLECTION	0.000	-0.042	-0.096	-0.158	-0.224	-0.291	-0.352	-0.404	-0.443	-0.468	-0.476	-0.468	-0.443	-0.404	-0.352	-0.291	-0.224	-0.158	-0.096	-0.042	0.000
VERTICAL CURVE ORDINATE	0.000	0.033	0.063	0.089	0.112	0.131	0.147	0.159	0.168	0.173	0.175	0.173	0.168	0.159	0.147	0.131	0.112	0.089	0.063	0.033	0.000
REQUIRED CAMBER	0	7/8	1 15/16	2 15/16	4 1/16	5 1/16	6	6 3/4	7 5/16	7 11/16	7 13/16	7 11/16	7 5/16	6 3/4	6	5 1/16	4 1/16	2 15/16	1 15/16	7/8	0

DEAD LOAD DEFLECTION TABLE FOR GIRDER

SPAN "B" - GIRDERS #3 & #6

TWENTIETH POINTS	0	1	2	3	4	5	6	7	8	9	10	11	12	13	14	15	16	17	18	19	20
DEFLECTION DUE TO WEIGHT OF GIRDER	0.000	-0.010	-0.022	-0.036	-0.051	-0.067	-0.081	-0.092	-0.102	-0.107	-0.109	-0.107	-0.102	-0.092	-0.081	-0.067	-0.051	-0.036	-0.022	-0.010	0.000
DEFLECTION DUE TO WEIGHT OF SLAB *	0.000	-0.030	-0.068	-0.111	-0.158	-0.205	-0.248	-0.285	-0.312	-0.330	-0.335	-0.330	-0.312	-0.285	-0.248	-0.205	-0.158	-0.111	-0.068	-0.030	0.000
DEFLECTION DUE TO WEIGHT OF BARRIER RAIL	0.000	-0.002	-0.005	-0.007	-0.010	-0.014	-0.016	-0.019	-0.020	-0.022	-0.022	-0.022	-0.020	-0.019	-0.016	-0.014	-0.010	-0.007	-0.005	-0.002	0.000
TOTAL DEAD LOAD DEFLECTION	0.000	-0.041	-0.094	-0.155	-0.220	-0.285	-0.345	-0.396	-0.434	-0.458	-0.466	-0.458	-0.434	-0.396	-0.345	-0.285	-0.220	-0.155	-0.094	-0.041	0.000
VERTICAL CURVE ORDINATE	0.000	0.033	0.063	0.089	0.112	0.131	0.147	0.159	0.168	0.173	0.175	0.173	0.168	0.159	0.147	0.131	0.112	0.089	0.063	0.033	0.000
REQUIRED CAMBER	0	7/8	1 7/8	2 15/16	4	5	5 7/8	6 11/16	7 1/4	7 9/16	7 11/16	7 9/16	7 1/4	6 11/16	5 7/8	5	4	2 15/16	1 7/8	7/8	0

DEAD LOAD DEFLECTION TABLE FOR GIRDER

SPAN "B" - GIRDERS #4 & #5

TWENTIETH POINTS	0	1	2	3	4	5	6	7	8	9	10	11	12	13	14	15	16	17	18	19	20
DEFLECTION DUE TO WEIGHT OF GIRDER	0.000	-0.010	-0.022	-0.036	-0.051	-0.067	-0.081	-0.092	-0.102	-0.107	-0.109	-0.107	-0.102	-0.092	-0.081	-0.067	-0.051	-0.036	-0.022	-0.010	0.000
DEFLECTION DUE TO WEIGHT OF SLAB *	0.000	-0.030	-0.068	-0.111	-0.158	-0.205	-0.248	-0.285	-0.312	-0.330	-0.335	-0.330	-0.312	-0.285	-0.248	-0.205	-0.158	-0.111	-0.068	-0.030	0.000
DEFLECTION DUE TO WEIGHT OF BARRIER RAIL	0.000	0.000	0.000	0.000	0.000	0.000	0.000	0.000	0.000	0.000	0.000	0.000	0.000	0.000	0.000	0.000	0.000	0.000	0.000	0.000	0.000
TOTAL DEAD LOAD DEFLECTION	0.000	-0.039	-0.090	-0.147	-0.209	-0.271	-0.329	-0.377	-0.414	-0.437	-0.444	-0.437	-0.414	-0.377	-0.329	-0.271	-0.209	-0.147	-0.090	-0.039	0.000
VERTICAL CURVE ORDINATE	0.000	0.033	0.063	0.089	0.112	0.131	0.147	0.159	0.168	0.173	0.175	0.173	0.168	0.159	0.147	0.131	0.112	0.089	0.063	0.033	0.000
REQUIRED CAMBER	0	7/8	1 13/16	2 13/16	3 7/8	4 13/16	5 11/16	6 7/16	7	7 5/16	7 7/16	7 5/16	7	6 7/16	5 11/16	4 13/16	3 7/8	2 13/16	1 13/16	7/8	0

DEAD LOAD DEFLECTION TABLE FOR GIRDER

SPAN "C" - GIRDERS #1 & #8

TWENTIETH POINTS	0	1	2	3	4	5	6	7	8	9	10	11	12	13	14	15	16	17	18	19	20
DEFLECTION DUE TO WEIGHT OF GIRDER	0.000	0.004	0.006	0.008	0.009	0.009	0.009	0.009	0.008	0.007	0.006	0.004	0.003	0.002	0.001	0.000	0.000	0.000	0.000	0.000	0.000
DEFLECTION DUE TO WEIGHT OF SLAB *	0.000	0.010	0.018	0.023	0.026	0.027	0.027	0.026	0.023	0.020	0.016	0.013	0.009	0.006	0.003	0.001	0.000	-0.001	-0.001	-0.001	0.000
DEFLECTION DUE TO WEIGHT OF BARRIER RAIL	0.000	0.002	0.003	0.003	0.004	0.004	0.004	0.004	0.003	0.003	0.002	0.002	0.001	0.001	0.000	0.000	0.000	0.000	0.000	0.000	0.000
TOTAL DEAD LOAD DEFLECTION	0.000	0.015	0.027	0.034	0.039	0.041	0.041	0.038	0.035	0.030	0.024	0.019	0.013	0.009	0.005	0.002	0.00	-0.001	-0.001	-0.001	0.000
VERTICAL CURVE ORDINATE	0.000	0.010	0.020	0.028	0.035	0.041	0.046	0.049	0.052	0.054	0.054	0.054	0.052	0.049	0.046	0.041	0.035	0.028	0.020	0.010	0.000
REQUIRED CAMBER	0	-1/16	-1/16	-1/16	-1/16	0	1/16	1/8	3/16	5/16	3/8	7/16	7/16	1/2	1/2	7/16	7/16	3/8	1/4	1/8	0

DEAD LOAD DEFLECTION TABLE FOR GIRDER

SPAN "C" - GIRDERS #2 & #7

TWENTIETH POINTS	0	1	2	3	4	5	6	7	8	9	10	11	12	13	14	15	16	17	18	19	20
DEFLECTION DUE TO WEIGHT OF GIRDER	0.000	0.004	0.007	0.008	0.009	0.010	0.010	0.009	0.008	0.007	0.006	0.005	0.003	0.002	0.001	0.000	0.000	0.000	0.000	0.000	0.000
DEFLECTION DUE TO WEIGHT OF SLAB *	0.000	0.012	0.020	0.026	0.029	0.031	0.031	0.029	0.026	0.023	0.018	0.014	0.010	0.007	0.004	0.002	0.000	-0.001	-0.001	-0.001	0.000
DEFLECTION DUE TO WEIGHT OF BARRIER RAIL	0.000	0.001	0.002	0.002	0.003	0.003	0.003	0.003	0.002	0.002	0.002	0.001	0.001	0.000	0.000	0.000	0.000	0.000	0.000	0.000	0.000
TOTAL DEAD LOAD DEFLECTION	0.000	0.017	0.028	0.036	0.041	0.043	0.043	0.041	0.037	0.032	0.026	0.020	0.014	0.009	0.005	0.002	0.000	-0.001	-0.001	-0.001	0.000
VERTICAL CURVE ORDINATE	0.000	0.010	0.020	0.028	0.035	0.041	0.046	0.049	0.052	0.054	0.054	0.054	0.052	0.049	0.046	0.041	0.035	0.028	0.020	0.010	0.000
REQUIRED CAMBER	0	-1/16	-1/8	-1/8	-1/16	-1/16	0	1/8	3/16	1/4	5/16	3/8	7/16	1/2	1/2	7/16	7/16	3/8	1/4	1/8	0

* INCLUDES SLAB, BUILDUPS & STAY-IN-PLACE FORMS

ALL VALUES ARE SHOWN IN FEET (DECIMAL FORM), EXCEPT "FINAL CAMBER", WHICH IS GIVEN IN INCHES (FRACTION FORM).

SIGN CONVENTION FOR DEAD LOAD DEFLECTION + 0 -

DRAWN BY : E.R. BONNEY DATE : 3-25-13
CHECKED BY : G.M. GILLAND DATE : 5-2-13
DESIGN ENGINEER OF RECORD: G.M. GILLAND DATE : 5-13

NORTH CAROLINA PROFESSIONAL SEAL 037400 ENGINEER GREGORY M. GILLAND 5/13/13

WETHERILL ENGINEERING
559 Jones Franklin Rd. Suite 164
Raleigh, N.C. 27606
Bus: 919 851 8077
Fax: 919 851 8107
License: F-0377
TRANSPORTATION PLANNING/DESIGN - BRIDGE/STRUCTURE DESIGN
CIVIL/SITE DESIGN - GIS/GPS - CONSTRUCTION OBSERVATION

PROJECT NO. U-0071
DURHAM COUNTY
STATION: 138+40.45-LDFEB-

SHEET 2 OF 3

STATE OF NORTH CAROLINA
DEPARTMENT OF TRANSPORTATION
RALEIGH

SUPERSTRUCTURE

DEAD LOAD DEFLECTION

REVISIONS						SHEET NO.
NO.	BY:	DATE:	NO.	BY:	DATE:	S-397
1			3			TOTAL SHEETS
2			4			671

STR #9

P:\2012\U-0071 Sites 3,8 & 9\Structures\DWG_9\U0071_SD_STR9_DD_WE1.dgn
7/8/2013 5:16:39 PM

DEAD LOAD DEFLECTION TABLE FOR GIRDER

	SPAN "C" - GIRDERS #3 & #6																				
TWENTIETH POINTS	0	1	2	3	4	5	6	7	8	9	10	11	12	13	14	15	16	17	18	19	20
DEFLECTION DUE TO WEIGHT OF GIRDER	0.000	0.004	0.007	0.008	0.009	0.010	0.010	0.009	0.008	0.007	0.006	0.005	0.003	0.002	0.001	0.000	0.000	0.000	0.000	0.000	0.000
DEFLECTION DUE TO WEIGHT OF SLAB ✳	0.000	0.012	0.020	0.026	0.029	0.031	0.031	0.029	0.026	0.023	0.018	0.014	0.010	0.007	0.004	0.002	0.000	-0.001	-0.001	-0.001	0.000
DEFLECTION DUE TO WEIGHT OF BARRIER RAIL	0.000	0.001	0.001	0.002	0.002	0.002	0.002	0.002	0.002	0.001	0.001	0.001	0.001	0.000	0.000	0.000	0.000	0.000	0.000	0.000	0.000
TOTAL DEAD LOAD DEFLECTION	0.000	0.016	0.028	0.036	0.040	0.043	0.043	0.040	0.036	0.031	0.025	0.020	0.014	0.009	0.005	0.002	0.000	-0.001	-0.001	-0.001	0.000
VERTICAL CURVE ORDINATE	0.000	0.010	0.020	0.028	0.035	0.041	0.046	0.049	0.052	0.054	0.054	0.054	0.052	0.049	0.046	0.041	0.035	0.028	0.020	0.010	0.000
REQUIRED CAMBER	0	-1/16	-1/8	-1/8	-1/16	0	1/16	1/8	3/16	1/4	3/8	7/16	7/16	1/2	1/2	7/16	7/16	3/8	1/4	1/8	0

✳ INCLUDES SLAB, BUILDUPS & STAY-IN-PLACE FORMS

ALL VALUES ARE SHOWN IN FEET (DECIMAL FORM), EXCEPT "FINAL CAMBER", WHICH IS GIVEN IN INCHES (FRACTION FORM).

DEAD LOAD DEFLECTION TABLE FOR GIRDER

	SPAN "C" - GIRDERS #4 & #5																				
TWENTIETH POINTS	0	1	2	3	4	5	6	7	8	9	10	11	12	13	14	15	16	17	18	19	20
DEFLECTION DUE TO WEIGHT OF GIRDER	0.000	0.004	0.007	0.008	0.009	0.010	0.010	0.009	0.008	0.007	0.006	0.005	0.003	0.002	0.001	0.000	0.000	0.000	0.000	0.000	0.000
DEFLECTION DUE TO WEIGHT OF SLAB ✳	0.000	0.012	0.020	0.026	0.029	0.031	0.031	0.029	0.026	0.023	0.018	0.014	0.010	0.007	0.004	0.002	0.000	-0.001	-0.001	-0.001	0.000
DEFLECTION DUE TO WEIGHT OF BARRIER RAIL	0.000	0.000	0.000	0.000	0.000	0.000	0.000	0.000	0.000	0.000	0.000	0.000	0.000	0.000	0.000	0.000	0.000	0.000	0.000	0.000	0.000
TOTAL DEAD LOAD DEFLECTION	0.000	0.015	0.027	0.034	0.039	0.041	0.041	0.039	0.035	0.030	0.024	0.019	0.013	0.009	0.005	0.002	0.000	-0.001	-0.001	-0.001	0.000
VERTICAL CURVE ORDINATE	0.000	0.010	0.020	0.028	0.035	0.041	0.046	0.049	0.052	0.054	0.054	0.054	0.052	0.049	0.046	0.041	0.035	0.028	0.020	0.010	0.000
REQUIRED CAMBER	0	-1/16	-3/16	-1/16	-1/16	0	1/16	1/8	3/16	5/16	3/8	7/16	7/16	1/2	1/2	7/16	7/16	3/8	1/4	1/8	0

SIGN CONVENTION FOR DEAD LOAD DEFLECTION + 0 -

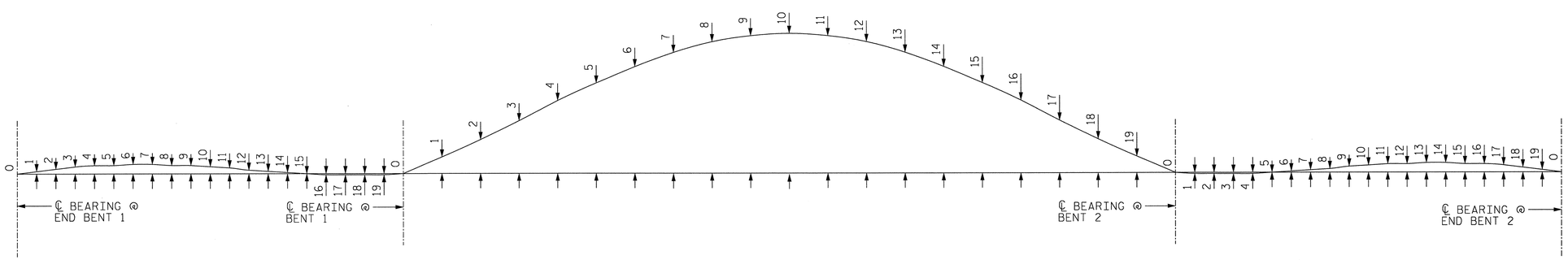

SPAN "A" SPAN "B" SPAN "C"

TYPICAL SCHEMATIC CAMBER ORDINATES

SLOPE FOR THE ZERO CAMBER BASE LINE VARIES

PROJECT NO. U-0071
DURHAM COUNTY
STATION: 138+40.45-LDFEB-

SHEET 3 OF 3

STATE OF NORTH CAROLINA
DEPARTMENT OF TRANSPORTATION
RALEIGH

SUPERSTRUCTURE

DEAD LOAD DEFLECTION

NORTH CAROLINA PROFESSIONAL SEAL 037400 ENGINEER GREGORY M. GILLAND 5/9/13

WETHERILL ENGINEERING
559 Jones Franklin Rd. Suite 164
Raleigh, N.C. 27606
Bus: 919 851 8077
Fax: 919 851 8107
License: F-0377

TRANSPORTATION PLANNING/DESIGN - BRIDGE/STRUCTURE DESIGN
CIVIL/SITE DESIGN - GIS/GPS - CONSTRUCTION OBSERVATION

REVISIONS								SHEET NO.
NO.	BY:	DATE:	NO.	BY:	DATE:			S-398
1			3					TOTAL SHEETS
2			4					671

DRAWN BY : E.R. BONNEY DATE : 3-25-13
CHECKED BY : G.M. GILLAND DATE : 5-2-13
DESIGN ENGINEER OF RECORD: G.M. GILLAND DATE : 5-13

P:\2012\U-0071 Sites 3,8 & 9\Structures\DMG_9\U0071_SD_STR9_DD_WE1.dgn
7/8/2013 5:16:59 PM

STR #9

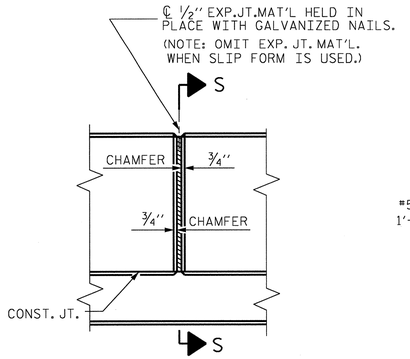

ELEVATION AT EXPANSION JOINTS

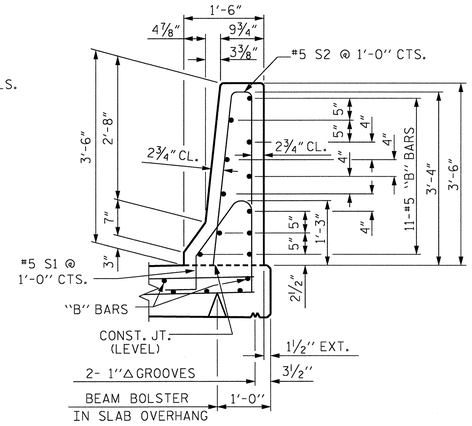

SECTION THRU RAIL

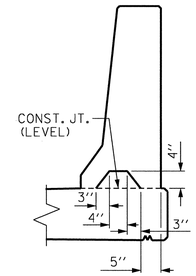

SECTION S-S

AT DAM IN OPEN JOINT
(THIS IS TO BE USED ONLY WHEN SLIP FORM IS USED)

BARRIER RAIL DETAILS

NOTES

THE BARRIER RAIL IN EACH CONTINUOUS UNIT SHALL NOT BE CAST UNTIL ALL SLAB CONCRETE IN THAT UNIT HAS BEEN CAST AND HAS REACHED A MINIMUM COMPRESSIVE STRENGTH OF 3,000 PSI.

ALL REINFORCING STEEL IN BARRIER RAILS SHALL BE EPOXY COATED.

GROOVED CONTRACTION JOINTS, ½" IN DEPTH, SHALL BE TOOLED IN ALL EXPOSED FACES OF THE BARRIER RAIL AND IN ACCORDANCE WITH ARTICLE 825-10(B) OF THE STANDARD SPECIFICATIONS. THE CONTRACTION JOINT SHALL BE LOCATED AT EACH THIRD POINT BETWEEN BARRIER RAIL EXPANSION JOINTS. ONLY ONE CONTRACTION JOINT IS REQUIRED AT MIDPOINT OF BARRIER RAIL SEGMENTS LESS THAN 20 FEET IN LENGTH AND NO CONTRACTION JOINTS ARE REQUIRED FOR THOSE SEGMENTS LESS THAN 10 FEET IN LENGTH.

THE #5 S1 AND S2 BARS MAY BE SHIFTED SLIGHTLY IN ORDER TO MAINTAIN A 2" MINIMUM CLEARANCE TO THE ½" EXPANSION JOINT MATERIAL IN THE RAIL.

BAR TYPES

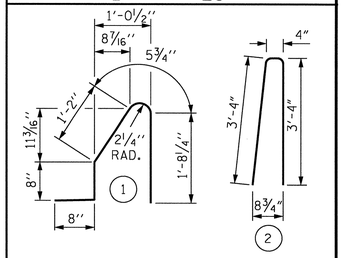

ALL BAR DIMENSIONS ARE OUT TO OUT

BILL OF MATERIAL

FOR CONCRETE BARRIER RAIL ONLY

BAR	No.	SIZE	TYPE	LENGTH	WEIGHT
* S1	790	#5	1	4'-8"	3845
* S2	790	#5	2	7'-0"	5768
* B1	286	#5	STR	26'-2"	7805
* B2	44	#5	STR	24'-7"	1128

* EPOXY COATED REINFORCING STEEL	18,546 LBS.
** CLASS AA CONCRETE	107.6 CU. YDS.
** CONCRETE BARRIER RAIL	791.69 LIN. FT.

** NOTE :
QUANTITIES FOR BARRIER RAIL ON APPROACH SLAB ARE NOT INCLUDED. FOR QUANTITIES OF BARRIER RAIL ON APPROACH SLAB, SEE "APPROACH SLAB DETAILS" SHEETS.

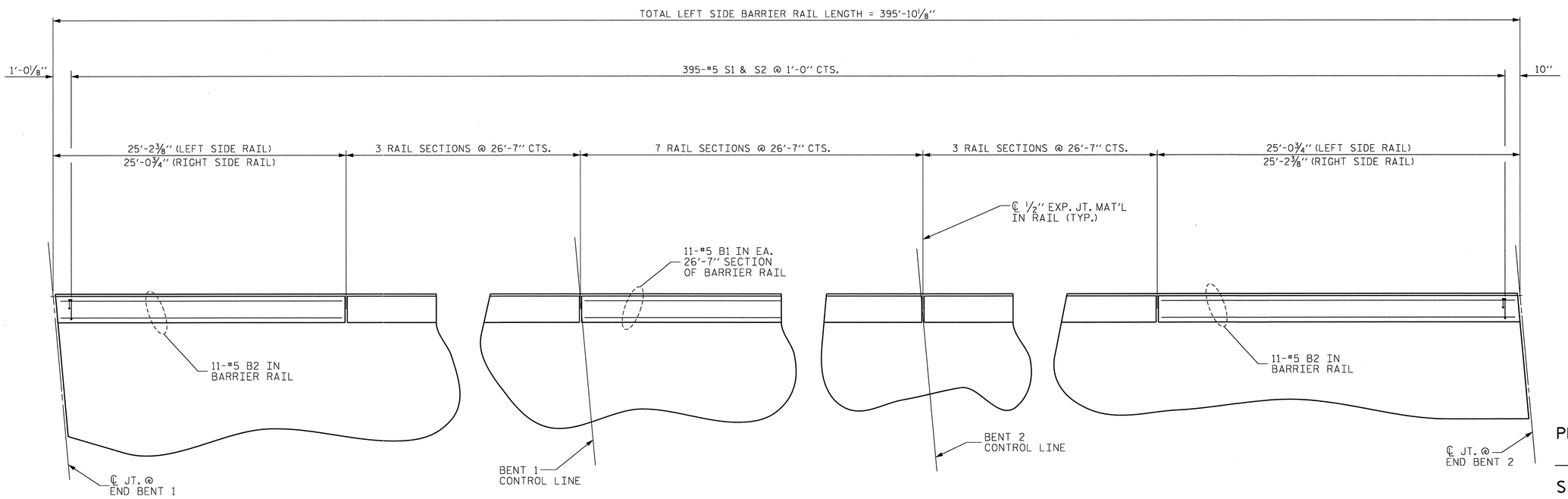

PLAN OF BARRIER RAIL - LEFT SIDE

ALL DIMENSIONS ARE MEASURED ALONG OUTSIDE FACE OF BARRIER RAIL
(RIGHT SIDE BARRIER RAIL SIMILAR BY ROTATION, EXCEPT AS NOTED)

PROJECT NO. U-0071
DURHAM COUNTY
STATION: 138+40.45-LDFEB-

STATE OF NORTH CAROLINA
DEPARTMENT OF TRANSPORTATION
RALEIGH

STANDARD

CONCRETE BARRIER RAIL

ASSEMBLED BY : J.M. BRITT	DATE : 3-5-13
CHECKED BY : G.M. GILLAND	DATE : 5-9-13
DESIGN ENGINEER OF RECORD : GMG	DATE : 5-13
DRAWN BY : ARB 5/87	REV. 10/1/11 MAA/GM
CHECKED BY : SJD 9/87	REV. 7/12 MAA/GM
	REV. 10/12 MAA/GM

NORTH CAROLINA PROFESSIONAL SEAL 037400 ENGINEER GREGORY M. GILLAND 6/19/13

WETHERILL ENGINEERING
559 Jones Franklin Rd. Suite 164
Raleigh, N.C. 27606
Bus: 919 851 8077
Fax: 919 851 8107
License: F-0377

TRANSPORTATION PLANNING/DESIGN - BRIDGE/STRUCTURE DESIGN
CIVIL/SITE DESIGN - GIS/GPS - CONSTRUCTION OBSERVATION

REVISIONS							SHEET NO.
NO.	BY:	DATE:	NO.	BY:	DATE:		S-399
1			3				TOTAL SHEETS
2			4				271

STR #9

STD. NO. CBR1 (SHT 3)

P:\2012\U-0071 Sites 3,8 & 9\Structures\DWG_9\U0071_SD_STR9_BR_WE1.dgn
7/8/2013 5:17:55 PM

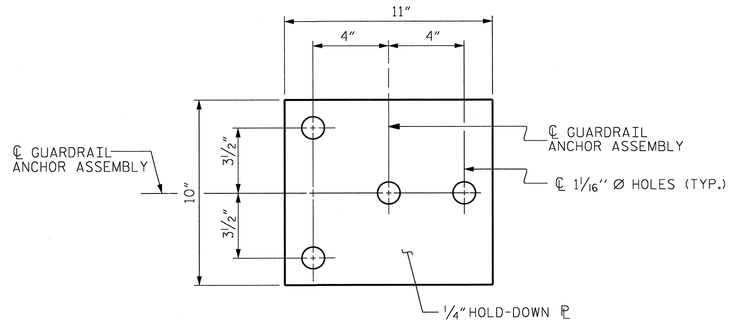

PLAN

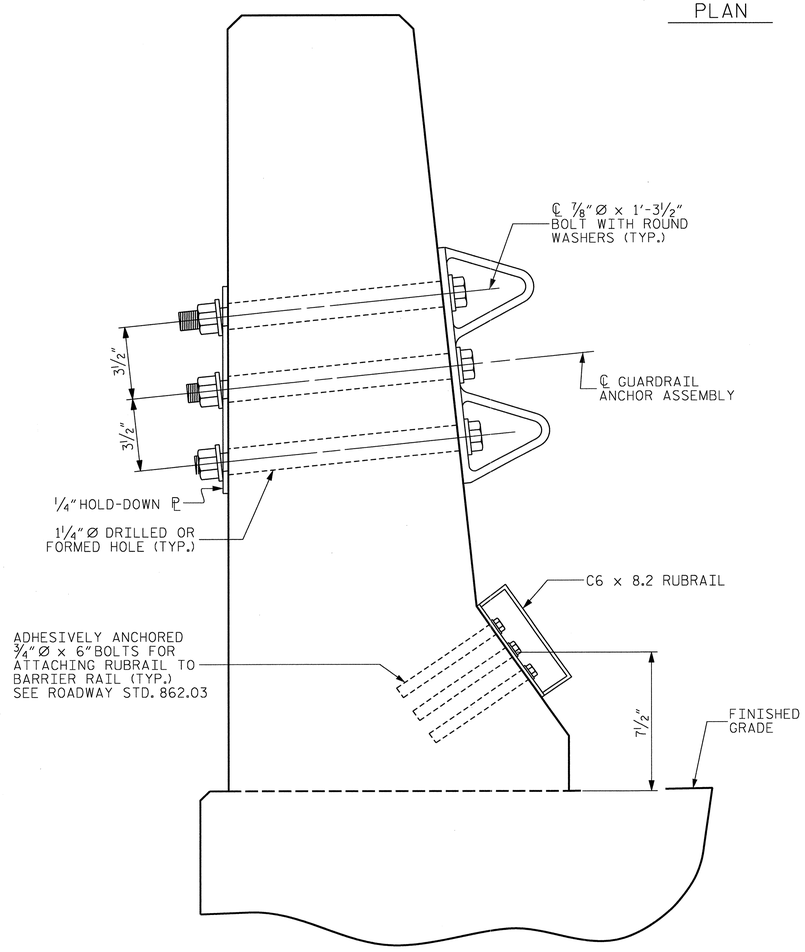

SECTION E-E

GUARDRAIL ANCHOR ASSEMBLY DETAILS

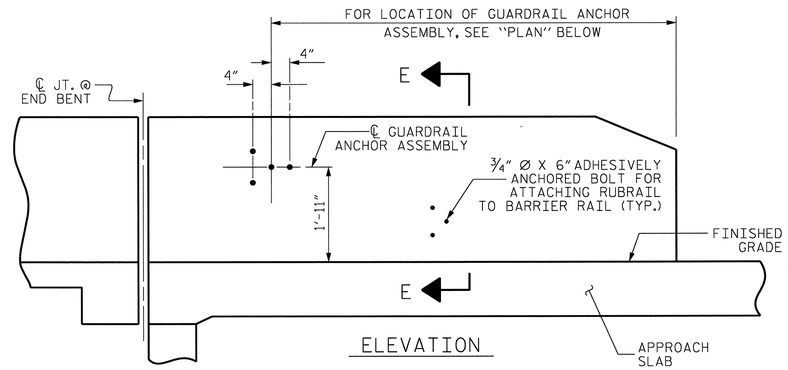

ELEVATION

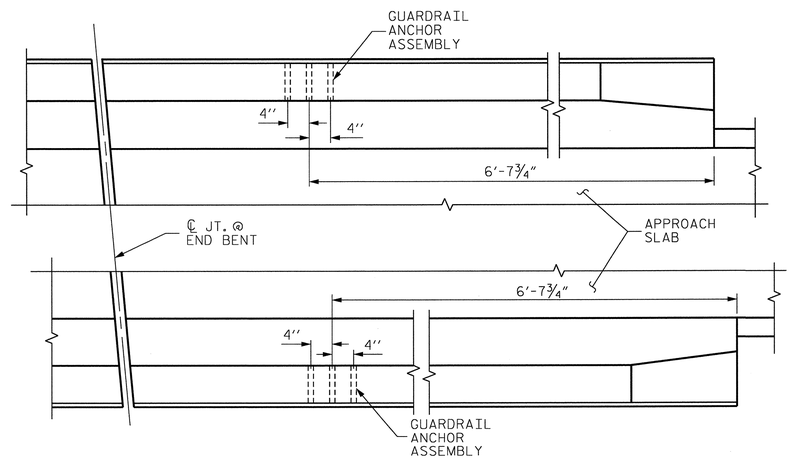

PLAN

LOCATION OF ANCHORS FOR GUARDRAIL

END BENT 2 SHOWN, END BENT 1 SIMILAR.

NOTES

THE GUARDRAIL ANCHOR ASSEMBLY SHALL CONSIST OF A 1/4" HOLD-DOWN PLATE AND 4 - 7/8" Ø BOLTS WITH NUTS AND WASHERS, RUBRAIL, AND ADHESIVELY ANCHORED BOLTS.

THE HOLD-DOWN PLATE SHALL CONFORM TO AASHTO M270 GRADE 36. AFTER FABRICATION, THE HOLD-DOWN PLATE SHALL BE HOT-DIP GALVANIZED IN ACCORDANCE WITH AASHTO M111.

BOLTS SHALL CONFORM TO THE REQUIREMENTS OF ASTM A307 AND NUTS SHALL CONFORM TO THE REQUIREMENTS OF AASHTO M291. BOLTS, NUTS AND WASHERS SHALL BE GALVANIZED. (AT THE CONTRACTOR'S OPTION, STAINLESS STEEL BOLTS, NUTS AND WASHERS MAY BE USED AS AN ALTERNATE FOR THE 7/8" Ø GALVANIZED BOLTS, NUTS AND WASHERS. THEY SHALL CONFORM TO OR EXCEED THE MECHANICAL REQUIREMENTS OF ASTM A307. THE USE OF THIS ALTERNATE SHALL BE APPROVED BY THE ENGINEER.)

THE GUARDRAIL ANCHOR ASSEMBLY IS REQUIRED AT ALL POINTS WHERE APPROACH GUARDRAIL IS TO BE ATTACHED TO THE END OF BARRIER RAIL. FOR POINTS OF ATTACHMENT, SEE SKETCH.

AFTER INSTALLATION, THE EXPOSED THREAD OF THE BOLT SHALL BE BURRED WITH A SHARP POINTED TOOL.

THE COST OF THE GUARDRAIL ANCHOR ASSEMBLY SHALL BE INCLUDED IN THE UNIT CONTRACT PRICE BID FOR CONCRETE BARRIER RAIL.

THE 1 1/4" Ø HOLES SHALL BE FORMED OR DRILLED WITH A CORE BIT. IMPACT TOOLS WILL NOT BE PERMITTED. ANY CONCRETE DAMAGED BY THIS WORK SHALL BE REPAIRED TO THE SATISFACTION OF THE ENGINEER.

THE C6 x 8.2 RUBRAIL IS TO BE ADHESIVELY ANCHORED TO THE RAIL USING THREE 3/4" Ø x 6" BOLTS WITH WASHERS. LEVEL ONE FIELD TESTING IS REQUIRED, AND THE YIELD LOAD OF THE 3/4" Ø BOLT IS 12 KIPS. FOR ADHESIVELY ANCHORED ANCHOR BOLTS OR DOWELS, SEE STANDARD SPECIFICATIONS. SEE ROADWAY STANDARD 862.03 FOR DETAILS AND LOCATION OF THE RUBRAIL.

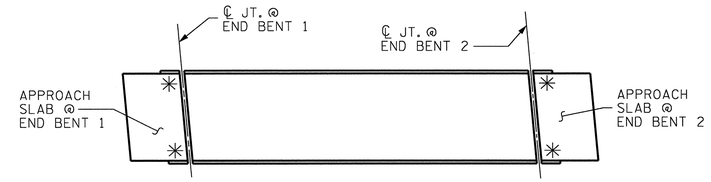

SKETCH SHOWING POINTS OF ATTACHMENTS

✳ DENOTES GUARDRAIL ANCHOR ASSEMBLY

PROJECT NO. U-0071
DURHAM COUNTY
STATION: 138+40.45-LDFEB-

STATE OF NORTH CAROLINA
DEPARTMENT OF TRANSPORTATION
RALEIGH

STANDARD

GUARDRAIL ANCHORAGE FOR BARRIER RAIL

REVISIONS						SHEET NO.
NO.	BY:	DATE:	NO.	BY:	DATE:	S-400
1			3			TOTAL SHEETS
2			4			671

NORTH CAROLINA PROFESSIONAL SEAL 037400 ENGINEER GREGORY M. GILLAND 8/9/13

WETHERILL ENGINEERING
559 Jones Franklin Rd. Suite 164
Raleigh, N.C. 27606
Bus: 919 851 8077
Fax: 919 851 8107
License: F-0377

TRANSPORTATION PLANNING/DESIGN - BRIDGE/STRUCTURE DESIGN
CIVIL/SITE DESIGN - GIS/GPS - CONSTRUCTION OBSERVATION

ASSEMBLED BY : J.M. BRITT		DATE : 3-5-13	
CHECKED BY : G.M. GILLAND		DATE : 5-9-13	
DESIGN ENGINEER OF RECORD : GMG		DATE : 5-13	
DRAWN BY : TLA 5/06	REV. 10/1/11	MAA/GM	
CHECKED BY : GM 5/06	REV. 7/12	MAA/GM	
	REV. 10/12	MAA/GM	

P:\2012\U-0071 Sites 3,8 & 9\Structures\DWG_9\U0071_SD_STR9_GRA_WE1.dgn
7/18/2013 5:18:43 PM

STD. NO. GRA2 STR. #9

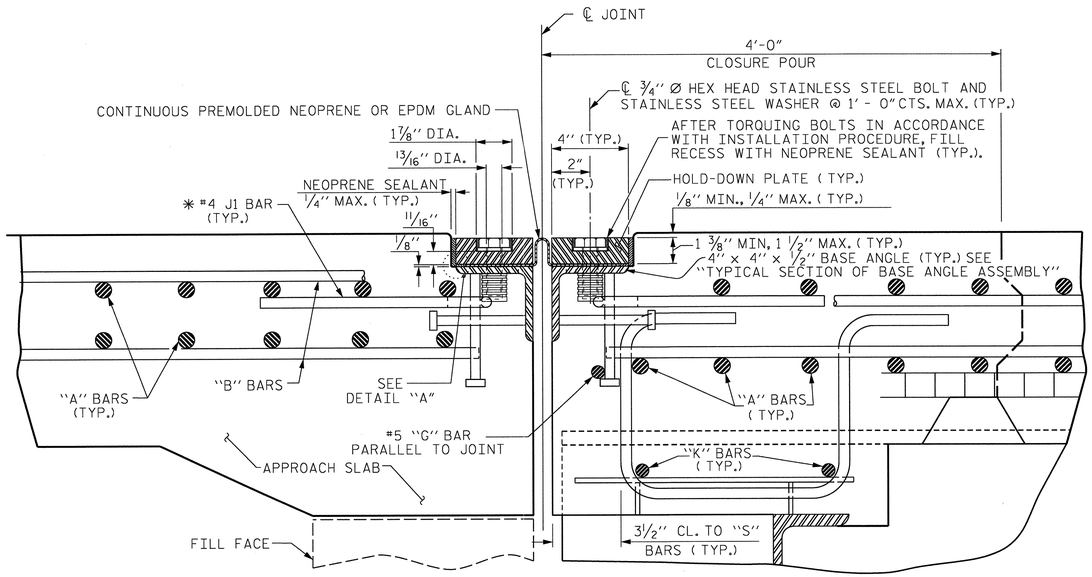

EXPANSION JOINT DETAILS

SECTION NORMAL TO JOINT -- STEEL SUPERSTRUCTURE

✱ THE QUANTITY OF #4 J1 BARS ON THE BILL OF MATERIAL IS BASED ON 1'-0" CENTERS. J1 BARS SHALL BE PLACED AT EACH VERTICAL STUD ANCHOR BOLT. IN THE EVENT THAT THE NUMBER OF VERTICAL STUD ANCHORS EXCEEDS THE NUMBER OF J1 BARS SPECIFIED, ADDITIONAL J1 BARS WILL NOT BE REQUIRED.

INSTALLATION PROCEDURE

1. A TEMPLATE OR OTHER SUITABLE DEVICE SHALL BE USED TO FORM THE TOP OF THE EXPANSION JOINT SEAL BLOCKOUT TO THE PROPER DEPTH AND WIDTH. THE TEMPLATE SHALL BE 4 1/8" TO 4 1/4" WIDE AND OF SUCH THICKNESS AS TO PROVIDE FOR CORRECT FINAL ELEVATION OF TOP OF HOLD-DOWN PLATES. THE TEMPLATE SHALL BE ATTACHED TO THE BASE ANGLE ASSEMBLY WITH THE ¾" Ø HEX HEAD BOLTS PROVIDED FOR THE HOLD-DOWN PLATES. A 1" Ø HOLE SHALL BE PROVIDED IN THE TEMPLATE CENTERED OVER EACH WEEP HOLE IN THE 4" X 4" X ½" BASE ANGLE. OTHER METHODS OF INSURING DRAINAGE THROUGH WEEP HOLES MAY BE EMPLOYED SUBJECT TO ENGINEER'S APPROVAL.
2. AFTER THE CONCRETE HAS BEEN CAST ON BOTH SIDES OF THE JOINT, REMOVE THE TEMPLATE. THOROUGHLY CLEAN THE BOLT HOLES AND THE ANGLE PLATE. REMOVE ANY EXCESS CONCRETE THAT COMES OUT OF THE WEEP HOLES. ANY DAMAGED STEEL SHALL BE COATED WITH A MINIMUM THICKNESS OF 4 DRY MILS OF ZINC-RICH PAINT IN ACCORDANCE WITH THE STANDARD SPECIFICATIONS.
3. LAY THE GLAND ON THE BASE ANGLE AND FIELD MARK THE GLAND FOR THE BOLT HOLES. HOLES IN THE GLAND SHALL BE PUNCHED ⅞" IN DIAMETER WITH A HAND PUNCH.
4. IN ORDER TO CHECK FOR PROPER ALIGNMENT, PLACE THE GLAND AND HOLD-DOWN PLATES ON THE BASE ANGLE. DO NOT APPLY NEOPRENE SEALANT. BOLT THE HOLD-DOWN PLATES TO THE BASE ANGLE BUT DO NOT TIGHTEN. THE ENGINEER SHALL INSPECT THE JOINT SEAL DEVICE FOR PROPER ALIGNMENT.
5. AFTER INSPECTION, REMOVE THE HOLD-DOWN PLATES AND GLAND. APPLY NEOPRENE SEALANT TO THE BASE ANGLE IN ACCORDANCE WITH THE "INSTALLATION SKETCH". PLACE GLAND AND HOLD-DOWN PLATES ON THE BASE ANGLE. BOLT THE HOLD-DOWN PLATES TO THE BASE ANGLE ASSEMBLY AND TORQUE THE BOLTS TO 88 FT-LBS WITH A TORQUE WRENCH. CHECK THE TORQUE AFTER THREE (3) HOURS AND, IF NECESSARY, RETIGHTEN TO 88 FT-LBS. A FINAL CHECK SHALL BE MADE AT SEVEN (7) DAYS. TORQUE SHALL NOT BE LESS THAN 80 FT-LBS AFTER SEVEN (7) DAYS.
6. AFTER PROPER TORQUING, CLEAN THE BOLT HOLE RECESSES AND THE RECESS BETWEEN THE JOINT SEAL DEVICE AND CONCRETE, COMPLETELY FILL THESE RECESSES WITH NEOPRENE SEALANT.

GENERAL NOTES

1. FOR EXPANSION JOINT SEALS, SEE SPECIAL PROVISIONS.
2. ALL PLATES AND ANGLES SHALL CONFORM TO AASHTO M270 GRADE 36 STEEL OR APPROVED EQUAL. ALL HOLD-DOWN BOLTS SHALL CONFORM TO ASTM F593 ALLOY 304 STAINLESS STEEL AND WASHERS SHALL CONFORM TO ASTM F844 EXCEPT THEY SHALL BE MADE FROM ALLOY 304 STAINLESS STEEL. ALL STUD ANCHORS SHALL CONFORM TO AASHTO M169, GRADES 1010 THRU 1020 OR APPROVED EQUAL. ALL CONCRETE INSERTS SHALL BE CLOSED END AND SHALL CONFORM TO AASHTO M169, GRADE 12L14. TENSILE CAPACITY SHALL BE 3000 LBS. MIN.
3. A PREMOLDED CORRUGATED OR NON-CORRUGATED GLAND SHALL BE USED FOR JOINTS SKEWED BETWEEN 50° THRU 130°. FOR JOINTS SKEWED LESS THAN 50° OR MORE THAN 130°, ONLY A CORRUGATED GLAND SHALL BE USED.
4. CLOSED END FERRULES AND STUD ANCHORS SHALL BE SHOP WELDED AND ALL HOLES SHALL BE SHOP DRILLED AS SHOWN ON PLANS. STUD ANCHORS SHALL BE ELECTRIC ARC END WELDED WITH COMPLETE FUSION.
5. SURFACES COMING IN CONTACT WITH NEOPRENE SHALL BE GROUND SMOOTH PRIOR TO METALLIZING.
6. UPON COMPLETION OF SHOP FABRICATION, THE HOLD DOWN PLATE AND BASE ANGLE ASSEMBLY, AS SHOWN IN THE "TYPICAL SECTION OF BASE ANGLE ASSEMBLY", SHALL BE METALLIZED. SEE SPECIAL PROVISION FOR THERMAL SPRAYED COATINGS (METALLIZATION).
7. BASE ANGLE ASSEMBLY SHALL BE CONTINUOUS FOR THE LENGTH OF THE JOINT. AT CROWN BREAKS, THE ENDS OF THE BASE ANGLE ASSEMBLY SHALL BE CUT PARALLEL TO THE BRIDGE CENTERLINE FOR SKEWS LESS THAN 80° AND GREATER THAN 100°. FINISHED WELD SHALL BE GROUND SMOOTH AND COATED WITH A MINIMUM THICKNESS OF 4 DRY MILS OF ZINC-RICH PAINT IN ACCORDANCE WITH THE STANDARD SPECIFICATIONS.
8. FIELD SPLICES OF HOLD-DOWN PLATES SHALL BE KEPT TO A MINIMUM. CONTRACTOR SHALL FURNISH DETAILED PLANS SHOWING PROPOSED SPLICE LOCATIONS FOR APPROVAL. HOLD-DOWN PLATES SHALL NOT EXCEED 20' LENGTHS UNLESS APPROVED BY THE ENGINEER.
9. NO ALTERNATE JOINT DETAILS SHALL BE PERMITTED IN LIEU OF THOSE SHOWN ON THESE PLANS.
10. THE CONTRACTOR MAY, AT HIS OPTION, USE ADHESIVELY ANCHORED ANCHOR BOLTS IN PLACE OF CONCRETE INSERTS FOR COVER PLATES. THE YIELD LOAD OF THE ¾" Ø BOLT IS 10 KIPS. FIELD TESTING OF THE ADHESIVE BONDING SYSTEM IS NOT REQUIRED.

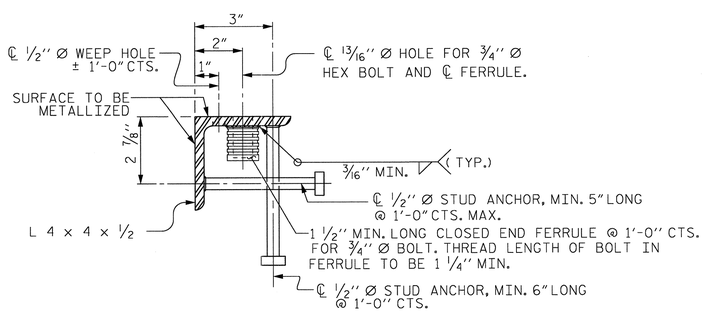

TYPICAL SECTION OF BASE ANGLE ASSEMBLY

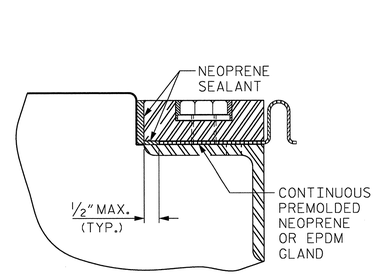

DETAIL "A"

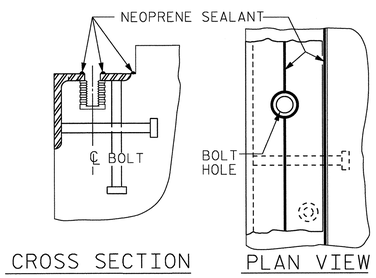

INSTALLATION SKETCH

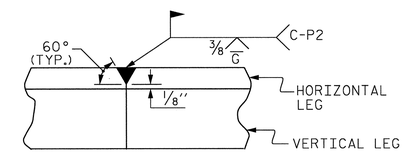

DETAIL- FIELD WELD SPLICE OF BASE ANGLE

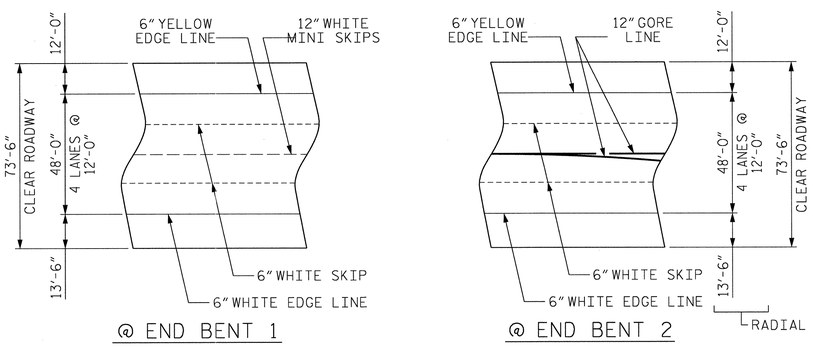

PAVEMENT MARKING ALIGNMENT

BRIDGE IS MEASURED ALONG -DFLW- AND EXTENDED TANGENT @ TS STATION 20+00.00 -DFLW-. SEE "GENERAL DRAWING" SHEETS FOR DETAILS.

MOVEMENT AND SETTING AT JOINT					
LOCATION	SKEW ANGLE	TOTAL MOVEMENT (ALONG ℄ RDWY)	PERPENDICULAR JOINT OPENING AT 45° F	PERPENDICULAR JOINT OPENING AT 60° F	PERPENDICULAR JOINT OPENING AT 90° F
END BENT 1	85°-00'-00"	1 9/16"	2"	1 3/4"	1 5/16"
END BENT 2	85°-00'-00"	1 9/16"	2"	1 3/4"	1 5/16"

PROJECT NO. U-0071
DURHAM COUNTY
STATION: 138+40.45-LDFEB-

SHEET 1 OF 2

STATE OF NORTH CAROLINA
DEPARTMENT OF TRANSPORTATION
RALEIGH

STANDARD

EXPANSION JOINT SEAL DETAILS

NORTH CAROLINA PROFESSIONAL SEAL 37400 ENGINEER GREGORY M. GILLAND 6/18/13

WETHERILL ENGINEERING
559 Jones Franklin Rd. Suite 164
Raleigh, N.C. 27606
Bus: 919 851 8077
Fax: 919 851 8107
License: F-0377
TRANSPORTATION PLANNING/DESIGN - BRIDGE/STRUCTURE DESIGN
CIVIL/SITE DESIGN - GIS/GPS - CONSTRUCTION OBSERVATION

REVISIONS						
NO.	BY:	DATE:	NO.	BY:	DATE:	
1			3			
2			4			

SHEET NO. S-401
TOTAL SHEETS 671

STD. NO. EJS1 STR #9

ASSEMBLED BY : G.M. GILLAND		DATE : 5-3-13	
CHECKED BY : T.J. DIFFEE		DATE : 5-?-13	
DESIGN ENGINEER OF RECORD : GMG		DATE : 5-13	
DRAWN BY : REK 9/87	REV. 5/7/03R	RWW/JTE	
CHECKED BY : CRK 10/87	REV. 5/1/06R	TLA/GM	
	REV. 10/1/11	MAA/GM	

P:\2012\U-0071 Sites 3,8 & 9\Structures\DWG_9\U0071_SD_STR9_EJS_WE1.dgn
7/18/2013 5:20:00 PM

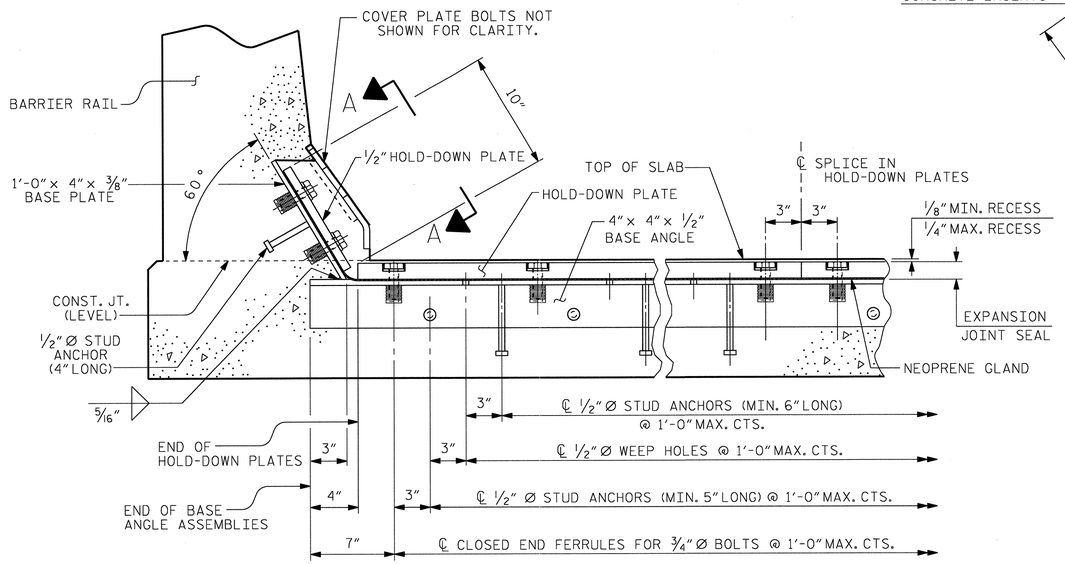

SECTION THRU RAIL NORMAL TO JOINT

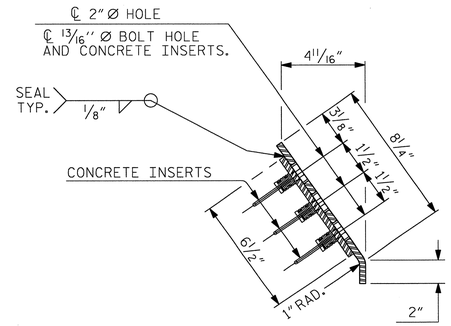

END VIEW

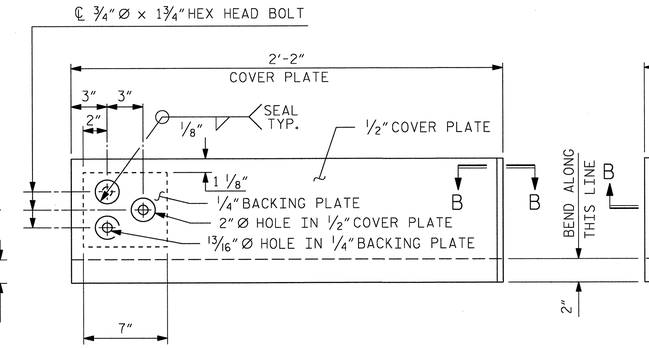

TYPE I - ELEVATION VIEW

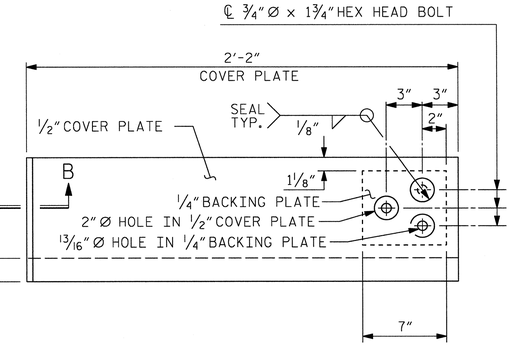

TYPE II - ELEVATION VIEW

COVER PLATE DETAILS

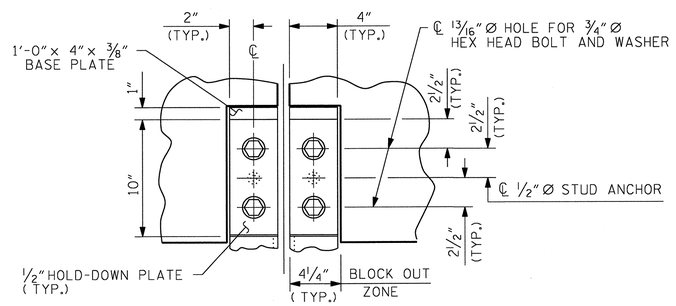

SECTION A-A

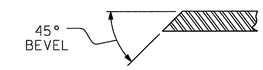

SECTION B-B

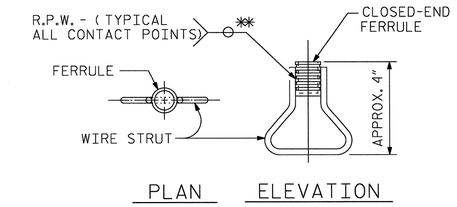

CONCRETE INSERT

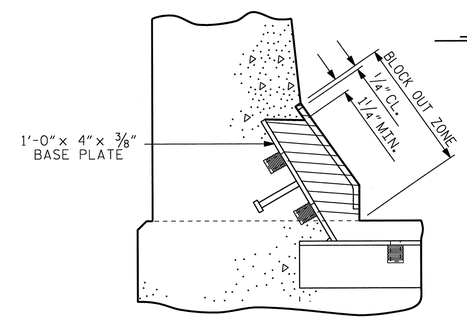

BLOCK OUT DETAIL

SEE " SECTION A-A " FOR OTHER DETAILS.

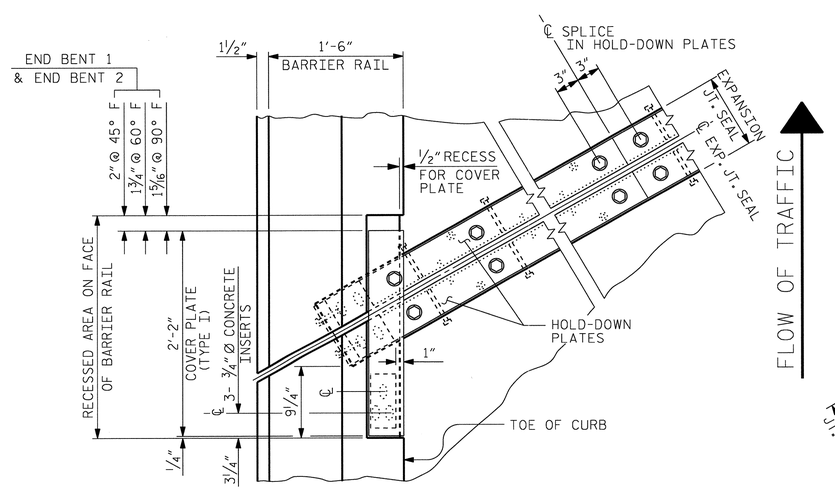

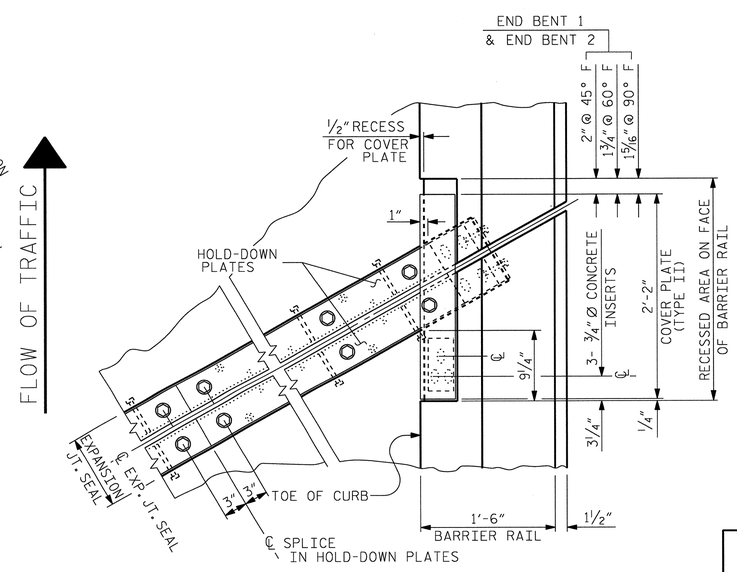

PLAN OF EXPANSION JOINT SEAL

ASSEMBLED BY : G.M. GILLAND		DATE : 5-3-13	
CHECKED BY : T.J. DIFFEE		DATE : 5-7-13	
DESIGN ENGINEER OF RECORD : GMG		DATE : 5-13	
DRAWN BY : REK 9/87	REV. 10/1/11	MAA/GM	
CHECKED BY : CRK 10/87	REV. 7/12	MAA/GM	
	REV. 10/12	MAA/GM	

NORTH CAROLINA PROFESSIONAL SEAL 037400 ENGINEER GREGORY M. GILLAND 9/8/15

WETHERILL ENGINEERING
559 Jones Franklin Rd. Suite 164
Raleigh, N.C. 27606
Bus: 919 851 8077
Fax: 919 851 8107
License: F-0377
TRANSPORTATION PLANNING/DESIGN - BRIDGE/STRUCTURE DESIGN
CIVIL/SITE DESIGN - GIS/GPS - CONSTRUCTION OBSERVATION

PROJECT NO. U-0071
DURHAM COUNTY
STATION: 138+40.45-LDFEB-

SHEET 2 OF 2

STATE OF NORTH CAROLINA
DEPARTMENT OF TRANSPORTATION
RALEIGH

STANDARD
EXPANSION JOINT SEAL DETAILS FOR BARRIER RAIL

REVISIONS								SHEET NO.
NO.	BY:	DATE:	NO.	BY:	DATE:			S-402
1			3					TOTAL SHEETS
2			4					671

STD. NO. EJS2 STR #9

P:\2012\U-0071 Sites 3,8 & 9\Structures\DWG_9\u0071_SD_STR9_EJS_WE1.dgn
7/8/2013 5:19:45 PM

SUPERSTRUCTURE REINFORCING STEEL LENGTHS ARE BASED ON THE FOLLOWING MINIMUM SPLICE LENGTHS					
BAR SIZE	SUPERSTRUCTURE EXCEPT APPROACH SLABS, PARAPET, AND BARRIER RAIL		APPROACH SLABS		PARAPET AND BARRIER RAIL
	EPOXY COATED	UNCOATED	EPOXY COATED	UNCOATED	
#4	2'-0"	1'-9"	2'-0"	1'-9"	2'-9"
#5	2'-6"	2'-2"	2'-6"	2'-2"	3'-5"
#6	3'-0"	2'-7"	3'-10"	2'-7"	4'-4"
#7	5'-3"	3'-6"			
#8	6'-10"	4'-7"			

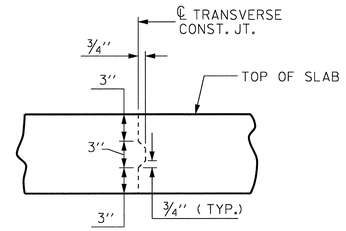

TRANSVERSE CONSTRUCTION JOINT DETAIL

NOTE: REINFORCING STEEL IN SLAB NOT SHOWN. LONGITUDINAL REINFORCING STEEL SHALL BE CONTINUOUS THRU JOINT.

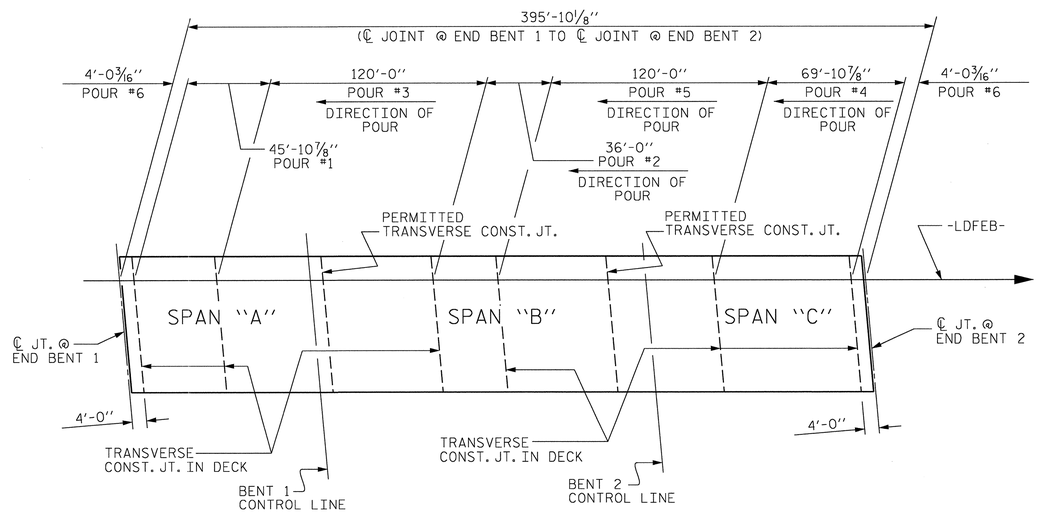

CONCRETE DECK POUR DETAIL

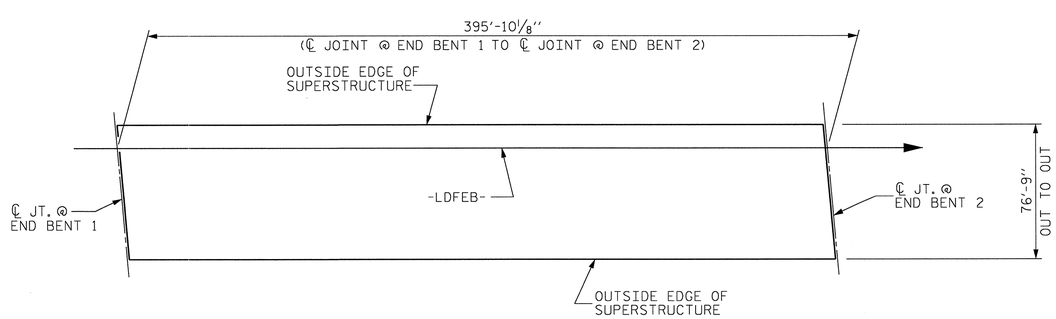

LAYOUT FOR COMPUTING AREA REINFORCED CONCRETE DECK SLAB (SQ. FT. = 30,381)

BILL OF MATERIAL

SPAN "A-B-C"

BAR	No.	SIZE	TYPE	LENGTH	WEIGHT
* A1	1564	#5	STR.	39'-6"	64434
A2	783	#5	STR.	34'-4"	28039
A3	782	#5	STR.	44'-4"	36159
* A101	2	#5	STR.	39'-1"	82
* A102	2	#5	STR.	33'-4"	70
* A103	2	#5	STR.	27'-7"	58
* A104	2	#5	STR.	21'-11"	46
* A105	2	#5	STR.	16'-2"	34
* A106	2	#5	STR.	10'-6"	22
* A107	2	#5	STR.	4'-9"	10
* A108	2	#5	STR.	36'-5"	76
* A109	2	#5	STR.	30'-8"	64
* A110	2	#5	STR.	24'-11"	52
* A111	2	#5	STR.	19'-3"	40
* A112	2	#5	STR.	13'-6"	28
* A113	2	#5	STR.	7'-10"	16
A201	1	#5	STR.	33'-4"	35
A202	1	#5	STR.	27'-8"	29
A203	1	#5	STR.	21'-11"	23
A204	1	#5	STR.	16'-2"	17
A205	1	#5	STR.	10'-6"	11
A206	1	#5	STR.	4'-9"	5
A207	1	#5	STR.	31'-3"	33
A208	1	#5	STR.	25'-6"	27
A209	1	#5	STR.	19'-9"	21
A210	1	#5	STR.	14'-1"	15
A211	1	#5	STR.	8'-4"	9
A212	1	#5	STR.	41'-3"	43
A213	1	#5	STR.	35'-6"	37
A214	1	#5	STR.	29'-10"	31
A215	1	#5	STR.	24'-1"	25
A216	1	#5	STR.	18'-4"	19
A217	1	#5	STR.	12'-8"	13
A218	1	#5	STR.	6'-11"	7
A219	1	#5	STR.	39'-1"	41
A220	1	#5	STR.	33'-4"	35
A221	1	#5	STR.	27'-7"	33
A222	1	#5	STR.	21'-11"	23
A223	1	#5	STR.	16'-2"	17
A224	1	#5	STR.	10'-6"	11
A225	1	#5	STR.	4'-9"	5
* B1	30	#4	STR.	28'-3"	566
* B2	204	#4	STR.	21'-10"	2975
* B3	204	#4	STR.	24'-6"	3339
* B4	202	#7	STR.	59'-3"	24464
* B5	202	#7	STR.	60'-0"	24773
B6	644	#5	STR.	58'-4"	39182
* G1	4	#5	STR.	39'-7"	165
* J1	148	#4	4	1'-5"	140
* K1	8	#5	1	7'-6"	63
* K2	24	#5	2	8'-7"	215
* K3	28	#5	STR.	8'-4"	243
* S1	112	#4	3	3'-8"	274

REINFORCING STEEL 103,941 LBS.

* EPOXY COATED REINFORCING STEEL 122,249 LBS.

BAR TYPES

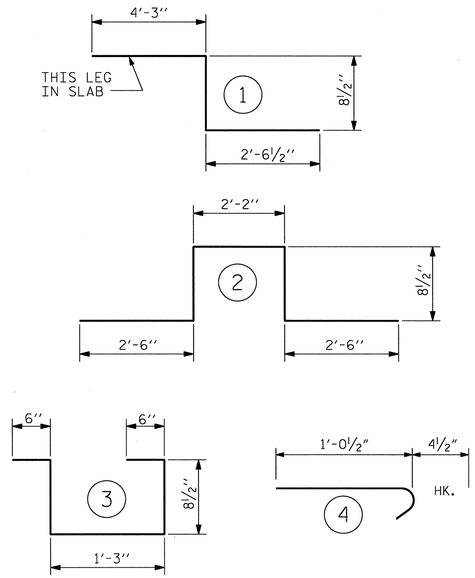

ALL BAR DIMENSIONS ARE OUT TO OUT

SUPERSTRUCTURE BILL OF MATERIAL

	CLASS AA CONCRETE	REINFORCING STEEL	EPOXY COATED REINFORCING STEEL
	(CU. YDS.)	(LBS.)	(LBS.)
TOTALS **	975.4	103,941	122,249

**QUANTITIES FOR CONCRETE BARRIER RAIL ARE NOT INCLUDED

GROOVING BRIDGE FLOORS		
APPROACH SLABS	3,341	SQ.FT.
BRIDGE DECK	27,808	SQ.FT.
TOTAL	31,149	SQ.FT.

CLASS AA CONCRETE BREAKDOWN	
POUR #1	113.1 CU. YDS.
POUR #2	88.7 CU. YDS.
POUR #3	294.0 CU. YDS.
POUR #4	162.3 CU. YDS.
POUR #5	294.0 CU. YDS.
POUR #6	23.3 CU. YDS.
TOTAL	975.4 CU. YDS.

PROJECT NO. U-0071
DURHAM COUNTY
STATION: 138+40.45-LDFEB-

STATE OF NORTH CAROLINA
DEPARTMENT OF TRANSPORTATION
RALEIGH

SUPERSTRUCTURE
BILL OF MATERIAL

NORTH CAROLINA PROFESSIONAL SEAL 37400 ENGINEER GREGORY M. GILLAND 9/19/13

WETHERILL ENGINEERING
559 Jones Franklin Rd. Suite 164
Raleigh, N.C. 27606
Bus: 919 851 8077
Fax: 919 851 8107
License: F-0377
TRANSPORTATION PLANNING/DESIGN - BRIDGE/STRUCTURE DESIGN
CIVIL/SITE DESIGN - GIS/GPS - CONSTRUCTION OBSERVATION

REVISIONS						SHEET NO.
NO.	BY:	DATE:	NO.	BY:	DATE:	S-403
1			3			TOTAL SHEETS
2			4			671

STR. #9

DRAWN BY : J.M. BRITT DATE : 4-24-13
CHECKED BY : G.M. GILLAND DATE : 5-8-13
DESIGN ENGINEER OF RECORD: G.M. GILLAND DATE : 5-13

P:\2012\U-0071 Sites 3,8 & 9\Structures\DWG_9\U0071_SD_STR9_BM_WE1.dgn
7/8/2013 5:20:56 PM

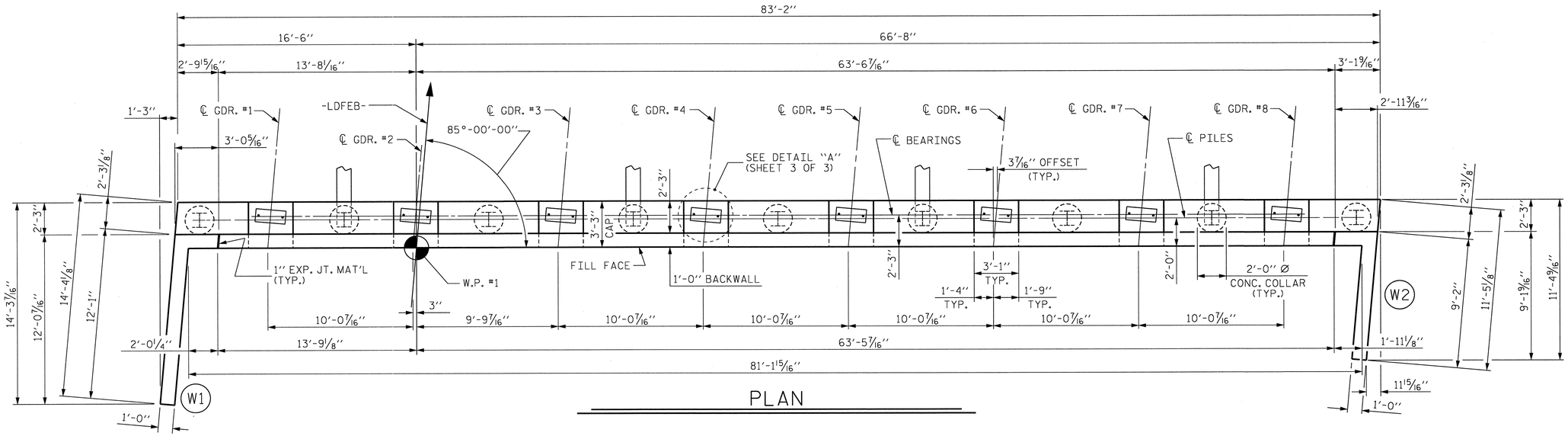

PLAN

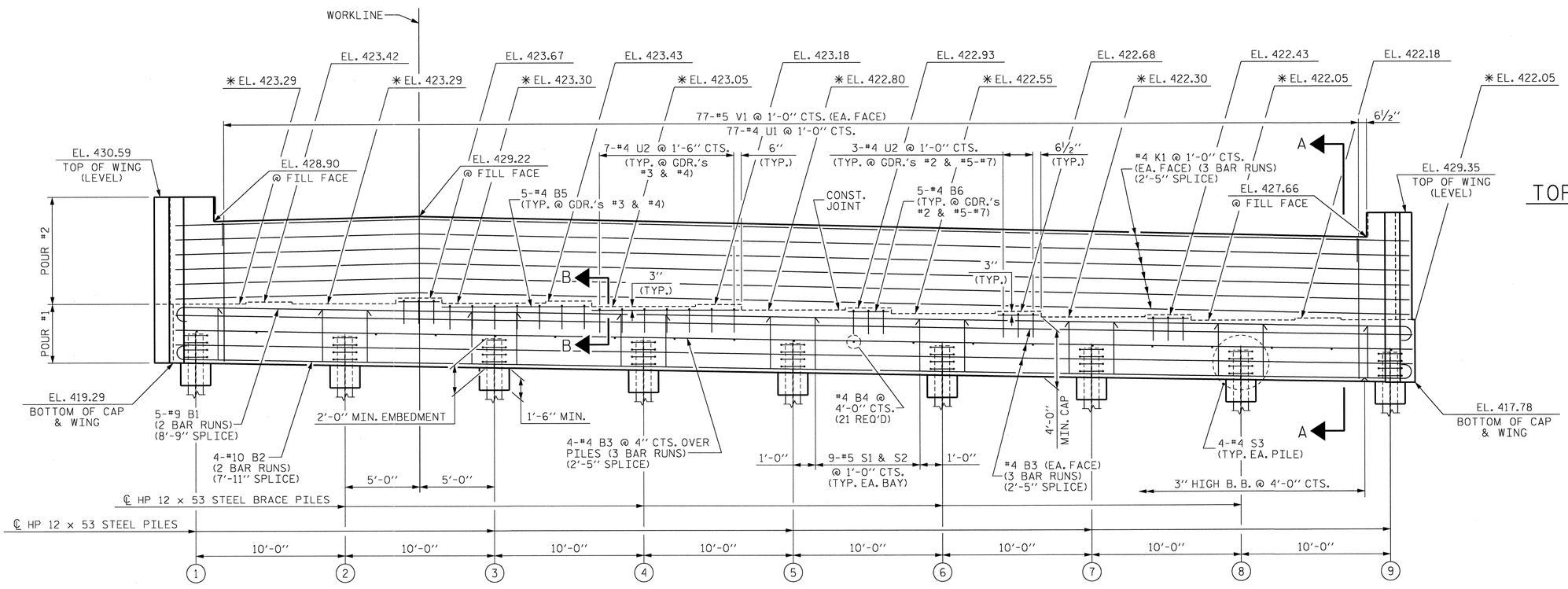

ELEVATION

TOP OF PILE ELEVATIONS

1	EL. 421.27	6	EL. 420.37
2	EL. 421.09	7	EL. 420.18
3	EL. 420.91	8	EL. 420.00
4	EL. 420.73	9	EL. 419.82
5	EL. 420.55		

PROJECT NO. U-0071
DURHAM COUNTY
STATION: 138+40.45-LDFEB-

SHEET 1 OF 3

STATE OF NORTH CAROLINA
DEPARTMENT OF TRANSPORTATION
RALEIGH

SUBSTRUCTURE
END BENT 1

NORTH CAROLINA PROFESSIONAL SEAL 037400 ENGINEER GREGORY M. GILLAND 6/19/13

WETHERILL ENGINEERING
559 Jones Franklin Rd. Suite 164
Raleigh, N.C. 27606
Bus: 919 851 8077
Fax: 919 851 8107
License: F-0377
TRANSPORTATION PLANNING/DESIGN - BRIDGE/STRUCTURE DESIGN
CIVIL/SITE DESIGN - GIS/GPS - CONSTRUCTION OBSERVATION

REVISIONS							SHEET NO.
NO.	BY:	DATE:	NO.	BY:	DATE:		S-10A
1			3				TOTAL SHEETS
2			4				67

DRAWN BY : J.M. BRITT DATE : 4-9-13
CHECKED BY : T. DIFFEE DATE : 5-22-13
DESIGN ENGINEER OF RECORD: G.M. GILLAND DATE : 5-13

P:\2012\U-0071 Sites 3,8 & 9\Structures\DWG_SW\0071_SD_STR9_EB1_WE1.dgn
7/18/2013 5:28:07 PM

STR. #9

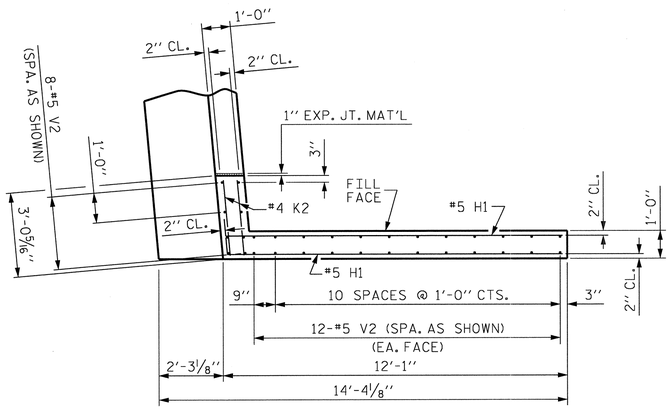

PLAN OF WING (W1)

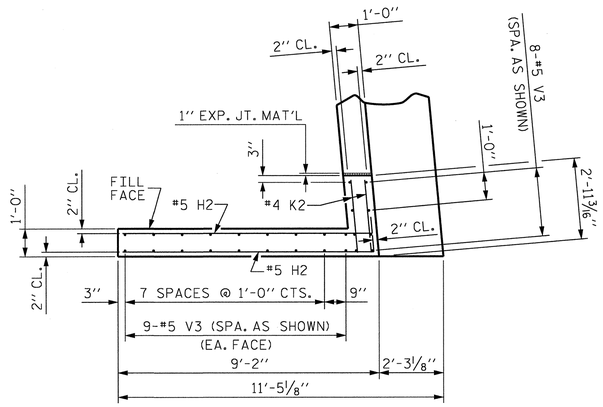

PLAN OF WING (W2)

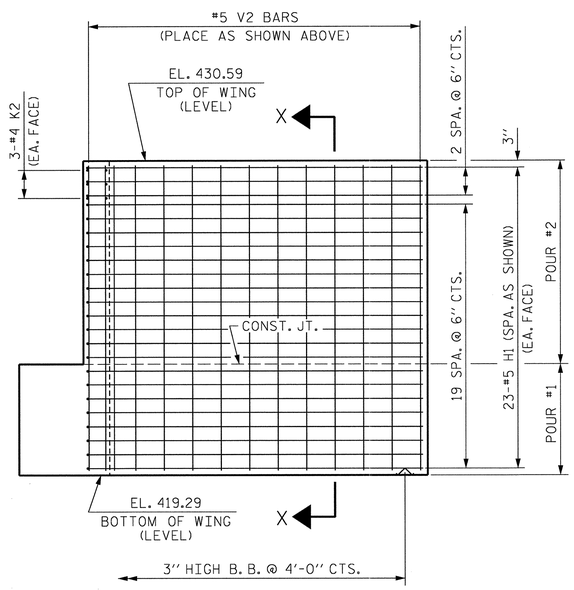

ELEVATION OF WING (W1)

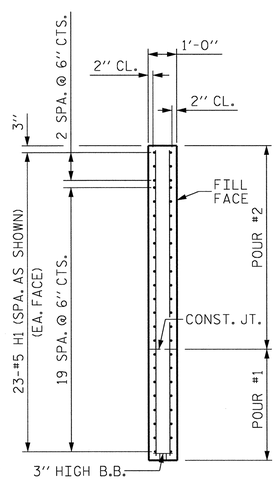

SECTION X-X

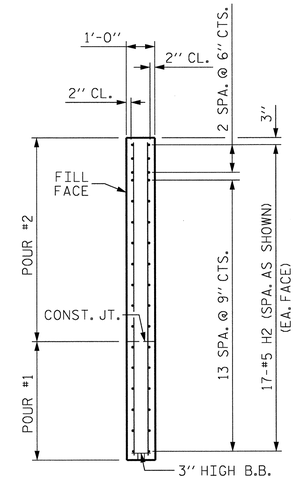

SECTION Y-Y

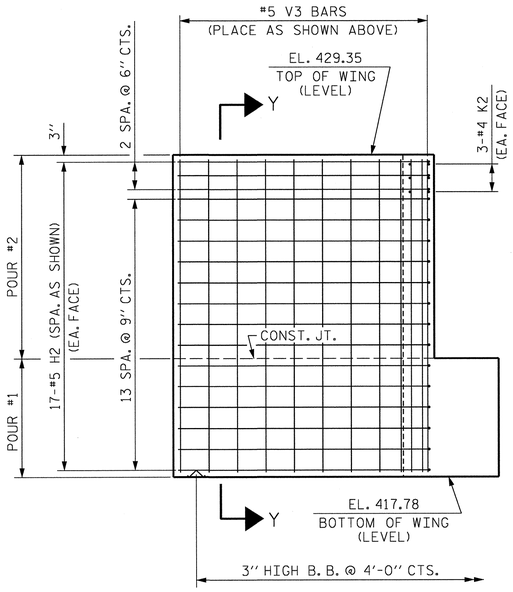

ELEVATION OF WING (W2)

PROJECT NO. U-0071
DURHAM COUNTY
STATION: 138+40.45-LDFEB-

SHEET 2 OF 3

STATE OF NORTH CAROLINA
DEPARTMENT OF TRANSPORTATION
RALEIGH

SUBSTRUCTURE

END BENT 1

NORTH CAROLINA PROFESSIONAL SEAL 037400 ENGINEER GREGORY M. GILLAND 6/19/13

WETHERILL ENGINEERING
559 Jones Franklin Rd. Suite 164
Raleigh, N.C. 27606
Bus: 919 851 8077
Fax: 919 851 8107
License: F-0377
TRANSPORTATION PLANNING/DESIGN - BRIDGE/STRUCTURE DESIGN
CIVIL/SITE DESIGN - GIS/GPS - CONSTRUCTION OBSERVATION

REVISIONS						SHEET NO.
NO.	BY:	DATE:	NO.	BY:	DATE:	S-405
1			3			TOTAL SHEETS
2			4			671

DRAWN BY : J.M. BRITT DATE : 4-9-13
CHECKED BY : T. DIFFEE DATE : 5-22-13
DESIGN ENGINEER OF RECORD: G.M. GILLAND DATE : 5-13

P:\2012\U-0071 Sites 3,8 & 9\Structures\DWG_9\U0071_SD_STR9_EB1_WE1.dgn
7/8/2013 5:28:29 PM

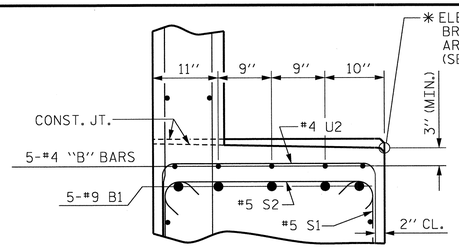

SECTION B-B

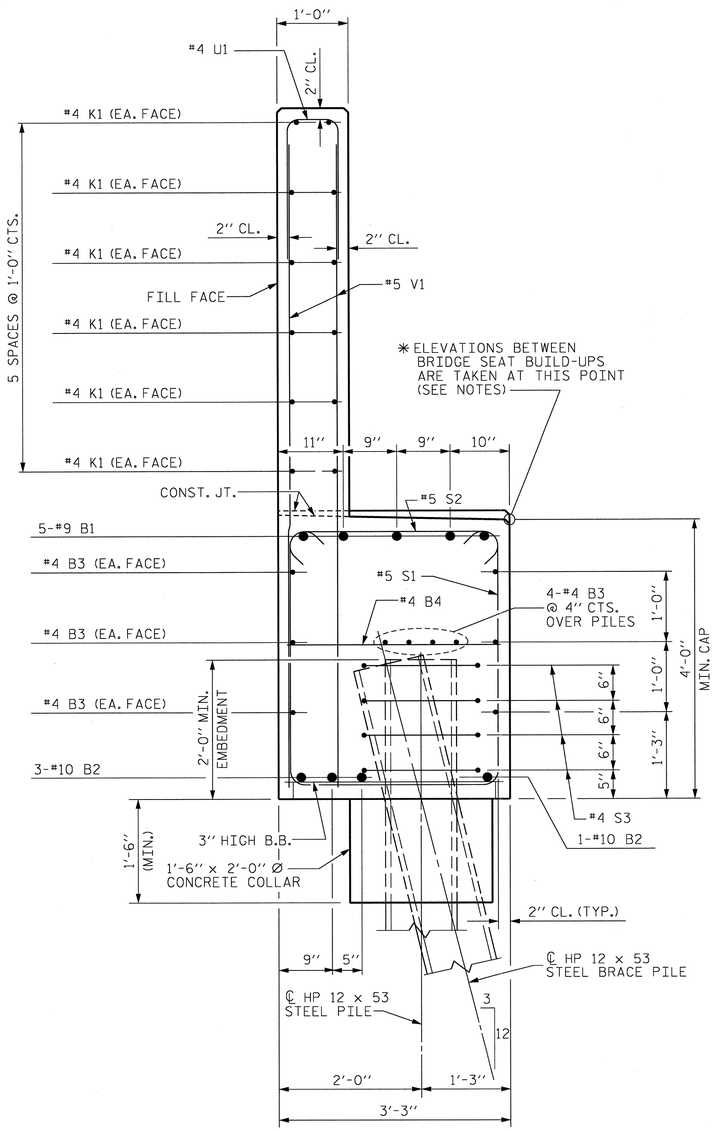

SECTION A-A

NOTES :

STIRRUPS AND #4 U2 BARS IN CAP MAY BE SHIFTED AS NECESSARY TO CLEAR ANCHOR BOLTS.

BACKWALL SHALL BE PLACED BEFORE APPLYING THE EPOXY PROTECTIVE COATING.

THE TOP SURFACE AREAS OF THE END BENT CAPS SHALL BE CURED IN ACCORDANCE WITH THE STANDARD SPECIFICATIONS EXCEPT THE MEMBRANE CURING COMPOUND METHOD SHALL NOT BE USED.

✱ THE TOP SURFACE OF THE CAP EXCEPT THE BRIDGE SEAT BUILDUPS SHALL BE SLOPED TRANSVERSELY FROM THE FILL FACE TO THE BACK FACE AT THE RATE OF 2%.

THE #5 V1 IN THE BACKWALL SHALL BE PLACED 2'' CLEAR FROM THE TOP OF THE BACKWALL.

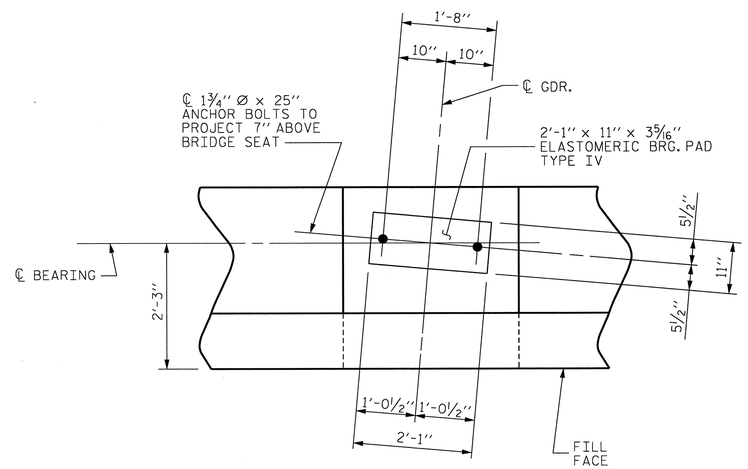

DETAIL "A"

(TYP. EA. GDR.)

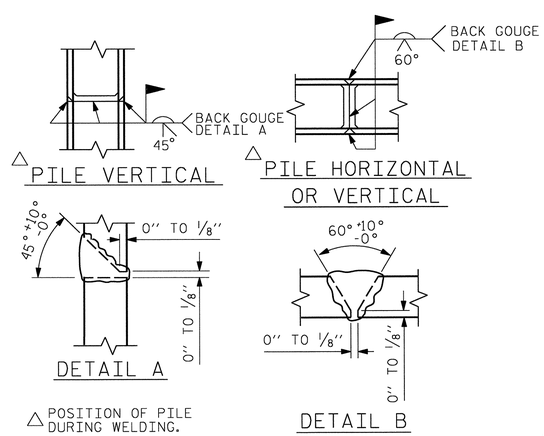

PILE SPLICE DETAIL

BAR TYPES

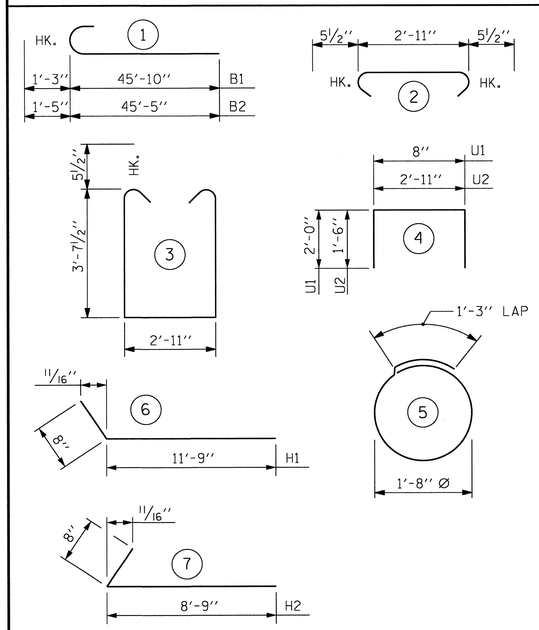

ALL BAR DIMENSIONS ARE OUT TO OUT.

BILL OF MATERIAL

END BENT 1

BAR	NO.	SIZE	TYPE	LENGTH	WEIGHT
B1	10	#9	1	47'-1"	1,601
B2	8	#10	1	46'-10"	1,612
B3	30	#4	STR	29'-3"	586
B4	21	#4	STR	2'-11"	41
B5	10	#4	STR	9'-10"	66
B6	20	#4	STR	2'-9"	37
H1	46	#5	6	12'-5"	596
H2	34	#5	7	9'-5"	334
K1	36	#4	STR	29'-3"	703
K2	12	#4	STR	2'-7"	21
S1	72	#5	3	11'-1"	832
S2	72	#5	2	3'-10"	288
S3	36	#4	5	6'-6"	156
U1	77	#4	4	4'-8"	204
U2	26	#4	4	5'-11"	103
V1	154	#5	STR	9'-4"	1,499
V2	32	#5	STR	10'-11"	364
V3	26	#5	STR	11'-2"	303

REINFORCING STEEL 9,346 LBS.

CLASS A CONCRETE BREAKDOWN :

POUR #1 47.7 CU. YDS.

POUR #2 23.2 CU. YDS.

TOTAL CLASS A CONCRETE 70.9 CU. YDS.

HP 12 x 53 STEEL PILES No. 9 386 LIN. FT.

STEEL PILE POINTS 9 EACH

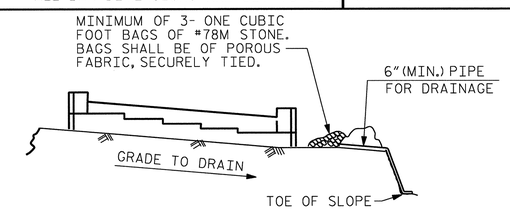

BAGGED STONE AND PIPE SHALL BE PLACED IMMEDIATELY AFTER COMPLETION OF END BENT EXCAVATION. PIPE MAY BE EITHER CONCRETE, CORRUGATED STEEL, CORRUGATED ALUMINUM ALLOY, OR CORRUGATED PLASTIC. PERFORATED PIPE WILL NOT BE ALLOWED.

BAGGED STONE SHALL REMAIN IN PLACE UNTIL THE ENGINEER DIRECTS THAT IT BE REMOVED. THE CONTRACTOR SHALL REMOVE AND DISPOSE OF SILT ACCUMULATIONS AT BAGGED STONE WHEN SO DIRECTED BY THE ENGINEER. BAGS SHALL BE REMOVED AND REPLACED WHENEVER THE ENGINEER DETERMINES THAT THEY HAVE DETERIORATED AND LOST THEIR EFFECTIVENESS.

NO SEPARATE PAYMENT WILL BE MADE FOR THIS WORK AND THE ENTIRE COST OF THIS WORK SHALL BE INCLUDED IN THE UNIT CONTRACT PRICE BID FOR THE SEVERAL PAY ITEMS.

TEMPORARY DRAINAGE AT END BENT 1

PROJECT NO. U-0071

DURHAM COUNTY

STATION: 138+40.45-LDFEB-

SHEET 3 OF 3

STATE OF NORTH CAROLINA
DEPARTMENT OF TRANSPORTATION
RALEIGH

SUBSTRUCTURE

END BENT 1

NORTH CAROLINA PROFESSIONAL SEAL 37400 ENGINEER GREGORY M. GILLAND 9/18/13

WETHERILL ENGINEERING
559 Jones Franklin Rd. Suite 164
Raleigh, N.C. 27606
Bus: 919 851 8077
Fax: 919 851 8107
License: F-0377
TRANSPORTATION PLANNING/DESIGN - BRIDGE/STRUCTURE DESIGN
CIVIL/SITE DESIGN - GIS/GPS - CONSTRUCTION OBSERVATION

REVISIONS						SHEET NO.
NO.	BY:	DATE:	NO.	BY:	DATE:	S-406
1			3			TOTAL SHEETS
2			4			671

DRAWN BY : J.M. BRITT DATE : 4-9-13
CHECKED BY : T. DIFFEE DATE : 5-22-13
DESIGN ENGINEER OF RECORD: G.M. GILLAND DATE : 5-13

P:\2012\U-0071 Sites 3,8 & 9\Structures\DWG_9\U0071_SD_STR9_EB1_WE1.dgn
7/8/2013 5:29:36 PM

STR. #9

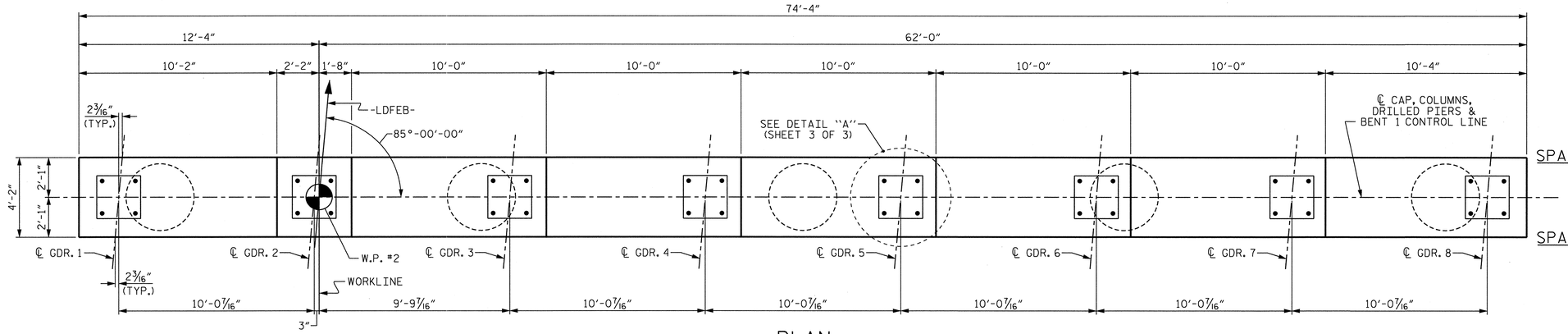

PLAN

(CRASHWALL NOT SHOWN FOR CLARITY)

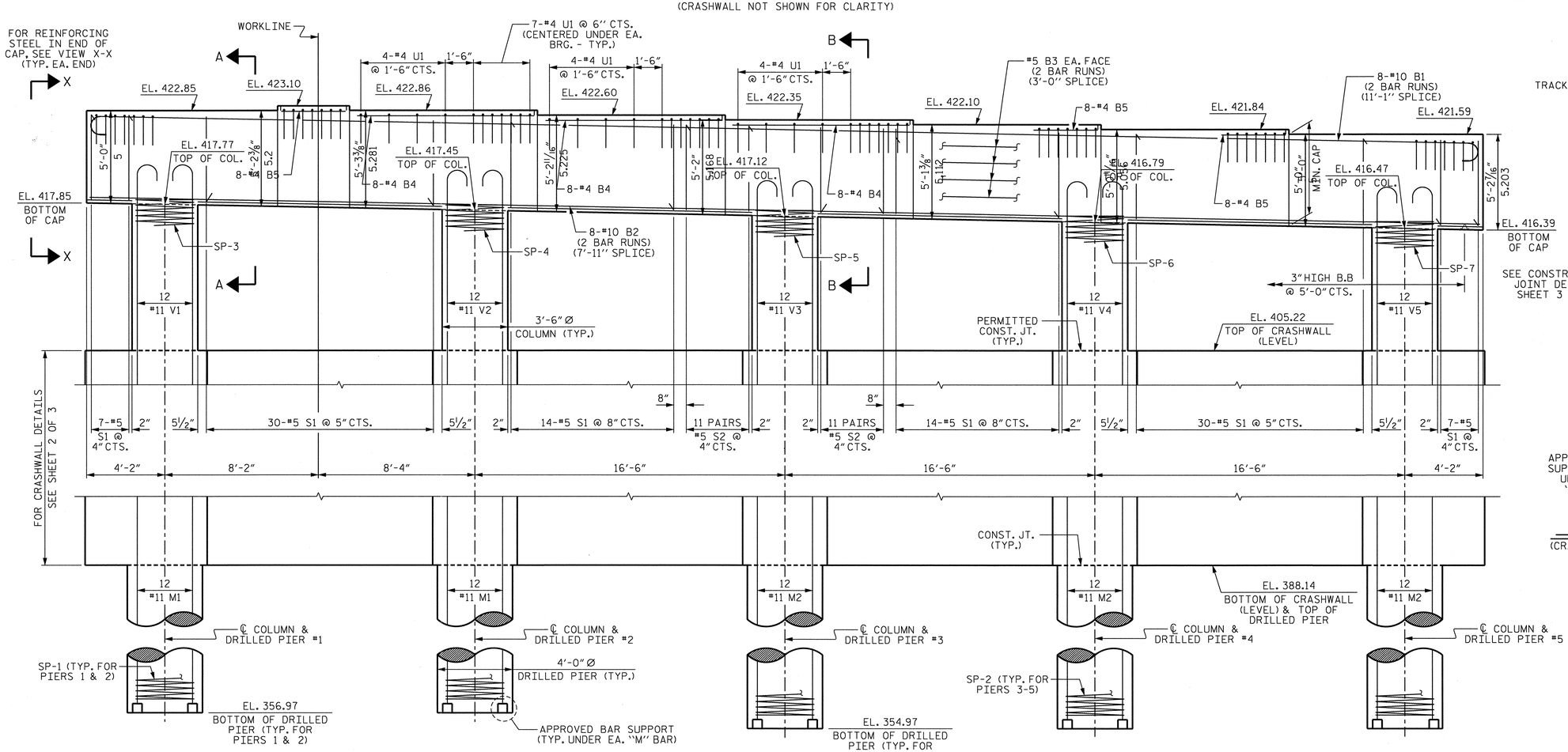

NOTE: INVERT ALTERNATE STIRRUPS

ELEVATION

(CRASHWALL REINFORCING NOT SHOWN FOR CLARITY)

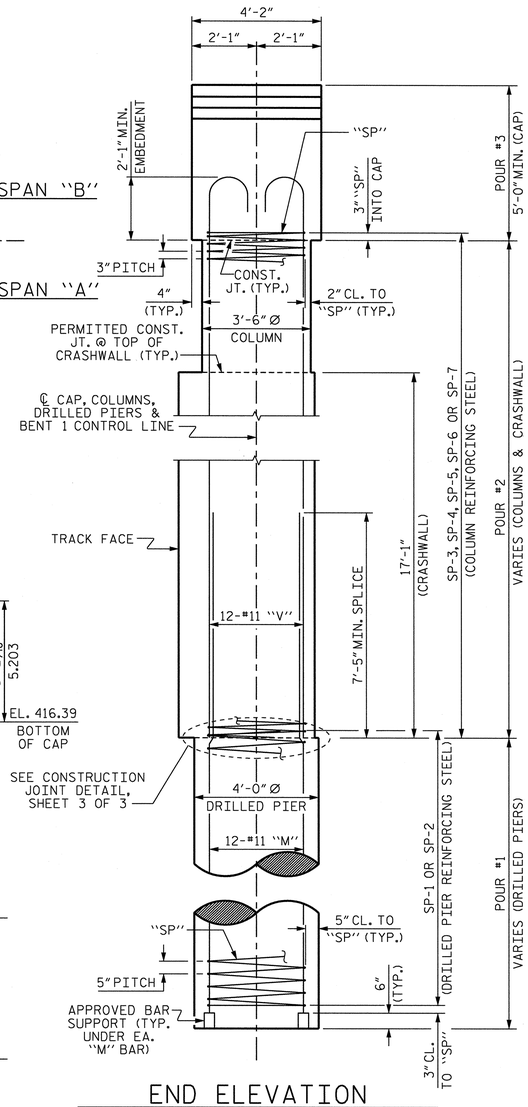

END ELEVATION

(CRASHWALL REINFORCING NOT SHOWN FOR CLARITY)

PROJECT NO. U-0071

DURHAM COUNTY

STATION: 138+40.45-LDFEB-

SHEET 1 OF 3

STATE OF NORTH CAROLINA
DEPARTMENT OF TRANSPORTATION
RALEIGH

SUBSTRUCTURE

BENT 1

NORTH CAROLINA PROFESSIONAL SEAL 37400 ENGINEER GREGORY M. GILLAND 1/27/14

WETHERILL ENGINEERING
559 Jones Franklin Rd. Suite 164
Raleigh, N.C. 27606
Bus: 919 851 8077
Fax: 919 851 8107
License: F-0377

TRANSPORTATION PLANNING/DESIGN - BRIDGE/STRUCTURE DESIGN
CIVIL/SITE DESIGN - GIS/GPS - CONSTRUCTION OBSERVATION

REVISIONS						SHEET NO.
NO.	BY:	DATE:	NO.	BY:	DATE:	S-407
1			3			TOTAL SHEETS
2			4			671

DRAWN BY : G.M. GILLAND DATE : 5-1-13
CHECKED BY : T. DIFFEE DATE : 5-15-13
DESIGN ENGINEER OF RECORD: G.M. GILLAND DATE : 5-13

P:\2012\U-0071 Sites 3,8 & 9\Structures\DWG_9\U0071_SD_STR9_B1_WE.dgn
1/27/2014 3:16:26 PM

STR #9

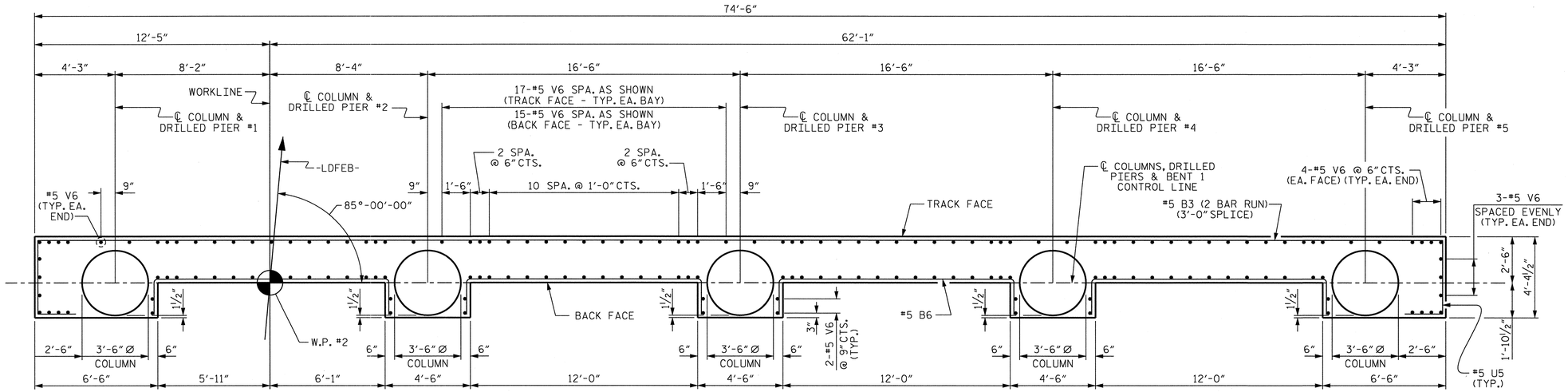

PLAN OF CRASHWALL

(COLUMN REINFORCING NOT SHOWN FOR CLARITY)

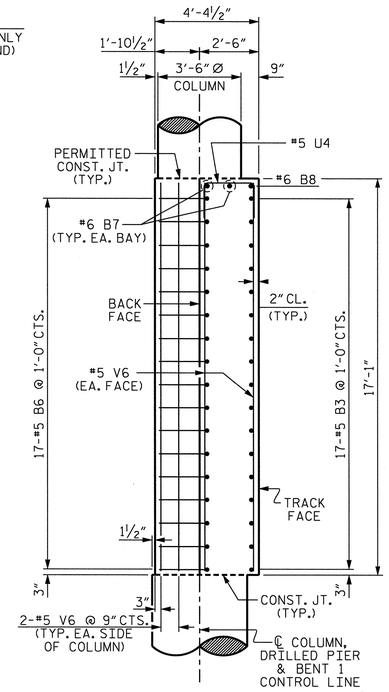

SECTION C-C

(COLUMN REINFORCING NOT SHOWN FOR CLARITY)

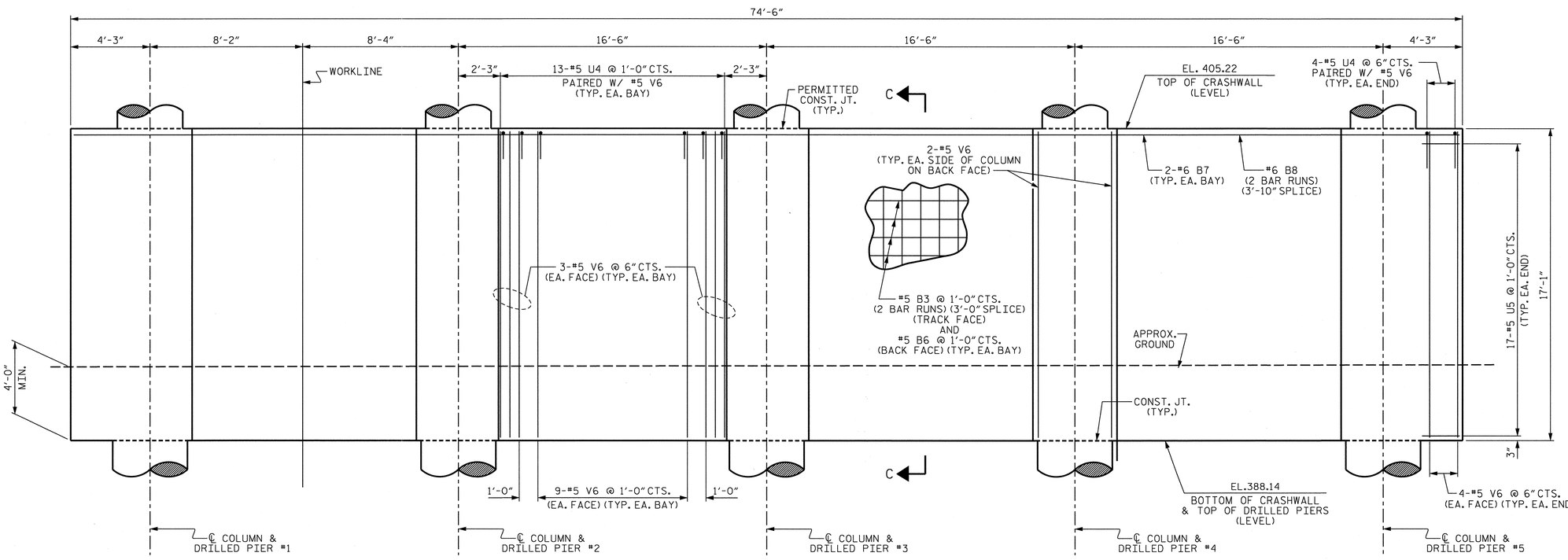

ELEVATION OF CRASHWALL

(COLUMN REINFORCING NOT SHOWN FOR CLARITY)

PROJECT NO. U-0071

DURHAM COUNTY

STATION: 138+40.45-LDFEB-

SHEET 2 OF 3

STATE OF NORTH CAROLINA
DEPARTMENT OF TRANSPORTATION
RALEIGH

SUBSTRUCTURE

BENT 1

REVISIONS								SHEET NO.
NO.	BY:	DATE:	NO.	BY:	DATE:			S-68
1			3					TOTAL SHEETS
2			4					671

NORTH CAROLINA PROFESSIONAL SEAL 37400 ENGINEER GREGORY M. GILLAND 1/27/14

WETHERILL ENGINEERING
559 Jones Franklin Rd. Suite 164
Raleigh, N.C. 27606
Bus: 919 851 8077
Fax: 919 851 8107
License: F-0377

TRANSPORTATION PLANNING/DESIGN - BRIDGE/STRUCTURE DESIGN
CIVIL/SITE DESIGN - GIS/GPS - CONSTRUCTION OBSERVATION

DRAWN BY :	G.M. GILLAND	DATE :	5-1-13
CHECKED BY :	T. DIFFEE	DATE :	5-15-13
DESIGN ENGINEER OF RECORD:	G.M. GILLAND	DATE :	5-13

P:\2012\U-0071 Sites 3,8 & 9\Structures\DWG_9\U07_1_SD_STR9_B1_WEI.dgn
1/27/2014 3:16:43 PM

STR #9

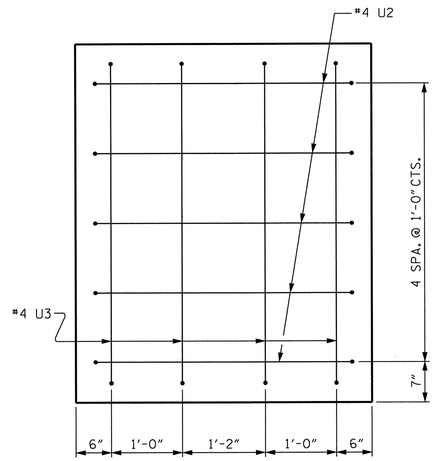

VIEW X-X

(TYP. @ EA. END)

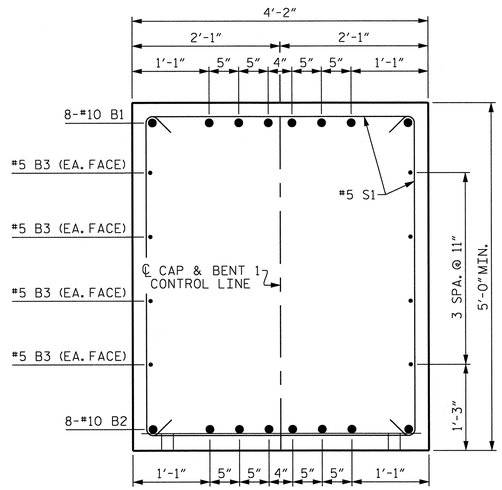

SECTION A-A

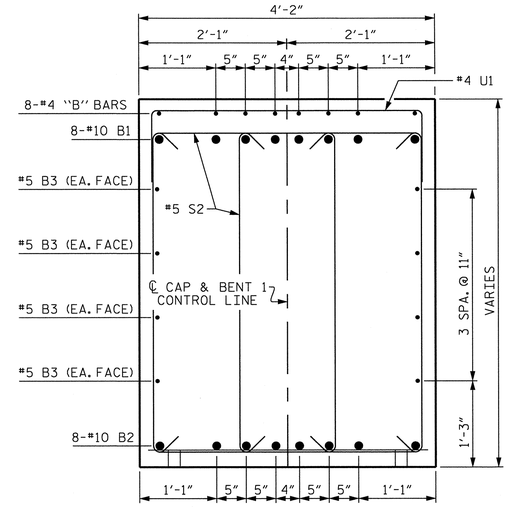

SECTION B-B

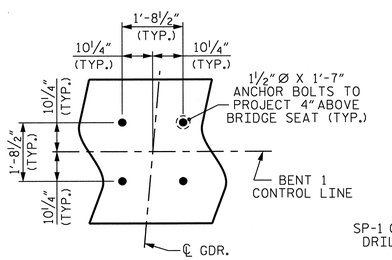

DETAIL "A"

(TYP. @ EA. BEARING)

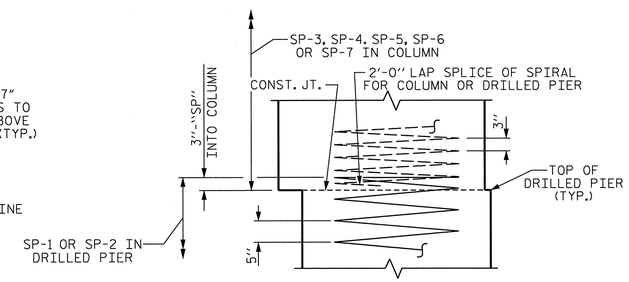

CONSTRUCTION JOINT DETAIL

NOTES :

HOOKS ON "V" BARS MAY BE TURNED AS NECESSARY FOR PLACING REINFORCING STEEL.

STIRRUPS IN CAP MAY BE SHIFTED AS NECESSARY TO CLEAR ANCHOR BOLTS.

ALL STEEL IN THE DRILLED PIERS IS INCLUDED IN THE PAY ITEMS FOR "REINFORCING STEEL" AND "SPIRAL COLUMN REINFORCING STEEL".

THE LOCATION OF THE CONSTRUCTION JOINT IN THE DRILLED PIERS AND BOTTOM OF CRASHWALL IS BASED ON AN APPROXIMATE GROUND LINE ELEVATION. IF THE CONSTRUCTION JOINT IS ABOVE THE ACTUAL GROUND ELEVATION, THE CONTRACTOR SHALL PLACE THE CONSTRUCTION JOINT 4 FOOT BELOW THE GROUND LINE.

THE CONTRACTOR SHALL ADJUST THE GIRDER BUILD-UPS AS NECESSARY TO INCORPORATE A MAXIMUM PERMISSIBLE VARIATION IN POT BEARING DEPTH OF ½", SEE SPECIAL PROVISION FOR POT BEARINGS.

USE CONCRETE DOWEL DOBIES AS REQUIRED TO SUPPORT REINFORCING FOR CRASHWALL.

BAR TYPES

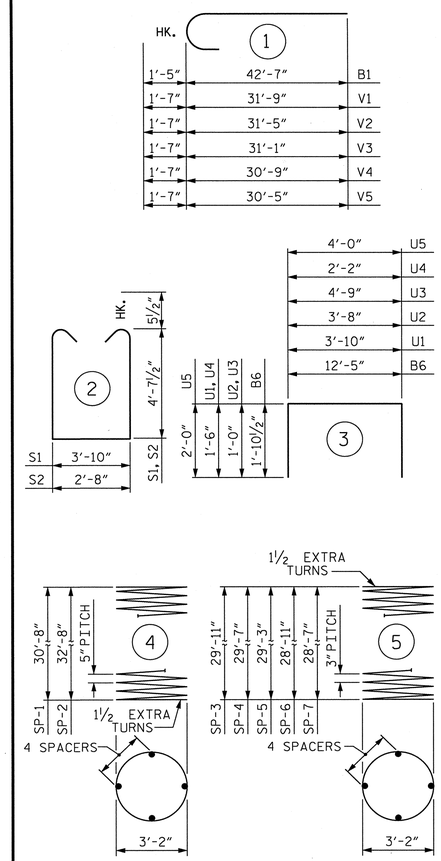

ALL BAR DIMENSIONS ARE OUT TO OUT.

BILL OF MATERIAL

BENT #1

BAR	NO.	SIZE	TYPE	LENGTH	WEIGHT
B1	16	#10	1	44'-0"	3,029
B2	16	#10	STR	41'-0"	2,823
B3	50	#5	STR	38'-7"	2,012
B4	24	#4	STR	9'-5"	151
B5	24	#4	STR	3'-5"	55
B6	68	#5	3	16'-2"	1,147
B7	8	#6	STR	13'-2"	158
B8	2	#6	STR	39'-0"	117
M1	24	#11	STR	38'-4"	4,888
M2	36	#11	STR	40'-4"	7,714
S1	102	#5	2	14'-0"	1,489
S2	44	#5	2	12'-10"	589
U1	68	#4	3	6'-10"	310
U2	10	#4	3	5'-8"	38
U3	8	#4	3	6'-9"	36
U4	60	#5	3	5'-2"	323
U5	34	#5	3	8'-0"	284
V1	12	#11	1	33'-4"	2,125
V2	12	#11	1	33'-0"	2,104
V3	12	#11	1	32'-8"	2,083
V4	12	#11	1	32'-4"	2,061
V5	12	#11	1	32'-0"	2,040
V6	168	#5	STR	16'-9"	2,935
TOTAL REINFORCING STEEL LBS.					38,511
SP-1	2	*	4	737'-0"	1,537
SP-2	3	*	4	783'-6"	2,452
SP-3	1	**	5	1,190'-10"	795
SP-4	1	**	5	1,176'-1"	786
SP-5	1	**	5	1,163'-9"	777
SP-6	1	**	5	1,149'-1"	768
SP-7	1	**	5	1,139'-3"	761
SPIRAL COLUMN REINFORCING STEEL LBS.					7,876

CLASS A CONCRETE BREAKDOWN	
POUR #2 (COLUMNS & CRASHWALL)	170.5 C.Y.
POUR #3 (BENT CAP)	60.0 C.Y.
TOTAL	230.5 C.Y.
DRILLED PIER QUANTITIES	
DRILLED PIER CONCRETE	
POUR #1 (DRILLED PIERS)	75.8 C.Y.
4'-0" DIA. DRILLED PIERS IN SOIL	115.8 LIN. FT.
4'-0" DIA. DRILLED PIERS NOT IN SOIL	46 LIN. FT.
CSL TUBES ♦	677 LIN. FT.

* THIS "SP" SPIRAL REINFORCING STEEL SHALL BE W31 OR D31 COLD DRAWN WIRE OR #5 PLAIN OR DEFORMED BAR.

** THIS "SP" SPIRAL REINFORCING STEEL SHALL BE W20 OR D20 COLD DRAWN WIRE OR #4 PLAIN OR DEFORMED BAR.

♦ NO SEPARATE PAYMENT WILL BE MADE FOR CSL TUBES. CSL TUBES WILL BE INCLUDED IN THE DRILLED PIER PAY ITEMS.

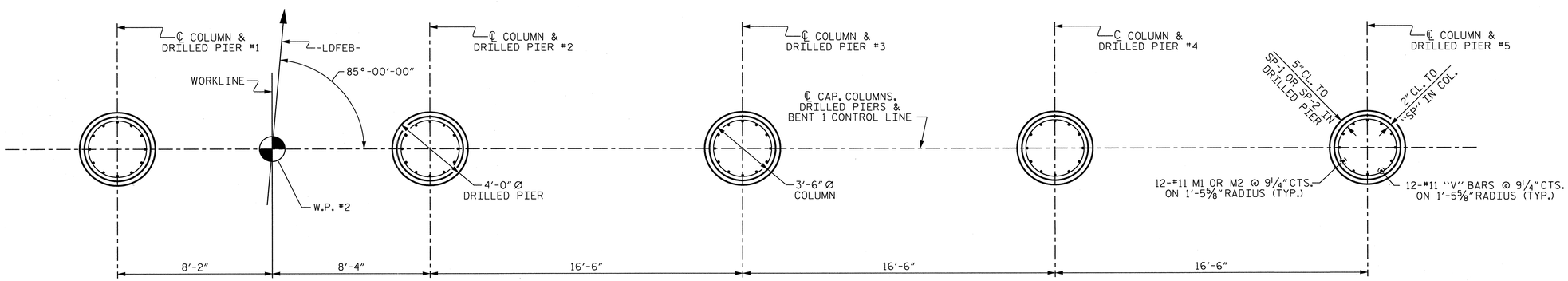

PLAN OF COLUMNS AND DRILLED PIERS

REINFORCING STEEL AND DIMENSIONS ARE TYPICAL FOR ALL COLUMNS AND DRILLED PIERS SHOWN

PROJECT NO. U-0071
DURHAM COUNTY
STATION: 138+40.45-LDFEB-

SHEET 3 OF 3

STATE OF NORTH CAROLINA
DEPARTMENT OF TRANSPORTATION
RALEIGH

SUBSTRUCTURE

BENT 1

NORTH CAROLINA PROFESSIONAL SEAL 37400 ENGINEER GREGORY M. GILLAND 1/21/14

WETHERILL ENGINEERING
559 Jones Franklin Rd. Suite 164
Raleigh, N.C. 27606
Bus: 919 851 8077
Fax: 919 851 8107
License: F-0377
TRANSPORTATION PLANNING/DESIGN - BRIDGE/STRUCTURE DESIGN
CIVIL/SITE DESIGN - GIS/GPS - CONSTRUCTION OBSERVATION

REVISIONS							SHEET NO.
NO.	BY:	DATE:	NO.	BY:	DATE:		S-409
1			3				TOTAL SHEETS
2			4				671

DRAWN BY : G.M. GILLAND DATE : 5-1-13
CHECKED BY : T. DIFFEE DATE : 5-15-13
DESIGN ENGINEER OF RECORD: G.M. GILLAND DATE : 5-13

P:\2012\U-0071 Sites 3,8 & 9\Structures\DWG_9\U0071_SD_STR9_B1_WE1.dgn
1/27/2014 3:16:57 PM

STR #9

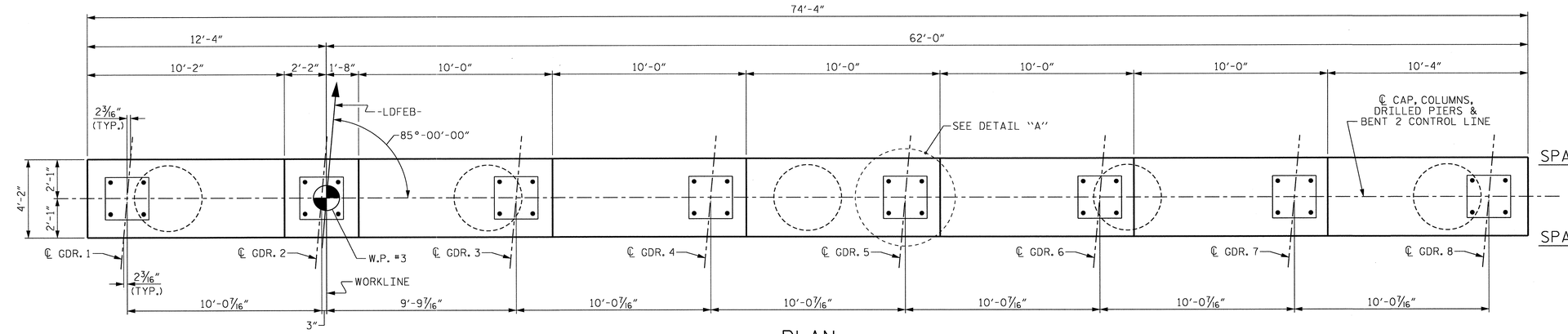

PLAN

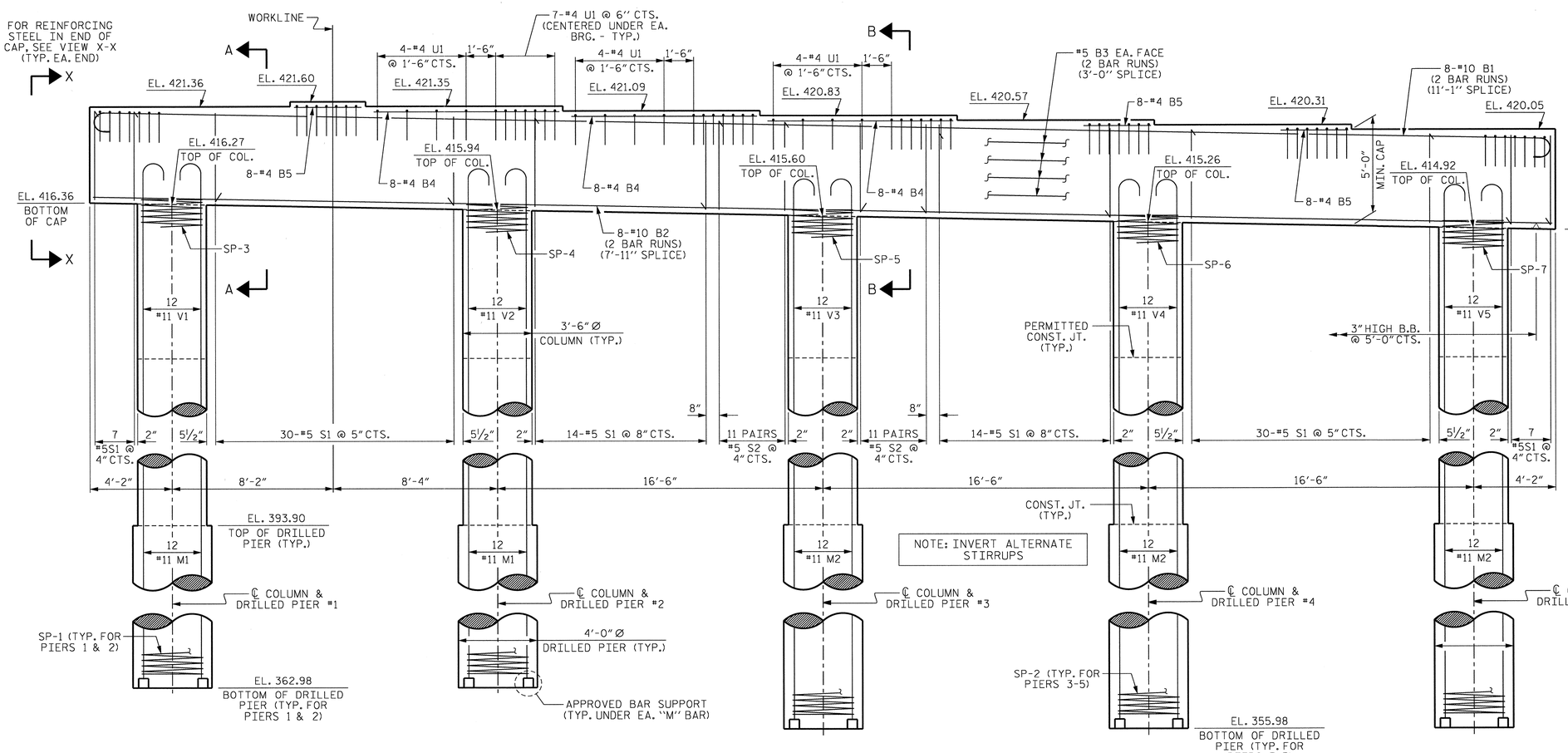

ELEVATION

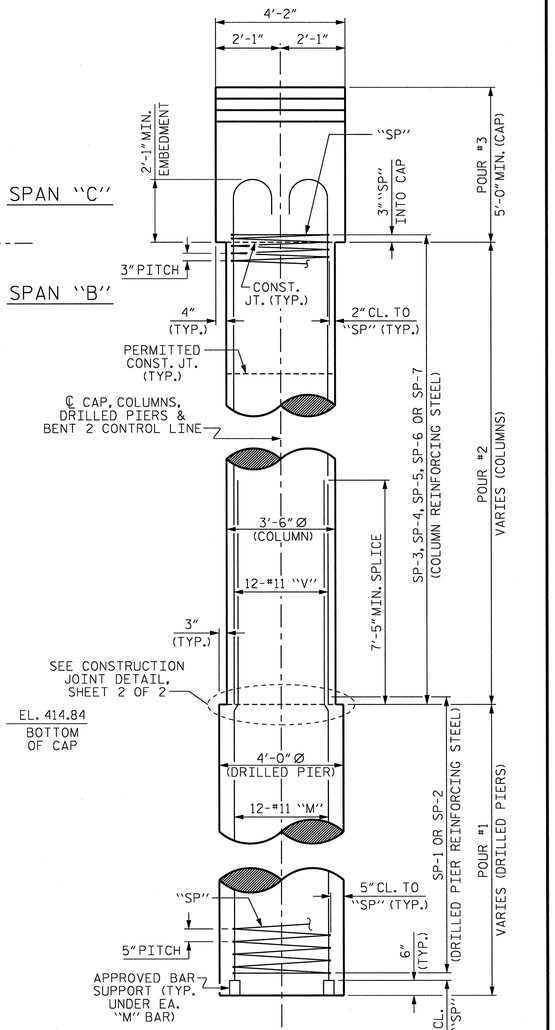

END ELEVATION

PROJECT NO. U-0071

DURHAM COUNTY

STATION: 138+40.45-LDFEB-

SHEET 1 OF 2

STATE OF NORTH CAROLINA
DEPARTMENT OF TRANSPORTATION
RALEIGH

SUBSTRUCTURE

BENT 2

REVISIONS						SHEET NO.
NO.	BY:	DATE:	NO.	BY:	DATE:	S-410
1			3			TOTAL SHEETS
2			4			671

NORTH CAROLINA PROFESSIONAL SEAL 37400 ENGINEER GREGORY M. GILLAND 6/19/13

WETHERILL ENGINEERING
559 Jones Franklin Rd. Suite 164
Raleigh, N.C. 27606
Bus: 919 851 8077
Fax: 919 851 8107
License: F-0377

TRANSPORTATION PLANNING/DESIGN - BRIDGE/STRUCTURE DESIGN
CIVIL/SITE DESIGN - GIS/GPS - CONSTRUCTION OBSERVATION

DRAWN BY :	G.M. GILLAND	DATE :	5-1-13
CHECKED BY :	T. DIFFEE	DATE :	5-20-13
DESIGN ENGINEER OF RECORD:	G.M. GILLAND	DATE :	5-13

P:\2012\U-0071 Sites 3,8 & 9\Structures\DWG_9\U0071_SD_STR9_B2_WEI.dgn
7/9/2013 8:21:46 AM

STR #9

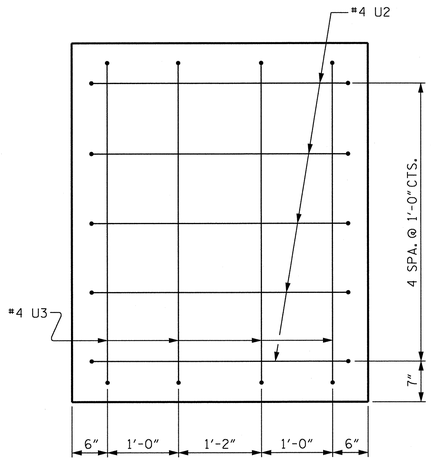

VIEW X-X

(TYP. @ EA. END)

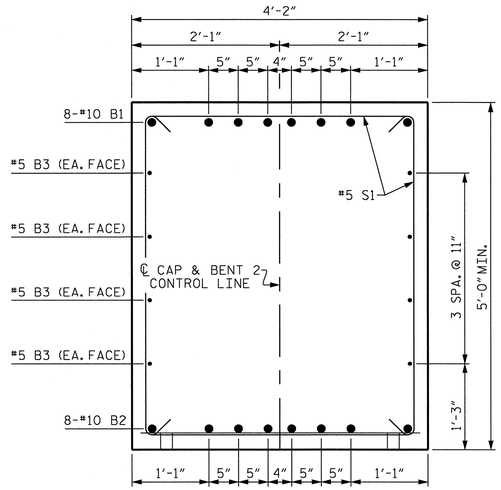

SECTION A-A

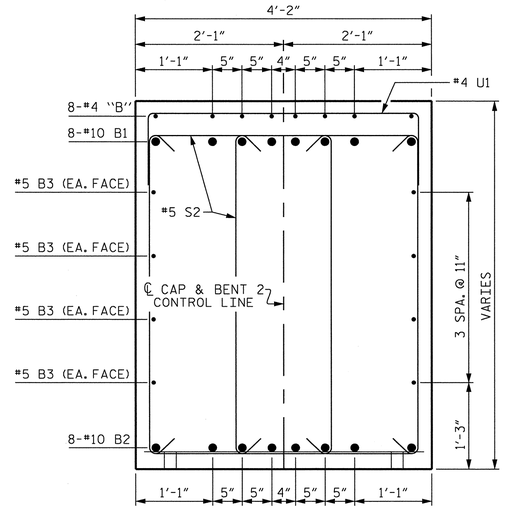

SECTION B-B

NOTES :

HOOKS ON "V" BARS MAY BE TURNED AS NECESSARY FOR PLACING REINFORCING STEEL.

STIRRUPS IN CAP MAY BE SHIFTED AS NECESSARY TO CLEAR ANCHOR BOLTS.

ALL STEEL IN THE DRILLED PIERS IS INCLUDED IN THE PAY ITEMS FOR "REINFORCING STEEL" AND "SPIRAL COLUMN REINFORCING STEEL".

THE LOCATION OF THE CONSTRUCTION JOINT IN THE DRILLED PIERS IS BASED ON AN APPROXIMATE GROUND LINE ELEVATION. IF THE CONSTRUCTION JOINT IS ABOVE THE ACTUAL GROUND ELEVATION, THE CONTRACTOR SHALL PLACE THE CONSTRUCTION JOINT 1 FOOT BELOW THE GROUND LINE.

THE CONTRACTOR SHALL ADJUST THE GIRDER BUILD-UPS AS NECESSARY TO INCORPORATE A MAXIMUM PERMISSIBLE VARIATION IN POT BEARING DEPTH OF 1/2". SEE SPECIAL PROVISION FOR POT BEARINGS.

BAR TYPES

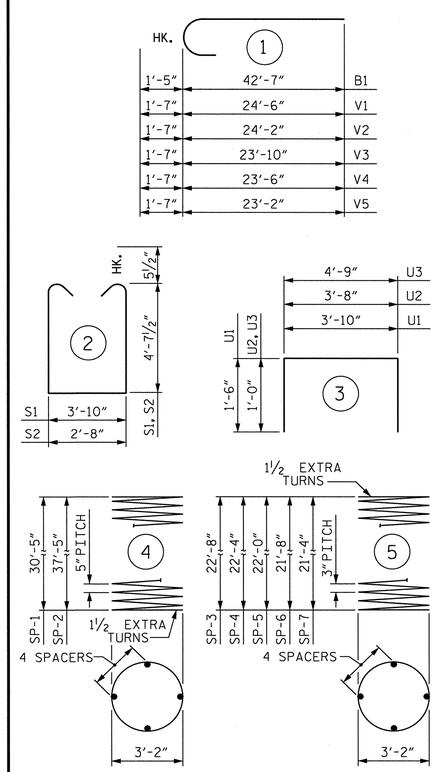

ALL BAR DIMENSIONS ARE OUT TO OUT.

BILL OF MATERIAL

BENT #2

BAR	NO.	SIZE	TYPE	LENGTH	WEIGHT
B1	16	#10	1	44'-0"	3,029
B2	16	#10	STR	41'-0"	2,823
B3	16	#5	STR	38'-6"	642
B4	24	#4	STR	9'-5"	151
B5	24	#4	STR	3'-5"	55
M1	24	#11	STR	38'-1"	4,856
M2	36	#11	STR	45'-1"	8,623
S1	102	#5	2	14'-0"	1,489
S2	44	#5	2	12'-10"	589
U1	68	#4	3	6'-10"	310
U2	10	#4	3	5'-8"	38
U3	8	#4	3	6'-9"	36
V1	12	#11	1	26'-1"	1,663
V2	12	#11	1	25'-9"	1,642
V3	12	#11	1	25'-5"	1,620
V4	12	#11	1	25'-1"	1,599
V5	12	#11	1	24'-9"	1,578
TOTAL REINFORCING STEEL LBS.					30,743
SP-1	2	✱	4	729'-8"	1,522
SP-2	3	✱	4	894'-2"	2,798
SP-3	1	✱✱	5	905'-2"	605
SP-4	1	✱✱	5	892'-1"	596
SP-5	1	✱✱	5	879'-0"	587
SP-6	1	✱✱	5	865'-11"	578
SP-7	1	✱✱	5	852'-10"	570
SPIRAL COLUMN REINFORCING STEEL LBS.					7,256

CLASS A CONCRETE BREAKDOWN

POUR #2 (COLUMNS)	38.8 C.Y.
POUR #3 (BENT CAP)	60.0 C.Y.
TOTAL	98.8 C.Y.

DRILLED PIER QUANTITIES

DRILLED PIER CONCRETE POUR #1 (DRILLED PIERS)	81.7 C.Y.
4'-0" DIA. DRILLED PIERS IN SOIL	109.6 LIN. FT.
4'-0" DIA. DRILLED PIERS NOT IN SOIL	66 LIN. FT.
CSL TUBES ♦	732 LIN. FT.

✱ THIS "SP" SPIRAL REINFORCING STEEL SHALL BE W31 OR D31 COLD DRAWN WIRE OR #5 PLAIN OR DEFORMED BAR.

✱✱ THIS "SP" SPIRAL REINFORCING STEEL SHALL BE W20 OR D20 COLD DRAWN WIRE OR #4 PLAIN OR DEFORMED BAR.

♦ NO SEPARATE PAYMENT WILL BE MADE FOR CSL TUBES. CSL TUBES WILL BE INCLUDED IN THE DRILLED PIER PAY ITEMS.

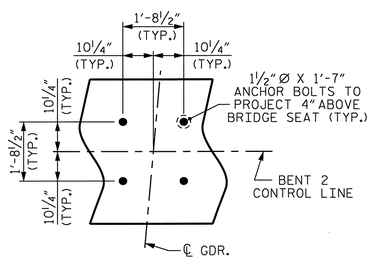

DETAIL "A"

(TYP. @ EA. BEARING)

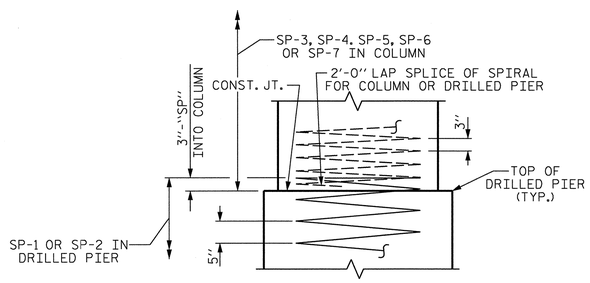

CONSTRUCTION JOINT DETAIL

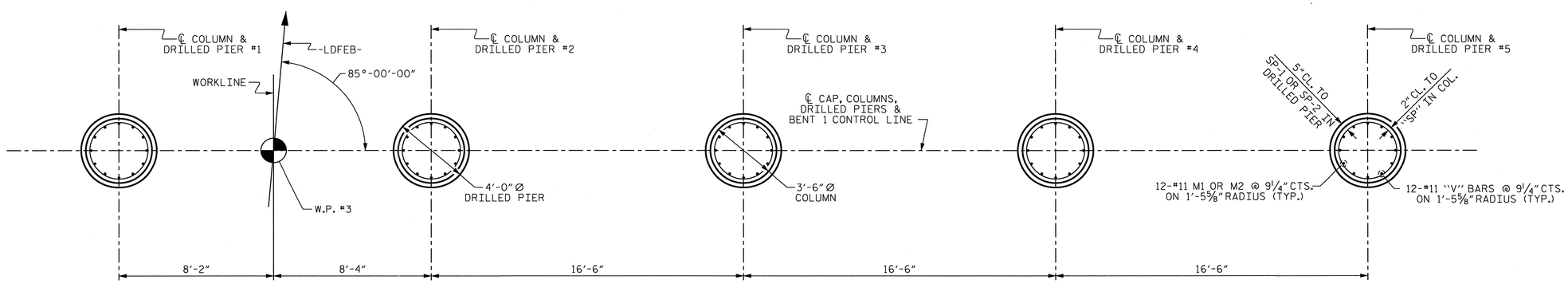

PLAN OF COLUMNS AND DRILLED PIERS

REINFORCING STEEL AND DIMENSIONS ARE TYPICAL FOR ALL COLUMNS AND DRILLED PIERS SHOWN

PROJECT NO. U-0071

DURHAM COUNTY

STATION: 138+40.45-LDFEB-

SHEET 2 OF 2

STATE OF NORTH CAROLINA
DEPARTMENT OF TRANSPORTATION
RALEIGH

SUBSTRUCTURE

BENT 2

NORTH CAROLINA PROFESSIONAL SEAL 37400 ENGINEER GREGORY M. GILLAND 1/27/14

WETHERILL ENGINEERING
559 Jones Franklin Rd. Suite 164
Raleigh, N.C. 27606
Bus: 919 851 8077
Fax: 919 851 8107
License: F-0377

TRANSPORTATION PLANNING/DESIGN - BRIDGE/STRUCTURE DESIGN
CIVIL/SITE DESIGN - GIS/GPS - CONSTRUCTION OBSERVATION

REVISIONS							SHEET NO.
NO.	BY:	DATE:	NO.	BY:	DATE:		S-411
1			3				TOTAL SHEETS
2			4				671

DRAWN BY : G.M. GILLAND DATE : 5-1-13
CHECKED BY : T. DIFFEE DATE : 5-20-13
DESIGN ENGINEER OF RECORD: G.M. GILLAND DATE : 5-13

P:\2012\U-0071_Sites 3,8 & 9\Structures\DWG_9\U0071_SD_STR9_B2_WE1.dgn
1/27/2014 3:17:42 PM

STR #9

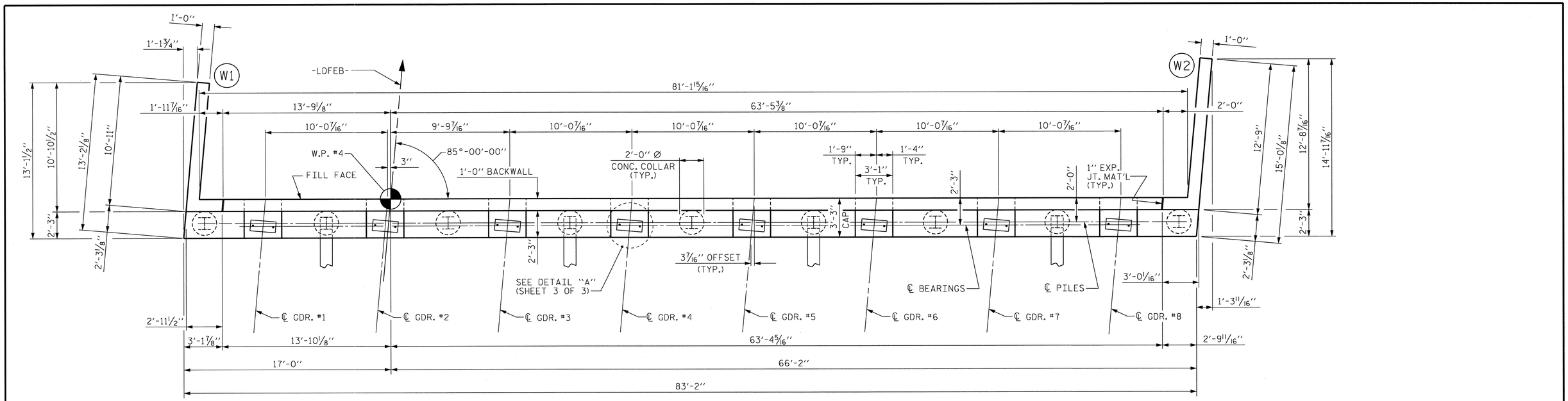

PLAN

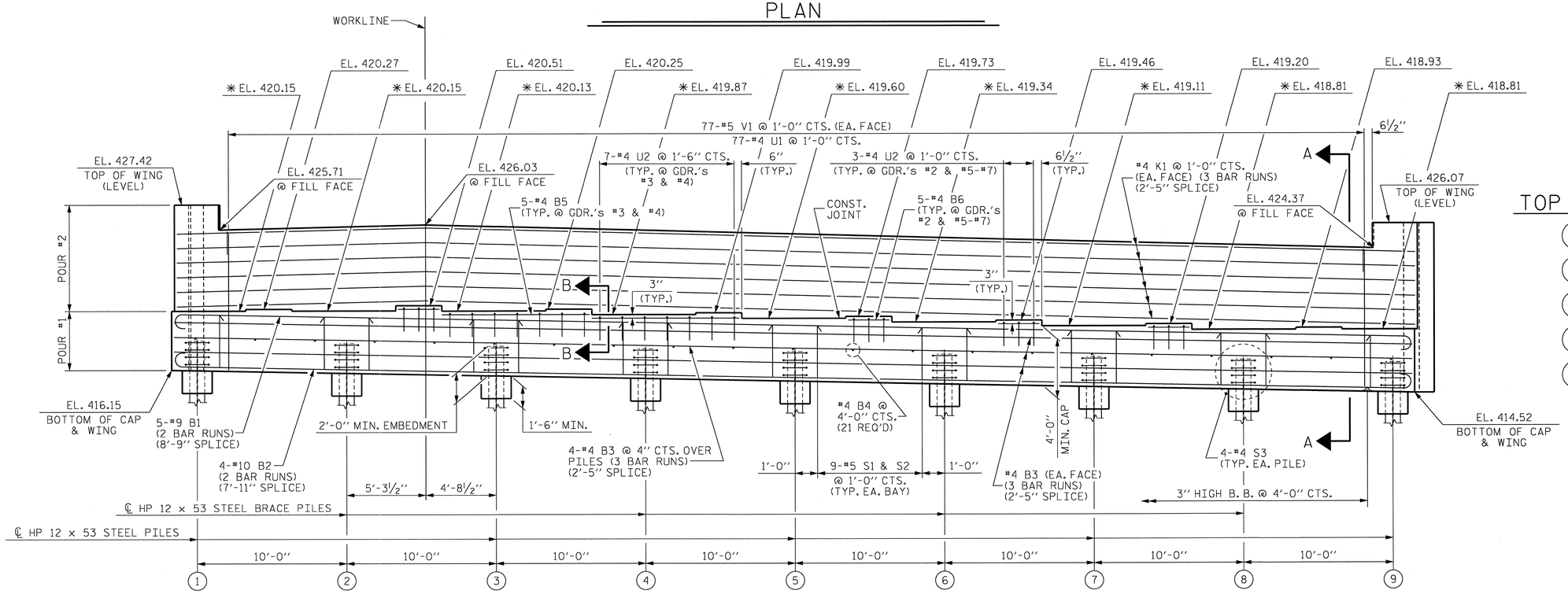

ELEVATION

✱ SEE NOTES (SHEET 3 OF 3)

TOP OF PILE ELEVATIONS

1	EL. 418.12	6	EL. 417.14
2	EL. 417.93	7	EL. 416.95
3	EL. 417.73	8	EL. 416.75
4	EL. 417.53	9	EL. 416.56
5	EL. 417.34		

PROJECT NO. U-0071
DURHAM COUNTY
STATION: 138+40.45-LDFEB-

SHEET 1 OF 3

STATE OF NORTH CAROLINA
DEPARTMENT OF TRANSPORTATION
RALEIGH

SUBSTRUCTURE
END BENT 2

NORTH CAROLINA PROFESSIONAL SEAL 37400 ENGINEER GREGORY M. GILLAND 6/9/13

WETHERILL ENGINEERING
559 Jones Franklin Rd. Suite 164
Raleigh, N.C. 27606
Bus: 919 851 8077
Fax: 919 851 8107
License: F-0377
TRANSPORTATION PLANNING/DESIGN - BRIDGE/STRUCTURE DESIGN
CIVIL/SITE DESIGN - GIS/GPS - CONSTRUCTION OBSERVATION

REVISIONS								SHEET NO.
NO.	BY:	DATE:	NO.	BY:	DATE:			S-12
1			3					TOTAL SHEETS
2			4					67

STR. #9

DRAWN BY : J.M. BRITT DATE : 4-10-13
CHECKED BY : T. DIFFEE DATE : 5-22-13
DESIGN ENGINEER OF RECORD: G.M. GILLAND DATE : 5-13

P:\2012\U-0071 Sites 3,8 & 9\Structures\DWG_9\U0071_SD_STR9_EB2_WE1.dgn
7/9/2013 9:07:00 AM

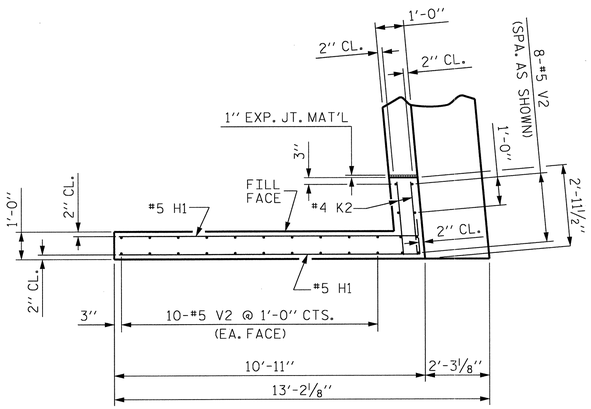

PLAN OF WING (W1)

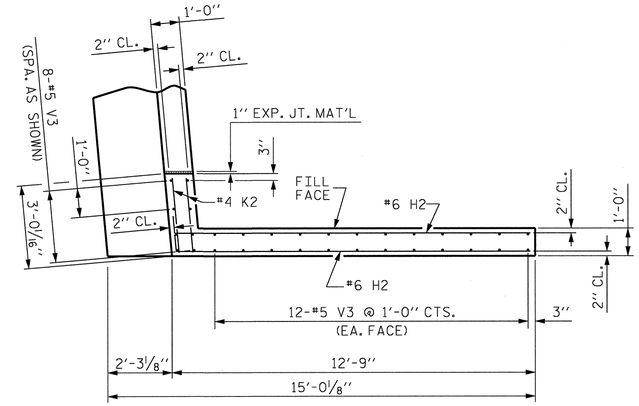

PLAN OF WING (W2)

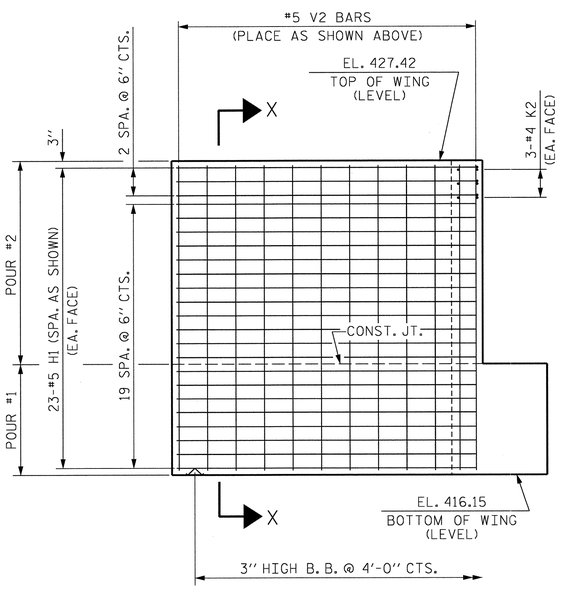

ELEVATION OF WING (W1)

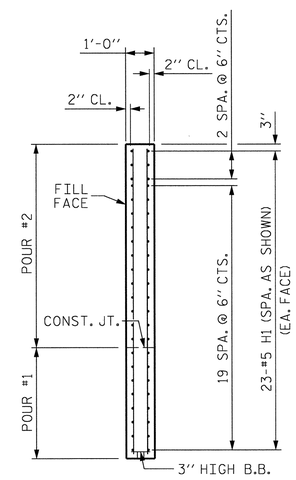

SECTION X-X

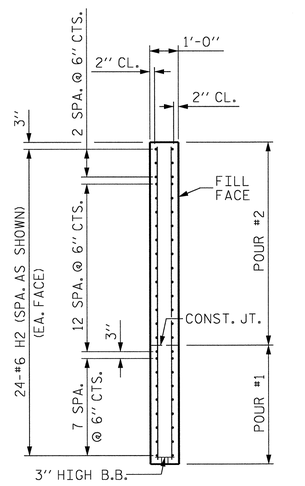

SECTION Y-Y

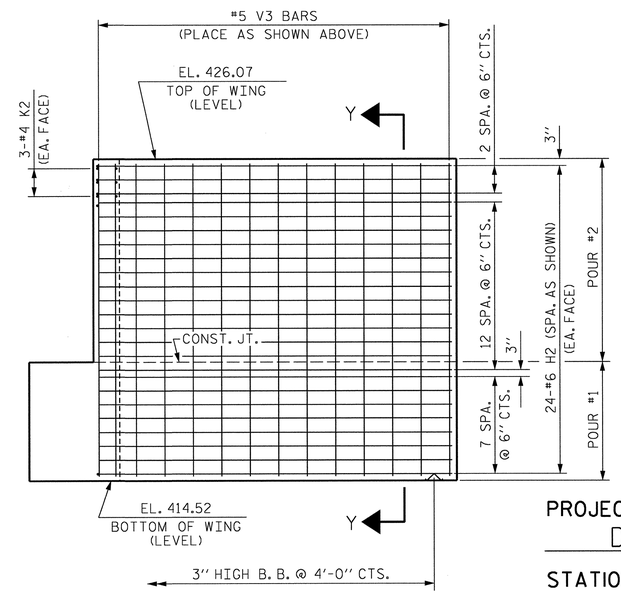

ELEVATION OF WING (W2)

PROJECT NO. U-0071

DURHAM COUNTY

STATION: 138+40.45-LDFEB-

SHEET 2 OF 3

STATE OF NORTH CAROLINA
DEPARTMENT OF TRANSPORTATION
RALEIGH

SUBSTRUCTURE

END BENT 2

NORTH CAROLINA PROFESSIONAL SEAL 037400 ENGINEER GREGORY M. GILLAND 4/19/13

WETHERILL ENGINEERING
559 Jones Franklin Rd. Suite 164
Raleigh, N.C. 27606
Bus: 919 851 8077
Fax: 919 851 8107
License: F-0377
TRANSPORTATION PLANNING/DESIGN - BRIDGE/STRUCTURE DESIGN
CIVIL/SITE DESIGN - GIS/GPS - CONSTRUCTION OBSERVATION

REVISIONS						SHEET NO.
NO.	BY:	DATE:	NO.	BY:	DATE:	S-413
1			3			TOTAL SHEETS
2			4			671

DRAWN BY : J.M. BRITT DATE : 4-10-13
CHECKED BY : T. DIFFEE DATE : 5-22-13
DESIGN ENGINEER OF RECORD: G.M. GILLAND DATE : 5-13

P:\2012\U-0071 Sites 3,8 & 9\Structures\DWG_9\U0071_SD_STR9_EB2_WE1.dgn
7/9/2013 9:07:18 AM

STR. #9

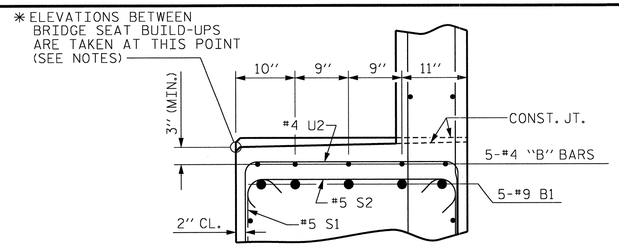

SECTION B-B

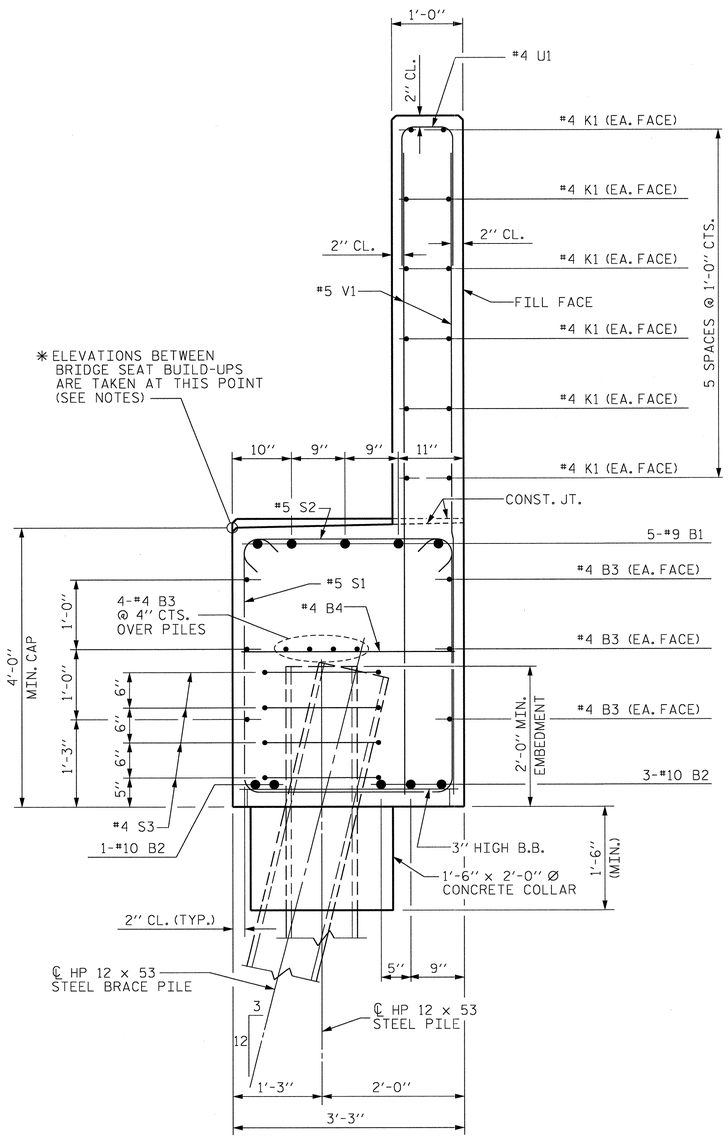

SECTION A-A

NOTES :

STIRRUPS AND #4 U2 BARS IN CAP MAY BE SHIFTED AS NECESSARY TO CLEAR ANCHOR BOLTS.

BACKWALL SHALL BE PLACED BEFORE APPLYING THE EPOXY PROTECTIVE COATING.

THE TOP SURFACE AREAS OF THE END BENT CAPS SHALL BE CURED IN ACCORDANCE WITH THE STANDARD SPECIFICATIONS EXCEPT THE MEMBRANE CURING COMPOUND METHOD SHALL NOT BE USED.

✱ THE TOP SURFACE OF THE CAP EXCEPT THE BRIDGE SEAT BUILDUPS SHALL BE SLOPED TRANSVERSELY FROM THE FILL FACE TO THE BACK FACE AT THE RATE OF 2%.

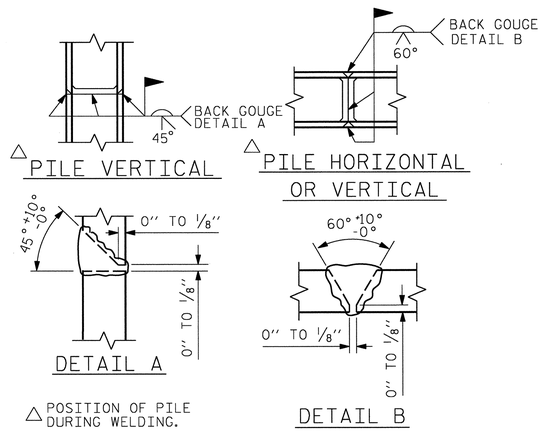

PILE SPLICE DETAIL

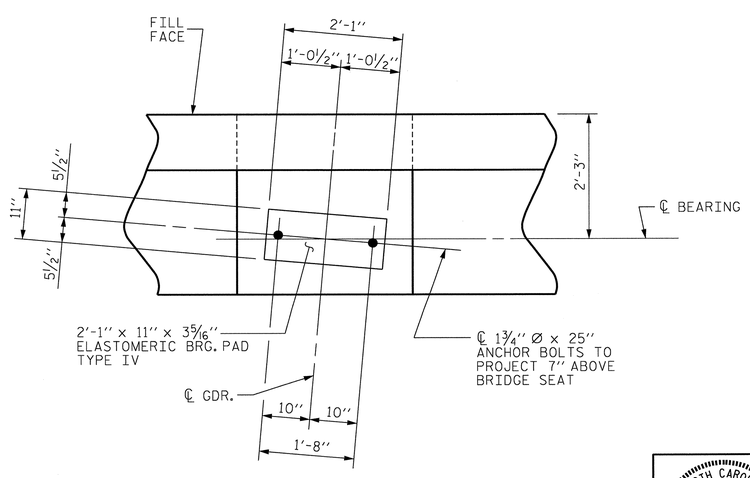

DETAIL "A"

(TYP. EA. GDR.)

BAR TYPES

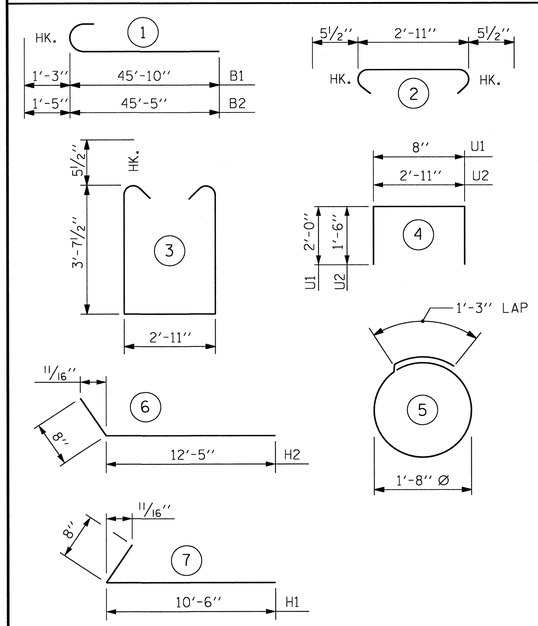

ALL BAR DIMENSIONS ARE OUT TO OUT.

BILL OF MATERIAL

END BENT 2

BAR	NO.	SIZE	TYPE	LENGTH	WEIGHT
B1	10	#9	1	47'-1"	1,601
B2	8	#10	1	46'-10"	1,612
B3	30	#4	STR	29'-3"	586
B4	21	#4	STR	2'-11"	41
B5	10	#4	STR	9'-10"	66
B6	20	#4	STR	2'-9"	37
H1	46	#5	7	11'-2"	536
H2	48	#6	6	13'-1"	943
K1	36	#4	STR	29'-3"	703
K2	12	#4	STR	2'-7"	21
S1	72	#5	3	11'-1"	832
S2	72	#5	2	3'-10"	288
S3	36	#4	5	6'-6"	156
U1	77	#4	4	4'-8"	204
U2	26	#4	4	5'-11"	103
V1	154	#5	STR	9'-5"	1,513
V2	28	#5	STR	10'-11"	319
V3	32	#5	STR	11'-2"	373

REINFORCING STEEL 9,934 LBS.

CLASS A CONCRETE BREAKDOWN :

POUR #1 48.2 CU. YDS.

POUR #2 24.1 CU. YDS.

TOTAL CLASS A CONCRETE 72.3 CU. YDS.

HP 12 x 53 STEEL PILES No. 9 280 LIN. FT.

STEEL PILE POINTS 9 EACH

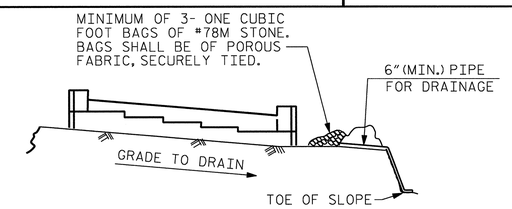

BAGGED STONE AND PIPE SHALL BE PLACED IMMEDIATELY AFTER COMPLETION OF END BENT EXCAVATION. PIPE MAY BE EITHER CONCRETE, CORRUGATED STEEL, CORRUGATED ALUMINUM ALLOY, OR CORRUGATED PLASTIC. PERFORATED PIPE WILL NOT BE ALLOWED.

BAGGED STONE SHALL REMAIN IN PLACE UNTIL THE ENGINEER DIRECTS THAT IT BE REMOVED. THE CONTRACTOR SHALL REMOVE AND DISPOSE OF SILT ACCUMULATIONS AT BAGGED STONE WHEN SO DIRECTED BY THE ENGINEER. BAGS SHALL BE REMOVED AND REPLACED WHENEVER THE ENGINEER DETERMINES THAT THEY HAVE DETERIORATED AND LOST THEIR EFFECTIVENESS.

NO SEPARATE PAYMENT WILL BE MADE FOR THIS WORK AND THE ENTIRE COST OF THIS WORK SHALL BE INCLUDED IN THE UNIT CONTRACT PRICE BID FOR THE SEVERAL PAY ITEMS.

TEMPORARY DRAINAGE AT END BENT 2

PROJECT NO. U-0071

DURHAM COUNTY

STATION: 138+40.45-LDFEB-

SHEET 3 OF 3

STATE OF NORTH CAROLINA
DEPARTMENT OF TRANSPORTATION
RALEIGH

SUBSTRUCTURE

END BENT 2

DRAWN BY : J.M. BRITT DATE : 4-10-13
CHECKED BY : T. DIFFEE DATE : 5-22-13
DESIGN ENGINEER OF RECORD: G.M. GILLAND DATE : 5-13

NORTH CAROLINA PROFESSIONAL SEAL 037400 ENGINEER GREGORY M. GILLAND 9/13/13

WETHERILL ENGINEERING
559 Jones Franklin Rd. Suite 164
Raleigh, N.C. 27606
Bus: 919 851 8077
Fax: 919 851 8107
License: F-0377
TRANSPORTATION PLANNING/DESIGN - BRIDGE/STRUCTURE DESIGN
CIVIL/SITE DESIGN - GIS/GPS - CONSTRUCTION OBSERVATION

REVISIONS						SHEET NO.
NO.	BY:	DATE:	NO.	BY:	DATE:	S-14
1			3			TOTAL SHEETS
2			4			671

STR. #9

P:\2012\U-0071 Sites 3,8 & 9\Structures\DWG_9\U0071_SD_STR9_EB2_WE1.dgn
7/9/2013 9:07:49 AM

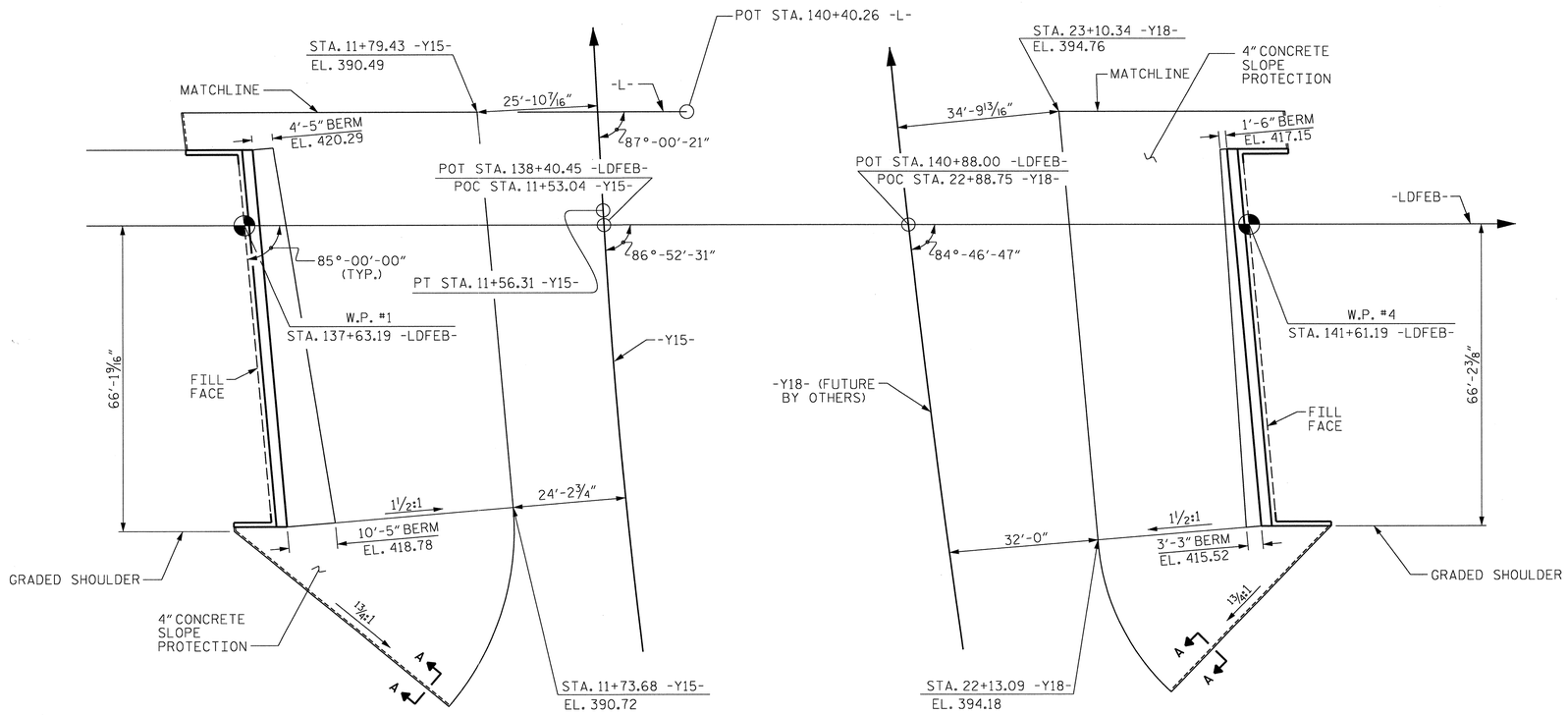

AT END BENT 1

AT END BENT 2

PLAN

NOTES

SLOPE PROTECTION SHALL CONSIST OF 4" POURED-IN-PLACE CONCRETE PAVING AS SHOWN IN THE DETAILS ON THIS SHEET. CONCRETE SHALL BE CLASS "B". THE CONCRETE SURFACE SHALL BE FLOATED WITH A WOODEN FLOAT AND FINISHED. WELDED WIRE FABRIC REINFORCING SHALL BE 6 X 6 - W1.4 X W1.4, 60" WIDE. SLOPE PROTECTION SHALL BE POURED IN 5' STRIPS AS SHOWN IN THE "POURING DETAIL" WITH 2'-0" LONG #4 BARS PLACED ALONG THE SLOPE BETWEEN STRIPS AT 1'-6" MAXIMUM SPACING. SLOPE PROTECTION MAY BE POURED IN ALTERNATE 4' AND 5' STRIPS AS SHOWN IN THE "OPTIONAL POURING DETAIL" WITH ADJACENT RUNS OF WELDED WIRE FABRIC LAPPING AT LEAST 6". THE COST OF THE WELDED WIRE FABRIC AND #4 BARS, IF USED, SHALL BE INCLUDED IN THE CONTRACT UNIT PRICE BID PER SQUARE YARD FOR SLOPE PROTECTION.

BRIDGE ID STA. 17+97.57 -DFLW-	4" SLOPE PROTECTION	* WELDED WIRE FABRIC 60 INCHES WIDE
	SQUARE YARDS	APPROX. L.F.
END BENT 1	768	1536
END BENT 2	575	1150

* QUANTITY SHOWN IS BASED ON 5' POURS.

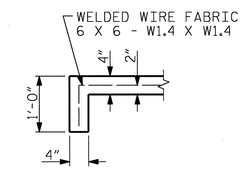

SECTION A-A

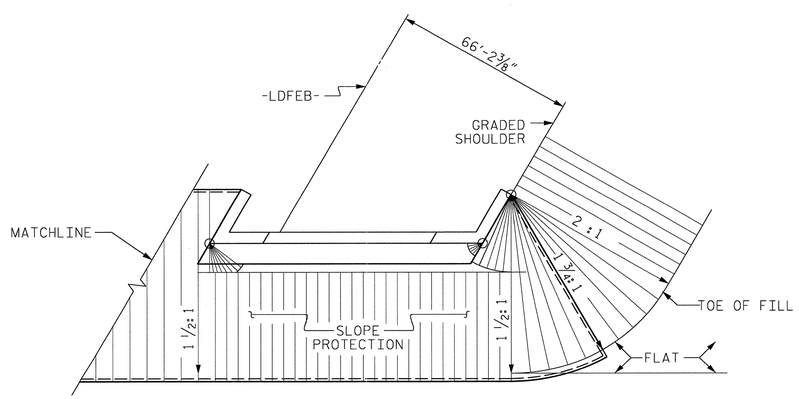

PLAN - END BENT WITH SWEPT BACK WINGS - SKEWED

(END BENT 2 SHOWN, END BENT 1 SIMILAR)

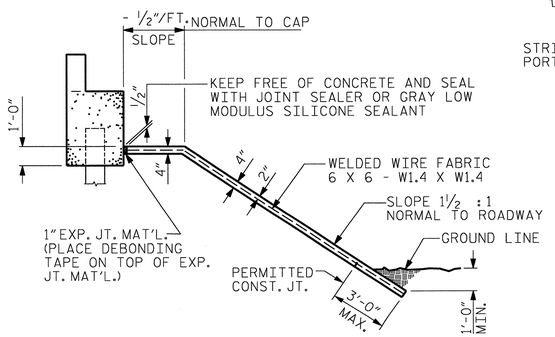

SECTION ALONG ℄ ROADWAY WHEN DITCH IS NOT PROVIDED

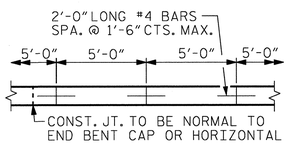

STRIP WIDTHS MAY VARY IN CURVED PORTION.

POURING DETAIL

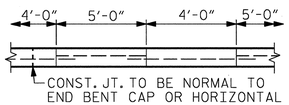

POUR A 4'-0" STRIP FIRST. STRIP WIDTHS MAY VARY IN CURVED PORTION.

OPTIONAL POURING DETAIL

PROJECT NO. U-0071
DURHAM COUNTY
STATION: 138+40.45-LDFEB-

STATE OF NORTH CAROLINA
DEPARTMENT OF TRANSPORTATION
RALEIGH

STANDARD
SLOPE PROTECTION DETAILS

REVISIONS							SHEET NO.
NO.	BY:	DATE:	NO.	BY:	DATE:		S-45
1			3				TOTAL SHEETS
2			4				57

NORTH CAROLINA PROFESSIONAL SEAL 037400 ENGINEER GREGORY M. GILLAND 5/13/13

WETHERILL ENGINEERING
559 Jones Franklin Rd. Suite 164
Raleigh, N.C. 27606
Bus: 919 851 8077
Fax: 919 851 8107
License: F-0377
TRANSPORTATION PLANNING/DESIGN - BRIDGE/STRUCTURE DESIGN
CIVIL/SITE DESIGN - GIS/GPS - CONSTRUCTION OBSERVATION

ASSEMBLED BY : G. WILSON		DATE : 5-18-13	
CHECKED BY : G.M. GILLAND		DATE : 5-23-13	
DESIGN ENGINEER OF RECORD : GMG		DATE : 5-13	
DRAWN BY : ELR 5/92	REV. 5/1/06	TLA/GM	
CHECKED BY : GRP 6/92	REV. 10/1/11	MAA/GM	
	REV. 12/21/11	MAA/GM	

P:\2012\U-0071 Sites 3,8 & 9\Structures\DWG_9\u0071_SD_STR9_SP_WEI.dgn
7/11/2013 7:39:01 AM

STR #9

STD. NO. SP1 (SHT 5)

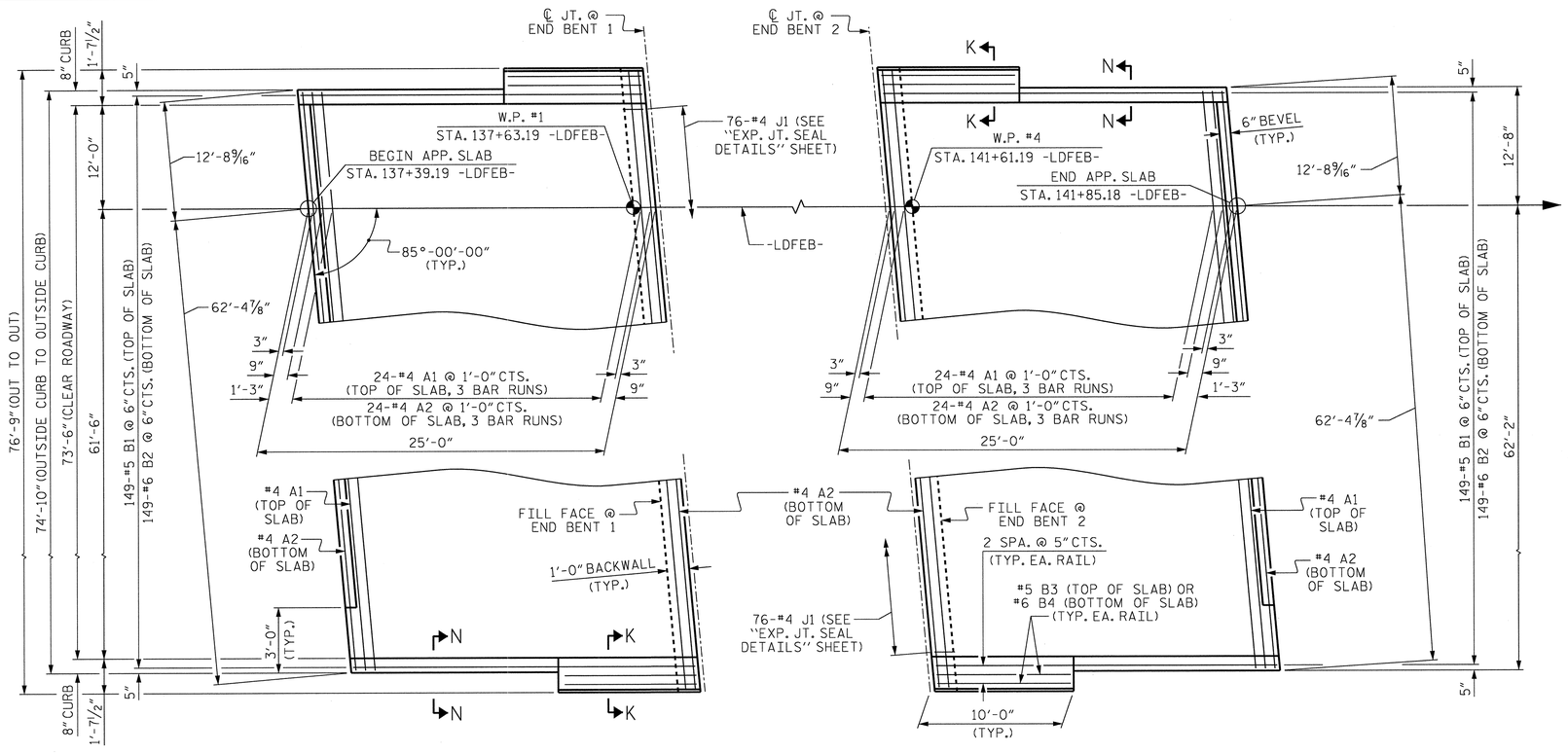

PLAN @ END BENT #1

PLAN @ END BENT #2

DIMENSIONS SHOWN ARE TYPICAL FOR BOTH APPROACH SLABS

NOTES

APPROACH SLAB SHALL NOT BE CONSTRUCTED PRIOR TO COMPLETION OF THE BRIDGE DECK.

FOR REINFORCED BRIDGE APPROACH FILL INCLUDING GEOTEXTILE, IMPERMEABLE GEOMEMBRANE, 4" Ø DRAINAGE PIPE, #78M STONE, AND SELECT MATERIAL, SEE ROADWAY PLANS.

AREA BETWEEN THE WINGWALL AND APPROACH SLAB SHALL BE GRADED TO DRAIN THE WATER AWAY FROM THE FILL FACE OF THE BRIDGE AND SHALL BE PAVED. SEE ROADWAY PLANS.

FOR EXPANSION JOINT SEALS, SEE SPECIAL PROVISIONS.

THE QUANTITY OF #4 J1 BARS ON THE BILL OF MATERIAL IS BASED ON 1'-0" CENTERS. J1 BARS SHALL BE PLACED AT EACH VERTICAL STUD ANCHOR BOLT. IN THE EVENT THAT THE NUMBER OF VERTICAL STUD ANCHORS EXCEEDS THE NUMBER OF J1 BARS SPECIFIED, ADDITIONAL J1 BARS WILL NOT BE REQUIRED.

BILL OF MATERIAL

FOR ONE APPROACH SLAB (2 REQ'D)

BAR	NO.	SIZE	TYPE	LENGTH	WEIGHT
✳ A1	75	#4	STR	26'-11"	1,349
A2	78	#4	STR	26'-9"	1,394
✳ B1	149	#5	STR	23'-10"	3,704
B2	149	#6	STR	24'-8"	5,520
✳ B3	4	#5	STR	9'-8"	40
B4	4	#6	STR	9'-8"	58
✳ J1	76	#4	1	1'-5"	72
REINFORCING STEEL				LBS.	6,972
✳ EPOXY COATED REINFORCING STEEL				LBS.	5,165
CLASS AA CONCRETE				C. Y.	81.9

BAR TYPE

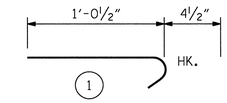

ALL BAR DIMENSIONS ARE OUT TO OUT

✳✳ QUANTITIES FOR BARRIER RAIL ARE NOT INCLUDED. SEE SHEET 2 OF 2.

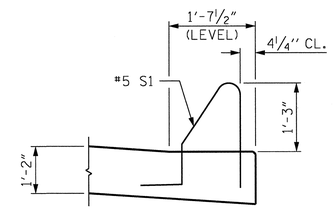

SECTION K-K

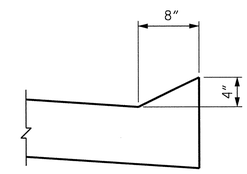

SECTION N-N

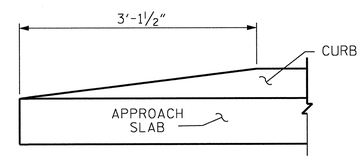

END OF CURB WITHOUT SHOULDER BERM GUTTER

CURB DETAILS

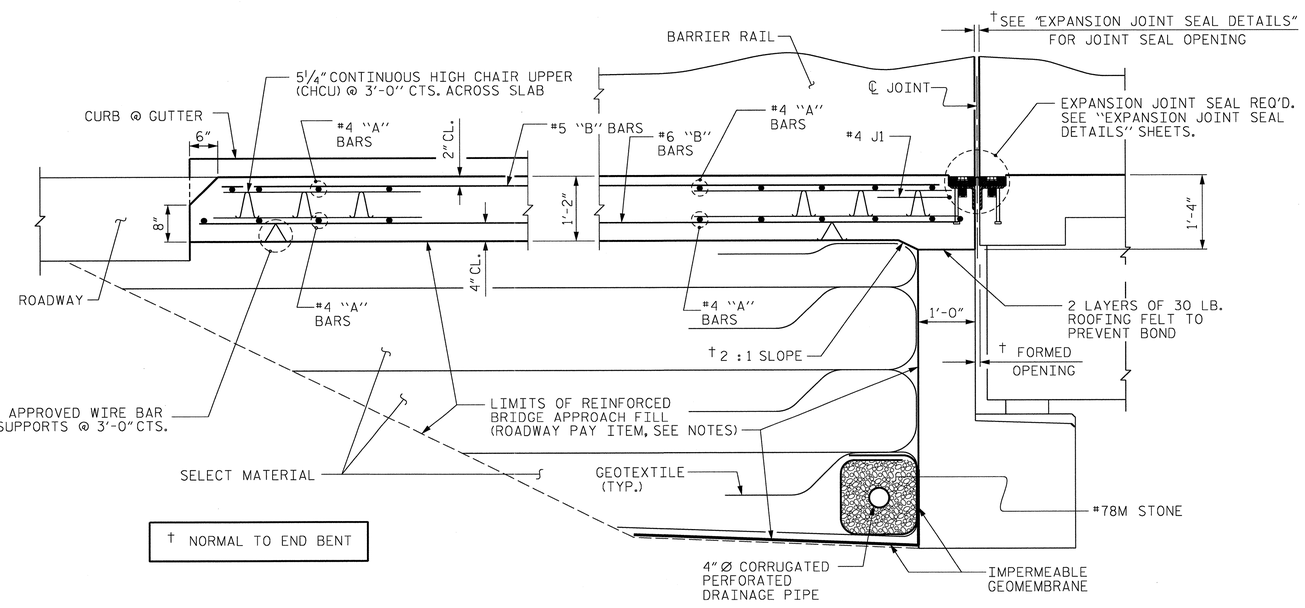

† NORMAL TO END BENT

SECTION THRU SLAB

SPLICE LENGTHS

BAR SIZE	EPOXY COATED	UNCOATED
#4	2'-0"	1'-9"
#5	2'-6"	2'-2"
#6	3'-10"	2'-7"

PROJECT NO. U-0071

DURHAM COUNTY

STATION: 138+40.45-LDFEB-

SHEET 1 OF 2

STATE OF NORTH CAROLINA
DEPARTMENT OF TRANSPORTATION
RALEIGH

STANDARD

BRIDGE APPROACH SLAB FOR FLEXIBLE PAVEMENT

REVISIONS						SHEET NO.
NO.	BY:	DATE:	NO.	BY:	DATE:	S-4K
1			3			TOTAL SHEETS
2			4			671

STR. #9

STD. NO. BAS2 (SHT 4a)

NORTH CAROLINA PROFESSIONAL SEAL 037400 ENGINEER GREGORY M. GILLAND 9/19/13

WETHERILL ENGINEERING
559 Jones Franklin Rd. Suite 164
Raleigh, N.C. 27606
Bus: 919 851 8077
Fax: 919 851 8107
License: F-0377
TRANSPORTATION PLANNING/DESIGN - BRIDGE/STRUCTURE DESIGN
CIVIL/SITE DESIGN - GIS/GPS - CONSTRUCTION OBSERVATION

ASSEMBLED BY : G.M. GILLAND		DATE : 5-6-13	
CHECKED BY : R. ASCENCIO		DATE : 5-20-13	
DESIGN ENGINEER OF RECORD : GMG		DATE : 5-13	
DRAWN BY : EEM 3/95	REV. 5/7/03R	RWW/JTE	
CHECKED BY : VAP 3/95	REV. 5/1/06RR	KMM/GM	
	REV. 10/1/11	MAA/GM	

P:\2012\U-0071 Sites 3,8 & 9\Structures\DWG_9\u0071_SD_STR9_AS_WE1.dgn
7/9/2013 10:58:44 AM

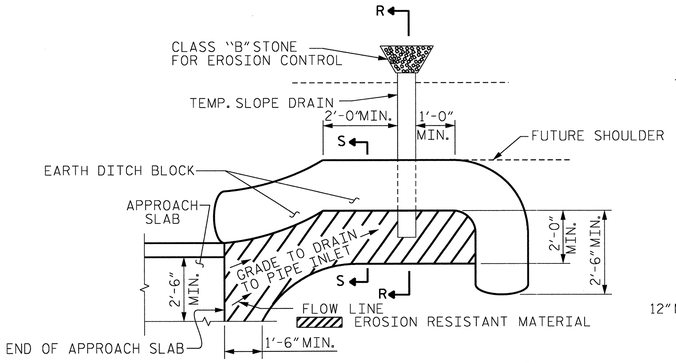

NOTE: IMMEDIATELY AFTER THE CONSTRUCTION OF THE APPROACH SLAB, THE CONTRACTOR SHALL PROVIDE TEMPORARY BERM AND SLOPE DRAIN. CONTRACTOR SHALL GRADE TO PIPE INLET AND PROVIDE EROSION RESISTANT MATERIAL AS SHOWN. THE EROSION RESISTANT MATERIAL SHALL BE EITHER 1) ASPHALT PLANT MIX, TYPE 1 OR TYPE 2, MIN. 2" DEPTH, 2) EROSION CONTROL MAT, OR 3) CONCRETE, AS DIRECTED BY THE ENGINEER. THE SLOPE DRAIN SHALL CONSIST OF A NON-PERFORATED TEMPORARY DRAINAGE PIPE, 12 INCHES IN DIAMETER.

PLAN VIEW

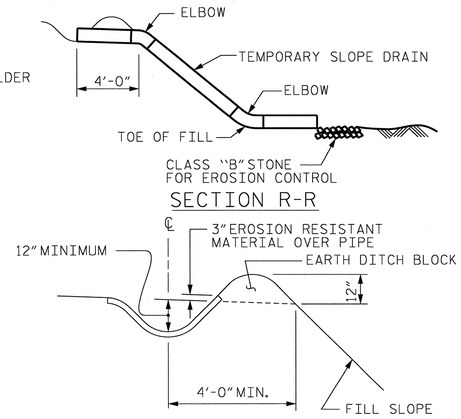

SECTION S-S

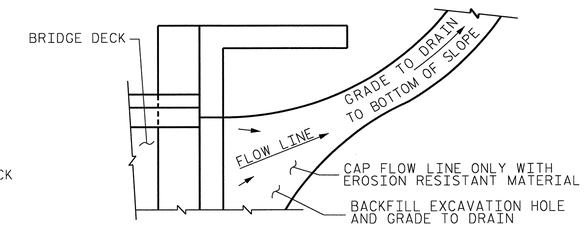

NOTE: IF THE APPROACH SLAB IS NOT CONSTRUCTED IMMEDIATELY AFTER THE BACKFILLING OF THE END BENT EXCAVATION, GRADE TO DRAIN TO THE BOTTOM OF THE SLOPE AND PROVIDE EROSION RESISTANT MATERIAL, SUCH AS FIBERGLASS ROVING OR AS DIRECTED BY THE ENGINEER TO PREVENT SOIL EROSION AND TO PROTECT THE AREA ADJACENT TO THE STRUCTURE. THE CONTRACTOR WILL BE REQUIRED TO REMOVE THESE MATERIALS PRIOR TO CONSTRUCTION OF THE APPROACH SLAB.

TEMPORARY DRAINAGE DETAIL

NOTES

THE COST OF THE BARRIER RAIL ON THE APPROACH SLAB SHALL BE INCLUDED IN THE LINEAR FOOT CONTRACT PRICE BID FOR "CONCRETE BARRIER RAIL".

THE BARRIER RAIL ON EACH APPROACH SLAB SHALL NOT BE CAST UNTIL ALL APPROACH SLAB CONCRETE HAS BEEN CAST AND HAS REACHED A MINIMUM COMPRESSIVE STRENGTH OF 3,000 PSI.

ALL REINFORCING STEEL IN BARRIER RAILS SHALL BE EPOXY COATED.

BAR TYPES

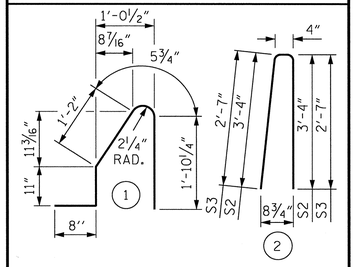

ALL BAR DIMENSIONS ARE OUT TO OUT

BILL OF MATERIAL

BARRIER RAIL ONLY

BAR	NO.	SIZE	TYPE	LENGTH	WEIGHT
* B3	44	#5	STR	9'-8"	444
* S1	40	#5	1	5'-1"	212
* S2	32	#5	2	7'-0"	234
* S3	8	#5	2	5'-6"	46
* EPOXY COATED REINFORCING STEEL				LBS.	936
CLASS AA CONCRETE				C. Y.	5.4
CONCRETE BARRIER RAIL					40 LIN. FT.

TEMPORARY BERM AND SLOPE DRAIN DETAILS

(TO BE USED WHEN SHOULDER BERM GUTTER IS REQUIRED)

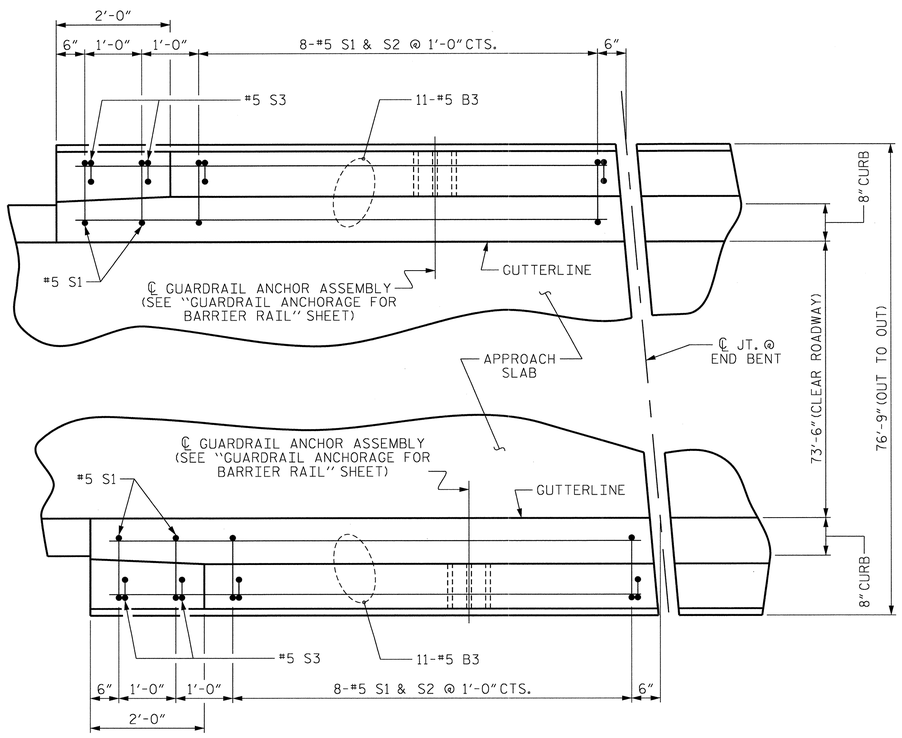

PLAN OF BARRIER RAIL

(APPROACH SLAB @ END BENT 1 SHOWN - APPROACH SLAB @ END BENT 2 SIMILAR BY ROTATION)

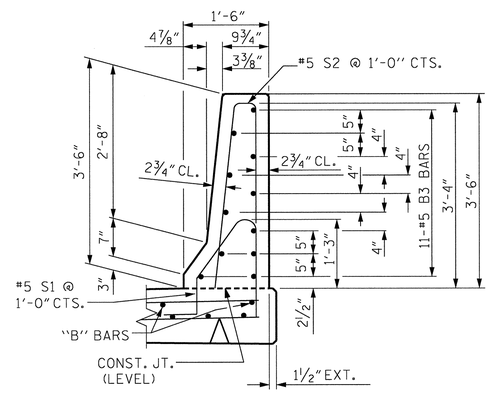

SECTION THRU RAIL

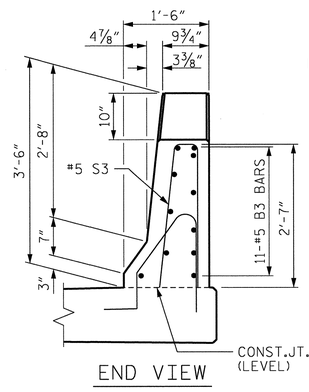

END VIEW

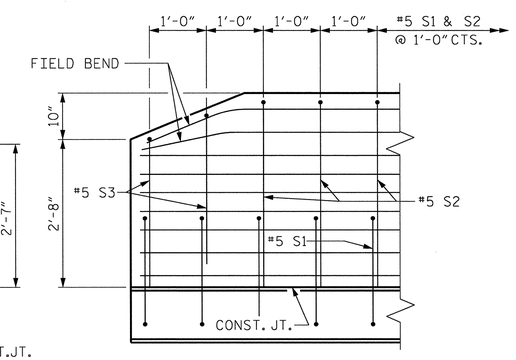

SIDE VIEW

END OF RAIL DETAILS

PROJECT NO. U-0071

DURHAM COUNTY

STATION: 138+40.45-LDFEB-

SHEET 2 OF 2

STATE OF NORTH CAROLINA
DEPARTMENT OF TRANSPORTATION
RALEIGH

STANDARD

BRIDGE APPROACH SLAB DETAILS

REVISIONS						SHEET NO.
NO.	BY:	DATE:	NO.	BY:	DATE:	S-417
1			3			TOTAL SHEETS
2			4			57

STR. #9

STD. NO. BAS4 (SHT 3a)

NORTH CAROLINA PROFESSIONAL SEAL 037400 ENGINEER GREGORY M. GILLAND 8/19/13

WETHERILL ENGINEERING
559 Jones Franklin Rd. Suite 164
Raleigh, N.C. 27606
Bus: 919 851 8077
Fax: 919 851 8107
License: F-0377

TRANSPORTATION PLANNING/DESIGN - BRIDGE/STRUCTURE DESIGN
CIVIL/SITE DESIGN - GIS/GPS - CONSTRUCTION OBSERVATION

ASSEMBLED BY : G.M. GILLAND		DATE : 5-6-13	
CHECKED BY : R. ASCENCIO		DATE : 5-20-13	
DESIGN ENGINEER OF RECORD : GMG		DATE : 5-13	
DRAWN BY : FCJ 11/88	REV. 10/1/11	MAA/GM	
CHECKED BY : ARB 11/88	REV. 7/12	MAA/GM	
	REV. 10/12	MAA/GM	

P:\2012\U-0071 Sites 3,8 & 9\Structures\DWG_9\u0ur1_SD_STR9_AS_WE1.dgn
7/9/2013 10:59:04 AM

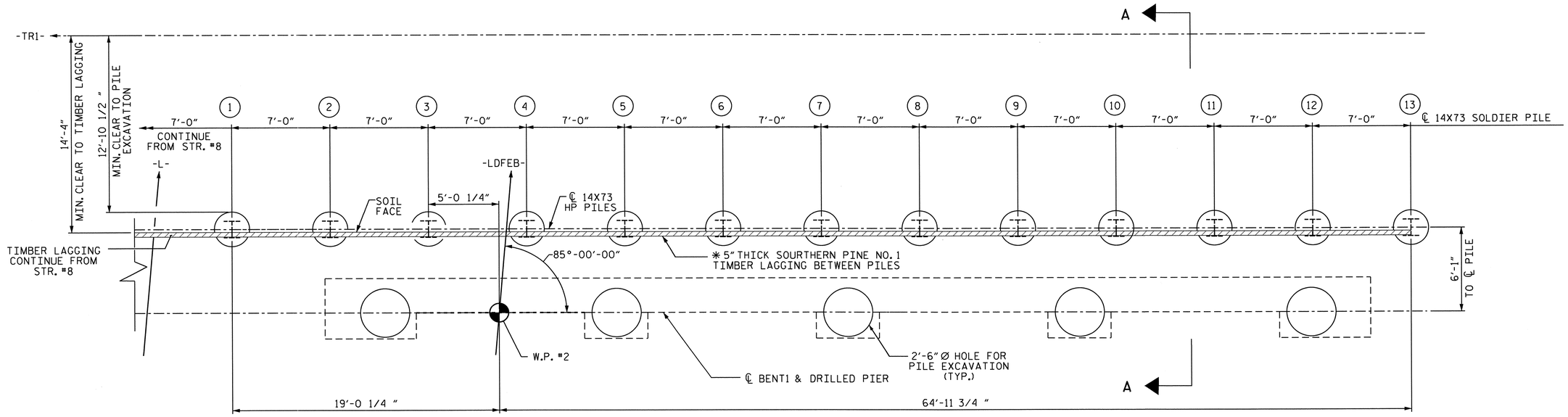

SHORING PLAN AT BENT 1

* LAGGING ARE INSERTED BETWEEN PILES TO RETAIN THE SOIL AS EXCAVATION PROGRESSES

ESTIMATED QUANTITY	
TEMPORARY RAILROAD SHORING FOR BENT NO.	TEMPORARY RAILROAD SHORING
1	LUMP SUM

ESTIMATED PILE LENGTH/PILE = 23'
NO. OF PILES = 13

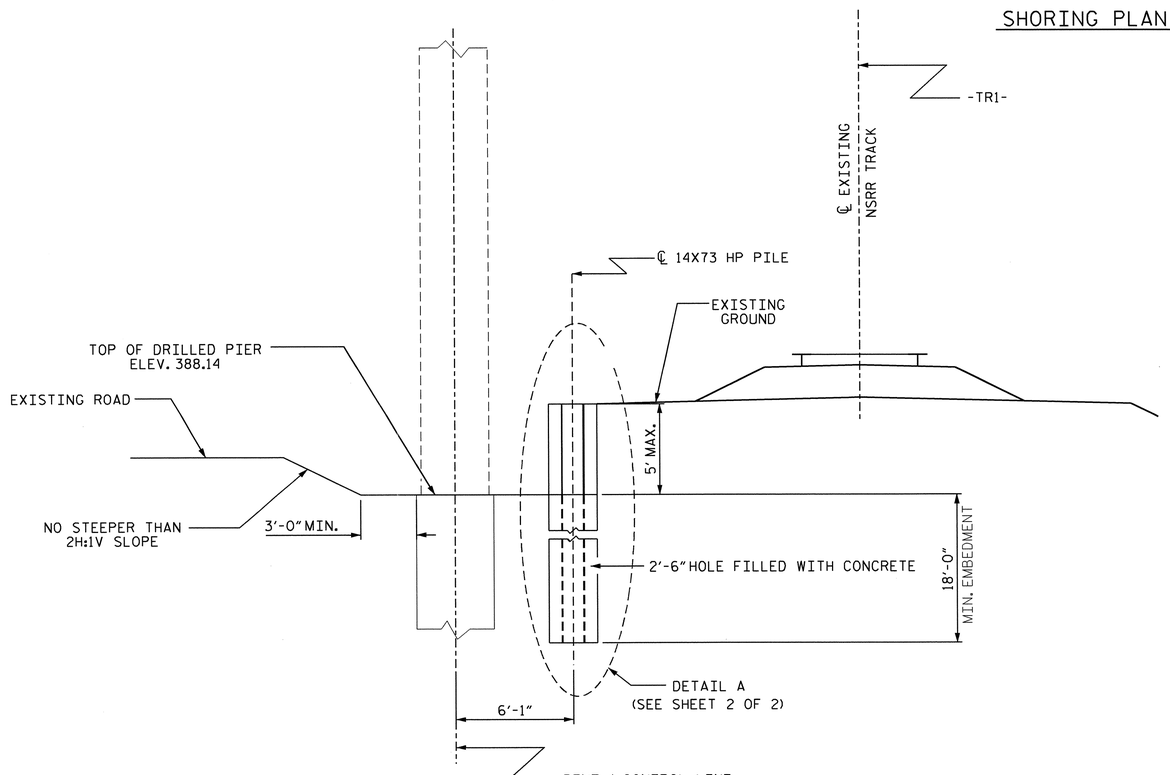

SECTION A-A
(NOT TO SCALE)

PROJECT NO. U-0071
DURHAM COUNTY
STATION: 138+40.45 -LDFEB-

SHEET 1 OF 2

STATE OF NORTH CAROLINA
DEPARTMENT OF TRANSPORTATION
RALEIGH

TMPORARY SHORING
BENT 1

NORTH CAROLINA PROFESSIONAL SEAL 031495 ENGINEER KANAK K. PUROHIT

REVISIONS						SHEET NO.
NO.	BY:	DATE:	NO.	BY:	DATE:	S-4B
1			3			TOTAL SHEETS
2			4			671

DRAWN BY :	K. K. PUROHIT	DATE :	06/14
CHECKED BY :	T. L. CLELLAND	DATE :	6/14
DESIGN ENGINEER OF RECORD:	K. K. PUROHIT	DATE :	6/14

13-JUN-2014 09:15
R:\Structures\Fischer\Temporary Shoring-KKP\u0071_SD_STR8 & 9_Shoring.dgn
kpurohit

STD #0

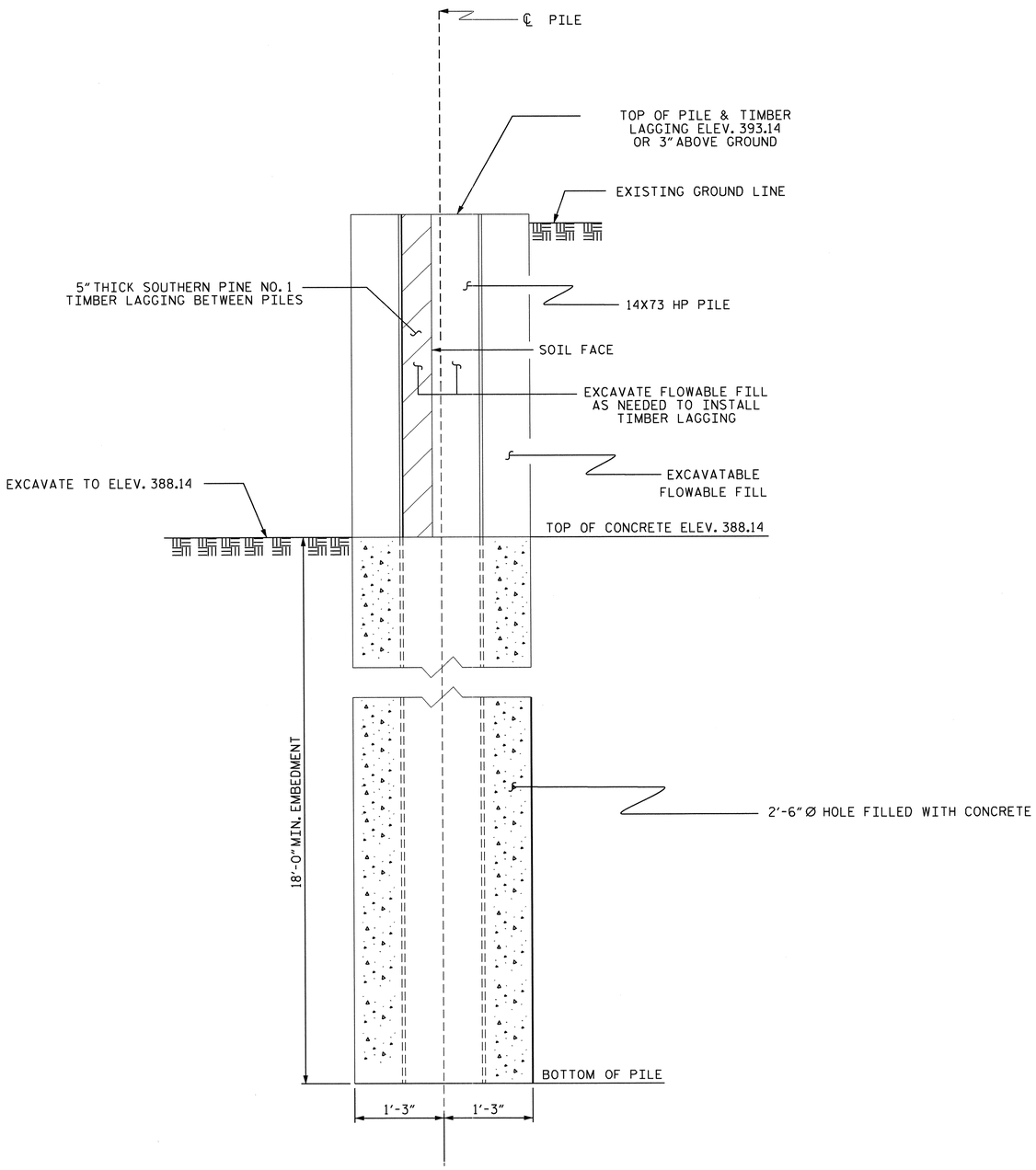

DETAIL "A"

NOTES

1. FOR TEMPORARY SHORING, SEE "TEMPORARY RAILROAD SHORING" SPECIAL PROVISION.
2. NOTE HAS BEEN OMMITED.
3. CONTROL DRAINAGE DURING CONSTRUCTION IN THE VICINITY OF SHORING. DIRECT RUNOFF AWAY FROM SHORING.
4. FOR EXCAVATABLE FLOWABLE FILL, SEE SUBARTICLE 1000-6 OF THE STANDARD SPECIFICATIONS.
5. THE TOP OF THE INSTALLED PILES SHALL BE WITHIN 1 INCH OF THEIR PLAN LOCATION IN ANY HORIZONTAL OR VERTICAL DIRECTION AND 1/8"/FT FROM VERTICAL.
6. NO SPLICES ARE PERMITTED IN H-PILES.
7. DRILLED-IN H-PILES ARE REQUIRED. FOR DRILLED-IN H-PILES INSTALLATION, SEE SUBARTICLE 450-3(E) OF THE STANDARD SPECIFICATIONS EXCEPT EXCAVATABLE FLOWABLE FILL MUST BE USED ABOVE THE PROPOSED EXCAVATION ELEVATION.
8. THE EXCAVATED HOLE SHALL BE 30 INCH MINIMUM DIAMETER.
9. WITHIN 12 HOURS OF COMPLETING EACH HOLE, PLACE H-PILES, BACKFILL WITH CONCRETE AND EXCAVATABLE FLOWABLE FILL TO THE ELEVATIONS SHOWN IN DETAIL 'A'.
10. USE CLASS A CONCRETE THAT MEETS ARTICLE 1000-4 EXCEPT PROVIDING CONCRETE WITH A SLUMP OF 6" TO 8". AN APPROVED HIGH-RANGE WATER REDUCER MAY BE USED TO ACHIEVE THIS SLUMP.
11. DESIGN OF TEMPORARY SHORING IS IN ACCORDANCE WITH AREMA VOLUME 2, CHAPTER 8 AND CSXT AND NS SHORING REQUIREMENTS FOR COOPERS E-80 TRAIN LOADINGS.
12. TEMPORARY SHORING HAS BEEN DESIGNED FOR THE FOLLOWING SOIL PROPERTIES AND GROUNDWATER ELEVATION:
    ABOVE ELEVATION 372.0 FT
    EFFECTIVE UNIT WEIGHT = 120 PCF
    FRICTION ANGLE = 24 DEGREES
    COHESION = 0 PSF
    WALL FRICTION = 8 DEGREES
    BELOW ELEVATION 372.0 FT
    EFFECTIVE UNIT WEIGHT = 70 PCF
    FRICTION ANGLE = 36 DEGREES
    COHESION = 0 PSF
    WALL FRICTION = 12 DEGREES
    GROUNDWATER ELEVATION = 372.0 FT
13. CURE CONCRETE AND EXCAVATABLE FLOWABLE FILL AT LEAST 7 DAYS BEFORE EXCAVATING IN FRONT OF TEMPORARY SHORING.
14. EXCAVATE IN FRONT OF PILES FROM THE TOP DOWN AND IMMEDIATELY INSTALL TIMBER LAGGING BETWEEN PILES TO RETAIN THE SOIL AS EXCAVATION PROGRESSES.
15. LIMIT OPEN EXCAVATION LIFT HEIGHT TO 5 FEET OR LESS IN HEIGHT.
16. POSITION LAGGING WITH AT LEAST $3\frac{9}{32}$ OF CONTACT IN THE HORIZONTAL DIRECTION BETWEEN LAGGING AND H-PILE FLANGES.
17. REMOVE TEMPORARY RAILROAD SHORING TO A MINIMUM OF TWO FEET BELOW PROPOSED GROUND.
18. ANY ALTERNATE DESIGN FOR TEMPORARY SHORING SHALL USE SOIL PARAMETERS NO BETTER THAN THOSE SHOWN ABOVE AND SHALL BE IN ACCORDANCE WITH AREMA VOLUME 2, CHAPTER 8 AND CSXT AND NS SHORING REQUIREMENTS FOR COOPERS E-80 TRAIN LOADINGS.
19. ANY ALTERNATE DESIGN FOR TEMPORARY SHORING SHALL HAVE A MAXIMUM DEFLECTION OF 1" AT THE PILE TOP.

PROJECT NO. U-0071

DURHAM COUNTY

STATION: 138+40.45 -LDFEB-

SHEET 2 OF 2

STATE OF NORTH CAROLINA
DEPARTMENT OF TRANSPORTATION
RALEIGH

TEMPORARY SHORING
BENT 1

NORTH CAROLINA PROFESSIONAL SEAL 031495 ENGINEER KANAK K. PUROHIT

REVISIONS						SHEET NO.
NO.	BY:	DATE:	NO.	BY:	DATE:	S-419
1			3			TOTAL SHEETS
2			4			671

DRAWN BY :	K. K. PUROHIT	DATE :	06/14
CHECKED BY :	T. L. CLELLAND	DATE :	06/14
DESIGN ENGINEER OF RECORD:	K. K. PUROHIT	DATE :	06/14

13-JUN-2014 09:16
R:\Structures\Fischer\Temporary Shoring-KKP\u0071_SD_STR8 & 9_Shoring.dgn
kpurohit

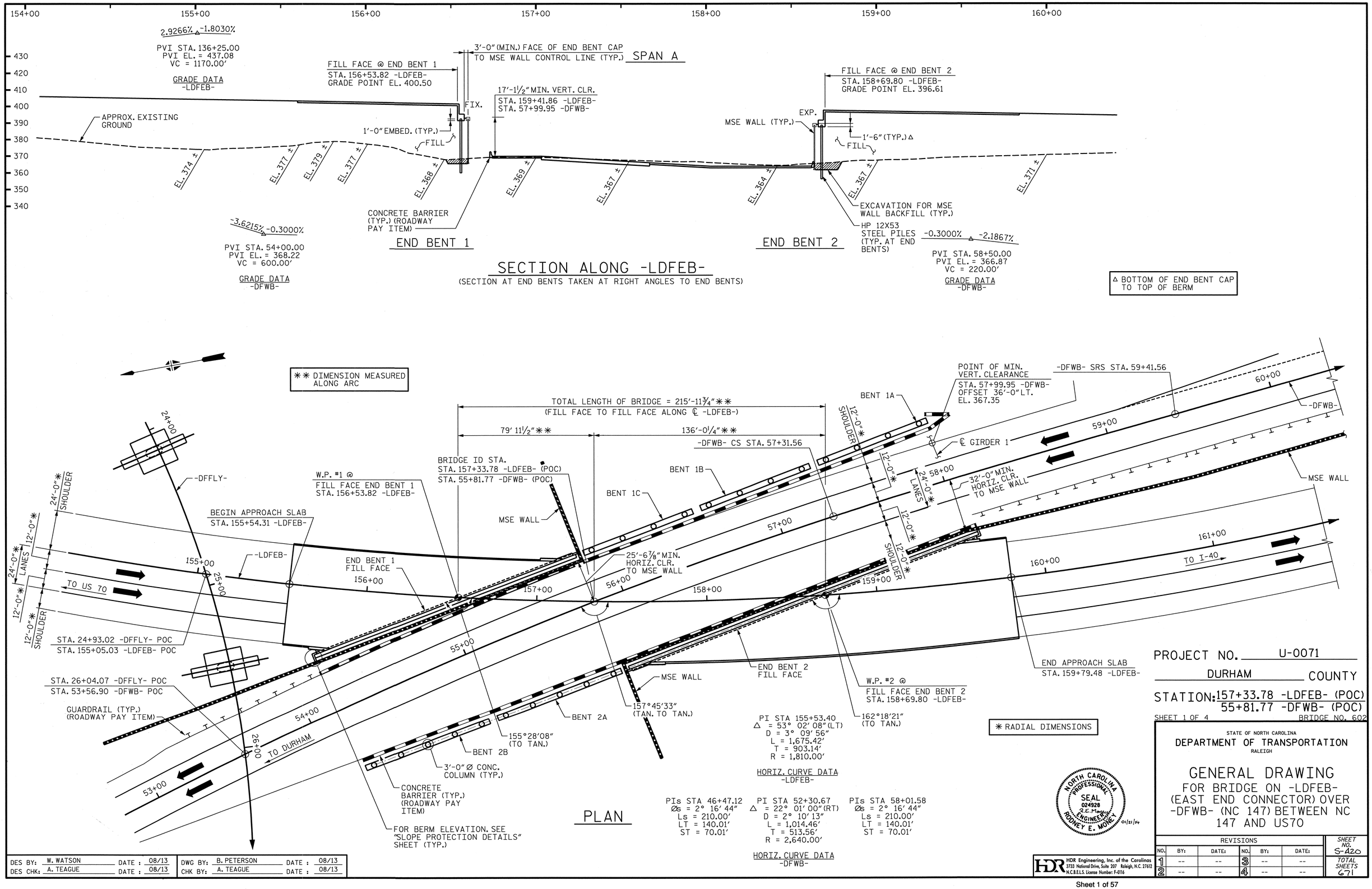
154+00
155+00
156+00
157+00
158+00
159+00
160+00
2.9266% -1.8030%
PVI STA. 136+25.00
PVI EL. = 437.08
VC = 1170.00'
GRADE DATA
-LDFEB-
3'-0" (MIN.) FACE OF END BENT CAP TO MSE WALL CONTROL LINE (TYP.)
SPAN A
FILL FACE @ END BENT 1
STA. 156+53.82 -LDFEB-
GRADE POINT EL. 400.50
17'-1½" MIN. VERT. CLR.
STA. 159+41.86 -LDFEB-
STA. 57+99.95 -DFWB-
FILL FACE @ END BENT 2
STA. 158+69.80 -LDFEB-
GRADE POINT EL. 396.61
APPROX. EXISTING GROUND
FIX.
EXP.
MSE WALL (TYP.)
1'-0" EMBED. (TYP.)
FILL
1'-6" (TYP.) △
EL. 374 ±
EL. 377 ±
EL. 379 ±
EL. 377 ±
EL. 368 ±
EL. 369 ±
EL. 367 ±
EL. 364 ±
EL. 367 ±
EL. 371 ±
CONCRETE BARRIER (TYP.) (ROADWAY PAY ITEM)
EXCAVATION FOR MSE WALL BACKFILL (TYP.)
HP 12X53 STEEL PILES (TYP. AT END BENTS)
-3.6215% -0.3000%
PVI STA. 54+00.00
PVI EL. = 368.22
VC = 600.00'
GRADE DATA
-DFWB-
END BENT 1
END BENT 2
-0.3000% -2.1867%
PVI STA. 58+50.00
PVI EL. = 366.87
VC = 220.00'
GRADE DATA
-DFWB-
SECTION ALONG -LDFEB-
(SECTION AT END BENTS TAKEN AT RIGHT ANGLES TO END BENTS)
△ BOTTOM OF END BENT CAP TO TOP OF BERM
** DIMENSION MEASURED ALONG ARC
TOTAL LENGTH OF BRIDGE = 215'-11¾"**
(FILL FACE TO FILL FACE ALONG ℄ -LDFEB-)
79' 11½"**
136'-0¼"**
-DFWB- CS STA. 57+31.56
BENT 1A
POINT OF MIN. VERT. CLEARANCE
STA. 57+99.95 -DFWB-
OFFSET 36'-0" LT.
EL. 367.35
-DFWB- SRS STA. 59+41.56
12'-0"* SHOULDER
℄ GIRDER 1
BRIDGE ID STA.
STA. 157+33.78 -LDFEB- (POC)
STA. 55+81.77 -DFWB- (POC)
BENT 1B
BENT 1C
W.P. #1 @
FILL FACE END BENT 1
STA. 156+53.82 -LDFEB-
24'-0"* LANES
32'-0" MIN. HORIZ. CLR. TO MSE WALL
MSE WALL
-DFFLY-
24'-0"* SHOULDER
12'-0"*
BEGIN APPROACH SLAB
STA. 155+54.31 -LDFEB-
-LDFEB-
END BENT 1 FILL FACE
25'-6⅞" MIN. HORIZ. CLR. TO MSE WALL
TO US 70
TO I-40
TO DURHAM
STA. 24+93.02 -DFFLY- POC
STA. 155+05.03 -LDFEB- POC
STA. 26+04.07 -DFFLY- POC
STA. 53+56.90 -DFWB- POC
GUARDRAIL (TYP.) (ROADWAY PAY ITEM)
END BENT 2 FILL FACE
W.P. #2 @
FILL FACE END BENT 2
STA. 158+69.80 -LDFEB-
END APPROACH SLAB
STA. 159+79.48 -LDFEB-
157°45'33" (TAN. TO TAN.)
155°28'08" (TO TAN.)
162°18'21" (TO TAN.)
BENT 2A
BENT 2B
3'-0" Ø CONC. COLUMN (TYP.)
CONCRETE BARRIER (TYP.) (ROADWAY PAY ITEM)
FOR BERM ELEVATION, SEE "SLOPE PROTECTION DETAILS" SHEET (TYP.)
PI STA 155+53.40
△ = 53° 02' 08" (LT)
D = 3° 09' 56"
L = 1,675.42'
T = 903.14'
R = 1,810.00'
HORIZ. CURVE DATA
-LDFEB-
PIs STA 46+47.12
Øs = 2° 16' 44"
Ls = 210.00'
LT = 140.01'
ST = 70.01'
PI STA 52+30.67
△ = 22° 01' 00" (RT)
D = 2° 10' 13"
L = 1,014.46'
T = 513.56'
R = 2,640.00'
HORIZ. CURVE DATA
-DFWB-
PIs STA 58+01.58
Øs = 2° 16' 44"
Ls = 210.00'
LT = 140.01'
ST = 70.01'
* RADIAL DIMENSIONS
PLAN
NORTH CAROLINA PROFESSIONAL SEAL 024928 ENGINEER RODNEY E. MONKEY 01/21/14
HDR Engineering, Inc. of the Carolinas
3733 National Drive, Suite 207 Raleigh, N.C. 27612
N.C.B.E.L.S. License Number: F-0116
PROJECT NO. U-0071
DURHAM COUNTY
STATION: 157+33.78 -LDFEB- (POC)
55+81.77 -DFWB- (POC)
SHEET 1 OF 4
BRIDGE NO. 602
STATE OF NORTH CAROLINA
DEPARTMENT OF TRANSPORTATION
RALEIGH
GENERAL DRAWING
FOR BRIDGE ON -LDFEB- (EAST END CONNECTOR) OVER -DFWB- (NC 147) BETWEEN NC 147 AND US70
REVISIONS
NO. BY: DATE: NO. BY: DATE:
1 -- -- 3 -- --
2 -- -- 4 -- --
SHEET NO. S-A20
TOTAL SHEETS 671
DES BY: W. WATSON DATE: 08/13
DES CHK: A. TEAGUE DATE: 08/13
DWG BY: B. PETERSON DATE: 08/13
CHK BY: A. TEAGUE DATE: 08/13
ORIGINATED INITIALS DATE
YELLOW HIGHLIGHTED & REDLINE CHECKED INITIALS DATE
BLUE HIGHLIGHTED CHANGES INITIALS DATE
CHANGES VERIFIED BY VERIFIED DATE
PLOT DRIVER: NCDOT_pdf_mono_eng_50.pltt
USER: ppeterso DATE: 1/21/2014
FILE: ...\Plan Set\0300
P TABLE: Durham_pen.tbl
TIME: 9:52:57 AM

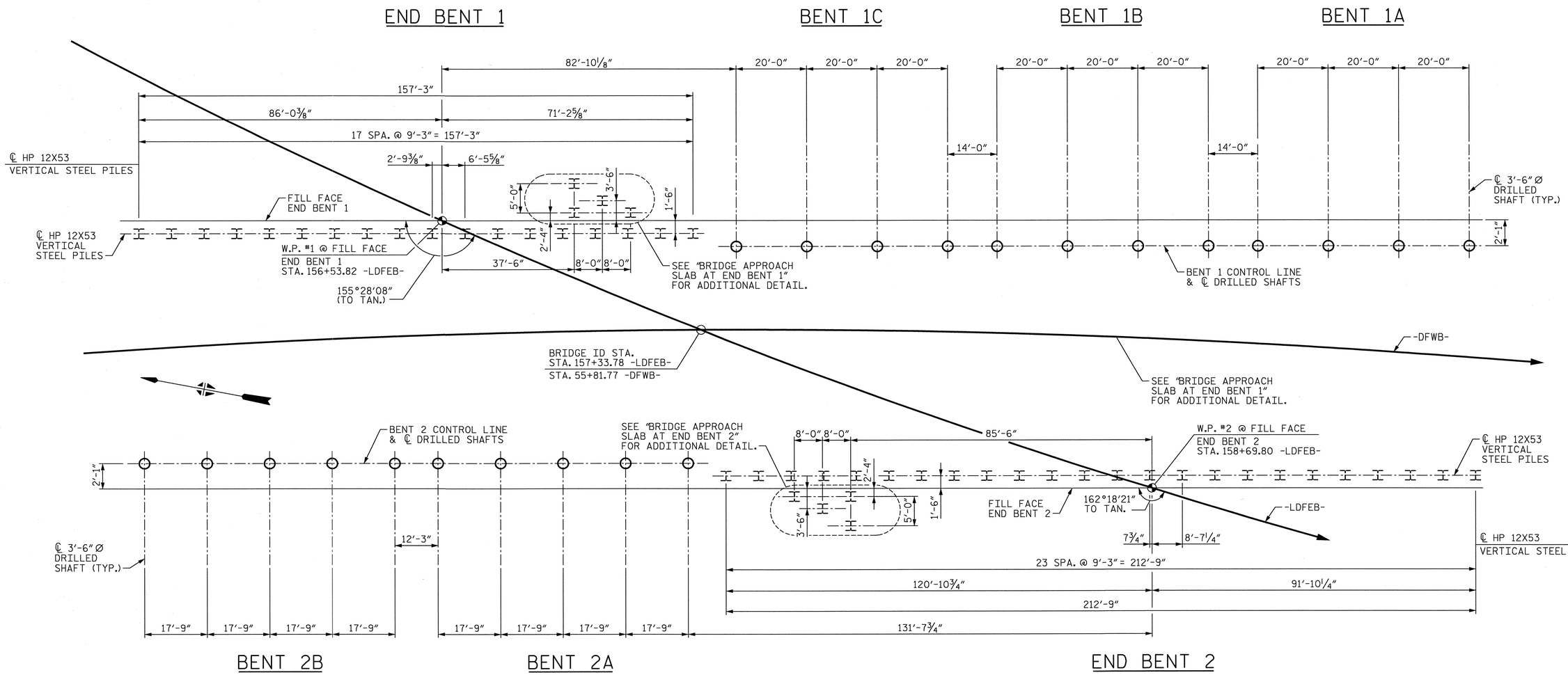

NOTES

FOR PILES, SEE SECTION 450 OF THE STANDARD SPECIFICATIONS.

PILES AT END BENT NO. 1 AND END BENT NO. 2 ARE DESIGNED FOR A FACTORED RESISTANCE OF 110 TONS PER PILE.

DRIVE PILES AT END BENT NO. 1 AND END BENT NO. 2 TO A REQUIRED DRIVING RESISTANCE OF 185 TONS PER PILE.

PILE EXCAVATION IS REQUIRED TO INSTALL PILES AT END BENT NO. 1 (ALL PILES) AND END BENT NO. 2 (PILE NO. 1 THROUGH PILE NO. 8 AND PILE NO. 15 THROUGH PILE NO. 24). EXCAVATE HOLES AT THE PILE LOCATIONS TO ELEVATION 358 FT. (LEFT), 359 FT. (CENTER) AND 360 FT. (RIGHT) FOR END BENT NO. 1 AND TO ELEVATION 351 FT. FOR END BENT NO. 2. FOR PILE EXCAVATION, SEE SECTION 450 OF THE STANDARD SPECIFICATIONS.

CONCRETE OR GROUT IS REQUIRED TO FILL HOLES FOR PILE EXCAVATION AT END BENT NO. 1 AND END BENT NO. 2.

OBSERVE A ONE MONTH WAITING PERIOD AFTER CONSTRUCTING THE EMBANKMENT TO THE BOTTOM OF CAP ELEVATION BEFORE BEGINNING END BENT CONSTRUCTION AT END BENT NO. 2.

FOR DRILLED PIERS, SEE SECTION 411 OF THE STANDARD SPECIFICATIONS.

DRILLED PIERS AT BENT NO. 1 AND BENT NO. 2 ARE DESIGNED FOR A FACTORED RESISTANCE OF 305 TONS PER PIER. CHECK FIELD CONDITIONS FOR THE REQUIRED TIP RESISTANCE OF 40 TSF.

INSTALL DRILLED PIERS AT BENT NO. 1 TO A TIP ELEVATION NO HIGHER THAN 351 FT (LEFT), 353 FT (CENTER) AND 351 FT (RIGHT), RESPECTIVELY, WITH THE REQUIRED TIP RESISTANCE.

INSTALL DRILLED PIERS AT BENT NO. 2 TO A TIP ELEVATION NO HIGHER THAN 346 FT AND WITH THE REQUIRED TIP RESISTANCE.

SPT TESTING MAY BE REQUIRED FOR DRILLED PIERS. THE ENGINEER WILL DETERMINE THE NEED FOR SPT TESTING.

SID INSPECTION MAY BE REQUIRED FOR DRILLED PIERS. THE ENGINEER WILL DETERMINE THE NEED FOR SID INSPECTIONS. FOR SID INSPECTIONS, SEE SECTION 411 OF THE STANDARD SPECIFICATIONS.

CSL TUBES ARE REQUIRED AND CSL TESTING MAY BE REQUIRED FOR DRILLED PIERS. THE ENGINEER WILL DETERMINE THE NEED FOR CSL TESTING. FOR CSL TESTING, SEE SECTION 411 OF THE STANDARD SPECIFICATIONS.

DRILLED PIER EXCAVATIONS AT BENT NO. 1 AND BENT NO. 2 WILL EXTEND INTO MATERIAL THAT DETERIORATES WHEN EXPOSED TO THE ELEMENTS. CHECK FIELD CONDITIONS FOR THE REQUIRED TIP RESISTANCE AND PLACE CONCRETE IMMEDIATELY AFTER THE EXCAVATION IS COMPLETED.

NORTH CAROLINA PROFESSIONAL SEAL 024928 ENGINEER RODNEY E. MONEY 01/21/14

PROJECT NO. U-0071

DURHAM COUNTY

STATION: 157+33.78 -LDFEB- (POC)
55+81.77 -DFWB- (POC)

SHEET 2 OF 4

STATE OF NORTH CAROLINA
DEPARTMENT OF TRANSPORTATION
RALEIGH

GENERAL DRAWING
FOUNDATION LAYOUT

REVISIONS						
NO.	BY:	DATE:	NO.	BY:	DATE:	
1	--	--	3	--	--	
2	--	--	4	--	--	

SHEET NO. S-421
TOTAL SHEETS 671

HDR Engineering, Inc. of the Carolinas
3733 National Drive, Suite 207 Raleigh, N.C. 27612
N.C.B.E.L.S. License Number: F-0116

DES BY: B. CARTER	DATE: 08/13	DWG BY: M. SELLS	DATE: 08/13
DES CHK: A. TEAGUE	DATE: 08/13	CHK BY: A. TEAGUE	DATE: 08/13

ORIGINATED		YELLOW HIGHLIGHTED & REDLINE CHECKED		BLUE HIGHLIGHTED CHANGES		CHANGES VERIFIED BY	
INITIALS	DATE	INITIALS	DATE	INITIALS	DATE	VERIFIED	DATE

PLOT DRIVER: NCDOT_pdf_mono_eng_50.plt
USER: ppeterso DATE: 1/21/2014
FILE: ...\Plan Set\0301
pr TABLE: Durham_pen.tbl
TIME: 10:34:28 AM

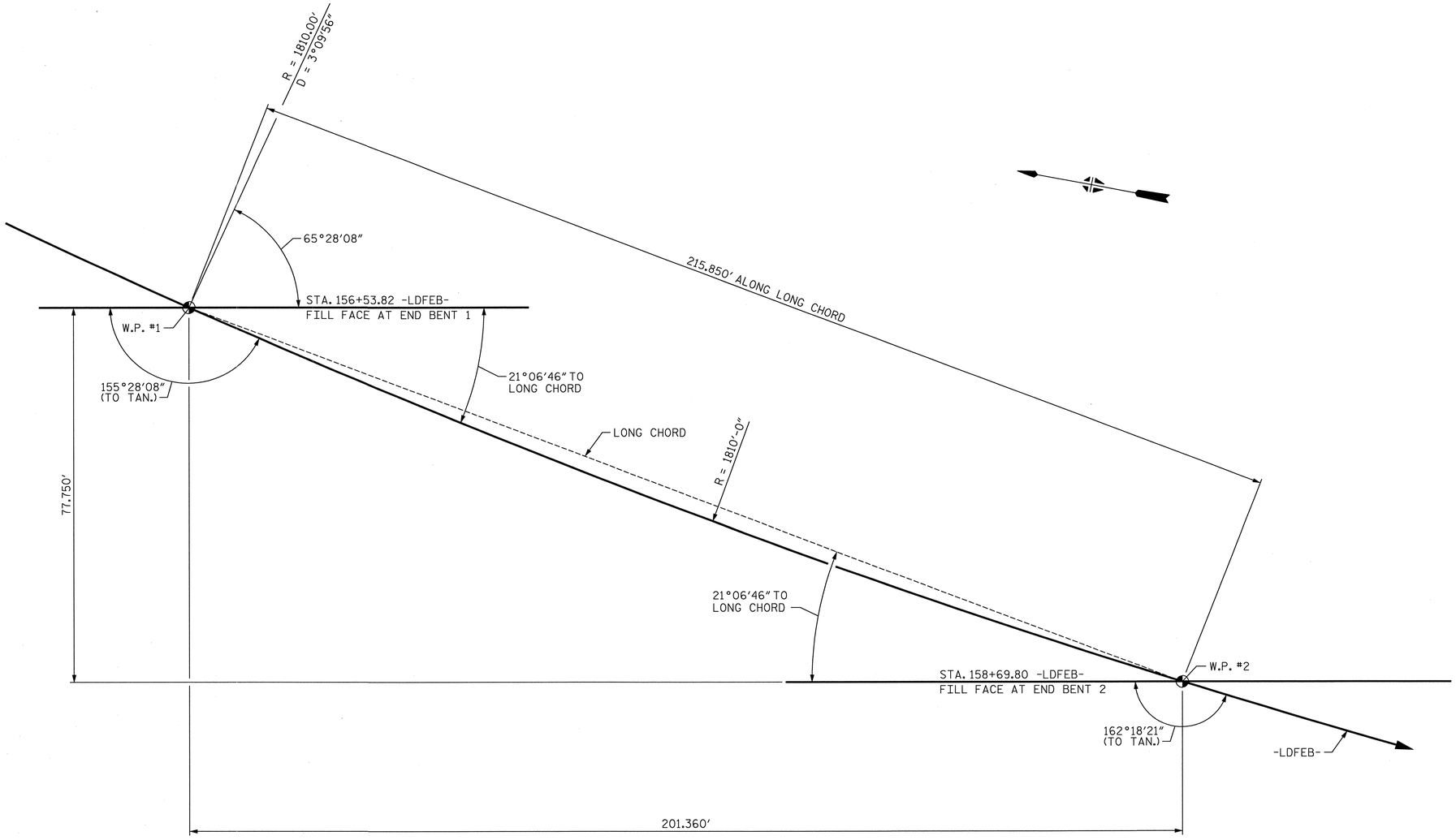

LONG CHORD LAYOUT

NOTE: END BENTS AND BENTS ARE PARALLEL.

PI STA 155+53.40
Δ = 53° 02' 08" (LT)
D = 3° 09' 56"
L = 1,675.42'
T = 903.14'
R = 1,810.00'

HORIZ. CURVE DATA
-LDFEB-

PROJECT NO. U-0071

DURHAM COUNTY

STATION: 157+33.78 -LDFEB- (POC)
55+81.77 -DFWB- (POC)

SHEET 3 OF 4

STATE OF NORTH CAROLINA
DEPARTMENT OF TRANSPORTATION
RALEIGH

GENERAL DRAWING
LONG CHORD LAYOUT

NORTH CAROLINA PROFESSIONAL SEAL 024928 ENGINEER RODNEY E. MONEY 01/21/14

HDR Engineering, Inc. of the Carolinas
3733 National Drive, Suite 207 Raleigh, N.C. 27612
N.C.B.E.L.S. License Number: F-0116

REVISIONS						SHEET NO.
NO.	BY:	DATE:	NO.	BY:	DATE:	S-422
1	--	--	3	--	--	TOTAL SHEETS
2	--	--	4	--	--	671

DES BY: E. NOLTING	DATE: 08/13	DWG BY: M. SELLS	DATE: 08/13
DES CHK: A. TEAGUE	DATE: 08/13	CHK BY: A. TEAGUE	DATE: 08/13

ORIGINATED		YELLOW HIGHLIGHTED & REDLINE CHECKED		BLUE HIGHLIGHTED CHANGES		CHANGES VERIFIED BY	
INITIALS	DATE	INITIALS	DATE	INITIALS	DATE	VERIFIED	DATE

PLOT DRIVER: NCDOT_pdf_mono_eng_50.plt
USER: ppeterso DATE: 1/21/2014
FILE: ...\Plan Set\0302
PP TABLE: Durham_pen.tbl
TIME: 9:54:19 AM

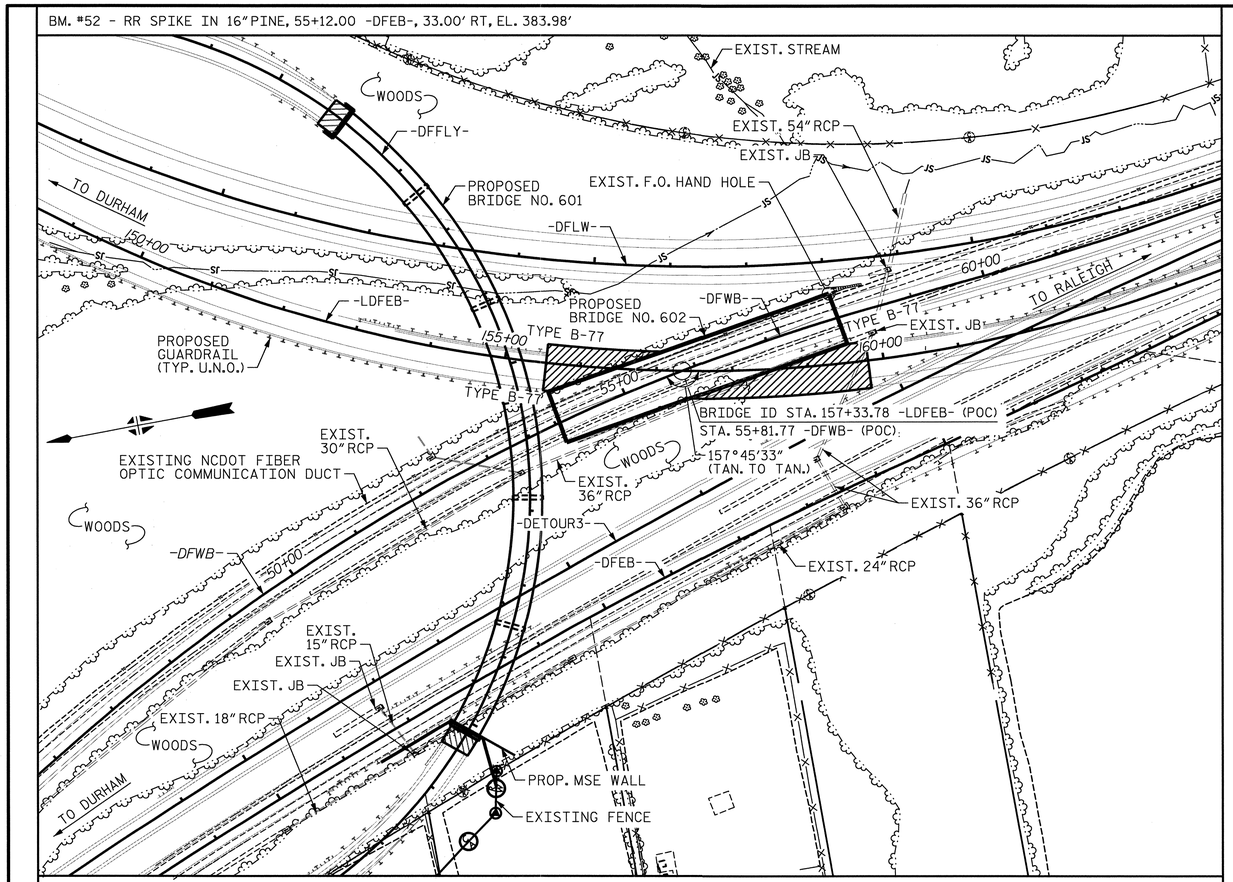

LOCATION SKETCH

NOTES

ALL STATIONS SHOWN ARE ALONG -LDFEB- UNLESS NOTED OTHERWISE.

ASSUMED LIVE LOAD = HL-93 OR ALTERNATE LOADING.

THIS BRIDGE HAS BEEN DESIGNED IN ACCORDANCE WITH THE REQUIREMENTS OF THE AASHTO LRFD BRIDGE DESIGN SPECIFICATIONS.

THIS BRIDGE IS LOCATED IN SEISMIC ZONE 1.

FOR UTILITY INFORMATION, SEE UTILITY PLANS AND SPECIAL PROVISIONS.

FOR OTHER DESIGN DATA AND GENERAL NOTES, SEE SHEET SN.

FOR SUBMITTAL OF WORKING DRAWINGS, SEE SPECIAL PROVISIONS.

FOR FALSEWORK AND FORMWORK, SEE SPECIAL PROVISIONS.

FOR CRANE SAFETY, SEE SPECIAL PROVISIONS.

FOR GROUT FOR STRUCTURES, SEE SPECIAL PROVISIONS.

THE ELEVATION AND CLEARANCE SHOWN ON THE PLANS AT THE POINT OF MINIMUM VERTICAL CLEARANCE IS FROM THE BEST INFORMATION AVAILABLE. PRIOR TO BEGINNING BRIDGE CONSTRUCTION, VERIFY THE ELEVATION ON THE EXISTING PAVEMENT AND CHECK THE CLEARANCE. REPORT ANY VARIATIONS TO THE ENGINEER. ANY PLAN REVISIONS NECESSARY TO ACHIEVE THE REQUIRED MINIMUM VERTICAL CLEARANCE WILL BE PROVIDED BY THE DEPARTMENT.

FOR MAINTENANCE AND PROTECTION OF TRAFFIC BENEATH PROPOSED STRUCTURE, SEE SPECIAL PROVISIONS.

REMOVABLE FORMS MAY BE USED IN LIEU OF METAL STAY-IN-PLACE FORMS IN ACCORDANCE WITH ARTICLE 420-3 OF THE STANDARD SPECIFICATIONS.

NEEDLE BEAMS WILL NOT BE ALLOWED UNLESS OTHERWISE CALLED FOR ON THE PLANS OR APPROVED BY THE ENGINEER.

FOR EROSION CONTROL MEASURES, SEE EROSION CONTROL PLANS.

SEE ROADWAY AND GEOTECH PLANS FOR MSE WALL PLANS, ELEVATIONS AND DETAILS.

FOR PLACING LOAD ON STRUCTURAL MEMBERS, SEE SPECIAL PROVISIONS.

THE CLASS AA CONCRETE IN THE BRIDGE DECK SHALL CONTAIN FLY ASH OR GROUND GRANULATED BLAST FURNACE SLAG AT THE SUBSTITUTION RATE SPECIFIED IN ARTICLE 1024-1 AND IN ACCORDANCE WITH ARTICLES 1024-5 AND 1024-6 OF THE STANDARD SPECIFICATIONS. NO PAYMENT WILL BE MADE FOR THIS SUBSTITUTION AS IT IS CONSIDERED INCIDENTAL TO THE COST OF THE REINFORCED CONCRETE DECK SLAB.

FOR BRIDGE DECK RIDEABILITY AND GROOVING, SEE SPECIAL PROVISIONS.

TOTAL BILL OF MATERIAL

	3'-6" DIA. DRILLED PIERS IN SOIL	3'-6" DIA. DRILLED PIERS NOT IN SOIL	SID INSPECTIONS	SPT TESTING	CSL TESTING	REINFORCED CONCRETE DECK SLAB	GROOVING BRIDGE FLOORS	CLASS A CONCRETE	BRIDGE APPROACH SLABS	REINFORCING STEEL	SPIRAL COLUMN REINFORCING STEEL	54" PRESTRESSED CONCRETE GIRDERS	HP 12X53 STEEL PILES		PILE EXCAVATION IN SOIL	PILE EXCAVATION NOT IN SOIL	CONCRETE BARRIER RAIL	4" SLOPE PROTECTION	ELASTOMERIC BEARINGS	EXPANSION JOINT SEALS
	LIN. FT.	LIN. FT.	EA.	EA.	EA.	SQ. FT.	SQ. FT.	CU. YDS.	LUMP SUM	LBS.	LBS.	LIN. FT.	NO.	LIN. FT.	LIN. FT.	LIN. FT.	LIN. FT.	SQ. YDS.	LUMP SUM	LUMP SUM
SUPERSTRUCTURE						29,488	23,918		LUMP SUM			3,155.8					446		LUMP SUM	LUMP SUM
END BENT 1								88.8		15723			22	851.0	10	121		37.3		
BENT 1A	26.3	24.0						57.4		14835	2697									
BENT 1B	23.4	24.0						58.7		14860	2715									
BENT 1C	37.2	24.0						60.5		15885	3132									
BENT 2A	79.6	30.0						79.6		22373	5341									
BENT 2B	76.2	30.0						84.8		23328	5759									
END BENT 2								121.3		21050			28	1,110.0	55	116		49.7		
TOTAL	242.7	132.0	4	4	1	29,488	23,918	551.1	LUMP SUM	128054	19644	3,155.8	50	1,961.0	65	237	446	87.0	LUMP SUM	LUMP SUM

PROJECT NO. U-0071

DURHAM COUNTY

STATION: 157+33.78 -LDFEB- (POC)
55+81.77 -DFWB- (POC)

SHEET 4 OF 4

STATE OF NORTH CAROLINA
DEPARTMENT OF TRANSPORTATION
RALEIGH

GENERAL DRAWING LOCATION SKETCH, NOTES & TOTAL BILL OF MATERIAL

NORTH CAROLINA PROFESSIONAL SEAL 024928 ENGINEER RODNEY E. MONEY 02/07/14

REVISIONS									SHEET NO. S-4423
NO.	BY:	DATE:	NO.	BY:	DATE:				TOTAL SHEETS 671
1	--	--	3	--	--				
2	--	--	4	--	--				

HDR Engineering, Inc. of the Carolinas
3733 National Drive, Suite 207 Raleigh, N.C. 27612
N.C.B.E.L.S. License Number: F-0116

DES BY: E. NOLTING DATE: 08/13
DES CHK: A. TEAGUE DATE: 08/13
DWG BY: M. SELLS DATE: 08/13
CHK BY: A. TEAGUE DATE: 08/13

ORIGINATED		YELLOW HIGHLIGHTED & REDLINE CHECKED		BLUE HIGHLIGHTED CHANGES		CHANGES VERIFIED BY	
INITIALS	DATE	INITIALS	DATE	INITIALS	DATE	VERIFIED	DATE

PLOT DRIVER: NCDOT_pdf_mono_eng_50.plt
USER: ppeterso DATE: 2/5/2014
FILE: ...\0303
PF TABLE: Durham_pen.tbl
TIME: 8:30:53 AM

LOAD AND RESISTANCE FACTOR RATING (LRFR) SUMMARY FOR PRESTRESSED CONCRETE GIRDERS

LEVEL		VEHICLE	WEIGHT (W) (TONS)	CONTROLLING LOAD RATING (#)	MINIMUM RATING FACTORS (RF)	TONS = W × RF	STRENGTH I LIMIT STATE											SERVICE III LIMIT STATE						COMMENT NUMBER
								MOMENT					SHEAR						MOMENT					
							LIVE-LOAD FACTORS (γ_{LL})	DISTRIBUTION FACTORS (DF)	RATING FACTOR	SPAN	GIRDER LOCATION	DISTANCE FROM LEFT END OF SPAN (ft)	DISTRIBUTION FACTORS (DF)	RATING FACTOR	SPAN	GIRDER LOCATION	DISTANCE FROM LEFT END OF SPAN (ft)	LIVE-LOAD FACTORS (γ_{LL})	DISTRIBUTION FACTORS (DF)	RATING FACTOR	SPAN	GIRDER LOCATION	DISTANCE FROM LEFT END OF SPAN (ft)	
DESIGN LOAD RATING		HL-93 (INVENTORY)	N/A	1	1.47	--	1.75	0.79	1.47	A	I	38.87	0.91	1.54	A	I	68.87	0.80	0.79	1.65	A	I	38.87	
		HL-93 (OPERATING)	N/A		1.90	--	1.35	0.79	1.90	A	I	38.87	0.91	2.02	A	I	68.87	N/A	--	--	--	--	--	
		HS-20 (INVENTORY)	36.000	2	1.92	69.12	1.75	0.79	1.92	A	I	38.87	0.91	1.96	A	I	68.87	0.80	0.79	2.16	A	I	38.87	
		HS-20 (OPERATING)	36.000		2.49	89.64	1.35	0.79	2.49	A	I	38.87	0.91	2.57	A	I	68.87	N/A	--	--	--	--	--	
LEGAL LOAD RATING	SINGLE VEHICLE (SV)	SNSH	13.500		4.88	65.88	1.40	0.79	5.44	A	I	38.87	0.91	6.04	A	I	68.87	0.80	0.79	4.88	A	I	38.87	
		SNGARBS2	20.000		3.63	72.60	1.40	0.79	4.05	A	I	38.87	0.91	4.27	A	I	68.87	0.80	0.79	3.63	A	I	38.87	
		SNAGRIS2	22.000		3.44	75.68	1.40	0.79	3.83	A	I	38.87	0.91	3.95	A	I	68.87	0.80	0.79	3.44	A	I	38.87	
		SNCOTTS3	27.250		2.43	66.22	1.40	0.79	2.71	A	I	38.87	0.91	2.95	A	I	68.87	0.80	0.79	2.43	A	I	38.87	
		SNAGGRS4	34.925		2.03	70.90	1.40	0.79	2.26	A	I	38.87	0.91	2.44	A	I	68.87	0.80	0.79	2.03	A	I	38.87	
		SNS5A	35.550		1.98	70.39	1.40	0.79	2.21	A	I	38.87	0.91	2.48	A	I	68.87	0.80	0.79	1.98	A	I	38.87	
		SNS6A	39.950		1.82	72.71	1.40	0.79	2.03	A	I	38.87	0.91	2.25	A	I	68.87	0.80	0.79	1.82	A	I	38.87	
		SNS7B	42.000		1.73	72.66	1.40	0.79	1.93	A	I	38.87	0.91	2.21	A	I	68.87	0.80	0.79	1.73	A	I	38.87	
	TRUCK TRACTOR SEMI-TRAILER (TTST)	TNAGRIT3	33.000		2.22	73.26	1.40	0.79	2.47	A	I	38.87	0.91	2.70	A	I	68.87	0.80	0.79	2.22	A	I	38.87	
		TNT4A	33.075		2.23	73.76	1.40	0.79	2.48	A	I	38.87	0.91	2.63	A	I	68.87	0.80	0.79	2.23	A	I	38.87	
		TNT6A	41.600		1.82	75.71	1.40	0.79	2.03	A	I	38.87	0.91	2.33	A	I	68.87	0.80	0.79	1.82	A	I	38.87	
		TNT7A	42.000		1.83	76.86	1.40	0.79	2.04	A	I	38.87	0.91	2.31	A	I	68.87	0.80	0.79	1.83	A	I	38.87	
		TNT7B	42.000		1.89	79.38	1.40	0.79	2.11	A	I	38.87	0.91	2.15	A	I	68.87	0.80	0.79	1.89	A	I	38.87	
		TNAGRIT4	43.000		1.80	77.40	1.40	0.79	2.01	A	I	38.87	0.91	2.08	A	I	68.87	0.80	0.79	1.80	A	I	38.87	
		TNAGT5A	45.000		1.70	76.50	1.40	0.79	1.89	A	I	38.87	0.91	2.07	A	I	68.87	0.80	0.79	1.70	A	I	38.87	
		TNAGT5B	45.000	3	1.68	75.60	1.40	0.79	1.87	A	I	38.87	0.91	1.98	A	I	68.87	0.80	0.79	1.68	A	I	38.87	

LOAD FACTORS:

DESIGN LOAD RATING FACTORS	LIMIT STATE	γ_{DC}	γ_{DW}
	STRENGTH I	1.25	1.50
	SERVICE III	1.00	1.00

NOTES:

MINIMUM RATING FACTORS ARE BASED ON THE STRENGTH I AND SERVICE III LIMIT STATES.

ALLOWABLE STRESSES FOR SERVICE III LIMIT STATE ARE AS REQUIRED FOR DESIGN.

(#) CONTROLLING LOAD RATING

- (1) DESIGN LOAD RATING (HL-93)
- (2) DESIGN LOAD RATING (HS-20)
- (3) LEGAL LOAD RATING **
- ** SEE CHART FOR VEHICLE TYPE

GIRDER LOCATION

- I - INTERIOR GIRDER
- EL - EXTERIOR LEFT GIRDER
- ER - EXTERIOR RIGHT GIRDER

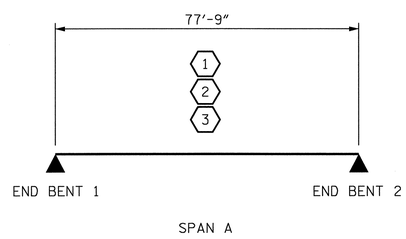

LRFR SUMMARY

PROJECT NO. U-0071

DURHAM COUNTY

STATION: 157+33.78 -LDFEB-

STATE OF NORTH CAROLINA
DEPARTMENT OF TRANSPORTATION
RALEIGH

SUPERSTRUCTURE
LRFR SUMMARY FOR
PRESTRESSED CONCRETE
GIRDERS
(NON-INTERSTATE TRAFFIC)

NORTH CAROLINA PROFESSIONAL SEAL 024928 ENGINEER RODNEY E. MONEY 01/21/14

REVISIONS								SHEET NO. S-424
NO.	BY:	DATE:	NO.	BY:	DATE:			TOTAL SHEETS 671
1	--	--	3	--	--			
2	--	--	4	--	--			

HDR Engineering, Inc. of the Carolinas
3733 National Drive, Suite 207 Raleigh, N.C. 27612
N.C.B.E.L.S. License Number: F-0116

DES BY: A. TEAGUE	DATE: 08/13	DWG BY: M. SELLS	DATE: 08/13
DES CHK: E. NOLTING	DATE: 08/13	CHK BY: E. NOLTING	DATE: 08/13

ORIGINATED		YELLOW HIGHLIGHTED & REDLINE CHECKED		BLUE HIGHLIGHTED CHANGES		CHANGES VERIFIED BY	
INITIALS	DATE	INITIALS	DATE	INITIALS	DATE	VERIFIED	DATE

WST 08/23/12
NJL 08/20/12

PLOT DRIVER: NCDOT_pdf_mono_eng_50.plt
USER: ppeterso DATE: 1/21/2014
FILE: ...\Plan Set\0340
PF TABLE: Durham_pen.tbl
TIME: 9:55:41 AM

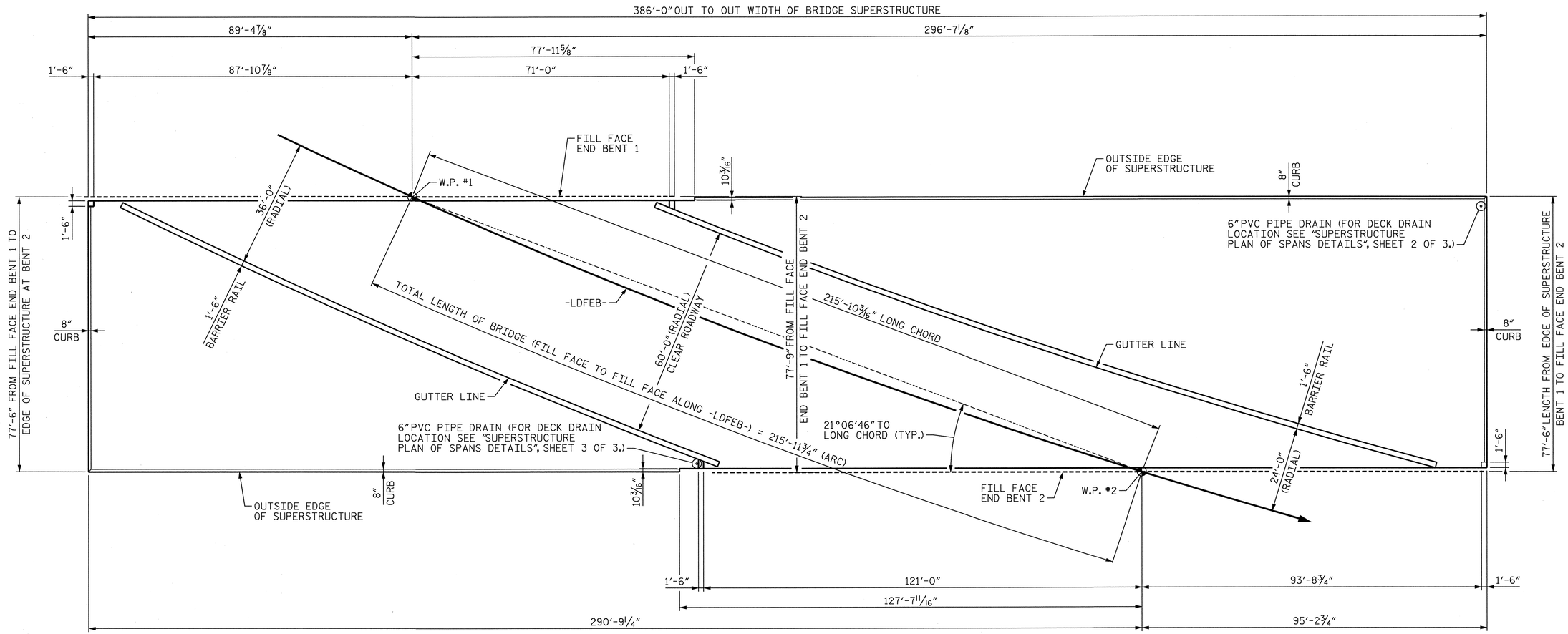

BRIDGE LAYOUT

PROJECT NO. U-0071

DURHAM COUNTY

STATION: 157+33.78 -LDFEB-

STATE OF NORTH CAROLINA
DEPARTMENT OF TRANSPORTATION
RALEIGH

SUPERSTRUCTURE BRIDGE LAYOUT

NORTH CAROLINA PROFESSIONAL SEAL 024928 ENGINEER RODNEY E. MONEY 01/21/14

REVISIONS							SHEET NO.
NO.	BY:	DATE:	NO.	BY:	DATE:		S-425
1	--	--	3	--	--		TOTAL SHEETS
2	--	--	4	--	--		67

HDR Engineering, Inc. of the Carolinas
3733 National Drive, Suite 207 Raleigh, N.C. 27612
N.C.B.E.L.S. License Number: F-0116

DES BY: E. NOLTING	DATE: 08/13	DWG BY: M. SELLS	DATE: 08/13
DES CHK: A. TEAGUE	DATE: 08/13	CHK BY: A. TEAGUE	DATE: 08/13

ORIGINATED		YELLOW HIGHLIGHTED & REDLINE CHECKED		BLUE HIGHLIGHTED CHANGES		CHANGES VERIFIED BY	
INITIALS	DATE	INITIALS	DATE	INITIALS	DATE	VERIFIED	DATE

PLOT DRIVER: NCDOT_pdf_mono_eng_50.plt
USER: ppeterso DATE: 1/21/2014
FILE: ...\Plan Set\0350
PF TABLE: Durham_pen.tbl
TIME: 9:54:43 AM

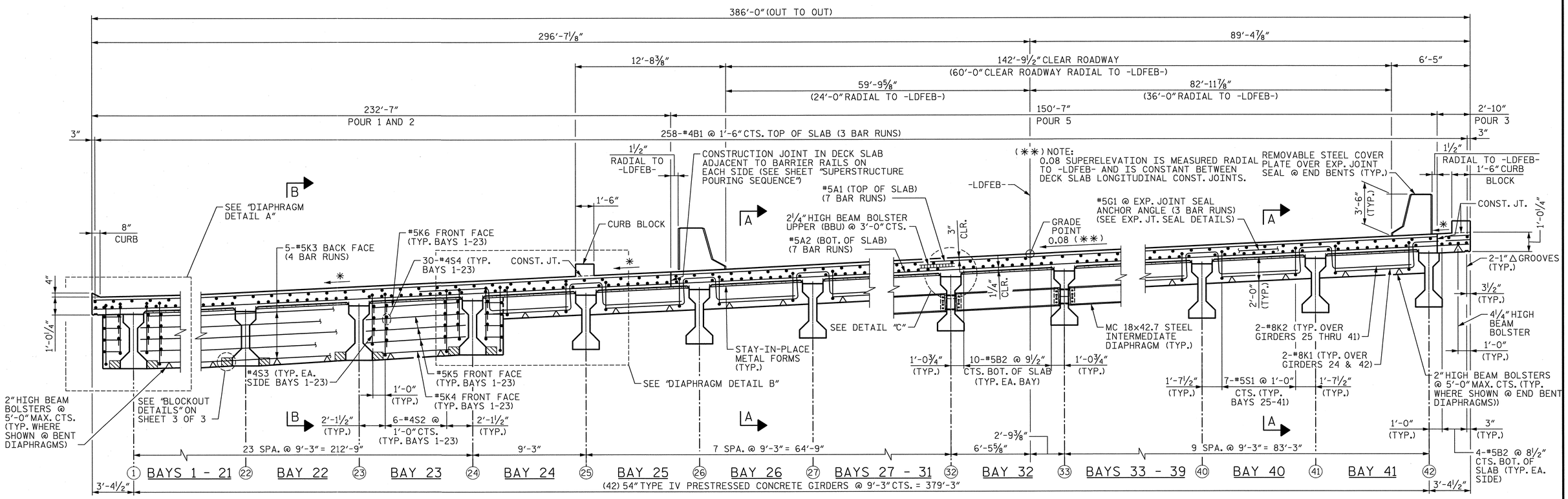

TYPICAL SECTION ALONG FILL FACE END BENT 1

(ALL DIMENSIONS MEASURED ALONG FILL FACE END BENT 1 U.N.O.)
(* CROSS SLOPE VARIES OUTSIDE CONST. JT.)

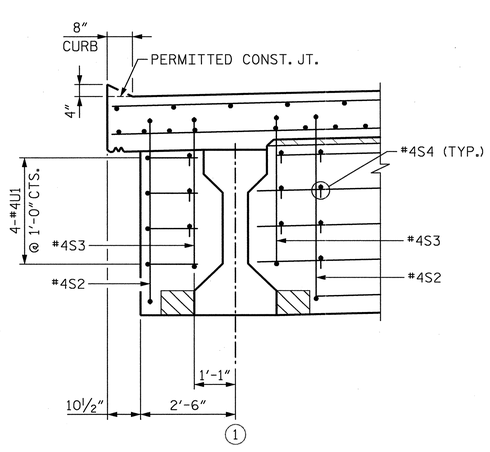

DIAPHRAGM DETAIL A

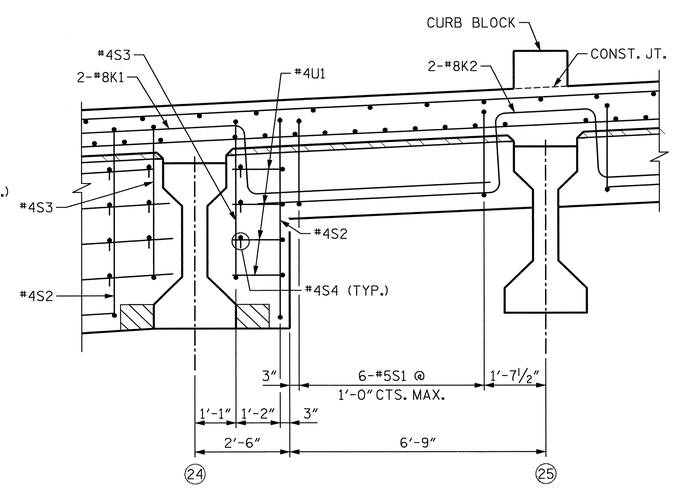

DIAPHRAGM DETAIL B

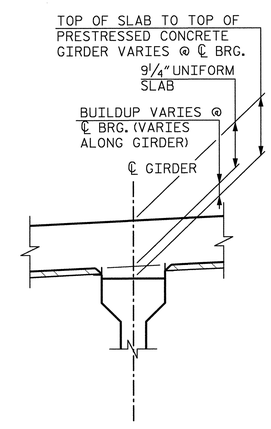

DETAIL "C"

FOR GIRDER BUILDUP TABLE, SEE SHEET 3 OF 3.

NORTH CAROLINA PROFESSIONAL SEAL 024928 ENGINEER RODNEY E. MONEY 01/21/14

PROJECT NO. U-0071
DURHAM COUNTY
STATION: 157+33.78 -LDFEB-

SHEET 1 OF 3

STATE OF NORTH CAROLINA
DEPARTMENT OF TRANSPORTATION
RALEIGH

SUPERSTRUCTURE TYPICAL SECTION

REVISIONS						SHEET NO. S-42
NO.	BY:	DATE:	NO.	BY:	DATE:	TOTAL SHEETS 57
1	--	--	3	--	--	
2	--	--	4	--	--	

HDR Engineering, Inc. of the Carolinas
3733 National Drive, Suite 207 Raleigh, N.C. 27612
N.C.B.E.L.S. License Number: F-0116

DES BY: E. NOLTING	DATE: 08/13	DWG BY: B. PETERSON	DATE: 08/13
DES CHK: A. TEAGUE	DATE: 08/13	CHK BY: A. TEAGUE	DATE: 08/13

ORIGINATED		YELLOW HIGHLIGHTED & REDLINE CHECKED		BLUE HIGHLIGHTED CHANGES		CHANGES VERIFIED BY	
INITIALS	DATE	INITIALS	DATE	INITIALS	DATE	VERIFIED	DATE

PLOT DRIVER: NCDOT_pdf_mono_eng_50.plt
USER: ppeterso DATE: 1/21/2014
FILE: ...\Plan Set\0500
PF TABLE: Durham_pen.tbl
TIME: 9:56:11 AM

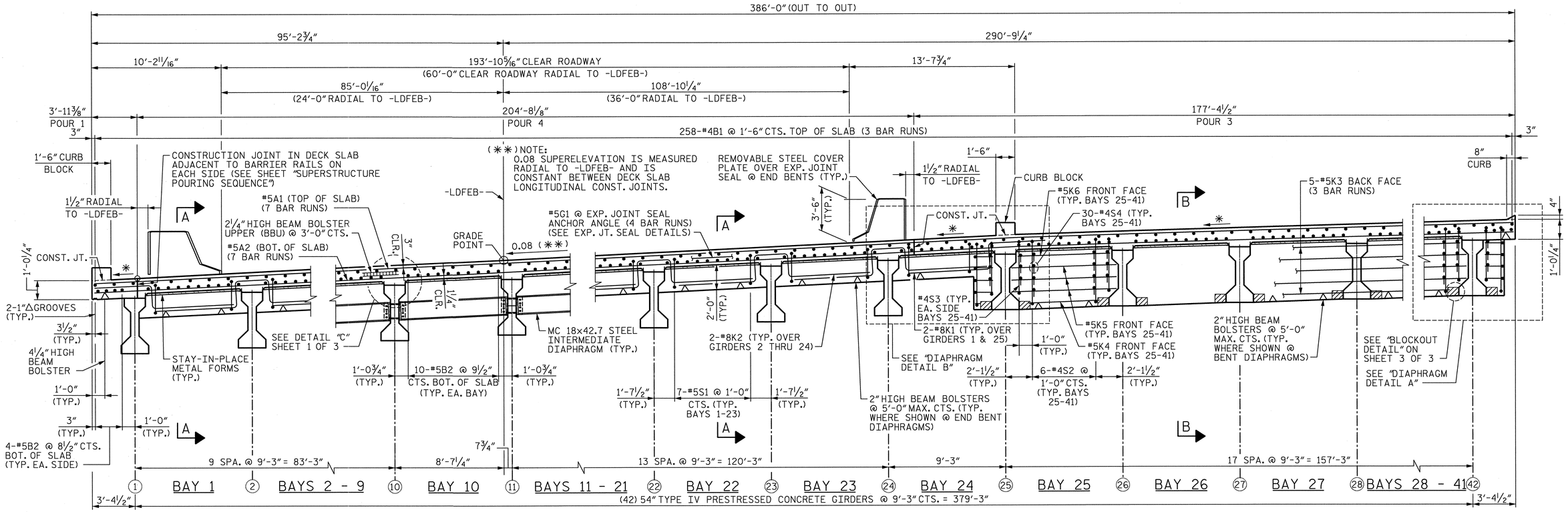

TYPICAL SECTION ALONG FILL FACE END BENT 2

(ALL DIMENSIONS MEASURED ALONG FILL FACE END BENT 2 U.N.O.)
(✱ CROSS SLOPE VARIES OUTSIDE CONST. JT.)

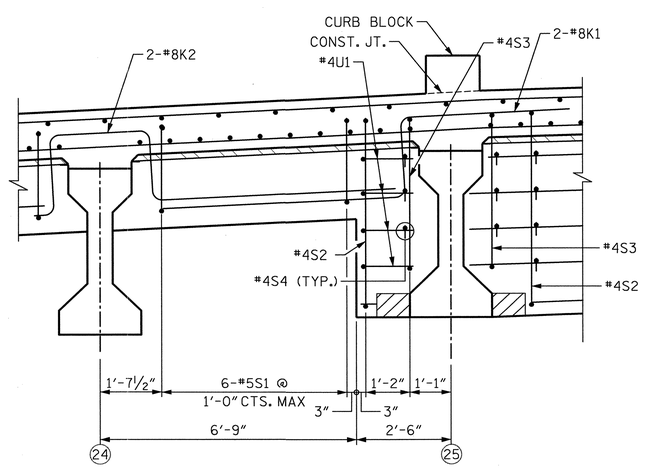

DIAPHRAGM DETAIL B

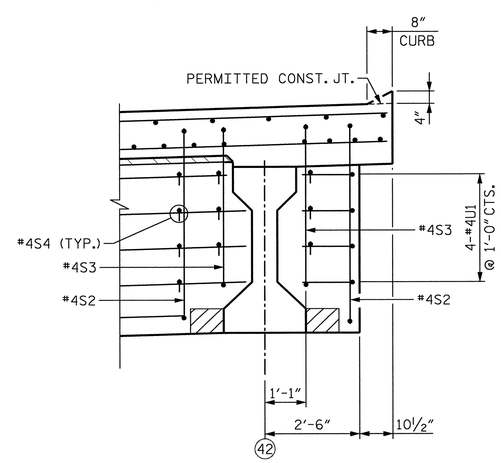

DIAPHRAGM DETAIL A

PROJECT NO. U-0071
DURHAM COUNTY
STATION: 157+33.78 -LDFEB-
SHEET 2 OF 3

STATE OF NORTH CAROLINA
DEPARTMENT OF TRANSPORTATION
RALEIGH

SUPERSTRUCTURE TYPICAL SECTION

NORTH CAROLINA PROFESSIONAL SEAL 024928 ENGINEER RODNEY E. MONEY 01/21/14

HDR Engineering, Inc. of the Carolinas
3733 National Drive, Suite 207 Raleigh, N.C. 27612
N.C.B.E.L.S. License Number: F-0116

REVISIONS								SHEET NO.
NO.	BY:	DATE:	NO.	BY:	DATE:			S-427
1	--	--	3	--	--			TOTAL SHEETS
2	--	--	4	--	--			671

DES BY: E. NOLTING	DATE: 08/13	DWG BY: B. PETERSON	DATE: 08/13
DES CHK: A. TEAGUE	DATE: 08/13	CHK BY: A. TEAGUE	DATE: 08/13

ORIGINATED		YELLOW HIGHLIGHTED & REDLINE CHECKED		BLUE HIGHLIGHTED CHANGES		CHANGES VERIFIED BY	
INITIALS	DATE	INITIALS	DATE	INITIALS	DATE	VERIFIED	DATE

PLOT DRIVER: NCDOT_pdf_mono_eng_50.plt
USER: ppeterso DATE: 1/21/2014
FILE: ...\Plan Set\0501
PF TABLE: Durham_pen.tbl
TIME: 9:56:37 AM

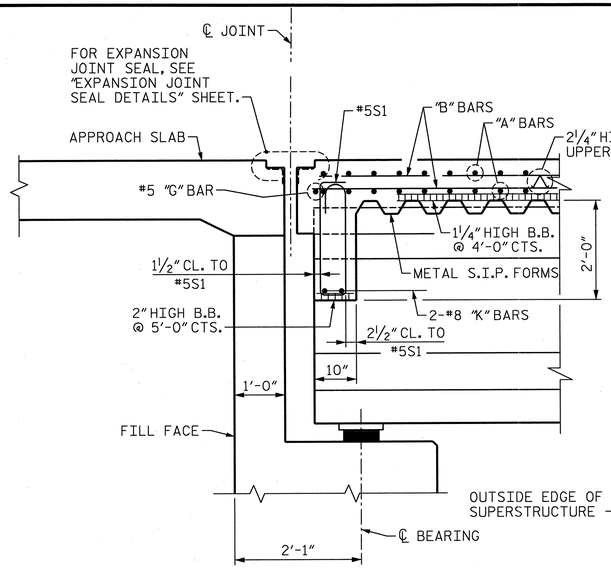

SECTION A-A

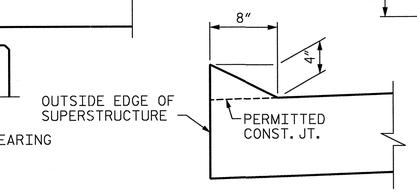

CURB DETAIL

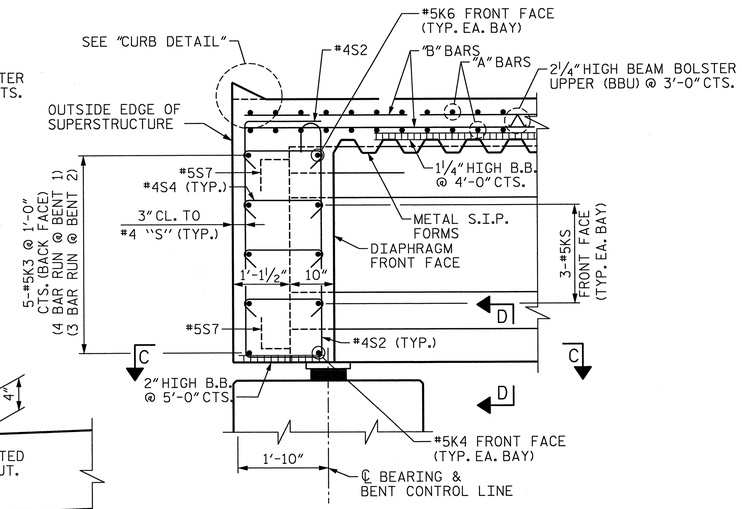

SECTION B-B

NOTES

PROVIDE 1¼" HIGH BEAM BOLSTERS UPPER AT 4'-0" CTS. ATOP THE METAL STAY-IN-PLACE FORMS TO SUPPORT THE BOTTOM MAT OF "A" BARS. WHEN USING REMOVABLE FORMS, PROVIDE CONTINUOUS HIGH CHAIRS FOR METAL DECK (C.H.C.M.) @ 4'-0" CTS. WITH A HEIGHT TO SUPPORT THE BOTTOM MAT OF "A" BARS A CLEAR DISTANCE OF 2½" ABOVE THE TOP OF THE REMOVABLE FORM.

LONGITUDINAL STEEL MAY BE SHIFTED SLIGHTLY, AS NECESSARY, TO AVOID INTERFERENCE WITH STIRRUPS IN PRESTRESSED CONCRETE GIRDERS.

BARRIER RAIL SHALL NOT BE CAST UNTIL ALL SLAB CONCRETE IN THAT SPAN HAS BEEN CAST AND HAS REACHED A MINIMUM COMPRESSIVE STRENGTH OF 3000 PSI.

ALL REINFORCING STEEL IN BARRIER RAILS SHALL BE EPOXY COATED.

FOR INTERMEDIATE STEEL DIAPHRAGM DETAILS, SEE "INTERMEDIATE STEEL DIAPHRAGMS FOR TYPE IV PRESTRESSED CONCRETE GIRDERS" SHEET.

THE CONTRACTOR IS MADE AWARE THAT THE BUILDUPS IN GIRDERS 5 THROUGH 18 WILL INCREASE WITHIN THE SPAN. THE MINIMUM GIRDER BUILDUP IS 3" AND THE MAXIMUM GIRDER BUILDUP IS 4¾". THE CONTRACTOR SHALL DESIGN THE SUPPORT SYSTEM FOR THE STAY-IN-PLACE FORMS ACCORDINGLY.

A 8" X 4" CURB SHALL BE PLACED AROUND THE OUTSIDE EDGE OF THE SUPERSTRUCTURE IN THE AREAS BEHIND THE BARRIER RAIL.

GIRDER BUILDUPS

GIRDER	BUILDUP AT ℄ BEARING
1	3"
2	3"
3	3"
4	3"
5	3¼"
6	3½"
7	4¼"
8	4½"
9	4¾"
10	4¾"
11	4¾"
12	4¾"
13	4¾"
14	4½"
15	4¼"
16	4"
17	3¾"
18	3¼"
19	3"
20	3"
21	3"
22	3"
23	3"
24	3"
25	3"
26	3"
27	3"
28	3"
29	3"
30	3"
31	3"
32	3"
33	3"
34	3"
35	3"
36	3"
37	3"
38	3"
39	3"
40	3"
41	3"
42	3"

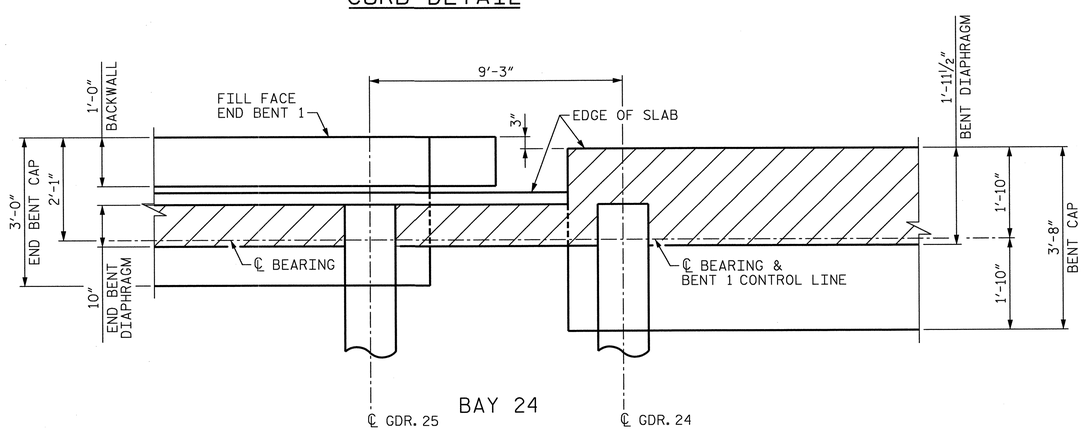

PLAN OF DIAPHRAGMS

(END BENT 1 SHOWN, END BENT 2 SIMILAR FOR BAY 24)

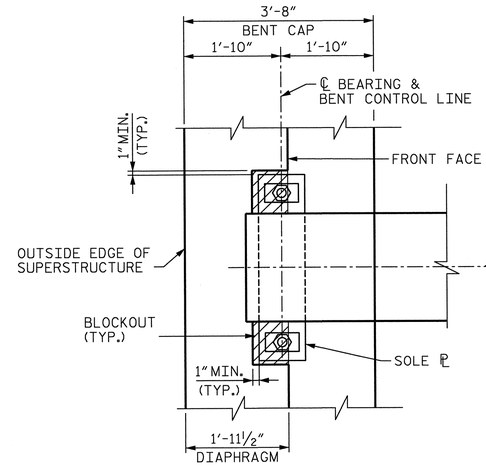

SECTION C-C

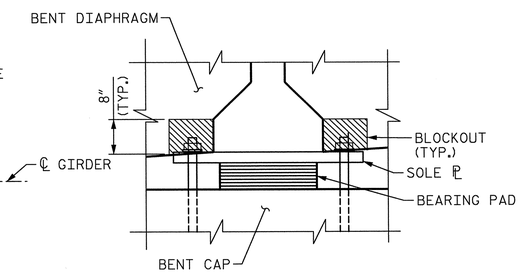

SECTION D-D

BLOCKOUT DETAILS

PROJECT NO. U-0071

DURHAM COUNTY

STATION: 157+33.78 -LDFEB-

SHEET 3 OF 3

STATE OF NORTH CAROLINA
DEPARTMENT OF TRANSPORTATION
RALEIGH

SUPERSTRUCTURE TYPICAL SECTION, NOTES & DETAILS

NORTH CAROLINA PROFESSIONAL SEAL 024928 ENGINEER RODNEY E. MONEY 01/21/14

HDR Engineering, Inc. of the Carolinas
3733 National Drive, Suite 207 Raleigh, N.C. 27612
N.C.B.E.L.S. License Number: F-0116

REVISIONS						
NO.	BY:	DATE:	NO.	BY:	DATE:	
1	--	--	3	--	--	
2	--	--	4	--	--	

SHEET NO. S-428
TOTAL SHEETS 671

DES BY: E. NOLTING	DATE: 08/13	DWG BY: B. PETERSON	DATE: 08/13
DES CHK: A. TEAGUE	DATE: 08/13	CHK BY: A. TEAGUE	DATE: 08/13

ORIGINATED		YELLOW HIGHLIGHTED & REQUIRE CHECKED		BLUE HIGHLIGHTED CHANGES		CHANGES VERIFIED BY	
INITIALS	DATE	INITIALS	DATE	INITIALS	DATE	VERIFIED	DATE

PLOT DRIVER: NCDOT_pdf_mono_eng_50.plt
USER: ppeterso DATE: 1/21/2014
FILE: ...\Plan Set\0502
PF TABLE: Durham_pen.tbl
TIME: 9:57:06 AM

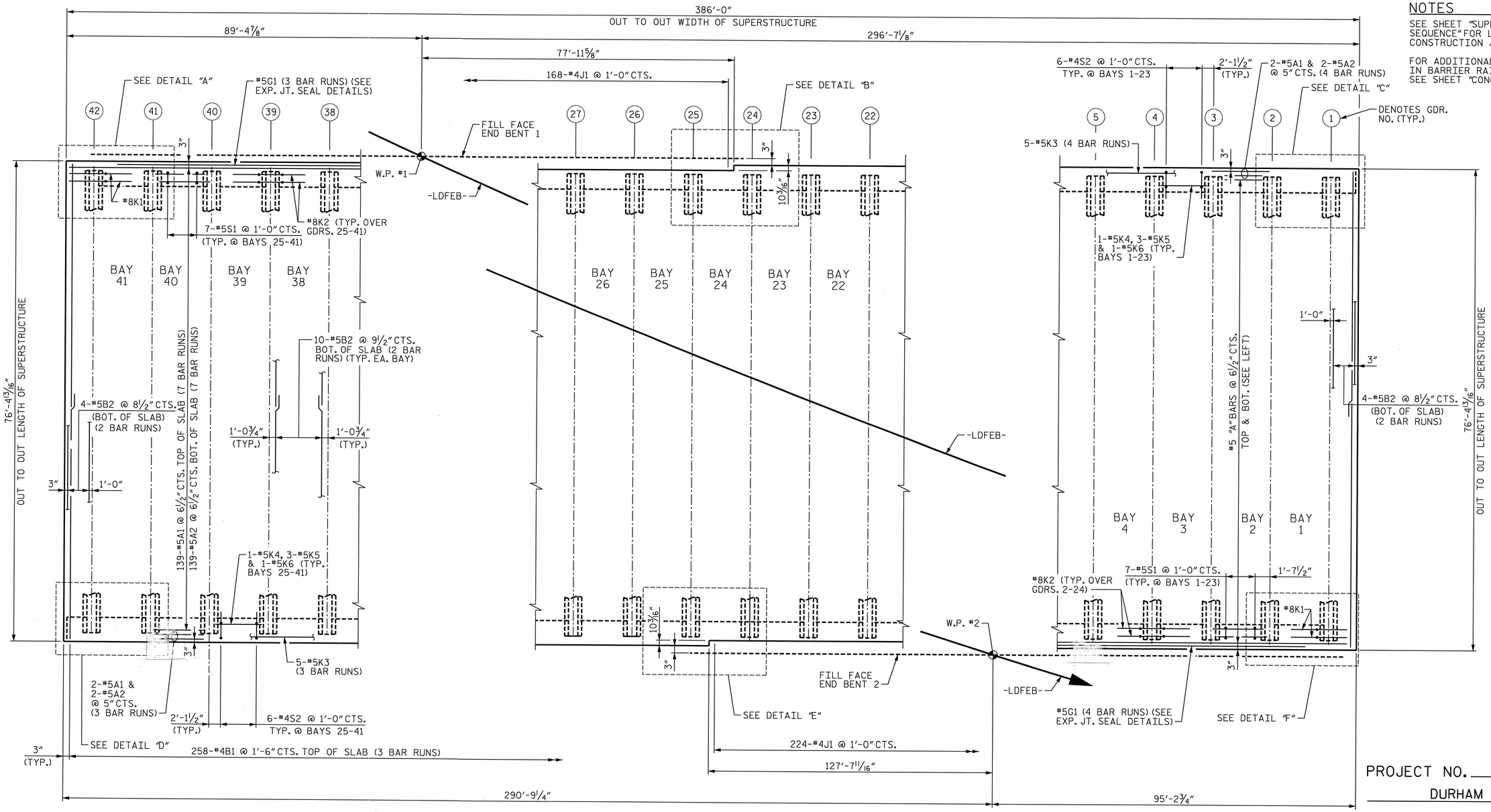

NOTES

SEE SHEET "SUPERSTRUCTURE POURING SEQUENCE" FOR LOCATION OF CONSTRUCTION JOINTS IN DECK SLAB.

FOR ADDITIONAL REINFORCING STEEL IN BARRIER RAIL AND BRIDGE DECK, SEE SHEET "CONCRETE BARRIER RAIL".

PROJECT NO. U-0071

DURHAM COUNTY

STATION: 157+33.78 -LDFEB-

SHEET 1 OF 3

PLAN OF SPAN

STATE OF NORTH CAROLINA
DEPARTMENT OF TRANSPORTATION
RALEIGH

SUPERSTRUCTURE PLAN OF SPAN

NORTH CAROLINA PROFESSIONAL SEAL 024928 ENGINEER RODNEY E. MONEY 01/21/14

REVISIONS							SHEET NO.
NO.	BY:	DATE:	NO.	BY:	DATE:		S-429
1	--	--	3	--	--		TOTAL SHEETS
2	--	--	4	--	--		67

HDR Engineering, Inc. of the Carolinas
3733 National Drive, Suite 207 Raleigh, N.C. 27612
N.C.B.E.L.S. License Number: F-0116

DES BY: E. NOLTING	DATE: 08/13	DWG BY: M. SELLS	DATE: 08/13
DES CHK: A. TEAGUE	DATE: 08/13	CHK BY: A. TEAGUE	DATE: 08/13

ORIGINATED		YELLOW HIGHLIGHTED & REDLINE CHECKED		BLUE HIGHLIGHTED CHANGES		CHANGES VERIFIED BY	
INITIALS	DATE	INITIALS	DATE	INITIALS	DATE	VERIFIED	DATE

PENTABLE: Durham_pen.tbl
TI... 9:57:33 AM

PLOT DRIVER: NCDOT_pdf_mono_eng_50.plt
USER: ppeterso DATE: 1/21/2014
FILE: ...\Plan Set\0520

NOTES

FOR SECTIONS A-A AND B-B SEE "SUPERSTRUCTURE TYPICAL SECTION, NOTES & DETAILS" SHEET.

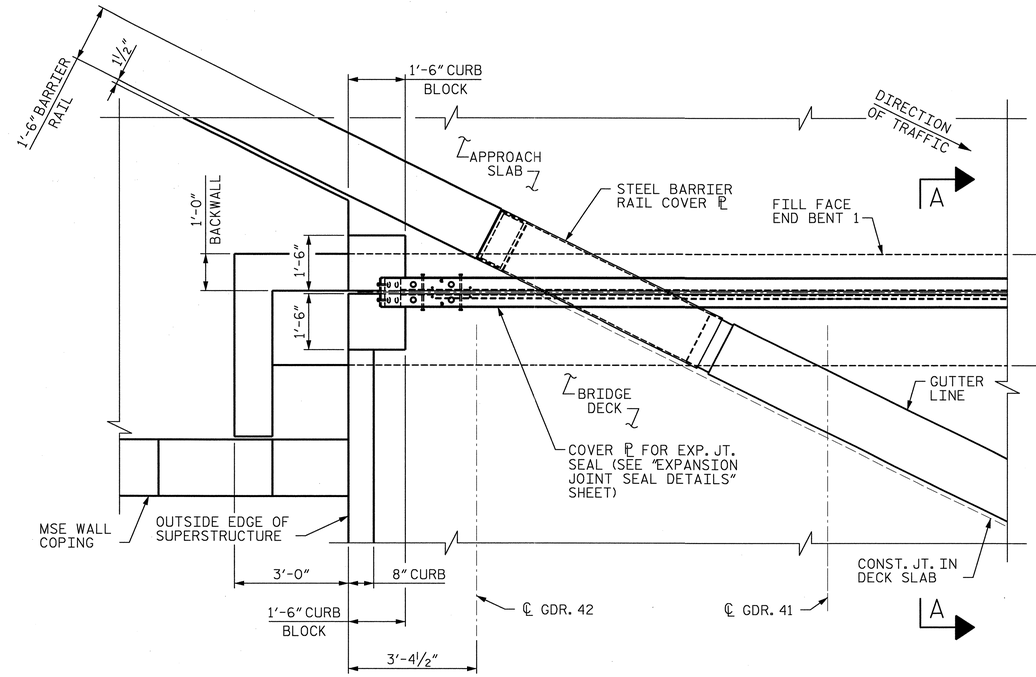

DETAIL "A"

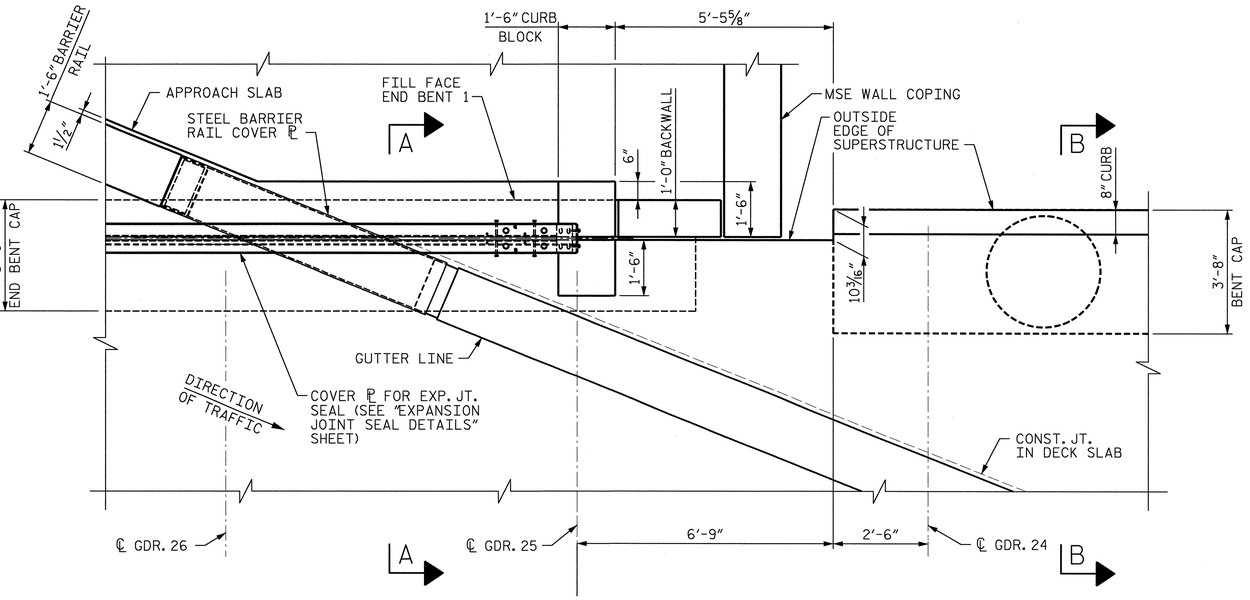

DETAIL "B"

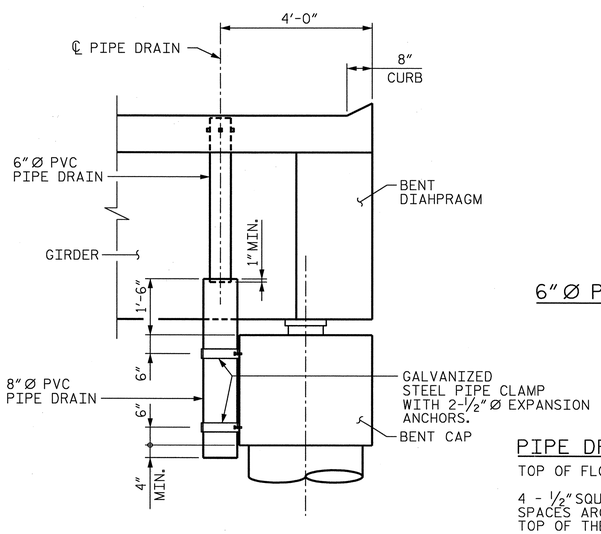

SECTION X-X

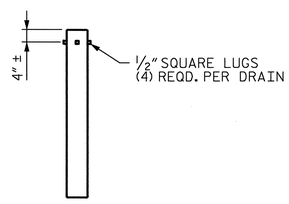

6"Ø PVC PIPE DRAIN DETAIL

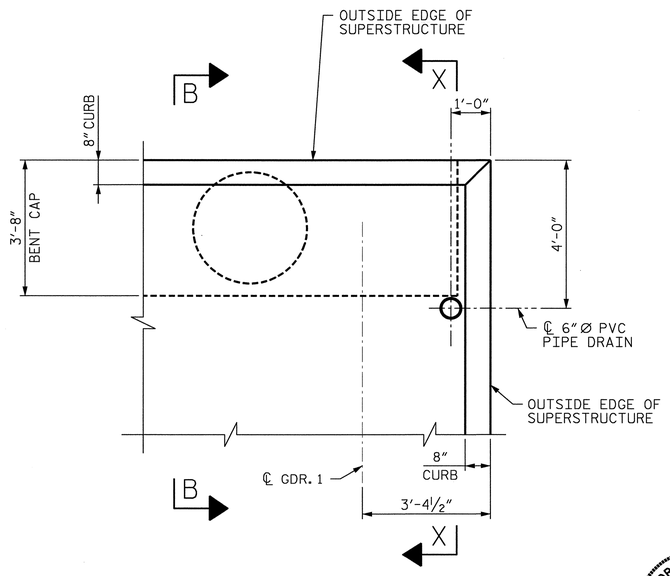

DETAIL "C"

PIPE DRAIN NOTES

TOP OF FLOOR DRAIN TO BE SET ½" BELOW SURFACE OF SLAB.

4 - ½" SQUARE LUGS TO BE GLUED TO THE PVC PIPE AT EQUAL SPACES AROUND THE PIPE DRAIN APPROXIMATELY 4" FROM THE TOP OF THE PIPE.

THE 6" AND 8"Ø PVC PIPE AND FITTINGS SHALL BE SCHEDULE 40 AND CONFORM TO ASTM D1785

THE 8"Ø PVC PIPE SHALL EXTEND 4" BELOW THE BOTTOM OF THE BENT CAP.

PROJECT NO. U-0071

DURHAM COUNTY

STATION: 157+33.78 -LDFEB-

SHEET 2 OF 3

STATE OF NORTH CAROLINA
DEPARTMENT OF TRANSPORTATION
RALEIGH

SUPERSTRUCTURE PLAN OF SPAN DETAILS

NORTH CAROLINA PROFESSIONAL SEAL 024928 ENGINEER RODNEY E. MONEY 01/31/14

HDR Engineering, Inc. of the Carolinas
3733 National Drive, Suite 207 Raleigh, N.C. 27612
N.C.B.E.L.S. License Number: F-0116

REVISIONS							
NO.	BY:	DATE:	NO.	BY:	DATE:		SHEET NO. S-430
1	--	--	3	--	--		TOTAL SHEETS 67
2	--	--	4	--	--		

DES BY: E. NOLTING	DATE: 08/13	DWG BY: B. PETERSON	DATE: 08/13
DES CHK: A. TEAGUE	DATE: 08/13	CHK BY: A. TEAGUE	DATE: 08/13

ORIGINATED		YELLOW HIGHLIGHTED & REDLINE CHECKED		BLUE HIGHLIGHTED CHANGES		CHANGES VERIFIED BY	
INITIALS	DATE	INITIALS	DATE	INITIALS	DATE	VERIFIED	DATE

PLOT DRIVER: NCDOT_pdf_mono.eng.50.plt
USER: ppeterso DATE: 1/21/2014
FILE: ...\Plan Set\0521
PENTABLE: Durham.pen.tbl
TIME: 9:57:53 AM

NOTES

FOR SECTIONS A-A AND B-B, SEE "SUPERSTRUCTURE TYPICAL SECTION, NOTES & DETAILS" SHEET.

FOR SECTION X-X AND PIPE DRAIN DETAILS, SEE SHEET 2 OF 3.

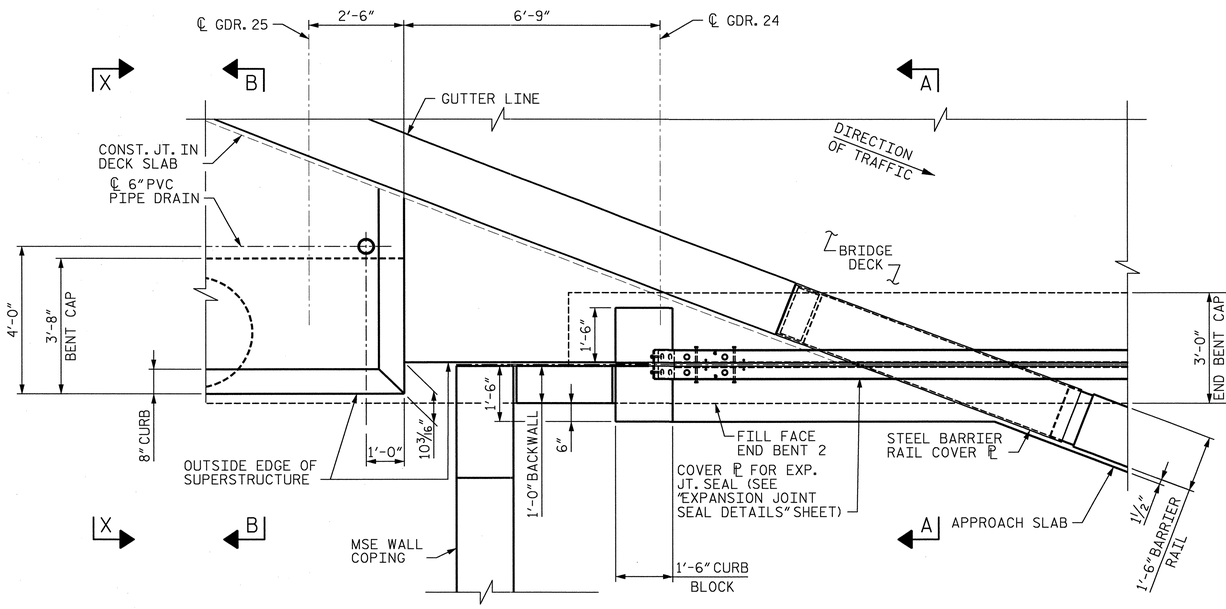

DETAIL "E"

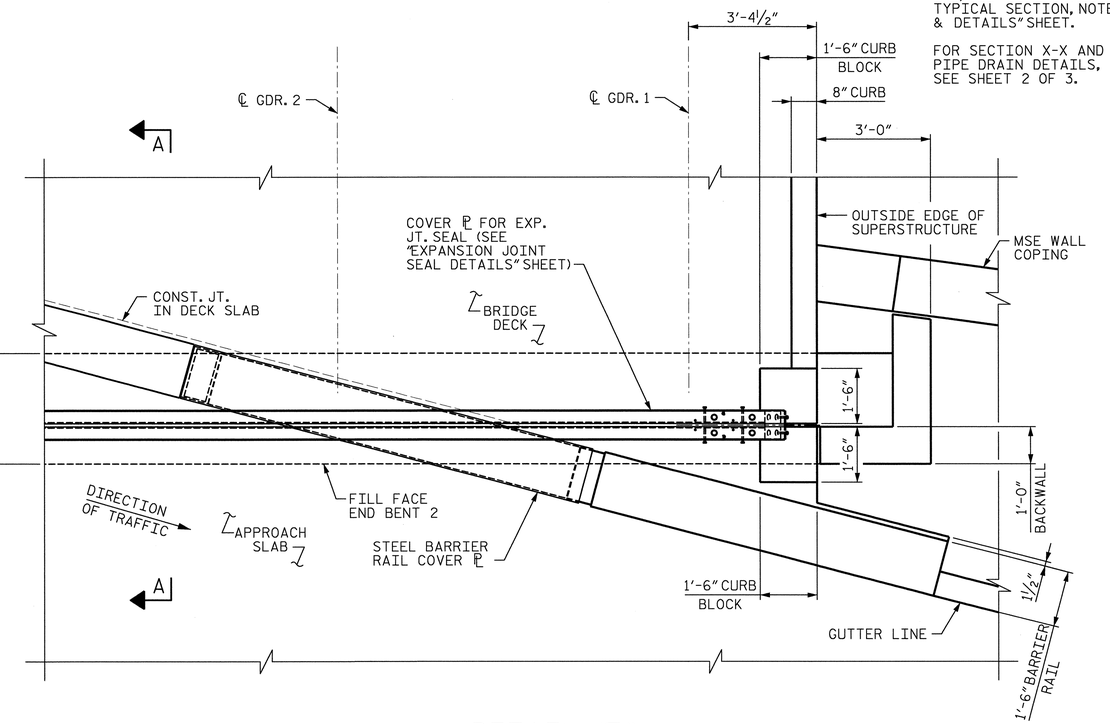

DETAIL "F"

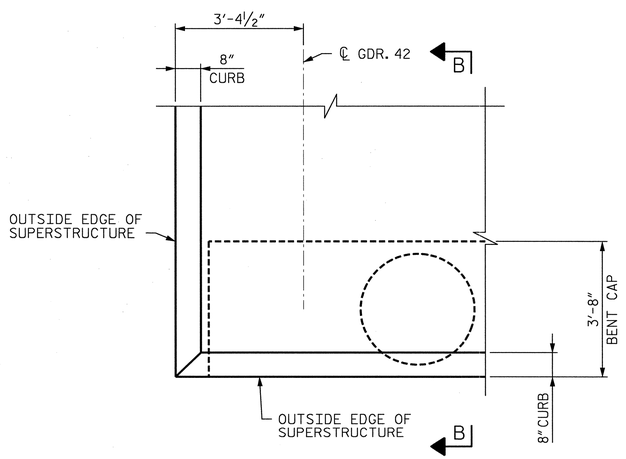

DETAIL "D"

PROJECT NO. U-0071

DURHAM COUNTY

STATION: 157+33.78 -LDFEB-

SHEET 3 OF 3

STATE OF NORTH CAROLINA
DEPARTMENT OF TRANSPORTATION
RALEIGH

SUPERSTRUCTURE PLAN OF SPAN DETAILS

NORTH CAROLINA PROFESSIONAL SEAL 024928 ENGINEER RODNEY E. MONEY 01/21/14

HDR Engineering, Inc. of the Carolinas
3733 National Drive, Suite 207 Raleigh, N.C. 27612
N.C.B.E.L.S. License Number: F-0116

REVISIONS						
NO.	BY:	DATE:	NO.	BY:	DATE:	
1	--	--	3	--	--	
2	--	--	4	--	--	

SHEET NO. S-431

TOTAL SHEETS 671

DES BY: E. NOLTING	DATE: 08/13	DWG BY: B. PETERSON	DATE: 08/13
DES CHK: A. TEAGUE	DATE: 08/13	CHK BY: A. TEAGUE	DATE: 08/13

ORIGINATED		YELLOW HIGHLIGHTED & REQUIRE CHECKED		BLUE HIGHLIGHTED CHANGES		CHANGES VERIFIED BY	
INITIALS	DATE	INITIALS	DATE	INITIALS	DATE	VERIFIED	DATE

PLOT DRIVER: NCDOT_pdf_mono_eng_50.plt
USER: ppeterso DATE: 1/21/2014
FILE: ...\Plan Set\0522
PENTABLE: Durham_pen.tbl
TIME: 9:58:17 AM

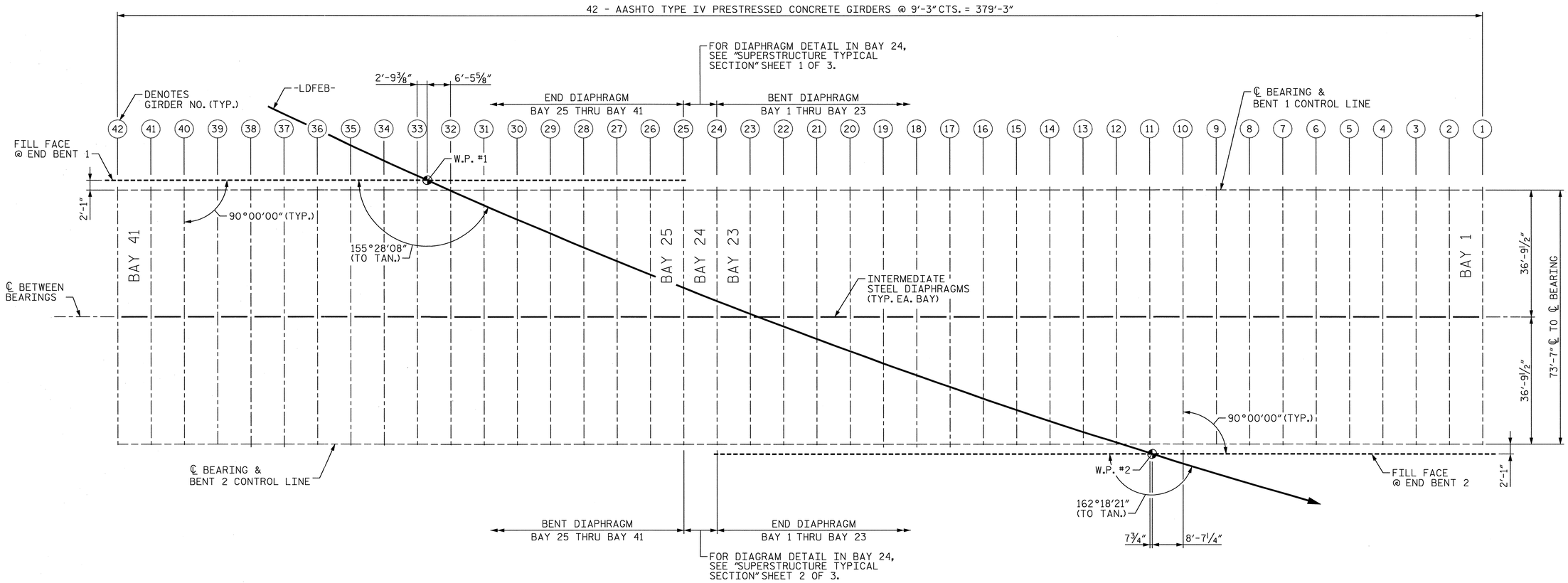

FRAMING PLAN

BEARING LAYOUT					
END BENT 1 (FIXED)			END BENT 2 (EXPANSION)		
GIRDERS	ELASTOMERIC BEARING	SOLE ℙ	GIRDERS	ELASTOMERIC BEARING	SOLE ℙ
GIRDERS #1-#9 GIRDERS #39-#42	E4	P1	GIRDERS #1-#6	E4	P4
GIRDERS #10-#15 GIRDERS #28-#38	E4	P2	GIRDERS #7-#15 GIRDERS #28-#42	E4	P5
GIRDERS #16-#27	E4	P3	GIRDERS #16-#27	E4	P6

PROJECT NO. U-0071

DURHAM COUNTY

STATION: 157+33.78 -LDFEB-

STATE OF NORTH CAROLINA
DEPARTMENT OF TRANSPORTATION
RALEIGH

SUPERSTRUCTURE FRAMING PLAN

NORTH CAROLINA PROFESSIONAL SEAL 024928 ENGINEER RODNEY E. MONEY 01/21/14

HDR Engineering, Inc. of the Carolinas
3733 National Drive, Suite 207 Raleigh, N.C. 27612
N.C.B.E.L.S. License Number: F-0116

REVISIONS								SHEET NO.
NO.	BY:	DATE:	NO.	BY:	DATE:			S-432
1	--	--	3	--	--			TOTAL SHEETS
2	--	--	4	--	--			671

DES BY: E. NOLTING	DATE : 08/13	DWG BY: M. SELLS	DATE : 08/13
DES CHK: A. TEAGUE	DATE : 08/13	CHK BY: A. TEAGUE	DATE : 08/13

ORIGINATED		YELLOW HIGHLIGHTED & REDLINE CHECKED		BLUE HIGHLIGHTED CHANGES		CHANGES VERIFIED BY	
INITIALS	DATE	INITIALS	DATE	INITIALS	DATE	VERIFIED	DATE

PLOT DRIVER: NCDOT_pdf_mono_eng_50.plt
USER: ppeterso DATE: 1/21/2014
FILE: ...\Plan Set\0540
PENTABLE: Durham_pen.tbl
TIME: 9:58:38 AM

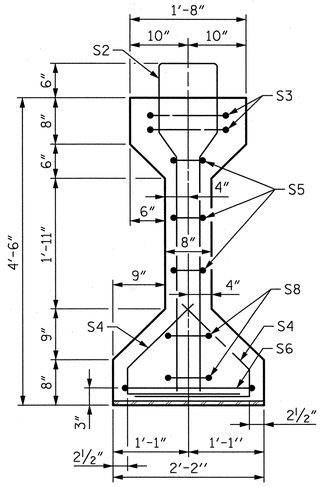

SECTION A-A

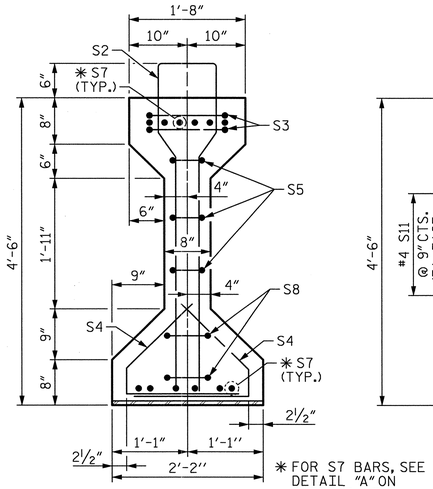

✱ FOR S7 BARS, SEE DETAIL "A" ON SHEET 3 OF 3.

SECTION B-B

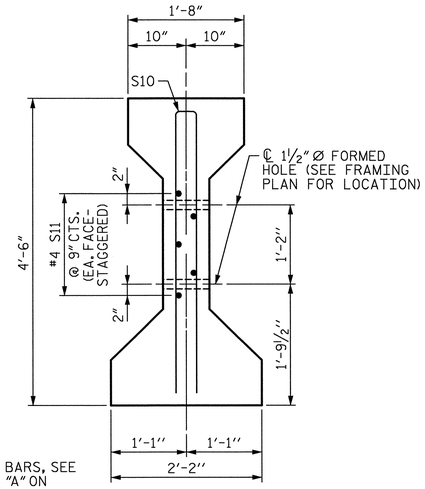

SECTION C-C

(S1 BARS NOT SHOWN)

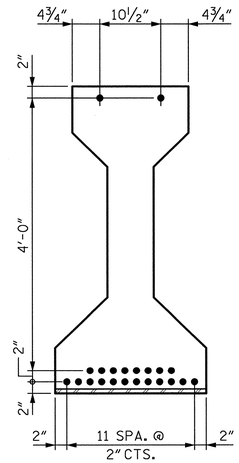

AT END OF GIRDER

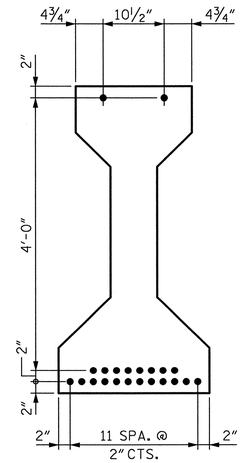

AT ℄ OF GIRDER

0.6" Ø LOW RELAXATION STRAND LAYOUT

GIRDER LENGTHS		
GIRDER	DIM A	DIM B
1	75'-15/16"	37'-6 7/16"
2	75'-1"	37'-6 1/2"
3	75'-1 1/16"	37'-6 1/2"
4	75'-1 1/8"	37'-6 9/16"
5	75'-1 3/16"	37'-6 5/8"
6	75'-1 1/4"	37'-6 5/8"
7	75'-1 5/16"	37'-6 11/16"
8	75'-1 7/16"	37'-6 11/16"
9	75'-1 1/2"	37'-6 3/4"
10	75'-1 9/16"	37'-6 3/4"
11	75'-1 5/8"	37'-6 13/16"
12	75'-1 11/16"	37'-6 13/16"
13	75'-1 3/4"	37'-6 7/8"
14	75'-1 3/4"	37'-6 7/8"
15	75'-1 13/16"	37'-6 15/16"
16	75'-1 7/8"	37'-6 15/16"
17	75'-1 15/16"	37'-7"
18	75'-1 15/16"	37'-7"
19	75'-2"	37'-7"
20	75'-2"	37'-7"
21	75'-2"	37'-7"
22	75'-2"	37'-7"
23	75'-2"	37'-7"
24	75'-2"	37'-7"

0.6" Ø L. R. GRADE 270 STRANDS		
AREA (SQUARE INCHES)	ULTIMATE STRENGTH (LBS. PER STRAND)	APPLIED PRESTRESS (LBS. PER STRAND)
0.217	58,600	43,950

REINF. STEEL FOR ONE GIRDER					
BAR	NUMBER	SIZE	TYPE	LENGTH	WEIGHT
S1	60	#4	1	10'-8"	428
S2	12	#6	1	10'-8"	192
S3	4	#4	2	17'-1"	46
S4	64	#4	3	3'-5"	146
S5	6	#4	2	16'-5"	66
S6	1	#4	2	17'-11"	12
✱ S7	12	#5	STR	3'-8"	46
S8	4	#4	2	16'-7"	44
S9	1	#3	STR	1'-10"	1
S10	2	#5	2	8'-8"	18
S11	5	#4	STR	7'-0"	23
S12	1	#3	STR	1'-4"	1

✱ NOTE: S7 BARS SHALL BE BENT BEFORE SHIPMENT. HEAT BENDING SHALL NOT BE ALLOWED.

BAR TYPES

ALL BAR DIMENSIONS ARE OUT-TO-OUT

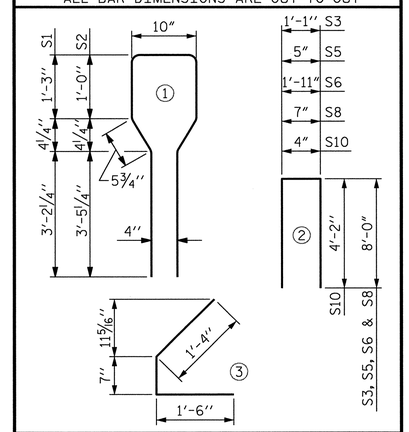

QUANTITIES FOR ONE GIRDER			
	REINF. STEEL	8000 PSI CONCRETE	0.6" Ø L.R. STRANDS
	LB.	C.Y.	No.
	1023	15.2	22

GIRDERS REQUIRED		
NUMBER	LENGTH	TOTAL LENGTH
24	✱✱	1803'-2¾"

✱✱ (VARIES - SEE TABLE)

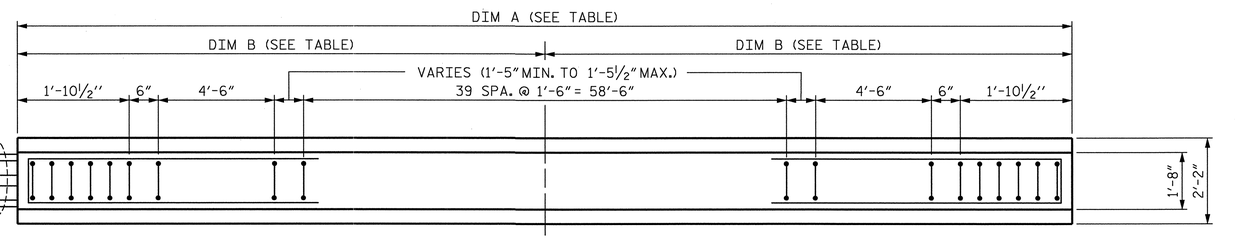

PLAN OF GIRDER

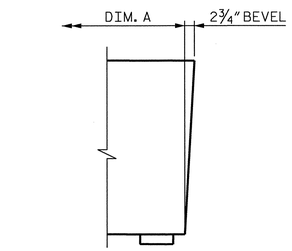

DETAIL B

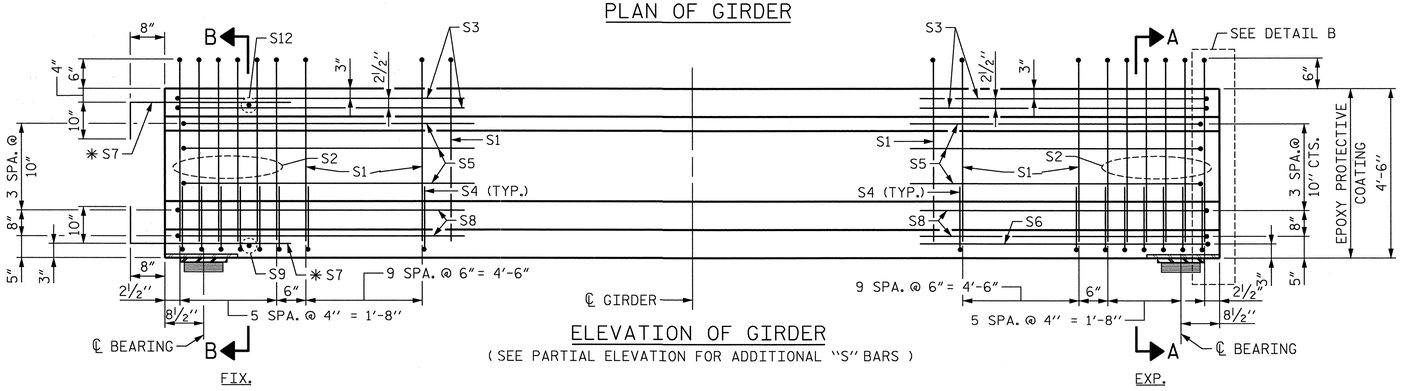

ELEVATION OF GIRDER

(SEE PARTIAL ELEVATION FOR ADDITIONAL "S" BARS)

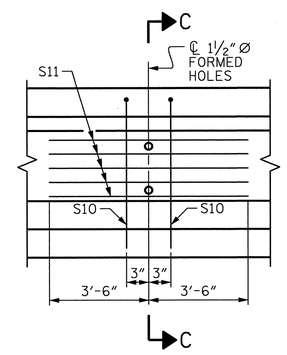

PARTIAL ELEVATION

SHOWING INTERMEDIATE DIAPHRAGM REINFORCING STEEL FOR GIRDER Nos. 1-24

PROJECT NO. U-0071

DURHAM COUNTY

STATION: 157+33.78 -LDFEB-

SHEET 1 OF 3

STATE OF NORTH CAROLINA
DEPARTMENT OF TRANSPORTATION
RALEIGH

SUPERSTRUCTURE
AASHTO TYPE IV
PRESTRESSED CONCRETE
GIRDER
(GRDS. #1-#24)

NORTH CAROLINA PROFESSIONAL SEAL 024928 ENGINEER RODNEY E. MONEY 01/21/14

REVISIONS						
NO.	BY:	DATE:	NO.	BY:	DATE:	SHEET NO. S-433
1	--	--	3	--	--	TOTAL SHEETS 671
2	--	--	4	--	--	

HDR Engineering, Inc. of the Carolinas
3733 National Drive, Suite 207 Raleigh, N.C. 27612
N.C.B.E.L.S. License Number: F-0116

DRAWN BY : JMB 12/87	REV. 8/16/99RR RWW/LES	ASSEMBLED BY : MJS	DATE : 08/13
CHECKED BY : ARB 12/87	REV. 5/1/06R TLA/GM	CHECKED BY : ACT	DATE : 08/13
	REV. 10/1/11 MAA/GM		
DES BY: E. NOLTING	DATE : 08/13	DWG BY: M. SELLS	DATE : 08/13
DES CHK: A. TEAGUE	DATE : 08/13	CHK BY: A. TEAGUE	DATE : 08/13

ORIGINATED		YELLOW HIGHLIGHTED & REDLINE CHECKED		BLUE HIGHLIGHTED CHANGES		CHANGES VERIFIED BY	
INITIALS	DATE	INITIALS	DATE	INITIALS	DATE	VERIFIED	DATE

PLOT DRIVER: NCDOT_pdf_mono_eng_50.plt
USER: ppeterso DATE: 1/21/2014
FILE: ...\Plan Set\0550_1
PENTABLE: Durham_pen.tbl
TIME: 9:59:13 AM

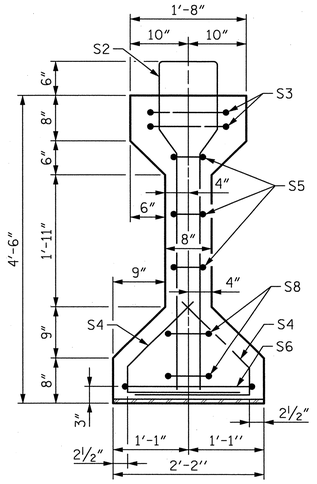

SECTION A-A

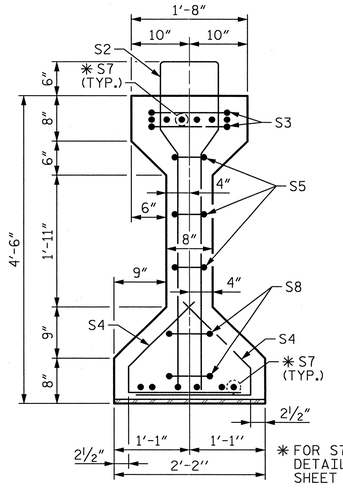

✱ FOR S7 BARS, SEE DETAIL "A" ON SHEET 3 OF 3.

SECTION B-B

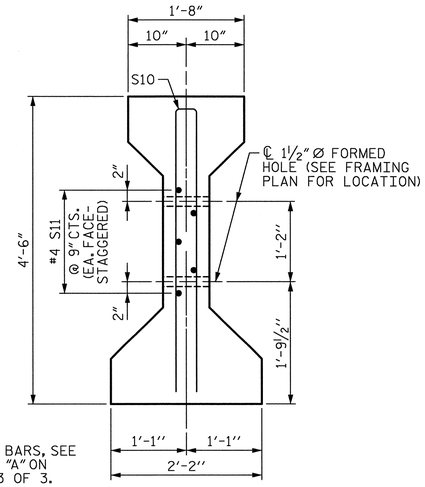

SECTION C-C
(S1 BARS NOT SHOWN)

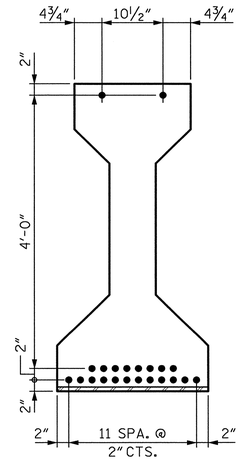

AT END OF GIRDER

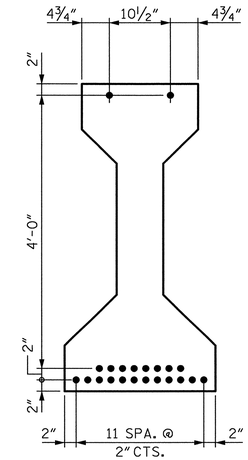

AT ℄ OF GIRDER

0.6" Ø LOW RELAXATION STRAND LAYOUT

GIRDER LENGTH		
GIRDER	DIM A	DIM B
25	75'-2"	37'-7"
26	75'-2"	37'-7"
27	75'-1 15/16"	37'-7"
28	75'-1 15/16"	37'-7"
29	75'-1 15/16"	37'-7"
30	75'-1 1/8"	37'-6 15/16"
31	75'-1 1/8"	37'-6 15/16"
32	75'-1 13/16"	37'-6 15/16"
33	75'-1 3/4"	37'-6 1/8"
34	75'-1 3/4"	37'-6 1/8"
35	75'-1 11/16"	37'-6 13/16"
36	75'-1 5/8"	37'-6 13/16"
37	75'-1 9/16"	37'-6 3/4"
38	75'-1 9/16"	37'-6 3/4"
39	75'-1 1/2"	37'-6 3/4"
40	75'-1 7/16"	37'-6 11/16"
41	75'-1 3/8"	37'-6 11/16"
42	75'-1 5/16"	37'-6 11/16"

0.6" Ø L. R. GRADE 270 STRANDS		
AREA (SQUARE INCHES)	ULTIMATE STRENGTH (LBS. PER STRAND)	APPLIED PRESTRESS (LBS. PER STRAND)
0.217	58,600	43,950

REINF. STEEL FOR ONE GIRDER					
BAR	NUMBER	SIZE	TYPE	LENGTH	WEIGHT
S1	60	#4	1	10'-8"	428
S2	12	#6	1	10'-8"	192
S3	4	#4	2	17'-1"	46
S4	64	#4	3	3'-5"	146
S5	6	#4	2	16'-5"	66
S6	1	#4	2	17'-11"	12
✱S7	12	#5	STR	3'-8"	46
S8	4	#4	2	16'-7"	44
S9	1	#3	STR	1'-10"	1
S10	2	#5	2	8'-8"	18
S11	5	#4	STR	7'-0"	23
S12	1	#3	STR	1'-4"	1

✱ NOTE: S7 BARS SHALL BE BENT BEFORE SHIPMENT. HEAT BENDING SHALL NOT BE ALLOWED.

BAR TYPES

ALL BAR DIMENSIONS ARE OUT-TO-OUT

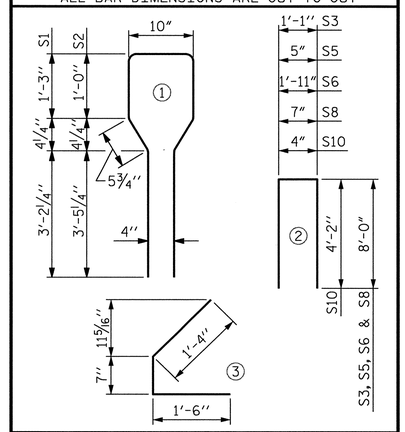

QUANTITIES FOR ONE GIRDER			
	REINF. STEEL	8000 PSI CONCRETE	0.6" Ø L.R. STRANDS
	LB.	C.Y.	No.
	1023	15.2	22

GIRDERS REQUIRED		
NUMBER	LENGTH	TOTAL LENGTH
18	✱✱	1352'-6 15/16"

✱✱ (VARIES - SEE TABLE)

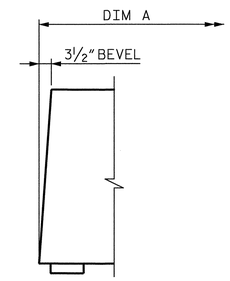

DETAIL C

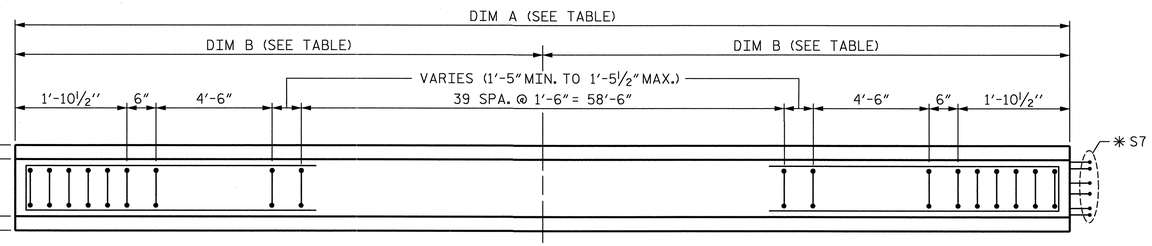

PLAN OF GIRDER

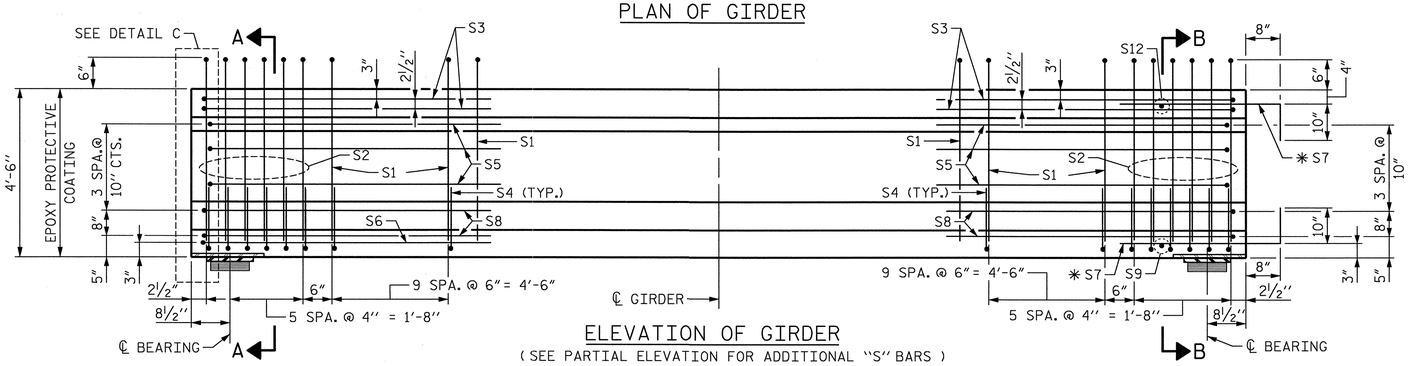

ELEVATION OF GIRDER
(SEE PARTIAL ELEVATION FOR ADDITIONAL "S" BARS)

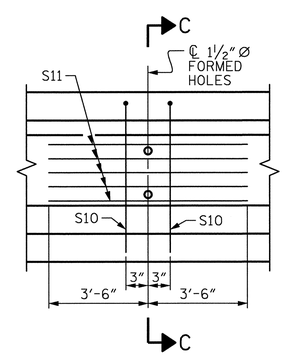

PARTIAL ELEVATION
SHOWING INTERMEDIATE DIAPHRAGM REINFORCING STEEL FOR GIRDER Nos. 25-42

PROJECT NO. U-0071

DURHAM COUNTY

STATION: 157+33.78 -LDFEB-

SHEET 2 OF 3

STATE OF NORTH CAROLINA
DEPARTMENT OF TRANSPORTATION
RALEIGH

SUPERSTRUCTURE
AASHTO TYPE IV
PRESTRESSED CONCRETE
GIRDER
(GRDS. #25-#42)

NORTH CAROLINA PROFESSIONAL SEAL 024928 ENGINEER RODNEY E. MONEY 01/21/14

HDR Engineering, Inc. of the Carolinas
3733 National Drive, Suite 207 Raleigh, N.C. 27612
N.C.B.E.L.S. License Number: F-0116

REVISIONS						
NO.	BY:	DATE:	NO.	BY:	DATE:	SHEET NO. S-43A
1	--	--	3	--	--	TOTAL SHEETS 67
2	--	--	4	--	--	

DRAWN BY : JMB 12/87	REV. 8/16/99RR RWW/LES	ASSEMBLED BY : MJS	DATE : 08/13
CHECKED BY : ARB 12/87	REV. 5/1/06R TLA/GM	CHECKED BY : ACT	DATE : 08/13
	REV. 10/1/11 MAA/GM		
DES BY: E. NOLTING	DATE : 08/13	DWG BY: M. SELLS	DATE : 08/13
DES CHK: A. TEAGUE	DATE : 08/13	CHK BY: A. TEAGUE	DATE : 08/13

ORIGINATED		YELLOW HIGHLIGHTED & REQUIRE CHECKED		BLUE HIGHLIGHTED CHANGES		CHANGES VERIFIED BY	
INITIALS	DATE	INITIALS	DATE	INITIALS	DATE	VERIFIED	DATE

PLOT DRIVER: NCDOT_pdf_mono_eng_50.plt
USER: ppeterso DATE: 1/21/2014
FILE: ...\Plan Set\0550_2
PENTABLE: Durham_pen.tbl
TIME: 9:59:29 AM

NOTES

ALL PRESTRESSING STRANDS SHALL BE 7-WIRE LOW-RELAXATION GRADE 270 STRANDS AND SHALL CONFORM TO AASHTO M203 EXCEPT FOR SAMPLING REQUIREMENTS WHICH SHALL BE IN ACCORDANCE WITH THE STANDARD SPECIFICATIONS.

ALL REINFORCING STEEL SHALL BE GRADE 60.

APPLY EPOXY PROTECTIVE COATING TO END OF GIRDER SURFACES INDICATED IN ELEVATION VIEW.

EMBEDDED PLATE "B-1" SHALL BE GALVANIZED IN ACCORDANCE WITH THE STANDARD SPECIFICATIONS. BEVEL EDGES OF PLATE "B-1" TO GIVE CLOSE FIT BUT NOT TIGHT FIT TO STEEL CASTING FORM.

ANCHOR STUDS SHALL CONFORM TO AASHTO M169 GRADES 1010 THROUGH 1020 OR APPROVED EQUAL, AND SHALL MEET THE TYPE "B" REQUIREMENTS OF SUBSECTION 7.3 OF THE ANSI/AASHTO/AWS D1.5 BRIDGE WELDING CODE.

AT ENDS OF GIRDERS TO BE EMBEDDED IN CONCRETE DIAPHRAGMS OR END WALLS, PRESTRESSING STRANDS MAY EXTEND A MAXIMUM OF 2" BEYOND THE GIRDER ENDS. OTHERWISE, PRESTRESSING STRANDS SHALL BE CUT FLUSH WITH THE GIRDER ENDS.

THE TRANSFER OF LOAD FROM THE ANCHORAGES TO THE GIRDER SHALL BE DONE WHEN CONCRETE HAS REACHED A COMPRESSIVE STRENGTH OF NOT LESS THAN 6500 PSI.

DEPENDING ON THE TYPE OF SYSTEM USED TO SUPPORT THE DECK SLAB FORMS, PRESET ANCHORS MAY BE NECESSARY IN THE PRESTRESSED CONCRETE GIRDER.

THE TOP SURFACE OF THE GIRDER, EXCLUDING THE OUTSIDE 4", SHALL BE RAKED TO A DEPTH OF 1/4".

THE CONTRACTOR HAS THE OPTION TO PROVIDE, AT NO ADDITIONAL COST TO THE DEPARTMENT, 2 ADDITIONAL STRANDS AT THE TOP OF THE GIRDER TO FACILITATE TYING OF THE REINFORCING STEEL. THESE STRANDS SHALL BE PULLED TO A LOAD OF 4500 lbs.

DEAD LOAD DEFLECTION TABLE FOR GIRDERS

0.6" Ø LOW RELAXATION	GIRDER #1 THROUGH GIRDER #42										
TENTH POINTS	BRG.	0.1	0.2	0.3	0.4	0.5	0.6	0.7	0.8	0.9	BRG.
CAMBER (GIRDER ALONG IN PLACE) ↑	0.000	0.048	0.082	0.106	0.120	0.124	0.120	0.106	0.082	0.048	0.000
DEFLECTION DUE TO SUPERIMPOSD DEAD LOAD * ↓	0.000	0.013	0.026	0.037	0.043	0.045	0.043	0.037	0.026	0.013	0.000
FINAL CAMBER ↑	0	7/16	11/16	13/16	15/16	15/16	15/16	13/16	11/16	7/16	0

* INCLUDES SLAB, BUILDUPS, STAY-IN-PLACE FORMS & 2 DIAPHRAGMS.
ALL VALUES ARE SHOWN IN FEET, EXCEPT "FINAL CAMBER" WHICH IS SHOWN IN INCHES.

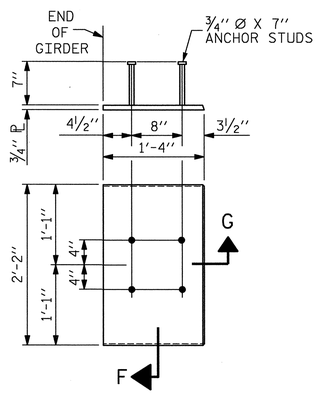

EMBEDDED PLATE "B-1" DETAILS
(2 REQ'D PER GIRDER)

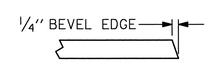

SECTION "G"

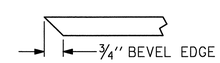

SECTION "F"
(SEE NOTES)

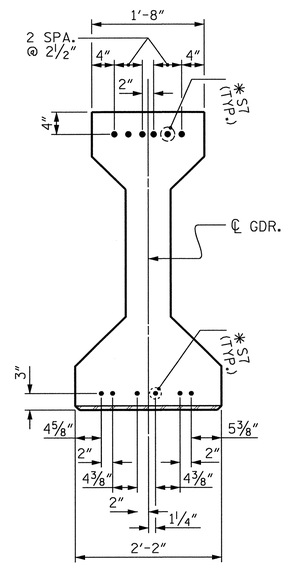

DETAIL "A"
(FOR AASHTO TYPE IV GIRDERS)

PROJECT NO. U-0071
DURHAM COUNTY
STATION: 157+33.78 -LDFEB-

SHEET 3 OF 3

STATE OF NORTH CAROLINA
DEPARTMENT OF TRANSPORTATION
RALEIGH

SUPERSTRUCTURE AASHTO TYPE IV PRESTRESSED CONCRETE GIRDER DETAILS

NORTH CAROLINA PROFESSIONAL SEAL 024928 ENGINEER RODNEY E. MONEY 01/21/14

REVISIONS							SHEET NO.
NO.	BY:	DATE:	NO.	BY:	DATE:		S-435
1	--	--	3	--	--		TOTAL SHEETS
2	--	--	4	--	--		671

HDR Engineering, Inc. of the Carolinas
3733 National Drive, Suite 207 Raleigh, N.C. 27612
N.C.B.E.L.S. License Number: F-0116

STD. NO. PCG9

DRAWN BY : ELR 11/91	REV. 7/10/01RR LES/RDR	ASSEMBLED BY : MJS	DATE : 08/13
CHECKED BY : GRP 11/91	REV. 5/1/06 TLA/GM	CHECKED BY : ACT	DATE : 08/13
	REV. 10/1/11 MAA/GM		
DES BY: E. NOLTING	DATE : 08/13	DWG BY: M. SELLS	DATE : 08/13
DES CHK: A. TEAGUE	DATE : 08/13	CHK BY: A. TEAGUE	DATE : 08/13

ORIGINATED		YELLOW HIGHLIGHTED & REDLINE CHECKED		BLUE HIGHLIGHTED CHANGES		CHANGES VERIFIED BY	
INITIALS	DATE	INITIALS	DATE	INITIALS	DATE	VERIFIED	DATE

PLOT DRIVER: NCDOT_pdf_mono_eng_50.plt
USER: ppeterso DATE: 1/21/2014
FILE: ...\Plan Set\0550_3
PENTABLE: Durham_pen.tbl
TIME: 9:59:44 AM

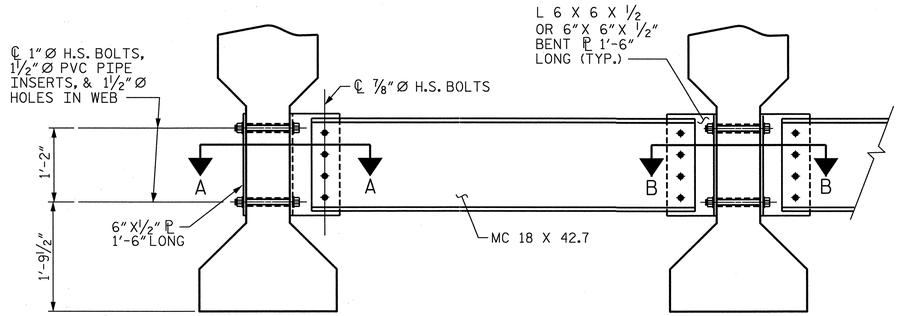

EXTERIOR GIRDER

INTERIOR GIRDER

PART SECTION AT INTERMEDIATE DIAPHRAGM

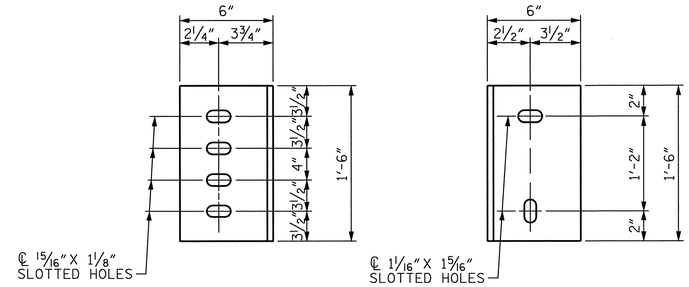

DIAPHRAGM FACE

WEB FACE

CONNECTOR PLATE DETAILS

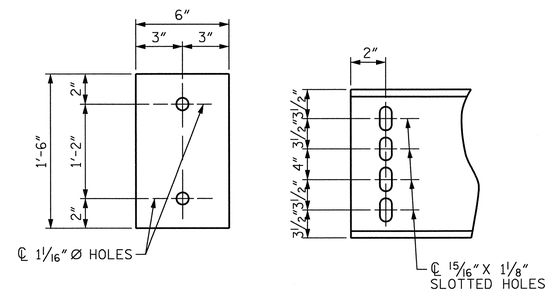

PLATE DETAILS

CHANNEL END

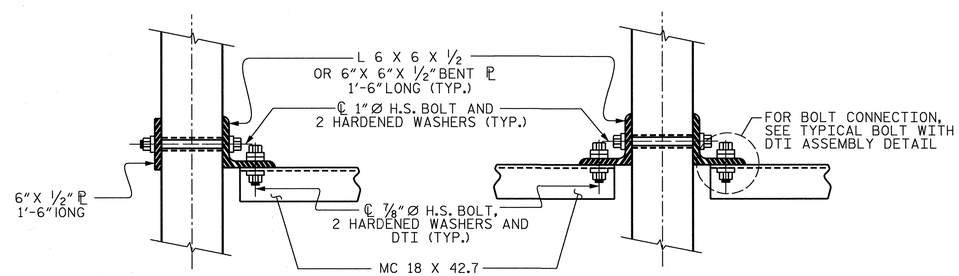

SECTION A-A

SECTION B-B

CONNECTION DETAIL

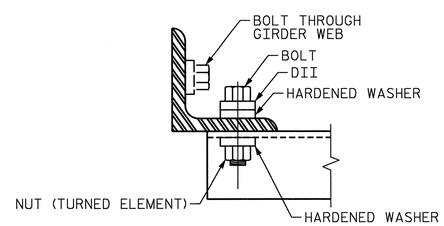

BOLT WITH DTI ASSEMBLY DETAIL

STRUCTURAL STEEL NOTES

ALL INTERMEDIATE DIAPHRAGM STEEL AND CONNECTOR PLATES SHALL BE AASHTO M270 GRADE 50 OR APPROVED EQUAL.

TENSION ON THE ASTM A325 BOLTS THROUGH THE CHANNEL MEMBER SHALL BE CALIBRATED USING DIRECT TENSION INDICATOR WASHERS IN ACCORDANCE WITH THE STANDARD SPECIFICATIONS.

TENSION ON THE ASTM A449 BOLTS THROUGH THE GIRDER WEB SHALL BE SNUG TIGHTENED FOLLOWED BY AN ADDITIONAL ¼ TURN.

THE PLATES, BENT PLATES, CHANNELS, AND ANGLES SHALL BE GALVANIZED OR METALLIZED IN ACCORDANCE WITH THE STANDARD SPECIFICATIONS. FOR THERMAL SPRAYED COATINGS (METALLIZATION), SEE SPECIAL PROVISIONS.

FOR METALLIZATION, APPLY AN 8 MIL THICK 99.99 PERCENT ZINC (W-Zn-1) THERMAL SPRAYED COATING WITH A 0.5 MIL THICK SEAL COAT TO ALL STEEL DIAPHRAGM SURFACES IN ACCORDANCE WITH THE THERMAL SPRAYED COATINGS SPECIAL PROVISION AND SECTION 442 OF THE STANDARD SPECIFICATIONS.

GALVANIZE THE HIGH STRENGTH BOLTS, NUTS, WASHERS AND DIRECT TENSION INDICATORS IN ACCORDANCE WITH THE STANDARD SPECIFICATIONS.

USE AN ASTM F436 HARDENED WASHER WITH STANDARD AND SLOTTED HOLES UNDER EACH BOLT HEAD AND NUT.

FOR BOLTS THROUGH THE GIRDER WEB, PROVIDE SUFFICIENT LENGTH OF THREADS ON ALL BOLTS TO ACCOMMODATE WASHERS AND THE THICKNESS OF CONNECTING MEMBER PLUS AT LEAST ¼" PROJECTION BEYOND THE NUT.

INTERMEDIATE DIAPHRAGM ASSEMBLY SHALL COMPLY WITH SECTION 1072 OF THE STANDARD SPECIFICATIONS.

SUBMIT TWO SETS OF WORKING DRAWINGS FOR THE INTERMEDIATE DIAPHRAGM ASSEMBLY FOR REVIEW, COMMENTS AND ACCEPTANCE. AFTER REVIEW, COMMENTS, AND ACCEPTANCE, SUBMIT SEVEN SETS FOR DISTRIBUTION.

IN THE EXTERIOR BAYS, PLACE TEMPORARY STRUTS BETWEEN PRESTRESSED GIRDERS ADJACENT TO THE STEEL DIAPHRAGMS. STRUTS SHALL REMAIN IN PLACE 3 DAYS AFTER CONCRETE IS PLACED.

THE COST OF THE STEEL DIAPHRAGMS AND ASSEMBLIES SHALL BE INCLUDED IN THE UNIT PRICE BID FOR PRESTRESSED CONCRETE GIRDERS.

PROJECT NO. U-0071

DURHAM COUNTY

STATION: 157+33.78 -LDFEB-

STATE OF NORTH CAROLINA
DEPARTMENT OF TRANSPORTATION
RALEIGH

SUPERSTRUCTURE
INTERMEDIATE STEEL
DIAPHRAGMS FOR TYPE IV
PRESTRESSED CONCRETE
GIRDERS

NORTH CAROLINA PROFESSIONAL SEAL 024928 ENGINEER RODNEY E. MONEY 01/21/14

REVISIONS							SHEET NO. S-436
NO.	BY:	DATE:	NO.	BY:	DATE:		TOTAL SHEETS 671
1	--	--	3	--	--		
2	--	--	4	--	--		

HDR Engineering, Inc. of the Carolinas
3733 National Drive, Suite 207 Raleigh, N.C. 27612
N.C.B.E.L.S. License Number: F-0116

DRAWN BY : TLA 6/05	ADDED 10/21/05	ASSEMBLED BY : MJS	DATE : 08/13
CHECKED BY : VC 6/05	REV. 5/1/06RRR KMM/GM	CHECKED BY : ACT	DATE : 08/13
	REV. 10/1/11 MAA/GM		
DES BY: E. NOLTING	DATE : 08/13	DWG BY: M. SELLS	DATE : 08/13
DES CHK: A. TEAGUE	DATE : 08/13	CHK BY: A. TEAGUE	DATE : 08/13

ORIGINATED		YELLOW HIGHLIGHTED & REDLINE CHECKED		BLUE HIGHLIGHTED CHANGES		CHANGES VERIFIED BY	
INITIALS	DATE	INITIALS	DATE	INITIALS	DATE	VERIFIED	DATE

PLOT DRIVER: NCDOT_pdf_mono_eng_50.plt
USER: ppeterso DATE: 1/21/2014
FILE: ...\Plan Set\0551
PFNTABLE: Durham_pen.tbl
TIME: 9:59:58 AM

STD. NO. PCG10

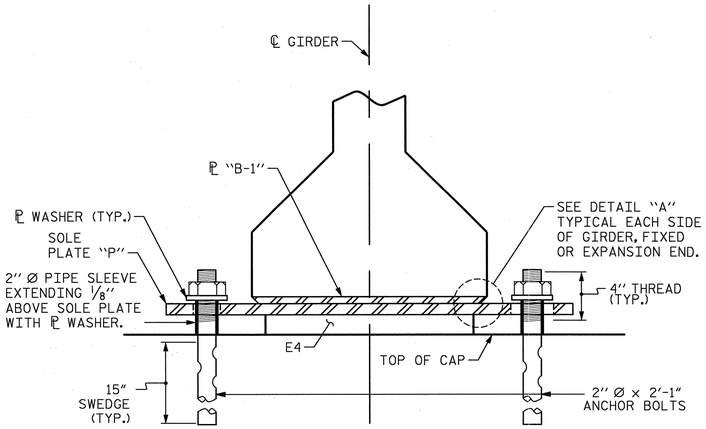

SECTION E-E

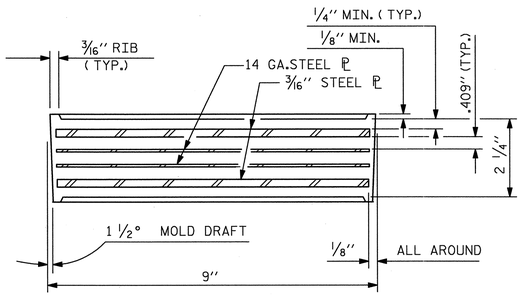

TYPICAL SECTION OF ELASTOMERIC BEARINGS

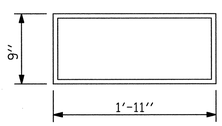

E4 (84 REQ'D)

PLAN VIEW OF ELASTOMERIC BEARING

TYPE V

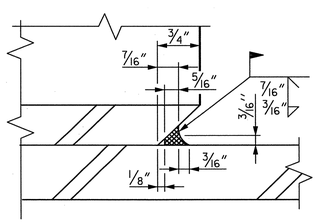

DETAIL "A"

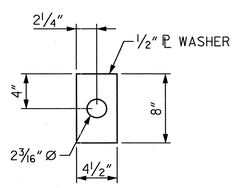

ℙ WASHER DETAILS

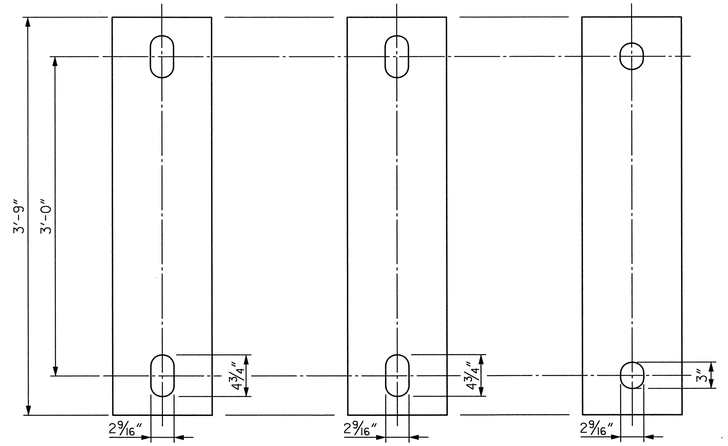

P1
(FIXED LONGITUDINALLY)
(13 REQUIRED)

P2
(FIXED LONGITUDINALLY)
(17 REQUIRED)

P3
(FIXED LONGITUDINALLY)
(12 REQUIRED)

INCREASING STATIONS →

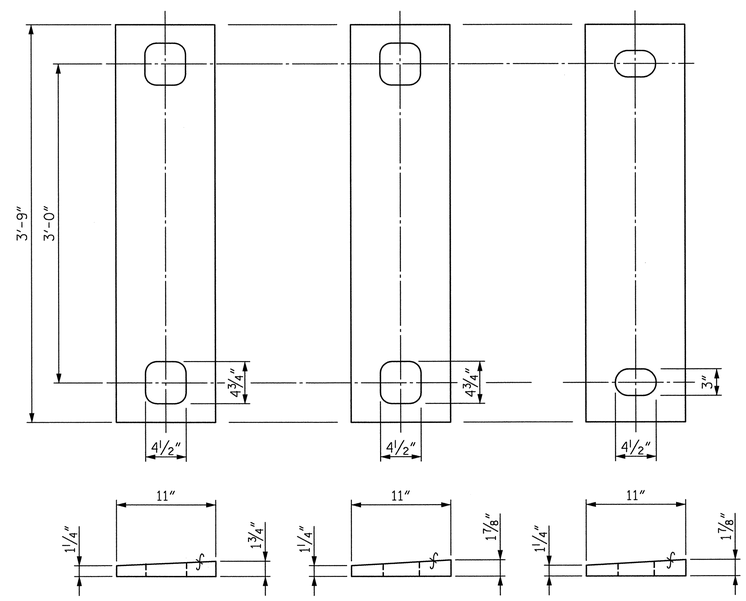

P4
(EXPANSION)
(6 REQUIRED)

P5
(EXPANSION)
(24 REQUIRED)

P6
(EXPANSION)
(12 REQUIRED)

SOLE PLATE DETAILS ("P")

NOTES

AT ALL LOCATIONS, NUTS FOR ANCHOR BOLTS ARE TO BE TIGHTENED FINGER TIGHT AND THEN BACKED OFF 1/2 TURN. THE THREAD OF THE NUT AND BOLT SHALL THEN BE BURRED WITH A SHARP POINTED TOOL.

THE 2" Ø PIPE SLEEVE SHALL BE CUT FROM SCHEDULE 40 PVC PLASTIC PIPE. THE PVC PLASTIC PIPE SHALL MEET THE REQUIREMENTS OF ASTM D1785.

STEEL SOLE PLATES, ANCHOR BOLTS, NUTS, AND WASHERS SHALL BE GALVANIZED IN ACCORDANCE WITH THE STANDARD SPECIFICATIONS.

PRIOR TO WELDING, GRIND THE GALVANIZED SURFACE OF THE PORTION OF THE EMBEDDED PLATE AND SOLE PLATE THAT ARE TO BE WELDED. AFTER WELDING, DAMAGED GALVANIZED SURFACES SHALL BE REPAIRED IN ACCORDANCE WITH THE STANDARD SPECIFICATIONS.

WHEN WELDING THE SOLE PLATE TO THE EMBEDDED PLATE IN THE GIRDER, USE TEMPERATURE INDICATING WAX PENS, OR OTHER SUITABLE MEANS, TO ENSURE THAT THE TEMPERATURE OF THE SOLE PLATE DOES NOT EXCEED 300°F. TEMPERATURES ABOVE THIS MAY DAMAGE THE ELASTOMER.

SOLE PLATE "P", BOLTS, NUTS, WASHERS, AND PIPE SLEEVE SHALL BE INCLUDED IN THE PAY ITEM FOR PRESTRESSED CONCRETE GIRDERS.

ANCHOR BOLTS SHALL MEET THE REQUIREMENTS OF ASTM A449. NUTS SHALL MEET THE REQUIREMENTS OF AASHTO M291-DH OR AASHTO M292-2H. WASHERS SHALL MEET THE REQUIREMENTS OF AASHTO M293. NO SHOP DRAWINGS ARE REQUIRED FOR ANCHOR BOLTS, NUTS AND WASHERS. SHOP INSPECTION IS REQUIRED.

ALL SURFACES OF BEARING PLATES SHALL BE SMOOTH AND STRAIGHT.

THE ELASTOMER IN THE STEEL REINFORCED BEARINGS SHALL HAVE A SHEAR MODULUS OF 0.160 KSI, IN ACCORDANCE WITH AASHTO M251.

FOR STEEL REINFORCED ELASTOMERIC BEARINGS, SEE SPECIAL PROVISIONS.

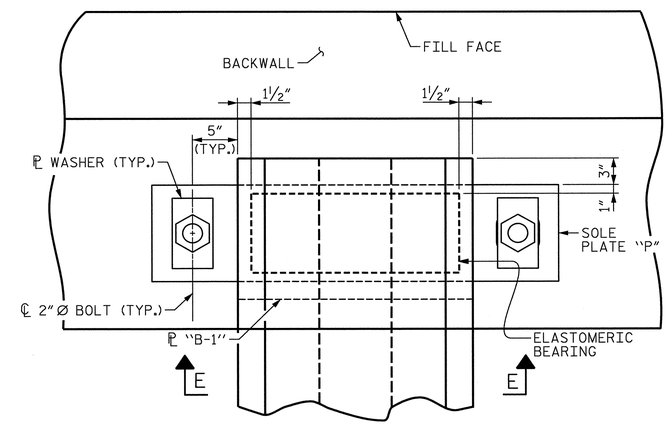

TYPICAL PLAN

MAXIMUM ALLOWABLE SERVICE LOADS	
D.L. + L.L. (NO IMPACT)	
TYPE V	365 K

PROJECT NO. U-0071

DURHAM COUNTY

STATION: 157+33.78 -LDFEB-

STATE OF NORTH CAROLINA
DEPARTMENT OF TRANSPORTATION
RALEIGH

SUPERSTRUCTURE ELASTOMERIC BEARING DETAILS

NORTH CAROLINA PROFESSIONAL SEAL 024928 ENGINEER RODNEY E. MONEY 01/21/14

HDR Engineering, Inc. of the Carolinas
3733 National Drive, Suite 207 Raleigh, N.C. 27612
N.C.B.E.L.S. License Number: F-0116

REVISIONS							
NO.	BY:	DATE:	NO.	BY:	DATE:		
1	--	--	3	--	--		
2	--	--	4	--	--		

SHEET NO. S-437
TOTAL SHEETS 671

ORIGINATED		YELLOW HIGHLIGHTED AREA(S) CHECKED		BLUE HIGHLIGHTED CHANGES		CHANGES VERIFIED BY	
INITIALS	DATE	INITIALS	DATE	INITIALS	DATE	VERIFIED	DATE

DRAWN BY : TLA 6/05	ADDED 10/21/05	ASSEMBLED BY : MJS	DATE : 08/13
CHECKED BY : VC 6/05	REV. 5/1/06RRR KMM/GM	CHECKED BY : EMN	DATE : 08/13
	REV. 10/1/11 MAA/GM		
DES BY: A. TEAGUE	DATE : 08/13	DWG BY: M. SELLS	DATE : 08/13
DES CHK: E. NOLTING	DATE : 08/13	CHK BY: E. NOLTING	DATE : 08/13

PLOT DRIVER: NCDOT_pdf_mono_eng_50.plt
USER: ppeterso DATE: 1/21/2014
FILE: ...\Plan Set\0570
PENTABLE: Durham_pen.tbl
TIME: 10:00:14 AM

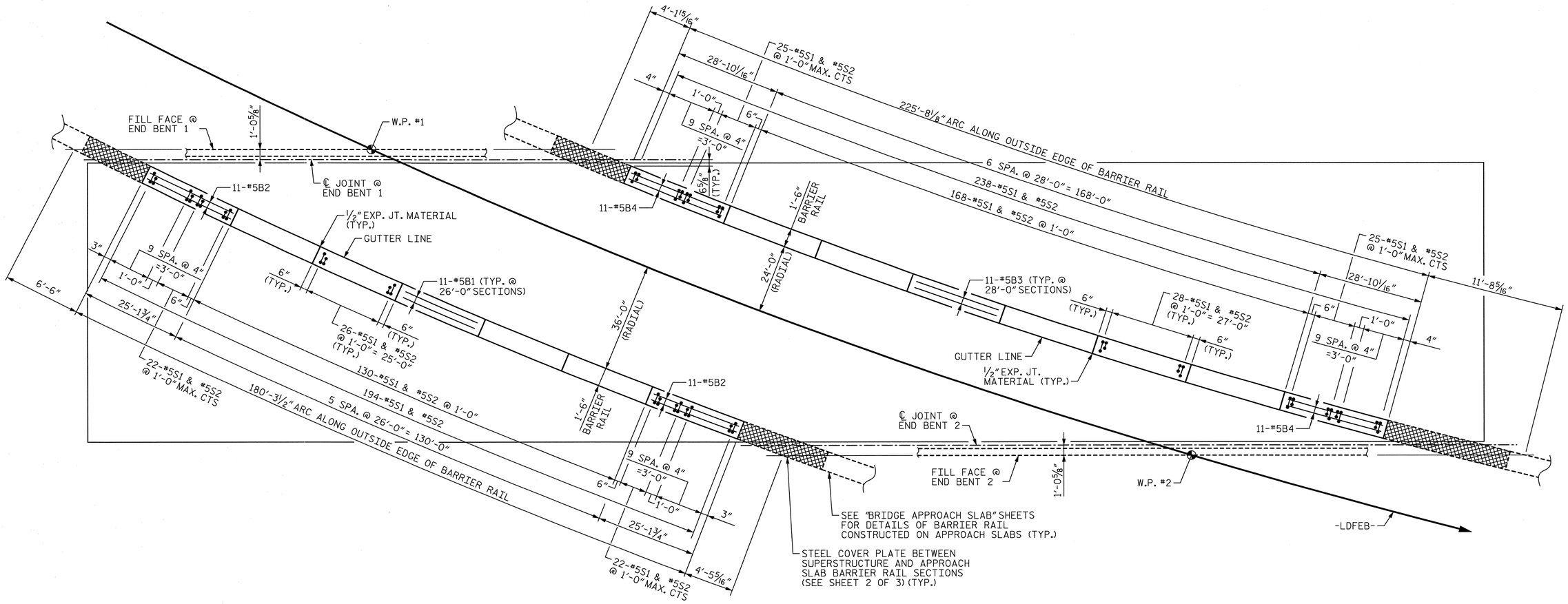

PLAN OF BARRIER RAILS

PROJECT NO. U-0071

DURHAM COUNTY

STATION: 157+33.78 -LDFEB-

SHEET 1 OF 3

STATE OF NORTH CAROLINA
DEPARTMENT OF TRANSPORTATION
RALEIGH

SUPERSTRUCTURE CONCRETE BARRIER RAIL

NORTH CAROLINA PROFESSIONAL SEAL 024928 ENGINEER RODNEY E. MONEY 01/21/14

REVISIONS						
NO.	BY:	DATE:	NO.	BY:	DATE:	
1	--	--	3	--	--	
2	--	--	4	--	--	

SHEET NO. S-438
TOTAL SHEETS 671

HDR Engineering, Inc. of the Carolinas
3733 National Drive, Suite 207 Raleigh, N.C. 27612
N.C.B.E.L.S. License Number: F-0116

DES BY: E. NOLTING	DATE: 08/13	DWG BY: B. PETERSON	DATE: 08/13
DES CHK: A. TEAGUE	DATE: 08/13	CHK BY: E. NOLTING	DATE: 08/13

ORIGINATED		YELLOW HIGHLIGHTED & REDLINE CHECKED		BLUE HIGHLIGHTED CHANGES		CHANGES VERIFIED BY	
INITIALS	DATE	INITIALS	DATE	INITIALS	DATE	VERIFIED	DATE

PLOT DRIVER: NCDOT_pdf_mono_eng_50.plt
USER: ppeterso DATE: 1/21/2014
FILE: ...\Plan Set\0600

PENTABLE: Durham_pen.tbl
TIME: 10:00:36 AM

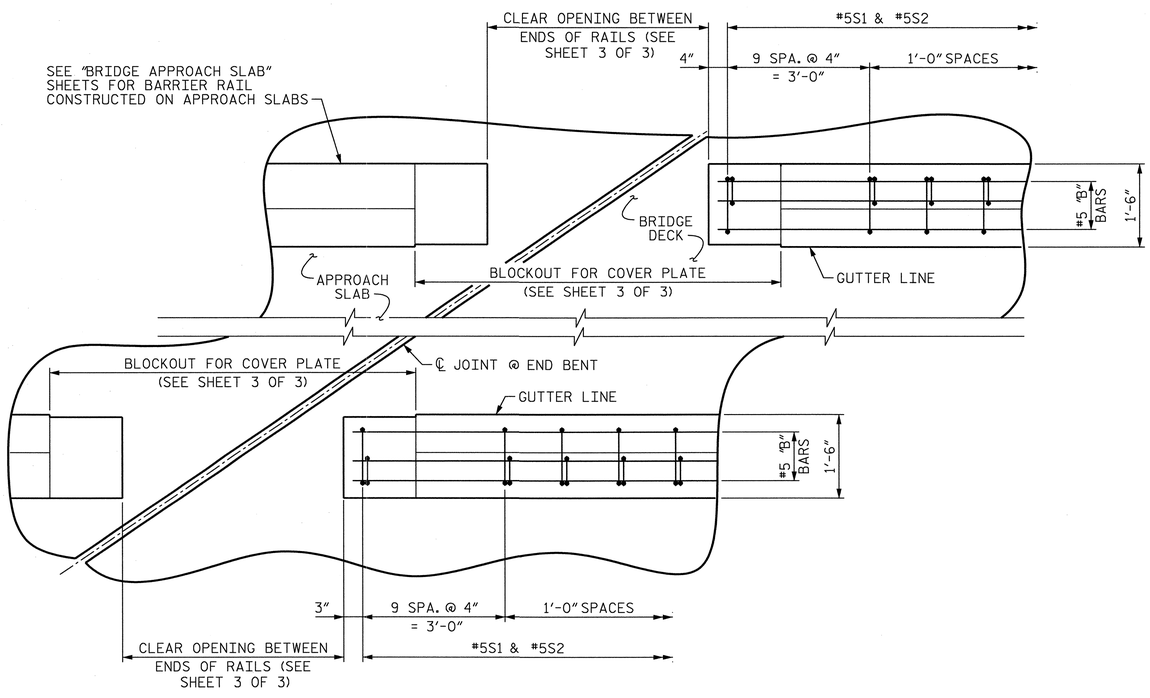

PLAN AT END BENT 1

(SIMILAR AT END BENT 2)

NOTES

THE BARRIER RAIL IN EACH SPAN SHALL NOT BE CAST UNTIL ALL SLAB CONCRETE IN THAT SPAN HAS BEEN CAST AND HAS REACHED A MINIMUM COMPRESSIVE STRENGTH OF 3,000 PSI.

ALL REINFORCING STEEL IN BARRIER RAILS SHALL BE EPOXY COATED.

GROOVED CONTRACTION JOINTS, 1/2" IN DEPTH, SHALL BE TOOLED IN ALL EXPOSED FACES OF THE BARRIER RAIL AND IN ACCORDANCE WITH ARTICLE 825-10(B) OF THE STANDARD SPECIFICATIONS. THE CONTRACTION JOINT SHALL BE LOCATED AT EACH THIRD POINT BETWEEN BARRIER RAIL EXPANSION JOINTS.

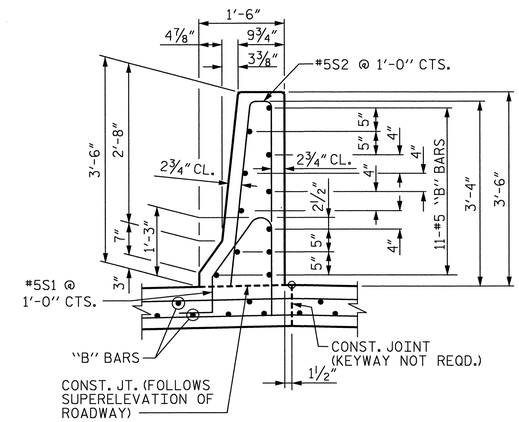

SECTION THRU RAIL

BAR TYPES

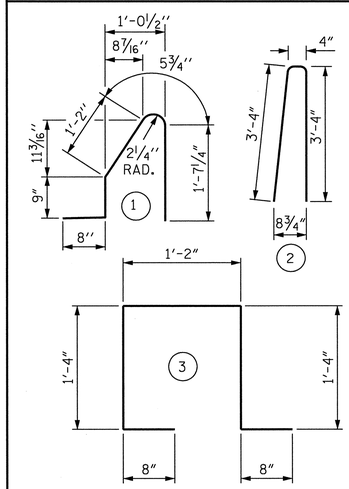

ALL BAR DIMENSIONS ARE OUT TO OUT

BILL OF MATERIAL

FOR CONC. BARRIER RAIL AND CURB BLOCK ONLY

BAR	NO.	SIZE	TYPE	LENGTH	WEIGHT
✳ B1	55	#5	STR.	25'-6"	1463
✳ B2	22	#5	STR.	24'-8"	566
✳ B3	66	#5	STR.	27'-6"	1893
✳ B4	22	#5	STR.	28'-4"	650
✳ H1	8	#4	STR.	1'-2"	6
✳ S1	432	#5	1	4'-8"	2103
✳ S2	432	#5	2	7'-0"	3154
✳ S4	8	#4	3	5'-2"	28

✳ EPOXY COATED REINFORCING STEEL 9863 LBS.

CLASS AA CONCRETE	
POUR 1 (BARRIER RAIL)	55.1 CU. YDS.
POUR 2 (CURB BLOCKS)	0.3 CU. YDS.
TOTAL	55.4 CU. YDS.
CONCRETE BARRIER RAIL	406 LIN. FT.

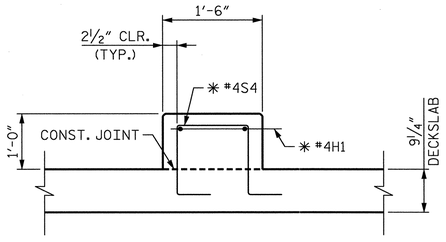

SECTION A-A

(MAIN DECK SLAB REINF.
NOT SHOWN FOR CLARITY)

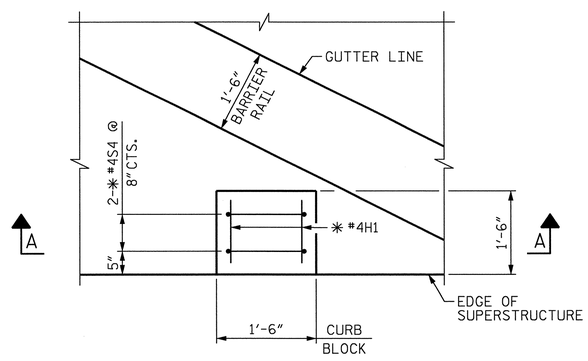

PLAN

(MAIN DECK SLAB REINF.
NOT SHOWN FOR CLARITY)

CURB BLOCK DETAILS

✳ SHIFT REINFORCING AS NECESSARY TO CLEAR BLOCKOUT.

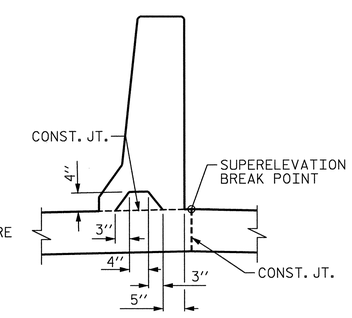

SECTION S-S

AT DAM IN OPEN JOINT
(THIS IS TO BE USED ONLY
WHEN SLIP FORM IS USED)

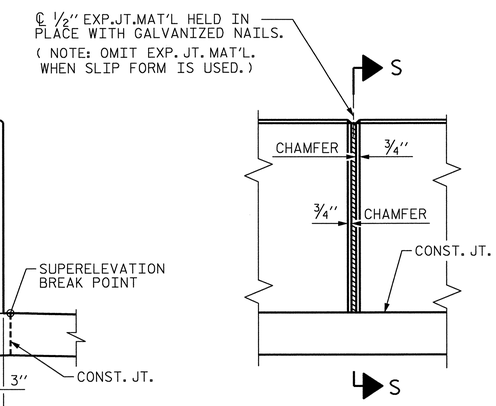

ELEVATION AT EXPANSION JOINTS

BARRIER RAIL DETAILS

PROJECT NO. U-0071

DURHAM COUNTY

STATION: 157+33.78 -LDFEB-

SHEET 2 OF 3

STATE OF NORTH CAROLINA
DEPARTMENT OF TRANSPORTATION
RALEIGH

SUPERSTRUCTURE CONCRETE BARRIER RAIL DETAILS

NORTH CAROLINA PROFESSIONAL SEAL 024928 ENGINEER RODNEY E. MOONEY 01/21/14

REVISIONS							SHEET NO.
NO.	BY:	DATE:	NO.	BY:	DATE:		S-439
1	--	--	3	--	--		TOTAL SHEETS
2	--	--	4	--	--		671

HDR Engineering, Inc. of the Carolinas
3733 National Drive, Suite 207 Raleigh, N.C. 27612
N.C.B.E.L.S. License Number: F-0116

DES BY: E. NOLTING	DATE: 08/13	DWG BY: B. PETERSON	DATE: 08/13
DES CHK: A. TEAGUE	DATE: 08/13	CHK BY: E. NOLTING	DATE: 08/13

ORIGINATED		YELLOW HIGHLIGHTED & REDLINE CHECKED		BLUE HIGHLIGHTED CHANGES		CHANGES VERIFIED BY	
INITIALS	DATE	INITIALS	DATE	INITIALS	DATE	VERIFIED	DATE

PLOT DRIVER: NCDOT_pdf_mono_eng_50.plt
USER: ppeterso DATE: 1/21/2014
FILE: ...\Plan Set\0601
PENTABLE: Durham_pen.tbl
TIME: 10:00:50 AM

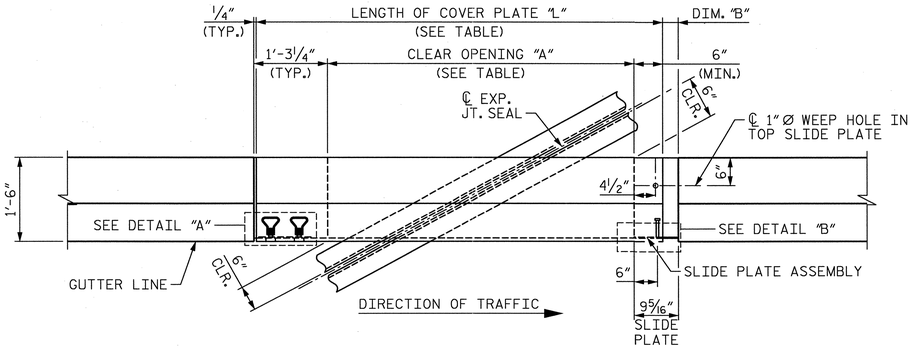

PLAN OF BARRIER RAIL COVER PLATE

(END BENT 1 LEFT SIDE SHOWN. OTHERS SIMILAR)

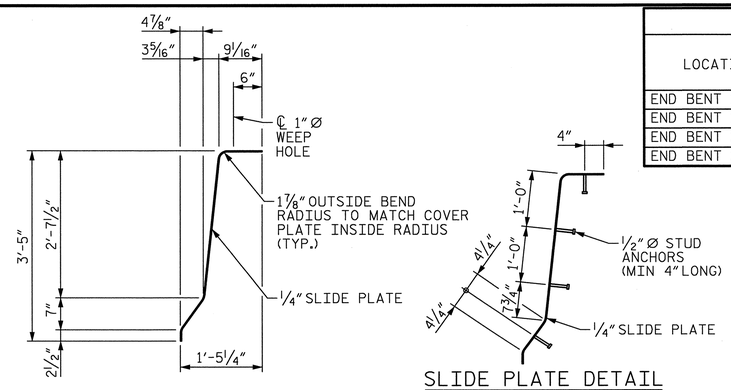

SECTION THRU SLIDE PLATE

SLIDE PLATE DETAIL

SLIDE PLATE ASSEMBLY DETAILS

DIMENSION TABLE									
LOCATION	TYPE	COVER PLATE LENGTH "L"	BOTTOM PLATE LENGTH "C"	CLEAR OPENING DIMENSION "A"			PLATE OPENING DIMENSION "B"		
				45°	60°	90°	45°	60°	90°
END BENT 1 LEFT	I	8'-5"	6'-2"	6'-4 7/8"	6'-5 1/16"	6'-6 5/8"	3 5/16"	2 3/4"	1 9/16"
END BENT 1 RIGHT	II	7'-4"	5'-1"	5'-4 3/16"	5'-4 3/4"	5'-5 15/16"	3 5/16"	2 3/4"	1 9/16"
END BENT 2 LEFT	I	11'-8"	9'-5"	9'-8 5/8"	9'-9 7/16"	9'-10 7/8"	3 5/16"	2 3/4"	1 9/16"
END BENT 2 RIGHT	II	8'-11"	6'-8"	6'-10 7/8"	6'-11 7/16"	7'-0 5/8"	3 5/16"	2 3/4"	1 9/16"

NOTES

1. ALL PLATES SHALL CONFORM TO AASHTO M270 GRADE 50 STEEL OR APPROVED EQUAL. ALL HOLD-DOWN BOLTS SHALL CONFORM TO ASTM F593 ALLOY 304 STAINLESS STEEL AND WASHERS SHALL CONFORM TO ASTM F844 EXCEPT THEY SHALL BE MADE FROM ALLOY 304 STAINLESS STEEL. ALL STUD ANCHORS SHALL CONFORM TO AASHTO M169, GRADES 1010 THRU 1020 OR APPROVED EQUAL. ALL CONCRETE INSERTS SHALL BE CLOSED END AND SHALL CONFORM TO AASHTO M169, GRADE 12L14. TENSILE CAPACITY SHALL BE 3000 LBS. MIN.
2. CLOSED END FERRULES AND STUD ANCHORS SHALL BE SHOP WELDED AND ALL HOLES SHALL BE SHOP DRILLED AS SHOWN ON PLANS. STUD ANCHORS SHALL BE ELECTRIC ARC END WELDED WITH COMPLETE FUSION.
3. UPON COMPLETION OF SHOP FABRICATION, THE COVER PLATE, BACKER PLATE, AND SLIDE PLATE ASSEMBLY SHALL BE METALLIZED. SEE SPECIAL PROVISION FOR THERMAL SPRAYED COATINGS (METALLIZATION).
4. NO SEPERATE PAYMENT WILL BE MADE FOR FURNISHING AND INSTALLING THE COVER PLATE. THE ENTIRE COST OF THIS WORK SHALL BE INCLUDED IN THE LUMP SUM PRICE FOR "EXPANSION JOINT SEALS."
5. REMOVE ANY EXCESS CONCRETE THAT COMES OUT OF THE WEEP HOLES.

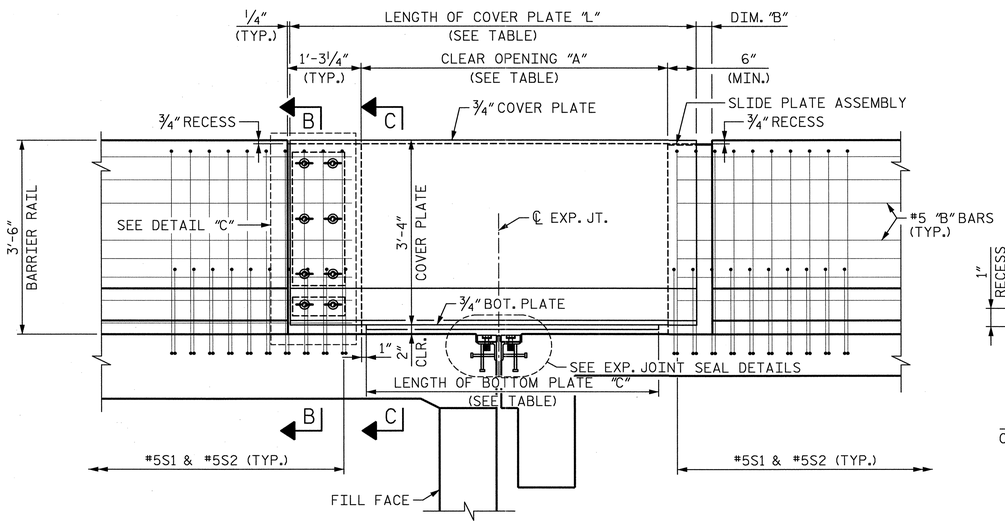

ELEVATION OF BARRIER RAIL COVER PLATE

(END BENT 1 LEFT SIDE SHOWN. OTHERS SIMILAR)

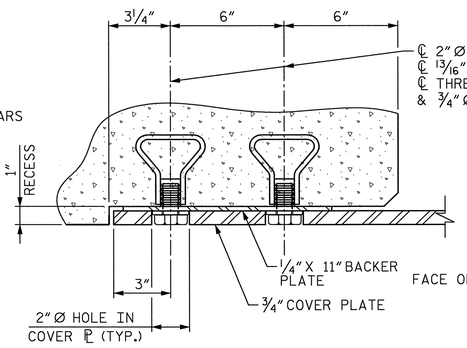

DETAIL "A"

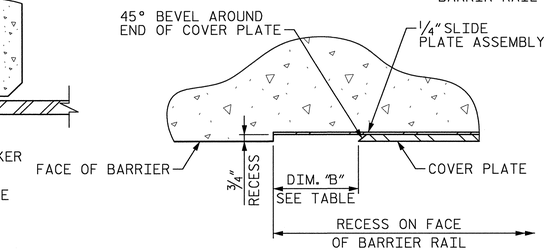

DETAIL "B"

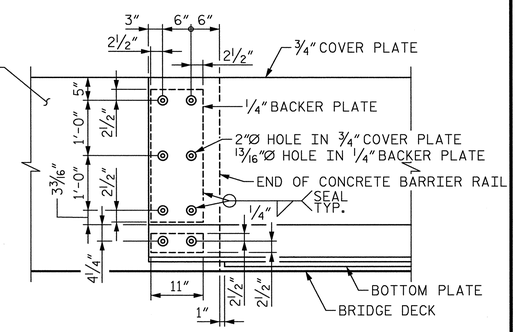

DETAIL "C"

(ALL DIMENSIONS NORMAL TO SURFACE)

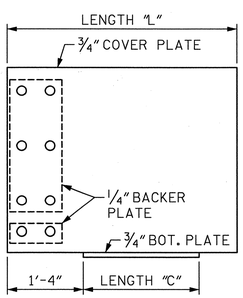

TYPE I

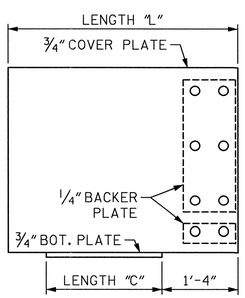

TYPE II

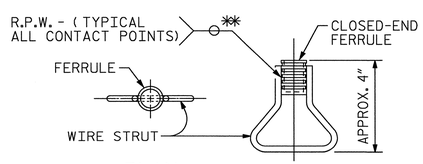

PLAN

ELEVATION

CONCRETE INSERT

** EACH WELDED ATTACHMENT OF WIRE TO FERRULE SHALL DEVELOP THE TENSILE STRENGTH OF THE WIRE.

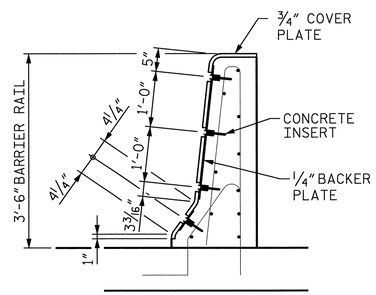

SECTION B-B

(MAIN DECK SLAB REINF. NOT SHOWN FOR CLARITY)

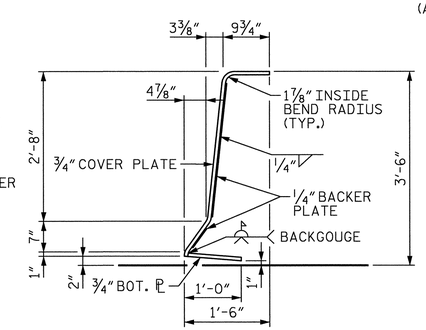

SECTION C-C

SECTION THRU COVER PLATE

NORTH CAROLINA PROFESSIONAL SEAL 024928 ENGINEER RODNEY E. MONEY 01/21/14

PROJECT NO. U-0071

DURHAM COUNTY

STATION: 157+33.78 -LDFEB-

SHEET 3 OF 3

STATE OF NORTH CAROLINA
DEPARTMENT OF TRANSPORTATION
RALEIGH

SUPERSTRUCTURE CONCRETE BARRIER RAIL COVER PLATE DETAILS

REVISIONS						SHEET NO. S-440
NO.	BY:	DATE:	NO.	BY:	DATE:	TOTAL SHEETS 671
1			3			
2			4			

HDR Engineering, Inc. of the Carolinas
3733 National Drive, Suite 207 Raleigh, N.C. 27612
N.C.B.E.L.S. License Number: F-0116

DES BY: E. NOLTING	DATE: 08/13	DWG BY: B. PETERSON	DATE: 09/13
DES CHK: A. TEAGUE	DATE: 08/13	CHK BY: E. NOLTING	DATE: 09/13

ORIGINATED		YELLOW HIGHLIGHTED & REDLINE CHECKED		BLUE HIGHLIGHTED CHANGES		CHANGES VERIFIED BY	
INITIALS	DATE	INITIALS	DATE	INITIALS	DATE	VERIFIED	DATE

PLOT DRIVER: NCDOT_pdf_mono_eng_50.plt
USER: ppeterso DATE: 1/21/2014
FILE: ...\Plan Set\0602
PENTABLE: Durham_pen.tbl
TIME: 10:01:11 AM

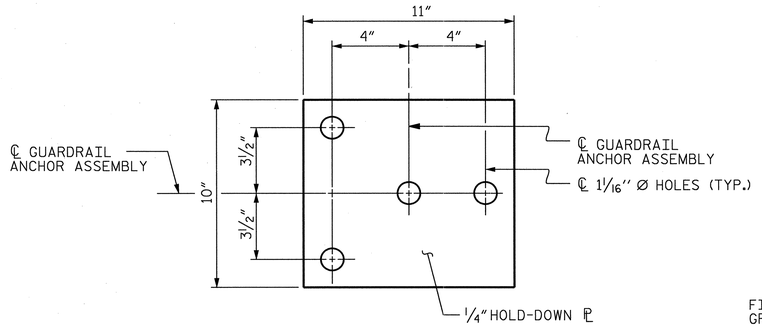

PLAN

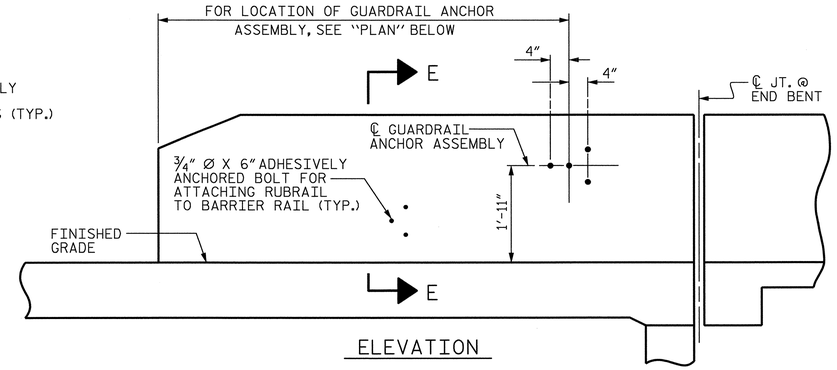

ELEVATION

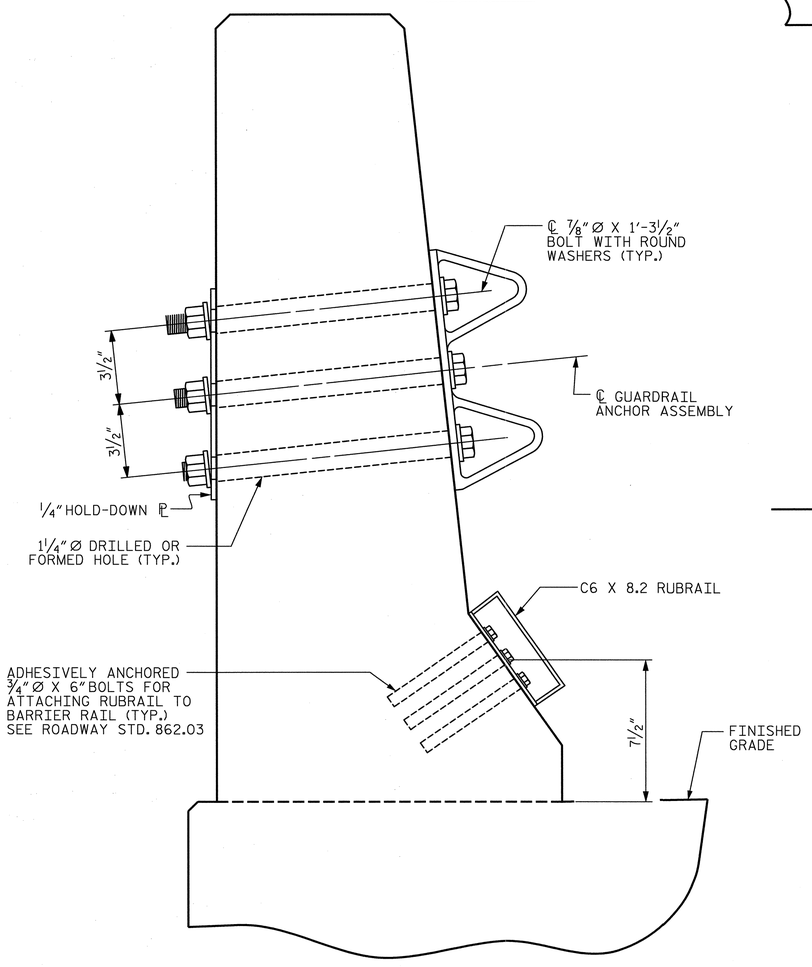

SECTION E-E

GUARDRAIL ANCHOR ASSEMBLY DETAILS

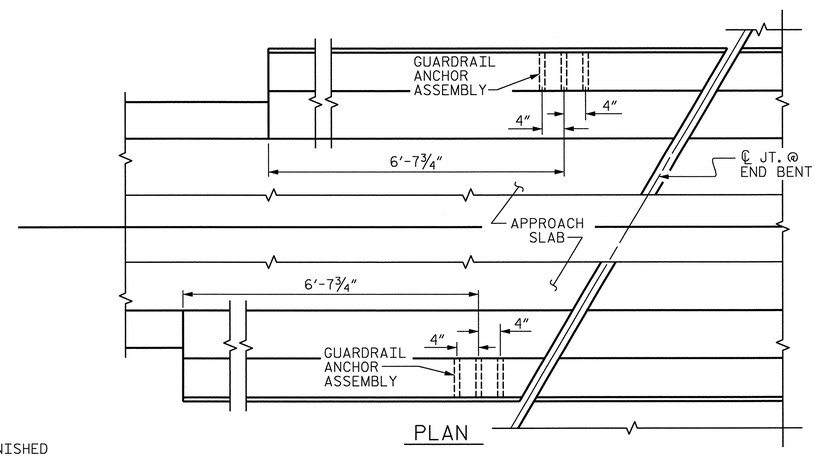

PLAN

LOCATION OF ANCHORS FOR GUARDRAIL

END BENT #1 SHOWN, END BENT #2 SIMILAR.

NOTES

THE GUARDRAIL ANCHOR ASSEMBLY SHALL CONSIST OF A 1/4" HOLD-DOWN PLATE AND 4 - 7/8" Ø BOLTS WITH NUTS AND WASHERS, RUBRAIL, AND ADHESIVELY ANCHORED BOLTS.

THE HOLD-DOWN PLATE SHALL CONFORM TO AASHTO M270 GRADE 36. AFTER FABRICATION, THE HOLD-DOWN PLATE SHALL BE HOT-DIP GALVANIZED IN ACCORDANCE WITH AASHTO M111.

BOLTS SHALL CONFORM TO THE REQUIREMENTS OF ASTM A307 AND NUTS SHALL CONFORM TO THE REQUIREMENTS OF AASHTO M291. BOLTS, NUTS AND WASHERS SHALL BE GALVANIZED. (AT THE CONTRACTOR'S OPTION, STAINLESS STEEL BOLTS, NUTS AND WASHERS MAY BE USED AS AN ALTERNATE FOR THE 7/8" Ø GALVANIZED BOLTS, NUTS AND WASHERS. THEY SHALL CONFORM TO OR EXCEED THE MECHANICAL REQUIREMENTS OF ASTM A307. THE USE OF THIS ALTERNATE SHALL BE APPROVED BY THE ENGINEER.)

THE GUARDRAIL ANCHOR ASSEMBLY IS REQUIRED AT ALL POINTS WHERE APPROACH GUARDRAIL IS TO BE ATTACHED TO THE END OF BARRIER RAIL. FOR POINTS OF ATTACHMENT, SEE SKETCH.

AFTER INSTALLATION, THE EXPOSED THREAD OF THE BOLT SHALL BE BURRED WITH A SHARP POINTED TOOL.

THE COST OF THE GUARDRAIL ANCHOR ASSEMBLY SHALL BE INCLUDED IN THE UNIT CONTRACT PRICE BID FOR CONCRETE BARRIER RAIL.

THE 1 1/4" Ø HOLES SHALL BE FORMED OR DRILLED WITH A CORE BIT. IMPACT TOOLS WILL NOT BE PERMITTED. ANY CONCRETE DAMAGED BY THIS WORK SHALL BE REPAIRED TO THE SATISFACTION OF THE ENGINEER.

THE C6 X 8.2 RUBRAIL IS TO BE ADHESIVELY ANCHORED TO THE RAIL USING THREE 3/4" Ø X 6" BOLTS WITH WASHERS. LEVEL ONE FIELD TESTING IS REQUIRED, AND THE YIELD LOAD OF THE 3/4" Ø BOLT IS 12 KIPS. FOR ADHESIVELY ANCHORED ANCHOR BOLTS OR DOWELS, SEE STANDARD SPECIFICATIONS. SEE ROADWAY STANDARD 862.03 FOR DETAILS AND LOCATION OF THE RUBRAIL.

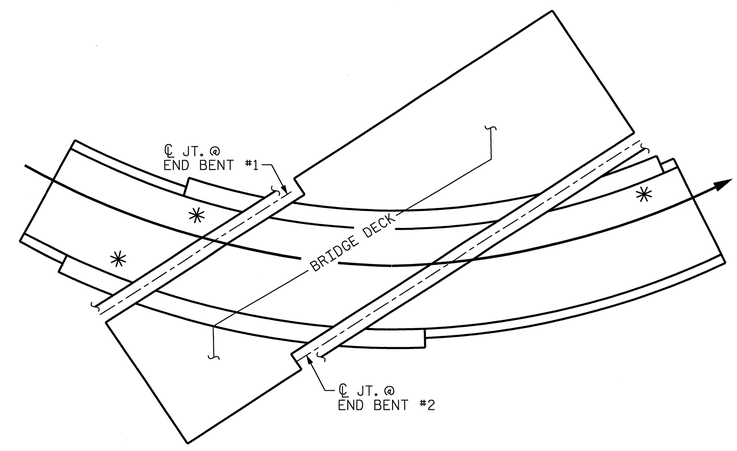

SKETCH SHOWING POINTS OF ATTACHMENTS

✳ DENOTES GUARDRAIL ANCHOR ASSEMBLY

PROJECT NO. U-0071

DURHAM COUNTY

STATION: 157+33.78 -LDFEB-

STATE OF NORTH CAROLINA
DEPARTMENT OF TRANSPORTATION
RALEIGH

STANDARD
SUPERSTRUCTURE
GUARDRAIL ANCHORAGE
FOR BARRIER RAIL

NORTH CAROLINA PROFESSIONAL SEAL 024928 ENGINEER RODNEY E. MONEY 01/21/14

HDR Engineering, Inc. of the Carolinas
3733 National Drive, Suite 207 Raleigh, N.C. 27612
N.C.B.E.L.S. License Number: F-0116

REVISIONS						
NO.	BY:	DATE:	NO.	BY:	DATE:	
1	--	--	3	--	--	
2	--	--	4	--	--	

SHEET NO. S-441
TOTAL SHEETS 67

STD. NO. GRA2

DRAWN BY : TLA 5/06	REV. 10/1/11 MAA/GM	ASSEMBLED BY : MJS	DATE : 09/13
CHECKED BY : GM 5/06	REV. 7/12 MAA/GM	CHECKED BY : EMN	DATE : 09/13
	REV. 10/12 MAA/GM		
DES BY: E. NOLTING	DATE : 09/13	DWG BY: M. SELLS	DATE : 09/13
DES CHK: A. TEAGUE	DATE : 09/13	CHK BY: E. NOLTING	DATE : 09/13

ORIGINATED		YELLOW HIGHLIGHTED & REDLINE CHECKED		BLUE HIGHLIGHTED CHANGES		CHANGES VERIFIED BY	
INITIALS	DATE	INITIALS	DATE	INITIALS	DATE	VERIFIED	DATE

PLOT DRIVER: NCDOT_pdf_mono_eng_50.plt
USER: ppeterso DATE: 1/21/2014
FILE: ...\Plan Set\0606
PF\TABLE: Durham_pen.tbl
TIME: 10:01:30 AM

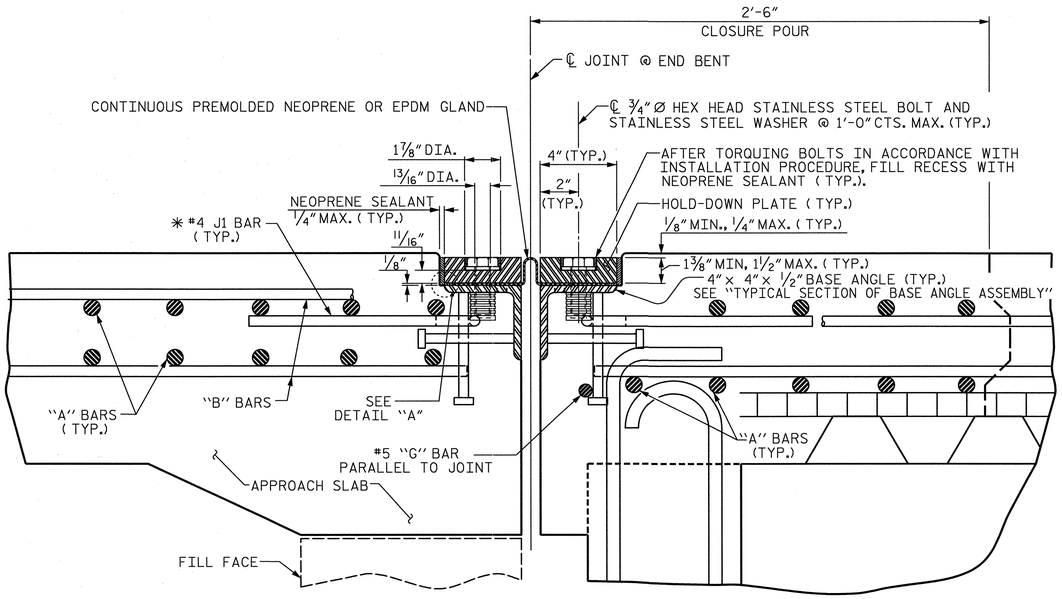

EXPANSION JOINT DETAILS

SECTION NORMAL TO JOINT -- PRESTRESSED GIRDER SUPERSTRUCTURE

✱ THE QUANTITY OF #4 J1 BARS ON THE BILL OF MATERIAL IS BASED ON 1'-0" CENTERS. J1 BARS SHALL BE PLACED AT EACH VERTICAL STUD ANCHOR BOLT. IN THE EVENT THAT THE NUMBER OF VERTICAL STUD ANCHORS EXCEEDS THE NUMBER OF J1 BARS SPECIFIED, ADDITIONAL J1 BARS WILL NOT BE REQUIRED.

INSTALLATION PROCEDURE

1. A TEMPLATE OR OTHER SUITABLE DEVICE SHALL BE USED TO FORM THE TOP OF THE EXPANSION JOINT SEAL BLOCKOUT TO THE PROPER DEPTH AND WIDTH. THE TEMPLATE SHALL BE 4⅛" TO 4¼" WIDE AND OF SUCH THICKNESS AS TO PROVIDE FOR CORRECT FINAL ELEVATION OF TOP OF HOLD-DOWN PLATES. THE TEMPLATE SHALL BE ATTACHED TO THE BASE ANGLE ASSEMBLY WITH THE ¾"Ø HEX HEAD BOLTS PROVIDED FOR THE HOLD-DOWN PLATES. A 1"Ø HOLE SHALL BE PROVIDED IN THE TEMPLATE CENTERED OVER EACH WEEP HOLE IN THE 4" X 4" X ½" BASE ANGLE. OTHER METHODS OF INSURING DRAINAGE THROUGH WEEP HOLES MAY BE EMPLOYED SUBJECT TO ENGINEER'S APPROVAL.
2. AFTER THE CONCRETE HAS BEEN CAST ON BOTH SIDES OF THE JOINT, REMOVE THE TEMPLATE. THOROUGHLY CLEAN THE BOLT HOLES AND THE ANGLE PLATE. REMOVE ANY EXCESS CONCRETE THAT COMES OUT OF THE WEEP HOLES. ANY DAMAGED STEEL SHALL BE COATED WITH A MINIMUM THICKNESS OF 4 DRY MILS OF ZINC-RICH PAINT IN ACCORDANCE WITH THE STANDARD SPECIFICATIONS.
3. LAY THE GLAND ON THE BASE ANGLE AND FIELD MARK THE GLAND FOR THE BOLT HOLES. HOLES IN THE GLAND SHALL BE PUNCHED ⅞" IN DIAMETER WITH A HAND PUNCH.
4. IN ORDER TO CHECK FOR PROPER ALIGNMENT, PLACE THE GLAND AND HOLD-DOWN PLATES ON THE BASE ANGLE. DO NOT APPLY NEOPRENE SEALANT. BOLT THE HOLD-DOWN PLATES TO THE BASE ANGLE BUT DO NOT TIGHTEN. THE ENGINEER SHALL INSPECT THE JOINT SEAL DEVICE FOR PROPER ALIGNMENT.
5. AFTER INSPECTION, REMOVE THE HOLD-DOWN PLATES AND GLAND. APPLY NEOPRENE SEALANT TO THE BASE ANGLE IN ACCORDANCE WITH THE "INSTALLATION SKETCH". PLACE GLAND AND HOLD-DOWN PLATES ON THE BASE ANGLE. BOLT THE HOLD-DOWN PLATES TO THE BASE ANGLE ASSEMBLY AND TORQUE THE BOLTS TO 88 FT-LBS WITH A TORQUE WRENCH. CHECK THE TORQUE AFTER THREE (3) HOURS AND, IF NECESSARY, RETIGHTEN TO 88 FT-LBS. A FINAL CHECK SHALL BE MADE AT SEVEN (7) DAYS. TORQUE SHALL NOT BE LESS THAN 80 FT-LBS AFTER SEVEN (7) DAYS.
6. AFTER PROPER TORQUING, CLEAN THE BOLT HOLE RECESSES AND THE RECESS BETWEEN THE JOINT SEAL DEVICE AND CONCRETE, COMPLETELY FILL THESE RECESSES WITH NEOPRENE SEALANT.

GENERAL NOTES

1. FOR EXPANSION JOINT SEALS, SEE SPECIAL PROVISIONS.
2. ALL PLATES AND ANGLES SHALL CONFORM TO AASHTO M270 GRADE 36 STEEL OR APPROVED EQUAL. ALL HOLD-DOWN BOLTS SHALL CONFORM TO ASTM F593 ALLOY 304 STAINLESS STEEL AND WASHERS SHALL CONFORM TO ASTM F844 EXCEPT THEY SHALL BE MADE FROM ALLOY 304 STAINLESS STEEL. ALL STUD ANCHORS SHALL CONFORM TO AASHTO M169, GRADES 1010 THRU 1020 OR APPROVED EQUAL. ALL CONCRETE INSERTS SHALL BE CLOSED END AND SHALL CONFORM TO AASHTO M169, GRADE 12L14. TENSILE CAPACITY SHALL BE 3000 LBS. MIN.
3. A PREMOLDED CORRUGATED OR NON-CORRUGATED GLAND SHALL BE USED FOR JOINTS SKEWED BETWEEN 50° THRU 130°. FOR JOINTS SKEWED LESS THAN 50° OR MORE THAN 130°, ONLY A CORRUGATED GLAND SHALL BE USED.
4. CLOSED END FERRULES AND STUD ANCHORS SHALL BE SHOP WELDED AND ALL HOLES SHALL BE SHOP DRILLED AS SHOWN ON PLANS. STUD ANCHORS SHALL BE ELECTRIC ARC END WELDED WITH COMPLETE FUSION.
5. SURFACES COMING IN CONTACT WITH NEOPRENE SHALL BE GROUND SMOOTH PRIOR TO METALLIZING.
6. UPON COMPLETION OF SHOP FABRICATION, THE HOLD DOWN PLATE AND BASE ANGLE ASSEMBLY, AS SHOWN IN THE "TYPICAL SECTION OF BASE ANGLE ASSEMBLY", SHALL BE METALLIZED. SEE SPECIAL PROVISION FOR THERMAL SPRAYED COATINGS (METALLIZATION).
7. BASE ANGLE ASSEMBLY SHALL BE CONTINUOUS FOR THE LENGTH OF THE JOINT. AT CROWN BREAKS, THE ENDS OF THE BASE ANGLE ASSEMBLY SHALL BE CUT PARALLEL TO THE BRIDGE CENTERLINE FOR SKEWS LESS THAN 80° AND GREATER THAN 100°. FINISHED WELD SHALL BE GROUND SMOOTH AND COATED WITH A MINIMUM THICKNESS OF 4 DRY MILS OF ZINC-RICH PAINT IN ACCORDANCE WITH THE STANDARD SPECIFICATIONS.
8. FIELD SPLICES OF HOLD-DOWN PLATES SHALL BE KEPT TO A MINIMUM. CONTRACTOR SHALL FURNISH DETAILED PLANS SHOWING PROPOSED SPLICE LOCATIONS FOR APPROVAL. HOLD-DOWN PLATES SHALL NOT EXCEED 20' LENGTHS UNLESS APPROVED BY THE ENGINEER.
9. NO ALTERNATE JOINT DETAILS SHALL BE PERMITTED IN LIEU OF THOSE SHOWN ON THESE PLANS.
10. THE CONTRACTOR MAY, AT HIS OPTION, USE ADHESIVELY ANCHORED ANCHOR BOLTS IN PLACE OF CONCRETE INSERTS FOR COVER PLATES. THE YIELD LOAD OF THE ¾"Ø BOLT IS 10 KIPS. FIELD TESTING OF THE ADHESIVE BONDING SYSTEM IS NOT REQUIRED.

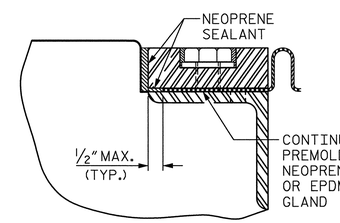

DETAIL "A"

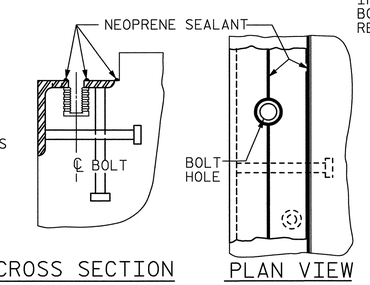

INSTALLATION SKETCH

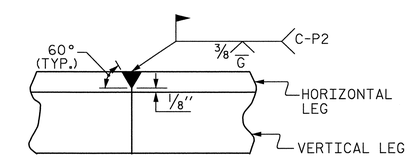

DETAIL- FIELD WELD SPLICE OF BASE ANGLE

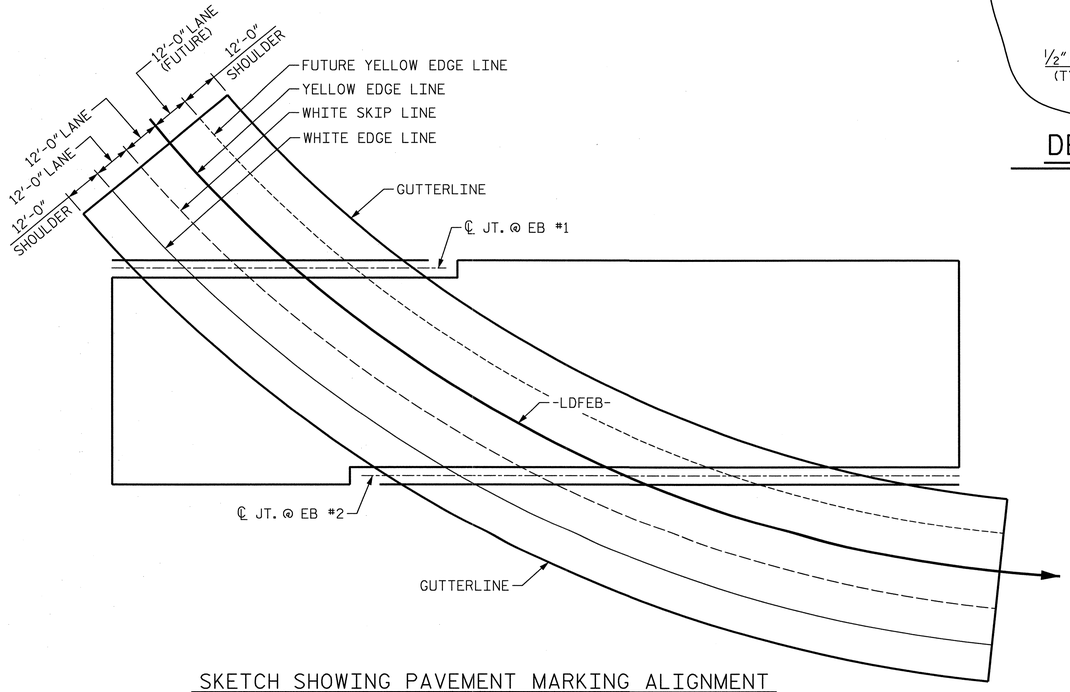

SKETCH SHOWING PAVEMENT MARKING ALIGNMENT

MOVEMENT AND SETTING AT JOINT						
END BENT NO.	SKEW ANGLE	TOTAL MOVEMENT PERPENDICULAR TO JOINT	PERPENDICULAR JOINT OPENING AT 45° F	PERPENDICULAR JOINT OPENING AT 60° F	PERPENDICULAR JOINT OPENING AT 90° F	TOTAL MOVEMENT PARALLEL TO JOINT
1	90°00'00"	0"	1³⁄₁₆"	1³⁄₁₆"	1³⁄₁₆"	1³⁄₁₆"
2	90°00'00"	½"	1¼"	1³⁄₁₆"	1¹⁄₁₆"	1³⁄₁₆"

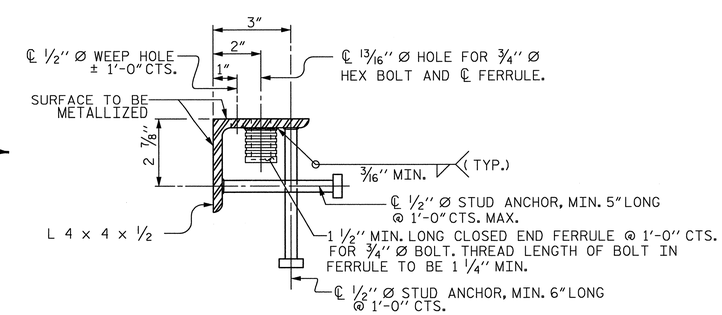

TYPICAL SECTION OF BASE ANGLE ASSEMBLY

PROJECT NO. U-0071

DURHAM COUNTY

STATION: 157+33.78 -LDFEB-

SHEET 1 OF 2

STATE OF NORTH CAROLINA
DEPARTMENT OF TRANSPORTATION
RALEIGH

SUPERSTRUCTURE
EXPANSION JOINT
SEAL DETAILS

NORTH CAROLINA PROFESSIONAL SEAL 024928 ENGINEER RODNEY E. MONEY 01/21/14

HDR Engineering, Inc. of the Carolinas
3733 National Drive, Suite 207 Raleigh, N.C. 27612
N.C.B.E.L.S. License Number: F-0116

REVISIONS								SHEET NO. S-442
NO.	BY:	DATE:	NO.	BY:	DATE:			TOTAL SHEETS 67
1	--	--	3	--	--			
2	--	--	4	--	--			

DRAWN BY : REK 9/87	REV. 5/7/03R RWW/JTE	ASSEMBLED BY : MJS	DATE : 08/13
CHECKED BY : CRK 10/87	REV. 5/1/06R TLA/GM	CHECKED BY : EMN	DATE : 08/13
	REV. 10/1/11 MAA/GM		
DES BY: E. NOLTING	DATE : 08/13	DWG BY: M. SELLS	DATE : 08/13
DES CHK: A. TEAGUE	DATE : 08/13	CHK BY: E. NOLTING	DATE : 08/13

ORIGINATED		YELLOW HIGHLIGHTED & RESUME CHECKED		BLUE HIGHLIGHTED CHANGES		CHANGES VERIFIED BY	
INITIALS	DATE	INITIALS	DATE	INITIALS	DATE	VERIFIED	DATE

PLOT DRIVER: NCDOT_pdf_mono_eng_50.plt
USER: ppeterso DATE: 1/21/2014
FILE: ...\Plan Set\0900
PF*TABLE: Durham_pen.tbl
TIME: 10:01:48 AM

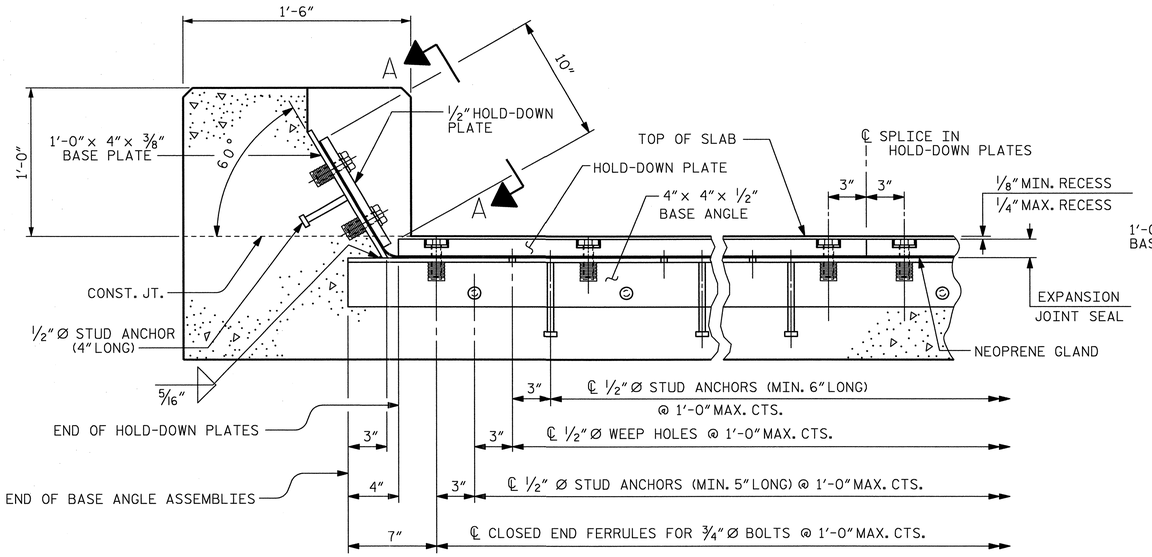

SECTION THRU RAIL NORMAL TO JOINT

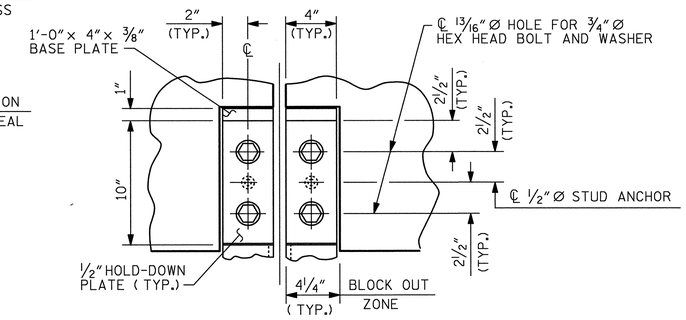

SECTION A - A

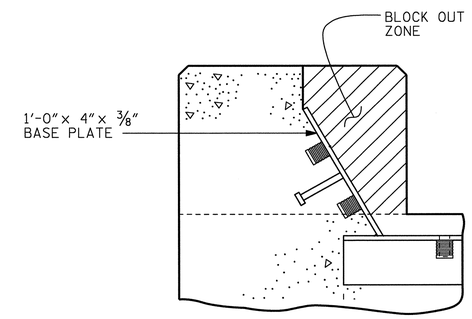

BLOCK OUT DETAIL

SEE " SECTION A - A " FOR OTHER DETAILS.

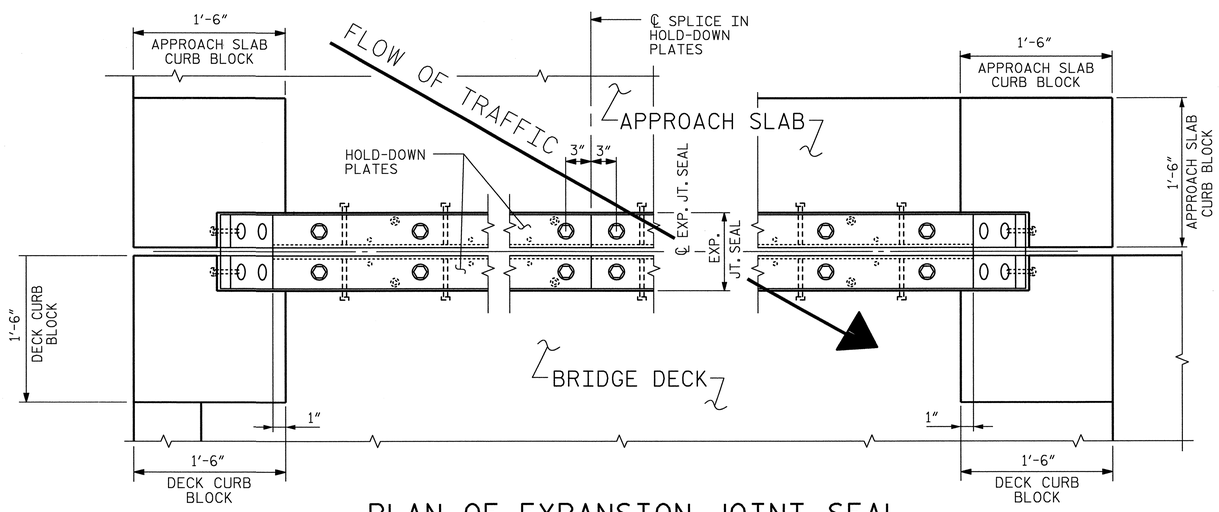

PLAN OF EXPANSION JOINT SEAL

DETAIL SHOWN AT END BENT 1 - SIMILAR AT END BENT 2
(BARRIER RAIL NOT SHOWN FOR CLARITY)

PROJECT NO. U-0071

DURHAM COUNTY

STATION: 157+33.78 -LDFEB-

SHEET 2 OF 2

STATE OF NORTH CAROLINA
DEPARTMENT OF TRANSPORTATION
RALEIGH

SUPERSTRUCTURE EXPANSION JOINT SEAL DETAILS FOR CURB BLOCK

NORTH CAROLINA PROFESSIONAL SEAL 024928 ENGINEER RODNEY E. MONEY 01/21/14

REVISIONS						
NO.	BY:	DATE:	NO.	BY:	DATE:	SHEET NO. S-443
1	--	--	3	--	--	TOTAL SHEETS 67
2	--	--	4	--	--	

HDR Engineering, Inc. of the Carolinas
3733 National Drive, Suite 207 Raleigh, N.C. 27612
N.C.B.E.L.S. License Number: F-0116

DES BY: E. NOLTING	DATE: 08/13	DWG BY: B. PETERSON	DATE: 08/13
DES CHK: A. TEAGUE	DATE: 08/13	CHK BY: E. NOLTING	DATE: 08/13

ORIGINATED		YELLOW HIGHLIGHTED & REDLINE CHECKED		BLUE HIGHLIGHTED CHANGES		CHANGES VERIFIED BY	
INITIALS	DATE	INITIALS	DATE	INITIALS	DATE	VERIFIED	DATE

PLOT DRIVER: NCDOT_pdf_mono_eng_50.plt
USER: ppeterso DATE: 1/21/2014
FILE: ...\Plan Set\0901

PFN TABLE: Durham_pen.tbl
TIME: 10:02:08 AM

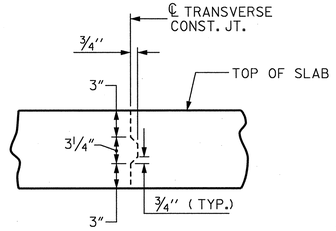

TRANSVERSE CONSTRUCTION JOINT DETAIL

REINFORCING STEEL IN SLAB NOT SHOWN. LONGITUDINAL AND TRANSVERSE REINFORCING STEEL SHALL BE CONTINUOUS THROUGH JOINT.

NOTES

PREVIOUSLY CAST CONCRETE SHALL HAVE ATTAINED A MINIMUM COMPRESSIVE STRENGTH OF 3000 PSI BEFORE ADDITIONAL CONCRETE IS CAST.

POURS #4, #5 AND #6 REQUIRE A SCREED FINISH.

POURS #1, #2, AND #3 SHALL BE GRADED TO DRAIN TO DETAILED DRAINAGE PIPE. POURS #1, #2, AND #3 DO NOT REQUIRE A SCREED FINISH.

THE CONTRACTOR HAS THE OPTION TO SUBMIT FOR APPROVAL AN ALTERNATE TO THE PROPOSED POURING SEQUENCE.

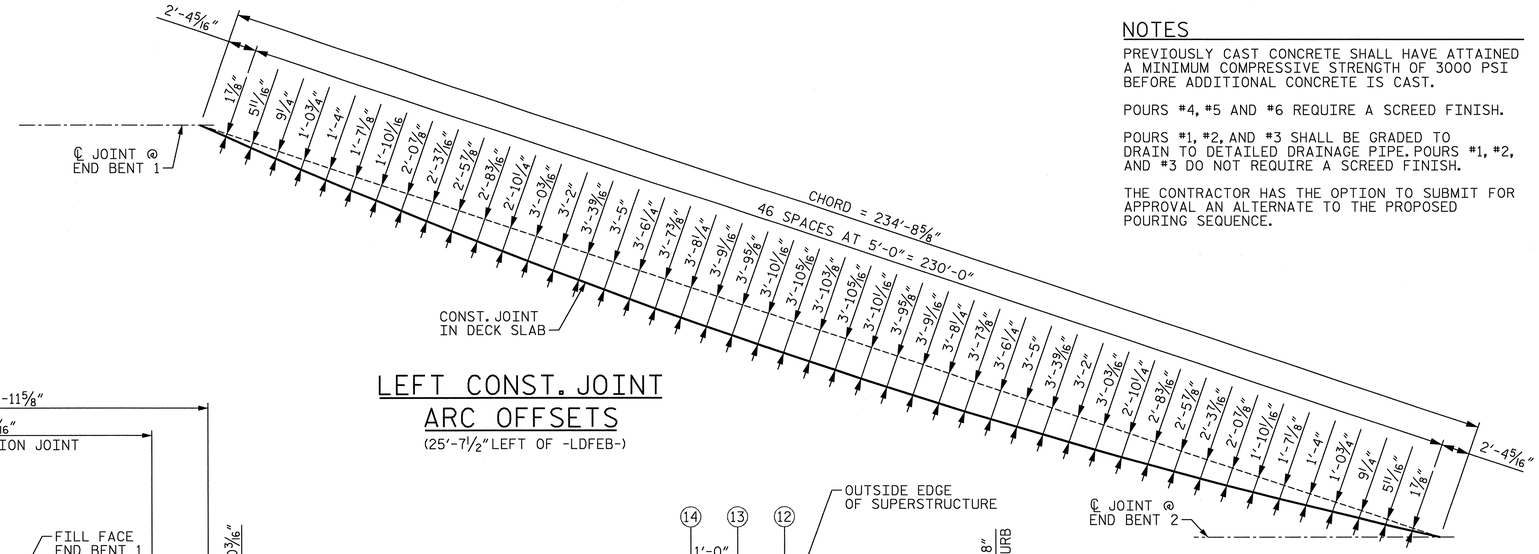

LEFT CONST. JOINT ARC OFFSETS

(25'-7 1/2" LEFT OF -LDFEB-)

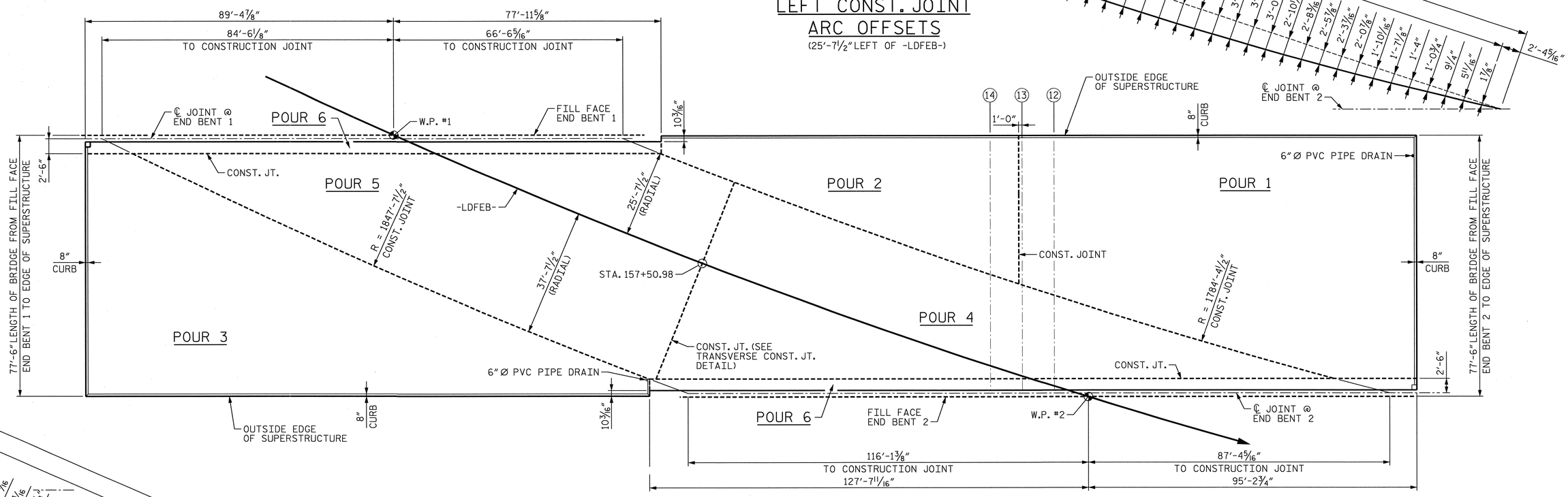

POURING SEQUENCE

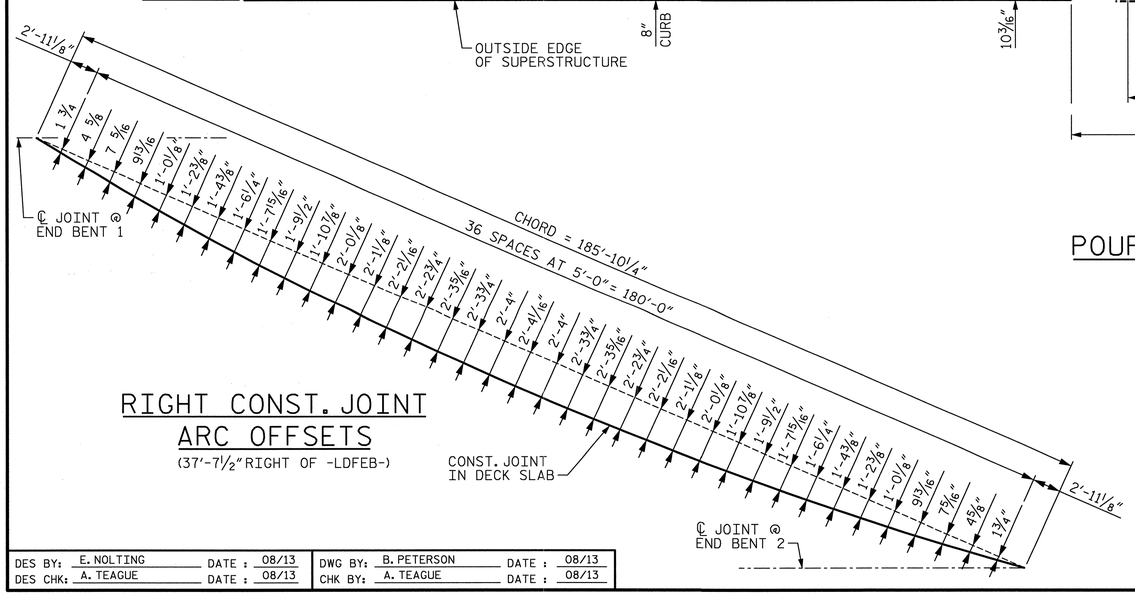

RIGHT CONST. JOINT ARC OFFSETS

(37'-7 1/2" RIGHT OF -LDFEB-)

PROJECT NO. U-0071

DURHAM COUNTY

STATION: 157+33.78 -LDFEB-

STATE OF NORTH CAROLINA
DEPARTMENT OF TRANSPORTATION
RALEIGH

SUPERSTRUCTURE POURING SEQUENCE

NORTH CAROLINA PROFESSIONAL SEAL 024928 P.E. Member ENGINEER RODNEY E. MONEY 01/21/14

HDR Engineering, Inc. of the Carolinas
3733 National Drive, Suite 207 Raleigh, N.C. 27612
N.C.B.E.L.S. License Number: F-0116

REVISIONS							SHEET NO.
NO.	BY:	DATE:	NO.	BY:	DATE:		S-444
1	--	--	3	--	--		TOTAL SHEETS
2	--	--	4	--	--		671

DES BY: E. NOLTING	DATE: 08/13	DWG BY: B. PETERSON	DATE: 08/13
DES CHK: A. TEAGUE	DATE: 08/13	CHK BY: A. TEAGUE	DATE: 08/13

ORIGINATED		YELLOW HIGHLIGHTED & REDLINE CHECKED		BLUE HIGHLIGHTED CHANGES		CHANGES VERIFIED BY	
INITIALS	DATE	INITIALS	DATE	INITIALS	DATE	VERIFIED	DATE

PLOT DRIVER: NCDOT_pdf_mono_eng_50.plt
USER: ppeterso DATE: 1/21/2014
FILE: ...\Plan Set\0902
PF TABLE: Durham_pen.tbl
TIME: 10:02:25 AM

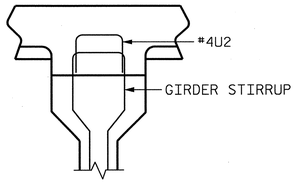

LARGE BUILDUP DETAIL

#4U2 BARS SHALL BE PLACED WITH THE STIRRUPS IN GIRDERS #6 THROUGH #18 FROM 0.0L TO 0.1L AND 0.9L AND 1.0L, WHERE "L" IS THE BEARING TO BEARING LENGTH IN PLAN VIEW. THE #4U2 BARS SHALL SIT ON TOP OF THE GIRDER.

GROOVING BRIDGE FLOORS		
APPROACH SLABS	12,310	SQ.FT.
BRIDGE DECK	11,608	SQ.FT.
TOTAL	23,918	SQ.FT.

SUPERSTRUCTURE REINFORCING STEEL LENGTHS ARE BASED ON THE FOLLOWING MINIMUM SPLICE LENGTHS

BAR SIZE	SUPERSTRUCTURE EXCEPT APPROACH SLABS, PARAPET, AND BARRIER RAIL		APPROACH SLABS		PARAPET AND BARRIER RAIL
	EPOXY COATED	UNCOATED	EPOXY COATED	UNCOATED	
#4	2'-0"	1'-9"	2'-0"	1'-9"	2'-9"
#5	2'-6"	2'-2"	2'-6"	2'-2"	3'-5"
#6	3'-0"	2'-7"	3'-10"	2'-7"	4'-4"
#7	5'-3"	3'-6"			
#8	6'-10"	4'-7"			

NOTES

✳ DENOTES EPOXY COATED REINFORCING STEEL.

✳✳ QUANTITIES FOR BARRIER RAIL ARE NOT INCLUDED IN THIS TOTAL.

PERFORM BRIDGE DECK GROOVING IN ACCORDANCE WITH STANDARD SPEC. ITEM 420-14.

BAR TYPES

ALL BAR DIMENSIONS ARE OUT TO OUT

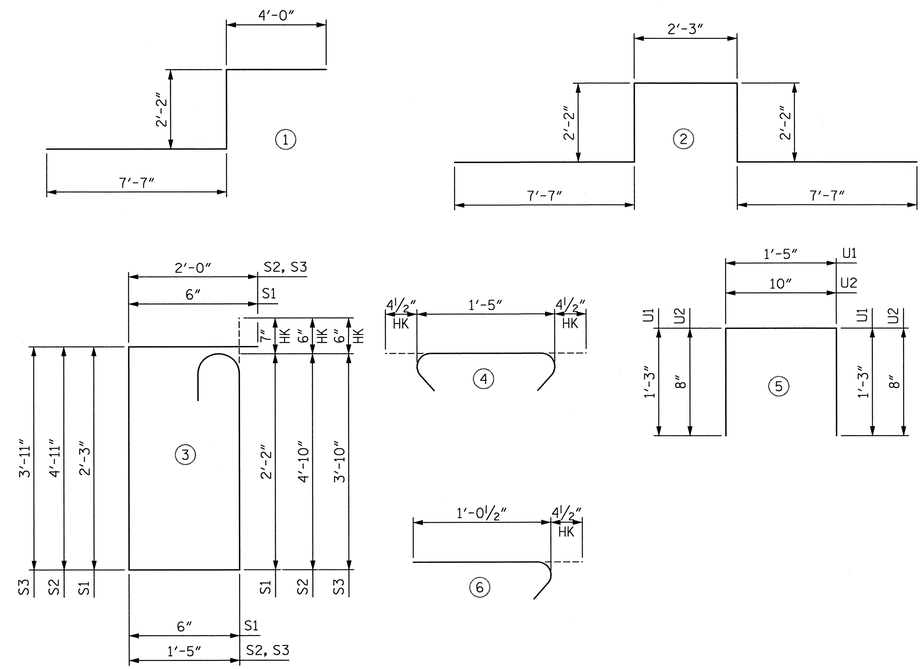

SUPERSTRUCTURE BILL OF MATERIAL

BAR	NO.	SIZE	TYPE	LENGTH	WEIGHT
✳ A1	987	#5	STR.	57'-3"	58935
A2	987	#5	STR.	57'-0"	58678
✳ B1	774	#4	STR.	26'-9"	13831
B2	836	#5	STR.	39'-2"	34151
G1	7	#5	STR.	57'-4"	419
✳ J1	392	#4	6	1'-5"	371
✳ K1	8	#8	1	13'-9"	294
✳ K2	80	#8	2	21'-9"	4646
K3	35	#5	STR.	56'-0"	2044
K4	40	#5	STR.	5'-0"	209
K5	120	#5	STR.	7'-11"	991
K6	40	#5	STR.	7'-3"	302
✳ S1	292	#5	3	6'-0"	1827
✳ S2	244	#4	3	13'-8"	2228
✳ S3	84	#4	3	11'-8"	655
S4	1212	#4	4	2'-2"	1754
U1	16	#4	5	3'-11"	42
U2	416	#4	5	2'-2"	602

REINFORCING STEEL	LBS.	99192
EPOXY COATED REINFORCING STEEL	LBS.	82787

CLASS AA CONCRETE

POUR 1	CYS.	273.4
POUR 2	CYS.	120.8
POUR 3	CYS.	272.1
POUR 4	CYS.	192.7
POUR 5	CYS.	211.9
POUR 6	CYS.	54.0
✳✳ TOTALS	CYS.	1124.8

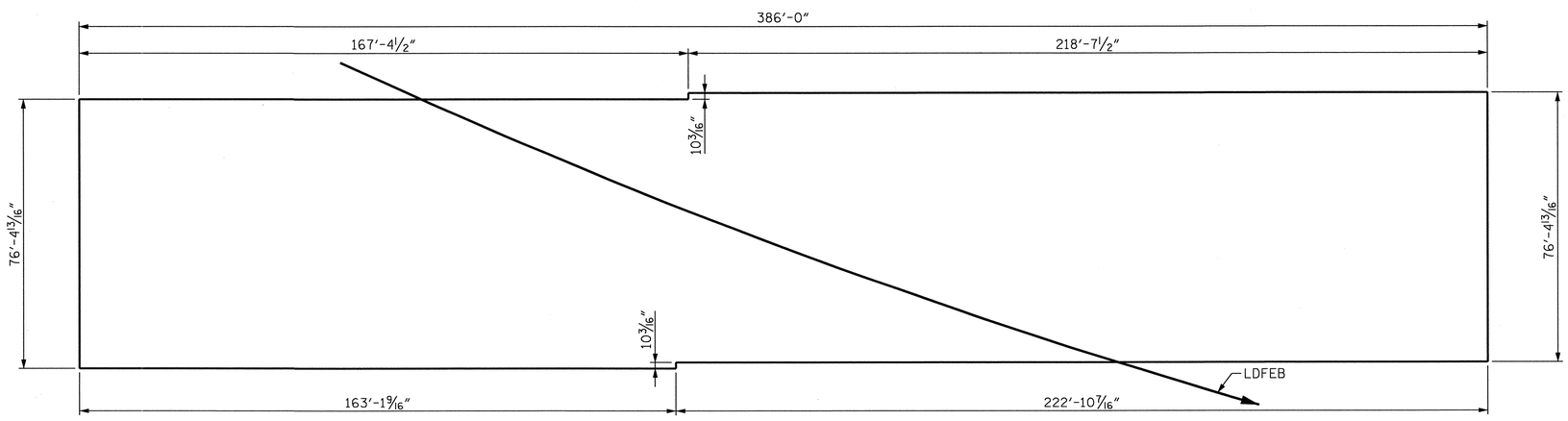

LAYOUT FOR COMPUTING AREA OF REINFORCED CONCRETE DECK SLAB (SQ. FEET = 29,488)

PROJECT NO. U-0071

DURHAM COUNTY

STATION: 157+33.78 -LDFEB-

STATE OF NORTH CAROLINA
DEPARTMENT OF TRANSPORTATION
RALEIGH

SUPERSTRUCTURE BILL OF MATERIAL

NORTH CAROLINA PROFESSIONAL SEAL 024928 ENGINEER RODNEY E. MONEY 01/21/14

REVISIONS							SHEET NO.
NO.	BY:	DATE:	NO.	BY:	DATE:		S-445
1	--	--	3	--	--		TOTAL SHEETS
2	--	--	4	--	--		67

HDR Engineering, Inc. of the Carolinas
3733 National Drive, Suite 207 Raleigh, N.C. 27612
N.C.B.E.L.S. License Number: F-0116

DES BY: E. NOLTING	DATE: 08/13	DWG BY: M. SELLS	DATE: 08/13
DES CHK: A. TEAGUE	DATE: 08/13	CHK BY: A. TEAGUE	DATE: 08/13

ORIGINATED		YELLOW HIGHLIGHTED & REDLINE CHECKED		BLUE HIGHLIGHTED CHANGES		CHANGES VERIFIED BY	
INITIALS	DATE	INITIALS	DATE	INITIALS	DATE	VERIFIED	DATE

PLOT DRIVER: NCDOT_pdf_mono_eng_50.plt
USER: ppeterso DATE: 1/21/2014
FILE: ...\Plan Set\000
PF TABLE: Durham_pen.tbl
TIME: 10:02:37 AM

NOTES

FOR SECTION A-A, VIEW B-B AND ADDITIONAL NOTES SEE "END BENT 1 SECTION & DETAILS".

FOR DETAIL "D" SEE "END BENT 1 PLAN AND ELEVATION", SHEET 2 OF 5.

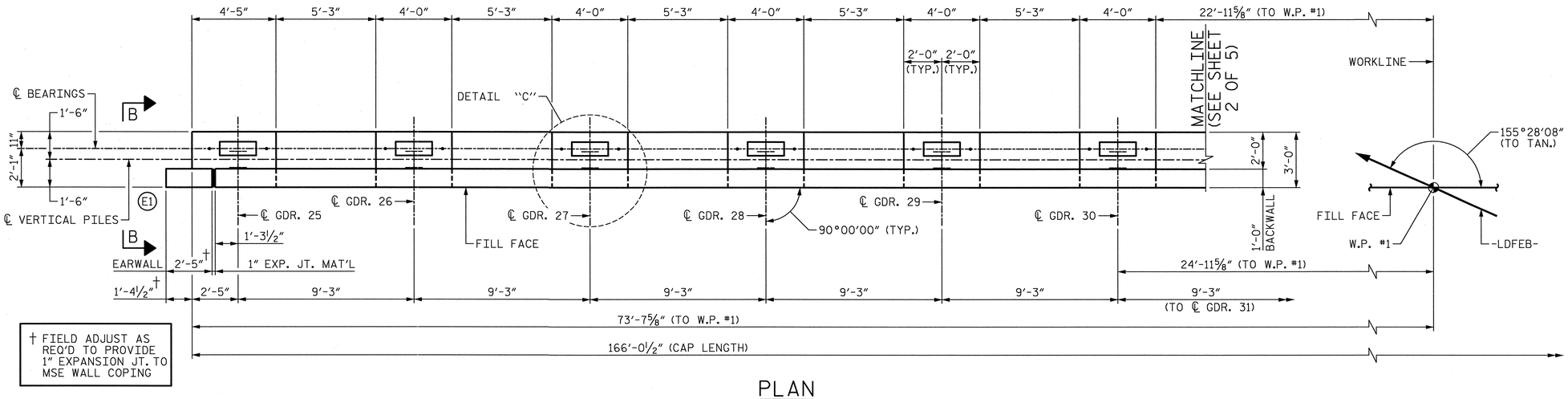

† FIELD ADJUST AS REQ'D TO PROVIDE 1" EXPANSION JT. TO MSE WALL COPING

PLAN

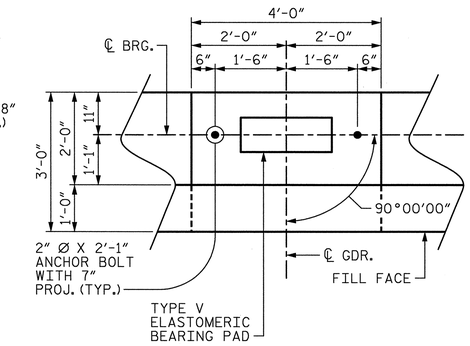

DETAIL "C"

TOP OF PILE ELEVATIONS	
LOCATION	ELEVATION
1	388.89
2	389.37
3	389.84
4	390.31
5	390.78
6	391.26

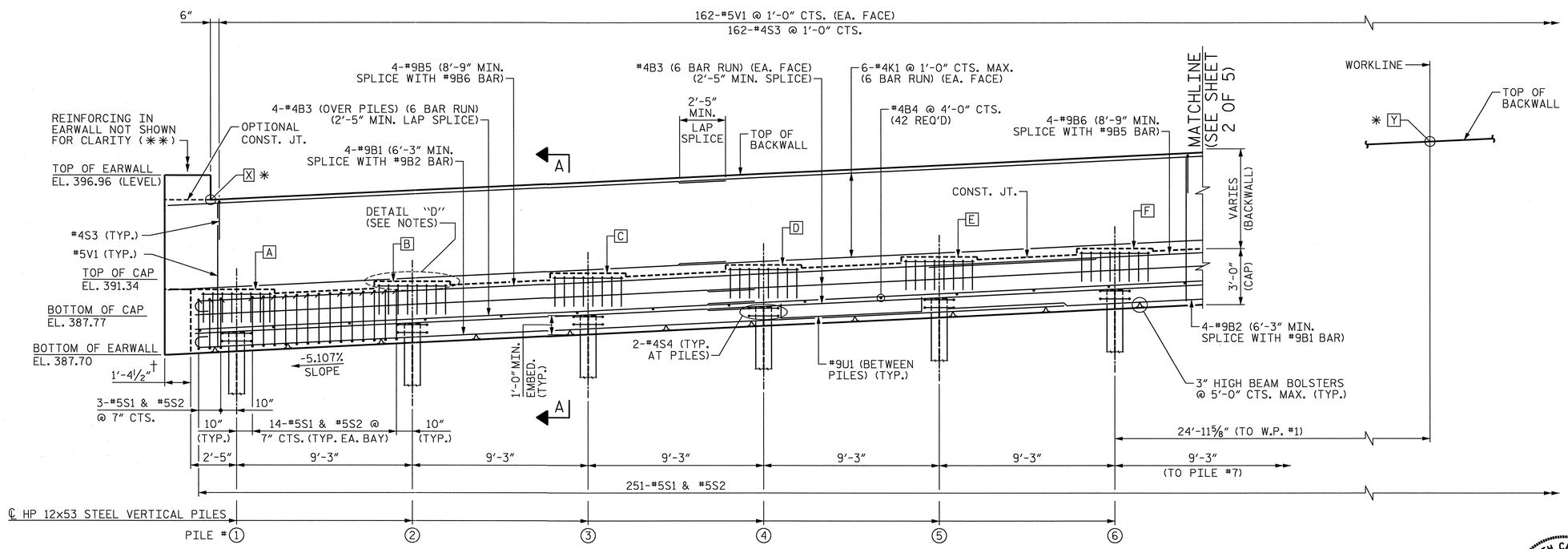

ELEVATION

(✱✱) SEE "END BENT 1 EARWALL & WINGWALL SECTION AND DETAILS" FOR REINFORCING STEEL TO BE PLACED PRIOR TO POUR #1.

ELEVATION TABLE	
LOCATION	ELEVATION
A	391.34
B	391.78
C	392.22
D	392.67
E	393.11
F	393.56
✱ X	395.62
✱ Y	399.24
✱ AT FILL FACE	

PROJECT NO. U-0071

DURHAM COUNTY

STATION: 157+33.78 -LDFEB-

SHEET 1 OF 5

STATE OF NORTH CAROLINA
DEPARTMENT OF TRANSPORTATION
RALEIGH

SUBSTRUCTURE END BENT 1 PLAN AND ELEVATION

NORTH CAROLINA PROFESSIONAL SEAL 024928 ENGINEER RODNEY E. MONEY 01/21/14

REVISIONS						
NO.	BY:	DATE:	NO.	BY:	DATE:	SHEET NO. S-4A6
1	--	--	3	--	--	TOTAL SHEETS 671
2	--	--	4	--	--	

HDR Engineering, Inc. of the Carolinas
3733 National Drive, Suite 207 Raleigh, N.C. 27612
N.C.B.E.L.S. License Number: F-0116

DES BY: T. ANDREWS	DATE: 07/13	DWG BY: W. TOWE	DATE: 07/13
DES CHK: K. TURNER	DATE: 07/13	CHK BY: T. ANDREWS	DATE: 07/13

ORIGINATED		YELLOW HIGHLIGHTED & REDLINE CHECKED		BLUE HIGHLIGHTED CHANGES		CHANGES VERIFIED BY	
INITIALS	DATE	INITIALS	DATE	INITIALS	DATE	VERIFIED	DATE

PLOT DRIVER: NCDOT_pdf_mono_eng_50.plt
USER: ppeterso DATE: 1/21/2014
FILE: ...\Plan Set\101
PF TABLE: Durham_pen.tbl
TIME: 10:34:40 AM

NOTES

FOR SECTION A-A AND ADDITIONAL NOTES SEE "END BENT 1 SECTION & DETAILS".

FOR DETAIL "C" SEE "END BENT 1 PLAN AND ELEVATION" SHEET 1 OF 5.

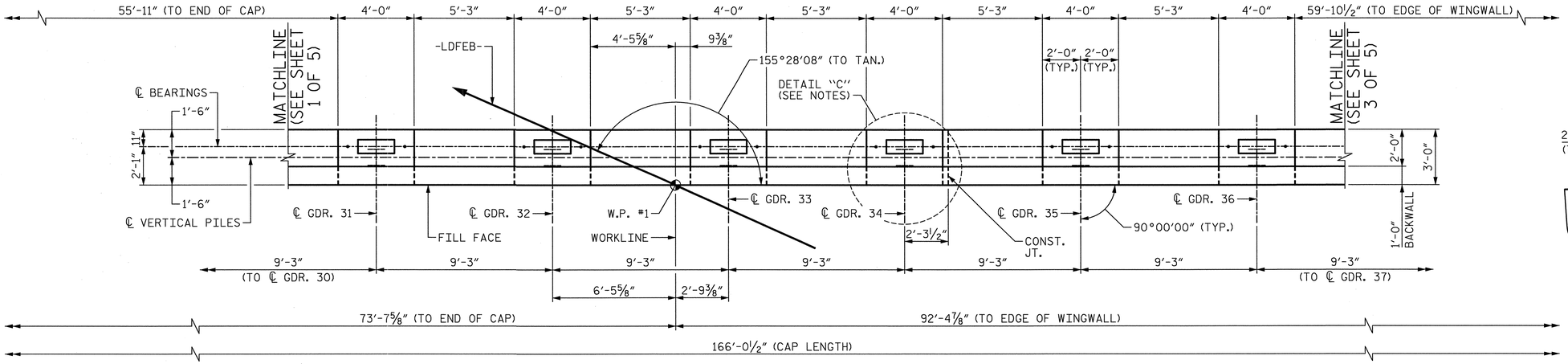

PLAN

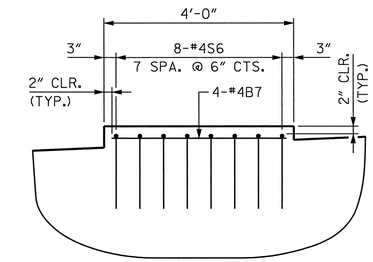

DETAIL "D"

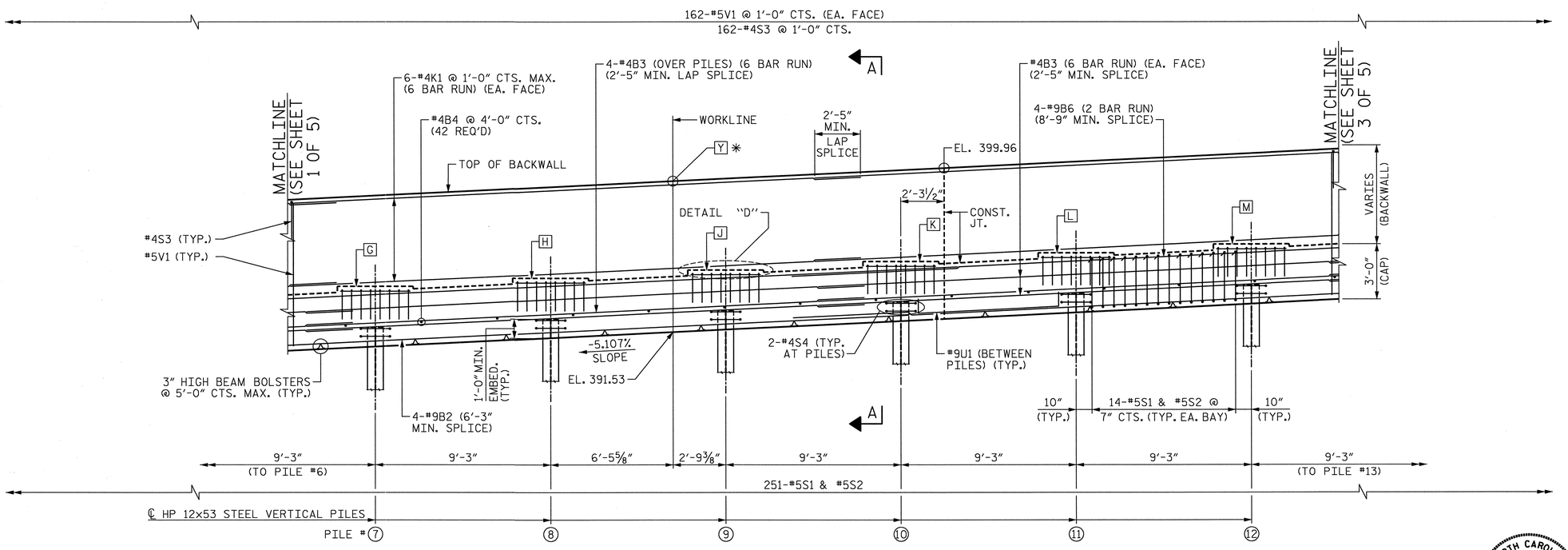

ELEVATION

TOP OF PILE ELEVATIONS	
LOCATION	ELEVATION
7	391.73
8	392.20
9	392.67
10	393.15
11	393.62
12	394.09

ELEVATION TABLE	
LOCATION	ELEVATION
G	394.02
H	394.47
J	394.93
K	395.39
L	395.85
M	396.32
✱ Y	399.24
✱ AT FILL FACE	

PROJECT NO. U-0071

DURHAM COUNTY

STATION: 157+33.78 -LDFEB-

SHEET 2 OF 5

STATE OF NORTH CAROLINA
DEPARTMENT OF TRANSPORTATION
RALEIGH

SUBSTRUCTURE END BENT 1 PLAN AND ELEVATION

NORTH CAROLINA PROFESSIONAL SEAL 024928 ENGINEER RODNEY E. MONEY 01/21/14

REVISIONS								
NO.	BY:	DATE:	NO.	BY:	DATE:		SHEET NO.	
1	--	--	3	--	--		S-447	
2	--	--	4	--	--		TOTAL SHEETS	
							671	

HDR Engineering, Inc. of the Carolinas
3733 National Drive, Suite 207 Raleigh, N.C. 27612
N.C.B.E.L.S. License Number: F-0116

DES BY: T. ANDREWS	DATE: 07/13	DWG BY: W. TOWE	DATE: 07/13
DES CHK: K. TURNER	DATE: 07/13	CHK BY: T. ANDREWS	DATE: 07/13

ORIGINATED		YELLOW HIGHLIGHTED & REDLINE CHECKED		BLUE HIGHLIGHTED CHANGES		CHANGES VERIFIED BY	
INITIALS	DATE	INITIALS	DATE	INITIALS	DATE	VERIFIED	DATE

PLOT DRIVER: NCDOT_pdf_mono_eng_50.plt
USER: ppeterso DATE: 1/21/2014
FILE: ...\Plan Set\102

PF TABLE: Durham_pen.tbl
TIME: 10:34:50 AM

NOTES

FOR SECTION A-A AND ADDITIONAL NOTES SEE "END BENT 1 SECTION & DETAILS".

FOR DETAIL "C" SEE "END BENT 1 PLAN AND ELEVATION" SHEET 1 OF 5.

FOR DETAIL "D" SEE "END BENT 1 PLAN AND ELEVATION", SHEET 2 OF 5.

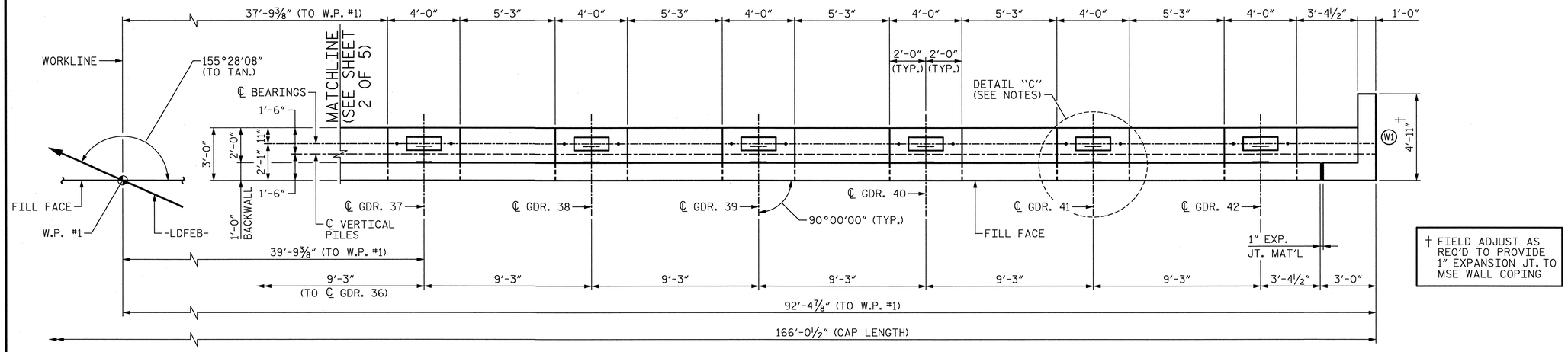

PLAN

† FIELD ADJUST AS REQ'D TO PROVIDE 1" EXPANSION JT. TO MSE WALL COPING

TOP OF PILE ELEVATIONS	
LOCATION	ELEVATION
13	394.56
14	395.04
15	395.51
16	395.98
17	396.45
18	396.93

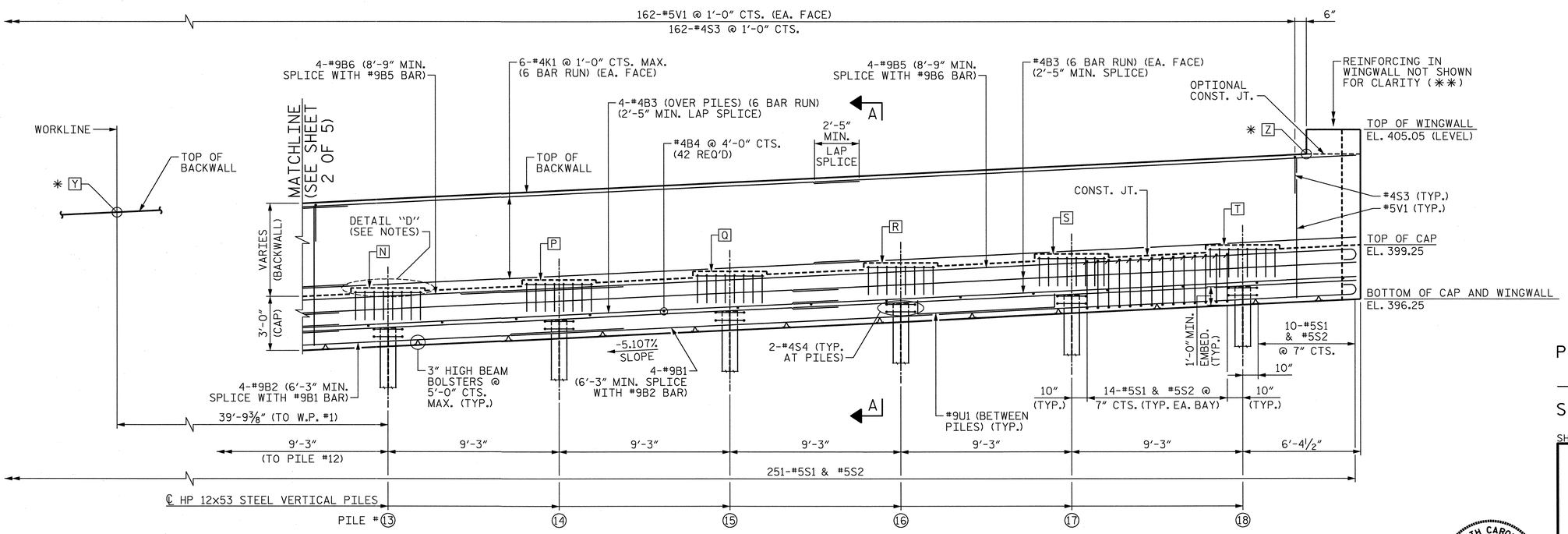

ELEVATION

(✱✱) SEE "END BENT 1 EARWALL & WINGWALL SECTION AND DETAILS" FOR REINFORCING STEEL TO BE PLACED PRIOR TO POUR #1.

ELEVATION TABLE	
LOCATION	ELEVATION
N	396.79
P	397.26
Q	397.74
R	398.21
S	398.69
T	399.15
✱ Y	399.24
✱ Z	403.71
✱ AT FILL FACE	

PROJECT NO. U-0071

DURHAM COUNTY

STATION: 157+33.78 -LDFEB-

SHEET 3 OF 5

STATE OF NORTH CAROLINA
DEPARTMENT OF TRANSPORTATION
RALEIGH

SUBSTRUCTURE END BENT 1 PLAN AND ELEVATION

NORTH CAROLINA PROFESSIONAL SEAL 024928 ENGINEER RODNEY E. MONEY 01/21/14

REVISIONS						
NO.	BY:	DATE:	NO.	BY:	DATE:	SHEET NO. S-448
1	--	--	3	--	--	TOTAL SHEETS 671
2	--	--	4	--	--	

HDR Engineering, Inc. of the Carolinas
3733 National Drive, Suite 207 Raleigh, N.C. 27612
N.C.B.E.L.S. License Number: F-0116

DES BY: T. ANDREWS	DATE: 07/13	DWG BY: W. TOWE	DATE: 07/13
DES CHK: K. TURNER	DATE: 07/13	CHK BY: T. ANDREWS	DATE: 07/13

ORIGINATED		YELLOW HIGHLIGHTED & REDLINE CHECKED		BLUE HIGHLIGHTED CHANGES		CHANGES VERIFIED BY	
INITIALS	DATE	INITIALS	DATE	INITIALS	DATE	VERIFIED	DATE

PLOT DRIVER: NCDOT_pdf_mono_eng_50.plt
USER: ppeterso DATE: 1/21/2014
FILE: ...\Plan Set\1103
PT\TABLE: Durham_pen.tbl
TIME: 10:35:01 AM

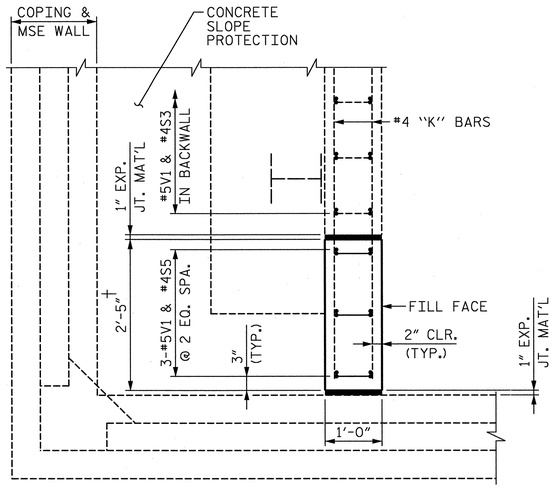

PLAN-EARWALL "E1"

(Δ) - #4K1 BARS IN BACKWALL

† = FIELD ADJUST AS REQ'D TO PROVIDE 1" EXPANSION JOINT TO MSE WALL COPING

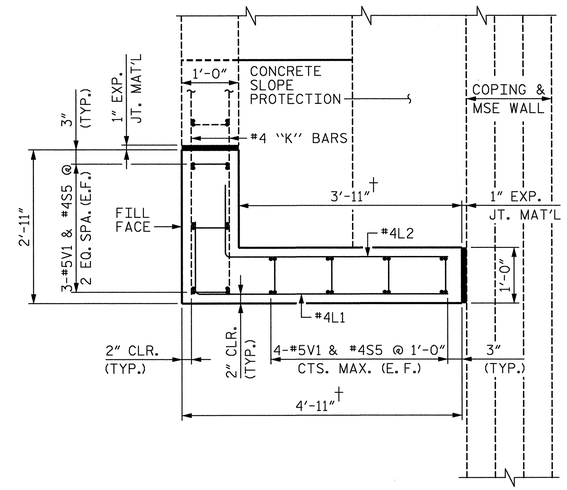

PLAN-WINGWALL "W1"

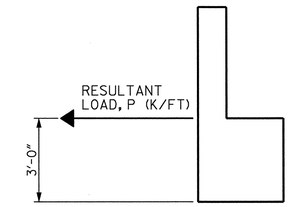

MSE REINFORCING STRAP LOAD DETAIL

LOAD CASE	RESULTANT LOAD, P (K/FT)
LIVE LOAD BRAKING	0.04
THERMAL CONTRACTION	0.42
WIND ON SUPERSTRUCTURE	0.78
WIND ON LIVE LOAD	0.07
ECCENTRICITY (LL)	0.46
ECCENTRICITY (DL)	2.47

MSE REINFORCING STRAP NOTES

MSE REINFORCING STRAPS SHALL BE ATTACHED TO THE END BENT CAP AND/OR BACKWALL. FOR DESIGN CRITERIA AND DETAILS, SEE MSE WALL SHEETS AND SPECIAL PROVISIONS.

PLANS, WORKING DRAWINGS AND DESIGN CALCULATIONS SHALL BE SUBMITTED BY THE CONTRACTOR TO THE ENGINEER FOR REVIEW AND APPROVAL. SEE SPECIAL PROVISIONS.

PLANS SUBMITTED FOR REVIEW SHALL INCLUDE THE FOLLOWING: PLAN VIEW, ELEVATION VIEW, TYPICAL SECTIONS, AND STRAP DETAILS.

THE MSE REINFORCING STRAPS SHALL BE DESIGNED TO CARRY THE LOADS FROM THE BRIDGE SUPERSTRUCTURE AS PRESENTED IN THE TABLE ABOVE. IN ADDITION, THE MSE REINFORCING STRAPS SHALL ALSO BE DESIGNED TO CARRY LOADS FROM SOIL PRESSURE AS OUTLINED IN THE SPECIAL PROVISIONS.

THE LOADS PRESENTED IN THE TABLE ABOVE ARE SERVICE LEVEL LOADS (NO LOAD FACTORS HAVE BEEN APPLIED). THE MSE WALL REINFORCING STRAP DESIGNER SHALL USE THESE LOADS IN ALL APPLICABLE LOAD COMBINATIONS AS APPROPRIATE, IN COMBINATION WITH SOIL PRESSURE LOADS.

A MINIMUM OF TWO ROWS OF MSE REINFORCING STRAPS IS REQUIRED.

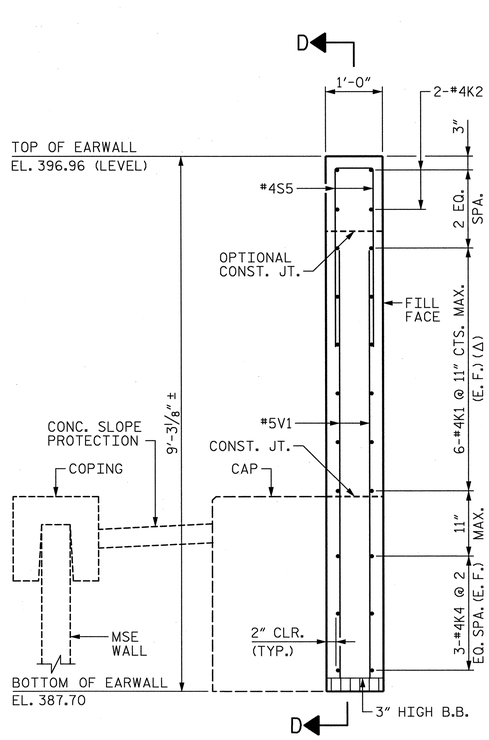

ELEVATION-EARWALL "E1"

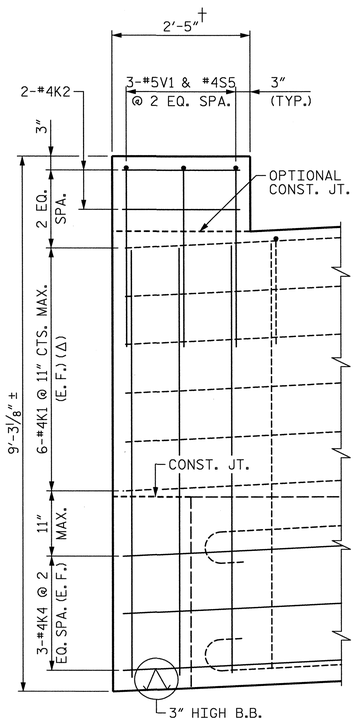

SECTION D-D

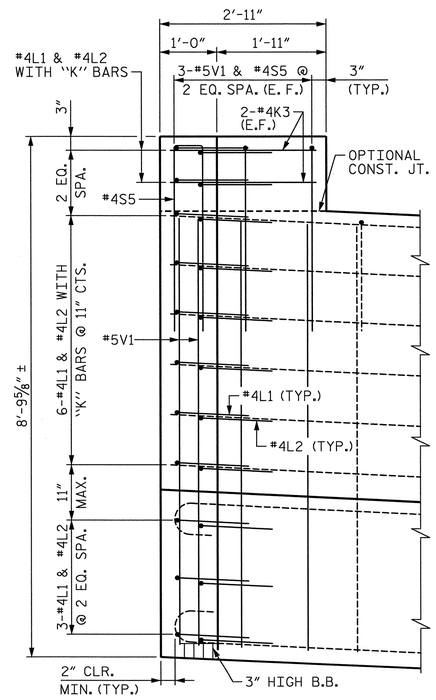

SECTION E-E

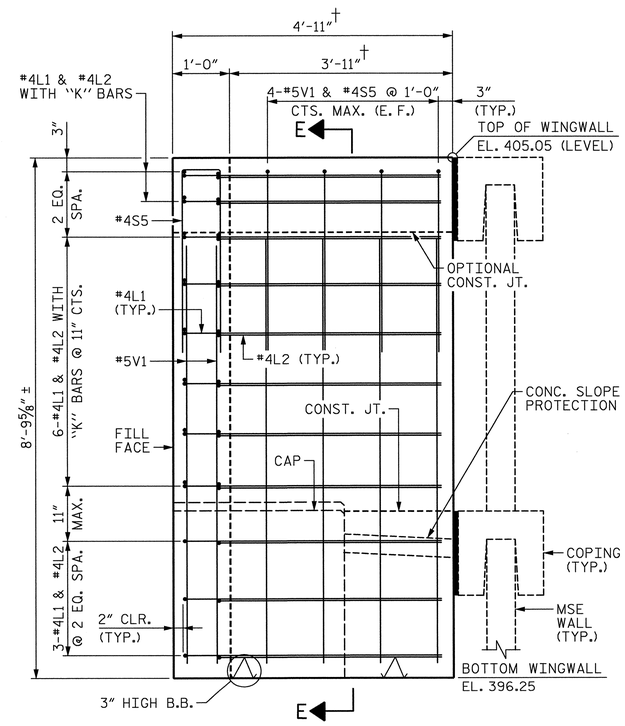

ELEVATION-WINGWALL "W1"

SEE "END BENT 1 PLAN AND ELEVATION" SHEETS FOR REINFORCING STEEL IN CAP.

PROJECT NO. U-0071

DURHAM COUNTY

STATION: 157+33.78 -LDFEB-

SHEET 4 OF 5

STATE OF NORTH CAROLINA
DEPARTMENT OF TRANSPORTATION
RALEIGH

SUBSTRUCTURE END BENT 1 EARWALL & WINGWALL SECTION AND DETAILS

NORTH CAROLINA PROFESSIONAL SEAL 024928 ENGINEER RODNEY E. MONEY 01/31/14

REVISIONS						
NO.	BY:	DATE:	NO.	BY:	DATE:	
1	--	--	3	--	--	
2	--	--	4	--	--	

SHEET NO. S-449
TOTAL SHEETS 67

HDR Engineering, Inc. of the Carolinas
3733 National Drive, Suite 207 Raleigh, N.C. 27612
N.C.B.E.L.S. License Number: F-0116

DES BY: T. ANDREWS	DATE: 07/13	DWG BY: W. TOWE	DATE: 07/13
DES CHK: K. TURNER	DATE: 07/13	CHK BY: T. ANDREWS	DATE: 07/13

ORIGINATED		YELLOW HIGHLIGHTED & REDLINE CHECKED		BLUE HIGHLIGHTED CHANGES		CHANGES VERIFIED BY	
INITIALS	DATE	INITIALS	DATE	INITIALS	DATE	VERIFIED	DATE

PLOT DRIVER: NCDOT_pdf_mono_eng_50.plt
USER: ppeterso DATE: 1/21/2014
FILE: ...\Plan Set\104

PF"TABLE: Durham_pen.tbl
TIME: 10:35:11 AM

NOTES

THE TOP SURFACE AREAS OF THE END BENT CAP SHALL BE CURED IN ACCORDANCE WITH THE STANDARD SPECIFICATIONS EXCEPT THAT THE MEMBRANE CURING COMPOUND METHOD SHALL NOT BE USED.

THE TOP SURFACE OF THE END BENT CAP, EXCEPT THE BRIDGE SEAT BUILDUPS, SHALL BE SLOPED TRANSVERSELY FROM THE FILL FACE TO THE BACK FACE AT THE RATE OF 2%.

STIRRUPS IN CAP MAY BE SHIFTED AS NECESSARY TO CLEAR ANCHOR BOLTS.

BACKWALL SHALL BE PLACED BEFORE APPLYING THE EPOXY PROTECTIVE COATING.

SEE GENERAL DRAWING "FOUNDATION LAYOUT" FOR ADDITIONAL NOTES FOR DRIVING PILES.

FOR MSE RETAINING WALLS SEE SPECIAL PROVISIONS.

FOR TEMPORARY DRAINAGE AT END BENT, SEE "SUBSTRUCTURE END BENT 2 SECTION AND DETAILS" SHEET.

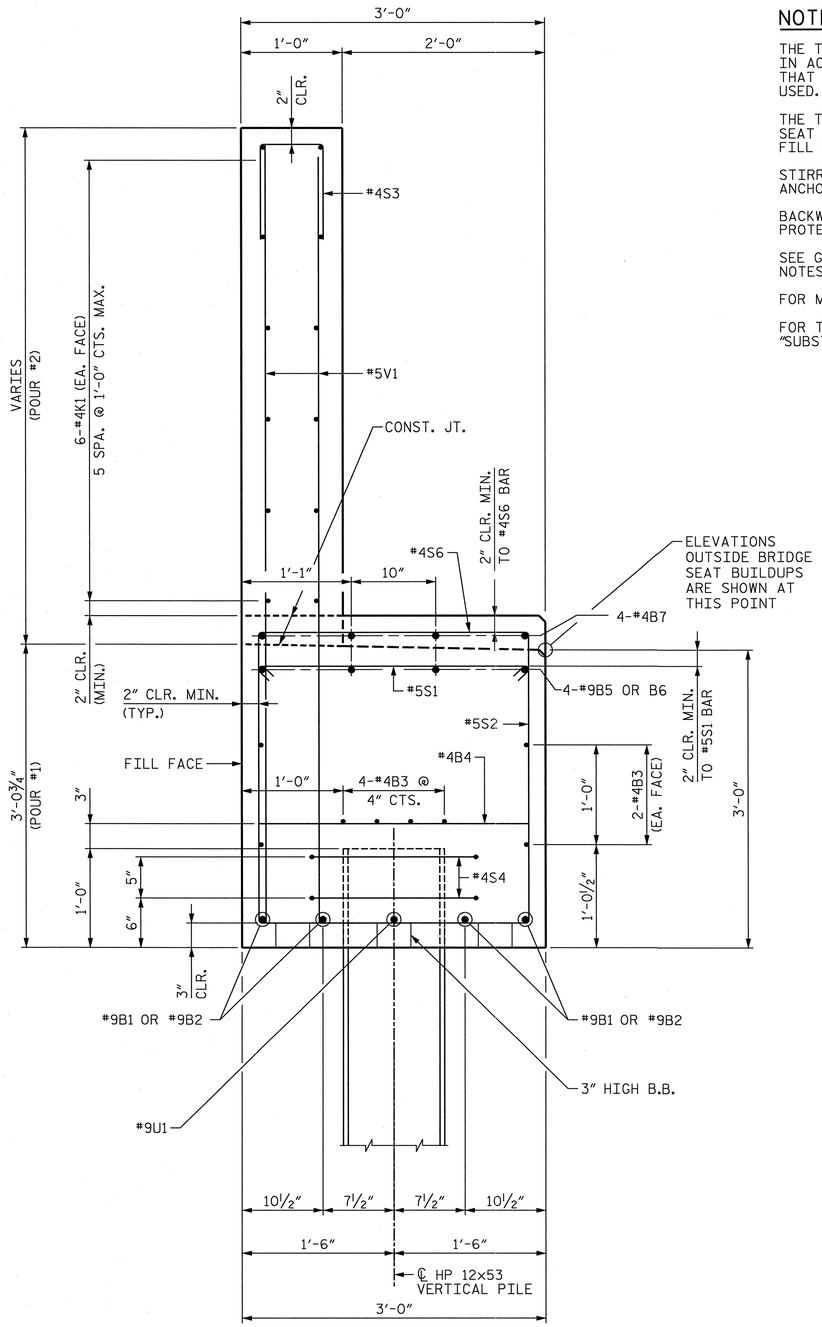

SECTION A-A

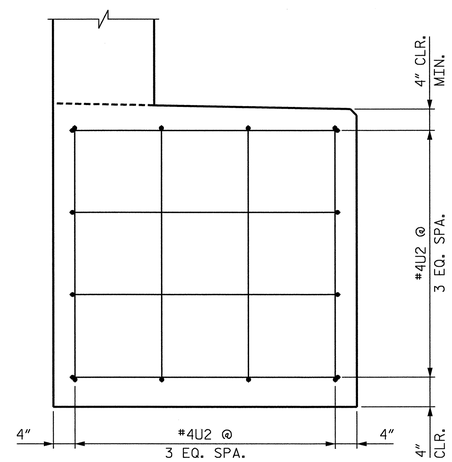

VIEW B-B

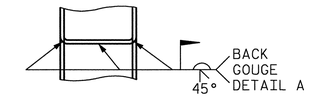

✱ PILE VERTICAL

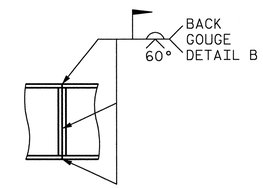

✱ PILE HORIZONTAL OR VERTICAL

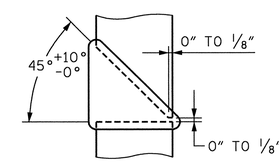

DETAIL A

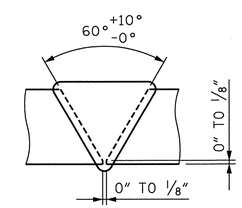

DETAIL B

BAR TYPES

(ALL DIMENSIONS ARE OUT TO OUT)

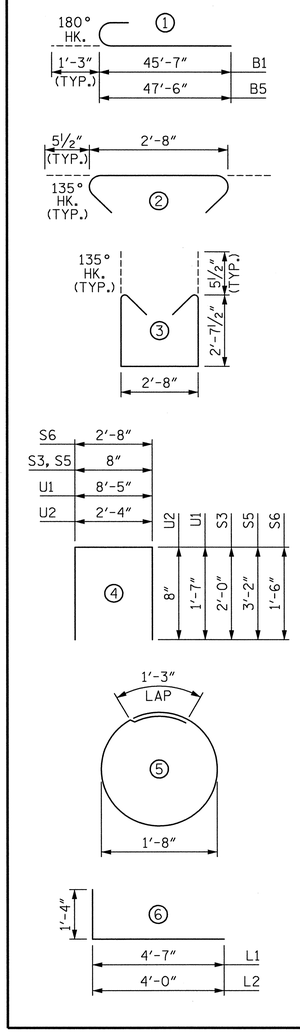

BILL OF MATERIAL

BAR	NO.	SIZE	TYPE	LENGTH	WEIGHT
B1	8	#9	1	46'-10"	1,274
B2	8	#9	STR.	46'-10"	1,274
B3	48	#4	STR.	29'-9"	954
B4	42	#4	STR.	2'-8"	75
B5	8	#9	1	48'-9"	1,326
B6	8	#9	STR.	48'-9"	1,326
B7	72	#4	STR.	3'-8"	176
K1	72	#4	STR.	30'-0"	1,443
K2	4	#4	STR.	2'-1"	6
K3	4	#4	STR.	2'-7"	7
K4	6	#4	STR.	3'-8"	15
L1	11	#4	6	5'-11"	43
L2	11	#4	6	5'-4"	39
S1	251	#5	2	3'-7"	938
S2	251	#5	3	8'-10"	2,313
S3	162	#4	4	4'-8"	505
S4	36	#4	5	6'-6"	156
S5	10	#4	4	7'-0"	47
S6	144	#4	4	5'-8"	545
U1	17	#9	4	11'-7"	670
U2	8	#4	4	3'-8"	20
V1	344	#5	STR.	7'-2"	2,571
				TOTAL	15,723

CLASS 'A' CONCRETE	
POUR 1	58.5 CY
POUR 2	30.3 CY
TOTAL	88.8 CY

HP 12x53 STEEL PILES (END BENT 1)	
NO.	18
LF	675

HP 12x53 STEEL PILES (APPROACH SLAB)	
NO.	4
LF	176

PILE SPLICE DETAILS

✱ POSITION OF PILE DURING WELDING

PROJECT NO. U-0071

DURHAM COUNTY

STATION: 157+33.78 -LDFEB-

SHEET 5 OF 5

STATE OF NORTH CAROLINA
DEPARTMENT OF TRANSPORTATION
RALEIGH

SUBSTRUCTURE END BENT 1 SECTION AND DETAILS

NORTH CAROLINA PROFESSIONAL SEAL 024928 ENGINEER RODNEY E. MONEY 01/21/14

REVISIONS							SHEET NO. S-A50
NO.	BY:	DATE:	NO.	BY:	DATE:		TOTAL SHEETS 671
1	--	--	3	--	--		
2	--	--	4	--	--		

HDR Engineering, Inc. of the Carolinas
3733 National Drive, Suite 207 Raleigh, N.C. 27612
N.C.B.E.L.S. License Number: F-0116

DES BY: T. ANDREWS	DATE: 07/13	DWG BY: W. TOWE	DATE: 07/13
DES CHK: K. TURNER	DATE: 07/13	CHK BY: T. ANDREWS	DATE: 07/13

ORIGINATED		YELLOW HIGHLIGHTED & REDLINE CHECKED		BLUE HIGHLIGHTED CHANGES		CHANGES VERIFIED BY	
INITIALS	DATE	INITIALS	DATE	INITIALS	DATE	VERIFIED	DATE

PLOT DRIVER: NCDOT_pdf_mono_eng_50.plt
USER: ppeterso DATE: 1/21/2014
FILE: ...\Plan Set\105
PF TABLE: Durham_pen.tbl
TIME: 10:35:21 AM

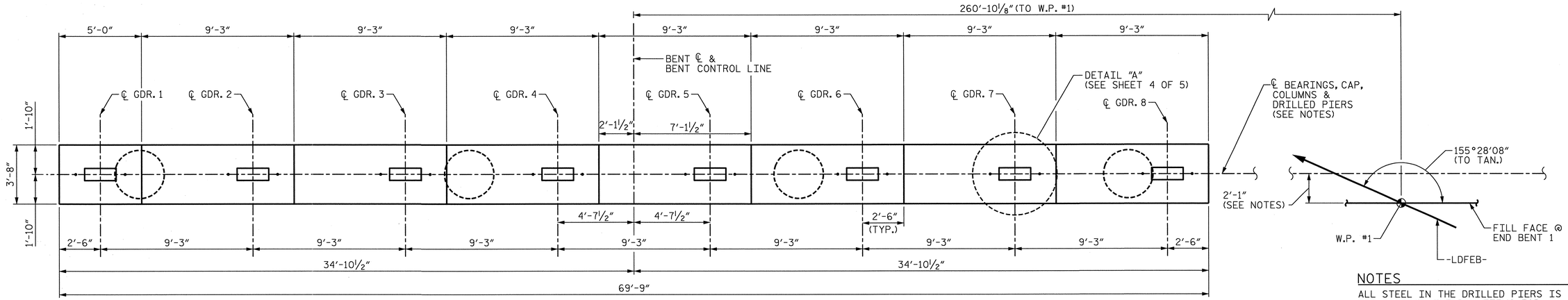

PLAN

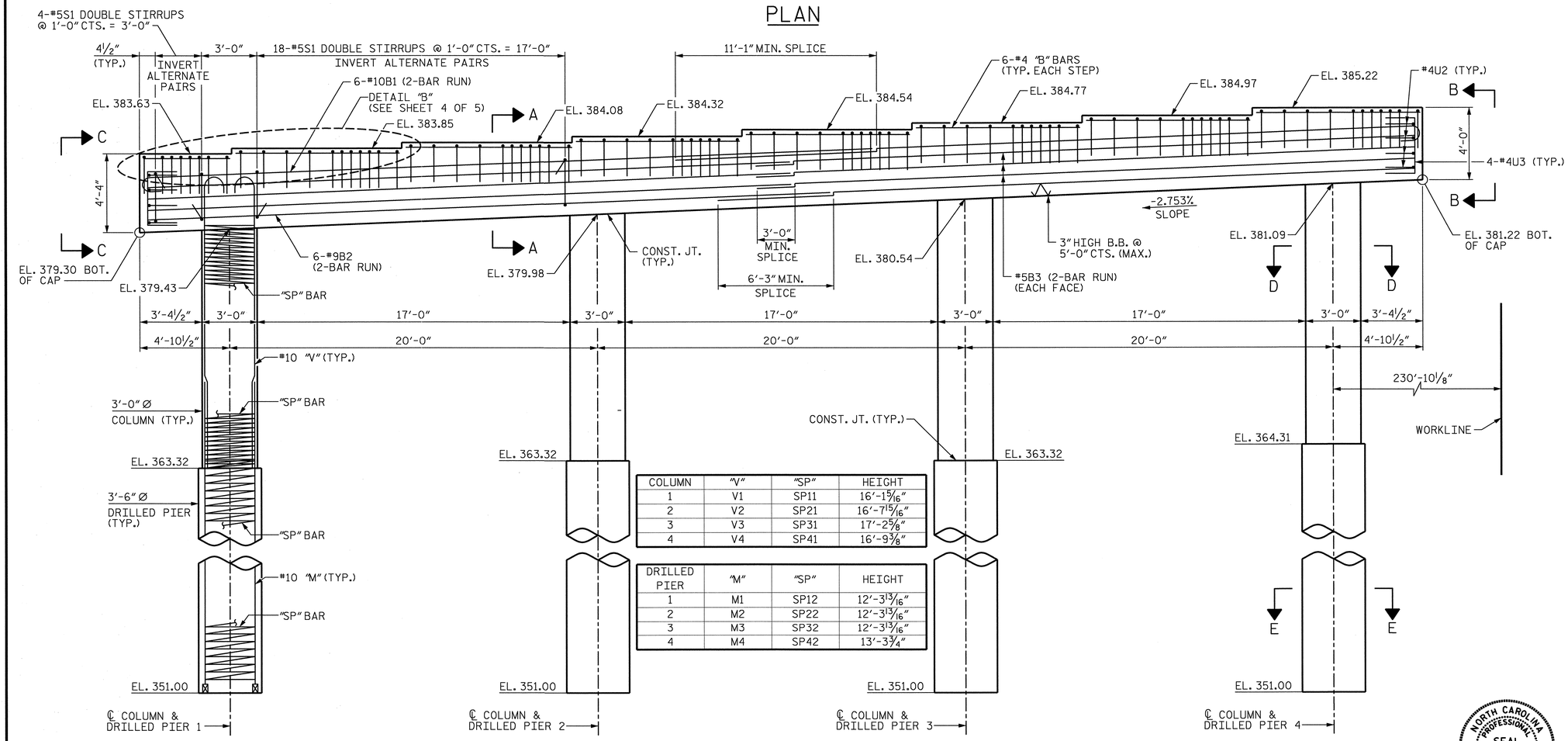

COLUMN	"V"	"SP"	HEIGHT
1	V1	SP11	16'-1 5/16"
2	V2	SP21	16'-7 15/16"
3	V3	SP31	17'-2 5/8"
4	V4	SP41	16'-9 3/8"

DRILLED PIER	"M"	"SP"	HEIGHT
1	M1	SP12	12'-3 13/16"
2	M2	SP22	12'-3 13/16"
3	M3	SP32	12'-3 13/16"
4	M4	SP42	13'-3¾"

ELEVATION

NOTES

ALL STEEL IN THE DRILLED PIERS IS INCLUDED IN THE PAY ITEMS FOR "REINFORCING STEEL" AND "SPIRAL COLUMN REINFORCING STEEL".

THE CONTRACTOR'S ATTENTION IS CALLED TO THE FACT THAT THE LONGITUDINAL REINFORCEMENT FOR THE DRILLED PIERS IS DETAILED WITH 3 EXTRA FEET OF LENGTH.

HOOKS ON "V" BARS MAY BE TURNED AS NECESSARY FOR PLACING REINFORCING STEEL.

THE LOCATION OF THE CONSTRUCTION JOINT IN THE DRILLED PIERS IS BASED ON AN APPROXIMATE GROUND LINE ELEVATION. IF THE CONSTRUCTION JOINT IS ABOVE THE ACTUAL GROUND ELEVATION, THE CONTRACTOR SHALL PLACE THE CONSTRUCTION JOINT 1'-0" BELOW THE GROUND LINE.

THE TOP SURFACE AREAS OF THE BENT CAPS SHALL BE CURED IN ACCORDANCE WITH THE STANDARD SPECIFICATIONS EXCEPT THE MEMBRANE CURING COMPOUND METHOD SHALL NOT BE USED.

THE CONTRACTOR'S ATTENTION IS CALLED TO THE FACT THE CENTERLINE OF THE CAP AND COLUMNS AND DRILLED PIERS ARE OFFSET 2'-1" FROM THE FILL FACE AT END BENT 1. THE OFFSET IS IN THE DIRECTION TOWARD THE SURVEY LINE UNDER THE STRUCTURE (-DFWB-).

FOR SECTIONS A-A, D-D, E-E, VIEW B-B & C-C, & DETAILS "A" & "B", SEE "BENT 1 SECTION AND DETAILS".

STIRRUPS IN CAP MAY BE SHIFTED AS NECESSARY TO CLEAR ANCHOR BOLTS.

PROJECT NO. U-0071

DURHAM COUNTY

STATION: 157+33.78 -LDFEB-

SHEET 1 OF 5

STATE OF NORTH CAROLINA
DEPARTMENT OF TRANSPORTATION
RALEIGH

SUBSTRUCTRUE BENT 1 PART "A" PLAN AND ELEVATION

NORTH CAROLINA PROFESSIONAL SEAL 024928 ENGINEER RODNEY E. MONEY 01/21/14

REVISIONS						SHEET NO. S-451
NO.	BY:	DATE:	NO.	BY:	DATE:	TOTAL SHEETS 671
1	--	--	3	--	--	
2	--	--	4	--	--	

HDR Engineering, Inc. of the Carolinas
3733 National Drive, Suite 207 Raleigh, N.C. 27612
N.C.B.E.L.S. License Number: F-0116

DES BY: B. CARTER	DATE: 07/13	DWG BY: J. BARRINGER	DATE: 08/13
DES CHK: K. TURNER	DATE: 07/13	CHK BY: K. TURNER	DATE: 08/13

ORIGINATED		YELLOW HIGHLIGHTED & REDLINE CHECKED		BLUE HIGHLIGHTED CHANGES		CHANGES VERIFIED BY	
INITIALS	DATE	INITIALS	DATE	INITIALS	DATE	VERIFIED	DATE

PLOT DRIVER: NCDOT_pdf_mono_eng_50.plt
USER: ppeterso DATE: 1/21/2014
FILE: ...\Plan Set\1111

PP TABLE: Durham_pen.tbl
TIME: 10:03:53 AM

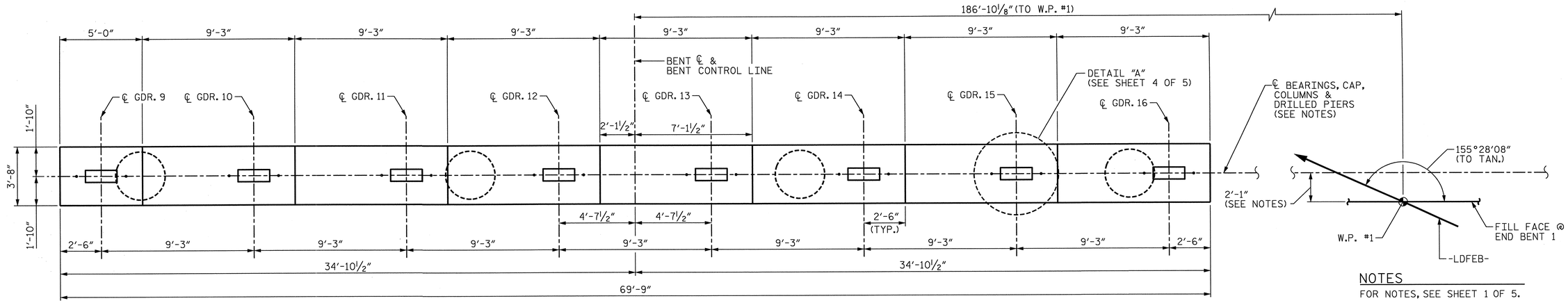

PLAN

NOTES

FOR NOTES, SEE SHEET 1 OF 5.

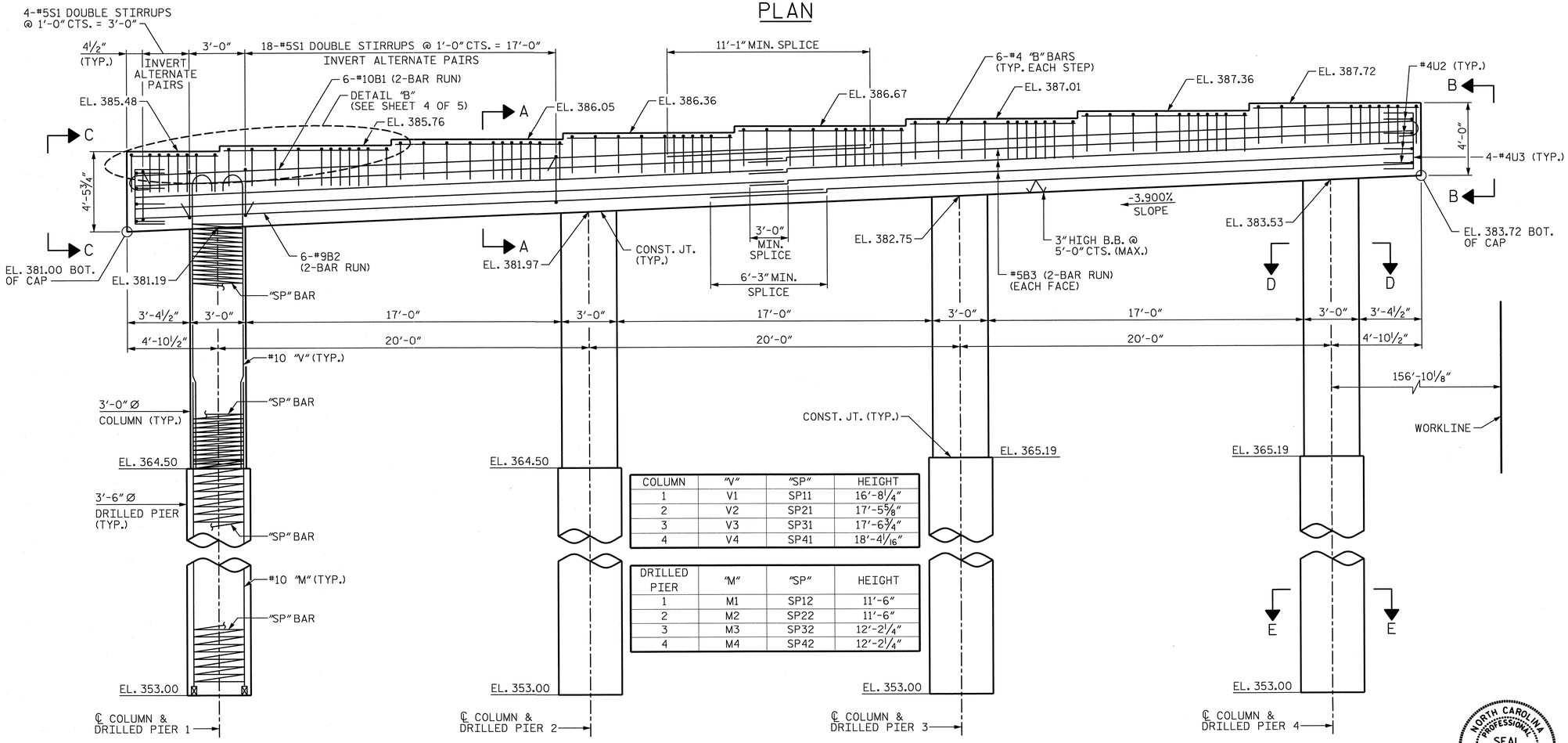

COLUMN	"V"	"SP"	HEIGHT
1	V1	SP11	16'-8 1/4"
2	V2	SP21	17'-5 5/8"
3	V3	SP31	17'-6 3/4"
4	V4	SP41	18'-4 1/16"

DRILLED PIER	"M"	"SP"	HEIGHT
1	M1	SP12	11'-6"
2	M2	SP22	11'-6"
3	M3	SP32	12'-2 1/4"
4	M4	SP42	12'-2 1/4"

ELEVATION

PROJECT NO. U-0071

DURHAM COUNTY

STATION: 157+33.78 -LDFEB-

SHEET 2 OF 5

STATE OF NORTH CAROLINA
DEPARTMENT OF TRANSPORTATION
RALEIGH

SUBSTRUCTRUE BENT 1 PART "B" PLAN AND ELEVATION

NORTH CAROLINA PROFESSIONAL SEAL 024928 ENGINEER RODNEY E. MONEY 01/21/14

HDR Engineering, Inc. of the Carolinas
3733 National Drive, Suite 207 Raleigh, N.C. 27612
N.C.B.E.L.S. License Number: F-0116

REVISIONS						
NO.	BY:	DATE:	NO.	BY:	DATE:	
1	--	--	3	--	--	
2	--	--	4	--	--	

SHEET NO. S-452
TOTAL SHEETS 67

DES BY: B. CARTER	DATE: 07/13	DWG BY: J. BARRINGER	DATE: 08/13
DES CHK: K. TURNER	DATE: 07/13	CHK BY: K. TURNER	DATE: 08/13

ORIGINATED		YELLOW HIGHLIGHTED ALCON INE CHECKED		BLUE HIGHLIGHTED CHANGES		CHANGES VERIFIED BY	
INITIALS	DATE	INITIALS	DATE	INITIALS	DATE	VERIFIED	DATE

PLOT DRIVER: NCDOT_pdf_mono_eng_50.plt
USER: ppeterso DATE: 1/21/2014
FILE: ...\Plan Set\1112

PF TABLE: Durham_pen.tbl
TIME: 10:04:05 AM

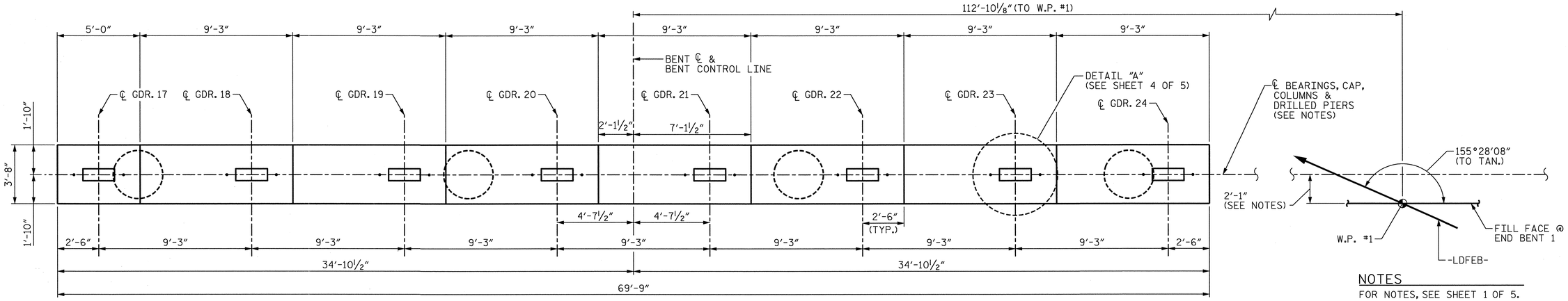

PLAN

NOTES

FOR NOTES, SEE SHEET 1 OF 5.

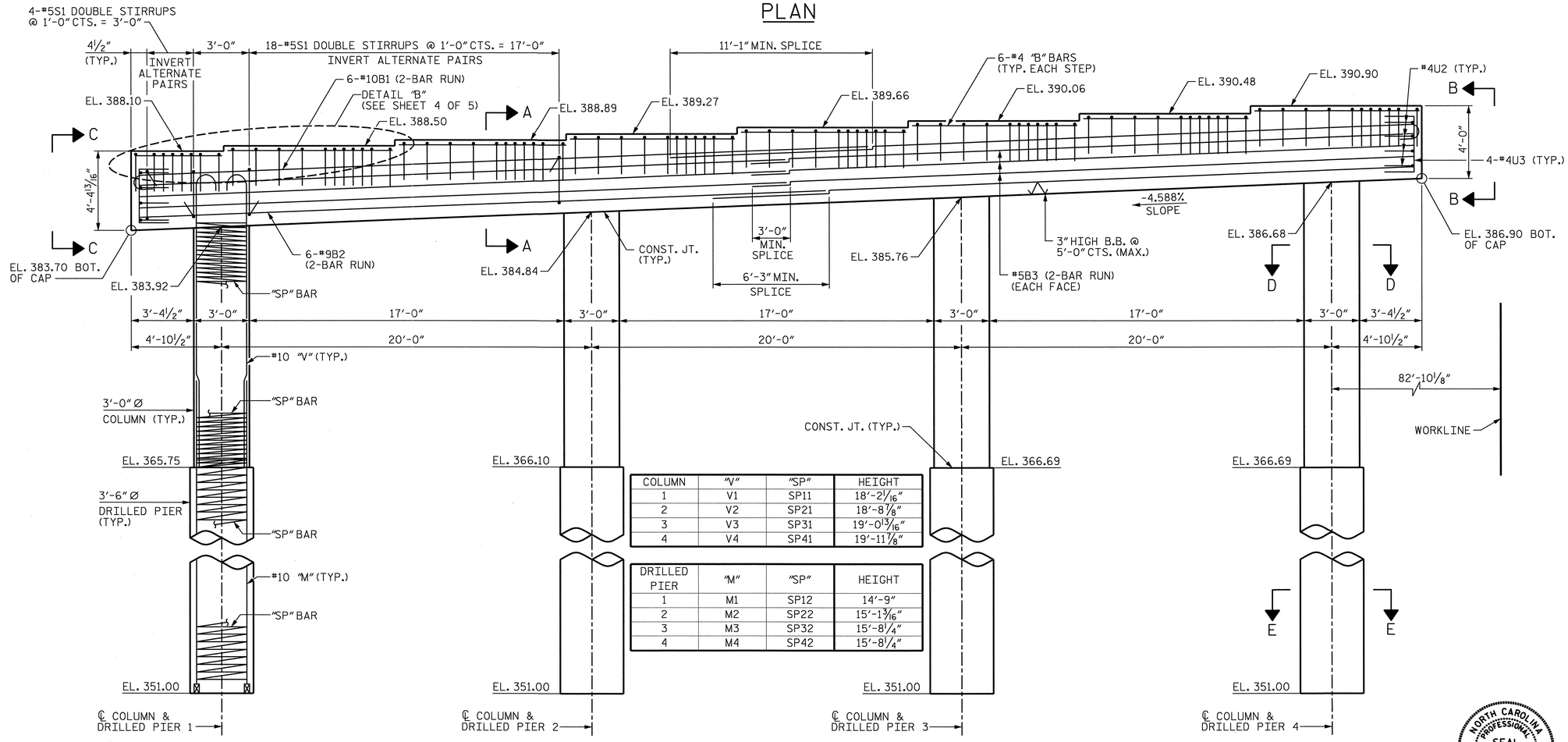

COLUMN	"V"	"SP"	HEIGHT
1	V1	SP11	18'-2 1/16"
2	V2	SP21	18'-8 1/8"
3	V3	SP31	19'-0 13/16"
4	V4	SP41	19'-11 7/8"

DRILLED PIER	"M"	"SP"	HEIGHT
1	M1	SP12	14'-9"
2	M2	SP22	15'-1 3/16"
3	M3	SP32	15'-8 1/4"
4	M4	SP42	15'-8 1/4"

ELEVATION

PROJECT NO. U-0071

DURHAM COUNTY

STATION: 157+33.78 -LDFEB-

SHEET 3 OF 5

STATE OF NORTH CAROLINA
DEPARTMENT OF TRANSPORTATION
RALEIGH

SUBSTRUCTRUE BENT 1 PART "C" PLAN AND ELEVATION

NORTH CAROLINA PROFESSIONAL SEAL 024928 ENGINEER RODNEY E. MONEY 01/21/14

REVISIONS						
NO.	BY:	DATE:	NO.	BY:	DATE:	
1	--	--	3	--	--	
2	--	--	4	--	--	

SHEET NO. S-2653

TOTAL SHEETS 671

HDR Engineering, Inc. of the Carolinas
3733 National Drive, Suite 207 Raleigh, N.C. 27612
N.C.B.E.L.S. License Number: F-0116

DES BY: B. CARTER	DATE: 07/13	DWG BY: J. BARRINGER	DATE: 08/13
DES CHK: K. TURNER	DATE: 07/13	CHK BY: K. TURNER	DATE: 08/13

ORIGINATED		YELLOW HIGHLIGHTED & REDLINE CHECKED		BLUE HIGHLIGHTED CHANGES		CHANGES VERIFIED BY	
INITIALS	DATE	INITIALS	DATE	INITIALS	DATE	VERIFIED	DATE

PLOT DRIVER: NCDOT_pdf_mono_eng_50.plt
USER: ppeterso DATE: 1/21/2014
FILE: ...\Plan Set\1113
P"\TABLE: Durham_pen.tbl
TIME: 10:04:18 AM

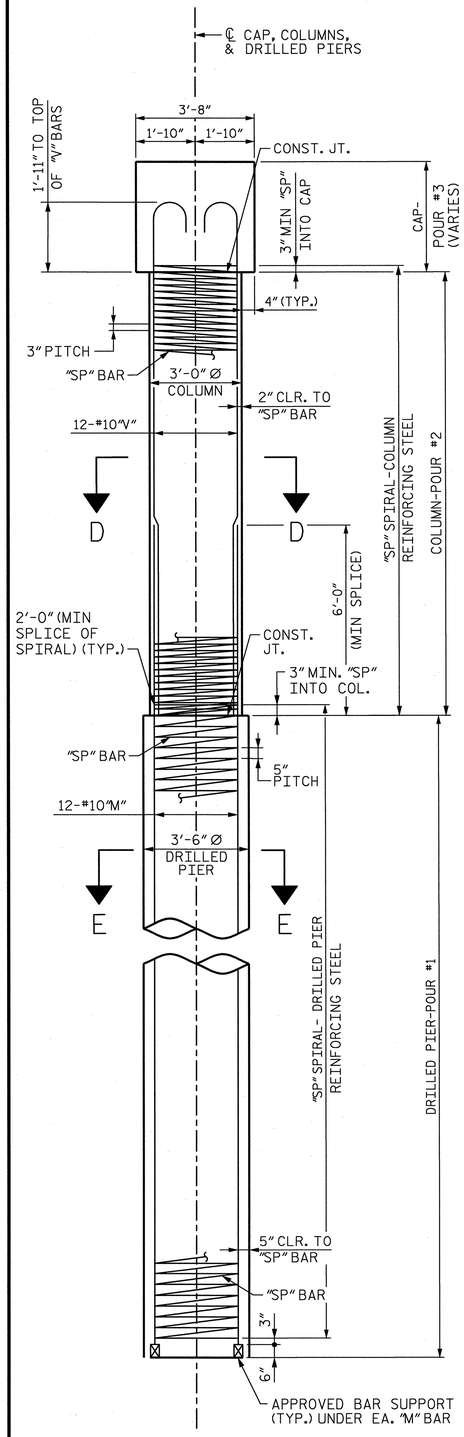

END ELEVATION

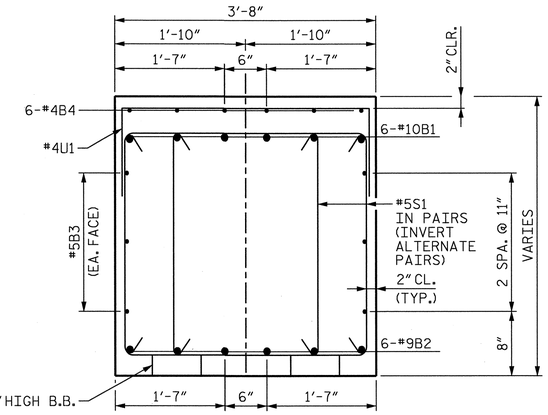

SECTION A-A

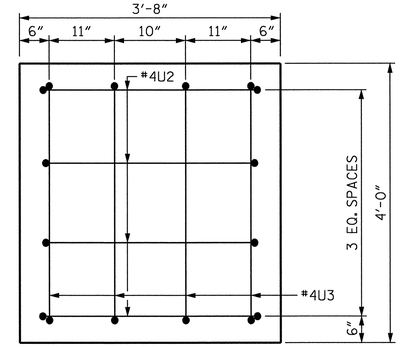

VIEW B-B

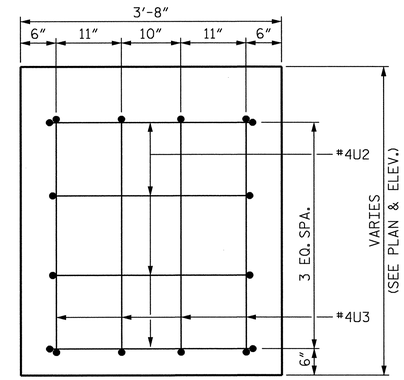

VIEW C-C

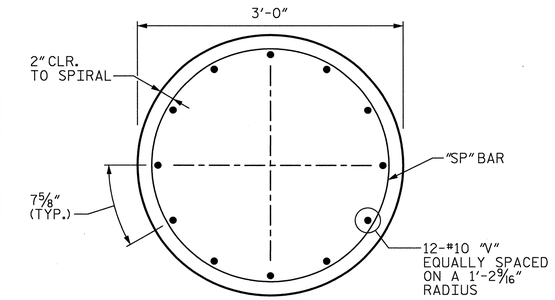

SECTION D-D

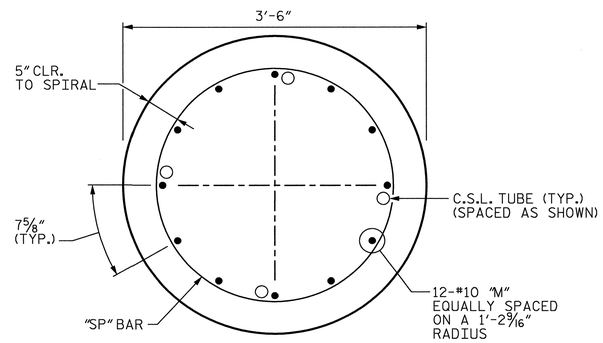

SECTION E-E

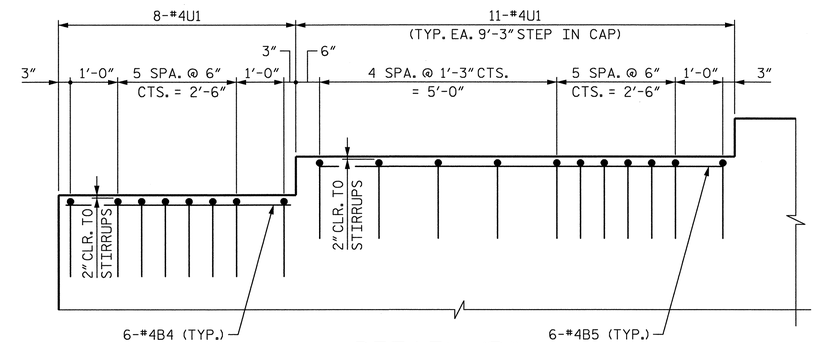

DETAIL "B"

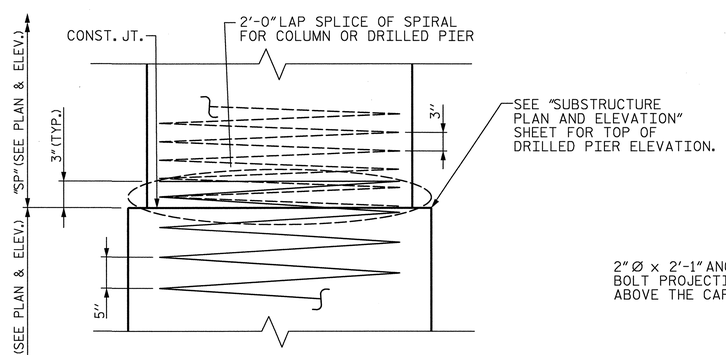

CONSTRUCTION JOINT DETAILS

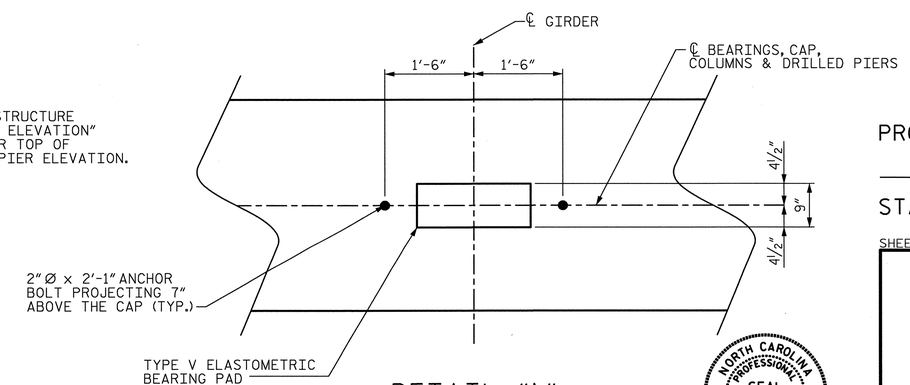

DETAIL "A"

PROJECT NO. U-0071

DURHAM COUNTY

STATION: 157+33.78 -LDFEB-

SHEET 4 OF 5

STATE OF NORTH CAROLINA
DEPARTMENT OF TRANSPORTATION
RALEIGH

SUBSTRUCTRUE BENT 1 SECTION AND DETAILS

NORTH CAROLINA PROFESSIONAL SEAL 024928 ENGINEER RODNEY E. MONEY 01/21/14

HDR Engineering, Inc. of the Carolinas
3733 National Drive, Suite 207 Raleigh, N.C. 27612
N.C.B.E.L.S. License Number: F-0116

REVISIONS							SHEET NO.
NO.	BY:	DATE:	NO.	BY:	DATE:		S-4EA
1	--	--	3	--	--		TOTAL SHEETS
2	--	--	4	--	--		671

DES BY: B. CARTER	DATE: 07/13	DWG BY: J. BARRINGER	DATE: 08/13
DES CHK: K. TURNER	DATE: 07/13	CHK BY: K. TURNER	DATE: 08/13

ORIGINATED		YELLOW HIGHLIGHTED & REDLINE CHECKED		BLUE HIGHLIGHTED CHANGES		CHANGES VERIFIED BY	
INITIALS	DATE	INITIALS	DATE	INITIALS	DATE	VERIFIED	DATE

PLOT DRIVER: NCDOT_pdf_mono_eng_50.plt
USER: ppeterso DATE: 1/21/2014
FILE: ...\Plan Set\1114
P' \TABLE: Durham_pen.tbl
TIME: 10:04:31 AM

BENT 1 PART "A"

SUBSTRUCTURE BILL OF MATERIAL

BAR	NUMBER	SIZE	TYPE	DIM "A"	LENGTH	WEIGHT
B1	12	#10	1	40'-4"	41'-9"	2,156
B2	12	#9	1	37'-11"	39'-2"	1,598
B3	12	#5	STR.	---	36'-3"	454
B4	6	#4	STR.	---	4'-8"	19
B5	42	#4	STR.	---	8'-11"	250
S1	124	#5	3	---	10'-11"	1,412
M1	12	#10	STR.	---	20'-10"	1,076
M2	12	#10	STR.	---	20'-10"	1,076
M3	12	#10	STR.	---	20'-10"	1,076
M4	12	#10	STR.	---	21'-10"	1,127
U1	85	#4	2	---	6'-6"	369
U2	8	#4	2	---	6'-4"	34
U3	8	#4	2	---	6'-8"	36
V1	12	#10	1	18'-1"	19'-6"	1,007
V2	12	#10	1	18'-8"	20'-1"	1,037
V3	12	#10	1	19'-3"	20'-8"	1,067
V4	12	#10	1	18'-9"	20'-2"	1,041
REINFORCING STEEL						14,835 LBS

BAR	NUMBER	SIZE	TYPE	DIM "A"	LENGTH	WEIGHT
SP11	1	**	4	16'-5"	569'-4"	380
SP12	1	***	5	11'-10"	264'-3"	276
SP21	1	**	4	17'-0"	585'-10"	391
SP22	1	***	5	11'-10"	264'-3"	276
SP31	1	**	4	17'-6"	610'-7"	408
SP32	1	***	5	11'-10"	264'-3"	276
SP41	1	**	4	17'-1"	594'-1"	397
SP42	1	***	5	12'-10"	280'-9"	293
SPIRAL COLUMN REINFORCING STEEL						2,697 LBS

CLASS "A" CONCRETE	
POUR #2 (COLUMN)	17.5 CY
POUR #3 (CAP)	39.9 CY
TOTAL CONCRETE	57.4 CY
DRILLED PIER QUANTITIES	
DRILLED PIER CONCRETE	
POUR #1 (DRILLED PIERS)	17.9 CY
3'-6"Ø DRILLED PIERS IN SOIL	26.3 LF
3'-6"Ø DRILLED PIERS NOT IN SOIL	24.0 LF
CSL TUBES	225.0 LF

BENT 1 PART "B"

SUBSTRUCTURE BILL OF MATERIAL

BAR	NUMBER	SIZE	TYPE	DIM "A"	LENGTH	WEIGHT
B1	12	#10	1	40'-4"	41'-9"	2,156
B2	12	#9	1	37'-11"	39'-2"	1,598
B3	12	#5	STR.	---	36'-3"	454
B4	6	#4	STR.	---	4'-8"	19
B5	42	#4	STR.	---	8'-11"	250
S1	124	#5	3	---	10'-11"	1,412
M1	12	#10	STR.	---	20'-0"	1,033
M2	12	#10	STR.	---	20'-0"	1,033
M3	12	#10	STR.	---	20'-9"	1,071
M4	12	#10	STR.	---	20'-9"	1,071
U1	85	#4	2	---	6'-6"	369
U2	8	#4	2	---	6'-4"	34
U3	8	#4	2	---	6'-8"	36
V1	12	#10	1	18'-8"	20'-1"	1,037
V2	12	#10	1	19'-6"	20'-11"	1,080
V3	12	#10	1	19'-7"	21'-0"	1,084
V4	12	#10	1	20'-4"	21'-9"	1,123
REINFORCING STEEL						14,860 LBS

BAR	NUMBER	SIZE	TYPE	DIM "A"	LENGTH	WEIGHT
SP11	1	**	4	17'-0"	585'-10"	391
SP12	1	***	5	11'-0"	247'-9"	258
SP21	1	**	4	17'-10"	618'-10"	413
SP22	1	***	5	11'-0"	247'-9"	258
SP31	1	**	4	17'-11"	618'-10"	413
SP32	1	***	5	11'-9"	264'-3"	276
SP41	1	**	4	18'-8"	643'-7"	430
SP42	1	***	5	11'-9"	264'-3"	276
SPIRAL COLUMN REINFORCING STEEL						2,715 LBS

CLASS "A" CONCRETE	
POUR #2 (COLUMN)	18.4 CY
POUR #3 (CAP)	40.3 CY
TOTAL CONCRETE	58.7 CY
DRILLED PIER QUANTITIES	
DRILLED PIER CONCRETE	
POUR #1 (DRILLED PIERS)	16.9 CY
3'-6"Ø DRILLED PIERS IN SOIL	23.4 LF
3'-6"Ø DRILLED PIERS NOT IN SOIL	24.0 LF
CSL TUBES	214.0 LF

BENT 1 PART "C"

SUBSTRUCTURE BILL OF MATERIAL

BAR	NUMBER	SIZE	TYPE	DIM "A"	LENGTH	WEIGHT
B1	12	#10	1	40'-4"	41'-9"	2,156
B2	12	#9	1	37'-11"	39'-2"	1,598
B3	12	#5	STR.	---	36'-3"	454
B4	6	#4	STR.	---	4'-8"	19
B5	42	#4	STR.	---	8'-11"	250
S1	124	#5	3	---	10'-11"	1,412
M1	12	#10	STR.	---	23'-3"	1,201
M2	12	#10	STR.	---	23'-8"	1,222
M3	12	#10	STR.	---	24'-3"	1,252
M4	12	#10	STR.	---	24'-3"	1,252
U1	85	#4	2	---	6'-6"	369
U2	8	#4	2	---	6'-4"	34
U3	8	#4	2	---	6'-8"	36
V1	12	#10	1	20'-2"	21'-7"	1,114
V2	12	#10	1	20'-9"	22'-2"	1,145
V3	12	#10	1	21'-1"	22'-6"	1,162
V4	12	#10	1	22'-0"	23'-5"	1,209
REINFORCING STEEL						15,885 LBS

BAR	NUMBER	SIZE	TYPE	DIM "A"	LENGTH	WEIGHT
SP11	1	**	4	18'-6"	635'-4"	424
SP12	1	***	5	14'-3"	313'-10"	327
SP21	1	**	4	19'-1"	660'-1"	441
SP22	1	***	5	14'-8"	322'-1"	336
SP31	1	**	4	19'-5"	668'-4"	446
SP32	1	***	5	15'-3"	330'-4"	345
SP41	1	**	4	20'-4"	701'-4"	468
SP42	1	***	5	15'-3"	330'-4"	345
SPIRAL COLUMN REINFORCING STEEL						3,132 LBS

CLASS "A" CONCRETE	
POUR #2 (COLUMN)	20.0 CY
POUR #3 (CAP)	40.5 CY
TOTAL CONCRETE	60.5 CY
DRILLED PIER QUANTITIES	
DRILLED PIER CONCRETE	
POUR #1 (DRILLED PIERS)	21.8 CY
3'-6"Ø DRILLED PIERS IN SOIL	37.2 LF
3'-6"Ø DRILLED PIERS NOT IN SOIL	24.0 LF
CSL TUBES	269.0 LF

**-THE SPIRAL REINFORCING STEEL SHALL BE W20 OR D-20 COLD DRAWN WIRE OR #4 PLAIN OR DEFORMED BAR.

***-THE SPIRAL REINFORCING STEEL SHALL BE W31 OR D-31 COLD DRAWN WIRE OR #5 PLAIN OR DEFORMED BAR.

BAR TYPES

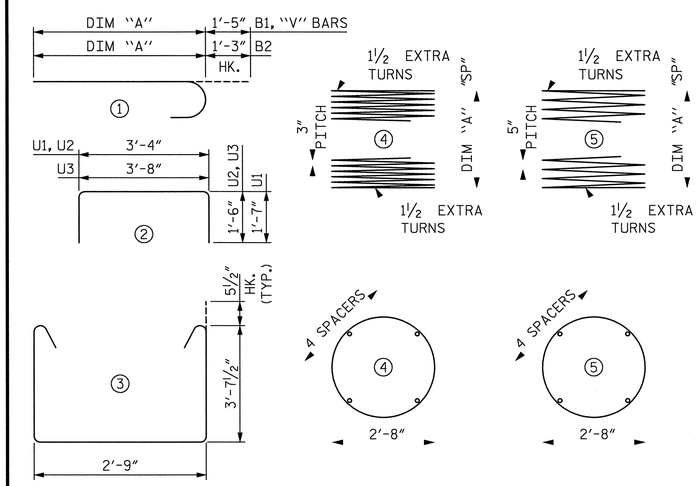

(ALL BAR DIMENSIONS ARE OUT TO OUT)

NOTES

FOR NOTES, SEE SHEET 1 OF 5.

PROJECT NO. U-0071

DURHAM COUNTY

STATION: 157+33.78 -LDFEB-

SHEET 5 OF 5

STATE OF NORTH CAROLINA
DEPARTMENT OF TRANSPORTATION
RALEIGH

SUBSTRUCTRUE
BENT 1
BILL OF MATERIALS

NORTH CAROLINA PROFESSIONAL SEAL 024928 ENGINEER RODNEY E. MONEY
01/21/14

REVISIONS						SHEET NO.
NO.	BY:	DATE:	NO.	BY:	DATE:	S-455
1	--	--	3	--	--	TOTAL SHEETS
2	--	--	4	--	--	671

HDR Engineering, Inc. of the Carolinas
3733 National Drive, Suite 207 Raleigh, N.C. 27612
N.C.B.E.L.S. License Number: F-0116

DES BY: B. CARTER DATE: 07/13
DES CHK: K. TURNER DATE: 07/13
DWG BY: J. BARRINGER DATE: 08/13
CHK BY: K. TURNER DATE: 08/13

ORIGINATED		YELLOW HIGHLIGHTED & REDLINE CHECKED		BLUE HIGHLIGHTED CHANGES		CHANGES VERIFIED BY	
INITIALS	DATE	INITIALS	DATE	INITIALS	DATE	VERIFIED	DATE

PLOT DRIVER: NCDOT_pdf_mono_eng_50.plt
USER: ppeterso DATE: 1/21/2014
FILE: ...\Plan Set\1115
r_\TABLE: Durham_pen.tbl
TIME: 10:04:46 AM

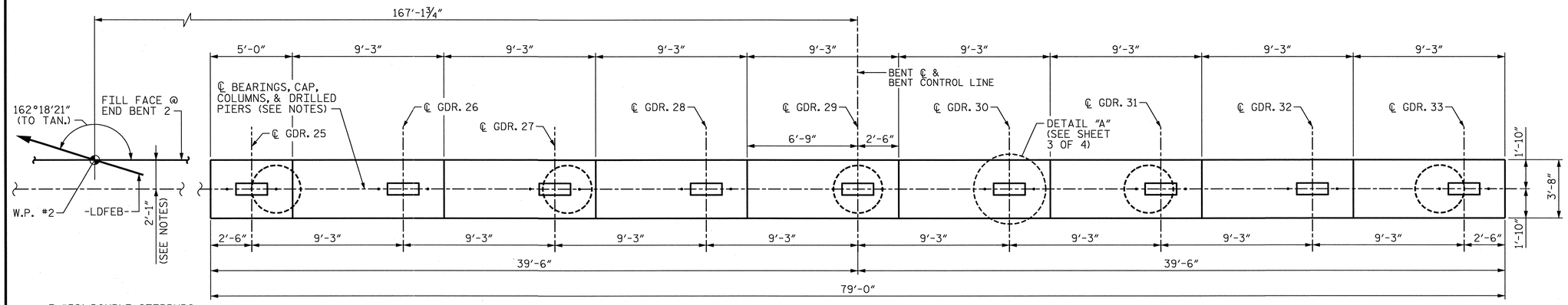

PLAN

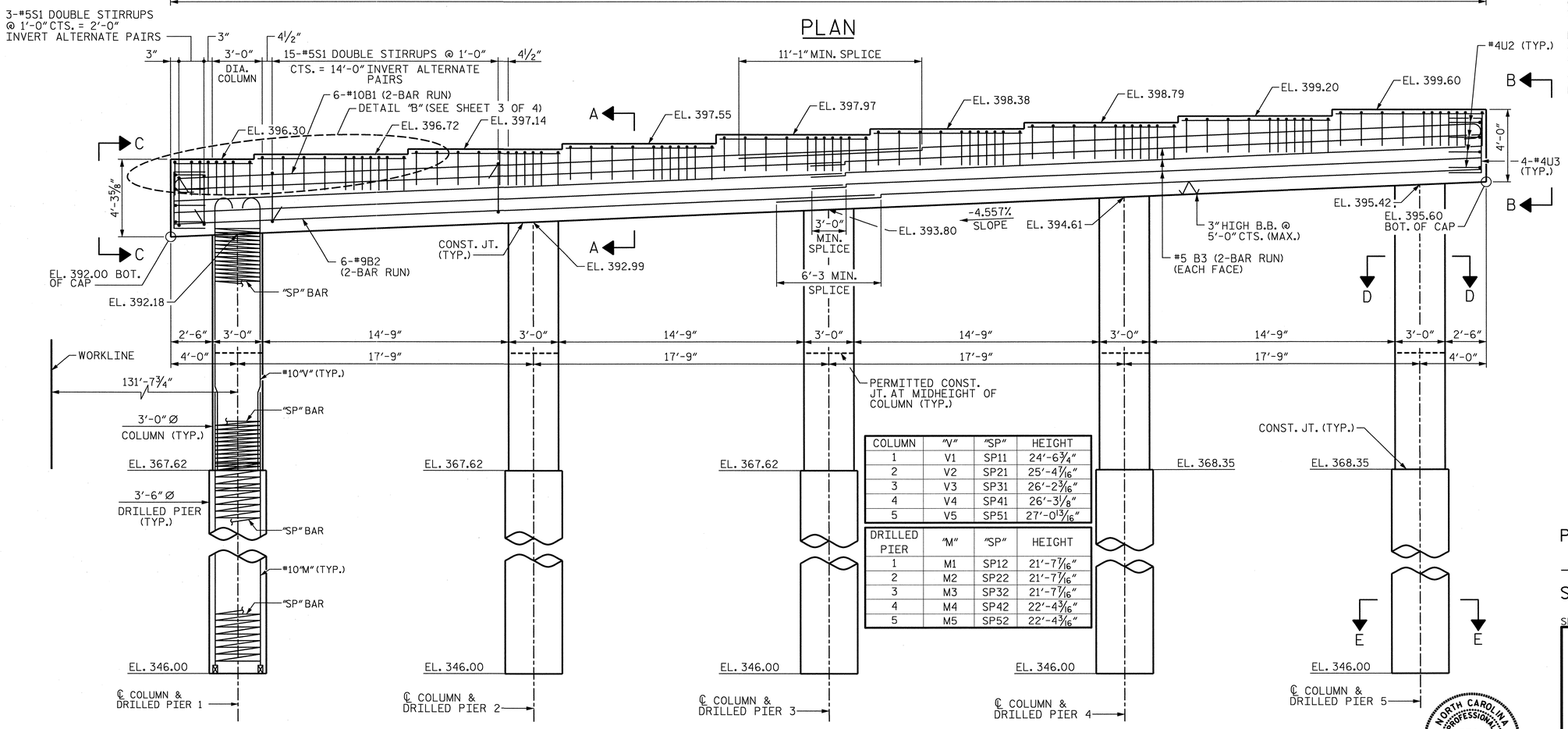

COLUMN	"V"	"SP"	HEIGHT
1	V1	SP11	24'-6¾"
2	V2	SP21	25'-4 7/16"
3	V3	SP31	26'-2 3/16"
4	V4	SP41	26'-3⅛"
5	V5	SP51	27'-0 13/16"

DRILLED PIER	"M"	"SP"	HEIGHT
1	M1	SP12	21'-7 7/16"
2	M2	SP22	21'-7 7/16"
3	M3	SP32	22'-4 3/16"
4	M4	SP42	22'-4 3/16"
5	M5	SP52	22'-4 3/16"

ELEVATION

NOTES

ALL STEEL IN THE DRILLED PIERS IS INCLUDED IN THE PAY ITEMS FOR "REINFORCING STEEL" AND "SPIRAL COLUMN REINFORCING STEEL".

THE CONTRACTOR'S ATTENTION IS CALLED TO THE FACT THAT THE LONGITUDINAL REINFORCEMENT FOR THE DRILLED PIERS IS DETAILED WITH 3 EXTRA FEET OF LENGTH.

HOOKS ON "V" BARS MAY BE TURNED AS NECESSARY FOR PLACING REINFORCING STEEL.

THE LOCATION OF THE CONSTRUCTION JOINT IN THE DRILLED PIERS IS BASED ON AN APPROXIMATE GROUND LINE ELEVATION. IF THE CONSTRUCTION JOINT IS ABOVE THE ACTUAL GROUND ELEVATION, THE CONTRACTOR SHALL PLACE THE CONSTRUCTION JOINT 1'-0" BELOW THE GROUND LINE.

THE TOP SURFACE AREAS OF THE BENT CAPS SHALL BE CURED IN ACCORDANCE WITH THE STANDARD SPECIFICATIONS EXCEPT THE MEMBRANE CURING COMPOUND METHOD SHALL NOT BE USED.

THE CONTRACTOR'S ATTENTION IS CALLED TO THE FACT THE CENTERLINE OF THE CAP AND COLUMNS AND DRILLED PIERS ARE OFFSET 2'-1" FROM THE FILL FACE AT END BENT 2. THE OFFSET IS IN THE DIRECTION TOWARD THE SURVEY LINE UNDER THE STRUCTURE (DFWB).

FOR SECTIONS A-A, D-D, E-E, VIEWS B-B & C-C, & DETAILS "A" & "B", SEE "BENT 2 SECTION AND DETAILS".

STIRRUPS IN CAP MAY BE SHIFTED AS NECESSARY TO CLEAR ANCHOR BOLTS.

PROJECT NO. U-0071

DURHAM COUNTY

STATION: 157+33.78 -LDFEB-

SHEET 1 OF 4

STATE OF NORTH CAROLINA
DEPARTMENT OF TRANSPORTATION
RALEIGH

SUBSTRUCTURE BENT 2 PART "A" PLAN AND ELEVATION

NORTH CAROLINA PROFESSIONAL SEAL 024928 ENGINEER RODNEY E. MONEY 01/21/14

HDR Engineering, Inc. of the Carolinas
3733 National Drive, Suite 207 Raleigh, N.C. 27612
N.C.B.E.L.S. License Number: F-0116

REVISIONS						
NO.	BY:	DATE:	NO.	BY:	DATE:	SHEET NO. S-4
1	--	--	3	--	--	TOTAL SHEETS 57
2	--	--	4	--	--	

DES BY: B. CARTER	DATE: 07/13	DWG BY: J. BARRINGER	DATE: 08/13
DES CHK: K. TURNER	DATE: 07/13	CHK BY: K. TURNER	DATE: 08/13

ORIGINATED		YELLOW HIGHLIGHTED & REDLINE CHECKED		BLUE HIGHLIGHTED CHANGES		CHANGES VERIFIED BY	
INITIALS	DATE	INITIALS	DATE	INITIALS	DATE	VERIFIED	DATE

PLOT DRIVER: NCDOT_pdf_mono-eng_50.plt
USER: ppeterso DATE: 1/21/2014
FILE: ...\Plan Set\121
P TABLE: Durham_pen.tbl
TIME: 10:05:01 AM

NOTES

FOR NOTES SEE SHEET 1 OF 4.

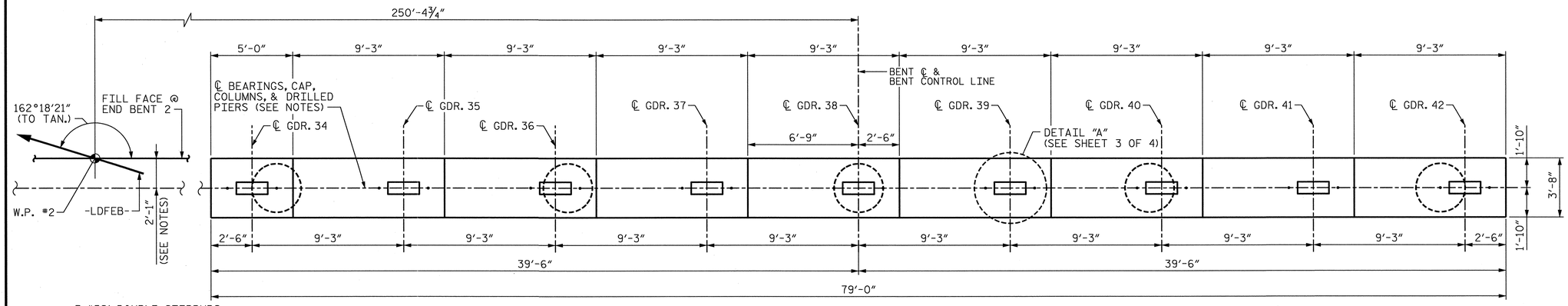

PLAN

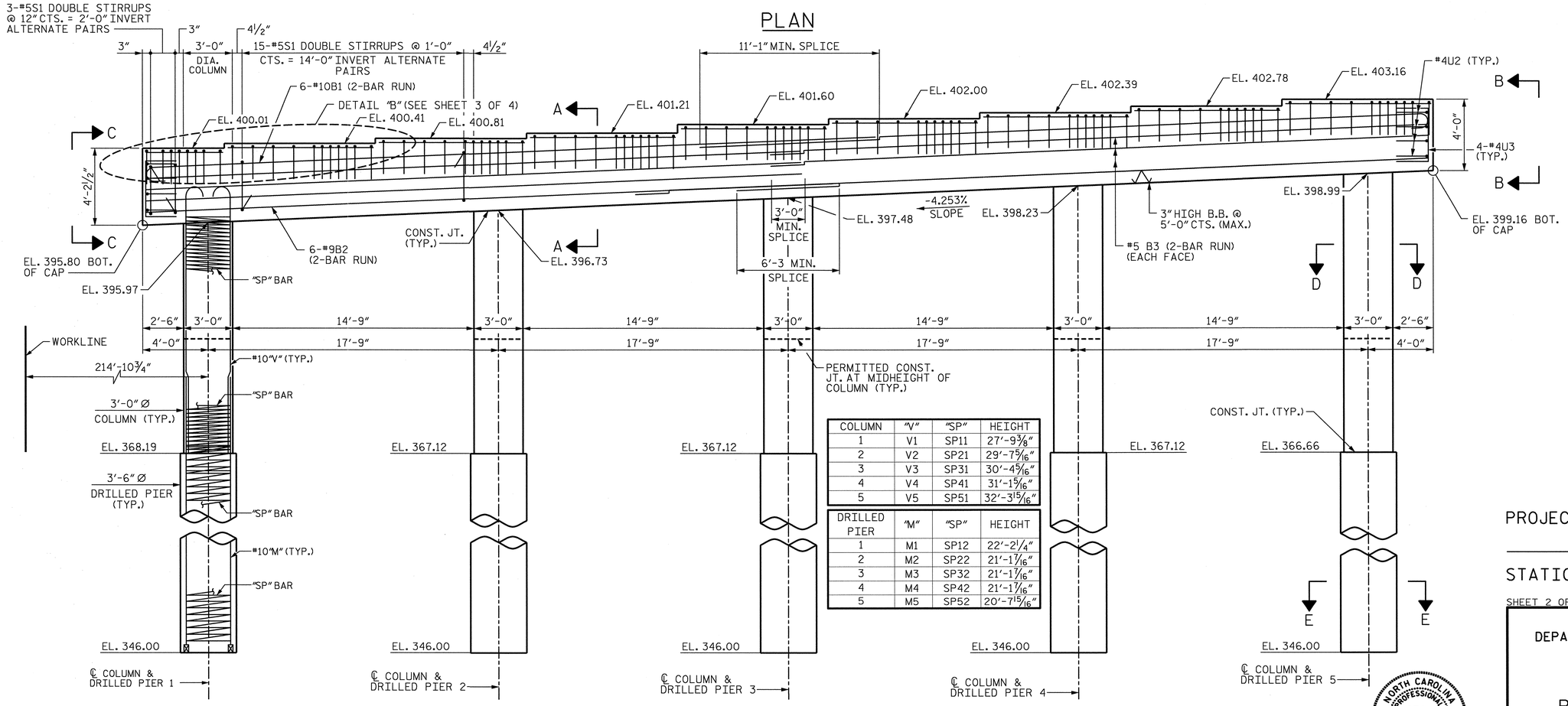

COLUMN	"V"	"SP"	HEIGHT
1	V1	SP11	27'-9⅜"
2	V2	SP21	29'-7 5/16"
3	V3	SP31	30'-4 5/16"
4	V4	SP41	31'-1 5/16"
5	V5	SP51	32'-3 15/16"

DRILLED PIER	"M"	"SP"	HEIGHT
1	M1	SP12	22'-2¼"
2	M2	SP22	21'-1 7/16"
3	M3	SP32	21'-1 7/16"
4	M4	SP42	21'-1 7/16"
5	M5	SP52	20'-7 15/16"

ELEVATION

PROJECT NO. U-0071

DURHAM COUNTY

STATION: 157+33.78 -LDFEB-

SHEET 2 OF 4

STATE OF NORTH CAROLINA
DEPARTMENT OF TRANSPORTATION
RALEIGH

SUBSTRUCTURE
BENT 2 PART "B"
PLAN AND ELEVATION

NORTH CAROLINA PROFESSIONAL SEAL 024928 ENGINEER RODNEY E. MONEY 01/21/14

REVISIONS							SHEET NO. S-457
NO.	BY:	DATE:	NO.	BY:	DATE:		TOTAL SHEETS 57
1	--	--	3	--	--		
2	--	--	4	--	--		

HDR Engineering, Inc. of the Carolinas
3723 National Drive, Suite 207 Raleigh, N.C. 27612
N.C.B.E.L.S. License Number: F-0116

DES BY: B. CARTER	DATE: 07/13	DWG BY: J. BARRINGER	DATE: 08/13
DES CHK: K. TURNER	DATE: 07/13	CHK BY: K. TURNER	DATE: 08/13

ORIGINATED		YELLOW HIGHLIGHTED & REDLINE CHECKED		BLUE HIGHLIGHTED CHANGES		CHANGES VERIFIED BY	
INITIALS	DATE	INITIALS	DATE	INITIALS	DATE	VERIFIED	DATE

PLOT DRIVER: NCDOT_pdf_mono_eng_50.plt
USER: ppeterso DATE: 1/21/2014
FILE: ...\Plan Set\1122
P. TABLE: Durham_pen.tbl
TIME: 10:05:15 AM

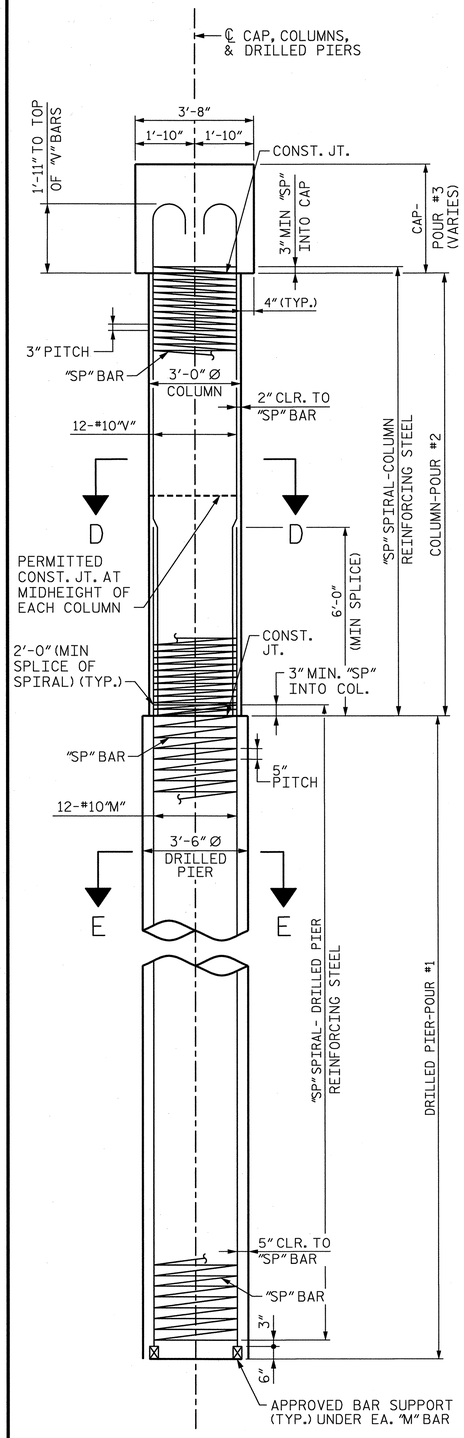

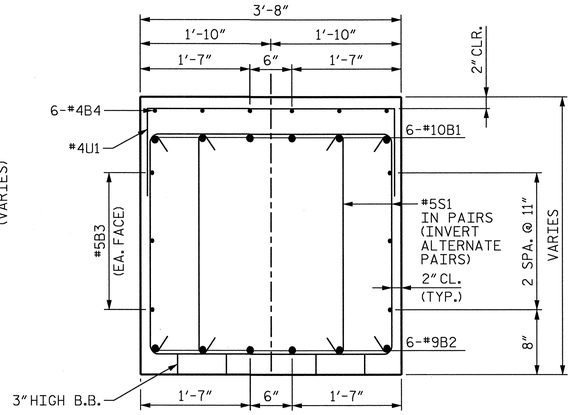

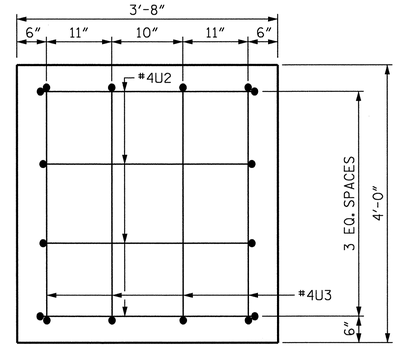

VIEW B-B

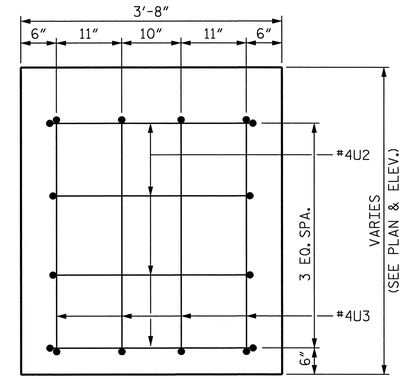

VIEW C-C

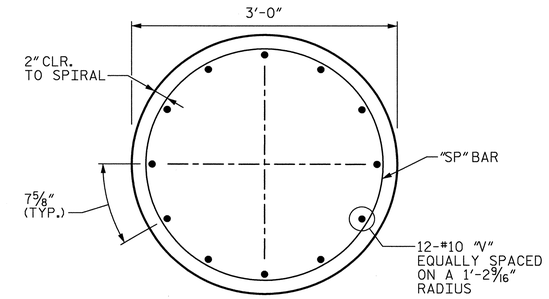

SECTION D-D

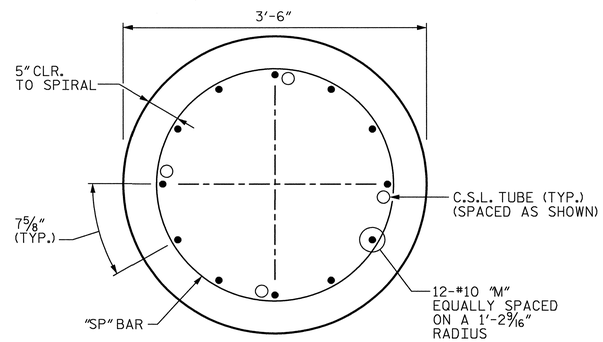

SECTION E-E

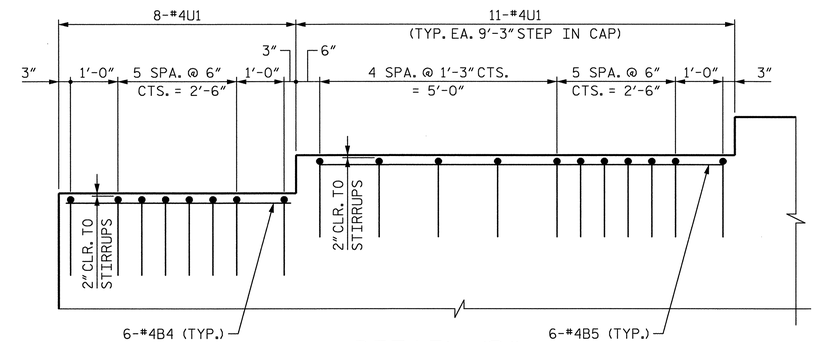

DETAIL "B"

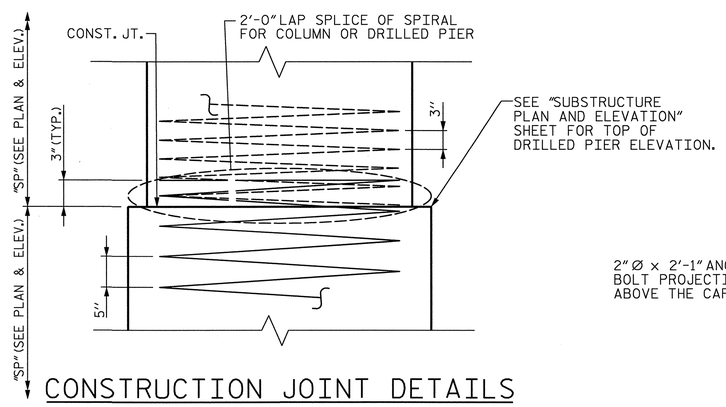

CONSTRUCTION JOINT DETAILS

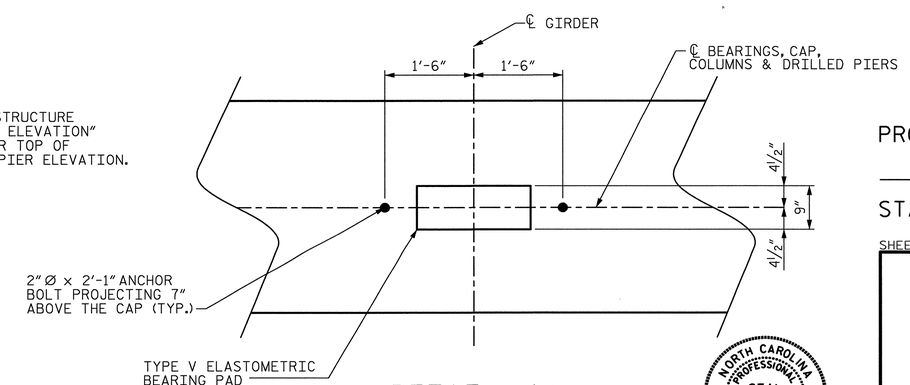

DETAIL "A"

NORTH CAROLINA PROFESSIONAL SEAL 024928 ENGINEER RODNEY E. MONKEY 01/21/14

PROJECT NO. U-0071

DURHAM COUNTY

STATION: 157+33.78 -LDFEB-

SHEET 3 OF 4

STATE OF NORTH CAROLINA
DEPARTMENT OF TRANSPORTATION
RALEIGH

SUBSTRUCTURE BENT 2 SECTION AND DETAILS

REVISIONS							
NO.	BY:	DATE:	NO.	BY:	DATE:		SHEET NO. S-458
1	--	--	3	--	--		TOTAL SHEETS 671
2	--	--	4	--	--		

HDR Engineering, Inc. of the Carolinas
3733 National Drive, Suite 207 Raleigh, N.C. 27612
N.C.B.E.L.S. License Number: F-0116

DES BY: B. CARTER	DATE: 07/13	DWG BY: J. BARRINGER	DATE: 08/13
DES CHK: K. TURNER	DATE: 07/13	CHK BY: K. TURNER	DATE: 08/13

ORIGINATED		YELLOW HIGHLIGHTED & REDLINE CHECKED		BLUE HIGHLIGHTED CHANGES		CHANGES VERIFIED BY	
INITIALS	DATE	INITIALS	DATE	INITIALS	DATE	VERIFIED	DATE

PLOT DRIVER: NCDOT_pdf_mono_eng_50.plt
USER: ppeterso DATE: 1/21/2014
FILE: ...\Plan Set\123
PLOT TABLE: Durham_pen.tbl
TIME: 10:05:30 AM

BENT 2 PART "A"

SUBSTRUCTURE BILL OF MATERIAL

BAR	NUMBER	SIZE	TYPE	DIM "A"	LENGTH	WEIGHT
B1	12	#10	1	44'-11"	46'-4"	2,392
B2	12	#9	1	42'-6"	43'-9"	1,785
B3	12	#5	STR.	---	40'-11"	512
B4	6	#4	STR.	---	4'-8"	19
B5	42	#4	STR.	---	8'-11"	250
S1	132	#5	3	---	10'-11"	1,503
M1	12	#10	STR.	---	30'-2"	1,558
M2	12	#10	STR.	---	30'-2"	1,558
M3	12	#10	STR.	---	30'-2"	1,558
M4	12	#10	STR.	---	30'-11"	1,596
M5	12	#10	STR.	---	30'-11"	1,596
U1	96	#4	2	---	6'-4"	406
U2	8	#4	2	---	6'-4"	34
U3	8	#4	2	---	6'-8"	36
V1	12	#10	1	26'-7"	28'-0"	1,446
V2	12	#10	1	27'-5"	28'-10"	1,489
V3	12	#10	1	28'-2"	29'-7"	1,528
V4	12	#10	1	28'-3"	29'-8"	1,532
V5	12	#10	1	29'-1"	30'-6"	1,575

REINFORCING STEEL 22,373 LBS

BAR	NUMBER	SIZE	TYPE	DIM "A"	LENGTH	WEIGHT
SP11	1	**	4	24'-11"	849'-10"	568
SP12	1	***	5	21'-2"	445'-11"	465
SP21	1	**	4	25'-9"	874'-7"	584
SP22	1	***	5	21'-2"	445'-11"	465
SP31	1	**	4	26'-6"	899'-4"	601
SP32	1	***	5	21'-2"	445'-11"	465
SP41	1	**	4	26'-7"	907'-7"	606
SP42	1	***	5	21'-11"	462'-5"	482
SP51	1	**	4	27'-5"	932'-4"	623
SP52	1	***	5	21'-11"	462'-5"	482

SPIRAL COLUMN REINFORCING STEEL 5,341 LBS

CLASS "A" CONCRETE

POUR #2 (COLUMN)	34.0 CY
POUR #3 (CAP)	45.6 CY
TOTAL CONCRETE	79.6 CY

DRILLED PIER QUANTITIES

DRILLED PIER CONCRETE	
POUR #1 (DRILLED PIERS)	39.0 CY
3'-6" Ø DRILLED PIERS IN SOIL	79.6 LF
3'-6" Ø DRILLED PIERS NOT IN SOIL	30.0 LF
CSL TUBES	468.0 LF

BENT 2 PART "B"

SUBSTRUCTURE BILL OF MATERIAL

BAR	NUMBER	SIZE	TYPE	DIM "A"	LENGTH	WEIGHT
B1	12	#10	1	44'-11"	46'-4"	2,392
B2	12	#9	1	42'-6"	43'-9"	1,785
B3	12	#5	STR.	---	40'-11"	512
B4	6	#4	STR.	---	4'-8"	19
B5	42	#4	STR.	---	8'-11"	250
S1	132	#5	3	---	10'-11"	1,503
M1	12	#10	STR.	---	30'-9"	1,588
M2	12	#10	STR.	---	29'-8"	1,532
M3	12	#10	STR.	---	29'-8"	1,532
M4	12	#10	STR.	---	29'-8"	1,532
M5	12	#10	STR.	---	29'-2"	1,506
U1	96	#4	2	---	6'-4"	406
U2	8	#4	2	---	6'-4"	34
U3	8	#4	2	---	6'-8"	36
V1	12	#10	1	29'-10"	31'-3"	1,614
V2	12	#10	1	31'-8"	33'-1"	1,708
V3	12	#10	1	32'-5"	33'-10"	1,747
V4	12	#10	1	33'-2"	34'-7"	1,786
V5	12	#10	1	34'-4"	35'-9"	1,846

REINFORCING STEEL 23,328 LBS

BAR	NUMBER	SIZE	TYPE	DIM "A"	LENGTH	WEIGHT
SP11	1	**	4	28'-1"	957'-1"	639
SP12	1	***	5	21'-9"	462'-5"	482
SP21	1	**	4	29'-11"	1014'-10"	678
SP22	1	***	5	20'-8"	437'-8"	456
SP31	1	**	4	30'-8"	1039'-7"	694
SP32	1	***	5	20'-8"	437'-8"	456
SP41	1	**	4	31'-5"	1064'-4"	711
SP42	1	***	5	20'-8"	437'-8"	456
SP51	1	**	4	32'-8"	1105'-7"	739
SP52	1	***	5	20'-2"	429'-5"	448

SPIRAL COLUMN REINFORCING STEEL 5,759 LBS

CLASS "A" CONCRETE

POUR #2 (COLUMN)	39.7 CY
POUR #3 (CAP)	45.1 CY
TOTAL CONCRETE	84.8 CY

DRILLED PIER QUANTITIES

DRILLED PIER CONCRETE	
POUR #1 (DRILLED PIERS)	37.8 CY
3'-6" Ø DRILLED PIERS IN SOIL	76.2 LF
3'-6" Ø DRILLED PIERS NOT IN SOIL	30.0 LF
CSL TUBES	455.0 LF

** -THE SPIRAL REINFORCING STEEL SHALL BE W20 OR D-20 COLD DRAWN WIRE OR #4 PLAIN OR DEFORMED BAR.

*** -THE SPIRAL REINFORCING STEEL SHALL BE W31 OR D-31 COLD DRAWN WIRE OR #5 PLAIN OR DEFORMED BAR.

BAR TYPES

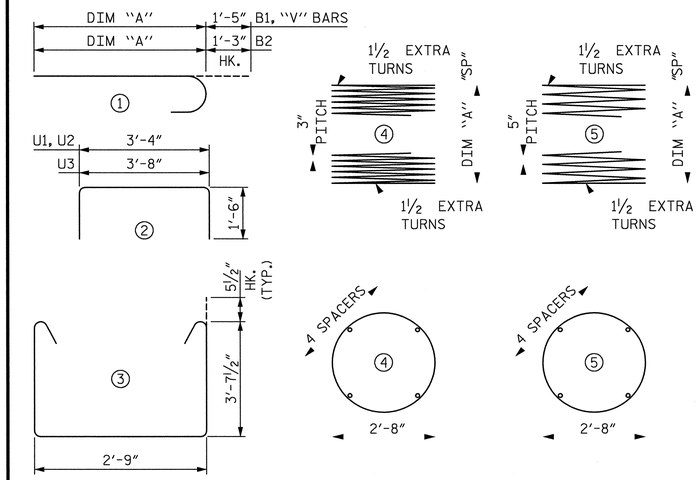

(ALL BAR DIMENSIONS ARE OUT TO OUT)

NOTES

FOR NOTES, SEE SHEET 1 OF 4.

PROJECT NO. U-0071

DURHAM COUNTY

STATION: 157+33.78 -LDFEB-

SHEET 4 OF 4

STATE OF NORTH CAROLINA
DEPARTMENT OF TRANSPORTATION
RALEIGH

SUBSTRUCTURE
BENT 2
BILL OF MATERIALS

NORTH CAROLINA PROFESSIONAL SEAL 024928 ENGINEER RODNEY E. MONEY 01/21/14

HDR Engineering, Inc. of the Carolinas
3733 National Drive, Suite 207 Raleigh, N.C. 27612
N.C.B.E.L.S. License Number: F-0116

REVISIONS						SHEET NO. 3-4-59
NO.	BY:	DATE:	NO.	BY:	DATE:	TOTAL SHEETS 671
1	--	--	3	--	--	
2	--	--	4	--	--	

DES BY: B. CARTER	DATE: 07/13	DWG BY: J. BARRINGER	DATE: 08/13
DES CHK: K. TURNER	DATE: 07/13	CHK BY: K. TURNER	DATE: 08/13

ORIGINATED		YELLOW HIGHLIGHTED & REDLINE CHECKED		BLUE HIGHLIGHTED CHANGES		CHANGES VERIFIED BY	
INITIALS	DATE	INITIALS	DATE	INITIALS	DATE	VERIFIED	DATE

PLOT DRIVER: NCDOT_pdf_mono_eng_50.plt
USER: ppeterso DATE: 1/21/2014
FILE: ...\Plan Set\1124
F TABLE: Durham_pen.tbl
TIME: 10:05:47 AM

NOTES

FOR SECTION A-A AND ADDITIONAL NOTES SEE "END BENT 2 SECTION & DETAILS".

FOR DETAIL "D" SEE "END BENT 2 PLAN AND ELEVATION" SHEET 2 OF 6.

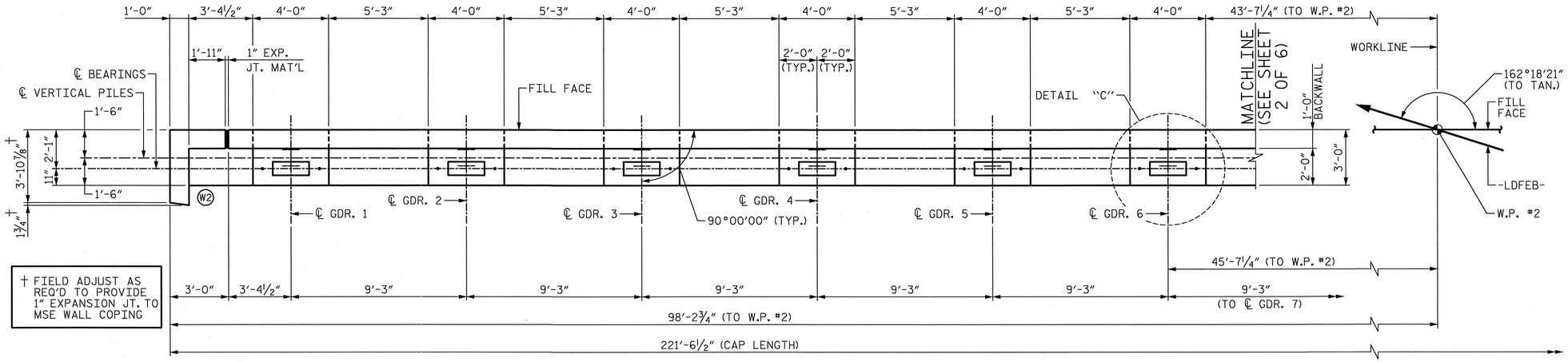

† FIELD ADJUST AS REQ'D TO PROVIDE 1" EXPANSION JT. TO MSE WALL COPING

PLAN

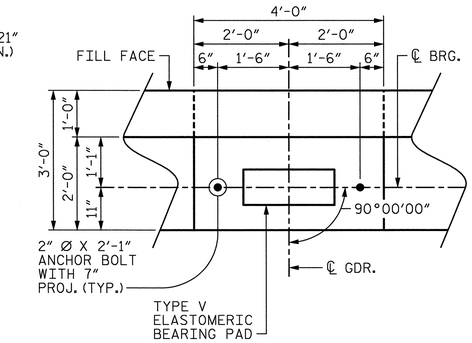

DETAIL "C"

TOP OF PILE ELEVATIONS	
LOCATION	ELEVATION
1	384.43
2	384.81
3	385.20
4	385.58
5	385.97
6	386.35

ELEVATION TABLE	
LOCATION	ELEVATION
A	387.02
B	387.31
C	387.67
D	388.03
E	388.38
F	388.73
✳ AA	391.43
✳ BB	395.43
✳ AT FILL FACE	

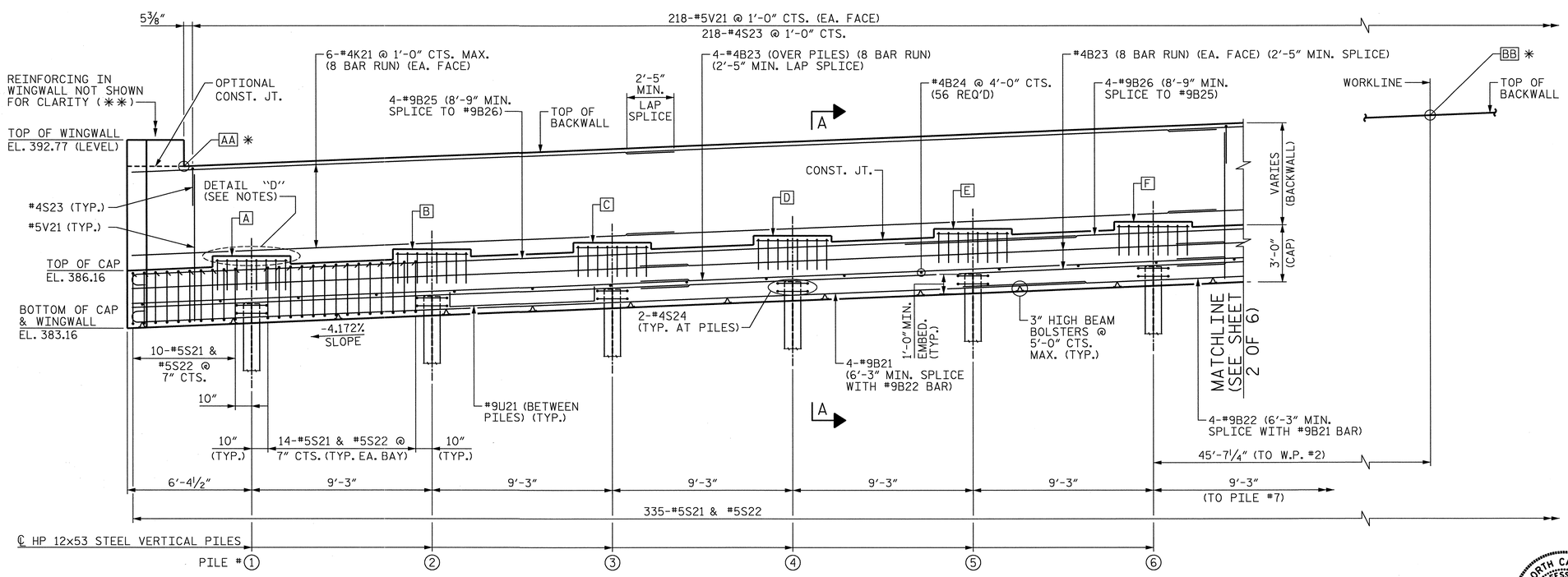

ELEVATION

(✳✳) SEE "END BENT 2 EARWALL & WINGWALL SECTION AND DETAILS" FOR REINFORCING STEEL TO BE PLACED PRIOR TO POUR #1.

PROJECT NO. U-0071

DURHAM COUNTY

STATION: 157+33.78 -LDFEB-

SHEET 1 OF 6

STATE OF NORTH CAROLINA
DEPARTMENT OF TRANSPORTATION
RALEIGH

SUBSTRUCTURE END BENT 2 PLAN AND ELEVATION

NORTH CAROLINA PROFESSIONAL SEAL 024928 ENGINEER RODNEY E. MONEY 01/21/14

HDR Engineering, Inc. of the Carolinas
3733 National Drive, Suite 207 Raleigh, N.C. 27612
N.C.B.E.L.S. License Number: F-0116

REVISIONS							SHEET NO. S-460
NO.	BY:	DATE:	NO.	BY:	DATE:		TOTAL SHEETS 671
1	--	--	3	--	--		
2	--	--	4	--	--		

DES BY: T. ANDREWS	DATE: 07/13	DWG BY: W. TOWE	DATE: 07/13
DES CHK: K. TURNER	DATE: 07/13	CHK BY: T. ANDREWS	DATE: 08/13

ORIGINATED		YELLOW HIGHLIGHTED & REDLINE CHECKED		BLUE HIGHLIGHTED CHANGES		CHANGES VERIFIED BY	
INITIALS	DATE	INITIALS	DATE	INITIALS	DATE	VERIFIED	DATE

PLOT DRIVER: NCDOT_pdf_mono_eng_50.plt
USER: peterso DATE: 1/21/2014
FILE: ...\Plan Set\1191
TABLE: Durham_pen.tbl
TIME: 10:35:32 AM

NOTES

FOR SECTION A-A AND ADDITIONAL NOTES SEE "END BENT 2 SECTION & DETAILS".

FOR DETAIL "C" SEE "END BENT 2 PLAN AND ELEVATION" SHEET 1 OF 6.

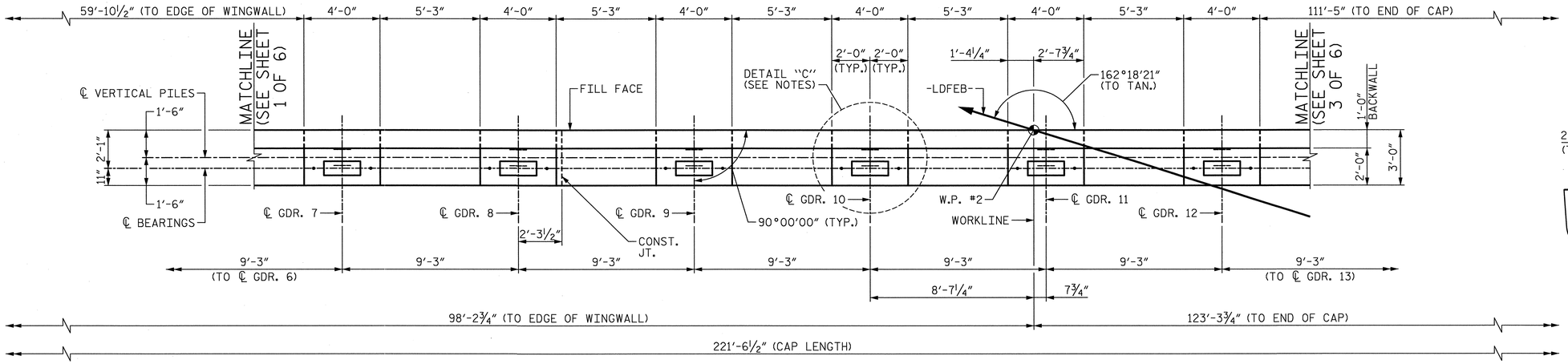

PLAN

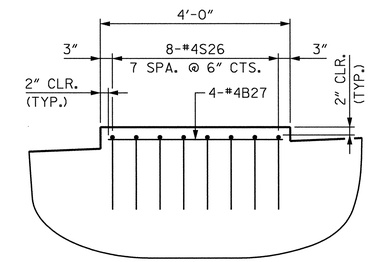

DETAIL "D"

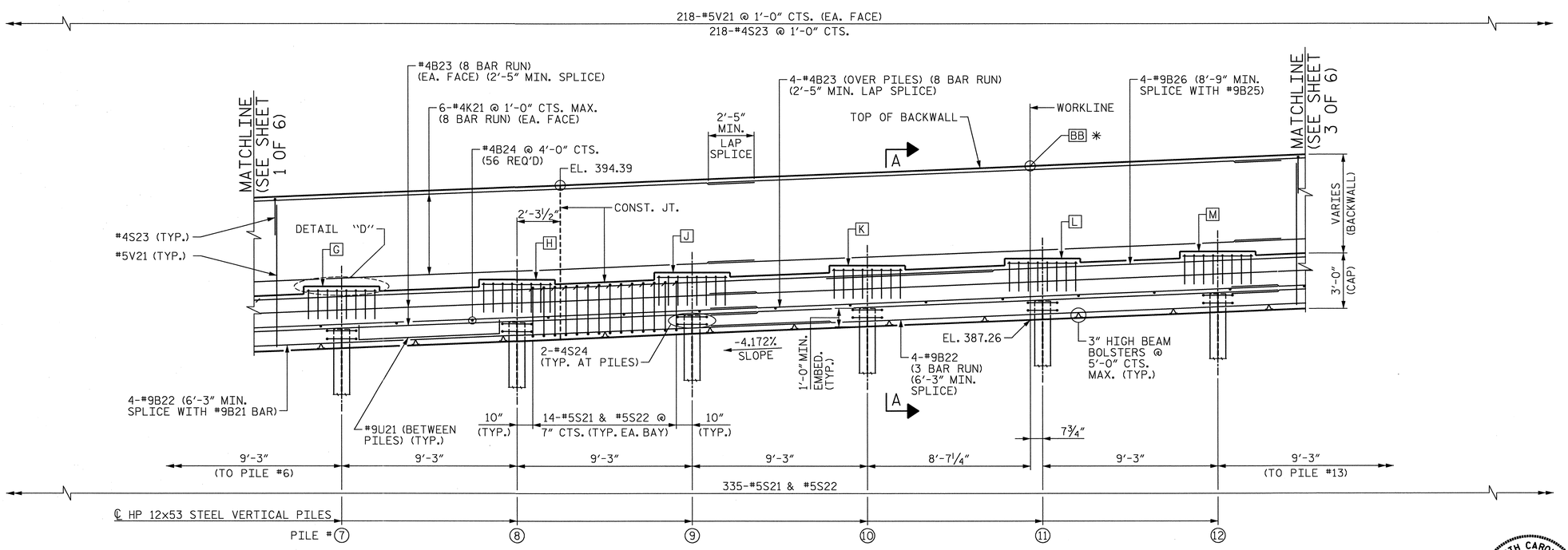

ELEVATION

TOP OF PILE ELEVATIONS	
LOCATION	ELEVATION
7	386.74
8	387.13
9	387.51
10	387.90
11	388.28
12	388.67

ELEVATION TABLE	
LOCATION	ELEVATION
G	389.03
H	389.38
J	389.74
K	390.12
L	390.50
M	390.89
* BB	395.43
* AT FILL FACE	

PROJECT NO. U-0071

DURHAM COUNTY

STATION: 157+33.78 -LDFEB-

SHEET 2 OF 6

STATE OF NORTH CAROLINA
DEPARTMENT OF TRANSPORTATION
RALEIGH

SUBSTRUCTURE END BENT 2 PLAN AND ELEVATION

NORTH CAROLINA PROFESSIONAL SEAL 024928 ENGINEER RODNEY E. MONE 01/21/14

REVISIONS								SHEET NO.
NO.	BY:	DATE:	NO.	BY:	DATE:			S-42
1	--	--	3	--	--			TOTAL SHEETS
2	--	--	4	--	--			57

HDR Engineering, Inc. of the Carolinas
3733 National Drive, Suite 207 Raleigh, N.C. 27612
N.C.B.E.L.S. License Number: F-0116

DES BY: T. ANDREWS	DATE: 07/13	DWG BY: W. TOWE	DATE: 07/13
DES CHK: K. TURNER	DATE: 07/13	CHK BY: T. ANDREWS	DATE: 08/13

ORIGINATED		YELLOW HIGHLIGHTED & REDLINE CHECKED		BLUE HIGHLIGHTED CHANGES		CHANGES VERIFIED BY	
INITIALS	DATE	INITIALS	DATE	INITIALS	DATE	VERIFIED	DATE

PLOT DRIVER: NCDOT_pdf_mono_eng_50.plt
USER: ppeterso DATE: 1/21/2014
FILE: ...\Plan Set\1192
TABLE: Durham_pen.tbl
TIME: 10:35:42 AM

NOTES

FOR SECTION A-A AND ADDITIONAL NOTES SEE "END BENT 2 SECTION & DETAILS".

FOR DETAIL "C" SEE "END BENT 2 PLAN AND ELEVATION" SHEET 1 OF 6.

FOR DETAIL "D" SEE "END BENT 2 PLAN AND ELEVATION", SHEET 2 OF 6.

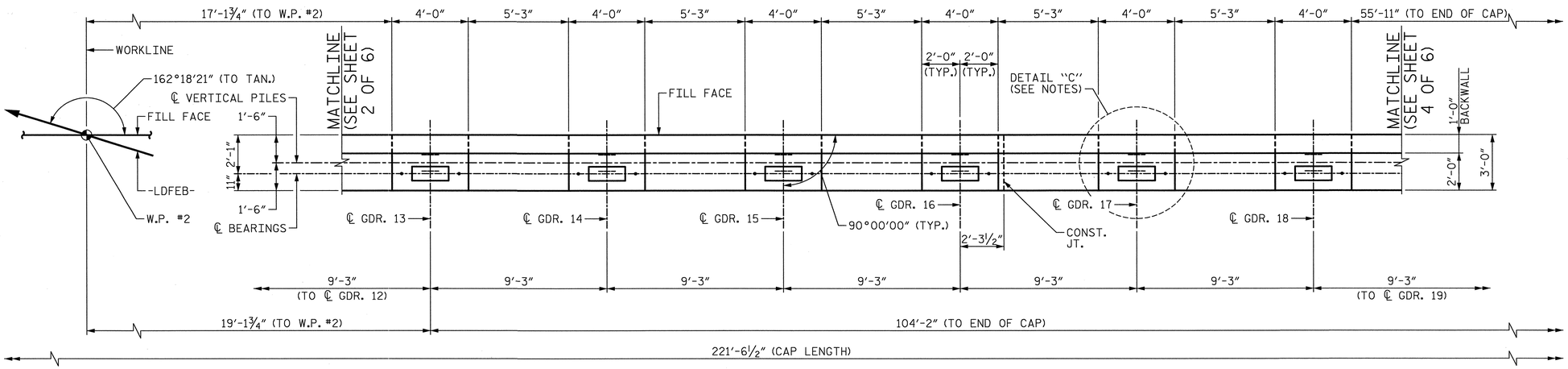

PLAN

TOP OF PILE ELEVATIONS	
LOCATION	ELEVATION
13	389.05
14	389.44
15	389.82
16	390.21
17	390.60
18	390.98

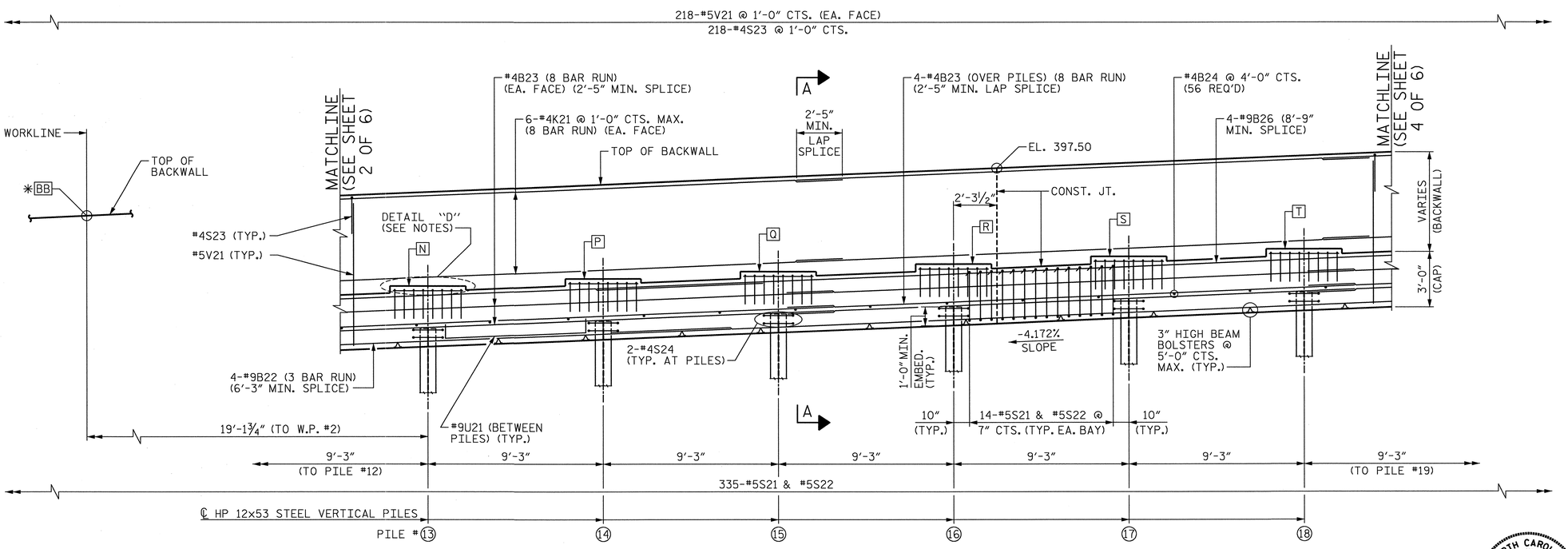

ELEVATION

ELEVATION TABLE	
LOCATION	ELEVATION
N	391.28
P	391.69
Q	392.10
R	392.52
S	392.94
T	393.39
✱ BB	395.43
✱ AT FILL FACE	

PROJECT NO. U-0071

DURHAM COUNTY

STATION: 157+33.78 -LDFEB-

SHEET 3 OF 6

STATE OF NORTH CAROLINA
DEPARTMENT OF TRANSPORTATION
RALEIGH

SUBSTRUCTURE END BENT 2 PLAN AND ELEVATION

NORTH CAROLINA PROFESSIONAL SEAL 024928 ENGINEER RODNEY E. MONEY 01/31/14

HDR Engineering, Inc. of the Carolinas
3733 National Drive, Suite 207 Raleigh, N.C. 27612
N.C.B.E.L.S. License Number: F-0116

REVISIONS						
NO.	BY:	DATE:	NO.	BY:	DATE:	SHEET NO. S-6.2
1	--	--	3	--	--	TOTAL SHEETS 67
2	--	--	4	--	--	

DES BY: T. ANDREWS	DATE: 07/13	DWG BY: W. TOWE	DATE: 07/13
DES CHK: K. TURNER	DATE: 07/13	CHK BY: T. ANDREWS	DATE: 08/13

ORIGINATED		YELLOW HIGHLIGHTED & REDLINE CHECKED		BLUE HIGHLIGHTED CHANGES		CHANGES VERIFIED BY	
INITIALS	DATE	INITIALS	DATE	INITIALS	DATE	VERIFIED	DATE

PLOT DRIVER: NCDOT_pdf_mono_eng_50.plt
USER: ppeterso DATE: 1/21/2014
FILE: ...\Plan Set\1193
TABLE: Durham_pen.tbl
TIME: 10:35:53 AM

NOTES

FOR SECTION A-A, VIEW B-B AND ADDITIONAL NOTES SEE "END BENT 2 SECTION & DETAILS".

FOR DETAIL "C" SEE "END BENT 2 PLAN AND ELEVATION" SHEET 1 OF 6.

FOR DETAIL "D" SEE "END BENT 2 PLAN AND ELEVATION", SHEET 2 OF 6.

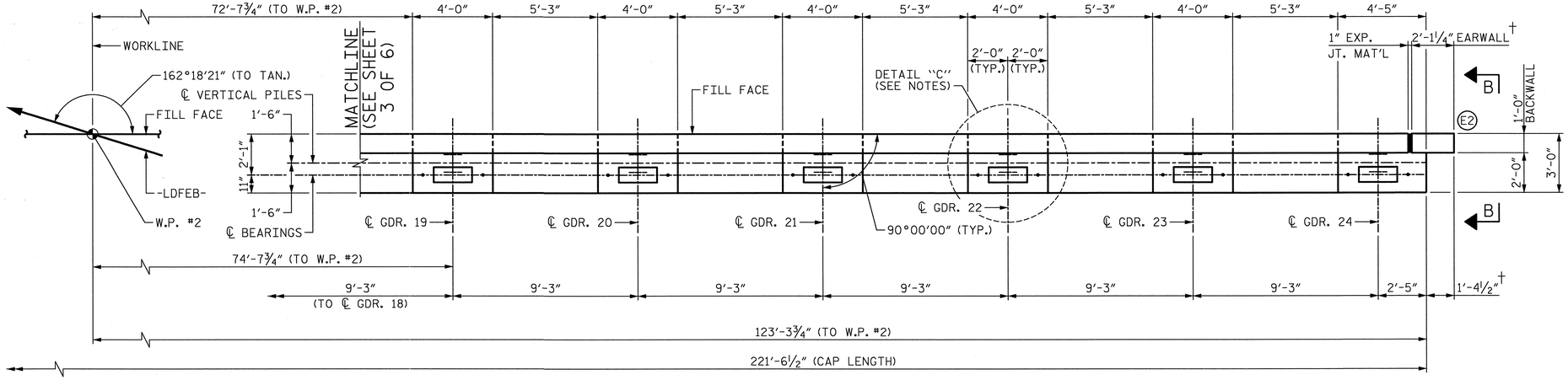

PLAN

† FIELD ADJUST AS REQ'D TO PROVIDE 1" EXPANSION JT. TO MSE WALL COPING

TOP OF PILE ELEVATIONS	
LOCATION	ELEVATION
19	391.37
20	391.75
21	392.14
22	392.52
23	392.91
24	393.30

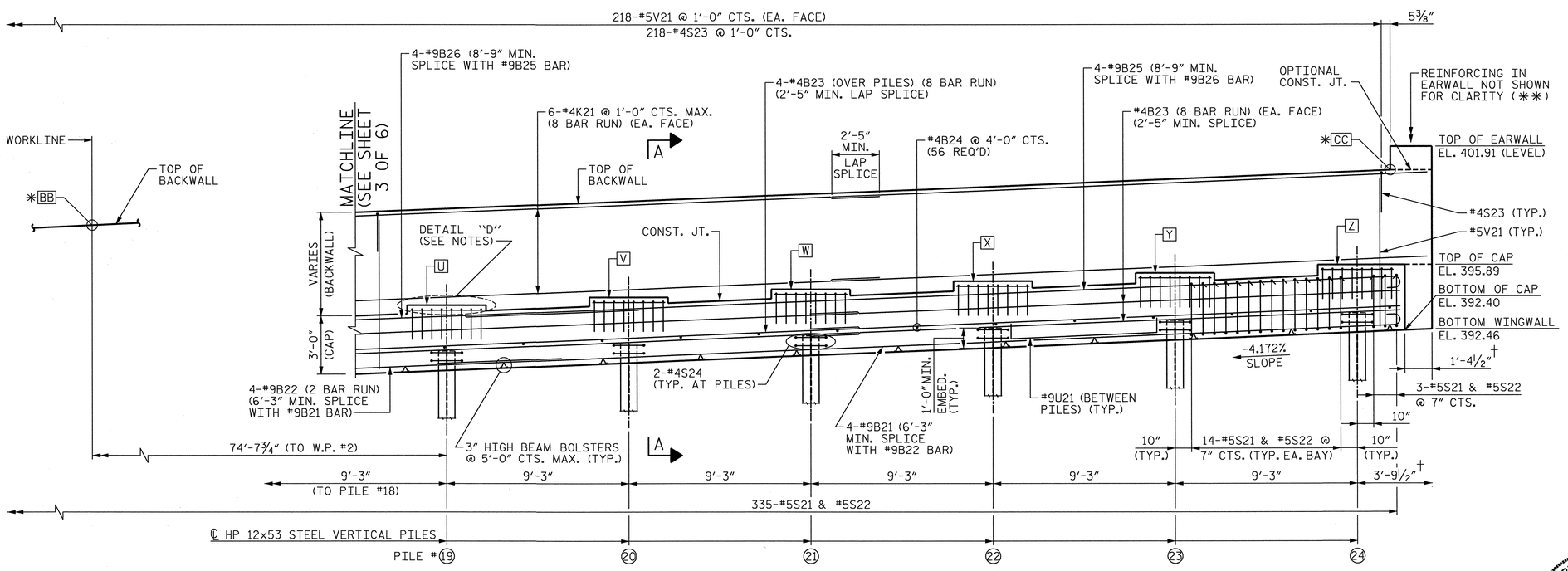

ELEVATION

(✱✱) SEE "END BENT 2 EARWALL & WINGWALL SECTION AND DETAILS" FOR REINFORCING STEEL TO BE PLACED PRIOR TO POUR #1.

ELEVATION TABLE	
LOCATION	ELEVATION
U	393.81
V	394.22
W	394.63
X	395.05
Y	395.47
Z	395.89
✱ BB	395.43
✱ CC	400.57
✱ AT FILL FACE	

PROJECT NO. U-0071

DURHAM COUNTY

STATION: 157+33.78 -LDFEB-

SHEET 4 OF 6

STATE OF NORTH CAROLINA
DEPARTMENT OF TRANSPORTATION
RALEIGH

SUBSTRUCTURE END BENT 2 PLAN AND ELEVATION

NORTH CAROLINA PROFESSIONAL SEAL 024928 ENGINEER RODNEY E. MONEY 06/21/14

REVISIONS						SHEET NO.
NO.	BY:	DATE:	NO.	BY:	DATE:	S-423
1	--	--	3	--	--	TOTAL SHEETS
2	--	--	4	--	--	671

HDR Engineering, Inc. of the Carolinas
3733 National Drive, Suite 207 Raleigh, N.C. 27612
N.C.B.E.L.S. License Number: F-0116

ORIGINATED		YELLOW HIGHLIGHTED & REDLINE CHECKED		BLUE HIGHLIGHTED CHANGES		CHANGES VERIFIED BY	
INITIALS	DATE	INITIALS	DATE	INITIALS	DATE	VERIFIED	DATE

DES BY: T. ANDREWS	DATE: 07/13	DWG BY: W. TOWE	DATE: 07/13
DES CHK: K. TURNER	DATE: 07/13	CHK BY: T. ANDREWS	DATE: 08/13

PLOT DRIVER: NCDOT_pdf_mono_eng_50.plt
USER: ppeterso DATE: 1/21/2014
FILE: ...\Plan Set\1194
TABLE: Durham_pen.tbl
TIME: 10:36:03 AM

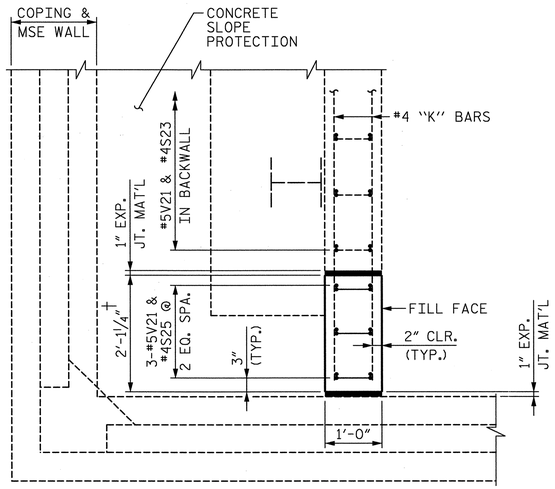

PLAN-EARWALL "E2"

(Δ) - #4K1 BARS IN BACKWALL

† = FIELD ADJUST AS REQ'D TO PROVIDE 1" EXPANSION JOINT TO MSE WALL COPING

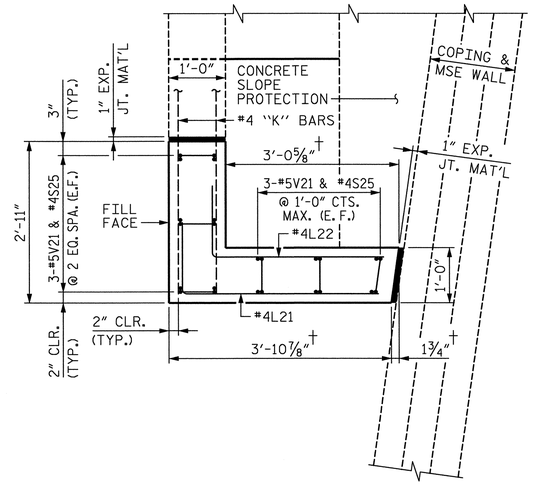

PLAN-WINGWALL "W2"

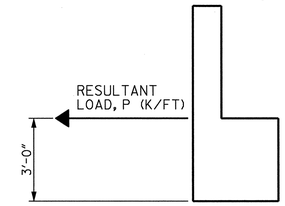

MSE REINFORCING STRAP LOAD DETAIL

LOAD CASE	RESULTANT LOAD, P (K/FT)
LIVE LOAD BRAKING	0.04
THERMAL CONTRACTION	0.42
WIND ON SUPERSTRUCTURE	0.78
WIND ON LIVE LOAD	0.07
ECCENTRICITY (LL)	0.46
ECCENTRICITY (DL)	2.47

MSE REINFORCING STRAP NOTES

MSE REINFORCING STRAPS SHALL BE ATTACHED TO THE END BENT CAP AND/OR BACKWALL. FOR DESIGN CRITERIA AND DETAILS, SEE MSE WALL SHEETS AND SPECIAL PROVISIONS.

PLANS, WORKING DRAWINGS AND DESIGN CALCULATIONS SHALL BE SUBMITTED BY THE CONTRACTOR TO THE ENGINEER FOR REVIEW AND APPROVAL. SEE SPECIAL PROVISIONS.

PLANS SUBMITTED FOR REVIEW SHALL INCLUDE THE FOLLOWING: PLAN VIEW, ELEVATION VIEW, TYPICAL SECTIONS, AND STRAP DETAILS.

THE MSE REINFORCING STRAPS SHALL BE DESIGNED TO CARRY THE LOADS FROM THE BRIDGE SUPERSTRUCTURE AS PRESENTED IN THE TABLE ABOVE. IN ADDITION, THE MSE REINFORCING STRAPS SHALL ALSO BE DESIGNED TO CARRY LOADS FROM SOIL PRESSURE AS OUTLINED IN THE SPECIAL PROVISIONS.

THE LOADS PRESENTED IN THE TABLE ABOVE ARE SERVICE LEVEL LOADS (NO LOAD FACTORS HAVE BEEN APPLIED). THE MSE WALL REINFORCING STRAP DESIGNER SHALL USE THESE LOADS IN ALL APPLICABLE LOAD COMBINATIONS AS APPROPRIATE, IN COMBINATION WITH SOIL PRESSURE LOADS.

A MINIMUM OF TWO ROWS OF MSE REINFORCING STRAPS IS REQUIRED.

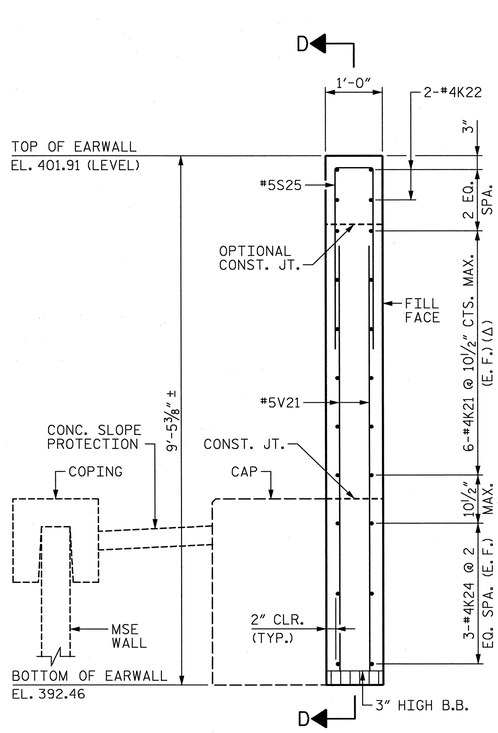

ELEVATION-EARWALL "E2"

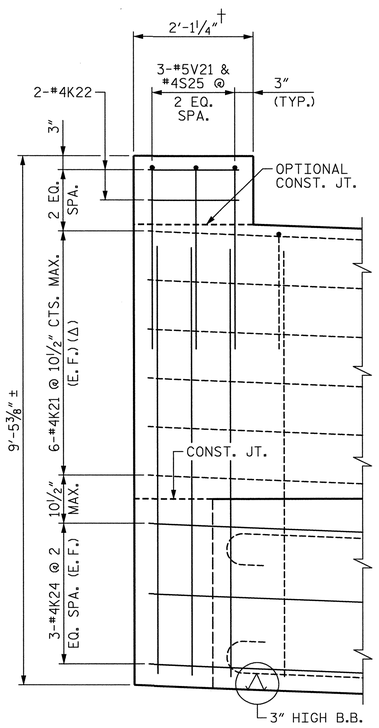

SECTION D-D

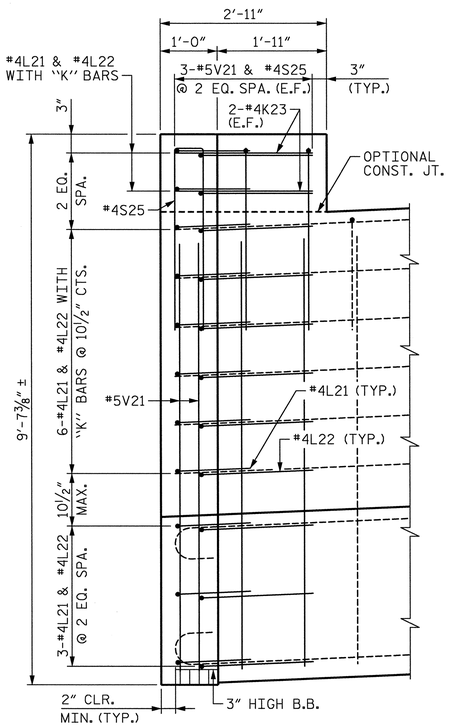

SECTION E-E

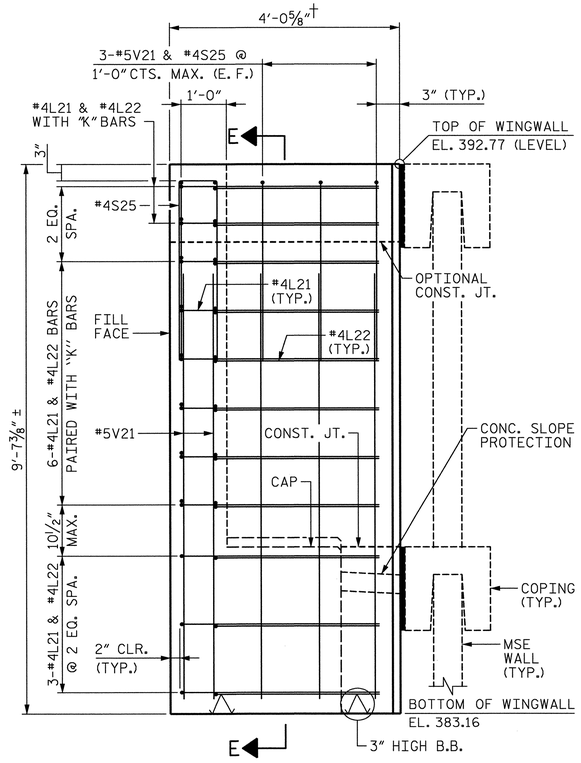

ELEVATION-WINGWALL "W2"

SEE "END BENT 2 PLAN AND ELEVATION" SHEETS FOR REINFORCING STEEL IN CAP.

PROJECT NO. U-0071

DURHAM COUNTY

STATION: 157+33.78 -LDFEB-

SHEET 5 OF 6

STATE OF NORTH CAROLINA
DEPARTMENT OF TRANSPORTATION
RALEIGH

SUBSTRUCTURE END BENT 2 EARWALL & WINGWALL SECTION AND DETAILS

NORTH CAROLINA PROFESSIONAL SEAL 024928 ENGINEER RODNEY E. MONEY 01/21/14

REVISIONS						SHEET NO. 5-A&A
NO.	BY:	DATE:	NO.	BY:	DATE:	TOTAL SHEETS 671
1	--	--	3	--	--	
2	--	--	4	--	--	

HDR Engineering, Inc. of the Carolinas
3733 National Drive, Suite 207 Raleigh, N.C. 27612
N.C.B.E.L.S. License Number: F-0116

DES BY: T. ANDREWS	DATE: 07/13	DWG BY: W. TOWE	DATE: 07/13
DES CHK: K. TURNER	DATE: 07/13	CHK BY: T. ANDREWS	DATE: 08/13

ORIGINATED		YELLOW HIGHLIGHTED & REDLINE CHECKED		BLUE HIGHLIGHTED CHANGES		CHANGES VERIFIED BY	
INITIALS	DATE	INITIALS	DATE	INITIALS	DATE	VERIFIED	DATE

PLOT DRIVER: NCDOT.pdf_mono_eng_50.plt
USER: ppeterso DATE: 1/21/2014
FILE: ...\Plan Set\1195
TABLE: Durham_pen.tbl
TIME: 10:36:14 AM

NOTES

THE TOP SURFACE AREAS OF THE END BENT CAP SHALL BE CURED IN ACCORDANCE WITH THE STANDARD SPECIFICATIONS EXCEPT THAT THE MEMBRANE CURING COMPOUND METHOD SHALL NOT BE USED.

THE TOP SURFACE OF THE END BENT CAP, EXCEPT THE BRIDGE SEAT BUILDUPS, SHALL BE SLOPED TRANSVERSELY FROM THE FILL FACE TO THE BACK FACE AT THE RATE OF 2%.

STIRRUPS IN CAP MAY BE SHIFTED AS NECESSARY TO CLEAR ANCHOR BOLTS.

BACKWALL SHALL BE PLACED BEFORE APPLYING THE EPOXY PROTECTIVE COATING.

SEE GENERAL DRAWING "FOUNDATION LAYOUT" FOR ADDITIONAL NOTES FOR DRIVING PILES.

FOR MSE RETAINING WALLS SEE SPECIAL PROVISIONS.

FOR PILE SPLICE DETAILS, SEE "SUBSTRUCTURE END BENT 1, SECTION AND DETAILS" SHEET.

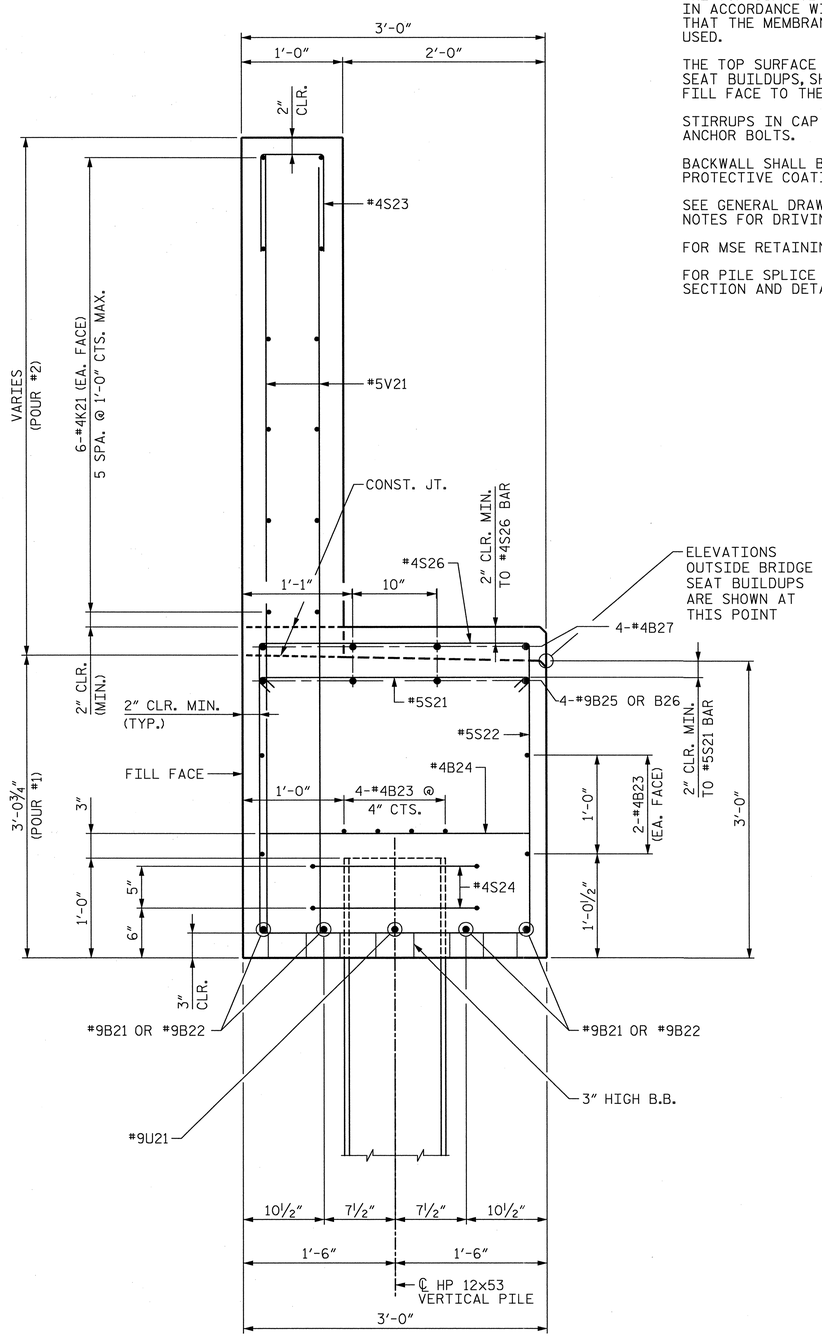

SECTION A-A

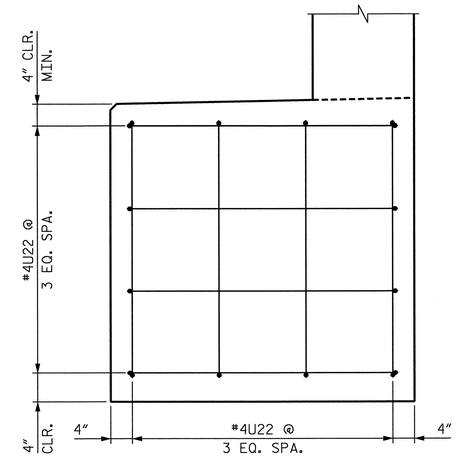

VIEW B-B

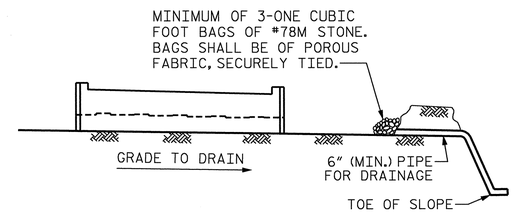

BAGGED STONE AND PIPE SHALL PLACED IMMEDIATELY AFTER COMPLETION OF END BENT EXCAVATION. PIPE MAY BE EITHER CONCRETE, CORRUGATED STEEL, CORRUGATED ALUMINUM ALLOY OR CORRUGATED PLASTIC. PERFORATED PIPE WILL NOT BE ALLOWED.

BAGGED STONE SHALL REMAIN IN PLACE UNTIL THE ENGINEER DIRECTS THAT IT BE REMOVED. THE CONTRACTOR SHALL REMOVE AND DISPOSE OF SILT ACCUMULATIONS AT BAGGED STONE WHEN SO DIRECTED BY THE ENGINEER. BAGS SHALL BE REMOVED AND REPLACED WHENEVER THE ENGINEER DETERMINES THAT THEY HAVE DETERIORATED AND LOST THEIR EFFECTIVENESS.

TEMPORARY DRAINAGE AT END BENT

(END BENT 2 SHOWN, END BENT 1 SIMILAR BY ROTATION)

BAR TYPES

(ALL DIMENSIONS ARE OUT TO OUT)

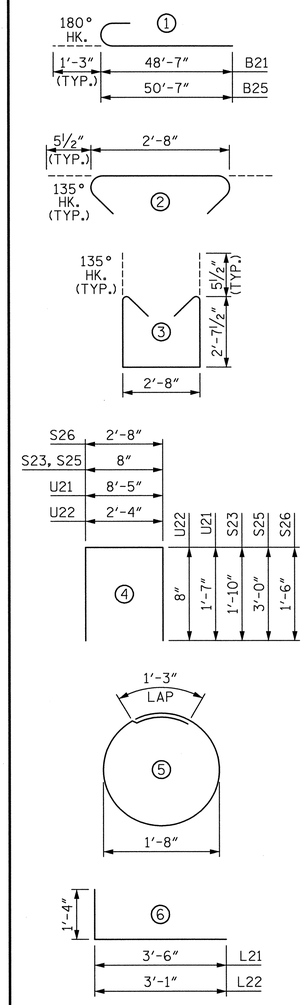

BILL OF MATERIAL

BAR	NO.	SIZE	TYPE	LENGTH	WEIGHT
B21	8	#9	1	49'-10"	1,355
B22	12	#9	STR.	49'-10"	2,033
B23	64	#4	STR.	30'-0"	1,283
B24	56	#4	STR.	2'-8"	100
B25	8	#9	1	51'-10"	1,410
B26	12	#9	STR.	51'-10"	2,115
B27	96	#4	STR.	3'-8"	235
K21	96	#4	STR.	30'-0"	1,924
K22	4	#4	STR.	1'-9"	5
K23	4	#4	STR.	2'-7"	7
K24	6	#4	STR.	3'-8"	15
L21	11	#4	6	4'-10"	36
L22	11	#4	6	4'-5"	32
S21	335	#5	2	3'-7"	1,252
S22	335	#5	3	8'-10"	3,086
S23	218	#4	4	4'-4"	631
S24	48	#4	5	6'-6"	208
S25	9	#4	4	6'-8"	40
S26	192	#4	4	5'-8"	727
U21	23	#9	4	11'-7"	906
U22	8	#4	4	3'-8"	20
V21	454	#5	STR.	7'-8"	3,630
				TOTAL	21,050

CLASS 'A' CONCRETE	
POUR 1	77.8 CY
POUR 2	43.5 CY
TOTAL	121.3 CY

HP 12x53 STEEL PILES (END BENT 2)	
NO.	24
LF	920

HP 12x53 STEEL PILES (APPROACH SLAB)	
NO.	4
LF	190

PROJECT NO. U-0071

DURHAM COUNTY

STATION: 157+33.78 -LDFEB-

SHEET 6 OF 6

STATE OF NORTH CAROLINA
DEPARTMENT OF TRANSPORTATION
RALEIGH

SUBSTRUCTURE END BENT 2 SECTION AND DETAILS

NORTH CAROLINA PROFESSIONAL SEAL 024928 ENGINEER RODNEY E. MONEY 01/21/14

REVISIONS						
NO.	BY:	DATE:	NO.	BY:	DATE:	
1	--	--	3	--	--	
2	--	--	4	--	--	

SHEET NO. S-6 TOTAL SHEETS 67

HDR Engineering, Inc. of the Carolinas
3733 National Drive, Suite 207 Raleigh, N.C. 27612
N.C.B.E.L.S. License Number: F-0116

DES BY: T. ANDREWS	DATE: 07/13	DWG BY: W. TOWE	DATE: 07/13
DES CHK: K. TURNER	DATE: 07/13	CHK BY: T. ANDREWS	DATE: 08/13

ORIGINATED		YELLOW HIGHLIGHTED & REDLINE CHECKED		BLUE HIGHLIGHTED CHANGES		CHANGES VERIFIED BY	
INITIALS	DATE	INITIALS	DATE	INITIALS	DATE	VERIFIED	DATE

PLOT DRIVER: NCDOT_pdf_mono_eng_50.plt
USER: ppeterso DATE: 1/21/2014
FILE: ...\Plan Set\1196
F)TABLE: Durham_pen.tbl
TIME: 10:36:23 AM

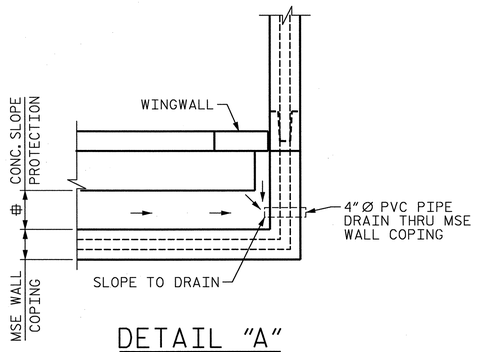

DETAIL "A"

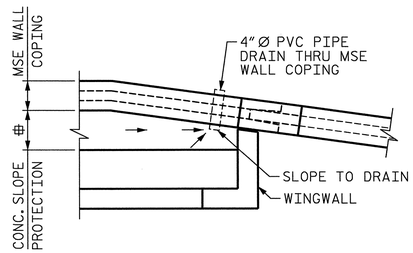

DETAIL "B"

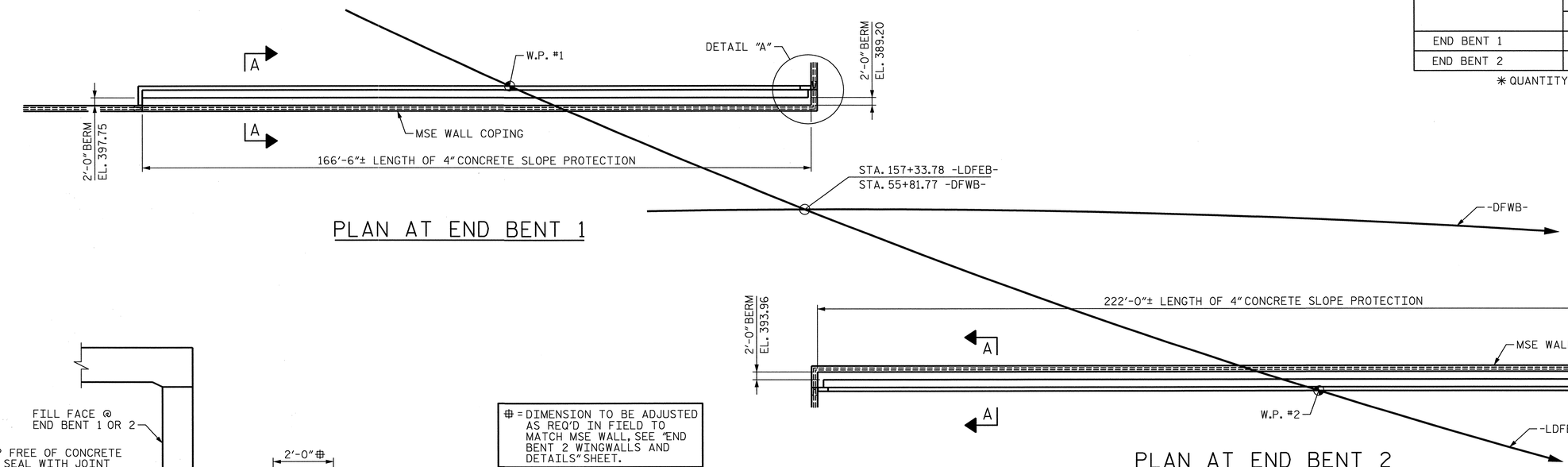

PLAN AT END BENT 1

PLAN AT END BENT 2

NOTES

SLOPE PROTECTION SHALL BE PLACED UNDER THE ENDS OF THE BRIDGE AS SHOWN IN THE DETAILS. STRAIGHT EDGING WILL NOT BE REQUIRED UNLESS, IN THE OPINION OF THE ENGINEER, VISUAL INSPECTION INDICATES A NEED FOR IT. MEASUREMENT AND PAYMENT SHALL BE AS PRESCRIBED IN SECTION 462 OF THE STANDARD SPECIFICATIONS.

SLOPE PROTECTION SHALL CONSIST OF 4" POURED-IN-PLACE CONCRETE PAVING AS SHOWN IN THE DETAILS ON THIS SHEET. CONCRETE SHALL BE CLASS "B". THE CONCRETE SURFACE SHALL BE FLOATED WITH A WOODEN FLOAT AND FINISHED. WELDED WIRE FABRIC REINFORCING SHALL BE 4 X 4 - W1.4 X W1.4, 60" WIDE. SLOPE PROTECTION SHALL BE POURED IN 5' STRIPS AS SHOWN IN THE "POURING DETAIL" WITH 2'-0" LONG #4 BARS PLACED ALONG THE SLOPE BETWEEN STRIPS AT 1'-6" MAXIMUM SPACING. SLOPE PROTECTION MAY BE POURED IN ALTERNATE 4' AND 5' STRIPS AS SHOWN IN THE "OPTIONAL POURING DETAIL" WITH ADJACENT RUNS OF WELDED WIRE FABRICLAPPING AT LEAST 6". THE COST OF THE WELDED WIRE FABRIC AND #4 BARS, IF USED, SHALL BE INCLUDED IN THE CONTRACT UNIT PRICE BID PER SQUARE YARD FOR SLOPE PROTECTION.

BRIDGE @ STA. 157+33.78 -LDFEB-	4 INCH SLOPE PROTECTION	✳ WELDED WIRE FABRIC 5'-0" WIDE
	SQUARE YARDS	APPROX. L.F.
END BENT 1	37.3	67
END BENT 2	49.7	89

✳ QUANTITY SHOWN IS BASED ON 5' POURS.

⊕ = DIMENSION TO BE ADJUSTED AS REQ'D IN FIELD TO MATCH MSE WALL, SEE "END BENT 2 WINGWALLS AND DETAILS" SHEET.

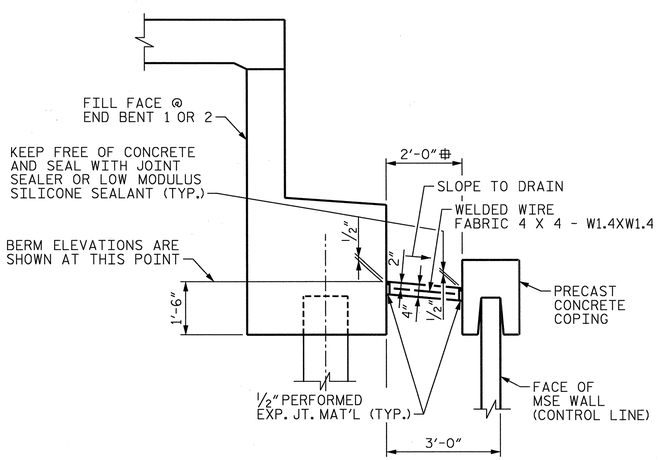

SECTION A-A

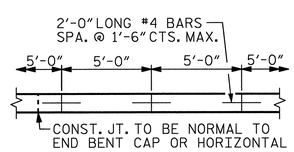

POURING DETAIL

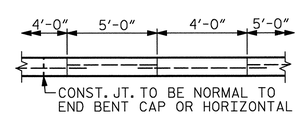

OPTIONAL POURING DETAIL

POUR A 4'-0" STRIP FIRST.

PROJECT NO. U-0071

DURHAM COUNTY

STATION: 157+33.78 -LDFEB-

STATE OF NORTH CAROLINA
DEPARTMENT OF TRANSPORTATION
RALEIGH

SLOPE PROTECTION DETAILS

NORTH CAROLINA PROFESSIONAL SEAL 024928 ENGINEER RODNEY E. MONEY 01/21/14

REVISIONS							SHEET NO.
NO.	BY:	DATE:	NO.	BY:	DATE:		S-4616
1	--	--	3	--	--		TOTAL SHEETS
2	--	--	4	--	--		57

HDR Engineering, Inc. of the Carolinas
3733 National Drive, Suite 207 Raleigh, N.C. 27612
N.C.B.E.L.S. License Number: F-0116

DES BY: E. NOLTING	DATE: 08/13	DWG BY: B. PETERSON	DATE: 08/13
DES CHK: A. TEAGUE	DATE: 08/13	CHK BY: A. TEAGUE	DATE: 08/13

ORIGINATED		YELLOW HIGHLIGHTED & REDLINE CHECKED		BLUE HIGHLIGHTED CHANGES		CHANGES VERIFIED BY	
INITIALS	DATE	INITIALS	DATE	INITIALS	DATE	VERIFIED	DATE

PLOT DRIVER: NCDOT_pdf_mono_eng_50.plt
USER: ppeterso DATE: 1/21/2014
FILE: ..\Plan Set\1300
P TABLE: Durham_pen.tbl
TIME: 10:07:24 AM

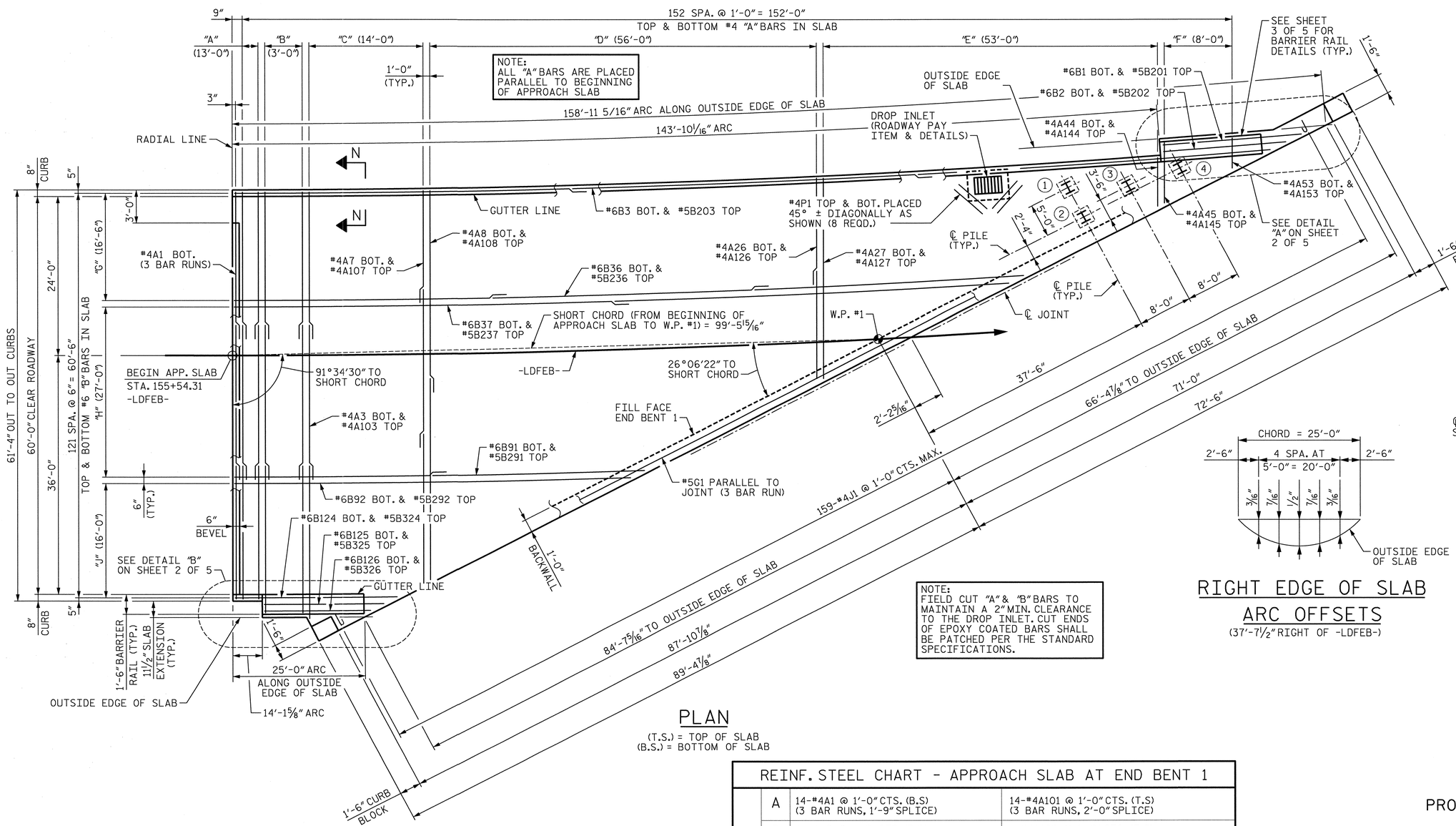

PLAN

(T.S.) = TOP OF SLAB
(B.S.) = BOTTOM OF SLAB

NOTE:
FIELD CUT "A" & "B" BARS TO MAINTAIN A 2" MIN. CLEARANCE TO THE DROP INLET. CUT ENDS OF EPOXY COATED BARS SHALL BE PATCHED PER THE STANDARD SPECIFICATIONS.

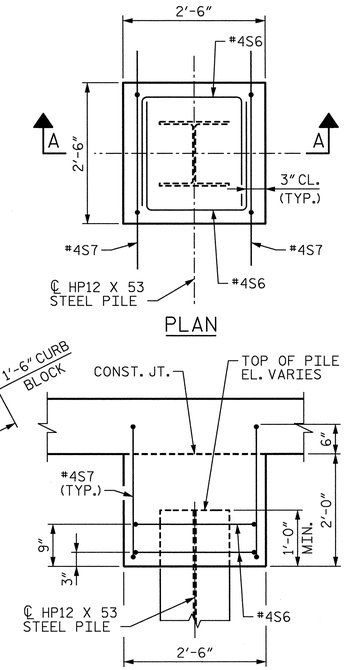

PLAN

SECTION A-A

PILE EMBEDMENT DETAILS

RIGHT EDGE OF SLAB ARC OFFSETS

(37'-7 1/2" RIGHT OF -LDFEB-)

TOP OF PILE ELEVATIONS	
PILE NO.	ELEVATION
1	396.01
2	396.34
3	395.87
4	395.57

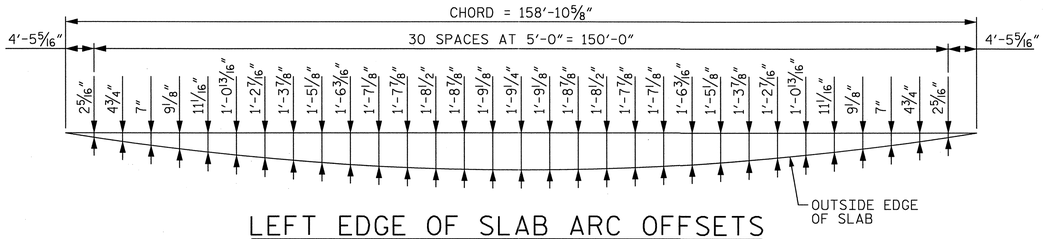

LEFT EDGE OF SLAB ARC OFFSETS

(25'-7 1/2" LEFT OF -LDFEB-)

REINF. STEEL CHART - APPROACH SLAB AT END BENT 1			
"A" BARS	A	14-#4A1 @ 1'-0" CTS. (B.S) (3 BAR RUNS, 1'-9" SPLICE)	14-#4A101 @ 1'-0" CTS. (T.S) (3 BAR RUNS, 2'-0" SPLICE)
	B	4-#4A2 @ 1'-0" CTS. (B.S) (3 BAR RUNS, 1'-9" SPLICE)	4-#4A102 @ 1'-0" CTS. (T.S) (3 BAR RUNS, 2'-0" SPLICE)
	C	#4A3 THRU #4A7 @ 1'-0" CTS. (B.S) (3 BAR RUNS, 1'-9" SPLICE, 3 LINES OF BARS PER MARK)	#4A103 THRU #4A107 @ 1'-0" CTS. (T.S) (3 BAR RUNS, 2'-0" SPLICE, 3 LINES OF BARS PER MARK)
	D	#4A8 THRU #4A26 @ 1'-0" CTS. (B.S) (2 BAR RUNS, 1'-9" SPLICE, 3 LINES OF BARS PER MARK)	#4A108 THRU #4A126 @ 1'-0" CTS. (T.S) (2 BAR RUNS, 2'-0" SPLICE, 3 LINES OF BARS PER MARK)
	E	#4A27 THRU #4A44 @ 1'-0" CTS. (B.S) (3 LINES OF BARS PER MARK)	#4A127 THRU #4A144 @ 1'-0" CTS. (T.S) (3 LINES OF BARS PER MARK)
	F	#4A45 THRU #4A53 @ 1'-0" CTS. (B.S)	#4A145 THRU #4A153 (@ 1'-0" CTS. (T.S))
"B" BARS	G	#6B3 THRU #6B36 @ 6" CTS. (B.S) (3 BAR RUNS, 2'-7" SPLICE)	#5B203 THRU #5B236 @ 6" CTS. (T.S) (3 BAR RUNS, 2'-6" SPLICE)
	H	#6B37 THRU #6B91 @ 6" CTS. (B.S) (2 BAR RUNS, 2'-7" SPLICE)	#5B237 THRU #5B291 @ 6" CTS. (T.S) (2 BAR RUNS, 2'-6" SPLICE)
	J	#6B92 THRU #6B124 @ 6" CTS. (B.S)	#5B292 THRU #5B324 @ 6" CTS. (T.S)

PROJECT NO. U-0071
DURHAM COUNTY
STATION: 157+33.78 -LDFEB-

SHEET 1 OF 5

STATE OF NORTH CAROLINA
DEPARTMENT OF TRANSPORTATION
RALEIGH

BRIDGE APPROACH SLAB AT END BENT 1

NORTH CAROLINA PROFESSIONAL SEAL 024928 ENGINEER RODNEY E. MONEY 01/21/14

HDR Engineering, Inc. of the Carolinas
3733 National Drive, Suite 207 Raleigh, N.C. 27612
N.C.B.E.L.S. License Number: F-0116

REVISIONS						
NO.	BY:	DATE:	NO.	BY:	DATE:	SHEET NO. S-67
1	--	--	3	--	--	TOTAL SHEETS 57
2	--	--	4	--	--	

DES BY: B. PETERSON	DATE: 09/13	DWG BY: B. PETERSON	DATE: 09/13
DES CHK: E. NOLTING	DATE: 09/13	CHK BY: E. NOLTING	DATE: 09/13

ORIGINATED		YELLOW HIGHLIGHTED & REDLINE CHECKED		BLUE HIGHLIGHTED CHANGES		CHANGES VERIFIED BY	
INITIALS	DATE	INITIALS	DATE	INITIALS	DATE	VERIFIED	DATE

PLOT DRIVER: NCDOT_pdf_mono_eng_50.plt
USER: ppeterso DATE: 1/21/2014
FILE: ...\Plan Set\1400
TABLE: Durham_pen.tbl
TIME: 10:07:42 AM

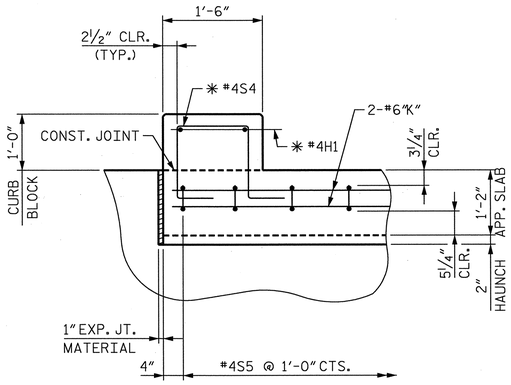

SECTION A-A

(MAIN APPROACH SLAB REINF. NOT SHOWN FOR CLARITY)
✱ SHIFT REINFORCING AS NECESSARY TO CLEAR BLOCKOUT.

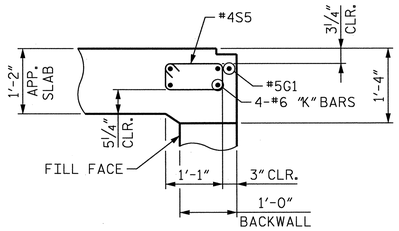

SECTION B-B

(MAIN APPROACH SLAB REINF. NOT SHOWN FOR CLARITY)

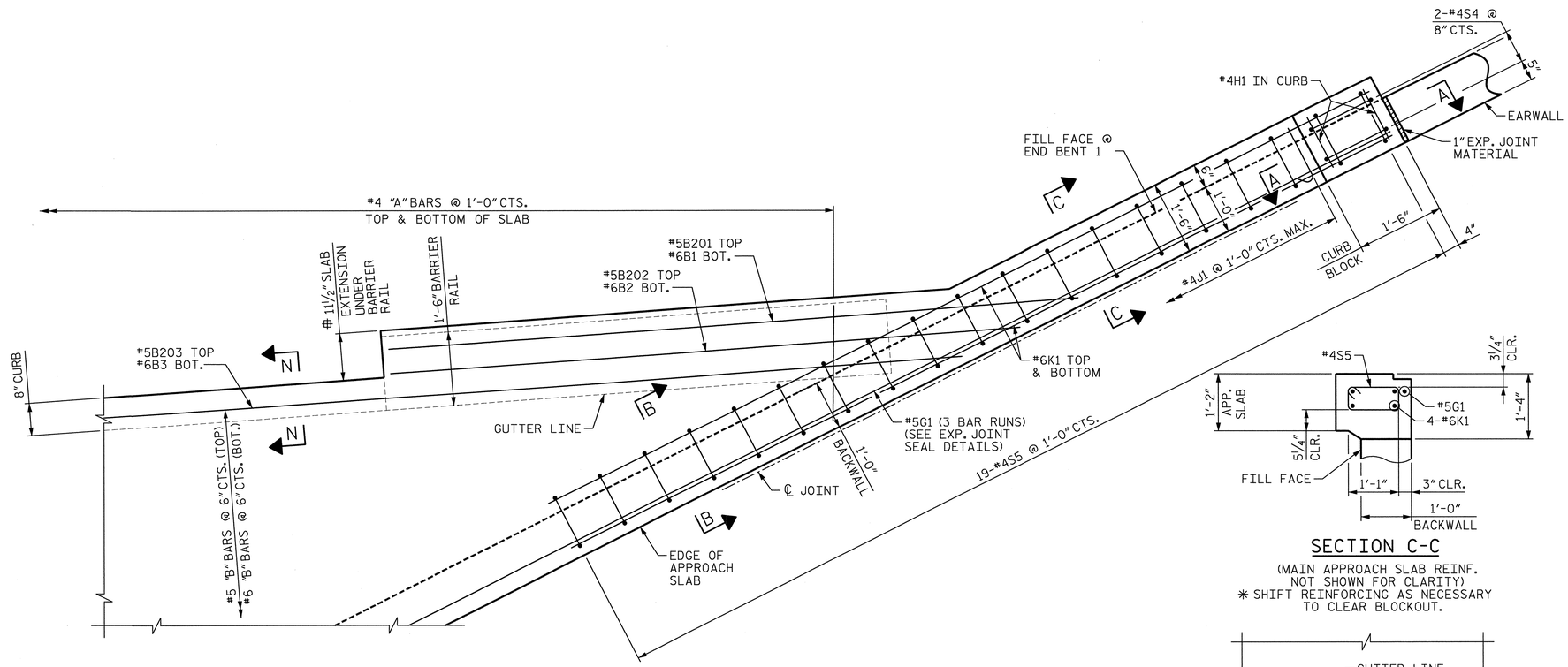

DETAIL "A"

(APPROACH SLAB @ LEFT SIDE END BENT 1)

SECTION C-C

(MAIN APPROACH SLAB REINF. NOT SHOWN FOR CLARITY)
✱ SHIFT REINFORCING AS NECESSARY TO CLEAR BLOCKOUT.

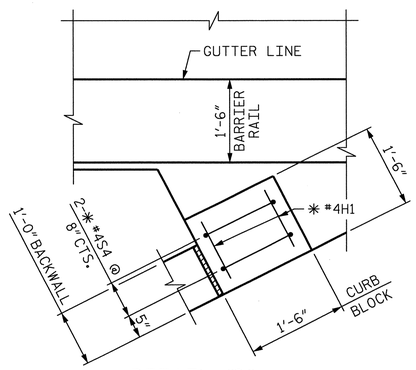

DETAIL "C"

(MAIN APPROACH SLAB REINF. NOT SHOWN FOR CLARITY)

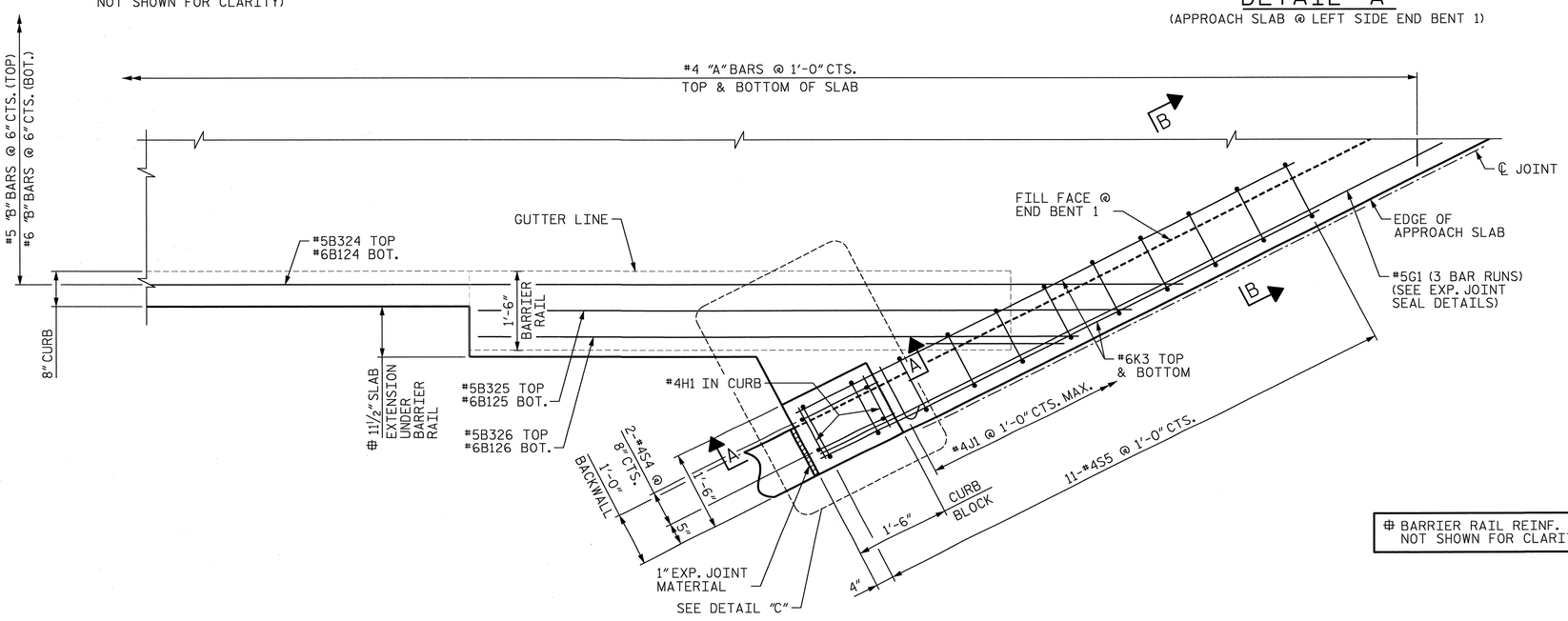

DETAIL "B"

(APPROACH SLAB @ RIGHT SIDE END BENT 1)

℄ BARRIER RAIL REINF. NOT SHOWN FOR CLARITY

PROJECT NO. U-0071

DURHAM COUNTY

STATION: 157+33.78 -LDFEB-

SHEET 2 OF 5

STATE OF NORTH CAROLINA
DEPARTMENT OF TRANSPORTATION
RALEIGH

BRIDGE APPROACH SLAB DETAILS AT END BENT 1

NORTH CAROLINA PROFESSIONAL SEAL 024928 ENGINEER RODNEY E. MONKEY 01/21/14

HDR Engineering, Inc. of the Carolinas
3733 National Drive, Suite 207 Raleigh, N.C. 27612
N.C.B.E.L.S. License Number: F-0116

REVISIONS							
NO.	BY:	DATE:	NO.	BY:	DATE:	SHEET NO. S-48
1	--	--	3	--	--	TOTAL SHEETS 67
2	--	--	4	--	--	

DES BY: B. PETERSON	DATE: 08/13	DWG BY: B. PETERSON	DATE: 08/13
DES CHK: E. NOLTING	DATE: 09/13	CHK BY: E. NOLTING	DATE: 09/13

ORIGINATED		YELLOW HIGHLIGHTED & REDLINE CHECKED		BLUE HIGHLIGHTED CHANGES		CHANGES VERIFIED BY	
INITIALS	DATE	INITIALS	DATE	INITIALS	DATE	VERIFIED	DATE

PLOT DRIVER: NCDOT_pdf_mono_eng_50.plt
USER: ppeterso DATE: 1/21/2014
FILE: ...\Plan Set\1401
TABLE: Durham_pen.tbl
TIME: 10:07:59 AM

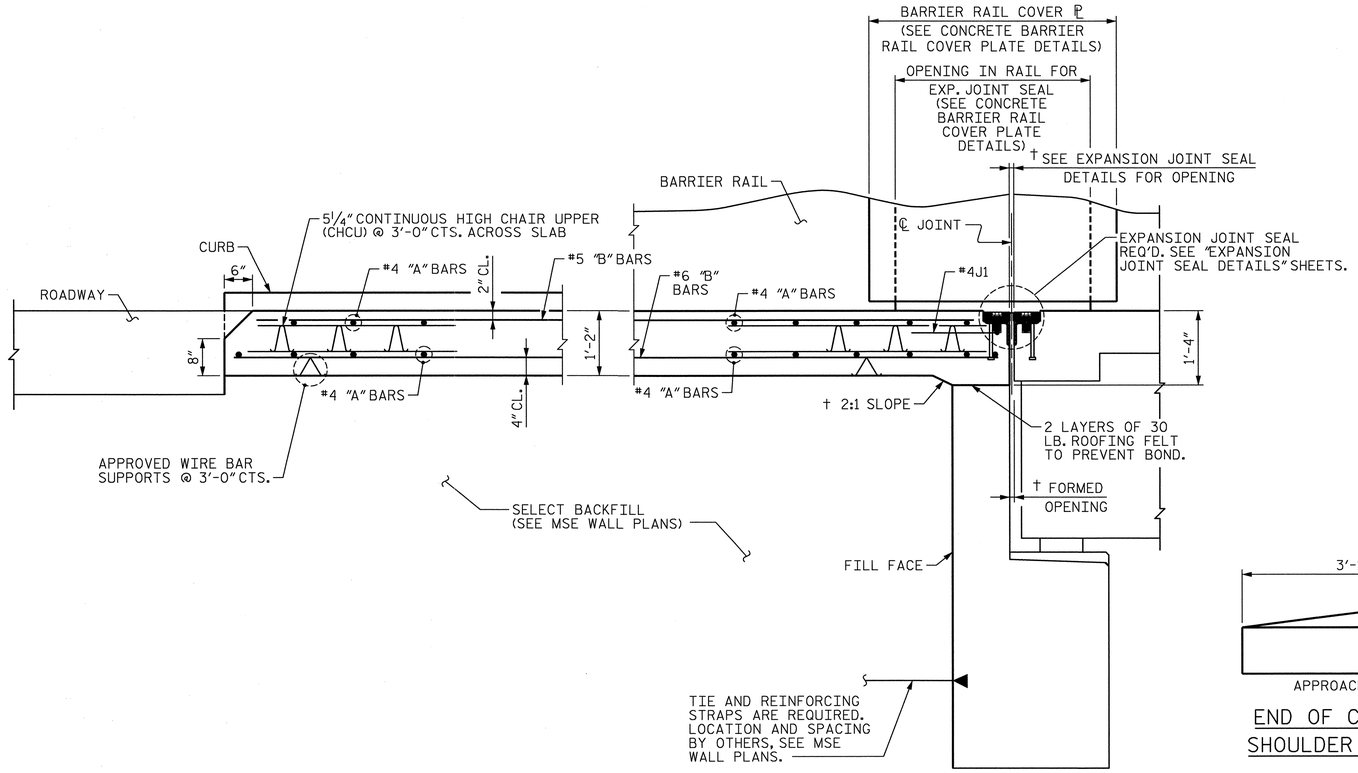

SECTION THRU SLAB AT END BENT 1

NOTES

APPROACH SLAB SHALL NOT BE CONSTRUCTED PRIOR TO COMPLETION OF THE BRIDGE DECK.

AREA BETWEEN THE WINGWALL AND APPROACH SLAB SHALL BE GRADED TO DRAIN THE WATER AWAY FROM THE FILL FACE OF THE BRIDGE AND SHALL BE PAVED. SEE ROADWAY PLANS.

THE COST OF THE BARRIER RAIL ON THE APPROACH SLAB SHALL BE INCLUDED IN THE LINEAR FOOT CONTTRACT PRICE BID FOR "CONCRETE BARRIER RAIL".

THE BARRIER RAIL ON EACH APPROACH SLAB SHALL NOT BE CAST UNTIL ALL APPROACH SLAB CONCRETE HAS BEEN CAST AND HAS REACHED A MINIMUM COMPRESSIVE STRENGTH OF 3,000 PSI.

ALL REINFORCING STEEL IN BARRIER RAILS SHALL BE EPOXY COATED.

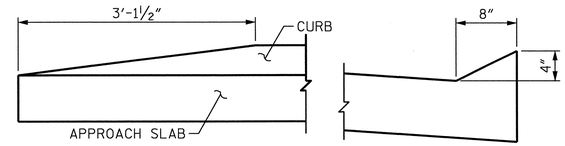

END OF CURB WITHOUT SHOULDER BERM GUTTER

SECTION N-N

CURB DETAILS

BILL OF MATERIAL FOR CONCRETE BARRIER RAIL AND CURB BLOCK (ONE APPROACH SLAB)

BAR	NO.	SIZE	TYPE	LENGTH	WEIGHT
* B1	22	#5	STR.	9'-6"	218
* H1	4	#4	STR.	1'-2"	3
* S1	34	#5	1	5'-0"	177
* S2	30	#5	2	7'-0"	219
* S3	4	#5	2	5'-5"	23
* S4	4	#4	3	5'-6"	15

* EPOXY COATED REINFORCING STEEL 655 LBS.

CLASS AA CONCRETE

POUR 1 (BARRIER RAIL)	2.7 CU. YDS.
POUR 2 (CURB BLOCKS)	0.2 CU. YDS.
TOTAL	2.9 CU. YDS.
CONCRETE BARRIER RAIL	20 LIN. FT.

BAR TYPES

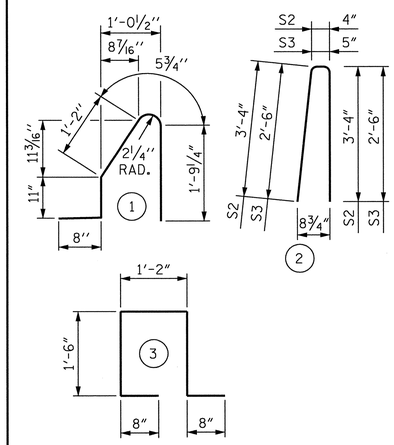

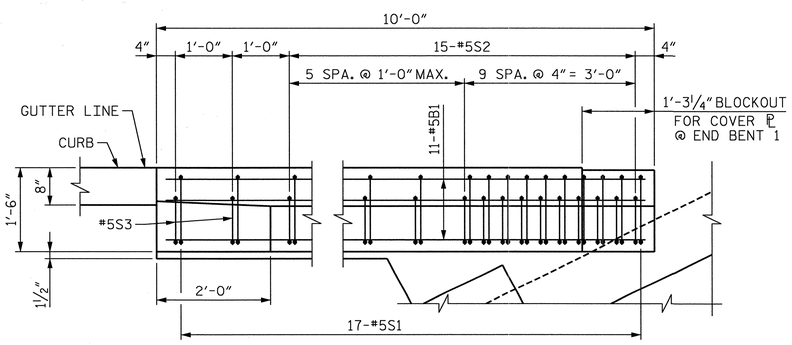

PLAN

SHOWN AT RIGHT SIDE END BENT 1 (SIMILAR AT OTHER LOCATIONS)

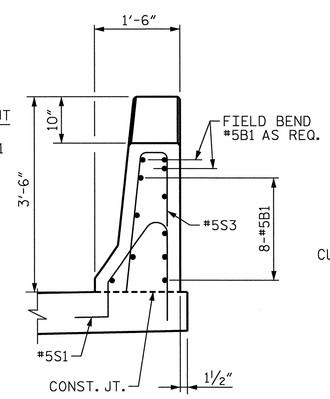

END OF RAIL

BARRIER RAIL DETAILS

SEE SHEET "SUPERSTRUCTURE CONCRETE BARRIER RAIL DETAILS" FOR SECTION THRU RAIL

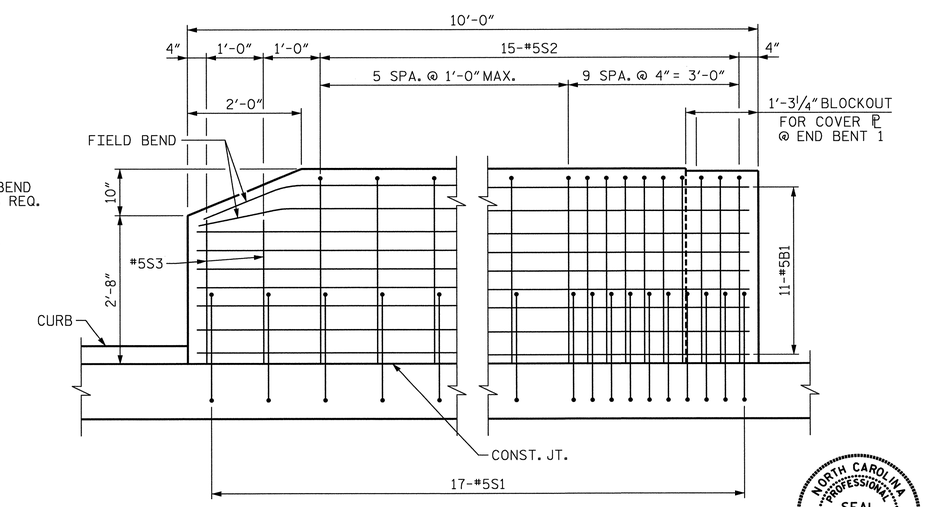

ELEVATION

PROJECT NO. U-0071

DURHAM COUNTY

STATION: 157+33.78 -LDFEB-

SHEET 3 OF 5

STATE OF NORTH CAROLINA
DEPARTMENT OF TRANSPORTATION
RALEIGH

BRIDGE APPROACH SLAB DETAILS AT END BENT 1

NORTH CAROLINA PROFESSIONAL SEAL 024928 ENGINEER RODNEY E. MONEY 01/21/14

REVISIONS						
NO.	BY:	DATE:	NO.	BY:	DATE:	
1	--	--	3	--	--	
2	--	--	4	--	--	

SHEET NO. S-429
TOTAL SHEETS 671

HDR Engineering, Inc. of the Carolinas
3733 National Drive, Suite 207 Raleigh, N.C. 27612
N.C.B.E.L.S. License Number: F-0116

DES BY: B. PETERSON	DATE: 08/13	DWG BY: B. PETERSON	DATE: 08/13
DES CHK: E. NOLTING	DATE: 09/13	CHK BY: E. NOLTING	DATE: 09/13

ORIGINATED		YELLOW HIGHLIGHTED & REDLINE CHECKED		BLUE HIGHLIGHTED CHANGES		CHANGES VERIFIED BY
INITIALS	DATE	INITIALS	DATE	INITIALS	DATE	VERIFIED DATE

PLOT DRIVER: NCDOT_pdf_mono_eng_50.plt
USER: peterso DATE: 1/21/2014
FILE: ...\Plan Set\1402
TABLE: Durham_pen.tbl
TIME: 10:08:13 AM

BILL OF MATERIAL - PLAIN (UNCOATED) REINF. STEEL

BAR	NUMBER	SIZE	TYPE	LENGTH	WEIGHT	BAR	NUMBER	SIZE	TYPE	LENGTH	WEIGHT	BAR	NUMBER	SIZE	TYPE	LENGTH	WEIGHT
A1	45	#4	STR.	21'-6"	646	B27	3	#6	STR.	44'-5"	200	B107	1	#6	STR.	43'-11"	66
A2	12	#4	STR.	21'-10"	175	B28	3	#6	STR.	44'-1"	199	B108	1	#6	STR.	42'-11"	64
A3	9	#4	STR.	22'-11"	138	B29	3	#6	STR.	43'-8"	197	B109	1	#6	STR.	41'-11"	63
A4	9	#4	STR.	22'-5"	135	B30	3	#6	STR.	43'-4"	195	B110	1	#6	STR.	40'-11"	61
A5	9	#4	STR.	21'-11"	132	B31	3	#6	STR.	43'-0"	194	B111	1	#6	STR.	39'-11"	60
A6	9	#4	STR.	21'-5"	129	B32	3	#6	STR.	42'-7"	192	B112	1	#6	STR.	38'-11"	58
A7	9	#4	STR.	20'-11"	126	B33	3	#6	STR.	42'-3"	190	B113	1	#6	STR.	37'-11"	57
A8	6	#4	STR.	29'-8"	119	B34	3	#6	STR.	41'-10"	189	B114	1	#6	STR.	36'-11"	55
A9	6	#4	STR.	28'-11"	116	B35	3	#6	STR.	41'-6"	187	B115	1	#6	STR.	35'-11"	54
A10	6	#4	STR.	28'-2"	113	B36	3	#6	STR.	41'-2"	185	B116	1	#6	STR.	34'-11"	52
A11	6	#4	STR.	27'-5"	110	B37	2	#6	STR.	59'-10"	180	B117	1	#6	STR.	34'-0"	51
A12	6	#4	STR.	26'-8"	107	B38	2	#6	STR.	59'-4"	178	B118	1	#6	STR.	33'-0"	50
A13	6	#4	STR.	25'-11"	104	B39	2	#6	STR.	58'-9"	176	B119	1	#6	STR.	32'-0"	48
A14	6	#4	STR.	25'-2"	101	B40	2	#6	STR.	58'-3"	175	B120	1	#6	STR.	31'-0"	47
A15	6	#4	STR.	24'-5"	98	B41	2	#6	STR.	57'-8"	173	B121	1	#6	STR.	30'-0"	45
A16	6	#4	STR.	23'-8"	95	B42	2	#6	STR.	57'-2"	172	B122	1	#6	STR.	29'-0"	44
A17	6	#4	STR.	22'-11"	92	B43	2	#6	STR.	56'-7"	170	B123	1	#6	STR.	28'-1"	42
A18	6	#4	STR.	22'-2"	89	B44	2	#6	STR.	56'-1"	168	B124	1	#6	STR.	27'-1"	41
A19	6	#4	STR.	21'-6"	86	B45	2	#6	STR.	55'-6"	167	B125	1	#6	STR.	12'-0"	18
A20	6	#4	STR.	20'-9"	83	B46	2	#6	STR.	55'-0"	165	B126	1	#6	STR.	11'-0"	17
A21	6	#4	STR.	20'-0"	80	B47	2	#6	STR.	54'-5"	163						
A22	6	#4	STR.	19'-4"	77	B48	2	#6	STR.	53'-11"	162						
A23	6	#4	STR.	18'-7"	74	B49	2	#6	STR.	53'-4"	160						
A24	6	#4	STR.	17'-10"	71	B50	2	#6	STR.	52'-10"	159						
A25	6	#4	STR.	17'-2"	69	B51	2	#6	STR.	52'-3"	157						
A26	6	#4	STR.	16'-5"	66	B52	2	#6	STR.	51'-9"	155						
A27	3	#4	STR.	29'-7"	59	B53	2	#6	STR.	51'-2"	154						
A28	3	#4	STR.	28'-1"	56	B54	2	#6	STR.	50'-8"	152						
A29	3	#4	STR.	26'-9"	54	B55	2	#6	STR.	50'-2"	151						
A30	3	#4	STR.	25'-4"	51	B56	2	#6	STR.	49'-7"	149						
A31	3	#4	STR.	23'-11"	48	B57	2	#6	STR.	49'-1"	147						
A32	3	#4	STR.	22'-6"	45	B58	2	#6	STR.	48'-6"	146						
A33	3	#4	STR.	21'-1"	42	B59	2	#6	STR.	48'-0"	144						
A34	3	#4	STR.	19'-9"	40	B60	2	#6	STR.	47'-6"	143						
A35	3	#4	STR.	18'-4"	37	B61	2	#6	STR.	46'-11"	141						
A36	3	#4	STR.	16'-11"	34	B62	2	#6	STR.	46'-5"	139						
A37	3	#4	STR.	15'-7"	31	B63	2	#6	STR.	45'-11"	138						
A38	3	#4	STR.	14'-3"	29	B64	2	#6	STR.	45'-4"	136						
A39	3	#4	STR.	12'-10"	26	B65	2	#6	STR.	44'-10"	135						
A40	3	#4	STR.	11'-6"	23	B66	2	#6	STR.	44'-4"	133						
A41	3	#4	STR.	10'-2"	20	B67	2	#6	STR.	43'-9"	131						
A42	3	#4	STR.	8'-10"	18	B68	2	#6	STR.	43'-3"	130						
A43	3	#4	STR.	7'-5"	15	B69	2	#6	STR.	42'-9"	128						
A44	3	#4	STR.	6'-1"	12	B70	2	#6	STR.	42'-3"	127						
A45	1	#4	STR.	5'-9"	4	B71	2	#6	STR.	41'-8"	125						
A46	1	#4	STR.	5'-4"	4	B72	2	#6	STR.	41'-2"	124						
A47	1	#4	STR.	4'-10"	3	B73	2	#6	STR.	40'-8"	122						
A48	1	#4	STR.	4'-5"	3	B74	2	#6	STR.	40'-2"	121						
A49	1	#4	STR.	4'-0"	3	B75	2	#6	STR.	39'-7"	119						
A50	1	#4	STR.	3'-6"	2	B76	2	#6	STR.	39'-1"	117						
A51	1	#4	STR.	3'-1"	2	B77	2	#6	STR.	38'-7"	116						
A52	1	#4	STR.	2'-8"	2	B78	2	#6	STR.	38'-1"	114						
A53	1	#4	STR.	2'-3"	2	B79	2	#6	STR.	37'-6"	113						
						B80	2	#6	STR.	37'-0"	111						
B1	1	#6	STR.	13'-8"	21	B81	2	#6	STR.	36'-6"	110						
B2	1	#6	STR.	12'-6"	19	B82	2	#6	STR.	36'-0"	108						
B3	3	#6	STR.	53'-6"	241	B83	2	#6	STR.	35'-6"	107						
B4	3	#6	STR.	53'-1"	239	B84	2	#6	STR.	35'-0"	105						
B5	3	#6	STR.	52'-9"	238	B85	2	#6	STR.	34'-5"	103						
B6	3	#6	STR.	52'-4"	236	B86	2	#6	STR.	33'-11"	102						
B7	3	#6	STR.	52'-0"	234	B87	2	#6	STR.	33'-5"	100						
B8	3	#6	STR.	51'-7"	232	B88	2	#6	STR.	32'-11"	99						
B9	3	#6	STR.	51'-2"	231	B89	2	#6	STR.	32'-5"	97						
B10	3	#6	STR.	50'-10"	229	B90	2	#6	STR.	31'-10"	96						
B11	3	#6	STR.	50'-5"	227	B91	2	#6	STR.	31'-4"	94						
B12	3	#6	STR.	50'-1"	226	B92	1	#6	STR.	59'-0"	89						
B13	3	#6	STR.	49'-8"	224	B93	1	#6	STR.	58'-0"	87						
B14	3	#6	STR.	49'-4"	222	B94	1	#6	STR.	57'-0"	86						
B15	3	#6	STR.	48'-11"	220	B95	1	#6	STR.	56'-0"	84						
B16	3	#6	STR.	48'-7"	219	B96	1	#6	STR.	55'-0"	83						
B17	3	#6	STR.	48'-2"	217	B97	1	#6	STR.	54'-0"	81						
B18	3	#6	STR.	47'-10"	216	B98	1	#6	STR.	52'-11"	79						
B19	3	#6	STR.	47'-5"	214	B99	1	#6	STR.	51'-11"	78						
B20	3	#6	STR.	47'-1"	212	B100	1	#6	STR.	50'-11"	76						
B21	3	#6	STR.	46'-8"	210	B101	1	#6	STR.	49'-11"	75						
B22	3	#6	STR.	46'-4"	209	B102	1	#6	STR.	48'-11"	73						
B23	3	#6	STR.	45'-11"	207	B103	1	#6	STR.	47'-11"	72						
B24	3	#6	STR.	45'-7"	205	B104	1	#6	STR.	46'-11"	70						
B25	3	#6	STR.	45'-2"	204	B105	1	#6	STR.	45'-11"	69						
B26	3	#6	STR.	44'-10"	202	B106	1	#6	STR.	44'-11"	67						

NOTE: ALL BARS THIS SHEET ARE PLAIN (UNCOATED) REINFORCING STEEL (SEE SHEET 5 OF 5 FOR EPOXY COATED REINFORCING STEEL)

PROJECT NO. U-0071

DURHAM COUNTY

STATION: 157+33.78 -LDFEB-

SHEET 4 OF 5

STATE OF NORTH CAROLINA
DEPARTMENT OF TRANSPORTATION
RALEIGH

BRIDGE APPROACH SLAB
BILL OF MATERIAL
AT END BENT 1

NORTH CAROLINA PROFESSIONAL SEAL 024928 ENGINEER RODNEY E. MONKEY 01/21/14

REVISIONS								SHEET NO.
NO.	BY:	DATE:	NO.	BY:	DATE:			S-470
1	--	--	3	--	--			TOTAL SHEETS
2	--	--	4	--	--			671

HDR Engineering, Inc. of the Carolinas
3733 National Drive, Suite 207 Raleigh, N.C. 27612
N.C.B.E.L.S. License Number: F-0116

DES BY: B. PETERSON	DATE: 08/13	DWG BY: B. PETERSON	DATE: 08/13
DES CHK: E. NOLTING	DATE: 09/13	CHK BY: E. NOLTING	DATE: 09/13

ORIGINATED		YELLOW HIGHLIGHTED & REDLINE CHECKED		BLUE HIGHLIGHTED CHANGES		CHANGES VERIFIED BY	
INITIALS	DATE	INITIALS	DATE	INITIALS	DATE	VERIFIED	DATE

PLOT DRIVER: NCDOT_pdf_mono_eng_50.plt
USER: ppeterso DATE: 1/21/2014
FILE: ...\Plan Set\1403
F TABLE: Durham_pen.tbl
TIME: 10:08:27 AM

BILL OF MATERIAL - EPOXY COATED REINF. STEEL

BAR	NUMBER	SIZE	TYPE	LENGTH	WEIGHT	BAR	NUMBER	SIZE	TYPE	LENGTH	WEIGHT	BAR	NUMBER	SIZE	TYPE	LENGTH	WEIGHT
✳ A101	42	#4	STR.	21'-8"	608	✳ B227	3	#5	STR.	44'-0"	138	✳ B307	1	#5	STR.	42'-8"	45
✳ A102	12	#4	STR.	22'-0"	176	✳ B228	3	#5	STR.	43'-7"	136	✳ B308	1	#5	STR.	41'-8"	43
✳ A103	9	#4	STR.	23'-0"	138	✳ B229	3	#5	STR.	43'-3"	135	✳ B309	1	#5	STR.	40'-8"	42
✳ A104	9	#4	STR.	22'-5"	135	✳ B230	3	#5	STR.	42'-10"	134	✳ B310	1	#5	STR.	39'-8"	41
✳ A105	9	#4	STR.	21'-11"	132	✳ B231	3	#5	STR.	42'-6"	133	✳ B311	1	#5	STR.	38'-8"	40
✳ A106	9	#4	STR.	21'-5"	129	✳ B232	3	#5	STR.	42'-2"	132	✳ B312	1	#5	STR.	37'-8"	39
✳ A107	9	#4	STR.	20'-11"	126	✳ B233	3	#5	STR.	41'-9"	131	✳ B313	1	#5	STR.	36'-8"	38
✳ A108	6	#4	STR.	29'-7"	119	✳ B234	3	#5	STR.	41'-5"	130	✳ B314	1	#5	STR.	35'-8"	37
✳ A109	6	#4	STR.	28'-10"	116	✳ B235	3	#5	STR.	41'-0"	128	✳ B315	1	#5	STR.	34'-8"	36
✳ A110	6	#4	STR.	28'-1"	113	✳ B236	3	#5	STR.	40'-8"	127	✳ B316	1	#5	STR.	33'-8"	35
✳ A111	6	#4	STR.	27'-4"	110	✳ B237	2	#5	STR.	59'-2"	123	✳ B317	1	#5	STR.	32'-9"	34
✳ A112	6	#4	STR.	26'-7"	107	✳ B238	2	#5	STR.	58'-8"	122	✳ B318	1	#5	STR.	31'-9"	33
✳ A113	6	#4	STR.	25'-10"	104	✳ B239	2	#5	STR.	58'-1"	121	✳ B319	1	#5	STR.	30'-9"	32
✳ A114	6	#4	STR.	25'-1"	101	✳ B240	2	#5	STR.	57'-7"	120	✳ B320	1	#5	STR.	29'-9"	31
✳ A115	6	#4	STR.	24'-4"	98	✳ B241	2	#5	STR.	57'-0"	119	✳ B321	1	#5	STR.	28'-9"	30
✳ A116	6	#4	STR.	23'-7"	95	✳ B242	2	#5	STR.	56'-6"	118	✳ B322	1	#5	STR.	27'-9"	29
✳ A117	6	#4	STR.	22'-11"	92	✳ B243	2	#5	STR.	55'-11"	117	✳ B323	1	#5	STR.	26'-10"	28
✳ A118	6	#4	STR.	22'-2"	89	✳ B244	2	#5	STR.	55'-5"	116	✳ B324	1	#5	STR.	25'-10"	27
✳ A119	6	#4	STR.	21'-5"	86	✳ B245	2	#5	STR.	54'-10"	114	✳ B325	1	#5	STR.	10'-9"	11
✳ A120	6	#4	STR.	20'-8"	83	✳ B246	2	#5	STR.	54'-4"	113	✳ B326	1	#5	STR.	9'-9"	10
✳ A121	6	#4	STR.	19'-11"	80	✳ B247	2	#5	STR.	53'-9"	112						
✳ A122	6	#4	STR.	19'-3"	77	✳ B248	2	#5	STR.	53'-3"	111						
✳ A123	6	#4	STR.	18'-6"	74	✳ B249	2	#5	STR.	52'-8"	110	✳ G1	3	#5	STR.	55'-6"	174
✳ A124	6	#4	STR.	17'-9"	71	✳ B250	2	#5	STR.	52'-2"	109						
✳ A125	6	#4	STR.	17'-1"	68	✳ B251	2	#5	STR.	51'-7"	108	✳ J1	159	#4	1	1'-5"	150
✳ A126	6	#4	STR.	16'-4"	65	✳ B252	2	#5	STR.	51'-1"	107						
✳ A127	3	#4	STR.	29'-2"	58	✳ B253	2	#5	STR.	50'-6"	105	✳ K1	4	#6	STR.	18'-4"	110
✳ A128	3	#4	STR.	27'-9"	56	✳ B254	2	#5	STR.	50'-0"	104	✳ K3	4	#6	STR.	10'-4"	62
✳ A129	3	#4	STR.	26'-4"	53	✳ B255	2	#5	STR.	49'-6"	103						
✳ A130	3	#4	STR.	24'-11"	50	✳ B256	2	#5	STR.	48'-11"	102	✳ P1	8	#4	STR.	5'-0"	27
✳ A131	3	#4	STR.	23'-6"	47	✳ B257	2	#5	STR.	48'-5"	101						
✳ A132	3	#4	STR.	22'-1"	44	✳ B258	2	#5	STR.	47'-10"	100	✳ S5	30	#4	2	3'-8"	73
✳ A133	3	#4	STR.	20'-9"	42	✳ B259	2	#5	STR.	47'-4"	99	✳ S6	16	#4	3	5'-11"	63
✳ A134	3	#4	STR.	19'-4"	39	✳ B260	2	#5	STR.	46'-10"	98	✳ S7	8	#4	4	8'-6"	45
✳ A135	3	#4	STR.	18'-0"	36	✳ B261	2	#5	STR.	46'-3"	96						
✳ A136	3	#4	STR.	16'-7"	33	✳ B262	2	#5	STR.	45'-9"	95						
✳ A137	3	#4	STR.	15'-3"	31	✳ B263	2	#5	STR.	45'-3"	94						
✳ A138	3	#4	STR.	13'-10"	28	✳ B264	2	#5	STR.	44'-8"	93						
✳ A139	3	#4	STR.	12'-6"	25	✳ B265	2	#5	STR.	44'-2"	92						
✳ A140	3	#4	STR.	11'-1"	22	✳ B266	2	#5	STR.	43'-8"	91						
✳ A141	3	#4	STR.	9'-9"	20	✳ B267	2	#5	STR.	43'-1"	90						
✳ A142	3	#4	STR.	8'-5"	17	✳ B268	2	#5	STR.	42'-7"	89						
✳ A143	3	#4	STR.	7'-1"	14	✳ B269	2	#5	STR.	42'-1"	88						
✳ A144	3	#4	STR.	5'-9"	12	✳ B270	2	#5	STR.	41'-7"	87						
✳ A145	1	#4	STR.	5'-4"	4	✳ B271	2	#5	STR.	41'-0"	86						
✳ A146	1	#4	STR.	4'-11"	3	✳ B272	2	#5	STR.	40'-6"	84						
✳ A147	1	#4	STR.	4'-6"	3	✳ B273	2	#5	STR.	40'-0"	83						
✳ A148	1	#4	STR.	4'-1"	3	✳ B274	2	#5	STR.	39'-6"	82						
✳ A149	1	#4	STR.	3'-7"	2	✳ B275	2	#5	STR.	38'-11"	81						
✳ A150	1	#4	STR.	3'-2"	2	✳ B276	2	#5	STR.	38'-5"	80						
✳ A151	1	#4	STR.	2'-9"	2	✳ B277	2	#5	STR.	37'-11"	79						
✳ A152	1	#4	STR.	2'-3"	2	✳ B278	2	#5	STR.	37'-5"	78						
✳ A153	1	#4	STR.	1'-10"	1	✳ B279	2	#5	STR.	36'-10"	77						
						✳ B280	2	#5	STR.	36'-4"	76						
✳ B201	1	#5	STR.	12'-5"	13	✳ B281	2	#5	STR.	35'-10"	75						
✳ B202	1	#5	STR.	11'-3"	12	✳ B282	2	#5	STR.	35'-4"	74						
✳ B203	3	#5	STR.	53'-0"	166	✳ B283	2	#5	STR.	34'-10"	73						
✳ B204	3	#5	STR.	52'-8"	165	✳ B284	2	#5	STR.	34'-4"	72						
✳ B205	3	#5	STR.	52'-3"	163	✳ B285	2	#5	STR.	33'-9"	70						
✳ B206	3	#5	STR.	51'-10"	162	✳ B286	2	#5	STR.	33'-3"	69						
✳ B207	3	#5	STR.	51'-6"	161	✳ B287	2	#5	STR.	32'-9"	68						
✳ B208	3	#5	STR.	51'-1"	160	✳ B288	2	#5	STR.	32'-3"	67						
✳ B209	3	#5	STR.	50'-9"	159	✳ B289	2	#5	STR.	31'-9"	66						
✳ B210	3	#5	STR.	50'-4"	157	✳ B290	2	#5	STR.	31'-2"	65						
✳ B211	3	#5	STR.	50'-0"	156	✳ B291	2	#5	STR.	30'-8"	64						
✳ B212	3	#5	STR.	49'-7"	155	✳ B292	1	#5	STR.	57'-9"	60						
✳ B213	3	#5	STR.	49'-3"	154	✳ B293	1	#5	STR.	56'-9"	59						
✳ B214	3	#5	STR.	48'-10"	153	✳ B294	1	#5	STR.	55'-9"	58						
✳ B215	3	#5	STR.	48'-5"	151	✳ B295	1	#5	STR.	54'-9"	57						
✳ B216	3	#5	STR.	48'-1"	150	✳ B296	1	#5	STR.	53'-9"	56						
✳ B217	3	#5	STR.	47'-8"	149	✳ B297	1	#5	STR.	52'-9"	55						
✳ B218	3	#5	STR.	47'-4"	148	✳ B298	1	#5	STR.	51'-8"	54						
✳ B219	3	#5	STR.	46'-11"	147	✳ B299	1	#5	STR.	50'-8"	53						
✳ B220	3	#5	STR.	46'-7"	146	✳ B300	1	#5	STR.	49'-8"	52						
✳ B221	3	#5	STR.	46'-2"	144	✳ B301	1	#5	STR.	48'-8"	51						
✳ B222	3	#5	STR.	45'-10"	143	✳ B302	1	#5	STR.	47'-8"	50						
✳ B223	3	#5	STR.	45'-5"	142	✳ B303	1	#5	STR.	46'-8"	49						
✳ B224	3	#5	STR.	45'-1"	141	✳ B304	1	#5	STR.	45'-8"	48						
✳ B225	3	#5	STR.	44'-9"	140	✳ B305	1	#5	STR.	44'-8"	47						
✳ B226	3	#5	STR.	44'-4"	139	✳ B306	1	#5	STR.	43'-8"	46						

✳ DENOTES EPOXY COATED REINFORCING STEEL

NOTE: ALL BARS THIS SHEET ARE EPOXY COATED (SEE SHEET 4 OF 5 FOR PLAIN (UNCOATED) REINFORCING STEEL)

SUMMARY OF QUANTITIES APPROACH SLAB AT END BENT 1

REINFORCING STEEL (LBS.)	20847
✳ EPOXY COATED REINF. STEEL (LBS.)	16137
CLASS AA CONCRETE (CU. YDS.)	244.0

BAR TYPES

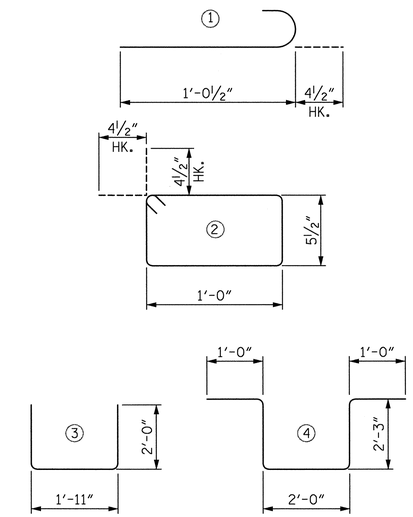

ALL DIMENSIONS ARE OUT TO OUT

SUPERSTRUCTURE REINFORCING STEEL LENGTHS ARE BASED ON THE FOLLOWING MINIMUM SPLICE LENGTHS

BAR SIZE	SUPERSTRUCTURE EXCEPT APPROACH SLABS, PARAPET, AND BARRIER RAIL		APPROACH SLABS		PARAPET AND BARRIER RAIL
	EPOXY COATED	UNCOATED	EPOXY COATED	UNCOATED	
#4	2'-0"	1'-9"	2'-0"	1'-9"	2'-9"
#5	2'-6"	2'-2"	2'-6"	2'-2"	3'-5"
#6	3'-0"	2'-7"	3'-10"	2'-7"	4'-4"
#7	5'-3"	3'-6"			
#8	6'-10"	4'-7"			

PROJECT NO. U-0071

DURHAM COUNTY

STATION: 157+33.78 -LDFEB-

SHEET 5 OF 5

STATE OF NORTH CAROLINA
DEPARTMENT OF TRANSPORTATION
RALEIGH

BRIDGE APPROACH SLAB BILL OF MATERIAL AT END BENT 1

NORTH CAROLINA PROFESSIONAL SEAL 024928 ENGINEER RODNEY E. MONEY
R.E. Money
01/21/14

REVISIONS						SHEET NO.
NO.	BY:	DATE:	NO.	BY:	DATE:	S-471
1	--	--	3	--	--	TOTAL SHEETS
2	--	--	4	--	--	671

HDR Engineering, Inc. of the Carolinas
3733 National Drive, Suite 207 Raleigh, N.C. 27612
N.C.B.E.L.S. License Number: F-0116

DES BY: B. PETERSON DATE: 08/13
DES CHK: E. NOLTING DATE: 09/13
DWG BY: B. PETERSON DATE: 08/13
CHK BY: E. NOLTING DATE: 09/13

ORIGINATED		YELLOW HIGHLIGHTED & REDLINE CHECKED		BLUE HIGHLIGHTED CHANGES		CHANGES VERIFIED BY	
INITIALS	DATE	INITIALS	DATE	INITIALS	DATE	VERIFIED	DATE

PLOT DRIVER: NCDOT-pdf_mono_eng_50.plt
USER: ppeterso DATE: 1/21/2014
FILE: ...\Plan Set\1404
TABLE: Durham_pen.tbl
TIME: 10:08:42 AM

TOP OF PILE ELEVATIONS	
PILE NO.	ELEVATION
1	398.98
2	398.71
3	398.27
4	398.62

LEFT EDGE OF SLAB ARC OFFSETS

(25'-7½" LEFT OF -LDFEB-)

NOTE:
ALL "A" BARS ARE PLACED PARALLEL TO END OF APPROACH SLAB

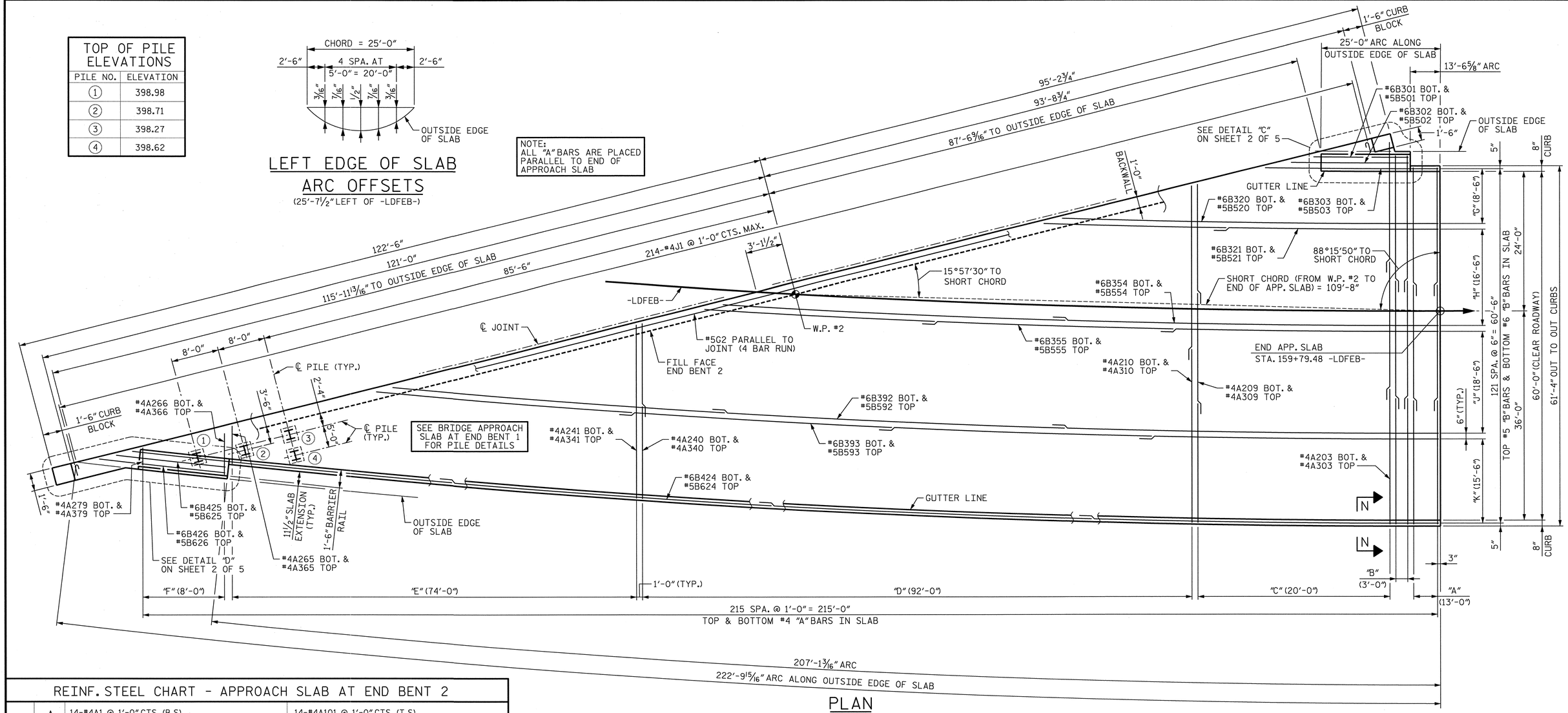

PLAN

(T.S.) = TOP OF SLAB
(B.S.) = BOTTOM OF SLAB

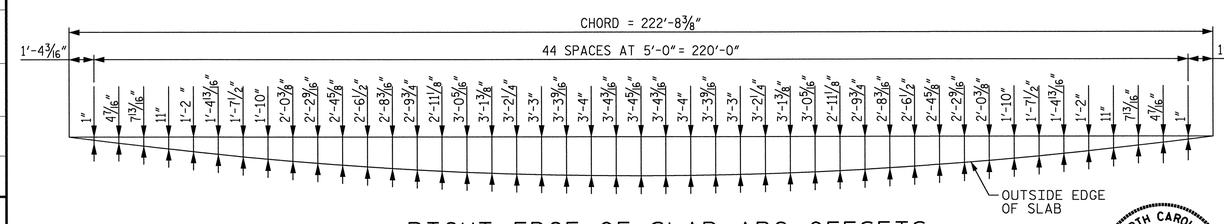

RIGHT EDGE OF SLAB ARC OFFSETS

(37'-7½" RIGHT OF -LDFEB-)

REINF. STEEL CHART - APPROACH SLAB AT END BENT 2

"A" BARS	A	14-#4A1 @ 1'-0" CTS. (B.S) (3 BAR RUNS, 1'-9" SPLICE)	14-#4A101 @ 1'-0" CTS. (T.S) (3 BAR RUNS, 2'-0" SPLICE)
	B	4-#4A2 @ 1'-0" CTS. (B.S) (3 BAR RUNS, 1'-9" SPLICE)	4-#4A102 @ 1'-0" CTS. (T.S) (3 BAR RUNS, 2'-0" SPLICE)
	C	#4A203 THRU #4A209 @ 1'-0" CTS. (B.S) (3 BAR RUNS, 1'-9" SPLICE, 3 LINES OF BARS PER MARK)	#4A303 THRU #4A309 @ 1'-0" CTS. (T.S) (3 BAR RUNS, 2'-0" SPLICE, 3 LINES OF BARS PER MARK)
	D	#4A210 THRU #4A240 @ 1'-0" CTS. (B.S) (2 BAR RUNS, 1'-9" SPLICE, 3 LINES OF BARS PER MARK)	#4A310 THRU #4A340 @ 1'-0" CTS. (T.S) (2 BAR RUNS, 2'-0" SPLICE, 3 LINES OF BARS PER MARK)
	E	#4A241 THRU #4A265 @ 1'-0" CTS. (B.S) (3 LINES OF BARS PER MARK)	#4A341 THRU #4A365 @ 1'-0" CTS. (T.S) (3 LINES OF BARS PER MARK)
	F	#4A266 THRU #4A274 @ 1'-0" CTS. (B.S)	#4A366 THRU #4A374 @ 1'-0" CTS. (T.S)
"B" BARS	G	#6B303 THRU #6B320 @ 6" CTS. (B.S)	#5B503 THRU #5B520 @ 6" CTS. (T.S)
	H	#6B321 THRU #6B354 @ 6" CTS. (B.S) (2 BAR RUNS, 2'-7" SPLICE)	#5B521 THRU #5B554 @ 6" CTS. (T.S) (2 BAR RUNS, 2'-6" SPLICE)
	J	#6B355 THRU #6B392 @ 6" CTS. (B.S) (3 BAR RUNS, 2'-7" SPLICE)	#5B555 THRU #5B592 @ 6" CTS. (T.S) (3 BAR RUNS, 2'-6" SPLICE)
	K	#6B393 THRU #6B424 (4 BAR RUNS, 2'-7" SPLICE)	#5B593 THRU #5B624 @ 6" CTS. (T.S) (4 BAR RUNS, 2'-6" SPLICE)

DES BY: B. PETERSON DATE: 08/13
DES CHK: E. NOLTING DATE: 09/13
DWG BY: B. PETERSON DATE: 08/13
CHK BY: E. NOLTING DATE: 09/13

PROJECT NO. U-0071
DURHAM COUNTY
STATION: 157+33.78 -LDFEB-

SHEET 1 OF 5

STATE OF NORTH CAROLINA
DEPARTMENT OF TRANSPORTATION
RALEIGH

BRIDGE APPROACH SLAB AT END BENT 2

NORTH CAROLINA PROFESSIONAL SEAL 024928 ENGINEER RODNEY E. MONEY 01/21/14

HDR Engineering, Inc. of the Carolinas
3733 National Drive, Suite 207 Raleigh, N.C. 27612
N.C.B.E.L.S. License Number: F-0116

REVISIONS							
NO.	BY:	DATE:	NO.	BY:	DATE:	SHEET NO.	
1	--	--	3	--	--	S-172	
2	--	--	4	--	--	TOTAL SHEETS	
						671	

ORIGINATED		YELLOW HIGHLIGHTED & REDLINE CHECKED		BLUE HIGHLIGHTED CHANGES		CHANGES VERIFIED BY	
INITIALS	DATE	INITIALS	DATE	INITIALS	DATE	VERIFIED	DATE

PLOT DRIVER: NCDOT_pdf_mono_eng_50.plt ! TABLE: Durham_pen.tbl
USER: ppeterso DATE: 1/21/2014 TIME: 10:08:57 AM
FILE: ...\Plan Set\1406

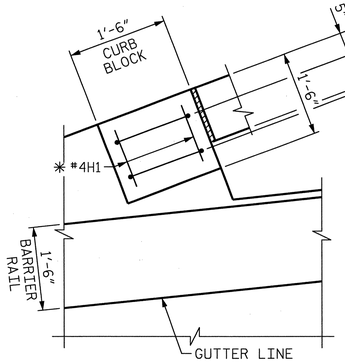

DETAIL "C"

(MAIN APPROACH SLAB REINF. NOT SHOWN FOR CLARITY)
✱ SHIFT REINFORCING AS NECESSARY TO CLEAR BLOCKOUT.

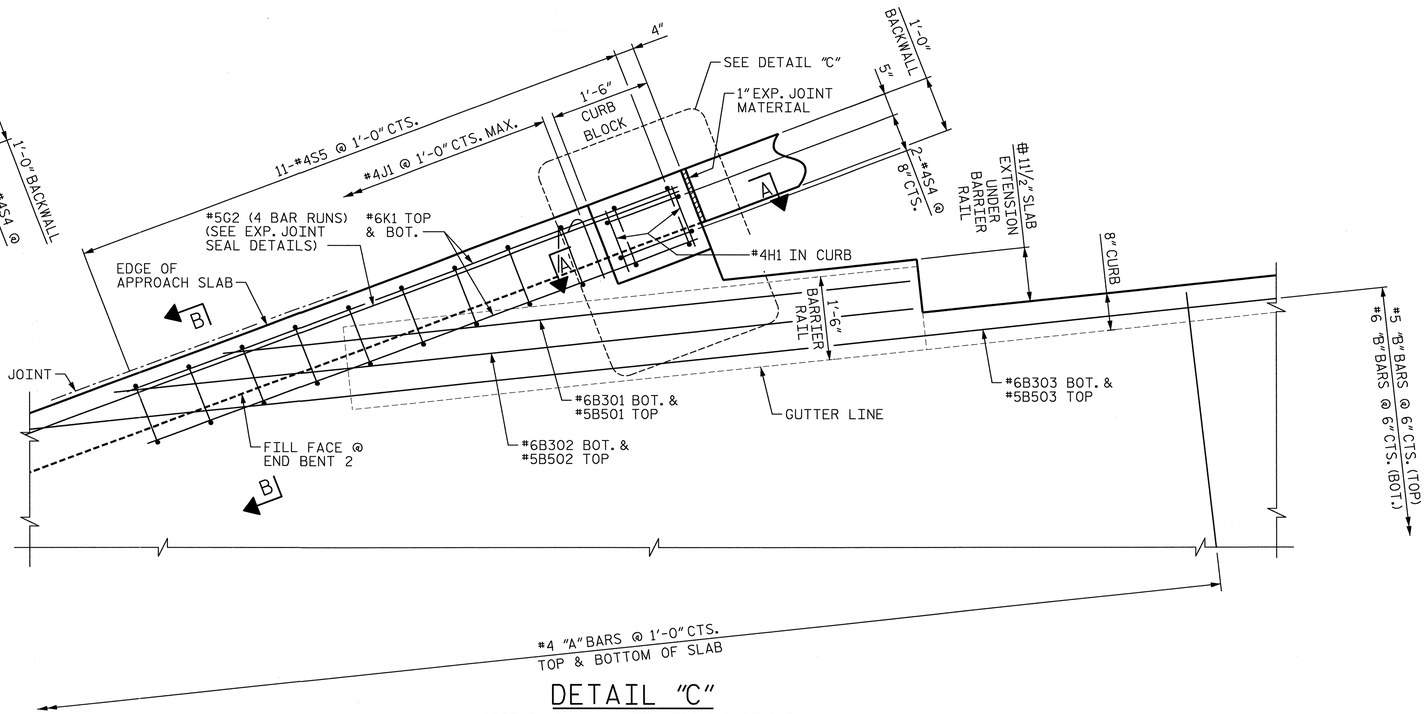

DETAIL "C"

(APPROACH SLAB @ LEFT SIDE END BENT 2)

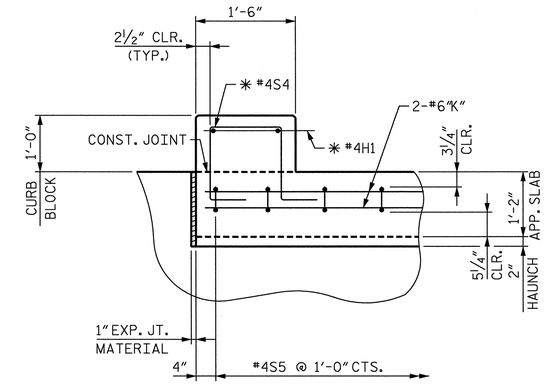

SECTION A-A

(MAIN APPROACH SLAB REINFORCING. NOT SHOWN FOR CLARITY)
✱ SHIFT REINFORCING AS NECESSARY TO CLEAR BLOCKOUT.

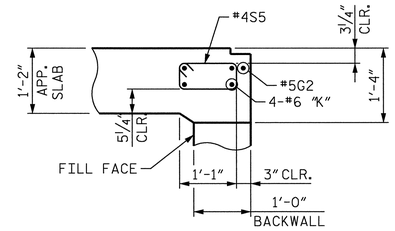

SECTION B-B

(MAIN APPROACH SLAB REINF. NOT SHOWN FOR CLARITY)

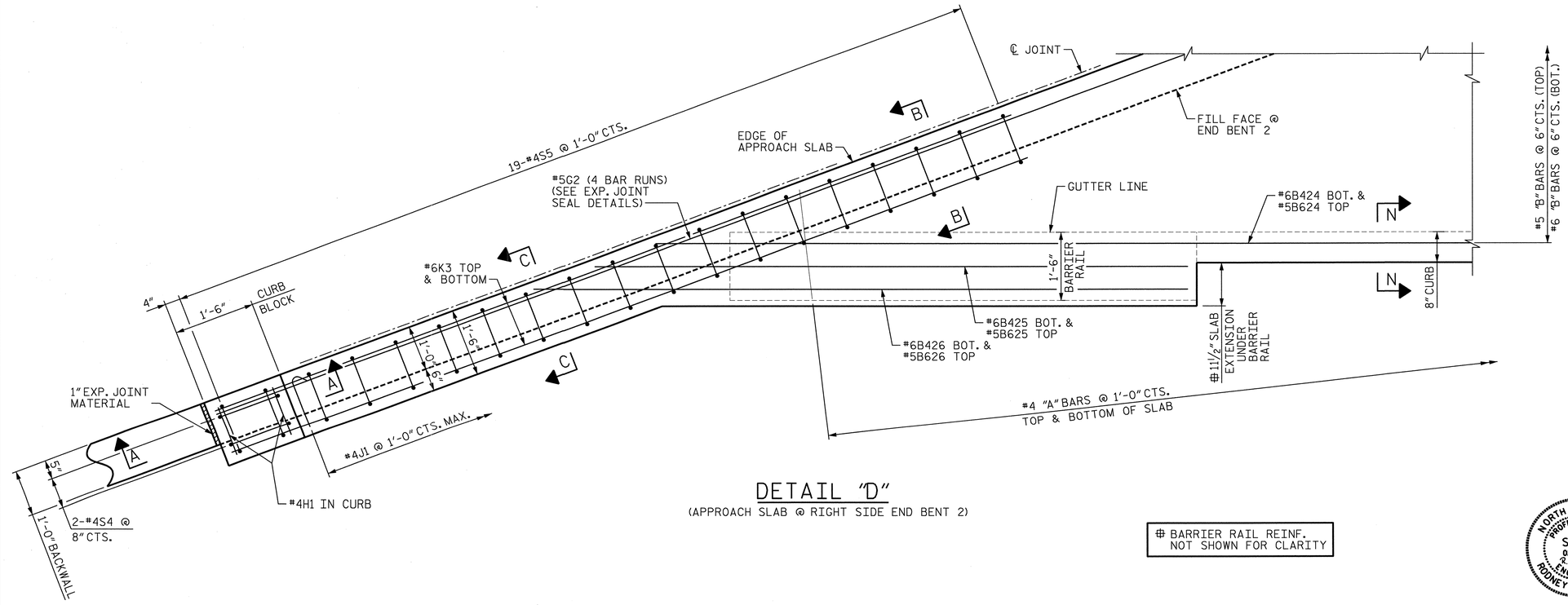

DETAIL "D"

(APPROACH SLAB @ RIGHT SIDE END BENT 2)

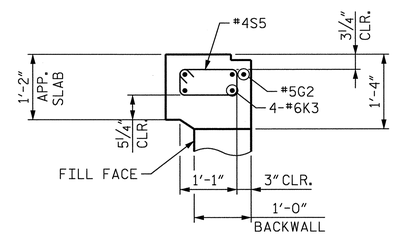

SECTION C-C

(MAIN APPROACH SLAB REINF. NOT SHOWN FOR CLARITY)

BARRIER RAIL REINF. NOT SHOWN FOR CLARITY

PROJECT NO. U-0071

DURHAM COUNTY

STATION: 157+33.78 -LDFEB-

SHEET 2 OF 5

STATE OF NORTH CAROLINA
DEPARTMENT OF TRANSPORTATION
RALEIGH

BRIDGE APPROACH SLAB DETAILS AT END BENT 2

NORTH CAROLINA PROFESSIONAL SEAL 024928 ENGINEER RODNEY E. MONEY 01/21/14

HDR Engineering, Inc. of the Carolinas
3733 National Drive, Suite 207 Raleigh, N.C. 27612
N.C.B.E.L.S. License Number: F-0116

REVISIONS							
NO.	BY:	DATE:	NO.	BY:	DATE:		SHEET NO. S-473
1	--	--	3	--	--		TOTAL SHEETS 671
2	--	--	4	--	--		

DES BY: B. PETERSON	DATE: 08/13	DWG BY: B. PETERSON	DATE: 08/13
DES CHK: E. NOLTING	DATE: 09/13	CHK BY: E. NOLTING	DATE: 09/13

ORIGINATED		YELLOW HIGHLIGHTED & REDLINE CHECKED		BLUE HIGHLIGHTED CHANGES		CHANGES VERIFIED BY	
INITIALS	DATE	INITIALS	DATE	INITIALS	DATE	VERIFIED	DATE

PLOT DRIVER: NCDOT_pdf_mono_eng_50.plt
USER: ppeterso DATE: 1/21/2014
FILE: ...\Plan Set\1407
TABLE: Durham_pen.tbl
TIME: 10:09:16 AM

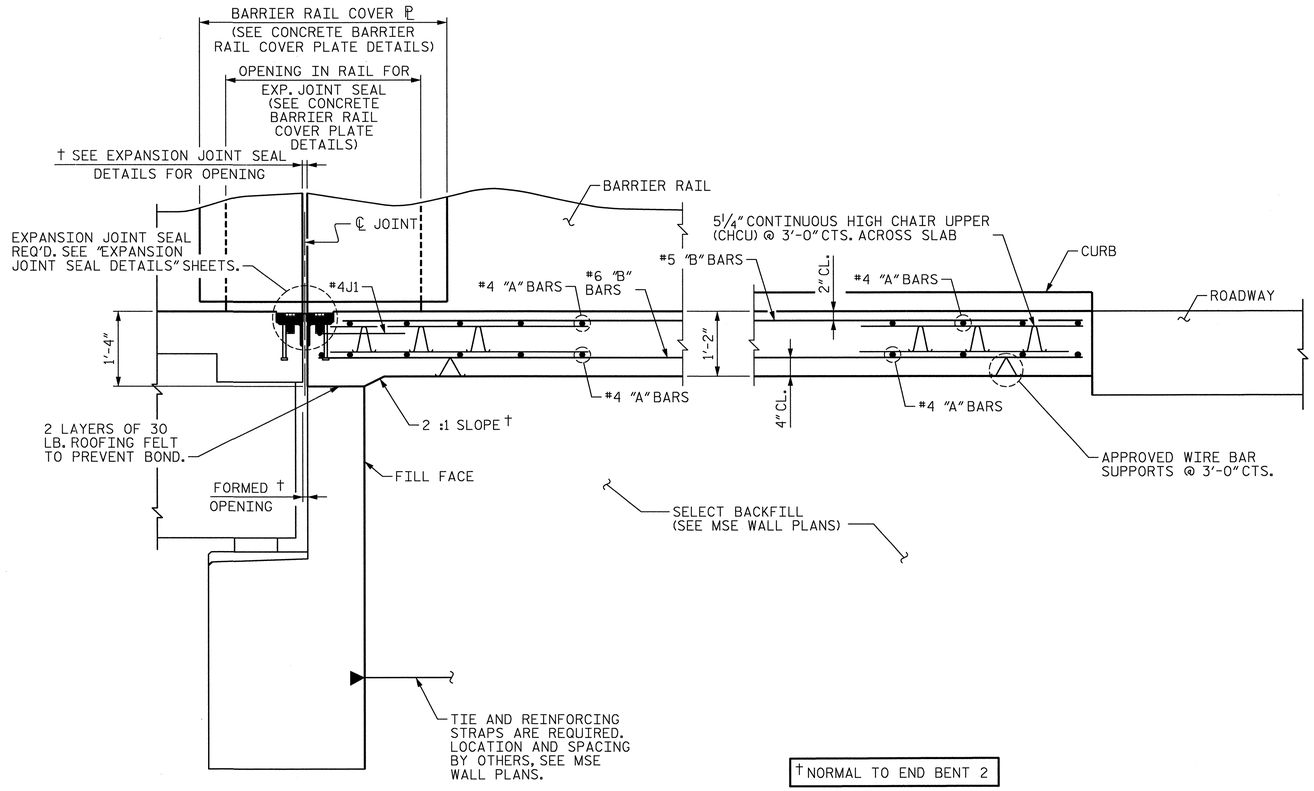

SECTION THRU SLAB AT END BENT 2

NOTES

SEE SHEET "BRIDGE APPROACH SLAB DETAILS AT END BENT 1" SHEET 3 OF 5 FOR NOTES.

SEE SHEET "BRIDGE APPROACH SLAB DETAILS AT END BENT 1" SHEET 3 OF 5 FOR BARRIER RAIL DETAILS AND BILL OF MATERIAL.

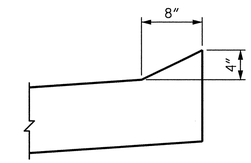

SECTION N-N

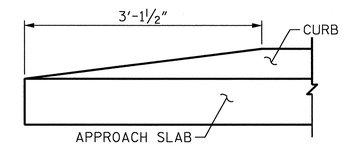

END OF CURB WITHOUT SHOULDER BERM GUTTER

CURB DETAILS

PROJECT NO. U-0071

DURHAM COUNTY

STATION: 157+33.78 -LDFEB-

SHEET 3 OF 5

STATE OF NORTH CAROLINA
DEPARTMENT OF TRANSPORTATION
RALEIGH

BRIDGE APPROACH SLAB DETAILS AT END BENT 2

NORTH CAROLINA PROFESSIONAL SEAL 024928 ENGINEER RODNEY E. MONEY 01/21/14

HDR Engineering, Inc. of the Carolinas
3733 National Drive, Suite 207 Raleigh, N.C. 27612
N.C.B.E.L.S. License Number: F-0116

REVISIONS								SHEET NO.
NO.	BY:	DATE:	NO.	BY:	DATE:			S-A74
1	--	--	3	--	--			TOTAL SHEETS
2	--	--	4	--	--			671

DES BY: B. PETERSON	DATE: 08/13	DWG BY: B. PETERSON	DATE: 08/13
DES CHK: E. NOLTING	DATE: 09/13	CHK BY: E. NOLTING	DATE: 09/13

ORIGINATED		YELLOW HIGHLIGHTED & REDLINE CHECKED		BLUE HIGHLIGHTED CHANGES		CHANGES VERIFIED BY	
INITIALS	DATE	INITIALS	DATE	INITIALS	DATE	VERIFIED	DATE

PLOT DRIVER: NCDOT_pdf_mono_eng_50.plt
USER: ppeterso DATE: 1/21/2014
FILE: ...\Plan Set\1408
t JTABLE: Durham_pen.tbl
TIME: 10:09:28 AM

BILL OF MATERIAL - PLAIN (UNCOATED) REINF. STEEL

BAR	NUMBER	SIZE	TYPE	LENGTH	WEIGHT	BAR	NUMBER	SIZE	TYPE	LENGTH	WEIGHT	BAR	NUMBER	SIZE	TYPE	LENGTH	WEIGHT
A1	42	#4	STR.	21'-6"	603	B301	1	#6	STR.	12'-1"	18	B375	3	#6	STR.	51'-3"	231
A2	12	#4	STR.	21'-10"	175	B302	1	#6	STR.	14'-0"	21	B376	3	#6	STR.	51'-9"	233
A203	9	#4	STR.	22'-5"	135	B303	1	#6	STR.	29'-4"	44	B377	3	#6	STR.	52'-3"	235
A204	9	#4	STR.	22'-2"	133	B304	1	#6	STR.	31'-3"	47	B378	3	#6	STR.	52'-9"	238
A205	9	#4	STR.	21'-11"	132	B305	1	#6	STR.	33'-1"	50	B379	3	#6	STR.	53'-3"	240
A206	9	#4	STR.	21'-8"	130	B306	1	#6	STR.	34'-11"	52	B380	3	#6	STR.	53'-9"	242
A207	9	#4	STR.	21'-5"	129	B307	1	#6	STR.	36'-9"	55	B381	3	#6	STR.	54'-3"	244
A208	9	#4	STR.	21'-1"	127	B308	1	#6	STR.	38'-6"	58	B382	3	#6	STR.	54'-9"	247
A209	9	#4	STR.	20'-10"	125	B309	1	#6	STR.	40'-4"	61	B383	3	#6	STR.	55'-3"	249
A210	6	#4	STR.	30'-0"	120	B310	1	#6	STR.	42'-2"	63	B384	3	#6	STR.	55'-9"	251
A211	6	#4	STR.	29'-7"	119	B311	1	#6	STR.	43'-11"	66	B385	3	#6	STR.	56'-3"	253
A212	6	#4	STR.	29'-2"	117	B312	1	#6	STR.	45'-9"	69	B386	3	#6	STR.	56'-8"	255
A213	6	#4	STR.	28'-9"	115	B313	1	#6	STR.	47'-6"	71	B387	3	#6	STR.	57'-2"	258
A214	6	#4	STR.	28'-4"	114	B314	1	#6	STR.	49'-4"	74	B388	3	#6	STR.	57'-8"	260
A215	6	#4	STR.	27'-11"	112	B315	1	#6	STR.	51'-1"	77	B389	3	#6	STR.	58'-2"	262
A216	6	#4	STR.	27'-5"	110	B316	1	#6	STR.	52'-10"	79	B390	3	#6	STR.	58'-8"	264
A217	6	#4	STR.	27'-0"	108	B317	1	#6	STR.	54'-7"	82	B391	3	#6	STR.	59'-2"	267
A218	6	#4	STR.	26'-7"	107	B318	1	#6	STR.	56'-5"	85	B392	3	#6	STR.	59'-7"	268
A219	6	#4	STR.	26'-2"	105	B319	1	#6	STR.	58'-2"	87	B393	4	#6	STR.	45'-9"	275
A220	6	#4	STR.	25'-9"	103	B320	1	#6	STR.	59'-10"	90	B394	4	#6	STR.	46'-1"	277
A221	6	#4	STR.	25'-3"	101	B321	2	#6	STR.	32'-1"	96	B395	4	#6	STR.	46'-5"	279
A222	6	#4	STR.	24'-10"	100	B322	2	#6	STR.	32'-11"	99	B396	4	#6	STR.	46'-10"	281
A223	6	#4	STR.	24'-5"	98	B323	2	#6	STR.	33'-11"	102	B397	4	#6	STR.	47'-2"	283
A224	6	#4	STR.	23'-11"	96	B324	2	#6	STR.	34'-9"	104	B398	4	#6	STR.	47'-6"	285
A225	6	#4	STR.	23'-6"	94	B325	2	#6	STR.	35'-7"	107	B399	4	#6	STR.	47'-11"	288
A226	6	#4	STR.	23'-1"	93	B326	2	#6	STR.	36'-6"	110	B400	4	#6	STR.	48'-3"	290
A227	6	#4	STR.	22'-7"	91	B327	2	#6	STR.	37'-4"	112	B401	4	#6	STR.	48'-7"	292
A228	6	#4	STR.	22'-2"	89	B328	2	#6	STR.	38'-2"	115	B402	4	#6	STR.	48'-11"	294
A229	6	#4	STR.	21'-8"	87	B329	2	#6	STR.	39'-0"	117	B403	4	#6	STR.	49'-4"	296
A230	6	#4	STR.	21'-3"	85	B330	2	#6	STR.	39'-10"	120	B404	4	#6	STR.	49'-8"	298
A231	6	#4	STR.	20'-9"	83	B331	2	#6	STR.	40'-8"	122	B405	4	#6	STR.	50'-0"	300
A232	6	#4	STR.	20'-4"	81	B332	2	#6	STR.	41'-7"	125	B406	4	#6	STR.	50'-4"	302
A233	6	#4	STR.	19'-10"	79	B333	2	#6	STR.	42'-5"	127	B407	4	#6	STR.	50'-8"	304
A234	6	#4	STR.	19'-4"	77	B334	2	#6	STR.	43'-3"	130	B408	4	#6	STR.	51'-1"	307
A235	6	#4	STR.	18'-11"	76	B335	2	#6	STR.	44'-1"	132	B409	4	#6	STR.	51'-5"	309
A236	6	#4	STR.	18'-5"	74	B336	2	#6	STR.	44'-11"	135	B410	4	#6	STR.	51'-9"	311
A237	6	#4	STR.	17'-11"	72	B337	2	#6	STR.	45'-9"	137	B411	4	#6	STR.	52'-1"	313
A238	6	#4	STR.	17'-6"	70	B338	2	#6	STR.	46'-6"	140	B412	4	#6	STR.	52'-5"	315
A239	6	#4	STR.	17'-0"	68	B339	2	#6	STR.	47'-4"	142	B413	4	#6	STR.	52'-10"	317
A240	6	#4	STR.	16'-6"	66	B340	2	#6	STR.	48'-2"	145	B414	4	#6	STR.	53'-2"	319
A241	3	#4	STR.	29'-6"	59	B341	2	#6	STR.	49'-0"	147	B415	4	#6	STR.	53'-6"	321
A242	3	#4	STR.	28'-6"	57	B342	2	#6	STR.	49'-10"	150	B416	4	#6	STR.	53'-10"	323
A243	3	#4	STR.	27'-7"	55	B343	2	#6	STR.	50'-8"	152	B417	4	#6	STR.	54'-2"	325
A244	3	#4	STR.	26'-7"	53	B344	2	#6	STR.	51'-5"	154	B418	4	#6	STR.	54'-6"	327
A245	3	#4	STR.	25'-7"	51	B345	2	#6	STR.	52'-3"	157	B419	4	#6	STR.	54'-10"	329
A246	3	#4	STR.	24'-7"	49	B346	2	#6	STR.	53'-1"	159	B420	4	#6	STR.	55'-3"	332
A247	3	#4	STR.	23'-7"	47	B347	2	#6	STR.	53'-10"	162	B421	4	#6	STR.	55'-7"	334
A248	3	#4	STR.	22'-6"	45	B348	2	#6	STR.	54'-8"	164	B422	4	#6	STR.	55'-11"	336
A249	3	#4	STR.	21'-6"	43	B349	2	#6	STR.	55'-6"	167	B423	4	#6	STR.	56'-3"	338
A250	3	#4	STR.	20'-6"	41	B350	2	#6	STR.	56'-3"	169	B424	4	#6	STR.	56'-7"	340
A251	3	#4	STR.	19'-6"	39	B351	2	#6	STR.	57'-1"	171	B425	1	#6	STR.	12'-9"	19
A252	3	#4	STR.	18'-5"	37	B352	2	#6	STR.	57'-10"	174	B426	1	#6	STR.	14'-0"	21
A253	3	#4	STR.	17'-5"	35	B353	2	#6	STR.	58'-8"	176						
A254	3	#4	STR.	16'-4"	33	B354	2	#6	STR.	59'-5"	178						
A255	3	#4	STR.	15'-4"	31	B355	3	#6	STR.	41'-0"	185						
A256	3	#4	STR.	14'-3"	29	B356	3	#6	STR.	41'-7"	187						
A257	3	#4	STR.	13'-3"	27	B357	3	#6	STR.	42'-1"	190						
A258	3	#4	STR.	12'-2"	24	B358	3	#6	STR.	42'-7"	192						
A259	3	#4	STR.	11'-1"	22	B359	3	#6	STR.	43'-1"	194						
A260	3	#4	STR.	10'-0"	20	B360	3	#6	STR.	43'-8"	197						
A261	3	#4	STR.	8'-11"	18	B361	3	#6	STR.	44'-2"	199						
A262	3	#4	STR.	7'-10"	16	B362	3	#6	STR.	44'-8"	201						
A263	3	#4	STR.	6'-9"	14	B363	3	#6	STR.	45'-2"	204						
A264	3	#4	STR.	5'-8"	11	B364	3	#6	STR.	45'-8"	206						
A265	3	#4	STR.	4'-7"	9	B365	3	#6	STR.	46'-3"	208						
A266	1	#4	STR.	5'-2"	3	B366	3	#6	STR.	46'-9"	211						
A267	1	#4	STR.	4'-10"	3	B367	3	#6	STR.	47'-3"	213						
A268	1	#4	STR.	4'-5"	3	B368	3	#6	STR.	47'-9"	215						
A269	1	#4	STR.	4'-1"	3	B369	3	#6	STR.	48'-3"	217						
A270	1	#4	STR.	3'-9"	3	B370	3	#6	STR.	48'-9"	220						
A271	1	#4	STR.	3'-4"	2	B371	3	#6	STR.	49'-3"	222						
A272	1	#4	STR.	3'-0"	2	B372	3	#6	STR.	49'-9"	224						
A273	1	#4	STR.	2'-7"	2	B373	3	#6	STR.	50'-3"	226						
A274	1	#4	STR.	2'-3"	2	B374	3	#6	STR.	50'-9"	229						

NOTE: ALL BARS THIS SHEET ARE PLAIN (UNCOATED) REINFORCING STEEL (SEE SHEET 5 OF 5 FOR EPOXY COATED REINFORCING STEEL)

PROJECT NO. U-0071

DURHAM COUNTY

STATION: 157+33.78 -LDFEB-

SHEET 4 OF 5

STATE OF NORTH CAROLINA
DEPARTMENT OF TRANSPORTATION
RALEIGH

BRIDGE APPROACH SLAB
BILL OF MATERIAL
AT END BENT 2

NORTH CAROLINA PROFESSIONAL SEAL 024928 ENGINEER RODNEY E. MONEY 01/21/14

HDR Engineering, Inc. of the Carolinas
3733 National Drive, Suite 207 Raleigh, N.C. 27612
N.C.B.E.L.S. License Number: F-0116

REVISIONS						SHEET NO.
NO.	BY:	DATE:	NO.	BY:	DATE:	S-47B
1	--	--	3	--	--	TOTAL SHEETS
2	--	--	4	--	--	671

DES BY: B. PETERSON	DATE : 08/13	DWG BY: B. PETERSON	DATE : 08/13
DES CHK: E. NOLTING	DATE : 09/13	CHK BY: E. NOLTING	DATE : 09/13

ORIGINATED		YELLOW HIGHLIGHTED & REDLINE CHECKED		BLUE HIGHLIGHTED CHANGES		CHANGES VERIFIED BY	
INITIALS	DATE	INITIALS	DATE	INITIALS	DATE	VERIFIED	DATE

PLOT DRIVER: NCDOT_pdf_mono_eng_50.plt
USER: ppeterso DATE: 1/21/2014
FILE: ...\Plan Set\1409
F)TABLE: Durham_pen.tbl
TIME: 10:09:40 AM

BILL OF MATERIAL - EPOXY COATED REINF. STEEL

BAR	NUMBER	SIZE	TYPE	LENGTH	WEIGHT	BAR	NUMBER	SIZE	TYPE	LENGTH	WEIGHT	BAR	NUMBER	SIZE	TYPE	LENGTH	WEIGHT
✳ A101	42	#4	STR.	21'-8"	608	✳ B501	1	#5	STR.	11'-0"	11	✳ B575	3	#5	STR.	50'-10"	159
✳ A102	12	#4	STR.	22'-0"	176	✳ B502	1	#5	STR.	12'-11"	13	✳ B576	3	#5	STR.	51'-4"	161
✳ A303	9	#4	STR.	22'-6"	135	✳ B503	1	#5	STR.	28'-4"	30	✳ B577	3	#5	STR.	51'-10"	162
✳ A304	9	#4	STR.	22'-3"	134	✳ B504	1	#5	STR.	30'-2"	31	✳ B578	3	#5	STR.	52'-4"	164
✳ A305	9	#4	STR.	22'-0"	132	✳ B505	1	#5	STR.	32'-0"	33	✳ B579	3	#5	STR.	52'-10"	165
✳ A306	9	#4	STR.	21'-8"	130	✳ B506	1	#5	STR.	33'-10"	35	✳ B580	3	#5	STR.	53'-4"	167
✳ A307	9	#4	STR.	21'-5"	129	✳ B507	1	#5	STR.	35'-8"	37	✳ B581	3	#5	STR.	53'-10"	168
✳ A308	9	#4	STR.	21'-2"	127	✳ B508	1	#5	STR.	37'-6"	39	✳ B582	3	#5	STR.	54'-4"	170
✳ A309	9	#4	STR.	20'-11"	126	✳ B509	1	#5	STR.	39'-3"	41	✳ B583	3	#5	STR.	54'-10"	172
✳ A310	6	#4	STR.	29'-11"	120	✳ B510	1	#5	STR.	41'-1"	43	✳ B584	3	#5	STR.	55'-4"	173
✳ A311	6	#4	STR.	29'-6"	118	✳ B511	1	#5	STR.	42'-11"	45	✳ B585	3	#5	STR.	55'-10"	175
✳ A312	6	#4	STR.	29'-1"	117	✳ B512	1	#5	STR.	44'-8"	47	✳ B586	3	#5	STR.	56'-3"	176
✳ A313	6	#4	STR.	28'-8"	115	✳ B513	1	#5	STR.	46'-6"	48	✳ B587	3	#5	STR.	56'-9"	178
✳ A314	6	#4	STR.	28'-3"	113	✳ B514	1	#5	STR.	48'-3"	50	✳ B588	3	#5	STR.	57'-3"	179
✳ A315	6	#4	STR.	27'-10"	112	✳ B515	1	#5	STR.	50'-0"	52	✳ B589	3	#5	STR.	57'-9"	181
✳ A316	6	#4	STR.	27'-5"	110	✳ B516	1	#5	STR.	51'-9"	54	✳ B590	3	#5	STR.	58'-3"	182
✳ A317	6	#4	STR.	27'-0"	108	✳ B517	1	#5	STR.	53'-7"	56	✳ B591	3	#5	STR.	58'-9"	184
✳ A318	6	#4	STR.	26'-6"	106	✳ B518	1	#5	STR.	55'-4"	58	✳ B592	3	#5	STR.	59'-2"	185
✳ A319	6	#4	STR.	26'-1"	105	✳ B519	1	#5	STR.	57'-1"	60	✳ B593	4	#5	STR.	45'-5"	189
✳ A320	6	#4	STR.	25'-8"	103	✳ B520	1	#5	STR.	58'-10"	61	✳ B594	4	#5	STR.	45'-9"	191
✳ A321	6	#4	STR.	25'-3"	101	✳ B521	2	#5	STR.	31'-6"	66	✳ B595	4	#5	STR.	46'-1"	192
✳ A322	6	#4	STR.	24'-9"	99	✳ B522	2	#5	STR.	32'-4"	67	✳ B596	4	#5	STR.	46'-6"	194
✳ A323	6	#4	STR.	24'-4"	98	✳ B523	2	#5	STR.	33'-4"	70	✳ B597	4	#5	STR.	46'-10"	195
✳ A324	6	#4	STR.	23'-11"	96	✳ B524	2	#5	STR.	34'-2"	71	✳ B598	4	#5	STR.	47'-2"	197
✳ A325	6	#4	STR.	23'-5"	94	✳ B525	2	#5	STR.	35'-0"	73	✳ B599	4	#5	STR.	47'-7"	199
✳ A326	6	#4	STR.	23'-0"	92	✳ B526	2	#5	STR.	35'-11"	75	✳ B600	4	#5	STR.	47'-11"	200
✳ A327	6	#4	STR.	22'-7"	91	✳ B527	2	#5	STR.	36'-9"	77	✳ B601	4	#5	STR.	48'-3"	201
✳ A328	6	#4	STR.	22'-1"	89	✳ B528	2	#5	STR.	37'-7"	78	✳ B602	4	#5	STR.	48'-7"	203
✳ A329	6	#4	STR.	21'-8"	87	✳ B529	2	#5	STR.	38'-5"	80	✳ B603	4	#5	STR.	49'-0"	204
✳ A330	6	#4	STR.	21'-2"	85	✳ B530	2	#5	STR.	39'-3"	82	✳ B604	4	#5	STR.	49'-4"	206
✳ A331	6	#4	STR.	20'-9"	83	✳ B531	2	#5	STR.	40'-2"	84	✳ B605	4	#5	STR.	49'-8"	207
✳ A332	6	#4	STR.	20'-3"	81	✳ B532	2	#5	STR.	41'-0"	86	✳ B606	4	#5	STR.	50'-0"	209
✳ A333	6	#4	STR.	19'-9"	79	✳ B533	2	#5	STR.	41'-10"	87	✳ B607	4	#5	STR.	50'-5"	210
✳ A334	6	#4	STR.	19'-4"	77	✳ B534	2	#5	STR.	42'-8"	89	✳ B608	4	#5	STR.	50'-9"	212
✳ A335	6	#4	STR.	18'-10"	75	✳ B535	2	#5	STR.	43'-6"	91	✳ B609	4	#5	STR.	51'-1"	213
✳ A336	6	#4	STR.	18'-4"	73	✳ B536	2	#5	STR.	44'-4"	92	✳ B610	4	#5	STR.	51'-5"	215
✳ A337	6	#4	STR.	17'-11"	72	✳ B537	2	#5	STR.	45'-2"	94	✳ B611	4	#5	STR.	51'-9"	216
✳ A338	6	#4	STR.	17'-5"	70	✳ B538	2	#5	STR.	46'-0"	96	✳ B612	4	#5	STR.	52'-1"	217
✳ A339	6	#4	STR.	16'-11"	68	✳ B539	2	#5	STR.	46'-9"	98	✳ B613	4	#5	STR.	52'-6"	219
✳ A340	6	#4	STR.	16'-5"	66	✳ B540	2	#5	STR.	47'-7"	99	✳ B614	4	#5	STR.	52'-10"	220
✳ A341	3	#4	STR.	29'-2"	58	✳ B541	2	#5	STR.	48'-5"	101	✳ B615	4	#5	STR.	53'-2"	222
✳ A342	3	#4	STR.	28'-2"	56	✳ B542	2	#5	STR.	49'-3"	103	✳ B616	4	#5	STR.	53'-6"	223
✳ A343	3	#4	STR.	27'-2"	54	✳ B543	2	#5	STR.	50'-1"	104	✳ B617	4	#5	STR.	53'-10"	225
✳ A344	3	#4	STR.	26'-2"	52	✳ B544	2	#5	STR.	50'-10"	106	✳ B618	4	#5	STR.	54'-2"	226
✳ A345	3	#4	STR.	25'-2"	50	✳ B545	2	#5	STR.	51'-8"	108	✳ B619	4	#5	STR.	54'-6"	227
✳ A346	3	#4	STR.	24'-2"	48	✳ B546	2	#5	STR.	52'-6"	110	✳ B620	4	#5	STR.	54'-11"	229
✳ A347	3	#4	STR.	23'-2"	46	✳ B547	2	#5	STR.	53'-3"	111	✳ B621	4	#5	STR.	55'-3"	231
✳ A348	3	#4	STR.	22'-2"	44	✳ B548	2	#5	STR.	54'-1"	113	✳ B622	4	#5	STR.	55'-7"	232
✳ A349	3	#4	STR.	21'-2"	42	✳ B549	2	#5	STR.	54'-11"	115	✳ B623	4	#5	STR.	55'-11"	233
✳ A350	3	#4	STR.	20'-1"	40	✳ B550	2	#5	STR.	55'-8"	116	✳ B624	4	#5	STR.	56'-3"	235
✳ A351	3	#4	STR.	19'-1"	38	✳ B551	2	#5	STR.	56'-6"	118	✳ B625	1	#5	STR.	11'-8"	12
✳ A352	3	#4	STR.	18'-1"	36	✳ B552	2	#5	STR.	57'-3"	119	✳ B626	1	#5	STR.	13'-0"	14
✳ A353	3	#4	STR.	17'-0"	34	✳ B553	2	#5	STR.	58'-1"	121						
✳ A354	3	#4	STR.	16'-0"	32	✳ B554	2	#5	STR.	58'-10"	123	✳ G2	4	#5	STR.	58'-6"	244
✳ A355	3	#4	STR.	14'-11"	30	✳ B555	3	#5	STR.	40'-7"	127						
✳ A356	3	#4	STR.	13'-11"	28	✳ B556	3	#5	STR.	41'-2"	129	✳ J1	214	#4	1	1'-5"	203
✳ A357	3	#4	STR.	12'-10"	26	✳ B557	3	#5	STR.	41'-8"	130						
✳ A358	3	#4	STR.	11'-9"	24	✳ B558	3	#5	STR.	42'-2"	132	✳ K1	4	#6	STR.	10'-4"	62
✳ A359	3	#4	STR.	10'-9"	22	✳ B559	3	#5	STR.	42'-8"	134	✳ K3	4	#6	STR.	18'-4"	110
✳ A360	3	#4	STR.	9'-8"	19	✳ B560	3	#5	STR.	43'-3"	135						
✳ A361	3	#4	STR.	8'-7"	17	✳ B561	3	#5	STR.	43'-9"	137	✳ S5	30	#4	2	3'-8"	73
✳ A362	3	#4	STR.	7'-6"	15	✳ B562	3	#5	STR.	44'-3"	138	✳ S6	16	#4	3	5'-11"	63
✳ A363	3	#4	STR.	6'-5"	13	✳ B563	3	#5	STR.	44'-9"	140	✳ S7	8	#4	4	8'-6"	45
✳ A364	3	#4	STR.	5'-4"	11	✳ B564	3	#5	STR.	45'-3"	142						
✳ A365	3	#4	STR.	4'-3"	9	✳ B565	3	#5	STR.	45'-10"	143						
✳ A366	1	#4	STR.	4'-10"	3	✳ B566	3	#5	STR.	46'-4"	145						
✳ A367	1	#4	STR.	4'-5"	3	✳ B567	3	#5	STR.	46'-10"	147						
✳ A368	1	#4	STR.	4'-1"	3	✳ B568	3	#5	STR.	47'-4"	148						
✳ A369	1	#4	STR.	3'-9"	3	✳ B569	3	#5	STR.	47'-10"	150						
✳ A370	1	#4	STR.	3'-4"	2	✳ B570	3	#5	STR.	48'-4"	151						
✳ A371	1	#4	STR.	3'-0"	2	✳ B571	3	#5	STR.	48'-10"	153						
✳ A372	1	#4	STR.	2'-7"	2	✳ B572	3	#5	STR.	49'-4"	154						
✳ A373	1	#4	STR.	2'-3"	2	✳ B573	3	#5	STR.	49'-10"	156						
✳ A374	1	#4	STR.	1'-10"	1	✳ B574	3	#5	STR.	50'-4"	157						

✳ DENOTES EPOXY COATED REINFORCING STEEL

NOTE: ALL BARS THIS SHEET ARE EPOXY COATED (SEE SHEET 4 OF 5 FOR PLAIN) (UNCOATED) REINFORCING STEEL)

SUMMARY OF QUANTITIES APPROACH SLAB AT END BENT 2

REINFORCING STEEL (LBS.)	29,950
✳ EPOXY COATED REINF. STEEL (LBS.)	23,099
CLASS AA CONCRETE (CU. YDS.)	349.2

BAR TYPES

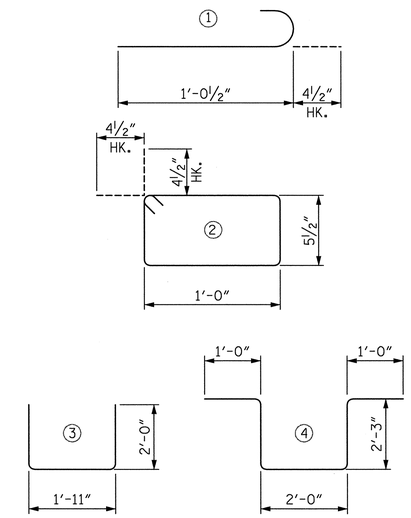

ALL DIMENSIONS ARE OUT TO OUT

SUPERSTRUCTURE REINFORCING STEEL LENGTHS ARE BASED ON THE FOLLOWING MINIMUM SPLICE LENGTHS

BAR SIZE	SUPERSTRUCTURE EXCEPT APPROACH SLABS, PARAPET, AND BARRIER RAIL		APPROACH SLABS		PARAPET AND BARRIER RAIL
	EPOXY COATED	UNCOATED	EPOXY COATED	UNCOATED	
#4	2'-0"	1'-9"	2'-0"	1'-9"	2'-9"
#5	2'-6"	2'-2"	2'-6"	2'-2"	3'-5"
#6	3'-0"	2'-7"	3'-10"	2'-7"	4'-4"
#7	5'-3"	3'-6"			
#8	6'-10"	4'-7"			

PROJECT NO. U-0071

DURHAM COUNTY

STATION: 157+33.78 -LDFEB-

SHEET 5 OF 5

STATE OF NORTH CAROLINA
DEPARTMENT OF TRANSPORTATION
RALEIGH

BRIDGE APPROACH SLAB BILL OF MATERIAL AT END BENT 2

NORTH CAROLINA PROFESSIONAL SEAL 024928 ENGINEER RODNEY E. MONEY 01/21/14

HDR Engineering, Inc. of the Carolinas
3733 National Drive, Suite 207 Raleigh, N.C. 27612
N.C.B.E.L.S. License Number: F-0116

REVISIONS								SHEET NO. S-47c
NO.	BY:	DATE:	NO.	BY:	DATE:			TOTAL SHEETS 671
1	--	--	3	--	--			
2	--	--	4	--	--			

DES BY: B. PETERSON	DATE: 08/13	DWG BY: B. PETERSON	DATE: 08/13
DES CHK: E. NOLTING	DATE: 09/13	CHK BY: E. NOLTING	DATE: 09/13

ORIGINATED		YELLOW HIGHLIGHTED & REDLINE CHECKED		BLUE HIGHLIGHTED CHANGES		CHANGES VERIFIED BY	
INITIALS	DATE	INITIALS	DATE	INITIALS	DATE	VERIFIED	DATE

PLOT DRIVER: NCDOT_pdf_mono_eng_50.plt
USER: ppeterso DATE: 1/21/2014
FILE: ...\Plan Set\1410
TABLE: Durham_pen.tbl
TIME: 10:09:52 AM

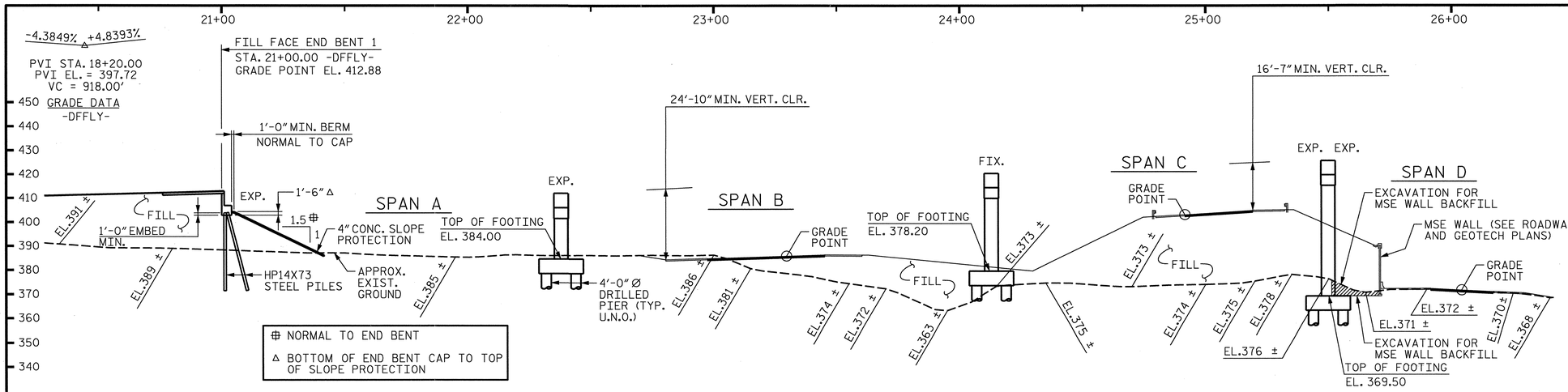

SECTION ALONG -DFFLY-

(SECTION AT END BENTS AND BENTS TAKEN AT RIGHT ANGLES TO BENTS)

REQUIRED MINIMUM VERTICAL CLEARANCE	
ROADWAY	MIN. REQ'D. CLEARANCE
-DFLW-	16'-6"
-LDFEB-	16'-6"
-DFWB-	17'-0"
-DETOUR3-	17'-0"
-DFEB-	17'-0"

+2.9264% -4.0000%
PVI STA. 18+45.00
PVI EL. = 444.69
VC = 1720.00'
GRADE DATA
-DFLW-

+2.9266% -1.8030%
PVI STA. 136+25.00
PVI EL. = 437.08
VC = 1170.00'
GRADE DATA
-LDFEB-

-3.6217% -0.3000%
PVI STA. 54+00.00
PVI EL. = 368.22
VC = 600.00'
GRADE DATA
-DFWB-

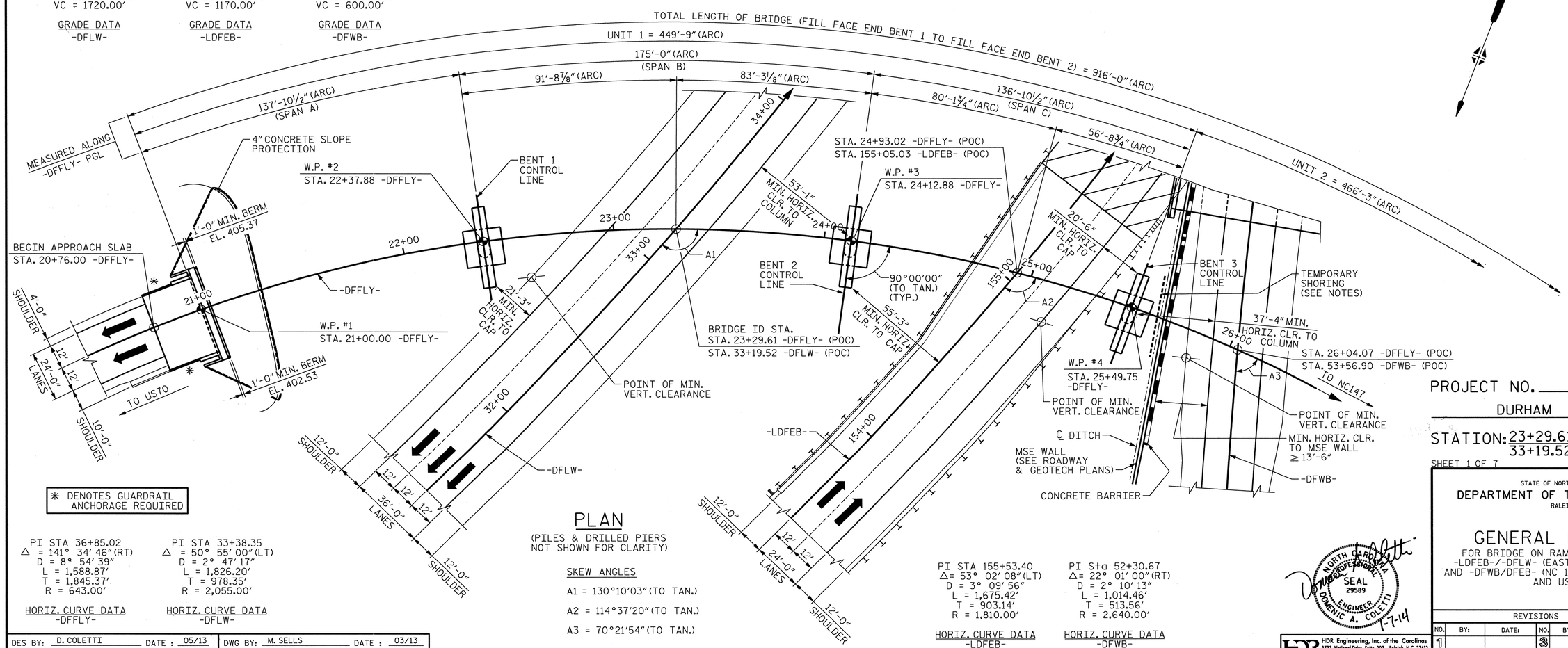

✱ DENOTES GUARDRAIL ANCHORAGE REQUIRED

PLAN

(PILES & DRILLED PIERS NOT SHOWN FOR CLARITY)

SKEW ANGLES

A1 = 130°10'03" (TO TAN.)

A2 = 114°37'20" (TO TAN.)

A3 = 70°21'54" (TO TAN.)

PI STA 36+85.02
Δ = 141° 34' 46" (RT)
D = 8° 54' 39"
L = 1,588.87'
T = 1,845.37'
R = 643.00'

HORIZ. CURVE DATA
-DFFLY-

PI STA 33+38.35
Δ = 50° 55' 00" (LT)
D = 2° 47' 17"
L = 1,826.20'
T = 978.35'
R = 2,055.00'

HORIZ. CURVE DATA
-DFLW-

PI STA 155+53.40
Δ = 53° 02' 08" (LT)
D = 3° 09' 56"
L = 1,675.42'
T = 903.14'
R = 1,810.00'

HORIZ. CURVE DATA
-LDFEB-

PI Sta 52+30.67
Δ = 22° 01' 00" (RT)
D = 2° 10' 13"
L = 1,014.46'
T = 513.56'
R = 2,640.00'

HORIZ. CURVE DATA
-DFWB-

PROJECT NO. U-0071

DURHAM COUNTY

STATION: 23+29.61 -DFFLY- (POC)
33+19.52 -DFLW- (POC)

SHEET 1 OF 7 BRIDGE NO. 601

STATE OF NORTH CAROLINA
DEPARTMENT OF TRANSPORTATION
RALEIGH

GENERAL DRAWING

FOR BRIDGE ON RAMP -DFFLY- OVER -LDFEB-/-DFLW- (EAST END CONNECTOR) AND -DFWB/DFEB- (NC 147) BETWEEN NC 147 AND US70

NORTH CAROLINA PROFESSIONAL SEAL 29589 ENGINEER DOMENIC A. COLETTI 1-7-14

REVISIONS								
NO.	BY:	DATE:	NO.	BY:	DATE:	NO.	BY:	DATE:
1			3					
2			4					

SHEET NO. S-477
TOTAL SHEETS 671

HDR Engineering, Inc. of the Carolinas
3733 National Drive, Suite 207 Raleigh, N.C. 27612
N.C.B.E.L.S. License Number: F-0116

DES BY: D. COLETTI	DATE: 05/13	DWG BY: M. SELLS	DATE: 03/13
DES CHK: J. TAYLOR	DATE: 06/13	CHK BY: J. TAYLOR	DATE: 06/13

ORIGINATED		YELLOW HIGHLIGHTED & REDLINE CHECKED		BLUE HIGHLIGHTED CHANGES		CHANGES VERIFIED BY	
INITIALS	DATE	INITIALS	DATE	INITIALS	DATE	VERIFIED	DATE

PLOT DRIVER: NCDOT_pdf_mono_eng_50.plt
USER: msells
DATE: 1/6/2014
FILE: ...\tpa\d039122\U0071_11_GD1.dgn
P. TABLE: Durham_pen.tbl
TIME: 1:11:35 PM

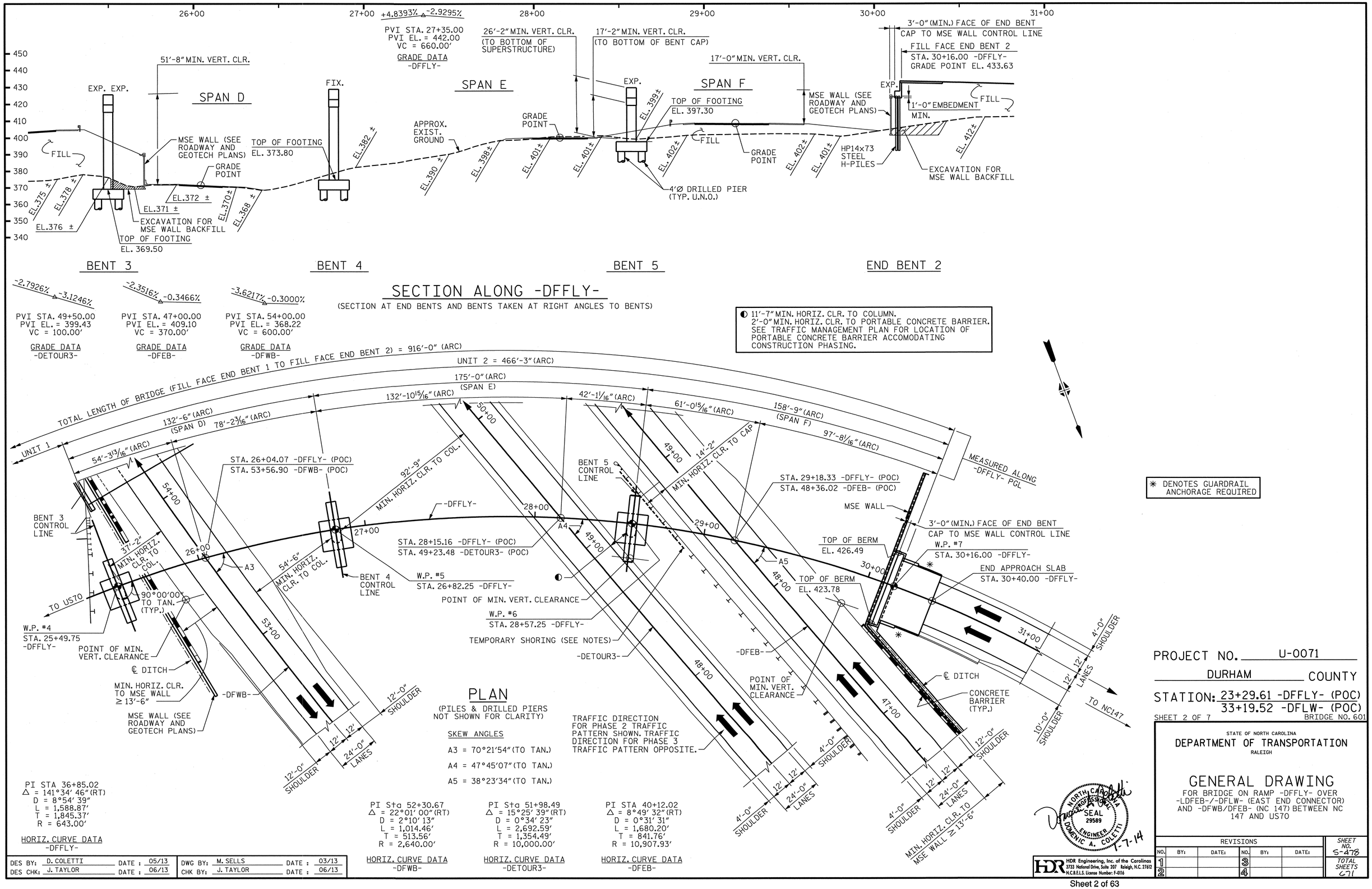
26+00
27+00
28+00
29+00
30+00
31+00
+4.8393% -2.9295%
PVI STA. 27+35.00
PVI EL. = 442.00
VC = 660.00'
GRADE DATA
-DFFLY-
26'-2" MIN. VERT. CLR.
(TO BOTTOM OF SUPERSTRUCTURE)
17'-2" MIN. VERT. CLR.
(TO BOTTOM OF BENT CAP)
17'-0" MIN. VERT. CLR.
3'-0" (MIN.) FACE OF END BENT CAP TO MSE WALL CONTROL LINE
FILL FACE END BENT 2
STA. 30+16.00 -DFFLY-
GRADE POINT EL. 433.63
51'-8" MIN. VERT. CLR.
SPAN D
SPAN E
SPAN F
EXP. EXP.
FIX.
EXP.
EXP.
FILL
MSE WALL (SEE ROADWAY AND GEOTECH PLANS)
GRADE POINT
EL.375 ±
EL.378 ±
EL.376 ±
EL.371 ±
EL.372 ±
EL.370 ±
EL.368 ±
EXCAVATION FOR MSE WALL BACKFILL
TOP OF FOOTING
EL. 369.50
TOP OF FOOTING
EL. 373.80
EL.382 ±
APPROX. EXIST. GROUND
EL.390 ±
EL.398 ±
EL.401 ±
EL.401 ±
GRADE POINT
EL.399 ±
TOP OF FOOTING
EL. 397.30
FILL
GRADE POINT
EL.402 ±
EL.402 ±
EL.401 ±
4'Ø DRILLED PIER (TYP. U.N.O.)
MSE WALL (SEE ROADWAY AND GEOTECH PLANS)
1'-0" EMBEDMENT MIN.
FILL
HP14x73 STEEL H-PILES
EL. 412 ±
EXCAVATION FOR MSE WALL BACKFILL
450
440
430
420
410
400
390
380
370
360
350
340
BENT 3
BENT 4
BENT 5
END BENT 2
SECTION ALONG -DFFLY-
(SECTION AT END BENTS AND BENTS TAKEN AT RIGHT ANGLES TO BENTS)
-2.7926% -3.1246%
PVI STA. 49+50.00
PVI EL. = 399.43
VC = 100.00'
GRADE DATA
-DETOUR3-
-2.3516% -0.3466%
PVI STA. 47+00.00
PVI EL. = 409.10
VC = 370.00'
GRADE DATA
-DFEB-
-3.6217% -0.3000%
PVI STA. 54+00.00
PVI EL. = 368.22
VC = 600.00'
GRADE DATA
-DFWB-
◐ 11'-7" MIN. HORIZ. CLR. TO COLUMN.
2'-0" MIN. HORIZ. CLR. TO PORTABLE CONCRETE BARRIER.
SEE TRAFFIC MANAGEMENT PLAN FOR LOCATION OF PORTABLE CONCRETE BARRIER ACCOMODATING CONSTRUCTION PHASING.
TOTAL LENGTH OF BRIDGE (FILL FACE END BENT 1 TO FILL FACE END BENT 2) = 916'-0" (ARC)
UNIT 2 = 466'-3" (ARC)
175'-0" (ARC)
(SPAN E)
132'-10 15/16" (ARC)
42'-1 1/16" (ARC)
61'-0 15/16" (ARC)
158'-9" (ARC)
(SPAN F)
97'-8 1/16" (ARC)
132'-6" (ARC)
(SPAN D)
78'-2 3/16" (ARC)
UNIT 1
54'-3 13/16" (ARC)
MEASURED ALONG -DFFLY- PGL
STA. 26+04.07 -DFFLY- (POC)
STA. 53+56.90 -DFWB- (POC)
92'-9"
MIN. HORIZ. CLR. TO COL.
BENT 5 CONTROL LINE
14'-2"
MIN. HORIZ. CLR. TO CAP
STA. 29+18.33 -DFFLY- (POC)
STA. 48+36.02 -DFEB- (POC)
MSE WALL
3'-0" (MIN.) FACE OF END BENT CAP TO MSE WALL CONTROL LINE
W.P. #7
STA. 30+16.00 -DFFLY-
END APPROACH SLAB
STA. 30+40.00 -DFFLY-
TOP OF BERM
EL. 426.49
TOP OF BERM
EL. 423.78
BENT 3 CONTROL LINE
37'-2"
MIN. HORIZ. CLR. TO COL.
54'-6"
MIN. HORIZ. CLR. TO COL.
-DFFLY-
STA. 28+15.16 -DFFLY- (POC)
STA. 49+23.48 -DETOUR3- (POC)
BENT 4 CONTROL LINE
W.P. #5
STA. 26+82.25 -DFFLY-
POINT OF MIN. VERT. CLEARANCE
W.P. #6
STA. 28+57.25 -DFFLY-
TEMPORARY SHORING (SEE NOTES)
-DETOUR3-
-DFEB-
POINT OF MIN. VERT. CLEARANCE
TO US70
W.P. #4
STA. 25+49.75
-DFFLY-
90°00'00" TO TAN. (TYP.)
POINT OF MIN. VERT. CLEARANCE
℄ DITCH
MIN. HORIZ. CLR. TO MSE WALL ≥ 13'-6"
-DFWB-
MSE WALL (SEE ROADWAY AND GEOTECH PLANS)
12'-0" SHOULDER
12'
12'
24'-0" LANES
12'-0" SHOULDER
4'-0" SHOULDER
12'
12'
24'-0" LANES
4'-0" SHOULDER
12'-0" SHOULDER
12'
12'
24'-0" LANES
4'-0" SHOULDER
MIN. HORIZ. CLR. TO MSE WALL ≥ 13'-6"
℄ DITCH
CONCRETE BARRIER (TYP.)
10'-0" SHOULDER
12'
12'
LANES
4'-0" SHOULDER
TO NC147
A3
A4
A5
26+00
27+00
28+00
29+00
30+00
31+00
48+00
49+00
49+00
48+00
47+00
54+00
53+00
PLAN
(PILES & DRILLED PIERS NOT SHOWN FOR CLARITY)
SKEW ANGLES
A3 = 70°21'54" (TO TAN.)
A4 = 47°45'07" (TO TAN.)
A5 = 38°23'34" (TO TAN.)
TRAFFIC DIRECTION FOR PHASE 2 TRAFFIC PATTERN SHOWN. TRAFFIC DIRECTION FOR PHASE 3 TRAFFIC PATTERN OPPOSITE.
✳ DENOTES GUARDRAIL ANCHORAGE REQUIRED
PI STA 36+85.02
Δ = 141°34' 46" (RT)
D = 8°54' 39"
L = 1,588.87'
T = 1,845.37'
R = 643.00'
HORIZ. CURVE DATA
-DFFLY-
PI Sta 52+30.67
Δ = 22°01' 00" (RT)
D = 2°10' 13"
L = 1,014.46'
T = 513.56'
R = 2,640.00'
HORIZ. CURVE DATA
-DFWB-
PI Sta 51+98.49
Δ = 15°25' 39" (RT)
D = 0°34' 23"
L = 2,692.59'
T = 1,354.49'
R = 10,000.00'
HORIZ. CURVE DATA
-DETOUR3-
PI STA 40+12.02
Δ = 8°49' 32" (RT)
D = 0°31' 31"
L = 1,680.20'
T = 841.76'
R = 10,907.93'
HORIZ. CURVE DATA
-DFEB-
NORTH CAROLINA PROFESSIONAL SEAL 29589 ENGINEER DOMENIC A. COLETTI
1-7-14
HDR Engineering, Inc. of the Carolinas
3733 National Drive, Suite 207 Raleigh, N.C. 27612
N.C.B.E.L.S. License Number: F-0116
PROJECT NO. U-0071
DURHAM COUNTY
STATION: 23+29.61 -DFFLY- (POC)
33+19.52 -DFLW- (POC)
SHEET 2 OF 7
BRIDGE NO. 601
STATE OF NORTH CAROLINA
DEPARTMENT OF TRANSPORTATION
RALEIGH
GENERAL DRAWING
FOR BRIDGE ON RAMP -DFFLY- OVER -LDFEB-/-DFLW- (EAST END CONNECTOR) AND -DFWB/DFEB- (NC 147) BETWEEN NC 147 AND US70
REVISIONS
NO. BY: DATE: NO. BY: DATE:
1 2 3 4
SHEET NO. S-478
TOTAL SHEETS 671
DES BY: D. COLETTI DATE: 05/13
DES CHK: J. TAYLOR DATE: 06/13
DWG BY: M. SELLS DATE: 03/13
CHK BY: J. TAYLOR DATE: 06/13
ORIGINATED INITIALS DATE
YELLOW HIGHLIGHTED & REDLINE CHECKED INITIALS DATE
BLUE HIGHLIGHTED CHANGES INITIALS DATE
CHANGES VERIFIED BY VERIFIED DATE
PLOT DRIVER: NCDOT_pdf_mono_eng_50.plt
USER: msells DATE: 1/6/2014
FILE: ...\Tpo\d0391221\U0071_11_G02.dgn
F TABLE: Durham_pen.tbl
TIME: 1:12:07 PM

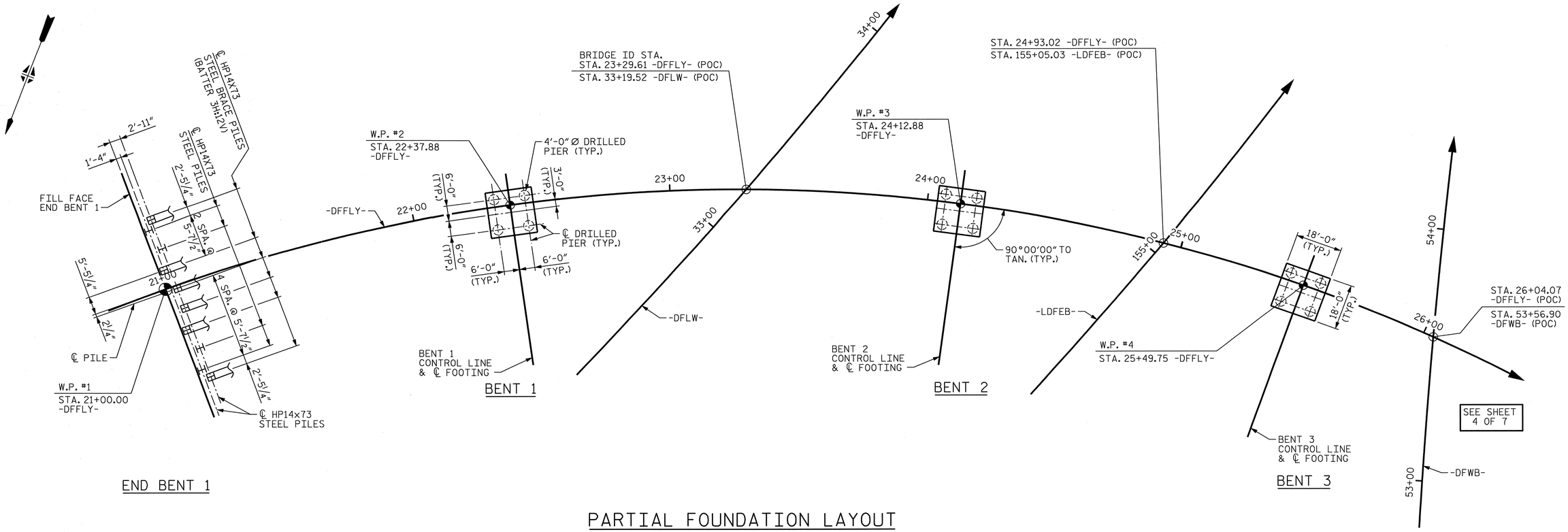

PARTIAL FOUNDATION LAYOUT

DIMENSIONS LOCATING DRILLED PIERS OR PILES ARE SHOWN TO DRILLED PIER OR PILE CENTERLINE AT THE BOTTOM OF CAP OR FOOTING, MEASURED FROM THE TANGENT TO -DFFLY- AT EACH WORK POINT.

ALL BENT CONTROL LINES & ℄ FOOTINGS IN TRANSVERSE DIRECTION ARE RADIAL TO -DFFLY-.

ALL DRILLED PIERS ARE 4'-0" Ø.

ALL PILES AT END BENTS ARE HP 14 X 73 STEEL PILES, GRADE 50.

BRACE PILES AT END BENTS SHALL BE BATTERED AT 3H/12V.

NOTES

FOR PILES, SEE SECTION 450 OF THE STANDARD SPECIFICATIONS.

PILES AT END BENT NO. 1 AND END BENT NO. 2 ARE DESIGNED FOR A FACTORED RESISTANCE OF 150 TONS PER PILE.

DRIVE PILES AT END BENT NO. 1 AND END BENT NO. 2 TO A REQUIRED DRIVING RESISTANCE OF 250 TONS.

FOR DRILLED PIERS, SEE SECTION 411 OF THE STANDARD SPECIFICATIONS.

DRILLED PIERS AT BENT NO. 1 ARE DESIGNED FOR A FACTORED RESISTANCE OF 725 TONS PER PIER EACH. CHECK FIELD CONDITIONS FOR THE REQUIRED TIP RESISTANCE OF 45 TSF.

DRILLED PIERS AT BENT NO. 2, BENT NO. 4 AND BENT NO. 5 ARE DESIGNED FOR A FACTORED RESISTANCE OF 850 TONS PER PIER EACH. CHECK FIELD CONDITIONS FOR THE REQUIRED TIP RESISTANCE OF 120 TSF.

DRILLED PIERS AT BENT NO. 3 ARE DESIGNED FOR A FACTORED RESISTANCE OF 925 TONS PER PIER EACH. CHECK FIELD CONDITIONS FOR THE REQUIRED TIP RESISTANCE OF 165 TSF.

INSTALL DRILLED PIERS AT BENT NO. 1 THROUGH BENT NO. 5 TO A TIP ELEVATION NO HIGHER THAN 350 FT, 350 FT, 348 FT, 348 FT AND 370 FT, RESPECTIVELY, AND WITH THE REQUIRED TIP RESISTANCE.

SPT TESTING MAY BE REQUIRED FOR DRILLED PIERS. THE ENGINEER WILL DETERMINE THE NEED FOR SPT TESTING.

SID INSPECTION MAY BE REQUIRED FOR DRILLED PIERS. THE ENGINEER WILL DETERMINE THE NEED FOR SID INSPECTIONS. FOR SID INSPECTIONS, SEE SECTION 411 OF THE STANDARD SPECIFICATIONS.

CSL TUBES ARE REQUIRED AND CSL TESTING MAY BE REQUIRED FOR DRILLED PIERS. THE ENGINEER WILL DETERMINE THE NEED FOR CSL TESTING. FOR CSL TESTING, SEE SECTION 411 OF THE STANDARD SPECIFICATIONS.

DRILLED PIER EXCAVATIONS AT BENT NO. 1 THROUGH BENT NO. 5 WILL EXTEND INTO MATERIAL THAT DETERIORATES WHEN EXPOSED TO THE ELEMENTS. CHECK FIELD CONDITIONS FOR THE REQUIRED TIP RESISTANCE AND PLACE CONCRETE IMMEDIATELY AFTER THE EXCAVATION IS COMPLETED.

ORIGINATED		YELLOW HIGHLIGHTED & REDLINE CHECKED		BLUE HIGHLIGHTED CHANGES		CHANGES VERIFIED BY	
INITIALS	DATE	INITIALS	DATE	INITIALS	DATE	VERIFIED	DATE

PLOT DRIVER: NCDOT_pdf_mono_eng_50.plt
USER: msells DATE: 1/6/2014
FILE: ...\Tpa\d039121\U0071_t1_FL1.dgn
TABLE: Durham_pen.tbl
TIME: 1:12:37 PM

DES BY: W. WATSON	DATE: 06/13	DWG BY: B. PETERSON	DATE: 06/13
DES CHK: J. TAYLOR	DATE: 06/13	CHK BY: W. WATSON	DATE: 06/13

PROJECT NO. U-0071

DURHAM COUNTY

STATION: 23+29.61 -DFFLY- (POC)
33+19.52 -DFLW- (POC)

SHEET 3 OF 7

STATE OF NORTH CAROLINA
DEPARTMENT OF TRANSPORTATION
RALEIGH

GENERAL DRAWING
FOUNDATION LAYOUT
FOR BRIDGE ON RAMP -DFFLY- OVER -LDFEB-/-DFLW- (EAST END CONNECTOR) AND -DFWB/DFEB- (NC 147) BETWEEN NC 147 AND US70

NORTH CAROLINA PROFESSIONAL SEAL 29589 ENGINEER DOMENIC A. COLETTI
1-7-14

HDR Engineering, Inc. of the Carolinas
3733 National Drive, Suite 207 Raleigh, N.C. 27612
N.C.B.E.L.S. License Number: F-0116

REVISIONS						SHEET NO.
NO.	BY:	DATE:	NO.	BY:	DATE:	S-479
1	--	--	3	--	--	TOTAL SHEETS
2	--	--	4	--	--	671

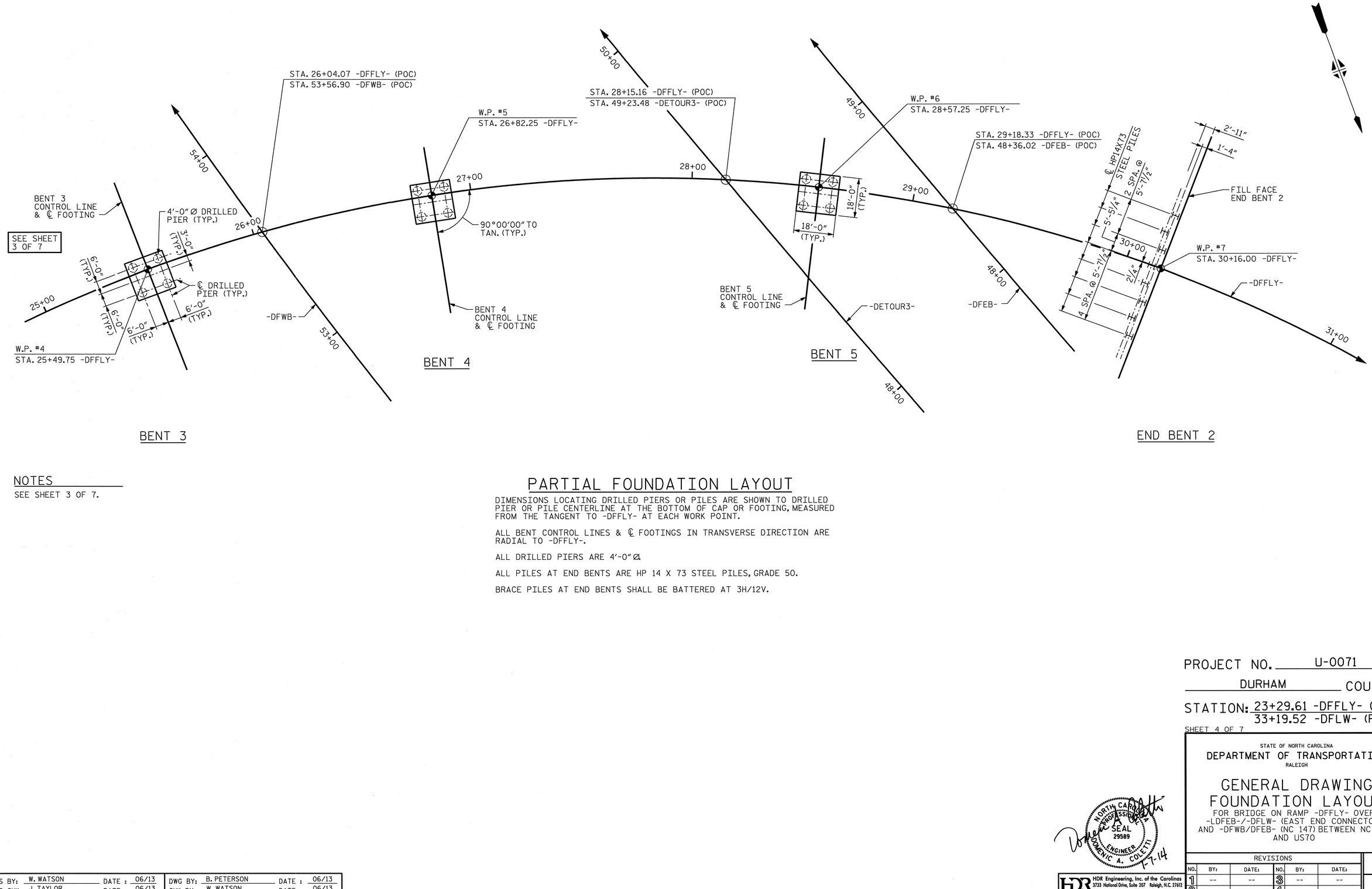

NOTES

SEE SHEET 3 OF 7.

PARTIAL FOUNDATION LAYOUT

DIMENSIONS LOCATING DRILLED PIERS OR PILES ARE SHOWN TO DRILLED PIER OR PILE CENTERLINE AT THE BOTTOM OF CAP OR FOOTING, MEASURED FROM THE TANGENT TO -DFFLY- AT EACH WORK POINT.

ALL BENT CONTROL LINES & ℄ FOOTINGS IN TRANSVERSE DIRECTION ARE RADIAL TO -DFFLY-.

ALL DRILLED PIERS ARE 4'-0" Ø.

ALL PILES AT END BENTS ARE HP 14 X 73 STEEL PILES, GRADE 50.

BRACE PILES AT END BENTS SHALL BE BATTERED AT 3H/12V.

PROJECT NO. U-0071

DURHAM COUNTY

STATION: 23+29.61 -DFFLY- (POC)
33+19.52 -DFLW- (POC)

SHEET 4 OF 7

STATE OF NORTH CAROLINA
DEPARTMENT OF TRANSPORTATION
RALEIGH

GENERAL DRAWING
FOUNDATION LAYOUT
FOR BRIDGE ON RAMP -DFFLY- OVER -LDFEB-/-DFLW- (EAST END CONNECTOR) AND -DFWB/DFEB- (NC 147) BETWEEN NC 147 AND US70

NORTH CAROLINA PROFESSIONAL SEAL 29589 ENGINEER DOMENIC A. COLETTI
7-7-14

HDR Engineering, Inc. of the Carolinas
3733 National Drive, Suite 207 Raleigh, N.C. 27612
N.C.B.E.L.S. License Number: F-0116

REVISIONS					
NO.	BY:	DATE:	NO.	BY:	DATE:
1	--	--	3	--	--
2	--	--	4	--	--

SHEET NO. S-480
TOTAL SHEETS 671

DES BY: W. WATSON	DATE: 06/13	DWG BY: B. PETERSON	DATE: 06/13
DES CHK: J. TAYLOR	DATE: 06/13	CHK BY: W. WATSON	DATE: 06/13

ORIGINATED		YELLOW HIGHLIGHTED & REDLINE CHECKED		BLUE HIGHLIGHTED CHANGES		CHANGES VERIFIED BY	
INITIALS	DATE	INITIALS	DATE	INITIALS	DATE	VERIFIED	DATE

PLOT DRIVER: NCDOT_pdf_mono_eng_50.plt
USER: msells DATE: 1/6/2014
FILE: ...\tpa\d039221\U0071_11_FL2.dgn
F TABLE: Durham_pen.tbl
TIME: 1:13:07 PM

NOTES

SEE SHEET 6 OF 7 FOR DETAILED LONG CHORD LAYOUTS OF EACH UNIT.

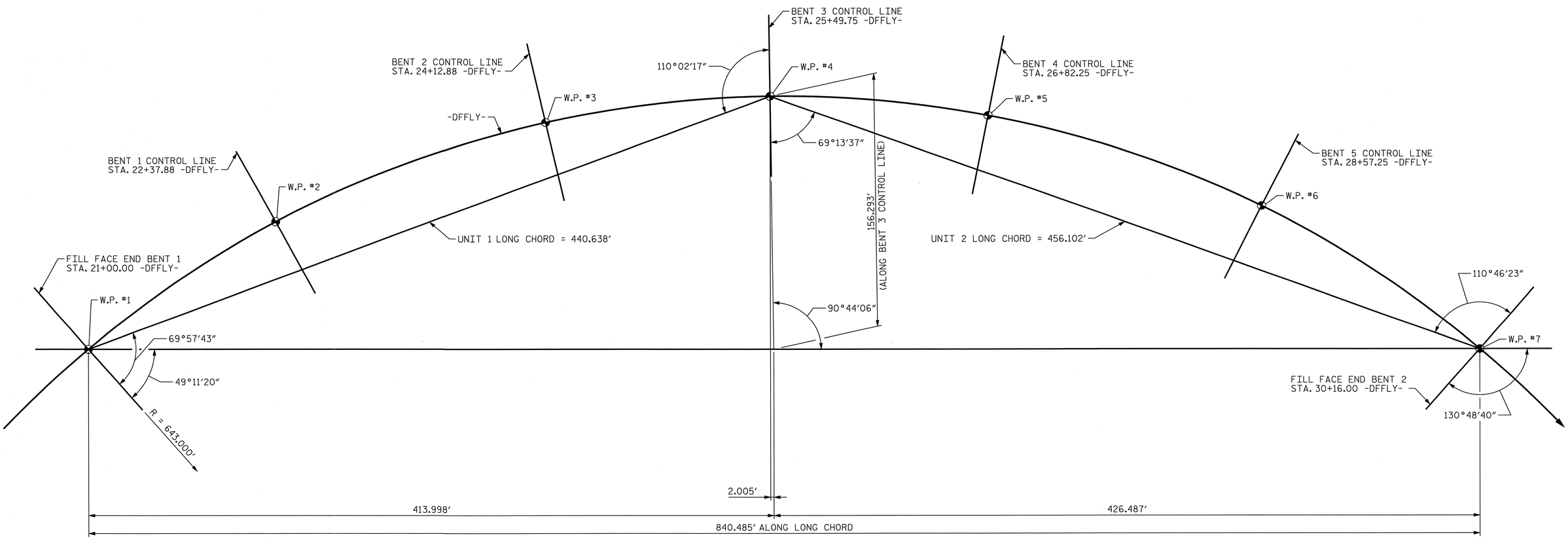

LONG CHORD LAYOUT

ALL BENTS ARE RADIAL TO -DFFLY-

PI STA 36+85.02
Δ = 141°34' 46" (RT)
D = 8°54' 39"
L = 1,588.87'
T = 1,845.37'
R = 643.00'

HORIZ. CURVE DATA
-DFFLY-

PROJECT NO. U-0071

DURHAM COUNTY

STATION: 23+29.61 -DFFLY- (POC)
33+19.52 -DFLW- (POC)

SHEET 5 OF 7

STATE OF NORTH CAROLINA
DEPARTMENT OF TRANSPORTATION
RALEIGH

GENERAL DRAWING

FOR BRIDGE ON RAMP -DFFLY- OVER -LDFEB-/-DFLW- (EAST END CONNECTOR) AND -DFWB/DFEB- (NC 147) BETWEEN NC 147 AND US70

NORTH CAROLINA PROFESSIONAL SEAL 29589 ENGINEER DOMENIC A. COLETTI
1-7-14

HDR Engineering, Inc. of the Carolinas
3733 National Drive, Suite 207 Raleigh, N.C. 27612
N.C.B.E.L.S. License Number: F-0116

REVISIONS						
NO.	BY:	DATE:	NO.	BY:	DATE:	SHEET NO. S-481
1			3			TOTAL SHEETS 671
2			4			

DES BY: J. TAYLOR	DATE: 03/13	DWG BY: M. SELLS	DATE: 03/13
DES CHK: B. PETERSON	DATE: 03/13	CHK BY: J. TAYLOR	DATE: 03/13

ORIGINATED		YELLOW HIGHLIGHTED & REDLINE CHECKED		BLUE HIGHLIGHTED CHANGES		CHANGES VERIFIED BY	
INITIALS	DATE	INITIALS	DATE	INITIALS	DATE	VERIFIED	DATE

PLOT DRIVER: NCDOT_pdf_mono_eng_50.plt
USER: msells DATE: 1/6/2014
FILE: ...\tpa\0039221\U0071_11_LC1.dgn
TABLE: Durham_pen.tbl
TIME: 1:13:38 PM

NOTES

SEE SHEET 5 OF 7 FOR LONG CHORD LAYOUTS OF ENTIRE BRIDGE.

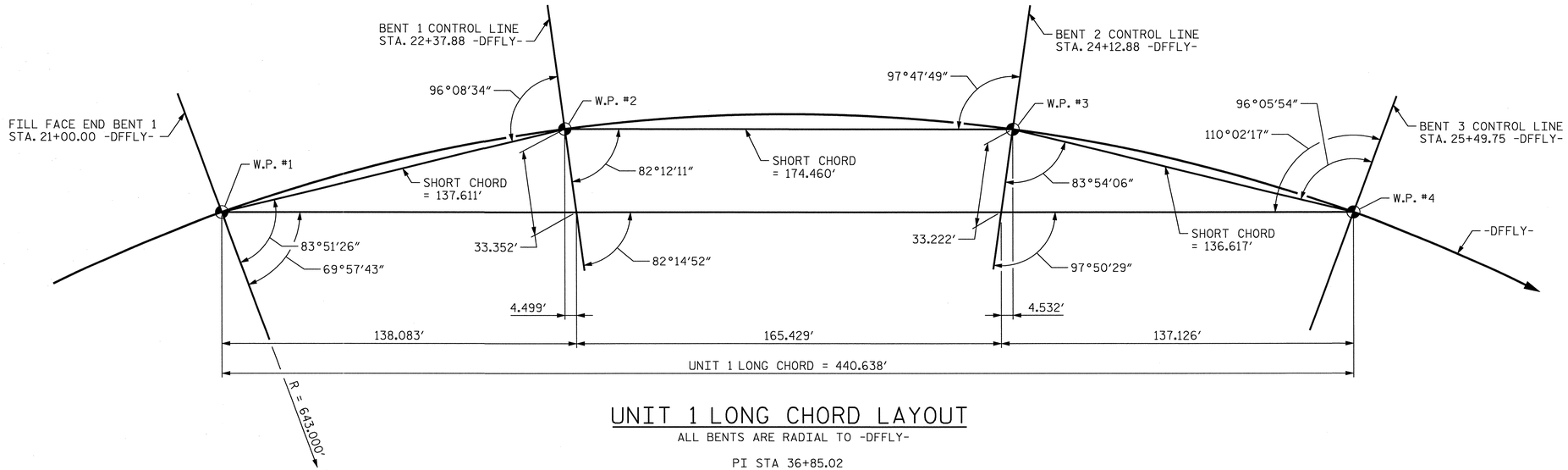

UNIT 1 LONG CHORD LAYOUT

ALL BENTS ARE RADIAL TO -DFFLY-

PI STA 36+85.02
Δ = 141°34′ 46″(RT)
D = 8°54′ 39″
L = 1,588.87′
T = 1,845.37′
R = 643.00′

HORIZ. CURVE DATA
-DFFLY-

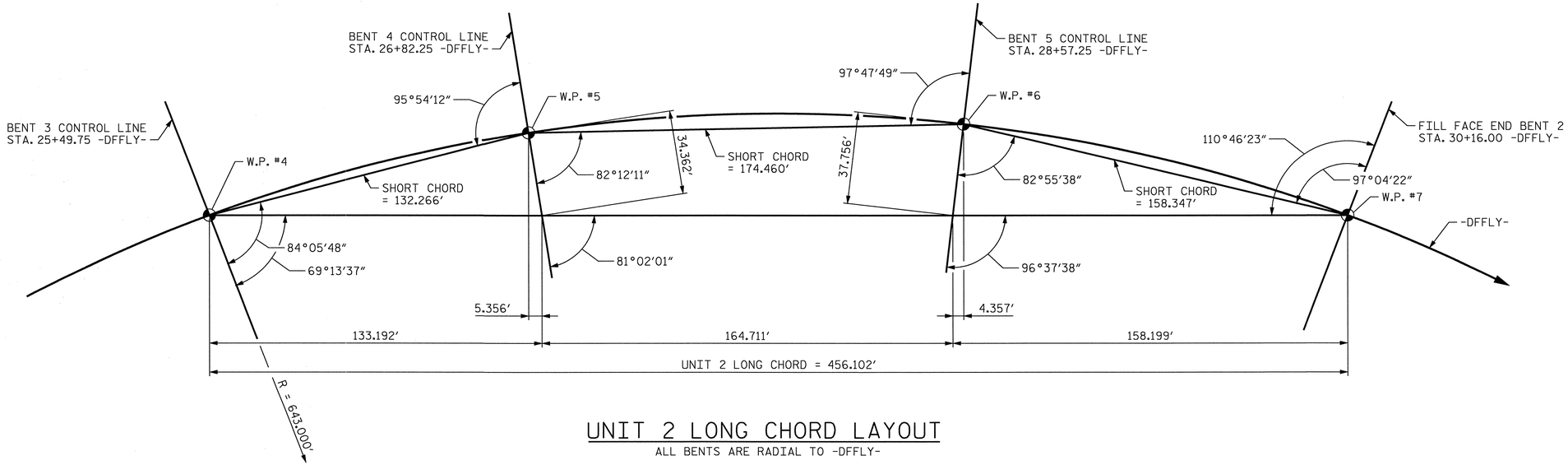

UNIT 2 LONG CHORD LAYOUT

ALL BENTS ARE RADIAL TO -DFFLY-

PROJECT NO. U-0071
DURHAM COUNTY
STATION: 23+29.61 -DFFLY- (POC)
33+19.52 -DFLW- (POC)

SHEET 6 OF 7

STATE OF NORTH CAROLINA
DEPARTMENT OF TRANSPORTATION
RALEIGH

GENERAL DRAWING
FOR BRIDGE ON RAMP -DFFLY- OVER -LDFEB-/-DFLW- (EAST END CONNECTOR) AND -DFWB/DFEB- (NC 147) BETWEEN NC 147 AND US70

NORTH CAROLINA PROFESSIONAL SEAL 29589 ENGINEER DOMENIC A. COLETTI
1-7-14

HDR Engineering, Inc. of the Carolinas
3733 National Drive, Suite 207 Raleigh, N.C. 27612
N.C.B.E.L.S. License Number: F-0116

REVISIONS								SHEET NO.
NO.	BY:	DATE:	NO.	BY:	DATE:			S-482
1			3					TOTAL SHEETS
2			4					671

DES BY: J. TAYLOR	DATE: 03/13	DWG BY: M. SELLS	DATE: 03/13
DES CHK: B. PETERSON	DATE: 03/13	CHK BY: J. TAYLOR	DATE: 03/13

ORIGINATED		YELLOW HIGHLIGHTED & REDLINE CHECKED		BLUE HIGHLIGHTED CHANGES		CHANGES VERIFIED BY	
INITIALS	DATE	INITIALS	DATE	INITIALS	DATE	VERIFIED	DATE

PLOT DRIVER: NCDOT_pdf_mono_eng_50.plt
USER: msells
FILE: ...\tpa\d039122\U0071_11_LC2.dgn
DATE: 1/6/2014
TABLE: Durham_pen.tbl
TIME: 1:14:11 PM

TOTAL BILL OF MATERIAL

	FOUNDATION EXCAVATION FOR BENT	4'-0" DRILLED PIERS IN SOIL	4'-0" DRILLED PIERS NOT IN SOIL	SID INSPECTIONS	SPT TESTING	CSL TESTING	REINFORCED CONCRETE DECK SLAB	GROOVING BRIDGE FLOORS	CLASS A CONCRETE	BRIDGE APPROACH SLABS	REINFORCING STEEL	SPIRAL COLUMN REINFORCING STEEL	STRUCTURAL STEEL	HP 14 x 73 STEEL PILES		CONCRETE BARRIER RAIL	4" SLOPE PROTECTION	ELASTOMERIC BEARINGS	EXPANSION JOINT SEALS
	LUMP SUM	LIN. FT.	LIN. FT.	EA.	EA.	EA.	SQ. FT.	SQ. FT.	CU. YDS.	LUMP SUM	LBS.	LBS.	APPROX. LBS.	NO.	LIN. FT.	LIN. FT.	SQ. YD.	LUMP SUM	LUMP SUM
SUPERSTRUCTURE							37,504	33,435		LUMP SUM			1,534,000			1,859.1		LUMP SUM	LUMP SUM
END BENT 1									41.9		8,107			10	275.0		361.0		
BENT 1	LUMP SUM	62.0	52.0						177.2		48,645	2,829							
BENT 2	LUMP SUM	48.8	42.0						202.7		51,276	2,296							
BENT 3	LUMP SUM	20.0	44.0						228.2		53,578	1,599							
BENT 4	LUMP SUM	21.2	60.0						225.9		54,363	2,050							
BENT 5	LUMP SUM	44.2	43.0						185.4		48,181	2,173							
END BENT 2									36.9		7,375			8	220.0		10.1		
TOTAL	LUMP SUM	196.2	241.0	10	5	3	37,504	33,435	1,098.2	LUMP SUM	271,525	10,947	1,534,000	18	495.0	1,859.1	371.1	LUMP SUM	LUMP SUM

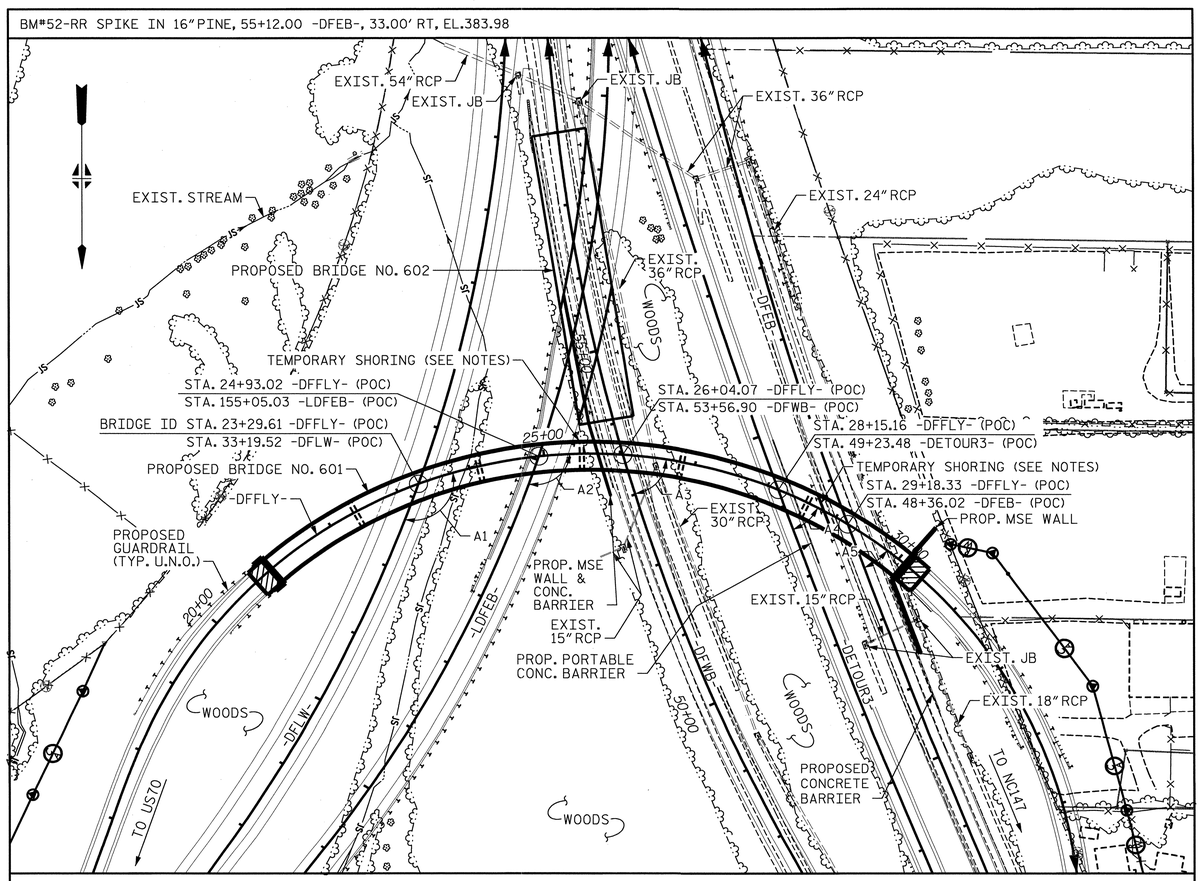

LOCATION SKETCH

NOTES

ALL STATIONS SHOWN ARE ALONG -DFFLY- UNLESS NOTED OTHERWISE.

ASSUMED LIVE LOAD = HL-93 OR ALTERNATE LOADING.

THIS BRIDGE HAS BEEN DESIGNED IN ACCORDANCE WITH THE AASHTO LRFD BRIDGE DESIGN SPECIFICATIONS.

THIS BRIDGE IS LOCATED IN SEISMIC ZONE 1.

FOR UTILITY INFORMATION, SEE UTILITY PLANS AND SPECIAL PROVISIONS.

FOR OTHER DESIGN DATA AND GENERAL NOTES, SEE "STANDARD NOTES" SHEET (SN).

FOR SUBMITTAL OF WORKING DRAWINGS, SEE SPECIAL PROVISIONS.

FOR FALSEWORK AND FORMWORK, SEE SPECIAL PROVISIONS.

FOR TEMPORARY BENTS, SEE SPECIAL PROVISIONS.

FOR CRANE SAFETY, SEE SPECIAL PROVISIONS.

FOR GROUT FOR STRUCTURES, SEE SPECIAL PROVISIONS.

FOR MAINTENANCE AND PROTECTION OF TRAFFIC BENEATH PROPOSED STRUCTURE, SEE SPECIAL PROVISIONS.

REMOVABLE FORMS MAY BE USED IN LIEU OF METAL STAY-IN-PLACE FORMS IN ACCORDANCE WITH ARTICLE 420-3 OF THE STANDARD SPECIFICATIONS.

NEEDLE BEAMS WILL NOT BE ALLOWED UNLESS OTHERWISE CALLED FOR ON THE PLANS OR APPROVED BY THE ENGINEER.

ALL STRUCTURAL STEEL SHALL BE AASHTO M270 GRADE 50W AND PAINTED IN ACCORDANCE WITH SYSTEM 4 OF ARTICLE 442-8 OF THE STANDARD SPECIFICATIONS UNLESS OTHERWISE NOTED ON THE PLANS.

STEEL SHEET PILING REQUIRED FOR SHORING SHALL BE HOT ROLLED.

TEMPORARY SHORING WILL BE REQUIRED IN THE AREAS INDICATED IN THE PLAN VIEW; SPECIFICALLY TEMPORARY SHORING IS REQUIRED TO MAINTAIN TRAFFIC ON EXISTING WESTBOUND DURHAM FREEWAY (NC 147) DURING CONSTRUCTION OF BENT 3 AND TO MAINTAIN TRAFFIC ON EXISTING EASTBOUND DURHAM FREEWAY (NC 147) DURING CONSTRUCTION OF BENT 5.

FOR TEMPORARY SHORING, SEE ROADWAY SPECIAL PROVISIONS.

FOR LIMITS OF TEMPORARY SHORING FOR MAINTENANCE OF TRAFFIC, SEE TRAFFIC CONTROL PLANS. FOR PAY ITEM FOR TEMPORARY SHORING FOR MAINTENANCE OF TRAFFIC, SEE ROADWAY PLANS.

THE DRILLED PIERS, FOOTINGS, AND COLUMNS FOR ALL INTERIOR BENTS (1 THROUGH 5) SHALL BE CONSTRUCTED PRIOR TO CONSTRUCTION OF ADJACENT PROPOSED EMBANKMENTS AND ROADWAYS.

SEE ROADWAY AND GEOTECH PLANS FOR MSE WALL PLANS, ELEVATIONS AND DETAILS.

STRUCTURE CONSTRUCTION SHALL BE COORDINATED WITH THE TRAFFIC CONTROL PLAN. THE SEQUENCE OF ROADWAY CONSTRUCTION AND THE VARIOUS EXISTING, INTERIM, AND FINAL PROPOSED TRAFFIC PATTERNS MAY DICTATE THE TIMING AND/OR SEQUENCE OF CONSTRUCTION OF STRUCTURE FOUNDATIONS, SUBSTRUCTURES, SUPERSTRUCTURES, AND RETAINING WALLS.

THE CLASS AA CONCRETE IN THE BRIDGE DECK SHALL CONTAIN FLY ASH OR GROUND GRANULATED BLAST FURNACE SLAG AT THE SUBSTITUTION RATE SPECIFIED IN ARTICLE 1024-1 AND IN ACCORDANCE WITH ARTICLES 1024-5 AND 1024-6 OF THE STANDARD SPECIFICATIONS. NO PAYMENT WILL BE MADE FOR THIS SUBSTITUTION AS IT IS CONSIDERED INCIDENTAL TO THE COST OF THE REINFORCED CONCRETE DECK SLAB.

FOR PLACING LOAD ON STRUCTURAL MEMBERS, SEE SPECIAL PROVISIONS.

FOR EROSION CONTROL MEASURES, SEE EROSION CONTROL PLANS.

NORTH CAROLINA PROFESSIONAL SEAL 29589 ENGINEER DOMENIC A. COLETTI
2-20-14

PROJECT NO. U-0071

DURHAM COUNTY

STATION: 23+29.61 -DFFLY- (POC)
33+19.52 -DFLW- (POC)

SHEET 7 OF 7

STATE OF NORTH CAROLINA
DEPARTMENT OF TRANSPORTATION
RALEIGH

GENERAL DRAWING

FOR BRIDGE ON RAMP -DFFLY- OVER -LDFEB-/-DFLW- (EAST END CONNECTOR) AND -DFWB/DFEB- (NC 147) BETWEEN NC 147 AND US70

REVISIONS								SHEET NO.
NO.	BY:	DATE:	NO.	BY:	DATE:			S-483
1	--	--	3	--	--			TOTAL SHEETS
2	--	--	4	--	--			67

HDR Engineering, Inc. of the Carolinas
3733 National Drive, Suite 207 Raleigh, N.C. 27612
N.C.B.E.L.S. License Number: F-0116

DES BY: D. COLETTI	DATE: 03/13	DWG BY: M. SELLS	DATE: 03/13
DES CHK: J. TAYLOR	DATE: 04/13	CHK BY: D. COLETTI	DATE: 07/13

ORIGINATED		YELLOW HIGHLIGHTED & REDLINE CHECKED		BLUE HIGHLIGHTED CHANGES		CHANGES VERIFIED BY	
INITIALS	DATE	INITIALS	DATE	INITIALS	DATE	VERIFIED	DATE

PLOT DRIVER: NCDOT_pdf_mono_eng_50.plt
USER: ppeterso DATE: 2/20/2014
FILE: ...\0330
...\TABLE: fayetteville_pen.tbl
TIME: 1:44:07 PM

LOAD AND RESISTANCE FACTOR RATING (LRFR) SUMMARY FOR STEEL GIRDERS

LEVEL		VEHICLE	WEIGHT (W) (TONS)	CONTROLLING LOAD RATING (#)	MINIMUM RATING FACTORS (RF)	TONS = W × RF	STRENGTH I LIMIT STATE											SERVICE II LIMIT STATE						COMMENT NUMBER
							LIVE-LOAD FACTORS (γ_{LL})	MOMENT					SHEAR					LIVE-LOAD FACTORS (γ_{LL})	MOMENT					
								DISTRIBUTION FACTORS (DF)	RATING FACTOR	SPAN	GIRDER LOCATION	DISTANCE FROM LEFT END OF SPAN (ft)	DISTRIBUTION FACTORS (DF)	RATING FACTOR	SPAN	GIRDER LOCATION	DISTANCE FROM LEFT END OF SPAN (ft)		DISTRIBUTION FACTORS (DF)	RATING FACTOR	SPAN	GIRDER LOCATION	DISTANCE FROM LEFT END OF SPAN (ft)	
DESIGN LOAD RATING		HL-93 (INVENTORY)	N/A	1	1.06	--	1.75	--	1.14	C	1	0.00	--	1.06	B	1	0.00	1.30	--	1.72	C	1	12.45	--
		HL-93 (OPERATING)	N/A		1.37	--	1.35	--	1.48	C	1	0.00	--	1.37	B	1	0.00	1.00	--	2.24	C	1	12.45	--
		HS-20 (INVENTORY)	36.000	2	1.45	52.20	1.75	--	1.73	A	1	55.32	--	1.45	B	1	45.95	1.30	--	2.36	A	1	55.32	--
		HS-20 (OPERATING)	36.000		1.88	67.67	1.35	--	2.24	A	1	55.32	--	1.88	B	1	45.95	1.00	--	3.07	A	1	55.32	--
LEGAL LOAD RATING	SINGLE VEHICLE (SV)	SNSH	13.500		5.18	69.93	1.40	--	6.42	A	1	55.32	--	5.18	B	1	45.95	1.30	--	7.03	A	1	55.32	--
		SNGARBS2	20.000		3.61	72.20	1.40	--	4.40	C	1	82.97	--	3.61	B	1	45.95	1.30	--	4.81	C	1	82.97	--
		SNAGRIS2	22.000		3.30	72.60	1.40	--	4.02	C	1	82.97	--	3.30	B	1	45.95	1.30	--	4.40	C	1	82.97	--
		SNCOTTS3	27.250		2.55	69.49	1.40	--	3.09	A	1	55.32	--	2.55	B	1	45.95	1.30	--	3.38	A	1	55.32	--
		SNAGGRS4	34.925		2.09	72.99	1.40	--	2.47	C	1	82.97	--	2.09	B	1	45.95	1.30	--	2.70	C	1	82.97	--
		SNS5A	35.550		2.04	72.52	1.40	--	2.43	A	1	55.32	--	2.04	B	1	45.95	1.30	--	2.66	A	1	55.32	--
		SNS6A	39.950		1.83	73.11	1.40	--	2.18	C	1	82.97	--	1.83	B	1	45.95	1.30	--	2.39	C	1	82.97	--
		SNS7B	42.000		1.77	74.34	1.40	--	2.09	A	1	55.32	--	1.77	B	1	45.95	1.30	--	2.28	A	1	55.32	--
	TRUCK TRACTOR SEMI-TRAILER (TTST)	TNAGRIT3	33.000		2.24	73.92	1.40	--	2.69	C	1	82.97	--	2.24	B	1	45.95	1.30	--	2.95	C	1	82.97	--
		TNT4A	33.075		2.19	72.43	1.40	--	2.66	C	1	82.97	--	2.19	B	1	45.95	1.30	--	2.91	C	1	82.97	--
		TNT6A	41.600		1.86	77.38	1.40	--	2.16	A	1	55.32	--	1.86	B	1	0.00	1.30	--	2.36	A	1	55.32	--
		TNT7A	42.000		1.85	77.70	1.40	--	2.15	A	1	55.32	--	1.85	B	1	45.95	1.30	--	2.35	A	1	55.32	--
		TNT7B	42.000		1.80	75.60	1.40	--	2.16	C	1	82.97	--	1.80	B	1	0.00	1.30	--	2.36	C	1	82.97	--
		TNAGRIT4	43.000		1.75	75.25	1.40	--	2.08	C	1	82.97	--	1.75	B	1	0.00	1.30	--	2.28	C	1	82.97	--
		TNAGT5A	45.000		1.68	75.60	1.40	--	1.99	A	1	55.32	--	1.68	B	1	132.83	1.30	--	2.18	A	1	55.32	--
		TNAGT5B	45.000	3	1.67	75.15	1.40	--	1.97	C	1	82.97	--	1.67	B	1	0.00	1.30	--	2.16	C	1	82.97	--
FATIGUE		HL-93 (INVENTORY)	γ_{LL}=0.75		--																			

LOAD FACTORS:

DESIGN LOAD RATING FACTORS	LIMIT STATE	γ_{DC}	γ_{DW}
	STRENGTH I	1.25	1.50
	SERVICE II	1.00	1.00

NOTES:

MINIMUM RATING FACTORS ARE BASED ON THE STRENGTH I AND SERVICE II LIMIT STATES.

ALLOWABLE STRESS FOR SERVICE II LIMIT STATE ARE AS REQUIRED FOR DESIGN.

COMMENTS:

1. THE ORIGINAL DESIGN AND RATING OF THIS BRIDGE WERE BASED ON AN INFLUENCE SURFACE ANALYSIS. LIVE LOAD DISTRIBUTION FACTORS WERE NOT USED AND ARE NOT PROVIDED.
2. LARSA 4D VERSION 7.06 r02 WAS USED FOR INFLUENCE SURFACE ANALYSIS.
3. DISTANCE FROM LEFT END OF SPAN IS GIVEN WITH RESPECT TO CENTERLINE OF BEARING AND IS MEASURED ALONG THE CONTROLLING GIRDER.
4. FATIGUE RATING IS NOT REQUIRED OR REPORTED SINCE GIRDER DESIGN DOES NOT INCLUDE FATIGUE-PRONE DETAILS.

(#) CONTROLLING LOAD RATING

- (1) DESIGN LOAD RATING (HL-93)
- (2) DESIGN LOAD RATING (HS-20)
- (3) LEGAL LOAD RATING **
- ** SEE CHART FOR VEHICLE TYPE

GIRDER LOCATION

GIRDER LOCATION IS PROVIDED USING GIRDER NUMBER, WHERE GIRDER 1 IS THE EXTERIOR GIRDER TO THE LEFT OF -DFFLY-.

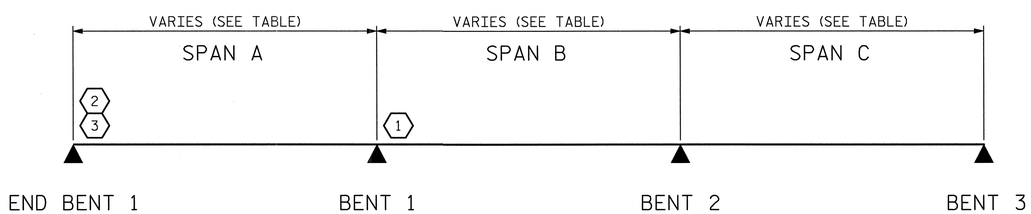

℄ BRG - ℄ BRG SPAN LENGTHS			
GIRDER	SPAN A	SPAN B	SPAN C
1	138'-4 3/16"	178'-9 5/16"	138'-3 15/16"
2	135'-11 1/4"	175'-8 9/16"	135'-11 3/16"
3	133'-6 5/16"	172'-7 13/16"	133'-6 7/16"
4	131'-1 3/8"	169'-7 1/16"	131'-1 3/4"

LRFR SUMMARY

PROJECT NO. U-0071

DURHAM COUNTY

STATION: 23+29.61 -DFFLY-

SHEET 1 OF 2

STATE OF NORTH CAROLINA
DEPARTMENT OF TRANSPORTATION
RALEIGH

LRFR SUMMARY FOR STEEL GIRDERS
(NON-INTERSTATE TRAFFIC)
(UNIT 1)

NORTH CAROLINA PROFESSIONAL SEAL 29589 ENGINEER DOMENIC A. COLETTI 1-7-14

HDR Engineering, Inc. of the Carolinas
3733 National Drive, Suite 207 Raleigh, N.C. 27612
N.C.B.E.L.S. License Number: F-0116

REVISIONS						SHEET NO.
NO.	BY:	DATE:	NO.	BY:	DATE:	S-284
1	--	--	3	--	--	TOTAL SHEETS
2	--	--	4	--	--	271

STD. NO. LRFR3

Sheet 8 of 63

ORIGINATED		YELLOW HIGHLIGHTED & REDLINE CHECKED		BLUE HIGHLIGHTED CHANGES		CHANGES VERIFIED BY	
INITIALS	DATE	INITIALS	DATE	INITIALS	DATE	VERIFIED	DATE

DRAWN BY : MAA 1/08 REV. 11/12/08RR MAA/GM
CHECKED BY : GM/DI 2/08 REV. 10/1/11 MAA/GM

DES BY: J. TAYLOR DATE : 05/13
DES CHK: S. DICKENS DATE : 06/13

DWG BY: B. PETERSON DATE : 06/13
CHK BY: S. DICKENS DATE : 06/13

PLOT DRIVER: NCDOT_pdf_mono_eng_50.plt
USER: msells
FILE: ...\tpa\d039221\U0071_11_LRI.dgn
DATE: 1/6/2014
TABLE: Durham_pen.tbl
TIME: 1:15:22 PM

$$$$$$SYSTIME$$$$$
$$$$$$$$$$$$$$$$$$$$$$$$$$DGN$$$$$$$$$$$$$$$$$$$$$$$$
$$$$USERNAME$$$$

LOAD AND RESISTANCE FACTOR RATING (LRFR) SUMMARY FOR STEEL GIRDERS

LEVEL		VEHICLE	WEIGHT (W) (TONS)	CONTROLLING LOAD RATING (#)	MINIMUM RATING FACTORS (RF)	TONS = W × RF	STRENGTH I LIMIT STATE											SERVICE II LIMIT STATE						COMMENT NUMBER
							LIVE-LOAD FACTORS γ_{LL}	MOMENT					SHEAR					LIVE-LOAD FACTORS γ_{LL}	MOMENT					
								DISTRIBUTION FACTORS (DF)	RATING FACTOR	SPAN	GIRDER LOCATION	DISTANCE FROM LEFT END OF SPAN (ft)	DISTRIBUTION FACTORS (DF)	RATING FACTOR	SPAN	GIRDER LOCATION	DISTANCE FROM LEFT END OF SPAN (ft)		DISTRIBUTION FACTORS (DF)	RATING FACTOR	SPAN	GIRDER LOCATION	DISTANCE FROM LEFT END OF SPAN (ft)	
DESIGN LOAD RATING		HL-93 (INVENTORY)	N/A	1	1.08	--	1.75	--	1.16	F	1	0.00	--	1.08	F	1	15.32	1.30	--	1.74	F	1	0.00	--
		HL-93 (OPERATING)	N/A		1.40	--	1.35	--	1.50	F	1	0.00	--	1.40	F	1	15.32	1.00	--	2.26	F	1	0.00	--
		HS-20 (INVENTORY)	36.000	2	1.48	53.28	1.75	--	1.75	F	1	95.75	--	1.48	F	2	45.18	1.30	--	2.48	F	1	95.75	--
		HS-20 (OPERATING)	36.000		1.92	69.07	1.35	--	2.27	F	1	95.75	--	1.92	F	2	45.18	1.00	--	3.22	F	1	95.75	--
LEGAL LOAD RATING	SINGLE VEHICLE (SV)	SNSH	13.500		3.92	52.92	1.40	--	6.15	F	1	95.75	--	3.92	F	2	45.18	1.30	--	6.96	F	1	95.75	--
		SNGARBS2	20.000		3.76	75.20	1.40	--	4.51	F	1	95.75	--	3.76	F	1	15.32	1.30	--	5.10	F	1	95.75	--
		SNAGRIS2	22.000		3.46	76.12	1.40	--	4.10	F	1	95.75	--	3.46	F	1	15.32	1.30	--	4.64	F	1	95.75	--
		SNCOTTS3	27.250		2.56	69.76	1.40	--	3.29	F	1	95.75	--	2.56	F	2	45.18	1.30	--	3.73	F	1	95.75	--
		SNAGGRS4	34.925		2.20	76.84	1.40	--	2.57	F	1	95.75	--	2.20	F	2	45.18	1.30	--	2.91	F	1	95.75	--
		SNS5A	35.550		2.15	76.43	1.40	--	2.52	F	1	95.75	--	2.15	E	1	0.00	1.30	--	2.85	F	1	95.75	--
		SNS6A	39.950		1.92	76.70	1.40	--	2.25	F	1	95.75	--	1.92	F	1	15.32	1.30	--	2.54	F	1	95.75	--
		SNS7B	42.000		1.85	77.70	1.40	--	2.15	F	1	95.75	--	1.85	F	1	15.32	1.30	--	2.43	F	1	95.75	--
	TRUCK TRACTOR SEMI-TRAILER (TTST)	TNAGRIT3	33.000		2.31	76.23	1.40	--	2.74	F	1	95.75	--	2.31	F	1	15.32	1.30	--	3.10	F	1	95.75	--
		TNT4A	33.075		2.31	76.40	1.40	--	2.74	F	1	95.75	--	2.31	F	4	0.00	1.30	--	3.10	F	1	95.75	--
		TNT6A	41.600		1.96	81.54	1.40	--	2.21	F	1	95.75	--	1.96	F	1	15.32	1.30	--	2.50	F	1	95.75	--
		TNT7A	42.000		1.93	81.06	1.40	--	2.20	F	1	95.75	--	1.93	F	1	15.32	1.30	--	2.49	F	1	95.75	--
		TNT7B	42.000		1.89	79.38	1.40	--	2.20	F	1	95.75	--	1.89	F	4	0.00	1.30	--	2.49	F	1	95.75	--
		TNAGRIT4	43.000		1.85	79.55	1.40	--	2.13	F	1	95.75	--	1.85	F	4	0.00	1.30	--	2.42	F	1	95.75	--
		TNAGT5A	45.000	3	1.71	76.95	1.40	--	2.05	F	1	95.75	--	1.71	F	1	15.32	1.30	--	2.32	F	1	95.75	--
		TNAGT5B	45.000		1.77	79.65	1.40	--	2.02	F	1	95.75	--	1.77	F	4	0.00	1.30	--	2.29	F	1	95.75	--
FATIGUE		HL-93 (INVENTORY)	γ_{LL}=0.75		--																			

LOAD FACTORS:

DESIGN LOAD RATING FACTORS	LIMIT STATE	γ_{DC}	γ_{DW}
	STRENGTH I	1.25	1.50
	SERVICE II	1.00	1.00

NOTES:

MINIMUM RATING FACTORS ARE BASED ON THE STRENGTH I AND SERVICE II LIMIT STATES.

ALLOWABLE STRESS FOR SERVICE II LIMIT STATE ARE AS REQUIRED FOR DESIGN.

COMMENTS:

1. THE ORIGINAL DESIGN AND RATING OF THIS BRIDGE WERE BASED ON AN INFLUENCE SURFACE ANALYSIS. LIVE LOAD DISTRIBUTION FACTORS WERE NOT USED AND ARE NOT PROVIDED.
2. LARSA 4D VERSION 7.06 r02 WAS USED FOR INFLUENCE SURFACE ANALYSIS.
3. DISTANCE FROM LEFT END OF SPAN IS GIVEN WITH RESPECT TO CENTERLINE OF BEARING AND IS MEASURED ALONG THE CONTROLLING GIRDER.
4. FATIGUE RATING IS NOT REQUIRED OR REPORTED SINCE GIRDER DESIGN DOES NOT INCLUDE FATIGUE-PRONE DETAILS.

CONTROLLING LOAD RATING
1 DESIGN LOAD RATING (HL-93)
2 DESIGN LOAD RATING (HS-20)
3 LEGAL LOAD RATING **
** SEE CHART FOR VEHICLE TYPE

GIRDER LOCATION
GIRDER LOCATION IS PROVIDED USING GIRDER NUMBER, WHERE GIRDER 1 IS THE EXTERIOR GIRDER TO THE LEFT OF -DFFLY-.

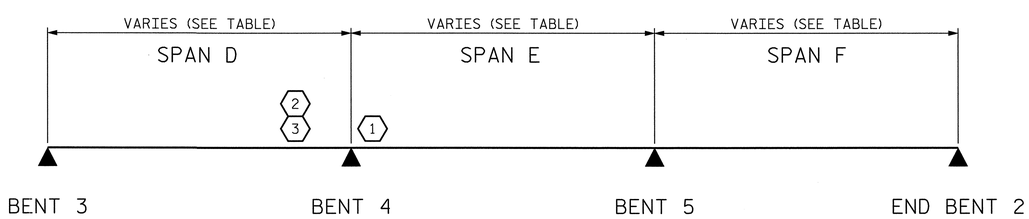

℄ BRG - ℄ BRG SPAN LENGTHS			
GIRDER	SPAN D	SPAN E	SPAN F
1	133'-10 5/16"	178'-9 5/16"	159'-8 1/8"
2	131'-6 1/2"	175'-8 9/16"	156'-10 3/4"
3	129'-2 11/16"	172'-7 13/16"	154'-1 7/16"
4	126'-10 7/8"	169'-7 1/16"	151'-4 1/8"

LRFR SUMMARY

PROJECT NO. U-0071

DURHAM COUNTY

STATION: 23+29.61 -DFFLY-

SHEET 2 OF 2

STATE OF NORTH CAROLINA
DEPARTMENT OF TRANSPORTATION
RALEIGH

LRFR SUMMARY FOR STEEL GIRDERS
(NON-INTERSTATE TRAFFIC)
(UNIT 2)

NORTH CAROLINA PROFESSIONAL SEAL 29589 ENGINEER DOMENIC A. COLETTI
7-7-14

HDR Engineering, Inc. of the Carolinas
3733 National Drive, Suite 207 Raleigh, N.C. 27612
N.C.B.E.L.S. License Number: F-0116

REVISIONS						SHEET NO. S-485
NO.	BY:	DATE:	NO.	BY:	DATE:	TOTAL SHEETS 671
1	--	--	3	--	--	
2	--	--	4	--	--	

STD. NO. LRFR3

DRAWN BY : MAA 1/08 REV. 11/12/08RR MAA/GM
CHECKED BY : GM/DI 2/08 REV. 10/1/11 MAA/GM

DES BY: J. TAYLOR DATE : 03/13
DES CHK: S. DICKENS DATE : 06/13

DWG BY: B. PETERSON DATE : 06/13
CHK BY: S. DICKENS DATE : 06/13

$$$$$$SYSTIME$$$$$
$$$$$$$$$$$$$$$$$$$$$$$$DGN$$$$$$$$$$$$$$$$$$$$$$
$$$$$USERNAME$$$$

ORIGINATED		YELLOW HIGHLIGHTED & REDLINE CHECKED		BLUE HIGHLIGHTED CHANGES		CHANGES VERIFIED BY	
INITIALS	DATE	INITIALS	DATE	INITIALS	DATE	VERIFIED	DATE

PLOT DRIVER: NCDOT_pdf_mono_eng_50.plt
USER: msells
FILE: ...\tpa\d039122\U0071_11_LR2.dgn
DATE: 1/6/2014
TIME: 1:15:43 PM
NTABLE: Durham_pen.tbl

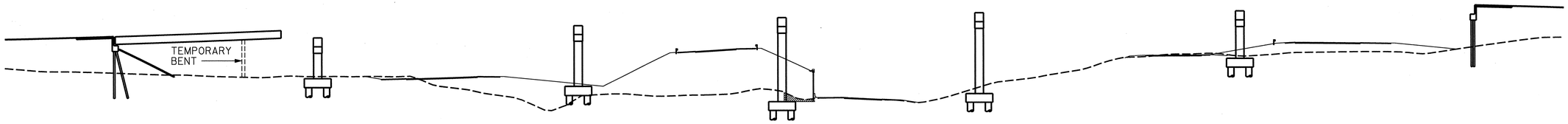

UNIT 1 - STEP 1 GIRDER ERECTION

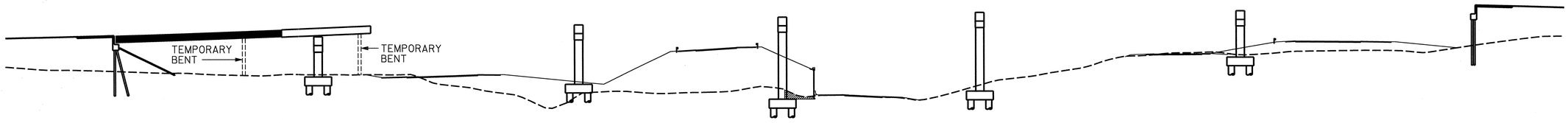

UNIT 1 - STEP 2 GIRDER ERECTION

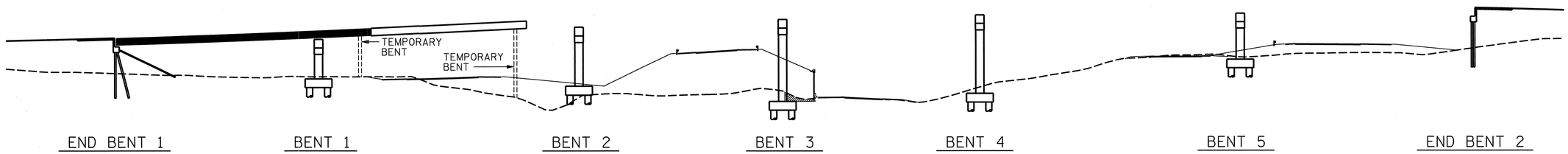

UNIT 1 - STEP 3 GIRDER ERECTION

ERECTION NOTES

ERECT A MINIMUM OF TWO GIRDERS WITH ALL DIAPHRAGMS/CROSSFRAMES BETWEEN THE GIRDERS IN PLACE AND THE BOLTS TIGHTENED PRIOR TO RELEASING THE GIRDERS.

ERECT EACH SUBSEQUENT GIRDER WITH DIAPHRAGMS/CROSSFRAMES CONNECTING TO THE ADJACENT PREVIOUSLY ERECTED GIRDER AND TIGHTEN ALL BOLTS BEFORE RELEASING.

THE STRUCTURAL STEEL SHALL REMAIN SUPPORTED DURING ERECTION IN ITS CAMBERED POSITION. TEMPORARY BENTS AS SHOWN SHALL BE USED.

TEMPORARY BENTS SHALL REMAIN IN PLACE UNTIL ALL DIAPHRAGMS/CROSSFRAMES ARE IN PLACE AND ALL HIGH STRENGTH BOLTS ARE TIGHTENED.

TEMPORARY BENTS SHALL PROVIDE BEARING AT CONNECTOR PLATE LOCATIONS. WHEN CONNECTOR PLATES ARE USED AS TEMPORARY BEARING STIFFENERS, DIAPHRAGMS MUST BE ATTACHED.

THE CONTRACTOR'S ERECTION PLANS SHALL INCLUDE A METHOD OF TEMPORARY SUPPORT REMOVAL THAT WILL UNIFORMLY TRANSFER THE STRUCTURAL WEIGHT TO THE DIAPHRAGMS/CROSSFRAMES AND THE GIRDERS WILL REMAIN IN THE CAMBERED POSITIONS.

PLANS FOR TEMPORARY BENT ERECTION AND REMOVAL SHALL BE SUBMITTED TO THE ENGINEER FOR REVIEW.

THE CONTRACTOR IS RESPONSIBLE FOR DESIGNING THE TEMPORARY BENTS. THE DESIGN SHALL BE COMPLETED BY A PROFESSIONAL ENGINEER REGISTERED IN THE STATE OF NORTH CAROLINA. THE CONTRACTOR SHALL SUBMIT SIGNED AND SEALED WORKING DRAWINGS AND CALCULATIONS FOR APPROVAL BY THE ENGINEER.

DURING GIRDER ERECTION PROCEDURE, THE CONTRACTOR IS RESPONSIBLE FOR PROVIDING TEMPORARY LATERAL BRACING AND OTHER MEANS OF SUPPORT, AS REQUIRED TO ENSURE STABILITY OF THE GIRDERS, AVOID UPLIFT OF THE GIRDERS AND TEMPORARY SUPPORTS AND TO ENSURE PLUMBNESS OF THE GIRDERS IN THE FINAL POSITION.

NO SEPARATE MEASUREMENT OR PAYMENT WILL BE MADE FOR PROVIDING THE TEMPORARY BENTS, TEMPORARY LATERAL BRACING OR OTHER MEANS OF SUPPORT. THE COST FOR ALL MATERIALS, EQUIPMENT, TOOLS, LABOR AND ANY INCIDENTALS NECESSARY TO PROVIDE THE TEMPORARY SUPPORTS SHALL BE CONSIDERED INCIDENTAL TO THE LUMP SUM BID PRICE FOR STRUCTURAL STEEL.

THE CONTRACTOR IS ADVISED THAT THE EXISTING GROUND UNDER THE PROPOSED BRIDGE MAY HAVE STEEP SLOPES AND/OR HEAVY VEGETATION.

THE CONTRACTOR MAY SUBMIT AN ALTERNATE ERECTION METHOD TO THE ENGINEER FOR REVIEW AND APPROVAL.

FOR TEMPORARY BENTS, SEE SPECIAL PROVISIONS.

PROJECT NO. U-0071

DURHAM COUNTY

STATION: 23+29.61 -DFFLY-

SHEET 1 OF 4

STATE OF NORTH CAROLINA
DEPARTMENT OF TRANSPORTATION
RALEIGH

GIRDER ERECTION DETAILS

NORTH CAROLINA PROFESSIONAL SEAL 29589 ENGINEER DOMENIC A. COLETTI 1-7-14

HDR Engineering, Inc. of the Carolinas
3733 National Drive, Suite 207 Raleigh, N.C. 27612
N.C.B.E.L.S. License Number: F-0116

REVISIONS						SHEET NO.
NO.	BY:	DATE:	NO.	BY:	DATE:	S-286
1	--	--	3	--	--	TOTAL SHEETS
2	--	--	4	--	--	671

DES BY: D. COLETTI	DATE : 03/13	DWG BY: B. PETERSON	DATE : 07/13
DES CHK: R. MONEY	DATE : 07/13	CHK BY: D. COLETTI	DATE : 07/13

ORIGINATED		YELLOW HIGHLIGHTED & REDLINE CHECKED		BLUE HIGHLIGHTED CHANGES		CHANGES VERIFIED BY
INITIALS	DATE	INITIALS	DATE	INITIALS	DATE	VERIFIED	DATE

PLOT DRIVER: NCDOT_pdf_mono_eng_50.plt
USER: msells DATE: 1/6/2014
FILE: ...\Tpd\d039221\U0071_11_GD3.dgn
TABLE: Durham_pen.tbl
TIME: 1:16:19 PM

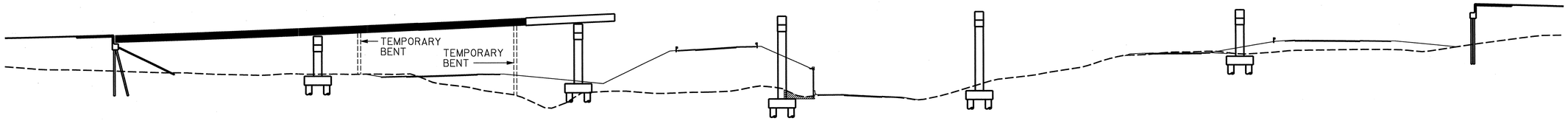

END BENT 1 | BENT 1 | BENT 2 | BENT 3 | BENT 4 | BENT 5 | END BENT 2

UNIT 1 - STEP 4 GIRDER ERECTION

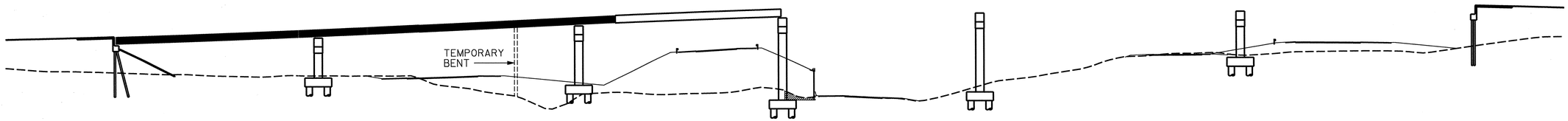

END BENT 1 | BENT 1 | BENT 2 | BENT 3 | BENT 4 | BENT 5 | END BENT 2

UNIT 1 - STEP 5 GIRDER ERECTION

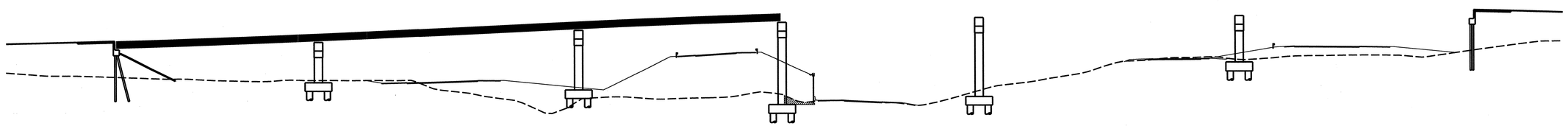

END BENT 1 | BENT 1 | BENT 2 | BENT 3 | BENT 4 | BENT 5 | END BENT 2

UNIT 1 - STEP 6 GIRDER ERECTION (UNIT 1 ERECTED)

ORIGINATED		YELLOW HIGHLIGHTED & REDLINE CHECKED		BLUE HIGHLIGHTED CHANGES		CHANGES VERIFIED BY
INITIALS	DATE	INITIALS	DATE	INITIALS	DATE	VERIFIED	DATE

PLOT DRIVER: NCDOT_pdf_mono_eng_50.plt
USER: msells DATE: 1/6/2014
FILE: ...\tpa\d039221\U0071_11_GD4.dgn
TABLE: Durham_pen.tbl
TIME: 1:16:55 PM

DES BY: D. COLETTI	DATE : 03/13	DWG BY: B. PETERSON	DATE : 07/13
DES CHK: R. MONEY	DATE : 07/13	CHK BY: D. COLETTI	DATE : 07/13

PROJECT NO. U-0071

DURHAM COUNTY

STATION: 23+29.61 -DFFLY-

SHEET 2 OF 4

STATE OF NORTH CAROLINA
DEPARTMENT OF TRANSPORTATION
RALEIGH

GIRDER ERECTION DETAILS

NORTH CAROLINA PROFESSIONAL SEAL 29589 ENGINEER DOMENIC A. COLETTI
1-7-14

HDR Engineering, Inc. of the Carolinas
3733 National Drive, Suite 207 Raleigh, N.C. 27612
N.C.B.E.L.S. License Number: F-0116

REVISIONS						SHEET NO.
NO.	BY:	DATE:	NO.	BY:	DATE:	S-487
1	--	--	3	--	--	TOTAL SHEETS
2	--	--	4	--	--	671

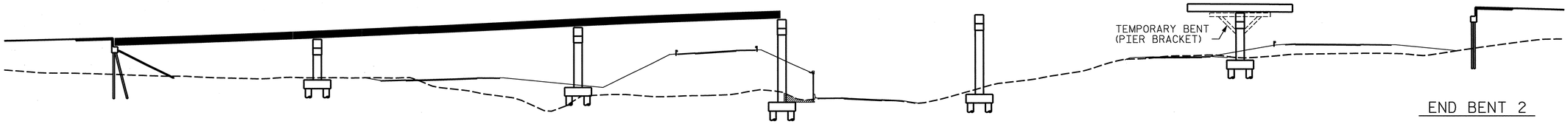

UNIT 2 - STEP 1 GIRDER ERECTION

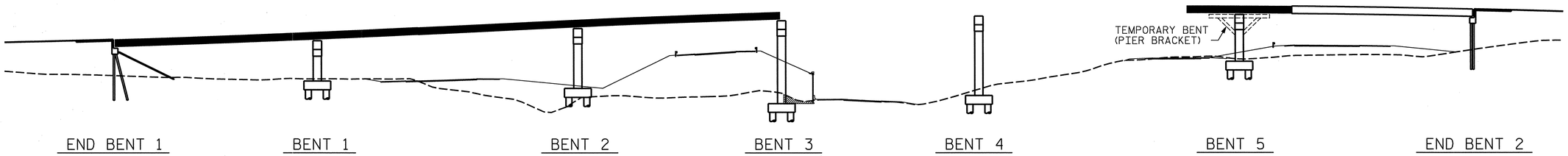

UNIT 2 - STEP 2 GIRDER ERECTION

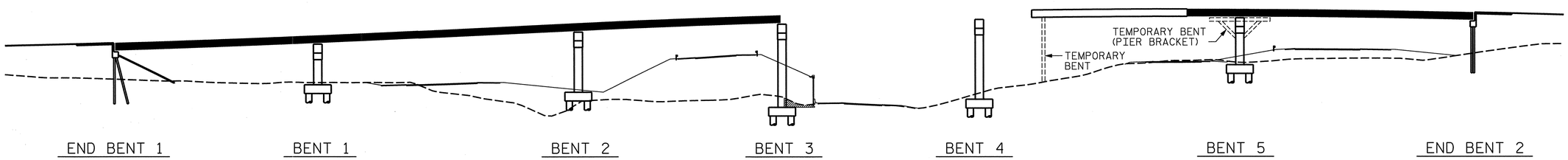

UNIT 2 - STEP 3 GIRDER ERECTION

PROJECT NO. U-0071

DURHAM COUNTY

STATION: 23+29.61 -DFFLY-

SHEET 3 OF 4

STATE OF NORTH CAROLINA
DEPARTMENT OF TRANSPORTATION
RALEIGH

GIRDER ERECTION DETAILS

NORTH CAROLINA PROFESSIONAL SEAL 29589 ENGINEER DOMENIC A. COLETTI
1-7-14

REVISIONS						
NO.	BY:	DATE:	NO.	BY:	DATE:	
1	--	--	3	--	--	
2	--	--	4	--	--	

SHEET NO. S-488

TOTAL SHEETS 671

HDR Engineering, Inc. of the Carolinas
3733 National Drive, Suite 207 Raleigh, N.C. 27612
N.C.B.E.L.S. License Number: F-0116

DES BY: D. COLETTI	DATE : 03/13	DWG BY: B. PETERSON	DATE : 07/13
DES CHK: R. MONRY	DATE : 07/13	CHK BY: D. COLETTI	DATE : 07/13

ORIGINATED		YELLOW HIGHLIGHTED & REDLINE CHECKED		BLUE HIGHLIGHTED CHANGES		CHANGES VERIFIED BY	
INITIALS	DATE	INITIALS	DATE	INITIALS	DATE	VERIFIED	DATE

PLOT DRIVER: NCDOT_pdf_mono_eng_50.plt
USER: msells
FILE: ...\tpo\d0391221\U0071_11_GD5.dgn
DATE: 1/6/2014
TIME: 1:17:33 PM
TABLE: Durham_pen.tbl

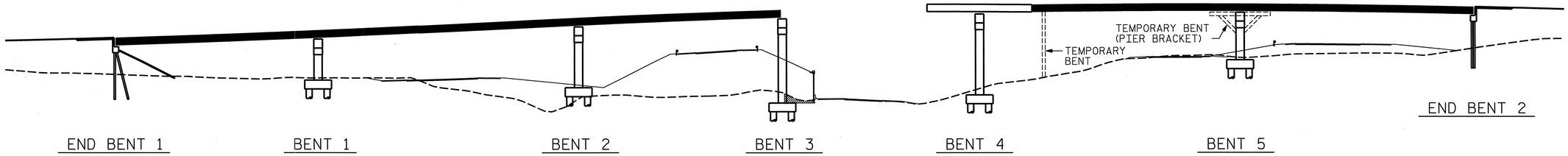

UNIT 2 - STEP 4 GIRDER ERECTION

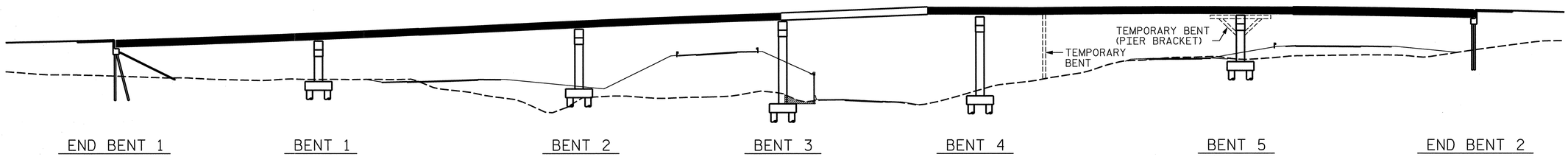

UNIT 2 - STEP 5 GIRDER ERECTION

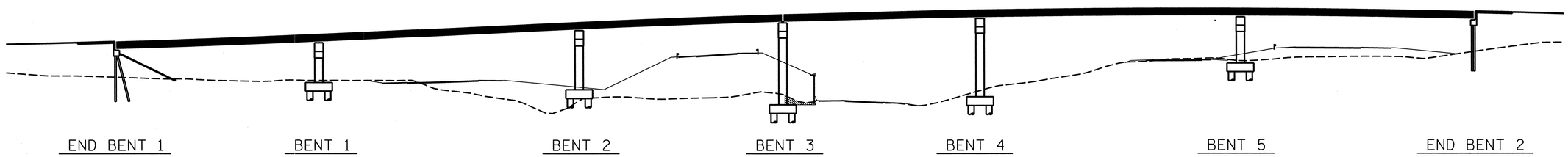

UNIT 2 - STEP 6 GIRDER ERECTION (UNIT 2 ERECTED)

ORIGINATED		YELLOW HIGHLIGHTED & BLUE HIGHLIGHTED CHANGES CHECKED		BLUE HIGHLIGHTED CHANGES		CHANGES VERIFIED BY	
INITIALS	DATE	INITIALS	DATE	INITIALS	DATE	VERIFIED	DATE

PLOT DRIVER: NCDOT_pdf_mono_eng_50.plt
USER: msells DATE: 1/6/2014
FILE: ...\tpa\d0391221\U0071_11_G06.dgn

+ TABLE: Durham_pen.tbl
TIME: 2:17:05 PM

PROJECT NO. U-0071
DURHAM COUNTY
STATION: 23+29.61 -DFFLY-

SHEET 4 OF 4

STATE OF NORTH CAROLINA
DEPARTMENT OF TRANSPORTATION
RALEIGH

GIRDER ERECTION DETAILS

NORTH CAROLINA PROFESSIONAL SEAL 29589 ENGINEER DOMENIC A. COLETTI
7-7-14

HDR Engineering, Inc. of the Carolinas
3733 National Drive, Suite 207 Raleigh, N.C. 27612
N.C.B.E.L.S. License Number: F-0116

REVISIONS						
NO.	BY:	DATE:	NO.	BY:	DATE:	
1	--	--	3	--	--	
2	--	--	4	--	--	

SHEET NO. 8-489
TOTAL SHEETS 571

DES BY: D. COLETTI	DATE : 03/13	DWG BY: B. PETERSON	DATE : 07/13
DES CHK: R. MONEY	DATE : 07/13	CHK BY: D. COLETTI	DATE : 07/13

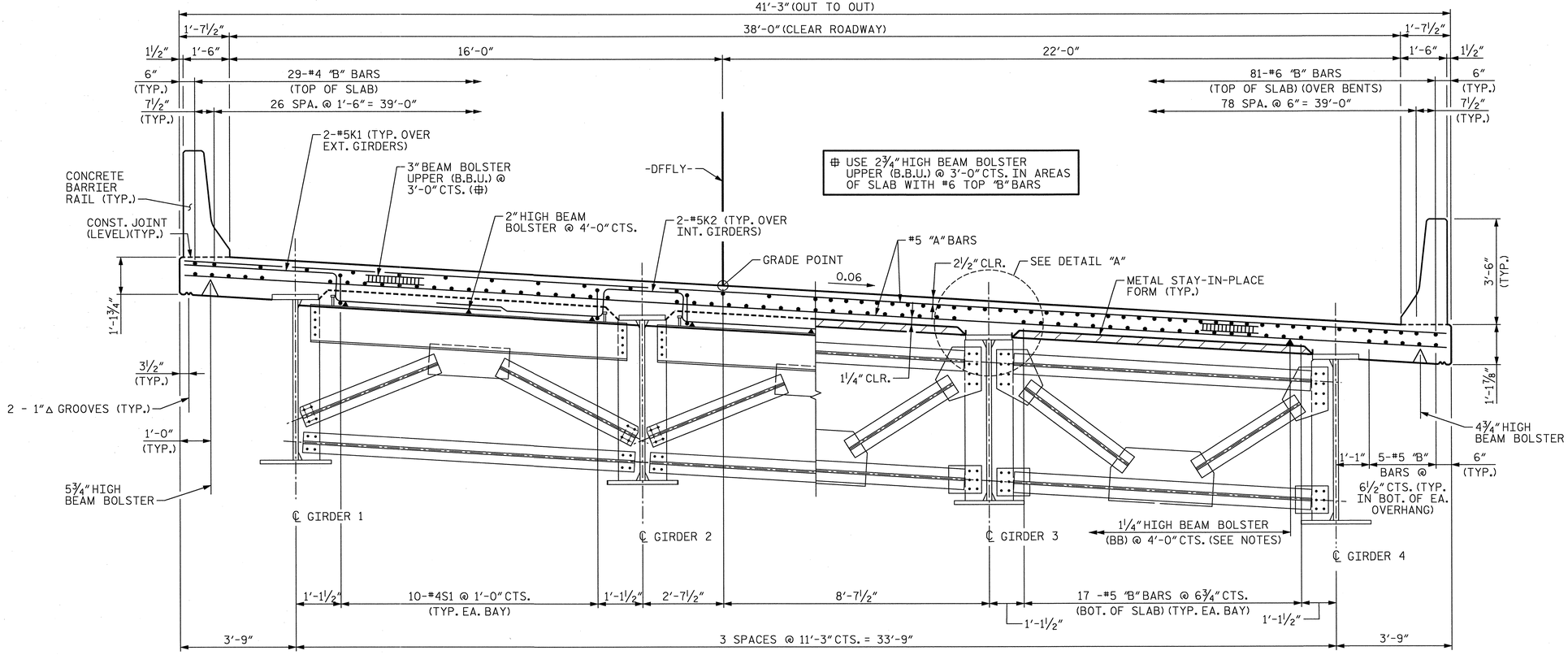

▲ = FOR DIMENSIONS OF FORMED OPENING SEE "EXPANSION JOINT SEAL DETAILS" SHEET

SECTION AT END BENT DIAPHRAGM & BENT DIAPHRAGM
(TYP. @ END BENT 1, BENT 3 & END BENT 2)

SECTION AT INTERMEDIATE & BENT DIAPHRAGM
(TYP. @ BENTS 1, 2, 4 & 5 AND IN SPANS)

TYPICAL SECTION

(ALL HORIZONTAL DIMENSIONS ARE RADIAL)

NOTES

PROVIDE 1¼" HIGH BEAM BOLSTER UPPER (BBU) AT 4'-0" CENTERS ATOP THE METAL STAY-IN-PLACE FORMS TO SUPPORT THE BOTTOM MAT OF "A" BARS. WHEN USING REMOVABLE FORMS, PROVIDE CONTINUOUS HIGH CHAIRS FOR METAL DECK (C.H.C.M.) @ 4'-0" CENTERS WITH HEIGHT TO SUPPORT THE BOTTOM MAT OF "A" BARS A CLEAR DISTANCE OF 2½" ABOVE THE TOP OF THE REMOVABLE FORM.

SET TOP OF EXPANSION JOINT SEAL DEVICE A MINIMUM OF ⅛" AND A MAXIMUM OF ¼" BELOW THE TOP SLAB

METAL STAY-IN-PLACE FORMS SHALL NOT BE WELDED TO BEAM OR GIRDER FLANGE IN THE ZONES REQUIRED CHAPPY V-NOTCH TEST. SEE STRUCTURAL STEEL DETAILS SHEETS.

PREVIOUSLY CAST CONCRETE IN A CONTINUOUS UNIT SHALL HAVE ATTAINED A MINIMUM COMPRESSIVE STRENGTH OF 3,000 PSI BEFORE ADDITIONAL CONCRETE IS CAST IN THE UNIT.

STRUCTURAL STEEL ERECTION IN A CONTINUOUS UNIT SHALL BE COMPLETE BEFORE FALSE WORK OR FORMS ARE PLACED ON THE UNIT.

THE CONTRACTOR MAY, WHEN NECESSARY, PROPOSE A SCHEME FOR AVOIDING INTERFERENCE BETWEEN METAL STAY-IN-PLACE FORM SUPPORTS OR FORMS AND BEAM/GIRDERS STIFFENERS OR CONECTOR PLATES. THE PROPOSAL SHALL BE INDICATED, AS APPROPRIATE, ON ETHER THE STEEL WORKING DRAWINGS OR THE METAL STAY-IN-PLACE FORM WORKING DRAWINGS.

FOR EXPANSION JOINT SEALS, SEE SPECIAL PROVISIONS.

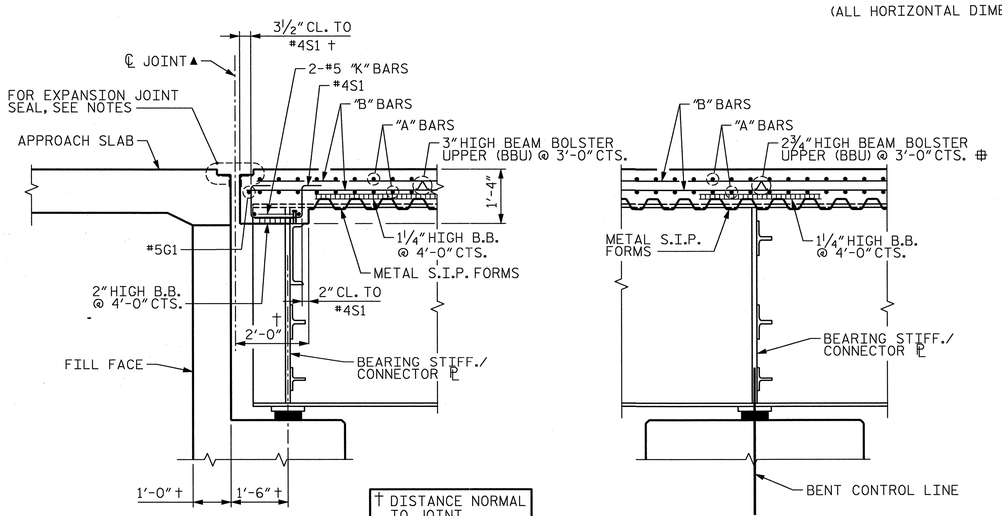

† DISTANCE NORMAL TO JOINT

SECTION A-A
(SEE "PLAN OF SPANS" SHEET FOR LOCATION OF SECTION)

SECTION B-B
(SEE "PLAN OF SPANS" SHEET FOR LOCATION OF SECTION)

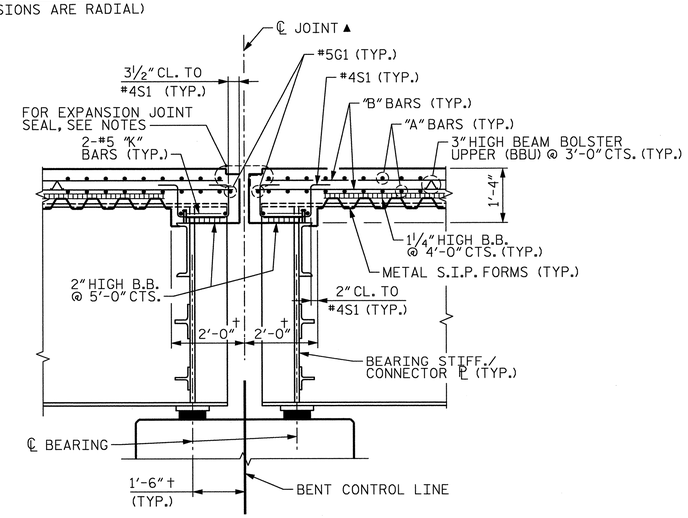

SECTION C-C
(SEE "PLAN OF SPANS" SHEET FOR LOCATION OF SECTION)

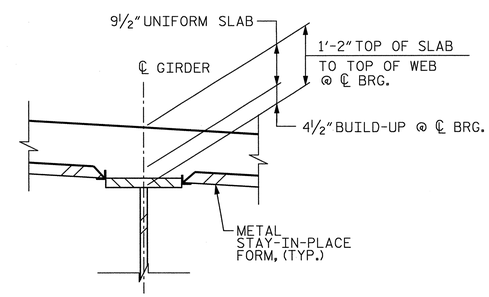

DETAIL "A"

PROJECT NO. U-0071

DURHAM COUNTY

STATION: 23+29.61 -DFFLY-

STATE OF NORTH CAROLINA
DEPARTMENT OF TRANSPORTATION
RALEIGH

SUPERSTRUCTURE TYPICAL SECTION

REVISIONS								SHEET NO.
NO.	BY:	DATE:	NO.	BY:	DATE:			S-490
1	--	--	3	--	--			TOTAL SHEETS
2	--	--	4	--	--			671

NORTH CAROLINA PROFESSIONAL SEAL 29589 ENGINEER DOMENIC A. COLETTI
1-7-14

HDR Engineering, Inc. of the Carolinas
3733 National Drive, Suite 207 Raleigh, N.C. 27612
N.C.B.E.L.S. License Number: F-0116

DES BY: D. COLETTI	DATE: 03/13	DWG BY: M. SELLS	DATE: 02/13
DES CHK: J. TAYLOR	DATE: 04/13	CHK BY: D. COLETTI	DATE: 07/13

ORIGINATED		YELLOW HIGHLIGHTED & REDLINE CHECKED		BLUE HIGHLIGHTED CHANGES		CHANGES VERIFIED BY	
INITIALS	DATE	INITIALS	DATE	INITIALS	DATE	VERIFIED	DATE

PLOT DRIVER: NCDOT_pdf_mono_eng_50.plt
USER: msells
FILE: ...\tpo\d039122i\U0071_11_TS.DGN
DATE: 1/6/2014
TABLE: Durham_pen.tbl
TIME: 1:18:57 PM

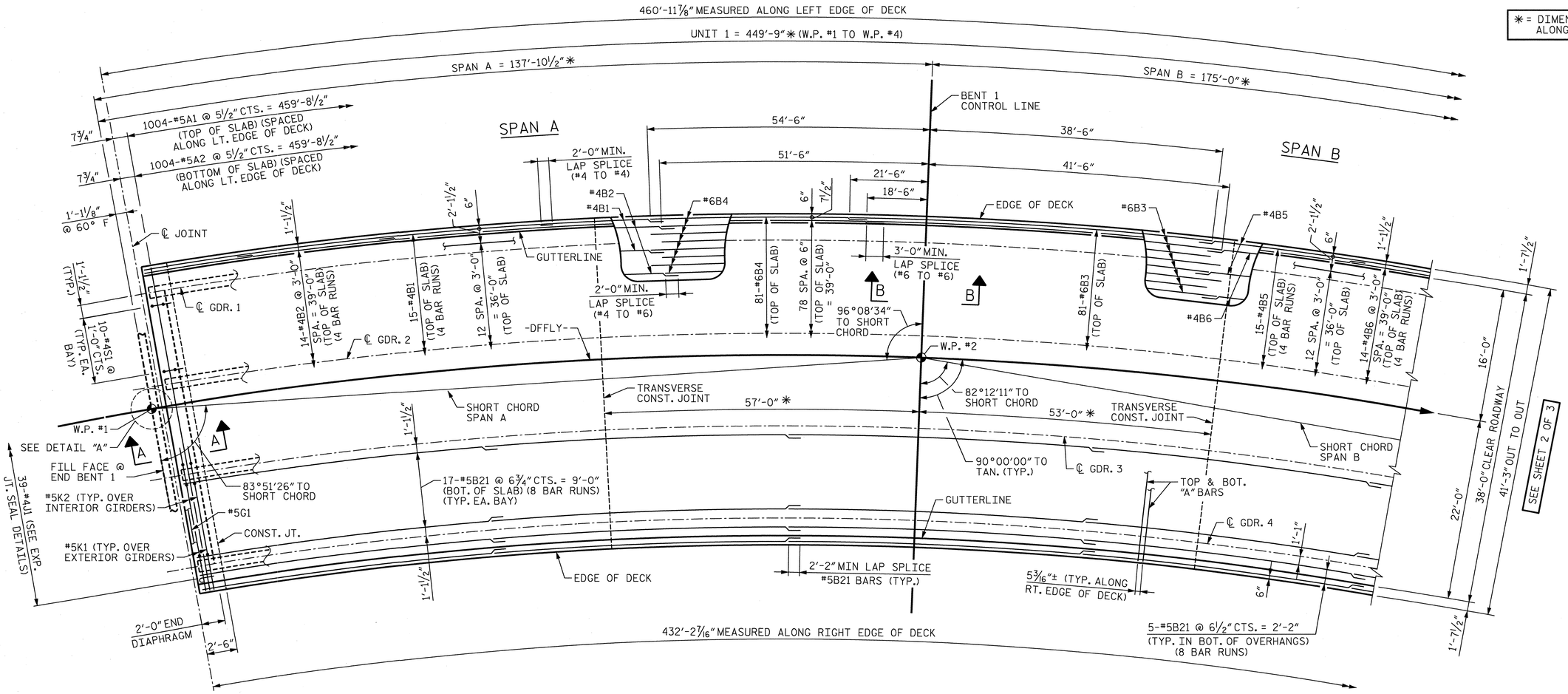

PARTIAL PLAN OF SPANS - UNIT 1

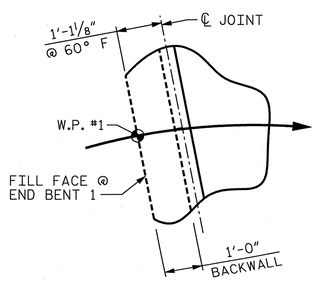

DETAIL "A"

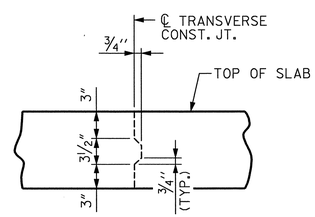

TRANSVERSE CONSTRUCTION JOINT DETAIL

NOTE: REINFORCING STEEL IN SLAB NOT SHOWN. LONGITUDINAL REINFORCING STEEL SHALL BE CONTINUOUS THRU JOINT

NOTES

FOR SECTIONS A-A AND B-B, SEE "SUPERSTRUCTURE TYPICAL SECTION" SHEET.

SEE SHEET 3 OF 3 FOR OUTSIDE EDGE OF DECK CURVE OFFSETS

FOR REINFORCING STEEL IN CONCRETE BARRIER RAIL, SEE "CONCRETE BARRIER RAIL" SHEETS.

#5"A" BARS ARE TO BE PLACED RADIALLY ALONG LEFT OUTSIDE EDGE OF SUPERSTRUCTURE.

FOR DECK POURING SEQUENCE SEE "BILL OF MATERIALS" SHEET.

PROJECT NO. U-0071

DURHAM COUNTY

STATION: 23+29.61 -DFFLY-

SHEET 1 OF 3

STATE OF NORTH CAROLINA
DEPARTMENT OF TRANSPORTATION
RALEIGH

SUPERSTRUCTURE PLAN OF SPANS UNIT 1

NORTH CAROLINA PROFESSIONAL SEAL 29589 ENGINEER DOMENIC A. COLETTI 1-7-14

HDR Engineering, Inc. of the Carolinas
3733 National Drive, Suite 207 Raleigh, N.C. 27612
N.C.B.E.L.S. License Number: F-0116

REVISIONS						SHEET NO.
NO.	BY:	DATE:	NO.	BY:	DATE:	S-491
1	--	--	3	--	--	TOTAL SHEETS
2	--	--	4	--	--	671

DES BY: J. TAYLOR	DATE: 06/13	DWG BY: M. SELLS	DATE: 06/13
DES CHK: S. DICKENS	DATE: 06/13	CHK BY: S. DICKENS	DATE: 06/13

ORIGINATED		YELLOW HIGHLIGHTED & REDLINE CHECKED		BLUE HIGHLIGHTED CHANGES		CHANGES VERIFIED BY	
INITIALS	DATE	INITIALS	DATE	INITIALS	DATE	VERIFIED	DATE

PLOT DRIVER: NCDOT_pdf_mono_eng_50.plt
USER: msells
FILE: ...\d0391221\U0071_11_PS1_1.DGN
DATE: 1/6/2014
TABLE: Durham_pen.tbl
TIME: 1:19:27 PM

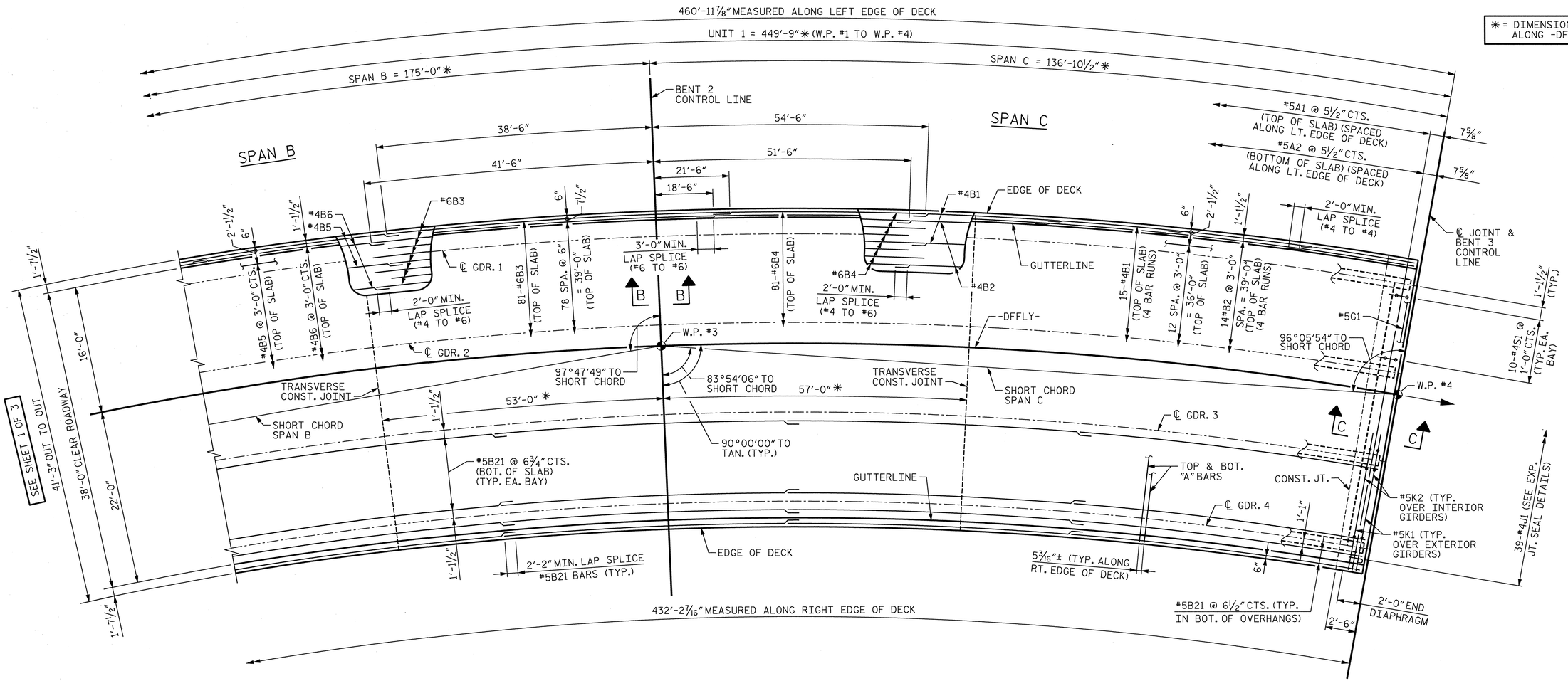

PARTIAL PLAN OF SPANS - UNIT 1

NOTES

FOR SECTIONS B-B AND C-C, SEE "SUPERSTRUCTURE TYPICAL SECTION" SHEET.

FOR NOTES, SEE SHEET 1 OF 3.

FOR BAR COUNTS NOT SHOWN, SEE SHEET 1 OF 3.

PROJECT NO. U-0071

DURHAM COUNTY

STATION: 23+29.61 -DFFLY-

SHEET 2 OF 3

STATE OF NORTH CAROLINA
DEPARTMENT OF TRANSPORTATION
RALEIGH

SUPERSTRUCTURE PLAN OF SPANS UNIT 1

REVISIONS						SHEET NO.
NO.	BY:	DATE:	NO.	BY:	DATE:	S-492
1	--	--	3	--	--	TOTAL SHEETS
2	--	--	4	--	--	671

NORTH CAROLINA PROFESSIONAL SEAL 29589 ENGINEER DOMENIC A. COLETTI 1-7-14

HDR Engineering, Inc. of the Carolinas
3733 National Drive, Suite 207 Raleigh, N.C. 27612
N.C.B.E.L.S. License Number: F-0116

DES BY: J. TAYLOR	DATE: 06/13	DWG BY: M. SELLS	DATE: 06/13
DES CHK: S. DICKENS	DATE: 06/13	CHK BY: S. DICKENS	DATE: 06/13

ORIGINATED		YELLOW HIGHLIGHTED & REDLINE CHECKED		BLUE HIGHLIGHTED CHANGES		CHANGES VERIFIED BY	
INITIALS	DATE	INITIALS	DATE	INITIALS	DATE	VERIFIED	DATE

PLOT DRIVER: NCDOT_pdf_mono_eng_50.plt
USER: msells DATE: 1/6/2014
FILE: ...\d039122\U0071_11_PS1-2.DGN
TABLE: Durham_pen.tbl
TIME: 1:19:58 PM

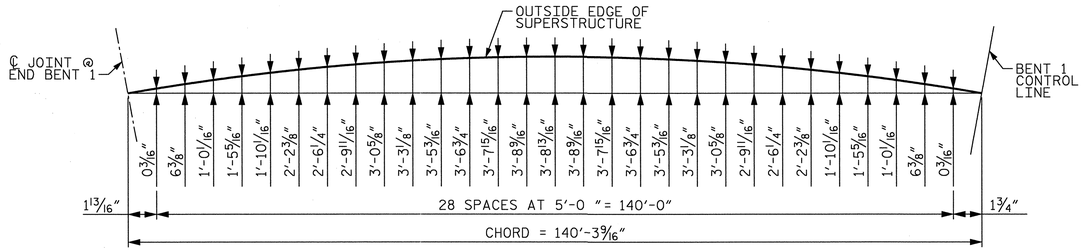

LEFT SIDE

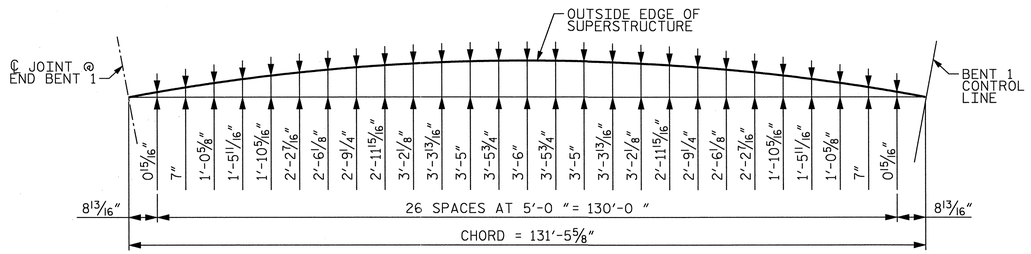

RIGHT SIDE

OUTSIDE EDGE ARC OFFSETS - SPAN A

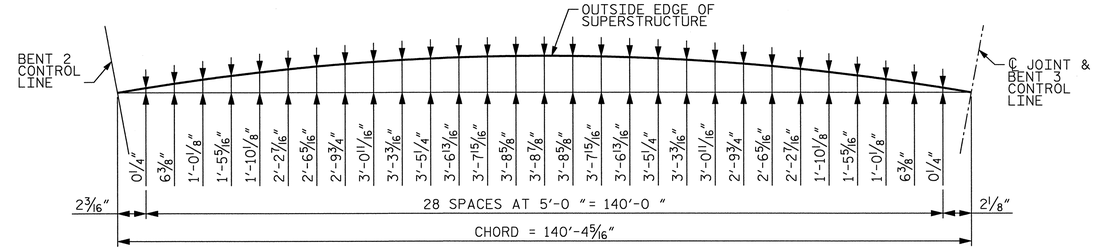

LEFT SIDE

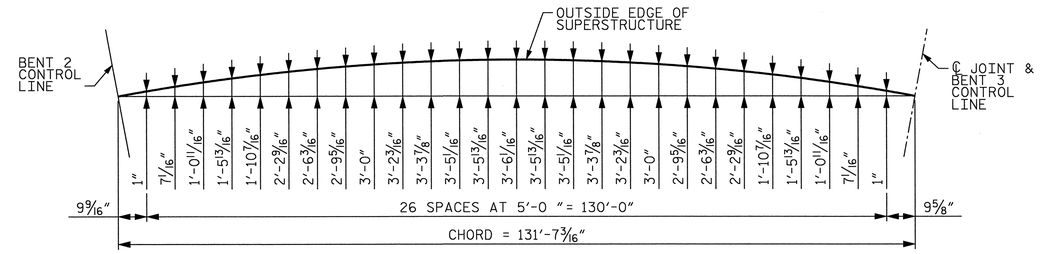

RIGHT SIDE

OUTSIDE EDGE ARC OFFSETS - SPAN C

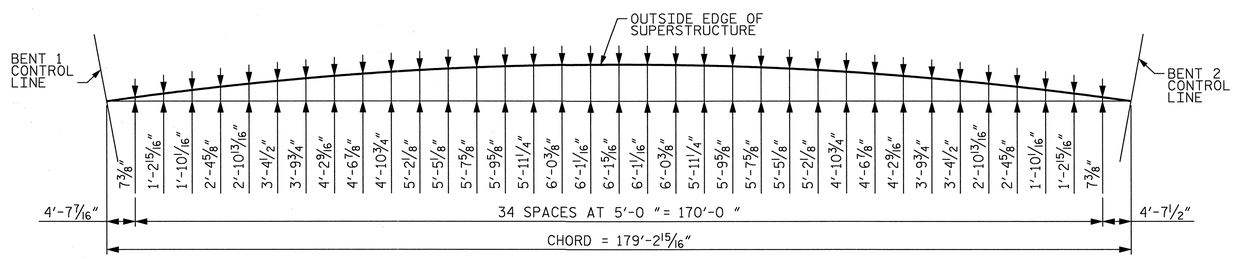

LEFT SIDE

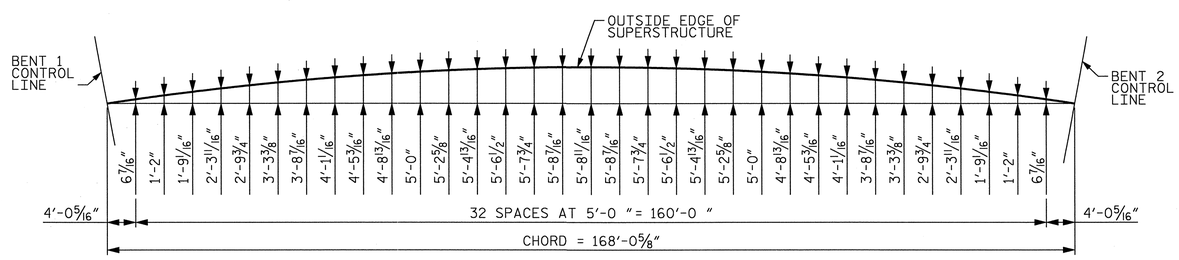

RIGHT SIDE

OUTSIDE EDGE ARC OFFSETS - SPAN B

ORIGINATED		YELLOW HIGHLIGHTED & REDLINE CHECKED		BLUE HIGHLIGHTED CHANGES		CHANGES VERIFIED BY	
INITIALS	DATE	INITIALS	DATE	INITIALS	DATE	VERIFIED	DATE

PLOT DRIVER: NCDOT_pdf_mono_eng_50.plt ..\TABLE: Durham_pen.tbl
USER: msells DATE: 1/6/2014 TIME: 1:20:27 PM
FILE: ...\U0391221\U0071_11_PS1-3.DGN

DES BY: J. TAYLOR	DATE : 06/13	DWG BY: B. PETERSON	DATE : 06/13
DES CHK: S. DICKENS	DATE : 06/13	CHK BY: S. DICKENS	DATE : 06/13

PROJECT NO. U-0071
DURHAM COUNTY
STATION: 23+29.61 -DFFLY-

SHEET 3 OF 3

STATE OF NORTH CAROLINA
DEPARTMENT OF TRANSPORTATION
RALEIGH

SUPERSTRUCTURE PLAN OF SPANS UNIT 1

NORTH CAROLINA PROFESSIONAL SEAL 29589 ENGINEER DOMENIC A. COLETTI
1-7-14

HDR Engineering, Inc. of the Carolinas
3733 National Drive, Suite 207 Raleigh, N.C. 27612
N.C.B.E.L.S. License Number: F-0116

REVISIONS								SHEET NO. S-493
NO.	BY:	DATE:	NO.	BY:	DATE:			TOTAL SHEETS 671
1	--	--	3	--	--			
2	--	--	4	--	--			

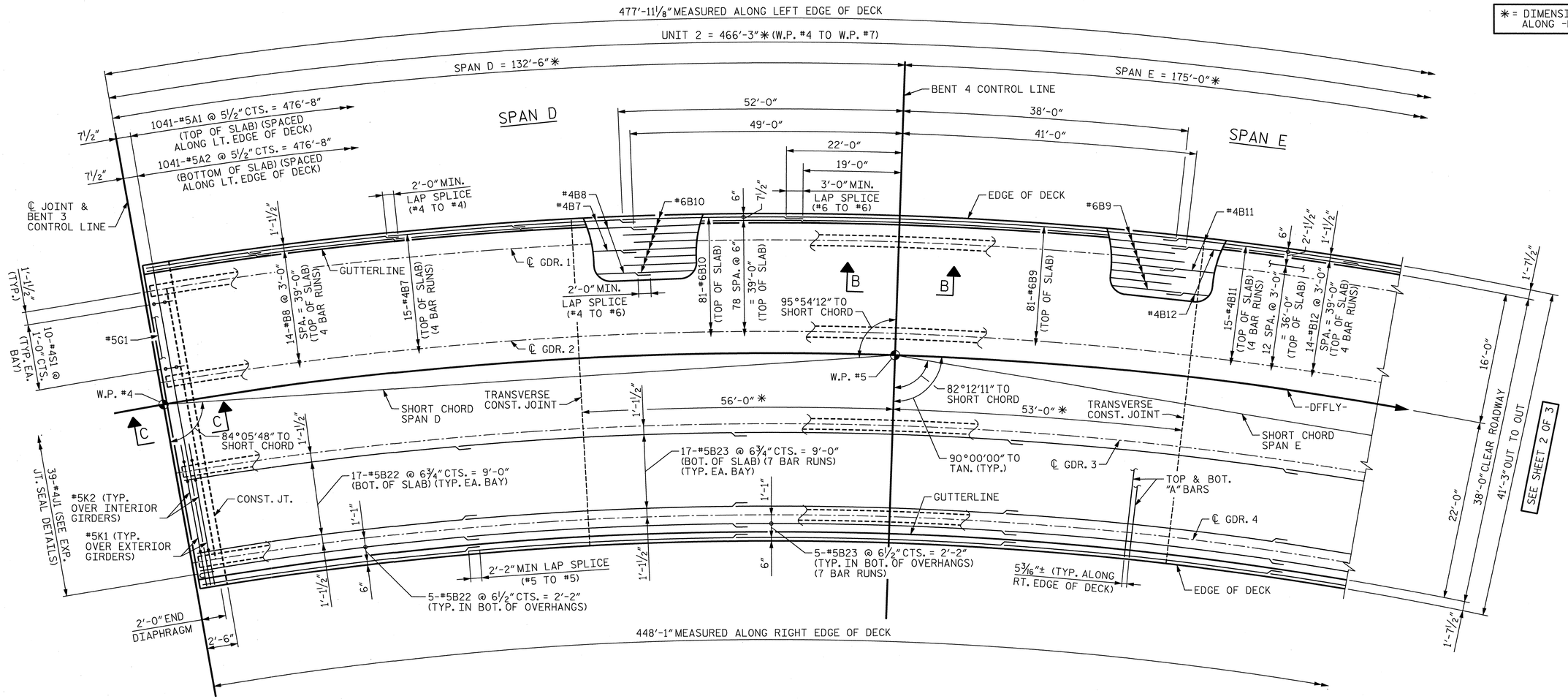

PARTIAL PLAN OF SPANS - UNIT 2

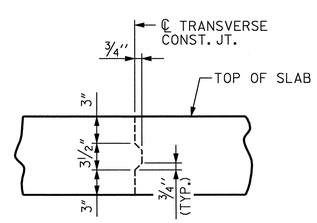

TRANSVERSE CONSTRUCTION JOINT DETAIL

NOTE: REINFORCING STEEL IN SLAB NOT SHOWN. LONGITUDINAL REINFORCING STEEL SHALL BE CONTINUOUS THRU JOINT

NOTES

FOR SECTIONS A-A AND B-B, SEE "SUPERSTRUCTURE TYPICAL SECTION" SHEET.

SEE SHEET 3 OF 3 FOR OUTSIDE EDGE OF DECK CURVE OFFSETS

FOR REINFORCING STEEL IN CONCRETE BARRIER RAIL, SEE "CONCRETE BARRIER RAIL" SHEETS.

#5"A" BARS ARE TO BE PLACED RADIALLY ALONG LEFT OUTSIDE EDGE OF SUPERSTRUCTURE.

FOR DECK POURING SEQUENCE SEE "BILL OF MATERIALS" SHEET.

PROJECT NO. U-0071

DURHAM COUNTY

STATION: 23+29.61 -DFFLY-

SHEET 1 OF 3

STATE OF NORTH CAROLINA
DEPARTMENT OF TRANSPORTATION
RALEIGH

SUPERSTRUCTURE PLAN OF SPANS UNIT 2

NORTH CAROLINA PROFESSIONAL SEAL 29589 ENGINEER DOMENIC A. COLETTI 1-7-14

HDR Engineering, Inc. of the Carolinas
3733 National Drive, Suite 207 Raleigh, N.C. 27612
N.C.B.E.L.S. License Number: F-0116

REVISIONS						SHEET NO.
NO.	BY:	DATE:	NO.	BY:	DATE:	S-44A
1	--	--	3	--	--	TOTAL SHEETS
2	--	--	4	--	--	67

DES BY: J. TAYLOR	DATE: 06/13	DWG BY: M. SELLS	DATE: 06/13
DES CHK: S. DICKENS	DATE: 06/13	CHK BY: S. DICKENS	DATE: 06/13

ORIGINATED		YELLOW HIGHLIGHTED & REDLINE CHECKED		BLUE HIGHLIGHTED CHANGES		CHANGES VERIFIED BY	
INITIALS	DATE	INITIALS	DATE	INITIALS	DATE	VERIFIED	DATE

PLOT DRIVER: NCDOT_pdf_mono_eng_50.plt
USER: msells
FILE: ...\d0391221\U0071_11_PS2-1.DGN
DATE: 1/6/2014
TABLE: Durham_pen.tbl
TIME: 1:20:57 PM

✱ = DIMENSION MEASURED ALONG -DFFLY-

477'-11⅛" MEASURED ALONG LEFT EDGE OF DECK
UNIT 2 = 466'-3" ✱ (W.P. #4 TO W.P. #7)
SPAN E = 175'-0" ✱
SPAN F = 158'-9" ✱
BENT 5 CONTROL LINE
45'-0"
48'-0"
50'-0"
47'-0"
15'-0"
12'-0"
3'-0" MIN. LAP SPLICE (#6 TO #6)
SPAN E
SPAN F
#4B12
#4B11
#6B9
#4B14
EDGE OF DECK
GUTTERLINE
℄ GDR. 1
#6B13
#4B15
TRANSVERSE CONST. JOINT
2'-0" MIN. LAP SPLICE (#4 TO #6)
W.P. #6
℄ GDR. 2
81-#6B9 (TOP OF SLAB)
78 SPA. @ 6" = 39'-0" (TOP OF SLAB)
81-#6B13 (TOP OF SLAB)
15-#4B14 (TOP OF SLAB) (4 BAR RUNS)
12 SPA. @ 3'-0" = 36'-0" (TOP OF SLAB)
14-#4B15 SPA. = 39'-0" (TOP OF SLAB) (5 BAR RUNS)
#4B12 @ 3'-0" (TOP OF SLAB)
#4B11 @ 3'-0" (TOP OF SLAB)
SHORT CHORD SPAN E
97°47'49" TO SHORT CHORD
82°55'38" TO SHORT CHORD
55'-0" ✱
67'-0" ✱
90°00'00" TO TAN. (TYP.)
SHORT CHORD SPAN F
-DFFLY-
℄ GDR. 3
#5B23 @ 6¾" CTS. (BOT. OF SLAB) (TYP. EA. BAY)
℄ GDR. 4
GUTTERLINE
TRANSVERSE CONST. JOINT
EDGE OF DECK
2'-2" MIN LAP SPLICE (#5 TO #5)
#5B23 @ 6½" CTS (TYP. IN BOT. OF OVERHANGS)
#5A1 @ 5½" CTS. (TOP OF SLAB) (SPACED ALONG LT. EDGE OF DECK)
#5A2 @ 5½" CTS. (BOTTOM OF SLAB) (SPACED ALONG LT. EDGE OF DECK)
7⅝"
7⅝"
2'-0" MIN. LAP SPLICE (#4 TO #4)
℄ JOINT
1'-1⅛" @ 60° F
#5G1
97°04'22" TO SHORT CHORD
10-#4S1 @ 1'-0" CTS. (TYP. EA. BAY)
W.P. #7
SEE DETAIL "B"
FILL FACE @ END BENT 2
TOP & BOT. "A" BARS
CONST. JT.
#5K2 (TYP. OVER INTERIOR GIRDERS)
#5K1 (TYP. OVER EXTERIOR GIRDERS)
39-#4J1 (SEE EXP. JT. SEAL DETAILS)
5¾16"± (TYP. ALONG RT. EDGE OF DECK)
17-#5B22 @ 6¾" CTS. = 9'-0" (BOT. OF SLAB) (TYP. EA. BAY)
5-#5B22 @ 6½" CTS = 2'-2" (TYP. IN BOT. OF OVERHANGS)
2'-0" END DIAPHRAGM
2'-6"
SEE SHEET 1 OF 3
41'-3" OUT TO OUT
38'-0" CLEAR ROADWAY
16'-0"
22'-0"
1'-7½"
1'-1½"
2'-1½"
6"
1'-1"
448'-1" MEASURED ALONG RIGHT EDGE OF DECK

PARTIAL PLAN OF SPANS - UNIT 2

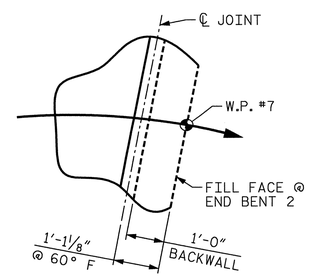

DETAIL "B"

NOTES

FOR SECTIONS B-B AND C-C, SEE "SUPERSTRUCTURE TYPICAL SECTION" SHEET.

FOR NOTES, SEE SHEET 1 OF 3.

FOR BAR COUNTS NOT SHOWN, SEE SHEET 1 OF 3.

PROJECT NO. U-0071
DURHAM COUNTY
STATION: 23+29.61 -DFFLY-

SHEET 2 OF 3

STATE OF NORTH CAROLINA
DEPARTMENT OF TRANSPORTATION
RALEIGH

SUPERSTRUCTURE PLAN OF SPANS UNIT 2

NORTH CAROLINA PROFESSIONAL SEAL 29589 ENGINEER DOMENIC A. COLETTI
1-7-14

HDR Engineering, Inc. of the Carolinas
3733 National Drive, Suite 207 Raleigh, N.C. 27612
N.C.B.E.L.S. License Number: F-0116

REVISIONS						
NO.	BY:	DATE:	NO.	BY:	DATE:	
1	--	--	3	--	--	
2	--	--	4	--	--	

SHEET NO. S-495
TOTAL SHEETS 671

DES BY: J. TAYLOR	DATE: 06/13	DWG BY: B. PETERSON	DATE: 06/13
DES CHK: S. DICKENS	DATE: 06/13	CHK BY: S. DICKENS	DATE: 06/13

ORIGINATED		YELLOW HIGHLIGHTED & REDLINE CHECKED		BLUE HIGHLIGHTED CHANGES		CHANGES VERIFIED BY	
INITIALS	DATE	INITIALS	DATE	INITIALS	DATE	VERIFIED	DATE

PLOT DRIVER: NCDOT_pdf_mono_eng_50.plt
USER: msells
FILE: ...\d0391221\U0071_11_PS2-2.DGN
TABLE: Durham_pen.tbl
DATE: 1/6/2014
TIME: 1:21:26 PM

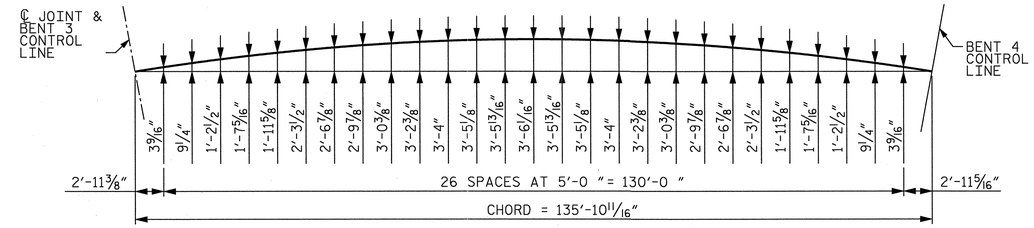

LEFT SIDE

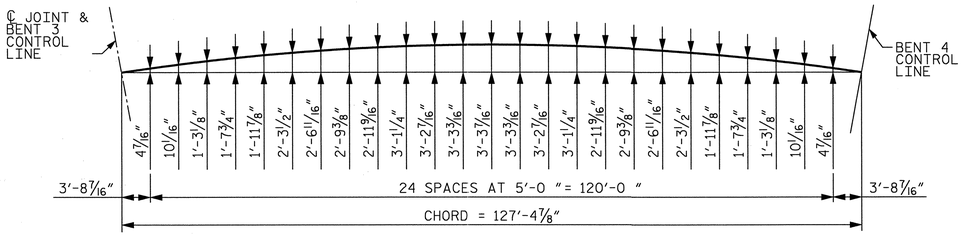

RIGHT SIDE

OUTSIDE EDGE ARC OFFSETS - SPAN D

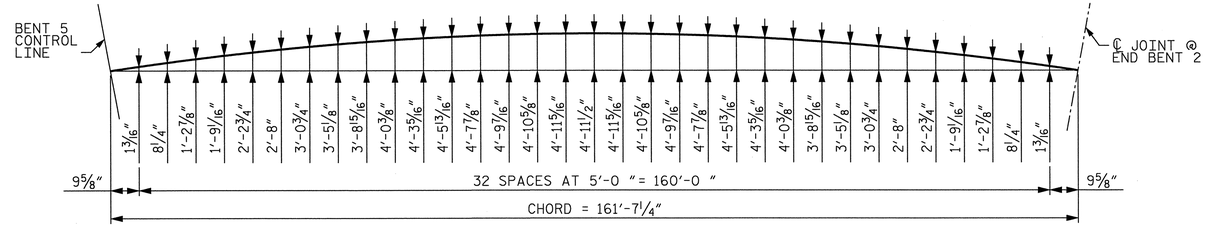

LEFT SIDE

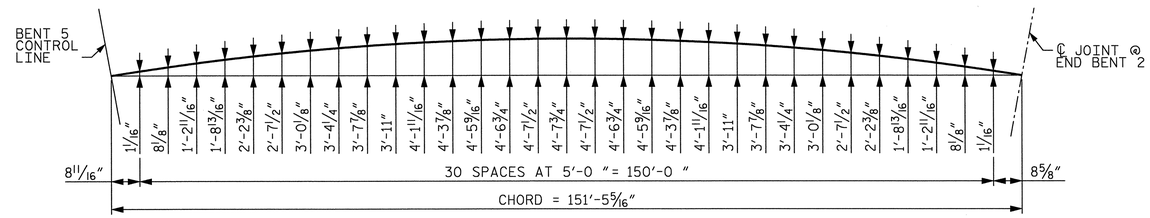

RIGHT SIDE

OUTSIDE EDGE ARC OFFSETS - SPAN F

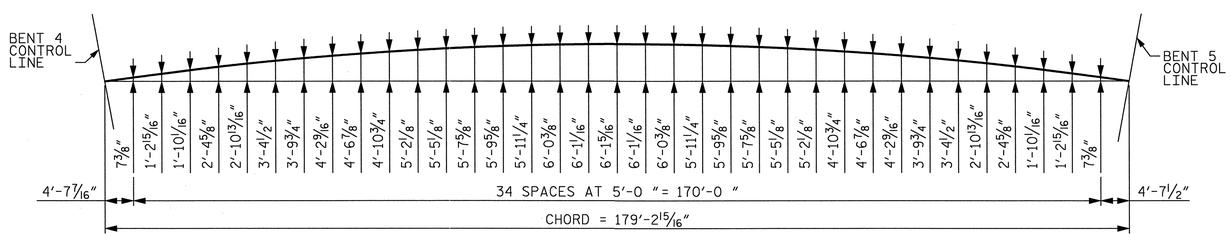

LEFT SIDE

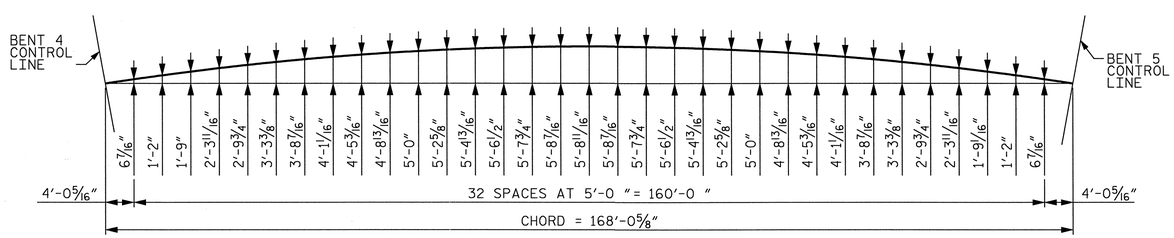

RIGHT SIDE

OUTSIDE EDGE ARC OFFSETS - SPAN E

ORIGINATED		YELLOW HIGHLIGHTED & REDLINE CHECKED		BLUE HIGHLIGHTED CHANGES		CHANGES VERIFIED BY	
INITIALS	DATE	INITIALS	DATE	INITIALS	DATE	VERIFIED	DATE

PLOT DRIVER: NCDOT_pdf_mono_eng_50.plt
USER: msells
DATE: 1/6/2014
FILE: ...\d0391221\U0071_11_PS2-3.DGN
. NTABLE: Durham_pen.tbl
TIME: 1:21:58 PM

DES BY: J. TAYLOR	DATE : 06/13	DWG BY: B. PETERSON	DATE : 06/13
DES CHK: S. DICKENS	DATE : 06/13	CHK BY: S. DICKENS	DATE : 06/13

PROJECT NO. U-0071
DURHAM COUNTY
STATION: 23+29.61 -DFFLY-
SHEET 3 OF 3

STATE OF NORTH CAROLINA
DEPARTMENT OF TRANSPORTATION
RALEIGH

SUPERSTRUCTURE PLAN OF SPANS UNIT 2

NORTH CAROLINA PROFESSIONAL SEAL 29589 ENGINEER DOMENIC A. COLETTI
1-7-14

HDR Engineering, Inc. of the Carolinas
3733 National Drive, Suite 207 Raleigh, N.C. 27612
N.C.B.E.L.S. License Number: F-0116

REVISIONS								SHEET NO.
NO.	BY:	DATE:	NO.	BY:	DATE:			S-AK
1	--	--	3	--	--			TOTAL SHEETS
2	--	--	4	--	--			67

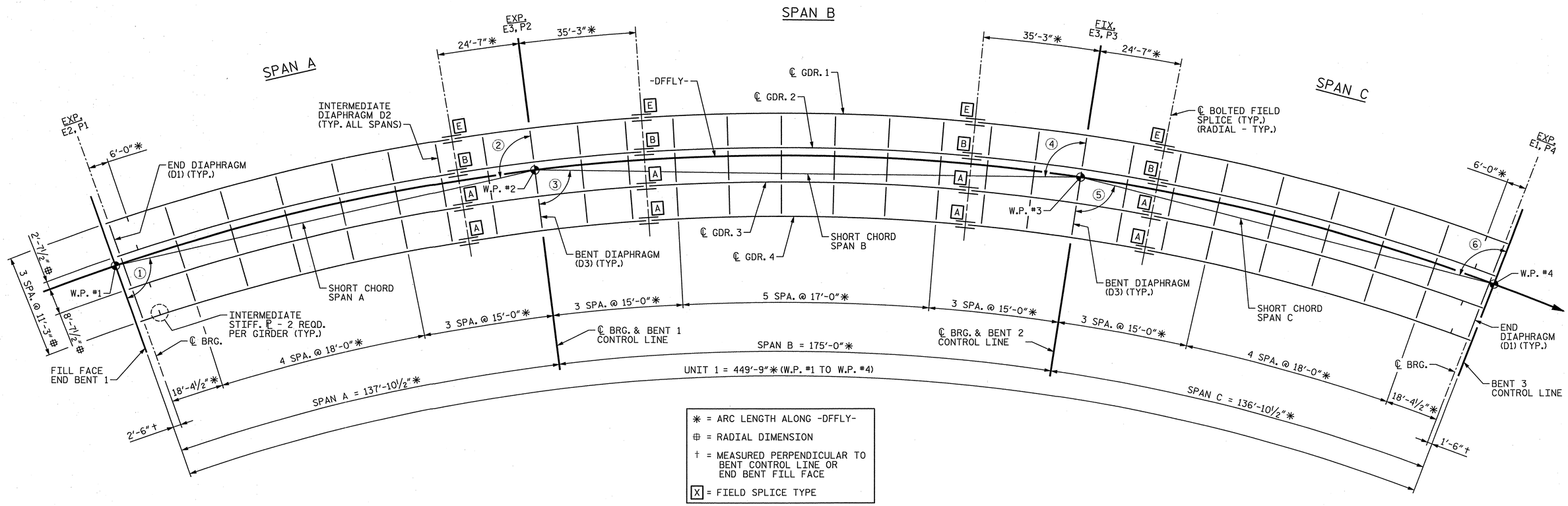

✱ = ARC LENGTH ALONG -DFFLY-

⊕ = RADIAL DIMENSION

† = MEASURED PERPENDICULAR TO BENT CONTROL LINE OR END BENT FILL FACE

[X] = FIELD SPLICE TYPE

FRAMING PLAN - UNIT 1

ANGLES TO SHORT CHORD

1. 83°51'26"
2. 96°08'34"
3. 82°12'11"
4. 97°47'49"
5. 83°54'06"
6. 96°05'54"

STRUCTURAL STEEL NOTES

ALL STRUCTURAL STEEL SHALL BE AASHTO M270 GRADE 50W AND PAINTED IN ACCORDANCE WITH SYSTEM 4 OF ARTICLE 442-8 OF THE STANDARD SPECIFICATIONS UNLESS OTHERWISE NOTED IN THE PLANS.

ALL DIMENSIONS SHOWN ARE HORIZONTAL OR VERTICAL, UNLESS OTHERWISE NOTED.

ALL FIELD CONNECTIONS TO BE 7/8" Ø DIA. HIGH STRENGTH BOLTS UNLESS OTHERWISE NOTED.

BEARING STIFFENERS ARE TO BE PLACED NORMAL TO THE WEB OF THE GIRDER AND SHALL BE PLUMB IN THE FINAL CONDITION.

PERMITTED FLANGE AND WEB SHOP SPLICES SHALL NOT BE LOCATED WITHIN 15 FEET OF MAXIMUM DEAD LOAD DEFLECTION (NOR WITHIN 15 FEET OF INTERMEDIATE BEARINGS OF CONTINUOUS UNITS). KEEP 2 FEET MINIMUM BETWEEN WEB AND FLANGE SHOP SPLICES. KEEP 6" MINIMUM BETWEEN CONNECTOR PLATE OR TRANSVERSE STIFFENER WELD AND WEB OR FLANGE SHOP SPLICES.

STUDS ON GIRDERS MAY BE SHIFTED UP TO 1" IF NECESSARY TO CLEAR FLANGE SPLICE WELDS.

TENSION ON THE AASHTO M164 BOLTS SHALL BE CALIBRATED USING DIRECT TENSION INDICATOR WASHERS IN ACCORDANCE WITH ARTICLE 440-8 OF THE STANDARD SPECIFICATIONS.

ENDS OF GIRDERS SHALL BE PLUMB IN THE FINAL CONDITION.

BEARING STIFFENER MAY REQUIRE COPING IF WIDER THAN BOTTOM FLANGE.

STRUCTURAL STEEL ERECTION IN A CONTINUOUS UNIT SHALL BE COMPLETE BEFORE FALSEWORK OR FORMS ARE PLACED ON THE UNIT.

FOR TEMPORARY BENTS, SEE SPECIAL PROVISIONS.

FABRICATORS SHALL DETAIL DIAPHRAGM MEMBERS AND CONNECTIONS FOR NO-LOAD FIT UP.

PROJECT NO. U-0071

DURHAM COUNTY

STATION: 23+29.61 -DFFLY-

STATE OF NORTH CAROLINA
DEPARTMENT OF TRANSPORTATION
RALEIGH

SUPERSTRUCTURE FRAMING PLAN UNIT 1

NORTH CAROLINA PROFESSIONAL SEAL 29589 ENGINEER DOMENIC A. COLETTI 3-5-14

REVISIONS						SHEET NO.
NO.	BY:	DATE:	NO.	BY:	DATE:	S-497
1	--	--	3	--	--	TOTAL SHEETS
2	--	--	4	--	--	63

HDR Engineering, Inc. of the Carolinas
3733 National Drive, Suite 207 Raleigh, N.C. 27612
N.C.B.E.L.S. License Number: F-0116

DES BY: D. COLETTI	DATE: 03/13	DWG BY: B. PETERSON	DATE: 06/13
DES CHK: J. TAYLOR	DATE: 04/13	CHK BY: D. COLETTI	DATE: 06/13

ORIGINATED		YELLOW HIGHLIGHTED & REDLINE CHECKED		BLUE HIGHLIGHTED CHANGES		CHANGES VERIFIED BY	
INITIALS	DATE	INITIALS	DATE	INITIALS	DATE	VERIFIED	DATE

PLOT DRIVER: NCDOT_pdf_mono_eng_50.plt
USER: ppeterso DATE: 3/4/2014
FILE: ...\Plan Set\0540
PENTABLE: Durham_pen.tbl
TIME: 3:23:01 PM

(Sheet 21 of 63 has been omitted) Sheet 22 of 63

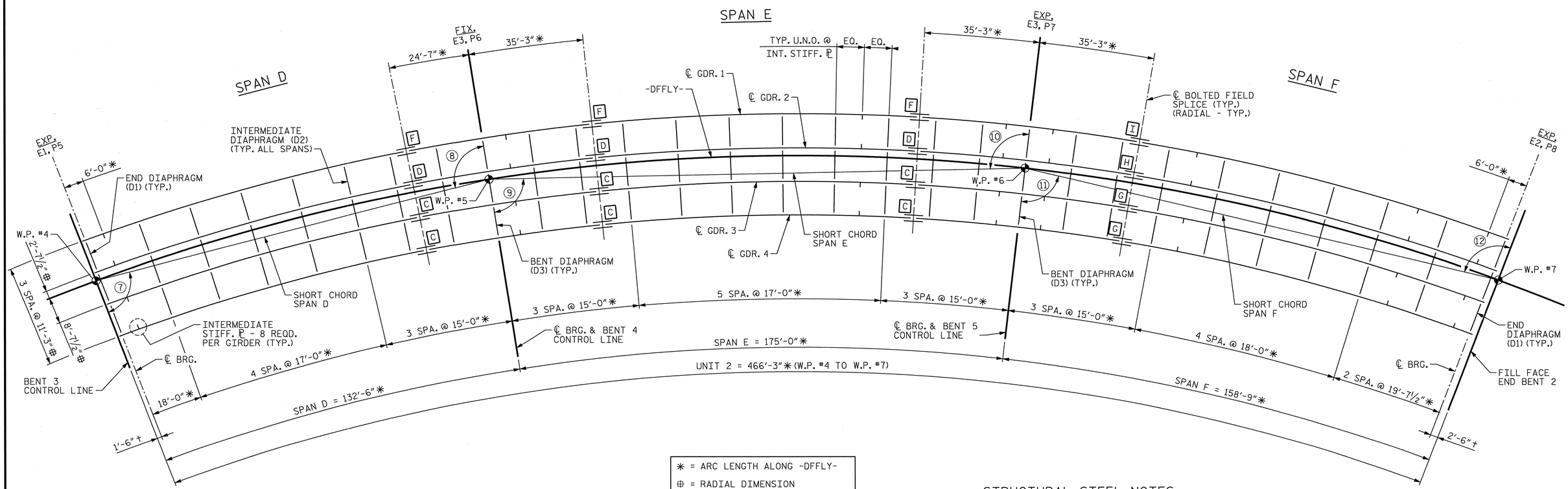

✱ = ARC LENGTH ALONG -DFFLY-

⊕ = RADIAL DIMENSION

† = MEASURED PERPENDICULAR TO BENT CONTROL LINE OR END BENT FILL FACE

[X] = FIELD SPLICE TYPE

STRUCTURAL STEEL NOTES

SEE "SUPERSTRUCTURE, FRAMING PLAN, UNIT 1" SHEET FOR NOTES

FRAMING PLAN - UNIT 2

ANGLES TO SHORT CHORD

⑦ 84°05'48"

⑧ 95°54'12"

⑨ 82°12'11"

⑩ 97°47'49"

⑪ 82°55'38"

⑫ 97°04'22"

PROJECT NO. U-0071

DURHAM COUNTY

STATION: 23+29.61 -DFFLY-

STATE OF NORTH CAROLINA
DEPARTMENT OF TRANSPORTATION
RALEIGH

SUPERSTRUCTURE FRAMING PLAN UNIT 2

REVISIONS						SHEET NO.
NO.	BY:	DATE:	NO.	BY:	DATE:	S-418
1	--	--	3	--	--	TOTAL SHEETS
2	--	--	4	--	--	571

NORTH CAROLINA PROFESSIONAL SEAL 29589 ENGINEER DOMENIC A. COLETTI 1-7-14

HDR Engineering, Inc. of the Carolinas
3733 National Drive, Suite 207 Raleigh, N.C. 27612
N.C.B.E.L.S. License Number: F-0116

DES BY: D. COLETTI	DATE: 03/13	DWG BY: B. PETERSON	DATE: 06/13
DES CHK: J. TAYLOR	DATE: 04/13	CHK BY: D. COLETTI	DATE: 06/13

ORIGINATED		YELLOW HIGHLIGHTED & REDLINE CHECKED		BLUE HIGHLIGHTED CHANGES		CHANGES VERIFIED BY	
INITIALS	DATE	INITIALS	DATE	INITIALS	DATE	VERIFIED	DATE

PLOT DRIVER: NCDOT_pdf_mono_eng_50.plt
USER: msells DATE: 1/6/2014
FILE: ...\tpa\d039122\U0071_11_FP2.DGN
r_NTABLE: Durham_pen.tbl
TIME: 1:22:51 PM

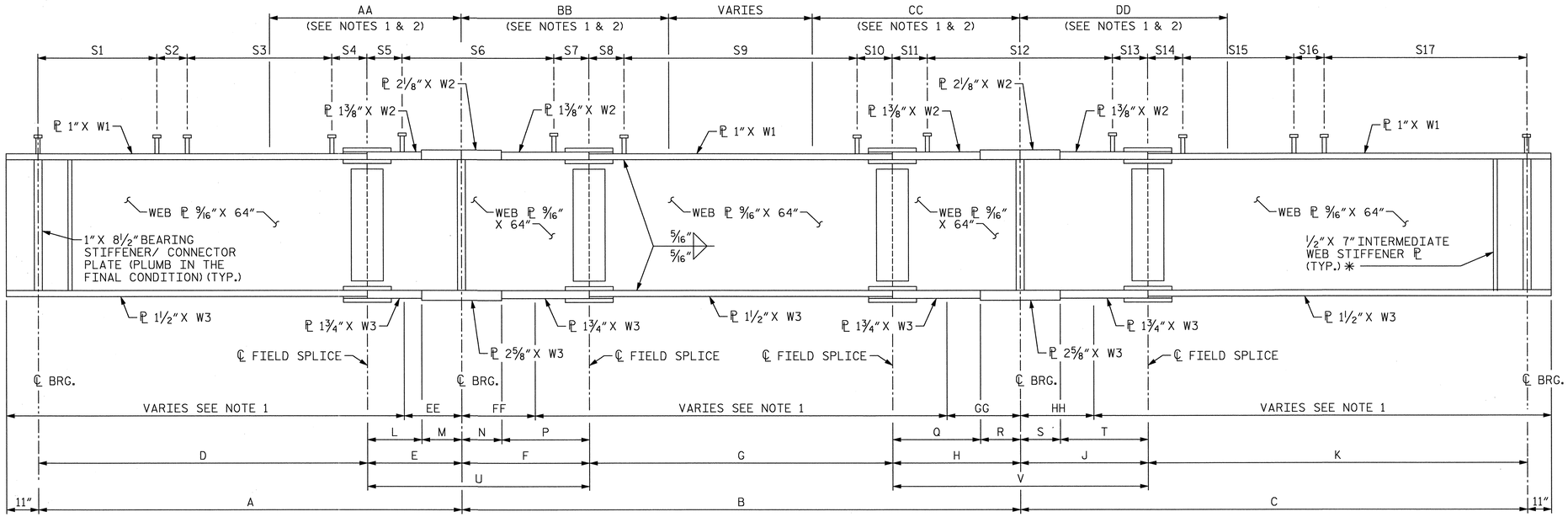

ELEVATION

* = PLACE ALL INTERMEDIATE WEB STIFFENERS ON THE INSIDE FACE OF THE WEB ON EXTERIOR GIRDERS.

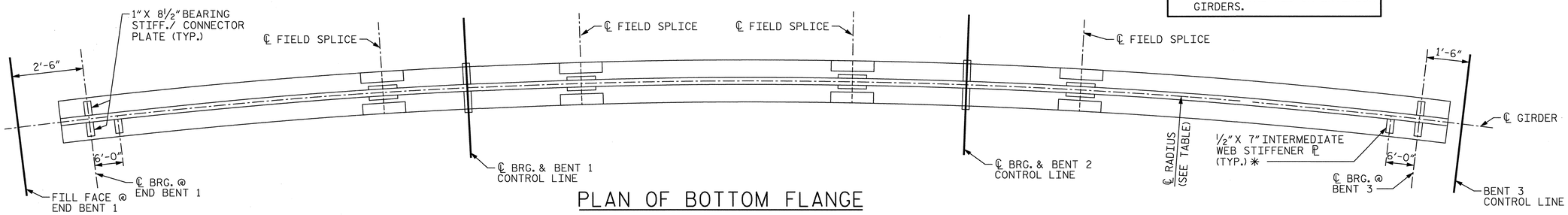

PLAN OF BOTTOM FLANGE

NOTES

1. CHARPY V-NOTCH TESTS ARE REQUIRED FOR ALL TOP OR BOTTOM FLANGE PLATES WHICH FALL WITHIN THESE LIMITS, ALL WEB PLATES AND ALL SPLICE PLATES. IF A PERMITTED SHOP FLANGE SPLICE IS NOT USED, CHARPY V-NOTCH TESTS WILL BE REQUIRED FOR THE ENTIRE FLANGE PLATE. SEE ARTICLE 1072-9 OF THE STANDARD SPECIFICATIONS.
2. NO WELDING OF FORMS OR FALSEWWORK TO THE TOP FLANGE WILL BE PERMITTED IN THIS REGION.
3. DIMENSIONS ARE HORIZONTAL ARC DIMENSIONS ALONG THE ℄ OF GIRDER. NO CORRECTIONS HAVE BEEN MADE TO ADJUST FOR THE DISTANCE ALONG THE GRADE.
4. FOR SHEAR CONNECTOR TRANSVERSE SPACING, SEE "STRUCTURAL STEEL DETAILS" SHEET.

GIRDER DIMENSIONS

GIRDER	℄ RADIUS	A	B	C	D	E	F	G	H	J	K	L	M	N	P	Q	R	S	T	U	V
1	656'-10 1/2"	138'-4 3/16"	178'-9 5/16"	138'-3 15/16"	113'-2 13/16"	25'-1 3/8"	36'-0 1/8"	106'-9 1/16"	36'-0 1/8"	25'-1 3/8"	113'-2 9/16"	12'-7 3/8"	12'-6"	12'-6"	23'-6 1/8"	23'-6 1/8"	12'-6"	12'-6"	12'-7 3/8"	61'-1 1/2"	61'-1 1/2"
2	645'-7 1/2"	135'-11 1/4"	175'-8 9/16"	135'-11 3/16"	111'-3 1/16"	24'-8 3/16"	35'-4 3/4"	104'-11 1/8"	35'-4 3/4"	24'-8 3/16"	111'-3"	12'-2 3/16"	12'-6"	12'-6"	22'-10 3/4"	22'-10 3/4"	12'-6"	12'-6"	12'-2 3/16"	60'-0 15/16"	60'-0 15/16"
3	634'-4 1/2"	133'-6 5/16"	172'-7 13/16"	133'-6 7/16"	109'-3 1/4"	24'-3 1/16"	34'-9 5/16"	103'-1 3/16"	34'-9 5/16"	24'-3 1/16"	109'-3 7/16"	11'-9 1/16"	12'-6"	12'-6"	22'-3 5/16"	22'-3 5/16"	12'-6"	12'-6"	11'-9 1/16"	59'-0 3/8"	59'-0 3/8"
4	623'-1 1/2"	131'-1 3/8"	169'-7 1/16"	131'-1 3/4"	107'-3 1/2"	23'-9 7/8"	34'-1 15/16"	101'-3 1/4"	34'-1 15/16"	23'-9 7/8"	107'-3 7/8"	11'-3 7/8"	12'-6"	12'-6"	21'-7 15/16"	21'-7 15/16"	12'-6"	12'-6"	11'-3 7/8"	57'-11 13/16"	57'-11 13/16"

STUD SPACING DIMENSIONS

GIRDER	S1	S2	S3	S4	S5	S6	S7	S8	S9	S10	S11	S12	S13	S14	S15	S16	S17
1	17 ROWS @ 11"	1'-1"	96 ROWS @ 1'-0"	2'-5 13/16"	2'-0"	58 ROWS @ 1'-0"	2'-1 1/2"	2'-1 1/2"	83 ROWS @ 1'-3"	2'-1 9/16"	2'-4 3/4"	53 ROWS @ 1'-1"	2'-4 3/4"	2'-5 9/16"	96 ROWS @ 1'-0"	1'-1"	17 ROWS @ 11"
2	16 ROWS @ 11"	1'-1"	96 ROWS @ 1'-0"	1'-5 1/16"	2'-0 7/16"	57 ROWS @ 1'-0"	2'-0 1/2"	1'-10 1/2"	82 ROWS @ 1'-3"	1'-9 5/8"	1'-9 11/16"	53 ROWS @ 1'-1"	1'-11 3/16"	1'-6"	95 ROWS @ 1'-0"	1'-1"	17 ROWS @ 11"
3	16 ROWS @ 11"	1'-1"	94 ROWS @ 1'-0"	1'-5 1/4"	2'-0"	56 ROWS @ 1'-0"	2'-0 3/8"	1'-6 9/16"	81 ROWS @ 1'-3"	1'-6 5/8"	1'-10 3/4"	52 ROWS @ 1'-1"	1'-10 5/8"	1'-5 3/8"	94 ROWS @ 1'-0"	1'-1"	16 ROWS @ 11"
4	16 ROWS @ 11"	1'-1"	92 ROWS @ 1'-0"	1'-5 1/2"	1'-9 1/2"	55 ROWS @ 1'-0"	2'-2 5/16"	1'-10 5/8"	79 ROWS @ 1'-3"	1'-10 5/8"	1'-10 7/8"	51 ROWS @ 1'-1"	1'-10 7/8"	1'-7 7/8"	90 ROWS @ 1'-0"	1'-1"	18 ROWS @ 11"

LIMITS OF TENSION FLANGES FOR CHARPY V-NOTCH TESTS

GIRDER	AA	BB	CC	DD	EE	FF	GG	HH
1	67'-2"	54'-2"	60'-5"	61'-7"	30'-10"	32'-4"	32'-2"	30'-11"
2	58'-5"	50'-2"	55'-4"	57'-4"	31'-5"	32'-4"	31'-11"	31'-1"
3	51'-10"	46'-8"	51'-6"	53'-3"	30'-0"	31'-1"	30'-9"	30'-5"
4	59'-1"	52'-2"	58'-2"	57'-0"	28'-2"	28'-7"	28'-5"	27'-9"

GIRDER FLANGE WIDTHS

GIRDER	W1	W2	W3
1	18"	26"	26"
2	16"	22"	22"
3	16"	18"	20"
4	16"	18"	20"

PROJECT NO. U-0071
DURHAM COUNTY
STATION: 23+29.61 -DFFLY-

STATE OF NORTH CAROLINA
DEPARTMENT OF TRANSPORTATION
RALEIGH

SUPERSTRUCTURE GIRDER DETAILS UNIT 1

NORTH CAROLINA PROFESSIONAL SEAL 29589 ENGINEER DOMENIC A. COLETTI
1-7-14

HDR Engineering, Inc. of the Carolinas
3733 National Drive, Suite 207 Raleigh, N.C. 27612
N.C.B.E.L.S. License Number: F-0116

REVISIONS									SHEET NO. S-499
NO.	BY:	DATE:	NO.	BY:	DATE:				TOTAL SHEETS 671
1	--	--	3	--	--				
2	--	--	4	--	--				

DES BY: D. COLETTI DATE: 03/13
DES CHK: J. TAYLOR DATE: 04/13
DWG BY: B. PETERSON DATE: 03/13
CHK BY: D. COLETTI DATE: 04/13

ORIGINATED		YELLOW HIGHLIGHTED & REDLINE CHECKED		BLUE HIGHLIGHTED CHANGES		CHANGES VERIFIED BY	
INITIALS	DATE	INITIALS	DATE	INITIALS	DATE	VERIFIED	DATE

PLOT DRIVER: NCDOT_pdf_mono_eng_50.plt
USER: msells
FILE: ...\tpa\d039122\U0071_11_SS1.DGN
DATE: 1/6/2014
TABLE: Durham_pen.tbl
TIME: 1:23:13 PM

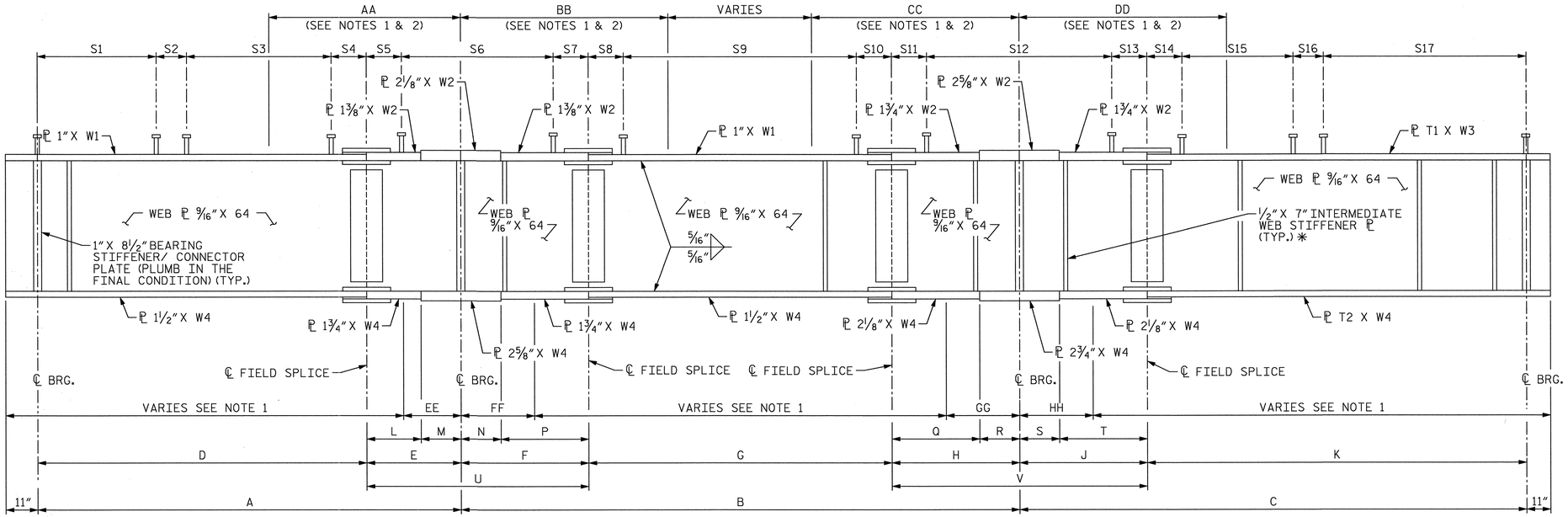

ELEVATION

* = PLACE ALL INTERMEDIATE WEB STIFFENERS ON THE INSIDE FACE OF THE WEB ON EXTERIOR GIRDERS.

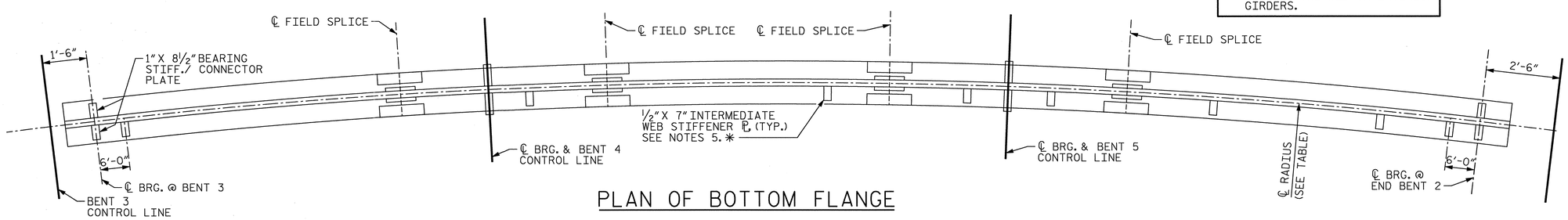

PLAN OF BOTTOM FLANGE

GIRDER DIMENSIONS

GIRDER	℄ RADIUS	A	B	C	D	E	F	G	H	J	K	L	M	N	P	Q	R	S	T	U	V
1	656'-10 1/2"	133'-10 5/16"	178'-9 5/16"	159'-8 1/8"	108'-8 15/16"	25'-1 3/8"	36'-0 1/8"	106'-9 1/16"	36'-0 1/8"	36'-0 1/8"	123'-8"	12'-7 3/8"	12'-6"	12'-6"	23'-6 1/8"	23'-6 1/8"	12'-6"	12'-6"	23'-6 1/8"	61'-1 1/2"	72'-0 1/4"
2	645'-7 1/2"	131'-6 1/2"	175'-8 9/16"	156'-10 3/4"	106'-10 5/16"	24'-8 3/16"	35'-4 3/4"	104'-11 1/8"	35'-4 3/4"	35'-4 3/4"	121'-6 1/16"	12'-2 3/16"	12'-6"	12'-6"	22'-10 3/4"	22'-10 3/4"	12'-6"	12'-6"	22'-10 3/4"	60'-0 15/16"	70'-9 1/2"
3	634'-4 1/2"	129'-2 11/16"	172'-7 13/16"	154'-1 7/16"	104'-11 5/8"	24'-3 1/16"	34'-9 5/16"	103'-1 3/16"	34'-9 5/16"	34'-9 5/16"	119'-4 1/8"	11'-9 1/16"	12'-6"	12'-6"	22'-3 5/16"	22'-3 5/16"	12'-6"	12'-6"	22'-3 5/16"	59'-0 3/8"	69'-6 5/8"
4	623'-1 1/2"	126'-10 7/8"	169'-7 1/16"	151'-4 1/8"	103'-1"	23'-9 7/8"	34'-1 15/16"	101'-3 1/4"	34'-1 15/16"	34'-1 15/16"	117'-2 3/16"	11'-3 7/8"	12'-6"	12'-6"	21'-7 15/16"	21'-7 15/16"	12'-6"	12'-6"	21'-7 15/16	57'-11 13/16"	68'-3 7/8"

STUD SPACING DIMENSIONS

GIRDER	S1	S2	S3	S4	S5	S6	S7	S8	S9	S10	S11	S12	S13	S14	S15	S16	S17
1	2 ROWS @ 11"	11"	115 ROWS @ 11"	2'-4 15/16"	2'-4 1/2"	53 ROWS @ 1'-1"	2'-5"	2'-0 1/2"	89 ROWS @ 1'-2"	2'-0 9/16"	2'-5"	63 ROWS @ 1'-1"	2'-5 1/4"	2'-5"	102 ROWS @ 1'-0"	1'-0"	22 ROWS @ 11"
2	2 ROWS @ 11"	11"	113 ROWS @ 11"	2'-4 5/16"	1'-11 3/16"	53 ROWS @ 1'-1"	1'-9 3/4"	1'-10 1/2"	88 ROWS @ 1'-2"	1'-6 5/8"	1'-6"	63 ROWS @ 1'-1"	2'-1 7/16"	2'-0"	103 ROWS @ 1'-0"	1'-0"	19 ROWS @ 11"
3	2 ROWS @ 11"	11"	111 ROWS @ 11"	2'-3 5/8"	1'-6"	52 ROWS @ 1'-1"	2'-3 3/8"	1'-11 11/16"	86 ROWS @ 1'-2"	1'-11 1/2"	1'-5 7/8"	62 ROWS @ 1'-1"	1'-11 3/4"	2'-6 1/8"	93 ROWS @ 1'-0"	1'-0"	27 ROWS @ 11"
4	2 ROWS @ 11"	11"	109 ROWS @ 11"	2'-3"	1'-7 1/2"	51 ROWS @ 1'-1"	2'-2 5/16"	1'-6"	85 ROWS @ 1'-2"	1'-9 1/4"	2'-2"	60 ROWS @ 1'-1"	2'-2 13/16"	2'-3 3/16"	92 ROWS @ 1'-0"	1'-0"	26 ROWS @ 11"

LIMITS OF TENSION FLANGES FOR CHARPY V-NOTCH TESTS

GIRDER	AA	BB	CC	DD	EE	FF	GG	HH
1	59'-6"	62'-5"	70'-5"	57'-11"	27'-10"	30'-5"	38'-1"	30'-3"
2	55'-11"	56'-8"	65'-0"	54'-8"	28'-4"	30'-9"	37'-7"	31'-4"
3	51'-8"	51'-10"	58'-8"	52'-7"	28'-9"	30'-3"	35'-9"	31'-8"
4	57'-3"	60'-11"	66'-8"	61'-4"	27'-2"	28'-0"	31'-9"	29'-8"

GIRDER FLANGE WIDTHS & THICKNESSES

GIRDER	W1	W2	W3	W4	T1	T2
1	18"	26"	20"	28"	1 3/4"	2 1/8"
2	16"	24"	18"	26"	1 3/4"	1 3/4"
3	16"	22"	18"	24"	1 1/2"	1 3/4"
4	16"	22"	18"	24"	1 1/2"	1 3/4"

NOTES

1. CHARPY V-NOTCH TESTS ARE REQUIRED FOR ALL TOP OR BOTTOM FLANGE PLATES WHICH FALL WITHIN THESE LIMITS, ALL WEB PLATES AND ALL SPLICE PLATES. IF A PERMITTED SHOP FLANGE SPLICE IS NOT USED, CHARPY V-NOTCH TESTS WILL BE REQUIRED FOR THE ENTIRE FLANGE PLATE. SEE ARTICLE 1072-9 OF THE STANDARD SPECIFICATIONS.
2. NO WELDING OF FORMS OR FALSEWWORK TO THE TOP FLANGE WILL BE PERMITTED IN THIS REGION.
3. DIMENSIONS ARE HORIZONTAL ARC DIMENSIONS ALONG THE ℄ OF GIRDER. NO CORRECTIONS HAVE BEEN MADE TO ADJUST FOR THE DISTANCE ALONG THE GRADE.
4. FOR SHEAR CONNECTOR TRANSVERSE SPACING, SEE "STRUCTURAL STEEL DETAILS" SHEET.
5. FOR INTERMEDIATE WEB SIFFENER PLATE AND CONNECTOR PLATE LOCATIONS, SEE "STRUCTURAL STEEL DETAILS" SHEET.

PROJECT NO. U-0071
DURHAM COUNTY
STATION: 23+29.61 -DFFLY-

STATE OF NORTH CAROLINA
DEPARTMENT OF TRANSPORTATION
RALEIGH

SUPERSTRUCTURE
GIRDER DETAILS
UNIT 2

REVISIONS						SHEET NO.
NO.	BY:	DATE:	NO.	BY:	DATE:	S-500
1	--	--	3	--	--	TOTAL SHEETS
2	--	--	4	--	--	671

NORTH CAROLINA PROFESSIONAL SEAL 29589 ENGINEER DOMENIC A. COLETTI
1-7-14

HDR Engineering, Inc. of the Carolinas
2733 National Drive, Suite 207 Raleigh, N.C. 27612
N.C.B.E.L.S. License Number: F-0116

DES BY: D. COLETTI	DATE: 03/13	DWG BY: M. SELLS	DATE: 03/13
DES CHK: J. TAYLOR	DATE: 04/13	CHK BY: D. COLETTI	DATE: 04/13

ORIGINATED		YELLOW HIGHLIGHTED & REDLINE CHECKED		BLUE HIGHLIGHTED CHANGES		CHANGES VERIFIED BY	
INITIALS	DATE	INITIALS	DATE	INITIALS	DATE	VERIFIED	DATE

PLOT DRIVER: NCDOT_pdf_mono_eng_50.plt
USER: msells DATE: 1/6/2014
FILE: ...\Tpq\d039122\U0071_11_S54.DGN
TABLE: Durham_pen.tbl
TIME: 1:23:40 PM

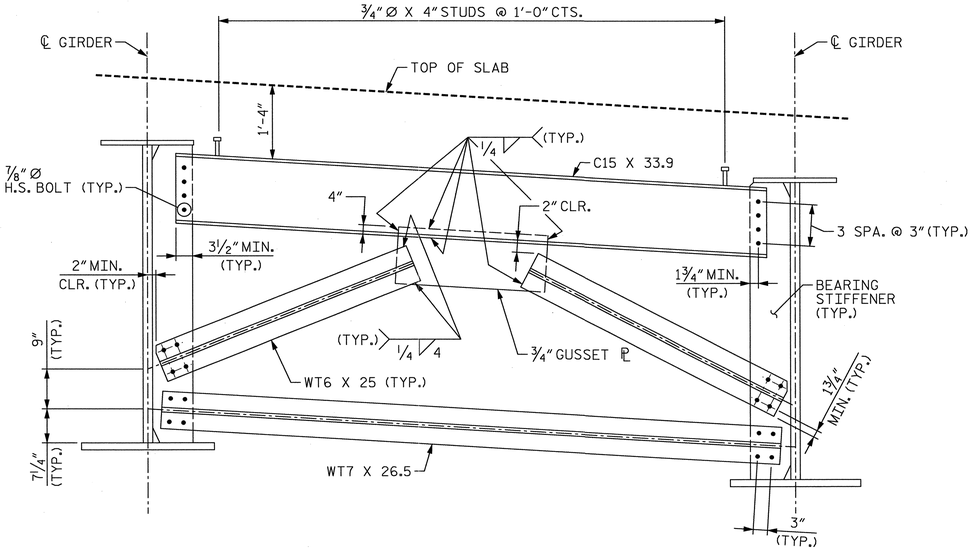

END BENT & BENT DIAPHRAGMS (D1)

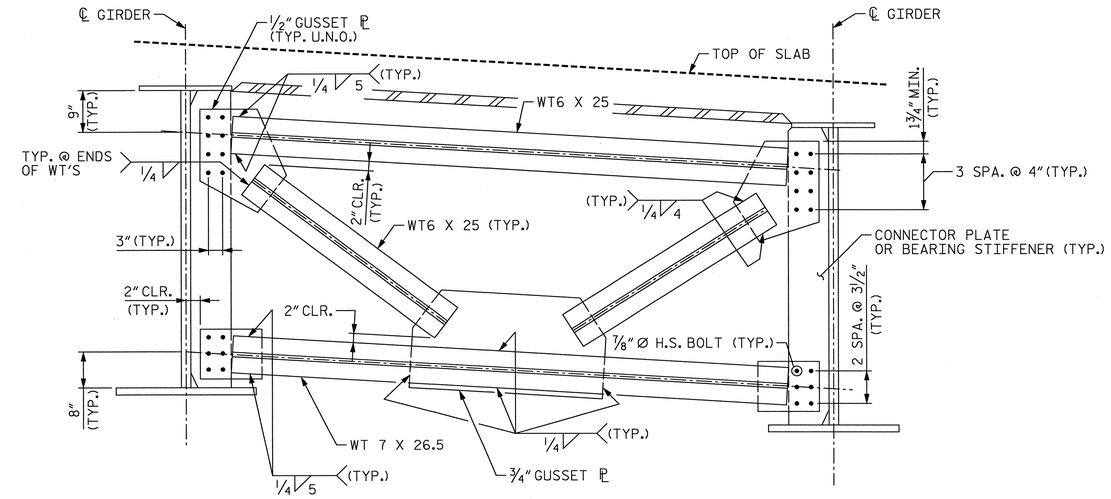

INTERMEDIATE (D2) & BENT (D3) DIAPHRAGMS

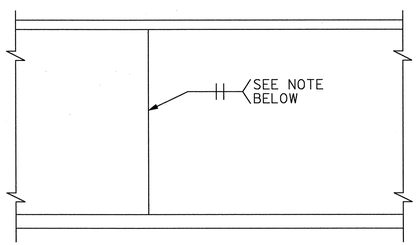

SHOP WEB SPLICE

NOTES

THE SHOP WEB SPLICE SHALL BE GROUND SMOOTH AND FLUSH ON THE OUTER FACE OF EXTERIOR GIRDERS.

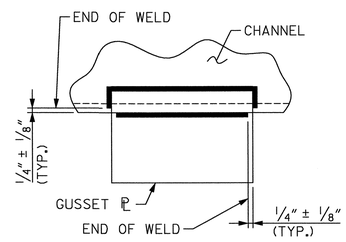

TYP. GUSSET PLATE CONNECTION

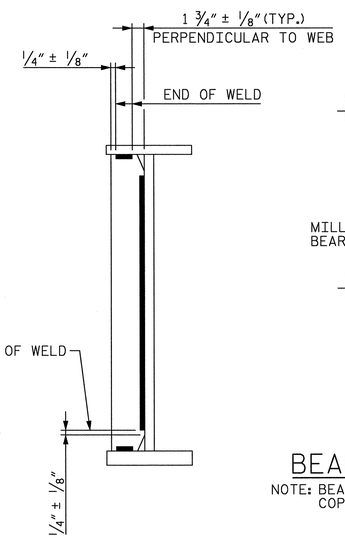

TYP. WT & L TO GUSSET PLATE CONNECTION

STIFFENER & CONNECTOR PLATE

WELD TERMINATION DETAILS

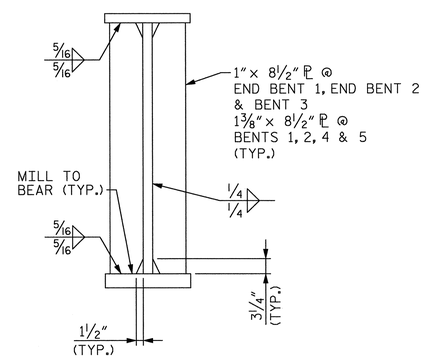

BEARING STIFFENER

NOTE: BEARING STIFFENER MAY REQUIRE COPING IF WIDER THAN BOT. FLANGE

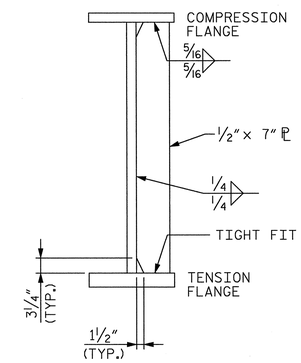

INTERMEDIATE STIFFENER

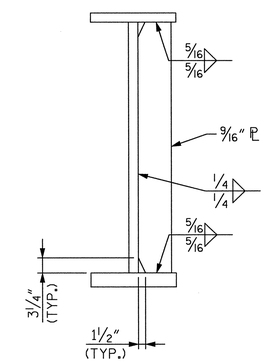

CONNECTOR PLATE

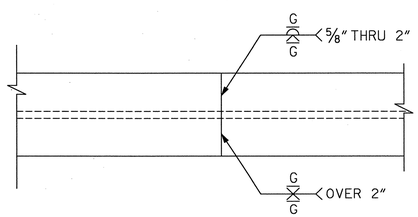

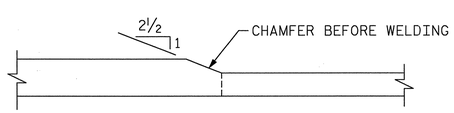

SHOP FLANGE SPLICE DETAILS

SHOP SPLICE DETAILS

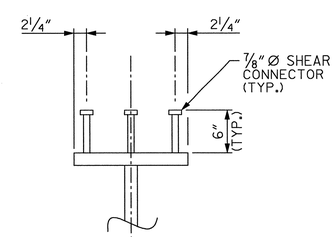

GIRDER SHEAR CONNECTORS

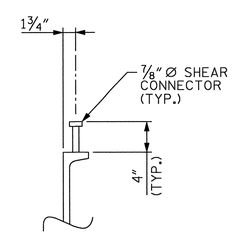

DIAPHRAGM SHEAR CONNECTORS

SHEAR CONNECTOR DETAILS

PROJECT NO. U-0071

DURHAM COUNTY

STATION: 23+29.61 -DFFLY-

STATE OF NORTH CAROLINA
DEPARTMENT OF TRANSPORTATION
RALEIGH

SUPERSTRUCTURE STRUCTURAL STEEL DETAILS

NORTH CAROLINA PROFESSIONAL SEAL 29589 ENGINEER DOMENIC A. COLETTI
1-7-14

HDR Engineering, Inc. of the Carolinas
3733 National Drive, Suite 207 Raleigh, N.C. 27612
N.C.B.E.L.S. License Number: F-0116

REVISIONS						SHEET NO. S-501
NO.	BY:	DATE:	NO.	BY:	DATE:	TOTAL SHEETS 71
1	--	--	3	--	--	
2	--	--	4	--	--	

DES BY: D. COLETTI	DATE : 03/13	DWG BY: M. SELLS	DATE : 06/13
DES CHK: J. TAYLOR	DATE : 04/13	CHK BY: D. COLETTI	DATE : 06/13

ORIGINATED		YELLOW HIGHLIGHTED & REDLINE CHECKED		BLUE HIGHLIGHTED CHANGES		CHANGES VERIFIED BY	
INITIALS	DATE	INITIALS	DATE	INITIALS	DATE	VERIFIED	DATE

PLOT DRIVER: NCDOT_pdf_mono_eng_50.plt
USER: msells DATE: 1/6/2014
FILE: ...\Tpo\d0391221\U0071_11_SS5.DGN
TABLE: Durham_pen.tbl
TIME: 1:24:06 PM

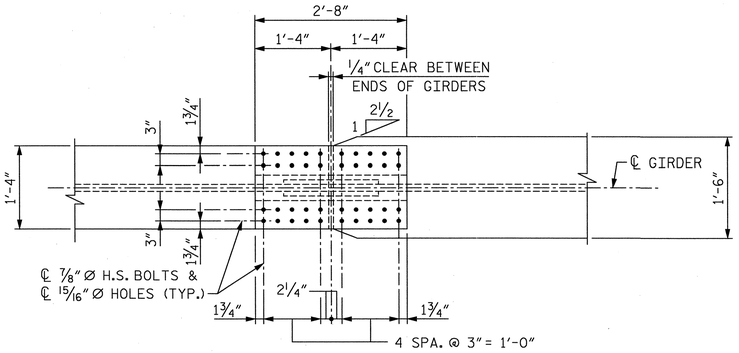

PLAN (TOP OF TOP FLANGE)
(STUDS NOT SHOWN FOR CLARITY)

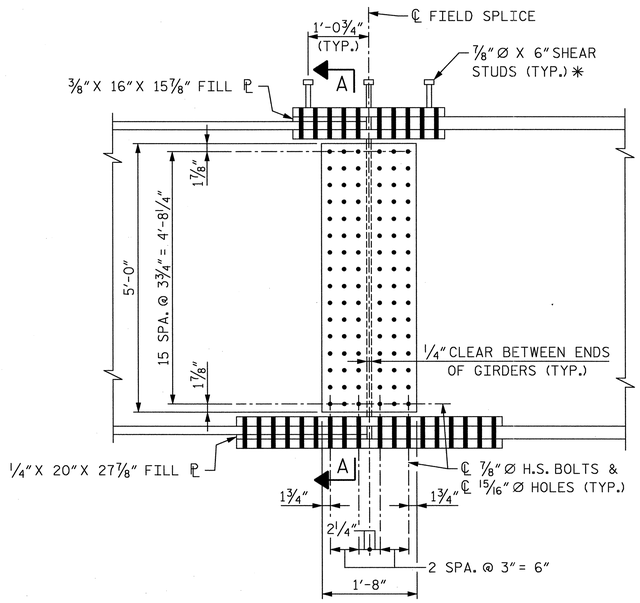

ELEVATION

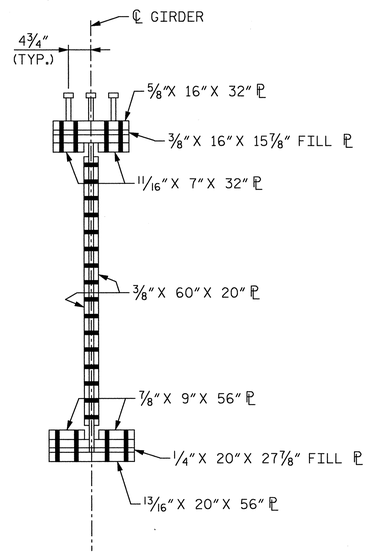

SECTION A-A

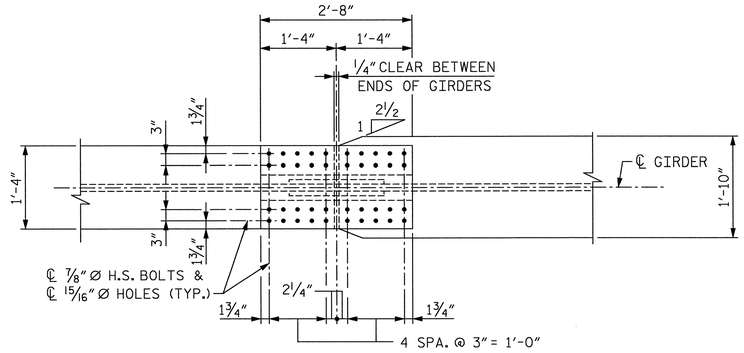

PLAN (TOP OF TOP FLANGE)
(STUDS NOT SHOWN FOR CLARITY)

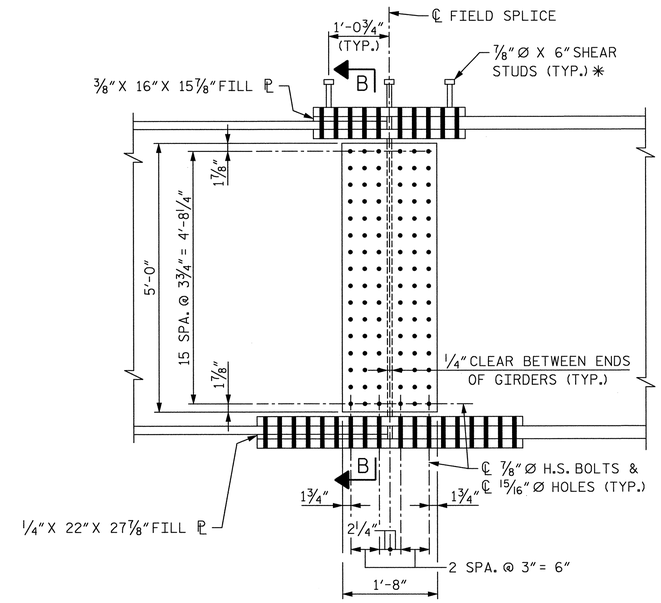

ELEVATION

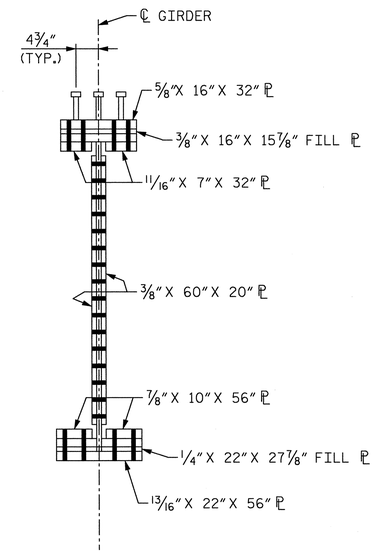

SECTION B-B

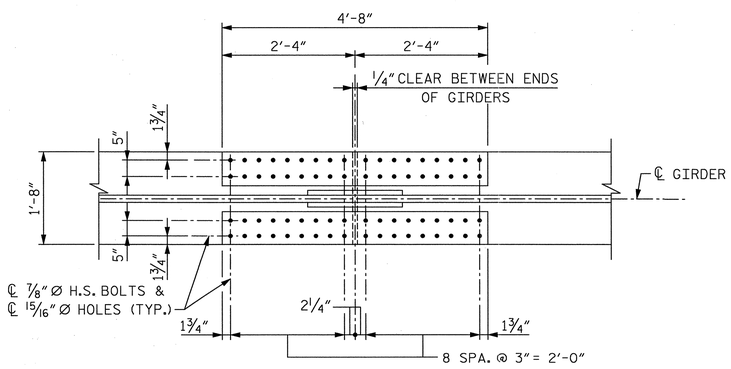

PLAN (TOP OF BOTTOM FLANGE)

BOLTED FIELD SPLICE DETAILS - TYPE "A"

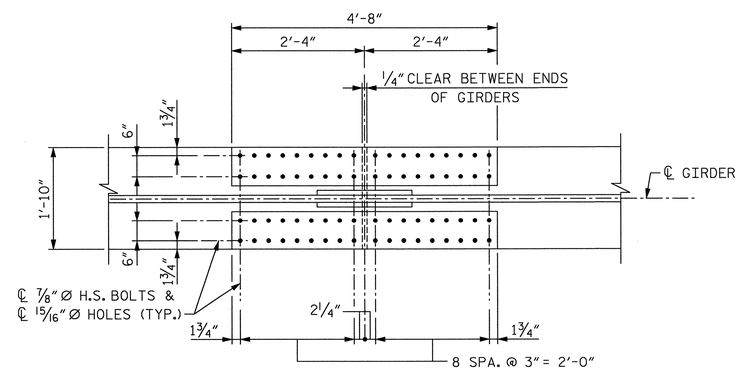

PLAN (TOP OF BOTTOM FLANGE)

BOLTED FIELD SPLICE DETAILS - TYPE "B"

* = SHEAR STUDS ARE TO BE SHOP WELDED ON TOP OF PLATE BEFORE FIELD ASSEMBLY

PROJECT NO. U-0071
DURHAM COUNTY
STATION: 23+29.61 -DFFLY-

SHEET 1 OF 5

STATE OF NORTH CAROLINA
DEPARTMENT OF TRANSPORTATION
RALEIGH

SUPERSTRUCTURE
BOLTED FIELD
SPLICE DETAILS

NORTH CAROLINA PROFESSIONAL SEAL 29589 ENGINEER DOMENIC A. COLETTI
1-7-14

HDR Engineering, Inc. of the Carolinas
3733 National Drive, Suite 207 Raleigh, N.C. 27612
N.C.B.E.L.S. License Number: F-0116

REVISIONS

NO.	BY:	DATE:	NO.	BY:	DATE:
1	--	--	3	--	--
2	--	--	4	--	--

SHEET NO. S-502
TOTAL SHEETS 671

DES BY: J. TAYLOR	DATE: 03/13	DWG BY: B. PETERSON	DATE: 07/13
DES CHK: D. COLETTI	DATE: 04/13	CHK BY: D. COLETTI	DATE: 07/13

ORIGINATED		YELLOW HIGHLIGHTED & REDLINE CHECKED		BLUE HIGHLIGHTED CHANGES		CHANGES VERIFIED BY	
INITIALS	DATE	INITIALS	DATE	INITIALS	DATE	VERIFIED	DATE

PLOT DRIVER: NCDOT_pdf_mono_eng_50.plt
USER: msells DATE: 1/6/2014
FILE: ...\Tpo\d039121\U0071_11_SS6.DGN
TABLE: Durham_pen.tbl
TIME: 1:24:30 PM

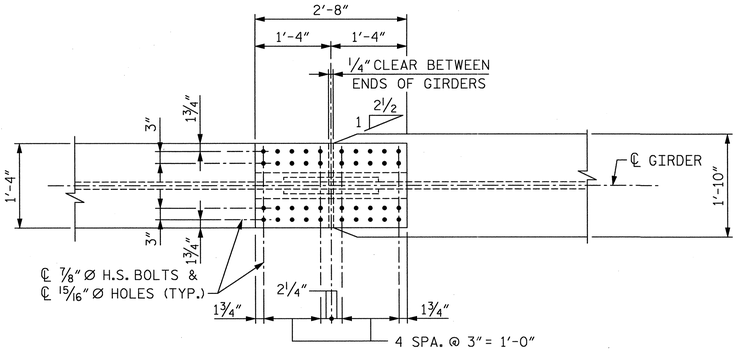

PLAN (TOP OF TOP FLANGE)
(STUDS NOT SHOWN FOR CLARITY)

✱ = SHEAR STUDS ARE TO BE SHOP WELDED ON TOP OF PLATE BEFORE FIELD ASSEMBLY

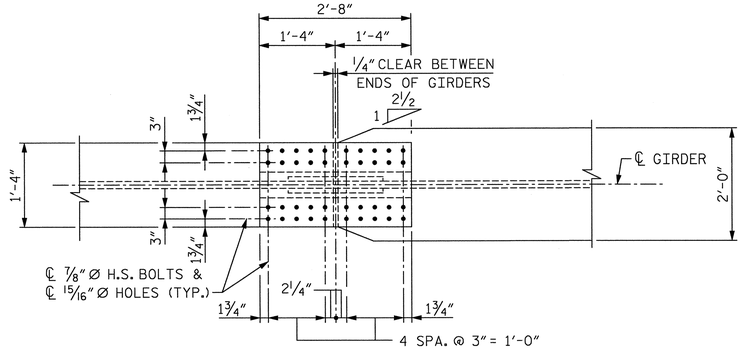

PLAN (TOP OF TOP FLANGE)
(STUDS NOT SHOWN FOR CLARITY)

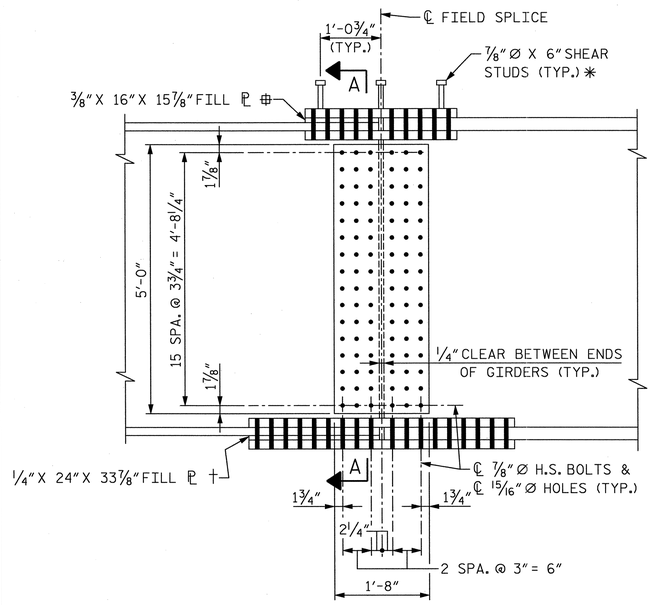

ELEVATION

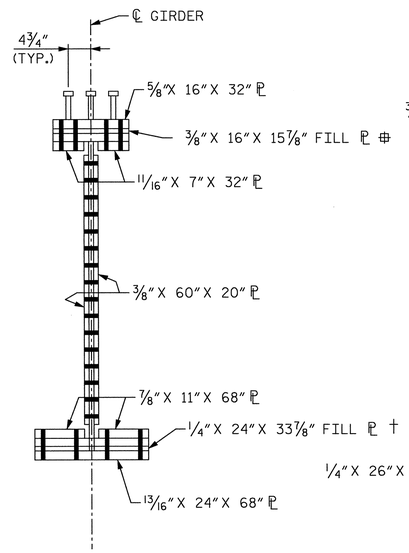

SECTION A-A

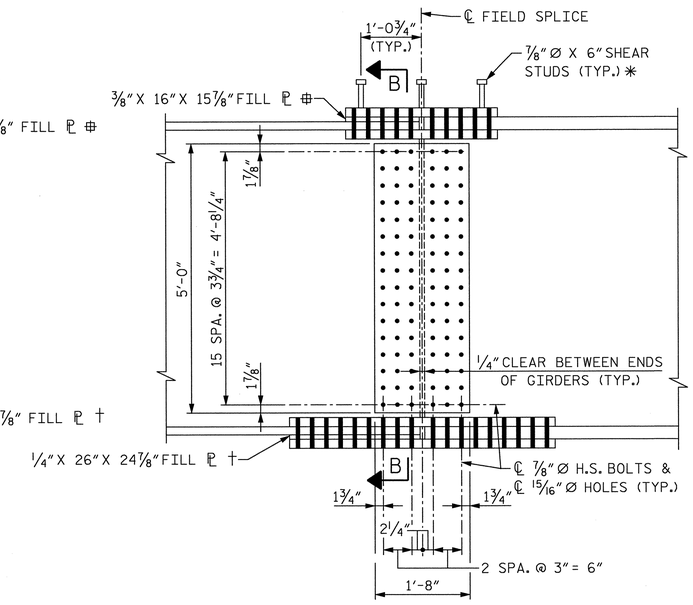

ELEVATION

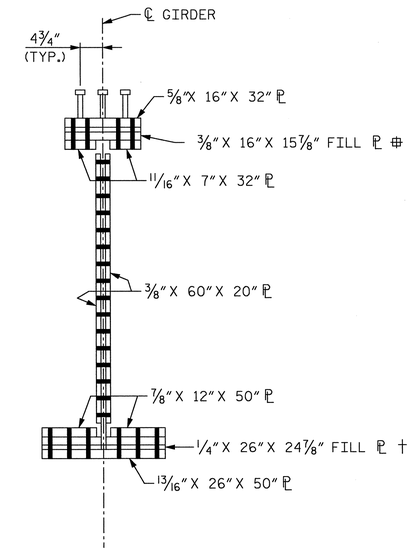

SECTION B-B

⊕ = TOP FILL ℙ IS 3/4" FOR SPLICE IN SPAN E NEAR BENT 5.

† = BOTTOM FILL ℙ IS 5/8" FOR SPLICE IN SPAN E NEAR BENT 5.

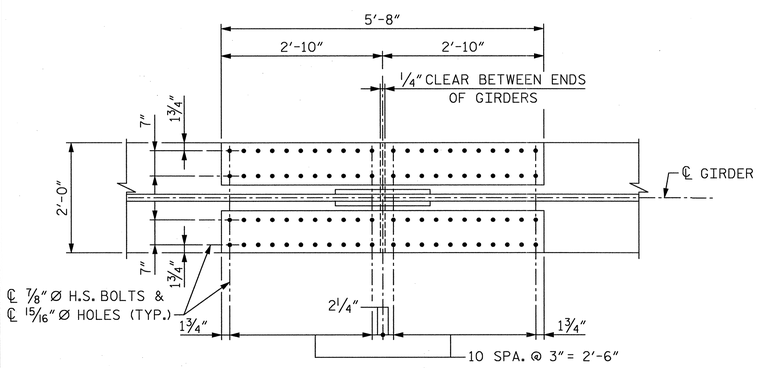

PLAN (TOP OF BOTTOM FLANGE)

BOLTED FIELD SPLICE DETAILS - TYPE "C"

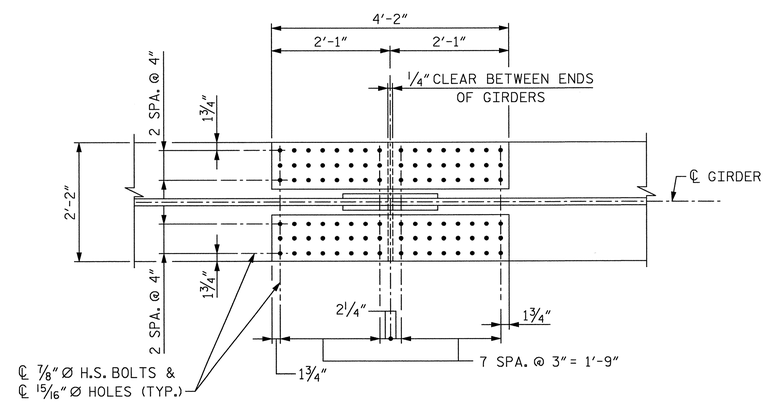

PLAN (TOP OF BOTTOM FLANGE)

BOLTED FIELD SPLICE DETAILS - TYPE "D"

DES BY: J. TAYLOR	DATE: 07/13	DWG BY: M. SELLS	DATE: 07/13
DES CHK: D. COLETTI	DATE: 04/13	CHK BY: D. COLETTI	DATE: 07/13

ORIGINATED		YELLOW HIGHLIGHTED & REDLINE CHECKED		BLUE HIGHLIGHTED CHANGES		CHANGES VERIFIED BY	
INITIALS	DATE	INITIALS	DATE	INITIALS	DATE	VERIFIED	DATE

PLOT DRIVER: NCDOT_pdf_mono_eng_50.plt
USER: msells
FILE: ...\tpa\d039122\U0071_11_SST.DGN
DATE: 1/6/2014
TIME: 1:24:56 PM
TABLE: Durham_pen.tbl

NORTH CAROLINA PROFESSIONAL SEAL 29589 ENGINEER DOMENIC A. COLETTI
1-7-14

HDR Engineering, Inc. of the Carolinas
3733 National Drive, Suite 207 Raleigh, N.C. 27612
N.C.B.E.L.S. License Number: F-0116

PROJECT NO. U-0071
DURHAM COUNTY
STATION: 23+29.61 -DFFLY-

SHEET 2 OF 5

STATE OF NORTH CAROLINA
DEPARTMENT OF TRANSPORTATION
RALEIGH

SUPERSTRUCTURE BOLTED FIELD SPLICE DETAILS

REVISIONS						SHEET NO.
NO.	BY:	DATE:	NO.	BY:	DATE:	S-503
1	--	--	3	--	--	TOTAL SHEETS
2	--	--	4	--	--	671

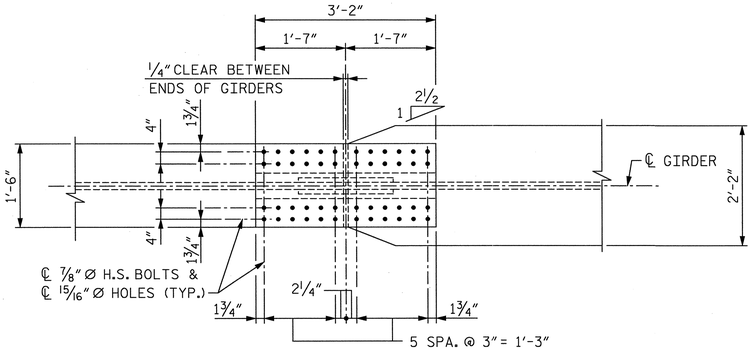

PLAN (TOP OF TOP FLANGE)
(STUDS NOT SHOWN FOR CLARITY)

✳ = SHEAR STUDS ARE TO BE SHOP WELDED ON TOP OF PLATE BEFORE FIELD ASSEMBLY

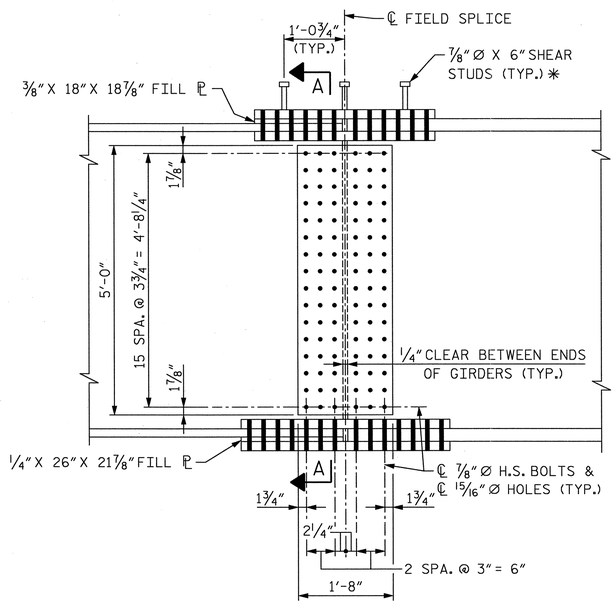

ELEVATION

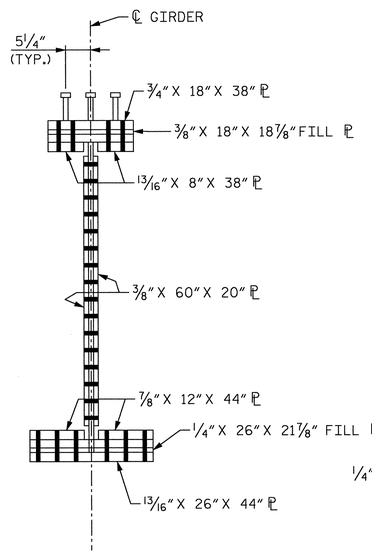

SECTION A-A

PLAN (TOP OF BOTTOM FLANGE)

BOLTED FIELD SPLICE DETAILS - TYPE "E"

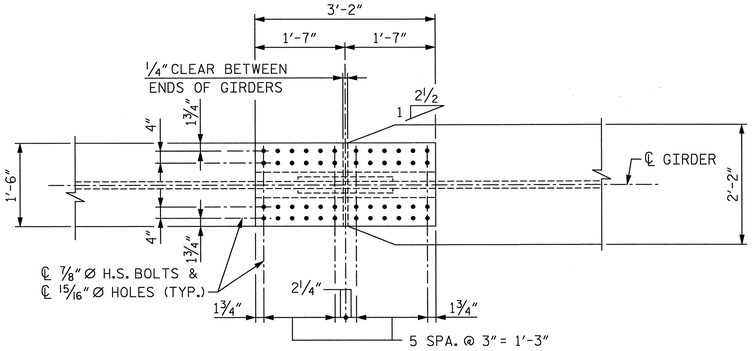

PLAN (TOP OF TOP FLANGE)
(STUDS NOT SHOWN FOR CLARITY)

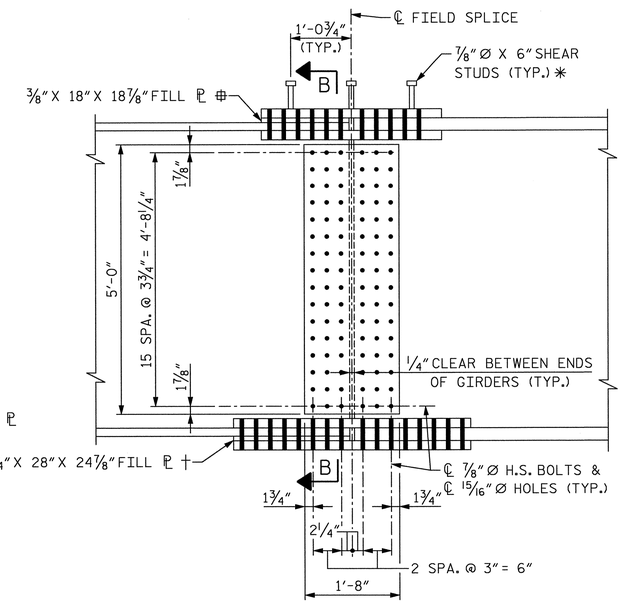

ELEVATION

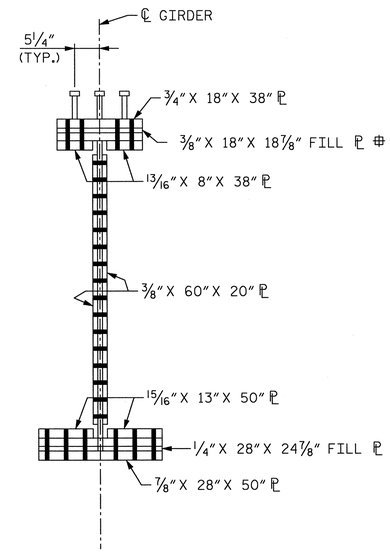

SECTION B-B

⊕ = TOP FILL ℙ IS 3/4" FOR SPLICE IN SPAN E NEAR BENT 5.

† = BOTTOM FILL ℙ IS 5/8" FOR SPLICE IN SPAN E NEAR BENT 5.

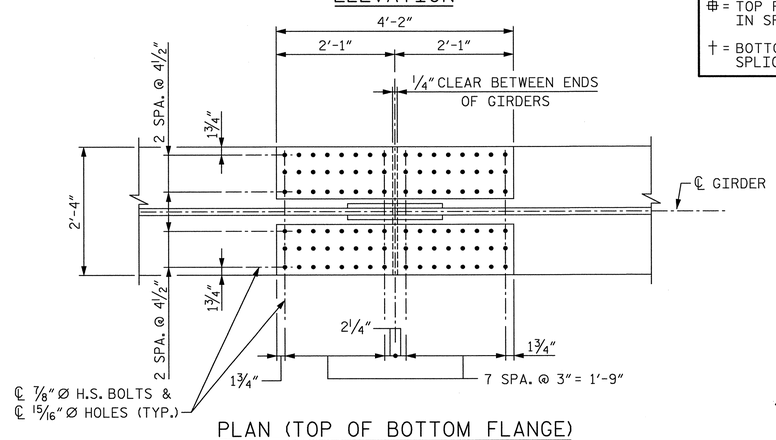

PLAN (TOP OF BOTTOM FLANGE)

BOLTED FIELD SPLICE DETAILS - TYPE "F"

PROJECT NO. U-0071
DURHAM COUNTY
STATION: 23+29.61 -DFFLY-

SHEET 3 OF 5

STATE OF NORTH CAROLINA
DEPARTMENT OF TRANSPORTATION
RALEIGH

SUPERSTRUCTURE BOLTED FIELD SPLICE DETAILS

NORTH CAROLINA PROFESSIONAL SEAL 29589 ENGINEER DOMENIC A. COLETTI 1-7-14

HDR Engineering, Inc. of the Carolinas
3733 National Drive, Suite 207 Raleigh, N.C. 27612
N.C.B.E.L.S. License Number: F-0116

REVISIONS								SHEET NO. S-504
NO.	BY:	DATE:	NO.	BY:	DATE:			TOTAL SHEETS 671
1	--	--	3	--	--			
2	--	--	4	--	--			

DES BY: J. TAYLOR	DATE : 03/13	DWG BY: M. SELLS	DATE : 07/13
DES CHK: D. COLETTI	DATE : 04/13	CHK BY: D. COLETTI	DATE : 07/13

ORIGINATED		YELLOW HIGHLIGHTED & REDLINE CHECKED		BLUE HIGHLIGHTED CHANGES		CHANGES VERIFIED BY	
INITIALS	DATE	INITIALS	DATE	INITIALS	DATE	VERIFIED	DATE

PLOT DRIVER: NCDOT_pdf_mono_eng_50.plt
USER: msells
FILE: ...\tpa\d039122\U0071_11_SS8.DGN
DATE: 1/6/2014
TIME: 1:25:20 PM
TABLE: Durham_pen.tbl

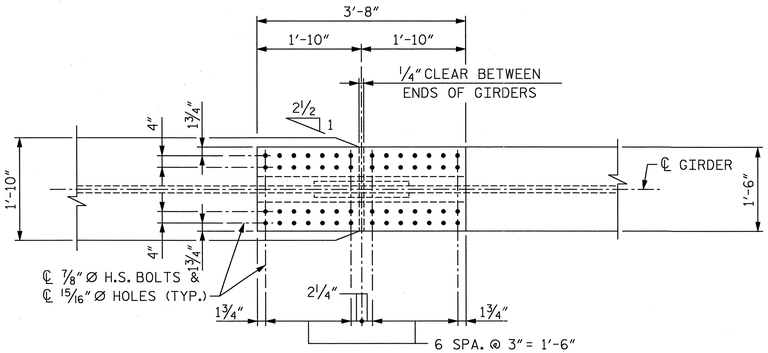

PLAN (TOP OF TOP FLANGE)
(STUDS NOT SHOWN FOR CLARITY)

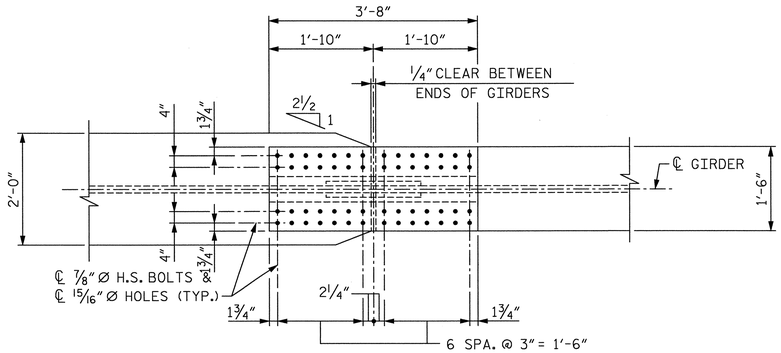

PLAN (TOP OF TOP FLANGE)
(STUDS NOT SHOWN FOR CLARITY)

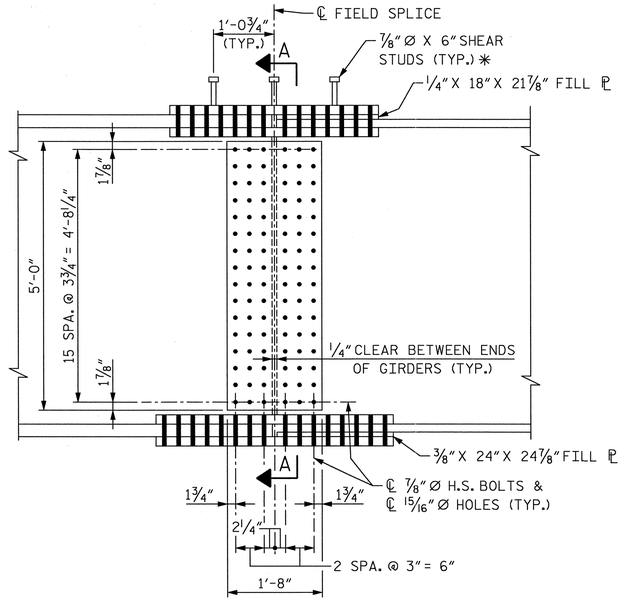

ELEVATION

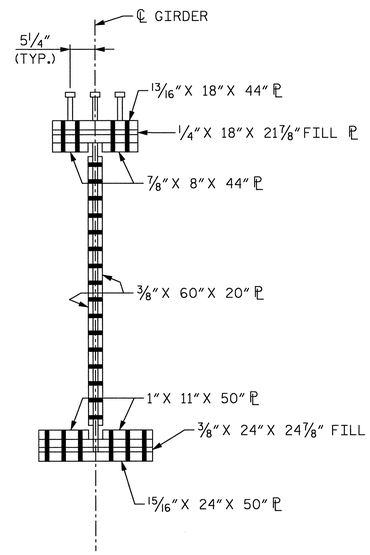

SECTION A-A

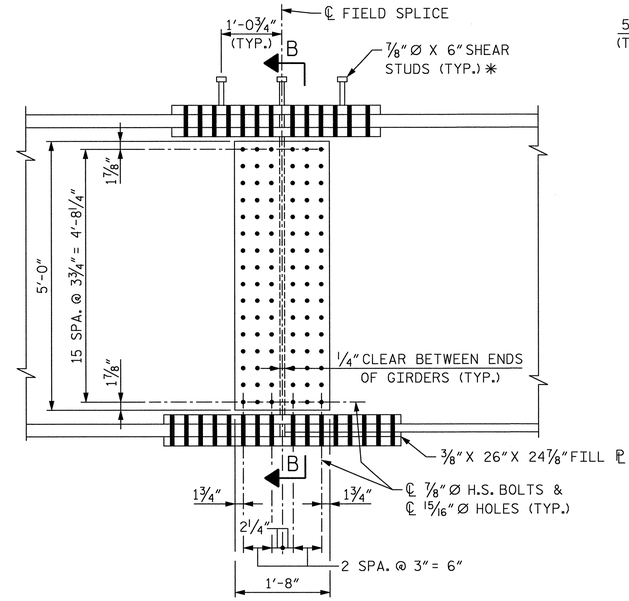

ELEVATION

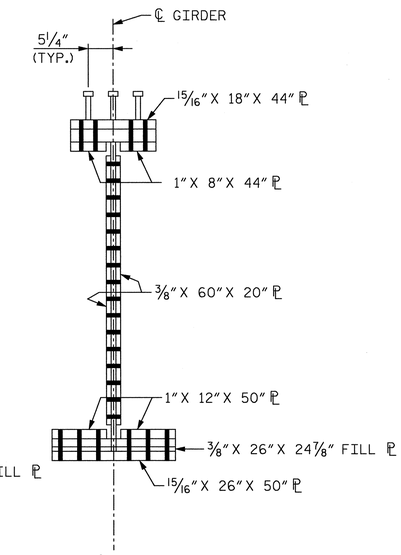

SECTION B-B

✱ = SHEAR STUDS ARE TO BE SHOP WELDED ON TOP OF PLATE BEFORE FIELD ASSEMBLY

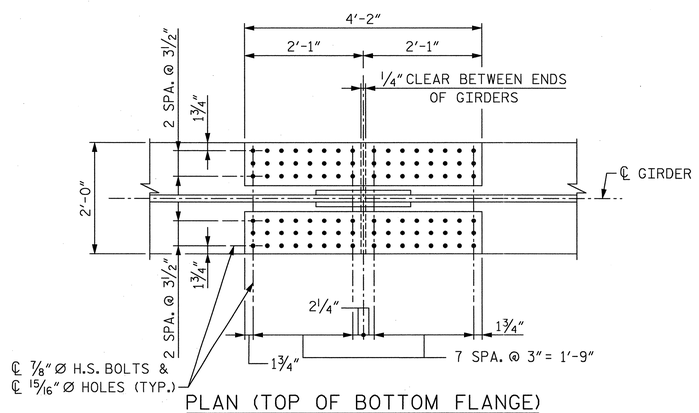

PLAN (TOP OF BOTTOM FLANGE)

BOLTED FIELD SPLICE DETAILS - TYPE "G"

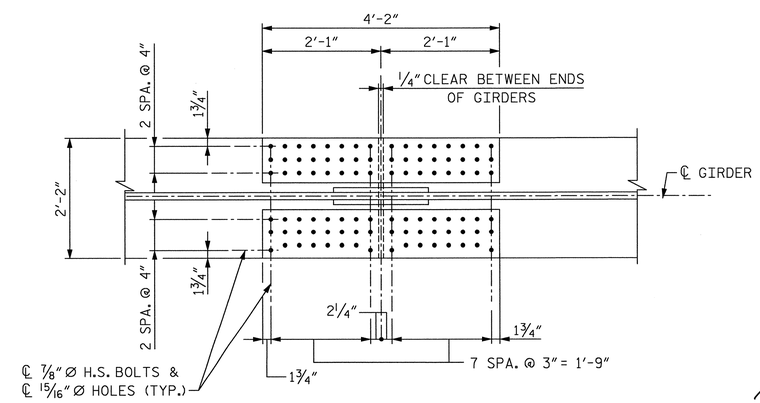

PLAN (TOP OF BOTTOM FLANGE)

BOLTED FIELD SPLICE DETAILS - TYPE "H"

PROJECT NO. U-0071
DURHAM COUNTY
STATION: 23+29.61 -DFFLY-

SHEET 4 OF 5

STATE OF NORTH CAROLINA
DEPARTMENT OF TRANSPORTATION
RALEIGH

SUPERSTRUCTURE BOLTED FIELD SPLICE DETAILS

REVISIONS						
NO.	BY:	DATE:	NO.	BY:	DATE:	
1	--	--	3	--	--	
2	--	--	4	--	--	

SHEET NO. S-505
TOTAL SHEETS 671

NORTH CAROLINA PROFESSIONAL SEAL 29589 ENGINEER DOMENIC A. COLETTI
1-7-14

HDR Engineering, Inc. of the Carolinas
3733 National Drive, Suite 207 Raleigh, N.C. 27612
N.C.B.E.L.S. License Number: F-0116

DES BY: J. TAYLOR	DATE: 03/13	DWG BY: M. SELLS	DATE: 07/13
DES CHK: D. COLETTI	DATE: 04/13	CHK BY: D. COLETTI	DATE: 07/13

ORIGINATED		YELLOW HIGHLIGHTED & REDLINE CHECKED		BLUE HIGHLIGHTED CHANGES		CHANGES VERIFIED BY	
INITIALS	DATE	INITIALS	DATE	INITIALS	DATE	VERIFIED	DATE

PLOT DRIVER: NCDOT_pdf_mono_eng_50.plt
USER: msells
FILE: ...\tpa\d039121\U0071_11_SS9.DGN
, ,NTABLE: Durham_pen.tbl
DATE: 1/6/2014
TIME: 1:25:45 PM

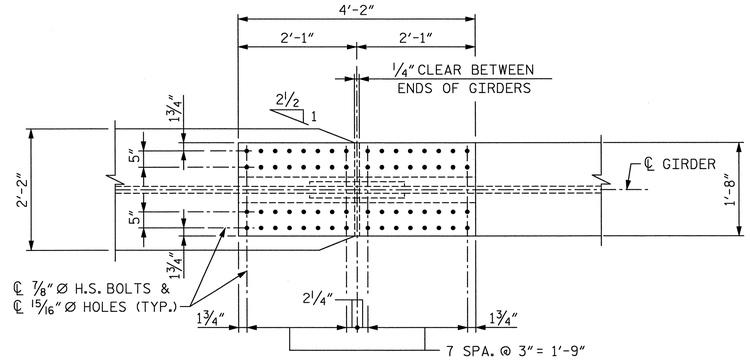

PLAN (TOP OF TOP FLANGE)

(STUDS NOT SHOWN FOR CLARITY)

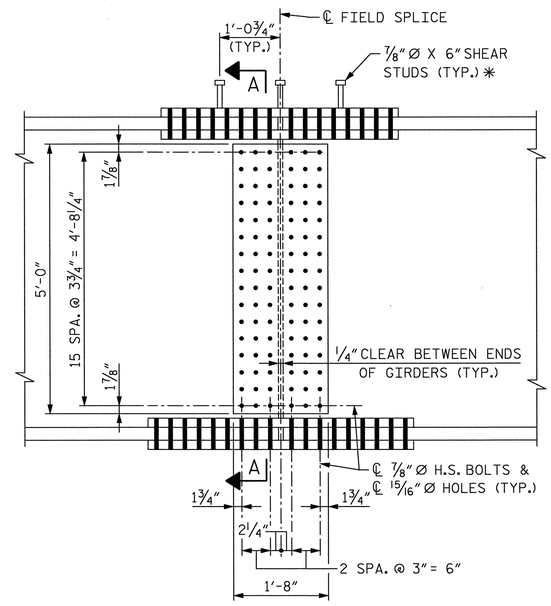

ELEVATION

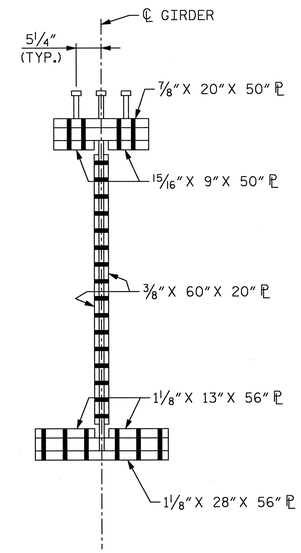

SECTION A-A

✳ = SHEAR STUDS ARE TO BE SHOP WELDED ON TOP OF PLATE BEFORE FIELD ASSEMBLY

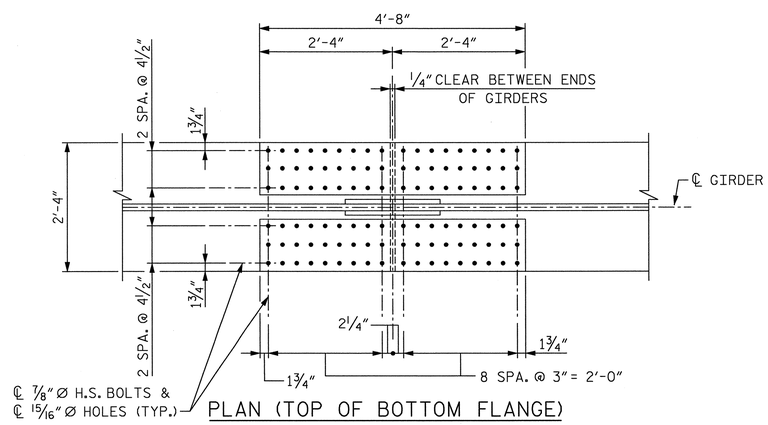

PLAN (TOP OF BOTTOM FLANGE)

BOLTED FIELD SPLICE DETAILS - TYPE "I"

PROJECT NO. U-0071

DURHAM COUNTY

STATION: 23+29.61 -DFFLY-

SHEET 5 OF 5

STATE OF NORTH CAROLINA
DEPARTMENT OF TRANSPORTATION
RALEIGH

SUPERSTRUCTURE BOLTED FIELD SPLICE DETAILS

NORTH CAROLINA PROFESSIONAL SEAL 29589 ENGINEER DOMENIC A. COLETTI 1-7-14

HDR Engineering, Inc. of the Carolinas
3733 National Drive, Suite 207 Raleigh, N.C. 27612
N.C.B.E.L.S. License Number: F-0116

REVISIONS								SHEET NO.
NO.	BY:	DATE:	NO.	BY:	DATE:			S-506
1	--	--	3	--	--			TOTAL SHEETS
2	--	--	4	--	--			671

DES BY: J. TAYLOR	DATE : 03/13	DWG BY: M. SELLS	DATE : 07/13
DES CHK: D. COLETTI	DATE : 04/13	CHK BY: D. COLETTI	DATE : 07/13

ORIGINATED		YELLOW HIGHLIGHTED & REDLINE CHECKED		BLUE HIGHLIGHTED CHANGES		CHANGES VERIFIED BY	
INITIALS	DATE	INITIALS	DATE	INITIALS	DATE	VERIFIED	DATE

PLOT DRIVER: NCDOT_pdf_mono_eng_50.plt
USER: msells DATE: 1/6/2014
FILE: ...\tpa\d039122\U0071_11_SS10.DGN
..\NTABLE: Durham_pen.tbl
TIME: 1:26:11 PM

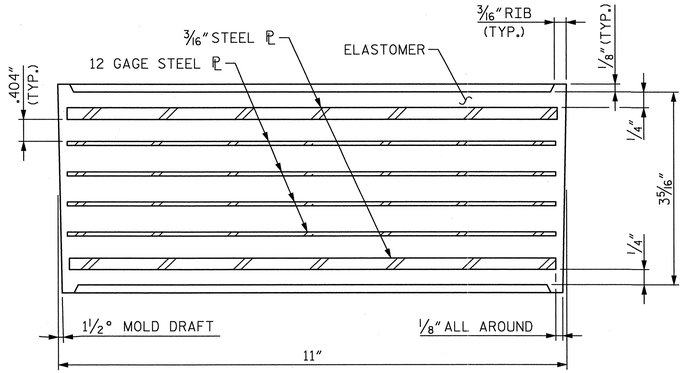

TYPICAL SECTION OF ELASTOMERIC BEARING

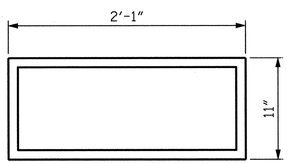

PLAN VIEW OF ELASTOMERIC BEARING

TYPE E1

(8 REQ'D)

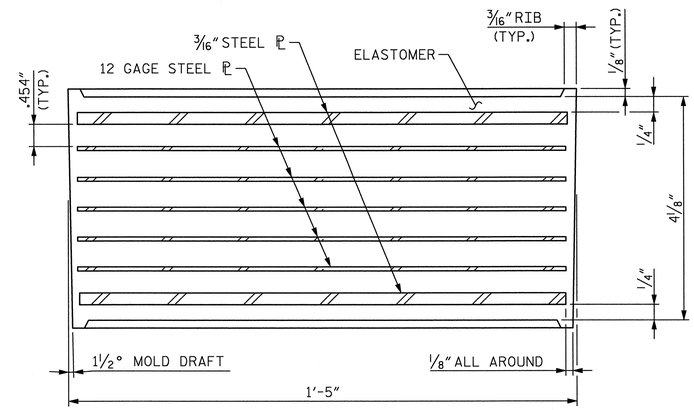

TYPICAL SECTION OF ELASTOMERIC BEARING

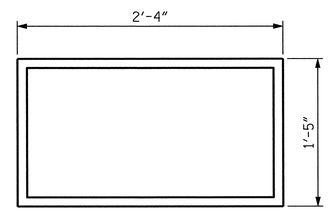

PLAN VIEW OF ELASTOMERIC BEARING

TYPE E3

(16 REQ'D)

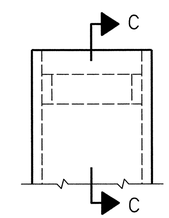

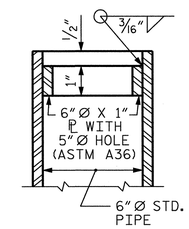

SECTION C-C

DETAIL "A"

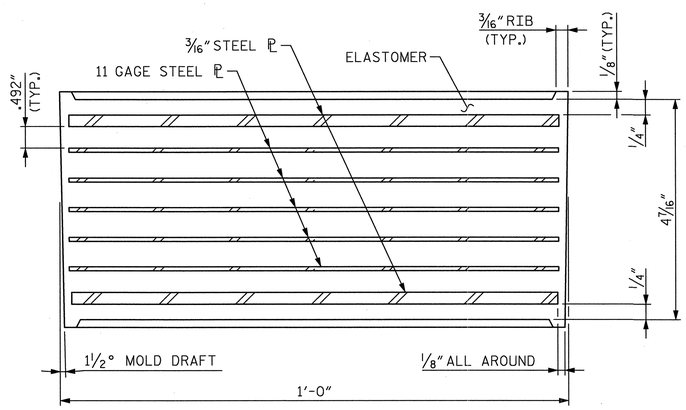

TYPICAL SECTION OF ELASTOMERIC BEARING

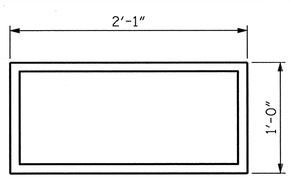

PLAN VIEW OF ELASTOMERIC BEARING

TYPE E2

(8 REQ'D)

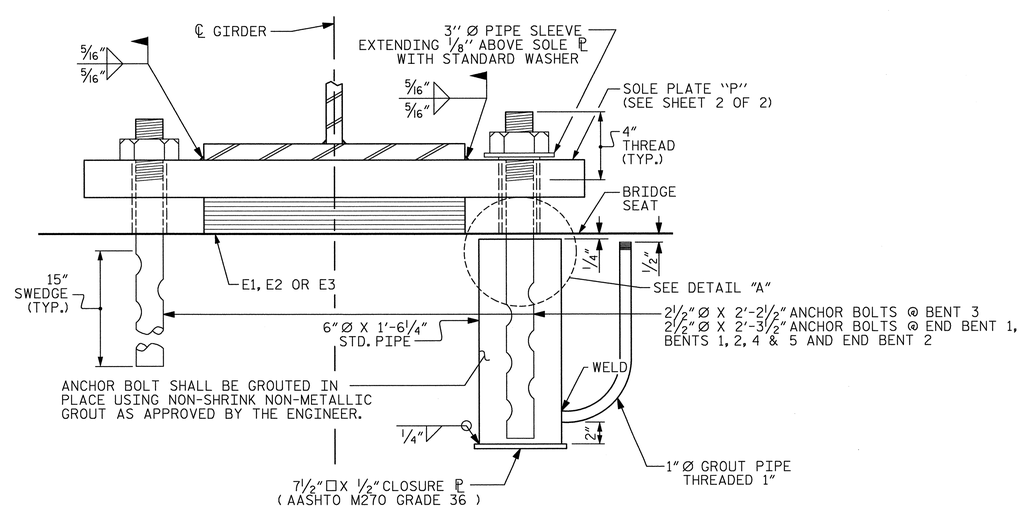

FIXED EXPANSION

TYP. END VIEW

NOTES

AT ALL FIXED POINTS OF SUPPORT, NUTS FOR ANCHOR BOLTS ARE TO BE TIGHTENED FINGER TIGHT AND THEN BACKED OFF 1/2 TURN. THE THREAD OF THE NUT AND BOLT SHALL THEN BE BURRED WITH A SHARP POINTED TOOL.

THE 3" Ø PIPE SLEEVE SHALL BE CUT FROM SCHEDULE 40 PVC PLASTIC PIPE. THE PVC PLASTIC PIPE SHALL MEET THE REQUIREMENTS OF ASTM D1785.

THE PAYMENT FOR THE PIPE SLEEVES SHALL BE INCLUDED IN THE SEVERAL PAY ITEMS.

FOR PAINTED STRUCTURAL STEEL (EXCLUDING AASHTO M270 GRADE 50W), SOLE PLATES, ANCHOR BOLTS, NUTS AND WASHERS SHALL BE GALVANIZED IN ACCORDANCE WITH THE STANDARD SPECIFICATIONS.

FOR AASHTO M270 GRADE 50W STRUCTURAL STEEL, SOLE PLATE SHALL BE AASHTO M270 GRADE 50W AND SHALL NOT BE GALVANIZED. ANCHOR BOLTS, NUTS AND WASHERS SHALL BE GALVANIZED IN ACCORDANCE WITH THE STANDARD SPECIFICATIONS.

ANCHOR BOLTS SHALL MEET THE REQUIREMENTS OF ASTM A449. NUTS SHALL MEET THE REQUIREMENTS OF AASHTO M291-DH OR AASHTO M292-2H. WASHERS SHALL MEET THE REQUIREMENTS OF AASHTO M293. SHOP DRAWINGS ARE NOT REQUIRED FOR ANCHOR BOLTS, NUTS AND WASHERS. SHOP INSPECTION IS REQUIRED.

SOLE PLATES SHALL BE WELDED TO THE BEAM FLANGES BEFORE FALSEWORK IS PLACED.

WHEN FIELD WELDING THE SOLE PLATE TO THE GIRDER FLANGE, USE TEMPERATURE INDICATING WAX PENS, OR OTHER SUITABLE MEANS, TO ENSURE THAT THE TEMPERATURE OF THE SOLE PLATE DOES NOT EXCEED 300°F. TEMPERATURES ABOVE THIS MAY DAMAGE THE ELASTOMER.

ALL SURFACES OF BEARING PLATES SHALL BE SMOOTH AND STRAIGHT.

THE ELASTOMER IN THE STEEL REINFORCED BEARINGS SHALL HAVE A SHEAR MODULUS OF 0.160 KSI, IN ACCORDANCE WITH AASHTO M251.

FOR STEEL REINFORCED ELASTOMERIC BEARINGS, SEE SPECIAL PROVISIONS.

THE CLOSURE PLATE, GROUT PIPE AND STANDARD PIPE FOR THE EXPANSION ASSEMBLY NEED NOT BE GALVANIZED.

THE CONTRACTOR'S ATTENTION IS CALLED TO THE FOLLOWING PROCEDURE, WHICH MAY BE REQUIRED BY THE ENGINEER, TO RESET ELASTOMERIC BEARINGS DUE TO GIRDER TRANSLATION AND END ROTATION:

1. ONCE THE DECK HAS CURED, THE GIRDERS SHALL BE JACKED THEN THE ANCHOR BOLTS CENTERED AS NEARLY AS PRACTICAL ABOUT THE BEARING STIFFENER. THIS OPERATION SHALL BE PERFORMED AT APPROXIMATELY 60°F.
2. AFTER CENTERING THE ANCHOR BOLTS, THE ANCHOR BOLTS SHALL BE GROUTED.

THE CONTRACTOR MAY PROPOSE ALTERNATE METHODS, PROVIDED DETAILS ARE SUBMITTED TO THE ENGINEER FOR REVIEW AND APPROVAL.

MAXIMUM ALLOWABLE SERVICE LOADS	
DL + LL (NO IMPACT)	
TYPE E1	281K
TYPE E2	344K
TYPE E3	770K

PROJECT NO. U-0071

DURHAM COUNTY

STATION: 23+29.61 -DFFLY-

SHEET 1 OF 2

STATE OF NORTH CAROLINA
DEPARTMENT OF TRANSPORTATION
RALEIGH

SUPERSTRUCTURE ELASTOMERIC BEARING DETAILS

NORTH CAROLINA PROFESSIONAL SEAL 29589 ENGINEER DOMENIC A. COLETTI 1-7-14

HDR Engineering, Inc. of the Carolinas
2733 National Drive, Suite 207 Raleigh, N.C. 27612
N.C.B.E.L.S. License Number: F-0116

REVISIONS					
NO.	BY:	DATE:	NO.	BY:	DATE:
1	--	--	3	--	--
2	--	--	4	--	--

SHEET NO. S-507
TOTAL SHEETS 671

DES BY: J. TAYLOR	DATE: 05/13	DWG BY: M. SELLS	DATE: 04/13
DES CHK: W. WATSON	DATE: 06/13	CHK BY: W. WATSON	DATE: 06/13

ORIGINATED		YELLOW HIGHLIGHTED & REDLINE CHECKED		BLUE HIGHLIGHTED CHANGES		CHANGES VERIFIED BY	
INITIALS	DATE	INITIALS	DATE	INITIALS	DATE	VERIFIED	DATE

PLOT DRIVER: NCDOT_pdf_mono_eng_50.plt
USER: msells DATE: 1/6/2014
FILE: ...\Tpq\d039221\U0071_11_BG1.DGN
r_NTABLE: Durham_pen.tbl
TIME: 1:26:35 PM

UNIT 1

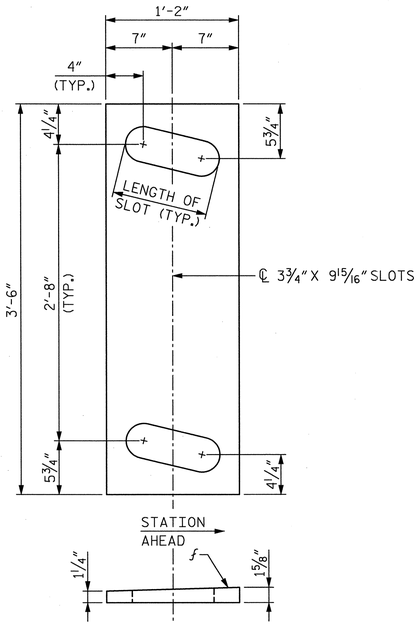

P1
(EXPANSION)
(4 REQD.)

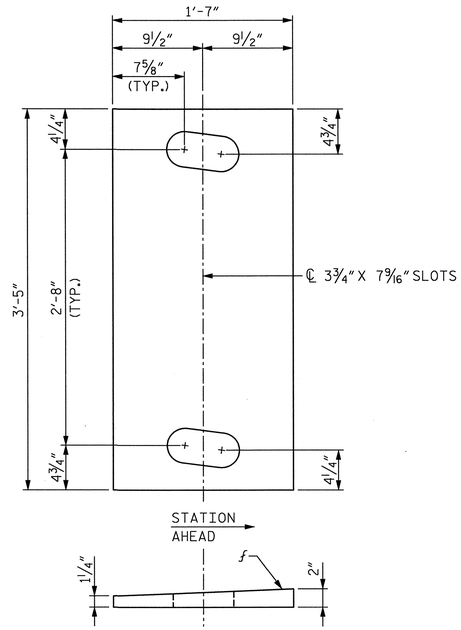

P2
(EXPANSION)
(4 REQD.)

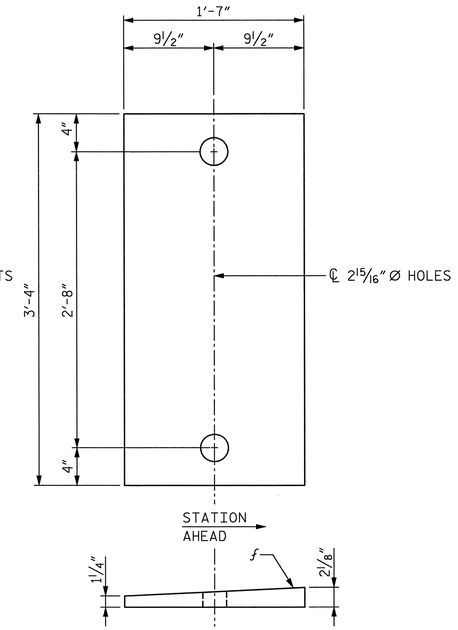

P3
(FIXED)
(4 REQD.)

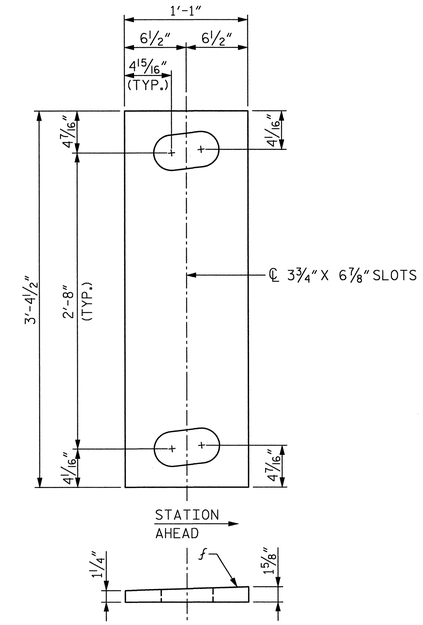

P4
(EXPANSION)
(4 REQD.)

UNIT 2

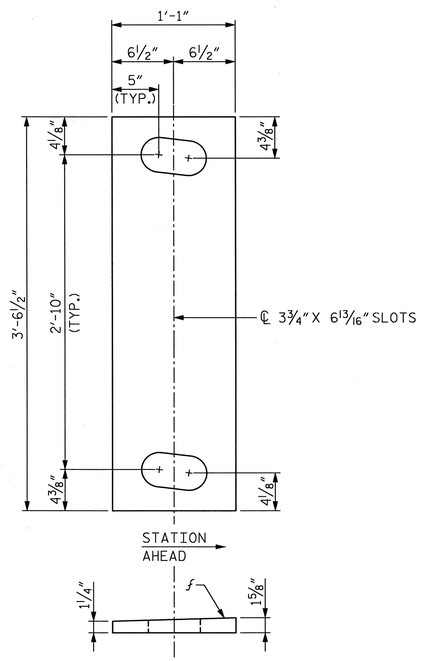

P5
(EXPANSION)
(4 REQD.)

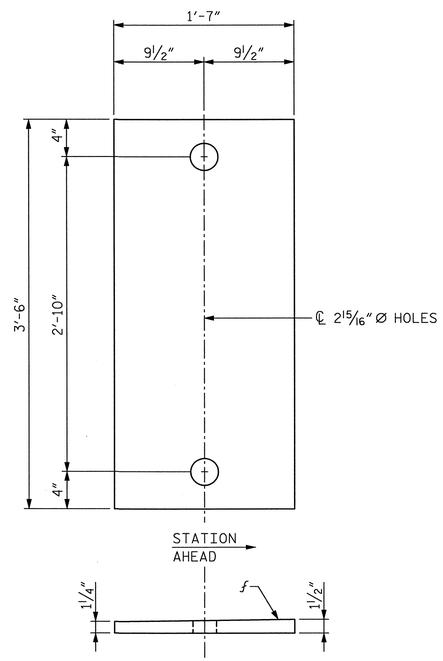

P6
(FIXED)
(4 REQD.)

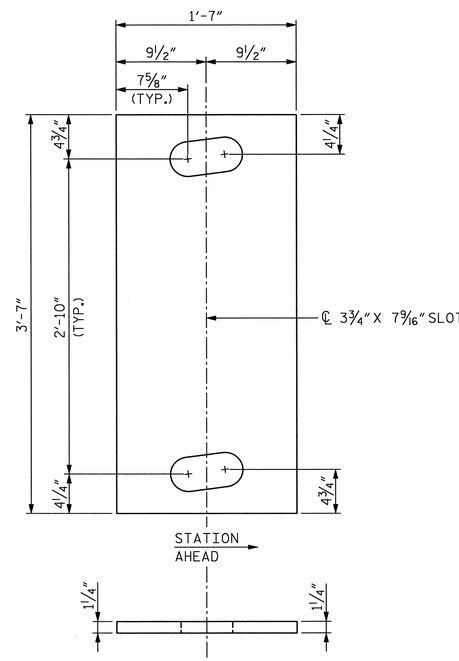

P7
(EXPANSION)
(4 REQD.)

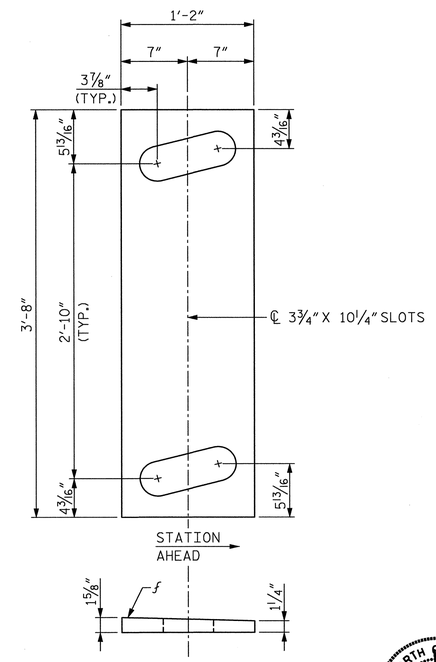

P8
(EXPANSION)
(4 REQD.)

PROJECT NO. U-0071

DURHAM COUNTY

STATION: 23+29.61 -DFFLY-

SHEET 2 OF 2

STATE OF NORTH CAROLINA
DEPARTMENT OF TRANSPORTATION
RALEIGH

SUPERSTRUCTURE ELASTOMERIC BEARING DETAILS

NORTH CAROLINA PROFESSIONAL SEAL 29589 ENGINEER DOMENIC A. COLETTI
1-7-14

HDR Engineering, Inc. of the Carolinas
3733 National Drive, Suite 207 Raleigh, N.C. 27612
N.C.B.E.L.S. License Number: F-0116

REVISIONS								SHEET NO.
NO.	BY:	DATE:	NO.	BY:	DATE:			S-5B
1	--	--	3	--	--			TOTAL SHEETS
2	--	--	4	--	--			67

DES BY: J. TAYLOR	DATE: 05/13	DWG BY: M. SELLS	DATE: 04/13
DES CHK: W. WATSON	DATE: 06/13	CHK BY: W. WATSON	DATE: 06/13

ORIGINATED		YELLOW HIGHLIGHTED & REDLINE CHECKED		BLUE HIGHLIGHTED CHANGES		CHANGES VERIFIED BY	
INITIALS	DATE	INITIALS	DATE	INITIALS	DATE	VERIFIED	DATE

PLOT DRIVER: NCDOT_pdf_mono_eng_50.plt
USER: msells
FILE: ...\tpa\d0391221\U0071_11_BG2.DGN
DATE: 1/6/2014
TABLE: Durham_pen.tbl
TIME: 12:7:06 PM

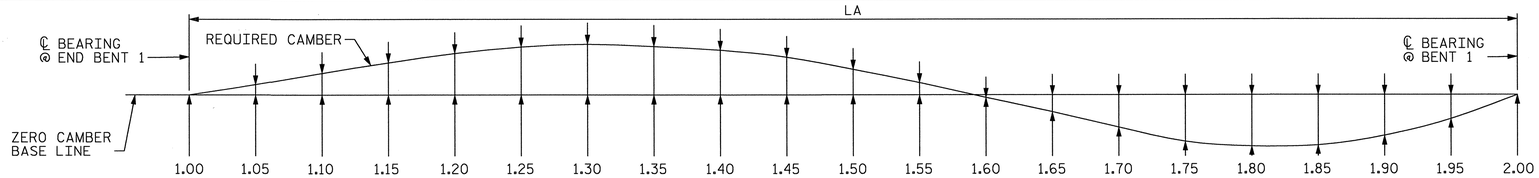

NOTES

SLOPE FOR THE ZERO CAMBER LINE VARIES.

VALUES GIVEN ARE AT TWENTIETH POINTS BETWEEN CENTERLINE OF BEARINGS.

DEFLECTIONS AND ORDINATES ARE IN FEET (DECIMAL FORM).

REQUIRED CAMBER VALUES ARE IN INCHES (FRACTION FORM).

DOWNWARD DEFLECTION IS INDICATED WITH A "-" SIGN.

SPAN "A"
GIRDER 1

20TH POINTS	1.00	1.05	1.10	1.15	1.20	1.25	1.30	1.35	1.40	1.45	1.50	1.55	1.60	1.65	1.70	1.75	1.80	1.85	1.90	1.95	2.00
DEFLECTION DUE TO WEIGHT OF GIRDER	0.000	-0.011	-0.021	-0.031	-0.039	-0.045	-0.050	-0.053	-0.054	-0.053	-0.050	-0.045	-0.040	-0.033	-0.026	-0.019	-0.013	-0.008	-0.004	-0.001	0.000
DEFLECTION DUE TO WEIGHT OF SLAB ✳	0.000	-0.041	-0.080	-0.114	-0.144	-0.168	-0.185	-0.194	-0.197	-0.193	-0.182	-0.166	-0.145	-0.120	-0.094	-0.067	-0.043	-0.024	-0.010	-0.002	0.000
DEFLECTION DUE TO WEIGHT OF BARRIER RAIL	0.000	-0.005	-0.010	-0.014	-0.018	-0.020	-0.023	-0.024	-0.024	-0.024	-0.023	-0.021	-0.019	-0.016	-0.013	-0.010	-0.007	-0.004	-0.002	-0.001	0.000
TOTAL DEAD LOAD DEFLECTION	0.000	-0.057	-0.111	-0.159	-0.200	-0.233	-0.257	-0.271	-0.275	-0.269	-0.255	-0.233	-0.204	-0.170	-0.133	-0.097	-0.063	-0.036	-0.016	-0.003	0.000
VERTICAL CURVE ORDINATE	0.000	-0.044	-0.083	-0.118	-0.148	-0.173	-0.193	-0.209	-0.221	-0.228	-0.230	-0.228	-0.221	-0.209	-0.193	-0.173	-0.147	-0.117	-0.083	-0.044	0.000
SUPERELEVATION ORDINATE	0.000	0.000	0.000	0.000	0.000	0.000	0.000	0.000	0.000	0.000	0.000	0.000	0.000	0.000	0.000	0.000	0.000	0.000	0.000	0.000	0.000
CAMBER DUE TO DISSIPATION RESULTING FROM HEAT CURVING ✳✳	0.000	0.004	0.008	0.011	0.014	0.016	0.018	0.019	0.019	0.019	0.018	0.016	0.014	0.012	0.009	0.000	0.000	0.000	0.000	0.000	0.000
REQUIRED CAMBER	0"	0 3/16"	0 7/16"	0 5/8"	0 13/16"	0 15/16"	1"	0 15/16"	0 7/8"	0 3/4"	0 1/2"	0 1/4"	-0 1/16"	-0 5/16"	-0 5/8"	-0 15/16"	-1"	-1"	-0 13/16"	-0 1/2"	0"

SPAN "A"
GIRDER 2

20TH POINTS	1.00	1.05	1.10	1.15	1.20	1.25	1.30	1.35	1.40	1.45	1.50	1.55	1.60	1.65	1.70	1.75	1.80	1.85	1.90	1.95	2.00
DEFLECTION DUE TO WEIGHT OF GIRDER	0.000	-0.010	-0.019	-0.027	-0.035	-0.040	-0.045	-0.047	-0.048	-0.047	-0.045	-0.041	-0.036	-0.030	-0.024	-0.018	-0.012	-0.007	-0.004	-0.001	0.000
DEFLECTION DUE TO WEIGHT OF SLAB ✳	0.000	-0.038	-0.074	-0.106	-0.133	-0.155	-0.171	-0.180	-0.183	-0.179	-0.170	-0.156	-0.137	-0.115	-0.090	-0.066	-0.044	-0.025	-0.011	-0.002	0.000
DEFLECTION DUE TO WEIGHT OF BARRIER RAIL	0.000	-0.003	-0.007	-0.010	-0.012	-0.015	-0.016	-0.017	-0.018	-0.017	-0.017	-0.015	-0.014	-0.012	-0.009	-0.007	-0.005	-0.003	-0.001	0.000	0.000
TOTAL DEAD LOAD DEFLECTION	0.000	-0.051	-0.099	-0.143	-0.180	-0.210	-0.232	-0.245	-0.249	-0.244	-0.231	-0.212	-0.186	-0.156	-0.124	-0.091	-0.060	-0.035	-0.016	-0.004	0.000
VERTICAL CURVE ORDINATE	0.000	-0.044	-0.083	-0.117	-0.147	-0.172	-0.193	-0.210	-0.221	-0.228	-0.230	-0.228	-0.221	-0.209	-0.193	-0.172	-0.147	-0.117	-0.083	-0.043	0.000
SUPERELEVATION ORDINATE	0.000	0.000	0.000	0.000	0.000	0.000	0.000	0.000	0.000	0.000	0.000	0.000	0.000	0.000	0.000	0.000	0.000	0.000	0.000	0.000	0.000
CAMBER DUE TO DISSIPATION RESULTING FROM HEAT CURVING ✳✳	0.000	0.004	0.008	0.011	0.014	0.017	0.018	0.019	0.020	0.019	0.018	0.017	0.015	0.012	0.010	0.000	0.000	0.000	0.000	0.000	0.000
REQUIRED CAMBER	0"	0 1/8"	0 5/16"	0 7/16"	0 9/16"	0 5/8"	0 11/16"	0 5/8"	0 9/16"	0 7/16"	0 1/4"	0"	-0 1/4"	-0 1/2"	-0 11/16"	-1"	-1 1/16"	-1"	-0 13/16"	-0 1/2"	0"

SPAN "A"
GIRDER 3

20TH POINTS	1.00	1.05	1.10	1.15	1.20	1.25	1.30	1.35	1.40	1.45	1.50	1.55	1.60	1.65	1.70	1.75	1.80	1.85	1.90	1.95	2.00
DEFLECTION DUE TO WEIGHT OF GIRDER	0.000	-0.009	-0.017	-0.024	-0.030	-0.036	-0.039	-0.042	-0.042	-0.042	-0.040	-0.037	-0.032	-0.027	-0.022	-0.016	-0.011	-0.006	-0.003	-0.001	0.000
DEFLECTION DUE TO WEIGHT OF SLAB ✳	0.000	-0.035	-0.068	-0.097	-0.123	-0.143	-0.158	-0.166	-0.169	-0.166	-0.158	-0.145	-0.129	-0.108	-0.086	-0.063	-0.042	-0.024	-0.011	-0.002	0.000
DEFLECTION DUE TO WEIGHT OF BARRIER RAIL	0.000	-0.003	-0.005	-0.007	-0.009	-0.011	-0.012	-0.013	-0.013	-0.013	-0.012	-0.012	-0.010	-0.009	-0.007	-0.005	-0.004	-0.002	-0.001	0.000	0.000
TOTAL DEAD LOAD DEFLECTION	0.000	-0.046	-0.089	-0.129	-0.162	-0.189	-0.209	-0.221	-0.225	-0.221	-0.210	-0.194	-0.171	-0.144	-0.115	-0.085	-0.056	-0.032	-0.015	-0.003	0.000
VERTICAL CURVE ORDINATE	0.000	-0.044	-0.083	-0.117	-0.147	-0.172	-0.193	-0.209	-0.221	-0.228	-0.230	-0.228	-0.221	-0.209	-0.193	-0.172	-0.147	-0.117	-0.083	-0.043	0.000
SUPERELEVATION ORDINATE	0.000	0.000	0.000	0.000	0.000	0.000	0.000	0.000	0.000	0.000	0.000	0.000	0.000	0.000	0.000	0.000	0.000	0.000	0.000	0.000	0.000
CAMBER DUE TO DISSIPATION RESULTING FROM HEAT CURVING ✳✳	0.000	0.004	0.008	0.012	0.015	0.017	0.019	0.020	0.020	0.020	0.019	0.017	0.015	0.013	0.010	0.000	0.000	0.000	0.000	0.000	0.000
REQUIRED CAMBER	0"	0 1/16"	0 3/16"	0 1/4"	0 3/8"	0 3/8"	0 7/16"	0 3/8"	0 5/16"	0 3/16"	0"	-0 3/16"	-0 7/16"	-0 5/8"	-0 13/16"	-1 1/16"	-1 1/16"	-1"	-0 13/16"	-0 1/2"	0"

SPAN "A"
GIRDER 4

20TH POINTS	1.00	1.05	1.10	1.15	1.20	1.25	1.30	1.35	1.40	1.45	1.50	1.55	1.60	1.65	1.70	1.75	1.80	1.85	1.90	1.95	2.00
DEFLECTION DUE TO WEIGHT OF GIRDER	0.000	-0.007	-0.014	-0.021	-0.026	-0.031	-0.034	-0.036	-0.037	-0.036	-0.035	-0.032	-0.028	-0.024	-0.019	-0.014	-0.010	-0.006	-0.003	-0.001	0.000
DEFLECTION DUE TO WEIGHT OF SLAB ✳	0.000	-0.031	-0.061	-0.088	-0.111	-0.129	-0.143	-0.151	-0.154	-0.152	-0.145	-0.134	-0.119	-0.101	-0.081	-0.060	-0.040	-0.023	-0.010	-0.002	0.000
DEFLECTION DUE TO WEIGHT OF BARRIER RAIL	0.000	-0.002	-0.004	-0.006	-0.008	-0.009	-0.010	-0.011	-0.011	-0.011	-0.010	-0.010	-0.009	-0.008	-0.006	-0.005	-0.004	-0.002	-0.001	0.000	0.000
TOTAL DEAD LOAD DEFLECTION	0.000	-0.041	-0.080	-0.115	-0.145	-0.169	-0.187	-0.198	-0.202	-0.199	-0.190	-0.175	-0.156	-0.132	-0.106	-0.079	-0.053	-0.031	-0.014	-0.003	0.000
VERTICAL CURVE ORDINATE	0.000	-0.044	-0.083	-0.117	-0.147	-0.173	-0.193	-0.209	-0.221	-0.228	-0.230	-0.228	-0.220	-0.209	-0.193	-0.172	-0.147	-0.117	-0.082	-0.043	0.000
SUPERELEVATION ORDINATE	0.000	0.000	0.000	0.000	0.000	0.000	0.000	0.000	0.000	0.000	0.000	0.000	0.000	0.000	0.000	0.000	0.000	0.000	0.000	0.000	0.000
CAMBER DUE TO DISSIPATION RESULTING FROM HEAT CURVING ✳✳	0.000	0.004	0.008	0.011	0.014	0.017	0.019	0.020	0.020	0.020	0.019	0.017	0.015	0.013	0.011	0.000	0.000	0.000	0.000	0.000	0.000
REQUIRED CAMBER	0"	0"	0 1/16"	0 1/8"	0 1/8"	0 1/8"	0 1/8"	0 1/8"	0"	-0 1/8"	-0 1/4"	-0 7/16"	-0 9/16"	-0 3/4"	-0 15/16"	-1 1/8"	-1 1/8"	-1 1/16"	-0 13/16"	-0 1/2"	0"

✳ = INCLUDES SLAB, BUILDUPS, AND STAY-IN-PLACE FORMS.
✳✳ = CAMBER DISSIPATION VALUES TO BE DEDUCTED FROM TOTAL REQUIRED CAMBER IF GIRDERS ARE CUT-CURVED INSTEAD OF BEING FULLY HEAT-CURVED.

PROJECT NO. U-0071
DURHAM COUNTY
STATION: 23+29.61 -DFFLY-

SHEET 1 OF 6

STATE OF NORTH CAROLINA
DEPARTMENT OF TRANSPORTATION
RALEIGH

SUPERSTRUCTURE DEAD LOAD DEFLECTION AND CAMBER ORDINATES SPAN "A"

NORTH CAROLINA PROFESSIONAL SEAL 29589 ENGINEER DOMENIC A. COLETTI
F-7-14

REVISIONS						
NO.	BY:	DATE:	NO.	BY:	DATE:	
1	--	--	3	--	--	
2	--	--	4	--	--	

SHEET NO. S-509
TOTAL SHEETS 671

HDR Engineering, Inc. of the Carolinas
3733 National Drive, Suite 207 Raleigh, N.C. 27612
N.C.B.E.L.S. License Number: F-0116

DES BY: J. TAYLOR DATE: 05/13
DES CHK: K. DICKENS DATE: 06/13
DWG BY: M. SELLS DATE: 07/13
CHK BY: K. DICKENS DATE: 07/13

ORIGINATED: INITIALS, DATE
YELLOW HIGHLIGHTED & REDLINE CHECKED: INITIALS, DATE
BLUE HIGHLIGHTED CHANGES: INITIALS, DATE
CHANGES VERIFIED BY: VERIFIED, DATE

PLOT DRIVER: NCDOT_pdf_mono_eng_50.plt
USER: msells
FILE: ...\tpg\d039221\U0071_11_DL1.dgn
.CNTABLE: Durham_pen.tbl
DATE: 1/6/2014
TIME: 12:7:30 PM

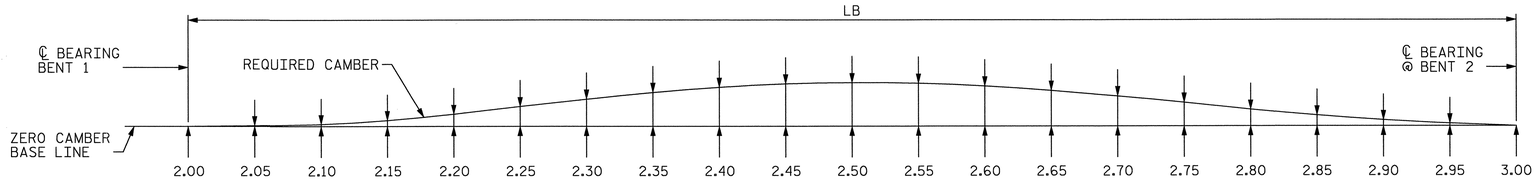

NOTES

SLOPE FOR THE ZERO CAMBER LINE VARIES.

VALUES GIVEN ARE AT TWENTIETH POINTS BETWEEN CENTERLINE OF BEARINGS.

DEFLECTIONS AND ORDINATES ARE IN FEET (DECIMAL FORM).

REQUIRED CAMBER VALUES ARE IN INCHES (FRACTION FORM).

DOWNWARD DEFLECTION IS INDICATED WITH A "-" SIGN.

SPAN "B"
GIRDER 1

20TH POINTS	2.00	2.05	2.10	2.15	2.20	2.25	2.30	2.35	2.40	2.45	2.50	2.55	2.60	2.65	2.70	2.75	2.80	2.85	2.90	2.95	3.00
DEFLECTION DUE TO WEIGHT OF GIRDER	0.000	-0.004	-0.010	-0.019	-0.030	-0.041	-0.052	-0.061	-0.068	-0.073	-0.075	-0.073	-0.068	-0.061	-0.052	-0.041	-0.030	-0.019	-0.010	-0.004	0.000
DEFLECTION DUE TO WEIGHT OF SLAB ✳	0.000	-0.017	-0.045	-0.084	-0.130	-0.178	-0.225	-0.266	-0.297	-0.315	-0.320	-0.311	-0.289	-0.257	-0.216	-0.170	-0.122	-0.078	-0.040	-0.014	0.000
DEFLECTION DUE TO WEIGHT OF BARRIER RAIL	0.000	-0.002	-0.006	-0.010	-0.015	-0.021	-0.026	-0.030	-0.033	-0.035	-0.036	-0.035	-0.033	-0.030	-0.026	-0.021	-0.015	-0.010	-0.006	-0.002	0.000
TOTAL DEAD LOAD DEFLECTION	0.000	-0.023	-0.061	-0.114	-0.175	-0.240	-0.303	-0.357	-0.398	-0.423	-0.430	-0.419	-0.391	-0.348	-0.293	-0.231	-0.168	-0.107	-0.056	-0.020	0.000
VERTICAL CURVE ORDINATE	0.000	-0.028	-0.048	-0.061	-0.065	-0.063	-0.058	-0.054	-0.050	-0.045	-0.041	-0.036	-0.032	-0.027	-0.023	-0.019	-0.014	-0.010	-0.005	-0.001	0.000
SUPERELEVATION ORDINATE	0.000	0.000	0.000	0.000	0.000	0.000	0.000	0.000	0.000	0.000	0.000	0.000	0.000	0.000	0.000	0.000	0.000	0.000	0.000	0.000	0.000
CAMBER DUE TO DISSIPATION RESULTING FROM HEAT CURVING ✳✳	0.000	0.000	0.000	0.000	0.000	0.009	0.012	0.014	0.015	0.016	0.017	0.016	0.015	0.013	0.011	0.009	0.000	0.000	0.000	0.000	0.000
REQUIRED CAMBER	0"	-0 1/16"	0 1/8"	0 5/8"	1 5/16"	2 1/4"	3 1/16"	3 13/16"	4 3/8"	4 3/4"	4 7/8"	4 13/16"	4 1/2"	4"	3 3/8"	2 11/16"	1 13/16"	1 3/16"	0 5/8"	0 1/4"	0

SPAN "B"
GIRDER 2

20TH POINTS	2.00	2.05	2.10	2.15	2.20	2.25	2.30	2.35	2.40	2.45	2.50	2.55	2.60	2.65	2.70	2.75	2.80	2.85	2.90	2.95	3.00
DEFLECTION DUE TO WEIGHT OF GIRDER	0.000	-0.003	-0.010	-0.018	-0.028	-0.038	-0.048	-0.057	-0.063	-0.067	-0.069	-0.067	-0.063	-0.057	-0.048	-0.038	-0.028	-0.018	-0.010	-0.004	0.000
DEFLECTION DUE TO WEIGHT OF SLAB ✳	0.000	-0.016	-0.043	-0.080	-0.123	-0.168	-0.211	-0.248	-0.276	-0.293	-0.297	-0.289	-0.270	-0.241	-0.203	-0.161	-0.117	-0.075	-0.039	-0.014	0.000
DEFLECTION DUE TO WEIGHT OF BARRIER RAIL	0.000	-0.001	-0.004	-0.007	-0.011	-0.015	-0.019	-0.023	-0.025	-0.027	-0.027	-0.027	-0.025	-0.022	-0.019	-0.015	-0.011	-0.007	-0.004	-0.001	0.000
TOTAL DEAD LOAD DEFLECTION	0.000	-0.021	-0.057	-0.106	-0.162	-0.221	-0.278	-0.327	-0.364	-0.387	-0.393	-0.383	-0.358	-0.320	-0.271	-0.215	-0.156	-0.101	-0.053	-0.019	0.000
VERTICAL CURVE ORDINATE	0.000	-0.028	-0.048	-0.061	-0.065	-0.063	-0.058	-0.054	-0.050	-0.045	-0.041	-0.036	-0.032	-0.027	-0.023	-0.019	-0.014	-0.010	-0.005	-0.001	0.000
SUPERELEVATION ORDINATE	0.000	0.000	0.000	0.000	0.000	0.000	0.000	0.000	0.000	0.000	0.000	0.000	0.000	0.000	0.000	0.000	0.000	0.000	0.000	0.000	0.000
CAMBER DUE TO DISSIPATION RESULTING FROM HEAT CURVING ✳✳	0.000	0.000	0.000	0.000	0.000	0.009	0.012	0.014	0.016	0.017	0.017	0.016	0.015	0.014	0.012	0.009	0.000	0.000	0.000	0.000	0.000
REQUIRED CAMBER	0"	-0 1/16"	0 1/8"	0 9/16"	1 3/16"	2"	2 3/4"	3 7/16"	3 15/16"	4 5/16"	4 7/16"	4 3/8"	4 1/8"	3 11/16"	3 1/8"	2 7/16"	1 11/16"	1 1/8"	0 9/16"	0 3/16"	0"

SPAN "B"
GIRDER 3

20TH POINTS	2.00	2.05	2.10	2.15	2.20	2.25	2.30	2.35	2.40	2.45	2.50	2.55	2.60	2.65	2.70	2.75	2.80	2.85	2.90	2.95	3.00
DEFLECTION DUE TO WEIGHT OF GIRDER	0.000	-0.003	-0.009	-0.017	-0.026	-0.035	-0.044	-0.052	-0.058	-0.062	-0.063	-0.062	-0.058	-0.052	-0.045	-0.036	-0.026	-0.017	-0.009	-0.003	0.000
DEFLECTION DUE TO WEIGHT OF SLAB ✳	0.000	-0.015	-0.041	-0.075	-0.115	-0.157	-0.196	-0.230	-0.255	-0.270	-0.274	-0.267	-0.250	-0.224	-0.190	-0.151	-0.111	-0.072	-0.038	-0.013	0.000
DEFLECTION DUE TO WEIGHT OF BARRIER RAIL	0.000	-0.001	-0.003	-0.006	-0.009	-0.012	-0.015	-0.017	-0.019	-0.020	-0.021	-0.020	-0.019	-0.017	-0.015	-0.012	-0.009	-0.006	-0.003	-0.001	0.000
TOTAL DEAD LOAD DEFLECTION	0.000	-0.019	-0.053	-0.098	-0.150	-0.204	-0.255	-0.299	-0.332	-0.352	-0.358	-0.350	-0.327	-0.293	-0.250	-0.199	-0.146	-0.095	-0.050	-0.018	0.000
VERTICAL CURVE ORDINATE	0.000	-0.028	-0.048	-0.061	-0.065	-0.063	-0.058	-0.054	-0.050	-0.045	-0.041	-0.036	-0.032	-0.027	-0.023	-0.019	-0.014	-0.010	-0.005	-0.001	0.000
SUPERELEVATION ORDINATE	0.000	0.000	0.000	0.000	0.000	0.000	0.000	0.000	0.000	0.000	0.000	0.000	0.000	0.000	0.000	0.000	0.000	0.000	0.000	0.000	0.000
CAMBER DUE TO DISSIPATION RESULTING FROM HEAT CURVING ✳✳	0.000	0.000	0.000	0.000	0.000	0.010	0.012	0.014	0.016	0.017	0.017	0.017	0.016	0.014	0.012	0.010	0.000	0.000	0.000	0.000	0.000
REQUIRED CAMBER	0"	-0 1/8"	0 1/16"	0 7/16"	1"	1 13/16"	2 1/2"	3 1/8"	3 9/16"	3 7/8"	4"	3 15/16"	3 3/4"	3 3/8"	2 7/8"	2 1/4"	1 9/16"	1"	0 9/16"	0 3/16"	0"

SPAN "B"
GIRDER 4

20TH POINTS	2.00	2.05	2.10	2.15	2.20	2.25	2.30	2.35	2.40	2.45	2.50	2.55	2.60	2.65	2.70	2.75	2.80	2.85	2.90	2.95	3.00
DEFLECTION DUE TO WEIGHT OF GIRDER	0.000	-0.003	-0.008	-0.016	-0.024	-0.032	-0.040	-0.047	-0.052	-0.056	-0.057	-0.056	-0.053	-0.047	-0.041	-0.033	-0.024	-0.016	-0.009	-0.003	0.000
DEFLECTION DUE TO WEIGHT OF SLAB ✳	0.000	-0.014	-0.038	-0.070	-0.107	-0.145	-0.180	-0.210	-0.232	-0.246	-0.250	-0.244	-0.229	-0.206	-0.176	-0.141	-0.104	-0.068	-0.036	-0.013	0.000
DEFLECTION DUE TO WEIGHT OF BARRIER RAIL	0.000	-0.001	-0.003	-0.005	-0.008	-0.010	-0.012	-0.014	-0.015	-0.016	-0.017	-0.016	-0.015	-0.014	-0.012	-0.010	-0.008	-0.005	-0.003	-0.001	0.000
TOTAL DEAD LOAD DEFLECTION	0.000	-0.019	-0.050	-0.091	-0.138	-0.187	-0.232	-0.271	-0.300	-0.318	-0.323	-0.316	-0.297	-0.267	-0.228	-0.183	-0.135	-0.089	-0.048	-0.018	0.000
VERTICAL CURVE ORDINATE	0.000	-0.028	-0.048	-0.061	-0.065	-0.063	-0.058	-0.054	-0.050	-0.045	-0.041	-0.036	-0.032	-0.027	-0.023	-0.019	-0.014	-0.010	-0.005	-0.001	0.000
SUPERELEVATION ORDINATE	0.000	0.000	0.000	0.000	0.000	0.000	0.000	0.000	0.000	0.000	0.000	0.000	0.000	0.000	0.000	0.000	0.000	0.000	0.000	0.000	0.000
CAMBER DUE TO DISSIPATION RESULTING FROM HEAT CURVING ✳✳	0.000	0.000	0.000	0.000	0.000	0.010	0.012	0.014	0.016	0.017	0.017	0.017	0.016	0.014	0.012	0.010	0.000	0.000	0.000	0.000	0.000
REQUIRED CAMBER	0"	-0 1/8"	0"	0 3/8"	0 7/8"	1 5/8"	2 1/4"	2 3/4"	3 3/16"	3 1/2"	3 5/8"	3 9/16"	3 3/8"	3 1/16"	2 5/8"	2 1/8"	1 7/16"	0 15/16"	0 1/2"	0 3/16"	0"

✳ = INCLUDES SLAB, BUILDUPS, AND STAY-IN-PLACE FORMS.
✳✳ = CAMBER DISSIPATION VALUES TO BE DEDUCTED FROM TOTAL REQUIRED CAMBER IF GIRDERS ARE CUT-CURVED INSTEAD OF BEING FULLY HEAT-CURVED.

PROJECT NO. U-0071
DURHAM COUNTY
STATION: 23+29.61 -DFFLY-

SHEET 2 OF 6

STATE OF NORTH CAROLINA
DEPARTMENT OF TRANSPORTATION
RALEIGH

SUPERSTRUCTURE DEAD LOAD DEFLECTION AND CAMBER ORDINATES SPAN "B"

NORTH CAROLINA PROFESSIONAL SEAL 29589 ENGINEER DOMENIC A. COLETTI
1-7-14

HDR Engineering, Inc. of the Carolinas
3733 National Drive, Suite 207 Raleigh, N.C. 27612
N.C.B.E.L.S. License Number: F-0116

REVISIONS						SHEET NO.
NO.	BY:	DATE:	NO.	BY:	DATE:	S-30
1	--	--	3	--	--	TOTAL SHEETS
2	--	--	4	--	--	571

DES BY: J. TAYLOR	DATE: 05/13	DWG BY: M. SELLS	DATE: 07/13
DES CHK: K. DICKENS	DATE: 06/13	CHK BY: K. DICKENS	DATE: 07/13

ORIGINATED		YELLOW HIGHLIGHTED & REDLINE CHECKED		BLUE HIGHLIGHTED CHANGES		CHANGES VERIFIED BY	
INITIALS	DATE	INITIALS	DATE	INITIALS	DATE	VERIFIED	DATE

PLOT DRIVER: NCDOT_pdf_mono_eng_50.plt
USER: msells
FILE: ...\Tpo\d039122I\U0071_11_DL2.dgn
DATE: 1/6/2014
.ENTABLE: Durham_pen.tbl
TIME: 1:27:48 PM

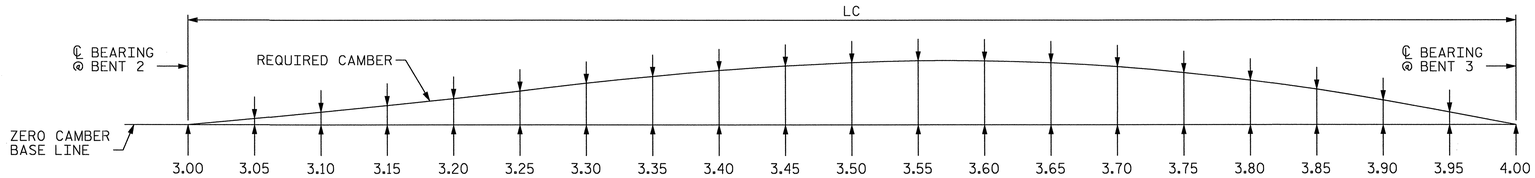

NOTES

SLOPE FOR THE ZERO CAMBER LINE VARIES.

VALUES GIVEN ARE AT TWENTIETH POINTS BETWEEN CENTERLINE OF BEARINGS.

DEFLECTIONS AND ORDINATES ARE IN FEET (DECIMAL FORM).

REQUIRED CAMBER VALUES ARE IN INCHES (FRACTION FORM).

DOWNWARD DEFLECTION IS INDICATED WITH A "-" SIGN.

SPAN "C"
GIRDER 1

20TH POINTS	3.00	3.05	3.10	3.15	3.20	3.25	3.30	3.35	3.40	3.45	3.50	3.55	3.60	3.65	3.70	3.75	3.80	3.85	3.90	3.95	4.00
DEFLECTION DUE TO WEIGHT OF GIRDER	0.000	-0.001	-0.003	-0.007	-0.013	-0.019	-0.026	-0.033	-0.040	-0.045	-0.050	-0.052	-0.054	-0.053	-0.050	-0.045	-0.039	-0.031	-0.021	-0.011	0.000
DEFLECTION DUE TO WEIGHT OF SLAB *	0.000	-0.004	-0.015	-0.031	-0.054	-0.082	-0.114	-0.146	-0.176	-0.204	-0.225	-0.239	-0.244	-0.240	-0.227	-0.206	-0.176	-0.139	-0.096	-0.049	0.000
DEFLECTION DUE TO WEIGHT OF BARRIER RAIL	0.000	-0.001	-0.002	-0.004	-0.007	-0.010	-0.013	-0.016	-0.019	-0.021	-0.023	-0.024	-0.024	-0.024	-0.023	-0.020	-0.018	-0.014	-0.010	-0.005	0.000
TOTAL DEAD LOAD DEFLECTION	0.000	-0.006	-0.020	-0.043	-0.074	-0.112	-0.153	-0.195	-0.235	-0.270	-0.298	-0.315	-0.322	-0.317	-0.300	-0.271	-0.232	-0.183	-0.127	-0.065	0.000
VERTICAL CURVE ORDINATE	0.000	0.052	0.098	0.138	0.173	0.203	0.227	0.246	0.259	0.267	0.270	0.267	0.259	0.246	0.227	0.202	0.173	0.138	0.097	0.051	0.000
SUPERELEVATION ORDINATE	0.000	0.000	0.000	0.000	0.000	0.000	0.000	0.000	0.000	0.000	0.000	0.000	0.000	0.000	0.000	0.000	0.000	0.000	0.000	0.000	0.000
CAMBER DUE TO DISSIPATION RESULTING FROM HEAT CURVING **	0.000	0.000	0.000	0.000	0.000	0.000	0.009	0.012	0.014	0.016	0.018	0.019	0.019	0.019	0.018	0.016	0.014	0.011	0.008	0.004	0.000
REQUIRED CAMBER	0"	0 11/16"	1 7/16"	2 3/16"	2 15/16"	3 3/4"	4 11/16"	5 7/16"	6 1/8"	6 5/8"	7"	7 1/4"	7 3/16"	7"	6 9/16"	5 7/8"	5"	4"	2 13/16"	1 7/16"	0"

SPAN "C"
GIRDER 2

20TH POINTS	3.00	3.05	3.10	3.15	3.20	3.25	3.30	3.35	3.40	3.45	3.50	3.55	3.60	3.65	3.70	3.75	3.80	3.85	3.90	3.95	4.00
DEFLECTION DUE TO WEIGHT OF GIRDER	0.000	-0.001	-0.003	-0.007	-0.012	-0.018	-0.024	-0.030	-0.036	-0.041	-0.045	-0.047	-0.048	-0.047	-0.045	-0.040	-0.035	-0.027	-0.019	-0.010	0.000
DEFLECTION DUE TO WEIGHT OF SLAB *	0.000	-0.004	-0.014	-0.030	-0.052	-0.078	-0.106	-0.135	-0.162	-0.186	-0.204	-0.216	-0.220	-0.216	-0.205	-0.185	-0.158	-0.125	-0.087	-0.045	0.000
DEFLECTION DUE TO WEIGHT OF BARRIER RAIL	0.000	0.000	-0.001	-0.003	-0.005	-0.007	-0.009	-0.012	-0.014	-0.015	-0.017	-0.017	-0.018	-0.017	-0.016	-0.015	-0.012	-0.010	-0.007	-0.003	0.000
TOTAL DEAD LOAD DEFLECTION	0.000	-0.005	-0.019	-0.040	-0.068	-0.102	-0.139	-0.177	-0.211	-0.242	-0.265	-0.280	-0.286	-0.280	-0.265	-0.240	-0.205	-0.162	-0.113	-0.058	0.000
VERTICAL CURVE ORDINATE	0.000	0.051	0.097	0.138	0.173	0.202	0.227	0.246	0.259	0.267	0.270	0.267	0.259	0.245	0.226	0.202	0.173	0.138	0.097	0.051	0.000
SUPERELEVATION ORDINATE	0.000	0.000	0.000	0.000	0.000	0.000	0.000	0.000	0.000	0.000	0.000	0.000	0.000	0.000	0.000	0.000	0.000	0.000	0.000	0.000	0.000
CAMBER DUE TO DISSIPATION RESULTING FROM HEAT CURVING **	0.000	0.000	0.000	0.000	0.000	0.000	0.010	0.012	0.015	0.017	0.018	0.019	0.020	0.019	0.018	0.017	0.014	0.011	0.008	0.004	0.000
REQUIRED CAMBER	0"	0 11/16"	1 3/8"	2 1/8"	2 7/8"	3 5/8"	4 1/2"	5 3/16"	5 13/16"	6 5/16"	6 5/8"	6 13/16"	6 3/4"	6 9/16"	6 1/8"	5 1/2"	4 11/16"	3 3/4"	2 5/8"	1 3/8"	0"

SPAN "C"
GIRDER 3

20TH POINTS	3.00	3.05	3.10	3.15	3.20	3.25	3.30	3.35	3.40	3.45	3.50	3.55	3.60	3.65	3.70	3.75	3.80	3.85	3.90	3.95	4.00
DEFLECTION DUE TO WEIGHT OF GIRDER	0.000	-0.001	-0.003	-0.006	-0.011	-0.016	-0.022	-0.027	-0.032	-0.036	-0.040	-0.042	-0.042	-0.042	-0.039	-0.036	-0.030	-0.024	-0.017	-0.009	0.000
DEFLECTION DUE TO WEIGHT OF SLAB *	0.000	-0.004	-0.013	-0.028	-0.049	-0.072	-0.098	-0.123	-0.147	-0.167	-0.183	-0.193	-0.196	-0.193	-0.182	-0.165	-0.141	-0.111	-0.078	-0.040	0.000
DEFLECTION DUE TO WEIGHT OF BARRIER RAIL	0.000	0.000	-0.001	-0.002	-0.004	-0.005	-0.007	-0.009	-0.010	-0.012	-0.012	-0.013	-0.013	-0.013	-0.012	-0.011	-0.009	-0.007	-0.005	-0.003	0.000
TOTAL DEAD LOAD DEFLECTION	0.000	-0.005	-0.017	-0.037	-0.063	-0.094	-0.126	-0.159	-0.189	-0.215	-0.235	-0.248	-0.252	-0.247	-0.233	-0.211	-0.181	-0.143	-0.099	-0.051	0.000
VERTICAL CURVE ORDINATE	0.000	0.051	0.097	0.138	0.173	0.202	0.227	0.245	0.259	0.267	0.270	0.267	0.259	0.246	0.226	0.202	0.173	0.138	0.097	0.051	0.000
SUPERELEVATION ORDINATE	0.000	0.000	0.000	0.000	0.000	0.000	0.000	0.000	0.000	0.000	0.000	0.000	0.000	0.000	0.000	0.000	0.000	0.000	0.000	0.000	0.000
CAMBER DUE TO DISSIPATION RESULTING FROM HEAT CURVING **	0.000	0.000	0.000	0.000	0.000	0.000	0.010	0.013	0.015	0.017	0.019	0.020	0.020	0.020	0.019	0.017	0.014	0.011	0.008	0.004	0.000
REQUIRED CAMBER	0"	0 11/16"	1 3/8"	2 1/8"	2 13/16"	3 9/16"	4 3/8"	5"	5 9/16"	6"	6 5/16"	6 7/16"	6 3/8"	6 1/8"	5 3/4"	5 3/16"	4 7/16"	3 1/2"	2 7/16"	1 1/4"	0"

SPAN "C"
GIRDER 4

20TH POINTS	3.00	3.05	3.10	3.15	3.20	3.25	3.30	3.35	3.40	3.45	3.50	3.55	3.60	3.65	3.70	3.75	3.80	3.85	3.90	3.95	4.00
DEFLECTION DUE TO WEIGHT OF GIRDER	0.000	-0.001	-0.003	-0.006	-0.009	-0.014	-0.019	-0.024	-0.028	-0.032	-0.034	-0.036	-0.037	-0.036	-0.034	-0.031	-0.026	-0.021	-0.014	-0.007	0.000
DEFLECTION DUE TO WEIGHT OF SLAB *	0.000	-0.004	-0.013	-0.026	-0.045	-0.066	-0.089	-0.111	-0.131	-0.148	-0.161	-0.169	-0.171	-0.167	-0.158	-0.143	-0.122	-0.097	-0.067	-0.035	0.000
DEFLECTION DUE TO WEIGHT OF BARRIER RAIL	0.000	0.000	-0.001	-0.002	-0.004	-0.005	-0.006	-0.008	-0.009	-0.010	-0.010	-0.011	-0.011	-0.011	-0.010	-0.009	-0.008	-0.006	-0.004	-0.002	0.000
TOTAL DEAD LOAD DEFLECTION	0.000	-0.005	-0.016	-0.034	-0.058	-0.085	-0.114	-0.142	-0.168	-0.190	-0.206	-0.216	-0.218	-0.214	-0.202	-0.182	-0.156	-0.124	-0.086	-0.045	0.000
VERTICAL CURVE ORDINATE	0.000	0.051	0.097	0.137	0.173	0.202	0.226	0.245	0.259	0.267	0.270	0.267	0.259	0.245	0.226	0.202	0.173	0.137	0.097	0.051	0.000
SUPERELEVATION ORDINATE	0.000	0.000	0.000	0.000	0.000	0.000	0.000	0.000	0.000	0.000	0.000	0.000	0.000	0.000	0.000	0.000	0.000	0.000	0.000	0.000	0.000
CAMBER DUE TO DISSIPATION RESULTING FROM HEAT CURVING **	0.000	0.000	0.000	0.000	0.000	0.000	0.010	0.013	0.015	0.017	0.019	0.020	0.020	0.020	0.018	0.017	0.014	0.011	0.008	0.004	0.000
REQUIRED CAMBER	0"	0 11/16"	1 3/8"	2 1/16"	2 3/4"	3 7/16"	4 3/16"	4 13/16"	5 5/16"	5 11/16"	5 15/16"	6"	5 15/16"	5 3/4"	5 3/8"	4 13/16"	4 1/8"	3 1/4"	2 5/16"	1 3/16"	0"

* = INCLUDES SLAB, BUILDUPS, AND STAY-IN-PLACE FORMS.
** = CAMBER DISSIPATION VALUES TO BE DEDUCTED FROM TOTAL REQUIRED CAMBER IF GIRDERS ARE CUT-CURVED INSTEAD OF BEING FULLY HEAT-CURVED.

PROJECT NO. U-0071
DURHAM COUNTY
STATION: 23+29.61 -DFFLY-

SHEET 3 OF 6

STATE OF NORTH CAROLINA
DEPARTMENT OF TRANSPORTATION
RALEIGH

SUPERSTRUCTURE DEAD LOAD DEFLECTION AND CAMBER ORDINATES SPAN "C"

NORTH CAROLINA PROFESSIONAL SEAL 29589 ENGINEER DOMENIC A. COLETTI
1-7-14

HDR Engineering, Inc. of the Carolinas
3733 National Drive, Suite 207 Raleigh, N.C. 27612
N.C.B.E.L.S. License Number: F-0116

REVISIONS						SHEET NO.
NO.	BY:	DATE:	NO.	BY:	DATE:	S-511
1	--	--	3	--	--	TOTAL SHEETS
2	--	--	4	--	--	571

DES BY: J. TAYLOR	DATE: 05/13	DWG BY: M. SELLS	DATE: 07/13
DES CHK: K. DICKENS	DATE: 06/13	CHK BY: K. DICKENS	DATE: 07/13

ORIGINATED		YELLOW HIGHLIGHTED & REDLINE CHECKED		BLUE HIGHLIGHTED CHANGES		CHANGES VERIFIED BY	
INITIALS	DATE	INITIALS	DATE	INITIALS	DATE	VERIFIED	DATE

PLOT DRIVER: NCDOT_pdf_mono_eng_50.plt
USER: msells
FILE: ...\Tpqvd0391221\U0071_11_DL3.dgn
DATE: 1/6/2014
TIME: 1:28:05 PM
ENTABLE: Durham_pen.tbl

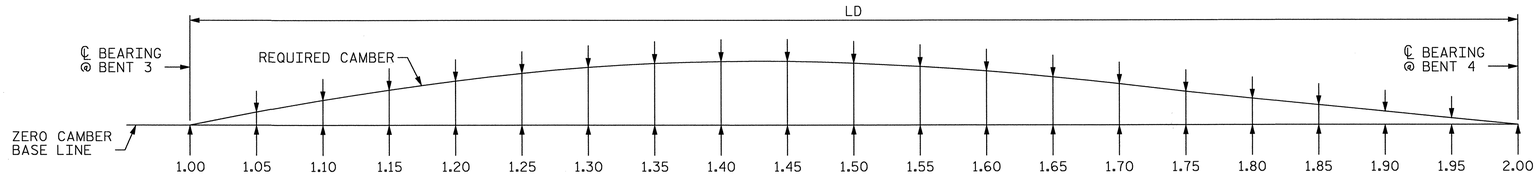

NOTES

SLOPE FOR THE ZERO CAMBER LINE VARIES.

VALUES GIVEN ARE AT TWENTIETH POINTS BETWEEN CENTERLINE OF BEARINGS.

DEFLECTIONS AND ORDINATES ARE IN FEET (DECIMAL FORM).

REQUIRED CAMBER VALUES ARE IN INCHES (FRACTION FORM).

DOWNWARD DEFLECTION IS INDICATED WITH A "-" SIGN.

SPAN "D"

GIRDER 1

20TH POINTS	1.00	1.05	1.10	1.15	1.20	1.25	1.30	1.35	1.40	1.45	1.50	1.55	1.60	1.65	1.70	1.75	1.80	1.85	1.90	1.95	2.00
DEFLECTION DUE TO WEIGHT OF GIRDER	0.000	-0.011	-0.022	-0.031	-0.040	-0.047	-0.052	-0.055	-0.057	-0.057	-0.055	-0.051	-0.046	-0.040	-0.033	-0.026	-0.019	-0.013	-0.007	-0.003	0.000
DEFLECTION DUE TO WEIGHT OF SLAB ✱	0.000	-0.043	-0.084	-0.122	-0.154	-0.180	-0.200	-0.211	-0.216	-0.212	-0.202	-0.184	-0.162	-0.137	-0.110	-0.083	-0.058	-0.036	-0.019	-0.007	0.000
DEFLECTION DUE TO WEIGHT OF BARRIER RAIL	0.000	-0.004	-0.008	-0.011	-0.014	-0.017	-0.018	-0.019	-0.020	-0.020	-0.019	-0.018	-0.016	-0.014	-0.011	-0.009	-0.006	-0.004	-0.002	-0.001	0.000
TOTAL DEAD LOAD DEFLECTION	0.000	-0.058	-0.114	-0.164	-0.208	-0.244	-0.270	-0.286	-0.293	-0.289	-0.275	-0.253	-0.224	-0.190	-0.154	-0.117	-0.083	-0.053	-0.029	-0.011	0.000
VERTICAL CURVE ORDINATE	0.000	0.048	0.091	0.129	0.162	0.190	0.212	0.230	0.242	0.250	0.253	0.250	0.243	0.230	0.212	0.189	0.162	0.129	0.091	0.048	0.000
SUPERELEVATION ORDINATE	0.000	0.000	0.000	0.000	0.000	0.000	0.000	0.000	0.000	0.000	0.000	0.000	0.000	0.000	0.000	0.000	0.000	0.000	0.000	0.000	0.000
CAMBER DUE TO DISSIPATION RESULTING FROM HEAT CURVING ✱✱	0.000	0.004	0.007	0.010	0.013	0.015	0.016	0.017	0.018	0.018	0.017	0.015	0.014	0.012	0.009	0.000	0.000	0.000	0.000	0.000	0.000
REQUIRED CAMBER	0″	1 5/16″	2 9/16″	3 5/8″	4 9/16″	5 3/8″	6″	6 3/8″	6 5/8″	6 11/16″	6 9/16″	6 1/4″	5 3/4″	5 3/16″	4 1/2″	3 11/16″	2 15/16″	2 3/16″	1 7/16″	0 11/16″	0″

SPAN "D"

GIRDER 2

20TH POINTS	1.00	1.05	1.10	1.15	1.20	1.25	1.30	1.35	1.40	1.45	1.50	1.55	1.60	1.65	1.70	1.75	1.80	1.85	1.90	1.95	2.00
DEFLECTION DUE TO WEIGHT OF GIRDER	0.000	-0.010	-0.019	-0.028	-0.035	-0.041	-0.045	-0.048	-0.049	-0.048	-0.046	-0.042	-0.037	-0.031	-0.025	-0.019	-0.013	-0.008	-0.004	-0.001	0.000
DEFLECTION DUE TO WEIGHT OF SLAB ✱	0.000	-0.038	-0.074	-0.107	-0.135	-0.158	-0.175	-0.186	-0.190	-0.188	-0.179	-0.165	-0.146	-0.125	-0.101	-0.077	-0.055	-0.035	-0.020	-0.008	0.000
DEFLECTION DUE TO WEIGHT OF BARRIER RAIL	0.000	-0.003	-0.006	-0.008	-0.011	-0.013	-0.014	-0.015	-0.015	-0.015	-0.015	-0.014	-0.012	-0.010	-0.008	-0.006	-0.004	-0.003	-0.001	0.000	0.000
TOTAL DEAD LOAD DEFLECTION	0.000	-0.051	-0.099	-0.143	-0.181	-0.212	-0.235	-0.249	-0.254	-0.251	-0.240	-0.220	-0.195	-0.166	-0.134	-0.102	-0.072	-0.046	-0.025	-0.009	0.000
VERTICAL CURVE ORDINATE	0.000	0.048	0.091	0.129	0.162	0.190	0.212	0.230	0.243	0.250	0.253	0.250	0.243	0.230	0.212	0.189	0.162	0.129	0.091	0.048	0.000
SUPERELEVATION ORDINATE	0.000	0.000	0.000	0.000	0.000	0.000	0.000	0.000	0.000	0.000	0.000	0.000	0.000	0.000	0.000	0.000	0.000	0.000	0.000	0.000	0.000
CAMBER DUE TO DISSIPATION RESULTING FROM HEAT CURVING ✱✱	0.000	0.004	0.007	0.010	0.013	0.015	0.016	0.017	0.018	0.017	0.017	0.015	0.014	0.012	0.009	0.000	0.000	0.000	0.000	0.000	0.000
REQUIRED CAMBER	0″	1 1/4″	2 3/8″	3 3/8″	4 1/4″	5″	5 9/16″	5 15/16″	6 3/16″	6 1/4″	6 1/8″	5 13/16″	5 7/16″	4 7/8″	4 1/4″	3 1/2″	2 13/16″	2 1/16″	1 3/8″	0 11/16″	0″

SPAN "D"

GIRDER 3

20TH POINTS	1.00	1.05	1.10	1.15	1.20	1.25	1.30	1.35	1.40	1.45	1.50	1.55	1.60	1.65	1.70	1.75	1.80	1.85	1.90	1.95	2.00
DEFLECTION DUE TO WEIGHT OF GIRDER	0.000	-0.008	-0.016	-0.023	-0.029	-0.034	-0.038	-0.040	-0.041	-0.040	-0.038	-0.034	-0.030	-0.025	-0.020	-0.015	-0.010	-0.006	-0.003	-0.001	0.000
DEFLECTION DUE TO WEIGHT OF SLAB ✱	0.000	-0.033	-0.064	-0.092	-0.117	-0.137	-0.152	-0.161	-0.165	-0.163	-0.156	-0.144	-0.128	-0.109	-0.088	-0.067	-0.047	-0.030	-0.016	-0.006	0.000
DEFLECTION DUE TO WEIGHT OF BARRIER RAIL	0.000	-0.003	-0.005	-0.007	-0.009	-0.011	-0.012	-0.013	-0.013	-0.013	-0.013	-0.012	-0.011	-0.009	-0.007	-0.006	-0.004	-0.002	-0.001	0.000	0.000
TOTAL DEAD LOAD DEFLECTION	0.000	-0.044	-0.085	-0.123	-0.156	-0.182	-0.202	-0.214	-0.219	-0.216	-0.206	-0.190	-0.169	-0.143	-0.116	-0.087	-0.061	-0.038	-0.020	-0.007	0.000
VERTICAL CURVE ORDINATE	0.000	0.048	0.091	0.129	0.162	0.189	0.212	0.230	0.242	0.250	0.252	0.250	0.242	0.230	0.212	0.189	0.161	0.129	0.091	0.048	0.000
SUPERELEVATION ORDINATE	0.000	0.000	0.000	0.000	0.000	0.000	0.000	0.000	0.000	0.000	0.000	0.000	0.000	0.000	0.000	0.000	0.000	0.000	0.000	0.000	0.000
CAMBER DUE TO DISSIPATION RESULTING FROM HEAT CURVING ✱✱	0.000	0.004	0.007	0.010	0.013	0.015	0.017	0.018	0.018	0.018	0.017	0.016	0.014	0.012	0.009	0.000	0.000	0.000	0.000	0.000	0.000
REQUIRED CAMBER	0″	1 1/8″	2 3/16″	3 1/8″	3 15/16″	4 5/8″	5 3/16″	5 9/16″	5 3/4″	5 13/16″	5 11/16″	5 7/16″	5 1/8″	4 5/8″	4 1/16″	3 5/16″	2 11/16″	2″	1 5/16″	0 11/16″	0″

SPAN "D"

GIRDER 4

20TH POINTS	1.00	1.05	1.10	1.15	1.20	1.25	1.30	1.35	1.40	1.45	1.50	1.55	1.60	1.65	1.70	1.75	1.80	1.85	1.90	1.95	2.00
DEFLECTION DUE TO WEIGHT OF GIRDER	0.000	-0.007	-0.013	-0.019	-0.024	-0.027	-0.030	-0.032	-0.032	-0.031	-0.030	-0.027	-0.023	-0.019	-0.015	-0.011	-0.007	-0.004	-0.002	0.000	0.000
DEFLECTION DUE TO WEIGHT OF SLAB ✱	0.000	-0.028	-0.054	-0.078	-0.098	-0.115	-0.128	-0.136	-0.139	-0.137	-0.132	-0.122	-0.109	-0.093	-0.075	-0.057	-0.040	-0.025	-0.013	-0.005	0.000
DEFLECTION DUE TO WEIGHT OF BARRIER RAIL	0.000	-0.003	-0.006	-0.008	-0.010	-0.011	-0.013	-0.013	-0.014	-0.014	-0.013	-0.012	-0.011	-0.010	-0.008	-0.006	-0.005	-0.003	-0.002	-0.001	0.000
TOTAL DEAD LOAD DEFLECTION	0.000	-0.037	-0.072	-0.104	-0.132	-0.154	-0.170	-0.181	-0.185	-0.183	-0.174	-0.161	-0.143	-0.122	-0.098	-0.074	-0.052	-0.032	-0.017	-0.005	0.000
VERTICAL CURVE ORDINATE	0.000	0.048	0.091	0.129	0.161	0.189	0.212	0.230	0.242	0.250	0.252	0.250	0.242	0.230	0.212	0.189	0.161	0.129	0.091	0.048	0.000
SUPERELEVATION ORDINATE	0.000	0.000	0.000	0.000	0.000	0.000	0.000	0.000	0.000	0.000	0.000	0.000	0.000	0.000	0.000	0.000	0.000	0.000	0.000	0.000	0.000
CAMBER DUE TO DISSIPATION RESULTING FROM HEAT CURVING ✱✱	0.000	0.004	0.007	0.010	0.013	0.015	0.016	0.017	0.018	0.018	0.017	0.016	0.014	0.012	0.010	0.000	0.000	0.000	0.000	0.000	0.000
REQUIRED CAMBER	0″	1 1/16″	2 1/16″	2 15/16″	3 11/16″	4 5/16″	4 13/16″	5 1/8″	5 5/16″	5 3/8″	5 5/16″	5 1/8″	4 13/16″	4 3/8″	3 13/16″	3 3/16″	2 9/16″	1 15/16″	1 5/16″	0 5/8″	0″

✱ = INCLUDES SLAB, BUILDUPS, AND STAY-IN-PLACE FORMS.
✱✱ = CAMBER DISSIPATION VALUES TO BE DEDUCTED FROM TOTAL REQUIRED CAMBER IF GIRDERS ARE CUT-CURVED INSTEAD OF BEING FULLY HEAT-CURVED.

PROJECT NO. U-0071

DURHAM COUNTY

STATION: 23+29.61 -DFFLY-

SHEET 4 OF 6

STATE OF NORTH CAROLINA
DEPARTMENT OF TRANSPORTATION
RALEIGH

SUPERSTRUCTURE DEAD LOAD DEFLECTION AND CAMBER ORDINATES SPAN "D"

NORTH CAROLINA PROFESSIONAL SEAL 29589 ENGINEER DOMENIC A. COLETTI 7-7-14

HDR Engineering, Inc. of the Carolinas
3733 National Drive, Suite 207 Raleigh, N.C. 27612
N.C.B.E.L.S. License Number: F-0116

REVISIONS						SHEET NO.
NO.	BY:	DATE:	NO.	BY:	DATE:	S-512
1	--	--	3	--	--	TOTAL SHEETS
2	--	--	4	--	--	671

DES BY: J. TAYLOR DATE: 05/13
DES CHK: K. DICKENS DATE: 06/13
DWG BY: M. SELLS DATE: 07/13
CHK BY: K. DICKENS DATE: 07/13

ORIGINATED		YELLOW HIGHLIGHTED & REDLINE CHECKED		BLUE HIGHLIGHTED CHANGES		CHANGES VERIFIED BY	
INITIALS	DATE	INITIALS	DATE	INITIALS	DATE	VERIFIED	DATE

PLOT DRIVER: NCDOT_pdf_mono_eng_50.pltcfg TABLE: Durham_pen.tbl
USER: msells DATE: 1/6/2014 TIME: 1:28:23 PM
FILE: ...\tpa\d039121\U0071_11_DL4.dgn

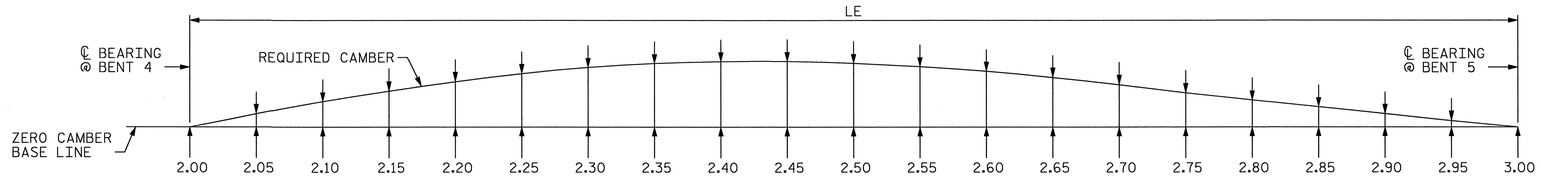

NOTES

SLOPE FOR THE ZERO CAMBER LINE VARIES.

VALUES GIVEN ARE AT TWENTIETH POINTS BETWEEN CENTERLINE OF BEARINGS.

DEFLECTIONS AND ORDINATES ARE IN FEET (DECIMAL FORM).

REQUIRED CAMBER VALUES ARE IN INCHES (FRACTION FORM).

DOWNWARD DEFLECTION IS INDICATED WITH A "-" SIGN.

SPAN "E"

GIRDER 1

20TH POINTS	2.00	2.05	2.10	2.15	2.20	2.25	2.30	2.35	2.40	2.45	2.50	2.55	2.60	2.65	2.70	2.75	2.80	2.85	2.90	2.95	3.00
DEFLECTION DUE TO WEIGHT OF GIRDER	0.000	0.000	-0.003	-0.007	-0.013	-0.019	-0.025	-0.029	-0.032	-0.033	-0.031	-0.028	-0.022	-0.015	-0.008	-0.001	0.004	0.008	0.009	0.006	0.000
DEFLECTION DUE TO WEIGHT OF SLAB ✳	0.000	-0.008	-0.025	-0.052	-0.084	-0.119	-0.151	-0.179	-0.200	-0.211	-0.212	-0.202	-0.183	-0.155	-0.122	-0.087	-0.054	-0.027	-0.006	0.003	0.000
DEFLECTION DUE TO WEIGHT OF BARRIER RAIL	0.000	-0.002	-0.004	-0.007	-0.011	-0.015	-0.018	-0.021	-0.023	-0.024	-0.024	-0.023	-0.021	-0.018	-0.015	-0.011	-0.008	-0.004	-0.002	0.000	0.000
TOTAL DEAD LOAD DEFLECTION	0.000	-0.009	-0.032	-0.067	-0.108	-0.153	-0.194	-0.229	-0.255	-0.268	-0.267	-0.253	-0.226	-0.189	-0.145	-0.099	-0.057	-0.023	0.000	0.008	0.000
VERTICAL CURVE ORDINATE	0.000	0.086	0.162	0.230	0.288	0.338	0.379	0.410	0.433	0.446	0.451	0.446	0.433	0.410	0.379	0.338	0.288	0.230	0.162	0.086	0.000
SUPERELEVATION ORDINATE	0.000	0.000	0.000	0.000	0.000	0.000	0.000	0.000	0.000	0.000	0.000	0.000	0.000	0.000	0.000	0.000	0.000	0.000	0.000	0.000	0.000
CAMBER DUE TO DISSIPATION RESULTING FROM HEAT CURVING ✳✳	0.000	0.000	0.000	0.000	0.000	0.007	0.010	0.011	0.012	0.013	0.013	0.012	0.011	0.009	0.007	0.000	0.000	0.000	0.000	0.000	0.000
REQUIRED CAMBER	0"	1 1/8"	2 5/16"	3 9/16"	4 3/4"	6"	7"	7 13/16"	8 3/8"	8 3/4"	8 3/4"	8 9/16"	8 1/16"	7 5/16"	6 3/8"	5 1/4"	4 1/8"	3 1/16"	1 15/16"	0 15/16"	0"

SPAN "E"

GIRDER 2

20TH POINTS	2.00	2.05	2.10	2.15	2.20	2.25	2.30	2.35	2.40	2.45	2.50	2.55	2.60	2.65	2.70	2.75	2.80	2.85	2.90	2.95	3.00
DEFLECTION DUE TO WEIGHT OF GIRDER	0.000	-0.002	-0.007	-0.012	-0.019	-0.025	-0.030	-0.034	-0.036	-0.036	-0.034	-0.031	-0.025	-0.018	-0.011	-0.005	0.000	0.004	0.004	0.002	0.000
DEFLECTION DUE TO WEIGHT OF SLAB ✳	0.000	-0.007	-0.024	-0.049	-0.079	-0.112	-0.143	-0.169	-0.189	-0.201	-0.204	-0.197	-0.180	-0.156	-0.126	-0.093	-0.061	-0.033	-0.011	0.001	0.000
DEFLECTION DUE TO WEIGHT OF BARRIER RAIL	0.000	-0.001	-0.003	-0.006	-0.009	-0.012	-0.015	-0.018	-0.020	-0.021	-0.021	-0.020	-0.018	-0.016	-0.013	-0.009	-0.006	-0.003	-0.001	0.000	0.000
TOTAL DEAD LOAD DEFLECTION	0.000	-0.011	-0.033	-0.067	-0.107	-0.149	-0.188	-0.221	-0.245	-0.258	-0.259	-0.247	-0.223	-0.190	-0.150	-0.107	-0.067	-0.033	-0.008	0.003	0.000
VERTICAL CURVE ORDINATE	0.000	0.086	0.162	0.230	0.288	0.338	0.379	0.410	0.433	0.446	0.451	0.446	0.433	0.410	0.379	0.338	0.288	0.230	0.162	0.086	0.000
SUPERELEVATION ORDINATE	0.000	0.000	0.000	0.000	0.000	0.000	0.000	0.000	0.000	0.000	0.000	0.000	0.000	0.000	0.000	0.000	0.000	0.000	0.000	0.000	0.000
CAMBER DUE TO DISSIPATION RESULTING FROM HEAT CURVING ✳✳	0.000	0.000	0.000	0.000	0.000	0.008	0.009	0.011	0.012	0.013	0.013	0.012	0.011	0.010	0.008	0.000	0.000	0.000	0.000	0.000	0.000
REQUIRED CAMBER	0"	1 1/8"	2 3/8"	3 9/16"	4 3/4"	5 15/16"	6 15/16"	7 11/16"	8 5/16"	8 5/8"	8 11/16"	8 7/16"	8"	7 5/16"	6 7/16"	5 5/16"	4 1/4"	3 1/8"	2 1/16"	1"	0"

SPAN "E"

GIRDER 3

20TH POINTS	2.00	2.05	2.10	2.15	2.20	2.25	2.30	2.35	2.40	2.45	2.50	2.55	2.60	2.65	2.70	2.75	2.80	2.85	2.90	2.95	3.00
DEFLECTION DUE TO WEIGHT OF GIRDER	0.000	-0.003	-0.008	-0.014	-0.021	-0.027	-0.033	-0.037	-0.040	-0.041	-0.039	-0.036	-0.031	-0.025	-0.018	-0.011	-0.005	-0.001	0.001	0.001	0.000
DEFLECTION DUE TO WEIGHT OF SLAB ✳	0.000	-0.007	-0.024	-0.048	-0.077	-0.107	-0.136	-0.161	-0.180	-0.191	-0.194	-0.188	-0.174	-0.153	-0.126	-0.095	-0.065	-0.038	-0.016	-0.002	0.000
DEFLECTION DUE TO WEIGHT OF BARRIER RAIL	0.000	-0.001	-0.003	-0.006	-0.009	-0.012	-0.015	-0.017	-0.019	-0.020	-0.020	-0.019	-0.017	-0.015	-0.013	-0.010	-0.007	-0.004	-0.002	0.000	0.000
TOTAL DEAD LOAD DEFLECTION	0.000	-0.012	-0.035	-0.068	-0.107	-0.146	-0.184	-0.215	-0.238	-0.251	-0.253	-0.243	-0.222	-0.193	-0.156	-0.116	-0.077	-0.043	-0.016	-0.001	0.000
VERTICAL CURVE ORDINATE	0.000	0.086	0.162	0.230	0.288	0.338	0.379	0.410	0.433	0.446	0.451	0.446	0.433	0.410	0.379	0.338	0.288	0.230	0.162	0.086	0.000
SUPERELEVATION ORDINATE	0.000	0.000	0.000	0.000	0.000	0.000	0.000	0.000	0.000	0.000	0.000	0.000	0.000	0.000	0.000	0.000	0.000	0.000	0.000	0.000	0.000
CAMBER DUE TO DISSIPATION RESULTING FROM HEAT CURVING ✳✳	0.000	0.000	0.000	0.000	0.000	0.008	0.010	0.011	0.013	0.013	0.013	0.013	0.012	0.010	0.008	0.000	0.000	0.000	0.000	0.000	0.000
REQUIRED CAMBER	0"	1 3/16"	2 3/8"	3 9/16"	4 3/4"	5 7/8"	6 7/8"	7 5/8"	8 3/16"	8 1/2"	8 5/8"	8 7/16"	8"	7 3/8"	6 1/2"	5 7/16"	4 3/8"	3 1/4"	2 1/8"	1 1/16"	0"

SPAN "E"

GIRDER 4

20TH POINTS	2.00	2.05	2.10	2.15	2.20	2.25	2.30	2.35	2.40	2.45	2.50	2.55	2.60	2.65	2.70	2.75	2.80	2.85	2.90	2.95	3.00
DEFLECTION DUE TO WEIGHT OF GIRDER	0.000	-0.004	-0.010	-0.016	-0.023	-0.030	-0.036	-0.040	-0.043	-0.044	-0.043	-0.041	-0.036	-0.031	-0.024	-0.017	-0.011	-0.005	-0.002	0.000	0.000
DEFLECTION DUE TO WEIGHT OF SLAB ✳	0.000	-0.008	-0.024	-0.047	-0.074	-0.102	-0.129	-0.151	-0.169	-0.180	-0.183	-0.179	-0.167	-0.149	-0.124	-0.097	-0.069	-0.043	-0.021	-0.006	0.000
DEFLECTION DUE TO WEIGHT OF BARRIER RAIL	0.000	-0.002	-0.004	-0.007	-0.010	-0.013	-0.016	-0.018	-0.020	-0.021	-0.021	-0.021	-0.019	-0.017	-0.015	-0.012	-0.009	-0.006	-0.003	-0.001	0.000
TOTAL DEAD LOAD DEFLECTION	0.000	-0.014	-0.037	-0.070	-0.107	-0.145	-0.180	-0.210	-0.232	-0.245	-0.248	-0.240	-0.223	-0.196	-0.163	-0.126	-0.088	-0.054	-0.025	-0.007	0.000
VERTICAL CURVE ORDINATE	0.000	0.086	0.162	0.230	0.288	0.338	0.379	0.410	0.433	0.446	0.451	0.446	0.433	0.410	0.379	0.338	0.288	0.230	0.162	0.086	0.000
SUPERELEVATION ORDINATE	0.000	0.000	0.000	0.000	0.000	0.000	0.000	0.000	0.000	0.000	0.000	0.000	0.000	0.000	0.000	0.000	0.000	0.000	0.000	0.000	0.000
CAMBER DUE TO DISSIPATION RESULTING FROM HEAT CURVING ✳✳	0.000	0.000	0.000	0.000	0.000	0.008	0.010	0.011	0.012	0.013	0.013	0.013	0.012	0.010	0.009	0.000	0.000	0.000	0.000	0.000	0.000
REQUIRED CAMBER	0"	1 3/16"	2 3/8"	3 5/8"	4 3/4"	5 7/8"	6 13/16"	7 9/16"	8 1/8"	8 7/16"	8 9/16"	8 3/8"	8"	7 3/8"	6 5/8"	5 9/16"	4 1/2"	3 3/8"	2 1/4"	1 1/8"	0"

✳ = INCLUDES SLAB, BUILDUPS, AND STAY-IN-PLACE FORMS.
✳✳ = CAMBER DISSIPATION VALUES TO BE DEDUCTED FROM TOTAL REQUIRED CAMBER IF GIRDERS ARE CUT-CURVED INSTEAD OF BEING FULLY HEAT-CURVED.

PROJECT NO. U-0071

DURHAM COUNTY

STATION: 23+29.61 -DFFLY-

SHEET 5 OF 6

STATE OF NORTH CAROLINA
DEPARTMENT OF TRANSPORTATION
RALEIGH

SUPERSTRUCTURE DEAD LOAD DEFLECTION AND CAMBER ORDINATES SPAN "E"

NORTH CAROLINA PROFESSIONAL SEAL 29589 ENGINEER DOMENIC A. COLETTI 1-7-14

HDR Engineering, Inc. of the Carolinas
3733 National Drive, Suite 207 Raleigh, N.C. 27612
N.C.B.E.L.S. License Number: F-0116

REVISIONS									SHEET NO. S-513
NO.	BY:	DATE:	NO.	BY:	DATE:				TOTAL SHEETS 61
1	--	--	3	--	--				
2	--	--	4	--	--				

DES BY: J. TAYLOR	DATE: 05/13	DWG BY: M. SELLS	DATE: 07/13
DES CHK: K. DICKENS	DATE: 06/13	CHK BY: K. DICKENS	DATE: 07/13

ORIGINATED		YELLOW HIGHLIGHTED & RODLINE CHECKED		BLUE HIGHLIGHTED CHANGES		CHANGES VERIFIED BY	
INITIALS	DATE	INITIALS	DATE	INITIALS	DATE	VERIFIED	DATE

PLOT DRIVER: NCDOT_pdf_mono_eng_50.plt ,ENTABLE: Durham_pen.tbl
USER: msells DATE: 1/6/2014 TIME: 1:28:42 PM
FILE: ...\tpo\d039221\U0071_11_DL5.dgn

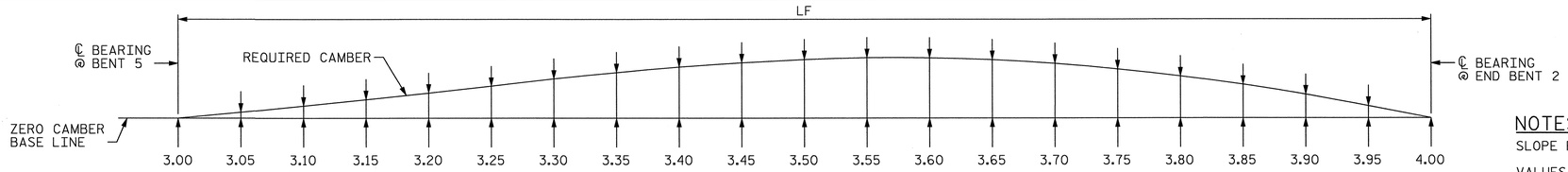

NOTES

SLOPE FOR THE ZERO CAMBER LINE VARIES.

VALUES GIVEN ARE AT TWENTIETH POINTS BETWEEN CENTERLINE OF BEARINGS.

DEFLECTIONS AND ORDINATES ARE IN FEET (DECIMAL FORM).

REQUIRED CAMBER VALUES ARE IN INCHES (FRACTION FORM).

DOWNWARD DEFLECTION IS INDICATED WITH A "-" SIGN.

SPAN "F"

GIRDER 1

20TH POINTS	3.00	3.05	3.10	3.15	3.20	3.25	3.30	3.35	3.40	3.45	3.50	3.55	3.60	3.65	3.70	3.75	3.80	3.85	3.90	3.95	4.00
DEFLECTION DUE TO WEIGHT OF GIRDER	0.000	-0.011	-0.024	-0.039	-0.056	-0.072	-0.088	-0.103	-0.115	-0.125	-0.132	-0.134	-0.133	-0.128	-0.119	-0.106	-0.090	-0.070	-0.048	-0.024	0.000
DEFLECTION DUE TO WEIGHT OF SLAB ✳	0.000	-0.020	-0.048	-0.084	-0.124	-0.168	-0.211	-0.251	-0.287	-0.315	-0.335	-0.346	-0.346	-0.335	-0.313	-0.280	-0.238	-0.187	-0.129	-0.066	0.000
DEFLECTION DUE TO WEIGHT OF BARRIER RAIL	0.000	-0.003	-0.006	-0.011	-0.015	-0.020	-0.025	-0.030	-0.034	-0.037	-0.039	-0.040	-0.040	-0.039	-0.036	-0.032	-0.028	-0.022	-0.015	-0.008	0.000
TOTAL DEAD LOAD DEFLECTION	0.000	-0.034	-0.078	-0.133	-0.195	-0.260	-0.324	-0.384	-0.436	-0.477	-0.506	-0.520	-0.519	-0.501	-0.468	-0.419	-0.355	-0.279	-0.192	-0.098	0.000
VERTICAL CURVE ORDINATE	0.000	0.068	0.129	0.183	0.230	0.270	0.302	0.327	0.345	0.356	0.359	0.356	0.345	0.327	0.302	0.269	0.230	0.183	0.129	0.068	0.000
SUPERELEVATION ORDINATE	0.000	0.000	0.000	1.000	0.000	0.000	0.000	0.000	0.000	0.000	0.000	0.000	0.000	0.000	0.000	0.000	0.000	0.000	0.000	0.000	0.000
CAMBER DUE TO DISSIPATION RESULTING FROM HEAT CURVING ✳✳	0.000	0.000	0.000	0.000	0.000	0.015	0.019	0.022	0.025	0.027	0.029	0.030	0.030	0.029	0.027	0.024	0.020	0.016	0.011	0.006	0.000
REQUIRED CAMBER	0"	1 1/4"	2 1/2"	3 13/16"	5 1/8"	6 9/16"	7 3/4"	8 13/16"	9 11/16"	10 5/16"	10 3/4"	10 7/8"	10 3/4"	10 5/16"	9 9/16"	8 9/16"	7 1/4"	5 3/4"	4"	2 1/16"	0"

SPAN "F"

GIRDER 2

20TH POINTS	3.00	3.05	3.10	3.15	3.20	3.25	3.30	3.35	3.40	3.45	3.50	3.55	3.60	3.65	3.70	3.75	3.80	3.85	3.90	3.95	4.00
DEFLECTION DUE TO WEIGHT OF GIRDER	0.000	-0.013	-0.023	-0.033	-0.045	-0.057	-0.069	-0.080	-0.090	-0.098	-0.104	-0.109	-0.111	-0.110	-0.107	-0.102	-0.094	-0.084	-0.072	-0.058	0.000
DEFLECTION DUE TO WEIGHT OF SLAB ✳	0.000	-0.013	-0.038	-0.070	-0.107	-0.147	-0.187	-0.224	-0.256	-0.281	-0.298	-0.306	-0.303	-0.290	-0.267	-0.233	-0.190	-0.140	-0.083	-0.021	0.000
DEFLECTION DUE TO WEIGHT OF BARRIER RAIL	0.000	-0.002	-0.005	-0.008	-0.012	-0.016	-0.020	-0.024	-0.027	-0.030	-0.032	-0.033	-0.032	-0.031	-0.029	-0.026	-0.022	-0.017	-0.012	-0.006	0.000
TOTAL DEAD LOAD DEFLECTION	0.000	-0.027	-0.065	-0.111	-0.165	-0.220	-0.276	-0.328	-0.373	-0.409	-0.434	-0.447	-0.446	-0.432	-0.403	-0.361	-0.307	-0.241	-0.166	-0.085	0.000
VERTICAL CURVE ORDINATE	0.000	0.068	0.129	0.183	0.230	0.269	0.302	0.327	0.345	0.356	0.359	0.356	0.345	0.327	0.302	0.269	0.230	0.183	0.129	0.068	0.000
SUPERELEVATION ORDINATE	0.000	0.000	0.000	1.000	0.000	0.000	0.000	0.000	0.000	0.000	0.000	0.000	0.000	0.000	0.000	0.000	0.000	0.000	0.000	0.000	0.000
CAMBER DUE TO DISSIPATION RESULTING FROM HEAT CURVING ✳✳	0.000	0.000	0.000	0.000	0.000	0.016	0.020	0.023	0.026	0.029	0.031	0.032	0.032	0.031	0.028	0.026	0.022	0.017	0.012	0.006	0.000
REQUIRED CAMBER	0"	1 1/8"	2 5/16"	3 9/16"	4 3/4"	6 1/16"	7 3/16"	8 1/8"	8 15/16"	9 1/2"	9 7/8"	10"	9 7/8"	9 7/16"	8 13/16"	7 7/8"	6 11/16"	5 5/16"	3 11/16"	1 15/16"	0"

SPAN "F"

GIRDER 3

20TH POINTS	3.00	3.05	3.10	3.15	3.20	3.25	3.30	3.35	3.40	3.45	3.50	3.55	3.60	3.65	3.70	3.75	3.80	3.85	3.90	3.95	4.00
DEFLECTION DUE TO WEIGHT OF GIRDER	0.000	-0.009	-0.017	-0.025	-0.034	-0.044	-0.053	-0.062	-0.070	-0.077	-0.082	-0.086	-0.088	-0.087	-0.085	-0.081	-0.075	-0.067	-0.058	-0.046	0.000
DEFLECTION DUE TO WEIGHT OF SLAB ✳	0.000	-0.010	-0.031	-0.059	-0.091	-0.125	-0.160	-0.192	-0.220	-0.242	-0.257	-0.264	-0.263	-0.252	-0.232	-0.204	-0.167	-0.124	-0.075	-0.022	0.000
DEFLECTION DUE TO WEIGHT OF BARRIER RAIL	0.000	-0.001	-0.004	-0.007	-0.010	-0.013	-0.017	-0.020	-0.023	-0.025	-0.027	-0.028	-0.028	-0.027	-0.025	-0.022	-0.019	-0.015	-0.010	-0.005	0.000
TOTAL DEAD LOAD DEFLECTION	0.000	-0.021	-0.052	-0.090	-0.135	-0.183	-0.230	-0.274	-0.313	-0.344	-0.366	-0.378	-0.378	-0.366	-0.342	-0.307	-0.261	-0.206	-0.142	-0.073	0.000
VERTICAL CURVE ORDINATE	0.000	0.068	0.129	0.183	0.230	0.269	0.302	0.327	0.345	0.355	0.359	0.356	0.345	0.327	0.302	0.269	0.230	0.183	0.129	0.068	0.000
SUPERELEVATION ORDINATE	0.000	0.000	0.000	1.000	0.000	0.000	0.000	0.000	0.000	0.000	0.000	0.000	0.000	0.000	0.000	0.000	0.000	0.000	0.000	0.000	0.000
CAMBER DUE TO DISSIPATION RESULTING FROM HEAT CURVING ✳✳	0.000	0.000	0.000	0.000	0.000	0.015	0.019	0.023	0.026	0.028	0.030	0.031	0.031	0.030	0.028	0.025	0.022	0.017	0.012	0.006	0.000
REQUIRED CAMBER	0"	1 1/16"	2 3/16"	3 5/16"	4 3/8"	5 5/8"	6 5/8"	7 1/2"	8 3/16"	8 3/4"	9 1/16"	9 3/16"	9 1/16"	8 11/16"	8 1/16"	7 1/4"	6 1/8"	4 7/8"	3 3/8"	1 3/4"	0"

SPAN "F"

GIRDER 4

20TH POINTS	3.00	3.05	3.10	3.15	3.20	3.25	3.30	3.35	3.40	3.45	3.50	3.55	3.60	3.65	3.70	3.75	3.80	3.85	3.90	3.95	4.00
DEFLECTION DUE TO WEIGHT OF GIRDER	0.000	-0.006	-0.011	-0.017	-0.024	-0.031	-0.038	-0.044	-0.050	-0.056	-0.060	-0.063	-0.064	-0.064	-0.063	-0.060	-0.056	-0.050	-0.043	-0.035	0.000
DEFLECTION DUE TO WEIGHT OF SLAB ✳	0.000	-0.008	-0.025	-0.047	-0.074	-0.103	-0.132	-0.159	-0.183	-0.202	-0.215	-0.221	-0.220	-0.212	-0.196	-0.173	-0.143	-0.107	-0.066	-0.021	0.000
DEFLECTION DUE TO WEIGHT OF BARRIER RAIL	0.000	-0.002	-0.004	-0.007	-0.010	-0.013	-0.016	-0.019	-0.021	-0.023	-0.025	-0.026	-0.026	-0.025	-0.023	-0.021	-0.018	-0.014	-0.010	-0.005	0.000
TOTAL DEAD LOAD DEFLECTION	0.000	-0.016	-0.040	-0.071	-0.108	-0.147	-0.186	-0.223	-0.255	-0.281	-0.299	-0.310	-0.310	-0.301	-0.282	-0.254	-0.217	-0.171	-0.119	-0.062	0.000
VERTICAL CURVE ORDINATE	0.000	0.068	0.129	0.183	0.230	0.269	0.301	0.327	0.344	0.355	0.359	0.355	0.345	0.327	0.301	0.269	0.230	0.183	0.129	0.068	0.000
SUPERELEVATION ORDINATE	0.000	0.000	0.000	1.000	0.000	0.000	0.000	0.000	0.000	0.000	0.000	0.000	0.000	0.000	0.000	0.000	0.000	0.000	0.000	0.000	0.000
CAMBER DUE TO DISSIPATION RESULTING FROM HEAT CURVING ✳✳	0.000	0.000	0.000	0.000	0.000	0.015	0.019	0.022	0.025	0.028	0.030	0.031	0.031	0.030	0.028	0.025	0.022	0.017	0.012	0.006	0.000
REQUIRED CAMBER	0"	1"	2"	3 1/16"	4 1/16"	5 3/16"	6 1/16"	6 7/8"	7 1/2"	8"	8 1/4"	8 3/8"	8 1/4"	7 7/8"	7 5/16"	6 9/16"	5 5/8"	4 7/16"	3 1/8"	1 5/8"	0"

✳ = INCLUDES SLAB, BUILDUPS, AND STAY-IN-PLACE FORMS.
✳✳ = CAMBER DISSIPATION VALUES TO BE DEDUCTED FROM TOTAL REQUIRED CAMBER IF GIRDERS ARE CUT-CURVED INSTEAD OF BEING FULLY HEAT-CURVED.

PROJECT NO. U-0071

DURHAM COUNTY

STATION: 23+29.61 -DFFLY-

SHEET 6 OF 6

STATE OF NORTH CAROLINA
DEPARTMENT OF TRANSPORTATION
RALEIGH

SUPERSTRUCTURE DEAD LOAD DEFLECTION AND CAMBER ORDINATES SPAN "F"

NORTH CAROLINA PROFESSIONAL SEAL 29589 ENGINEER DOMENIC A. COLETTI 7-7-14

HDR Engineering, Inc. of the Carolinas
3733 National Drive, Suite 207 Raleigh, N.C. 27612
N.C.B.E.L.S. License Number: F-0116

REVISIONS								SHEET NO.
NO.	BY:	DATE:	NO.	BY:	DATE:			S-514
1	--	--	3	--	--			TOTAL SHEETS
2	--	--	4	--	--			671

DES BY: J. TAYLOR	DATE: 05/13	DWG BY: M. SELLS	DATE: 07/13
DES CHK: K. DICKENS	DATE: 06/13	CHK BY: K. DICKENS	DATE: 07/13

ORIGINATED		YELLOW HIGHLIGHTED & REDLINE CHECKED		BLUE HIGHLIGHTED CHANGES		CHANGES VERIFIED BY	
INITIALS	DATE	INITIALS	DATE	INITIALS	DATE	VERIFIED	DATE

PLOT DRIVER: NCDOT_pdf_mono_eng_50.plt
USER: msells DATE: 1/6/2014
FILE: ...\Tpq\d039122\U0071_11_DL6.dgn
cENTABLE: Durham_pen.tbl
TIME: 1:29:00 PM

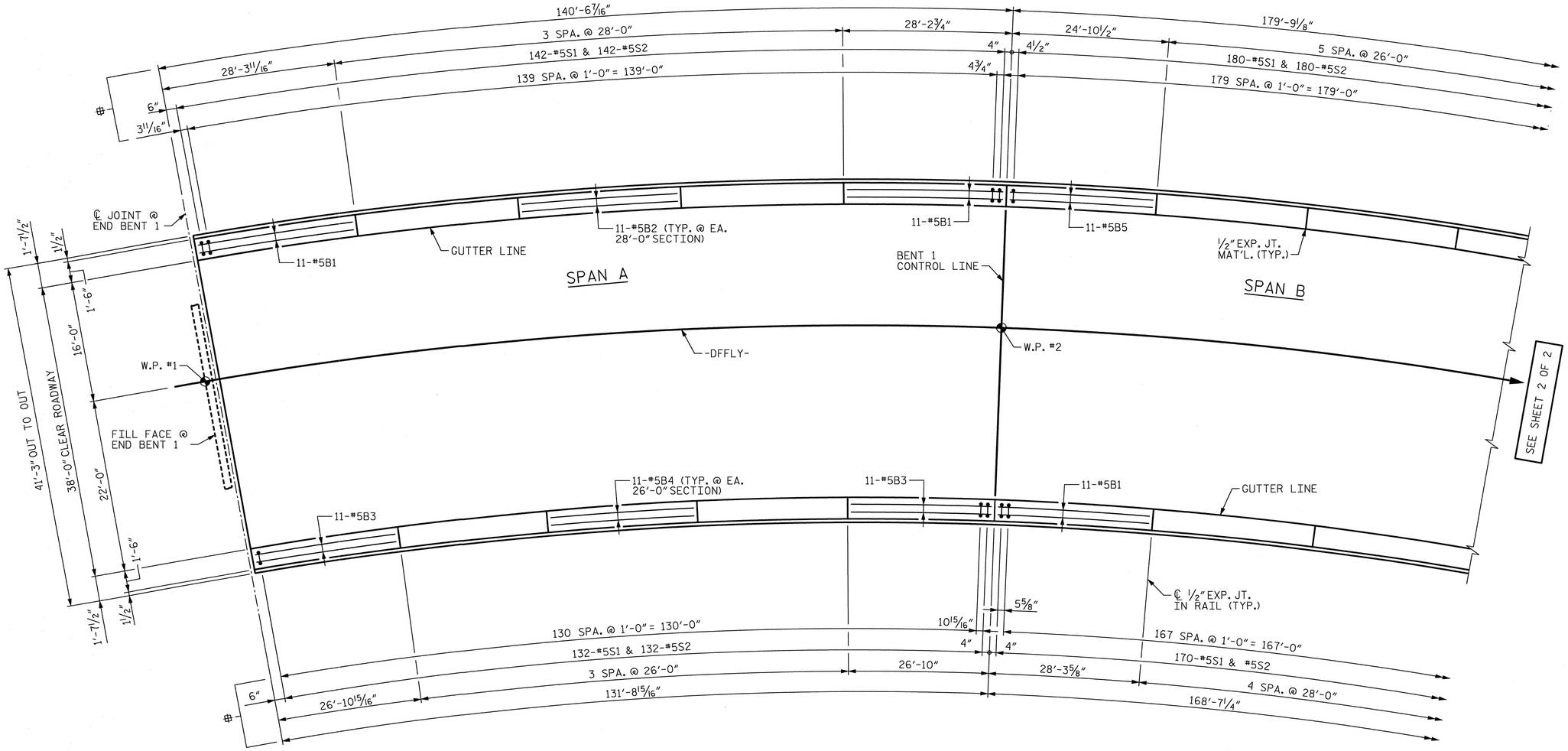

PARTIAL PLAN OF BARRIER RAIL - UNIT 1

⌖ = DIMENSIONS MEASURED ALONG OUTSIDE FACE OF BARRIER RAIL.

PROJECT NO. U-0071

DURHAM COUNTY

STATION: 23+29.61 -DFFLY-

SHEET 1 OF 2

STATE OF NORTH CAROLINA
DEPARTMENT OF TRANSPORTATION
RALEIGH

SUPERSTRUCTURE BARRIER RAIL UNIT 1

NORTH CAROLINA PROFESSIONAL SEAL 29589 ENGINEER DOMENIC A. COLETTI
1-7-14

HDR Engineering, Inc. of the Carolinas
3733 National Drive, Suite 207 Raleigh, N.C. 27612
N.C.B.E.L.S. License Number: F-0116

REVISIONS						SHEET NO.
NO.	BY:	DATE:	NO.	BY:	DATE:	S-515
1	--	--	3	--	--	TOTAL SHEETS
2	--	--	4	--	--	671

DES BY: B. PETERSON	DATE: 04/13	DWG BY: M. SELLS	DATE: 05/13
DES CHK: S. DICKENS	DATE: 06/13	CHK BY: S. DICKENS	DATE: 06/13

ORIGINATED		YELLOW HIGHLIGHTED & REDLINE CHECKED		BLUE HIGHLIGHTED CHANGES		CHANGES VERIFIED BY	
INITIALS	DATE	INITIALS	DATE	INITIALS	DATE	VERIFIED	DATE

PLOT DRIVER: NCDOT_pdf_mono_eng_50.plt
USER: msells DATE: 1/6/2014
FILE: ...\tpo\d039122\U0071_11_BR1.DGN
TABLE: Durham_pen.tbl
TIME: 1:29:20 PM

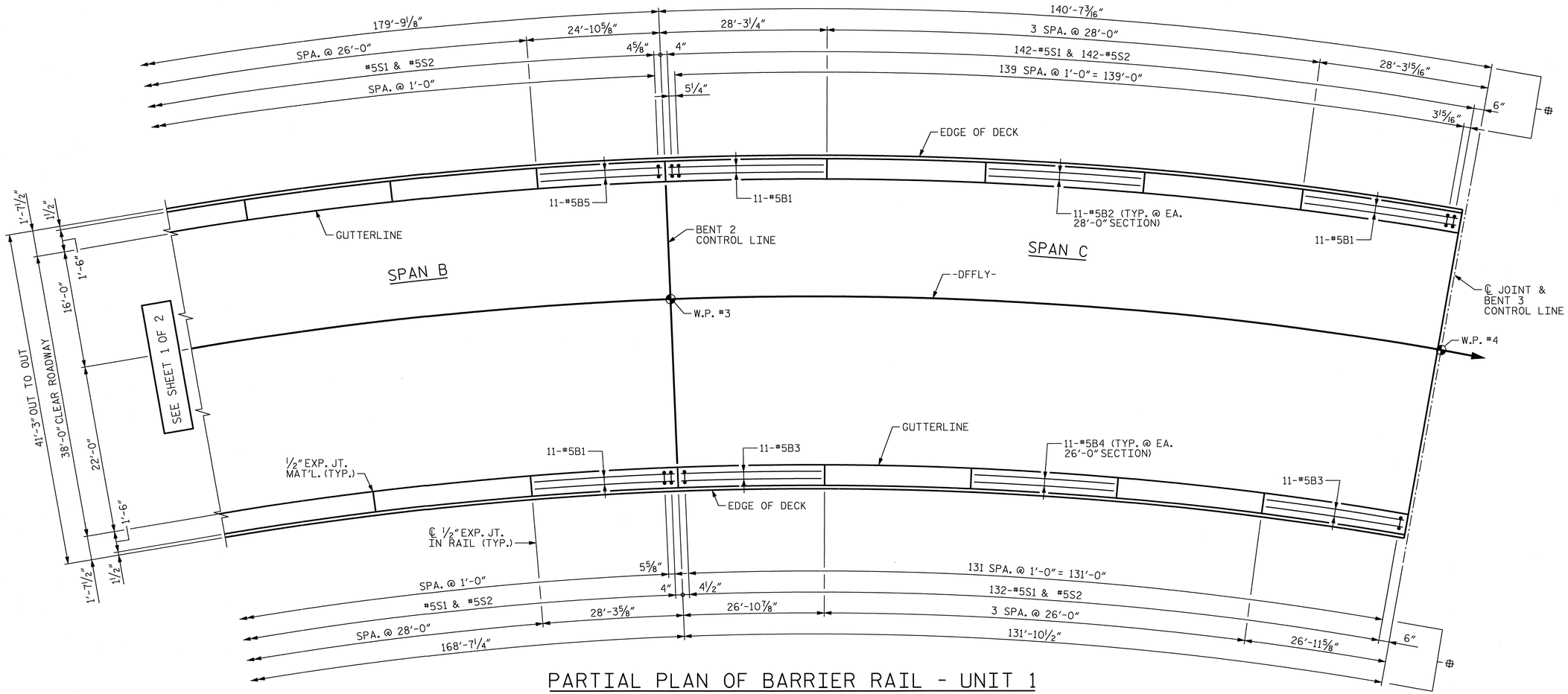

PARTIAL PLAN OF BARRIER RAIL - UNIT 1

⊕ = DIMENSIONS MEASURED ALONG OUTSIDE FACE OF BARRIER RAIL.

FOR BAR COUNTS NOT SHOWN SEE SHEET 1 OF 2

PROJECT NO. U-0071

DURHAM COUNTY

STATION: 23+29.61 -DFFLY-

SHEET 2 OF 2

STATE OF NORTH CAROLINA
DEPARTMENT OF TRANSPORTATION
RALEIGH

SUPERSTRUCTURE
BARRIER RAIL
UNIT 1

NORTH CAROLINA PROFESSIONAL SEAL 29589 ENGINEER DOMENIC A. COLETTI 1-7-14

HDR Engineering, Inc. of the Carolinas
3733 National Drive, Suite 207 Raleigh, N.C. 27612
N.C.B.E.L.S. License Number: F-0116

REVISIONS								SHEET NO.
NO.	BY:	DATE:	NO.	BY:	DATE:			S-516
1	--	--	3	--	--			TOTAL SHEETS
2	--	--	4	--	--			671

DES BY: B. PETERSON	DATE: 04/13	DWG BY: M. SELLS	DATE: 05/13
DES CHK: S. DICKENS	DATE: 06/13	CHK BY: S. DICKENS	DATE: 06/13

ORIGINATED		YELLOW HIGHLIGHTED & REDLINE CHECKED		BLUE HIGHLIGHTED CHANGES		CHANGES VERIFIED BY	
INITIALS	DATE	INITIALS	DATE	INITIALS	DATE	VERIFIED	DATE

PLOT DRIVER: NCDOT_pdf_mono_eng_50.plt
USER: msells
FILE: ...\tpo\d039122i\U0071_11_BR2.DGN
DATE: 1/6/2014
TIME: 1:29:48 PM
ENTABLE: Durham_pen.tbl

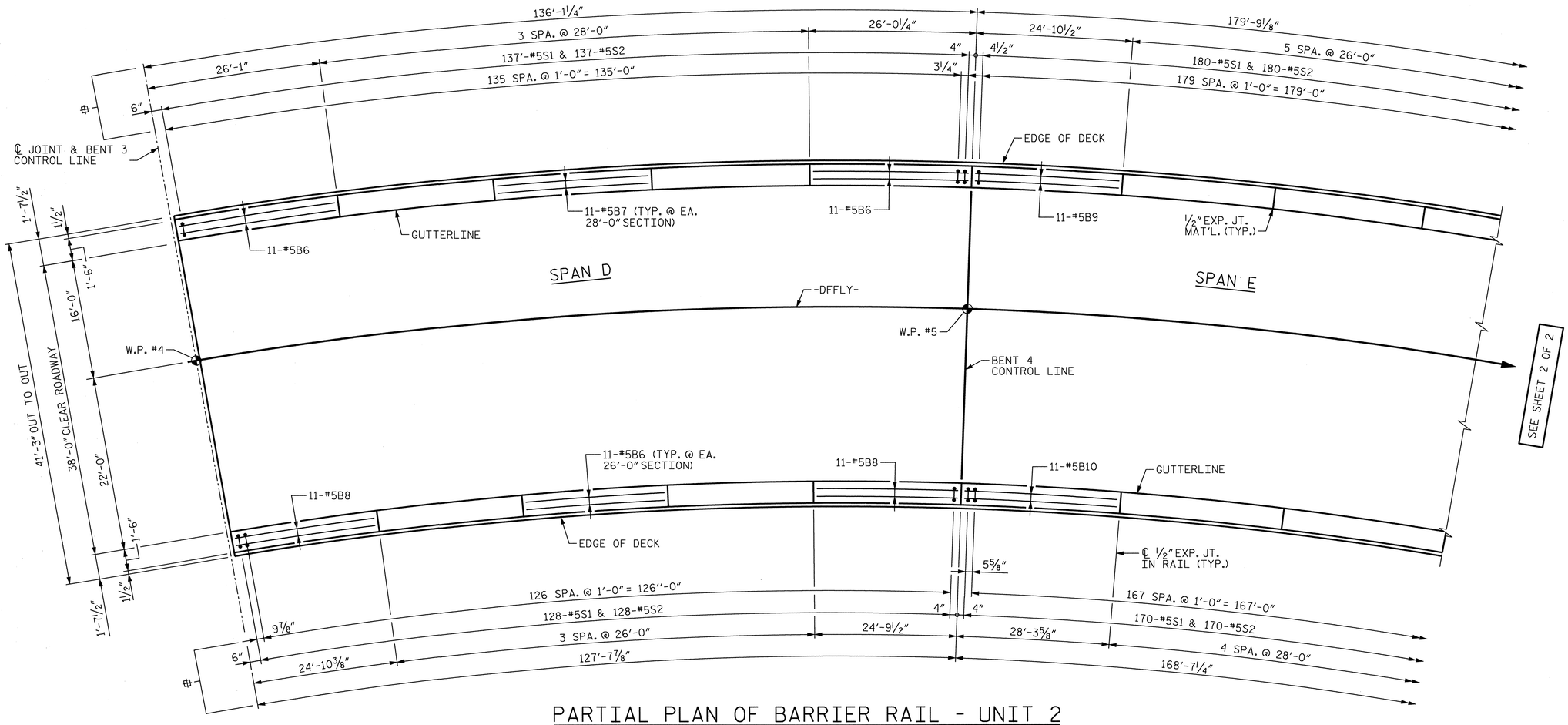

PARTIAL PLAN OF BARRIER RAIL - UNIT 2

⊕ = DIMENSIONS MEASURED ALONG OUTSIDE FACE OF BARRIER RAIL.

PROJECT NO. U-0071

DURHAM COUNTY

STATION: 23+29.61 -DFFLY-

SHEET 1 OF 2

STATE OF NORTH CAROLINA
DEPARTMENT OF TRANSPORTATION
RALEIGH

SUPERSTRUCTURE
BARRIER RAIL
UNIT 2

NORTH CAROLINA PROFESSIONAL SEAL 29589 ENGINEER DOMENIC A. COLETTI
1-7-14

HDR Engineering, Inc. of the Carolinas
3733 National Drive, Suite 207 Raleigh, N.C. 27612
N.C.B.E.L.S. License Number: F-0116

REVISIONS								SHEET NO. S-51
NO.	BY:	DATE:	NO.	BY:	DATE:			TOTAL SHEETS 671
1	--	--	3	--	--			
2	--	--	4	--	--			

DES BY: B. PETERSON	DATE : 04/13	DWG BY: M. SELLS	DATE : 05/13
DES CHK: S. DICKENS	DATE : 06/13	CHK BY: S. DICKENS	DATE : 06/13

ORIGINATED		YELLOW HIGHLIGHTED & REDLINE CHECKED		BLUE HIGHLIGHTED CHANGES		CHANGES VERIFIED BY	
INITIALS	DATE	INITIALS	DATE	INITIALS	DATE	VERIFIED	DATE

PLOT DRIVER: NCDOT_pdf_mono_eng_50.plt
USER: msells
FILE: ...\tpa\d0391221\U0071_11_BR3.DGN
DATE: 1/6/2014
TIME: 1:30:18 PM
TABLE: Durham_pen.tbl

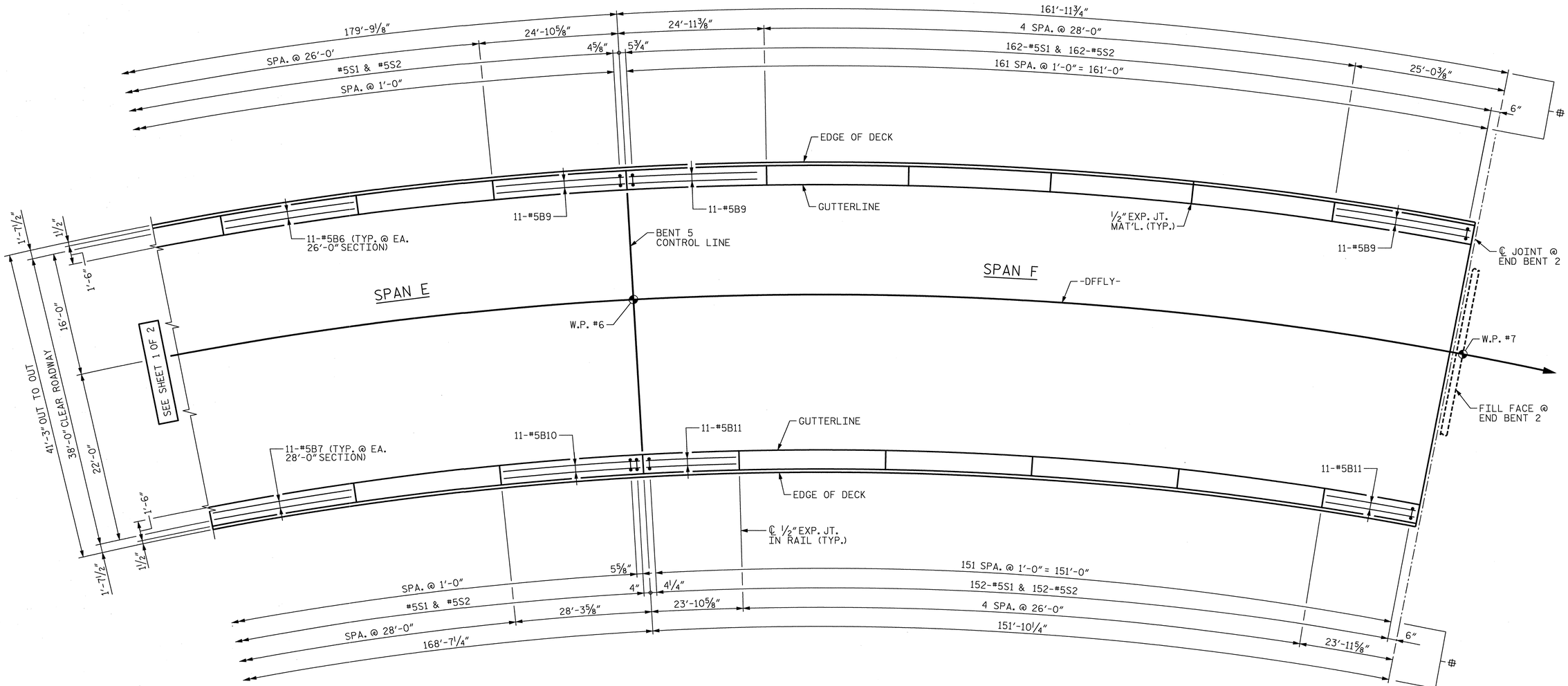

PARTIAL PLAN OF BARRIER RAIL - UNIT 2

⊕ = DIMENSIONS MEASURED ALONG OUTSIDE FACE OF BARRIER RAIL.

FOR BAR COUNT NOT SHOWN SEE SHEET 1 OF 2

PROJECT NO. U-0071

DURHAM COUNTY

STATION: 23+29.61 -DFFLY-

SHEET 2 OF 2

STATE OF NORTH CAROLINA
DEPARTMENT OF TRANSPORTATION
RALEIGH

SUPERSTRUCTURE BARRIER RAIL UNIT 2

NORTH CAROLINA PROFESSIONAL SEAL 29589 ENGINEER DOMENIC A. COLETTI

7-1-14

HDR Engineering, Inc. of the Carolinas
3733 National Drive, Suite 207 Raleigh, N.C. 27612
N.C.B.E.L.S. License Number: F-0116

REVISIONS							
NO.	BY:	DATE:	NO.	BY:	DATE:		SHEET NO. S-518
1	--	--	3	--	--		TOTAL SHEETS 671
2	--	--	4	--	--		

DES BY: B. PETERSON	DATE: 04/13	DWG BY: M. SELLS	DATE: 05/13
DES CHK: S. DICKENS	DATE: 06/13	CHK BY: S. DICKENS	DATE: 06/13

ORIGINATED		YELLOW HIGHLIGHTED & REDLINE CHECKED		BLUE HIGHLIGHTED CHANGES		CHANGES VERIFIED BY	
INITIALS	DATE	INITIALS	DATE	INITIALS	DATE	VERIFIED	DATE

PLOT DRIVER: NCDOT_pdf_mono_eng_50.plt
USER: msells DATE: 1/6/2014
FILE: ...\tpo\d039122\U0071_11_BR4.DGN
rENTABLE: Durham_pen.tbl
TIME: 1:30:45 PM

NOTES

THE BARRIER RAIL IN EACH UNIT SHALL NOT BE CAST UNTIL ALL SLAB CONCRETE IN THAT UNIT HAS BEEN CAST AND HAS REACHED A MINIMUM COMPRESSIVE STRENGTH OF 3,000 PSI.

~~WHEN FOAM JOINT SEAL IS REQUIRED, THE JOINT IN THE DECK SHALL BE SAWED PRIOR TO THE CASTING OF BARRIER RAIL.~~

ALL REINFORCING STEEL IN BARRIER RAILS SHALL BE EPOXY COATED.

~~THE #5 S3, S4, S5 AND S6 BARS SHALL BE INSTALLED, USING AN ADHESIVE ANCHORING SYSTEM, AFTER SAWING THE JOINT. THE YIELD LOAD FOR THE #5 S3, S4, S5 AND S6 BARS IS 18.6 KIPS. FIELD TESTING FOR THE ADHESIVE BONDING SYSTEM IS NOT REQUIRED.~~

GROOVED CONTRACTION JOINTS, 1/2" IN DEPTH, SHALL BE TOOLED IN ALL EXPOSED FACES OF THE BARRIER RAIL AND IN ACCORDANCE WITH ARTICLE 825-10(B) OF THE STANDARD SPECIFICATIONS. THE CONTRACTION JOINT SHALL BE LOCATED AT EACH THIRD POINT BETWEEN BARRIER RAIL EXPANSION JOINTS. ONLY ONE CONTRACTION JOINT IS REQUIRED AT MIDPOINT OF BARRIER RAIL SEGMENTS LESS THAN 20 FEET IN LENGTH AND NO CONTRACTION JOINTS ARE REQUIRED FOR THOSE SEGMENTS LESS THAN 10 FEET IN LENGTH.

SEE BRIDGE APPROACH SLAB SHEETS FOR BARRIER RAIL CONSTRUCTED ON APPROACH SLABS AND END OF RAIL DETAILS.

BAR TYPES

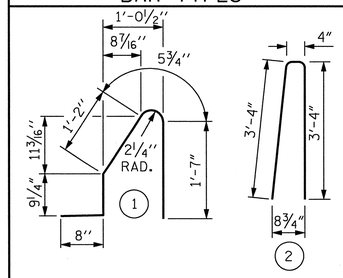

ALL BAR DIMENSIONS ARE OUT TO OUT

BILL OF MATERIAL

FOR CONCRETE BARRIER RAIL ON BRIDGE DECK ONLY

UNIT 1

BAR	NO.	SIZE	TYPE	LENGTH	WEIGHT
* B1	66	#5	STR.	27'-10"	1,916
* B2	110	#5	STR.	27'-7"	3,165
* B3	44	#5	STR.	26'-5"	1,212
* B4	121	#5	STR.	25'-7"	3,229
* B5	22	#5	STR.	24'-6"	562
* S1	898	#5	1	4'-8"	4,371
* S2	898	#5	2	7'-0"	6,556

* EPOXY COATED REINFORCING STEEL	21,011 LBS.
CLASS AA CONCRETE	121.5 CU. YDS.
CONCRETE BARRIER RAIL	893.1 LIN. FT.

UNIT 2

BAR	NO.	SIZE	TYPE	LENGTH	WEIGHT
* B6	154	#5	STR.	25'-7"	4,109
* B7	121	#5	STR.	27'-7"	3,481
* B8	22	#5	STR.	24'-5"	560
* B9	44	#5	STR.	24'-6"	1,124
* B10	22	#5	STR.	27'-11"	641
* B11	22	#5	STR.	23'-6"	539
* S1	929	#5	1	4'-8"	4,522
* S2	929	#5	2	7'-0"	6,783

* EPOXY COATED REINFORCING STEEL	21,759 LBS.
CLASS AA CONCRETE	126.0 CU. YDS.
CONCRETE BARRIER RAIL	926.0 LIN. FT.
TOTAL EPOXY COATED REINFORCING STEEL **	42,770 LBS.
TOTAL CLASS AA CONC. **	247.5 CU. YDS.
TOTAL CONCRETE BARRIER RAIL **	1,819.1 LIN. FT.

** QUANTITIES DO NOT INCLUDE APPROACH SLAB BARRIER RAILS.

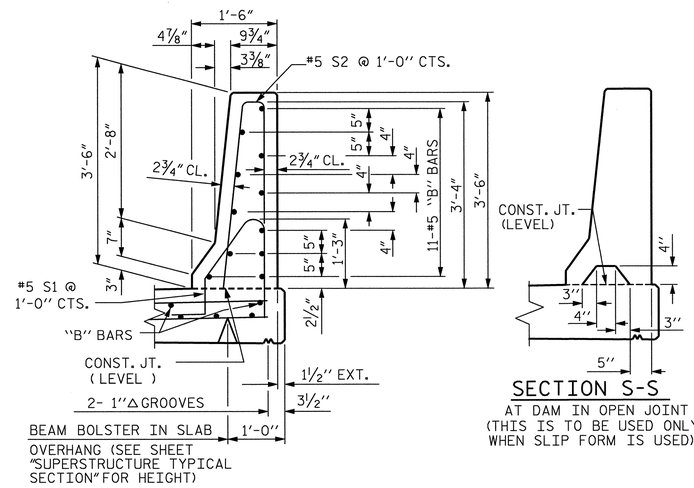

SECTION THRU RAIL

SECTION S-S

AT DAM IN OPEN JOINT (THIS IS TO BE USED ONLY WHEN SLIP FORM IS USED)

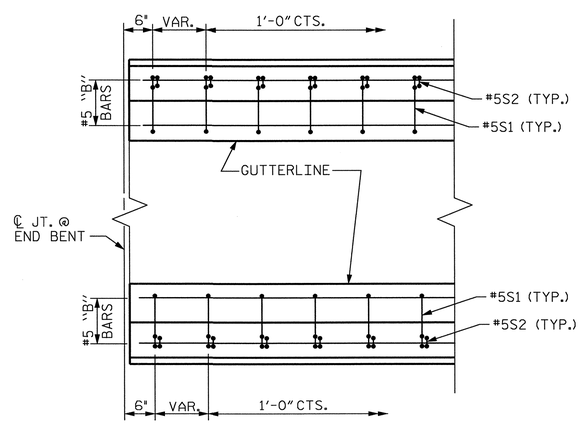

PLAN

END OF RAIL DETAILS

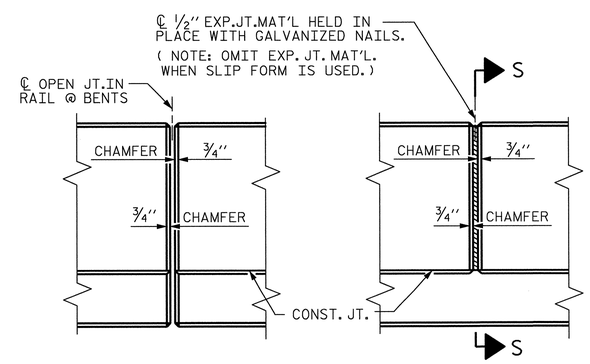

ELEVATION AT EXPANSION JOINTS

BARRIER RAIL DETAILS

PROJECT NO. U-0071

DURHAM COUNTY

STATION: 23+29.61 -DFFLY-

STATE OF NORTH CAROLINA
DEPARTMENT OF TRANSPORTATION
RALEIGH

STANDARD
SUPERSTRUCTURE
CONCRETE BARRIER
RAIL DETAILS

NORTH CAROLINA PROFESSIONAL SEAL 29589 ENGINEER DOMENIC A. COLETTI 1-7-14

HDR Engineering, Inc. of the Carolinas
3733 National Drive, Suite 207 Raleigh, N.C. 27612
N.C.B.E.L.S. License Number: F-0116

REVISIONS						SHEET NO.
NO.	BY:	DATE:	NO.	BY:	DATE:	6-S19
1	--	--	3	--	--	TOTAL SHEETS
2	--	--	4	--	--	671

DRAWN BY : ARB 5/87	REV. 10/1/11 MAA/GM	ASSEMBLED BY : M. SELLS	DATE : 06/13
CHECKED BY : SJD 9/87	REV. 7/12 MAA/GM	CHECKED BY :	DATE :
	REV. 10/12 MAA/GM		
DES BY: B. PETERSON	DATE : 04/13	DWG BY: B. PETERSON	DATE :
DES CHK: S. DICKENS	DATE : 06/13	CHK BY: S. DICKENS	DATE : 06/13

ORIGINATED		YELLOW HIGHLIGHTED & REDLINE CHECKED		BLUE HIGHLIGHTED CHANGES		CHANGES VERIFIED BY	
INITIALS	DATE	INITIALS	DATE	INITIALS	DATE	VERIFIED	DATE

PLOT DRIVER: NCDOT_pdf_mono_eng_50.plt
USER: msells
FILE: ...\tpo\d39122\U0071_11_BR5.dgn
DATE: 1/6/2014
TIME: 1:31:22 PM
PENTABLE: Durham_pen.tbl

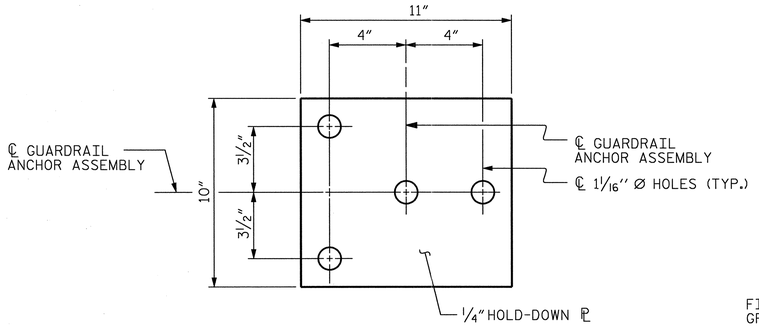

PLAN

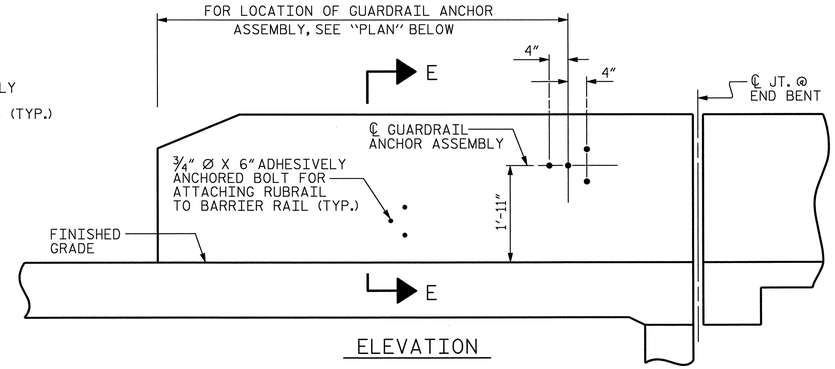

ELEVATION

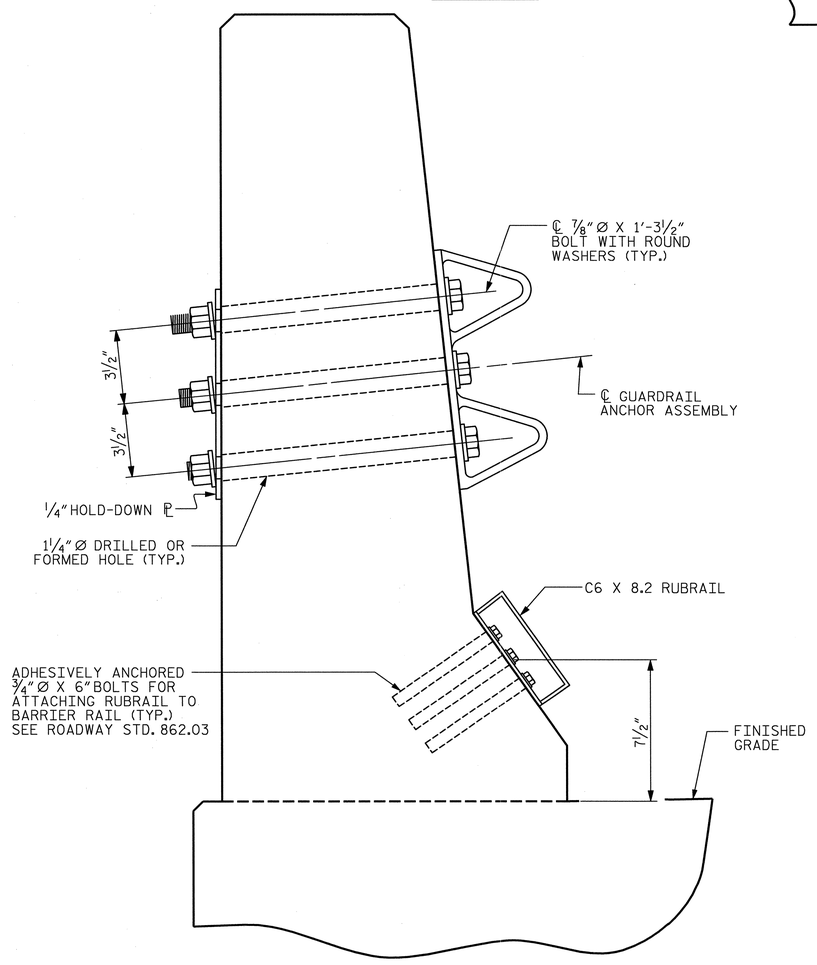

SECTION E-E

GUARDRAIL ANCHOR ASSEMBLY DETAILS

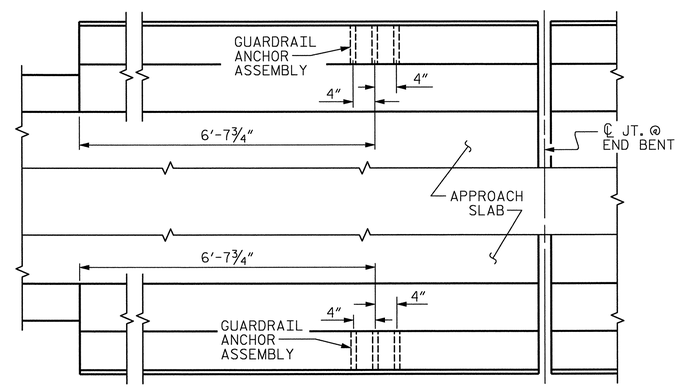

PLAN

LOCATION OF ANCHORS FOR GUARDRAIL

END BENT #1 SHOWN, END BENT #2 SIMILAR.

NOTES

THE GUARDRAIL ANCHOR ASSEMBLY SHALL CONSIST OF A 1/4" HOLD-DOWN PLATE AND 4 - 7/8" Ø BOLTS WITH NUTS AND WASHERS, RUBRAIL, AND ADHESIVELY ANCHORED BOLTS.

THE HOLD-DOWN PLATE SHALL CONFORM TO AASHTO M270 GRADE 36. AFTER FABRICATION, THE HOLD-DOWN PLATE SHALL BE HOT-DIP GALVANIZED IN ACCORDANCE WITH AASHTO M111.

BOLTS SHALL CONFORM TO THE REQUIREMENTS OF ASTM A307 AND NUTS SHALL CONFORM TO THE REQUIREMENTS OF AASHTO M291. BOLTS, NUTS AND WASHERS SHALL BE GALVANIZED. (AT THE CONTRACTOR'S OPTION, STAINLESS STEEL BOLTS, NUTS AND WASHERS MAY BE USED AS AN ALTERNATE FOR THE 7/8" Ø GALVANIZED BOLTS, NUTS AND WASHERS. THEY SHALL CONFORM TO OR EXCEED THE MECHANICAL REQUIREMENTS OF ASTM A307. THE USE OF THIS ALTERNATE SHALL BE APPROVED BY THE ENGINEER.)

THE GUARDRAIL ANCHOR ASSEMBLY IS REQUIRED AT ALL POINTS WHERE APPROACH GUARDRAIL IS TO BE ATTACHED TO THE END OF BARRIER RAIL. FOR POINTS OF ATTACHMENT, SEE SKETCH.

AFTER INSTALLATION, THE EXPOSED THREAD OF THE BOLT SHALL BE BURRED WITH A SHARP POINTED TOOL.

THE COST OF THE GUARDRAIL ANCHOR ASSEMBLY SHALL BE INCLUDED IN THE UNIT CONTRACT PRICE BID FOR CONCRETE BARRIER RAIL.

THE 1 1/4" Ø HOLES SHALL BE FORMED OR DRILLED WITH A CORE BIT. IMPACT TOOLS WILL NOT BE PERMITTED. ANY CONCRETE DAMAGED BY THIS WORK SHALL BE REPAIRED TO THE SATISFACTION OF THE ENGINEER.

THE C6 X 8.2 RUBRAIL IS TO BE ADHESIVELY ANCHORED TO THE RAIL USING THREE 3/4" Ø X 6" BOLTS WITH WASHERS. LEVEL ONE FIELD TESTING IS REQUIRED, AND THE YIELD LOAD OF THE 3/4" Ø BOLT IS 12 KIPS. FOR ADHESIVELY ANCHORED ANCHOR BOLTS OR DOWELS, SEE STANDARD SPECIFICATIONS. SEE ROADWAY STANDARD 862.03 FOR DETAILS AND LOCATION OF THE RUBRAIL.

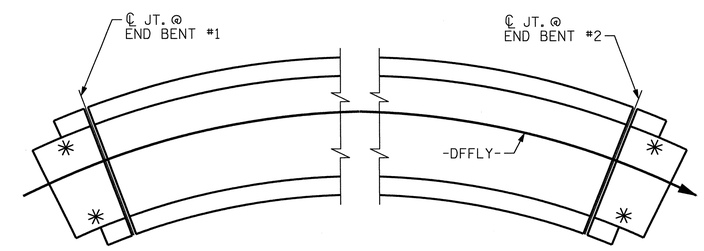

SKETCH SHOWING POINTS OF ATTACHMENTS

✳ DENOTES GUARDRAIL ANCHOR ASSEMBLY

PROJECT NO. U-0071

DURHAM COUNTY

STATION: 23+29.61 -DFFLY-

STATE OF NORTH CAROLINA
DEPARTMENT OF TRANSPORTATION
RALEIGH

STANDARD
GUARDRAIL ANCHORAGE FOR BARRIER RAIL

NORTH CAROLINA PROFESSIONAL SEAL 29589 ENGINEER DOMENIC A. COLETTI 1-7-14

HDR Engineering, Inc. of the Carolinas
3733 National Drive, Suite 207 Raleigh, N.C. 27612
N.C.B.E.L.S. License Number: F-0116

REVISIONS							
NO.	BY:	DATE:	NO.	BY:	DATE:		
1	--	--	3	--	--		
2	--	--	4	--	--		

SHEET NO. S-520
TOTAL SHEETS 571

STD. NO. GRA2

DRAWN BY : TLA 5/06	REV. 10/1/11 MAA/GM	ASSEMBLED BY : M.SELLS	DATE : 03/13
CHECKED BY : GM 5/06	REV. 7/12 MAA/GM	CHECKED BY :	DATE :
	REV. 10/12 MAA/GM		
DES BY: B. PETERSON	DATE : 04/13	DWG BY: B. PETERSON	DATE : 04/13
DES CHK: S. DICKENS	DATE : 06/13	CHK BY: S. DICKENS	DATE : 06/13

ORIGINATED		YELLOW HIGHLIGHTED & REDLINE CHECKED		BLUE HIGHLIGHTED CHANGES		CHANGES VERIFIED BY	
INITIALS	DATE	INITIALS	DATE	INITIALS	DATE	VERIFIED	DATE

PLOT DRIVER: NCDOT_pdf_mono_eng_50.plt
USER: msells
FILE: ...\tpa\d039122\U0071_11_GR1.dgn
DATE: 1/6/2014
TIME: 1:31:40 PM
rENTABLE: Durham_pen.tbl

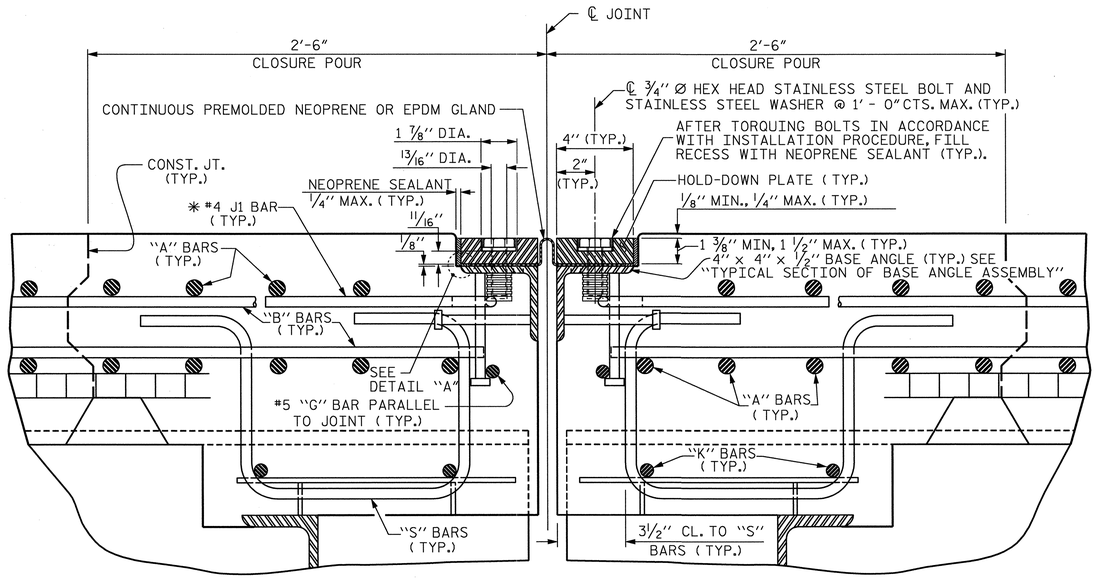

EXPANSION JOINT DETAILS AT BENT 3

SECTION NORMAL TO JOINT -- STEEL SUPERSTRUCTURE

✱ THE QUANTITY OF #4 J1 BARS ON THE BILL OF MATERIAL IS BASED ON 1'-0" CENTERS. J1 BARS SHALL BE PLACED AT EACH VERTICAL STUD ANCHOR BOLT. IN THE EVENT THAT THE NUMBER OF VERTICAL STUD ANCHORS EXCEEDS THE NUMBER OF J1 BARS SPECIFIED, ADDITIONAL J1 BARS WILL NOT BE REQUIRED.

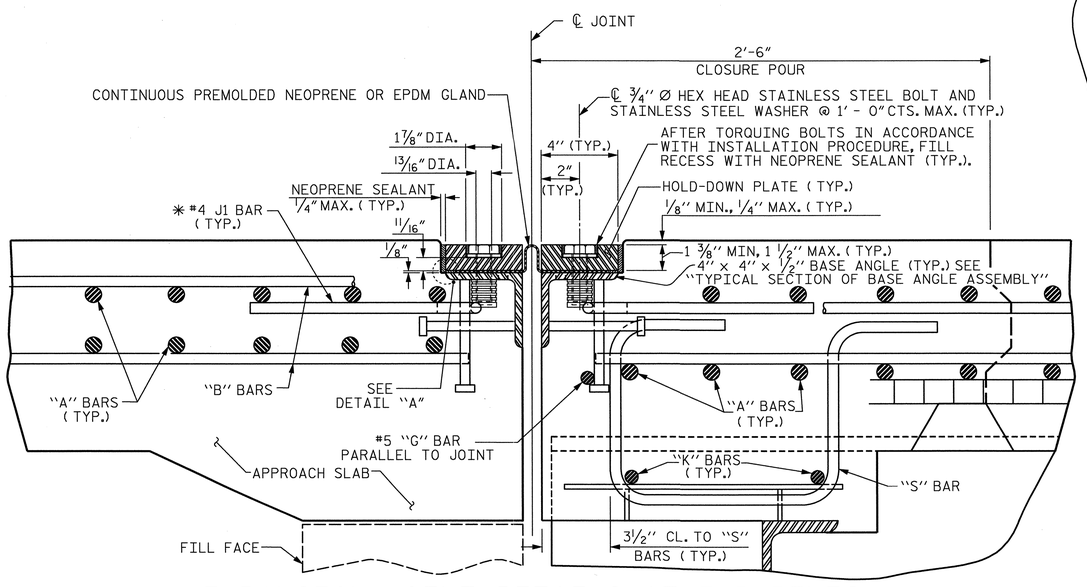

EXPANSION JOINT DETAILS AT END BENTS

SECTION NORMAL TO JOINT -- STEEL SUPERSTRUCTURE

✱ THE QUANTITY OF #4 J1 BARS ON THE BILL OF MATERIAL IS BASED ON 1'-0" CENTERS. J1 BARS SHALL BE PLACED AT EACH VERTICAL STUD ANCHOR BOLT. IN THE EVENT THAT THE NUMBER OF VERTICAL STUD ANCHORS EXCEEDS THE NUMBER OF J1 BARS SPECIFIED, ADDITIONAL J1 BARS WILL NOT BE REQUIRED.

INSTALLATION PROCEDURE

1. A TEMPLATE OR OTHER SUITABLE DEVICE SHALL BE USED TO FORM THE TOP OF THE EXPANSION JOINT SEAL BLOCKOUT TO THE PROPER DEPTH AND WIDTH. THE TEMPLATE SHALL BE 4 1/8" TO 4 1/4" WIDE AND OF SUCH THICKNESS AS TO PROVIDE FOR CORRECT FINAL ELEVATION OF TOP OF HOLD-DOWN PLATES. THE TEMPLATE SHALL BE ATTACHED TO THE BASE ANGLE ASSEMBLY WITH THE 3/4" Ø HEX HEAD BOLTS PROVIDED FOR THE HOLD-DOWN PLATES. A 1" Ø HOLE SHALL BE PROVIDED IN THE TEMPLATE CENTERED OVER EACH WEEP HOLE IN THE 4" X 4" X 1/2" BASE ANGLE. OTHER METHODS OF INSURING DRAINAGE THROUGH WEEP HOLES MAY BE EMPLOYED SUBJECT TO ENGINEER'S APPROVAL.
2. AFTER THE CONCRETE HAS BEEN CAST ON BOTH SIDES OF THE JOINT, REMOVE THE TEMPLATE. THOROUGHLY CLEAN THE BOLT HOLES AND THE ANGLE PLATE. REMOVE ANY EXCESS CONCRETE THAT COMES OUT OF THE WEEP HOLES. ANY DAMAGED STEEL SHALL BE COATED WITH A MINIMUM THICKNESS OF 4 DRY MILS OF ZINC-RICH PAINT IN ACCORDANCE WITH THE STANDARD SPECIFICATIONS.
3. LAY THE GLAND ON THE BASE ANGLE AND FIELD MARK THE GLAND FOR THE BOLT HOLES. HOLES IN THE GLAND SHALL BE PUNCHED 7/8" IN DIAMETER WITH A HAND PUNCH.
4. IN ORDER TO CHECK FOR PROPER ALIGNMENT, PLACE THE GLAND AND HOLD-DOWN PLATES ON THE BASE ANGLE. DO NOT APPLY NEOPRENE SEALANT. BOLT THE HOLD-DOWN PLATES TO THE BASE ANGLE BUT DO NOT TIGHTEN. THE ENGINEER SHALL INSPECT THE JOINT SEAL DEVICE FOR PROPER ALIGNMENT.
5. AFTER INSPECTION, REMOVE THE HOLD-DOWN PLATES AND GLAND. APPLY NEOPRENE SEALANT TO THE BASE ANGLE IN ACCORDANCE WITH THE "INSTALLATION SKETCH". PLACE GLAND AND HOLD-DOWN PLATES ON THE BASE ANGLE. BOLT THE HOLD-DOWN PLATES TO THE BASE ANGLE ASSEMBLY AND TORQUE THE BOLTS TO 88 FT-LBS WITH A TORQUE WRENCH. CHECK THE TORQUE AFTER THREE (3) HOURS AND, IF NECESSARY, RETIGHTEN TO 88 FT-LBS. A FINAL CHECK SHALL BE MADE AT SEVEN (7) DAYS. TORQUE SHALL NOT BE LESS THAN 80 FT-LBS AFTER SEVEN (7) DAYS.
6. AFTER PROPER TORQUING, CLEAN THE BOLT HOLE RECESSES AND THE RECESS BETWEEN THE JOINT SEAL DEVICE AND CONCRETE, COMPLETELY FILL THESE RECESSES WITH NEOPRENE SEALANT.

GENERAL NOTES

1. FOR EXPANSION JOINT SEALS, SEE SPECIAL PROVISIONS.
2. ALL PLATES AND ANGLES SHALL CONFORM TO AASHTO M270 GRADE 36 STEEL OR APPROVED EQUAL. ALL HOLD-DOWN BOLTS SHALL CONFORM TO ASTM F593 ALLOY 304 STAINLESS STEEL AND WASHERS SHALL CONFORM TO ASTM F844 EXCEPT THEY SHALL BE MADE FROM ALLOY 304 STAINLESS STEEL. ALL STUD ANCHORS SHALL CONFORM TO AASHTO M169, GRADES 1010 THRU 1020 OR APPROVED EQUAL. ALL CONCRETE INSERTS SHALL BE CLOSED END AND SHALL CONFORM TO AASHTO M169, GRADE 12L14. TENSILE CAPACITY SHALL BE 3000 LBS. MIN.
3. A PREMOLDED CORRUGATED OR NON-CORRUGATED GLAND SHALL BE USED FOR JOINTS SKEWED BETWEEN 50° THRU 130°. FOR JOINTS SKEWED LESS THAN 50° OR MORE THAN 130°, ONLY A CORRUGATED GLAND SHALL BE USED.
4. CLOSED END FERRULES AND STUD ANCHORS SHALL BE SHOP WELDED AND ALL HOLES SHALL BE SHOP DRILLED AS SHOWN ON PLANS. STUD ANCHORS SHALL BE ELECTRIC ARC END WELDED WITH COMPLETE FUSION.
5. SURFACES COMING IN CONTACT WITH NEOPRENE SHALL BE GROUND SMOOTH PRIOR TO METALLIZING.
6. UPON COMPLETION OF SHOP FABRICATION, THE HOLD DOWN PLATE AND BASE ANGLE ASSEMBLY, AS SHOWN IN THE "TYPICAL SECTION OF BASE ANGLE ASSEMBLY", SHALL BE METALLIZED. SEE SPECIAL PROVISION FOR THERMAL SPRAYED COATINGS (METALLIZATION).
7. BASE ANGLE ASSEMBLY SHALL BE CONTINUOUS FOR THE LENGTH OF THE JOINT. AT CROWN BREAKS, THE ENDS OF THE BASE ANGLE ASSEMBLY SHALL BE CUT PARALLEL TO THE BRIDGE CENTERLINE FOR SKEWS LESS THAN 80° AND GREATER THAN 100°. FINISHED WELD SHALL BE GROUND SMOOTH AND COATED WITH A MINIMUM THICKNESS OF 4 DRY MILS OF ZINC-RICH PAINT IN ACCORDANCE WITH THE STANDARD SPECIFICATIONS.
8. FIELD SPLICES OF HOLD-DOWN PLATES SHALL BE KEPT TO A MINIMUM. CONTRACTOR SHALL FURNISH DETAILED PLANS SHOWING PROPOSED SPLICE LOCATIONS FOR APPROVAL. HOLD-DOWN PLATES SHALL NOT EXCEED 20' LENGTHS UNLESS APPROVED BY THE ENGINEER.
9. NO ALTERNATE JOINT DETAILS SHALL BE PERMITTED IN LIEU OF THOSE SHOWN ON THESE PLANS.
10. THE CONTRACTOR MAY, AT HIS OPTION, USE ADHESIVELY ANCHORED ANCHOR BOLTS IN PLACE OF CONCRETE INSERTS FOR COVER PLATES. THE YIELD LOAD OF THE 3/4" Ø BOLT IS 10 KIPS. FIELD TESTING OF THE ADHESIVE BONDING SYSTEM IS NOT REQUIRED.

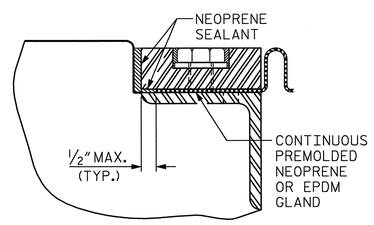

DETAIL "A"

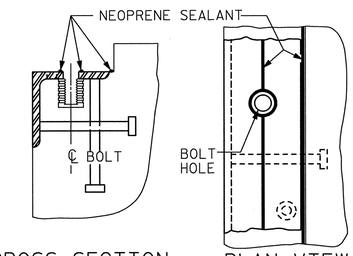

CROSS SECTION PLAN VIEW

INSTALLATION SKETCH

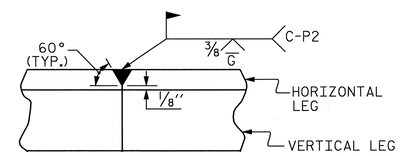

DETAIL- FIELD WELD SPLICE OF BASE ANGLE

MOVEMENT AND SETTING AT JOINT					
BENT NO.	SKEW ANGLE	TOTAL MOVEMENT (ALONG ℄ RDWY)	PERPENDICULAR JOINT OPENING AT 45° F	PERPENDICULAR JOINT OPENING AT 60° F	PERPENDICULAR JOINT OPENING AT 90° F
EB1	90°	2.345"	2 1/2"	2 3/16"	1 1/2"
B3	90°	2.086"	2 3/8"	2 1/16"	1 7/16'
EB2	90°	2.488"	2 5/8"	2 1/4"	1 1/2"

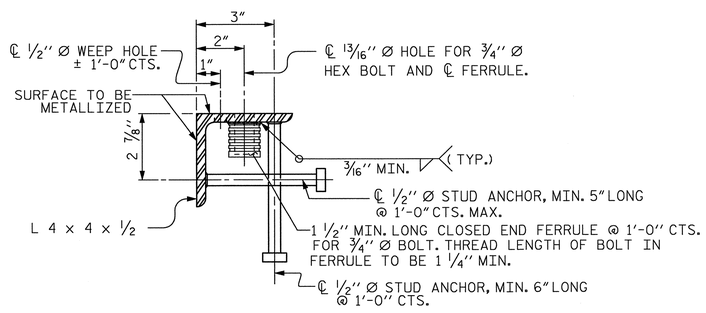

TYPICAL SECTION OF BASE ANGLE ASSEMBLY

PROJECT NO. U-0071

DURHAM COUNTY

STATION: 23+29.61 -DFFLY-

SHEET 1 OF 2

STATE OF NORTH CAROLINA
DEPARTMENT OF TRANSPORTATION
RALEIGH

STANDARD
EXPANSION JOINT SEAL DETAILS

REVISIONS						
NO.	BY:	DATE:	NO.	BY:	DATE:	SHEET NO. S-821
1	--	--	3	--	--	TOTAL SHEETS 671
2	--	--	4	--	--	

NORTH CAROLINA PROFESSIONAL SEAL 29589 ENGINEER DOMENIC A. COLETTI 7-7-14

HDR Engineering, Inc. of the Carolinas
3733 National Drive, Suite 207 Raleigh, N.C. 27612
N.C.B.E.L.S. License Number: F-0116

STD. NO. EJS1

DRAWN BY : REK 9/87	REV. 5/7/03R RWW/JTE	ASSEMBLED BY :	DATE :
CHECKED BY : CRK 10/87	REV. 5/1/06R TLA/GM	CHECKED BY :	DATE :
	REV. 10/1/11 MAA/GM		
DES BY: J. TAYLOR	DATE : 04/13	DWG BY: B. PETERSON	DATE : 04/13
DES CHK: D. COLETTI	DATE : 05/13	CHK BY: J. TAYLOR	DATE : 06/13

ORIGINATED		YELLOW HIGHLIGHTED & REDLINE CHECKED		BLUE HIGHLIGHTED CHANGES		CHANGES VERIFIED BY	
INITIALS	DATE	INITIALS	DATE	INITIALS	DATE	VERIFIED	DATE

PLOT DRIVER: NCDOT_pdf_mono_eng_50.plt
USER: msells
FILE: ...\Tpg\d039122\U0071_J1_EJI.dgn
DATE: 1/6/2014
TIME: 1:32:05 PM
PENTABLE: Durham_pen.tbl

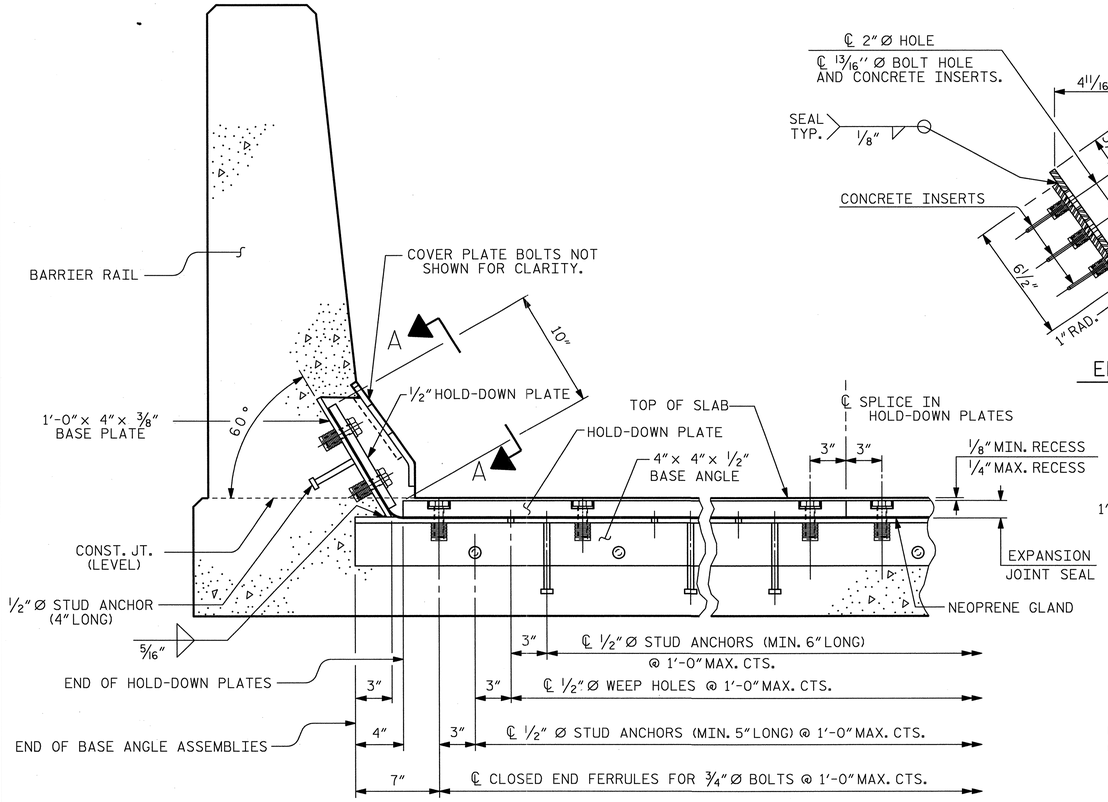

SECTION THRU RAIL NORMAL TO JOINT

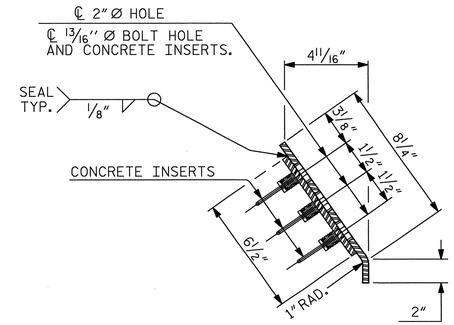

END VIEW

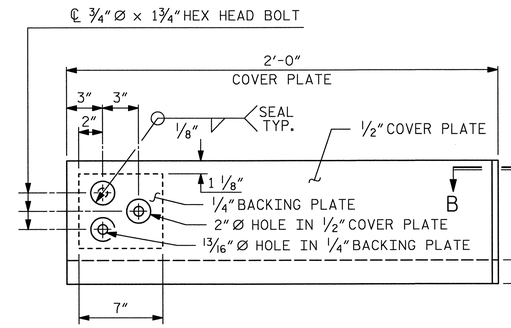

TYPE I - ELEVATION VIEW

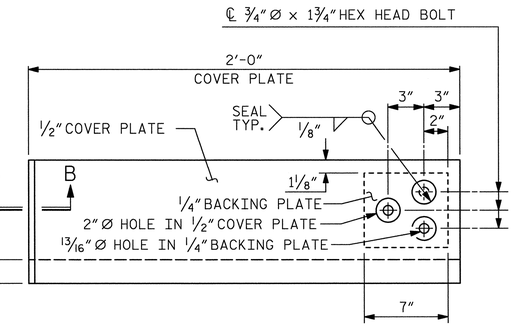

TYPE II - ELEVATION VIEW

COVER PLATE DETAILS

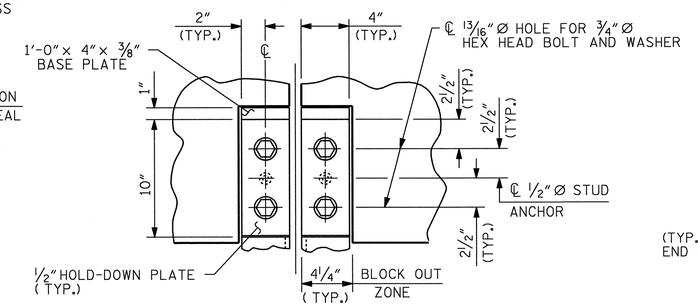

SECTION A - A

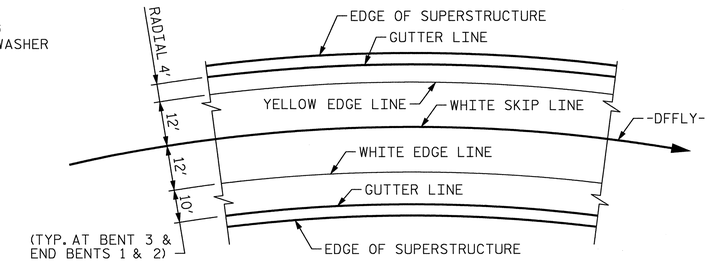

PAVEMENT MARKING ALIGNMENT

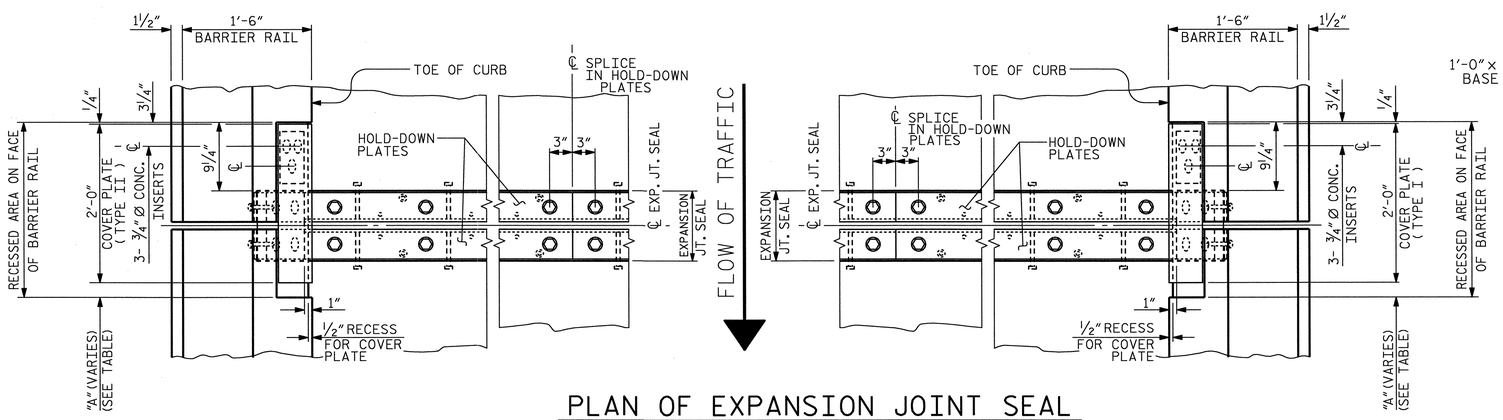

PLAN OF EXPANSION JOINT SEAL

DIMENSION "A"			
BENT NO.	OPENING AT 45° F	OPENING AT 60° F	OPENING AT 90° F
EB1	2 1/2"	2 3/16"	1 1/2"
B3	2 3/8"	2 1/16"	1 7/16'
EB2	2 5/8"	2 1/4"	1 1/2"

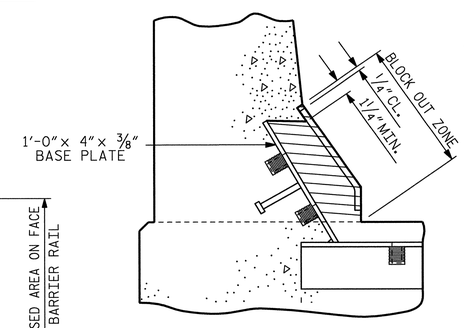

BLOCK OUT DETAIL

SEE "SECTION A - A" FOR OTHER DETAILS.

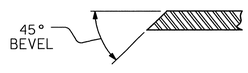

SECTION B - B

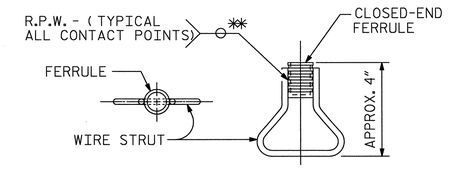

PLAN ELEVATION

CONCRETE INSERT

✱✱ EACH WELDED ATTACHMENT OF WIRE TO FERRULE SHALL DEVELOP THE TENSILE STRENGTH OF THE WIRE.

PROJECT NO. U-0071

DURHAM COUNTY

STATION: 23+29.61 -DFFLY-

SHEET 2 OF 2

STATE OF NORTH CAROLINA
DEPARTMENT OF TRANSPORTATION
RALEIGH

STANDARD
EXPANSION JOINT SEAL DETAILS FOR BARRIER RAIL

NORTH CAROLINA PROFESSIONAL SEAL 29589 ENGINEER DOMENIC A. COLETTI 1-7-14

HDR Engineering, Inc. of the Carolinas
3733 National Drive, Suite 207 Raleigh, N.C. 27612
N.C.B.E.L.S. License Number: F-0116

REVISIONS							
NO.	BY:	DATE:	NO.	BY:	DATE:	SHEET NO. S-522
1	--	--	3	--	--	TOTAL SHEETS 671
2	--	--	4	--	--	

ORIGINATED		YELLOW HIGHLIGHTED & REDLINE CHECKED		BLUE HIGHLIGHTED CHANGES		CHANGES VERIFIED BY	
INITIALS	DATE	INITIALS	DATE	INITIALS	DATE	VERIFIED	DATE

DRAWN BY : REK 9/87	REV. 10/1/11	MAA/GM	ASSEMBLED BY :	DATE :	
CHECKED BY : CRK 10/87	REV. 7/12	MAA/GM	CHECKED BY :	DATE :	
	REV. 6/13	MAA/GM			
DES BY: J. TAYLOR	DATE : 04/13	DWG BY: B. PETERSON	DATE : 04/13		
DES CHK: D. COLETTI	DATE : 05/13	CHK BY: J. TAYLOR	DATE : 06/13		

PLOT DRIVER: NCDOT_pdf_mono_eng_50.plt
USER: msells
FILE: ...\tpo\d039122i\U0071_11_EJ2.dgn
DATE: 1/6/2014
TIME: 1:32:30 PM
PENTABLE: Durham_pen.tbl

STD. NO. EJS2

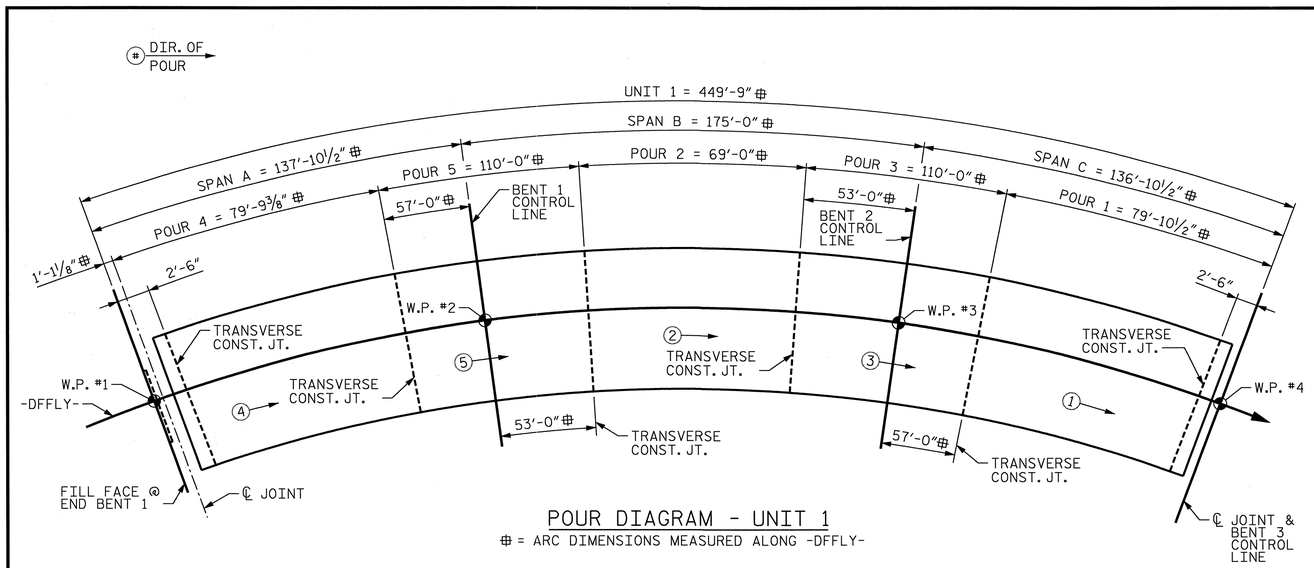

POUR DIAGRAM - UNIT 1

⊕ = ARC DIMENSIONS MEASURED ALONG -DFFLY-

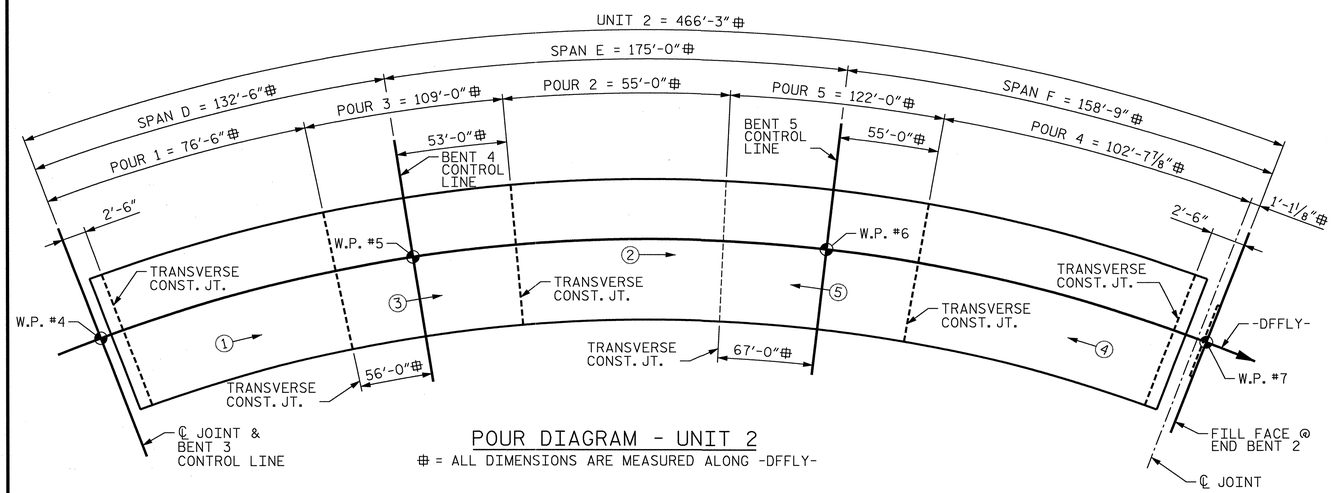

POUR DIAGRAM - UNIT 2

⊕ = ALL DIMENSIONS ARE MEASURED ALONG -DFFLY-

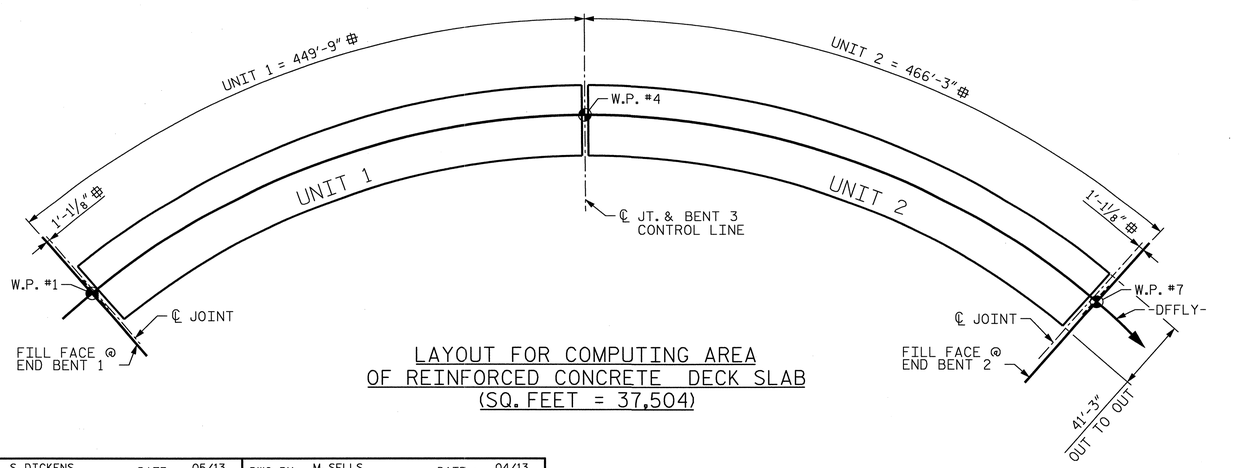

LAYOUT FOR COMPUTING AREA OF REINFORCED CONCRETE DECK SLAB (SQ. FEET = 37,504)

BILL OF MATERIAL DECK & DIAPHRAGM-UNIT 1

BAR	NO.	SIZE	TYPE	LENGTH	WEIGHT
✳ A1	1004	#5	STR.	40'-11"	42,847
A2	1004	#5	STR.	40'-11"	42,847
✳ B1	120	#4	STR.	23'-6"	1,884
✳ B2	112	#4	STR.	24'-3"	1,814
✳ B3	162	#6	STR.	60'-0"	14,599
✳ B4	162	#6	STR.	36'-0"	8,760
✳ B5	60	#4	STR.	28'-4"	1,136
✳ B6	56	#4	STR.	26'-10"	1,004
B21	488	#5	STR.	59'-5"	30,242
✳ G1	2	#5	STR.	40'-11"	85
✳ K1	8	#5	2	11'-3"	94
✳ K2	8	#5	3	15'-8"	131
✳ S1	60	#4	1	3'-8"	147
✳ J1	78	#4	4	1'-5"	74
✳ - EPOXY COATED BARS					
REINFORCING STEEL					LBS. 73,089
EPOXY COATED REINF. STEEL					LBS. 72,575

BILL OF MATERIAL DECK & DIAPHRAGM-UNIT 2

BAR	NO.	SIZE	TYPE	LENGTH	WEIGHT
✳ A1	1041	#5	STR.	40'-11"	44,426
A2	1041	#5	STR.	40'-11"	44,426
✳ B7	60	#4	STR.	23'-0"	922
✳ B8	56	#4	STR.	23'-9"	888
✳ B9	162	#6	STR.	60'-0"	14,599
✳ B10	81	#6	STR.	33'-0"	4,015
✳ B11	60	#4	STR.	26'-10"	1,075
✳ B12	56	#4	STR.	25'-4"	948
✳ B13	81	#6	STR.	38'-0"	4,623
✳ B14	60	#4	STR.	30'-0"	1,202
✳ B15	70	#4	STR.	25'-0"	1,169
B22	122	#5	STR.	37'-3"	4,740
B23	427	#5	STR.	60'-0"	26,722
✳ G1	2	#5	STR.	40' -11"	85
✳ K1	8	#5	2	11'-3"	94
✳ K2	8	#5	3	15'-8"	131
✳ S1	60	#4	1	3'-8"	147
✳ J1	78	#4	4	1'-5"	74
✳ - EPOXY COATED BARS					
REINFORCING STEEL					LBS. 75,888
EPOXY COATED REINF. STEEL					LBS. 74,398

BAR TYPES

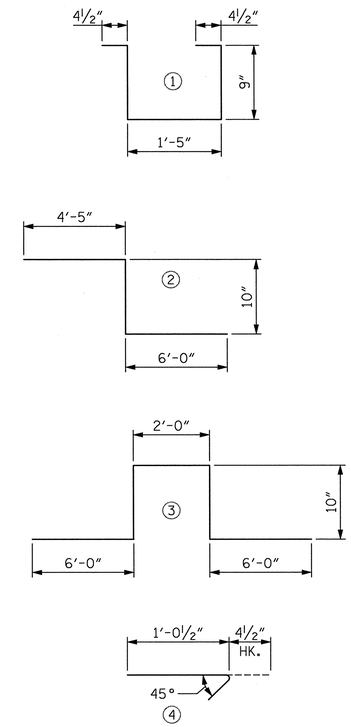

ALL BAR DIMENSIONS ARE OUT TO OUT

CONCRETE BREAKDOWN

POUR	UNIT 1	UNIT 2
1	115.6	110.6
2	99.2	78.9
3	158.1	156.4
4	115.5	148.1
5	158.1	175.0
TOTAL	646.5	669.0

GROOVING BRIDGE FLOORS

APPROACH SLABS	1,680	SQ.FT.
BRIDGE DECK	31,755	SQ.FT.
TOTAL	33,435	SQ.FT.

SUPERSTRUCTURE REINFORCING STEEL LENGTHS ARE BASED ON THE FOLLOWING MINIMUM SPLICE LENGTHS

BAR SIZE	SUPERSTRUCTURE EXCEPT APPROACH SLABS, PARAPET, AND BARRIER RAIL		APPROACH SLABS		PARAPET AND BARRIER RAIL
	EPOXY COATED	UNCOATED	EPOXY COATED	UNCOATED	
#4	2'-0"	1'-9"	2'-0"	1'-9"	2'-9"
#5	2'-6"	2'-2"	2'-6"	2'-2"	3'-5"
#6	3'-0"	2'-7"	3'-10"	2'-7"	4'-4"
#7	5'-3"	3'-6"			
#8	6'-10"	4'-7"			

SUPERSTRUCTURE BILL OF MATERIAL

	CLASS AA CONCRETE	REINFORCING STEEL	EPOXY COATED REINFORCING STEEL
	CU. YARDS	LBS.	LBS.
UNIT 1	646.5	73,089	72,575
UNIT 2	669.0	75,888	74,398
TOTAL ✳✳	1,315.5	148,977	146,973

NOTES

✳ DENOTES EPOXY COATED REINFORCING STEEL.
✳✳ QUANTITIES FOR BARRIER RAIL ARE NOT INCLUDE.
PERFORM BRIDGE DECK GROOVING IN ACCORDANCE WITH STANDARD SPEC. ITEM 420-14.

PROJECT NO. U-0071

DURHAM COUNTY

STATION: 23+29.61 -DFFLY-

STATE OF NORTH CAROLINA
DEPARTMENT OF TRANSPORTATION
RALEIGH

SUPERSTRUCTURE BILL OF MATERIALS

NORTH CAROLINA PROFESSIONAL SEAL 29589 ENGINEER DOMENIC A. COLETTI
7-7-14

HDR Engineering, Inc. of the Carolinas
3733 National Drive, Suite 207 Raleigh, N.C. 27612
N.C.B.E.L.S. License Number: F-0116

REVISIONS								SHEET NO.
NO.	BY:	DATE:	NO.	BY:	DATE:			S-523
1	--	--	3	--	--			TOTAL SHEETS
2	--	--	4	--	--			671

DES BY: S. DICKENS	DATE: 05/13	DWG BY: M. SELLS	DATE: 04/13
DES CHK: J. TAYLOR	DATE: 06/13	CHK BY: S. DICKENS	DATE: 06/13

ORIGINATED		YELLOW HIGHLIGHTED & REDLINE CHECKED		BLUE HIGHLIGHTED CHANGES		CHANGES VERIFIED BY	
INITIALS	DATE	INITIALS	DATE	INITIALS	DATE	VERIFIED	DATE

PLOT DRIVER: NCDOT_pdf_mono_eng_50.plt
USER: msells DATE: 1/6/2014
FILE: ...\d039122\U0071_11_SSBOM.dgn
ENTABLE: Durham_pen.tbl
TIME: 1:32:49 PM

NOTES

FOR SECTION A-A AND SECTION B-B SEE SHEET 3 OF 3.

FOR ADDITIONAL NOTES SEE SHEET 3 OF 3.

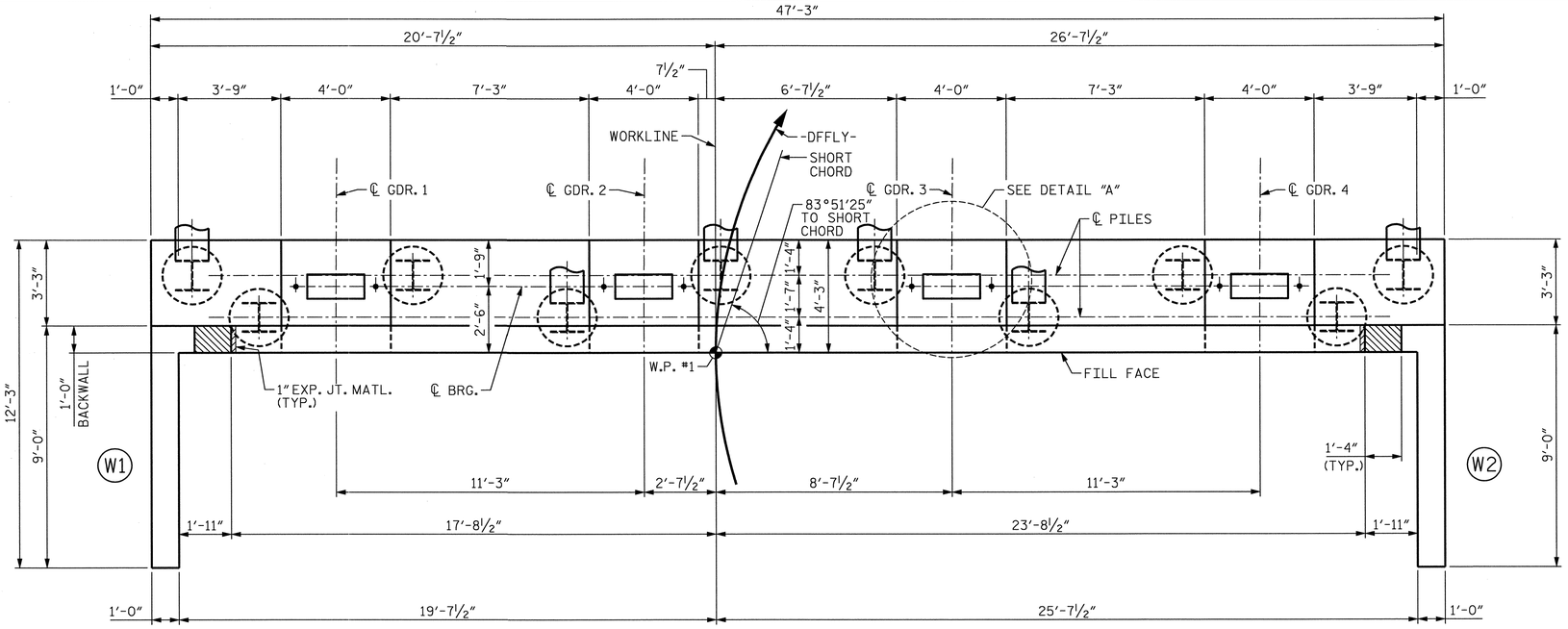

PLAN

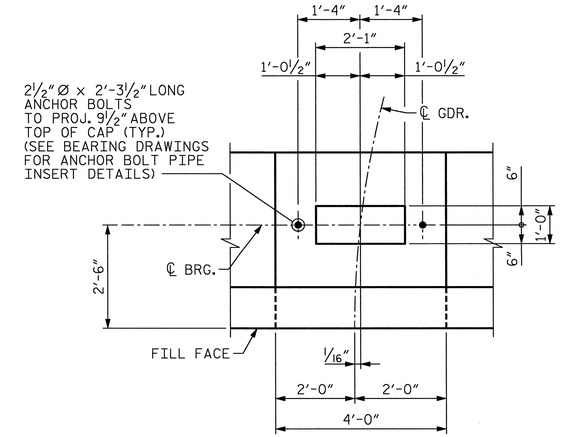

DETAIL "A"

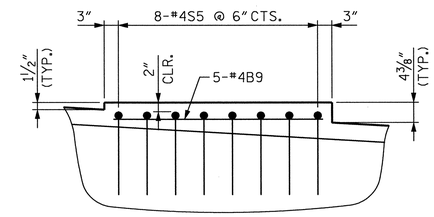

DETAIL "B"

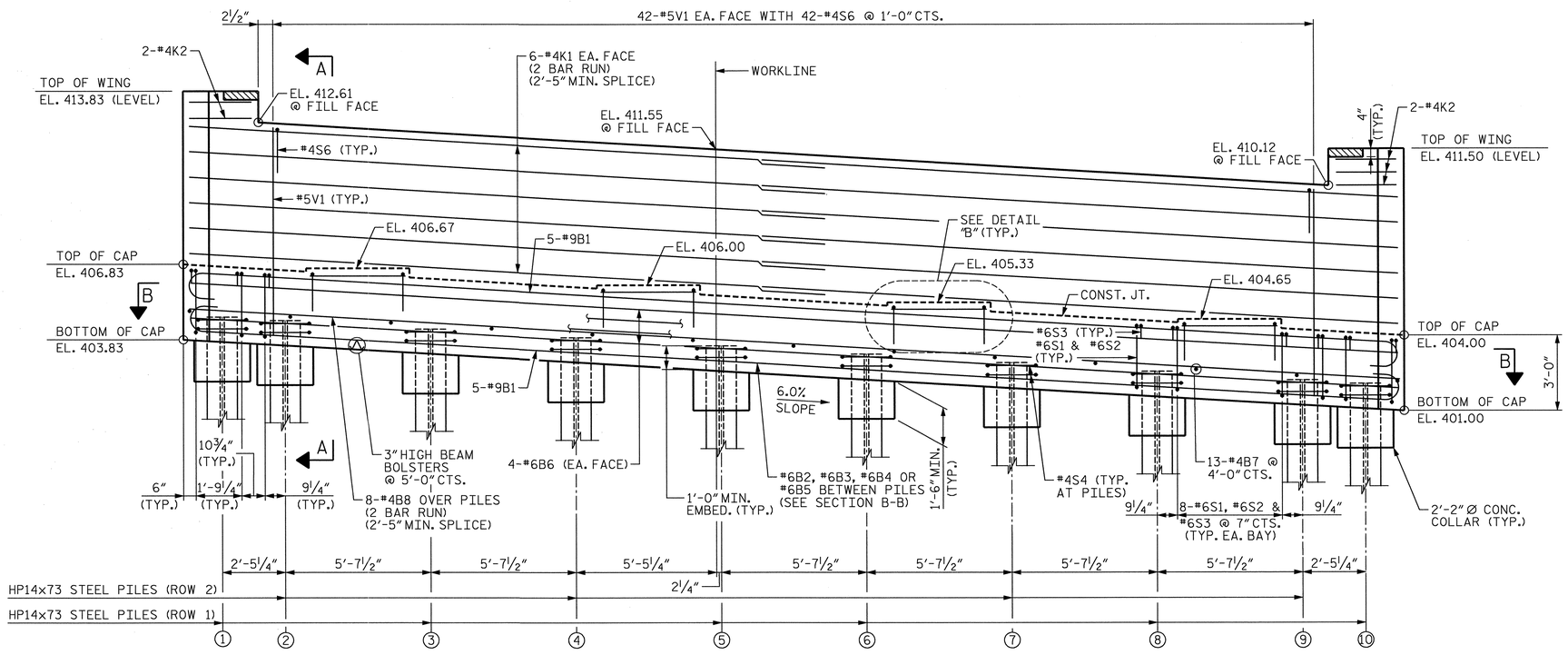

ELEVATION

TOP OF PILE ELEVATIONS	
PILE	ELEVATION
1	404.74
2	404.59
3	404.26
4	403.92
5	403.58
6	403.25
7	402.91
8	402.57
9	402.24
10	402.09

PROJECT NO. U-0071

DURHAM COUNTY

STATION: 23+29.61 -DFFLY-

SHEET 1 OF 3

STATE OF NORTH CAROLINA
DEPARTMENT OF TRANSPORTATION
RALEIGH

SUBSTRUCTURE END BENT 1 PLAN AND ELEVATION

NORTH CAROLINA PROFESSIONAL SEAL 29589 ENGINEER DOMENIC A. COLETTI 1-7-14

HDR Engineering, Inc. of the Carolinas
3733 National Drive, Suite 207 Raleigh, N.C. 27612
N.C.B.E.L.S. License Number: F-0116

REVISIONS						SHEET NO.
NO.	BY:	DATE:	NO.	BY:	DATE:	S-52A
1	--	--	3	--	--	TOTAL SHEETS
2	--	--	4	--	--	67

ORIGINATED		YELLOW HIGHLIGHTED & REDLINE CHECKED		BLUE HIGHLIGHTED CHANGES		CHANGES VERIFIED BY	
INITIALS	DATE	INITIALS	DATE	INITIALS	DATE	VERIFIED	DATE

DES BY: W. WATSON	DATE: 03/13	DWG BY: B. PETERSON	DATE: 03/13
DES CHK: J. TAYLOR	DATE: 04/13	CHK BY: W. WATSON	DATE: 06/13

PLOT DRIVER: NCDOT_pdf_mono_eng_50.plt
USER: msells
FILE: ...\d0391221\U0071_11_EB1-1.dgn
DATE: 1/6/2014
PENTABLE: Durham_pen.tbl
TIME: 1:33:14 PM

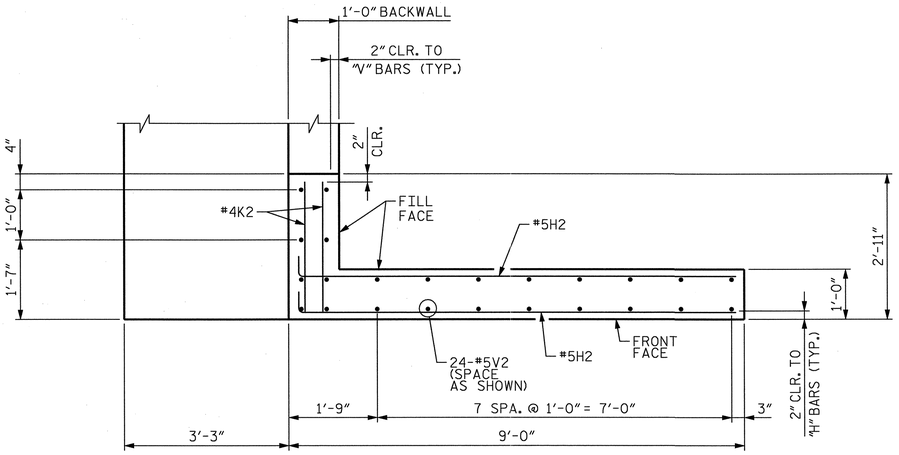

PLAN - WINGWALL "W1"

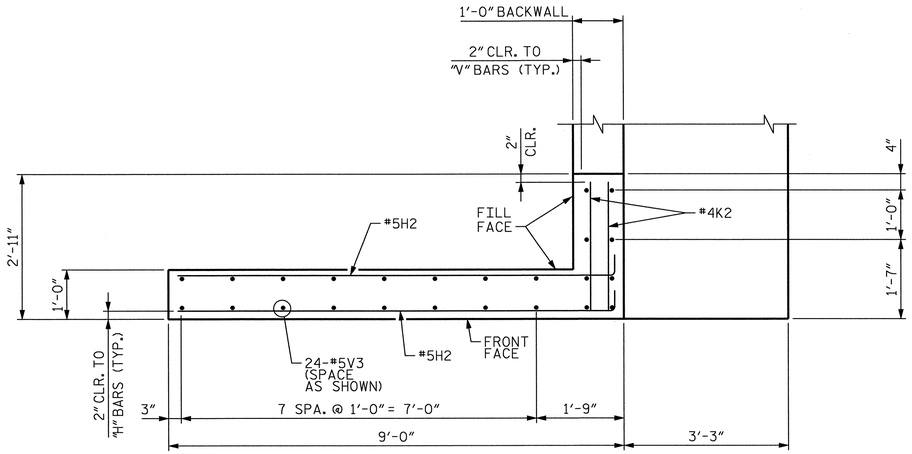

PLAN - WINGWALL "W2"

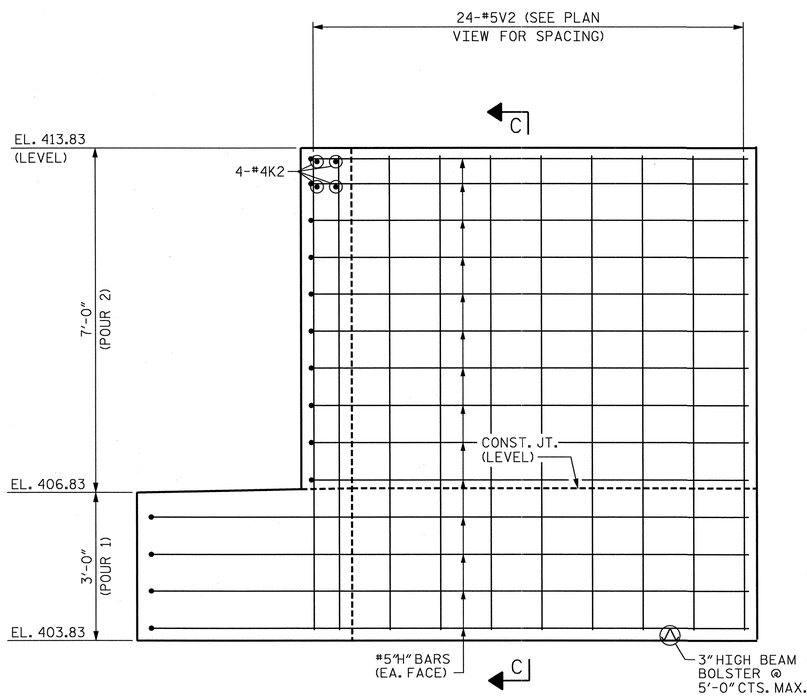

ELEVATION - WINGWALL "W1"

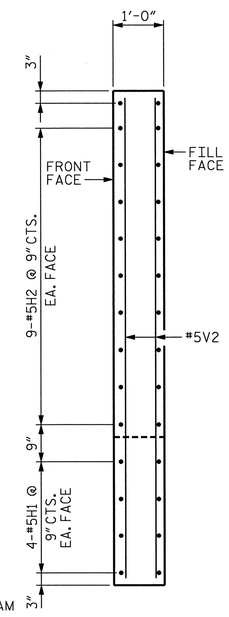

SECTION C-C

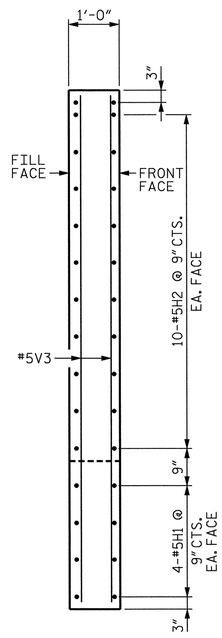

SECTION D-D

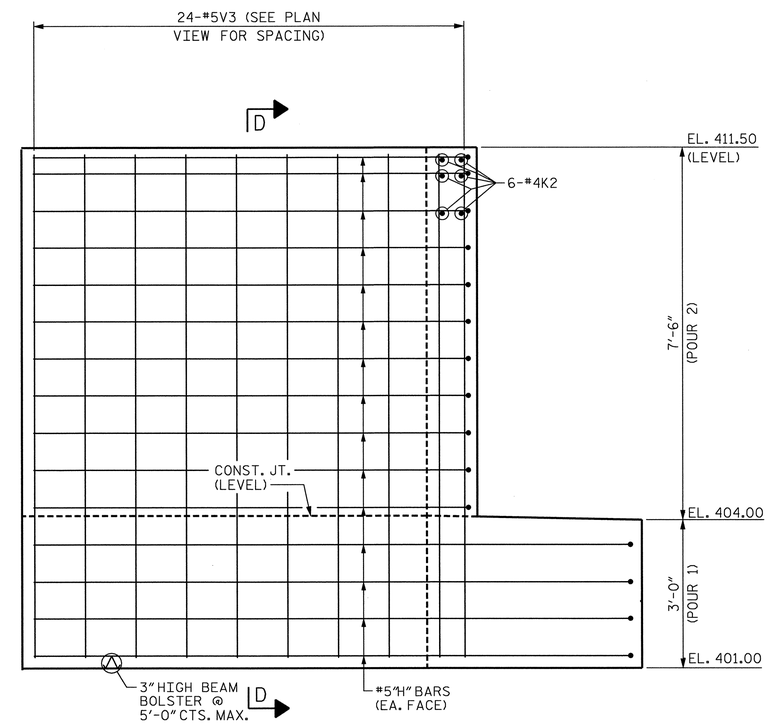

ELEVATION - WINGWALL "W2"

PROJECT NO. U-0071

DURHAM COUNTY

STATION: 23+29.61 -DFFLY-

SHEET 2 OF 3

STATE OF NORTH CAROLINA
DEPARTMENT OF TRANSPORTATION
RALEIGH

SUBSTRUCTURE END BENT 1 WINGWALLS AND DETAILS

REVISIONS						SHEET NO.
NO.	BY:	DATE:	NO.	BY:	DATE:	8-525
1	--	--	3	--	--	TOTAL SHEETS
2	--	--	4	--	--	671

NORTH CAROLINA PROFESSIONAL SEAL 29589 ENGINEER DOMENIC A. COLETTI 7-14

HDR Engineering, Inc. of the Carolinas
3733 National Drive, Suite 207 Raleigh, N.C. 27612
N.C.B.E.L.S. License Number: F-0116

DES BY: W. WATSON	DATE: 03/13	DWG BY: B. PETERSON	DATE: 03/13
DES CHK: J. TAYLOR	DATE: 04/13	CHK BY: W. WATSON	DATE: 06/13

ORIGINATED		YELLOW HIGHLIGHTED & REDLINE CHECKED		BLUE HIGHLIGHTED CHANGES		CHANGES VERIFIED BY	
INITIALS	DATE	INITIALS	DATE	INITIALS	DATE	VERIFIED	DATE

PLOT DRIVER: NCDOT_pdf_mono_eng_50.plt
USER: msellis
FILE: ...\d0391221\U0071_11_EB1-2.dgn
DATE: 1/6/2014
TIME: 1:33:40 PM
PENTABLE: Durham_pen.tbl

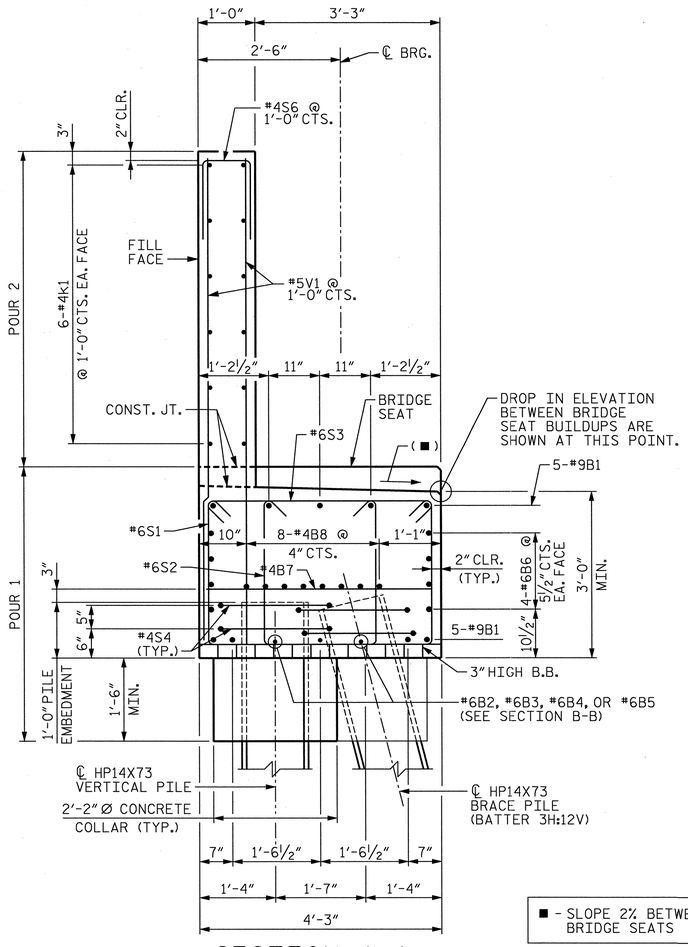

SECTION A-A

■ - SLOPE 2% BETWEEN BRIDGE SEATS

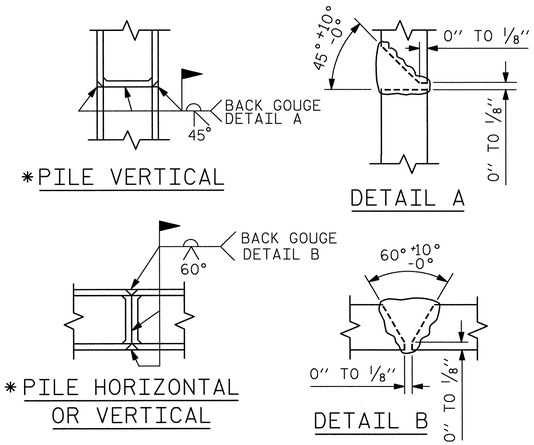

PILE SPLICE DETAILS

*POSITION OF PILE DURING WELDING.

NOTES

STIRRUPS IN CAP MAY BE SHIFTED AS NECESSARY TO CLEAR ANCHOR BOLTS.

BACKWALL SHALL BE PLACED BEFORE APPLYING THE EPOXY PROTECTIVE COATING.

THE TOP SURFACE AREAS OF THE END BENT CAPS SHALL BE CURED IN ACCORDANCE WITH THE STANDARD SPECIFICATIONS EXCEPT THE MEMBRANE CURING COMPOUND METHOD SHALL NOT BE USED.

THE TOP SURFACE OF THE CAP EXCEPT THE BRIDGE SEAT BUILDUPS SHALL BE SLOPED TRANSVERSELY FROM THE FILL FACE TO THE BACK FACE AT THE RATE OF 2%.

THE CONCRETE IN THE SHADED AREA OF THE WING SHALL BE POURED AFTER THE BARRIER RAIL ARE CAST IF SLIP FORMING IS USED.

EPOXY COAT THE END BENT CAP AFTER ADJUSTMENTS ARE MADE TO ELASTOMERIC BEARINGS AND ANCHOR BOLTS ARE GROUTED.

INSTALL THE 4"DIA. DRAIN PIPE THROUGH THE WING WALL AS REQUIRED FOR REINFORCED BRIDGE APPROACH FILLS, SEE THE ROADWAY PLANS. REINFORCING STEEL IN THE WING WALL MAY BE SHIFTED AS NECESSARY TO CLEAR THE DRAIN PIPE.

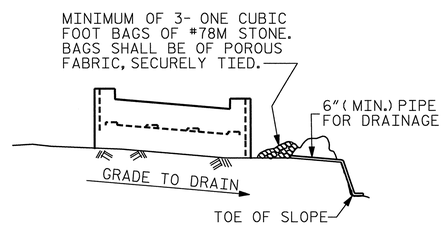

BAGGED STONE AND PIPE SHALL BE PLACED IMMEDIATELY AFTER COMPLETION OF END BENT EXCAVATION. PIPE MAY BE EITHER CONCRETE, CORRUGATED STEEL, CORRUGATED ALUMINUM ALLOY, OR CORRUGATED PLASTIC. PERFORATED PIPE WILL NOT BE ALLOWED.

BAGGED STONE SHALL REMAIN IN PLACE UNTIL THE ENGINEER DIRECTS THAT IT BE REMOVED. THE CONTRACTOR SHALL REMOVE AND DISPOSE OF SILT ACCUMULATIONS AT BAGGED STONE WHEN SO DIRECTED BY THE ENGINEER. BAGS SHALL BE REMOVED AND REPLACED WHENEVER THE ENGINEER DETERMINES THAT THEY HAVE DETERIORATED AND LOST THEIR EFFECTIVENESS.

TEMPORARY DRAINAGE AT END BENT

BAR TYPES

ALL DIMENSIONS ARE OUT TO OUT

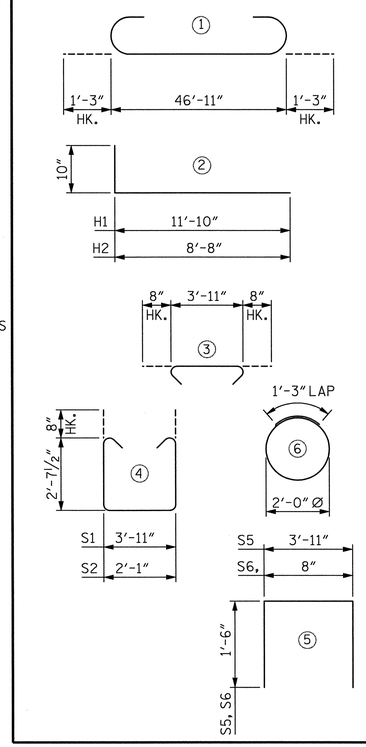

BILL OF MATERIAL

BAR	NO.	SIZE	TYPE	LENGTH	WEIGHT
B1	10	#9	1	49'-5"	1,680
B2	4	#6	STR	10'-9"	65
B3	2	#6	STR	7'-6"	23
B4	1	#6	STR	16"-4"	25
B5	1	#6	STR	5'-1"	8
B6	8	#6	STR	46'-11"	564
B7	13	#4	STR	3'-11"	34
B8	16	#4	STR	24'-8"	264
B9	20	#4	STR	3'-8"	49
K1	24	#4	STR	24'-8"	395
K2	10	#4	STR	2'-7"	17
H1	16	#5	2	12'-8"	211
H2	42	#5	2	9'-6"	416
S1	62	#6	4	10'-6"	978
S2	62	#6	4	8'-8"	807
S3	62	#6	3	5'-3"	489
S4	20	#4	6	7'-7"	101
S5	32	#4	5	6'-11"	148
S6	42	#4	5	3'-8"	103
V1	84	#5	STR	8'-6"	745
V2	48	#5	STR	9'-7"	480
V3	48	#5	STR	10'-1"	505
REINFORCING STEEL				LBS.	8,107

CLASS 'A' CONCRETE	CU. YDS.
POUR-1 CAP & LOWER WINGS	27.2
POUR 2-BACKWALL & UPPER WINGS	14.6
TOTAL	41.9

HP 14X73 STEEL PILES	
NO.	10
LF.	275.0

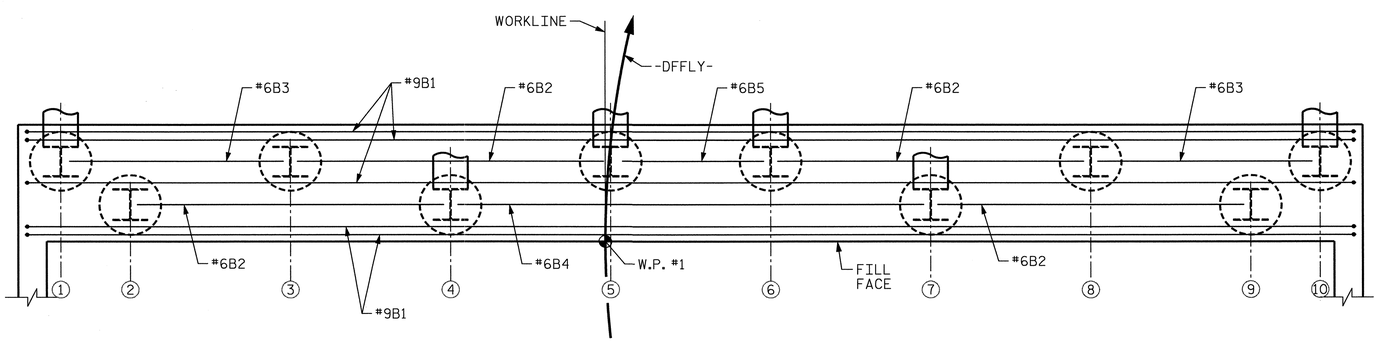

SECTION B-B

DES BY: W. WATSON	DATE: 03/13	DWG BY: M. SELLS	DATE: 03/13
DES CHK: J. TAYLOR	DATE: 04/13	CHK BY: W. WATSON	DATE: 06/13

HDR Engineering, Inc. of the Carolinas
3733 National Drive, Suite 207 Raleigh, N.C. 27612
N.C.B.E.L.S. License Number: F-0176

NORTH CAROLINA PROFESSIONAL SEAL 29589 ENGINEER DOMENIC A. COLETTI 7-14

PROJECT NO. U-0071

DURHAM COUNTY

STATION: 23+29.61 -DFFLY-

SHEET 3 OF 3

STATE OF NORTH CAROLINA
DEPARTMENT OF TRANSPORTATION
RALEIGH

SUBSTRUCTURE
END BENT 1
DETAILS

REVISIONS								SHEET NO.
NO.	BY:	DATE:	NO.	BY:	DATE:			S-526
1	--	--	3	--	--			TOTAL SHEETS
2	--	--	4	--	--			67

INITIALS	DATE	ORIGINATED	INITIALS	DATE	YELLOW HIGHLIGHTED & REDLINE CHECKED	INITIALS	DATE	BLUE HIGHLIGHTED CHANGES	INITIALS	DATE	CHANGES VERIFIED BY	VERIFIED	DATE

PLOT DRIVER: NCDOT_pdf_mono_eng_50.plt
USER: msells
FILE: ...\d0391221\U0071_11_EB1-3.dgn
DATE: 1/6/2014
ENTABLE: Durham_pen.tbl
TIME: 1:34:05 PM

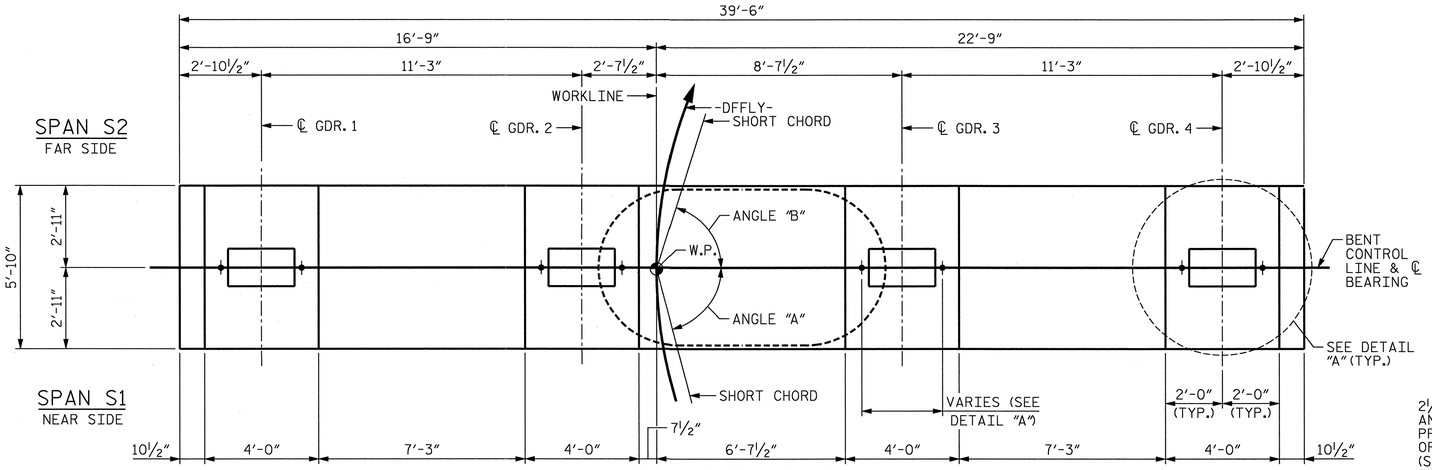

PLAN OF CAP

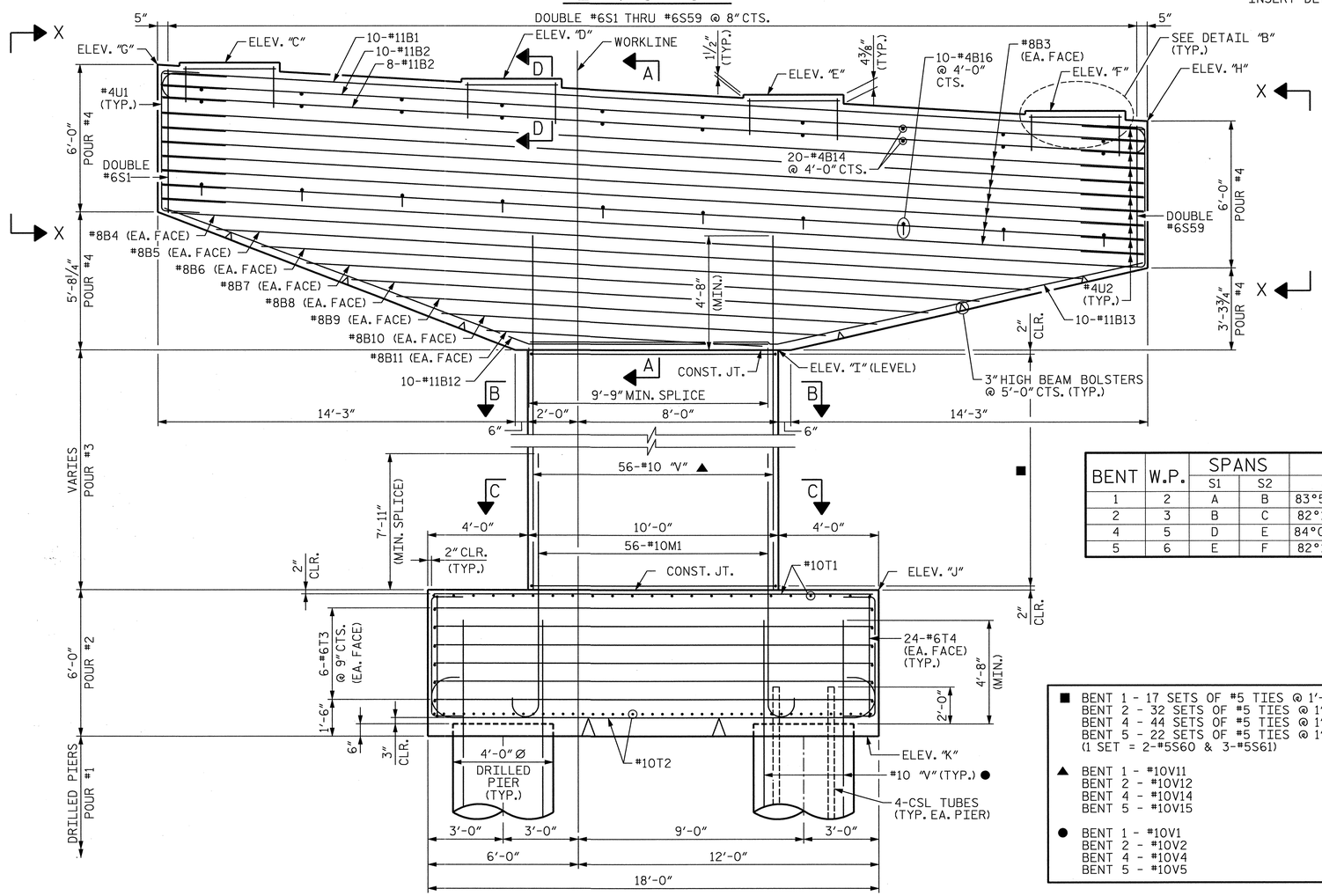

ELEVATION

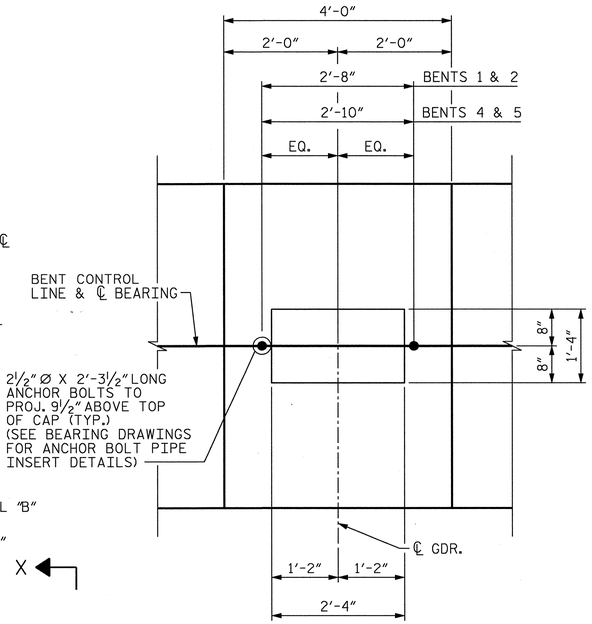

DETAIL "A"

(DIMENSIONS TYP. U.N.O)

NOTES

FOR SECTION A-A, SECTION B-B, SECTION C-C, SECTION D-D DETAIL "A" AND DETAIL "B" SEE SHEET 3 OF 5.

FOR VIEW X-X SEE SHEET 2 OF 5.

STIRRUPS IN CAP MAY BE SHIFTED AS NECESSARY TO CLEAR ANCHOR BOLTS.

HOOKS ON "M" BARS MAY BE TURNED AS NECESSARY FOR PLACING REINFORCING STEEL.

T1 AND T2 BARS IN FOOTING MAY BE SHIFTED AS NECESSARY TO CLEAR M1 AND V1 BARS IN FOOTING.

THE SP-1 SPIRAL REINFORCING STEEL SHALL BE W31 OR D-31 COLD DRAWN WIRE OR #5 PLAIN OR DEFORMED BAR.

FOR DRILLED PIERS, SEE SECTION 411 OF THE STANDARD SPECIFICATIONS.

THE CONTRACTOR'S ATTENTION IS CALLED TO THE FACT THAT THE LONGITUDINAL REINFORCEMENT FOR THE DRILLED PIERS IS DETAILED WITH 3 FEET OF EXTRA LENGTH.

LONGITUDINAL REINFORCEMENT IN DRILLED PIERS MAY BE FIELD CUT TO PROVIDE 4'-8" MINIMUM EMBEDMENT INTO FOOTING.

ALL STEEL IN THE DRILLED PIERS IS INCLUDED IN THE PAY ITEMS FOR "REINFORCING STEEL" AND "SPIRAL COLUMN REINFORCING STEEL".

SPLICING OF THE LONGITUDINAL BARS IN THE DRILLED PIER WILL NOT BE PERMITTED.

NO SEPARATE PAYMENT SHALL BE MADE FOR ANY ADDITIONAL STEEL REQUIRED IN CONSTRUCTION OF DRILLED PIER AS THIS IS CONSIDERED INCIDENTAL TO THE LINEAR FOOT PRICE FOR DRILLED PIER.

DETAILED DRAWINGS FOR FALSEWORK AND FORMS FOR THIS HAMMERHEAD BENT CAP SHALL BE SUBMITTED. SEE SPECIAL PROVISIONS FOR FORMWORK & FALSEWORK.

FOR MASS CONCRETE, SEE SPECIAL PROVISIONS.

BENT	W.P.	SPANS		ANGLES		ELEVATION TABLE								
		S1	S2	A	B	C	D	E	F	G	H	I	J	K
1	2	A	B	83°51'26"	82°12'11"	411.66	410.98	410.31	409.63	411.59	409.22	399.90	384.00	378.00
2	3	B	C	82°12'11"	83°54'06"	420.03	419.36	418.68	418.01	419.96	417.59	408.28	378.20	372.20
4	5	D	E	84°05'48"	82°12'11"	428.58	427.90	427.23	426.55	428.50	426.13	416.82	373.80	367.80
5	6	E	F	82°12'11"	82°55'38"	429.53	428.86	428.18	427.51	429.46	427.09	417.77	397.30	391.30

■ BENT 1 - 17 SETS OF #5 TIES @ 1'-0" CTS.
BENT 2 - 32 SETS OF #5 TIES @ 1'-0" CTS.
BENT 4 - 44 SETS OF #5 TIES @ 1'-0" CTS.
BENT 5 - 22 SETS OF #5 TIES @ 1'-0" CTS.
(1 SET = 2-#5S60 & 3-#5S61)

▲ BENT 1 - #10V11
BENT 2 - #10V12
BENT 4 - #10V14
BENT 5 - #10V15

● BENT 1 - #10V1
BENT 2 - #10V2
BENT 4 - #10V4
BENT 5 - #10V5

PROJECT NO. U-0071
DURHAM COUNTY
STATION: 23+29.61 -DFFLY-

SHEET 1 OF 5

STATE OF NORTH CAROLINA
DEPARTMENT OF TRANSPORTATION
RALEIGH

SUBSTRUCTURE BENTS 1, 2, 4, & 5 PLAN AND ELEVATION

NORTH CAROLINA PROFESSIONAL SEAL 29589 ENGINEER DOMENIC A. COLETTI
2-5-14

HDR Engineering, Inc. of the Carolinas
3733 National Drive, Suite 207 Raleigh, N.C. 27612
N.C.B.E.L.S. License Number: F-0116

REVISIONS						SHEET NO.
NO.	BY:	DATE:	NO.	BY:	DATE:	S-527
1	--	--	3	--	--	TOTAL SHEETS
2	--	--	4	--	--	671

ORIGINATED		YELLOW HIGHLIGHTED & REDLINE CHECKED		BLUE HIGHLIGHTED CHANGES		CHANGES VERIFIED BY	
INITIALS	DATE	INITIALS	DATE	INITIALS	DATE	VERIFIED	DATE

DES BY: W. WATSON	DATE: 06/13	DWG BY: M. SELLS	DATE: 06/13
DES CHK: J. TAYLOR	DATE: 06/13	CHK BY: W. WATSON	DATE: 07/13

PLOT DRIVER: NCDOT_pdf_mono_eng_50.plt
USER: msells
FILE: ...\d0532406\U0071_11_B11-1.dgn
DATE: 2/5/2014
ENTABLE: Durham_pen.tbl
TIME: 9:25:41 AM

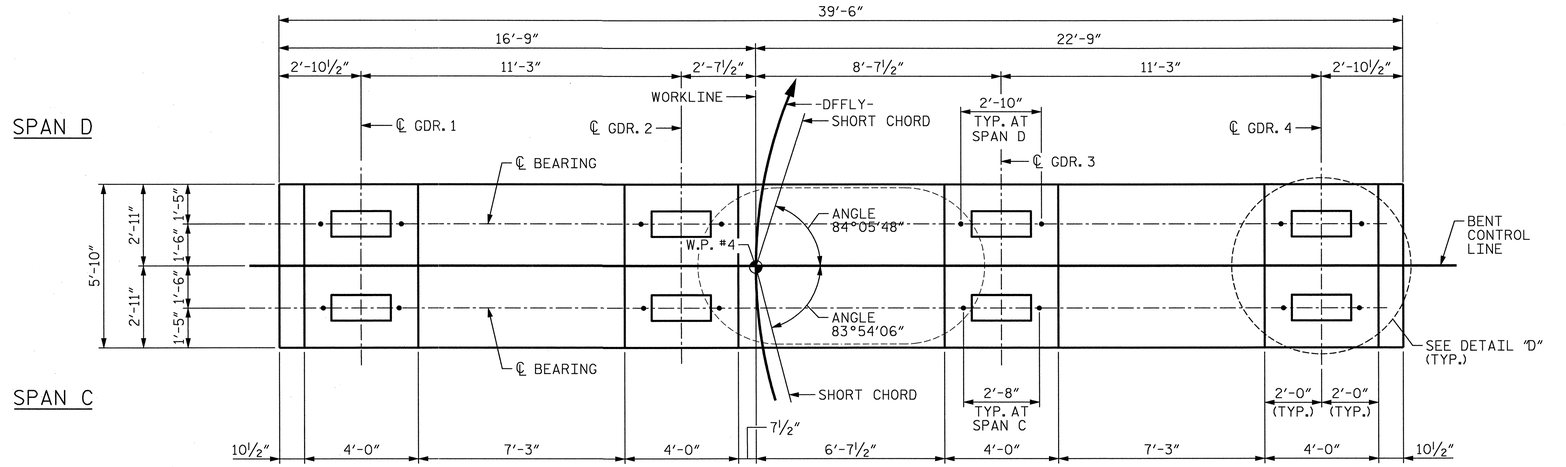

PLAN OF CAP

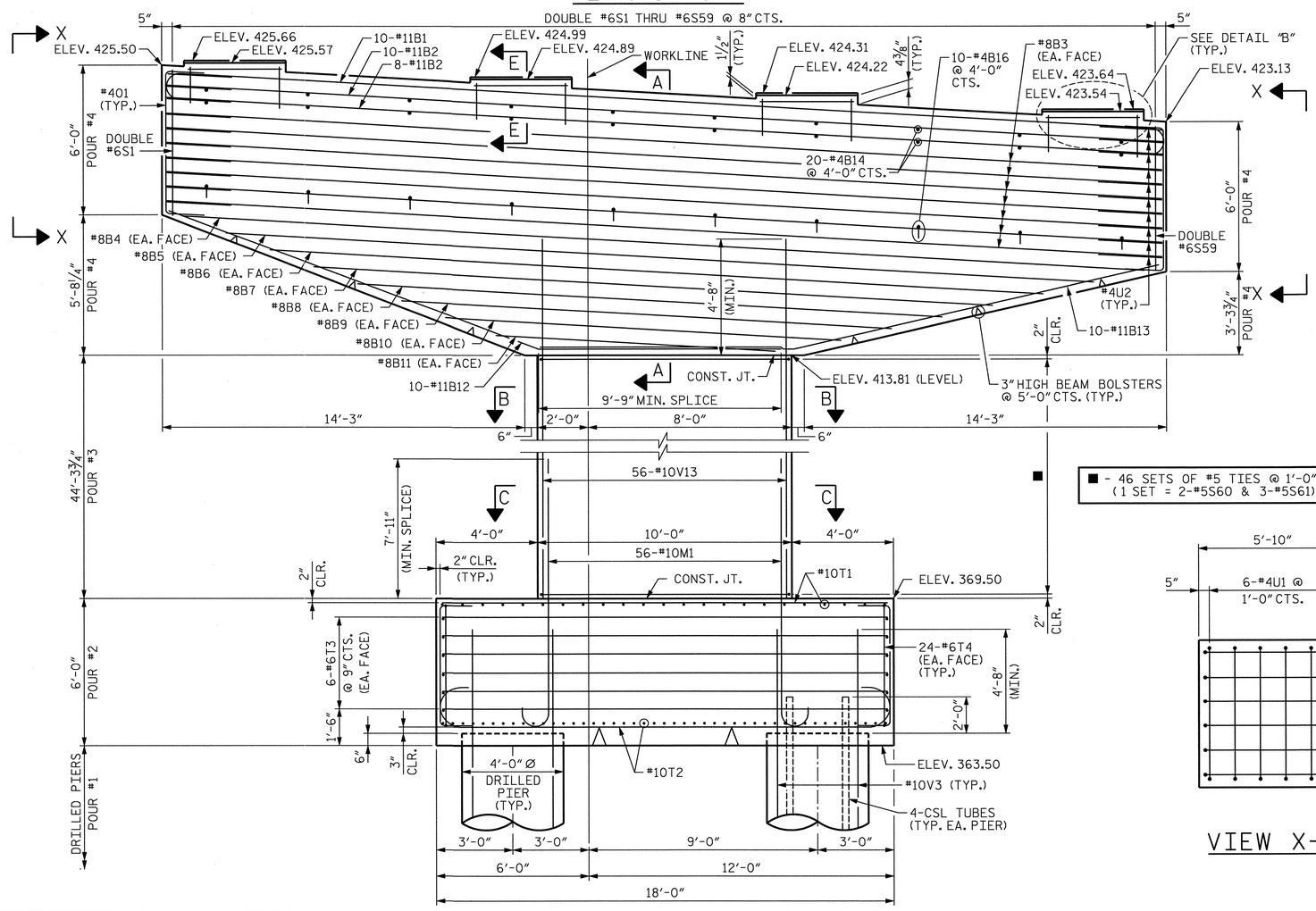

ELEVATION

BENT 3 NOTES

FOR SECTION A-A, SECTION B-B, SECTION C-C, SECTION E-E AND DETAIL "B", SEE SHEET 3 OF 5.

THE TOP SURFACE AREAS OF THE BENT CAPS SHALL BE CURED IN ACCORDANCE WITH THE STANDARD SPECIFICATIONS EXCEPT THE MEMBRANE CURING COMPOUND METHOD SHALL NOT BE USED.

EPOXY COAT THE BENT CAP AFTER ADJUSTMENTS ARE MADE TO SOLE PLATES AND ANCHOR BOLTS ARE GROUTED.

FOR ADDITIONAL NOTES, SEE SHEET 1 OF 5.

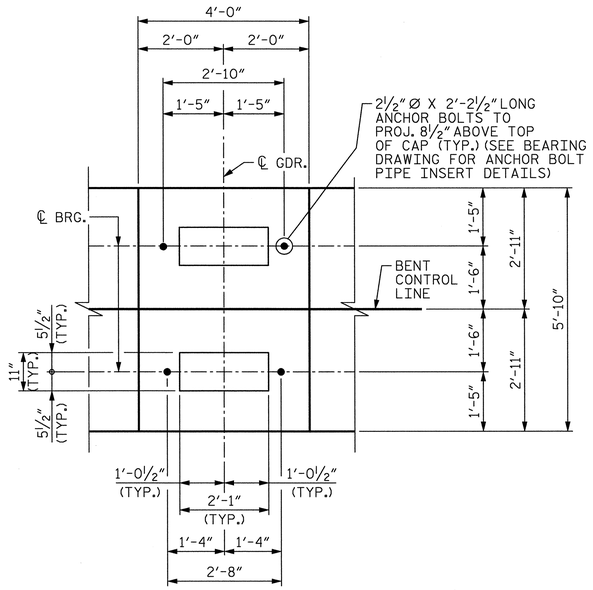

DETAIL "D"

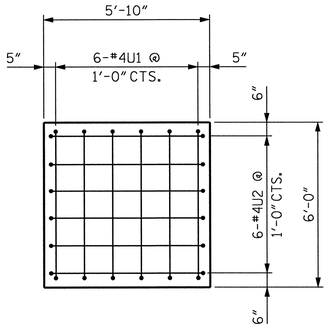

VIEW X-X

PROJECT NO. U-0071

DURHAM COUNTY

STATION: 23+29.61 -DFFLY-

SHEET 2 OF 5

STATE OF NORTH CAROLINA
DEPARTMENT OF TRANSPORTATION
RALEIGH

SUBSTRUCTURE BENT 3 PLAN AND ELEVATION

REVISIONS						SHEET NO.
NO.	BY:	DATE:	NO.	BY:	DATE:	S-528
1	--	--	3	--	--	TOTAL SHEETS
2	--	--	4	--	--	671

NORTH CAROLINA PROFESSIONAL SEAL 29589 ENGINEER DOMENIC A. COLETTI 1-7-14

HDR Engineering, Inc. of the Carolinas
3733 National Drive, Suite 207 Raleigh, N.C. 27612
N.C.B.E.L.S. License Number: F-0116

DES BY: W. WATSON	DATE: 06/13	DWG BY: M. SELLS	DATE: 06/13
DES CHK: J. TAYLOR	DATE: 06/13	CHK BY: W. WATSON	DATE: 07/13

ORIGINATED		YELLOW HIGHLIGHTED & REDLINE CHECKED		BLUE HIGHLIGHTED CHANGES		CHANGES VERIFIED BY	
INITIALS	DATE	INITIALS	DATE	INITIALS	DATE	VERIFIED	DATE

PLOT DRIVER: NCDOT_pdf_mono_eng_50.plt
USER: msells
FILE: ...\d0391221\U0071_11_BT1-2.dgn
DATE: 1/6/2014
PENTABLE: Durham_pen.tbl
TIME: 1:34:54 PM

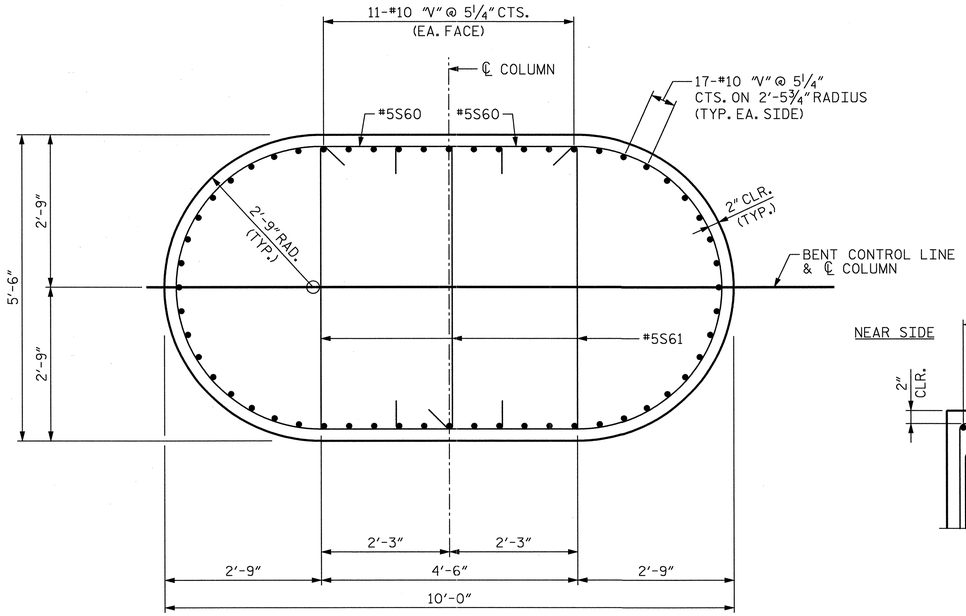

SECTION B-B

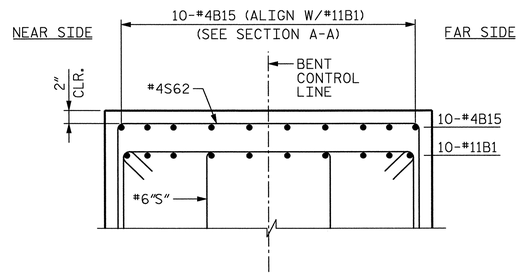

SECTION D-D

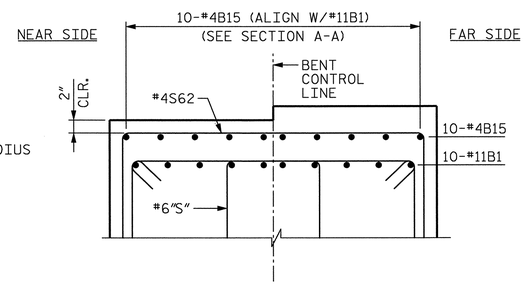

SECTION E-E

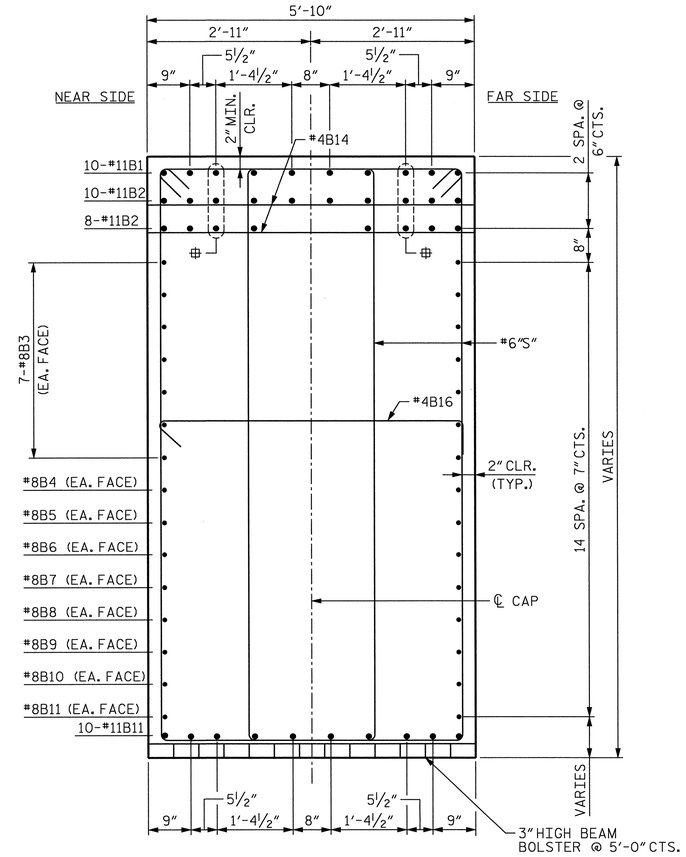

SECTION A-A

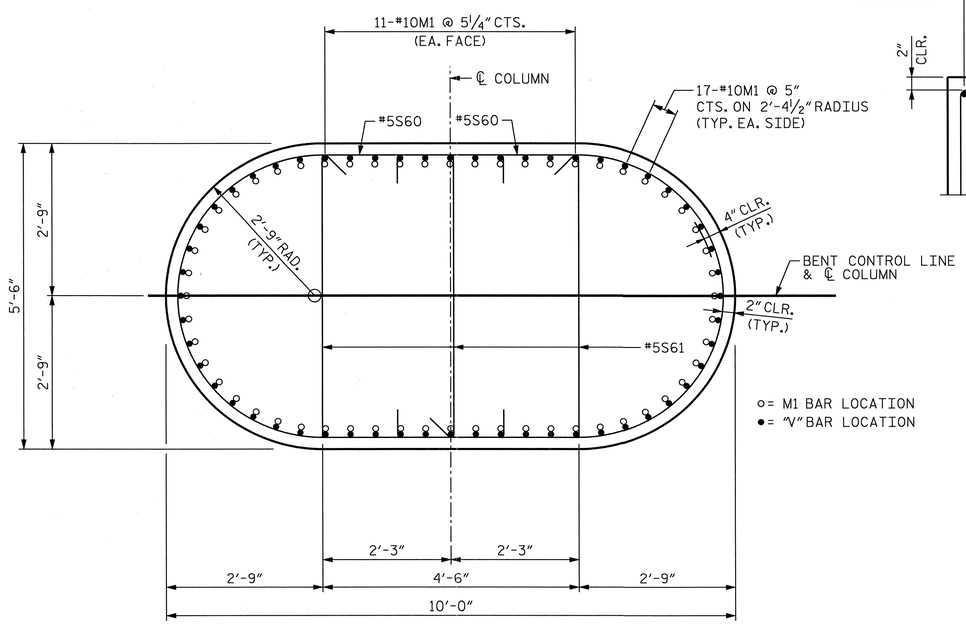

SECTION C-C

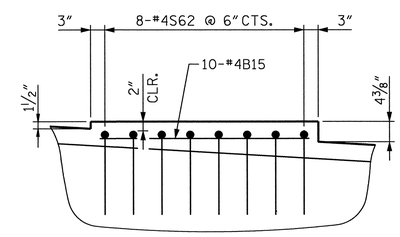

DETAIL "B"

⊕ - BARS MAY BE SHIFTED UP TO 1½" IN ORDER TO CLEAR ANCHOR BOLT PIPE INSERTS

PROJECT NO. U-0071

DURHAM COUNTY

STATION: 23+29.61 -DFFLY-

SHEET 3 OF 5

STATE OF NORTH CAROLINA
DEPARTMENT OF TRANSPORTATION
RALEIGH

SUBSTRUCTURE
BENTS 1 - 5
SECTIONS & DETAILS

REVISIONS						SHEET NO.
NO.	BY:	DATE:	NO.	BY:	DATE:	S-529
1	--	--	3	--	--	TOTAL SHEETS
2	--	--	4	--	--	671

NORTH CAROLINA PROFESSIONAL SEAL 29589 ENGINEER DOMENIC A. COLETTI
1-7-14

HDR Engineering, Inc. of the Carolinas
3733 National Drive, Suite 207 Raleigh, N.C. 27612
N.C.B.E.L.S. License Number: F-0116

DES BY: W. WATSON	DATE: 06/13	DWG BY: M. SELLS	DATE: 06/13
DES CHK: J. TAYLOR	DATE: 06/13	CHK BY: W. WATSON	DATE: 07/13

ORIGINATED		YELLOW HIGHLIGHTED & REDLINE CHECKED		BLUE HIGHLIGHTED CHANGES		CHANGES VERIFIED BY	
INITIALS	DATE	INITIALS	DATE	INITIALS	DATE	VERIFIED	DATE

PLOT DRIVER: NCDOT_pdf_mono_eng_50.plt
USER: msells
DATE: 1/6/2014
FILE: ...\d0391221\U0071_11_BT1-3.dgn
PENTABLE: Durham_pen.tbl
TIME: 1:35:16 PM

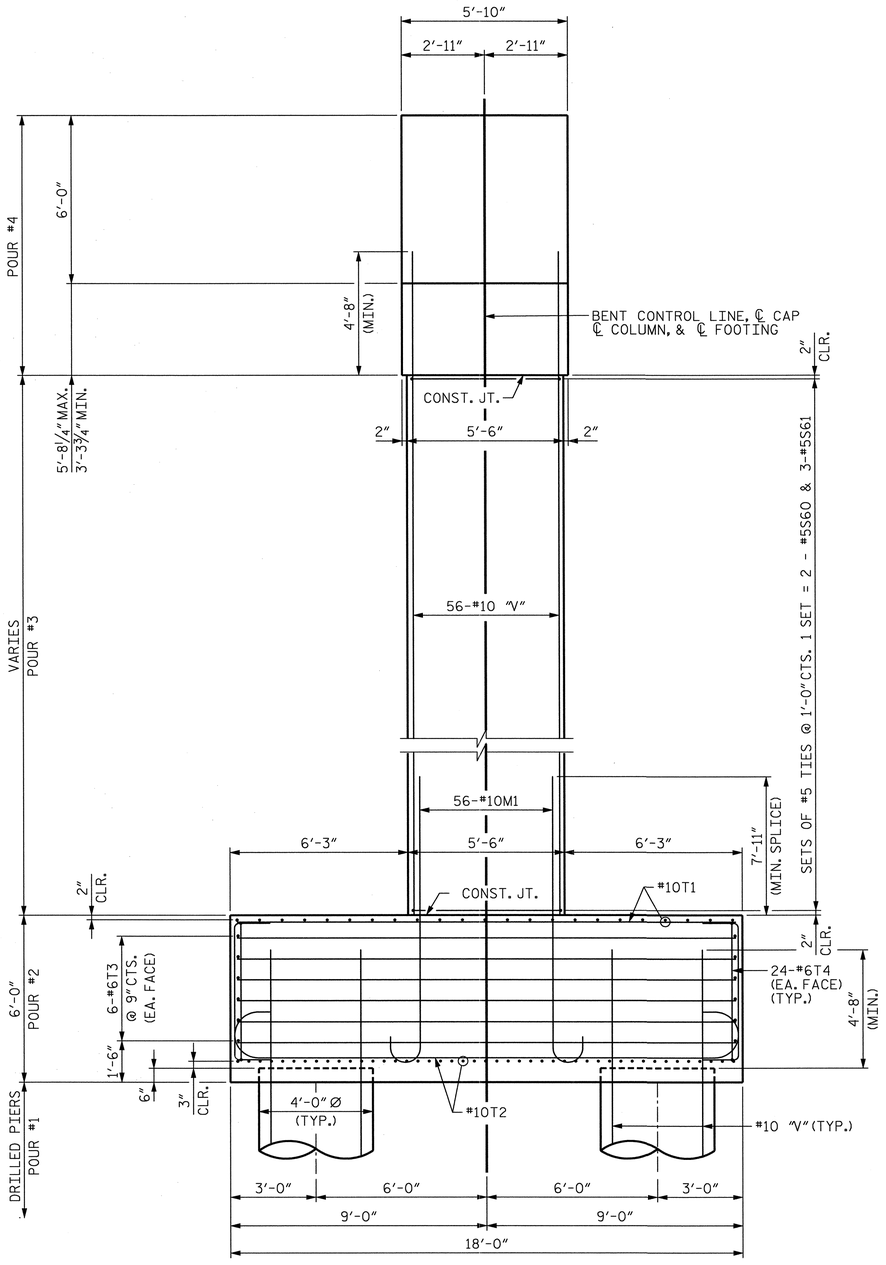

END ELEVATION

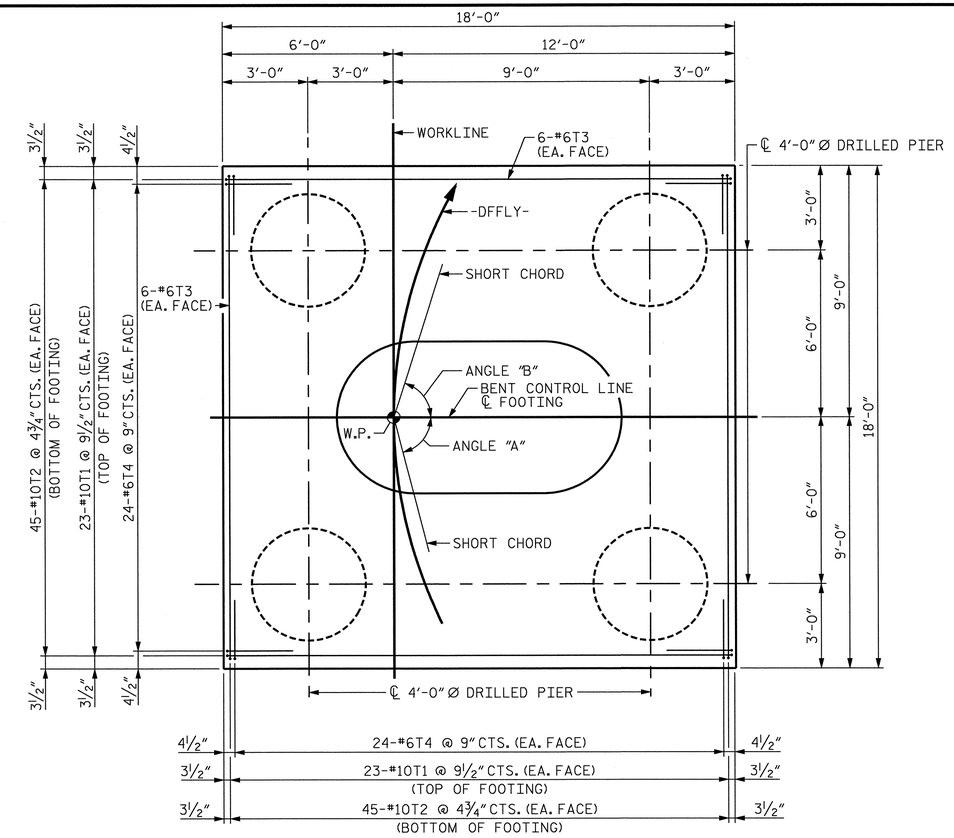

PLAN OF FOOTING

BENT	ANGLES		ELEVATIONS		DIM.
	A	B	L	M	Y
1	83°51'26"	82°12'11"	378.50	350.00	28.50'
2	82°12'11"	83°54'06"	372.70	350.00	22.70'
3	83°54'06"	84°05'48"	364.00	348.00	16.00'
4	84°05'48"	82°12'11"	368.30	348.00	20.30'
5	82°12'11"	82°55'38"	391.80	370.00	21.80'

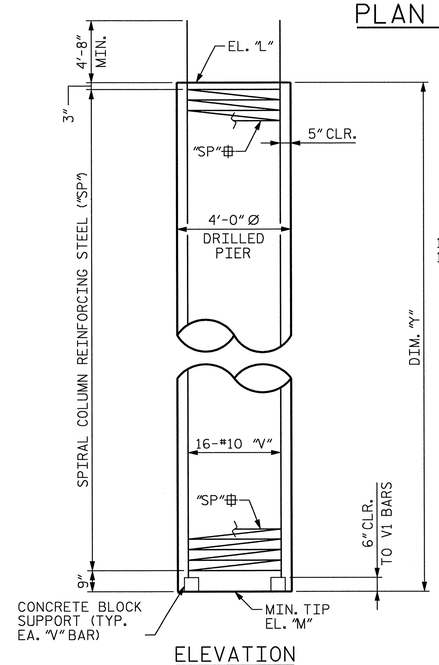

ELEVATION

DRILLED PIER DETAILS

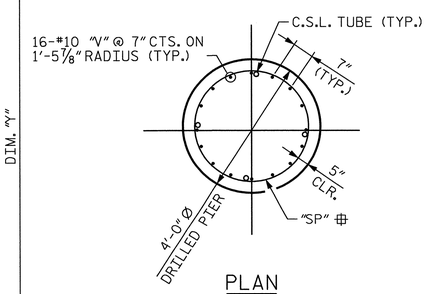

PLAN

⊕ - BENT 1 - SP1
BENT 2 - SP2
BENT 3 - SP3
BENT 4 - SP4
BENT 5 - SP5

PROJECT NO. U-0071

DURHAM COUNTY

STATION: 23+29.61 -DFFLY-

SHEET 4 OF 5

STATE OF NORTH CAROLINA
DEPARTMENT OF TRANSPORTATION
RALEIGH

SUBSTRUCTURE BENTS 1-5 DETAILS

REVISIONS								SHEET NO. 3-530
NO.	BY:	DATE:	NO.	BY:	DATE:			TOTAL SHEETS 61
1	--	--	3	--	--			
2	--	--	4	--	--			

NORTH CAROLINA PROFESSIONAL SEAL 29589 ENGINEER DOMENIC A. COLETTI 1-7-14

HDR Engineering, Inc. of the Carolinas
3733 National Drive, Suite 207 Raleigh, N.C. 27612
N.C.B.E.L.S. License Number: F-0116

DES BY: W. WATSON	DATE: 06/13	DWG BY: M. SELLS	DATE: 07/13
DES CHK: J. TAYLOR	DATE: 06/13	CHK BY: W. WATSON	DATE: 07/13

ORIGINATED		YELLOW HIGHLIGHTED & REDLINE CHECKED		BLUE HIGHLIGHTED CHANGES		CHANGES VERIFIED BY	
INITIALS	DATE	INITIALS	DATE	INITIALS	DATE	VERIFIED	DATE

PLOT DRIVER: NCDOT_pdf_mono_eng_50.plt
USER: msells
FILE: ...\d039221\U0071_11_BT1-4.dgn
DATE: 1/6/2014
TIME: 1:35:38 PM
TENTABLE: Durham_pen.tbl

BILL OF MATERIAL
BENT CAP
(QUANTITY SHOWN FOR ONE BENT ONLY)
(5 BENTS REQUIRED)

BAR	NO.	SIZE	TYPE	DIM. "A"	LENGTH	WEIGHT
B1	10	#11	1	-	42'-4"	2,249
B2	18	#11	STR	-	39'-2"	3,746
B3	14	#8	STR	-	39'-2"	1,464
B4	2	#8	STR	-	37'-10"	202
B5	2	#8	STR	-	34'-1"	182
B6	2	#8	STR	-	30'-4"	162
B7	2	#8	STR	-	26'-7"	142
B8	2	#8	STR	-	22'-10"	122
B9	2	#8	STR	-	19'-2"	102
B10	2	#8	STR	-	15'-5"	82
B11	2	#8	STR	-	11'-8"	62
B12	10	#11	2	-	25'-7"	1,359
B13	10	#11	2	-	24'-11"	1,324
B14	20	#4	STR	-	5'-6"	73
B15	40	#4	STR	-	3'-8"	98
B16	10	#4	9	-	6'-7"	44
S1	2	#6	5	5'-9"	20'-7"	62
S2	2	#6	5	6'-0"	21'-1"	63
S3	2	#6	5	6'-2½"	21'-6"	65
S4	2	#6	5	6'-5½"	22'-0"	66
S5	2	#6	5	6'-8"	22'-5"	67
S6	2	#6	5	6'-10½"	22'-10"	69
S7	2	#6	5	7'-1½"	23'-4"	70
S8	2	#6	5	7'-4"	23'-9"	71
S9	2	#6	5	7'-7"	24'-3"	73
S10	2	#6	5	7'-9½"	24'-8"	74
S11	2	#6	5	8'-0½"	25'-2"	76
S12	2	#6	5	8'-3"	25'-7"	77
S13	2	#6	5	8'-5½"	26'-0"	78
S14	2	#6	5	8'-8½"	26'-6"	80
S15	2	#6	5	8'-11"	26'-11"	81
S16	2	#6	5	9'-2"	27'-5"	82
S17	2	#6	5	9'-4½"	27'-10"	84
S18	2	#6	5	9'-7½"	28'-4"	85
S19	2	#6	5	9'-10"	28'-9"	86
S20	2	#6	5	10'-0½"	29'-2"	88
S21	2	#6	5	10'-3½"	29'-8"	89
S22	2	#6	5	10'-5½"	30'-0"	90
S23	2	#6	5	10'-5"	29'-11"	90
S24	2	#6	5	10'-4½"	29'-10"	90
S25	2	#6	5	10'-4"	29'-9"	89
S26	2	#6	5	10'-3½"	29'-8"	89
S27	2	#6	5	10'-3"	29'-7"	89
S28	2	#6	5	10'-2½"	29'-6"	89
S29	2	#6	5	10'-2"	29'-5"	88
S30	2	#6	5	10'-1½"	29'-4"	88
S31	2	#6	5	10'-1"	29'-3"	88
S32	2	#6	5	10'-0½"	29'-2"	88
S33	2	#6	5	10'-0"	29'-1"	87
S34	2	#6	5	9'-11½"	29'-0"	87
S35	2	#6	5	9'-11"	28'-11"	87
S36	2	#6	5	9'-10½"	28'-10"	87
S37	2	#6	5	9'-10"	28'-9"	86
S38	2	#6	5	9'-9½"	28'-8"	86
S39	2	#6	5	9'-8"	28'-5"	85
S40	2	#6	5	9'-5½"	28'-0"	84
S41	2	#6	5	9'-3"	27'-7"	83
S42	2	#6	5	9'-1"	27'-3"	82
S43	2	#6	5	8'-10½"	26'-10"	81
S44	2	#6	5	8'-8"	26'-5"	79
S45	2	#6	5	8'-6"	26'-1"	78
S46	2	#6	5	8'-3½"	25'-8"	77
S47	2	#6	5	8'-1"	25'-3"	76
S48	2	#6	5	7'-11"	24'-11"	75
S49	2	#6	5	7'-8½"	24'-6"	74
S50	2	#6	5	7'-6"	24'-1"	72
S51	2	#6	5	7'-4"	23'-9"	71
S52	2	#6	5	7'-1½"	23'-4"	70
S53	2	#6	5	6'-11"	22'-11"	69
S54	2	#6	5	6'-9"	22'-7"	68
S55	2	#6	5	6'-6½"	22'-2"	67
S56	2	#6	5	6'-4"	21'-9"	65
S57	2	#6	5	6'-2"	21'-5"	64
S58	2	#6	5	5'-11½"	21'-0"	63
S59	2	#6	5	5'-9"	20'-7"	62
S62	32	#4	3	-	8'-6"	182
U1	12	#4	3	-	8'-7"	69
U2	12	#4	3	-	8'-4"	67
REINFORCING STEEL						16,360 LBS.
CLASS A CONCRETE						
POUR #4 - CAP						76.6 CY

BILL OF MATERIAL
COLUMNS

BENT 1

BAR	NO.	SIZE	TYPE	LENGTH	WEIGHT
S60	34	#5	6	16'-4"	579
S61	51	#5	9	6'-2"	328
V11	56	#10	STR	20'-8"	4,980
REINFORCING STEEL					5,887 LBS.
CLASS A CONCRETE					
POUR #3 - COLUMN					28.6 CY

BENT 2

BAR	NO.	SIZE	TYPE	LENGTH	WEIGHT
S60	64	#5	6	16'-4"	1,090
S61	96	#5	9	6'-2"	617
V12	56	#10	STR	34'-10"	8,394
REINFORCING STEEL					10,101 LBS.
CLASS A CONCRETE					
POUR #3 - COLUMN					54.1 CY

BENT 3

BAR	NO.	SIZE	TYPE	LENGTH	WEIGHT
S60	92	#5	6	16'-4"	1,567
S61	138	#5	9	6'-2"	888
V13	56	#10	STR	49'-0"	11,807
REINFORCING STEEL					14,262 LBS.
CLASS A CONCRETE					
POUR #3 - COLUMN					79.6 CY

BENT 4

BAR	NO.	SIZE	TYPE	LENGTH	WEIGHT
S60	88	#5	6	16'-4"	1,499
S61	132	#5	9	6'-2"	849
V14	56	#10	STR	47'-9"	11,506
REINFORCING STEEL					13,854 LBS.
CLASS A CONCRETE					
POUR #3 - COLUMN					77.3 CY

BENT 5

BAR	NO.	SIZE	TYPE	LENGTH	WEIGHT
S60	44	#5	6	16'-4"	750
S61	66	#5	9	6'-2"	425
V15	56	#10	STR	25'-3"	6,084
REINFORCING STEEL					7,259 LBS.
CLASS A CONCRETE					
POUR #3 - COLUMN					36.8 CY

BILL OF MATERIAL
DRILLED PIERS

BENT 1

BAR	NO.	SIZE	TYPE	DIM "B"	LENGTH	WEIGHT
V1	64	10	STR	-	35'-8"	9,822
REINFORCING STEEL						9,822 LBS.
SP1	4	*	8	27'-6'	678'-0'	2,829
SPIRAL REINFORCING STEEL						2,829 LBS.
DRILLED PIER CONCRETE						
POUR #1 - DRILLED PIERS						53.1 CY
CSL TUBES						480.0 LF

BENT 2

BAR	NO.	SIZE	TYPE	DIM "B"	LENGTH	WEIGHT
V2	64	10	STR	-	29'-11"	8,239
REINFORCING STEEL						8,239 LBS.
SP2	4	*	8	22'-1"	550'-4"	2,296
SPIRAL REINFORCING STEEL						2,296 LBS.
DRILLED PIER CONCRETE						
POUR #1 - DRILLED PIERS						42.3 CY
CSL TUBES						387.2 LF

BENT 3

BAR	NO.	SIZE	TYPE	DIM "B"	LENGTH	WEIGHT
V3	64	10	STR	-	23'-2"	6,380
REINFORCING STEEL						6,380 LBS.
SP3	4	*	8	15'-0"	383'-3"	1,599
SPIRAL REINFORCING STEEL						1,599 LBS.
DRILLED PIER CONCRETE						
POUR #1 - DRILLED PIERS						29.8 CY
CSL TUBES						280.0 LF

BENT 4

BAR	NO.	SIZE	TYPE	DIM "B"	LENGTH	WEIGHT
V4	64	10	STR	-	27'-6"	7,573
REINFORCING STEEL						7,573 LBS.
SP4	4	*	8	19'-7"	491'-4"	2,050
SPIRAL REINFORCING STEEL						2,050 LBS.
DRILLED PIER CONCRETE						
POUR #1 - DRILLED PIERS						37.8 CY
CSL TUBES						348.8 LF

BENT 5

BAR	NO.	SIZE	TYPE	DIM "B"	LENGTH	WEIGHT
V5	64	10	STR	-	29'-0"	7,986
REINFORCING STEEL						7,986 LBS.
SP5	4	*	8	20'-10"	520'-10"	2,173
SPIRAL REINFORCING STEEL						2,173 LBS.
DRILLED PIER CONCRETE						
POUR #1 - DRILLED PIERS						40.6 CY
CSL TUBES						372.8 LF

* - THE "SP" SPIRAL REINFORCING STEEL SHALL BE W31 OR D-31 COLD DRAWN WIRE OR #5 PLAIN OR DEFORMED BAR.

BILL OF MATERIAL
FOOTING
(QUANTITY SHOWN FOR ONE BENT ONLY)
(5 BENTS REQUIRED)

BAR	NO.	SIZE	TYPE	LENGTH	WEIGHT
M1	56	#10	4	14'-7"	3,514
T1	46	#10	STR	17'-6"	3,464
T2	90	#10	1	20'-4"	7,874
T3	24	#6	STR	17'-6"	631
T4	96	#6	3	7'-7"	1,093
REINFORCING STEEL					16,576 LBS.
CLASS A CONCRETE					
POUR #2 - FOOTING					72.0 CY

BILL OF MATERIAL
SUMMARY

		REINFORCING STEEL (LBS.)	SPIRAL REINFORCING STEEL (LBS.)	CLASS A CONCRETE (CY)	DRILLED PIER CONCRETE (CY)
BENT 1	CAP	16,360	-	76.6	-
	COLUMN	5,887	-	28.6	-
	FOOTING	16,576	-	72.0	-
	DRILLED PIER	9,822	2,829	-	53.1
	TOTAL	48,645	2,829	177.2	53.1
BENT 2	CAP	16,360	-	76.6	-
	COLUMN	10,101	-	54.1	-
	FOOTING	16,576	-	72.0	-
	DRILLED PIER	8,239	2,296	-	42.3
	TOTAL	51,276	2,296	202.7	42.3
BENT 3	CAP	16,360	-	76.6	-
	COLUMN	14,262	-	79.6	-
	FOOTING	16,576	-	72.0	-
	DRILLED PIER	6,380	1,599	-	29.8
	TOTAL	53,578	1,599	228.2	29.8
BENT 4	CAP	16,360	-	76.6	-
	COLUMN	13,854	-	77.3	-
	FOOTING	16,576	-	72.0	-
	DRILLED PIER	7,573	2,050	-	37.8
	TOTAL	54,363	2,050	225.9	37.8
BENT 5	CAP	16,360	-	76.6	-
	COLUMN	7,259	-	36.8	-
	FOOTING	16,576	-	72.0	-
	DRILLED PIER	7,986	2,173	-	40.6
	TOTAL	48,181	2,173	185.4	40.6

BAR TYPES
ALL BAR DIMENSIONS ARE OUT TO OUT

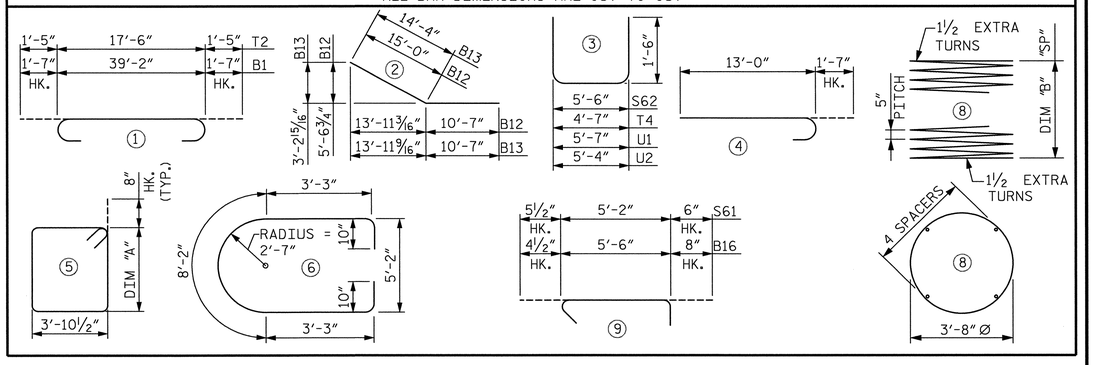

PROJECT NO. U-0071

DURHAM COUNTY

STATION: 23+29.61 -DFFLY-

SHEET 5 OF 5

STATE OF NORTH CAROLINA
DEPARTMENT OF TRANSPORTATION
RALEIGH

SUBSTRUCTURE
BENTS 1-5
BILL OF MATERIAL

NORTH CAROLINA PROFESSIONAL SEAL 29589 ENGINEER DOMENIC A. COLETTI
1-7-14

HDR Engineering, Inc. of the Carolinas
3733 National Drive, Suite 207 Raleigh, N.C. 27612
N.C.B.E.L.S. License Number: F-0116

REVISIONS						
NO.	BY:	DATE:	NO.	BY:	DATE:	SHEET NO. S-531
1	--	--	3	--	--	TOTAL SHEETS 671
2	--	--	4	--	--	

DES BY: W. WATSON DATE: 06/13
DES CHK: J. TAYLOR DATE: 06/13
DWG BY: M. SELLS DATE: 07/13
CHK BY: W. WATSON DATE: 07/13

ORIGINATED		YELLOW HIGHLIGHTED & REDLINE CHECKED		BLUE HIGHLIGHTED CHANGES		CHANGES VERIFIED BY	
INITIALS	DATE	INITIALS	DATE	INITIALS	DATE	VERIFIED	DATE

PLOT DRIVER: NCDOT_pdf_mono_eng_50.plt
USER: msells
FILE: ...\d0391221\U0071_11_BT1-5.dgn
DATE: 1/6/2014
PENTABLE: Durham_pen.tbl
TIME: 1:35:56 PM

NOTES

FOR SECTION A-A AND SECTION B-B SEE SHEET 3 OF 3.

FOR ADDITIONAL NOTES SEE SHEET 3 OF 3.

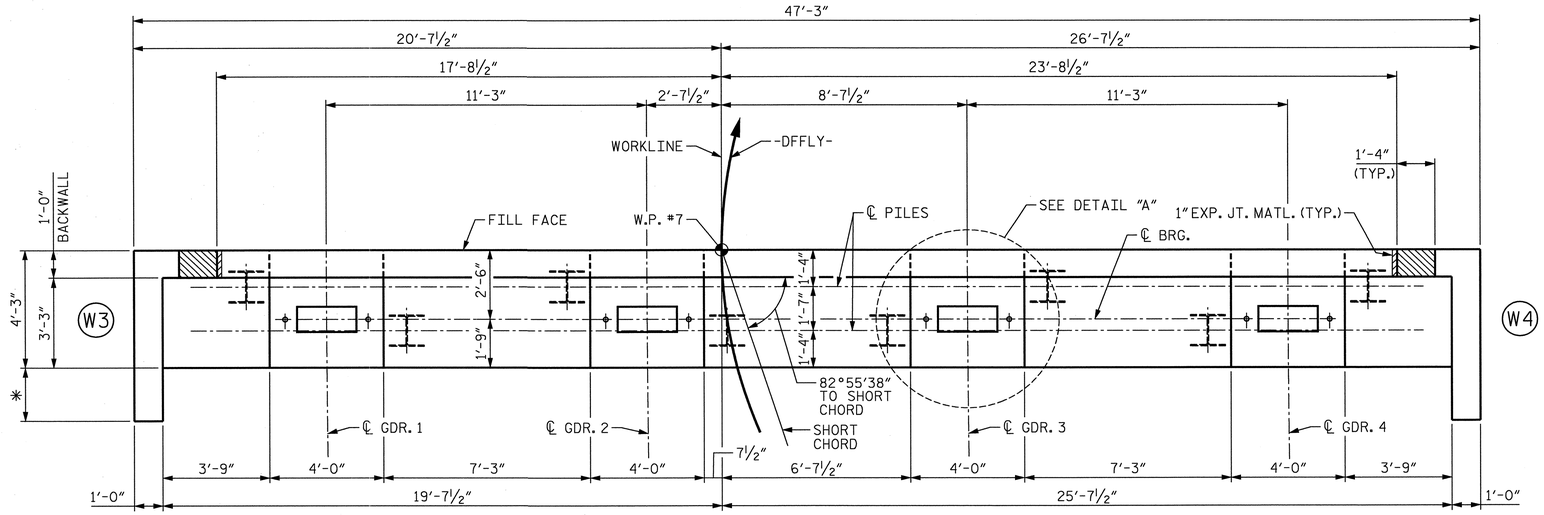

PLAN

✳ - WINGWALL EXTENSION DISTANCE TO BE FIELD ADJUSTED AS REQUIRED TO PROVIDE 1" EXP. JT. BETWEEN THE MSE WALL COPING AND THE EXTENDED WINGWALL. MSE WALL PLANS BY OTHERS.

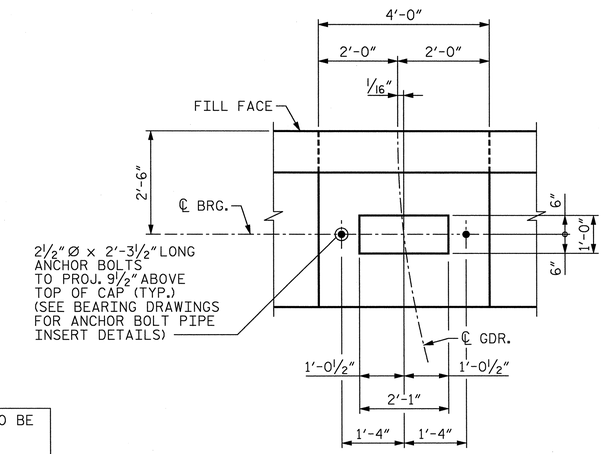

DETAIL "A"

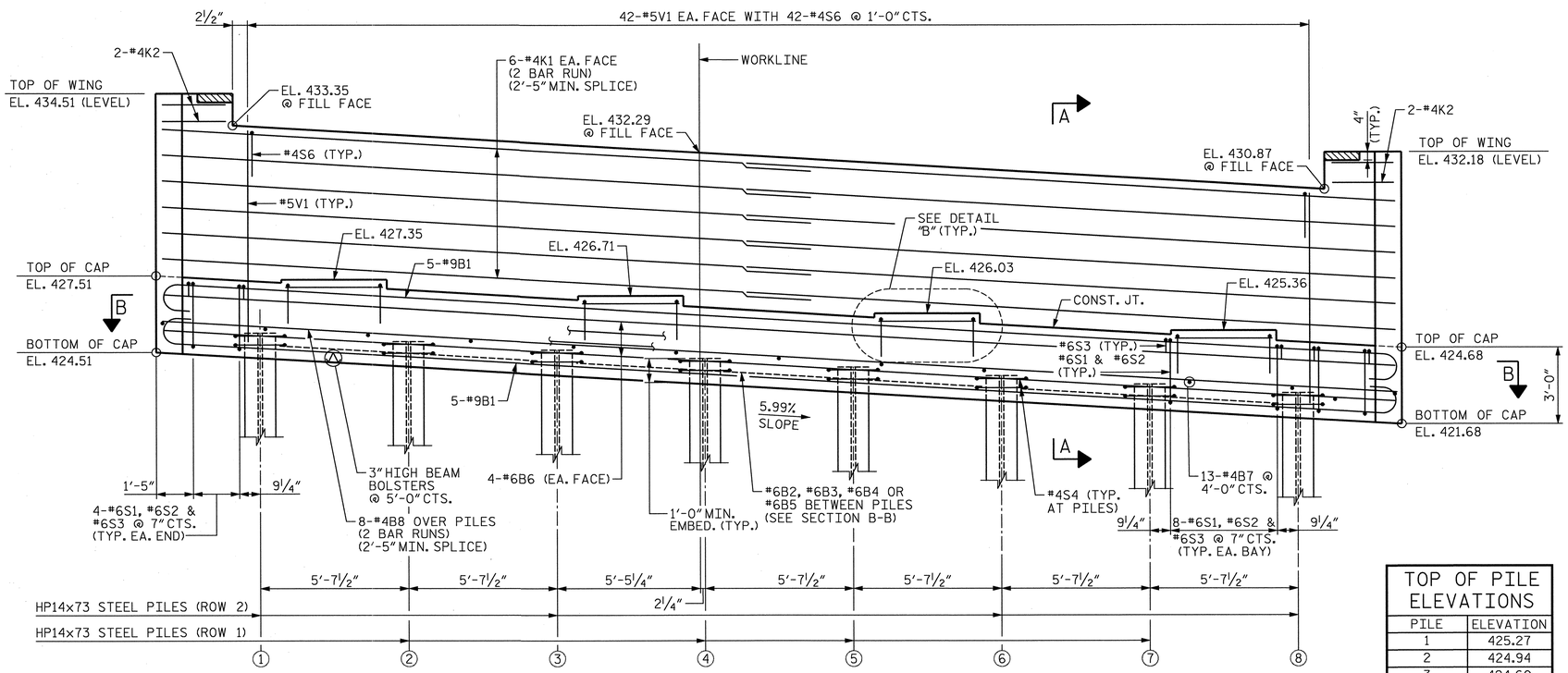

ELEVATION

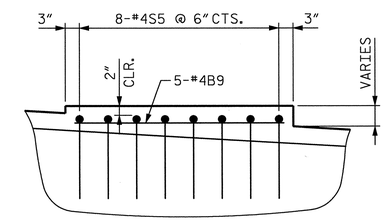

DETAIL "B"

TOP OF PILE ELEVATIONS	
PILE	ELEVATION
1	425.27
2	424.94
3	424.60
4	424.26
5	423.93
6	423.59
7	423.25
8	422.92'

PROJECT NO. U-0071

DURHAM COUNTY

STATION: 23+29.61 -DFFLY-

SHEET 1 OF 3

STATE OF NORTH CAROLINA
DEPARTMENT OF TRANSPORTATION
RALEIGH

SUBSTRUCTURE END BENT 2 PLAN AND ELEVATION

NORTH CAROLINA PROFESSIONAL SEAL 29589 ENGINEER DOMENIC A. COLETTI 1-7-14

HDR Engineering, Inc. of the Carolinas
3733 National Drive, Suite 207 Raleigh, N.C. 27612
N.C.B.E.L.S. License Number: F-0116

REVISIONS						SHEET NO.
NO.	BY:	DATE:	NO.	BY:	DATE:	S-532
1	--	--	3	--	--	TOTAL SHEETS
2	--	--	4	--	--	671

DES BY: W. WATSON	DATE: 03/13	DWG BY: B. PETERSON	DATE: 03/13
DES CHK: J. TAYLOR	DATE: 04/13	CHK BY: W. WATSON	DATE: 06/13

ORIGINATED		YELLOW HIGHLIGHTED & REDLINE CHECKED		BLUE HIGHLIGHTED CHANGES		CHANGES VERIFIED BY	
INITIALS	DATE	INITIALS	DATE	INITIALS	DATE	VERIFIED	DATE

PLOT DRIVER: NCDOT_pdf_mono_eng_50.plt
USER: mselis DATE: 1/7/2014
FILE: ...\d0391221\U0071_11_EB2-1.dgn
TABLE: Durham_pen.tbl
TIME: 2:17:44 PM

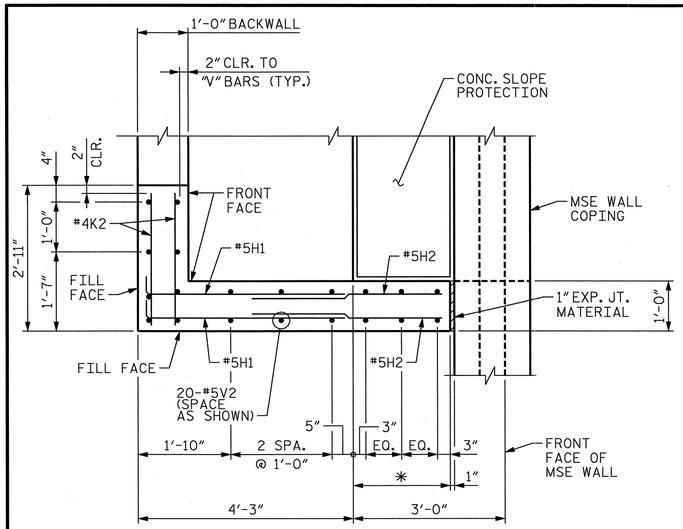

PLAN - WINGWALL "W3"

* = DIMENSION TO BE ADJUSTED AS REQD. IN FIELD TO MATCH MSE WALL COPING

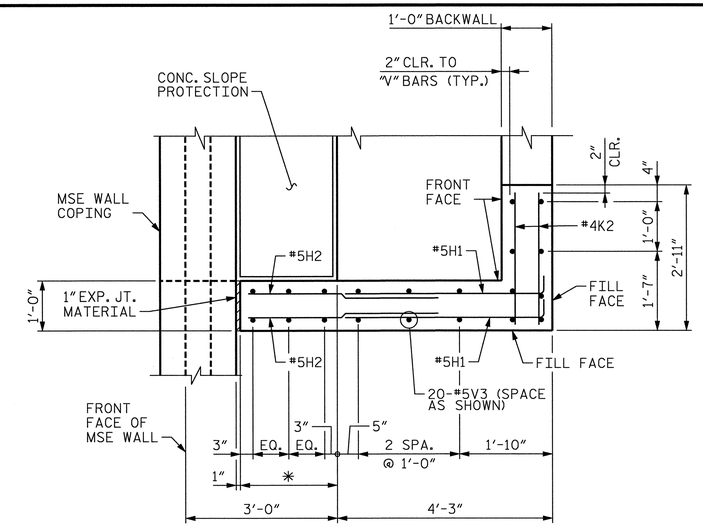

PLAN - WINGWALL "W4"

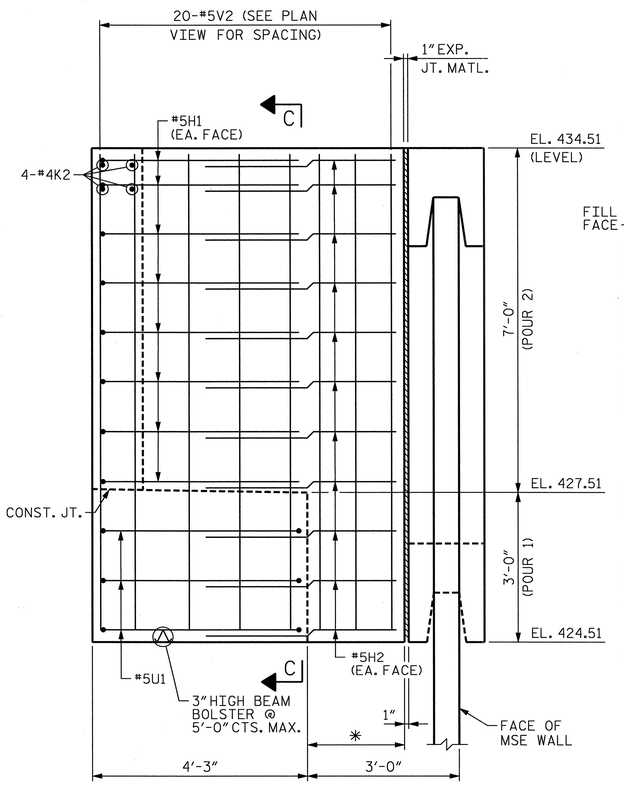

ELEVATION - WINGWALL "W3"

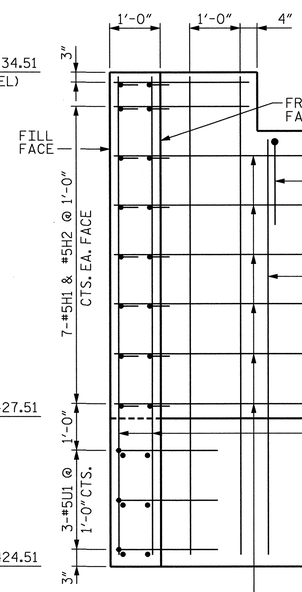

SECTION C-C

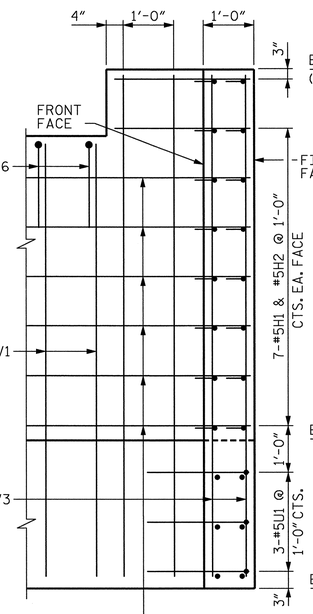

SECTION D-D

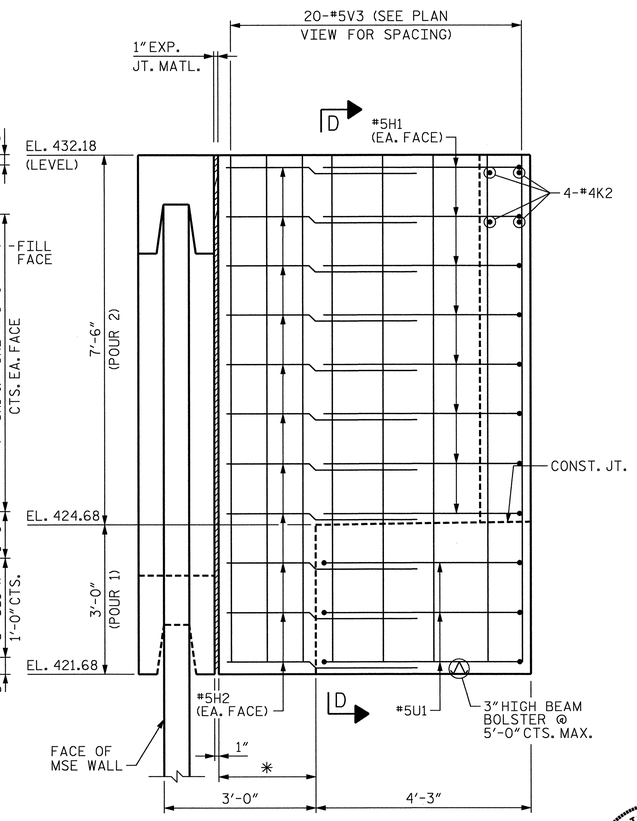

ELEVATION - WINGWALL "W4"

PROJECT NO. U-0071

DURHAM COUNTY

STATION: 23+29.61 -DFFLY-

SHEET 2 OF 3

STATE OF NORTH CAROLINA
DEPARTMENT OF TRANSPORTATION
RALEIGH

SUBSTRUCTURE END BENT 2 WINGWALLS AND DETAILS

NORTH CAROLINA PROFESSIONAL SEAL 29589 ENGINEER DOMENIC A. COLETTI
7-7-14

REVISIONS						SHEET NO.
NO.	BY:	DATE:	NO.	BY:	DATE:	S-633
1	--	--	3	--	--	TOTAL SHEETS
2	--	--	4	--	--	671

HDR Engineering, Inc. of the Carolinas
3733 National Drive, Suite 207 Raleigh, N.C. 27612
N.C.B.E.L.S. License Number: F-0116

DES BY: W. WATSON	DATE: 03/13	DWG BY: B. PETERSON	DATE: 03/13
DES CHK: J. TAYLOR	DATE: 04/13	CHK BY: W. WATSON	DATE: 06/13

ORIGINATED		YELLOW HIGHLIGHTED & REDLINE CHECKED		BLUE HIGHLIGHTED CHANGES		CHANGES VERIFIED BY	
INITIALS	DATE	INITIALS	DATE	INITIALS	DATE	VERIFIED	DATE

PLOT DRIVER: NCDOT_pdf_mono_eng_50.plt
USER: msells
FILE: ...\d0391221\U0071_11_EB2_2.dgn
PENTABLE: Durham_pen.tbl
DATE: 1/6/2014
TIME: 1:36:31 PM

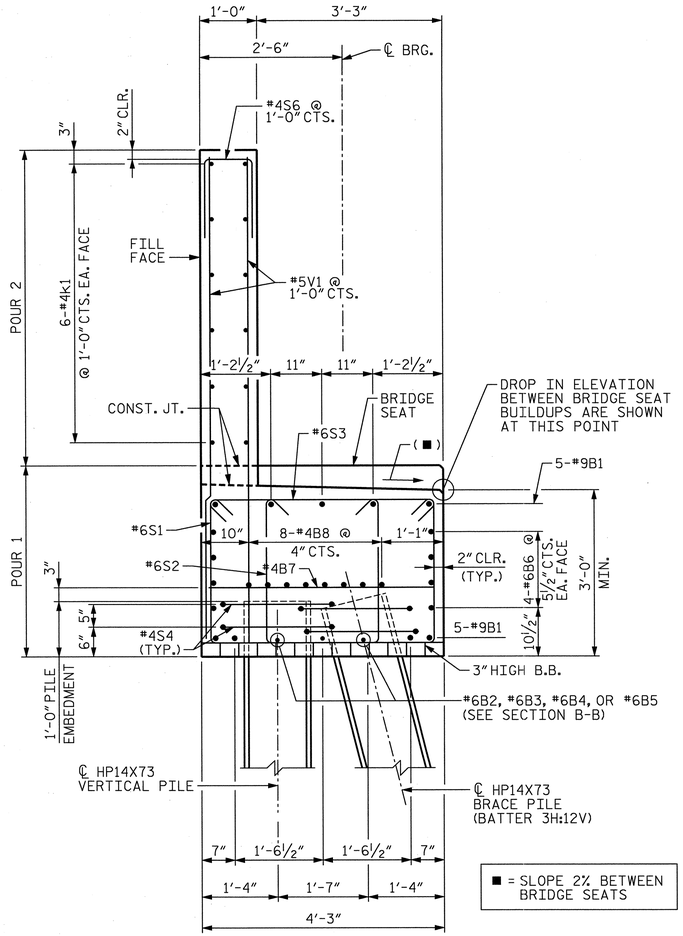

SECTION A-A

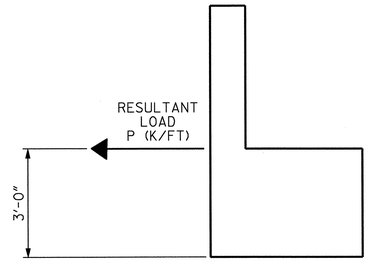

MSE REINFORCING STRAP LOAD DETAIL

LOAD CASE	RESULTANT LOAD, P (K/FT)
LIVE LOAD BRAKING	0.3
THERMAL CONTRACTION	1.2
WIND ON SUPERSTRUCTURE	1.3
WIND ON LIVE LOAD	0.2

MSE REINFORCING STRAP NOTES

MSE REINFORCING STRAPS SHALL BE ATTACHED TO THE END BENT CAP AND/OR BACKWALL. FOR DESIGN CRITERIA AND DETAILS, SEE MSE WALL SHEETS AND SPECIAL PROVISIONS.

PLANS, WORKING DRAWINGS AND DESIGN CALCULATIONS SHALL BE SUBMITTED BY THE CONTRACTOR TO THE ENGINEER FOR REVIEW AND APPROVAL. SEE SPECIAL PROVISIONS.

PLANS SUBMITTED FOR REVIEW SHALL INCLUDE THE FOLLOWING: PLAN VIEW, ELEVATION VIEW, TYPICAL SECTIONS, AND STRAP DETAILS.

THE MSE REINFORCING STRAPS SHALL BE DESIGNED TO CARRY THE LOADS FROM THE BRIDGE SUPERSTRUCTURE AS PRESENTED IN THE TABLE ABOVE. IN ADDITION, THE MSE REINFORCING STRAPS SHALL ALSO BE DESIGNED TO CARRY LOADS FROM SOIL PRESSURE AS OUTLINED IN THE SPECIAL PROVISIONS.

THE LOADS PRESENTED IN THE TABLE ABOVE ARE SERVICE LEVEL LOADS (NO LOAD FACTORS HAVE BEEN APPLIED). THE MSE WALL REINFORCING STRAP DESIGNER SHALL USE THESE LOADS IN ALL APPLICABLE LOAD COMBINATIONS AS APPROPRIATE, IN COMBINATION WITH SOIL PRESSURE LOADS.

A MINIMUM OF TWO ROWS OF MSE REINFORCING STRAPS IS REQUIRED.

NOTES

STIRRUPS IN CAP MAY BE SHIFTED AS NECESSARY TO CLEAR ANCHOR BOLTS.

BACKWALL SHALL BE PLACED BEFORE APPLYING THE EPOXY PROTECTIVE COATING.

THE TOP SURFACE AREAS OF THE END BENT CAPS SHALL BE CURED IN ACCORDANCE WITH THE STANDARD SPECIFICATIONS EXCEPT THE MEMBRANE CURING COMPOUND METHOD SHALL NOT BE USED.

THE TOP SURFACE OF THE CAP EXCEPT THE BRIDGE SEAT BUILDUPS SHALL BE SLOPED TRANSVERSELY FROM THE FILL FACE TO THE BACK FACE AT THE RATE OF 2%.

THE CONCRETE IN THE SHADED AREA OF THE WING SHALL BE POURED AFTER THE BARRIER RAIL ARE CAST IF SLIP FORMING IS USED.

EPOXY COAT THE END BENT CAP AFTER ADJUSTMENTS ARE MADE TO ELASTOMERIC BEARINGS AND ANCHOR BOLTS ARE GROUTED.

FOR MSE RETAINING WALLS, SEE SPECIAL PROVISIONS.

FOR PILE SPLICE DETAILS, SEE "END BENT 1 DETAILS" SHEET.

BAR TYPES

ALL DIMENSIONS ARE OUT TO OUT

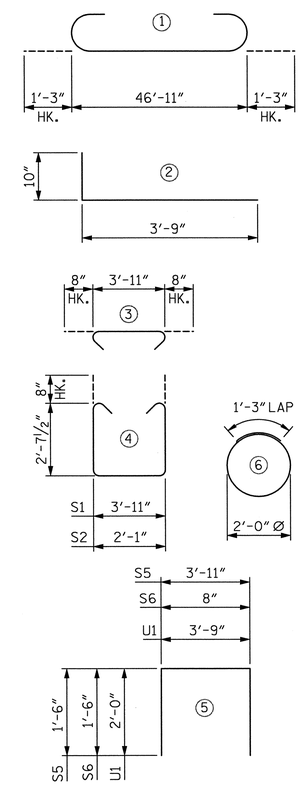

BILL OF MATERIAL

BAR	NO.	SIZE	TYPE	LENGTH	WEIGHT
B1	10	#9	1	49'-5"	1,680
B2	4	#6	STR	10'-9"	65
B3	2	#6	STR	9'-0"	27
B4	1	#6	STR	16'-4"	25
B5	1	#6	STR	5'-1"	8
B6	8	#6	STR	46'-11"	564
B7	13	#4	STR	3'-11"	34
B8	16	#4	STR	24'-8"	264
B9	20	#4	STR	3'-8"	49
K1	24	#4	STR	24'-8"	395
K2	8	#4	STR	2'-7"	14
H1	32	#5	2	4'-7"	153
H2	44	#5	STR	4'-6"	207
S1	64	#6	4	10'-6"	1,009
S2	64	#6	4	8'-8"	833
S3	64	#6	3	5'-3"	505
S4	16	#4	6	7'-7"	81
S5	32	#4	5	6'-11"	148
S6	42	#4	5	3'-8"	103
U1	6	#5	5	7'-9"	48
V1	84	#5	STR	8'-7"	752
V2	20	#5	STR	9'-8"	202
V3	20	#5	STR	10'-0"	209
REINFORCING STEEL				LBS.	7,375

CLASS 'A' CONCRETE	CU. YDS.
POUR-1 CAP & LOWER WINGS	23.6
POUR 2-BACKWALL & UPPER WINGS	13.3
TOTAL	36.9

HP 14X73 STEEL PILES	
NO.	8
LF.	220.0

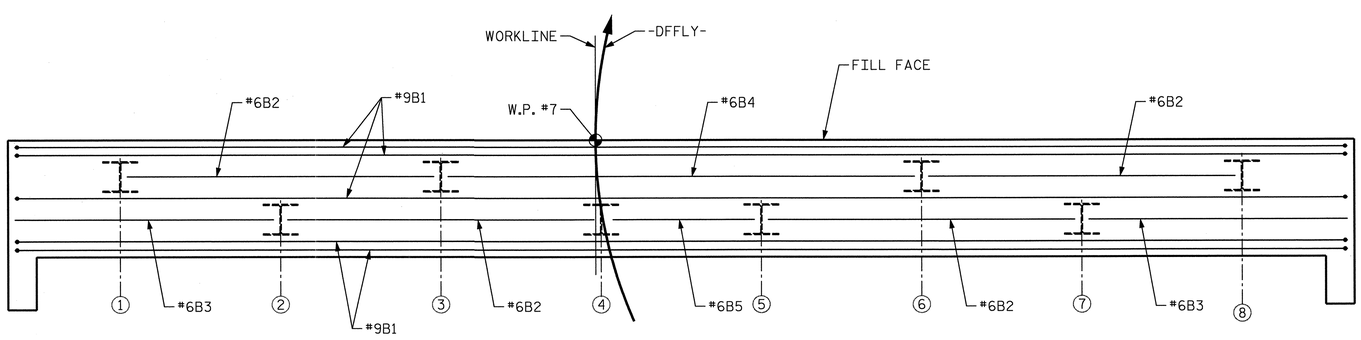

SECTION B-B

PROJECT NO. U-0071

DURHAM COUNTY

STATION: 23+29.61 -DFFLY-

SHEET 3 OF 3

STATE OF NORTH CAROLINA
DEPARTMENT OF TRANSPORTATION
RALEIGH

SUBSTRUCTURE END BENT 2 DETAILS

REVISIONS						
NO.	BY:	DATE:	NO.	BY:	DATE:	
1	--	--	3	--	--	
2	--	--	4	--	--	

SHEET NO. S-534

TOTAL SHEETS 671

NORTH CAROLINA PROFESSIONAL SEAL 29589 ENGINEER DOMENIC A. COLETTI 1-7-14

HDR Engineering, Inc. of the Carolinas
3733 National Drive, Suite 207 Raleigh, N.C. 27612
N.C.B.E.L.S. License Number: F-0116

DES BY: W. WATSON	DATE: 03/13	DWG BY: M. SELLS	DATE: 03/13
DES CHK: J. TAYLOR	DATE: 04/13	CHK BY: W. WATSON	DATE: 06/13

ORIGINATED		YELLOW HIGHLIGHTED & REDLINE CHECKED		BLUE HIGHLIGHTED CHANGES		CHANGES VERIFIED BY	
INITIALS	DATE	INITIALS	DATE	INITIALS	DATE	VERIFIED	DATE

PLOT DRIVER: NCDOT_pdf_mono_eng_50.plt
USER: msells DATE: 1/7/2014
FILE: ...\d039221\U0071_11_EB2-3.dgn
)ENTABLE: Durham_pen.tbl
TIME: 2:36:35 PM

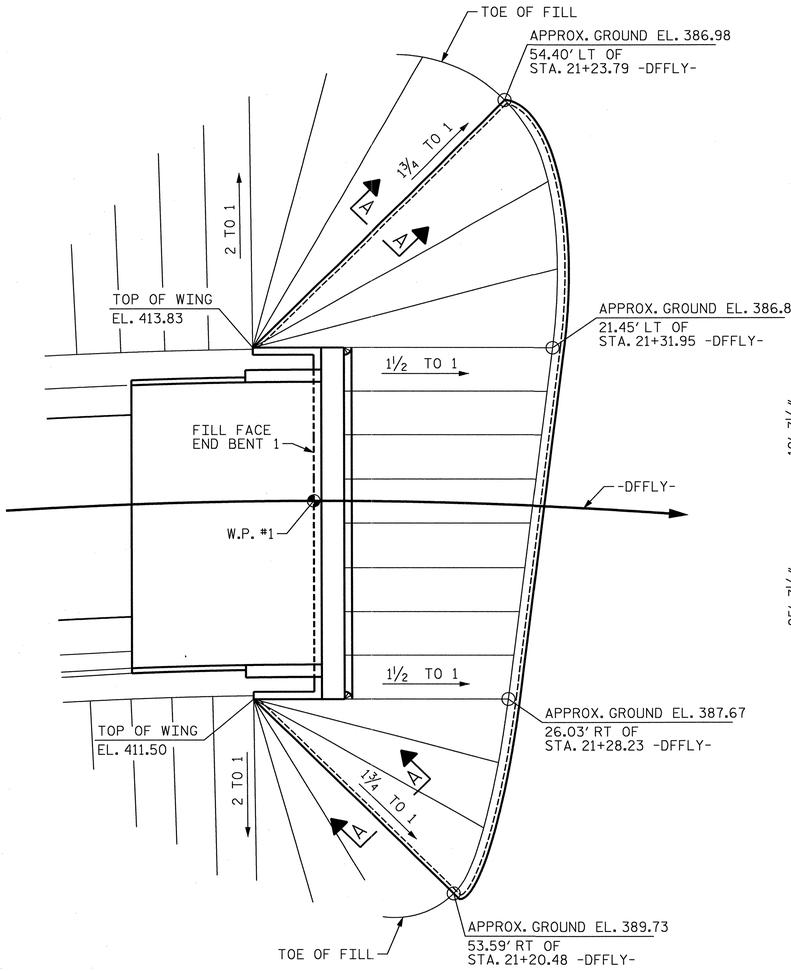

PLAN AT END BENT 1

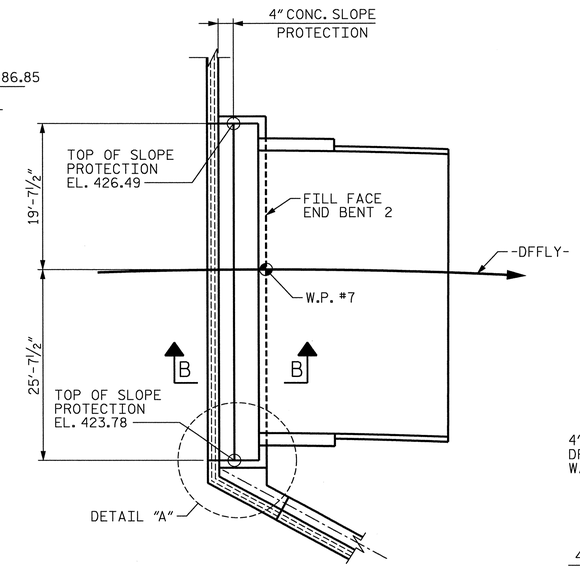

PLAN AT END BENT 2

NOTES

SLOPE PROTECTION SHALL BE PLACED UNDER THE ENDS OF THE BRIDGE AS SHOWN IN THE DETAILS. STRAIGHT EDGING WILL NOT BE REQUIRED UNLESS, IN THE OPINION OF THE ENGINEER, VISUAL INSPECTION INDICATES A NEED FOR IT.
MEASUREMENT AND PAYMENT SHALL BE AS PRESCRIBED IN SECTION 462 OF THE STANDARD SPECIFICATIONS. FOR BERM WIDTH, SEE GENERAL DRAWING.

SLOPE PROTECTION SHALL CONSIST OF 4" POURED-IN-PLACE CONCRETE PAVING AS SHOWN IN THE DETAILS ON THIS SHEET. CONCRETE SHALL BE CLASS "B". THE CONCRETE SURFACE SHALL BE FLOATED WITH A WOODEN FLOAT AND FINISHED. WELDED WIRE FABRIC REINFORCING SHALL BE 6 X 6 - W1.4 X W1.4, 60" WIDE. SLOPE PROTECTION SHALL BE POURED IN 5' STRIPS AS SHOWN IN THE "POURING DETAIL" WITH 2'-0" LONG #4 BARS PLACED ALONG THE SLOPE BETWEEN STRIPS AT 1'-6" MAXIMUM SPACING. SLOPE PROTECTION MAY BE POURED IN ALTERNATE 4' AND 5' STRIPS AS SHOWN IN THE "OPTIONAL POURING DETAIL" WITH ADJACENT RUNS OF WELDED WIRE FABRIC LAPPING AT LEAST 6". THE COST OF THE WELDED WIRE FABRIC AND #4 BARS, IF USED, SHALL BE INCLUDED IN THE CONTRACT UNIT PRICE BID PER SQUARE YARD FOR SLOPE PROTECTION.

BRIDGE @ STA. 23+29.61 -DFFLY-	4 INCH SLOPE PROTECTION	✳ WELDED WIRE FABRIC 60 INCHES WIDE
	SQUARE YARDS	APPROX. L.F.
END BENT 1	361.0	722
END BENT 2	10.1	20

✳ QUANTITY SHOWN IS BASED ON 5'-0" POURS.

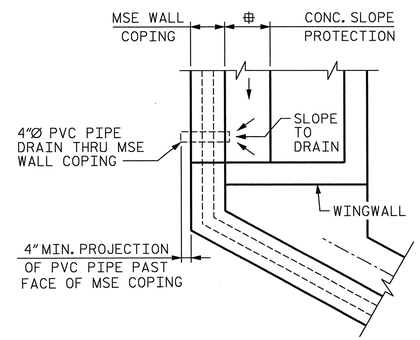

DETAIL "A"

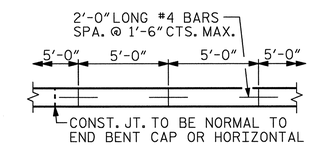

STRIP WIDTHS MAY VARY IN CURVED PORTION.

POURING DETAIL

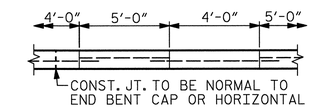

POUR A 4'-0" STRIP FIRST. STRIP WIDTHS MAY VARY IN CURVED PORTION.

OPTIONAL POURING DETAIL

⊕ = DIMENSION TO BE ADJUSTED AS REQ'D IN FIELD TO MATCH MSE WALL, SEE "END BENT 2 WINGWALLS AND DETAILS" SHEET.

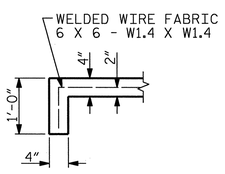

SECTION A-A

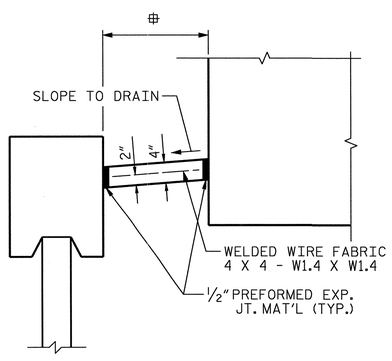

SECTION B-B

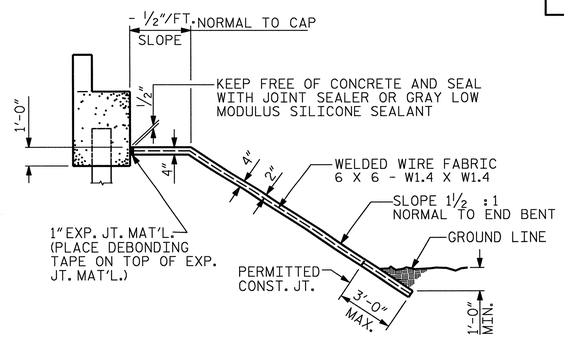

SECTION ALONG ℄ ROADWAY
WHEN DITCH IS NOT PROVIDED

PROJECT NO. U-0071
DURHAM COUNTY
STATION: 23+29.61 -DFFLY-

STATE OF NORTH CAROLINA
DEPARTMENT OF TRANSPORTATION
RALEIGH

SLOPE PROTECTION DETAILS

NORTH CAROLINA PROFESSIONAL SEAL 29589 ENGINEER DOMENIC A. COLETTI
7-14

HDR Engineering, Inc. of the Carolinas
3733 National Drive, Suite 207 Raleigh, N.C. 27612
N.C.B.E.L.S. License Number: F-0116

REVISIONS						SHEET NO.
NO.	BY:	DATE:	NO.	BY:	DATE:	S-835
1	--	--	3	--	--	TOTAL SHEETS
2	--	--	4	--	--	71

DES BY: B. PETERSON	DATE: 03/13	DWG BY: M. SELLS	DATE: 03/13
DES CHK: J. TAYLOR	DATE: 06/13	CHK BY: J. TAYLOR	DATE: 06/13

ORIGINATED		YELLOW HIGHLIGHTED & REDLINE CHECKED		BLUE HIGHLIGHTED CHANGES		CHANGES VERIFIED BY	
INITIALS	DATE	INITIALS	DATE	INITIALS	DATE	VERIFIED	DATE

PLOT DRIVER: NCDOT_pdf_mono_eng_50.plt
USER: msells DATE: 1/6/2014
FILE: ...\Tpd\d039122\U0071_11_SP1.dgn
PENTABLE: Durham_pen.tbl
TIME: 1:37:18 PM

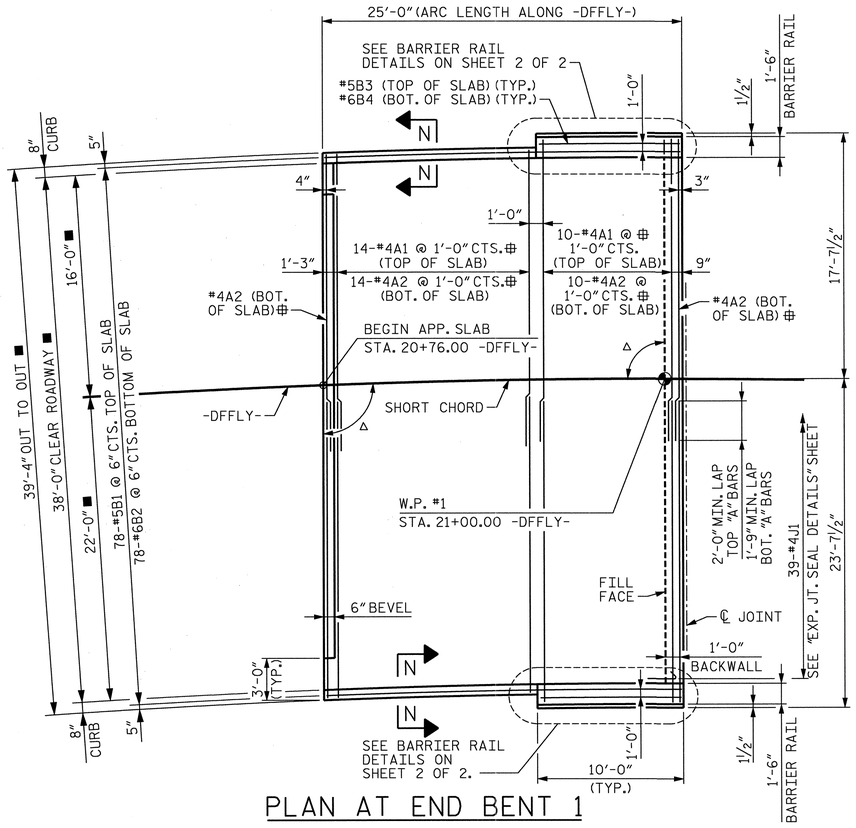

PLAN AT END BENT 1

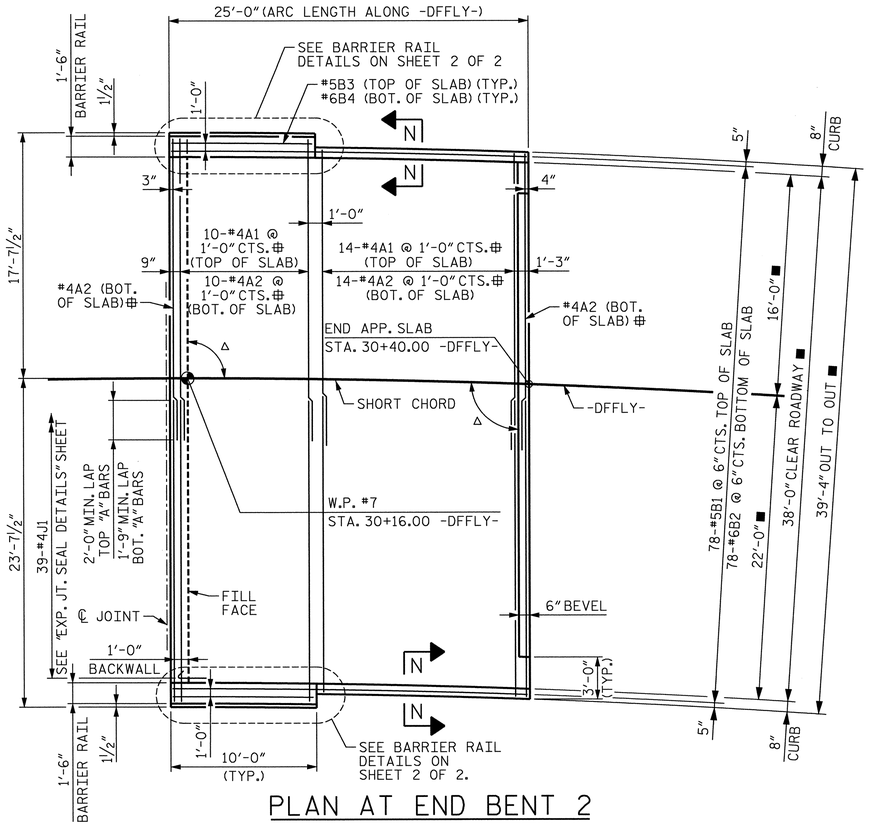

PLAN AT END BENT 2

⊕ = 2 BAR RUNS

■ = RADIAL DIMENSION

✳ = EPOXY COATED

✳✳ = CONCRETE QUANTITY DOES NOT INCLUDE BARRIER RAIL

Δ = 91°04'09" TO SHORT CHORD

† = NORMAL TO BENT

◐ = FOR PLACEMENT OF #4J1 SEE "EXPANSION JOINT SEAL DETAILS" SHEET

BILL OF MATERIAL

FOR ONE APPR. SLAB (2 REQD.)

BAR	NO.	SIZE	TYPE	LENGTH	WEIGHT
✳ A1	48	#4	STR	21'-6"	689
A2	52	#4	STR	21'-4"	741
✳ B1	78	#5	STR	23'-10"	1,939
B2	78	#6	STR	24'-8"	2,890
✳ B3	2	#5	STR	9'-8"	20
B4	2	#6	STR	9'-8"	29
✳ J1	39	#4	1	1'-5"	37
REINFORCING STEEL				LBS.	3,660
✳ EPOXY COATED REINFORCING STEEL				LBS.	2,685
CLASS AA CONCRETE ✳✳				C. Y.	43.5

BAR TYPES

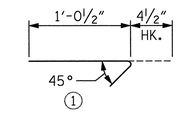

ALL BAR DIMENSIONS ARE OUT TO OUT

SPLICE LENGTHS

BAR SIZE	EPOXY COATED	UNCOATED
#4	2'-0"	1'-9"
#5	2'-6"	2'-2"
#6	3'-10"	2'-7"

NOTES

APPROACH SLAB SHALL NOT BE CONSTRUCTED PRIOR TO COMPLETION OF THE BRIDGE DECK.

FOR REINFORCED BRIDGE APPROACH FILL INCLUDING GEOTEXTILE, IMPERMEABLE GEOMEMBRANE, 4" Ø DRAINAGE PIPE, #78M STONE, AND SELECT MATERIAL, SEE ROADWAY PLANS.

AREA BETWEEN THE WINGWALL AND APPROACH SLAB SHALL BE GRADED TO DRAIN THE WATER AWAY FROM THE FILL FACE OF THE BRIDGE AND SHALL BE PAVED. SEE ROADWAY PLANS.

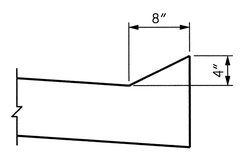

SECTION N-N

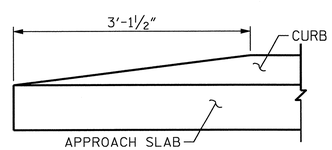

END OF CURB WITHOUT SHOULDER BERM GUTTER

CURB DETAILS

PROJECT NO. U-0071

DURHAM COUNTY

STATION: 23+29.61 -DFFLY-

SHEET 1 OF 3

STATE OF NORTH CAROLINA
DEPARTMENT OF TRANSPORTATION
RALEIGH

BRIDGE APPROACH SLAB DETAILS

REVISIONS						SHEET NO.
NO.	BY:	DATE:	NO.	BY:	DATE:	S-536
1	--	--	3	--	--	TOTAL SHEETS
2	--	--	4	--	--	67

NORTH CAROLINA PROFESSIONAL SEAL 29589 ENGINEER DOMENIC A. COLETTI 1-7-14

HDR Engineering, Inc. of the Carolinas
3733 National Drive, Suite 207 Raleigh, N.C. 27612
N.C.B.E.L.S. License Number: F-0116

DES BY:	B. PETERSON	DATE :	03/13	DWG BY:	B. PETERSON	DATE :	03/13
DES CHK:	K. DICKENS	DATE :	06/13	CHK BY:	K. DICKENS	DATE :	06/13

ORIGINATED		YELLOW HIGHLIGHTED & REDLINE CHECKED		BLUE HIGHLIGHTED CHANGES		CHANGES VERIFIED BY:	
INITIALS	DATE	INITIALS	DATE	INITIALS	DATE	VERIFIED	DATE

PLOT DRIVER: NCDOT_pdf_mono_eng_50.plt
USER: msells DATE: 1/6/2014
FILE: ...\tpa\d039122\U0071_11_AS1.DGN
PENTABLE: Durham_pen.tbl
TIME: 1:37:56 PM

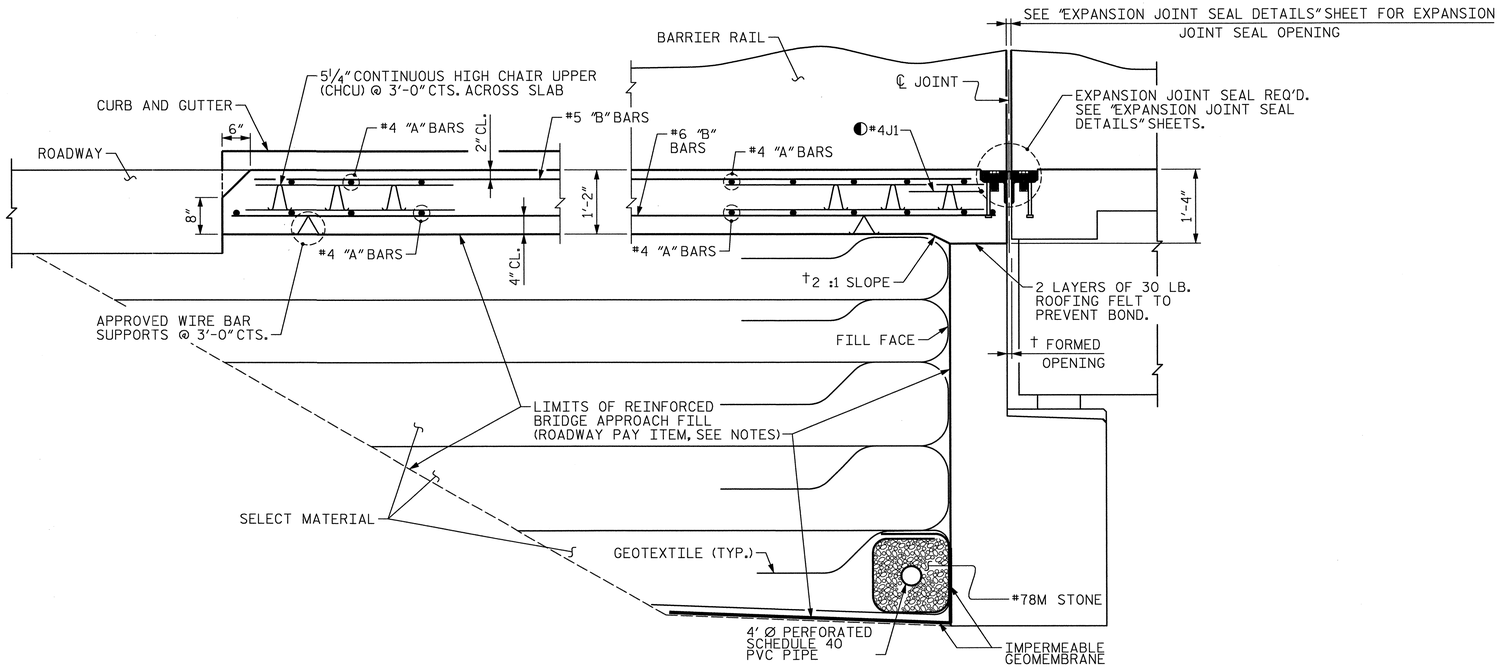

SECTION THRU SLAB @ END BENT 1

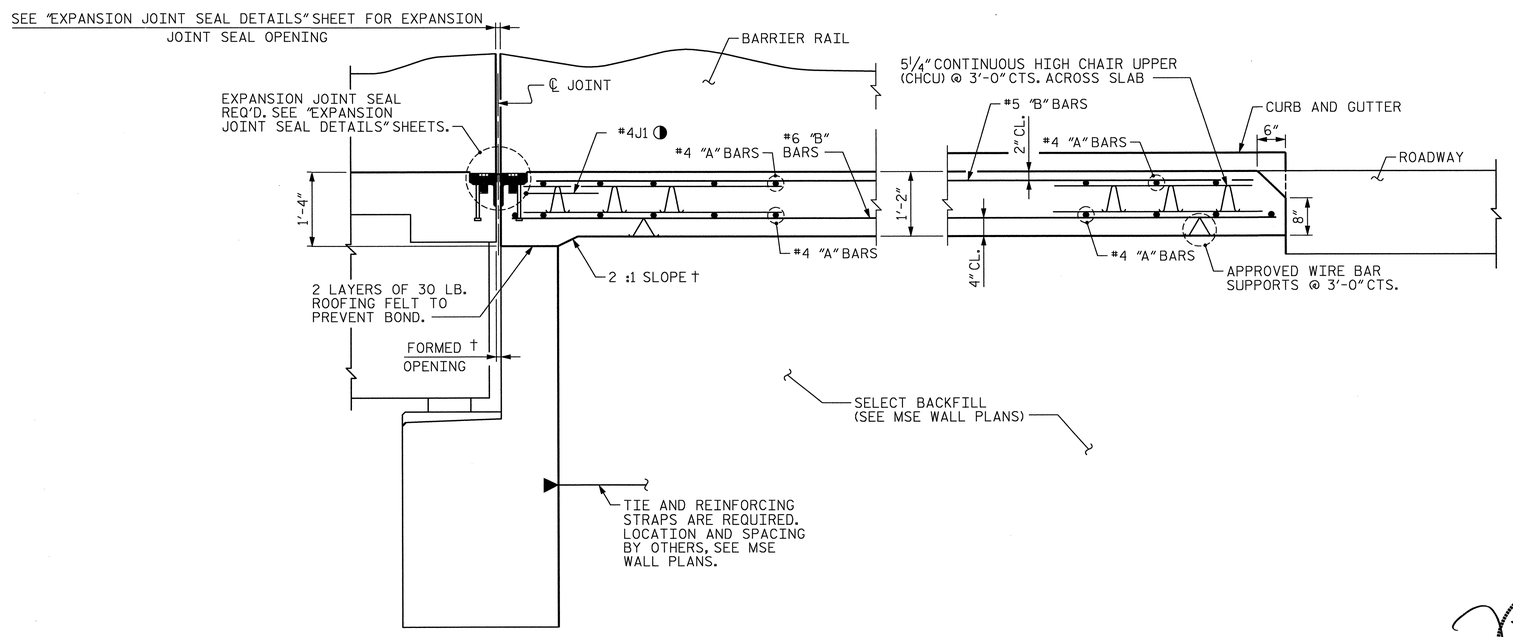

SECTION THRU SLAB @ END BENT 2

PROJECT NO. U-0071

DURHAM COUNTY

STATION: 23+29.61 -DFFLY-

SHEET 2 OF 3

STATE OF NORTH CAROLINA
DEPARTMENT OF TRANSPORTATION
RALEIGH

BRIDGE APPROACH SLAB DETAILS

REVISIONS								SHEET NO.
NO.	BY:	DATE:	NO.	BY:	DATE:			S-537
1	--	--	3	--	--			TOTAL SHEETS
2	--	--	4	--	--			671

NORTH CAROLINA PROFESSIONAL SEAL 29589 ENGINEER DOMENIC A. COLETTI
1-7-14

HDR Engineering, Inc. of the Carolinas
3733 National Drive, Suite 207 Raleigh, N.C. 27612
N.C.B.E.L.S. License Number: F-0116

DES BY:	B. PETERSON	DATE :	03/13	DWG BY:	B. PETERSON	DATE :	03/13
DES CHK:	K. DICKENS	DATE :	06/13	CHK BY:	K. DICKENS	DATE :	06/13

ORIGINATED		YELLOW HIGHLIGHTED & REDLINE CHECKED		BLUE HIGHLIGHTED CHANGES		CHANGES VERIFIED BY	
INITIALS	DATE	INITIALS	DATE	INITIALS	DATE	VERIFIED	DATE

PLOT DRIVER: NCDOT_pdf_mono_eng_50.plt
USER: msells
FILE: ...\tpa\d039122\U0071_11_AS2.DGN
DATE: 1/6/2014
TIME: 1:38:16 PM
PENTABLE: Durham_pen.tbl

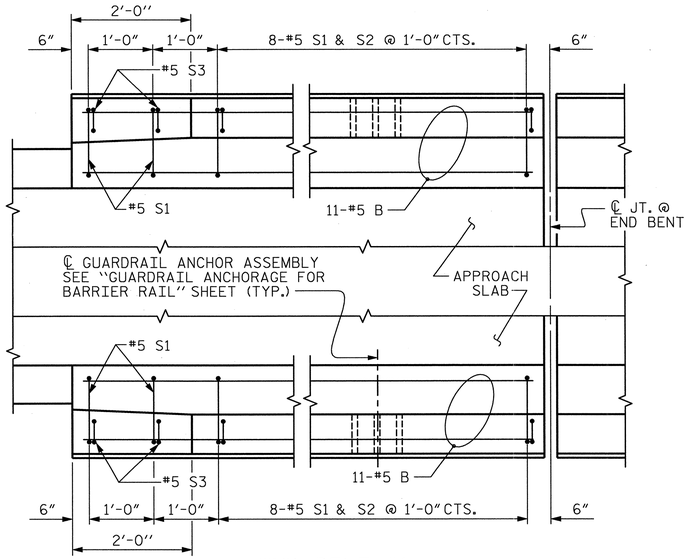

END BENT #1

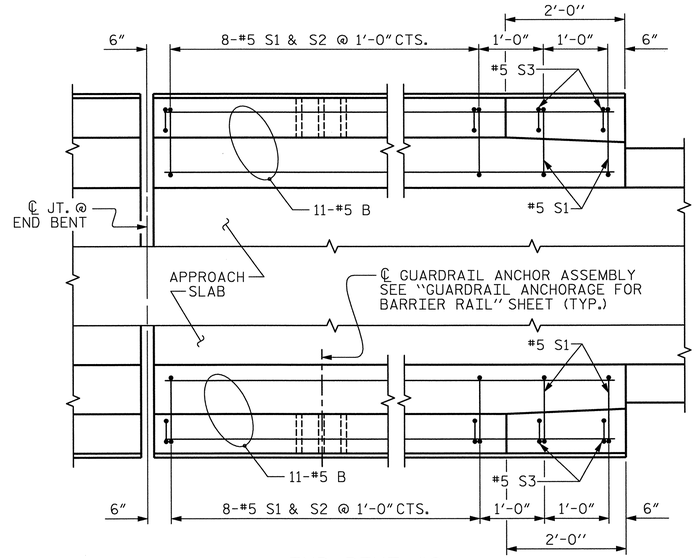

END BENT #2

PLAN OF BARRIER RAIL

NOTES

THE COST OF THE BARRIER RAIL ON THE APPROACH SLAB SHALL BE INCLUDED IN THE LINEAR FOOT CONTRACT PRICE BID FOR "CONCRETE BARRIER RAIL".

THE BARRIER RAIL ON EACH APPROACH SLAB SHALL NOT BE CAST UNTIL ALL APPROACH SLAB CONCRETE HAS BEEN CAST AND HAS REACHED A MINIMUM COMPRESSIVE STRENGTH OF 3,000 PSI.

ALL REINFORCING STEEL IN BARRIER RAILS SHALL BE EPOXY COATED.

BAR TYPES

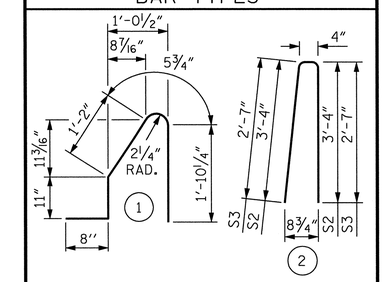

ALL BAR DIMENSIONS ARE OUT TO OUT

BILL OF MATERIAL

BARRIER RAIL ONLY

BAR	NO.	SIZE	TYPE	LENGTH	WEIGHT
* B	44	#5	STR	9'-8"	444
* S1	40	#5	1	5'-1"	212
* S2	32	#5	2	7'-0"	234
* S3	8	#5	2	5'-6"	46

* EPOXY COATED REINFORCING STEEL	LBS.	936
CLASS AA CONCRETE	C. Y.	5.4
CONCRETE BARRIER RAIL	LIN. FT.	40.0

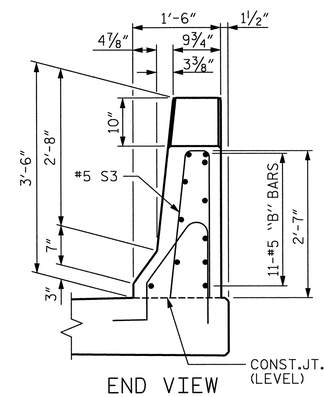

END VIEW

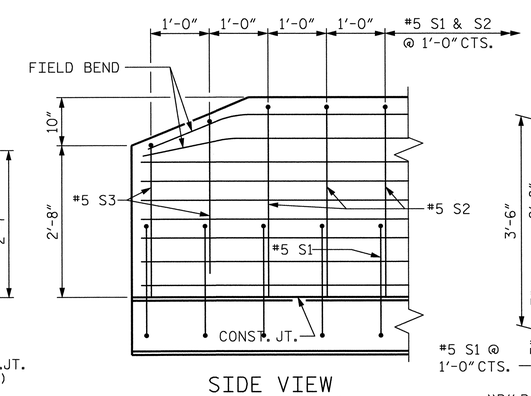

SIDE VIEW

END OF RAIL DETAILS

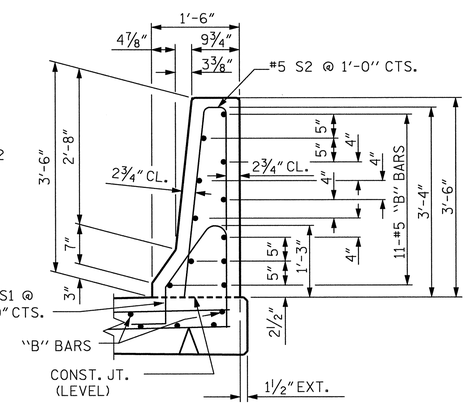

SECTION THRU RAIL

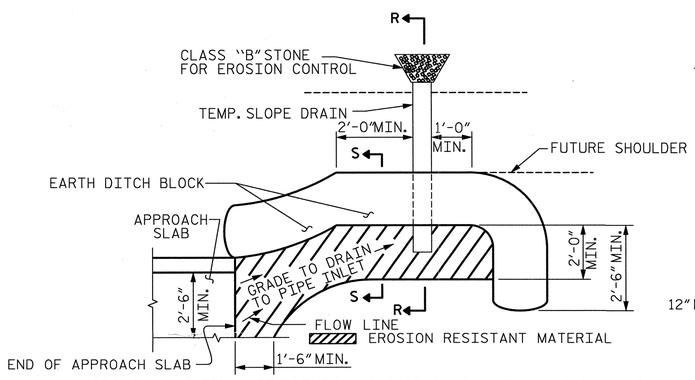

NOTE: IMMEDIATELY AFTER THE CONSTRUCTION OF THE APPROACH SLAB, THE CONTRACTOR SHALL PROVIDE TEMPORARY BERM AND SLOPE DRAIN. CONTRACTOR SHALL GRADE TO PIPE INLET AND PROVIDE EROSION RESISTANT MATERIAL AS SHOWN. THE EROSION RESISTANT MATERIAL SHALL BE EITHER 1) ASPHALT PLANT MIX, TYPE 1 OR TYPE 2, MIN. 2" DEPTH, 2) EROSION CONTROL MAT, OR 3) CONCRETE, AS DIRECTED BY THE ENGINEER. THE SLOPE DRAIN SHALL CONSIST OF A NON-PERFORATED TEMPORARY DRAINAGE PIPE, 12 INCHES IN DIAMETER.

PLAN VIEW

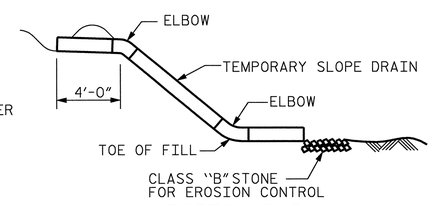

SECTION R-R

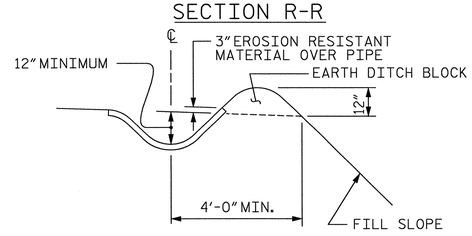

SECTION S-S

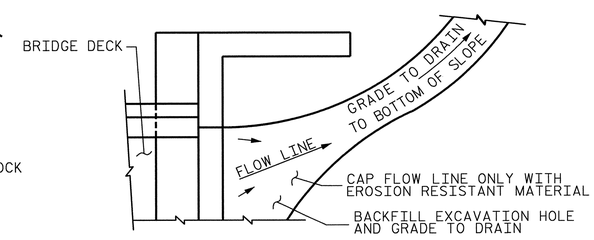

NOTE: IF THE APPROACH SLAB IS NOT CONSTRUCTED IMMEDIATELY AFTER THE BACKFILLING OF THE END BENT EXCAVATION, GRADE TO DRAIN TO THE BOTTOM OF THE SLOPE AND PROVIDE EROSION RESISTANT MATERIAL, SUCH AS FIBERGLASS ROVING OR AS DIRECTED BY THE ENGINEER TO PREVENT SOIL EROSION AND TO PROTECT THE AREA ADJACENT TO THE STRUCTURE. THE CONTRACTOR WILL BE REQUIRED TO REMOVE THESE MATERIALS PRIOR TO CONSTRUCTION OF THE APPROACH SLAB.

TEMPORARY DRAINAGE DETAIL

TEMPORARY BERM AND SLOPE DRAIN DETAILS

(TO BE USED WHEN SHOULDER BERM GUTTER IS REQUIRED)

DRAWN BY : FCJ 11/88	REV. 10/1/11	MAA/GM	ASSEMBLED BY :	DATE :	
CHECKED BY : ARB 11/88	REV. 7/12	MAA/GM	CHECKED BY :	DATE :	
	REV. 10/12	MAA/GM			
DES BY: B. PETERSON	DATE : 03/13	DWG BY: B. PETERSON	DATE : 03/13		
DES CHK: K. DICKENS	DATE : 06/13	CHK BY: K. DICKENS	DATE : 06/13		

PROJECT NO. U-0071

DURHAM COUNTY

STATION: 23+29.61 -DFFLY-

SHEET 3 OF 3

STATE OF NORTH CAROLINA
DEPARTMENT OF TRANSPORTATION
RALEIGH

STANDARD
BRIDGE
APPROACH SLAB
DETAILS

NORTH CAROLINA PROFESSIONAL SEAL 29589 ENGINEER DOMENIC A. COLETTI 12-7-14

HDR Engineering, Inc. of the Carolinas
3733 National Drive, Suite 207 Raleigh, N.C. 27612
N.C.B.E.L.S. License Number: F-0116

REVISIONS						SHEET NO.
NO.	BY:	DATE:	NO.	BY:	DATE:	S-538
1	--	--	3	--	--	TOTAL SHEETS
2	--	--	4	--	--	671

Sheet 63 of 63

STD. NO. BAS4

ORIGINATED		YELLOW HIGHLIGHTED & REDLINE CHECKED		BLUE HIGHLIGHTED CHANGES		CHANGES VERIFIED BY	
INITIALS	DATE	INITIALS	DATE	INITIALS	DATE	VERIFIED	DATE

PLOT DRIVER: NCDOT_pdf_mono_eng_50.plt
USER: msells
FILE: ...\Tpo\d039122\U0071_11_AS3.dgn
PENTABLE: Durham_pen.tbl
DATE: 1/6/2014
TIME: 1:38:41 PM