TIP PROJECT: U-0071

CONTRACT: C203394

STATE OF NORTH CAROLINA
DIVISION OF HIGHWAYS

DURHAM COUNTY

STATE	STATE PROJECT REFERENCE NO.	SHEET NO.	TOTAL SHEETS
N.C.	U-0071		

STATE PROJ. NO.	F.A. PROJ. NO.	DESCRIPTION
34745.1.1	NHF-76-1(2)	PE
34745.2.8	NHF-76-1(2)	R/W, UTILITIES
34745.3.S2		CONSTRUCTION

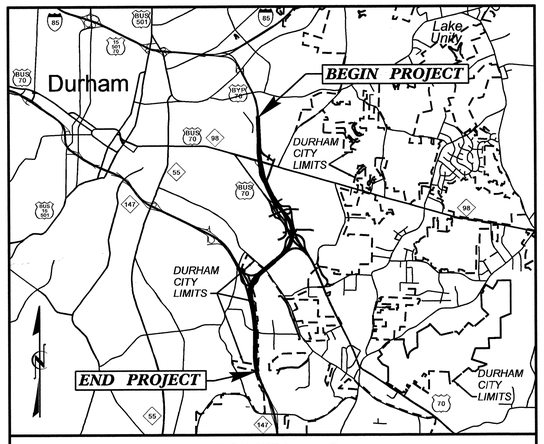

VICINITY MAP

LOCATION: DURHAM EAST END CONNECTOR FROM NORTH OF NC 98 TO NC 147 (BUCK DEAN FREEWAY)

TYPE OF WORK: GRADING, DRAINAGE, PAVING, STRUCTURES, AND SIGNALS

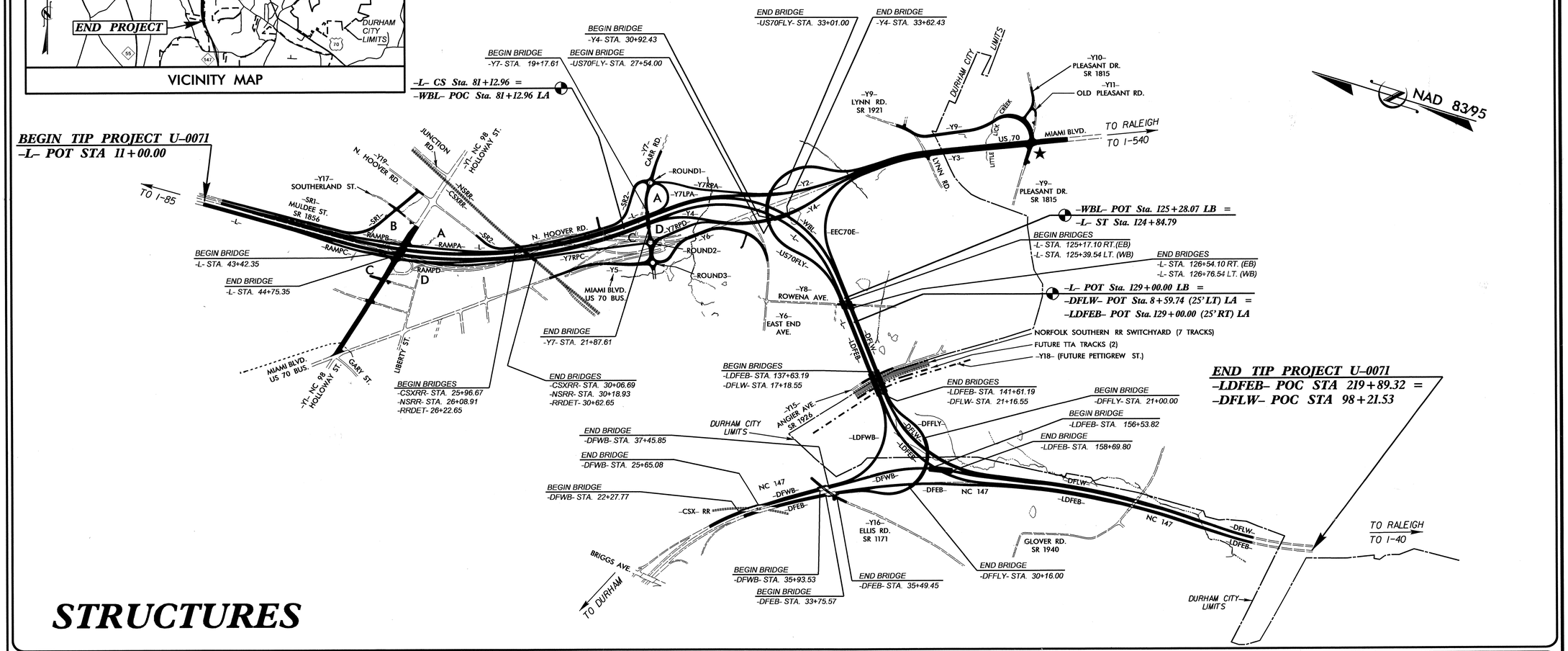

STRUCTURES

DESIGN DATA

ADT 2015 = 65,700
ADT 2035 = 116,100
DHV = 11 %
D = 55 %
T = 14 % *
V = 70 MPH
* TTST=8%, DUAL=6%
FUNCT. CLASS. = INTERSTATE
STATEWIDE TIER

PROJECT LENGTH

LENGTH ROADWAY TIP PROJECT U-0071	=	3.789 mi.
LENGTH STRUCTURES TIP PROJECT U-0071	=	0.167 mi.
TOTAL LENGTH OF TIP PROJECT U-0071	=	3.956 mi.

LENGTH OF ROADWAY PROJECT BASED ON -L- AND -LDFEB-
LENGTH OF STRUCTURES PROJECT BASED ON -L- AND -LDFEB-

Prepared For:
DIVISION OF HIGHWAYS
1000 Birch Ridge Dr., Raleigh NC, 27610

LETTING DATE:
NOVEMBER 18, 2014

24-JUN-2014 11:57
$$$$$$$$$$$$$$$$DGN$$$$$$$$$$$$$$$$$
dcrutcher

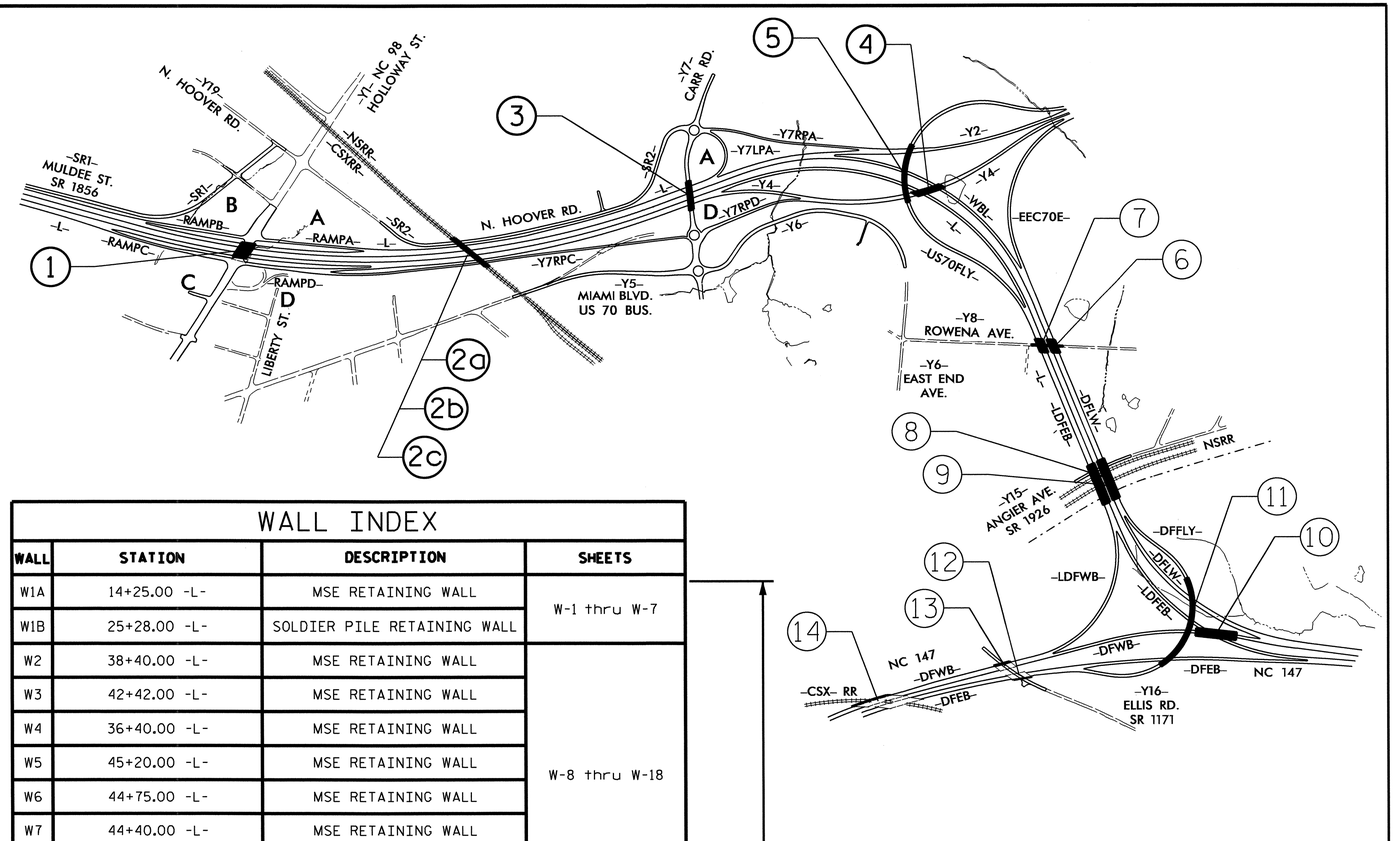

PART 1 OF 3

BRIDGE INDEX

STR	STATION	DESCRIPTION	SHEETS
1	44+08.60 -L-	BRIDGE ON EAST END CONNECTOR OVER NC98 (-Y1-)	S-1 thru S-37
2a	64+55.50 -L-	BRIDGE ON CSX RR OVER US70 BYPASS	S-38 thru S-80
2b	64+74.69 -L-	BRIDGE ON NSRR OVER US70 BYPASS	S-81 thru S-122
2c	65+21.79 -L-	DETOUR BRIDGE ON CSXT AND NSRR OVER US70	S-123 thru S-152
3	85+26.52 -L-	BRIDGE ON CARR RD. -(Y7-) OVER EAST END CONNECTOR	S-153 thru S-189
4	107+45.55 -L-	BRIDGE ON US70EB (-Y4-) OVER EAST END CONNECTOR	S-190 thru S-227
5	105+29.00 -L-	BRIDGE ON US70 FLYOVER OVER US70	S-228 thru S-272
6	125+91.57 -L-	BRIDGE ON EAST CONNECTOR OVER ROWENA AVE. (WBL)	S-273 thru S-300
7	125+91.57 -L-	BRIDGE ON EAST CONNECTOR OVER ROWENA AVE. (EBL)	S-301 thru S-330
8	17+97.57 -DFLW-	BRIDGE ON EAST END CONN OVER ANGIER AVE. (-Y15-) & NSRR	S-331 thru S-374
9	138+40.45 -LDFEB-	BRIDGE ON EAST END CONN OVER ANGIER AVE. (-Y15-) AND NSRR	S-375 thru S-419
10	157+33.78 -LDFEB-	BRIDGE ON EAST END CONNECTOR OVER NC 147	S-420 thru S-476
11	23+29.61 -DFFLY-	BRIDGE ON RAMP -DFFLY- OVER EAST END CONNECTOR AND NC147	S-477 thru S-538
12	36+69.26 -DFWB-	BRIDGE WIDENING ON WB NC147 OVER ELLIS RD. (-Y16-)	S-539 thru S-573
13	34+62.88 -DFEB-	BRIDGE WIDENING ON EB NC147 OVER ELLIS RD. (-Y16-)	S-574 thru S-610
14	24+70.18 -DFWB-	BRIDGE WIDENING ON WB NC147 OVER CSXT	S-611 thru S-671

PART 1

PART 2

PART 3

PRESERVATION AND REHAB INDEX

STR	STATION	DESCRIPTION	SHEETS
SP12	36+69.26 -DFWB-	REHABILITATION OF BRIDGE ON WB NC147 OVER ELLIS RD. (-Y16-)	SP-1 thru SP-10a
SP13	34+62.88 -DFEB-	REHABILITATION OF BRIDGE ON EB NC147 OVER ELLIS RD. (-Y16-)	SP-11 thru SP-21
SP14	24+70.18 -DFWB-	REHABILITATION OF BRIDGE ON WB NC147 OVER CSXT	SP-22 thru SP-50
SP15	23+44.51 -DFEB-	REHABILITATION OF BRIDGE ON EB NC147 OVER CSXT	SP-51 thru SP-83

PART 3

WALL INDEX

WALL	STATION	DESCRIPTION	SHEETS
W1A	14+25.00 -L-	MSE RETAINING WALL	W-1 thru W-7
W1B	25+28.00 -L-	SOLDIER PILE RETAINING WALL	
W2	38+40.00 -L-	MSE RETAINING WALL	W-8 thru W-18
W3	42+42.00 -L-	MSE RETAINING WALL	
W4	36+40.00 -L-	MSE RETAINING WALL	
W5	45+20.00 -L-	MSE RETAINING WALL	
W6	44+75.00 -L-	MSE RETAINING WALL	
W7	44+40.00 -L-	MSE RETAINING WALL	
W8	21+40.00 -Y1-	CAST IN PLACE GRAVITY WALL	
W9	24+00.00 -Y1-	SOLDIER PILE RETAINING WALL	
W10	14+80.00 -Y7RPC-	SOIL NAIL WALL	W-19 thru W-20
W11	10+00.00 -US70FLY RETW-	MSE RETAINING WALL	W-21 thru W-27
W12	10+00.00 -Y4 RETE-	MSE RETAINING WALL	
W13	10+00.00 -Y4 RETW-	MSE RETAINING WALL	
W14	52+84.32 -DFWB-	MSE RETAINING WALL	W-28 thru W-31
W15	46+50.00 -DFEB-	MSE RETAINING WALL	W-32 thru W-35
W16	157+72.04 -LDFEB-	MSE RETAINING WALL	W-28 thru W-31
W17	58+20.00 -DFWB-	MSE RETAINING WALL	W-36 thru W-38
-	N/A	CONCRETE DITCH DETAILS	W-39
-	N/A	CONCRETE BARRIER RAIL WITH MOMENT SLAB	W-40 thru W-41
W18	16+70.77 -US70FLY-	SOUND BARRIER WALL	W-42 thru W-44

CULVERT INDEX

CULV	STATION	DESCRIPTION	SHEETS
C1	95+48.49 -L-	SINGLE 8' X 9' RCBC	C-1 thru C-6
C2	133+41.46 -L-	SINGLE 6' X 7' RCBC	C-7 thru C-11
C3	34+45.00 -Y3-	SINGLE 8' X 10' RCBC	C-12 thru C-19
C4	19+07.28 -Y4-	SINGLE 8' X 9' RCBC	C-20 thru C-26

PART 3

PROJECT NO. U-0071

DURHAM COUNTY

STATION:

STATE OF NORTH CAROLINA
DEPARTMENT OF TRANSPORTATION
RALEIGH

INDEX SHEET

REVISIONS					
NO.	BY:	DATE:	NO.	BY:	DATE:
1			3		
2			4		

DRAWN BY : W.D. CRUTCHER DATE : 6-19-14
CHECKED BY : R.D. MARTIN DATE : 6-23-14

12-NOV-2014 10:36
S:\PEF\ALL INDIVIDUAL FOLDERS\Darrell\u0071_title.dgn
dcrutcher

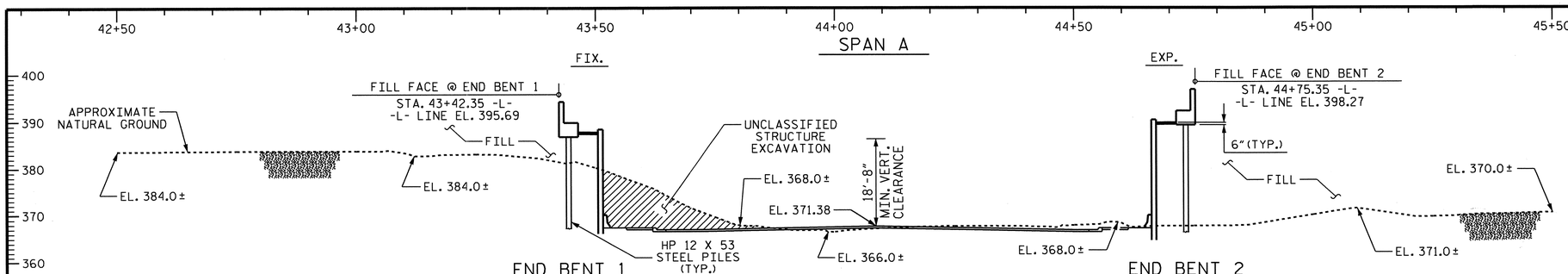

SECTION ALONG -L-

(SECTION AT END BENTS ARE TAKEN AT RIGHT ANGLES)

+3.3606% -1.0098 %
PI=46+00.00
EL.=405.30
VC=1100'

GRADE DATA -L- (WB)

+3.3605% -1.0100%
PI=46+00.00
EL.=406.80
VC=1100'

GRADE DATA -L- (EB)

HORIZONTAL CURVE DATA -L-
PI STA.=58+90.40 -L-
Δ=34°-23'-04.7"(LT)
D=0°-44'-58.0"
L=4587.96'
T=2365.40'
R=7645.00'
SE=0.03

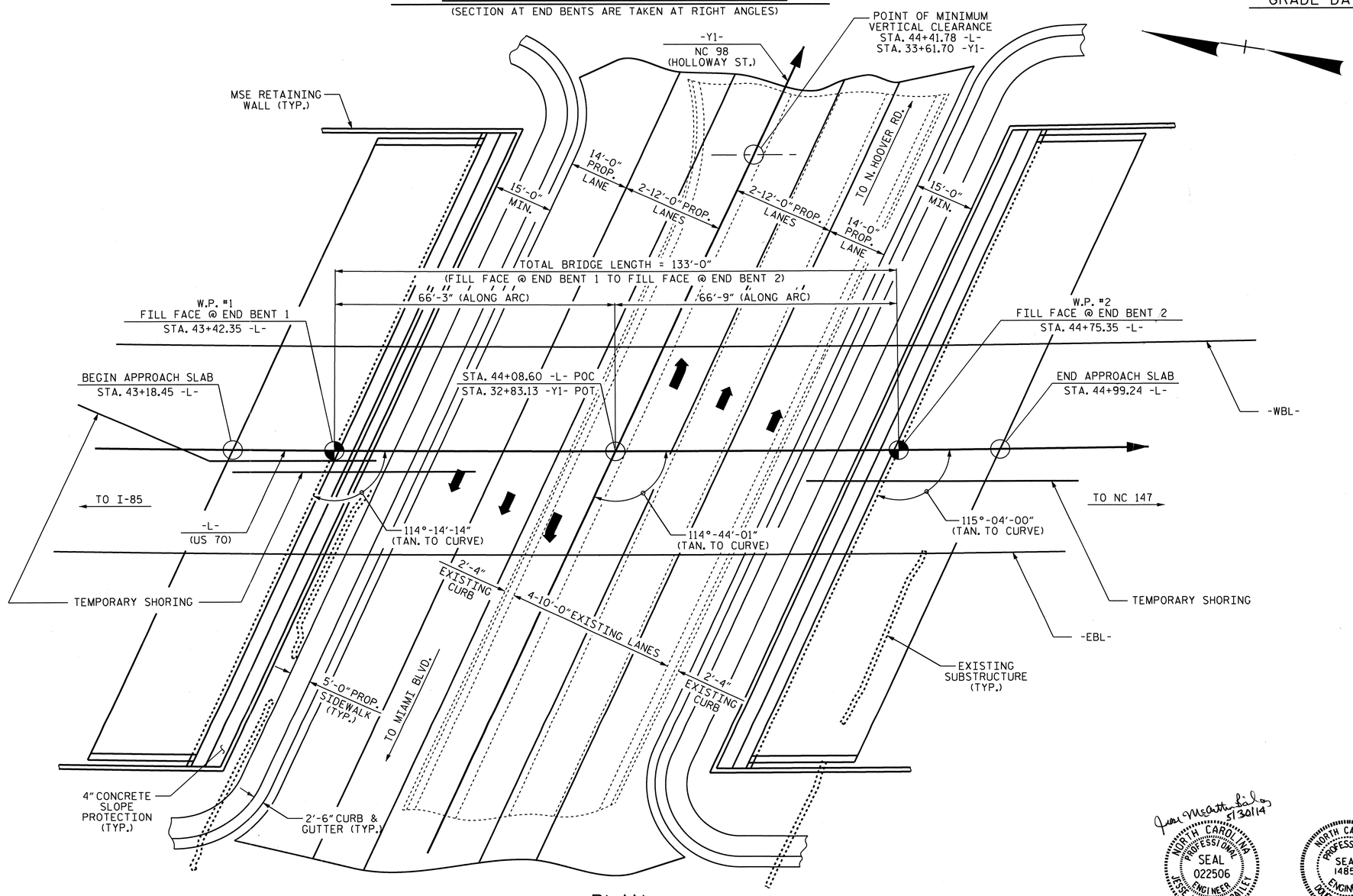

PLAN

(PILES NOT SHOWN IN PLAN VIEW FOR CLARITY)

DRAWN BY : D. G. ELY DATE : 06/2013
CHECKED BY : D. R. CALHOUN DATE : 11/2013

12-MAY-2014 16:56
Z:\TIPProjects-U\U0071\Structures\Plans\Str#1-L-over-Y1-\Gen_Drawing\U0071_SD_GD.dgn
asorsenginh

5/30/14
NORTH CAROLINA PROFESSIONAL SEAL 022506 ENGINEER JESSE MCARTHUR BAILEY

NORTH CAROLINA PROFESSIONAL SEAL 14855 ENGINEER DOUGLAS RICHARD CALHOUN
5/13/14

PROJECT NO. U-0071
DURHAM COUNTY
STATION: 44+08.60 -L-
32+83.13 -Y1-
SHEET 1 OF 4
BRIDGE NO. 593

STATE OF NORTH CAROLINA
DEPARTMENT OF TRANSPORTATION
RALEIGH

GENERAL DRAWING

BRIDGE ON DURHAM EAST CONNECTOR OVER NC 98 (HOLLOWAY ST.) BETWEEN I-85 AND NC 147

(REPLACES BRIDGES NO. 115 & NO. 106)

REVISIONS						SHEET NO.
NO.	BY:	DATE:	NO.	BY:	DATE:	S-1
1			3			TOTAL SHEETS
2			4			671

STR. #1

NOTES

FOR PILES, SEE SECTION 450 OF THE STANDARD SPECIFICATIONS.

PILES AT END BENT 1 AND END BENT 2 ARE DESIGNED FOR A FACTORED RESISTANCE OF 130 TONS PER PILE.

DRIVE PILES AT END BENT 1 AND END BENT 2 TO A REQUIRED DRIVING RESISTANCE OF 215 TONS PER PILE.

TESTING PILES WITH THE PDA DURING DRIVING, RESTRIKING OR REDRIVING MAY BE REQUIRED. THE ENGINEER WILL DETERMINE THE NEED FOR PDA TESTING. FOR PDA TESTING, SEE SECTION 450 OF THE STANDARD SPECIFICATIONS.

* THESE PILES TO BE DRIVEN DURING STAGE I CONSTRUCTION.

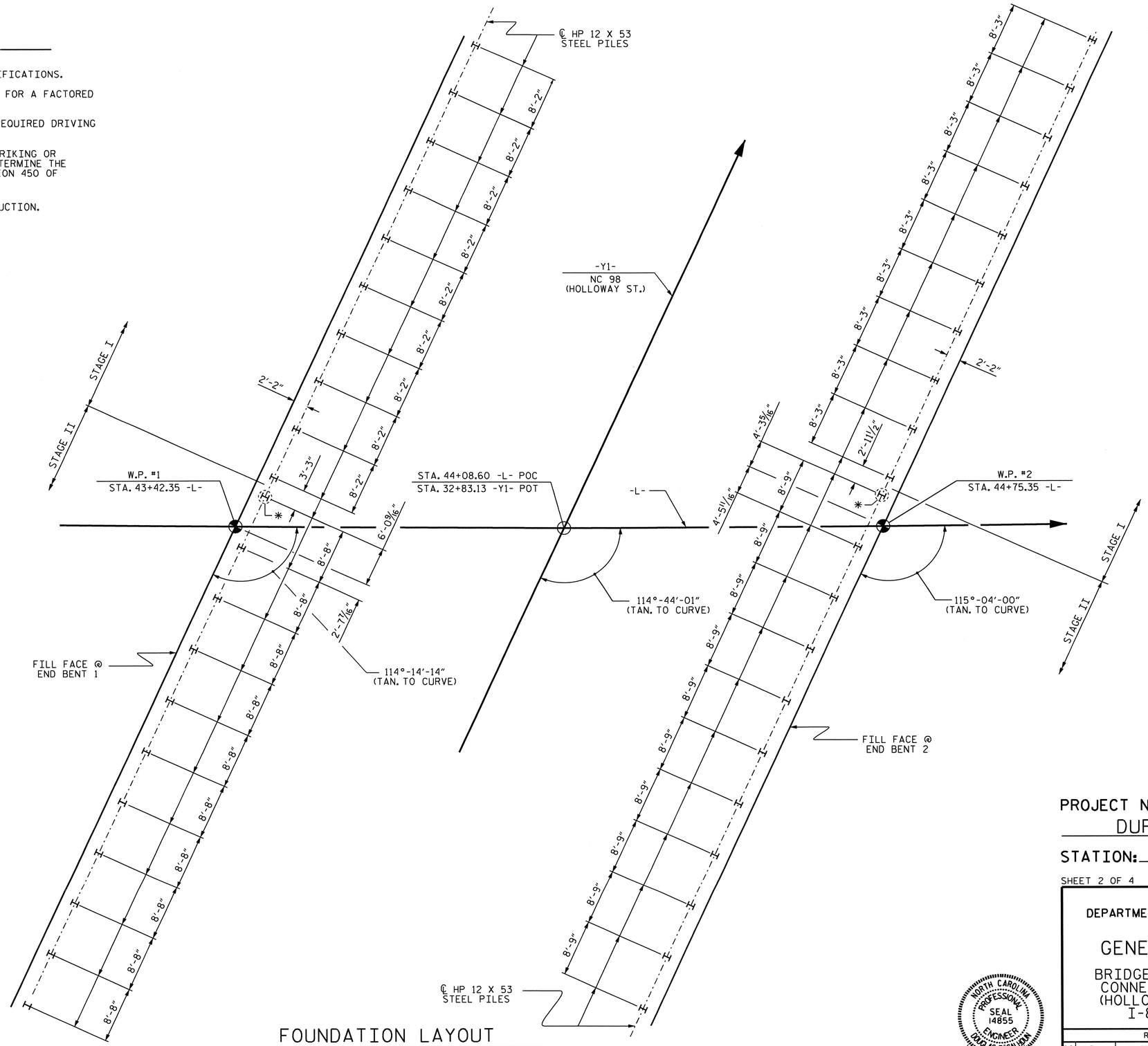

FOUNDATION LAYOUT

DIMENSIONS LOCATING PILES ARE SHOWN TO THE CENTERLINE OF THE PILES.

PROJECT NO. U-0071
DURHAM COUNTY
STATION: 44+08.60 -L-

SHEET 2 OF 4

STATE OF NORTH CAROLINA
DEPARTMENT OF TRANSPORTATION
RALEIGH

GENERAL DRAWING

BRIDGE ON DURHAM EAST CONNECTOR OVER NC 98 (HOLLOWAY ST.) BETWEEN I-85 AND NC 147

NORTH CAROLINA PROFESSIONAL SEAL 14855 ENGINEER DOUGLAS R. CALHOUN
5/13/14

REVISIONS						SHEET NO.
NO.	BY:	DATE:	NO.	BY:	DATE:	5-2
1			3			TOTAL SHEETS
2			4			671

DRAWN BY :	D. G. ELY	DATE :	07/2013
CHECKED BY :	D. R. CALHOUN	DATE :	11/2013
DESIGN ENGINEER OF RECORD:	D. R. CALHOUN	DATE :	11/2013

12-MAY-2014 16:56
Z:\TIPProjects-U\U0071\Structures\Plans\Str#1-L-over-Y1-\Gen_Drawing\U0071_SD_GD.dgn
asorsenginh

STR. #1

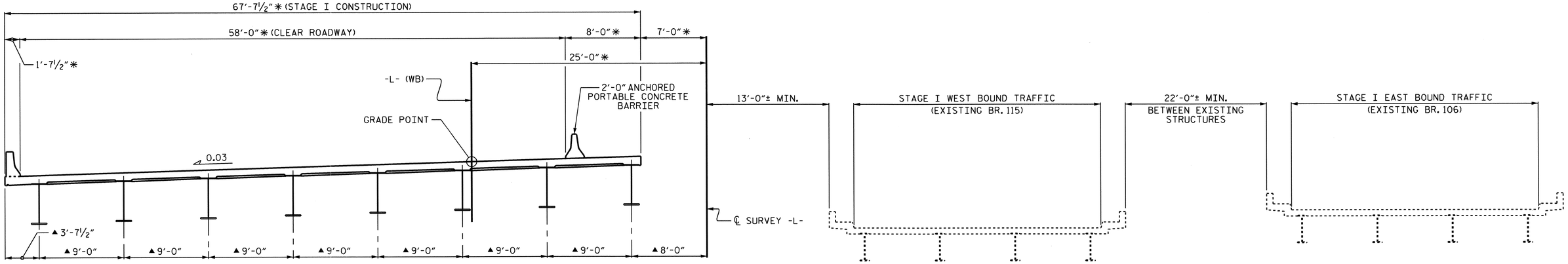

STAGE I CONSTRUCTION

SEE TRAFFIC CONTROL PLANS FOR LOCATION AND PAY LIMITS OF THE ANCHORED PORTABLE CONCRETE BARRIER

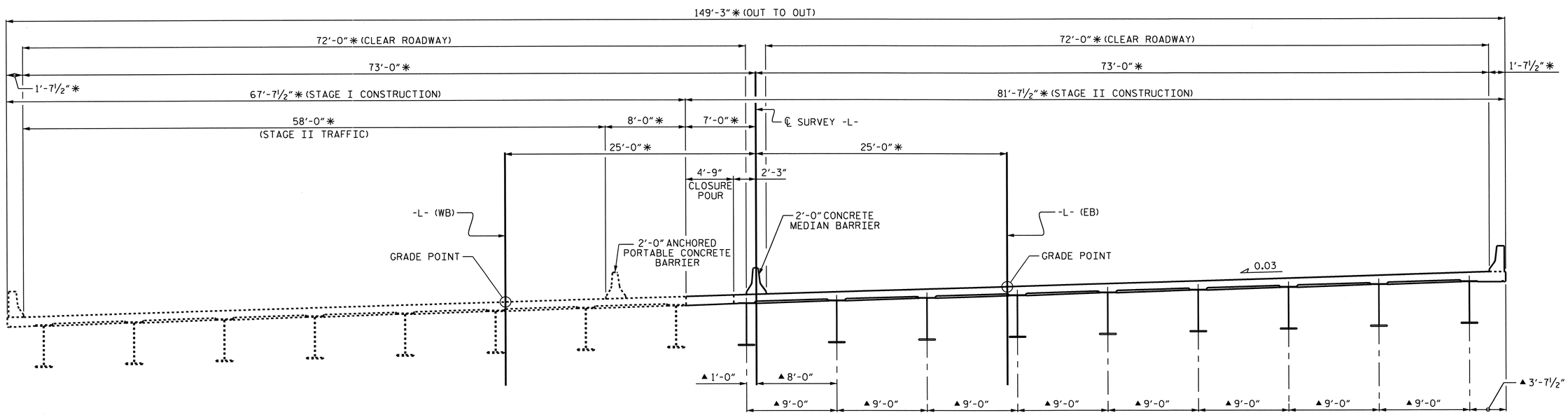

STAGE II CONSTRUCTION

PROJECT NO. U-0071

DURHAM COUNTY

STATION: 44+08.60 -L-

SHEET 3 OF 4

✱RADIAL DIMENSIONS

▲RADIAL THRU WORKPOINTS

STATE OF NORTH CAROLINA
DEPARTMENT OF TRANSPORTATION
RALEIGH

CONSTRUCTION SEQUENCE

NORTH CAROLINA PROFESSIONAL SEAL 14855 ENGINEER DOUGLAS R. CALHOUN
5/13/14

REVISIONS						SHEET NO.
NO.	BY:	DATE:	NO.	BY:	DATE:	S-3
1			3			TOTAL SHEETS
2			4			671

STR. #1

DRAWN BY : T. BANKOVICH DATE : 8-2010
CHECKED BY : T.L. CLELLAND DATE : 10-2010

12-MAY-2014 16:56
Z:\TIPProjects-U\U0071\Structures\Plans\Str#1-L-over-Y1-\Gen_Drawing\U0071_SD_GD.dgn
asorsenginh

BM # 56: 9.49' RT. OF STA. 43+50.00 -L- EL. 384.62

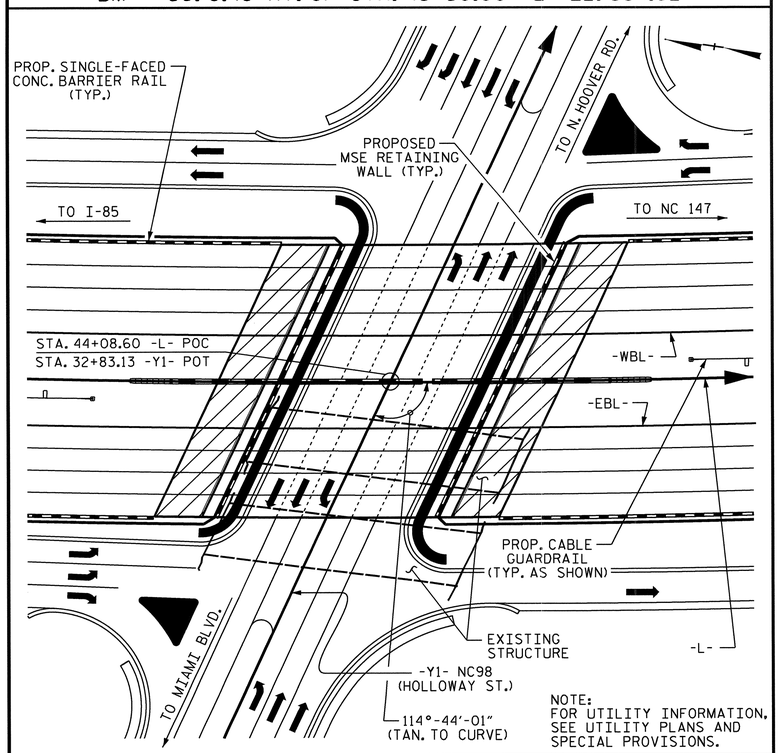

NOTE:
FOR UTILITY INFORMATION, SEE UTILITY PLANS AND SPECIAL PROVISIONS.

LOCATION SKETCH

NOTES

ASSUMED LIVE LOAD = HL-93 OR ALTERNATE LOADING.

FOR OTHER DESIGN DATA AND GENERAL NOTES, SEE SHEET SN.

FOR EROSION CONTROL MEASURES, SEE EROSION CONTROL PLANS.

THIS BRIDGE HAS BEEN DESIGNED IN ACCORDANCE WITH THE AASHTO LRFD BRIDGE DESIGN SPECIFICATIONS.

ALL STRUCTURAL STEEL SHALL BE AASHTO M270 GRADE 50 AND PAINTED IN ACCORDANCE WITH SYSTEM 1 OF ARTICLE 442-8 OF THE STANDARD SPECIFICATIONS UNLESS OTHERWISE NOTED ON THE PLANS.

THE MATERIAL SHOWN IN THE CROSS-HATCHED AREA SHALL BE EXCAVATED AS DIRECTED BY THE ENGINEER. THIS WORK WILL BE PAID FOR AT THE CONTRACT LUMP SUM PRICE FOR UNCLASSIFIED STRUCTURE EXCAVATION. SEE SECTION 412 OF THE STANDARD SPECIFICATIONS.

THE SUBSTRUCTURE OF THE EXISTING BRIDGE INDICATED ON THE PLANS IS FROM THE BEST INFORMATION AVAILABLE. SINCE THIS INFORMATION IS SHOWN FOR THE CONVENIENCE OF THE CONTRACTOR, THE CONTRACTOR SHALL HAVE NO CLAIM WHATSOEVER AGAINST THE DEPARTMENT OF TRANSPORTATION FOR ANY DELAYS OR ADDITIONAL COST INCURRED BASED ON DIFFERENCES BETWEEN THE EXISTING BRIDGE SUBSTRUCTURE SHOWN ON THE PLANS AND THE ACTUAL CONDITIONS AT THE PROJECT SITE.

THE CLASS AA CONCRETE IN THE BRIDGE DECK SHALL CONTAIN FLY ASH OR GROUND GRANULATED BLAST FURNACE SLAG AT THE SUBSTITUTION RATE SPECIFIED IN ARTICLE 1024-1 AND IN ACCORDANCE WITH ARTICLES 1024-5 AND 1024-6 OF THE STANDARD SPECIFICATIONS. NO PAYMENT WILL BE MADE FOR THIS SUBSTITUTION AS IT IS CONSIDERED INCIDENTAL TO THE COST OF THE REINFORCED CONCRETE DECK SLAB.

FOR SUBMITTAL OF WORKING DRAWINGS, SEE SPECIAL PROVISIONS.

FOR FALSEWORK AND FORMWORK, SEE SPECIAL PROVISIONS.

FOR CRANE SAFETY, SEE SPECIAL PROVISIONS.

FOR GROUT FOR STRUCTURES, SEE SPECIAL PROVISIONS.

THIS BRIDGE IS LOCATED IN SEISMIC ZONE 1.

FOR MAINTENANCE AND PROTECTION OF TRAFFIC BENEATH PROPOSED STRUCTURE, SEE SPECIAL PROVISIONS.

REMOVABLE FORMS MAY BE USED IN LIEU OF METAL STAY-IN-PLACE FORMS IN ACCORDANCE WITH ARTICLE 420-3 OF THE STANDARD SPECIFICATIONS.

NEEDLE BEAMS WILL NOT BE ALLOWED UNLESS OTHERWISE CALLED FOR ON THE PLANS OR APPROVED BY THE ENGINEER.

FOR LIMITS OF TEMPORARY SHORING FOR MAINTENANCE OF TRAFFIC, SEE TRAFFIC CONTROL PLANS. FOR PAY ITEM FOR TEMPORARY SHORING FOR MAINTENANCE OF TRAFFIC, SEE ROADWAY PLANS.

THE ELEVATION(S) AND CLEARANCE(S) SHOWN ON THE PLANS AT THE POINT(S) OF MINIMUM VERTICAL CLEARANCE ARE FROM THE BEST INFORMATION AVAILABLE. PRIOR TO BEGINNING BRIDGE CONSTRUCTION, VERIFY THE ELEVATION(S) ON THE EXISTING PAVEMENT AND CHECK THE CLEARANCE. REPORT ANY VARIATIONS TO THE ENGINEER. ANY PLAN REVISIONS NECESSARY TO ACHIEVE THE REQUIRED MINIMUM VERTICAL CLEARANCE WILL BE PROVIDED BY THE DEPARTMENT.

INASMUCH AS THE PAINT SYSTEM ON THE EXISTING STRUCTURAL STEEL CONTAINS LEAD, THE CONTRACTOR'S ATTENTION IS DIRECTED TO ARTICLE 107-1 OF THE STANDARD SPECIFICATIONS. ANY COSTS RESULTING FROM COMPLIANCE WITH APPLICABLE STATE OR FEDERAL REGULATIONS PERTAINING TO HANDLING OF MATERIALS CONTAINING LEAD BASED PAINT SHALL BE INCLUDED IN THE BID PRICE FOR "REMOVAL OF EXISTING STRUCTURES AT STATION 44+08.60 -L-."

AFTER SERVING AS TEMPORARY STRUCTURES, THE EXISTING STRUCTURES CONSISTING OF 3 SPANS (41', 53' AND 41') REINFORCED CONCRETE FLOOR ON I-BEAMS WITH 5"-6" AWS, 28 FT. CLEAR ROADWAY, ON REINFORCED CONCRETE CAP AND STEEL PILE END BENTS AND BENTS, LOCATED AT THE PROPOSED BRIDGE SITE SHALL BE REMOVED. THE EXISTING BRIDGES ARE CURRENTLY NOT POSTED. SHOULD THE STRUCTURAL INTEGRITY OF THE BRIDGES DETERIORATE DURING CONSTRUCTION OF THE PROPOSED BRIDGE, A LOAD LIMIT MAY BE POSTED AND MAY BE REDUCED AS FOUND NECESSARY DURING THE LIFE OF THE PROJECT.

FOR PLACING LOAD ON STRUCTURE MEMBERS, SEE SPECIAL PROVISIONS.

FOR MSE RETAINING WALLS, SEE SPECIAL PROVISIONS.

FOR STEEL REINFORCED ELASTOMERIC BEARINGS, SEE SPECIAL PROVISIONS.

TOTAL BILL OF MATERIAL

	REMOVAL OF EXISTING STRUCTURES	PDA TESTING	UNCLASSIFIED STRUCTURE EXCAVATION	REINFORCED CONCRETE DECK SLAB	GROOVING BRIDGE FLOORS	CLASS A CONCRETE	BRIDGE APPROACH SLABS	REINFORCING STEEL	STRUCTURAL STEEL	HP 12 X 53 STEEL PILES		CONCRETE BARRIER RAIL	CONCRETE MEDIAN BARRIER	4" SLOPE PROTECTION	ELASTOMERIC BEARINGS	EXPANSION JOINT SEALS
	LUMP SUM	EA.	LUMP SUM	SQ. FT.	SQ. FT.	CU. YDS.	LUMP SUM	LBS.	APPROX. LBS.	NO.	LIN. FT.	LIN. FT.	LIN. FT.	SQ. YDS.	LUMP SUM	LUMP SUM
SUPERSTRUCTURE				19,508	24,368		LUMP SUM		736,300			361.4	182.4		LUMP SUM	LUMP SUM
END BENT 1			LUMP SUM			110.5		19,484		21	735			43		
END BENT 2			LUMP SUM			112.8		19,448		21	840			47		
TOTAL	LUMP SUM	2	LUMP SUM	19,508	24,368	223.3	LUMP SUM	38,932	736300	42	1575	361.4	182.4	90	LUMP SUM	LUMP SUM

PROJECT NO. U-0071
DURHAM COUNTY
STATION: 44+08.60 -L-

SHEET 4 OF 4

STATE OF NORTH CAROLINA
DEPARTMENT OF TRANSPORTATION
RALEIGH

GENERAL DRAWING
BRIDGE ON DURHAM EAST CONNECTOR OVER NC 98 (HOLLOWAY ST.) BETWEEN I-85 AND NC 147

NORTH CAROLINA PROFESSIONAL SEAL 14855 ENGINEER DOUGLAS BIERLEIN
5/13/14

REVISIONS						SHEET NO.
NO.	BY:	DATE:	NO.	BY:	DATE:	5-4
1			3			TOTAL SHEETS
2			4			671

DRAWN BY : D. G. ELY DATE : 06/2013
CHECKED BY : D. R. CALHOUN DATE : 11/2013

12-MAY-2014 16:55
Z:\TIPProjects-U\U0071\Structures\Plans\Str#1-L-over-Y1-\Gen_Drawing\U0071_SD_GD.dgn
asorsenginh

STR. #1

LOAD AND RESISTANCE FACTOR RATING (LRFR) SUMMARY FOR STEEL GIRDERS

LEVEL		VEHICLE	WEIGHT (W) (TONS)	CONTROLLING LOAD RATING (#)	MINIMUM RATING FACTORS (RF)	TONS = W × RF	STRENGTH I LIMIT STATE											SERVICE II LIMIT STATE						COMMENT NUMBER
							LIVE-LOAD FACTORS (γ_{LL})	MOMENT					SHEAR					LIVE-LOAD FACTORS (γ_{LL})	MOMENT					
								DISTRIBUTION FACTORS (DF)	RATING FACTOR	SPAN	GIRDER LOCATION	DISTANCE FROM LEFT END OF SPAN (ft)	DISTRIBUTION FACTORS (DF)	RATING FACTOR	SPAN	GIRDER LOCATION	DISTANCE FROM LEFT END OF SPAN (ft)		DISTRIBUTION FACTORS (DF)	RATING FACTOR	SPAN	GIRDER LOCATION	DISTANCE FROM LEFT END OF SPAN (ft)	
DESIGN LOAD RATING		HL-93 (INVENTORY)	N/A	1	1.56	--	1.75	0.800	1.56	A	EL	63.75	0.955	2.22	A	I	0.00	1.30	0.800	1.66	A	EL	63.75	
		HL-93 (OPERATING)	N/A		2.02	--	1.35	0.800	2.02	A	EL	63.75	0.955	2.88	A	I	0.00	1.00	0.800	2.15	A	EL	63.75	
		HS-20 (INVENTORY)	36.00	2	2.31	83.16	1.75	0.800	2.31	A	EL	63.75	0.955	3.24	A	I	0.00	1.30	0.800	2.46	A	EL	63.75	
		HS-20 (OPERATING)	36.00		3.00	108.00	1.35	0.800	3.00	A	EL	63.75	0.955	4.20	A	I	0.00	1.00	0.800	3.20	A	EL	63.75	
LEGAL LOAD RATING	SINGLE VEHICLE (SV)	SNSH	13.500		6.00	81.00	1.40	0.800	7.06	A	EL	63.75	0.955	9.99	A	I	0.00	1.30	0.800	6.00	A	EL	63.75	
		SNGARBS2	20.000		4.27	85.40	1.40	0.800	5.03	A	EL	63.75	0.955	7.08	A	I	0.00	1.30	0.800	4.27	A	EL	63.75	
		SNAGRIS2	22.000		3.97	87.34	1.40	0.800	4.67	A	EL	63.75	0.955	6.50	A	I	0.00	1.30	0.800	3.97	A	EL	63.75	
		SNCOTTS3	27.250		2.98	81.21	1.40	0.800	3.51	A	EL	63.75	0.955	5.08	A	I	0.00	1.30	0.800	2.98	A	EL	63.75	
		SNAGGRS4	34.925		2.41	84.17	1.40	0.800	2.84	A	EL	63.75	0.955	4.09	A	I	0.00	1.30	0.800	2.41	A	EL	63.75	
		SNS5A	35.550		2.37	84.25	1.40	0.800	2.78	A	EL	63.75	0.955	4.08	A	I	0.00	1.30	0.800	2.37	A	EL	63.75	
		SNS6A	39.950		2.14	85.49	1.40	0.800	2.52	A	EL	63.75	0.955	3.67	A	I	0.00	1.30	0.800	2.14	A	EL	63.75	
		SNS7B	42.000		2.04	85.68	1.40	0.800	2.40	A	EL	63.75	0.955	3.55	A	I	0.00	1.30	0.800	2.04	A	EL	63.75	
	TRUCK TRACTOR SEMI-TRAILER (TTST)	TNAGRIT3	33.000		2.60	85.80	1.40	0.800	3.06	A	EL	63.75	0.955	4.41	A	I	0.00	1.30	0.800	2.60	A	EL	63.75	
		TNT4A	33.075		2.60	86.00	1.40	0.800	3.06	A	EL	63.75	0.955	4.35	A	I	0.00	1.30	0.800	2.60	A	EL	63.75	
		TNT6A	41.600		2.10	87.36	1.40	0.800	2.47	A	EL	63.75	0.955	3.67	A	I	0.00	1.30	0.800	2.10	A	EL	63.75	
		TNT7A	42.000		2.10	88.20	1.40	0.800	2.47	A	EL	63.75	0.955	3.62	A	I	0.00	1.30	0.800	2.10	A	EL	63.75	
		TNT7B	42.000		2.13	89.46	1.40	0.800	2.51	A	EL	63.75	0.955	3.51	A	I	0.00	1.30	0.800	2.13	A	EL	63.75	
		TNAGRIT4	43.000		2.05	88.15	1.40	0.800	2.42	A	EL	63.75	0.955	3.41	A	I	0.00	1.30	0.800	2.05	A	EL	63.75	
		TNAGT5A	45.000		1.95	87.75	1.40	0.800	2.30	A	EL	63.75	0.955	3.32	A	I	0.00	1.30	0.800	1.75	A	EL	63.75	
		TNAGT5B	45.000	3	1.94	87.30	1.40	0.800	2.28	A	EL	63.75	0.955	3.25	A	I	0.00	1.30	0.800	1.94	A	EL	63.75	

LOAD FACTORS:

DESIGN LOAD RATING FACTORS	LIMIT STATE	γ_{DC}	γ_{DW}
	STRENGTH I	1.25	1.50
	SERVICE II	1.00	1.00

NOTES:

MINIMUM RATING FACTORS ARE BASED ON THE STRENGTH I AND SERVICE II LIMIT STATES.

ALLOWABLE STRESS FOR SERVICE II LIMIT STATE ARE AS REQUIRED FOR DESIGN.

(#) CONTROLLING LOAD RATING

(1) DESIGN LOAD RATING (HL-93) **

(2) DESIGN LOAD RATING (HS-20) **

(3) LEGAL LOAD RATING **

** SEE CHART FOR VEHICLE TYPE

GIRDER LOCATION

I - INTERIOR GIRDER
EL - EXTERIOR LEFT GIRDER
ER - EXTERIOR RIGHT GIRDER

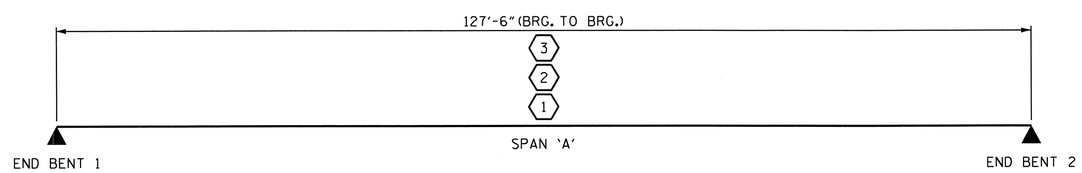

LRFR SUMMARY

PROJECT NO. U-0071
DURHAM COUNTY
STATION: 44+08.60 -L-

STATE OF NORTH CAROLINA
DEPARTMENT OF TRANSPORTATION
RALEIGH

STANDARD

LRFR SUMMARY FOR STEEL GIRDERS
(NON-INTERSTATE TRAFFIC)

NORTH CAROLINA PROFESSIONAL SEAL 14855 ENGINEER DOUGLAS B. CALHOUN
5/13/14

REVISIONS						SHEET NO.
NO.	BY:	DATE:	NO.	BY:	DATE:	S-5
1			3			TOTAL SHEETS
2			4			671

DRAWN BY : P. K. NEWTON DATE : 11/2013
CHECKED BY : A. SORSENGINH DATE : 11/2013
DESIGN ENGINEER OF RECORD: P. K. NEWTON DATE : 11/2013

12-MAY-2014 16:54
Z:\TIPProjects-U\U0071\Structures\Plans\Str*1-L-over-Y1-\Misc\U0071_SD_LR_01.dgn
asorsenginh

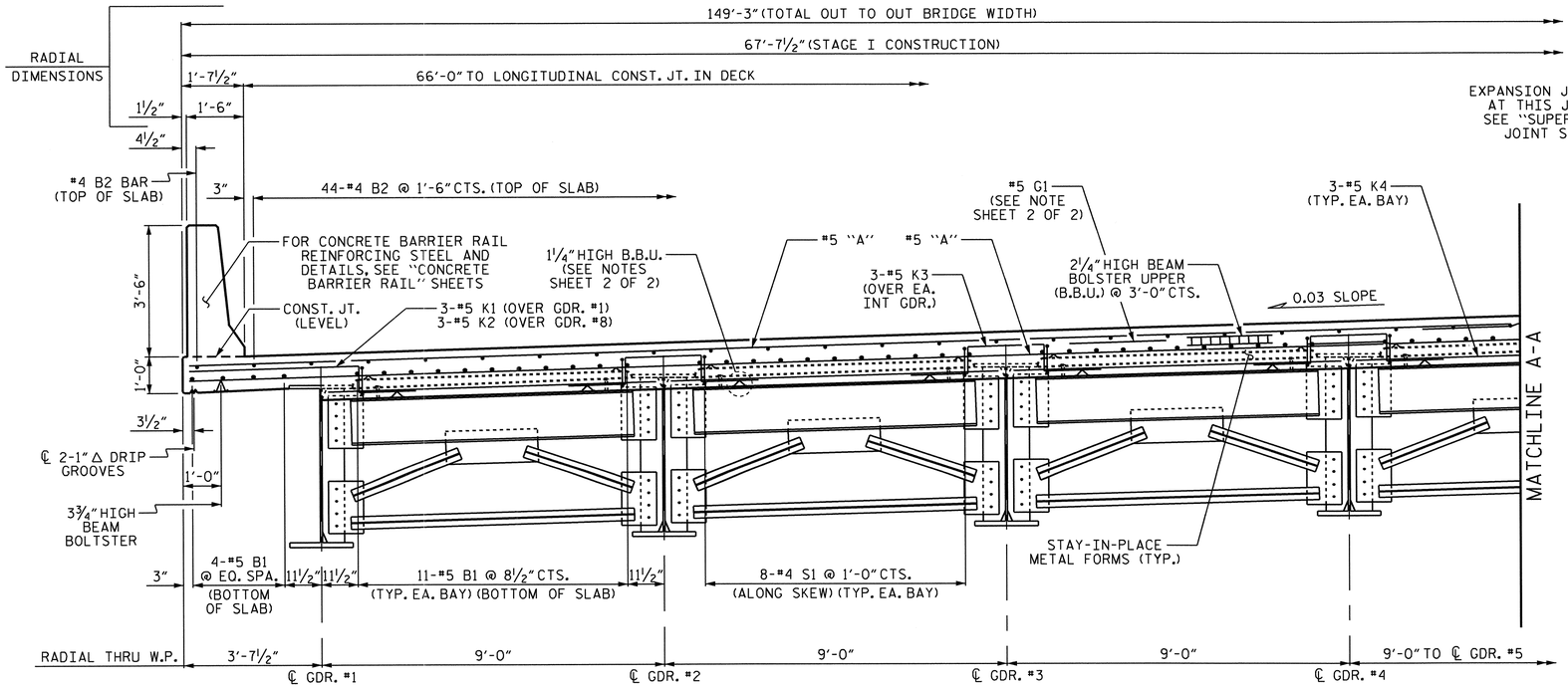

HALF SECTION
(SHOWING END BENT DIAPHRAGMS)

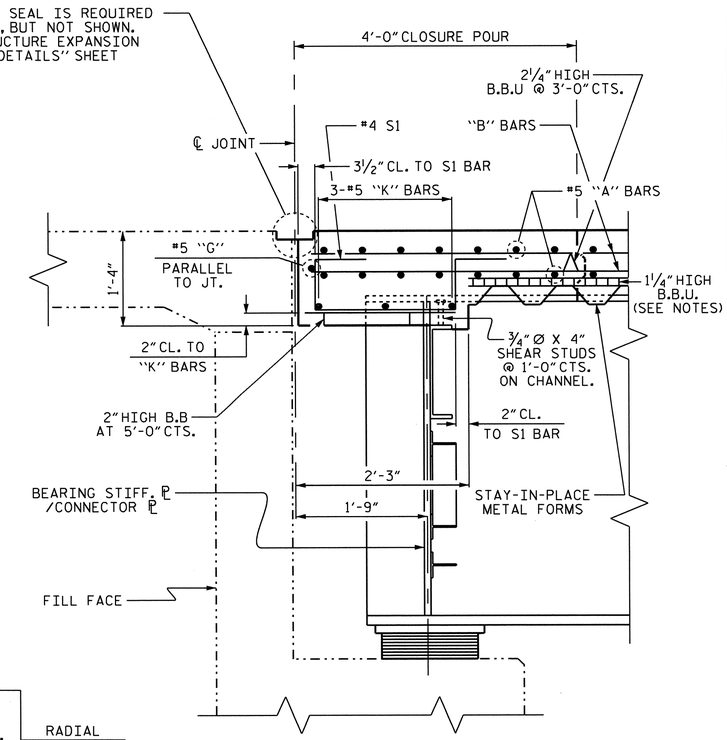

SECTION A-A

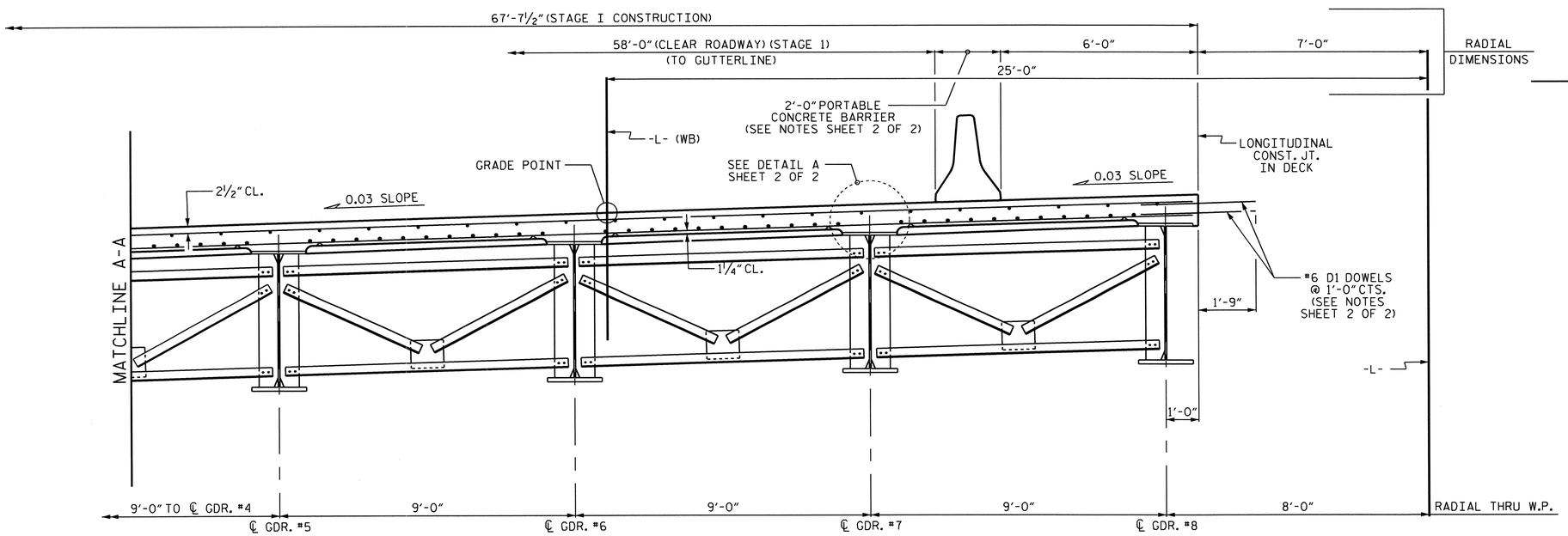

HALF SECTION
(SHOWING INTERMEDIATE DIAPHRAGMS)

TYPICAL SECTION
(STAGE I CONSTRUCTION)

PROJECT NO. U-0071
DURHAM COUNTY
STATION: 44+08.60 -L-

SHEET 1 OF 2

STATE OF NORTH CAROLINA
DEPARTMENT OF TRANSPORTATION
RALEIGH

SUPERSTRUCTURE
TYPICAL SECTION
STAGE I

NORTH CAROLINA PROFESSIONAL SEAL 14855 ENGINEER DOUGLAS R. CALHOUN
5/13/14

REVISIONS						SHEET NO.
NO.	BY:	DATE:	NO.	BY:	DATE:	5-6
1			3			TOTAL SHEETS
2			4			671

STR. #1

DRAWN BY : T. BANKOVICH DATE : 8-2010
CHECKED BY : D. G. ELY DATE : 9-2010
DESIGN ENGINEER OF RECORD : D. R. CALHOUN DATE : 11-2013

12-MAY-2014 16:53
Z:\TIPProjects-U\U0071\Structures\Plans\Str#1-L-over-Y1-\Super_Drawing\U-0071_str1_TS.dgn
asorsenginh

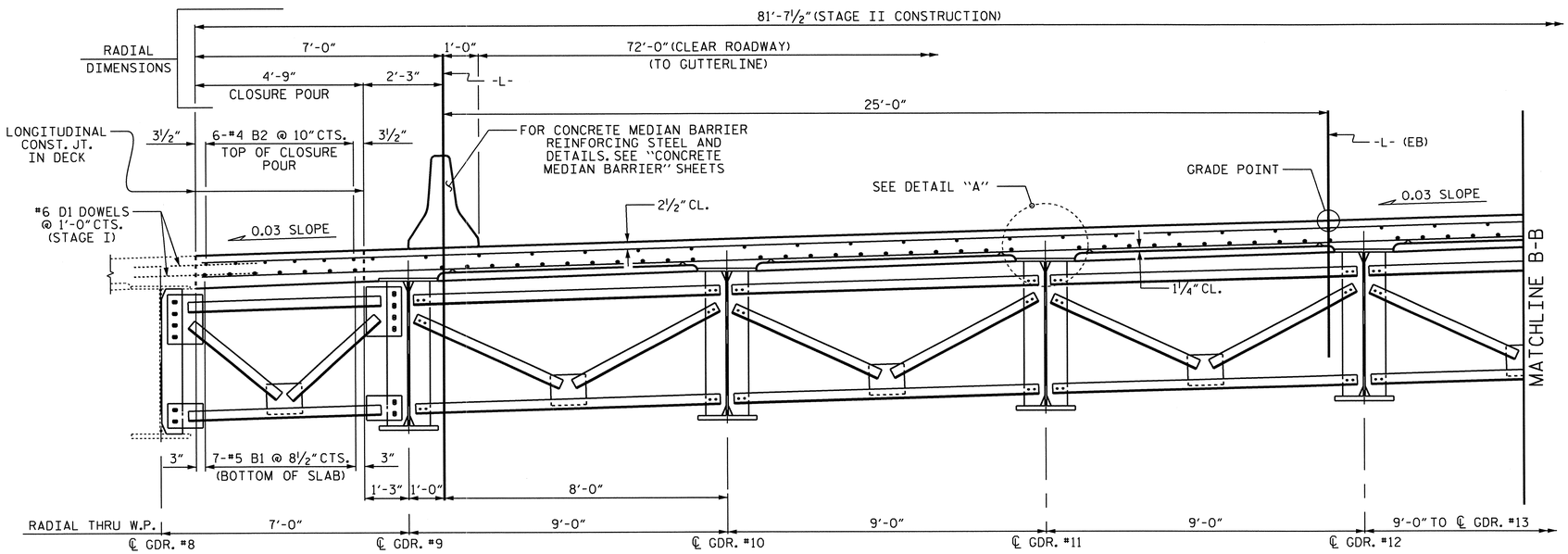

HALF SECTION

(SHOWING INTERMEDIATE DIAPHRAGMS)

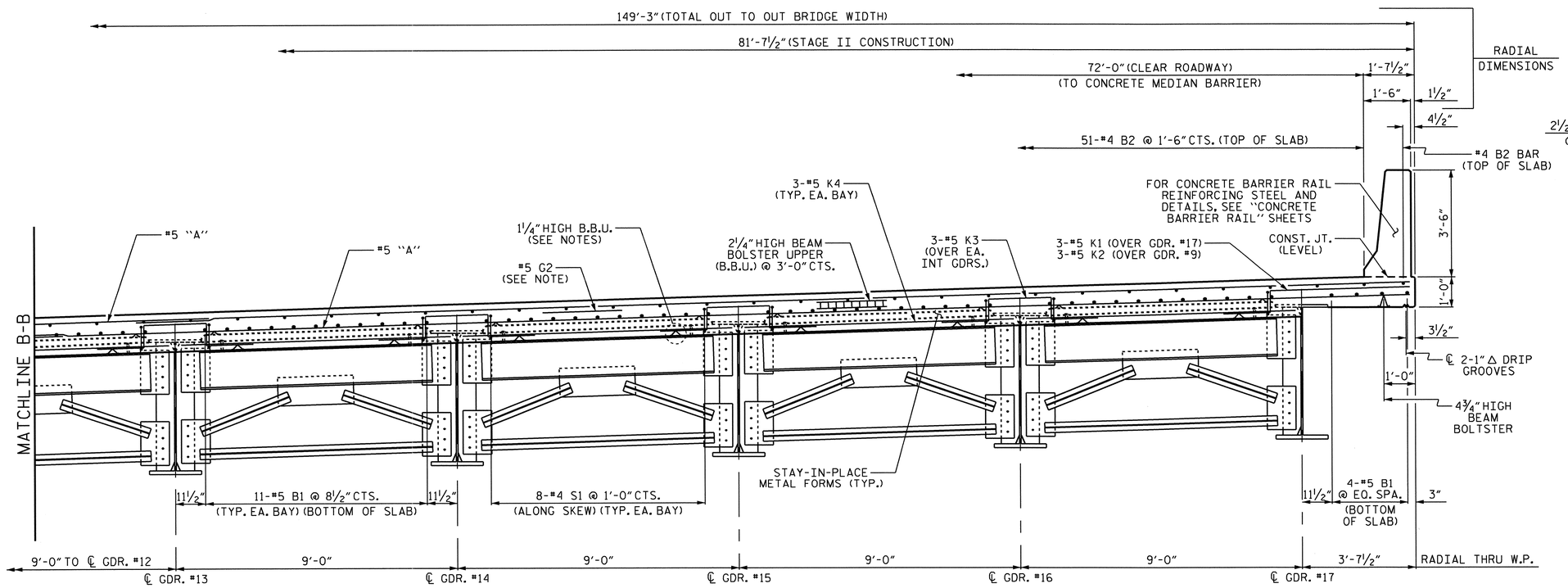

HALF SECTION

(SHOWING END BENT DIAPHRAGMS)

TYPICAL SECTION

(STAGE II CONSTRUCTION)

NOTES:

PROVIDE 1¼" HIGH BEAM BOLSTERS UPPER AT 4'-0" CTS. ATOP THE METAL STAY-IN-PLACE FORMS TO SUPPORT THE BOTTOM MAT OF "A" BARS. WHEN USING REMOVABLE FORMS, PROVIDE CONTINUOUS HIGH CHAIRS FOR METAL DECK (C.H.C.M.) @ 4'-0" CTS. WITH A HEIGHT TO SUPPORT THE BOTTOM MAT OF "A" BARS A CLEAR DISTANCE OF 2½" ABOVE THE TOP OF THE REMOVABLE FORM.

PREVIOUSLY CAST CONCRETE IN THE SPAN SHALL HAVE ATTAINED A MINIMUM COMPRESSIVE STRENGTH OF 3,000 PSI BEFORE ADDITIONAL CONCRETE IS CAST IN THE SPAN.

#6 DOWELS SHALL BE PLACED IN THE SAME HORIZONTAL PLANE AS THE TOP AND BOTTOM SLAB REINFORCING STEEL.

BARRIER RAIL AND CONCRETE MEDIAN BARRIER SHALL NOT BE CAST UNTIL ALL SLAB CONCRETE HAS BEEN CAST AND HAS REACHED A MINIMUM COMPRESSIVE STRENGTH OF 3,000 PSI.

THE CONTRACTOR MAY, WHEN NECESSARY, PROPOSE A SCHEME FOR AVOIDING INTERFERENCE BETWEEN METAL STAY-IN-PLACE FORM SUPPORTS OR FORMS AND GIRDER STIFFENERS OR CONNECTOR PLATES. THE PROPOSAL SHALL BE INDICATED, AS APPROPRIATE, ON EITHER THE STEEL WORKING DRAWINGS OR THE METAL STAY-IN-PLACE FORM WORKING DRAWINGS

ALL REINFORCING STEEL IN BARRIER RAILS AND CONCRETE MEDIAN BARRIER SHALL BE EPOXY COATED.

SEE TRAFFIC CONTROL PLANS FOR LOCATION AND PAY LIMITS OF THE PORTABLE CONCRETE BARRIER.

THE #5 "G" BARS MAY BE SHIFTED SLIGHTLY AS NECESSARY TO CLEAR REINFORCING STEEL AND STIRRUPS.

FOR EXPANSION JOINT SEALS, SEE SPECIAL PROVISIONS.

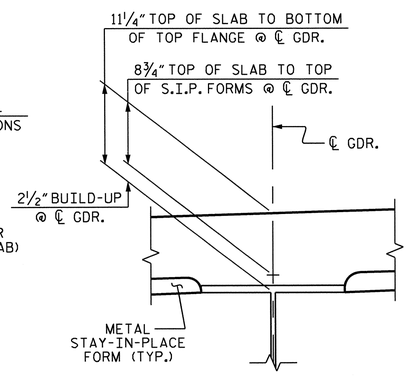

DETAIL "A"

(TYP. EA. GDR.)

PROJECT NO. U-0071

DURHAM COUNTY

STATION: 44+08.60 -L-

SHEET 2 OF 2

STATE OF NORTH CAROLINA
DEPARTMENT OF TRANSPORTATION
RALEIGH

SUPERSTRUCTURE

TYPICAL SECTION

STAGE II

NORTH CAROLINA PROFESSIONAL SEAL 14855 ENGINEER DARRAS R. CALHOUN
05/13/14

REVISIONS							SHEET NO.
NO.	BY:	DATE:	NO.	BY:	DATE:		5-7
1			3				TOTAL SHEETS
2			4				671

STR. #1

DRAWN BY : T. BANKOVICH DATE : 8-2010
CHECKED BY : D. G. ELY DATE : 9-2010
DESIGN ENGINEER OF RECORD : D. R. CALHOUN DATE : 11-2013

12-MAY-2014 16:53
Z:\TIPProjects-U\U0071\Structures\Plans\Str#1-L-over-Y1-\Super_Drawing\U-0071_str1_TS.dgn
asorsenginh

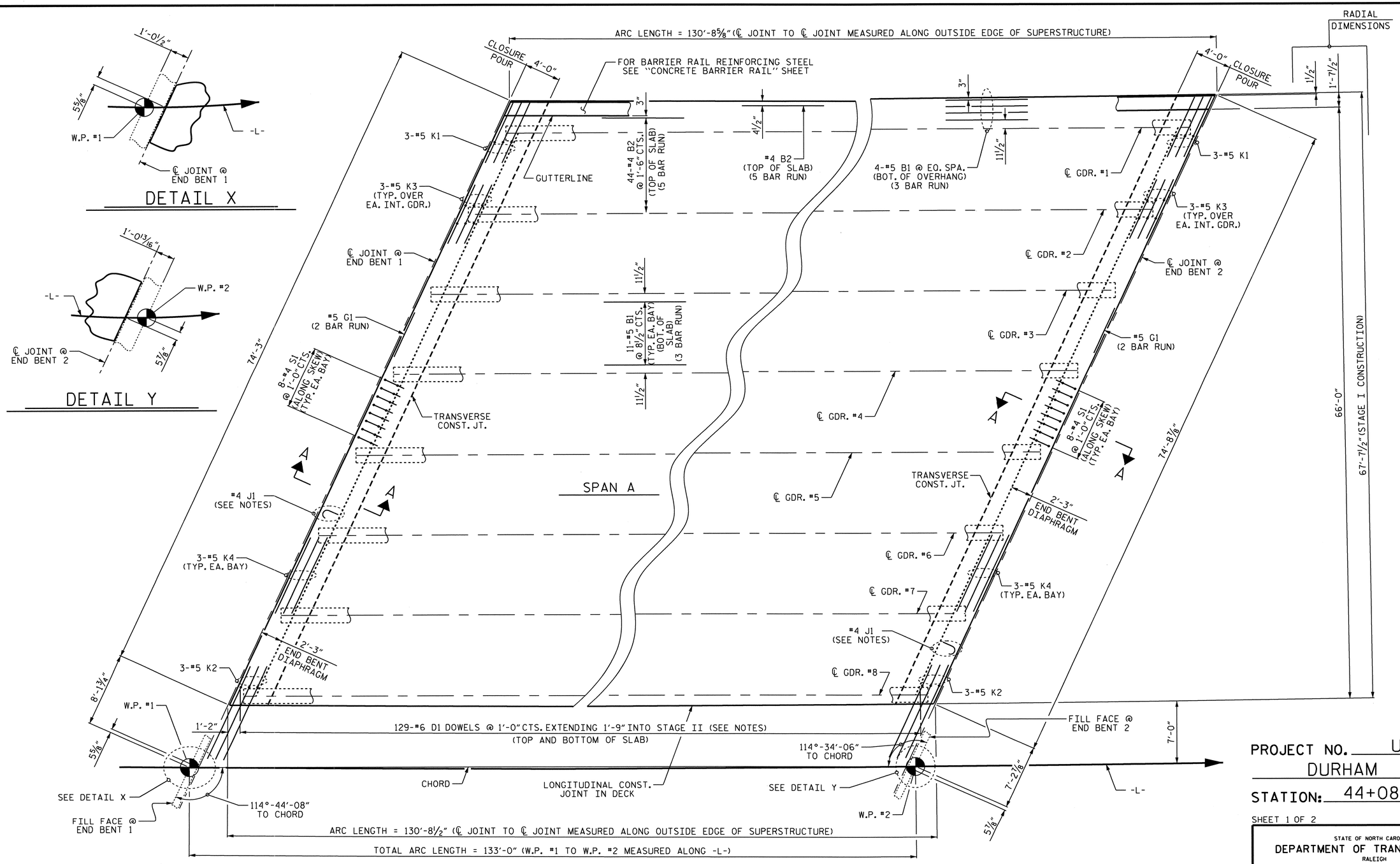

PLAN OF SPAN
(STAGE I)

NOTES

PERMITTED CONSTRUCTION JOINT NOT SHOWN. FOR LOCATION SEE "CONCRETE DECK POUR DETAILS" SHEET.

FOR SECTION A-A, SEE "TYPICAL SECTION" SHEET 1 OF 2.

FOR "A" BAR PLACEMENT, SEE "A" BAR PLACEMENT SHEETS.

#6 D1 DOWELS SHALL BE PLACED IN THE SAME HORIZONTAL PLANE AS THE TOP AND BOTTOM SLAB REINFORCING STEEL.

FOR PLACEMENT OF #4 J1 BARS, SEE "EXPANSION JOINT SEAL DETAILS" SHEET.

NORTH CAROLINA PROFESSIONAL SEAL 14855 ENGINEER DOUGLAS R. CALHOUN
5/13/14

PROJECT NO. U-0071
DURHAM COUNTY
STATION: 44+08.60 -L-

SHEET 1 OF 2

STATE OF NORTH CAROLINA
DEPARTMENT OF TRANSPORTATION
RALEIGH

SUPERSTRUCTURE

PLAN OF SPAN

STAGE I

REVISIONS							SHEET NO.
NO.	BY:	DATE:	NO.	BY:	DATE:		5-8
1			3				TOTAL SHEETS
2			4				671

DRAWN BY : T. BANKOVICH DATE : 9-2010
CHECKED BY : D.G. ELY DATE : 9-2010
DESIGN ENINEER OF RECORD: D. R. CALHOUN DATE : 11-2013

12-MAY-2014 16:52
Z:\TIPProjects-U\U0071\Structures\Plans\Str#1-L-over-Y1-\Super_Drawing\U-0071_str1_PS.dgn
asorsenginh

STR. #1

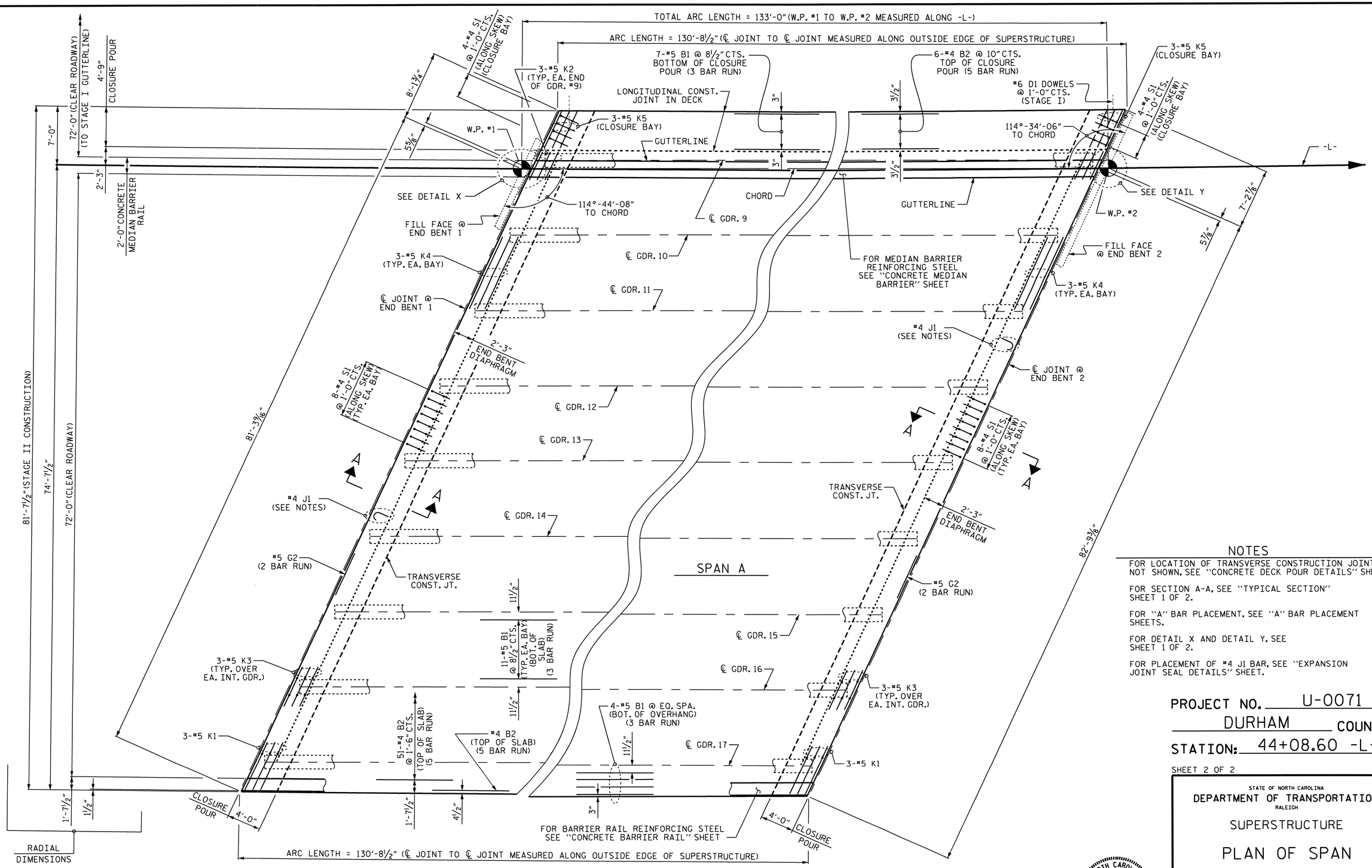

PLAN OF SPAN
(STAGE II)

NOTES

FOR LOCATION OF TRANSVERSE CONSTRUCTION JOINT NOT SHOWN, SEE "CONCRETE DECK POUR DETAILS" SHEET.

FOR SECTION A-A, SEE "TYPICAL SECTION" SHEET 1 OF 2.

FOR "A" BAR PLACEMENT, SEE "A" BAR PLACEMENT SHEETS.

FOR DETAIL X AND DETAIL Y, SEE SHEET 1 OF 2.

FOR PLACEMENT OF #4 J1 BAR, SEE "EXPANSION JOINT SEAL DETAILS" SHEET.

PROJECT NO. U-0071
DURHAM COUNTY
STATION: 44+08.60 -L-

SHEET 2 OF 2

STATE OF NORTH CAROLINA
DEPARTMENT OF TRANSPORTATION
RALEIGH

SUPERSTRUCTURE

PLAN OF SPAN

STAGE II

NORTH CAROLINA PROFESSIONAL SEAL 14855 ENGINEER DOUGLAS R. CALHOUN
03/13/14

REVISIONS						SHEET NO.
NO.	BY:	DATE:	NO.	BY:	DATE:	5-9
1			3			TOTAL SHEETS
2			4			671

DRAWN BY : T. BANKOVICH DATE : 9-2010
CHECKED BY : D.G. ELY DATE : 9-2010
DESIGN ENGINEER OF RECORD: D. R. CALHOUN DATE : 11-2013

12-MAY-2014 16:52
Z:\TIPProjects-U\U0071\Structures\Plans\Str#1-L-over-Y1-\Super_Drawing\U-0071_str1_PS.dgn
gsorsenglph

STR. #1

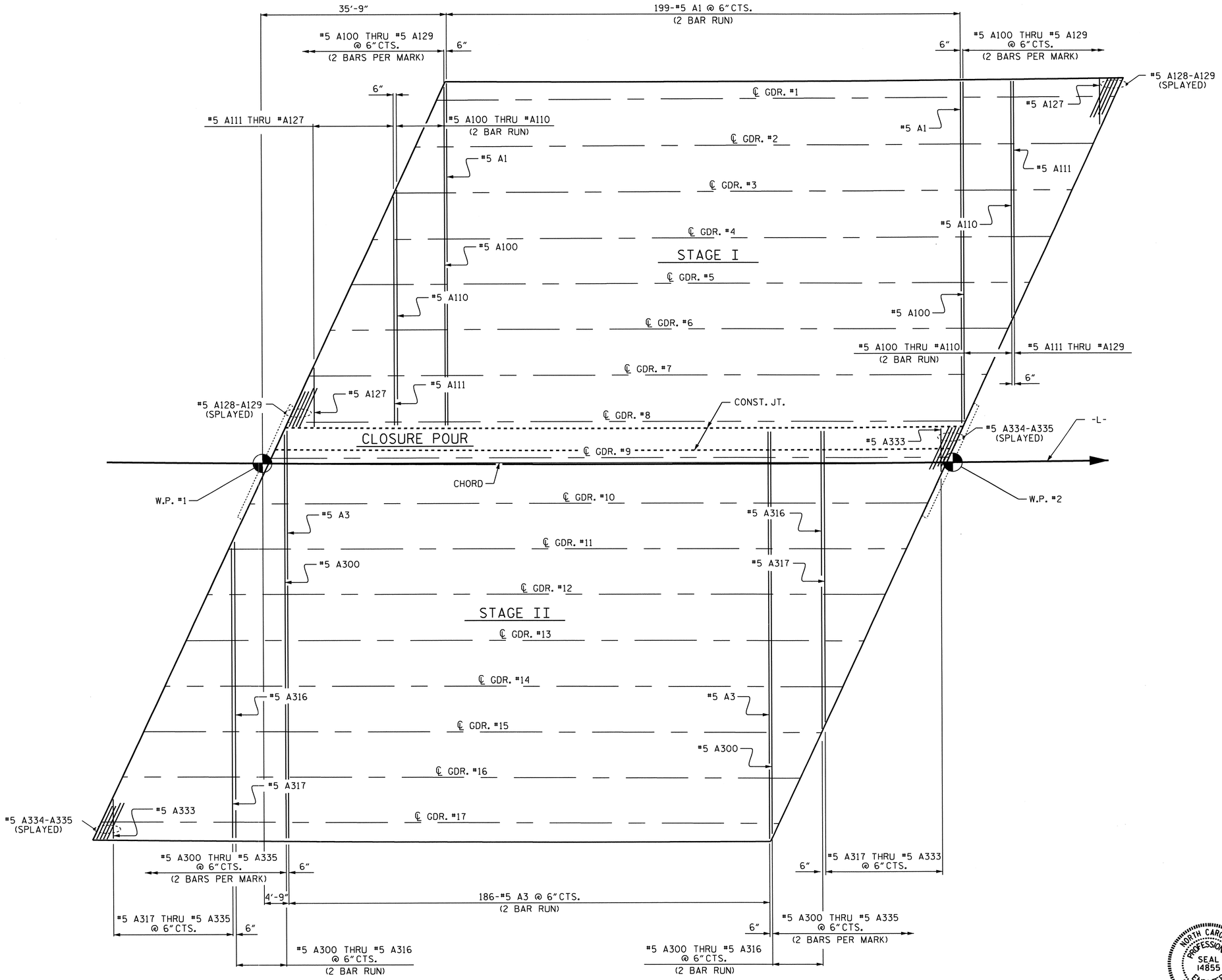

NOTE:

"A" BARS TO BE PLACED PERPENDICULAR TO THE CHORD AND SPACED ALONG THE CHORD.

"A" BAR PLACEMENT

TOP OF SLAB SHOWN

PROJECT NO. U-0071

DURHAM COUNTY

STATION: 44+08.60 -L-

SHEET 1 OF 2

STATE OF NORTH CAROLINA
DEPARTMENT OF TRANSPORTATION
RALEIGH

SUPERSTRUCTURE

"A" BAR PLACEMENT

NORTH CAROLINA PROFESSIONAL SEAL 14855 ENGINEER DOUGLAS R. CALHOUN
5/13/14

REVISIONS								SHEET NO.
NO.	BY:	DATE:	NO.	BY:	DATE:			S-10
1			3					TOTAL SHEETS
2			4					671

DRAWN BY : T. BANKOVICH DATE : 9-2010
CHECKED BY : D.G. ELY DATE : 9-2010
DESIGN ENGINEER OF RECORD : D. R. CALHOUN DATE : 11-2013

12-MAY-2014 16:52
Z:\TIPProjects-U\U0071\Structures\Plans\Str#1-L-over-Y1-\Super_Drawing\U-0071_str1_PS.dgn
asorsenginh

STR. #1

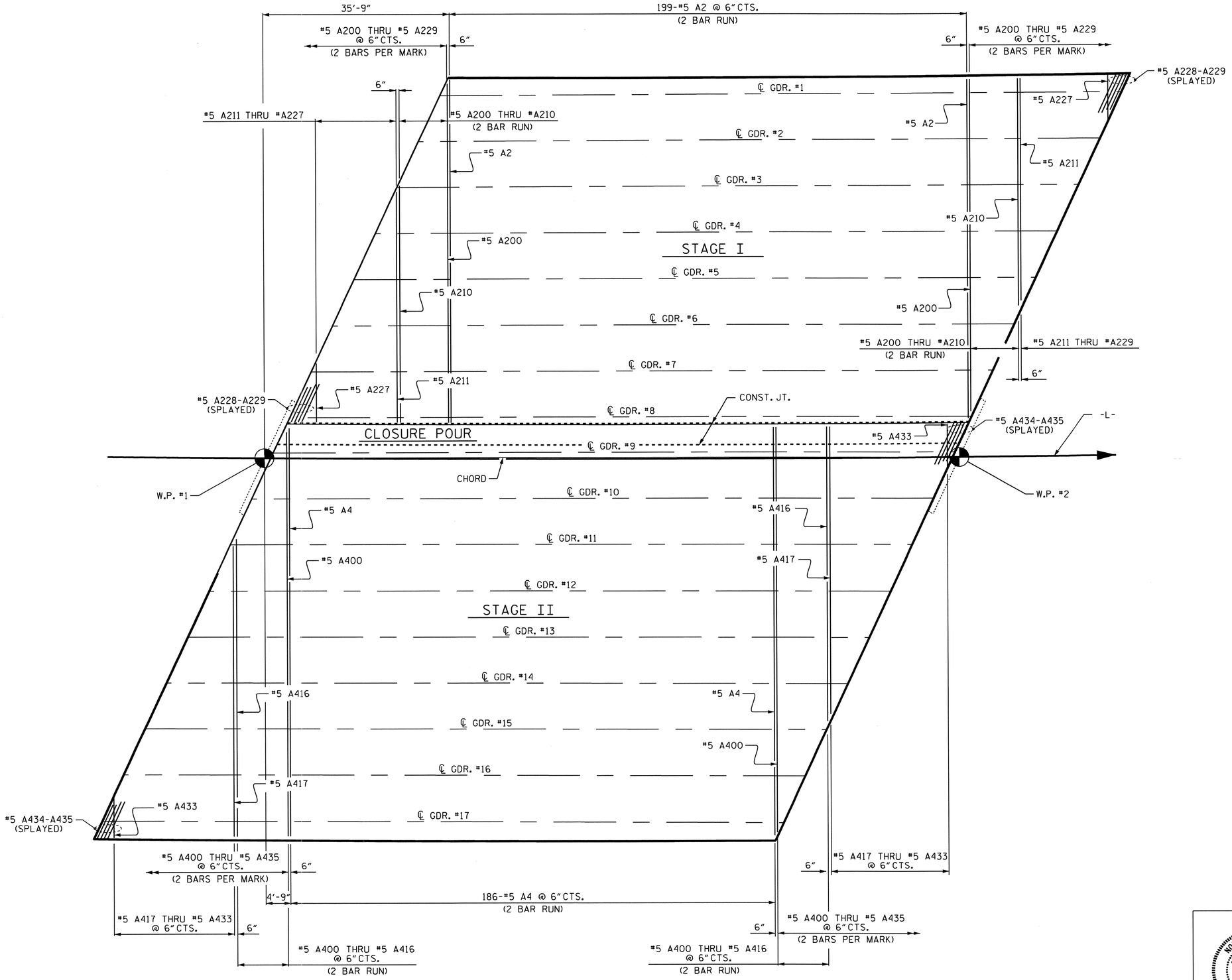

NOTE:

"A" BARS TO BE PLACED PERPENDICULAR TO THE CHORD AND SPACED ALONG THE CHORD.

"A" BAR PLACEMENT

BOTTOM OF SLAB SHOWN

DRAWN BY :	T. BANKOVICH	DATE :	9-2010
CHECKED BY :	D.G. ELY	DATE :	9-2010
DESIGN ENGINEER OF RECORD :	D. R. CALHOUN	DATE :	11-2013

12-MAY-2014 16:51
Z:\TIPProjects-U\U0071\Structures\Plans\Str#1-L-over-Y1-\Super_Drawing\U-0071_str1_PS.dgn
asorsenginh

PROJECT NO. U-0071
DURHAM COUNTY
STATION: 44+08.60 -L-

SHEET 2 OF 2

STATE OF NORTH CAROLINA
DEPARTMENT OF TRANSPORTATION
RALEIGH

SUPERSTRUCTURE

"A" BAR PLACEMENT

NORTH CAROLINA PROFESSIONAL SEAL 14855 ENGINEER DOUGLAS R. CALHOUN
5/13/14

REVISIONS						
NO.	BY:	DATE:	NO.	BY:	DATE:	SHEET NO. 5-11
1			3			TOTAL SHEETS 671
2			4			

STR. #1

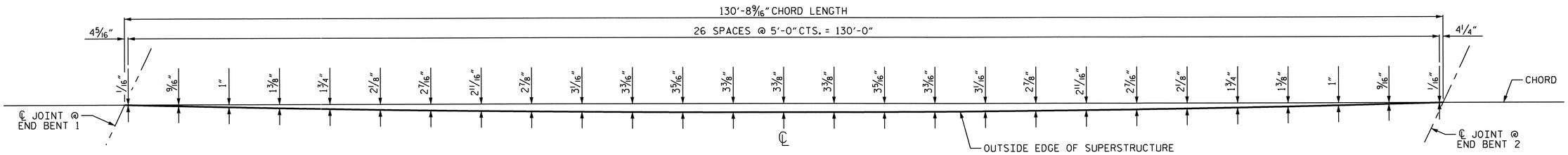

STAGE I LEFT OVERHANG ARC OFFSETS

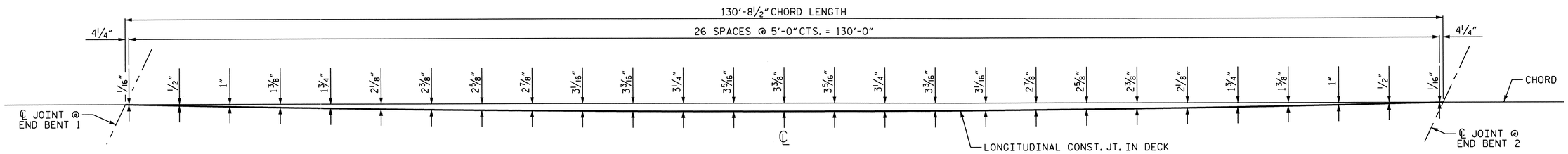

LONGITUDINAL CONST. JOINT ARC OFFSETS

STAGE I RIGHT LONGITUDINAL CONST. JT. AND STAGE II LEFT LONGITUDINAL CONST. JT.

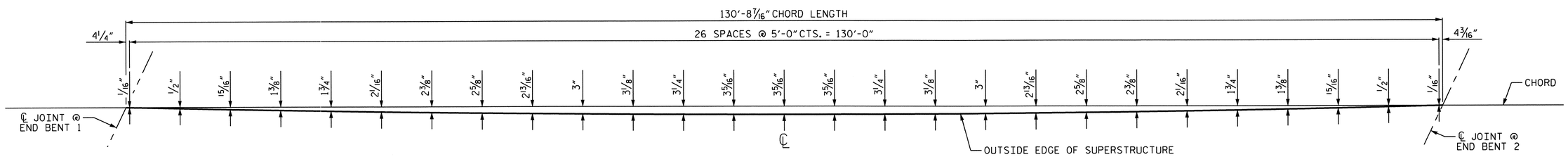

STAGE II RIGHT OVERHANG ARC OFFSETS

PROJECT NO. U-0071

DURHAM COUNTY

STATION: 44+08.60 -L-

STATE OF NORTH CAROLINA
DEPARTMENT OF TRANSPORTATION
RALEIGH

SUPERSTRUCTURE

ARC OFFSETS

NORTH CAROLINA PROFESSIONAL SEAL 14855 ENGINEER DOUGLAS R. CALHOUN
5/13/14

REVISIONS						SHEET NO.
NO.	BY:	DATE:	NO.	BY:	DATE:	5-12
1			3			TOTAL SHEETS
2			4			671

STR. #1

DRAWN BY : T. BANKOVICH DATE : 9-2010
CHECKED BY : D.G. ELY DATE : 9-2010
DESIGN ENGINEER OF RECORD : D. R. CALHOUN DATE : 11-2013

12-MAY-2014 16:51
Z:\TIPProjects-U\U0071\Structures\Plans\Str#1-L-over-Y1-\Super_Drawing\U-0071_str1_ARC.dgn
asorsenginh

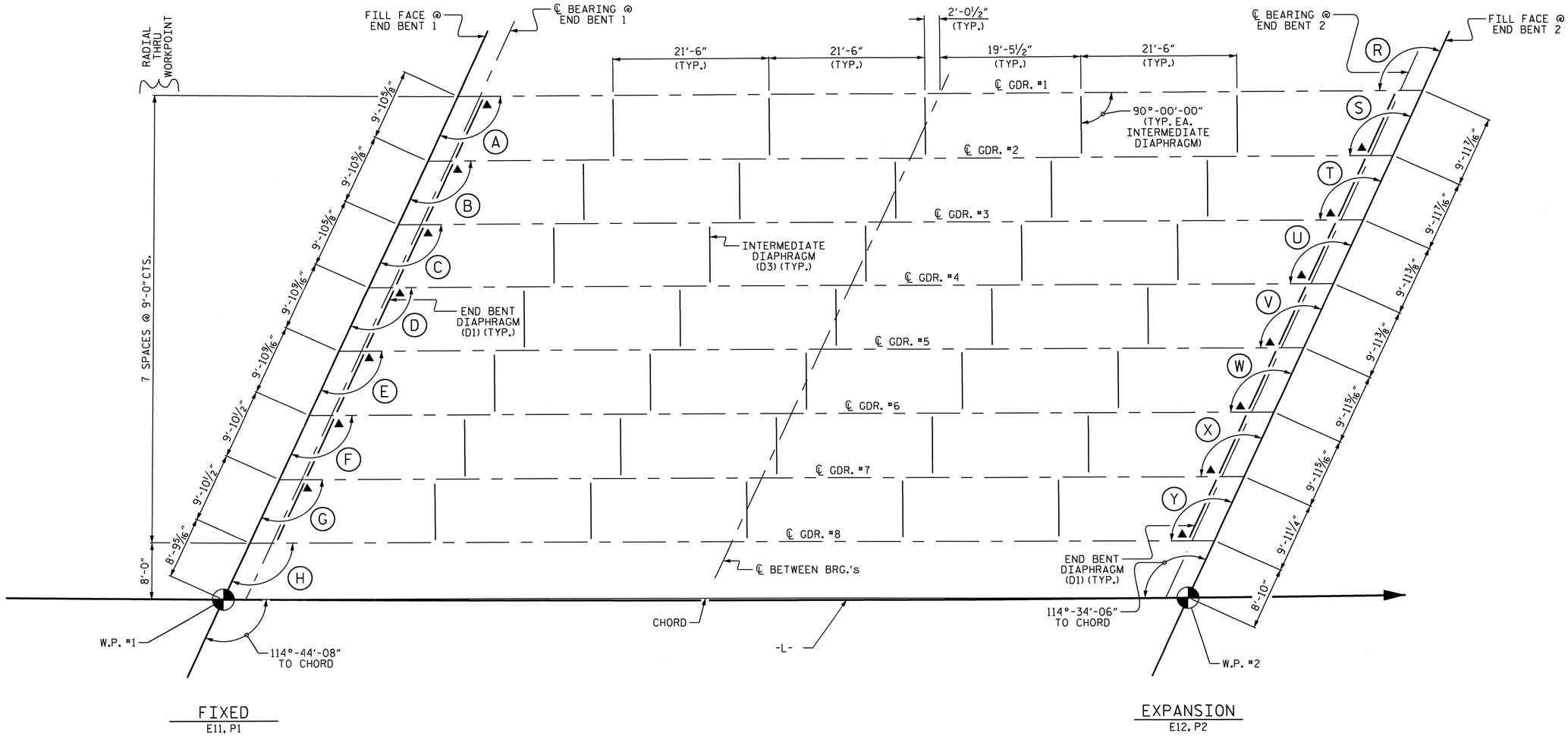

FRAMING PLAN
(STAGE I)

ANGLES

A	114°-58'-56"	R	114°-48'-54"
B	114°-57'-03"	S	114°-47'-01"
C	114°-55'-09"	T	114°-45'-07"
D	114°-53'-16"	U	114°-43'-14"
E	114°-51'-24"	V	114°-41'-21"
F	114°-49'-31"	W	114°-39'-29"
G	114°-47'-39"	X	114°-37'-37"
H	114°-45'-47"	Y	114°-35'-45"

▲ THE BEARING STIFFENER IN THIS AREA SHALL BE UTILIZED AS A CONNECTOR PLATE FOR THE DIAPHRAGM.

PROJECT NO. U-0071
DURHAM COUNTY
STATION: 44+08.60 -L-

SHEET 1 OF 2

STATE OF NORTH CAROLINA
DEPARTMENT OF TRANSPORTATION
RALEIGH

SUPERSTRUCTURE

FRAMING PLAN

NORTH CAROLINA PROFESSIONAL SEAL 14855 ENGINEER DOUGLAS R. CALHOUN
5/13/14

REVISIONS						SHEET NO.
NO.	BY:	DATE:	NO.	BY:	DATE:	5-13
1			3			TOTAL SHEETS
2			4			671

DRAWN BY : T. BANKOVICH DATE : 9-2010
CHECKED BY : D.G. ELY DATE : 9-2010
DESIGN ENGINEER OF RECORD : D. R. CALHOUN DATE : 11-2013

12-MAY-2014 16:50
Z:\TIPProjects-U\U0071\Structures\Plans\Str#1-L-over-Y1-\Super_Drawing\U-0071_str1_FP.dgn
asorsenginh

STR. #1

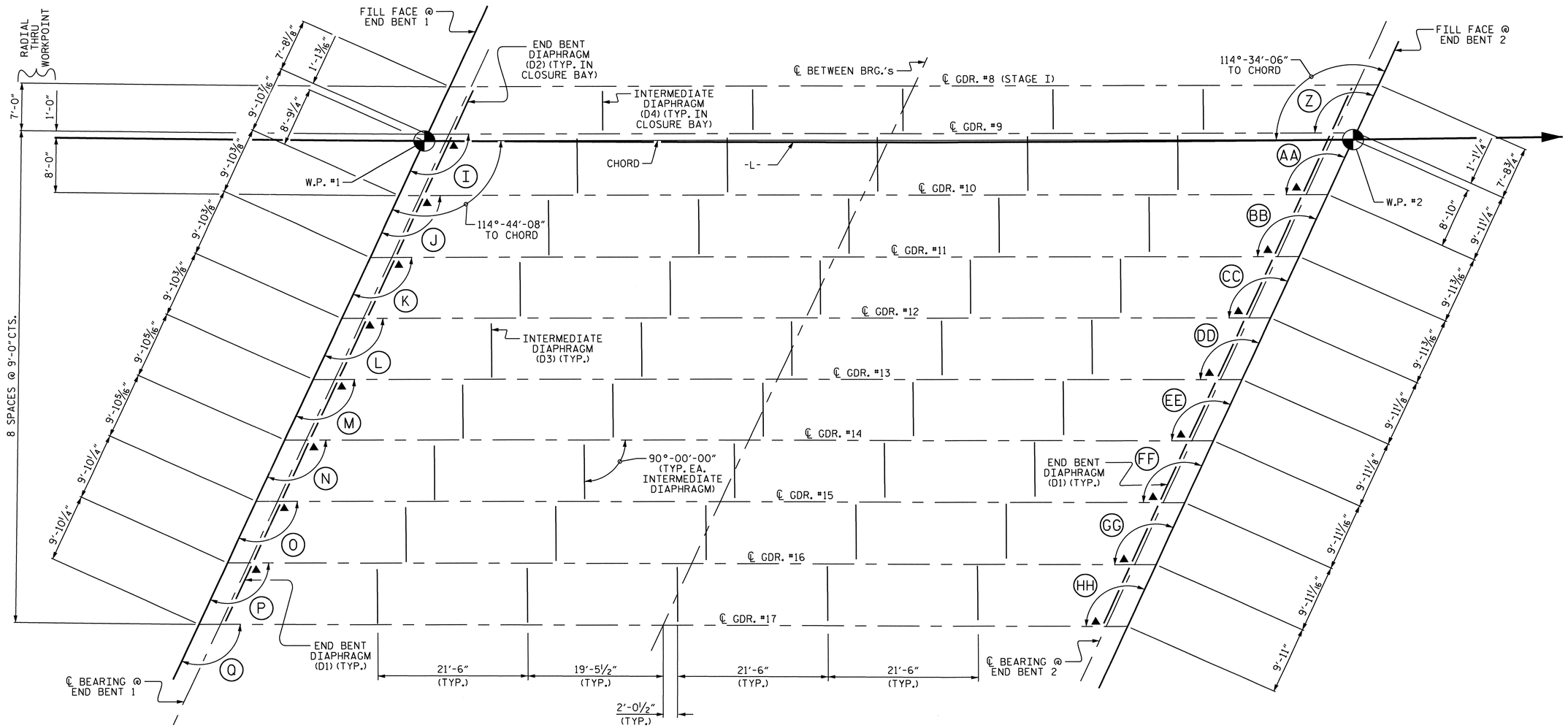

FIXED
E11, P1

EXPANSION
E12, P2

FRAMING PLAN
(STAGE II)

ANGLES

I	114°-44'-20"	Z	114°-34'-18"
J	114°-42'-29"	AA	114°-32'-27"
K	114°-40'-38"	BB	114°-30'-36"
L	114°-38'-47"	CC	114°-28'-45"
M	114°-36'-57"	DD	114°-26'-55"
N	114°-35'-07"	EE	114°-25'-04"
O	114°-33'-17"	FF	114°-23'-15"
P	114°-31'-27"	GG	114°-21'-25"
Q	114°-29'38"	HH	114°-19'-36"

▲ THE BEARING STIFFENER IN THIS AREA SHALL BE UTILIZED AS A CONNECTOR PLATE FOR THE DIAPHRAGM.

PROJECT NO. U-0071
DURHAM COUNTY
STATION: 44+08.60 -L-

SHEET 2 OF 2

STATE OF NORTH CAROLINA
DEPARTMENT OF TRANSPORTATION
RALEIGH

SUPERSTRUCTURE

FRAMING PLAN

NORTH CAROLINA PROFESSIONAL SEAL 14855 ENGINEER DOUGLAS R. CALHOUN
5/13/14

REVISIONS						
NO.	BY:	DATE:	NO.	BY:	DATE:	
1			3			
2			4			

SHEET NO. 5-14
TOTAL SHEETS 671

STR. #1

DRAWN BY : T. BANKOVICH DATE : 9-2010
CHECKED BY : D.G. ELY DATE : 9-2010
DESIGN ENGINEER OF RECORD : D. R. CALHOUN DATE : 11-2013

12-MAY-2014 16:50
Z:\TIPProjects-U\U0071\Structures\Plans\Str#1-L-over-Y1-\Super_Drawing\U-0071_str1_FP.dgn
asorsenginh

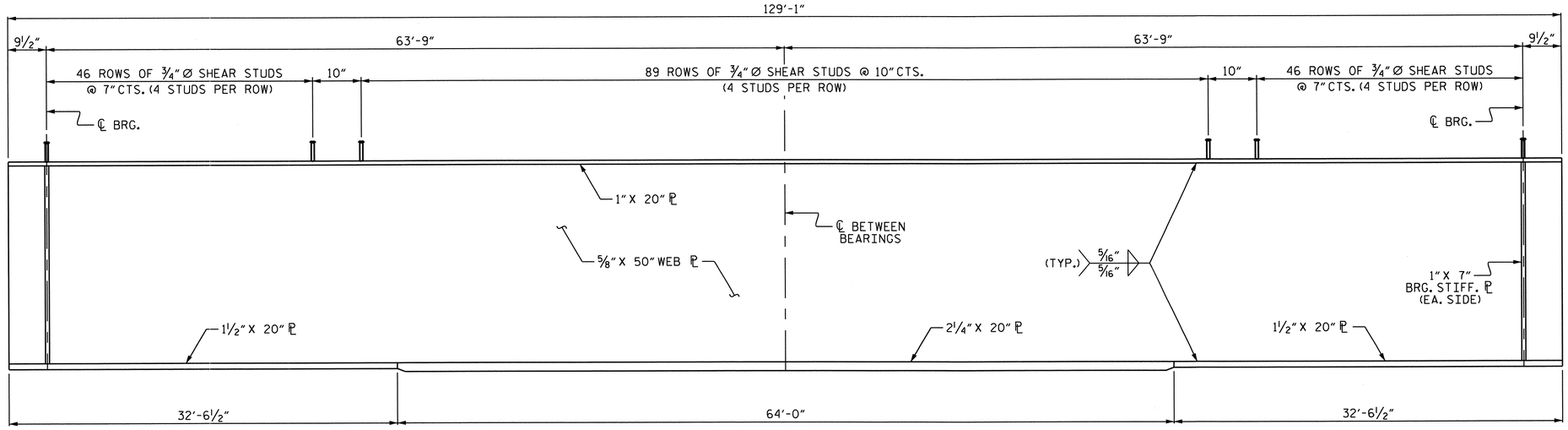

ELEVATION OF GIRDER

(FOR CLARITY, CONNECTOR ℙ's NOT SHOWN.
FOR PLACEMENT, SEE "FRAMING PLAN" SHEET.)

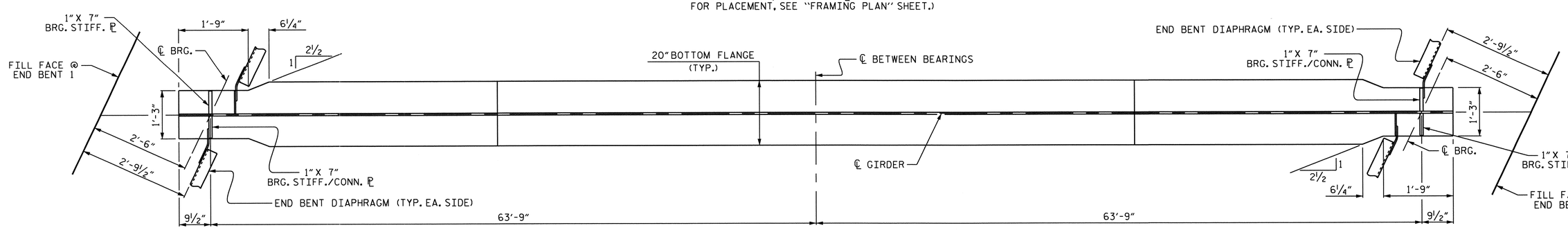

BOTTOM FLANGE DETAIL

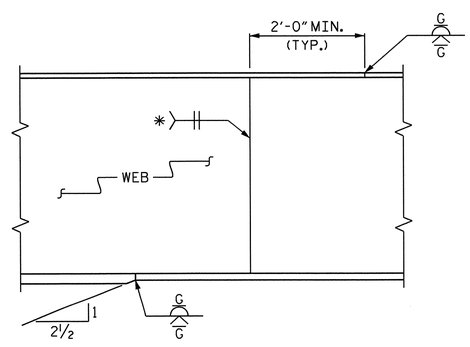

ELEVATION

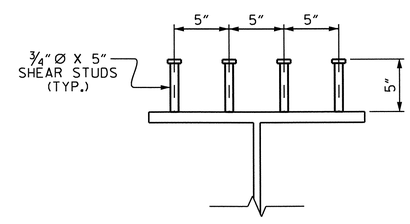

SHEAR STUD DETAIL

PERMISSIBLE SHOP FLANGE & WEB SPLICE

* GRIND SMOOTH AND FLUSH ON OUTER FACE OF EXTERIOR GIRDER

PROJECT NO. U-0071
DURHAM COUNTY
STATION: 44+08.60 -L-

SHEET 1 OF 3

STATE OF NORTH CAROLINA
DEPARTMENT OF TRANSPORTATION
RALEIGH

SUPERSTRUCTURE

STRUCTURAL STEEL DETAILS

NORTH CAROLINA PROFESSIONAL SEAL 14855 ENGINEER DOUGLAS R. CALHOUN
5/12/14

REVISIONS						SHEET NO.
NO.	BY:	DATE:	NO.	BY:	DATE:	5-15
1			3			TOTAL SHEETS
2			4			671

DRAWN BY : T. BANKOVICH DATE : 9-2010
CHECKED BY : D.G. ELY DATE : 9-2010
DESIGN ENGINEER OF RECORD : D. R. CALHOUN DATE : 11-2013

12-MAY-2014 16:49
Z:\TIPProjects-U\U0071\Structures\Plans\Str#1-L-over-Y1-\Super_Drawing\U-0071_str1_SS.dgn
asorsenginh

STR. #1

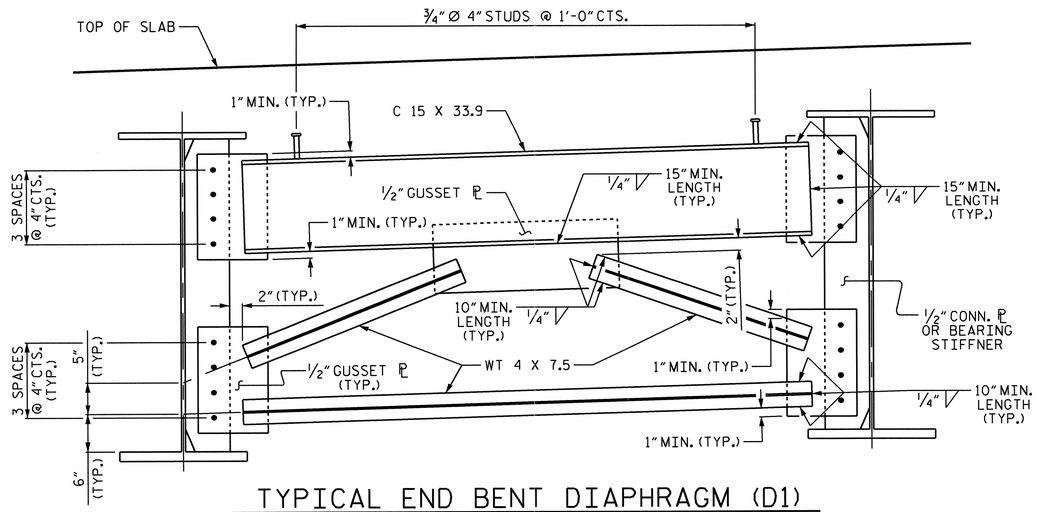

TYPICAL END BENT DIAPHRAGM (D1)

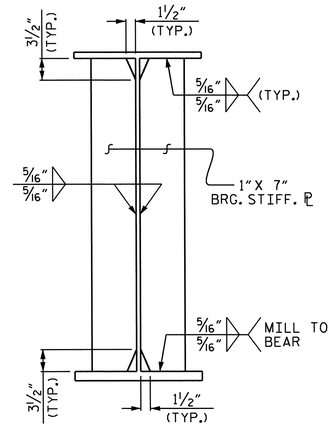

BEARING STIFFENER

THE BEARING STIFFENER SHALL BE WELDED TO THE BOTTOM FLANGE ONLY WHEN USED AS A CONNECTOR PLATE.

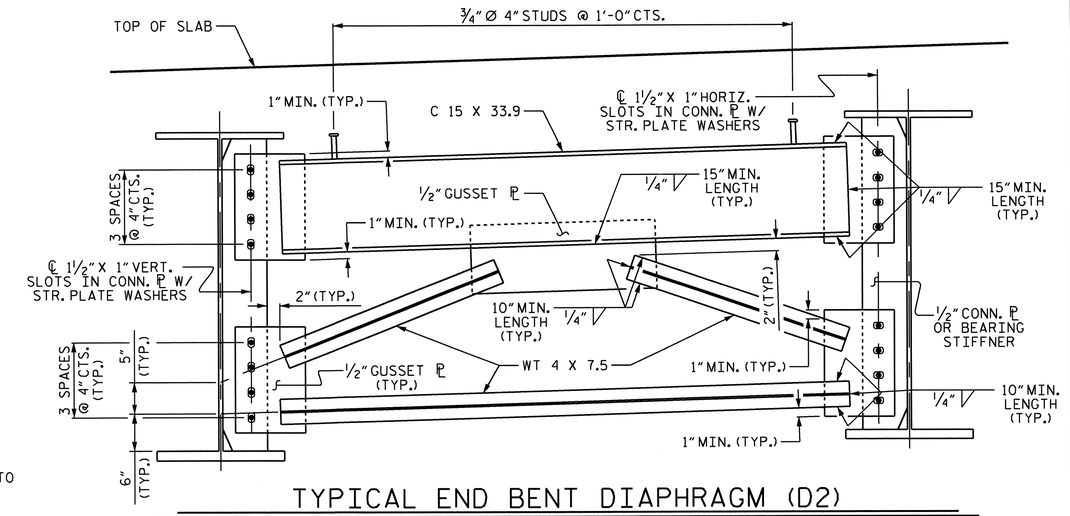

TYPICAL END BENT DIAPHRAGM (D2)

NOTE: NUTS ON BOLTS FOR CONNECTING DIAPHRAGM TO CONNECTOR PLATE SHALL BE LEFT LOOSE FOR PURPOSE OF ADJUSTMENT UNTIL BOTH SIDES OF SLAB HAVE BEEN POURED.

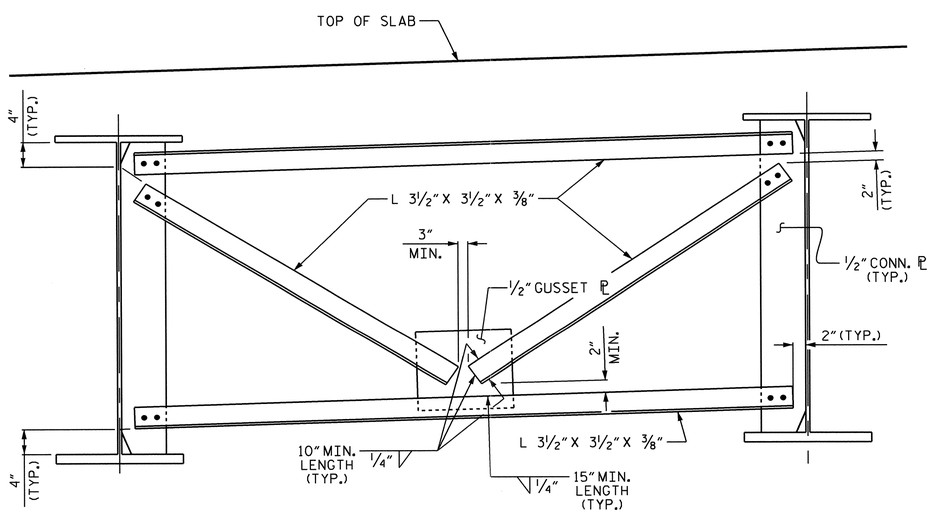

TYPICAL INTERMEDIATE DIAPHRAGM (D3)

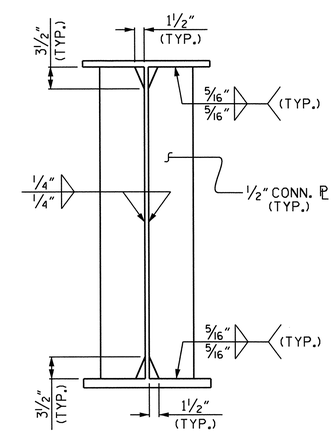

CONNECTOR PLATE

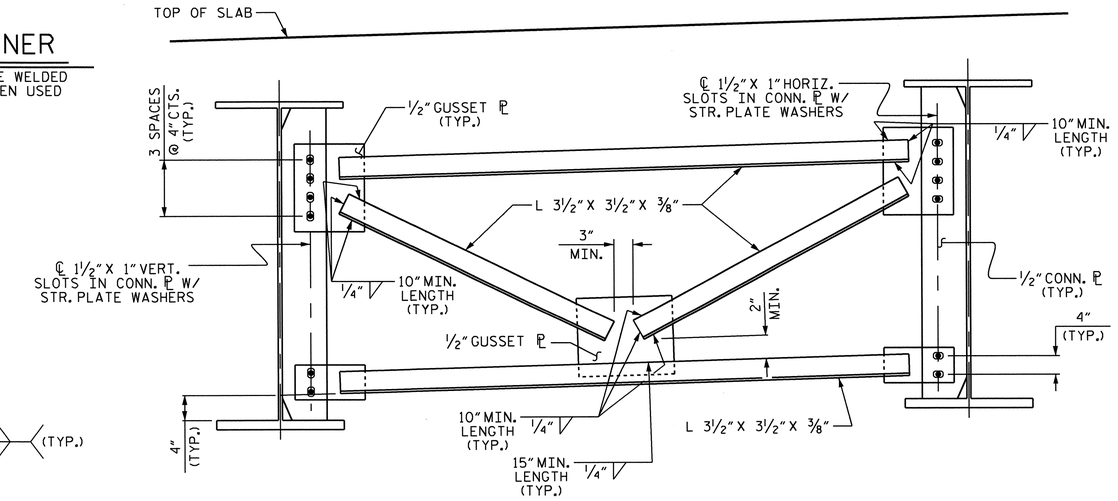

TYPICAL INTERMEDIATE DIAPHRAGM (D4)

NOTE: NUTS ON BOLTS FOR CONNECTING DIAPHRAGM TO CONNECTOR PLATE SHALL BE LEFT LOOSE FOR PURPOSE OF ADJUSTMENT UNTIL BOTH SIDES OF SLAB HAVE BEEN POURED.

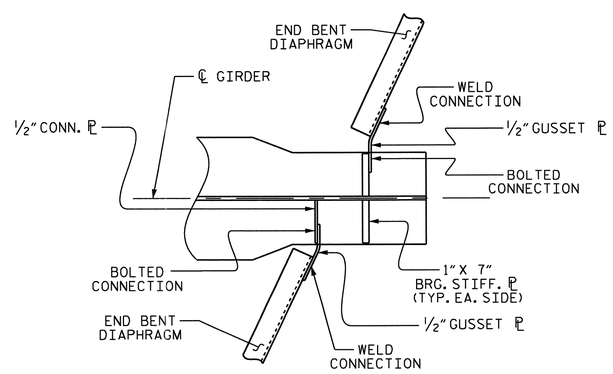

BENT GUSSET ℙ DETAIL

(EACH END SIMILAR)

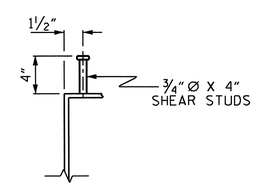

SHEAR STUD DETAIL

(TYP. EA. END BENT DIAPHRAGM)

PROJECT NO. U-0071
DURHAM COUNTY
STATION: 44+08.60 -L-

SHEET 2 OF 3

STATE OF NORTH CAROLINA
DEPARTMENT OF TRANSPORTATION
RALEIGH

SUPERSTRUCTURE

STRUCTURAL STEEL DETAILS

NORTH CAROLINA PROFESSIONAL SEAL 14855 ENGINEER DOUGLAS R. CALHOUN
5/13/14

REVISIONS						SHEET NO.
NO.	BY:	DATE:	NO.	BY:	DATE:	S-16
1			3			TOTAL SHEETS
2			4			671

STR. #1

DRAWN BY : T. BANKOVICH DATE : 9-2010
CHECKED BY : D.G. ELY DATE : 9-2010
DESIGN ENGINEER OF RECORD : D. R. CALHOUN DATE : 11-2013

12-MAY-2014 16:49
Z:\TIPProjects-U\U0071\Structures\Plans\Str#1-L-over-Y1-\Super_Drawing\U-0071_str1_SS.dgn
asorsenginh

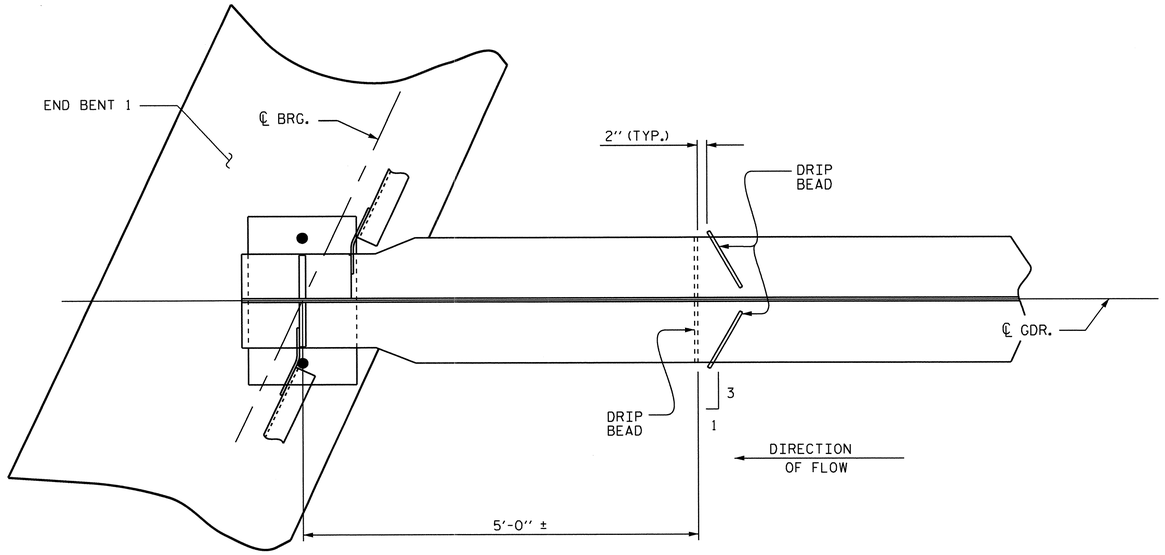

PART PLAN - BOTTOM FLANGE

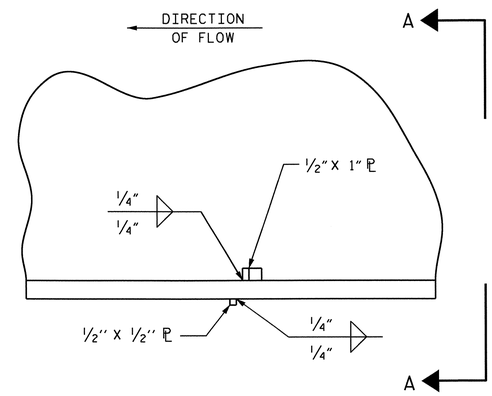

SECTION

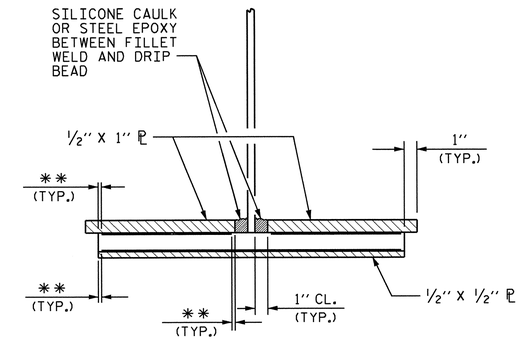

VIEW A-A

** SEE "WELD TERMINATION DETAILS"

DRIP BEAD DETAILS

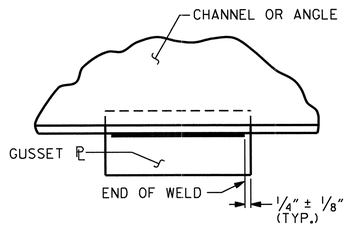

TYPICAL GUSSET PLATE CONNECTION

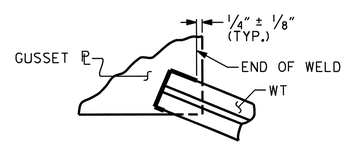

TYPICAL "TEE" TO GUSSET PLATE CONNECTION

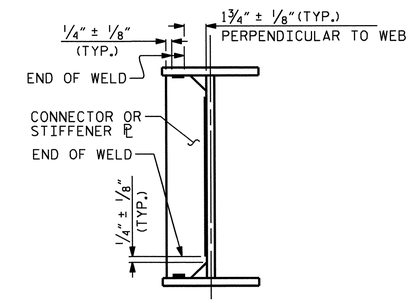

TYPICAL STIFFENER OR CONNECTOR PLATE CONNECTIONS

WELD TERMINATION DETAILS

NOTES

ALL STRUCTURAL STEEL SHALL BE AASHTO M270 GRADE 50 AND PAINTED IN ACCORDANCE WITH SYSTEM 1 OF ARTICLE 442-8 OF THE STANDARD SPECIFICATIONS UNLESS OTHERWISE NOTED ON THE PLANS.

ALL DIMENSIONS SHOWN ARE HORIZONTAL OR VERTICAL, UNLESS OTHERWISE NOTED.

ALL FIELD CONNECTIONS TO BE ⅞" DIA. HIGH STRENGTH BOLTS UNLESS OTHERWISE NOTED.

BEARING STIFFENERS ARE TO BE PLACED NORMAL TO THE WEB OF THE GIRDER AND SHALL BE PLUMB.

A CHARPY V-NOTCH TEST IS REQUIRED FOR WEB PLATES AND BOTTOM FLANGE PLATES FOR ALL GIRDERS AND IN ACCORDANCE WITH ARTICLE 1072-7 OF THE STANDARD SPECIFICATIONS.

NUTS ON BOLTS FOR CONNECTING DIAPHRAGMS TO CONNECTOR PLATE SHALL BE LEFT LOOSE FOR PURPOSE OF ADJUSTMENT UNTIL BOTH SIDES OF SLAB HAVE BEEN POURED.

BEARING STIFFENER PLATE WIDTHS SHOWN ON THE PLANS ARE A MINIMUM WIDTH. THE BEARING STIFFENER PLATE WIDTHS MAY BE INCREASED AS NECESSARY IN ORDER TO CONNECT THE DIAPHRAGM MEMBER.

BEARING STIFFENER MAY REQUIRE COPING IF WIDER THAN BOTTOM FLANGE.

PERMITTED FLANGE AND WEB SHOP SPLICES SHALL NOT BE LOCATED WITHIN 15 FEET OF MAXIMUM DEAD LOAD DEFLECTION. KEEP 2 FEET MINIMUM BETWEEN WEB AND FLANGE SHOP SPLICES. KEEP 6" MINIMUM BETWEEM CONNECTOR PLATE OR TRANSVERSE STIFFENER WELDS AND WEB OR FLANGE SHOP SPLICES.

STUDS ON GIRDERS MAY BE SHIFTED UP TO 1" IF NECESSARY TO CLEAR FLANGE SPLICE WELD.

TENSION ON THE ASTM A325 BOLTS SHALL BE CALIBRATED USING DIRECT TENSION INDICATOR WASHERS IN ACCORDANCE WITH ARTICLE 440-8 OF THE STANDARD SPECIFICATIONS.

END OF GIRDERS SHALL BE PLUMB.

FABRICATORS SHALL DETAIL DIAPHRAGM MEMBERS AND CONNECTIONS FOR STEEL DEAD LOAD FIT UP.

PROJECT NO. U-0071
DURHAM COUNTY
STATION: 44+08.60 -L-

SHEET 3 OF 3

STATE OF NORTH CAROLINA
DEPARTMENT OF TRANSPORTATION
RALEIGH

SUPERSTRUCTURE

STRUCTURAL STEEL DETAILS

NORTH CAROLINA PROFESSIONAL SEAL 14855 ENGINEER DOUGLAS R. CALHOUN
3/13/14

REVISIONS						SHEET NO.
NO.	BY:	DATE:	NO.	BY:	DATE:	5-17
1			3			TOTAL SHEETS
2			4			671

STR. #1

DRAWN BY :	D. G. ELY	DATE :	7-2012
CHECKED BY :	W. F. PARKER	DATE :	9-2012
DESIGN ENGINEER OF RECORD :	D. R. CALHOUN	DATE :	11-2013

12-MAY-2014 16:48
Z:\TIPProjects-U\U0071\Structures\Plans\Str#1-L-over-Y1-\Super_Drawing\U-0071_str1_SS.dgn
asorsenginh

DEAD LOAD DEFLECTION TABLE FOR GIRDERS

SPAN A

GIRDERS 1 & 17

TWENTIETH POINTS	0	.05	.10	.15	.20	.25	.30	.35	.40	.45	.50	.55	.60	.65	.70	.75	.80	.85	.90	.95	0
DEFLECTION DUE TO WEIGHT OF GIRDER ↓	0.000	0.021	0.041	0.060	0.077	0.092	0.105	0.115	0.122	0.127	0.128	0.127	0.122	0.115	0.105	0.092	0.077	0.060	0.041	0.021	0.000
DEFLECTION DUE TO WEIGHT OF SLAB * ↓	0.000	0.062	0.131	0.195	0.254	0.305	0.348	0.382	0.407	0.422	0.427	0.422	0.407	0.382	0.348	0.305	0.254	0.195	0.131	0.062	0.000
DEFLECTION DUE TO WEIGHT OF SUPERIMPOSED DEAD LOAD ↓	0.000	0.008	0.016	0.024	0.031	0.037	0.042	0.046	0.048	0.050	0.051	0.050	0.048	0.046	0.042	0.037	0.031	0.024	0.016	0.008	0.000
TOTAL DEAD LOAD DEFLECTION ↓	0.000	0.091	0.188	0.279	0.362	0.434	0.494	0.542	0.577	0.598	0.606	0.598	0.577	0.542	0.494	0.434	0.362	0.279	0.188	0.091	0.000
VERTICAL CURVE ORDINATE ↑	0.000	0.015	0.029	0.041	0.052	0.061	0.068	0.073	0.078	0.080	0.081	0.080	0.078	0.073	0.068	0.061	0.052	0.041	0.029	0.015	0.000
REQUIRED CAMBER ↑	0	1 1/4"	2 5/8"	3 7/8"	4 15/16"	5 15/16"	6 3/4"	7 3/8"	7 7/8"	8 1/8"	8 1/4"	8 1/8"	7 7/8"	7 3/8"	6 3/4"	5 15/16"	4 15/16"	3 7/8"	2 5/8"	1 1/4"	0

GIRDERS 2 & 16

TWENTIETH POINTS	0	.05	.10	.15	.20	.25	.30	.35	.40	.45	.50	.55	.60	.65	.70	.75	.80	.85	.90	.95	0
DEFLECTION DUE TO WEIGHT OF GIRDER ↓	0.000	0.021	0.041	0.060	0.077	0.092	0.105	0.115	0.122	0.127	0.128	0.127	0.122	0.115	0.105	0.092	0.077	0.060	0.041	0.021	0.000
DEFLECTION DUE TO WEIGHT OF SLAB * ↓	0.000	0.061	0.130	0.194	0.253	0.303	0.346	0.380	0.405	0.420	0.425	0.420	0.405	0.380	0.346	0.303	0.253	0.194	0.130	0.061	0.000
DEFLECTION DUE TO WEIGHT OF SUPERIMPOSED DEAD LOAD ↓	0.000	0.006	0.012	0.017	0.022	0.027	0.030	0.033	0.035	0.036	0.037	0.036	0.035	0.033	0.030	0.027	0.022	0.017	0.012	0.006	0.000
TOTAL DEAD LOAD DEFLECTION ↓	0.000	0.088	0.183	0.272	0.352	0.422	0.481	0.528	0.562	0.583	0.589	0.583	0.562	0.528	0.481	0.422	0.352	0.272	0.183	0.088	0.000
VERTICAL CURVE ORDINATE ↑	0.000	0.015	0.029	0.041	0.052	0.061	0.068	0.074	0.078	0.080	0.081	0.080	0.078	0.074	0.068	0.061	0.052	0.041	0.029	0.015	0.000
REQUIRED CAMBER ↑	0	1 1/4"	2 9/16"	3 3/4"	4 7/8"	5 13/16"	6 9/16"	7 3/16"	7 11/16"	7 15/16"	8 1/16"	7 15/16"	7 11/16"	7 3/16"	6 9/16"	5 13/16"	4 7/8"	3 3/4"	2 9/16"	1 1/4"	0

GIRDERS 3, 8, 9, 10 & 15

TWENTIETH POINTS	0	.05	.10	.15	.20	.25	.30	.35	.40	.45	.50	.55	.60	.65	.70	.75	.80	.85	.90	.95	0
DEFLECTION DUE TO WEIGHT OF GIRDER ↓	0.000	0.021	0.041	0.060	0.077	0.092	0.105	0.115	0.122	0.127	0.128	0.127	0.122	0.115	0.105	0.092	0.077	0.060	0.041	0.021	0.000
DEFLECTION DUE TO WEIGHT OF SLAB * ↓	0.000	0.061	0.129	0.193	0.251	0.302	0.344	0.378	0.403	0.418	0.422	0.418	0.403	0.378	0.344	0.302	0.251	0.193	0.129	0.061	0.000
DEFLECTION DUE TO WEIGHT OF SUPERIMPOSED DEAD LOAD ↓	0.000	0.004	0.008	0.012	0.016	0.019	0.021	0.023	0.024	0.025	0.026	0.025	0.024	0.023	0.021	0.019	0.016	0.012	0.008	0.004	0.000
TOTAL DEAD LOAD DEFLECTION ↓	0.000	0.086	0.179	0.266	0.344	0.413	0.470	0.516	0.549	0.570	0.576	0.570	0.549	0.516	0.470	0.413	0.344	0.266	0.179	0.086	0.000
VERTICAL CURVE ORDINATE ↑	0.000	0.016	0.030	0.042	0.053	0.062	0.069	0.075	0.079	0.081	0.082	0.081	0.079	0.075	0.069	0.062	0.053	0.042	0.030	0.016	0.000
REQUIRED CAMBER ↑	0	1 3/16"	2 1/2"	3 11/16"	4 3/4"	5 11/16"	6 7/16"	7 1/16"	7 9/16"	7 13/16"	7 7/8"	7 13/16"	7 9/16"	7 1/16"	6 7/16"	5 11/16"	4 3/4"	3 11/16"	2 1/2"	1 3/16"	0

GIRDERS 4, 5, 6, 7, 11, 12, 13 & 14

TWENTIETH POINTS	0	.05	.10	.15	.20	.25	.30	.35	.40	.45	.50	.55	.60	.65	.70	.75	.80	.85	.90	.95	0
DEFLECTION DUE TO WEIGHT OF GIRDER ↓	0.000	0.021	0.041	0.060	0.077	0.092	0.105	0.115	0.122	0.127	0.128	0.127	0.122	0.115	0.105	0.092	0.077	0.060	0.041	0.021	0.000
DEFLECTION DUE TO WEIGHT OF SLAB * ↓	0.000	0.061	0.129	0.193	0.251	0.302	0.344	0.378	0.403	0.418	0.422	0.418	0.403	0.378	0.344	0.302	0.251	0.193	0.129	0.061	0.000
DEFLECTION DUE TO WEIGHT OF SUPERIMPOSED DEAD LOAD ↓	0.000	0.000	0.000	0.000	0.000	0.000	0.000	0.000	0.000	0.000	0.000	0.000	0.000	0.000	0.000	0.000	0.000	0.000	0.000	0.000	0.000
TOTAL DEAD LOAD DEFLECTION ↓	0.000	0.082	0.170	0.253	0.329	0.394	0.449	0.493	0.525	0.544	0.551	0.544	0.525	0.493	0.449	0.394	0.329	0.253	0.170	0.082	0.000
VERTICAL CURVE ORDINATE ↑	0.000	0.015	0.029	0.041	0.052	0.061	0.068	0.073	0.078	0.080	0.081	0.080	0.078	0.073	0.068	0.061	0.052	0.041	0.029	0.015	0.000
REQUIRED CAMBER ↑	0	1 3/16"	2 3/8"	3 9/16"	4 9/16"	5 7/16"	6 3/16"	6 13/16"	7 1/4"	7 1/2"	7 9/16"	7 1/2"	7 1/4"	6 13/16"	6 3/16"	5 7/16"	4 9/16"	3 9/16"	2 3/8"	1 3/16"	0

* INCLUDES SLAB, BUILDUPS, AND STAY-IN-PLACE FORMS.
ALL VALUES ARE SHOWN IN FEET (DECIMAL FORM), EXCEPT "FINAL CAMBER", WHICH IS SHOWN IN INCHES (FRACTION FORM).

PROJECT NO. U-0071
DURHAM COUNTY
STATION: 44+08.60 -L-

STATE OF NORTH CAROLINA
DEPARTMENT OF TRANSPORTATION
RALEIGH

SUPERSTRUCTURE

DEAD LOAD DEFLECTIONS

NORTH CAROLINA PROFESSIONAL SEAL 14855 ENGINEER DOUGLAS R. CALHOUN
5/13/14

REVISIONS						SHEET NO.
NO.	BY:	DATE:	NO.	BY:	DATE:	5-18
1			3			TOTAL SHEETS
2			4			671

DRAWN BY : P.K. NEWTON DATE : 11/14/13
CHECKED BY : A. SORSENGINH DATE : 11/22/13
DESIGN ENGINEER OF RECORD: D.R. CALHOUN DATE : 11/2013

12-MAY-2014 16:46
Z:\TIPProjects-U\U0071\Structures\Plans\Str#1-L-over-Y1-\Super_Drawing\U-0071_str1_DL.dgn
asorsenginh

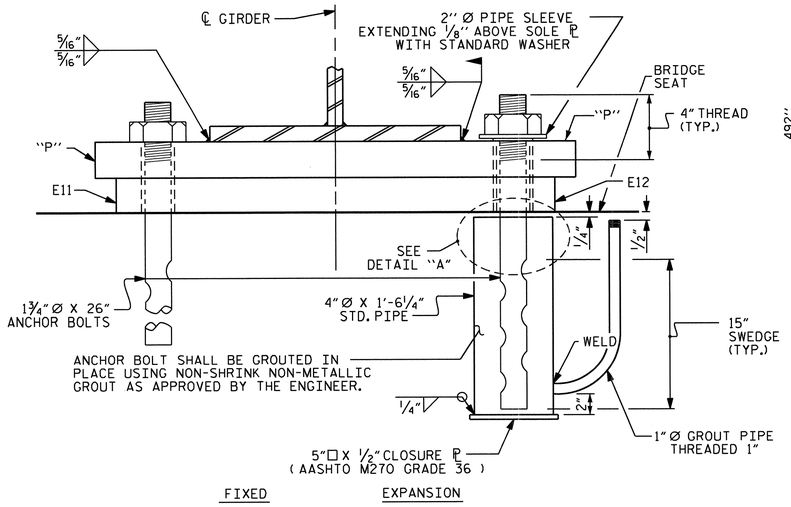

END VIEW

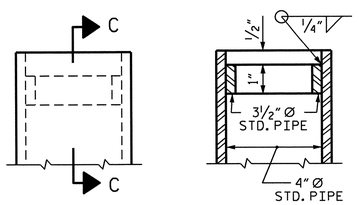

SECTION C-C

DETAIL "A"

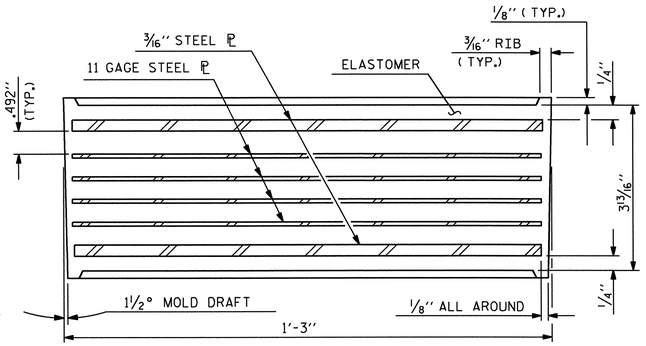

TYPICAL SECTION OF ELASTOMERIC BEARING

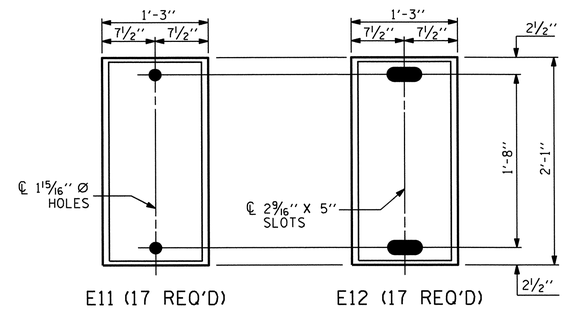

PLAN VIEW OF ELASTOMERIC BEARING

TYPE VI

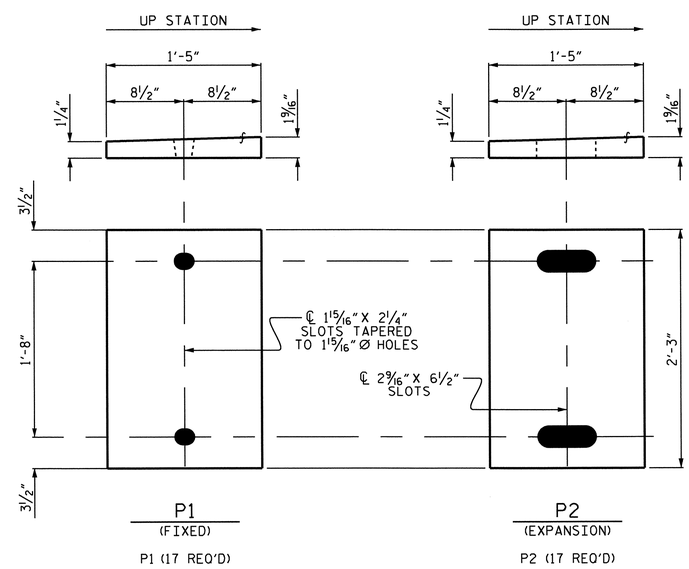

SOLE PLATE DETAILS ("P")

NOTES

AT ALL FIXED POINTS OF SUPPORT, NUTS FOR ANCHOR BOLTS ARE TO BE TIGHTENED FINGER TIGHT AND THEN BACKED OFF ½ TURN. THE THREAD OF THE NUT AND BOLT SHALL THEN BE BURRED WITH A SHARP POINTED TOOL.

THE 2" Ø PIPE SLEEVE SHALL BE CUT FROM SCHEDULE 40 PVC PLASTIC PIPE. THE PVC PLASTIC PIPE SHALL MEET THE REQUIREMENTS OF ASTM D1785.

THE PAYMENT FOR THE PIPE SLEEVES SHALL BE INCLUDED IN THE SEVERAL PAY ITEMS.

FOR PAINTED STRUCTURAL STEEL (EXCLUDING AASHTO M270 GRADE 50W), SOLE PLATES, ANCHOR BOLTS, NUTS AND WASHERS SHALL BE GALVANIZED IN ACCORDANCE WITH THE STANDARD SPECIFICATIONS.

FOR AASHTO M270 GRADE 50W STRUCTURAL STEEL, SOLE PLATE SHALL BE AASHTO M270 GRADE 50W AND SHALL NOT BE GALVANIZED. ANCHOR BOLTS, NUTS AND WASHERS SHALL BE GALVANIZED IN ACCORDANCE WITH THE STANDARD SPECIFICATIONS.

ANCHOR BOLTS SHALL MEET THE REQUIREMENTS OF ASTM A449. NUTS SHALL MEET THE REQUIREMENTS OF AASHTO M291-DH OR AASHTO M292-2H. WASHERS SHALL MEET THE REQUIREMENTS OF AASHTO M293. SHOP DRAWINGS ARE NOT REQUIRED FOR ANCHOR BOLTS, NUTS AND WASHERS. SHOP INSPECTION IS REQUIRED.

WHEN FIELD WELDING THE SOLE PLATE TO THE GIRDER FLANGE, USE TEMPERATURE INDICATING WAX PENS, OR OTHER SUITABLE MEANS, TO ENSURE THAT THE TEMPERATURE OF THE SOLE PLATE DOES NOT EXCEED 300°F. TEMPERATURES ABOVE THIS MAY DAMAGE THE ELASTOMER.

ALL SURFACES OF BEARING PLATES SHALL BE SMOOTH AND STRAIGHT.

THE ELASTOMER IN THE STEEL REINFORCED BEARINGS SHALL HAVE A SHEAR MODULUS OF 0.160 KSI, IN ACCORDANCE WITH AASHTO M251.

FOR STEEL REINFORCED ELASTOMERIC BEARINGS, SEE SPECIAL PROVISIONS.

THE CLOSURE PLATE, GROUT PIPE AND STANDARD PIPE FOR THE EXPANSION ASSEMBLY NEED NOT BE GALVANIZED.

THE CONTRACTOR'S ATTENTION IS CALLED TO THE FOLLOWING PROCEDURE, WHICH MAY BE REQUIRED BY THE ENGINEER, TO RESET ELASTOMERIC BEARINGS DUE TO GIRDER TRANSLATION AND END ROTATION:

1. ONCE THE DECK HAS CURED, THE GIRDERS SHALL BE JACKED THEN THE ANCHOR BOLTS AND ELASTOMERIC BEARING SLOTS CENTERED AS NEARLY AS PRACTICAL ABOUT THE BEARING STIFFENER. THIS OPERATION SHALL BE PERFORMED AT APPROXIMATELY 60°F.
2. AFTER CENTERING THE ELASTOMERIC BEARING SLOTS AND ANCHOR BOLTS, THE ANCHOR BOLTS SHALL BE GROUTED.

THE CONTRACTOR MAY PROPOSE ALTERNATE METHODS, PROVIDED DETAILS ARE SUBMITTED TO THE ENGINEER FOR REVIEW AND APPROVAL.

MAXIMUM ALLOWABLE SERVICE LOADS	
D.L.+L.L. (NO IMPACT)	
TYPE VI	375 K

PROJECT NO. U-0071
DURHAM COUNTY
STATION: 44+08.60 -L-

STATE OF NORTH CAROLINA
DEPARTMENT OF TRANSPORTATION
RALEIGH

STANDARD

ELASTOMERIC BEARING DETAILS

(STEEL SUPERSTRUCTURE)

NORTH CAROLINA PROFESSIONAL SEAL 14855 ENGINEER DAVID G. ELY
5/13/14

REVISIONS								SHEET NO.
NO.	BY:	DATE:	NO.	BY:	DATE:			5-19
1			3					TOTAL SHEETS
2			4					671

ASSEMBLED BY : T. BANKOVICH		DATE : 9-2010	
CHECKED BY : D.G. ELY		DATE : 9-2010	
DRAWN BY : EEM 10/95	REV. 5/1/06	TLA/GM	
CHECKED BY : PEK 10/95	REV. 10/1/11	MAA/GM	
	REV. 6/13	AAC/MAA	

12-MAY-2014 16:46
Z:\TIPProjects-U\U0071\Structures\Plans\Str#1-L-over-Y1-\Super_Drawing\U-0071_str1_BG.dgn
asorsenginh

(SHT 3b) STD. NO. EB2 STR. #1

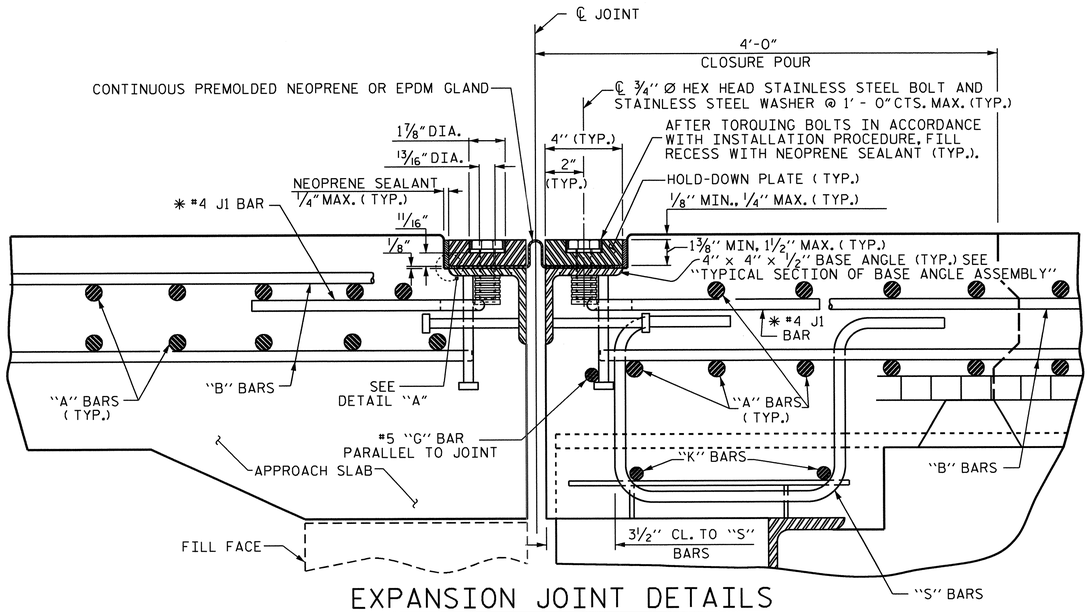

EXPANSION JOINT DETAILS

SECTION NORMAL TO JOINT -- STEEL SUPERSTRUCTURE

⁎ THE QUANTITY OF #4 J1 BARS ON THE BILL OF MATERIAL IS BASED ON 1'-0" CENTERS. J1 BARS SHALL BE PLACED AT EACH VERTICAL STUD ANCHOR BOLT. IN THE EVENT THAT THE NUMBER OF VERTICAL STUD ANCHORS EXCEEDS THE NUMBER OF J1 BARS SPECIFIED, ADDITIONAL J1 BARS WILL NOT BE REQUIRED.

INSTALLATION PROCEDURE

1. A TEMPLATE OR OTHER SUITABLE DEVICE SHALL BE USED TO FORM THE TOP OF THE EXPANSION JOINT SEAL BLOCKOUT TO THE PROPER DEPTH AND WIDTH. THE TEMPLATE SHALL BE 4⅛" TO 4¼" WIDE AND OF SUCH THICKNESS AS TO PROVIDE FOR CORRECT FINAL ELEVATION OF TOP OF HOLD-DOWN PLATES. THE TEMPLATE SHALL BE ATTACHED TO THE BASE ANGLE ASSEMBLY WITH THE ¾" Ø HEX HEAD BOLTS PROVIDED FOR THE HOLD-DOWN PLATES. A 1" Ø HOLE SHALL BE PROVIDED IN THE TEMPLATE CENTERED OVER EACH WEEP HOLE IN THE 4" X 4" X ½" BASE ANGLE. OTHER METHODS OF INSURING DRAINAGE THROUGH WEEP HOLES MAY BE EMPLOYED SUBJECT TO ENGINEER'S APPROVAL.
2. AFTER THE CONCRETE HAS BEEN CAST ON BOTH SIDES OF THE JOINT, REMOVE THE TEMPLATE. THOROUGHLY CLEAN THE BOLT HOLES AND THE ANGLE PLATE. REMOVE ANY EXCESS CONCRETE THAT COMES OUT OF THE WEEP HOLES. ANY DAMAGED STEEL SHALL BE COATED WITH A MINIMUM THICKNESS OF 4 DRY MILS OF ZINC-RICH PAINT IN ACCORDANCE WITH THE STANDARD SPECIFICATIONS.
3. LAY THE GLAND ON THE BASE ANGLE AND FIELD MARK THE GLAND FOR THE BOLT HOLES. HOLES IN THE GLAND SHALL BE PUNCHED ⅛" IN DIAMETER WITH A HAND PUNCH.
4. IN ORDER TO CHECK FOR PROPER ALIGNMENT, PLACE THE GLAND AND HOLD-DOWN PLATES ON THE BASE ANGLE. DO NOT APPLY NEOPRENE SEALANT. BOLT THE HOLD-DOWN PLATES TO THE BASE ANGLE BUT DO NOT TIGHTEN. THE ENGINEER SHALL INSPECT THE JOINT SEAL DEVICE FOR PROPER ALIGNMENT.
5. AFTER INSPECTION, REMOVE THE HOLD-DOWN PLATES AND GLAND. APPLY NEOPRENE SEALANT TO THE BASE ANGLE IN ACCORDANCE WITH THE "INSTALLATION SKETCH". PLACE GLAND AND HOLD-DOWN PLATES ON THE BASE ANGLE. BOLT THE HOLD-DOWN PLATES TO THE BASE ANGLE ASSEMBLY AND TOROUE THE BOLTS TO 88 FT-LBS WITH A TOROUE WRENCH. CHECK THE TOROUE AFTER THREE (3) HOURS AND, IF NECESSARY, RETIGHTEN TO 88 FT-LBS. A FINAL CHECK SHALL BE MADE AT SEVEN (7) DAYS. TOROUE SHALL NOT BE LESS THAN 80 FT-LBS AFTER SEVEN (7) DAYS.
6. AFTER PROPER TOROUING, CLEAN THE BOLT HOLE RECESSES AND THE RECESS BETWEEN THE JOINT SEAL DEVICE AND CONCRETE, COMPLETELY FILL THESE RECESSES WITH NEOPRENE SEALANT.

GENERAL NOTES

1. FOR EXPANSION JOINT SEALS, SEE SPECIAL PROVISIONS.
2. ALL PLATES AND ANGLES SHALL CONFORM TO AASHTO M270 GRADE 36 STEEL OR APPROVED EQUAL. ALL HOLD-DOWN BOLTS SHALL CONFORM TO ASTM F593 ALLOY 304 STAINLESS STEEL AND WASHERS SHALL CONFORM TO ASTM F844 EXCEPT THEY SHALL BE MADE FROM ALLOY 304 STAINLESS STEEL. ALL STUD ANCHORS SHALL CONFORM TO AASHTO M169, GRADES 1010 THRU 1020 OR APPROVED EQUAL. ALL CONCRETE INSERTS SHALL BE CLOSED END AND SHALL CONFORM TO AASHTO M169, GRADE 12L14. TENSILE CAPACITY SHALL BE 3000 LBS. MIN.
3. A PREMOLDED CORRUGATED OR NON-CORRUGATED GLAND SHALL BE USED FOR JOINTS SKEWED BETWEEN 50° THRU 130°. FOR JOINTS SKEWED LESS THAN 50° OR MORE THAN 130°, ONLY A CORRUGATED GLAND SHALL BE USED.
4. CLOSED END FERRULES AND STUD ANCHORS SHALL BE SHOP WELDED AND ALL HOLES SHALL BE SHOP DRILLED AS SHOWN ON PLANS. STUD ANCHORS SHALL BE ELECTRIC ARC END WELDED WITH COMPLETE FUSION.
5. SURFACES COMING IN CONTACT WITH NEOPRENE SHALL BE GROUND SMOOTH PRIOR TO METALLIZING.
6. UPON COMPLETION OF SHOP FABRICATION, THE HOLD DOWN PLATE AND BASE ANGLE ASSEMBLY, AS SHOWN IN THE "TYPICAL SECTION OF BASE ANGLE ASSEMBLY", SHALL BE METALLIZED. SEE SPECIAL PROVISION FOR THERMAL SPRAYED COATINGS (METALLIZATION).
7. BASE ANGLE ASSEMBLY SHALL BE CONTINUOUS FOR THE LENGTH OF THE JOINT. AT CROWN BREAKS, THE ENDS OF THE BASE ANGLE ASSEMBLY SHALL BE CUT PARALLEL TO THE BRIDGE CENTERLINE FOR SKEWS LESS THAN 80° AND GREATER THAN 100°. FINISHED WELD SHALL BE GROUND SMOOTH AND COATED WITH A MINIMUM THICKNESS OF 4 DRY MILS OF ZINC-RICH PAINT IN ACCORDANCE WITH THE STANDARD SPECIFICATIONS.
8. FIELD SPLICES OF HOLD-DOWN PLATES SHALL BE KEPT TO A MINIMUM. CONTRACTOR SHALL FURNISH DETAILED PLANS SHOWING PROPOSED SPLICE LOCATIONS FOR APPROVAL. HOLD-DOWN PLATES SHALL NOT EXCEED 20' LENGTHS UNLESS APPROVED BY THE ENGINEER.
9. NO ALTERNATE JOINT DETAILS SHALL BE PERMITTED IN LIEU OF THOSE SHOWN ON THESE PLANS.
10. THE CONTRACTOR MAY, AT HIS OPTION, USE ADHESIVELY ANCHORED ANCHOR BOLTS IN PLACE OF CONCRETE INSERTS FOR COVER PLATES. THE YIELD LOAD OF THE ¾" Ø BOLT IS 10 KIPS. FIELD TESTING OF THE ADHESIVE BONDING SYSTEM IS NOT REQUIRED.

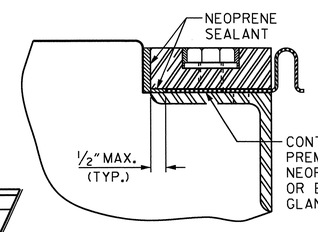

DETAIL "A"

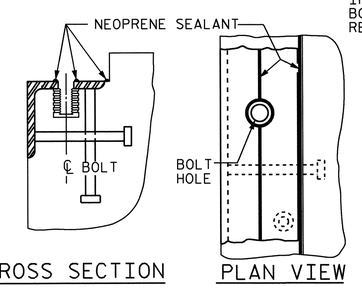

INSTALLATION SKETCH

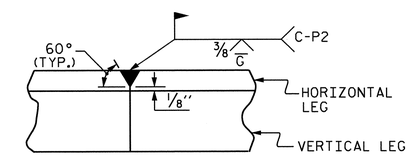

DETAIL- FIELD WELD SPLICE OF BASE ANGLE

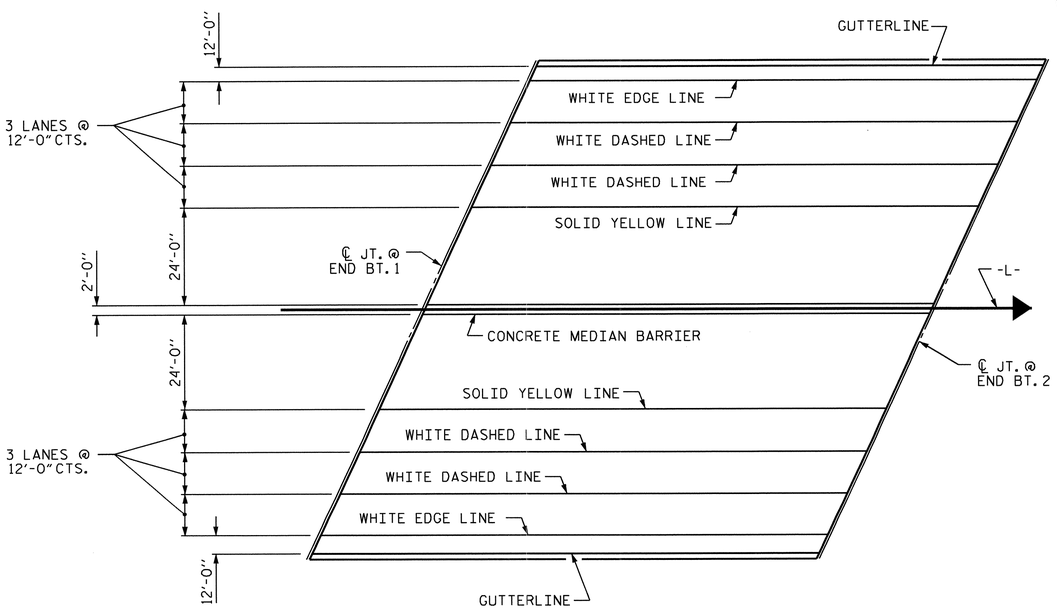

PAVEMENT MARKING ALIGNMENT SKETCH

MOVEMENT AND SETTING AT JOINT					
LOCATION	SKEW ANGLE	TOTAL MOVEMENT (ALONG ℄ RDWY)	PERPENDICULAR JOINT OPENING AT 45° F	PERPENDICULAR JOINT OPENING AT 60° F	PERPENDICULAR JOINT OPENING AT 90° F
END BENT 1	114°-14'-14"	—	1"	1"	1"
END BENT 2	115°-04'-00"	1⅜"	1¹³⁄₁₆"	1⅝"	1¼"

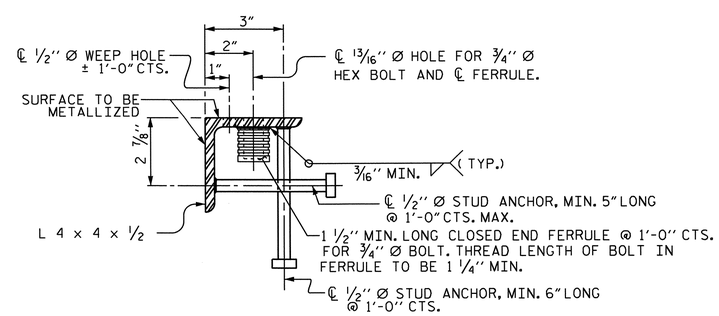

TYPICAL SECTION OF BASE ANGLE ASSEMBLY

PROJECT NO. U-0071

DURHAM COUNTY

STATION: 44+08.60 -L-

SHEET 1 OF 3

STATE OF NORTH CAROLINA
DEPARTMENT OF TRANSPORTATION
RALEIGH

STANDARD

EXPANSION JOINT SEAL DETAILS

NORTH CAROLINA PROFESSIONAL SEAL 14855 ENGINEER DOUGLAS B. CALHOUN 05/13/14

REVISIONS						SHEET NO.
NO.	BY:	DATE:	NO.	BY:	DATE:	S-20
1			3			TOTAL SHEETS
2			4			671

STD. NO. EJS1

STR. #1

ASSEMBLED BY : D. G. ELY		DATE : 7/2012	
CHECKED BY : W. F. PARKER		DATE : 9/2012	
DRAWN BY : REK 9/87	REV. 5/7/03R	RWW/JTE	
CHECKED BY : CRK 10/87	REV. 5/11/06R	TLA/GM	
	REV. 10/1/11	MAA/GM	

12-MAY-2014 16:45
Z:\TIPProjects-U\U0071\Structures\Plans\Str#1-L-over-Y1-\Super_Drawing\U-0071_str1_EJS.dgn
asorsenginh

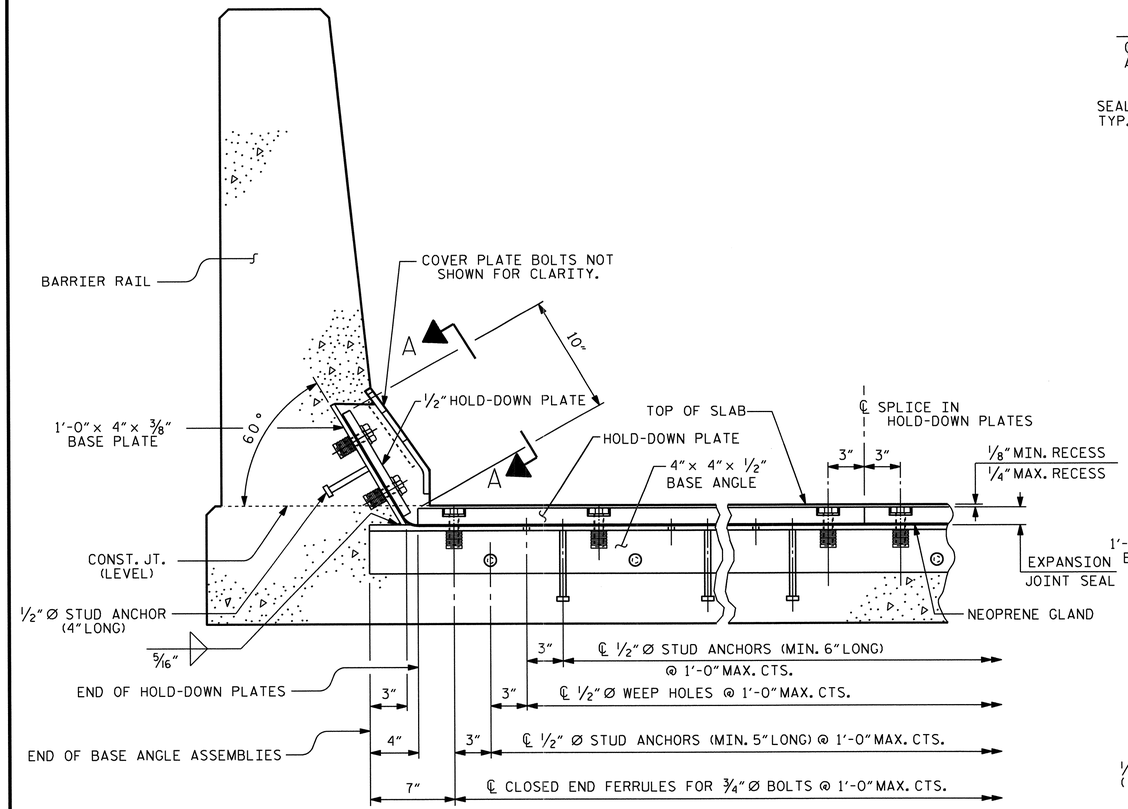

SECTION THRU RAIL NORMAL TO JOINT

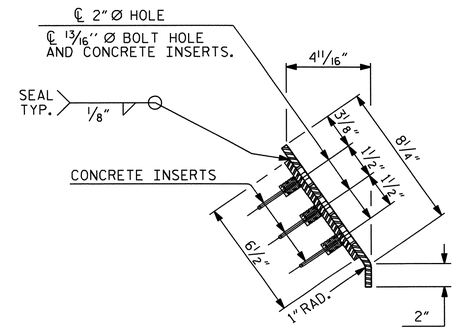

END VIEW

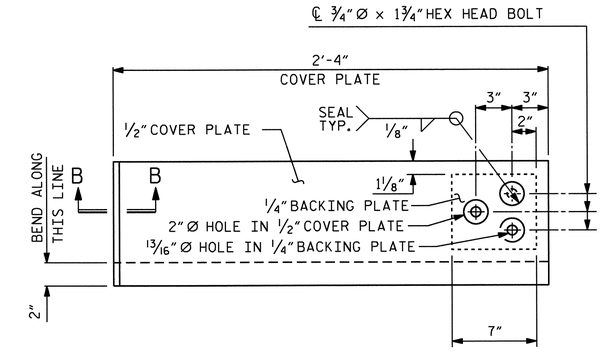

TYPE II - ELEVATION VIEW

COVER PLATE DETAILS

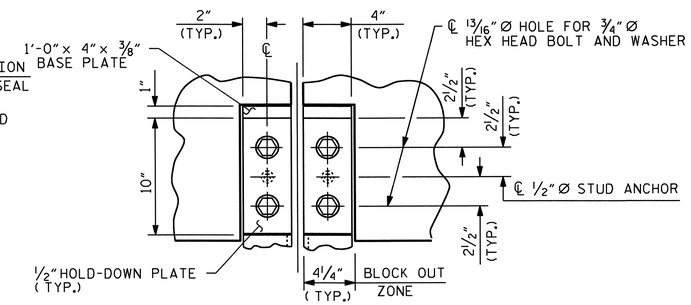

VIEW A - A

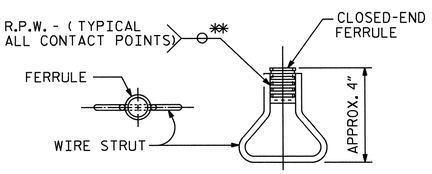

PLAN ELEVATION

CONCRETE INSERT

** EACH WELDED ATTACHMENT OF WIRE TO FERRULE SHALL DEVELOP THE TENSILE STRENGTH OF THE WIRE.

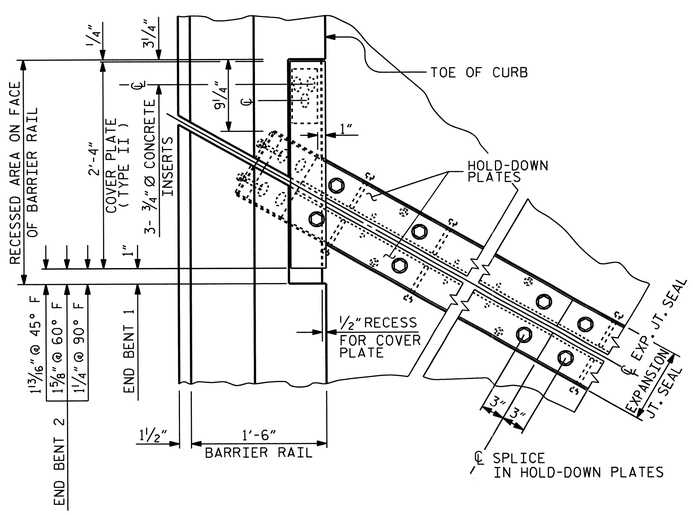

FLOW OF TRAFFIC

FLOW OF TRAFFIC

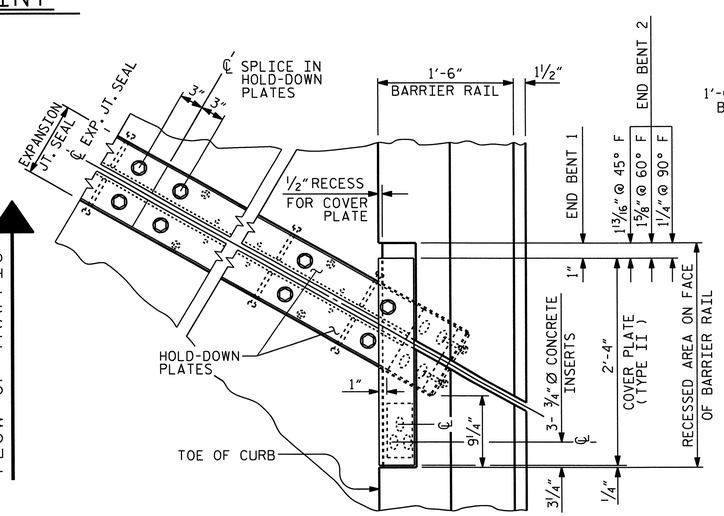

PLAN OF EXPANSION JOINT SEAL

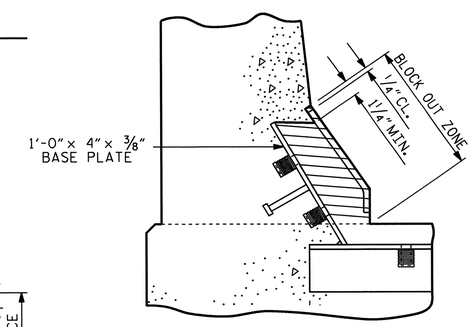

BLOCK OUT DETAIL

SEE "SECTION A - A" FOR OTHER DETAILS.

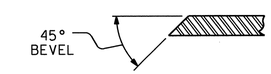

SECTION B - B

PROJECT NO. U-0071

DURHAM COUNTY

STATION: 44+08.60 -L-

SHEET 2 OF 3

STATE OF NORTH CAROLINA
DEPARTMENT OF TRANSPORTATION
RALEIGH

STANDARD

EXPANSION JOINT SEAL DETAILS FOR BARRIER RAIL

NORTH CAROLINA PROFESSIONAL SEAL 14855 ENGINEER DAVID AS R. CALVIN
5/13/14

ASSEMBLED BY : D. G. ELY	DATE : 7/2012
CHECKED BY : W. F. PARKER	DATE : 9/2012
DRAWN BY : REK 9/87	REV. 10/1/11 MAA/GM
CHECKED BY : CRK 10/87	REV. 7/12 MAA/GM
	REV. 6/13 MAA/GM

REVISIONS							SHEET NO.
NO.	BY:	DATE:	NO.	BY:	DATE:		5-21
1			3				TOTAL SHEETS
2			4				671

SHT 2a STD. NO. EJS2 STR. #1

12-MAY-2014 16:44
Z:\TIPProjects-U\U0071\Structures\Plans\Str*1-L-over-Y1-\Super_Drawing\U-0071_str1_EJS.dgn
asorsenginh

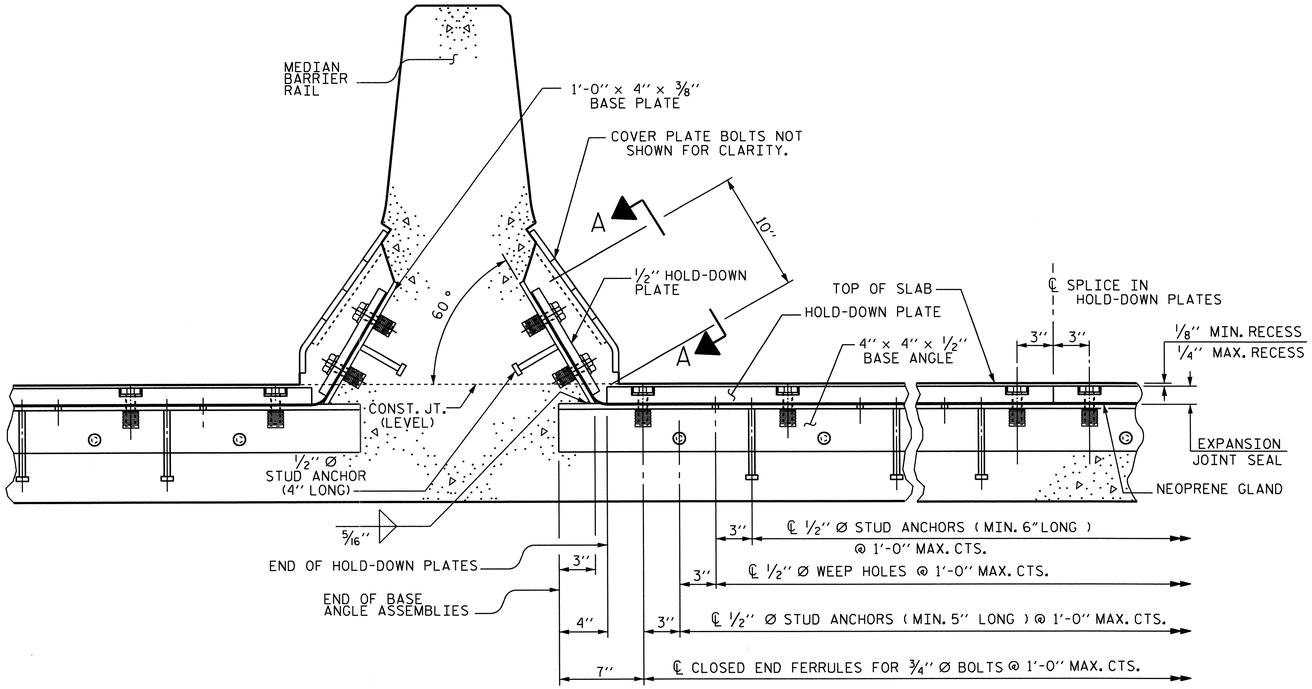

SECTION THRU RAIL NORMAL TO JOINT

(DETAILS TYPICAL BOTH SIDES)

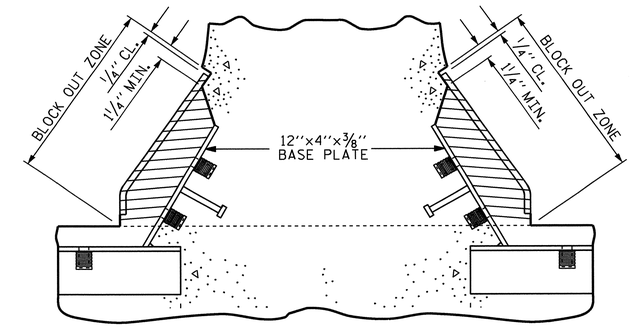

BLOCK OUT DETAIL

SEE "SECTION A - A" FOR OTHER DETAILS.

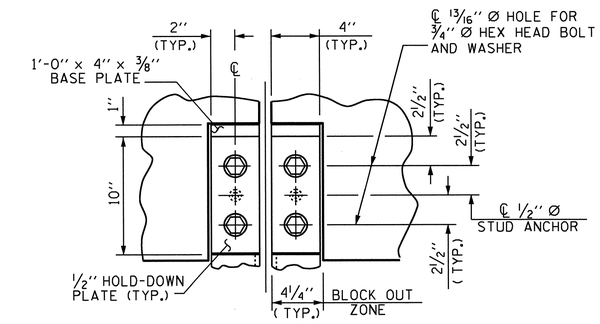

SECTION A-A

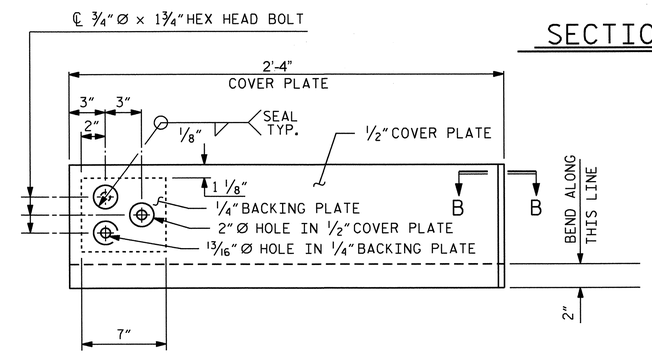

TYPE I - ELEVATION VIEW

COVER PLATE DETAILS

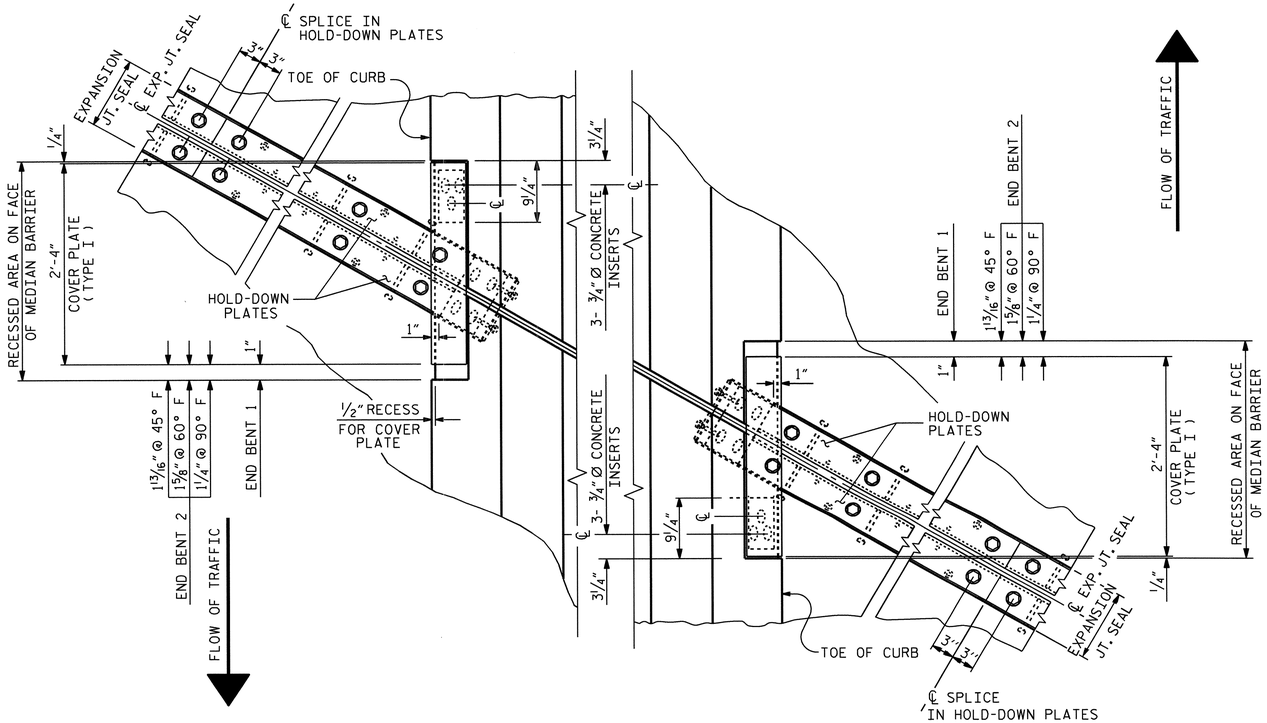

PLAN OF EXPANSION JOINT SEAL

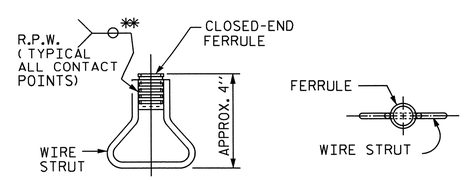

ELEVATION PLAN

CONCRETE INSERT

** EACH WELDED ATTACHMENT OF WIRE TO FERRULE SHALL DEVELOP THE TENSILE STRENGTH OF THE WIRE.

NORTH CAROLINA PROFESSIONAL SEAL 14855 ENGINEER DOUGLAS R. CALHOUN
5/13/14

PROJECT NO. U-0071
DURHAM COUNTY
STATION: 44+08.60 -L-

SHEET 3 OF 3

STATE OF NORTH CAROLINA
DEPARTMENT OF TRANSPORTATION
RALEIGH

EXPANSION JOINT SEAL DETAILS FOR MEDIAN BARRIER

REVISIONS						SHEET NO.
NO.	BY:	DATE:	NO.	BY:	DATE:	S-22
1			3			TOTAL SHEETS
2			4			671

DRAWN BY : D. G. ELY DATE : 9-2012
CHECKED BY : W. F. PARKER DATE : 9-2012

12-MAY-2014 16:44
Z:\TIPProjects-U\U0071\Structures\Plans\Str#1-L-over-Y1-\Super_Drawing\U-0071_str1_EJS.dgn
asorsenghn

STR. #1

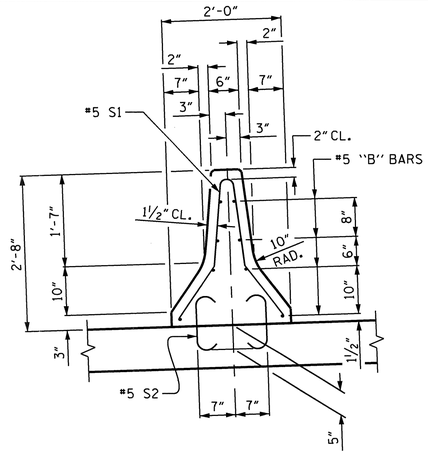

TYPICAL SECTION THRU MEDIAN

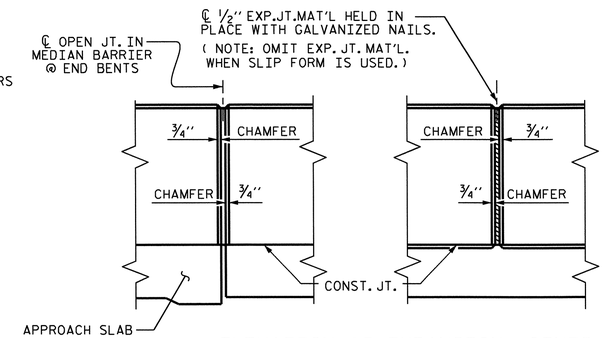

ELEVATION AT EXPANSION JOINTS

BAR TYPES

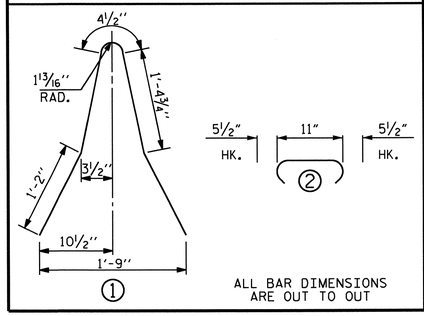

BILL OF MATERIAL

BAR	NO.	SIZE	TYPE	LENGTH	WEIGHT
* B1	32	#5	STR	14'-9"	492
* B2	32	#5	STR	9'-9"	325
* B3	32	#5	STR	24'-8"	823
* S1	182	#5	1	5'-6"	1044
* S2	364	#5	2	1'-10"	696

* EPOXY COATED REINFORCING STEEL	3380 LBS.
CLASS AA CONCRETE	18.6 C.Y.
CONCRETE MEDIAN BARRIER	182.4 LIN. FT.

MEDIAN BARRIER DETAILS

#5 S2 MAY BE PUSHED INTO GREEN CONCRETE AFTER SCREEDING

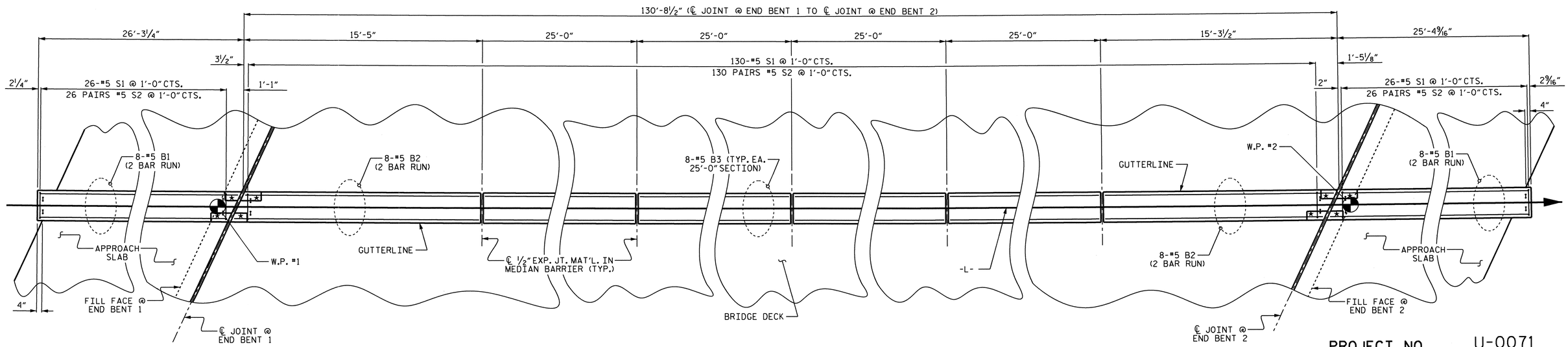

PLAN OF MEDIAN BARRIER

PROJECT NO. U-0071

DURHAM COUNTY

STATION: 44+08.60 -L-

NOTES

THE MEDIAN BARRIER IN EACH SPAN SHALL NOT BE CAST UNTIL ALL SLAB CONCRETE IN THAT SPAN HAS BEEN CAST AND HAS REACHED A MINIMUM COMPRESSIVE STRENGTH OF 3,000 PSI.

ALL REINFORCING STEEL IN MEDIAN BARRIER SHALL BE EPOXY COATED.

GROOVED CONTRACTION JOINTS, ½" IN DEPTH, SHALL BE TOOLED IN ALL EXPOSED FACES OF THE MEDIAN BARRIER AND IN ACCORDANCE WITH ARTICLE 825-10(B) OF THE STANDARD SPECIFICATIONS. THE CONTRACTION JOINT SHALL BE LOCATED AT EACH THIRD POINT BETWEEN MEDIAN BARRIER EXPANSION JOINTS. ONLY ONE CONTRACTION JOINT IS REQUIRED AT MIDPOINT OF MEDIAN BARRIER SEGMENTS LESS THAN 20 FEET IN LENGTH AND NO CONTRACTION JOINTS ARE REQUIRED FOR THOSE SEGMENTS LESS THAN 10 FEET IN LENGTH.

#5 "S" BARS MAY BE SHIFTED SLIGHTLY AS NECESSARY IN ORDER TO MAINTAIN A 2" MINIMUM CLEARANCE TO THE ½" EXPANSION JOINT MATERIAL IN THE CONCRETE MEDIAN BARRIER.

#5 "S" BARS MAY BE SHIFTED SLIGHTLY OR FIELD BENT AS NECESSARY IN ORDER TO CLEAR THE EXPANSION JOINT COVER PLATE ASSEMBLY IN THE CONCRETE MEDIAN BARRIER AT THE END BENTS.

* FOR RECESS DETAILS, SEE "EXPANSION JOINT SEAL DETAILS" SHEET 3 OF 3.

NORTH CAROLINA PROFESSIONAL SEAL 14855 ENGINEER DOUGLAS R. CALHOUN
5/13/14

STATE OF NORTH CAROLINA
DEPARTMENT OF TRANSPORTATION
RALEIGH

SUPERSTRUCTURE

CONCRETE MEDIAN BARRIER

REVISIONS							SHEET NO.
NO.	BY:	DATE:	NO.	BY:	DATE:		5-23
1			3				TOTAL SHEETS
2			4				671

DRAWN BY :	T. BANKOVICH	DATE :	9-2010
CHECKED BY :	D.G. ELY	DATE :	9-2010
DESIGN ENGINEER OF RECORD :	D. R. CALHOUN	DATE :	11-2013

12-MAY-2014 16:42
Z:\TIPProjects-U\U0071\Structures\Plans\Str#1-L-over-Y1-\Super_Drawing\U-0071_str1_CMR.dgn
asorsenginh

STR. #1

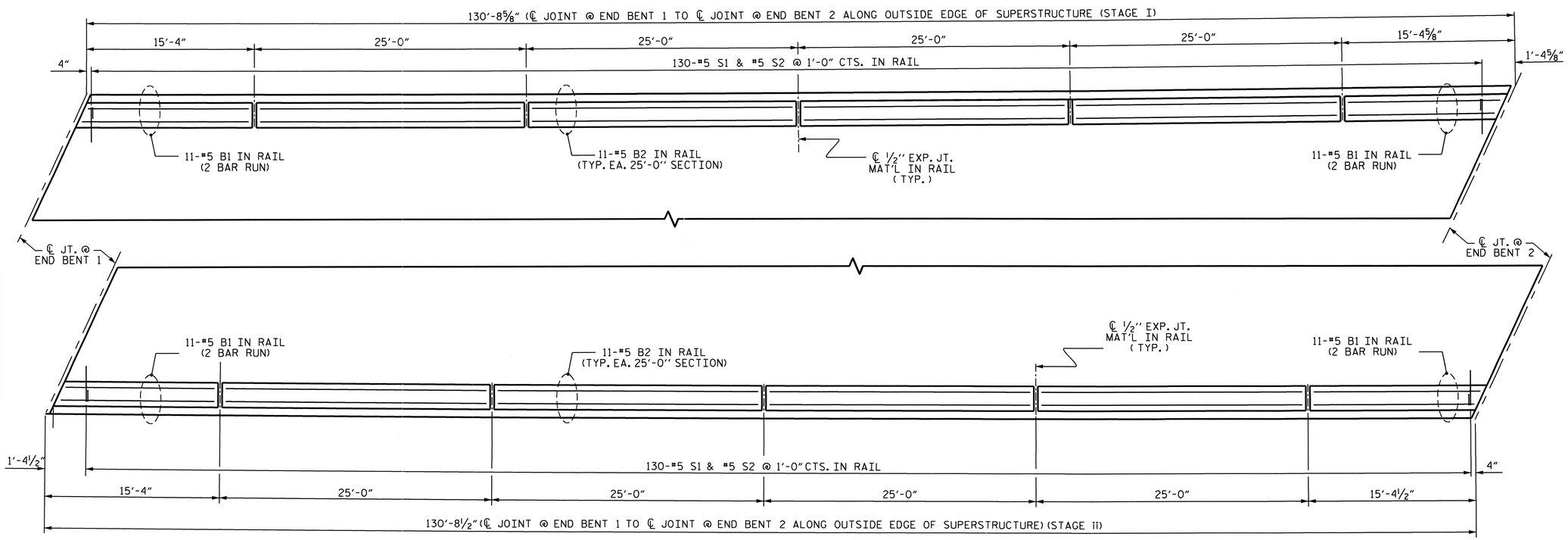

PLAN OF BARRIER RAIL

BAR TYPES

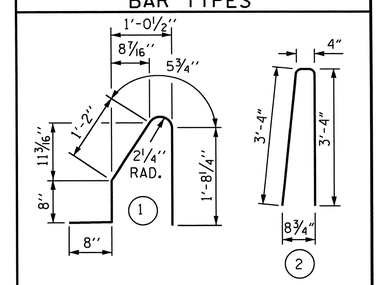

ALL BAR DIMENSIONS ARE OUT TO OUT

BILL OF MATERIAL

FOR CONCRETE BARRIER RAIL ONLY

BAR	NO.	SIZE	TYPE	LENGTH	WEIGHT
* S1	260	#5	1	4'-8"	1266
* S2	260	#5	2	7'-0"	1898
* B1	88	#5	STR	9'-3"	849
* B2	88	#5	STR	24'-7"	2256

* EPOXY COATED REINFORCING STEEL	6269 LBS.
CLASS AA CONCRETE	35.5 CU. YDS.
▲CONCRETE BARRIER RAIL	261.4 LIN. FT.

▲ THE QUANTITIES FOR BARRIER RAIL ON THE APPROACH SLABS ARE NOT INCLUDED. FOR BARRIER RAIL ON THE APPROACH SLABS, SEE "APPROACH SLAB DETAILS" SHEET.

NOTES

THE BARRIER RAIL IN EACH SPAN SHALL NOT BE CAST UNTIL ALL SLAB CONCRETE IN THAT SPAN HAS BEEN CAST AND HAS REACHED A MINIMUM COMPRESSIVE STRENGTH OF 3,000 PSI.

ALL REINFORCING STEEL IN BARRIER RAILS SHALL BE EPOXY COATED.

GROOVED CONTRACTION JOINTS, ½" IN DEPTH, SHALL BE TOOLED IN ALL EXPOSED FACES OF THE BARRIER RAIL AND IN ACCORDANCE WITH ARTICLE 825-10(B) OF THE STANDARD SPECIFICATIONS. THE CONTRACTION JOINT SHALL BE LOCATED AT EACH THIRD POINT BETWEEN BARRIER RAIL EXPANSION JOINTS. ONLY ONE CONTRACTION JOINT IS REQUIRED AT MIDPOINT OF BARRIER RAIL SEGMENTS LESS THAN 20 FEET IN LENGTH AND NO CONTRACTION JOINTS ARE REQUIRED FOR THOSE SEGMENTS LESS THAN 10 FEET IN LENGTH.

#5 "S" BARS MAY BE SHIFTED SLIGHTLY AS NECESSARY IN ORDER TO MAINTAIN A 2" MINIMUM CLEARANCE TO THE ½" EXPANSION JOINT MATERIAL IN THE CONCRETE BARRIER RAIL.

#5 "S" BARS MAY BE SHIFTED SLIGHTLY OR FIELD BENT AS NECESSARY IN ORDER TO CLEAR THE EXPANSION JOINT COVER PLATE ASSEMBLY IN THE CONCRETE BARRIER RAIL AT THE END BENTS.

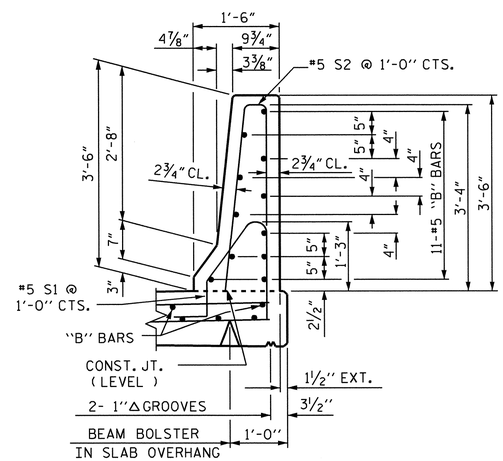

SECTION THRU RAIL

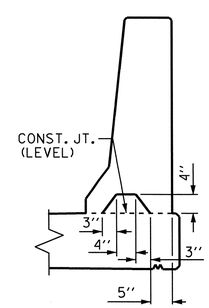

SECTION S-S

AT DAM IN OPEN JOINT (THIS IS TO BE USED ONLY WHEN SLIP FORM IS USED)

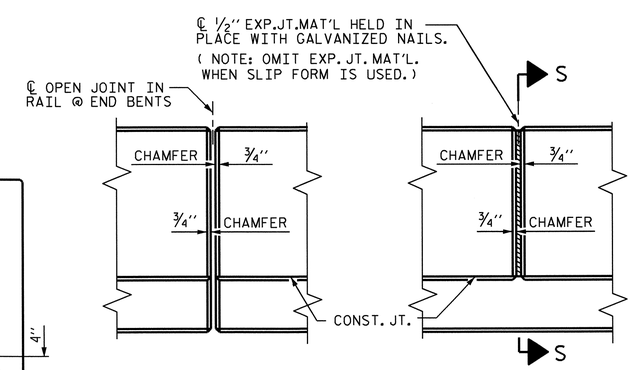

ELEVATION AT EXPANSION JOINTS

BARRIER RAIL DETAILS

NORTH CAROLINA PROFESSIONAL SEAL 14855 ENGINEER DOUGLAS R. CALHOUN
03/13/14

PROJECT NO. U-0071
DURHAM COUNTY
STATION: 44+08.60 -L-

STATE OF NORTH CAROLINA
DEPARTMENT OF TRANSPORTATION
RALEIGH

STANDARD
CONCRETE BARRIER RAIL

REVISIONS								SHEET NO.
NO.	BY:	DATE:	NO.	BY:	DATE:			5-24
1			3					TOTAL SHEETS
2			4					671

ASSEMBLED BY : T. BANKOVICH/DGE	DATE : 9-10/6-13		
CHECKED BY : W. F. PARKER	DATE : 10/2012		
DRAWN BY : ARB 5/87	REV. 10/1/11	MAA/GM	
CHECKED BY : SJD 9/87	REV. 7/12	MAA/GM	
	REV. 6/13	MAA/GM	

12-MAY-2014 16:41
Z:\TIPProjects-U\U0071\Structures\Plans\Str#1-L-over-Y1-\Super_Drawing\U-0071_str1_BR.dgn
asorsenginh

(SHT 2) STD. NO. CBR1 STR. #1

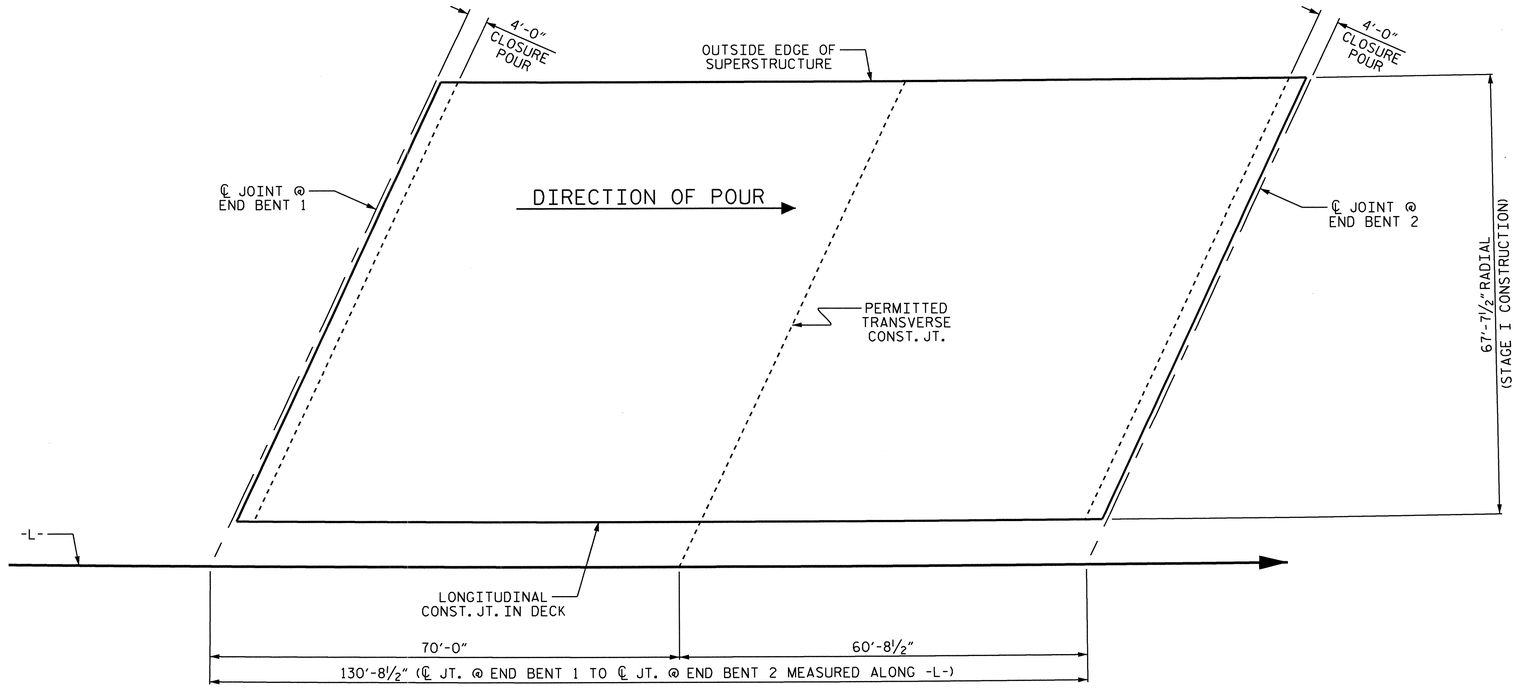

POURING SEQUENCE
(STAGE I)

CLASS AA CONCRETE BREAKDOWN	
STAGE I	
POUR #1	254.3 C.Y.
4'-0" CLOSURE POURS	22.1 C.Y.
TOTAL	276.4 C.Y.
STAGE II	
POUR #1	155.4 C.Y.
POUR #2	133.7 C.Y.
4'-9" CLOSURE POUR	22.0 C.Y.
4'-0" CLOSURE POURS	25.8 C.Y.
TOTAL	336.9 C.Y.

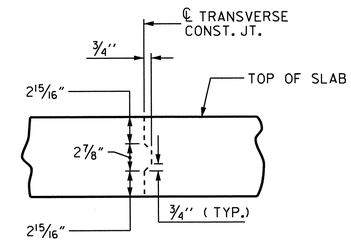

TRANSVERSE CONSTRUCTION JOINT DETAIL

NOTE: REINFORCING STEEL IN SLAB NOT SHOWN. LONGITUDINAL REINFORCING STEEL SHALL BE CONTINUOUS THRU JOINT.

NOTE:
POUR LENGTHS ARE MEASURED ALONG -L-

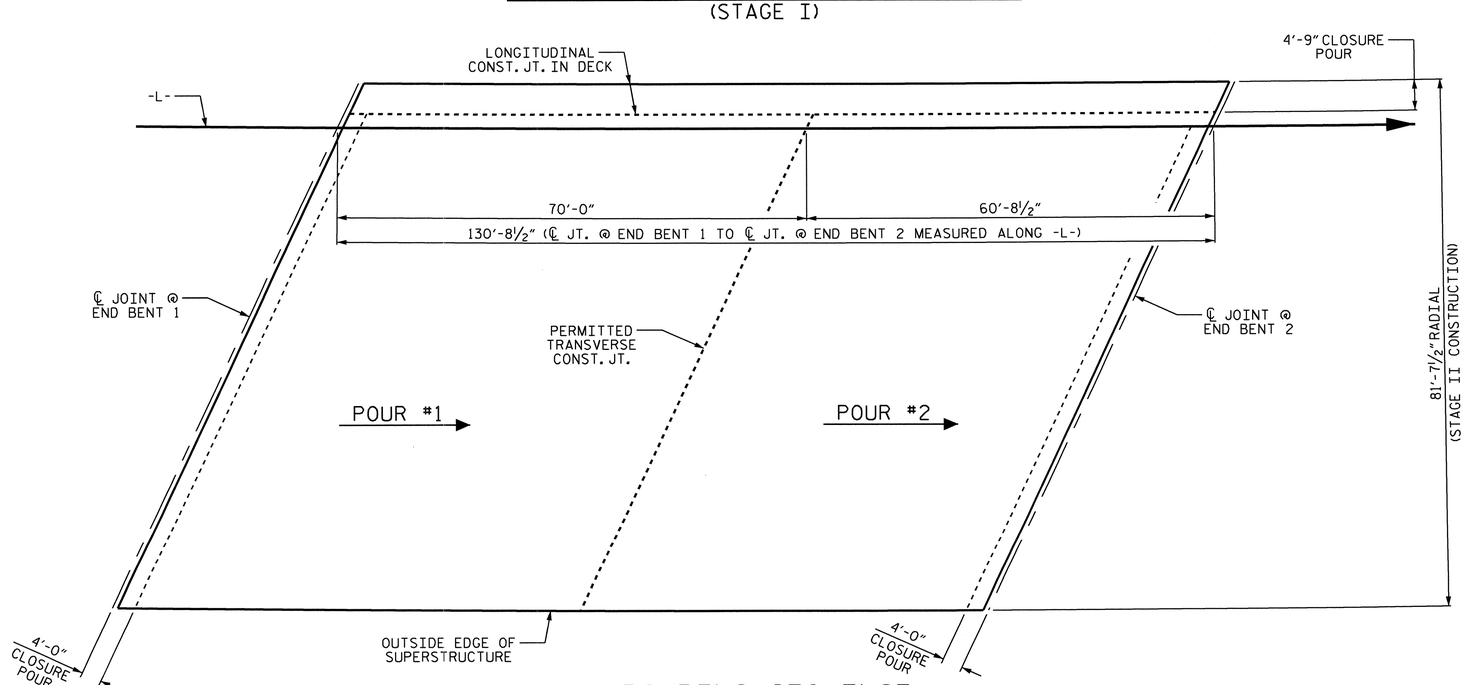

POURING SEQUENCE
(STAGE II)

PROJECT NO. U-0071
DURHAM COUNTY
STATION: 44+08.60 -L-

STATE OF NORTH CAROLINA
DEPARTMENT OF TRANSPORTATION
RALEIGH

SUPERSTRUCTURE

CONCRETE DECK POUR DETAILS

NORTH CAROLINA PROFESSIONAL SEAL 14855 ENGINEER DOUGLAS R. CALHOUN
5/13/14

REVISIONS						SHEET NO.
NO.	BY:	DATE:	NO.	BY:	DATE:	5-25
1			3			TOTAL SHEETS
2			4			671

STR. #1

DRAWN BY : T. BANKOVICH DATE : 9-2010
CHECKED BY : D.G. ELY DATE : 9-2010
DESIGN ENGINEER OF RECORD : D. R. CALHOUN DATE : 11-2013

12-MAY-2014 16:40
Z:\TIPProjects-U\U0071\Structures\Plans\Str#1-L-over-Y1-\Super_Drawing\U-0071_str1_BM.dgn
asorsenginh

BAR TYPES

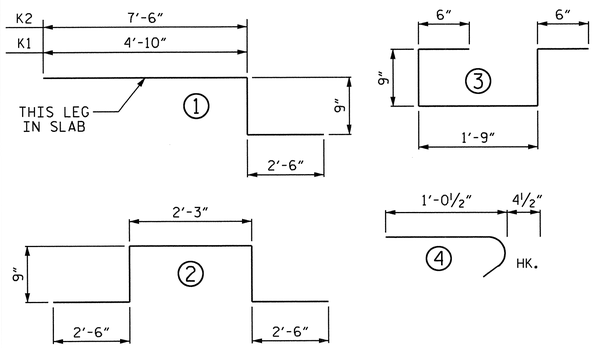

ALL BAR DIMENSIONS ARE OUT TO OUT.

SUPERSTRUCTURE REINFORCING STEEL LENGTHS ARE BASED ON THE FOLLOWING MINIMUM SPLICE LENGTHS

BAR SIZE	SUPERSTRUCTURE EXCEPT APPROACH SLABS, PARAPET, AND SIDEWALK		APPROACH SLABS		PARAPET AND SIDEWALK
	EPOXY COATED	UNCOATED	EPOXY COATED	UNCOATED	
#4	2'-0"	1'-9"	2'-0"	1'-9"	2'-9"
#5	2'-6"	2'-2"	2'-6"	2'-2"	3'-5"
#6	3'-0"	2'-7"	3'-10"	2'-7"	4'-4"
#7	5'-3"	3'-6"			
#8	6'-10"	4'-7"			

GROOVING BRIDGE FLOOR

APPROACH SLABS	6,533 SQ. FT.
BRIDGE DECK	17,835 SQ. FT.
TOTAL	24,368 SQ. FT.

SUPERSTRUCTURE BILL OF MATERIAL

	CLASS AA CONCRETE	REINFORCING STEEL	* EPOXY COATED REINFORCING STEEL
	(CU. YDS.)	(LBS.)	(LBS.)
STAGE I	276.4	30,178	26,328
STAGE II	336.9	36,533	28,018
TOTAL **	613.3	66,711	54,346

** QUANTITIES FOR CONCRETE MEDIAN BARRIER RAIL AND BARRIER RAIL ARE NOT INCLUDED

BILL OF MATERIAL

STAGE I

BAR	NO.	SIZE	TYPE	LENGTH	WEIGHT	BAR	NO.	SIZE	TYPE	LENGTH	WEIGHT
* A1	398	#5	STR	34'-11"	14494	A207	8	#5	STR	26'-3"	219
A2	398	#5	STR	34'-9"	14425	A208	8	#5	STR	25'-2"	210
						A209	8	#5	STR	24'-1"	201
* A100	8	#5	STR	34'-0"	284	A210	8	#5	STR	23'-0"	192
* A101	8	#5	STR	32'-11"	275	A211	4	#5	STR	41'-6"	173
* A102	8	#5	STR	31'-10"	266	A212	4	#5	STR	39'-4"	164
* A103	8	#5	STR	30'-9"	257	A213	4	#5	STR	37'-2"	155
* A104	8	#5	STR	29'-8"	248	A214	4	#5	STR	35'-0"	146
* A105	8	#5	STR	28'-7"	238	A215	4	#5	STR	32-10"	137
* A106	8	#5	STR	27'-6"	229	A216	4	#5	STR	30'-8"	128
* A107	8	#5	STR	26'-5"	220	A217	4	#5	STR	28'-6"	119
* A108	8	#5	STR	25'-4"	211	A218	4	#5	STR	26'-4"	110
* A109	8	#5	STR	24'-3"	202	A219	4	#5	STR	24'-1"	100
* A110	8	#5	STR	23'-2"	193	A220	4	#5	STR	21'-11"	91
* A111	4	#5	STR	41'-6"	173	A221	4	#5	STR	19'-9"	82
* A112	4	#5	STR	39'-4"	164	A222	4	#5	STR	17'-7"	73
* A113	4	#5	STR	37'-2"	155	A223	4	#5	STR	15'-5"	64
* A114	4	#5	STR	35'-0"	146	A224	4	#5	STR	13'-3"	55
* A115	4	#5	STR	32'-10"	137	A225	4	#5	STR	11'-1"	46
* A116	4	#5	STR	30'-8"	128	A226	4	#5	STR	8'-10"	37
* A117	4	#5	STR	28'-6"	119	A227	4	#5	STR	6'-8"	28
* A118	4	#5	STR	26'-4"	110	A228	4	#5	STR	6'-9"	28
* A119	4	#5	STR	24'-1"	100	A229	4	#5	STR	6'-3"	26
* A120	4	#5	STR	21'-11"	91						
* A121	4	#5	STR	19'-9"	82	B1	243	#5	STR	44'-11"	11384
* A122	4	#5	STR	17'-7"	73	* B2	225	#4	STR	27'-8"	4158
* A123	4	#5	STR	15'-5"	64						
* A124	4	#5	STR	13'-3"	55	* D1	258	#6	STR	3'-6"	1356
* A125	4	#5	STR	11'-1"	46						
* A126	4	#5	STR	8'-10"	37	* G1	4	#5	STR	38'-4"	160
* A127	4	#5	STR	6'-8"	28						
* A128	4	#5	STR	6'-9"	28	* J1	160	#4	STR	1'-5"	151
* A129	4	#5	STR	6'-3"	26						
						* K1	6	#5	1	8'-1"	51
A200	8	#5	STR	33'-10"	282	* K2	6	#5	1	10'-9"	67
A201	8	#5	STR	32'-9"	273	* K3	36	#5	2	8'-9"	329
A202	8	#5	STR	31'-8"	264	* K4	42	#5	STR	9'-4"	409
A203	8	#5	STR	30'-7"	255						
A204	8	#5	STR	29'-6"	246	* S1	112	#4	3	4'-3"	318
A205	8	#5	STR	28'-5"	237						
A206	8	#5	STR	27'-4"	228	REINFORCING STEEL					30,178 LBS.
						* EPOXY COATED REINF. STEEL					26,328 LBS.

STAGE II

BAR	NO.	SIZE	TYPE	LENGTH	WEIGHT	BAR	NO.	SIZE	TYPE	LENGTH	WEIGHT
* A3	372	#5	STR	41'-11"	16264	A402	8	#5	STR	38'-9"	323
A4	372	#5	STR	41'-9"	16199	A403	8	#5	STR	37'-8"	314
						A404	8	#5	STR	36'-7"	305
* A300	8	#5	STR	41'-2"	343	A405	8	#5	STR	35'-6"	296
* A301	8	#5	STR	40'-0"	334	A406	8	#5	STR	34'-5"	287
* A302	8	#5	STR	38'-10"	324	A407	8	#5	STR	33'-4"	278
* A303	8	#5	STR	37'-10"	316	A408	8	#5	STR	32'-3"	269
* A304	8	#5	STR	36'-9"	307	A409	8	#5	STR	31'-1"	259
* A305	8	#5	STR	35'-8"	298	A410	8	#5	STR	30'-0"	250
* A306	8	#5	STR	34'-7"	289	A411	8	#5	STR	28'-11"	241
* A307	8	#5	STR	33'-7"	280	A412	8	#5	STR	27'-10"	232
* A308	8	#5	STR	32'-5"	270	A413	8	#5	STR	26'-9"	223
* A309	8	#5	STR	31'-3"	261	A414	8	#5	STR	25'-8"	214
* A310	8	#5	STR	30'-2"	252	A415	8	#5	STR	24'-7"	205
* A311	8	#5	STR	29'-1"	243	A416	8	#5	STR	23'-6"	196
* A312	8	#5	STR	28'-0"	234	A417	4	#5	STR	42'-6"	177
* A313	8	#5	STR	26'-11"	225	A418	4	#5	STR	40'-4"	168
* A314	8	#5	STR	25-10"	216	A419	4	#5	STR	38'-2"	159
* A315	8	#5	STR	24-9"	207	A420	4	#5	STR	36'-0"	150
* A316	8	#5	STR	23'-8"	197	A421	4	#5	STR	33'-10"	141
* A317	4	#5	STR	42'-6"	177	A422	4	#5	STR	31'-7"	132
* A318	4	#5	STR	40-4"	168	A423	4	#5	STR	29'-5"	123
* A319	4	#5	STR	38'-2"	159	A424	4	#5	STR	27'-3"	114
* A320	4	#5	STR	36'-0"	150	A425	4	#5	STR	25'-1"	105
* A321	4	#5	STR	33'-10"	141	A426	4	#5	STR	22'-11"	96
* A322	4	#5	STR	31'-7"	132	A427	4	#5	STR	20'-9"	87
* A323	4	#5	STR	29'-5"	123	A428	4	#5	STR	18'-6"	77
* A324	4	#5	STR	27'-3"	114	A429	4	#5	STR	16'-4"	68
* A325	4	#5	STR	25'-1"	105	A430	4	#5	STR	14'-2"	59
* A326	4	#5	STR	22'-11"	96	A431	4	#5	STR	12'-0"	50
* A327	4	#5	STR	20'-9"	87	A432	4	#5	STR	9'-10"	41
* A328	4	#5	STR	18'-6"	77	A433	4	#5	STR	7'-7"	32
* A329	4	#5	STR	16'-4"	68	A434	4	#5	STR	9'-5"	39
* A330	4	#5	STR	14'-2"	59	A435	4	#5	STR	8'-11"	37
* A331	4	#5	STR	12'-0"	50						
* A332	4	#5	STR	9'-10"	41	B1	297	#5	STR	44'-11"	13914
* A333	4	#5	STR	7'-7"	32	* B2	290	#4	STR	27'-8"	5360
* A334	4	#5	STR	9'-5"	39						
* A335	4	#5	STR	8'-11"	37	* G2	4	#5	STR	46'-0"	192
A400	8	#5	STR	40'-11"	341	* J1	176	#4	4	1'-5"	167
A401	8	#5	STR	39-10"	332						
						* K1	6	#5	1	8'-1"	51
						* K2	6	#5	1	10'-9"	34
						* K3	42	#5	2	8'-9"	383
						* K4	48	#5	STR	9'-4"	467
						* K5	6	#5	STR	4'-9"	30
						* S1	136	#4	3	4'-3"	386
						REINFORCING STEEL					36,533 LBS.
						* EPOXY COATED REINF. STEEL					28,018 LBS.

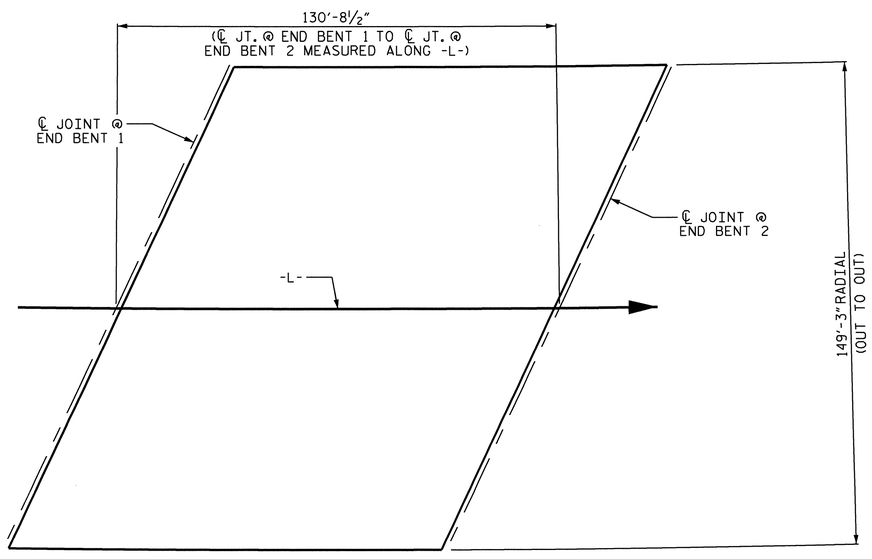

LAYOUT FOR COMPUTING AREA OF REINFORCED CONCRETE DECK SLAB (SQ. FT. = 19,508)

PROJECT NO. U-0071
DURHAM COUNTY
STATION: 44+08.60 -L-

STATE OF NORTH CAROLINA
DEPARTMENT OF TRANSPORTATION
RALEIGH

SUPERSTRUCTURE

BILL OF MATERIAL

NORTH CAROLINA PROFESSIONAL SEAL 14855 ENGINEER DOUGLAS R. CALHOUN
5/13/14

REVISIONS						SHEET NO.
NO.	BY:	DATE:	NO.	BY:	DATE:	5-26
1			3			TOTAL SHEETS
2			4			671

DRAWN BY : T. BANKOVICH DATE : 9-2010
CHECKED BY : D.G. ELY DATE : 9-2010
DESIGN ENGINEER OF RECORD : D. R. CALHOUN DATE : 11-2013

12-MAY-2014 16:40
Z:\TIPProjects-U\U0071\Structures\Plans\Str#1-L-over-Y1-\Super_Drawing\U-0071_str1_BM.dgn
asarsenginh

STR. #1

NOTES

✱ FOR LOCATION OF ELEVATION BETWEEN BUILDUPS, SEE SECTION A-A, ON SHEET 3 OF 3.

STIRRUPS IN CAP MAY BE SHIFTED AS NECESSARY TO CLEAR ANCHOR BOLTS.

FOR PILE SPLICE DETAILS, SEE SHEET 3 OF 3.

BACKWALL SHALL BE PLACED BEFORE APPLYING THE EPOXY PROTECTIVE COATING.

THE TOP SURFACE AREAS OF THE END BENT CAPS SHALL BE CURED IN ACCORDANCE WITH THE STANDARD SPECIFICATIONS EXCEPT THE MEMBRANE CURING COMPOUND METHOD SHALL NOT BE USED.

THE TOP SURFACE OF THE CAP EXCEPT THE BRIDGE SEAT BUILDUPS SHALL BE SLOPED TRANSVERSELY FROM THE FILL FACE TO THE BACK FACE AT THE RATE OF 2%.

PILE NO. 11 TO BE DRIVEN IN STAGE I IF APPROVED BY THE ENGINEER.

FOR MECHANICAL BUTT SPLICES, SEE SECTION 1070-9 OF THE STANDARD SPECIFICATIONS.

FOR MSE RETAINING WALLS, SEE SPECIAL PROVISIONS.

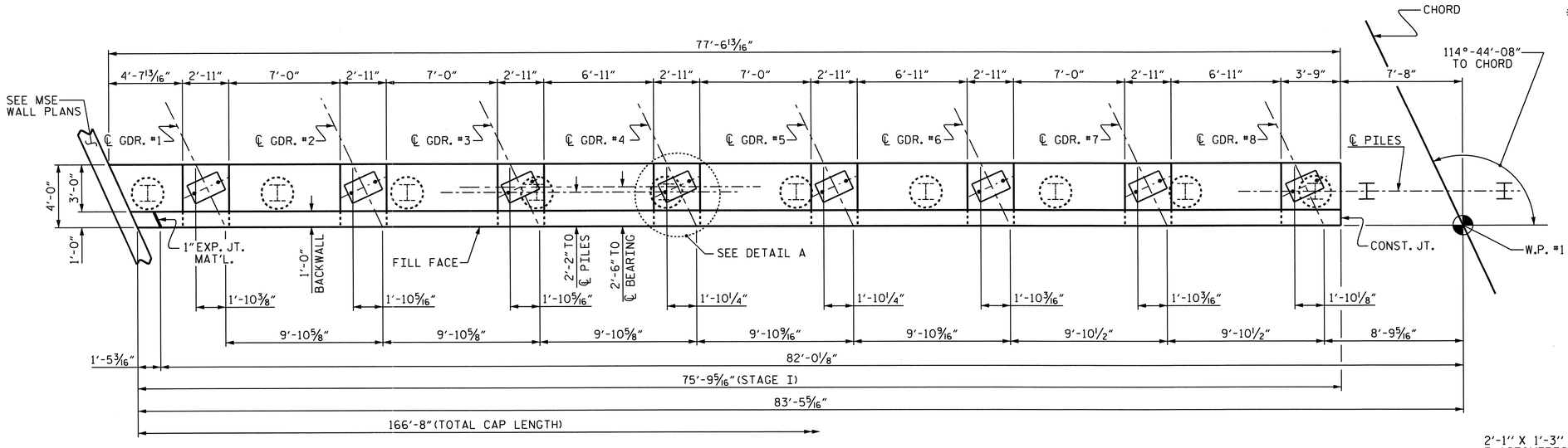

PLAN - STAGE I

TOP OF PILE ELEVATIONS			
1	EL. 386.32	7	EL. 387.17
2	EL. 386.46	8	EL. 387.31
3	EL. 386.60	9	EL. 387.46
4	EL. 386.74	10	EL. 387.60
5	EL. 386.89	11	EL. 387.65
6	EL. 387.03		

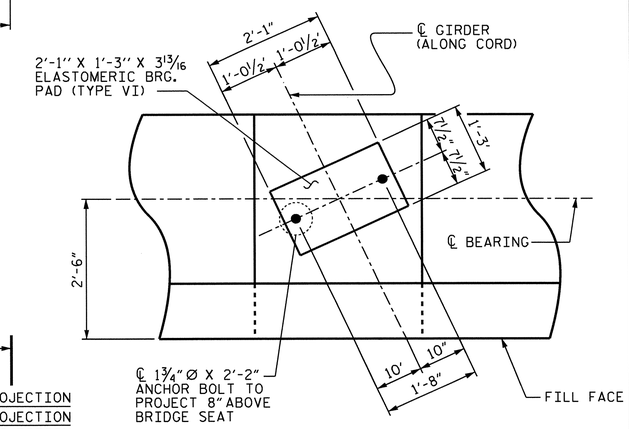

DETAIL A

(TYP. EA. BEARING)

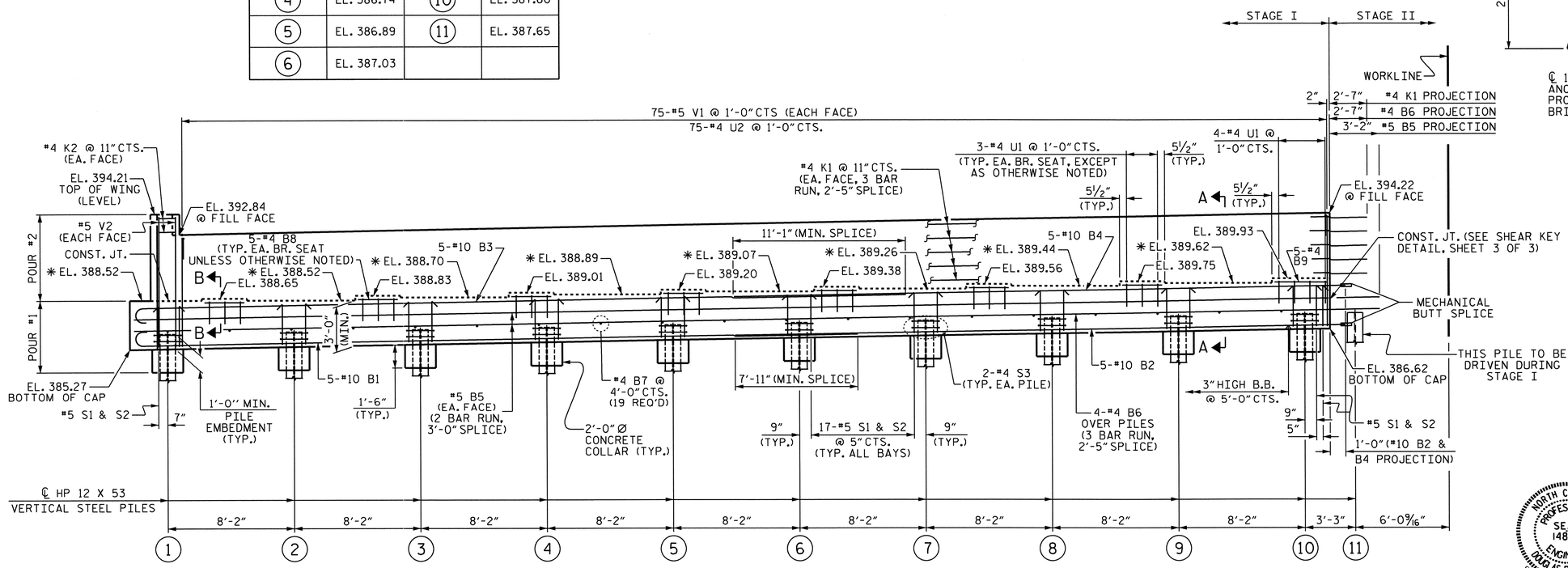

ELEVATION - STAGE I

PROJECT NO. U-0071

DURHAM COUNTY

STATION: 44+08.60 -L-

SHEET 1 of 3

STATE OF NORTH CAROLINA
DEPARTMENT OF TRANSPORTATION
RALEIGH

SUBSTRUCTURE
END BENT 1
STAGE I

NORTH CAROLINA PROFESSIONAL SEAL 14855 ENGINEER DOUGLAS B. CALDWELL
5/13/14

REVISIONS								SHEET NO.
NO.	BY:	DATE:	NO.	BY:	DATE:			S-27
1			3					TOTAL SHEETS
2			4					671

DRAWN BY :	ASHVIN PATEL	DATE :	7/2013
CHECKED BY :	D. G. ELY	DATE :	8/2013
DESIGN ENGINEER OF RECORD:	A. SORSENGINH	DATE :	10/2013

12-MAY-2014 16:39
Z:\TIPProjects-U\U0071\Structures\Plans\Str#1-L-over-Y1-\Sub_Drawing\U-0071_SD_E*_STR1.dgn
asorsenginh

STR. #1

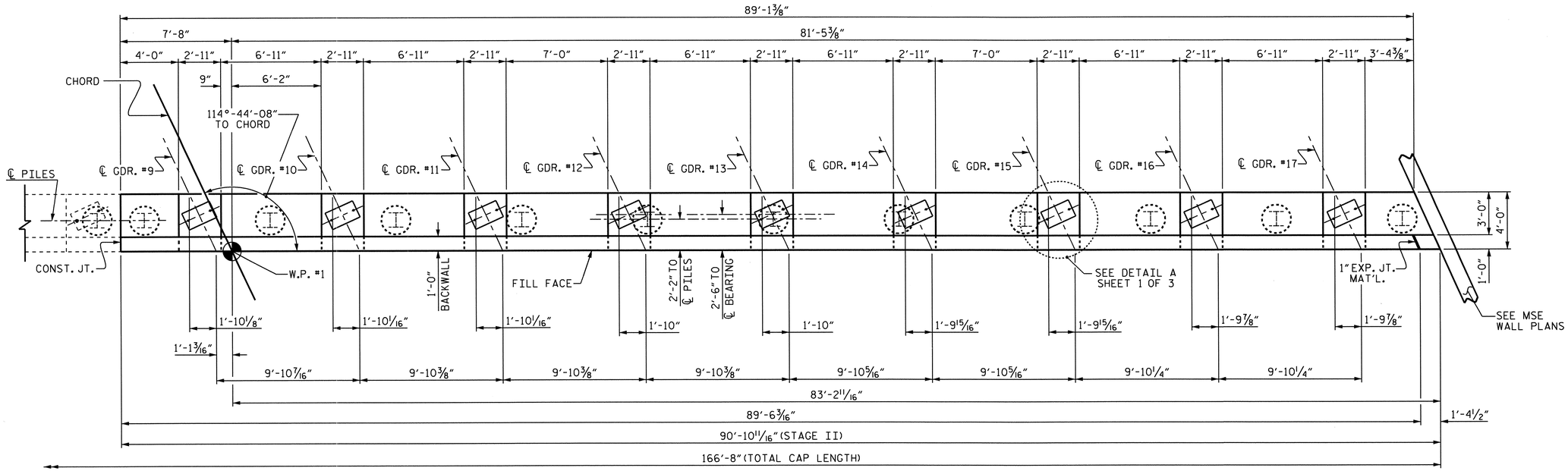

PLAN - STAGE II

TOP OF PILE ELEVATIONS	
12	EL. 387.80
13	EL. 387.96
14	EL. 388.11
15	EL. 388.26
16	EL. 388.41
17	EL. 388.56
18	EL. 388.71
19	EL. 388.86
20	EL. 389.01
21	EL. 389.16

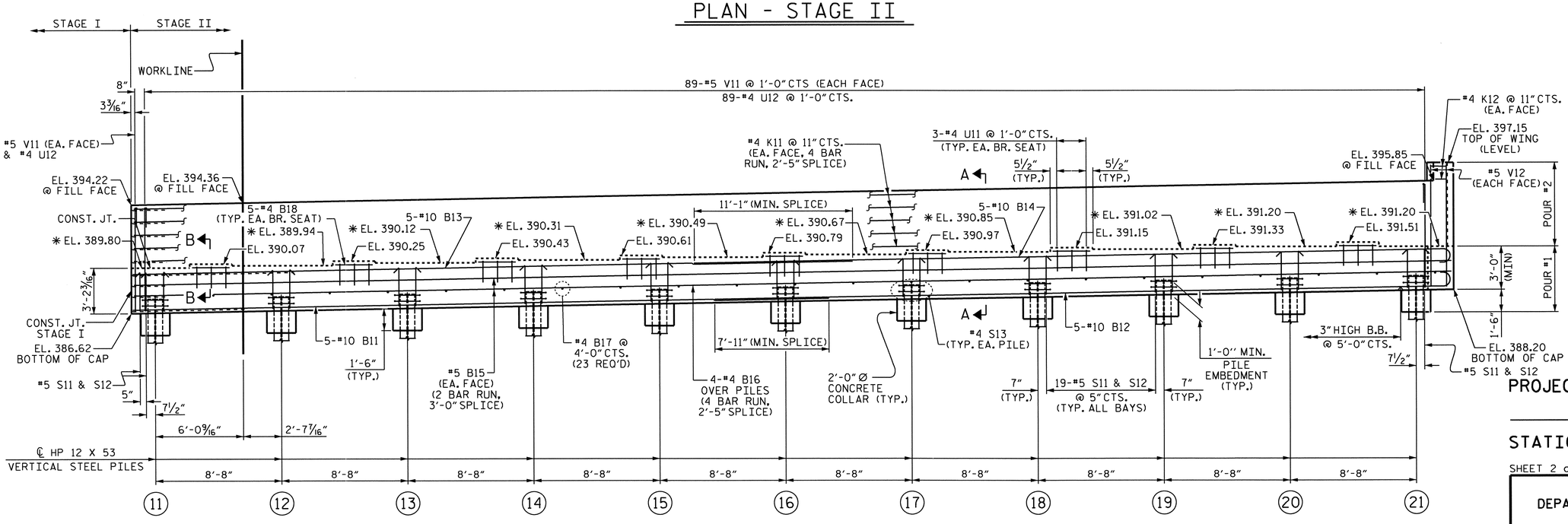

ELEVATION - STAGE II

PROJECT NO. U-0071

DURHAM COUNTY

STATION: 44+08.60 -L-

SHEET 2 of 3

STATE OF NORTH CAROLINA
DEPARTMENT OF TRANSPORTATION
RALEIGH

SUBSTRUCTURE
END BENT 1
STAGE II

NORTH CAROLINA PROFESSIONAL SEAL 14855 ENGINEER DOUGLAS R. CALHOUN
4/15/14

REVISIONS							SHEET NO.
NO.	BY:	DATE:	NO.	BY:	DATE:		5-28
1			3				TOTAL SHEETS
2			4				671

DRAWN BY :	ASHVIN PATEL	DATE :	7/2013
CHECKED BY :	D. G. ELY	DATE :	8/2013
DESIGN ENGINEER OF RECORD:	A. SORSENGINH	DATE :	10/2013

12-MAY-2014 16:39
Z:\TIPProjects-U\U0071\Structures\Plans\Str#1-L-over-Y1-\Sub_Drawing\U-0071_SD_E*_STR1.dgn
asorsenginh

STR. #1

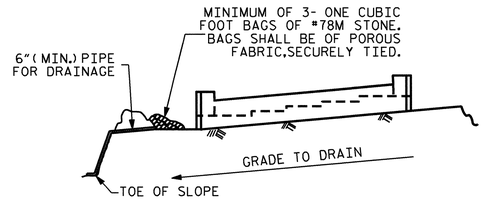

BAGGED STONE AND PIPE SHALL BE PLACED IMMEDIATELY AFTER COMPLETION OF END BENT EXCAVATION. PIPE MAY BE EITHER CONCRETE, CORRUGATED STEEL, CORRUGATED ALUMINUM ALLOY, OR CORRUGATED PLASTIC. PERFORATED PIPE WILL NOT BE ALLOWED.

BAGGED STONE SHALL REMAIN IN PLACE UNTIL THE ENGINEER DIRECTS THAT IT BE REMOVED. THE CONTRACTOR SHALL REMOVE AND DISPOSE OF SILT ACCUMULATIONS AT BAGGED STONE WHEN SO DIRECTED BY THE ENGINEER. BAGS SHALL BE REMOVED AND REPLACED WHENEVER THE ENGINEER DETERMINES THAT THEY HAVE DETERIORATED AND LOST THEIR EFFECTIVENESS.

NO SEPARATE PAYMENT WILL BE MADE FOR THIS WORK AND THE ENTIRE COST OF THIS WORK SHALL BE INCLUDED IN THE UNIT CONTRACT PRICE BID FOR THE SEVERAL PAY ITEMS.

TEMPORARY DRAINAGE AT END BENT

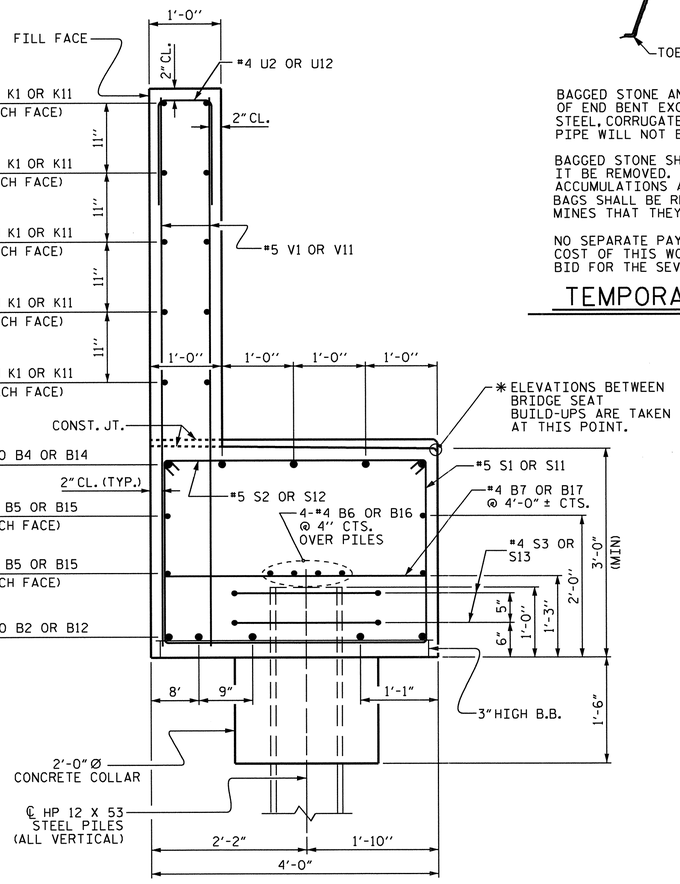

SECTION A-A

(SEE SHEET 1 & 2 OF 3)

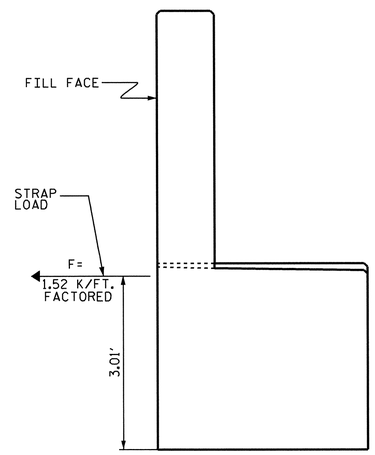

TIEBACK DETAILS

(DETAIL SHOWING TIEBACK RESTRAINT FOR END BENT 1)

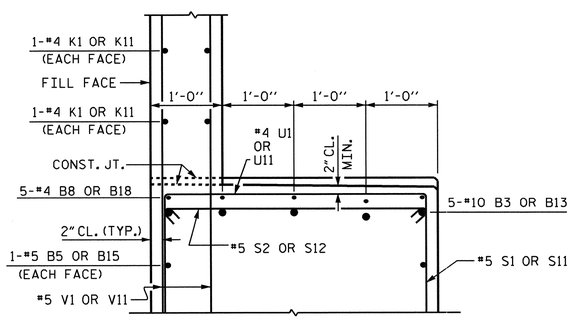

SECTION B-B

(SEE SHEET 1 & 2 OF 3)

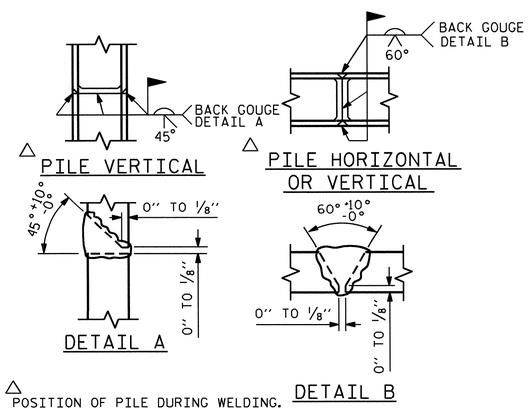

△ POSITION OF PILE DURING WELDING.

PILE SPLICE DETAILS

BAR TYPES

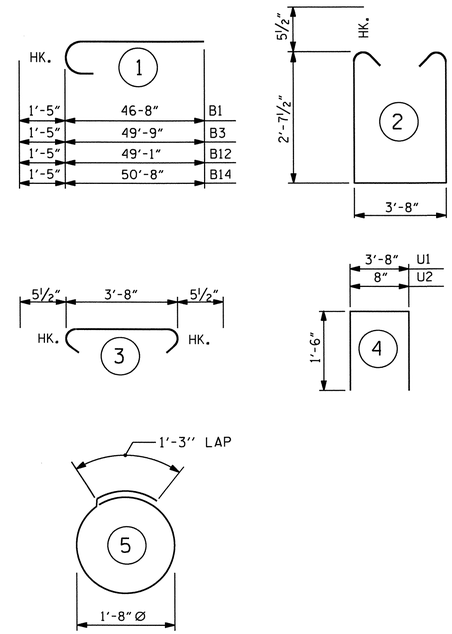

ALL BAR DIMENSIONS ARE OUT TO OUT.

BILL OF MATERIAL — STAGE I

BAR	NO.	SIZE	TYPE	LENGTH	WEIGHT
B1	5	10	1	48'-1"	1035
B2	5	10	STR	39'-6"	850
B3	5	10	1	51'-2"	1101
B4	5	10	STR	39'-6"	850
B5	8	5	STR	41'-10"	349
B6	12	4	STR	28'-3"	226
B7	19	4	STR	3'-8"	47
B8	35	4	STR	2'-7"	60
B9	5	4	STR	3'-5"	11
K1	30	4	STR	27'-9"	556
K2	4	4	STR	1'-0"	3
S1	156	5	2	9'-10"	1600
S2	156	5	3	4'-7"	746
S3	20	4	5	6'-6"	87
U1	25	4	4	6'-8"	111
U2	75	4	4	3'-8"	184
V1	150	5	STR	7'-2"	1121
V2	4	5	STR	8'-6"	35

REINFORCING STEEL 8,972 LBS.

CLASS A CONCRETE BREAKDOWN

POUR #1	CAP AND COLLARS	38.1 CU. YDS.
POUR #2	BACKWALL AND WINGS	12.8 CU. YDS.
TOTAL CLASS A CONCRETE		50.9 CU. YDS.

HP 12 X 53 STEEL PILES
NO. 10 315 LIN. FT.

BILL OF MATERIAL — STAGE II

BAR	NO.	SIZE	TYPE	LENGTH	WEIGHT
B11	5	10	STR	48'-7"	1045
B12	5	10	1	50'-6"	1087
B13	5	10	STR	50'-2"	1079
B14	5	10	1	52'-1"	1121
B15	8	5	STR	46'-11"	391
B16	16	4	STR	24'-6"	262
B17	23	4	STR	3'-8"	56
B18	45	4	STR	2'-7"	78
K11	40	4	STR	24'-6"	655
K12	4	4	STR	1'-0"	3
S11	193	5	2	9'-10"	1979
S12	193	5	3	4'-7"	923
S13	22	4	5	6'-6"	96
U11	27	4	4	6'-8"	120
U12	90	4	4	3'-8"	220
V11	180	5	STR	7'-3"	1361
V12	4	5	STR	8'-7"	36

REINFORCING STEEL 10,512 LBS.

CLASS A CONCRETE BREAKDOWN

POUR #1	CAP AND COLLARS	44.7 CU. YDS.
POUR #2	BACKWALL AND WINGS	14.9 CU. YDS.
TOTAL CLASS A CONCRETE		59.6 CU. YDS.

HP 12 X 53 STEEL PILES
NO. 11 420 LIN. FT.

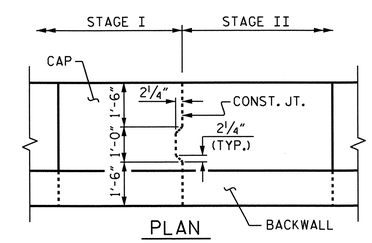

PLAN

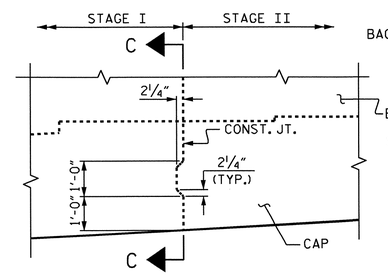

ELEVATION

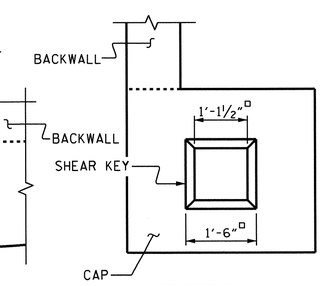

SECTION C-C

SHEAR KEY DETAIL

REINFORCING STEEL NOT SHEAR KEY

TOTAL BILL OF MATERIAL

REINFORCING STEEL	19,484 LBS.
CLASS A CONCRETE	110.5 CU. YDS.
HP 12 X 53 STEEL PILES NO. 21	735 LIN. FT.

PROJECT NO. U-0071
DURHAM COUNTY
STATION: 44+08.60 -L-

SHEET 3 OF 3

STATE OF NORTH CAROLINA
DEPARTMENT OF TRANSPORTATION
RALEIGH

SUBSTRUCTURE

END BENT 1

NORTH CAROLINA PROFESSIONAL SEAL 14855 ENGINEER DOUGLAS R. CALHOUN 5/13/14

REVISIONS							SHEET NO.
NO.	BY:	DATE:	NO.	BY:	DATE:		5-29
1			3				TOTAL SHEETS
2			4				671

DRAWN BY : ASHVIN PATEL DATE : 7/2013
CHECKED BY : D. G. ELY DATE : 8/2013
DESIGN ENGINEER OF RECORD: A. SORSENGINH DATE : 10/2013

12-MAY-2014 16:38
Z:\TIPProjects-U\U0071\Structures\Plans\Str#1-L-over-Y1-\Sub_Drawing\U-0071_SD_E#_STR1.dgn
asorsenginh

STR. #1

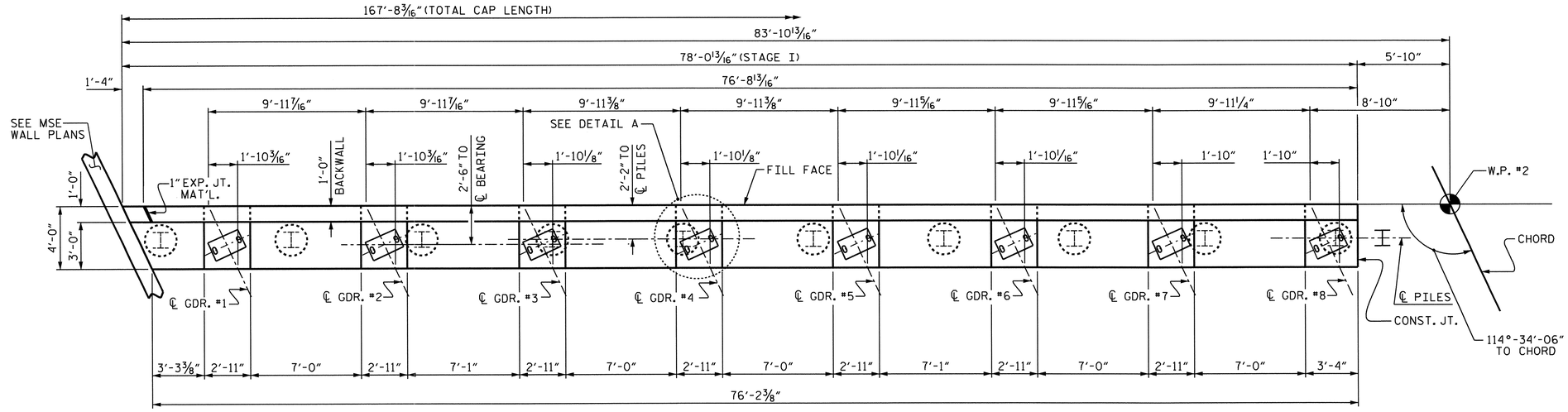

PLAN - STAGE I

NOTES

✱ FOR LOCATION OF ELEVATION BETWEEN BUILDUPS, SEE SECTION A-A, ON SHEET 3 OF 3.

STIRRUPS IN CAP MAY BE SHIFTED AS NECESSARY TO CLEAR ANCHOR BOLTS.

FOR PILE SPLICE DETAILS, SEE SHEET 3 OF 3.

BACKWALL SHALL BE PLACED BEFORE APPLYING THE EPOXY PROTECTIVE COATING.

THE TOP SURFACE AREAS OF THE END BENT CAPS SHALL BE CURED IN ACCORDANCE WITH THE STANDARD SPECIFICATIONS EXCEPT THE MEMBRANE CURING COMPOUND METHOD SHALL NOT BE USED.

THE TOP SURFACE OF THE CAP EXCEPT THE BRIDGE SEAT BUILDUPS SHALL BE SLOPED TRANSVERSELY FROM THE FILL FACE TO THE BACK FACE AT THE RATE OF 2%.

FOR PIPE INSERT DETAILS, SEE BEARINGS SHEET.

PILE NO. 11 TO BE DRIVEN IN STAGE I IF APPROVED BY THE ENGINEER.

FOR MECHANICAL BUTT SPLICES, SEE SECTION 1070-9 OF THE STANDARD SPECIFICATIONS.

FOR MSE RETAINING WALLS, SEE SPECIAL PROVISIONS.

EPOXY COAT THE END BENT CAP AFTER ADJUSTMENTS ARE MADE TO BEARINGS AND ANCHOR BOLTS ARE GROUTED.

TOP OF PILE ELEVATIONS			
1	EL. 388.61	7	EL. 389.55
2	EL. 388.77	8	EL. 389.70
3	EL. 388.92	9	EL. 389.86
4	EL. 389.08	10	EL. 390.01
5	EL. 389.23	11	EL. 390.07
6	EL. 389.39		

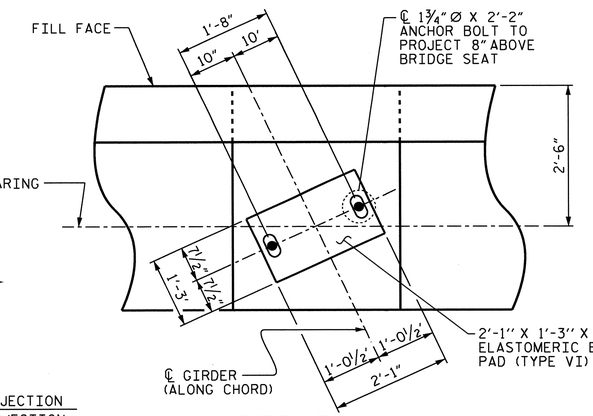

DETAIL A

(TYP. EA. BEARING)

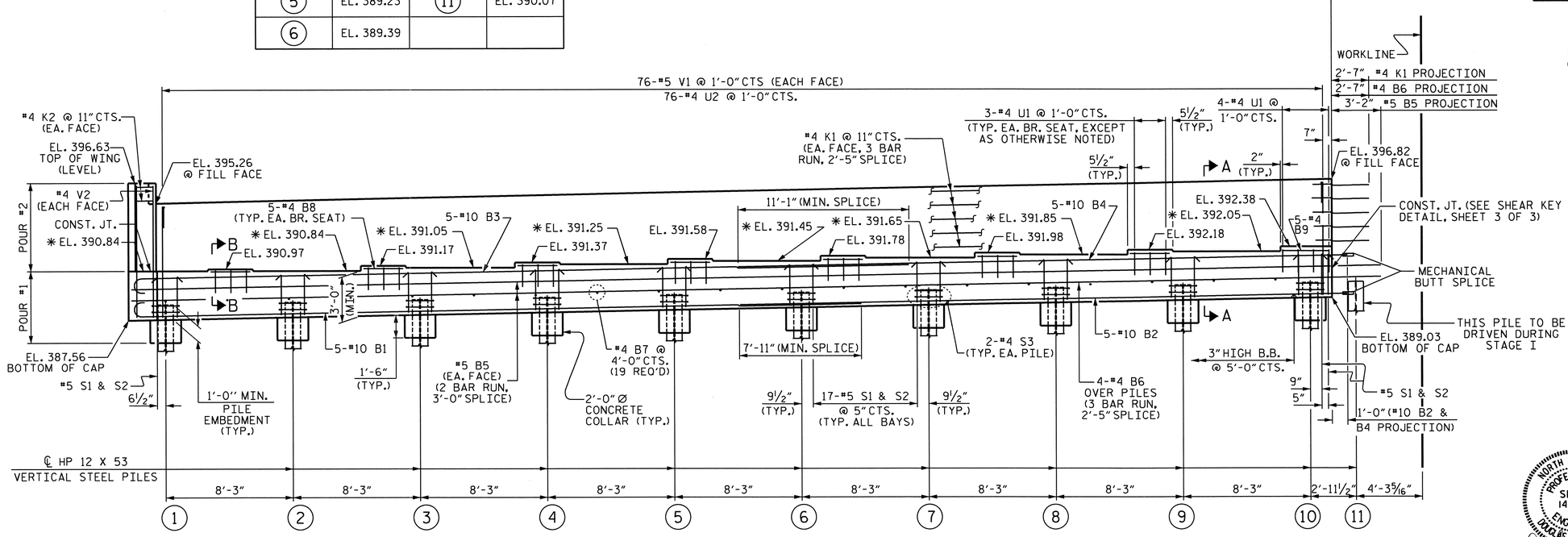

ELEVATION - STAGE I

PROJECT NO. U-0071

DURHAM COUNTY

STATION: 44+08.60 -L-

SHEET 1 of 3

STATE OF NORTH CAROLINA
DEPARTMENT OF TRANSPORTATION
RALEIGH

SUBSTRUCTURE
END BENT 2
STAGE I

NORTH CAROLINA PROFESSIONAL SEAL 14855 ENGINEER DOUGLAS G. CALHOUN
5/13/14

REVISIONS								SHEET NO.
NO.	BY:	DATE:	NO.	BY:	DATE:			S-30
1			3					TOTAL SHEETS
2			4					671

DRAWN BY : ASHVIN PATEL DATE : 7/2013
CHECKED BY : D.G.ELY DATE : 8/2013
DESIGN ENGINEER OF RECORD: A. SORSENGINH DATE : 10/2013

12-MAY-2014 16:38
Z:\TIPProjects-U\U0071\Structures\Plans\Str#1-L-over-Y1-\Sub_Drawing\U-0071_SD_E*_STR1.dgn
asorsenginh

STR. #1

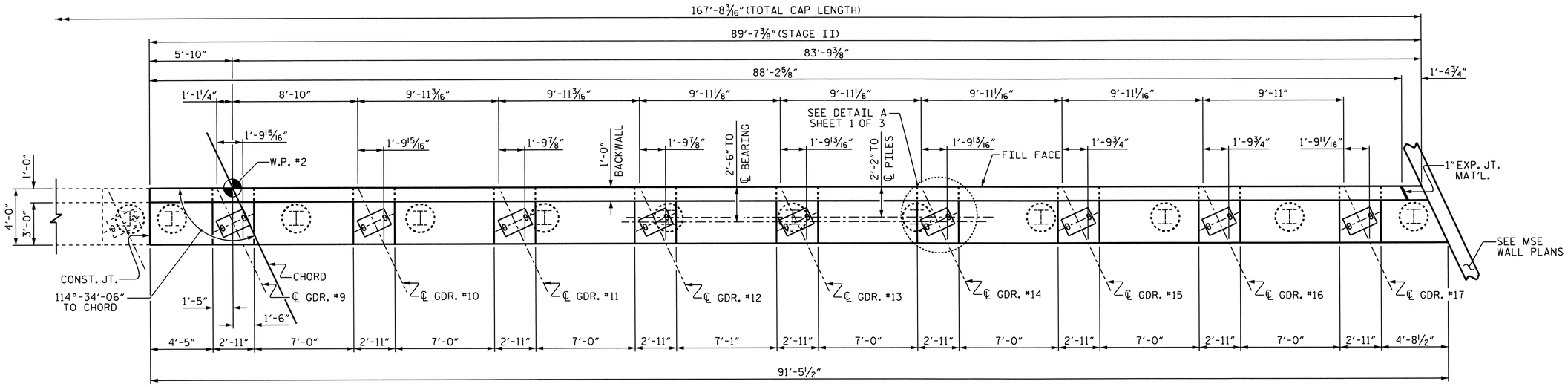

PLAN - STAGE II

TOP OF PILE ELEVATIONS	
12	EL. 390.23
13	EL. 390.40
14	EL. 390.56
15	EL. 390.73
16	EL. 390.89
17	EL. 391.06
18	EL. 391.23
19	EL. 391.39
20	EL. 391.56
21	EL. 391.72

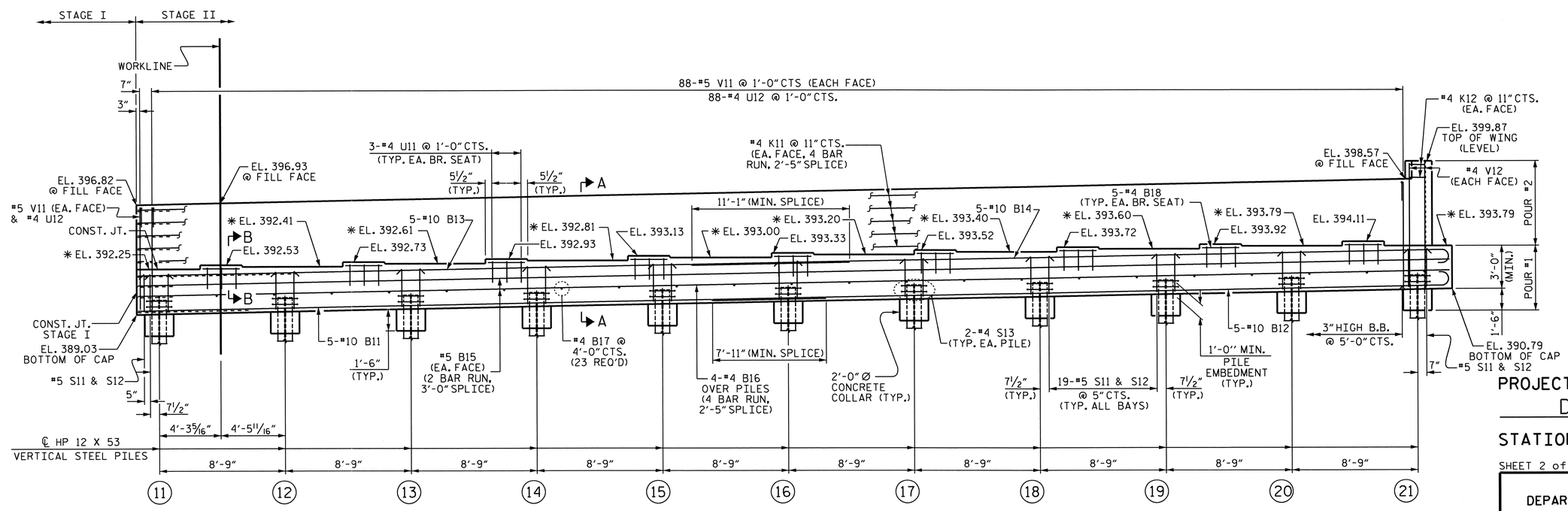

ELEVATION - STAGE II

PROJECT NO. U-0071

DURHAM COUNTY

STATION: 44+08.60 -L-

SHEET 2 of 3

STATE OF NORTH CAROLINA
DEPARTMENT OF TRANSPORTATION
RALEIGH

SUBSTRUCTURE
END BENT 2
STAGE II

NORTH CAROLINA PROFESSIONAL SEAL 14855 ENGINEER DOUGLAS R. CALHOUN
5/13/14

REVISIONS								SHEET NO.
NO.	BY:	DATE:	NO.	BY:	DATE:			S-31
1			3					TOTAL SHEETS
2			4					671

DRAWN BY :	ASHVIN PATEL	DATE :	7/2013
CHECKED BY :	D. G. ELY	DATE :	8/2013
DESIGN ENGINEER OF RECORD:	A. SORSENGINH	DATE :	10/2013

12-MAY-2014 16:38
Z:\TIPProjects-U\U0071\Structures\Plans\Str#1-L-over-Y1-\Sub_Drawing\U-0071_SD_E#_STR1.dgn
asorsenginh

STR. #1

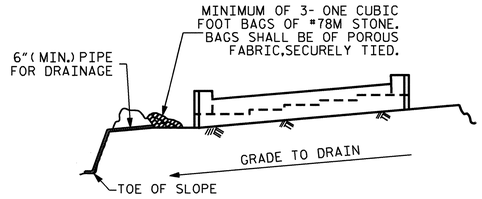

BAGGED STONE AND PIPE SHALL BE PLACED IMMEDIATELY AFTER COMPLETION OF END BENT EXCAVATION. PIPE MAY BE EITHER CONCRETE, CORRUGATED STEEL, CORRUGATED ALUMINUM ALLOY, OR CORRUGATED PLASTIC. PERFORATED PIPE WILL NOT BE ALLOWED.

BAGGED STONE SHALL REMAIN IN PLACE UNTIL THE ENGINEER DIRECTS THAT IT BE REMOVED. THE CONTRACTOR SHALL REMOVE AND DISPOSE OF SILT ACCUMULATIONS AT BAGGED STONE WHEN SO DIRECTED BY THE ENGINEER. BAGS SHALL BE REMOVED AND REPLACED WHENEVER THE ENGINEER DETERMINES THAT THEY HAVE DETERIORATED AND LOST THEIR EFFECTIVENESS.

NO SEPARATE PAYMENT WILL BE MADE FOR THIS WORK AND THE ENTIRE COST OF THIS WORK SHALL BE INCLUDED IN THE UNIT CONTRACT PRICE BID FOR THE SEVERAL PAY ITEMS.

TEMPORARY DRAINAGE AT END BENT

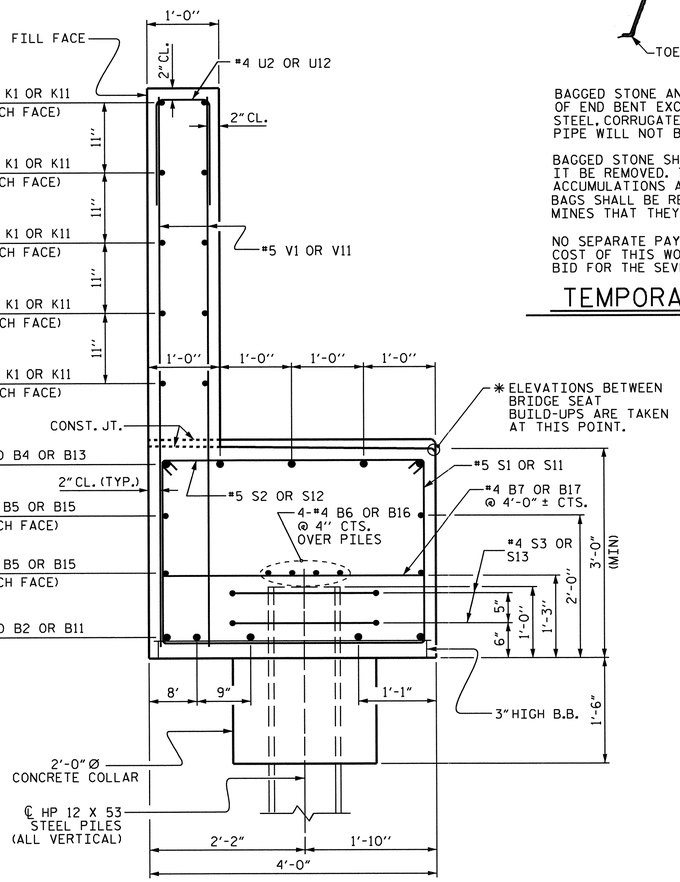

SECTION A-A

(SEE SHEET 1 & 2 OF 3)

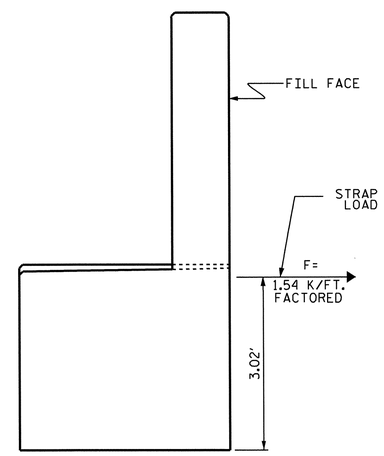

TIEBACK DETAILS

(DETAIL SHOWING TIEBACK RESTRAINT FOR END BENT 2)

BAR TYPES

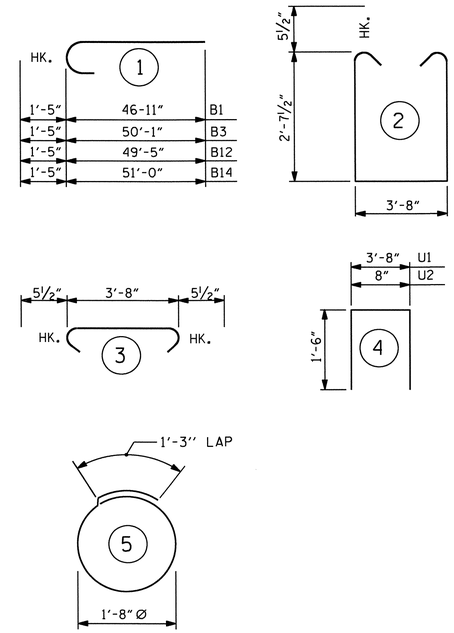

ALL BAR DIMENSIONS ARE OUT TO OUT.

BILL OF MATERIAL — STAGE I

BAR	NO.	SIZE	TYPE	LENGTH	WEIGHT
B1	5	10	1	48'-4"	1040
B2	5	10	STR	39'-6"	850
B3	5	10	1	51'-6"	1108
B4	5	10	STR	39'-6"	850
B5	8	5	STR	42'-1"	351
B6	12	4	STR	28'-6"	228
B7	19	4	STR	3'-8"	47
B8	35	4	STR	2'-7"	60
B9	5	4	STR	3'-0"	10
K1	30	4	STR	28'-5"	569
K2	4	4	STR	1'-0"	3
S1	156	5	2	9'-10"	1600
S2	156	5	3	4'-7"	746
S3	20	4	5	6'-6"	87
U1	25	4	4	6'-8"	111
U2	76	4	4	3'-8"	186
V1	152	5	STR	7'-2"	1136
V2	4	5	STR	8'-8"	36

REINFORCING STEEL 9,018 LBS.

CLASS A CONCRETE BREAKDOWN

POUR #1	CAP AND COLLARS	38.5 CU. YDS.
POUR #2	BACKWALL AND WINGS	13.2 CU. YDS.
TOTAL CLASS A CONCRETE		51.7 CU. YDS.

HP 12 X 53 STEEL PILES
NO. 10 435 LIN. FT.

BILL OF MATERIAL — STAGE II

BAR	NO.	SIZE	TYPE	LENGTH	WEIGHT
B11	5	10	STR	46'-10"	1008
B12	5	10	1	50'-10"	1094
B13	5	10	STR	48'-6"	1043
B14	5	10	1	52'-5"	1128
B15	8	5	STR	47'-1"	393
B16	16	4	STR	24'-6"	262
B17	23	4	STR	3'-8"	56
B18	45	4	STR	2'-7"	78
K11	40	4	STR	24'-2"	646
K12	4	4	STR	1'-0"	3
S11	193	5	2	9'-10"	1979
S12	193	5	3	4'-7"	923
S13	22	4	5	6'-6"	96
U11	27	4	4	6'-8"	120
U12	89	4	4	3'-8"	218
V11	178	5	STR	7'-3"	1346
V12	4	5	STR	8'-9"	37

REINFORCING STEEL 10,430 LBS.

CLASS A CONCRETE BREAKDOWN

POUR #1	CAP AND COLLARS	45.5 CU. YDS.
POUR #2	BACKWALL AND WINGS	15.6 CU. YDS.
TOTAL CLASS A CONCRETE		61.1 CU. YDS.

HP 12 X 53 STEEL PILES
NO. 11 405 LIN. FT.

TOTAL BILL OF MATERIAL

REINFORCING STEEL	19,448 LBS.
CLASS A CONCRETE	112.8 CU. YDS.
HP 12 X 53 STEEL PILES NO. 21	840 LIN. FT.

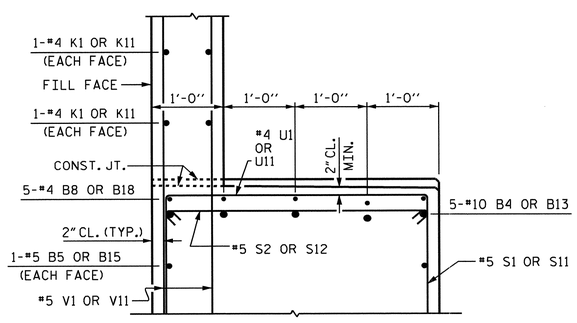

SECTION B-B

(SEE SHEET 1 & 2 OF 3)

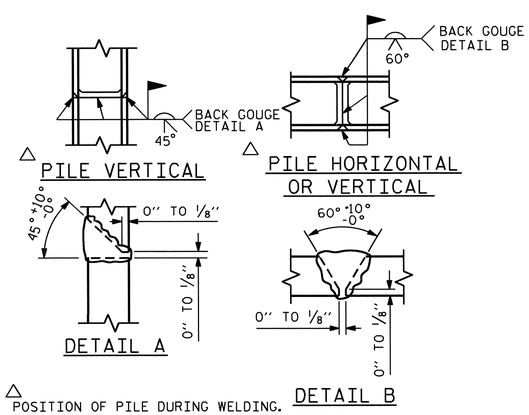

△ POSITION OF PILE DURING WELDING.

PILE SPLICE DETAILS

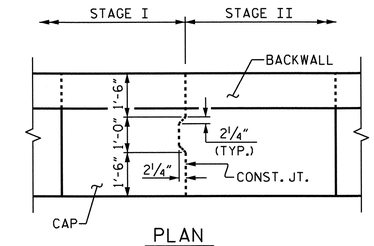

PLAN

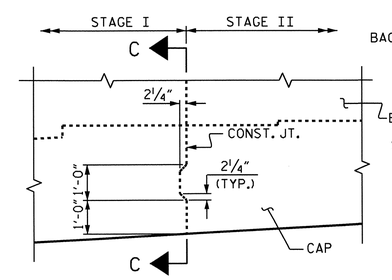

ELEVATION

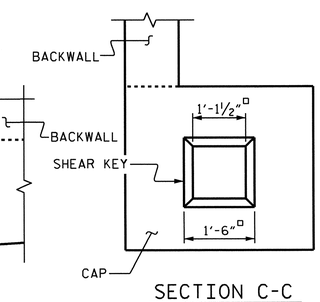

SECTION C-C

SHEAR KEY DETAIL

REINFORCING STEEL NOT SHOWN

NORTH CAROLINA PROFESSIONAL SEAL 14855 ENGINEER DOUGLAS R. CALLAM
5/13/14

PROJECT NO. U-0071
DURHAM COUNTY
STATION: 44+08.60 -L-

SHEET 3 OF 3

STATE OF NORTH CAROLINA
DEPARTMENT OF TRANSPORTATION
RALEIGH

SUBSTRUCTURE

END BENT 2

REVISIONS							SHEET NO.
NO.	BY:	DATE:	NO.	BY:	DATE:		S-32
1			3				TOTAL SHEETS
2			4				671

DRAWN BY : ASHVIN PATEL DATE : 7/2013
CHECKED BY : D. G. ELY DATE : 8/2013
DESIGN ENGINEER OF RECORD: A. SORSENGINH DATE : 10/2013

12-MAY-2014 16:37
Z:\TIPProjects-U\U0071\Structures\Plans\Str#1-L-over-Y1-\Sub_Drawing\U-0071_SD_E#_STR1.dgn
asorsenginh

STR. #1

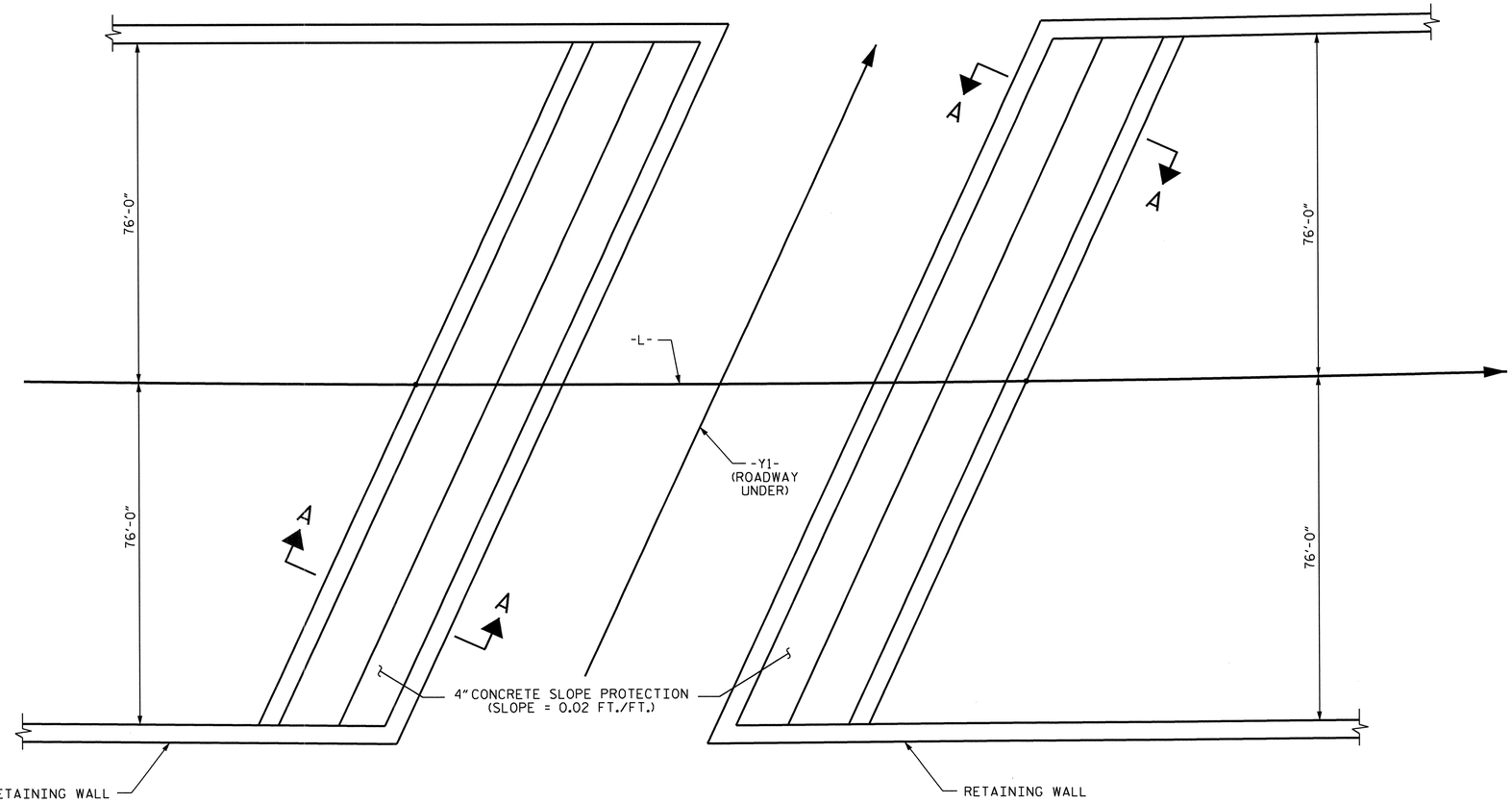

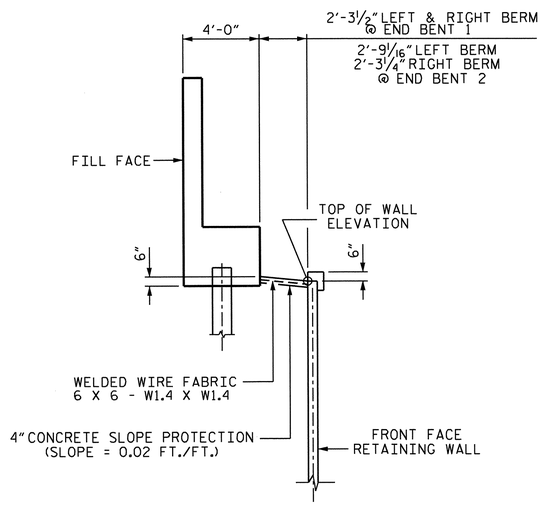

SECTION A-A

SLOPE PROTECTION

GENERAL NOTES

SLOPE PROTECTION SHALL BE PLACED UNDER THE ENDS OF THE BRIDGE AS SHOWN IN THE DETAILS. STRAIGHT EDGING WILL NOT BE REQUIRED UNLESS, IN THE OPINION OF THE ENGINEER, VISUAL INSPECTION INDICATES A NEED FOR IT. MEASUREMENT AND PAYMENT SHALL BE AS PRESCRIBED IN SECTION 462 OF THE STANDARD SPECIFICATIONS.

THE SLOPE PROTECTION SHALL CONSIST OF 4" POURED-IN-PLACE CONCRETE PAVING AS SHOWN IN THE DETAILS ON THIS SHEET. CONCRETE SHALL BE CLASS "B". THE CONCRETE SURFACE SHALL BE FLOATED WITH A WOODEN FLOAT AND FINISHED. WELDED WIRE FABRIC REINFORCING SHALL BE 6 X 6 - W1.4 X W1.4. SLOPE PROTECTION SHALL BE POURED AS DIRECTED BY THE ENGINEER. THE COST OF THE WELDED WIRE FABRIC SHALL BE INCLUDED IN THE CONTRACT UNIT PRICE BID PER SQUARE YARD FOR SLOPE PROTECTION.

BRIDGE @ STA. 44+08.60 -L-	4 INCH SLOPE PROTECTION	WELDED WIRE FABRIC
	SQUARE YARDS	APPROX. L.F.
END BENT 1	43	167
END BENT 2	47	168

PROJECT NO. U-0071
DURHAM COUNTY
STATION: 44+08.60 -L-

STATE OF NORTH CAROLINA
DEPARTMENT OF TRANSPORTATION
RALEIGH

SLOPE PROTECTION DETAILS

NORTH CAROLINA PROFESSIONAL SEAL 14855 ENGINEER DOUGLAS R. CALHOUN
5/13/14

REVISIONS							SHEET NO.
NO.	BY:	DATE:	NO.	BY:	DATE:		5-33
1			3				TOTAL SHEETS
2			4				671

ASSEMBLED BY : D. G. ELY		DATE : 12/2013	
CHECKED BY : A. K. PATEL		DATE : 12/2013	
DRAWN BY : ELR 5/92	REV. 5/1/06	TLA/GM	
CHECKED BY : GRP 6/92	REV. 10/1/11	MAA/GM	
	REV. 12/21/11	MAA/GM	

12-MAY-2014 16:36
Z:\TIPProjects-U\U0071\Structures\Plans\Str#1-L-over-Y1-\Misc\U0071_SD_SP_01.dgn
asorsenginh

STR. #1

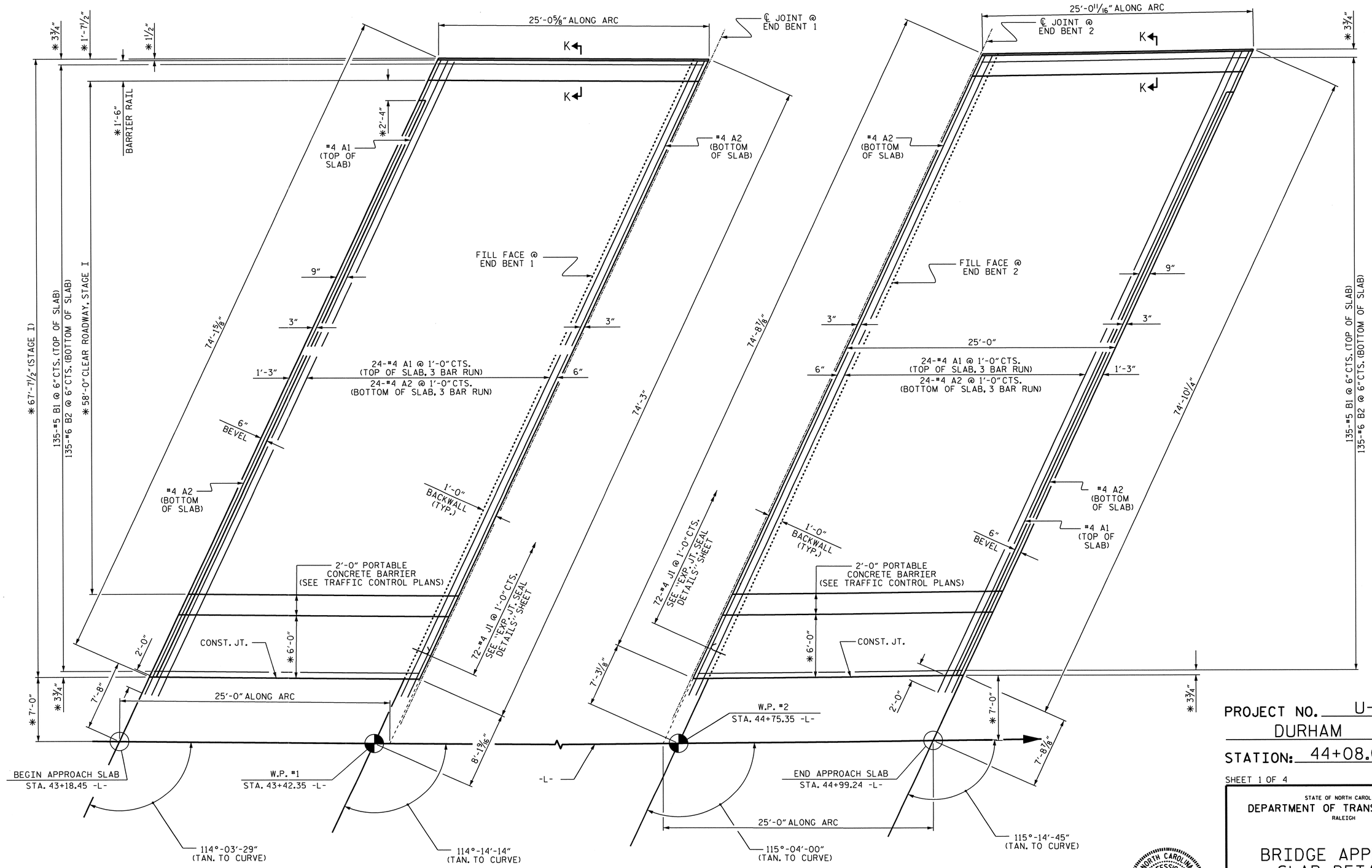

STAGE I

*RADIAL DIMENSIONS
ARC OFFSETS ARE NEGLIGIBLE
SEE SECTION K-K ON SHEET 3 OF 4

NORTH CAROLINA PROFESSIONAL SEAL 14855 ENGINEER DOUGLAS R. CALHOUN
5/13/14

PROJECT NO. U-0071
DURHAM COUNTY
STATION: 44+08.60 -L-

SHEET 1 OF 4

STATE OF NORTH CAROLINA
DEPARTMENT OF TRANSPORTATION
RALEIGH

BRIDGE APPROACH SLAB DETAILS

STAGE I

REVISIONS							SHEET NO.
NO.	BY:	DATE:	NO.	BY:	DATE:		S-34
1			3				TOTAL SHEETS
2			4				671

DRAWN BY :	D. G. ELY	DATE :	06/2013
CHECKED BY :	A. K. PATEL	DATE :	11/2013
DESIGN ENGINEER OF RECORD:	D. R. CALHOUN	DATE :	11/2013

12-MAY-2014 16:35
Z:\TIPProjects-U\U0071\Structures\Plans\Str#1-L-over-Y1-\Misc\U0071_SD_AS_01.dgn
asorsenglnh

STR. #1

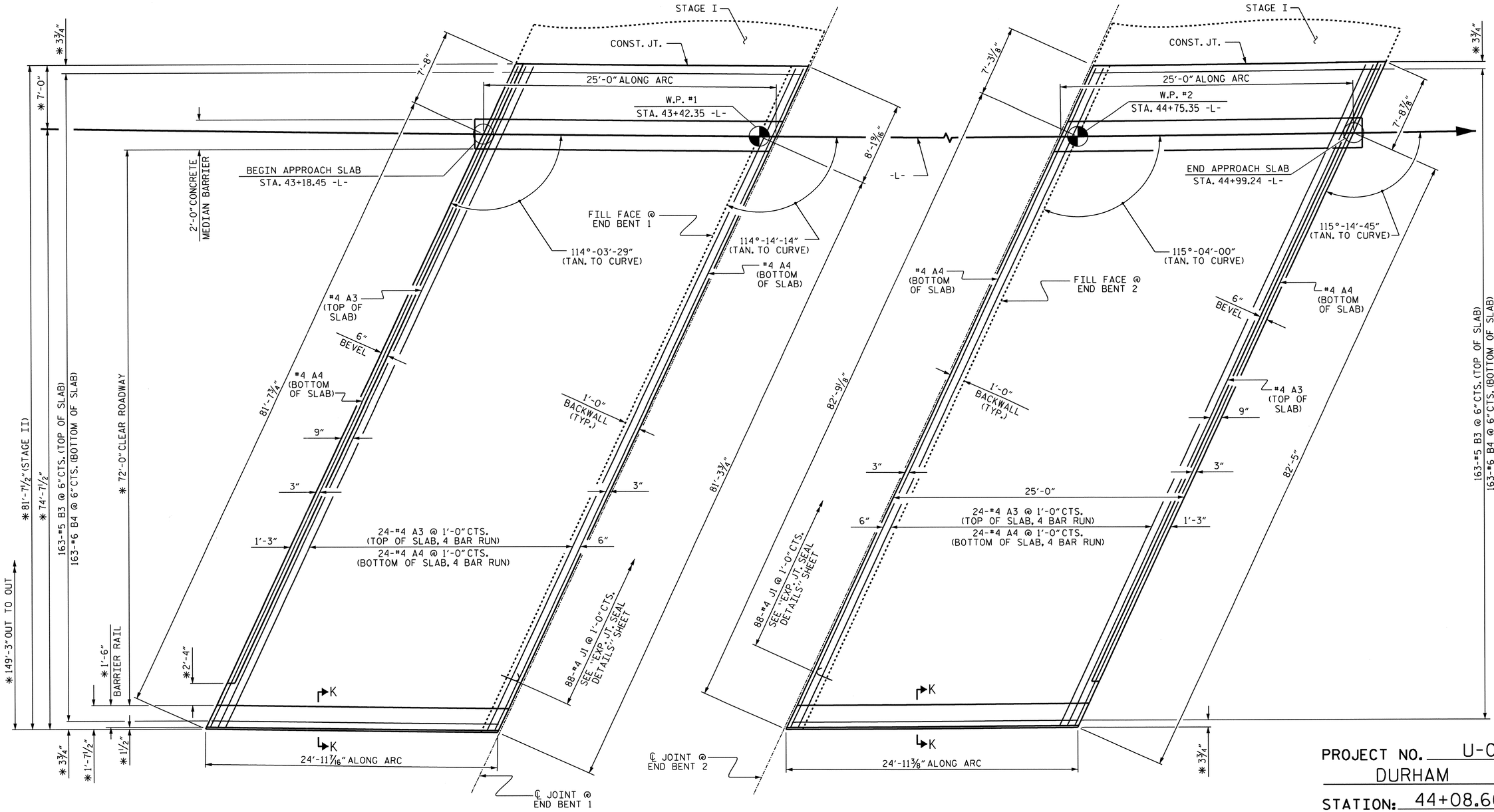

PLAN @ END BENT 1

PLAN @ END BENT 2

STAGE II

* RADIAL DIMENSIONS
ARC OFFSETS ARE NEGLIGIBLE
SEE SECTION K-K ON SHEET 3 OF 4

PROJECT NO. U-0071
DURHAM COUNTY
STATION: 44+08.60 -L-

SHEET 2 OF 4

STATE OF NORTH CAROLINA
DEPARTMENT OF TRANSPORTATION
RALEIGH

BRIDGE APPROACH SLAB DETAILS

STAGE II

NORTH CAROLINA PROFESSIONAL SEAL 14855 ENGINEER DOUGLAS R. CALHOUN
5/13/14

REVISIONS						SHEET NO.
NO.	BY:	DATE:	NO.	BY:	DATE:	S-35
1			3			TOTAL SHEETS
2			4			671

DRAWN BY : D. G. ELY DATE : 06/2013
CHECKED BY : A. K. PATEL DATE : 11/2013
DESIGN ENGINEER OF RECORD: D. R. CALHOUN DATE : 11/2013

12-MAY-2014 16:34
Z:\TIPProjects-U\U0071\Structures\Plans\Str#1-L-over-Y1-\Misc\U0071_SD_AS_01.dgn
asorsenginh

STR. #1

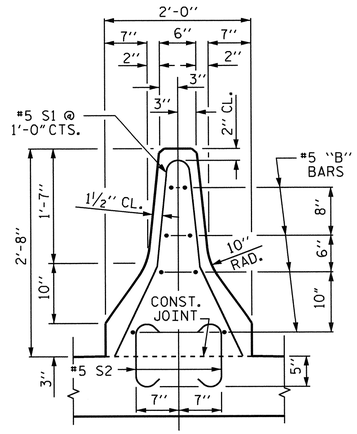

SECTION THRU CONCRETE MEDIAN BARRIER

#5 S2 MAY BE PUSHED INTO GREEN CONCRETE AFTER SCREEDING

FOR QUANTITIES AND ADDITIONAL REINFORCING STEEL IN CONCRETE MEDIAN BARRIER ON APPROACH SLAB, SEE "SUPERSTRUCTURE-CONCRETE MEDIAN BARRIER DETAILS" SHEET.

NOTES

FOR MSE WALL BACKFILL, SEE "MSE RETAINING WALL" PLANS.

APPROACH SLABS SHALL NOT BE CONSTRUCTED PRIOR TO COMPLETION OF THE BRIDGE DECK.

AREA BETWEEN THE MSE WALL AND APPROACH SLAB SHALL BE GRADED TO DRAIN THE WATER AWAY FROM THE FILL FACE OF THE BRIDGE AND SHALL BE PAVED. SEE ROADWAY PLANS.

FOR PLACEMENT OF #4 J1 BARS, SEE "EXPANSION JOINT SEAL DETAILS" SHEET.

FOR EXPANSION JOINT SEALS, SEE SPECIAL PROVISIONS.

BILL OF MATERIAL STAGE I

APPROACH SLAB AT EB 1

BAR	NO.	SIZE	TYPE	LENGTH	WEIGHT
* A1	75	#4	STR	27'-0"	1353
A2	78	#4	STR	26'-9"	1394
* B1	135	#5	STR	23'-9"	3344
B2	135	#6	STR	24'-8"	5002
* J1	72	#4	1	1'-5"	68

REINFORCING STEEL = 6,396 LBS

* EPOXY COATED REINFORCING STEEL = 4,765 LBS

CLASS AA CONCRETE = 73.3 C. Y.

APPROACH SLAB AT EB 2

BAR	NO.	SIZE	TYPE	LENGTH	WEIGHT
* A1	75	#4	STR	27'-0"	1353
A2	78	#4	STR	26'-9"	1394
* B1	135	#5	STR	23'-9"	3344
B2	135	#6	STR	24'-8"	5002
* J1	72	#4	1	1'-5"	68

REINFORCING STEEL = 6,396 LBS

* EPOXY COATED REINFORCING STEEL = 4,765 LBS

CLASS AA CONCRETE = 73.3 C. Y.

BILL OF MATERIAL STAGE II

APPROACH SLAB AT EB 1

BAR	NO.	SIZE	TYPE	LENGTH	WEIGHT
* A3	100	#4	STR	23'-10"	1592
A4	104	#4	STR	23'-7"	1638
* B3	163	#5	STR	23'-8"	4024
B4	163	#6	STR	24'-7"	6019
* J1	88	#4	1	1'-5"	83

REINFORCING STEEL = 7,657 LBS

* EPOXY COATED REINFORCING STEEL = 5,699 LBS

CLASS AA CONCRETE = 88.3 C. Y.

APPROACH SLAB AT EB 2

BAR	NO.	SIZE	TYPE	LENGTH	WEIGHT
* A3	100	#4	STR	23'-10"	1592
A4	104	#4	STR	23'-7"	1638
* B3	163	#5	STR	23'-8"	4024
B4	163	#6	STR	24'-7"	6019
* J1	88	#4	1	1'-5"	83

REINFORCING STEEL = 7,657 LBS

* EPOXY COATED REINFORCING STEEL = 5,699 LBS

CLASS AA CONCRETE = 88.3 C. Y.

BAR TYPES

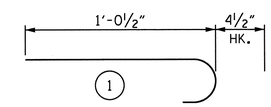

ALL BAR DIMENSION ARE OUT TO OUT

THE QUANTITY OF #4 J1 BARS ON THE BILL OF MATERIAL IS BASED ON 1'-0" CENTERS. J1 BARS SHALL BE PLACED AT EACH VERTICAL STUD ANCHOR BOLT. IN THE EVENT THAT THE NUMBER OF VERTICAL STUD ANCHORS EXCEEDS THE NUMBER OF J1 BARS SPECIFIED, ADDITIONAL J1 BARS WILL NOT BE REQUIRED.

QUANTITIES FOR BARRIER RAIL ARE NOT INCLUDED. SEE SHEET 4 OF 4.

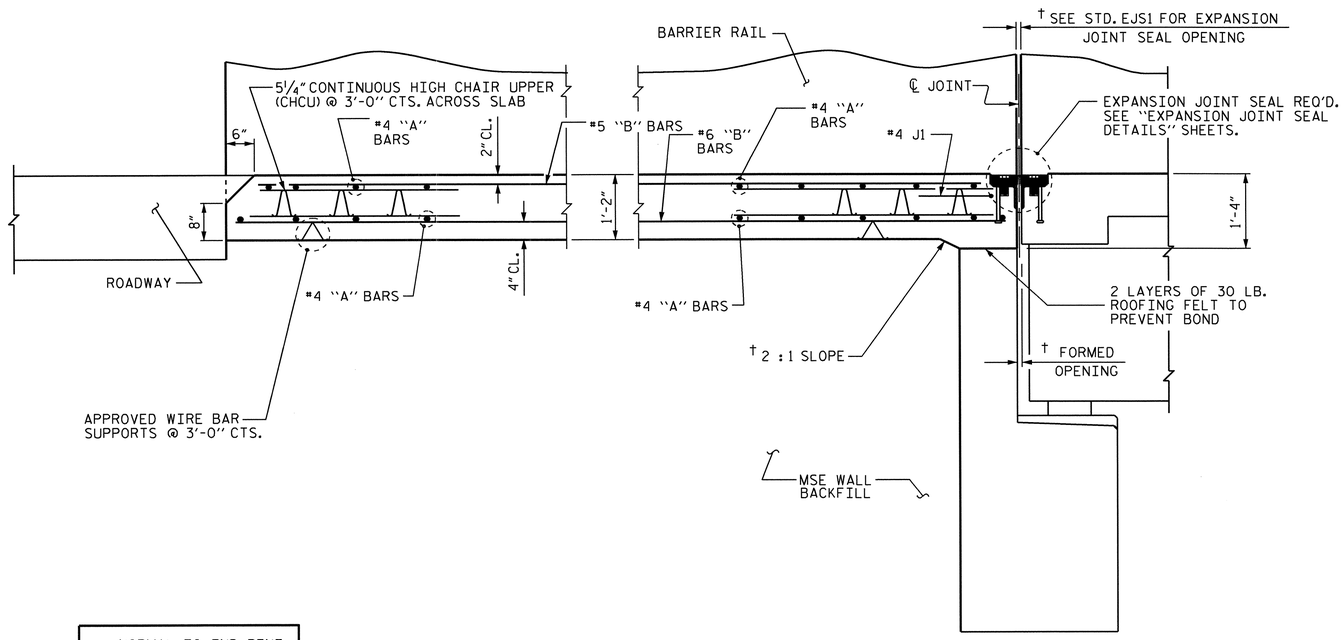

NORMAL TO END BENT

SECTION THRU SLAB

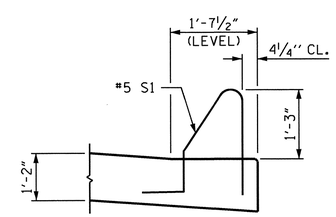

SECTION K-K

SPLICE LENGTHS		
BAR SIZE	EPOXY COATED	UNCOATED
#4	2'-0"	1'-9"
#5	2'-6"	2'-2"
#6	3'-10"	2'-7"

PROJECT NO. U-0071

DURHAM COUNTY

STATION: 44+08.60 -L-

SHEET 3 OF 4

STATE OF NORTH CAROLINA
DEPARTMENT OF TRANSPORTATION
RALEIGH

STANDARD

BRIDGE APPROACH SLAB FOR FLEXIBLE PAVEMENT

NORTH CAROLINA PROFESSIONAL SEAL 14855 ENGINEER DOUGLAS R. CALHOUN
5/13/14

REVISIONS						SHEET NO.
NO.	BY:	DATE:	NO.	BY:	DATE:	5-36
1			3			TOTAL SHEETS
2			4			671

ASSEMBLED BY : D. G. ELY		DATE : 06/2013	
CHECKED BY : A. K. PATEL		DATE : 11/2013	
DRAWN BY : EEM 3/95	REV. 5/7/03R	RWW/JTE	
CHECKED BY : VAP 3/95	REV. 5/1/06RR	KMM/GM	
	REV. 10/1/11	MAA/GM	

12-MAY-2014 16:33
Z:\TIPProjects-U\U0071\Structures\Plans\Str#1-L-over-Y1-\Misc\U0071_SD_AS_01.dgn
asorsenglnh

STD. NO. BAS2 (SHT 4b) STR. #1

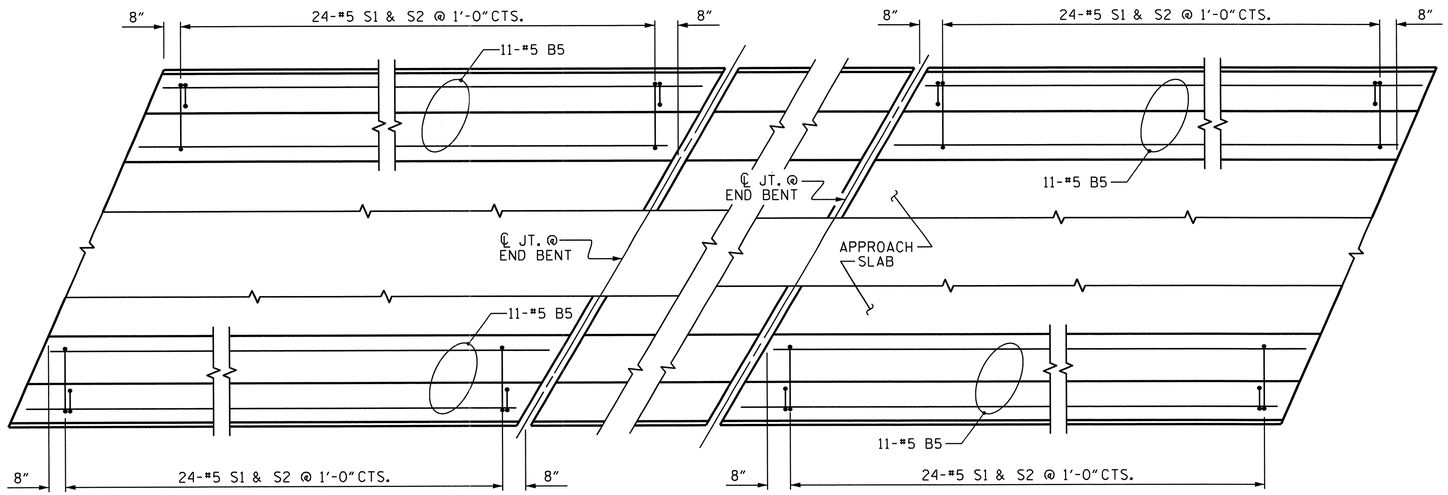

END BENT 1

END BENT 2

PLAN OF BARRIER RAIL ON APPROACH SLAB

NOTES

THE COST OF THE BARRIER RAIL ON THE APPROACH SLAB SHALL BE INCLUDED IN THE LINEAR FOOT CONTRACT PRICE BID FOR "CONCRETE BARRIER RAIL".

THE BARRIER RAIL ON EACH APPROACH SLAB SHALL NOT BE CAST UNTIL ALL APPROACH SLAB CONCRETE HAS BEEN CAST AND HAS REACHED A MINIMUM COMPRESSIVE STRENGTH OF 3,000 PSI.

ALL REINFORCING STEEL IN BARRIER RAILS SHALL BE EPOXY COATED.

"S" BARS MAY BE SHIFTED AS NECESSARY NEAR EXPANSION JOINT.

BAR TYPES

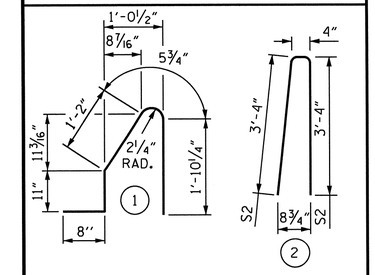

ALL BAR DIMENSIONS ARE OUT TO OUT

BILL OF MATERIAL

BARRIER RAIL ONLY

BAR	NO.	SIZE	TYPE	LENGTH	WEIGHT
✳ B5	44	#5	STR	24'-8"	1132
✳ S1	96	#5	1	5'-1"	509
✳ S2	96	#5	2	7'-0"	701
✳ EPOXY COATED REINFORCING STEEL				LBS.	2342
CLASS AA CONCRETE				C. Y.	13.5
CONCRETE BARRIER RAIL				100.0	LIN. FT.

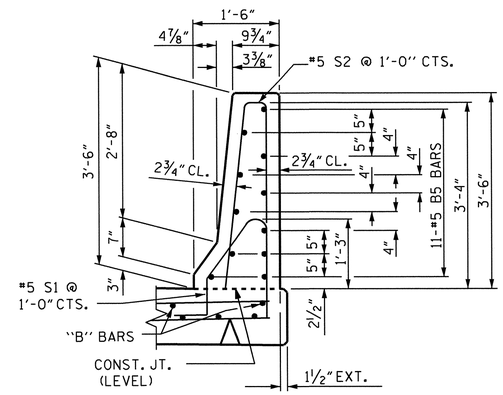

SECTION THRU RAIL

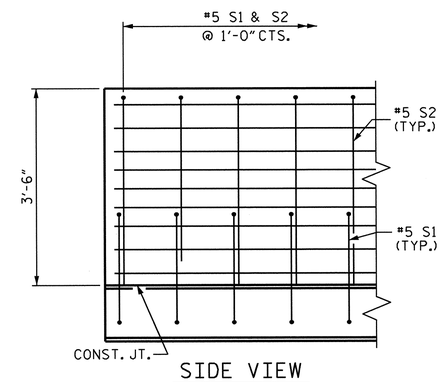

SIDE VIEW

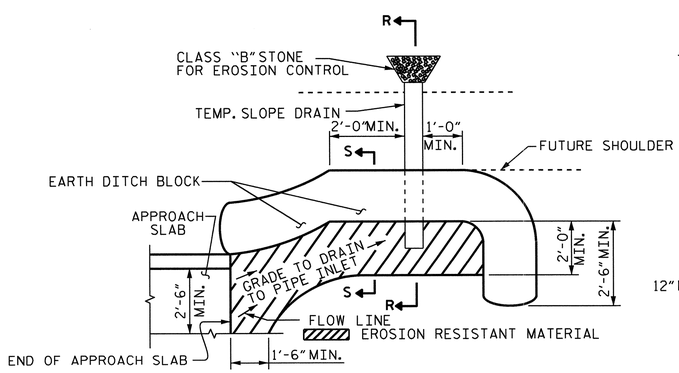

NOTE: IMMEDIATELY AFTER THE CONSTRUCTION OF THE APPROACH SLAB, THE CONTRACTOR SHALL PROVIDE TEMPORARY BERM AND SLOPE DRAIN. CONTRACTOR SHALL GRADE TO PIPE INLET AND PROVIDE EROSION RESISTANT MATERIAL AS SHOWN. THE EROSION RESISTANT MATERIAL SHALL BE EITHER 1) ASPHALT PLANT MIX, TYPE 1 OR TYPE 2, MIN. 2" DEPTH, 2) EROSION CONTROL MAT, OR 3) CONCRETE, AS DIRECTED BY THE ENGINEER. THE SLOPE DRAIN SHALL CONSIST OF A NON-PERFORATED TEMPORARY DRAINAGE PIPE, 12 INCHES IN DIAMETER.

PLAN VIEW

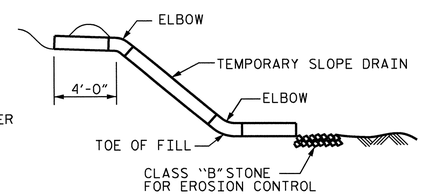

SECTION R-R

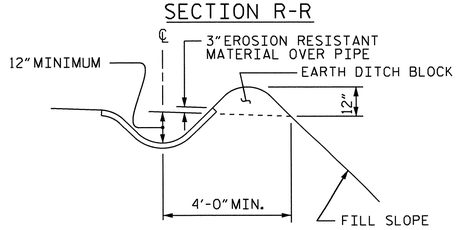

SECTION S-S

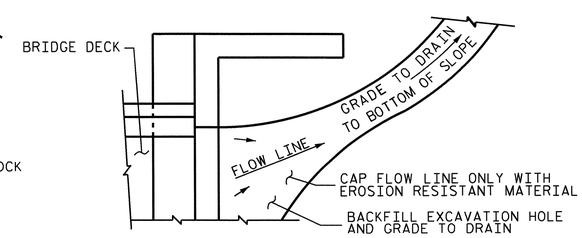

NOTE: IF THE APPROACH SLAB IS NOT CONSTRUCTED IMMEDIATELY AFTER THE BACKFILLING OF THE END BENT EXCAVATION, GRADE TO DRAIN TO THE BOTTOM OF THE SLOPE AND PROVIDE EROSION RESISTANT MATERIAL, SUCH AS FIBERGLASS ROVING OR AS DIRECTED BY THE ENGINEER TO PREVENT SOIL EROSION AND TO PROTECT THE AREA ADJACENT TO THE STRUCTURE. THE CONTRACTOR WILL BE REQUIRED TO REMOVE THESE MATERIALS PRIOR TO CONSTRUCTION OF THE APPROACH SLAB.

TEMPORARY DRAINAGE DETAIL

TEMPORARY BERM AND SLOPE DRAIN DETAILS

(TO BE USED WHEN SHOULDER BERM GUTTER IS REQUIRED)

PROJECT NO. U-0071

DURHAM COUNTY

STATION: 44+08.60 -L-

SHEET 4 OF 4

STATE OF NORTH CAROLINA
DEPARTMENT OF TRANSPORTATION
RALEIGH

STANDARD

BRIDGE APPROACH SLAB DETAILS

NORTH CAROLINA PROFESSIONAL SEAL 14855 ENGINEER DOUGLAS R. CALHOUN
5/12/14

ASSEMBLED BY : D. G. ELY		DATE : 06/13	
CHECKED BY : A. K. PATEL		DATE : 11/13	
DRAWN BY : FCJ	11/88	REV. 10/1/11	MAA/GM
CHECKED BY : ARB	11/88	REV. 7/12	MAA/GM
		REV. 10/12	MAA/GM

REVISIONS						SHEET NO.
NO.	BY:	DATE:	NO.	BY:	DATE:	S-37
1			3			TOTAL SHEETS
2			4			671

STD. NO. BAS4 (SHT 3b) STR. #1

12-MAY-2014 16:32
Z:\TIPProjects-U\U0071\Structures\Plans\Str#1-L-over-Y1-\Misc\U0071_SD_AS_01.dgn
asorsenjnh

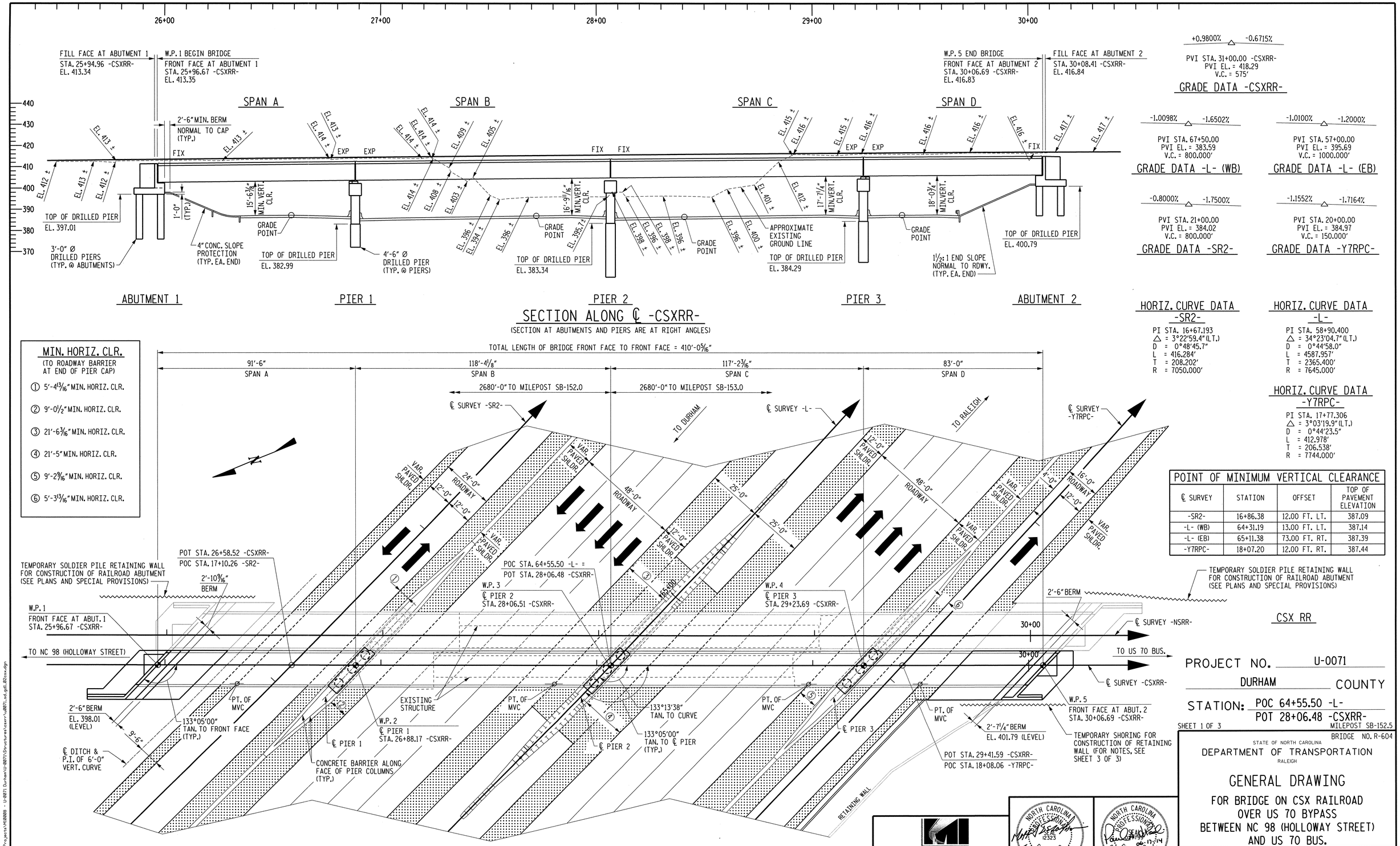

HORIZ. CURVE DATA -SR2-

PI STA. 16+67.193
△ = 3°22'59.4" (LT.)
D = 0°48'45.7"
L = 416.284'
T = 208.202'
R = 7050.000'

HORIZ. CURVE DATA -L-

PI STA. 58+90.400
△ = 34°23'04.7" (LT.)
D = 0°44'58.0"
L = 4587.957'
T = 2365.400'
R = 7645.000'

HORIZ. CURVE DATA -Y7RPC-

PI STA. 17+77.306
△ = 3°03'19.9" (LT.)
D = 0°44'23.5"
L = 412.978'
T = 206.538'
R = 7744.000'

POINT OF MINIMUM VERTICAL CLEARANCE

℄ SURVEY	STATION	OFFSET	TOP OF PAVEMENT ELEVATION
-SR2-	16+86.38	12.00 FT. LT.	387.09
-L- (WB)	64+31.19	13.00 FT. LT.	387.14
-L- (EB)	65+11.38	73.00 FT. RT.	387.39
-Y7RPC-	18+07.20	12.00 FT. RT.	387.44

CSX RR

PROJECT NO. U-0071

DURHAM COUNTY

STATION: POC 64+55.50 -L-
POT 28+06.48 -CSXRR-
MILEPOST SB-152.5

SHEET 1 OF 3

BRIDGE NO. R-604

STATE OF NORTH CAROLINA
DEPARTMENT OF TRANSPORTATION
RALEIGH

GENERAL DRAWING

FOR BRIDGE ON CSX RAILROAD
OVER US 70 BYPASS
BETWEEN NC 98 (HOLLOWAY STREET)
AND US 70 BUS.

MI ENGINEERING
1011 SCHAUB DRIVE, SUITE 100
RALEIGH, NC 27606
(919) 851-6606
FIRM PE NUMBER : P-0671

NORTH CAROLINA PROFESSIONAL SEAL ENGINEER MORRIS ISRAELNAM 12323 06/17/2014

NORTH CAROLINA PROFESSIONAL SEAL ENGINEER PAUL A. de PAOLI 06/17/2014

DWG. NO. 1

REVISIONS						
NO.	BY:	DATE:	NO.	BY:	DATE:	
1			3			
2			4			

SHEET NO. S-38
TOTAL SHEETS 671

DRAWN BY B.E. ATKINSON DATE MAY 2013
CHECKED BY P.A. de PAOLI DATE MAY 2013
DESIGN ENGINEER OF RECORD P.A. de PAOLI DATE JUNE 2014

PLOT: 6/17/2014 12:21:21 PM bbanning
FILE NAME: P:\NC Projects\M100B8 - U-0071 Durham\U-0071\Structures\csxrr\u0071_sd_g01_02csx.dgn

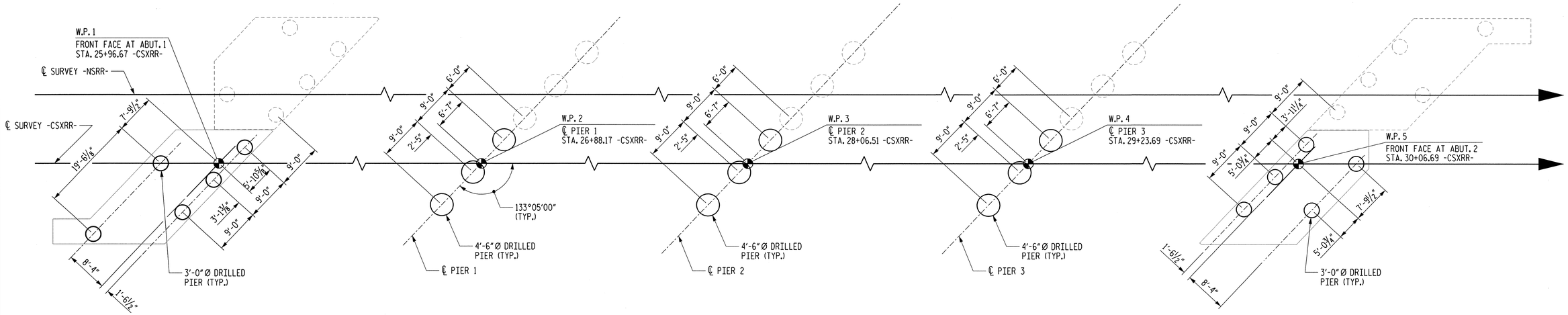

FOUNDATION LAYOUT

NOTES

FOR DRILLED PIERS, SEE "LFD DRILLED PIERS" SPECIAL PROVISIONS.

DRILLED PIERS AT ABUTMENT NO. 1, PIER NO. 1, PIER NO. 2, PIER NO. 3 AND ABUTMENT NO. 2 ARE DESIGNED FOR BOTH SKIN FRICTION AND END BEARING. CHECK FIELD CONDITIONS FOR THE REQUIRED END BEARING CAPACITY OF 75 TSF.

DRILLED PIERS AT ABUTMENT NO. 1 ARE DESIGNED FOR AN APPLIED LOAD OF 405 TONS EACH AT THE TOP OF THE COLUMN.

DRILLED PIERS AT PIER NO. 1 ARE DESIGNED FOR AN APPLIED LOAD OF 590 TONS EACH AT THE TOP OF THE COLUMN.

DRILLED PIERS AT PIER NO. 2 ARE DESIGNED FOR AN APPLIED LOAD OF 750 TONS EACH AT THE TOP OF THE COLUMN.

DRILLED PIERS AT PIER NO. 3 ARE DESIGNED FOR AN APPLIED LOAD OF 590 TONS EACH AT THE TOP OF THE COLUMN.

DRILLED PIERS AT ABUTMENT NO. 2 ARE DESIGNED FOR AN APPLIED LOAD OF 350 TONS EACH AT THE TOP OF THE COLUMN.

INSTALL DRILLED PIERS AT ABUTMENT NO. 1 THAT EXTEND TO AN ELEVATION NO HIGHER THAN 376 FT. AND SATISFY THE REQUIRED END BEARING CAPACITY.

INSTALL DRILLED PIERS AT PIER NO. 1 THAT EXTEND TO AN ELEVATION NO HIGHER THAN 369 FT. (LT. PIER), 372 FT. (CTR. PIER) AND 372 FT. (RT. PIER) AND SATISFY THE REQUIRED END BEARING CAPACITY.

INSTALL DRILLED PIERS AT PIER NO. 2 THAT EXTEND TO AN ELEVATION NO HIGHER THAN 358 FT. (LT. PIER), 362 FT. (CTR. PIER) AND 362 FT. (RT. PIER) AND SATISFY THE REQUIRED END BEARING CAPACITY.

INSTALL DRILLED PIERS AT PIER NO. 3 THAT EXTEND TO AN ELEVATION NO HIGHER THAN 365 FT. (LT. PIER), 368 FT. (CTR. PIER) AND 368 FT. (RT. PIER) AND SATISFY THE REQUIRED END BEARING CAPACITY.

INSTALL DRILLED PIERS AT ABUTMENT NO. 2 THAT EXTEND TO AN ELEVATION NO HIGHER THAN 380 FT. AND SATISFY THE REQUIRED END BEARING CAPACITY.

SPT TESTING MAY BE REQUIRED FOR DRILLED PIERS AT ABUTMENT NO. 1, PIER NO. 1 AND ABUTMENT NO. 2. THE ENGINEER WILL DETERMINE THE NEED FOR SPT TESTING.

SPT TESTING IS REQUIRED FOR DRILLED PIERS AT PIER NO. 2 AND PIER NO. 3.

SID INSPECTIONS MAY BE REQUIRED FOR DRILLED PIERS. THE ENGINEER WILL DETERMINE THE NEED FOR SID INSPECTIONS.

CSL TUBES AND TESTING ARE REQUIRED FOR ALL DRILLED PIERS. FOR CROSSHOLE SONIC LOGGING, SEE STANDARD SPECIFICATIONS SECTION 411.

DRILLED PIER EXCAVATIONS AT ABUTMENT NO. 1, PIER NO. 1, PIER NO. 2, PIER NO. 3 AND ABUTMENT NO. 2 WILL EXTEND INTO MATERIAL THAT DETERIORATES WHEN EXPOSED TO THE ELEMENTS. CHECK FIELD CONDITIONS FOR THE REQUIRED END BEARING CAPACITY AND PLACE CONCRETE IMMEDIATELY AFTER THE EXCAVATION IS COMPLETED.

FOR SID INSPECTIONS, SPT TESTING AND CSL TESTING, SEE STANDARD SPECIFICATIONS SECTION 411.

CSX RR

PROJECT NO. U-0071

DURHAM COUNTY

STATION: POC 64+55.50 -L-

SHEET 2 OF 3 MILEPOST SB-152.5

STATE OF NORTH CAROLINA
DEPARTMENT OF TRANSPORTATION
RALEIGH

GENERAL DRAWING

FOR BRIDGE ON CSX RAILROAD
OVER US 70 BYPASS
BETWEEN NC 98 (HOLLOWAY STREET)
AND US 70 BUS.

MI ENGINEERING
1011 SCHAUB DRIVE, SUITE 100
RALEIGH, NC 27606
(919) 851-6606
FIRM PE NUMBER : P-0671

NORTH CAROLINA PROFESSIONAL SEAL ENGINEER PAUL A. de PAOLI
06-05-14

DWG. NO. 2

REVISIONS						
NO.	BY:	DATE:	NO.	BY:	DATE:	
1			3			
2			4			

SHEET NO. 5-39
TOTAL SHEETS 671

DRAWN BY: B.E. LANNING	DATE	MAY 2013	
CHECKED BY: P.A. de PAOLI	DATE	MAY 2013	
DESIGN ENGINEER OF RECORD: P.A. de PAOLI	DATE	JUNE 2014	

PLOT: 6/9/2014 2:27:54 PM bbenning
FILE NAME: P:\NC Projects\M100B8 - U-0071 Durham\U-0071\Structures\csxr\u0071_sd_g02_02csx.dgn

TOTAL BILL OF MATERIAL

	FOUNDATION EXCAVATION	SID INSPECTIONS	SPT TESTING	CSL TESTING	REINFORCED CONCRETE DECK SLAB	CLASS AA CONCRETE (AS MODIFIED BY RAILWAY)	REINFORCING STEEL	EPOXY COATED REINFORCING STEEL	EPOXY COATED SPIRAL COLUMN REINFORCING STEEL	SPIRAL COLUMN REINFORCING STEEL	STRUCTURAL STEEL	PAINTING STRUCTURAL STEEL	METHOD A WATERPROOFING
	LUMP SUM	EACH	EACH	EACH	SQ. FEET	CU. YDS.	LBS.	LBS.	LBS.	LBS.	APPROX. LBS.	LUMP SUM	SQ. YARDS
SUPERSTRUCTURE					6,970						1,042,750	LUMP SUM	
ABUTMENT 1	LUMP SUM		*	5		112.1	22,090			2,105			74
PIER 1			*	3		51.0	2,934	9,145	1,252	1,035			
PIER 2			3	3		49.8	2,676	12,106	1,335	1,950			
PIER 3			3	3		52.0	2,896	10,692	1,328	1,483			
ABUTMENT 2	LUMP SUM		*	5		102.1	16,326			2,081			59
TOTAL	LUMP SUM	19	19	19	6,970	367.0	46,922	31,943	3,915	8,654	1,042,750	LUMP SUM	133

* SPT TESTING AT ABUTMENT 1, PIER 1 AND ABUTMENT 2 MAY BE REQUIRED. SEE FOUNDATION NOTES ON GENERAL DRAWING SHEET 2 OF 3.

TOTAL BILL OF MATERIAL

	WATERPROOFING (RAILROAD STRUCTURES)	DAMPPROOFING (RAILROAD STRUCTURES)	METAL HANDRAIL (ALUMINUM)	CONCRETE PARAPET	4" SLOPE PROTECTION	SELF-LUBRICATING EXPANSION BEARING ASSEMBLIES	STEEL BEARING ASSEMBLIES	ROCKER BEARING ASSEMBLIES	STRUCTURE DRAINAGE SYSTEM	3'-0" Ø LFD DRILLED PIERS IN SOIL	3'-0" Ø LFD DRILLED PIERS NOT IN SOIL	4'-6" Ø LFD DRILLED PIERS IN SOIL	4'-6" Ø LFD DRILLED PIERS NOT IN SOIL
	SQ. FEET	SQ. FEET	LIN. FEET	LIN. FEET	SQ. YARDS	LUMP SUM	LUMP SUM	LUMP SUM	LUMP SUM	LIN. FEET	LIN. FEET	LIN. FEET	LIN. FEET
SUPERSTRUCTURE	7,483		451.0	820.1		LUMP SUM	LUMP SUM	LUMP SUM	LUMP SUM				
ABUTMENT 1	73	1,035			73					43.4	62.0		
PIER 1		128										0.0	36.0
PIER 2		115										37.0	31.0
PIER 3		99										14.9	37.0
ABUTMENT 2	73	1040			116					20.2	84.0		
TOTAL	7,629	2,417	451.0	820.1	189	LUMP SUM	LUMP SUM	LUMP SUM	LUMP SUM	63.6	146.0	51.9	104.0

GENERAL NOTES:

DESIGN SPECIFICATIONS: 2010 AREMA AND CSX TRANSPORTATION GUIDELINES FOR DESIGN OF HIGHWAY SEPARATION STRUCTURES UNDER RAILROAD.

ASSUMED LIVE LOAD = COOPER E-80 AMD ALTERNATE LIVE LOAD WITH IMPACT PER AREMA.

ALL MATERIALS AND WORKMANSHIP SHALL BE IN ACCORDANCE WITH "STANDARD SPECIFICATIONS FOR ROADS AND STRUCTURES", NORTH CAROLINA DEPARTMENT OF TRANSPORTATION, 2012 HEREIN CALLED STANDARD SPECIFICATIONS, EXCEPT AS NOTED HEREIN, ELSEWHERE ON PLANS, OR IN THE "SPECIAL PROVISIONS". STRUCTURAL STEEL SHALL BE IN ACCORDANCE WITH CURRENT A.R.E.M.A. SPECIFICATIONS.

ALL CONCRETE SHALL BE IN ACCORDANCE WITH THE CSX SPECIFICATIONS FOR CAST-IN-PLACE CONCRETE. THE CONCRETE SHALL HAVE A MINIMUM 28-DAY COMPRESSIVE STRENGTH OF:

CLASS AA CONCRETE IN SUPERSTRUCTURE 5,000 PSI

CLASS AA CONCRETE IN SUBSTRUCTURE 4,000 PSI

DRILLED PIER CONCRETE 4,500 PSI

THE NOMINAL COURSE AGGREGATE SIZE SHALL BE 1 INCH (NO. 57). THE MINIMUM CEMENT CONTENT SHALL BE 640 LBS./CY. THE CONCRETE SHALL HAVE AN ENTRAINED AIR CONTENT BETWEEN 4.0 AND 6.0 PERCENT. THE USE OF GRANULATED BLAST FURNACE SLAG, FLY ASH AND OTHER POZZOLANS IS NOT PERMITTED IN THIS STRUCTURE.

REINFORCING STEEL SHALL BE ASTM A615, GRADE 60. ALL REINFORCING BARS IN THE CONCRETE DECK AND PARAPETS SHALL BE EPOXY-COATED IN ACCORDANCE WITH ASTM A775. FABRICATION TO BE IN ACCORDANCE WITH THE "MANUAL OF STANDARD PRACTICE" A.C.I. 315-99.

THE REINFORCED CONCRETE DECK SLAB WILL BE MEASURED AND PAID FOR AS DESCRIBED IN SECTION 420-21 OF THE STANDARD SPECIFICATIONS. THE CONCRETE AND REINFORCING STEEL SHALL MEET THE REQUIREMENTS DESCRIBED IN THE NOTES ABOVE.

PREMOLDED EXPANSION JOINT FILLER MATERIAL SHALL BE EITHER RUBBER OR CORK CONFORMING WITH ASTM D1752.

CELLULAR AND BULB TYPE WATERSTOPS AND RUBBER JOINT COMPOUNDS SHALL BE AS SHOWN ON THE PLANS AND IN THE SPECIAL PROVISIONS.

STRUCTURE DRAINAGE SYSTEM: METAL DRAINS BEHIND THE ABUTMENTS AND IN THE CONCRETE DECK OF THE BRIDGE, INCLUDING DUCTILE IRON PIPE COLLECTOR SYSTEM, SHALL BE AS SHOWN ON THE PLANS AND OUTLINED IN THE SPECIAL PROVISIONS. DETAILS OF THE DRAINAGE SYSTEM SHALL BE SUBMITTED TO: CSX TRANSPORTATION, JACKSONVILLE, FL FOR APPROVAL.

CONTROL OF WORK: ALL WORK INVOLVED IN THE CONSTRUCTION OF THE RAILROAD STRUCTURE SHALL BE PERFORMED TO THE SATISFACTION OF THE ENGINEER AND/OR CSX TRANSPORTATION. ALL METHODS OF HANDLING WORK AFFECTING THE SAFETY OF RAIL OPERATIONS MUST BE APPROVED BY THE RAILWAY ENGINEER BEFORE PROCEEDING WITH THAT PORTION OF THE WORK. RAIL TRAFFIC SHALL, AT ALL TIMES, BE MAINTAINED AND PROTECTED. THE CONTRACTOR SHALL NOT, AT ANY TIME, DELAY OR INTERFERE WITH RAIL OPERATIONS.

ALL CONSTRUCTION JOINTS SHOWN ON THESE PLANS SHALL BE REQUIRED UNLESS SHOWN AS OPTIONAL. CONSTRUCTION JOINTS SHALL NOT BE PERMITTED EXCEPT AS SHOWN ON THE PLANS, OR WHERE WRITTEN APPROVAL HAS BEEN OBTAINED.

DAMPPROOFING LIMITS: PIER COLUMNS FROM THE TOP OF THE DRILLED PIERS TO THE FINISHED GROUND LINE, THE TOP OF ABUTMENT FOOTINGS AND FILL FACE OF ABUTMENT WINGWALLS AND BACKWALL FROM THE TOP OF THE FOOTING TO THE FINISHED GROUND LINE.

WATERPROOFING: ALL CONSTRUCTION JOINTS AND ANY SHRINKAGE CRACKS WHICH WILL BE COVERED BY FILL SHALL BE WATERPROOFED WITH METHOD A WATERPROOFING. STRIPS OF WATERPROOFING NO LESS THAN 2 FEET WIDE SHALL BE PLACED SYMMETRICALLY OVER JOINTS OR CRACKS. ADDITIONALLY, THE HORIZONTAL SURFACES OF THE BALLAST TROUGH (EXCLUDING THE END DAM) SHALL BE WATERPROOFED WITH A TWO PART WATERPROOFING SYSTEM CONSISTING OF A MEMBRANE LAYER AND A 1 INCH THICK ASPHALT PLANKING OR OTHER RAILWAY APPROVED PROTECTION MATERIAL. ALL WATERPROOFING MATERIALS SHALL CONFORM TO THE RECOMMENDED PRACTICES IN THE AREMA MANUAL OF RAILWAY ENGINEERING CHAPTER 29.

FOR STRUCTURAL STEEL NOTES, SEE "STRUCTURAL STEEL DETAILS" SHEET (DWG. NO. 15).

FOR MAINTENANCE AND PROTECTION OF TRAFFIC BENEATH PROPOSED STRUCTURE, SEE SPECIAL PROVISIONS.

FOR SUBMITTAL OF WORKING DRAWINGS, SEE SPECIAL PROVISIONS.

FOR FALSEWORK AND FORMWORK, SEE SPECIAL PROVISIONS.

FOR CRANE SAFETY, SEE SPECIAL PROVISIONS.

FOR GROUT FOR STRUCTURES, SEE SPECIAL PROVISIONS.

FOR CONCRETE PARAPET, SEE SPECIAL PROVISIONS.

FOR WATERPROOFING, SEE SPECIAL PROVISIONS.

FOR PORTLAND CEMENT, SEE SPECIAL PROVISIONS.

FOR FINE AND COARSE AGGREGATE, SEE SPECIAL PROVISIONS.

FOR WATERSTOPS, SEE SPECIAL PROVISIONS.

FOR ELASTOMERIC FLASHING, SEE SPECIAL PROVISIONS.

FOR RUBBER JOINT COMPOUNDS, SEE SPECIAL PROVISIONS.

FOR STRUCTURE DRAINAGE SYSTEM, SEE SPECIAL PROVISIONS.

FOR BACKFILLING AROUND STRUCTURES, SEE SPECIAL PROVISIONS.

FOR SELF-LUBRICATING EXPANSION BEARING ASSEMBLIES, SEE SPECIAL PROVISIONS.

FOR CONDUIT IN PARAPETS, SEE SPECIAL PROVISIONS.

FOR CONCRETE PARAPET, SEE SPECIAL PROVISIONS.

FOR METAL HANDRAIL (ALUMINUM), SEE SPECIAL PROVISIONS.

FOR STRUCTURAL STEEL, SEE SPECIAL PROVISIONS.

FOR PAINTING STRUCTURAL STEEL, SEE SPECIAL PROVISIONS.

FOR CLASS AA CONCRETE (AS MODIFIED BY RAILWAY), SEE SPECIAL PROVISIONS.

TEMPORARY SHORING IS REQUIRED FOR CONSTRUCTION OF THE SOIL NAIL WALL AND ABUTMENT #2 AS SHOWN ON SHEET 1 OF 3. THE SHORING SHALL BE DESIGNED BY THE CONTRACTOR AND APPROVED BY NCDOT PRIOR TO ABUTMENT EXCAVATION. A TEMPORARY SOIL NAIL WALL IS ANTICIPATED TO ADJOIN THE PERMANENT SOIL NAIL RETAINING WALL ADJACENT TO ABUTMENT #2. A PLAN FOR BACKFILLING AND ABUTTING THE PERMANENT SOIL NAIL RETAINING WALL TO ABUTMENT #2 AFTER COMPLETION OF THE ABUTMENT CONSTRUCTION SHALL ALSO BE PREPARED FOR NCDOT APPROVAL. ANY ALTERNATE TEMPORARY SHORING TYPES ARE REQUIRED TO LIMIT DISTURBANCE OF THE SOIL BEHIND THE PERMANENT SOIL NAIL WALL. PAYMENT FOR THE TEMPORARY SHORING SHALL BE CONSIDERED INCIDENTAL TO THE SOIL NAIL WALL.

CSX RR

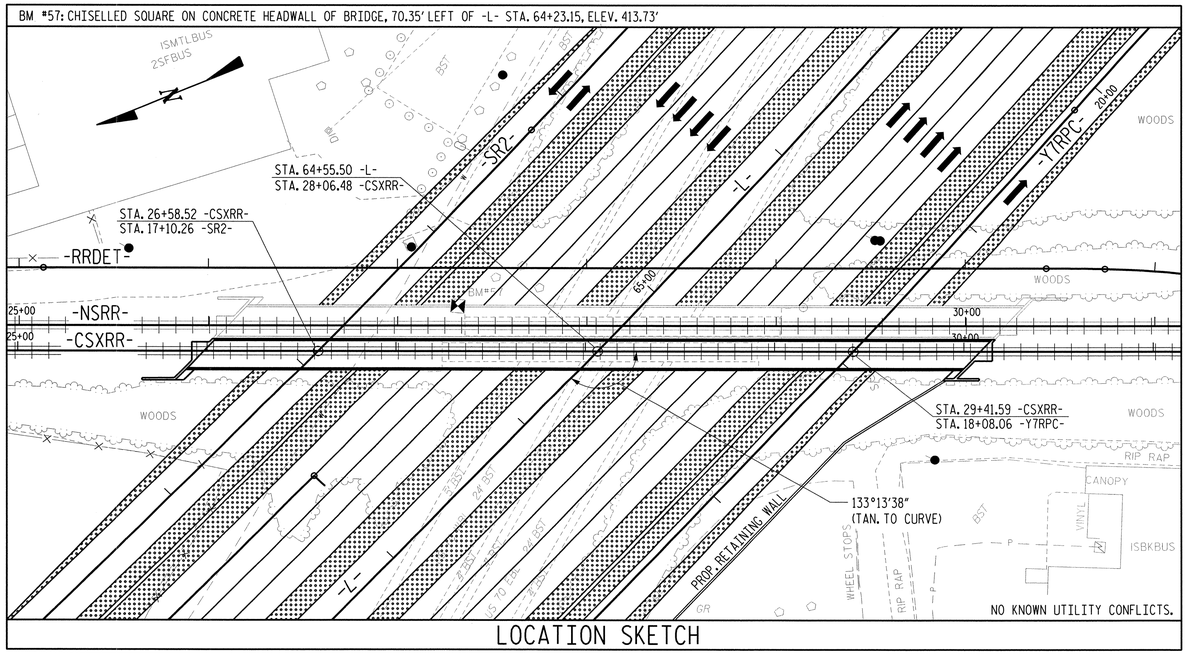

LOCATION SKETCH

PROJECT NO. U-0071

DURHAM COUNTY

STATION: POC 64+55.50 -L-

SHEET 3 OF 3 MILEPOST SB-152.5

STATE OF NORTH CAROLINA
DEPARTMENT OF TRANSPORTATION
RALEIGH

GENERAL DRAWING

FOR BRIDGE ON CSX RAILROAD
OVER US 70 BYPASS
BETWEEN NC 98 (HOLLOWAY STREET)
AND US 70 BUS.

MI ENGINEERING
1011 SCHAUB DRIVE, SUITE 100
RALEIGH, NC 27606
(919) 851-6606
FIRM PE NUMBER : P-0671

NORTH CAROLINA PROFESSIONAL SEAL 23969 ENGINEER PAUL A. de PAOLI
06.25.14

DWG. NO. 3

REVISIONS						SHEET NO.
NO.	BY:	DATE:	NO.	BY:	DATE:	S-40
1			3			TOTAL SHEETS
2			4			671

DRAWN BY	B.E. ATKINSON	DATE	MAY 2013
CHECKED BY	P.A. de PAOLI	DATE	MAY 2013
DESIGN ENGINEER OF RECORD	P.A. de PAOLI	DATE	JUNE 2014

PLOT: 6/25/2014 1:37:38 PM bbanning
FILE NAME: P:\NC Projects\M180808 - U-0071 Durham\U-0071\Structures\csxrr\u0071_sd_gd3_02csx.dgn

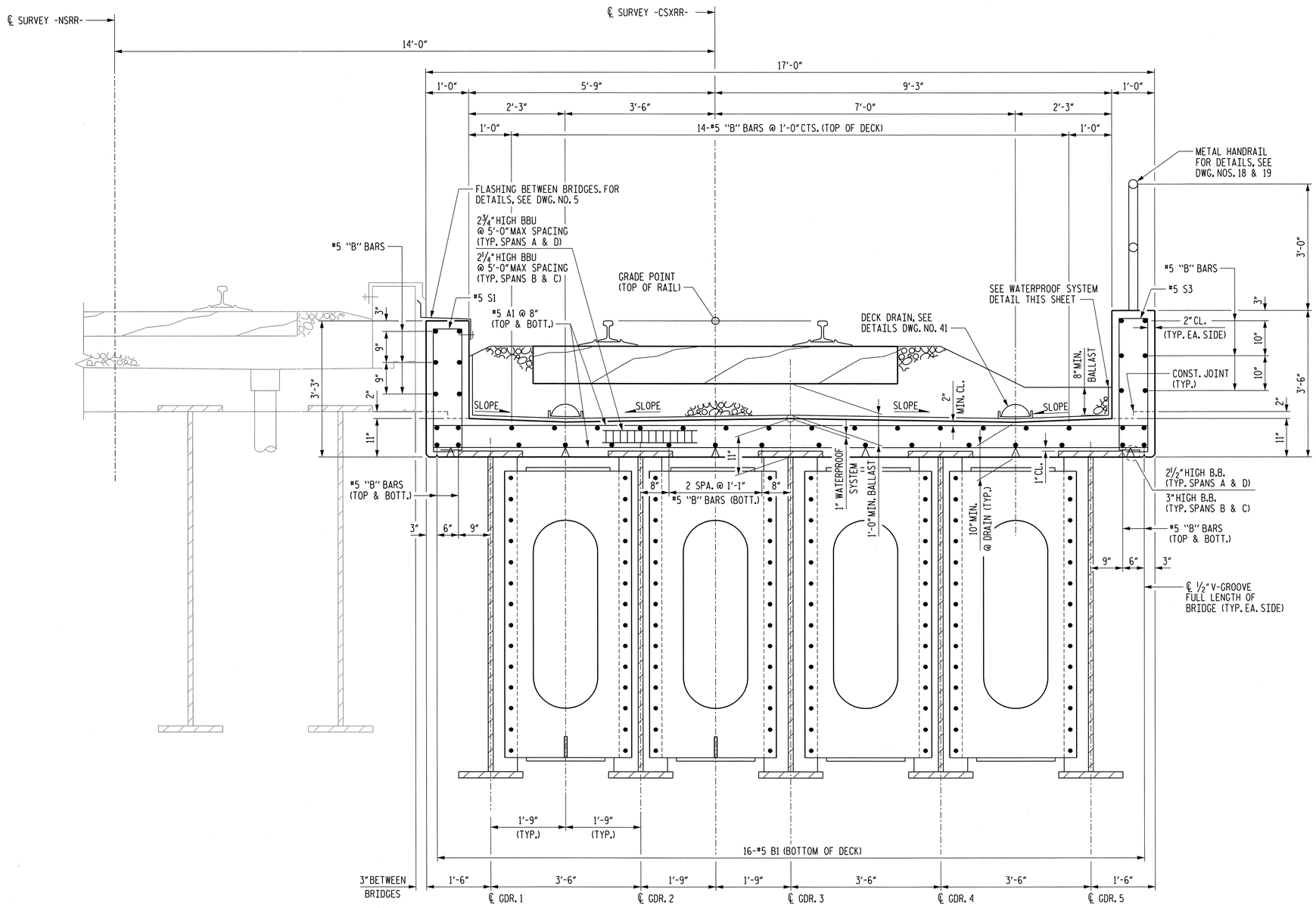

TYPICAL SECTION

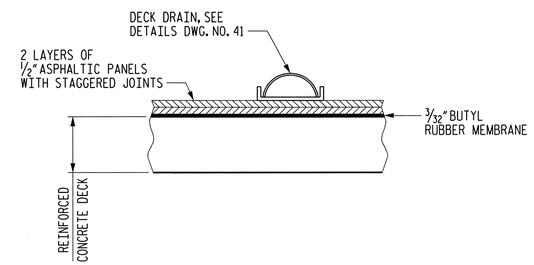

WATERPROOF SYSTEM DETAIL

CSX RR

PROJECT NO. U-0071

DURHAM COUNTY

STATION: POC 64+55.50 -L-

MILEPOST SB-152.5

STATE OF NORTH CAROLINA
DEPARTMENT OF TRANSPORTATION
RALEIGH

SUPERSTRUCTURE
TYPICAL SECTION

MI ENGINEERING
1011 SCHAUB DRIVE, SUITE 100
RALEIGH, NC 27606
(919) 851-6606
FIRM PE NUMBER : P-0671

NORTH CAROLINA PROFESSIONAL SEAL 027499 ENGINEER PAUL A. de PAOLI
06.09.14

DWG. NO. 4

REVISIONS						SHEET NO.
NO.	BY:	DATE:	NO.	BY:	DATE:	5-41
1			3			TOTAL SHEETS
2			4			671

DRAWN BY B.E. LANNING DATE MAY 2012
CHECKED BY P.A. de PAOLI DATE MAY 2012
DESIGN ENGINEER OF RECORD P.A. de PAOLI DATE JUNE 2014

PLOT: 6/9/2014 2:27:59 PM blanning
FILE NAME: P:\NC Projects\M10008 - U-0071 Durham\U-0071\Structures\csxrr\u0071_sd_ts_02csx.dgn

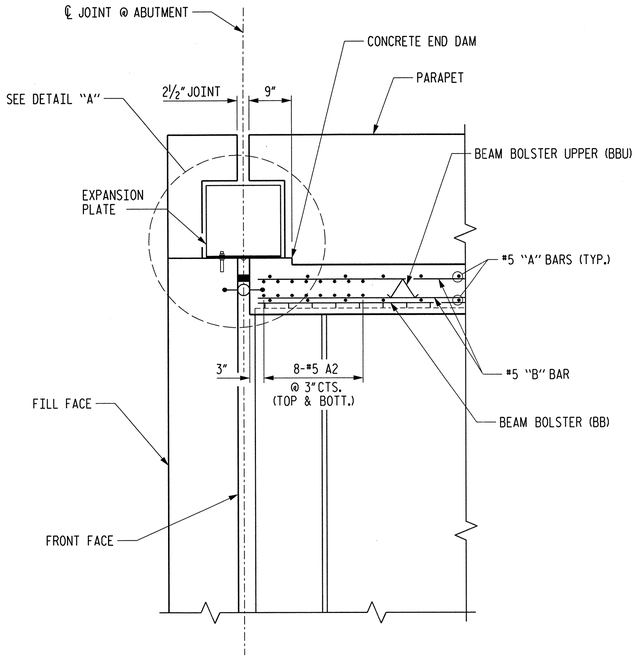

SECTION A-A

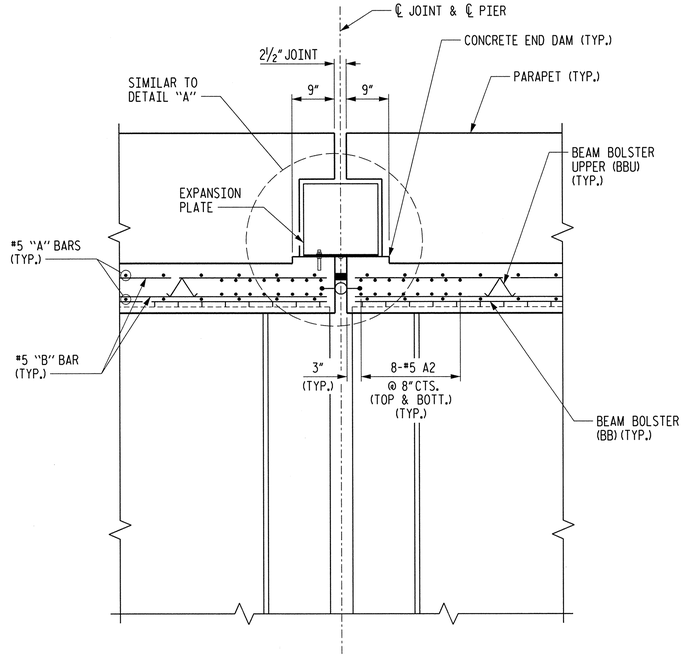

SECTION B-B

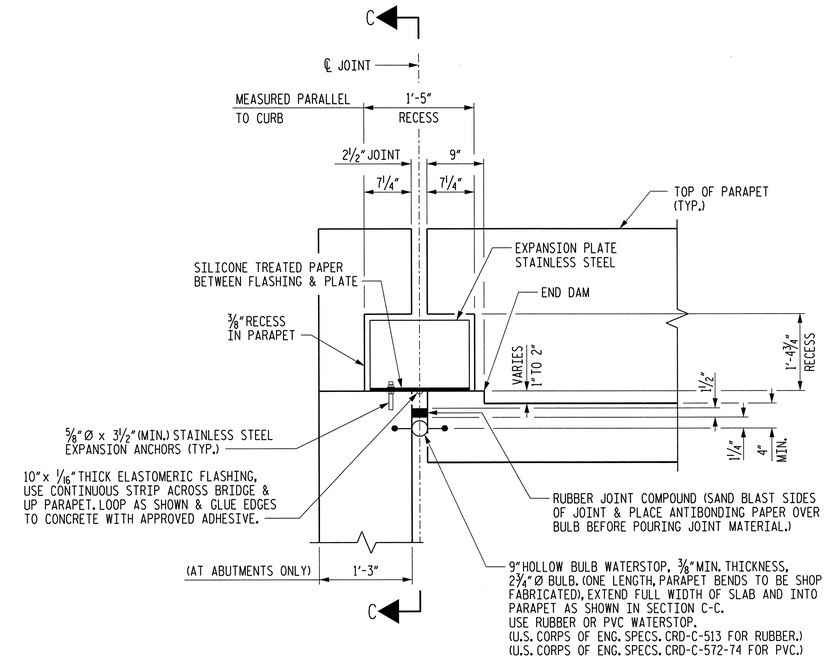

DETAIL "A"

NOTE: JOINT SHALL BE TESTED FOR LEAKS AND MADE WATERTIGHT BEFORE FLASHING AND EXPANSION PLATES ARE ARE INSTALLED.

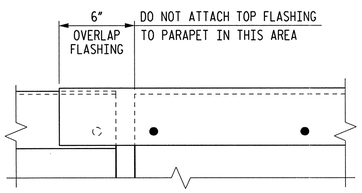

INTERIOR ELEVATION
AT PIER AND ABUTMENT JOINTS

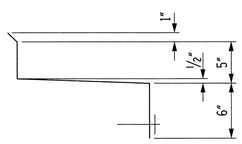

FLASHING DETAIL

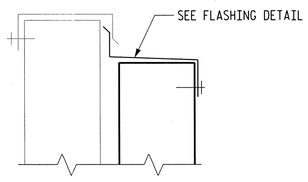

SECTION THRU PARAPETS

PARAPET FLASHING DETAIL

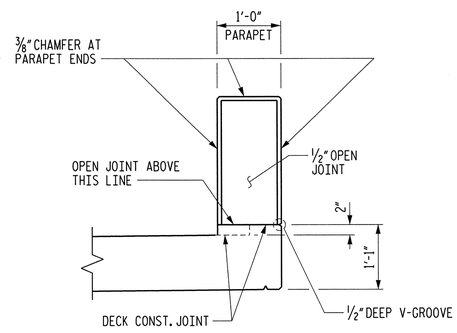

SECTION THRU OPEN JOINT IN PARAPET

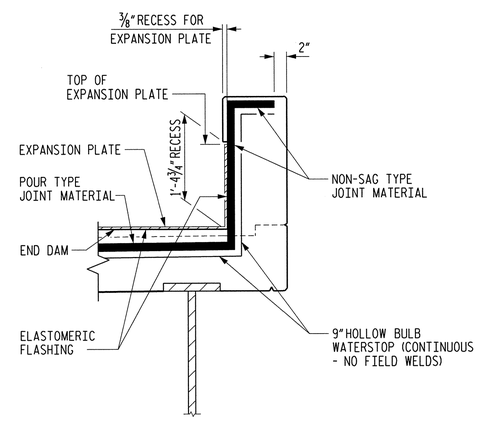

SECTION C-C

CSX RR

PROJECT NO. U-0071

DURHAM COUNTY

STATION: POC 64+55.50 -L-

MILEPOST SB-152.5

STATE OF NORTH CAROLINA
DEPARTMENT OF TRANSPORTATION
RALEIGH

SUPERSTRUCTURE
DECK DETAILS AND SECTIONS

MI ENGINEERING
1011 SCHAUB DRIVE, SUITE 100
RALEIGH, NC 27606
(919) 851-6606
FIRM PE NUMBER : P-0671

NORTH CAROLINA PROFESSIONAL SEAL ENGINEER PAUL A. de PAOLI
06-09-14

DWG. NO. 5

REVISIONS								SHEET NO.
NO.	BY:	DATE:	NO.	BY:	DATE:			5-42
1			3					TOTAL SHEETS
2			4					671

DRAWN BY B.E. LANNING DATE MAY 2012
CHECKED BY P.A. de PAOLI DATE JUNE 2012
DESIGN ENGINEER OF RECORD P.A. de PAOLI DATE JUNE 2014

PLOT: 6/9/2014 2:28:21 PM blanning
FILE NAME: P:\NC Projects\M10088 - U-0071 Durham\U-0071\Structures\cover\u0071_std_details_02csx.dgn

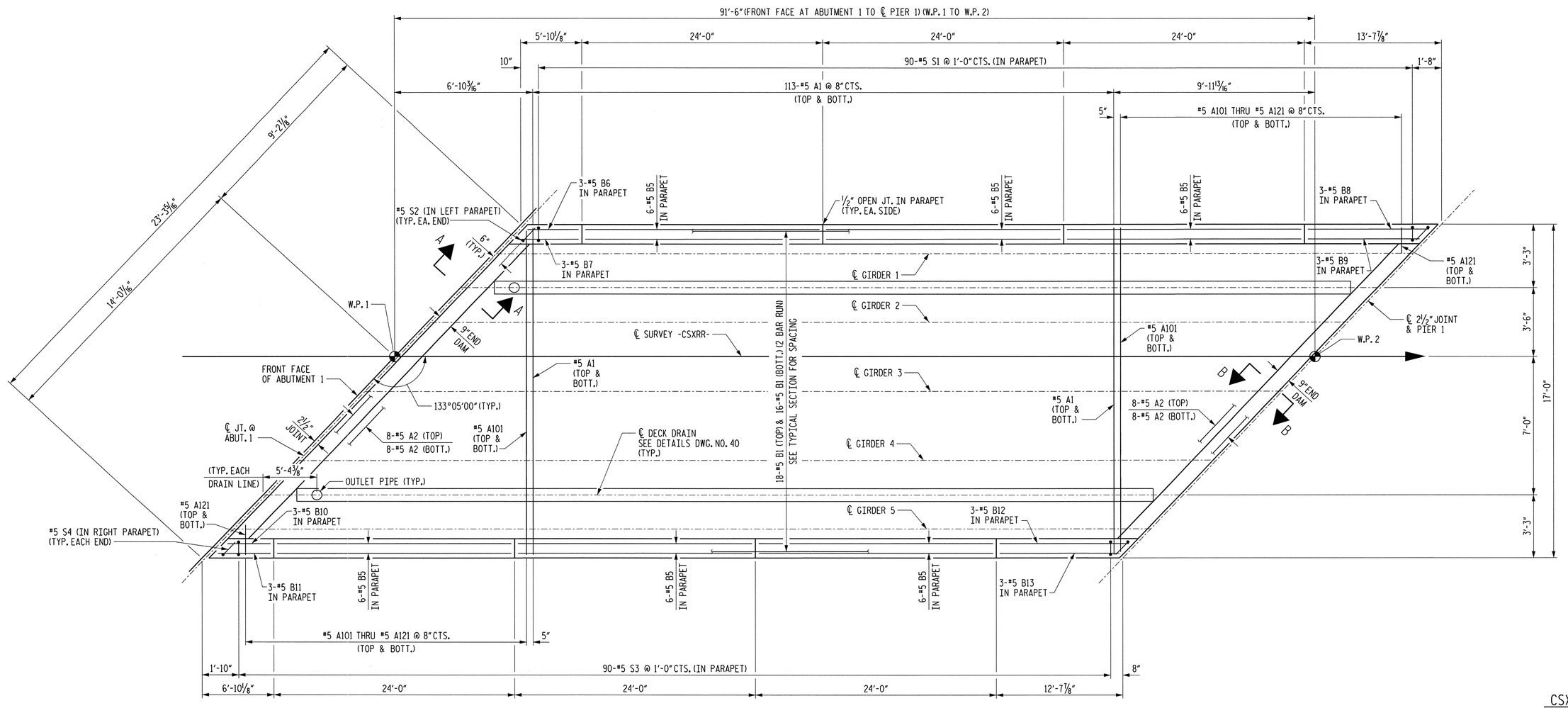

CSX RR

PLAN OF SPAN - SPAN "A"

PROJECT NO. U-0071

DURHAM COUNTY

STATION: POC 64+55.50 -L-

SHEET 1 OF 4 MILEPOST SB-152.5

NOTES

SHIFT REINFORCING STEEL TO AVOID DECK DRAINS.

FOR DECK DRAIN DETAILS, SEE DWG. NO. 40.

FOR SECTIONS A-A AND B-B, SEE DWG. NO. 5.

FOR PARAPET DETAILS, SEE DWG. NOS. 4 & 5.

STATE OF NORTH CAROLINA
DEPARTMENT OF TRANSPORTATION
RALEIGH

SUPERSTRUCTURE
PLAN OF SPAN
SPAN "A"

MI ENGINEERING
1011 SCHAUB DRIVE, SUITE 100
RALEIGH, NC 27606
(919) 851-6606
FIRM PE NUMBER : P-0671

NORTH CAROLINA PROFESSIONAL SEAL 027499 ENGINEER PAUL A. de PAOLI
04-09-14

DWG. NO. 6

REVISIONS						SHEET NO.
NO.	BY:	DATE:	NO.	BY:	DATE:	5-43
1			3			TOTAL SHEETS
2			4			671

DRAWN BY B.E. LANNING DATE JUNE 2012
CHECKED BY P.A. de PAOLI DATE JUNE 2012
DESIGN ENGINEER OF RECORD P.A. de PAOLI DATE JUNE 2014

PLOT: 6/9/2014 2:28:03 PM blanning
FILE NAME: P:\NC Projects\M10808 - U-0071 Durham\U-0071\Structures\csxrr\u0071_sd_ps-a_02csx.dgn

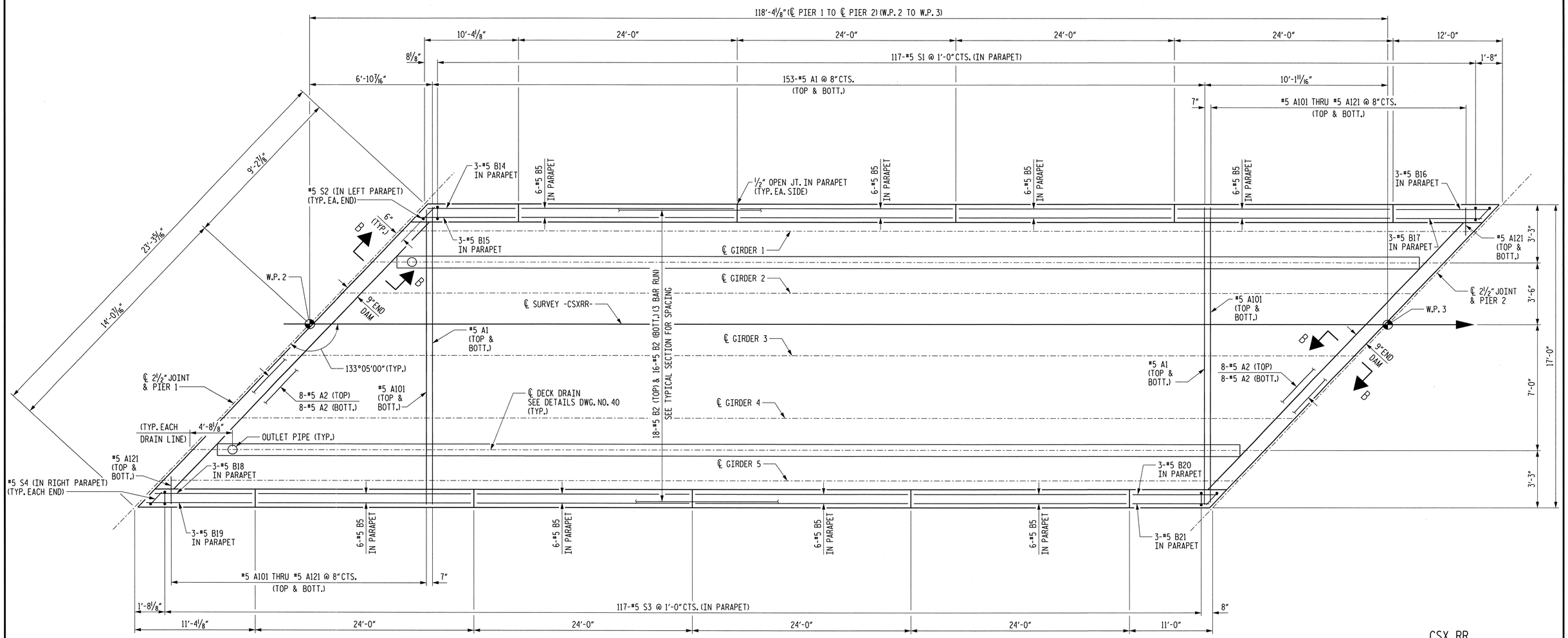

CSX RR

PLAN OF SPAN - SPAN "B"

PROJECT NO. U-0071

DURHAM COUNTY

STATION: POC 64+55.50 -L-

SHEET 2 OF 4 MILEPOST SB-152.5

NOTES

SHIFT REINFORCING STEEL TO AVOID DECK DRAINS.

FOR DECK DRAIN DETAILS, SEE DWG. NO. 40.

FOR SECTIONS A-A AND B-B, SEE DWG. NO. 5.

FOR PARAPET DETAILS, SEE DWG. NOS. 4 & 5.

STATE OF NORTH CAROLINA
DEPARTMENT OF TRANSPORTATION
RALEIGH

SUPERSTRUCTURE
PLAN OF SPAN
SPAN "B"

MI ENGINEERING
1011 SCHAUB DRIVE, SUITE 100
RALEIGH, NC 27606
(919) 851-6606
FIRM PE NUMBER : P-0671

NORTH CAROLINA PROFESSIONAL ENGINEER SEAL 027795 PAUL A. de PAOLI
06-09-14

DWG. NO. 7

REVISIONS						SHEET NO.
NO.	BY:	DATE:	NO.	BY:	DATE:	5-44
1			3			TOTAL SHEETS
2			4			671

DRAWN BY B.E. LANNING DATE JUNE 2012
CHECKED BY P.A. de PAOLI DATE JUNE 2012
DESIGN ENGINEER OF RECORD P.A. de PAOLI DATE JUNE 2014

PLOT: 6/9/2014 2:28:05 PM blanning
FILE NAME: P:\NC Projects\M10008 - U-0071 Durham\U-0071\Structures\csxrr\u0071_sd_ps-b_02csx.dgn

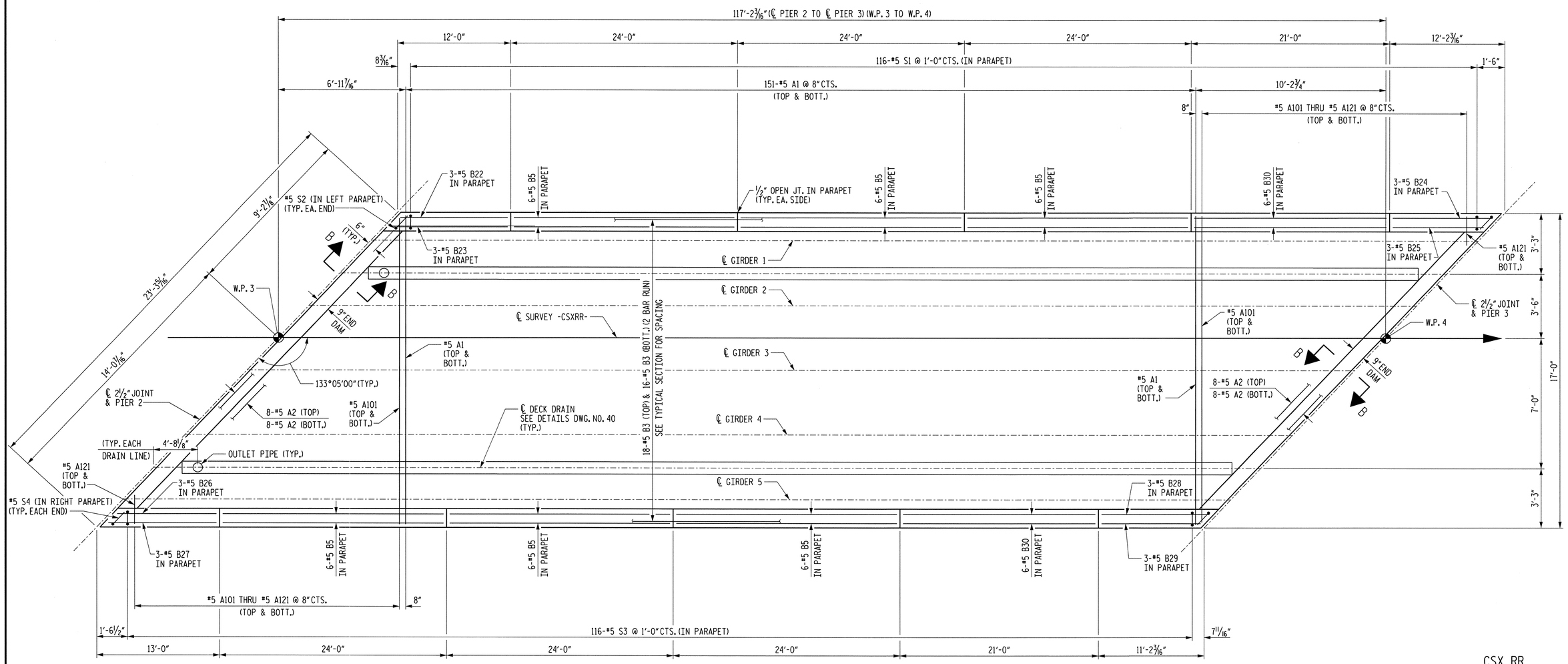

CSX RR

PLAN OF SPAN - SPAN "C"

PROJECT NO. U-0071

DURHAM COUNTY

STATION: POC 64+55.50 -L-

SHEET 3 OF 4 MILEPOST SB-152.5

NOTES

SHIFT REINFORCING STEEL TO AVOID DECK DRAINS.

FOR DECK DRAIN DETAILS, SEE DWG. NO. 40.

FOR SECTIONS A-A AND B-B, SEE DWG. NO. 5.

FOR PARAPET DETAILS, SEE DWG. NOS. 4 & 5.

STATE OF NORTH CAROLINA
DEPARTMENT OF TRANSPORTATION
RALEIGH

SUPERSTRUCTURE
PLAN OF SPAN
SPAN "C"

MI ENGINEERING
1011 SCHAUB DRIVE, SUITE 100
RALEIGH, NC 27606
(919) 851-6606
FIRM PE NUMBER : P-0671

NORTH CAROLINA PROFESSIONAL SEAL 027 ENGINEER PAUL A. de PAOLI
06.05.14

DWG. NO. 8

REVISIONS						SHEET NO.
NO.	BY:	DATE:	NO.	BY:	DATE:	5-45
1			3			TOTAL SHEETS
2			4			671

DRAWN BY B.E. LANNING DATE JUNE 2012
CHECKED BY P.A. de PAOLI DATE JUNE 2012
DESIGN ENGINEER OF RECORD P.A. de PAOLI DATE JUNE 2014

PLOT: 6/9/2014 2:28:07 PM blanning
FILE NAME: P:\NC Projects\M10008 - U-0071 Durham\U-0071\Structures\csxrr\u0071_sd_pa-c_02csx.dgn

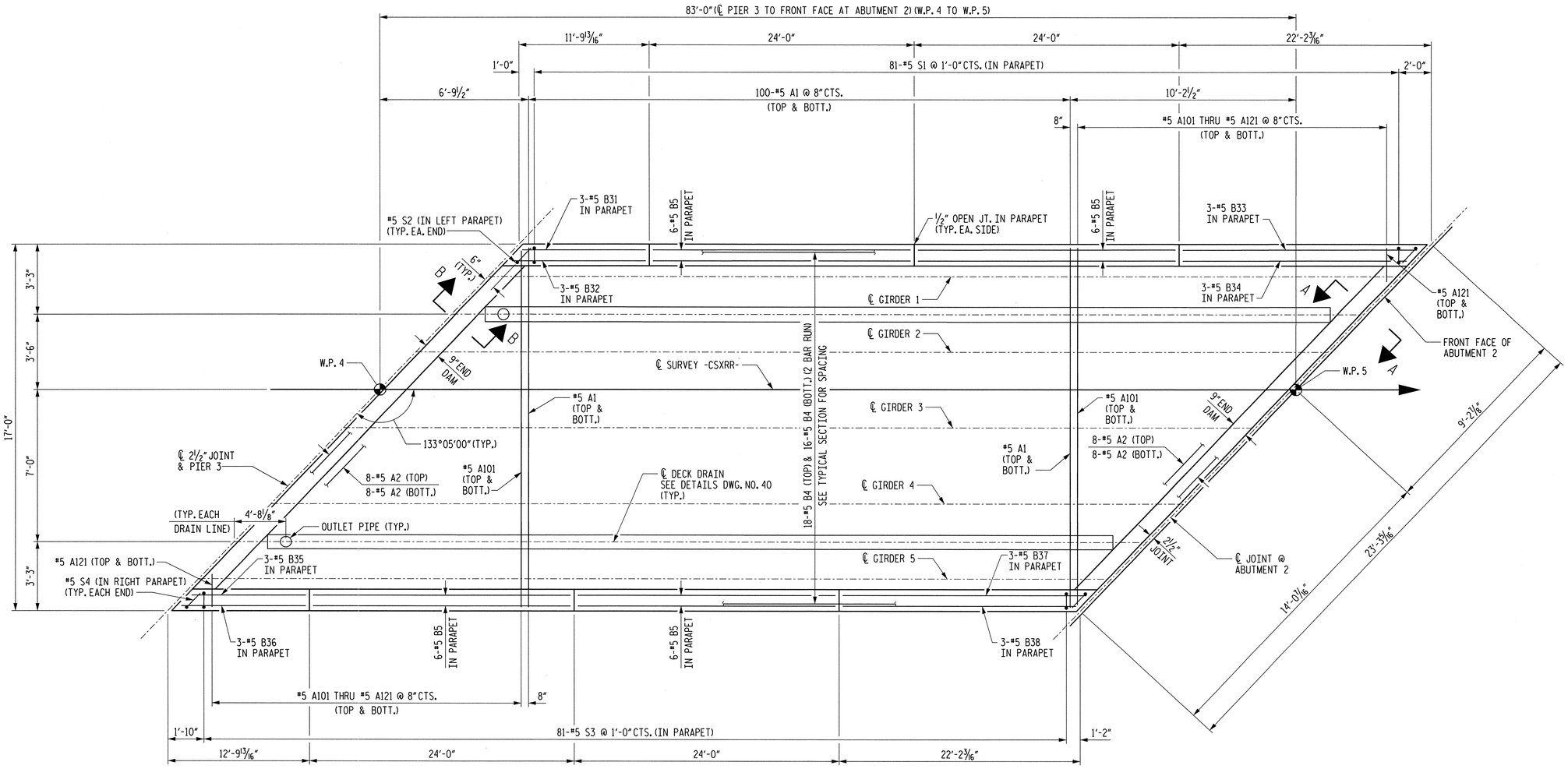

CSX RR

PLAN OF SPAN - SPAN "D"

PROJECT NO. U-0071

DURHAM COUNTY

STATION: POC 64+55.50 -L-

SHEET 4 OF 4 MILEPOST SB-152.5

NOTES

SHIFT REINFORCING STEEL TO AVOID DECK DRAINS.

FOR DECK DRAIN DETAILS, SEE DWG. NO. 40.

FOR SECTIONS A-A AND B-B, SEE DWG. NO. 5.

FOR PARAPET DETAILS, SEE DWG. NOS. 4 & 5.

STATE OF NORTH CAROLINA
DEPARTMENT OF TRANSPORTATION
RALEIGH

SUPERSTRUCTURE
PLAN OF SPAN
SPAN "D"

MI ENGINEERING
1011 SCHAUB DRIVE, SUITE 100
RALEIGH, NC 27606
(919) 851-6606
FIRM PE NUMBER : P-0671

NORTH CAROLINA PROFESSIONAL SEAL 023799 ENGINEER PAUL A. de PAOLI
06.09.14

DWG. NO. 9

REVISIONS						SHEET NO.
NO.	BY:	DATE:	NO.	BY:	DATE:	5-46
1			3			TOTAL SHEETS
2			4			671

DRAWN BY B.E. LANNING DATE JUNE 2012
CHECKED BY P.A. de PAOLI DATE JUNE 2012
DESIGN ENGINEER OF RECORD P.A. de PAOLI DATE JUNE 2014

PLOT: 6/9/2014 2:28:10 PM blanning
FILE NAME: P:\NC Projects\M10008 - U-0071 Durham\U-0071\Structures\csxrr\u0071_sd_pa-d_02csx.dgn

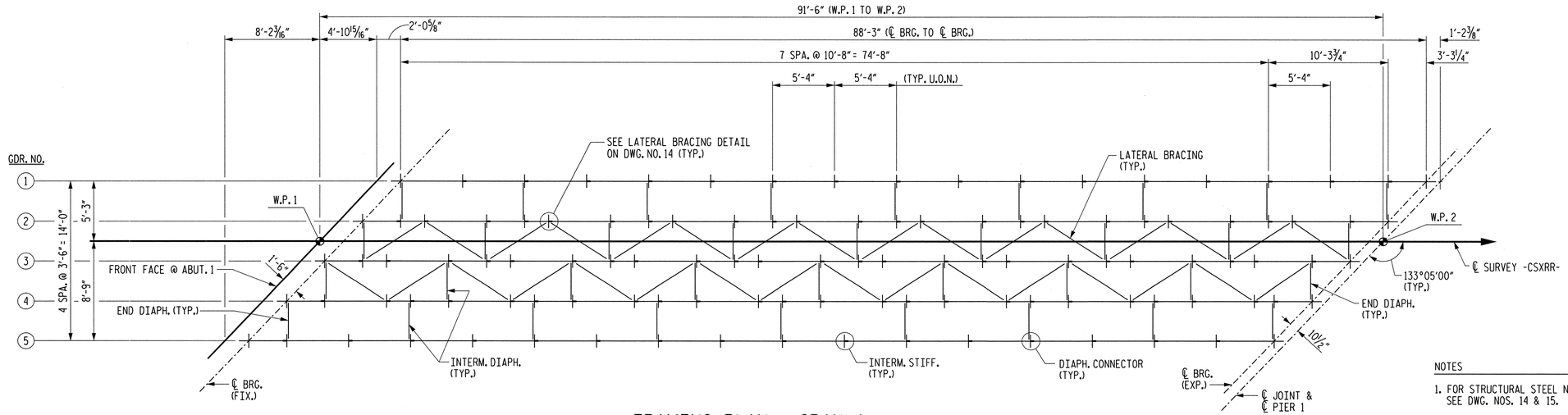

FRAMING PLAN - SPAN A

NOTES

1. FOR STRUCTURAL STEEL NOTES AND DETAILS, SEE DWG. NOS. 14 & 15.
2. "FCM" DENOTES FRACTURE CRITICAL MEMBER.

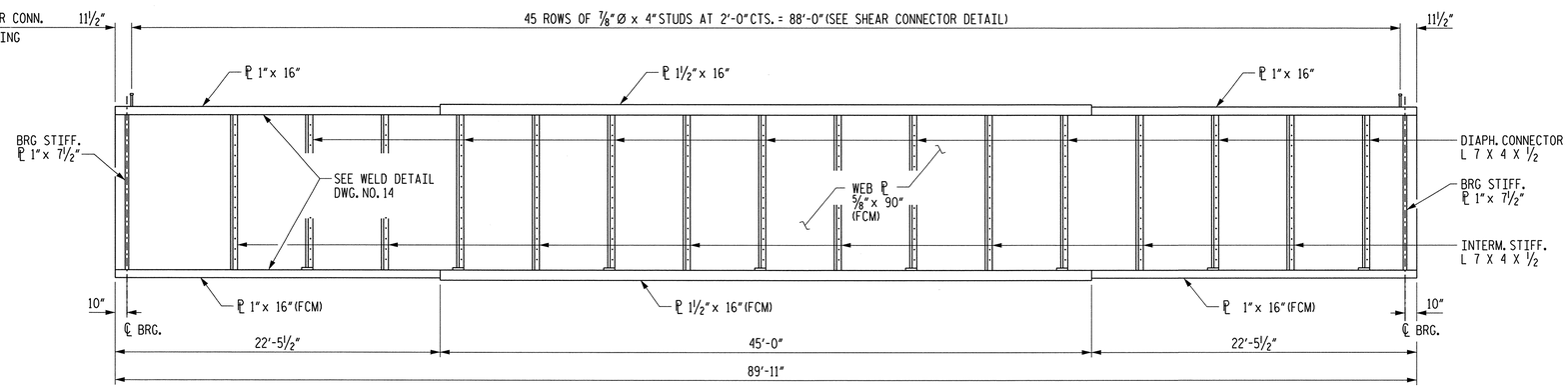

GIRDER ELEVATION - SPAN A

(GIRDER 1 SHOWN, OTHERS SIMILAR)

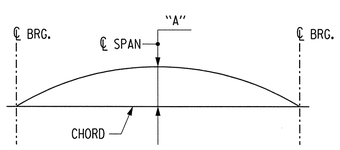

CAMBER DIAGRAM

CAMBER DUE TO:	
VERTICAL CURVE ORDINATE	0.000
GIRDERS, DIAPHRAGMS, ETC.	0.016
DECK	0.014
PARAPET AND RAILINGS	0.005
BALLAST, TIES AND RAILS	0.021
DIMENSION "A"	11/16"

DEFLECTIONS ARE SHOWN IN DECIMAL FEET.
DIMENSION "A" IS SHOWN IN INCHES.

DRAWN BY B.E. LANNING DATE JUNE 2012
CHECKED BY P.A. de PAOLI DATE JUNE 2012
DESIGN ENGINEER OF RECORD P.A. de PAOLI DATE JUNE 2014

MI ENGINEERING
1011 SCHAUB DRIVE, SUITE 100
RALEIGH, NC 27606
(919) 851-6606
FIRM PE NUMBER : P-0671

NORTH CAROLINA PROFESSIONAL SEAL ENGINEER PAUL A. de PAOLI 06-09-14

DWG. NO. 10

CSX RR

PROJECT NO. U-0071
DURHAM COUNTY
STATION: POC 64+55.50 -L-

SHEET 1 OF 4 MILEPOST SB-152.5

STATE OF NORTH CAROLINA
DEPARTMENT OF TRANSPORTATION
RALEIGH

SUPERSTRUCTURE
FRAMING PLAN
SPAN A

REVISIONS						SHEET NO.
NO.	BY:	DATE:	NO.	BY:	DATE:	5-47
1			3			TOTAL SHEETS
2			4			671

PLOT: 6/9/2014 2:28:11 PM blanning
FILE NAME: PLNC Projects\M10808 - U-0071 Durham\U-0071\Structures\csxr\u0071_sd_fpn_a02csx.dgn

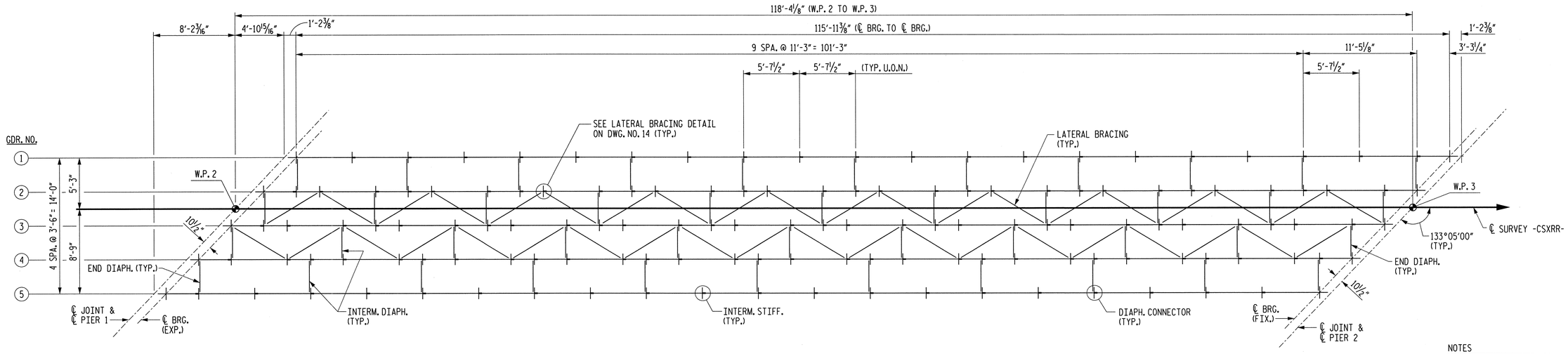

FRAMING PLAN - SPAN B

NOTES

1. FOR STRUCTURAL STEEL NOTES AND DETAILS, SEE DWG. NOS. 14 & 15.
2. "FCM" DENOTES FRACTURE CRITICAL MEMBER.

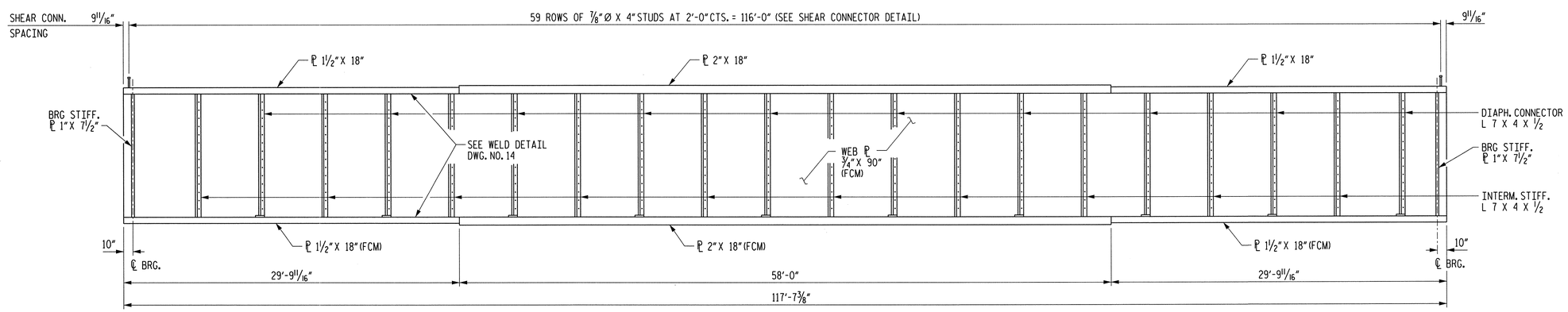

GIRDER ELEVATION - SPAN B

(GIRDER 1 SHOWN, OTHERS SIMILAR)

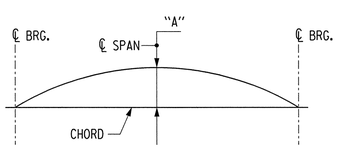

CAMBER DIAGRAM

CAMBER DUE TO:	
VERTICAL CURVE ORDINATE	0.000
GIRDERS, DIAPHRAGMS, ETC.	0.040
DECK	0.031
PARAPET AND RAILINGS	0.010
BALLAST, TIES AND RAILS	0.046
DIMENSION "A"	1 1/2"

DEFLECTIONS ARE SHOWN IN DECIMAL FEET.
DIMENSION "A" IS SHOWN IN INCHES.

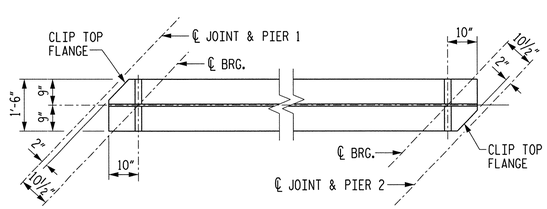

TOP FLANGE CLIP DETAIL

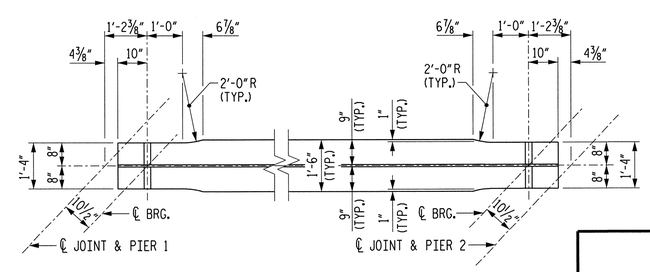

BOTTOM FLANGE DETAIL

CSX RR

PROJECT NO. U-0071

DURHAM COUNTY

STATION: POC 64+55.50 -L-

SHEET 2 OF 4 MILEPOST SB-152.5

STATE OF NORTH CAROLINA
DEPARTMENT OF TRANSPORTATION
RALEIGH

SUPERSTRUCTURE
FRAMING PLAN
SPAN B

MI ENGINEERING
1011 SCHAUB DRIVE, SUITE 100
RALEIGH, NC 27606
(919) 851-6606
FIRM PE NUMBER : P-0671

NORTH CAROLINA PROFESSIONAL SEAL 19890 ENGINEER PAUL A. de PAOLI
06-05-14

DWG. NO. 11

REVISIONS						SHEET NO.
NO.	BY:	DATE:	NO.	BY:	DATE:	5-48
1			3			TOTAL SHEETS
2			4			67

DRAWN BY B.E. LANNING DATE MAY 2012
CHECKED BY P.A. de PAOLI DATE MAY 2012
DESIGN ENGINEER OF RECORD P.A. de PAOLI DATE JUNE 2014

PLOT: 6/9/2014 2:28:13 PM bbanning
FILE NAME: P:\NC Projects\M100808 - U-0071 Durham\U-0071\Structures\cover\u0071_sd_fp-b_02cover.dgn

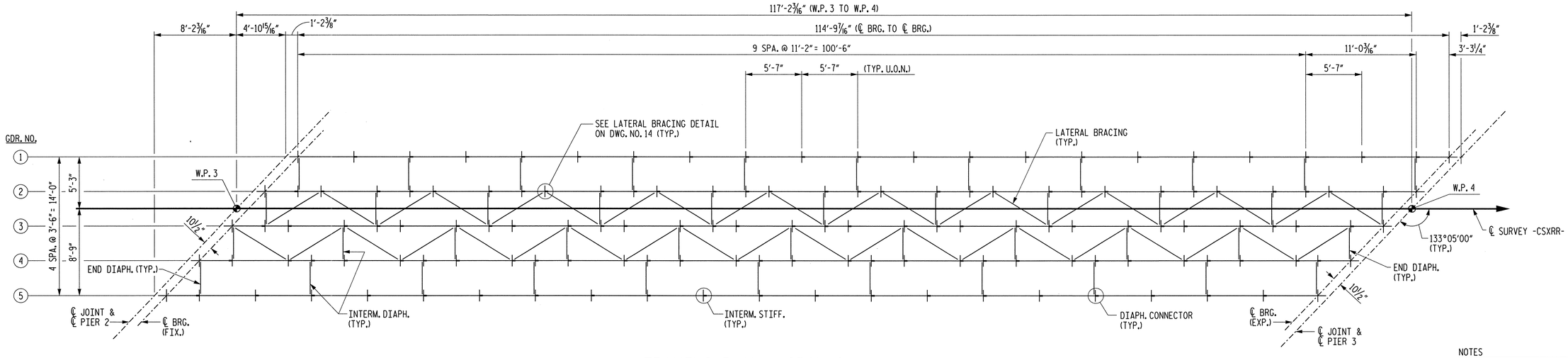

FRAMING PLAN - SPAN C

NOTES

1. FOR STRUCTURAL STEEL NOTES AND DETAILS, SEE DWG. NOS. 14 & 15.
2. "FCM" DENOTES FRACTURE CRITICAL MEMBER.

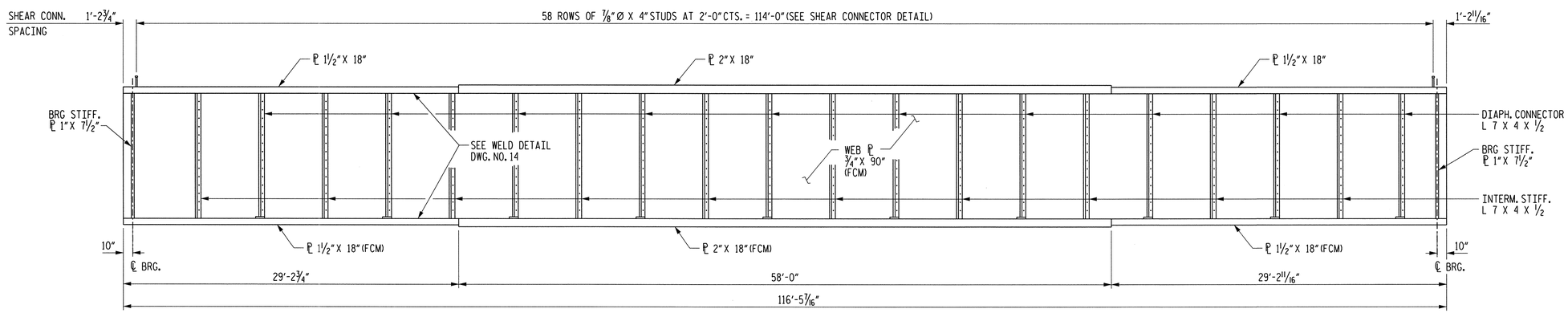

GIRDER ELEVATION - SPAN C

(GIRDER 1 SHOWN, OTHERS SIMILAR)

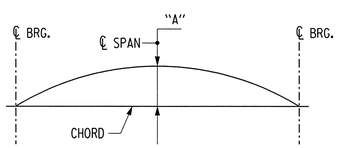

CAMBER DIAGRAM

CAMBER DUE TO:	
VERTICAL CURVE ORDINATE	0.047
GIRDERS, DIAPHRAGMS, ETC.	0.040
DECK	0.031
PARAPET AND RAILINGS	0.010
BALLAST, TIES AND RAILS	0.046
DIMENSION "A"	2 7/16"

DEFLECTIONS ARE SHOWN IN DECIMAL FEET.
DIMENSION "A" IS SHOWN IN INCHES.

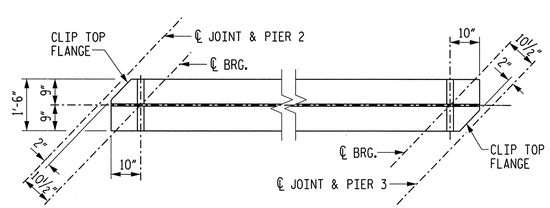

TOP FLANGE CLIP DETAIL

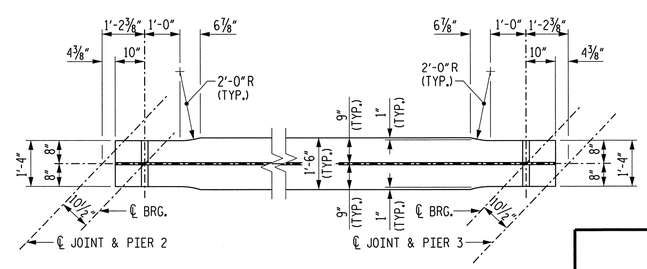

BOTTOM FLANGE DETAIL

CSX RR

PROJECT NO. U-0071

DURHAM COUNTY

STATION: POC 64+55.50 -L-

SHEET 3 OF 4 MILEPOST SB-152.5

STATE OF NORTH CAROLINA
DEPARTMENT OF TRANSPORTATION
RALEIGH

SUPERSTRUCTURE
FRAMING PLAN
SPAN C

MI ENGINEERING
1011 SCHAUB DRIVE, SUITE 100
RALEIGH, NC 27606
(919) 851-6606
FIRM PE NUMBER : P-0671

NORTH CAROLINA PROFESSIONAL SEAL 027199 ENGINEER PAUL A. de PAOLI
06-09-14

DWG. NO. 12

REVISIONS						
NO.	BY:	DATE:	NO.	BY:	DATE:	
1			3			
2			4			

SHEET NO. 5-49
TOTAL SHEETS 671

DRAWN BY B.E. LANNING DATE MAY 2012
CHECKED BY P.A. de PAOLI DATE MAY 2012
DESIGN ENGINEER OF RECORD P.A. de PAOLI DATE JUNE 2014

PLOT: 6/9/2014 2:26:15 PM bleanning
FILE NAME: P:\NC Projects\M10808 - U-0071 Durham\U-0071\Structures\user\u0071_sd_fr_c_02sx.dgn

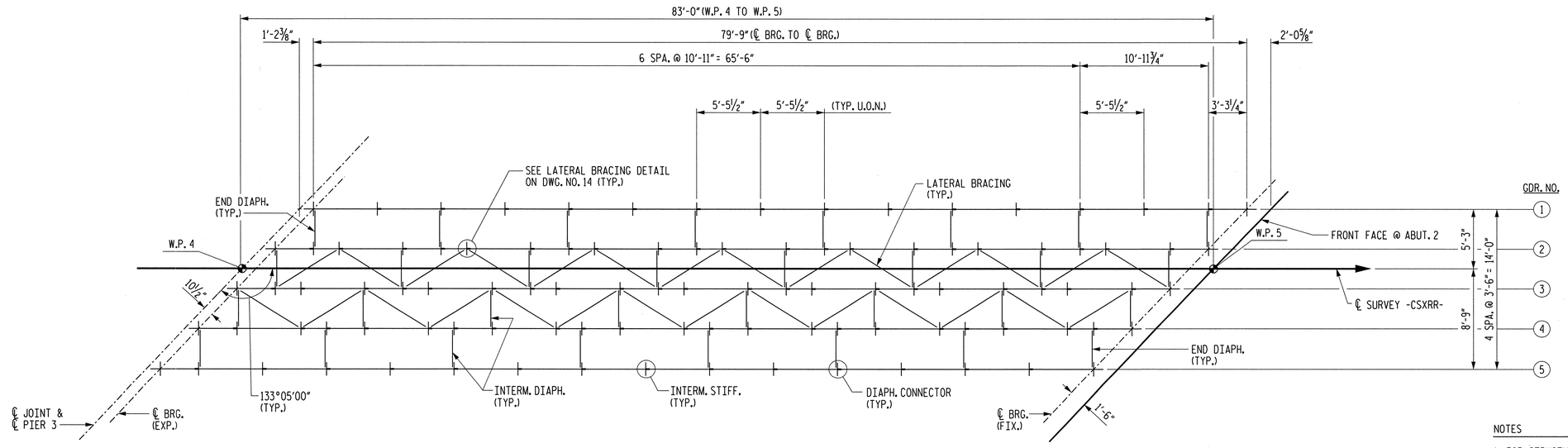

NOTES

1. FOR STRUCTURAL STEEL NOTES AND DETAILS, SEE DWG. NOS. 14 & 15.
2. "FCM" DENOTES FRACTURE CRITICAL MEMBER.

FRAMING PLAN - SPAN D

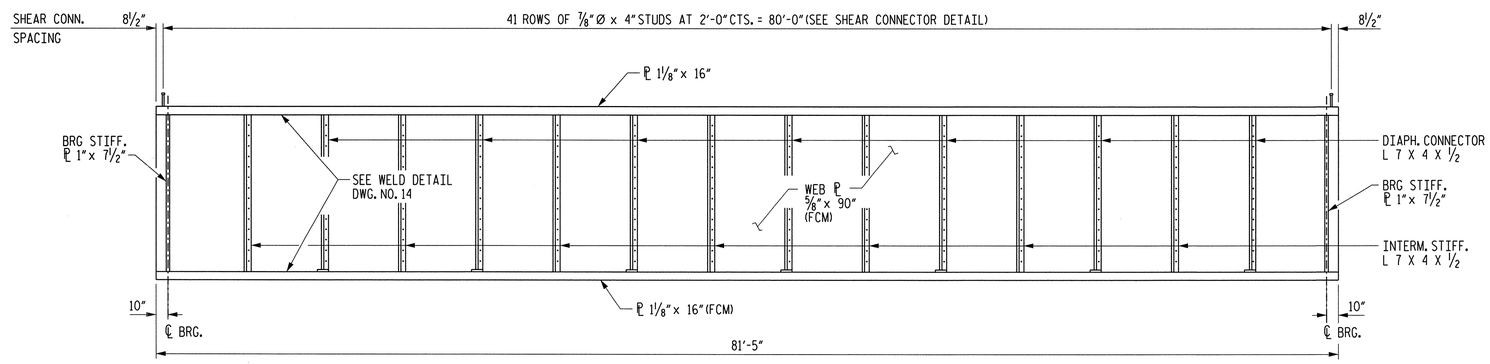

GIRDER ELEVATION - SPAN D

(GIRDER 1 SHOWN, OTHERS SIMILAR)

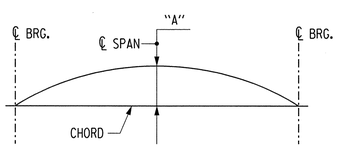

CAMBER DIAGRAM

CAMBER DUE TO:	
VERTICAL CURVE ORDINATE	0.023
GIRDERS, DIAPHRAGMS, ETC.	0.017
DECK	0.012
PARAPET AND RAILINGS	0.004
BALLAST, TIES AND RAILS	0.016
DIMENSION "A"	13/16"

DEFLECTIONS ARE SHOWN IN DECIMAL FEET.
DIMENSION "A" IS SHOWN IN INCHES.

CSX RR

PROJECT NO. U-0071

DURHAM COUNTY

STATION: POC 64+55.50 -L-

SHEET 4 OF 4 MILEPOST SB-152.5

STATE OF NORTH CAROLINA
DEPARTMENT OF TRANSPORTATION
RALEIGH

SUPERSTRUCTURE
FRAMING PLAN
SPAN D

MI ENGINEERING
1011 SCHAUB DRIVE, SUITE 100
RALEIGH, NC 27606
(919) 851-6606
FIRM PE NUMBER : P-0671

NORTH CAROLINA PROFESSIONAL ENGINEER SEAL 037799 PAUL A. de PAOLI
06.09.14

DWG. NO. 13

REVISIONS						SHEET NO.
NO.	BY:	DATE:	NO.	BY:	DATE:	S-50
1			3			TOTAL SHEETS
2			4			671

DRAWN BY B.E. LANNING DATE JUNE 2012
CHECKED BY P.A. de PAOLI DATE JUNE 2012
DESIGN ENGINEER OF RECORD P.A. de PAOLI DATE JUNE 2014

PLOT: 6/9/2014 2:29:58 PM blanning
FILE NAME: P:\NC Projects\MI0008 - U-0071 Durham\U-0071\Structures\csxrr\u0071_sd_fp-d_02csx.dgn

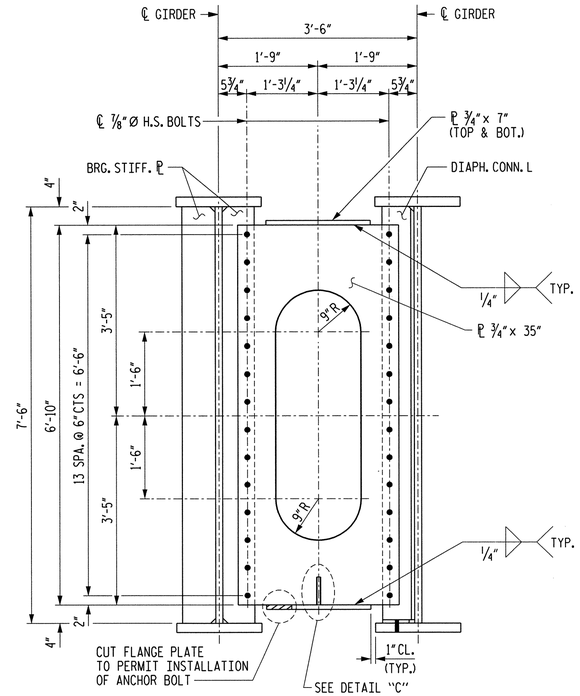

SECTION @ END DIAPHRAGM

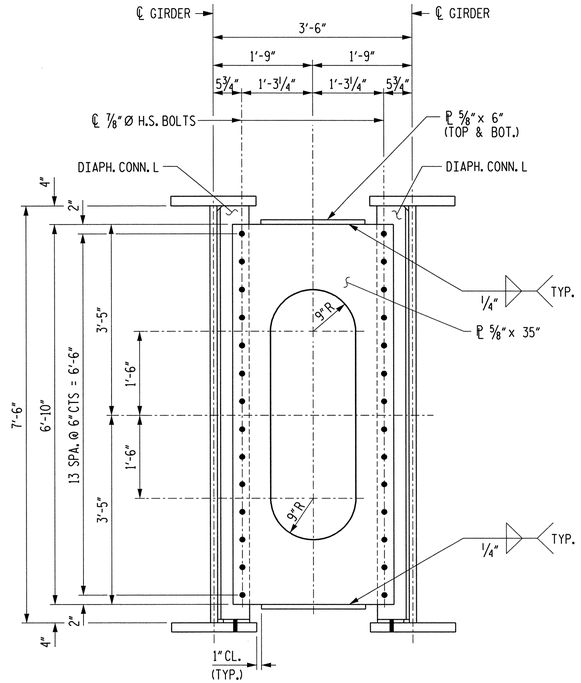

SECTION @ INTERMEDIATE DIAPHRAGM

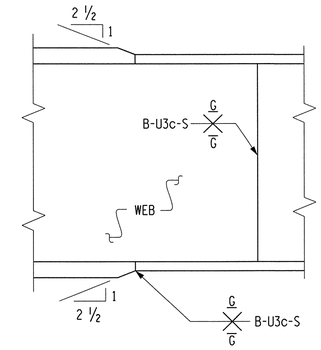

SHOP SPLICE DETAILS

NOTE:
1. ELECTROSLAG WELDING IS NOT PERMITTED.
2. ULTRASONIC OR RADIOGRAPHIC INSPECTION IS REQUIRED FOR ALL FLANGE WELDS. SEE SPECIAL PROVISIONS.
3. GRIND WELDS IN DIRECTION OF STRESS ONLY (I.E. - PARALLEL TO ℄ GIRDER)
4. BOTTOM FLANGE AND WEB SPLICE WELDS ARE FRACTURE CRITICAL.

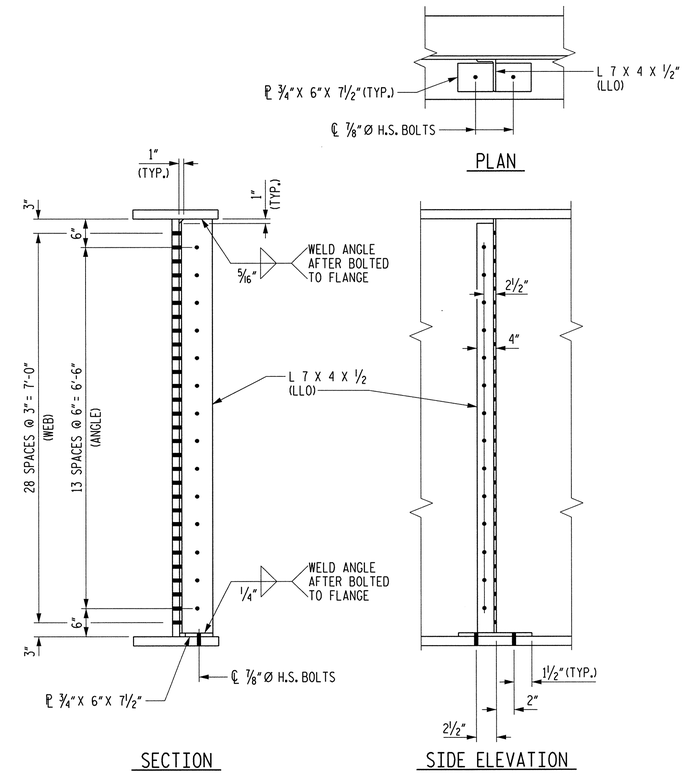

INTERMEDIATE DIAPHRAGM CONNECTOR DETAIL

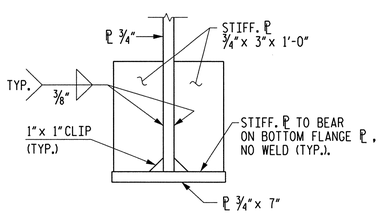

DETAIL "C"

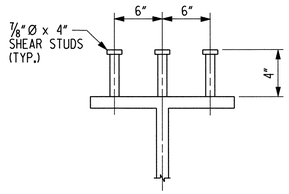

SHEAR CONNECTOR DETAIL

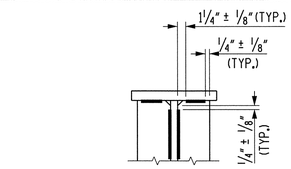

WELD TERMINATION DETAIL

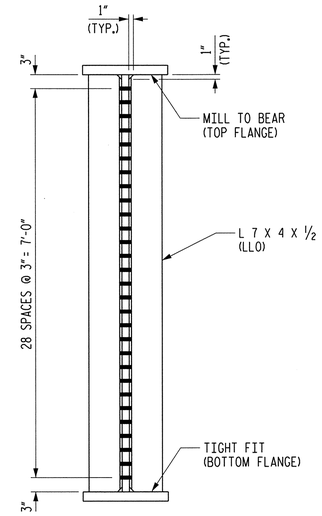

INTERMEDIATE STIFFENER DETAIL

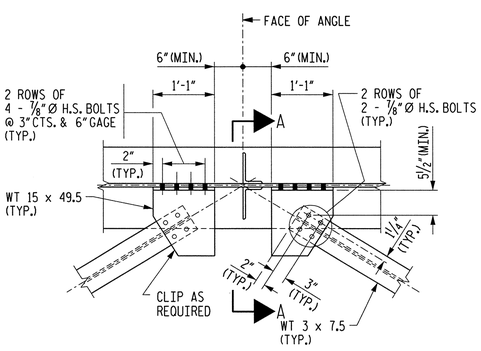

LATERAL BRACING DETAILS

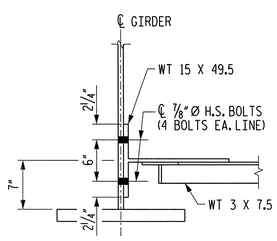

SECTION A-A

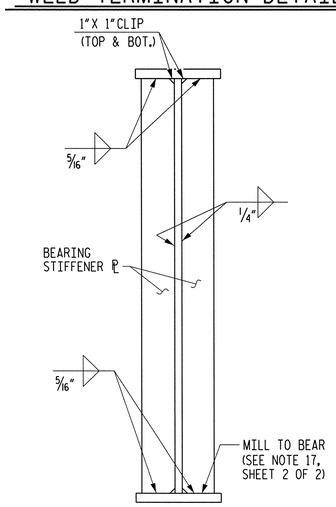

BEARING STIFFENER DETAIL

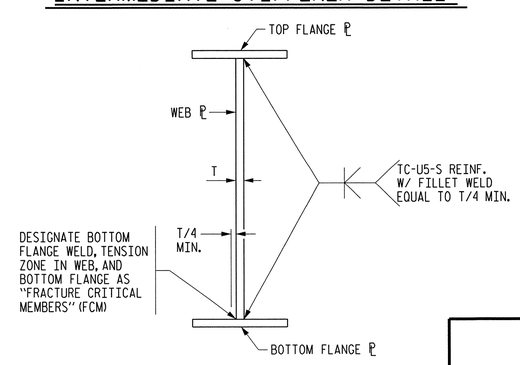

FLANGE TO WEB WELD

FOR NOTES, SEE SHEET 2 OF 2.

CSX RR

PROJECT NO. U-0071

DURHAM COUNTY

STATION: POC 64+55.50 -L-

SHEET 1 OF 2 MILEPOST SB-152.5

STATE OF NORTH CAROLINA
DEPARTMENT OF TRANSPORTATION
RALEIGH

SUPERSTRUCTURE
STRUCTURAL STEEL
DETAILS

MI ENGINEERING
1011 SCHAUB DRIVE, SUITE 100
RALEIGH, NC 27606
(919) 851-6606
FIRM PE NUMBER : P-0671

NORTH CAROLINA PROFESSIONAL SEAL 025795 ENGINEER PAUL A. de PAOLI
06-17-14

DWG. NO. 14

REVISIONS						SHEET NO.
NO.	BY:	DATE:	NO.	BY:	DATE:	5-51
1			3			TOTAL SHEETS
2			4			671

DRAWN BY	B.E. LANNING	DATE	JUNE 2012
CHECKED BY	P.A. de PAOLI	DATE	JUNE 2012
DESIGN ENGINEER OF RECORD	P.A. de PAOLI	DATE	JUNE 2014

PLOT: 6/17/2014 12:22:18 PM blanning
FILE NAME: P:\MC Projects\M10028 - U-0071 Durham\U-0071\Structures\sesr\u0071_sd-sa11_02csx.dgn

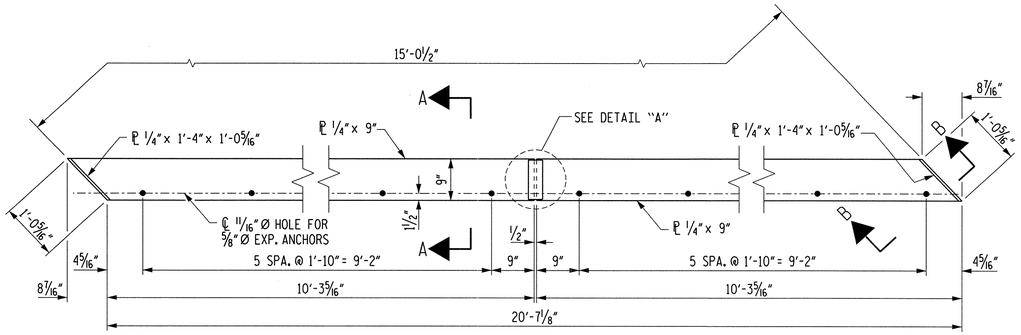

EXPANSION PLATE ASSEMBLY

(TYPICAL AT EACH PIER AND ABUTMENT)

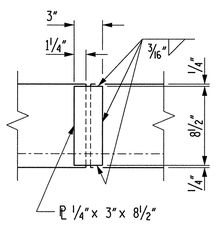

DETAIL "A"

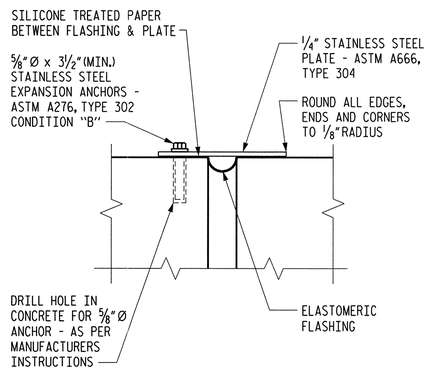

SECTION A-A

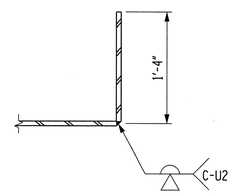

SECTION B-B

NOTES

1. STRUCTURAL STEEL SPECIFICATIONS: CSX TRANSPORTATION SPECIFICATIONS FOR STRUCTURAL STEEL AND CURRENT AREMA.

2. STRUCTURAL STEEL SHALL CONFORM TO THE FOLLOWING ASTM SPECIFICATIONS:

   BOTTOM FLANGES AND WEBS OF MAIN GIRDERS:
   ASTM A709, GRADE 50, WITH SUPPLEMENTALS S84-F2, S91 AND S93, AND SHALL MEET CHARPY V-NOTCH IMPACT TEST REQUIREMENT OF 25 FT-LB @ 40 DEG F AS GOVERNED BY ASTM A673 FOR TEST FREQUENCY "P".

   TOP FLANGES OF MAIN GIRDERS:
   ASTM A709, GRADE 50, WITH SUPPLEMENTALS S83-T2 AND S91, AND SHALL MEET CHARPY V-NOTCH IMPACT TEST REQUIREMENT OF 15 FT-LB @ 40 DEG F AS GOVERNED BY ASTM A673 FOR TEST FREQUENCY "H".

   BRIDGE BEARINGS: ASTM A709, GRADE 36.

   BRONZE PLATES: ASTM B22, ALLOY C91100. BRONZE PLATES SHALL BE SELF-LUBRICATING.

   MISCELLANEOUS MATERIAL: ASTM A709, GRADE 36.

   EXPANSION PLATES: ASTM A666, TYPE 304, GRADE A STAINLESS STEEL.

   HIGH STRENGTH BOLTS: ASTM A325, TYPE 3 UNLESS NOTED OTHERWISE.
   HIGH STRENGTH NUTS: ASTM A563, GRADE DH
   HARDENED WASHERS: ASTM F436, TYPE 1
   ALL HIGH STRENGTH BOLTS, NUTS AND WASHERS SHALL BE MECHANICALLY GALVANIZED IN ACCORDANCE WITH ASTM B695.

   SHEAR CONNECTORS: ASTM A108.

   ANCHOR BOLTS FOR BEARING DEVICES SHALL CONFORM TO ASTM F1554, GRADE 36. ANCHOR BOLTS, NUTS AND PLATE WASHERS SHALL BE MECHANICALLY GALVANIZED IN ACCORDANCE WITH ASTM B695.

   WELDING ELECTRODES SHALL BE E70XX, LOW HYDROGEN.

3. GIRDER BOTTOM FLANGE AND WEB PLATES INCLUDING BOTTOM FLANGE-WEB WELD ARE DESIGNATED FRACTURE CRITICAL MEMBERS (FCM). CHARPY V-NOTCH TESTING FOR FCM MEMBERS SHALL BE IN ACCORDANCE WITH AREMA 15.1.14, ZONE 2 (MIN).

4. WEB SHOP SPLICES ARE PERMITTED TO LIMIT THE MAXIMUM REQUIRED WEB PIECE LENGTH TO 45 FEET. PERMITTED WEB SHOP SPLICES SHALL NOT BE LOCATED WITHIN 15 FEET OF MAXIMUM DEAD LOAD DEFLECTION AND SHALL BE LOCATED SIX (6) INCHES MINIMUM FROM CONNECTOR PLATE OR INTERMEDIATE STIFFENERS. FLANGE SHOP SPLICES SHALL NOT BE PERMITTED UNLESS NOTED.

5. ALL WELDING SHALL BE IN ACCORDANCE WITH AASHTO/AWS D1.5M/D1.5:2010. ELECTROSLAG WELDING IS NOT PERMITTED.

6. MILL TEST REPORTS: CSX TRANSPORTATION SHALL BE FURNISHED COPIES OF MILL TEST REPORTS FOR ALL MATERIALS EXCEPT MISCELLANEOUS PLATES AND SHAPES. REPORTS SHALL INDICATE COMPLIANCE WITH ALL SPECIFIED REQUIREMENTS.

7. INSPECTION: SHOP INSPECTION BY CSX TRANSPORTATION OR ITS AUTHORIZED AGENT. SEE SPECIAL PROVISIONS FOR ADDITIONAL WELDING INSPECTION OF FLANGE PLATES TO WEB PLATE WELDS.

8. HIGH STRENGTH BOLTED CONNECTIONS SHALL BE TIGHTENED USING THE TURN OF THE NUT METHOD. DIRECT TENSION INDICATORS SHALL NOT BE USED.

9. SHOP DRAWINGS: SHOP DRAWINGS SHALL BE SUBMITTED TO CSX TRANSPORTATION FOR APPROVAL. SHOP DRAWINGS SHALL BE LABELED "CSX MP SB-152.5". SHOP DRAWINGS SHALL BE SENT TO:

   CSX TRANSPORTATION
   500 WATER STREET (J-301)
   JACKSONVILLE, FLORIDA 32202

10. PAINTING STRUCTURAL STEEL: FOR INORGANIC ZINC ACRYLIC PAINT SYSTEM FOR STRUCTURAL STEEL, SEE SPECIAL PROVISIONS. ALL STRUCTURAL STEEL WITH THE EXCEPTION OF THE SWEDGED ANCHOR BOLTS, BEARING PINS, MACHINED SURFACES AND FAYING SURFACES SHALL BE PAINTED.

11. ANCHOR BOLTS SHALL BE GROUTED IN FORMED HOLES AFTER GIRDERS ARE ERECTED.

12. ALL PLAN DIMENSIONS SHOWN ARE HORIZONTAL OR VERTICAL UNLESS OTHERWISE NOTED.

13. FOR CAMBER REQUIREMENTS, SEE FRAMING PLANS.

14. CAMBERED GIRDER LENGTHS SHALL BE ADJUSTED AND BEARINGS PLACED ON CAMBERED GIRDERS SO AS TO BE ALIGNED WITH THE ANCHORS AFTER DEAD LOAD DEFLECTION HAS OCCURRED. SHOP PLANS SHALL BE PREPARED ACCORDINGLY.

15. ENDS OF GIRDERS, BEARING STIFFENERS AND DIAPHRAGM CONNECTION PLATES SHALL BE VERTICAL AFTER DEAD LOAD DEFLECTION HAS TAKEN PLACE.

16. FOR PROTECTION OF PAINTED STEEL, SEE SPECIAL PROVISIONS.

17. THE CONTRACTOR SHALL SUBMIT A PROCEDURE TO INJECT OR CAULK ANY GAPS FOUND AT THE EDGE OF THE WELDS AND STIFFENER PLATES AFTER THE AREA IS CLEANED AND PRIOR TO PAINTING.

CSX RR

PROJECT NO. U-0071

DURHAM COUNTY

STATION: POC 64+55.50 -L-

SHEET 2 OF 2 MILEPOST SB-152.5

STATE OF NORTH CAROLINA
DEPARTMENT OF TRANSPORTATION
RALEIGH

SUPERSTRUCTURE
STRUCTURAL STEEL
DETAILS

DRAWN BY B.E. LANNING	DATE JUNE 2012	
CHECKED BY P.A. de PAOLI	DATE JUNE 2012	
DESIGN ENGINEER OF RECORD P.A. de PAOLI	DATE JUNE 2014	

MI ENGINEERING
1011 SCHAUB DRIVE, SUITE 100
RALEIGH, NC 27606
(919) 851-6606
FIRM PE NUMBER : P-0671

NORTH CAROLINA PROFESSIONAL SEAL 027799 ENGINEER PAUL A. de PAOLI
06.17.14

DWG. NO. 15

REVISIONS						SHEET NO.
NO.	BY:	DATE:	NO.	BY:	DATE:	5-52
1			3			TOTAL SHEETS
2			4			671

PLOT: 6/17/2014 12:22:47 PM bbanning
FILE NAME: P:\MI PROJECTS\MI0606 - U-0071 Durham\U-0071\Structures\sxrr\u0071_sd_sd2_02csx.dgn

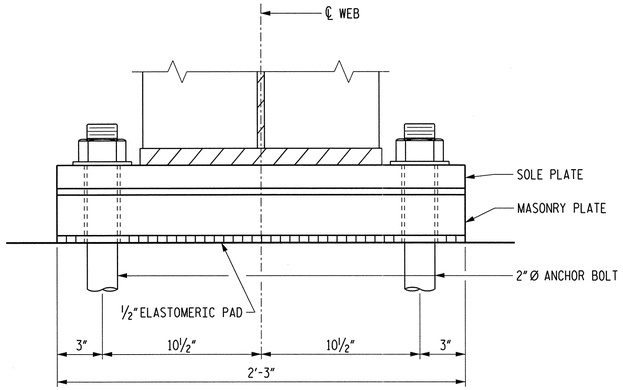

SECTION A-A

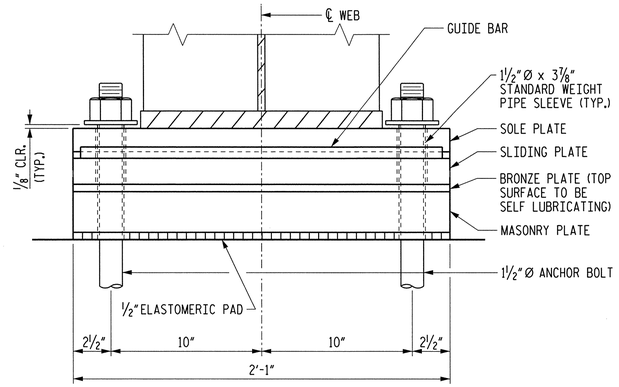

SECTION B-B

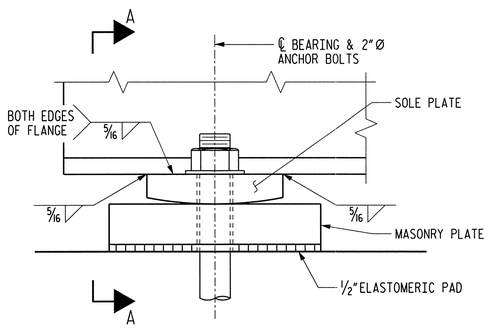

ELEVATION

FIXED BEARING ASSEMBLY

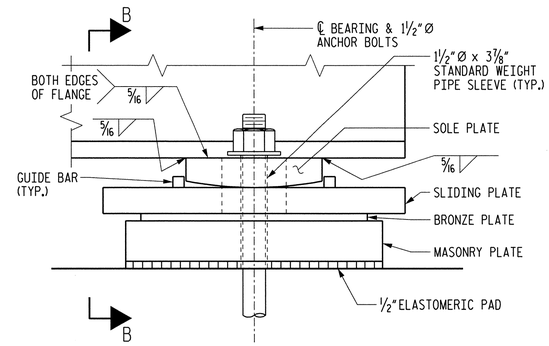

ELEVATION

EXPANSION BEARING ASSEMBLY

NOTES

AT ALL BEARINGS, NUTS FOR ANCHOR BOLTS ARE TO BE TIGHTENED FINGER TIGHT AND GIVEN AN ADDITIONAL ¼ TURN. THE THREAD OF THE BOLT SHALL THEN BE BURRED WITH A SHARP POINTED TOOL.

BEARING MATERIALS AND FABRICATION SHALL MEET THE REQUIREMENTS OF CSX TRANSPORTATION AND CURRENT AREMA.

PIPE SLEEVES ARE TO BE GALVANIZED STANDARD WEIGHT STEEL PIPE.

THE CONTACT SURFACES OF BEARING ASSEMBLIES SHALL HAVE A SURFACE FINISH IN ACCORDANCE WITH AREMA 15.11.2.1.

STEEL PLATES IN CONTACT WITH BRONZE BEARING PLATES SHALL BE FABRICATED AND ERECTED IN ACCORDANCE WITH THE SPECIFICATIONS AND CRITERIA SET FORTH IN AREMA 15.11.3. ANY SURFACE OF A GALVANIZED STEEL COMPONENT IN CONTACT WITH A BRONZE BEARING PLATE SHALL BE COATED WITH A PROTECTIVE COATING IN ACCORDANCE WITH AREMA.

ELASTOMERIC BEARING PADS SHALL BE PREFORMED FABRIC BEARING PADS, ½" THICK, AND SHALL BE SHOCK PAD STYLE NO. 15175 AS MANUFACTURED BY ALERT MANUFACTURING AND SUPPLY COMPANY, CHICAGO, IL; OR FABREEKA PADS, AS MANUFACTURED BY THE FABREEKA PRODUCT COMPANY, BOSTON, MA; OR SORBTEX PADS AS MANUFACTURED BY VOSS ENGINEERING, INC., CHICAGO, IL; OR APPROVED EQUAL.

AT THE CONTRACTOR'S OPTION, A FILL PLATE MAY BE USED IN COMBINATION WITH THE MASONRY PLATE TO OBTAIN THE REQUIRED PLATE THICKNESS SHOWN IN THE TABLE. IF A FILL PLATE IS USED, THE MINIMUM MASONRY PLATE THICKNESS SHALL BE:

SPANS "A" & "D" - 2¾" AT ALL BEARINGS
SPANS "B" & "C" - 1½" AT FIXED BEARINGS
SPANS "B" & "C" - 3" AT EXPANSION BEARINGS

FOR STRUCTURAL STEEL NOTES, SEE "SUPERSTRUCTURE STRUCTURAL STEEL DETAILS, SHEET 2 OF 2".

MASONRY PLATE THICKNESS

GIRDER	SPAN "A"		SPAN "D"	
	FIXED	EXP.	FIXED	EXP.
1	3⅛"	3⅛"	3⅛"	3½"
2	2¾"	2¾"	3 1/16"	3 5/16"
3	3½"	3½"	2 15/16"	3⅛"
4	3⅛"	3⅛"	2⅞"	2 15/16"
5	2¾"	2¾"	2¾"	2¾"

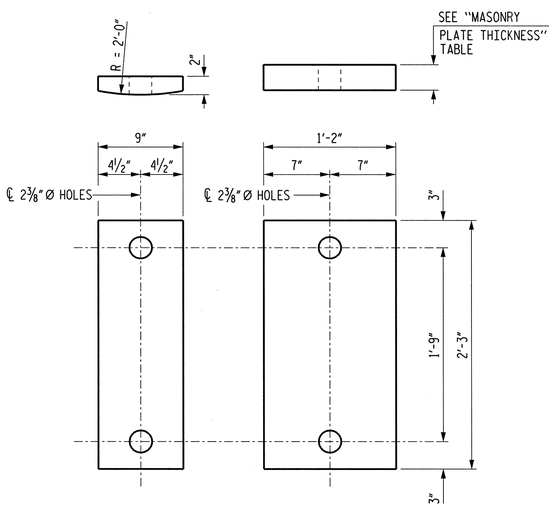

FIXED BEARING DETAILS
(10 REQUIRED)

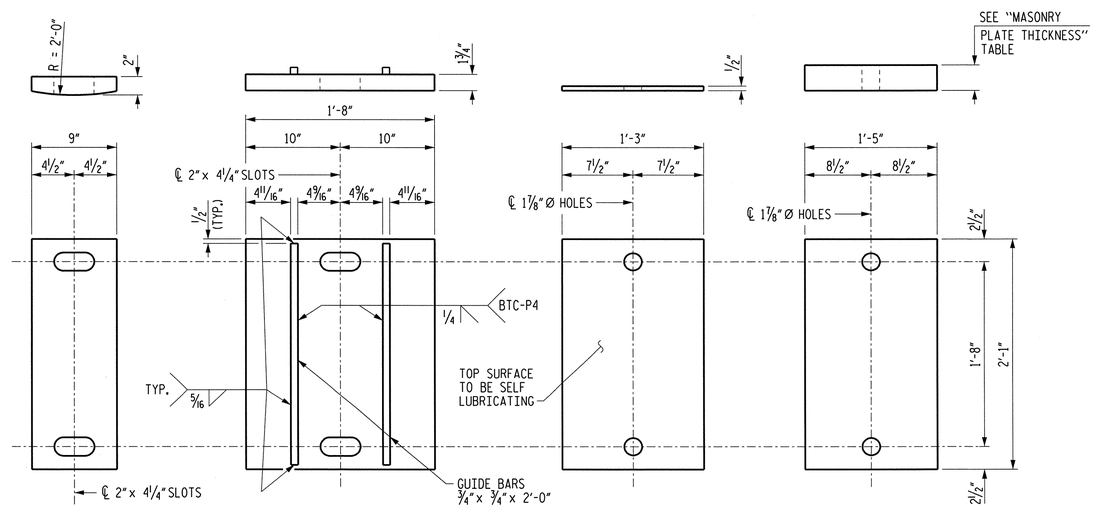

EXPANSION BEARING DETAILS
(10 REQUIRED)

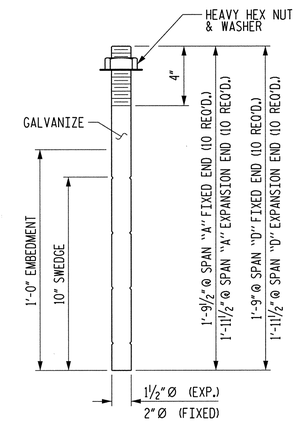

ANCHOR BOLT DETAIL

CSX RR

PROJECT NO. U-0071

DURHAM COUNTY

STATION: POC 64+55.50 -L-

SHEET 1 OF 2

MILEPOST SB-152.5

STATE OF NORTH CAROLINA
DEPARTMENT OF TRANSPORTATION
RALEIGH

SUPERSTRUCTURE
BEARING DETAILS
SPANS "A" & "D"

SPANS "A" AND "D" BEARINGS

DRAWN BY B.E. LANNING DATE JUNE 2011
CHECKED BY P.A. de PAOLI DATE JUNE 2011
DESIGN ENGINEER OF RECORD P.A. de PAOLI DATE JUNE 2014

MI ENGINEERING
1011 SCHAUB DRIVE, SUITE 100
RALEIGH, NC 27606
(919) 851-6606
FIRM PE NUMBER : P-0671

NORTH CAROLINA PROFESSIONAL SEAL ENGINEER PAUL A. de PAOLI
06.06.14

DWG. NO. 16

REVISIONS							SHEET NO.
NO.	BY:	DATE:	NO.	BY:	DATE:		5-53
1			3				TOTAL SHEETS
2			4				671

PLOT: 6/9/2014 2:38:04 PM blanning
FILE NAME: P:\NC Projects\M08080 - U-0071 Durham\U-0071\Structures\sssn\u0071_std_brgl_02sss.dgn

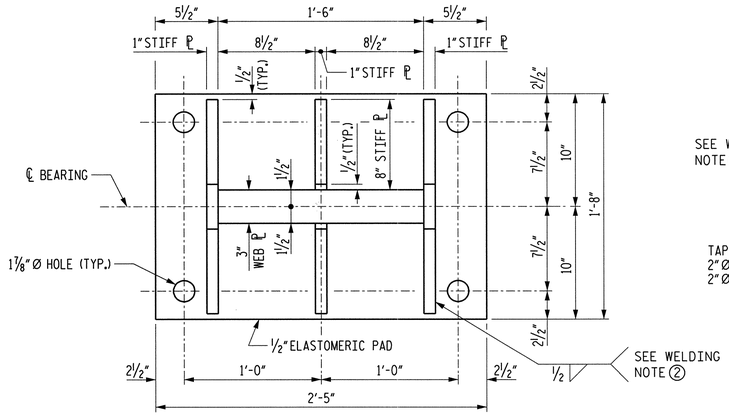

MASONRY PLATE AND ELASTOMERIC PAD

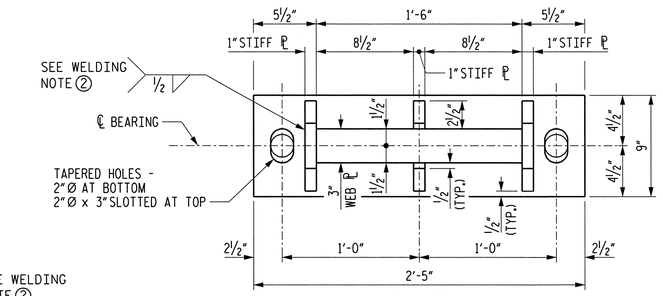

ROCKER

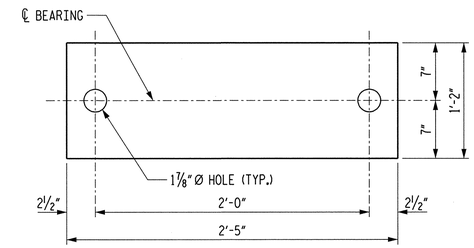

MASONRY PLATE & ELASTOMERIC PAD

NOTES

FOR NOTES, SEE SUPERSTRUCTURE BEARING DETAILS, SHEET 1 OF 2.

MASONRY PLATE THICKNESS "A"				
GIRDER	SPAN "B"		SPAN "C"	
	FIXED	EXP.	FIXED	EXP.
1	1 13/16"	3⅜"	2 1/16"	3¾"
2	1½"	3"	1¾"	3⅝"
3	2 3/16"	3¾"	2⅜"	3⅜"
4	1 13/16"	3⅜"	2 1/16"	3 3/16"
5	1½"	3"	1¾"	3"

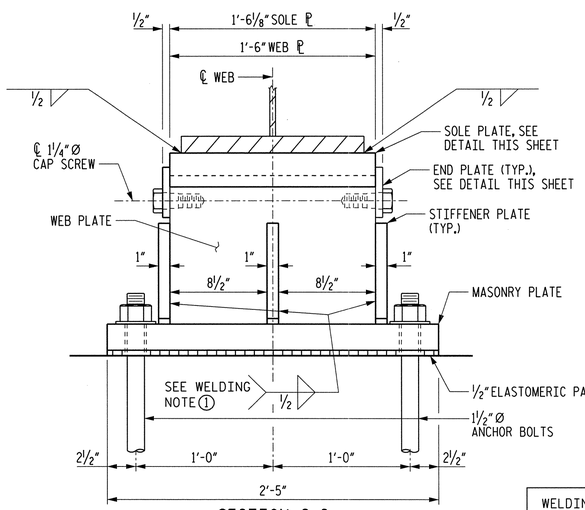

SECTION C-C

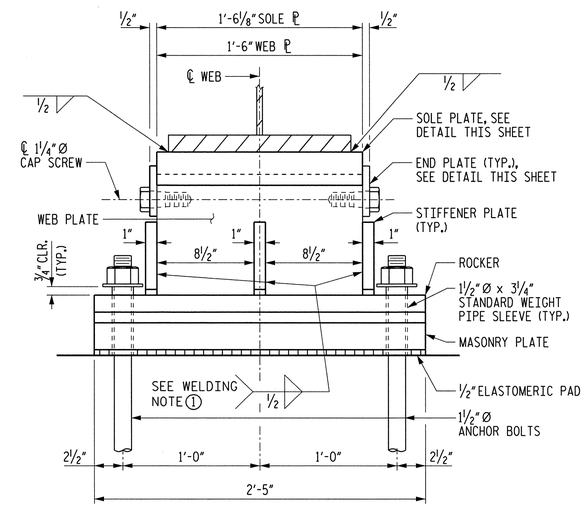

SECTION D-D

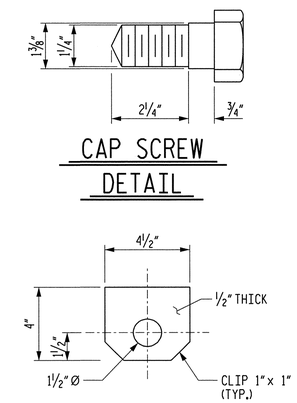

CAP SCREW DETAIL

END PLATE DETAIL

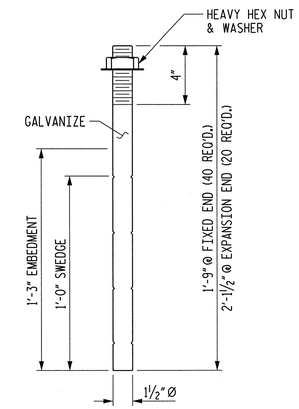

ANCHOR BOLT DETAIL

WELDING NOTES

① WELD ALL SIDES AND EDGES OF STIFFENER PLATES IN CONTACT WITH WEB PLATE

② WELD ENTIRE PERIMETER OF WEB PLATE AND STIFFENER PLATES TO TOP OF MASONRY PLATE OR ROCKER PLATE

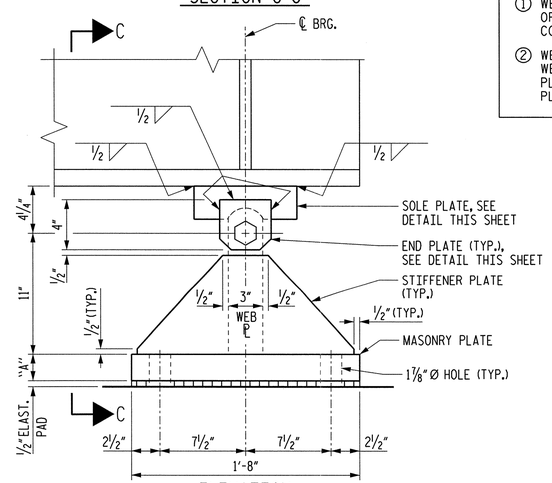

ELEVATION
FIXED BEARING DETAILS
(10 REQUIRED)

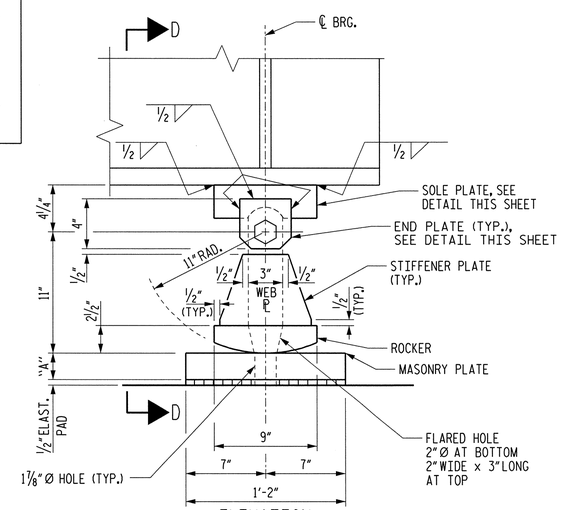

ELEVATION
EXPANSION BEARING DETAILS
(10 REQUIRED)

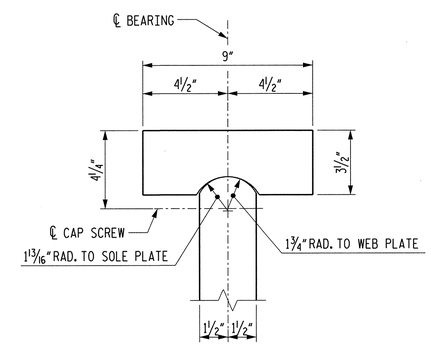

SOLE PLATE DETAIL

CSX RR

PROJECT NO. U-0071

DURHAM COUNTY

STATION: POC 64+55.50 -L-

SHEET 2 OF 2 MILEPOST SB-152.5

STATE OF NORTH CAROLINA
DEPARTMENT OF TRANSPORTATION
RALEIGH

SUPERSTRUCTURE
BEARING DETAILS
SPANS "B" & "C"

MI ENGINEERING
1011 SCHAUB DRIVE, SUITE 100
RALEIGH, NC 27606
(919) 851-6606
FIRM PE NUMBER : P-0671

NORTH CAROLINA PROFESSIONAL SEAL 027159 ENGINEER PAUL A. de PAOLI 06-05-14

DWG. NO. 17

REVISIONS						SHEET NO.
NO.	BY:	DATE:	NO.	BY:	DATE:	5-54
1			3			TOTAL SHEETS
2			4			67

DRAWN BY B.E. LANNING	DATE JUNE 2011	
CHECKED BY P.A. de PAOLI	DATE JUNE 2011	
DESIGN ENGINEER OF RECORD P.A. de PAOLI	DATE JUNE 2014	

SPANS "B" AND "C" BEARINGS

PLOT: 6/9/2014 2:30:06 PM bbenning
FILE NAME: P:\NE Projects\MI0006 - U-0071 Durham\U-0071\Structures\cover\u0071_std_brg_02c.dgn

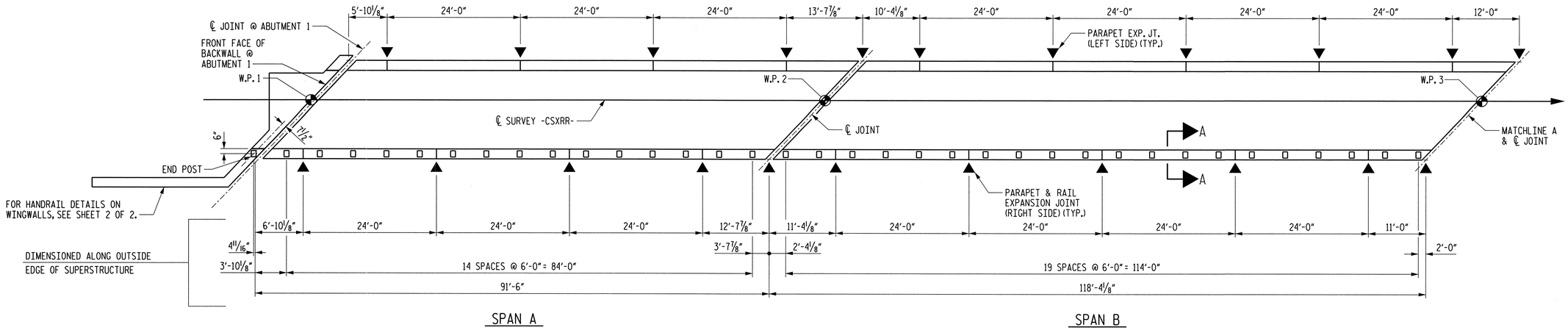

HANDRAIL POST SPACING PLAN - SPANS A & B

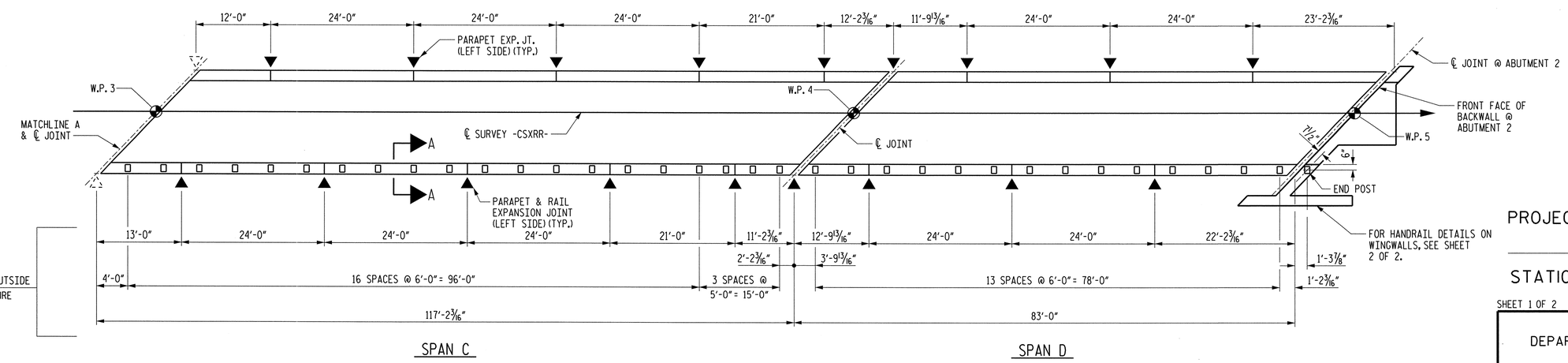

HANDRAIL POST SPACING PLAN - SPANS C & D

NOTE: FOR SECTION A-A, SEE SHEET 2 OF 2.

CSX RR

PROJECT NO. U-0071

DURHAM COUNTY

STATION: POC 64+55.50 -L-

SHEET 1 OF 2 MILEPOST SB-152.5

STATE OF NORTH CAROLINA
DEPARTMENT OF TRANSPORTATION
RALEIGH

SUPERSTRUCTURE
METAL HANDRAIL DETAILS

MI ENGINEERING
1011 SCHAUB DRIVE, SUITE 100
RALEIGH, NC 27606
(919) 851-6606
FIRM PE NUMBER : P-0671

NORTH CAROLINA PROFESSIONAL SEAL ENGINEER PAUL A. de PAOLI 06.09.14

DWG. NO. 18

REVISIONS						SHEET NO.
NO.	BY:	DATE:	NO.	BY:	DATE:	5-55
1			3			TOTAL SHEETS
2			4			671

DRAWN BY B.E. LANNING DATE MAR. 2012
CHECKED BY P.A. de PAOLI DATE MAY 2012
DESIGN ENGINEER OF RECORD P.A. de PAOLI DATE JUNE 2014

PLOT: 6/9/2014 2:30:28 PM blanning
FILE NAME: P:\NC Projects\M10008 - U-0071 Durham\U-0071\Structures\csxrr\u0071_sd_mhr1_02csx.dgn

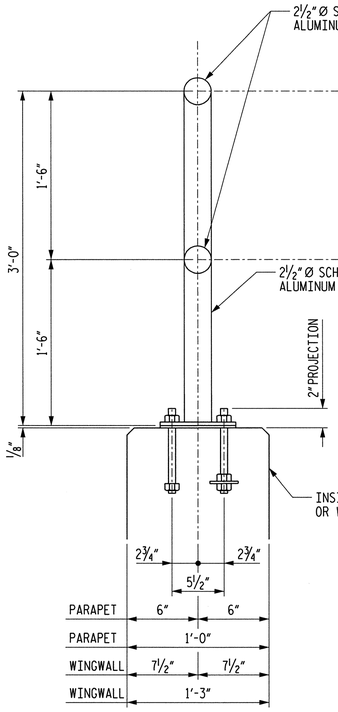

SECTION A-A

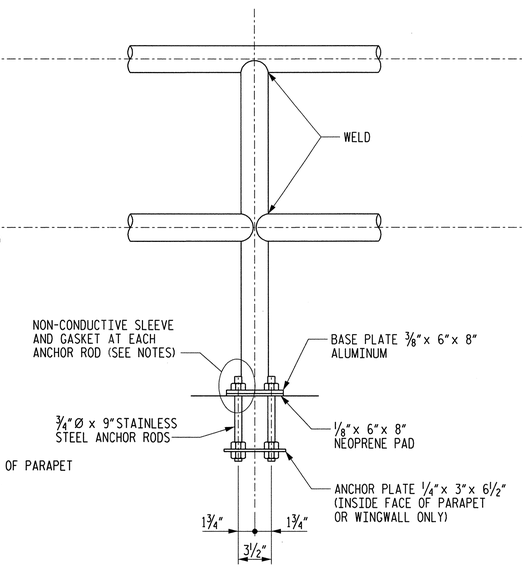

ELEVATION

ALUMINUM HANDRAIL AND POST

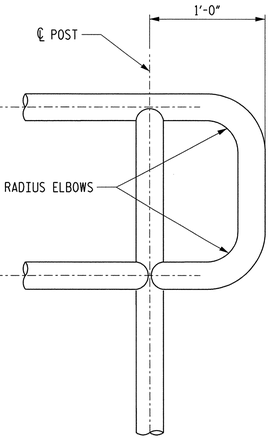

END POST DETAIL

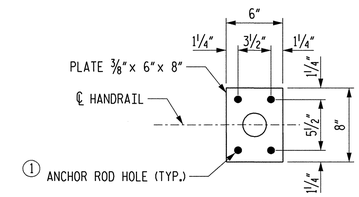

BASE PLATE

① HOLE DIAMETER SHALL BE EQUAL TO THE OUTSIDE DIAMETER OF THE NON-CONDUCTIVE SLEEVE + 1/16"

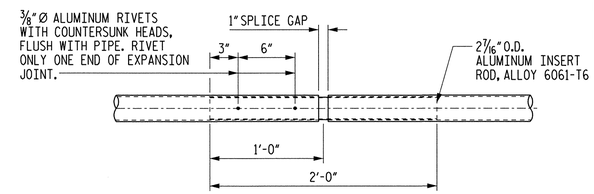

EXPANSION JOINT DETAIL

NOTES

ALUMINUM PIPE TO BE ASTM B-429, ALLOY 6061-T6 AND BASE PLATE TO BE ASTM B-209, ALLOY 6061-T6.

STAINLESS STEEL BOLTS, CAP SCREWS AND NUTS TO BE ASTM A-276 TYPE 304. STAINLESS STEEL WASHERS TO BE ASTM A-276 TYPE 302.

CERTIFIED MILL REPORTS ARE REQUIRED FOR RAIL AND POSTS. SHOP INSPECTIONS ARE NOT REQUIRED.

AFTER ANCHOR BOLT NUTS HAVE BEEN TIGHTENED, THREADS SHALL BE NICKED TO LOCK NUTS.

ANCHOR PLATES SHALL CONFORM TO ASTM SPECIFICATION A36.

ANCHOR RODS SHALL CONFORM TO ASTM SPECIFICATION A276 TYPE 302 OR 304, STAINLESS STEEL AND THREADS SHALL BE ROLLED, NOT CUT.

LOWER ANCHOR ROD NUTS SHALL BE HEAVY STEEL HEX NUTS, PER ASTM A563.

UPPER ANCHOR ROD NUTS SHALL BE HEAVY HEX NUTS, PER ASTM A276 TYPE 302 OR 304 STAINLESS STEEL.

PLACE A NON-CONDUCTIVE SLEEVE AROUND EACH ANCHOR ROD AND A NON-CONDUCTIVE GASKET UNDER EACH NUT TO ISOLATE THE ANCHOR ROD AND NUT FROM THE ALUMINUM BASE PLATE.

WELDING SHALL BE IN ACCORDANCE WITH THE CURRENT AWS STRUCTURAL WELDING CODE - ALUMINUM.

JOINTS IN RAILING (SPLICE CAP) SHALL BE LOCATED AS SHOWN IN POST SPACING PLAN.

POST TO BE SET PERPENDICULAR TO TOP OF PARAPET AND RAILS SHALL BE PLACED PARALLEL TO THE GRADE OF THE BRIDGE.

THE CENTERLINE OF ANY SPLICE AND/OR EXPANSION JOINT IS TO BE LOCATED AT LEAST 2'-0" AWAY FROM CENTERLINE OF POST. EXPANSION AND/OR SPLICE JOINTS FOR EACH RAIL OF TWO RAILING ARE TO BE PLACED IN THE SAME LOCATION AND IN THE SAME PANEL.

THE LENGTH OF METAL RAIL TO BE PAID FOR SHALL BE THE CONTINUOUS LENGTH MEASURED FROM END TO END OF RAIL, ALONG THE TOP OF THE RAIL.

PAY LENGTH = 451.0 LIN. FT.

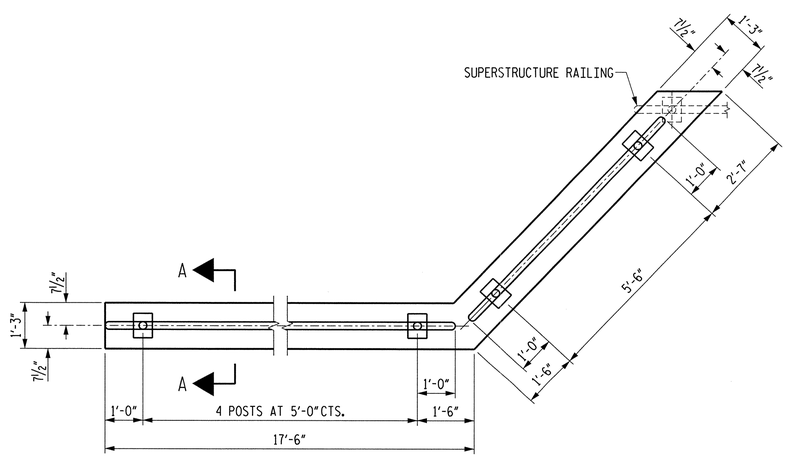

HANDRAIL DETAIL AT ABUTMENT 1

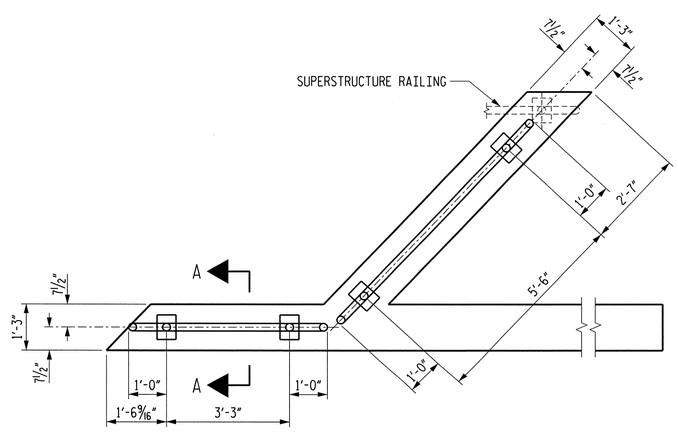

HANDRAIL DETAIL AT ABUTMENT 2

CSX RR

PROJECT NO. U-0071

DURHAM COUNTY

STATION: POC 64+55.50 -L-

SHEET 2 OF 2 MILEPOST SB-152.5

STATE OF NORTH CAROLINA
DEPARTMENT OF TRANSPORTATION
RALEIGH

SUPERSTRUCTURE
METAL HANDRAIL DETAILS

MI ENGINEERING
1011 SCHAUB DRIVE, SUITE 100
RALEIGH, NC 27606
(919) 851-6606
FIRM PE NUMBER : P-0671

NORTH CAROLINA PROFESSIONAL SEAL 022498 ENGINEER PAUL A. de PAOLI
06.17.14

DWG. NO. 19

REVISIONS						SHEET NO.
NO.	BY:	DATE:	NO.	BY:	DATE:	5-56
1			3			TOTAL SHEETS
2			4			671

DRAWN BY B.E. LANNING DATE JUNE 2012
CHECKED BY P.A. de PAOLI DATE JUNE 2012
DESIGN ENGINEER OF RECORD P.A. de PAOLI DATE JUNE 2014

PLOT: 6/17/2014 12:23:12 PM bbanning
FILE NAME: P:\NC Projects\M10008 - U-0071 Durham\U-0071\Structures\csxrr\u0071_sd_mhr2.02cnv.dgn

EPOXY COATED REINFORCING STEEL BAR SCHEDULE

SPAN "A"

BAR	NO.	SIZE	TYPE	LENGTH	WEIGHT
A1	113	#5	STR.	16'-8"	1,964
A2	16	#5	STR.	22'-9"	380
A101	4	#5	STR.	16'-4"	68
A102	4	#5	STR.	15'-7"	65
A103	4	#5	STR.	14'-11"	62
A104	4	#5	STR.	14'-2"	59
A105	4	#5	STR.	13'-6"	56
A106	4	#5	STR.	12'-9"	53
A107	4	#5	STR.	12'-1"	50
A108	4	#5	STR.	11'-4"	47
A109	4	#5	STR.	10'-8"	45
A110	4	#5	STR.	9'-11"	41
A111	4	#5	STR.	9'-3"	39
A112	4	#5	STR.	8'-6"	35
A113	4	#5	STR.	7'-9"	32
A114	4	#5	STR.	7'-1"	30
A115	4	#5	STR.	6'-4"	26
A116	4	#5	STR.	5'-8"	24
A117	4	#5	STR.	4'-11"	21
A118	4	#5	STR.	4'-3"	18
A119	4	#5	STR.	3'-6"	15
A120	4	#5	STR.	2'-10"	12
A121	4	#5	STR.	2'-1"	9
B1	68	#5	STR.	46'-7"	3,304
B5	36	#5	STR.	23'-7"	886
B6	3	#5	STR.	5'-4"	17
B7	3	#5	STR.	5'-9"	18
B8	3	#5	STR.	12'-10"	40
B9	3	#5	STR.	12'-4"	39
B10	3	#5	STR.	5'-5"	17
B11	3	#5	STR.	5'-10"	18
B12	3	#5	STR.	12'-9"	40
B13	3	#5	STR.	12'-3"	38
S1	90	#5	1	7'-6"	704
S2	2	#5	2	4'-6"	9
S3	90	#5	1	8'-0"	751
S4	2	#5	2	4'-9"	10
EPOXY COATED REINFORCING STEEL				LBS.	9,042

SPAN "B"

BAR	NO.	SIZE	TYPE	LENGTH	WEIGHT
A1	153	#5	STR.	16'-8"	2,660
A2	16	#5	STR.	22'-9"	380
A101	4	#5	STR.	16'-4"	68
A102	4	#5	STR.	15'-7"	65
A103	4	#5	STR.	14'-11"	62
A104	4	#5	STR.	14'-2"	59
A105	4	#5	STR.	13'-6"	56
A106	4	#5	STR.	12'-9"	53
A107	4	#5	STR.	12'-1"	50
A108	4	#5	STR.	11'-4"	47
A109	4	#5	STR.	10'-8"	45
A110	4	#5	STR.	9'-11"	41
A111	4	#5	STR.	9'-3"	39
A112	4	#5	STR.	8'-6"	35
A113	4	#5	STR.	7'-9"	32
A114	4	#5	STR.	7'-1"	30
A115	4	#5	STR.	6'-4"	26
A116	4	#5	STR.	5'-8"	24
A117	4	#5	STR.	4'-11"	21
A118	4	#5	STR.	4'-3"	18
A119	4	#5	STR.	3'-6"	15
A120	4	#5	STR.	2'-10"	12
A121	4	#5	STR.	2'-1"	9
B2	102	#5	STR.	40'-1"	4,264
B5	48	#5	STR.	23'-7"	1,181
B14	3	#5	STR.	9'-11"	31
B15	3	#5	STR.	10'-5"	33
B16	3	#5	STR.	11'-2"	35
B17	3	#5	STR.	10'-8"	33
B18	3	#5	STR.	10'-0"	31
B19	3	#5	STR.	10'-6"	33
B20	3	#5	STR.	11'-1"	35
B21	3	#5	STR.	10'-7"	33
S1	117	#5	1	7'-6"	915
S2	2	#5	2	4'-6"	9
S3	117	#5	1	8'-0"	976
S4	2	#5	2	4'-9"	10
EPOXY COATED REINFORCING STEEL				LBS.	11,466

SPAN "C"

BAR	NO.	SIZE	TYPE	LENGTH	WEIGHT
A1	151	#5	STR.	16'-8"	2,625
A2	16	#5	STR.	22'-9"	380
A101	4	#5	STR.	16'-4"	68
A102	4	#5	STR.	15'-7"	65
A103	4	#5	STR.	14'-11"	62
A104	4	#5	STR.	14'-2"	59
A105	4	#5	STR.	13'-6"	56
A106	4	#5	STR.	12'-9"	53
A107	4	#5	STR.	12'-1"	50
A108	4	#5	STR.	11'-4"	47
A109	4	#5	STR.	10'-8"	45
A110	4	#5	STR.	9'-11"	41
A111	4	#5	STR.	9'-3"	39
A112	4	#5	STR.	8'-6"	35
A113	4	#5	STR.	7'-9"	32
A114	4	#5	STR.	7'-1"	30
A115	4	#5	STR.	6'-4"	26
A116	4	#5	STR.	5'-8"	24
A117	4	#5	STR.	4'-11"	21
A118	4	#5	STR.	4'-3"	18
A119	4	#5	STR.	3'-6"	15
A120	4	#5	STR.	2'-10"	12
A121	4	#5	STR.	2'-1"	9
B3	68	#5	STR.	59'-6"	4,220
B5	36	#5	STR.	23'-7"	886
B22	3	#5	STR.	11'-7"	36
B23	3	#5	STR.	12'-1"	38
B24	3	#5	STR.	11'-4"	35
B25	3	#5	STR.	10'-10"	34
B26	3	#5	STR.	11'-8"	37
B27	3	#5	STR.	12'-2"	38
B28	3	#5	STR.	11'-3"	35
B29	3	#5	STR.	10'-10"	34
B30	12	#5	STR.	20'-7"	258
S1	116	#5	1	7'-6"	907
S2	2	#5	2	4'-6"	9
S3	116	#5	1	8'-0"	968
S4	2	#5	2	4'-9"	10
EPOXY COATED REINFORCING STEEL				LBS.	11,357

SPAN "D"

BAR	NO.	SIZE	TYPE	LENGTH	WEIGHT
A1	100	#5	STR.	16'-8"	1,738
A2	16	#5	STR.	22'-9"	380
A101	4	#5	STR.	16'-4"	68
A102	4	#5	STR.	15'-7"	65
A103	4	#5	STR.	14'-11"	62
A104	4	#5	STR.	14'-2"	59
A105	4	#5	STR.	13'-6"	56
A106	4	#5	STR.	12'-9"	53
A107	4	#5	STR.	12'-1"	50
A108	4	#5	STR.	11'-4"	47
A109	4	#5	STR.	10'-8"	45
A110	4	#5	STR.	9'-11"	41
A111	4	#5	STR.	9'-3"	39
A112	4	#5	STR.	8'-6"	35
A113	4	#5	STR.	7'-9"	32
A114	4	#5	STR.	7'-1"	30
A115	4	#5	STR.	6'-4"	26
A116	4	#5	STR.	5'-8"	24
A117	4	#5	STR.	4'-11"	21
A118	4	#5	STR.	4'-3"	18
A119	4	#5	STR.	3'-6"	15
A120	4	#5	STR.	2'-10"	12
A121	4	#5	STR.	2'-1"	9
B4	68	#5	STR.	42'-4"	3,002
B5	24	#5	STR.	23'-7"	590
B31	3	#5	STR.	11'-5"	36
B32	3	#5	STR.	11'-11"	37
B33	3	#5	STR.	22'-2"	69
B34	3	#5	STR.	21'-9"	68
B35	3	#5	STR.	11'-6"	36
B36	3	#5	STR.	11'-11"	37
B37	3	#5	STR.	22'-1"	69
B38	3	#5	STR.	21'-8"	68
S1	81	#5	1	7'-6"	634
S2	2	#5	2	4'-6"	9
S3	81	#5	1	8'-0"	676
S4	2	#5	2	4'-9"	10
EPOXY COATED REINFORCING STEEL				LBS.	8,266

BAR TYPES

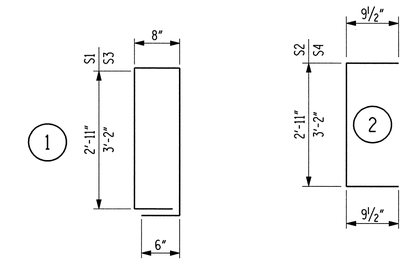

ALL BAR DIMENSIONS ARE OUT TO OUT.

— SUPERSTRUCTURE BILL OF MATERIAL —

	EPOXY COATED REINFORCING STEEL		CLASS AA CONCRETE ⊛	
	DECK (LBS.)	PARAPET (LBS.)	DECK (CU. YARDS)	PARAPET (CU. YARDS)
SPAN "A"	6,455	2,587	48.8	16.0
SPAN "B"	8,111	3,355	61.1	20.8
SPAN "C"	8,032	3,325	60.5	20.6
SPAN "D"	5,927	2,339	44.4	14.5
TOTALS	28,525	11,606	214.8	71.9
SUMMARY	40,131		286.70	

⊛ (AS MODIFIED BY RAILWAY)

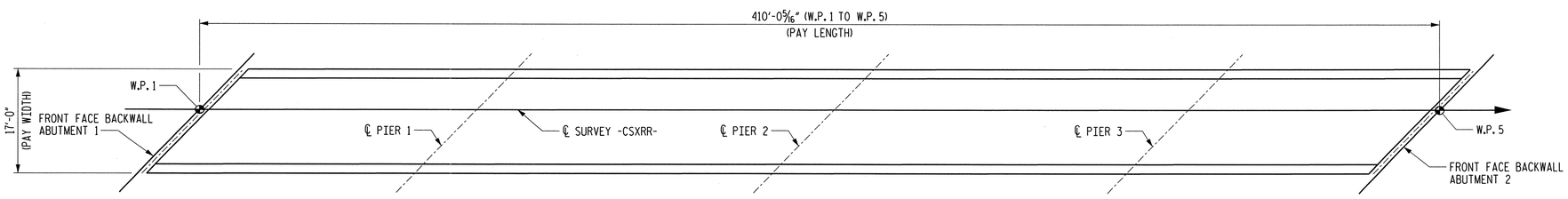

LAYOUT FOR COMPUTING AREA REINFORCED CONCRETE DECK (SQ. FT. = 6,970)

CSX RR

PROJECT NO. U-0071

DURHAM COUNTY

STATION: POC 64+55.50 -L-

MILEPOST SB-152.5

STATE OF NORTH CAROLINA
DEPARTMENT OF TRANSPORTATION
RALEIGH

SUPERSTRUCTURE
BILL OF MATERIAL

MI ENGINEERING
1011 SCHAUB DRIVE, SUITE 100
RALEIGH, NC 27606
(919) 851-6606
FIRM PE NUMBER : P-0671

NORTH CAROLINA PROFESSIONAL SEAL 041750 ENGINEER PAUL A. de PAOLI
06.05.14

DWG. NO. 20

REVISIONS							SHEET NO.
NO.	BY:	DATE:	NO.	BY:	DATE:		5-57
1			3				TOTAL SHEETS
2			4				671

DRAWN BY B.E. LANNING DATE JUNE 2012
CHECKED BY P.A. de PAOLI DATE MAY 2013
DESIGN ENGINEER OF RECORD P.A. de PAOLI DATE JUNE 2014

PLOT: 6/9/2014 2:26:32 PM bleanning
FILE NAME: P:\MC Projects\M10088 - U-0071 Durham\U-0071\Structures\csxrr\u0071_sd_bom_02csxc.dgn

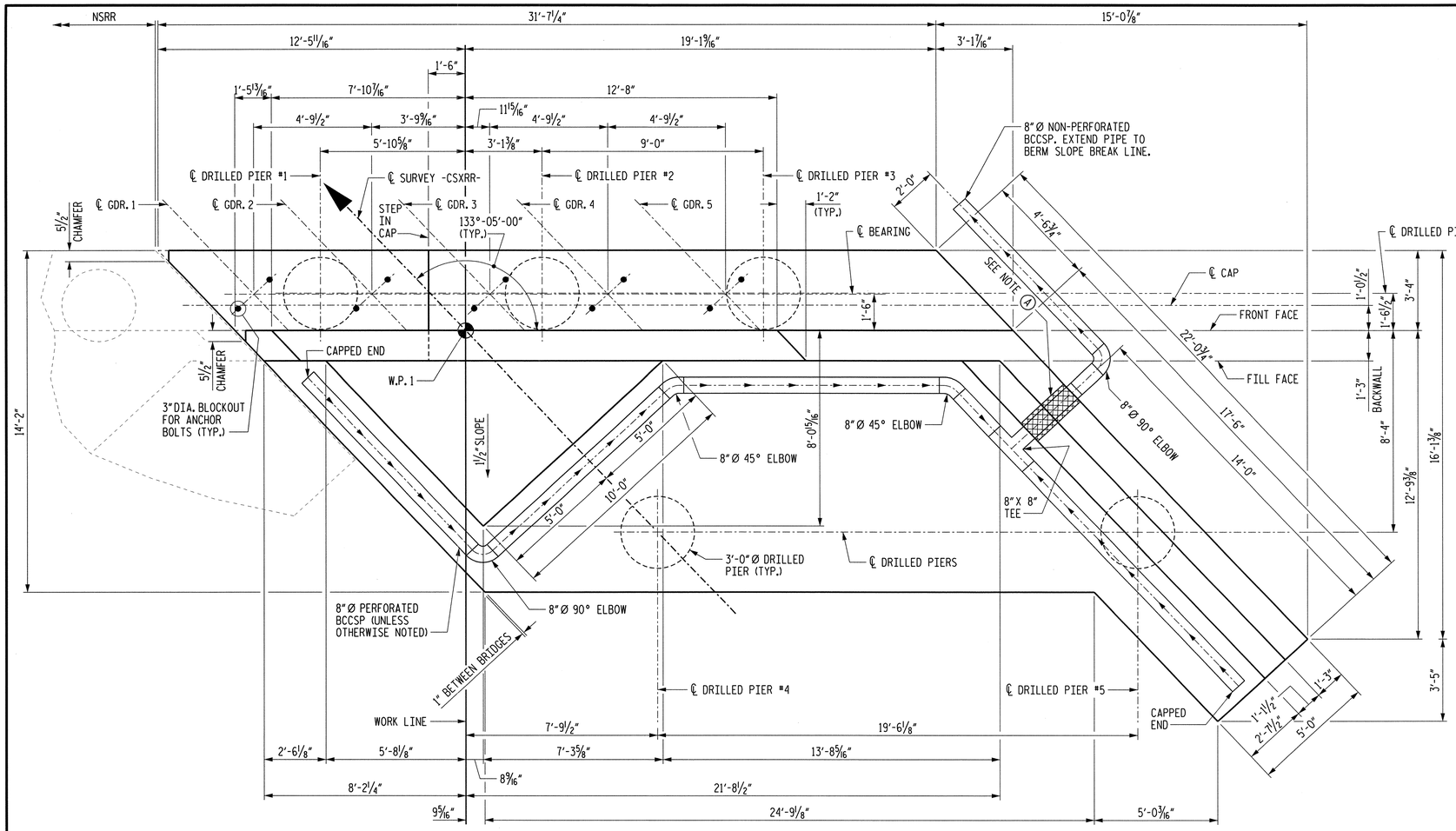

PLAN

BCCSP = BITUMINOUS COATED CORRUGATED STEEL PIPE

NOTES

#9 "B" BARS IN BOTTOM OF CAP MAY BE SHIFTED SLIGHTLY TO AVOID CONFLICT WITH BARS IN DRILLED PIERS.

STIRRUPS IN CAP MAY BE SHIFTED AS NECESSARY TO CLEAR ANCHOR BOLTS AND BARS IN DRILLED PIERS.

ALL STEEL IN THE DRILLED PIERS IS INCLUDED IN THE PAY ITEMS FOR "REINFORCING STEEL" AND "SPIRAL COLUMN REINFORCING STEEL."

PROVIDE 3"DIA. BLOCKOUT FOR ANCHOR BOLTS. ANCHOR BOLT HOLES SHALL NOT BE DRILLED. ANCHOR BOLTS SHALL BE GROUTED IN PLACE. GROUT TO BE APPROVED BY ENGINEER.

PAYMENT FOR PIPE SLEEVE INSERT AS SHOWN ON SECTION THRU WINGWALL IS CONSIDERED INCIDENTAL OF THE ABUTMENT.

FOR FRENCH DRAINS, SEE SPECIAL PROVISION "STRUCTURE DRAINAGE SYSTEM".

"T" BARS IN FOOTING MAY BE SHIFTED SLIGHTLY TO AVOID CONFLICT WITH BARS IN DRILLED PIERS.

THE CONTRACTOR'S ATTENTION IS CALLED TO THE FACT THAT THE LONGITUDINAL REINFORCEMENT FOR THE DRILLED PIERS IS DETAILED WITH 3 FEET OF EXTRA LENGTH.

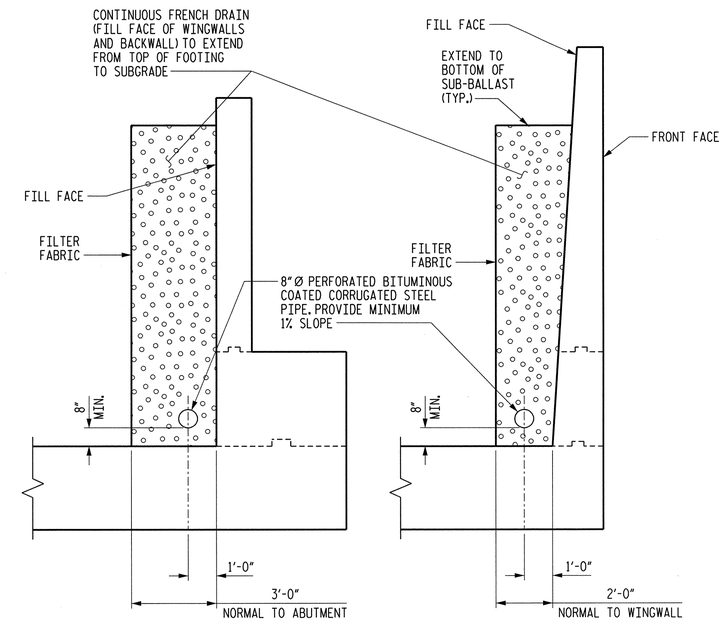

CONTINUOUS UNDERDRAIN DETAIL

NOTE Ⓐ:
12" I.D. STEEL PIPE SLEEVE (⅜" WALL THICKNESS) TO BE FLUSH WITH BOTH FACES OF WING. FIELD BEND REINFORCING STEEL AS NECESSARY TO PROVIDE FOR SLEEVE. SEE SECTION THRU WINGWALL THIS SHEET FOR DETAILS. INSTALL BCCSP WITH A MINIMUM OF ⅛" PER FOOT SLOPE.

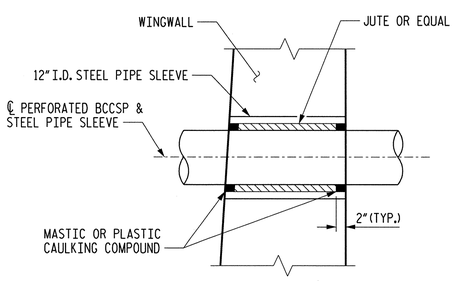

SECTION THRU WINGWALL

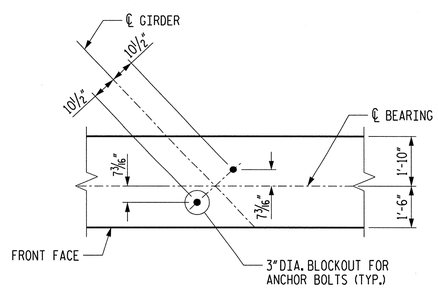

ANCHOR BOLT LAYOUT

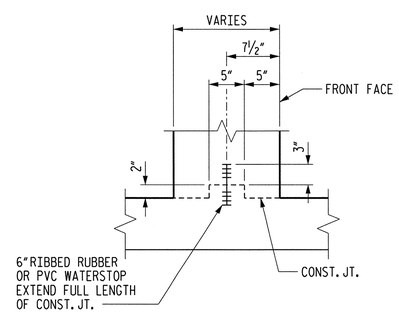

RAISED KEY WITH WATERSTOP

CSX RR

PROJECT NO. U-0071

DURHAM COUNTY

STATION: POC 64+55.50 -L-

SHEET 1 OF 5 MILEPOST SB-152.5

STATE OF NORTH CAROLINA
DEPARTMENT OF TRANSPORTATION
RALEIGH

SUBSTRUCTURE
ABUTMENT 1

MI ENGINEERING
1011 SCHAUB DRIVE, SUITE 100
RALEIGH, NC 27606
(919) 851-6606
FIRM PE NUMBER : P-0671

NORTH CAROLINA PROFESSIONAL SEAL 022199 ENGINEER PAUL A. de PAOLI
06-05-14

DWG. NO. 21

REVISIONS						SHEET NO.
NO.	BY:	DATE:	NO.	BY:	DATE:	5-58
1			3			TOTAL SHEETS
2			4			67

DRAWN BY	B.E. LANNING	DATE	APR. 2013
CHECKED BY	P.A. de PAOLI	DATE	APR. 2013
DESIGN ENGINEER OF RECORD	P.A. de PAOLI	DATE	JUNE 2014

PLOT: 6/9/2014 2:28:25 PM bbanning
FILE NAME: P:\MC Projects\M10088 - U-0071 Durham\U-0071\Structures\csxrr\u0071_sd_abut1a_02csx.dgn

NOTES

FOR ADDITIONAL NOTES, SEE SHEET 1 OF 5.

FOR SECTION A-A, SEE SHEET 5 OF 5.

FOR SECTIONS B-B AND C-C, SEE SHEET 4 OF 5.

FOR SECTION D-D, SEE SHEET 3 OF 5.

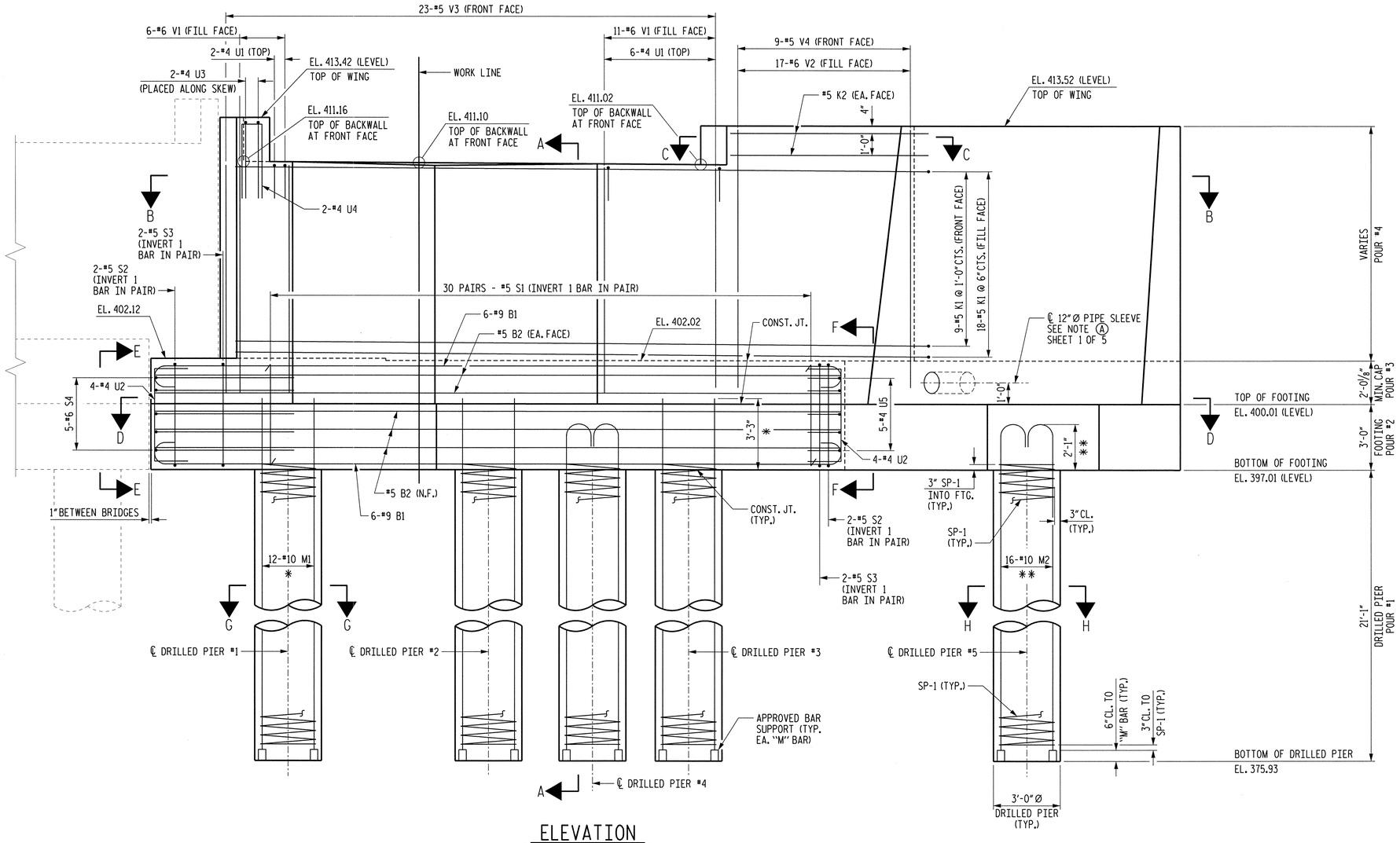

ELEVATION

(DIMENSIONS AND REINFORCING STEEL ARE TYPICAL FOR EACH DRILLED PIER)

FOR REINFORCING BAR SPACING, SEE SECTION VIEWS.

* DRILLED PIERS 1-3

** DRILLED PIERS 4-5

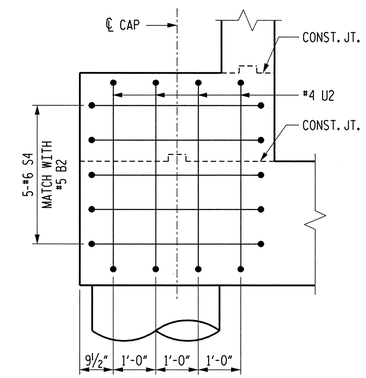

VIEW E-E

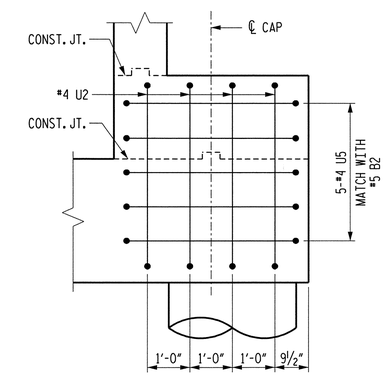

VIEW F-F

CSX RR

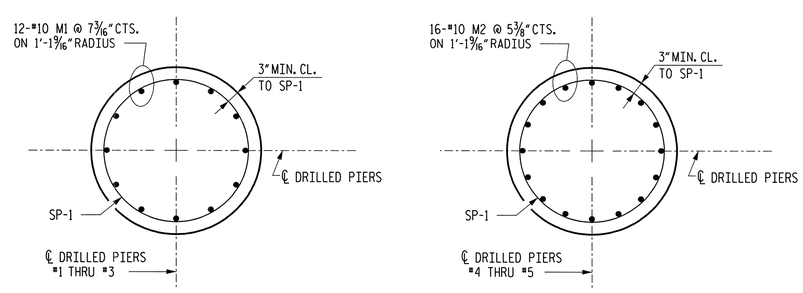

SECTION G-G

SECTION H-H

PROJECT NO. U-0071

DURHAM COUNTY

STATION: POC 64+55.50 -L-

SHEET 2 OF 5 MILEPOST SB-152.5

STATE OF NORTH CAROLINA
DEPARTMENT OF TRANSPORTATION
RALEIGH

SUBSTRUCTURE
ABUTMENT 1

MI ENGINEERING
1011 SCHAUB DRIVE, SUITE 100
RALEIGH, NC 27606
(919) 851-6606
FIRM PE NUMBER : P-0671

NORTH CAROLINA PROFESSIONAL SEAL ENGINEER PAUL A. de PAOLI 06-09-14

DWG. NO. 22

REVISIONS						SHEET NO.
NO.	BY:	DATE:	NO.	BY:	DATE:	5-59
1			3			TOTAL SHEETS
2			4			671

DRAWN BY	B.E. LANNING	DATE	APR. 2013
CHECKED BY	P.A. de PAOLI	DATE	APR. 2013
DESIGN ENGINEER OF RECORD	P.A. de PAOLI	DATE	JUNE 2014

PLOT: 6/9/2014 2:38:37 PM bbenning
FILE NAME: P:\MI Projects\MI0808 - U-0071 Durham\U-0071\Structures\bsvr\U0071_sd_abutb_02.dgn

NOTES

FOR NOTES, SEE SHEET 1 OF 5.

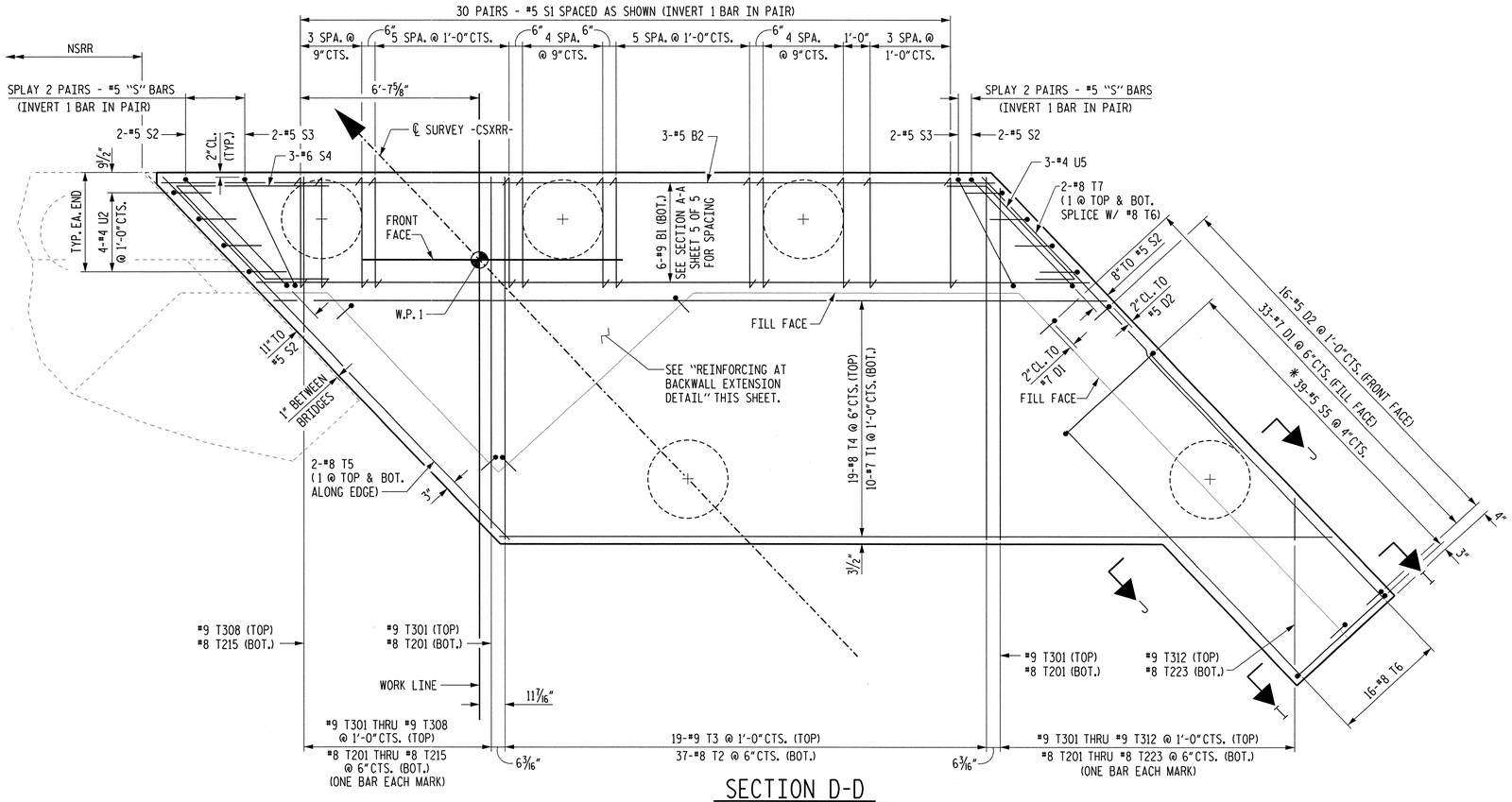

SECTION D-D

(FOOTING PLAN)

* #5 S5 BARS MAY BE SHIFTED SLIGHTLY TO AVOID CONFLICT WITH "D" AND "M" BARS.

① SEE RAISED KEY WITH WATERSTOP DETAIL ON DWG. NO. 21.

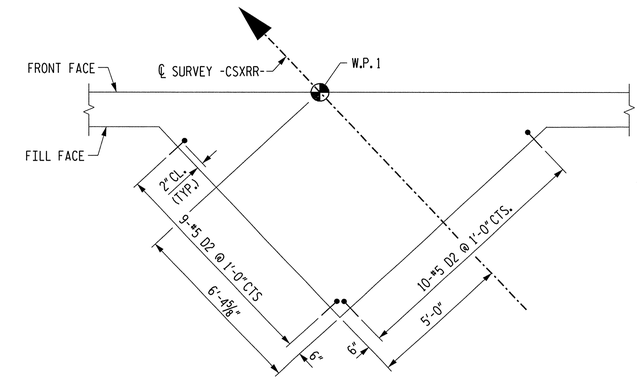

REINFORCING AT BACKWALL EXTENSION

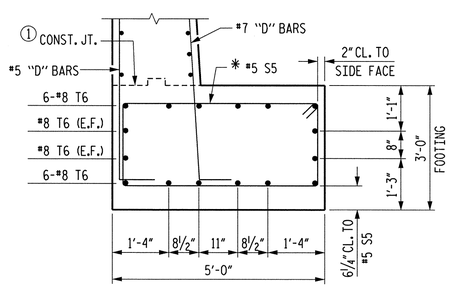

SECTION I-I

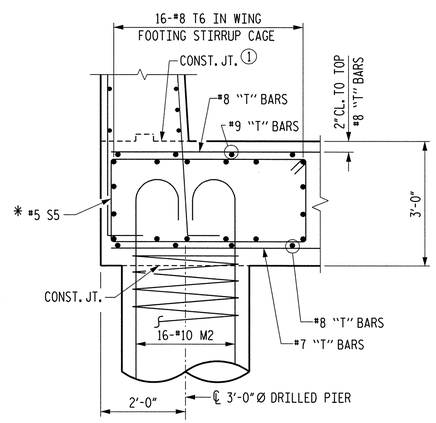

SECTION J-J

SEE SECTION I-I & SECTION A-A (SHEET 5 OF 5) FOR ADDITIONAL DETAILS.

CSX RR

PROJECT NO. U-0071

DURHAM COUNTY

STATION: POC 64+55.50 -L-

SHEET 3 OF 5 MILEPOST SB-152.5

STATE OF NORTH CAROLINA
DEPARTMENT OF TRANSPORTATION
RALEIGH

SUBSTRUCTURE
ABUTMENT 1

MI ENGINEERING
1011 SCHAUB DRIVE, SUITE 100
RALEIGH, NC 27606
(919) 851-6606
FIRM PE NUMBER : P-0671

NORTH CAROLINA PROFESSIONAL SEAL 024199 ENGINEER PAUL A. de PAOLI 06-09-14

DWG. NO. 23

REVISIONS							SHEET NO.
NO.	BY:	DATE:	NO.	BY:	DATE:		S-60
1			3				TOTAL SHEETS
2			4				671

DRAWN BY	B.E. ATKINSON	DATE	APR. 2013
CHECKED BY	P.A. de PAOLI	DATE	APR. 2013
DESIGN ENGINEER OF RECORD	P.A. de PAOLI	DATE	JUNE 2014

PLOT: 6/9/2014 2:28:39 PM bleming
FILE NAME: P:\MC Projects\M100288 - U-0071 Durham\U-0071\Structures\csxrr\u0071_sub_abutto_02csx.dgn

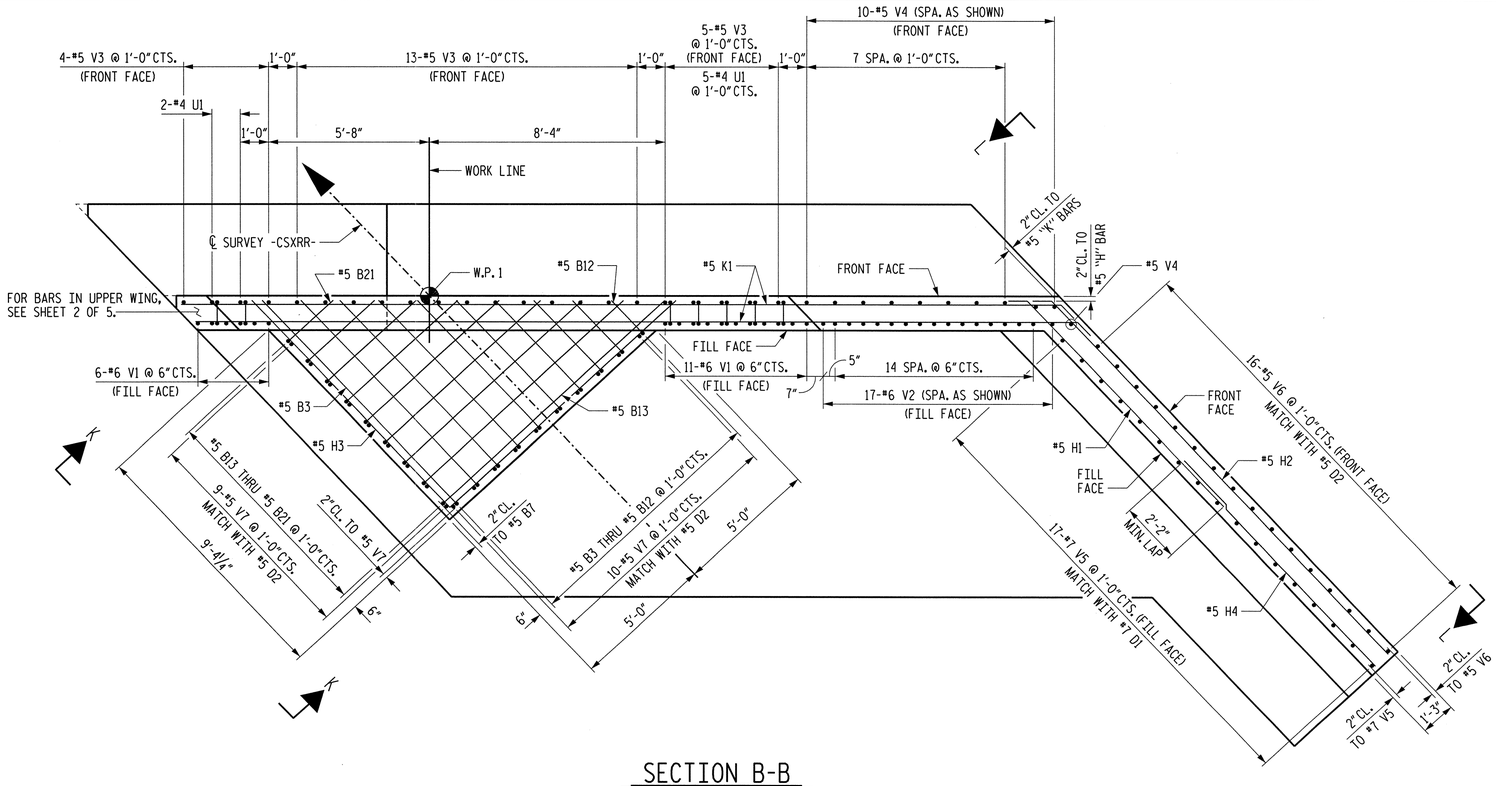

SECTION B-B

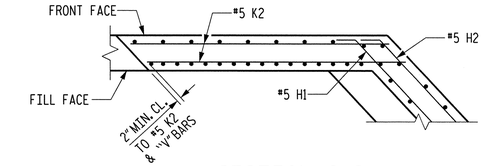

SECTION C-C

FOR "V" BAR SPACING, SEE SECTION B-B

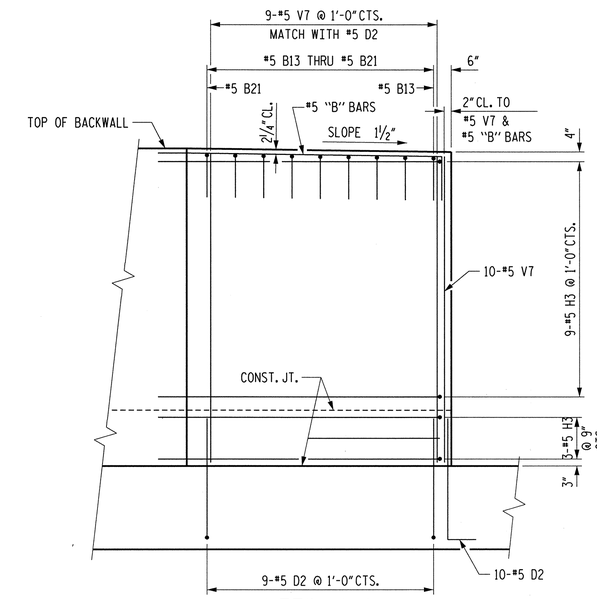

VIEW K-K

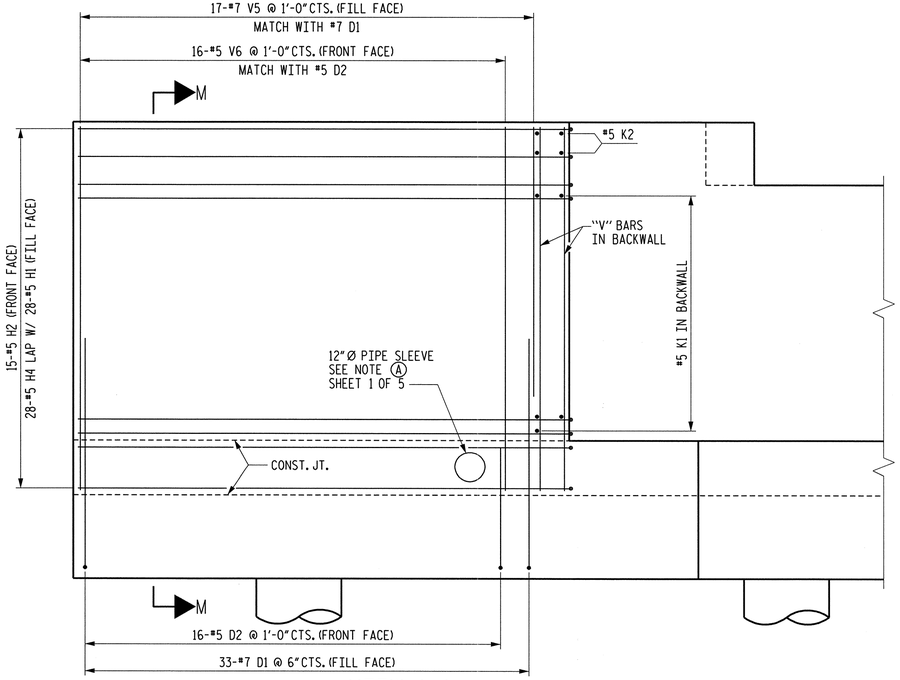

VIEW L-L

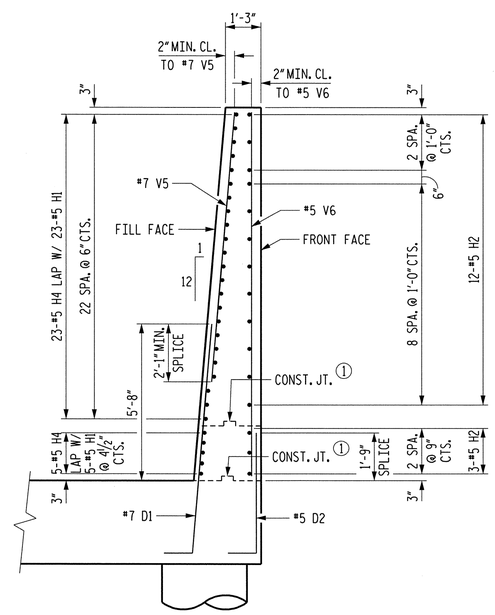

SECTION M-M

(1) SEE RAISED KEY WITH WATERSTOP DETAIL ON DWG. NO. 21.

CSX RR

PROJECT NO. U-0071

DURHAM COUNTY

STATION: POC 64+55.50 -L-

SHEET 4 OF 5 MILEPOST SB-152.5

STATE OF NORTH CAROLINA
DEPARTMENT OF TRANSPORTATION
RALEIGH

SUBSTRUCTURE
ABUTMENT 1

MI ENGINEERING
1011 SCHAUB DRIVE, SUITE 100
RALEIGH, NC 27606
(919) 851-6606
FIRM PE NUMBER : P-0671

NORTH CAROLINA PROFESSIONAL SEAL ENGINEER PAUL A. de PAOLI 06-09-14

DWG. NO. 24

REVISIONS								SHEET NO.
NO.	BY:	DATE:	NO.	BY:	DATE:			5-61
1			3					TOTAL SHEETS
2			4					671

DRAWN BY	B.E. LANNING	DATE	APR. 2013
CHECKED BY	P.A. de PAOLI	DATE	APR. 2013
DESIGN ENGINEER OF RECORD	P.A. de PAOLI	DATE	JUNE 2014

PLOT: 6/9/2014 2:32:02 PM bbenning
FILE NAME: P:\NC Projects\M10808 - U-0071 Durham\U-0071\Structures\conv\u0071_sub_abut1d_02conv.dgn

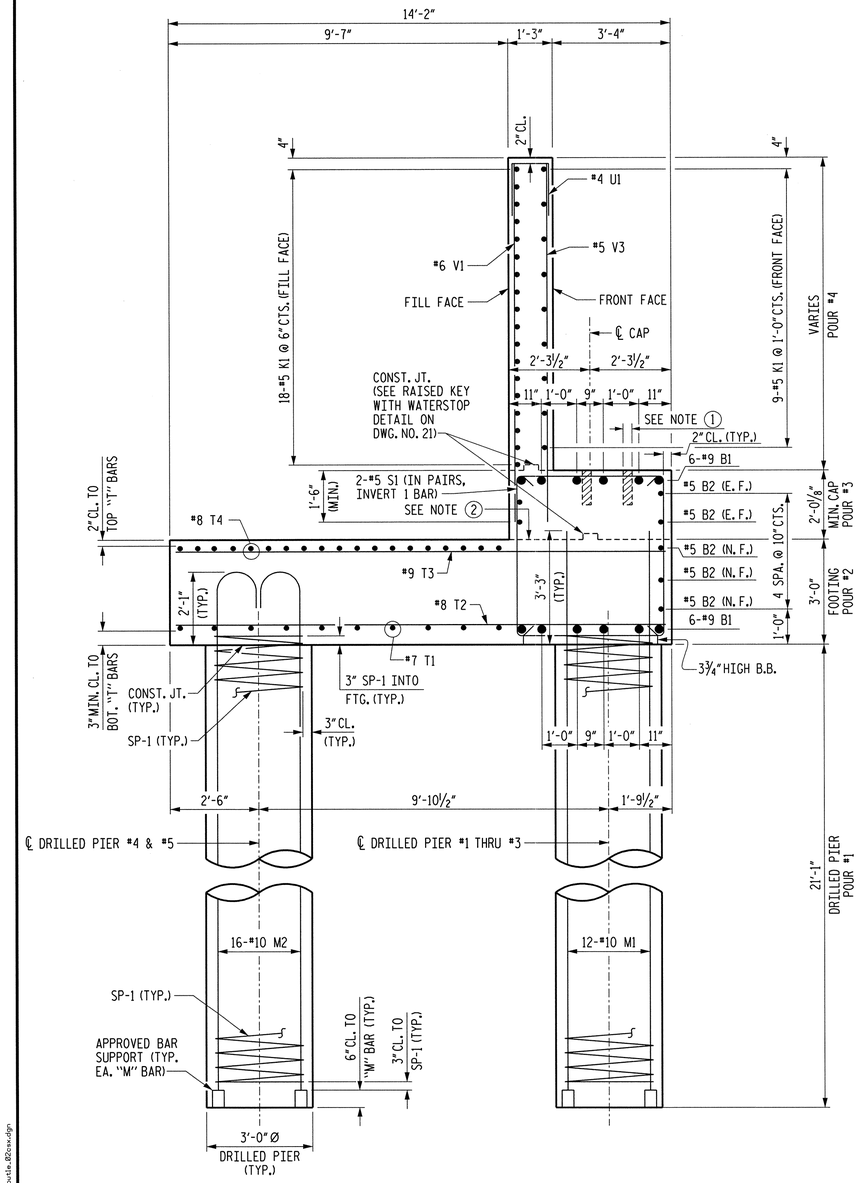

SECTION A-A

NOTES

1. BLOCKOUT FOR ANCHOR BOLTS, 3" DIA. X 1'-0" DEEP HOLE (TYP.). SEE NOTES, SHEET 1 OF 5.
2. THE SURFACE OF CONSTRUCTION JOINT AT THE TOP OF THE FOOTING SHALL BE CLEAN, FREE OF LAITANCE AND ROUGHENED TO ¼" BY RAKING OR OTHER METHOD.
3. E.F. = EACH FACE
   N.F. = NEAR FACE
4. FOR ADDITIONAL NOTES, SEE SHEET 1 OF 5.

BILL OF MATERIAL

ABUTMENT 1

BAR	NO.	SIZE	TYPE	LENGTH	WEIGHT
B1	12	#9	3	33'-5"	1363
B2	7	#5	STR	30'-11"	226
B3	1	#5	7	11'-8"	12
B4	1	#5	7	10'-8"	11
B5	1	#5	7	9'-9"	10
B6	1	#5	7	8'-10"	9
B7	1	#5	7	7'-11"	8
B8	1	#5	7	7'-0"	7
B9	1	#5	7	6'-0"	6
B10	1	#5	7	5'-1"	5
B11	1	#5	7	4'-2"	4
B12	1	#5	7	3'-3"	3
B13	1	#5	7	12'-4"	13
B14	1	#5	7	11'-3"	12
B15	1	#5	7	10'-2"	11
B16	1	#5	7	9'-1"	9
B17	1	#5	7	8'-0"	8
B18	1	#5	7	7'-0"	7
B19	1	#5	7	5'-11"	6
B20	1	#5	7	4'-10"	5
B21	1	#5	7	3'-9"	4
D1	33	#7	5	9'-5"	635
D2	35	#5	7	5'-1"	186
H1	28	#5	5	12'-1"	353
H2	15	#5	5	18'-1"	283
H3	12	#5	7	21'-3"	266
H4	28	#5	STR	10'-0"	292
K1	27	#5	5	31'-9"	894
K2	4	#5	STR	9'-0"	38
M1	36	#10	STR	26'-10"	4157
M2	32	#10	9	27'-1"	3729
S1	60	#5	1	14'-4"	897
S2	4	#5	2	14'-11"	62
S3	4	#5	2	13'-10"	58
S4	5	#6	6	14'-5"	108
S5	39	#5	4	14'-5"	586
T1	10	#7	STR	31'-0"	634
T2	19	#8	STR	13'-10"	702
T3	19	#9	STR	13'-10"	894
T4	19	#8	STR	31'-0"	1573
T5	2	#8	STR	18'-8"	100
T6	16	#8	STR	13'-0"	555
T7	2	#8	STR	14'-0"	75

BAR	NO.	SIZE	TYPE	LENGTH	WEIGHT
T201	2	#8	STR	13'-4"	71
T202	2	#8	STR	12'-9"	68
T203	2	#8	STR	12'-3"	65
T204	2	#8	STR	11'-8"	62
T205	2	#8	STR	11'-2"	60
T206	2	#8	STR	10'-8"	57
T207	2	#8	STR	10'-1"	54
T208	2	#8	STR	9'-7"	51
T209	2	#8	STR	9'-0"	48
T210	2	#8	STR	8'-6"	45
T211	2	#8	STR	7'-11"	42
T212	2	#8	STR	7'-5"	40
T213	2	#8	STR	6'-11"	37
T214	2	#8	STR	6'-4"	34
T215	2	#8	STR	5'-10"	31
T216	1	#8	STR	5'-3"	14
T217	1	#8	STR	4'-9"	13
T218	1	#8	STR	4'-3"	11
T219	1	#8	STR	3'-8"	10
T220	1	#8	STR	3'-2"	8
T221	1	#8	STR	2'-7"	7
T222	1	#8	STR	2'-1"	6
T223	1	#8	STR	1'-7"	4
T301	2	#9	STR	13'-4"	91
T302	2	#9	STR	12'-3"	83
T303	2	#9	STR	11'-2"	76
T304	2	#9	STR	10'-1"	69
T305	2	#9	STR	9'-0"	61
T306	2	#9	STR	7'-11"	54
T307	2	#9	STR	6'-11"	47
T308	2	#9	STR	5'-10"	40
T309	1	#9	STR	4'-9"	16
T310	1	#9	STR	3'-8"	12
T311	1	#9	STR	2'-7"	9
T312	1	#9	STR	1'-7"	5
U1	8	#4	2	3'-11"	21
U2	8	#4	2	7'-5"	40
U3	2	#4	2	8'-3"	11
U4	2	#4	2	7'-11"	11
U5	5	#4	6	8'-7"	29
V1	17	#6	STR	10'-6"	268
V2	17	#6	STR	12'-10"	328
V3	22	#5	STR	10'-6"	241
V4	11	#5	STR	12'-10"	147
V5	17	#7	STR	9'-10"	342
V6	16	#5	STR	13'-2"	220
V7	19	#5	STR	10'-10"	215
REINFORCING STEEL					22,090 LBS.

BAR	NO.	SIZE	TYPE	LENGTH	WEIGHT
SP-1	5	✳	8	403'-7"	2105
SPIRAL COLUMN REINFORCING STEEL					2,105 LBS.

✳ THE SP-1 SPIRAL REINFORCING STEEL SHALL BE W31 OR D-31 COLD DRAWN WIRE OR #5 PLAIN OR DEFORMED BAR.

CLASS AA CONCRETE (AS MODIFIED BY RAILWAY)		
POUR #2 (FOOTING)	52.5	C.Y.
POUR #3 (CAP)	17.3	C.Y.
POUR #4 (BACKWALL & WINGWALLS)	42.3	C.Y.
TOTAL	112.1	C.Y.

BAR TYPES

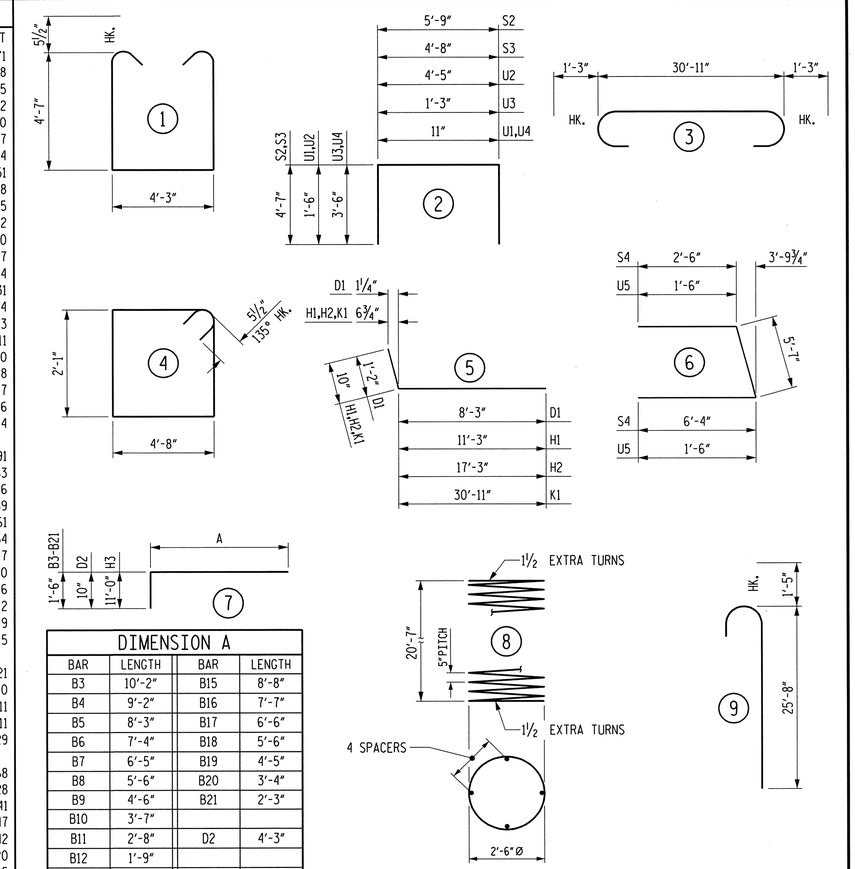

DIMENSION A			
BAR	LENGTH	BAR	LENGTH
B3	10'-2"	B15	8'-8"
B4	9'-2"	B16	7'-7"
B5	8'-3"	B17	6'-6"
B6	7'-4"	B18	5'-6"
B7	6'-5"	B19	4'-5"
B8	5'-6"	B20	3'-4"
B9	4'-6"	B21	2'-3"
B10	3'-7"		
B11	2'-8"	D2	4'-3"
B12	1'-9"		
B13	10'-10"	H3	10'-3"
B14	9'-9"		

ALL BAR DIMENSIONS ARE OUT TO OUT.

3'-0" Ø DRILLED PIER		
DRILLED PIER CONCRETE (AS MOFIFIED BY RAILWAY) POUR 1 (DRILLED PIER)	27.6	C.Y.
3'-0" Ø LFD DRILLED PIER IN SOIL	43.4	LIN. FT.
3'-0" Ø LFD DRILLED PIER NOT IN SOIL	62.0	LIN. FT.
CSL TESTING	5	EACH
CSL TUBES	455.0	LIN. FT.

CSX RR

PROJECT NO. U-0071

DURHAM COUNTY

STATION: POC 64+55.50 -L-

SHEET 5 OF 5 MILEPOST SB-152.5

STATE OF NORTH CAROLINA
DEPARTMENT OF TRANSPORTATION
RALEIGH

SUBSTRUCTURE
ABUTMENT 1

MI ENGINEERING
1011 SCHAUB DRIVE, SUITE 100
RALEIGH, NC 27606
(919) 851-6606
FIRM PE NUMBER : P-0671

NORTH CAROLINA PROFESSIONAL ENGINEER SEAL 027195 PAUL A. de PAOLI 06-09-14

DWG. NO. 25

REVISIONS							SHEET NO.
NO.	BY:	DATE:	NO.	BY:	DATE:		5-62
1			3				TOTAL SHEETS
2			4				671

DRAWN BY B.E. LANNING DATE APR. 2013
CHECKED BY P.A. de PAOLI DATE APR. 2013
DESIGN ENGINEER OF RECORD P.A. de PAOLI DATE JUNE 2014

PLOT: 6/9/2014 2:32:24 PM blanning
FILE NAME: P:\NC Projects\H10808 - U-0071 Durham\U-0071\Structures\user\u0071_sd_abut1a_02csx.dgn

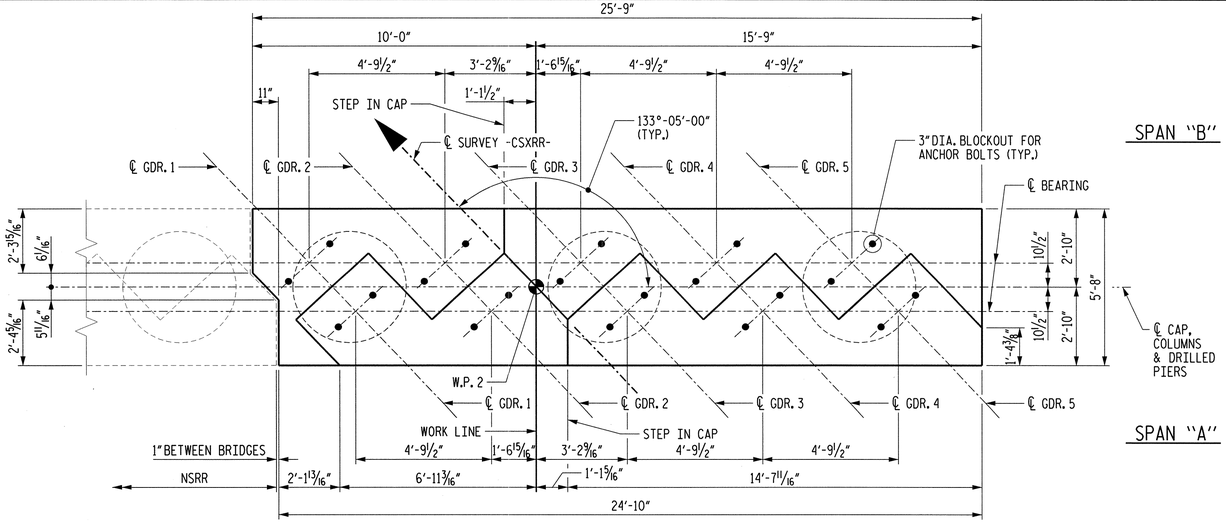

PLAN

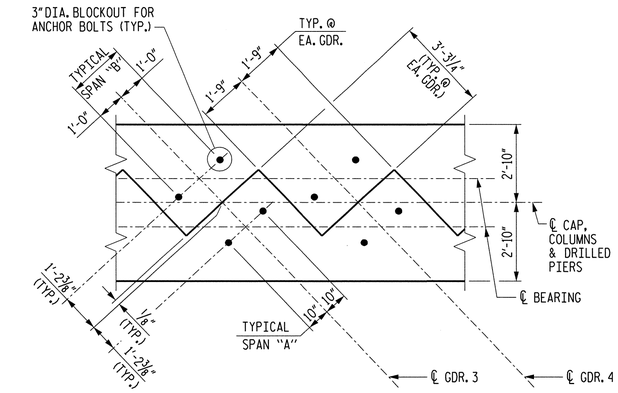

ANCHOR BOLT AND PEDESTAL LAYOUT

FOR REINFORCING STEEL IN PEDESTAL, SEE PEDESTAL REINFORCING DETAIL ON SHEET 2 OF 2.

NOTES

#9 "B" BARS IN BOTTOM OF CAP MAY BE SHIFTED SLIGHTLY TO AVOID CONFLICT WITH #9 V1 BARS IN COLUMN.

STIRRUPS IN CAP MAY BE SHIFTED AS NECESSARY TO CLEAR ANCHOR BOLTS.

ALL STEEL IN THE DRILLED PIERS IS INCLUDED IN THE PAY ITEMS FOR "REINFORCING STEEL" AND "SPIRAL COLUMN REINFORCING STEEL."

THE CONTRACTOR'S ATTENTION IS CALLED TO THE FACT THAT THE LONGITUDINAL REINFORCEMENT FOR THE DRILLED PIERS IS DETAILED WITH 3 FEET OF EXTRA LENGTH.

THE LOCATION OF THE CONSTRUCTION JOINT IN THE DRILLED PIERS IS BASED ON AN APPROXIMATE GROUND LINE ELEVATION. IF THE CONSTRUCTION JOINT IS ABOVE THE ACTUAL GROUND ELEVATION, THE CONTRACTOR SHALL PLACE THE CONSTRUCTION JOINT 2'-0" BELOW THE GROUND LINE.

PROVIDE 3"DIA. BLOCKOUT FOR ANCHOR BOLTS. ANCHOR BOLT HOLES SHALL NOT BE DRILLED. ANCHOR BOLTS SHALL BE GROUTED IN PLACE. GROUT TO BE APPROVED BY ENGINEER.

FOR SECTIONS A-A THRU C-C, SEE SHEET 2 OF 2.

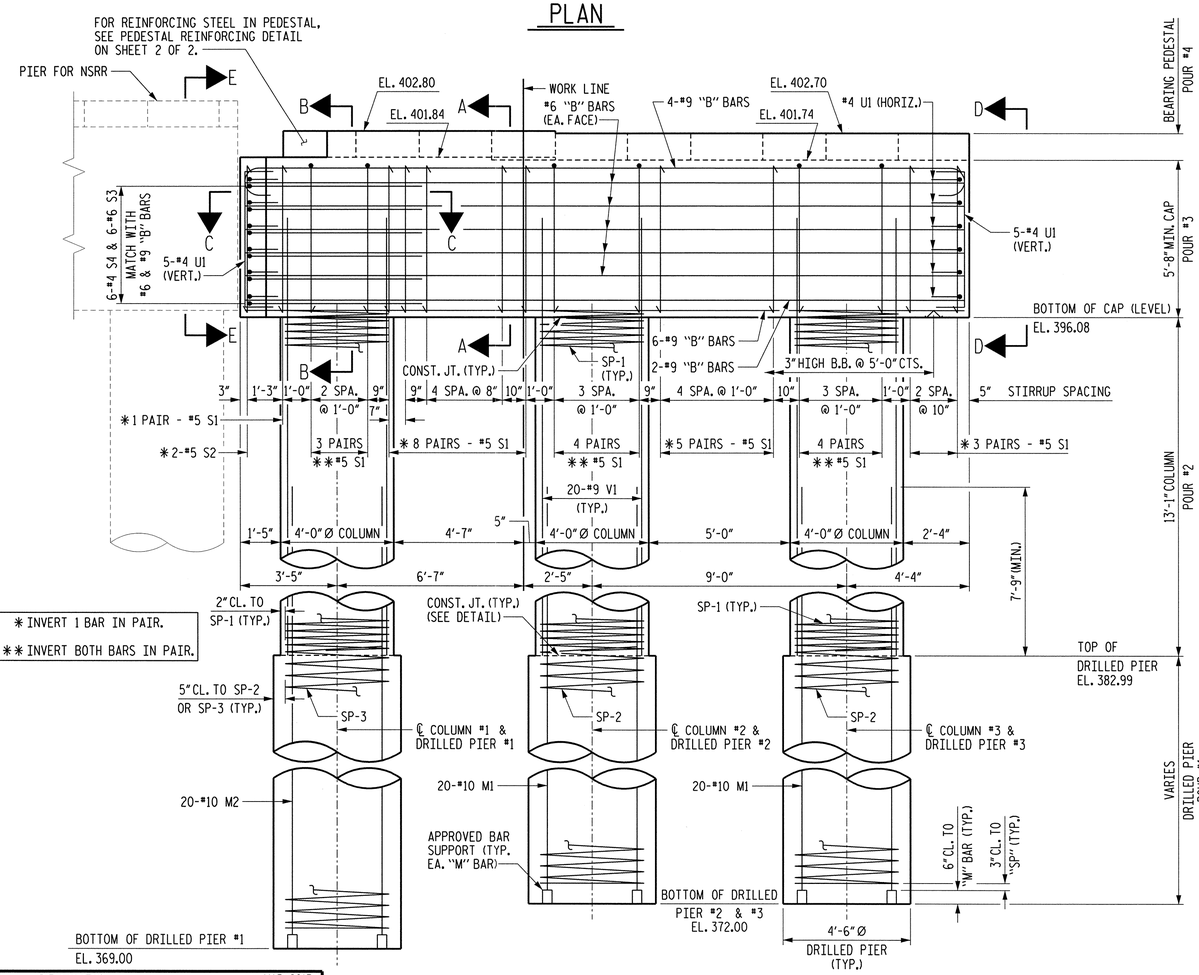

ELEVATION

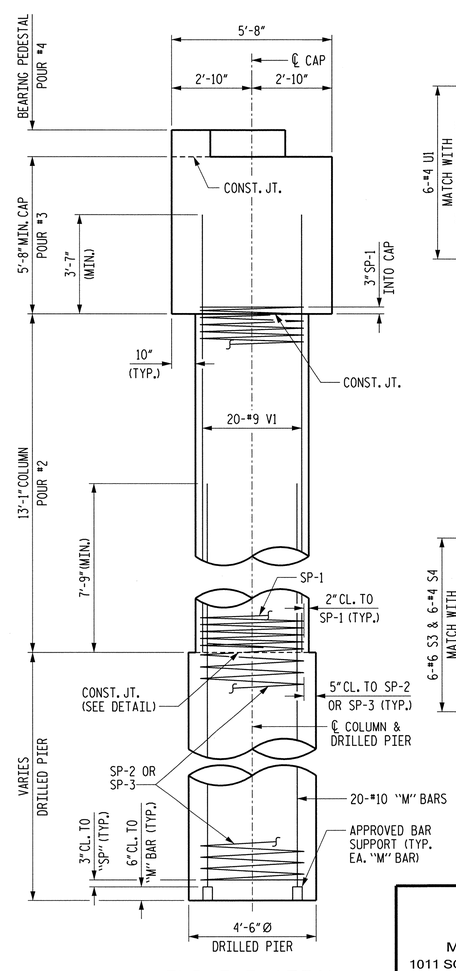

END ELEVATION

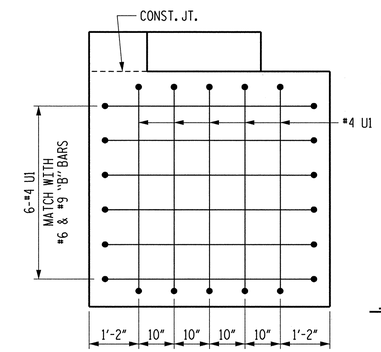

VIEW D-D

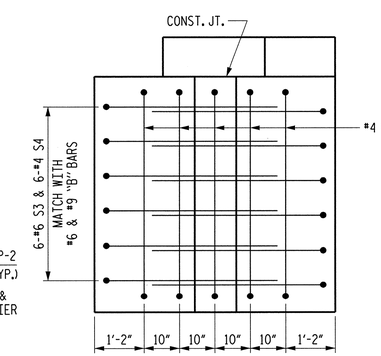

VIEW E-E

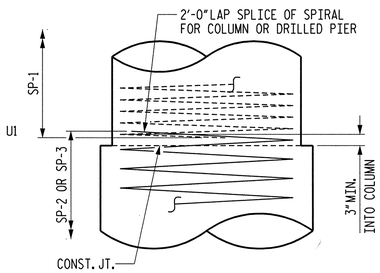

CONSTRUCTION JOINT DETAIL

CSX RR

PROJECT NO. U-0071

DURHAM COUNTY

STATION: POC 64+55.50 -L-

SHEET 1 OF 2 MILEPOST SB-152.5

STATE OF NORTH CAROLINA
DEPARTMENT OF TRANSPORTATION
RALEIGH

SUBSTRUCTURE
PIER 1

DRAWN BY: B.E. LANNING	DATE: MAR. 2013				
CHECKED BY: P.A. de PAOLI	DATE: MAR. 2013				
DESIGN ENGINEER OF RECORD: P.A. de PAOLI	DATE: JUNE 2014				

MI ENGINEERING
1011 SCHAUB DRIVE, SUITE 100
RALEIGH, NC 27606
(919) 851-6606
FIRM PE NUMBER : P-0671

NORTH CAROLINA PROFESSIONAL SEAL ENGINEER PAUL A. de PAOLI 06-09-14

DWG. NO. 26

REVISIONS							SHEET NO.
NO.	BY:	DATE:	NO.	BY:	DATE:		5-63
1			3				TOTAL SHEETS
2			4				67

PLOT: 6/9/2014 2:32:46 PM blanning
FILE NAME: P:\NC Projects\M10088 - U-0071 Durham\U-0071\Structures\sasm\u0071-sd_pier1_02csx.dgn

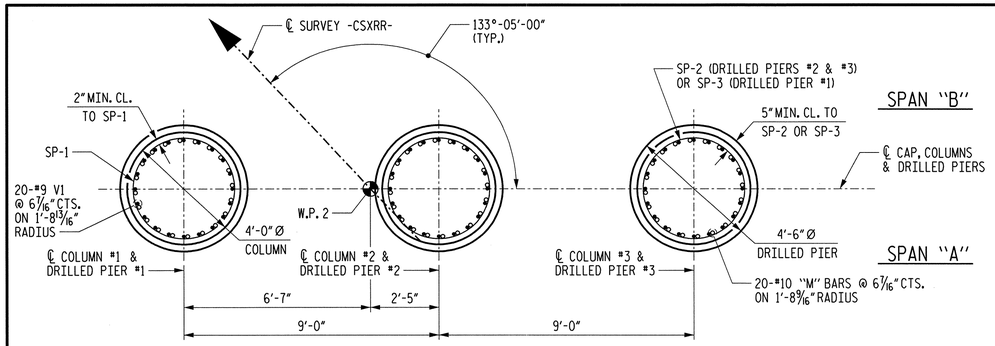

PLAN

(DIMENSIONS AND REINFORCING STEEL ARE TYPICAL FOR EACH COLUMN AND DRILLED PIER)

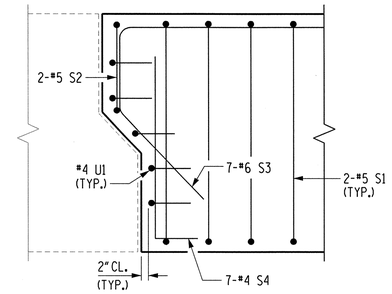

SECTION C-C

("B" BARS NOT SHOWN FOR CLARITY)

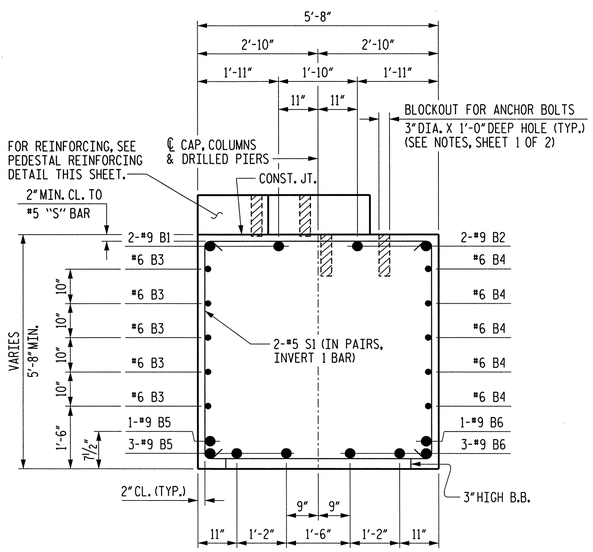

SECTION A-A

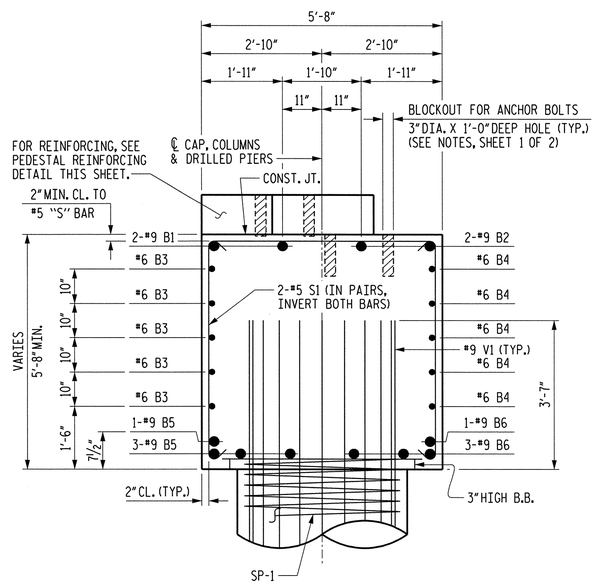

SECTION B-B

BAR TYPES

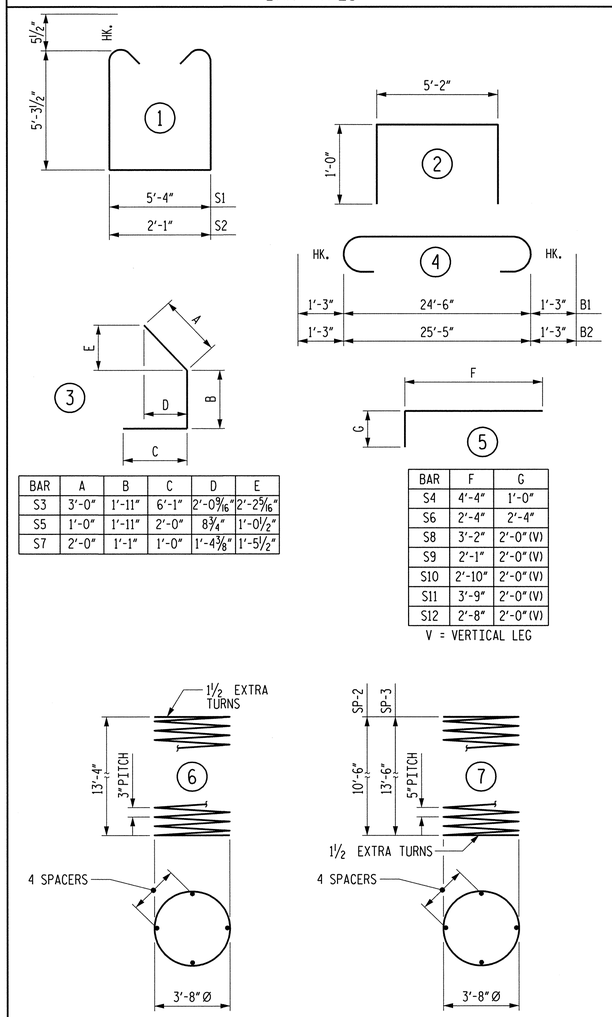

BAR	A	B	C	D	E
S3	3'-0"	1'-11"	6'-1"	2'-0 9/16"	2'-2 5/16"
S5	1'-0"	1'-11"	2'-0"	8 3/4"	1'-0 1/2"
S7	2'-0"	1'-1"	1'-0"	1'-4 3/8"	1'-5 1/2"

BAR	F	G
S4	4'-4"	1'-0"
S6	2'-4"	2'-4"
S8	3'-2"	2'-0" (V)
S9	2'-1"	2'-0" (V)
S10	2'-10"	2'-0" (V)
S11	3'-9"	2'-0" (V)
S12	2'-8"	2'-0" (V)

V = VERTICAL LEG

ALL BAR DIMENSIONS ARE OUT TO OUT.

BILL OF MATERIAL

PIER 1

BAR	NO.	SIZE	TYPE	LENGTH	WEIGHT
B1	2	#9	4	27'-0"	184
B2	2	#9	4	27'-11"	190
B3	6	#6	STR	24'-6"	221
B4	6	#6	STR	25'-5"	229
B5	4	#9	STR	24'-6"	333
B6	4	#9	STR	25'-5"	346
B7	1	#4	STR	22'-5"	15
▲ M1	40	#10	STR	21'-3"	3658
▲ M2	20	#10	STR	24'-3"	2087
S1	56	#5	1	16'-10"	983
S2	2	#5	1	13'-7"	28
S3	6	#6	3	11'-0"	99
S4	6	#4	5	5'-4"	21
S5	1	#4	3	4'-11"	3
S6	9	#4	5	4'-8"	28
S7	1	#4	5	4'-1"	3
S8	2	#4	3	5'-2"	7
S9	20	#4	5	4'-1"	55
S10	20	#4	5	4'-10"	65
S11	8	#4	5	5'-9"	31
S12	5	#4	5	4'-8"	16
U1	16	#4	2	7'-2"	77
▲ V1	60	#9	STR	16'-8"	3400
REINFORCING STEEL					2,934 LBS.
▲ EPOXY COATED REINFORCING STEEL					9,145 LBS.
◆ SP-1	3	*	6	624'-8"	1252
SP-2	2	**	7	303'-5"	633
SP-3	1	**	7	385'-3"	402
SPIRAL COLUMN REINFORCING STEEL					1,035 LBS.
◆ EPOXY COATED SPIRAL COLUMN REINFORCING STEEL					1,252 LBS.

* THE SP-1 SPIRAL REINFORCING STEEL SHALL BE W20 OR D-20 COLD DRAWN WIRE OR #4 PLAIN OR DEFORMED BAR.

** THE SP-2 AND SP-3 SPIRAL REINFORCING STEEL SHALL BE W31 OR D-31 COLD DRAWN WIRE OR #5 PLAIN OR DEFORMED BAR.

CLASS AA CONCRETE (AS MODIFIED BY RAILWAY)

POUR #2 (COLUMN)	18.3	C.Y.
POUR #3 (CAP)	30.3	C.Y.
POUR #4 (BEARING PEDESTAL)	2.4	C.Y.
TOTAL	51.0	C.Y.

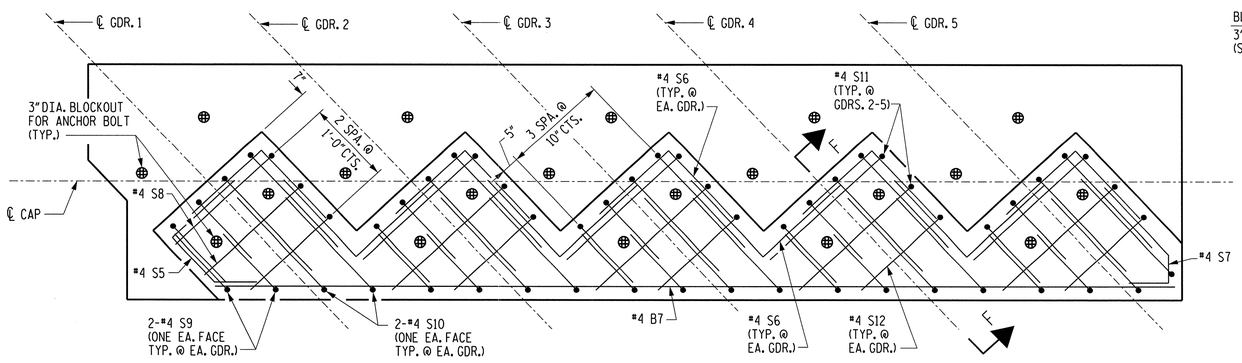

PEDESTAL REINFORCING DETAIL

FOR ADDITIONAL DIMENSIONS AND DETAILS FOR PEDESTALS, SEE SHEET 1 OF 2.

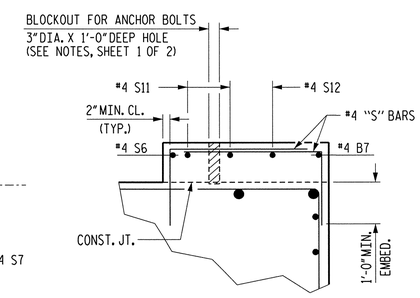

SECTION F-F

4'-6" Ø DRILLED PIER

DRILLED PIER CONCRETE (AS MODIFIED BY RAILWAY) POUR 1 (DRILLED PIER)	21.2	C.Y.
4'-6" Ø LFD DRILLED PIER IN SOIL	0.0	LIN. FT.
4'-6" Ø LFD DRILLED PIER NOT IN SOIL	36.0	LIN. FT.
CSL TESTING	3	EACH
CSL TUBES	204.0	LIN. FT.

CSX RR

PROJECT NO. U-0071

DURHAM COUNTY

STATION: POC 64+55.50 -L-

SHEET 2 OF 2 MILEPOST SB-152.5

STATE OF NORTH CAROLINA
DEPARTMENT OF TRANSPORTATION
RALEIGH

SUBSTRUCTURE
PIER 1

MI ENGINEERING
1011 SCHAUB DRIVE, SUITE 100
RALEIGH, NC 27606
(919) 851-6606
FIRM PE NUMBER : P-0671

NORTH CAROLINA PROFESSIONAL SEAL ENGINEER PAUL A. de PAOLI 06-09-14

DWG. NO. 27

REVISIONS						SHEET NO.
NO.	BY:	DATE:	NO.	BY:	DATE:	5-64
1			3			TOTAL SHEETS
2			4			671

DRAWN BY B.E. LANNING	DATE MAR. 2013	
CHECKED BY P.A. de PAOLI	DATE	
DESIGN ENGINEER OF RECORD P.A. de PAOLI	DATE JUNE 2014	

PLOT: 6/9/2014 2:32:08 PM bleanning
FILE NAME: P:\NC Projects\MI0088 - U-0071 Durham\U-0071\Structures\csxrr\u0071_s4_pier_02csxrr.dgn

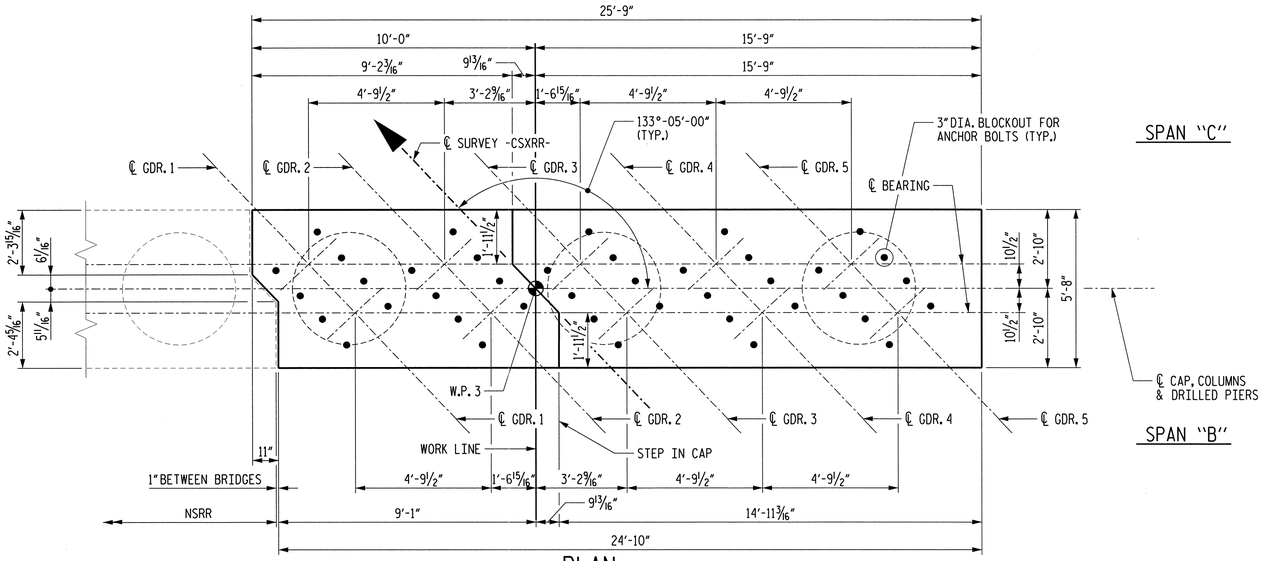

PLAN

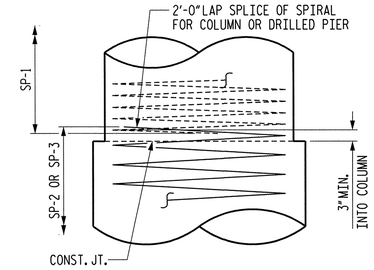

CONSTRUCTION JOINT DETAIL

NOTES

#9 "B" BARS IN BOTTOM OF CAP MAY BE SHIFTED SLIGHTLY TO AVOID CONFLICT WITH #9 V1 BARS IN COLUMN.

STIRRUPS IN CAP MAY BE SHIFTED AS NECESSARY TO CLEAR ANCHOR BOLTS.

ALL STEEL IN THE DRILLED PIERS IS INCLUDED IN THE PAY ITEMS FOR "REINFORCING STEEL" AND "SPIRAL COLUMN REINFORCING STEEL."

THE CONTRACTOR'S ATTENTION IS CALLED TO THE FACT THAT THE LONGITUDINAL REINFORCEMENT FOR THE DRILLED PIERS IS DETAILED WITH 3 FEET OF EXTRA LENGTH.

THE LOCATION OF THE CONSTRUCTION JOINT IN THE DRILLED PIERS IS BASED ON AN APPROXIMATE GROUND LINE ELEVATION. IF THE CONSTRUCTION JOINT IS ABOVE THE ACTUAL GROUND ELEVATION, THE CONTRACTOR SHALL PLACE THE CONSTRUCTION JOINT 2'-0" BELOW THE GROUND LINE.

PROVIDE 3" DIA. BLOCKOUT FOR ANCHOR BOLTS. ANCHOR BOLT HOLES SHALL NOT BE DRILLED. ANCHOR BOLTS SHALL BE GROUTED IN PLACE. GROUT TO BE APPROVED BY ENGINEER.

FOR SECTIONS A-A THRU C-C AND VIEWS D-D THRU E-E, SEE SHEET 2 OF 2.

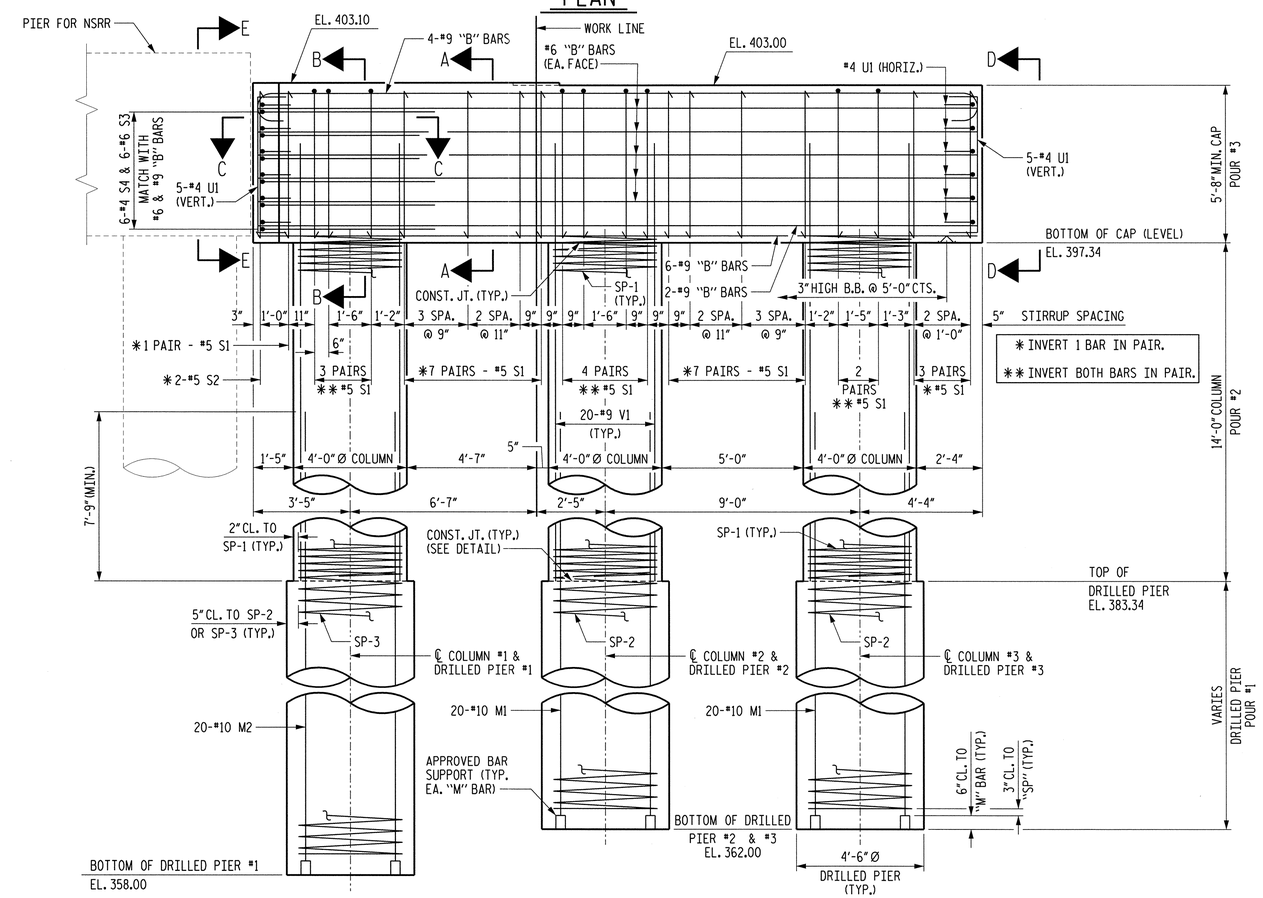

ELEVATION

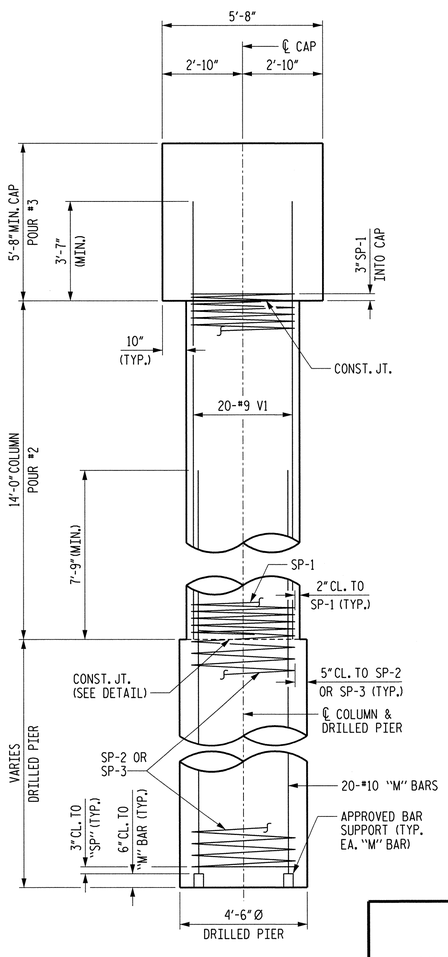

END ELEVATION

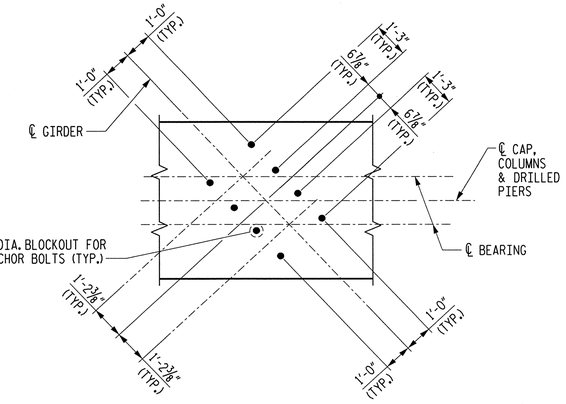

ANCHOR BOLT LAYOUT

CSX RR

PROJECT NO. U-0071

DURHAM COUNTY

STATION: POC 64+55.50 -L-

SHEET 1 OF 2 MILEPOST SB-152.5

STATE OF NORTH CAROLINA
DEPARTMENT OF TRANSPORTATION
RALEIGH

SUBSTRUCTURE
PIER 2

REVISIONS						SHEET NO.
NO.	BY:	DATE:	NO.	BY:	DATE:	5-65
1			3			TOTAL SHEETS
2			4			671

DWG. NO. 28

MI ENGINEERING
1011 SCHAUB DRIVE, SUITE 100
RALEIGH, NC 27606
(919) 851-6606
FIRM PE NUMBER : P-0671

NORTH CAROLINA PROFESSIONAL SEAL ENGINEER PAUL A. de PAOLI 06-09-14

DRAWN BY	B.E. LANNING	DATE	MAR. 2013
CHECKED BY	P.A. de PAOLI	DATE	MAR. 2013
DESIGN ENGINEER OF RECORD	P.A. de PAOLI	DATE	JUNE 2014

PLOT: 6/9/2014 2:32:11 PM bleming
FILE NAME: P:\NC Projects\M10808 - U-0071 Durham\U-0071\Structures\pier_U0071_sub_p2a_02sxu.dgn

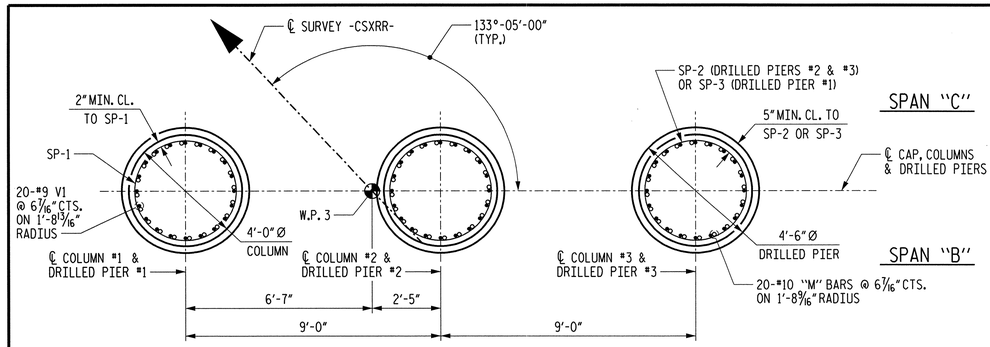

PLAN

(DIMENSIONS AND REINFORCING STEEL ARE TYPICAL FOR EACH COLUMN AND DRILLED PIER)

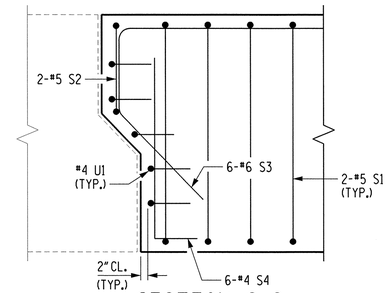

SECTION C-C

("B" BARS NOT SHOWN FOR CLARITY)

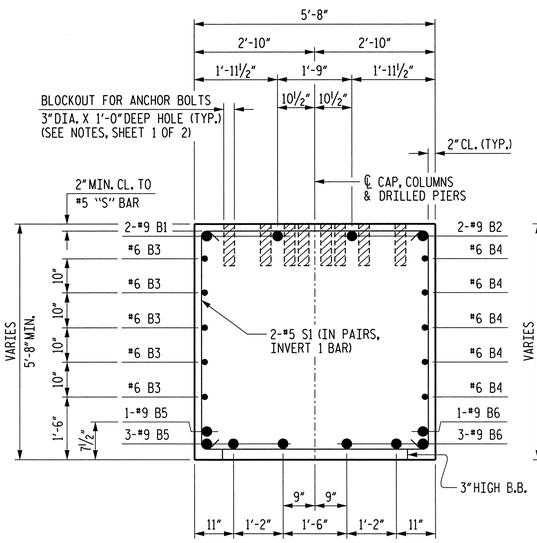

SECTION A-A

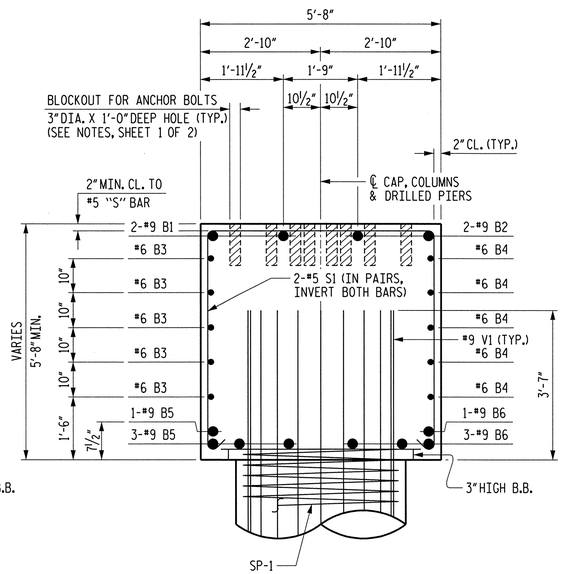

SECTION B-B

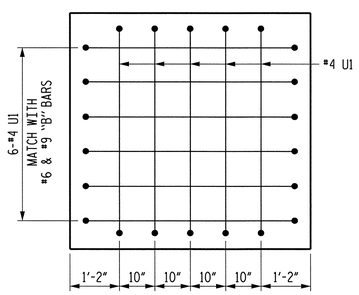

VIEW D-D

BAR TYPES

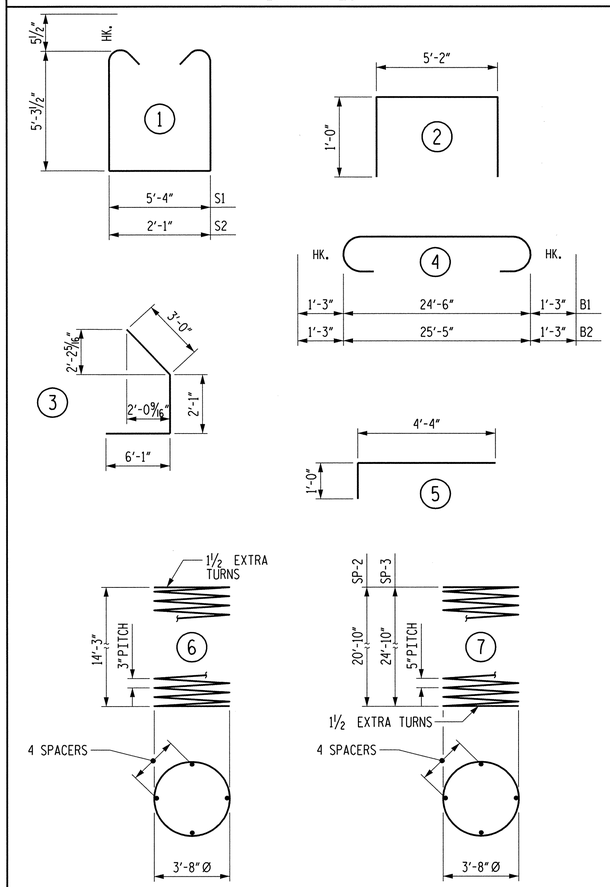

ALL BAR DIMENSIONS ARE OUT TO OUT.

BILL OF MATERIAL

PIER 2

BAR	NO.	SIZE	TYPE	LENGTH	WEIGHT
B1	2	#9	4	27'-0"	184
B2	2	#9	4	27'-11"	190
B3	6	#6	STR	24'-6"	221
B4	6	#6	STR	25'-5"	229
B5	4	#9	STR	24'-6"	333
B6	4	#9	STR	25'-5"	346
▲ M1	40	#10	STR	31'-8"	5450
▲ M2	20	#10	STR	35'-8"	3069
S1	54	#5	1	16'-10"	948
S2	2	#5	1	13'-7"	28
S3	6	#6	3	11'-0"	99
S4	6	#4	5	5'-4"	21
U1	16	#4	2	7'-2"	77
▲ V1	60	#9	STR	17'-7"	3587

REINFORCING STEEL 2,676 LBS.

▲ EPOXY COATED REINFORCING STEEL 12,106 LBS.

◆ SP-1	3	✱	6	666'-5"	1335
SP-2	2	✱✱	7	585'-3"	1221
SP-3	1	✱✱	7	698'-10"	729

SPIRAL COLUMN REINFORCING STEEL 1,950 LBS.

◆ EPOXY COATED SPIRAL COLUMN REINFORCING STEEL 1,335 LBS.

✱ THE SP-1 SPIRAL REINFORCING STEEL SHALL BE W20 OR D-20 COLD DRAWN WIRE OR #4 PLAIN OR DEFORMED BAR.

✱✱ THE SP-2 AND SP-3 SPIRAL REINFORCING STEEL SHALL BE W31 OR D-31 COLD DRAWN WIRE OR #5 PLAIN OR DEFORMED BAR.

CLASS AA CONCRETE (AS MODIFIED BY RAILWAY)

POUR #2 (COLUMN)	19.5	C.Y.
POUR #3 (CAP)	30.3	C.Y.
TOTAL	49.8	C.Y.

4'-6" Ø DRILLED PIER

DRILLED PIER CONCRETE (AS MOFIFIED BY RAILWAY)

POUR 1 (DRILLED PIER)	40.1	C.Y.
4'-6" Ø LFD DRILLED PIER IN SOIL	37.0	LIN. FT.
4'-6" Ø LFD DRILLED PIER NOT IN SOIL	31.0	LIN. FT.
SPT TESTING	3	EACH
CSL TESTING	3	EACH
CSL TUBES	365.0	LIN. FT.

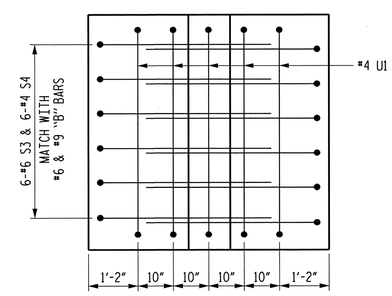

VIEW E-E

CSX RR

PROJECT NO. U-0071

DURHAM COUNTY

STATION: POC 64+55.50 -L-

SHEET 2 OF 2

MILEPOST SB-152.5

STATE OF NORTH CAROLINA
DEPARTMENT OF TRANSPORTATION
RALEIGH

SUBSTRUCTURE
PIER 2

MI ENGINEERING
1011 SCHAUB DRIVE, SUITE 100
RALEIGH, NC 27606
(919) 851-6606
FIRM PE NUMBER : P-0671

NORTH CAROLINA PROFESSIONAL SEAL ENGINEER PAUL A. de PAOLI
06-09-14

DWG. NO. 29

REVISIONS						SHEET NO.
NO.	BY:	DATE:	NO.	BY:	DATE:	5-66
1			3			TOTAL SHEETS
2			4			671

DRAWN BY B.E. LANNING DATE MAR. 2013
CHECKED BY P.A. de PAOLI DATE MAR. 2013
DESIGN ENGINEER OF RECORD P.A. de PAOLI DATE JUNE 2014

PLOT: 6/9/2014 2:32:13 PM bleanung
FILE NAME: P:\NC Projects\W10088 - U-0071 Durham\U-0071\Structures\csxrr\u0071_sd_p2b_02cnc.dgn

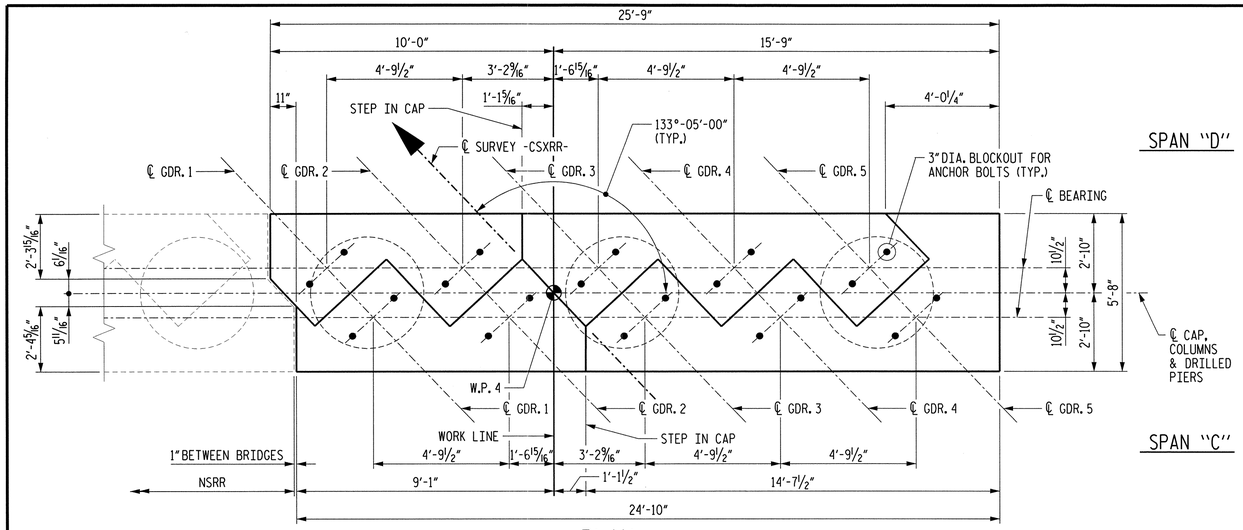

PLAN

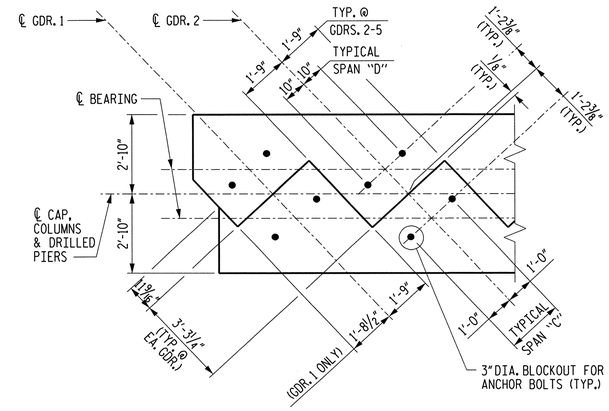

ANCHOR BOLT AND PEDESTAL LAYOUT

FOR REINFORCING STEEL IN PEDESTAL, SEE PEDESTAL REINFORCING DETAIL ON SHEET 2 OF 2.

NOTES

#9 "B" BARS IN BOTTOM OF CAP MAY BE SHIFTED SLIGHTLY TO AVOID CONFLICT WITH #9 V1 BARS IN COLUMN.

STIRRUPS IN CAP MAY BE SHIFTED AS NECESSARY TO CLEAR ANCHOR BOLTS.

ALL STEEL IN THE DRILLED PIERS IS INCLUDED IN THE PAY ITEMS FOR "REINFORCING STEEL" AND "SPIRAL COLUMN REINFORCING STEEL."

THE CONTRACTOR'S ATTENTION IS CALLED TO THE FACT THAT THE LONGITUDINAL REINFORCEMENT FOR THE DRILLED PIERS IS DETAILED WITH 3 FEET OF EXTRA LENGTH.

THE LOCATION OF THE CONSTRUCTION JOINT IN THE DRILLED PIERS IS BASED ON AN APPROXIMATE GROUND LINE ELEVATION. IF THE CONSTRUCTION JOINT IS ABOVE THE ACTUAL GROUND ELEVATION, THE CONTRACTOR SHALL PLACE THE CONSTRUCTION JOINT 2'-0" BELOW THE GROUND LINE.

PROVIDE 3"DIA. BLOCKOUT FOR ANCHOR BOLTS. ANCHOR BOLT HOLES SHALL NOT BE DRILLED. ANCHOR BOLTS SHALL BE GROUTED IN PLACE. GROUT TO BE APPROVED BY ENGINEER.

FOR SECTIONS A-A THRU C-C, SEE SHEET 2 OF 2.

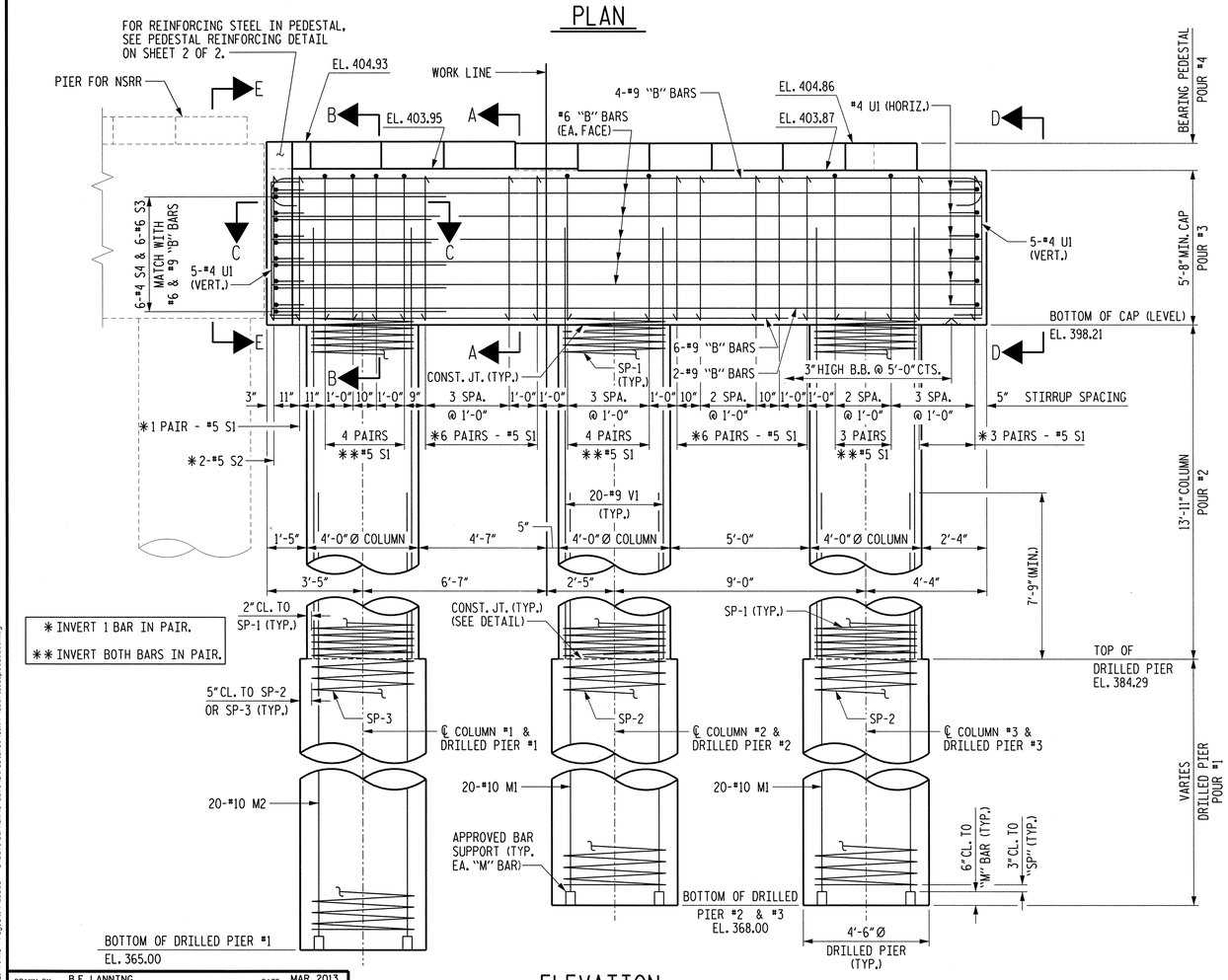

ELEVATION

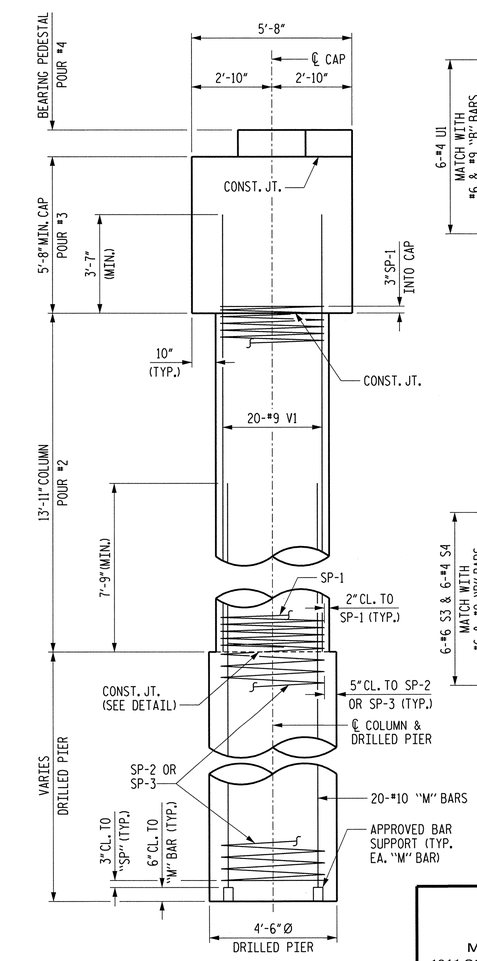

END ELEVATION

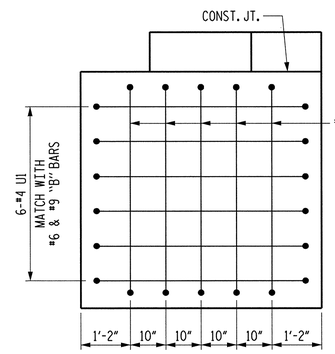

VIEW D-D

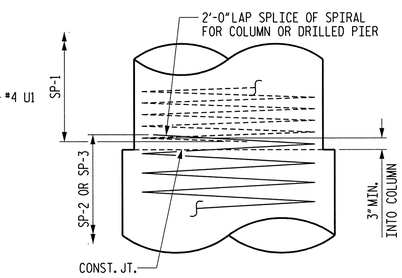

CONSTRUCTION JOINT DETAIL

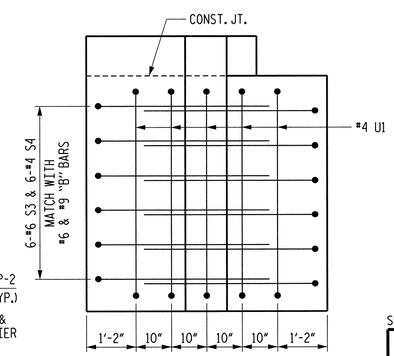

VIEW E-E

CSX RR

PROJECT NO. U-0071

DURHAM COUNTY

STATION: POC 64+55.50 -L-

SHEET 1 OF 2

MILEPOST SB-152.5

STATE OF NORTH CAROLINA
DEPARTMENT OF TRANSPORTATION
RALEIGH

SUBSTRUCTURE
PIER 3

MI ENGINEERING
1011 SCHAUB DRIVE, SUITE 100
RALEIGH, NC 27606
(919) 851-6606
FIRM PE NUMBER : P-0671

NORTH CAROLINA PROFESSIONAL SEAL ENGINEER PAUL A. de PAOLI 06-05-14

DWG. NO. 30

REVISIONS						SHEET NO.
NO.	BY:	DATE:	NO.	BY:	DATE:	5-67
1			3			TOTAL SHEETS
2			4			67

DRAWN BY	B.E. LANNING	DATE	MAR. 2013
CHECKED BY	P.A. de PAOLI	DATE	MAR. 2013
DESIGN ENGINEER OF RECORD	P.A. de PAOLI	DATE	JUNE 2014

PLOT: 6/4/2014 2:33:35 PM bleanning
FILE NAME: PLNC Projects\MIDBRR - U-0071 Durham\U-0071\Structures\csxrr\U0071_sd_p3a_02sub.dgn

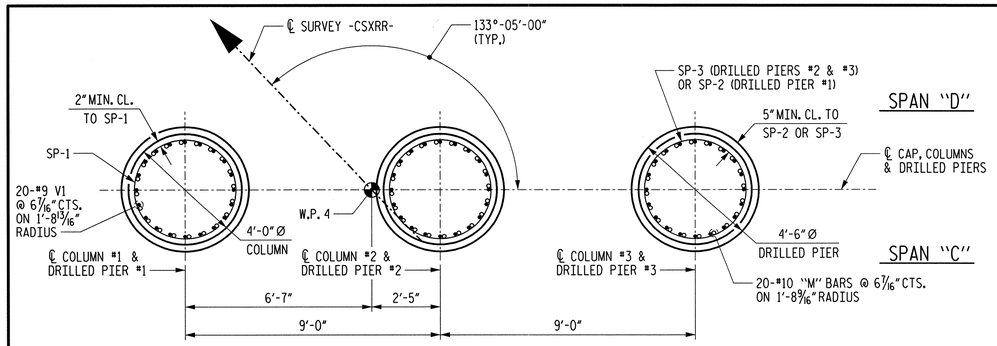

PLAN

(DIMENSIONS AND REINFORCING STEEL ARE TYPICAL FOR EACH COLUMN AND DRILLED PIER)

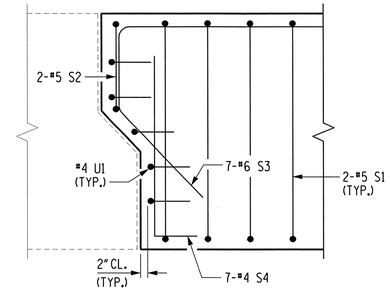

SECTION C-C

("B" BARS NOT SHOWN FOR CLARITY)

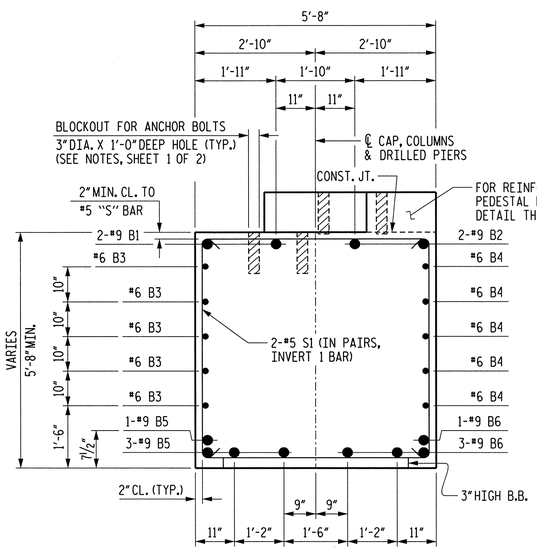

SECTION A-A

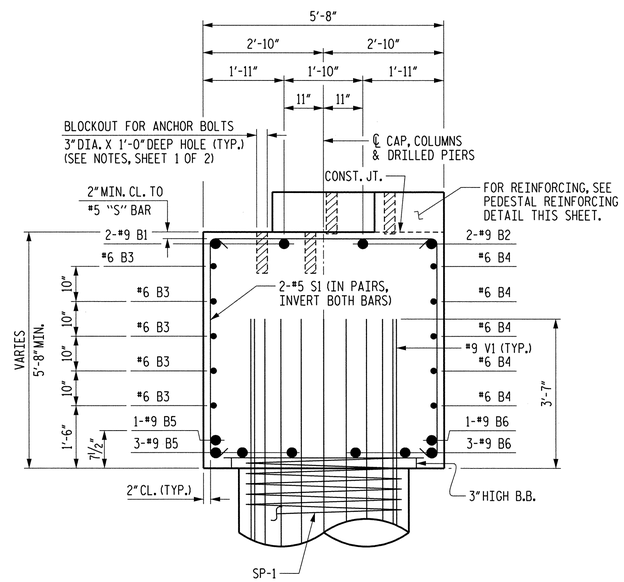

SECTION B-B

BAR TYPES

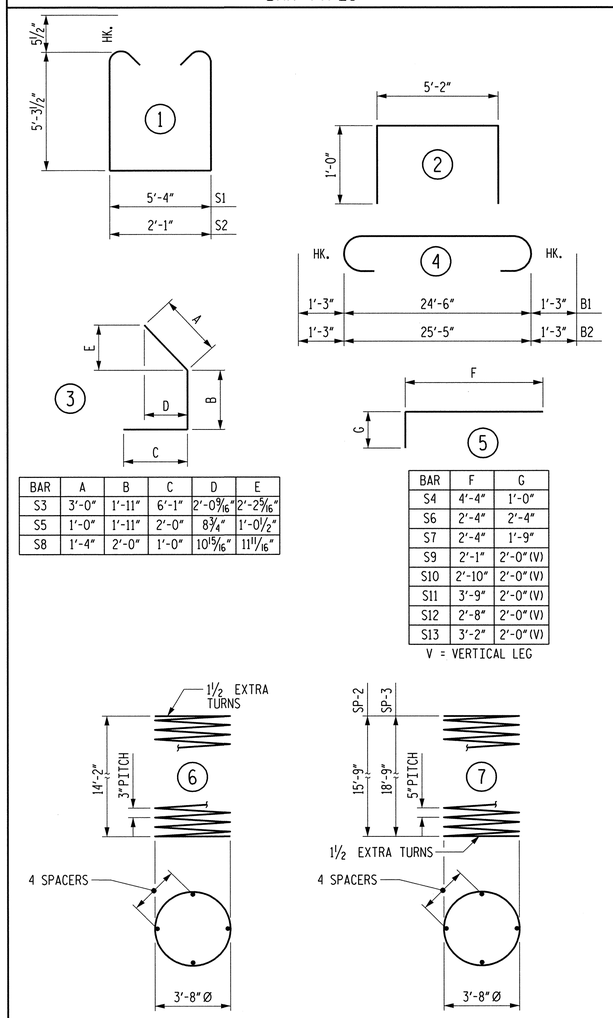

BAR	A	B	C	D	E
S3	3'-0"	1'-11"	6'-1"	2'-0 9/16"	2'-2 5/16"
S5	1'-0"	1'-11"	2'-0"	8 3/4"	1'-0 1/2"
S8	1'-4"	2'-0"	1'-0"	10 15/16"	11 11/16"

BAR	F	G
S4	4'-4"	1'-0"
S6	2'-4"	2'-4"
S7	2'-4"	1'-9"
S9	2'-1"	2'-0"(V)
S10	2'-10"	2'-0"(V)
S11	3'-9"	2'-0"(V)
S12	2'-8"	2'-0"(V)
S13	3'-2"	2'-0"(V)

V = VERTICAL LEG

ALL BAR DIMENSIONS ARE OUT TO OUT.

BILL OF MATERIAL

PIER 3

BAR	NO.	SIZE	TYPE	LENGTH	WEIGHT
B1	#9	2	4	27'-0"	184
B2	#9	2	4	27'-11"	190
B3	#6	6	STR	24'-6"	221
B4	#6	6	STR	25'-5"	229
B5	#9	4	STR	24'-6"	333
B6	#9	4	STR	25'-5"	346
B7	#4	1	STR	21'-4"	14
▲ M1	#10	40	STR	26'-7"	4576
▲ M2	#10	20	STR	29'-7"	2546
S1	#5	54	1	16'-10"	948
S2	#5	2	1	13'-7"	28
S3	#6	6	3	11'-0"	99
S4	#4	6	5	5'-4"	21
S5	#4	1	3	4'-11"	3
S6	#4	8	5	4'-8"	25
S7	#4	1	5	4'-1"	3
S8	#4	1	3	4'-4"	3
S9	#4	22	5	4'-1"	60
S10	#4	18	5	4'-10"	58
S11	#4	8	5	5'-9"	31
S12	#4	5	5	4'-8"	16
S13	#4	2	5	5'-2"	7
U1	#4	16	2	7'-2"	77
▲ V1	#9	60	STR	17'-6"	3570
REINFORCING STEEL					2,896 LBS.
▲ EPOXY COATED REINFORCING STEEL					10,692 LBS.
◆ SP-1	3	*	6	662'-7"	1328
SP-2	2	**	7	446'-7"	932
SP-3	1	**	7	528'-5"	551
SPIRAL COLUMN REINFORCING STEEL					1,483 LBS.
◆ EPOXY COATED SPIRAL COLUMN REINFORCING STEEL					1,328 LBS.

* THE SP-1 SPIRAL REINFORCING STEEL SHALL BE W20 OR D-20 COLD DRAWN WIRE OR #4 PLAIN OR DEFORMED BAR.

** THE SP-2 AND SP-3 SPIRAL REINFORCING STEEL SHALL BE W31 OR D-31 COLD DRAWN WIRE OR #5 PLAIN OR DEFORMED BAR.

CLASS AA CONCRETE (AS MODIFIED BY RAILWAY)		
POUR #2 (COLUMN)	19.4	C.Y.
POUR #3 (CAP)	30.2	C.Y.
POUR #4 (BEARING PEDESTAL)	2.4	C.Y.
TOTAL	52.0	C.Y.

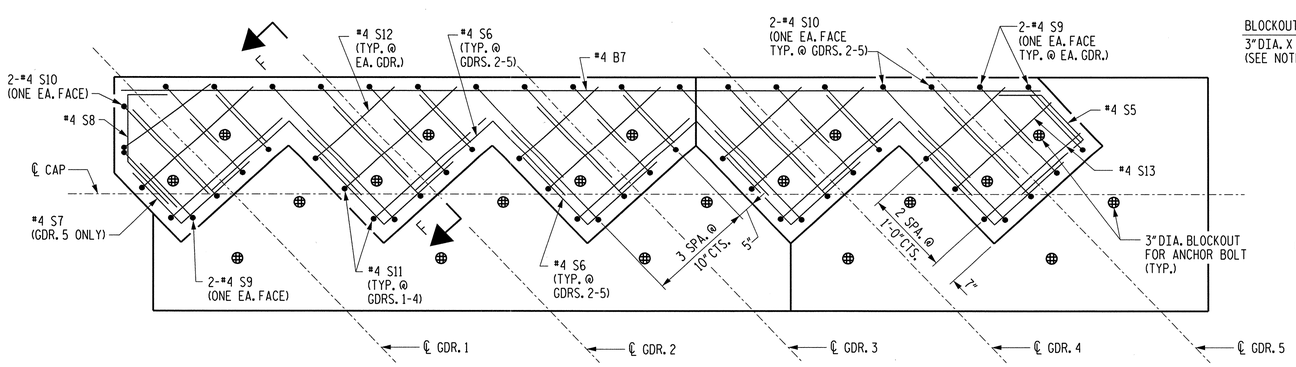

PEDESTAL REINFORCING DETAIL

FOR ADDITIONAL DIMENSIONS AND DETAILS FOR PEDESTALS, SEE SHEET 1 OF 2.

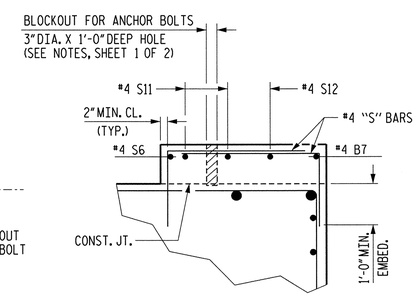

SECTION F-F

4'-6" Ø DRILLED PIER

DRILLED PIER CONCRETE (AS MODIFIED BY RAILWAY) POUR 1 (DRILLED PIER)	30.6	C.Y.
4'-6" Ø LFD DRILLED PIER IN SOIL	14.9	LIN. FT.
4'-6" Ø LFD DRILLED PIER NOT IN SOIL	37.0	LIN. FT.
SPT TESTING	3	EACH
CSL TESTING	3	EACH
CSL TUBES	282.0	LIN. FT.

CSX RR

PROJECT NO. U-0071

DURHAM COUNTY

STATION: POC 64+55.50 -L-

SHEET 2 OF 2 MILEPOST SB-152.5

STATE OF NORTH CAROLINA
DEPARTMENT OF TRANSPORTATION
RALEIGH

SUBSTRUCTURE
PIER 3

MI ENGINEERING
1011 SCHAUB DRIVE, SUITE 100
RALEIGH, NC 27606
(919) 851-6606
FIRM PE NUMBER : P-0671

NORTH CAROLINA PROFESSIONAL SEAL ENGINEER PAUL A. de PAOLI
04-02-14

DWG. NO. 31

REVISIONS						SHEET NO.
NO.	BY:	DATE:	NO.	BY:	DATE:	5-68
1			3			TOTAL SHEETS
2			4			671

DRAWN BY B.E. LANNING	DATE MAR. 2013		
CHECKED BY P.A. de PAOLI	DATE MAR. 2013		
DESIGN ENGINEER OF RECORD P.A. de PAOLI	DATE JUNE 2014		

PLOT: 6/9/2014 2:32:37 PM bleanning
FILE NAME: P:\MC Projects\W10088 - U-0071 Durham\U-0071\Structures\cover\u0071_sdd_p3b_02cover.dgn

NOTES

#9 "B" BARS IN BOTTOM OF CAP MAY BE SHIFTED SLIGHTLY TO AVOID CONFLICT WITH BARS IN DRILLED PIERS.

STIRRUPS IN CAP MAY BE SHIFTED AS NECESSARY TO CLEAR ANCHOR BOLTS AND BARS IN DRILLED PIERS.

ALL STEEL IN THE DRILLED PIERS IS INCLUDED IN THE PAY ITEMS FOR "REINFORCING STEEL" AND "SPIRAL COLUMN REINFORCING STEEL."

PROVIDE 3" DIA. BLOCKOUT FOR ANCHOR BOLTS. ANCHOR BOLT HOLES SHALL NOT BE DRILLED. ANCHOR BOLTS SHALL BE GROUTED IN PLACE. GROUT TO BE APPROVED BY ENGINEER.

PAYMENT FOR PIPE SLEEVE INSERT AS SHOWN ON SECTION THRU WINGWALL IS CONSIDERED INCIDENTAL OF THE ABUTMENT.

FOR FRENCH DRAINS, SEE SPECIAL PROVISION "STRUCTURE DRAINAGE SYSTEM".

"T" BARS IN FOOTING MAY BE SHIFTED SLIGHTLY TO AVOID CONFLICT WITH BARS IN DRILLED PIERS.

THE CONTRACTOR'S ATTENTION IS CALLED TO THE FACT THAT THE LONGITUDINAL REINFORCEMENT FOR THE DRILLED PIERS IS DETAILED WITH 3 FEET OF EXTRA LENGTH.

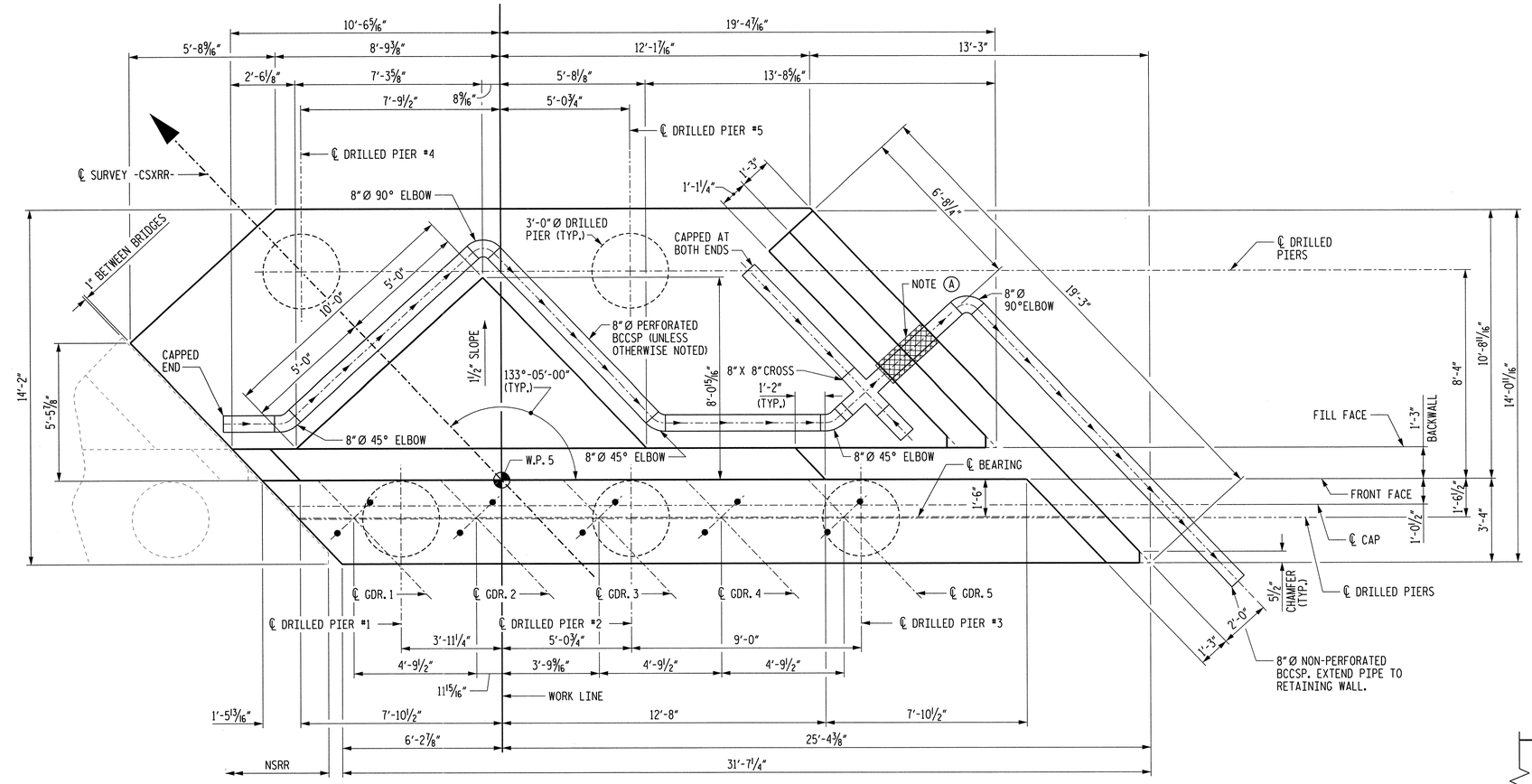

PLAN

BCCSP = BITUMINOUS COATED CORRUGATED STEEL PIPE

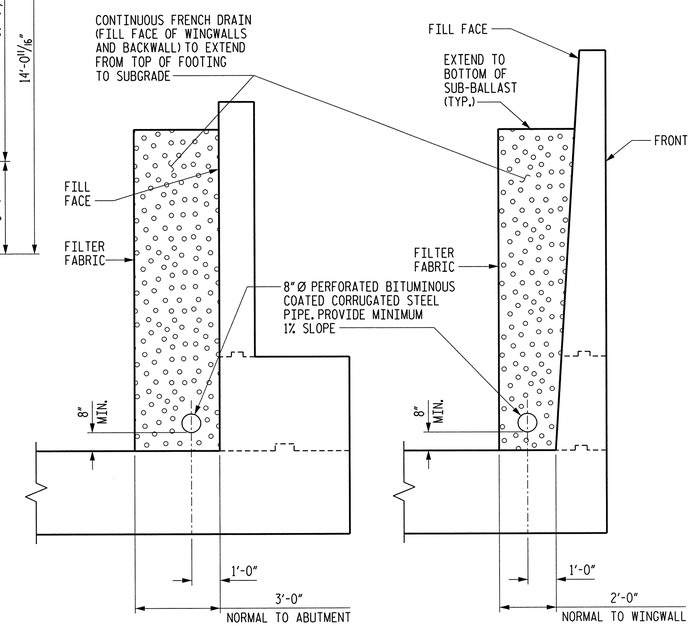

CONTINUOUS UNDERDRAIN DETAIL

CSX RR

NOTE (A):
12" I.D. STEEL PIPE SLEEVE (3/8" WALL THICKNESS) TO BE FLUSH WITH BOTH FACES OF WING. FIELD BEND REINFORCING STEEL AS NECESSARY TO PROVIDE FOR SLEEVE. SEE SECTION THRU WINGWALL THIS SHEET FOR DETAILS. INSTALL BCCSP WITH A MINIMUM OF 1/8" PER FOOT SLOPE.

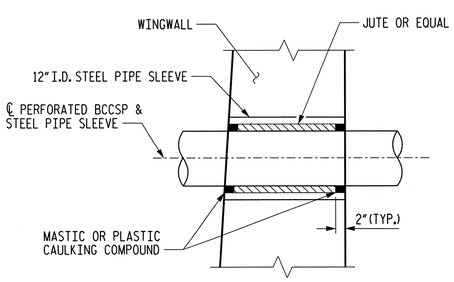

SECTION THRU WINGWALL

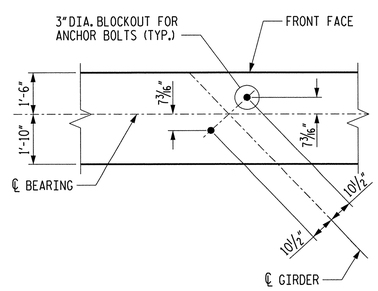

ANCHOR BOLT LAYOUT

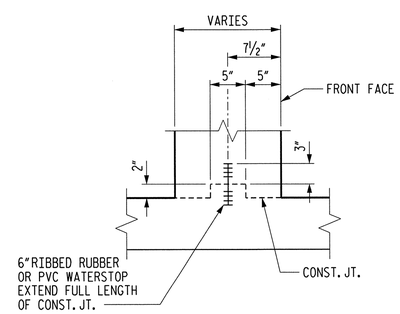

RAISED KEY WITH WATERSTOP

PROJECT NO. U-0071

DURHAM COUNTY

STATION: POC 64+55.50 -L-

SHEET 1 OF 5 MILEPOST SB-152.5

STATE OF NORTH CAROLINA
DEPARTMENT OF TRANSPORTATION
RALEIGH

SUBSTRUCTURE
ABUTMENT 2

MI ENGINEERING
1011 SCHAUB DRIVE, SUITE 100
RALEIGH, NC 27606
(919) 851-6606
FIRM PE NUMBER : P-0671

NORTH CAROLINA PROFESSIONAL SEAL ENGINEER PAUL A. de PAOLI
06-09-14

DWG. NO. 32

REVISIONS						SHEET NO.
NO.	BY:	DATE:	NO.	BY:	DATE:	5-69
1			3			TOTAL SHEETS
2			4			671

DRAWN BY B.E. LANNING DATE MAY 2013
CHECKED BY P.A. de PAOLI DATE MAY 2013
DESIGN ENGINEER OF RECORD P.A. de PAOLI DATE JUNE 2014

PLOT: 6/9/2014 2:32:40 PM bbanning
FILE NAME: P:\MC Projects\M10028 - U-0071 Durham\U-0071\Structures\sesr\u0071_sd_abut2a_02csx.dgn

NOTES

FOR ADDITIONAL NOTES, SEE SHEET 1 OF 5.

FOR SECTION A-A, SEE SHEET 5 OF 5.

FOR SECTIONS B-B AND C-C, SEE SHEET 4 OF 5.

FOR SECTION D-D, SEE SHEET 3 OF 5.

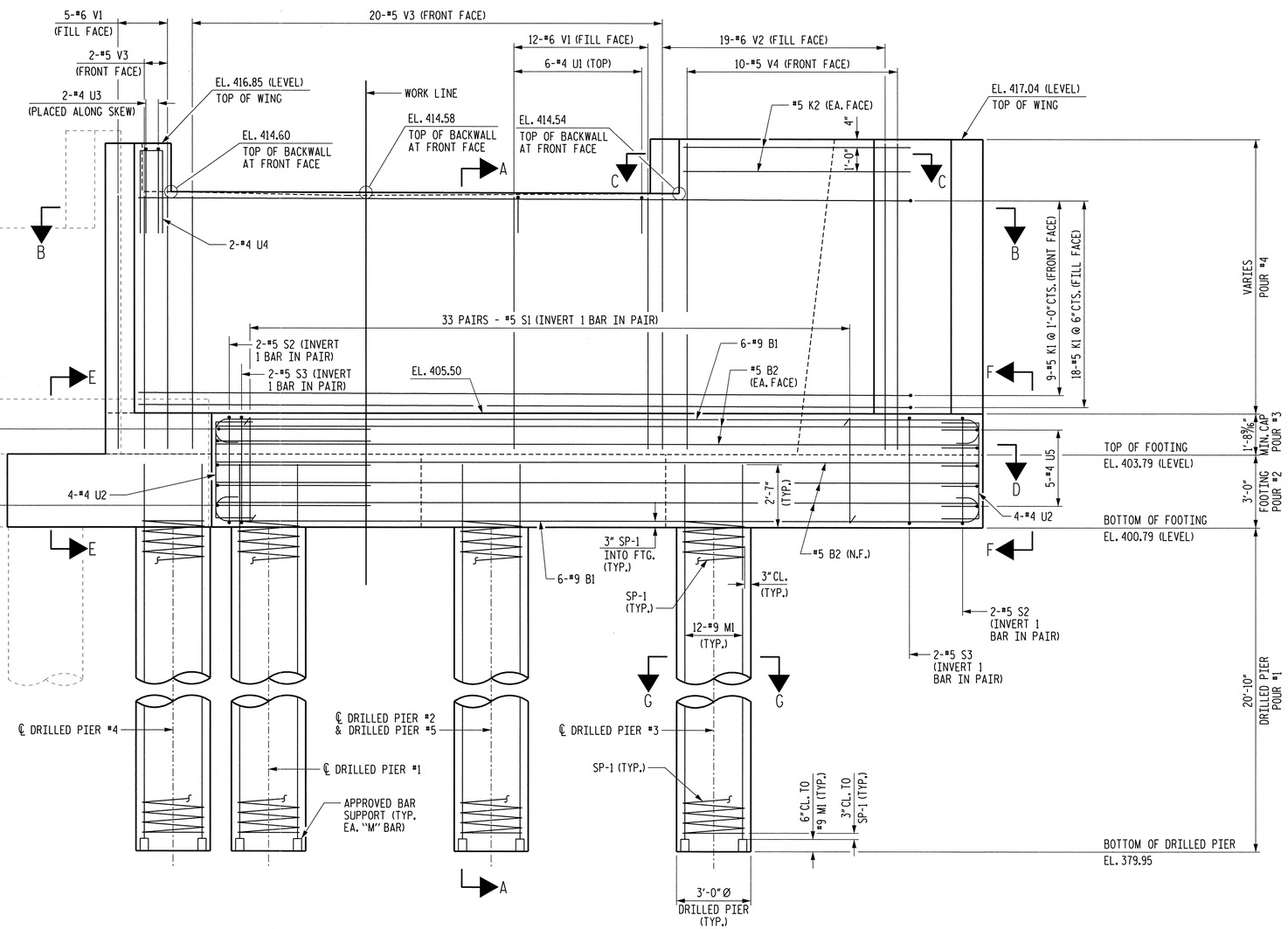

ELEVATION

(DIMENSIONS AND REINFORCING STEEL ARE TYPICAL FOR EACH DRILLED PIER)

FOR REINFORCING BAR SPACING, SEE SECTION VIEWS.

RIGHT WINGWALL NOT SHOWN FOR CLARITY.

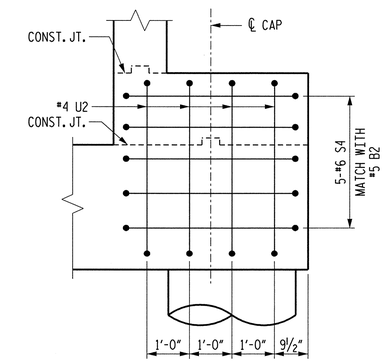

VIEW E-E

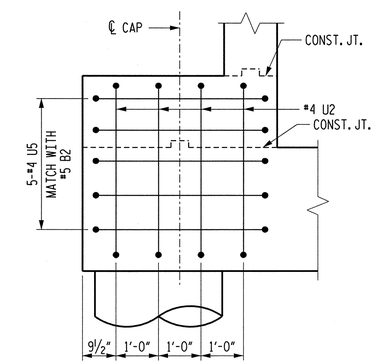

VIEW F-F

CSX RR

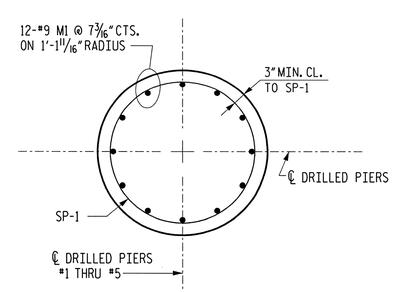

SECTION G-G

PROJECT NO. U-0071

DURHAM COUNTY

STATION: POC 64+55.50 -L-

SHEET 2 OF 5 MILEPOST SB-152.5

STATE OF NORTH CAROLINA
DEPARTMENT OF TRANSPORTATION
RALEIGH

SUBSTRUCTURE
ABUTMENT 2

MI ENGINEERING
1011 SCHAUB DRIVE, SUITE 100
RALEIGH, NC 27606
(919) 851-6606
FIRM PE NUMBER : P-0671

NORTH CAROLINA PROFESSIONAL SEAL ENGINEER PAUL A. de PAOLI 06.09.14

DWG. NO. 33

REVISIONS							SHEET NO.
NO.	BY:	DATE:	NO.	BY:	DATE:		S-70
1			3				TOTAL SHEETS
2			4				671

DRAWN BY B.E. LANNING DATE MAY 2013
CHECKED BY P.A. de PAOLI DATE MAY 2013
DESIGN ENGINEER OF RECORD P.A. de PAOLI DATE JUNE 2014

PLOT: 6/9/2014 2:32:42 PM blanning
FILE NAME: P:\NC Projects\M100008 - U-0071 Durham\U-0071\Structures\csxrr\u0071_sd_abut2b_02csx.dgn

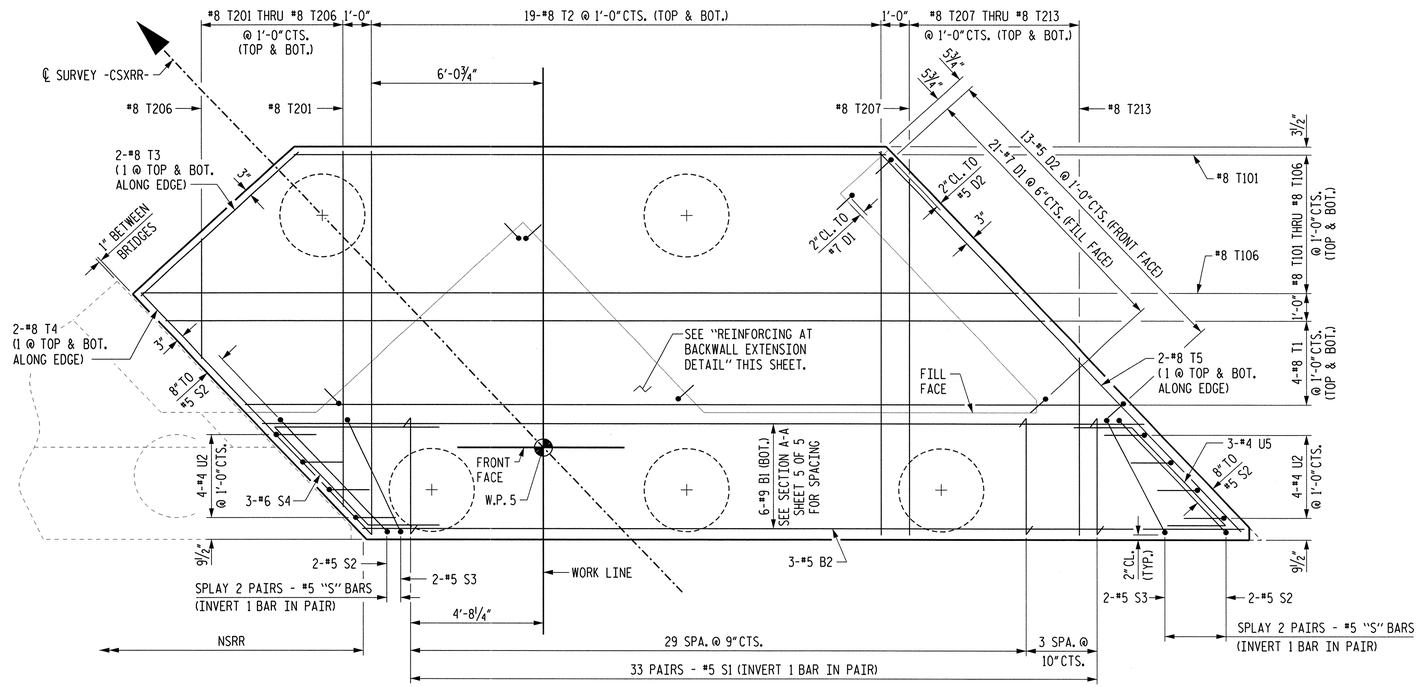

SECTION D-D

(FOOTING PLAN)

NOTES

FOR NOTES, SEE SHEET 1 OF 5.

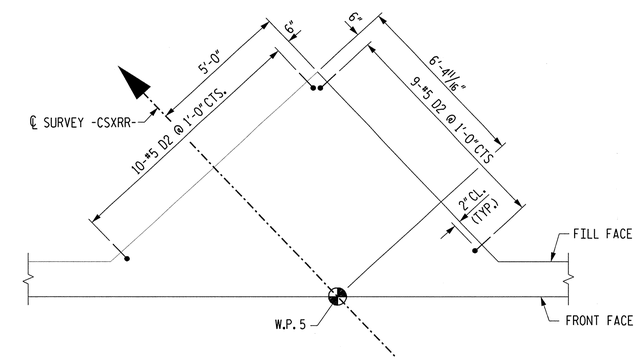

REINFORCING AT BACKWALL EXTENSION

CSX RR

PROJECT NO. U-0071

DURHAM COUNTY

STATION: POC 64+55.50 -L-

SHEET 3 OF 5 MILEPOST SB-152.5

STATE OF NORTH CAROLINA
DEPARTMENT OF TRANSPORTATION
RALEIGH

SUBSTRUCTURE
ABUTMENT 2

MI ENGINEERING
1011 SCHAUB DRIVE, SUITE 100
RALEIGH, NC 27606
(919) 851-6606
FIRM PE NUMBER : P-0671

NORTH CAROLINA PROFESSIONAL ENGINEER SEAL 027199 PAUL A. de PAOLI
06-09-14

DWG. NO. 34

REVISIONS						SHEET NO.
NO.	BY:	DATE:	NO.	BY:	DATE:	5-71
1			3			TOTAL SHEETS
2			4			671

DRAWN BY	B.E. ATKINSON	DATE	MAY 2013
CHECKED BY	P.A. de PAOLI	DATE	MAY 2013
DESIGN ENGINEER OF RECORD	P.A. de PAOLI	DATE	JUNE 2014

PLOT: 6/9/2014 2:52:44 PM bbenning
FILE NAME: P:\NC Projects\WI0808 - U-0071 Durham\U-0071\Structures\csxrr\U0071_sd_abu2c_02csx.dgn

NOTES

FOR NOTES, SEE SHEET 1 OF 5.

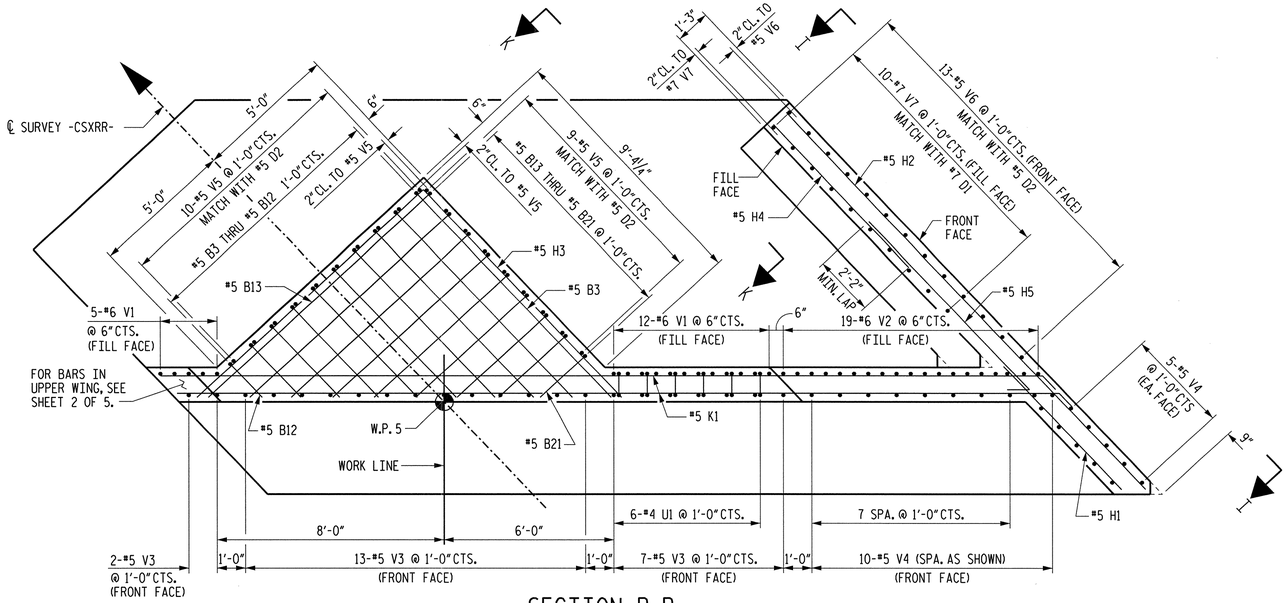

SECTION B-B

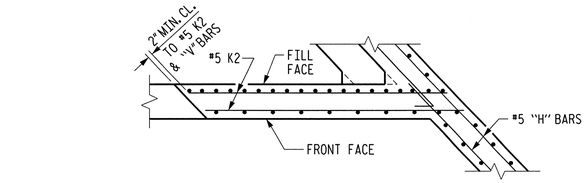

SECTION C-C

FOR "V" BAR SPACING, SEE SECTION B-B

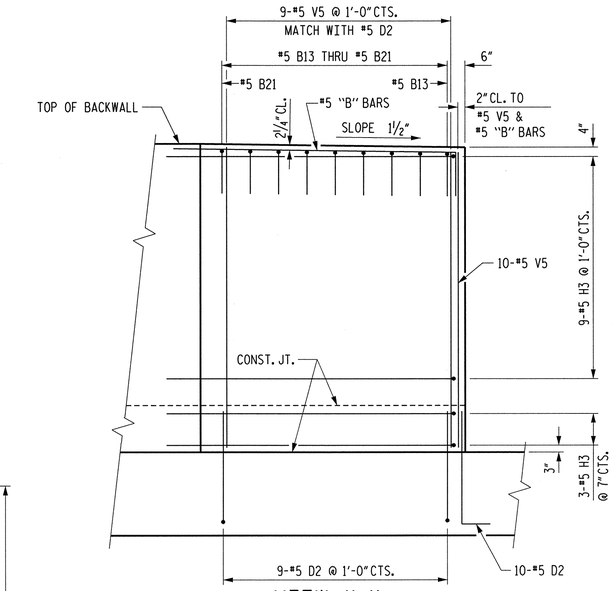

VIEW K-K

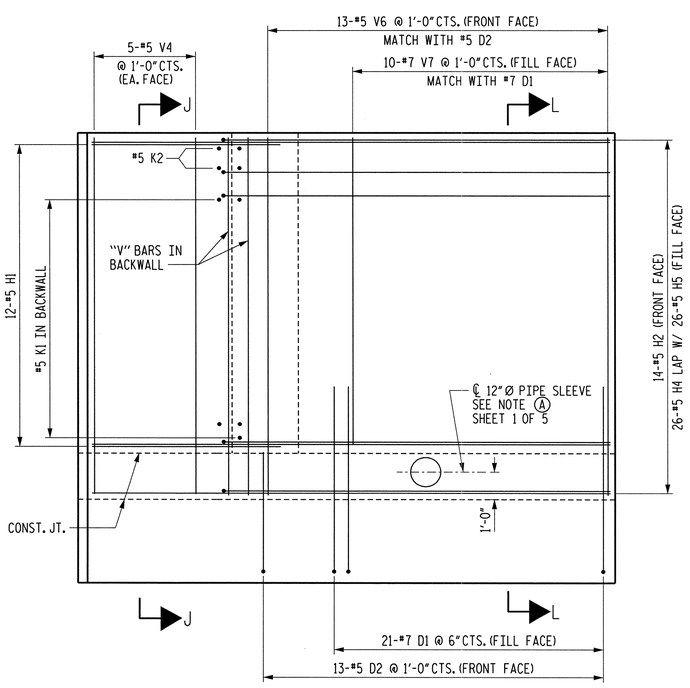

VIEW I-I

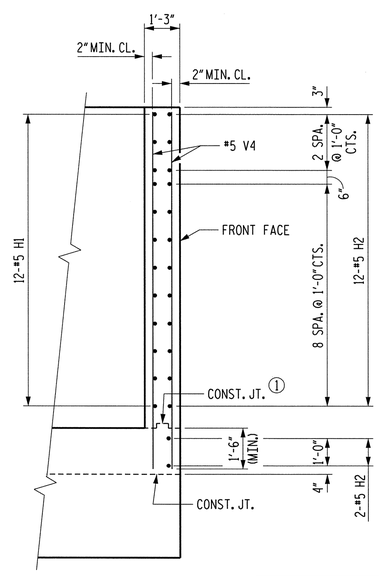

SECTION J-J

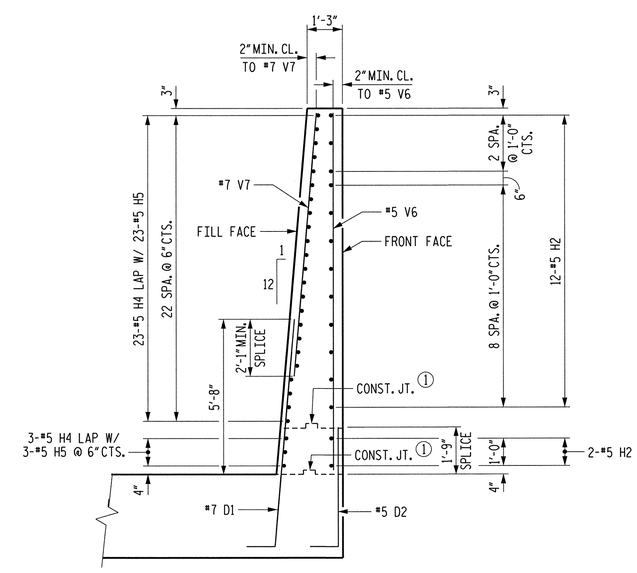

SECTION L-L

① SEE RAISED KEY WITH WATERSTOP DETAIL ON DWG. NO. 32.

CSX RR

PROJECT NO. U-0071

DURHAM COUNTY

STATION: POC 64+55.50 -L-

SHEET 4 OF 5 MILEPOST SB-152.5

STATE OF NORTH CAROLINA
DEPARTMENT OF TRANSPORTATION
RALEIGH

SUBSTRUCTURE
ABUTMENT 2

MI ENGINEERING
1011 SCHAUB DRIVE, SUITE 100
RALEIGH, NC 27606
(919) 851-6606
FIRM PE NUMBER : P-0671

NORTH CAROLINA PROFESSIONAL ENGINEER SEAL 027199 PAUL A. de PAOLI 06-09-14

DWG. NO. 35

REVISIONS						SHEET NO.
NO.	BY:	DATE:	NO.	BY:	DATE:	5-72
1			3			TOTAL SHEETS
2			4			67

DRAWN BY	B.E. ATKINSON	DATE	MAY 2013
CHECKED BY	P.A. de PAOLI	DATE	MAY 2013
DESIGN ENGINEER OF RECORD	P.A. de PAOLI	DATE	JUNE 2014

PLOT: 6/9/2014 2:34:02 PM bbanning
FILE NAME: PLNC P:\projects\M180080 - U-0071 Durham\U-0071\Structures\sxsm\u0071_sd_abut2&2b_02csx.dgn

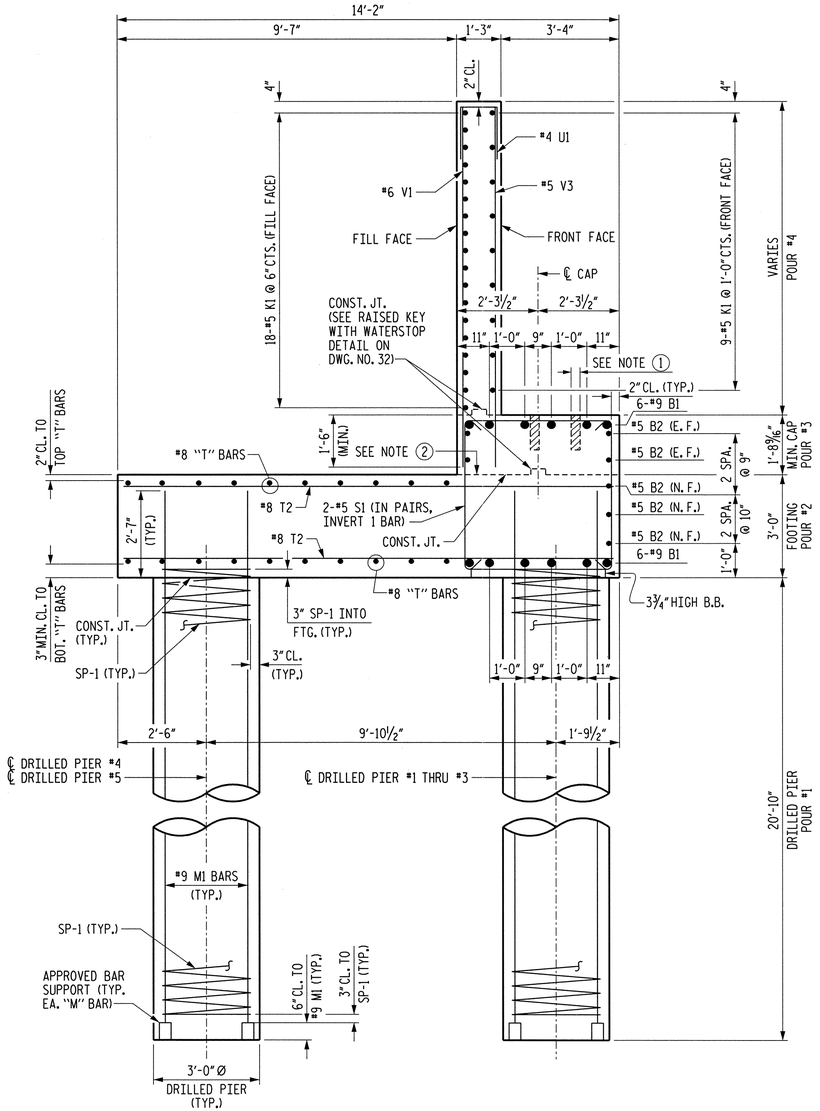

SECTION A-A

NOTES

1. BLOCKOUT FOR ANCHOR BOLTS, 3"DIA. X 1'-0"DEEP HOLE (TYP.). SEE NOTES, SHEET 1 OF 5.
2. THE SURFACE OF CONSTRUCTION JOINT AT THE TOP OF THE FOOTING SHALL BE CLEAN, FREE OF LAITANCE AND ROUGHENED TO ¼" BY RAKING OR OTHER METHOD.
3. E.F. = EACH FACE
   N.F. = NEAR FACE
4. FOR ADDITIONAL NOTES, SEE SHEET 1 OF 5.

BILL OF MATERIAL

ABUTMENT 2

BAR	NO.	SIZE	TYPE	LENGTH	WEIGHT
B1	12	#9	3	33'-5"	1363
B2	7	#5	STR	30'-11"	226
B3	1	#5	7	11'-8"	12
B4	1	#5	7	10'-8"	11
B5	1	#5	7	9'-9"	10
B6	1	#5	7	8'-10"	9
B7	1	#5	7	7'-11"	8
B8	1	#5	7	7'-0"	7
B9	1	#5	7	6'-0"	6
B10	1	#5	7	5'-1"	5
B11	1	#5	7	4'-2"	4
B12	1	#5	7	3'-3"	3
B13	1	#5	7	12'-4"	13
B14	1	#5	7	11'-3"	12
B15	1	#5	7	10'-2"	11
B16	1	#5	7	9'-1"	9
B17	1	#5	7	8'-0"	8
B18	1	#5	7	7'-0"	7
B19	1	#5	7	5'-11"	6
B20	1	#5	7	4'-10"	5
B21	1	#5	7	3'-9"	4
D1	21	#7	5	9'-5"	404
D2	32	#5	7	5'-1"	170
H1	12	#5	STR	5'-8"	71
H2	14	#5	STR	18'-5"	269
H3	12	#5	7	21'-3"	266
H4	26	#5	STR	7'-0"	190
H5	26	#5	8	9'-4"	253
K1	27	#5	5	31'-9"	894
K2	4	#5	STR	9'-0"	38
M1	60	#9	STR	25'-11"	5287
S1	66	#5	1	13'-9"	947
S2	4	#5	2	14'-3"	59
S3	4	#5	2	13'-2"	55
S4	5	#6	6	14'-5"	108
T1	8	#8	STR	31'-0"	662
T2	38	#8	STR	13'-10"	1404
T3	2	#8	STR	7'-7"	40
T4	2	#8	STR	11'-10"	63
T5	2	#8	STR	18'-8"	100
T101	2	#8	STR	20'-11"	112
T102	2	#8	STR	22'-11"	122
T103	2	#8	STR	24'-11"	133
T104	2	#8	STR	26'-11"	144
T105	2	#8	STR	28'-11"	154
T106	2	#8	STR	30'-11"	165

BAR	NO.	SIZE	TYPE	LENGTH	WEIGHT
T201	2	#8	STR	12'-9"	68
T202	2	#8	STR	11'-9"	63
T203	2	#8	STR	10'-3"	55
T204	2	#8	STR	8'-3"	44
T205	2	#8	STR	6'-3"	33
T206	2	#8	STR	4'-3"	23
T207	2	#8	STR	12'-9"	68
T208	2	#8	STR	11'-9"	63
T209	2	#8	STR	10'-8"	57
T210	2	#8	STR	9'-7"	51
T211	2	#8	STR	8'-6"	45
T212	2	#8	STR	7'-5"	40
T213	2	#8	STR	6'-4"	34
U1	6	#4	2	3'-11"	16
U2	8	#4	2	7'-2"	38
U3	2	#4	2	8'-3"	11
U4	2	#4	2	7'-11"	11
U5	5	#4	6	8'-7"	29
V1	17	#6	STR	10'-6"	268
V2	19	#6	STR	12'-11"	369
V3	22	#5	STR	10'-6"	241
V4	20	#5	STR	12'-11"	269
V5	19	#5	STR	10'-7"	210
V6	13	#5	STR	13'-1"	177
V7	10	#7	STR	9'-6"	194

REINFORCING STEEL 16,326 LBS.

BAR	NO.	SIZE	TYPE	LENGTH	WEIGHT
SP-1	5	*	4	399'-0"	2081

SPIRAL COLUMN
REINFORCING STEEL 2,081 LBS.

* THE SP-1 SPIRAL REINFORCING STEEL SHALL BE W31 OR D-31 COLD DRAWN WIRE OR #5 PLAIN OR DEFORMED BAR.

CLASS AA CONCRETE (AS MODIFIED BY RAILWAY)

POUR #2 (FOOTING)	46.6	C.Y.
POUR #3 (CAP)	13.9	C.Y.
POUR #4 (BACKWALL & WINGWALLS)	41.6	C.Y.
TOTAL	102.1	C.Y.

BAR TYPES

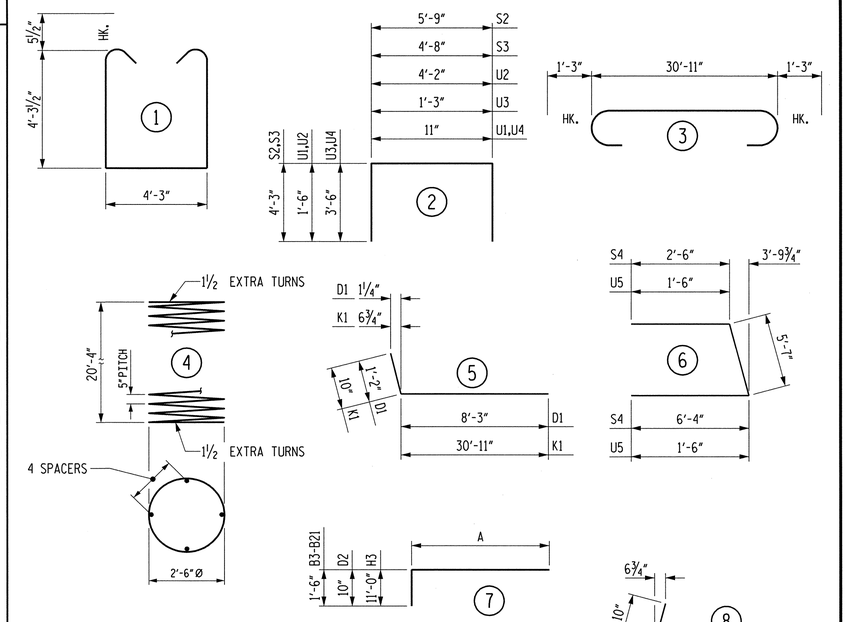

DIMENSION A

BAR	LENGTH	BAR	LENGTH
B3	10'-2"	B15	8'-8"
B4	9'-2"	B16	7'-7"
B5	8'-3"	B17	6'-6"
B6	7'-4"	B18	5'-6"
B7	6'-5"	B19	4'-5"
B8	5'-6"	B20	3'-4"
B9	4'-6"	B21	2'-3"
B10	3'-7"		
B11	2'-8"	D2	4'-3"
B12	1'-9"		
B13	10'-10"	H3	10'-3"
B14	9'-9"		

ALL BAR DIMENSIONS ARE OUT TO OUT.

3'-0"Ø DRILLED PIER

DRILLED PIER CONCRETE (AS MOFIFIED BY RAILWAY) POUR 1 (DRILLED PIER)	27.3	C.Y.
3'-0"Ø LFD DRILLED PIER IN SOIL	20.2	LIN. FT.
3'-0"Ø LFD DRILLED PIER NOT IN SOIL	84.0	LIN. FT.
CSL TESTING	5	EACH
CSL TUBES	450.0	LIN. FT.

CSX RR

PROJECT NO. U-0071
DURHAM COUNTY
STATION: POC 64+55.50 -L-

SHEET 5 OF 5 MILEPOST SB-152.5

STATE OF NORTH CAROLINA
DEPARTMENT OF TRANSPORTATION
RALEIGH

SUBSTRUCTURE
ABUTMENT 2

MI ENGINEERING
1011 SCHAUB DRIVE, SUITE 100
RALEIGH, NC 27606
(919) 851-6606
FIRM PE NUMBER : P-0671

NORTH CAROLINA PROFESSIONAL SEAL 027199 ENGINEER PAUL A. de PAOLI
06.09.14

DWG. NO. 36

REVISIONS							SHEET NO.
NO.	BY:	DATE:	NO.	BY:	DATE:		5-73
1			3				TOTAL SHEETS
2			4				671

DRAWN BY B.E. LANNING DATE MAY 2013
CHECKED BY P.A. de PAOLI DATE MAY 2013
DESIGN ENGINEER OF RECORD P.A. de PAOLI DATE JUNE 2014

PLOT: 6/9/2014 2:34:04 PM bbenung
FILE NAME: P:\NC Projects\M180B8 - U-0071 Durham\U-0071\Structures\sssn\u0071_sd_abu02e_02csx.dgn

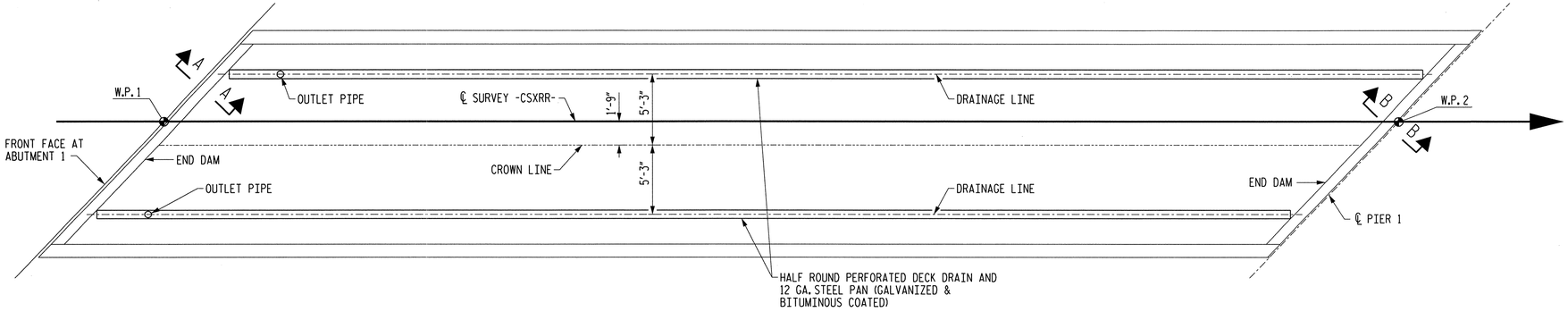

DRAINAGE LAYOUT - SPAN A

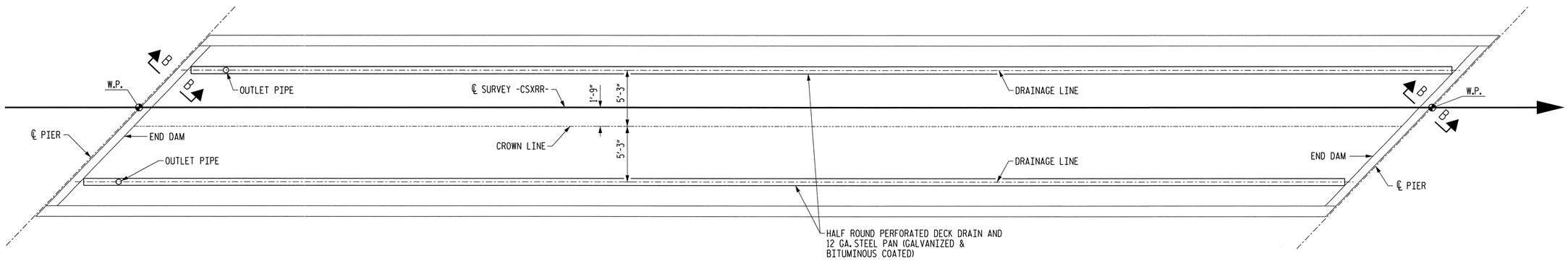

DRAINAGE LAYOUT - SPAN B & SPAN C

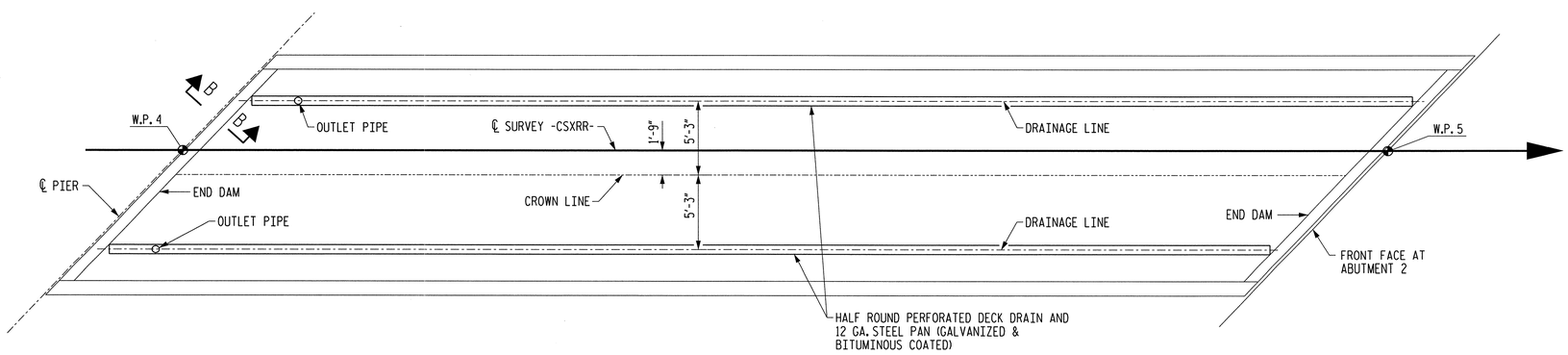

DRAINAGE LAYOUT - SPAN D

NOTES

ALL DIMENSIONS ARE SUBJECT TO ADJUSTMENT TO FIT MEASUREMENTS TAKEN AFTER THE DECKS HAVE BEEN POURED.

FOR STRUCTURE DRAINAGE DETAIL NOTES, SEE SHEET 5 OF 5.

FOR SECTION A-A, SEE SHEET 2 OF 5.

FOR SECTION B-B, SEE SHEET 3 OF 5.

CSX RR

PROJECT NO. U-0071

DURHAM COUNTY

STATION: POC 64+55.50 -L-

SHEET 1 OF 5 MILEPOST SB-152.5

STATE OF NORTH CAROLINA
DEPARTMENT OF TRANSPORTATION
RALEIGH

STRUCTURE DRAINAGE LAYOUT

MI ENGINEERING
1011 SCHAUB DRIVE, SUITE 100
RALEIGH, NC 27606
(919) 851-6606
FIRM PE NUMBER : P-0671

NORTH CAROLINA PROFESSIONAL SEAL 027795 ENGINEER PAUL A. de PAOLI 06.09.14

DWG. NO. 37

REVISIONS						SHEET NO.
NO.	BY:	DATE:	NO.	BY:	DATE:	5-74
1			3			TOTAL SHEETS
2			4			671

DRAWN BY B.E. ATKINSON DATE MAY 2012
CHECKED BY P.A. de PAOLI DATE JUN 2012
DESIGN ENGINEER OF RECORD P.A. de PAOLI DATE JUNE 2014

PLOT: 6/9/2014 2:34:06 PM blanning
FILE NAME: P:\NC Projects\MI0008 - U-0071 Durham\U-0071\Structures\csxrr\u0071_sd_drn1_02csx.dgn

NOTES

ALL DIMENSIONS ARE SUBJECT TO ADJUSTMENT TO FIT MEASUREMENTS TAKEN AFTER DECKS HAVE BEEN POURED.

FOR STRUCTURE DRAINAGE SYSTEM NOTES, SEE SHEET 5 OF 5.

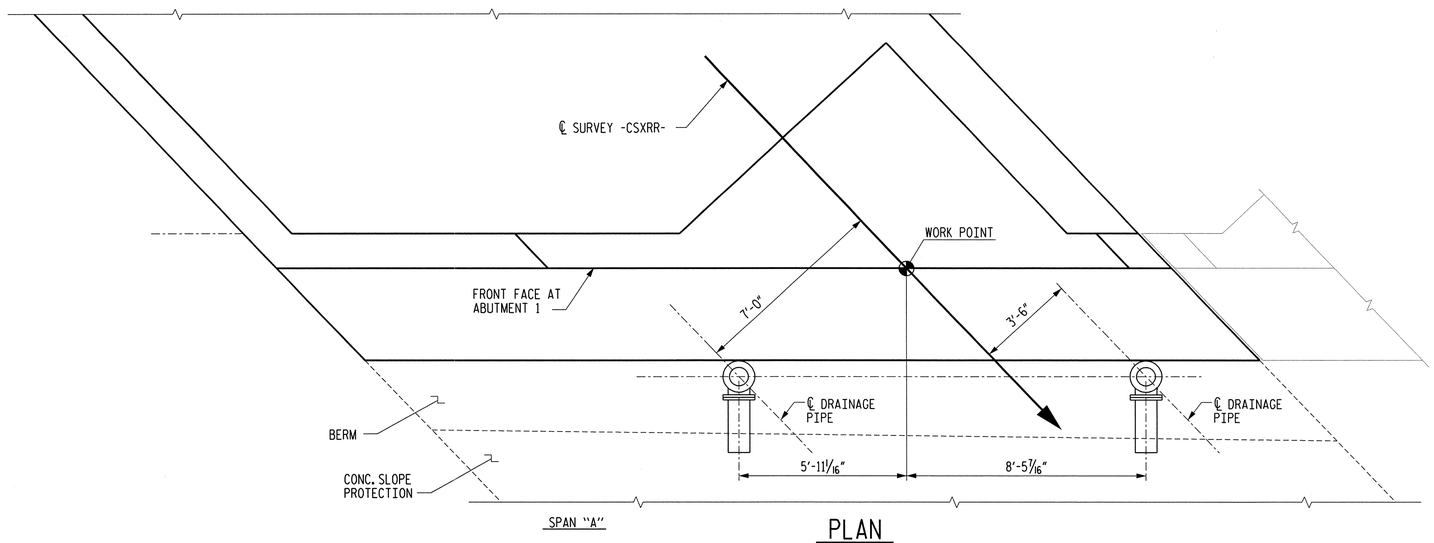

PLAN

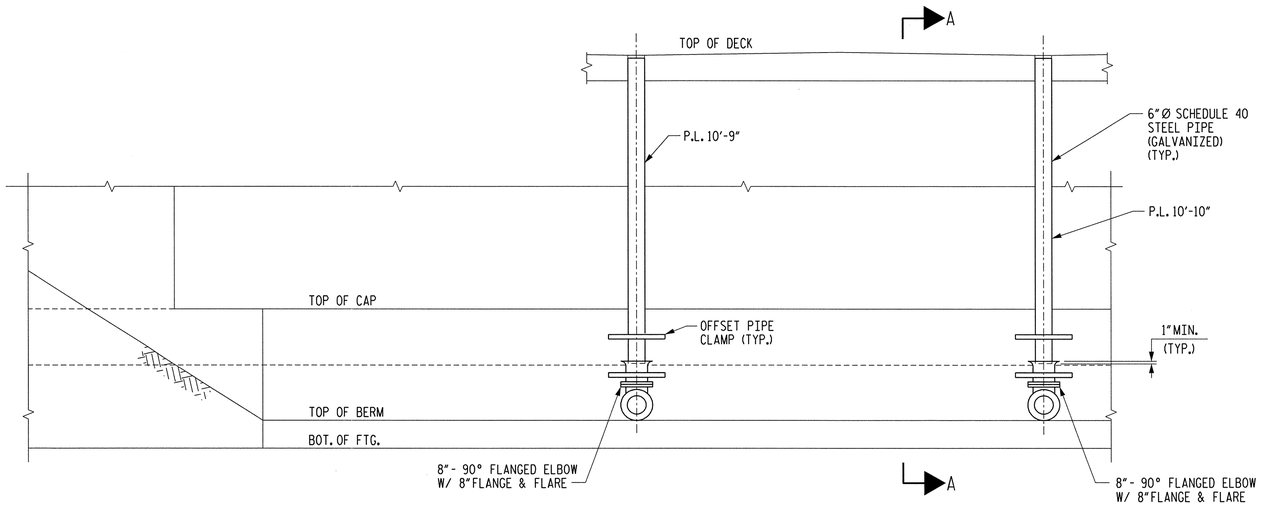

ELEVATION

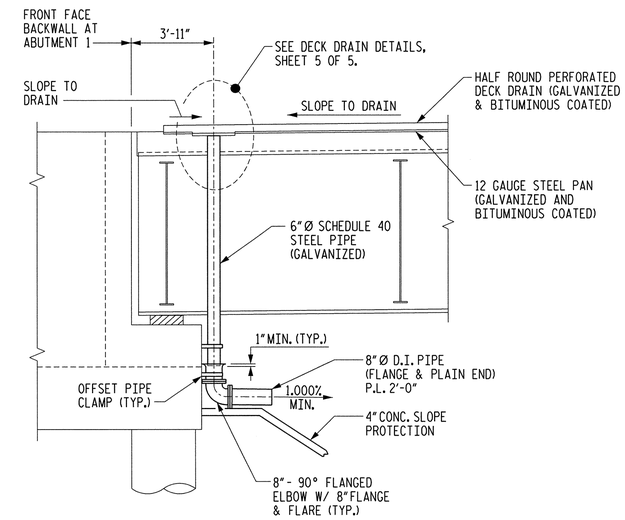

SECTION A-A

CSX RR

PROJECT NO. U-0071

DURHAM COUNTY

STATION: POC 64+55.50 -L-

SHEET 2 OF 5 MILEPOST SB-152.5

STATE OF NORTH CAROLINA
DEPARTMENT OF TRANSPORTATION
RALEIGH

STRUCTURE DRAINAGE SYSTEM AT ABUTMENT 1

MI ENGINEERING
1011 SCHAUB DRIVE, SUITE 100
RALEIGH, NC 27606
(919) 851-6606
FIRM PE NUMBER : P-0671

NORTH CAROLINA PROFESSIONAL SEAL ENGINEER PAUL A. de PAOLI 06.05.14

DWG. NO. 38

REVISIONS						SHEET NO.
NO.	BY:	DATE:	NO.	BY:	DATE:	5-75
1			3			TOTAL SHEETS
2			4			671

DRAWN BY B.E. ATKINSON DATE MAY 2012
CHECKED BY P.A. de PAOLI DATE JUN 2012
DESIGN ENGINEER OF RECORD P.A. de PAOLI DATE JUNE 2014

PLOT: 6/9/2014 2:34:09 PM blanning
FILE NAME: P:\NC Projects\M10008 - U-0071 Durham\U-0071\Structures\csxrr\u0071_sd_drn2_02csx.dgn

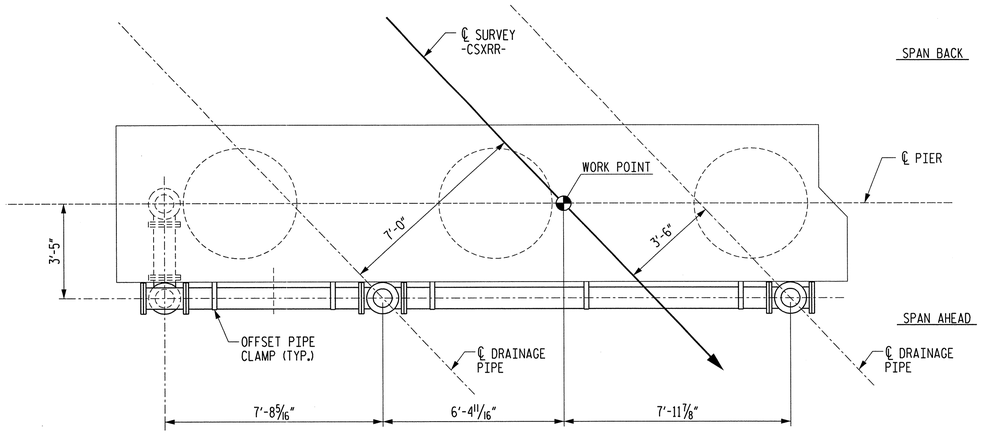

PLAN

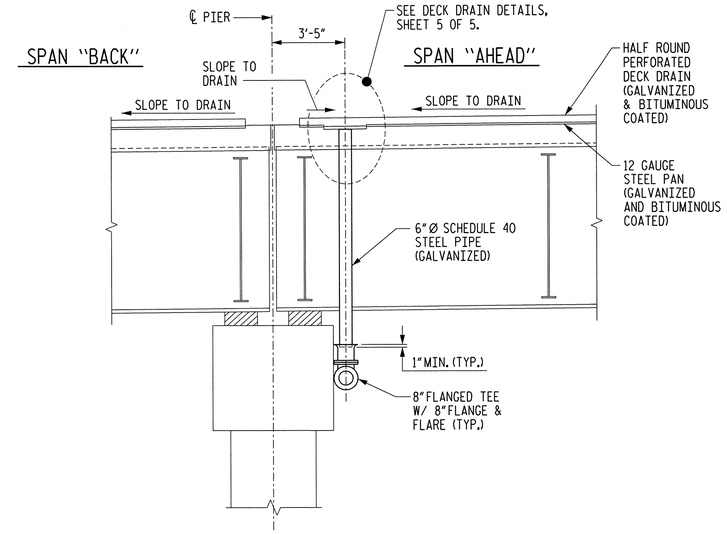

SECTION B-B

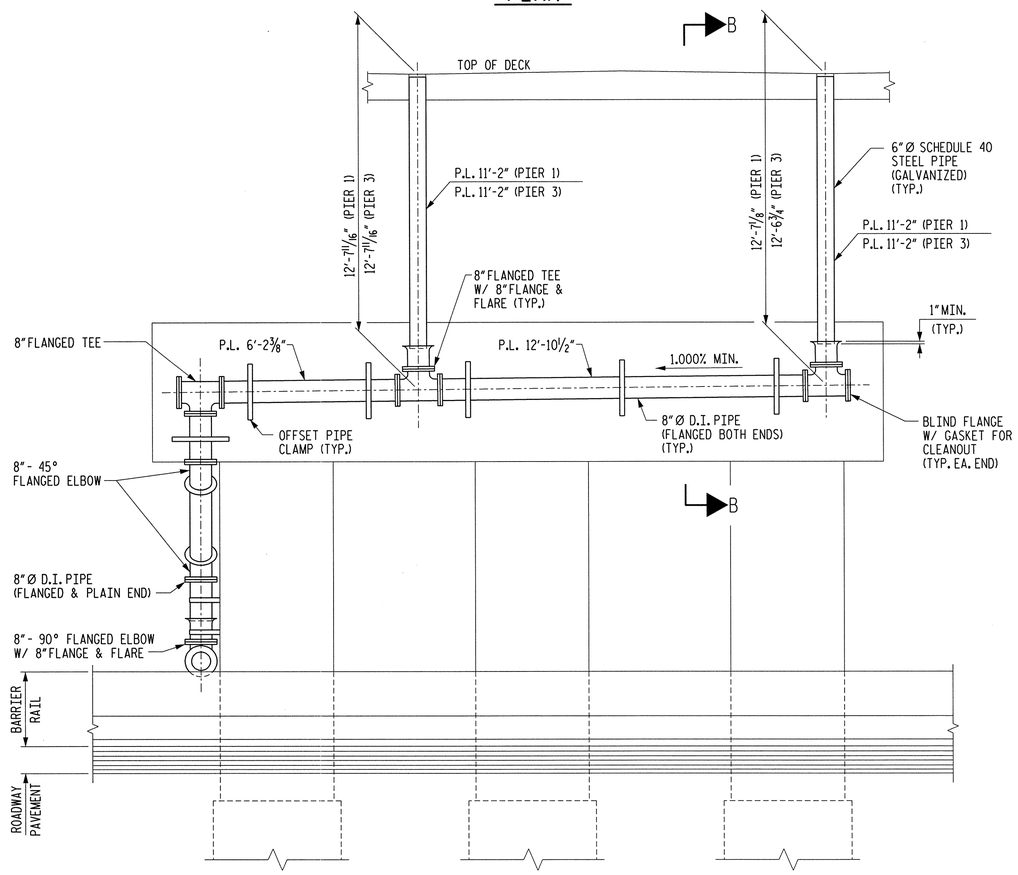

ELEVATION

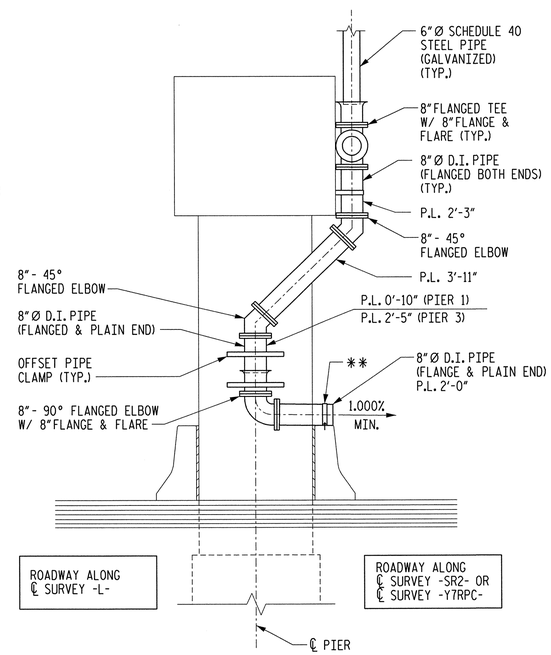

END VIEW

(PIER 3 SHOWN, PIER 1 SIMILAR)

** SECURE PIPE TO BARRIER RAIL WITH 1/8" X 2" WIDE GALVANIZED STRAP AND 5/8" DIA. X 3" LONG STAINLESS STEEL EXPANSION BOLT

NOTES

ALL DIMENSIONS ARE SUBJECT TO ADJUSTMENT TO FIT MEASUREMENTS TAKEN AFTER DECKS HAVE BEEN POURED.

FOR STRUCTURE DRAINAGE SYSTEM NOTES, SEE SHEET 5 OF 5.

CSX RR

PROJECT NO. U-0071

DURHAM COUNTY

STATION: POC 64+55.50 -L-

SHEET 3 OF 5 MILEPOST SB-152.5

STATE OF NORTH CAROLINA
DEPARTMENT OF TRANSPORTATION
RALEIGH

STRUCTURE DRAINAGE SYSTEM AT PIERS 1 & 3

MI ENGINEERING
1011 SCHAUB DRIVE, SUITE 100
RALEIGH, NC 27606
(919) 851-6606
FIRM PE NUMBER : P-0671

NORTH CAROLINA PROFESSIONAL SEAL ENGINEER PAUL A. de PAOLI 06.09.14

DWG. NO. 39

REVISIONS						SHEET NO.
NO.	BY:	DATE:	NO.	BY:	DATE:	5-76
1			3			TOTAL SHEETS
2			4			671

DRAWN BY B.E. ATKINSON DATE MAY 2012
CHECKED BY P.A. de PAOLI DATE JUN 2012
DESIGN ENGINEER OF RECORD P.A. de PAOLI DATE JUNE 2014

PLOT: 6/9/2014 2:38:45 PM blanning
FILE NAME: P:\NC Projects\MI0008 - U-0071 Durham\U-0071\Structures\csxrr\u0071_sd_drn3_02csx.dgn

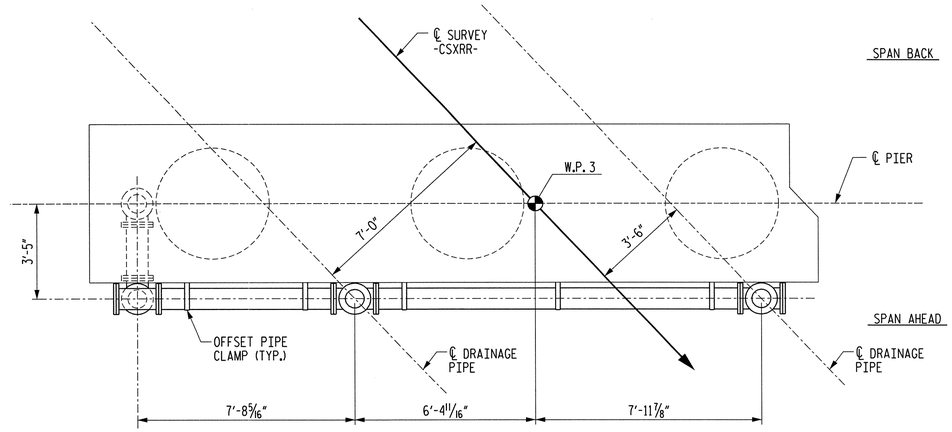

PLAN

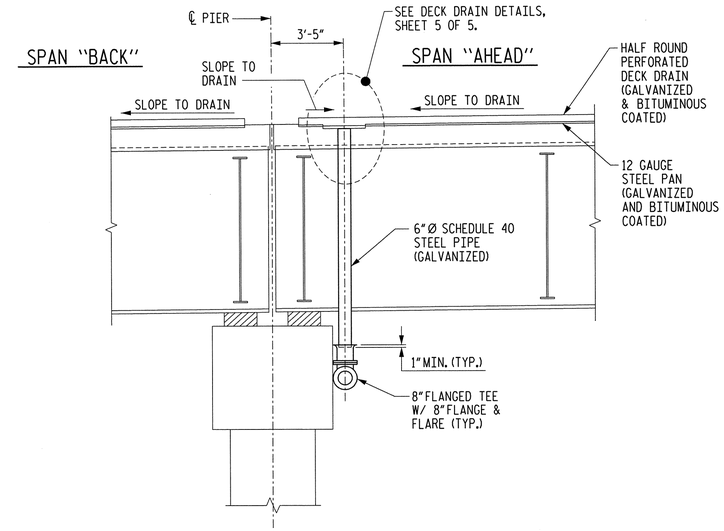

SECTION B-B

NOTES

ALL DIMENSIONS ARE SUBJECT TO ADJUSTMENT TO FIT MEASUREMENTS TAKEN AFTER DECKS HAVE BEEN POURED.

FOR STRUCTURE DRAINAGE SYSTEM NOTES, SEE SHEET 5 OF 5.

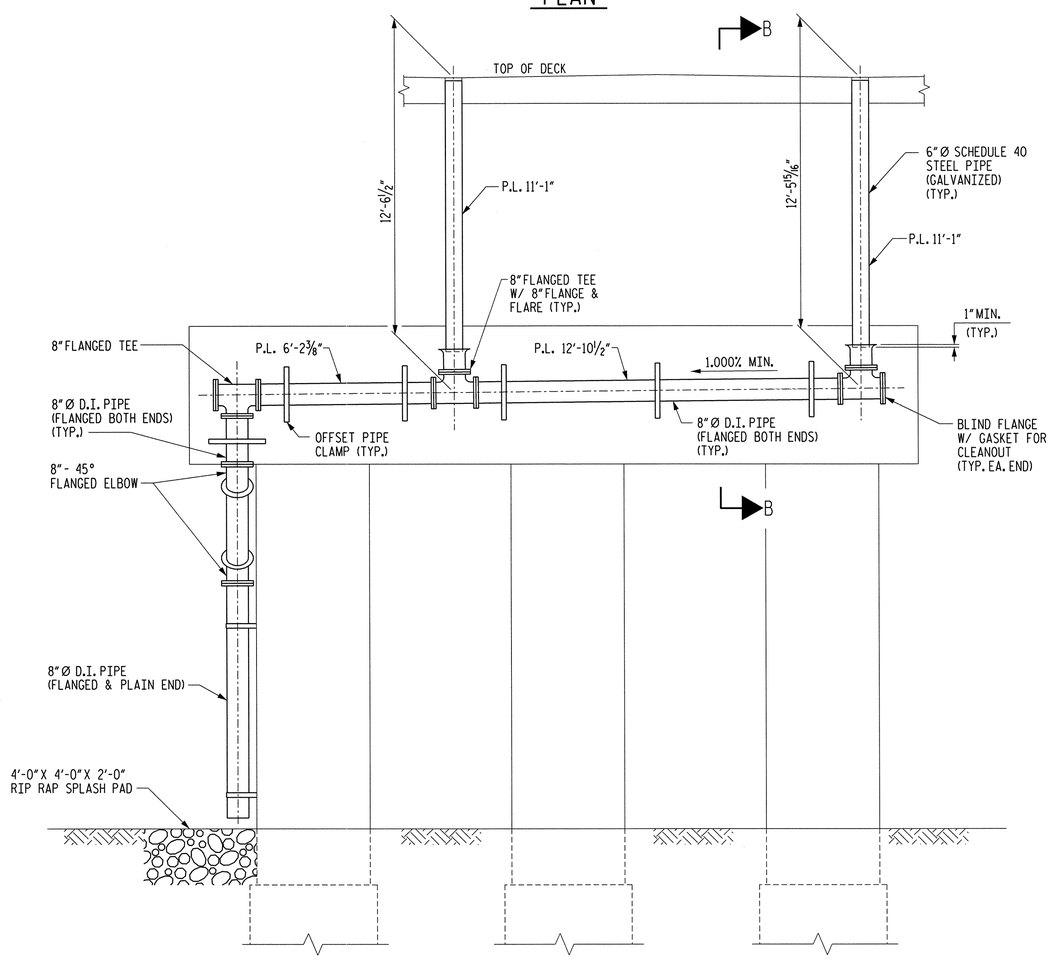

ELEVATION

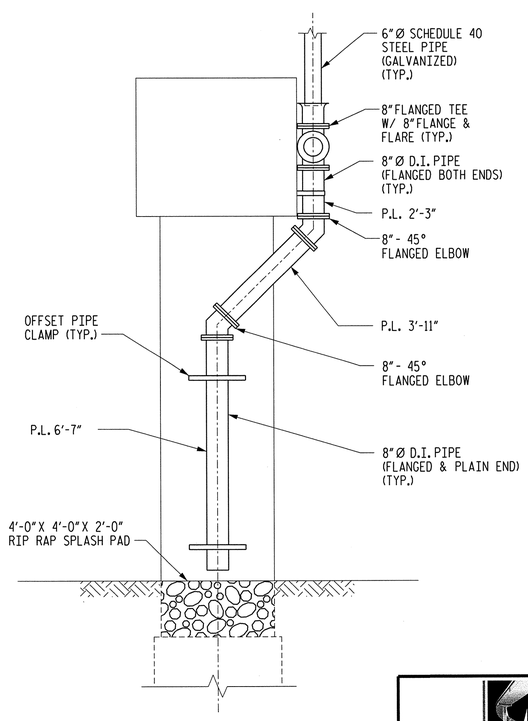

END VIEW

CSX RR

PROJECT NO. U-0071

DURHAM COUNTY

STATION: POC 64+55.50 -L-

SHEET 4 OF 5 MILEPOST SB-152.5

STATE OF NORTH CAROLINA
DEPARTMENT OF TRANSPORTATION
RALEIGH

STRUCTURE DRAINAGE SYSTEM
AT PIER 2

MI ENGINEERING
1011 SCHAUB DRIVE, SUITE 100
RALEIGH, NC 27606
(919) 851-6606
FIRM PE NUMBER : P-0671

NORTH CAROLINA PROFESSIONAL SEAL ENGINEER PAUL A. de PAOLI 06-09-14

DWG. NO. 40

REVISIONS						SHEET NO.
NO.	BY:	DATE:	NO.	BY:	DATE:	5-77
1			3			TOTAL SHEETS
2			4			671

DRAWN BY B.E. ATKINSON DATE MAY 2012
CHECKED BY P.A. de PAOLI DATE JUN 2012
DESIGN ENGINEER OF RECORD P.A. de PAOLI DATE JUNE 2014

PLOT: 6/9/2014 2:34:41 PM blanning
FILE NAME: P:\NC Projects\M180BB - U-0071 Durham\U-0071\Structures\cover\u0071_sd_dr-4_02cov.dgn

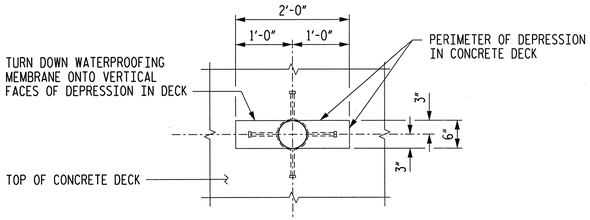

PLAN VIEW AT OUTLET PIPE

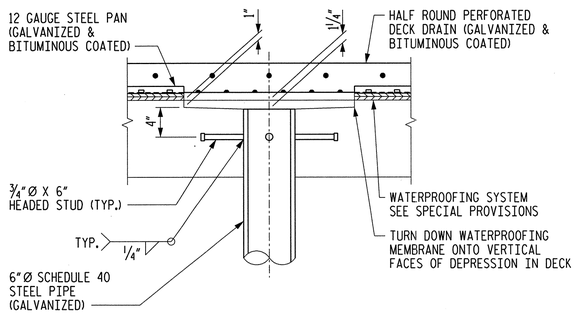

SECTION AT OUTLET PIPE

DECK DRAIN DETAILS

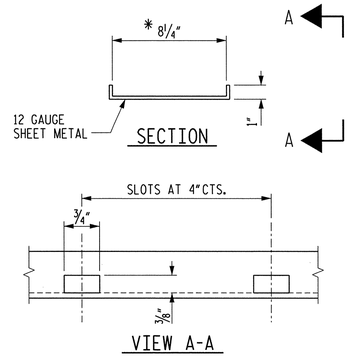

VIEW A-A

STEEL PAN DETAIL

NOTES: PROVIDE ⅜" X ¾" SLOTS IN LINE WITH HOLES IN PERFORATED PIPE.

* CONFIRM PAN WIDTH AFTER PIPE SUPPLIER PROVIDES OUTSIDE PIPE DIAMETER.

NOTES

ALL PIPE, TEES, BELLS AND BENDS SHALL BE CLASS 53 DUCTILE IRON.

ALL BENDS TO BE SHORT RADIUS, INCLUDING FLANGE & FLARE BENDS.

LAYOUT BASED ON DIMENSIONS GIVEN IN THE PIPE MANUAL OF THE AMERICAN CAST IRON PIPE COMPANY.

PIPE LENGTH SHOWN DO NOT ACCOUNT FOR 1/16" THICK GASKETS TO BE USED AT ALL BOLTED FLANGE CONNECTIONS.

PAYMENT FOR ALL MATERIALS, FABRICATION, INSTALLATION AND ADJUSTMENTS RELATED TO STRUCTURE DRAINAGE SHALL BE INCLUDED IN THE CONTRACT LUMP SUM PRICE BID FOR "STRUCTURE DRAINAGE SYSTEM". NO SEPARATE MEASUREMENT OR PAYMENT SHALL BE MADE FOR ANY COMPONENT OF THE STRUCTURE DRAINAGE SYSTEM INCLUDING, BUT NOT LIMITED TO:

- DUCTILE IRON PIPE AND FITTINGS
- STANDARD PIPE
- GASKETS AND PVC OR NEOPRENE COATED STRIPS
- STEEL SUPPORT ANGLES AND PLATES
- U-BOLTS AND H.S. BOLTS, WASHERS, AND NUTS
- OFFSET PIPE CLAMPS AND EXPANSION ANCHOR BOLTS

AT THE CONTRACTOR'S OPTION, THE OUTSIDE COATING FOR THE DUCTILE IRON PIPE MAY BE PAINTED WITH A SHOP PRIME COAT OF INORGANIC ZINC PRIMER AND A FINISH (FIELD) COATING OF VINYL PAINT AS SPECIFIED FOR THE STRUCTURAL STEEL.

FOR STRUCTURE DRAINAGE SYSTEM, SEE SPECIAL PROVISIONS.

FOR WATERPROOFING SYSTEM, SEE SPECIAL PROVISION "WATERPROOFING (RAILROAD STRUCTURES)".

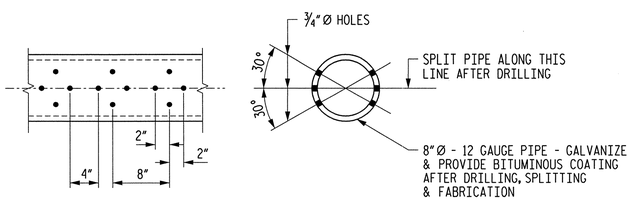

8"Ø PERFORATED PIPE DETAIL

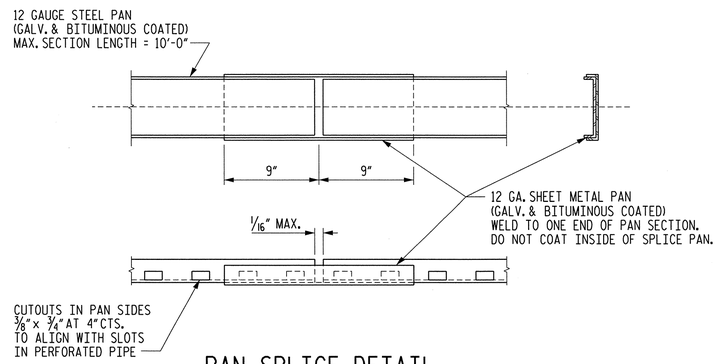

PAN SPLICE DETAIL

STRUCTURE DRAINAGE SYSTEM ESTIMATED QUANTITIES		
ITEM	QUANTITY	UNIT
6" I.D. STD PIPE (GALVANIZED WITH ¾"DIA. x 6" HEADED STUDS)	89	FT
8" I.D. DUCTILE IRON PIPE, CLASS 53 (FLANGE BOTH ENDS)	80	FT
8" I.D. DUCTILE IRON PIPE, CLASS 53 (FLANGE & PLAIN END)	18	FT
8" I.D. DUCTILE IRON PIPE FLANGED FITTINGS, 250 PSI P.R.	3115	LBS
8" I.D. DUCTILE IRON BLIND FLANGES	240	LBS
8" I.D. OFFSET PIPE CLAMPS	26	EA
8" I.D. PERFORATED HALF ROUND PIPE (GALVANIZED AND BITUMINOUS COATING)	796	FT
STEEL PAN BELOW HALF ROUND PIPE (GALVANIZED AND BITUMINOUS COATING)	796	FT

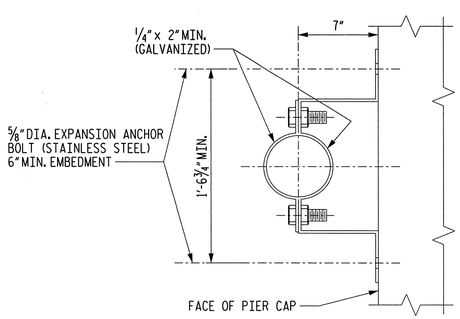

CLAMP ALONG FACE OF CAP

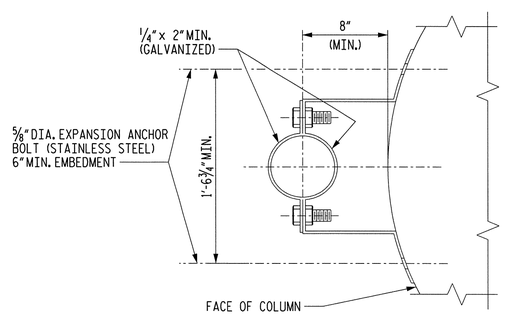

CLAMP ALONG FACE OF COLUMN

OFFSET PIPE CLAMPS

CSX RR

PROJECT NO. U-0071

DURHAM COUNTY

STATION: POC 64+55.50 -L-

SHEET 5 OF 5 MILEPOST SB-152.5

STATE OF NORTH CAROLINA
DEPARTMENT OF TRANSPORTATION
RALEIGH

STRUCTURE DRAINAGE SYSTEM DETAILS

REVISIONS						SHEET NO.
NO.	BY:	DATE:	NO.	BY:	DATE:	5-78
1			3			TOTAL SHEETS
2			4			671

MI ENGINEERING
1011 SCHAUB DRIVE, SUITE 100
RALEIGH, NC 27606
(919) 851-6606
FIRM PE NUMBER : P-0671

NORTH CAROLINA PROFESSIONAL SEAL 027750 ENGINEER PAUL A. de PAOLI
06-09-14

DWG. NO. 41

DRAWN BY	B.E. ATKINSON	DATE	MAY 2012
CHECKED BY	P.A. de PAOLI	DATE	JUN 2012
DESIGN ENGINEER OF RECORD	P.A. de PAOLI	DATE	JUNE 2014

PLOT: 6/9/2014 5:18:25 PM bbenning
FILE NAME: P:\NC Projects\MIB000 - U-0071 Durham\U-0071\Structures\User\U0071_sd_det-5_02csx.dgn

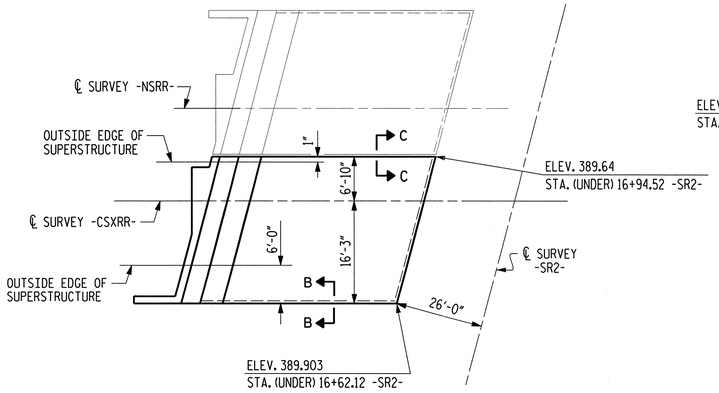

ABUTMENT 1

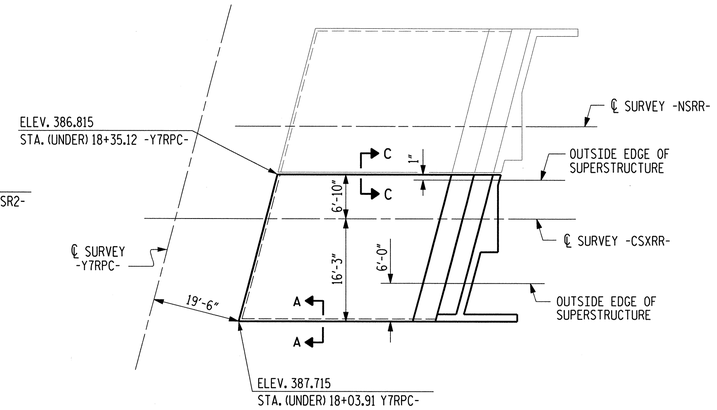

ABUTMENT 2

PLAN

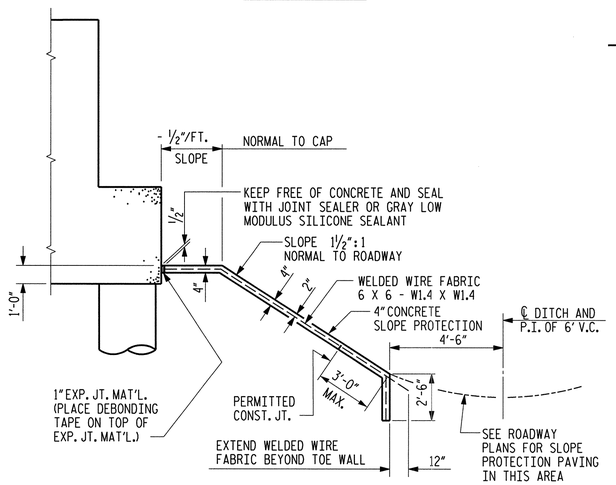

SECTION ALONG ℄ SURVEY -CSXRR- AT ABUTMENT 1

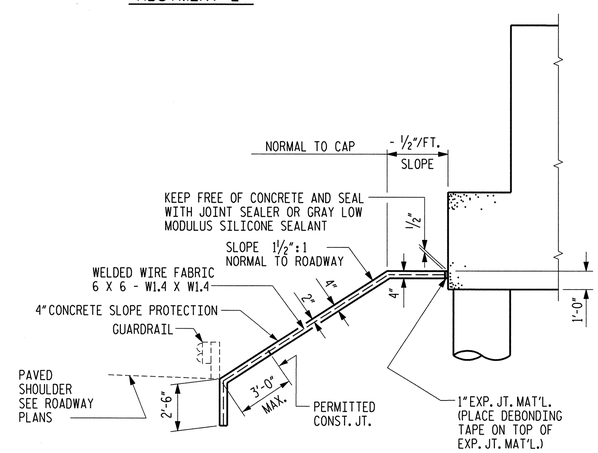

SECTION ALONG ℄ SURVEY -CSXRR- AT ABUTMENT 2

GENERAL NOTES

SLOPE PROTECTION SHALL BE PLACED UNDER THE ENDS OF THE BRIDGE AS SHOWN IN THE DETAILS. MEASUREMENT AND PAYMENT SHALL BE AS PRESCRIBED IN SECTION 462 OF THE STANDARD SPECIFICATIONS. FOR BERM WIDTH, SEE GENERAL DRAWING.

SLOPE PROTECTION SHALL CONSIST OF 4" POURED-IN-PLACE CONCRETE PAVING AS SHOWN IN THE DETAILS ON THIS SHEET. CONCRETE SHALL BE CLASS "B". THE CONCRETE SURFACE SHALL BE FLOATED WITH A WOODEN FLOAT AND FINISHED. WELDED WIRE FABRIC REINFORCING SHALL BE 6 X 6 - W1.4 X W1.4, 60" WIDE. SLOPE PROTECTION SHALL BE POURED IN 5' STRIPS AS SHOWN IN THE "POURING DETAIL" WITH 2'-0" LONG #4 BARS PLACED ALONG THE SLOPE BETWEEN STRIPS AT 1'-6" MAXIMUM SPACING. SLOPE PROTECTION MAY BE POURED IN ALTERNATE 4' AND 5' STRIPS AS SHOWN IN THE "OPTIONAL POURING DETAIL" WITH ADJACENT RUNS OF WELDED WIRE FABRIC LAPPING AT LEAST 6". THE COST OF THE WELDED WIRE FABRIC AND #4 BARS, IF USED, SHALL BE INCLUDED IN THE CONTRACT UNIT PRICE BID PER SQUARE YARD FOR SLOPE PROTECTION.

BRIDGE @ STA. 64+55.50 -L-	4" INCH SLOPE PROTECTION	* WELDED WIRE FABRIC 60 INCHES WIDE
	SQUARE YARDS	APPROX. L.F.
ABUTMENT 1	73	131
ABUTMENT 2	116	209

* QUANTITY SHOWN IS BASED ON 5' POURS.

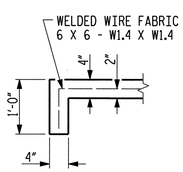

SECTION A-A

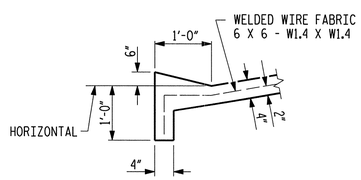

SECTION B-B

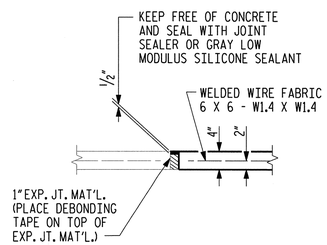

SECTION C-C

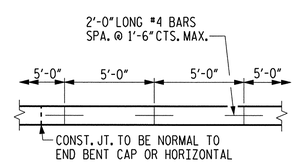

STRIP WIDTHS MAY VARY IN CURVED PORTION.

POURING DETAIL

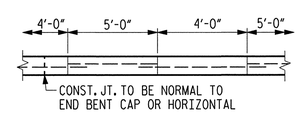

POUR A 4'-0" STRIP FIRST. STRIP WIDTHS MAY VARY IN CURVED PORTION.

OPTIONAL POURING DETAIL

CSX RR

PROJECT NO. U-0071

DURHAM COUNTY

STATION: POC 64+55.50 -L-

SHEET 1 OF 2 MILEPOST SB-152.5

STATE OF NORTH CAROLINA
DEPARTMENT OF TRANSPORTATION
RALEIGH

SLOPE PROTECTION DETAILS

MI ENGINEERING
1011 SCHAUB DRIVE, SUITE 100
RALEIGH, NC 27606
(919) 851-6606
FIRM PE NUMBER : P-0671

NORTH CAROLINA PROFESSIONAL SEAL ENGINEER PAUL A. de PAOLI
06.09.14

DWG. NO. 42

REVISIONS						SHEET NO.
NO.	BY:	DATE:	NO.	BY:	DATE:	5-79
1			3			TOTAL SHEETS
2			4			671

DRAWN BY	B.E. ATKINSON	DATE	MAR 2013
CHECKED BY	P.A. de PAOLI	DATE	MAR 2013
DESIGN ENGINEER OF RECORD	P.A. de PAOLI	DATE	JUNE 2014

PLOT: 6/9/2014 2:34:13 PM bianning
FILE NAME: P:\NC Projects\W10088 - U-0071 Durham\U-0071\Structures\csxrr\u0071_sd_p1.02csxdgn

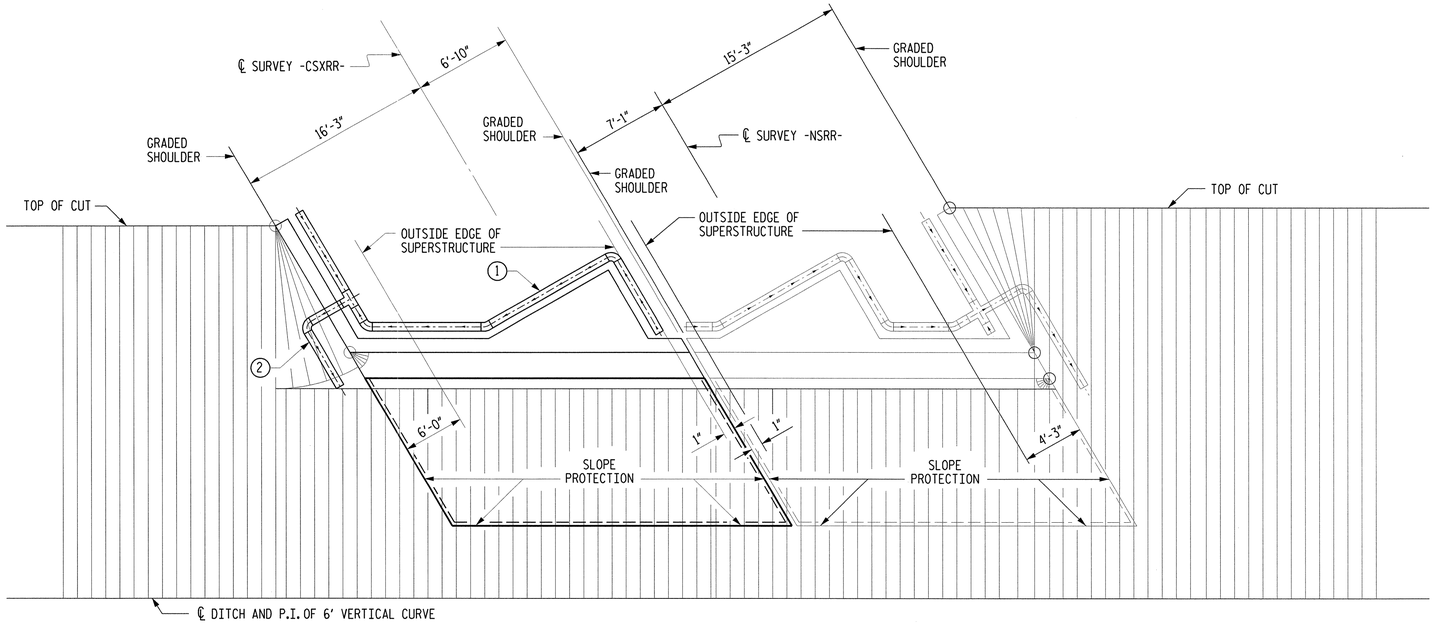

PLAN AT ABUTMENT 1

1 8"Ø PERFORATED BITUMINOUS COATED CORRUGATED METAL PIPE BEHIND ABUTMENT

2 8"Ø NON-PERFORATED BITUMINOUS COATED CORRUGATED METAL PIPE EXTEND TO BERM SLOPE BREAK LINE

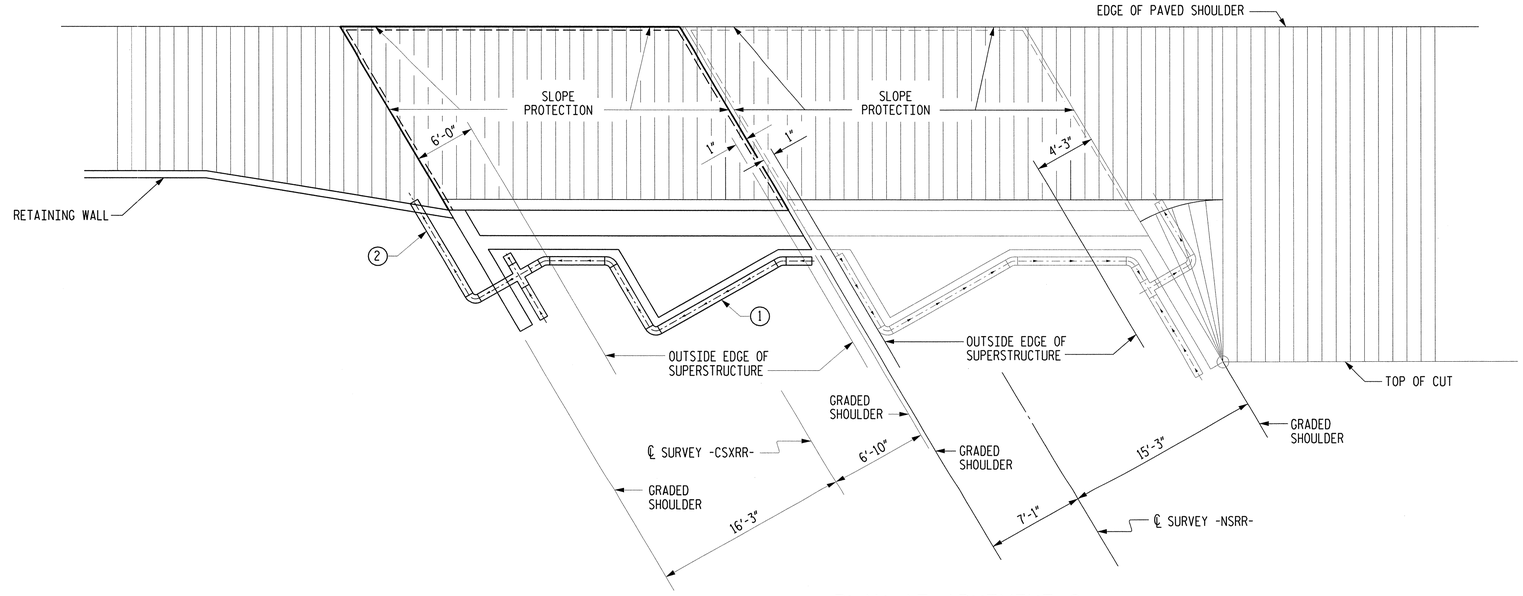

PLAN AT ABUTMENT 2

CSX RR

PROJECT NO. U-0071

DURHAM COUNTY

STATION: POC 64+55.50 -L-

SHEET 2 OF 2 MILEPOST SB-152.5

STATE OF NORTH CAROLINA
DEPARTMENT OF TRANSPORTATION
RALEIGH

SLOPE PROTECTION DETAILS

MI ENGINEERING
1011 SCHAUB DRIVE, SUITE 100
RALEIGH, NC 27606
(919) 851-6606
FIRM PE NUMBER : P-0671

NORTH CAROLINA PROFESSIONAL SEAL ENGINEER PAUL A. de PAOLI
06.09.14

DWG. NO. 43

REVISIONS						SHEET NO.
NO.	BY:	DATE:	NO.	BY:	DATE:	S-80
1			3			TOTAL SHEETS
2			4			671

DRAWN BY B.E. ATKINSON DATE MAR 2013
CHECKED BY P.A. de PAOLI DATE MAR 2013
DESIGN ENGINEER OF RECORD P.A. de PAOLI DATE JUNE 2014

PLOT: 6/9/2014 2:34:35 PM blanning
FILE NAME: P:\NC Projects\MI0008 - U-0071 Durham\U-0071\Structures\csxrr\u0071_sd_sp2_02csx.dgn

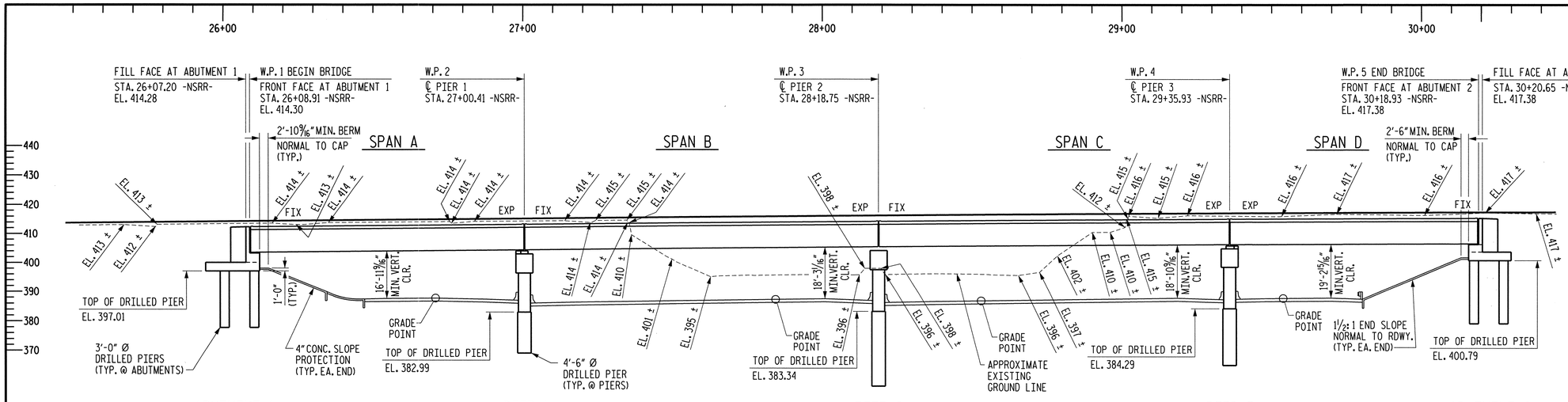

SECTION ALONG ℄ -NSRR-

(SECTION AT ABUTMENTS AND PIERS ARE AT RIGHT ANGLES)

+0.9600% △ -0.8000%
PVI STA. 30+80.00
PVI EL. = 418.82
V.C. = 610'

GRADE DATA -NSRR-

-1.0098% △ -1.6502%
PVI STA. 67+50.00
PVI EL. = 383.59
V.C. = 800.000'

GRADE DATA -L- (WB)

-1.0100% △ -1.2000%
PVI STA. 57+00.00
PVI EL. = 395.69
V.C. = 1000.000'

GRADE DATA -L- (EB)

-0.8000% △ -1.7500%
PVI STA. 21+00.00
PVI EL. = 384.02
V.C. = 800.000'

GRADE DATA -SR2-

-1.1552% △ -1.7164%
PVI STA. 20+00.00
PVI EL. = 384.97
V.C. = 150.000'

GRADE DATA -Y7RPC-

HORIZ. CURVE DATA -SR2-

PI STA. 16+67.193
△ = 3°22'59.4" (LT.)
D = 0°48'45.7"
L = 416.284'
T = 208.202'
R = 7050.000'

HORIZ. CURVE DATA -L-

PI STA. 58+90.400
△ = 34°23'04.7" (LT.)
D = 0°44'58.0"
L = 4587.957'
T = 2365.400'
R = 7645.000'

HORIZ. CURVE DATA -Y7RPC-

PI STA. 17+77.306
△ = 3°03'19.9" (LT.)
D = 0°44'23.5"
L = 412.978'
T = 206.538'
R = 7744.000'

MIN. HORIZ. CLR.

(TO ROADWAY BARRIER AT END OF PIER CAP)

1. 5'-4 13/16" MIN. HORIZ. CLR.
2. 9'-0 1/2" MIN. HORIZ. CLR.
3. 21'-6 3/16" MIN. HORIZ. CLR.
4. 21'-5" MIN. HORIZ. CLR.
5. 9'-2 9/16" MIN. HORIZ. CLR.
6. 5'-3 13/16" MIN. HORIZ. CLR.

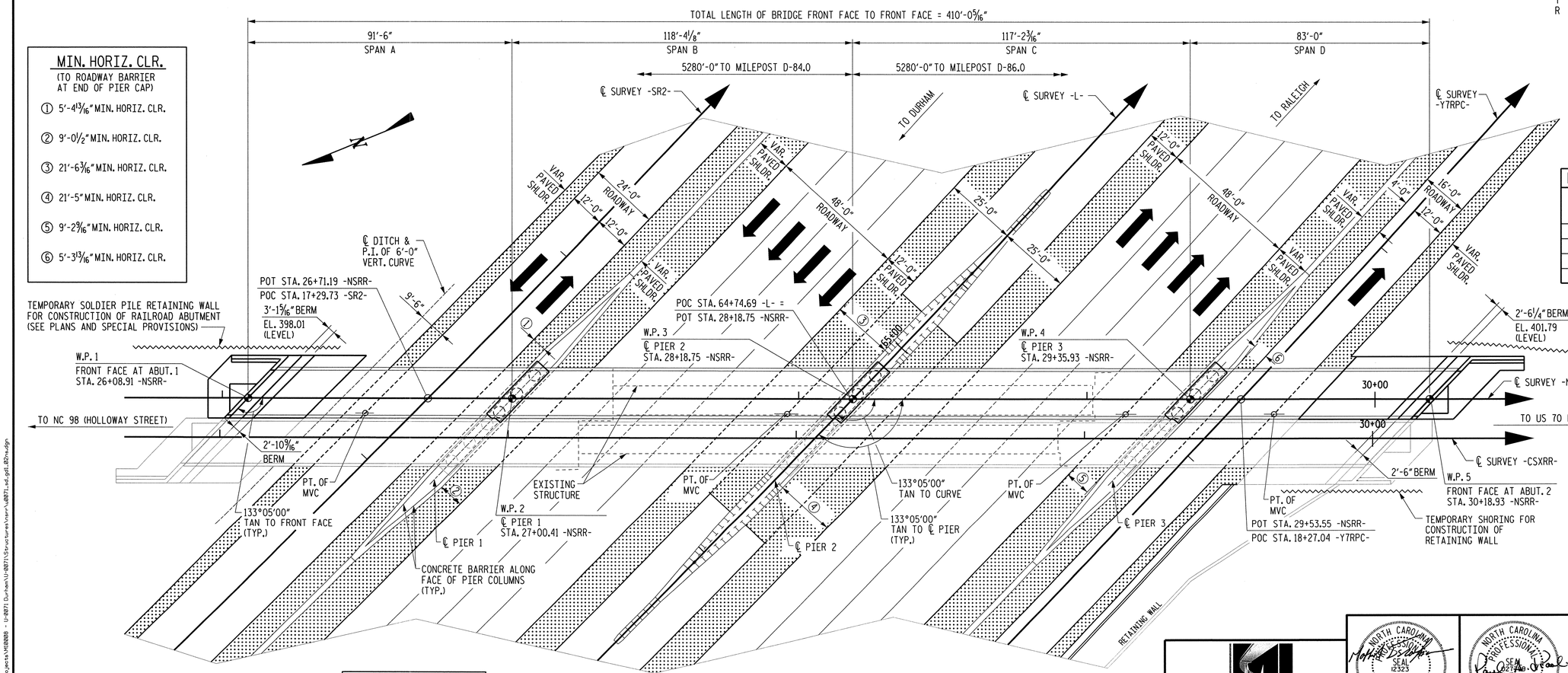

PLAN

NOTE: 1. ABUTMENTS AND PIERS ARE PARALLEL.
2. DRILLED PIERS NOT SHOWN FOR CLARITY.

FOR STRUCTURE DRAINAGE, SEE ABUTMENT DETAILS AND STRUCTURE DRAINAGE DETAILS SHEETS

POINT OF MINIMUM VERTICAL CLEARANCE

℄ SURVEY	STATION	OFFSET	TOP OF PAVEMENT ELEVATION
-SR2-	17+10.82	12.00 FT. LT.	386.89
-L- (WB)	64+55.28	13.00 FT. LT.	386.88
-L- (EB)	65+34.97	73.00 FT. RT.	387.11
-Y7RPC-	18+30.89	12.00 FT. RT.	387.16

NORFOLK SOUTHERN RR

PROJECT NO. U-0071

DURHAM COUNTY

STATION: POC 64+74.69 -L-
POT 28+18.75 -NSRR-
MILEPOST D-85.0

SHEET 1 OF 3

REPLACES BRIDGE NO. R-131

STATE OF NORTH CAROLINA
DEPARTMENT OF TRANSPORTATION
RALEIGH

GENERAL DRAWING

FOR BRIDGE ON NORFOLK SOUTHERN RAILROAD OVER US 70 BYPASS BETWEEN NC 98 (HOLLOWAY STREET) AND US 70 BUS.

MI ENGINEERING
1011 SCHAUB DRIVE, SUITE 100
RALEIGH, NC 27606
(919) 851-6606
FIRM PE NUMBER : P-0671

NORTH CAROLINA PROFESSIONAL SEAL 12323 ENGINEER MORRIS ISRAELNAM
06/17/2014

NORTH CAROLINA PROFESSIONAL SEAL 027748 ENGINEER PAUL A. de PAOLI
06.17.14

DWG. NO. 1

REVISIONS						SHEET NO.
NO.	BY:	DATE:	NO.	BY:	DATE:	S-81
1			3			TOTAL SHEETS
2			4			671

DRAWN BY B.E. ATKINSON DATE MAY 2013
CHECKED BY P.A. de PAOLI DATE MAY 2013
DESIGN ENGINEER OF RECORD P.A. de PAOLI DATE JUNE 2014

PLOT: 6/17/2014 12:26:18 PM bleming
FILE NAME: P:\NC Projects\M080B5 - U-0071 Durham\U-0071\Structures\rsrc\u0071_sd_gdl_02.rsc.dgn

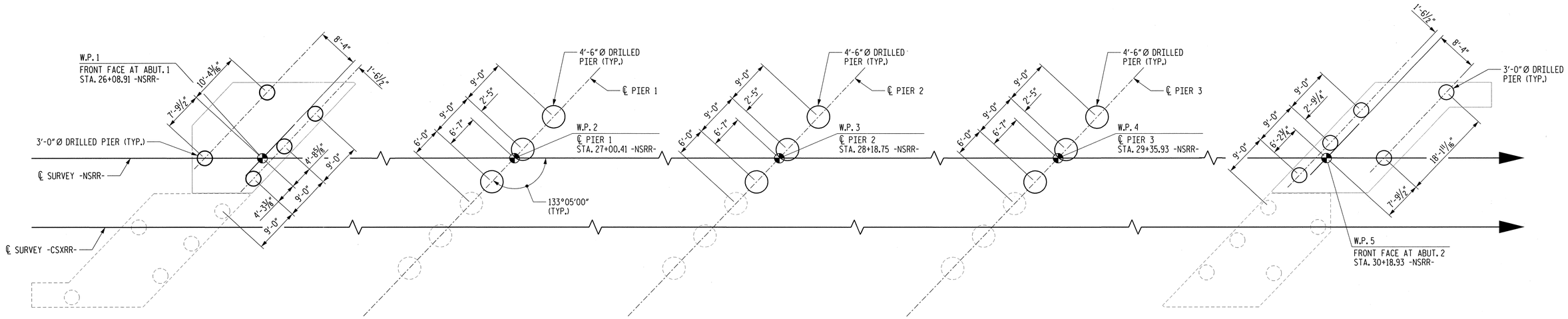

FOUNDATION LAYOUT

NOTES

FOR DRILLED PIERS, SEE "LFD DRILLED PIERS" SPECIAL PROVISIONS.

DRILLED PIERS AT ABUTMENT NO. 1, PIER NO. 1, PIER NO. 2, PIER NO. 3 AND ABUTMENT NO. 2 ARE DESIGNED FOR BOTH SKIN FRICTION AND END BEARING. CHECK FIELD CONDITIONS FOR THE REQUIRED END BEARING CAPACITY OF 75 TSF.

DRILLED PIERS AT ABUTMENT NO. 1 ARE DESIGNED FOR AN APPLIED LOAD OF 342 TONS EACH AT THE TOP OF THE COLUMN.

DRILLED PIERS AT PIER NO. 1 ARE DESIGNED FOR AN APPLIED LOAD OF 590 TONS EACH AT THE TOP OF THE COLUMN.

DRILLED PIERS AT PIER NO. 2 ARE DESIGNED FOR AN APPLIED LOAD OF 750 TONS EACH AT THE TOP OF THE COLUMN.

DRILLED PIERS AT PIER NO. 3 ARE DESIGNED FOR AN APPLIED LOAD OF 590 TONS EACH AT THE TOP OF THE COLUMN.

DRILLED PIERS AT ABUTMENT NO. 2 ARE DESIGNED FOR AN APPLIED LOAD OF 405 TONS EACH AT THE TOP OF THE COLUMN.

INSTALL DRILLED PIERS AT ABUTMENT NO. 1 THAT EXTEND TO AN ELEVATION NO HIGHER THAN 378 FT. AND SATISFY THE REQUIRED END BEARING CAPACITY.

INSTALL DRILLED PIERS AT PIER NO. 1 THAT EXTEND TO AN ELEVATION NO HIGHER THAN 372 FT. (LT. PIER), 372 FT. (CTR. PIER) AND 369 FT. (RT. PIER) AND SATISFY THE REQUIRED END BEARING CAPACITY.

INSTALL DRILLED PIERS AT PIER NO. 2 THAT EXTEND TO AN ELEVATION NO HIGHER THAN 362 FT. (LT. PIER), 362 FT. (CTR. PIER) AND 358 FT. (RT. PIER) AND SATISFY THE REQUIRED END BEARING CAPACITY.

INSTALL DRILLED PIERS AT PIER NO. 3 THAT EXTEND TO AN ELEVATION NO HIGHER THAN 368 FT. (LT. PIER), 368 FT. (CTR. PIER) AND 365 FT. (RT. PIER) AND SATISFY THE REQUIRED END BEARING CAPACITY.

INSTALL DRILLED PIERS AT ABUTMENT NO. 2 THAT EXTEND TO AN ELEVATION NO HIGHER THAN 380 FT. AND SATISFY THE REQUIRED END BEARING CAPACITY.

SPT TESTING MAY BE REQUIRED FOR DRILLED PIERS AT ABUTMENT NO. 1, PIER NO. 1 AND ABUTMENT NO. 2. THE ENGINEER WILL DETERMINE THE NEED FOR SPT TESTING.

SPT TESTING IS REQUIRED FOR DRILLED PIERS AT PIER NO. 2 AND PIER NO. 3.

SID INSPECTIONS MAY BE REQUIRED FOR DRILLED PIERS. THE ENGINEER WILL DETERMINE THE NEED FOR SID INSPECTIONS.

CSL TUBES AND TESTING ARE REQUIRED FOR ALL DRILLED PIERS. FOR CROSSHOLE SONIC LOGGING, SEE STANDARD SPECIFICATIONS SECTION 411.

DRILLED PIER EXCAVATIONS AT ABUTMENT NO. 1, PIER NO. 1, PIER NO. 2, PIER NO. 3 AND ABUTMENT NO. 2 WILL EXTEND INTO MATERIAL THAT DETERIORATES WHEN EXPOSED TO THE ELEMENTS. CHECK FIELD CONDITIONS FOR THE REQUIRED END BEARING CAPACITY AND PLACE CONCRETE IMMEDIATELY AFTER THE EXCAVATION IS COMPLETED.

FOR SID INSPECTIONS, SPT TESTING AND CSL TESTING, SEE STANDARD SPECIFICATIONS SECTION 411.

NORFOLK SOUTHERN RR

PROJECT NO. U-0071

DURHAM COUNTY

STATION: POC 64+74.69 -L-

SHEET 2 OF 3 MILEPOST D-85.0

STATE OF NORTH CAROLINA
DEPARTMENT OF TRANSPORTATION
RALEIGH

GENERAL DRAWING

FOR BRIDGE ON NORFOLK SOUTHERN RAILROAD OVER US 70 BYPASS BETWEEN NC 98 (HOLLOWAY STREET) AND US 70 BUS.

MI ENGINEERING
1011 SCHAUB DRIVE, SUITE 100
RALEIGH, NC 27606
(919) 851-6606
FIRM PE NUMBER : P-0671

NORTH CAROLINA PROFESSIONAL SEAL ENGINEER PAUL A. de PAOLI
06-05-14

DWG. NO. 2

REVISIONS						SHEET NO.
NO.	BY:	DATE:	NO.	BY:	DATE:	5-82
1			3			TOTAL SHEETS
2			4			671

DRAWN BY	B.E. LANNING	DATE	FEB. 2013
CHECKED BY	P.A. de PAOLI	DATE	MAY 2013
DESIGN ENGINEER OF RECORD	P.A. de PAOLI	DATE	JUNE 2014

PLOT: 6/9/2014 12:22:12 PM bbanning
FILE NAME: P:\NC Projects\U0071\Structures\ser\U071_sd_gd2_02ns.dgn

TOTAL BILL OF MATERIAL

	REMOVAL OF EXISTING STRUCTURES AT STA. 64+74.69 -L-	FOUNDATION EXCAVATION	SID INSPECTIONS	SPT TESTING	CSL TESTING	REINFORCED CONCRETE DECK SLAB	CLASS AA CONCRETE (AS MODIFIED BY RAILWAY)	REINFORCING STEEL	SPIRAL COLUMN REINFORCING STEEL	STRUCTURAL STEEL	PAINTING STRUCTURAL STEEL	METHOD A WATERPROOFING	WATERPROOFING (RAILROAD STRUCTURES)
	LUMP SUM	LUMP SUM	EACH	EACH	EACH	SQ. FEET	CU. YDS.	LBS.	LBS.	APPROX. LBS.	LUMP SUM	SQ. YARDS	SQ. FEET
SUPERSTRUCTURE						7,381				959,500	LUMP SUM		7380
ABUTMENT 1		LUMP SUM		*	5		120.7	17,732	1,928			34	75
PIER 1				*	3		56.1	12,746	2,317				
PIER 2				3	3		55.3	15,523	3,301				
PIER 3				3	3		56.1	14,228	2,834				
ABUTMENT 2		LUMP SUM		*	5		114.7	22,526	2,081			35	75
TOTAL	LUMP SUM	LUMP SUM	19	19	19	7,381	402.9	82,755	12,461	959,500	LUMP SUM	69	7530

* SPT TESTING AT ABUTMENT 1, PIER 1 AND ABUTMENT 2 MAY BE REQUIRED. SEE FOUNDATION NOTES ON GENERAL DRAWING SHEET 2 OF 3.

TOTAL BILL OF MATERIAL

	DAMPPROOFING (RAILROAD STRUCTURES)	METAL HANDRAIL (ALUMINUM)	CONCRETE PARAPET	4" SLOPE PROTECTION	SELF-LUBRICATING EXPANSION BEARING ASSEMBLIES	STEEL BEARING ASSEMBLIES	ROCKER BEARING ASSEMBLIES	STRUCTURE DRAINAGE SYSTEM AT STA. 64+74.69 -L-	3'-0" Ø LFD DRILLED PIERS IN SOIL	3'-0" Ø LFD DRILLED PIERS NOT IN SOIL	4'-6" Ø LFD DRILLED PIERS IN SOIL	4'-6" Ø LFD DRILLED PIERS NOT IN SOIL
	SQ. FEET	LIN. FEET	LIN. FEET	SQ. YARDS	LUMP SUM	LUMP SUM	LUMP SUM	LUMP SUM	LIN. FEET	LIN. FEET	LIN. FEET	LIN. FEET
SUPERSTRUCTURE		460.0	820.1		LUMP SUM	LUMP SUM	LUMP SUM	LUMP SUM				
ABUTMENT 1	962			73					32.3	64.0		
PIER 1	121										4.0	32.0
PIER 2	105										37.0	31.0
PIER 3	89										10.9	41.0
ABUTMENT 2	1022			115					27.2	77.0		
TOTAL	2299	460.0	820.1	188	LUMP SUM	LUMP SUM	LUMP SUM	LUMP SUM	59.5	141.0	51.9	104.0

GENERAL NOTES:

DESIGN SPECIFICATIONS: 2010 AREMA AND NORFOLK SOUTHERN GUIDELINES FOR DESIGN OF HIGHWAY SEPARATION STRUCTURES UNDER RAILROAD.

ASSUMED LIVE LOAD = COOPER E-80 AND ALTERNATE LIVE LOAD WITH IMPACT PER AREMA.

ALL MATERIALS AND WORKMANSHIP SHALL BE IN ACCORDANCE WITH "STANDARD SPECIFICATIONS FOR ROADS AND STRUCTURES", NORTH CAROLINA DEPARTMENT OF TRANSPORTATION, 2012 HEREIN CALLED STANDARD SPECIFICATIONS, EXCEPT AS NOTED HEREIN, ELSEWHERE ON PLANS, OR IN THE "SPECIAL PROVISIONS". STRUCTURAL STEEL SHALL BE IN ACCORDANCE WITH CURRENT A.R.E.M.A. SPECIFICATIONS.

ALL CONCRETE SHALL BE IN ACCORDANCE WITH THE NORFOLK SOUTHERN SPECIFICATIONS FOR CAST-IN-PLACE CONCRETE. THE CONCRETE SHALL HAVE A MINIMUM 28-DAY COMPRESSIVE STRENGTH OF:

CLASS AA CONCRETE 4,000 PSI

DRILLED PIER CONCRETE 4,500 PSI

THE NOMINAL COURSE AGGREGATE SIZE SHALL BE 1 INCH (NO. 57). THE MINIMUM CEMENT CONTENT SHALL BE 640 LBS/CY. THE CONCRETE SHALL HAVE AN ENTRAINED AIR CONTENT BETWEEN 4.0 AND 6.0 PERCENT. FLY ASH, BLAST FURNACE SLAG OR OTHER POZZOLANS ARE NOT PERMITTED IN THIS STRUCTURE.

REINFORCING STEEL SHALL BE ASTM A615, GRADE 60. ALL REINFORCING BARS IN THE CONCRETE DECK AND PARAPETS SHALL BE EPOXY-COATED IN ACCORDANCE WITH ASTM A775. FABRICATION TO BE IN ACCORDANCE WITH THE "MANUAL OF STANDARD PRACTICE" A.C.I. 315-99.

THE REINFORCED CONCRETE DECK SLAB WILL BE MEASURED AND PAID FOR AS DESCRIBED IN SECTION 420-21 OF THE STANDARD SPECIFICATIONS. THE CONCRETE AND REINFORCING STEEL SHALL MEET THE REQUIREMENTS DESCRIBED IN THE NOTES ABOVE.

PREMOLDED EXPANSION JOINT FILLER MATERIAL SHALL BE EITHER RUBBER OR CORK CONFORMING WITH ASTM D1752.

CELLULAR AND BULB TYPE WATERSTOPS AND RUBBER JOINT COMPOUNDS SHALL BE AS SHOWN ON THE PLANS AND IN THE SPECIAL PROVISIONS.

STRUCTURE DRAINAGE SYSTEM: METAL DRAINS BEHIND THE ABUTMENTS AND IN THE CONCRETE DECK OF THE BRIDGE, INCLUDING DUCTILE IRON PIPE COLLECTOR SYSTEM, SHALL BE AS SHOWN ON THE PLANS AND OUTLINED IN THE SPECIAL PROVISIONS. DETAILS OF THE DRAINAGE SYSTEM SHALL BE SUBMITTED TO THE CHIEF ENGINEER - BRIDGES AND STRUCTURES, NORFOLK SOUTHERN CORPORATION, ATLANTA, GA FOR APPROVAL.

ALL CONSTRUCTION JOINTS SHOWN ON THESE PLANS SHALL BE REQUIRED UNLESS SHOWN AS OPTIONAL. CONSTRUCTION JOINTS SHALL NOT BE PERMITTED EXCEPT AS SHOWN ON THE PLANS, OR WHERE WRITTEN APPROVAL HAS BEEN OBTAINED.

CONTROL OF WORK: ALL WORK INVOLVED IN THE CONSTRUCTION OF THE RAILROAD STRUCTURE SHALL BE PERFORMED TO THE SATISFACTION OF THE ENGINEER AND/OR NORFOLK SOUTHERN RAILWAY COMPANY. ALL METHODS OF HANDLING WORK AFFECTING THE SAFETY OF RAIL OPERATIONS MUST BE APPROVED BY THE RAILWAY ENGINEER BEFORE PROCEEDING WITH THAT PORTION OF THE WORK. RAIL TRAFFIC SHALL, AT ALL TIMES, BE MAINTAINED AND PROTECTED. THE CONTRACTOR SHALL NOT, AT ANY TIME, DELAY OR INTERFERE WITH RAIL OPERATIONS.

DAMPPROOFING LIMITS: PIER COLUMNS FROM THE TOP OF THE DRILLED PIERS TO THE FINISHED GROUND LINE, THE TOP OF ABUTMENT FOOTINGS AND FILL FACE OF ABUTMENT WINGWALLS AND BACKWALL FROM THE TOP OF THE FOOTING TO THE FINISHED GROUND LINE.

WATERPROOFING: ALL CONSTRUCTION JOINTS AND ANY SHRINKAGE CRACKS WHICH WILL BE COVERED BY FILL SHALL BE WATERPROOFED WITH METHOD A WATERPROOFING. STRIPS OF WATERPROOFING NO LESS THAN 2 FEET WIDE SHALL BE PLACED SYMMETRICALLY OVER JOINTS OR CRACKS. ADDITIONALLY, THE HORIZONTAL SURFACES OF THE BALLAST TROUGH (EXCLUDING THE END DAM) SHALL BE WATERPROOFED WITH A TWO PART WATERPROOFING SYSTEM CONSISTING OF A MEMBRANE LAYER AND A 1 INCH THICK ASPHALT PLANKING OR OTHER RAILWAY APPROVED PROTECTION MATERIAL. ALL WATERPROOFING MATERIALS SHALL CONFORM TO THE RECOMMENDED PRACTICES IN THE AREMA MANUAL OF RAILWAY ENGINEERING CHAPTER 29.

FOR STRUCTURAL STEEL NOTES, SEE "STRUCTURAL STEEL DETAILS" SHEET (DWG. NO. 15).

FOR MAINTENANCE AND PROTECTION OF TRAFFIC BENEATH PROPOSED STRUCTURE, SEE SPECIAL PROVISIONS.

FOR SUBMITTAL OF WORKING DRAWINGS, SEE SPECIAL PROVISIONS.

FOR FALSEWORK AND FORMWORK, SEE SPECIAL PROVISIONS.

FOR CRANE SAFETY, SEE SPECIAL PROVISIONS.

FOR GROUT FOR STRUCTURES, SEE SPECIAL PROVISIONS.

FOR CONCRETE PARAPET, SEE SPECIAL PROVISIONS.

FOR WATERPROOFING, SEE SPECIAL PROVISIONS.

FOR PORTLAND CEMENT, SEE SPECIAL PROVISIONS.

FOR FINE AND COARSE AGGREGATE, SEE SPECIAL PROVISIONS.

FOR WATERSTOPS, SEE SPECIAL PROVISIONS.

FOR ELASTOMERIC FLASHING, SEE SPECIAL PROVISIONS.

FOR RUBBER JOINT COMPOUNDS, SEE SPECIAL PROVISIONS.

FOR STRUCTURE DRAINAGE SYSTEM, SEE SPECIAL PROVISIONS.

FOR BACKFILLING AROUND STRUCTURES, SEE SPECIAL PROVISIONS.

FOR SELF-LUBRICATING EXPANSION BEARING ASSEMBLIES, SEE SPECIAL PROVISIONS.

FOR CONDUIT IN PARAPETS, SEE SPECIAL PROVISIONS.

FOR CONCRETE PARAPET, SEE SPECIAL PROVISIONS.

FOR METAL RAIL (ALUMINUM), SEE SPECIAL PROVISIONS.

FOR STRUCTURAL STEEL, SEE SPECIAL PROVISIONS.

FOR PAINTING STRUCTURAL STEEL, SEE SPECIAL PROVISIONS.

FOR PROTECTION OF RAILWAY INTERESTS, SEE SPECIAL PROVISIONS.

FOR RAILROAD ROADBED, SEE SPECIAL PROVISIONS.

FOR CLASS AA CONCRETE (AS MODIFIED BY RAILWAY), SEE SPECIAL PROVISIONS.

THE EXISTING STRUCTURE CONSISTS TWO PARALLEL SUPERSTRUCTURES OF 4 SPANS OF STEEL GIRDERS WITH AN OPEN TIMBER DECK ON COMMON CONCRETE ABUTMENTS AND PIERS. THE ENTIRE STRUCTURE SHALL BE REMOVED.

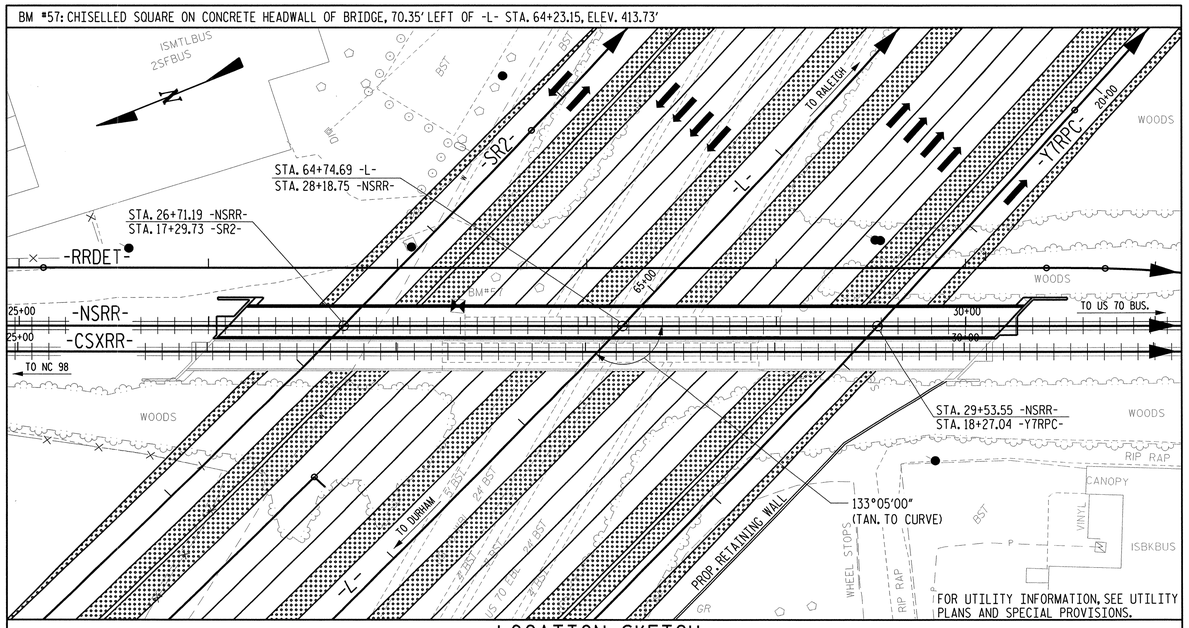

LOCATION SKETCH

NORFOLK SOUTHERN RR

PROJECT NO. U-0071

DURHAM COUNTY

STATION: POC 64+74.69 -L-

SHEET 3 OF 3 MILEPOST D-85.0

STATE OF NORTH CAROLINA
DEPARTMENT OF TRANSPORTATION
RALEIGH

GENERAL DRAWING

FOR BRIDGE ON NORFOLK SOUTHERN RAILROAD OVER US 70 BYPASS BETWEEN NC 98 (HOLLOWAY STREET) AND US 70 BUS.

MI ENGINEERING
1011 SCHAUB DRIVE, SUITE 100
RALEIGH, NC 27606
(919) 851-6606
FIRM PE NUMBER : P-0671

NORTH CAROLINA PROFESSIONAL SEAL 17891 ENGINEER PAUL A. de PAOLI
06-17-14

DWG. NO. 3

REVISIONS							SHEET NO.
NO.	BY:	DATE:	NO.	BY:	DATE:		5-83
1			3				TOTAL SHEETS
2			4				671

DRAWN BY	B.E. LANNING	DATE	FEB. 2013
CHECKED BY	P.A. de PAOLI	DATE	MAY 2013
DESIGN ENGINEER OF RECORD	P.A. de PAOLI	DATE	JUNE 2014

PLOT: 6/17/2014 12:28:37 PM blanning
FILE NAME: P:\NC Projects\M10808 - U-0071 Durham\U-0071\Structures\Year\U0071_sd_gd3_82ns.dgn

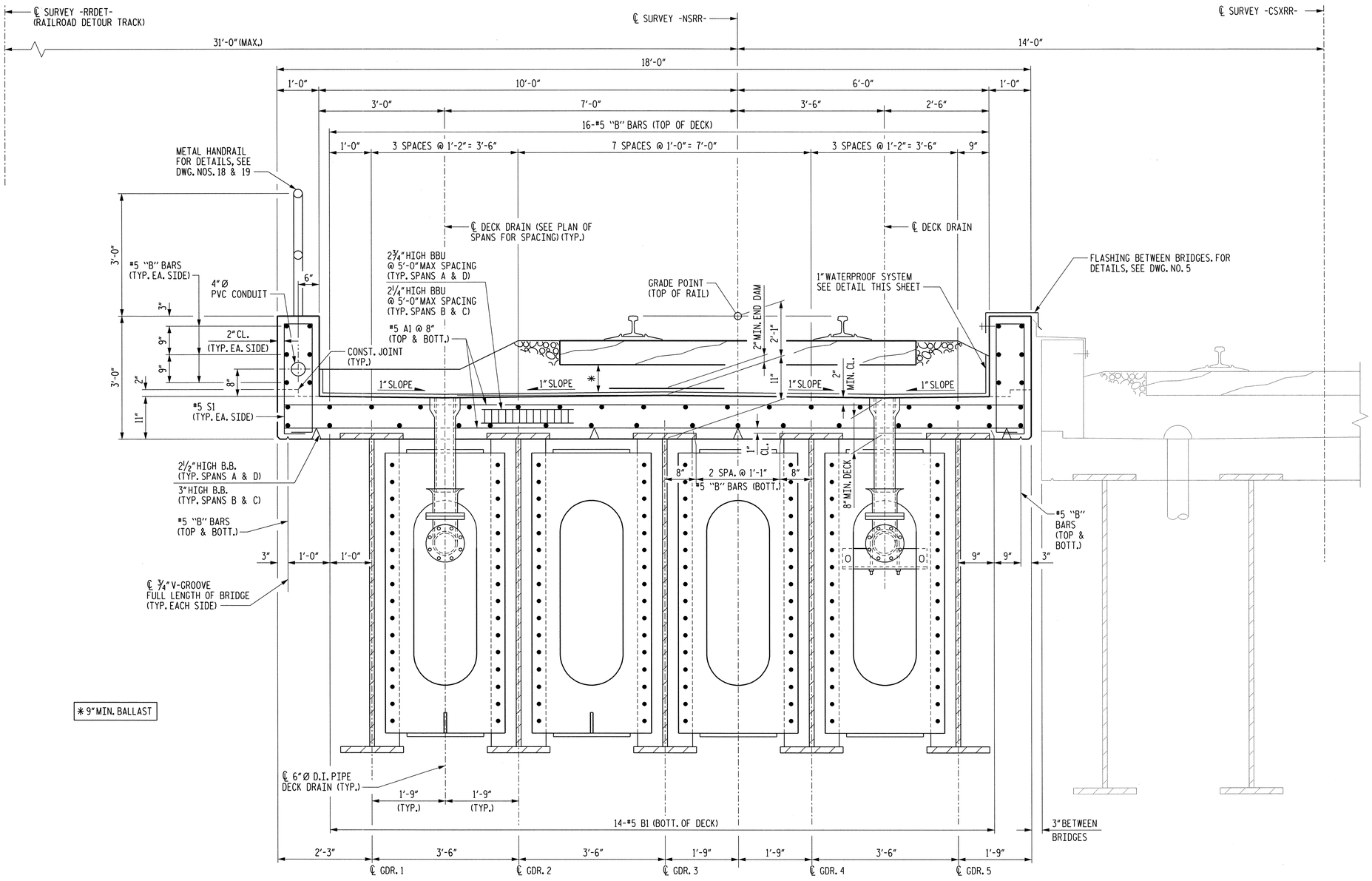

TYPICAL SECTION

NOTES

ALL REINFORCING STEEL IN DECK AND PARAPET SHALL BE EPOXY COATED.

LONGITUDINAL BARS MAY BE SHIFTED SLIGHTLY TO AVOID DRAINS IN BRIDGE DECK.

SHEAR CONNECTORS NOT SHOWN FOR CLARITY.

NOTES FOR SIGNAL CONDUIT IN PARAPET

SIGNAL CONDUIT TO BE 4" DIA. IN ACCORDANCE WITH UNDERWRITER'S LABORATORY SPECIFICATIONS.

PROVISIONS SHALL BE MADE FOR EXPANSION BETWEEN DECK SLABS AT EXPANSION JOINTS AT PIERS 1,2 & 3 (GALVANIZED EXPANSION FITTINGS).

COUPLING SHALL BE PROVIDED BEHIND BACKWALL OF ABUTMENT 1 AND 2 FOR CONNECTION TO 4" DIA. RIGID PIPE (RIGID PIPE BY RAILWAY COMPANY).

FOR SIGNAL CONDUIT IN PARAPET SEE SPECIAL PROVISIONS.

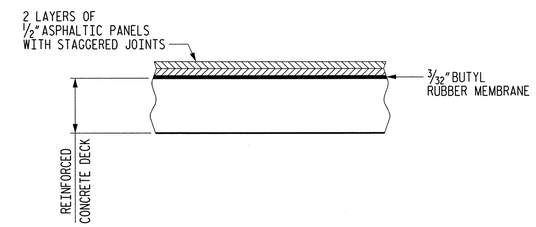

WATERPROOF SYSTEM DETAIL

NORFOLK SOUTHERN RR

PROJECT NO. U-0071

DURHAM COUNTY

STATION: POC 64+74.69 -L-

MILEPOST D-85.0

STATE OF NORTH CAROLINA
DEPARTMENT OF TRANSPORTATION
RALEIGH

SUPERSTRUCTURE
TYPICAL SECTION

MI ENGINEERING
1011 SCHAUB DRIVE, SUITE 100
RALEIGH, NC 27606
(919) 851-6606
FIRM PE NUMBER : P-0671

NORTH CAROLINA PROFESSIONAL ENGINEER SEAL 12795 PAUL A. de PAOLI
06-09-14

DWG. NO. 4

REVISIONS						SHEET NO.
NO.	BY:	DATE:	NO.	BY:	DATE:	5-84
1			3			TOTAL SHEETS
2			4			671

DRAWN BY B.E. LANNING DATE OCT. 2011
CHECKED BY P.A. de PAOLI DATE NOV. 2011
DESIGN ENGINEER OF RECORD P.A. de PAOLI DATE JUNE 2014

PLOT: 6/9/2014 1:05:00 PM blanning
FILE NAME: P:\NC Projects\MI0008 - U-0071 Durham\U-0071\Structures\nsrr\u0071_sd_ts_02ns.dgn

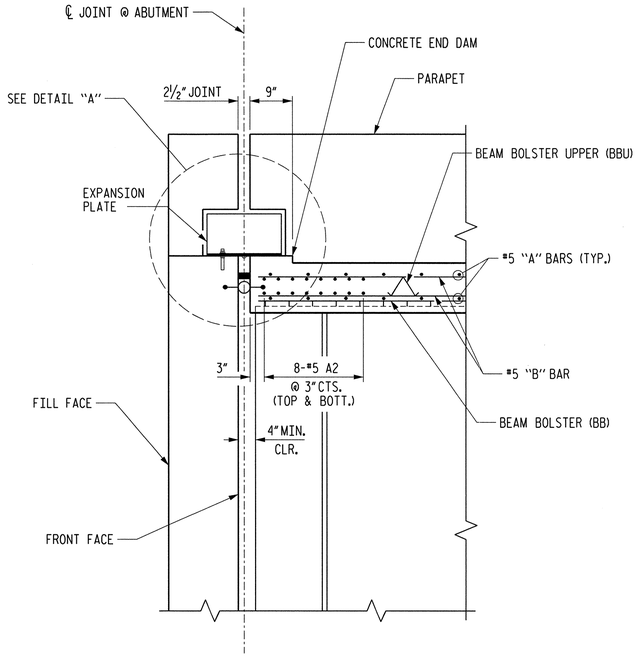

SECTION A-A

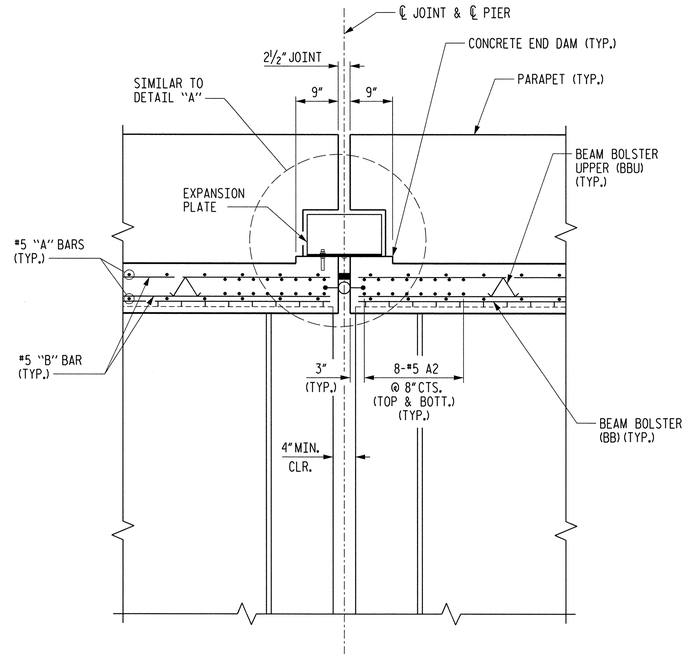

SECTION B-B

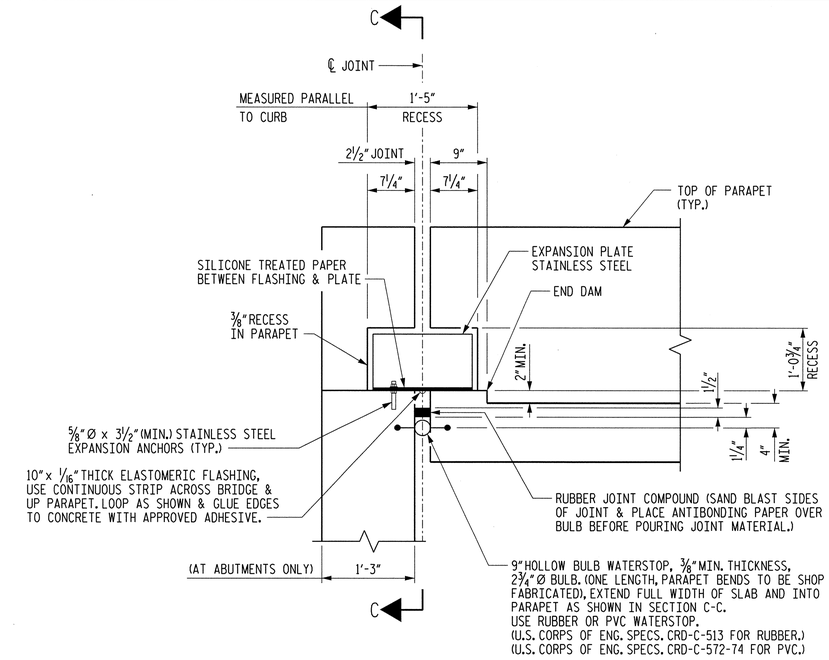

DETAIL "A"

NOTE: JOINT SHALL BE TESTED FOR LEAKS AND MADE WATERTIGHT BEFORE FLASHING AND EXPANSION PLATES ARE ARE INSTALLED.

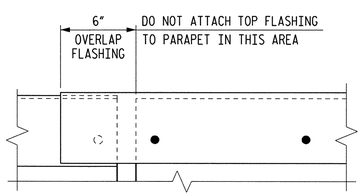

INTERIOR ELEVATION

AT PIER AND ABUTMENT JOINTS

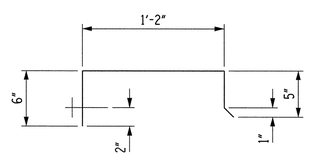

FLASHING DETAIL

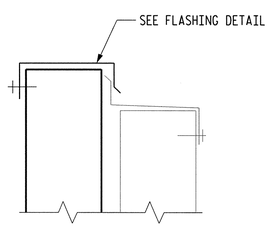

SECTION THRU PARAPETS

PARAPET FLASHING DETAIL

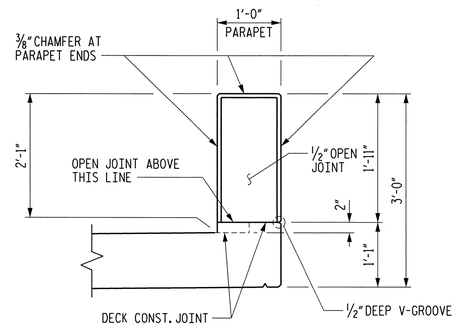

SECTION THRU OPEN JOINT IN PARAPET

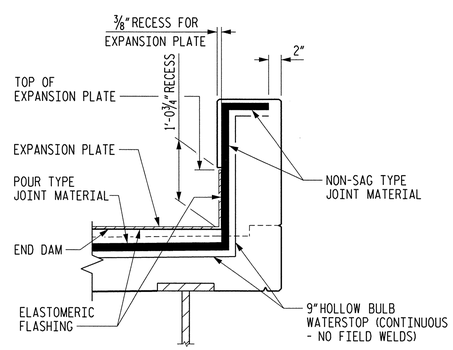

SECTION C-C

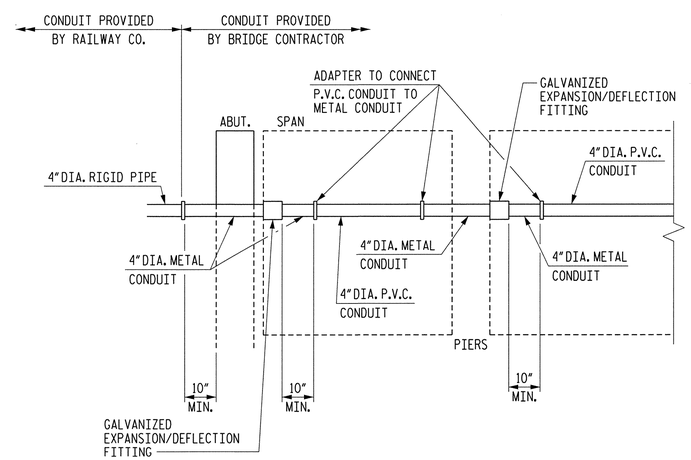

CONDUIT LAYOUT

NORFOLK SOUTHERN RR

PROJECT NO. U-0071

DURHAM COUNTY

STATION: POC 64+74.69 -L-

MILEPOST D-85.0

STATE OF NORTH CAROLINA
DEPARTMENT OF TRANSPORTATION
RALEIGH

SUPERSTRUCTURE
DECK DETAILS AND SECTIONS

MI ENGINEERING
1011 SCHAUB DRIVE, SUITE 100
RALEIGH, NC 27606
(919) 851-6606
FIRM PE NUMBER : P-0671

NORTH CAROLINA PROFESSIONAL SEAL ENGINEER PAUL A. de PAOLI 06-09-14

DWG. NO. 5

REVISIONS						SHEET NO.
NO.	BY:	DATE:	NO.	BY:	DATE:	5-85
1			3			TOTAL SHEETS
2			4			671

DRAWN BY B.E. LANNING DATE JUNE 2011
CHECKED BY P.A. de PAOLI DATE OCT. 2011
DESIGN ENGINEER OF RECORD P.A. de PAOLI DATE JUNE 2014

PLOT: 6/9/2014 1:05:02 PM bleanning
FILE NAME: PLNC Projects\MIB088 - U-0071 (Durham)\U-0071\Structures\ser\u0071_sd_tset1a_02nu.dgn

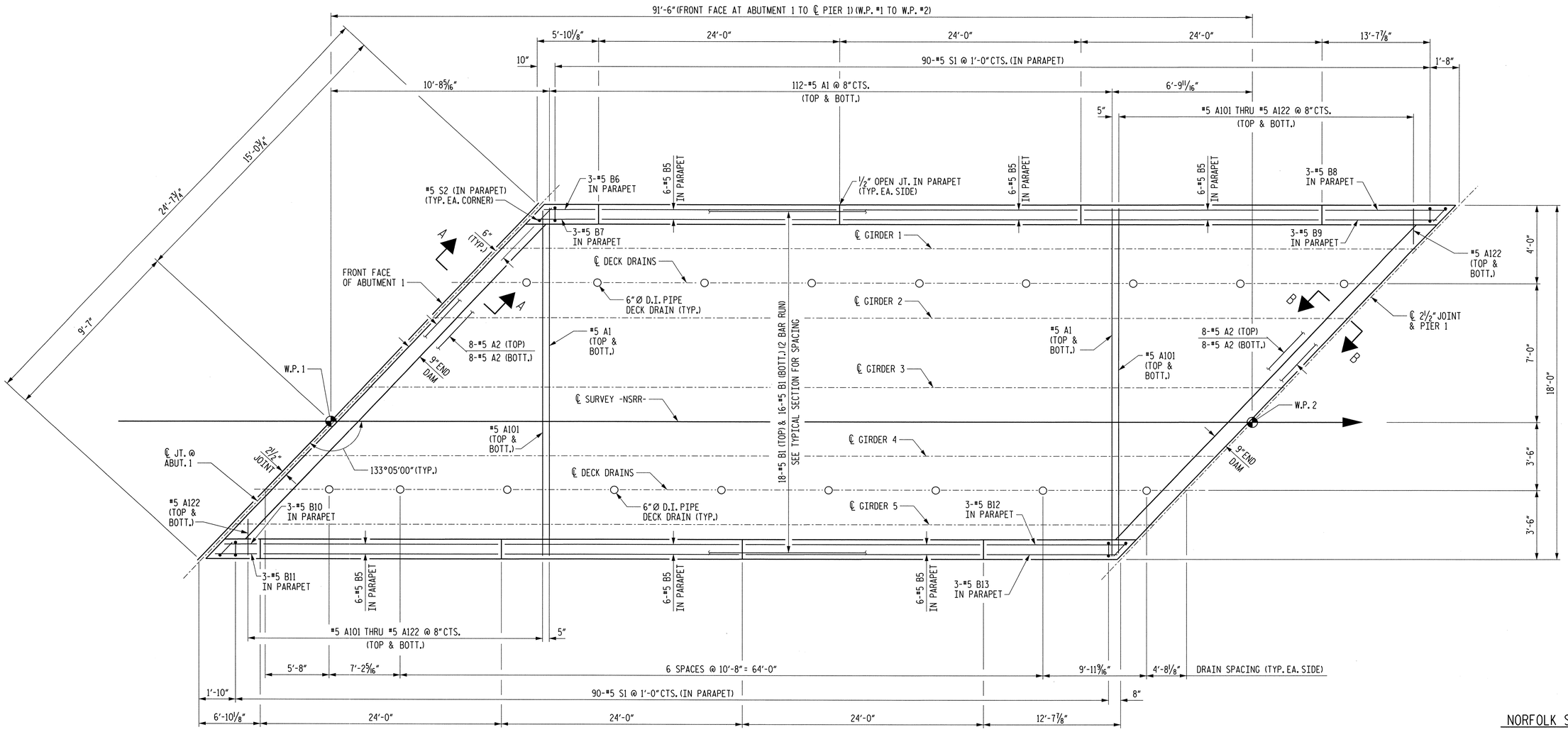

PLAN OF SPAN - SPAN "A"

NORFOLK SOUTHERN RR

PROJECT NO. U-0071

DURHAM COUNTY

STATION: POC 64+74.69 -L-

SHEET 1 OF 4 MILEPOST D-85.0

NOTES

SHIFT REINFORCING STEEL TO AVOID DECK DRAINS.

FOR DECK DRAIN DETAILS, SEE DWG. NO. 40.

FOR SECTIONS A-A AND B-B, SEE DWG. NO. 5.

FOR PARAPET DETAILS, SEE DWG. NO. 4 & 5.

STATE OF NORTH CAROLINA
DEPARTMENT OF TRANSPORTATION
RALEIGH

SUPERSTRUCTURE
PLAN OF SPAN
SPAN "A"

MI ENGINEERING
1011 SCHAUB DRIVE, SUITE 100
RALEIGH, NC 27606
(919) 851-6606
FIRM PE NUMBER : P-0671

NORTH CAROLINA PROFESSIONAL SEAL ENGINEER PAUL A. de PAOLI
06-09-14

DWG. NO. 6

REVISIONS						SHEET NO.
NO.	BY:	DATE:	NO.	BY:	DATE:	5-86
1			3			TOTAL SHEETS
2			4			671

DRAWN BY B.E. LANNING DATE NOV. 2011
CHECKED BY P.A. de PAOLI DATE NOV. 2011
DESIGN ENGINEER OF RECORD P.A. de PAOLI DATE JUNE 2014

PLOT: 6/9/2014 1:05:04 PM blanning
FILE NAME: P:\NC Projects\M100008 - U-0071 Durham\U-0071\Structures\nsrr\u0071_sd_ps-a_02ns.dgn

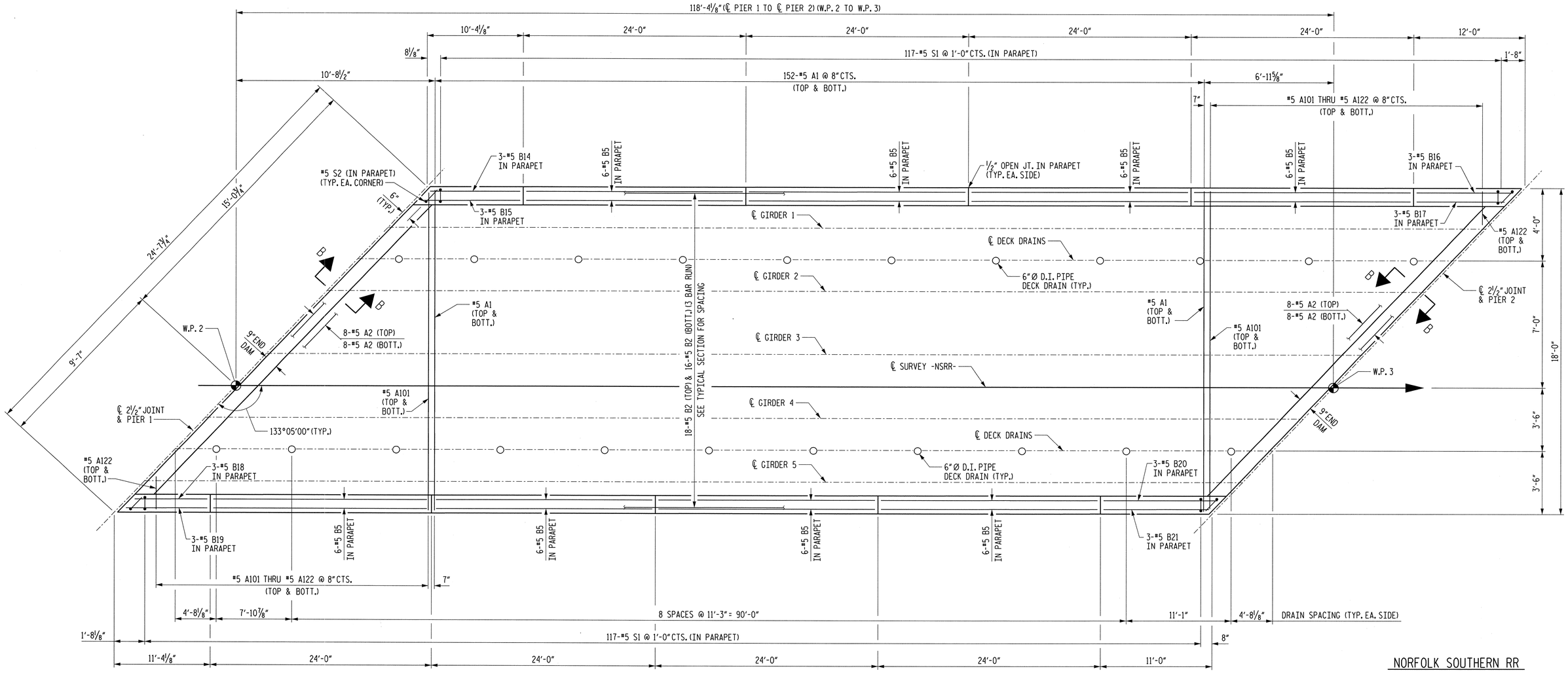

PLAN OF SPAN - SPAN "B"

NORFOLK SOUTHERN RR

PROJECT NO. U-0071

DURHAM COUNTY

STATION: POC 64+74.69 -L-

SHEET 2 OF 4 MILEPOST D-85.0

NOTES

SHIFT REINFORCING STEEL TO AVOID DECK DRAINS.

FOR DECK DRAIN DETAILS, SEE DWG. NO. 40.

FOR SECTIONS A-A AND B-B, SEE DWG. NO. 4.

FOR PARAPET DETAILS, SEE DWG. NO. 4 & 5.

STATE OF NORTH CAROLINA
DEPARTMENT OF TRANSPORTATION
RALEIGH

SUPERSTRUCTURE
PLAN OF SPAN
SPAN "B"

MI ENGINEERING
1011 SCHAUB DRIVE, SUITE 100
RALEIGH, NC 27606
(919) 851-6606
FIRM PE NUMBER : P-0671

NORTH CAROLINA PROFESSIONAL SEAL ENGINEER PAUL A. de PAOLI 06-05-14

DWG. NO. 7

REVISIONS						SHEET NO.
NO.	BY:	DATE:	NO.	BY:	DATE:	5-87
1			3			TOTAL SHEETS
2			4			671

DRAWN BY B.E. LANNING DATE OCT. 2011
CHECKED BY P.A. de PAOLI DATE NOV. 2011
DESIGN ENGINEER OF RECORD P.A. de PAOLI DATE JUNE 2014

PLOT: 6/9/2014 1:05:06 PM blanning
FILE NAME: P:\NC Projects\MI0008 - U-0071 Durham\U-0071\Structures\nsrr\u0071_sd_ps-b_02ns.dgn

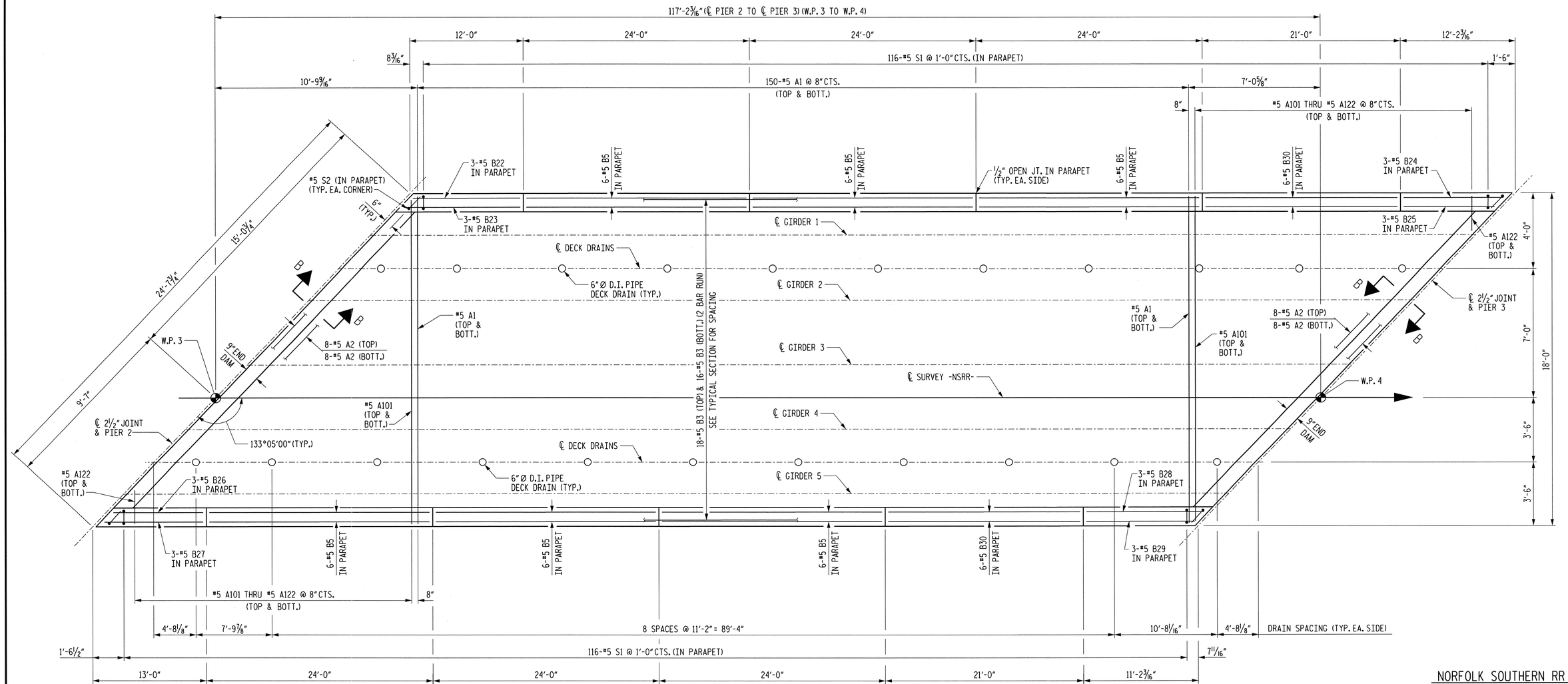

PLAN OF SPAN - SPAN "C"

NORFOLK SOUTHERN RR

PROJECT NO. U-0071

DURHAM COUNTY

STATION: POC 64+74.69 -L-

SHEET 3 OF 4 MILEPOST D-85.0

NOTES

SHIFT REINFORCING STEEL TO AVOID DECK DRAINS.

FOR DECK DRAIN DETAILS, SEE DWG. NO. 40.

FOR SECTIONS A-A AND B-B, SEE DWG. NO. 4.

FOR PARAPET DETAILS, SEE DWG. NO. 4 & 5.

STATE OF NORTH CAROLINA
DEPARTMENT OF TRANSPORTATION
RALEIGH

SUPERSTRUCTURE
PLAN OF SPAN
SPAN "C"

MI ENGINEERING
1011 SCHAUB DRIVE, SUITE 100
RALEIGH, NC 27606
(919) 851-6606
FIRM PE NUMBER : P-0671

NORTH CAROLINA PROFESSIONAL SEAL ENGINEER PAUL A. de PAOLI 06.09.14

DWG. NO. 8

REVISIONS						SHEET NO.
NO.	BY:	DATE:	NO.	BY:	DATE:	5-88
1			3			TOTAL SHEETS
2			4			671

DRAWN BY B.E. LANNING DATE OCT. 2011
CHECKED BY P.A. de PAOLI DATE NOV. 2011
DESIGN ENGINEER OF RECORD P.A. de PAOLI DATE JUNE 2014

PLOT: 6/9/2014 1:05:08 PM blanning
FILE NAME: P:\NC Projects\MI0008 - U-0071 Durham\U-0071\Structures\nsrr\u0071_sd_ps-c_02ns.dgn

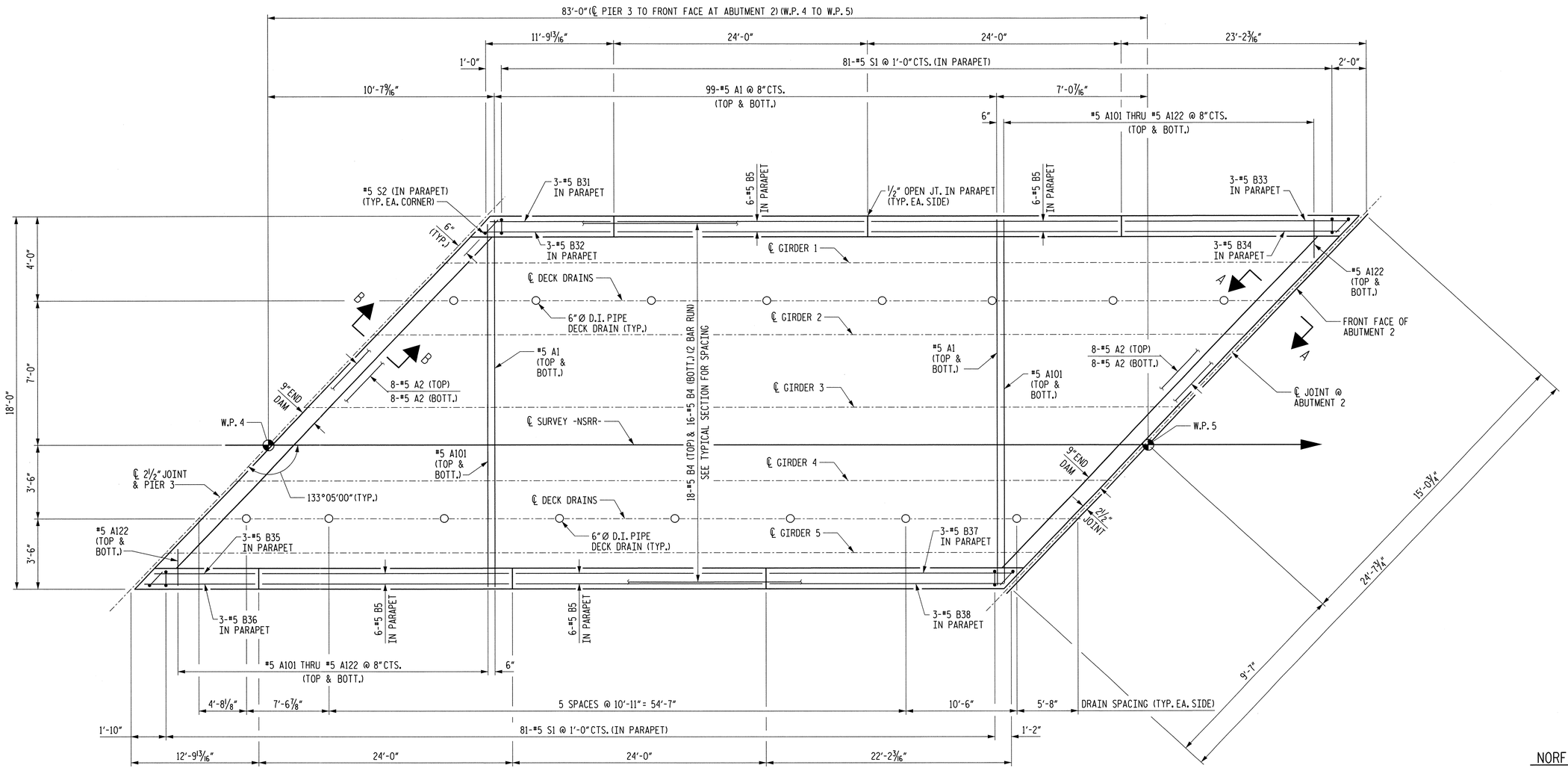

PLAN OF SPAN - SPAN "D"

NOTES

SHIFT REINFORCING STEEL TO AVOID DECK DRAINS.

FOR DECK DRAIN DETAILS, SEE DWG. NO. 40.

FOR SECTIONS A-A AND B-B, SEE DWG. NO. 4.

FOR PARAPET DETAILS, SEE DWG. NO. 4 & 5.

NORFOLK SOUTHERN RR

PROJECT NO. U-0071

DURHAM COUNTY

STATION: POC 64+74.69 -L-

SHEET 4 OF 4 MILEPOST D-85.0

STATE OF NORTH CAROLINA
DEPARTMENT OF TRANSPORTATION
RALEIGH

SUPERSTRUCTURE
PLAN OF SPAN
SPAN "D"

MI ENGINEERING
1011 SCHAUB DRIVE, SUITE 100
RALEIGH, NC 27606
(919) 851-6606
FIRM PE NUMBER : P-0671

NORTH CAROLINA PROFESSIONAL ENGINEER SEAL 06-09-14 PAUL A. de PAOLI

DWG. NO. 9

REVISIONS						SHEET NO.
NO.	BY:	DATE:	NO.	BY:	DATE:	5-89
1			3			TOTAL SHEETS
2			4			671

DRAWN BY B.E. LANNING DATE OCT. 2011
CHECKED BY P.A. de PAOLI DATE NOV. 2011
DESIGN ENGINEER OF RECORD P.A. de PAOLI DATE JUNE 2014

PLOT: 6/9/2014 1:05:10 PM blanning
FILE NAME: P:\NC Projects\MI0008 - U-0071 Durham\U-0071\Structures\nsrr\u0071_sd_ps-d_02ns.dgn

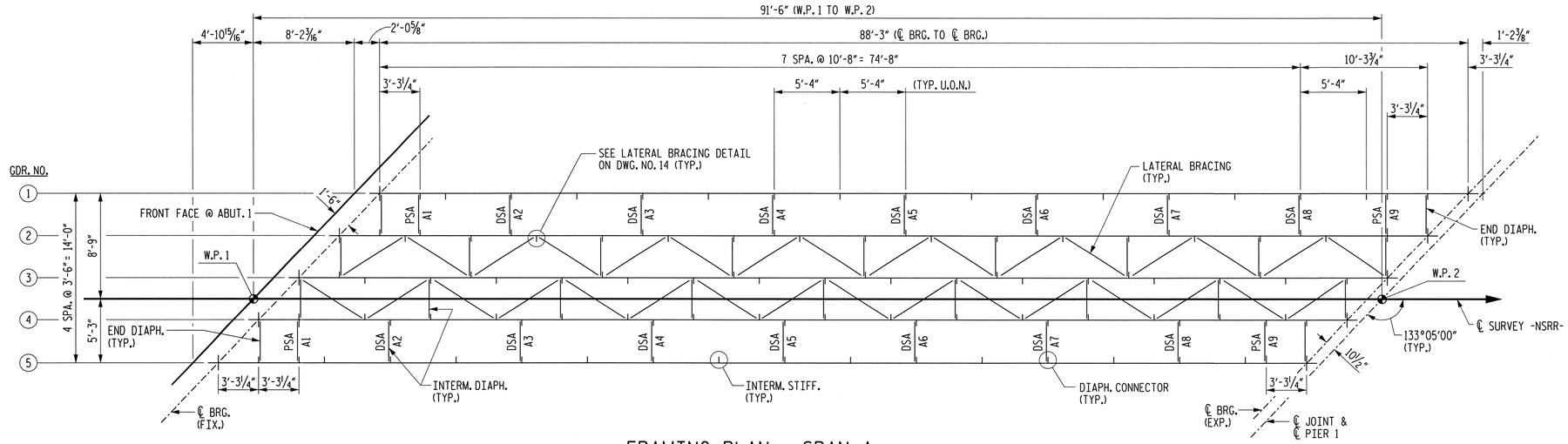

FRAMING PLAN - SPAN A

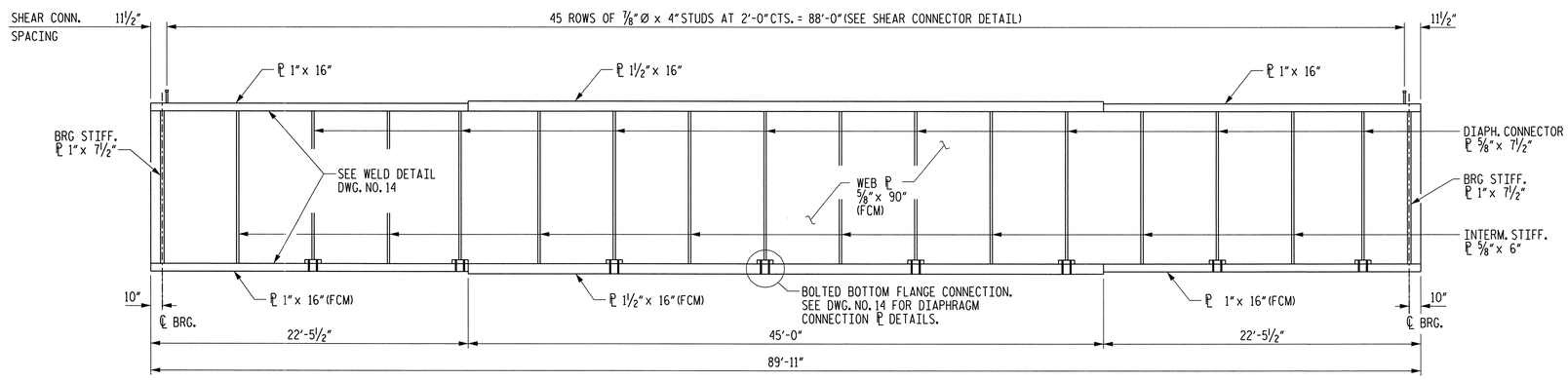

GIRDER ELEVATION - SPAN A

(GIRDER 1 SHOWN, OTHERS SIMILAR)

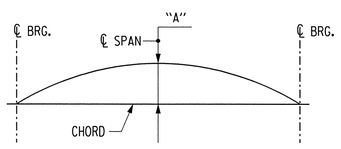

CAMBER DIAGRAM

CAMBER DUE TO:	
VERTICAL CURVE ORDINATE	0.000
GIRDERS, DIAPHRAGMS, ETC.	0.015
DECK	0.015
PARAPET AND RAILINGS	0.004
BALLAST, TIES AND RAILS	0.019
DIMENSION "A"	5/8"

DEFLECTIONS ARE SHOWN IN DECIMAL FEET.
DIMENSION "A" IS SHOWN IN INCHES.

NOTES

1. FOR STRUCTURAL STEEL NOTES AND DETAILS, SEE DWG. NOS. 14 & 15.
2. "FCM" DENOTES FRACTURE CRITICAL MEMBER.
3. PSA - PIPE SUPPORT ANGLE
4. DSA - DIAPHRAGM SUPPORT ANGLE

NORFOLK SOUTHERN RR

PROJECT NO. U-0071

DURHAM COUNTY

STATION: POC 64+74.69 -L-

SHEET 1 OF 4 MILEPOST D-85.0

STATE OF NORTH CAROLINA
DEPARTMENT OF TRANSPORTATION
RALEIGH

SUPERSTRUCTURE
FRAMING PLAN
SPAN A

MI ENGINEERING
1011 SCHAUB DRIVE, SUITE 100
RALEIGH, NC 27606
(919) 851-6606
FIRM PE NUMBER : P-0671

NORTH CAROLINA PROFESSIONAL SEAL ENGINEER PAUL A. de PAOLI
06-09-14

DWG. NO. 10

REVISIONS						SHEET NO.
NO.	BY:	DATE:	NO.	BY:	DATE:	S-90
1			3			TOTAL SHEETS
2			4			671

DRAWN BY B.E. LANNING DATE OCT. 2011
CHECKED BY P.A. de PAOLI DATE NOV. 2011
DESIGN ENGINEER OF RECORD P.A. de PAOLI DATE JUNE 2014

PLOT: 6/9/2014 1:05:12 PM blanning
FILE NAME: P:\NC Projects\H10008 - U-0071 Durham\U-0071\Structures\nsrr\u0071_sd_fp-a_02ns.dgn

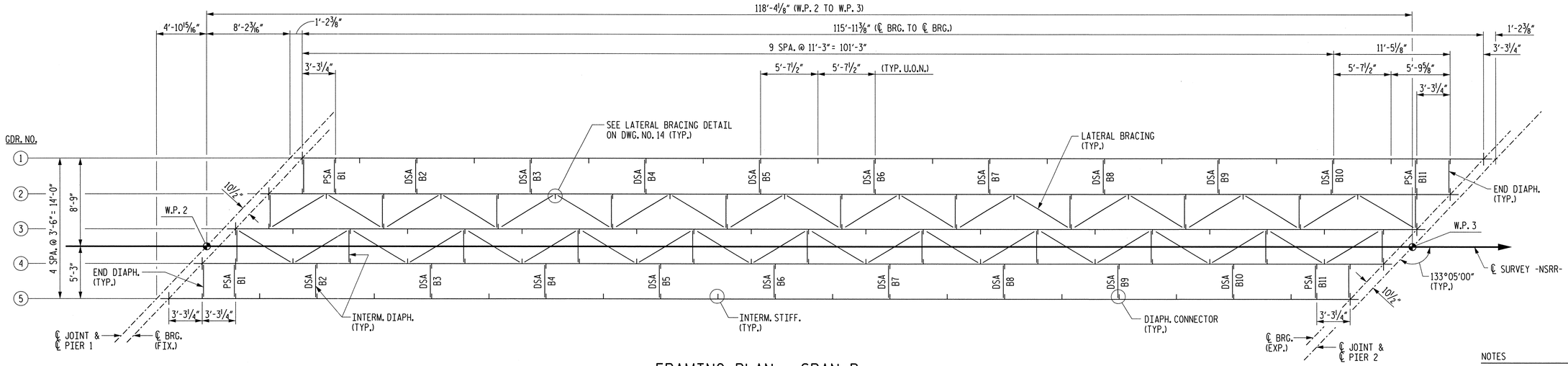

FRAMING PLAN - SPAN B

NOTES

1. FOR STRUCTURAL STEEL NOTES AND DETAILS, SEE DWG. NOS. 14 & 15.
2. "FCM" DENOTES FRACTURE CRITICAL MEMBER.
3. PSA - PIPE SUPPORT ANGLE
4. DSA - DIAPHRAGM SUPPORT ANGLE

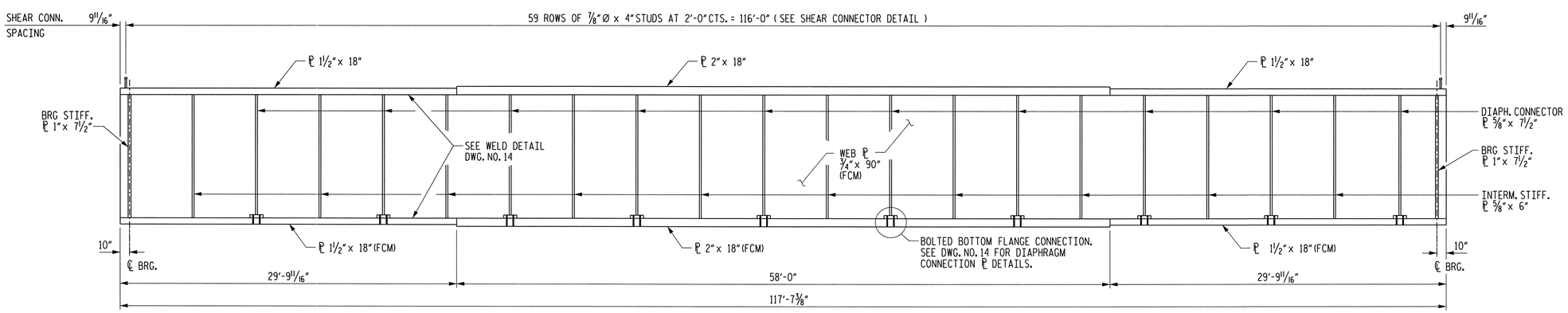

GIRDER ELEVATION - SPAN B

(GIRDER 1 SHOWN, OTHERS SIMILAR)

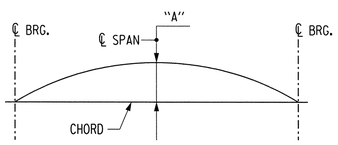

CAMBER DIAGRAM

CAMBER DUE TO:	
VERTICAL CURVE ORDINATE	0.019
GIRDERS, DIAPHRAGMS, ETC.	0.037
DECK	0.031
PARAPET AND RAILINGS	0.009
BALLAST, TIES AND RAILS	0.039
DIMENSION "A"	1 5/8"

DEFLECTIONS ARE SHOWN IN DECIMAL FEET.
DIMENSION "A" IS SHOWN IN INCHES.

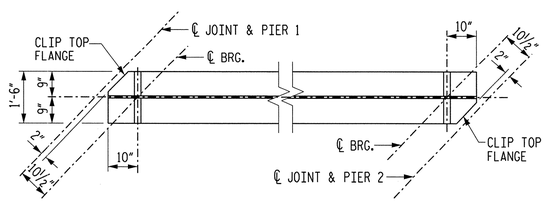

TOP FLANGE CLIP DETAIL

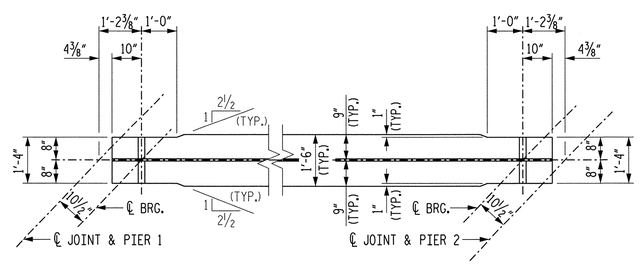

BOTTOM FLANGE DETAIL

NORFOLK SOUTHERN RR

PROJECT NO. U-0071

DURHAM COUNTY

STATION: POC 64+74.69 -L-

SHEET 2 OF 4 MILEPOST D-85.0

STATE OF NORTH CAROLINA
DEPARTMENT OF TRANSPORTATION
RALEIGH

SUPERSTRUCTURE
FRAMING PLAN
SPAN B

MI ENGINEERING
1011 SCHAUB DRIVE, SUITE 100
RALEIGH, NC 27606
(919) 851-6606
FIRM PE NUMBER : P-0671

NORTH CAROLINA PROFESSIONAL SEAL ENGINEER PAUL A. de PAOLI 06-09-14

DWG. NO. 11

REVISIONS							SHEET NO.
NO.	BY:	DATE:	NO.	BY:	DATE:		5-91
1			3				TOTAL SHEETS
2			4				671

DRAWN BY B.E. ATKINSON DATE OCT. 2011
CHECKED BY P.A. de PAOLI DATE NOV. 2011
DESIGN ENGINEER OF RECORD P.A. de PAOLI DATE JUNE 2014

PLOT: 6/9/2014 1:05:14 PM bleanung
FILE NAME: P:\NC Projects\MIDBOB - U-0071 Durham\U-0071\Structures\ser\U0071_sd_fp_b_02.dgn

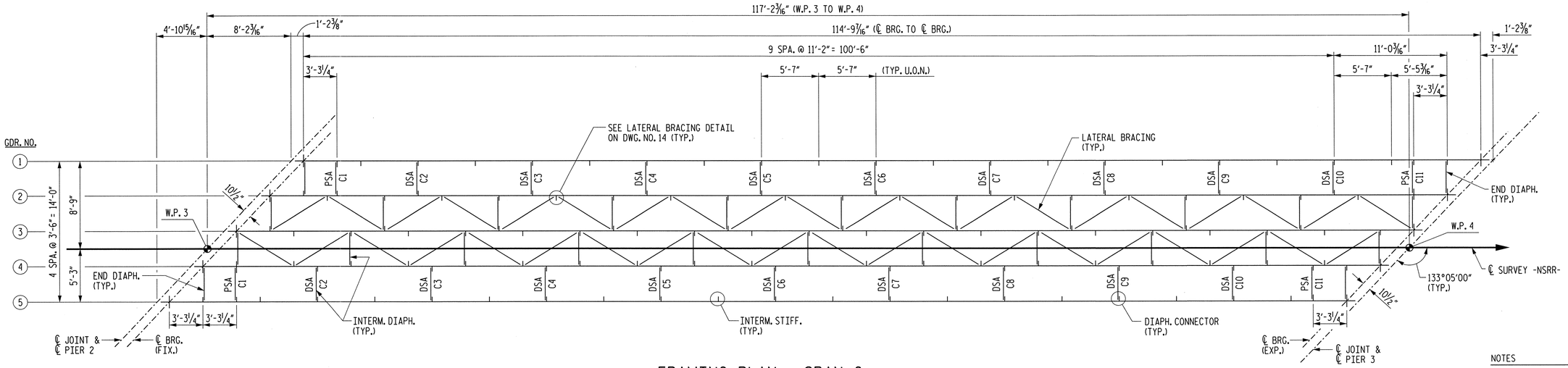

FRAMING PLAN - SPAN C

NOTES

1. FOR STRUCTURAL STEEL NOTES AND DETAILS, SEE DWG. NOS. 14 & 15.
2. "FCM" DENOTES FRACTURE CRITICAL MEMBER.
3. PSA - PIPE SUPPORT ANGLE
4. DSA - DIAPHRAGM SUPPORT ANGLE

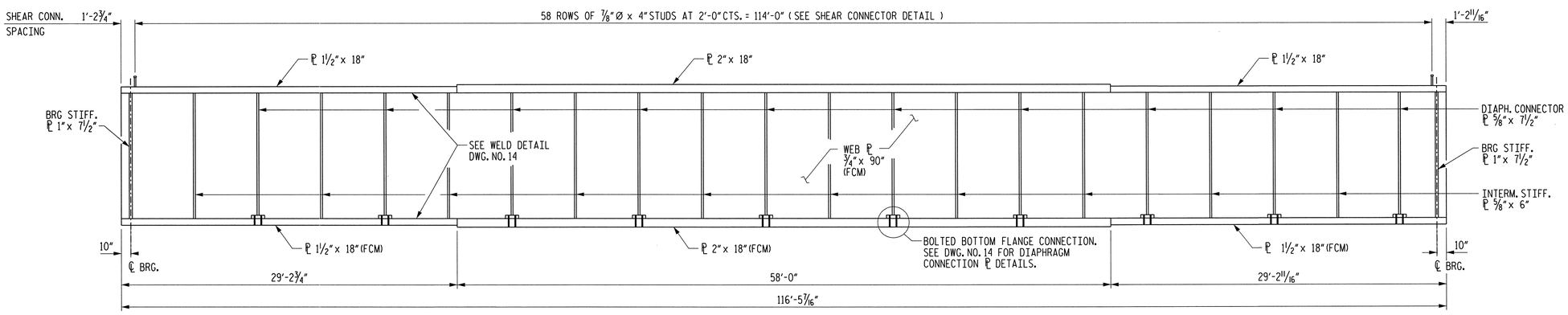

GIRDER ELEVATION - SPAN C

(GIRDER 1 SHOWN, OTHERS SIMILAR)

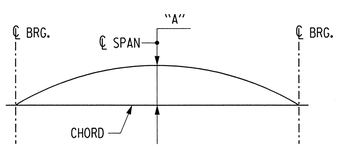

CAMBER DIAGRAM

CAMBER DUE TO:	
VERTICAL CURVE ORDINATE	0.048
GIRDERS, DIAPHRAGMS, ETC.	0.037
DECK	0.031
PARAPET AND RAILINGS	0.009
BALLAST, TIES AND RAILS	0.039
DIMENSION "A"	2"

DEFLECTIONS ARE SHOWN IN DECIMAL FEET.
DIMENSION "A" IS SHOWN IN INCHES.

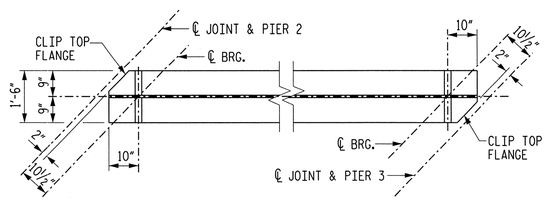

TOP FLANGE CLIP DETAIL

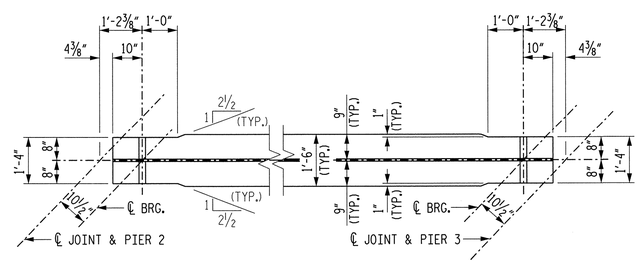

BOTTOM FLANGE DETAIL

NORFOLK SOUTHERN RR

PROJECT NO. U-0071

DURHAM COUNTY

STATION: POC 64+74.69 -L-

SHEET 3 OF 4 MILEPOST D-85.0

STATE OF NORTH CAROLINA
DEPARTMENT OF TRANSPORTATION
RALEIGH

SUPERSTRUCTURE
FRAMING PLAN
SPAN C

MI ENGINEERING
1011 SCHAUB DRIVE, SUITE 100
RALEIGH, NC 27606
(919) 851-6606
FIRM PE NUMBER : P-0671

NORTH CAROLINA PROFESSIONAL SEAL ENGINEER PAUL A. de PAOLI 06.05.14

DWG. NO. 12

REVISIONS						SHEET NO.
NO.	BY:	DATE:	NO.	BY:	DATE:	5-92
1			3			TOTAL SHEETS
2			4			671

DRAWN BY	B.E. ATKINSON	DATE	OCT. 2011
CHECKED BY	P.A. de PAOLI	DATE	NOV. 2011
DESIGN ENGINEER OF RECORD	P.A. de PAOLI	DATE	JUNE 2014

PLOT: 6/9/2014 1:05:16 PM bbarnung
FILE NAME: PW:C:\Projects\M100088 - U-0071 Durham\U-0071\Structures\User\U0071_sd_fra_02.mndgn

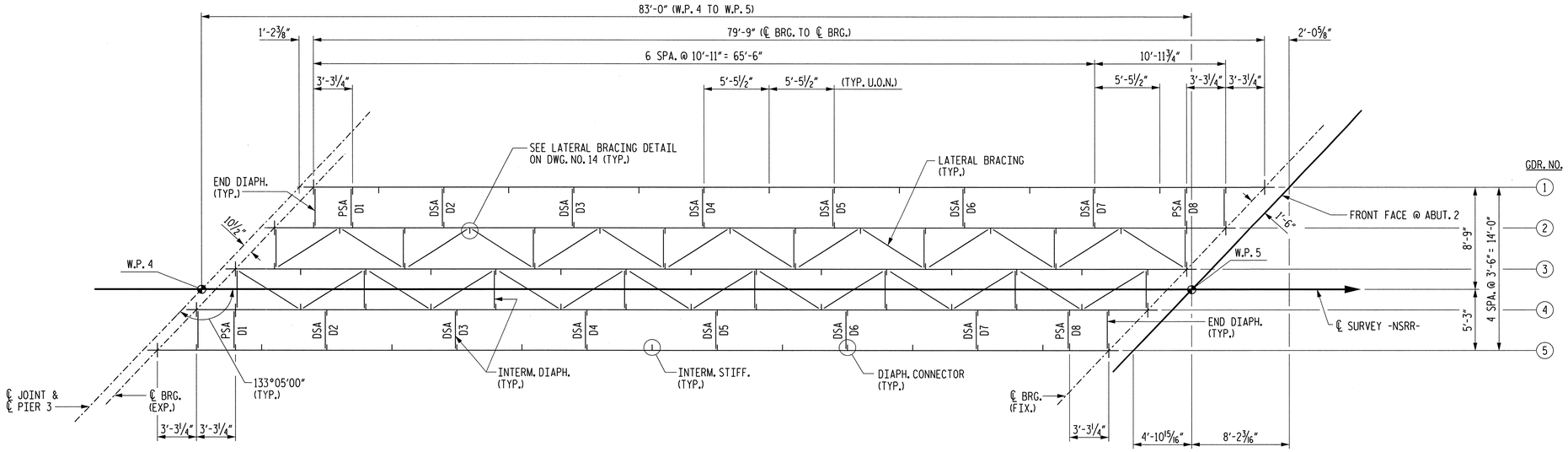

FRAMING PLAN - SPAN D

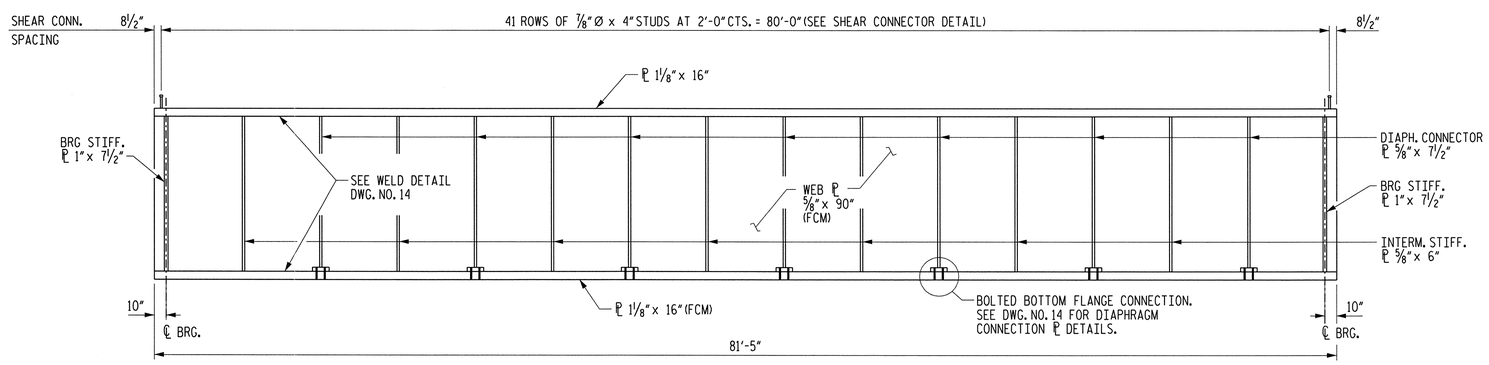

GIRDER ELEVATION - SPAN D

(GIRDER 1 SHOWN, OTHERS SIMILAR)

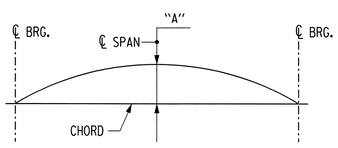

CAMBER DIAGRAM

CAMBER DUE TO:	
VERTICAL CURVE ORDINATE	0.023
GIRDERS, DIAPHRAGMS, ETC.	0.011
DECK	0.012
PARAPET AND RAILINGS	0.003
BALLAST, TIES AND RAILS	0.015
DIMENSION "A"	3/4"

DEFLECTIONS ARE SHOWN IN DECIMAL FEET.
DIMENSION "A" IS SHOWN IN INCHES.

NOTES

1. FOR STRUCTURAL STEEL NOTES AND DETAILS, SEE DWG. NOS. 14 & 15.
2. "FCM" DENOTES FRACTURE CRITICAL MEMBER.
3. PSA - PIPE SUPPORT ANGLE
4. DSA - DIAPHRAGM SUPPORT ANGLE

NORFOLK SOUTHERN RR

PROJECT NO. U-0071

DURHAM COUNTY

STATION: POC 64+74.69 -L-

SHEET 4 OF 4 MILEPOST D-85.0

STATE OF NORTH CAROLINA
DEPARTMENT OF TRANSPORTATION
RALEIGH

SUPERSTRUCTURE
FRAMING PLAN
SPAN D

MI ENGINEERING
1011 SCHAUB DRIVE, SUITE 100
RALEIGH, NC 27606
(919) 851-6606
FIRM PE NUMBER : P-0671

NORTH CAROLINA PROFESSIONAL SEAL ENGINEER PAUL A. de PAOLI
06.05.14

DWG. NO. 13

REVISIONS						SHEET NO.
NO.	BY:	DATE:	NO.	BY:	DATE:	5-93
1			3			TOTAL SHEETS
2			4			671

DRAWN BY B.E. LANNING DATE OCT. 2011
CHECKED BY P.A. de PAOLI DATE NOV. 2011
DESIGN ENGINEER OF RECORD P.A. de PAOLI DATE JUNE 2014

PLOT: 6/9/2014 1:05:18 PM blanning
FILE NAME: P:\NC Projects\MI0008 - U-0071 Durham\U-0071\Structures\nsrr\u0071_sd_fp-d_02ns.dgn

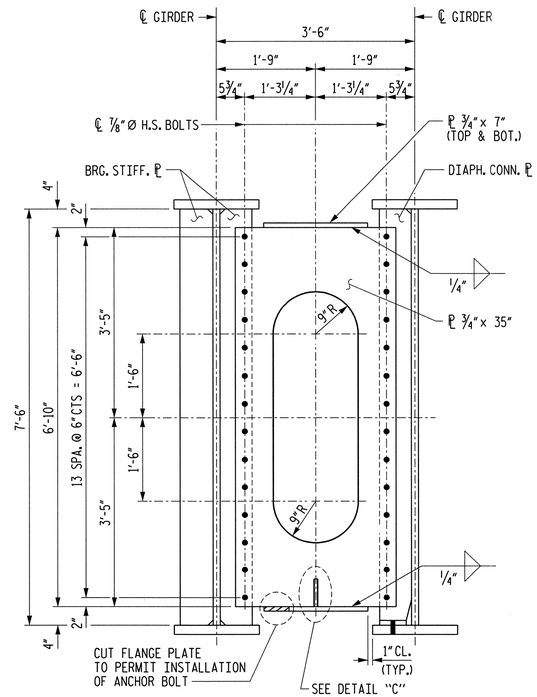

SECTION @ END DIAPHRAGM

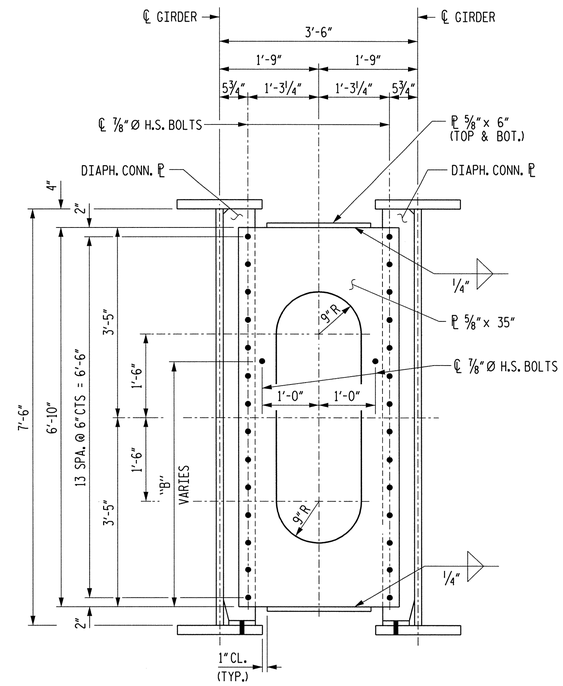

SECTION @ INTERMEDIATE DIAPHRAGM

(SEE SHEET 2 OF 2 FOR DIMENSION "B")

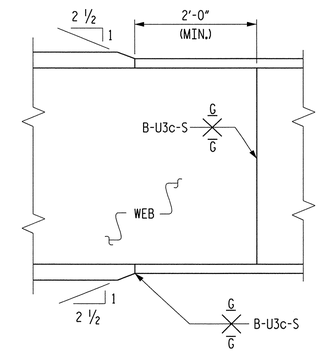

SHOP SPLICE DETAILS

NOTE:
1. ELECTROSLAG WELDING IS NOT PERMITTED.
2. ULTRASONIC OR RADIOGRAPHIC INSPECTION IS REQUIRED FOR ALL FLANGE WELDS. SEE SPECIAL PROVISIONS.
3. GRIND WELDS IN DIRECTION OF STRESS ONLY (I.E. - PARALLEL TO ℄ GIRDER)
4. BOTTOM FLANGE AND WEB SPLICE WELDS ARE FRACTURE CRITICAL.

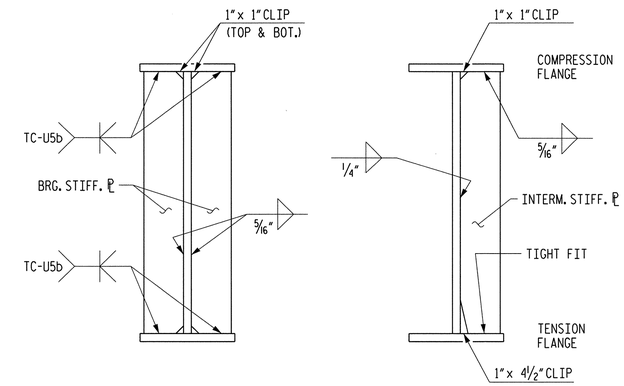

STIFFENER ℘ DETAILS

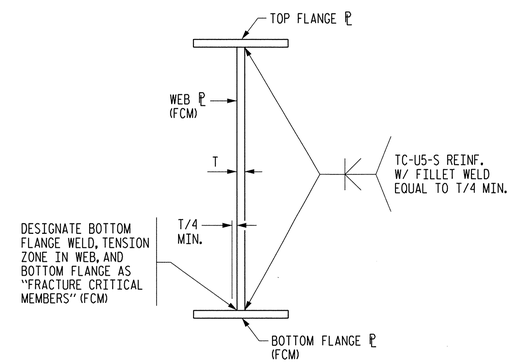

FLANGE TO WEB WELD

(FCM) = FRACTURE CRITICAL MEMBER

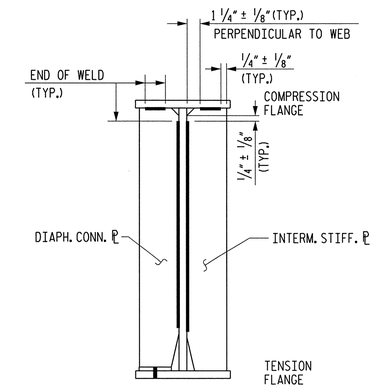

WELD TERMINATION DETAILS

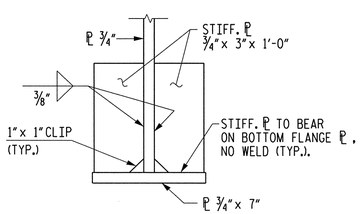

DETAIL "C"

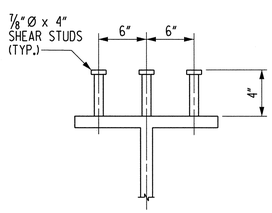

SHEAR CONNECTOR DETAIL

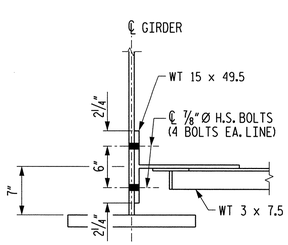

SECTION A-A

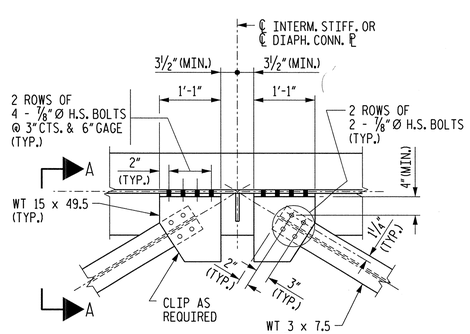

LATERAL BRACING DETAIL

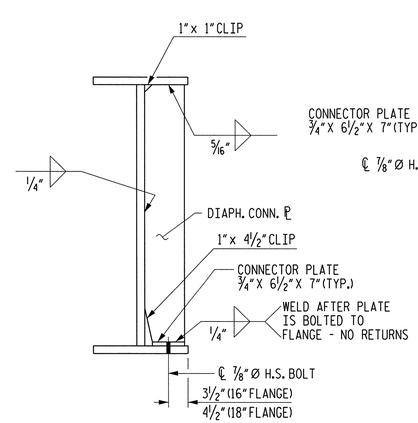

SECTION

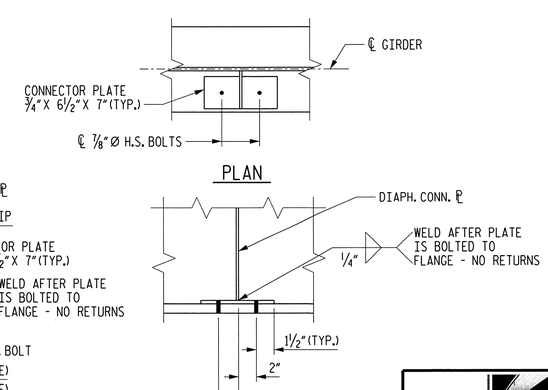

SIDE ELEVATION

DIAPHRAGM CONNECTION ℘ DETAILS

FOR NOTES, SEE SHEET 2 OF 2.

NORFOLK SOUTHERN RR

PROJECT NO. U-0071

DURHAM COUNTY

STATION: POC 64+74.69 -L-

SHEET 1 OF 2 MILEPOST D-85.0

STATE OF NORTH CAROLINA
DEPARTMENT OF TRANSPORTATION
RALEIGH

SUPERSTRUCTURE
STRUCTURAL STEEL
DETAILS

MI ENGINEERING
1011 SCHAUB DRIVE, SUITE 100
RALEIGH, NC 27606
(919) 851-6606
FIRM PE NUMBER : P-0671

NORTH CAROLINA PROFESSIONAL SEAL ENGINEER PAUL A. de PAOLI 06.05.14

DWG. NO. 14

REVISIONS							SHEET NO.
NO.	BY:	DATE:	NO.	BY:	DATE:		5-94
1			3				TOTAL SHEETS
2			4				671

DRAWN BY	B.E. ATKINSON	DATE	JULY 2011
CHECKED BY	P.A. de PAOLI	DATE	NOV. 2011
DESIGN ENGINEER OF RECORD	P.A. de PAOLI	DATE	JUNE 2014

PLOT: 6/9/2014 1:05:29 PM bbenung
FILE NAME: P:\NC Projects\M100808 - U-0071 Durham\U-0071\Structures\Ver\U0071_ss1_02ss.dgn

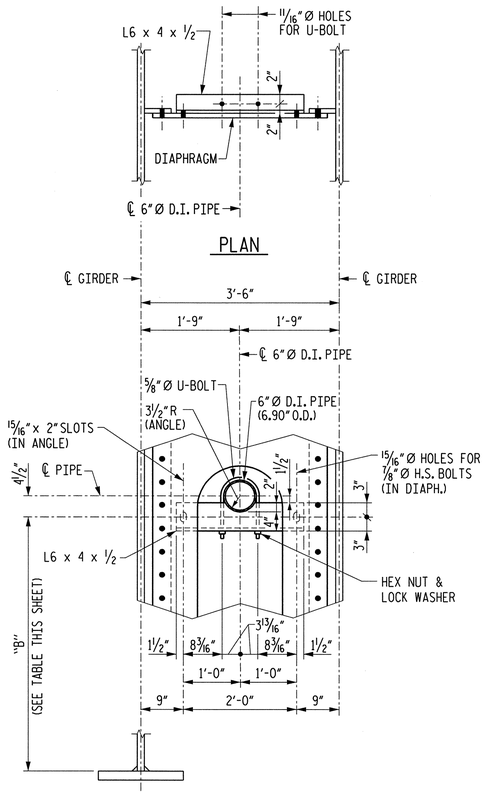

ELEVATION

DIAPHRAGM SUPPORT ANGLE (DSA)

SPAN A		SPAN B		SPAN C		SPAN D	
DSA	DIM "B"	DSA	DIM "B"	DSA	DIM "B"	DSA	DIM "B"
A2	4'-9 7/16"	B2	3'-10 13/16"	C2	4'-9 1/2"	D2	3'-11"
A3	4'-6 15/16"	B3	4'-0 3/16"	C3	4'-7 1/8"	D3	4'-11 1/16"
A4	4'-4 7/16"	B4	4'-1 9/16"	C4	4'-4 3/4"	D4	4'-3 1/8"
A5	4'-1 15/16"	B5	4'-3"	C5	4'-2 1/2"	D5	4'-5 1/4"
A6	3'-11 7/16"	B6	4'-4 3/8"	C6	4'-0 1/4"	D6	4'-7 1/16"
A7	3'-8 15/16"	B7	4'-5 13/16"	C7	3'-10 1/16"	D7	4'-9 9/8"
A8	3'-6 3/8"	B8	4'-7 1/4"	C8	3'-7 7/8"		
		B9	4'-8 11/16"	C9	3'-5 3/4"		
		B10	4'-10 3/16"	C10	3'-3 11/16"		

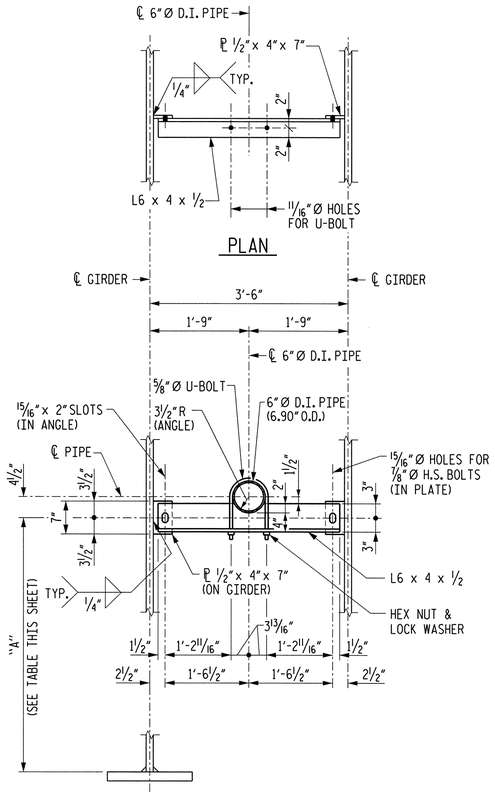

ELEVATION

PIPE SUPPORT ANGLE (PSA)

SPAN A		SPAN B		SPAN C		SPAN D	
PSA	DIM "A"	DSA	DIM "A"	DSA	DIM "A"	DSA	DIM "A"
A1	4'-11 3/16"	B1	3'-9 13/16"	C1	4'-11 3/16"	D1	3'-9 9/16"
A9	3'-4 3/4"	B11	4'-11 3/8"	C11	3'-2 1/4"	D8	4'-11 1/4"

NOTES

1. STRUCTURAL STEEL SPECIFICATIONS: NORFOLK SOUTHERN CORPORATION SPECIFICATIONS FOR STEEL AND CURRENT AREMA.

2. STRUCTURAL STEEL SHALL CONFORM TO THE FOLLOWING ASTM SPECIFICATIONS:

   BOTTOM FLANGES AND WEBS OF MAIN GIRDERS:
   ASTM A709, GRADE 50, WITH SUPPLEMENTALS S84-F2, S91 AND S93, AND SHALL MEET CHARPY V-NOTCH IMPACT TEST REQUIREMENT OF 25 FT-LB @ 40 DEG F AS GOVERNED BY ASTM A673 FOR TEST FREQUENCY "P".

   TOP FLANGES OF MAIN GIRDERS:
   ASTM A709, GRADE 50, WITH SUPPLEMENTALS S83-T2 AND S91, AND SHALL MEET CHARPY V-NOTCH IMPACT TEST REQUIREMENT OF 15 FT-LB @ 40 DEG F AS GOVERNED BY ASTM A673 FOR TEST FREQUENCY "H".

   BRIDGE BEARINGS: ASTM A709, GRADE 36.

   BRONZE PLATES: ASTM B22, ALLOY C91100. BRONZE PLATES SHALL BE SELF-LUBRICATING.

   MISCELLANEOUS MATERIAL: ASTM A709, GRADE 36.

   EXPANSION PLATES: ASTM A666, TYPE 304, GRADE A STAINLESS STEEL.

   HIGH STRENGTH BOLTS: ASTM A325, TYPE 1 UNLESS NOTED OTHERWISE.
   HIGH STRENGTH NUTS: ASTM A563, GRADE DH
   HARDENED WASHERS: ASTM F436, TYPE 1
   ALL HIGH STRENGTH BOLTS, NUTS AND WASHERS SHALL BE MECHANICALLY GALVANIZED IN ACCORDANCE WITH ASTM B695.

   SHEAR CONNECTORS: ASTM A108.

   ANCHOR BOLTS FOR BEARING DEVICES SHALL CONFORM TO ASTM F1554. ANCHOR BOLTS, NUTS AND PLATE WASHERS SHALL BE MECHANICALLY GALVANIZED IN ACCORDANCE WITH ASTM B695.

   WELDING ELECTRODES SHALL BE E70XX.

3. GIRDER BOTTOM FLANGE AND WEB PLATES INCLUDING BOTTOM FLANGE-WEB WELD ARE DESIGNATED FRACTURE CRITICAL MEMBERS (FCM). CHARPY V-NOTCH TESTING FOR FCM MEMBERS SHALL BE IN ACCORDANCE WITH AREMA 15.1.14, ZONE 2 (MIN).

4. WEB SHOP SPLICES ARE PERMITTED TO LIMIT THE MAXIMUM REQUIRED WEB PIECE LENGTH TO 45 FEET. PERMITTED WEB SHOP SPLICES SHALL NOT BE LOCATED WITHIN 15 FEET OF MAXIMUM DEAD LOAD DEFLECTION AND SHALL BE LOCATED SIX (6) INCHES MINIMUM FROM CONNECTOR PLATE OR INTERMEDIATE STIFFENERS. FLANGE SHOP SPLICES SHALL NOT BE PERMITTED UNLESS NOTED.

5. ALL WELDING SHALL BE IN ACCORDANCE WITH AASHTO/AWS D1.5M/D1.5:2010. ELECTROSLAG WELDING IS NOT PERMITTED.

6. MILL TEST REPORTS: NORFOLK SOUTHERN CORPORATION SHALL BE FURNISHED COPIES OF MILL TEST REPORTS FOR ALL MATERIALS EXCEPT MISCELLANEOUS PLATES AND SHAPES. REPORTS SHALL INDICATE COMPLIANCE WITH ALL SPECIFIED REQUIREMENTS.

7. INSPECTION: SHOP INSPECTION BY NORFOLK SOUTHERN CORPORATION OR ITS AUTHORIZED AGENT. SEE SPECIAL PROVISIONS FOR ADDITIONAL WELDING INSPECTION OF FLANGE PLATES TO WEB PLATE WELDS.

8. HIGH STRENGTH BOLTED CONNECTIONS SHALL BE TIGHTENED USING THE TURN OF THE NUT METHOD. DIRECT TENSION INDICATORS SHALL NOT BE USED.

9. SHOP DRAWINGS: SHOP DRAWINGS SHALL BE SUBMITTED TO NORFOLK SOUTHERN CORPORATION FOR APPROVAL. SHOP DRAWINGS SHALL BE LABELED "NORFOLK SOUTHERN MP D-85.0". SHOP DRAWINGS SHALL BE SENT TO:

   CHIEF ENGINEER - BRIDGES & STRUCTURES
   NORFOLK SOUTHERN CORPORATION
   1200 PEACHTREE STREET, NW
   ATLANTA, GA 30309

10. PAINTING STRUCTURAL STEEL: FOR INORGANIC ZINC ACRYLIC PAINT SYSTEM FOR STRUCTURAL STEEL, SEE SPECIAL PROVISIONS. ALL STRUCTURAL STEEL WITH THE EXCEPTION OF THE SWEDGED ANCHOR BOLTS, BEARING PINS, MACHINED SURFACES AND FAYING SURFACES SHALL BE PAINTED.

11. ANCHOR BOLTS SHALL BE GROUTED IN FORMED HOLES AFTER GIRDERS ARE ERECTED.

12. ALL PLAN DIMENSIONS SHOWN ARE HORIZONTAL OR VERTICAL UNLESS OTHERWISE NOTED.

13. FOR CAMBER REQUIREMENTS, SEE FRAMING PLANS.

14. CAMBERED GIRDER LENGTHS SHALL BE ADJUSTED AND BEARINGS PLACED ON CAMBERED GIRDERS SO AS TO BE ALIGNED WITH THE ANCHORS AFTER DEAD LOAD DEFLECTION HAS OCCURRED. SHOP PLANS SHALL BE PREPARED ACCORDINGLY.

15. ENDS OF GIRDERS, BEARING STIFFENERS AND DIAPHRAGM CONNECTION PLATES SHALL BE VERTICAL AFTER DEAD LOAD DEFLECTION HAS TAKEN PLACE.

16. FOR PROTECTION OF PAINTED STEEL, SEE SPECIAL PROVISIONS.

17. FOR STRUCTURAL STEEL, SEE SPECIAL PROVISIONS.

18. FOR FABRICATION OF STRUCTURAL STEEL, SEE SPECIAL PROVISIONS.

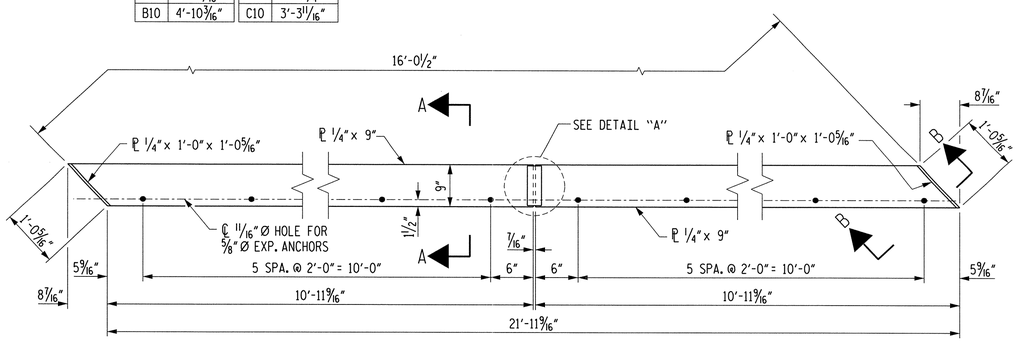

EXPANSION PLATE ASSEMBLY

(TYPICAL AT EACH PIER AND ABUTMENT)

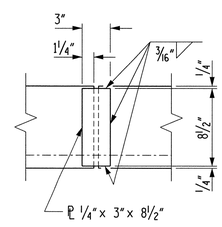

DETAIL "A"

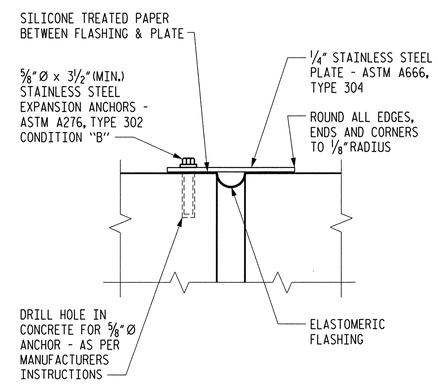

SECTION A-A

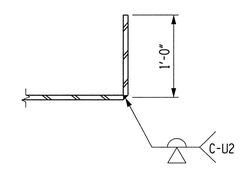

SECTION B-B

NORFOLK SOUTHERN RR

PROJECT NO. U-0071

DURHAM COUNTY

STATION: POC 64+74.69 -L-

SHEET 2 OF 2 MILEPOST D-85.0

STATE OF NORTH CAROLINA
DEPARTMENT OF TRANSPORTATION
RALEIGH

SUPERSTRUCTURE
STRUCTURAL STEEL
DETAILS

MI ENGINEERING
1011 SCHAUB DRIVE, SUITE 100
RALEIGH, NC 27606
(919) 851-6606
FIRM PE NUMBER : P-0671

NORTH CAROLINA PROFESSIONAL ENGINEER SEAL 19941 PAUL A. de PAOLI 06.05.14

DWG. NO. 15

REVISIONS						SHEET NO.
NO.	BY:	DATE:	NO.	BY:	DATE:	5-95
1			3			TOTAL SHEETS
2			4			671

DRAWN BY B.E. ATKINSON DATE JULY 2011
CHECKED BY P.A. de PAOLI DATE NOV. 2011
DESIGN ENGINEER OF RECORD P.A. de PAOLI DATE JUNE 2014

PLOT: 6/9/2014 1:05:22 PM bbenning
FILE NAME: P:\NC Projects\M180208 - U-0071 Durham\U-0071\Structures\Sheets\U0071_sd_s2_02.dgn

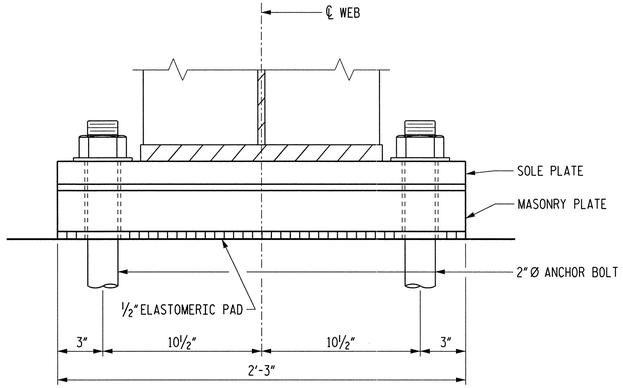

SECTION A-A

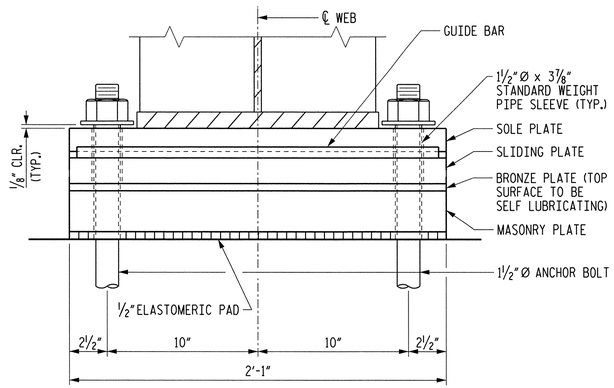

SECTION B-B

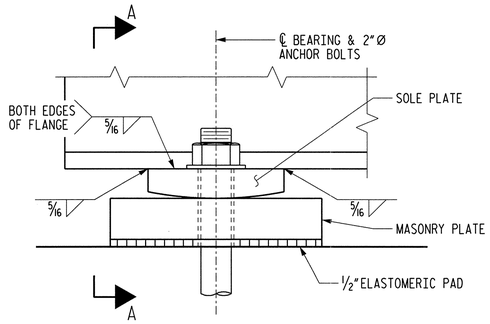

ELEVATION

FIXED BEARING ASSEMBLY

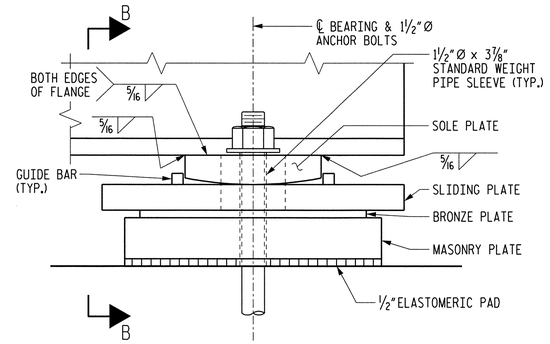

ELEVATION

EXPANSION BEARING ASSEMBLY

NOTES

AT ALL BEARINGS, NUTS FOR ANCHOR BOLTS ARE TO BE TIGHTENED FINGER TIGHT AND GIVEN AN ADDITIONAL 1/4 TURN. THE THREAD OF THE BOLT SHALL THEN BE BURRED WITH A SHARP POINTED TOOL.

BEARING MATERIALS AND FABRICATION SHALL MEET THE REQUIREMENTS OF NORFOLK SOUTHERN CORPORATION AND CURRENT AREMA.

PIPE SLEEVES ARE TO BE GALVANIZED STANDARD WEIGHT STEEL PIPE.

THE CONTACT SURFACES OF BEARING ASSEMBLIES SHALL HAVE A SURFACE FINISH IN ACCORDANCE WITH AREMA 15.11.2.1.

ELASTOMERIC BEARING PADS SHALL BE PREFORMED FABRIC BEARING PADS, 1/2" THICK, AND SHALL BE SHOCK PAD STYLE NO. 15175 AS MANUFACTURED BY ALERT MANUFACTURING AND SUPPLY COMPANY, CHICAGO, IL; OR FABREEKA PADS, AS MANUFACTURED BY THE FABREEKA PRODUCT COMPANY, BOSTON, MA; OR SORBTEX PADS AS MANUFACTURED BY VOSS ENGINEERING, INC., CHICAGO, IL; OR APPROVED EQUAL.

AT THE CONTRACTOR'S OPTION, A FILL PLATE MAY BE USED IN COMBINATION WITH THE MASONRY PLATE TO OBTAIN THE REQUIRED PLATE THICKNESS SHOWN IN THE TABLE. IF A FILL PLATE IS USED, THE MINIMUM MASONRY PLATE THICKNESS SHALL BE:
- SPANS "A" & "D" - 2 3/4" AT ALL BEARINGS
- SPANS "B" & "C" - 1 1/2" AT FIXED BEARINGS
- SPANS "B" & "C" - 3" AT EXPANSION BEARINGS

FOR STRUCTURAL STEEL NOTES, SEE "SUPERSTRUCTURE STRUCTURAL STEEL DETAILS, SHEET 2 OF 2".

MASONRY PLATE THICKNESS

GIRDER	SPAN "A"		SPAN "D"	
	FIXED	EXP.	FIXED	EXP.
1	3 1/8"	3 1/8"	3 1/8"	3 1/2"
2	2 3/4"	2 3/4"	3 1/16"	3 5/16"
3	3 1/2"	3 1/2"	2 15/16"	3 1/8"
4	3 1/8"	3 1/8"	2 7/8"	2 15/16"
5	2 3/4"	2 3/4"	2 3/4"	2 3/4"

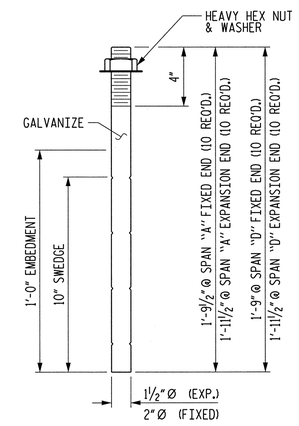

ANCHOR BOLT DETAIL

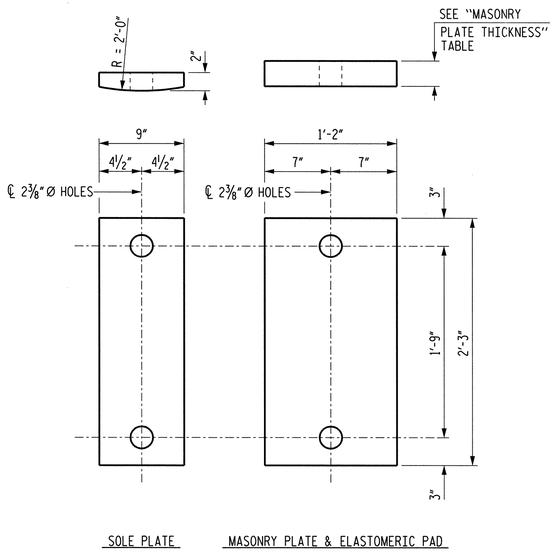

FIXED BEARING DETAILS
(10 REQUIRED)

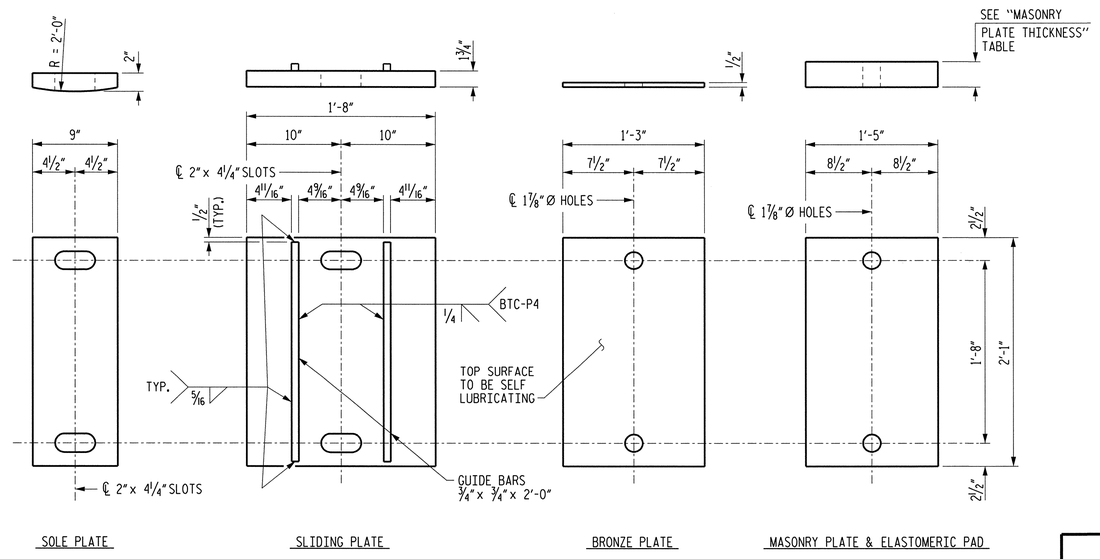

EXPANSION BEARING DETAILS
(10 REQUIRED)

SPANS "A" AND "D" BEARINGS

NORFOLK SOUTHERN RR

PROJECT NO. U-0071

DURHAM COUNTY

STATION: POC 64+74.69 -L-

SHEET 1 OF 2 MILEPOST D-85.0

STATE OF NORTH CAROLINA
DEPARTMENT OF TRANSPORTATION
RALEIGH

SUPERSTRUCTURE
BEARING DETAILS
SPANS "A" & "D"

REVISIONS						SHEET NO.
NO.	BY:	DATE:	NO.	BY:	DATE:	S-96
1			3			TOTAL SHEETS
2			4			671

MI ENGINEERING
1011 SCHAUB DRIVE, SUITE 100
RALEIGH, NC 27606
(919) 851-6606
FIRM PE NUMBER : P-0671

NORTH CAROLINA PROFESSIONAL ENGINEER SEAL 027154 PAUL A. de PAOLI
06-09-14

DWG. NO. 16

DRAWN BY	B.E. LANNING	DATE	JUNE 2011
CHECKED BY	P.A. de PAOLI	DATE	NOV. 2011
DESIGN ENGINEER OF RECORD	P.A. de PAOLI	DATE	JUNE 2014

PLOT: 6/9/2014 1:07:05 PM blanning
FILE NAME: P:\NC Projects\M10800 U-0071\Durham\U-0071\Structures\sor\u0071_sd_brg_003rev.dgn

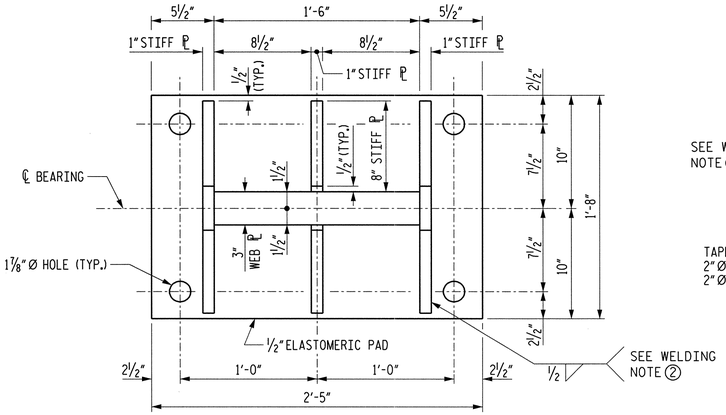

MASONRY PLATE AND ELASTOMERIC PAD

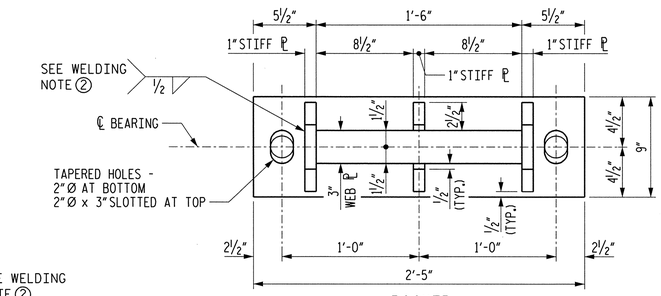

ROCKER

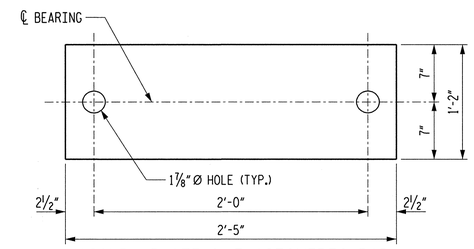

MASONRY PLATE & ELASTOMERIC PAD

NOTES

FOR NOTES, SEE SUPERSTRUCTURE BEARING DETAILS, SHEET 1 OF 2.

MASONRY PLATE THICKNESS "A"				
GIRDER	SPAN "B"		SPAN "C"	
	FIXED	EXP.	FIXED	EXP.
1	1⅞"	3 9/16"	1 13/16"	3¾"
2	1½"	3"	1½"	3⅝"
3	2¼"	3 11/16"	2⅛"	3⅜"
4	1⅞"	3 9/16"	1 13/16"	3 3/16"
5	1½"	3"	1½"	3"

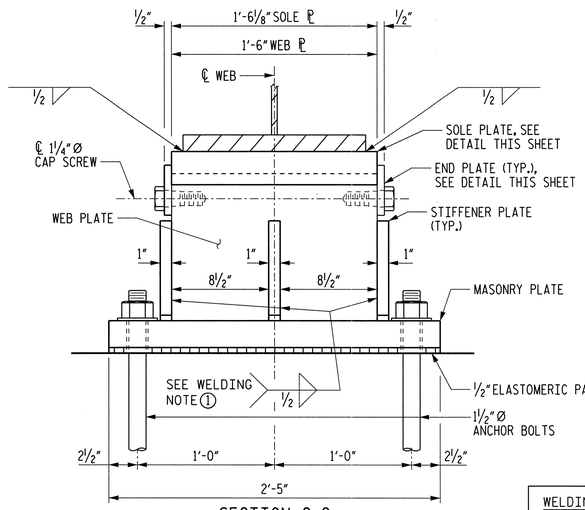

SECTION C-C

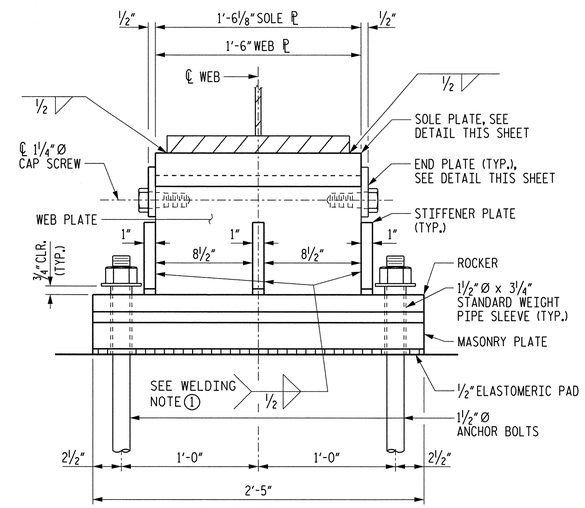

SECTION D-D

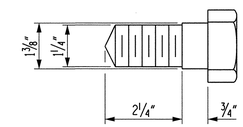

CAP SCREW DETAIL

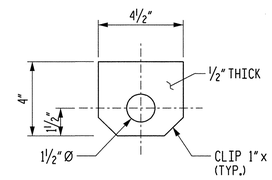

END PLATE DETAIL

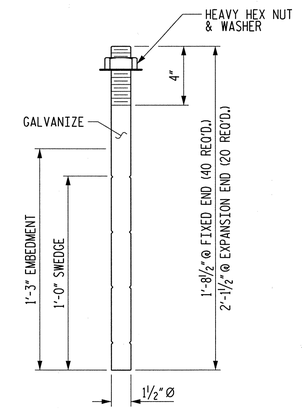

ANCHOR BOLT DETAIL

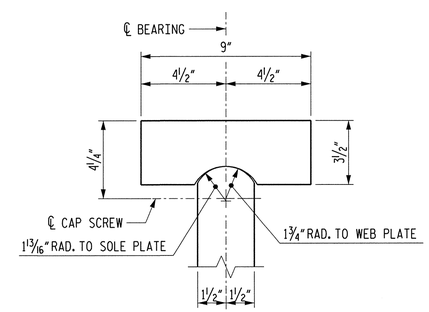

SOLE PLATE DETAIL

WELDING NOTES

① WELD ALL SIDES AND EDGES OF STIFFENER PLATES IN CONTACT WITH WEB PLATE

② WELD ENTIRE PERIMETER OF WEB PLATE AND STIFFENER PLATES TO TOP OF MASONRY PLATE OR ROCKER PLATE

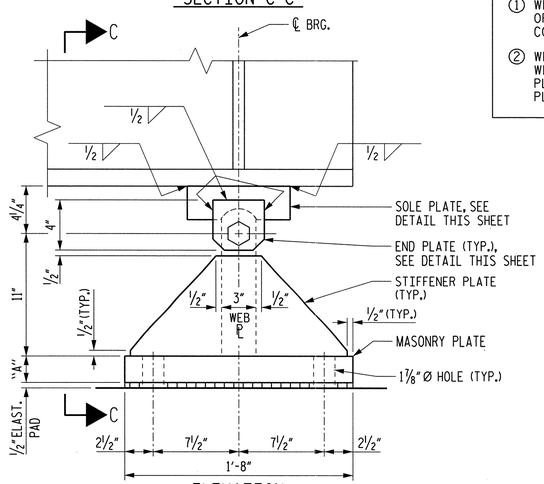

ELEVATION
FIXED BEARING DETAILS
(10 REQUIRED)

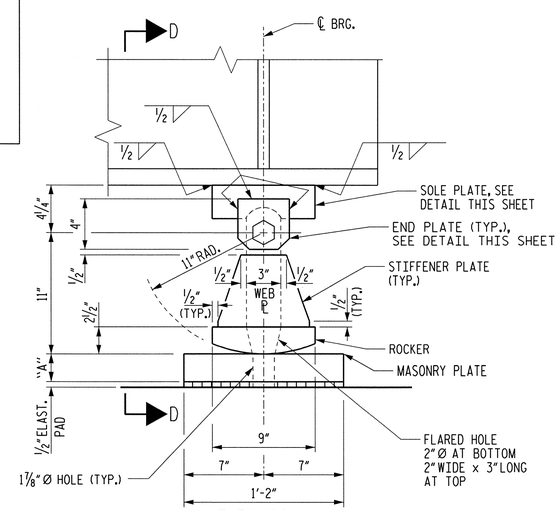

ELEVATION
EXPANSION BEARING DETAILS
(10 REQUIRED)

SPANS "B" AND "C" BEARINGS

NORFOLK SOUTHERN RR

PROJECT NO. U-0071

DURHAM COUNTY

STATION: POC 64+74.69 -L-

SHEET 2 OF 2 MILEPOST D-85.0

STATE OF NORTH CAROLINA
DEPARTMENT OF TRANSPORTATION
RALEIGH

SUPERSTRUCTURE
BEARING DETAILS
SPANS "B" & "C"

MI ENGINEERING
1011 SCHAUB DRIVE, SUITE 100
RALEIGH, NC 27606
(919) 851-6606
FIRM PE NUMBER : P-0671

NORTH CAROLINA PROFESSIONAL ENGINEER SEAL 027199 PAUL A. de PAOLI 06-05-14

DWG. NO. 17

REVISIONS						SHEET NO.
NO.	BY:	DATE:	NO.	BY:	DATE:	5-97
1			3			TOTAL SHEETS
2			4			671

DRAWN BY B.E. LANNING DATE JUNE 2011
CHECKED BY P.A. de PAOLI DATE NOV. 2011
DESIGN ENGINEER OF RECORD P.A. de PAOLI DATE JUNE 2014

PLOT: 6/9/2014 1:07:07 PM bbenning
FILE NAME: P:\NC Projects\MI0028 - U-0071 Durham\U-0071\Structures\Year\u0071_std_brg-2_02v8.dgn

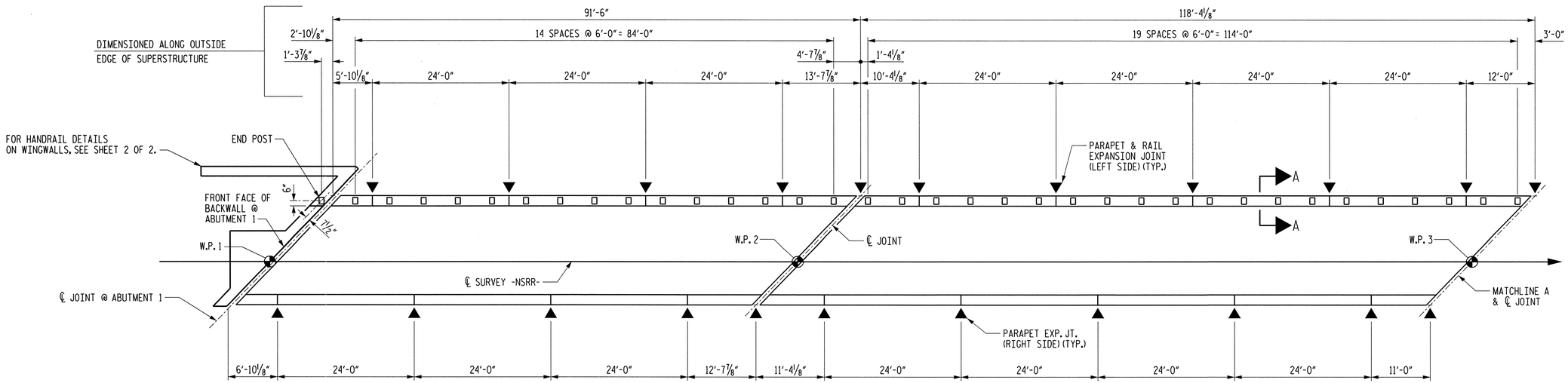

HANDRAIL POST SPACING PLAN - SPANS A & B

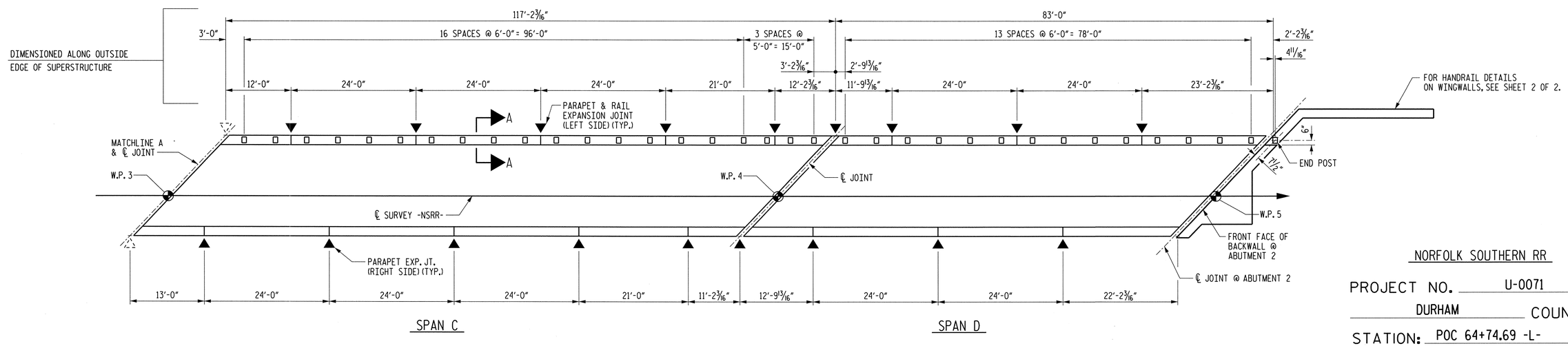

HANDRAIL POST SPACING PLAN - SPANS C & D

NOTE: FOR SECTION A-A, SEE SHEET 2 OF 2.

NORFOLK SOUTHERN RR

PROJECT NO. U-0071

DURHAM COUNTY

STATION: POC 64+74.69 -L-

SHEET 1 OF 2 MILEPOST D-85.0

STATE OF NORTH CAROLINA
DEPARTMENT OF TRANSPORTATION
RALEIGH

SUPERSTRUCTURE
METAL HANDRAIL DETAILS

MI ENGINEERING
1011 SCHAUB DRIVE, SUITE 100
RALEIGH, NC 27606
(919) 851-6606
FIRM PE NUMBER : P-0671

NORTH CAROLINA PROFESSIONAL ENGINEER SEAL 027199 PAUL A. de PAOLI
06-09-14

DWG. NO. 18

REVISIONS							SHEET NO.
NO.	BY:	DATE:	NO.	BY:	DATE:		5-98
1			3				TOTAL SHEETS
2			4				671

DRAWN BY B.E. LANNING DATE JUNE 2011
CHECKED BY P.A. de PAOLI DATE OCT. 2011
DESIGN ENGINEER OF RECORD P.A. de PAOLI DATE JUNE 2014

PLOT: 6/9/2014 1:07:07 PM blanning
FILE NAME: P:\NC Projects\M100608 - U-0071 Durham\U-0071\Structures\Struct\U0071_sd_ahrl_R20.dgn

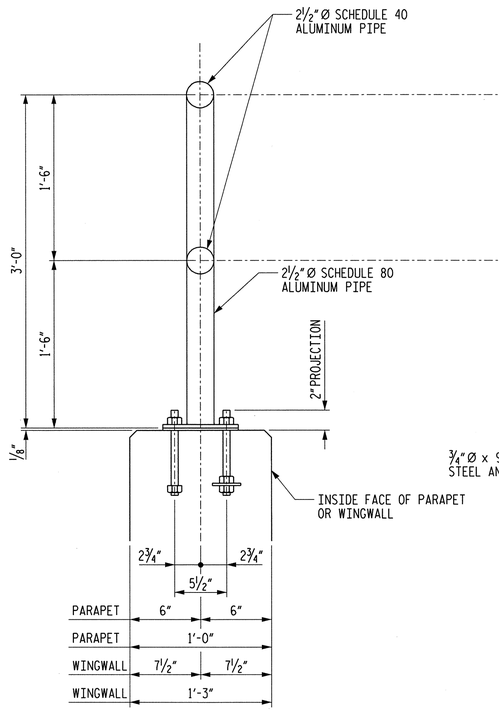

SECTION A-A

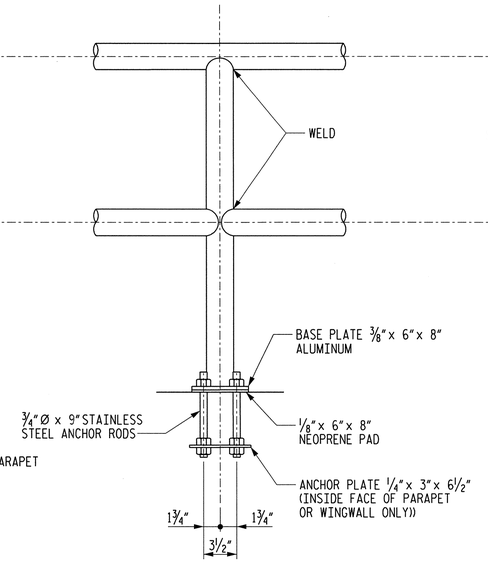

ELEVATION

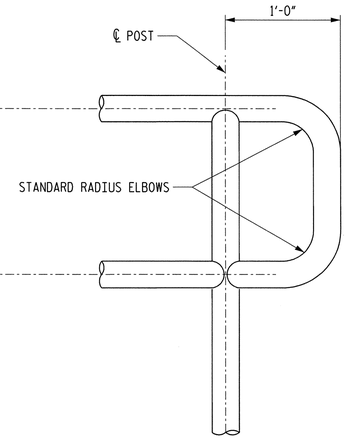

END POST DETAIL

ALUMINUM HANDRAIL AND POST

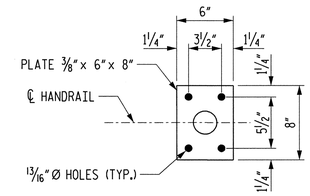

BASE PLATE

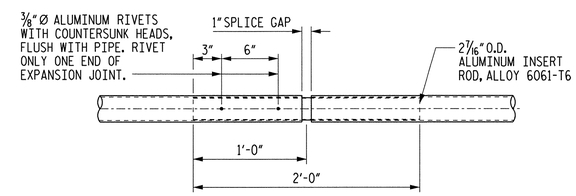

EXPANSION JOINT DETAIL

NOTES

ALUMINUM PIPE TO BE ASTM B-429, ALLOY 6061-T6 AND BASE PLATE TO BE ASTM B-209, ALLOY 6061-T6.

STAINLESS STEEL BOLTS, CAP SCREWS AND NUTS TO BE ASTM A-276 TYPE 304. STAINLESS STEEL WASHERS TO BE ASTM A-276 TYPE 302.

CERTIFIED MILL REPORTS ARE REQUIRED FOR RAIL AND POSTS. SHOP INSPECTIONS ARE NOT REQUIRED.

AFTER ANCHOR BOLT NUTS HAVE BEEN TIGHTENED, THREADS SHALL BE NICKED TO LOCK NUTS.

ANCHOR PLATES SHALL CONFORM TO ASTM SPECIFICATION A36.

ANCHOR RODS SHALL CONFORM TO ASTM SPECIFICATION A276 TYPE 302 OR 304, STAINLESS STEEL AND THREADS SHALL BE ROLLED, NOT CUT.

LOWER ANCHOR ROD NUTS SHALL BE HEAVY STEEL HEX NUTS, PER ASTM A563.

UPPER ANCHOR ROD NUTS SHALL BE HEAVY HEX NUTS, PER ASTM A276 TYPE 302 OR 304 STAINLESS STEEL.

WELDING SHALL BE INACCORDANCE WITH THE CURRENT AWS STRUCTURAL WELDING CODE - ALUMINUM.

JOINTS IN RAILING (SPLICE CAP) SHALL BE LOCATED AS SHOWN IN POST SPACING PLAN.

POST TO BE SET PERPENDICULAR TO TOP OF PARAPET AND RAILS SHALL BE PLACED PARALLEL TO THE GRADE OF THE BRIDGE.

THE CENTERLINE OF ANY SPLICE AND/OR EXPANSION JOINT IS TO BE LOCATED AT LEAST 2'-0" AWAY FROM CENTERLINE OF POST. EXPANSION AND/OR SPLICE JOINTS FOR EACH RAIL OF TWO RAILING ARE TO BE PLACED IN THE SAME LOCATION AND IN THE SAME PANEL.

THE LENGTH OF METAL RAIL TO BE PAID FOR SHALL BE THE CONTINUOUS LENGTH MEASURED FROM END TO END OF RAIL, ALONG THE TOP OF THE RAIL.

SHOP DRAWINGS SHALL BE REQUIRED.

FOR METAL HANDRAIL, SEE SPECIAL PROVISIONS.

PAY LENGTH = 460.0 LIN FT.

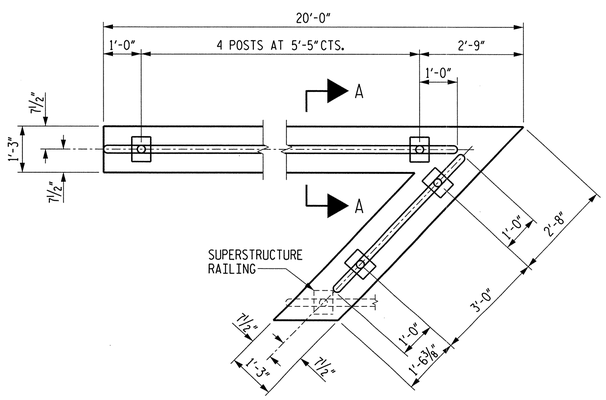

HANDRAIL DETAIL AT ABUTMENT 1

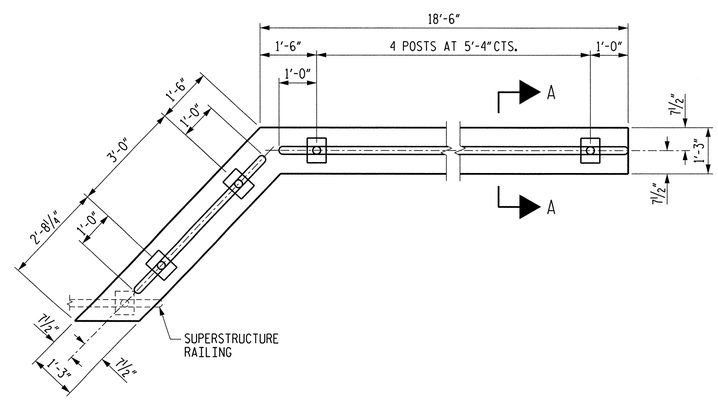

HANDRAIL DETAIL AT ABUTMENT 2

NORFOLK SOUTHERN RR

PROJECT NO. U-0071

DURHAM COUNTY

STATION: POC 64+74.69 -L-

SHEET 2 OF 2 MILEPOST D-85.0

STATE OF NORTH CAROLINA
DEPARTMENT OF TRANSPORTATION
RALEIGH

SUPERSTRUCTURE
METAL HANDRAIL DETAILS

MI ENGINEERING
1011 SCHAUB DRIVE, SUITE 100
RALEIGH, NC 27606
(919) 851-6606
FIRM PE NUMBER : P-0671

NORTH CAROLINA PROFESSIONAL SEAL ENGINEER PAUL A. de PAOLI 06.05.14

DWG. NO. 19

REVISIONS							SHEET NO.
NO.	BY:	DATE:	NO.	BY:	DATE:		5-99
1			3				TOTAL SHEETS
2			4				671

DRAWN BY	B.E. LANNING	DATE	JUNE 2011
CHECKED BY	P.A. de PAOLI	DATE	OCT. 2011
DESIGN ENGINEER OF RECORD	P.A. de PAOLI	DATE	JUNE 2014

PLOT: 6/9/2014 1:07:11 PM bbenning
FILE NAME: P:\NC Projects\M\0808 - U-0071 Durham\U-0071\Structures\User\U0071_sd_sht-2_02ha.dgn

EPOXY COATED REINFORCING STEEL BAR SCHEDULE

SPAN "A"

BAR	NO.	SIZE	TYPE	LENGTH	WEIGHT
A1	112	#5	STR.	17'-8"	2,064
A2	16	#5	STR.	24'-2"	403
A101	4	#5	STR.	17'-2"	72
A102	4	#5	STR.	16'-6"	69
A103	4	#5	STR.	15'-9"	66
A104	4	#5	STR.	15'-1"	63
A105	4	#5	STR.	14'-4"	60
A106	4	#5	STR.	13'-8"	57
A107	4	#5	STR.	12'-11"	54
A108	4	#5	STR.	12'-2"	51
A109	4	#5	STR.	11'-6"	48
A110	4	#5	STR.	10'-9"	45
A111	4	#5	STR.	10'-1"	42
A112	4	#5	STR.	9'-4"	39
A113	4	#5	STR.	8'-8"	36
A114	4	#5	STR.	7'-11"	33
A115	4	#5	STR.	7'-3"	30
A116	4	#5	STR.	6'-6"	27
A117	4	#5	STR.	5'-9"	24
A118	4	#5	STR.	5'-1"	21
A119	4	#5	STR.	4'-4"	18
A120	4	#5	STR.	3'-8"	15
A121	4	#5	STR.	2'-11"	12
A122	4	#5	STR.	2'-3"	9
B1	68	#5	STR.	46'-7"	3,304
B5	36	#5	STR.	23'-7"	886
B6	3	#5	STR.	5'-4"	17
B7	3	#5	STR.	5'-9"	18
B8	3	#5	STR.	12'-10"	40
B9	3	#5	STR.	12'-4"	39
B10	3	#5	STR.	5'-5"	17
B11	3	#5	STR.	5'-10"	18
B12	3	#5	STR.	12'-9"	40
B13	3	#5	STR.	12'-3"	38
S1	180	#5	1	7'-0"	1,314
S2	4	#5	2	4'-3"	18
EPOXY COATED REINFORCING STEEL				LBS.	9,107

SPAN "B"

BAR	NO.	SIZE	TYPE	LENGTH	WEIGHT
A1	152	#5	STR.	17'-8"	2,801
A2	16	#5	STR.	24'-2"	403
A101	4	#5	STR.	17'-2"	72
A102	4	#5	STR.	16'-6"	69
A103	4	#5	STR.	15'-9"	66
A104	4	#5	STR.	15'-1"	63
A105	4	#5	STR.	14'-4"	60
A106	4	#5	STR.	13'-8"	57
A107	4	#5	STR.	12'-11"	54
A108	4	#5	STR.	12'-2"	51
A109	4	#5	STR.	11'-6"	48
A110	4	#5	STR.	10'-9"	45
A111	4	#5	STR.	10'-1"	42
A112	4	#5	STR.	9'-4"	39
A113	4	#5	STR.	8'-8"	36
A114	4	#5	STR.	7'-11"	33
A115	4	#5	STR.	7'-3"	30
A116	4	#5	STR.	6'-6"	27
A117	4	#5	STR.	5'-9"	24
A118	4	#5	STR.	5'-1"	21
A119	4	#5	STR.	4'-4"	18
A120	4	#5	STR.	3'-8"	15
A121	4	#5	STR.	2'-11"	12
A122	4	#5	STR.	2'-3"	9
B2	102	#5	STR.	40'-1"	4,264
B5	48	#5	STR.	23'-7"	1,181
B14	3	#5	STR.	9'-11"	31
B15	3	#5	STR.	10'-5"	33
B16	3	#5	STR.	11'-2"	35
B17	3	#5	STR.	10'-8"	33
B18	3	#5	STR.	10'-0"	31
B19	3	#5	STR.	10'-6"	33
B20	3	#5	STR.	11'-1"	35
B21	3	#5	STR.	10'-7"	33
S1	234	#5	1	7'-0"	1,708
S2	4	#5	2	4'-3"	18
EPOXY COATED REINFORCING STEEL				LBS.	11,530

SPAN "C"

BAR	NO.	SIZE	TYPE	LENGTH	WEIGHT
A1	150	#5	STR.	17'-8"	2,764
A2	16	#5	STR.	24'-2"	403
A101	4	#5	STR.	17'-2"	72
A102	4	#5	STR.	16'-6"	69
A103	4	#5	STR.	15'-9"	66
A104	4	#5	STR.	15'-1"	63
A105	4	#5	STR.	14'-4"	60
A106	4	#5	STR.	13'-8"	57
A107	4	#5	STR.	12'-11"	54
A108	4	#5	STR.	12'-2"	51
A109	4	#5	STR.	11'-6"	48
A110	4	#5	STR.	10'-9"	45
A111	4	#5	STR.	10'-1"	42
A112	4	#5	STR.	9'-4"	39
A113	4	#5	STR.	8'-8"	36
A114	4	#5	STR.	7'-11"	33
A115	4	#5	STR.	7'-3"	30
A116	4	#5	STR.	6'-6"	27
A117	4	#5	STR.	5'-9"	24
A118	4	#5	STR.	5'-1"	21
A119	4	#5	STR.	4'-4"	18
A120	4	#5	STR.	3'-8"	15
A121	4	#5	STR.	2'-11"	12
A122	4	#5	STR.	2'-3"	9
B3	68	#5	STR.	59'-6"	4,220
B5	36	#5	STR.	23'-7"	886
B22	3	#5	STR.	11'-7"	36
B23	3	#5	STR.	12'-1"	38
B24	3	#5	STR.	11'-4"	35
B25	3	#5	STR.	10'-10"	34
B26	3	#5	STR.	11'-8"	37
B27	3	#5	STR.	12'-2"	38
B28	3	#5	STR.	11'-3"	35
B29	3	#5	STR.	10'-10"	34
B30	12	#5	STR.	20'-7"	258
S1	232	#5	1	7'-0"	1,694
S2	4	#5	2	4'-3"	18
EPOXY COATED REINFORCING STEEL				LBS.	11,421

SPAN "D"

BAR	NO.	SIZE	TYPE	LENGTH	WEIGHT
A1	99	#5	STR.	17'-8"	1,824
A2	16	#5	STR.	24'-2"	403
A101	4	#5	STR.	17'-2"	72
A102	4	#5	STR.	16'-6"	69
A103	4	#5	STR.	15'-9"	66
A104	4	#5	STR.	15'-1"	63
A105	4	#5	STR.	14'-4"	60
A106	4	#5	STR.	13'-8"	57
A107	4	#5	STR.	12'-11"	54
A108	4	#5	STR.	12'-2"	51
A109	4	#5	STR.	11'-6"	48
A110	4	#5	STR.	10'-9"	45
A111	4	#5	STR.	10'-1"	42
A112	4	#5	STR.	9'-4"	39
A113	4	#5	STR.	8'-8"	36
A114	4	#5	STR.	7'-11"	33
A115	4	#5	STR.	7'-3"	30
A116	4	#5	STR.	6'-6"	27
A117	4	#5	STR.	5'-9"	24
A118	4	#5	STR.	5'-1"	21
A119	4	#5	STR.	4'-4"	18
A120	4	#5	STR.	3'-8"	15
A121	4	#5	STR.	2'-11"	12
A122	4	#5	STR.	2'-3"	9
B4	68	#5	STR.	42'-4"	3,002
B5	24	#5	STR.	23'-7"	590
B31	3	#5	STR.	11'-5"	36
B32	3	#5	STR.	11'-11"	37
B33	3	#5	STR.	22'-2"	69
B34	3	#5	STR.	21'-9"	68
B35	3	#5	STR.	11'-6"	36
B36	3	#5	STR.	11'-11"	37
B37	3	#5	STR.	22'-1"	69
B38	3	#5	STR.	21'-8"	68
S1	162	#5	1	7'-0"	1,183
S2	4	#5	2	4'-3"	18
EPOXY COATED REINFORCING STEEL				LBS.	8,331

BAR TYPES

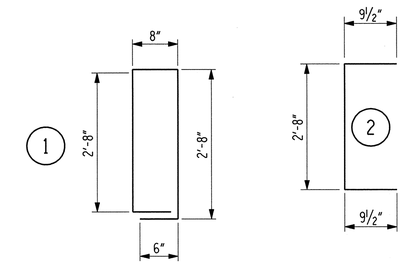

ALL BAR DIMENSIONS ARE OUT TO OUT.

— SUPERSTRUCTURE BILL OF MATERIAL —

	EPOXY COATED REINFORCING STEEL		CLASS AA CONCRETE (AS MODIFIED BY RAILWAY)	
	DECK (LBS.)	PARAPET (LBS.)	DECK (CU. YARDS)	PARAPET (CU. YARDS)
SPAN "A"	6,662	2,445	51.7	13.5
SPAN "B"	8,359	3,171	64.9	17.5
SPAN "C"	8,278	3,143	64.3	17.3
SPAN "D"	6,120	2,211	47.1	12.2
TOTALS	29,419	10,970	228.0	60.5
SUMMARY	40,389		288.5	

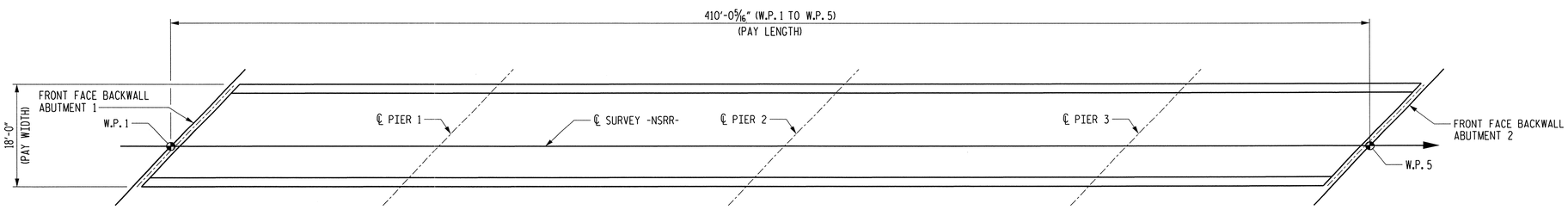

LAYOUT FOR COMPUTING AREA
REINFORCED CONCRETE DECK
(SQ. FT. = 7,381)

NORFOLK SOUTHERN RR

PROJECT NO. U-0071

DURHAM COUNTY

STATION: POC 64+74.69 -L-

MILEPOST D-85.0

STATE OF NORTH CAROLINA
DEPARTMENT OF TRANSPORTATION
RALEIGH

SUPERSTRUCTURE
BILL OF MATERIAL

MI ENGINEERING
1011 SCHAUB DRIVE, SUITE 100
RALEIGH, NC 27606
(919) 851-6606
FIRM PE NUMBER : P-0671

NORTH CAROLINA PROFESSIONAL SEAL ENGINEER PAUL A. de PAOLI
06-09-14

DWG. NO. 20

REVISIONS						SHEET NO.
NO.	BY:	DATE:	NO.	BY:	DATE:	S-100
1			3			TOTAL SHEETS
2			4			671

DRAWN BY B.E. LANNING DATE DEC. 2011
CHECKED BY B.E. ATKINSON DATE JAN. 2012
DESIGN ENGINEER OF RECORD P.A. de PAOLI DATE JUNE 2014

PLOT: 6/9/2014 1:07:23 PM bbanning
FILE NAME: P:\NC Projects\M100088 - U-0071 Durham\U-0071\Structures\nsrr\u0071_sd_bom_R20nu.dgn

NOTES

#9 "B" BARS IN BOTTOM OF CAP MAY BE SHIFTED SLIGHTLY TO AVOID CONFLICT WITH BARS IN DRILLED PIERS.

STIRRUPS IN CAP MAY BE SHIFTED AS NECESSARY TO CLEAR ANCHOR BOLTS AND BARS IN DRILLED PIERS.

"T" BARS IN FOOTING MAY BE SHIFTED SLIGHTLY TO AVOID CONFLICT WITH BARS IN DRILLED PIERS.

THE CONTRACTOR'S ATTENTION IS CALLED TO THE FACT THAT THE LONGITUDINAL REINFORCEMENT FOR THE DRILLED PIERS IS DETAILED WITH 3 FEET OF EXTRA LENGTH.

ALL STEEL IN THE DRILLED PIERS IS INCLUDED IN THE PAY ITEMS FOR "REINFORCING STEEL" AND "SPIRAL COLUMN REINFORCING STEEL."

PAYMENT FOR PIPE SLEEVE INSERT AS SHOWN ON SECTION THRU WINGWALL IS CONSIDERED INCIDENTAL OF THE ABUTMENT.

FOR FRENCH DRAIN, SEE SPECIAL PROVISION "STRUCTURE DRAINAGE SYSTEM".

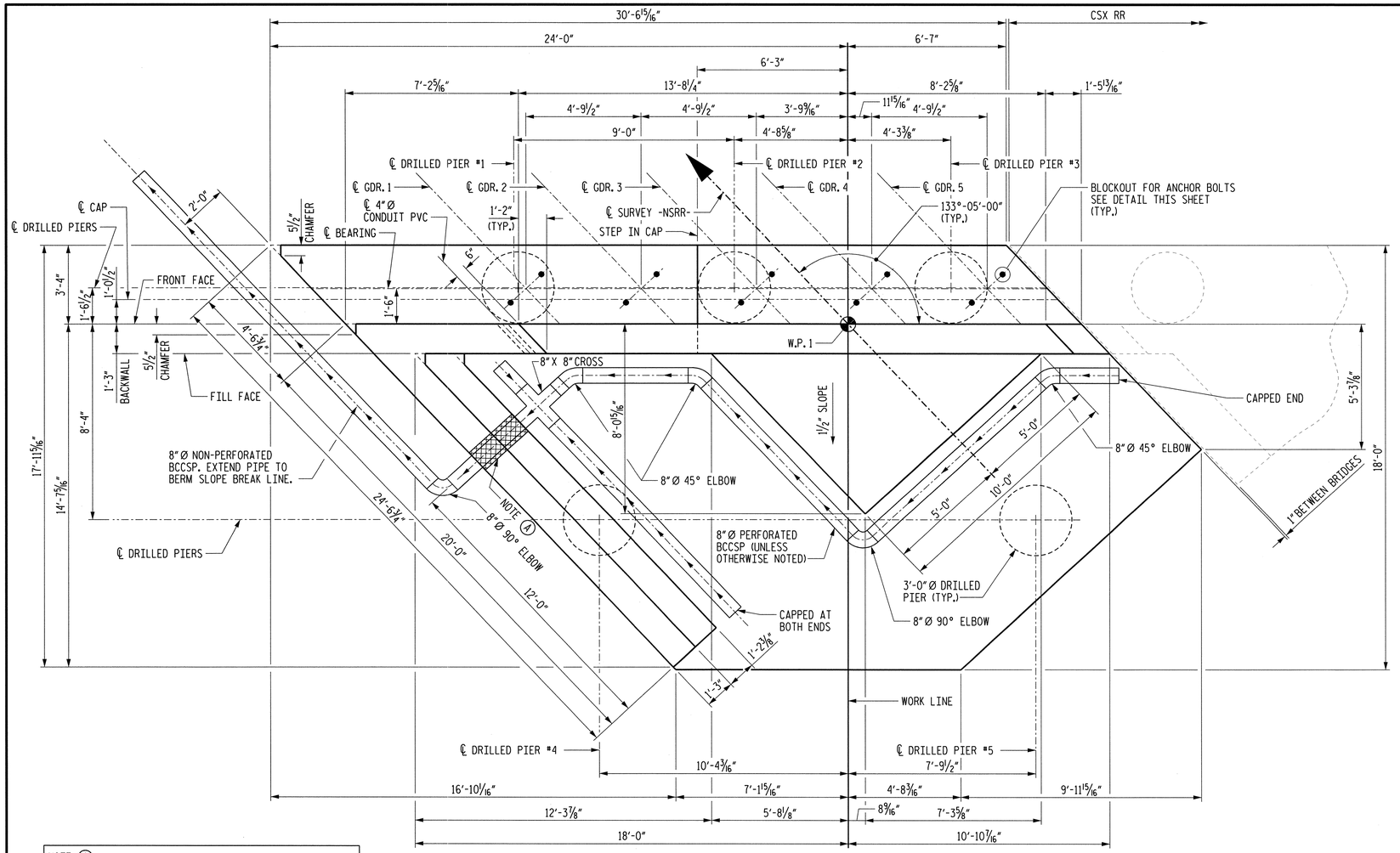

PLAN

BCCSP = BITUMINOUS COATED CORRUGATED STEEL PIPE

NOTE (A):
12" I.D. STEEL PIPE SLEEVE (3/8" WALL THICKNESS) TO BE FLUSH WITH BOTH FACES OF WING. FIELD BEND REINFORCING STEEL AS NECESSARY TO PROVIDE FOR SLEEVE. SEE SECTION THRU WINGWALL THIS SHEET FOR DETAILS. INSTALL BCCSP WITH A MINIMUM OF 1/8" PER FOOT SLOPE.

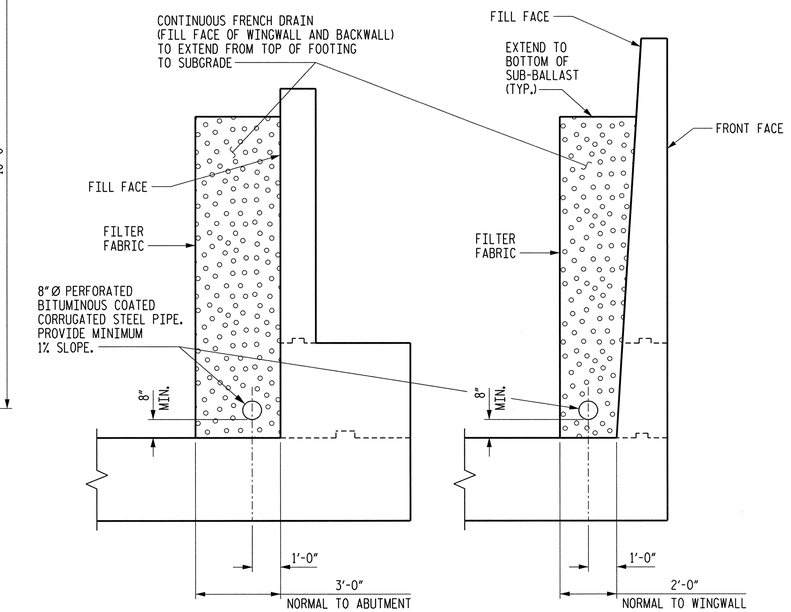

CONTINUOUS UNDERDRAIN DETAIL

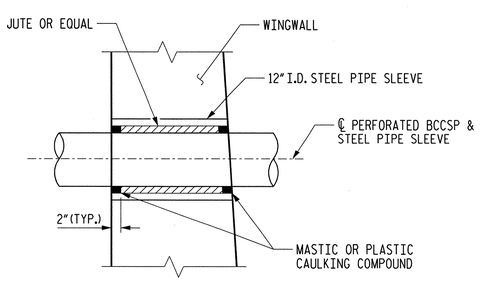

SECTION THRU WINGWALL

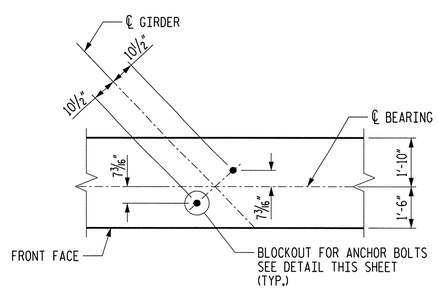

ANCHOR BOLT LAYOUT

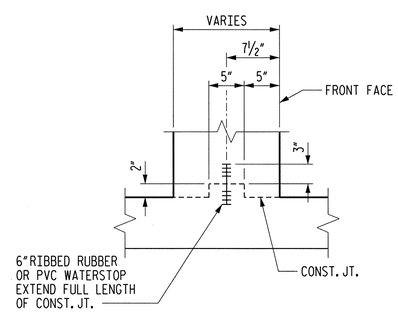

RAISED KEY WITH WATERSTOP

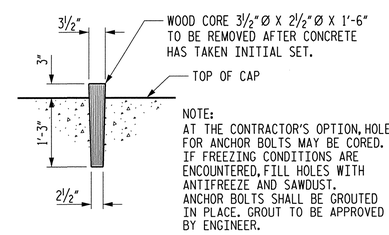

NOTE:
AT THE CONTRACTOR'S OPTION, HOLES FOR ANCHOR BOLTS MAY BE CORED. IF FREEZING CONDITIONS ARE ENCOUNTERED, FILL HOLES WITH ANTIFREEZE AND SAWDUST. ANCHOR BOLTS SHALL BE GROUTED IN PLACE. GROUT TO BE APPROVED BY ENGINEER.

BLOCKOUT FOR ANCHOR BOLTS

NORFOLK SOUTHERN RR

PROJECT NO. U-0071

DURHAM COUNTY

STATION: POC 64+74.69 -L-

SHEET 1 OF 5 MILEPOST D-85.0

STATE OF NORTH CAROLINA
DEPARTMENT OF TRANSPORTATION
RALEIGH

SUBSTRUCTURE
ABUTMENT 1

MI ENGINEERING
1011 SCHAUB DRIVE, SUITE 100
RALEIGH, NC 27606
(919) 851-6606
FIRM PE NUMBER : P-0671

NORTH CAROLINA PROFESSIONAL SEAL ENGINEER PAUL A. de PAOLI 06.09.14

DWG. NO. 21

REVISIONS						SHEET NO.
NO.	BY:	DATE:	NO.	BY:	DATE:	5-101
1			3			TOTAL SHEETS
2			4			671

DRAWN BY	B.E. LANNING	DATE	APR. 2013
CHECKED BY	P.A. de PAOLI	DATE	APR. 2013
DESIGN ENGINEER OF RECORD	P.A. de PAOLI	DATE	JUNE 2014

PLOT: 6/9/2014 1:07:25 PM bbenning
FILE NAME: P:\NC Projects\M180080 - U-0071 Durham\U-0071\Structures\Inter\u0071_sub_abut1a_020ns.dgn

NOTES

FOR ADDITIONAL NOTES, SEE SHEET 1 OF 5.

FOR SECTION A-A, SEE SHEET 5 OF 5.

FOR SECTIONS B-B AND C-C, SEE SHEET 4 OF 5.

FOR SECTION D-D, SEE SHEET 3 OF 5.

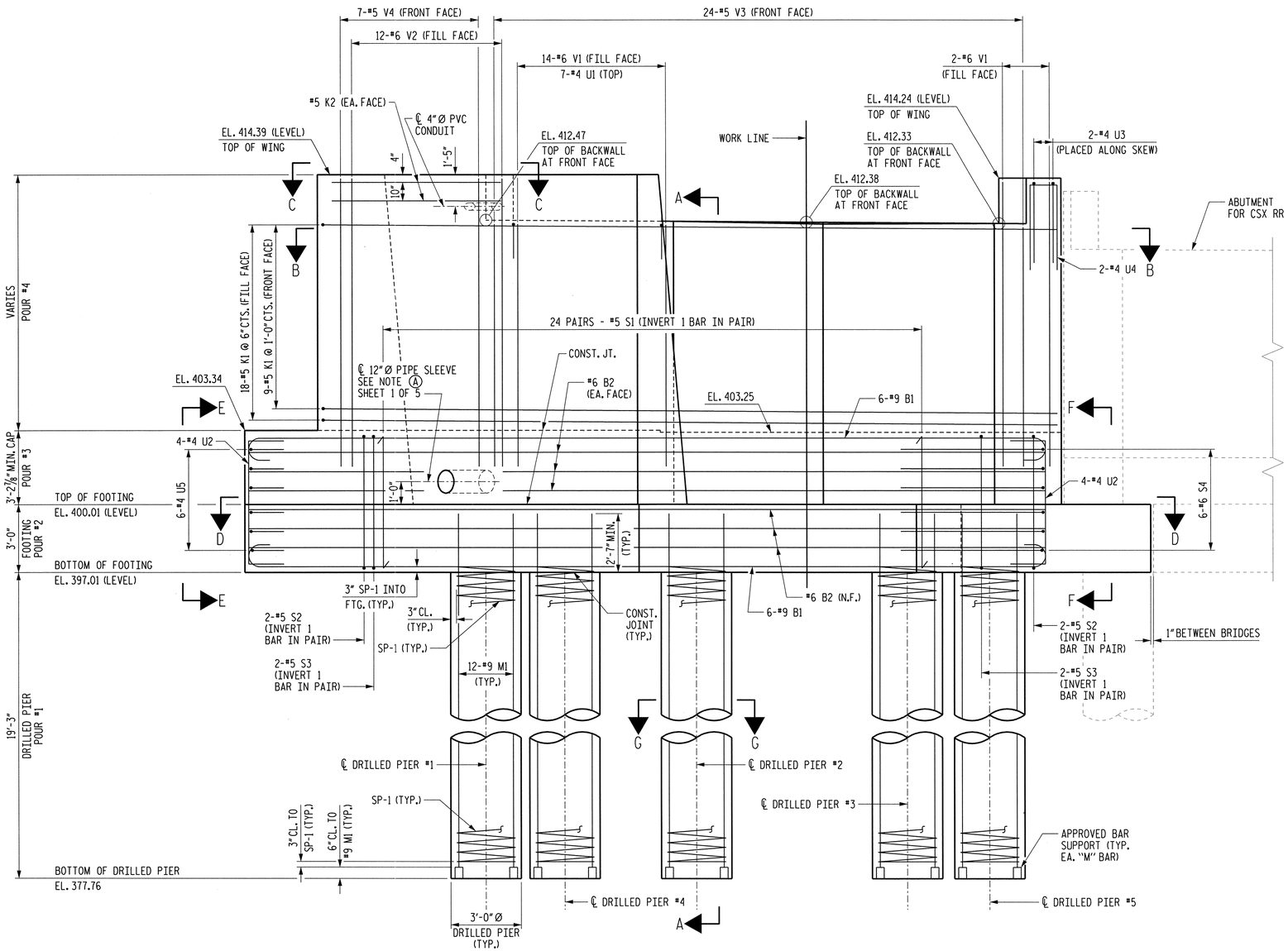

ELEVATION

(DIMENSIONS AND REINFORCING STEEL ARE TYPICAL FOR EACH DRILLED PIER)

FOR REINFORCING BAR SPACING, SEE SECTION VIEWS.

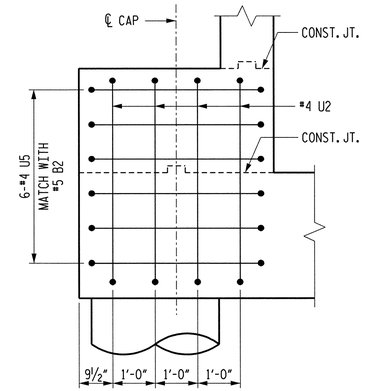

VIEW E-E

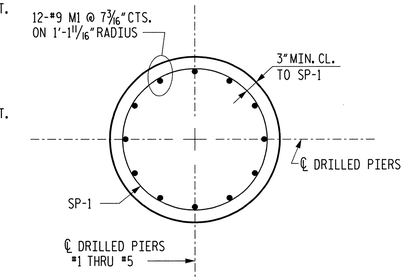

SECTION G-G

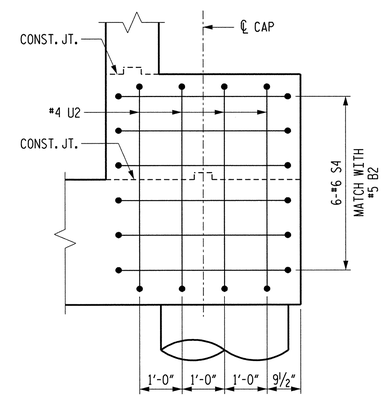

VIEW F-F

NORFOLK SOUTHERN RR

PROJECT NO. U-0071

DURHAM COUNTY

STATION: POC 64+74.69 -L-

SHEET 2 OF 5 MILEPOST D-85.0

STATE OF NORTH CAROLINA
DEPARTMENT OF TRANSPORTATION
RALEIGH

SUBSTRUCTURE
ABUTMENT 1

MI ENGINEERING
1011 SCHAUB DRIVE, SUITE 100
RALEIGH, NC 27606
(919) 851-6606
FIRM PE NUMBER : P-0671

NORTH CAROLINA PROFESSIONAL ENGINEER SEAL 027734 PAUL A. de PAOLI 06-05-14

DWG. NO. 22

REVISIONS						SHEET NO.
NO.	BY:	DATE:	NO.	BY:	DATE:	5-102
1			3			TOTAL SHEETS
2			4			671

DRAWN BY	B.E. LANNING	DATE	MAY 2013
CHECKED BY	P.A. de PAOLI	DATE	MAY 2013
DESIGN ENGINEER OF RECORD	P.A. de PAOLI	DATE	JUNE 2014

PLOT: 6/9/2014 1:07:37 PM bbenning
FILE NAME: P:\NC Projects\V4U0B8 - U-0071 Durham\U-0071\Structures\rsrc\u0071_sd_abutb.82rndgn

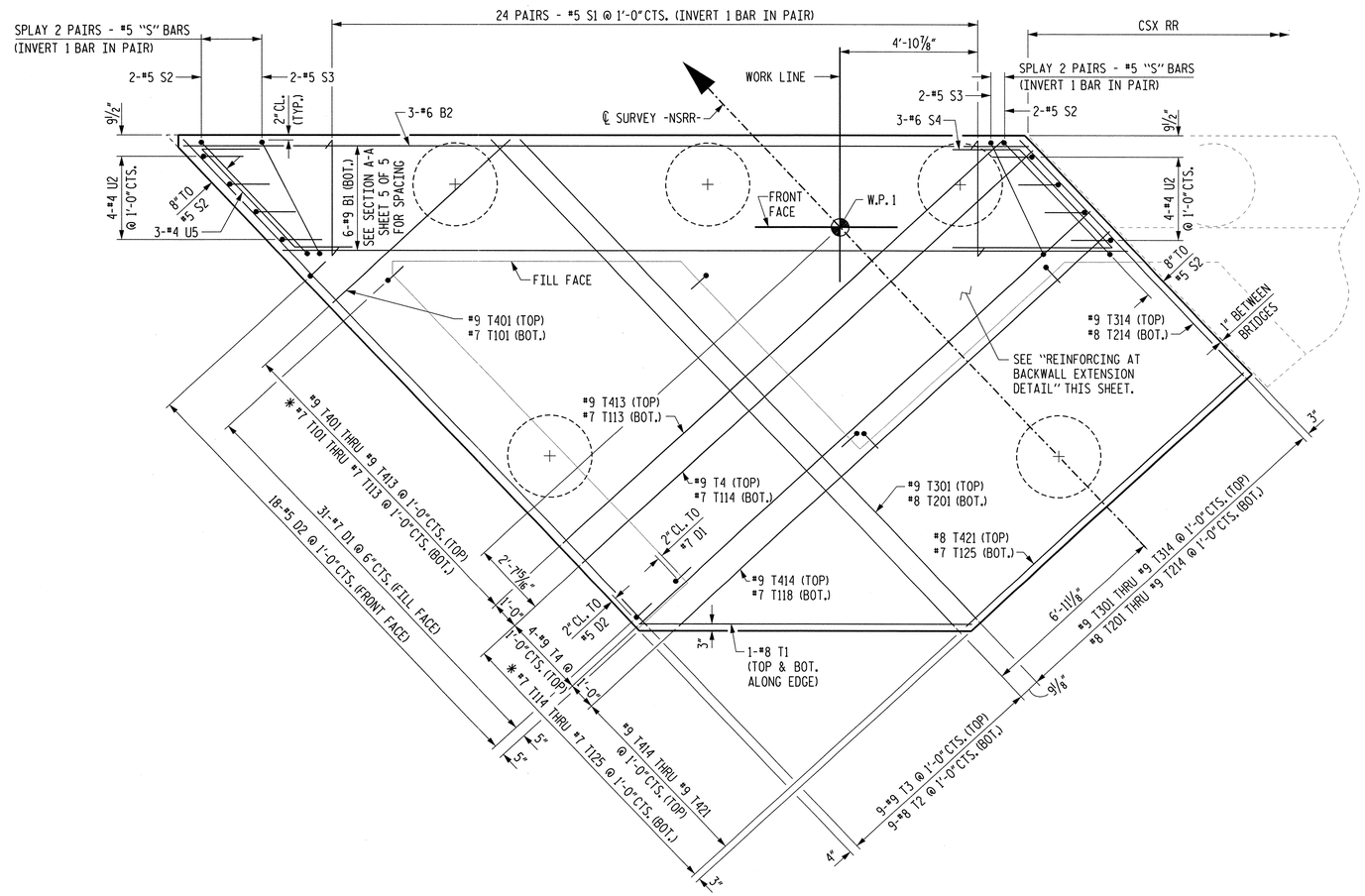

SECTION D-D

(FOOTING PLAN)

* EXTEND # 7 T101 THRU #7 T119 TO FILL FACE @ CAP

NOTES

FOR NOTES, SEE SHEET 1 OF 5.

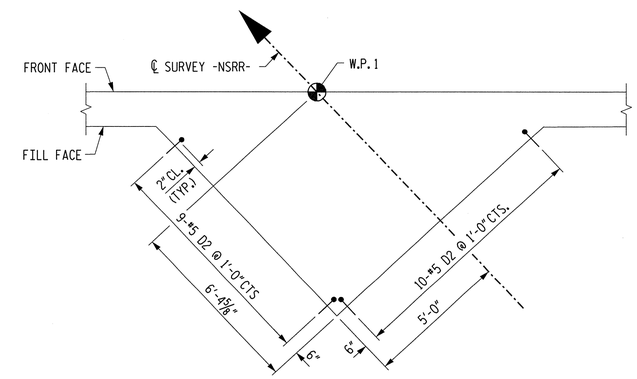

REINFORCING AT BACKWALL EXTENSION

NORFOLK SOUTHERN RR

PROJECT NO. U-0071

DURHAM COUNTY

STATION: POC 64+74.69 -L-

SHEET 3 OF 5 MILEPOST D-85.0

STATE OF NORTH CAROLINA
DEPARTMENT OF TRANSPORTATION
RALEIGH

SUBSTRUCTURE
ABUTMENT 1

MI ENGINEERING
1011 SCHAUB DRIVE, SUITE 100
RALEIGH, NC 27606
(919) 851-6606
FIRM PE NUMBER : P-0671

NORTH CAROLINA PROFESSIONAL ENGINEER PAUL A. de PAOLI 027799
06-09-14

DWG. NO. 23

REVISIONS						SHEET NO.
NO.	BY:	DATE:	NO.	BY:	DATE:	5-103
1			3			TOTAL SHEETS
2			4			671

DRAWN BY B.E. ATKINSON DATE APR. 2013
CHECKED BY P.A. de PAOLI DATE MAY 2013
DESIGN ENGINEER OF RECORD P.A. de PAOLI DATE JUNE 2014

PLOT: 6/9/2014 1:07:39 PM blanning
FILE NAME: P:\NC Projects\MI0808 - U-0071 Durham\U-0071\Structures\nsrr\u0071_sd_abutlc_02ns.dgn

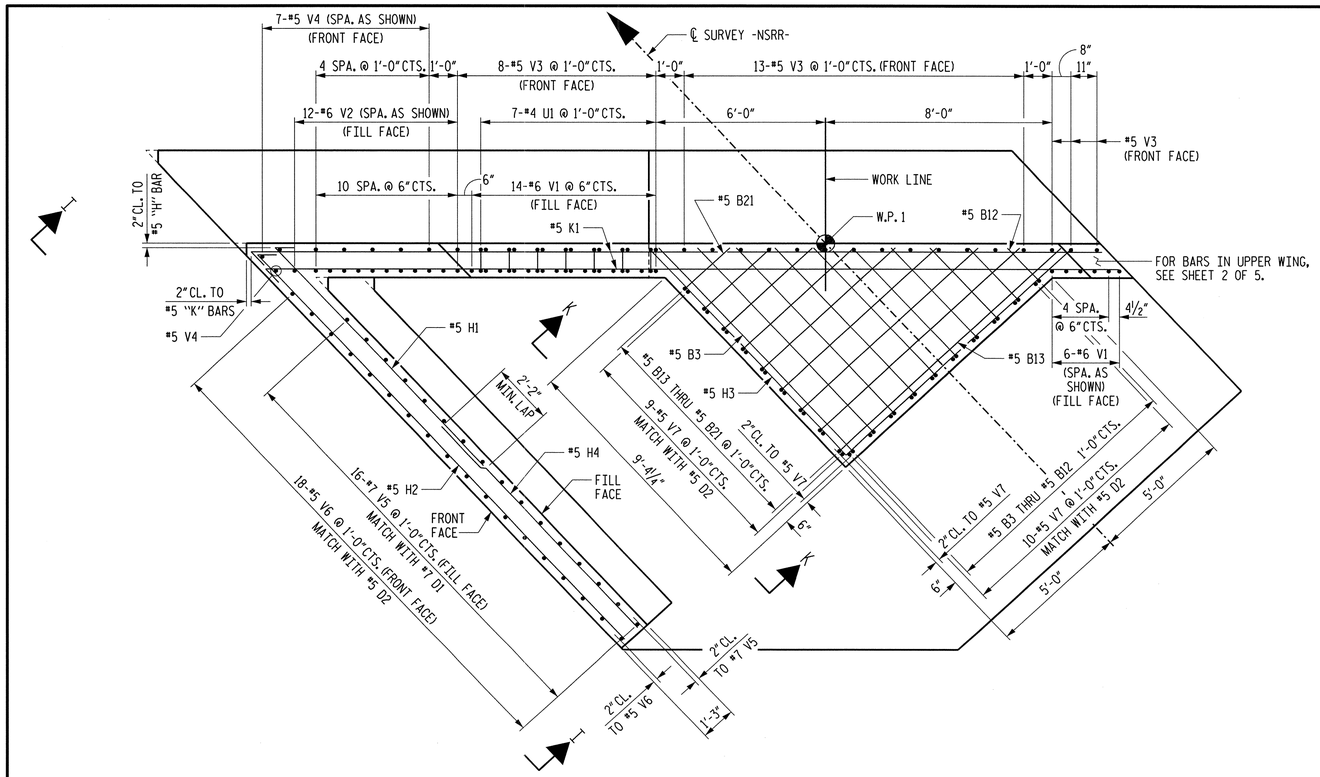

SECTION B-B

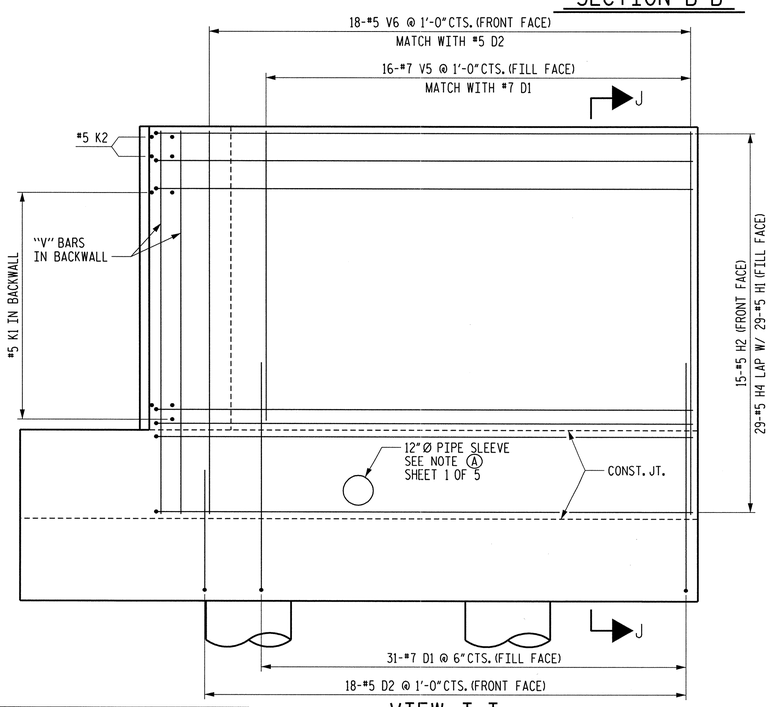

VIEW I-I

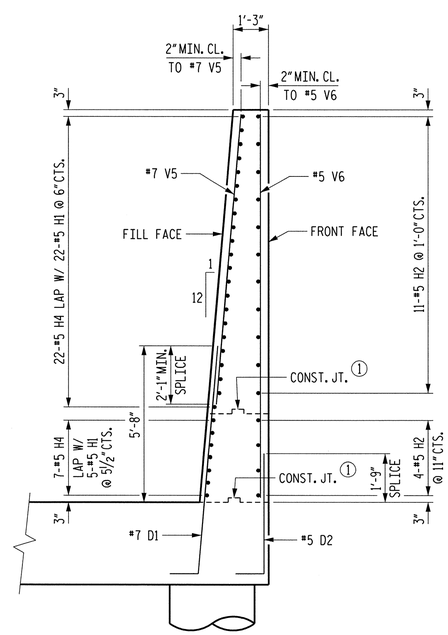

SECTION J-J

① SEE RAISED KEY WITH WATERSTOP DETAIL ON SHEET 1 OF 5.

NOTES

FOR NOTES, SEE SHEET 1 OF 5.

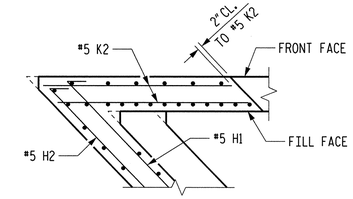

SECTION C-C

FOR "V" BAR SPACING, SEE SECTION B-B

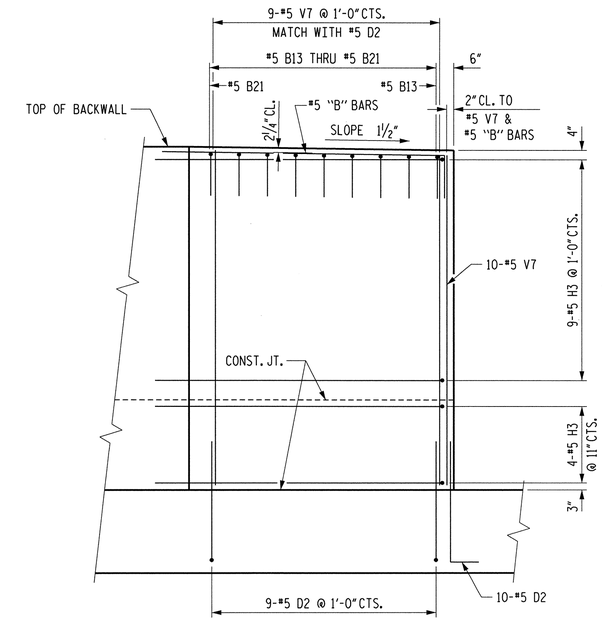

VIEW K-K

NORFOLK SOUTHERN RR

PROJECT NO. U-0071

DURHAM COUNTY

STATION: POC 64+74.69 -L-

SHEET 4 OF 5 MILEPOST D-85.0

STATE OF NORTH CAROLINA
DEPARTMENT OF TRANSPORTATION
RALEIGH

SUBSTRUCTURE
ABUTMENT 1

MI ENGINEERING
1011 SCHAUB DRIVE, SUITE 100
RALEIGH, NC 27606
(919) 851-6606
FIRM PE NUMBER : P-0671

NORTH CAROLINA PROFESSIONAL SEAL 027799 ENGINEER PAUL A. de PAOLI
06-05-14

DWG. NO. 24

REVISIONS						SHEET NO.
NO.	BY:	DATE:	NO.	BY:	DATE:	5-104
1			3			TOTAL SHEETS
2			4			67

DRAWN BY B.E. LANNING DATE MAY 2013
CHECKED BY P.A. de PAOLI DATE MAY 2013
DESIGN ENGINEER OF RECORD P.A. de PAOLI DATE JUNE 2014

PLOT: 6/9/2014 1:07:41 PM bleanning
FILE NAME: P:\NC Projects\M120289 - U-0071 Durham\U-0071\Structures\Views\U0071_sd_abutd1.dgn

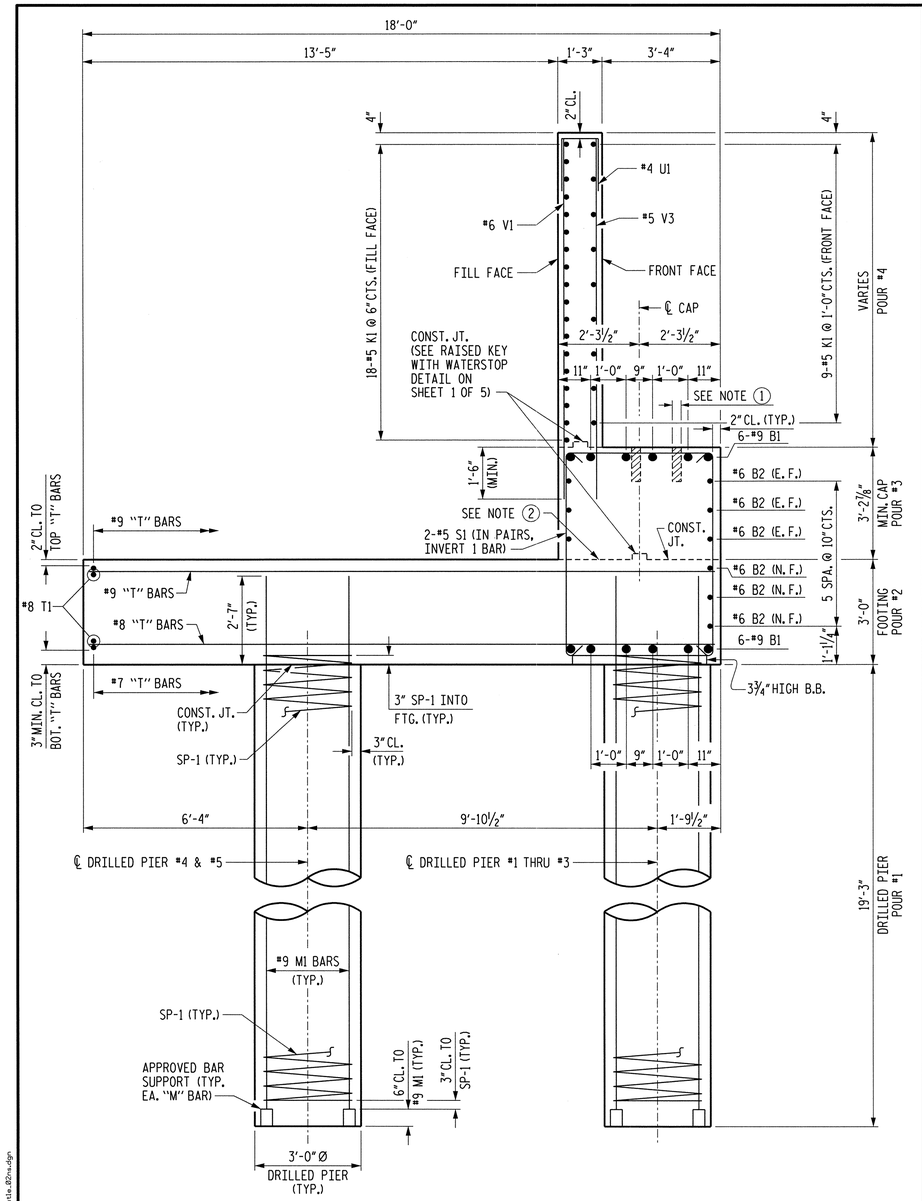

SECTION A-A

NOTES

1. BLOCKOUT FOR ANCHOR BOLTS. SEE DETAIL ON SHEET 1 OF 5.
2. THE SURFACE OF CONSTRUCTION JOINT AT THE TOP OF FOOTING SHALL BE CLEAN, FREE OF LAITANCE AND ROUGHENED TO ¼" BY RAKING OR OTHER METHOD.
3. E.F. = EACH FACE
   N.F. = NEAR FACE
4. FOR ADDITIONAL NOTES, SEE SHEET 1 OF 5.

BILL OF MATERIAL

ABUTMENT 1

BAR	NO.	SIZE	TYPE	LENGTH	WEIGHT
B1	12	#9	3	32'-5"	1323
B2	9	#6	STR	29'-11"	404
B3	1	#5	7	11'-8"	12
B4	1	#5	7	10'-8"	11
B5	1	#5	7	9'-9"	10
B6	1	#5	7	8'-10"	9
B7	1	#5	7	7'-11"	8
B8	1	#5	7	7'-0"	7
B9	1	#5	7	6'-0"	6
B10	1	#5	7	5'-1"	5
B11	1	#5	7	4'-2"	4
B12	1	#5	7	3'-3"	3
B13	1	#5	7	12'-4"	13
B14	1	#5	7	11'-3"	12
B15	1	#5	7	10'-2"	11
B16	1	#5	7	9'-1"	9
B17	1	#5	7	8'-0"	8
B18	1	#5	7	7'-0"	7
B19	1	#5	7	5'-11"	6
B20	1	#5	7	4'-10"	5
B21	1	#5	7	3'-9"	4
D1	31	#7	5	9'-5"	597
D2	37	#5	7	5'-1"	196
H1	29	#5	4	11'-9"	355
H2	15	#5	4	20'-2"	316
H3	13	#5	7	21'-3"	288
H4	29	#5	STR	10'-0"	302
K1	27	#5	4	30'-10"	868
K2	4	#5	STR	6'-6"	27
M1	60	#9	STR	24'-4"	4964
S1	48	#5	1	16'-9"	839
S2	4	#5	2	17'-3"	72
S3	4	#5	2	16'-2"	67
S4	6	#6	6	14'-5"	130
T1	2	#8	STR	11'-9"	63
T2	9	#8	STR	24'-1"	579
T3	9	#9	STR	24'-1"	737
T4	4	#9	STR	22'-0"	299
T101	1	#7	STR	2'-2"	4
T102	1	#7	STR	3'-3"	7
T103	1	#7	STR	4'-4"	9
T104	1	#7	STR	5'-5"	11
T105	1	#7	STR	6'-6"	13
T106	1	#7	STR	7'-6"	15
T107	1	#7	STR	8'-7"	18
T108	1	#7	STR	9'-8"	20
T109	1	#7	STR	10'-9"	22
T110	1	#7	STR	11'-9"	24
T111	1	#7	STR	12'-10"	26
T112	1	#7	STR	13'-11"	28
T113	1	#7	STR	15'-0"	31
T114	1	#7	STR	16'-0"	33
T115	1	#7	STR	17'-2"	35
T116	1	#7	STR	18'-3"	37
T117	1	#7	STR	19'-3"	39
T118	1	#7	STR	19'-4"	40
T119	1	#7	STR	19'-4"	40
T120	1	#7	STR	18'-10"	38
T121	1	#7	STR	17'-9"	36
T122	1	#7	STR	16'-8"	34
T123	1	#7	STR	15'-7"	32
T124	1	#7	STR	14'-6"	30
T125	1	#7	STR	13'-5"	27

BAR	NO.	SIZE	TYPE	LENGTH	WEIGHT
T201	1	#8	STR	23'-9"	63
T202	1	#8	STR	22'-10"	61
T203	1	#8	STR	21'-11"	59
T204	1	#8	STR	20'-11"	56
T205	1	#8	STR	20'-0"	53
T206	1	#8	STR	19'-1"	51
T207	1	#8	STR	18'-2"	49
T208	1	#8	STR	17'-3"	46
T209	1	#8	STR	16'-3"	43
T210	1	#8	STR	15'-4"	41
T211	1	#8	STR	14'-5"	38
T212	1	#8	STR	13'-6"	36
T213	1	#8	STR	12'-6"	33
T214	1	#8	STR	11'-7"	31
T301	1	#9	STR	23'-9"	81
T302	1	#9	STR	22'-10"	78
T303	1	#9	STR	21'-11"	75
T304	1	#9	STR	20'-11"	71
T305	1	#9	STR	20'-0"	68
T306	1	#9	STR	19'-1"	65
T307	1	#9	STR	18'-2"	62
T308	1	#9	STR	17'-3"	59
T309	1	#9	STR	16'-3"	55
T310	1	#9	STR	15'-4"	52
T311	1	#9	STR	14'-5"	49
T312	1	#9	STR	13'-6"	46
T313	1	#9	STR	12'-6"	43
T314	1	#9	STR	11'-7"	39
T401	1	#9	STR	8'-7"	29
T402	1	#9	STR	9'-8"	33
T403	1	#9	STR	10'-9"	37
T404	1	#9	STR	11'-9"	40
T405	1	#9	STR	12'-10"	44
T406	1	#9	STR	13'-11"	47
T407	1	#9	STR	15'-0"	51
T408	1	#9	STR	16'-1"	55
T409	1	#9	STR	17'-2"	58
T410	1	#9	STR	18'-2"	62
T411	1	#9	STR	19'-3"	65
T412	1	#9	STR	20'-4"	69
T413	1	#9	STR	21'-5"	73
T414	1	#9	STR	20'-11"	71
T415	1	#9	STR	19'-10"	67
T416	1	#9	STR	18'-10"	64
T417	1	#9	STR	17'-9"	60
T418	1	#9	STR	16'-8"	57
T419	1	#9	STR	15'-7"	53
T420	1	#9	STR	14'-6"	49
T421	1	#9	STR	13'-5"	46
U1	7	#4	2	3'-11"	18
U2	8	#4	2	8'-8"	46
U3	2	#4	2	8'-3"	11
U4	2	#4	2	7'-11"	11
U5	6	#4	6	8'-7"	34
V1	20	#6	STR	10'-6"	315
V2	12	#6	STR	12'-6"	225
V3	24	#5	STR	10'-6"	263
V4	8	#5	STR	12'-6"	104
V5	16	#7	STR	10'-8"	349
V6	18	#5	STR	14'-0"	263
V7	19	#5	STR	11'-10"	235

REINFORCING STEEL	17,732	LBS.

BAR	NO.	SIZE	TYPE	LENGTH	WEIGHT
SP-1	5	✳	8	369'-8"	1928

SPIRAL COLUMN REINFORCING STEEL	1,928	LBS.

✳ THE SP-1 SPIRAL REINFORCING STEEL SHALL BE W31 OR D-31 COLD DRAWN WIRE OR #5 PLAIN OR DEFORMED BAR.

CLASS AA CONCRETE (AS MODIFIED BY RAILWAY)

POUR #2 (FOOTING)	51.4	C.Y.
POUR #3 (CAP)	27.5	C.Y.
POUR #4 (BACKWALL & WINGWALLS)	41.8	C.Y.
TOTAL	120.7	C.Y.

BAR TYPES

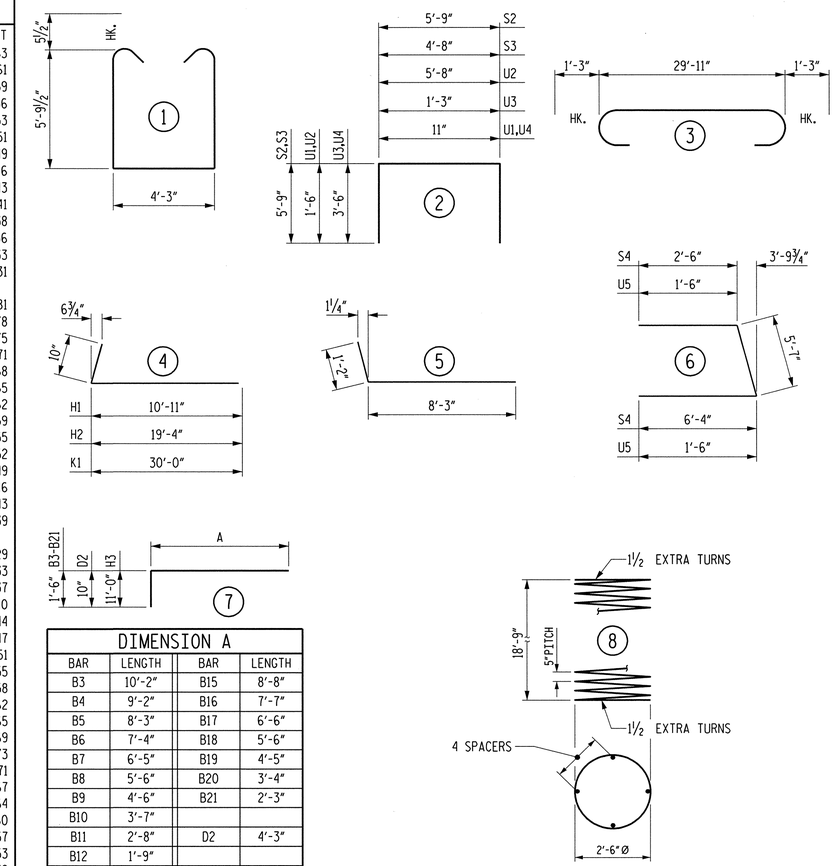

DIMENSION A			
BAR	LENGTH	BAR	LENGTH
B3	10'-2"	B15	8'-8"
B4	9'-2"	B16	7'-7"
B5	8'-3"	B17	6'-6"
B6	7'-4"	B18	5'-6"
B7	6'-5"	B19	4'-5"
B8	5'-6"	B20	3'-4"
B9	4'-6"	B21	2'-3"
B10	3'-7"		
B11	2'-8"	D2	4'-3"
B12	1'-9"		
B13	10'-10"	H3	10'-3"
B14	9'-9"		

ALL BAR DIMENSIONS ARE OUT TO OUT.

3'-0" Ø DRILLED PIER		
DRILLED PIER CONCRETE (AS MODIFIED BY RAILWAY) POUR 1 (DRILLED PIER)	25.2	C.Y.
3'-0" Ø LFD DRILLED PIER IN SOIL	32.3	LIN. FT.
3'-0" Ø LFD DRILLED PIER NOT IN SOIL	64.0	LIN. FT.
CSL TESTING	5	EACH
CSL TUBES	420.0	LIN. FT.

NORFOLK SOUTHERN RR

PROJECT NO. U-0071

DURHAM COUNTY

STATION: POC 64+74.69 -L-

SHEET 5 OF 5 MILEPOST D-85.0

STATE OF NORTH CAROLINA
DEPARTMENT OF TRANSPORTATION
RALEIGH

SUBSTRUCTURE
ABUTMENT 1

MI ENGINEERING
1011 SCHAUB DRIVE, SUITE 100
RALEIGH, NC 27606
(919) 851-6606
FIRM PE NUMBER : P-0671

NORTH CAROLINA PROFESSIONAL SEAL ENGINEER PAUL A. de PAOLI
06-05-14

DWG. NO. 25

REVISIONS							SHEET NO.
NO.	BY:	DATE:	NO.	BY:	DATE:		5-105
1			3				TOTAL SHEETS
2			4				671

DRAWN BY	B.E. LANNING	DATE	APR. 2013
CHECKED BY	P.A. de PAOLI	DATE	MAY 2013
DESIGN ENGINEER OF RECORD	P.A. de PAOLI	DATE	JUNE 2014

PLOT: 6/9/2014 1:07:43 PM bleanning
FILE NAME: P:\NC Projects\M180028 - U-0071 Durham\U-0071\Structures\river\u0071_sd_abu1a_02.mu.dgn

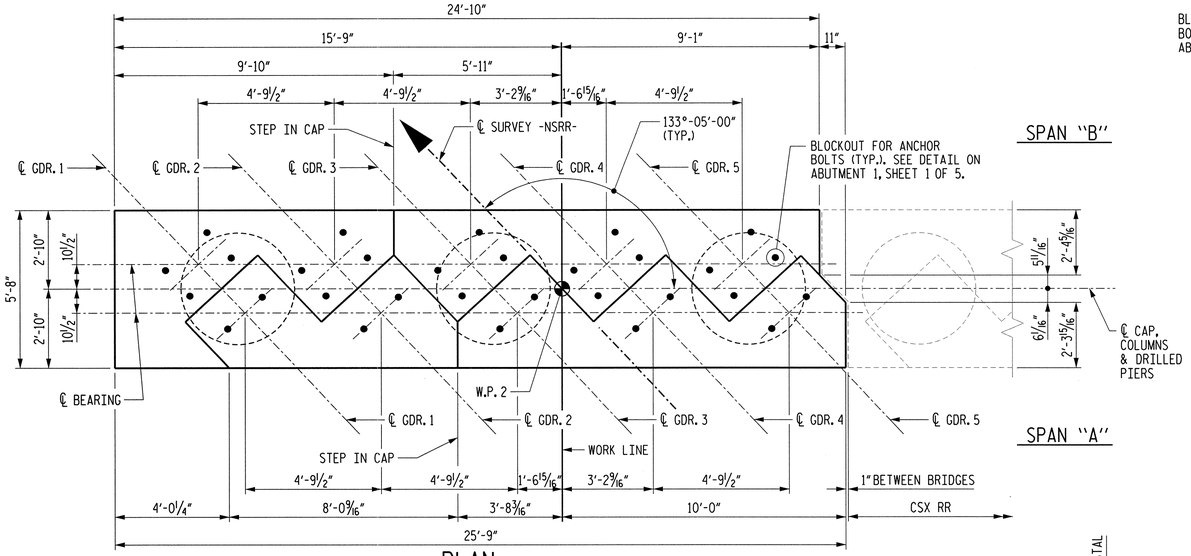

PLAN

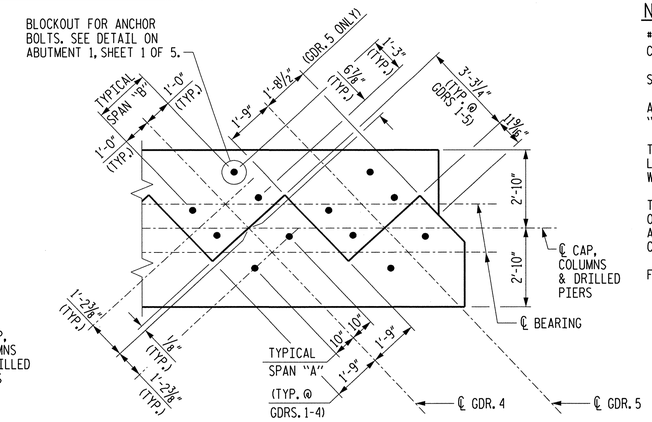

ANCHOR BOLT AND PEDESTAL LAYOUT

FOR REINFORCING STEEL IN PEDESTAL, SEE PEDESTAL REINFORCING DETAIL ON SHEET 2 OF 2.

NOTES

#11 "B" BARS IN BOTTOM OF CAP MAY BE SHIFTED SLIGHTLY TO AVOID CONFLICT WITH #9 V1 BARS IN COLUMN.

STIRRUPS IN CAP MAY BE SHIFTED AS NECESSARY TO CLEAR ANCHOR BOLTS.

ALL STEEL IN THE DRILLED PIERS IS INCLUDED IN THE PAY ITEMS FOR "REINFORCING STEEL" AND "SPIRAL COLUMN REINFORCING STEEL."

THE CONTRACTOR'S ATTENTION IS CALLED TO THE FACT THAT THE LONGITUDINAL REINFORCEMENT FOR THE DRILLED PIERS IS DETAILED WITH 3 FEET OF EXTRA LENGTH.

THE LOCATION OF THE CONSTRUCTION JOINT IN THE DRILLED PIERS IS BASED ON AN APPROXIMATE GROUND LINE ELEVATION. IF THE CONSTRUCTION JOINT IS ABOVE THE ACTUAL GROUND ELEVATION, THE CONTRACTOR SHALL PLACE THE CONSTRUCTION JOINT 2'-0" BELOW THE GROUND LINE.

FOR SECTIONS A-A THRU C-C, SEE SHEET 2 OF 2.

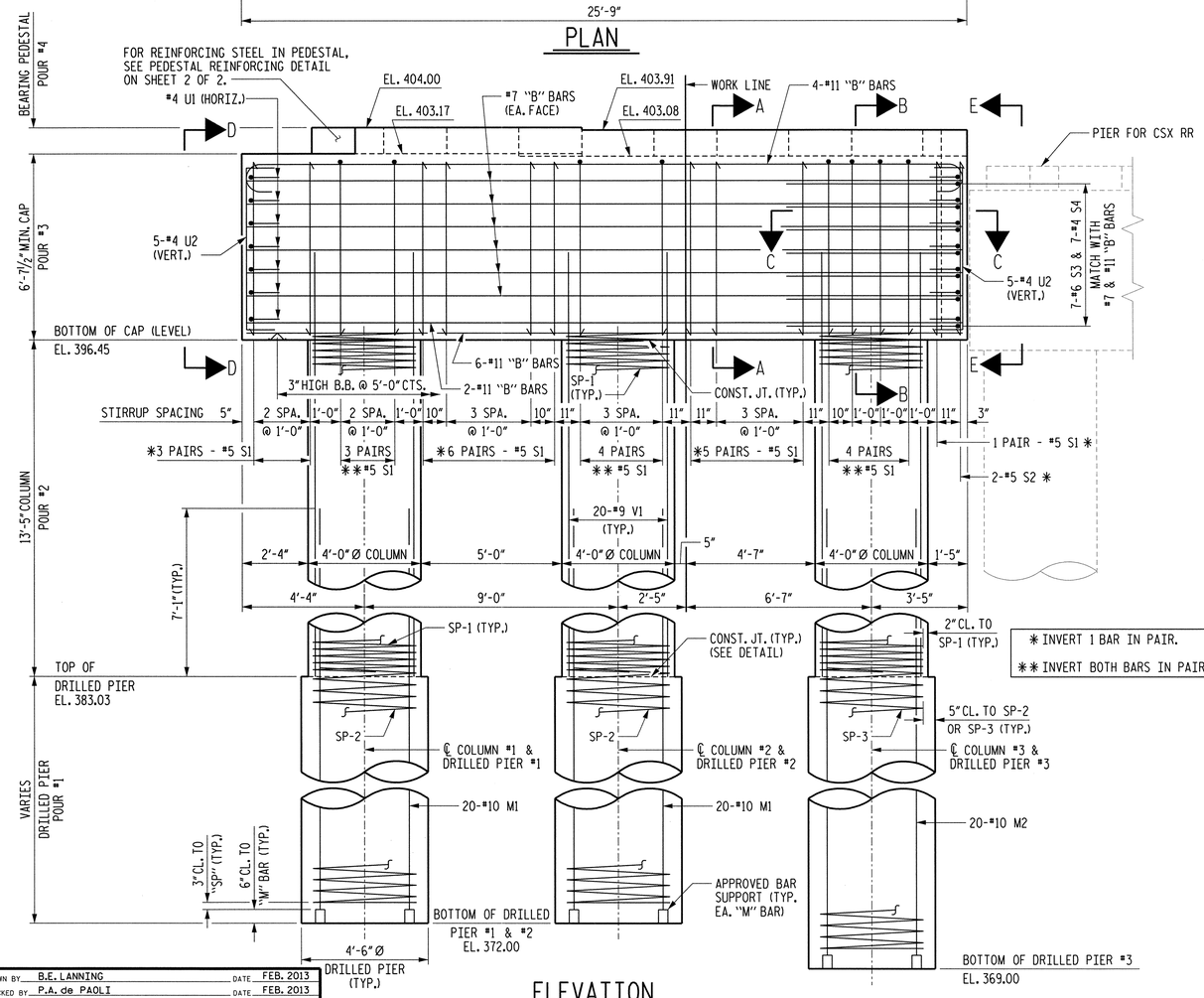

* INVERT 1 BAR IN PAIR.
** INVERT BOTH BARS IN PAIR.

ELEVATION

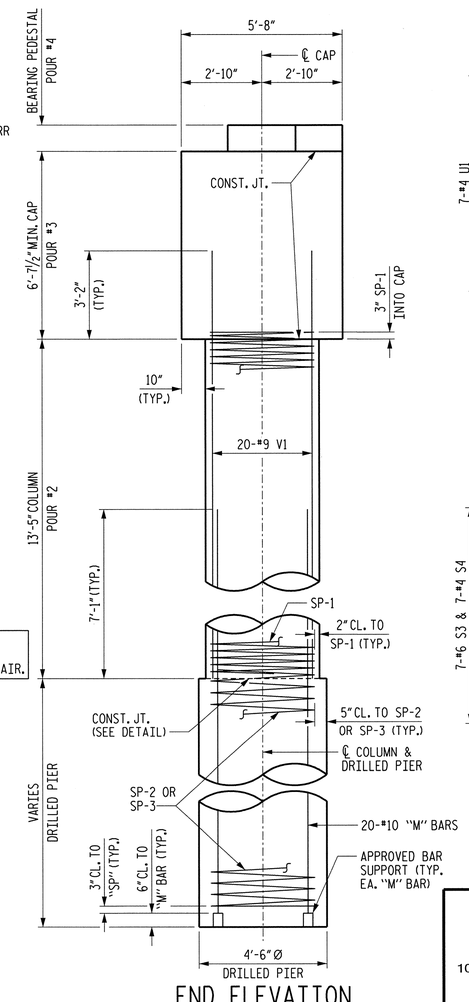

END ELEVATION

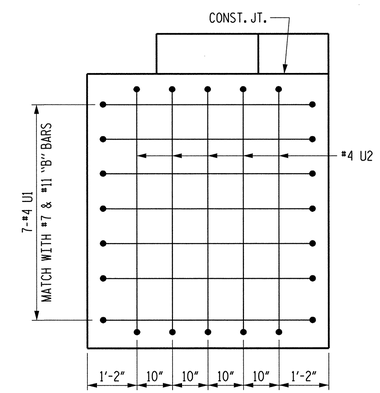

VIEW D-D

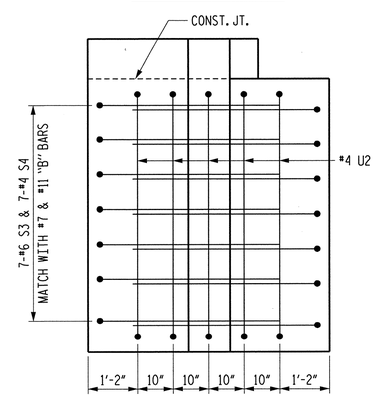

VIEW E-E

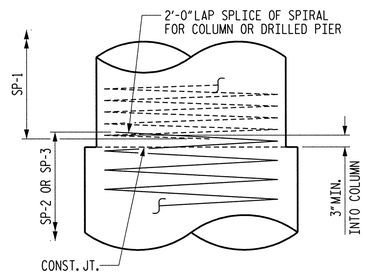

CONSTRUCTION JOINT DETAIL

NORFOLK SOUTHERN RR

PROJECT NO. U-0071

DURHAM COUNTY

STATION: POC 64+74.69 -L-

SHEET 1 OF 2 MILEPOST D-85.0

STATE OF NORTH CAROLINA
DEPARTMENT OF TRANSPORTATION
RALEIGH

SUBSTRUCTURE
PIER 1

MI ENGINEERING
1011 SCHAUB DRIVE, SUITE 100
RALEIGH, NC 27606
(919) 851-6606
FIRM PE NUMBER : P-0671

NORTH CAROLINA PROFESSIONAL SEAL ENGINEER PAUL A. de PAOLI
06-09-14

DWG. NO. 26

REVISIONS						SHEET NO.
NO.	BY:	DATE:	NO.	BY:	DATE:	5-106
1			3			TOTAL SHEETS
2			4			671

DRAWN BY B.E. LANNING DATE FEB. 2013
CHECKED BY P.A. de PAOLI DATE FEB. 2013
DESIGN ENGINEER OF RECORD P.A. de PAOLI DATE JUNE 2014

PLOT: 6/9/2014 12:06:59 PM bleanning
FILE NAME: P:\NC Projects\V4100B8 - U-0071 Durham\U-0071\Structures\struct\U0071_sd_pls_B20m.dgn

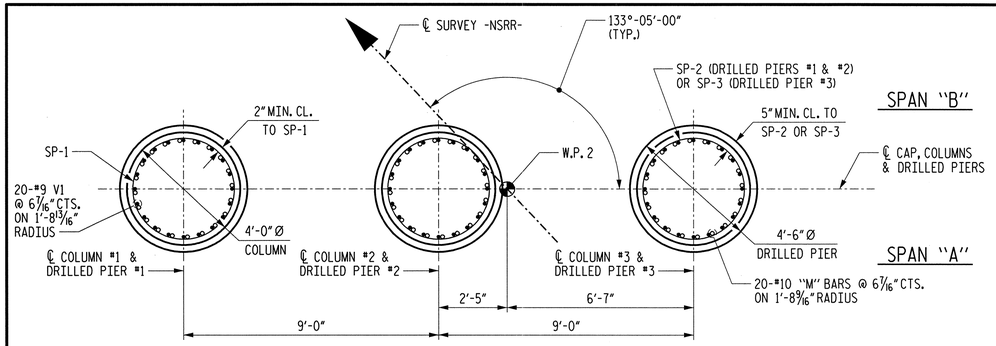

PLAN

(DIMENSIONS AND REINFORCING STEEL ARE TYPICAL FOR EACH COLUMN AND DRILLED PIER)

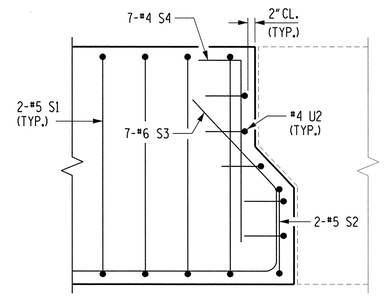

SECTION C-C

("B" BARS NOT SHOWN FOR CLARITY)

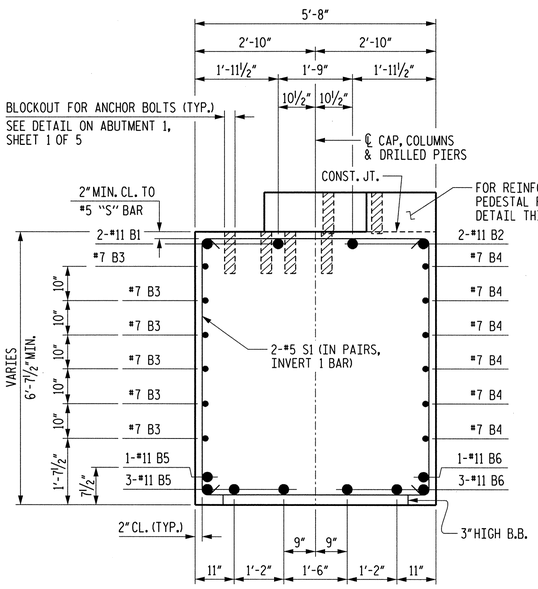

SECTION A-A

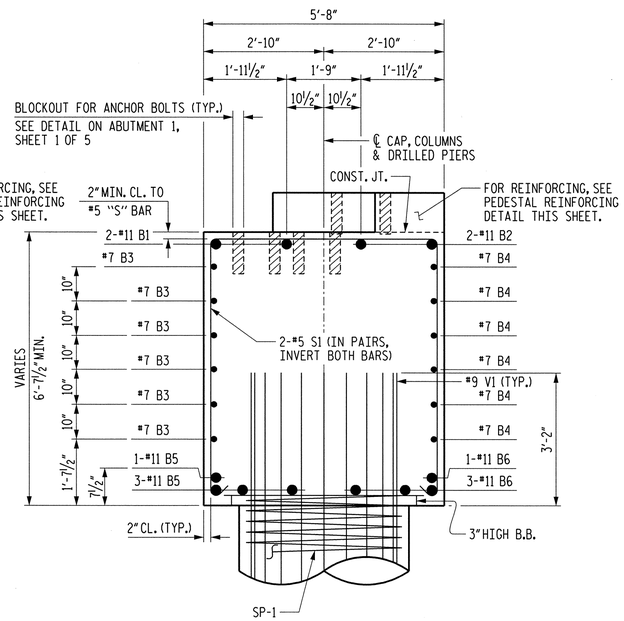

SECTION B-B

BAR TYPES

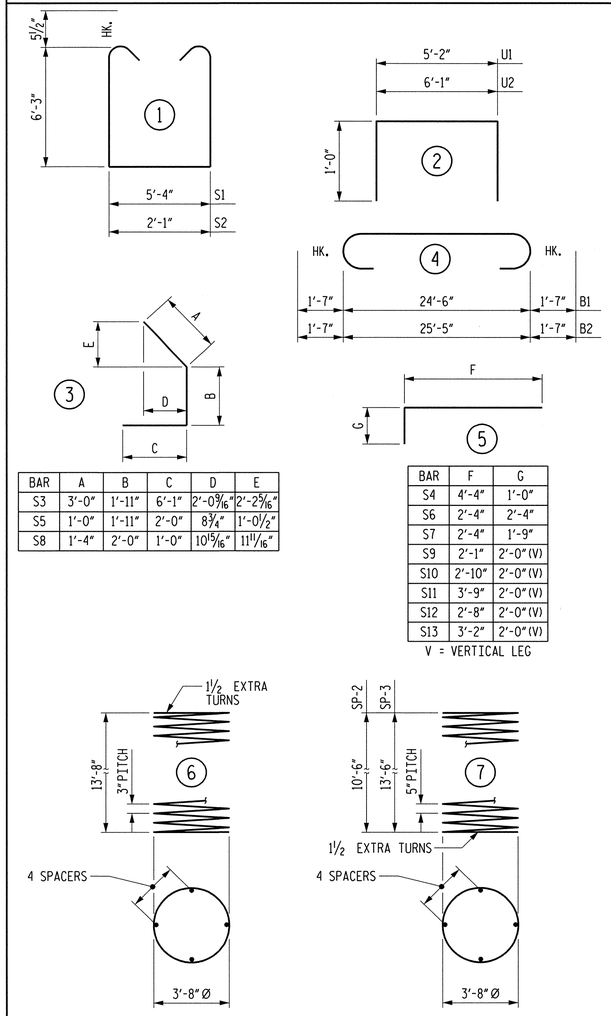

BAR	A	B	C	D	E
S3	3'-0"	1'-11"	6'-1"	2'-0 9/16"	2'-2 5/16"
S5	1'-0"	1'-11"	2'-0"	8 3/4"	1'-0½"
S8	1'-4"	2'-0"	1'-0"	10 15/16"	11 11/16"

BAR	F	G
S4	4'-4"	1'-0"
S6	2'-4"	2'-4"
S7	2'-4"	1'-9"
S9	2'-1"	2'-0"(V)
S10	2'-10"	2'-0"(V)
S11	3'-9"	2'-0"(V)
S12	2'-8"	2'-0"(V)
S13	3'-2"	2'-0"(V)

V = VERTICAL LEG

ALL BAR DIMENSIONS ARE OUT TO OUT.

BILL OF MATERIAL

PIER 1

BAR	NO.	SIZE	TYPE	LENGTH	WEIGHT
B1	2	#11	4	27'-8"	294
B2	2	#11	4	28'-7"	304
B3	6	#7	STR	24'-6"	300
B4	6	#7	STR	25'-5"	312
B5	4	#11	STR	24'-6"	521
B6	4	#11	STR	25'-5"	540
B7	1	#4	STR	21'-4"	14
M1	40	#10	STR	20'-8"	3357
M2	20	#10	STR	23'-8"	2037
S1	52	#5	1	18'-9"	1017
S2	2	#5	1	15'-6"	32
S3	7	#6	3	11'-0"	116
S4	7	#4	5	5'-4"	25
S5	1	#4	3	4'-11"	3
S6	8	#4	5	4'-8"	25
S7	1	#4	5	4'-1"	3
S8	1	#4	3	4'-4"	3
S9	22	#4	5	4'-1"	60
S10	18	#4	5	4'-10"	58
S11	8	#4	5	5'-9"	31
S12	5	#4	5	4'-8"	16
S13	2	#4	5	5'-2"	7
U1	7	#4	2	7'-2"	34
U2	10	#4	2	8'-1"	54
V1	60	#9	STR	16'-7"	3383
REINFORCING STEEL				12,746	LBS.
SP-1	3	✱	6	639'-10"	1282
SP-2	2	✱✱	7	303'-5"	633
SP-3	1	✱✱	7	385'-3"	402
SPIRAL COLUMN REINFORCING STEEL				2,317	LBS.

✱ THE SP-1 SPIRAL REINFORCING STEEL SHALL BE W20 OR D-20 COLD DRAWN WIRE OR #4 PLAIN OR DEFORMED BAR.

✱✱ THE SP-2 AND SP-3 SPIRAL REINFORCING STEEL SHALL BE W31 OR D-31 COLD DRAWN WIRE OR #5 PLAIN OR DEFORMED BAR.

CLASS AA CONCRETE (AS MODIFIED BY RAILWAY)

POUR #2 (COLUMN)	18.7	C.Y.
POUR #3 (CAP)	35.4	C.Y.
POUR #4 (BEARING PEDESTAL)	2.0	C.Y.
TOTAL	56.1	C.Y.

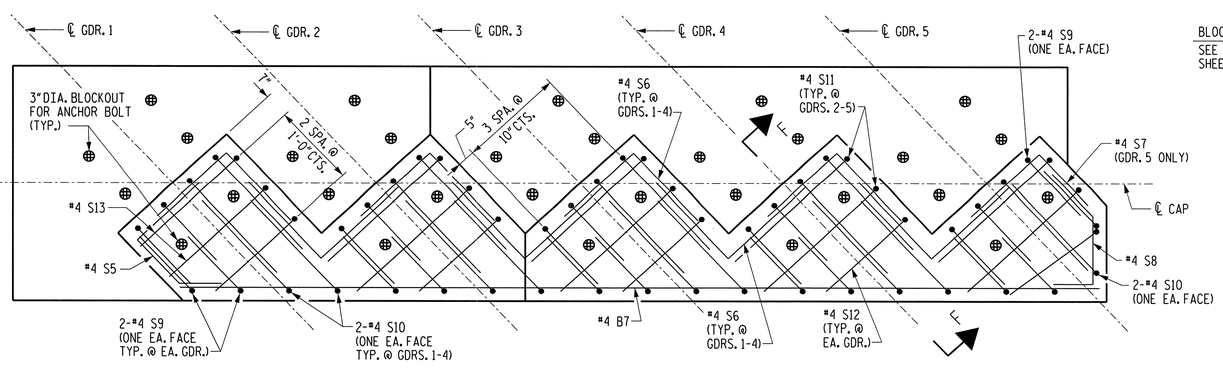

PEDESTAL REINFORCING DETAIL

FOR ADDITIONAL DIMENSIONS AND DETAILS FOR PEDESTALS, SEE SHEET 1 OF 2.

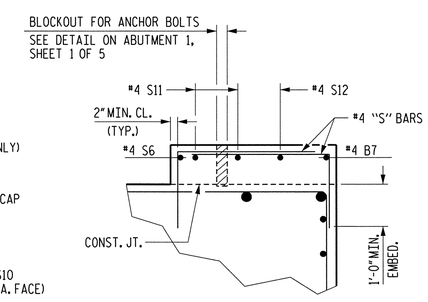

SECTION F-F

4'-6" Ø DRILLED PIER

DRILLED PIER CONCRETE (AS MODIFIED BY RAILWAY) POUR 1 (DRILLED PIER)	21.3	C.Y.
4'-6" Ø LFD DRILLED PIER IN SOIL	4.0	LIN. FT.
4'-6" Ø LFD DRILLED PIER NOT IN SOIL	32.0	LIN. FT.
CSL TESTING	3	EACH
CSL TUBES	204.0	LIN. FT.

NORFOLK SOUTHERN RR

PROJECT NO. U-0071

DURHAM COUNTY

STATION: POC 64+74.69 -L-

SHEET 2 OF 2 MILEPOST D-85.0

STATE OF NORTH CAROLINA
DEPARTMENT OF TRANSPORTATION
RALEIGH

SUBSTRUCTURE
PIER 1

MI ENGINEERING
1011 SCHAUB DRIVE, SUITE 100
RALEIGH, NC 27606
(919) 851-6606
FIRM PE NUMBER : P-0671

NORTH CAROLINA PROFESSIONAL SEAL ENGINEER PAUL A. de PAOLI 06-05-14

DWG. NO. 27

REVISIONS						SHEET NO.
NO.	BY:	DATE:	NO.	BY:	DATE:	5-107
1			3			TOTAL SHEETS
2			4			671

DRAWN BY B.E. LANNING DATE FEB. 2013
CHECKED BY P.A. de PAOLI DATE FEB. 2013
DESIGN ENGINEER OF RECORD P.A. de PAOLI DATE JUNE 2014

PLOT: 6/4/2014 1:28:08 PM blanning
FILE NAME: P:\NC Projects\M10808 - U-0071 Durham\U-0071\Structures\User\u0071_s4_pier_02no.dgn

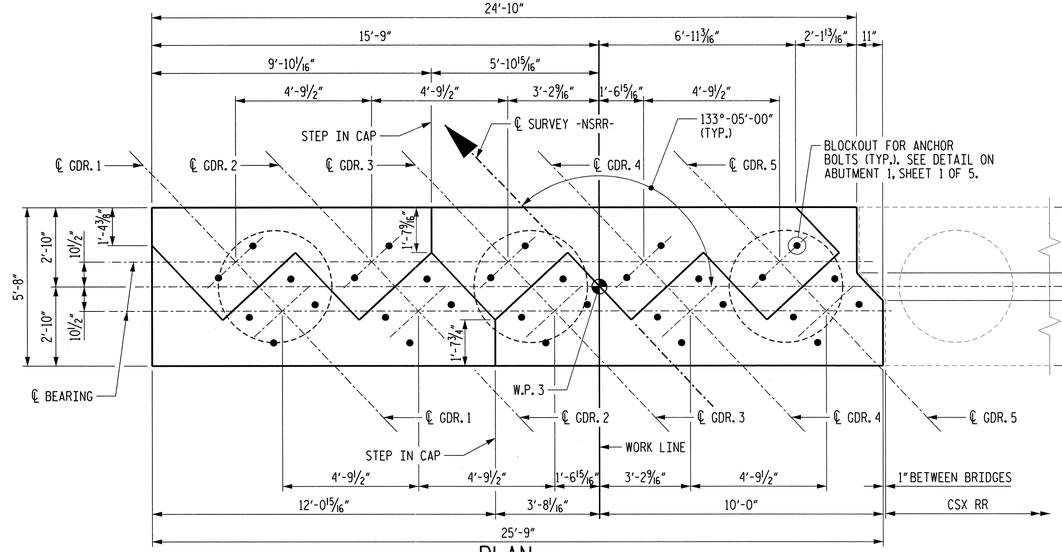

PLAN

SPAN "C"

SPAN "B"

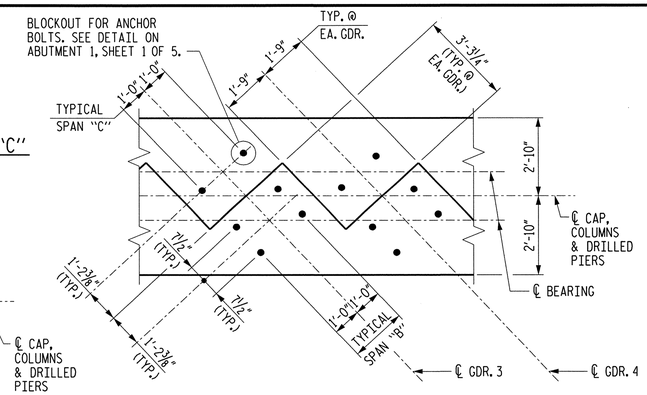

ANCHOR BOLT AND PEDESTAL LAYOUT

NOTES

#11 "B" BARS IN BOTTOM OF CAP MAY BE SHIFTED SLIGHTLY TO AVOID CONFLICT WITH #9 V1 BARS IN COLUMN.

STIRRUPS IN CAP MAY BE SHIFTED AS NECESSARY TO CLEAR ANCHOR BOLTS.

ALL STEEL IN THE DRILLED PIERS IS INCLUDED IN THE PAY ITEMS FOR "REINFORCING STEEL" AND "SPIRAL COLUMN REINFORCING STEEL."

THE CONTRACTOR'S ATTENTION IS CALLED TO THE FACT THAT THE LONGITUDINAL REINFORCEMENT FOR THE DRILLED PIERS IS DETAILED WITH 3 FEET OF EXTRA LENGTH.

THE LOCATION OF THE CONSTRUCTION JOINT IN THE DRILLED PIERS IS BASED ON AN APPROXIMATE GROUND LINE ELEVATION. IF THE CONSTRUCTION JOINT IS ABOVE THE ACTUAL GROUND ELEVATION, THE CONTRACTOR SHALL PLACE THE CONSTRUCTION JOINT 2'-0" BELOW THE GROUND LINE.

FOR SECTIONS A-A THRU C-C AND VIEWS D-D THRU E-E, SEE SHEET 2 OF 2.

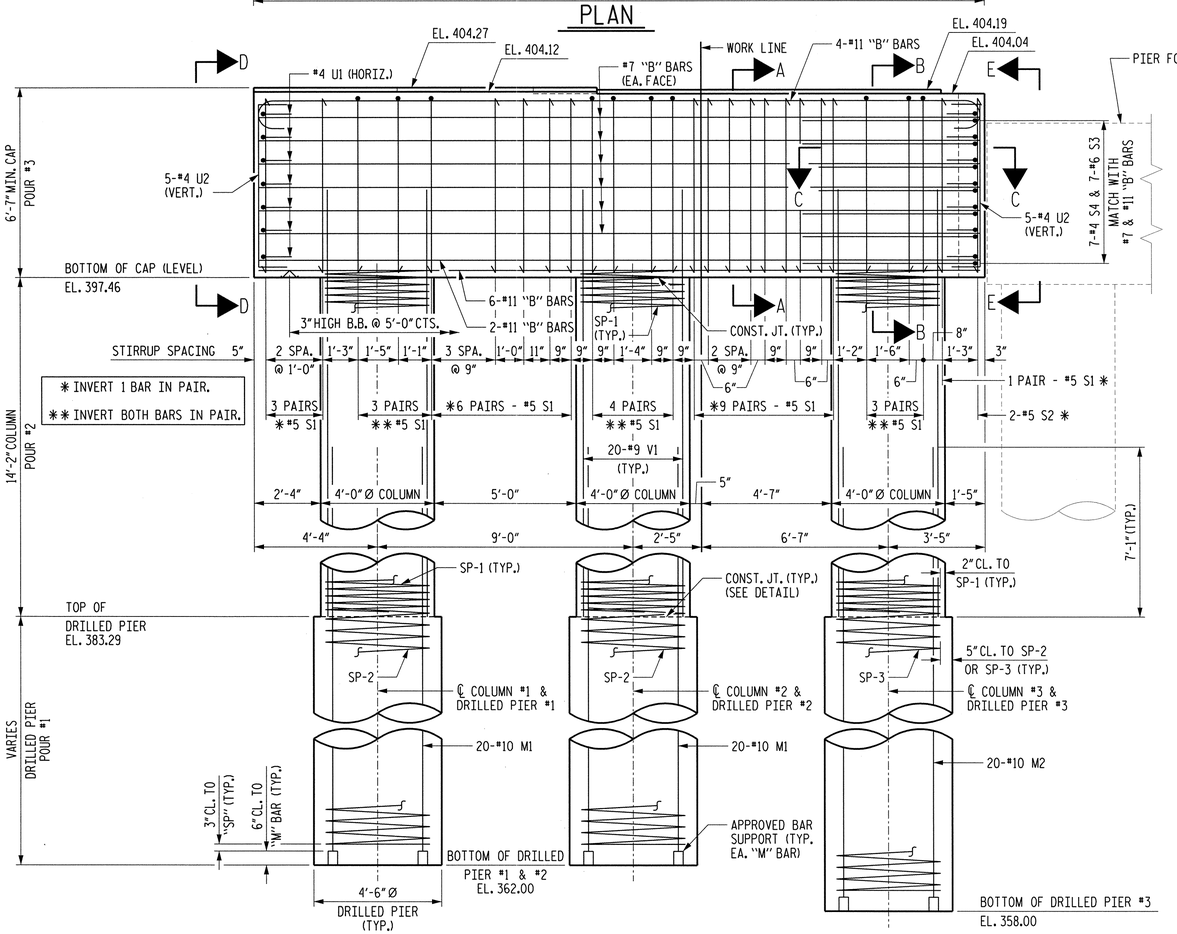

ELEVATION

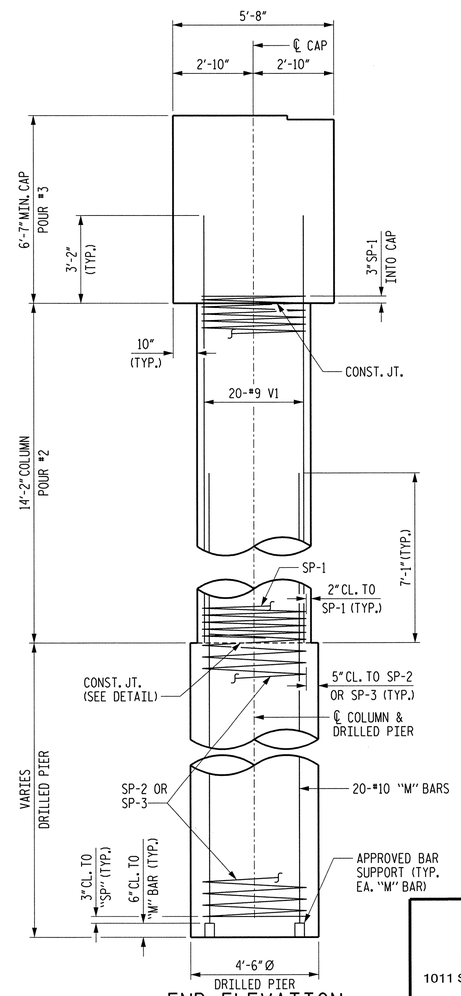

END ELEVATION

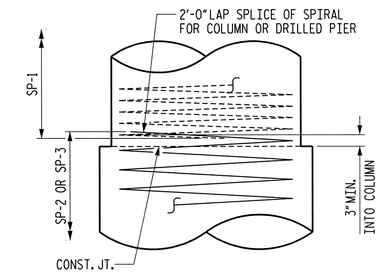

CONSTRUCTION JOINT DETAIL

NORFOLK SOUTHERN RR

PROJECT NO. U-0071

DURHAM COUNTY

STATION: POC 64+74.69 -L-

SHEET 1 OF 2 MILEPOST D-85.0

STATE OF NORTH CAROLINA
DEPARTMENT OF TRANSPORTATION
RALEIGH

SUBSTRUCTURE
PIER 2

MI ENGINEERING
1011 SCHAUB DRIVE, SUITE 100
RALEIGH, NC 27606
(919) 851-6606
FIRM PE NUMBER : P-0671

NORTH CAROLINA PROFESSIONAL ENGINEER SEAL 027799 PAUL A. de PAOLI
06-09-14

DWG. NO. 28

REVISIONS						SHEET NO.
NO.	BY:	DATE:	NO.	BY:	DATE:	5-108
1			3			TOTAL SHEETS
2			4			671

DRAWN BY B.E. LANNING DATE FEB. 2013
CHECKED BY P.A. de PAOLI DATE FEB. 2013
DESIGN ENGINEER OF RECORD P.A. de PAOLI DATE JUNE 2014

PLOT: 6/9/2014 12:13:37 PM bjlanning
FILE NAME: P:\NC Projects\U0071\Structures\var\U0071_sd_p2a_02nc.dgn

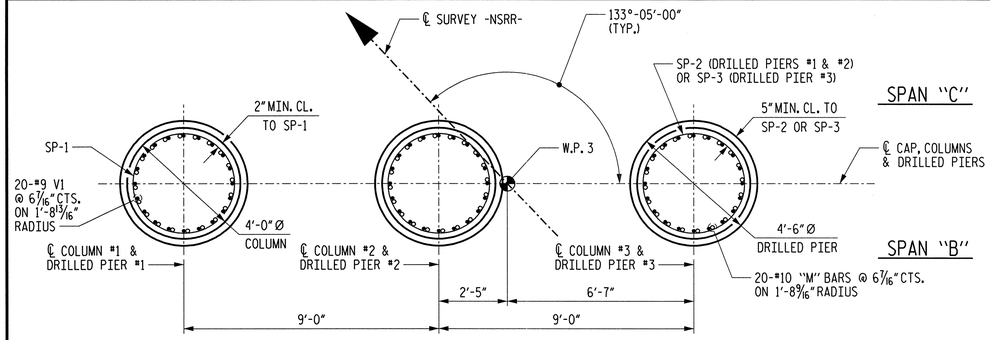

PLAN

(DIMENSIONS AND REINFORCING STEEL ARE TYPICAL FOR EACH COLUMN AND DRILLED PIER)

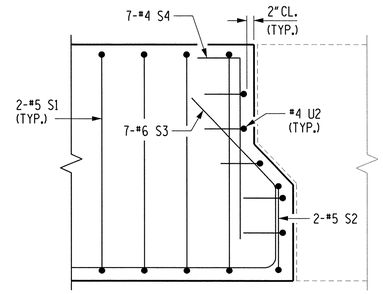

SECTION C-C

("B" BARS NOT SHOWN FOR CLARITY)

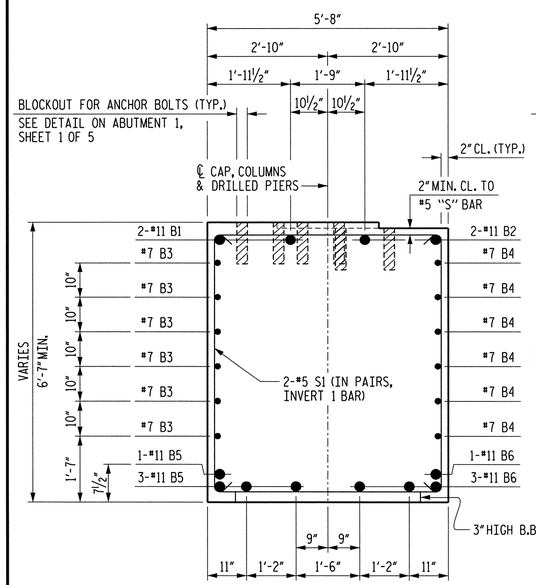

SECTION A-A

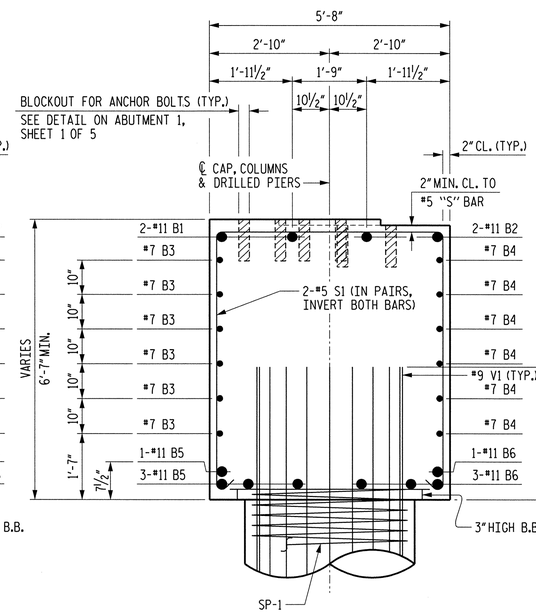

SECTION B-B

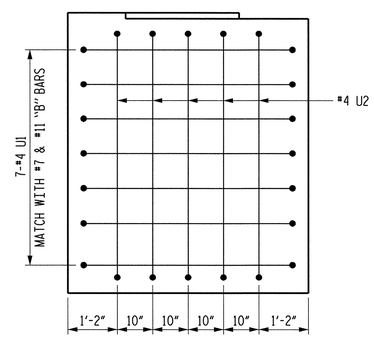

VIEW D-D

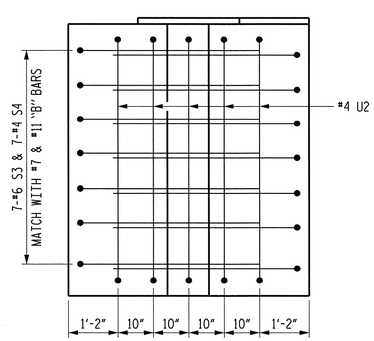

VIEW E-E

BAR TYPES

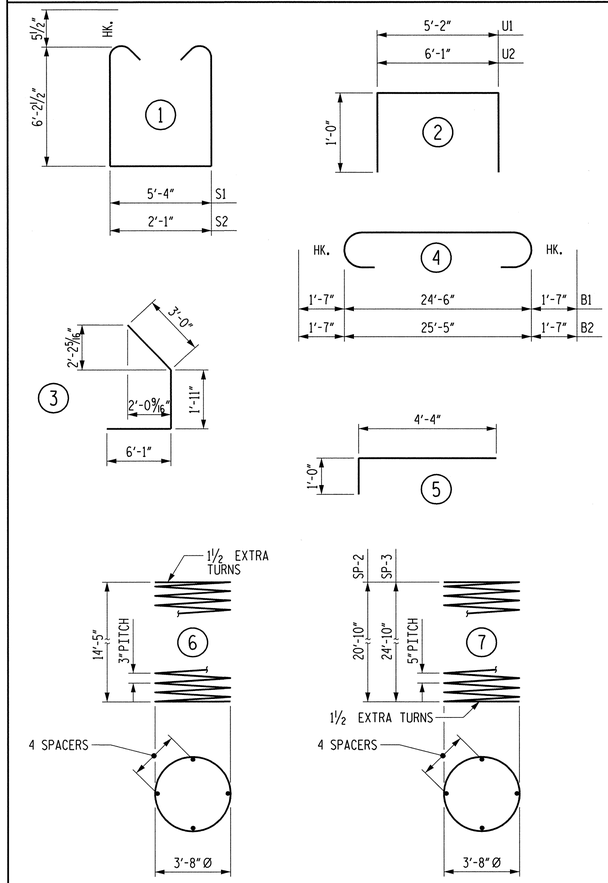

ALL BAR DIMENSIONS ARE OUT TO OUT.

BILL OF MATERIAL

PIER 2

BAR	NO.	SIZE	TYPE	LENGTH	WEIGHT
B1	2	#11	4	27'-8"	294
B2	2	#11	4	28'-7"	304
B3	6	#7	STR	24'-6"	300
B4	6	#7	STR	25'-5"	312
B5	4	#11	STR	24'-6"	521
B6	4	#11	STR	25'-5"	540
M1	40	#10	STR	31'-0"	5336
M2	20	#10	STR	35'-0"	3012
S1	58	#5	1	18'-8"	1129
S2	2	#5	1	15'-5"	32
S3	7	#6	3	11'-0"	116
S4	7	#4	5	5'-4"	25
U1	7	#4	2	7'-2"	34
U2	10	#4	2	8'-1"	54
V1	60	#9	STR	17'-4"	3536
REINFORCING STEEL					15,523 LBS.
SP-1	3	*	6	674'-0"	1351
SP-2	2	**	7	585'-3"	1221
SP-3	1	**	7	698'-10"	729
SPIRAL COLUMN REINFORCING STEEL					3,301 LBS.

* THE SP-1 SPIRAL REINFORCING STEEL SHALL BE W20 OR D-20 COLD DRAWN WIRE OR #4 PLAIN OR DEFORMED BAR.

** THE SP-2 AND SP-3 SPIRAL REINFORCING STEEL SHALL BE W31 OR D-31 COLD DRAWN WIRE OR #5 PLAIN OR DEFORMED BAR.

CLASS AA CONCRETE (AS MODIFIED BY RAILWAY)

POUR #2 (COLUMN)	19.8	C.Y.
POUR #3 (CAP)	35.5	C.Y.
TOTAL	55.3	C.Y.

4'-6" Ø DRILLED PIER

DRILLED PIER CONCRETE (AS MODIFIED BY RAILWAY) POUR 1 (DRILLED PIER)	40.0	C.Y.
4'-6" Ø LFD DRILLED PIER IN SOIL	37.0	LIN. FT.
4'-6" Ø LFD DRILLED PIER NOT IN SOIL	31.0	LIN. FT.
SPT TESTING	3	EACH
CSL TESTING	3	EACH
CSL TUBES	362.0	LIN. FT.

NORFOLK SOUTHERN RR

PROJECT NO. U-0071

DURHAM COUNTY

STATION: POC 64+74.69 -L-

SHEET 2 OF 2 MILEPOST D-85.0

STATE OF NORTH CAROLINA
DEPARTMENT OF TRANSPORTATION
RALEIGH

SUBSTRUCTURE
PIER 2

MI ENGINEERING
1011 SCHAUB DRIVE, SUITE 100
RALEIGH, NC 27606
(919) 851-6606
FIRM PE NUMBER : P-0671

NORTH CAROLINA PROFESSIONAL SEAL ENGINEER PAUL A. de PAOLI
06.09.14

DWG. NO. 29

REVISIONS						SHEET NO.
NO.	BY:	DATE:	NO.	BY:	DATE:	5-109
1			3			TOTAL SHEETS
2			4			671

DRAWN BY B.E. LANNING DATE FEB. 2013
CHECKED BY P.A. de PAOLI DATE FEB. 2013
DESIGN ENGINEER OF RECORD P.A. de PAOLI DATE JUNE 2014

PLOT: 6/9/2014 1:09:13 PM bbenning
FILE NAME: P:\NC Projects\M10808 - U-0071 Durham\U-0071\Structures\User\U0071_sd_s29_d2ns_d2ns.dgn

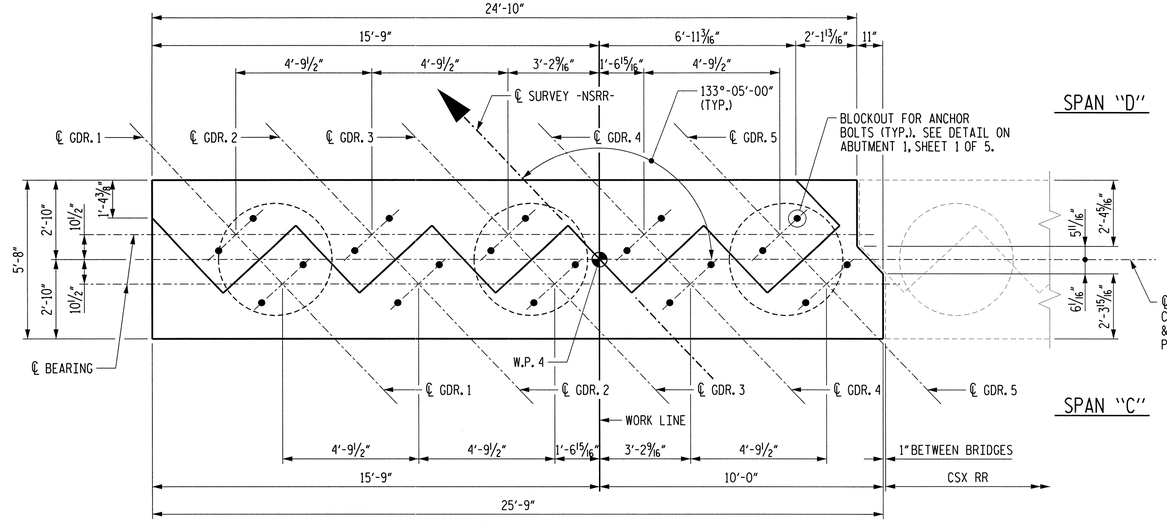

PLAN

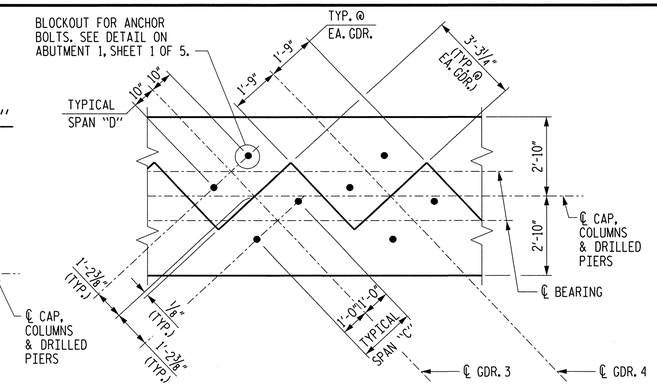

ANCHOR BOLT AND PEDESTAL LAYOUT

FOR REINFORCING STEEL IN PEDESTAL, SEE PEDESTAL REINFORCING DETAIL ON SHEET 2 OF 2.

NOTES

#11 "B" BARS IN BOTTOM OF CAP MAY BE SHIFTED SLIGHTLY TO AVOID CONFLICT WITH #9 V1 BARS IN COLUMN.

STIRRUPS IN CAP MAY BE SHIFTED AS NECESSARY TO CLEAR ANCHOR BOLTS.

ALL STEEL IN THE DRILLED PIERS IS INCLUDED IN THE PAY ITEMS FOR "REINFORCING STEEL" AND "SPIRAL COLUMN REINFORCING STEEL."

THE CONTRACTOR'S ATTENTION IS CALLED TO THE FACT THAT THE LONGITUDINAL REINFORCEMENT FOR THE DRILLED PIERS IS DETAILED WITH 3 FEET OF EXTRA LENGTH.

THE LOCATION OF THE CONSTRUCTION JOINT IN THE DRILLED PIERS IS BASED ON AN APPROXIMATE GROUND LINE ELEVATION. IF THE CONSTRUCTION JOINT IS ABOVE THE ACTUAL GROUND ELEVATION, THE CONTRACTOR SHALL PLACE THE CONSTRUCTION JOINT 2'-0" BELOW THE GROUND LINE.

FOR SECTIONS A-A THRU C-C, SEE SHEET 2 OF 2.

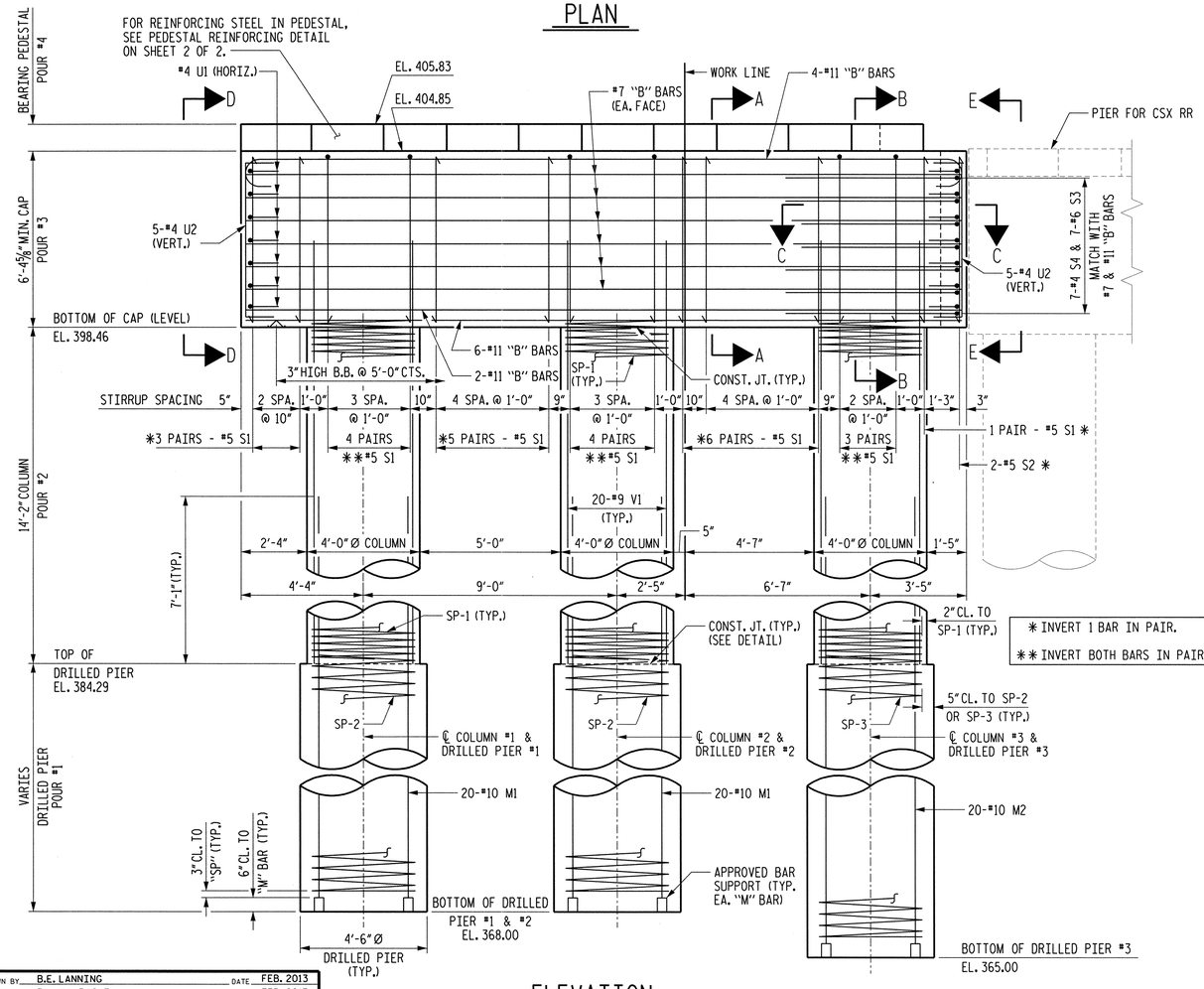

* INVERT 1 BAR IN PAIR.
** INVERT BOTH BARS IN PAIR.

ELEVATION

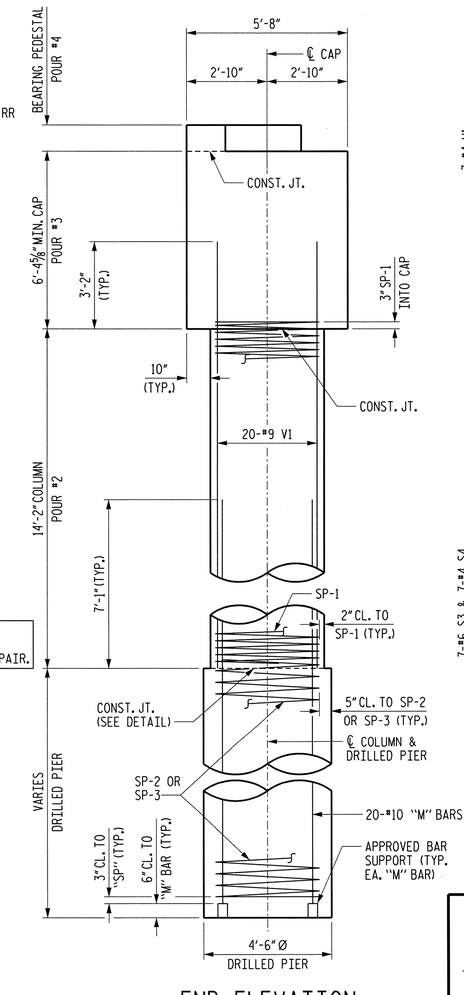

END ELEVATION

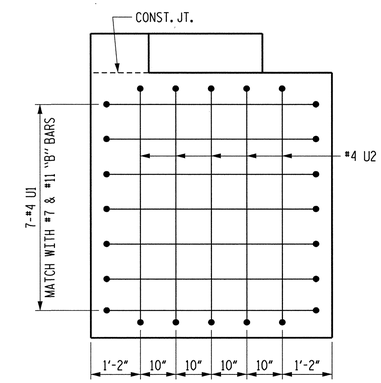

VIEW D-D

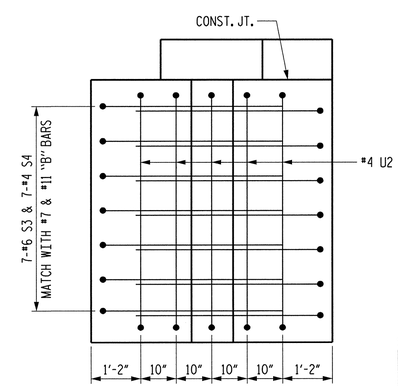

VIEW E-E

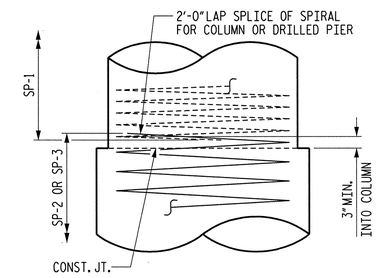

CONSTRUCTION JOINT DETAIL

NORFOLK SOUTHERN RR

PROJECT NO. U-0071

DURHAM COUNTY

STATION: POC 64+74.69 -L-

SHEET 1 OF 2 MILEPOST D-85.0

STATE OF NORTH CAROLINA
DEPARTMENT OF TRANSPORTATION
RALEIGH

SUBSTRUCTURE
PIER 3

DRAWN BY B.E. LANNING	DATE FEB. 2013		
CHECKED BY P.A. de PAOLI	DATE FEB. 2013		
DESIGN ENGINEER OF RECORD P.A. de PAOLI	DATE JUNE 2014		

MI ENGINEERING
1011 SCHAUB DRIVE, SUITE 100
RALEIGH, NC 27606
(919) 851-6606
FIRM PE NUMBER : P-0671

NORTH CAROLINA PROFESSIONAL SEAL 021799 ENGINEER PAUL A. de PAOLI 06-09-14

DWG. NO. 30

REVISIONS								SHEET NO.
NO.	BY:	DATE:	NO.	BY:	DATE:			S-110
1			3					TOTAL SHEETS
2			4					671

PLOT: 6/9/2014 1:22:22 PM blanning
FILE NAME: P:\NC Projects\M180088 - U-0071 Durham\U-0071\Structures\User\U0071_s4_p3a_B2na.dgn

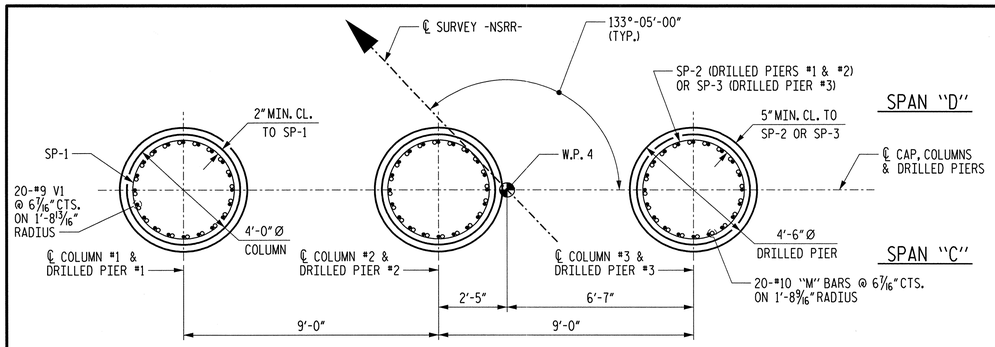

PLAN

(DIMENSIONS AND REINFORCING STEEL ARE TYPICAL FOR EACH COLUMN AND DRILLED PIER)

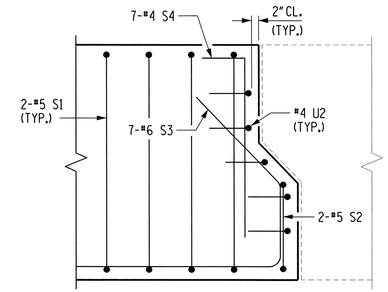

SECTION C-C

("B" BARS NOT SHOWN FOR CLARITY)

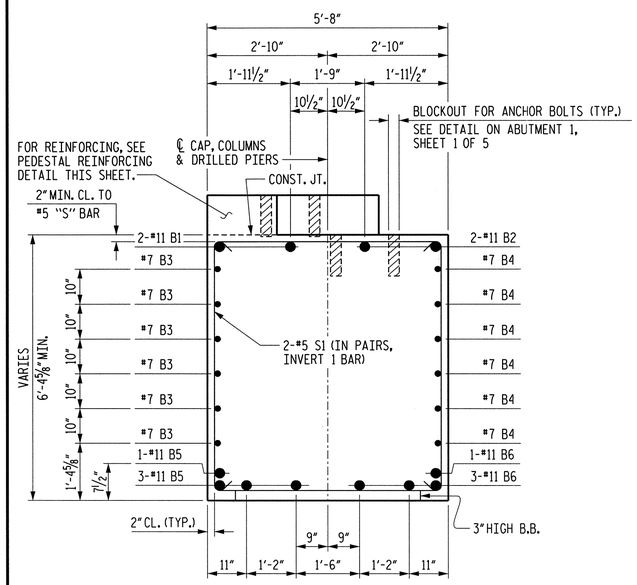

SECTION A-A

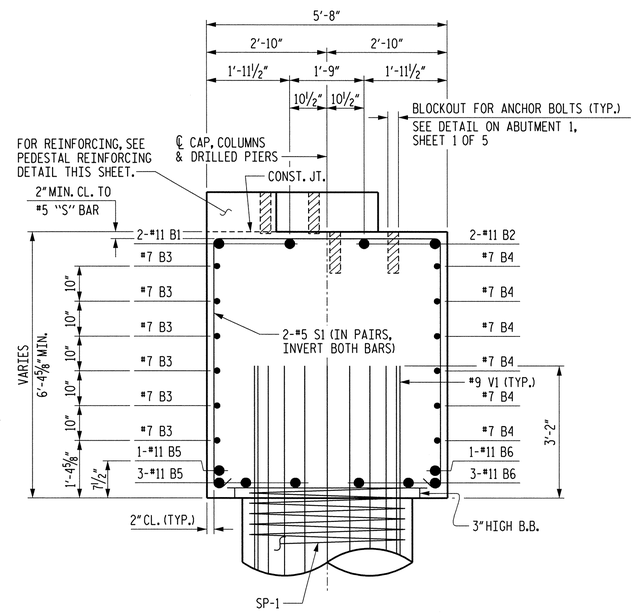

SECTION B-B

BAR TYPES

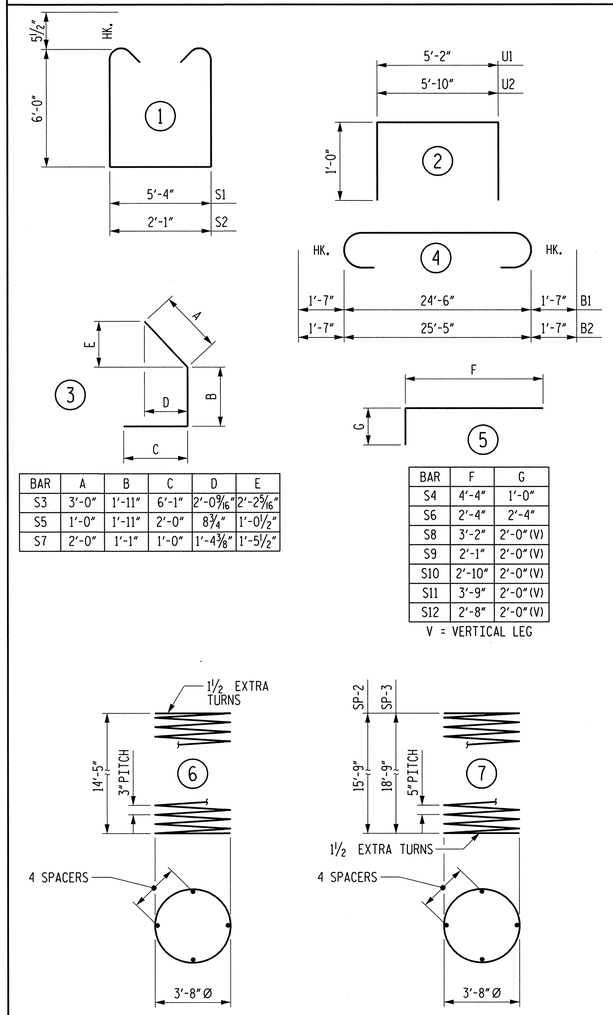

BAR	A	B	C	D	E
S3	3'-0"	1'-11"	6'-1"	2'-0 9/16"	2'-2 5/16"
S5	1'-0"	1'-11"	2'-0"	8 3/4"	1'-0½"
S7	2'-0"	1'-1"	1'-0"	1'-4 3/8"	1'-5½"

BAR	F	G
S4	4'-4"	1'-0"
S6	2'-4"	2'-4"
S8	3'-2"	2'-0"(V)
S9	2'-1"	2'-0"(V)
S10	2'-10"	2'-0"(V)
S11	3'-9"	2'-0"(V)
S12	2'-8"	2'-0"(V)

V = VERTICAL LEG

ALL BAR DIMENSIONS ARE OUT TO OUT.

BILL OF MATERIAL

PIER 3

BAR	NO.	SIZE	TYPE	LENGTH	WEIGHT
B1	2	#11	4	27'-8"	294
B2	2	#11	4	28'-7"	304
B3	6	#7	STR	24'-6"	300
B4	6	#7	STR	25'-5"	312
B5	4	#11	STR	24'-6"	521
B6	4	#11	STR	25'-5"	540
B7	1	#4	STR	22'-5"	15
M1	40	#10	STR	25'-11"	4461
M2	20	#10	STR	28'-11"	2489
S1	52	#5	1	18'-3"	990
S2	2	#5	1	15'-0"	31
S3	7	#6	3	11'-0"	116
S4	7	#4	5	5'-4"	25
S5	1	#4	3	4'-11"	3
S6	9	#4	5	4'-8"	28
S7	1	#4	5	4'-1"	3
S8	2	#4	3	5'-2"	7
S9	20	#4	5	4'-1"	55
S10	20	#4	5	4'-10"	65
S11	8	#4	5	5'-9"	31
S12	5	#4	5	4'-8"	16
U1	7	#4	2	7'-2"	34
U2	10	#4	2	7'-10"	52
V1	60	#9	STR	17'-4"	3536
REINFORCING STEEL					14,228 LBS.
SP-1	3	*	6	674'-0"	1351
SP-2	2	**	7	446'-7"	932
SP-3	1	**	7	528'-5"	551
SPIRAL COLUMN REINFORCING STEEL					2,834 LBS.

* THE SP-1 SPIRAL REINFORCING STEEL SHALL BE W20 OR D-20 COLD DRAWN WIRE OR #4 PLAIN OR DEFORMED BAR.

** THE SP-2 AND SP-3 SPIRAL REINFORCING STEEL SHALL BE W31 OR D-31 COLD DRAWN WIRE OR #5 PLAIN OR DEFORMED BAR.

CLASS AA CONCRETE (AS MODIFIED BY RAILWAY)		
POUR #2 (COLUMN)	19.8	C.Y.
POUR #3 (CAP)	33.9	C.Y.
POUR #4 (BEARING PEDESTAL)	2.4	C.Y.
TOTAL	56.1	C.Y.

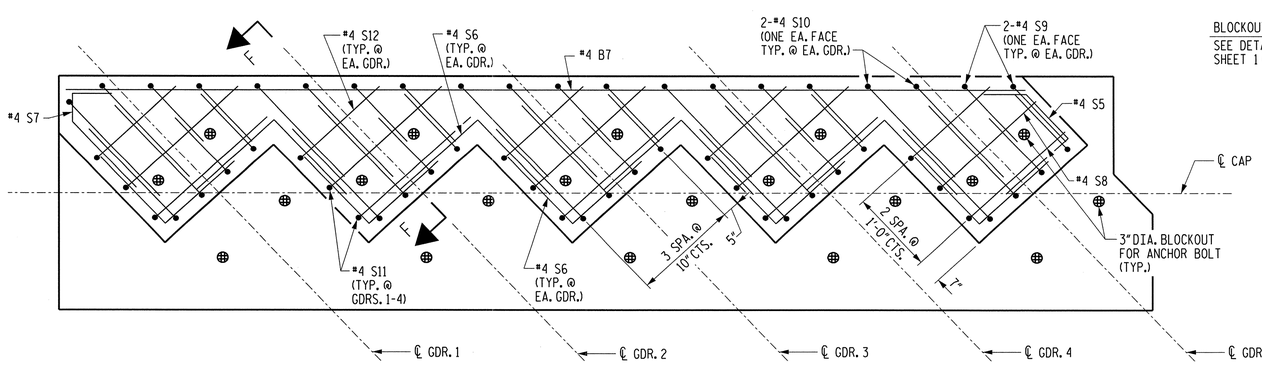

PEDESTAL REINFORCING DETAIL

FOR ADDITIONAL DIMENSIONS AND DETAILS FOR PEDESTALS, SEE SHEET 1 OF 2.

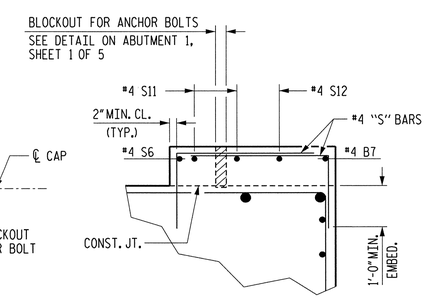

SECTION F-F

4'-6" Ø DRILLED PIER

DRILLED PIER CONCRETE (AS MODIFIED BY RAILWAY) POUR 1 (DRILLED PIER)	8.6	C.Y.
4'-6" Ø LFD DRILLED PIER IN SOIL	10.9	LIN. FT.
4'-6" Ø LFD DRILLED PIER NOT IN SOIL	41.0	LIN. FT.
SPT TESTING	3	EACH
CSL TESTING	3	EACH
CSL TUBES	282.0	LIN. FT.

NORFOLK SOUTHERN RR

PROJECT NO. U-0071

DURHAM COUNTY

STATION: POC 64+74.69 -L-

SHEET 2 OF 2 MILEPOST D-85.0

STATE OF NORTH CAROLINA
DEPARTMENT OF TRANSPORTATION
RALEIGH

SUBSTRUCTURE
PIER 3

MI ENGINEERING
1011 SCHAUB DRIVE, SUITE 100
RALEIGH, NC 27606
(919) 851-6606
FIRM PE NUMBER : P-0671

NORTH CAROLINA PROFESSIONAL ENGINEER SEAL 027793 PAUL A. de PAOLI 06.05.14

DWG. NO. 31

REVISIONS						SHEET NO.
NO.	BY:	DATE:	NO.	BY:	DATE:	5-111
1			3			TOTAL SHEETS
2			4			671

DRAWN BY	B.E. LANNING	DATE	FEB. 2013
CHECKED BY	P.A. de PAOLI	DATE	FEB. 2013
DESIGN ENGINEER OF RECORD	P.A. de PAOLI	DATE	JUNE 2014

PLOT: 6/4/2014 1:07:17 PM bleanning
FILE NAME: P:\NC Projects\M10080 - U-0071 Durham\U-0071\Structures\str\U071_sd_p3b_02rev.dgn

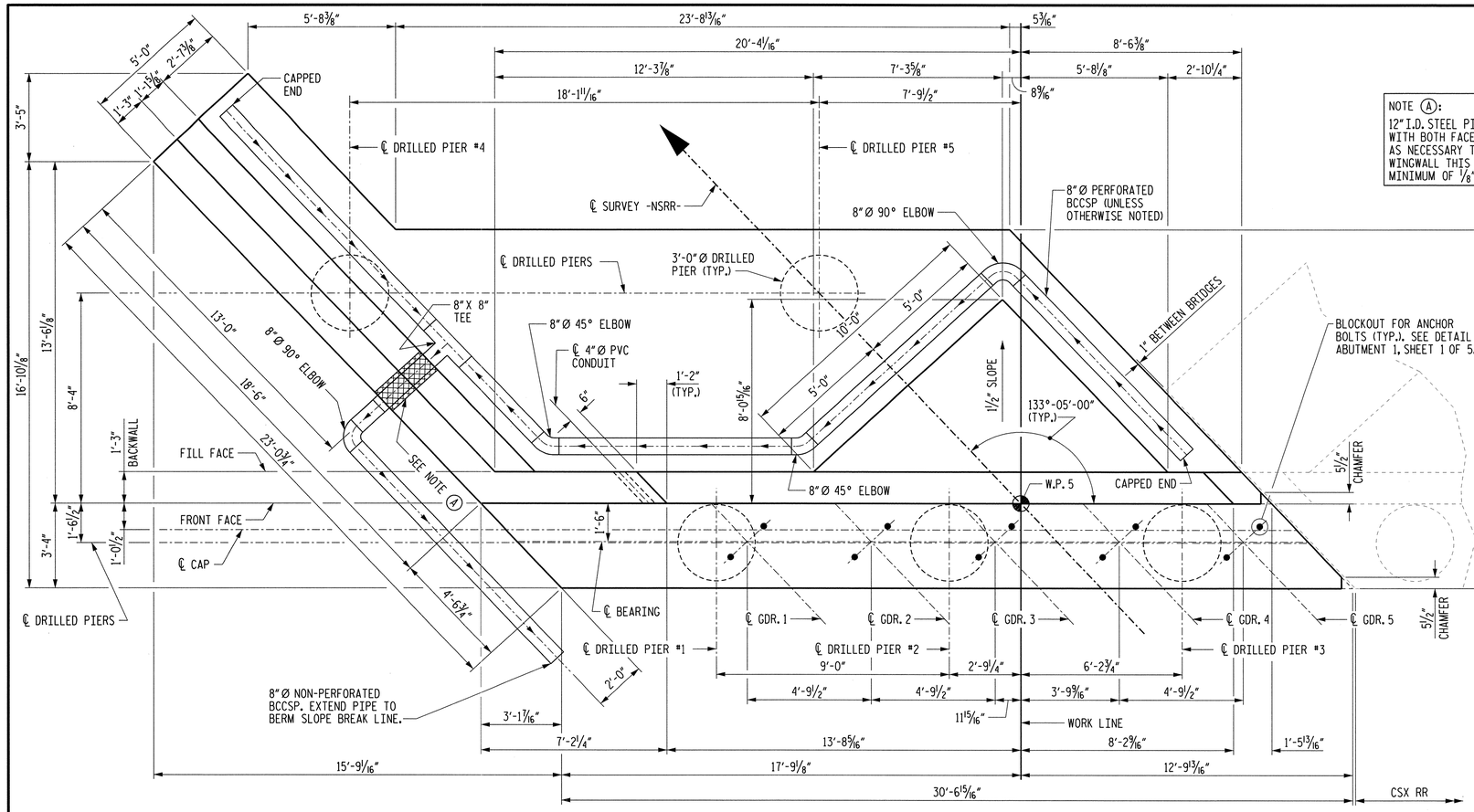

PLAN

BCCSP = BITUMINOUS COATED CORRUGATED STEEL PIPE

NOTE (A):

12" I.D. STEEL PIPE SLEEVE (3/8" WALL THICKNESS) TO BE FLUSH WITH BOTH FACES OF WING. FIELD BEND REINFORCING STEEL AS NECESSARY TO PROVIDE FOR SLEEVE. SEE SECTION THRU WINGWALL THIS SHEET FOR DETAILS. INSTALL BCCSP WITH A MINIMUM OF 1/8" PER FOOT SLOPE.

NOTES

#9 "B" BARS IN BOTTOM OF CAP MAY BE SHIFTED SLIGHTLY TO AVOID CONFLICT WITH BARS IN DRILLED PIERS.

STIRRUPS IN CAP MAY BE SHIFTED AS NECESSARY TO CLEAR ANCHOR BOLTS AND BARS IN DRILLED PIERS.

"T" BARS IN FOOTING MAY BE SHIFTED SLIGHTLY TO AVOID CONFLICT WITH BARS IN DRILLED PIERS.

THE CONTRACTOR'S ATTENTION IS CALLED TO THE FACT THAT THE LONGITUDINAL REINFORCEMENT FOR THE DRILLED PIERS IS DETAILED WITH 3 FEET OF EXTRA LENGTH.

ALL STEEL IN THE DRILLED PIERS IS INCLUDED IN THE PAY ITEMS FOR "REINFORCING STEEL" AND "SPIRAL COLUMN REINFORCING STEEL."

PAYMENT FOR PIPE SLEEVE INSERT AS SHOWN ON SECTION THRU WINGWALL IS CONSIDERED INCIDENTAL OF THE ABUTMENT.

FOR FRENCH DRAIN, SEE SPECIAL PROVISION "STRUCTURE DRAINAGE SYSTEM".

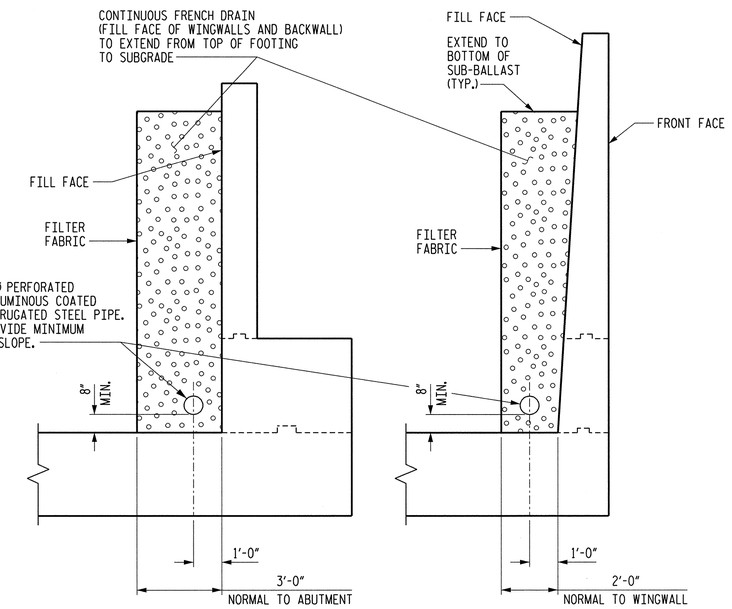

CONTINUOUS UNDERDRAIN DETAIL

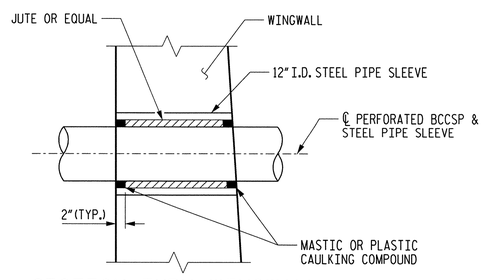

SECTION THRU WINGWALL

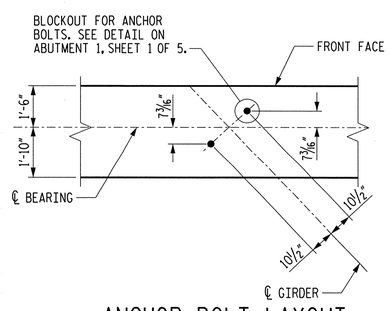

ANCHOR BOLT LAYOUT

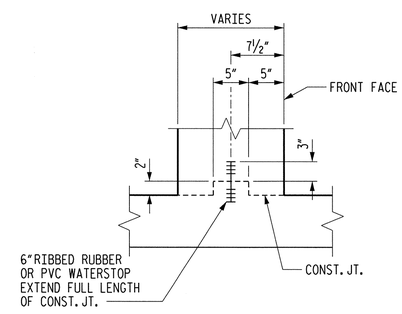

RAISED KEY WITH WATERSTOP

NORFOLK SOUTHERN RR

PROJECT NO. U-0071

DURHAM COUNTY

STATION: POC 64+74.69 -L-

SHEET 1 OF 5 MILEPOST D-85.0

STATE OF NORTH CAROLINA
DEPARTMENT OF TRANSPORTATION
RALEIGH

SUBSTRUCTURE
ABUTMENT 2

MI ENGINEERING
1011 SCHAUB DRIVE, SUITE 100
RALEIGH, NC 27606
(919) 851-6606
FIRM PE NUMBER : P-0671

NORTH CAROLINA PROFESSIONAL SEAL ENGINEER PAUL A. de PAOLI 06-09-14

DWG. NO. 32

REVISIONS						SHEET NO.
NO.	BY:	DATE:	NO.	BY:	DATE:	5-112
1			3			TOTAL SHEETS
2			4			671

DRAWN BY	B.E. LANNING	DATE	APR. 2013
CHECKED BY	P.A. de PAOLI	DATE	APR. 2013
DESIGN ENGINEER OF RECORD	P.A. de PAOLI	DATE	JUNE 2014

PLOT: 6/9/2014 1:09:25 PM bbenning
FILE NAME: P:\NC Projects\M10089 - U-0071 Durham\U-0071\Structures\User\u0071_sd_abut2a_02me.dgn

NOTES

FOR ADDITIONAL NOTES, SEE SHEET 1 OF 5.

FOR SECTION A-A, SEE SHEET 5 OF 5.

FOR SECTIONS B-B AND C-C, SEE SHEET 4 OF 5.

FOR SECTION D-D, SEE SHEET 3 OF 5.

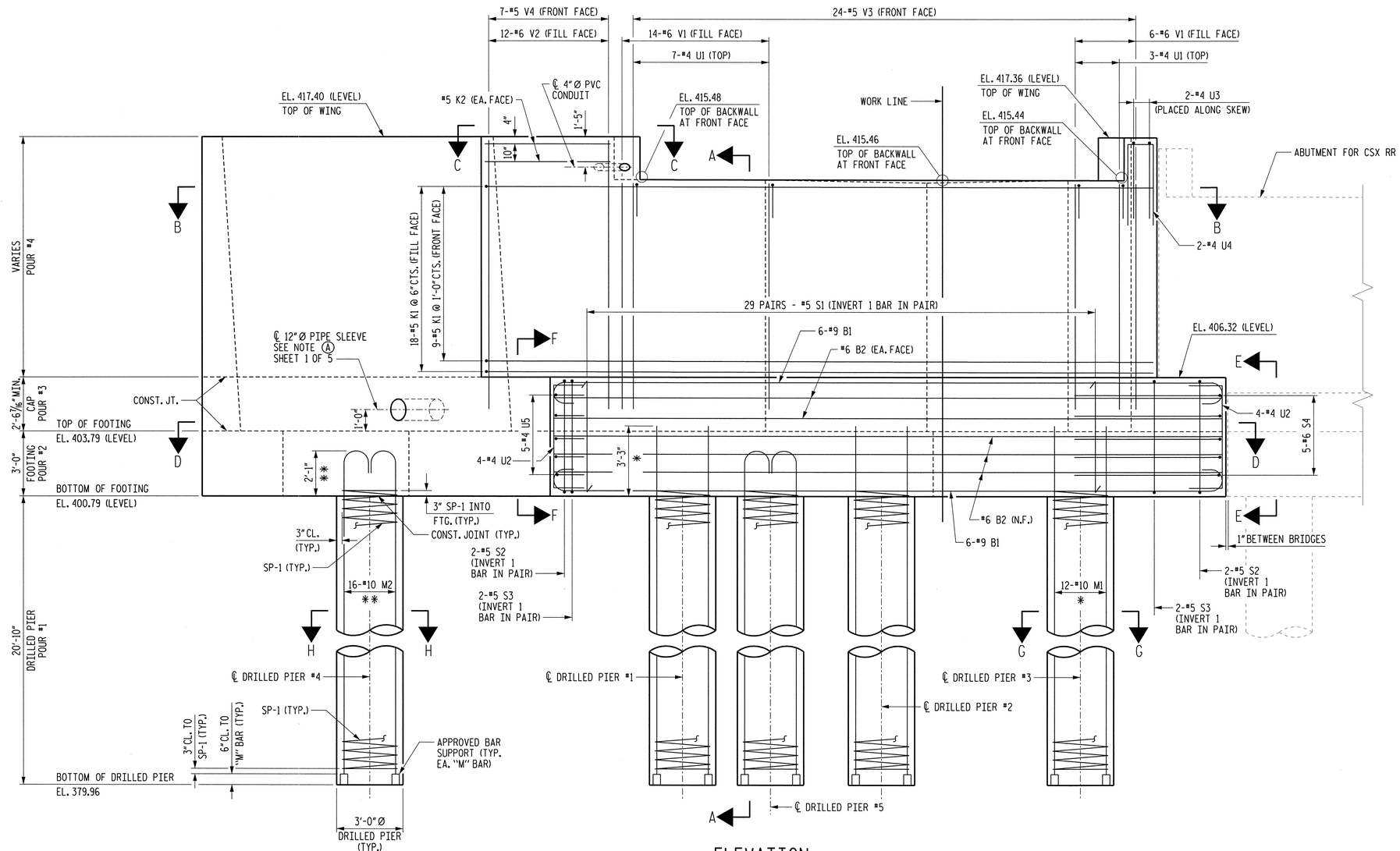

ELEVATION

(DIMENSIONS AND REINFORCING STEEL ARE TYPICAL FOR EACH DRILLED PIER)

FOR REINFORCING BAR SPACING, SEE SECTION VIEWS.

✱ DRILLED PIERS 1-3

✱✱ DRILLED PIERS 4-5

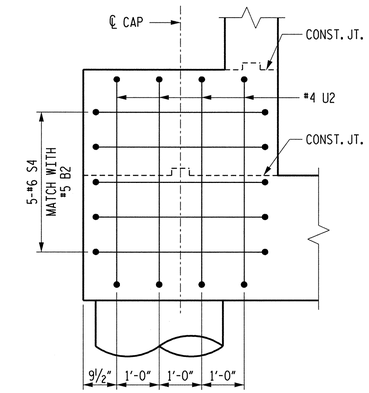

VIEW E-E

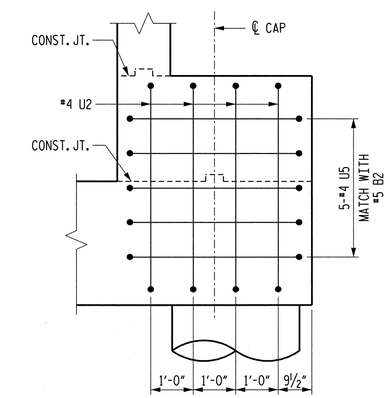

VIEW F-F

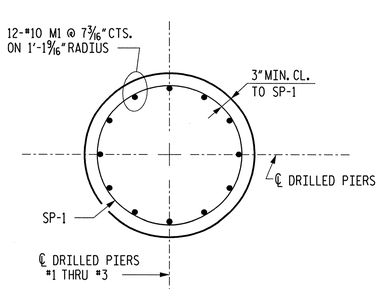

SECTION G-G

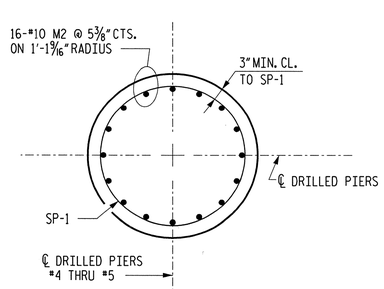

SECTION H-H

NORFOLK SOUTHERN RR

PROJECT NO. U-0071

DURHAM COUNTY

STATION: POC 64+74.69 -L-

SHEET 2 OF 5 MILEPOST D-85.0

STATE OF NORTH CAROLINA
DEPARTMENT OF TRANSPORTATION
RALEIGH

SUBSTRUCTURE
ABUTMENT 2

MI ENGINEERING
1011 SCHAUB DRIVE, SUITE 100
RALEIGH, NC 27606
(919) 851-6606
FIRM PE NUMBER : P-0671

NORTH CAROLINA PROFESSIONAL ENGINEER SEAL PAUL A. de PAOLI 026 06-09-14

DWG. NO. 33

REVISIONS						SHEET NO.
NO.	BY:	DATE:	NO.	BY:	DATE:	5-1/3
1			3			TOTAL SHEETS
2			4			671

DRAWN BY	B.E. LANNING	DATE	APR. 2013
CHECKED BY	P.A. de PAOLI	DATE	APR. 2013
DESIGN ENGINEER OF RECORD	P.A. de PAOLI	DATE	JUNE 2014

PLOT: 6/9/2014 1:09:42 PM blanning

FILE NAME: P:\NC Projects\M10036 - U-0071 Durham\U-0071\Structures\Year\u0071_sd_abu2b_02na.dgn

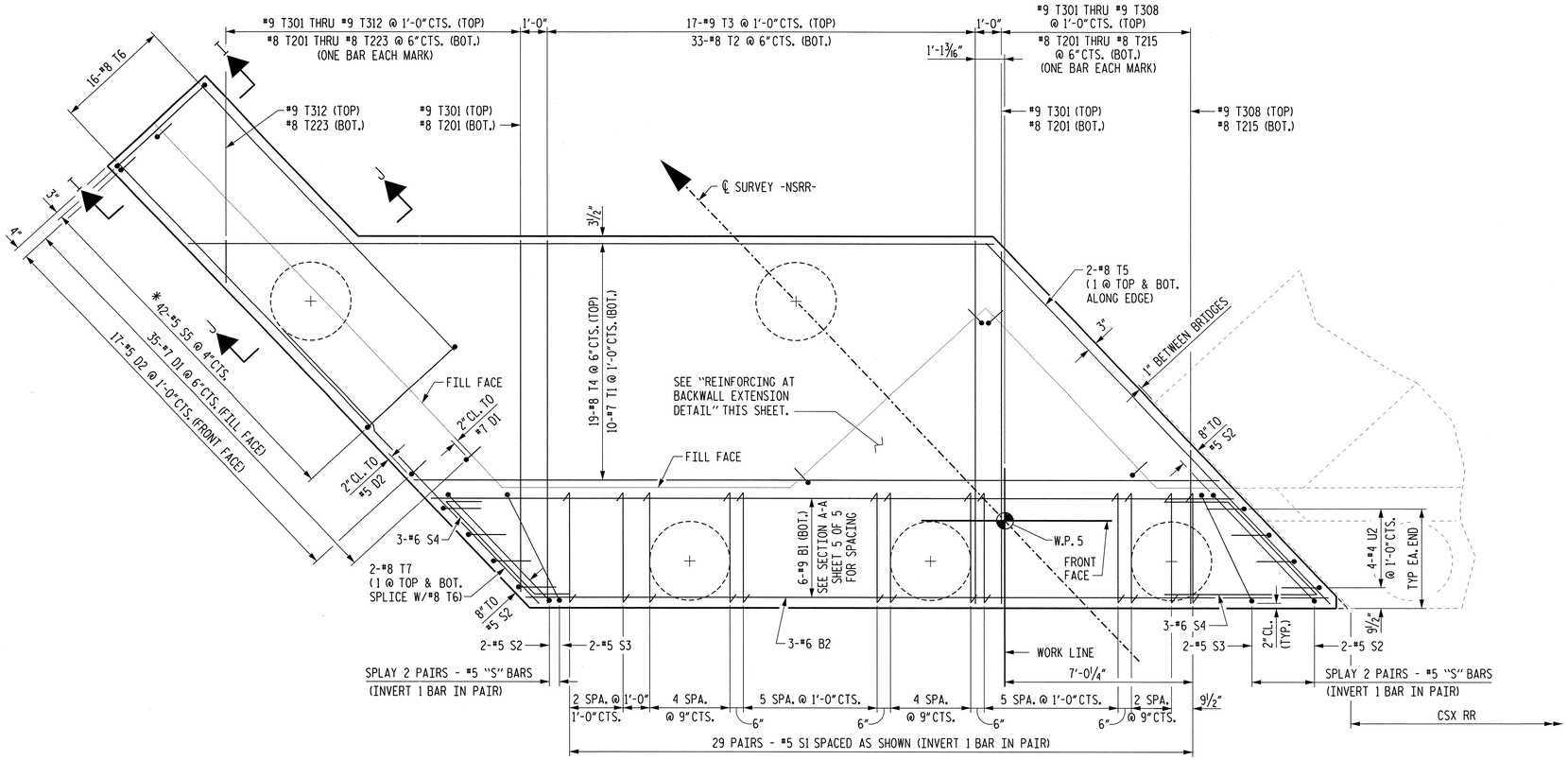

SECTION D-D

(FOOTING PLAN)

* #5 S5 BARS MAY BE SHIFTED SLIGHTLY TO AVOID CONFLICT WITH "D" AND "M" BARS.

NOTES

FOR NOTES, SEE SHEET 1 OF 5.

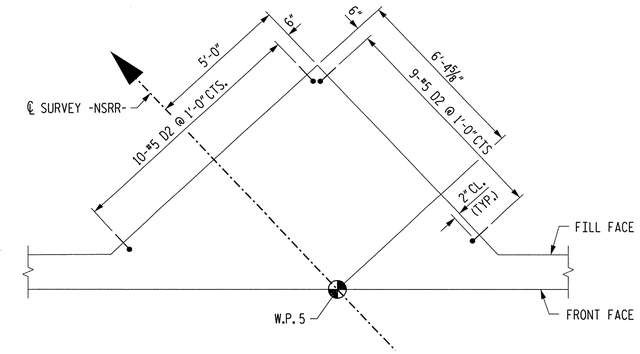

REINFORCING AT BACKWALL EXTENSION

① SEE RAISED KEY WITH WATERSTOP DETAIL ON DWG. NO. 32.

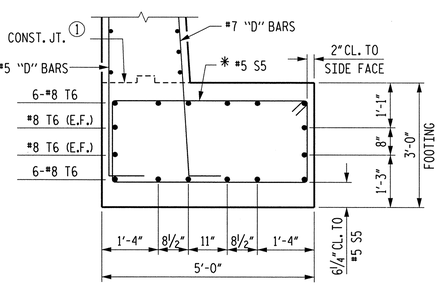

SECTION I-I

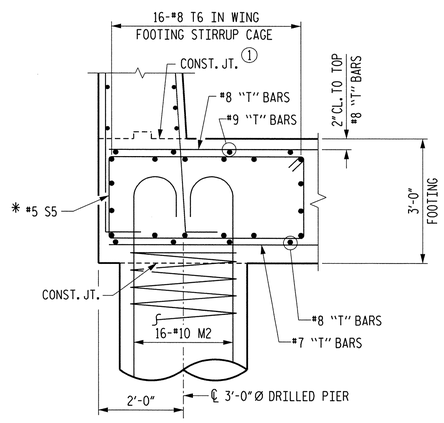

SECTION J-J

SEE SECTION I-I & SECTION A-A (SHEET 5 OF 5) FOR ADDITIONAL DETAILS.

NORFOLK SOUTHERN RR

PROJECT NO. U-0071

DURHAM COUNTY

STATION: POC 64+74.69 -L-

SHEET 3 OF 5 MILEPOST D-85.0

STATE OF NORTH CAROLINA
DEPARTMENT OF TRANSPORTATION
RALEIGH

SUBSTRUCTURE
ABUTMENT 2

MI ENGINEERING
1011 SCHAUB DRIVE, SUITE 100
RALEIGH, NC 27606
(919) 851-6606
FIRM PE NUMBER : P-0671

NORTH CAROLINA PROFESSIONAL SEAL 027199 ENGINEER PAUL A. de PAOLI
06-09-14

DWG. NO. 34

REVISIONS						SHEET NO.
NO.	BY:	DATE:	NO.	BY:	DATE:	5-114
1			3			TOTAL SHEETS
2			4			671

DRAWN BY	B.E. ATKINSON	DATE	APR. 2013
CHECKED BY	P.A. de PAOLI	DATE	APR. 2013
DESIGN ENGINEER OF RECORD	P.A. de PAOLI	DATE	JUNE 2014

PLOT: 6/9/2014 1:09:44 PM bbenning
FILE NAME: P:\NC Projects\M100808 - U-0071 Durham\U-0071\Structures\User\u0071_sd_abu12c_020ru.dgn

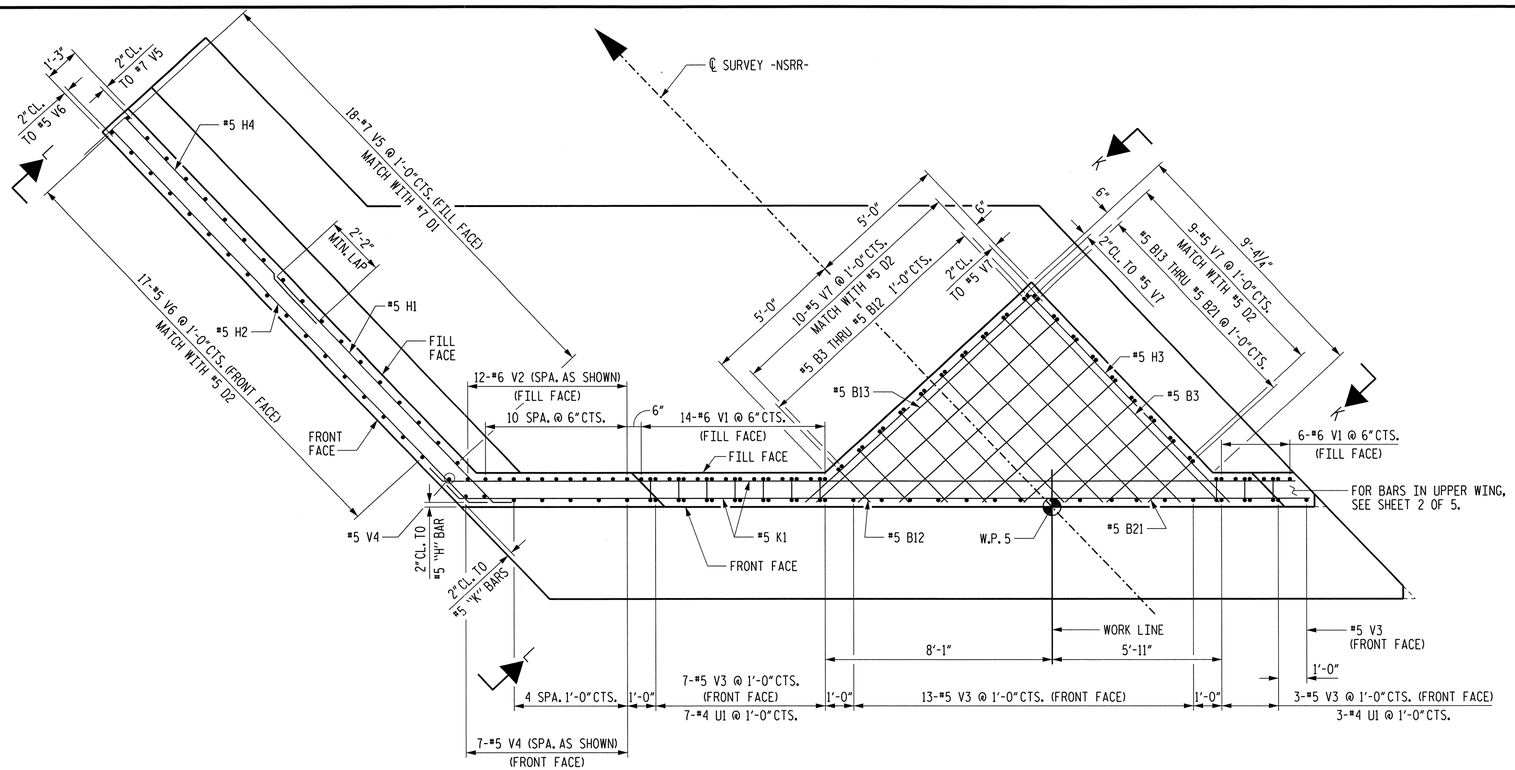

SECTION B-B

NOTES

FOR NOTES, SEE SHEET 1 OF 5.

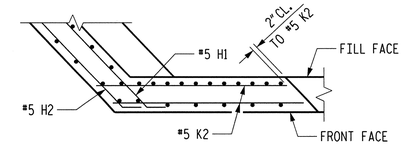

SECTION C-C

FOR "V" BAR SPACING, SEE SECTION B-B

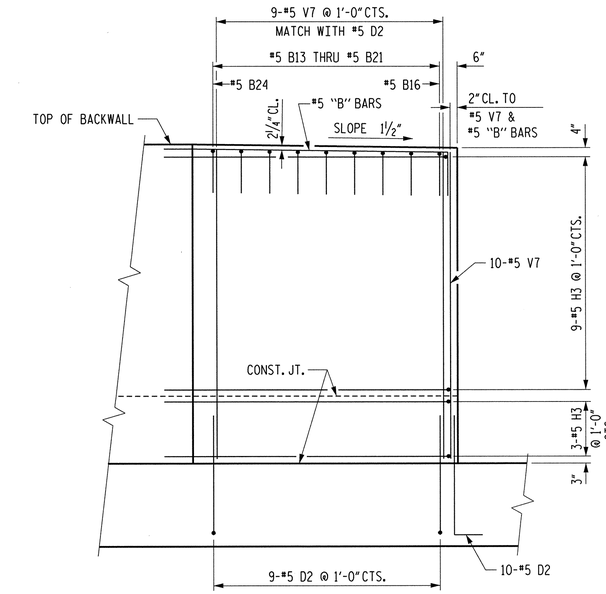

VIEW K-K

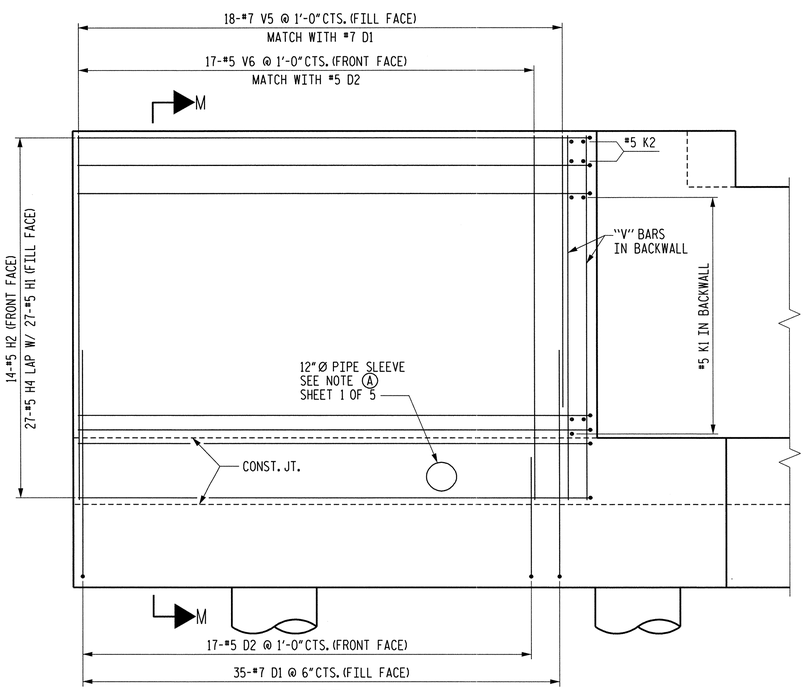

VIEW L-L

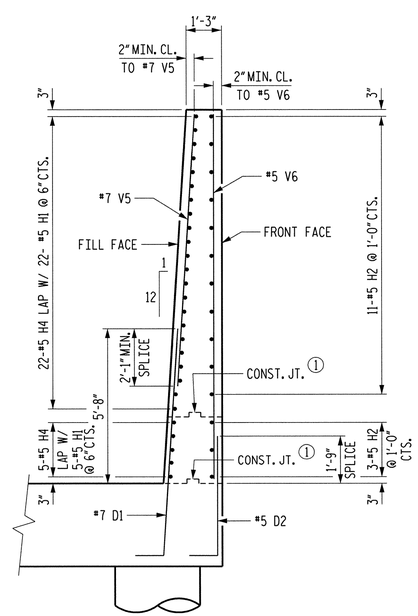

SECTION M-M

1 SEE RAISED KEY WITH WATERSTOP DETAIL ON DWG. NO. 32.

NORFOLK SOUTHERN RR

PROJECT NO. U-0071

DURHAM COUNTY

STATION: POC 64+74.69 -L-

SHEET 4 OF 5 MILEPOST D-85.0

STATE OF NORTH CAROLINA
DEPARTMENT OF TRANSPORTATION
RALEIGH

SUBSTRUCTURE
ABUTMENT 2

MI ENGINEERING
1011 SCHAUB DRIVE, SUITE 100
RALEIGH, NC 27606
(919) 851-6606
FIRM PE NUMBER : P-0671

NORTH CAROLINA PROFESSIONAL SEAL 024799 ENGINEER PAUL A. de PAOLI
06-05-14

DWG. NO. 35

REVISIONS						SHEET NO.
NO.	BY:	DATE:	NO.	BY:	DATE:	5-115
1			3			TOTAL SHEETS
2			4			671

DRAWN BY	B.E. LANNING	DATE	APR. 2013
CHECKED BY	P.A. de PAOLI	DATE	APR. 2013
DESIGN ENGINEER OF RECORD	P.A. de PAOLI	DATE	JUNE 2014

PLOT: 6/9/2014 1:09:46 PM bleanning
FILE NAME: P:\NC Projects\M100200 - U-0071 Durham\U-0071\Structures\User\u0071_sub_abu2bl_02v.dgn

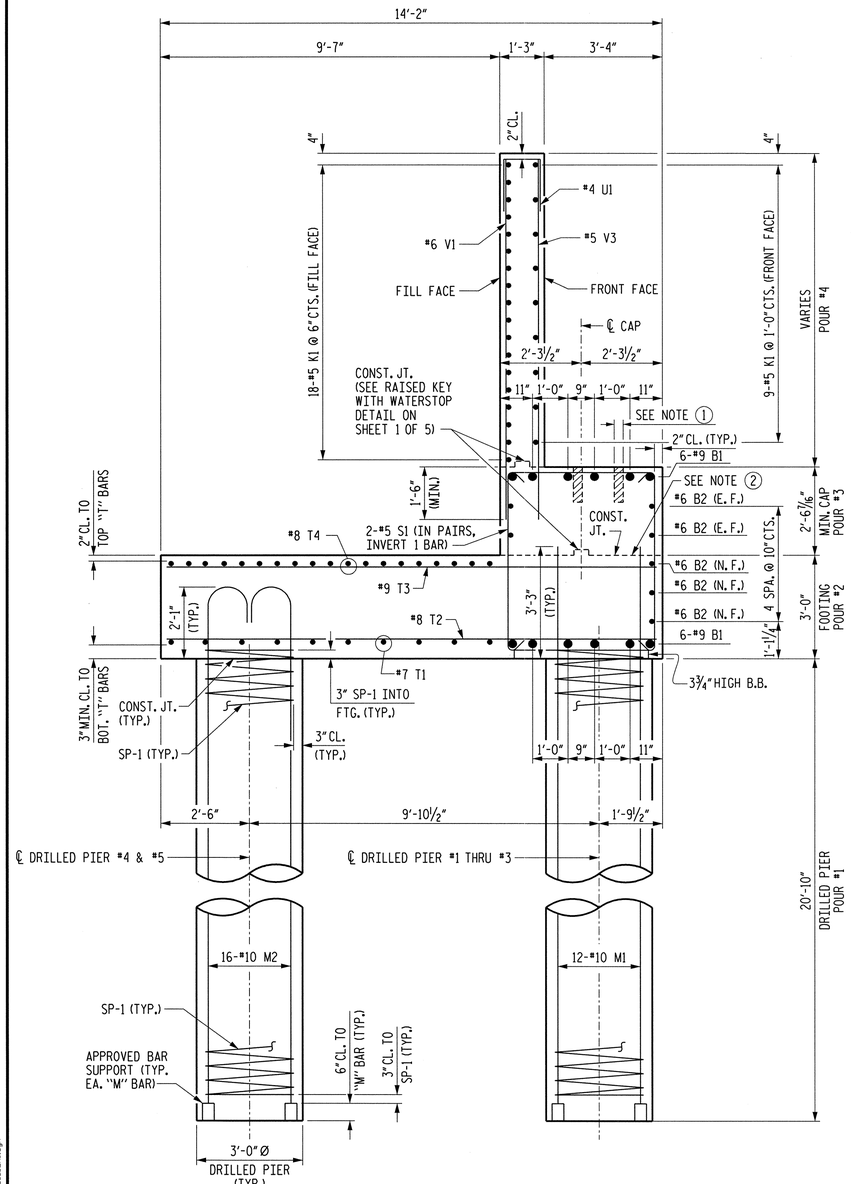

SECTION A-A

NOTES

1. BLOCKOUT FOR ANCHOR BOLTS. SEE DETAIL ON ABUTMENT 1, SHEET 1 OF 5.
2. THE SURFACE OF CONSTRUCTION JOINT AT THE TOP OF FOOTING SHALL BE CLEAN, FREE OF LAITANCE AND ROUGHENED TO ¼" BY RAKING OR OTHER METHOD.
3. E.F. = EACH FACE
   N.F. = NEAR FACE
4. FOR ADDITIONAL NOTES, SEE SHEET 1 OF 5.

BILL OF MATERIAL

ABUTMENT 2

BAR	NO.	SIZE	TYPE	LENGTH	WEIGHT
B1	12	#9	3	32'-5"	1323
B2	7	#6	STR	29'-11"	315
B3	1	#5	7	11'-8"	12
B4	1	#5	7	10'-8"	11
B5	1	#5	7	9'-9"	10
B6	1	#5	7	8'-10"	9
B7	1	#5	7	7'-11"	8
B8	1	#5	7	7'-0"	7
B9	1	#5	7	6'-0"	6
B10	1	#5	7	5'-1"	5
B11	1	#5	7	4'-2"	4
B12	1	#5	7	3'-3"	3
B13	1	#5	7	12'-4"	13
B14	1	#5	7	11'-3"	12
B15	1	#5	7	10'-2"	11
B16	1	#5	7	9'-1"	9
B17	1	#5	7	8'-0"	8
B18	1	#5	7	7'-0"	7
B19	1	#5	7	5'-11"	6
B20	1	#5	7	4'-10"	5
B21	1	#5	7	3'-9"	4
D1	35	#7	5	9'-5"	674
D2	36	#5	7	5'-1"	191
H1	27	#5	5	13'-1"	368
H2	14	#5	5	19'-1"	279
H3	12	#5	7	21'-3"	266
H4	27	#5	STR	10'-0"	282
K1	27	#5	5	30'-9"	866
K2	4	#5	STR	6'-8"	28
M1	36	#10	STR	26'-7"	4118
M2	32	#10	9	26'-10"	3695
S1	58	#5	1	15'-4"	928
S2	4	#5	2	15'-11"	66
S3	4	#5	2	14'-10"	62
S4	5	#6	6	14'-5"	108
S5	42	#5	4	14'-5"	632
T1	10	#7	STR	30'-0"	613
T2	33	#8	STR	13'-10"	1219
T3	17	#9	STR	13'-10"	800
T4	19	#8	STR	30'-0"	1522
T5	2	#8	STR	18'-8"	100
T6	16	#8	STR	14'-0"	598
T7	2	#8	STR	14'-3"	76

BAR	NO.	SIZE	TYPE	LENGTH	WEIGHT
T201	2	#8	STR	13'-4"	71
T202	2	#8	STR	12'-9"	68
T203	2	#8	STR	12'-3"	65
T204	2	#8	STR	11'-8"	62
T205	2	#8	STR	11'-2"	60
T206	2	#8	STR	10'-7"	57
T207	2	#8	STR	10'-1"	54
T208	2	#8	STR	9'-6"	51
T209	2	#8	STR	9'-0"	48
T210	2	#8	STR	8'-5"	45
T211	2	#8	STR	7'-11"	42
T212	2	#8	STR	7'-5"	40
T213	2	#8	STR	6'-11"	37
T214	2	#8	STR	6'-4"	34
T215	2	#8	STR	5'-10"	31
T216	1	#8	STR	5'-3"	14
T217	1	#8	STR	4'-9"	13
T218	1	#8	STR	4'-2"	11
T219	1	#8	STR	3'-8"	10
T220	1	#8	STR	3'-1"	8
T221	1	#8	STR	2'-7"	7
T222	1	#8	STR	2'-1"	6
T223	1	#8	STR	1'-7"	4
T301	2	#9	STR	13'-4"	91
T302	2	#9	STR	12'-3"	83
T303	2	#9	STR	11'-2"	76
T304	2	#9	STR	10'-1"	69
T305	2	#9	STR	9'-0"	61
T306	2	#9	STR	7'-11"	54
T307	2	#9	STR	6'-11"	47
T308	2	#9	STR	5'-10"	40
T309	1	#9	STR	4'-9"	16
T310	1	#9	STR	3'-8"	12
T311	1	#9	STR	2'-7"	9
T312	1	#9	STR	1'-7"	5
U1	10	#4	2	3'-11"	26
U2	8	#4	2	7'-11"	42
U3	2	#4	2	8'-3"	11
U4	2	#4	2	7'-11"	11
U5	5	#4	6	8'-7"	29
V1	20	#6	STR	10'-6"	315
V2	12	#6	STR	12'-6"	225
V3	24	#5	STR	10'-6"	263
V4	8	#5	STR	12'-6"	104
V5	18	#7	STR	9'-11"	365
V6	17	#5	STR	13'-3"	235
V7	19	#5	STR	11'-1"	220
REINFORCING STEEL					22,526 LBS.

BAR	NO.	SIZE	TYPE	LENGTH	WEIGHT
SP-1	5	*	8	399'-0"	2081
SPIRAL COLUMN REINFORCING STEEL					2,081 LBS.

* THE SP-1 SPIRAL REINFORCING STEEL SHALL BE W31 OR D-31 COLD DRAWN WIRE OR #5 PLAIN OR DEFORMED BAR.

CLASS AA CONCRETE (AS MODIFIED BY RAILWAY)		
POUR #2 (FOOTING)	51.5	C.Y.
POUR #3 (CAP)	21.4	C.Y.
POUR #4 (BACKWALL & WINGWALLS)	41.8	C.Y.
TOTAL	114.7	C.Y.

BAR TYPES

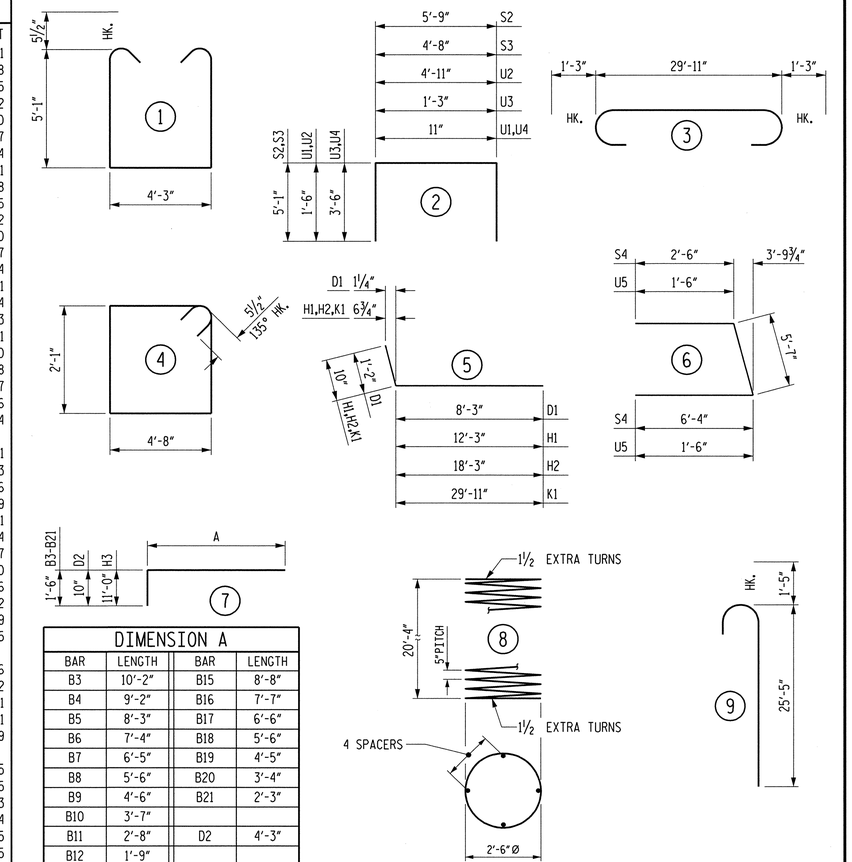

DIMENSION A			
BAR	LENGTH	BAR	LENGTH
B3	10'-2"	B15	8'-8"
B4	9'-2"	B16	7'-7"
B5	8'-3"	B17	6'-6"
B6	7'-4"	B18	5'-6"
B7	6'-5"	B19	4'-5"
B8	5'-6"	B20	3'-4"
B9	4'-6"	B21	2'-3"
B10	3'-7"		
B11	2'-8"	D2	4'-3"
B12	1'-9"		
B13	10'-10"	H3	10'-3"
B14	9'-9"		

ALL BAR DIMENSIONS ARE OUT TO OUT.

3'-0"Ø DRILLED PIER		
DRILLED PIER CONCRETE (AS MODIFIED BY RAILWAY) POUR 1 (DRILLED PIER)	27.3	C.Y.
3'-0"Ø LFD DRILLED PIER IN SOIL	27.2	LIN. FT.
3'-0"Ø LFD DRILLED PIER NOT IN SOIL	77.0	LIN. FT.
CSL TESTING	5	EACH
CSL TUBES	450.0	LIN. FT.

NORFOLK SOUTHERN RR

PROJECT NO. U-0071

DURHAM COUNTY

STATION: POC 64+74.69 -L-

SHEET 5 OF 5 MILEPOST D-85.0

STATE OF NORTH CAROLINA
DEPARTMENT OF TRANSPORTATION
RALEIGH

SUBSTRUCTURE
ABUTMENT 2

MI ENGINEERING
1011 SCHAUB DRIVE, SUITE 100
RALEIGH, NC 27606
(919) 851-6606
FIRM PE NUMBER : P-0671

NORTH CAROLINA PROFESSIONAL SEAL 021199 ENGINEER PAUL A. de PAOLI
06.09.14

DWG. NO. 36

REVISIONS							SHEET NO.
NO.	BY:	DATE:	NO.	BY:	DATE:		5-116
1			3				TOTAL SHEETS
2			4				671

DRAWN BY B.E. LANNING DATE APR. 2013
CHECKED BY P.A. de PAOLI DATE APR. 2013
DESIGN ENGINEER OF RECORD P.A. de PAOLI DATE JUNE 2014

PLOT: 6/9/2014 1:09:46 PM blanning
FILE NAME: P:\NC Projects\M100289 - U-0071 Durham\U-0071\Structures\User\U0071_sd_abu02e_020ne.dgn

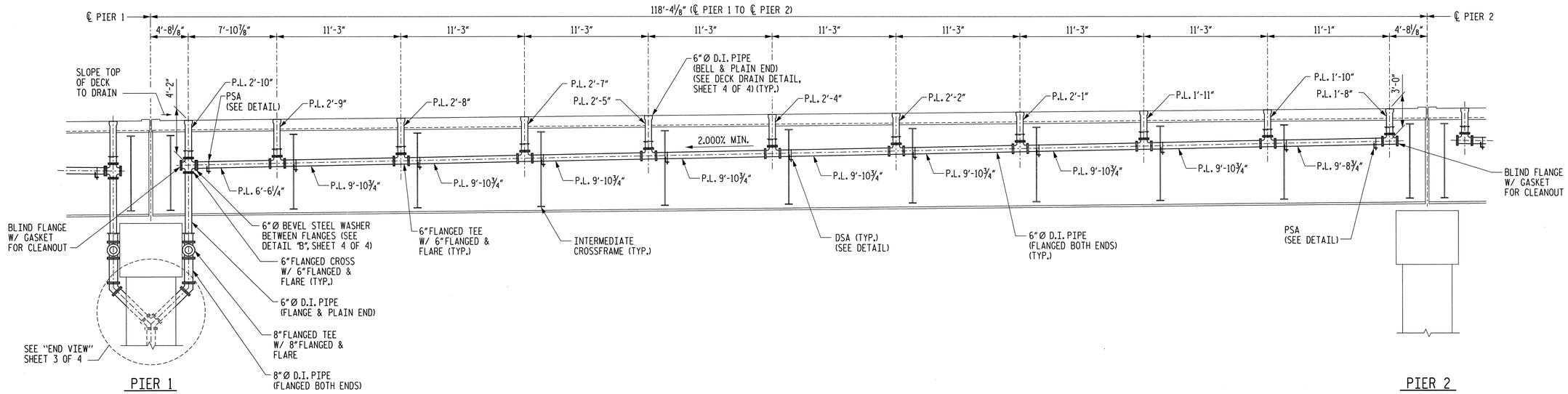

DRAINAGE DETAILS - SPAN B

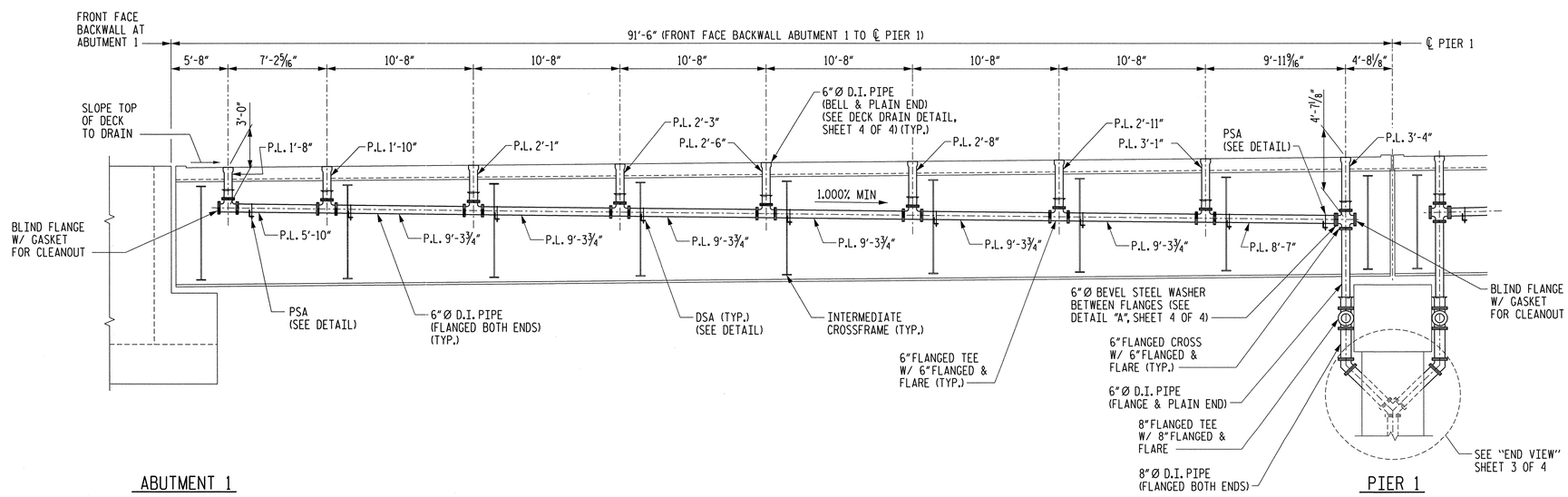

DRAINAGE DETAILS - SPAN A

NOTES

ALL DIMENSIONS ARE SUBJECT TO ADJUSTMENT TO FIT MEASUREMENTS TAKEN AFTER THE DECKS HAVE BEEN POURED.

FOR PSA AND DSA DETAILS, SEE STRUCTURAL STEEL DETAILS, SHEET 2 OF 2.

FOR STRUCTURE DRAINAGE DETAIL NOTES, SEE SHEET 4 OF 4.

P.L. = PIPE LENGTH
PSA = PIPE SUPPORT ANGLE
DSA = DIAPHRAGM SUPPORT ANGLE

NORFOLK SOUTHERN RR

PROJECT NO. U-0071

DURHAM COUNTY

STATION: POC 64+74.69 -L-

SHEET 1 OF 4 MILEPOST D-85.0

STATE OF NORTH CAROLINA
DEPARTMENT OF TRANSPORTATION
RALEIGH

STRUCTURE DRAINAGE DETAILS
SPANS A & B

REVISIONS						SHEET NO.
NO.	BY:	DATE:	NO.	BY:	DATE:	S-117
1			3			TOTAL SHEETS
2			4			671

MI ENGINEERING
1011 SCHAUB DRIVE, SUITE 100
RALEIGH, NC 27606
(919) 851-6606
FIRM PE NUMBER : P-0671

NORTH CAROLINA PROFESSIONAL SEAL 037199 ENGINEER PAUL A. de PAOLI
06.09.14

DWG. NO. 37

DRAWN BY	B.E. ATKINSON	DATE	NOV. 2011
CHECKED BY	P.A. de PAOLI	DATE	JAN. 2012
DESIGN ENGINEER OF RECORD	P.A. de PAOLI	DATE	JUNE 2014

PLOT: 6/9/2014 1:29:50 PM blanning
FILE NAME: P:\NC Projects\M10008 - U-0071 Durham\U-0071\Structures\nsrr\u0071_sd_drn1_02ns.dgn

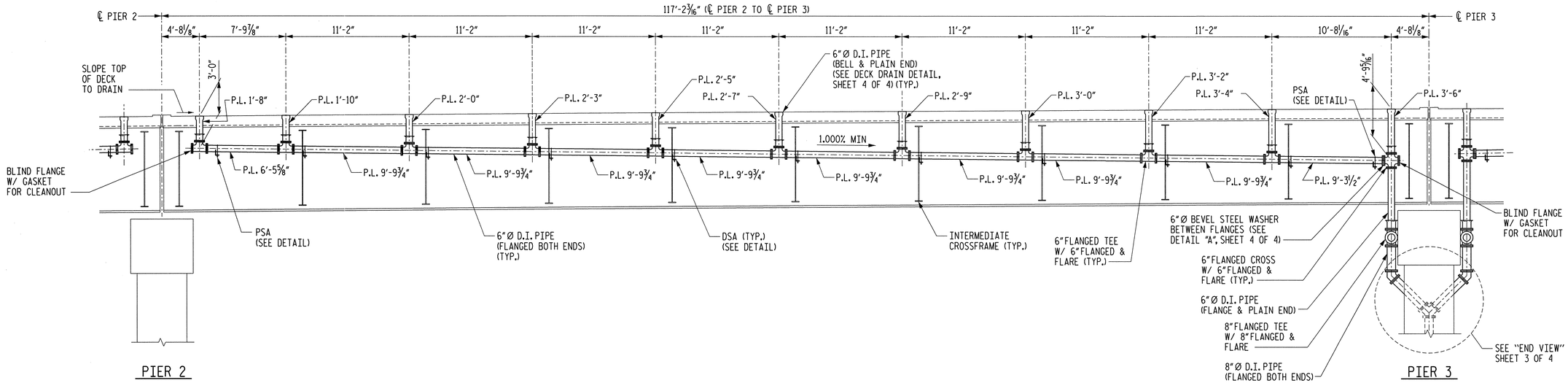

DRAINAGE DETAILS - SPAN C

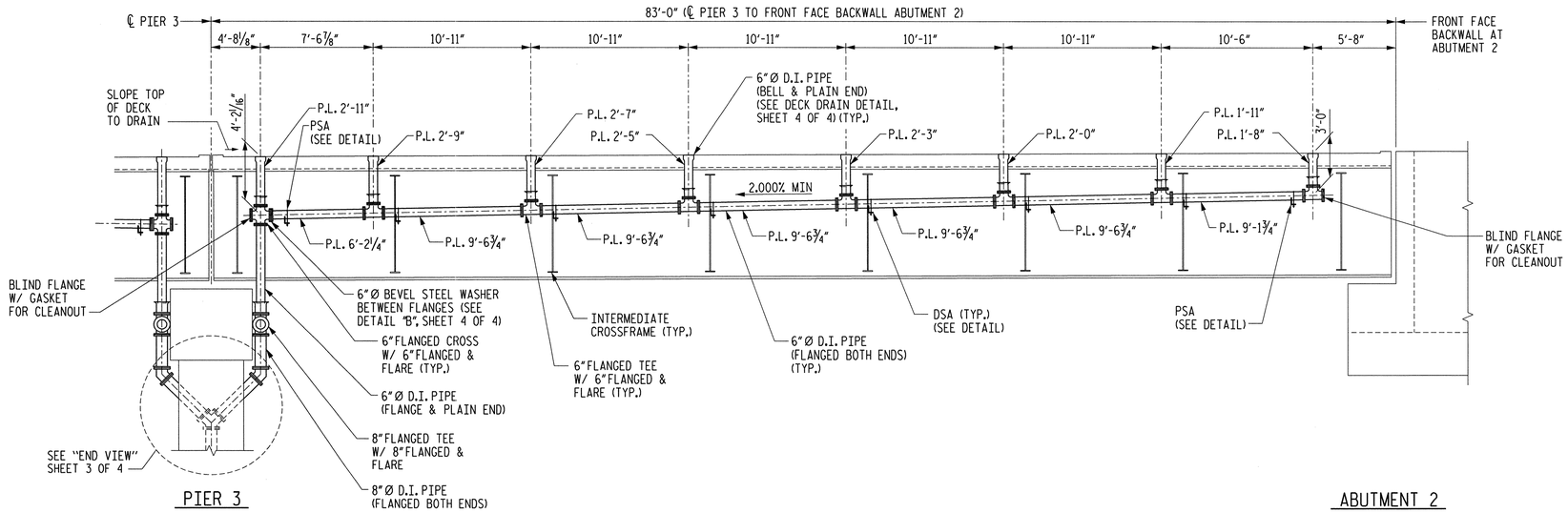

DRAINAGE DETAILS - SPAN D

NOTES

ALL DIMENSIONS ARE SUBJECT TO ADJUSTMENT TO FIT MEASUREMENTS TAKEN AFTER THE DECKS HAVE BEEN POURED.

FOR PSA AND DSA DETAILS, SEE STRUCTURAL STEEL DETAILS, SHEET 2 OF 2.

FOR STRUCTURE DRAINAGE DETAIL NOTES, SEE SHEET 4 OF 4.

P.L. = PIPE LENGTH
PSA = PIPE SUPPORT ANGLE
DSA = DIAPHRAGM SUPPORT ANGLE

NORFOLK SOUTHERN RR

PROJECT NO. U-0071

DURHAM COUNTY

STATION: POC 64+74.69 -L-

SHEET 2 OF 4 MILEPOST D-85.0

STATE OF NORTH CAROLINA
DEPARTMENT OF TRANSPORTATION
RALEIGH

STRUCTURE DRAINAGE DETAILS
SPANS C & D

MI ENGINEERING
1011 SCHAUB DRIVE, SUITE 100
RALEIGH, NC 27606
(919) 851-6606
FIRM PE NUMBER : P-0671

NORTH CAROLINA PROFESSIONAL ENGINEER SEAL 027799 PAUL A. de PAOLI 06.09.14

DWG. NO. 38

REVISIONS						SHEET NO.
NO.	BY:	DATE:	NO.	BY:	DATE:	5-118
1			3			TOTAL SHEETS
2			4			671

DRAWN BY B.E. ATKINSON DATE NOV. 2011
CHECKED BY P.A. de PAOLI DATE JAN. 2012
DESIGN ENGINEER OF RECORD P.A. de PAOLI DATE JUNE 2014

PLOT: 6/9/2014 1:37:44 PM blanning
FILE NAME: P:\NC Projects\M10008 - U-0071 Durham\U-0071\Structures\nsrr\u0071_sd_drn2_02ns.dgn

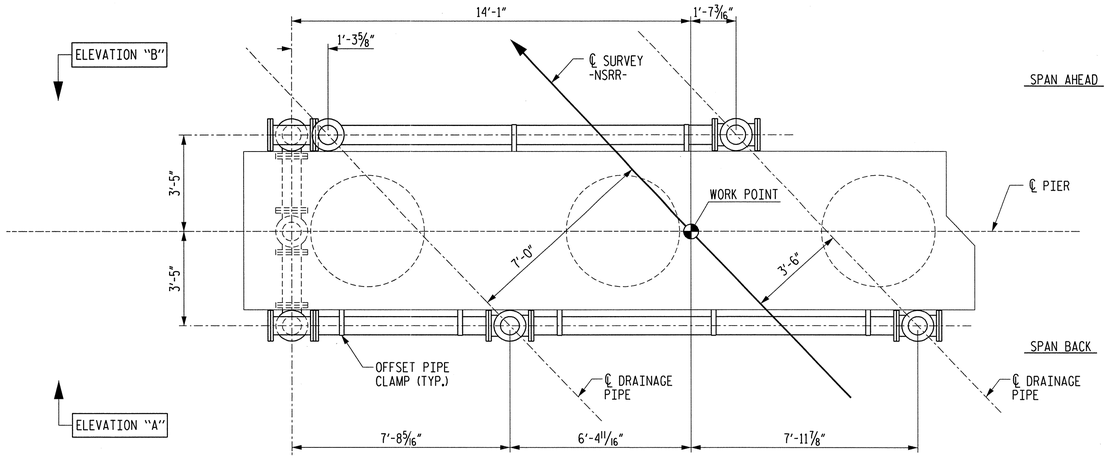

PLAN

NOTES

ALL DIMENSIONS ARE SUBJECT TO ADJUSTMENT TO FIT MEASUREMENTS TAKEN AFTER DECKS HAVE BEEN POURED.

FOR STRUCTURE DRAINAGE SYSTEM NOTES, SEE SHEET 4 OF 4.

FOR ELEVATION "B", SEE SHEET 4 OF 4.

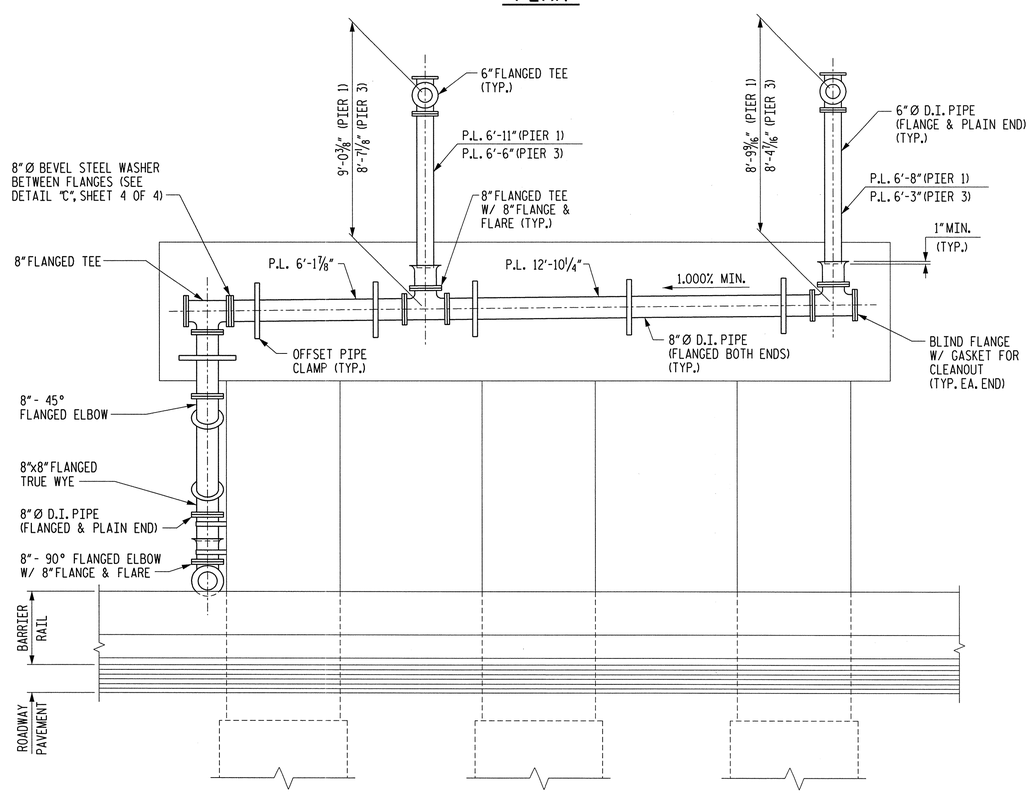

ELEVATION "A"

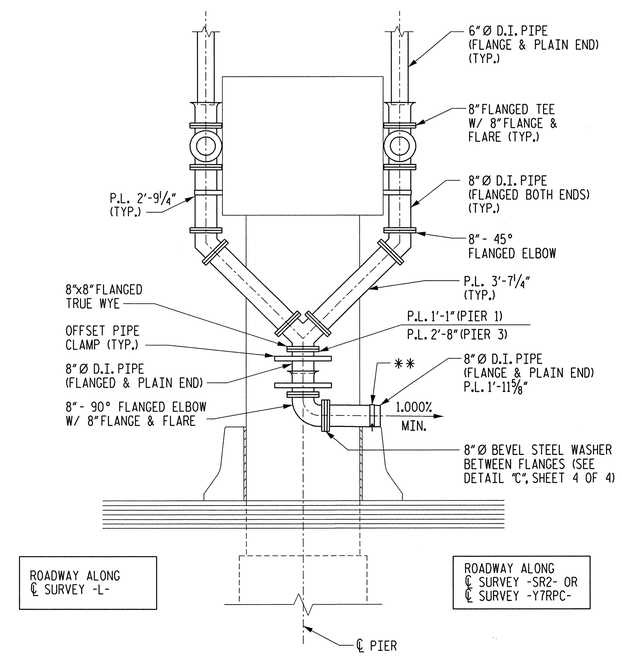

END VIEW

** SECURE PIPE TO BARRIER RAIL WITH 1/8"X 2" WIDE GALVANIZED STRAP AND 5/8" DIA. X 3" LONG STAINLESS STEEL EXPANSION BOLT

NORFOLK SOUTHERN RR

PROJECT NO. U-0071

DURHAM COUNTY

STATION: POC 64+74.69 -L-

SHEET 3 OF 4 MILEPOST D-85.0

STATE OF NORTH CAROLINA
DEPARTMENT OF TRANSPORTATION
RALEIGH

STRUCTURE DRAINAGE SYSTEM AT PIERS 1 & 3

MI ENGINEERING
1011 SCHAUB DRIVE, SUITE 100
RALEIGH, NC 27606
(919) 851-6606
FIRM PE NUMBER : P-0671

NORTH CAROLINA PROFESSIONAL SEAL 027193 ENGINEER PAUL A. de PAOLI
06-09-14

DWG. NO. 39

REVISIONS						SHEET NO.
NO.	BY:	DATE:	NO.	BY:	DATE:	5-119
1			3			TOTAL SHEETS
2			4			671

DRAWN BY	B.E. ATKINSON	DATE	NOV. 2011
CHECKED BY	P.A. de PAOLI	DATE	MAY 2012
DESIGN ENGINEER OF RECORD	P.A. de PAOLI	DATE	JUNE 2014

PLOT: 6/9/2014 1:40:54 PM bbenning
FILE NAME: P:\NC Projects\M100B0 - U-0071 Durham\U-0071\Structures\Vnorm\U071_sd_drn3_B2nw.dgn

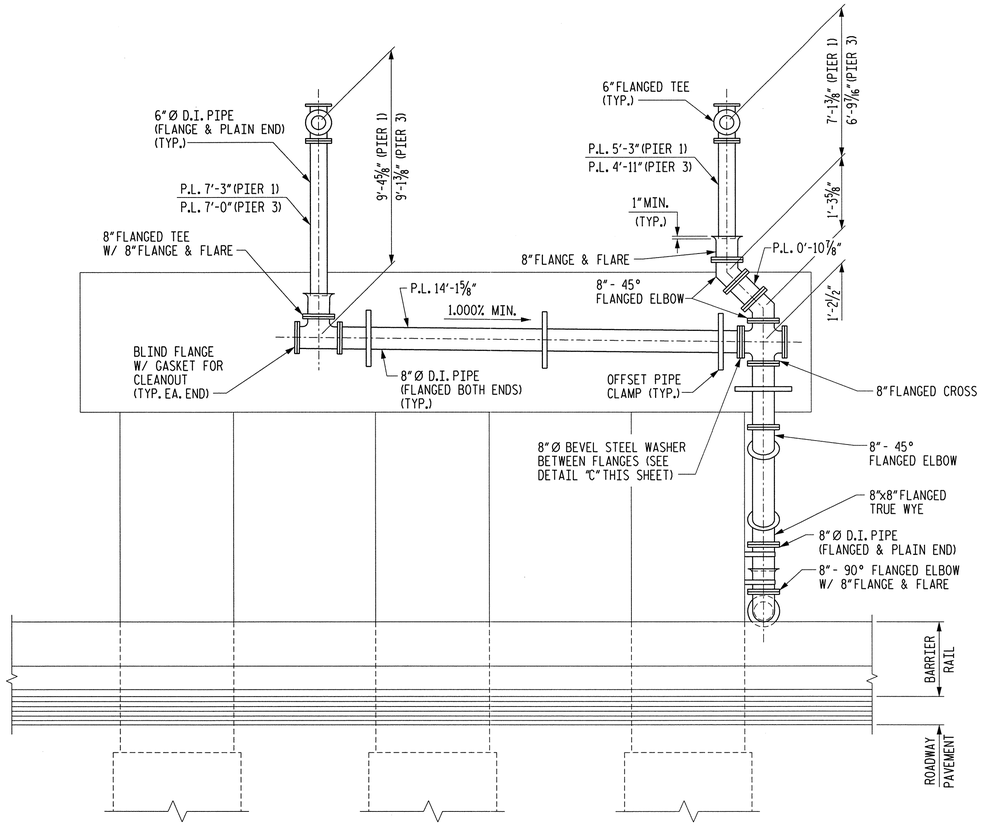

ELEVATION "B"

ALL DIMENSIONS ARE SUBJECT TO ADJUSTMENT TO FIT MEASUREMENTS TAKEN AFTER DECKS HAVE BEEN POURED.

FOR END VIEW, SEE SHEET 3 OF 4.

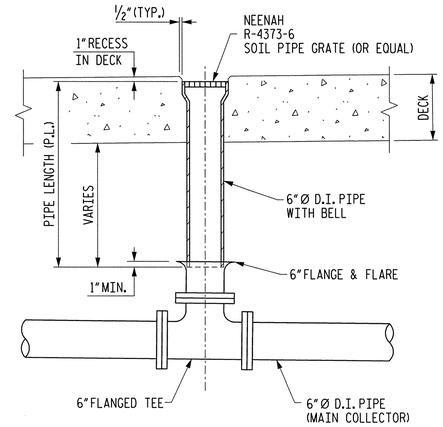

DECK DRAIN DETAIL

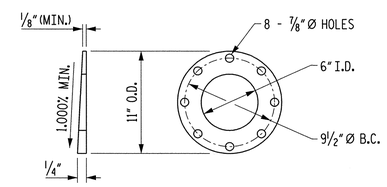

DETAIL "A"

BEVELED STEEL WASHER FOR 6" I.D. FLANGED PIPE
(4 REQ'D.)

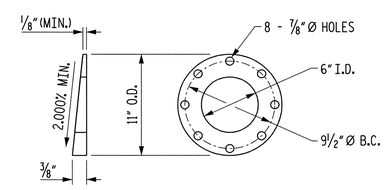

DETAIL "B"

BEVELED STEEL WASHER FOR 6" I.D. FLANGED PIPE
(4 REQ'D.)

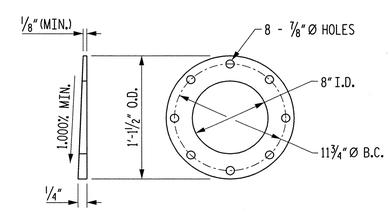

DETAIL "C"

BEVELED STEEL WASHER FOR 8" I.D. FLANGED PIPE
(6 REQ'D.)

NOTES

ALL PIPE, TEES, BELLS AND BENDS SHALL BE CLASS 53 DUCTILE IRON.

ALL BENDS TO BE SHORT RADIUS, INCLUDING FLANGE & FLARE BENDS.

LAYOUT BASED ON DIMENSIONS GIVEN IN THE PIPE MANUAL OF THE AMERICAN CAST IRON PIPE COMPANY.

FOR LOCATIONS AND DESIGNATIONS OF DSA & PSA, SEE FRAMING PLANS.

PIPE LENGTH SHALL ALLOW FOR ⅛" THICK GASKETS TO BE USED AT ALL BOLTED FLANGE CONNECTIONS.

MAKE FINAL PIPE ALIGNMENT AND TIGHTEN U-BOLTS AFTER RAILROAD TRACK HAS BEEN LAID ACROSS THE BRIDGE.

PAYMENT FOR ALL MATERIALS, FABRICATION, INSTALLATION AND ADJUSTMENTS RELATED TO STRUCTURE DRAINAGE SHALL BE INCLUDED IN THE CONTRACT LUMP SUM PRICE BID FOR "STRUCTURE DRAINAGE SYSTEM". NO SEPARATE MEASUREMENT OR PAYMENT SHALL BE MADE FOR ANY COMPONENT OF THE STRUCTURE DRAINAGE SYSTEM INCLUDING, BUT NOT LIMITED TO:

- DUCTILE IRON PIPE AND FITTINGS
- CAST IRON GRATES
- GASKETS AND PVC OR NEOPRENE COATED STRIPS
- STEEL SUPPORT ANGLES AND PLATES
- U-BOLTS AND H.S. BOLTS, WASHERS, AND NUTS
- OFFSET PIPE CLAMPS AND EXPANSION ANCHOR BOLTS

PROVIDE PVC OR NEOPRENE-COATED STRIPS, EPOXY-CEMENTED TO THE U-BOLT OR PIPE FOR STRAY CURRENT PROTECTION.

THE OUTSIDE COAT FOR THE DUCTILE IRON PIPE SHALL BE A SHOP PRIME COAT OF INORGANIC ZINC PRIMER AND A FINISH (FIELD) COAT OF VINYL PAINT AS SPECIFIED FOR THE STRUCTURAL STEEL.

FOR STRUCTURE DRAINAGE SYSTEM, SEE SPECIAL PROVISIONS.

ALL HARDWARE FOR DRAINAGE SYSTEM SHALL BE MECHANICALLY GALVANIZED.

STRUCTURE DRAINAGE SYSTEM ESTIMATED QUANTITIES

ITEM	QUANTITY	UNIT
SOIL PIPE GRATES, "NEENAH" R-4373-6 GRATE OR EQUAL	78	EA
6" I.D. DUCTILE IRON PIPE, CLASS 53 (BELL & PLAIN END)	190	FT
6" I.D. DUCTILE IRON PIPE, CLASS 53 (FLANGE BOTH ENDS)	647	FT
6" I.D. DUCTILE IRON PIPE, CLASS 53 (FLANGE & PLAIN END)	51	FT
6" I.D. DUCTILE IRON PIPE FLANGED FITTINGS, 250 PSI P.R.	11510	LBS
6" I.D. BEVELED STEEL WASHERS	8	EA
6" I.D. DUCTILE IRON BLIND FLANGES	400	LBS
8" I.D. DUCTILE IRON PIPE, CLASS 53 (FLANGE BOTH ENDS)	94	FT
8" I.D. DUCTILE IRON PIPE, CLASS 53 (FLANGE & PLAIN END)	8	FT
8" I.D. DUCTILE IRON PIPE FLANGED FITTINGS, 250 PSI P.R.	3600	LBS
8" I.D. BEVELED STEEL WASHERS	6	EA
8" I.D. DUCTILE IRON BLIND FLANGES	320	LBS
8" I.D. OFFSET PIPE CLAMPS	24	EA
DIAPHRAGM SUPPORT ANGLES (DSA) *	62	EA
PIPE SUPPORT ANGLES (PSA) *	16	EA

* INCLUDES U-BOLTS, ANGLES, NUTS, BOLTS, WASHERS AND PLATES.

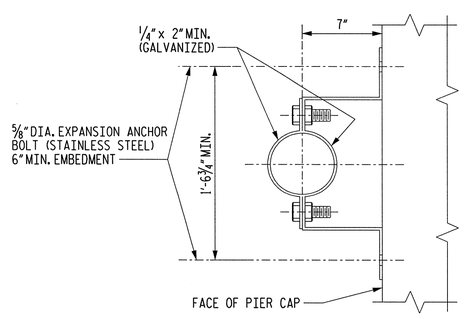

CLAMP ALONG FACE OF CAP

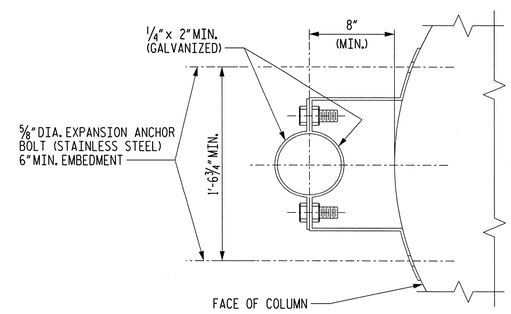

CLAMP ALONG FACE OF COLUMN

OFFSET PIPE CLAMPS

NORFOLK SOUTHERN RR

PROJECT NO. U-0071

DURHAM COUNTY

STATION: POC 64+74.69 -L-

SHEET 4 OF 4 MILEPOST D-85.0

STATE OF NORTH CAROLINA
DEPARTMENT OF TRANSPORTATION
RALEIGH

STRUCTURE DRAINAGE SYSTEM DETAILS

MI ENGINEERING
1011 SCHAUB DRIVE, SUITE 100
RALEIGH, NC 27606
(919) 851-6606
FIRM PE NUMBER : P-0671

NORTH CAROLINA PROFESSIONAL ENGINEER SEAL 022499 PAUL A. de PAOLI
06-09-14

DWG. NO. 40

REVISIONS						SHEET NO.
NO.	BY:	DATE:	NO.	BY:	DATE:	S-120
1			3			TOTAL SHEETS
2			4			671

DRAWN BY B.E. ATKINSON DATE NOV. 2011
CHECKED BY P.A. de PAOLI DATE MAY 2012
DESIGN ENGINEER OF RECORD P.A. de PAOLI DATE JUNE 2014

PLOT: 6/9/2014 1:45:26 PM bbenning
FILE NAME: P:\NC Projects\U0071\Durham\U-0071_Durham_str_sht_dtl_S-120.dgn

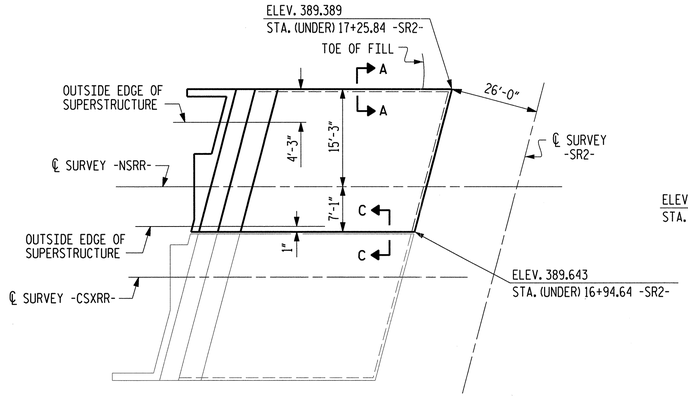

ABUTMENT 1

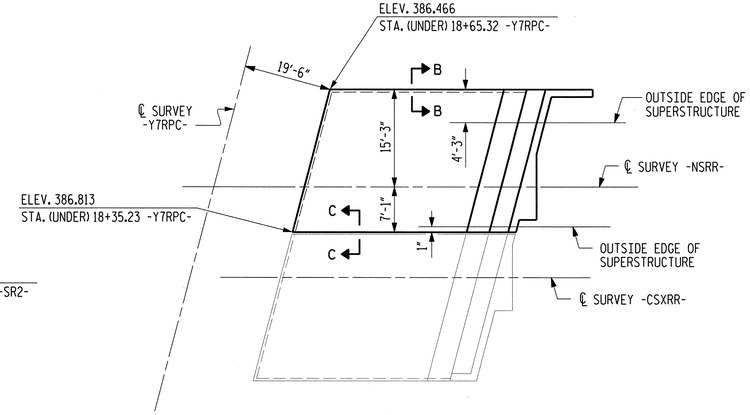

ABUTMENT 2

PLAN

GENERAL NOTES

SLOPE PROTECTION SHALL BE PLACED UNDER THE ENDS OF THE BRIDGE AS SHOWN IN THE DETAILS. MEASUREMENT AND PAYMENT SHALL BE AS PRESCRIBED IN SECTION 462 OF THE STANDARD SPECIFICATIONS. FOR BERM WIDTH, SEE GENERAL DRAWING.

SLOPE PROTECTION SHALL CONSIST OF 4" POURED-IN-PLACE CONCRETE PAVING AS SHOWN IN THE DETAILS ON THIS SHEET. CONCRETE SHALL BE CLASS "B". THE CONCRETE SURFACE SHALL BE FLOATED WITH A WOODEN FLOAT AND FINISHED. WELDED WIRE FABRIC REINFORCING SHALL BE 6 X 6 - W1.4 X W1.4, 60" WIDE. SLOPE PROTECTION SHALL BE POURED IN 5' STRIPS AS SHOWN IN THE "POURING DETAIL" WITH 2'-0" LONG #4 BARS PLACED ALONG THE SLOPE BETWEEN STRIPS AT 1'-6" MAXIMUM SPACING. SLOPE PROTECTION MAY BE POURED IN ALTERNATE 4' AND 5' STRIPS AS SHOWN IN THE "OPTIONAL POURING DETAIL" WITH ADJACENT RUNS OF WELDED WIRE FABRIC LAPPING AT LEAST 6". THE COST OF THE WELDED WIRE FABRIC AND #4 BARS, IF USED, SHALL BE INCLUDED IN THE CONTRACT UNIT PRICE BID PER SQUARE YARD FOR SLOPE PROTECTION.

BRIDGE @ STA. 64+74.69 -L-	4" INCH SLOPE PROTECTION	* WELDED WIRE FABRIC 60 INCHES WIDE
	SQUARE YARDS	APPROX. L.F.
ABUTMENT 1	73	131
ABUTMENT 2	115	207

* QUANTITY SHOWN IS BASED ON 5' POURS.

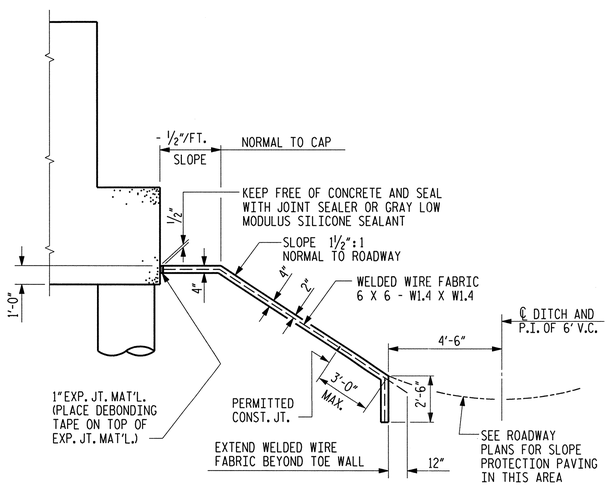

SECTION ALONG ℄ SURVEY -NSRR- AT ABUTMENT 1

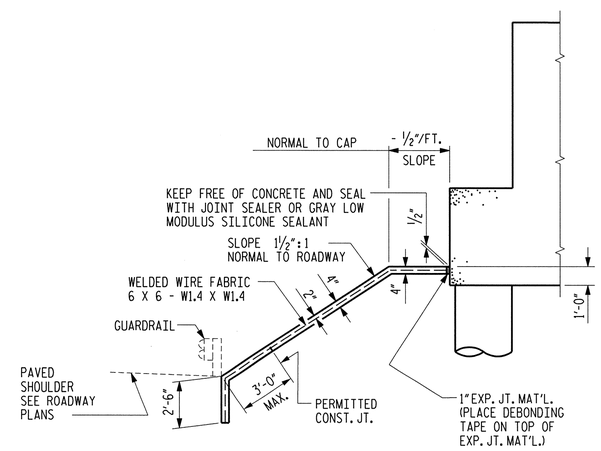

SECTION ALONG ℄ SURVEY -NSRR- AT ABUTMENT 2

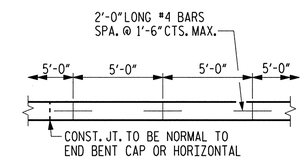

STRIP WIDTHS MAY VARY IN CURVED PORTION.

POURING DETAIL

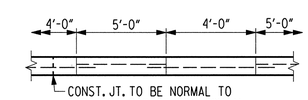

POUR A 4'-0" STRIP FIRST. STRIP WIDTHS MAY VARY IN CURVED PORTION.

OPTIONAL POURING DETAIL

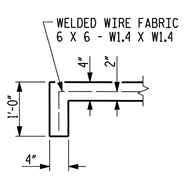

SECTION A-A

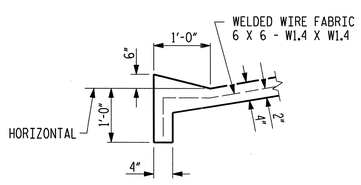

SECTION B-B

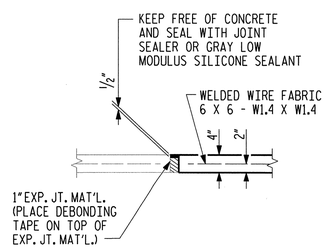

SECTION C-C

NORFOLK SOUTHERN RR

PROJECT NO. U-0071

DURHAM COUNTY

STATION: POC 64+74.69 -L-

SHEET 1 OF 2 MILEPOST D-85.0

STATE OF NORTH CAROLINA
DEPARTMENT OF TRANSPORTATION
RALEIGH

SLOPE PROTECTION DETAILS

MI ENGINEERING
1011 SCHAUB DRIVE, SUITE 100
RALEIGH, NC 27606
(919) 851-6606
FIRM PE NUMBER : P-0671

NORTH CAROLINA PROFESSIONAL SEAL 027799 ENGINEER PAUL A. de PAOLI
06-09-14

DWG. NO. 41

REVISIONS						SHEET NO.
NO.	BY:	DATE:	NO.	BY:	DATE:	5-121
1			3			TOTAL SHEETS
2			4			671

DRAWN BY B.E. ATKINSON DATE MAR 2013
CHECKED BY P.A. de PAOLI DATE MAR 2013
DESIGN ENGINEER OF RECORD P.A. de PAOLI DATE JUNE 2014

PLOT: 6/9/2014 11:11:19 PM bbenning
FILE NAME: PLANS Projects\MIENGINE - U-0071 Durham\U-0071\Structures\Var-\u0071_sd_spl_020ns.dgn

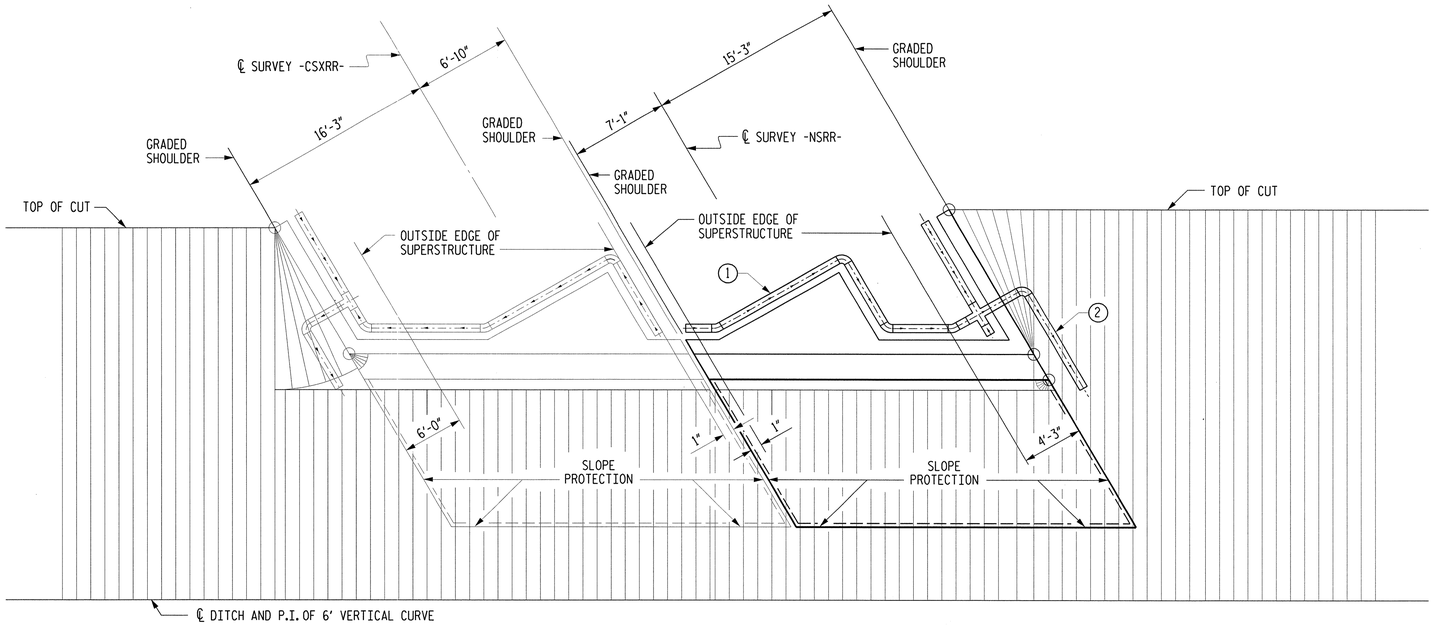

PLAN AT ABUTMENT 1

1. 8"Ø PERFORATED BITUMINOUS COATED CORRUGATED METAL PIPE BEHIND ABUTMENT
2. 8"Ø NON-PERFORATED BITUMINOUS COATED CORRUGATED METAL PIPE EXTEND TO BERM SLOPE BREAK LINE

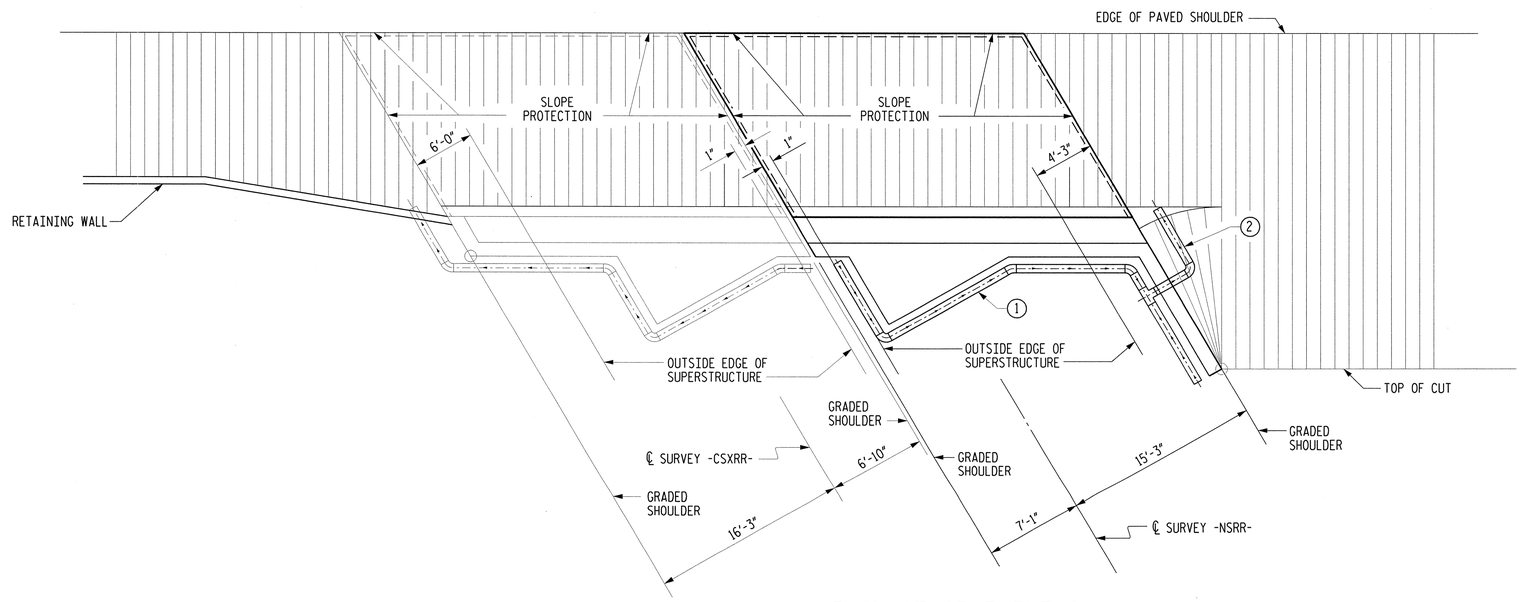

PLAN AT ABUTMENT 2

NORFOLK SOUTHERN RR

PROJECT NO. U-0071

DURHAM COUNTY

STATION: POC 64+74.69 -L-

SHEET 2 OF 2 MILEPOST D-85.0

STATE OF NORTH CAROLINA
DEPARTMENT OF TRANSPORTATION
RALEIGH

SLOPE PROTECTION DETAILS

MI ENGINEERING
1011 SCHAUB DRIVE, SUITE 100
RALEIGH, NC 27606
(919) 851-6606
FIRM PE NUMBER : P-0671

NORTH CAROLINA PROFESSIONAL ENGINEER PAUL A. de PAOLI 027799
06.09.14

DWG. NO. 42

REVISIONS						SHEET NO.
NO.	BY:	DATE:	NO.	BY:	DATE:	S-122
1			3			TOTAL SHEETS
2			4			671

DRAWN BY B.E. ATKINSON DATE MAR 2013
CHECKED BY P.A. de PAOLI DATE MAR 2013
DESIGN ENGINEER OF RECORD P.A. de PAOLI DATE JUNE 2014

PLOT: 6/9/2014 1:11:21 PM blanning
FILE NAME: P:\NC Projects\M10008 - U-0071 Durham\U-0071\Structures\nsrr\u0071_sd_sp2_02ns.dgn

P.V.I. = STA. 20+00.00
EL. = 385.05'
V.C. = 150.000'

(-)1.1567% △ (-)1.7160%

GRADE DATA –DETEB–

P.V.I. = STA. 64+50.00
EL. = 387.77'
V.C. = 170.000'

(-)3.0000% △ (-)1.2000%

GRADE DATA –DETWB–

P.V.I. = STA. 57+00.00
EL. = 395.69'
V.C. = 1000.000'

(-)1.0100% △ (-)1.2000%

GRADE DATA –L–(EB)–

P.V.I. = STA. 67+50.00
EL. = 383.59'
V.C. = 800.000'

(-)1.0098% △ (-)1.6502%

GRADE DATA –L–(WB)–

P.V.I. = STA. 31+25.00
EL. = 418.56'
V.C. = 575.000'

(+)0.8400% △ (-)0.8240%

GRADE DATA –RRDET–

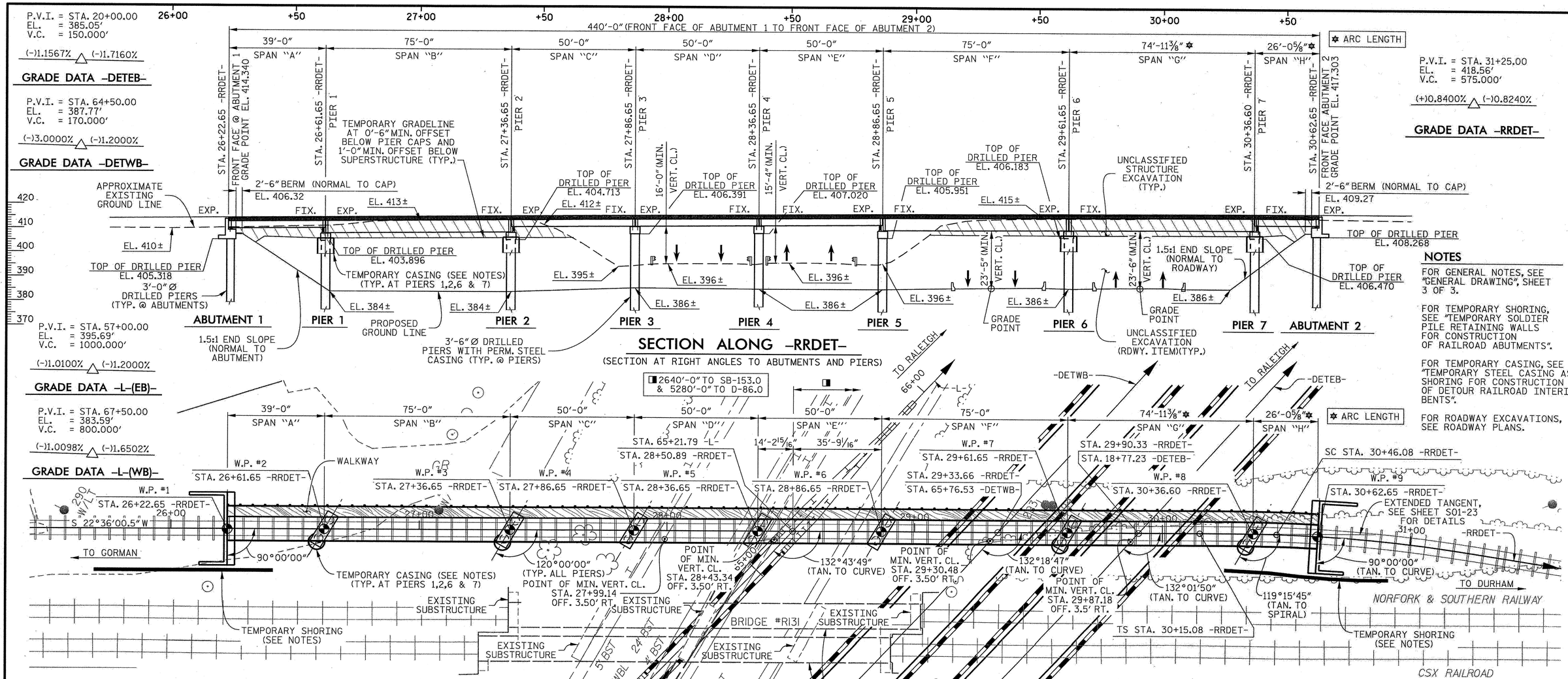

SECTION ALONG –RRDET–

(SECTION AT RIGHT ANGLES TO ABUTMENTS AND PIERS)

NOTES

FOR GENERAL NOTES, SEE "GENERAL DRAWING", SHEET 3 OF 3.

FOR TEMPORARY SHORING, SEE "TEMPORARY SOLDIER PILE RETAINING WALLS FOR CONSTRUCTION OF RAILROAD ABUTMENTS".

FOR TEMPORARY CASING, SEE "TEMPORARY STEEL CASING AS SHORING FOR CONSTRUCTION OF DETOUR RAILROAD INTERIOR BENTS".

FOR ROADWAY EXCAVATIONS, SEE ROADWAY PLANS.

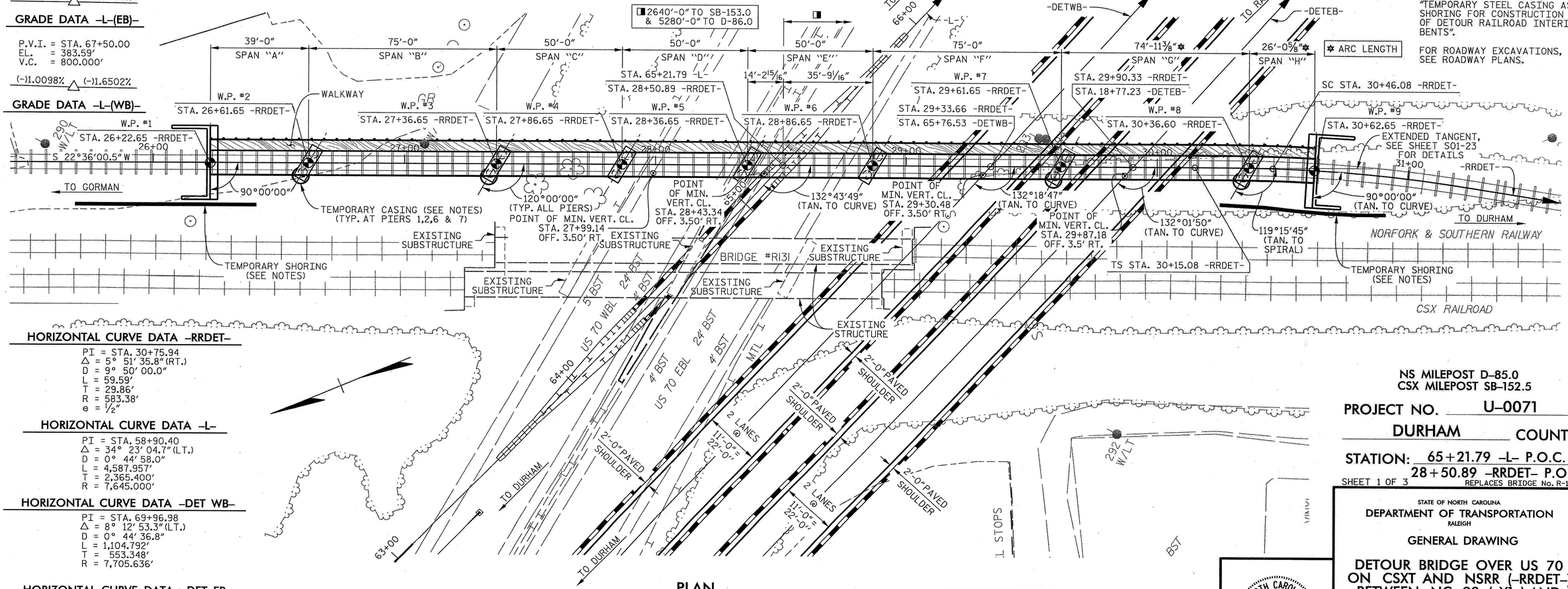

PLAN

HORIZONTAL CURVE DATA –RRDET–

PI = STA. 30+75.94
Δ = 5° 51' 35.8" (RT.)
D = 9° 50' 00.0"
L = 59.59'
T = 29.86'
R = 583.38'
e = ½"

HORIZONTAL CURVE DATA –L–

PI = STA. 58+90.40
Δ = 34° 23' 04.7" (LT.)
D = 0° 44' 58.0"
L = 4,587.957'
T = 2,365.400'
R = 7,645.000'

HORIZONTAL CURVE DATA –DET WB–

PI = STA. 69+96.98
Δ = 8° 12' 53.3" (LT.)
D = 0° 44' 36.8"
L = 1,104.792'
T = 553.348'
R = 7,705.636'

HORIZONTAL CURVE DATA –DET EB–

PI = STA. 18+42.44
Δ = 2° 05' 27.1" (LT.)
D = 0° 44' 22.9"
L = 282.741'
T = 141.387'
R = 7,748.000'

NS MILEPOST D-85.0
CSX MILEPOST SB-152.5

PROJECT NO. U-0071

DURHAM COUNTY

STATION: 65+21.79 -L- P.O.C. = 28+50.89 -RRDET- P.O.T.

SHEET 1 OF 3 REPLACES BRIDGE No. R-131

STATE OF NORTH CAROLINA
DEPARTMENT OF TRANSPORTATION
RALEIGH

GENERAL DRAWING

DETOUR BRIDGE OVER US 70 ON CSXT AND NSRR (-RRDET-) BETWEEN NC 98 (-Y1-) AND US 70 BUSINESS

CDM Smith

Camp Dresser & McKee
5400 Glenwood Avenue, Suite 300
Raleigh, NC 27612-3228
NC COA No. F-1255

DRAWN BY : K.E. LOFTON /W.R. SPENCE DATE : 6-14
CHECKED BY : A.E. COOK /J.B. TAYLOR DATE : 6-14
DESIGN ENGINEER : P.R. HOLSHOUSER DATE : 4-13

DWG. No. S01-001

NORTH CAROLINA PROFESSIONAL SEAL 37035 ENGINEER DAVID W. TAYLOR 2.20.14

REVISIONS						SHEET No.
No.	BY:	DATE:	No.	BY:	DATE:	5-123
1			3			TOTAL SHEETS
2			4			671

SPENCEWR
N:\ME_Wind\NCDOT\18_WORKPACE\Structures_STD\U-0071_TEMP_RR_BRIDGE\plan\h_PS_PDP.dgn
N:\ME_Wind\NCDOT\18_WORKPACE\Structures_STD\U-0071_TEMP_RR_BRIDGE\plan\RR_BRIDGE.dgn
P:\B5331\U-0071_TEMP_RR_BRIDGE\127_SitePlan\Plans\U0071_SD_Site1.pdf.dgn
6/20/2014 8:38:25 AM

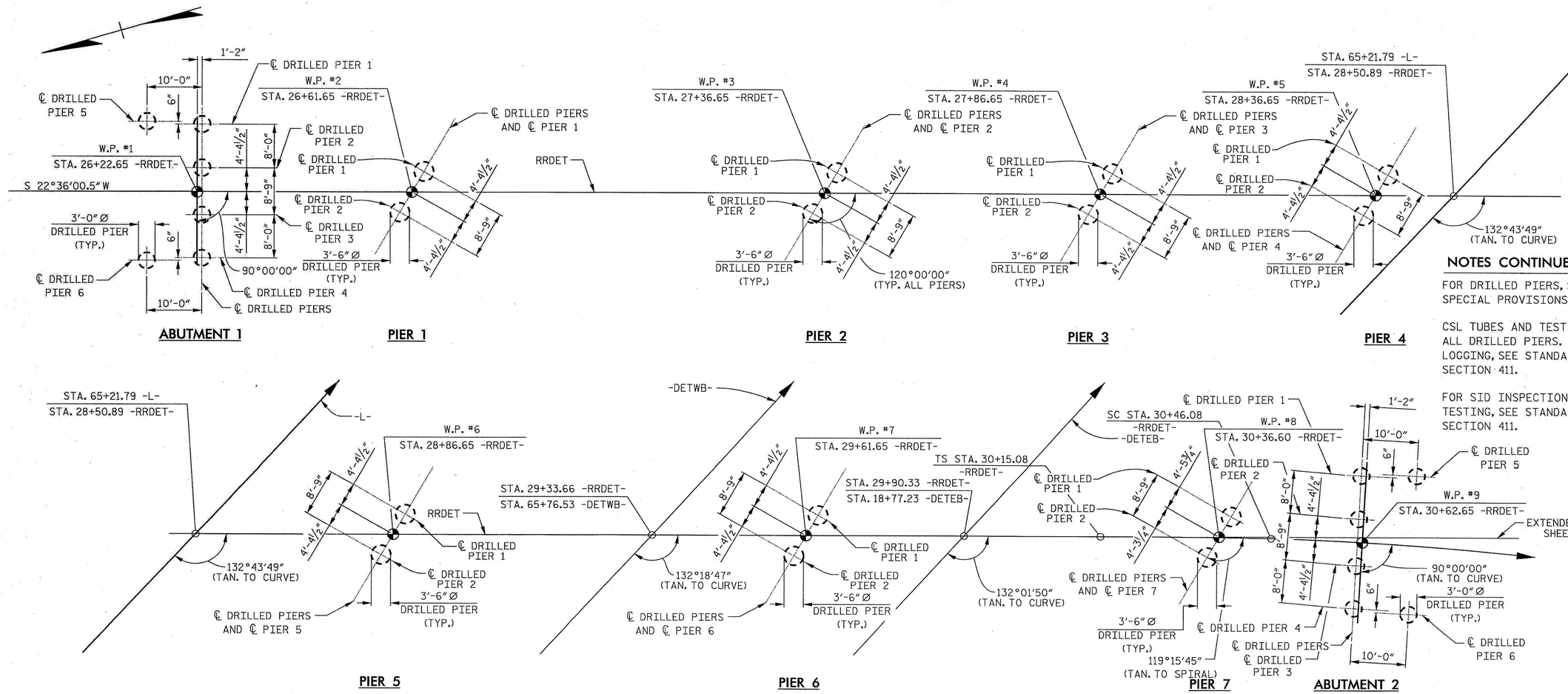

NOTES CONTINUED

FOR DRILLED PIERS, SEE "LFD DRILLED PIERS" SPECIAL PROVISIONS.

CSL TUBES AND TESTING ARE REQUIRED FOR ALL DRILLED PIERS. FOR CROSSHOLE SONIC LOGGING, SEE STANDARD SPECIFICATIONS SECTION 411.

FOR SID INSPECTIONS, SPT TESTING AND CSL TESTING, SEE STANDARD SPECIFICATIONS SECTION 411.

FOUNDATION LAYOUT

NOTES

DRILLED PIERS AT ABUTMENT NO. 1 AND ABUTMENT NO. 2 ARE DESIGNED FOR BOTH SKIN FRICTION AND END BEARING. CHECK FIELD CONDITIONS FOR THE REQUIRED END BEARING CAPACITY OF 75 TSF.

DRILLED PIERS AT PIER NO. 1 THROUGH PIER NO. 7 ARE DESIGNED FOR BOTH SKIN FRICTION AND END BEARING. CHECK FIELD CONDITIONS FOR THE REQUIRED END BEARING CAPACITY OF 75 TSF.

DRILLED PIERS AT ABUTMENT NO. 1 AND ABUTMENT NO. 2 ARE DESIGNED FOR AN APPLIED LOAD OF 200 TONS EACH AT THE TOP OF THE COLUMN.

DRILLED PIERS AT PIER NO. 1 AND PIER NO. 7 ARE DESIGNED FOR AN APPLIED LOAD OF 385 TONS EACH AT THE TOP OF THE COLUMN.

DRILLED PIERS AT PIER NO. 2 AND PIER NO. 5 ARE DESIGNED FOR AN APPLIED LOAD OF 395 TONS EACH AT THE TOP OF THE COLUMN.

DRILLED PIERS AT PIER NO. 3 AND PIER NO. 4 ARE DESIGNED FOR AN APPLIED LOAD OF 305 TONS EACH AT THE TOP OF THE COLUMN.

DRILLED PIERS AT PIER NO. 6 ARE DESIGNED FOR AN APPLIED LOAD OF 455 TONS EACH AT THE TOP OF THE COLUMN.

PERMANENT STEEL CASINGS ARE REQUIRED FOR DRILLED PIERS AT PIER NO. 1 THROUGH PIER NO. 7. DO NOT EXTEND PERMANENT CASINGS BELOW ELEVATION 382, 382, 384, 384, 384, 385 AND 385 FT, RESPECTIVELY, WITHOUT PRIOR APPROVAL FROM THE ENGINEER.

INSTALL DRILLED PIERS AT ABUTMENT NO. 1 AND ABUTMENT NO. 2 THAT EXTEND TO AN ELEVATION NO HIGHER THAN 385 FT AND 393 FT, RESPECTIVELY, AND SATISFY THE REQUIRED END BEARING CAPACITY.

INSTALL DRILLED PIERS AT PIER NO. 1 AND PIER NO. 2 THAT EXTEND TO AN ELEVATION NO HIGHER THAN 373 FT AND SATISFY THE REQUIRED END BEARING CAPACITY.

INSTALL DRILLED PIERS AT PIER NO. 3 AND PIER NO. 4 THAT EXTEND TO AN ELEVATION NO HIGHER THAN 370 FT AND SATISFY THE REQUIRED END BEARING CAPACITY

INSTALL DRILLED PIERS AT PIER NO. 5 THAT EXTEND TO AN ELEVATION NO HIGHER THAN 368 FT AND SATISFY THE REQUIRED END BEARING CAPACITY.

INSTALL DRILLED PIERS AT PIER NO. 6 THAT EXTEND TO AN ELEVATION NO HIGHER THAN 376 FT AND SATISFY THE REQUIRED END BEARING CAPACITY.

INSTALL DRILLED PIERS AT PIER NO. 7 THAT EXTEND TO AN ELEVATION NO HIGHER THAN 374 FT AND SATISFY THE REQUIRED END BEARING CAPACITY.

SPT TESTING MAY BE REQUIRED FOR DRILLED PIERS AT ABUTMENT NO. 1 AND ABUTMENT NO. 2. THE ENGINEER WILL DETERMINE THE NEED FOR SPT TESTING.

SPT TESTING IS REQUIRED FOR DRILLED PIERS AT PIER NO. 1 THROUGH PIER NO. 7.

SID INSPECTIONS MAY BE REQUIRED FOR DRILLED PIERS. THE ENGINEER WILL DETERMINE THE NEED FOR SID INSPECTIONS.

DRILLED PIER EXCAVATIONS AT ABUTMENT NO. 1 AND ABUTMENT NO. 2 WILL EXTEND INTO MATERIAL THAT DETERIORATES WHEN EXPOSED TO THE ELEMENTS. CHECK FIELD CONDITIONS FOR THE REQUIRED END BEARING CAPACITY AND PLACE CONCRETE IMMEDIATELY AFTER THE EXCAVATION IS COMPLETED.

DRILLED PIER EXCAVATIONS AT PIER NO. 1 THROUGH PIER NO. 7 WILL EXTEND INTO MATERIAL THAT DETERIORATES WHEN EXPOSED TO THE ELEMENTS. CHECK FIELD CONDITIONS FOR THE REQUIRED END BEARING CAPACITY AND PLACE CONCRETE IMMEDIATELY AFTER THE EXCAVATION IS COMPLETED.

NO WAITING PERIOD IS REQUIRED FOR END ABUTMENT CONSTRUCTION AFTER COMPLETION OF EMBANKMENT.

CDM Smith
Camp Dresser & McKee
5400 Glenwood Avenue, Suite 300
Raleigh, NC 27612-3228
NC COA No. F-1255

DRAWN BY :	C.E. DIXON	DATE :	5-13
CHECKED BY :	A.E. COOK	DATE :	5-13
DESIGN ENGINEER :	A.E. COOK	DATE :	5-13

DWG. No. S01-002

NORTH CAROLINA PROFESSIONAL SEAL 37035 ENGINEER DAVID W. TAYLOR 2-10-14

PROJECT NO. U-0071
DURHAM COUNTY
STATION: 65+21.79 -L- P.O.C. = 28+50.89 -RRDET- P.O.T.

SHEET 2 OF 3

STATE OF NORTH CAROLINA
DEPARTMENT OF TRANSPORTATION
RALEIGH

GENERAL DRAWING

DETOUR BRIDGE OVER US 70 ON CSXT AND NSRR (-RRDET-) BETWEEN NC 98 (-Y1-) AND US 70 BUSINESS

REVISIONS								SHEET No.
No.	BY:	DATE:	No.	BY:	DATE:			S-124
1			3					TOTAL SHEETS
2			4					671

COOKIE
N:\MS_Willard\MCDOT_VB_WORKSPACE\Structures_STD\U-0071_TBMR_RR_BRIDGE\plan\BW_PS_PDP.dgn
N:\MS_Willard\MCDOT_VB_WORKSPACE\Structures_STD\U-0071_TBMR_RR_BRIDGE\plan\HS-SHADE.tbl
P:\R5331\U-0071_TBMR_RR_BRIDGE\221-Sn\Sea\Plans\U0071_S0_Sheet_01.dgn
6/10/2014 1:40:19 PM

TOTAL BILL OF MATERIAL

	REMOVAL OF EXISTING STRUCTURE @ STA. 28+50.89 -RRDET-	3'-0"Ø DRILLED PIERS IN SOIL (LFD)	3'-0"Ø DRILLED PIERS NOT IN SOIL (LFD)	3'-6"Ø DRILLED PIERS IN SOIL (LFD)	3'-6"Ø DRILLED PIERS NOT IN SOIL (LFD)	PERMANENT STEEL CASING FOR 3'-6"Ø DRILLED PIERS	SID INSPECTION	SPT TESTING	CSL TESTING	UNCLASSIFIED STRUCTURE EXCAVATION STA. 28+50.89 -RRDET-	CLASS "AA" CONCRETE (AS MODIFIED BY RAILWAY)	REINFORCING STEEL	SPIRAL COLUMN REINFORCING STEEL	STRUCTURAL STEEL	STRUCTURE DRAINAGE SYSTEM STA. 28+50.89 -RRDET-	SELF-LUBRICATING EXPANSION BEARING ASSEMBLIES	STEEL BEARING ASSEMBLIES	TREATED LUMBER DECK
	LUMP SUM	LIN. FT.	LIN. FT.	LIN. FT.	LIN. FT.	LIN. FT.	EACH	EACH	EACH	LUMP SUM	CU. YDS.	LBS.	LBS.	LBS. (APPROX.)	LUMP SUM	LUMP SUM	LUMP SUM	LUMP SUM
SUPERSTRUCTURE														714,223		LUMP SUM	LUMP SUM	LUMP SUM
ABUTMENT 1		83.9	38.0					6	6		48.6	26,460	2,300		LUMP SUM			
PIER 1				39.8	22.0	43.8		2	2		10.9	12,302	1,398					
PIER 2				41.4	22.0	45.4		2	2		10.9	12,514	1,434					
PIER 3				55.8	17.0	44.8		2	2		10.9	13,704	1,639					
PIER 4				57.0	17.0	46.0		2	2		10.9	13,853	1,664					
PIER 5				58.9	17.0	43.9		2	2		10.9	14,087	1,704					
BENT 6				40.4	20.0	42.4		2	2		10.9	12,110	1,365					
PIER 7				39.9	25.0	42.9		2	2		10.9	12,705	1,467					
ABUTMENT 2		32.6	59.0					6	6		48.7	23,985	1,761		LUMP SUM			
TOTAL	LUMP SUM	116.5	97.0	333.2	140.0	309.2	1	26	26	LUMP SUM	173.6	141,720	14,732	714,223	LUMP SUM	LUMP SUM	LUMP SUM	LUMP SUM

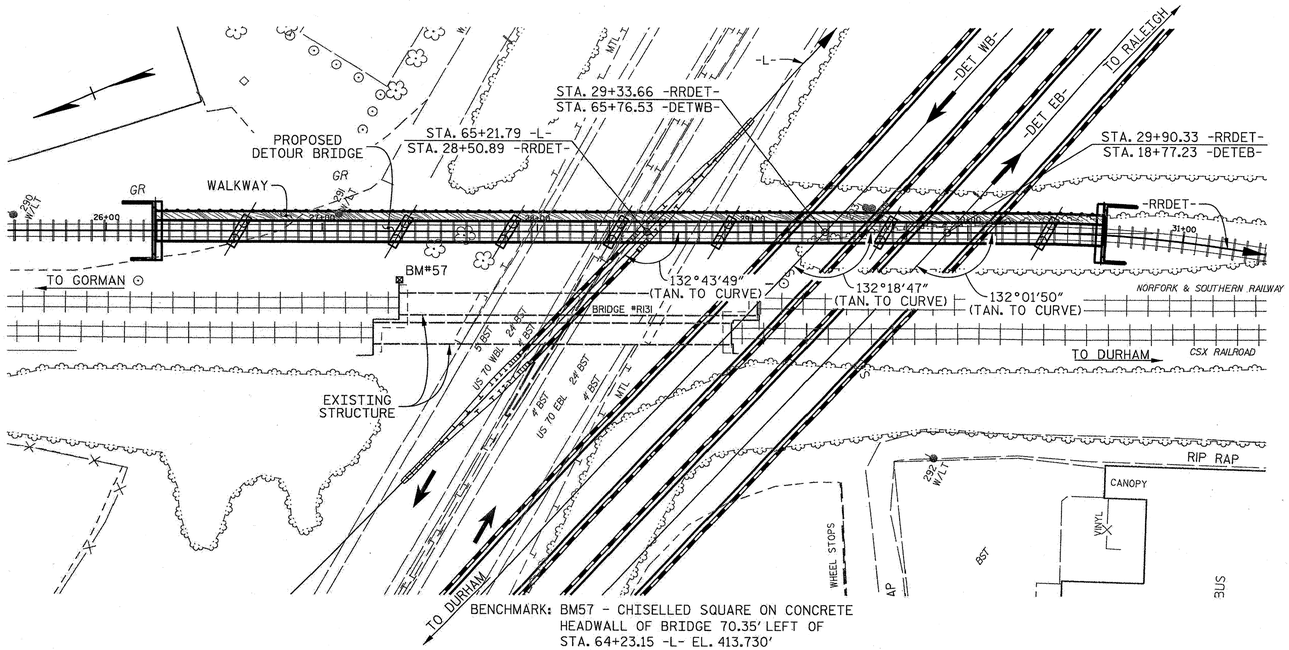

BENCHMARK: BM57 - CHISELLED SQUARE ON CONCRETE HEADWALL OF BRIDGE 70.35' LEFT OF STA. 64+23.15 -L- EL. 413.730'

LOCATION SKETCH

NOTES

DESIGN SPECIFICATIONS: CURRENT AREMA AND NORFOLK SOUTHERN GUIDELINE FOR DESIGN OF HIGHWAY SEPARATION STRUCTURES UNDER RAILROAD.

ASSUMED LIVE LOAD = COOPER E-80 WITH IMPACT PER AREMA.

ALL MATERIALS AND WORKMANSHIP SHALL BE IN ACCORDANCE WITH "STANDARD SPECIFICATIONS FOR ROADS AND STRUCTURES", NORTH CAROLINA DEPARTMENT OF TRANSPORTATION, 2012 HEREIN CALLED STANDARD SPECIFICATIONS, EXCEPT AS NOTED HEREIN, ELSEWHERE ON PLANS, OR IN THE "SPECIAL PROVISIONS". STRUCTURAL STEEL SHALL BE IN ACCORDANCE WITH CURRENT A.R.E.M.A. SPECIFICATIONS.

ALL CONCRETE SHALL BE IN ACCORDANCE WITH THE NORFOLK SOUTHERN SPECIFICATIONS FOR CAST-IN-PLACE CONCRETE. THE CONCRETE SHALL HAVE A MINIMUM 28-DAY COMPRESSIVE STRENGTH OF: CLASS "AA" CONCRETE (AS MODIFIED BY RAILWAY) 4,000 PSI.
DRILLED PIER CONCRETE (SPECIAL) 4,500 PSI.

THE NOMINAL COURSE AGGREGATE SIZE SHALL BE 1 INCH (NO. 57). THE MINIMUM CEMENT CONTENT SHALL BE 640 LBS/CY. THE CONCRETE SHALL HAVE AN ENTRAINED AIR CONTENT BETWEEN 4.0 AND 6.0 PERCENT. FLY ASH, BLAST FURNACE SLAG OR OTHER POZZOLANS ARE NOT PERMITTED IN THIS STRUCTURE.

REINFORCING STEEL SHALL BE ASTM A615, GRADE 60. FABRICATION TO BE IN ACCORDANCE WITH THE "MANUAL OF STANDARD PRACTICE" A.C.I. 315-99.

STRUCTURE DRAINAGE SYSTEM: METAL DRAINS BEHIND THE ABUTMENTS SHALL BE AS SHOWN ON THE PLANS AND OUTLINED IN THE SPECIAL PROVISIONS. DETAILS OF THE DRAINAGE SYSTEM SHALL BE SUBMITTED TO THE CHIEF ENGINEER - BRIDGES AND STRUCTURES, NORFOLK SOUTHERN CORPORATION, ATLANTA, GA FOR APPROVAL.

CONTROL OF WORK: ALL WORK INVOLVED IN THE CONSTRUCTION OF THE RAILROAD STRUCTURE SHALL BE PERFORMED TO THE SATISFACTION OF THE ENGINEER AND/OR NORFOLK SOUTHERN. ALL METHODS OF HANDLING WORK AFFECTING THE SAFETY OF RAIL OPERATIONS MUST BE APPROVED BY THE RAILWAY ENGINEER BEFORE PROCEEDING WITH THAT PORTION OF THE WORK. RAIL TRAFFIC SHALL, AT ALL TIMES, BE MAINTAINED AND PROTECTED. THE CONTRACTOR SHALL NOT, AT ANY TIME, DELAY OR INTERFERE WITH RAIL OPERATIONS.

ALL CONSTRUCTION JOINTS SHOWN ON THESE PLANS SHALL BE REQUIRED UNLESS SHOWN AS OPTIONAL. CONSTRUCTION JOINTS SHALL NOT BE PERMITTED EXCEPT AS SHOWN ON THE PLANS OR WHERE WRITTEN APPROVAL HAS BEEN OBTAINED.

FOR STRUCTURAL STEEL NOTES, SEE "GIRDER DETAILS" AND SPECIAL PROVISIONS.

FOR MAINTENANCE AND PROTECTION OF TRAFFIC BENEATH PROPOSED STRUCTURE, SEE SPECIAL PROVISIONS.

UPON REMOVAL OF TRAFFIC FROM THE DETOUR STRUCTURE AND PRIOR TO THE REMOVAL OF THE TEMPORARY SHORING, DETOUR STRUCTURE DRILLED SHAFTS SHALL BE CUT-OFF TWO FEET BELOW FINAL GRADE OR AS DIRECTED BY THE ENGINEER.

THE MATERIAL SHOWN IN THE CROSS-HATCHED AREA SHALL BE EXCAVATED FOR A DISTANCE OF 16 FEET EACH SIDE OF -RRDET- AS DIRECTED BY THE ENGINEER. THIS WORK WILL BE MEASURED AND PAID FOR AT THE CONTRACT UNIT PRICE PER CUBIC YARD FOR UNCLASSIFIED STRUCTURE EXCAVATION.

FOR SUBMITTAL OF WORKING DRAWINGS, SEE SPECIAL PROVISIONS.

FOR FALSEWORK AND FORMWORK, SEE SPECIAL PROVISIONS.

FOR CRANE SAFETY, SEE SPECIAL PROVISIONS.

FOR GROUT FOR STRUCTURES, SEE SPECIAL PROVISIONS.

FOR PORTLAND CEMENT, SEE SPECIAL PROVISIONS.

FOR FINE AND COARSE AGGREGATE, SEE SPECIAL PROVISIONS.

FOR STRUCTURE DRAINAGE SYSTEM, SEE SPECIAL PROVISIONS.

FOR BACK FILLING AROUND STRUCTURES, SEE SPECIAL PROVISIONS.

FOR SELF-LUBRICATING EXPANSION BEARING ASSEMBLIES, SEE SPECIAL PROVISIONS.

FOR STEEL BEARING ASSEMBLIES, SEE SPECIAL PROVISIONS.

FOR STRUCTURAL STEEL, SEE SPECIAL PROVISIONS.

FOR TREATED LUMBER DECK, SEE SPECIAL PROVISIONS.

FOR TEMPORARY RAILROAD SHORING, SEE SPECIAL PROVISIONS.

FOR PROTECTION OF RAILWAY INTERESTS, SEE SPECIAL PROVISIONS.

PROJECT NO. U-0071
DURHAM COUNTY
STATION: 65+21.79 -L- P.O.C. = 28+50.89 -RRDET- P.O.T.

SHEET 3 OF 3

STATE OF NORTH CAROLINA
DEPARTMENT OF TRANSPORTATION
RALEIGH

GENERAL DRAWING

DETOUR BRIDGE OVER US 70 ON CSXT AND NSRR (-RRDET-) BETWEEN NC 98 (-Y1-) AND US 70 BUSINESS

CDM Smith
Camp Dresser & McKee
5400 Glenwood Avenue, Suite 300
Raleigh, NC 27612-3228
NC COA No. F-1255

DRAWN BY : K.E. LOFTON /W.R. SPENCE DATE : 6-14
CHECKED BY : A.E. COOK /J.B. TAYLOR DATE : 6-14
DESIGN ENGINEER : - DATE : -

DWG. No. S01-003

NORTH CAROLINA PROFESSIONAL SEAL 37035 ENGINEER DAVID W. TAYLOR 7-1-14

REVISIONS								SHEET No.
No.	BY:	DATE:	No.	BY:	DATE:			S-125
1			3					TOTAL SHEETS
2			4					671

COOKIE
N:\HAS_V8\acl\NCDOT_RE_WORKSPACE\Structures_STRS\U-0071_TEMP_RR_BRIDGE\proj.dgn
N:\HAS_V8\acl\NCDOT_RE_WORKSPACE\Structures_STRS\U-0071_TEMP_RR_BRIDGE\proj.dgn
P:\16531\U-0071_TEMP_RR_BRIDGE\221_SitePlan\Plans\U0071_S0_Site_Ini.dgn
7/1/2014 9:52:01 AM

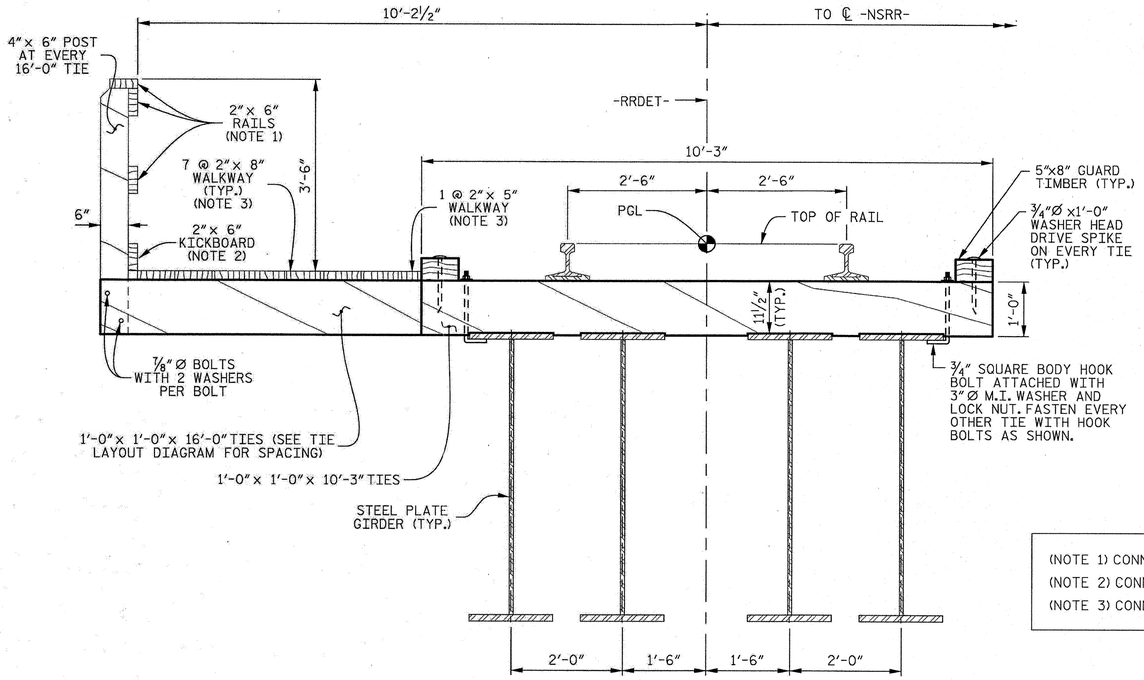

TYPICAL SECTION

SPAN B, F, AND G
SIMPLE SPAN NON-COMPOSITE

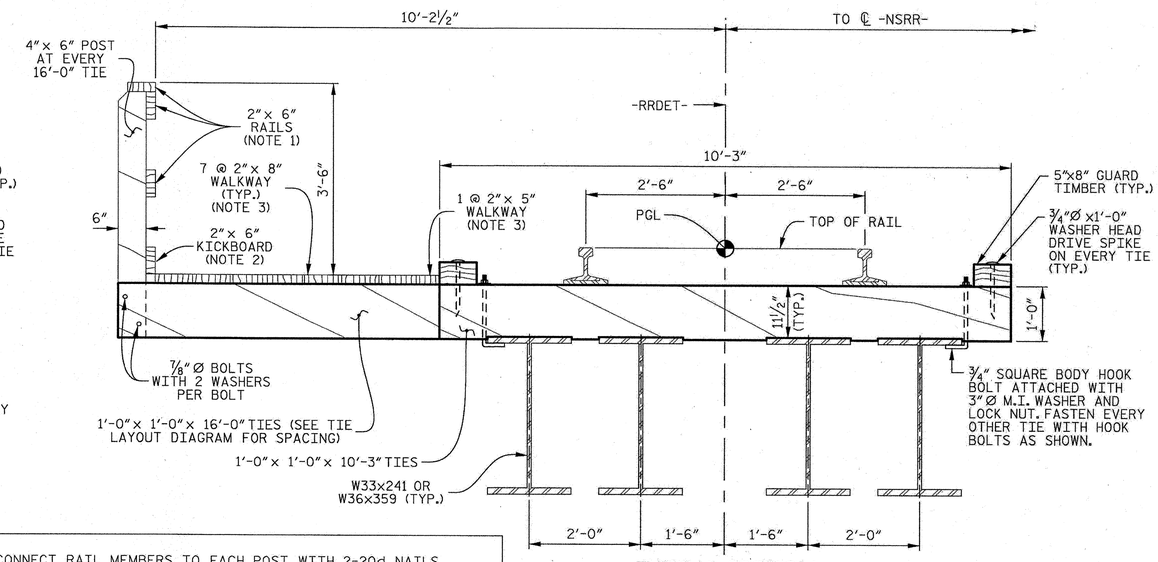

TYPICAL SECTION

SPAN A, C, D, E AND H
SIMPLE SPAN NON-COMPOSITE

(NOTE 1) CONNECT RAIL MEMBERS TO EACH POST WITH 2-20d NAILS
(NOTE 2) CONNECT KICKBOARD MEMBERS TO EACH POST WITH 2-20d NAILS
(NOTE 3) CONNECT WALKWAY MEMBERS TO EACH TIE WITH 2-20d NAILS

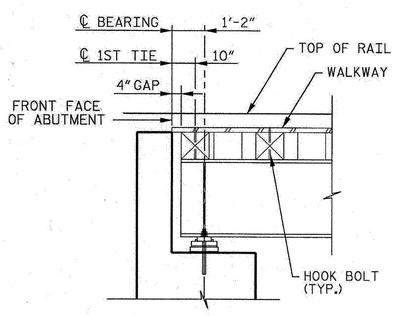

SECTION AT ABUTMENT 1

(ABUTMENT 2 SIMILAR)

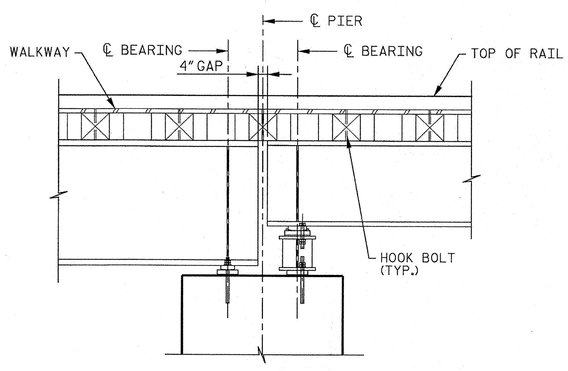

SECTION AT PIER 2

(PIERS 1, 5 & 7 SIMILAR)

NOTE:
TYPICAL TIE LAYOUT FOR PIERS SHOWN.
SEE "PLAN OF SPAN" SHEETS FOR TIE SPACING.
GIRDER AND BEARING TYPES DIFFER AT
ALL PIERS. REFER TO GIRDER AND BEARING
DETAIL SHEETS FOR MORE INFORMATION.

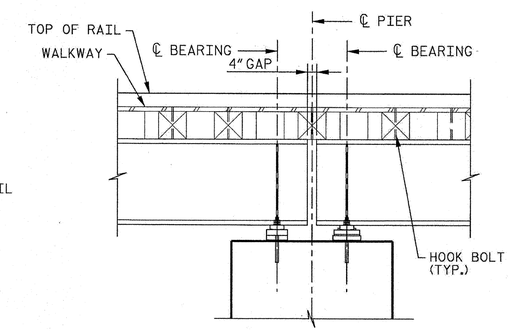

SECTION AT PIER 4

(PIERS 3 & 6 SIMILAR)

NOTE:
TYPICAL TIE LAYOUT FOR PIERS SHOWN.
SEE "PLAN OF SPAN" SHEETS FOR TIE SPACING.
GIRDER AND BEARING TYPES DIFFER AT
ALL PIERS. REFER TO GIRDER AND BEARING
DETAIL SHEETS FOR MORE INFORMATION.

⊠ - DENOTES LONG TIE

PROJECT NO. U-0071
DURHAM COUNTY
STATION: 65+21.79 -L- P.O.C. =
28+50.89 -RRDET- P.O.T.
SHEET 1 OF 3

STATE OF NORTH CAROLINA
DEPARTMENT OF TRANSPORTATION
RALEIGH

SUPERSTRUCTURE

TYPICAL SECTION

CDM Smith
Camp Dresser & McKee
5400 Glenwood Avenue, Suite 300
Raleigh, NC 27612-3228
NC COA No. F-1255

DRAWN BY : W.R. SPENCE DATE : 5-13
CHECKED BY : A.E. COOK DATE : 5-13
DESIGN ENGINEER : W.R. SPENCE DATE : 5-13
DWG. No. S01-004

NORTH CAROLINA PROFESSIONAL SEAL 37035 ENGINEER DAVID W. TAYLOR 8.10.14

REVISIONS						SHEET No.
No.	BY:	DATE:	No.	BY:	DATE:	5-126
1			3			TOTAL SHEETS
2			4			671

COOKIE
MASTER: P:\Projects\NCDOT PB_WORKSPACE\Structures_STD\U-0071_TEMP-RR-BRIDGE\plan\PB-01_PDP.dgn
(1)P:\6633.6.4\proj_conf\FdG_Files\NCDOT_PB_WORKSPACE\Structures_Std\U-0071_TEMP-RR-BRIDGE\plan\HS-SHADE.dgn
P:\6633.6.4\proj_conf\FdG_Files\NCDOT_PB_WORKSPACE\Structures_Std\U-0071_TEMP-RR-BRIDGE\plan\HS-SHADE.dgn
P:\6633.6.4\proj_conf\FdG_Files\NCDOT_PB_WORKSPACE\Structures_Std\U-0071_TEMP-RR-BRIDGE\221.Sn-Deck\Plans\U-0071_sd_bhd_b1.dgn
6/10/2014 1:41:44 PM

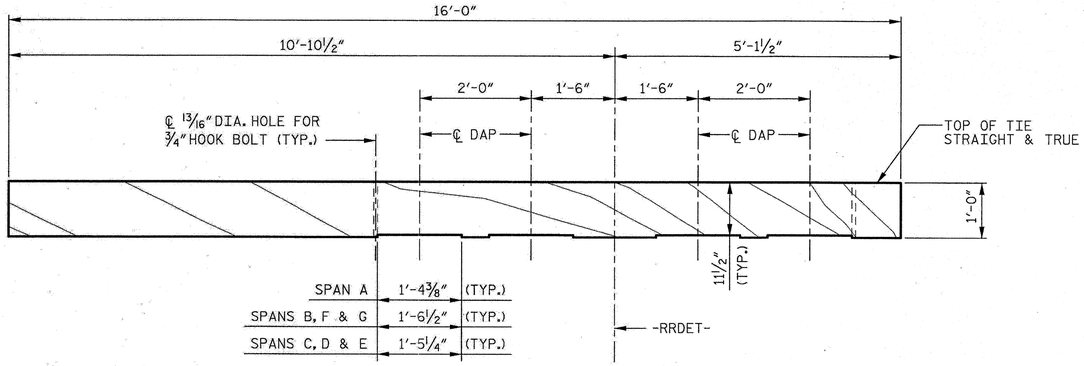

LONG TIE

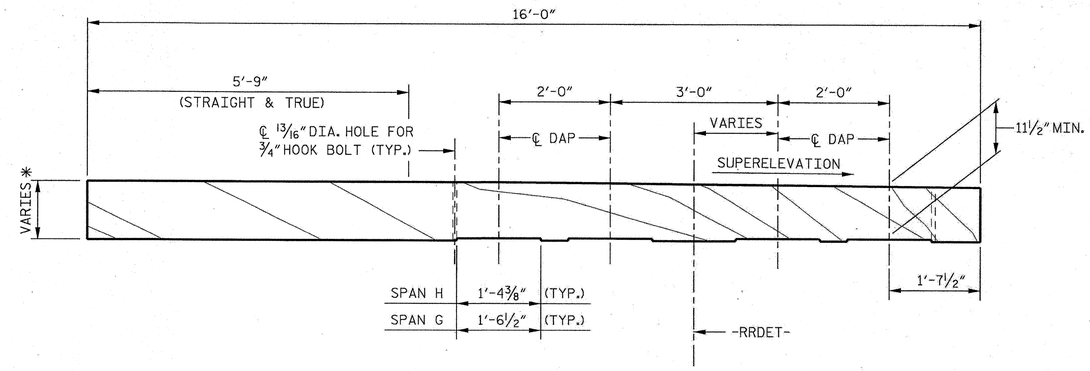

BEVELED LONG TIE

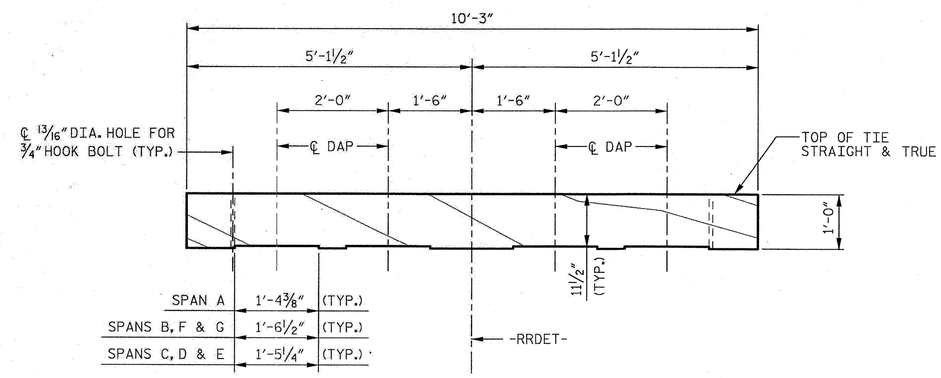

SHORT TIE

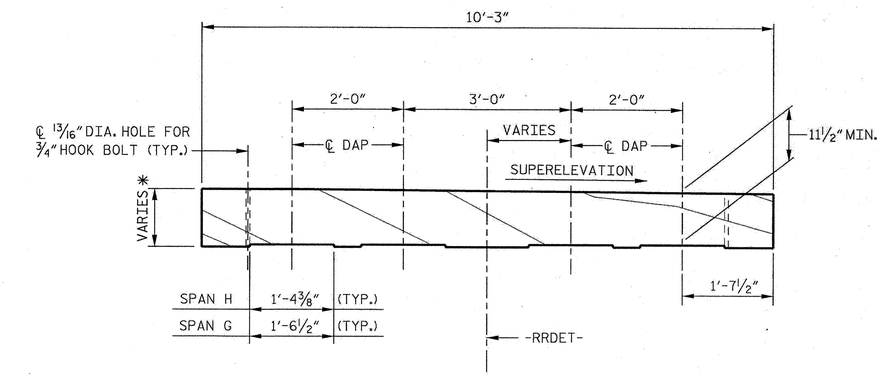

BEVELED SHORT TIE

* VARIES FROM 12" TO 12⅞" WITHIN LIMITS OF SPIRAL

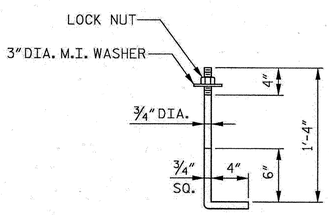

HOOK BOLT DETAIL

SPECIAL DAP PATTERNS					
TIE	GIRDER	DAP WIDTH			
		PIER 1	PIER 2	PIER 5	PIER 7
1	1	1'-4⅜"	1'-6½"	1'-5¼"	1'-6½"
	2	1'-4⅜"	1'-6½"	1'-5¼"	1'-6½"
	3	1'-4⅜"	1'-6½"	1'-5¼"	1'-6½"
	4	1'-6½"	1'-5¼"	1'-6½"	1'-4⅜"
2	1	1'-4⅜"	1'-6½"	1'-5¼"	1'-6½"
	2	1'-4⅜"	1'-6½"	1'-5¼"	1'-6½"
	3	1'-6½"	1'-5¼"	1'-6½"	1'-4⅜"
	4	1'-6½"	1'-5¼"	1'-6½"	1'-4⅜"
3	1	1'-4⅜"	1'-6½"	1'-5¼"	1'-6½"
	2	1'-6½"	1'-5¼"	1'-6½"	1'-4⅜"
	3	1'-6½"	1'-5¼"	1'-6½"	1'-4⅜"
	4	1'-6½"	1'-5¼"	1'-6½"	1'-4⅜"

SEE "PLAN OF SPAN" SHEETS FOR TIE LOCATIONS.

PROJECT NO. U-0071
DURHAM COUNTY
STATION: 65+21.79 -L- P.O.C. = 28+50.89 -RRDET- P.O.T.
SHEET 2 OF 3

STATE OF NORTH CAROLINA
DEPARTMENT OF TRANSPORTATION
RALEIGH

SUPERSTRUCTURE

TYPICAL SECTION DETAILS

CDM Smith
Camp Dresser & McKee
5400 Glenwood Avenue, Suite 300
Raleigh, NC 27612-3228
NC COA No. F-1255

DRAWN BY : W.R. SPENCE DATE : 5-13
CHECKED BY : A.E. COOK DATE : 5-13
DESIGN ENGINEER : W.R. SPENCE DATE : 5-13

DWG. No. S01-005a

NORTH CAROLINA PROFESSIONAL SEAL 37035 ENGINEER DAVID W. TAYLOR 6-10-14

REVISIONS						SHEET No.
No.	BY:	DATE:	No.	BY:	DATE:	5-127
1			3			TOTAL SHEETS
2			4			671

COOKIE
N:\HS_Willard\WCDOT_TIP_W-5000\ACDOT\Drawings_STD\U-0071\TEMP_BRIDGE\Utility\TEMP_PS_PDF\utility
\\WWW.Mail.Groups\HS_Willard\WCDOT_TIP_W-5000\ACDOT\Drawings_STD\U-0071\TEMP_BRIDGE\Utility\TEMP_PS_PDF\utility
P:\86331\U-0071\TEMP_BR_BRIDGE\1221.SnDwg\Plans\U-0071_sd_det_bz2.dgn
6/10/2014 1:43:27 PM

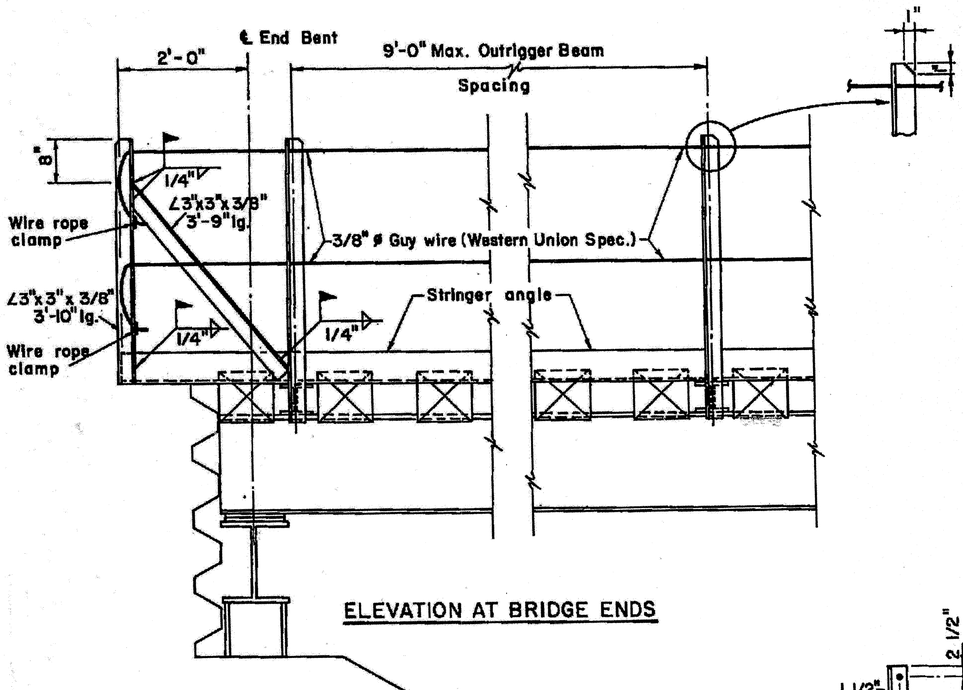

ELEVATION AT BRIDGE ENDS

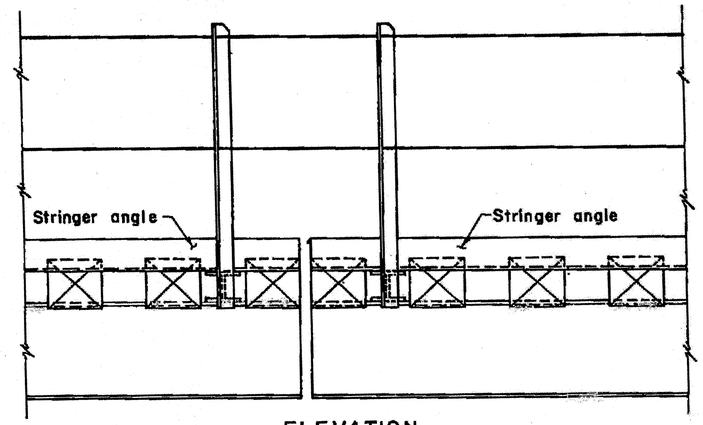

ELEVATION

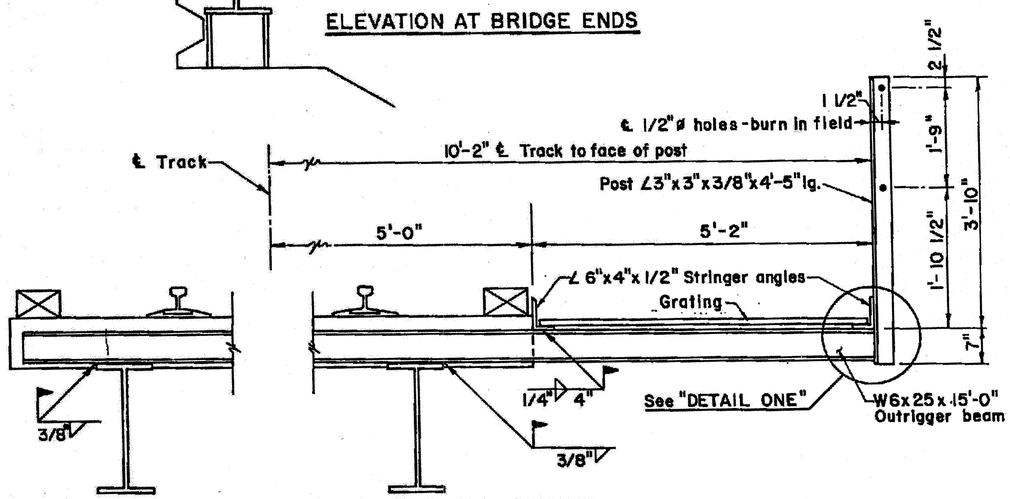

TYPICAL SECTION

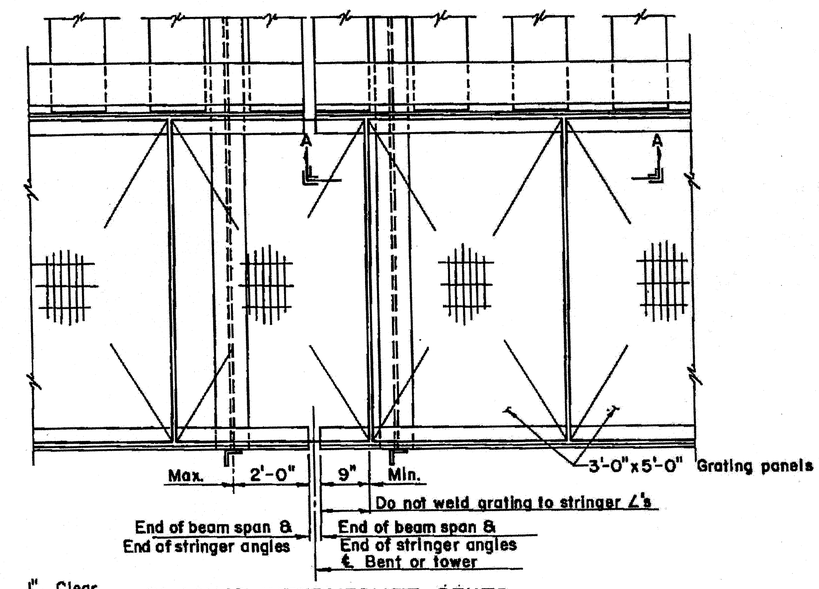

PLAN AT INTERMEDIATE BENTS

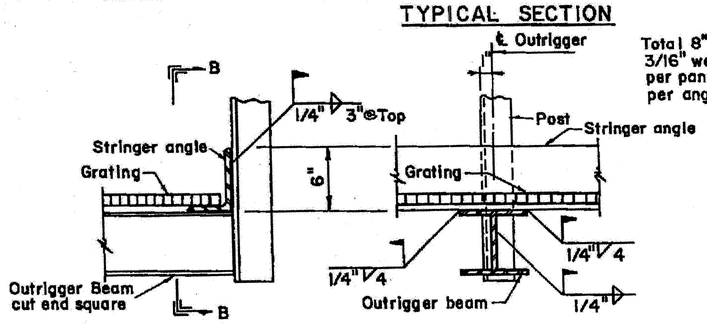

DETAIL ONE

SECTION B-B

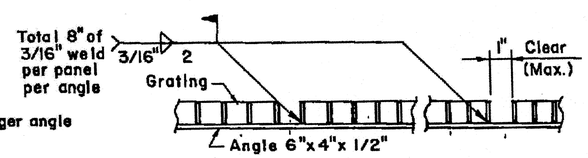

SECTION A-A

GRATING CONNECTION DETAIL

NOTES

THIS SHEET IS FURNISHED AS AN ALTERNATE TO THE TIMBER WALKWAY SHOWN ON TYPICAL SECTION, SHEET 1 OF 3. ANY OTHER STRUCTURAL ELEMENTS DEPICTED ON THIS SHEET MAY NOT BE RELEVANT TO THIS BRIDGE.

IF THE CONTRACTOR ELECTS TO USE THE STEEL WALKWAY ALTERNATE, THE CONTRACTOR SHALL SUBMIT PROPOSED TIE AND OUTRIGGER BEAM LAYOUT FOR APPROVAL. TIES OVER PIERS MAY REQUIRE A DIFFERENT SPECIAL DAP PATTERN THAN SHOWN IN THESE PLANS. THERE SHALL BE NO GAPS BETWEEN TIES AND OUTRIGGER BEAMS IN SPANS D, E, F, AND G.

DETAILS ON THIS SHEET ARE FROM NORFOLK SOUTHERN'S PLAN 5-25 "STEEL WALKWAY FOR OPEN DECK STEEL STRUCTURES" DATED NOVEMBER, 1981.

PROJECT NO. U-0071

DURHAM COUNTY

STATION: 65+21.79 -L- P.O.C. = 28+50.89 -RRDET- P.O.T.

SHEET 3 OF 3

STATE OF NORTH CAROLINA
DEPARTMENT OF TRANSPORTATION
RALEIGH

SUPERSTRUCTURE

ALTERNATE WALKWAY DETAILS

CDM Smith
Camp Dresser & McKee
5400 Glenwood Avenue, Suite 300
Raleigh, NC 27612-3228
NC COA No. F-1255

DRAWN BY : A.E. COOK DATE : 12-13
CHECKED BY : J.B. TAYLOR DATE : 12-13
DESIGN ENGINEER : - DATE : -

DWG. No. S01-005b

REVISIONS						SHEET No.
No.	BY:	DATE:	No.	BY:	DATE:	5-128
1			3			TOTAL SHEETS
2			4			671

COOKEA
N:\WORKSPACE\NCDOT_W_WORKSPACE\Structures_STD\U-0071_TEMP_RR_BRIDGE\plan\BW_FS_PDF.pltcfg
\\172.168.4.4\ime_cadd\Ag Yellow1\NCDOT_W_WORKSPACE\structures_Std\U-0071_TEMP_RR_BRIDGE\plan\HS-SHADE.tbl
P:\84331.U-0071_TEMP_RR_BRIDGE\221_SHDwg\Plans\U-0071_sd_site1_ts3.dgn
6/10/2014 1:43:57 PM

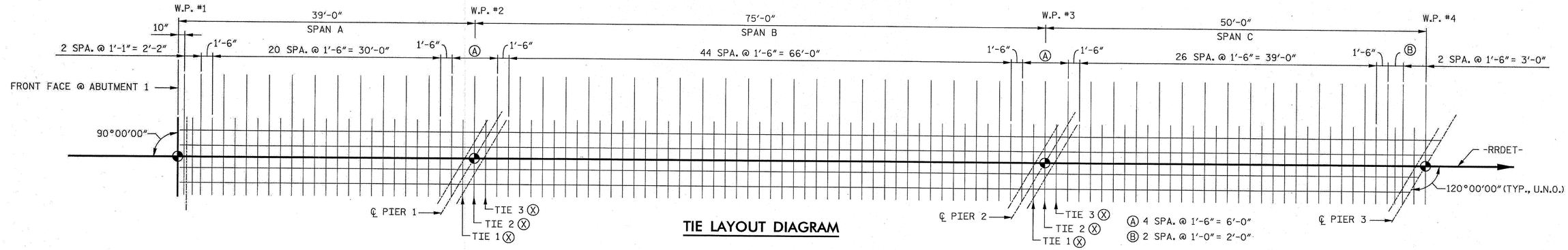

TIE LAYOUT DIAGRAM

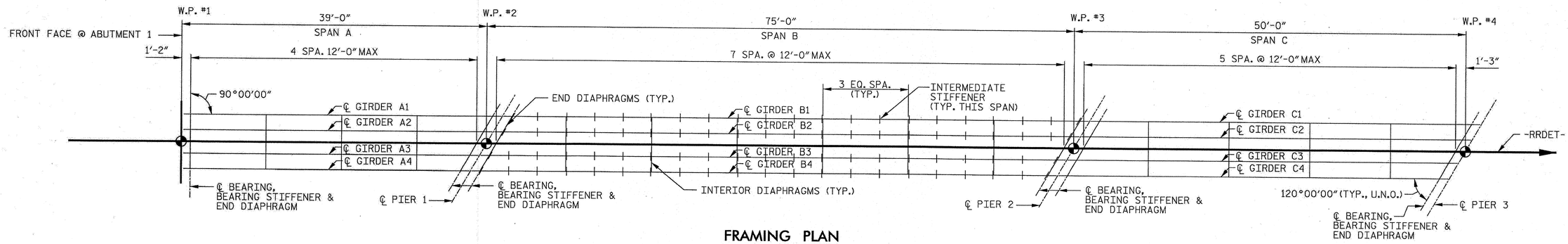

FRAMING PLAN

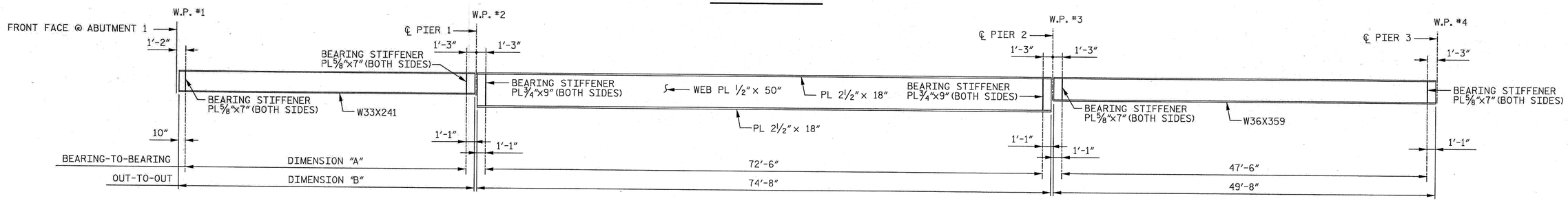

TYPICAL GIRDER ELEVATION

TABLE OF GIRDER DIMENSIONS		
GIRDER	DIMENSION "A"	DIMENSION "B"
A1	38'-7 1/4"	40'-6 1/4"
A2	37'-5 5/8"	39'-4 3/8"
A3	35'-8 5/8"	37'-7 5/8"
A4	34'-6 3/4"	36'-5 3/4"

NOTE:

SEE GIRDER DETAILS FOR ADDITIONAL NOTES AND DETAILS.

Ⓧ TIES AT THIS LOCATION REQUIRE A SPECIAL DAP PATTERN. SEE TYPICAL SECTION DETAILS, SHEET 2 OF 2 FOR VARYING DAP WIDTHS FOR TIES AT THIS LOCATION.

PROJECT NO. U-0071

DURHAM COUNTY

STATION: 65+21.79 -L- P.O.C. = 28+50.89 -RRDET- P.O.T.

SHEET 1 OF 3

STATE OF NORTH CAROLINA
DEPARTMENT OF TRANSPORTATION
RALEIGH

SUPERSTRUCTURE

PLAN OF SPAN A THRU SPAN C

CDM Smith
Camp Dresser & McKee
5400 Glenwood Avenue, Suite 300
Raleigh, NC 27612-3228
NC COA No. F-1255

DRAWN BY : W.R. SPENCE DATE : 5-13
CHECKED BY : A.E. COOK DATE : 5-13
DESIGN ENGINEER : W.R. SPENCE DATE : 5-13

DWG. No. S01-006

NORTH CAROLINA PROFESSIONAL SEAL 37035 ENGINEER DAVID W. TAYLOR 6/10/14

REVISIONS						
No.	BY:	DATE:	No.	BY:	DATE:	
1			3			
2			4			

SHEET No. 5-129

TOTAL SHEETS 671

COOKAE
N:\142_Villas2\NCDOT_V8_WORKSPACE\Structures_STD35\U-0071_TEMP_RB_BRIDGE\plan\BW_FS_STD-plt.cfg
\\192.168.6.4\wsc_cadd\142_Villas2\NCDOT_V8_WORKSPACE\structures_Sta\U-0071-TEMP_RB_BRIDGE\plan\HS-SHADE.tbl
\\192.168.6.4\wsc_cadd\142_Villas2\NCDOT_V8_WORKSPACE\structures_Sta\U-0071-TEMP_RB_BRIDGE\257_SKDwg\Plans\U-0071_ed_side1_psd.dgn
6/10/2014 4:04:57 PM

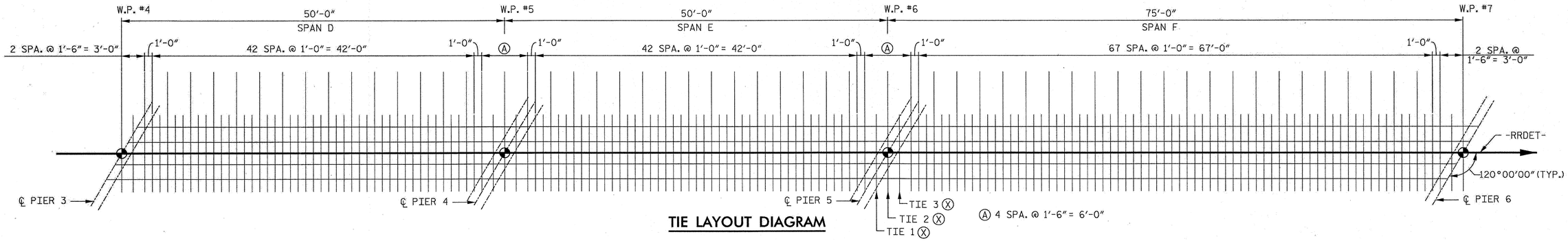

TIE LAYOUT DIAGRAM

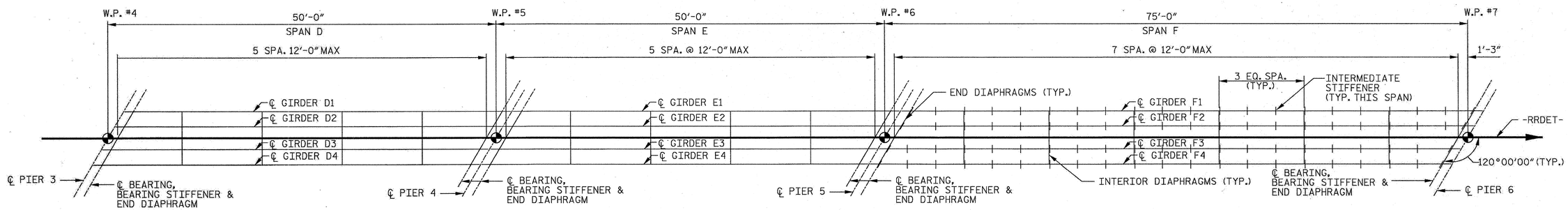

FRAMING PLAN

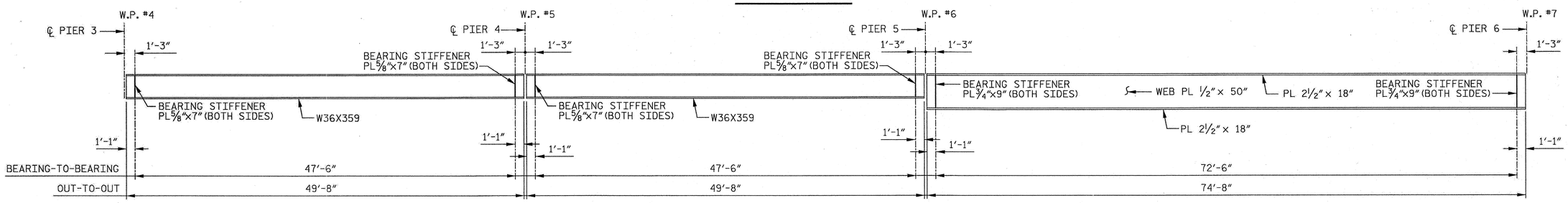

TYPICAL GIRDER ELEVATION

PROJECT NO. U-0071

DURHAM COUNTY

STATION: 65+21.79 -L- P.O.C. =
28+50.89 -RRDET- P.O.T.

SHEET 2 OF 3

NOTE:

SEE GIRDER DETAILS FOR ADDITIONAL NOTES AND DETAILS.

Ⓧ TIES AT THIS LOCATION REQUIRE A SPECIAL DAP PATTERN. SEE TYPICAL SECTION DETAILS, SHEET 2 OF 2 FOR VARYING DAP WIDTHS FOR TIES AT THIS LOCATION.

CDM Smith
Camp Dresser & McKee
5400 Glenwood Avenue, Suite 300
Raleigh, NC 27612-3228
NC COA No. F-1255

DRAWN BY :	W.R. SPENCE	DATE :	5-13
CHECKED BY :	A.E. COOK	DATE :	5-13
DESIGN ENGINEER :	W.R. SPENCE	DATE :	5-13

DWG. No. S01-007

NORTH CAROLINA PROFESSIONAL SEAL 37035 ENGINEER DAVID W. TAYLOR 8-10-14

STATE OF NORTH CAROLINA
DEPARTMENT OF TRANSPORTATION
RALEIGH

SUPERSTRUCTURE

PLAN OF SPAN D THRU SPAN F

REVISIONS									SHEET No.
No.	BY:	DATE:	No.	BY:	DATE:				S-130
1			3						TOTAL SHEETS
2			4						671

COOKAE
N:\MS_Willard\NCDOT_VB_WORKSPACE\Structures_STDS\U-0071_TEMP_RR_BRIDGE\plan\BW_FS_PDP.dgn
\\192.168.4.1\wsc_cad\MS_Willard\NCDOT_VB_WORKSPACE\Structures_Sets\U-0071_TEMP_RR_BRIDGE\plan\HS-SHADE.tbl
\\192.168.4.1\wsc_cad\U-0071_TEMP_RR_BRIDGE\221-Strides\Plans\U-0071_S_plan_plat.dgn
6/16/2014
2:39:05 PM

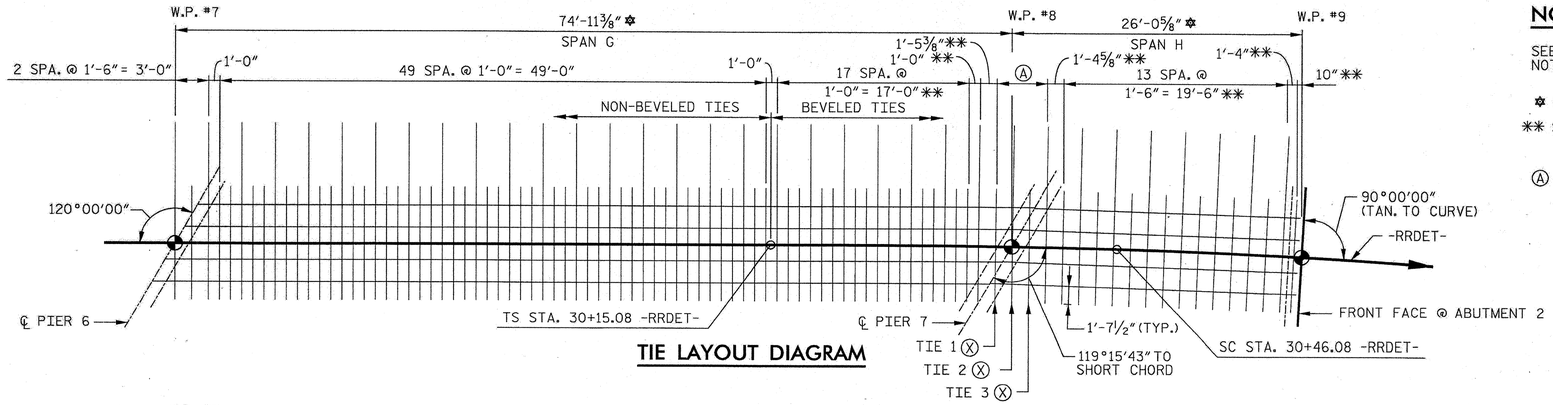

TIE LAYOUT DIAGRAM

NOTES:

SEE GIRDER DETAILS FOR ADDITIONAL NOTES AND DETAILS.

✡ MEASURED ALONG CURVE

** SET TIE RADIAL TO BASELINE

Ⓐ 3 SPA. @ 1'-6" = 4'-6" **

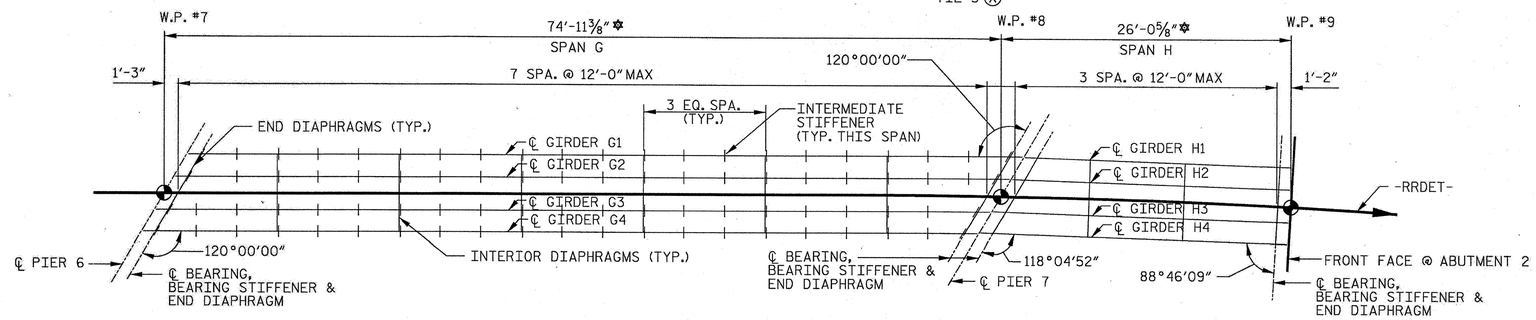

FRAMING PLAN

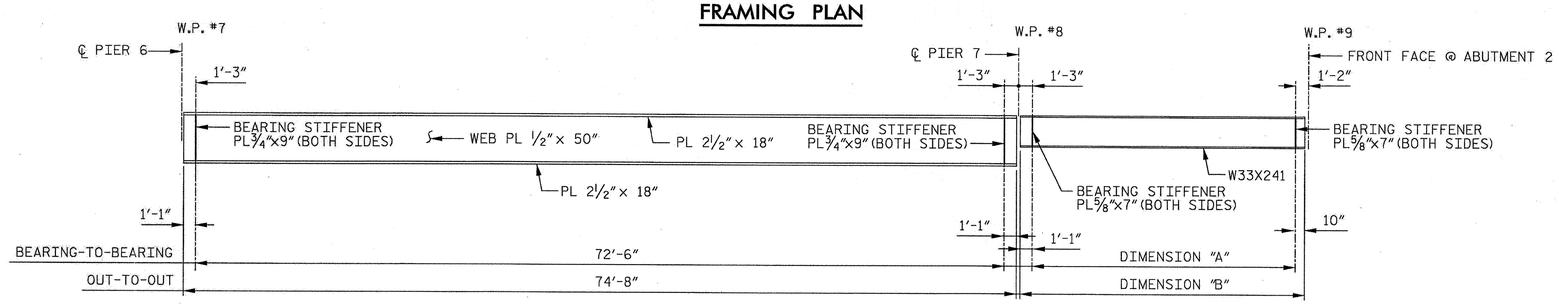

TYPICAL GIRDER ELEVATION

TABLE OF GIRDER DIMENSIONS		
GIRDER	DIMENSION "A"	DIMENSION "B"
H1	21'-9⅛"	23'-8⅛"
H2	22'-9⅜"	24'-8⅜"
H3	24'-3⅞"	26'-2⅞"
H4	25'-4⅛"	27'-3⅛"

Ⓧ TIES AT THIS LOCATION REQUIRE A SPECIAL DAP PATTERN. SEE TYPICAL SECTION DETAILS, SHEET 2 OF 2 FOR VARYING DAP WIDTHS FOR TIES AT THIS LOCATION.

PROJECT NO. U-0071

DURHAM COUNTY

STATION: 65+21.79 -L- P.O.C. = 28+50.89 -RRDET- P.O.T.

SHEET 3 OF 3

STATE OF NORTH CAROLINA
DEPARTMENT OF TRANSPORTATION
RALEIGH

SUPERSTRUCTURE

PLAN OF SPAN G
THRU SPAN H

CDM Smith
Camp Dresser & McKee
5400 Glenwood Avenue, Suite 300
Raleigh, NC 27612-3228
NC COA No. F-1255

DRAWN BY : W.R. SPENCE DATE : 5-13
CHECKED BY : A.E. COOK DATE : 5-13
DESIGN ENGINEER : W.R. SPENCE DATE : 5-13

DWG. No. S01-008

NORTH CAROLINA PROFESSIONAL SEAL 37035 ENGINEER DAVID W. TAYLOR 6-16-14

REVISIONS						SHEET No.
No.	BY:	DATE:	No.	BY:	DATE:	5-131
1			3			TOTAL SHEETS
2			4			671

COOKIE
N:\Unit_Proj\NCDOT VB_WORKSPACE\Structures_STDS\U-0071_TEMP_RB_BRIDGE\plan\PW_TS_PDF.cfg
\\192.168.6.4\wes_cadd\US_Wind\NCDOT_VB_WORKSPACE\structures_Bds\U-0071_TEMP_RB_BRIDGE\plan\HS-SHADE.sl
P:\B5331\U-0071_TEMP_RB_BRIDGE\231_Sr\Dwg\Plans\U-0071_sd_dlnl_pa3.dgn
6/10/2014 1:56:47 PM

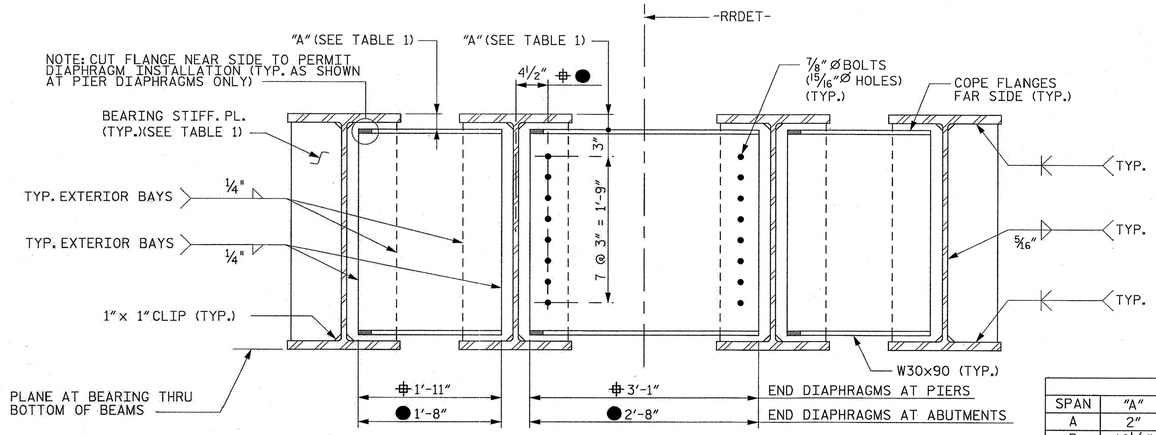

⌖ LENGTHS PARALLEL TO CL BEARING

● LENGTHS NORMAL TO CL GIRDER

TYPICAL END DIAPHRAGMS

(LOOKING STATIONS AHEAD)

TABLE 1		
SPAN	"A"	BEARING STIFFENER
A	2"	⅝"x7"
B	10¼"	¾"x9"
C	3"	⅝"x7"
D	3"	⅝"x7"
E	3"	⅝"x7"
F	10¼"	¾"x9"
G	10¼"	¾"x9"
H	2"	⅝"x7"

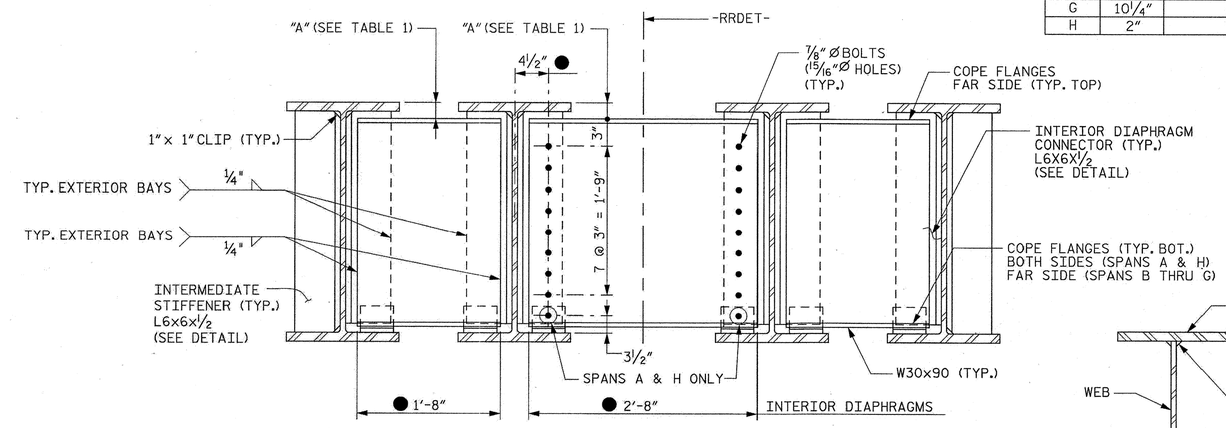

TYPICAL INTERIOR DIAPHRAGMS

(LOOKING STATIONS AHEAD)

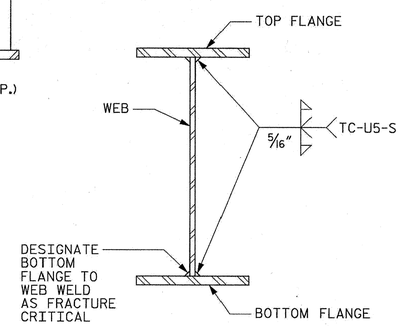

PLATE GIRDER WELD DETAIL

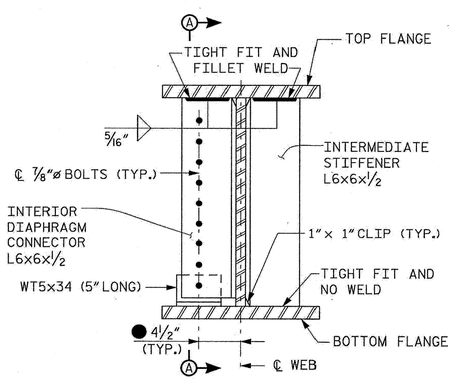

INTERIOR DIAPHRAGM CONNECTIONS & INTERMEDIATE STIFFENER DETAIL

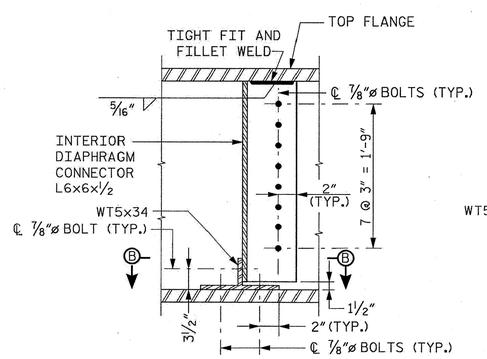

SECTION A–A

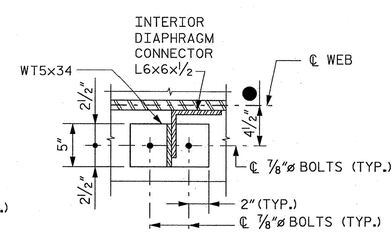

SECTION B–B

NOTES:

FOR ADDITIONAL GIRDER INFORMATION, SEE PLAN SHEETS SPANS A THRU H.

STRUCTURAL STEEL SHALL MEET THE CURRENT REQUIREMENTS OF THE ASTM SPECIFICATIONS FOR STRUCTURAL STEEL, DESIGNATION A-709. WELDED PLATE GIRDERS (FLANGES AND WEB) AND ROLLED BEAMS SHALL BE GRADE 50. ALL OTHER STRUCTURAL STEEL SHALL BE GRADE 36. SEE SPECIAL PROVISIONS FOR ADDITIONAL INFORMATION.

A CHARPY V-NOTCH TOUGHNESS TEST SHALL BE REQUIRED ON ALL BOTTOM FLANGE AND WEB PLATES AND SHALL BE IN ACCORDANCE WITH AREMA CHAPTER 15, SECTION 1.14 FOR ZONE 2.

ALL DIAPHRAGM BOLTS SHALL BE A325 HIGH STRENGTH BOLTS WITH HEAVY HEX NUTS AND STD. WASHERS.

INTERMEDIATE STIFFENERS AND INTERIOR DIAPHRAGMS SHALL BE PLACED NORMAL TO GIRDER WEB. BEARING STIFFENERS AND END DIAPHRAGMS SHALL BE SKEWED PARALLEL TO CENTERLINE OF BEARING.

FILLET WELDS SHALL TERMINATE AT ¼" ± ⅛" FROM EDGE OF CONNECTED MEMBER UNLESS NOTED OTHERWISE.

SHOP DRAWINGS: SHOP DRAWINGS SHALL BE APPROVED BY THE CHIEF ENGINEER BRIDGES & STRUCTURES, NORFOLK SOUTHERN CORPORATION, ATLANTA, GEORGIA. SHOP DRAWINGS SHALL BE LABELED NORFOLK SOUTHERN MP D-85.0.

FIELD CONNECTIONS SHALL BE BOLTED WITH ⅞" DIAMETER ASTM A325, TYPE 1 HIGH STRENGTH BOLTS WITH HARDENED WASHERS IN ACCORDANCE WITH AREMA SPECIFICATIONS USING THE TURN OF NUT METHOD.

ANCHOR BOLTS: SHALL BE 1¼" DIAMETER IN ACCORDANCE WITH AREMA SPECIFICATIONS AND SHALL BE GROUTED IN FORMED HOLES AFTER GIRDERS ARE ERECTED.

PAINTING OF TEMPORARY GIRDERS IS NOT REQUIRED.

BILL OF STRUCTURAL STEEL		
NO. PCS.	DESCRIPTION	REMARKS
74	W30x90x1'-8"	INTERIOR DIAPHRAGMS - BAYS 1 AND 3 END DIAPHRAGMS - BAYS 1 AND 3 AT ABUTMENTS
28	W30x90x1'-11"	END DIAPHRAGMS - BAYS 1 AND 3 AT PIERS
37	W30x90x2'-8"	INTERIOR DIAPHRAGMS - BAY 2 END DIAPHRAGMS - BAY 2 AT ABUTMENTS
14	W30x90x3'-1"	END DIAPHRAGMS - BAY 2 AT PIERS
1	W33x241x40'-6¼"	GIRDER A1
1	W33x241x39'-4⅜"	GIRDER A2
1	W33x241x37'-7⅝"	GIRDER A3
1	W33x241x36'-5¾"	GIRDER A4
1	W33x241x23'-8⅛"	GIRDER H1
1	W33x241x24'-8⅜"	GIRDER H2
1	W33x241x26'-2⅞"	GIRDER H3
1	W33x241x27'-3⅛"	GIRDER H4
12	W36x359x49'-8"	GIRDERS - SPANS C, D AND E
30	L6x6x½x2'-5⅞"	INTERIOR DIAPHRAGM CONNECTORS (SPANS A, H)
108	L6x6x½x4'-0½"	INTERIOR DIAPHRAGM CONNECTORS (SPANS B, F, G)
72	L6x6x½x2'-7⅛"	INTERIOR DIAPHRAGM CONNECTORS (SPANS C, D, E)
10	L6x6x½x2'-7⅜"	INTERMEDIATE STIFFENERS (SPANS A, H)
348	L6x6x½x4'-2"	INTERMEDIATE STIFFENERS (SPANS B, F, G)
24	L6x6x½x2'-9⅜"	INTERMEDIATE STIFFENERS (SPANS C, D, E)
210	WT5x34x5"	INTERIOR DIAPHRAGM CONNECTORS
AS REQ'D.	PLATES*	SEE DETAILS
AS REQ'D.	BEARING ASSEMBLIES**	SEE DETAILS
3814	⅞" DIA. x 3" - 5" MACHINE BOLTS W/ 2 WASHERS	INT. DIAPHRAGMS/CONNECTORS AND INT. STIFFENERS

* - INCLUDES PLATE GIRDERS (SPANS B, F AND G) AND BEARING STIFFENER PLATES.

** - INCLUDES ANCHOR BOLT ASSEMBLIES.

APPROXIMATELY 714,223 LBS. OF STRUCTURAL STEEL. THIS INCLUDES BEAMS, PLATE GIRDERS, BEARING STIFFENERS, DIAPHRAGMS, CONNECTORS, INT. STIFFENERS AND BOLTS.

BILL OF HARDWARE (NET)		
NO. PCS.	DESCRIPTION	REMARKS
740	¾" DIA. x 1'-0" WASHER HEAD DRIVE SPIKES	GUARD TIMBERS
370	¾" DIA. x 1'-3" SQUARE BODY HOOK BOLTS	TIES
296	⅞" DIA. x 1'-6" MACHINE BOLTS WITH 2 WASHERS	HANDRAIL POSTS
1184	20d NAILS	WALKWAY RAILING
2368	20d NAILS	WALKWAY FLOORING

BILL OF LUMBER		
NO. PCS.	DESCRIPTION	REMARKS
132	12"x12"x16'-0"	TIES - SEE DETAILS
200	12"x12"x10'-3"	TIES - SEE DETAILS
16	12"x13"x16'-0"	TIES - SEE DETAILS ***
22	12"x13"x10'-3"	TIES - SEE DETAILS ***
88	5"x8"x10'-0"	GUARD TIMBERS
148	4"x6"x4'-6"	HANDRAIL POSTS
308	2"x8"x10'-0"	WALKWAY FLOORING
176	2"x6"x10'-0"	HANDRAILS AND KICKBOARD
44	2"x5"x10'-0"	WALKWAY FLOORING

*** - BEVELED TIES TO BE FABRICATED FROM 12"x13" TIES. BEVELED TIE DEPTHS TO VARY FROM 12" TO 12⅞" WITHIN LIMITS OF SPIRAL. CONTINUE DEPTH AT 12⅞" WITHIN LIMITS OF CURVE. DUE TO TIE DEPTH DIMENSION EXCEEDING 12", BEVELED TIES MUST BE SOUTHERN PINE. SEE TIMBER DECK SPECIAL PROVISION.

PROJECT NO. U-0071

DURHAM COUNTY

STATION: 65+21.79 -L- P.O.C. = 28+50.89 -RRDET- P.O.T.

STATE OF NORTH CAROLINA
DEPARTMENT OF TRANSPORTATION
RALEIGH

SUPERSTRUCTURE

GIRDER DETAILS

CDM Smith
Camp Dresser & McKee
5400 Glenwood Avenue, Suite 300
Raleigh, NC 27612-3228
NC COA No. F-1255

DRAWN BY :	W.R. SPENCE	DATE :	5-13
CHECKED BY :	A.E. COOK	DATE :	5-13
DESIGN ENGINEER :	W.R. SPENCE	DATE :	5-13

DWG. No. S01-009

NORTH CAROLINA PROFESSIONAL SEAL 37035 ENGINEER DAVID W. TAYLOR 6-30-14

REVISIONS						
No.	BY:	DATE:	No.	BY:	DATE:	
1			3			
2			4			

SHEET No. S-132

TOTAL SHEETS 671

SPENCEWR
H:\HAS_Willard\WCROOT_98_WORKSPACE\Structures_STRS\U-0071_TEMP_RR_BRIDGE\dgn\S01-009_Girder_Details.dgn
P:\56331\U-0071_TEMP_RR_BRIDGE\221_Sn\Sheet_Plans\U-0071_st_dtl01_sd1.dgn
6/30/2014 1:13:34 PM

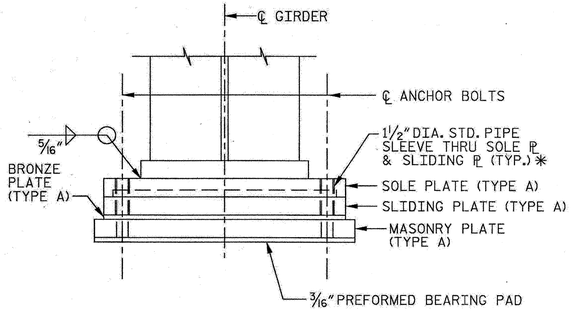

TYPE 1 BEARING ASSEMBLY

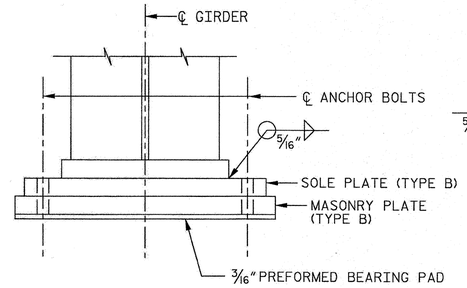

TYPE 2 BEARING ASSEMBLY

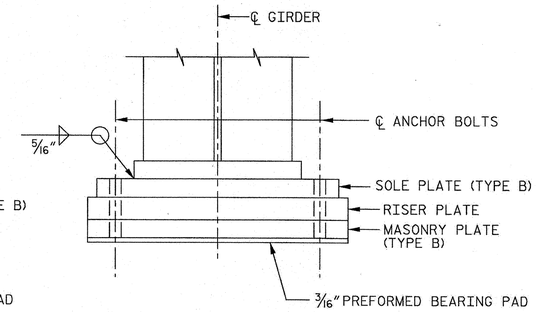

TYPE 3 BEARING ASSEMBLY

NOTES:

FOR DETAILS ON STEEL PLATES FOR BEARING ASSEMBLIES, SEE BEARING DETAILS, SHEETS 2 OF 3 & 3 OF 3.

SEE BEARING DETAILS, SHEET 3 OF 3 FOR ANCHOR BOLT NOTES AND DETAILS.

PREFORMED BEARING PAD SHALL MEET THE REQUIREMENTS OF:
(1) NCDOT STANDARD SPECIFICATION, SECTION 1079-1
(2) AREMA CHAPTER 11, SECTION 2.4.4.

SEE BEARING DETAILS, SHEET 3 OF 3 FOR BEAM SEAT ELEVATIONS. USE SHIMS UNDER SOLE PLATE TO ACHIEVE REQUIRED ELEVATION. SHIMS SHALL MATCH SOLE PLATE DIMENSIONS.

✱ ALL 1 1/2" DIA. STD. PIPE SLEEVES SHALL EXTEND 1/8" BEYOND THE TOP OF THE SOLE PLATE.

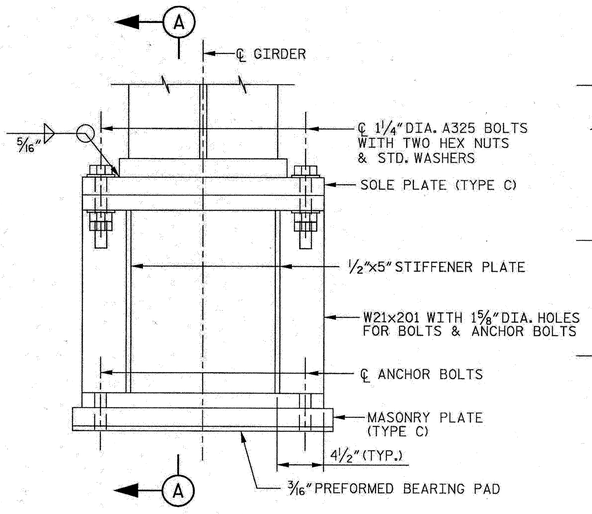

TYPE 4 BEARING ASSEMBLY

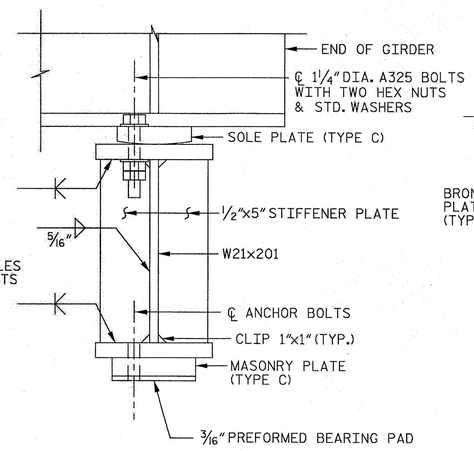

SECTION A–A

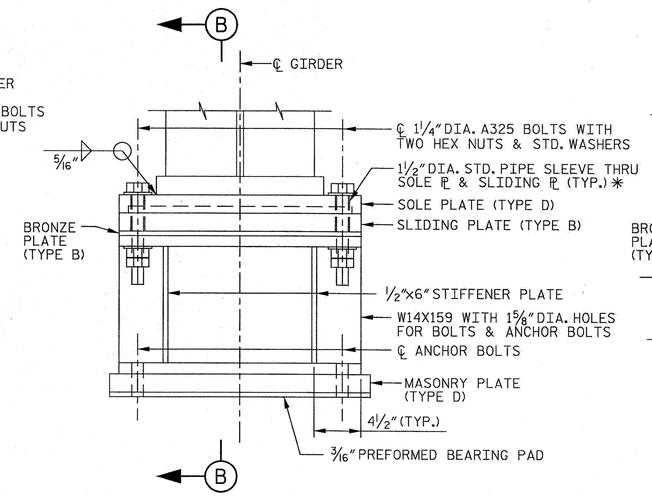

TYPE 5 BEARING ASSEMBLY

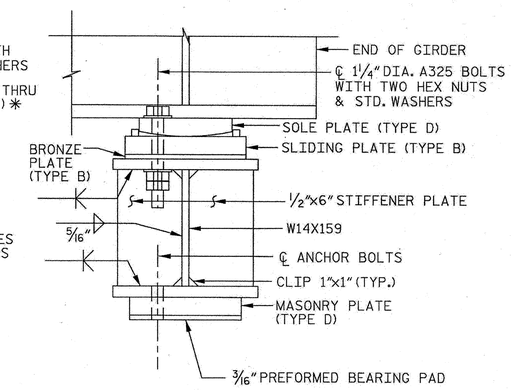

SECTION B–B

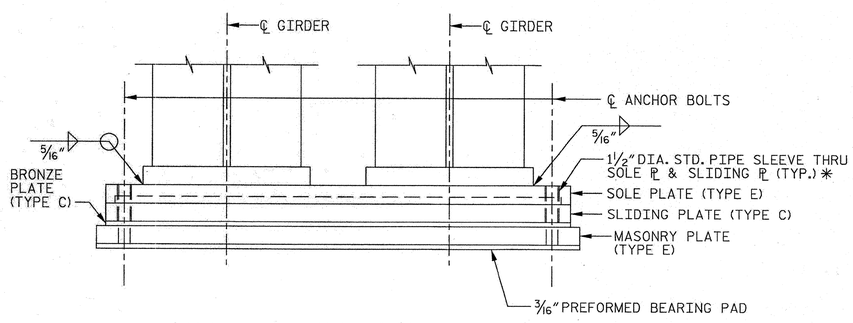

TYPE 6 BEARING ASSEMBLY

PROJECT NO. U-0071

DURHAM COUNTY

STATION: 65+21.79 –L– P.O.C. = 28+50.89 –RRDET– P.O.T.

SHEET 1 OF 3

STATE OF NORTH CAROLINA
DEPARTMENT OF TRANSPORTATION
RALEIGH

SUPERSTRUCTURE

BEARING DETAILS

CDM Smith
Camp Dresser & McKee
5400 Glenwood Avenue, Suite 300
Raleigh, NC 27612-3228
NC COA No. F-1255

DRAWN BY :	W.R. SPENCE	DATE :	5-13
CHECKED BY :	A.E. COOK	DATE :	5-13
DESIGN ENGINEER :	W.R. SPENCE	DATE :	5-13

DWG. No. S01-010

NORTH CAROLINA PROFESSIONAL SEAL 37035 ENGINEER DAVID W. TAYLOR 2.10.14

REVISIONS						SHEET No.
No.	BY:	DATE:	No.	BY:	DATE:	5-133
1			3			TOTAL SHEETS
2			4			671

CADFILE
N:\HS_V8i\sa21\NCDOT_V8_WORKSPACE\Structures_ST035\U-0071_TEMP_RR_BRIDGE\plan\BW_P3_POT.dgn
\\192.168.4.1\wes_cadd\HS_V8i\sa21\NCDOT_V8_WORKSPACE\structures_St\U-0071_TEMP_RR_BRIDGE\plan\HS-SHADE.bsl
P:\184331\U-0071_TEMP_RR_BRIDGE\271.Sh\Dwl\Plans\U-0071_sd_sheet_bgl1.dgn
6/20/2014 12:22:24 PM

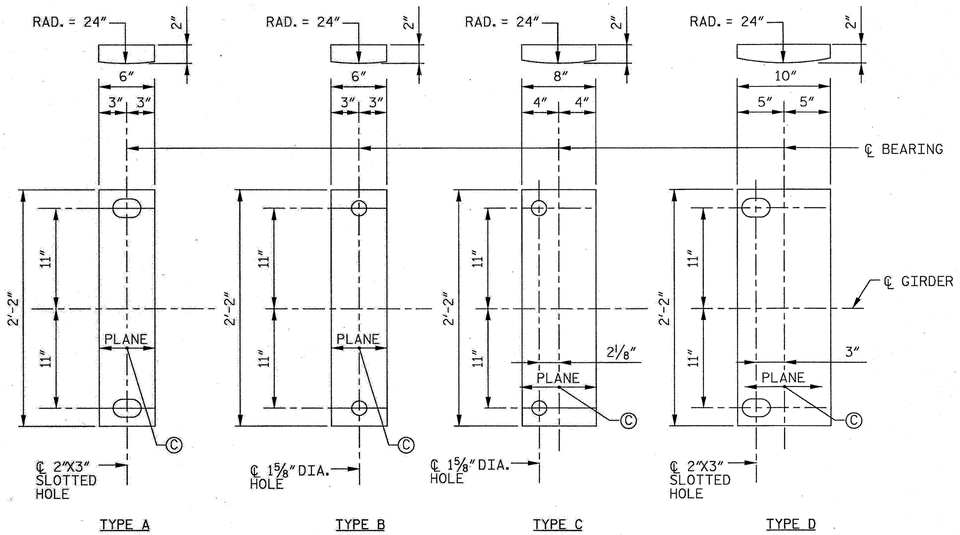

SOLE PLATE

Ⓒ ANSI 125 FINISH OR POLISH, BOTTOM CURVED SURFACE

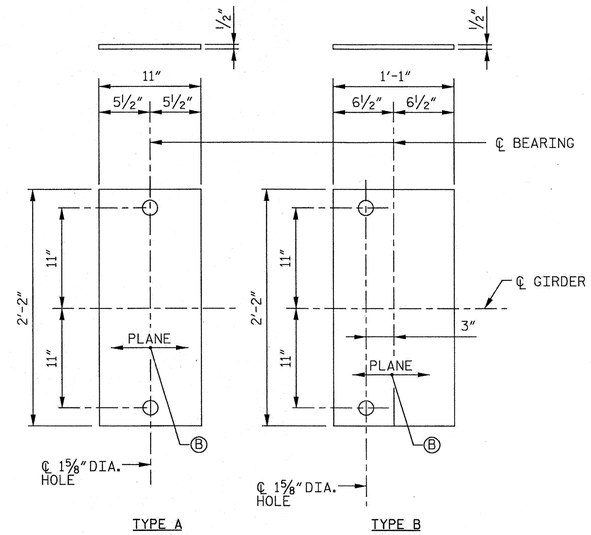

BRONZE PLATE

Ⓑ ANSI 125 FINISH OR POLISH, BOTH SIDES

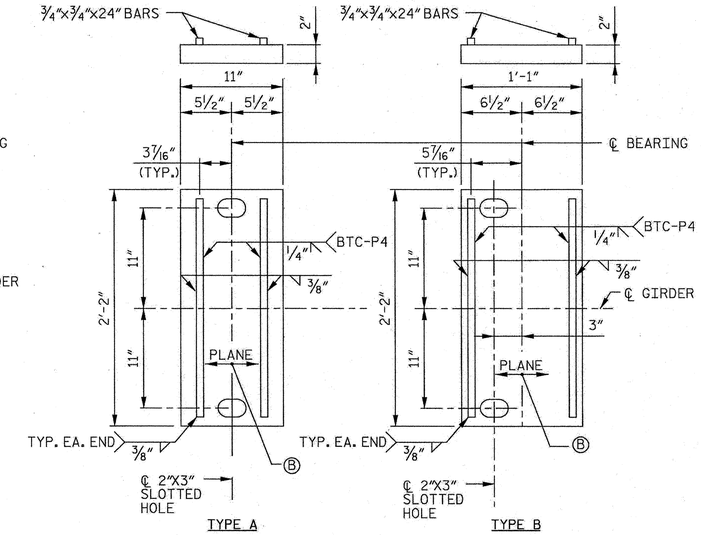

SLIDING PLATE

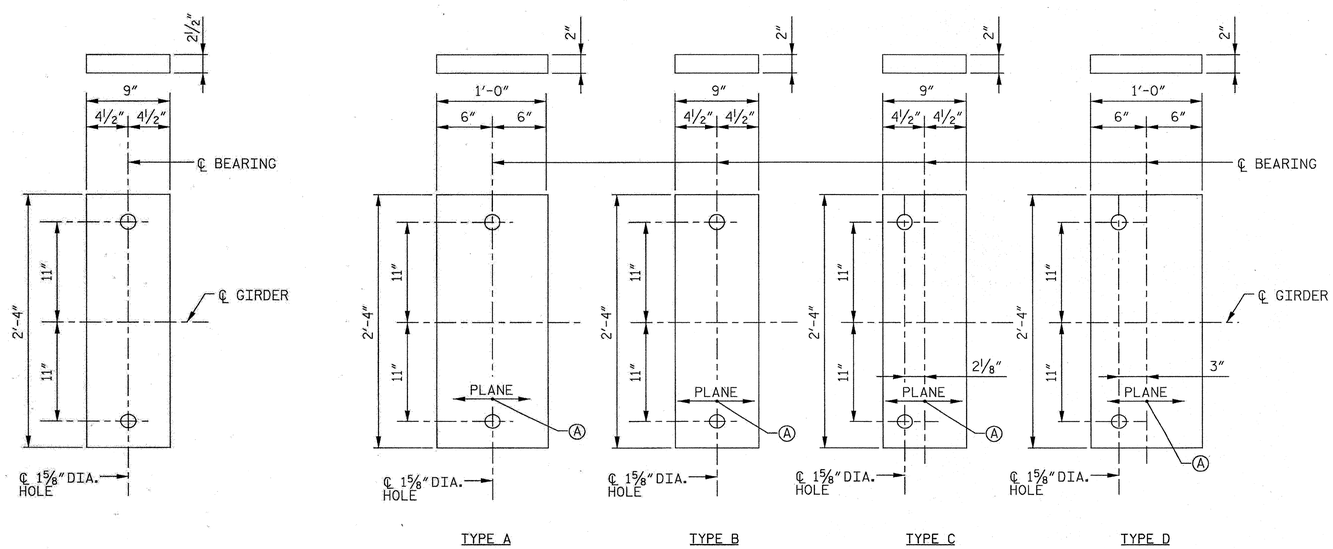

RISER PLATE

MASONRY PLATE

(3/16" PREFORMED BEARING PAD SIMILAR)

Ⓐ ANSI 125 FINISH OR POLISH, TOP SURFACE; ANSI 250 FINISH ON BOTTOM SURFACE

NOTES:

SEE BEARING DETAILS, SHEETS 1 OF 3 & 3 OF 3 FOR ADDITIONAL BEARING NOTES AND DETAILS.

ALL STEEL PLATES FOR BEARING ASSEMBLIES SHALL BE ASTM A709 GRADE 36 OR GRADE 50 STEEL.

ALL BRONZE PLATES FOR BEARING ASSEMBLIES SHALL BE ASTM B22-COPPER ALLOY 913 OR ASTM B100-COPPER ALLOY 510. TOP SURFACE TO BE SELF LUBRICATING.

PROJECT NO. U-0071

DURHAM COUNTY

STATION: 65+21.79 -L- P.O.C. = 28+50.89 -RRDET- P.O.T.

SHEET 2 OF 3

STATE OF NORTH CAROLINA
DEPARTMENT OF TRANSPORTATION
RALEIGH

SUPERSTRUCTURE

BEARING DETAILS

CDM Smith
Camp Dresser & McKee
5400 Glenwood Avenue, Suite 300
Raleigh, NC 27612-3228
NC COA No. F-1255

DRAWN BY :	W.R. SPENCE	DATE :	5-13
CHECKED BY :	A.E. COOK	DATE :	5-13
DESIGN ENGINEER :	W.R. SPENCE	DATE :	5-13

DWG. No. S01-011

NORTH CAROLINA PROFESSIONAL SEAL 37035 ENGINEER DAVID W. TAYLOR 6.10.14

REVISIONS						
No.	BY:	DATE:	No.	BY:	DATE:	
1			3			
2			4			

SHEET No. 5-134

TOTAL SHEETS 671

CODE:K6
NAME:\\Bw2\NCDOT_V8_WORKSPACE\Structures_STDS\U-0071_TEMP_RB_BRIDGE\plat-BW_FS_STD.dgn
\\192.168.4.1\wes_cook\AG_V8\w2\NCDOT_V8_WORKSPACE\structures_Sub\U-0071_TEMP_RB_BRIDGE\plat\HS-SHADE.tbl
P:\B6331\U-0071_TEMP_RB_BRIDGE\221_SrDes\Plans\U-0071_pt_plfd_bg2.dgn
6/10/2014 1:26:15 PM

LOCATION	GIRDER	BEAM SEAT ELEVATION *	REQUIRED SHIM HEIGHT (INCHES)	BEARING ASSEMBLY TYPE
ABUTMENT 1	A1	409.875	0	6
	A2	409.875	0	6
	A3	409.875	0	6
	A4	409.875	0	6
PIER 1	A1	410.199	7/16	4
	A2	410.190	5/16	4
	A3	410.175	1/8	4
	A4	410.165	0	4
	B1	408.487	3/8	1
	B2	408.477	1/4	1
	B3	408.463	1/16	1
	B4	408.453	0	1
PIER 2	B1	409.096	3/8	2
	B2	409.086	1/4	2
	B3	409.072	1/16	2
	B4	409.062	0	2
	C1	410.584	3/4	5
	C2	410.574	5/8	5
	C3	410.559	7/16	5
	C4	410.550	5/16	5
PIER 3	C1	410.983	3/8	3
	C2	410.973	1/4	3
	C3	410.958	1/16	3
	C4	410.949	0	3
	D1	411.004	5/8	1
	D2	410.994	1/2	1
	D3	410.979	5/16	1
	D4	410.970	1/4	1
PIER 4	D1	411.403	3/8	2
	D2	411.393	1/4	2
	D3	411.378	1/16	2
	D4	411.369	0	2
	E1	411.424	5/8	2
	E2	411.414	1/2	2
	E3	411.399	5/16	2
	E4	411.390	1/4	2
PIER 5	E1	411.787	5/16	5
	E2	411.779	3/16	5
	E3	411.766	1/16	5
	E4	411.758	0	5
	F1	410.337	7/16	2
	F2	410.329	5/16	2
	F3	410.317	3/16	2
	F4	410.309	1/16	2
PIER 6	F1	410.760	3/16	1
	F2	410.755	1/8	1
	F3	410.746	1/16	1
	F4	410.741	0	1
	G1	410.772	3/8	3
	G2	410.767	1/4	3
	G3	410.758	3/16	3
	G4	410.753	1/8	3
PIER 7	G1	411.038	1/8	1
	G2	411.035	1/16	1
	G3	411.030	0	1
	G4	411.027	0	1
	H1	412.777	1/2	4
	H2	412.774	7/16	4
	H3	412.770	3/8	4
	H4	412.767	3/8	4
ABUTMENT 2	H1	412.826	0	6
	H2	412.826	0	6
	H3	412.826	0	6
	H4	412.826	0	6

*BEAM SEAT ELEVATION IS TAKEN AS TOP OF SOLE PLATE.

ANCHOR BOLT LENGTHS		
TYPE	"X"	"L"
1	10½"	2'-1"
2	8"	1'-10½"
3	10½"	2'-1"
4	8"	1'-10½"
5	8"	1'-10½"
6	10½"	2'-1"

NOTES:

SEE BEARING DETAILS, SHEETS 1 OF 3 & 2 OF 3 FOR ADDITIONAL BEARING NOTES AND DETAILS.

ALL STEEL PLATES FOR BEARING ASSEMBLIES SHALL BE ASTM A709 GRADE 36 OR GRADE 50 STEEL.

ALL BRONZE PLATES FOR BEARING ASSEMBLIES SHALL BE ASTM B22-COPPER ALLOY 913 OR ASTM B100-COPPER ALLOY 510. TOP SURFACE TO BE SELF LUBRICATING.

ANCHOR BOLTS SHALL BE ASTM F1554 GRADE 55, GALVANIZED.

ANCHOR BOLT INSTALLATION PROCEDURE SHALL BE APPROVED BY NORFOLK SOUTHERN CORPORATION AND SHALL UTILIZE THE WOOD CORE BLOCKOUT DETAIL SHOWN ON THIS SHEET. GROUT AND COSTS SHALL BE IN ACCORDANCE WITH GROUT FOR STRUCTURES, SPECIAL PROVISIONS.

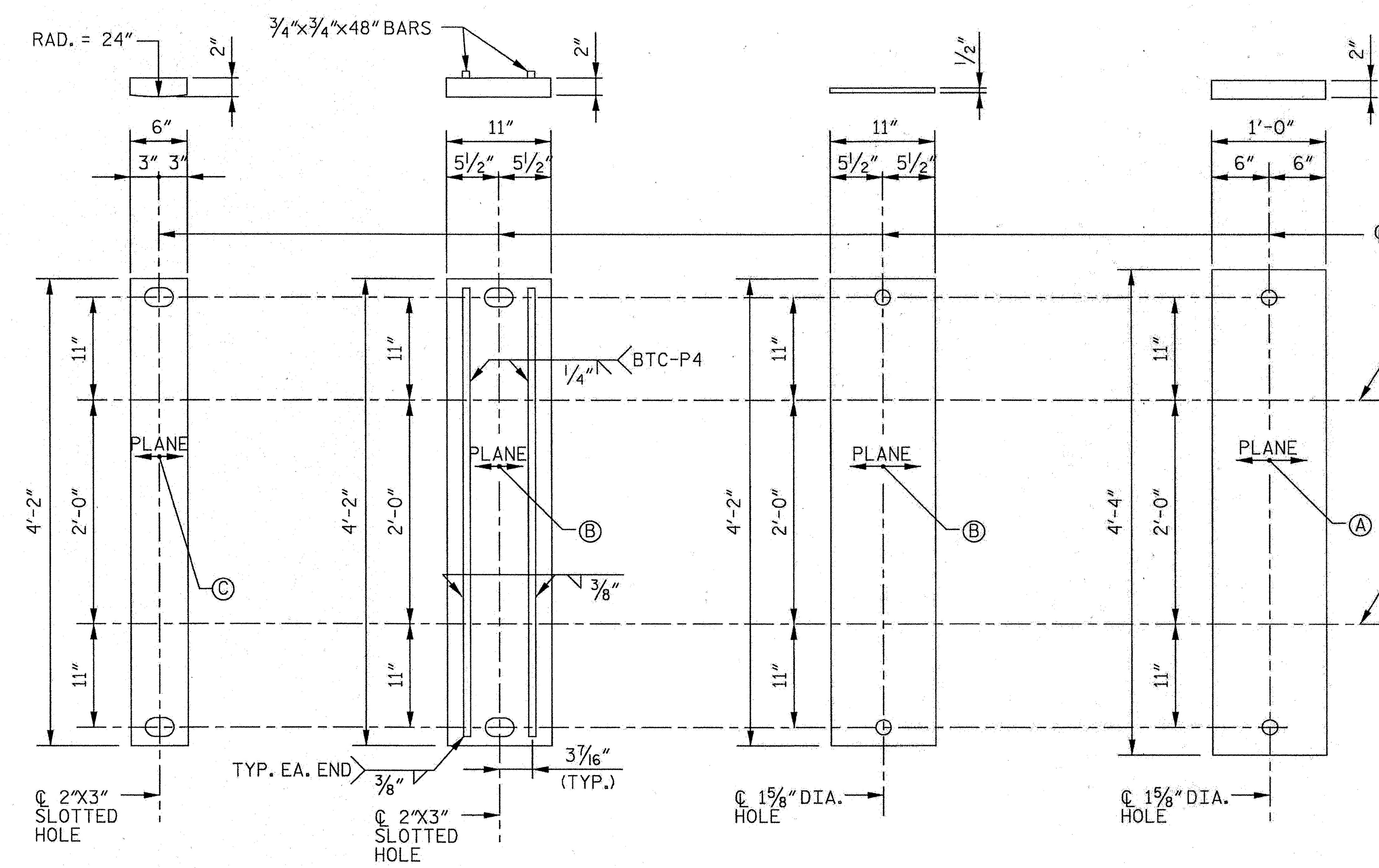

Ⓐ ANSI 125 FINISH OR POLISH, TOP SURFACE; ANSI 250 FINISH ON BOTTOM SURFACE

Ⓑ ANSI 125 FINISH OR POLISH, BOTH SIDES

Ⓒ ANSI 125 FINISH OR POLISH, BOTTOM CURVED SURFACE

TYPE E — **SOLE PLATE**

TYPE C — **SLIDING PLATE**

TYPE C — **BRONZE PLATE**

TYPE E — **MASONRY PLATE**

(³⁄₁₆" PREFORMED BEARING PAD SIMILAR)

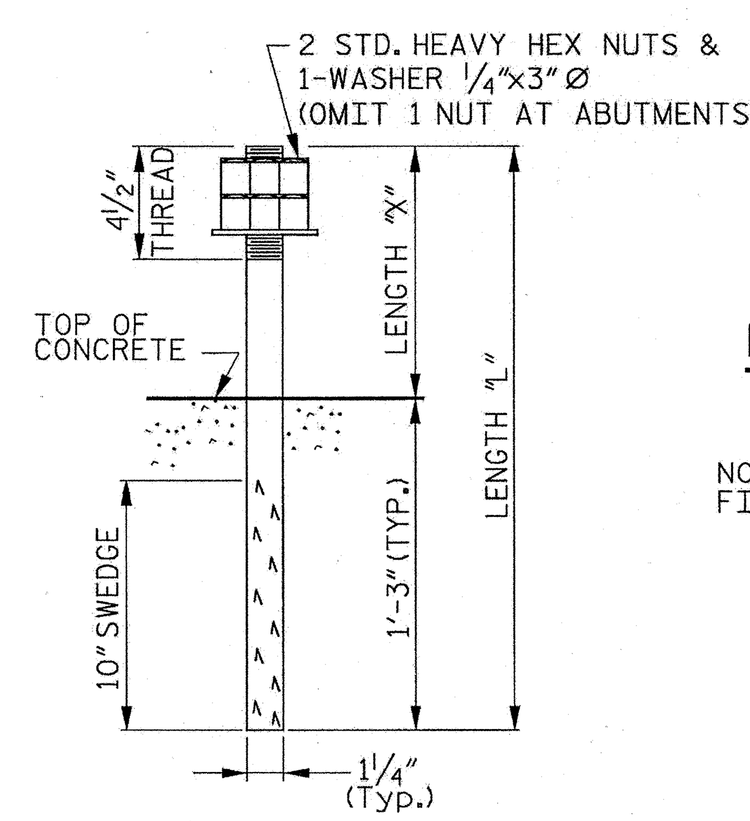

ANCHOR BOLT DETAIL

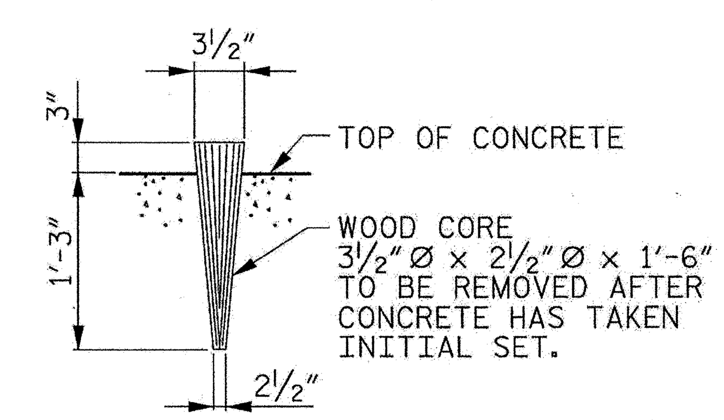

DETAIL OF WOOD CORE FOR ANCHOR BOLT HOLES

NOTE: IF FREEZING WEATHER IS ENCOUNTERED, FILL HOLES WITH ANTIFREEZE & SAWDUST.

PROJECT NO. U-0071

DURHAM COUNTY

STATION: 65+21.79 -L- P.O.C. = 28+50.89 -RRDET- P.O.T.

SHEET 3 OF 3

STATE OF NORTH CAROLINA
DEPARTMENT OF TRANSPORTATION
RALEIGH

SUPERSTRUCTURE

BEARING DETAILS

CDM Smith
Camp Dresser & McKee
5400 Glenwood Avenue, Suite 300
Raleigh, NC 27612-3228
NC COA No. F-1255

DRAWN BY :	W.R. SPENCE	DATE :	5-13
CHECKED BY :	A.E. COOK	DATE :	5-13
DESIGN ENGINEER :	W.R. SPENCE	DATE :	5-13

DWG. No. S01-012

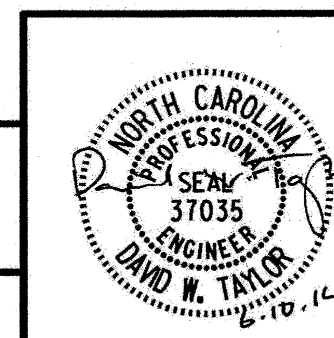

REVISIONS					
No.	BY:	DATE:	No.	BY:	DATE:
1			3		
2			4		

SHEET No. S-135

TOTAL SHEETS 671

COOKAE
N:\MS_V8iss2\NCDOT_V8_WORKSPACE\Structures_STDS\U-0071.TEMP.RR.BRIDGE\plot\BW_FS_PDF.pltcfg
\\192.168.6.4\wsa_cadd\MS_V8iss2\NCDOT_V8_WORKSPACE\structures_Stds\U-0071.TEMP.RR.BRIDGE\plot\HS-SHADE.tbl
P:\86331.U-0071.TEMP.RR.BRIDGE\221.StrDes\Plans\U-0071_sd_site1_bg3.dgn
6/10/2014 1:58:39 PM

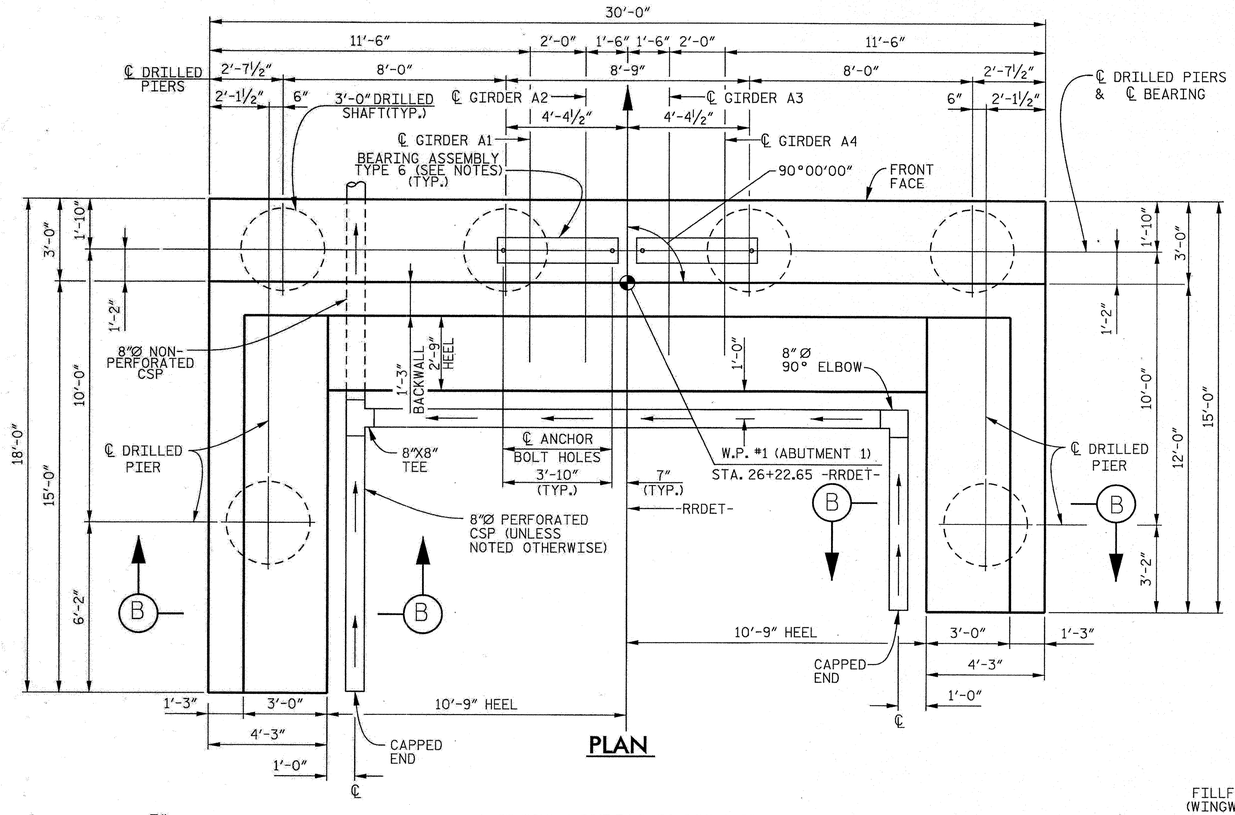

PLAN

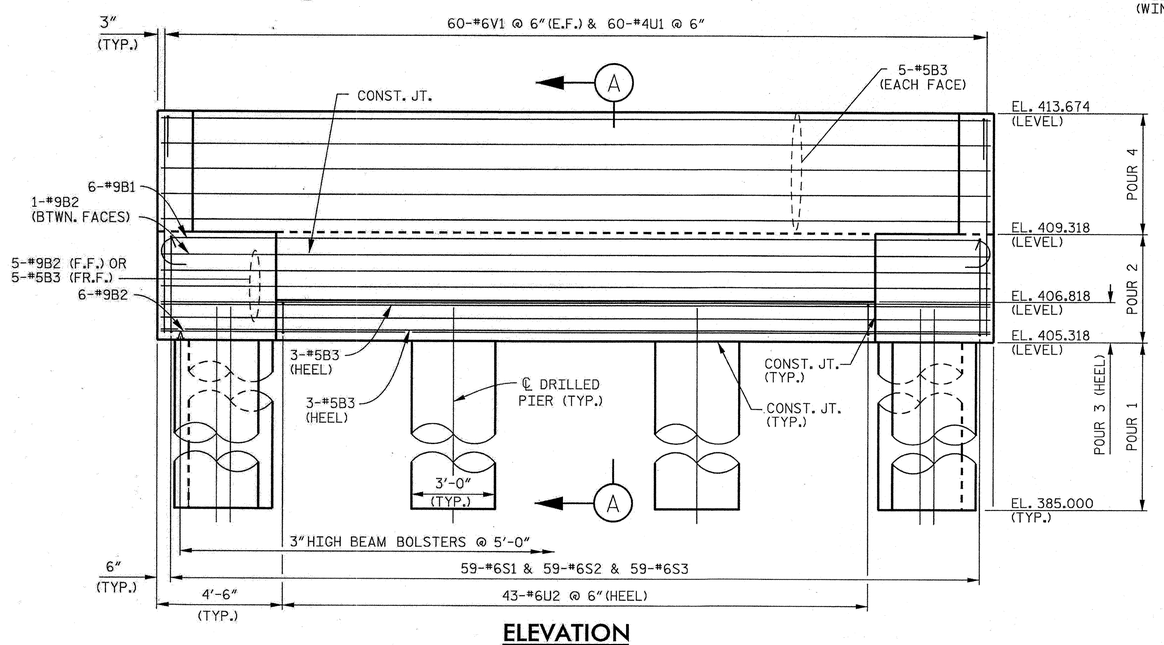

ELEVATION

(WING WALL REINFORCING NOT SHOWN FOR CLARITY)
(CONTINUOUS FRENCH DRAIN CORRUGATED STEEL PIPES NOT SHOWN)

NOTES

#9 "B" AND "H" BARS IN BOTTOM OF CAP AND WINGWALLS MAY BE SHIFTED SLIGHTY TO AVOID CONFLICT WITH BARS IN DRILLED PIERS.

STIRRUPS IN CAP MAY BE SHIFTED AS NECESSARY TO CLEAR ANCHOR BOLTS.

THE TOP SURFACE AREA OF THE END BENT CAP SHALL BE CURED IN ACCORDANCE WITH THE STANDARD SPECIFICATIONS EXCEPT THAT THE MEMBRANE CURING COMPOUND METHOD SHALL NOT BE USED.

FOR SECTION A-A, SEE ABUTMENT 1 SHEET 3 OF 3.

FOR SECTION B-B, SEE ABUTMENT 1 SHEET 2 OF 3.

FOR FRENCH DRAIN, SEE SPECIAL PROVISION "STRUCTURE DRAINAGE SYSTEM".

ALL STEEL IN THE DRILLED PIERS IS INCLUDED IN THE PAY ITEMS FOR "REINFORCING STEEL" AND "SPIRAL COLUMN REINFORCING STEEL.

SPLICING OF THE LONGITUDINAL BARS IN THE DRILLED PIERS WILL NOT BE PERMITTED.

E.F.= EACH FACE

FR.F.= FRONT FACE

F.F.= FILL FACE

FOR BEARING ASSEMBLY DETAILS AND ANCHOR BOLT HOLES, SEE BEARING DETAILS SHEET.

NO WATERPROOFING OR DAMPPROOFING WILL BE REQUIRED FOR THE TEMPORARY STRUCTURE.

THE CONTRACTOR'S ATTENTION IS CALLED TO THE FACT THAT THE LONGITUDINAL REINFORCEMENT FOR THE DRILLED PIERS IS DETAILED WITH 3 FEET OF EXTRA LENGTH.

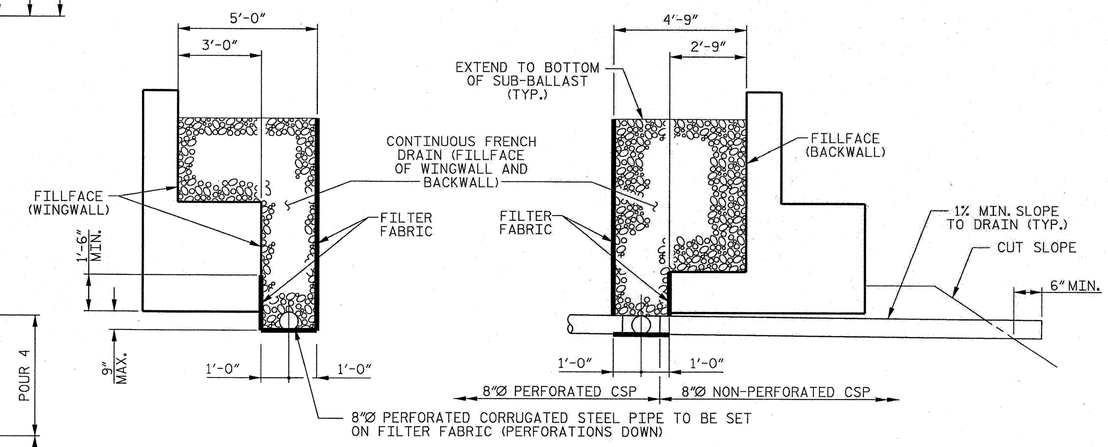

CONTINUOUS FRENCH DRAIN DETAIL

PROJECT NO. U-0071
DURHAM COUNTY
STATION: 65+21.79 -L- P.O.C. = 28+50.89 -RRDET- P.O.T.
SHEET 1 OF 3

STATE OF NORTH CAROLINA
DEPARTMENT OF TRANSPORTATION
RALEIGH

SUBSTRUCTURE

TEMPORARY BRIDGE ABUTMENT 1

CDM Smith
Camp Dresser & McKee
5400 Glenwood Avenue, Suite 300
Raleigh, NC 27612-3228
NC COA No. F-1255

DRAWN BY : R.M. HALSALL /C.E. DIXON DATE : 12-13
CHECKED BY : J.B. TAYLOR DATE : 12-13
DESIGN ENGINEER : A.E. COOK DATE : 8-13

DWG. No. S01-013

NORTH CAROLINA PROFESSIONAL SEAL 37035 ENGINEER DAVID W. TAYLOR 2-10-14

REVISIONS						SHEET No.
No.	BY:	DATE:	No.	BY:	DATE:	5-136
1			3			TOTAL SHEETS
2			4			671

COOKIE
N:\MAS_Wilson\MCDOT_VB_WORKSPACE\Drawings_STDS\U-0071_TEMP_RR_BRIDGE\plan\BV_PS_PDF.cfg
N:\MAS_Wilson\MCDOT_VB_WORKSPACE\Drawings_STDS\U-0071_TEMP_RR_BRIDGE\plan\U05-SHA08.dgn
P:\SASSI\U-0071_TEMP_RR_BRIDGE\221_Site Dwgs\Plans\U0071_S0_Sht_sub13.dgn
6/10/2014 2:12:13 PM

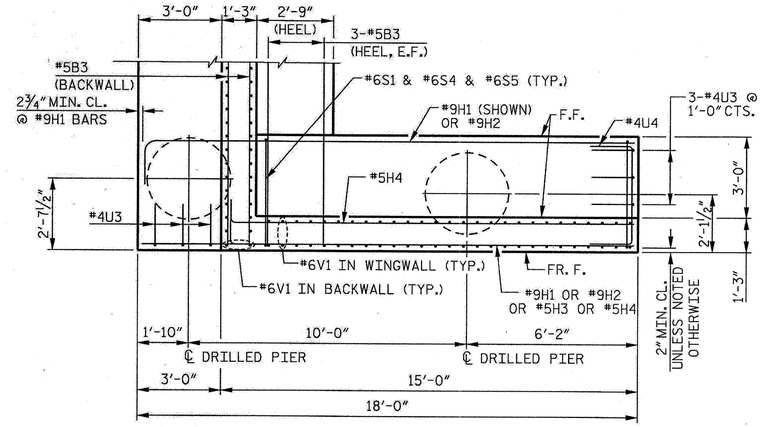

PLAN OF LEFT WING

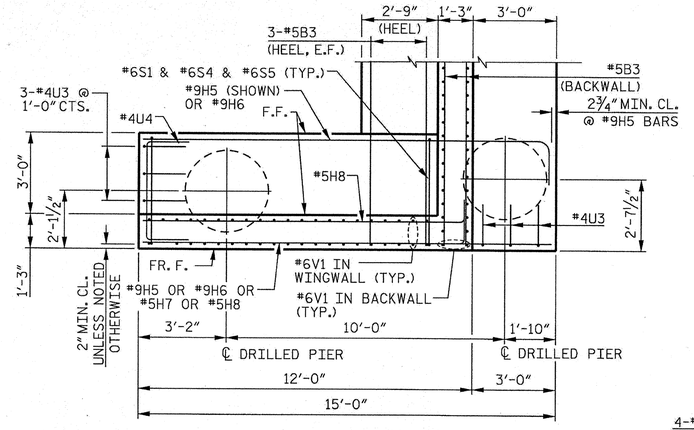

PLAN OF RIGHT WING

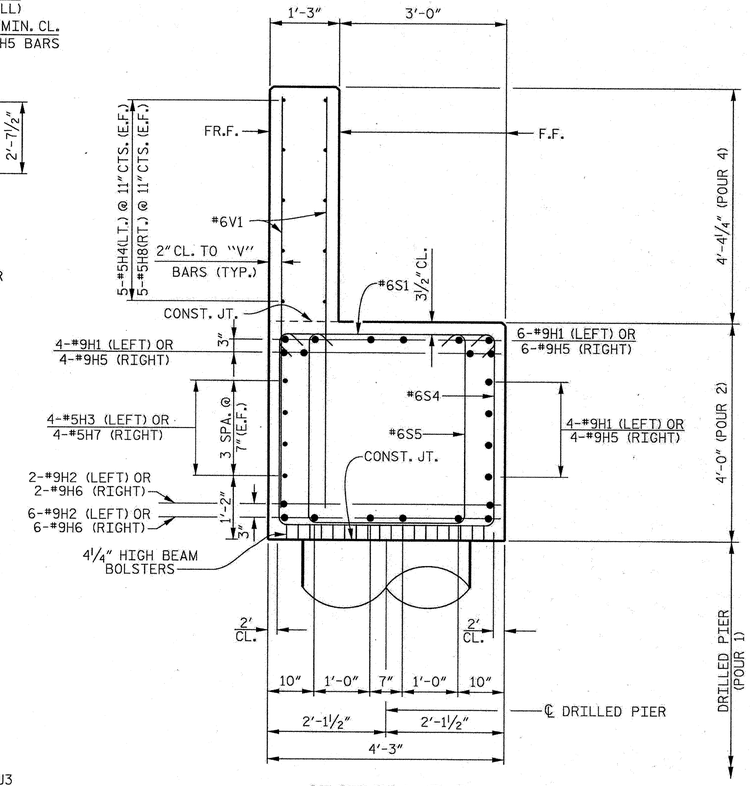

SECTION B–B

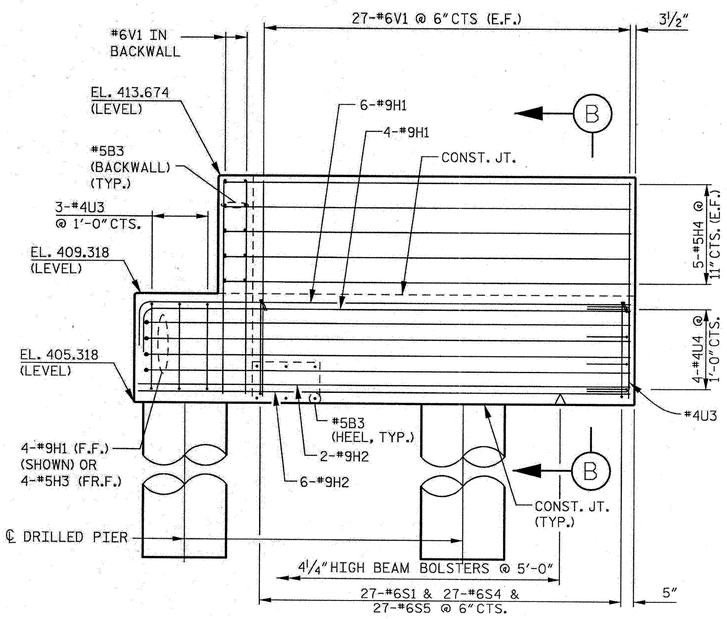

ELEVATION OF LEFT WING

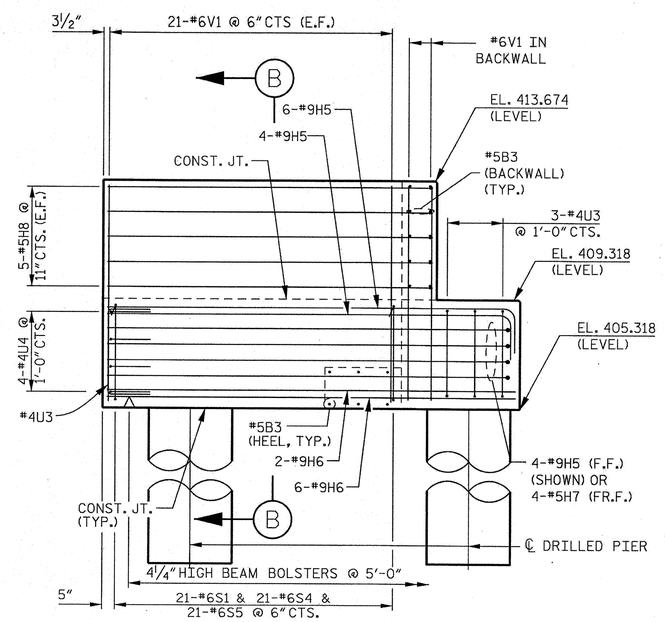

ELEVATION OF RIGHT WING

NOTES:

F.F. = FILL FACE
FR.F. = FRONT FACE
E.F. = EACH FACE

PROJECT NO. U-0071

DURHAM COUNTY

STATION: 65+21.79 –L– P.O.C. =
28+50.89 –RRDET– P.O.T.

SHEET 2 OF 3

STATE OF NORTH CAROLINA
DEPARTMENT OF TRANSPORTATION
RALEIGH

SUBSTRUCTURE

ABUTMENT 1 DETAILS

CDM Smith
Camp Dresser & McKee
5400 Glenwood Avenue, Suite 300
Raleigh, NC 27612-3228
NC COA No. F-1255

DRAWN BY : R.M. HALSALL /C.E. DIXON DATE : 12-13
CHECKED BY : A.E. COOK DATE : 12-13
DESIGN ENGINEER : J.B. TAYLOR DATE : 8-13

DWG. No. S01-014

NORTH CAROLINA PROFESSIONAL SEAL 37035 ENGINEER DAVID W. TAYLOR 8-10-14

REVISIONS						SHEET No.
No.	BY:	DATE:	No.	BY:	DATE:	5-137
1			3			TOTAL SHEETS
2			4			671

COOKJE
R:\Hydraulics_unit\NCDOT V8_WORKSPACE\Structures_STD\U-0071_TSMP_PR_BRIDGE\plot\PW FG_P02.pltcfg
\\172.16.6.4\wmc_cadd\Alg Velasco\NCDOT V8_WORKSPACE\structures_Bob\U-0071_TSMP_PR_BRIDGE\plot\135-SHADE.tbl
P:\56337\U-0071_TSMP_PR_BRIDGE\2221.Str\Dwg\Plans\U0071_SQ_Sheet_ab13.dgn
8/6/2014 2:19:57 PM

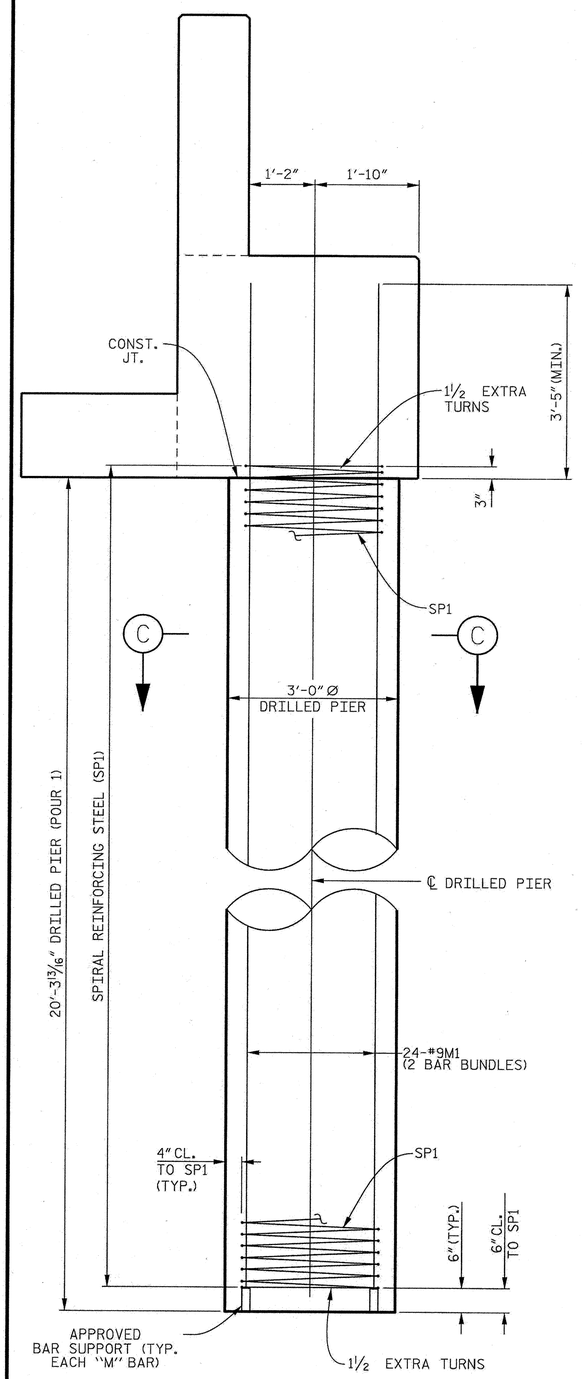

SECTION AT DRILLED PIER

(CAP PIER SHOWN, WING PIER SIMILAR)

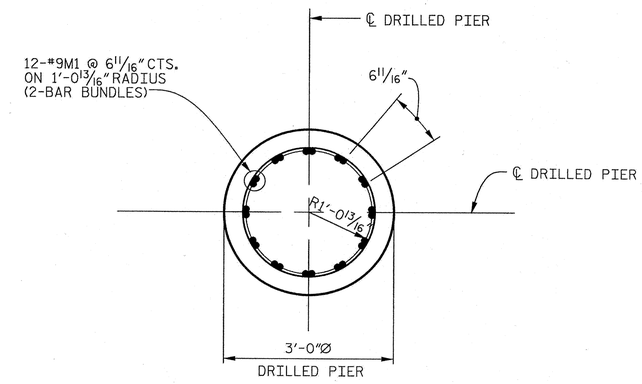

SECTION C–C

(TYP. ALL DRILLED PIERS)

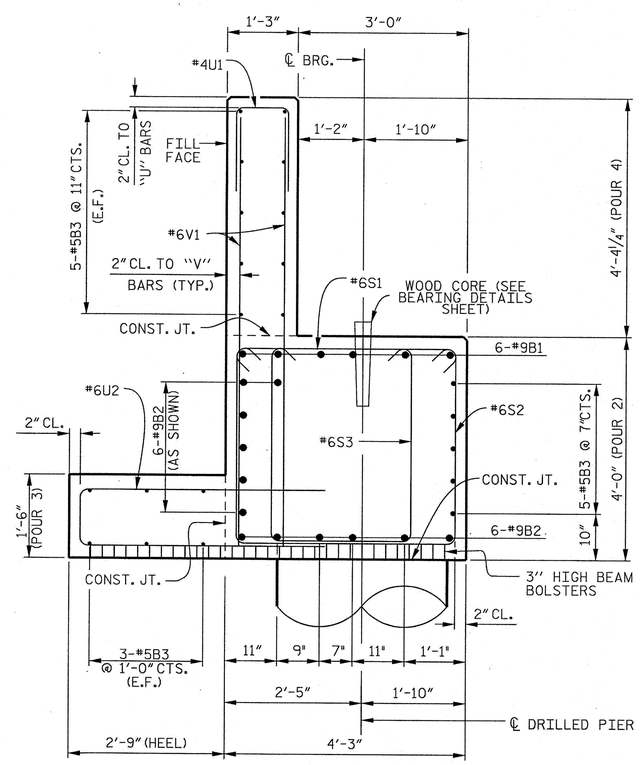

SECTION A–A

BAR TYPES

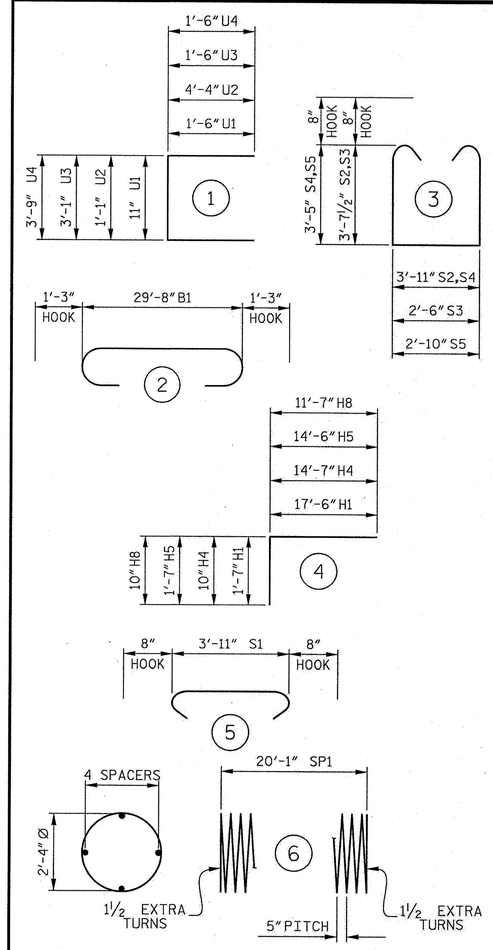

ALL BAR DIMENSIONS ARE OUT TO OUT.

BILL OF MATERIAL

ABUTMENT 1

BAR	No.	SIZE	TYPE	LENGTH	WEIGHT
B1	6	#9	2	32' - 2"	656
B2	12	#9	STR	29' - 8"	1210
B3	21	#5	STR	29' - 8"	650
H1	14	#9	4	19' - 1"	908
H2	8	#9	STR	17' - 8"	481
H3	4	#5	STR	17' - 8"	74
H4	10	#5	4	15' - 5"	161
H5	14	#9	4	16' - 1"	766
H6	8	#9	STR	14' - 8"	399
H7	4	#5	STR	14' - 8"	61
H8	10	#5	4	12' - 5"	130
M1	144	#9	STR	26' - 3"	12852
S1	107	#6	5	5' - 3"	844
S2	59	#6	3	12' - 6"	1108
S3	59	#6	3	11' -11"	1056
S4	48	#6	3	12' - 1"	871
S5	48	#6	3	11' - 0"	793
U1	60	#4	1	3' -11"	157
U2	43	#6	1	9' - 9"	630
U3	12	#4	1	6' - 1"	49
U4	8	#4	1	6' - 9"	36
V1	216	#6	STR	7' -11"	2568
REINFORCING STEEL					26460
SP1	6	**	6	367' - 7"	2,300

SPIRAL COLUMN REINFORCING STEEL 2,300 LBS.

CLASS "AA" CONCRETE (AS MODIFIED BY RAILWAY)

POUR 2	34.3 CU. YDS.
POUR 3	3.3 CU. YDS.
POUR 4	11.0 CU. YDS.
TOTAL	48.6 CU. YDS.

DRILLED PIER CONCRETE

POUR 1	31.9 CU. YDS.
3'-0" Ø DRILLED PIER NOT IN SOIL (LFD)	38.0 LIN. FT.
3'-0" Ø DRILLED PIER IN SOIL (LFD)	83.9 LIN. FT.
CSL TUBES	524.0 LIN. FT.

** THE SP1 SPIRAL REINFORCING STEEL SHALL BE W31 OR D31 COLD DRAWN WIRE OR #5 PLAIN OR DEFORMED BAR.

PROJECT NO. U-0071

DURHAM COUNTY

STATION: 65+21.79 -L- P.O.C. = 28+50.89 -RRDET- P.O.T.

SHEET 3 OF 3

STATE OF NORTH CAROLINA
DEPARTMENT OF TRANSPORTATION
RALEIGH

SUBSTRUCTURE

ABUTMENT 1 DETAILS

CDM Smith
Camp Dresser & McKee
5400 Glenwood Avenue, Suite 300
Raleigh, NC 27612-3228
NC COA No. F-1255

DRAWN BY : C.E. DIXON /W.R. SPENCE DATE : 6-14
CHECKED BY : A.E. COOK /J.B. TAYLOR DATE : 6-14
DESIGN ENGINEER : J.B. TAYLOR DATE : 8-13

DWG. No. S01-015

NORTH CAROLINA PROFESSIONAL SEAL 37035 ENGINEER DAVID W. TAYLOR 6.20.14

REVISIONS						SHEET No.
No.	BY:	DATE:	No.	BY:	DATE:	5-138
1			3			TOTAL SHEETS
2			4			671

SPENCEWR
\\WA-FS-PROJECT\NCDOT_TB_WORKSPACE\Structures_STD\U-0071\TEMP RR BRIDGE\Sol\Sp_S_SOP.dgn
\\WA-FS-PROJECT\NCDOT_TB_Wind1\NCDOT_TB_WORKSPACE\Structures_STD\U-0071\TEMP RR BRIDGE\Sol\HS-SHADE.bl
P:\86531\U-0071\TEMP RR BRIDGE\221_SnDwl\Plans\U0071_SD_Shet_ab13.dgn
6/20/2014 9:06:39 AM

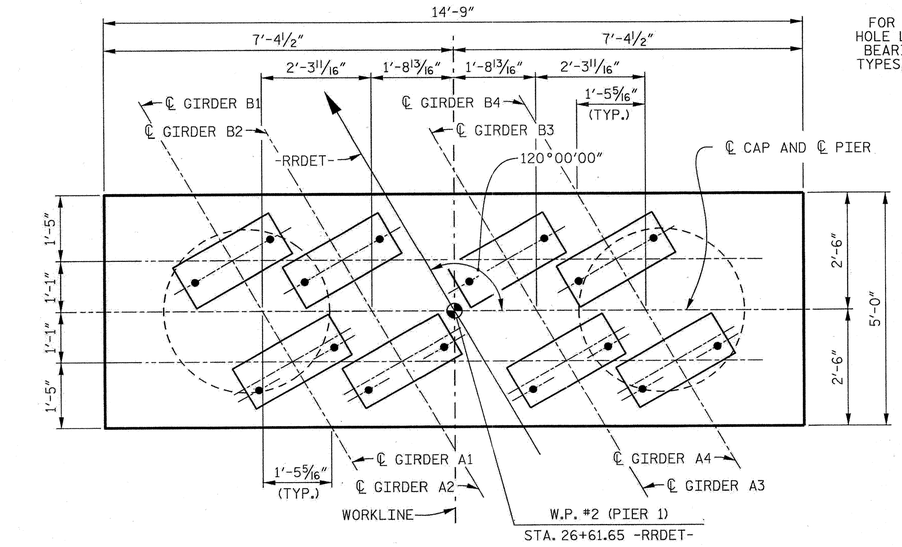

FOR ANCHOR BOLT HOLE LOCATIONS AND BEARING ASSEMBLY TYPES, SEE DETAIL A

PLAN

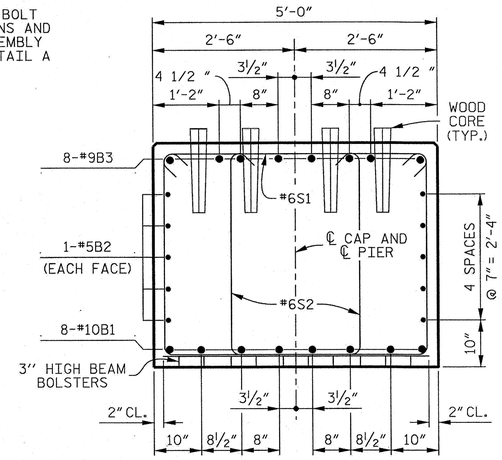

SECTION A–A

BAR TYPES

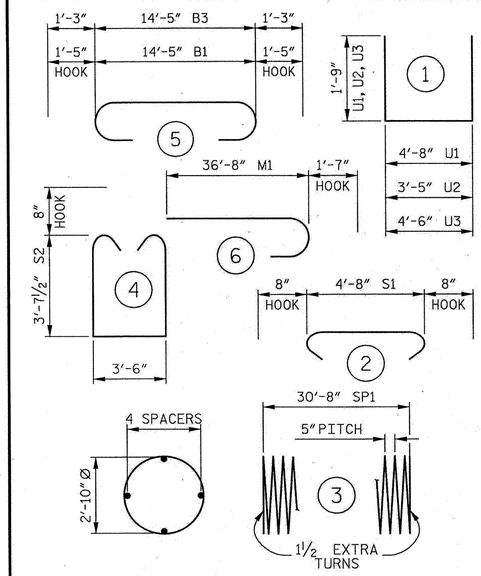

ALL BAR DIMENSIONS ARE OUT TO OUT.

BILL OF MATERIAL

PIER 1

BAR	No.	SIZE	TYPE	LENGTH	WEIGHT
B1	8	#10	5	17'- 3"	594
B2	10	#5	STR	14'- 5"	150
B3	8	#9	5	16'-11"	460
M1	48	#11	6	38'- 3"	9,755
S1	25	#6	2	6'- 0"	225
S2	50	#6	4	12'- 1"	907
U1	24	#4	1	8'- 2"	131
U2	8	#4	1	6'-11"	37
U3	8	#4	1	8'- 0"	43
REINFORCING STEEL					12,302 LBS.
SP1	2	**	3	670'- 1"	1,398
SPIRAL COLUMN REINFORCING STEEL					1,398 LBS.

CLASS "AA" CONCRETE (AS MODIFIED BY RAILWAY)
POUR 2 CAP — 10.9 CU. YDS.

DRILLED PIER CONCRETE (SPECIAL)
POUR 1 — 22.0 CU. YDS.

3'-6" Ø DRILLED PIER IN SOIL (LFD) — 39.8 LIN. FT.

3'-6" Ø DRILLED PIER NOT IN SOIL (LFD) — 22.0 LIN. FT.

PERMANENT STEEL CASING FOR 3'-6" Ø DRILLED PIER — 43.8 LIN. FT.

** THE SP1 SPIRAL REINFORCING STEEL SHALL BE W31 OR D31 COLD DRAWN WIRE OR #5 PLAIN OR DEFORMED BAR.

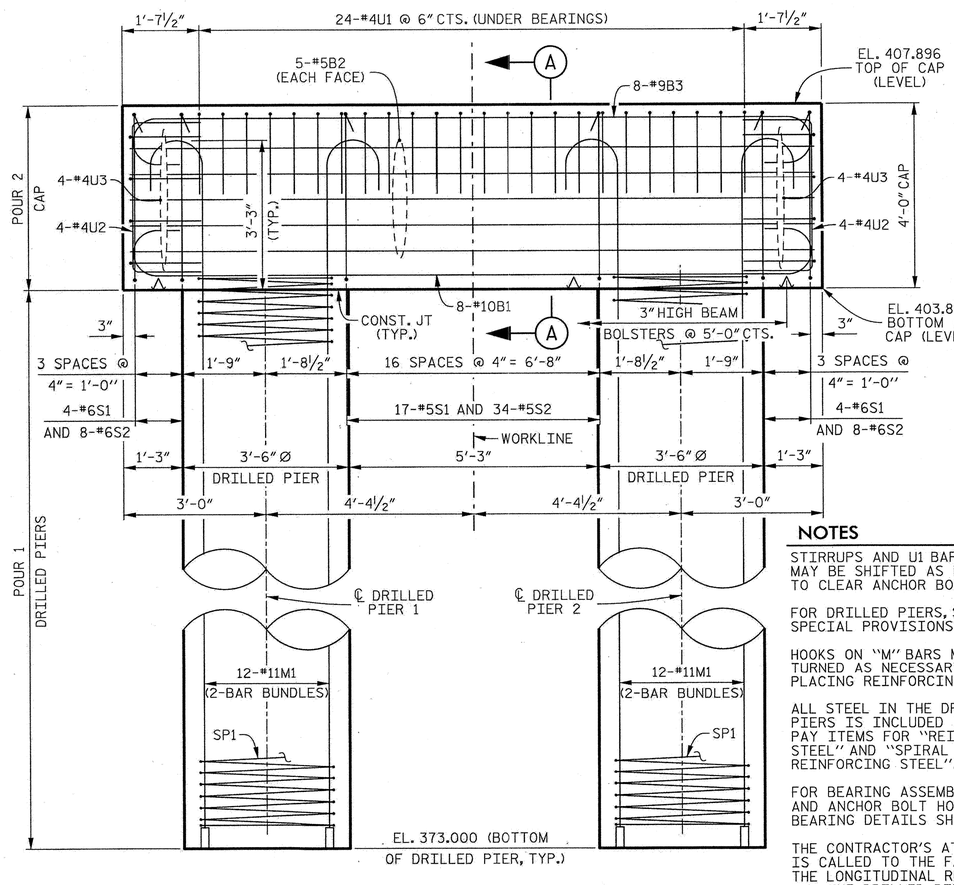

ELEVATION

(PERMANENT STEEL CASING NOT SHOWN)

NOTES

STIRRUPS AND U1 BARS IN CAP MAY BE SHIFTED AS NECESSARY TO CLEAR ANCHOR BOLTS.

FOR DRILLED PIERS, SEE SPECIAL PROVISIONS.

HOOKS ON "M" BARS MAY BE TURNED AS NECESSARY FOR PLACING REINFORCING STEEL.

ALL STEEL IN THE DRILLED PIERS IS INCLUDED IN THE PAY ITEMS FOR "REINFORCING STEEL" AND "SPIRAL COLUMN REINFORCING STEEL".

FOR BEARING ASSEMBLY DETAILS AND ANCHOR BOLT HOLES, SEE BEARING DETAILS SHEET.

THE CONTRACTOR'S ATTENTION IS CALLED TO THE FACT THAT THE LONGITUDINAL REINFORCEMENT FOR THE DRILLED PIERS IS DETAILED WITH 3 FEET OF EXTRA LENGTH.

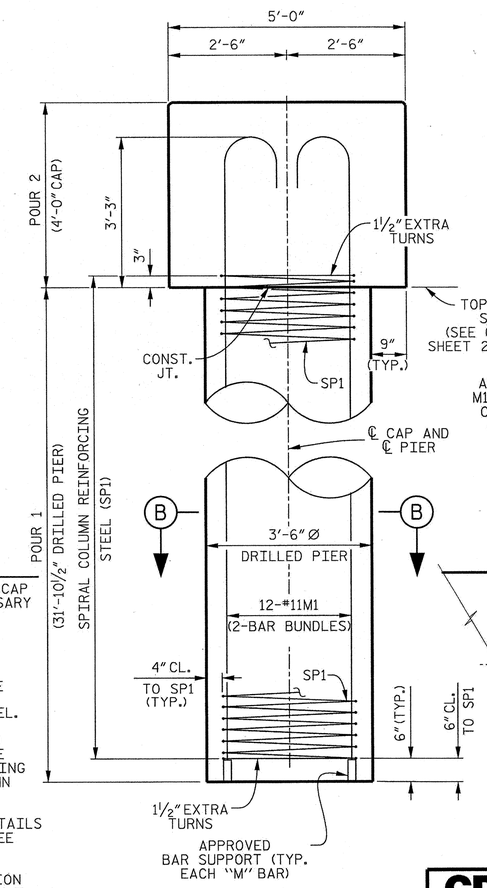

END VIEW

(PERMANENT STEEL CASING NOT SHOWN)

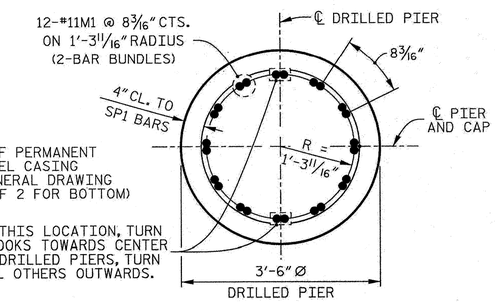

SECTION B–B

(TYP. ALL DRILLED PIERS)

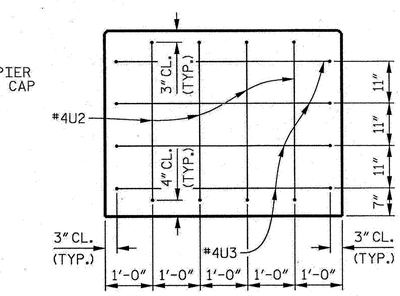

END OF CAP DETAIL

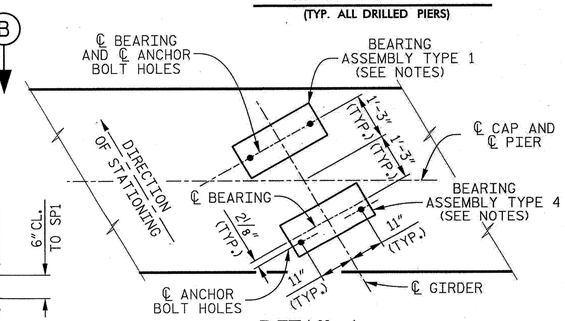

DETAIL A

PROJECT NO. U-0071

DURHAM COUNTY

STATION: 65+21.79 -L- P.O.C. = 28+50.89 -RRDET- P.O.T.

STATE OF NORTH CAROLINA
DEPARTMENT OF TRANSPORTATION
RALEIGH

SUBSTRUCTURE

TEMPORARY BRIDGE PIER 1

CDM Smith
Camp Dresser & McKee
5400 Glenwood Avenue, Suite 300
Raleigh, NC 27612-3228
NC COA No. F-1255

DRAWN BY : K.E. LOFTON /W.R. SPENCE DATE : 6-14
CHECKED BY : A.E. COOK /J.B. TAYLOR DATE : 6-14
DESIGN ENGINEER : A.E. COOK DATE : 4-13

DWG. No. S01-016

NORTH CAROLINA PROFESSIONAL SEAL 37035 ENGINEER DAVID W. TAYLOR 8-20-14

REVISIONS							SHEET No.
No.	BY:	DATE:	No.	BY:	DATE:		5-139
1			3				TOTAL SHEETS
2			4				671

SPENCEWR
N:\MS_Village\NCDOT_VB_WORKSPACE\Structures_STD5\U-0071\TEMP_RR_BRIDGE\plan\BW_PS_PDF.pltcfg
\\192.168.6.4\wes_cosd\MS_Village\NCDOT_VB_WORKSPACE\Structures_STD5\U-0071\TEMP_RR_BRIDGE\plan\US-SHADE.tbl
P:\B6331\U-0071\TEMP_RR_BRIDGE\221.3\Plan\Plans\U0071_SO_S001_pier1.dgn
8/20/2014 9:21:24 AM

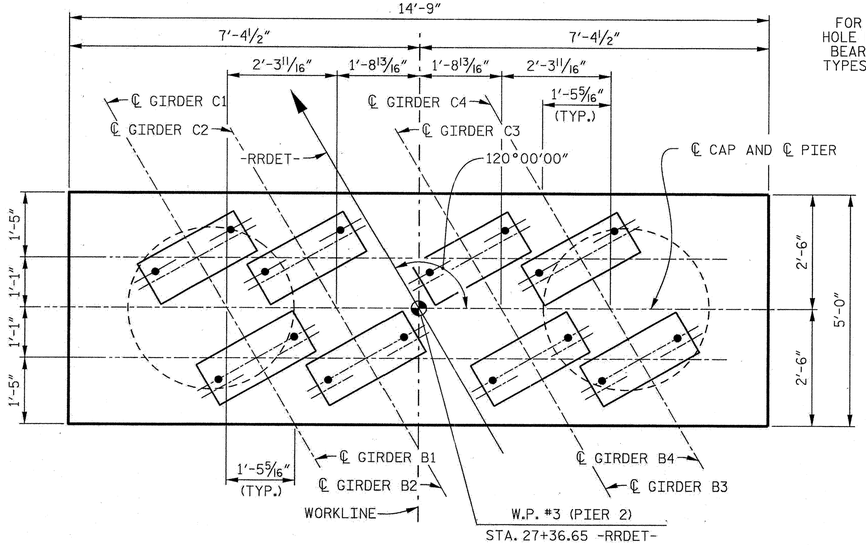

PLAN

FOR ANCHOR BOLT HOLE LOCATIONS AND BEARING ASSEMBLY TYPES, SEE DETAIL A

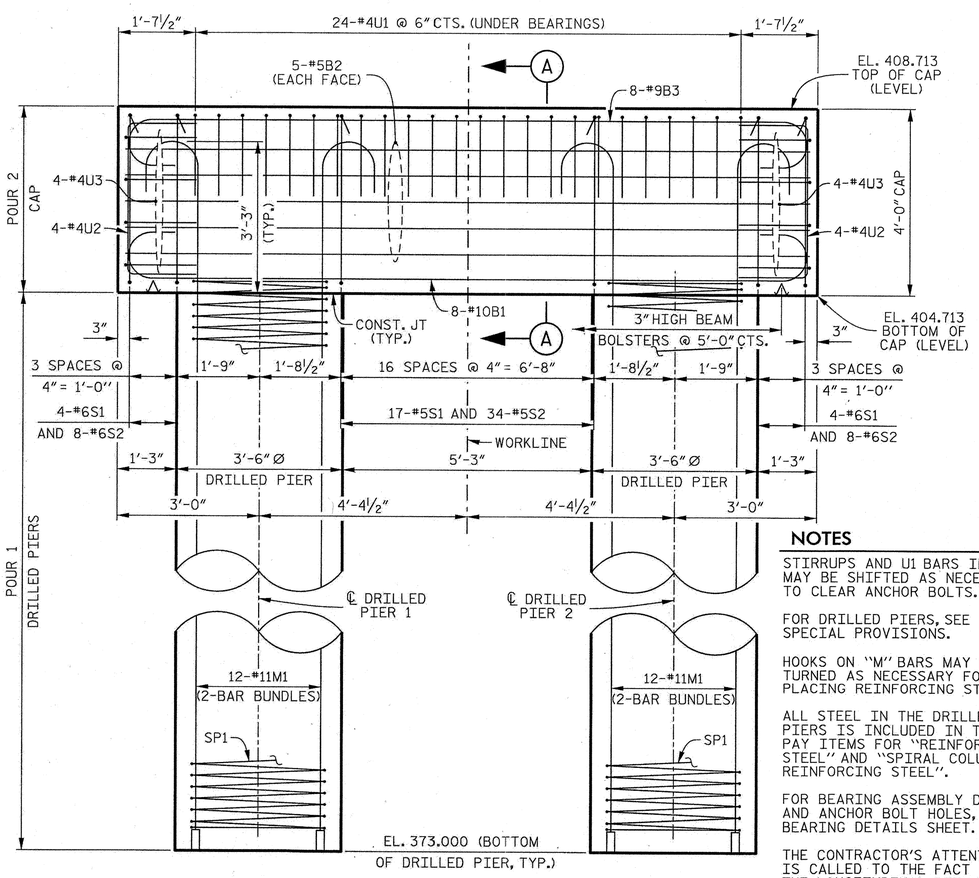

ELEVATION

(PERMANENT STEEL CASING NOT SHOWN)

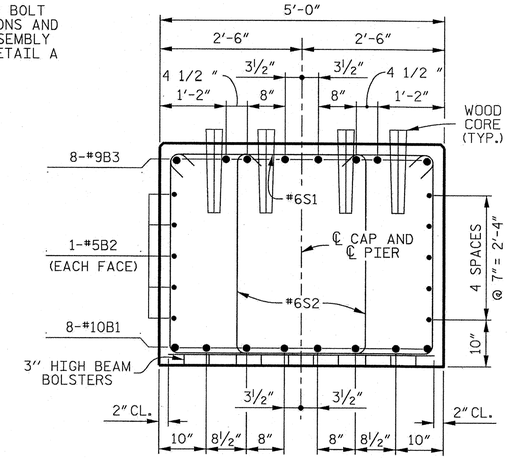

SECTION A–A

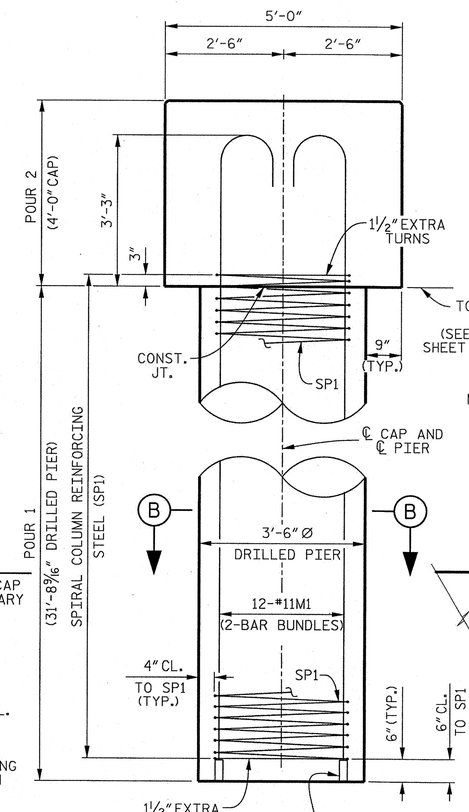

END VIEW

(PERMANENT STEEL CASING NOT SHOWN)

BAR TYPES

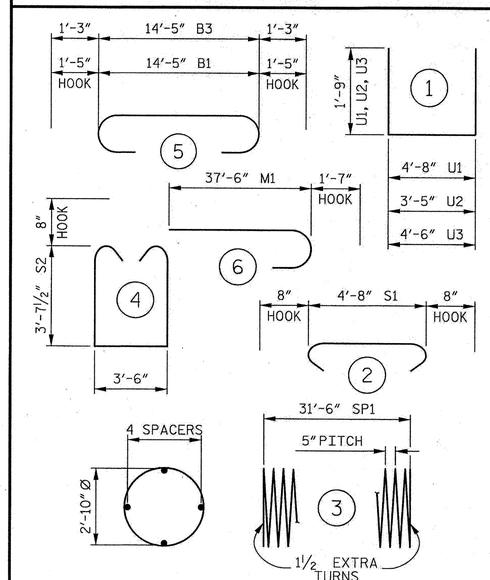

ALL BAR DIMENSIONS ARE OUT TO OUT.

BILL OF MATERIAL

PIER 2

BAR	No.	SIZE	TYPE	LENGTH	WEIGHT
B1	8	#10	5	17'- 3"	594
B2	10	#5	STR	14'- 5"	150
B3	8	#9	5	16'-11"	460
M1	48	#11	6	39'- 1"	9,967
S1	25	#6	2	6'- 0"	225
S2	50	#6	4	12'- 1"	907
U1	24	#4	1	8'- 2"	131
U2	8	#4	1	6'-11"	37
U3	8	#4	1	8'- 0"	43
REINFORCING STEEL					12,514 LBS.
SP1	2	**	3	687'- 7"	1,434
SPIRAL COLUMN REINFORCING STEEL					1,434 LBS.
CLASS "AA" CONCRETE (AS MODIFIED BY RAILWAY) POUR 2 CAP					10.9 CU. YDS.
DRILLED PIER CONCRETE (SPECIAL) POUR 1					25.9 CU. YDS.
3'-6" Ø DRILLED PIER IN SOIL (LFD)					41.4 LIN. FT.
3'-6" Ø DRILLED PIER NOT IN SOIL (LFD)					22.0 LIN. FT.
PERMANENT STEEL CASING FOR 3'-6" Ø DRILLED PIER					45.4 LIN. FT.

** THE SP1 SPIRAL REINFORCING STEEL SHALL BE W31 OR D31 COLD DRAWN WIRE OR #5 PLAIN OR DEFORMED BAR.

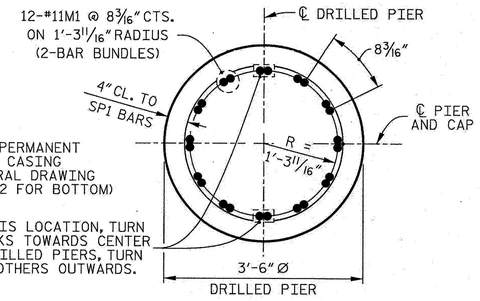

SECTION B–B

(TYP. ALL DRILLED PIERS)

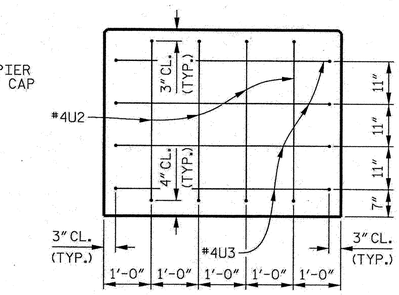

END OF CAP DETAIL

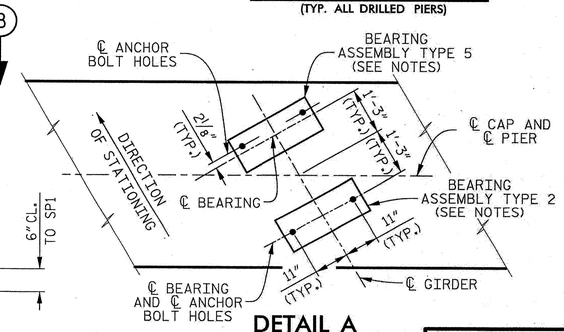

DETAIL A

NOTES

STIRRUPS AND U1 BARS IN CAP MAY BE SHIFTED AS NECESSARY TO CLEAR ANCHOR BOLTS.

FOR DRILLED PIERS, SEE SPECIAL PROVISIONS.

HOOKS ON "M" BARS MAY BE TURNED AS NECESSARY FOR PLACING REINFORCING STEEL.

ALL STEEL IN THE DRILLED PIERS IS INCLUDED IN THE PAY ITEMS FOR "REINFORCING STEEL" AND "SPIRAL COLUMN REINFORCING STEEL".

FOR BEARING ASSEMBLY DETAILS AND ANCHOR BOLT HOLES, SEE BEARING DETAILS SHEET.

THE CONTRACTOR'S ATTENTION IS CALLED TO THE FACT THAT THE LONGITUDINAL REINFORCEMENT FOR THE DRILLED PIERS IS DETAILED WITH 3 FEET OF EXTRA LENGTH.

PROJECT NO. U-0071

DURHAM COUNTY

STATION: 65+21.79 -L- P.O.C. = 28+50.89 -RRDET- P.O.T.

STATE OF NORTH CAROLINA
DEPARTMENT OF TRANSPORTATION
RALEIGH

SUBSTRUCTURE

TEMPORARY BRIDGE PIER 2

CDM Smith
Camp Dresser & McKee
5400 Glenwood Avenue, Suite 300
Raleigh, NC 27612-3228
NC COA No. F-1255

DRAWN BY : K.E. LOFTON /W.R. SPENCE DATE : 6-14
CHECKED BY : A.E. COOK /J.B. TAYLOR DATE : 6-14
DESIGN ENGINEER : A.E. COOK DATE : 4-13

DWG. No. S01-017

NORTH CAROLINA PROFESSIONAL SEAL 37035 ENGINEER DAVID W. TAYLOR 6.20.14

REVISIONS								SHEET No.
No.	BY:	DATE:	No.	BY:	DATE:			5-140
1			3					TOTAL SHEETS
2			4					671

SPENCEWR
N:\HS_Willard\INCROUT_W_WORKSPACE\Structures_STRS\U-0071_TEMP_RB_BRIDGE\pier1inc_R_PIER.dgn
N:\HS_Willard\INCROUT_W_WORKSPACE\Structures_STRS\U-0071_TEMP_RB_BRIDGE\pier1inc_R_PIER.dgn
P:\B6203\U-0071_TEMP_RB_BRIDGE\221_SubDwg\Plans\U0071_S0_Sub_pier2.dgn
6/20/2014 9:13:35 AM

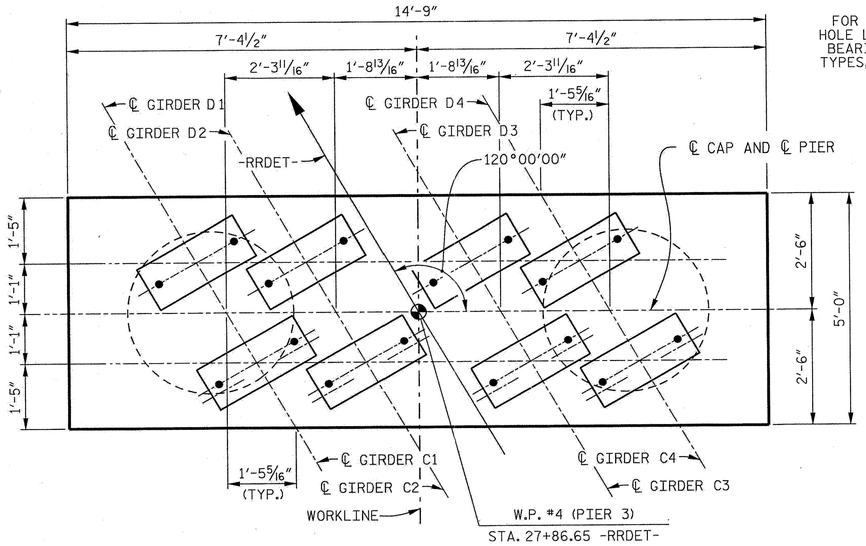

FOR ANCHOR BOLT HOLE LOCATIONS AND BEARING ASSEMBLY TYPES, SEE DETAIL A

PLAN

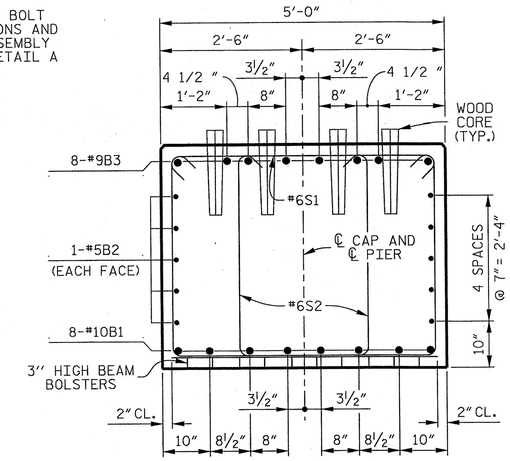

SECTION A–A

BAR TYPES

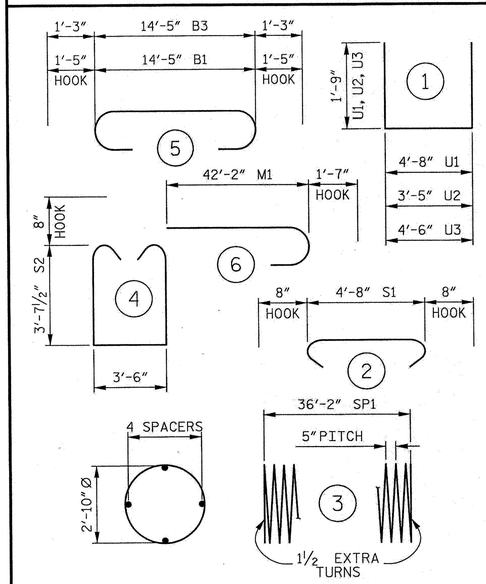

ALL BAR DIMENSIONS ARE OUT TO OUT.

BILL OF MATERIAL

PIER 3

BAR	No.	SIZE	TYPE	LENGTH	WEIGHT
B1	8	#10	5	17'- 3"	594
B2	10	#5	STR	14'- 5"	150
B3	8	#9	5	16'-11"	460
M1	48	#11	6	43'- 9"	11,157
S1	25	#6	2	6'- 0"	225
S2	50	#6	4	12'- 1"	907
U1	24	#4	1	8'- 2"	131
U2	8	#4	1	6'-11"	37
U3	8	#4	1	8'- 0"	43
REINFORCING STEEL					13,704 LBS.
SP1	2	**	3	785'- 7"	1,639
SPIRAL COLUMN REINFORCING STEEL					1,639 LBS.
CLASS "AA" CONCRETE (AS MODIFIED BY RAILWAY) POUR 2 CAP					10.9 CU. YDS.
DRILLED PIER CONCRETE (SPECIAL) POUR 1					25.9 CU. YDS.
3'-6" Ø DRILLED PIER IN SOIL (LFD)					55.8 LIN. FT.
3'-6" Ø DRILLED PIER NOT IN SOIL (LFD)					17.0 LIN. FT.
PERMANENT STEEL CASING FOR 3'-6" Ø DRILLED PIER					44.8 LIN. FT.

** THE SP1 SPIRAL REINFORCING STEEL SHALL BE W31 OR D31 COLD DRAWN WIRE OR #5 PLAIN OR DEFORMED BAR.

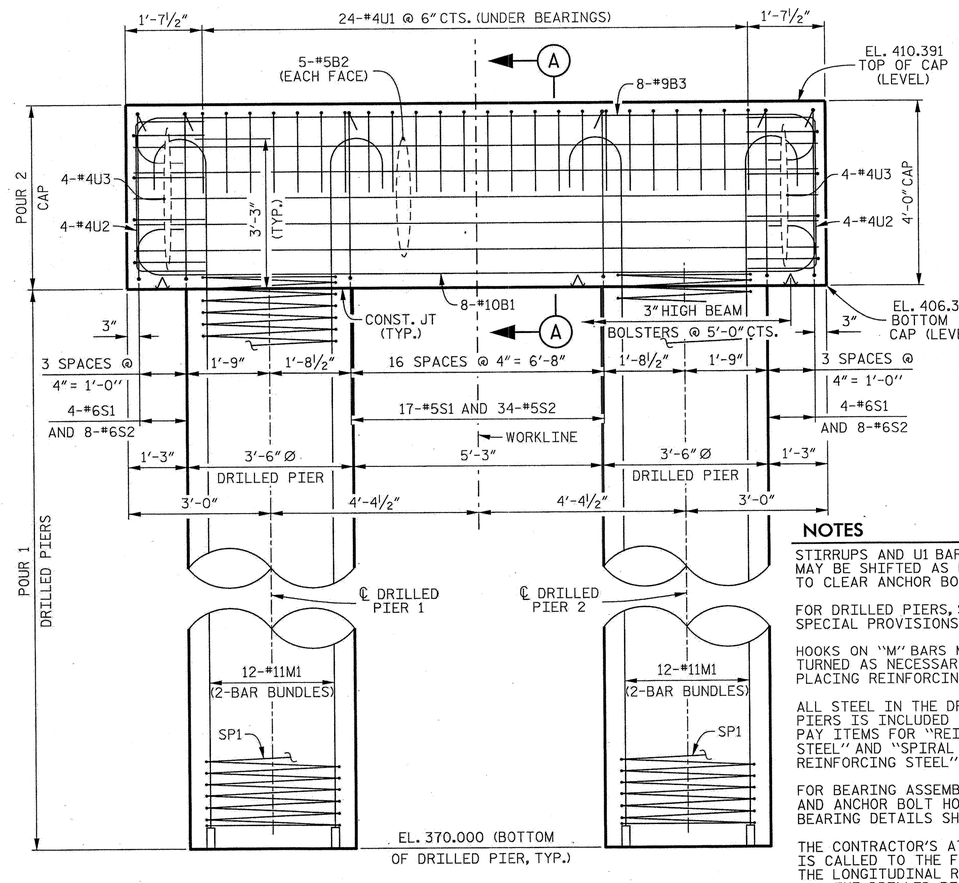

ELEVATION

(PERMANENT STEEL CASING NOT SHOWN)

NOTES

STIRRUPS AND U1 BARS IN CAP MAY BE SHIFTED AS NECESSARY TO CLEAR ANCHOR BOLTS.

FOR DRILLED PIERS, SEE SPECIAL PROVISIONS.

HOOKS ON "M" BARS MAY BE TURNED AS NECESSARY FOR PLACING REINFORCING STEEL.

ALL STEEL IN THE DRILLED PIERS IS INCLUDED IN THE PAY ITEMS FOR "REINFORCING STEEL" AND "SPIRAL COLUMN REINFORCING STEEL".

FOR BEARING ASSEMBLY DETAILS AND ANCHOR BOLT HOLES, SEE BEARING DETAILS SHEET.

THE CONTRACTOR'S ATTENTION IS CALLED TO THE FACT THAT THE LONGITUDINAL REINFORCEMENT FOR THE DRILLED PIERS IS DETAILED WITH 3 FEET OF EXTRA LENGTH.

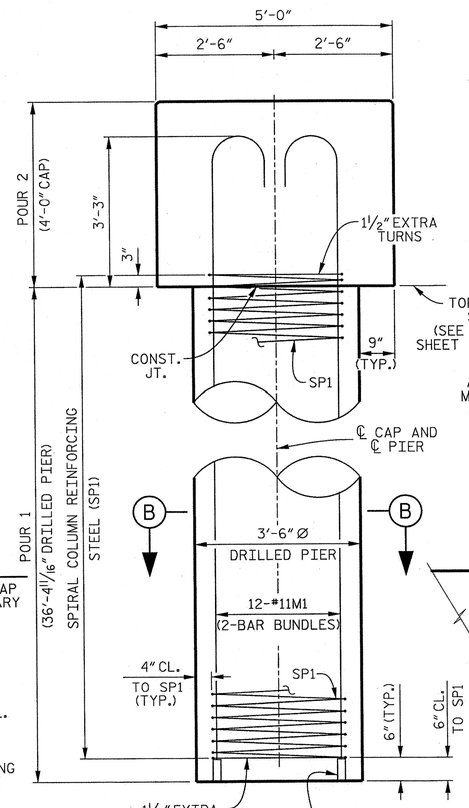

END VIEW

(PERMANENT STEEL CASING NOT SHOWN)

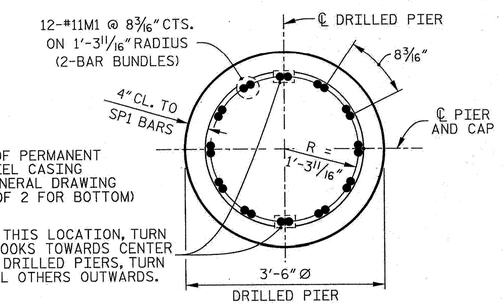

SECTION B–B

(TYP. ALL DRILLED PIERS)

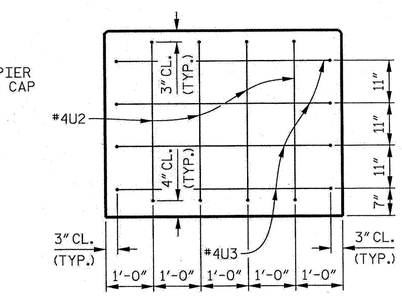

END OF CAP DETAIL

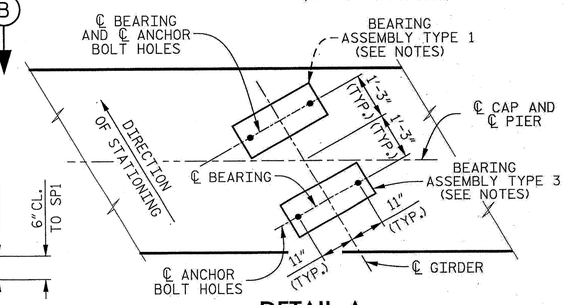

DETAIL A

PROJECT NO. U-0071

DURHAM COUNTY

STATION: 65+21.79 -L- P.O.C. = 28+50.89 -RRDET- P.O.T.

STATE OF NORTH CAROLINA
DEPARTMENT OF TRANSPORTATION
RALEIGH

SUBSTRUCTURE

TEMPORARY BRIDGE PIER 3

CDM Smith
Camp Dresser & McKee
5400 Glenwood Avenue, Suite 300
Raleigh, NC 27612-3228
NC COA No. F-1255

DRAWN BY : K.E. LOFTON /W.R. SPENCE DATE : 6-14
CHECKED BY : A.E. COOK /J.B. TAYLOR DATE : 6-14
DESIGN ENGINEER : A.E. COOK DATE : 4-13

DWG. No. S01-018

NORTH CAROLINA PROFESSIONAL SEAL 37035 ENGINEER DAVID W. TAYLOR 6.20.14

REVISIONS						SHEET No.
No.	BY:	DATE:	No.	BY:	DATE:	5-141
1			3			TOTAL SHEETS
2			4			671

SPENCEWR
P:\U0071_TEMP-RR-BRIDGE\121-SnDes\Plans\U0071_S01_Sheet_pier31.dgn
6/20/2014 9:14:35 AM

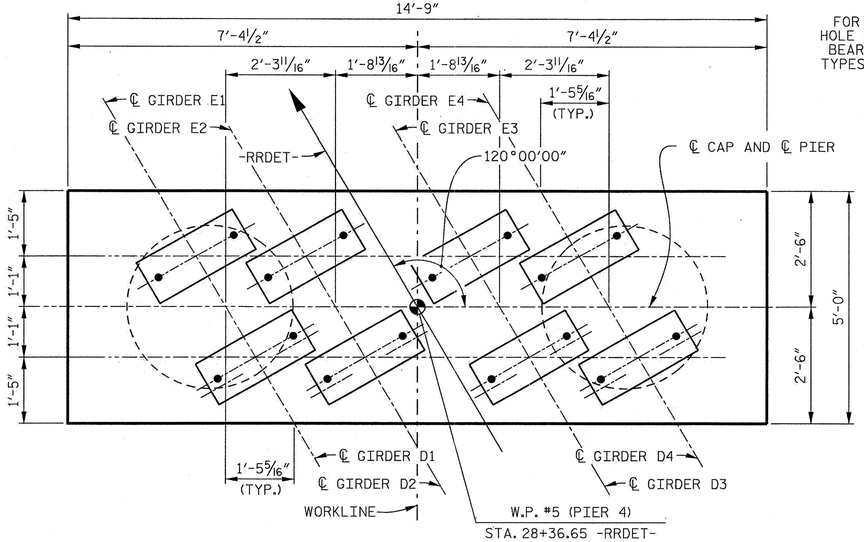

FOR ANCHOR BOLT HOLE LOCATIONS AND BEARING ASSEMBLY TYPES, SEE DETAIL A

PLAN

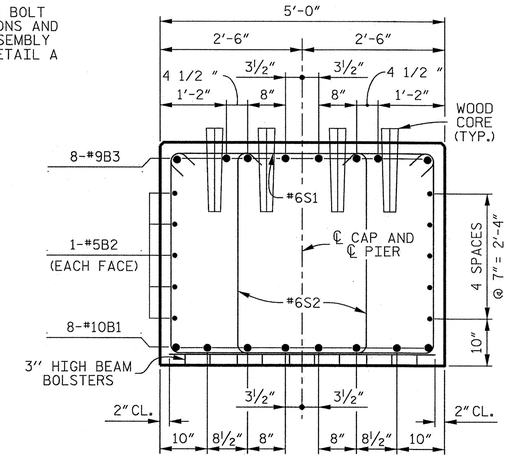

SECTION A–A

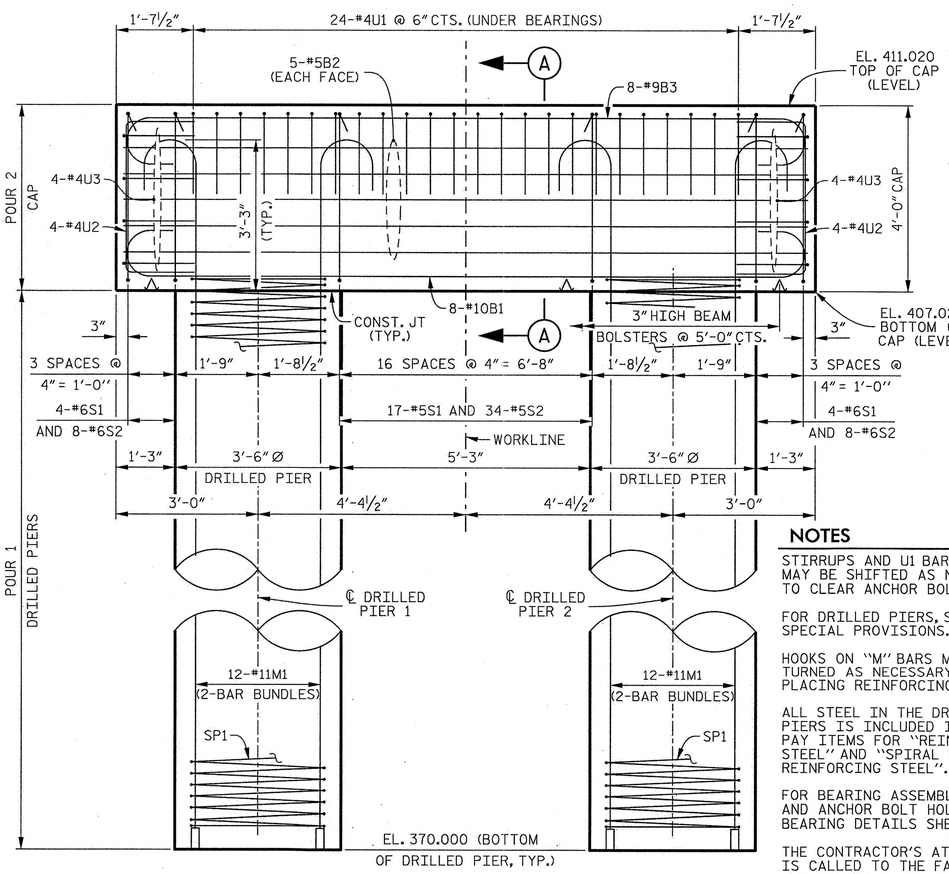

ELEVATION

(PERMANENT STEEL CASING NOT SHOWN)

NOTES

STIRRUPS AND U1 BARS IN CAP MAY BE SHIFTED AS NECESSARY TO CLEAR ANCHOR BOLTS.

FOR DRILLED PIERS, SEE SPECIAL PROVISIONS.

HOOKS ON "M" BARS MAY BE TURNED AS NECESSARY FOR PLACING REINFORCING STEEL.

ALL STEEL IN THE DRILLED PIERS IS INCLUDED IN THE PAY ITEMS FOR "REINFORCING STEEL" AND "SPIRAL COLUMN REINFORCING STEEL".

FOR BEARING ASSEMBLY DETAILS AND ANCHOR BOLT HOLES, SEE BEARING DETAILS SHEET.

THE CONTRACTOR'S ATTENTION IS CALLED TO THE FACT THAT THE LONGITUDINAL REINFORCEMENT FOR THE DRILLED PIERS IS DETAILED WITH 3 FEET OF EXTRA LENGTH.

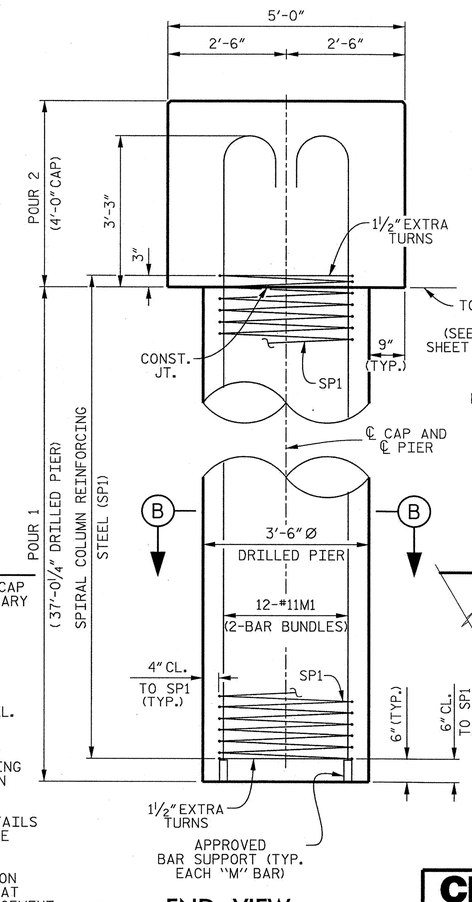

END VIEW

(PERMANENT STEEL CASING NOT SHOWN)

BAR TYPES

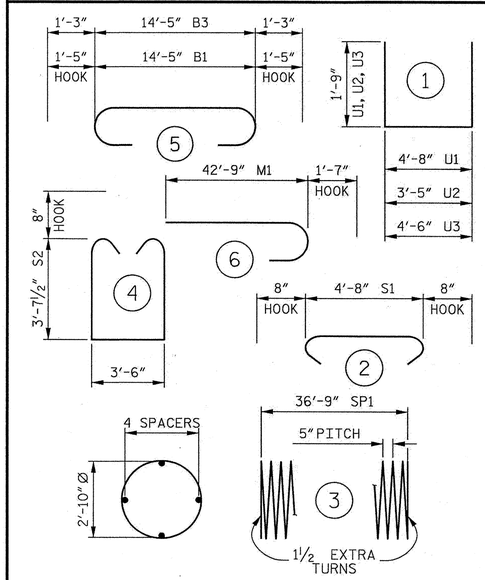

ALL BAR DIMENSIONS ARE OUT TO OUT.

BILL OF MATERIAL

PIER 4

BAR	No.	SIZE	TYPE	LENGTH	WEIGHT
B1	8	#10	S	17'- 3"	594
B2	10	#5	STR	14'- 5"	150
B3	8	#9	S	16'-11"	460
M1	48	#11	6	44'- 4"	11,306
S1	25	#6	2	6'- 0"	225
S2	50	#6	4	12'- 1"	907
U1	24	#4	1	8'- 2"	131
U2	8	#4	1	6'-11"	37
U3	8	#4	1	8'- 0"	43
REINFORCING STEEL					13,853 LBS.
SP1	2	**	3	797'-10"	1,664
SPIRAL COLUMN REINFORCING STEEL					1,664 LBS.

CLASS "AA" CONCRETE (AS MODIFIED BY RAILWAY)
POUR 2 CAP — 10.9 CU. YDS.

DRILLED PIER CONCRETE (SPECIAL)
POUR 1 — 26.4 CU. YDS.

3'-6" Ø DRILLED PIER IN SOIL (LFD) — 57.0 LIN. FT.

3'-6" Ø DRILLED PIER NOT IN SOIL (LFD) — 17.0 LIN. FT.

PERMANENT STEEL CASING FOR 3'-6" Ø DRILLED PIER — 46.0 LIN. FT.

** THE SP1 SPIRAL REINFORCING STEEL SHALL BE W31 OR D31 COLD DRAWN WIRE OR #5 PLAIN OR DEFORMED BAR.

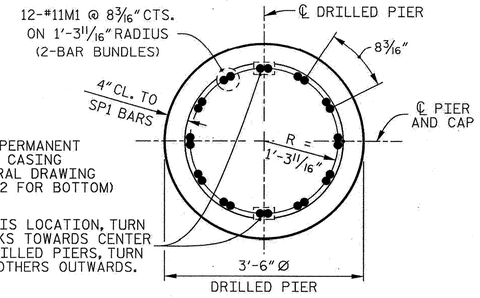

SECTION B–B

(TYP. ALL DRILLED PIERS)

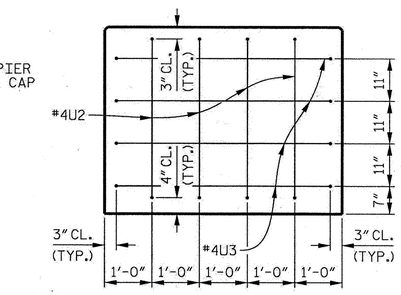

END OF CAP DETAIL

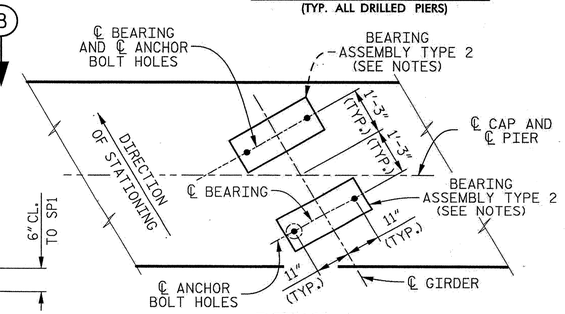

DETAIL A

PROJECT NO. U-0071

DURHAM COUNTY

STATION: 65+21.79 -L- P.O.C. = 28+50.89 -RRDET- P.O.T.

STATE OF NORTH CAROLINA
DEPARTMENT OF TRANSPORTATION
RALEIGH

SUBSTRUCTURE

TEMPORARY BRIDGE PIER 4

CDM Smith
Camp Dresser & McKee
5400 Glenwood Avenue, Suite 300
Raleigh, NC 27612-3228
NC COA No. F-1255

DRAWN BY : K.E. LOFTON /W.R. SPENCE DATE : 6-14
CHECKED BY : A.E. COOK /J.B. TAYLOR DATE : 6-14
DESIGN ENGINEER : A.E. COOK DATE : 4-13

DWG. No. S01-019

NORTH CAROLINA PROFESSIONAL SEAL 37035 ENGINEER DAVID W. TAYLOR 6-20-14

REVISIONS								SHEET No.
No.	BY:	DATE:	No.	BY:	DATE:			5-142
1			3					TOTAL SHEETS
2			4					671

SPENCEWR
N:\HS_Wilson\NCDOT_VE_WORKSPACE\Structures_STD5\U-0071_TEMP_RR_BRIDGE\plan\PIR_PE_PDF.dgn
N:\HS_Wilson\NCDOT_VE_WORKSPACE\Structures_STD5\U-0071_TEMP_RR_BRIDGE\plan\PIR_PE_SHADE.tsk
P:\R5331\U-0071_TEMP_RR_BRIDGE\221_Sh/Dwg\Plans\U0071_S0_Site1_pier4.dgn
6/20/2014 9:15:39 AM

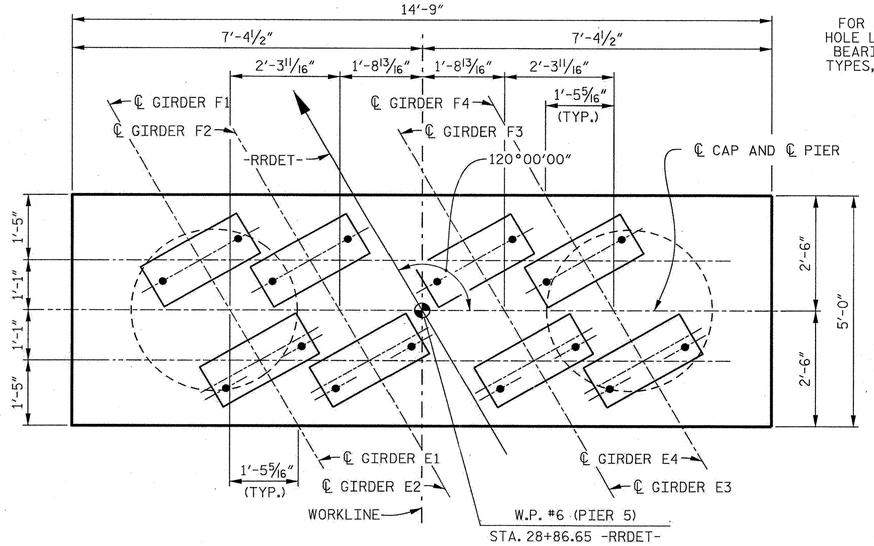

FOR ANCHOR BOLT HOLE LOCATIONS AND BEARING ASSEMBLY TYPES, SEE DETAIL A

PLAN

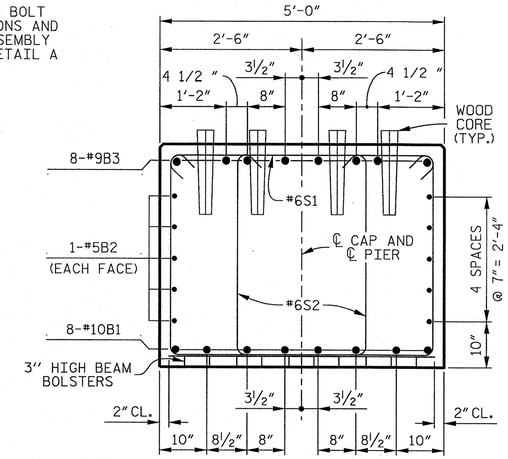

SECTION A–A

BAR TYPES

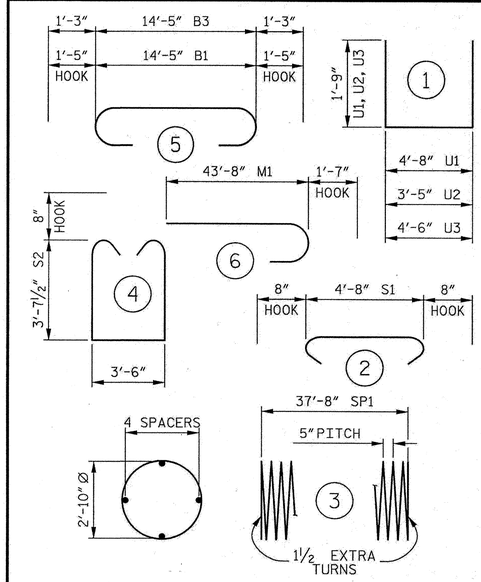

ALL BAR DIMENSIONS ARE OUT TO OUT.

BILL OF MATERIAL

PIER 5

BAR	No.	SIZE	TYPE	LENGTH	WEIGHT
B1	8	#10	5	17'- 3"	594
B2	10	#5	STR	14'- 5"	150
B3	8	#9	5	16'-11"	460
M1	48	#11	6	45'- 3"	11,540
S1	25	#6	2	6'- 0"	225
S2	50	#6	4	12'- 1"	907
U1	24	#4	1	8'- 2"	131
U2	8	#4	1	6'-11"	37
U3	8	#4	1	8'- 0"	43
REINFORCING STEEL					14,087 LBS.
SP1	2	**	3	871'- 1"	1,704
SPIRAL COLUMN REINFORCING STEEL					1,704 LBS.
CLASS "AA" CONCRETE (AS MODIFIED BY RAILWAY) POUR 2 CAP					10.9 CU. YDS.
DRILLED PIER CONCRETE (SPECIAL) POUR 1					27.0 CU. YDS.
3'-6" Ø DRILLED PIER IN SOIL (LFD)					58.9 LIN. FT.
3'-6" Ø DRILLED PIER NOT IN SOIL (LFD)					17.0 LIN. FT.
PERMANENT STEEL CASING FOR 3'-6" Ø DRILLED PIER					43.9 LIN. FT.

** THE SP1 SPIRAL REINFORCING STEEL SHALL BE W31 OR D31 COLD DRAWN WIRE OR #5 PLAIN OR DEFORMED BAR.

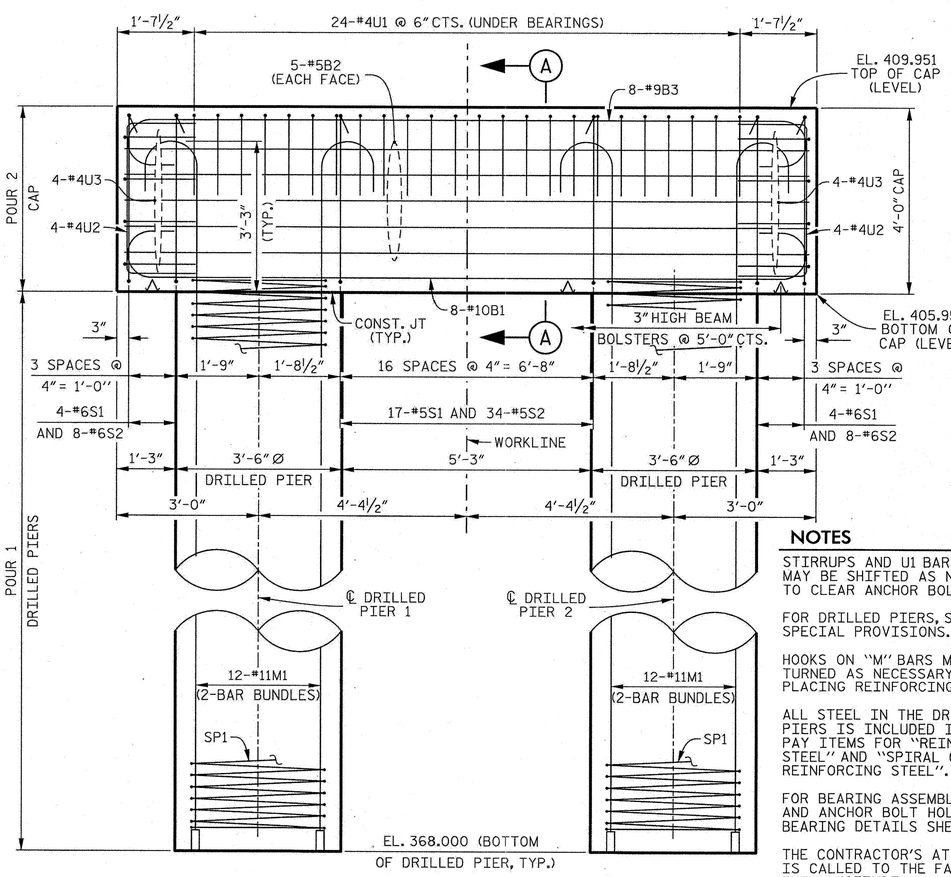

ELEVATION

(PERMANENT STEEL CASING NOT SHOWN)

NOTES

STIRRUPS AND U1 BARS IN CAP MAY BE SHIFTED AS NECESSARY TO CLEAR ANCHOR BOLTS.

FOR DRILLED PIERS, SEE SPECIAL PROVISIONS.

HOOKS ON "M" BARS MAY BE TURNED AS NECESSARY FOR PLACING REINFORCING STEEL.

ALL STEEL IN THE DRILLED PIERS IS INCLUDED IN THE PAY ITEMS FOR "REINFORCING STEEL" AND "SPIRAL COLUMN REINFORCING STEEL".

FOR BEARING ASSEMBLY DETAILS AND ANCHOR BOLT HOLES, SEE BEARING DETAILS SHEET.

THE CONTRACTOR'S ATTENTION IS CALLED TO THE FACT THAT THE LONGITUDINAL REINFORCEMENT FOR THE DRILLED PIERS IS DETAILED WITH 3 FEET OF EXTRA LENGTH.

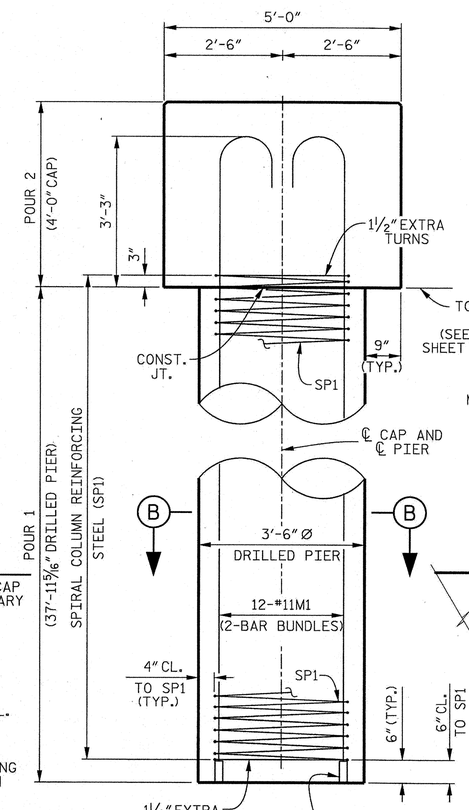

END VIEW

(PERMANENT STEEL CASING NOT SHOWN)

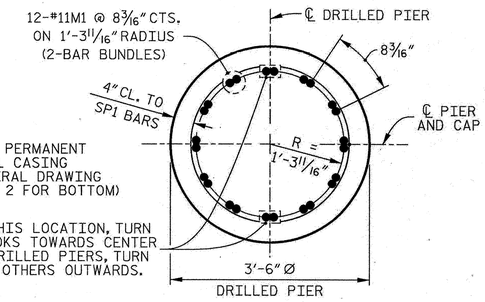

SECTION B–B

(TYP. ALL DRILLED PIERS)

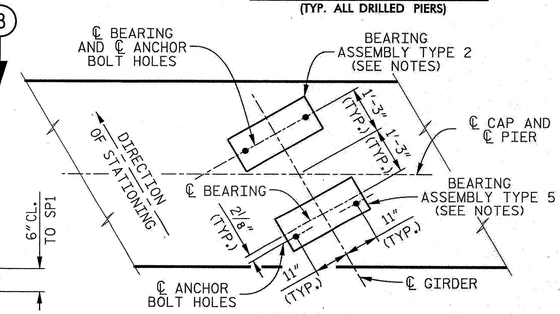

DETAIL A

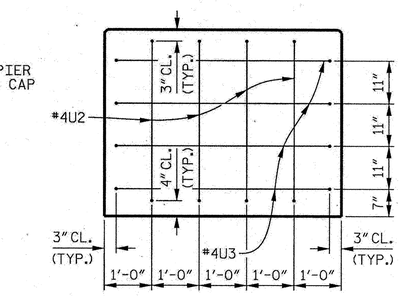

END OF CAP DETAIL

PROJECT NO. U-0071

DURHAM COUNTY

STATION: 65+21.79 -L- P.O.C. = 28+50.89 -RRDET- P.O.T.

STATE OF NORTH CAROLINA
DEPARTMENT OF TRANSPORTATION
RALEIGH

SUBSTRUCTURE

TEMPORARY BRIDGE PIER 5

CDM Smith
Camp Dresser & McKee
5400 Glenwood Avenue, Suite 300
Raleigh, NC 27612-3228
NC COA No. F-1255

DRAWN BY : K.E. LOFTON /W.R. SPENCE DATE : 6-14
CHECKED BY : A.E. COOK /J.B. TAYLOR DATE : 6-14
DESIGN ENGINEER : A.E. COOK DATE : 4-13

DWG. No. S01-020

NORTH CAROLINA PROFESSIONAL SEAL 37035 ENGINEER DAVID W. TAYLOR 8-20-14

REVISIONS								SHEET No.
No.	BY:	DATE:	No.	BY:	DATE:			5-143
1			3					TOTAL SHEETS
2			4					671

SPENCEWR
N:\HS_Wbsd\HCDOT_V8_WORKSPACE\Structure_STDS\U-0071_TEMP_RR_BRIDGE\pier1.dgn, V8_PDF.pdf.dgn
N:\Structure_Design\U-0071_TEMP_RR_BRIDGE\Pier 5\Pier 5 Plans\U0071_SD_S01_pier5.dgn
P:\B4331\U-0071_TEMP_RR_BRIDGE\221_SrvDsn\Plans\U0071_SD_S01_pier5.dgn
4/30/2014 9:16:31 AM

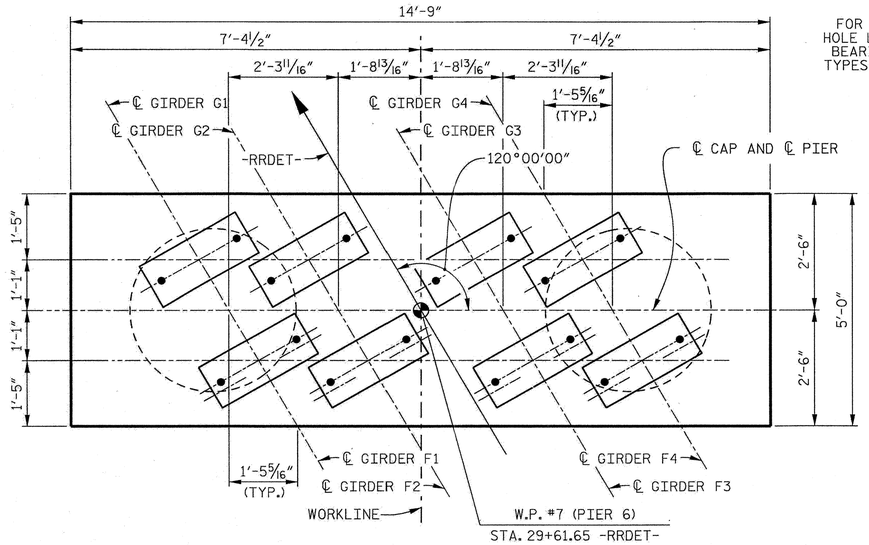

PLAN

FOR ANCHOR BOLT HOLE LOCATIONS AND BEARING ASSEMBLY TYPES, SEE DETAIL A

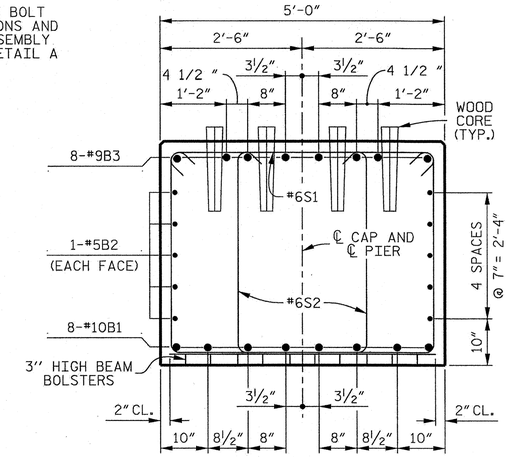

SECTION A–A

BAR TYPES

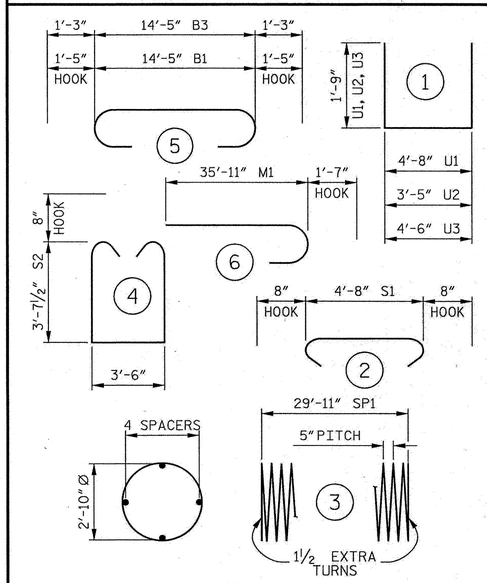

ALL BAR DIMENSIONS ARE OUT TO OUT.

BILL OF MATERIAL

PIER 6

BAR	No.	SIZE	TYPE	LENGTH	WEIGHT
B1	8	#10	5	17'- 3"	594
B2	10	#5	STR	14'- 5"	150
B3	8	#9	5	16'-11"	460
M1	48	#11	6	37'- 6"	9,563
S1	25	#6	2	6'- 0"	225
S2	50	#6	4	12'- 1"	907
U1	24	#4	1	8'- 2"	131
U2	8	#4	1	6'-11"	37
U3	8	#4	1	8'- 0"	43
REINFORCING STEEL					12,110 LBS.
SP1	2	**	3	654'- 4"	1,365
SPIRAL COLUMN REINFORCING STEEL					1,365 LBS.
CLASS "AA" CONCRETE (AS MODIFIED BY RAILWAY) POUR 2 CAP					10.9 CU. YDS.
DRILLED PIER CONCRETE (SPECIAL) POUR 1					21.5 CU. YDS.
3'-6" Ø DRILLED PIER IN SOIL (LFD)					40.4 LIN. FT.
3'-6" Ø DRILLED PIER NOT IN SOIL (LFD)					20.0 LIN. FT.
PERMANENT STEEL CASING FOR 3'-6" Ø DRILLED PIER					42.4 LIN. FT.

** THE SP1 SPIRAL REINFORCING STEEL SHALL BE W31 OR D31 COLD DRAWN WIRE OR #5 PLAIN OR DEFORMED BAR.

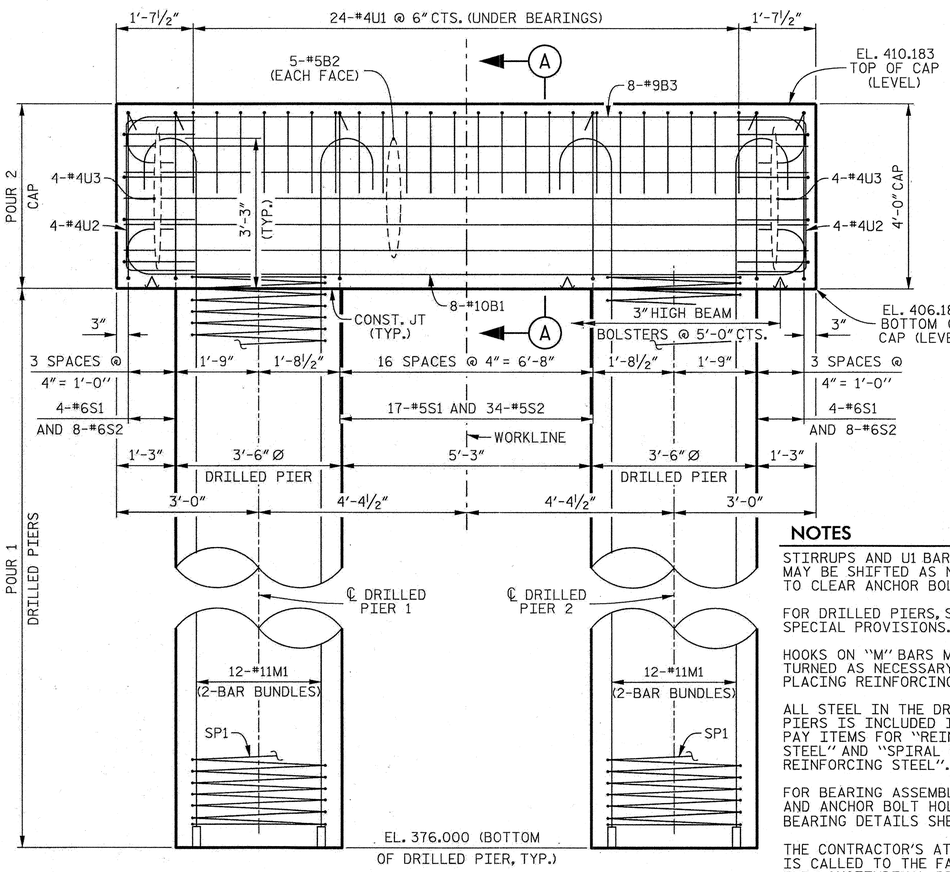

ELEVATION

(PERMANENT STEEL CASING NOT SHOWN)

NOTES

STIRRUPS AND U1 BARS IN CAP MAY BE SHIFTED AS NECESSARY TO CLEAR ANCHOR BOLTS.

FOR DRILLED PIERS, SEE SPECIAL PROVISIONS.

HOOKS ON "M" BARS MAY BE TURNED AS NECESSARY FOR PLACING REINFORCING STEEL.

ALL STEEL IN THE DRILLED PIERS IS INCLUDED IN THE PAY ITEMS FOR "REINFORCING STEEL" AND "SPIRAL COLUMN REINFORCING STEEL".

FOR BEARING ASSEMBLY DETAILS AND ANCHOR BOLT HOLES, SEE BEARING DETAILS SHEET.

THE CONTRACTOR'S ATTENTION IS CALLED TO THE FACT THAT THE LONGITUDINAL REINFORCEMENT FOR THE DRILLED PIERS IS DETAILED WITH 3 FEET OF EXTRA LENGTH.

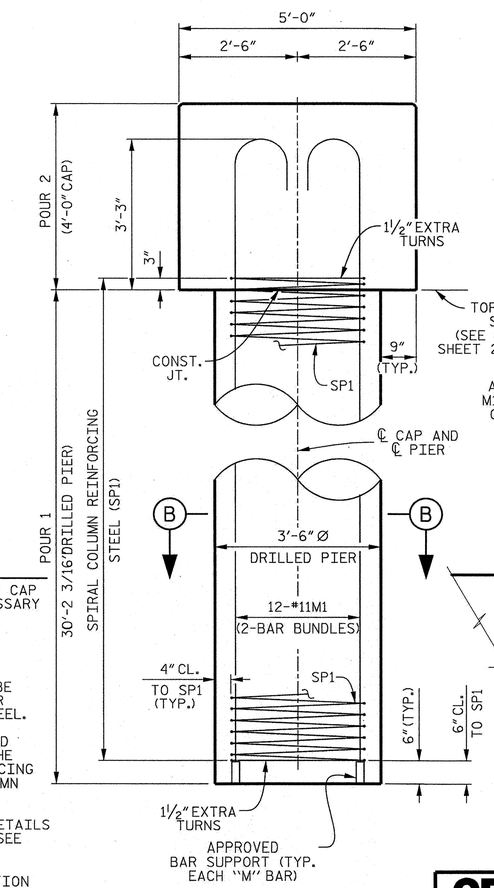

END VIEW

(PERMANENT STEEL CASING NOT SHOWN)

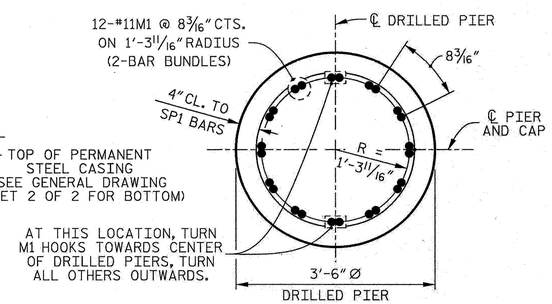

SECTION B–B

(TYP. ALL DRILLED PIERS)

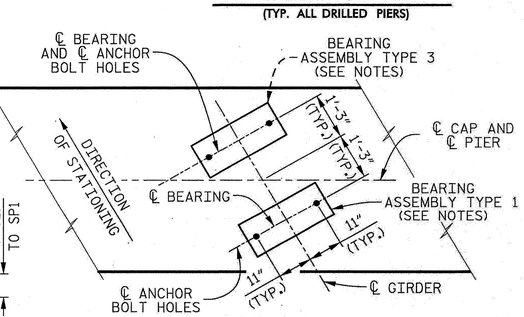

DETAIL A

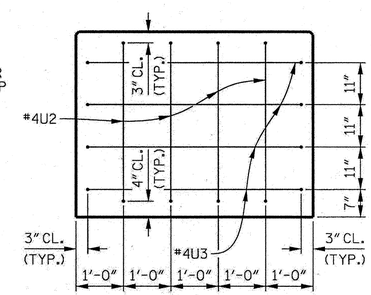

END OF CAP DETAIL

PROJECT NO. U-0071

DURHAM COUNTY

STATION: 65+21.79 -L- P.O.C. = 28+50.89 -RRDET- P.O.T.

STATE OF NORTH CAROLINA
DEPARTMENT OF TRANSPORTATION
RALEIGH

SUBSTRUCTURE

TEMPORARY BRIDGE PIER 6

CDM Smith
Camp Dresser & McKee
5400 Glenwood Avenue, Suite 300
Raleigh, NC 27612-3228
NC COA No. F-1255

DRAWN BY : K.E. LOFTON /W.R. SPENCE DATE : 6-14
CHECKED BY : A.E. COOK /J.B. TAYLOR DATE : 6-14
DESIGN ENGINEER : A.E. COOK DATE : 4-13

DWG. No. S01-021

NORTH CAROLINA PROFESSIONAL SEAL 37035 ENGINEER DAVID W. TAYLOR 6-20-14

REVISIONS									SHEET No.
No.	BY:	DATE:	No.	BY:	DATE:				5-144
1			3						TOTAL SHEETS
2			4						671

SPENCEWR
N:\ME_Wake\ncdot_v8_workspace\STD\Structures_STD\U-0071_TEMP_RR_BRIDGE\plan\BV_PS_PDF.utl\dgn
\\172.16.6.4\wsa_cadd\AS_Wake\ncdot_v8_workspace\STD\Structures_STD\U-0071_TEMP_RR_BRIDGE\plan\HS-SPA205.tbl
P:\86331\U-0071\TEMP_RR_BRIDGE\1221.Sht\Bed\Plans\U0071_SD_Sht_1pr61.dgn
6/20/2014 9:27:27 AM

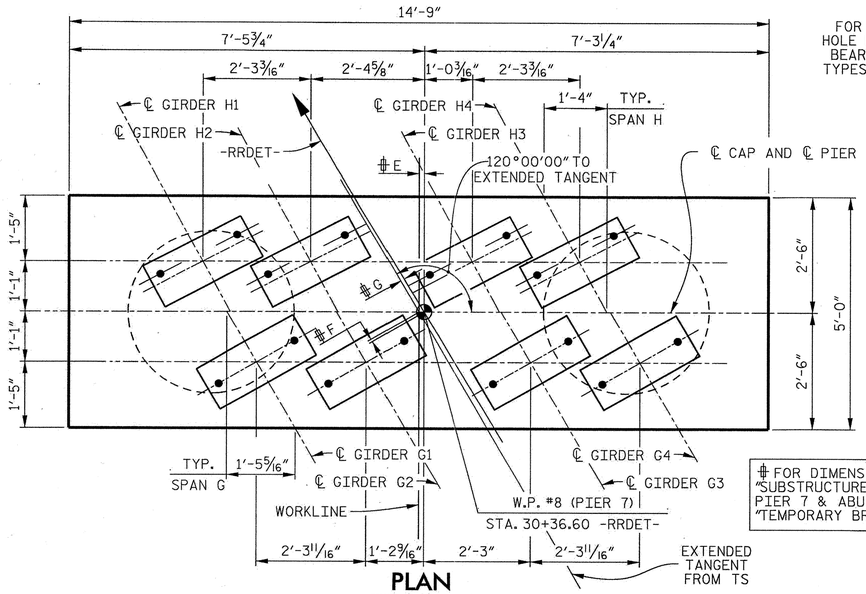

FOR ANCHOR BOLT HOLE LOCATIONS AND BEARING ASSEMBLY TYPES, SEE DETAIL A

FOR DIMENSIONS E,F, & G SEE "SUBSTRUCTURE LAYOUT DETAIL FOR PIER 7 & ABUTMENT 2" ON SHEET "TEMPORARY BRIDGE ABUTMENT 2"

PLAN

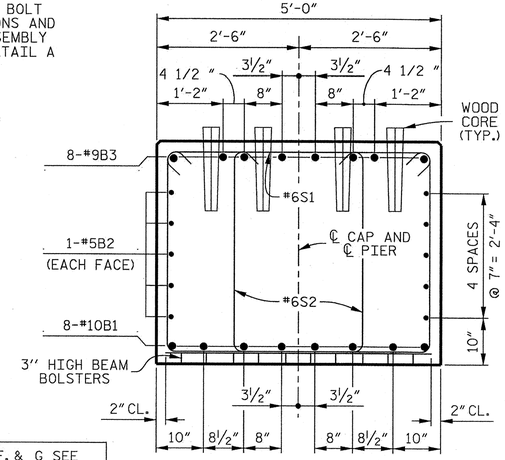

SECTION A–A

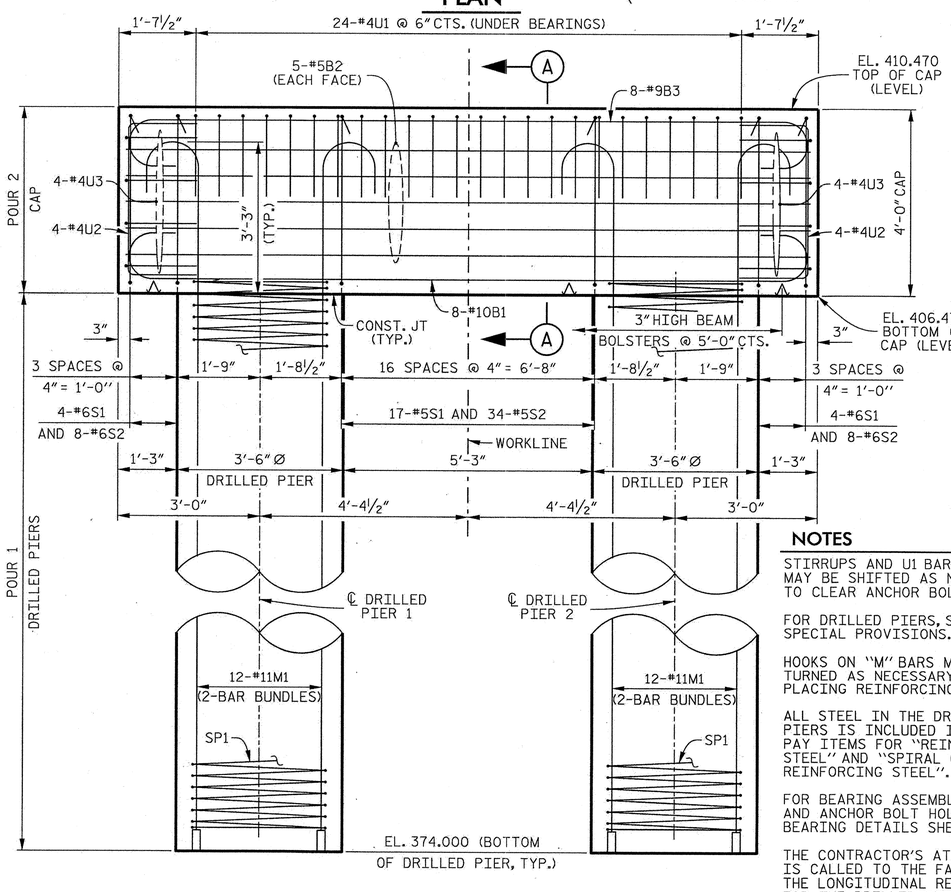

ELEVATION

(PERMANENT STEEL CASING NOT SHOWN)

NOTES

STIRRUPS AND U1 BARS IN CAP MAY BE SHIFTED AS NECESSARY TO CLEAR ANCHOR BOLTS.

FOR DRILLED PIERS, SEE SPECIAL PROVISIONS.

HOOKS ON "M" BARS MAY BE TURNED AS NECESSARY FOR PLACING REINFORCING STEEL.

ALL STEEL IN THE DRILLED PIERS IS INCLUDED IN THE PAY ITEMS FOR "REINFORCING STEEL" AND "SPIRAL COLUMN REINFORCING STEEL".

FOR BEARING ASSEMBLY DETAILS AND ANCHOR BOLT HOLES, SEE BEARING DETAILS SHEET.

THE CONTRACTOR'S ATTENTION IS CALLED TO THE FACT THAT THE LONGITUDINAL REINFORCEMENT FOR THE DRILLED PIERS IS DETAILED WITH 3 FEET OF EXTRA LENGTH.

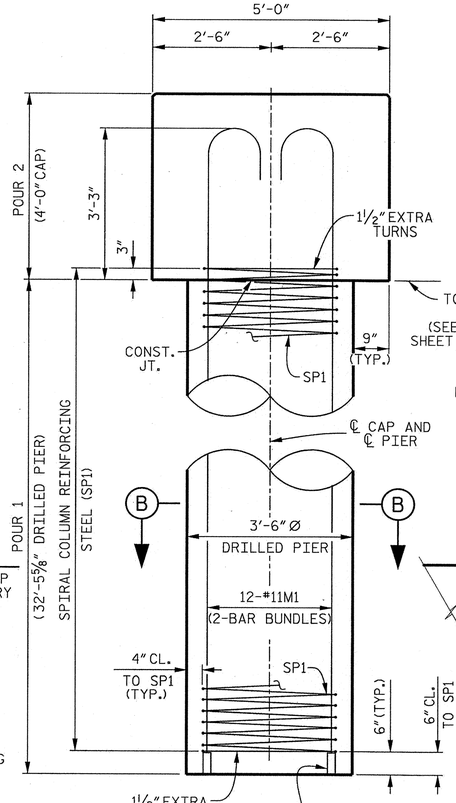

END VIEW

(PERMANENT STEEL CASING NOT SHOWN)

BAR TYPES

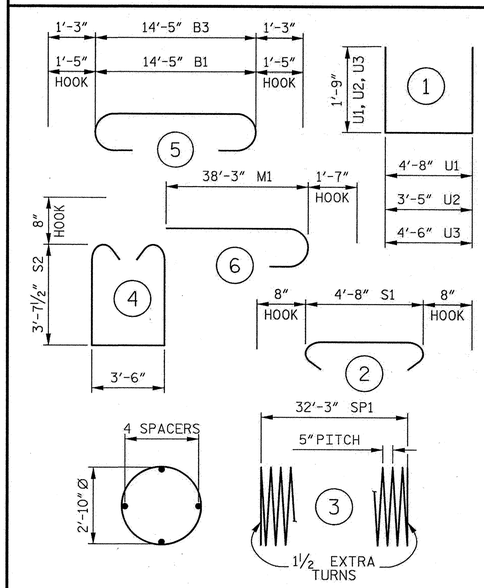

ALL BAR DIMENSIONS ARE OUT TO OUT.

BILL OF MATERIAL

PIER 7

BAR	No.	SIZE	TYPE	LENGTH	WEIGHT
B1	8	#10	5	17'- 3"	594
B2	10	#5	STR	14'- 5"	150
B3	8	#9	5	16'-11"	460
M1	48	#11	6	39'-10"	10,158
S1	25	#6	2	6'- 0"	225
S2	50	#6	4	12'- 1"	907
U1	24	#4	1	8'- 2"	131
U2	8	#4	1	6'-11"	37
U3	8	#4	1	8'- 0"	43
REINFORCING STEEL					12,705 LBS.
SP1	2	**	3	703'- 4"	1,467
SPIRAL COLUMN REINFORCING STEEL					1,467 LBS.

CLASS "AA" CONCRETE (AS MODIFIED BY RAILWAY)
POUR 2 CAP — 10.9 CU. YDS.

DRILLED PIER CONCRETE (SPECIAL)
POUR 1 — 23.1 CU. YDS.

3'-6" Ø DRILLED PIER IN SOIL (LFD) — 39.9 LIN. FT.

3'-6" Ø DRILLED PIER NOT IN SOIL (LFD) — 25.0 LIN. FT.

PERMANENT STEEL CASING FOR 3'-6" Ø DRILLED PIER — 42.9 LIN. FT.

** THE SP1 SPIRAL REINFORCING STEEL SHALL BE W31 OR D31 COLD DRAWN WIRE OR #5 PLAIN OR DEFORMED BAR.

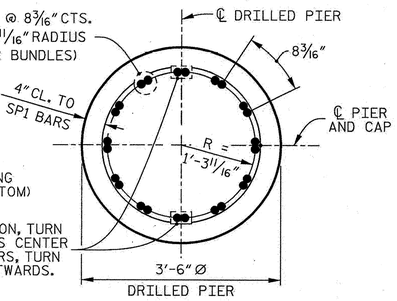

SECTION B–B

(TYP. ALL DRILLED PIERS)

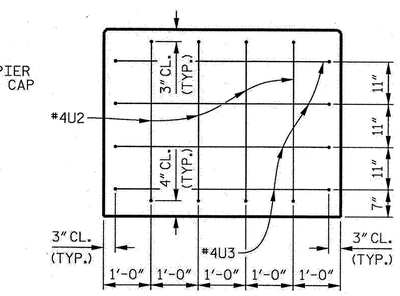

END OF CAP DETAIL

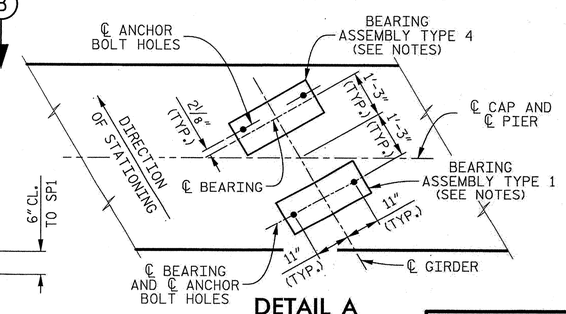

DETAIL A

PROJECT NO. U-0071

DURHAM COUNTY

STATION: 65+21.79 -L- P.O.C. = 28+50.89 -RRDET- P.O.T.

STATE OF NORTH CAROLINA
DEPARTMENT OF TRANSPORTATION
RALEIGH

SUBSTRUCTURE

TEMPORARY BRIDGE PIER 7

CDM Smith
Camp Dresser & McKee
5400 Glenwood Avenue, Suite 300
Raleigh, NC 27612-3228
NC COA No. F-1255

DRAWN BY : K.E. LOFTON /W.R. SPENCE DATE : 6-14
CHECKED BY : A.E. COOK /J.B. TAYLOR DATE : 6-14
DESIGN ENGINEER : A.E. COOK DATE : 4-13

DWG. No. S01-022

NORTH CAROLINA PROFESSIONAL SEAL 37035 ENGINEER DAVID W. TAYLOR 6-20-14

REVISIONS							SHEET No.
No.	BY:	DATE:	No.	BY:	DATE:		5-145
1			3				TOTAL SHEETS
2			4				671

SPENCENWR
N:\HAS_Wilson\INCROOT_W_WORKSPACE\Structure_STUDY\U-0071_TEMP_RR_BRIDGE\pier\Pier_PS_PDF.adcfg
N:\HAS_Wilson\INCROOT_W_WORKSPACE\Structure_STUDY\U-0071_TEMP_RR_BRIDGE\pier\Pier_PS_SHEET.dgn
P:\56331.U-0071.TEMP.RR.BRIDGE\221.SHDwg\Plans\U0071_S0_Site1_pr71.dgn
6/20/2014 9:18:45 AM

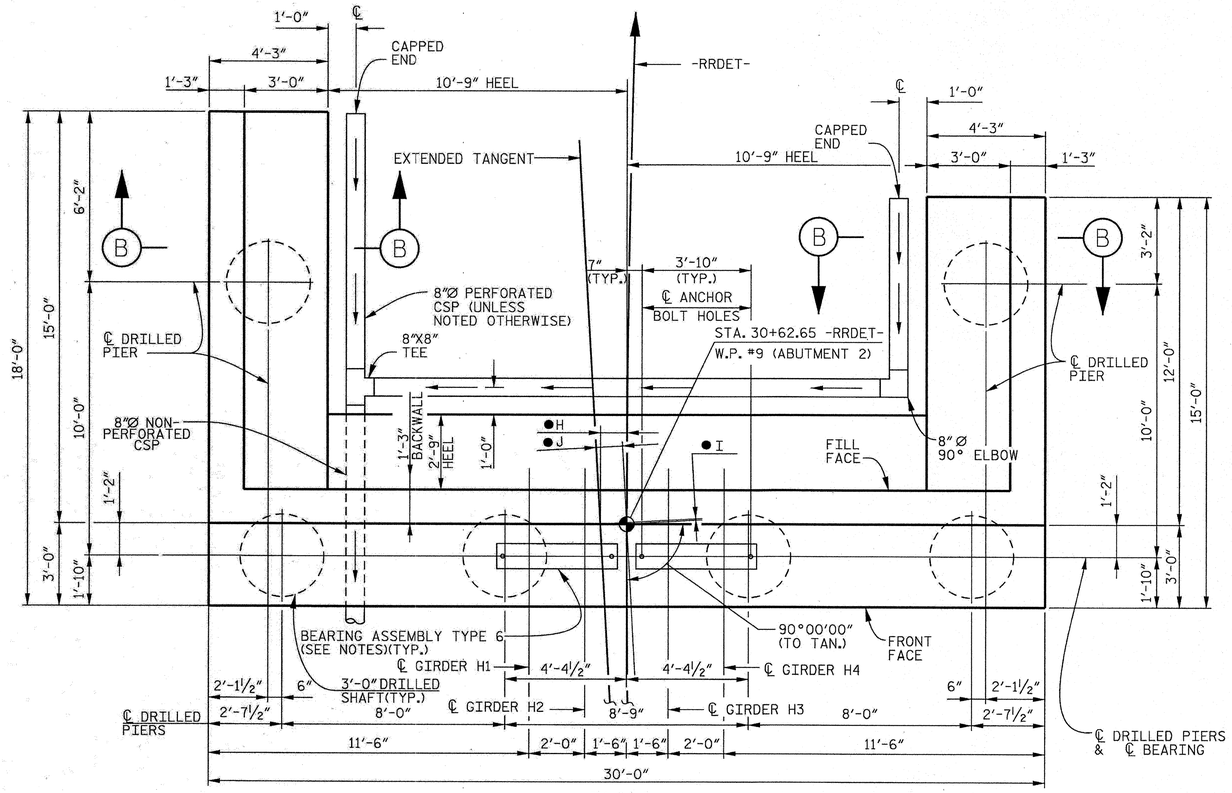

PLAN

● SEE LAYOUT DIMENSION TABLE THIS SHEET

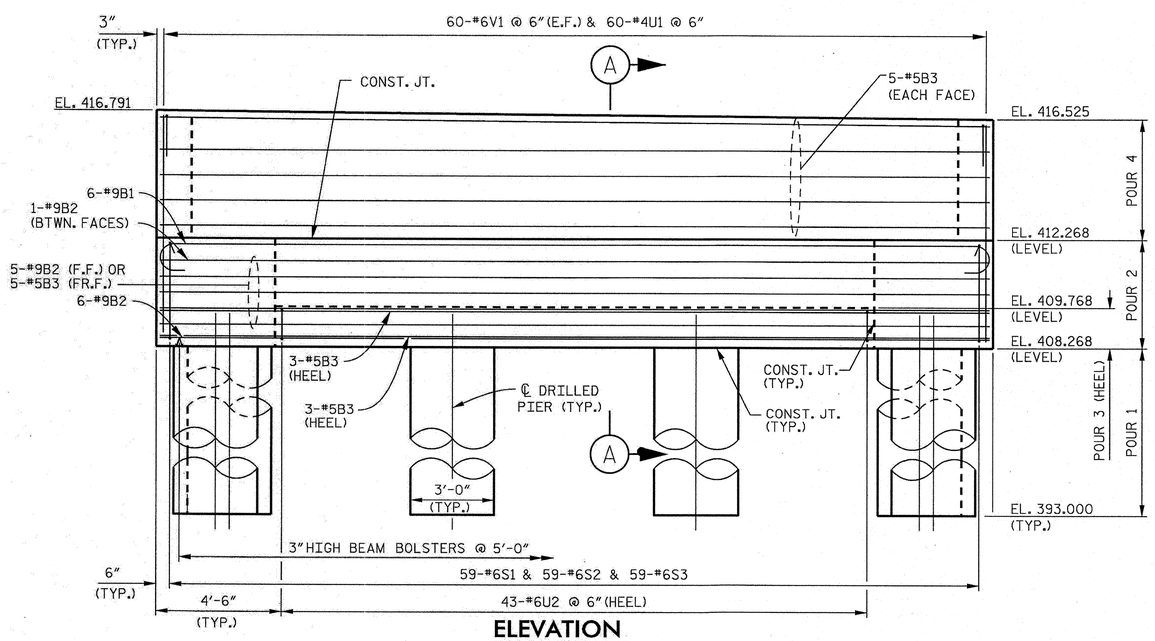

ELEVATION

(WING WALL REINFORCEMENT NOT SHOWN FOR CLARITY)
(CONTINUOUS FRENCH DRAIN CORRUGATED STEEL PIPES NOT SHOWN)

NOTES

#9 "B" AND "H" BARS IN BOTTOM OF CAP AND WINGWALLS MAY BE SHIFTED SLIGHTY TO AVOID CONFLICT WITH BARS IN DRILLED PIERS.

STIRRUPS IN CAP MAY BE SHIFTED AS NECESSARY TO CLEAR ANCHOR BOLTS.

THE TOP SURFACE AREA OF THE END BENT CAP SHALL BE CURED IN ACCORDANCE WITH THE STANDARD SPECIFICATIONS EXCEPT THAT THE MEMBRANE CURING COMPOUND METHOD SHALL NOT BE USED.

FOR SECTION A-A, SEE ABUTMENT 2 SHEET 3 OF 3.

FOR SECTION B-B, SEE ABUTMENT 2 SHEET 2 OF 3.

FOR CONTINUOUS FRENCH DRAIN, SEE TEMPORARY BRIDGE ABUTMENT 1 SHEET.

ALL STEEL IN THE DRILLED PIERS IS INCLUDED IN THE PAY ITEMS FOR "REINFORCING STEEL" AND "SPIRAL COLUMN REINFORCING STEEL.

SPLICING OF THE LONGITUDINAL BARS IN THE DRILLED PIERS WILL NOT BE PERMITTED.

E.F.= EACH FACE

FR.F.= FRONT FACE

F.F.= FILL FACE

FOR BEARING ASSEMBLY DETAILS AND ANCHOR BOLT HOLES, SEE BEARING DETAILS SHEET.

NO WATERPROOFING OR DAMPPROOFING WILL BE REQUIRED FOR THE TEMPORARY STRUCTURE.

THE CONTRACTOR'S ATTENTION IS CALLED TO THE FACT THAT THE LONGITUDINAL REINFORCEMENT FOR THE DRILLED PIERS IS DETAILED WITH 3 FEET OF EXTRA LENGTH.

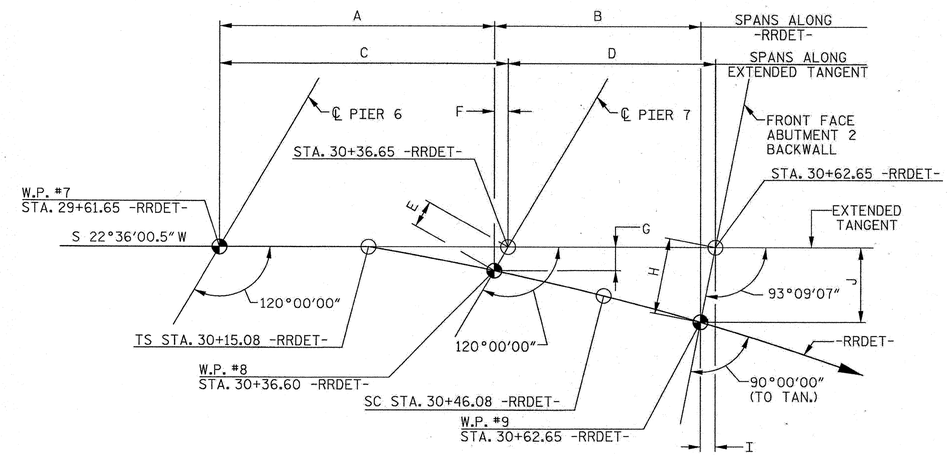

SUBSTRUCTURE LAYOUT DETAIL FOR PIER 7 & ABUTMENT 2

(NOT TO SCALE)

LAYOUT DIMENSION (FT.)	
A	74.950
B	26.050
C	75.003
D	26.053
E	0.106
F	0.053
G	0.092
H	0.953
I	0.052
J	0.951

PROJECT NO. U-0071

DURHAM COUNTY

STATION: 65+21.79 -L- P.O.C. = 28+50.89 -RRDET- P.O.T.

SHEET 1 OF 3

STATE OF NORTH CAROLINA
DEPARTMENT OF TRANSPORTATION
RALEIGH

SUBSTRUCTURE

TEMPORARY BRIDGE ABUTMENT 2

CDM Smith
Camp Dresser & McKee
5400 Glenwood Avenue, Suite 300
Raleigh, NC 27612-3228
NC COA No. F-1255

DRAWN BY : R.M. HALSALL /C.E. DIXON DATE : 12-13
CHECKED BY : J.B. TAYLOR DATE : 12-13
DESIGN ENGINEER : A.E. COOK DATE : 8-13

DWG. No. S01-023

NORTH CAROLINA PROFESSIONAL SEAL 37035 ENGINEER DAVID W. TAYLOR 10.14

REVISIONS						SHEET No.
No.	BY:	DATE:	No.	BY:	DATE:	5-146
1			3			TOTAL SHEETS
2			4			671

COOKAE
N:\HS_1\Bad (NCDOT_R)\WORKPACE\Drawings_STRS\U-0071_TEMP_BRIDGE\Sheet\BW_R_PDF.dgn
U:\Users\cookae\AppData\Local\Bentley\Microstation\08.11\en-US\Workspace\Projects\Bridgeworks\HS-SHADE.ski
P:\86331\U-0071\TEMP_BR_BRIDGE\121.SrDev\Plans\U0071_3D_Shell_ab13.dgn
6/10/2014 2:05:06 PM

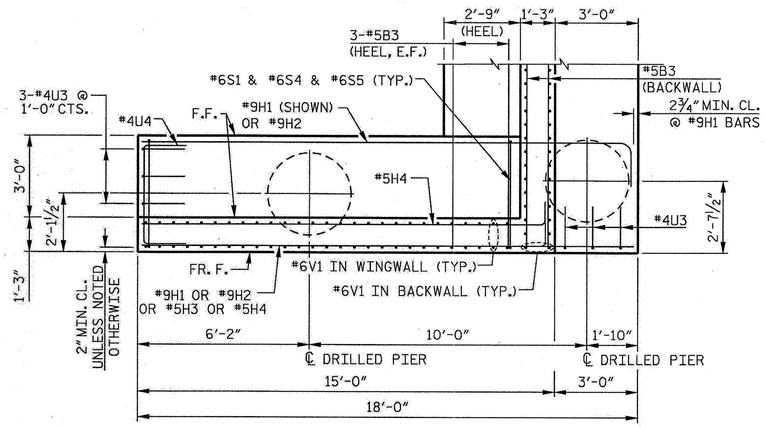

PLAN OF LEFT WING

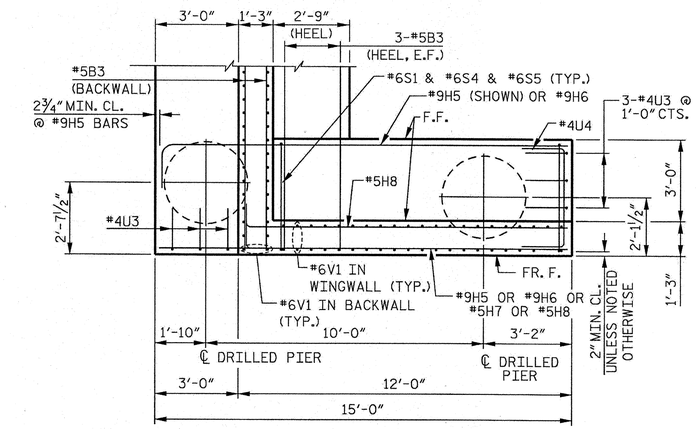

PLAN OF RIGHT WING

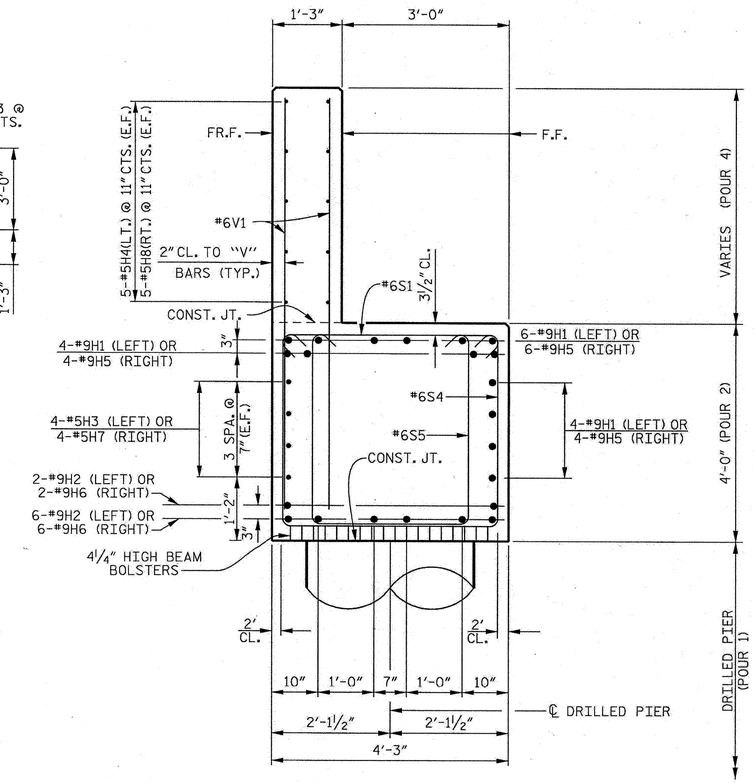

SECTION B–B

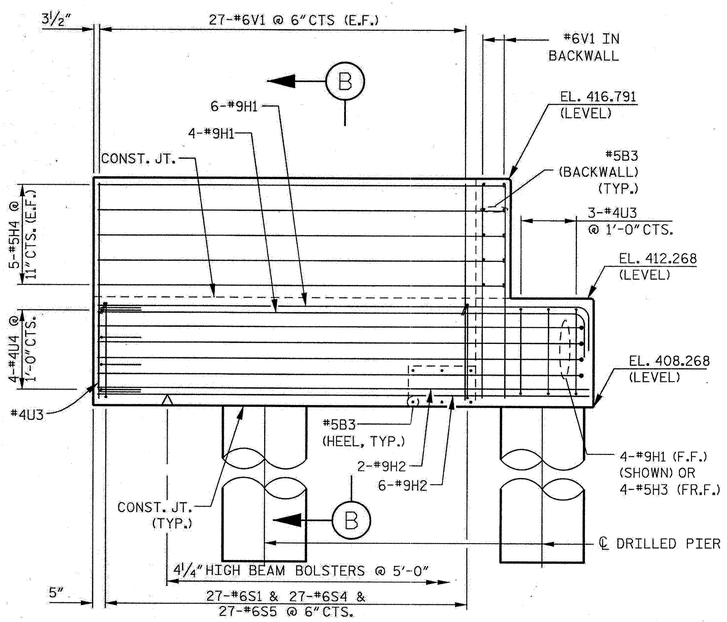

ELEVATION OF LEFT WING

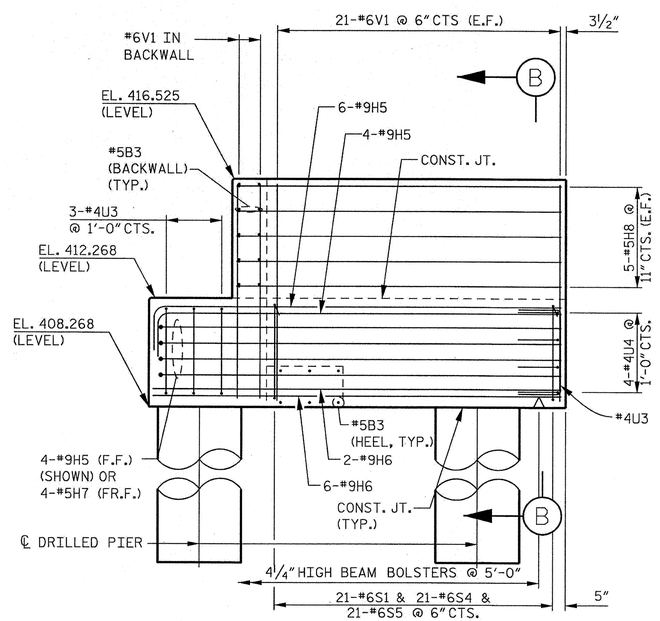

ELEVATION OF RIGHT WING

NOTES:

F.F. = FILL FACE
FR.F. = FRONT FACE
E.F. = EACH FACE

PROJECT NO. U-0071
DURHAM COUNTY
STATION: 65+21.79 –L– P.O.C. =
28+50.89 –RRDET– P.O.T.

SHEET 2 OF 3

STATE OF NORTH CAROLINA
DEPARTMENT OF TRANSPORTATION
RALEIGH

SUBSTRUCTURE

ABUTMENT 2 DETAILS

CDM Smith
Camp Dresser & McKee
5400 Glenwood Avenue, Suite 300
Raleigh, NC 27612-3228
NC COA No. F-1255

DRAWN BY : R.M. HALSALL /C.E. DIXON DATE : 12-13
CHECKED BY : A.E. COOK DATE : 12-13
DESIGN ENGINEER : J.B. TAYLOR DATE : 8-13

DWG. No. S01-024

NORTH CAROLINA PROFESSIONAL SEAL 37035 ENGINEER DAVID W. TAYLOR 8-16-14

REVISIONS						
No.	BY:	DATE:	No.	BY:	DATE:	
1			3			
2			4			

SHEET No. 5-147
TOTAL SHEETS 671

COOKJE
\\MAILBOX\Proj\HDOT\B_WORKING\Drawings\STD\U-0071\TMP-RB_BRIDGE.dgn\TMP-RB_BRIDGE.dgn
\\172.16.4.1\wm_cmbr\B_Wks\HDOT\B_WORKING\Drawings\U-5810\U-0071\TMP-RB_BRIDGE.dgn
P:\B5331\U-0071\TEMP-RB_BRIDGE\221.5\Dist\Plans\U0071_SD_Site1_ab13.dgn
01/02/2014 2:07:07 PM

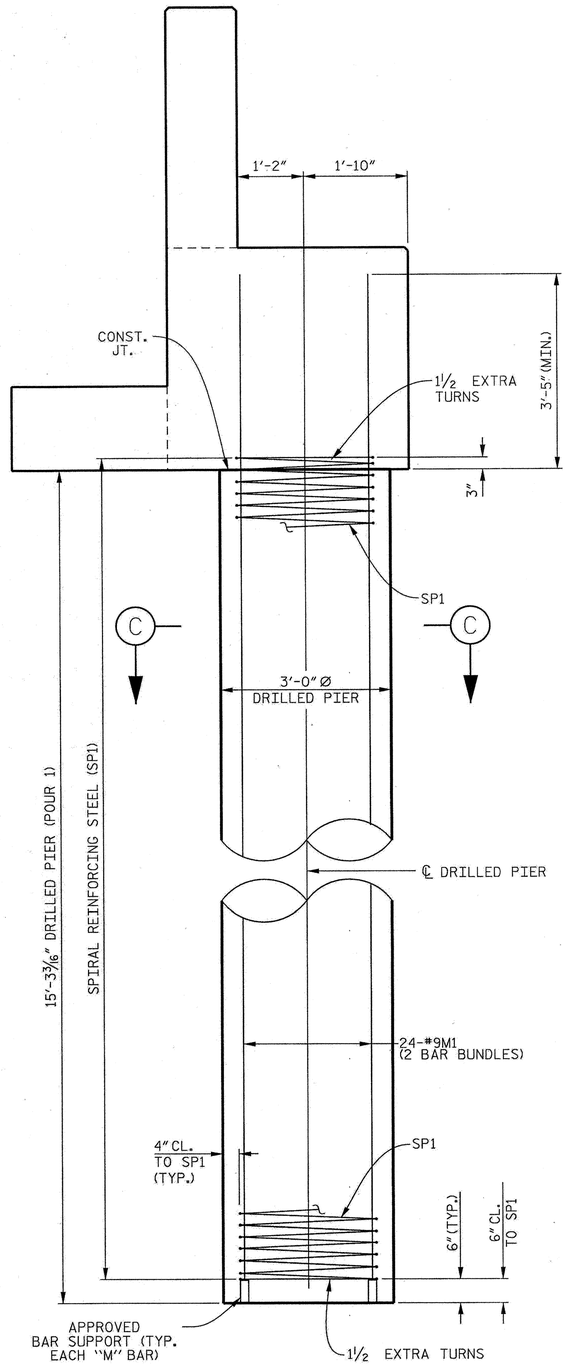

SECTION AT DRILLED PIER

(CAP PIER SHOWN, WING PIER SIMILAR)

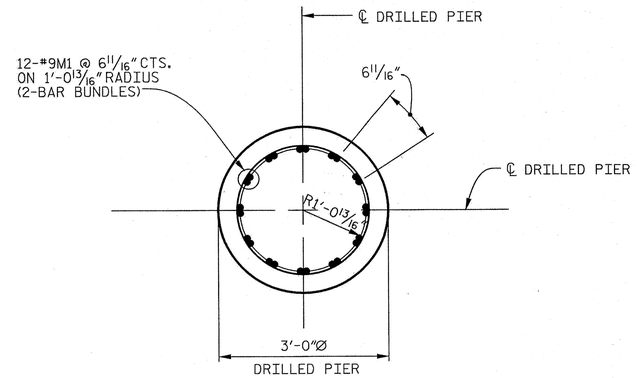

SECTION C–C

(TYP. ALL DRILLED PIERS)

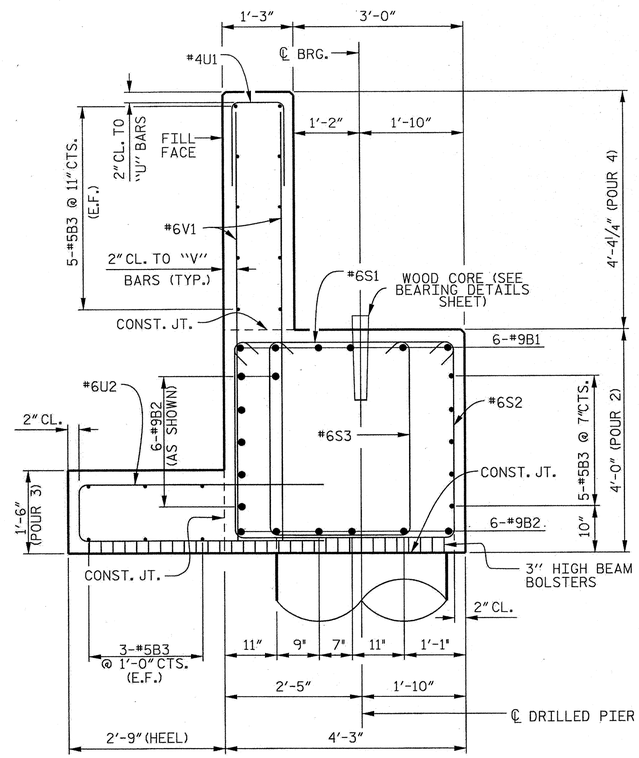

SECTION A–A

BAR TYPES

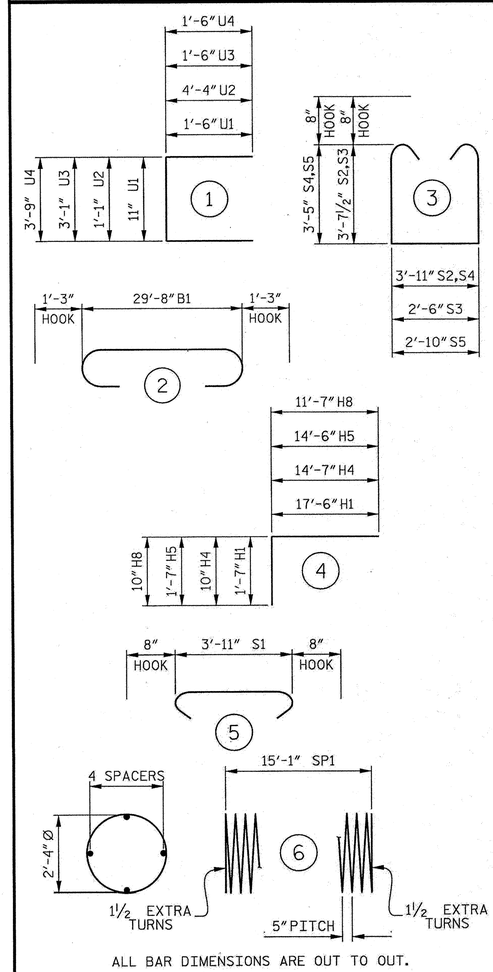

ALL BAR DIMENSIONS ARE OUT TO OUT.

BILL OF MATERIAL

ABUTMENT 2

BAR	No.	SIZE	TYPE	LENGTH	WEIGHT
B1	6	#9	2	32' - 2"	656
B2	12	#9	STR	29' - 8"	1210
B3	21	#5	STR	29' - 8"	650
H1	14	#9	4	19' - 1"	908
H2	8	#9	STR	17' - 8"	481
H3	4	#5	STR	17' - 8"	74
H4	10	#5	4	15' - 5"	161
H5	14	#9	4	16' - 1"	766
H6	8	#9	STR	14' - 8"	399
H7	4	#5	STR	14' - 8"	61
H8	10	#5	4	12' - 5"	130
M1	144	#9	STR	21' - 3"	10404
S1	107	#6	5	5' - 3"	844
S2	59	#6	3	12' - 6"	1108
S3	59	#6	3	11' -11"	1056
S4	48	#6	3	12' - 1"	871
S5	48	#6	3	11' - 0"	793
U1	60	#4	1	3' -11"	157
U2	43	#6	1	9' - 9"	630
U3	12	#4	1	6' - 1"	49
U4	8	#4	1	6' - 9"	36
V1	216	#6	STR	7' -10"	2541
REINFORCING STEEL					23985
SP1	6	**	6	281' - 5"	1,761

SPIRAL COLUMN REINFORCING STEEL 1,761 LBS.

CLASS "AA" CONCRETE (AS MODIFIED BY RAILWAY)

POUR 2	34.3 CU. YDS.
POUR 3	3.3 CU. YDS.
POUR 4	11.1 CU. YDS.
TOTAL	48.7 CU. YDS.

DRILLED PIER CONCRETE (SPECIAL)

POUR 1	24.0 CU. YDS.
3'-0"Ø DRILLED PIER NOT IN SOIL (LFD)	59.0 LIN. FT.
3'-0"Ø DRILLED PIER IN SOIL (LFD)	32.6 LIN. FT.
CSL TUBES	403.0 LIN. FT.

** THE SP1 SPIRAL REINFORCING STEEL SHALL BE W31 OR D31 COLD DRAWN WIRE OR #5 PLAIN OR DEFORMED BAR.

PROJECT NO. U-0071

DURHAM COUNTY

STATION: 65+21.79 –L– P.O.C. = 28+50.89 –RRDET– P.O.T.

SHEET 3 OF 3

STATE OF NORTH CAROLINA
DEPARTMENT OF TRANSPORTATION
RALEIGH

SUBSTRUCTURE

ABUTMENT 2 DETAILS

CDM Smith
Camp Dresser & McKee
5400 Glenwood Avenue, Suite 300
Raleigh, NC 27612-3228
NC COA No. F-1255

DRAWN BY : C.E. DIXON /W.R. SPENCE DATE : 6-14
CHECKED BY : A.E. COOK /J.B. TAYLOR DATE : 6-14
DESIGN ENGINEER : J.B. TAYLOR DATE : 8-13

DWG. No. S01-025

NORTH CAROLINA PROFESSIONAL SEAL 37035 ENGINEER DAVID W. TAYLOR 6.20.14

REVISIONS								SHEET No.
No.	BY:	DATE:	No.	BY:	DATE:			S-148
1			3					TOTAL SHEETS
2			4					671

SIGNATURE
N:\AS_Wing\NCDOT_YR_WORKSPACE\Structures_STD5\U-0071_TEMP_RR_BRIDGE\plot\BW_RR_PDF.pltcfg
\\172.16.6.4\wsa_cad\AS_Wing\NCDOT_YR_WORKSPACE\Structures_STD5\U-0071_TEMP_RR_BRIDGE\plot\HS-SHADE.slt
P:\86331\U-0071_TEMP_RR_BRIDGE\1221_SrDwg\Plans\U0071_SD_Sht1_abt10.dgn
8/29/2014 9:06:45 AM

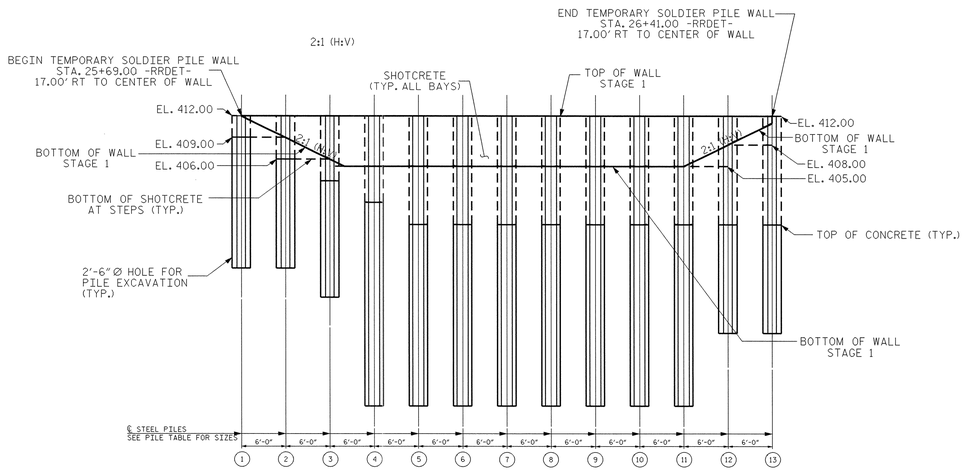

ELEVATION OF TEMP. SOLDIER PILE WALL NO. 1 LAYOUT

STAGE 1

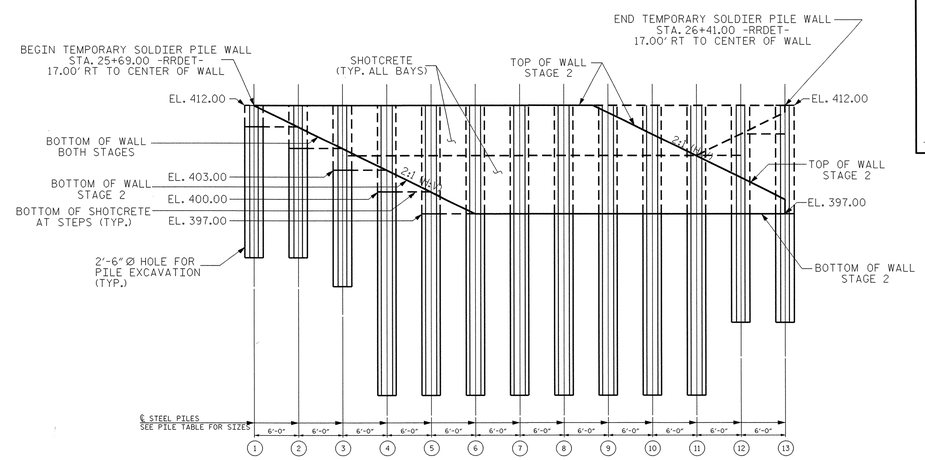

ELEVATION OF TEMP. SOLDIER PILE WALL NO. 1 LAYOUT

STAGE 2

GEOTECHNICAL ENGINEER	ENGINEER
NORTH CAROLINA PROFESSIONAL SEAL 032672 ENGINEER MICHAEL D. VALIQUETTE	
SIGNATURE DATE	SIGNATURE DATE

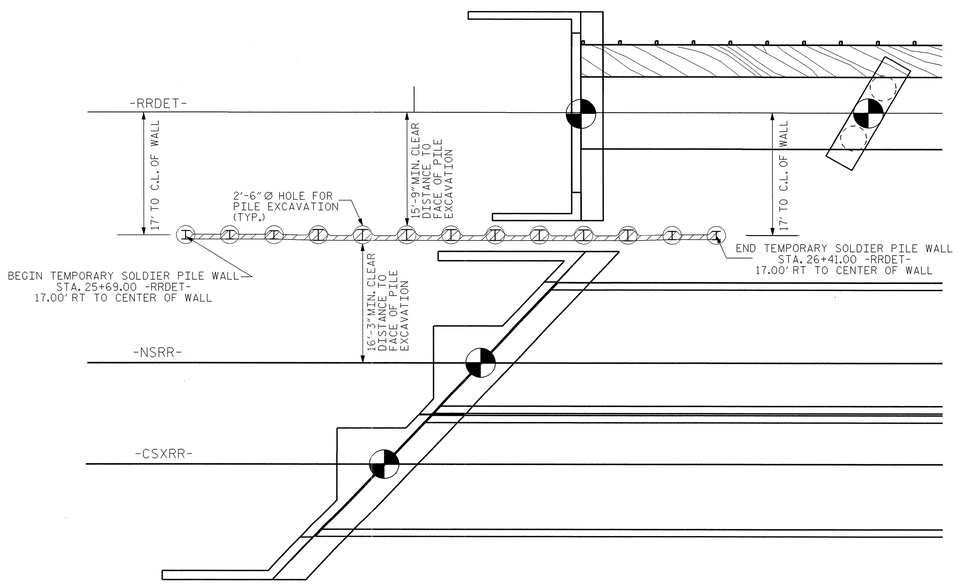

TEMP. SOLDIER PILE WALL NO. 1 LOCATION SKETCH

TEMP. SOLDIER PILE WALL FOR RAILROAD ABUTMENT, NO. 1, PILE SUMMARY TABLE

PILE NO.	PILE STATION -RRDET-	PILE OFFSET FROM -RRDET-	PILE SIZE	TOP OF PILE ELEV. (FT)	BOTTOM OF PILE ELEV. (FT)	PILE LENGTH (FT)	TOP OF SHAFT CONC. ELEV. (FT)	TOP OF EXC. FLOWABLE FILL ELEV. (FT)	TOP OF WALL STAGE 1	BOTTOM OF WALL STAGE 1	TOP OF WALL STAGE 2	BOTTOM OF WALL STAGE 2
1	25+69.00	17' RT.	HP14X73	412.00	391.00	21	409.00	412.00	412.00	412.00	412.00	412.00
2	25+75.00	17' RT.	HP14X73	412.00	391.00	21	406.00	412.00	412.00	409.00	412.00	409.00
3	25+81.00	17' RT.	HP14X73	412.00	387.00	25	403.00	412.00	412.00	406.00	412.00	406.00
4	25+87.00	17' RT.	HP18X204	412.00	372.00	40	400.00	412.00	412.00	405.00	412.00	403.00
5	25+93.00	17' RT.	HP18X204	412.00	372.00	40	397.00	412.00	412.00	405.00	412.00	400.00
6	25+99.00	17' RT.	HP18X204	412.00	372.00	40	397.00	412.00	412.00	405.00	412.00	397.00
7	26+05.00	17' RT.	HP18X204	412.00	372.00	40	397.00	412.00	412.00	405.00	412.00	397.00
8	26+11.00	17' RT.	HP18X204	412.00	372.00	40	397.00	412.00	412.00	405.00	412.00	397.00
9	26+17.00	17' RT.	HP18X204	412.00	372.00	40	397.00	412.00	412.00	405.00	411.00	397.00
10	26+23.00	17' RT.	HP18X204	412.00	372.00	40	397.00	412.00	412.00	405.00	408.00	397.00
11	26+29.00	17' RT.	HP18X204	412.00	372.00	40	397.00	412.00	412.00	405.00	405.00	397.00
12	26+35.00	17' RT.	HP14X73	412.00	382.00	30	397.00	412.00	412.00	408.00	402.00	397.00
13	26+41.00	17' RT.	HP14X73	412.00	382.00	30	397.00	412.00	412.00	411.00	399.00	397.00

ESTIMATED QUANTITIES

TEMPORARY SOLDIER PILE RETAINING WALL FOR RAILROAD ABUTMENT NO.	TEMPORARY SOLDIER PILE RETAINING WALL FOR RAILROAD ABUTMENT
1	LUMP SUM

PROJECT NO.: U-0071

DURHAM ***COUNTY***

STATION: 25+69.00 -RRDET-

SHEET 1 OF 3

PREPARED BY: M. VALIQUETTE	DATE: 11/2013
REVIEWED BY: C. KREIDER	DATE: 11/2013

GEOTECHNICAL ENGINEERING UNIT

☐ ***EASTERN REGIONAL OFFICE***

☐ ***WESTERN REGIONAL OFFICE***

☐ ***CONTRACT OFFICE***

STATE OF NORTH CAROLINA
DEPARTMENT OF TRANSPORTATION
RALEIGH

TEMPORARY SOLDIER PILE RETAINING WALLS FOR CONSTRUCTION OF RAILROAD ABUTMENTS

REVISIONS

NO.	BY	DATE	NO.	BY	DATE
1			3		
2			4		

SHEET NO. S-149

TOTAL SHEETS 671

GEOTECHNICAL ENGINEER	ENGINEER
NORTH CAROLINA PROFESSIONAL SEAL 032672 ENGINEER MICHAEL D. VALIQUETTE	
SIGNATURE DATE	SIGNATURE DATE

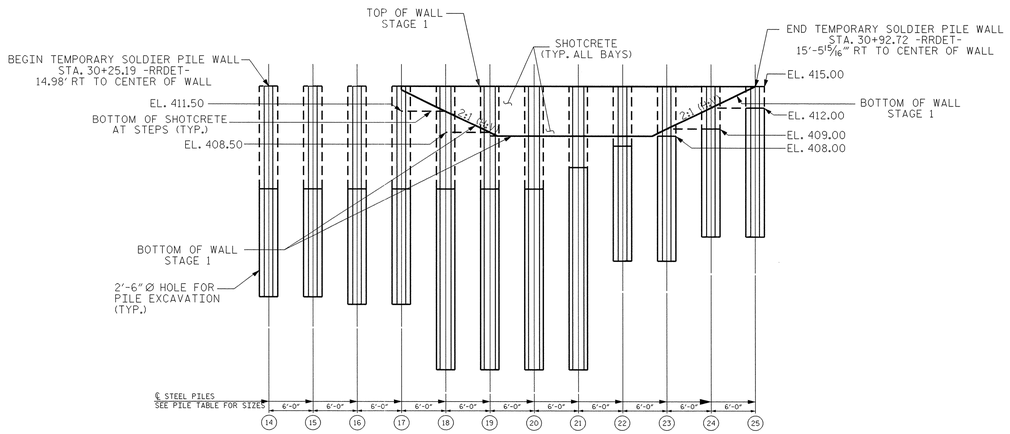

ELEVATION OF TEMP. SOLDIER PILE WALL NO. 2 LAYOUT

STAGE 1

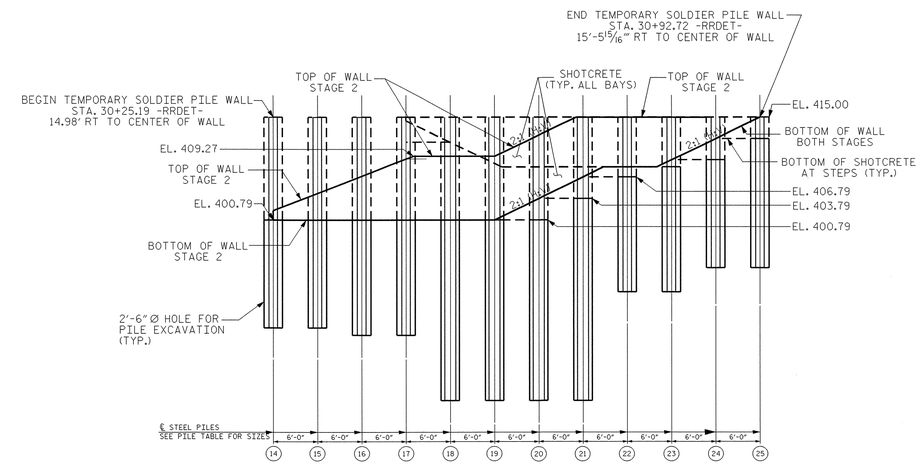

ELEVATION OF TEMP. SOLDIER PILE WALL NO. 2 LAYOUT

STAGE 2

TEMP. SOLDIER PILE WALL FOR RAILROAD ABUTMENT, NO. 2, PILE SUMMARY TABLE

PILE NO.	PILE STATION -RRDET-	PILE OFFSET FROM -RRDET-	PILE SIZE	TOP OF PILE ELEV. (FT)	BOTTOM OF PILE ELEV. (FT)	PILE LENGTH (FT)	TOP OF SHAFT CONC. ELEV. (FT)	TOP OF EXC. FLOWABLE FILL ELEV. (FT)	TOP OF WALL STAGE 1	BOTTOM OF WALL STAGE 1	TOP OF WALL STAGE 2	BOTTOM OF WALL STAGE 2
14	30+25.19	14'-11 3/4" RT.	HP14X73	415.00	385.79	29.21	400.79	415.00	-	-	402.12	400.79
15	30+31.26	15'-3 1/4" RT.	HP14X73	415.00	385.79	29.21	400.79	415.00	-	-	404.50	400.79
16	30+37.35	15'-6 3/8" RT.	HP14X73	415.00	384.79	30.21	400.79	415.00	-	-	406.85	400.79
17	30+43.50	15'-8 13/16" RT.	HP14X73	415.00	384.79	30.21	400.79	415.00	415.00	414.50	409.23	400.79
18	30+49.68	16'-2 7/8" RT.	HP18X204	415.00	375.79	39.21	400.79	415.00	415.00	411.50	409.27	400.79
19	30+55.84	16'-8 1/16" RT.	HP18X204	415.00	375.79	39.21	400.79	415.00	415.00	408.50	409.27	400.79
20	30+61.99	17'-1/2" RT.	HP18X204	415.00	375.79	39.21	400.79	415.00	415.00	408.00	412.27	403.79
21	30+68.16	17'-3/16" RT.	HP18X204	415.00	375.79	39.21	403.79	415.00	415.00	408.00	415.00	406.79
22	30+74.33	16'-11 1/8" RT.	HP14X73	415.00	390.79	24.21	406.79	415.00	415.00	408.00	415.00	408.00
23	30+80.44	16'-7 13/16" RT.	HP14X73	415.00	390.79	24.21	408.00	415.00	415.00	409.00	415.00	409.00
24	30+86.59	16'-1 1/4" RT.	HP14X73	415.00	394.00	21.00	409.00	415.00	415.00	412.00	415.00	412.00
25	30+92.72	15'-5 15/16" RT.	HP14X73	415.00	394.00	21.00	412.00	415.00	415.00	415.00	415.00	415.00

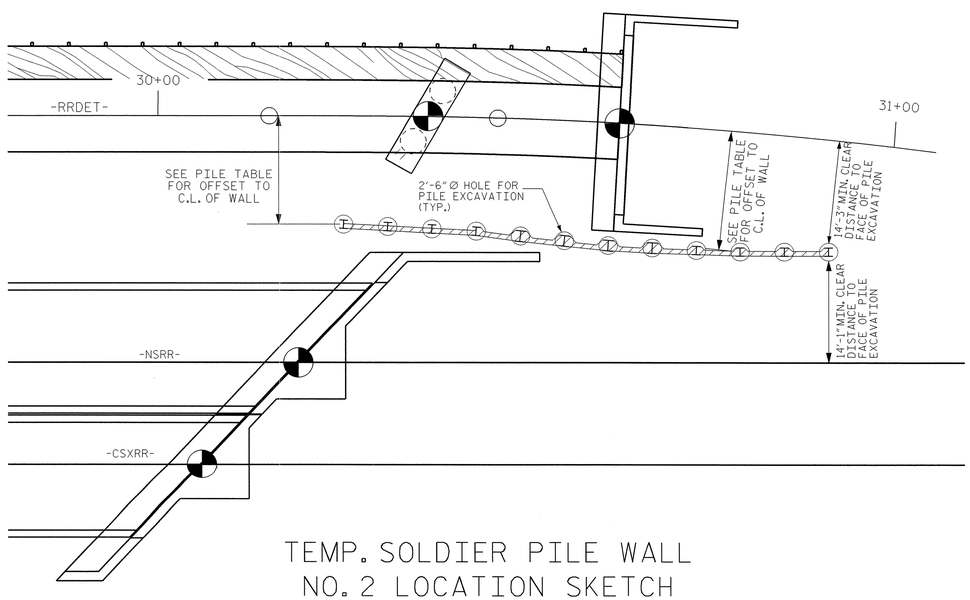

TEMP. SOLDIER PILE WALL NO. 2 LOCATION SKETCH

ESTIMATED QUANTITIES

TEMPORARY SOLDIER PILE RETAINING WALL FOR RAILROAD ABUTMENT NO.	TEMPORARY SOLDIER PILE RETAINING WALL FOR RAILROAD ABUTMENT
2	LUMP SUM

PROJECT NO.: U-0071

DURHAM ***COUNTY***

STATION: 25+69.00 -RRDET-

SHEET 2 OF 3

PREPARED BY: M. VALIQUETTE	DATE: 11/2013
REVIEWED BY: C. KREIDER	DATE: 11/2013

GEOTECHNICAL ENGINEERING UNIT

☐ ***EASTERN REGIONAL OFFICE***

☐ ***WESTERN REGIONAL OFFICE***

☐ ***CONTRACT OFFICE***

STATE OF NORTH CAROLINA
DEPARTMENT OF TRANSPORTATION
RALEIGH

TEMPORARY SOLDIER PILE RETAINING WALLS FOR CONSTRUCTION OF RAILROAD ABUTMENTS

REVISIONS

NO.	BY	DATE	NO.	BY	DATE
1			3		
2			4		

SHEET NO. S-150

TOTAL SHEETS 671

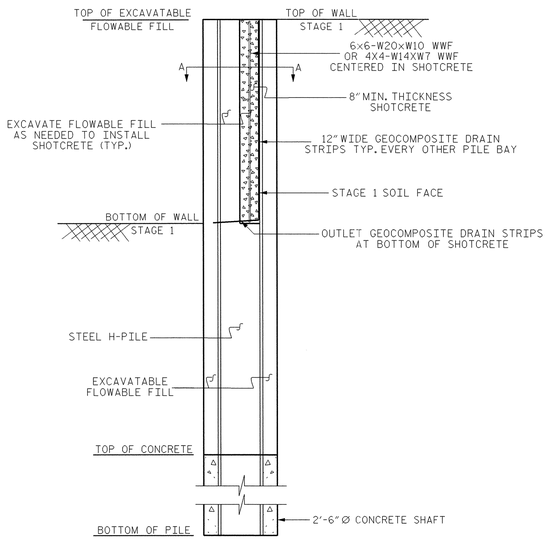

TYPICAL SECTION
STAGE 1

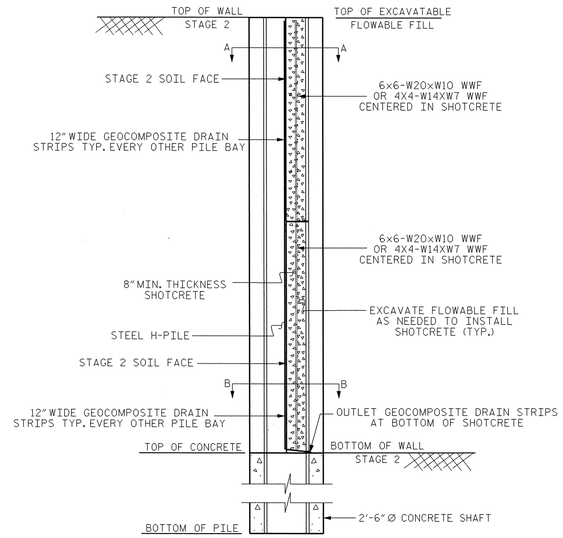

TYPICAL SECTION
STAGE 2

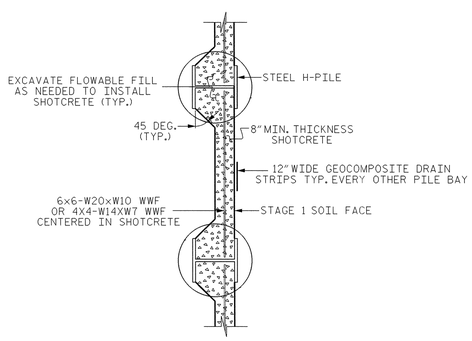

SECTION A-A
STAGE 1

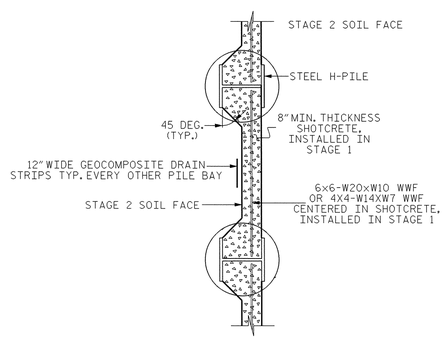

SECTION A-A
STAGE 2

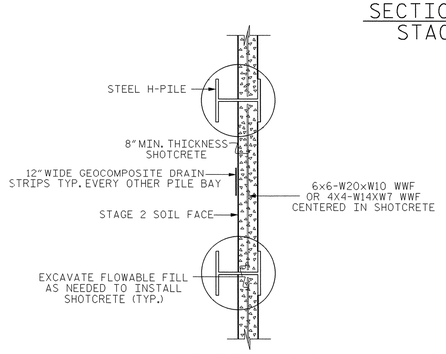

SECTION B-B
STAGE 2

NOTES

1. FOR TEMPORARY SOLDIER PILE RETAINING WALLS, SEE TEMPORARY SOLDIER PILE RETAINING WALLS FOR RAILROAD ABUTMENTS SPECIAL PROVISION.
2. FOR SHOTCRETE, SEE SECTION 1002 OF THE NCDOT STANDARD SPECIFICATIONS AND THE TEMPORARY SOLDIER PILE RETAINING WALLS FOR RAILROAD ABUTMENTS SPECIAL PROVISION.
3. DRILLED-IN H-PILES ARE REQUIRED.
4. PLACE SOLDIER PILE, CONCRETE, AND EXCAVATABLE FLOWABLE FILL THE SAME DAY THE EXCAVATION IS COMPLETED.
5. PILES SHALL BE INSTALLED TO THE ELEVATIONS AND LENGTHS SHOWN ON THE PLANS BY DRILLING. THE EXCAVATED HOLE SHALL BE 30 INCH MINIMUM DIAMETER AND BACKFILLED WITH CONCRETE AND EXCAVATABLE FLOWABLE FILL TO THE ELEVATIONS NOTED IN THE PILE SUMMARY TABLES.
6. THE TOP OF THE INSTALLED PILES SHALL BE WITHIN 1 INCH OF THEIR PLAN LOCATION IN ANY HORIZONTAL OR VERTICAL DIRECTION AND $\frac{1}{8}$"/FT FROM VERTICAL.
7. FULLY CONSTRUCT ALL ODD NUMBERED PILE LOCATIONS BEFORE BEGINNING CONSTRUCTION OF EVEN NUMBERED PILE LOCATIONS.
8. NO SPLICES ARE PERMITTED IN H-PILES.
9. ANY OVEREXCAVATION SHALL BE BACKFILLED WITH SHOTCRETE.
10. REMOVE ANY COBBLES, BOULDERS, RUBBLE, OR DEBRIS THAT WILL PROTRUDE INTO THE SHOTCRETE FACE.
11. LIMIT OPEN EXCAVATION LIFT HEIGHT WITHOUT SHOTCRETE TO 5 FEET OR LESS IN HEIGHT.
12. APPLY SHOTCRETE TO OPEN EXCAVATION FACES WITHIN 12 HOURS OF EXCAVATING EACH LIFT.
13. LIMIT SHOTCRETE LIFT HEIGHT TO 4 FEET OR LESS, EXCEPT FOR BOTTOM LIFT, TO ALLOW FOR 12 INCH W.W.F. MIN. SPLICE LENGTH.
14. DO NOT EXCAVATE NEXT LIFT UNTIL SHOTCRETE APPLICATION OF THE CURRENT LIFT HAS CURED FOR AT LEAST 24 HOURS.
15. PROVIDE 12 INCH W.W.F. MIN SPLICE LENGTH AT BOTTOM OF SHOTCRETE LIFTS. NO OTHER W.W.F. SPICES ARE PERMITTED.
16. DESIGN OF TEMPORARY SOLDIER PILE RETAINING WALLS FOR RAILROAD ABUTMENTS IS IN ACCORDANCE WITH AREMA VOLUME 2, CHAPTER 8 AND CSXT AND NS SHORING REQUIREMENTS FOR COOPERS E-80 TRAIN LOADINGS.
17. TEMPORARY SOLDIER PILE RETAINING WALL NO. 1 HAS BEEN DESIGNED FOR THE FOLLOWING SOIL PROPERTIES
    - ABOVE ELEVATION 397.0 FT
      - EFFECTIVE UNIT WEIGHT = 120 PCF
      - FRICTION ANGLE = 24 DEGREES
      - COHESION = 0 PSF
      - WALL FRICTION = 8 DEGREES
    - BELOW ELEVATION 397.0 FT
      - EFFECTIVE UNIT WEIGHT = 70 PCF
      - FRICTION ANGLE = 36 DEGREES
      - COHESION = 0 PSF
      - WALL FRICTION = 12 DEGREES
18. TEMPORARY SOLDIER PILE RETAINING WALL NO. 2 HAS BEEN DESIGNED FOR THE FOLLOWING SOIL PROPERTIES
    - ABOVE ELEVATION 400.79 FT
      - EFFECTIVE UNIT WEIGHT = 120 PCF
      - FRICTION ANGLE = 24 DEGREES
      - COHESION = 0 PSF
      - WALL FRICTION = 8 DEGREES
    - BELOW ELEVATION 400.79 FT
      - EFFECTIVE UNIT WEIGHT = 70 PCF
      - FRICTION ANGLE = 36 DEGREES
      - COHESION = 0 PSF
      - WALL FRICTION = 12 DEGREES
19. ANY TEMPORARY SOLDIER PILE WALL REDESIGN SHALL USE SOIL PARAMETERS NO BETTER THAN THOSE SHOWN ON THIS PLAN SHEET AND SHALL BE IN ACCORDANCE WITH AREMA VOLUME 2, CHAPTER 8 AND CSXT AND NS SHORING REQUIREMENTS FOR COOPERS E-80 TRAIN LOADINGS.

GEOTECHNICAL ENGINEER	ENGINEER
NORTH CAROLINA PROFESSIONAL SEAL 032672 ENGINEER MICHAEL D. VALIQUETTE	
SIGNATURE DATE	SIGNATURE DATE

CONSTRUCTION SEQUENCE

1. DRILL MINIMUM 30 INCH DIAMETER SHAFTS FOR ODD NUMBERED H-PILES FROM NATURAL GROUND.
2. WITHIN 12 HOURS, OF COMPLETING EACH SHAFT EXAVATION, PLACE H-PILES, BACKFILL WITH CONCRETE AND EXCAVATABLE FLOWABLE FILL TO THE ELEVATIONS SHOWN IN PILE TALBES.
3. REPEAT STEPS 1 AND 2 FOR EVEN NUMBERED PILE LOCATIONS.
4. EXCAVATE FOR FIRST LIFT OF STAGE 1 SHOTCRETE WHILE OBSERVING LIFT HEIGHT RESTRICITONS.
5. PLACE GEOCOMPOSITE DRAIN STRIPS, W.W.F., AND SHOTCRETE WITHIN 12 HOURS OF OPENING EXCAVATION LIFT.
6. ALLOW SHOTCRETE TO CURE FOR A MINIMUM OF 24 HOURS.
7. REPEAT STEPS 4 AND 5 UNTIL BOTTOM OF STAGE 1 WALL HAS BEEN REACHED.
8. CONSTUCT TEMPORARY RAILROAD DETOUR BRIDGE ABUTMENTS.
9. INSTALL STAGE 2 GEOCOMPOSITE DRAIN STRIPS AND BACKFILL AGAINST EXPOSED FACE OF STAGE 1 SHORING TO CONSTRUCT TEMPORARY RAILROAD TRACK BED.
10. BEGIN EXCAVATION FOR STAGE 2 AFTER RAIL TRAFFIC HAS BEEN SWITCHED ONTO TEMPORARY RAILROAD DETOUR BRIDGE.
11. EXCAVATE FOR FIRST LIFT OF STAGE 2 SHOTCRETE WHILE OBSERVING LIFT HEIGHT RESTRICITONS.
12. PLACE GEOCOMPOSITE DRAIN STRIPS, W.W.F., AND SHOTCRETE WITHIN 12 HOURS OF OPENING EXCAVATION LIFT.
13. REPEAT STEPS 10 AND 11 UNTIL BOTTOM OF STAGE 2 WALL HAS BEEN REACHED.
14. CONSTUCT PERMANENT RAILROAD BRIDGE ABUTMENTS.
15. BACKFILL AGAINST TEMPORARY SOLDIER PILE AND CONSTRUCT PERMANENT RAILROAD TRACK BED.

PREPARED BY: M. VALIQUETTE	DATE: 5/2014
REVIEWED BY: C. KREIDER	DATE: 5/2014

PROJECT NO.: U-0071
DURHAM ***COUNTY***
STATION: 25+69.00 -RRDET-
SHEET 3 OF 3

GEOTECHNICAL ENGINEERING UNIT

☐ ***EASTERN REGIONAL OFFICE***
☐ ***WESTERN REGIONAL OFFICE***
☐ ***CONTRACT OFFICE***

STATE OF NORTH CAROLINA
DEPARTMENT OF TRANSPORTATION
RALEIGH

TEMPORARY SOLDIER PILE RETAINING WALLS FOR CONSTRUCTION OF RAILROAD ABUTMENTS

REVISIONS						SHEET NO.
NO.	BY	DATE	NO.	BY	DATE	S-151
1			3			TOTAL SHEETS
2			4			671

GEOTECHNICAL ENGINEER	ENGINEER
NORTH CAROLINA PROFESSIONAL SEAL 032672 ENGINEER MICHAEL D. VALIQUETTE	
SIGNATURE DATE	SIGNATURE DATE

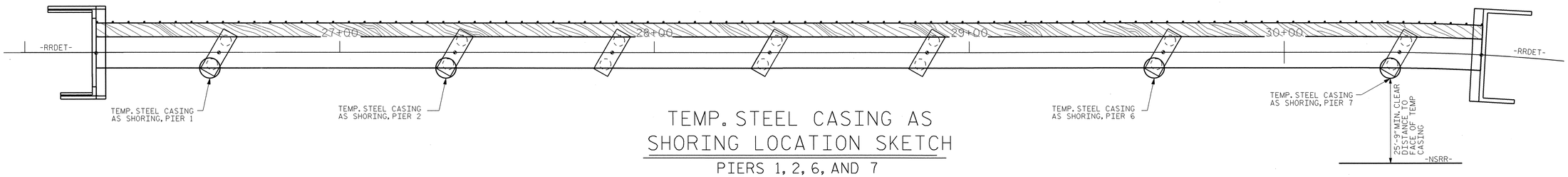

TEMP. STEEL CASING AS SHORING LOCATION SKETCH

PIERS 1, 2, 6, AND 7

NOTES

1. FOR TEMPORARY STEEL CASING AS SHORING, SEE TEMPORARY STEEL CASING AS SHORING FOR CONSTRUCTION OF DETOUR RAILROAD INTERIOR BENTS SPECIAL PROVISION.
2. INSTALL TEMPORARY STEEL CASING AS SHORING BY VIBRATING, SCREWING, OR DRIVING TO A DEPTH OF 10 FEET BELOW BOTTOM OF CAP. DO NOT REMOVE OR LOOSEN MATERIAL AHEAD OF ADVANCING CASING.
3. MATERIAL WITHIN THE CASING MAY BE REMOVED DURING CASING INSTALLATION. CASING SHALL BE BACKFILLED AT THE END OF INSTALLATION TO 6 INCHES BELOW BOTTOM OF CAP ELEVATION.
4. PROVIDE STEEL CASING WITH AN MINIMUM OUTSIDE DIAMETER OF 6'-6" AND WITH A MINIMUM WALL THICKNESS OF 0.5". CASING DIAMETER MAY BE OVERSIZED BY UP TO 6" AT THE DISCRETION OF THE CONTRACTOR.
5. AFTER CASING INSALLATION, REMOVE PORTION OF CASING AS SHOWN TO ALLOW CONSTRUCTION OF PIER CAPS.

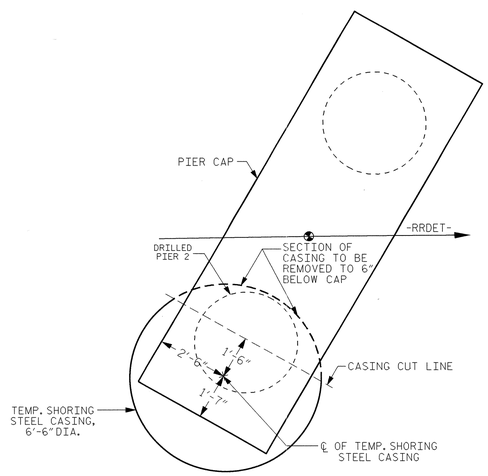

TYPICAL PLAN VIEW

PIERS 1, 2, 6, AND 7

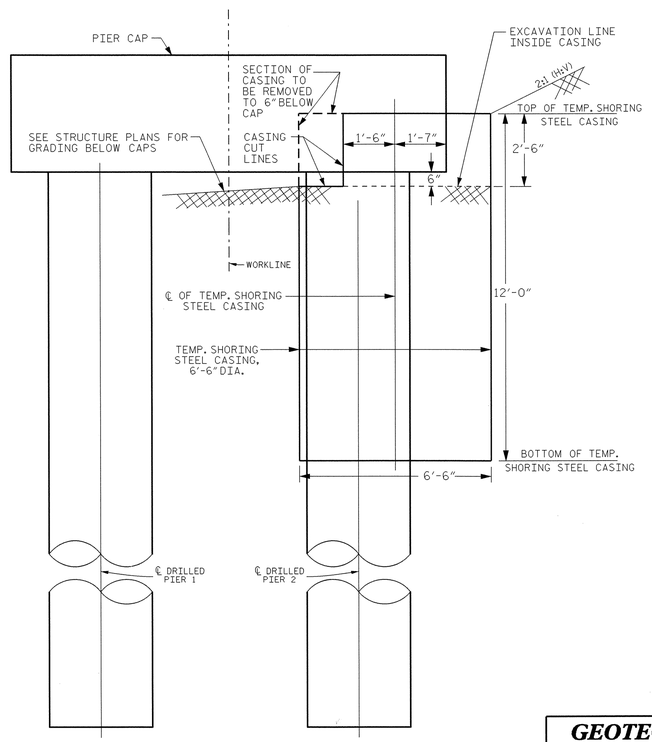

TYPICAL SECTION

PIERS 1, 2, 6, AND 7

ESTIMATED QUANTITIES	
PIER NUMBER	TEMPORARY STEEL CASING AS SHORING (LINEAR FEET)
1	12 FEET
2	12 FEET
6	12 FEET
7	12 FEET
TOTAL	48 FEET

PROJECT NO.: U-0071

DURHAM ***COUNTY***

STATION: 25+69.00 -RRDET-

SHEET 1 OF 1

GEOTECHNICAL ENGINEERING UNIT

☒ ***EASTERN REGIONAL OFFICE***

☐ ***WESTERN REGIONAL OFFICE***

☐ ***CONTRACT OFFICE***

STATE OF NORTH CAROLINA
DEPARTMENT OF TRANSPORTATION
RALEIGH

TEMPORARY STEEL CASING AS SHORING FOR CONSTRUCTION OF DETOUR RAILROAD INTERIOR BENTS

REVISIONS						SHEET NO.
NO.	BY	DATE	NO.	BY	DATE	S-152
1			3			TOTAL SHEETS
2			4			671

PREPARED BY: M. VALIQUETTE	DATE: 1/2014
REVIEWED BY: C. KREIDER	DATE: 1/2014

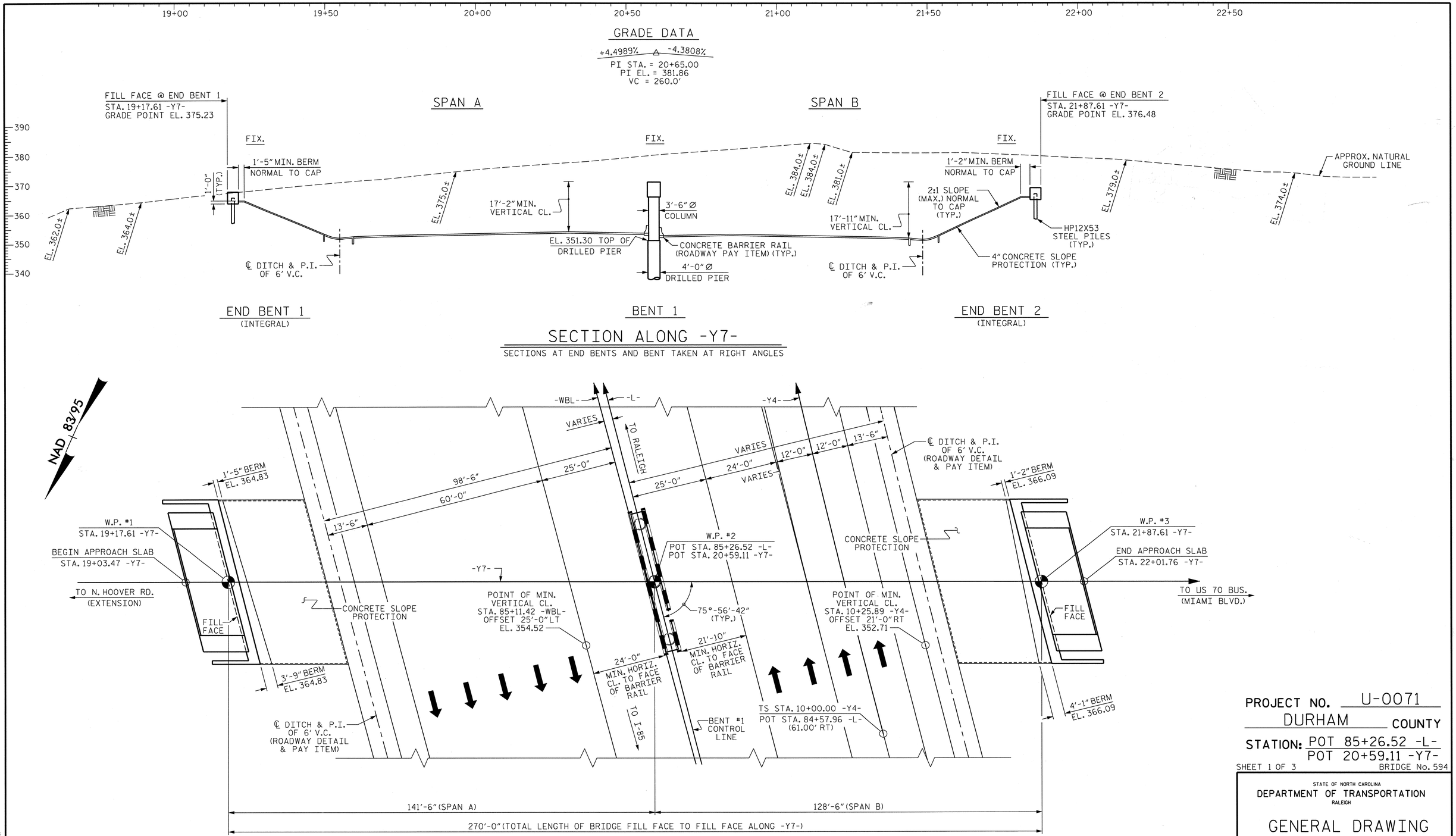

PROJECT NO. U-0071

DURHAM COUNTY

STATION: POT 85+26.52 -L-
POT 20+59.11 -Y7-

SHEET 1 OF 3

BRIDGE No. 594

STATE OF NORTH CAROLINA
DEPARTMENT OF TRANSPORTATION
RALEIGH

GENERAL DRAWING

FOR BRIDGE ON -Y7- (CARR RD.) OVER -L- (US 70), -WBL-, & -Y4- EAST END CONNECTOR BETWEEN N. HOOVER RD. AND US 70 BUS.

NORTH CAROLINA PROFESSIONAL SEAL 37400 ENGINEER GREGORY M. GILLAND 12/4/13

WETHERILL ENGINEERING
559 Jones Franklin Rd. Suite 164
Raleigh, N.C. 27606
Bus: 919 851 8077
Fax: 919 851 8107
License: F-0377

TRANSPORTATION PLANNING/DESIGN - BRIDGE/STRUCTURE DESIGN
CIVIL/SITE DESIGN - GIS/GPS - CONSTRUCTION OBSERVATION

REVISIONS							
NO.	BY:	DATE:	NO.	BY:	DATE:	SHEET NO.	
1			3			S-153	
2			4			TOTAL SHEETS	
						671	

DRAWN BY : G.M. GILLAND DATE : 6-18-13
CHECKED BY : T. DIFFEE DATE : 6-26-13
DESIGN ENGINEER OF RECORD: G.M. GILLAND DATE : 6-13

P:\2012\U-0071 Sites 3,8 & 9\Structures\DWG_3\u0071_SD_STR3_GD_WE1.dgn
12/10/2013 10:43:52 AM

STR #3

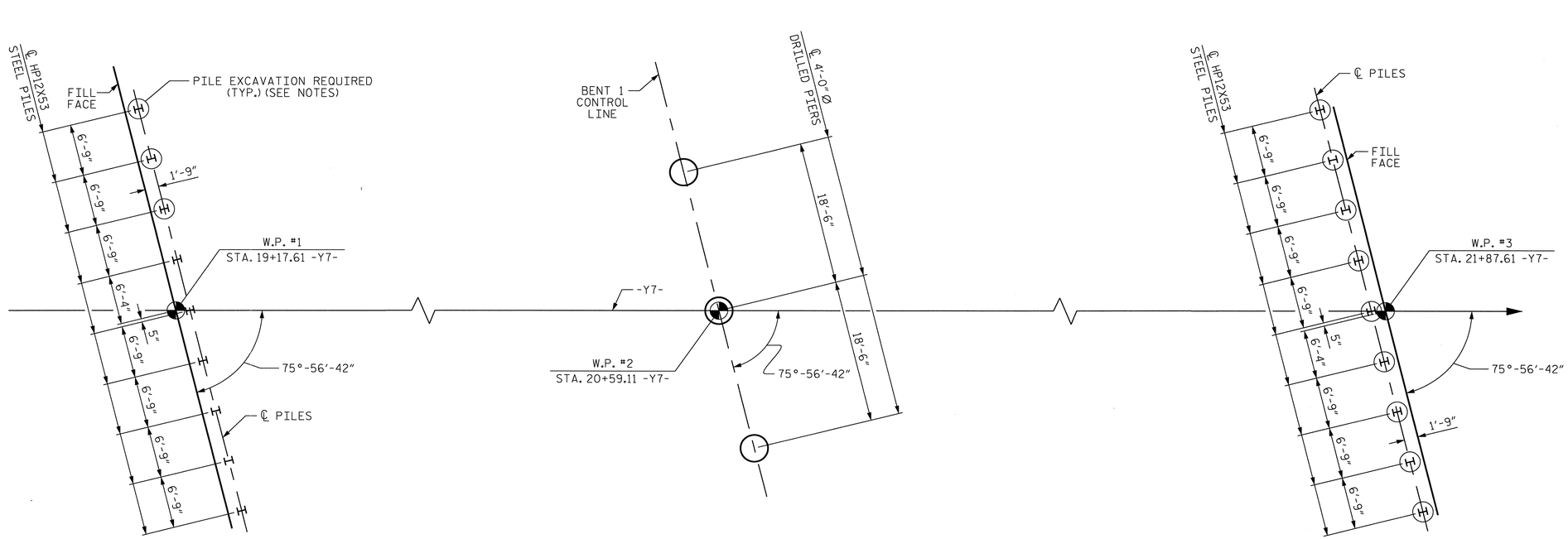

END BENT 1 | BENT 1 | END BENT 2

FOUNDATION LAYOUT

DIMENSIONS LOCATING PILES AND DRILLED PIERS ARE SHOWN TO THEIR CENTERLINE

NOTES

FOR PILES, SEE SECTION 450 OF THE STANDARD SPECIFICATIONS.

PILES AT END BENT 1 AND END BENT 2 ARE DESIGNED FOR A FACTORED RESISTANCE OF 120 TONS PER PILE.

DRIVE PILES AT END BENT 1 AND END BENT 2 TO A REQUIRED DRIVING RESISTANCE OF 200 TONS PER PILE.

PILE EXCAVATION IS REQUIRED TO INSTALL PILES AT END BENT 2. EXCAVATE HOLES AT PILE LOCATIONS TO ELEVATION 355.1 FT. FOR PILE EXCAVATION, SEE SECTION 450 OF THE STANDARD SPECIFICATIONS

PILE EXCAVATION IS REQUIRED TO INSTALL PILE 1, 2 AND 3 AT END BENT 1. EXCAVATE HOLES AT PILE LOCATIONS TO ELEVATION 353.8 FT. FOR PILE EXCAVATION, SEE SECTION 450 OF THE STANDARD SPECIFICATIONS.

CONCRETE OR GROUT IS REQUIRED TO FILL HOLES FOR PILE EXCAVATION TO WITHIN 5 FT. OF THE TOP OF THE HOLE AT END BENT 1 AND END BENT 2. FILL THE TOP 5 FT. WITH SELECT GRANULAR MATERIAL AFTER CONCRETE OR GROUT SETS. THE PAYMENT OF SELECT GRANULAR MATERIAL BACKFILL SHALL BE INCLUDED IN THE UNIT COST FOR PILE EXCAVATION IN SOIL OR PILE EXCAVATION NOT IN SOIL IN SECTION 450-4 OF THE STANDARD SPECIFICATIONS.

FOR DRILLED PIERS, SEE SECTION 411 OF THE STANDARD SPECIFICATIONS.

DRILLED PIERS AT BENT 1 ARE DESIGNED FOR A FACTORED RESISTANCE OF 555 TONS PER PIER. CHECK FIELD CONDITIONS FOR THE REQUIRED TIP RESISTANCE OF 60 TSF.

INSTALL DRILLED PIERS AT BENT 1 TO A TIP ELEVATION NO HIGHER THAN 335 FT. (LT), 335 FT. (CTR) AND 337 FT. (RT) AND WITH THE REQUIRED TIP RESISTANCE.

SID INSPECTION MAY BE REQUIRED FOR DRILLED PIERS. THE ENGINEER WILL DETERMINE THE NEED FOR SID INSPECTIONS. FOR SID INSPECTIONS, SEE SECTION 411 OF THE STANDARD SPECIFICATIONS.

CSL TUBES ARE REQUIRED AND CSL TESTING MAY BE REQUIRED FOR DRILLED PIERS. THE ENGINEER WILL DETERMINE THE NEED FOR CSL TESTING. FOR CSL TESTING, SEE SECTION 411 OF THE STANDARD SPECIFICATIONS.

DRAWN BY : G.M. GILLAND	DATE : 6-18-13		
CHECKED BY : T. DIFFEE	DATE : 6-26-13		
DESIGN ENGINEER OF RECORD: G.M. GILLAND	DATE : 6-13		

NORTH CAROLINA PROFESSIONAL SEAL 37400 ENGINEER GREGORY M. GILLAND 12/10/13

WETHERILL ENGINEERING
559 Jones Franklin Rd. Suite 164
Raleigh, N.C. 27606
Bus: 919 851 8077
Fax: 919 851 8107
License: F-0377
TRANSPORTATION PLANNING/DESIGN - BRIDGE/STRUCTURE DESIGN
CIVIL/SITE DESIGN - GIS/GPS - CONSTRUCTION OBSERVATION

PROJECT NO. U-0071
DURHAM COUNTY
STATION: 85+26.52 -L-

SHEET 2 OF 3

STATE OF NORTH CAROLINA
DEPARTMENT OF TRANSPORTATION
RALEIGH

GENERAL DRAWING
FOR BRIDGE ON -Y7- (CARR RD.) OVER -L- (US 70), -WBL-, & -Y4- EAST END CONNECTOR BETWEEN N. HOOVER RD. AND US 70 BUS.

REVISIONS							SHEET NO.
NO.	BY:	DATE:	NO.	BY:	DATE:		S-154
1			3				TOTAL SHEETS
2			4				671

STR #3

P:\2012\U-0071 Sites 3,8 & 9\Structures\DWG_3\u0071_SD_STR3_GD_WEI.dgn
12/10/2013 10:46:08 AM

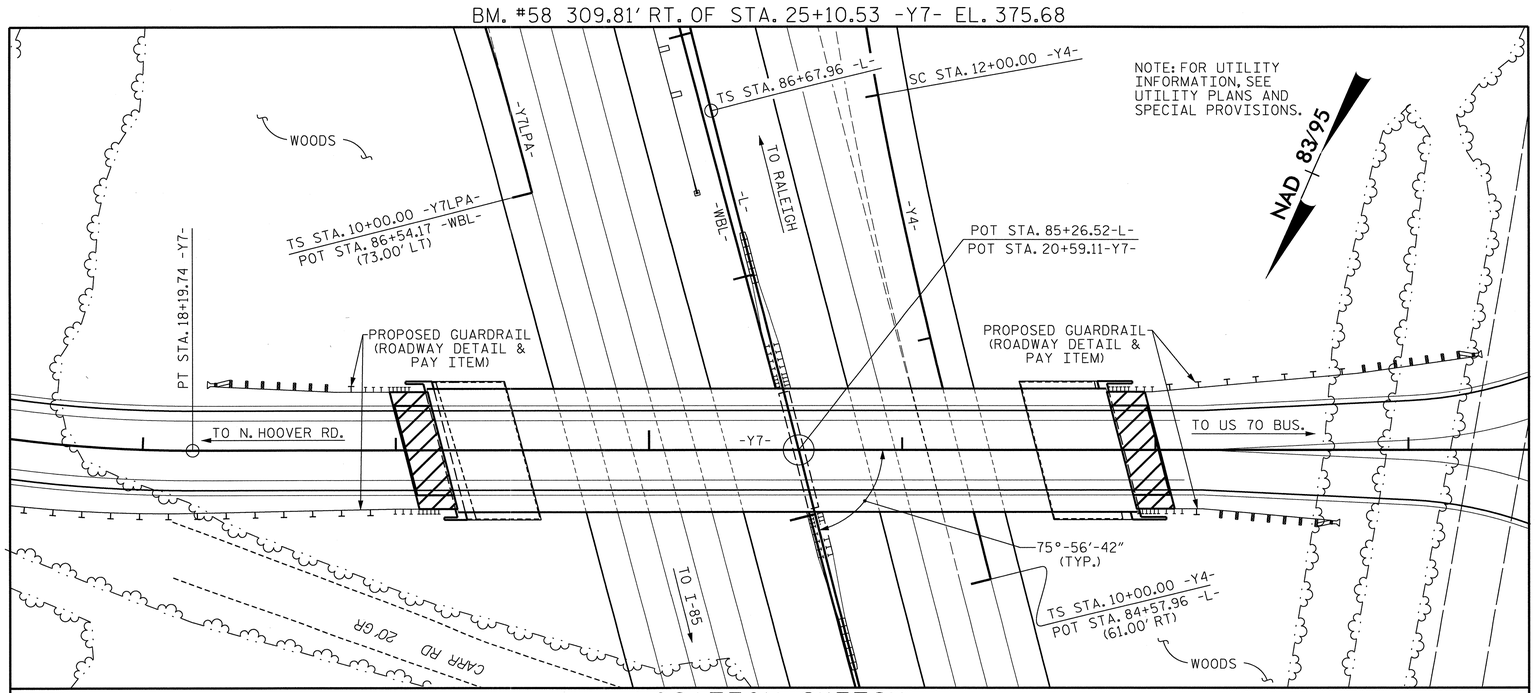

LOCATION SKETCH

NOTES

ASSUMED LIVE LOAD = HL-93 OR ALTERNATE LOADING.

THIS BRIDGE HAS BEEN DESIGNED IN ACCORDANCE WITH THE AASHTO LRFD BRIDGE DESIGN SPECIFICATIONS.

THIS BRIDGE IS LOCATED IN SEISMIC ZONE 1.

FOR OTHER DESIGN DATA AND GENERAL NOTES, SEE SHEET SN.

FOR SUBMITTAL OF WORKING DRAWINGS, SEE SPECIAL PROVISIONS.

FOR FALSEWORK AND FORMWORK, SEE SPECIAL PROVISIONS.

FOR CRANE SAFETY, SEE SPECIAL PROVISIONS.

FOR GROUT FOR STRUCTURES, SEE SPECIAL PROVISIONS.

FOR PLACING LOAD ON STRUCTURE MEMBERS, SEE SPECIAL PROVISIONS.

REMOVABLE FORMS MAY BE USED IN LIEU OF METAL STAY-IN-PLACE FORMS IN ACCORDANCE WITH ARTICLE 420-3 OF THE STANDARD SPECIFICATIONS.

NEEDLE BEAMS WILL NOT BE ALLOWED UNLESS OTHERWISE CALLED FOR ON THE PLANS OR APPROVED BY THE ENGINEER.

ALL STRUCTURAL STEEL SHALL BE AASHTO M270 GRADE 50W AND PAINTED IN ACCORDANCE WITH SYSTEM 4 OF ARTICLE 442-8 OF THE STANDARD SPECIFICATIONS UNLESS OTHERWISE NOTED ON THE PLANS.

THE CLASS AA CONCRETE IN THE BRIDGE DECK SHALL CONTAIN FLY ASH OR GROUND GRANULATED BLAST FURNACE SLAG AT THE SUBSTITUTION RATE SPECIFIED IN ARTICLE 1024-1 AND IN ACCORDANCE WITH ARTICLES 1024-5 AND 1024-6 OF THE STANDARD SPECIFICATIONS. NO PAYMENT WILL BE MADE FOR THIS SUBSTITUTION AS IT IS CONSIDERED INCIDENTAL TO THE COST OF THE REINFORCED CONCRETE DECK SLAB.

FOR EROSION CONTROL MEASURES, SEE EROSION CONTROL PLANS.

WORK SHALL NOT BE STARTED ON THIS BRIDGE (OR SPECIFIC PARTS OF BRIDGE) UNTIL ROADWAY SECTION HAS BEEN EXCAVATED.

TOTAL BILL OF MATERIAL

	PILE EXCAVATION IN SOIL	PILE EXCAVATION NOT IN SOIL	4'-0" Ø DRILLED PIER IN SOIL	4'-0" Ø DRILLED PIER NOT IN SOIL	SID INSPECTION	CSL TESTING	REINFORCED CONCRETE DECK SLAB	GROOVING BRIDGE FLOORS	CLASS A CONCRETE	BRIDGE APPROACH SLABS	REINFORCING STEEL	SPIRAL COLUMN REINFORCING STEEL	STRUCTURAL STEEL	HP 12 X 53 STEEL PILES		THREE BAR METAL RAIL	4" SLOPE PROTECTION	POT BEARINGS	ELASTOMERIC BEARINGS
	LIN. FT.	LIN. FT.	LIN. FT.	LIN. FT.	EACH	EACH	SQ. FT.	SQ. FT.	CU. YDS.	LUMP SUM	LBS.	LBS.	APPROX. LBS.	NO.	LIN. FT.	LIN. FT.	SQ. YDS.	LUMP SUM	LUMP SUM
SUPERSTRUCTURE							13,388	9,776		LUMP SUM			528,900			521.0		LUMP SUM	LUMP SUM
END BENT #1	10	20							39.2		6,009			9	180		210		
BENT #1			19.3	30.0	1	1			54.0		11,284	2,443							
END BENT #2	52	38							39.5		6,144			9	90		225		
TOTAL	62	58	19.3	30.0	1	1	13,388	9,776	132.7	LUMP SUM	23,437	2,443	528,900	18	270	521.0	435	LUMP SUM	LUMP SUM

PROJECT NO. U-0071
DURHAM COUNTY
STATION: 85+26.52 -L-

SHEET 3 OF 3

STATE OF NORTH CAROLINA
DEPARTMENT OF TRANSPORTATION
RALEIGH

GENERAL DRAWING
FOR BRIDGE ON -Y7- (CARR RD.) OVER -L- (US 70), -WBL-, & -Y4- EAST END CONNECTOR BETWEEN N. HOOVER RD. AND US 70 BUS.

NORTH CAROLINA PROFESSIONAL SEAL 37400 ENGINEER GREGORY M. GILLAND 12/9/13

WETHERILL ENGINEERING
559 Jones Franklin Rd. Suite 164
Raleigh, N.C. 27606
Bus: 919 851 8077
Fax: 919 851 8107
License: F-0377
TRANSPORTATION PLANNING/DESIGN - BRIDGE/STRUCTURE DESIGN
CIVIL/SITE DESIGN - GIS/GPS - CONSTRUCTION OBSERVATION

REVISIONS						SHEET NO.
NO.	BY:	DATE:	NO.	BY:	DATE:	6-155
1			3			TOTAL SHEETS
2			4			671

DRAWN BY : G.M. GILLAND DATE : 6-18-13
CHECKED BY : T. DIFFEE DATE : 7-1-13
DESIGN ENGINEER OF RECORD: G.M. GILLAND DATE : 7-13

P:\2012\U-0071 Sites 3,8 & 9\Structures\DWG_3\u0071_SD_STR3_GD_WEI.dgn
12/10/2013 10:46:52 AM

STR #3

LOAD AND RESISTANCE FACTOR RATING (LRFR) SUMMARY FOR STEEL GIRDERS

LEVEL		VEHICLE	WEIGHT (W) (TONS)	CONTROLLING LOAD RATING (#)	MINIMUM RATING FACTORS (RF)	TONS = W × RF	STRENGTH I LIMIT STATE												SERVICE II LIMIT STATE						COMMENT NUMBER
							LIVE-LOAD FACTORS (γ_{LL})	MOMENT					SHEAR						LIVE-LOAD FACTORS (γ_{LL})	MOMENT					
								DISTRIBUTION FACTORS (DF)	RATING FACTOR	SPAN	GIRDER LOCATION	DISTANCE FROM LEFT END OF SPAN (ft)	DISTRIBUTION FACTORS (DF)	RATING FACTOR	SPAN	GIRDER LOCATION	DISTANCE FROM LEFT END OF SPAN (ft)		DISTRIBUTION FACTORS (DF)	RATING FACTOR	SPAN	GIRDER LOCATION	DISTANCE FROM LEFT END OF SPAN (ft)	
DESIGN LOAD RATING		HL-93 (INVENTORY)	N/A	1	1.04	--	1.75	0.865	1.04	A	E	0.0	1.001	1.08	A	I	139.70	1.30	0.865	1.56	A	E	0.0	
		HL-93 (OPERATING)	N/A		1.35	--	1.35	0.865	1.35	A	E	0.0	1.001	1.41	A	I	139.70	1.00	0.865	2.02	A	E	0.0	
		HS-20 (INVENTORY)	36.00	2	1.43	51.48	1.75	0.755	1.43	A	I	139.70	1.001	1.61	A	I	139.70	1.30	0.865	2.87	A	E	139.70	
		HS-20 (OPERATING)	36.00		1.86	66.96	1.35	0.755	1.86	A	I	139.70	1.001	2.08	A	I	139.70	1.00	0.865	3.73	A	E	139.70	
LEGAL LOAD RATING	SINGLE VEHICLE (SV)	SNSH	13.500		4.70	63.45	1.40	0.755	4.70	A	I	139.70	1.001	5.26	A	I	139.70	1.30	0.865	7.55	A	E	139.70	
		SNGARBS2	20.000		3.17	63.40	1.40	0.755	3.17	A	I	139.70	1.001	3.57	A	I	139.70	1.30	0.865	5.09	A	E	139.70	
		SNAGRIS2	22.000		2.88	63.36	1.40	0.755	2.88	A	I	139.70	1.001	3.25	A	I	139.70	1.30	0.865	4.62	A	E	139.70	
		SNCOTTS3	27.250		2.31	62.95	1.40	0.755	2.31	A	I	139.70	1.001	2.60	A	I	139.70	1.30	0.865	3.71	A	E	139.70	
		SNAGGRS4	34.925		1.81	63.21	1.40	0.755	1.81	A	I	139.70	1.001	2.05	A	I	139.70	1.30	0.865	2.90	A	E	139.70	
		SNS5A	35.550		1.78	63.28	1.40	0.755	1.78	A	I	139.70	1.001	2.02	A	I	139.70	1.30	0.865	2.86	A	E	139.70	
		SNS6A	39.950		1.59	63.52	1.40	0.755	1.59	A	I	139.70	1.001	1.81	A	I	139.70	1.30	0.865	2.56	A	E	139.70	
		SNS7B	42.000		1.51	63.42	1.40	0.755	1.51	A	I	139.70	1.001	1.73	A	I	139.70	1.30	0.865	2.43	A	E	139.70	
	TRUCK TRACTOR SEMI-TRAILER (TTST)	TNAGRIT3	33.000		1.92	63.36	1.40	0.755	1.92	A	I	139.70	1.001	2.18	A	I	139.70	1.30	0.865	3.09	A	E	139.70	
		TNT4A	33.075		1.93	63.83	1.40	0.755	1.93	A	I	139.70	1.001	2.17	A	I	139.70	1.30	0.865	3.10	A	E	139.70	
		TNT6A	41.600		1.54	64.06	1.40	0.755	1.54	A	I	139.70	1.001	1.77	A	I	139.70	1.30	0.865	2.48	A	E	139.70	
		TNT7A	42.000		1.53	64.26	1.40	0.755	1.53	A	I	139.70	1.001	1.75	A	I	139.70	1.30	0.865	2.46	A	E	139.70	
		TNT7B	42.000		1.55	65.10	1.40	0.755	1.55	A	I	139.70	1.001	1.73	A	I	139.70	1.30	0.865	2.49	A	E	139.70	
		TNAGRIT4	43.000		1.49	64.07	1.40	0.755	1.49	A	I	139.70	1.001	1.68	A	I	139.70	1.30	0.865	2.39	A	E	139.70	
		TNAGT5A	45.000		1.43	64.35	1.40	0.755	1.43	A	I	139.70	1.001	1.62	A	I	139.70	1.30	0.865	2.30	A	E	139.70	
		TNAGT5B	45.000	3	1.41	63.45	1.40	0.755	1.41	A	I	139.70	1.001	1.60	A	I	139.70	1.30	0.865	2.27	A	E	139.70	
FATIGUE		HL-93 (INVENTORY)	γ_{LL}=0.75																						

LOAD FACTORS:

DESIGN LOAD RATING FACTORS	LIMIT STATE	γ_{DC}	γ_{DW}
	STRENGTH I	1.25	1.50
	SERVICE II	1.00	1.00

NOTES:

MINIMUM RATING FACTORS ARE BASED ON THE STRENGTH I AND SERVICE II LIMIT STATES.

ALLOWABLE STRESS FOR SERVICE II LIMIT STATE ARE AS REQUIRED FOR DESIGN.

COMMENTS:

1.
2.
3.
4.

(#) CONTROLLING LOAD RATING

(1) DESIGN LOAD RATING (HL-93) **
(2) DESIGN LOAD RATING (HS-20) **
(3) LEGAL LOAD RATING **
** SEE CHART FOR VEHICLE TYPE

GIRDER LOCATION

I - INTERIOR GIRDER
E - EXTERIOR GIRDER

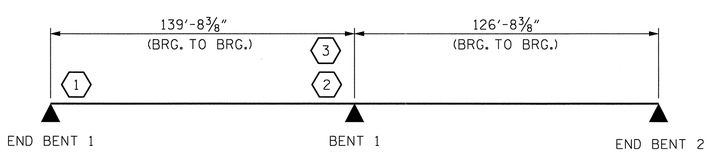

LRFR SUMMARY

PROJECT NO. U-0071
DURHAM COUNTY
STATION: 85+26.52 -L-

STATE OF NORTH CAROLINA
DEPARTMENT OF TRANSPORTATION
RALEIGH
STANDARD

LRFR SUMMARY FOR STEEL GIRDERS
(NON-INTERSTATE TRAFFIC)

REVISIONS						SHEET NO.
NO.	BY:	DATE:	NO.	BY:	DATE:	S-156
1			3			TOTAL SHEETS
2			4			671

WETHERILL ENGINEERING
559 Jones Franklin Rd. Suite 164
Raleigh, N.C. 27606
Bus: 919 851 8077
Fax: 919 851 8107
License: F-0377
TRANSPORTATION PLANNING/DESIGN - BRIDGE/STRUCTURE DESIGN
CIVIL/SITE DESIGN - GIS/GPS - CONSTRUCTION OBSERVATION

NORTH CAROLINA PROFESSIONAL SEAL 37400 ENGINEER GREGORY M. GILLAND 12/11/13

ASSEMBLED BY : J. PENDERGRAFT DATE : 6-4-13
CHECKED BY : G.M. GILLAND DATE : 6-6-13
DESIGN ENGINEER OF RECORD: G.M. GILLAND DATE : 6-6-13
DRAWN BY : MAA 1/08
CHECKED BY : GM/DI 2/08
REV. 11/12/08RR MAA/GM
REV. 10/1/11 MAA/GM

P:\2012\U-0071 Sites 3,8 & 9\Structures\DWG_3\U0071_SD_STR3_LFR_WEI.dgn
12/10/2013 12:50:10 PM

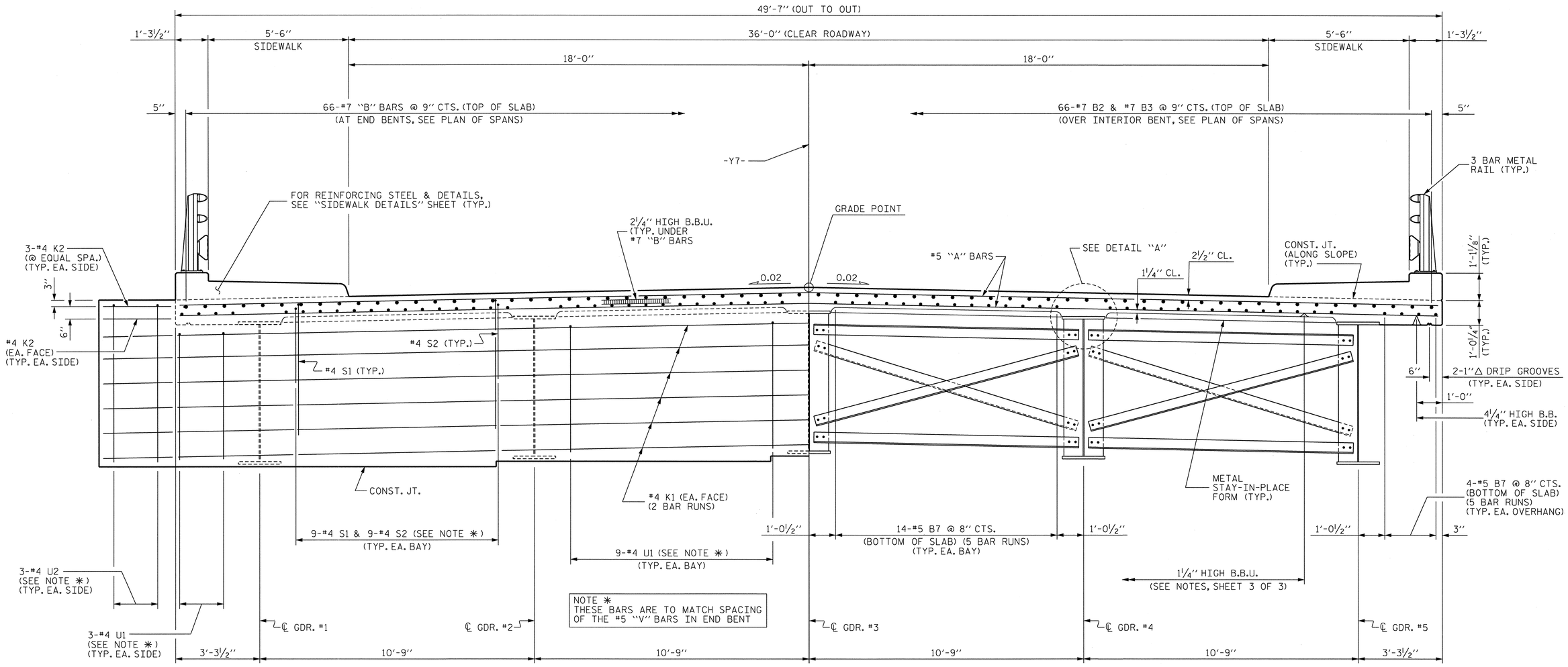

HALF SECTION - INTEGRAL END BENT DIAPHRAGM

HALF SECTION - BENT DIAPHRAGM

TYPICAL SECTION

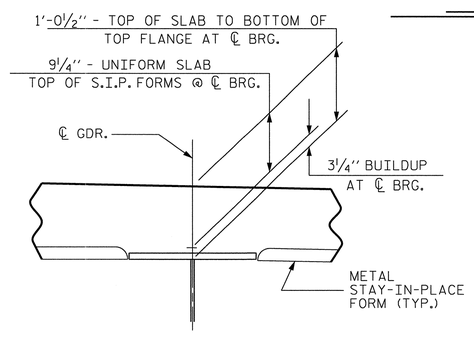

DETAIL "A"

PROJECT NO. U-0071
DURHAM COUNTY
STATION: 85+26.52 -L-

SHEET 1 OF 3

STATE OF NORTH CAROLINA
DEPARTMENT OF TRANSPORTATION
RALEIGH

SUPERSTRUCTURE

TYPICAL SECTION

REVISIONS						SHEET NO.
NO.	BY:	DATE:	NO.	BY:	DATE:	S-157
1			3			TOTAL SHEETS
2			4			671

NORTH CAROLINA PROFESSIONAL SEAL 037400 ENGINEER GREGORY M. GILLAND 12/10/13

WETHERILL ENGINEERING
559 Jones Franklin Rd. Suite 164
Raleigh, N.C. 27606
Bus: 919 851 8077
Fax: 919 851 8107
License: F-0377

TRANSPORTATION PLANNING/DESIGN - BRIDGE/STRUCTURE DESIGN
CIVIL/SITE DESIGN - GIS/GPS - CONSTRUCTION OBSERVATION

DRAWN BY : J.M. BRITT DATE : 4-25-13
CHECKED BY : G.M. GILLAND DATE : 6-3-13
DESIGN ENGINEER OF RECORD: G.M. GILLAND DATE : 6-13

P:\2012\U-0071 Sites 3,8 & 9\Structures\DWG_3\U0071_SD_STR3_TS_WEI.dgn
12/10/2013 10:48:44 AM

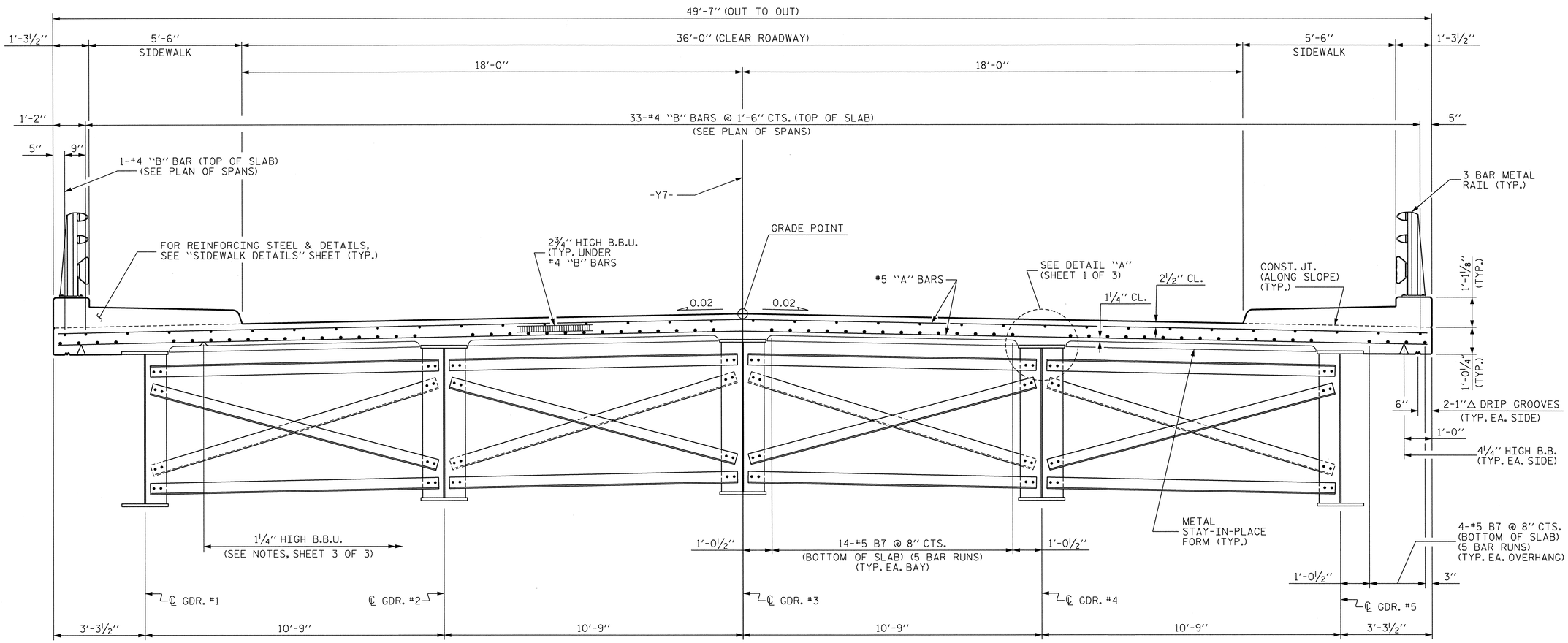

TYPICAL SECTION - INTERMEDIATE DIAPHRAGM

PROJECT NO. U-0071

DURHAM COUNTY

STATION: 85+26.52 -L-

SHEET 2 OF 3

STATE OF NORTH CAROLINA
DEPARTMENT OF TRANSPORTATION
RALEIGH

SUPERSTRUCTURE

TYPICAL SECTION

REVISIONS						SHEET NO.
NO.	BY:	DATE:	NO.	BY:	DATE:	S-158
1			3			TOTAL SHEETS
2			4			671

NORTH CAROLINA PROFESSIONAL SEAL 37400 ENGINEER GREGORY M. GILLAND 12/1/13

WETHERILL ENGINEERING

559 Jones Franklin Rd. Suite 164
Raleigh, N.C. 27606
Bus: 919 851 8077
Fax: 919 851 8107
License: F-0377

TRANSPORTATION PLANNING/DESIGN - BRIDGE/STRUCTURE DESIGN
CIVIL/SITE DESIGN - GIS/GPS - CONSTRUCTION OBSERVATION

DRAWN BY : J.M. BRITT DATE : 4-25-13
CHECKED BY : G.M. GILLAND DATE : 6-3-13
DESIGN ENGINEER OF RECORD: G.M. GILLAND DATE : 6-13

P:\2012\U-0071 Sites 3,8 & 9\Structures\DMG_3\U0071_SD_STR3_TS_WE1.dgn
12/10/2013 10:49:03 AM

NOTES :

PROVIDE 1¼"HIGH BEAM BOLSTERS UPPER AT 4'-0"CTS. ATOP THE METAL STAY-IN-PLACE FORMS TO SUPPORT THE BOTTOM MAT OF "A" BARS. WHEN USING REMOVABLE FORMS, PROVIDE CONTINUOUS HIGH CHAIRS FOR METAL DECK @ 4'-0"CTS. WITH A HEIGHT TO SUPPORT THE BOTTOM MAT OF "A" BARS A CLEAR DISTANCE OF 2½" ABOVE THE TOP OF THE REMOVABLE FORM.

METAL STAY-IN-PLACE FORMS SHALL NOT BE WELDED TO GIRDER FLANGES IN THE ZONES REQUIRING CHARPY V-NOTCH TEST. SEE STRUCTURAL STEEL DETAIL SHEETS.

STRUCTURAL STEEL ERECTION IN A CONTINUOUS UNIT SHALL BE COMPLETE BEFORE FALSEWORK OR FORMS ARE PLACED ON THE UNIT.

PREVIOUSLY CAST CONCRETE IN A CONTINUOUS UNIT SHALL HAVE ATTAINED A MINIMUM COMPRESSIVE STRENGTH OF 3,000 PSI BEFORE ADDITIONAL CONCRETE IS CAST IN THE UNIT.

ALL REINFORCING STEEL IN SIDEWALK SHALL BE EPOXY COATED.

THE SIDEWALK SHALL NOT BE CAST UNTIL ALL SLAB CONCRETE HAS BEEN CAST AND HAS REACHED A MINIMUM COMPRESSIVE STRENGTH OF 3,000 PSI.

THE CONTRACTOR MAY, WHEN NECESSARY, PROPOSE A SCHEME FOR AVOIDING INTERFERENCE BETWEEN METAL STAY-IN-PLACE FORM SUPPORTS OR FORMS AND GIRDER STIFFENERS OR CONNECTOR PLATES. THE PROPOSAL SHALL BE INDICATED, AS APPROPRIATE, ON EITHER THE STEEL WORKING DRAWINGS OR THE METAL STAY-IN-PLACE FORM WORKING DRAWINGS.

THE CONTRACTOR SHALL ADJUST THE GIRDER BUILDUPS AS NECESSARY TO INCORPORATE A MAXIMUM PERMISSIBLE VARIATION IN POT BEARING DEPTH OF ½", SEE SPECIAL PROVISION FOR POT BEARINGS.

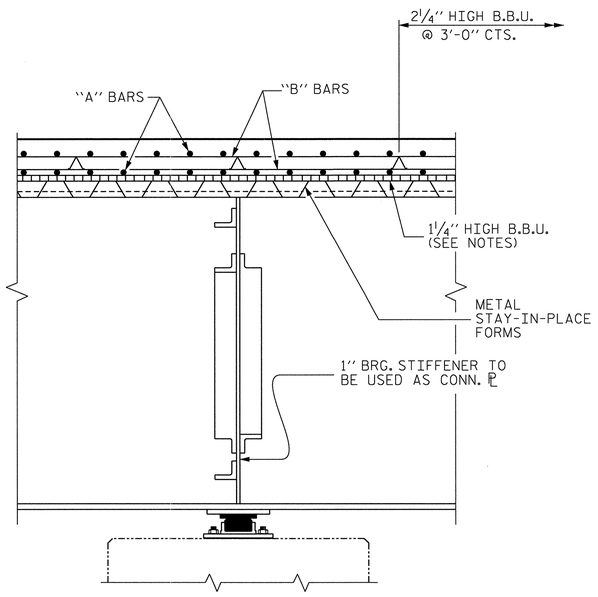

SECTION THRU BENT DIAPHRAGM

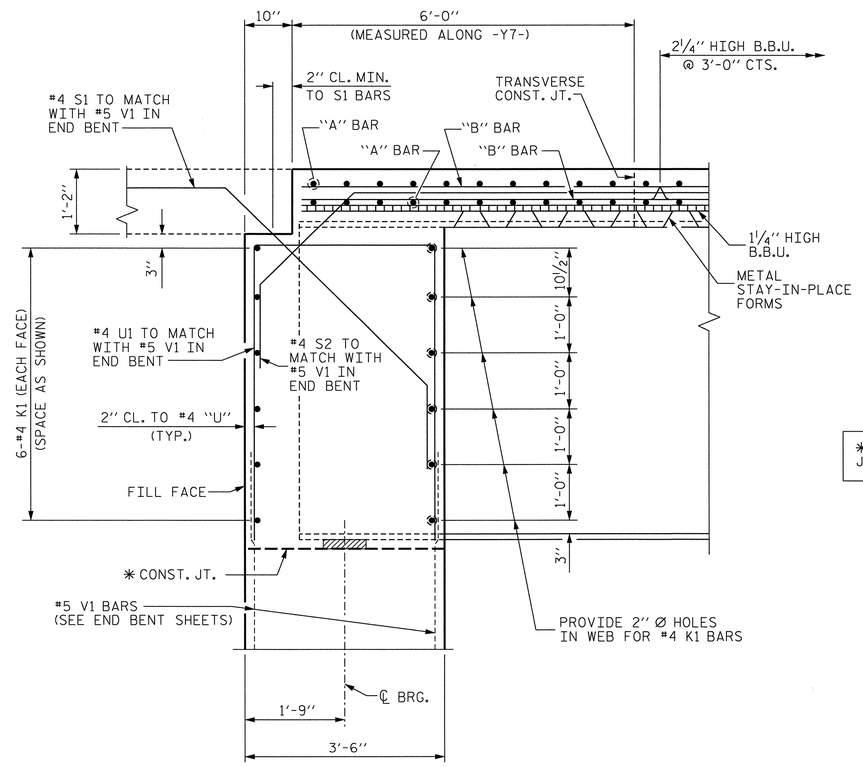

SECTION THRU INTEGRAL END BENT DIAPHRAGM

(SECTION TAKEN PERPENDICULAR TO FILL FACE)

* SEE INTEGRAL END BENT SHEETS FOR CONSTRUCTION JOINT SURFACE PREPERATION DETAILS.

PROJECT NO. U-0071
DURHAM COUNTY
STATION: 85+26.52 -L-

SHEET 3 OF 3

STATE OF NORTH CAROLINA
DEPARTMENT OF TRANSPORTATION
RALEIGH

SUPERSTRUCTURE

TYPICAL SECTION

REVISIONS								SHEET NO.
NO.	BY:	DATE:	NO.	BY:	DATE:			S-159
1			3					TOTAL SHEETS
2			4					671

NORTH CAROLINA PROFESSIONAL SEAL 37400 ENGINEER GREGORY M. GILLAND 12/10/13

WETHERILL ENGINEERING
559 Jones Franklin Rd. Suite 164
Raleigh, N.C. 27606
Bus: 919 851 8077
Fax: 919 851 8107
License: F-0377
TRANSPORTATION PLANNING/DESIGN - BRIDGE/STRUCTURE DESIGN
CIVIL/SITE DESIGN - GIS/GPS - CONSTRUCTION OBSERVATION

DRAWN BY : J.M. BRITT DATE : 4-30-13
CHECKED BY : G.M. GILLAND DATE : 6-3-13
DESIGN ENGINEER OF RECORD: G.M. GILLAND DATE : 6-13

P:\2012\U-0071 Sites 3,8 & 9\Structures\DWG_3\U0071_SD_STR3_TS_WE1.dgn
12/10/2013 2:20:29 PM

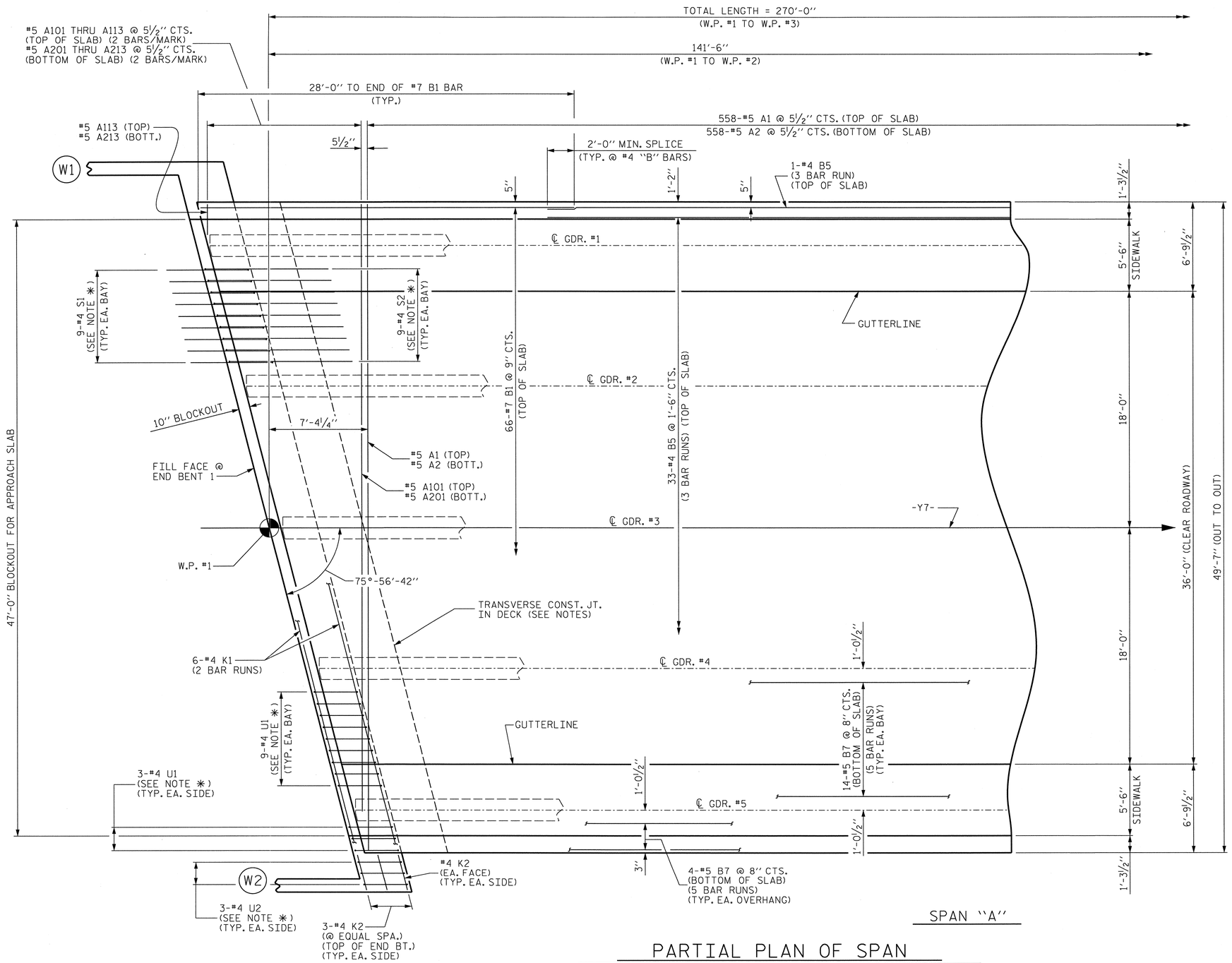

PARTIAL PLAN OF SPAN

SEE "PLAN OF SPAN DETAILS" SHEET 4 OF 5 FOR ADDITIONAL REINFORCING STEEL IN WINGS

NOTES :

FOR SIDEWALK DETAILS AND REINFORCING STEEL, SEE "SIDEWALK DETAILS" SHEET.

FOR TRANSVERSE CONSTRUCTION JOINT LOCATIONS, SEE "TOTAL BILL OF MATERIAL" SHEET.

✱ THESE BARS ARE TO MATCH SPACING OF THE #5 "V" BARS IN END BENT.

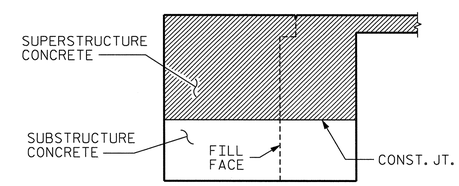

CONCRETE QUANTITY DETAIL

(TYPICAL EACH END BENT)

NOTE :
CONCRETE QUANTITIES OF INTEGRAL END BENT CAP AND WINGWALLS ABOVE CONSTRUCTION JOINT ARE INCLUDED IN SUPERSTRUCTURE QUANTITIES.

PROJECT NO. U-0071
DURHAM COUNTY
STATION: 85+26.52 -L-

SHEET 1 OF 5

STATE OF NORTH CAROLINA
DEPARTMENT OF TRANSPORTATION
RALEIGH

SUPERSTRUCTURE

PLAN OF SPAN

NORTH CAROLINA PROFESSIONAL SEAL 37400 ENGINEER GREGORY M. GILLAND 12/10/12

WETHERILL ENGINEERING
559 Jones Franklin Rd. Suite 164
Raleigh, N.C. 27606
Bus: 919 851 8077
Fax: 919 851 8107
License: F-0377
TRANSPORTATION PLANNING/DESIGN - BRIDGE/STRUCTURE DESIGN
CIVIL/SITE DESIGN - GIS/GPS - CONSTRUCTION OBSERVATION

REVISIONS								SHEET NO.
NO.	BY:	DATE:	NO.	BY:	DATE:			S-160
1			3					TOTAL SHEETS
2			4					671

DRAWN BY : J.M. BRITT DATE : 4-30-13
CHECKED BY : G.M. GILLAND DATE : 6-3-13
DESIGN ENGINEER OF RECORD: G.M. GILLAND DATE : 6-13

P:\2012\U-0071 Sites 3,8 & 9\Structures\DMG_3\U0071_SD_STR3_PS_WE1.dgn
12/10/2013 10:55:07 AM

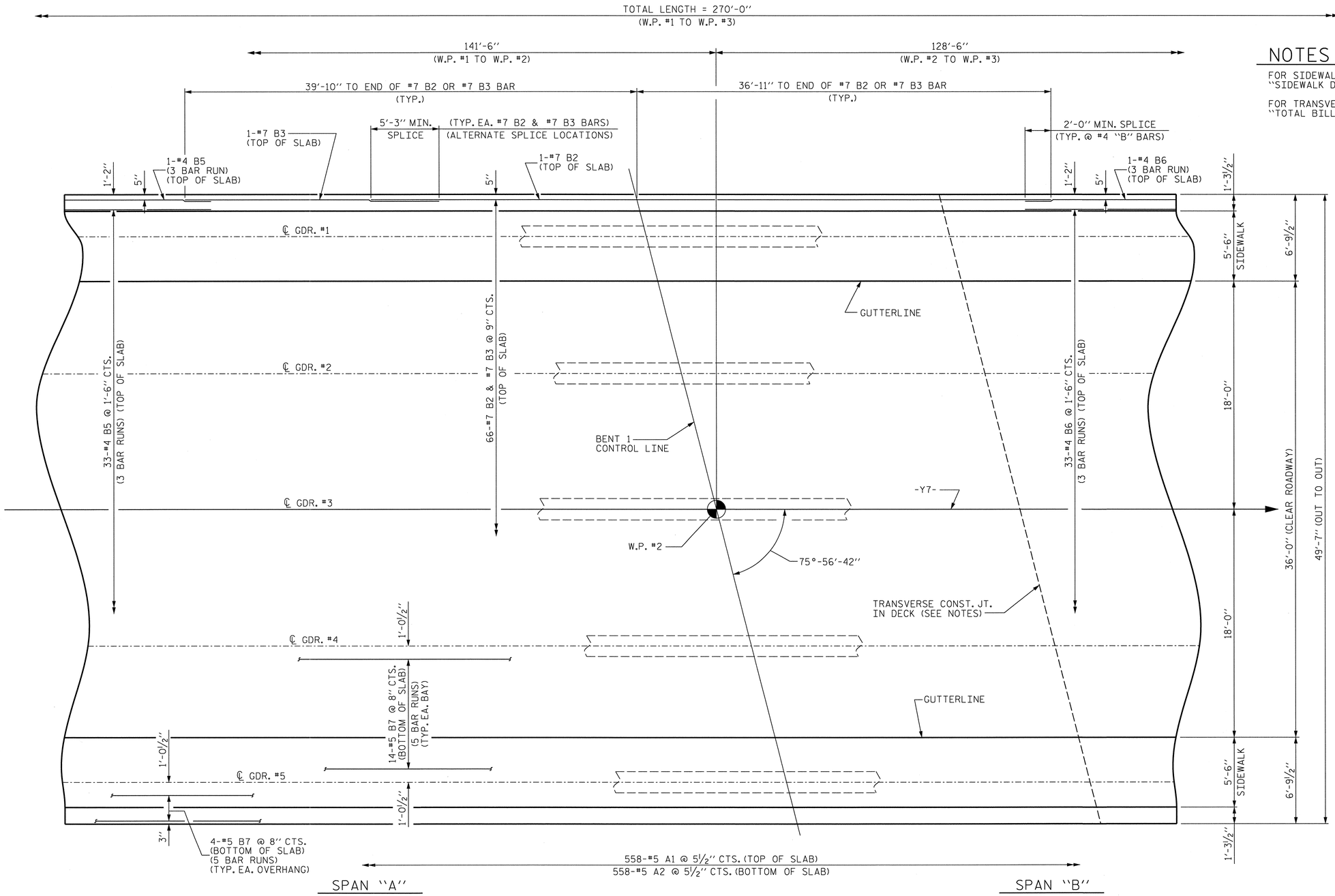

PARTIAL PLAN OF SPAN

NOTES :

FOR SIDEWALK DETAILS AND REINFORCING STEEL, SEE "SIDEWALK DETAILS" SHEET.

FOR TRANSVERSE CONSTRUCTION JOINT LOCATIONS, SEE "TOTAL BILL OF MATERIAL" SHEET.

PROJECT NO. U-0071
DURHAM COUNTY
STATION: 85+26.52 -L-

SHEET 2 OF 5

STATE OF NORTH CAROLINA
DEPARTMENT OF TRANSPORTATION
RALEIGH

SUPERSTRUCTURE
PLAN OF SPAN

NORTH CAROLINA PROFESSIONAL SEAL 37400 ENGINEER GREGORY M. GILLAND 5/9/13

WETHERILL ENGINEERING
559 Jones Franklin Rd. Suite 164
Raleigh, N.C. 27606
Bus: 919 851 8077
Fax: 919 851 8107
License: F-0377
TRANSPORTATION PLANNING/DESIGN - BRIDGE/STRUCTURE DESIGN
CIVIL/SITE DESIGN - GIS/GPS - CONSTRUCTION OBSERVATION

REVISIONS							
NO.	BY:	DATE:	NO.	BY:	DATE:	SHEET NO.	
1			3			S-161	
2			4			TOTAL SHEETS	
						671	

DRAWN BY : J.M. BRITT DATE : 5-1-13
CHECKED BY : G.M. GILLAND DATE : 6-3-13
DESIGN ENGINEER OF RECORD: G.M. GILLAND DATE : 6-13

P:\2012\U-0071 Sites 3,8 & 9\Structures\DWG_3\U0071_SD_STR3_PS_WE1.dgn
12/10/2013 10:55:17 AM

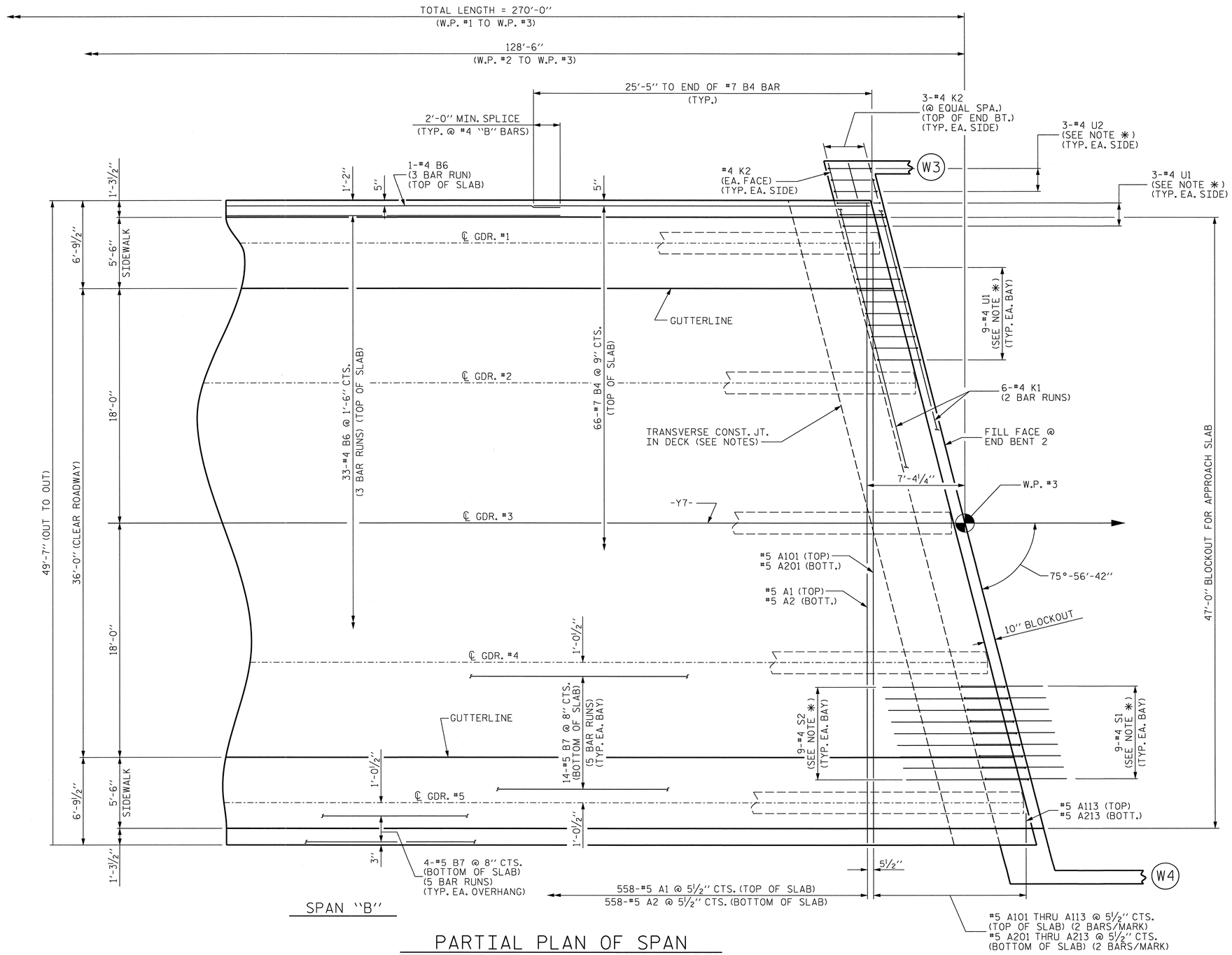

PARTIAL PLAN OF SPAN

SEE "PLAN OF SPAN DETAILS" SHEET 5 OF 5 FOR ADDITIONAL REINFORCING STEEL IN WINGS

NOTES :

FOR SIDEWALK DETAILS AND REINFORCING STEEL, SEE "SIDEWALK DETAILS" SHEET.

FOR TRANSVERSE CONSTRUCTION JOINT LOCATIONS, SEE "TOTAL BILL OF MATERIAL" SHEET.

✱ THESE BARS ARE TO MATCH SPACING OF THE #5 "V" BARS IN END BENT.

PROJECT NO. U-0071
DURHAM COUNTY
STATION: 85+26.52 -L-

SHEET 3 OF 5

STATE OF NORTH CAROLINA
DEPARTMENT OF TRANSPORTATION
RALEIGH

SUPERSTRUCTURE
PLAN OF SPAN

NORTH CAROLINA PROFESSIONAL SEAL 37400 ENGINEER GREGORY M. GILLAND 12/10/13

WETHERILL ENGINEERING
559 Jones Franklin Rd. Suite 164
Raleigh, N.C. 27606
Bus: 919 851 8077
Fax: 919 851 8107
License: F-0377
TRANSPORTATION PLANNING/DESIGN - BRIDGE/STRUCTURE DESIGN
CIVIL/SITE DESIGN - GIS/GPS - CONSTRUCTION OBSERVATION

REVISIONS							SHEET NO.
NO.	BY:	DATE:	NO.	BY:	DATE:		S-162
1			3				TOTAL SHEETS
2			4				671

DRAWN BY : J.M. BRITT DATE : 5-1-13
CHECKED BY : G.M. GILLAND DATE : 6-3-13
DESIGN ENGINEER OF RECORD: G.M. GILLAND DATE : 6-13

P:\2012\U-0071 Sites 3,8 & 9\Structures\DWG_3\U0071_SD_STR3_PS_WE1.dgn
12/10/2013 10:55:32 AM

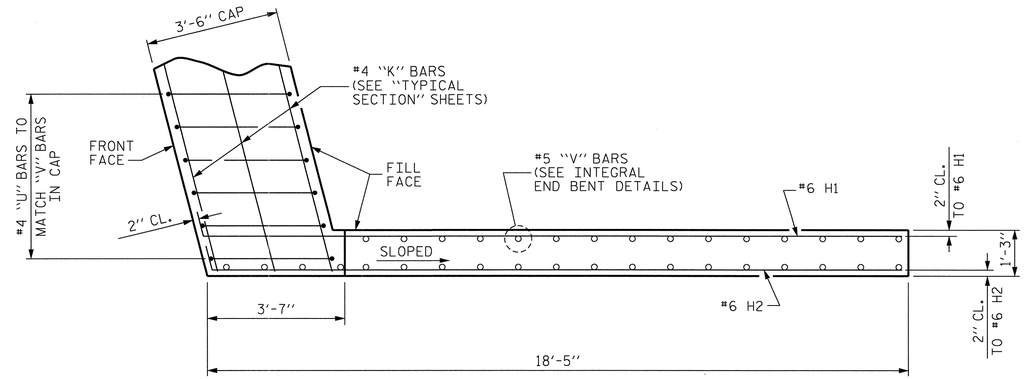

PLAN OF WING (W1)

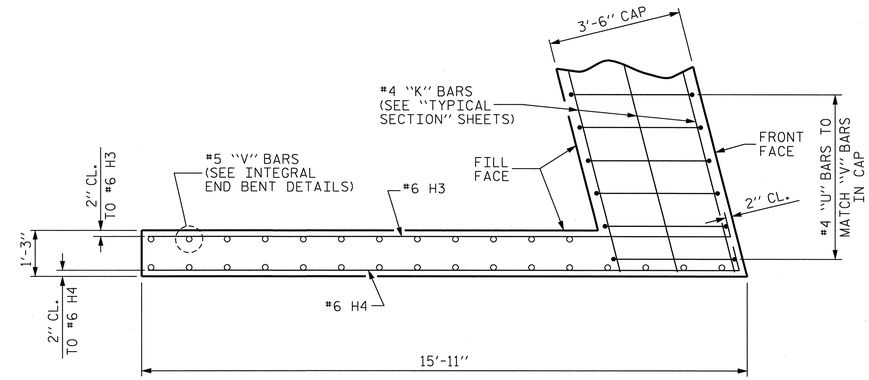

PLAN OF WING (W2)

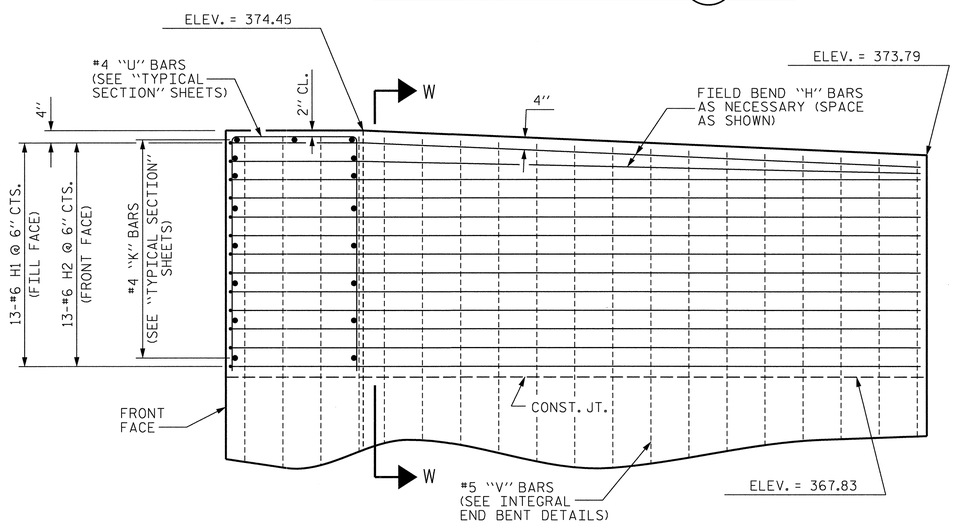

ELEVATION OF WING (W1)

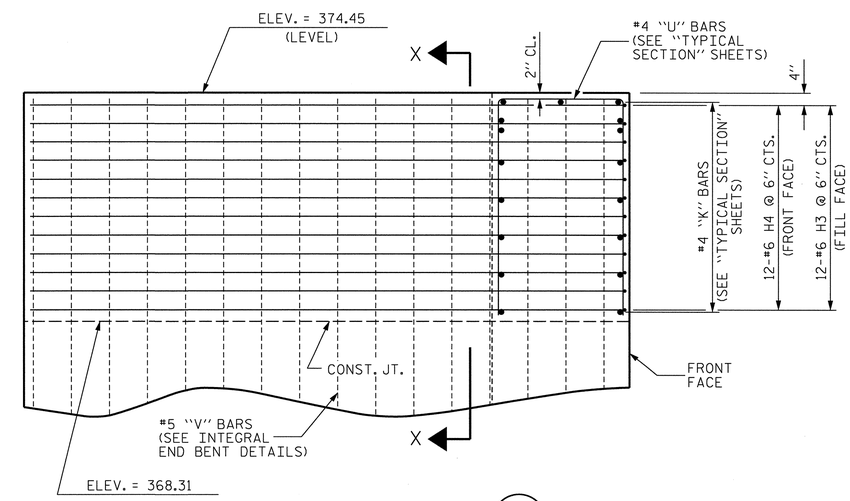

ELEVATION OF WING (W2)

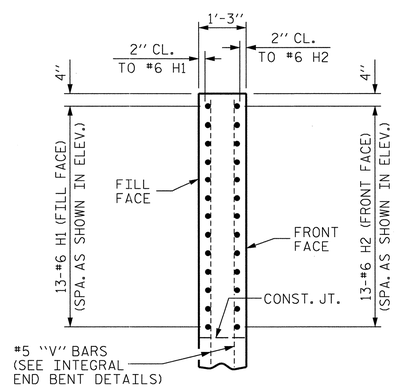

SECTION W-W

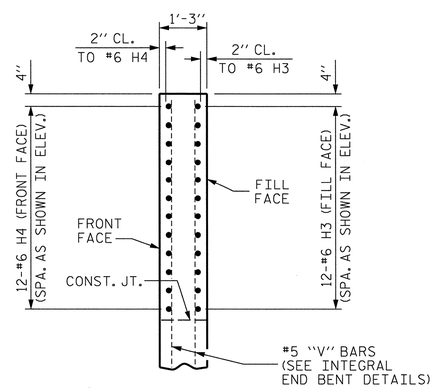

SECTION X-X

PROJECT NO. U-0071
DURHAM COUNTY
STATION: 85+26.52 -L-

SHEET 4 OF 5

STATE OF NORTH CAROLINA
DEPARTMENT OF TRANSPORTATION
RALEIGH

SUPERSTRUCTURE

PLAN OF SPAN

DETAILS @ END BENT 1

REVISIONS								SHEET NO.
NO.	BY:	DATE:	NO.	BY:	DATE:			S-163
1			3					TOTAL SHEETS
2			4					671

NORTH CAROLINA PROFESSIONAL SEAL 37400 ENGINEER GREGORY M. GILLAND 12/10/13

WETHERILL ENGINEERING
559 Jones Franklin Rd. Suite 164
Raleigh, N.C. 27606
Bus: 919 851 8077
Fax: 919 851 8107
License: F-0377

TRANSPORTATION PLANNING/DESIGN - BRIDGE/STRUCTURE DESIGN
CIVIL/SITE DESIGN - GIS/GPS - CONSTRUCTION OBSERVATION

DRAWN BY : J.M. BRITT DATE : 5-15-13
CHECKED BY : G.M. GILLAND DATE : 6-11-13
DESIGN ENGINEER OF RECORD: G.M. GILLAND DATE : 6-13

P:\2012\U-0071 Sites 3,8 & 9\Structures\DWG_3\U0071_SD_STR3_PS_WE1.dgn
12/10/2013 10:55:48 AM

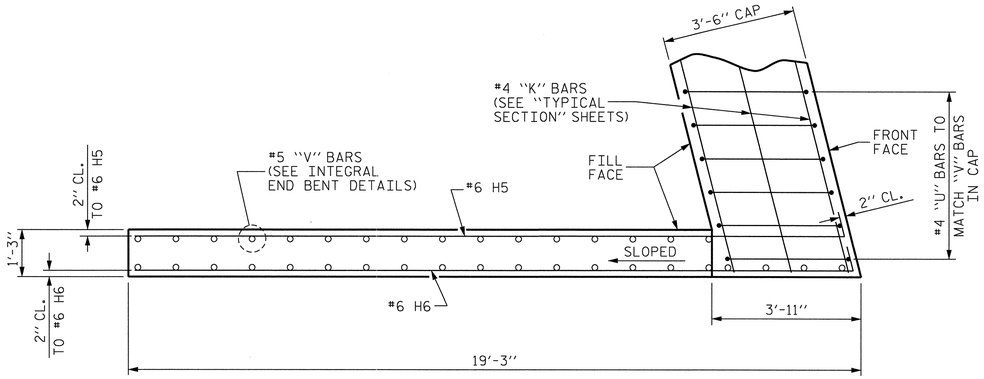

PLAN OF WING (W3)

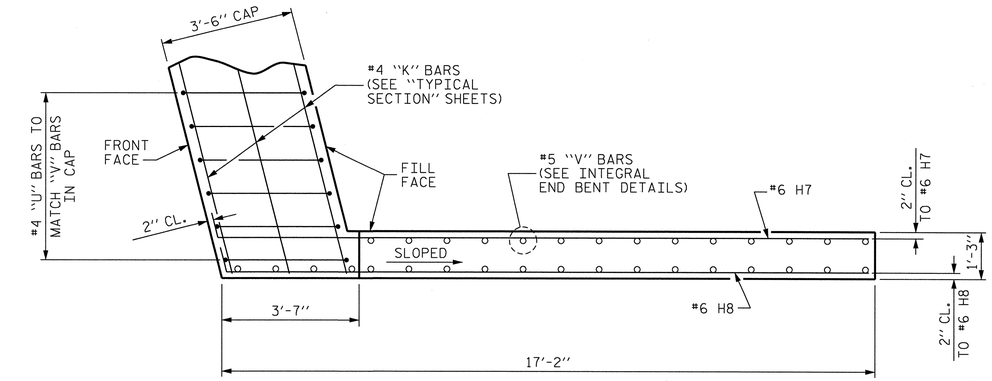

PLAN OF WING (W4)

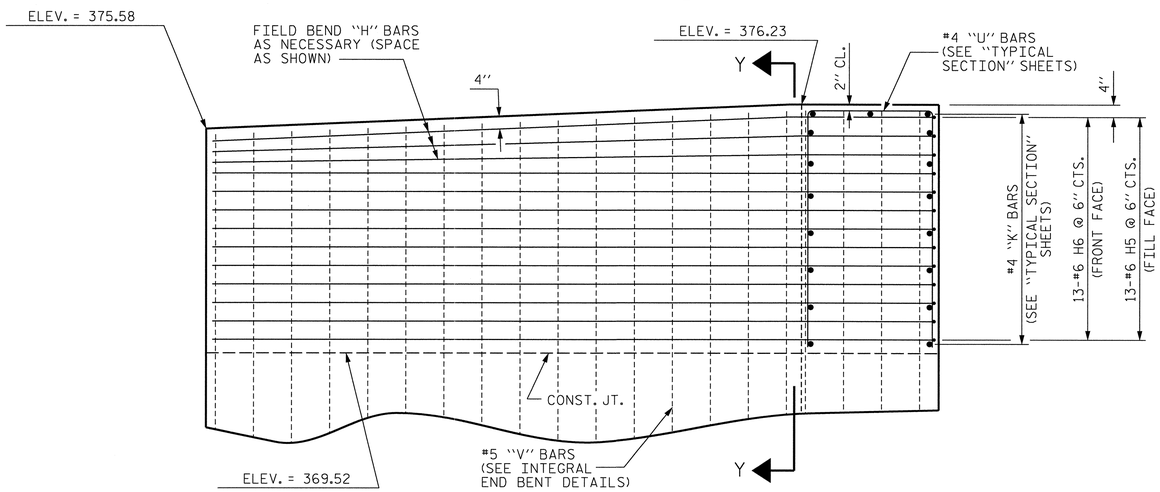

ELEVATION OF WING (W3)

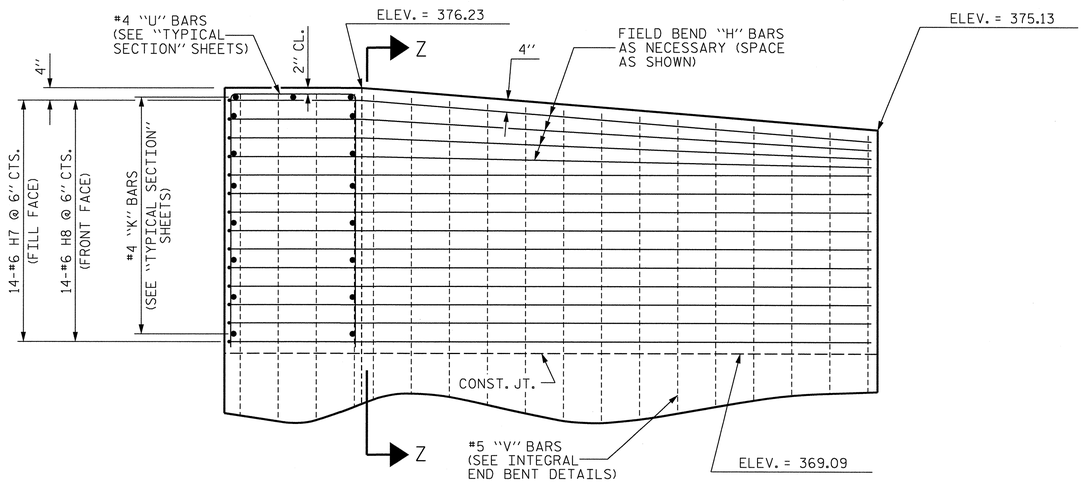

ELEVATION OF WING (W4)

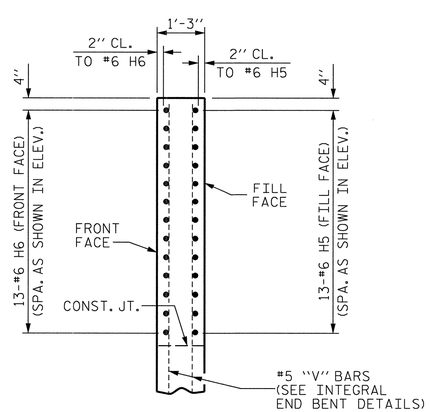

SECTION Y-Y

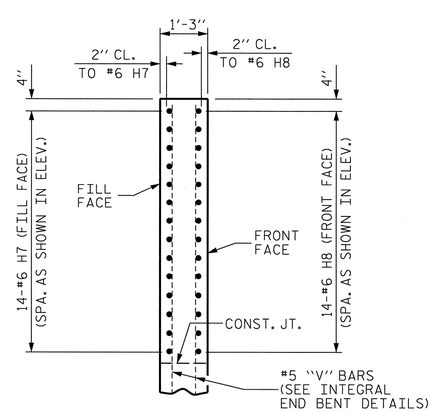

SECTION Z-Z

PROJECT NO. U-0071
DURHAM COUNTY
STATION: 85+26.52 -L-

SHEET 5 OF 5

STATE OF NORTH CAROLINA
DEPARTMENT OF TRANSPORTATION
RALEIGH

SUPERSTRUCTURE
PLAN OF SPAN
DETAILS @ END BENT 2

NORTH CAROLINA PROFESSIONAL SEAL 37400 ENGINEER GREGORY M. GILLAND 12/11/13

WETHERILL ENGINEERING
559 Jones Franklin Rd. Suite 164
Raleigh, N.C. 27606
Bus: 919 851 8077
Fax: 919 851 8107
License: F-0377
TRANSPORTATION PLANNING/DESIGN - BRIDGE/STRUCTURE DESIGN
CIVIL/SITE DESIGN - GIS/GPS - CONSTRUCTION OBSERVATION

REVISIONS						
NO.	BY:	DATE:	NO.	BY:	DATE:	
1			3			
2			4			

SHEET NO. 5-164
TOTAL SHEETS 671

DRAWN BY : J.M. BRITT DATE : 5-15-13
CHECKED BY : G.M. GILLAND DATE : 6-11-13
DESIGN ENGINEER OF RECORD: G.M. GILLAND DATE : 6-13

P:\2012\U-0071 Sites 3,8 & 9\Structures\DWG_3\U0071_SD_STR3_PS_WE1.dgn
12/10/2013 10:55:57 AM

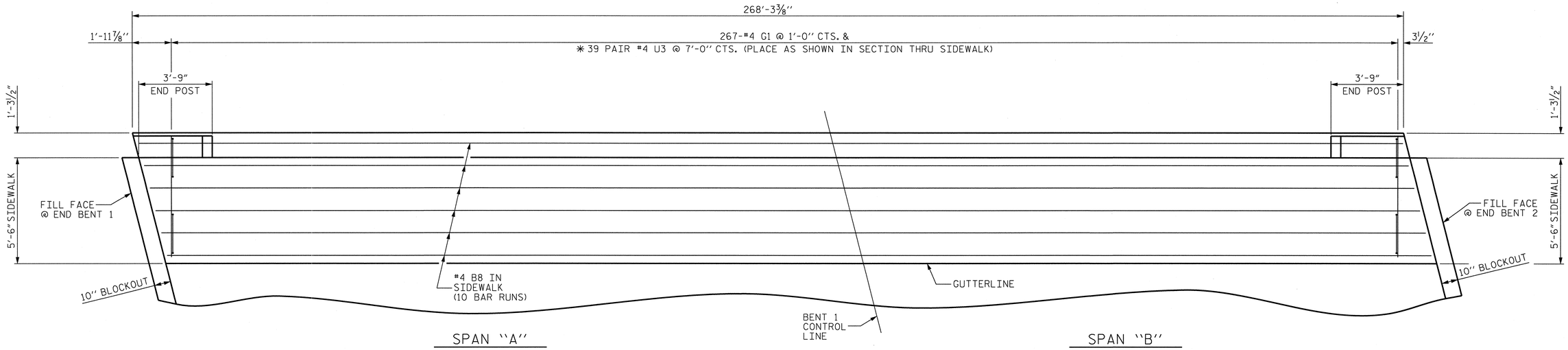

PLAN OF SIDEWALK

(LEFT SIDEWALK SHOWN, RIGHT SIDEWALK SIMILAR, EXCEPT AS NOTED)

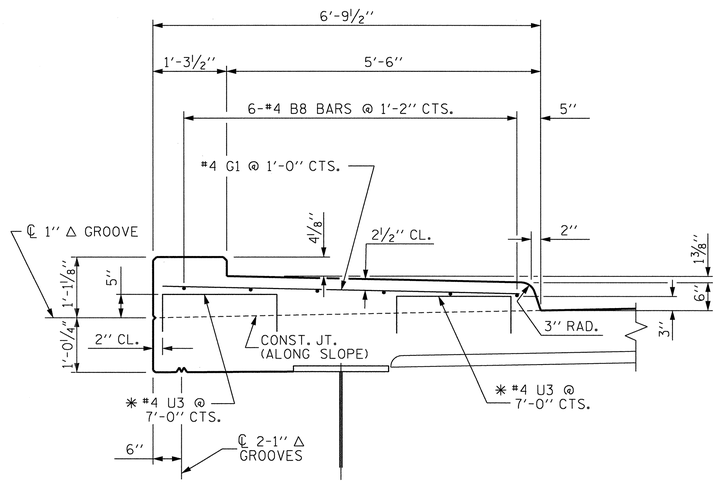

SECTION THRU SIDEWALK

(LEFT SIDEWALK SHOWN, RIGHT SIDEWALK SIMILAR)

NOTES :

SIDEWALK IN A CONTINUOUS UNIT SHALL NOT BE CAST UNTIL ALL SLAB CONCRETE IN THE UNIT HAS BEEN CAST AND HAS REACHED A MINIMUM COMPRESSIVE STRENGTH OF 3,000 PSI.

ALL REINFORCING STEEL IN SIDEWALK SHALL BE EPOXY COATED.

GROOVED CONTRACTION JOINTS ½" IN DEPTH, SHALL BE TOOLED IN ALL EXPOSED FACES OF SIDEWALK IN ACCORDANCE WITH ARTICLE 825-10(B) OF THE STANDARD SPECIFICATIONS. THE CONTRACTION JOINTS SHALL BE LOCATED AT A SPACING OF 8 FEET TO 10 FEET BETWEEN EXPANSION JOINTS. NO CONTRACTION JOINTS WILL BE REQUIRED FOR SEGMENTS LESS THAN 10 FEET IN LENGTH.

FOR REINFORCING STEEL AND CONCRETE QUANTITES, SEE "BILL OF MATERIAL" SHEET.

FOR DETAILS OF CONCRETE INSERTS IN END POST, SEE "3 BAR METAL RAIL" SHEETS.

FOR DETAILS OF GUARDRAIL ANCHOR ASSEMBLIES, SEE "GUARDRAIL ANCHORAGE DETAILS FOR METAL RAILS" SHEET.

✱ #4 U3 BARS MAY BE PUSHED INTO GREEN CONCRETE AFTER SPAN HAS BEEN SCREEDED OFF.

PROJECT NO. U-0071
DURHAM COUNTY
STATION: 85+26.52 -L-

STATE OF NORTH CAROLINA
DEPARTMENT OF TRANSPORTATION
RALEIGH

SUPERSTRUCTURE

SIDEWALK DETAILS

NORTH CAROLINA PROFESSIONAL SEAL 37400 ENGINEER GREGORY M. GILLAND 6/10/13

WETHERILL ENGINEERING
559 Jones Franklin Rd. Suite 164
Raleigh, N.C. 27606
Bus: 919 851 8077
Fax: 919 851 8107
License: F-0377
TRANSPORTATION PLANNING/DESIGN - BRIDGE/STRUCTURE DESIGN
CIVIL/SITE DESIGN - GIS/GPS - CONSTRUCTION OBSERVATION

REVISIONS						SHEET NO.
NO.	BY:	DATE:	NO.	BY:	DATE:	5-165
1			3			TOTAL SHEETS
2			4			671

DRAWN BY : J.M. BRITT DATE : 5-1-13
CHECKED BY : G.M. GILLAND DATE : 6-11-13
DESIGN ENGINEER OF RECORD: G.M. GILLAND DATE : 6-13

P:\2012\U-0071 Sites 3,8 & 9\Structures\DWG_3\U0071_SD_STR3_SW_WE1.dgn
12/10/2013 11:10:24 AM

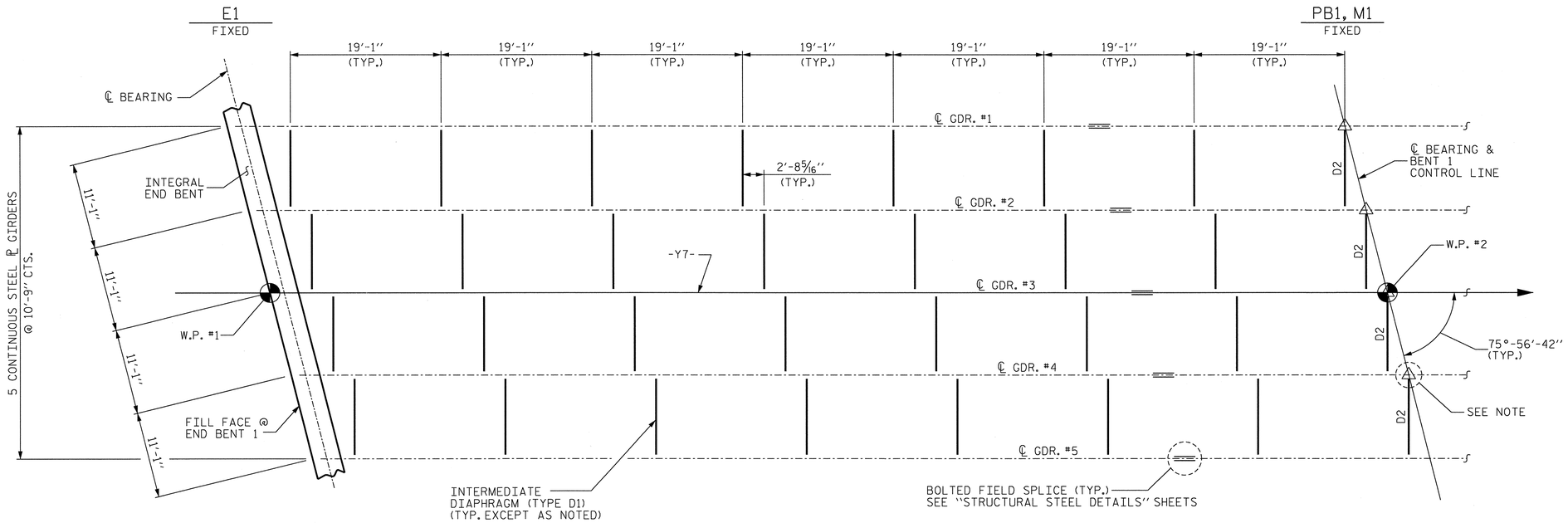

SPAN "A" FRAMING PLAN

△ NOTE
BEARING STIFFENERS TO BE USED AS CONNECTOR PLATES.

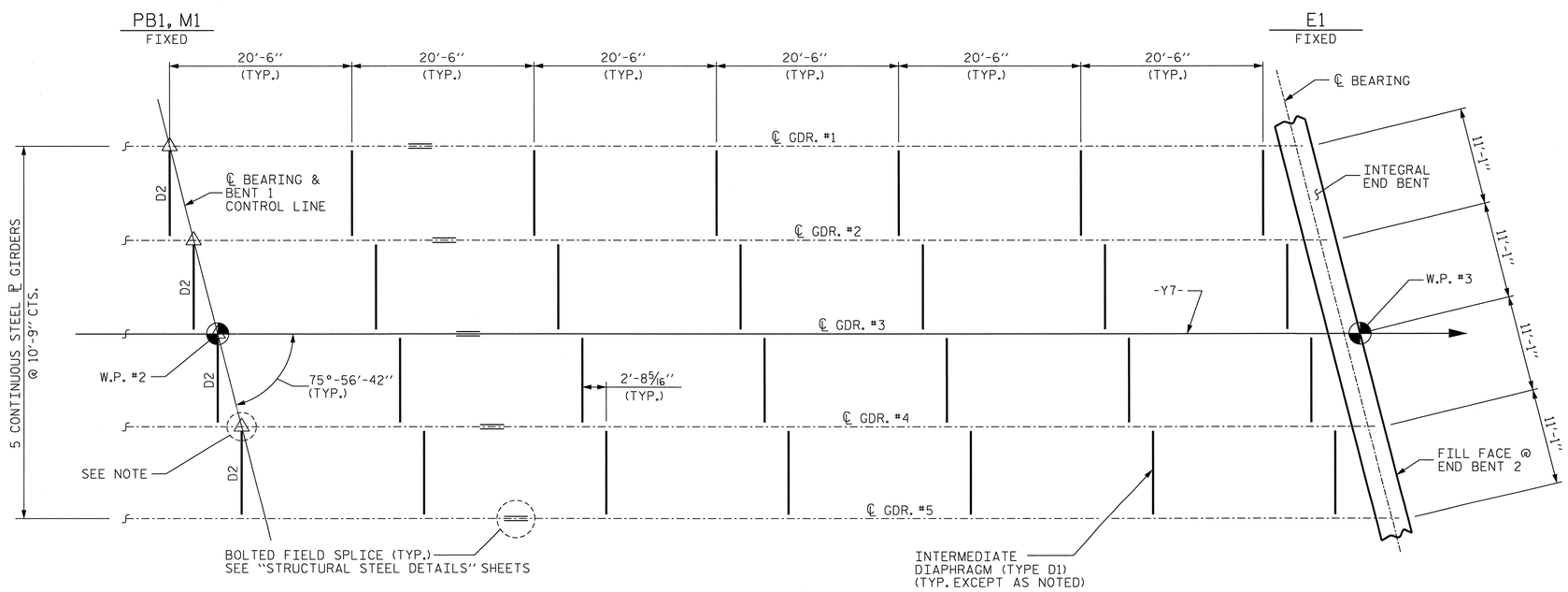

SPAN "B" FRAMING PLAN

PROJECT NO. U-0071
DURHAM COUNTY
STATION: 85+26.52 -L-

STATE OF NORTH CAROLINA
DEPARTMENT OF TRANSPORTATION
RALEIGH

SUPERSTRUCTURE
FRAMING PLAN

REVISIONS								SHEET NO.
NO.	BY:	DATE:	NO.	BY:	DATE:			5-166
1			3					TOTAL SHEETS
2			4					671

NORTH CAROLINA PROFESSIONAL SEAL 37400 ENGINEER GREGORY M. GILLAND 12/11/13

WETHERILL ENGINEERING
559 Jones Franklin Rd. Suite 164
Raleigh, N.C. 27606
Bus: 919 851 8077
Fax: 919 851 8107
License: F-0377
TRANSPORTATION PLANNING/DESIGN - BRIDGE/STRUCTURE DESIGN
CIVIL/SITE DESIGN - GIS/GPS - CONSTRUCTION OBSERVATION

DRAWN BY : J.M. BRITT DATE : 5-2-13
CHECKED BY : G.M. GILLAND DATE : 6-12-13
DESIGN ENGINEER OF RECORD: G.M. GILLAND DATE : 6-13

P:\2012\U-0071 Sites 3,8 & 9\Structures\DWG_3\U0071_SD_STR3_FP_WE1.dgn
12/10/2013 11:02:43 AM

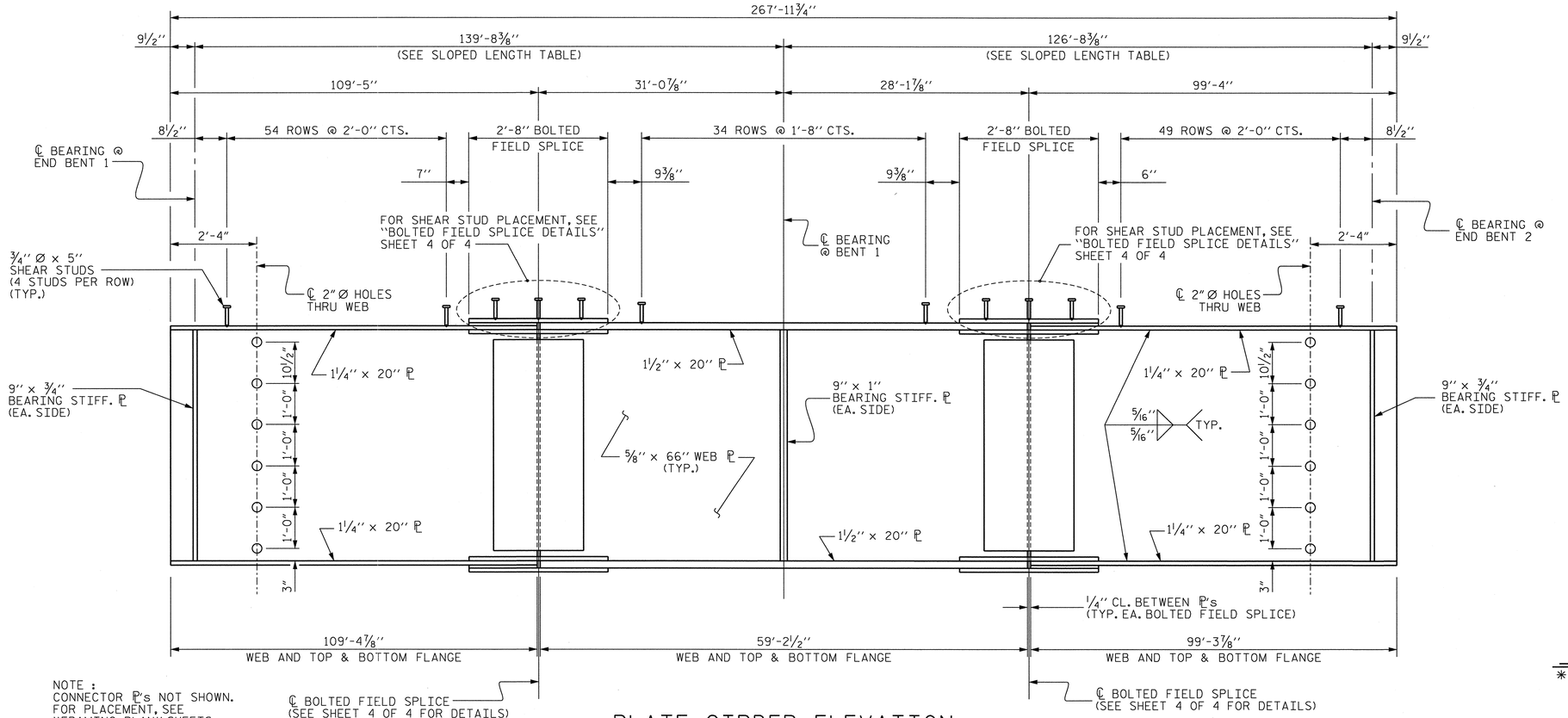

NOTE :
CONNECTOR ℙ's NOT SHOWN.
FOR PLACEMENT, SEE
"FRAMING PLAN" SHEETS.

PLATE GIRDER ELEVATION

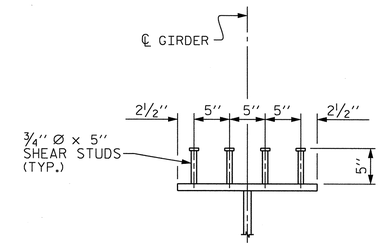

SHEAR STUD DETAIL

(TYPICAL AS SHOWN EXCEPT @ SPLICE ℙ)

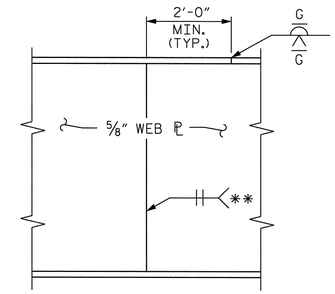

ELEVATION

PERMISSIBLE SHOP FLANGE & WEB SPLICE

** GRIND SMOOTH AND FLUSH ON OUTSIDE OF EXTERIOR GIRDER

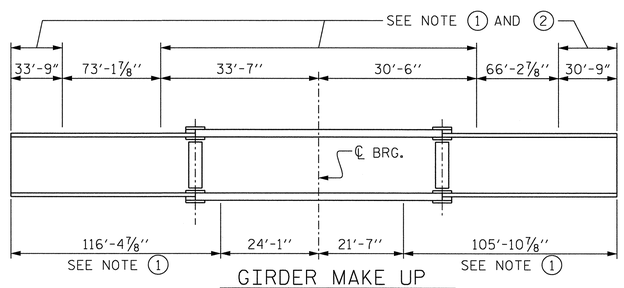

GIRDER MAKE UP

NOTE 1 : CHARPY V-NOTCH TESTS ARE REQUIRED FOR ALL TOP OR BOTTOM FLANGE PLATES WHICH FALL WITHIN THESE LIMITS, ALL WEB PLATES, AND ALL SPLICE PLATES. IF A PERMITTED SHOP FLANGE SPLICE IS NOT USED, CHARPY V-NOTCH TESTS WILL BE REQUIRED FOR THE ENTIRE FLANGE PLATE. FOR CHARPY V-NOTCH TESTS, SEE ARTICLE 1072-7 OF THE STANDARD SPECIFICATIONS.

NOTE 2 : NO WELDING OF FORMS OR FALSEWORK TO THE TOP FLANGE WILL BE PERMITTED IN THIS REGION.

CHARPY V-NOTCH TESTS FOR CONTINUOUS PLATE GIRDERS

SLOPED LENGTH

GIRDER	SPAN "A" SLOPED DISTANCE ℄ BRG. TO ℄ BRG.	SPAN "B" SLOPED DISTANCE ℄ BRG. TO ℄ BRG.
#1	139'-8⅞"	--
#2	139'-8 13/16"	--
#3	139'-8 13/16"	--
#4	139'-8¾"	--
#5	139'-8¾"	--

PROJECT NO. U-0071
DURHAM COUNTY
STATION: 85+26.52 -L-

SHEET 1 OF 4

STATE OF NORTH CAROLINA
DEPARTMENT OF TRANSPORTATION
RALEIGH

SUPERSTRUCTURE

STRUCTURAL STEEL DETAILS

NORTH CAROLINA PROFESSIONAL SEAL 37400 ENGINEER GREGORY M. GILLAND 12/9/13

WETHERILL ENGINEERING
559 Jones Franklin Rd. Suite 164
Raleigh, N.C. 27606
Bus: 919 851 8077
Fax: 919 851 8107
License: F-0377
TRANSPORTATION PLANNING/DESIGN - BRIDGE/STRUCTURE DESIGN
CIVIL/SITE DESIGN - GIS/GPS - CONSTRUCTION OBSERVATION

REVISIONS						SHEET NO.
NO.	BY:	DATE:	NO.	BY:	DATE:	5-167
1			3			TOTAL SHEETS
2			4			671

DRAWN BY : J.M. BRITT DATE : 5-8-13
CHECKED BY : G.M. GILLAND DATE : 6-12-13
DESIGN ENGINEER OF RECORD: G.M. GILLAND DATE : 6-13

P:\2012\U-0071 Sites 3,8 & 9\Structures\DWG_3\U0071_SD_STR3_SS_WE1.dgn
12/10/2013 11:05:06 AM

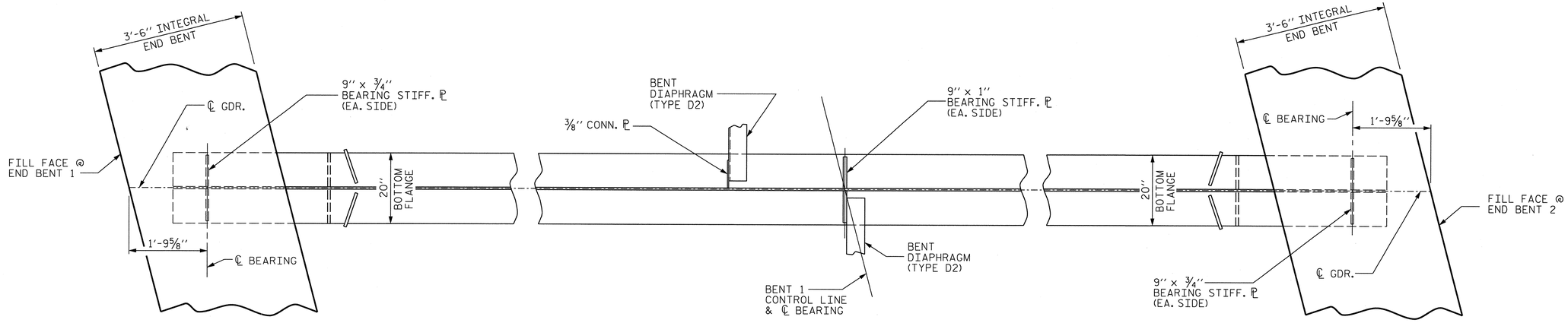

@ END BENT 1 @ BENT 1 @ END BENT 2

SPAN "A-B" BOTTOM FLANGE DETAIL

SEE FRAMING PLAN SHEETS FOR INTERMEDIATE DIAPHRAGM LOCATIONS
(FIELD SPLICES NOT SHOWN)

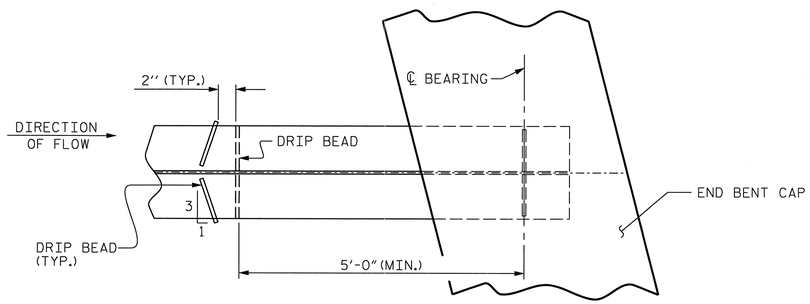

PART PLAN - BOTTOM FLANGE

(END BENT 2 SHOWN, END BENT 1 SIMILAR)

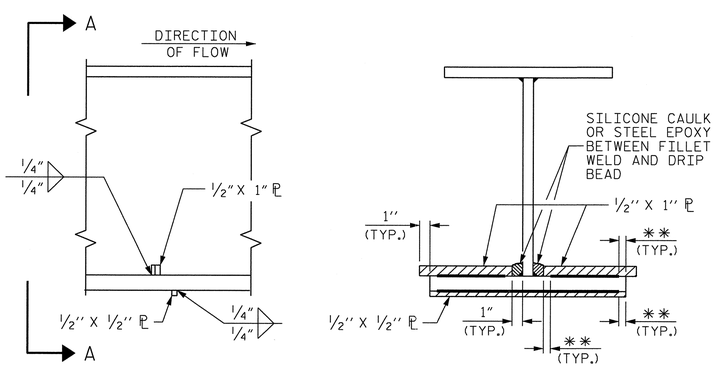

SECTION VIEW A-A

** SEE "WELD TERMINATION DETAILS" SHEET 3 OF 4

DRIP BEAD DETAILS

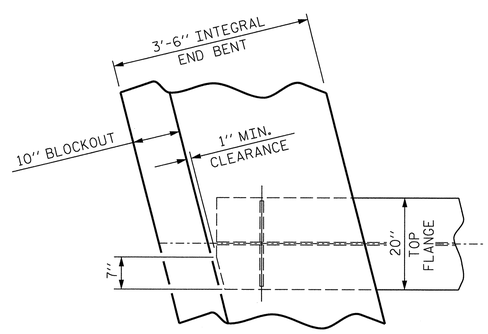

TOP FLANGE CLIP DETAIL

(TYP. EA. GIRDER)

STRUCTURAL STEEL NOTES :

STRUCTURAL STEEL SHALL BE AASHTO M270 GRADE 50W AND PAINTED IN ACCORDANCE WITH SYSTEM 4 OF ARTICLE 442-7 OF THE STANDARD SPECIFICATIONS UNLESS OTHERWISE NOTED ON THE PLANS.

ALL DIMENSIONS SHOWN ARE HORIZONTAL OR VERTICAL, UNLESS OTHERWISE NOTED.

ALL FIELD CONNECTIONS TO BE 7/8" DIA. HIGH STRENGTH BOLTS UNLESS OTHERWISE NOTED.

BEARING STIFFENERS ARE TO BE PLACED NORMAL TO THE WEB OF THE GIRDER AND SHALL BE PLUMB.

PERMITTED FLANGE AND WEB SHOP SPLICES SHALL NOT BE LOCATED WITHIN 15 FEET OF MAXIMUM DEAD LOAD DEFLECTION (NOR WITHIN 15 FEET OF INTERMEDIATE BEARINGS OF CONTINUOUS UNITS). KEEP 2 FEET MINIMUM BETWEEN WEB AND FLANGE SHOP SPLICES. KEEP 6" MINIMUM BETWEEN CONNECTOR PLATE OR TRANSVERSE STIFFENER WELDS AND WEB OR FLANGE SHOP SPLICES.

STUDS ON GIRDERS MAY BE SHIFTED UP TO 1" IF NECESSARY TO CLEAR FLANGE SPLICE WELD.

TENSION ON THE AASHTO M164 BOLTS SHALL BE CALIBRATED USING DIRECT TENSION INDICATOR WASHERS IN ACCORDANCE WITH ARTICLE 440-8 OF THE STANDARD SPECIFICATIONS.

STRUCTURAL STEEL ERECTION IN A CONTINUOUS UNIT SHALL BE COMPLETE BEFORE FALSEWORK OR FORMS ARE PLACED ON THE UNIT.

END OF GIRDERS SHALL BE PLUMB.

BEARING STIFFENERS MAY REQUIRE COPING IF WIDER THAN BOTTOM FLANGE.

FABRICATORS SHALL DETAIL DIAPHRAGM MEMBERS AND CONNECTIONS FOR STEEL DEAD LOAD FIT UP.

PROJECT NO. U-0071
DURHAM COUNTY
STATION: 85+26.52 -L-

SHEET 2 OF 4

STATE OF NORTH CAROLINA
DEPARTMENT OF TRANSPORTATION
RALEIGH

SUPERSTRUCTURE

STRUCTURAL STEEL DETAILS

REVISIONS						SHEET NO.
NO.	BY:	DATE:	NO.	BY:	DATE:	5-168
1			3			TOTAL SHEETS
2			4			671

NORTH CAROLINA PROFESSIONAL SEAL 037400 ENGINEER GREGORY M. GILLAND 5-5-14

WETHERILL ENGINEERING
559 Jones Franklin Rd. Suite 164
Raleigh, N.C. 27606
Bus: 919 851 8077
Fax: 919 851 8107
License: F-0377

TRANSPORTATION PLANNING/DESIGN - BRIDGE/STRUCTURE DESIGN
CIVIL/SITE DESIGN - GIS/GPS - CONSTRUCTION OBSERVATION

DRAWN BY :	J.M. BRITT	DATE :	5-8-13
CHECKED BY :	G.M. GILLAND	DATE :	6-12-13
DESIGN ENGINEER OF RECORD:	G.M. GILLAND	DATE :	6-13

P:\2012\U-0071 Sites 3,8 & 9\Structures\DWG_3\U0071_SD_STR3_SS_WE1.dgn
3/3/2014 2:40:27 PM

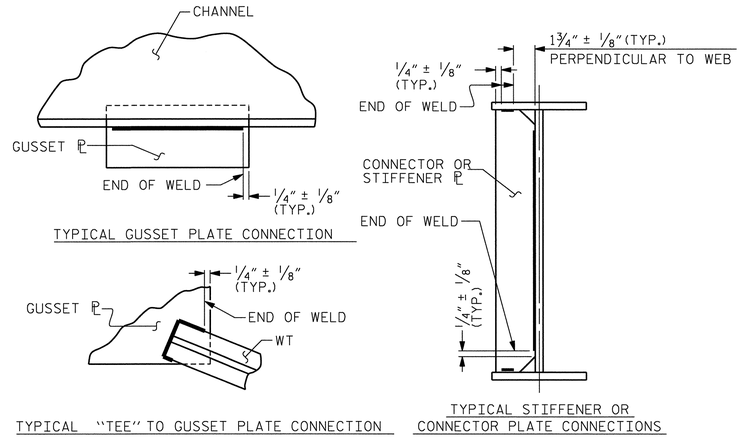

WELD TERMINATION DETAILS

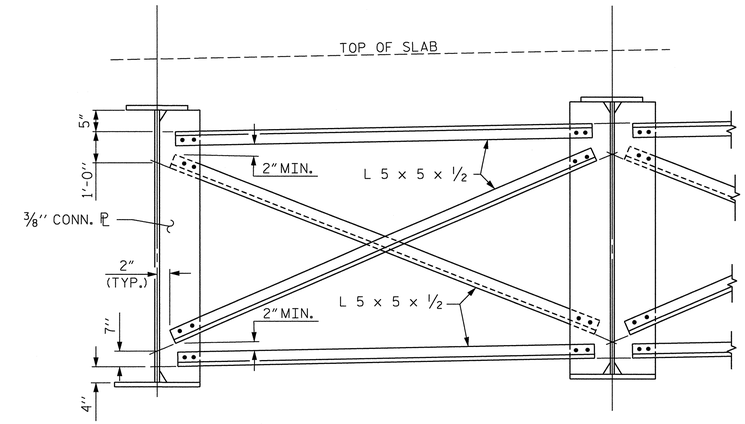

TYPICAL INTERMEDIATE DIAPHRAGM (TYPE D1)

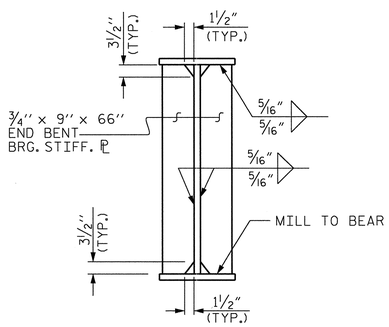

BEARING STIFFENER

(AT END BENTS)

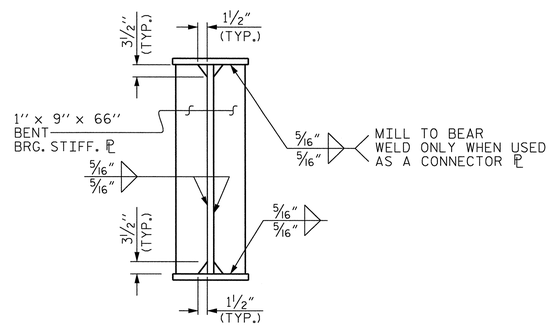

BEARING STIFFENER

(AT INTERIOR BENT)

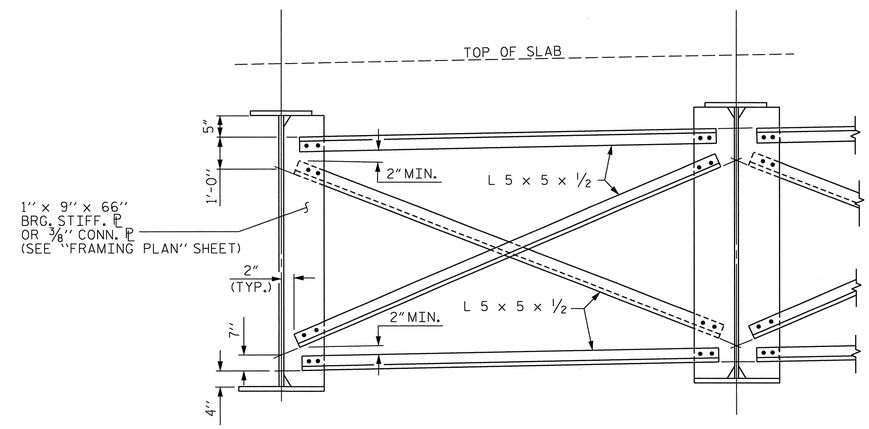

TYPICAL BENT DIAPHRAGM (TYPE D2)

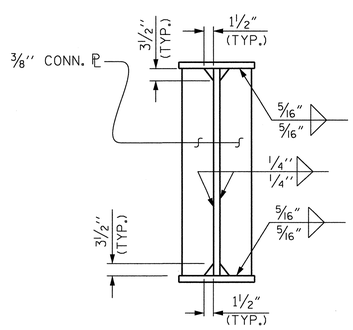

CONNECTOR PL

PROJECT NO. U-0071

DURHAM COUNTY

STATION: 85+26.52 -L-

SHEET 3 OF 4

STATE OF NORTH CAROLINA
DEPARTMENT OF TRANSPORTATION
RALEIGH

SUPERSTRUCTURE

STRUCTURAL STEEL DETAILS

NORTH CAROLINA PROFESSIONAL SEAL 37400 ENGINEER GREGORY M. GILLAND 12/9/12

WETHERILL ENGINEERING
559 Jones Franklin Rd. Suite 164
Raleigh, N.C. 27606
Bus: 919 851 8077
Fax: 919 851 8107
License: F-0377
TRANSPORTATION PLANNING/DESIGN - BRIDGE/STRUCTURE DESIGN
CIVIL/SITE DESIGN - GIS/GPS - CONSTRUCTION OBSERVATION

REVISIONS						SHEET NO.
NO.	BY:	DATE:	NO.	BY:	DATE:	S-169
1			3			TOTAL SHEETS
2			4			671

DRAWN BY : J.M. BRITT DATE : 5-8-13
CHECKED BY : G.M. GILLAND DATE : 6-12-13
DESIGN ENGINEER OF RECORD: G.M. GILLAND DATE : 6-13

P:\2012\U-0071 Sites 3,8 & 9\Structures\DWG_3\U0071_SD_STR3_SS_WE1.dgn
12/10/2013 11:05:31 AM

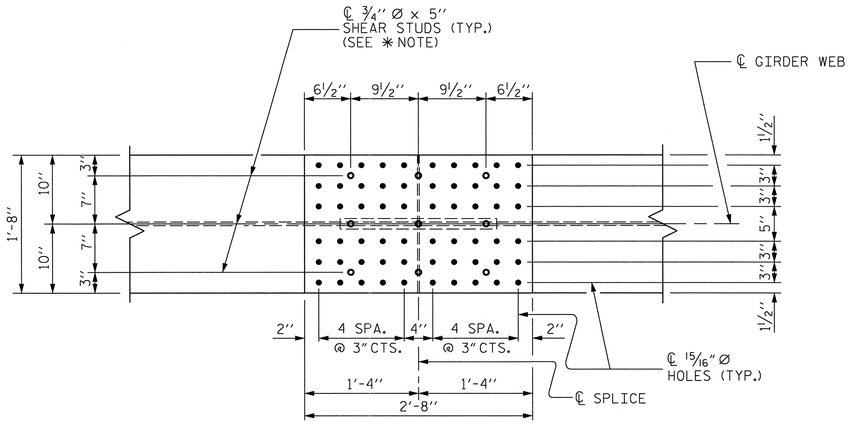

PLAN (TOP OF TOP FLANGE)

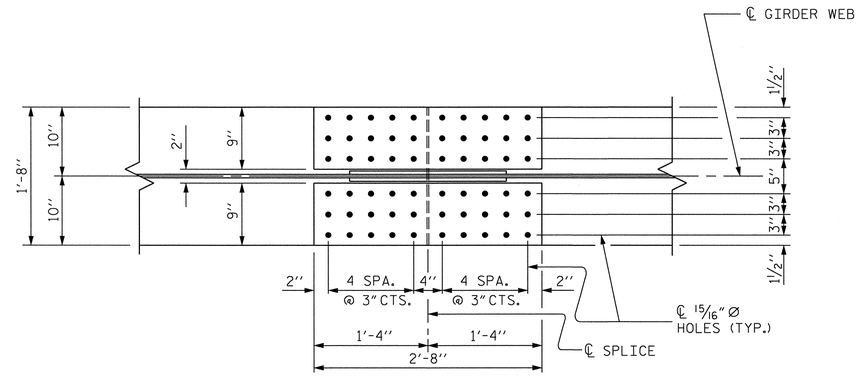

PLAN (TOP OF BOTTOM FLANGE)

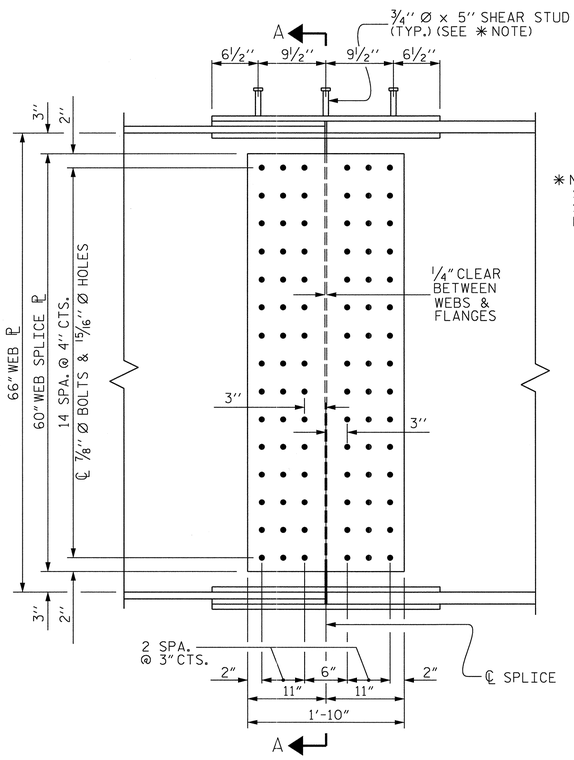

ELEVATION

✱ NOTE:
SHEAR STUDS ARE TO BE SHOP WELDED ON TOP OF PLATE BEFORE FIELD ASSEMBLY.

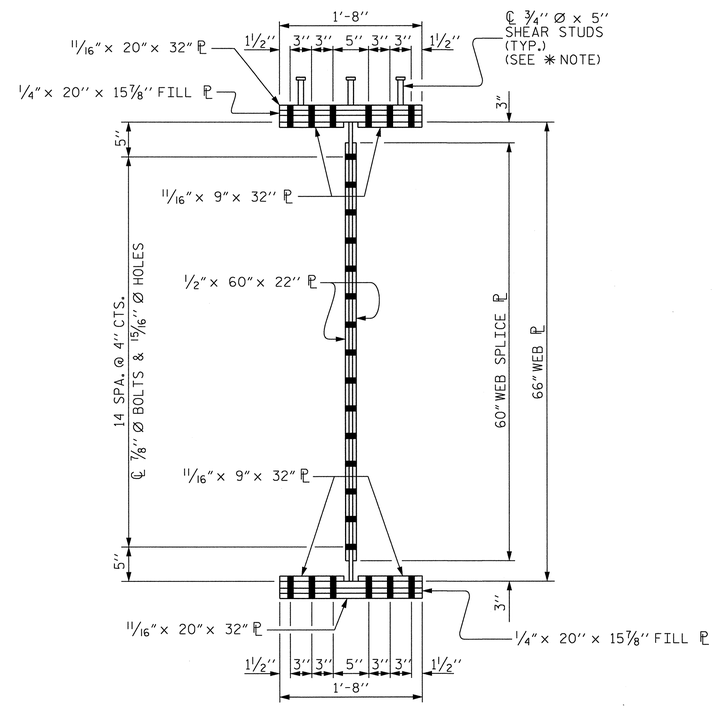

SECTION A-A

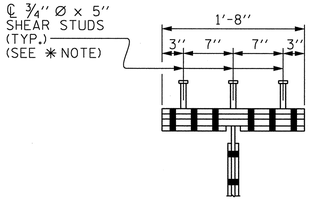

SHEAR STUD DETAIL
FOR TOP FLANGE SPLICE PLATE

BOLTED FIELD SPLICE DETAILS

(ALL BOLTED FIELD SPLICES ARE TYPICAL)

PROJECT NO. U-0071
DURHAM COUNTY
STATION: 85+26.52 -L-

SHEET 4 OF 4

STATE OF NORTH CAROLINA
DEPARTMENT OF TRANSPORTATION
RALEIGH

SUPERSTRUCTURE

STRUCTURAL STEEL DETAILS

NORTH CAROLINA PROFESSIONAL SEAL 37400 ENGINEER GREGORY M. GILLAND 12/10/13

WETHERILL ENGINEERING
559 Jones Franklin Rd. Suite 164
Raleigh, N.C. 27606
Bus: 919 851 8077
Fax: 919 851 8107
License: F-0377

TRANSPORTATION PLANNING/DESIGN - BRIDGE/STRUCTURE DESIGN
CIVIL/SITE DESIGN - GIS/GPS - CONSTRUCTION OBSERVATION

REVISIONS							SHEET NO.
NO.	BY:	DATE:	NO.	BY:	DATE:		S-170
1			3				TOTAL SHEETS
2			4				671

DRAWN BY : J.M. BRITT DATE : 5-8-13
CHECKED BY : G.M. GILLAND DATE : 6-12-13
DESIGN ENGINEER OF RECORD: G.M. GILLAND DATE : 6-13

P:\2012\U-0071 Sites 3,8 & 9\Structures\DWG_3\U0071_SD_STR3_SS_WEI.dgn
12/10/2013 11:05:41 AM

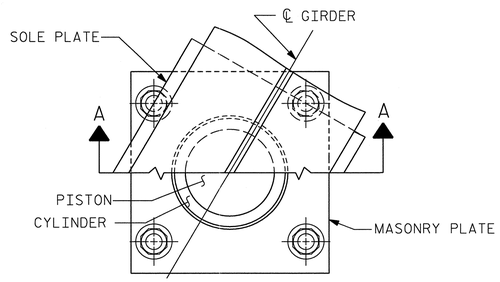

CUT-AWAY PLAN

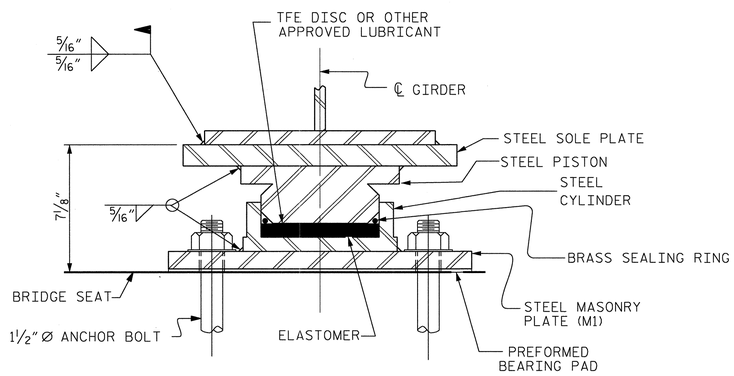

SECTION A-A

PB1, FIXED
(5 REQ'D. @ BENT 1)

POT BEARING DETAILS

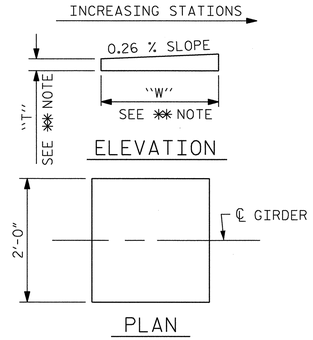

✱✱ NOTE:
DIMENSIONS "W" AND "T" ARE TO BE DETERMINED BY THE MANUFACTURER.

SOLE PLATE DETAILS

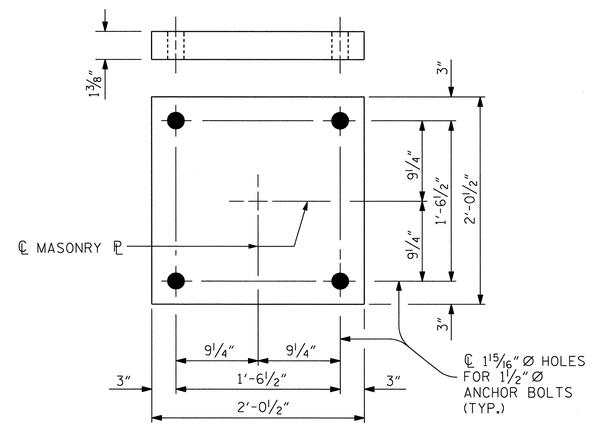

PLAN
M1 (5 REQ'D.)

MASONRY PLATE DETAILS

NOTES

FOR POT BEARINGS, SEE SPECIAL PROVISIONS.

FOR STEEL REINFORCED ELASTOMERIC BEARINGS, SEE SPECIAL PROVISIONS.

AT ALL POINTS OF SUPPORT AT BENT 1, NUTS FOR ANCHOR BOLTS SHALL BE TIGHTENED FINGER TIGHT AND GIVEN AN ADDITIONAL 1/4 TURN. THE THREAD OF THE NUT AND BOLT SHALL THEN BE BURRED WITH A SHARP POINTED TOOL.

WHEN WELDING THE SOLE PLATE TO THE GIRDER, USE TEMPERATURE INDICATING WAX PENS, OR OTHER SUITABLE MEANS, TO ENSURE THAT THE TEMPERATURE OF THE BEARING DOES NOT EXCEED 250°F TEMPERATURES ABOVE THIS MAY DAMAGE THE TFE OR ELASTOMER.

ALL SURFACES OF BEARING PLATES SHALL BE SMOOTH AND STRAIGHT.

FOR THERMAL SPRAYED COATINGS (METALLIZATION), SEE SPECIAL PROVISIONS.

THE CONTRACTOR MAY SUBSTITUTE DISC BEARINGS FOR THE POT BEARINGS SHOWN. FOR OPTIONAL DISC BEARINGS, SEE SPECIAL PROVISIONS.

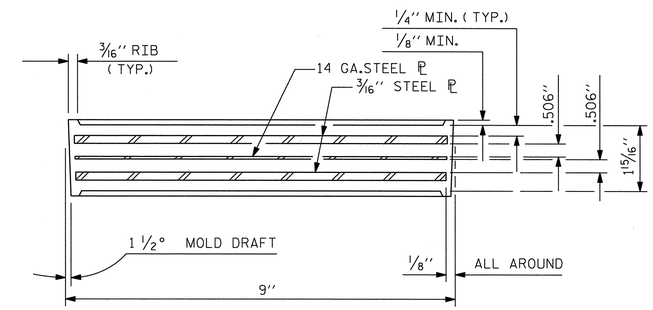

TYPICAL SECTION OF ELASTOMERIC BEARINGS

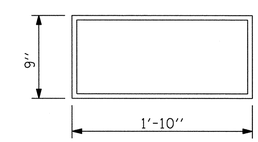

E1 (10 REQ'D @ END BENTS)

PLAN

ELASTOMERIC BEARING PAD DETAILS

TABLE FOR LOADS AND MOVEMENT							
BEARING	LOCATION	UNFACTORED VERTICAL LOAD (KIPS)				FACTORED LATERAL LOAD (KIPS)	TOTAL MOVEMENT (INCHES)
		DEAD		LIVE	TOTAL		
		DC	DW	LL+IM			
PB1 (FIXED)	BENT 1	290	29	218	537	107	0.00

PROJECT NO. U-0071
DURHAM COUNTY
STATION: 85+26.52 -L-

STATE OF NORTH CAROLINA
DEPARTMENT OF TRANSPORTATION
RALEIGH

STANDARD
POT BEARING AND ELASTOMERIC BEARING DETAILS

REVISIONS						SHEET NO.
NO.	BY:	DATE:	NO.	BY:	DATE:	5-171
1			3			TOTAL SHEETS
2			4			671

STD. NO. PB1

WETHERILL ENGINEERING
559 Jones Franklin Rd. Suite 164
Raleigh, N.C. 27606
Bus: 919 851 8077
Fax: 919 851 8107
License: F-0377
TRANSPORTATION PLANNING/DESIGN - BRIDGE/STRUCTURE DESIGN
CIVIL/SITE DESIGN - GIS/GPS - CONSTRUCTION OBSERVATION

NORTH CAROLINA PROFESSIONAL SEAL 37400 ENGINEER GREGORY M. GILLAND 12/10/13

ASSEMBLED BY : G. M. GILLAND	DATE : 5-30-13
CHECKED BY: T. DIFFEE	DATE : 7-1-13
DESIGN ENGINEER OF RECORD : GMG	DATE : 6-13
DRAWN BY : RWW 8/99	REV. 5/7/03 RWW/JTE
CHECKED BY : LES 8/99	REV. 5/1/06R TLA/GM
	REV. 10/1/11 MAA/GM

P:\2012\U-0071 Sites 3,8 & 9\Structures\DWG_3\U0071_SD_STR3_BG_WE1.dgn
12/10/2013 11:23:06 AM

DEAD LOAD DEFLECTION TABLE FOR GIRDER

SPAN "A"

GIRDER #1

TWENTIETH POINTS	0	1	2	3	4	5	6	7	8	9	10	11	12	13	14	15	16	17	18	19	20
DEFLECTION DUE TO WEIGHT OF GIRDER	0.000	-0.001	-0.003	-0.006	-0.010	-0.013	-0.016	-0.019	-0.021	-0.023	-0.023	-0.023	-0.021	-0.019	-0.016	-0.013	-0.009	-0.006	-0.003	-0.001	0.000
DEFLECTION DUE TO WEIGHT OF SLAB ✳	0.000	-0.003	-0.011	-0.022	-0.034	-0.047	-0.058	-0.068	-0.076	-0.080	-0.082	-0.080	-0.075	-0.067	-0.056	-0.045	-0.032	-0.020	-0.010	-0.003	0.000
DEFLECTION DUE TO WEIGHT OF SIDEWALK & RAIL	0.000	0.000	-0.002	-0.003	-0.005	-0.007	-0.009	-0.011	-0.012	-0.013	-0.013	-0.012	-0.012	-0.010	-0.009	-0.007	-0.005	-0.003	-0.002	0.000	0.000
TOTAL DEAD LOAD DEFLECTION	0.000	-0.004	-0.015	-0.031	-0.049	-0.067	-0.084	-0.098	-0.109	-0.116	-0.118	-0.115	-0.107	-0.096	-0.081	-0.064	-0.047	-0.029	-0.015	-0.004	0.000
VERTICAL CURVE ORDINATE	0.000	0.120	0.241	0.361	0.473	0.569	0.647	0.709	0.755	0.784	0.796	0.791	0.770	0.732	0.677	0.606	0.518	0.414	0.292	0.155	0.000
REQUIRED CAMBER	0	1 1/2	3 1/16	4 11/16	6 1/4	7 5/8	8 3/4	9 11/16	10 3/8	10 13/16	10 15/16	10 7/8	10 1/2	9 15/16	9 1/8	8 1/16	6 3/4	5 5/16	3 11/16	1 7/8	0

DEAD LOAD DEFLECTION TABLE FOR GIRDER

SPAN "A"

GIRDER #2

TWENTIETH POINTS	0	1	2	3	4	5	6	7	8	9	10	11	12	13	14	15	16	17	18	19	20
DEFLECTION DUE TO WEIGHT OF GIRDER	0.000	-0.001	-0.003	-0.006	-0.010	-0.014	-0.017	-0.020	-0.022	-0.024	-0.024	-0.024	-0.022	-0.020	-0.017	-0.013	-0.010	-0.006	-0.003	-0.001	0.000
DEFLECTION DUE TO WEIGHT OF SLAB ✳	0.000	-0.004	-0.013	-0.026	-0.041	-0.056	-0.070	-0.082	-0.091	-0.097	-0.098	-0.096	-0.090	-0.080	-0.068	-0.054	-0.039	-0.024	-0.012	-0.003	0.000
DEFLECTION DUE TO WEIGHT OF SIDEWALK & RAIL	0.000	0.000	-0.002	-0.003	-0.005	-0.007	-0.009	-0.010	-0.011	-0.012	-0.012	-0.012	-0.011	-0.010	-0.008	-0.007	-0.005	-0.003	-0.002	0.000	0.000
TOTAL DEAD LOAD DEFLECTION	0.000	-0.005	-0.018	-0.036	-0.056	-0.077	-0.096	-0.112	-0.125	-0.132	-0.134	-0.131	-0.123	-0.110	-0.093	-0.074	-0.053	-0.034	-0.017	-0.005	0.000
VERTICAL CURVE ORDINATE	0.000	0.126	0.252	0.376	0.488	0.582	0.660	0.721	0.766	0.793	0.805	0.799	0.777	0.738	0.683	0.611	0.522	0.416	0.294	0.155	0.000
REQUIRED CAMBER	0	1 9/16	3 1/4	4 15/16	6 1/2	7 7/8	9 1/16	10	10 11/16	11 1/8	11 1/4	11 3/16	10 13/16	10 3/16	9 5/16	8 3/16	6 7/8	5 3/8	3 3/4	1 15/16	0

DEAD LOAD DEFLECTION TABLE FOR GIRDER

SPAN "A"

GIRDER #3

TWENTIETH POINTS	0	1	2	3	4	5	6	7	8	9	10	11	12	13	14	15	16	17	18	19	20
DEFLECTION DUE TO WEIGHT OF GIRDER	0.000	-0.001	-0.003	-0.006	-0.010	-0.014	-0.017	-0.020	-0.022	-0.024	-0.024	-0.024	-0.022	-0.020	-0.017	-0.013	-0.010	-0.006	-0.003	-0.001	0.000
DEFLECTION DUE TO WEIGHT OF SLAB ✳	0.000	-0.004	-0.013	-0.026	-0.041	-0.056	-0.070	-0.082	-0.091	-0.097	-0.098	-0.096	-0.090	-0.080	-0.068	-0.054	-0.039	-0.024	-0.012	-0.003	0.000
DEFLECTION DUE TO WEIGHT OF SIDEWALK & RAIL	0.000	0.000	-0.002	-0.003	-0.005	-0.007	-0.009	-0.010	-0.011	-0.012	-0.012	-0.012	-0.011	-0.010	-0.008	-0.007	-0.005	-0.003	-0.002	0.000	0.000
TOTAL DEAD LOAD DEFLECTION	0.000	-0.005	-0.018	-0.036	-0.056	-0.077	-0.096	-0.112	-0.125	-0.132	-0.134	-0.131	-0.123	-0.110	-0.093	-0.074	-0.053	-0.034	-0.017	-0.005	0.000
VERTICAL CURVE ORDINATE	0.000	0.132	0.263	0.390	0.500	0.594	0.671	0.731	0.775	0.802	0.812	0.806	0.783	0.744	0.687	0.614	0.525	0.419	0.296	0.156	0.000
REQUIRED CAMBER	0	1 5/8	3 3/8	5 1/8	6 11/16	8 1/16	9 3/16	10 1/8	10 13/16	11 3/16	11 3/8	11 1/4	10 7/8	10 1/4	9 3/8	8 1/4	6 15/16	5 7/16	3 3/4	1 15/16	0

DEAD LOAD DEFLECTION TABLE FOR GIRDER

SPAN "A"

GIRDER #4

TWENTIETH POINTS	0	1	2	3	4	5	6	7	8	9	10	11	12	13	14	15	16	17	18	19	20
DEFLECTION DUE TO WEIGHT OF GIRDER	0.000	-0.001	-0.003	-0.006	-0.010	-0.014	-0.017	-0.020	-0.022	-0.024	-0.024	-0.024	-0.022	-0.020	-0.017	-0.013	-0.010	-0.006	-0.003	-0.001	0.000
DEFLECTION DUE TO WEIGHT OF SLAB ✳	0.000	-0.004	-0.013	-0.026	-0.041	-0.056	-0.070	-0.082	-0.091	-0.097	-0.098	-0.096	-0.090	-0.080	-0.068	-0.054	-0.039	-0.024	-0.012	-0.003	0.000
DEFLECTION DUE TO WEIGHT OF SIDEWALK & RAIL	0.000	0.000	-0.002	-0.003	-0.005	-0.007	-0.009	-0.010	-0.011	-0.012	-0.012	-0.012	-0.011	-0.010	-0.008	-0.007	-0.005	-0.003	-0.002	0.000	0.000
TOTAL DEAD LOAD DEFLECTION	0.000	-0.005	-0.018	-0.036	-0.056	-0.077	-0.096	-0.112	-0.125	-0.132	-0.134	-0.131	-0.123	-0.110	-0.093	-0.074	-0.053	-0.034	-0.017	-0.005	0.000
VERTICAL CURVE ORDINATE	0.000	0.137	0.274	0.401	0.510	0.604	0.680	0.740	0.783	0.809	0.819	0.812	0.788	0.748	0.691	0.618	0.528	0.421	0.297	0.157	0.000
REQUIRED CAMBER	0	1 11/16	3 1/2	5 1/4	6 13/16	8 3/16	9 5/16	10 1/4	10 7/8	11 5/16	11 7/16	11 5/16	10 5/16	10 5/16	9 7/16	8 5/16	6 15/16	5 7/16	3 3/4	1 15/16	0

DEAD LOAD DEFLECTION TABLE FOR GIRDER

SPAN "A"

GIRDER #5

TWENTIETH POINTS	0	1	2	3	4	5	6	7	8	9	10	11	12	13	14	15	16	17	18	19	20
DEFLECTION DUE TO WEIGHT OF GIRDER	0.000	-0.001	-0.003	-0.006	-0.010	-0.013	-0.016	-0.019	-0.021	-0.023	-0.023	-0.023	-0.021	-0.019	-0.016	-0.013	-0.009	-0.006	-0.003	-0.001	0.000
DEFLECTION DUE TO WEIGHT OF SLAB ✳	0.000	-0.003	-0.011	-0.022	-0.034	-0.047	-0.058	-0.068	-0.076	-0.080	-0.082	-0.080	-0.075	-0.067	-0.056	-0.045	-0.032	-0.020	-0.010	-0.003	0.000
DEFLECTION DUE TO WEIGHT OF SIDEWALK & RAIL	0.000	0.000	-0.002	-0.003	-0.005	-0.007	-0.009	-0.011	-0.012	-0.013	-0.013	-0.012	-0.012	-0.010	-0.009	-0.007	-0.005	-0.003	-0.002	0.000	0.000
TOTAL DEAD LOAD DEFLECTION	0.000	-0.004	-0.015	-0.031	-0.049	-0.067	-0.084	-0.098	-0.109	-0.116	-0.118	-0.115	-0.107	-0.096	-0.081	-0.064	-0.047	-0.029	-0.015	-0.004	0.000
VERTICAL CURVE ORDINATE	0.000	0.143	0.284	0.410	0.519	0.612	0.687	0.747	0.789	0.815	0.824	0.817	0.793	0.752	0.694	0.620	0.530	0.422	0.298	0.157	0.000
REQUIRED CAMBER	0	1 3/4	3 9/16	5 5/16	6 13/16	8 1/8	9 1/4	10 1/8	10 3/4	11 3/16	11 5/16	11 3/16	10 13/16	10 3/16	9 5/16	8 3/16	6 15/16	5 7/16	3 3/4	1 15/16	0

✳ INCLUDE SLAB, BUILDUPS & STAY-IN-PLACE FORMS

ALL VALUES ARE SHOWN IN FEET (DECIMAL FORM), EXCEPT "FINAL CAMBER", WHICH IS GIVEN IN INCHES (FRACTION FORM).

SIGN CONVENTION FOR DEAD LOAD DEFLECTION + 0 -

DRAWN BY : E.R. BONNEY DATE : 4-1-13
CHECKED BY : G.M. GILLAND DATE : 6-25-13
DESIGN ENGINEER OF RECORD: G.M. GILLAND DATE : 6-13

NORTH CAROLINA PROFESSIONAL SEAL 37400 ENGINEER GREGORY M. GILLAND 12/9/13

WETHERILL ENGINEERING
559 Jones Franklin Rd. Suite 164
Raleigh, N.C. 27606
Bus: 919 851 8077
Fax: 919 851 8107
License: F-0377
TRANSPORTATION PLANNING/DESIGN - BRIDGE/STRUCTURE DESIGN
CIVIL/SITE DESIGN - GIS/GPS - CONSTRUCTION OBSERVATION

PROJECT NO. U-0071
DURHAM COUNTY
STATION: 85+26.52 -L-

SHEET 1 OF 2

STATE OF NORTH CAROLINA
DEPARTMENT OF TRANSPORTATION
RALEIGH

SUPERSTRUCTURE

DEAD LOAD DEFLECTION

REVISIONS						SHEET NO.
NO.	BY:	DATE:	NO.	BY:	DATE:	5-172
1			3			TOTAL SHEETS
2			4			671

P:\2012\U-0071 Sites 3,8 & 9\Structures\DWG_3\U0071_SD_STR3_DD_WEI.dgn
12/10/2013 11:24:25 AM

DEAD LOAD DEFLECTION TABLE FOR GIRDER

SPAN "B"

GIRDER #1

TWENTIETH POINTS	0	1	2	3	4	5	6	7	8	9	10	11	12	13	14	15	16	17	18	19	20
DEFLECTION DUE TO WEIGHT OF GIRDER	0.000	-0.001	-0.002	-0.004	-0.006	-0.009	-0.011	-0.013	-0.014	-0.015	-0.016	-0.015	-0.014	-0.013	-0.011	-0.009	-0.006	-0.004	-0.002	-0.001	0.000
DEFLECTION DUE TO WEIGHT OF SLAB *	0.000	-0.002	-0.007	-0.014	-0.022	-0.030	-0.038	-0.045	-0.051	-0.054	-0.055	-0.054	-0.051	-0.046	-0.039	-0.032	-0.023	-0.015	-0.007	-0.002	0.000
DEFLECTION DUE TO WEIGHT OF SIDEWALK & RAIL	0.000	0.000	-0.001	-0.002	-0.003	-0.005	-0.006	-0.007	-0.008	-0.008	-0.009	-0.008	-0.008	-0.007	-0.006	-0.005	-0.004	-0.002	-0.001	0.000	0.000
TOTAL DEAD LOAD DEFLECTION	0.000	-0.003	-0.010	-0.020	-0.031	-0.044	-0.055	-0.065	-0.073	-0.078	-0.080	-0.078	-0.074	-0.066	-0.057	-0.045	-0.033	-0.021	-0.010	-0.003	0.000
VERTICAL CURVE ORDINATE	0.000	0.130	0.247	0.349	0.439	0.514	0.576	0.624	0.658	0.678	0.685	0.678	0.658	0.624	0.576	0.514	0.439	0.349	0.247	0.130	0.000
REQUIRED CAMBER	0	1 5/8	3 1/16	4 7/16	5 5/8	6 11/16	7 9/16	8 1/4	8 3/4	9 1/16	9 3/16	9 1/16	8 3/4	8 1/4	7 9/16	6 11/16	5 11/16	4 7/16	3 1/16	1 5/8	0

DEAD LOAD DEFLECTION TABLE FOR GIRDER

SPAN "B"

GIRDERS #2, #3 & #4

TWENTIETH POINTS	0	1	2	3	4	5	6	7	8	9	10	11	12	13	14	15	16	17	18	19	20
DEFLECTION DUE TO WEIGHT OF GIRDER	0.000	-0.001	-0.002	-0.004	-0.006	-0.009	-0.011	-0.013	-0.015	-0.016	-0.016	-0.016	-0.015	-0.014	-0.012	-0.009	-0.007	-0.004	-0.002	-0.001	0.000
DEFLECTION DUE TO WEIGHT OF SLAB *	0.000	-0.002	-0.008	-0.017	-0.026	-0.036	-0.046	-0.054	-0.061	-0.065	-0.066	-0.065	-0.062	-0.055	-0.047	-0.038	-0.028	-0.018	-0.009	-0.002	0.000
DEFLECTION DUE TO WEIGHT OF SIDEWALK & RAIL	0.000	0.000	-0.001	-0.002	-0.003	-0.005	-0.006	-0.007	-0.007	-0.008	-0.008	-0.008	-0.008	-0.007	-0.006	-0.005	-0.003	-0.002	-0.001	0.000	0.000
TOTAL DEAD LOAD DEFLECTION	0.000	-0.003	-0.011	-0.023	-0.036	-0.050	-0.063	-0.074	-0.083	-0.089	-0.091	-0.089	-0.084	-0.076	-0.065	-0.052	-0.038	-0.024	-0.012	-0.003	0.000
VERTICAL CURVE ORDINATE	0.000	0.130	0.247	0.349	0.439	0.514	0.576	0.624	0.658	0.678	0.685	0.678	0.658	0.624	0.576	0.514	0.439	0.349	0.247	0.013	0.000
REQUIRED CAMBER	0	1 5/8	3 1/8	4 7/16	5 11/16	6 3/4	7 11/16	8 3/8	8 7/8	9 3/16	9 5/16	9 3/16	8 7/8	8 3/8	7 11/16	6 13/16	5 11/16	4 1/2	3 1/8	1 5/8	0

DEAD LOAD DEFLECTION TABLE FOR GIRDER

SPAN "B"

GIRDER #5

TWENTIETH POINTS	0	1	2	3	4	5	6	7	8	9	10	11	12	13	14	15	16	17	18	19	20
DEFLECTION DUE TO WEIGHT OF GIRDER	0.000	-0.001	-0.002	-0.004	-0.006	-0.009	-0.011	-0.013	-0.014	-0.015	-0.016	-0.015	-0.014	-0.013	-0.011	-0.009	-0.006	-0.004	-0.002	-0.001	0.000
DEFLECTION DUE TO WEIGHT OF SLAB *	0.000	-0.002	-0.007	-0.014	-0.022	-0.030	-0.038	-0.045	-0.051	-0.055	-0.055	-0.054	-0.051	-0.046	-0.039	-0.032	-0.023	-0.015	-0.007	-0.002	0.000
DEFLECTION DUE TO WEIGHT OF SIDEWALK & RAIL	0.000	0.000	-0.001	-0.002	-0.003	-0.005	-0.006	-0.007	-0.008	-0.009	-0.009	-0.008	-0.008	-0.007	-0.006	-0.005	-0.004	-0.002	-0.001	0.000	0.000
TOTAL DEAD LOAD DEFLECTION	0.000	-0.003	-0.010	-0.020	-0.031	-0.044	-0.055	-0.065	-0.073	-0.080	-0.080	-0.078	-0.074	-0.066	-0.057	-0.045	-0.033	-0.021	-0.010	-0.003	0.000
VERTICAL CURVE ORDINATE	0.000	0.130	0.247	0.349	0.439	0.514	0.576	0.624	0.658	0.685	0.685	0.678	0.658	0.624	0.576	0.514	0.439	0.349	0.247	0.130	0.000
REQUIRED CAMBER	0	1 5/8	3 1/16	4 7/16	5 5/8	6 11/16	7 9/16	8 1/4	8 3/4	9 3/16	9 3/16	9 1/16	8 3/4	8 1/4	7 9/16	6 11/16	5 11/16	4 7/16	3 1/16	1 5/8	0

* INCLUDE SLAB, BUILDUPS & STAY-IN-PLACE FORMS

ALL VALUES ARE SHOWN IN FEET (DECIMAL FORM), EXCEPT "FINAL CAMBER", WHICH IS GIVEN IN INCHES (FRACTION FORM).

SIGN CONVENTION FOR DEAD LOAD DEFLECTION + 0 -

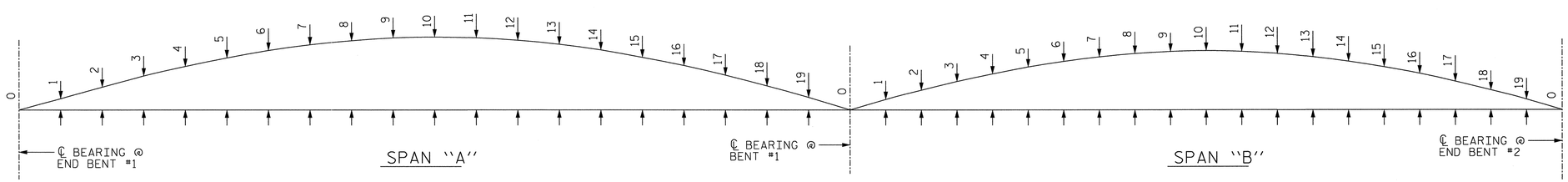

SCHEMATIC CAMBER ORDINATES

SLOPE FOR THE ZERO CAMBER BASE LINE VARIES

PROJECT NO. U-0071

DURHAM COUNTY

STATION: 85+26.52 -L-

SHEET 2 OF 2

STATE OF NORTH CAROLINA
DEPARTMENT OF TRANSPORTATION
RALEIGH

SUPERSTRUCTURE

DEAD LOAD DEFLECTION

NORTH CAROLINA PROFESSIONAL SEAL 37400 ENGINEER GREGORY M. GILLAND 12/9/12

WETHERILL ENGINEERING
559 Jones Franklin Rd. Suite 164
Raleigh, N.C. 27606
Bus: 919 851 8077
Fax: 919 851 8107
License: F-0377
TRANSPORTATION PLANNING/DESIGN - BRIDGE/STRUCTURE DESIGN
CIVIL/SITE DESIGN - GIS/GPS - CONSTRUCTION OBSERVATION

REVISIONS						SHEET NO.
NO.	BY:	DATE:	NO.	BY:	DATE:	5-173
1			3			TOTAL SHEETS
2			4			671

DRAWN BY : E.R. BONNEY DATE : 4-1-13
CHECKED BY : G.M. GILLAND DATE : 6-25-13
DESIGN ENGINEER OF RECORD: G.M. GILLAND DATE : 6-13

P:\2012\U-0071 Sites 3,8 & 9\Structures\DWG_3\U0071_SD_STR3_DD_WE1.dgn
12/10/2013 11:24:54 AM

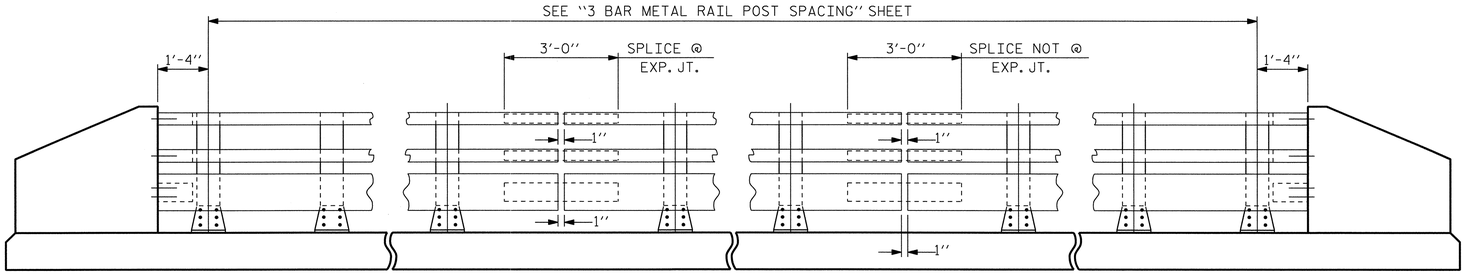

NOTE:
FOR ATTACHMENT OF METAL RAIL TO END POST, SEE "3 BAR METAL RAIL", SHEET 4 OF 4

ELEVATION

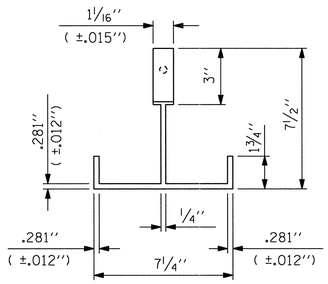

PLAN

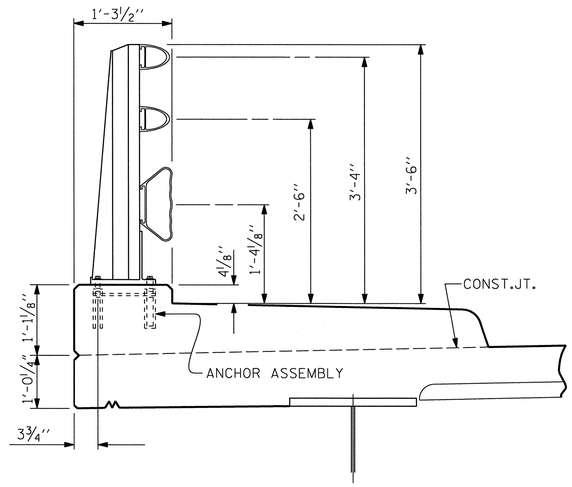

SECTION THRU RAIL

FOR ANCHOR ASSEMBLY, SEE "3 BAR METAL RAIL" SHEET 2 OF 4

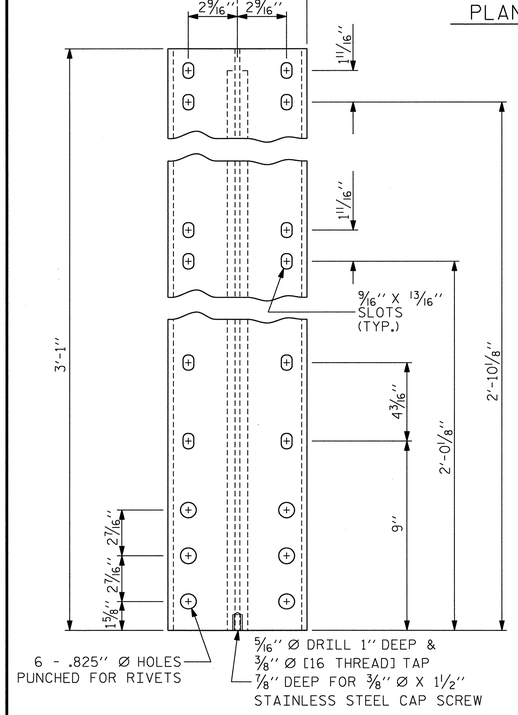

FRONT ELEVATION

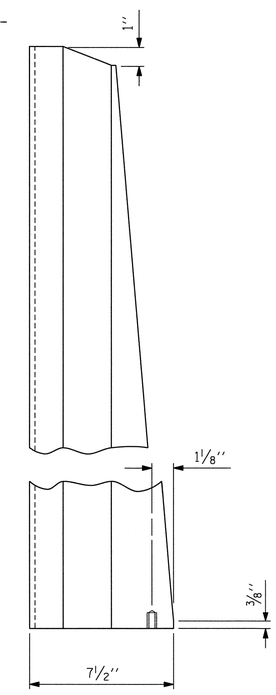

SIDE ELEVATION

DETAILS OF POST

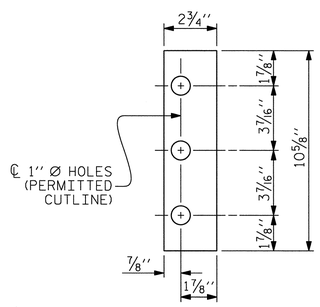

FRONT PLATE

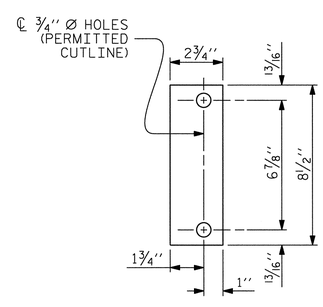

REAR PLATE

SHIM DETAILS

NOTE :
SHIMS MAY BE CUT ALONG PERMITTED CUTLINE OR SLOTTED TO EDGE OF PLATE TO FACILITATE PLACEMENT.

NOTES

AT THE CONTRACTOR'S OPTION, METAL RAIL MAY BE EITHER ALUMINUM OR GALVANIZED STEEL IN ACCORDANCE WITH THE REQUIREMENTS OF THE GENERAL NOTES AND THE FOLLOWING SPECIFICATIONS FOR THE ALTERNATE MATERIALS; HOWEVER, THE CONTRACTOR WILL BE REQUIRED TO USE THE SAME RAIL MATERIAL ON ALL STRUCTURES ON THE PROJECT FOR WHICH METAL RAIL IS DESIGNATED.

ALUMINUM RAILS

MATERIAL FOR POSTS, BASES AND RAILS, EXPANSION BARS AND CLAMP BARS SHALL BE ASTM B221 ALLOY 6061-T6.

MATERIAL FOR RIVETS SHALL BE ASTM B316 ALLOY 6061-T6. RIVETS SHALL BE STANDARD BUTTON HEAD AND CONE POINT COLD DRIVEN AS PER DRAWING.

THE BASE OF RAIL POSTS, OR ANY OTHER ALUMINUM SURFACE IN CONTACT WITH CONCRETE SHALL BE THOROUGHLY COATED WITH AN ALUMINUM IMPREGNATED CAULKING COMPOUND OF APPROVED QUALITY.

MATERIAL FOR SHIMS TO BE ASTM B209 ALLOY 6061-T6.

GALVANIZED STEEL RAILS

MATERIAL AND GALVANIZING ARE TO CONFORM TO THE FOLLOWING SPECIFICATIONS:

POST, POST BASES, RAILS, EXPANSION BARS AND CLAMP BARS : AASHTO M270 GRADE 36 STRUCTURAL STEEL - GALVANIZED TO AASHTO M111.

RIVETS: RIVETS SHALL MEET THE REQUIREMENTS OF ASTM A502 FOR GRADE 1 RIVETS.

THE CUT ENDS OF GALVANIZED STEEL RAILING, AFTER GRINDING SMOOTH SHALL BE GIVEN TWO COATS OF ZINC RICH PAINT MEETING THE REQUIREMENTS OF FEDERAL SPECIFICATION MIL-P-26915 USAF TYPE 1, OR OF FEDERAL SPECIFICATIONS TT-P-641.

SHIMS: SHIMS SHALL MEET THE REQUIREMENTS OF ASTM A570 FOR GRADE 33 OR A611 FOR GRADE C AND SHALL BE GALVANIZED IN ACCORDANCE WITH AASHTO M111.

RAIL CAPS: RAIL CAPS SHALL MEET THE REQUIREMENTS OF ASTM A570 FOR GRADE 33 OR A611 FOR GRADE C AND SHALL BE GALVANIZED IN ACCORDANCE WITH AASHTO M111.

GENERAL NOTES

RAILING SHALL BE CONTINUOUS FROM END POST TO END POST OF BRIDGE. EACH JOINT IN RAIL LENGTH SHALL BE SPLICED AS DETAILED. PANEL LENGTHS OF RAIL SHALL BE ATTACHED TO A MINIMUM OF THREE POSTS. PLACE ONE JOINT SPLICE JUST BEYOND THE 3RD RAIL POST FROM EACH END, TYPICALLY 14' FROM THE END. PLACE OTHER JOINTS AS NEEDED.

FOR END OF RAIL TO CLEAR FACE OF CONCRETE END POST DIMENSION, SEE STANDARD NO. BMR7.

CAP SCREWS SHALL BE ASTM F593 ALLOY 305 STAINLESS STEEL. WASHERS FOR RAIL ATTACHMENT SHALL MEET THE REQUIREMENTS OF ASTM F844 EXCEPT THEY SHALL BE MADE FROM ALLOY 304 STAINLESS STEEL.

CERTIFIED MILL REPORTS ARE REQUIRED FOR RAILS AND POSTS. SHOP INSPECTION IS NOT REQUIRED.

METAL RAIL POSTS SHALL BE SET NORMAL TO CURB GRADE.

METHOD OF MEASUREMENT FOR METAL RAILS: FOR LENGTH OF METAL RAILS TO BE PAID FOR, SEE THE STANDARD SPECIFICATIONS.

CURVED RAIL USAGE: WHERE RAILS ARE TO BE USED ON BRIDGES ON HORIZONTAL AND/OR VERTICAL CURVATURE THE CONTRACTOR MAY, AT HIS OPTION, HAVE THE REQUIRED CURVATURE IN THE RAIL FORMED IN THE SHOP OR IN THE FIELD. IN EITHER EVENT, THE RAIL SHALL CONFORM WITHOUT BUCKLING OR KINKING TO THE REQUIRED CURVATURE IN A UNIFORM MANNER ACCEPTABLE TO THE ENGINEER.

TO INSURE FUTURE IDENTIFICATION OF THE FABRICATOR, A PERMANENT IDENTIFYING MARK SHALL BE PLACED ON EACH POST. THE METHOD OF MARKING AND LOCATION SHALL BE SUCH THAT IT DOES NOT DETRACT FROM THE APPEARANCE OF THE POST, BUT REMAIN VISIBLE AFTER RAIL PLACEMENT.

SHIMS SHALL BE USED AS NECESSARY FOR POST ALIGNMENT.

ALLOY 6351-T5 MAY BE SUBSTITUTED FOR ALLOY 6061-T6 WHERE APPLICABLE.

MINOR VARIATIONS IN DETAILS OF METAL RAIL WILL BE CONSIDERED. DETAILS OF SUCH VARIATIONS, IF DESIRED, SHALL BE SUBMITTED FOR APPROVAL.

PAY LENGTH = 521.0 LIN.FT.

PROJECT NO. U-0071
DURHAM COUNTY
STATION: 85+26.52 -L-

SHEET 1 OF 4

STATE OF NORTH CAROLINA
DEPARTMENT OF TRANSPORTATION
RALEIGH

STANDARD

3 BAR METAL RAIL

ASSEMBLED BY : J.M. BRITT		DATE : 5-1-13	
CHECKED BY : G.M. GILLAND		DATE : 6-10-13	
DESIGN ENGINEER OF RECORD: GMG		DATE : 6-13	
DRAWN BY : JMB 1/88	REV. 5/7/03	RWW/JTE	
CHECKED BY : GGH 1/88	REV. 5/1/06	TLA/GM	
	REV. 10/1/11	MAA/GM	

NORTH CAROLINA PROFESSIONAL SEAL 037400 ENGINEER GREGORY M. GILLAND 12/10/13

WETHERILL ENGINEERING
559 Jones Franklin Rd. Suite 164
Raleigh, N.C. 27606
Bus: 919 851 8077
Fax: 919 851 8107
License: F-0377

TRANSPORTATION PLANNING/DESIGN - BRIDGE/STRUCTURE DESIGN
CIVIL/SITE DESIGN - GIS/GPS - CONSTRUCTION OBSERVATION

REVISIONS								SHEET NO.
NO.	BY:	DATE:	NO.	BY:	DATE:			5-174
1			3					TOTAL SHEETS
2			4					671

P:\2012\U-0071 Sites 3,8 & 9\Structures\DWG_3\U0071_SD_STR3_3BAR_WE1.dgn
12/10/2013 11:29:59 AM

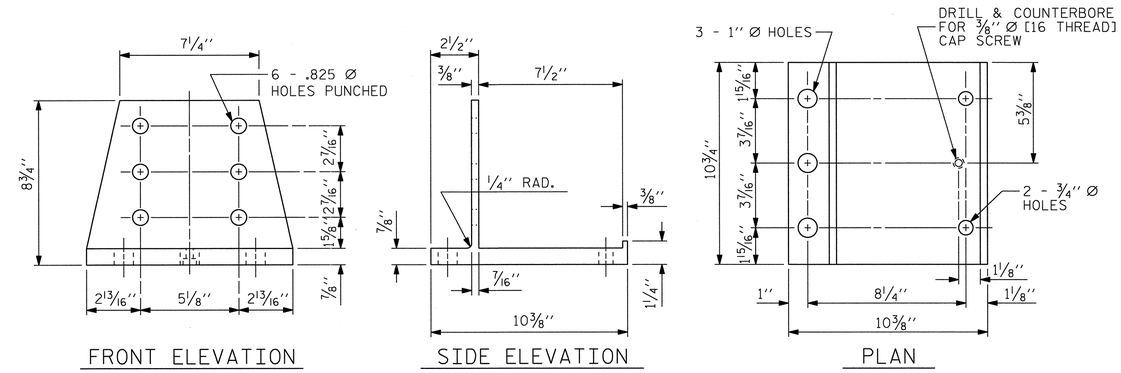

POST BASE DETAILS

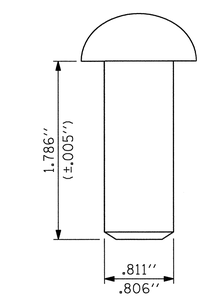

RIVET DETAIL

NOTES

STRUCTURAL CONCRETE ANCHOR ASSEMBLY

THE STRUCTURAL CONCRETE ANCHOR ASSEMBLY SHALL CONSIST OF THE FOLLOWING COMPONENTS:

A. FERRULES SHALL BE MADE FROM STEEL MEETING THE REQUIREMENTS OF AASHTO M169, GRADE 12L14 AND SHALL HAVE A MINIMUM LENGTH OF THREADS OF 2'' FOR 3/4'' FERRULES AND 1 3/4'' FOR 5/8'' FERRULES.

B. 3 - 3/4'' Ø X 2 1/2'' BOLTS WITH WASHERS. BOLTS SHALL CONFORM TO THE REQUIREMENTS OF ASTM A307. BOLTS AND WASHERS SHALL BE GALVANIZED. AT THE CONTRACTOR'S OPTION, STAINLESS STEEL BOLTS AND WASHERS MAY BE USED AS AN ALTERNATE FOR THE 3/4'' Ø X 2 1/2'' GALVANIZED BOLTS AND WASHERS. THEY SHALL CONFORM TO OR EXCEED THE MECHANICAL REQUIREMENTS OF ASTM A307. THE USE OF THIS ALTERNATE SHALL BE APPROVED BY THE ENGINEER.

C. 2 - 5/8'' Ø X 2 1/4'' BOLTS WITH WASHERS. BOLTS SHALL CONFORM TO THE REQUIREMENTS OF ASTM A307. BOLTS AND WASHERS SHALL BE GALVANIZED. AT THE CONTRACTOR'S OPTION, STAINLESS STEEL BOLTS AND WASHERS MAY BE USED AS AN ALTERNATE FOR THE 5/8'' Ø X 2 1/4'' GALVANIZED BOLTS AND WASHERS. THEY SHALL CONFORM TO OR EXCEED THE MECHANICAL REQUIREMENTS OF ASTM A307. THE USE OF THIS ALTERNATE SHALL BE APPROVED BY THE ENGINEER.

D. WIRE STRUT SHOWN IN THE CONCRETE ANCHOR ASSEMBLY DETAIL IS THE MINIMUM ALLOWABLE SIZE AND SHALL HAVE A MINIMUM TENSILE STRENGTH OF 100,000 PSI. AS AN OPTION, A 7/16'' Ø WIRE STRUT WITH A MINIMUM TENSILE STRENGTH OF 90,000 PSI IS ACCEPTABLE.

E. THE METAL RAIL ANCHOR ASSEMBLIES TO BE HOT DIPPED GALVANIZED TO CONFORM TO REQUIREMENTS OF AASHTO M111.

F. THE COST OF THE METAL RAIL ANCHOR ASSEMBLY WITH BOLTS AND WASHERS COMPLETE IN PLACE SHALL BE INCLUDED IN THE PRICE BID FOR LINEAR FEET OF METAL RAIL.

G. BOLTS TO BE TIGHTENED ONE-HALF TURN WITH A WRENCH FROM A FINGER-TIGHT POSITION.

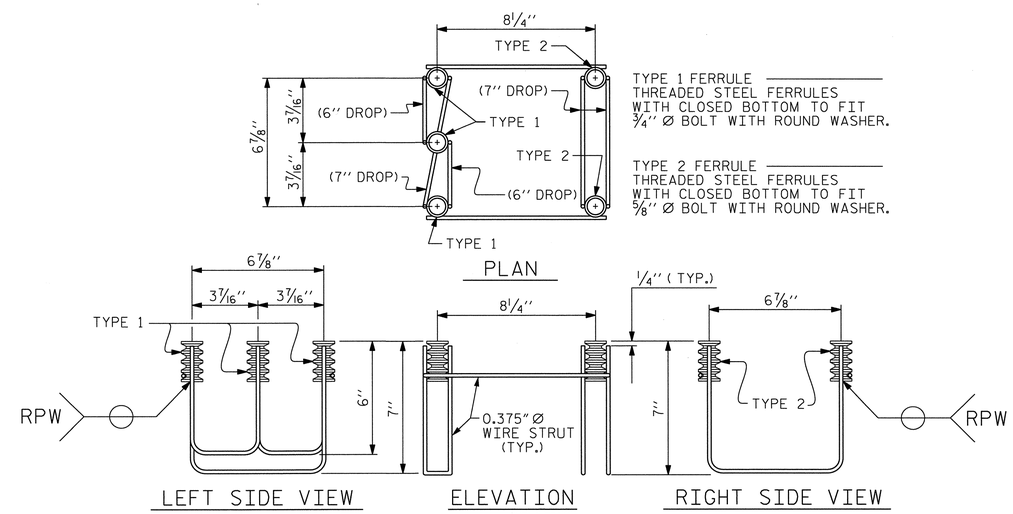

5-BOLT METAL RAIL ANCHOR ASSEMBLY

(86 ASSEMBLIES REQUIRED)

PROJECT NO. U-0071

DURHAM COUNTY

STATION: 85+26.52 -L-

SHEET 2 OF 4

STATE OF NORTH CAROLINA
DEPARTMENT OF TRANSPORTATION
RALEIGH

STANDARD

3 BAR METAL RAIL

ASSEMBLED BY : J.M. BRITT		DATE : 5-1-13	
CHECKED BY : G.M. GILLAND		DATE : 6-10-13	
DESIGN ENGINEER OF RECORD: GMG		DATE : 6-13	
DRAWN BY : JMB 1/88	REV. 5/7/03	RWW/JTE	
CHECKED BY : GGH 1/88	REV. 5/1/06	TLA/GM	
	REV. 10/1/11	MAA/GM	

NORTH CAROLINA PROFESSIONAL SEAL 37400 ENGINEER GREGORY M. GILLAND 12/4/13

WETHERILL ENGINEERING
559 Jones Franklin Rd. Suite 164
Raleigh, N.C. 27606
Bus: 919 851 8077
Fax: 919 851 8107
License: F-0377
TRANSPORTATION PLANNING/DESIGN - BRIDGE/STRUCTURE DESIGN
CIVIL/SITE DESIGN - GIS/GPS - CONSTRUCTION OBSERVATION

REVISIONS								SHEET NO.
NO.	BY:	DATE:	NO.	BY:	DATE:			5-175
1			3					TOTAL SHEETS
2			4					671

P:\2012\U-0071_Sites 3,8 & 9\Structures\DWG_3\U0071_SD_STR3_3BAR_WE1.dgn
12/10/2013 11:30:10 AM

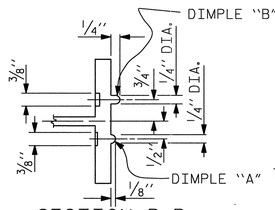

SECTION B-B

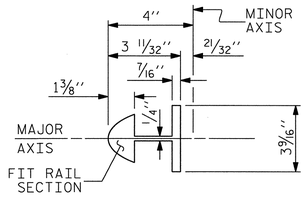

BAR SECTION

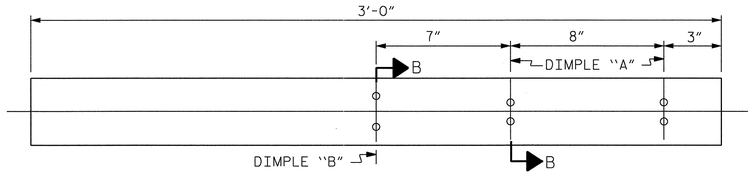

BACK ELEVATION

TOP & MIDDLE RAIL EXPANSION BAR

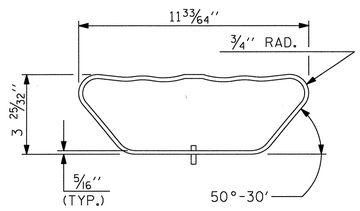

END VIEW

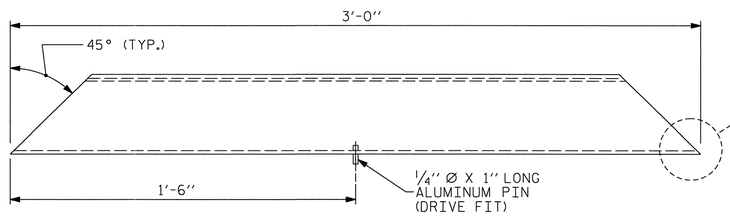

PLAN VIEW

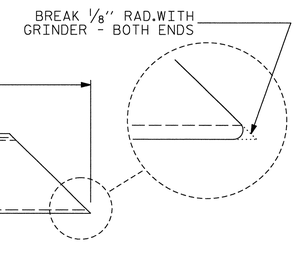

BOTTOM RAIL EXPANSION BAR

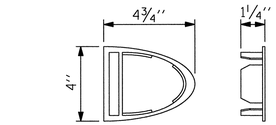

TOP & MIDDLE RAIL CAP

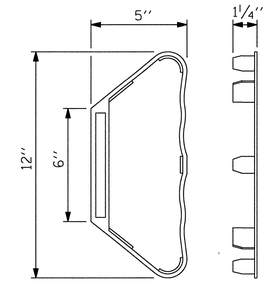

BOTTOM RAIL CAP

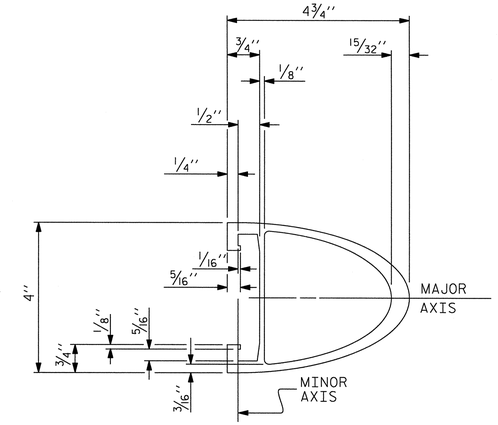

TOP & MIDDLE RAIL SECTION

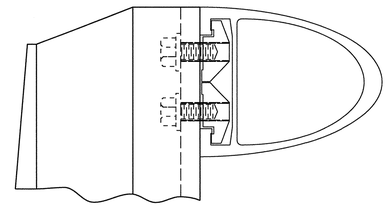

CLAMP ASSEMBLY

TOP RAIL SHOWN
(MIDDLE & BOTTOM RAIL ARE SIMILAR)

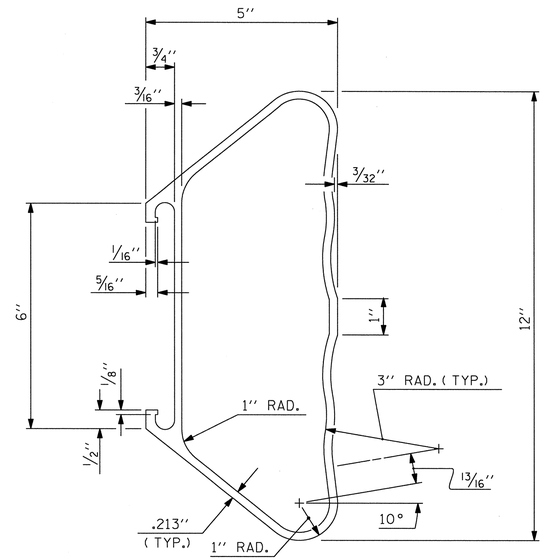

BOTTOM RAIL SECTION

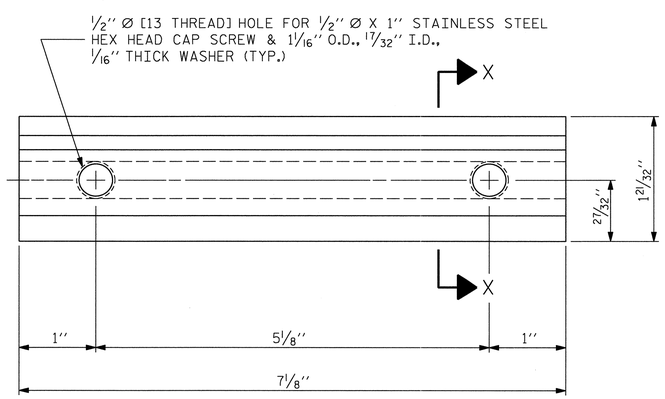

ELEVATION

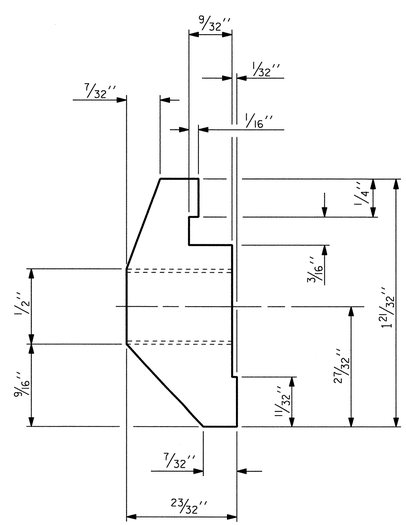

SECTION X-X

CLAMP BAR DETAIL

(6 REQUIRED PER POST)

PROJECT NO. U-0071
DURHAM COUNTY
STATION: 85+26.52 -L-

SHEET 3 OF 4

STATE OF NORTH CAROLINA
DEPARTMENT OF TRANSPORTATION
RALEIGH

STANDARD

3 BAR METAL RAIL

ASSEMBLED BY : J.M. BRITT		DATE : 5-1-13	
CHECKED BY : G.M. GILLAND		DATE : 6-10-13	
DESIGN ENGINEER OF RECORD: GMG		DATE : 6-13	
DRAWN BY : JMB 1/88	REV. 5/7/03	RWW/JTE	
CHECKED BY : GGH 1/88	REV. 5/1/06	TLA/GM	
	REV. 10/1/11	MAA/GM	

NORTH CAROLINA PROFESSIONAL SEAL 37400 ENGINEER GREGORY M. GILLAND 12/9/13

WETHERILL ENGINEERING
559 Jones Franklin Rd. Suite 164
Raleigh, N.C. 27606
Bus: 919 851 8077
Fax: 919 851 8107
License: F-0377
TRANSPORTATION PLANNING/DESIGN - BRIDGE/STRUCTURE DESIGN
CIVIL/SITE DESIGN - GIS/GPS - CONSTRUCTION OBSERVATION

REVISIONS						SHEET NO.
NO.	BY:	DATE:	NO.	BY:	DATE:	S-176
1			3			TOTAL SHEETS
2			4			671

P:\2012\U-0071 Sites 3,8 & 9\Structures\DWG_3\U0071_SD_STR3_3BAR_WE1.dgn
12/10/2013 11:30:21 AM

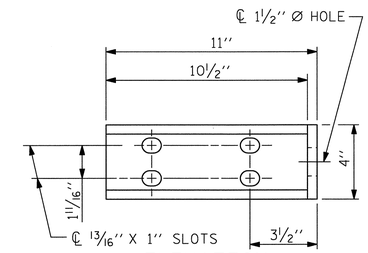

ELEVATION

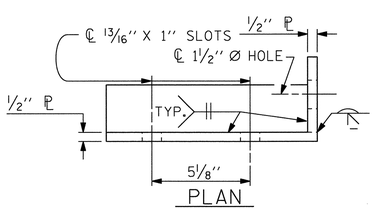

PLAN

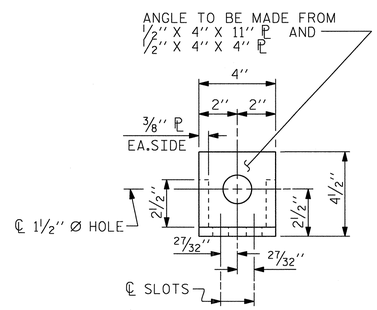

END VIEW
(FIX. AND EXP.)

DETAILS FOR ATTACHMENT BRACKET

(TOP & MIDDLE RAIL ONLY)

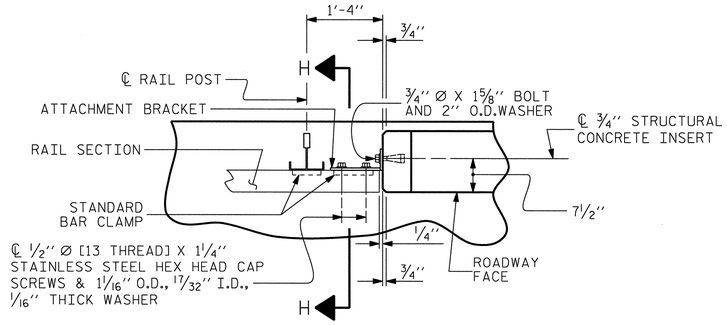

PLAN OF RAIL AND END POST

(STIFFENER ON ½'' ℙ NOT SHOWN FOR CLARITY)

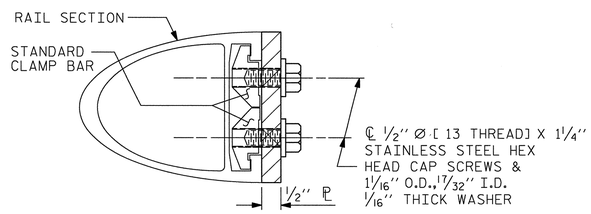

SECTION H-H

(FOR TOP & MIDDLE RAIL)

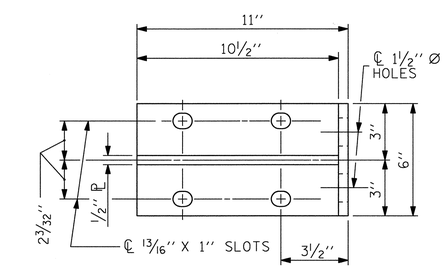

ELEVATION

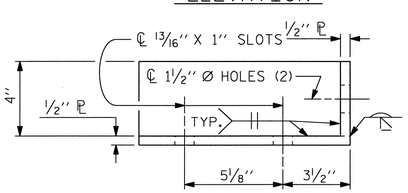

PLAN

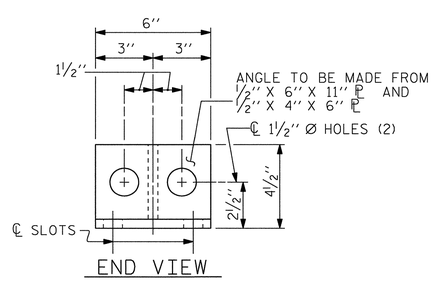

END VIEW

DETAILS FOR ATTACHMENT BRACKET

(BOTTOM RAIL ONLY)

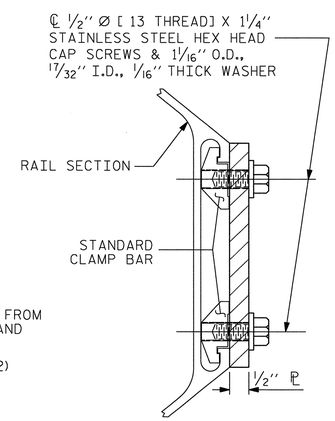

SECTION H-H

(FOR BOTTOM RAIL)

NOTES

METAL RAIL TO END POST CONNECTION

THE METAL RAIL TO END POST CONNECTION SHALL CONSIST OF THE FOLLOWING COMPONENTS:

A. ½'' PLATES SHALL CONFORM TO AASHTO M270 GRADE 36 AND SHALL BE GALVANIZED AFTER FABRICATION.

B. ¾'' STRUCTURAL CONCRETE INSERT SHALL HAVE A WORKING LOAD SHEAR CAPACITY OF 4800 LBS. THE FERRULES SHALL ENGAGE A ¾'' Ø X 1⅝'' BOLT WITH 2'' O.D. WASHER IN PLACE. THE ¾'' Ø X 1⅝'' BOLT SHALL HAVE N. C. THREADS.

C. CAP SCREWS FOR RAIL ATTACHMENT TO ANGLE SHALL CONFORM TO THE REQUIREMENTS OF ASTM F593 ALLOY 305 STAINLESS STEEL. CAP SCREWS TO BE CENTERED IN SLOTS AT 60°F. WASHERS FOR RAIL ATTACHMENT SHALL MEET THE REQUIREMENTS OF ASTM F844 EXCEPT THEY SHALL BE MADE FROM ALLOY 304 STAINLESS STEEL.

D. STANDARD CLAMP BARS (STD. No. BMR6).

THE COST OF THE STANDARD CLAMP BARS AND CAP SCREWS USED IN THE METAL RAIL TO END POST CONNECTION SHALL BE INCLUDED IN THE UNIT CONTRACT PRICE BID FOR LINEAR FEET OF 3 BAR METAL RAIL.

THE ¾'' STRUCTURAL CONCRETE INSERT WITH BOLT SHALL BE ASSEMBLED IN THE SHOP.

THE COST OF THE ¾'' STRUCTURAL CONCRETE INSERT ASSEMBLY, AND THE ½'' PLATES COMPLETE IN PLACE SHALL BE INCLUDED IN THE VARIOUS PAY ITEMS.

THE CONTRACTOR, AT HIS OPTION, MAY USE AN ADHESIVE BONDING SYSTEM IN LIEU OF THE STRUCTURAL CONCRETE INSERT EMBEDDED IN THE END POST. IF THE ADHESIVE BONDING SYSTEM IS USED, THE ¾'' Ø X 1⅝'' BOLT WITH WASHER SHALL BE REPLACED WITH A ¾'' Ø X 6 ½'' BOLT AND 2'' O.D.WASHER. ALL SPECIFICATIONS THAT APPLY TO THE ¾'' Ø X 1⅝'' BOLT SHALL APPLY TO THE ¾'' Ø X 6 ½'' BOLT. FIELD TESTING OF THE ADHESIVE BONDING SYSTEM IS NOT REQUIRED.

NOTES

STRUCTURAL CONCRETE INSERT

THE STRUCTURAL CONCRETE INSERT ASSEMBLY SHALL CONSIST OF THE FOLLOWING COMPONENTS:

A. FERRULES SHALL BE MADE FROM STEEL MEETING THE REQUIREMENTS OF AASHTO M169, GRADE 12L14 AND SHALL HAVE A MINIMUM LENGTH OF THREADS OF 1½''.

B. 1 - ¾'' Ø X 1⅝'' BOLT WITH WASHER. BOLT SHALL CONFORM TO THE REQUIREMENTS OF ASTM A307. BOLT AND WASHER SHALL BE GALVANIZED. AT THE CONTRACTORS OPTION, STAINLESS STEEL BOLT AND WASHER MAY BE USED AS AN ALTERNATE FOR THE ¾'' Ø X 1⅝'' GALVANIZED BOLT AND WASHER. THEY SHALL CONFORM TO OR EXCEED THE MECHANICAL REQUIREMENTS OF ASTM A307. THE USE OF THIS ALTERNATE SHALL BE APPROVED BY THE ENGINEER.

C. WIRE STRUT SHOWN IN THE CONCRETE INSERT ASSEMBLY DETAIL IS THE MINIMUM ALLOWABLE SIZE AND SHALL HAVE A MINIMUM TENSILE STRENGTH OF 100,000 PSI. AS AN OPTION, A 7/16'' Ø WIRE STRUT WITH A MINIMUM TENSILE STRENGTH OF 90,000 PSI IS ACCEPTABLE.

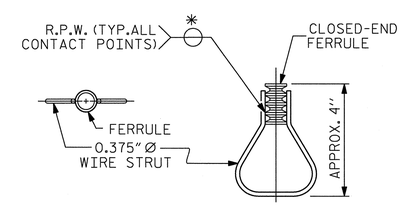

PLAN ELEVATION

STRUCTURAL CONCRETE INSERT

* EACH WELDED ATTACHMENT OF WIRE TO FERRULE SHALL DEVELOP THE TENSILE STRENGTH OF THE WIRE.

PROJECT NO. U-0071
DURHAM COUNTY
STATION: 85+26.52 -L-

SHEET 4 OF 4

STATE OF NORTH CAROLINA
DEPARTMENT OF TRANSPORTATION
RALEIGH

STANDARD

3 BAR METAL RAIL

ASSEMBLED BY : J.M. BRITT	DATE : 5-1-13
CHECKED BY : G.M. GILLAND	DATE : 6-10-13
DESIGN ENGINEER OF RECORD: GMG	DATE : 6-13

DRAWN BY :	JMB	1/88	REV. 5/7/03 RWW/JTE
CHECKED BY :	GGH	1/88	REV. 5/1/06 TLA/GM
			REV. 10/1/11 MAA/GM

NORTH CAROLINA PROFESSIONAL SEAL 37400 ENGINEER GREGORY M. GILLAND 12/10/13

WETHERILL ENGINEERING
559 Jones Franklin Rd. Suite 164
Raleigh, N.C. 27606
Bus: 919 851 8077
Fax: 919 851 8107
License: F-0377
TRANSPORTATION PLANNING/DESIGN - BRIDGE/STRUCTURE DESIGN
CIVIL/SITE DESIGN - GIS/GPS - CONSTRUCTION OBSERVATION

REVISIONS								SHEET NO.
NO.	BY:	DATE:	NO.	BY:	DATE:			5-177
1			3					TOTAL SHEETS
2			4					671

P:\2012\U-0071_Sites 3,8 & 9\Structures\DWG_3\U0071_SD_STR3_3BAR_WE1.dgn
12/10/2013 11:30:29 AM

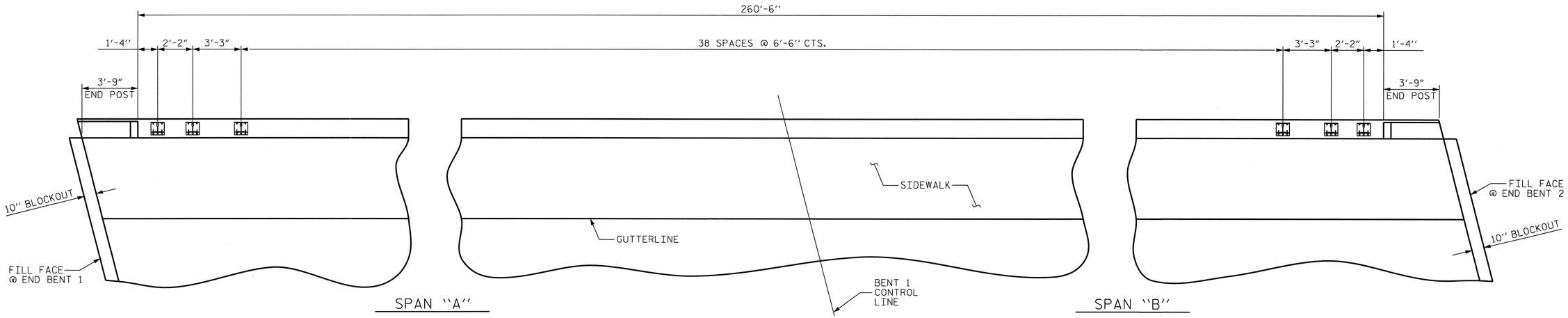

PLAN OF 3 BAR METAL RAIL POST SPACING

(LEFT SIDE SHOWN, RIGHT SIDE SIMILAR)

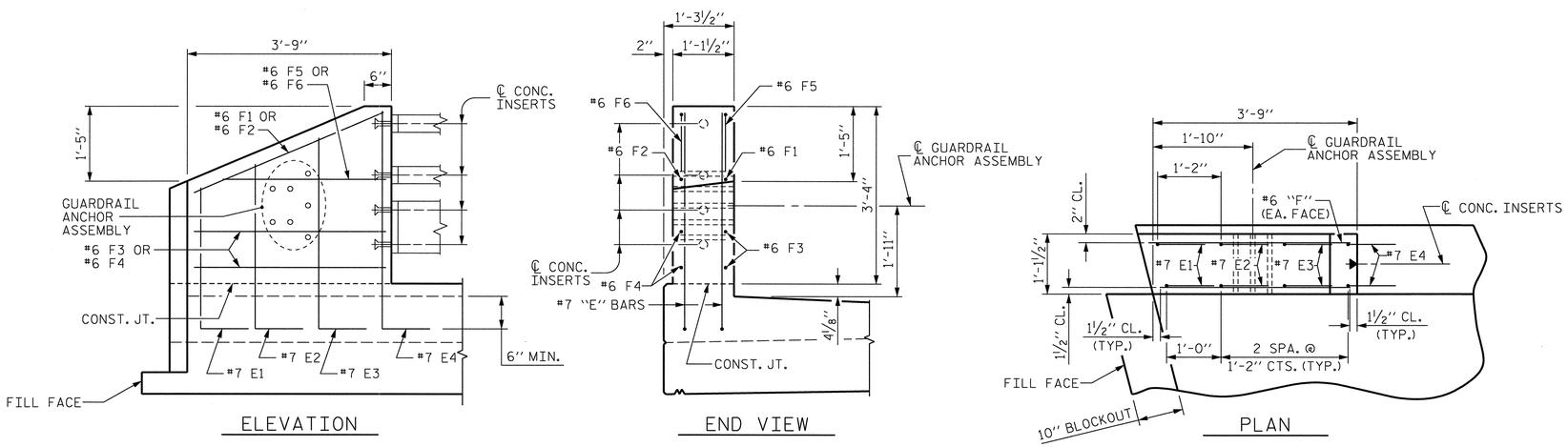

END POST FOR THREE BAR METAL RAIL

(LEFT SIDE OF END BENT 1 SHOWN, OTHER CORNERS SIMILAR)

PROJECT NO. U-0071

DURHAM COUNTY

STATION: 85+26.52 -L-

STATE OF NORTH CAROLINA
DEPARTMENT OF TRANSPORTATION
RALEIGH

SUPERSTRUCTURE

3 BAR METAL RAIL POST SPACING

NORTH CAROLINA PROFESSIONAL SEAL 37400 ENGINEER GREGORY M. GILLAND 12/9/13

WETHERILL ENGINEERING

559 Jones Franklin Rd. Suite 164
Raleigh, N.C. 27606
Bus: 919 851 8077
Fax: 919 851 8107
License: F-0377

TRANSPORTATION PLANNING/DESIGN - BRIDGE/STRUCTURE DESIGN
CIVIL/SITE DESIGN - GIS/GPS - CONSTRUCTION OBSERVATION

REVISIONS						SHEET NO.
NO.	BY:	DATE:	NO.	BY:	DATE:	5-178
1			3			TOTAL SHEETS
2			4			671

DRAWN BY : J.M. BRITT DATE : 5-1-13
CHECKED BY : G.M. GILLAND DATE : 6-12-13
DESIGN ENGINEER OF RECORD: G.M. GILLAND DATE : 6-13

P:\2012\U-0071 Sites 3,8 & 9\Structures\DWG_3\U0071_SD_STR3_3BAR_WE1.dgn
12/10/2013 11:30:50 AM

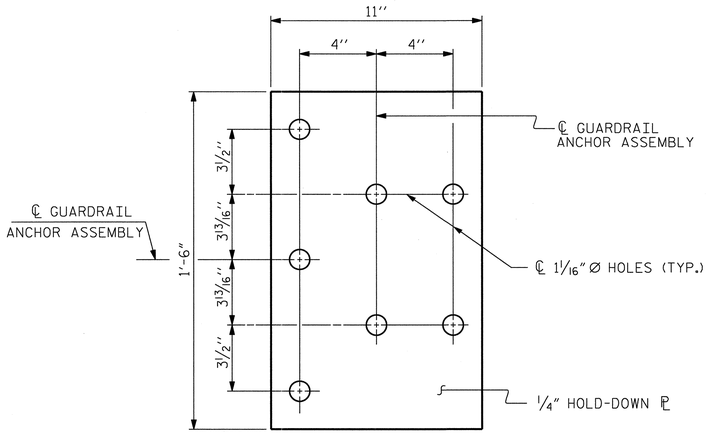

PLAN

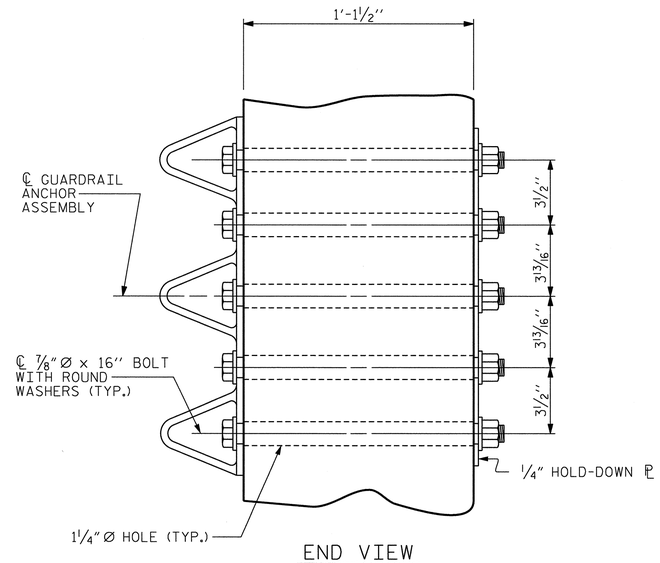

END VIEW

GUARDRAIL ANCHOR ASSEMBLY DETAILS

NOTES

THE GUARDRAIL ANCHOR ASSEMBLY SHALL CONSIST OF A 1/4'' HOLD DOWN PLATE AND 7 - 7/8'' Ø BOLTS WITH NUTS AND WASHERS.

THE HOLD-DOWN PLATE SHALL CONFORM TO AASHTO M270 GRADE 36. AFTER FABRICATION, THE HOLD-DOWN PLATE SHALL BE HOT-DIP GALVANIZED IN ACCORDANCE WITH AASHTO M111.

BOLTS SHALL CONFORM TO THE REQUIREMENTS OF ASTM A307 AND NUTS SHALL CONFORM TO THE REQUIREMENTS OF AASHTO M291. BOLTS, NUTS AND WASHERS SHALL BE GALVANIZED. AT THE CONTRACTOR'S OPTION, STAINLESS STEEL BOLTS, NUTS AND WASHERS MAY BE USED AS AN ALTERNATE FOR THE 7/8'' Ø GALVANIZED BOLTS, NUTS AND WASHERS. THEY SHALL CONFORM TO OR EXCEED THE MECHANICAL REQUIREMENTS OF ASTM A307. THE USE OF THIS ALTERNATE SHALL BE APPROVED BY THE ENGINEER.

THE GUARDRAIL ANCHOR ASSEMBLY IS REQUIRED AT ALL POINTS WHERE APPROACH GUARDRAIL IS TO BE ATTACHED TO THE END OF THE PARAPET. FOR POINTS OF ATTACHMENT, SEE SKETCH.

AFTER INSTALLATION, THE EXPOSED THREAD OF THE BOLT SHALL BE BURRED WITH A SHARP POINTED TOOL.

THE COST OF THE GUARDRAIL ANCHOR ASSEMBLIES WITH BOLTS, NUTS AND WASHERS COMPLETE IN PLACE, SHALL BE INCLUDED IN THE VARIOUS PAY ITEMS.

THE VERTICAL REINFORCING BARS MAY BE SHIFTED SLIGHTLY IN THE END POST TO CLEAR ASSEMBLY BOLTS.

THE 1 1/4'' Ø HOLES SHALL BE FORMED OR DRILLED WITH A CORE BIT. IMPACT TOOLS WILL NOT BE PERMITTED. ANY CONCRETE DAMAGED BY THIS WORK SHALL BE REPAIRED TO THE SATISFACTION OF THE ENGINEER.

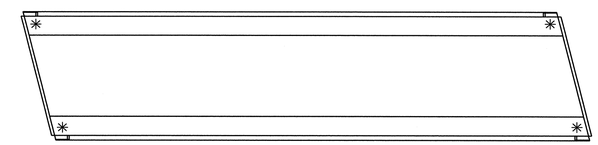

SKETCH SHOWING POINTS OF ATTACHMENT

✳ LOCATION OF GUARDRAIL ATTACHMENT

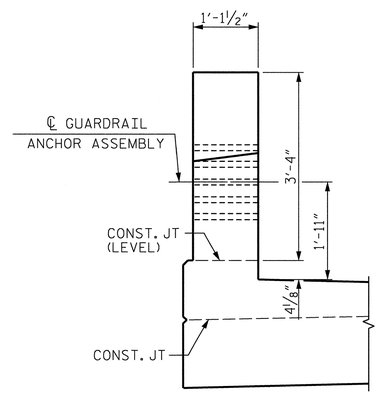

END VIEW

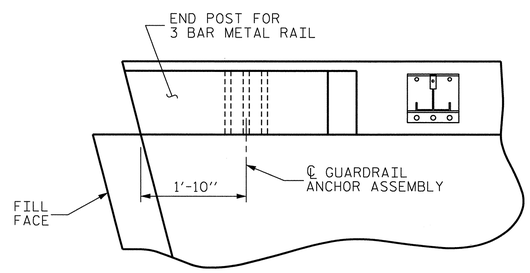

PLAN VIEW

LOCATION OF GUARDRAIL ANCHOR AT END POST

PROJECT NO. U-0071
DURHAM COUNTY
STATION: 85+26.52 -L-

STATE OF NORTH CAROLINA
DEPARTMENT OF TRANSPORTATION
RALEIGH

STANDARD
GUARDRAIL ANCHORAGE DETAILS FOR METAL RAILS

REVISIONS						SHEET NO.
NO.	BY:	DATE:	NO.	BY:	DATE:	5-179
1			3			TOTAL SHEETS
2			4			671

NORTH CAROLINA PROFESSIONAL SEAL 37400 ENGINEER GREGORY M. GILLAND 12/10/12

WETHERILL ENGINEERING
559 Jones Franklin Rd. Suite 164
Raleigh, N.C. 27606
Bus: 919 851 8077
Fax: 919 851 8107
License: F-0377

TRANSPORTATION PLANNING/DESIGN - BRIDGE/STRUCTURE DESIGN
CIVIL/SITE DESIGN - GIS/GPS - CONSTRUCTION OBSERVATION

ASSEMBLED BY : J.M. BRITT	DATE : 5-2-13
CHECKED BY : G.M. GILLAND	DATE : 6-12-13
DESIGN ENGINEER OF RECORD: GMG	DATE : 6-13
DRAWN BY : MAA 5/10	ADDED 5/6/10
CHECKED BY : GM 5/10	REV. 10/1/11 MAA/GM
	REV. 12/5/11 MAA/GM

P:\2012\U-0071 Sites 3,8 & 9\Structures\DWG_3\U0071_SD_STR3_GRA_WE1.dgn
12/10/2013 12:09:40 PM

SUPERSTRUCTURE REINFORCING STEEL LENGTHS ARE BASED ON THE FOLLOWING MINIMUM SPLICE LENGTHS					
BAR SIZE	SUPERSTRUCTURE EXCEPT APPROACH SLABS, PARAPET, AND BARRIER RAIL		APPROACH SLABS		PARAPET AND BARRIER RAIL
	EPOXY COATED	UNCOATED	EPOXY COATED	UNCOATED	
#4	2'-0"	1'-9"	2'-0"	1'-9"	2'-9"
#5	2'-6"	2'-2"	2'-6"	2'-2"	3'-5"
#6	3'-0"	2'-7"	3'-10"	2'-7"	4'-4"
#7	5'-3"	3'-6"			
#8	6'-10"	4'-7"			

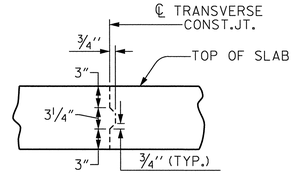

TRANSVERSE CONSTRUCTION JOINT DETAIL

NOTE: SLAB REINFORCING STEEL SHALL BE CONTINUOUS THRU JOINT

CLASS AA CONCRETE BREAKDOWN		
POUR #1	121.9	CY
POUR #2	294.7	CY
POUR #3A	61.8	CY
POUR #3B	62.7	CY
CLASS AA CONCRETE BREAKDOWN TOTAL	541.1	CY

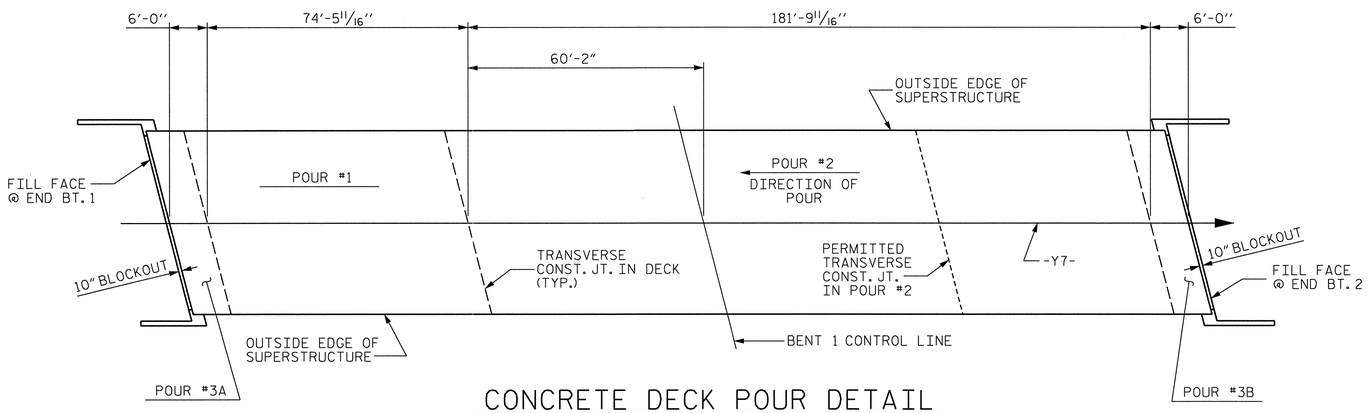

CONCRETE DECK POUR DETAIL

NOTE :
EACH POUR #3 INCLUDES UPPER PART OF THE INTEGRAL END BENT AND UPPER PART OF THE WINGS.

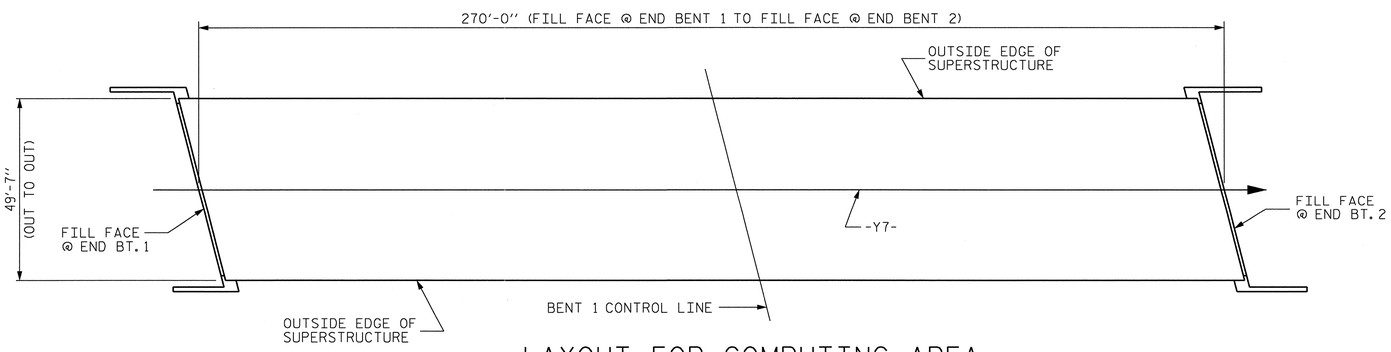

LAYOUT FOR COMPUTING AREA REINFORCED CONCRETE DECK SLAB (SQ. FT. = 13,388)

REINFORCING BAR SCHEDULE

SPAN "A-B"

BAR	No.	SIZE	TYPE	LENGTH	WEIGHT
✱A1	558	#5	STR	49'-3"	28663
A2	558	#5	STR	49'-3"	28663
✱A101	4	#5	STR	46'-2"	193
✱A102	4	#5	STR	42'-6"	177
✱A103	4	#5	STR	38'-10"	162
✱A104	4	#5	STR	35'-2"	147
✱A105	4	#5	STR	31'-6"	131
✱A106	4	#5	STR	27'-11"	116
✱A107	4	#5	STR	24'-3"	101
✱A108	4	#5	STR	20'-7"	86
✱A109	4	#5	STR	16'-11"	71
✱A110	4	#5	STR	13'-3"	55
✱A111	4	#5	STR	9'-7"	40
✱A112	4	#5	STR	5'-11"	25
✱A113	4	#5	STR	2'-3"	9
A201	4	#5	STR	46'-2"	193
A202	4	#5	STR	42'-6"	177
A203	4	#5	STR	38'-10"	162
A204	4	#5	STR	35'-2"	147
A205	4	#5	STR	31'-6"	131
A206	4	#5	STR	27'-11"	116
A207	4	#5	STR	24'-3"	101
A208	4	#5	STR	20'-7"	86
A209	4	#5	STR	16'-11"	71
A210	4	#5	STR	13'-3"	55
A211	4	#5	STR	9'-7"	40
A212	4	#5	STR	5'-11"	25
A213	4	#5	STR	2'-3"	9
✱B1	66	#7	STR	27'-10"	3755
✱B2	66	#7	STR	60'-0"	8094
✱B3	66	#7	STR	22'-0"	2968
✱B4	66	#7	STR	25'-3"	3406
✱B5	102	#4	STR	27'-0"	1840
✱B6	102	#4	STR	24'-6"	1669
B7	320	#5	STR	55'-4"	18468
✱B8	120	#4	STR	28'-8"	2298
✱E1	8	#7	4	3'-5"	56
✱E2	8	#7	4	4'-0"	65
✱E3	8	#7	4	4'-7"	75
✱E4	8	#7	4	5'-1"	83
✱F1	4	#6	STR	3'-1"	19
✱F2	4	#6	STR	3'-3"	20
✱F3	8	#6	STR	3'-5"	41
✱F4	8	#6	STR	3'-7"	43
✱F5	4	#6	STR	3'-4"	20
✱F6	4	#6	STR	3'-6"	21
✱G1	534	#4	STR	6'-3"	2229
H1	13	#6	5	19'-0"	371
H2	13	#6	5	18'-9"	366
H3	12	#6	6	15'-11"	287
H4	12	#6	6	16'-2"	291
H5	13	#6	6	19'-3"	376
H6	13	#6	6	19'-6"	381
H7	14	#6	5	17'-9"	373
H8	14	#6	5	17'-6"	368
K1	48	#4	STR	29'-5"	943
K2	20	#4	STR	2'-9"	37
✱S1	72	#4	1	10'-8"	513
✱S2	72	#4	1	11'-11"	573
U1	84	#4	2	13'-6"	758
U2	12	#4	2	14'-8"	118
✱U3	156	#4	3	3'-4"	347

REINFORCING STEEL 53,133 LBS.

✱ EPOXY COATED REINFORCING STEEL 58,111 LBS.

✱ THESE BARS ARE EPOXY COATED

BAR TYPES

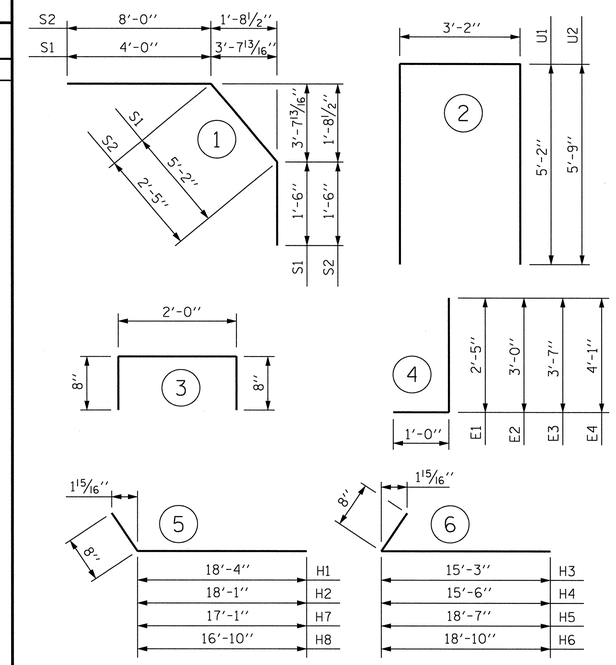

ALL BAR DIMENSIONS ARE OUT TO OUT

SUPERSTRUCTURE BILL OF MATERIAL

	CLASS AA CONCRETE	REINFORCING STEEL	EPOXY COATED REINFORCING STEEL
	(CU. YDS.)	(LBS.)	(LBS.)
SPAN "A-B"	541.1	53,133	58,111
SIDEWALK	93.7	✱✱	✱✱
3 BAR RAIL END POST	1.7	✱✱	✱✱
TOTALS	636.5	53,133	58,111

✱✱ QUANTITIES ARE INCLUDED IN SPAN TOTAL

GROOVING BRIDGE FLOORS		
APPROACH SLABS	934	SQ.FT.
BRIDGE DECK	8,842	SQ.FT.
TOTAL	9,776	SQ.FT.

PROJECT NO. U-0071
DURHAM COUNTY
STATION: 85+26.52 -L-

STATE OF NORTH CAROLINA
DEPARTMENT OF TRANSPORTATION
RALEIGH

SUPERSTRUCTURE
BILL OF MATERIAL

NORTH CAROLINA PROFESSIONAL SEAL 37400 ENGINEER GREGORY M. GILLAND 12/19/12

WETHERILL ENGINEERING
559 Jones Franklin Rd. Suite 164
Raleigh, N.C. 27606
Bus: 919 851 8077
Fax: 919 851 8107
License: F-0377

TRANSPORTATION PLANNING/DESIGN - BRIDGE/STRUCTURE DESIGN
CIVIL/SITE DESIGN - GIS/GPS - CONSTRUCTION OBSERVATION

REVISIONS								SHEET NO.
NO.	BY:	DATE:	NO.	BY:	DATE:			S-180
1			3					TOTAL SHEETS
2			4					671

DRAWN BY : J.M. BRITT DATE : 5-1-13
CHECKED BY : G.M. GILLAND DATE : 6-12-13
DESIGN ENGINEER OF RECORD: G.M. GILLAND DATE : 6-13

P:\2012\U-0071 Sites 3,8 & 9\Structures\DWG_3\U0071_SD_STR3_BM_WE1.dgn
12/10/2013 11:59:35 AM

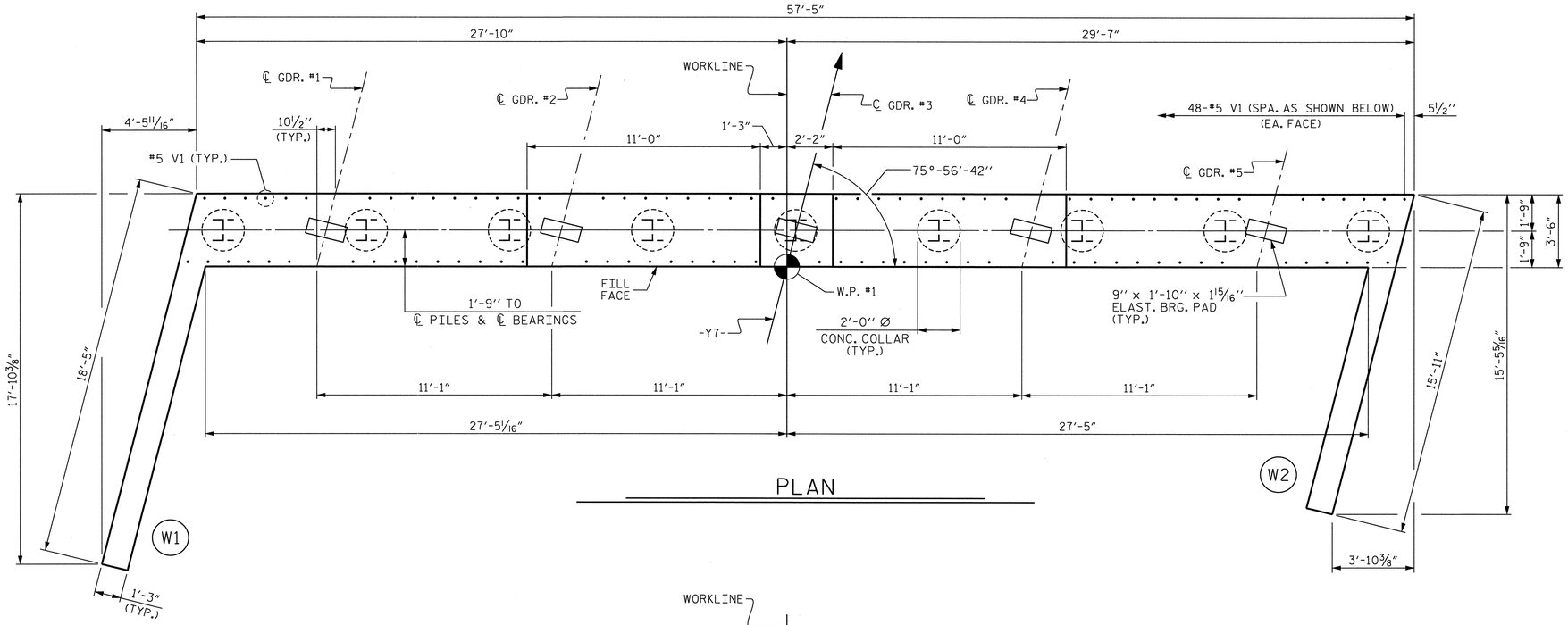

PLAN

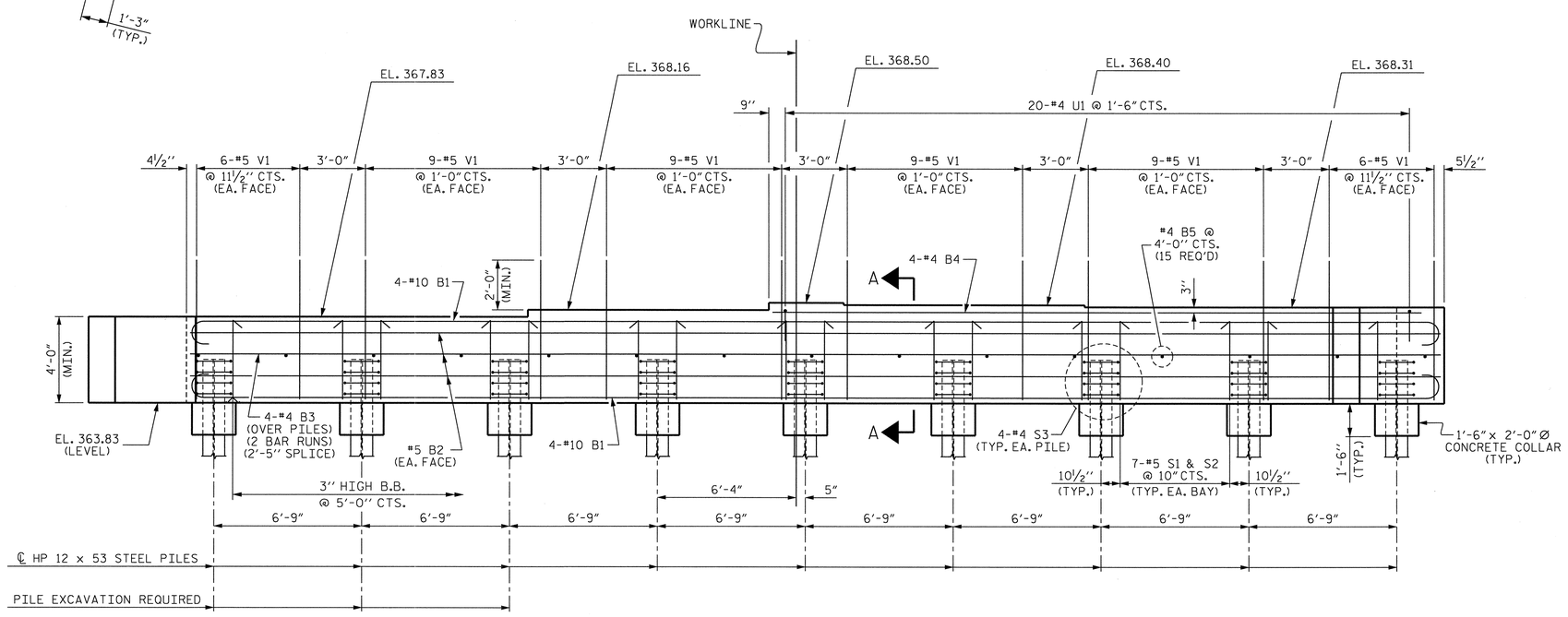

ELEVATION

NOTES :

SEE SUPERSTRUCTURE PLAN SHEETS FOR UPPER PART OF THE INTEGRAL END BENT DETAILS.

CONCRETE IN THE UPPER PORTION OF THE WINGS SHALL BE POURED WITH THE SUPERSTRUCTURE. FOR DETAILS AND REINFORCING STEEL, SEE SUPERSTRUCTURE DETAILS.

INSTALL THE 4" DIA. DRAIN PIPE THROUGH THE WING WALL AS REQUIRED FOR REINFORCED BRIDGE APPROACH FILLS, SEE THE ROADWAY PLANS. REINFORCING STEEL IN THE WING WALL MAY BE SHIFTED AS NECESSARY TO CLEAR THE DRAIN PIPE.

THE TOP SURFACE OF THE END BENT CAP AND WINGS, EXCEPT THE BEARING AREA, SHALL BE RAKED TO A DEPTH OF 1/4".

FOR PILE SPLICE DETAIL, SEE "INTEGRAL END BENT 2" PLANS.

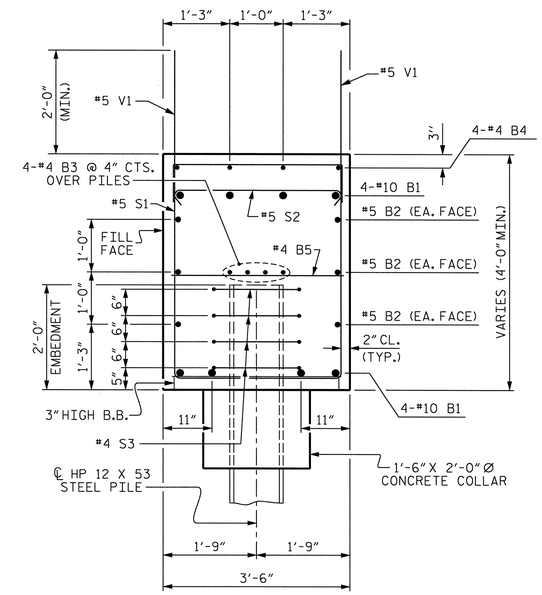

SECTION A-A

PROJECT NO. U-0071

DURHAM COUNTY

STATION: 85+26.52 -L-

SHEET 1 OF 2

STATE OF NORTH CAROLINA
DEPARTMENT OF TRANSPORTATION
RALEIGH

SUBSTRUCTURE

INTEGRAL END BENT 1

DRAWN BY : J.M. BRITT	DATE : 6-11-13		
CHECKED BY : G.M. GILLAND	DATE : 6-17-13		
DESIGN ENGINEER OF RECORD: G.M. GILLAND	DATE : 6-13		

NORTH CAROLINA PROFESSIONAL SEAL 37400 ENGINEER GREGORY M. GILLAND 12/9/13

WETHERILL ENGINEERING
559 Jones Franklin Rd. Suite 164
Raleigh, N.C. 27606
Bus: 919 851 8077
Fax: 919 851 8107
License: F-0377
TRANSPORTATION PLANNING/DESIGN - BRIDGE/STRUCTURE DESIGN
CIVIL/SITE DESIGN - GIS/GPS - CONSTRUCTION OBSERVATION

REVISIONS								SHEET NO.
NO.	BY:	DATE:	NO.	BY:	DATE:			S-181
1			3					TOTAL SHEETS
2			4					671

STR #3

P:\2012\U-0071 Sites 3,8 & 9\Structures\DWG_3\U0071_SD_STR3_EB1_WEI.dgn
12/10/2013 12:12:25 PM

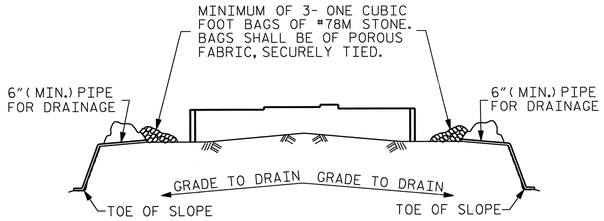

BAGGED STONE AND PIPE SHALL BE PLACED IMMEDIATELY AFTER COMPLETION OF END BENT EXCAVATION. PIPE MAY BE EITHER CONCRETE, CORRUGATED STEEL, CORRUGATED ALUMINUM ALLOY, OR CORRUGATED PLASTIC. PERFORATED PIPE WILL NOT BE ALLOWED.

BAGGED STONE SHALL REMAIN IN PLACE UNTIL THE ENGINEER DIRECTS THAT IT BE REMOVED. THE CONTRACTOR SHALL REMOVE AND DISPOSE OF SILT ACCUMULATIONS AT BAGGED STONE WHEN SO DIRECTED BY THE ENGINEER. BAGS SHALL BE REMOVED AND REPLACED WHENEVER THE ENGINEER DETERMINES THAT THEY HAVE DETERIORATED AND LOST THEIR EFFECTIVENESS.

NO SEPARATE PAYMENT WILL BE MADE FOR THIS WORK AND THE ENTIRE COST OF THIS WORK SHALL BE INCLUDED IN THE UNIT CONTRACT PRICE BID FOR THE SEVERAL PAY ITEMS.

TEMPORARY DRAINAGE AT END BENT

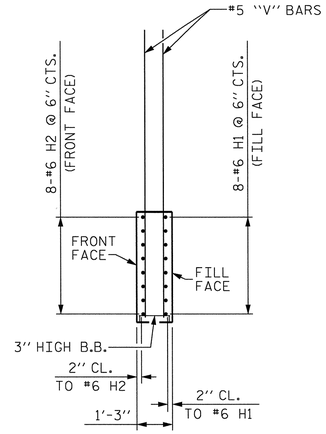

SECTION X-X

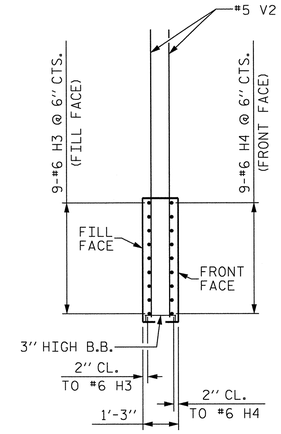

SECTION Y-Y

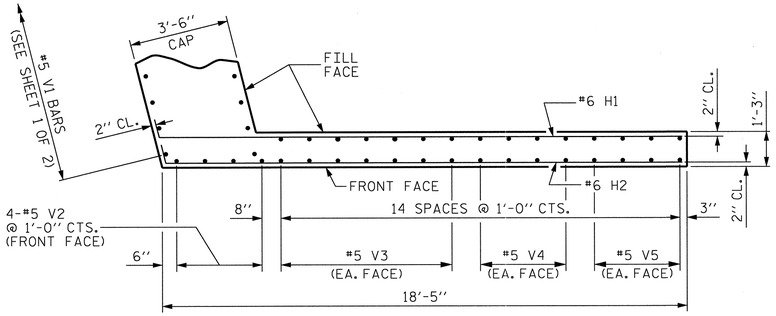

PLAN OF WING (W1)

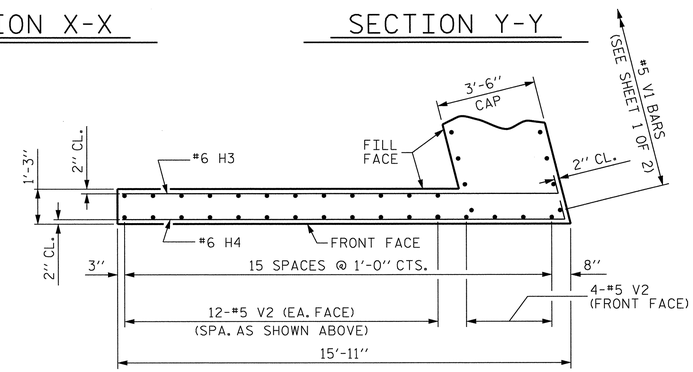

PLAN OF WING (W2)

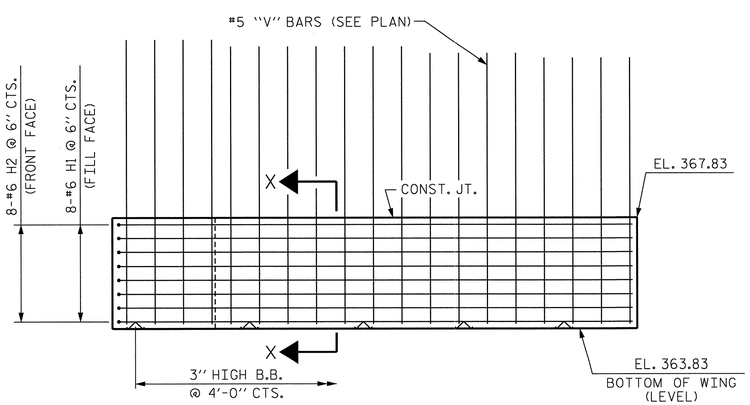

ELEVATION OF WING (W1)

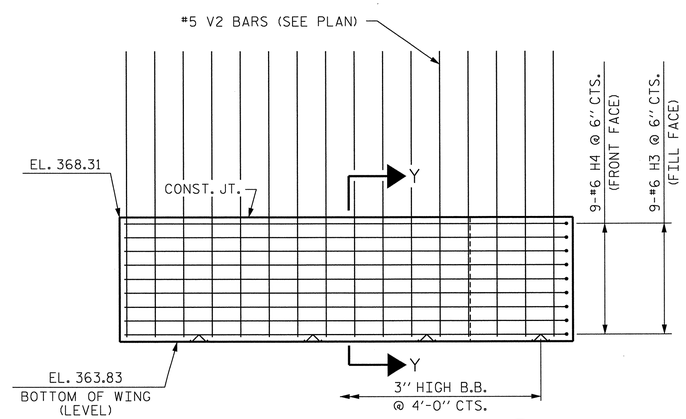

ELEVATION OF WING (W2)

BAR TYPES

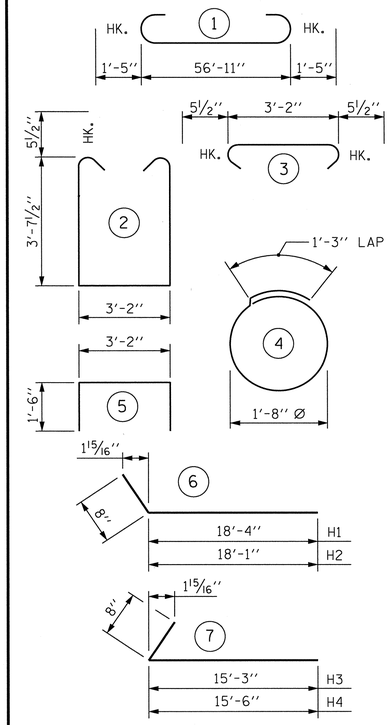

ALL BAR DIMENSIONS ARE OUT TO OUT.

BILL OF MATERIAL — END BENT 1

BAR	No.	SIZE	TYPE	LENGTH	WEIGHT
B1	8	#10	1	59'-9"	2057
B2	6	#5	STR	57'-1"	357
B3	8	#4	STR	29'-9"	159
B4	4	#4	STR	29'-7"	79
B5	15	#4	STR	3'-2"	32
H1	8	#6	6	19'-0"	228
H2	8	#6	6	18'-9"	225
H3	9	#6	7	15'-11"	215
H4	9	#6	7	16'-2"	219
S1	56	#5	2	11'-4"	662
S2	56	#5	3	4'-1"	238
S3	36	#4	4	6'-6"	156
U1	20	#4	5	6'-2"	82
V1	96	#5	STR	6'-6"	651
V2	32	#5	STR	10'-3"	342
V3	14	#5	STR	10'-0"	146
V4	8	#5	STR	9'-9"	81
V5	8	#5	STR	9'-7"	80

REINFORCING STEEL	6,009 LBS.
CLASS A CONCRETE	39.2 CU. YDS.
HP 12 x 53 STEEL PILES No. 9	180.0 LIN. FT.
PILE EXCAVATION IN SOIL	10 LIN. FT.
PILE EXCAVATION NOT IN SOIL	20 LIN. FT.

PROJECT NO. U-0071
DURHAM COUNTY
STATION: 85+26.52 -L-

SHEET 2 OF 2

STATE OF NORTH CAROLINA
DEPARTMENT OF TRANSPORTATION
RALEIGH

SUBSTRUCTURE

INTEGRAL END BENT 1

NORTH CAROLINA PROFESSIONAL SEAL 37400 ENGINEER GREGORY M. GILLAND 12/10/13

WETHERILL ENGINEERING
559 Jones Franklin Rd. Suite 164
Raleigh, N.C. 27606
Bus: 919 851 8077
Fax: 919 851 8107
License: F-0377
TRANSPORTATION PLANNING/DESIGN - BRIDGE/STRUCTURE DESIGN
CIVIL/SITE DESIGN - GIS/GPS - CONSTRUCTION OBSERVATION

REVISIONS						
NO.	BY:	DATE:	NO.	BY:	DATE:	SHEET NO. S-182
1			3			TOTAL SHEETS 671
2			4			

DRAWN BY : J.M. BRITT DATE : 6-11-13
CHECKED BY : G.M. GILLAND DATE : 6-17-13
DESIGN ENGINEER OF RECORD: G.M. GILLAND DATE : 6-13

P:\2012\U-0071 Sites 3,8 & 9\Structures\DWG_3\U0071_SD_STR3_EB1_WEI.dgn
12/10/2013 12:12:48 PM

STR #3

NOTES :

FOR VIEW X-X AND SECTIONS A-A & B-B, SEE SHEET 2 OF 2.

HOOKS ON V1 BARS MAY BE TURNED AS NECESSARY FOR PLACING REINFORCING STEEL.

STIRRUPS IN CAP MAY BE SHIFTED AS NECESSARY TO CLEAR ANCHOR BOLTS.

ALL STEEL IN THE DRILLED PIERS IS INCLUDED IN THE PAY ITEMS FOR "REINFORCING STEEL" AND "SPIRAL COLUMN REINFORCING STEEL".

THE LOCATION OF THE CONSTRUCTION JOINT IN THE DRILLED PIERS IS BASED ON AN APPROXIMATE GROUND LINE ELEVATION. IF THE CONSTRUCTION JOINT IS ABOVE THE ACTUAL GROUND ELEVATION, THE CONTRACTOR SHALL PLACE THE CONSTRUCTION JOINT 1 FOOT BELOW THE GROUND LINE.

THE CONTRACTOR SHALL ADJUST THE GIRDER BUILD-UPS AS NECESSARY TO INCORPORATE A MAXIMUM PERMISSIBLE VARIATION IN POT BEARING DEPTH OF 1/2", SEE SPECIAL PROVISION FOR POT BEARINGS.

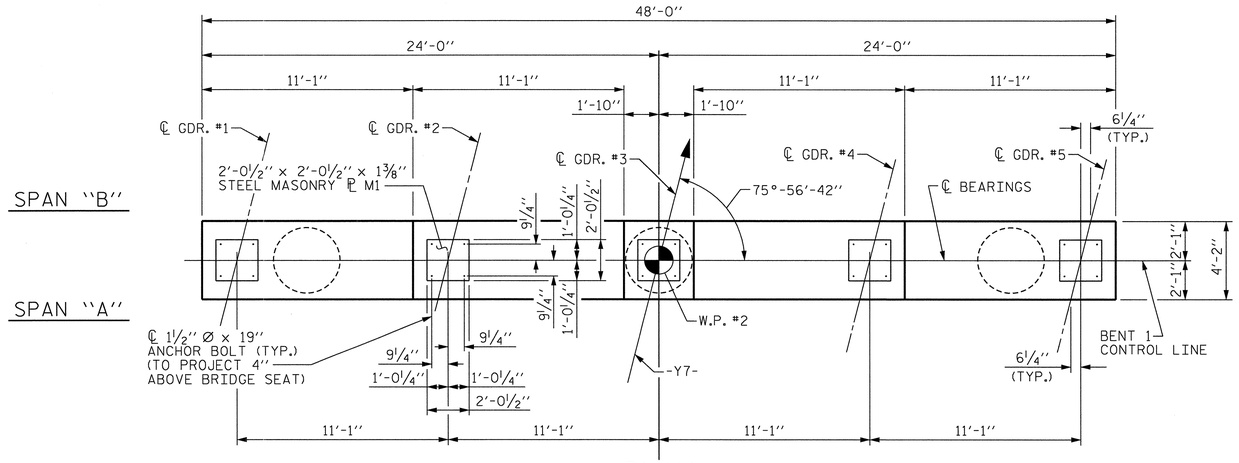

NOTE :
BEARING DETAILS TYP. FOR EACH GIRDER (SEE "POT BEARING AND ELASTOMERIC BEARING DETAILS" SHEET)

PLAN

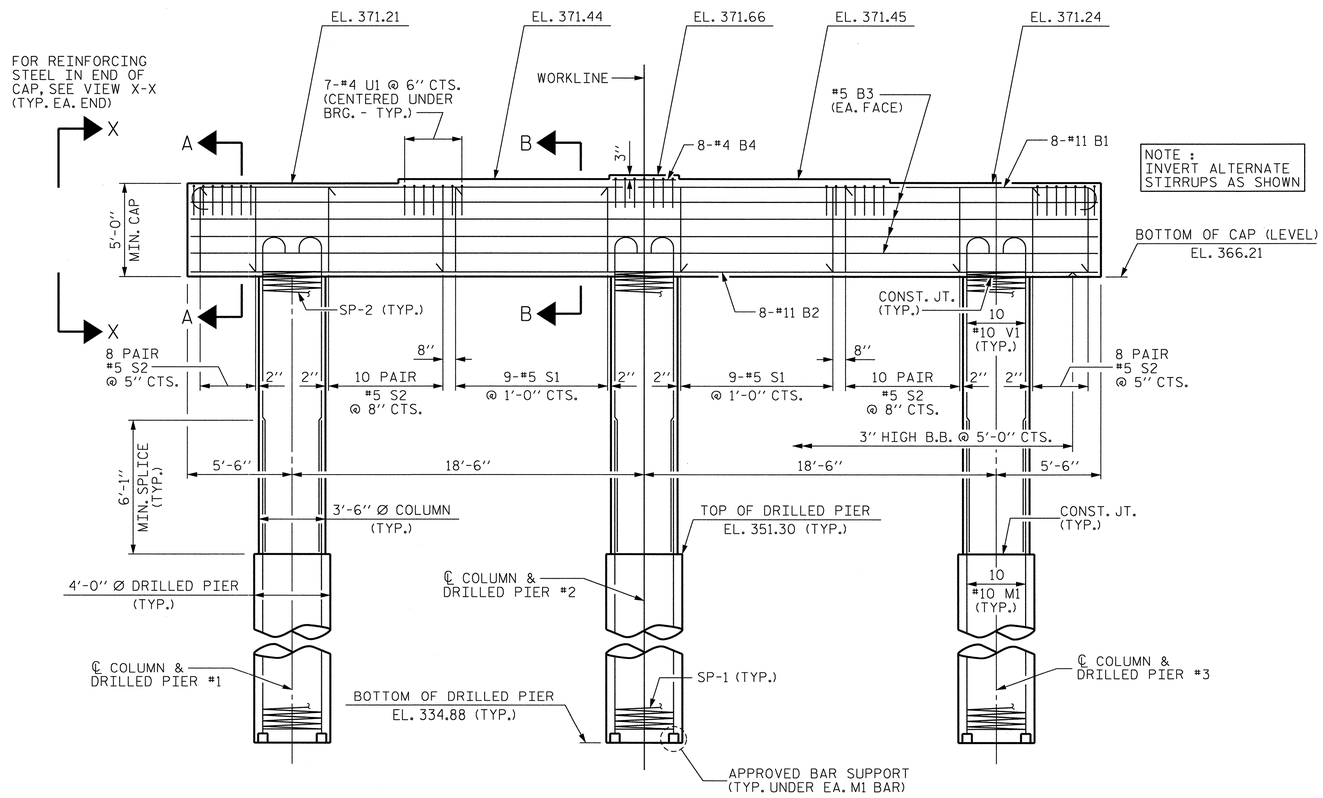

ELEVATION

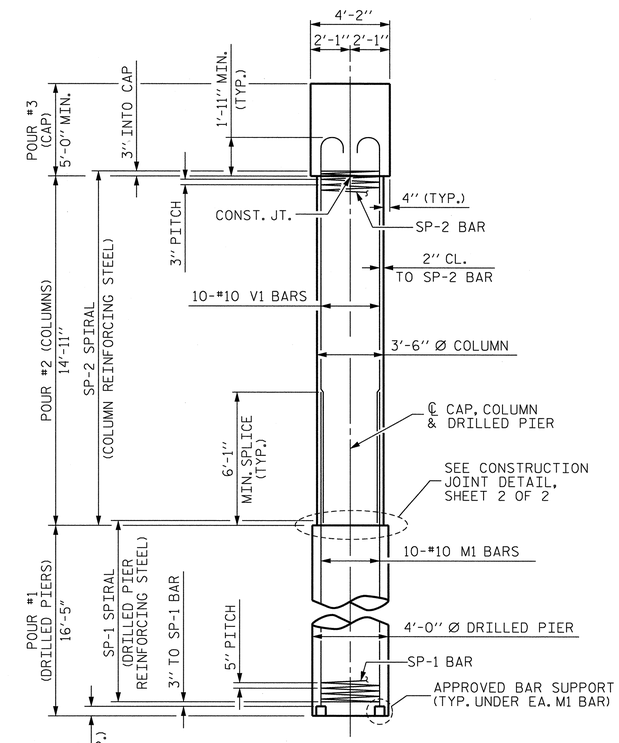

END ELEVATION

PROJECT NO. U-0071
DURHAM COUNTY
STATION: 85+26.52 -L-

SHEET 1 OF 2

STATE OF NORTH CAROLINA
DEPARTMENT OF TRANSPORTATION
RALEIGH

SUBSTRUCTURE

BENT 1

DRAWN BY : J.M. BRITT	DATE : 6-5-13	
CHECKED BY : G.M. GILLAND	DATE : 6-18-13	
DESIGN ENGINEER OF RECORD: G.M. GILLAND	DATE : 6-13	

NORTH CAROLINA PROFESSIONAL SEAL 37400 ENGINEER GREGORY M. GILLAND 12/18/13

WETHERILL ENGINEERING
559 Jones Franklin Rd. Suite 164
Raleigh, N.C. 27606
Bus: 919 851 8077
Fax: 919 851 8107
License: F-0377
TRANSPORTATION PLANNING/DESIGN - BRIDGE/STRUCTURE DESIGN
CIVIL/SITE DESIGN - GIS/GPS - CONSTRUCTION OBSERVATION

REVISIONS								SHEET NO.
NO.	BY:	DATE:	NO.	BY:	DATE:			5-183
1			3					TOTAL SHEETS
2			4					671

P:\2012\U-0071 Sites 3,8 & 9\Structures\DWG_3\U0071_SD_STR3_BT1_WE1.dgn
12/10/2013 12:14:37 PM

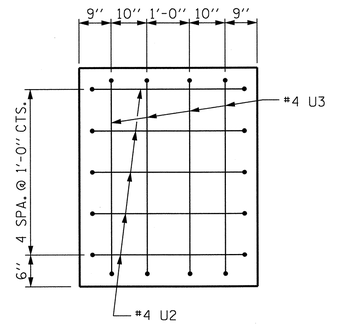

VIEW X-X

(TYPICAL EACH END)

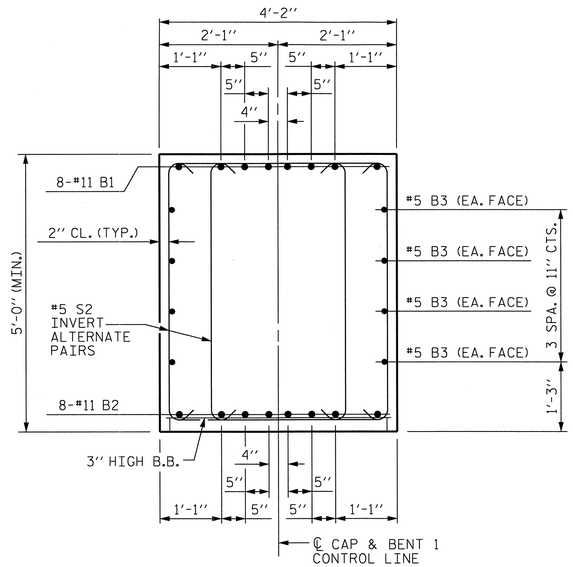

SECTION A-A

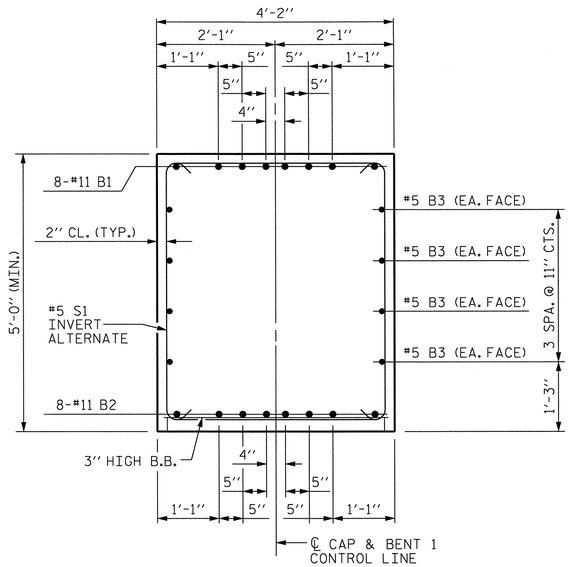

SECTION B-B

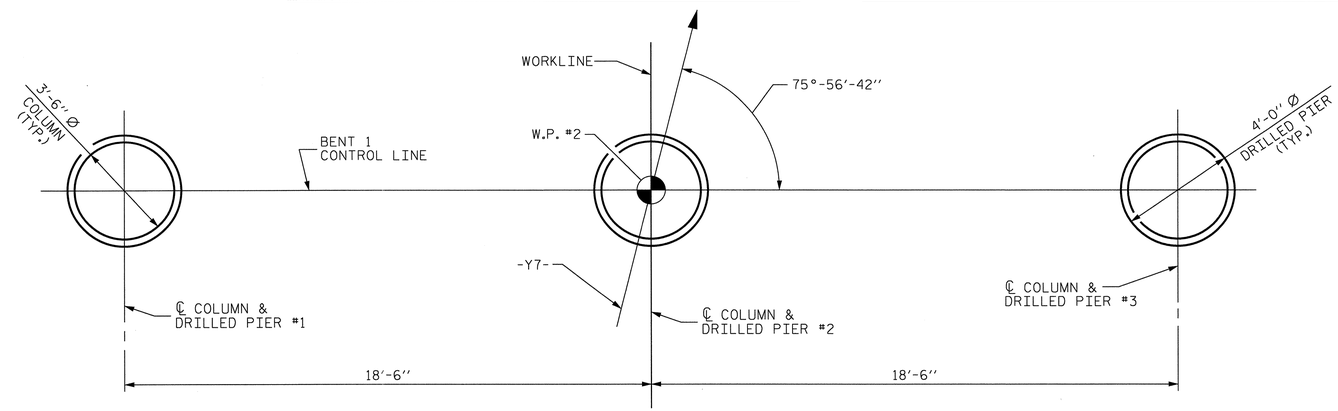

PLAN OF DRILLED PIERS & COLUMNS

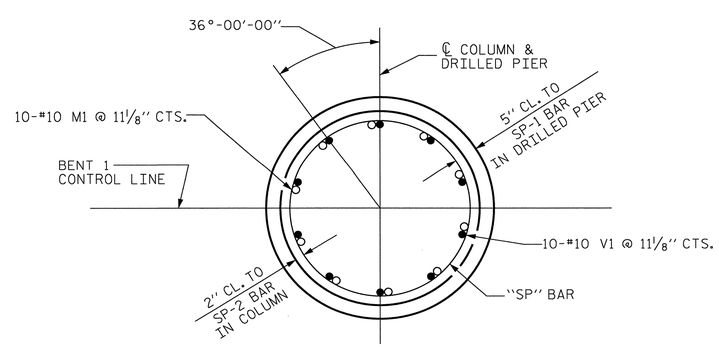

SECTION THRU DRILLED PIER & COLUMN

(TYPICAL FOR EACH DRILLED PIER & COLUMN)

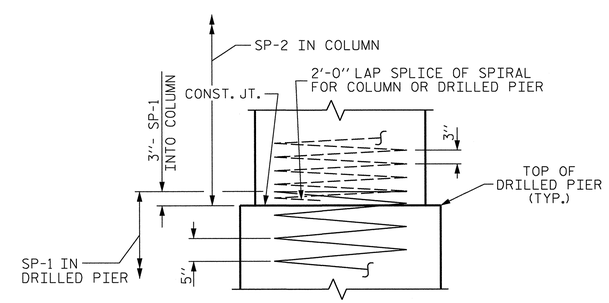

CONSTRUCTION JOINT DETAIL

BAR TYPES

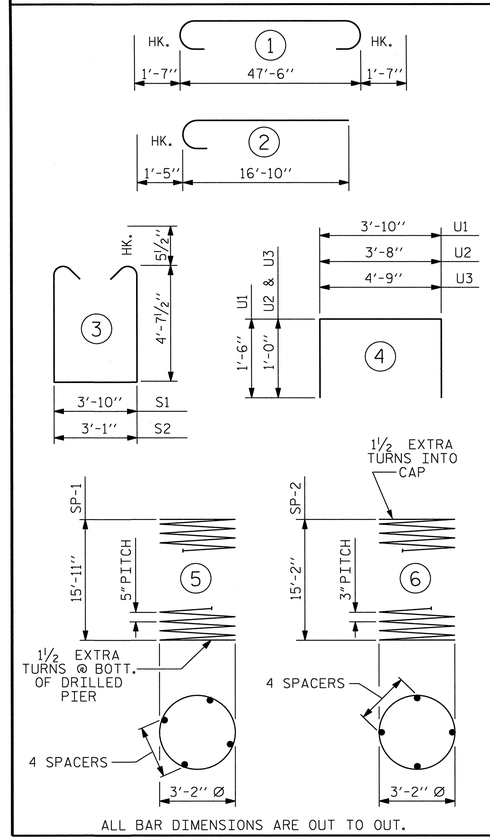

ALL BAR DIMENSIONS ARE OUT TO OUT.

BILL OF MATERIAL

BENT 1

BAR	No.	SIZE	TYPE	LENGTH	WEIGHT
B1	8	#11	1	50'-8''	2154
B2	8	#11	STR	47'-8''	2026
B3	8	#5	STR	47'-8''	398
B4	8	#4	STR	3'-4''	18
M1	30	#10	STR	22'-0''	2840
S1	18	#5	3	14'-0''	263
S2	72	#5	3	13'-3''	995
U1	35	#4	4	6'-10''	160
U2	10	#4	4	5'-8''	38
U3	8	#4	4	6'-9''	36
V1	30	#10	2	18'-3''	2356

REINFORCING STEEL 11,284 LBS.

SP-1	3	*	5	389'-4''	1218
SP-2	3	**	6	611'-5''	1225

SPIRAL COLUMN REINFORCING STEEL 2,443 LBS.

* THIS "SP" SPIRAL REINFORCING STEEL SHALL BE W31 OR D-31 COLD DRAWN WIRE OR #5 PLAIN OR DEFORMED BAR

** THIS "SP" SPIRAL REINFORCING STEEL SHALL BE W20 OR D-20 COLD DRAWN WIRE OR #4 PLAIN OR DEFORMED BAR

CLASS A CONCRETE BREAKDOWN

POUR #2 (COLUMNS)	15.9 CU. YDS.
POUR #3 (CAP)	38.1 CU. YDS.
TOTAL CLASS A CONCRETE	54.0 CU. YDS.

DRILLED PIERS

DRILLED PIER CONCRETE POUR #1 (DRILLED PIERS)	22.9 CU. YDS.
4'-0'' Ø DRILLED PIER NOT IN SOIL	30.0 LIN. FT.
4'-0'' Ø DRILLED PIER IN SOIL	19.3 LIN. FT.
CSL TUBES ♦	215 LIN. FT.

♦ NO SEPARATE PAYMENT WILL BE MADE FOR CSL TUBES. CSL TUBES WILL BE INCLUDED IN THE DRILLED PIER PAY ITEMS.

PROJECT NO. U-0071

DURHAM COUNTY

STATION: 85+26.52 -L-

SHEET 2 OF 2

STATE OF NORTH CAROLINA
DEPARTMENT OF TRANSPORTATION
RALEIGH

SUBSTRUCTURE

BENT 1

NORTH CAROLINA PROFESSIONAL SEAL 37400 ENGINEER GREGORY M. GILLAND 12/4/13

WETHERILL ENGINEERING
559 Jones Franklin Rd. Suite 164
Raleigh, N.C. 27606
Bus: 919 851 8077
Fax: 919 851 8107
License: F-0377
TRANSPORTATION PLANNING/DESIGN - BRIDGE/STRUCTURE DESIGN
CIVIL/SITE DESIGN - GIS/GPS - CONSTRUCTION OBSERVATION

REVISIONS						SHEET NO.
NO.	BY:	DATE:	NO.	BY:	DATE:	5-184
1			3			TOTAL SHEETS
2			4			671

DRAWN BY : J.M. BRITT DATE : 6-6-13
CHECKED BY : G.M. GILLAND DATE : 6-18-13
DESIGN ENGINEER OF RECORD: G.M. GILLAND DATE : 6-13

P:\2012\U-0071 Sites 3,8 & 9\Structures\DWG_3\U0071_SD_STR3_BT1_WEI.dgn
12/10/2013 12:14:55 PM

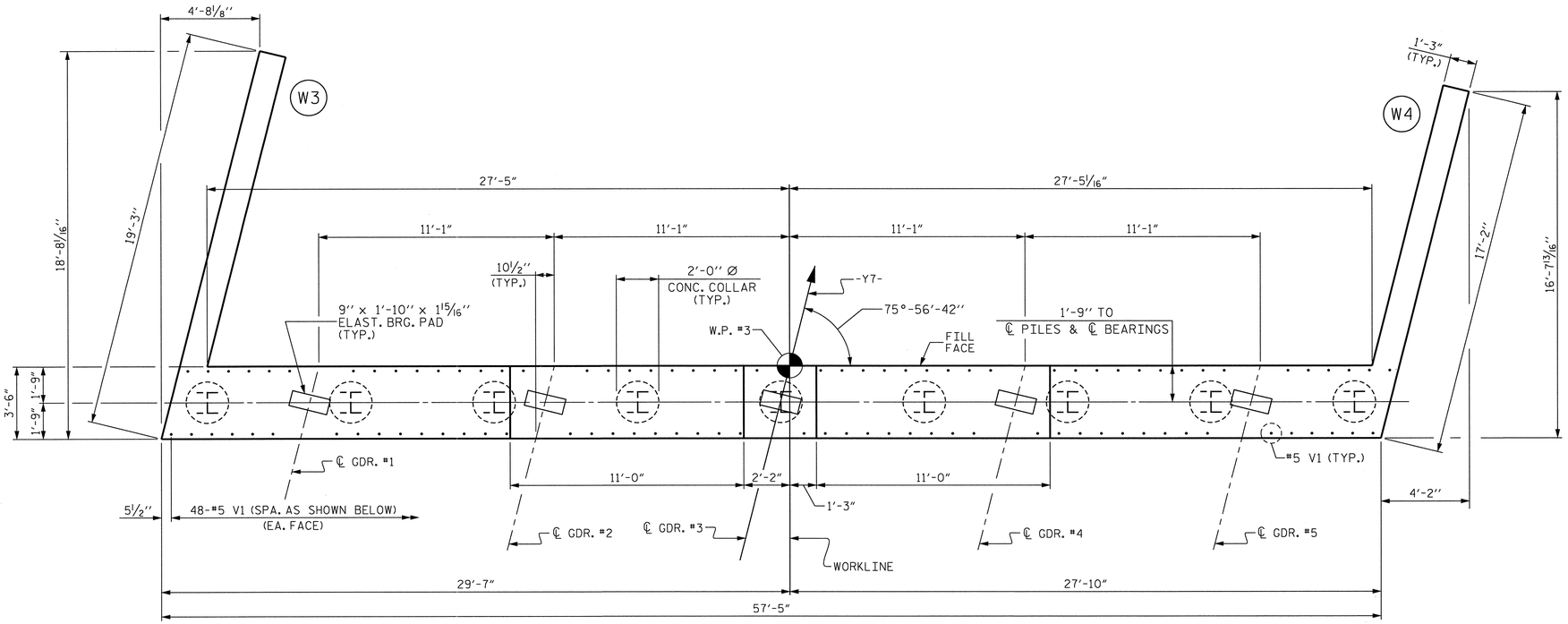

PLAN

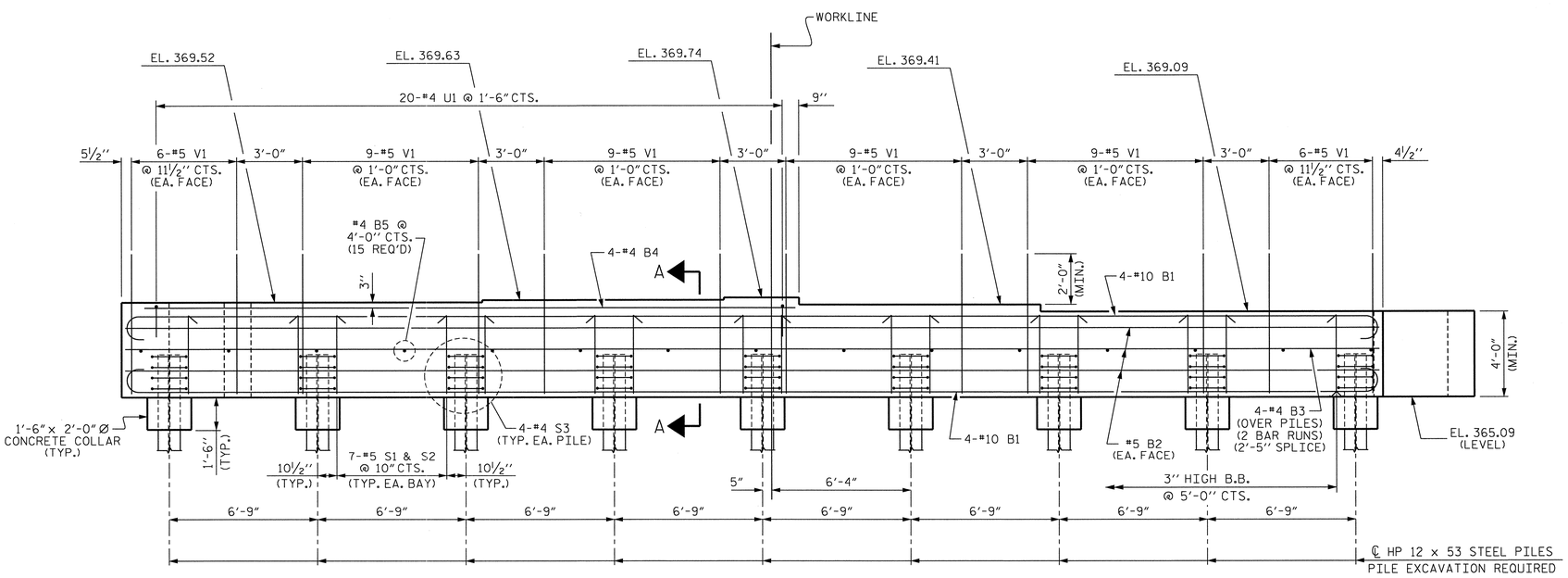

ELEVATION

NOTES :

SEE SUPERSTRUCTURE PLAN SHEETS FOR UPPER PART OF THE INTEGRAL END BENT DETAILS.

CONCRETE IN THE UPPER PORTION OF THE WINGS SHALL BE POURED WITH THE SUPERSTRUCTURE. FOR DETAILS AND REINFORCING STEEL, SEE SUPERSTRUCTURE DETAILS.

INSTALL THE 4"DIA. DRAIN PIPE THROUGH THE WING WALL AS REQUIRED FOR REINFORCED BRIDGE APPROACH FILLS, SEE THE ROADWAY PLANS. REINFORCING STEEL IN THE WING WALL MAY BE SHIFTED AS NECESSARY TO CLEAR THE DRAIN PIPE.

THE TOP SURFACE OF THE END BENT CAP AND WINGS, EXCEPT THE BEARING AREA, SHALL BE RAKED TO A DEPTH OF 1/4".

FOR TEMPORARY DRAINAGE AT END BENT, SEE "INTEGRAL END BENT 1" PLANS.

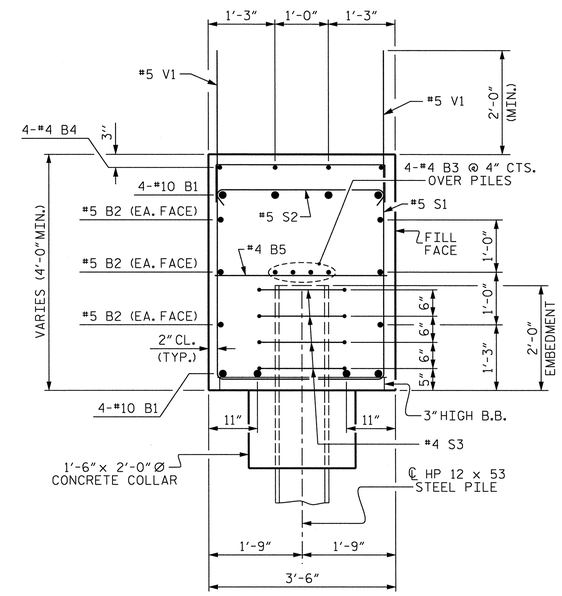

SECTION A-A

PROJECT NO. U-0071

DURHAM COUNTY

STATION: 85+26.52 -L-

SHEET 1 OF 2

STATE OF NORTH CAROLINA
DEPARTMENT OF TRANSPORTATION
RALEIGH

SUBSTRUCTURE

INTEGRAL END BENT 2

REVISIONS								SHEET NO.
NO.	BY:	DATE:	NO.	BY:	DATE:			S-185
1			3					TOTAL SHEETS
2			4					671

STR #3

NORTH CAROLINA PROFESSIONAL SEAL 37400 ENGINEER GREGORY M. GILLAND 12/17/13

WETHERILL ENGINEERING
559 Jones Franklin Rd. Suite 164
Raleigh, N.C. 27606
Bus: 919 851 8077
Fax: 919 851 8107
License: F-0377

TRANSPORTATION PLANNING/DESIGN - BRIDGE/STRUCTURE DESIGN
CIVIL/SITE DESIGN - GIS/GPS - CONSTRUCTION OBSERVATION

DRAWN BY : J.M. BRITT DATE : 6-12-13
CHECKED BY : G.M. GILLAND DATE : 6-17-13
DESIGN ENGINEER OF RECORD: G.M. GILLAND DATE : 6-13

P:\2012\U-0071 Sites 3,8 & 9\Structures\DWG_3\U0071_SD_STR3_EB2_WE1.dgn
12/10/2013 12:16:32 PM

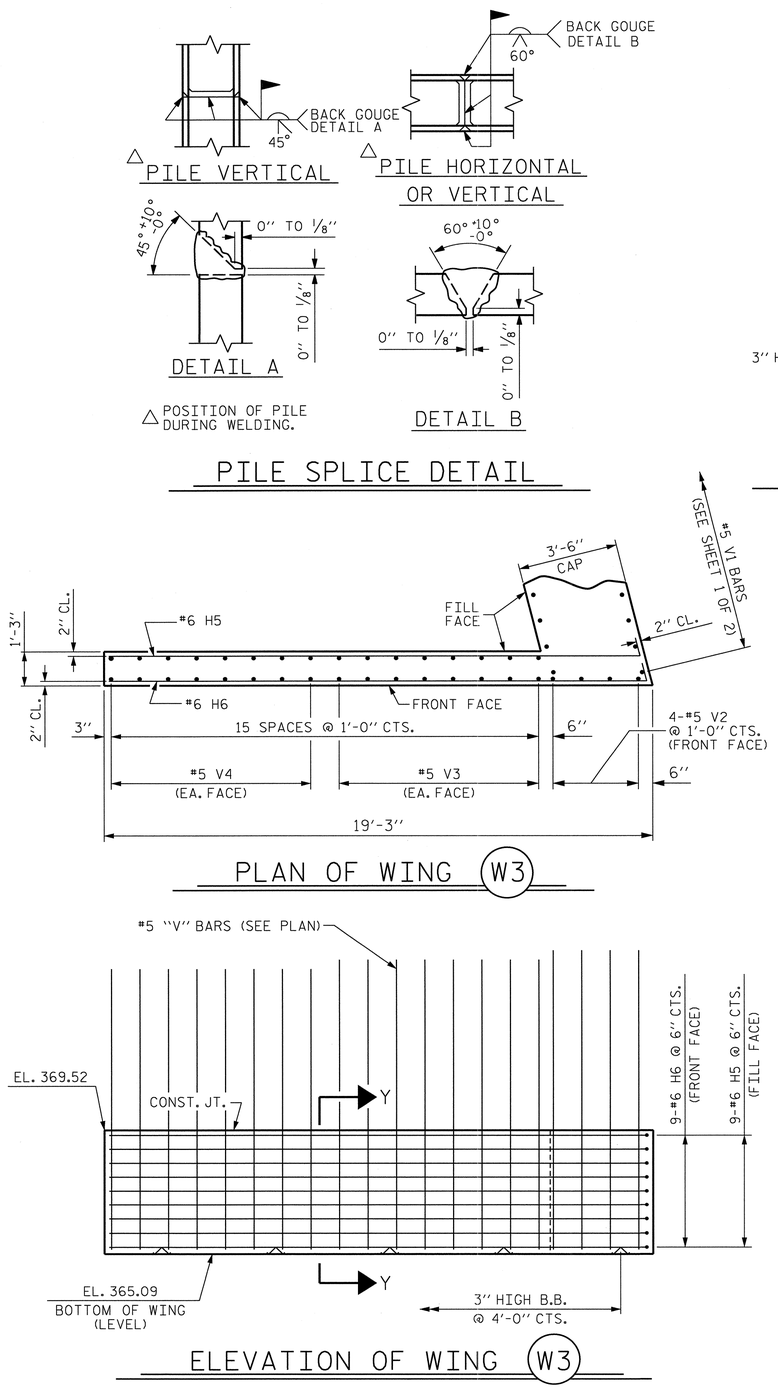

BAR TYPES

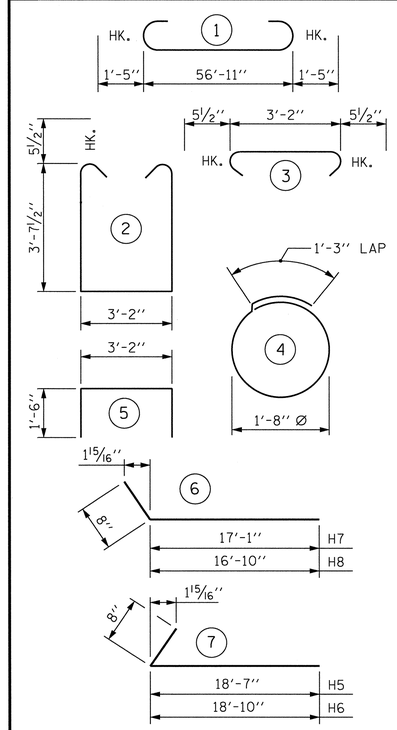

ALL BAR DIMENSIONS ARE OUT TO OUT.

BILL OF MATERIAL — END BENT 2

BAR	No.	SIZE	TYPE	LENGTH	WEIGHT
B1	8	#10	1	59'-9"	2057
B2	6	#5	STR	57'-1"	357
B3	8	#4	STR	29'-9"	159
B4	4	#4	STR	29'-7"	79
B5	15	#4	STR	3'-2"	32
H5	9	#6	7	19'-3"	260
H6	9	#6	7	19'-6"	264
H7	8	#6	6	17'-9"	213
H8	8	#6	6	17'-6"	210
S1	56	#5	2	11'-4"	662
S2	56	#5	3	4'-1"	238
S3	36	#4	4	6'-6"	156
U1	20	#4	5	6'-2"	82
V1	96	#5	STR	6'-6"	651
V2	8	#5	STR	10'-9"	90
V3	16	#5	STR	10'-5"	174
V4	16	#5	STR	10'-1"	168
V5	10	#5	STR	10'-4"	108
V6	8	#5	STR	10'-0"	83
V7	10	#5	STR	9'-8"	101

REINFORCING STEEL	6,144 LBS.
CLASS A CONCRETE	39.5 CU. YDS.
HP 12 x 53 STEEL PILES No. 9	90.0 LIN. FT.
PILE EXCAVATION IN SOIL	52 LIN. FT.
PILE EXCAVATION NOT IN SOIL	38 LIN. FT.

PROJECT NO. U-0071
DURHAM COUNTY
STATION: 85+26.52 -L-

SHEET 2 OF 2

STATE OF NORTH CAROLINA
DEPARTMENT OF TRANSPORTATION
RALEIGH

SUBSTRUCTURE

INTEGRAL END BENT 2

REVISIONS							SHEET NO.
NO.	BY:	DATE:	NO.	BY:	DATE:		5-136
1			3				TOTAL SHEETS
2			4				671

NORTH CAROLINA PROFESSIONAL SEAL 37400 ENGINEER GREGORY M. GILLAND 12/01/13

WETHERILL ENGINEERING
559 Jones Franklin Rd. Suite 164
Raleigh, N.C. 27606
Bus: 919 851 8077
Fax: 919 851 8107
License: F-0377

TRANSPORTATION PLANNING/DESIGN - BRIDGE/STRUCTURE DESIGN
CIVIL/SITE DESIGN - GIS/GPS - CONSTRUCTION OBSERVATION

DRAWN BY : J.M. BRITT DATE : 6-12-13
CHECKED BY : G.M. GILLAND DATE : 6-17-13
DESIGN ENGINEER OF RECORD: G.M. GILLAND DATE : 6-13

P:\2012\U-0071 Sites 3,8 & 9\Structures\DWG_3\U0071_SD_STR3_EB2_WE1.dgn
12/10/2013 12:16:55 PM

STR #3

NOTES

SLOPE PROTECTION SHALL CONSIST OF 4" POURED-IN-PLACE CONCRETE PAVING AS SHOWN IN THE DETAILS ON THIS SHEET. CONCRETE SHALL BE CLASS "B". THE CONCRETE SURFACE SHALL BE FLOATED WITH A WOODEN FLOAT AND FINISHED. WELDED WIRE FABRIC REINFORCING SHALL BE 6 X 6 - W1.4 X W1.4, 60" WIDE. SLOPE PROTECTION SHALL BE POURED IN 5' STRIPS AS SHOWN IN THE "POURING DETAIL" WITH 2'-0" LONG #4 BARS PLACED ALONG THE SLOPE BETWEEN STRIPS AT 1'-6" MAXIMUM SPACING. SLOPE PROTECTION MAY BE POURED IN ALTERNATE 4' AND 5' STRIPS AS SHOWN IN THE "OPTIONAL POURING DETAIL" WITH ADJACENT RUNS OF WELDED WIRE FABRIC LAPPING AT LEAST 6". THE COST OF THE WELDED WIRE FABRIC AND #4 BARS, IF USED, SHALL BE INCLUDED IN THE CONTRACT UNIT PRICE BID PER SQUARE YARD FOR SLOPE PROTECTION.

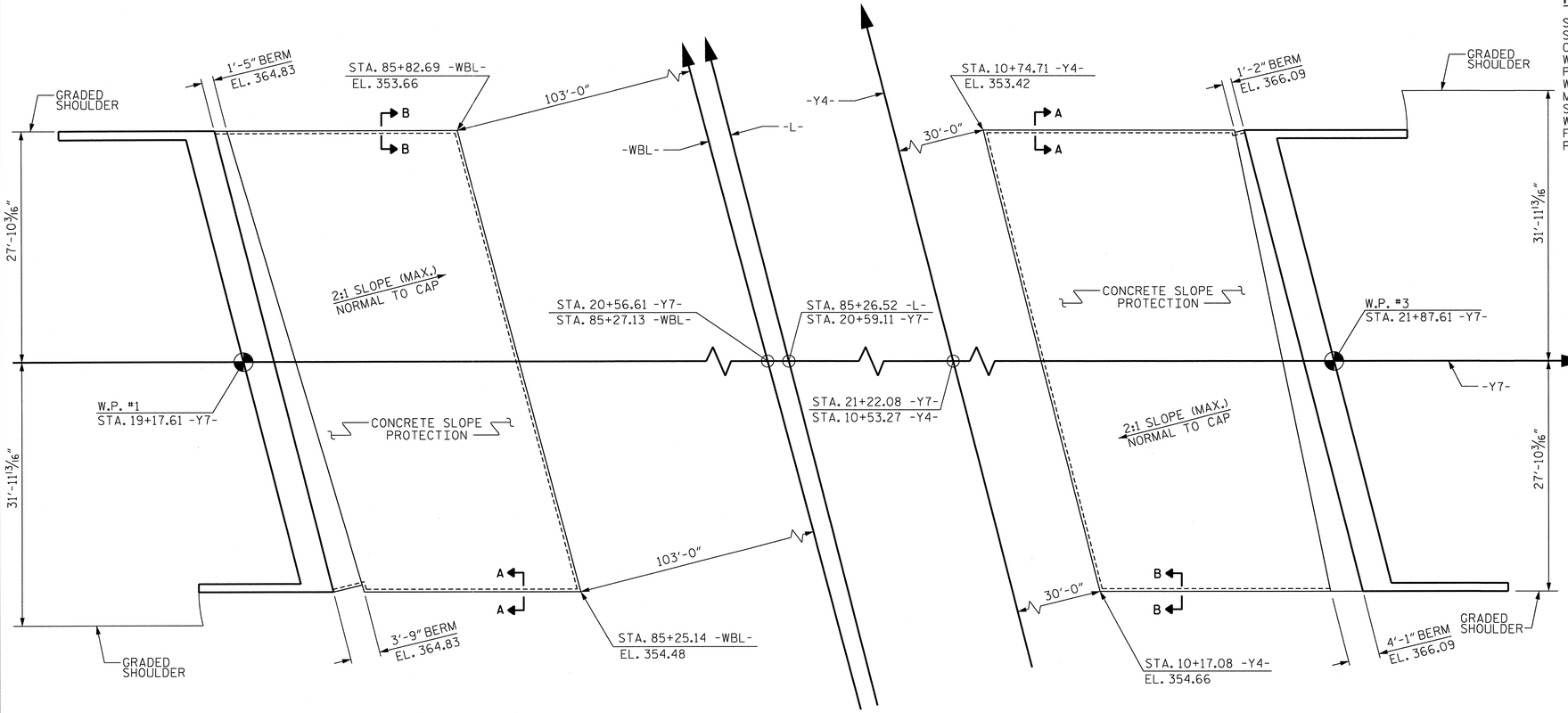

AT END BENT 1

PLAN

AT END BENT 2

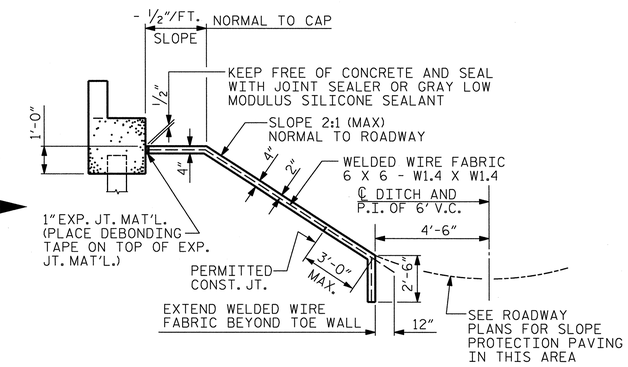

SECTION ALONG ℄ ROADWAY WHEN FILL CATCHES IN DITCH

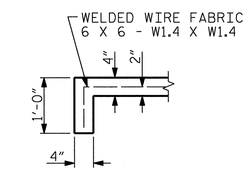

SECTION A-A

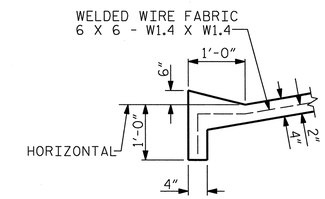

SECTION B-B

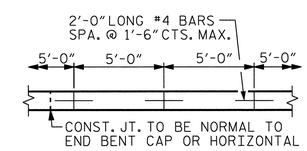

STRIP WIDTHS MAY VARY IN CURVED PORTION.

POURING DETAIL

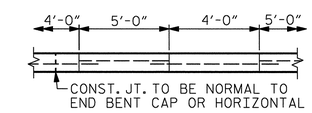

POUR A 4'-0" STRIP FIRST. STRIP WIDTHS MAY VARY IN CURVED PORTION.

OPTIONAL POURING DETAIL

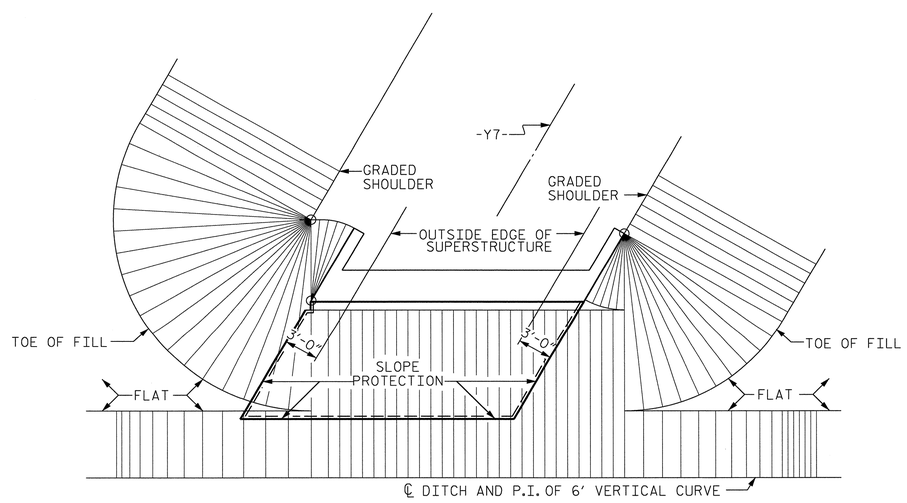

PLAN - END BENT WITH SWEPT BACK WINGS - SKEWED

BRIDGE ID STA. 85+26.52 -L-	4" INCH SLOPE PROTECTION	* WELDED WIRE FABRIC 60 INCHES WIDE
	SQUARE YARDS	APPROX. L.F.
END BENT 1	210	420
END BENT 2	225	450

* QUANTITY SHOWN IS BASED ON 5' POURS.

PROJECT NO. U-0071
DURHAM COUNTY
STATION: 85+26.52 -L-

STATE OF NORTH CAROLINA
DEPARTMENT OF TRANSPORTATION
RALEIGH

STANDARD
SLOPE PROTECTION DETAILS

NORTH CAROLINA PROFESSIONAL SEAL 37400 ENGINEER GREGORY M. GILLAND 12/10/12

WETHERILL ENGINEERING
559 Jones Franklin Rd. Suite 164
Raleigh, N.C. 27606
Bus: 919 851 8077
Fax: 919 851 8107
License: F-0377

TRANSPORTATION PLANNING/DESIGN - BRIDGE/STRUCTURE DESIGN
CIVIL/SITE DESIGN - GIS/GPS - CONSTRUCTION OBSERVATION

REVISIONS								SHEET NO.
NO.	BY:	DATE:	NO.	BY:	DATE:			S-187
1			3					TOTAL SHEETS
2			4					671

STD. NO. SP1

STR #3

ASSEMBLED BY : T. DIFFEE		DATE : 6-21-13	
CHECKED BY : G.M. GILLAND		DATE : 6-26-13	
DESIGN ENGINEER OF RECORD : GMG		DATE : 6-13	
DRAWN BY : ELR 5/92	REV. 5/1/06	TLA/GM	
CHECKED BY : GRP 6/92	REV. 10/1/11	MAA/GM	
	REV. 12/21/11	MAA/GM	

P:\2012\U-0071 Sites 3,8 & 9\Structures\DWG_3\u0071_SD_STR3_SP_WEI.dgn
12/10/2013 12:18:18 PM

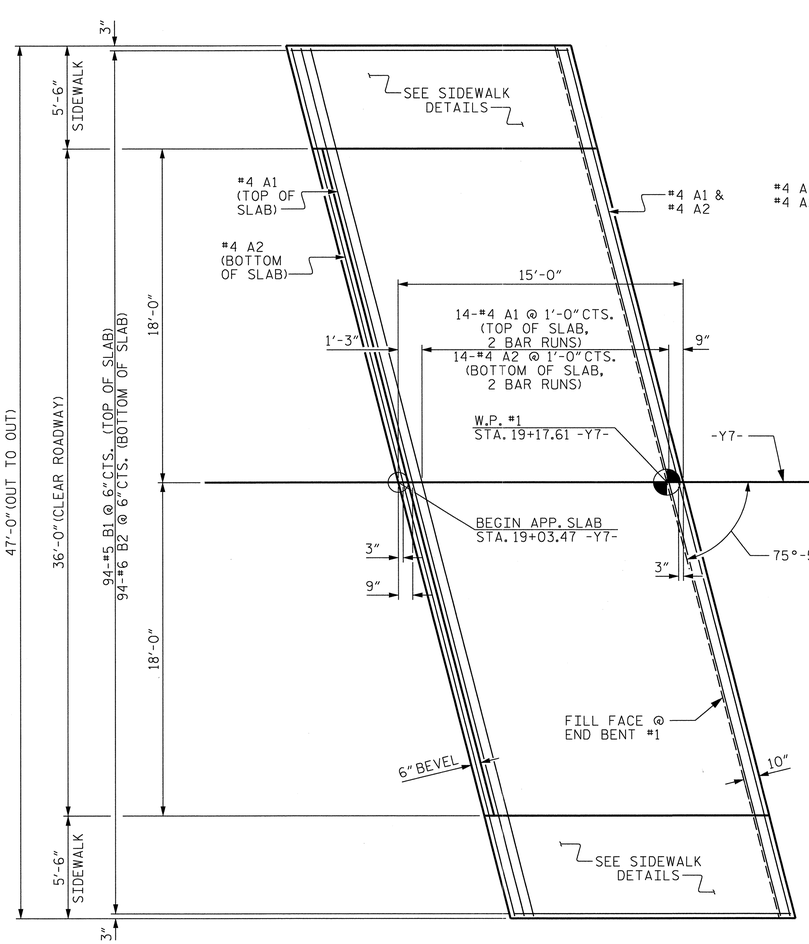

END BENT #1

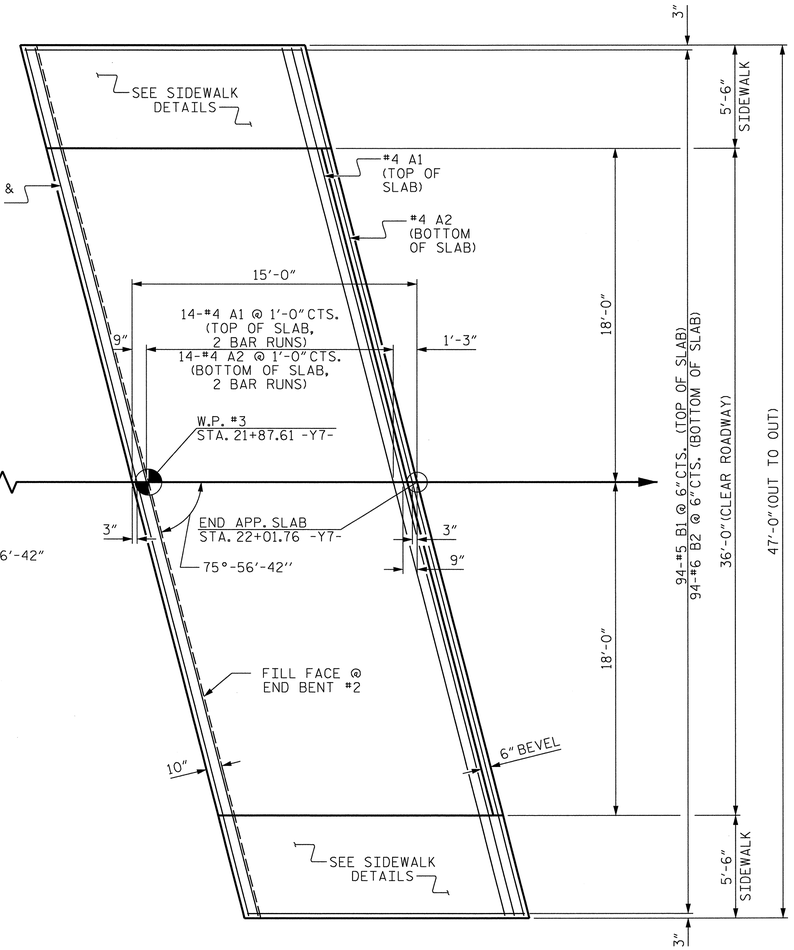

END BENT #2

PLAN

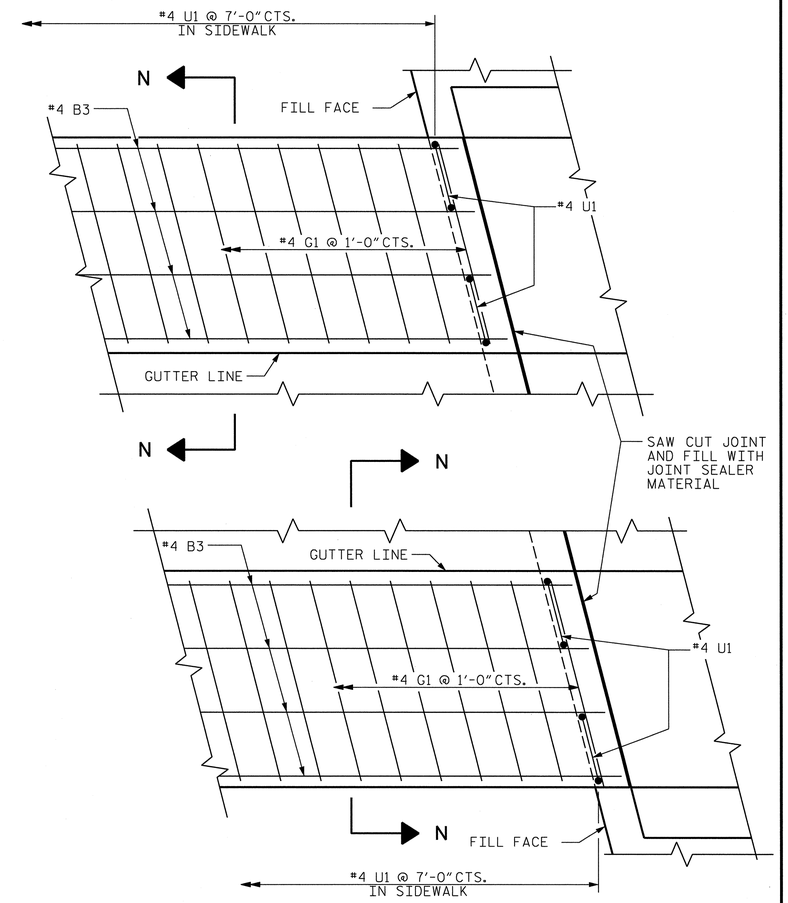

PLAN OF SIDEWALK ON APPROACH SLAB

#4 U1 BARS ARE TO BE PLACED AFTER THE SAWING OF THE JOINT. THE HOLES SHALL BE DRILLED AND THE DOWELS GROUTED INTO PLACE.

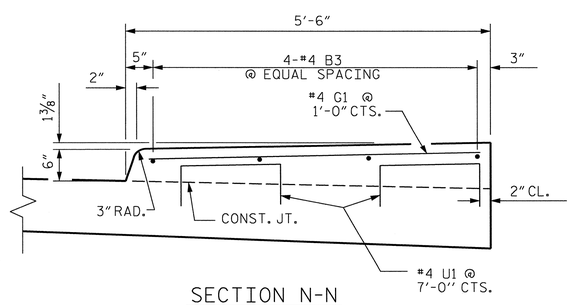

SECTION N-N

SIDEWALK DETAILS

PROJECT NO. U-0071

DURHAM COUNTY

STATION: 85+26.52 -L-

SHEET 1 OF 2

STATE OF NORTH CAROLINA
DEPARTMENT OF TRANSPORTATION
RALEIGH

STANDARD
BRIDGE APPROACH SLAB FOR INTEGRAL ABUTMENT

NORTH CAROLINA PROFESSIONAL SEAL 37400 ENGINEER GREGORY M. GILLAND 12/9/12

WETHERILL ENGINEERING
559 Jones Franklin Rd. Suite 164
Raleigh, N.C. 27606
Bus: 919 851 8077
Fax: 919 851 8107
License: F-0377

TRANSPORTATION PLANNING/DESIGN - BRIDGE/STRUCTURE DESIGN
CIVIL/SITE DESIGN - GIS/GPS - CONSTRUCTION OBSERVATION

REVISIONS						SHEET NO.
NO.	BY:	DATE:	NO.	BY:	DATE:	5-188
1			3			TOTAL SHEETS
2			4			671

STR #3

ASSEMBLED BY : T. DIFFEE	DATE : 6-25-13
CHECKED BY : G.M. GILLAND	DATE : 6-26-13
DESIGN ENGINEER OF RECORD : GMG	DATE : 6-13
DRAWN BY : TLA 10/05	ADDED 5/1/06RR KMM/GM
CHECKED BY : GM 5/06	REV. 10/1/11 MAA/GM
	REV. 12/21/11 MAA/GM

P:\2012\U-0071 Sites 3,8 & 9\Structures\DMG_3\U0071_SD_STR3_AS_WE1.dgn
12/10/2013 12:20:08 PM

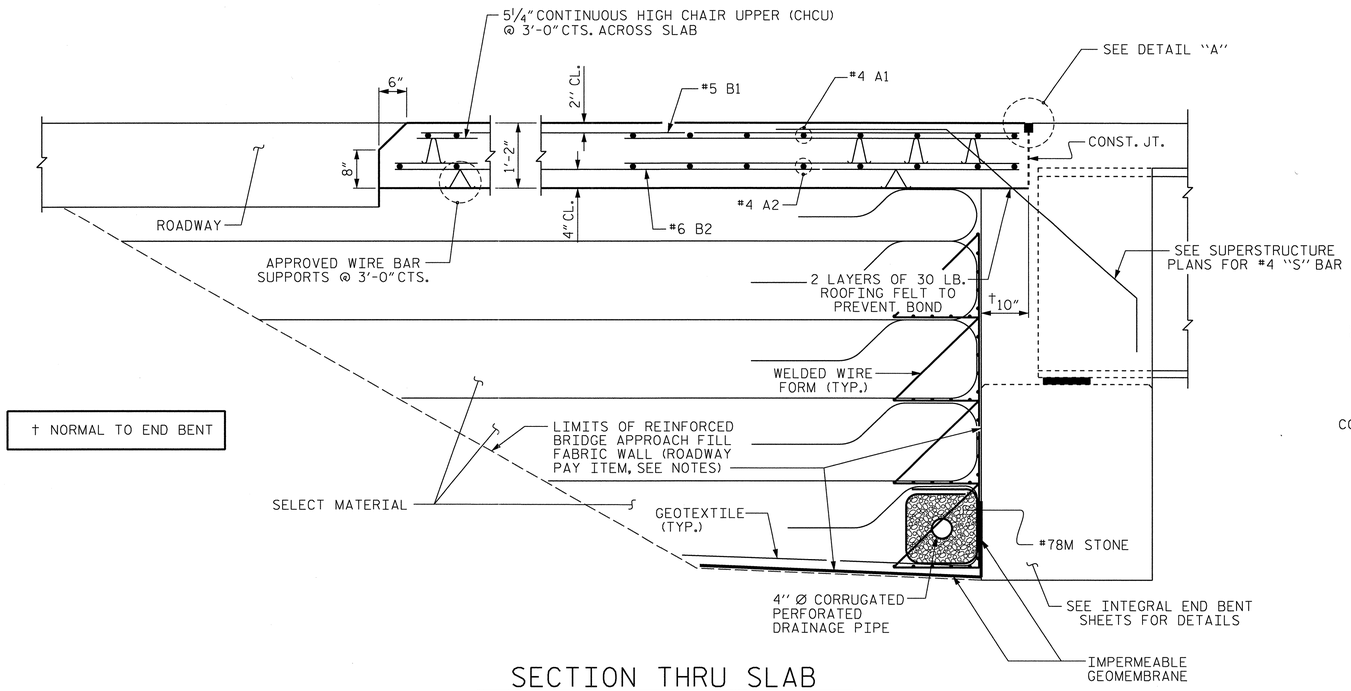

SECTION THRU SLAB

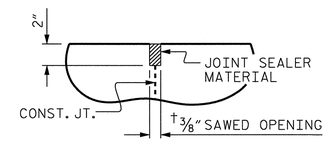

DETAIL "A"

SPLICE LENGTHS		
BAR SIZE	EPOXY COATED	UNCOATED
#4	2'-0"	1'-9"
#5	2'-6"	2'-2"
#6	3'-10"	2'-7"

BAR TYPE

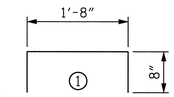

ALL BAR DIMENSIONS ARE OUT TO OUT

BILL OF MATERIAL

FOR ONE APPROACH SLAB (2 REQ'D.)

BAR	NO.	SIZE	TYPE	LENGTH	WEIGHT
✳ A1	32	#4	STR	25'-1"	536
A2	32	#4	STR	25'-0"	534
✳ B1	94	#5	STR	14'-2"	1389
B2	94	#6	STR	14'-8"	2071
✳ B3	8	#4	STR	14'-8"	78
✳ G1	30	#4	STR	5'-0"	100
✳ U1	12	#4	1	3'-0"	24
REINFORCING STEEL				LBS.	2605
✳ EPOXY COATED REINFORCING STEEL				LBS.	2,127
CLASS AA CONCRETE				C. Y.	34.0

NOTES

APPROACH SLAB SHALL NOT BE CONSTRUCTED PRIOR TO COMPLETION OF THE BRIDGE DECK.

FOR REINFORCED BRIDGE APPROACH FILL FABRIC WALL INCLUDING GEOTEXTILE, IMPERMEABLE GEOMEMBRANE, 4' Ø DRAINAGE PIPE, #78M STONE, WELDED WIRE FORM, AND SELECT MATERIAL, SEE ROADWAY PLANS.

AREA BETWEEN THE WINGWALL AND APPROACH SLAB SHALL BE GRADED TO DRAIN THE WATER AWAY FROM THE FILL FACE OF THE BRIDGE AND SHALL BE PAVED. SEE ROADWAY PLANS.

THE JOINT OPENING AT THE APPROACH SLAB/DECK INTERFACE SHALL BE SAWED NO MORE THAN 12 HOURS AFTER THE APPROACH SLAB IS CAST. THE JOINT SHALL BE CLEANED OF ALL DEBRIS BEFORE THE SEALANT IS APPLIED. THE JOINT SEALER MATERIAL SHALL CONFORM TO THE REQUIREMENTS OF SECTION 1028-3 OF THE STANDARD SPECIFICATIONS.

GROOVED CONTRACTION JOINTS ½" IN DEPTH, SHALL BE TOOLED IN ALL EXPOSED FACES OF SIDEWALK IN ACCORDANCE WITH ARTICLE 825-10(B) OF THE STANDARD SPECIFICATIONS.

FOR THE SIDEWALKS ON THE APPROACH SLABS, THE CONTRACTION JOINTS SHALL BE LOCATED AT THE MIDDLE OF THE APPROACH SLAB SIDEWALK.

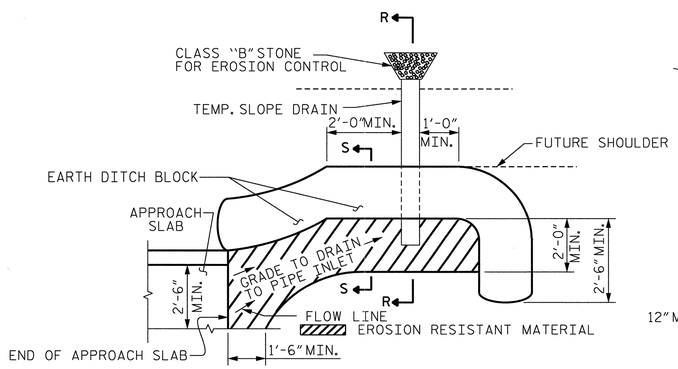

NOTE: IMMEDIATELY AFTER THE CONSTRUCTION OF THE APPROACH SLAB, THE CONTRACTOR SHALL PROVIDE TEMPORARY BERM AND SLOPE DRAIN. CONTRACTOR SHALL GRADE TO PIPE INLET AND PROVIDE EROSION RESISTANT MATERIAL AS SHOWN. THE EROSION RESISTANT MATERIAL SHALL BE EITHER 1) ASPHALT PLANT MIX, TYPE 1 OR TYPE 2, MIN. 2" DEPTH, 2) EROSION CONTROL MAT, OR 3) CONCRETE, AS DIRECTED BY THE ENGINEER. THE SLOPE DRAIN SHALL CONSIST OF A NON-PERFORATED TEMPORARY DRAINAGE PIPE, 12 INCHES IN DIAMETER.

PLAN VIEW

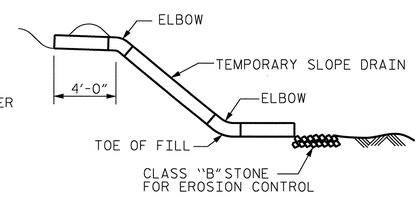

SECTION R-R

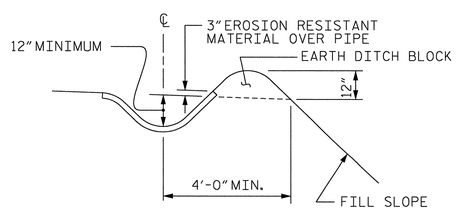

SECTION S-S

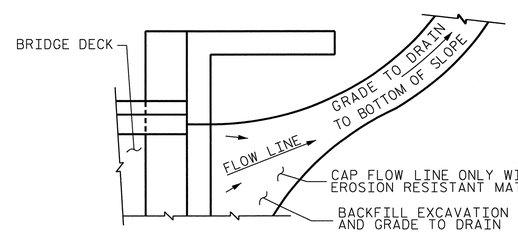

NOTE: IF THE APPROACH SLAB IS NOT CONSTRUCTED IMMEDIATELY AFTER THE BACKFILLING OF THE END BENT EXCAVATION, GRADE TO DRAIN TO THE BOTTOM OF THE SLOPE AND PROVIDE EROSION RESISTANT MATERIAL, SUCH AS FIBERGLASS ROVING OR AS DIRECTED BY THE ENGINEER TO PREVENT SOIL EROSION AND TO PROTECT THE AREA ADJACENT TO THE STRUCTURE. THE CONTRACTOR WILL BE REQUIRED TO REMOVE THESE MATERIALS PRIOR TO CONSTRUCTION OF THE APPROACH SLAB.

TEMPORARY DRAINAGE DETAIL

TEMPORARY BERM AND SLOPE DRAIN DETAILS

(TO BE USED WHEN SHOULDER BERM GUTTER IS REQUIRED)

PROJECT NO. U-0071
DURHAM COUNTY
STATION: 85+26.52 -L-

SHEET 2 OF 2

STATE OF NORTH CAROLINA
DEPARTMENT OF TRANSPORTATION
RALEIGH

STANDARD

BRIDGE APPROACH SLAB DETAILS

NORTH CAROLINA PROFESSIONAL SEAL 037400 ENGINEER GREGORY M. GILLAND 12/10/13

WETHERILL ENGINEERING
559 Jones Franklin Rd. Suite 164
Raleigh, N.C. 27606
Bus: 919 851 8077
Fax: 919 851 8107
License: F-0377
TRANSPORTATION PLANNING/DESIGN - BRIDGE/STRUCTURE DESIGN
CIVIL/SITE DESIGN - GIS/GPS - CONSTRUCTION OBSERVATION

REVISIONS							
NO.	BY:	DATE:	NO.	BY:	DATE:	SHEET NO.	
1			3			S-189	
2			4			TOTAL SHEETS	
						671	

ASSEMBLED BY : T. DIFFEE	DATE : 6-25-13
CHECKED BY : G.M. GILLAND	DATE : 6-26-13
DESIGN ENGINEER OF RECORD : GMG	DATE : 6-13
DRAWN BY : TLA 10/05	ADDED 5/1/06RR KMM/GM
CHECKED BY : GM 5/06	REV. 10/1/11 MAA/GM
	REV. 12/21/11 MAA/GM

P:\2012\U-0071 Sites 3,8 & 9\Structures\DWG_3\u0071_SD_STR3_AS_WEI.dgn
12/10/2013 12:20:19 PM

STR #3

PI = 30+85.00
EL = 402.04'
VC = 800'
(+)5.0000% △ (-)4.8912%

GRADE DATA -Y4-

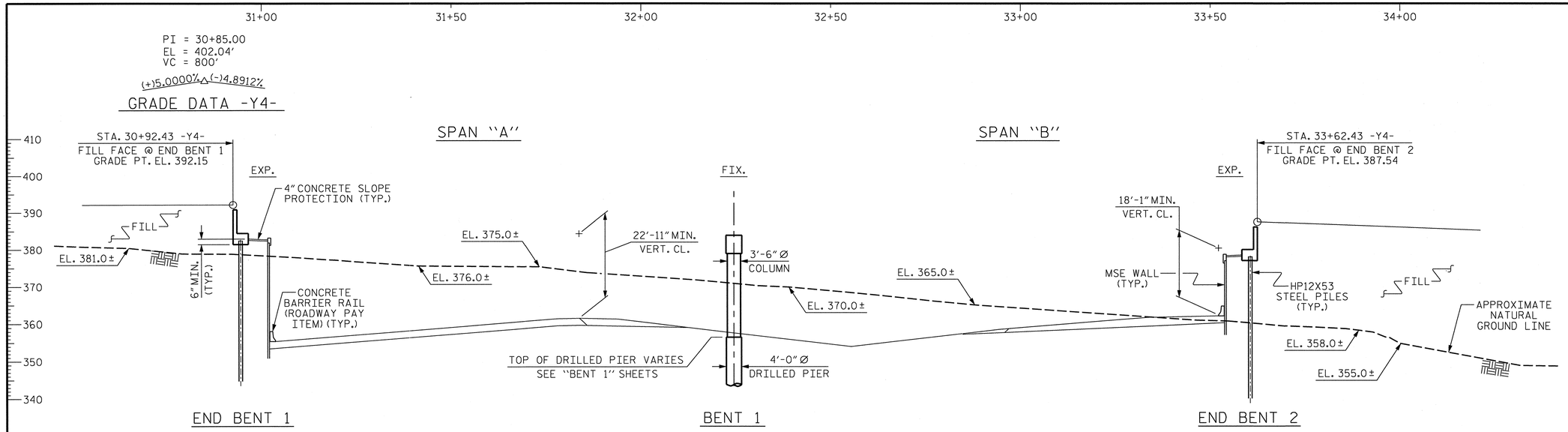

SECTION ALONG -Y4-

SECTION AT BENT AND END BENTS ARE AT RIGHT ANGLES

HORIZONTAL CURVE DATA

PI = 108+17.74 -WBL-	PI = 108+19.74 -L-	PI = 30+81.43 -Y4-
△ = 69°47' 33.8" (RT)	△ = 70°07' 35.3" (RT)	△ = 41°08' 53.4" (LT)
D = 2°56' 17.7"	D = 2°48' 31.0"	D = 2° 26' 17.2"
L = 2,375.32'	L = 2,496.83'	L = 1,687.70'
T = 1,360.15'	T = 1431.78'	T = 882.09'
R = 1,950.00'	R = 2,040.00'	R = 2,350.00'

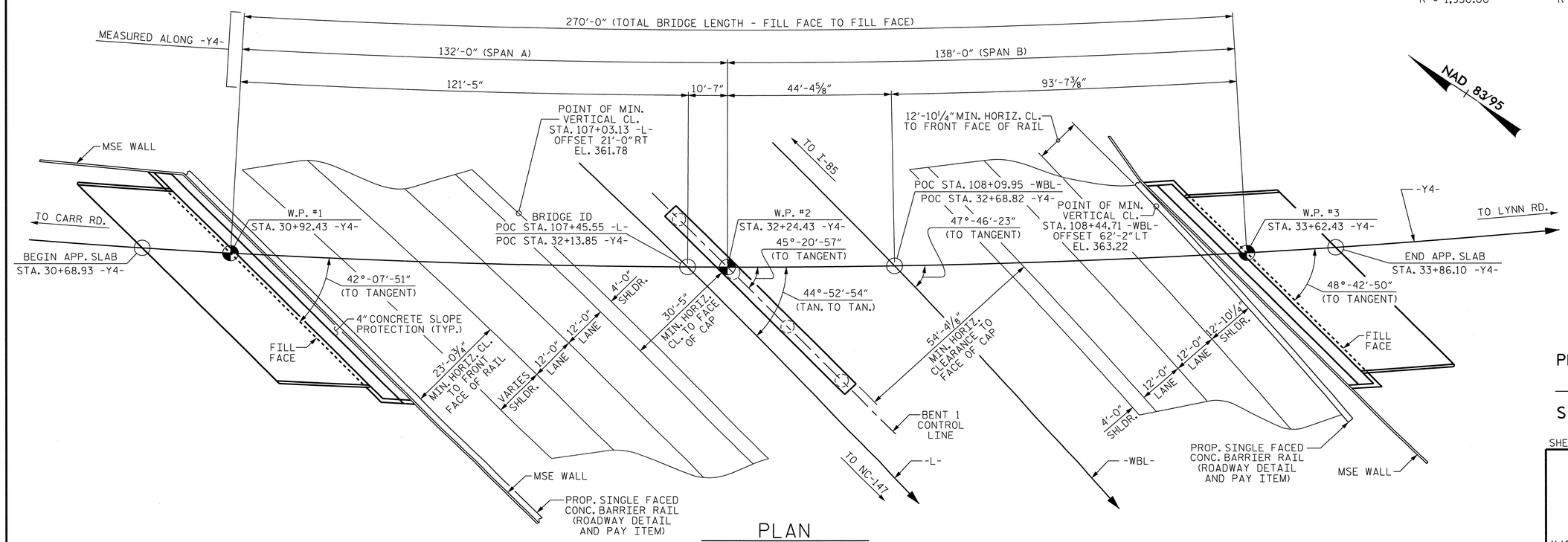

PLAN

PILES NOT SHOWN FOR CLARITY

PROJECT NO. U-0071
DURHAM COUNTY
STATION: POC 107+45.55 -L-
POC 32+13.85 -Y4-

SHEET 1 OF 4 BRIDGE #595

STATE OF NORTH CAROLINA
DEPARTMENT OF TRANSPORTATION
RALEIGH

GENERAL DRAWING
FOR BRIDGE ON -Y4-
(US 70 EB) OVER -L- AND -WBL-
EAST END CONNECTOR BETWEEN
CARR RD. AND LYNN RD.

REVISIONS								SHEET NO.
NO.	BY:	DATE:	NO.	BY:	DATE:			S-190
1			3					TOTAL SHEETS
2			4					671

NORTH CAROLINA PROFESSIONAL SEAL 37400 ENGINEER GREGORY M. GILLAND 1/17/14

WETHERILL ENGINEERING
559 Jones Franklin Rd. Suite 164
Raleigh, N.C. 27606
Bus: 919 851 8077
Fax: 919 851 8107
License: F-0377

TRANSPORTATION PLANNING/DESIGN - BRIDGE/STRUCTURE DESIGN
CIVIL/SITE DESIGN - GIS/GPS - CONSTRUCTION OBSERVATION

DRAWN BY : G.M. GILLAND DATE : 3-5-13
CHECKED BY : T.V. ROUNTREE DATE : 4-8-13
DESIGN ENGINEER OF RECORD: G.M. GILLAND DATE : 6-13

P:\2012\U-0071 -Y4 over L\Structures\DGN\U0071_SD_Y4_GD_WE1.dgn
1/17/2014 8:10:26 AM

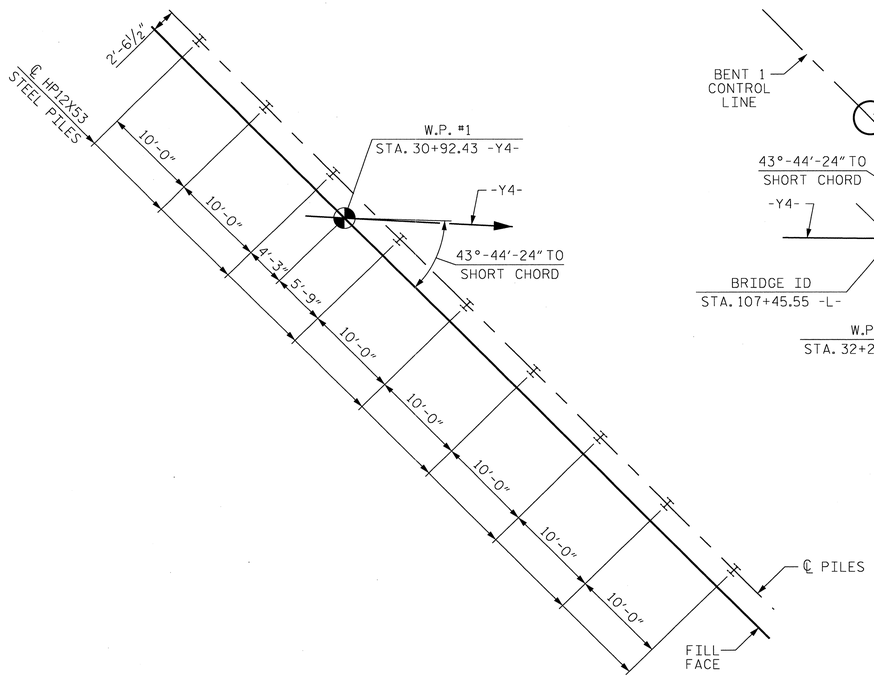

END BENT 1

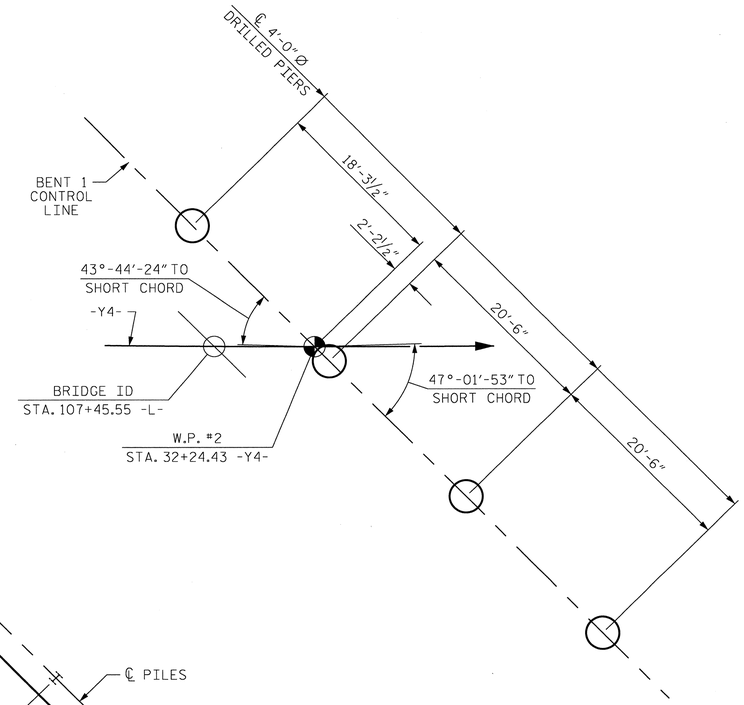

BENT 1

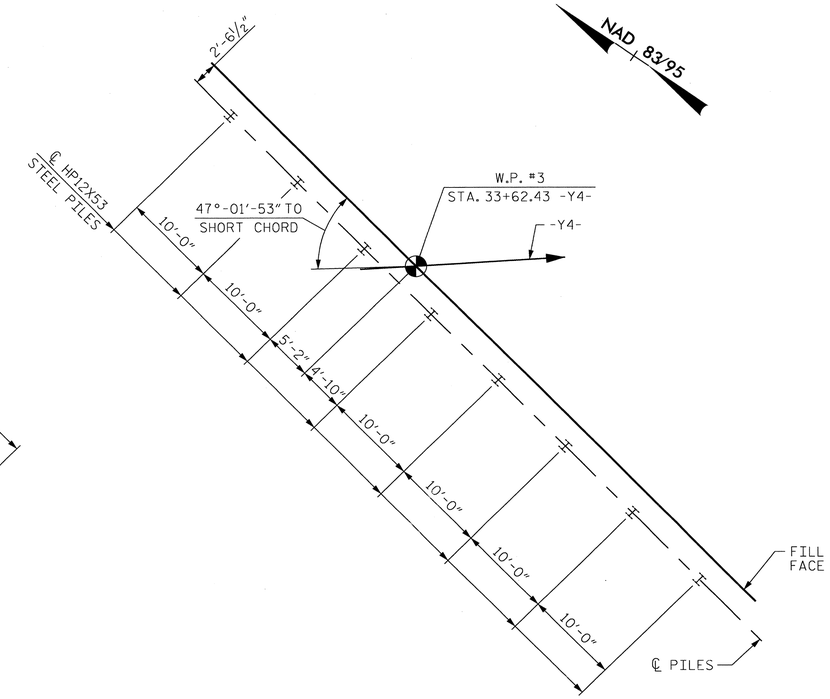

END BENT 1

FOUNDATION LAYOUT

DIMENSIONS LOCATING PILES AND DRILLED PIERS ARE SHOWN TO THEIR CENTERLINE

NOTES

FOR PILES, SEE SECTION 450 OF THE STANDARD SPECIFICATIONS.

PILES AT END BENT 1 ARE DESIGNED FOR A FACTORED RESISTANCE OF 105 TONS PER PILE.

PILES AT END BENT 2 ARE DESIGNED FOR A FACTORED RESISTANCE OF 120 TONS PER PILE.

DRIVE PILES AT END BENT 1 TO A REQUIRED DRIVING RESISTANCE OF 175 TONS PER PILE.

DRIVE PILES AT END BENT 2 TO A REQUIRED DRIVING RESISTANCE OF 200 TONS PER PILE.

STEEL H-PILE POINTS ARE REQUIRED FOR STEEL H-PILES AT END BENT 2 LEFT SIDE. FOR STEEL PILE POINTS, SEE SECTION 450 OF THE STANDARD SPECIFICATIONS.

PILE EXCAVATION IS REQUIRED TO INSTALL LEFT 4 PILES AT END BENT 1. EXCAVATE HOLES AT PILE LOCATIONS TO ELEVATION 343 FT. FOR PILE EXCAVATION, SEE SECTION 450 OF THE STANDARD SPECIFICATIONS.

CONCRETE OR GROUT IS REQUIRED TO FILL HOLES FOR PILE EXCAVATION AT END BENT 1.

FOR DRILLED PIERS, SEE SECTION 411 OF THE STANDARD SPECIFICATIONS.

DRILLED PIERS AT BENT 1 ARE DESIGNED FOR A FACTORED RESISTANCE OF 555 TONS PER PIER. CHECK FIELD CONDITIONS FOR THE REQUIRED TIP RESISTANCE OF 50 TSF.

INSTALL DRILLED PIERS AT BENT 1 TO A TIP ELEVATION NO HIGHER THAN 328 FT (LEFT) AND 330 FT (RIGHT) AND WITH THE REQUIRED TIP RESISTANCE.

DRILLED PIER EXCAVATIONS AT BENT 1 WILL EXTEND INTO MATERIAL THAT DETERIORATES WHEN EXPOSED TO THE ELEMENTS. CHECK FIELD CONDITIONS FOR THE REQUIRED TIP RESISTANCE AND PLACE CONCRETE IMMEDIATELY AFTER THE EXCAVATION IS COMPLETED.

SPT IS REQUIRED FOR DRILLED PIERS AT BENT 1. FOR SPT TESTING, SEE SECTION 411 OF THE STANDARD SPECIFICATIONS.

SID INSPECTIONS MAY BE REQUIRED FOR DRILLED PIERS. THE ENGINEER WILL DETERMINE THE NEED FOR SID INSPECTIONS. FOR SID INSPECTIONS, SEE SECTION 411 OF THE STANDARD SPECIFICATIONS.

CSL TUBES ARE REQUIRED AND CSL TESTING MAY BE REQUIRED FOR DRILLED PIERS. THE ENGINEER WILL DETERMINE THE NEED FOR CSL TESTING. FOR CSL TESTING, SEE SECTION 411 OF THE STANDARD SPECIFICATIONS.

DRIVE PILES AT END BENT 1 AND END BENT 2 BEFORE CONSTRUCTING THE MSE RETAINING WALLS.

DRAWN BY : G.M. GILLAND DATE : 3-26-13
CHECKED BY : T.V. ROUNTREE DATE : 4-8-13
DESIGN ENGINEER OF RECORD: G.M. GILLAND DATE : 6-13

NORTH CAROLINA PROFESSIONAL SEAL 037408 ENGINEER GREGORY M. GILLAND 7/11/13

WETHERILL ENGINEERING
559 Jones Franklin Rd. Suite 164
Raleigh, N.C. 27606
Bus: 919 851 8077
Fax: 919 851 8107
License: F-0377
TRANSPORTATION PLANNING/DESIGN - BRIDGE/STRUCTURE DESIGN
CIVIL/SITE DESIGN - GIS/GPS - CONSTRUCTION OBSERVATION

PROJECT NO. U-0071
DURHAM COUNTY
STATION: 107+45.55 -L-

SHEET 2 OF 4

STATE OF NORTH CAROLINA
DEPARTMENT OF TRANSPORTATION
RALEIGH

GENERAL DRAWING

FOR BRIDGE ON -Y4-
(US 70 EB) OVER -L- AND -WBL-
EAST END CONNECTOR BETWEEN
CARR RD. AND LYNN RD.

REVISIONS						SHEET NO.
NO.	BY:	DATE:	NO.	BY:	DATE:	5-191
1			3			TOTAL SHEETS
2			4			671

P:\2012\U-0071 - Y4 over LV\Structures\DGN\U0071_SD_Y4_GD_WE1.dgn
7/11/2013 7:29:09 AM

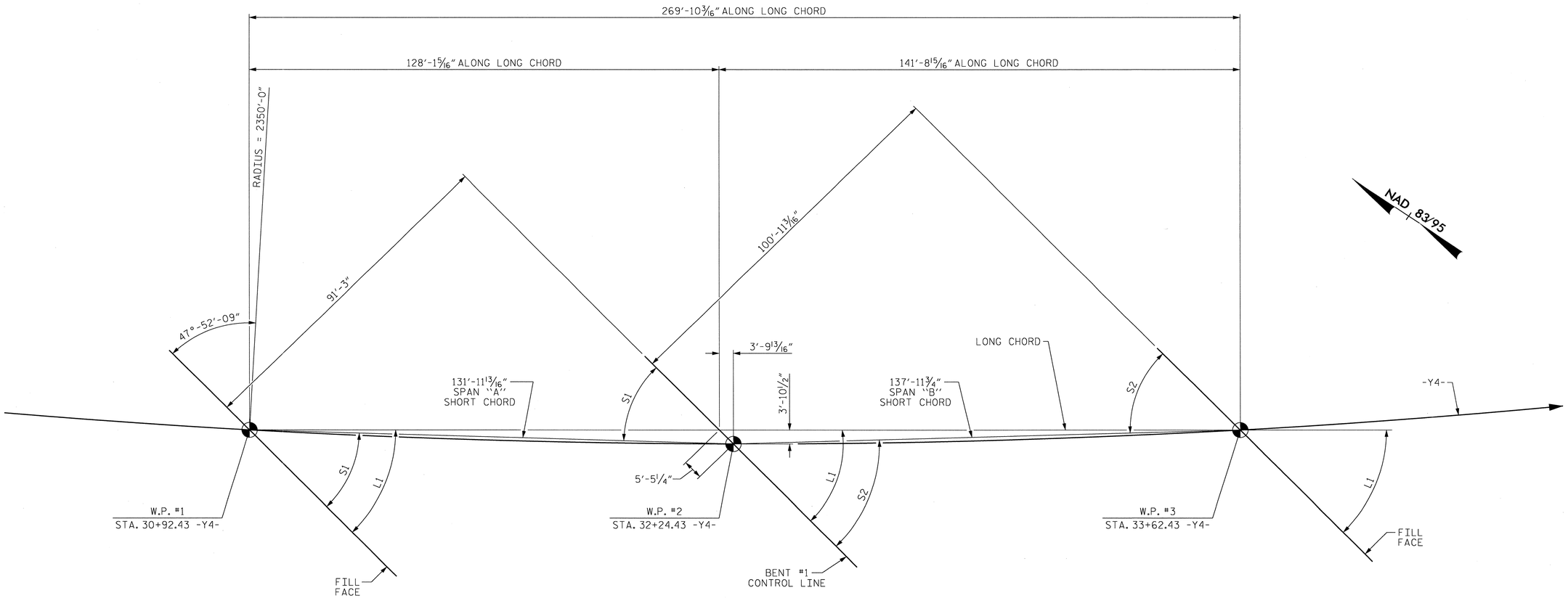

LONG CHORD LAYOUT

NOTE: END BENTS AND BENT ARE PARALLEL

ANGLES			
LONG CHORD		SHORT CHORD	
L1	45°-25'-20"	S1	43°-44'-24"
		S2	47°-01'-53"

HORIZONTAL CURVE DATA -Y4-

PI = 30+81.43 -Y4-
△ = 41°08' 53.4" (LT)
D = 2° 26' 17.2"
L = 1,687.70'
T = 882.09'
R = 2,350.00'

PROJECT NO. U-0071
DURHAM COUNTY
STATION: 107+45.55 -L-

SHEET 3 OF 4

STATE OF NORTH CAROLINA
DEPARTMENT OF TRANSPORTATION
RALEIGH

GENERAL DRAWING

FOR BRIDGE ON -Y4-
(US 70 EB) OVER -L- AND -WBL-
EAST END CONNECTOR BETWEEN
CARR RD. AND LYNN RD.

NORTH CAROLINA PROFESSIONAL SEAL ENGINEER GREGORY M. GILLAND 7/11/13

WETHERILL ENGINEERING
559 Jones Franklin Rd. Suite 164
Raleigh, N.C. 27606
Bus: 919 851 8077
Fax: 919 851 8107
License: F-0377
TRANSPORTATION PLANNING/DESIGN - BRIDGE/STRUCTURE DESIGN
CIVIL/SITE DESIGN - GIS/GPS - CONSTRUCTION OBSERVATION

REVISIONS							SHEET NO.
NO.	BY:	DATE:	NO.	BY:	DATE:		S-192
1			3				TOTAL SHEETS
2			4				671

DRAWN BY : G.M. GILLAND DATE : 2-22-13
CHECKED BY : T.V. ROUNTREE DATE : 4-8-13
DESIGN ENGINEER OF RECORD: G.M. GILLAND DATE : 6-13

P:\2012\U-0071 - Y4 over L\Structures\DGN\U0071_SD_Y4_GD_WE1.dgn
7/11/2013 7:30:54 AM

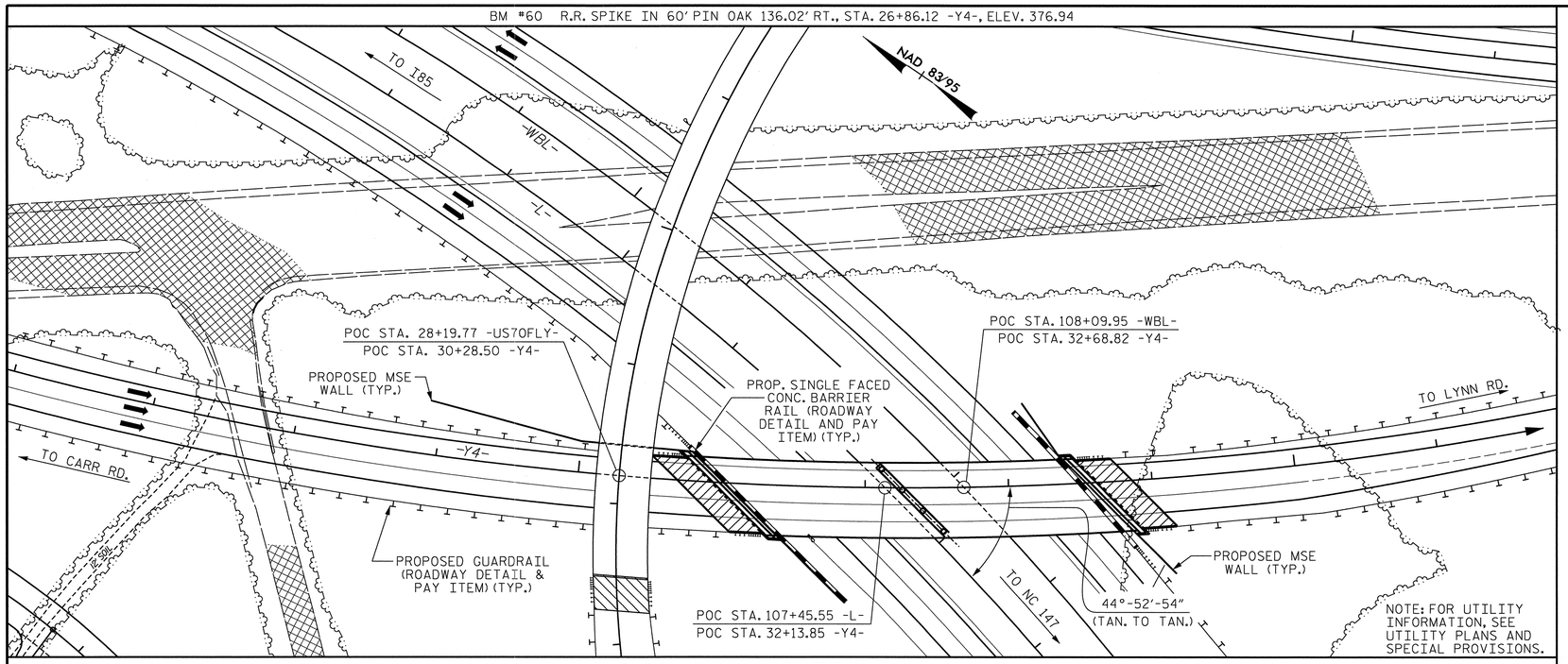

LOCATION SKETCH

NOTES

ASSUMED LIVE LOAD = HL-93 OR ALTERNATE LOADING.

THIS BRIDGE HAS BEEN DESIGNED IN ACCORDANCE WITH THE AASHTO LRFD BRIDGE DESIGN SPECIFICATIONS.

THIS BRIDGE IS LOCATED IN SEISMIC ZONE 1.

FOR OTHER DESIGN DATA AND GENERAL NOTES, SEE SHEET SN.

FOR SUBMITTAL OF WORKING DRAWINGS, SEE SPECIAL PROVISIONS.

FOR FALSEWORK AND FORMWORK, SEE SPECIAL PROVISIONS.

FOR CRANE SAFETY, SEE SPECIAL PROVISIONS.

FOR GROUT FOR STRUCTURES, SEE SPECIAL PROVISIONS.

FOR PLACING LOAD ON STRUCTURE MEMBERS, SEE SPECIAL PROVISIONS.

REMOVABLE FORMS MAY BE USED IN LIEU OF METAL STAY-IN-PLACE FORMS IN ACCORDANCE WITH ARTICLE 420-3 OF THE STANDARD SPECIFICATIONS.

NEEDLE BEAMS WILL NOT BE ALLOWED UNLESS OTHERWISE CALLED FOR ON THE PLANS OR APPROVED BY THE ENGINEER.

STRUCTURAL STEEL USED FOR THE 1½" TOP & BOTTOM FLANGE SHALL BE HPS 70W AND PAINTED IN ACCORDANCE WITH SYSTEM 4 OF ARTICLE 442-8 OF THE STANDARD SPECIFICATIONS UNLESS OTHERWISE NOTED IN THE PLANS.

ALL REMAINING STRUCTURAL STEEL SHALL BE AASHTO M270 GRADE 50W AND PAINTED IN ACCORDANCE WITH SYSTEM 4 OF ARTICLE 442-8 OF THE STANDARD SPECIFICATIONS UNLESS OTHERWISE NOTED ON THE PLANS.

THE CLASS AA CONCRETE IN THE BRIDGE DECK SHALL CONTAIN FLY ASH OR GROUND GRANULATED BLAST FURNACE SLAG AT THE SUBSTITUTION RATE SPECIFIED IN ARTICLE 1024-1 AND IN ACCORDANCE WITH ARTICLES 1024-5 AND 1024-6 OF THE STANDARD SPECIFICATIONS. NO PAYMENT WILL BE MADE FOR THIS SUBSTITUTION AS IT IS CONSIDERED INCIDENTAL TO THE COST OF THE REINFORCED CONCRETE DECK SLAB.

FOR EROSION CONTROL MEASURES, SEE EROSION CONTROL PLANS.

TOTAL BILL OF MATERIAL

	PILE EXCAVATION IN SOIL	PILE EXCAVATION NOT IN SOIL	4'-0" Ø DRILLED PIER IN SOIL	4'-0" Ø DRILLED PIER NOT IN SOIL	SID INSPECTION	SPT TESTING	CSL TESTING	REINFORCED CONCRETE DECK SLAB	GROOVING BRIDGE FLOORS	CLASS A CONCRETE	BRIDGE APPROACH SLABS	REINFORCING STEEL
	LIN. FT.	LIN. FT.	LIN. FT.	LIN. FT.	EACH	EACH	EACH	SQ. FT.	SQ. FT.	CU. YDS.	LUMP SUM	LBS.
SUPERSTRUCTURE								14,164	14,589		LUMP SUM	
END BENT #1	20	20								58.8		10,573
BENT #1			87.25	32.0	1	4	1			84.2		22,489
END BENT #2										54.4		9,634
TOTAL	20	20	87.25	32.0	1	4	1	14,164	14,589	197.4	LUMP SUM	42,696

TOTAL BILL OF MATERIAL

	SPIRAL COLUMN REINFORCING STEEL	STRUCTURAL STEEL	HP 12 X 53 STEEL PILES		STEEL PILE POINTS	CONCRETE BARRIER RAIL	4" SLOPE PROTECTION	POT BEARINGS	ELASTOMERIC BEARINGS	FOAM JOINT SEALS
	LBS.	APPROX. LBS.	NO.	LIN. FT.	EACH	LIN. FT.	SQ. YDS.	LUMP SUM	LUMP SUM	LUMP SUM
SUPERSTRUCTURE		465,500				532.33		LUMP SUM	LUMP SUM	LUMP SUM
END BENT #1			9	385			20			
BENT #1	5,167									
END BENT #2			8	360	4		18			
TOTAL	5,167	465,500	17	745	4	532.33	38	LUMP SUM	LUMP SUM	LUMP SUM

PROJECT NO. U-0071
DURHAM COUNTY
STATION: 107+45.55 -L-

SHEET 4 OF 4

STATE OF NORTH CAROLINA
DEPARTMENT OF TRANSPORTATION
RALEIGH

GENERAL DRAWING
FOR BRIDGE ON -Y4-
(US 70 EB) OVER -L- AND -WBL-
EAST END CONNECTOR BETWEEN
CARR RD. AND LYNN RD.

NORTH CAROLINA PROFESSIONAL SEAL 37400 ENGINEER GREGORY M. GILLAND 1/17/14

WETHERILL ENGINEERING
559 Jones Franklin Rd. Suite 164
Raleigh, N.C. 27606
Bus: 919 851 8077
Fax: 919 851 8107
License: F-0377
TRANSPORTATION PLANNING/DESIGN - BRIDGE/STRUCTURE DESIGN
CIVIL/SITE DESIGN - GIS/GPS - CONSTRUCTION OBSERVATION

REVISIONS							SHEET NO.
NO.	BY:	DATE:	NO.	BY:	DATE:		S-193
1			3				TOTAL SHEETS
2			4				671

DRAWN BY : G.M. GILLAND DATE : 4-1-13
CHECKED BY : T.V. ROUNTREE DATE : 4-8-13
DESIGN ENGINEER OF RECORD: G.M. GILLAND DATE : 6-13

P:\2012\U-0071 - Y4 over LVStructures\DGN\U0071_SD_Y4_GD_WEI.dgn
1/17/2014 7:20:09 AM

LOAD AND RESISTANCE FACTOR RATING (LRFR) SUMMARY FOR STEEL GIRDERS

LEVEL		VEHICLE	WEIGHT (W) (TONS)	CONTROLLING LOAD RATING (#)	MINIMUM RATING FACTORS (RF)	TONS = W × RF	STRENGTH I LIMIT STATE												SERVICE II LIMIT STATE						COMMENT NUMBER
							LIVE-LOAD FACTORS (γ_{LL})	MOMENT					SHEAR						LIVE-LOAD FACTORS (γ_{LL})	MOMENT					
								DISTRIBUTION FACTORS (DF)	RATING FACTOR	SPAN	GIRDER LOCATION	DISTANCE FROM LEFT END OF SPAN (ft)	DISTRIBUTION FACTORS (DF)	RATING FACTOR	SPAN	GIRDER LOCATION	DISTANCE FROM LEFT END OF SPAN (ft)		DISTRIBUTION FACTORS (DF)	RATING FACTOR	SPAN	GIRDER LOCATION	DISTANCE FROM LEFT END OF SPAN (ft)	
DESIGN LOAD RATING		HL-93 (INVENTORY)	N/A	1	1.08	--	1.75		1.08	B	5	72.00													
		HL-93 (OPERATING)	N/A		1.40	--	1.35		1.40	B	5	72.00													
		HS-20 (INVENTORY)	36.00	2	1.59	57.21	1.75		1.59	B	5	72.00													
		HS-20 (OPERATING)	36.00		2.06	74.16	1.35		2.06	B	5	72.00													
LEGAL LOAD RATING	SINGLE VEHICLE (SV)	SNSH	13.500		4.08	55.08	1.40		4.93	B	5	72.00													
		SNGARBS2	20.000		3.45	69.00	1.40		3.45	B	5	72.00													
		SNAGRIS2	22.000		3.19	70.18	1.40		3.19	B	5	72.00													
		SNCOTTS3	27.250		2.46	67.04	1.40		2.46	B	5	72.00													
		SNAGGRS4	34.925		1.98	69.15	1.40		1.98	B	5	72.00													
		SNS5A	35.550		1.94	68.97	1.40		1.94	B	5	72.00													
		SNS6A	39.950		1.75	69.91	1.40		1.75	B	5	72.00													
		SNS7B	42.000		1.67	70.14	1.40		1.67	B	5	72.00													
	TRUCK TRACTOR SEMI-TRAILER (TTST)	TNAGRIT3	33.000		2.15	70.95	1.40		2.15	B	5	72.00													
		TNT4A	33.075		2.12	70.12	1.40		2.12	B	5	72.00													
		TNT6A	41.600		1.72	71.55	1.40		1.72	B	5	72.00													
		TNT7A	42.000		1.71	71.82	1.40		1.71	B	5	72.00													
		TNT7B	42.000		1.70	71.40	1.40		1.70	B	5	72.00													
		TNAGRIT4	43.000		1.66	71.38	1.40		1.66	B	5	72.00													
		TNAGT5A	45.000		1.60	72.00	1.40		1.60	B	5	72.00													
		TNAGT5B	45.000	3	1.58	71.10	1.40		1.58	B	5	72.00													
FATIGUE		HL-93 (INVENTORY)	γ_{LL}=0.75																						

LOAD FACTORS:

DESIGN LOAD RATING FACTORS	LIMIT STATE	γ_{DC}	γ_{DW}
	STRENGTH I	1.25	1.50
	SERVICE II	1.00	1.00

NOTES:

MINIMUM RATING FACTORS ARE BASED ON THE STRENGTH I AND SERVICE II LIMIT STATES.

ALLOWABLE STRESS FOR SERVICE II LIMIT STATE ARE AS REQUIRED FOR DESIGN.

COMMENTS:

1. DISTRIBUTION FACTORS BASED ON A COMPLEX SYSTEM OF ANALYSIS FOR CURVED GIRDERS. THEREFORE, DISTRIBUTION FACTORS VARY AND ARE NOT SHOWN.

2. ✱ AVERAGE GIRDER LENGTHS FOR SPAN USED.

(#) CONTROLLING LOAD RATING

(1) DESIGN LOAD RATING (HL-93) ✱✱

(2) DESIGN LOAD RATING (HS-20) ✱✱

(3) LEGAL LOAD RATING ✱✱

✱✱ SEE CHART FOR VEHICLE TYPE

GIRDER LOCATION

I - INTERIOR GIRDER
EL - EXTERIOR LEFT GIRDER
ER - EXTERIOR RIGHT GIRDER

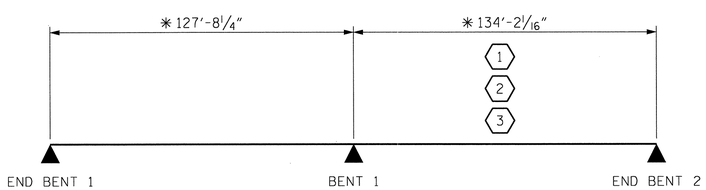

LRFR SUMMARY

PROJECT NO. U-0071
DURHAM COUNTY
STATION: 107+45.55 -L-

STATE OF NORTH CAROLINA
DEPARTMENT OF TRANSPORTATION
RALEIGH

STANDARD

LRFR SUMMARY FOR STEEL GIRDERS
(NON-INTERSTATE TRAFFIC)

REVISIONS								SHEET NO.
NO.	BY:	DATE:	NO.	BY:	DATE:			5-194
1			3					TOTAL SHEETS
2			4					671

STD. NO. LRFR3

NORTH CAROLINA PROFESSIONAL SEAL 37400 ENGINEER GREGORY M. GILLAND 7/1/13

ETHERILL ENGINEERING
559 Jones Franklin Rd. Suite 164
Raleigh, N.C. 27606
Bus: 919 851 8077
Fax: 919 851 8107
License: F-0377

TRANSPORTATION PLANNING/DESIGN - BRIDGE/STRUCTURE DESIGN
CIVIL/SITE DESIGN - GIS/GPS - CONSTRUCTION OBSERVATION

ASSEMBLED BY : J. PENDERGRAFT DATE : 2-26-13
CHECKED BY : R. ASCENCIO DATE : 3-22-13
DESIGN ENGINEER OF RECORD: GMG DATE : 6-13

DRAWN BY : MAA 1/08
CHECKED BY : GM/DI 2/08

REV. 11/12/08RR MAA/GM
REV. 10/1/11 MAA/GM

P:\2012\U-0071 - Y4 over LVStructures\DGN\U0071_SD_Y4_LRFR_WEI.dgn
7/1/2013 7:37:26 AM

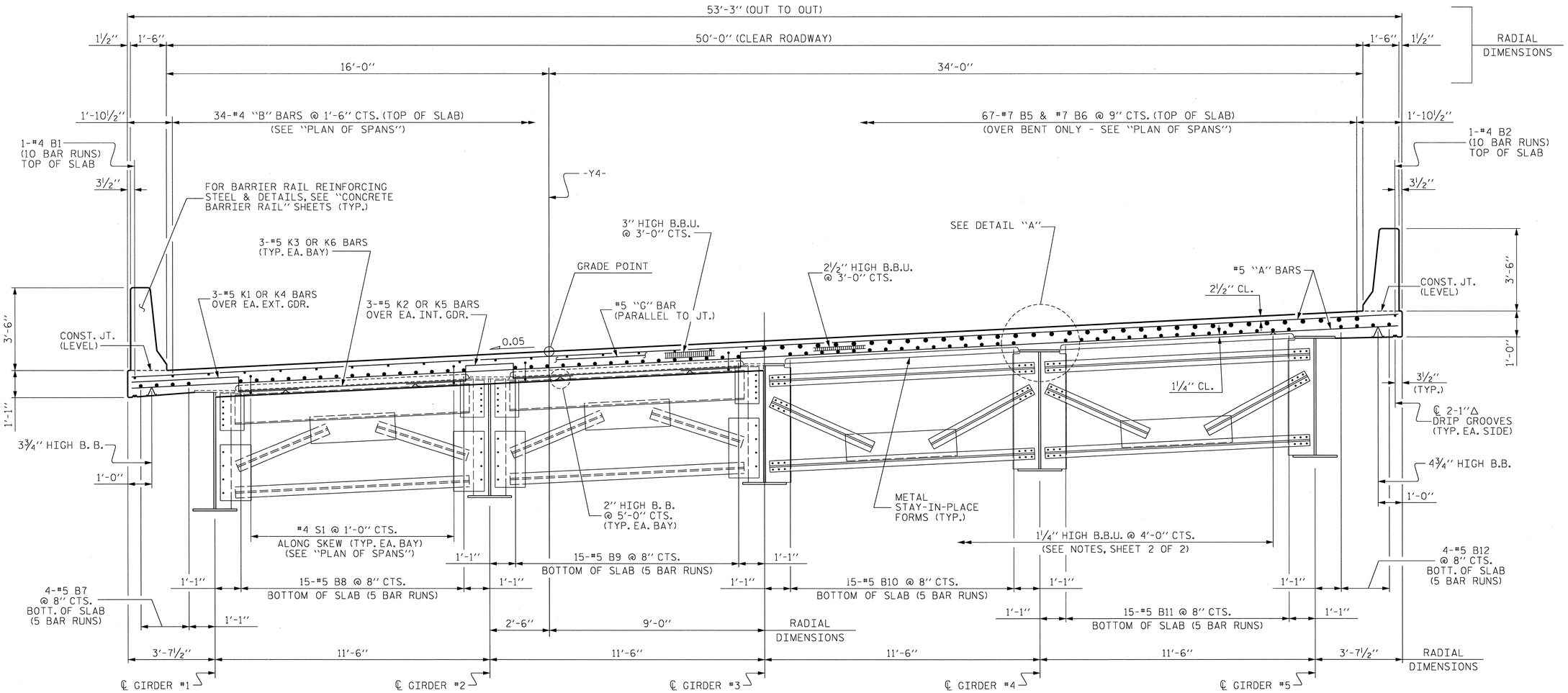

HALF TYPICAL SECTION

SHOWING END BENT DIAPHRAGMS (D1)

HALF TYPICAL SECTION

SHOWING BENT DIAPHRAGMS (D2)

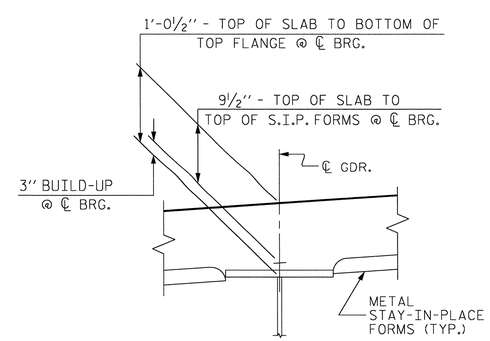

DETAIL "A"

PROJECT NO. U-0071

DURHAM COUNTY

STATION: 107+45.55 -L-

SHEET 1 OF 2

STATE OF NORTH CAROLINA
DEPARTMENT OF TRANSPORTATION
RALEIGH

SUPERSTRUCTURE

TYPICAL SECTION

REVISIONS								SHEET NO.
NO.	BY:	DATE:	NO.	BY:	DATE:			S-195
1			3					TOTAL SHEETS
2			4					671

NORTH CAROLINA PROFESSIONAL SEAL 21400 ENGINEER GREGORY M. GILLAND 7/11/13

WETHERILL ENGINEERING
559 Jones Franklin Rd. Suite 164
Raleigh, N.C. 27606
Bus: 919 851 8077
Fax: 919 851 8107
License: F-0377

TRANSPORTATION PLANNING/DESIGN - BRIDGE/STRUCTURE DESIGN
CIVIL/SITE DESIGN - GIS/GPS - CONSTRUCTION OBSERVATION

DRAWN BY :	J.M. BRITT	DATE :	1-2-13
CHECKED BY :	G.M. GILLAND	DATE :	3-5-13
DESIGN ENGINEER OF RECORD:	G.M. GILLAND	DATE :	6-13

P:\2012\U-0071 - Y4 over L\Structures\DGN\U071_SD_Y4_TS_WEI.dgn
7/11/2013 7:39:00 AM

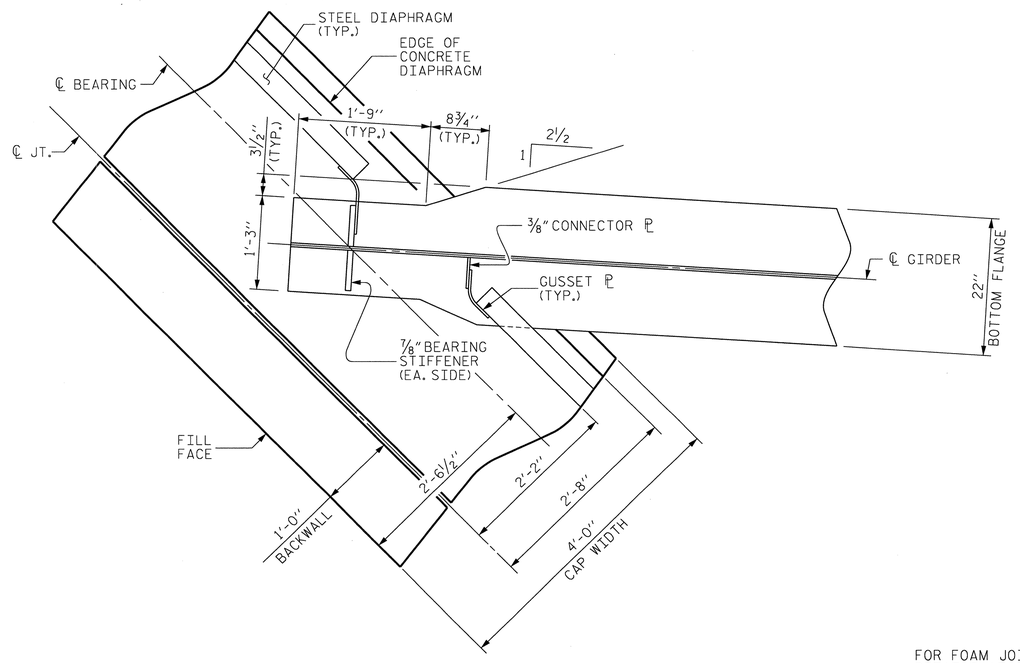

PLAN @ END BENT

END BENT 1 SHOWN, END BENT 2 SIMILAR

NOTES :

PROVIDE 1¼" HIGH BEAM BOLSTERS UPPER AT 4'-0" CTS. ATOP THE METAL STAY-IN-PLACE FORMS TO SUPPORT THE BOTTOM MAT OF "A" BARS. WHEN USING REMOVABLE FORMS, PROVIDE CONTINUOUS HIGH CHAIRS FOR METAL DECK (C.H.C.M.) @ 4'-0" CTS. WITH A HEIGHT TO SUPPORT THE BOTTOM MAT OF "A" BARS A CLEAR DISTANCE OF 2½" ABOVE THE TOP OF THE REMOVABLE FORM.

METAL STAY-IN-PLACE FORMS SHALL NOT BE WELDED TO GIRDER FLANGES IN THE ZONES REQUIRING CHARPY V-NOTCH TEST. SEE STRUCTURAL STEEL DETAIL SHEETS.

PREVIOUSLY CAST CONCRETE IN A CONTINUOUS UNIT SHALL HAVE ATTAINED A MINIMUM COMPRESSIVE STRENGTH OF 3,000 PSI BEFORE ADDITIONAL CONCRETE IS CAST IN THE UNIT.

BARRIER RAIL IN A CONTINUOUS UNIT SHALL NOT BE CAST UNTIL ALL SLAB CONCRETE IN THE UNIT HAS BEEN CAST AND HAS REACHED A MINIMUM COMPRESSIVE STRENGTH OF 3,000 PSI.

STRUCTURAL STEEL ERECTION IN A CONTINUOUS UNIT SHALL BE COMPLETE BEFORE FALSEWORK OR FORMS ARE PLACED ON THE UNIT.

#5 "G" BAR MAY BE SHIFTED SLIGHTLY, AS NECESSARY, TO CLEAR REINFORCING STEEL AND STIRRUPS.

THE CONTRACTOR MAY, WHEN NECESSARY, PROPOSE A SCHEME FOR AVOIDING INTERFERENCE BETWEEN METAL STAY-IN-PLACE FORM SUPPORTS OR FORMS AND GIRDER STIFFENERS OR CONNECTOR PLATES. THE PROPOSAL SHALL BE INDICATED, AS APPROPRIATE, ON EITHER THE STEEL WORKING DRAWINGS OR THE METAL STAY-IN-PLACE FORM WORKING DRAWINGS.

THE NOMINAL UNCOMPRESSED SEAL WIDTH OF THE FOAM JOINT SEAL SHALL BE 2" AT END BENTS. FOR FOAM JOINT SEALS, SEE SPECIAL PROVISIONS.

THE CONTRACTOR SHALL ADJUST THE GIRDER BUILDUPS AS NECESSARY TO INCORPORATE A MAXIMUM PERMISSIBLE VARIATION IN POT BEARING DEPTH OF ½", SEE SPECIAL PROVISION FOR POT BEARINGS.

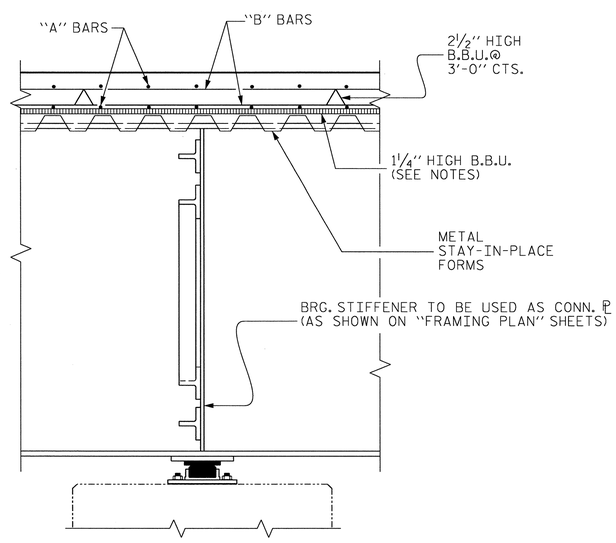

SECTION THRU BENT DIAPHRAGM (D2)

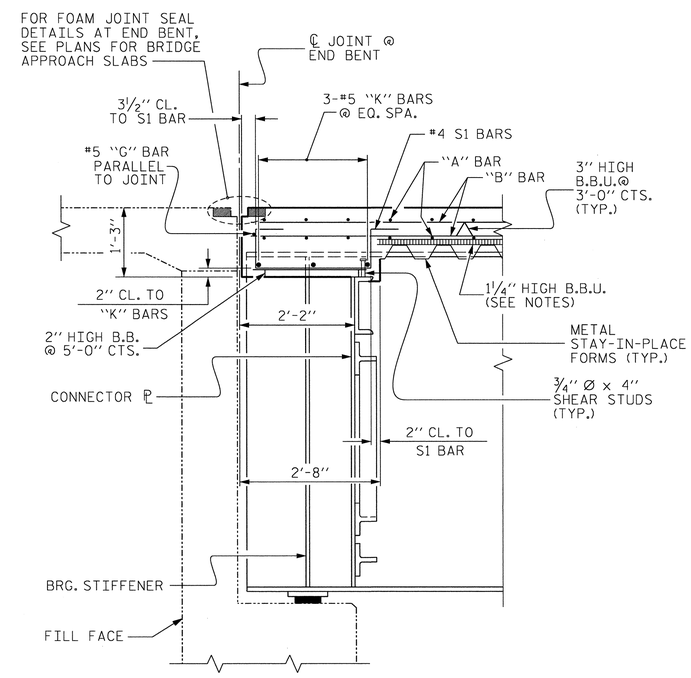

SECTION THRU END BENT DIAPHRAGM (D1)

SECTION TAKEN NORMAL TO FILL FACE

PROJECT NO. U-0071
DURHAM COUNTY
STATION: 107+45.55 -L-

SHEET 2 OF 2

STATE OF NORTH CAROLINA
DEPARTMENT OF TRANSPORTATION
RALEIGH

SUPERSTRUCTURE
TYPICAL SECTION

NORTH CAROLINA PROFESSIONAL SEAL 037400 ENGINEER GREGORY M. GILLAND 7/1/13

WETHERILL ENGINEERING
559 Jones Franklin Rd. Suite 164
Raleigh, N.C. 27606
Bus: 919 851 8077
Fax: 919 851 8107
License: F-0377
TRANSPORTATION PLANNING/DESIGN - BRIDGE/STRUCTURE DESIGN
CIVIL/SITE DESIGN - GIS/GPS - CONSTRUCTION OBSERVATION

REVISIONS							
NO.	BY:	DATE:	NO.	BY:	DATE:		
1			3				
2			4				

SHEET NO. 5-196
TOTAL SHEETS 671

DRAWN BY : J.M. BRITT DATE : 1-2-13
CHECKED BY : G.M. GILLAND DATE : 3-5-13
DESIGN ENGINEER OF RECORD: G.M. GILLAND DATE : 6-13

P:\2012\U-0071 - Y4 over L\Structures\DGN\U0071_SD_Y4_TS_WE.dgn
7/1/2013 7:39:38 AM

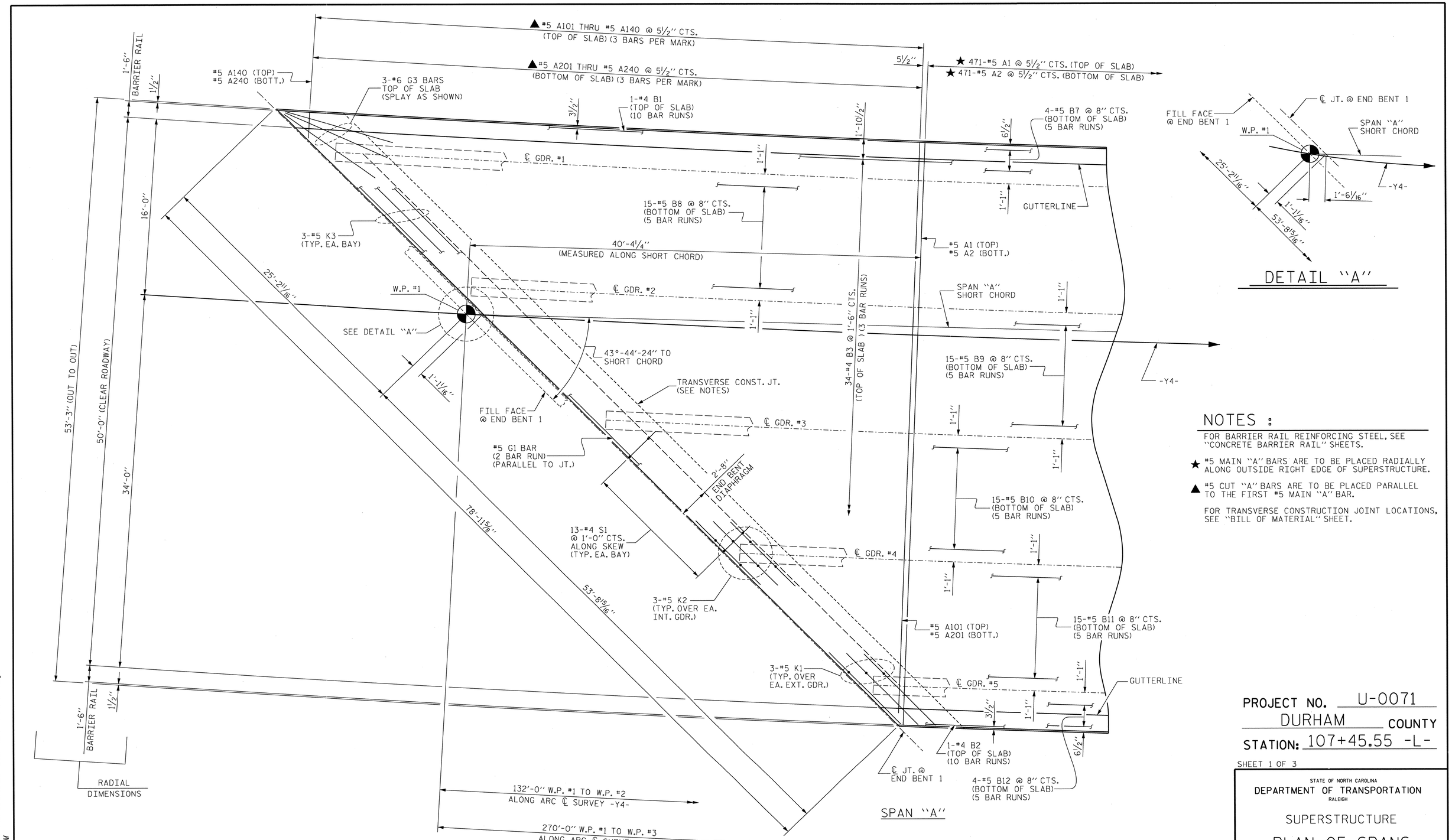

NOTES :

FOR BARRIER RAIL REINFORCING STEEL, SEE "CONCRETE BARRIER RAIL" SHEETS.

★ #5 MAIN "A" BARS ARE TO BE PLACED RADIALLY ALONG OUTSIDE RIGHT EDGE OF SUPERSTRUCTURE.

▲ #5 CUT "A" BARS ARE TO BE PLACED PARALLEL TO THE FIRST #5 MAIN "A" BAR.

FOR TRANSVERSE CONSTRUCTION JOINT LOCATIONS, SEE "BILL OF MATERIAL" SHEET.

PARTIAL PLAN OF SPAN

PROJECT NO. U-0071

DURHAM COUNTY

STATION: 107+45.55 -L-

SHEET 1 OF 3

STATE OF NORTH CAROLINA
DEPARTMENT OF TRANSPORTATION
RALEIGH

SUPERSTRUCTURE

PLAN OF SPANS

REVISIONS								SHEET NO.
NO.	BY:	DATE:	NO.	BY:	DATE:			S-197
1			3					TOTAL SHEETS
2			4					671

NORTH CAROLINA PROFESSIONAL SEAL 037400 ENGINEER GREGORY M. GILLAND 7/11/13

WETHERILL ENGINEERING
559 Jones Franklin Rd. Suite 164
Raleigh, N.C. 27606
Bus: 919 851 8077
Fax: 919 851 8107
License: F-0377

TRANSPORTATION PLANNING/DESIGN - BRIDGE/STRUCTURE DESIGN
CIVIL/SITE DESIGN - GIS/GPS - CONSTRUCTION OBSERVATION

DRAWN BY :	J.M. BRITT	DATE :	1-8-13
CHECKED BY :	G.M. GILLAND	DATE :	3-5-13
DESIGN ENGINEER OF RECORD:	G.M. GILLAND	DATE :	6-13

P:\2012\U-0071 - Y4 over L\Structures\DGN\U0071_SD_Y4_PS_WE1.dgn
7/11/2013 7:40:37 AM

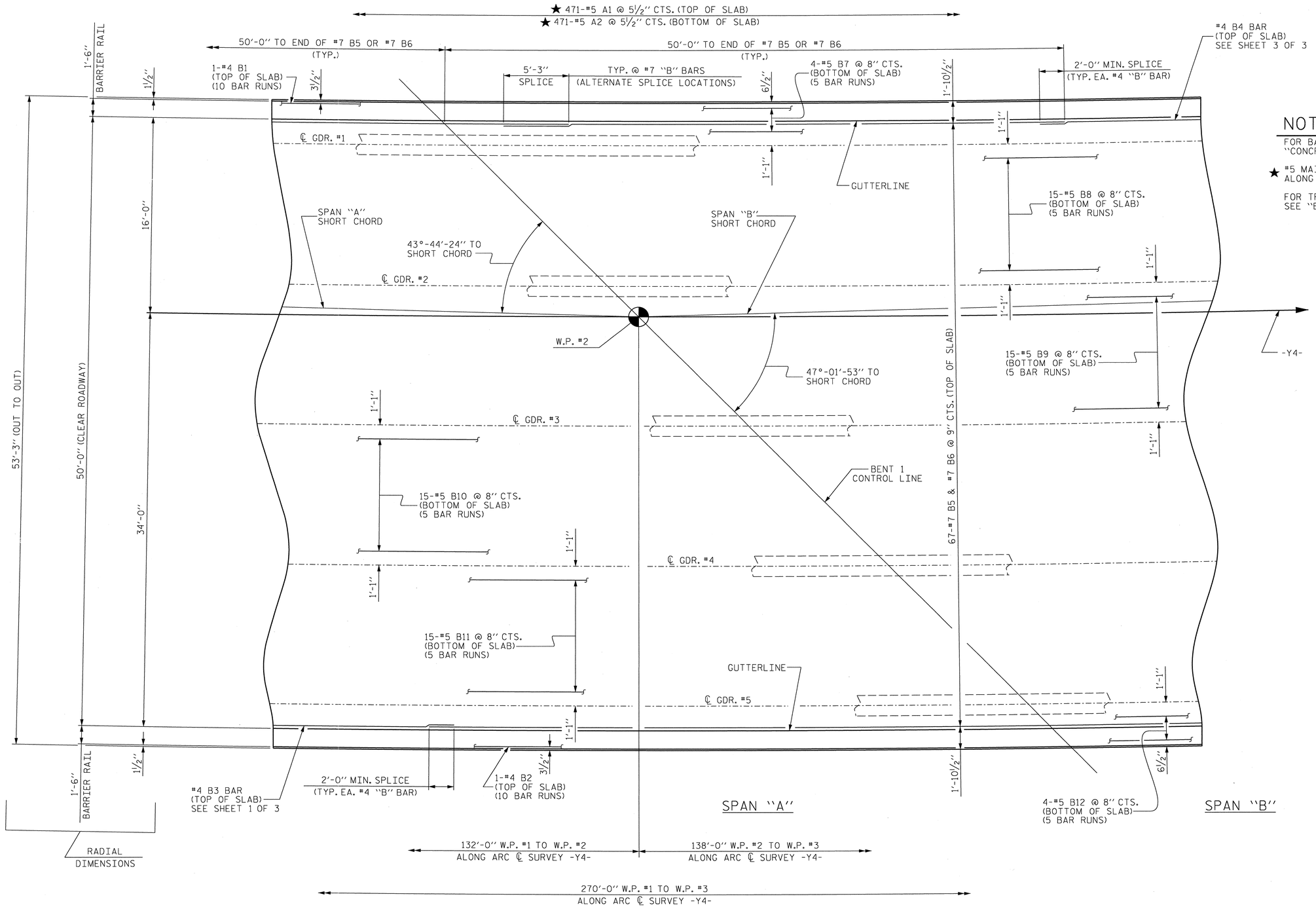

NOTES :

FOR BARRIER RAIL REINFORCING STEEL, SEE "CONCRETE BARRIER RAIL" SHEETS.

★ #5 MAIN "A" BARS ARE TO BE PLACED RADIALLY ALONG OUTSIDE RIGHT EDGE OF SUPERSTRUCTURE.

FOR TRANSVERSE CONSTRUCTION JOINT LOCATIONS, SEE "BILL OF MATERIAL" SHEET.

PARTIAL PLAN OF SPAN

PROJECT NO. U-0071
DURHAM COUNTY
STATION: 107+45.55 -L-

SHEET 2 OF 3

STATE OF NORTH CAROLINA
DEPARTMENT OF TRANSPORTATION
RALEIGH

SUPERSTRUCTURE
PLAN OF SPANS

NORTH CAROLINA PROFESSIONAL SEAL 037400 ENGINEER GREGORY M. GILLAND 7/11/13

WETHERILL ENGINEERING
559 Jones Franklin Rd. Suite 164
Raleigh, N.C. 27606
Bus: 919 851 8077
Fax: 919 851 8107
License: F-0377
TRANSPORTATION PLANNING/DESIGN - BRIDGE/STRUCTURE DESIGN
CIVIL/SITE DESIGN - GIS/GPS - CONSTRUCTION OBSERVATION

REVISIONS						SHEET NO.
NO.	BY:	DATE:	NO.	BY:	DATE:	5-198
1			3			TOTAL SHEETS
2			4			671

DRAWN BY : J.M. BRITT DATE : 1-8-13
CHECKED BY : G.M. GILLAND DATE : 3-5-13
DESIGN ENGINEER OF RECORD: G.M. GILLAND DATE : 6-13

P:\2012\U-0071 - Y4 over L\Structures\DGN\U0071_SD_Y4_PS_WE1.dgn
7/11/2013 7:41:00 AM

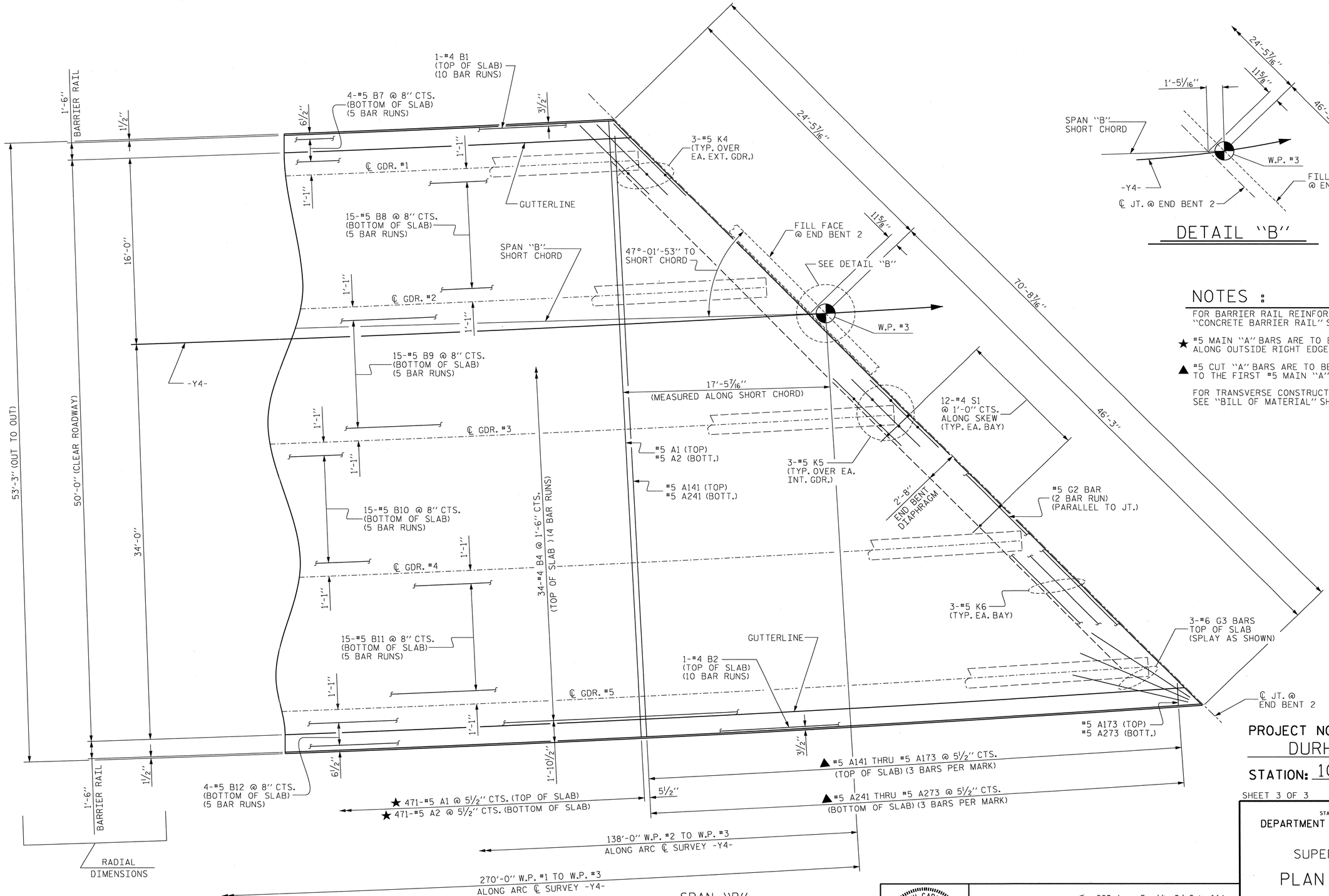

SPAN "B"

PARTIAL PLAN OF SPAN

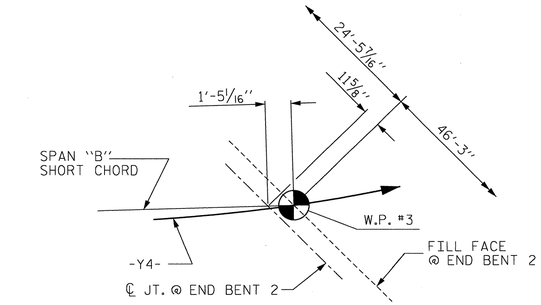

DETAIL "B"

NOTES :

FOR BARRIER RAIL REINFORCING STEEL, SEE "CONCRETE BARRIER RAIL" SHEETS.

★ #5 MAIN "A" BARS ARE TO BE PLACED RADIALLY ALONG OUTSIDE RIGHT EDGE OF SUPERSTRUCTURE.

▲ #5 CUT "A" BARS ARE TO BE PLACED PARALLEL TO THE FIRST #5 MAIN "A" BAR.

FOR TRANSVERSE CONSTRUCTION JOINT LOCATIONS, SEE "BILL OF MATERIAL" SHEET.

PROJECT NO. U-0071
DURHAM COUNTY
STATION: 107+45.55 -L-

SHEET 3 OF 3

STATE OF NORTH CAROLINA
DEPARTMENT OF TRANSPORTATION
RALEIGH

SUPERSTRUCTURE
PLAN OF SPANS

NORTH CAROLINA PROFESSIONAL SEAL 37400 ENGINEER GREGORY M. GILLAND 7/11/13

WETHERILL ENGINEERING
559 Jones Franklin Rd. Suite 164
Raleigh, N.C. 27606
Bus: 919 851 8077
Fax: 919 851 8107
License: F-0377
TRANSPORTATION PLANNING/DESIGN - BRIDGE/STRUCTURE DESIGN
CIVIL/SITE DESIGN - GIS/GPS - CONSTRUCTION OBSERVATION

REVISIONS						SHEET NO.
NO.	BY:	DATE:	NO.	BY:	DATE:	5-199
1			3			TOTAL SHEETS
2			4			671

DRAWN BY : J.M. BRITT DATE : 1-8-13
CHECKED BY : G.M. GILLAND DATE : 3-5-13
DESIGN ENGINEER OF RECORD: G.M. GILLAND DATE : 6-13

P:\2012\U-0071 - Y4 over LS\Structures\DGN\U0071_SD_Y4_PS_WE1.dgn
7/11/2013 7:57:55 AM

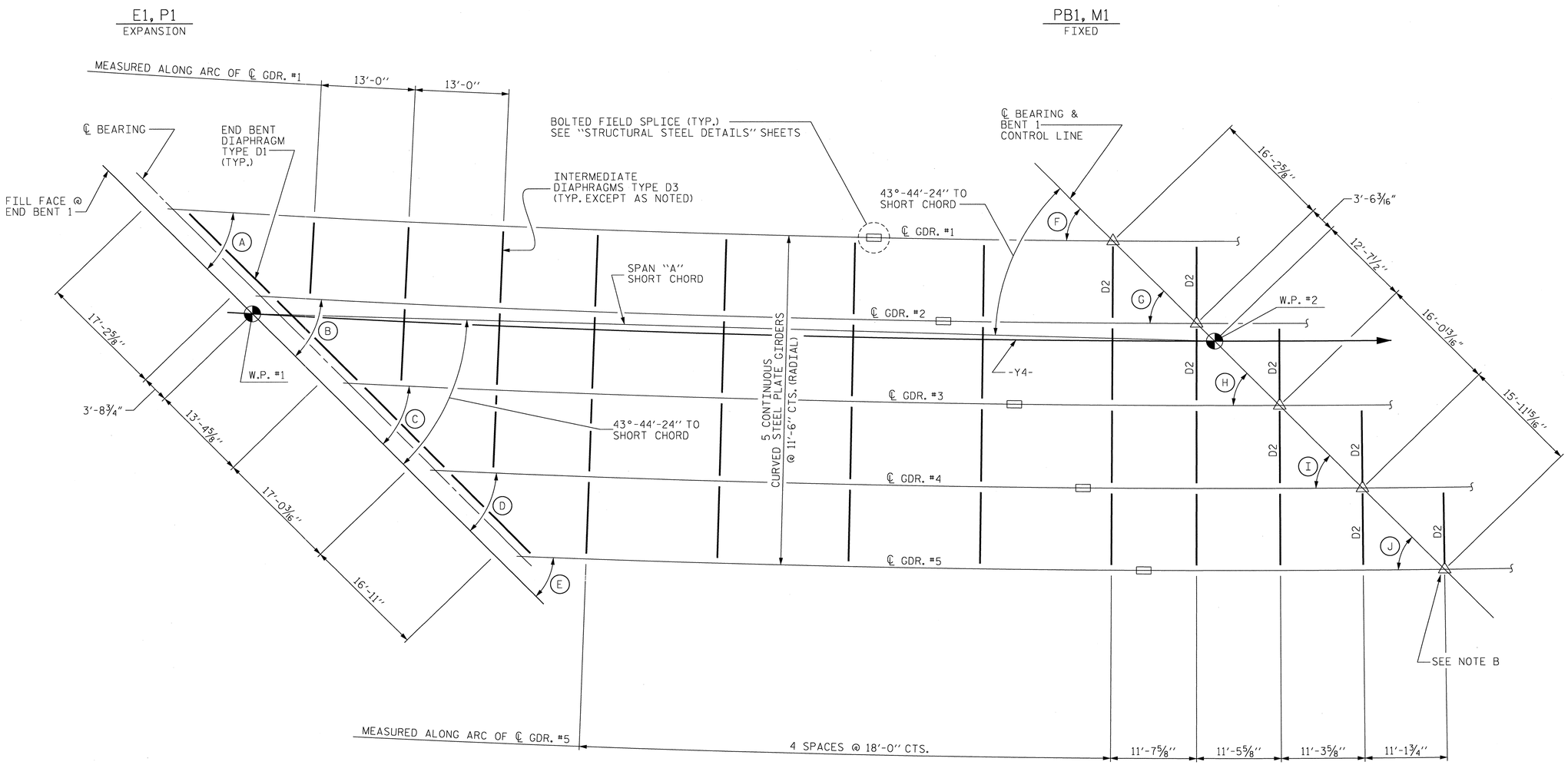

SPAN "A" FRAMING PLAN

PROJECT NO. U-0071
DURHAM COUNTY
STATION: 107+45.55 -L-

SHEET 1 OF 2

ANGLES

ANGLES ARE TANGENT TO CURVE AT FILL FACE AND BENT CONTROL LINE

A	41°-44'-59"	F	45°-00'-32"
B	42°-03'-48"	G	45°-17'-20"
C	42°-22'-19"	H	45°-33'-53"
D	42°-40'-33"	I	45°-50'-12"
E	42°-58'-30"	J	46°-06'-17"

NOTE A :
ALL BENT & INTERMEDIATE DIAPHRAGMS (TYPES D2 & D3) ARE TO BE PLACED RADIALLY TO ℄ GIRDERS.

△ NOTE B :
BEARING STIFFENERS TO BE USED AS CONNECTOR PLATES.

NORTH CAROLINA PROFESSIONAL SEAL 37400 ENGINEER GREGORY M. GILLAND 7/11/13

WETHERILL ENGINEERING
559 Jones Franklin Rd. Suite 164
Raleigh, N.C. 27606
Bus: 919 851 8077
Fax: 919 851 8107
License: F-0377
TRANSPORTATION PLANNING/DESIGN - BRIDGE/STRUCTURE DESIGN
CIVIL/SITE DESIGN - GIS/GPS - CONSTRUCTION OBSERVATION

STATE OF NORTH CAROLINA
DEPARTMENT OF TRANSPORTATION
RALEIGH

SUPERSTRUCTURE
FRAMING PLAN

REVISIONS							SHEET NO.
NO.	BY:	DATE:	NO.	BY:	DATE:		S-200
1			3				TOTAL SHEETS
2			4				671

DRAWN BY :	J.M. BRITT	DATE :	2-27-13
CHECKED BY :	G.M. GILLAND	DATE :	3-6-13
DESIGN ENGINEER OF RECORD:	G.M. GILLAND	DATE :	6-13

P:\2012\U-0071 - Y4 over L\Structures\DGN\U0071_SD_Y4_FP_WE1.dgn
7/11/2013 7:59:06 AM

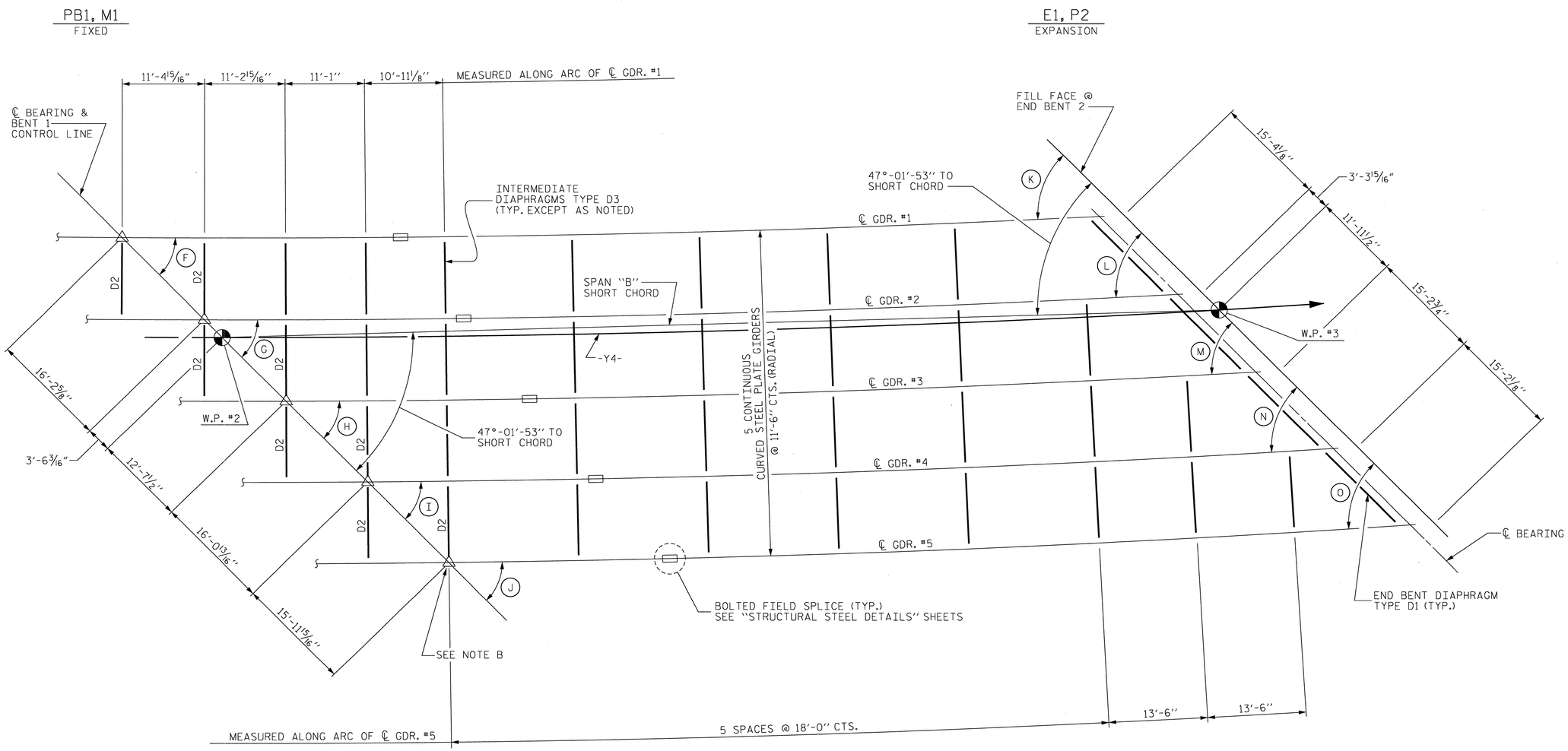

SPAN "B" FRAMING PLAN

ANGLES

ANGLES ARE TANGENT TO CURVE AT FILL FACE AND BENT CONTROL LINE

F	45°-00'-32"	K	48°-24'-42"
G	45°-17'-20"	L	48°-39'-37"
H	45°-33'-53"	M	48°-54'-20"
I	45°-50'-12"	N	49°-08'-51"
J	46°-06'-17"	O	49°-23'-10"

NOTE A :
ALL BENT & INTERMEDIATE DIAPHRAGMS (TYPES D2 & D3) ARE TO BE PLACED RADIALLY TO ℄ GIRDERS.

△ NOTE B :
BEARING STIFFENERS TO BE USED AS CONNECTOR PLATES.

PROJECT NO. U-0071
DURHAM COUNTY
STATION: 107+45.55 -L-

SHEET 2 OF 2

STATE OF NORTH CAROLINA
DEPARTMENT OF TRANSPORTATION
RALEIGH

SUPERSTRUCTURE
FRAMING PLAN

NORTH CAROLINA PROFESSIONAL SEAL ENGINEER 37400 GREGORY M. GILLAND 7/1/13

WETHERILL ENGINEERING
559 Jones Franklin Rd. Suite 164
Raleigh, N.C. 27606
Bus: 919 851 8077
Fax: 919 851 8107
License: F-0377
TRANSPORTATION PLANNING/DESIGN - BRIDGE/STRUCTURE DESIGN
CIVIL/SITE DESIGN - GIS/GPS - CONSTRUCTION OBSERVATION

REVISIONS						SHEET NO.
NO.	BY:	DATE:	NO.	BY:	DATE:	S-201
1			3			TOTAL SHEETS
2			4			671

DRAWN BY : J.M. BRITT DATE : 2-27-13
CHECKED BY : G.M. GILLAND DATE : 3-6-13
DESIGN ENGINEER OF RECORD: G.M. GILLAND DATE : 6-13

P:\2012\U-0071 - Y4 over L\Structures\DGN\U0071_SD_Y4_FP_WE1.dgn
7/1/2013 7:59:35 AM

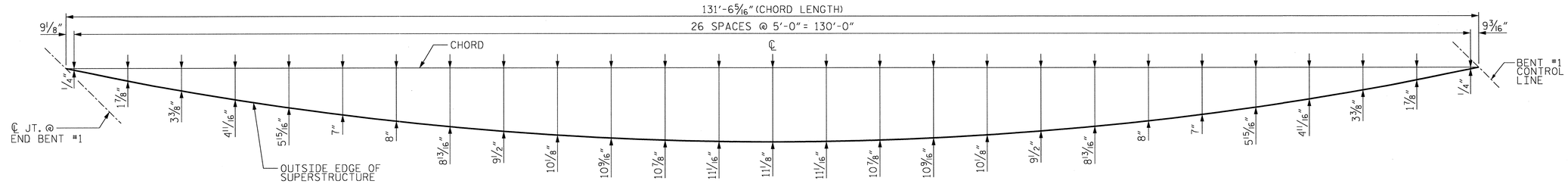

ARC OFFSETS - SPAN "A"

LEFT OUTSIDE EDGE OF SUPERSTRUCTURE

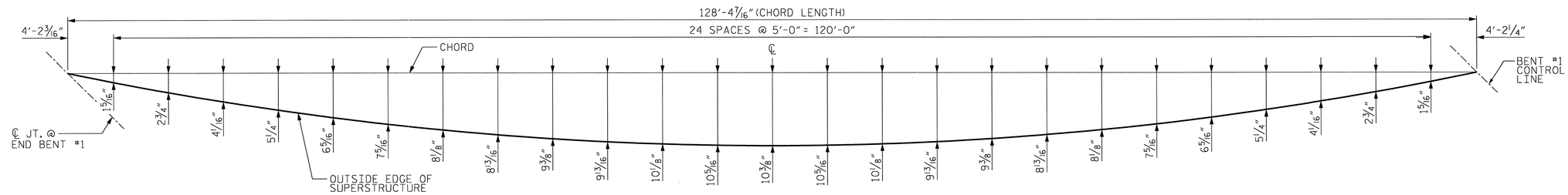

ARC OFFSETS - SPAN "A"

RIGHT OUTSIDE EDGE OF SUPERSTRUCTURE

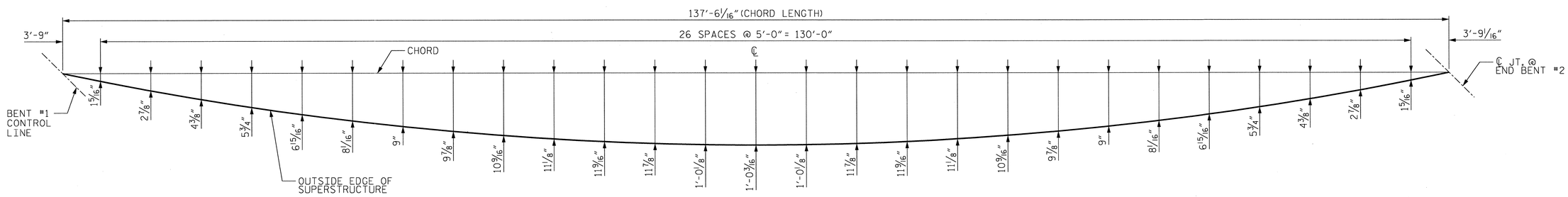

ARC OFFSETS - SPAN "B"

LEFT OUTSIDE EDGE OF SUPERSTRUCTURE

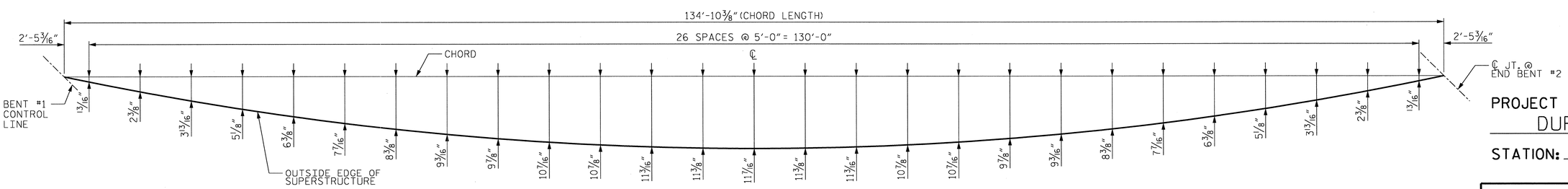

ARC OFFSETS - SPAN "B"

RIGHT OUTSIDE EDGE OF SUPERSTRUCTURE

PROJECT NO. U-0071

DURHAM COUNTY

STATION: 107+45.55 -L-

STATE OF NORTH CAROLINA
DEPARTMENT OF TRANSPORTATION
RALEIGH

SUPERSTRUCTURE

ARC OFFSETS

REVISIONS						SHEET NO.
NO.	BY:	DATE:	NO.	BY:	DATE:	S-202
1			3			TOTAL SHEETS
2			4			671

NORTH CAROLINA PROFESSIONAL SEAL 37400 ENGINEER GREGORY M. GILLAND 7/1/13

WETHERILL ENGINEERING
559 Jones Franklin Rd. Suite 164
Raleigh, N.C. 27606
Bus: 919 851 8077
Fax: 919 851 8107
License: F-0377

TRANSPORTATION PLANNING/DESIGN - BRIDGE/STRUCTURE DESIGN
CIVIL/SITE DESIGN - GIS/GPS - CONSTRUCTION OBSERVATION

DRAWN BY : E.R. BONNEY DATE : 2-12-13
CHECKED BY : T.J. DIFFEE DATE : 3-11-13
DESIGN ENGINEER OF RECORD: G.M. GILLAND DATE : 6-13

P:\2012\U-0071 - Y4 over L\Structures\DGN\U0071_SD_Y4_ARC12_WEI.dgn
7/1/2013 8:01:48 AM

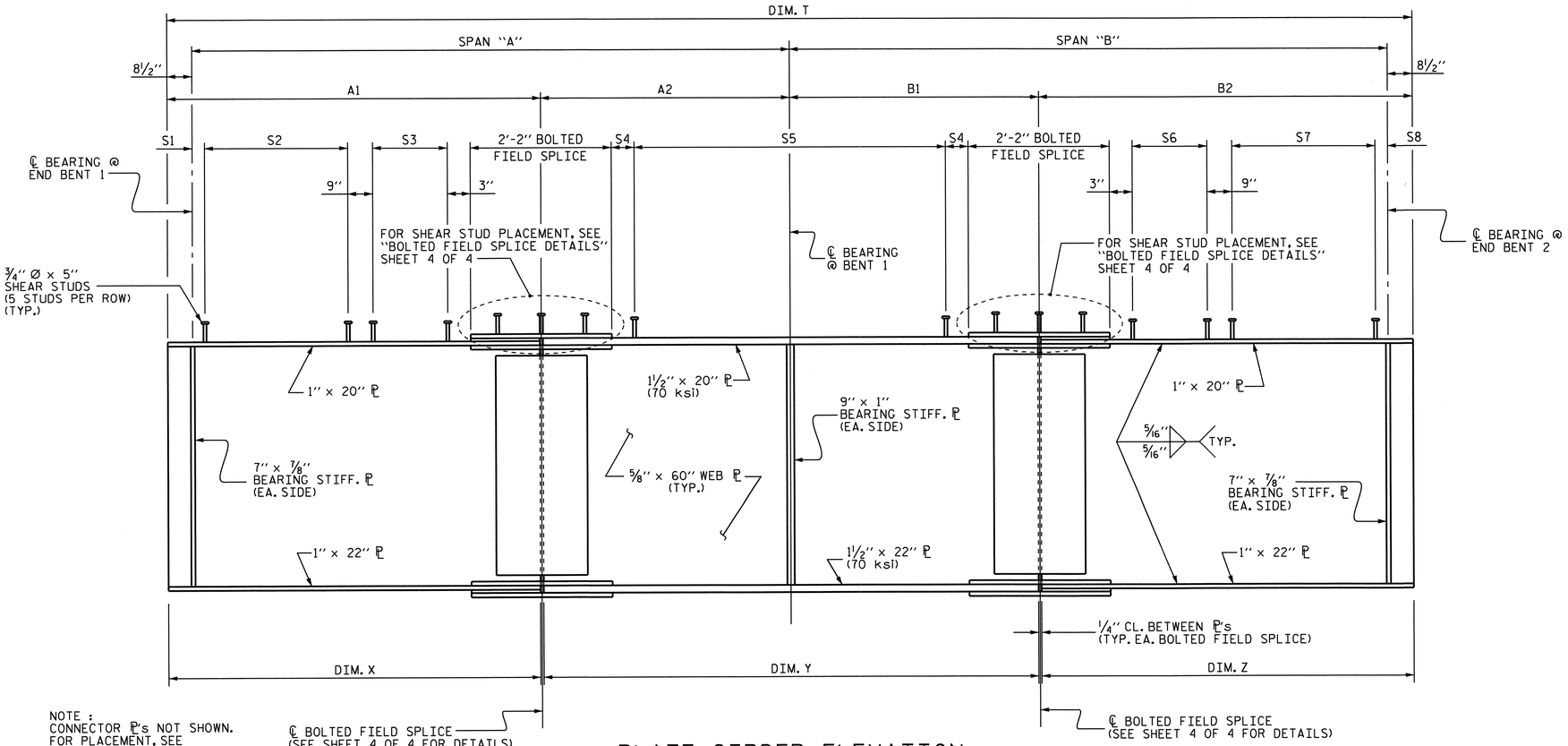

NOTE :
CONNECTOR ℙ's NOT SHOWN.
FOR PLACEMENT, SEE "FRAMING PLAN" SHEETS.

PLATE GIRDER ELEVATION

(TYP. FOR GIRDERS #1 THRU #5)
(SEE TABLES BELOW)

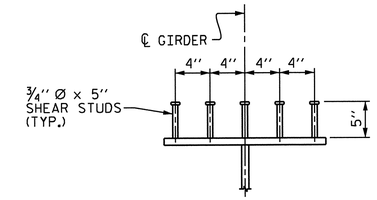

SHEAR STUD DETAIL

(TYPICAL EXCEPT @ SPLICE ℙ)

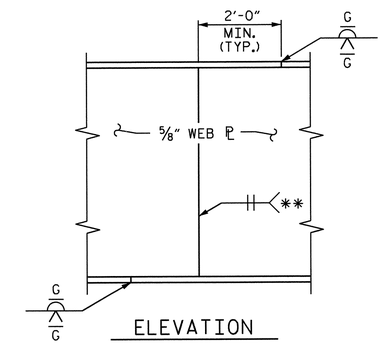

ELEVATION

PERMISSIBLE SHOP FLANGE & WEB SPLICE

** GRIND SMOOTH AND FLUSH ON OUTSIDE OF EXTERIOR GIRDER

SHEAR STUD SPACING TABLE FOR SPAN "A-B" GIRDERS

GIRDER	S1	S2	S3	S4	S5	S6	S7	S8
#1	2 15/16"	63 ROWS @ 1'-0" CTS.	33 ROWS @ 1'-0" CTS.	6⅞"	69 ROWS @ 1'-0" CTS.	42 ROWS @ 1'-0" CTS.	65 ROWS @ 10" CTS.	4"
#2	1¾"	74 ROWS @ 9" CTS.	50 ROWS @ 9" CTS.	5⅜"	91 ROWS @ 9" CTS.	42 ROWS @ 10" CTS.	94 ROWS @ 8" CTS.	6¾"
#3	3/16"	72 ROWS @ 9" CTS.	44 ROWS @ 10" CTS.	6 15/16"	81 ROWS @ 10" CTS.	46 ROWS @ 10" CTS.	82 ROWS @ 9" CTS.	1⅜"
#4	4 9/16"	64 ROWS @ 9" CTS.	48 ROWS @ 10" CTS.	5½"	81 ROWS @ 10" CTS.	41 ROWS @ 10" CTS.	80 ROWS @ 10" CTS.	9 3/16"
#5	2⅜"	61 ROWS @ 10" CTS.	34 ROWS @ 1'-0" CTS.	4 13/16"	76 ROWS @ 11" CTS.	39 ROWS @ 11" CTS.	79 ROWS @ 10" CTS.	6 9/16"

TABLE "A-B"

GIRDER	RADIUS (FEET)	SPAN "A" HORIZONTAL DISTANCE ℄ BRG. TO ℄ BRG.	SPAN "B" HORIZONTAL DISTANCE ℄ BRG. TO ℄ BRG.	SPAN "A" SLOPED DISTANCE ℄ BRG. TO ℄ BRG.	SPAN "B" SLOPED DISTANCE ℄ BRG. TO ℄ BRG.	A1 END OF GIRDER TO ℄ BFS	A2 ℄ BFS TO ℄ BRG. @ BENT 1	B1 ℄ BRG. @ BENT 1 TO ℄ BFS	B2 ℄ BFS TO END OF GIRDER	DIM. X WEB ℙ AND TOP & BOTTOM FLANGE ℙ LENGTHS	DIM. Y WEB ℙ AND TOP & BOTTOM FLANGE ℙ LENGTHS	DIM. Z WEB ℙ AND TOP & BOTTOM FLANGE ℙ LENGTHS	DIM. T TOTAL GIRDER LENGTH (ALONG ARC)
#1	2336'-0"	129'-0¾"	135'-3 15/16"	--	135'-4 5/16"	97'-0 7/16"	32'-8 13/16"	38'-6 15/16"	97'-5½"	97'-0 5/16"	71'-3½"	97'-5⅜"	265'-9 11/16"
#2	2347'-6"	128'-4⅜"	134'-8⅞"	--	134'-9 5/16"	94'-5¼"	34'-7⅝"	35'-11⅛"	99'-6¼"	94'-5⅛"	70'-6½"	99'-6⅛"	264'-6¼"
#3	2359'-0"	127'-8¼"	134'-2 1/16"	--	134'-2½"	92'-1 9/16"	36'-3 3/16"	33'-8 11/16"	101'-1⅞"	92'-1 7/16"	69'-11⅝"	101'-1¾"	263'-3 5/16"
#4	2370'-6"	127'-0 5/16"	133'-7⅜"	--	133'-7⅞"	89'-7 1/16"	38'-1¾"	31'-7¼"	102'-8 11/16"	89'-6 15/16"	69'-8¾"	102'-8 9/16"	262'-0¾"
#5	2382'-0"	126'-4 11/16"	133'-0 15/16"	--	133'-1 7/16"	85'-11⅞"	41'-1 5/16"	30'-7 5/16"	103'-2 1/16"	85'-11¾"	71'-8 5/16"	103'-1 15/16"	260'-10 9/16"

NOTE : ALL GIRDER DIMENSIONS IN THE ABOVE TABLES ARE MEASURED ALONG THE ℄ OF GIRDER.
ALL LENGTHS IN TABLE "A-B" ARE HORIZONTAL DISTANCES UNLESS OTHERWISE NOTED.
"BFS" DENOTES BOLTED FIELD SPLICE

PROJECT NO. U-0071
DURHAM COUNTY
STATION: 107+45.55 -L-

SHEET 1 OF 4

STATE OF NORTH CAROLINA
DEPARTMENT OF TRANSPORTATION
RALEIGH

SUPERSTRUCTURE

STRUCTURAL STEEL DETAILS

NORTH CAROLINA PROFESSIONAL SEAL 37400 ENGINEER GREGORY M. GILLAND 9-23-14

WETHERILL ENGINEERING
559 Jones Franklin Rd. Suite 164
Raleigh, N.C. 27606
Bus: 919 851 8077
Fax: 919 851 8107
License: F-0377
TRANSPORTATION PLANNING/DESIGN - BRIDGE/STRUCTURE DESIGN
CIVIL/SITE DESIGN - GIS/GPS - CONSTRUCTION OBSERVATION

REVISIONS								SHEET NO.
NO.	BY:	DATE:	NO.	BY:	DATE:			S-203
1			3					TOTAL SHEETS
2			4					671

DRAWN BY : J.M. BRITT DATE : 2-21-13
CHECKED BY : G.M. GILLAND DATE : 3-27-13
DESIGN ENGINEER OF RECORD: G.M. GILLAND DATE : 6-13

$FILE$ $TIME$
$DATE$

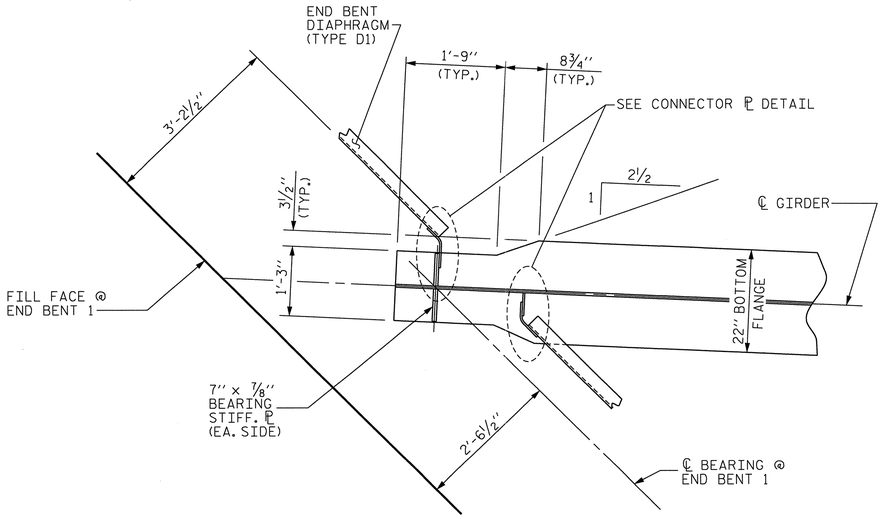

@ END BENT 1

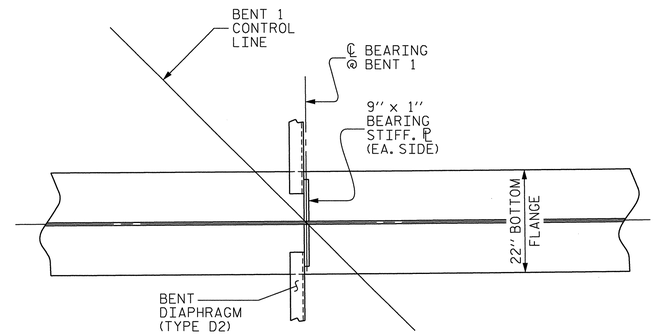

@ BENT 1

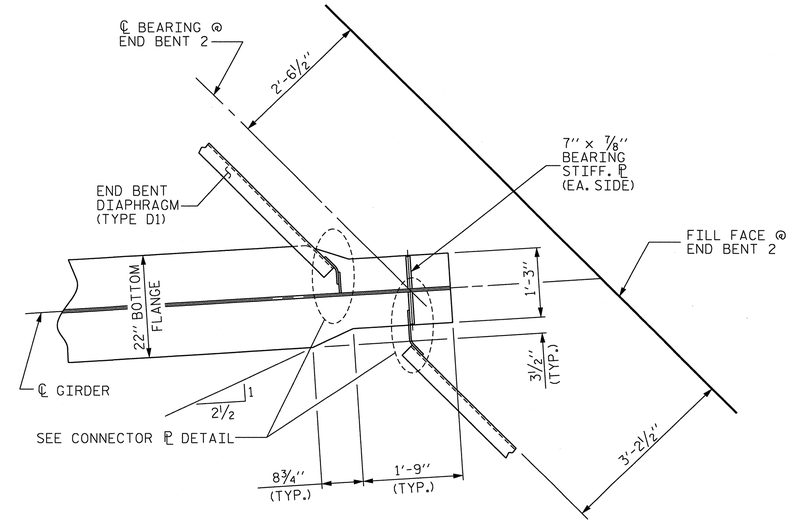

@ END BENT 2

SPAN "A-B" BOTTOM FLANGE DETAIL

SEE FRAMING PLAN SHEETS FOR INTERMEDIATE DIAPHRAGM LOCATIONS

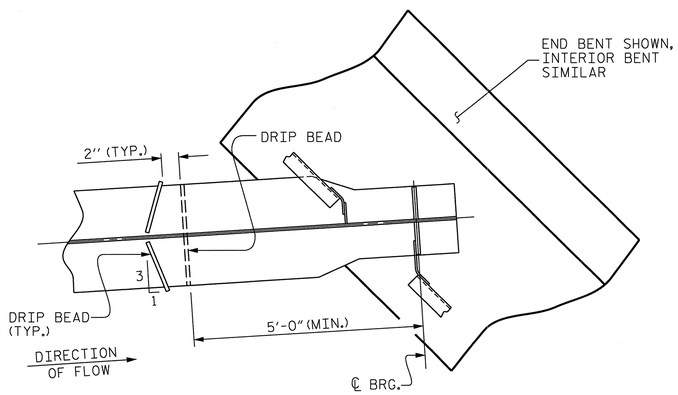

PART PLAN - BOTTOM FLANGE

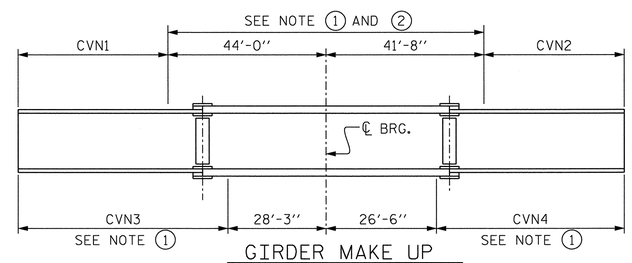

GIRDER MAKE UP

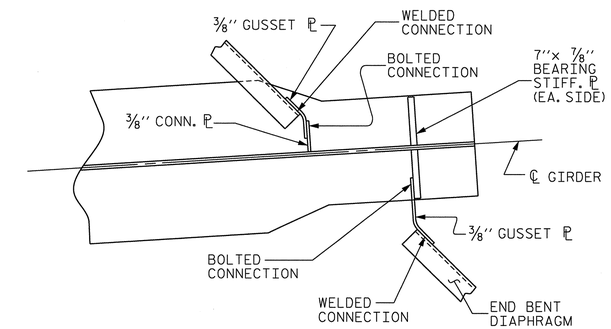

CONNECTOR ℙ DETAIL

(EACH END SIMILAR)

NOTE 1 : CHARPY V-NOTCH TESTS ARE REQUIRED FOR ALL TOP OR BOTTOM FLANGE PLATES WHICH FALL WITHIN THESE LIMITS, ALL WEB PLATES, AND ALL SPLICE PLATES. IF A PERMITTED SHOP FLANGE SPLICE IS NOT USED, CHARPY V-NOTCH TESTS WILL BE REQUIRED FOR THE ENTIRE FLANGE PLATE. FOR CHARPY V-NOTCH TESTS, SEE ARTICLE 1072-7 OF THE STANDARD SPECIFICATIONS AND "CHARPY V-NOTCH TESTS" SPECIAL PROVISION.

NOTE 2 : NO WELDING OF FORMS OR FALSEWORK TO THE TOP FLANGE WILL BE PERMITTED IN THIS REGION.

CHARPY V-NOTCH TESTS FOR CONTINUOUS PLATE GIRDERS

TABLE FOR CHARPY V-NOTCH TEST

GIRDER	CVN1	CVN2	CVN3	CVN4
#1	85'-9¼"	94'-4 7/16"	101'-6¼"	109'-6 7/16"
#2	85'-0⅞"	93'-9⅜"	100'-9⅞"	108'-11⅜"
#3	84'-4¾"	93'-2 9/16"	100'-1¾"	108'-4 9/16"
#4	83'-8 13/16"	92'-7⅞"	99'-5 13/16"	107'-9⅞"
#5	83'-1 3/16"	92'-1 7/16"	98'-10 3/16"	107'-3 7/16"

NOTE : ALL GIRDER DIMENSIONS IN THE ABOVE TABLE ARE MEASURED ALONG THE ℄ OF GIRDER AND ARE HORIZONTAL DIMENSIONS.

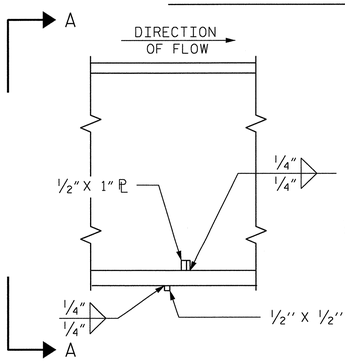

SECTION

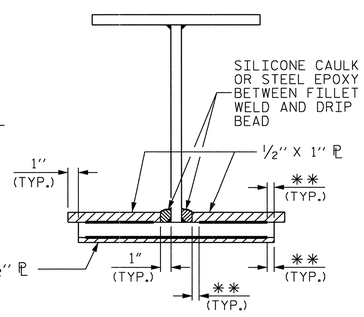

VIEW A-A

** SEE "WELD TERMINATION DETAILS" SHEET 3 OF 4

DRIP BEAD DETAILS

PROJECT NO. U-0071

DURHAM COUNTY

STATION: 107+45.55 -L-

SHEET 2 OF 4

STATE OF NORTH CAROLINA
DEPARTMENT OF TRANSPORTATION
RALEIGH

SUPERSTRUCTURE

STRUCTURAL STEEL DETAILS

REVISIONS							SHEET NO.
NO.	BY:	DATE:	NO.	BY:	DATE:		S-204
1			3				TOTAL SHEETS
2			4				671

WETHERILL ENGINEERING
559 Jones Franklin Rd. Suite 164
Raleigh, N.C. 27606
Bus: 919 851 8077
Fax: 919 851 8107
License: F-0377
TRANSPORTATION PLANNING/DESIGN - BRIDGE/STRUCTURE DESIGN
CIVIL/SITE DESIGN - GIS/GPS - CONSTRUCTION OBSERVATION

NORTH CAROLINA PROFESSIONAL SEAL 37400 ENGINEER GREGORY M. GILLAND 6-5-14

DRAWN BY : J.M. BRITT DATE : 2-20-13
CHECKED BY : G.M. GILLAND DATE : 3-27-13
DESIGN ENGINEER OF RECORD: G.M. GILLAND DATE : 6-13

P:\2012\U-0071 - Y4 over I\Structures\DGN\U0071_SD_Y4_SS_WEI.dgn
6/5/2014 10:47:00 AM

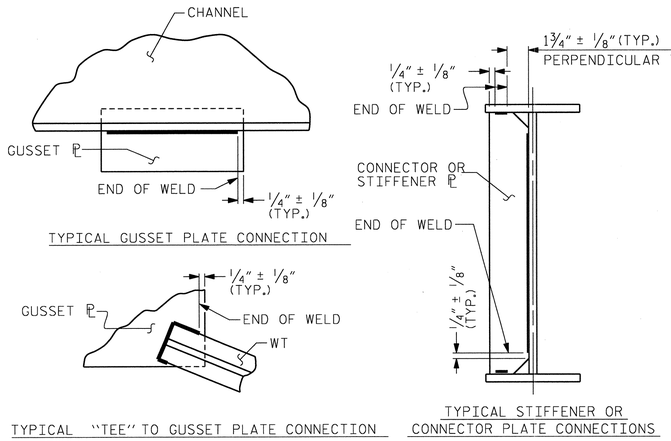

WELD TERMINATION DETAILS

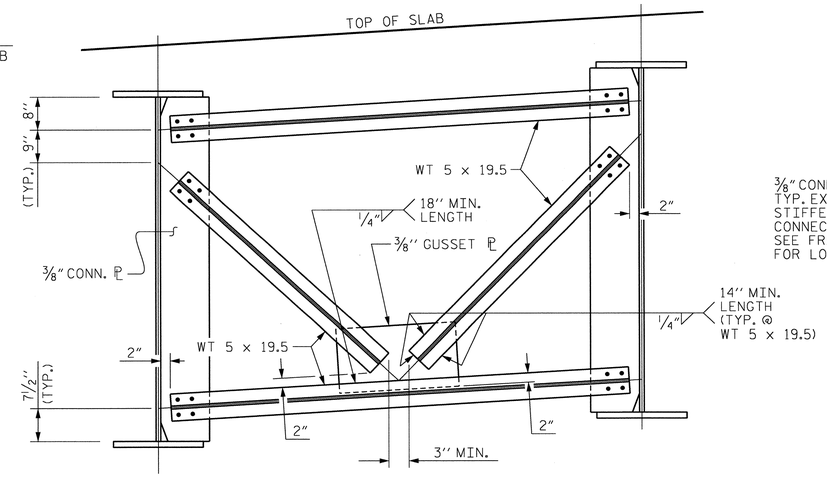

TYPICAL INTERMEDIATE DIAPHRAGM (TYPE D3)

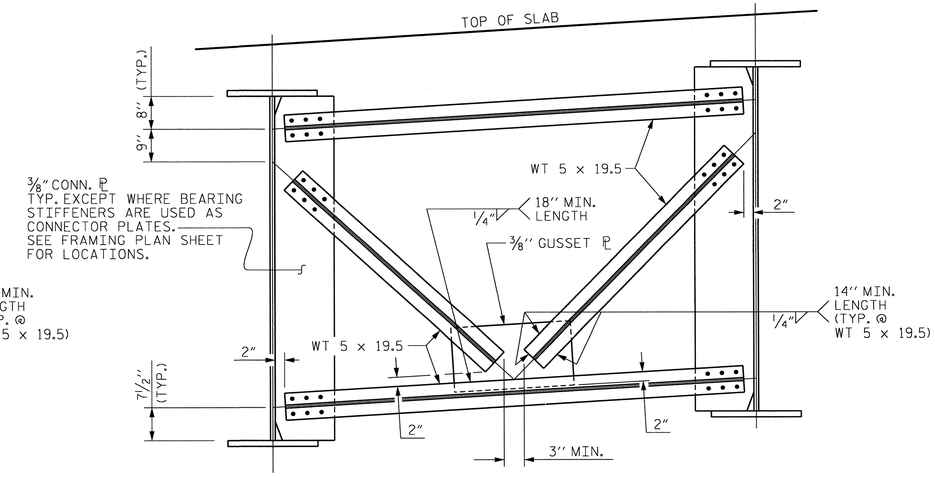

TYPICAL BENT DIAPHRAGM (TYPE D2)

USE 1" THICK PLATE WHERE BEARING STIFFENERS ARE USED AS CONNECTOR PLATE FOR BENT DIAPHRAGM.

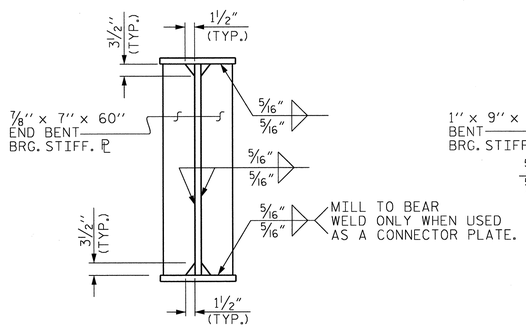

BEARING STIFFENER

(AT END BENTS)

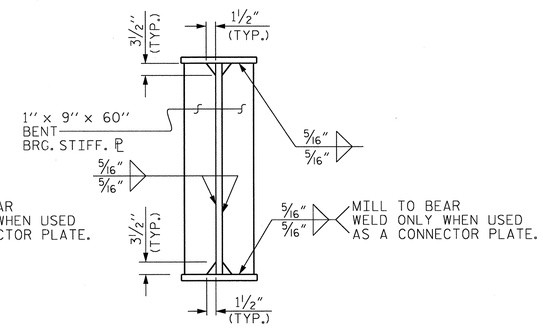

BEARING STIFFENER

(AT BENT 1)

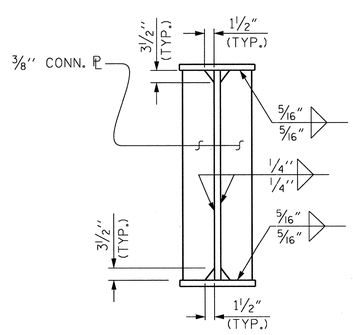

CONNECTOR PL

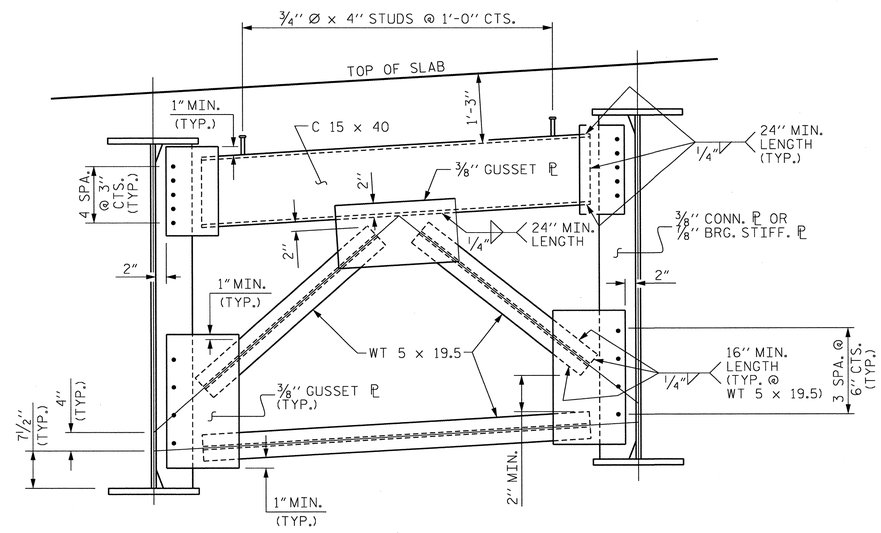

TYPICAL END BENT DIAPHRAGM (TYPE D1)

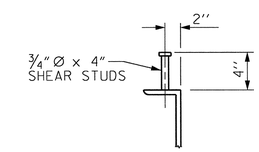

SHEAR STUD DETAILS

(TYP. EA. END BENT DIAPHRAGM)

PROJECT NO. U-0071
DURHAM COUNTY
STATION: 107+45.55 -L-

SHEET 3 OF 4

STATE OF NORTH CAROLINA
DEPARTMENT OF TRANSPORTATION
RALEIGH

SUPERSTRUCTURE

STRUCTURAL STEEL DETAILS

NORTH CAROLINA PROFESSIONAL SEAL 37400 ENGINEER GREGORY M. GILLAND 7/11/13

WETHERILL ENGINEERING
559 Jones Franklin Rd. Suite 164
Raleigh, N.C. 27606
Bus: 919 851 8077
Fax: 919 851 8107
License: F-0377

TRANSPORTATION PLANNING/DESIGN - BRIDGE/STRUCTURE DESIGN
CIVIL/SITE DESIGN - GIS/GPS - CONSTRUCTION OBSERVATION

REVISIONS							SHEET NO.
NO.	BY:	DATE:	NO.	BY:	DATE:		S-205
1			3				TOTAL SHEETS
2			4				671

DRAWN BY : J.M. BRITT DATE : 2-26-13
CHECKED BY : G.M. GILLAND DATE : 3-27-13
DESIGN ENGINEER OF RECORD: G.M. GILLAND DATE : 6-13

P:\2012\U-0071 - Y4 over L\Structures\DGN\U071_SD_Y4_SS_WEI.dgn
7/11/2013

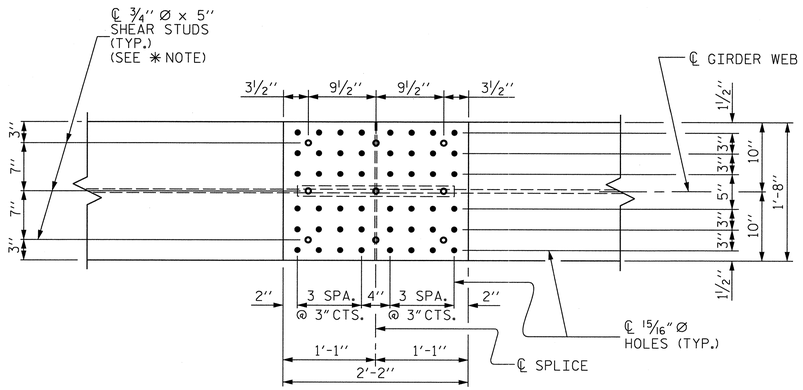

PLAN (TOP OF TOP FLANGE)

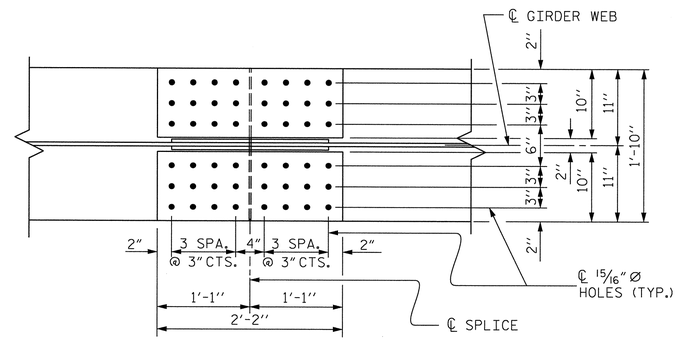

PLAN (TOP OF BOTTOM FLANGE)

STRUCTURAL STEEL NOTES :

STRUCTURAL STEEL USED FOR THE 1½" TOP & BOTTOM FLANGE SHALL BE HPS 70W AND PAINTED IN ACCORDANCE WITH SYSTEM 4 OF ARTICLE 442-8 OF THE STANDARD SPECIFICATIONS UNLESS OTHERWISE NOTED ON THE PLANS.

ALL REMAINING STRUCTURAL STEEL SHALL BE AASHTO M270 GRADE 50W AND PAINTED IN ACCORDANCE WITH SYSTEM 4 OF ARTICLE 442-8 OF THE STANDARD SPECIFICATIONS UNLESS OTHERWISE NOTED ON THE PLANS.

FOR HIGH PERFORMANCE STEEL, SEE SPECIAL PROVISIONS.

ALL DIMENSIONS SHOWN ARE HORIZONTAL OR VERTICAL, UNLESS OTHERWISE NOTED.

ALL FIELD CONNECTIONS TO BE ⅞" DIA. HIGH STRENGTH BOLTS UNLESS OTHERWISE NOTED.

BEARING STIFFENERS ARE TO BE PLACED NORMAL TO THE WEB OF THE GIRDER AND SHALL BE PLUMB.

PERMITTED FLANGE AND WEB SHOP SPLICES SHALL NOT BE LOCATED WITHIN 15 FEET OF MAXIMUM DEAD LOAD DEFLECTION (NOR WITHIN 15 FEET OF INTERMEDIATE BEARINGS OF CONTINUOUS UNITS). KEEP 2 FEET MINIMUM BETWEEN WEB AND FLANGE SHOP SPLICES. KEEP 6" MINIMUM BETWEEN CONNECTOR PLATE OR TRANSVERSE STIFFENER WELDS AND WEB OR FLANGE SHOP SPLICES.

STUDS ON GIRDERS MAY BE SHIFTED UP TO 1" IF NECESSARY TO CLEAR FLANGE SPLICE WELD.

TENSION ON THE AASHTO M164 BOLTS SHALL BE CALIBRATED USING DIRECT TENSION INDICATOR WASHERS IN ACCORDANCE WITH ARTICLE 440-8 OF THE STANDARD SPECIFICATIONS.

END OF GIRDERS SHALL BE PLUMB.

THE CONTRACTOR SHALL MAINTAIN STABILITY OF THE CURVED GIRDERS UNTIL ALL FIELD SPLICES AND CROSSFRAME CONNECTIONS HAVE BEEN COMPLETED. STRUCTURAL STEEL ERECTION IN A CONTINUOUS UNIT SHALL BE COMPLETE BEFORE FALSEWORK OR FORMS ARE PLACED ON THE UNIT.

BEARING STIFFENERS MAY REQUIRE COPING IF WIDER THAN BOTTOM FLANGE.

CURVATURE OF STEEL GIRDERS MAY BE ACCOMPLISHED BY CUTTING PLATES TO THE REQUIRED CURVATURE OR BY HEAT TREATMENT.

FABRICATORS SHALL DETAIL DIAPHRAGM MEMBERS AND CONNECTIONS FOR NO-LOAD FIT UP.

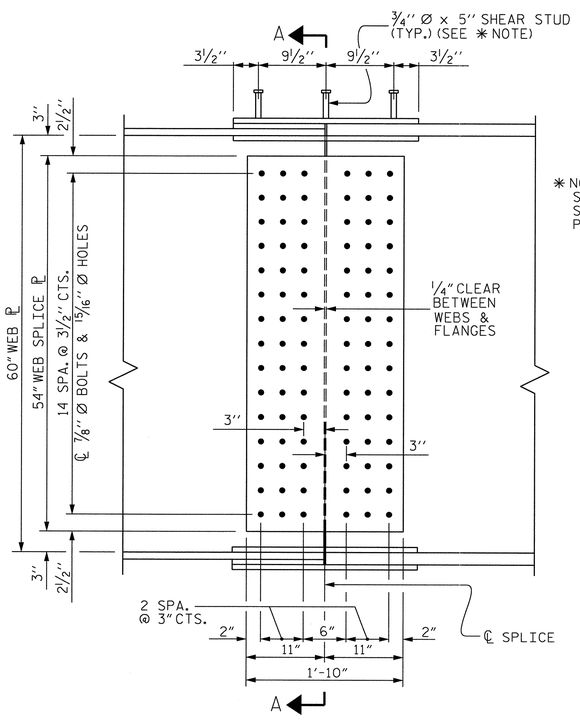

ELEVATION

✱ NOTE:
SHEAR STUDS ARE TO BE SHOP WELDED ON TOP OF PLATE BEFORE FIELD ASSEMBLY.

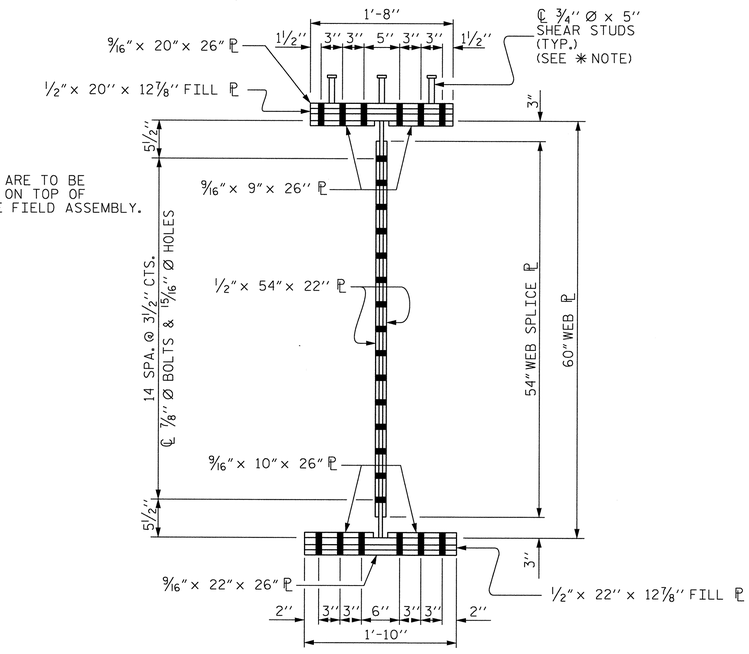

SECTION A-A

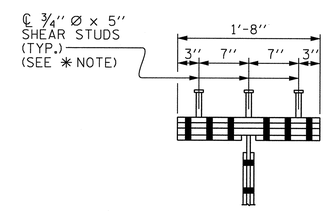

SHEAR STUD DETAIL
FOR TOP FLANGE SPLICE PLATE

BOLTED FIELD SPLICE DETAILS

(ALL BOLTED FIELD SPLICES ARE TYPICAL)

PROJECT NO. U-0071
DURHAM COUNTY
STATION: 107+45.55 -L-

SHEET 4 OF 4

STATE OF NORTH CAROLINA
DEPARTMENT OF TRANSPORTATION
RALEIGH

SUPERSTRUCTURE

STRUCTURAL STEEL DETAILS

WETHERILL ENGINEERING
559 Jones Franklin Rd. Suite 164
Raleigh, N.C. 27606
Bus: 919 851 8077
Fax: 919 851 8107
License: F-0377
TRANSPORTATION PLANNING/DESIGN - BRIDGE/STRUCTURE DESIGN
CIVIL/SITE DESIGN - GIS/GPS - CONSTRUCTION OBSERVATION

NORTH CAROLINA PROFESSIONAL SEAL 37400 ENGINEER GREGORY M. GILLAND 3-3-14

REVISIONS						SHEET NO.
NO.	BY:	DATE:	NO.	BY:	DATE:	S-206
1			3			TOTAL SHEETS
2			4			671

DRAWN BY : J.M. BRITT DATE : 2-26-13
CHECKED BY : G.M. GILLAND DATE : 3-27-13
DESIGN ENGINEER OF RECORD: G.M. GILLAND DATE : 6-13

P:\2012\U-0071 - Y4 over L\Structures\DGN\U0071_SD_Y4_SS_WEI.dgn
3/3/2014

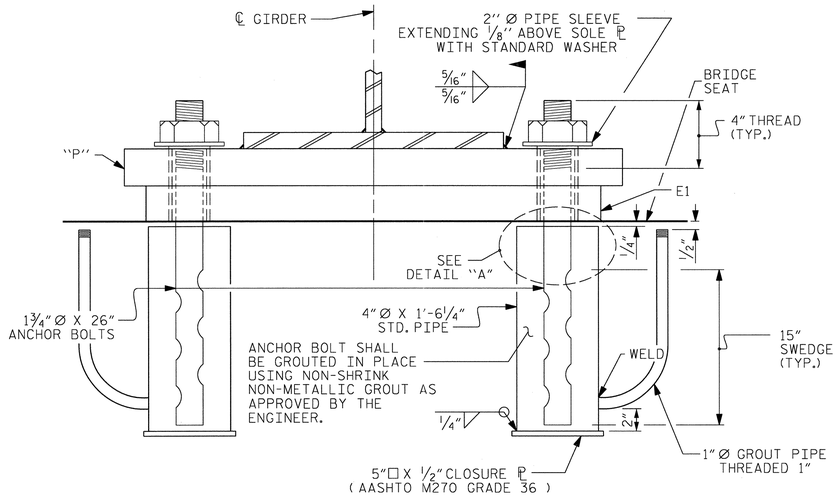

EXPANSION END VIEW

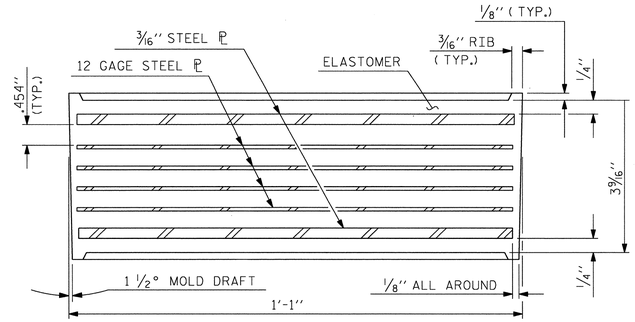

TYPICAL SECTION OF ELASTOMERIC BEARING

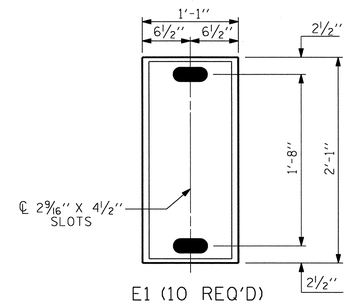

E1 (10 REQ'D)

PLAN VIEW OF ELASTOMERIC BEARING

TYPE V

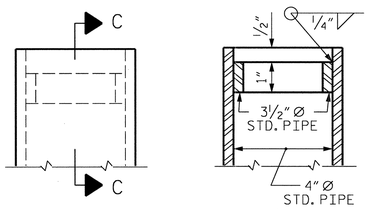

SECTION C-C

DETAIL "A"

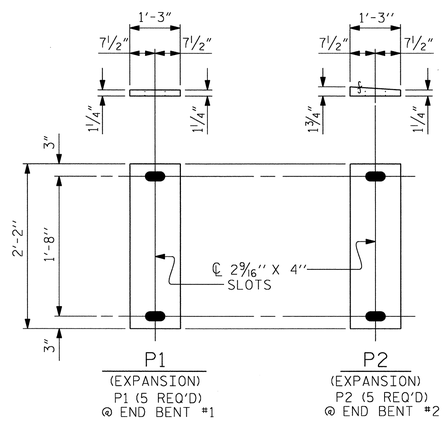

SOLE PLATE DETAILS

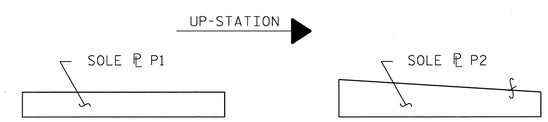

SOLE ℙ PLACEMENT DETAIL

NOTES

AT ALL FIXED POINTS OF SUPPORT, NUTS FOR ANCHOR BOLTS ARE TO BE TIGHTENED FINGER TIGHT AND THEN BACKED OFF 1/2 TURN. THE THREAD OF THE NUT AND BOLT SHALL THEN BE BURRED WITH A SHARP POINTED TOOL.

THE 2" Ø PIPE SLEEVE SHALL BE CUT FROM SCHEDULE 40 PVC PLASTIC PIPE. THE PVC PLASTIC PIPE SHALL MEET THE REQUIREMENTS OF ASTM D1785.

THE PAYMENT FOR THE PIPE SLEEVES SHALL BE INCLUDED IN THE SEVERAL PAY ITEMS.

FOR PAINTED STRUCTURAL STEEL (EXCLUDING AASHTO M270 GRADE 50W), SOLE PLATES, ANCHOR BOLTS, NUTS AND WASHERS SHALL BE GALVANIZED IN ACCORDANCE WITH THE STANDARD SPECIFICATIONS.

FOR AASHTO M270 GRADE 50W STRUCTURAL STEEL, SOLE PLATE SHALL BE AASHTO M270 GRADE 50W AND SHALL NOT BE GALVANIZED. ANCHOR BOLTS, NUTS AND WASHERS SHALL BE GALVANIZED IN ACCORDANCE WITH THE STANDARD SPECIFICATIONS.

ANCHOR BOLTS SHALL MEET THE REQUIREMENTS OF ASTM A449. NUTS SHALL MEET THE REQUIREMENTS OF AASHTO M291-DH OR AASHTO M292-2H. WASHERS SHALL MEET THE REQUIREMENTS OF AASHTO M293. SHOP DRAWINGS ARE NOT REQUIRED FOR ANCHOR BOLTS, NUTS AND WASHERS. SHOP INSPECTION IS REQUIRED.

WHEN FIELD WELDING THE SOLE PLATE TO THE GIRDER FLANGE, USE TEMPERATURE INDICATING WAX PENS, OR OTHER SUITABLE MEANS, TO ENSURE THAT THE TEMPERATURE OF THE SOLE PLATE DOES NOT EXCEED 300°F. TEMPERATURES ABOVE THIS MAY DAMAGE THE ELASTOMER.

ALL SURFACES OF BEARING PLATES SHALL BE SMOOTH AND STRAIGHT.

THE ELASTOMER IN THE STEEL REINFORCED BEARINGS SHALL HAVE A SHEAR MODULUS OF 0.160 KSI, IN ACCORDANCE WITH AASHTO M251.

FOR STEEL REINFORCED ELASTOMERIC BEARINGS, SEE SPECIAL PROVISIONS.

THE CLOSURE PLATE, GROUT PIPE AND STANDARD PIPE FOR THE EXPANSION ASSEMBLY NEED NOT BE GALVANIZED.

THE CONTRACTOR'S ATTENTION IS CALLED TO THE FOLLOWING PROCEDURE, WHICH MAY BE REQUIRED BY THE ENGINEER, TO RESET ELASTOMERIC BEARINGS DUE TO GIRDER TRANSLATION AND END ROTATION:

1. ONCE THE DECK HAS CURED, THE GIRDERS SHALL BE JACKED THEN THE ANCHOR BOLTS AND ELASTOMERIC BEARING SLOTS CENTERED AS NEARLY AS PRACTICAL ABOUT THE BEARING STIFFENER. THIS OPERATION SHALL BE PERFORMED AT APPROXIMATELY 60°F.
2. AFTER CENTERING THE ELASTOMERIC BEARING SLOTS AND ANCHOR BOLTS, THE ANCHOR BOLTS SHALL BE GROUTED.

THE CONTRACTOR MAY PROPOSE ALTERNATE METHODS, PROVIDED DETAILS ARE SUBMITTED TO THE ENGINEER FOR REVIEW AND APPROVAL.

MAXIMUM ALLOWABLE SERVICE LOADS	
D.L.+L.L. (NO IMPACT)	
TYPE V	335 k

PROJECT NO. U-0071
DURHAM COUNTY
STATION: 107+45.55 -L-

STATE OF NORTH CAROLINA
DEPARTMENT OF TRANSPORTATION
RALEIGH

STANDARD

ELASTOMERIC BEARING DETAILS

REVISIONS								SHEET NO.
NO.	BY:	DATE:	NO.	BY:	DATE:			S-207
1			3					TOTAL SHEETS
2			4					671

NORTH CAROLINA PROFESSIONAL SEAL 37400 ENGINEER GREGORY M. GILLAND 7/1/13

WETHERILL ENGINEERING
559 Jones Franklin Rd. Suite 164
Raleigh, N.C. 27606
Bus: 919 851 8077
Fax: 919 851 8107
License: F-0377
TRANSPORTATION PLANNING/DESIGN - BRIDGE/STRUCTURE DESIGN
CIVIL/SITE DESIGN - GIS/GPS - CONSTRUCTION OBSERVATION

ASSEMBLED BY : E.R. BONNEY		DATE : 2-26-13	
CHECKED BY : G.M. GILLAND		DATE : 3-11-13	
DESIGN ENGINEER OF RECORD: GMG		DATE : 6-13	
DRAWN BY : EEM 10/95	REV. 5/1/06	TLA/GM	
CHECKED BY : PEK 10/95	REV. 10/1/11	MAA/GM	
	REV. 10/24/12	AAC/MAA	

P:\2012\U-0071 - Y4 over I-5\Structures\DGN\U071_SD_Y4_BG_WEI.dgn
7/1/2013 8:10:13 AM

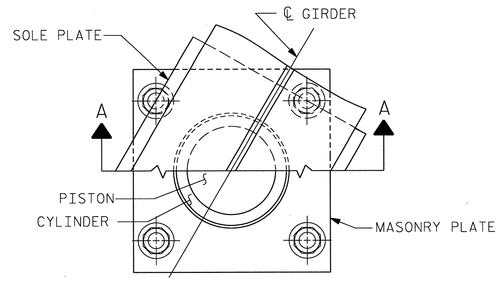

CUT-AWAY PLAN

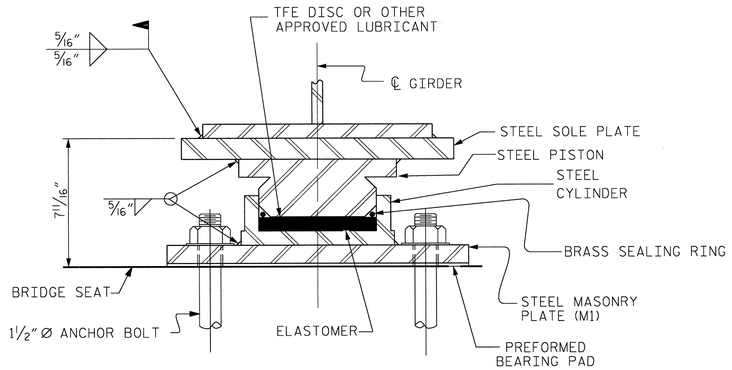

SECTION A-A

PB1, FIXED
(5 REQ'D. @ BENT 1)

POT BEARING DETAILS

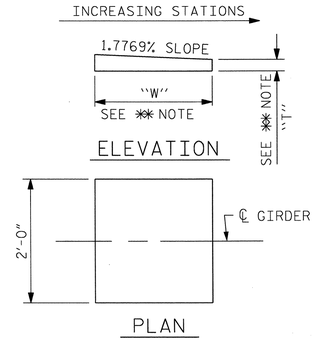

✱✱ NOTE:
DIMENSIONS "W" AND "T" ARE TO BE DETERMINED BY THE MANUFACTURER.

SOLE PLATE DETAILS

NOTES

FOR POT BEARINGS, SEE SPECIAL PROVISIONS.

AT ALL POINTS OF SUPPORT AT BENT 1, NUTS FOR ANCHOR BOLTS SHALL BE TIGHTENED FINGER TIGHT AND GIVEN AN ADDITIONAL 1/4 TURN. THE THREAD OF THE NUT AND BOLT SHALL THEN BE BURRED WITH A SHARP POINTED TOOL.

WHEN WELDING THE SOLE PLATE TO THE GIRDER, USE TEMPERATURE INDICATING WAX PENS, OR OTHER SUITABLE MEANS, TO ENSURE THAT THE TEMPERATURE OF THE BEARING DOES NOT EXCEED 250°F TEMPERATURES ABOVE THIS MAY DAMAGE THE TFE OR ELASTOMER.

SOLE PLATES SHOULD BE WELDED TO BEAM FLANGES AND ANCHOR BOLTS SHOULD BE GROUTED BEFORE FALSEWORK IS PLACED.

ALL SURFACES OF BEARING PLATES SHALL BE SMOOTH AND STRAIGHT.

FOR THERMAL SPRAYED COATINGS (METALLIZATION), SEE SPECIAL PROVISIONS.

THE CONTRACTOR MAY SUBSTITUTE DISC BEARINGS FOR THE POT BEARINGS SHOWN. FOR OPTIONAL DISC BEARINGS, SEE SPECIAL PROVISIONS.

TABLE FOR LOADS AND MOVEMENT

BEARING	LOCATION	UNFACTORED VERTICAL LOAD (KIPS)				FACTORED LATERAL LOAD (KIPS)	TOTAL MOVEMENT (INCHES)
		DEAD		LIVE	TOTAL		
		DC	DW	LL+IM			
PB1 (FIXED)	BENT #1	382	52	181	615	131	0.00

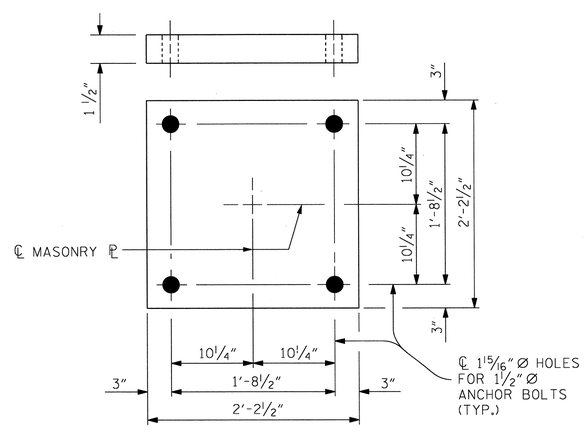

PLAN
M1 (5 REQ'D.)

MASONRY PLATE DETAILS

PROJECT NO. U-0071
DURHAM COUNTY
STATION: 107+45.55 -L-

STATE OF NORTH CAROLINA
DEPARTMENT OF TRANSPORTATION
RALEIGH

STANDARD

POT BEARING DETAILS

NORTH CAROLINA PROFESSIONAL SEAL 37400 ENGINEER GREGORY M. GILLAND 7/11/13

WETHERILL ENGINEERING
559 Jones Franklin Rd. Suite 164
Raleigh, N.C. 27606
Bus: 919 851 8077
Fax: 919 851 8107
License: F-0377
TRANSPORTATION PLANNING/DESIGN - BRIDGE/STRUCTURE DESIGN
CIVIL/SITE DESIGN - GIS/GPS - CONSTRUCTION OBSERVATION

REVISIONS						SHEET NO.
NO.	BY:	DATE:	NO.	BY:	DATE:	5-208
1			3			TOTAL SHEETS
2			4			671

ASSEMBLED BY : E.R. BONNEY		DATE : 2-26-13	
CHECKED BY : G.M. GILLAND		DATE : 3-11-13	
DESIGN ENGINEER OF RECORD: GMG		DATE : 6-13	
DRAWN BY : RWW 8/99	REV. 5/7/03	RWW/JTE	
CHECKED BY : LES 8/99	REV. 5/1/06R	TLA/GM	
	REV. 10/1/11	MAA/GM	

P:\2012\U-0071 - Y4 over LS\Structures\DGN\U0071_SD_Y4_PB_WE1.dgn
7/11/2013 8:10:58 AM

DEAD LOAD DEFLECTION TABLE FOR GIRDER

✱ INCLUDES SLAB, BUILDUPS & STAY-IN-PLACE FORMS

ALL VALUES ARE SHOWN IN FEET (DECIMAL FORM), EXCEPT "REQUIRED CAMBER", WHICH IS GIVEN IN INCHES (FRACTION FORM).

SPAN "A" GIRDER #1

TWENTIETH POINTS	0	1	2	3	4	5	6	7	8	9	10	11	12	13	14	15	16	17	18	19	20
DEFLECTION DUE TO WEIGHT OF GIRDER	0.000	-0.008	-0.016	-0.022	-0.029	-0.034	-0.038	-0.040	-0.042	-0.042	-0.040	-0.038	-0.034	-0.030	-0.025	-0.019	-0.014	-0.009	-0.005	-0.002	0.000
DEFLECTION DUE TO WEIGHT OF SLAB ✱	0.000	-0.041	-0.078	-0.112	-0.143	-0.169	-0.189	-0.202	-0.209	-0.209	-0.202	-0.189	-0.171	-0.149	-0.123	-0.095	-0.068	-0.043	-0.023	-0.008	0.000
DEFLECTION DUE TO WEIGHT OF BARRIER RAIL	0.000	-0.004	-0.007	-0.010	-0.013	-0.015	-0.017	-0.019	-0.019	-0.020	-0.019	-0.018	-0.017	-0.015	-0.013	-0.010	-0.007	-0.005	-0.003	-0.001	0.000
TOTAL DEAD LOAD DEFLECTION	0.000	-0.053	-0.101	-0.144	-0.185	-0.218	-0.244	-0.261	-0.270	-0.270	-0.262	-0.245	-0.221	-0.194	-0.160	-0.123	-0.089	-0.057	-0.030	-0.011	0.000
VERTICAL CURVE ORDINATE	0.000	0.050	0.094	0.133	0.167	0.195	0.219	0.237	0.250	0.258	0.261	0.258	0.250	0.237	0.219	0.195	0.167	0.133	0.094	0.050	0.000
REQUIRED CAMBER	0	1 1/4	2 5/16	3 5/16	4 1/4	4 15/16	5 9/16	6	6 1/4	6 5/16	6 1/4	6 1/16	5 11/16	5 3/16	4 9/16	3 13/16	3 1/16	2 1/4	1 1/2	3/4	0

SPAN "A" GIRDER #2

TWENTIETH POINTS	0	1	2	3	4	5	6	7	8	9	10	11	12	13	14	15	16	17	18	19	20
DEFLECTION DUE TO WEIGHT OF GIRDER	0.000	-0.007	-0.014	-0.020	-0.025	-0.029	-0.032	-0.034	-0.035	-0.035	-0.033	-0.031	-0.028	-0.023	-0.019	-0.014	-0.010	-0.006	-0.003	-0.001	0.000
DEFLECTION DUE TO WEIGHT OF SLAB ✱	0.000	-0.036	-0.070	-0.100	-0.128	-0.149	-0.165	-0.175	-0.179	-0.177	-0.170	-0.158	-0.141	-0.120	-0.098	-0.074	-0.051	-0.032	-0.014	-0.003	0.000
DEFLECTION DUE TO WEIGHT OF BARRIER RAIL	0.000	-0.003	-0.006	-0.009	-0.011	-0.013	-0.015	-0.016	-0.017	-0.017	-0.016	-0.015	-0.014	-0.012	-0.010	-0.008	-0.006	-0.004	-0.002	0.000	0.000
TOTAL DEAD LOAD DEFLECTION	0.000	-0.046	-0.090	-0.129	-0.164	-0.192	-0.213	-0.226	-0.231	-0.228	-0.220	-0.204	-0.183	-0.156	-0.127	-0.096	-0.067	-0.041	-0.019	-0.004	0.000
VERTICAL CURVE ORDINATE	0.000	0.048	0.092	0.130	0.163	0.191	0.214	0.232	0.245	0.253	0.255	0.253	0.245	0.232	0.214	0.191	0.163	0.130	0.092	0.048	0.000
REQUIRED CAMBER	0	1 1/8	2 3/16	3 1/8	3 15/16	4 5/8	5 1/8	5 1/2	5 11/16	5 3/4	5 11/16	5 1/2	5 1/8	4 5/8	4 1/8	3 7/16	2 3/4	2 1/16	1 5/16	5/8	0

SPAN "A" GIRDER #3

TWENTIETH POINTS	0	1	2	3	4	5	6	7	8	9	10	11	12	13	14	15	16	17	18	19	20
DEFLECTION DUE TO WEIGHT OF GIRDER	0.000	-0.006	-0.012	-0.018	-0.022	-0.026	-0.029	-0.030	-0.031	-0.031	-0.029	-0.027	-0.024	-0.020	-0.016	-0.012	-0.008	-0.004	-0.002	0.000	0.000
DEFLECTION DUE TO WEIGHT OF SLAB ✱	0.000	-0.032	-0.063	-0.091	-0.115	-0.134	-0.148	-0.157	-0.160	-0.158	-0.150	-0.137	-0.122	-0.103	-0.081	-0.060	-0.040	-0.022	-0.008	0.000	0.000
DEFLECTION DUE TO WEIGHT OF BARRIER RAIL	0.000	-0.003	-0.006	-0.008	-0.010	-0.012	-0.014	-0.015	-0.015	-0.015	-0.015	-0.014	-0.012	-0.011	-0.009	-0.007	-0.005	-0.003	-0.001	0.000	0.000
TOTAL DEAD LOAD DEFLECTION	0.000	-0.041	-0.081	-0.117	-0.148	-0.173	-0.191	-0.202	-0.206	-0.203	-0.194	-0.178	-0.158	-0.133	-0.105	-0.078	-0.052	-0.029	-0.011	0.000	0.000
VERTICAL CURVE ORDINATE	0.000	0.048	0.090	0.128	0.160	0.188	0.210	0.228	0.240	0.248	0.250	0.248	0.240	0.228	0.210	0.188	0.160	0.128	0.090	0.048	0.000
REQUIRED CAMBER	0	1 1/16	2 1/16	2 15/16	3 11/16	4 5/16	4 13/16	5 1/8	5 3/8	5 7/16	5 5/16	5 1/8	4 3/4	4 5/16	3 13/16	3 3/16	2 9/16	1 7/8	1 3/16	9/16	0

SPAN "A" GIRDER #4

TWENTIETH POINTS	0	1	2	3	4	5	6	7	8	9	10	11	12	13	14	15	16	17	18	19	20
DEFLECTION DUE TO WEIGHT OF GIRDER	0.000	-0.006	-0.012	-0.017	-0.021	-0.025	-0.027	-0.029	-0.029	-0.029	-0.027	-0.025	-0.021	-0.018	-0.014	-0.010	-0.006	-0.003	-0.001	0.000	0.000
DEFLECTION DUE TO WEIGHT OF SLAB ✱	0.000	-0.030	-0.060	-0.085	-0.108	-0.125	-0.138	-0.145	-0.147	-0.144	-0.136	-0.123	-0.106	-0.088	-0.067	-0.048	-0.030	-0.014	-0.003	0.003	0.000
DEFLECTION DUE TO WEIGHT OF BARRIER RAIL	0.000	-0.003	-0.005	-0.008	-0.010	-0.012	-0.013	-0.014	-0.014	-0.014	-0.014	-0.013	-0.011	-0.010	-0.008	-0.006	-0.004	-0.002	-0.001	0.000	0.000
TOTAL DEAD LOAD DEFLECTION	0.000	-0.039	-0.076	-0.110	-0.139	-0.162	-0.178	-0.187	-0.190	-0.186	-0.177	-0.161	-0.139	-0.116	-0.089	-0.064	-0.040	-0.019	-0.004	0.003	0.000
VERTICAL CURVE ORDINATE	0.000	0.047	0.088	0.125	0.157	0.184	0.206	0.223	0.235	0.243	0.245	0.243	0.235	0.223	0.206	0.184	0.157	0.125	0.088	0.047	0.000
REQUIRED CAMBER	0	1	2	2 13/16	3 9/16	4 1/8	4 5/8	4 15/16	5 1/8	5 1/8	5 1/16	4 13/16	4 1/2	4 1/16	3 9/16	3	2 3/8	1 3/4	1 1/8	1/2	0

SPAN "A" GIRDER #5

TWENTIETH POINTS	0	1	2	3	4	5	6	7	8	9	10	11	12	13	14	15	16	17	18	19	20
DEFLECTION DUE TO WEIGHT OF GIRDER	0.000	-0.006	-0.012	-0.018	-0.022	-0.025	-0.028	-0.029	-0.029	-0.028	-0.026	-0.024	-0.020	-0.016	-0.012	-0.008	-0.004	-0.001	0.001	0.001	0.000
DEFLECTION DUE TO WEIGHT OF SLAB ✱	0.000	-0.031	-0.060	-0.086	-0.107	-0.124	-0.136	-0.142	-0.141	-0.136	-0.126	-0.113	-0.095	-0.074	-0.054	-0.034	-0.017	-0.004	0.005	0.006	0.000
DEFLECTION DUE TO WEIGHT OF BARRIER RAIL	0.000	-0.003	-0.006	-0.008	-0.010	-0.012	-0.014	-0.014	-0.015	-0.014	-0.014	-0.013	-0.011	-0.009	-0.007	-0.005	-0.003	-0.001	0.000	0.000	0.000
TOTAL DEAD LOAD DEFLECTION	0.000	-0.040	-0.078	-0.112	-0.140	-0.162	-0.177	-0.185	-0.185	-0.178	-0.166	-0.149	-0.126	-0.099	-0.073	-0.047	-0.025	-0.007	0.005	0.008	0.000
VERTICAL CURVE ORDINATE	0.000	0.046	0.087	0.123	0.154	0.180	0.202	0.219	0.231	0.238	0.240	0.238	0.231	0.219	0.202	0.180	0.154	0.123	0.087	0.046	0.000
REQUIRED CAMBER	0	1	2	2 13/16	3 1/2	4 1/8	4 9/16	4 7/8	5	5	4 7/8	4 5/8	4 5/16	3 13/16	3 5/16	2 3/4	2 1/8	1 9/16	1	7/16	0

SPAN "B" GIRDER #1

TWENTIETH POINTS	0	1	2	3	4	5	6	7	8	9	10	11	12	13	14	15	16	17	18	19	20
DEFLECTION DUE TO WEIGHT OF GIRDER	0.000	-0.001	-0.003	-0.007	-0.013	-0.018	-0.024	-0.030	-0.036	-0.040	-0.043	-0.045	-0.046	-0.045	-0.043	-0.039	-0.033	-0.026	-0.018	-0.010	0.000
DEFLECTION DUE TO WEIGHT OF SLAB ✱	0.000	-0.003	-0.015	-0.035	-0.060	-0.088	-0.118	-0.148	-0.176	-0.198	-0.214	-0.225	-0.230	-0.225	-0.213	-0.193	-0.165	-0.130	-0.092	-0.048	0.000
DEFLECTION DUE TO WEIGHT OF BARRIER RAIL	0.000	0.000	-0.002	-0.004	-0.007	-0.010	-0.012	-0.015	-0.018	-0.019	-0.021	-0.021	-0.021	-0.021	-0.019	-0.017	-0.015	-0.012	-0.008	-0.004	0.000
TOTAL DEAD LOAD DEFLECTION	0.000	-0.005	-0.021	-0.046	-0.079	-0.116	-0.154	-0.193	-0.229	-0.257	-0.278	-0.292	-0.297	-0.291	-0.275	-0.249	-0.213	-0.168	-0.118	-0.062	0.000
VERTICAL CURVE ORDINATE	0.000	0.054	0.103	0.146	0.183	0.215	0.241	0.261	0.275	0.284	0.286	0.284	0.275	0.261	0.241	0.215	0.183	0.146	0.103	0.054	0.000
REQUIRED CAMBER	0	1/16	1 1/2	2 5/16	3 1/8	3 15/16	4 3/4	5 7/16	6 1/16	6 1/2	6 3/4	6 7/8	6 7/8	6 5/8	6 3/16	5 9/16	4 3/4	3 3/4	2 5/8	1 3/8	0

SIGN CONVENTION FOR DEAD LOAD DEFLECTION + 0 −

PROJECT NO. U-0071
DURHAM COUNTY
STATION: 107+45.55 -L-

SHEET 1 OF 2

STATE OF NORTH CAROLINA
DEPARTMENT OF TRANSPORTATION
RALEIGH

SUPERSTRUCTURE

DEAD LOAD DEFLECTION

REVISIONS						SHEET NO.
NO.	BY:	DATE:	NO.	BY:	DATE:	S-209
1			3			TOTAL SHEETS
2			4			671

WETHERILL ENGINEERING
559 Jones Franklin Rd. Suite 164
Raleigh, N.C. 27606
Bus: 919 851 8077
Fax: 919 851 8107
License: F-0377
TRANSPORTATION PLANNING/DESIGN - BRIDGE/STRUCTURE DESIGN
CIVIL/SITE DESIGN - GIS/GPS - CONSTRUCTION OBSERVATION

NORTH CAROLINA PROFESSIONAL SEAL 37400 ENGINEER GREGORY M. GILLAND 7/1/13

DRAWN BY : E.R. BONNEY DATE : 2-13-13
CHECKED BY : G.M. GILLAND DATE : 3-11-13
DESIGN ENGINEER OF RECORD: G.M. GILLAND DATE : 6-13

P:\2012\U-0071 - Y4 over L\Structures\DGN\U0071_SD_Y4_DD_WEI.dgn
7/1/2013 8:12:02 AM

DEAD LOAD DEFLECTION TABLE FOR GIRDER

	SPAN "B" GIRDER #2																				
TWENTIETH POINTS	0	1	2	3	4	5	6	7	8	9	10	11	12	13	14	15	16	17	18	19	20
DEFLECTION DUE TO WEIGHT OF GIRDER	0.000	-0.002	-0.005	-0.009	-0.014	-0.020	-0.026	-0.032	-0.036	-0.040	-0.043	-0.045	-0.045	-0.044	-0.041	-0.037	-0.032	-0.025	-0.017	-0.009	0.000
DEFLECTION DUE TO WEIGHT OF SLAB ✳	0.000	-0.007	-0.023	-0.045	-0.071	-0.100	-0.130	-0.159	-0.183	-0.203	-0.220	-0.229	-0.230	-0.225	-0.212	-0.191	-0.163	-0.129	-0.089	-0.046	0.000
DEFLECTION DUE TO WEIGHT OF BARRIER RAIL	0.000	-0.001	-0.003	-0.005	-0.008	-0.010	-0.013	-0.016	-0.018	-0.019	-0.020	-0.021	-0.021	-0.020	-0.019	-0.017	-0.014	-0.011	-0.008	-0.004	0.000
TOTAL DEAD LOAD DEFLECTION	0.000	-0.009	-0.030	-0.059	-0.093	-0.130	-0.170	-0.206	-0.237	-0.263	-0.284	-0.295	-0.297	-0.290	-0.272	-0.245	-0.209	-0.166	-0.114	-0.059	0.000
VERTICAL CURVE ORDINATE	0.000	0.053	-0.101	0.143	0.180	0.211	0.236	0.256	0.270	0.278	0.281	0.278	0.270	0.256	0.236	0.211	0.180	0.143	0.101	0.053	0.000
REQUIRED CAMBER	0	3/4	1 9/16	2 7/16	3 1/4	4 1/8	4 7/8	5 9/16	6 1/16	6 1/2	6 3/4	6 7/8	6 13/16	6 9/16	6 1/8	5 1/2	4 11/16	3 11/16	2 9/16	1 3/8	0

	SPAN "B" GIRDER #3																				
TWENTIETH POINTS	0	1	2	3	4	5	6	7	8	9	10	11	12	13	14	15	16	17	18	19	20
DEFLECTION DUE TO WEIGHT OF GIRDER	0.000	-0.002	-0.006	-0.010	-0.016	-0.022	-0.028	-0.034	-0.038	-0.042	-0.045	-0.047	-0.047	-0.046	-0.043	-0.038	-0.033	-0.026	-0.018	-0.009	0.000
DEFLECTION DUE TO WEIGHT OF SLAB ✳	0.000	-0.010	-0.028	-0.053	-0.081	-0.111	-0.141	-0.171	-0.196	-0.216	-0.230	-0.240	-0.241	-0.234	-0.220	-0.198	-0.169	-0.133	-0.092	-0.047	0.000
DEFLECTION DUE TO WEIGHT OF BARRIER RAIL	0.000	-0.001	-0.003	-0.005	-0.008	-0.011	-0.014	-0.016	-0.018	-0.020	-0.021	-0.022	-0.021	-0.021	-0.019	-0.017	-0.015	-0.011	-0.008	-0.004	0.000
TOTAL DEAD LOAD DEFLECTION	0.000	-0.013	-0.037	-0.068	-0.105	-0.143	-0.183	-0.221	-0.253	-0.278	-0.296	-0.308	-0.309	-0.300	-0.282	-0.254	-0.216	-0.170	-0.118	-0.060	0.000
VERTICAL CURVE ORDINATE	0.000	0.052	0.099	0.141	0.177	0.207	0.232	0.251	0.265	0.273	0.276	0.273	0.265	0.251	0.232	0.207	0.177	0.141	0.099	0.052	0.000
REQUIRED CAMBER	0	13/16	1 5/8	2 1/2	3 3/8	4 3/16	5	5 11/16	6 1/4	6 5/8	6 7/8	7	6 7/8	6 5/8	6 3/16	5 1/2	4 11/16	3 3/4	2 5/8	1 3/8	0

	SPAN "B" GIRDER #4																				
TWENTIETH POINTS	0	1	2	3	4	5	6	7	8	9	10	11	12	13	14	15	16	17	18	19	20
DEFLECTION DUE TO WEIGHT OF GIRDER	0.000	-0.003	-0.007	-0.012	-0.018	-0.025	-0.031	-0.037	-0.042	-0.046	-0.049	-0.051	-0.051	-0.049	-0.046	-0.042	-0.035	-0.028	-0.019	-0.010	0.000
DEFLECTION DUE TO WEIGHT OF SLAB ✳	0.000	-0.013	-0.034	-0.062	-0.092	-0.124	-0.157	-0.186	-0.214	-0.236	-0.250	-0.258	-0.259	-0.251	-0.235	-0.211	-0.180	-0.141	-0.098	-0.050	0.000
DEFLECTION DUE TO WEIGHT OF BARRIER RAIL	0.000	-0.001	-0.003	-0.006	-0.009	-0.012	-0.015	-0.018	-0.020	-0.022	-0.023	-0.023	-0.023	-0.022	-0.021	-0.019	-0.016	-0.012	-0.009	-0.004	0.000
TOTAL DEAD LOAD DEFLECTION	0.000	-0.017	-0.045	-0.080	-0.119	-0.161	-0.203	-0.241	-0.277	-0.304	-0.322	-0.332	-0.333	-0.323	-0.302	-0.271	-0.231	-0.182	-0.126	-0.064	0.000
VERTICAL CURVE ORDINATE	0.000	0.052	0.098	0.138	0.174	0.203	0.228	0.247	0.260	0.268	0.271	0.268	0.260	0.247	0.228	0.203	0.174	0.138	0.098	0.052	0.000
REQUIRED CAMBER	0	13/16	1 11/16	2 5/8	3 1/2	4 3/8	5 3/16	5 7/8	6 7/16	6 7/8	7 1/8	7 3/16	7 1/8	6 13/16	6 3/8	5 11/16	4 7/8	3 13/16	2 11/16	1 3/8	0

	SPAN "B" GIRDER #5																				
TWENTIETH POINTS	0	1	2	3	4	5	6	7	8	9	10	11	12	13	14	15	16	17	18	19	20
DEFLECTION DUE TO WEIGHT OF GIRDER	0.000	-0.003	-0.008	-0.015	-0.022	-0.029	-0.036	-0.043	-0.049	-0.053	-0.056	-0.058	-0.057	-0.055	-0.052	-0.046	-0.039	-0.031	-0.021	-0.011	0.000
DEFLECTION DUE TO WEIGHT OF SLAB ✳	0.000	-0.017	-0.043	-0.074	-0.108	-0.145	-0.182	-0.215	-0.243	-0.264	-0.280	-0.289	-0.287	-0.277	-0.258	-0.230	-0.195	-0.153	-0.105	-0.055	0.000
DEFLECTION DUE TO WEIGHT OF BARRIER RAIL	0.000	-0.002	-0.004	-0.007	-0.011	-0.014	-0.018	-0.021	-0.023	-0.025	-0.026	-0.026	-0.026	-0.025	-0.023	-0.021	-0.017	-0.014	-0.009	-0.005	0.000
TOTAL DEAD LOAD DEFLECTION	0.000	-0.022	-0.055	-0.096	-0.141	-0.188	-0.236	-0.279	-0.315	-0.342	-0.362	-0.373	-0.370	-0.357	-0.333	-0.297	-0.251	-0.197	-0.136	-0.071	0.000
VERTICAL CURVE ORDINATE	0.000	0.051	0.096	0.136	0.170	0.200	0.224	0.242	0.256	0.264	0.266	0.264	0.256	0.242	0.224	0.200	0.170	0.136	0.096	0.051	0.000
REQUIRED CAMBER	0	7/8	1 13/16	2 3/4	3 3/4	4 5/8	5 1/2	6 1/4	6 7/8	7 1/4	7 9/16	7 5/8	7 1/2	7 3/16	6 11/16	5 15/16	5 1/16	4	2 13/16	1 7/16	0

✳ INCLUDES SLAB, BUILDUPS & STAY-IN-PLACE FORMS

ALL VALUES ARE SHOWN IN FEET (DECIMAL FORM), EXCEPT "REQUIRED CAMBER", WHICH IS GIVEN IN INCHES (FRACTION FORM).

SIGN CONVENTION FOR DEAD LOAD DEFLECTION + 0 -

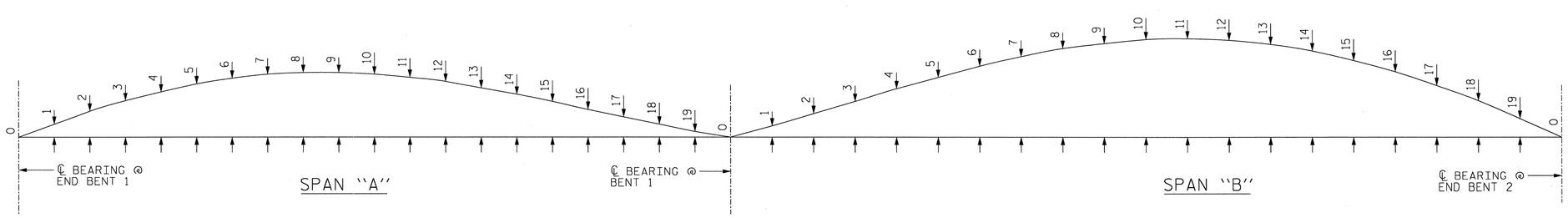

TYPICAL SCHEMATIC CAMBER ORDINATES

SLOPE FOR THE ZERO CAMBER BASE LINE VARIES

PROJECT NO. U-0071
DURHAM COUNTY
STATION: 107+45.55 -L-

SHEET 2 OF 2

STATE OF NORTH CAROLINA
DEPARTMENT OF TRANSPORTATION
RALEIGH

SUPERSTRUCTURE

DEAD LOAD DEFLECTION

NORTH CAROLINA PROFESSIONAL SEAL 37400 ENGINEER GREGORY M. GILLAND 7/1/13

WETHERILL ENGINEERING
559 Jones Franklin Rd. Suite 164
Raleigh, N.C. 27606
Bus: 919 851 8077
Fax: 919 851 8107
License: F-0377
TRANSPORTATION PLANNING/DESIGN - BRIDGE/STRUCTURE DESIGN
CIVIL/SITE DESIGN - GIS/GPS - CONSTRUCTION OBSERVATION

REVISIONS								SHEET NO.
NO.	BY:	DATE:	NO.	BY:	DATE:			S-210
1			3					TOTAL SHEETS
2			4					671

DRAWN BY : E.R. BONNEY DATE : 2-13-13
CHECKED BY : G.M. GILLAND DATE : 3-11-13
DESIGN ENGINEER OF RECORD: G.M. GILLAND DATE : 6-13

P:\2012\U-0071 - Y4 over L\Structures\DGN\U0071_SD_Y4_DD_WE1.dgn
7/1/2013 8:12:21 AM

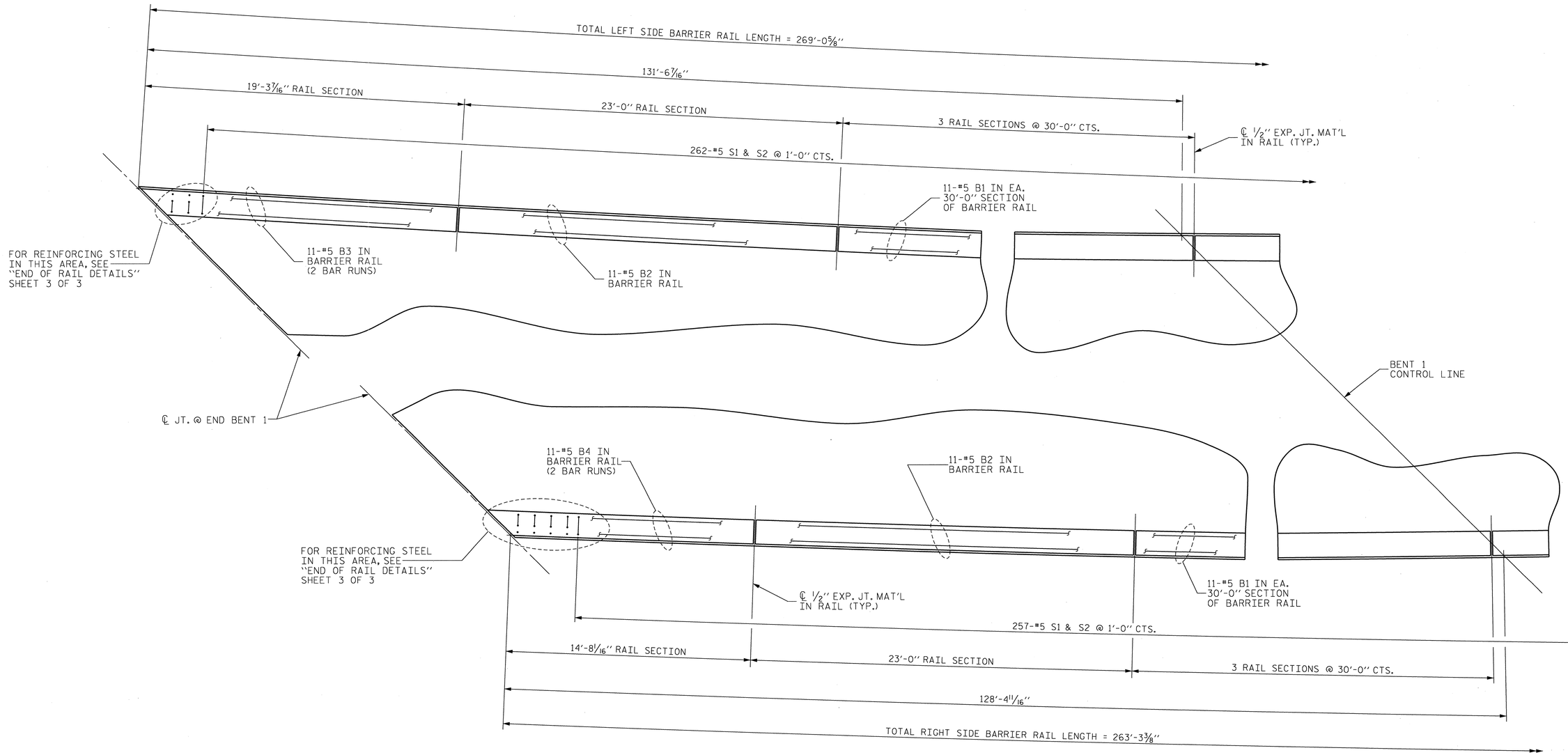

PLAN OF BARRIER RAIL - SPAN "A"

ALL DIMENSIONS ARE MEASURED ALONG OUTSIDE FACE OF BARRIER RAIL AND ARE RADIAL

PROJECT NO. U-0071
DURHAM COUNTY
STATION: 107+45.55 -L-

SHEET 1 OF 3

STATE OF NORTH CAROLINA
DEPARTMENT OF TRANSPORTATION
RALEIGH

SUPERSTRUCTURE

CONCRETE BARRIER RAIL

NORTH CAROLINA PROFESSIONAL SEAL 37400 ENGINEER GREGORY M. GILLAND 7/1/13

WETHERILL ENGINEERING
559 Jones Franklin Rd. Suite 164
Raleigh, N.C. 27606
Bus: 919 851 8077
Fax: 919 851 8107
License: F-0377
TRANSPORTATION PLANNING/DESIGN - BRIDGE/STRUCTURE DESIGN
CIVIL/SITE DESIGN - GIS/GPS - CONSTRUCTION OBSERVATION

REVISIONS						
NO.	BY:	DATE:	NO.	BY:	DATE:	SHEET NO. 5-211
1			3			TOTAL SHEETS 671
2			4			

DRAWN BY : J.M. BRITT DATE : 1-10-13
CHECKED BY : G.M. GILLAND DATE : 3-5-13
DESIGN ENGINEER OF RECORD: G.M. GILLAND DATE : 6-13

P:\2012\U-0071 - Y4 over L\Structures\DGN\U0071_SD_Y4_BR_WE1.dgn
7/1/2013 8:13:18 AM

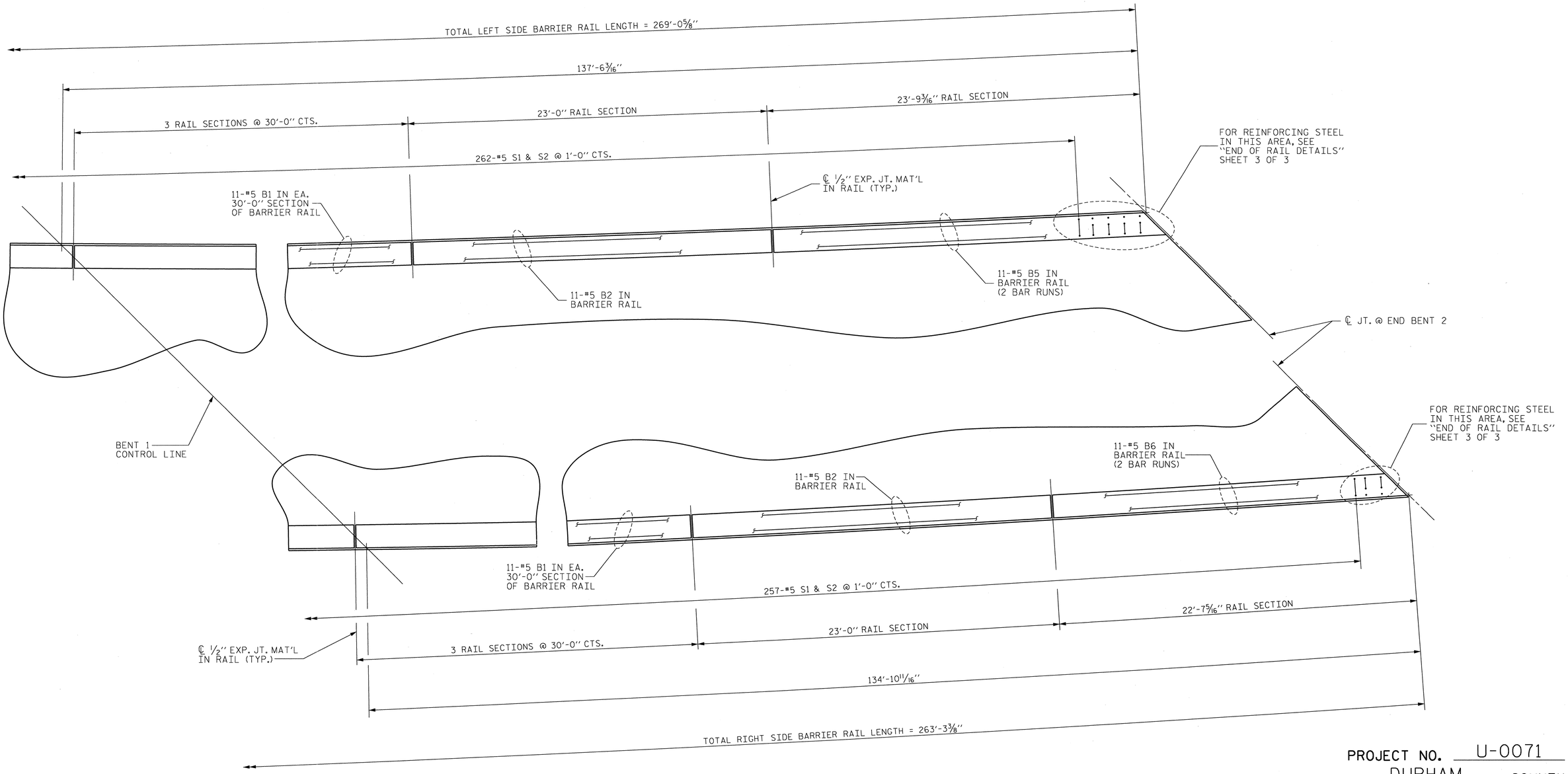

PROJECT NO. U-0071

DURHAM COUNTY

STATION: 107+45.55 -L-

SHEET 2 OF 3

PLAN OF BARRIER RAIL - SPAN "B"

ALL DIMENSIONS ARE MEASURED ALONG OUTSIDE FACE OF BARRIER RAIL AND ARE RADIAL

STATE OF NORTH CAROLINA
DEPARTMENT OF TRANSPORTATION
RALEIGH

SUPERSTRUCTURE

CONCRETE BARRIER RAIL

NORTH CAROLINA PROFESSIONAL SEAL 37400 ENGINEER GREGORY M. GILLAND 7/1/13

WETHERILL ENGINEERING
559 Jones Franklin Rd. Suite 164
Raleigh, N.C. 27606
Bus: 919 851 8077
Fax: 919 851 8107
License: F-0377
TRANSPORTATION PLANNING/DESIGN - BRIDGE/STRUCTURE DESIGN
CIVIL/SITE DESIGN - GIS/GPS - CONSTRUCTION OBSERVATION

REVISIONS								SHEET NO.
NO.	BY:	DATE:	NO.	BY:	DATE:			S-212
1			3					TOTAL SHEETS
2			4					671

DRAWN BY : J.M. BRITT DATE : 1-15-13
CHECKED BY : G.M. GILLAND DATE : 3-5-13
DESIGN ENGINEER OF RECORD: G.M. GILLAND DATE : 6-13

P:\2012\U-0071 -Y4 over LVStructures\DGN\0071_SD_Y4_BR_WE1.dgn
7/1/2013 8:13:38 AM

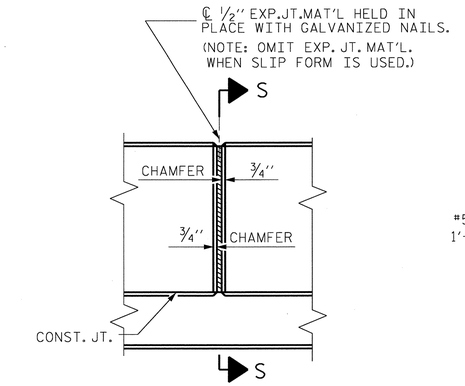

ELEVATION AT EXPANSION JOINTS

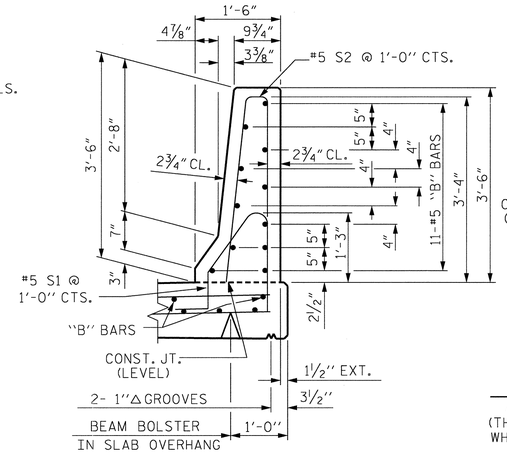

SECTION THRU RAIL

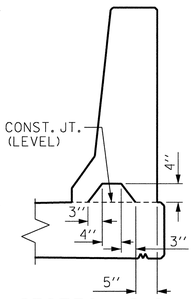

SECTION S-S

AT DAM IN OPEN SURFACE (THIS IS TO BE USED ONLY WHEN SLIP FORM IS USED)

BARRIER RAIL DETAILS

NOTES

THE BARRIER RAIL IN A CONTINUOUS UNIT SHALL NOT BE CAST UNTIL ALL SLAB CONCRETE IN THAT UNIT HAS BEEN CAST AND HAS REACHED A MINIMUM COMPRESSIVE STRENGTH OF 3,000 PSI.

WHEN FOAM JOINT SEAL IS REQUIRED, THE JOINT IN THE DECK SHALL BE SAWED PRIOR TO THE CASTING OF BARRIER RAIL.

ALL REINFORCING STEEL IN BARRIER RAILS SHALL BE EPOXY COATED.

THE #5 S3, S4, S5 AND S6 BARS SHALL BE INSTALLED, USING AN ADHESIVE ANCHORING SYSTEM, AFTER SAWING THE JOINT. THE YIELD LOAD FOR THE #5 S3, S4, S5 AND S6 BARS IS 18.6 KIPS. FIELD TESTING FOR THE ADHESIVE BONDING SYSTEM IS NOT REQUIRED.

GROOVED CONTRACTION JOINTS, 1/2" IN DEPTH, SHALL BE TOOLED IN ALL EXPOSED FACES OF THE BARRIER RAIL AND IN ACCORDANCE WITH ARTICLE 825-10(B) OF THE STANDARD SPECIFICATIONS. THE CONTRACTION JOINT SHALL BE LOCATED AT EACH THIRD POINT BETWEEN BARRIER RAIL EXPANSION JOINTS. ONLY ONE CONTRACTION JOINT IS REQUIRED AT MIDPOINT OF BARRIER RAIL SEGMENTS LESS THAN 20 FEET IN LENGTH AND NO CONTRACTION JOINTS ARE REQUIRED FOR THOSE SEGMENTS LESS THAN 10 FEET IN LENGTH.

THE #5 S1 AND S2 BARS MAY BE SHIFTED SLIGHTLY IN ORDER TO MAINTAIN A 2" MINIMUM CLEARANCE TO THE 1/2" EXPANSION JOINT MATERIAL IN THE RAIL.

BAR TYPES

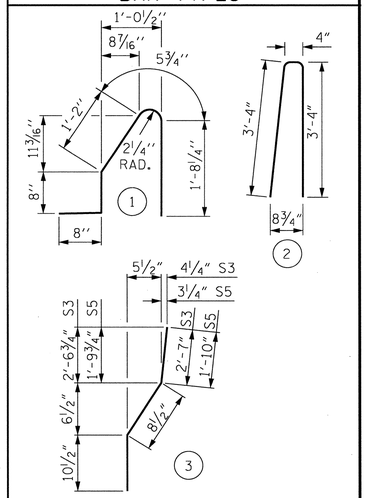

ALL BAR DIMENSIONS ARE OUT TO OUT

BILL OF MATERIAL

FOR CONCRETE BARRIER RAIL ONLY

BAR	No.	SIZE	TYPE	LENGTH	WEIGHT
* S1	519	#5	1	4'-8"	2526
* S2	519	#5	2	7'-0"	3789
* S3	4	#5	3	4'-2"	17
* S4	4	#5	STR	4'-0"	17
* S5	8	#5	3	3'-5"	29
* S6	8	#5	STR	3'-3"	27
* B1	132	#5	STR	29'-7"	4073
* B2	44	#5	STR	22'-7"	1036
* B3	22	#5	STR	10'-8"	245
* B4	22	#5	STR	9'-2"	210
* B5	22	#5	STR	13'-7"	312
* B6	22	#5	STR	12'-4"	283

* EPOXY COATED REINFORCING STEEL	12,564 LBS.
CLASS AA CONCRETE	72.3 CU. YDS.
CONCRETE BARRIER RAIL	532.33 LIN. FT.

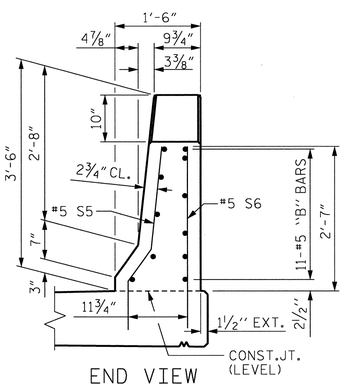

END VIEW

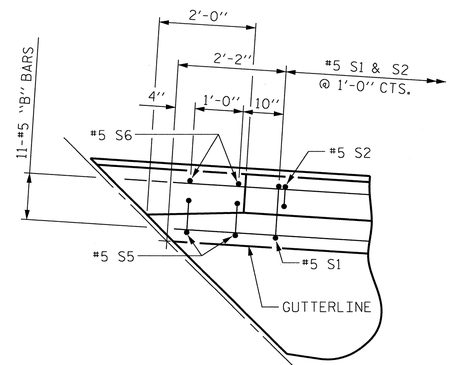

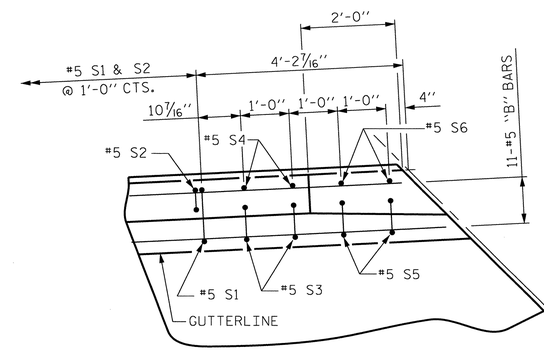

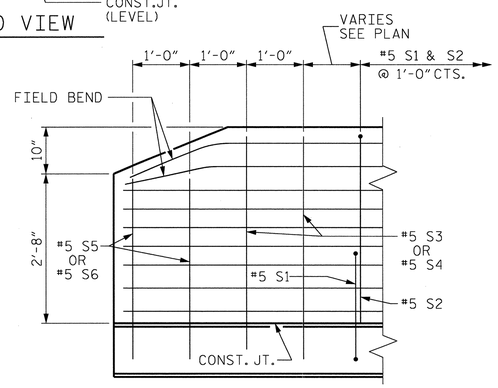

SIDE VIEW

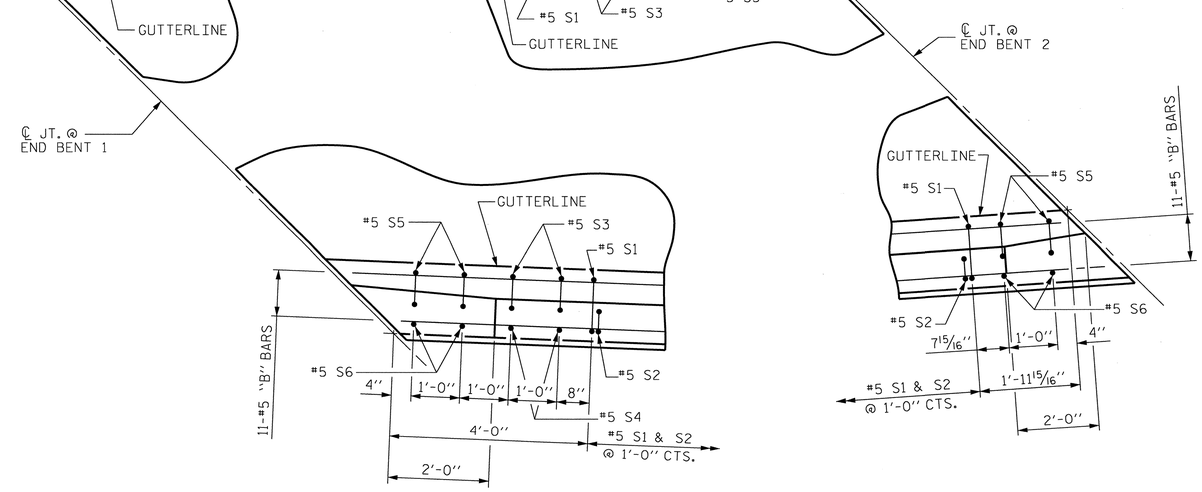

PLAN

END OF RAIL DETAILS

FOR ADHESIVE ANCHORING AT SAWED JOINTS

PROJECT NO. U-0071
DURHAM COUNTY
STATION: 107+45.55 -L-

SHEET 3 OF 3

STATE OF NORTH CAROLINA
DEPARTMENT OF TRANSPORTATION
RALEIGH

STANDARD

CONCRETE BARRIER RAIL

REVISIONS						SHEET NO.
NO.	BY:	DATE:	NO.	BY:	DATE:	5-213
1			3			TOTAL SHEETS
2			4			671

NORTH CAROLINA PROFESSIONAL SEAL 37400 ENGINEER GREGORY M. GILLAND 7/11/13

WETHERILL ENGINEERING
559 Jones Franklin Rd. Suite 164
Raleigh, N.C. 27606
Bus: 919 851 8077
Fax: 919 851 8107
License: F-0377

TRANSPORTATION PLANNING/DESIGN - BRIDGE/STRUCTURE DESIGN
CIVIL/SITE DESIGN - GIS/GPS - CONSTRUCTION OBSERVATION

ASSEMBLED BY : J.M. BRITT	DATE : 1-15-13		
CHECKED BY : G.M. GILLAND	DATE : 3-5-13		
DESIGN ENGINEER OF RECORD: GMG	DATE : 6-13		
DRAWN BY : ARB 5/87	REV. 10/1/11	MAA/GM	
CHECKED BY : SJD 9/87	REV. 7/12	MAA/GM	
	REV. 10/12	MAA/GM	

P:\2012\U-0071_-Y4 over LVStructures\DGN\U0071_-SD_Y4_BR_WE1.dgn
7/11/2013 8:14:24 AM

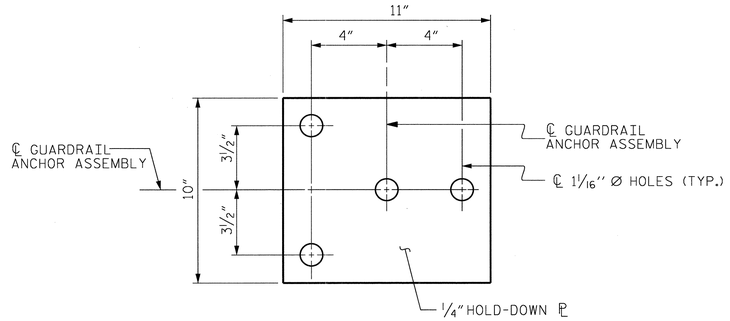

PLAN

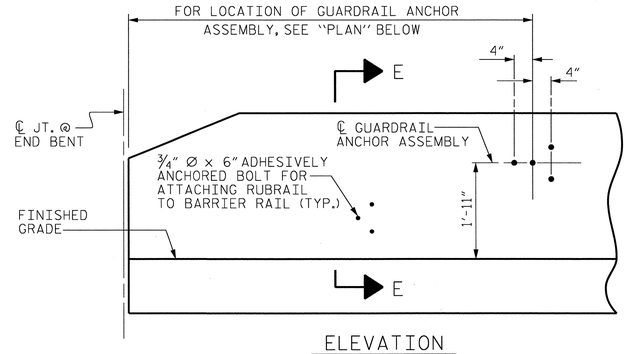

ELEVATION

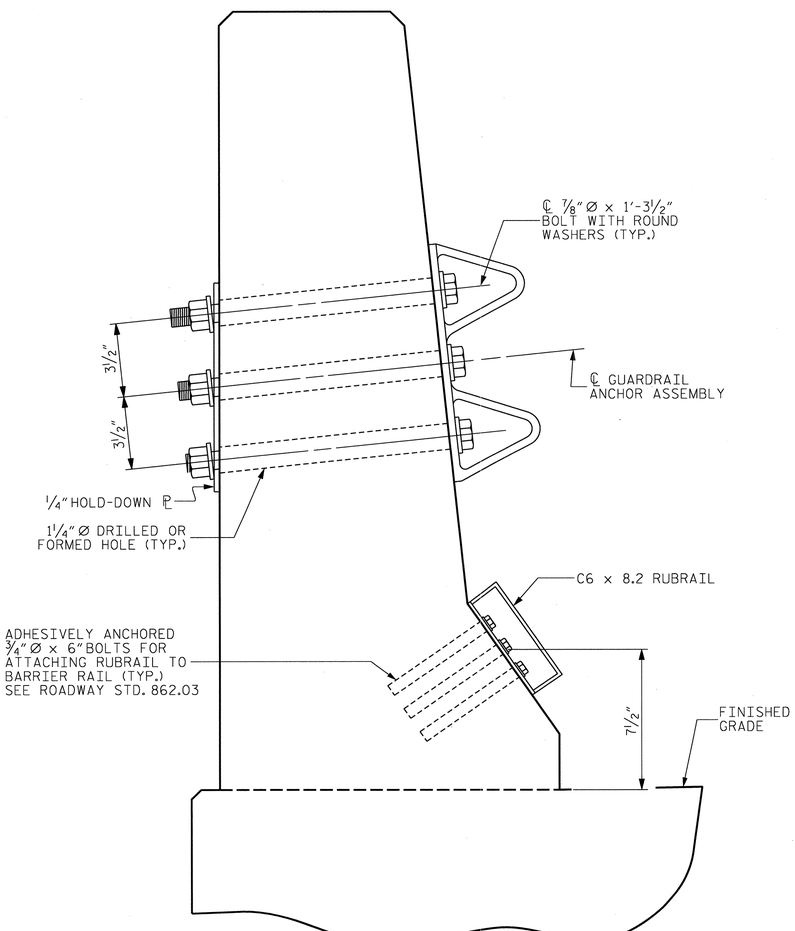

SECTION E-E

GUARDRAIL ANCHOR ASSEMBLY DETAILS

NOTES

THE GUARDRAIL ANCHOR ASSEMBLY SHALL CONSIST OF A 1/4" HOLD-DOWN PLATE AND 4 - 7/8" Ø BOLTS WITH NUTS AND WASHERS, RUBRAIL, AND ADHESIVELY ANCHORED BOLTS.

THE HOLD-DOWN PLATE SHALL CONFORM TO AASHTO M270 GRADE 36. AFTER FABRICATION, THE HOLD-DOWN PLATE SHALL BE HOT-DIP GALVANIZED IN ACCORDANCE WITH AASHTO M111.

BOLTS SHALL CONFORM TO THE REQUIREMENTS OF ASTM A307 AND NUTS SHALL CONFORM TO THE REQUIREMENTS OF AASHTO M291. BOLTS, NUTS AND WASHERS SHALL BE GALVANIZED. (AT THE CONTRACTOR'S OPTION, STAINLESS STEEL BOLTS, NUTS AND WASHERS MAY BE USED AS AN ALTERNATE FOR THE 7/8" Ø GALVANIZED BOLTS, NUTS AND WASHERS. THEY SHALL CONFORM TO OR EXCEED THE MECHANICAL REQUIREMENTS OF ASTM A307. THE USE OF THIS ALTERNATE SHALL BE APPROVED BY THE ENGINEER.)

THE GUARDRAIL ANCHOR ASSEMBLY IS REQUIRED AT ALL POINTS WHERE APPROACH GUARDRAIL IS TO BE ATTACHED TO THE END OF BARRIER RAIL. FOR POINTS OF ATTACHMENT, SEE SKETCH.

AFTER INSTALLATION, THE EXPOSED THREAD OF THE BOLT SHALL BE BURRED WITH A SHARP POINTED TOOL.

THE COST OF THE GUARDRAIL ANCHOR ASSEMBLY SHALL BE INCLUDED IN THE UNIT CONTRACT PRICE BID FOR CONCRETE BARRIER RAIL.

THE 1 1/4" Ø HOLES SHALL BE FORMED OR DRILLED WITH A CORE BIT. IMPACT TOOLS WILL NOT BE PERMITTED. ANY CONCRETE DAMAGED BY THIS WORK SHALL BE REPAIRED TO THE SATISFACTION OF THE ENGINEER.

THE C6 x 8.2 RUBRAIL IS TO BE ADHESIVELY ANCHORED TO THE RAIL USING THREE 3/4" Ø x 6" BOLTS WITH WASHERS. LEVEL ONE FIELD TESTING IS REQUIRED, AND THE YIELD LOAD OF THE 3/4" Ø BOLT IS 12 KIPS. FOR ADHESIVELY ANCHORED ANCHOR BOLTS OR DOWELS, SEE STANDARD SPECIFICATIONS. SEE ROADWAY STANDARD 862.03 FOR DETAILS AND LOCATION OF THE RUBRAIL.

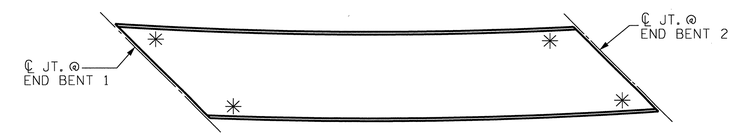

SKETCH SHOWING POINTS OF ATTACHMENTS

✳ DENOTES GUARDRAIL ANCHOR ASSEMBLY

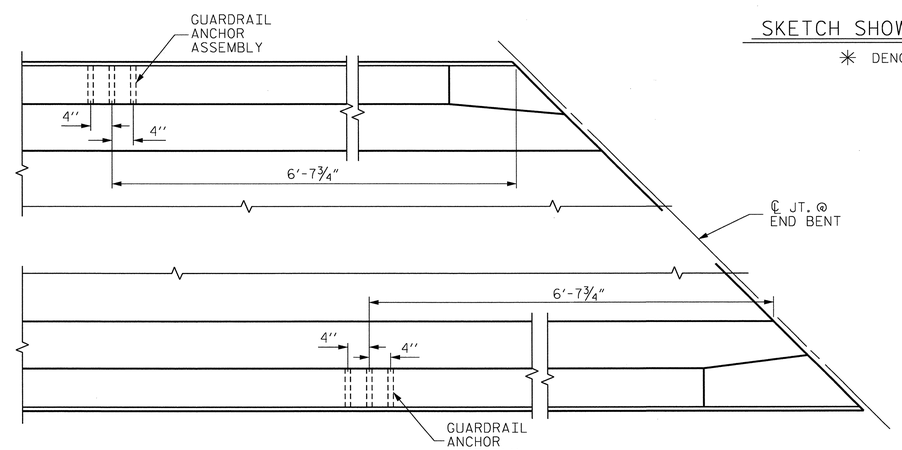

PLAN

LOCATION OF ANCHORS FOR GUARDRAIL

END BENT 2 SHOWN, END BENT 1 SIMILAR.

PROJECT NO. U-0071

DURHAM COUNTY

STATION: 107+45.55 -L-

STATE OF NORTH CAROLINA
DEPARTMENT OF TRANSPORTATION
RALEIGH

STANDARD

GUARDRAIL ANCHORAGE FOR BARRIER RAIL

ASSEMBLED BY : J.M. BRITT	DATE : 1-15-13		
CHECKED BY : G.M. GILLAND	DATE : 3-8-13		
DESIGN ENGINEER OF RECORD: GMG	DATE : 6-13		
DRAWN BY : TLA 5/06	REV. 10/1/11	MAA/GM	
CHECKED BY : GM 5/06	REV. 7/12	MAA/GM	
	REV. 10/12	MAA/GM	

NORTH CAROLINA PROFESSIONAL SEAL 037400 ENGINEER GREGORY M. GILLAND 7/11/13

WETHERILL ENGINEERING
559 Jones Franklin Rd. Suite 164
Raleigh, N.C. 27606
Bus: 919 851 8077
Fax: 919 851 8107
License: F-0377

TRANSPORTATION PLANNING/DESIGN - BRIDGE/STRUCTURE DESIGN
CIVIL/SITE DESIGN - GIS/GPS - CONSTRUCTION OBSERVATION

REVISIONS						SHEET NO.
NO.	BY:	DATE:	NO.	BY:	DATE:	S-214
1			3			TOTAL SHEETS
2			4			671

P:\2012\U-0071 - Y4 over LS\Structures\DGN\0071_SD_Y4_GRA_WE1.dgn
7/11/2013 8:15:22 AM

SUPERSTRUCTURE REINFORCING STEEL LENGTHS ARE BASED ON THE FOLLOWING MINIMUM SPLICE LENGTHS					
BAR SIZE	SUPERSTRUCTURE EXCEPT APPROACH SLABS, PARAPET, AND BARRIER RAIL		APPROACH SLABS		PARAPET AND BARRIER RAIL
	EPOXY COATED	UNCOATED	EPOXY COATED	UNCOATED	
#4	2'-0"	1'-9"	2'-0"	1'-9"	2'-9"
#5	2'-6"	2'-2"	2'-6"	2'-2"	3'-5"
#6	3'-0"	2'-7"	3'-10"	2'-7"	4'-4"
#7	5'-3"	3'-6"			
#8	6'-10"	4'-7"			

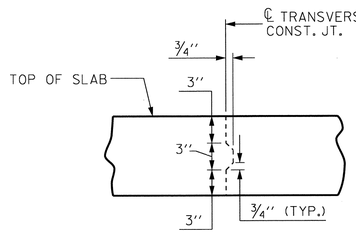

TRANSVERSE CONSTRUCTION JOINT DETAIL

NOTE: REINFORCING STEEL IN SLAB NOT SHOWN. LONGITUDINAL REINFORCING STEEL SHALL BE CONTINUOUS THROUGH JOINT.

BILL OF MATERIAL

SPAN "A-B"

BAR	No.	SIZE	TYPE	LENGTH	WEIGHT
✱ A1	471	#5	STR.	52'-11"	25995
A2	471	#5	STR.	52'-11"	25995
✱ A101	3	#5	STR.	51'-10"	162
✱ A102	3	#5	STR.	50'-7"	158
✱ A103	3	#5	STR.	49'-3"	154
✱ A104	3	#5	STR.	48'-0"	150
✱ A105	3	#5	STR.	46'-9"	146
✱ A106	3	#5	STR.	45'-5"	142
✱ A107	3	#5	STR.	44'-2"	138
✱ A108	3	#5	STR.	42'-10"	134
✱ A109	3	#5	STR.	41'-7"	130
✱ A110	3	#5	STR.	40'-4"	126
✱ A111	3	#5	STR.	39'-0"	122
✱ A112	3	#5	STR.	37'-9"	118
✱ A113	3	#5	STR.	36'-6"	114
✱ A114	3	#5	STR.	35'-2"	110
✱ A115	3	#5	STR.	33'-11"	106
✱ A116	3	#5	STR.	32'-8"	102
✱ A117	3	#5	STR.	31'-4"	98
✱ A118	3	#5	STR.	30'-1"	94
✱ A119	3	#5	STR.	28'-10"	90
✱ A120	3	#5	STR.	27'-7"	86
✱ A121	3	#5	STR.	26'-3"	82
✱ A122	3	#5	STR.	25'-0"	78
✱ A123	3	#5	STR.	23'-9"	74
✱ A124	3	#5	STR.	22'-6"	70
✱ A125	3	#5	STR.	21'-3"	66
✱ A126	3	#5	STR.	19'-11"	62
✱ A127	3	#5	STR.	18'-8"	58
✱ A128	3	#5	STR.	17'-5"	54
✱ A129	3	#5	STR.	16'-2"	51
✱ A130	3	#5	STR.	14'-11"	47
✱ A131	3	#5	STR.	13'-7"	43
✱ A132	3	#5	STR.	12'-4"	39
✱ A133	3	#5	STR.	11'-1"	35
✱ A134	3	#5	STR.	9'-10"	31
✱ A135	3	#5	STR.	8'-7"	27
✱ A136	3	#5	STR.	7'-4"	23
✱ A137	3	#5	STR.	6'-1"	19
✱ A138	3	#5	STR.	4'-10"	15
✱ A139	3	#5	STR.	3'-7"	11
✱ A140	3	#5	STR.	2'-4"	7
✱ A141	3	#5	STR.	51'-8"	162
✱ A142	3	#5	STR.	50'-1"	157
✱ A143	3	#5	STR.	48'-7"	152

BAR	No.	SIZE	TYPE	LENGTH	WEIGHT
✱ A144	3	#5	STR.	47'-0"	147
✱ A145	3	#5	STR.	45'-6"	142
✱ A146	3	#5	STR.	43'-11"	137
✱ A147	3	#5	STR.	42'-4"	132
✱ A148	3	#5	STR.	40'-10"	128
✱ A149	3	#5	STR.	39'-3"	123
✱ A150	3	#5	STR.	37'-9"	118
✱ A151	3	#5	STR.	36'-2"	113
✱ A152	3	#5	STR.	34'-7"	108
✱ A153	3	#5	STR.	33'-1"	104
✱ A154	3	#5	STR.	31'-6"	99
✱ A155	3	#5	STR.	29'-11"	94
✱ A156	3	#5	STR.	28'-5"	89
✱ A157	3	#5	STR.	26'-10"	84
✱ A158	3	#5	STR.	25'-3"	79
✱ A159	3	#5	STR.	23'-9"	74
✱ A160	3	#5	STR.	22'-2"	69
✱ A161	3	#5	STR.	20'-7"	64
✱ A162	3	#5	STR.	19'-1"	60
✱ A163	3	#5	STR.	17'-6"	55
✱ A164	3	#5	STR.	15'-11"	50
✱ A165	3	#5	STR.	14'-4"	45
✱ A166	3	#5	STR.	12'-10"	40
✱ A167	3	#5	STR.	11'-3"	35
✱ A168	3	#5	STR.	9'-8"	30
✱ A169	3	#5	STR.	8'-1"	25
✱ A170	3	#5	STR.	6'-7"	21
✱ A171	3	#5	STR.	5'-0"	16
✱ A172	3	#5	STR.	3'-5"	11
✱ A173	3	#5	STR.	1'-10"	6
A201	3	#5	STR.	51'-10"	162
A202	3	#5	STR.	50'-7"	158
A203	3	#5	STR.	49'-3"	154
A204	3	#5	STR.	48'-0"	150
A205	3	#5	STR.	46'-9"	146
A206	3	#5	STR.	45'-5"	142
A207	3	#5	STR.	44'-2"	138
A208	3	#5	STR.	42'-10"	134
A209	3	#5	STR.	41'-7"	130
A210	3	#5	STR.	40'-4"	126
A211	3	#5	STR.	39'-0"	122
A212	3	#5	STR.	37'-9"	118
A213	3	#5	STR.	36'-6"	114
A214	3	#5	STR.	35'-2"	110
A215	3	#5	STR.	33'-11"	106

BAR	No.	SIZE	TYPE	LENGTH	WEIGHT
A216	3	#5	STR.	32'-8"	102
A217	3	#5	STR.	31'-4"	98
A218	3	#5	STR.	30'-1"	94
A219	3	#5	STR.	28'-10"	90
A220	3	#5	STR.	27'-7"	86
A221	3	#5	STR.	26'-3"	82
A222	3	#5	STR.	25'-0"	78
A223	3	#5	STR.	23'-9"	74
A224	3	#5	STR.	22'-6"	70
A225	3	#5	STR.	21'-3"	66
A226	3	#5	STR.	19'-11"	62
A227	3	#5	STR.	18'-8"	58
A228	3	#5	STR.	17'-5"	54
A229	3	#5	STR.	16'-2"	51
A230	3	#5	STR.	14'-11"	47
A231	3	#5	STR.	13'-7"	43
A232	3	#5	STR.	12'-4"	39
A233	3	#5	STR.	11'-1"	35
A234	3	#5	STR.	9'-10"	31
A235	3	#5	STR.	8'-7"	27
A236	3	#5	STR.	7'-4"	23
A237	3	#5	STR.	6'-1"	19
A238	3	#5	STR.	4'-10"	15
A239	3	#5	STR.	3'-7"	11
A240	3	#5	STR.	2'-4"	7
A241	3	#5	STR.	51'-8"	162
A242	3	#5	STR.	50'-1"	157
A243	3	#5	STR.	48'-7"	152
A244	3	#5	STR.	47'-0"	147
A245	3	#5	STR.	45'-6"	142
A246	3	#5	STR.	43'-11"	137
A247	3	#5	STR.	42'-4"	132
A248	3	#5	STR.	40'-10"	128
A249	3	#5	STR.	39'-3"	123
A250	3	#5	STR.	37'-9"	118
A251	3	#5	STR.	36'-2"	113
A252	3	#5	STR.	34'-7"	108
A253	3	#5	STR.	33'-1"	104
A254	3	#5	STR.	31'-6"	99
A255	3	#5	STR.	29'-11"	94
A256	3	#5	STR.	28'-5"	89
A257	3	#5	STR.	26'-10"	84
A258	3	#5	STR.	25'-3"	79
A259	3	#5	STR.	23'-9"	74
A260	3	#5	STR.	22'-2"	69
A261	3	#5	STR.	20'-7"	64

BAR	No.	SIZE	TYPE	LENGTH	WEIGHT
A262	3	#5	STR.	19'-1"	60
A263	3	#5	STR.	17'-6"	55
A264	3	#5	STR.	15'-11"	50
A265	3	#5	STR.	14'-4"	45
A266	3	#5	STR.	12'-10"	40
A267	3	#5	STR.	11'-3"	35
A268	3	#5	STR.	9'-8"	30
A269	3	#5	STR.	8'-1"	25
A270	3	#5	STR.	6'-7"	21
A271	3	#5	STR.	5'-0"	16
A272	3	#5	STR.	3'-5"	11
A273	3	#5	STR.	1'-10"	6
✱ B1	10	#4	STR.	28'-8"	191
✱ B2	10	#4	STR.	28'-1"	188
✱ B3	102	#4	STR.	29'-1"	1982
✱ B4	136	#4	STR.	23'-10"	2165
✱ B5	67	#7	STR.	60'-0"	8217
✱ B6	67	#7	STR.	45'-3"	6197
B7	20	#5	STR.	55'-5"	1156
B8	75	#5	STR.	55'-4"	4328
B9	75	#5	STR.	55'-1"	4309
B10	75	#5	STR.	54'-10"	4289
B11	75	#5	STR.	54'-7"	4270
B12	20	#5	STR.	54'-4"	1133
✱ G1	2	#5	STR.	40'-7"	85
✱ G2	2	#5	STR.	36'-5"	76
✱ G3	6	#6	STR.	10'-0"	90
✱ K1	6	#5	1	9'-10"	62
✱ K2	9	#5	2	9'-7"	90
✱ K3	12	#5	STR.	16'-1"	201
✱ K4	6	#5	1	9'-2"	57
✱ K5	9	#5	2	9'-3"	87
✱ K6	12	#5	STR.	14'-6"	181
✱ S1	100	#4	3	4'-7"	306

REINFORCING STEEL 51,621 LBS.

✱ EPOXY COATED REINFORCING STEEL 52,311 LBS.

BAR TYPES

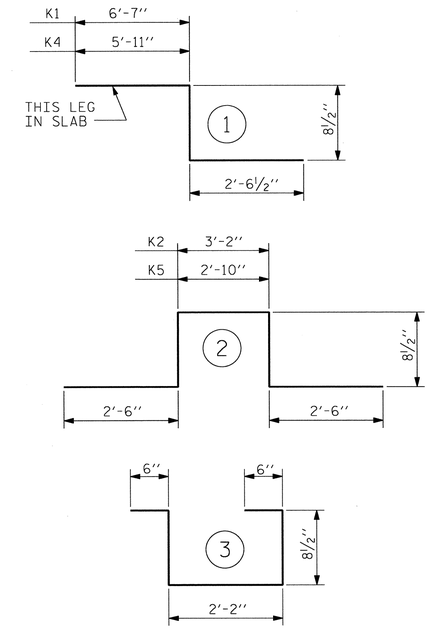

ALL BAR DIMENSIONS ARE OUT TO OUT

SUPERSTRUCTURE BILL OF MATERIAL

	CLASS AA CONCRETE	REINFORCING STEEL	EPOXY COATED REINFORCING STEEL
	(CU. YDS.)	(LBS.)	(LBS.)
TOTALS ✱✱	478.9	51,621	52,311

✱✱QUANTITIES FOR CONCRETE BARRIER RAIL ARE NOT INCLUDED

GROOVING BRIDGE FLOORS	
APPROACH SLABS	2,168 SQ.FT.
BRIDGE DECK	12,421 SQ.FT.
TOTAL	14,589 SQ.FT.

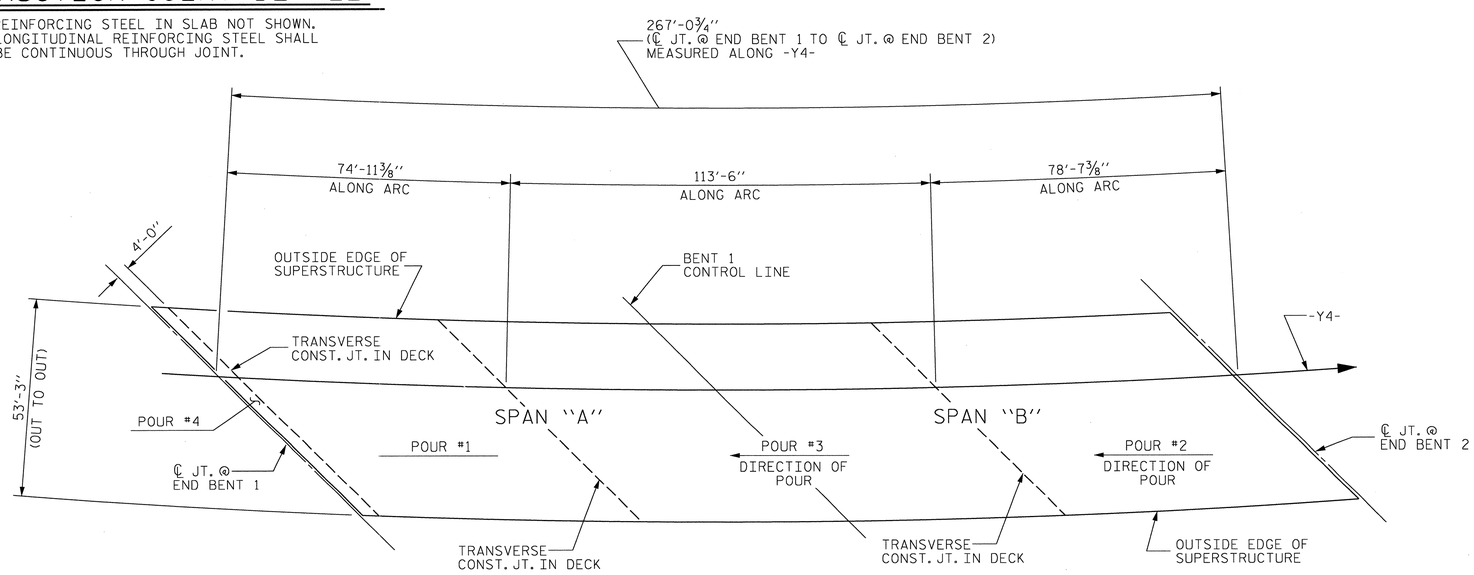

CONCRETE POUR DETAIL AND LAYOUT FOR COMPUTING AREA REINFORCED CONCRETE DECK SLAB

(SQ. FT. = 14,164)

CLASS AA CONCRETE BREAKDOWN	
POUR #1	122.7 CU. YDS.
POUR #2	142.1 CU. YDS.
POUR #3	201.1 CU. YDS.
POUR #4	13.0 CU. YDS.
TOTAL	478.9 CU. YDS.

PROJECT NO. U-0071
DURHAM COUNTY
STATION: 107+45.55 -L-

STATE OF NORTH CAROLINA
DEPARTMENT OF TRANSPORTATION
RALEIGH

SUPERSTRUCTURE
BILL OF MATERIAL

NORTH CAROLINA PROFESSIONAL SEAL 37400 ENGINEER GREGORY M. GILLAND 7/1/13

WETHERILL ENGINEERING
559 Jones Franklin Rd. Suite 164
Raleigh, N.C. 27606
Bus: 919 851 8077
Fax: 919 851 8107
License: F-0377
TRANSPORTATION PLANNING/DESIGN - BRIDGE/STRUCTURE DESIGN
CIVIL/SITE DESIGN - GIS/GPS - CONSTRUCTION OBSERVATION

REVISIONS							SHEET NO.
NO.	BY:	DATE:	NO.	BY:	DATE:		5-215
1			3				TOTAL SHEETS
2			4				671

DRAWN BY : J.M. BRITT DATE : 1-16-13
CHECKED BY : G.M. GILLAND DATE : 3-5-13
DESIGN ENGINEER OF RECORD: G.M. GILLAND DATE : 6-13

P:\2012\U-0071 - Y4 over LVStructures\DGN\U0071_SD_Y4_BM_WE1.dgn
7/1/2013 8:15:57 AM

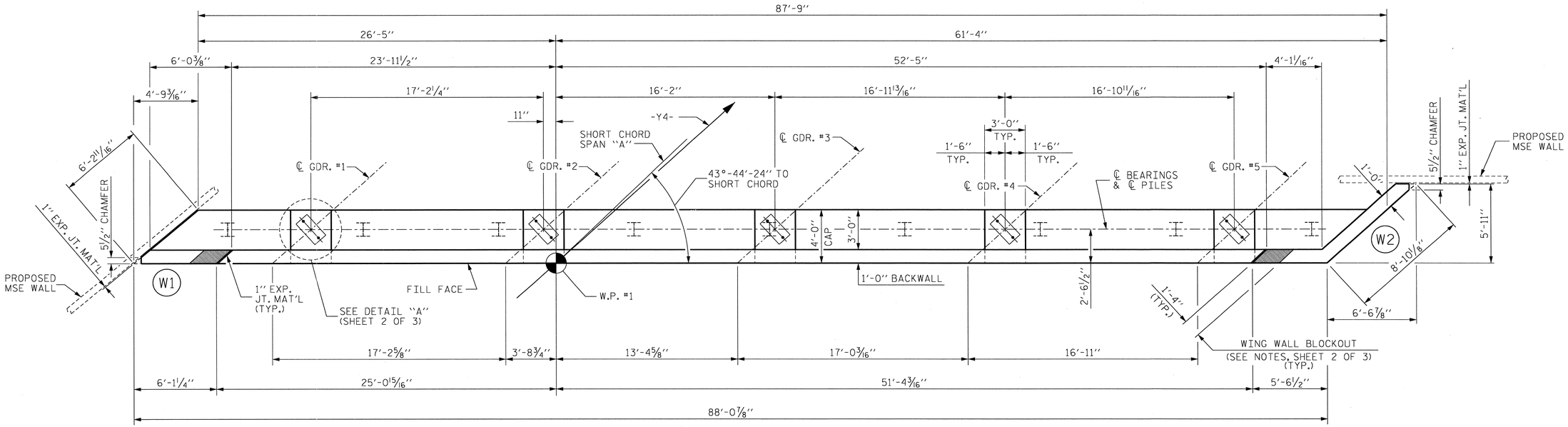

PLAN

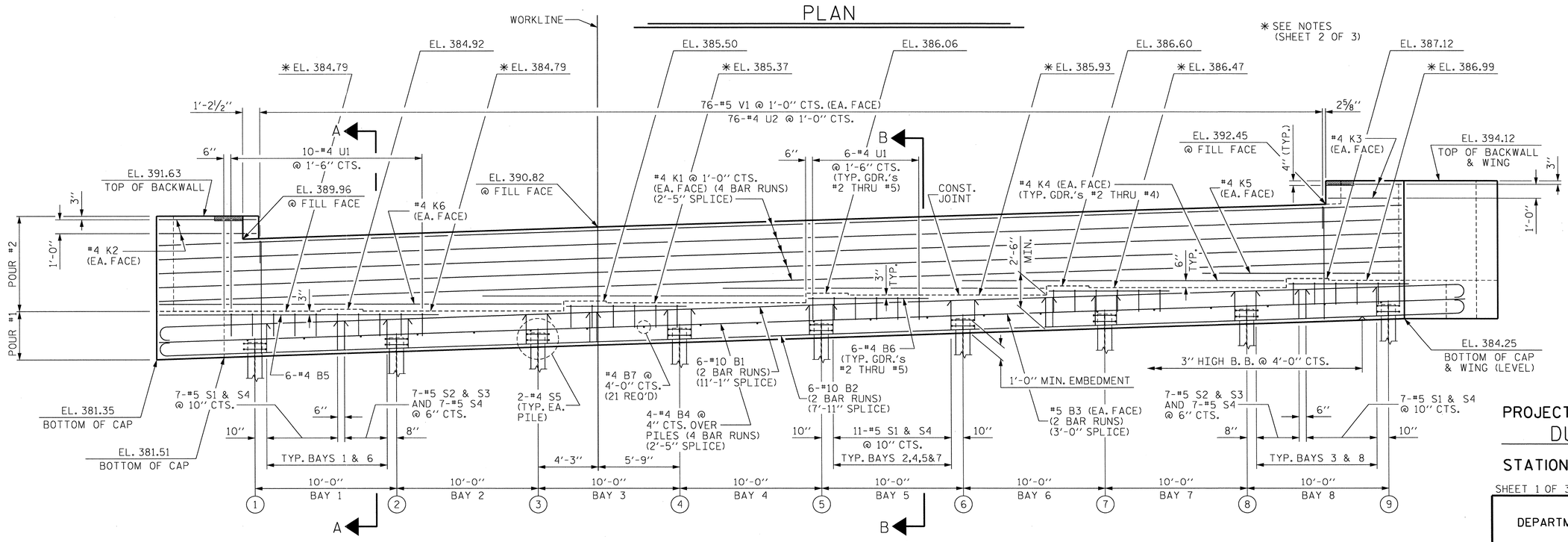

ELEVATION

FOR TOP OF PILE ELEVATIONS, SEE SHEET 2 OF 3
(NOTE : 5 1/2" CHAMFERS NOT SHOWN IN ELEVATION VIEW)

P:\2012\U-0071 - Y4 over LS\Structures\DGN\U0071_SD_Y4_EB1_WE1.dgn
7/1/2013 8:16:49 AM

DRAWN BY :	J.M. BRITT	DATE :	2-5-13
CHECKED BY :	R. ASCENCIO	DATE :	3-7-13
DESIGN ENGINEER OF RECORD:	G.M. GILLAND	DATE :	6-13

NORTH CAROLINA PROFESSIONAL SEAL 037400 ENGINEER GREGORY M. GILLAND 7/1/13

WETHERILL ENGINEERING
559 Jones Franklin Rd. Suite 164
Raleigh, N.C. 27606
Bus: 919 851 8077
Fax: 919 851 8107
License: F-0377
TRANSPORTATION PLANNING/DESIGN - BRIDGE/STRUCTURE DESIGN
CIVIL/SITE DESIGN - GIS/GPS - CONSTRUCTION OBSERVATION

PROJECT NO. U-0071
DURHAM COUNTY
STATION: 107+45.55 -L-

SHEET 1 OF 3

STATE OF NORTH CAROLINA
DEPARTMENT OF TRANSPORTATION
RALEIGH

SUBSTRUCTURE
END BENT 1

REVISIONS								SHEET NO.
NO.	BY:	DATE:	NO.	BY:	DATE:			S-216
1			3					TOTAL SHEETS
2			4					671

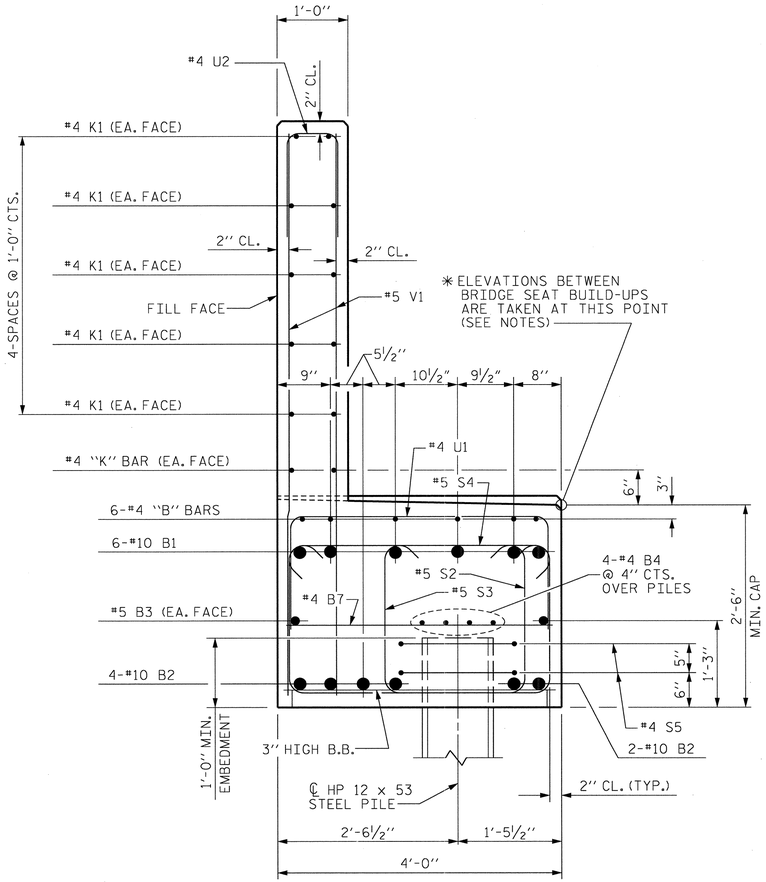

SECTION A-A

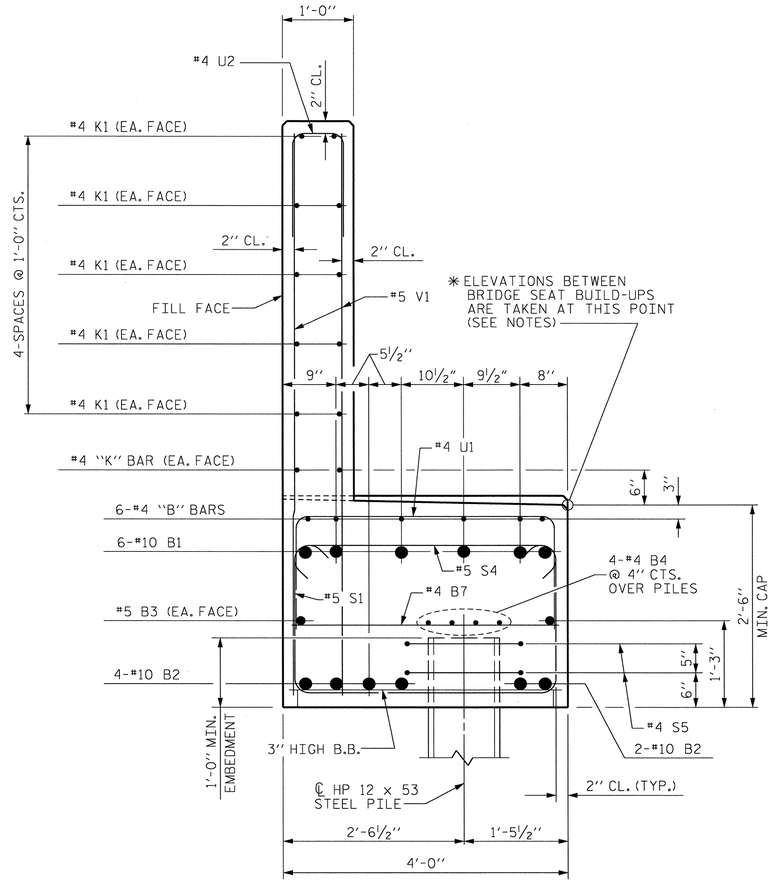

SECTION B-B

NOTES :

STIRRUPS AND #4 U1 BARS IN CAP MAY BE SHIFTED AS NECESSARY TO CLEAR ANCHOR BOLTS.

BACKWALL SHALL BE PLACED BEFORE APPLYING THE EPOXY PROTECTIVE COATING.

EPOXY COAT THE END BENT CAP AFTER ADJUSTMENTS ARE MADE TO BEARINGS AND ANCHOR BOLTS ARE GROUTED.

FOR PIPE INSERT DETAILS, SEE "ELASTOMERIC BEARING DETAILS" SHEET.

THE TOP SURFACE AREAS OF THE END BENT CAPS SHALL BE CURED IN ACCORDANCE WITH THE STANDARD SPECIFICATIONS EXCEPT THE MEMBRANE CURING COMPOUND METHOD SHALL NOT BE USED.

✱ THE TOP SURFACE OF THE CAP EXCEPT THE BRIDGE SEAT BUILDUPS SHALL BE SLOPED TRANSVERSELY FROM THE FILL FACE TO THE BACK FACE AT THE RATE OF 2%.

THE #5 V1 IN THE BACKWALL SHALL BE PLACED 2" CLEAR FROM THE TOP OF THE BACKWALL.

THE CONCRETE IN THE SHADED AREA OF THE WING SHALL BE POURED AFTER THE JOINT IN THE DECK AND APPROACH SLAB HAS BEEN SAWED AND THE BARRIER RAIL IS CAST IF SLIP FORMING IS USED.

FOR GALVANIZED REINFORCING STRAPS, SEE MSE WALL PLANS.

FOR MSE RETAINING WALLS, SEE SPECIAL PROVISIONS.

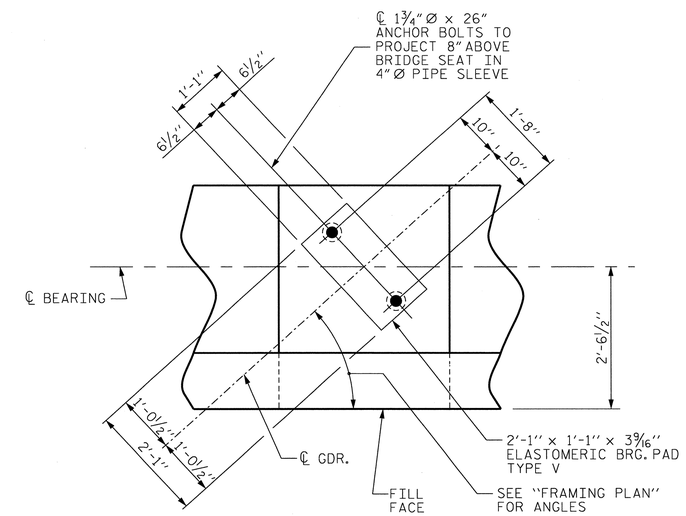

DETAIL "A"

(TYP. EA. GDR.)

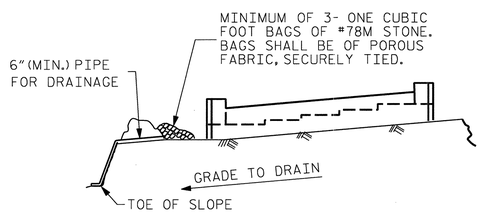

BAGGED STONE AND PIPE SHALL BE PLACED IMMEDIATELY AFTER COMPLETION OF END BENT EXCAVATION. PIPE MAY BE EITHER CONCRETE, CORRUGATED STEEL, CORRUGATED ALUMINUM ALLOY, OR CORRUGATED PLASTIC. PERFORATED PIPE WILL NOT BE ALLOWED.

BAGGED STONE SHALL REMAIN IN PLACE UNTIL THE ENGINEER DIRECTS THAT IT BE REMOVED. THE CONTRACTOR SHALL REMOVE AND DISPOSE OF SILT ACCUMULATIONS AT BAGGED STONE WHEN SO DIRECTED BY THE ENGINEER. BAGS SHALL BE REMOVED AND REPLACED WHENEVER THE ENGINEER DETERMINES THAT THEY HAVE DETERIORATED AND LOST THEIR EFFECTIVENESS.

NO SEPARATE PAYMENT WILL BE MADE FOR THIS WORK AND THE ENTIRE COST OF THIS WORK SHALL BE INCLUDED IN THE UNIT CONTRACT PRICE BID FOR THE SEVERAL PAY ITEMS.

TEMPORARY DRAINAGE AT END BENT 1

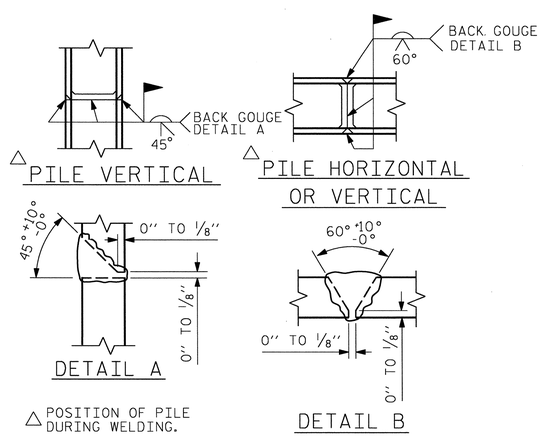

PILE SPLICE DETAIL

TOP OF PILE ELEVATIONS

1	EL. 382.59	6	EL. 384.24
2	EL. 382.92	7	EL. 384.57
3	EL. 383.25	8	EL. 384.90
4	EL. 383.58	9	EL. 385.23
5	EL. 383.91		

PROJECT NO. U-0071
DURHAM COUNTY
STATION: 107+45.55 -L-

SHEET 2 OF 3

STATE OF NORTH CAROLINA
DEPARTMENT OF TRANSPORTATION
RALEIGH

SUBSTRUCTURE

END BENT 1

NORTH CAROLINA PROFESSIONAL SEAL 37400 ENGINEER GREGORY M. GILLAND 7/11/13

WETHERILL ENGINEERING
559 Jones Franklin Rd. Suite 164
Raleigh, N.C. 27606
Bus: 919 851 8077
Fax: 919 851 8107
License: F-0377
TRANSPORTATION PLANNING/DESIGN - BRIDGE/STRUCTURE DESIGN
CIVIL/SITE DESIGN - GIS/GPS - CONSTRUCTION OBSERVATION

REVISIONS								SHEET NO.
NO.	BY:	DATE:	NO.	BY:	DATE:			5-217
1			3					TOTAL SHEETS
2			4					671

DRAWN BY :	J.M. BRITT	DATE :	2-6-13
CHECKED BY :	R. ASCENCIO	DATE :	3-7-13
DESIGN ENGINEER OF RECORD:	G.M. GILLAND	DATE :	6-13

P:\2012\U-0071 - Y4 over L\Structures\DGN\U071_SD_Y4_EB1_WE1.dgn
7/11/2013 8:17:06 AM

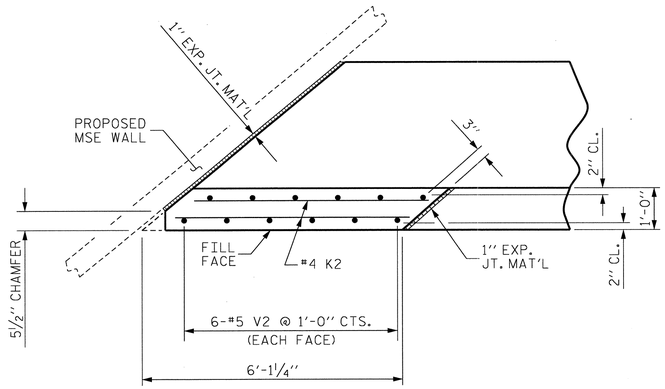

PLAN OF WING (W1)

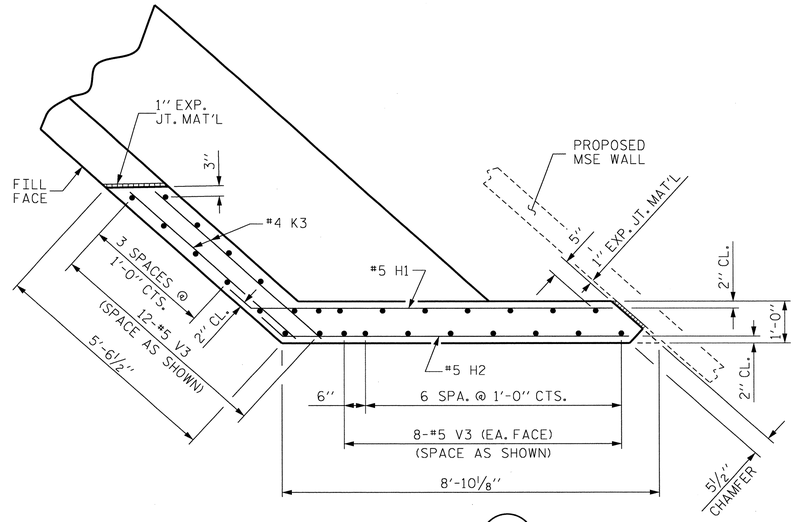

PLAN OF WING (W2)

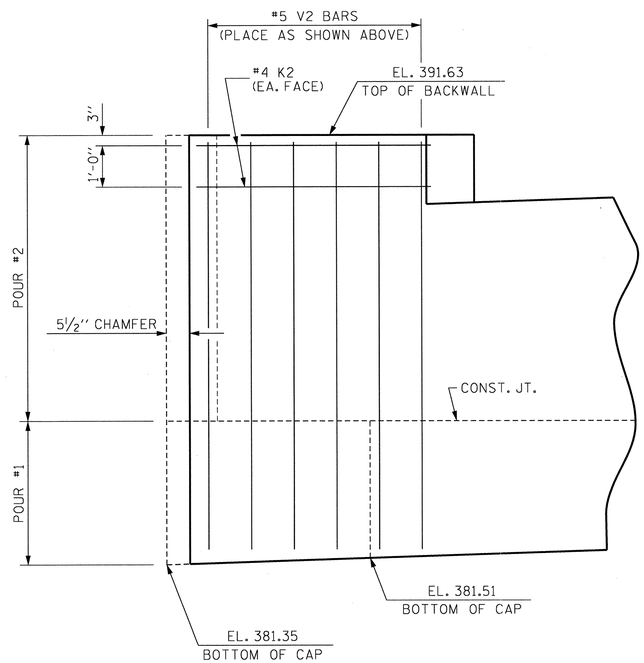

ELEVATION OF WING (W1)

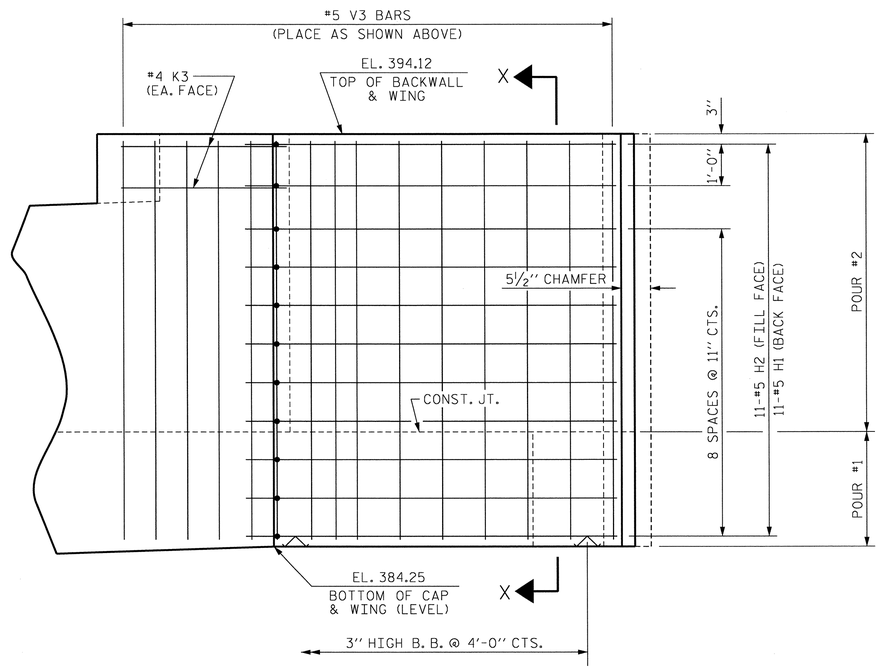

ELEVATION OF WING (W2)

BAR TYPES

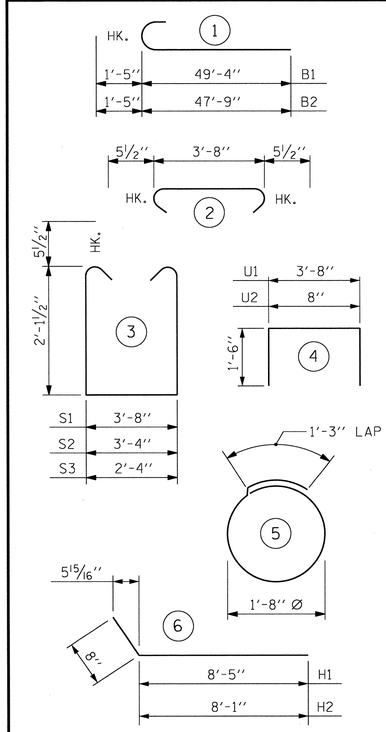

ALL BAR DIMENSIONS ARE OUT TO OUT.

BILL OF MATERIAL
END BENT 1

BAR	No.	SIZE	TYPE	LENGTH	WEIGHT
B1	12	#10	1	50'-9"	2621
B2	12	#10	1	49'-2"	2539
B3	4	#5	STR	45'-4"	189
B4	16	#4	STR	23'-9"	254
B5	6	#4	STR	19'-9"	79
B6	24	#4	STR	8'-6"	136
B7	21	#4	STR	3'-8"	51
H1	11	#5	6	9'-1"	104
H2	11	#5	6	8'-9"	100
K1	40	#4	STR	23'-9"	635
K2	4	#4	STR	5'-5"	14
K3	4	#4	STR	5'-2"	14
K4	6	#4	STR	22'-8"	91
K5	2	#4	STR	14'-1"	19
K6	2	#4	STR	27'-5"	37
S1	72	#5	3	8'-10"	663
S2	28	#5	3	8'-6"	248
S3	28	#5	3	7'-6"	219
S4	100	#5	2	4'-7"	478
S5	18	#4	5	6'-6"	78
U1	34	#4	4	6'-8"	151
U2	76	#4	4	3'-8"	186
V1	152	#5	STR	8'-0"	1268
V2	12	#5	STR	9'-9"	122
V3	28	#5	STR	9'-6"	277

REINFORCING STEEL 10,573 LBS.

CLASS A CONCRETE BREAKDOWN :

POUR #1	38.0 CU. YDS.
POUR #2	20.8 CU. YDS.
TOTAL CLASS A CONCRETE	58.8 CU. YDS.

HP 12 x 53 STEEL PILES No. 9 385 LIN. FT.

PILE EXCAVATION IN SOIL 20 LIN. FT.

PILE EXCAVATION NOT IN SOIL 20 LIN. FT.

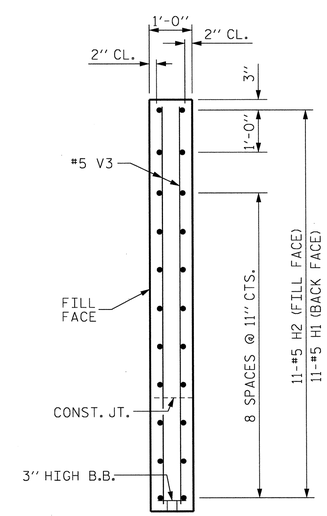

SECTION X-X

PROJECT NO. U-0071

DURHAM COUNTY

STATION: 107+45.55 -L-

SHEET 3 OF 3

STATE OF NORTH CAROLINA
DEPARTMENT OF TRANSPORTATION
RALEIGH

SUBSTRUCTURE

END BENT 1

NORTH CAROLINA PROFESSIONAL SEAL 037400 ENGINEER GREGORY M. GILLAND 7/11/13

WETHERILL ENGINEERING
559 Jones Franklin Rd. Suite 164
Raleigh, N.C. 27606
Bus: 919 851 8077
Fax: 919 851 8107
License: F-0377

TRANSPORTATION PLANNING/DESIGN - BRIDGE/STRUCTURE DESIGN
CIVIL/SITE DESIGN - GIS/GPS - CONSTRUCTION OBSERVATION

REVISIONS							
NO.	BY:	DATE:	NO.	BY:	DATE:	SHEET NO.	
1			3			S-218	
2			4			TOTAL SHEETS	
						671	

DRAWN BY : J.M. BRITT DATE : 2-7-13
CHECKED BY : R. ASCENCIO DATE : 3-7-13
DESIGN ENGINEER OF RECORD: G.M. GILLAND DATE : 6-13

P:\2012\U-0071 - Y4 over LS\Structures\DGN\U0071_SD_Y4_EB1_WE1.dgn
7/11/2013 8:17:40 AM

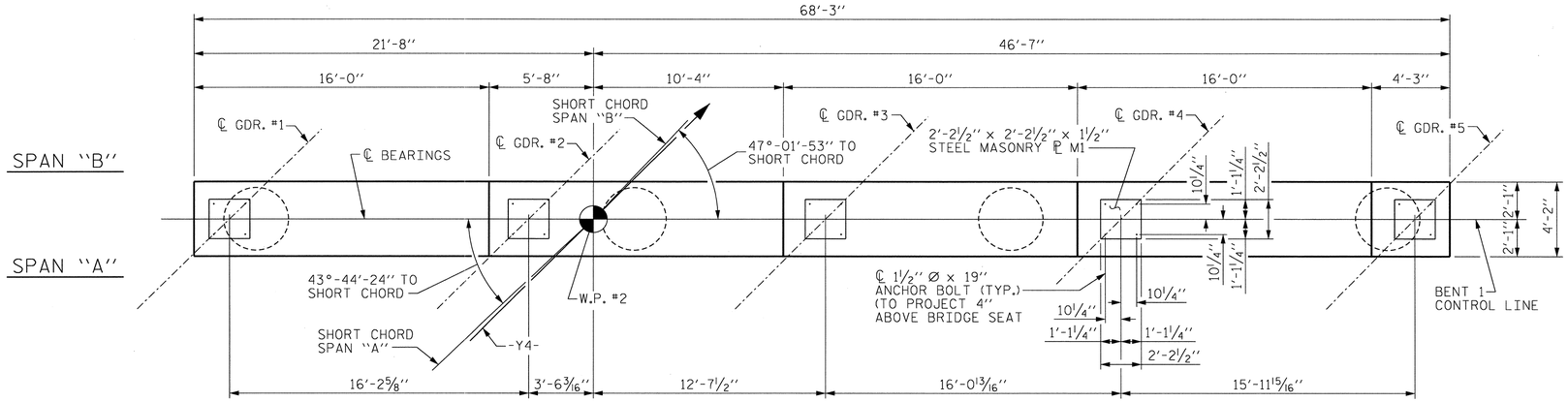

PLAN

NOTE :
BEARING DETAILS TYP. FOR EACH GIRDER (SEE "POT BEARING DETAILS" SHEET)

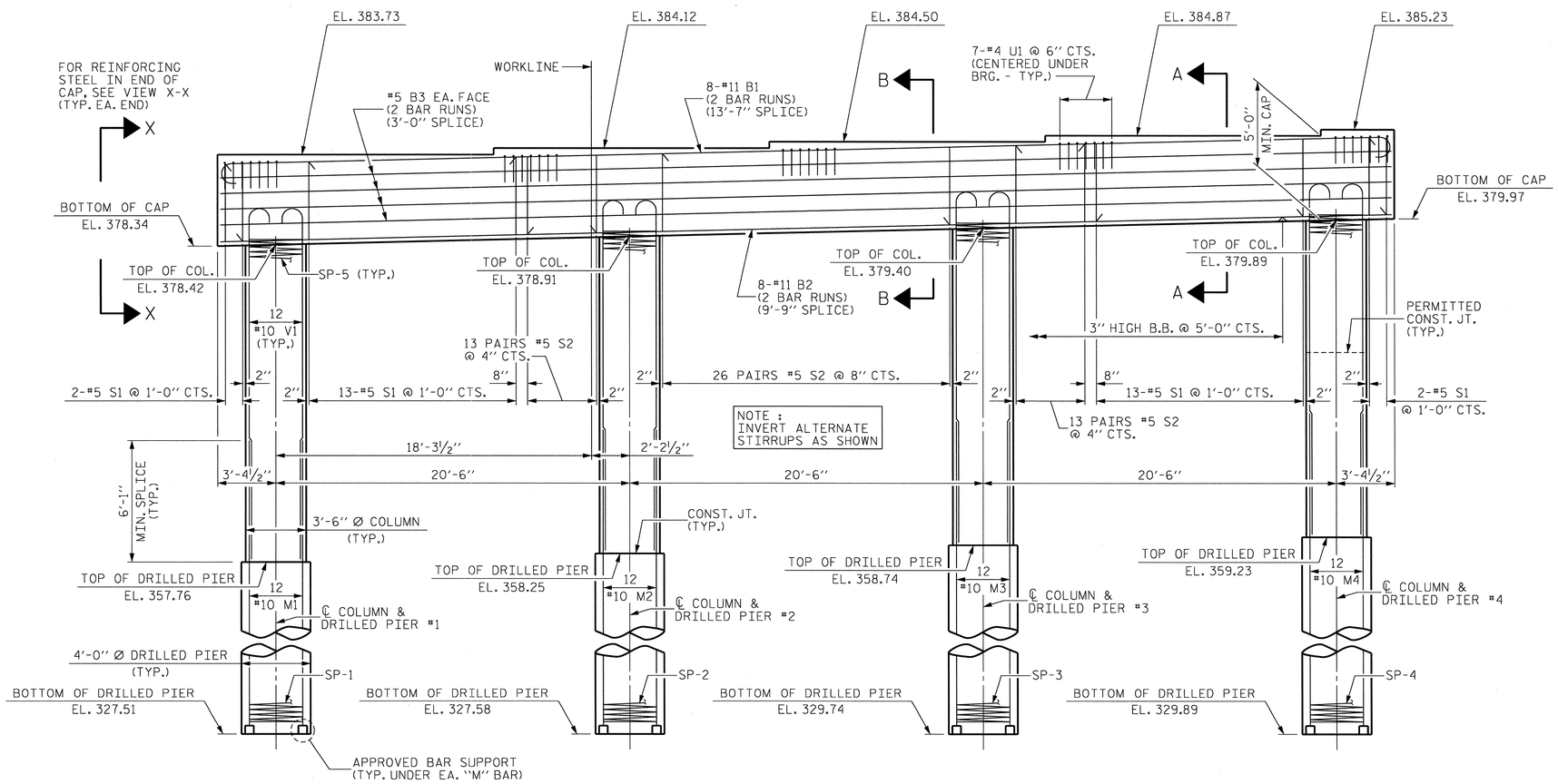

ELEVATION

NOTES :

FOR VIEW X-X AND SECTIONS A-A & B-B, SEE SHEET 2 OF 2.

HOOKS ON V1 BARS MAY BE TURNED AS NECESSARY FOR PLACING REINFORCING STEEL.

STIRRUPS IN CAP MAY BE SHIFTED AS NECESSARY TO CLEAR ANCHOR BOLTS.

ALL STEEL IN THE DRILLED PIERS IS INCLUDED IN THE PAY ITEMS FOR "REINFORCING STEEL" AND "SPIRAL COLUMN REINFORCING STEEL".

THE LOCATION OF THE CONSTRUCTION JOINT IN THE DRILLED PIERS IS BASED ON AN APPROXIMATE GROUND LINE ELEVATION. IF THE CONSTRUCTION JOINT IS ABOVE THE ACTUAL GROUND ELEVATION, THE CONTRACTOR SHALL PLACE THE CONSTRUCTION JOINT 1 FOOT BELOW THE GROUND LINE.

THE CONTRACTOR SHALL ADJUST THE GIRDER BUILD-UPS AS NECESSARY TO INCORPORATE A MAXIMUM PERMISSIBLE VARIATION IN POT BEARING DEPTH OF ½", SEE SPECIAL PROVISION FOR POT BEARINGS.

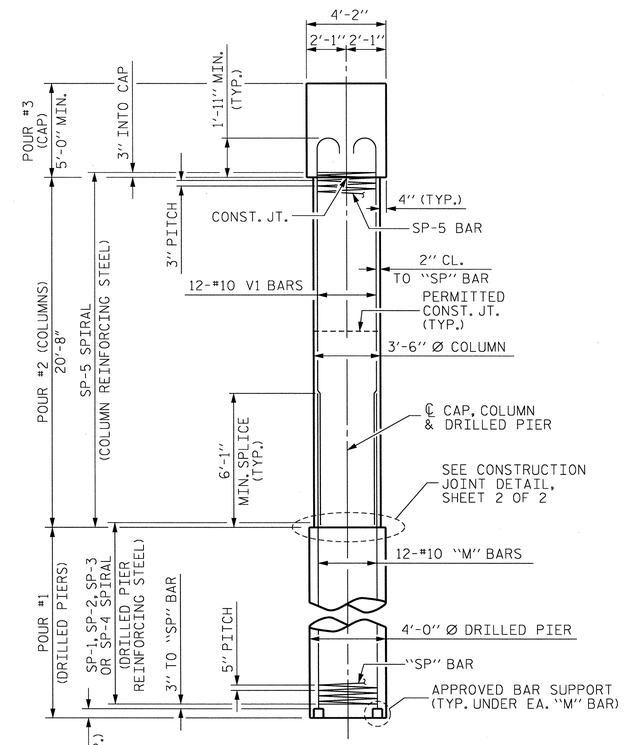

END ELEVATION

PROJECT NO. U-0071
DURHAM COUNTY
STATION: 107+45.55 -L-

SHEET 1 OF 2

STATE OF NORTH CAROLINA
DEPARTMENT OF TRANSPORTATION
RALEIGH

SUBSTRUCTURE

BENT 1

REVISIONS								SHEET NO.
NO.	BY:	DATE:	NO.	BY:	DATE:			5-219
1			3					TOTAL SHEETS
2			4					671

WETHERILL ENGINEERING
559 Jones Franklin Rd. Suite 164
Raleigh, N.C. 27606
Bus: 919 851 8077
Fax: 919 851 8107
License: F-0377
TRANSPORTATION PLANNING/DESIGN - BRIDGE/STRUCTURE DESIGN
CIVIL/SITE DESIGN - GIS/GPS - CONSTRUCTION OBSERVATION

NORTH CAROLINA PROFESSIONAL SEAL 37400 ENGINEER GREGORY M. GILLAND 7/1/13

DRAWN BY : J.M. BRITT DATE : 2-19-13
CHECKED BY : G.M. GILLAND DATE : 3-27-13
DESIGN ENGINEER OF RECORD: G.M. GILLAND DATE : 6-13

P:\2012\U-0071 - Y4 over I\Structures\DGN\0071_SD_Y4_BT1_WE.dgn
7/1/2013 8:18:34 AM

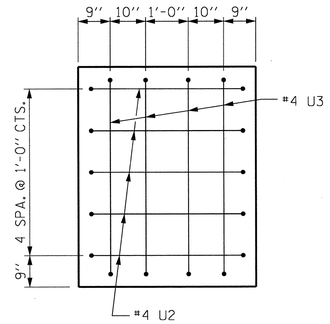

VIEW X-X

(TYPICAL EACH END)

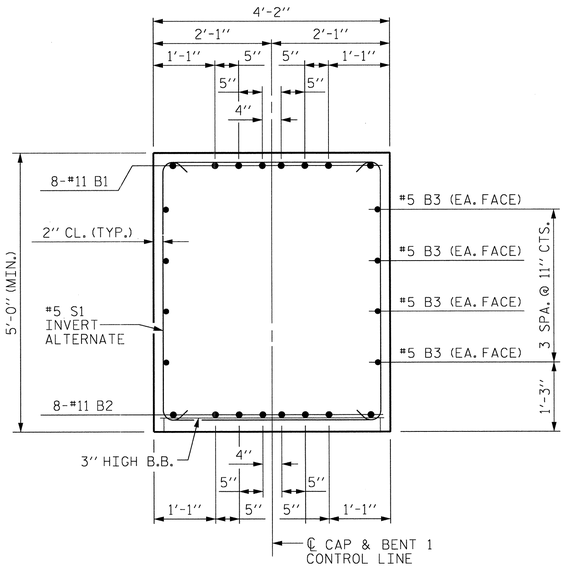

SECTION A-A

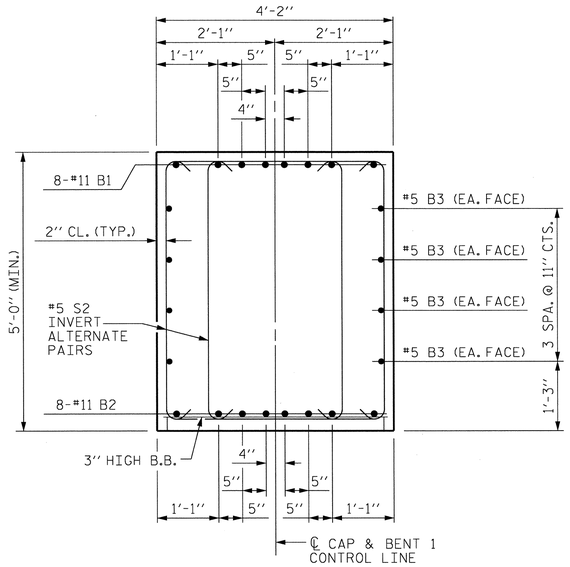

SECTION B-B

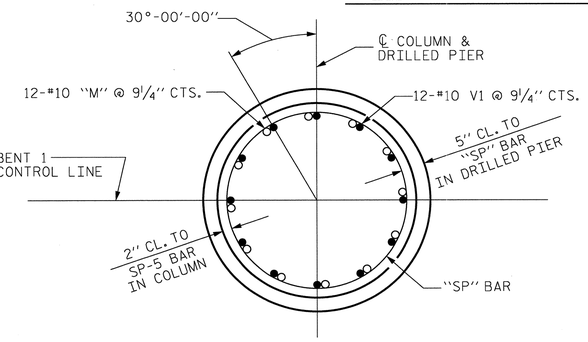

SECTION THRU DRILLED PIER & COLUMN

(TYPICAL FOR EACH DRILLED PIER & COLUMN)

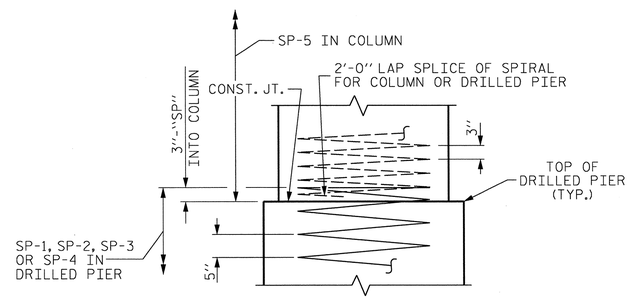

CONSTRUCTION JOINT DETAIL

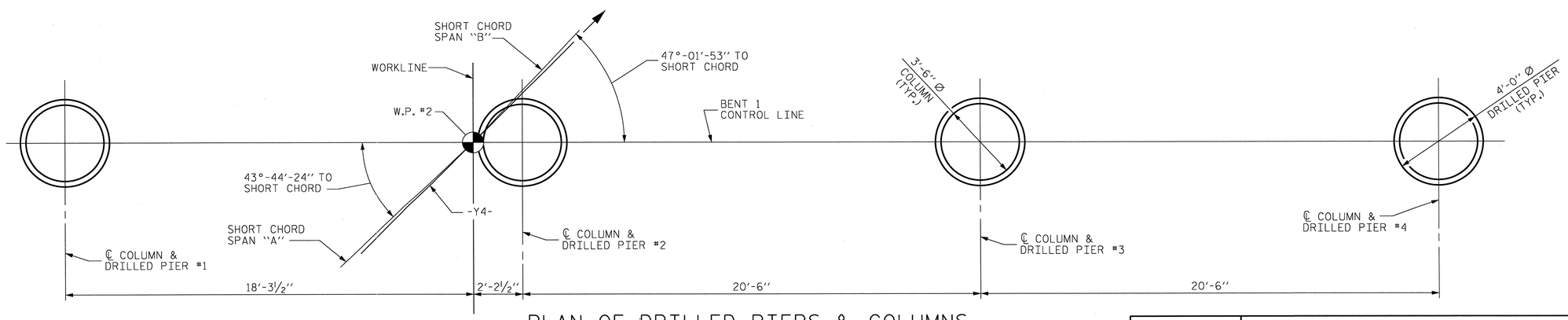

PLAN OF DRILLED PIERS & COLUMNS

BAR TYPES

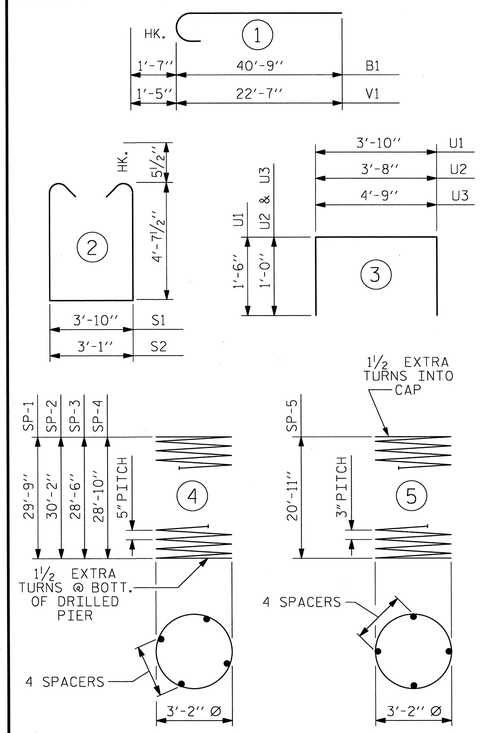

ALL BAR DIMENSIONS ARE OUT TO OUT.

BILL OF MATERIAL

BENT 1

BAR	No.	SIZE	TYPE	LENGTH	WEIGHT
B1	16	#11	1	42'-4''	3599
B2	16	#11	STR	38'-10''	3301
B3	16	#5	STR	35'-6''	592
M1	12	#10	STR	35'-10''	1850
M2	12	#10	STR	36'-3''	1872
M3	12	#10	STR	34'-7''	1786
M4	12	#10	STR	34'-11''	1803
S1	30	#5	2	14'-0''	438
S2	104	#5	2	13'-3''	1437
U1	35	#4	3	6'-10''	160
U2	10	#4	3	5'-8''	38
U3	8	#4	3	6'-9''	36
V1	48	#10	1	24'-0''	4957
REINFORCING STEEL					21,869 LBS.
SP-1	1	*	4	715'-0''	746
SP-2	1	*	4	724'-9''	756
SP-3	1	*	4	685'-7''	715
SP-4	1	*	4	692'-11''	723
SP-5	4	**	5	837'-3''	2237
SPIRAL COLUMN REINFORCING STEEL					5,167 LBS.

* THIS "SP" SPIRAL REINFORCING STEEL SHALL BE W31 OR D-31 COLD DRAWN WIRE OR #5 PLAIN OR DEFORMED BAR

** THIS "SP" SPIRAL REINFORCING STEEL SHALL BE W20 OR D-20 COLD DRAWN WIRE OR #4 PLAIN OR DEFORMED BAR

CLASS A CONCRETE BREAKDOWN	
POUR #2 (COLUMNS)	29.4 CU. YDS.
POUR #3 (CAP)	54.8 CU. YDS.
TOTAL CLASS A CONCRETE	84.2 CU. YDS.

DRILLED PIERS	
DRILLED PIER CONCRETE POUR #1 (DRILLED PIERS)	55.5 CU. YDS.
4'-0'' Ø DRILLED PIER NOT IN SOIL	32.0 LIN. FT.
4'-0'' Ø DRILLED PIER IN SOIL	87.25 LIN. FT.
CSL TUBES ♦	501 LIN. FT.

♦ NO SEPARATE PAYMENT WILL BE MADE FOR CSL TUBES. CSL TUBES WILL BE INCLUDED IN THE DRILLED PIER PAY ITEMS.

PROJECT NO. U-0071

DURHAM COUNTY

STATION: 107+45.55 -L-

SHEET 2 OF 2

STATE OF NORTH CAROLINA
DEPARTMENT OF TRANSPORTATION
RALEIGH

SUBSTRUCTURE

BENT 1

NORTH CAROLINA PROFESSIONAL SEAL 37400 ENGINEER GREGORY M. GILLAND 7/1/13

WETHERILL ENGINEERING
559 Jones Franklin Rd. Suite 164
Raleigh, N.C. 27606
Bus: 919 851 8077
Fax: 919 851 8107
License: F-0377
TRANSPORTATION PLANNING/DESIGN - BRIDGE/STRUCTURE DESIGN
CIVIL/SITE DESIGN - GIS/GPS - CONSTRUCTION OBSERVATION

REVISIONS								SHEET NO.
NO.	BY:	DATE:	NO.	BY:	DATE:			S-220
1			3					TOTAL SHEETS
2			4					671

DRAWN BY : J.M. BRITT DATE : 2-19-13
CHECKED BY : G.M. GILLAND DATE : 3-27-13
DESIGN ENGINEER OF RECORD: G.M. GILLAND DATE : 6-13

P:\2012\U-0071 - Y4 over L\Structures\DGN\0071_SD_Y4_BT1_WE1.dgn
7/1/2013 8:18:56 AM

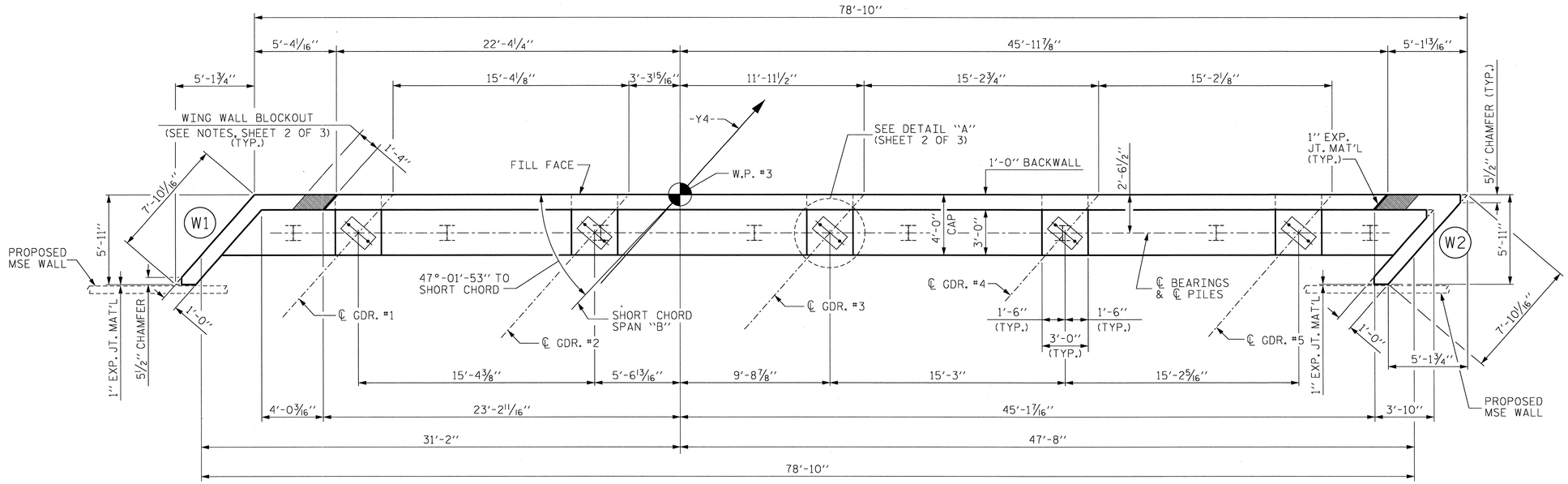

PLAN

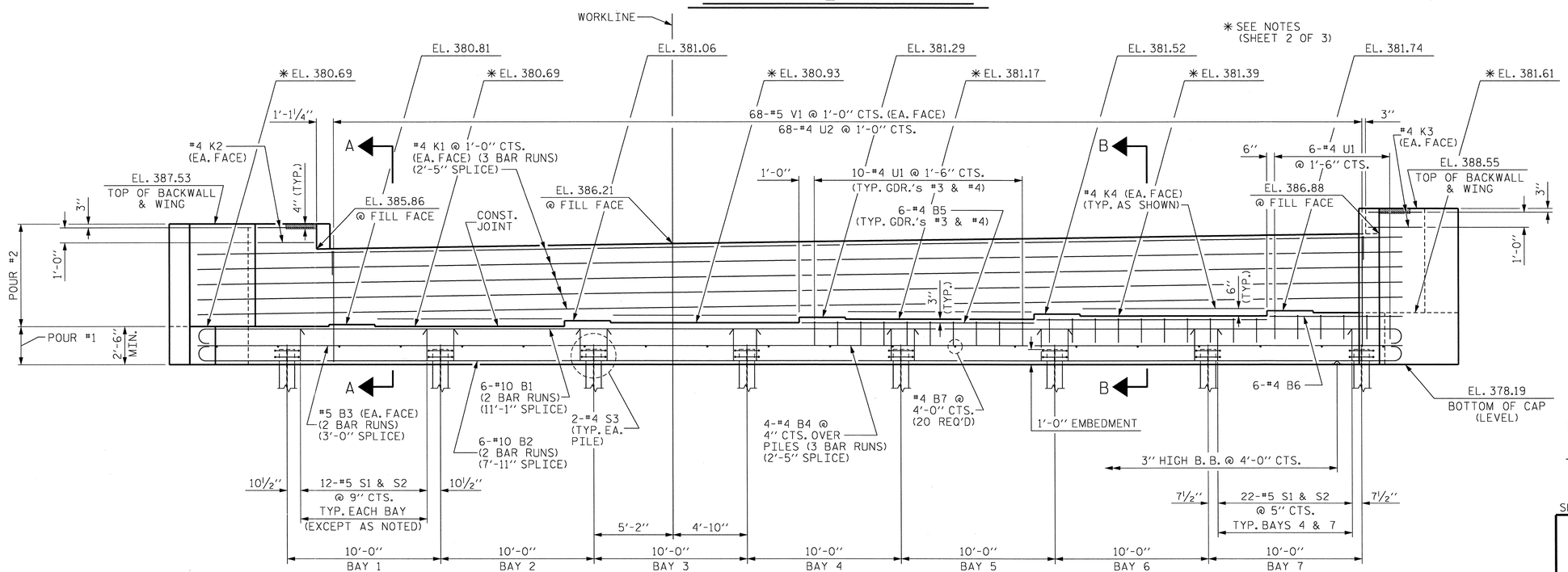

ELEVATION

(NOTE : 5 1/2" CHAMFERS NOT SHOWN IN ELEVATION VIEW)

PROJECT NO. U-0071

DURHAM COUNTY

STATION: 107+45.55 -L-

SHEET 1 OF 3

STATE OF NORTH CAROLINA
DEPARTMENT OF TRANSPORTATION
RALEIGH

SUBSTRUCTURE

END BENT 2

NORTH CAROLINA PROFESSIONAL SEAL 037400 ENGINEER GREGORY M. GILLAND 7/11/13

WETHERILL ENGINEERING
559 Jones Franklin Rd. Suite 164
Raleigh, N.C. 27606
Bus: 919 851 8077
Fax: 919 851 8107
License: F-0377

TRANSPORTATION PLANNING/DESIGN - BRIDGE/STRUCTURE DESIGN
CIVIL/SITE DESIGN - GIS/GPS - CONSTRUCTION OBSERVATION

REVISIONS								SHEET NO.
NO.	BY:	DATE:	NO.	BY:	DATE:			S-221
1			3					TOTAL SHEETS
2			4					671

DRAWN BY : J.M. BRITT DATE : 2-12-13
CHECKED BY : G.M. GILLAND DATE : 3-28-13
DESIGN ENGINEER OF RECORD: G.M. GILLAND DATE : 6-13

P:\2012\U-0071 - Y4 over LS\Structures\DGN\U0071_SD_Y4_EB2_WE1.dgn
7/11/2013 8:20:31 AM

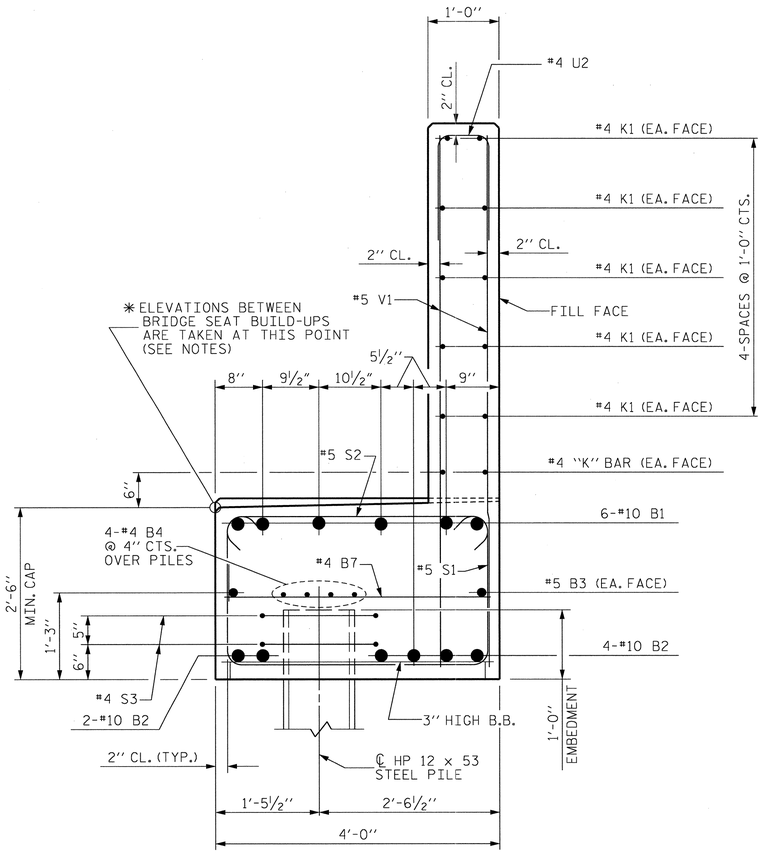

SECTION A-A

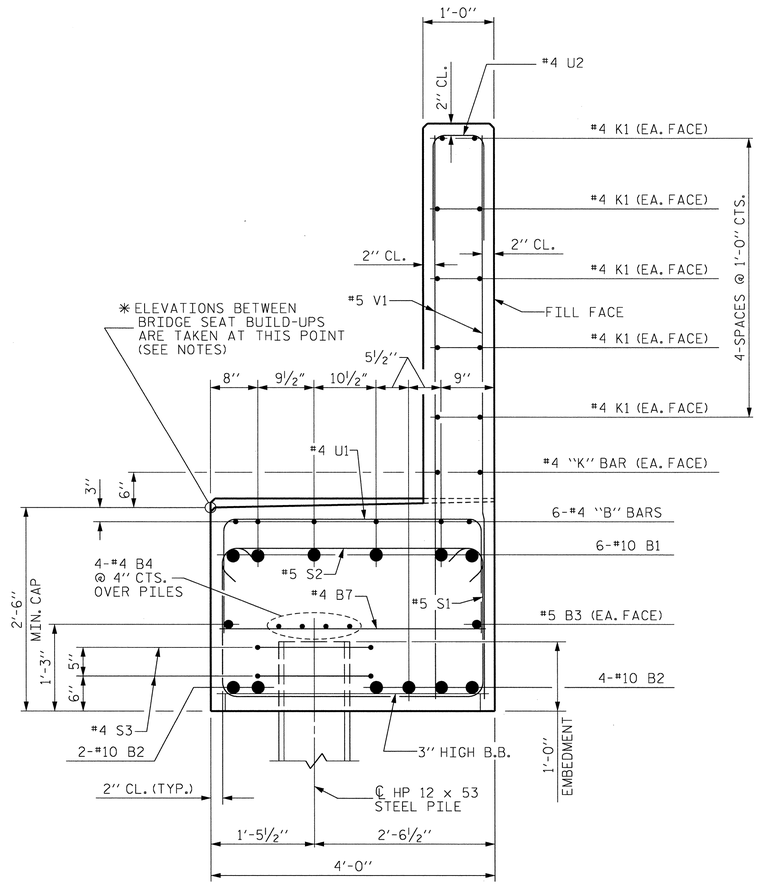

SECTION B-B

NOTES :

STIRRUPS AND #4 U1 BARS IN CAP MAY BE SHIFTED AS NECESSARY TO CLEAR ANCHOR BOLTS.

BACKWALL SHALL BE PLACED BEFORE APPLYING THE EPOXY PROTECTIVE COATING.

EPOXY COAT THE END BENT CAP AFTER ADJUSTMENTS ARE MADE TO BEARINGS AND ANCHOR BOLTS ARE GROUTED.

FOR PIPE INSERT DETAILS, SEE "ELASTOMERIC BEARING DETAILS" SHEET.

THE TOP SURFACE AREAS OF THE END BENT CAPS SHALL BE CURED IN ACCORDANCE WITH THE STANDARD SPECIFICATIONS EXCEPT THE MEMBRANE CURING COMPOUND METHOD SHALL NOT BE USED.

✱ THE TOP SURFACE OF THE CAP EXCEPT THE BRIDGE SEAT BUILDUPS SHALL BE SLOPED TRANSVERSELY FROM THE FILL FACE TO THE BACK FACE AT THE RATE OF 2%.

THE #5 V1 IN THE BACKWALL SHALL BE PLACED 2" CLEAR FROM THE TOP OF THE BACKWALL.

THE CONCRETE IN THE SHADED AREA OF THE WING SHALL BE POURED AFTER THE JOINT IN THE DECK AND APPROACH SLAB HAS BEEN SAWED AND THE BARRIER RAIL IS CAST IF SLIP FORMING IS USED.

FOR GALVANIZED REINFORCING STRAPS, SEE MSE WALL PLANS.

FOR MSE RETAINING WALLS, SEE SPECIAL PROVISIONS.

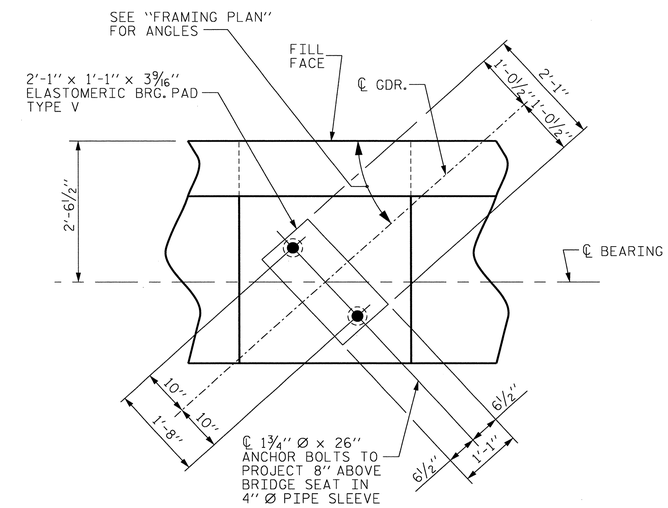

DETAIL "A"

(TYP. EA. GDR.)

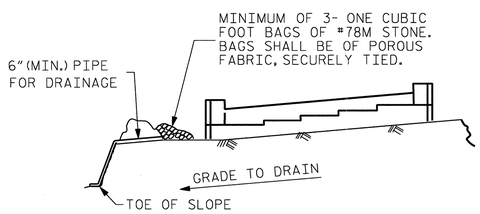

BAGGED STONE AND PIPE SHALL BE PLACED IMMEDIATELY AFTER COMPLETION OF END BENT EXCAVATION. PIPE MAY BE EITHER CONCRETE, CORRUGATED STEEL, CORRUGATED ALUMINUM ALLOY, OR CORRUGATED PLASTIC. PERFORATED PIPE WILL NOT BE ALLOWED.

BAGGED STONE SHALL REMAIN IN PLACE UNTIL THE ENGINEER DIRECTS THAT IT BE REMOVED. THE CONTRACTOR SHALL REMOVE AND DISPOSE OF SILT ACCUMULATIONS AT BAGGED STONE WHEN SO DIRECTED BY THE ENGINEER. BAGS SHALL BE REMOVED AND REPLACED WHENEVER THE ENGINEER DETERMINES THAT THEY HAVE DETERIORATED AND LOST THEIR EFFECTIVENESS.

NO SEPARATE PAYMENT WILL BE MADE FOR THIS WORK AND THE ENTIRE COST OF THIS WORK SHALL BE INCLUDED IN THE UNIT CONTRACT PRICE BID FOR THE SEVERAL PAY ITEMS.

TEMPORARY DRAINAGE AT END BENT 2

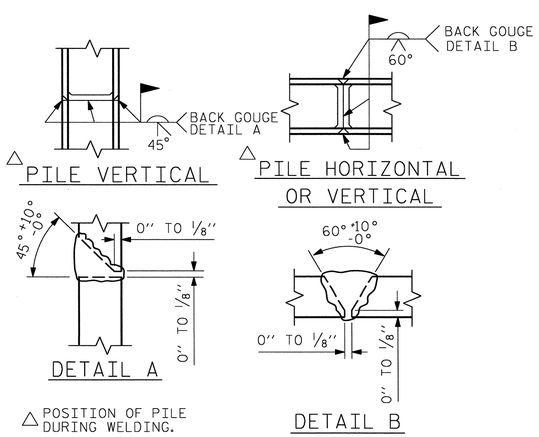

PILE SPLICE DETAIL

PROJECT NO. U-0071
DURHAM COUNTY
STATION: 107+45.55 -L-

SHEET 2 OF 3

STATE OF NORTH CAROLINA
DEPARTMENT OF TRANSPORTATION
RALEIGH

SUBSTRUCTURE

END BENT 2

REVISIONS						SHEET NO.
NO.	BY:	DATE:	NO.	BY:	DATE:	S-222
1			3			TOTAL SHEETS
2			4			671

WETHERILL ENGINEERING
559 Jones Franklin Rd. Suite 164
Raleigh, N.C. 27606
Bus: 919 851 8077
Fax: 919 851 8107
License: F-0377
TRANSPORTATION PLANNING/DESIGN - BRIDGE/STRUCTURE DESIGN
CIVIL/SITE DESIGN - GIS/GPS - CONSTRUCTION OBSERVATION

NORTH CAROLINA PROFESSIONAL SEAL 037400 ENGINEER GREGORY M. GILLAND 7/1/13

DRAWN BY :	J.M. BRITT	DATE :	2-12-13
CHECKED BY :	G.M. GILLAND	DATE :	3-28-13
DESIGN ENGINEER OF RECORD:	G.M. GILLAND	DATE :	6-13

P:\2012\U-0071 - Y4 over L\Structures\DGN\0071_SD_Y4_EB2_WEI.dgn
7/1/2013 8:20:51 AM

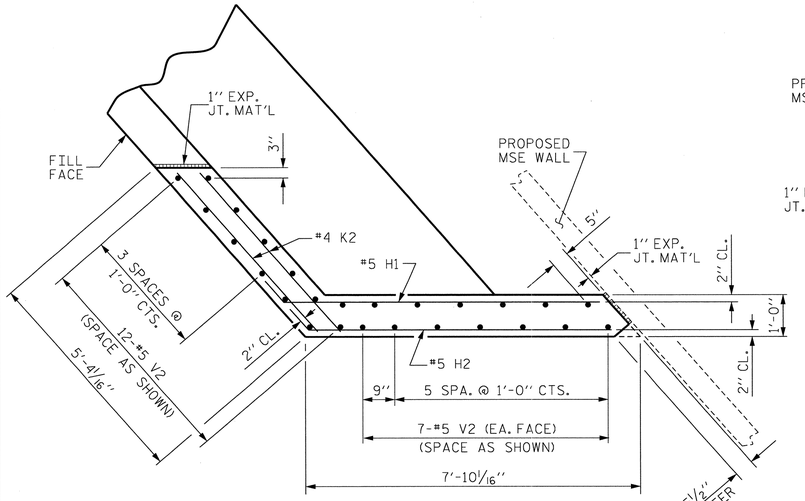

PLAN OF WING (W1)

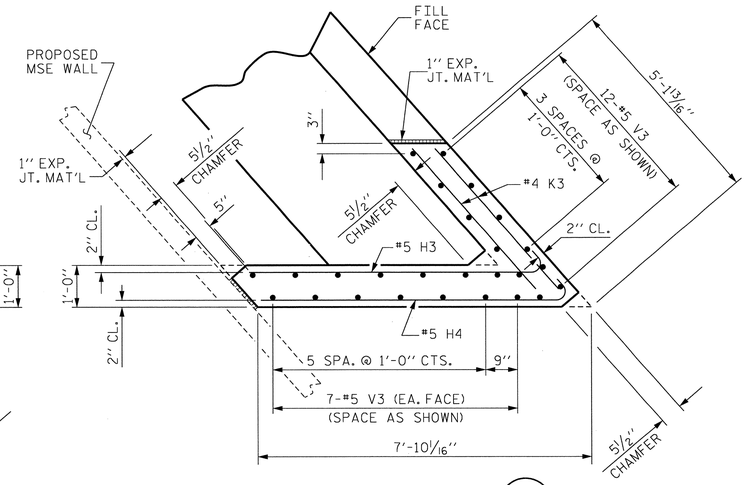

PLAN OF WING (W2)

BAR TYPES

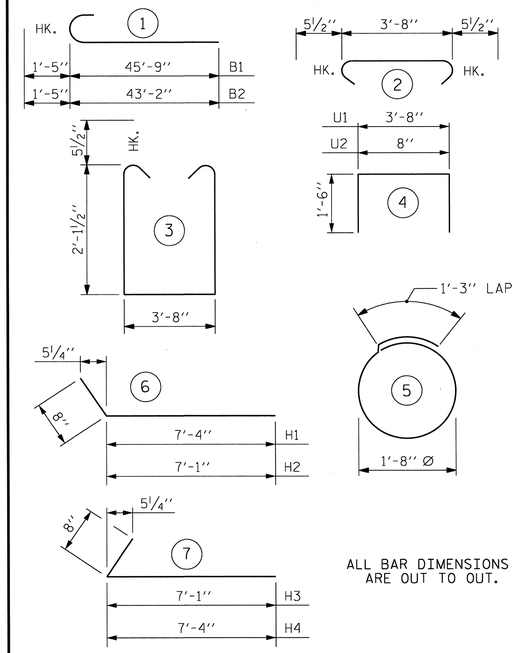

ALL BAR DIMENSIONS ARE OUT TO OUT.

BILL OF MATERIAL
END BENT 2

BAR	No.	SIZE	TYPE	LENGTH	WEIGHT
B1	12	#10	1	46'-2"	2384
B2	12	#10	1	44'-7"	2302
B3	4	#5	STR	40'-9"	170
B4	12	#4	STR	27'-9"	222
B5	12	#4	STR	15'-1"	121
B6	6	#4	STR	8'-7"	34
B7	20	#4	STR	3'-8"	49
H1	10	#5	6	8'-0"	83
H2	10	#5	6	7'-9"	81
H3	11	#5	7	7'-9"	89
H4	11	#5	7	8'-0"	92
K1	30	#4	STR	27'-9"	556
K2	4	#4	STR	5'-0"	13
K3	4	#4	STR	4'-5"	12
K4	8	#4	STR	12'-0"	64
S1	104	#5	3	8'-10"	958
S2	104	#5	2	4'-7"	497
S3	16	#4	5	6'-6"	69
U1	26	#4	4	6'-8"	116
U2	68	#4	4	3'-8"	167
V1	136	#5	STR	7'-4"	1040
V2	26	#5	STR	9'-0"	244
V3	26	#5	STR	10'-0"	271

REINFORCING STEEL	9,634 LBS.
CLASS A CONCRETE BREAKDOWN :	
POUR #1	35.1 CU. YDS.
POUR #2	19.3 CU. YDS.
TOTAL CLASS A CONCRETE	54.4 CU. YDS.
HP 12 x 53 STEEL PILES No. 8	360 LIN. FT.
PILE POINTS	4 EACH

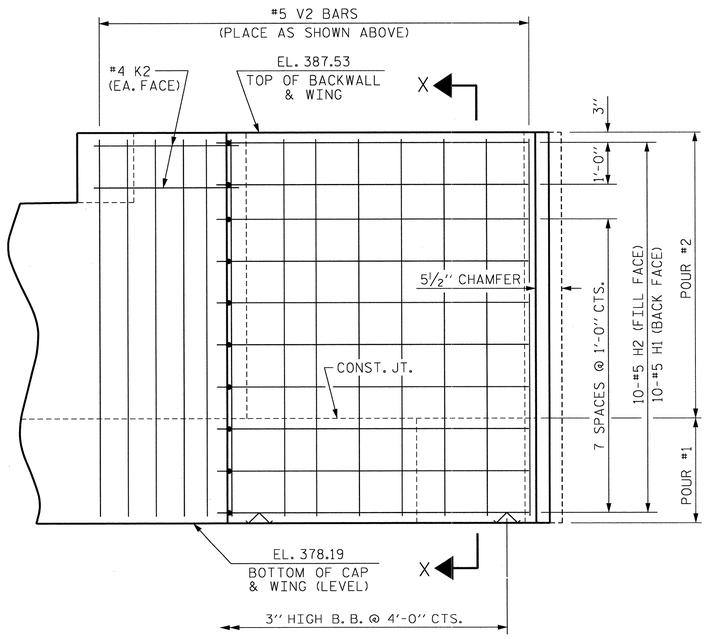

ELEVATION OF WING (W1)

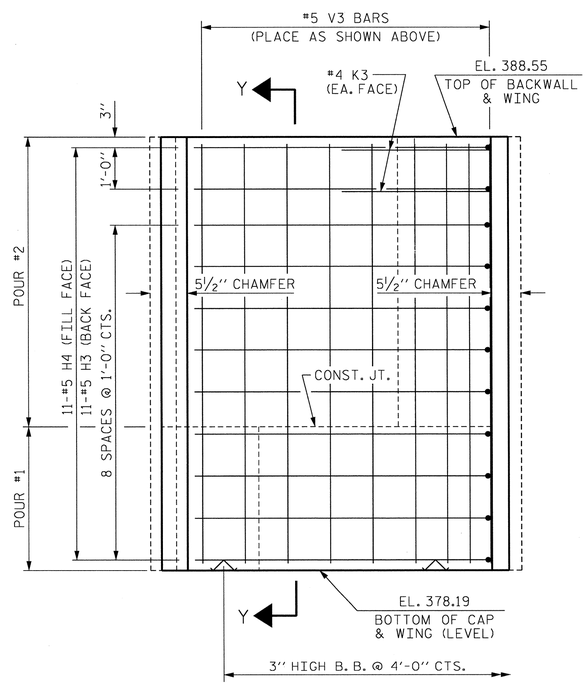

ELEVATION OF WING (W2)

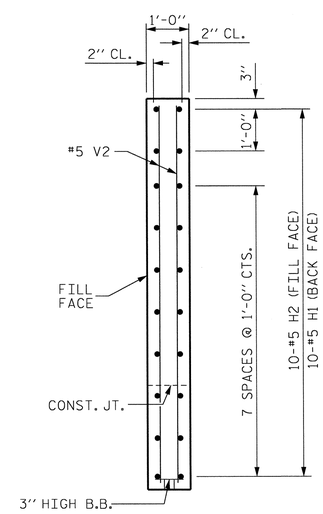

SECTION X-X

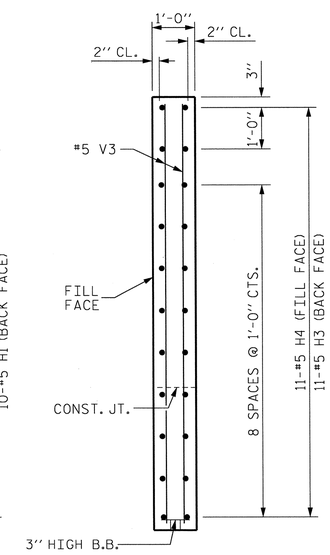

SECTION Y-Y

PROJECT NO. U-0071
DURHAM COUNTY
STATION: 107+45.55 -L-

SHEET 3 OF 3

STATE OF NORTH CAROLINA
DEPARTMENT OF TRANSPORTATION
RALEIGH

SUBSTRUCTURE
END BENT 2

NORTH CAROLINA PROFESSIONAL SEAL 37400 ENGINEER GREGORY M. GILLAND 7/1/13

WETHERILL ENGINEERING
559 Jones Franklin Rd. Suite 164
Raleigh, N.C. 27606
Bus: 919 851 8077
Fax: 919 851 8107
License: F-0377
TRANSPORTATION PLANNING/DESIGN - BRIDGE/STRUCTURE DESIGN
CIVIL/SITE DESIGN - GIS/GPS - CONSTRUCTION OBSERVATION

REVISIONS							SHEET NO.
NO.	BY:	DATE:	NO.	BY:	DATE:		S-223
1			3				TOTAL SHEETS
2			4				671

DRAWN BY : J.M. BRITT DATE : 2-13-13
CHECKED BY : G.M. GILLAND DATE : 3-28-13
DESIGN ENGINEER OF RECORD: G.M. GILLAND DATE : 6-13

P:\2012\U-0071 - Y4 over L\Structures\DGN\U0071_SD_Y4_EB2_WEI.dgn
7/1/2013 8:21:09 AM

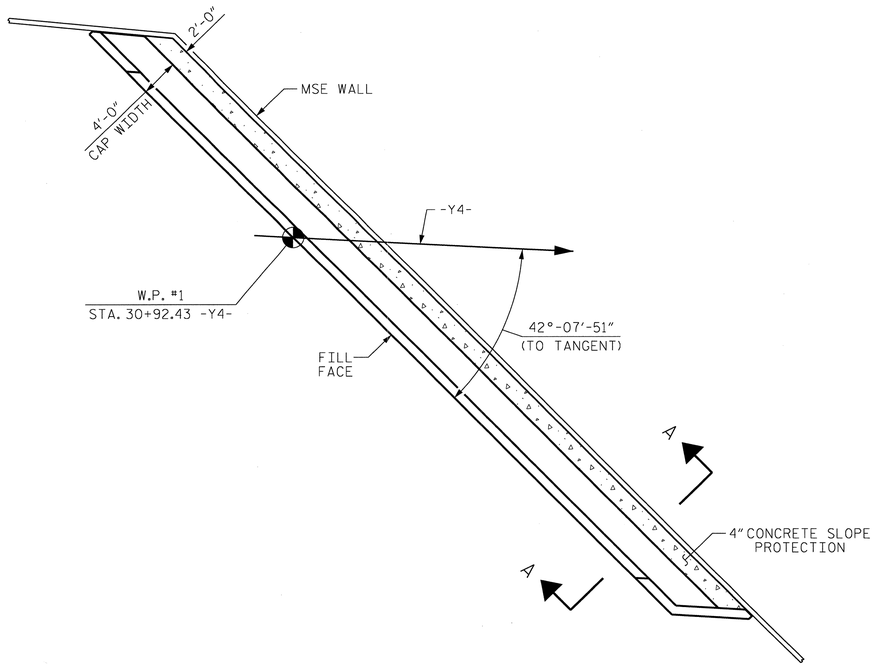

END BENT 1

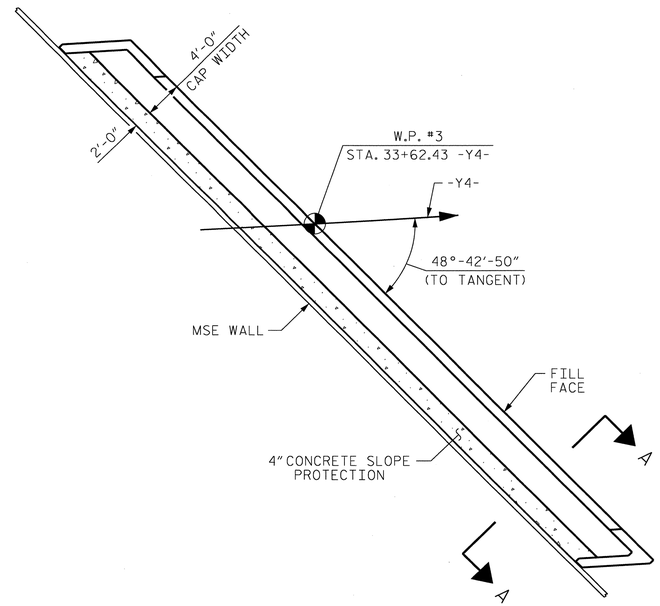

END BENT 2

PLAN

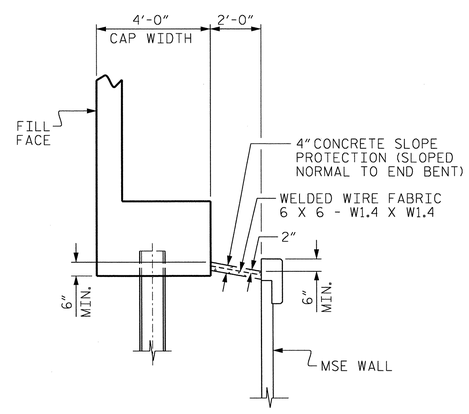

SECTION A-A

NOTES

SLOPE PROTECTION SHALL BE PLACED UNDER THE ENDS OF THE BRIDGE AS SHOWN IN THE DETAILS. MEASUREMENT AND PAYMENT SHALL BE AS PRESCRIBED IN SECTION 462 OF THE STANDARD SPECIFICATIONS.

SLOPE PROTECTION SHALL CONSIST OF 4" POURED CONCRETE PAVING AS SHOWN IN THE DETAILS. CONCRETE SHALL BE CLASS "B". THE CONCRETE SURFACE SHALL BE FINISHED TO THE SATISFACTION OF THE ENGINEER. WELDED WIRE FABRIC REINFORCING SHALL BE 6 X 6 - W1.4 X W1.4, 20" WIDE AND PLACED IN THE MIDDLE OF THE 4" CONCRETE SLOPE PROTECTION. THE COST OF THE WELDED WIRE FABRIC SHALL BE INCLUDED IN THE CONTRACT UNIT PRICE BID PER SQUARE YARD FOR SLOPE PROTECTION.

BRIDGE ID 107+45.55 -L-	4" CONCRETE SLOPE PROTECTION	WELDED WIRE FABRIC 20 INCHES WIDE
	SQUARE YARDS	APPROX. L.F.
END BENT 1	20	86
END BENT 2	18	76

PROJECT NO. U-0071
DURHAM COUNTY
STATION: 107+45.55 -L-

STATE OF NORTH CAROLINA
DEPARTMENT OF TRANSPORTATION
RALEIGH

SLOPE PROTECTION DETAILS

NORTH CAROLINA PROFESSIONAL SEAL 37400 ENGINEER GREGORY M. GILLAND 7/1/13

WETHERILL ENGINEERING
559 Jones Franklin Rd. Suite 164
Raleigh, N.C. 27606
Bus: 919 851 8077
Fax: 919 851 8107
License: F-0377
TRANSPORTATION PLANNING/DESIGN - BRIDGE/STRUCTURE DESIGN
CIVIL/SITE DESIGN - GIS/GPS - CONSTRUCTION OBSERVATION

REVISIONS							SHEET NO.
NO.	BY:	DATE:	NO.	BY:	DATE:		5-224
1			3				TOTAL SHEETS
2			4				671

DRAWN BY : G.M. GILLAND DATE : 2-26-13
CHECKED BY : E.R. BONNEY DATE : 3-11-13
DESIGN ENGINEER OF RECORD: G.M. GILLAND DATE : 6-13

P:\2012\U-0071 - Y4 over L\Structures\DGN\U0071_SD_Y4_SP_WE1.dgn
7/1/2013 8:22:35 AM

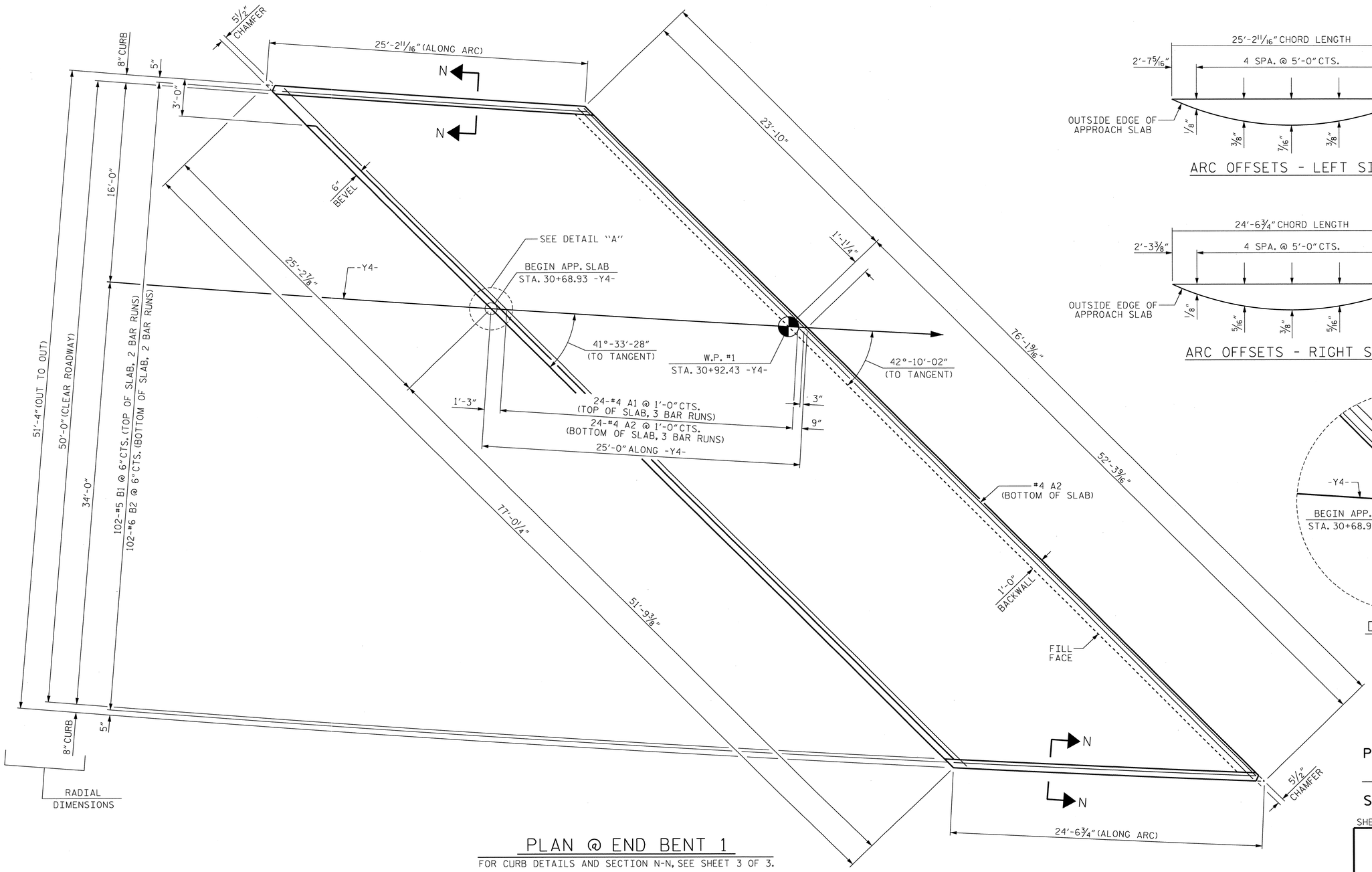

PLAN @ END BENT 1

FOR CURB DETAILS AND SECTION N-N, SEE SHEET 3 OF 3.

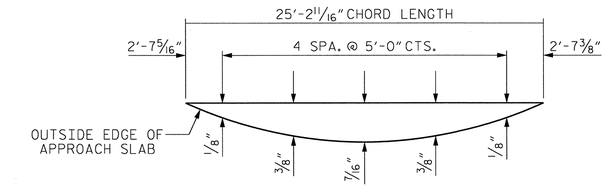

ARC OFFSETS - LEFT SIDE

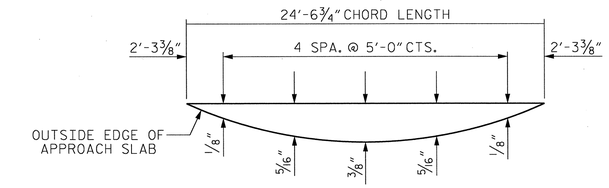

ARC OFFSETS - RIGHT SIDE

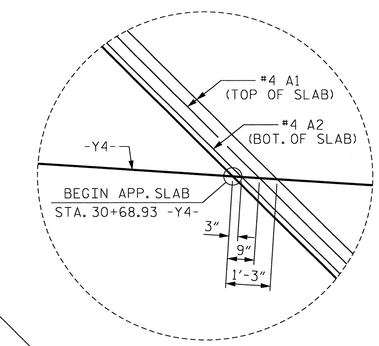

DETAIL "A"

PROJECT NO. U-0071

DURHAM COUNTY

STATION: 107+45.55 -L-

SHEET 1 OF 3

STATE OF NORTH CAROLINA
DEPARTMENT OF TRANSPORTATION
RALEIGH

BRIDGE APPROACH SLAB FOR FLEXIBLE PAVEMENT AT END BENT 1

REVISIONS						SHEET NO.
NO.	BY:	DATE:	NO.	BY:	DATE:	5-225
1			3			TOTAL SHEETS
2			4			671

NORTH CAROLINA PROFESSIONAL SEAL 037400 ENGINEER GREGORY M. GILLAND 7/1/13

WETHERILL ENGINEERING
559 Jones Franklin Rd. Suite 164
Raleigh, N.C. 27606
Bus: 919 851 8077
Fax: 919 851 8107
License: F-0377
TRANSPORTATION PLANNING/DESIGN - BRIDGE/STRUCTURE DESIGN
CIVIL/SITE DESIGN - GIS/GPS - CONSTRUCTION OBSERVATION

DRAWN BY : E.R. BONNEY DATE : 2-5-13
CHECKED BY : G.M. GILLAND DATE : 2-27-13
DESIGN ENGINEER OF RECORD: G.M. GILLAND DATE : 6-13

P:\2012\U-0071 - Y4 over L\Structures\DGN\U0071_SD_Y4_AS_WE.dgn
7/1/2013 8:23:16 AM

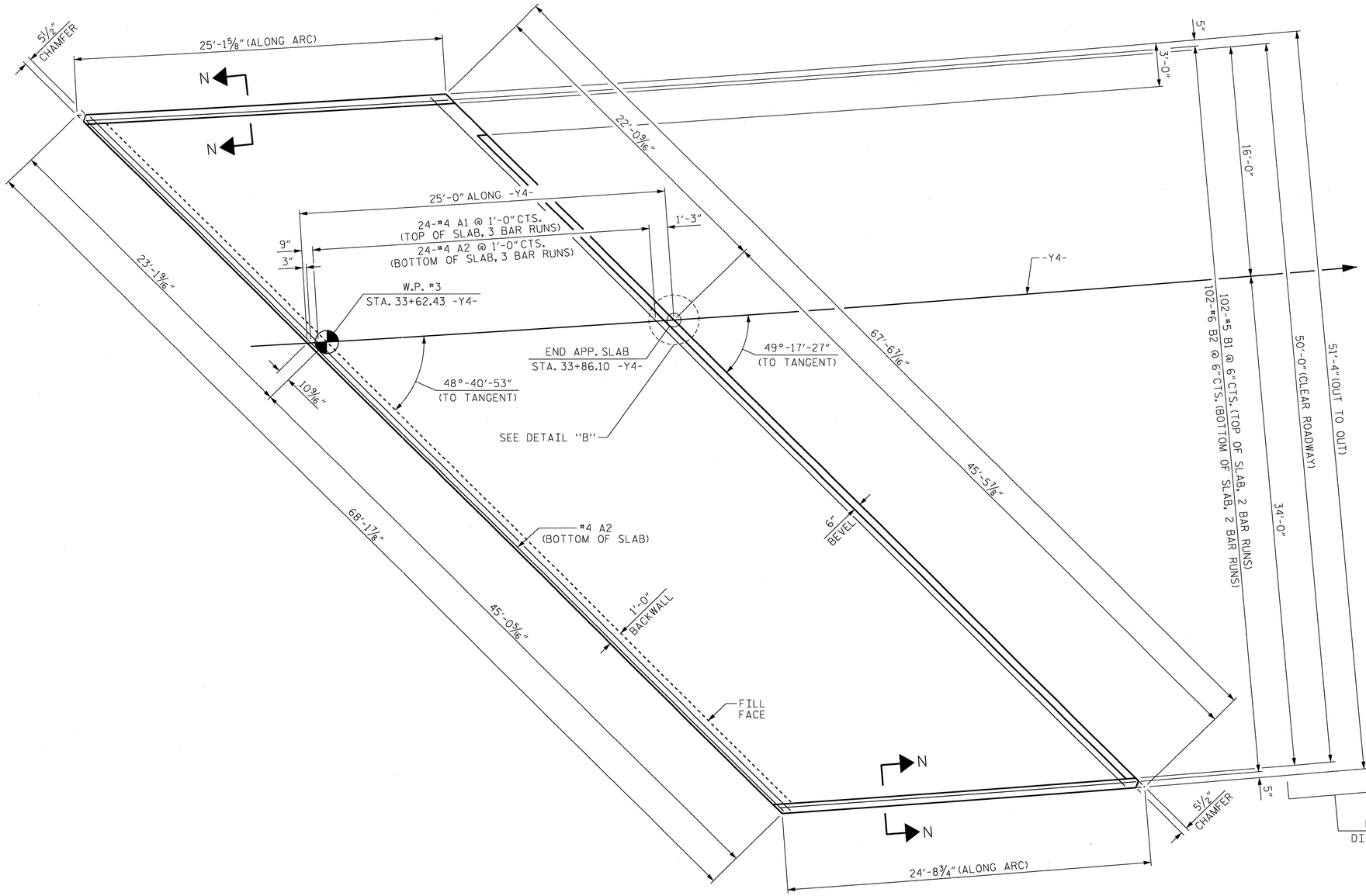

PLAN @ END BENT 2

FOR CURB DETAILS AND SECTION N-N, SEE SHEET 3 OF 3.

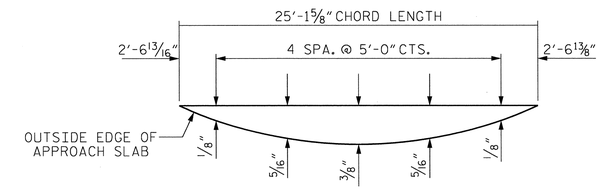

ARC OFFSETS - LEFT SIDE

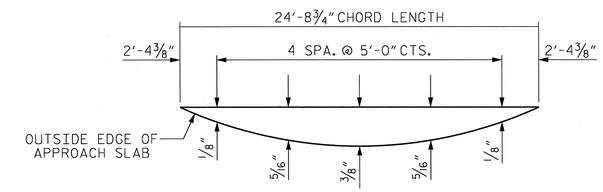

ARC OFFSETS - RIGHT SIDE

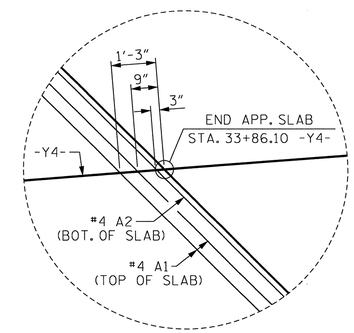

DETAIL "B"

PROJECT NO. U-0071

DURHAM COUNTY

STATION: 107+45.55 -L-

SHEET 2 OF 3

STATE OF NORTH CAROLINA
DEPARTMENT OF TRANSPORTATION
RALEIGH

BRIDGE APPROACH SLAB FOR FLEXIBLE PAVEMENT AT END BENT 2

NORTH CAROLINA PROFESSIONAL SEAL 37400 ENGINEER GREGORY M. GILLAND 7/1/13

WETHERILL ENGINEERING
559 Jones Franklin Rd. Suite 164
Raleigh, N.C. 27606
Bus: 919 851 8077
Fax: 919 851 8107
License: F-0377

TRANSPORTATION PLANNING/DESIGN - BRIDGE/STRUCTURE DESIGN
CIVIL/SITE DESIGN - GIS/GPS - CONSTRUCTION OBSERVATION

REVISIONS						SHEET NO.
NO.	BY:	DATE:	NO.	BY:	DATE:	S-226
1			3			TOTAL SHEETS
2			4			671

DRAWN BY : E.R. BONNEY DATE : 2-5-13
CHECKED BY : G.M. GILLAND DATE : 2-27-13
DESIGN ENGINEER OF RECORD: G.M. GILLAND DATE : 6-13

P:\2012\U-0071 - Y4 over LS\Structures\DGN\U0071_SD_Y4_AS_WE1.dgn
7/1/2013 8:26:22 AM

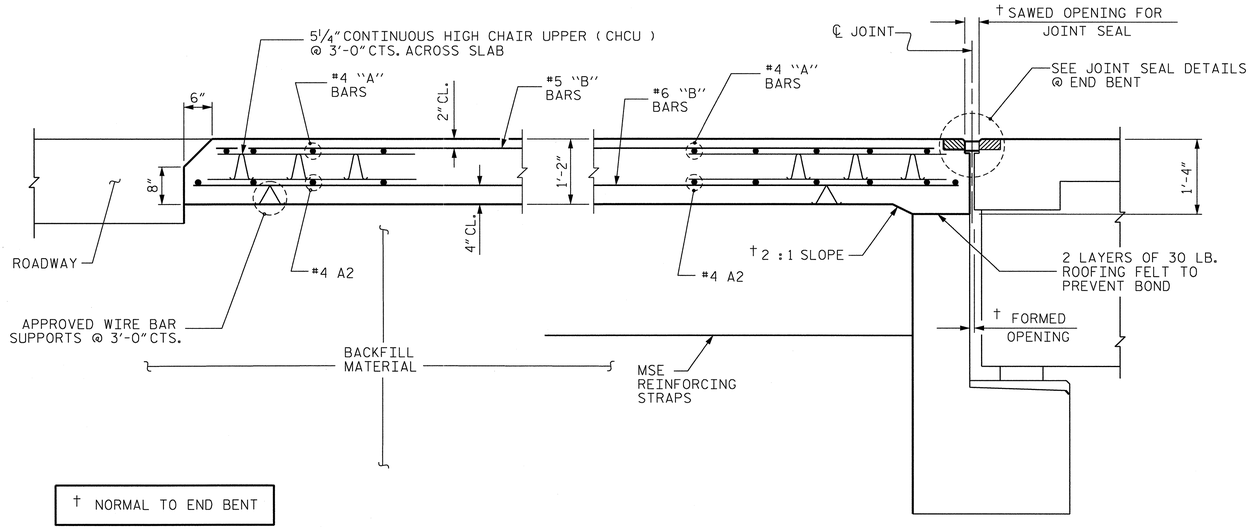

† NORMAL TO END BENT

SECTION THRU SLAB

NOTES

APPROACH SLAB SHALL NOT BE CONSTRUCTED PRIOR TO COMPLETION OF THE BRIDGE DECK.

FOR REINFORCED BRIDGE APPROACH FILL INCLUDING GEOTEXTILE, IMPERMEABLE GEOMEMBRANE, 4" Ø DRAINAGE PIPE, #78M STONE, AND SELECT MATERIAL, SEE ROADWAY PLANS.

AREA BETWEEN THE WINGWALL AND APPROACH SLAB SHALL BE GRADED TO DRAIN THE WATER AWAY FROM THE FILL FACE OF THE BRIDGE AND SHALL BE PAVED. SEE ROADWAY PLANS.

THE JOINT SHALL BE SAWED PRIOR TO THE CASTING OF THE BARRIER RAIL.

FOR GALVANIZED REINFORCING STRAPS AND BACKFILL MATERIAL, SEE MSE WALL PLANS AND SPECIAL PROVISIONS.

WITH FOAM JOINT SEAL

FOR FOAM JOINT SEALS, SEE SPECIAL PROVISIONS.

THE NOMINAL UNCOMPRESSED SEAL WIDTH OF THE FOAM JOINT SEAL SHALL BE 2".

FOR ELASTOMERIC CONCRETE, SEE SPECIAL PROVISIONS.

BILL OF MATERIAL

APPROACH SLAB AT EB #1

BAR	NO.	SIZE	TYPE	LENGTH	WEIGHT
✳ A1	75	#4	STR	26'-10"	1344
A2	78	#4	STR	26'-8"	1389
✳ B1	204	#5	STR	13'-2"	2801
B2	204	#6	STR	13'-8"	4188
REINFORCING STEEL				LBS.	5577
✳ EPOXY COATED REINFORCING STEEL				LBS.	4145
CLASS AA CONCRETE				C. Y.	55.1

APPROACH SLAB AT EB #2

BAR	NO.	SIZE	TYPE	LENGTH	WEIGHT
✳ A1	75	#4	STR	23'-11"	1198
A2	78	#4	STR	23'-9"	1237
✳ B1	204	#5	STR	13'-2"	2801
B2	204	#6	STR	13'-8"	4188
REINFORCING STEEL				LBS.	5425
✳ EPOXY COATED REINFORCING STEEL				LBS.	3999
CLASS AA CONCRETE				C. Y.	55.3

SPLICE LENGTHS

BAR SIZE	EPOXY COATED	UNCOATED
#4	2'-0"	1'-9"
#5	2'-6"	2'-2"
#6	3'-10"	2'-7"

ELASTOMERIC CONCRETE

END BENT NO.	ELASTOMERIC CONCRETE ✳ (CU. FT.)
1	13.0
2	11.7
TOTAL	24.7

✳ BASED ON THE MINIMUM BLOCKOUT SHOWN.

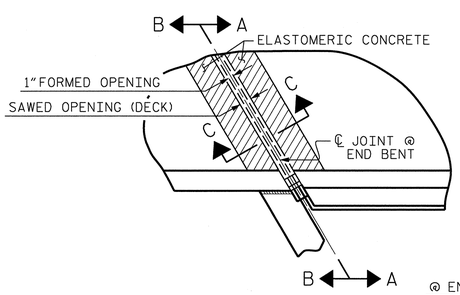

PLAN

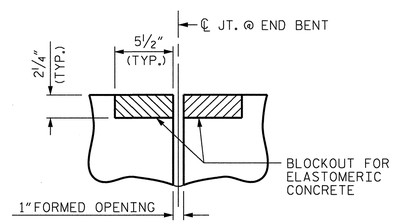

SECTION C-C

FOAM JOINT SEAL (PRE-SAWED ELASTOMERIC CONCRETE DIMENSIONS)

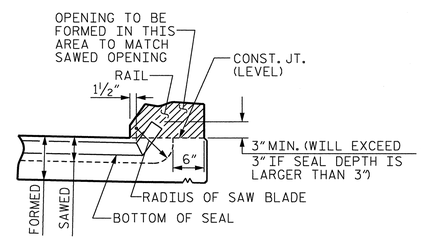

SECTION A-A

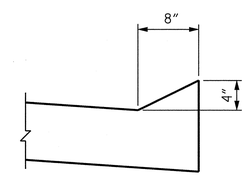

SECTION N-N

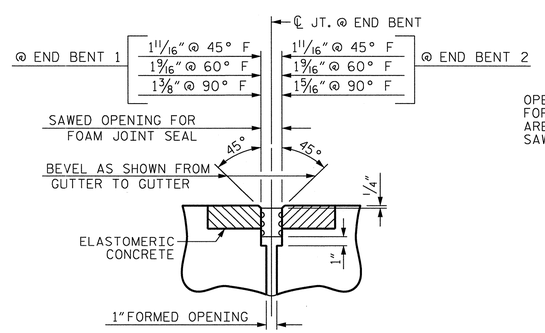

SECTION C-C

FOAM JOINT SEAL (EXPANSION)

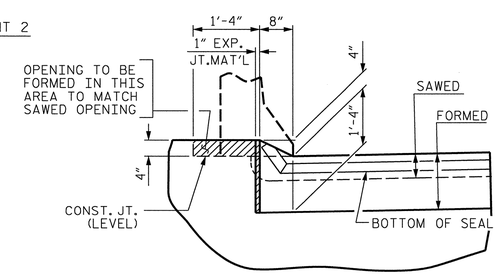

SECTION B-B

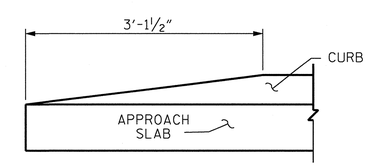

END OF CURB WITHOUT SHOULDER BERM GUTTER

CURB DETAILS

JOINT SEAL DETAILS @ END BENT

FOAM JOINT SEAL TO BE CUT, HEAT WELDED AND TURNED UP PARALLEL TO SLOPED FACE OF THE BARRIER RAIL.

THE JOINT SHALL BE SAWED PRIOR TO THE CASTING OF THE BARRIER RAIL.

PROJECT NO. U-0071
DURHAM COUNTY
STATION: 107+45.55 -L-

SHEET 3 OF 3

STATE OF NORTH CAROLINA
DEPARTMENT OF TRANSPORTATION
RALEIGH

BRIDGE APPROACH SLAB DETAILS

NORTH CAROLINA PROFESSIONAL SEAL 37400 ENGINEER GREGORY M. GILLAND
1/17/14

WETHERILL ENGINEERING
559 Jones Franklin Rd. Suite 164
Raleigh, N.C. 27606
Bus: 919 851 8077
Fax: 919 851 8107
License: F-0377
TRANSPORTATION PLANNING/DESIGN - BRIDGE/STRUCTURE DESIGN
CIVIL/SITE DESIGN - GIS/GPS - CONSTRUCTION OBSERVATION

REVISIONS							SHEET NO.
NO.	BY:	DATE:	NO.	BY:	DATE:		S-227
1			3				TOTAL SHEETS
2			4				671

DRAWN BY : E.R. BONNEY DATE : 2-5-13
CHECKED BY : G.M. GILLAND DATE : 2-28-13
DESIGN ENGINEER OF RECORD: G.M. GILLAND DATE : 6-13

P:\2012\U-0071 - Y4 over L\Structures\DGN\U071_SD_Y4_AS_WE.dgn
1/16/2014 3:27:51 PM

PVI 26+50.00 -US70FLY-
EL. 427.82
V.C. = 590.00 FT.

(+)4.5213% △ (-)5.1121%
GRADE DATA

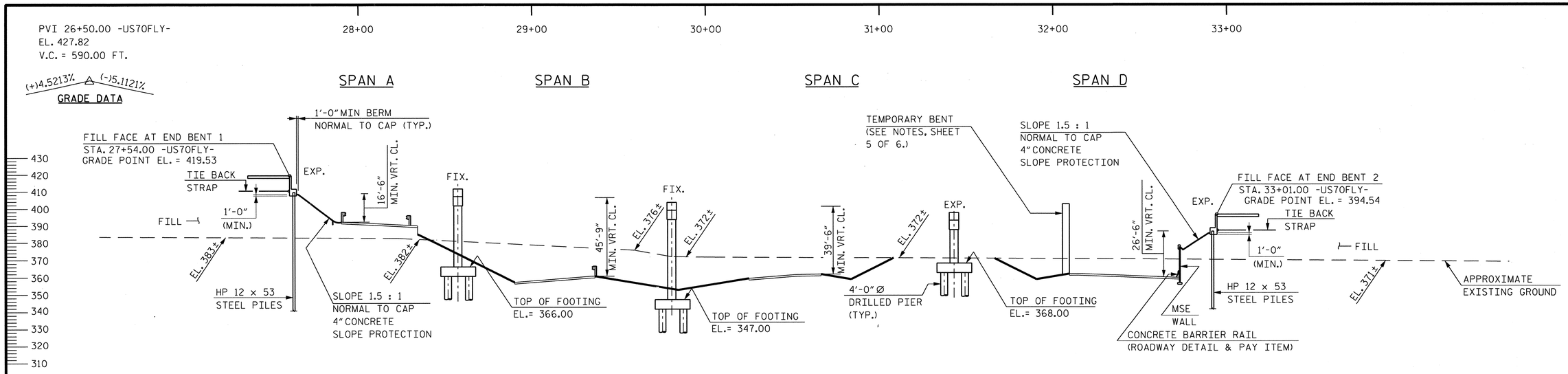

SECTION ALONG ℄ -US70FLY-
(SECTION TAKEN AT RIGHT ANGLE TO END BENTS AND BENTS)

HORIZONTAL CURVE DATA -US70FLY-

PI STA. 52+41.98
Δ = 153°14'03.0" (RT)
D = 8°05'33.4"
L = 1893.50'
T = 2975.81'
R = 708.00'

POINT	STATION	OFFSET	ELEVATION
A	-Y4- 30+49.07	34.00 RT.	393.75
B	-L- 105+60.91	21.00 RT.	359.48
C	-WBL- 105+36.73	61.00 LT.	358.72
D	-Y7RPA- 10+32.96	19.00 RT.	360.75

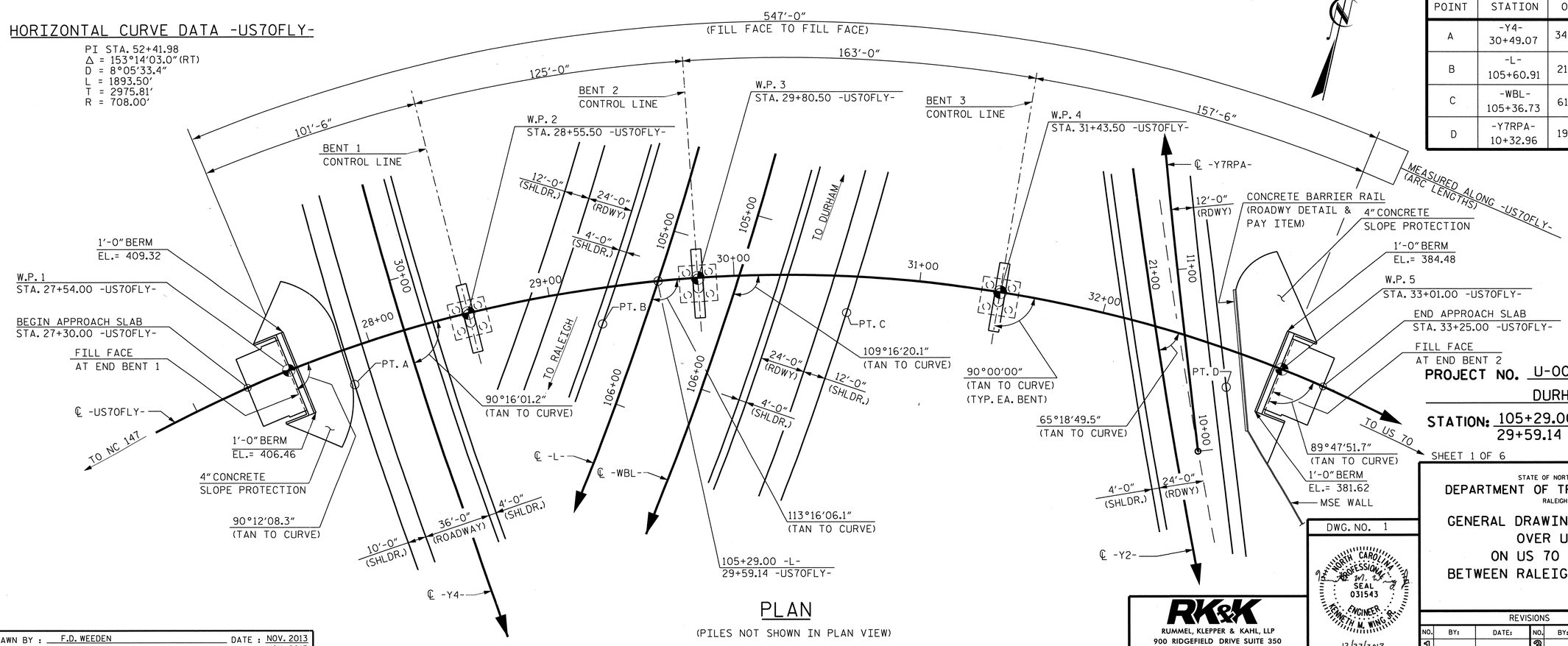

PLAN
(PILES NOT SHOWN IN PLAN VIEW)

PROJECT NO. U-0071
DURHAM COUNTY
STATION: 105+29.00 -L-
29+59.14 -US70FLY-
SHEET 1 OF 6
BRIDGE NO. 596

STATE OF NORTH CAROLINA
DEPARTMENT OF TRANSPORTATION
RALEIGH

GENERAL DRAWING FOR BRIDGE
OVER US 70
ON US 70 FLYOVER
BETWEEN RALEIGH AND DURHAM

DWG. NO. 1

RK&K
RUMMEL, KLEPPER & KAHL, LLP
900 RIDGEFIELD DRIVE SUITE 350
RALEIGH, NORTH CAROLINA 27609-3960
NC LICENSE NUMBER: F-0112

NORTH CAROLINA PROFESSIONAL SEAL 031543 ENGINEER KENNETH M. WING JR.
12/23/2013

REVISIONS								SHEET NO.
NO.	BY:	DATE:	NO.	BY:	DATE:			S-228
1			3					TOTAL SHEETS
2			4					611

DRAWN BY : F.D. WEEDEN DATE : NOV. 2013
CHECKED BY : K.M. WING DATE : NOV. 2013
DESIGN ENGINEER OF RECORD : Y. TAN DATE : NOV. 2013

fweeden
12/23/2013 m:\projects\2011\11153_u0071 structures\structure\us70flyover\dgn\U0071_sd_pe.dgn

STR. #5

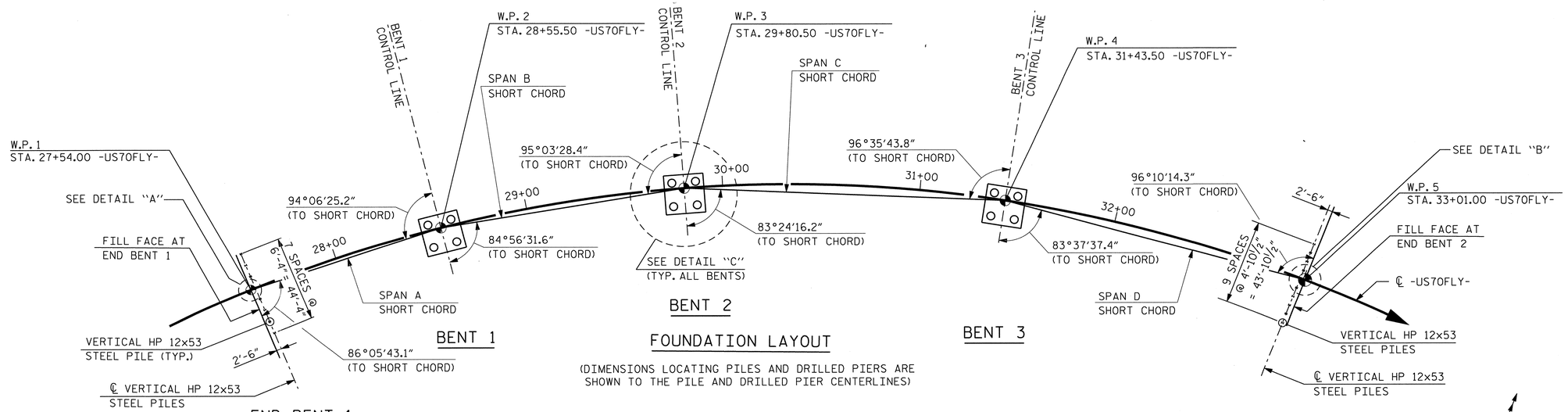

FOUNDATION LAYOUT

(DIMENSIONS LOCATING PILES AND DRILLED PIERS ARE SHOWN TO THE PILE AND DRILLED PIER CENTERLINES)

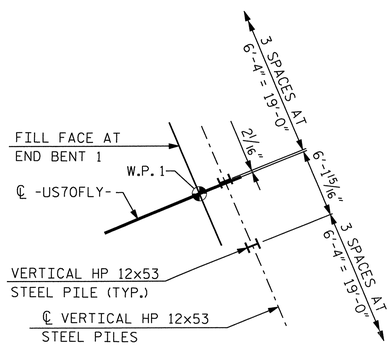

DETAIL "A"

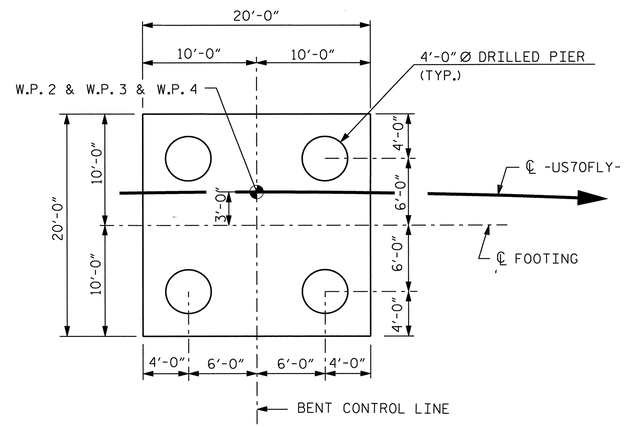

DETAIL "C"

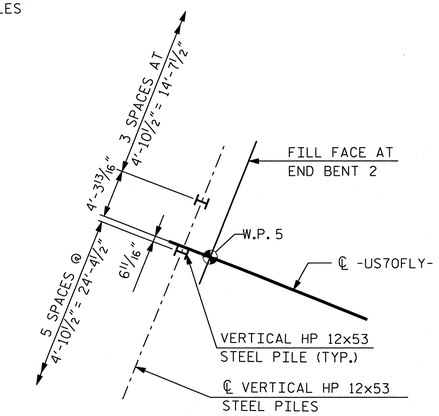

DETAIL "B"

FOUNDATION NOTES:

FOR PILES, SEE SECTION 450 OF THE STANDARD SPECIFICATIONS.

PILES AT END BENT NO. 1 ARE DESIGNED FOR A FACTORED RESISTANCE OF 110 TONS PER PILE.

DRIVE PILES AT END BENT NO. 1 TO A REQUIRED DRIVING RESISTANCE OF 185 TONS PER PILE.

PILES AT END BENT NO. 2 ARE DESIGNED FOR A FACTORED RESISTANCE OF 120 TONS PER PILE.

DRIVE PILES AT END BENT NO. 2 TO A REQUIRED DRIVING RESISTANCE OF 200 TONS PER PILE.

DRIVE PILES AT END BENT NO. 2 BEFORE CONSTRUCTING THE MSE RETAINING WALL.

FOR DRILLED PIERS, SEE SECTION 411 OF THE STANDARD SPECIFICATIONS.

DRILLED PIERS AT BENT NO. 1 ARE DESIGNED FOR A FACTORED RESISTANCE OF 780 TONS PER PIER. CHECK FIELD CONDITIONS FOR THE REQUIRED TIP RESISTANCE OF 50 TSF.

INSTALL DRILLED PIERS AT BENT NO. 1 TO A TIP ELEVATION NO HIGHER THAN 325 FT. AND WITH THE REQUIRED TIP RESISTANCE.

DRILLED PIERS AT BENT NO. 2 ARE DESIGNED FOR A FACTORED RESISTANCE OF 915 TONS PER PIER. CHECK FIELD CONDITIONS FOR THE REQUIRED TIP RESISTANCE OF 130 TSF.

INSTALL DRILLED PIERS AT BENT NO. 2 TO A TIP ELEVATION NO HIGHER THAN 317 FT. AND WITH THE REQUIRED TIP RESISTANCE.

DRILLED PIERS AT BENT NO. 3 ARE DESIGNED FOR A FACTORED RESISTANCE OF 890 TONS PER PIER. CHECK FIELD CONDITIONS FOR THE REQUIRED TIP RESISTANCE OF 130 TSF.

INSTALL DRILLED PIERS AT BENT NO. 3 TO A TIP ELEVATION NO HIGHER THAN 324 FT. AND WITH THE REQUIRED TIP RESISTANCE.

DRILLED PIER EXCAVATION AT BENT NO. 1, BENT NO. 2, AND BENT NO. 3 WILL EXTEND INTO MATERIAL THAT DETERIORATES WHEN EXPOSED TO THE ELEMENTS. CHECK FIELD CONDITIONS FOR THE REQUIRED TIP RESISTANCE AND PLACE CONCRETE IMMEDIATELY AFTER THE EXCAVATION IS COMPLETED.

SPT MAY BE REQUIRED FOR DRILLED PIERS. THE ENGINEER WILL DETERMINE THE NEED FOR SPT. FOR SPT TESTING, SEE SECTION 411 OF THE STANDARD SPECIFICATIONS.

SID INSPECTIONS MAY BE REQUIRED FOR DRILLED PIERS. THE ENGINEER WILL DETERMINE THE NEED FOR SID INSPECTIONS. FOR SID INSPECTIONS, SEE SECTION 411 OF THE STANDARD SPECIFICATIONS.

CSL TUBES ARE REQUIRED AND CSL TESTING MAY BE REQUIRED FOR DRILLED PIERS. THE ENGINEER WILL DETERMINE THE NEED FOR CSL TESTING. FOR CSL TESTING, SEE SECTION 411 OF THE STANDARD SPECIFICATIONS.

PROJECT NO. U-0071
DURHAM COUNTY
STATION: 105+29.00 -L-
29+59.14 -US70FLY-

SHEET 2 OF 6

STATE OF NORTH CAROLINA
DEPARTMENT OF TRANSPORTATION
RALEIGH

GENERAL DRAWING
FOUNDATION LAYOUT

DWG. NO. 2

NORTH CAROLINA PROFESSIONAL SEAL 031543 ENGINEER KENNETH M. WING JR.
12/23/2013

RK&K
RUMMEL, KLEPPER & KAHL, LLP
900 RIDGEFIELD DRIVE SUITE 350
RALEIGH, NORTH CAROLINA 27609-3960
NC LICENSE NUMBER: F-0112

REVISIONS						SHEET NO.
NO.	BY:	DATE:	NO.	BY:	DATE:	5-229
1			3			TOTAL SHEETS
2			4			671

STR. #5

DRAWN BY : F.D. WEEDEN DATE : NOV. 2013
CHECKED BY : K.M. WING DATE : NOV. 2013
DESIGN ENGINEER OF RECORD : Y. TAN DATE : NOV. 2013

fweeden
12/23/2013 m:\projects\2011\11153_u0071 structures\structure\us70flyover\dgn\U0071_sd_fl.dgn

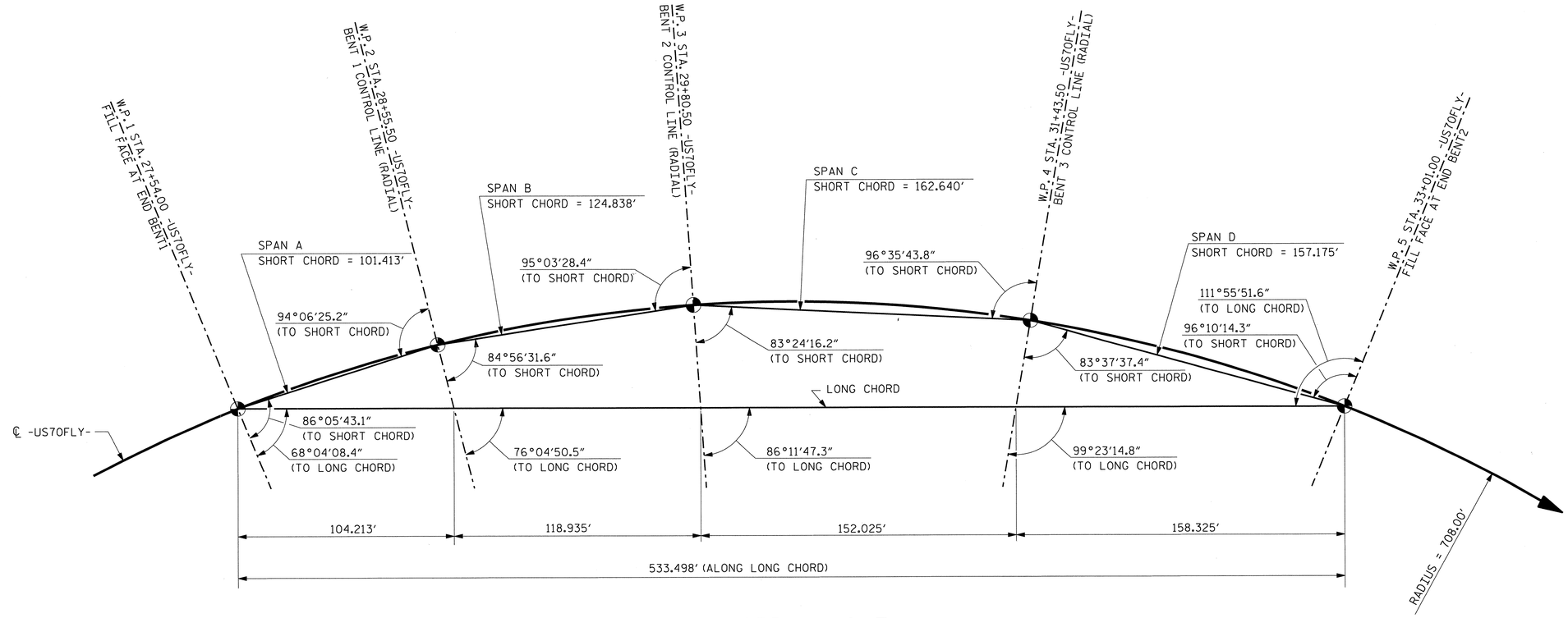

LONG CHORD LAYOUT

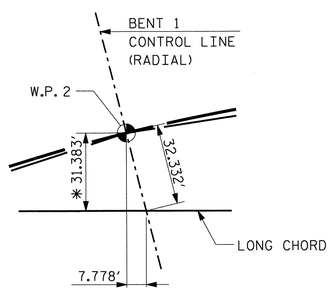

W.P. 2

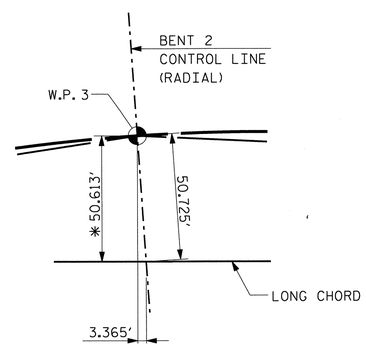

W.P. 3

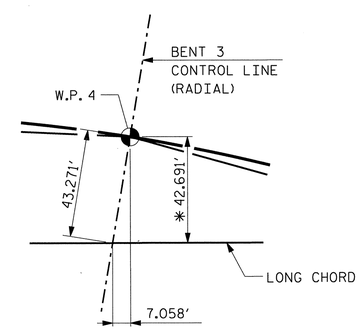

W.P. 4

✱ PERPENDICULAR TO LONG CHORD

PROJECT NO. U-0071
DURHAM COUNTY
STATION: 105+29.00 -L-
29+59.14 -US70FLY-

SHEET 3 OF 6

STATE OF NORTH CAROLINA
DEPARTMENT OF TRANSPORTATION
RALEIGH

GENERAL DRAWING
LONG CHORD LAYOUT

DWG. NO. 3

NORTH CAROLINA PROFESSIONAL SEAL 031543 ENGINEER KENNETH M. WING JR.
12/23/2013

RK&K
RUMMEL, KLEPPER & KAHL, LLP
900 RIDGEFIELD DRIVE SUITE 350
RALEIGH, NORTH CAROLINA 27609-3960
NC LICENSE NUMBER: F-0112

REVISIONS								SHEET NO.
NO.	BY:	DATE:	NO.	BY:	DATE:			S-230
1			3					TOTAL SHEETS
2			4					671

STR. #5

DRAWN BY :	F.D. WEEDEN	DATE :	NOV. 2013
CHECKED BY :	K.M. WING	DATE :	NOV. 2013
DESIGN ENGINEER OF RECORD :	Y. TAN	DATE :	NOV. 2013

fweeden
12/23/2013 m:\projects\2011\11153_u0071 structures\structure\us70flyover\dgn\U0071_sd_lcl.dgn

TOTAL BILL OF MATERIAL

LOCATION	FOUNDATION EXCAVATION	4'-0" Ø DRILLED PIERS IN SOIL	4'-0" Ø DRILLED PIERS NOT IN SOIL	SID INSPECTION	SPT TESTING	CSL TESTING	REINFORCED CONCRETE DECK SLAB	GROOVING BRIDGE FLOORS	CLASS A CONCRETE	BRIDGE APPROACH SLABS	REINF. STEEL	SPIRAL COLUMN REINFORCING STEEL	STRUCTURAL STEEL	HP 12X53 STEEL PILES		CONCRETE BARRIER RAIL	4" SLOPE PROTECTION	POT BEARINGS	EXPANSION JOINT SEALS
	LUMP SUM	L.F.	L.F.	EA.	EA.	EA.	SQ. FT.	SQ. FT.	CU. YDS.	LUMP SUM	LBS.	LBS.	APPROX. LBS.	NO.	L.F.	L.F.	S.Y.	LUMP SUM	LUMP SUM
SUPERSTRUCTURE	—	—	—	—	—	—	22,475	20,650	—	LUMP SUM	—	—	882,765	—	—	1,125.08	—	LUMP SUM	LUMP SUM
END BENT 1	—	—	—	—	—	—	—	—	58.4	—	7,336	—	—	8	360	—	405	—	—
BENT 1	LUMP SUM	70	72	—	—	—	—	—	200.1	—	55,898	2,410	—	—	—	—	—	—	—
BENT 2	LUMP SUM	21	77	—	—	—	—	—	221.9	—	57,435	1,683	—	—	—	—	—	—	—
BENT 3	LUMP SUM	90	64	—	—	—	—	—	173.0	—	50,861	2,609	—	—	—	—	—	—	—
END BENT 2	—	—	—	—	—	—	—	—	56.1	—	7,846	—	—	10	300	—	335	—	—
TOTAL	LUMP SUM	181	213	3	6	1	22,475	20,650	595.0	LUMP SUM	179,376	6,702	882,765	18	660	1,125.08	740	LUMP SUM	LUMP SUM

BM #65: RR SPIKE IN 12" PINE 292.29' RT., STA. 45+56.47 -US70FLY-, EL.342.33

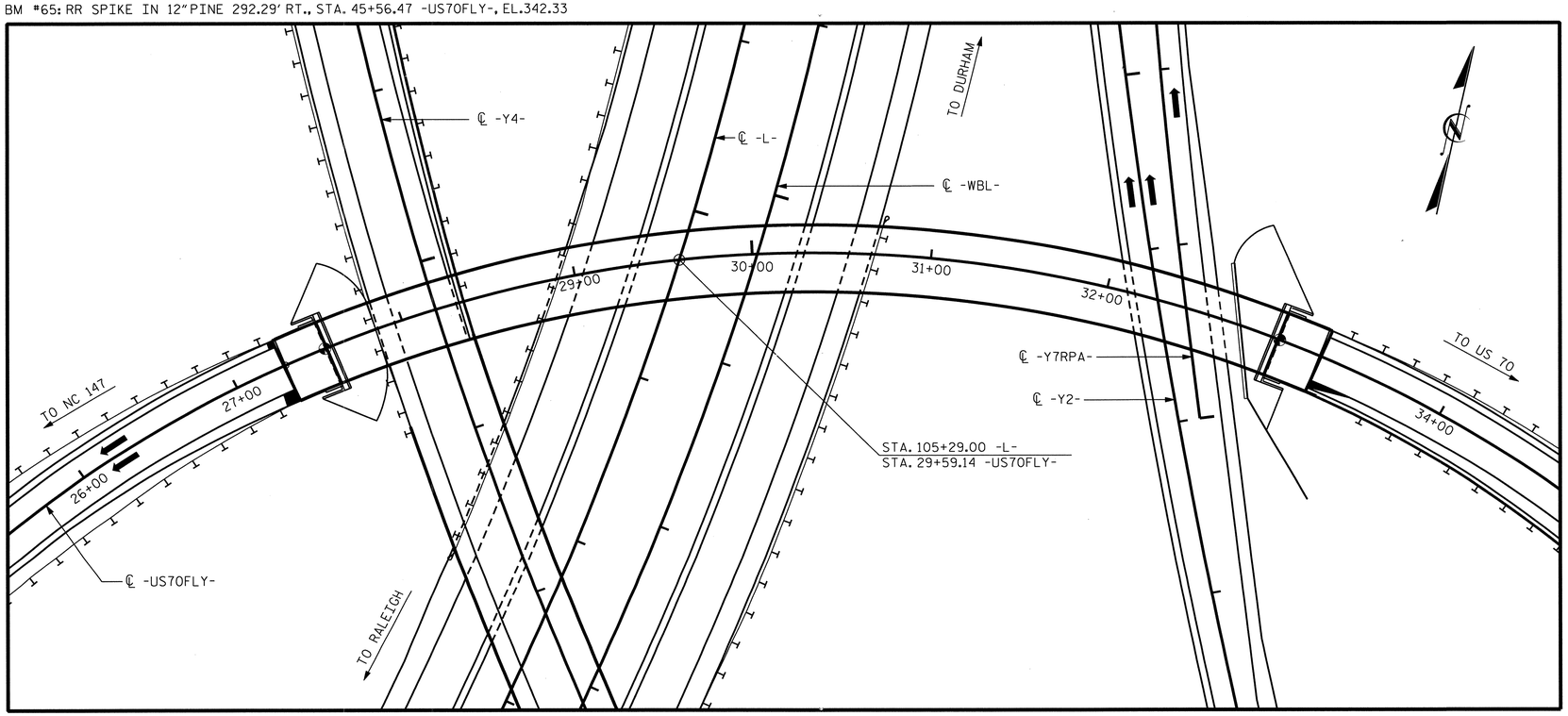

LOCATION SKETCH

NOTE: FOR UTILITY INFORMATION, SEE UTILITY PLANS AND SPECIAL PROVISIONS.

PROJECT NO. U-0071
DURHAM COUNTY
STATION: 105+29.00 -L-
29+59.14 -US70FLY-

SHEET 4 OF 6

STATE OF NORTH CAROLINA
DEPARTMENT OF TRANSPORTATION
RALEIGH

GENERAL DRAWING
LOCATION SKETCH
AND TOTAL
BILL OF MATERIALS

DWG. NO. 4

NORTH CAROLINA PROFESSIONAL SEAL 031543 ENGINEER KENNETH M. WING JR.
12/23/2013

RK&K
RUMMEL, KLEPPER & KAHL, LLP
900 RIDGEFIELD DRIVE SUITE 350
RALEIGH, NORTH CAROLINA 27609-3960
NC LICENSE NUMBER: F-0112

REVISIONS							
NO.	BY:	DATE:	NO.	BY:	DATE:	SHEET NO.	
1			3			5-231	
2			4			TOTAL SHEETS	
						671	

STR. #5

DRAWN BY : F.D. WEEDEN DATE : NOV. 2013
CHECKED BY : K.M. WING DATE : NOV. 2013
DESIGN ENGINEER OF RECORD : Y. TAN DATE : NOV. 2013

fweeden
12/23/2013 m:\projects\2011\11153_u0071 structures\structure\us70flyover\dgn\U0071_sd_loc.dgn

GENERAL NOTES:

ASSUMED LIVE LOAD = HL-93 OR ALTERNATE LOADING.

THIS BRIDGE HAS BEEN DESIGNED IN ACCORDANCE WITH THE AASHTO LRFD BRIDGE DESIGN SPECIFICATIONS.

THIS BRIDGE IS LOCATED IN SEISMIC ZONE 1.

FOR OTHER DESIGN DATA AND GENERAL NOTES, SEE SHEET SN.

FOR MAINTENANCE AND PROTECTION OF TRAFFIC BENEATH PROPOSED STRUCTURE, SEE SPECIAL PROVISIONS.

FOR PLACING LOAD ON STRUCTURAL MEMBERS, SEE SPECIAL PROVISIONS.

FOR FALSEWORK AND FORMWORK, SEE SPECIAL PROVISIONS.

FOR SUBMITTAL OF WORKING DRAWINGS, SEE SPECIAL PROVISIONS.

FOR CRANE SAFETY, SEE SPECIAL PROVISIONS.

FOR GROUT FOR STRUCTURES, SEE SPECIAL PROVISIONS.

REMOVABLE FORMS MAY BE USED IN LIEU OF METAL STAY-IN-PLACE FORMS IN ACCORDANCE WITH ARTICLE 420-3 OF THE STANDARD SPECIFICATIONS.

NEEDLE BEAMS WILL NOT EB ALLOWED UNLESS OTHERWISE CALLED FOR ON THE PLANS OR APPROVED BY THE ENGINEER.

ALL STRUCTURAL STEEL SHALL BE AASHTO M270 GRADE 50W AND PAINTED IN ACCORDANCE WITH SYSTEM 4 OF ARTICLE 442-7 OF THE STANDARD SPECIFICATIONS UNLESS OTHERWISE NOTED ON PLANS.

THE CLASS AA CONCRETE IN THE BRIDGE DECK SHALL CONTAIN FLY ASH OR GROUND GRANULATED BLAST FURNACE SLAG AT THE SUBSTITUTION RATE SPECIFIED IN ARTICLE 1024-1 AND IN ACCORDANCE WITH ARTICLES 1024-5 AND 1024-6 OF THE STANDARD SPECIFICATIONS. NO PAYMENT WILL BE MADE FOR THIS SUBSTITUTION AS IT IS CONSIDERED INCIDENTAL TO THE COST OF THE REINFORCED CONCRETE DECK SLAB.

FOR EROSION CONTROL MEASURES, SEE EROSION CONTROL PLANS.

PROJECT NO. U-0071
DURHAM COUNTY
STATION: 105+29.00 -L-
29+59.14 -US70FLY-

SHEET 5 OF 6

STATE OF NORTH CAROLINA
DEPARTMENT OF TRANSPORTATION
RALEIGH

GENERAL DRAWING
GENERAL NOTES
AND
GIRDER ERECTION SEQUENCE

DWG. NO. 5

NORTH CAROLINA PROFESSIONAL SEAL 031543 ENGINEER KENNETH M. WING, JR.
2/5/2014

RK&K
RUMMEL, KLEPPER & KAHL, LLP
900 RIDGEFIELD DRIVE SUITE 350
RALEIGH, NORTH CAROLINA 27609-3960
NC LICENSE NUMBER: F-0112

REVISIONS						SHEET NO.
NO.	BY:	DATE:	NO.	BY:	DATE:	5-232
1			3			TOTAL SHEETS
2			4			671

STR. #5

DRAWN BY : F.D. WEEDEN DATE : NOV. 2013
CHECKED BY : K.M. WING DATE : NOV. 2013
DESIGN ENGINEER OF RECORD : Y. TAN DATE : NOV. 2013

fweeden
2/4/2014 M:\projects\2011\11153.U0071 Structures\Structure\US70Flyover\DGN\U0071_sd_gn.dgn

LOAD AND RESISTANCE FACTOR RATING (LRFR) SUMMARY FOR STEEL GIRDERS

LEVEL		VEHICLE	WEIGHT (W) (TONS)	CONTROLLING LOAD RATING (#)	MINIMUM RATING FACTORS (RF)	TONS = W × RF	STRENGTH I LIMIT STATE											SERVICE II LIMIT STATE						COMMENT NUMBER
							LIVE-LOAD FACTORS (γ_{LL})	MOMENT					SHEAR					LIVE-LOAD FACTORS (γ_{LL})	MOMENT					
								DISTRIBUTION FACTORS (DF)	RATING FACTOR	SPAN	GIRDER LOCATION	DISTANCE FROM LEFT END OF SPAN (ft)	DISTRIBUTION FACTORS (DF)	RATING FACTOR	SPAN	GIRDER LOCATION	DISTANCE FROM LEFT END OF SPAN (ft)		DISTRIBUTION FACTORS (DF)	RATING FACTOR	SPAN	GIRDER LOCATION	DISTANCE FROM LEFT END OF SPAN (ft)	
DESIGN LOAD RATING		HL-93 (INVENTORY)	N/A	1	1.25	--	1.75		1.25	D	EL	94.82		1.73	A	IR	0.00	1.30		1.74	D	EL	94.82	1,2
		HL-93 (OPERATING)	N/A		1.62	--	1.35		1.62	D	EL	94.82		2.24	A	IR	0.00	1.00		2.26	D	EL	94.82	1,2
		HS-20 (INVENTORY)	36.00	2	2.20	79.20	1.75		2.20	D	EL	94.41		2.86	A	EL	0.00	1.30		3.07	D	EL	94.41	1,2
		HS-20 (OPERATING)	36.00		2.85	102.60	1.35		2.85	D	EL	94.41		3.70	A	EL	0.00	1.00		3.99	D	EL	94.41	1,2
LEGAL LOAD RATING	SINGLE VEHICLE (SV)	SNSH	13.500		6.88	92.88	1.40		6.88	D	EL	94.41		8.59	A	EL	0.00	1.30		7.66	D	EL	94.41	1,2
		SNGARBS2	20.000		4.82	96.40	1.40		4.82	D	EL	94.41		6.09	A	EL	0.00	1.30		5.36	D	EL	94.41	1,2
		SNAGRIS2	22.000		4.44	97.68	1.40		4.44	D	EL	94.41		5.64	A	EL	0.00	1.30		4.94	D	EL	94.41	1,2
		SNCOTTS3	27.250		3.42	93.20	1.40		3.42	D	EL	94.41		4.29	A	EL	0.00	1.30		3.81	D	EL	94.41	1,2
		SNAGGRS4	34.925		2.74	95.69	1.40		2.74	D	EL	94.41		3.60	A	EL	0.00	1.30		3.05	D	EL	94.41	1,2
		SNS5A	35.550		2.70	95.99	1.40		2.70	D	EL	94.41		3.64	A	EL	0.00	1.30		3.00	D	EL	94.41	1,2
		SNS6A	39.950		2.43	97.08	1.40		2.43	D	EL	94.41		3.31	A	EL	0.00	1.30		2.70	D	EL	94.41	1,2
		SNS7B	42.000		2.31	97.02	1.40		2.31	D	EL	94.41		3.19	A	EL	0.00	1.30		2.58	D	EL	94.41	1,2
	TRUCK TRACTOR SEMI-TRAILER (TTST)	TNAGRIT3	33.000		2.95	97.35	1.40		2.95	D	EL	94.41		3.88	A	EL	0.00	1.30		3.29	D	EL	94.41	1,2
		TNT4A	33.075		2.94	97.24	1.40		2.94	D	EL	94.41		3.85	A	EL	0.00	1.30		3.27	D	EL	94.41	1,2
		TNT6A	41.600		2.37	98.59	1.40		2.37	D	EL	94.41		3.43	A	EL	0.00	1.30		2.64	D	EL	94.41	1,2
		TNT7A	42.000		2.36	99.12	1.40		2.36	D	EL	94.41		3.36	A	EL	0.00	1.30		2.62	D	EL	94.41	1,2
		TNT7B	42.000		2.38	99.96	1.40		2.38	D	EL	94.41		3.16	A	EL	0.00	1.30		2.65	D	EL	94.41	1,2
		TNAGRIT4	43.000		2.31	99.33	1.40		2.31	D	EL	94.41		3.02	A	EL	0.00	1.30		2.57	D	EL	94.41	1,2
		TNAGT5A	45.000		2.20	99.00	1.40		2.20	D	EL	94.41		3.04	A	EL	0.00	1.30		2.45	D	EL	94.41	1,2
		TNAGT5B	45.000	3	2.18	98.10	1.40		2.18	D	EL	94.41		2.87	A	EL	0.00	1.30		2.43	D	EL	94.41	1,2
FATIGUE		HL-93 (INVENTORY)	γ_{LL}=0.75																					

LOAD FACTORS:

DESIGN LOAD RATING FACTORS	LIMIT STATE	γ_{DC}	γ_{DW}
	STRENGTH I	1.25	1.50
	SERVICE II	1.00	1.00

NOTES:

MINIMUM RATING FACTORS ARE BASED ON THE STRENGTH I AND SERVICE II LIMIT STATES.

ALLOWABLE STRESS FOR SERVICE II LIMIT STATE ARE AS REQUIRED FOR DESIGN.

COMMENTS:

1. DISTRIBUTION FACTORS ARE BASED ON A COMPLEX SYSTEM OF ANALYSIS FOR CURVED GIRDERS. THEREFORE, DISTRIBUTION FACTORS VARY AND ARE NOT SHOWN.
2. DISTANCE FROM LEFT END OF SPAN IS MEASURED ALONG ℄ GIRDER.
3. FATIGUE RATING IS NOT PROVIDED SINCE GIRDER DESIGN DOES NOT INCLUDE FATIGUE PRONE DETALS.

#	CONTROLLING LOAD RATING
1	DESIGN LOAD RATING (HL-93)
2	DESIGN LOAD RATING (HS-20)
3	LEGAL LOAD RATING **
**	SEE CHART FOR VEHICLE TYPE
GIRDER LOCATION	
EL	EXTERIOR LEFT GIRDER

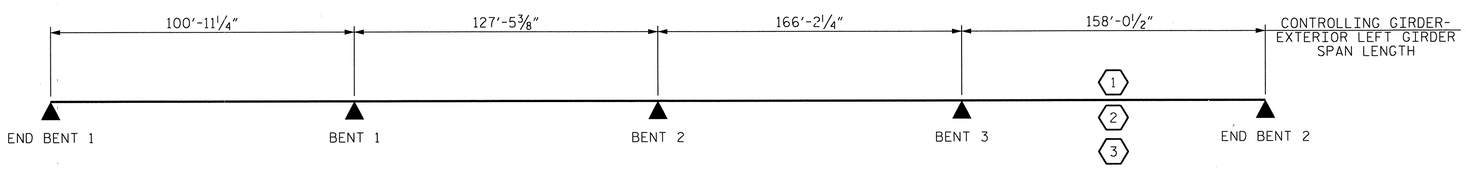

LRFR SUMMARY

PROJECT NO. U-0071
DURHAM COUNTY
STATION: 105+29.00 -L-
29+59.14 -US70FLY-
SHEET 6 OF 6

STATE OF NORTH CAROLINA
DEPARTMENT OF TRANSPORTATION
RALEIGH

GENERAL DRAWING
LRFR SUMMARY
FOR STEEL GIRDERS
(NON-INTERSTATE TRAFFIC)

DWG. NO. 6

NORTH CAROLINA PROFESSIONAL SEAL 031543 ENGINEER KENNETH M. WING JR.
6/25/2014

RK&K
RUMMEL, KLEPPER & KAHL, LLP
900 RIDGEFIELD DRIVE SUITE 350
RALEIGH, NORTH CAROLINA 27609-3960
NC LICENSE NUMBER: F-0112

REVISIONS								SHEET NO.
NO.	BY:	DATE:	NO.	BY:	DATE:			S-233
1			3					TOTAL SHEETS
2			4					61

STR. #5

DRAWN BY : F.D. WEEDEN DATE : NOV. 2013
CHECKED BY : K.M. WING DATE : NOV. 2013
DESIGN ENGINEER OF RECORD : Y. TAN DATE : NOV. 2013

fweeden
6/25/2014 M:\projects\2011\11153_U0071 Structures\Structure\US70Flyover\DGN\U0071_sd_lrfr.dgn

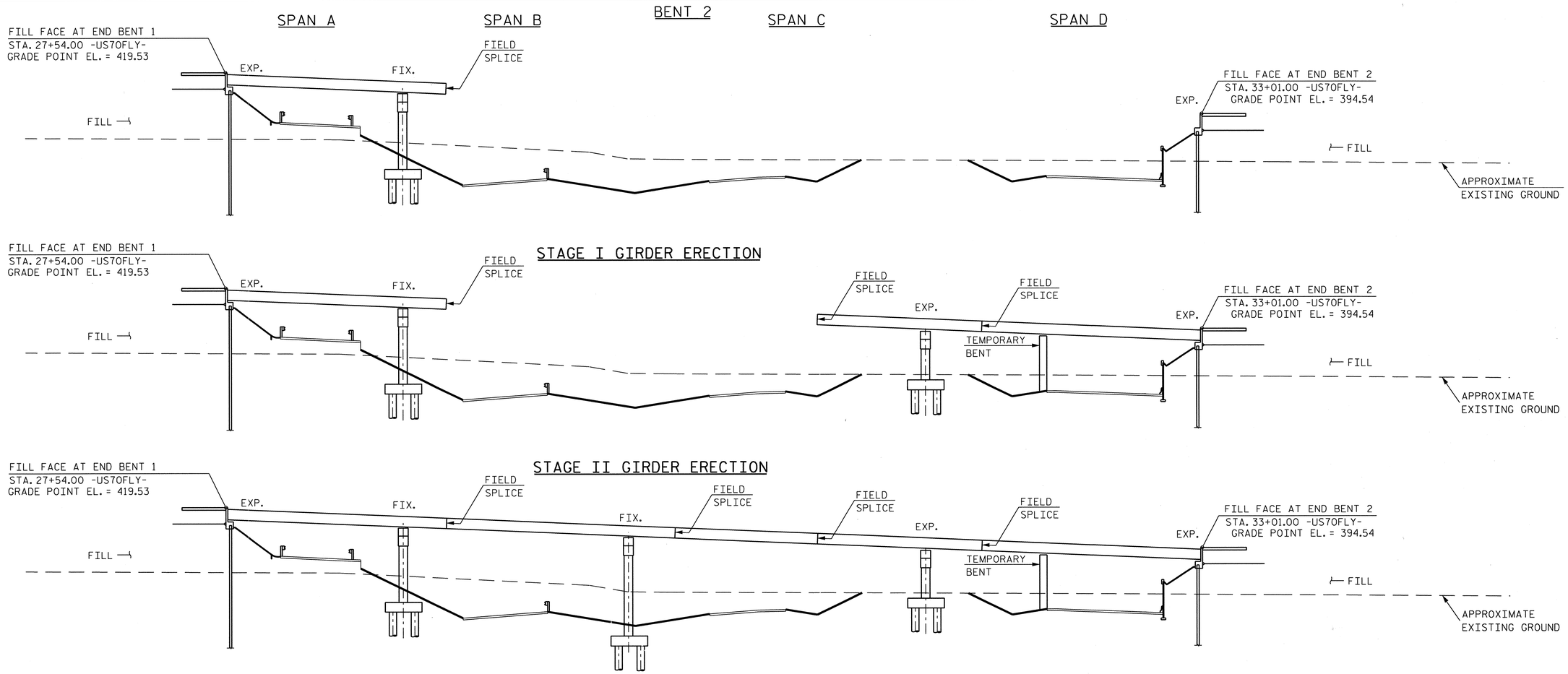

GIRDER ERECTION SEQUENCE:

THE STRUCTURAL STEEL SHALL BE SUPPORTED DURING ERECTION IN ITS CAMBERED POSITION. A MINIMUM OF ONE TEMPORARY BENT SHALL BE USED. ONE EXTERIOR GIRDER AND ITS ADJACENT INTERIOR GIRDER SHALL BE ERECTED WITH ALL DIAPHRAGMS AND LATERAL BRACING BETWEEN THE GIRDERS IN PLACE AND ALL BOLTS TIGHTENED PRIOR TO RELEASE OF THE GIRDERS. THE REMAINING GIRDERS SHALL THEN BE ERECTED WITH DIAPHRAGMS CONNECTING THE GIRDER TO THE ADJACENT ERECTED GIRDERS AND ALL BOLTS TIGHTENED BEFORE RELEASING THE GIRDER.

FOR TEMPORARY BENTS, SEE SPECIAL PROVISIONS.

PLACEMENT OF TEMPORARY BENTS SHALL BE COORDINATED WITH TRAFFIC PHASING REQUIREMENTS. SEE TRAFFIC CONTROL PLANS.

TEMPORARY BENTS SHALL BE DESIGNED BY A PROFESSIONAL ENGINEER REGISTERED IN THE STATE OF NORTH CAROLINA. SIGNED AND SEALED WORKING DRAWINGS AND CALCULATIONS FOR TEMPORARY BENT ERECTION AND REMOVAL SHALL BE SUBMITTED TO THE ENGINEER FOR REVIEW AND APPROVAL.

TEMPORARY BENTS SHALL PROVIDE BEARING AT CONNECTOR PLATE LOCATIONS AND REMAIN IN PLACE UNTIL ALL DIAPHRAGMS ARE IN PLACE AND ALL BOLTS TIGHTENED.

DURING THE GIRDER ERECTION PROCEDURE, THE CONTRACTOR IS RESPONSIBLE FOR PROVIDING TEMPORARY LATERAL BRACING AND ANY OTHER MEANS OF SUPPORT, AS REQUIRED, TO ENSURE THE STABILITY OF THE GIRDERS AND AVOID UPLIFT OF THE GIRDERS AT THE TEMPORARY ERECTION BENTS.

THE CONTRACTOR'S ERECTION PLAN SHALL INCLUDE A METHOD OF TEMPORARY BENT REMOVAL THAT WILL UNIFORMLY APPLY THE STRUCTURAL STEEL WEIGHT TO THE BRIDGE DIAPHRAGMS, WHILE THE GIRDERS REMAIN IN THE CAMBERED POSITION.

THE CONTRACTOR MAY SUBMIT ALTERNATE ERECTION METHODS. PLANS FOR SUCH ERECTION METHODS SHALL BE APPROVED BY THE ENGINEER.

PROJECT NO. U-0071
DURHAM COUNTY
STATION: 105+29.00 -L-

STATE OF NORTH CAROLINA
DEPARTMENT OF TRANSPORTATION
RALEIGH

GIRDER ERECTION DETAILS

DWG. NO. 6A

NORTH CAROLINA PROFESSIONAL SEAL 031543 ENGINEER KENNETH M. WING, JR. 3/4/2014

RK&K
RUMMEL, KLEPPER & KAHL, LLP
900 RIDGEFIELD DRIVE SUITE 350
RALEIGH, NORTH CAROLINA 27609-3960
NC LICENSE NUMBER: F-0112

REVISIONS							SHEET NO.
NO.	BY:	DATE:	NO.	BY:	DATE:		S-234
1			3				TOTAL SHEETS
2			4				671

STR. #5

DRAWN BY :	F.D. WEEDEN	DATE :	NOV. 2013
CHECKED BY :	K.M. WING	DATE :	NOV. 2013
DESIGN ENGINEER OF RECORD :	Y. TAN	DATE :	NOV. 2013

fweeden 3/4/2014 M:\projects\2011\11153_U0071 Structures\Structure\US70Flyover\DGN\U0071_sd_ge.dgn

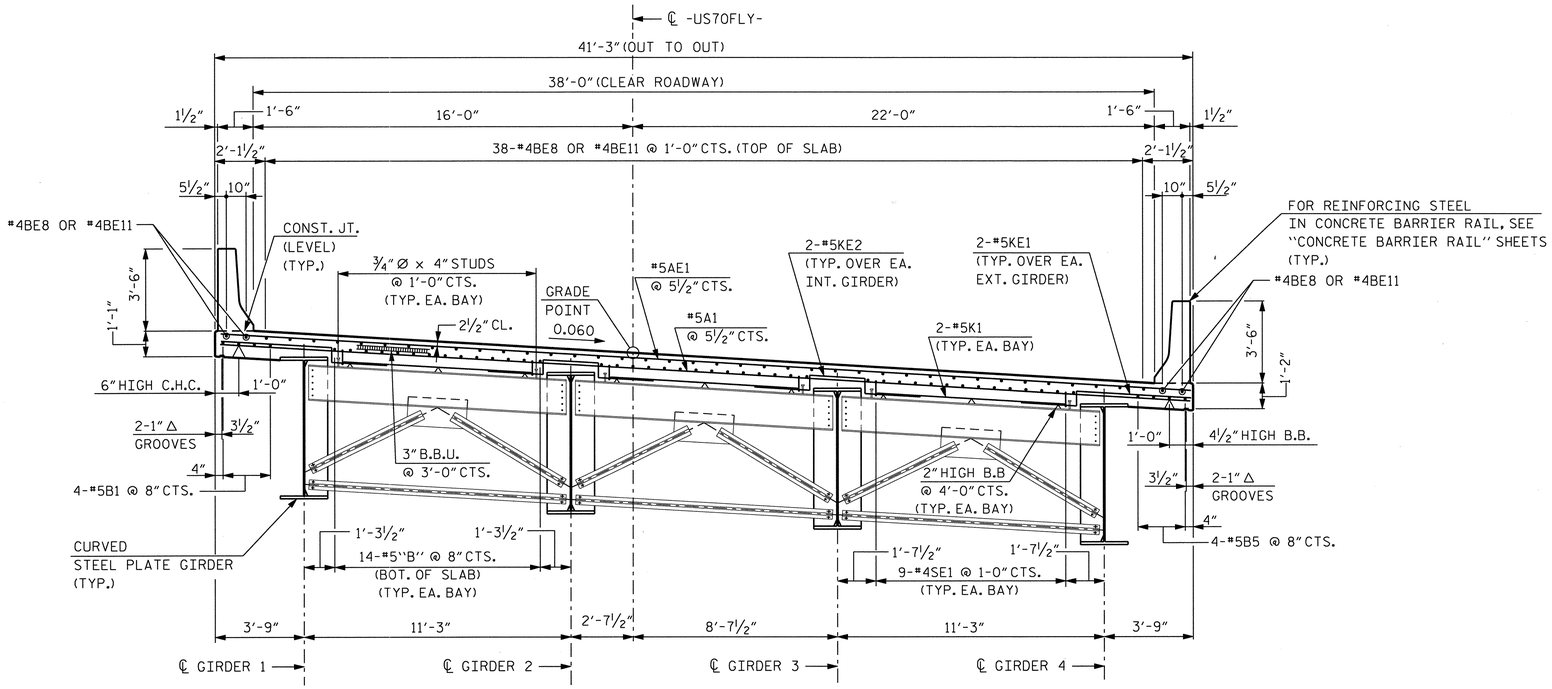

TYPICAL SECTION AT END BENT DIAPHRAGM

(ALL HORIZONTAL DIMENSIONS SHOWN ARE RADIAL TO ℄ -US70FLY-)

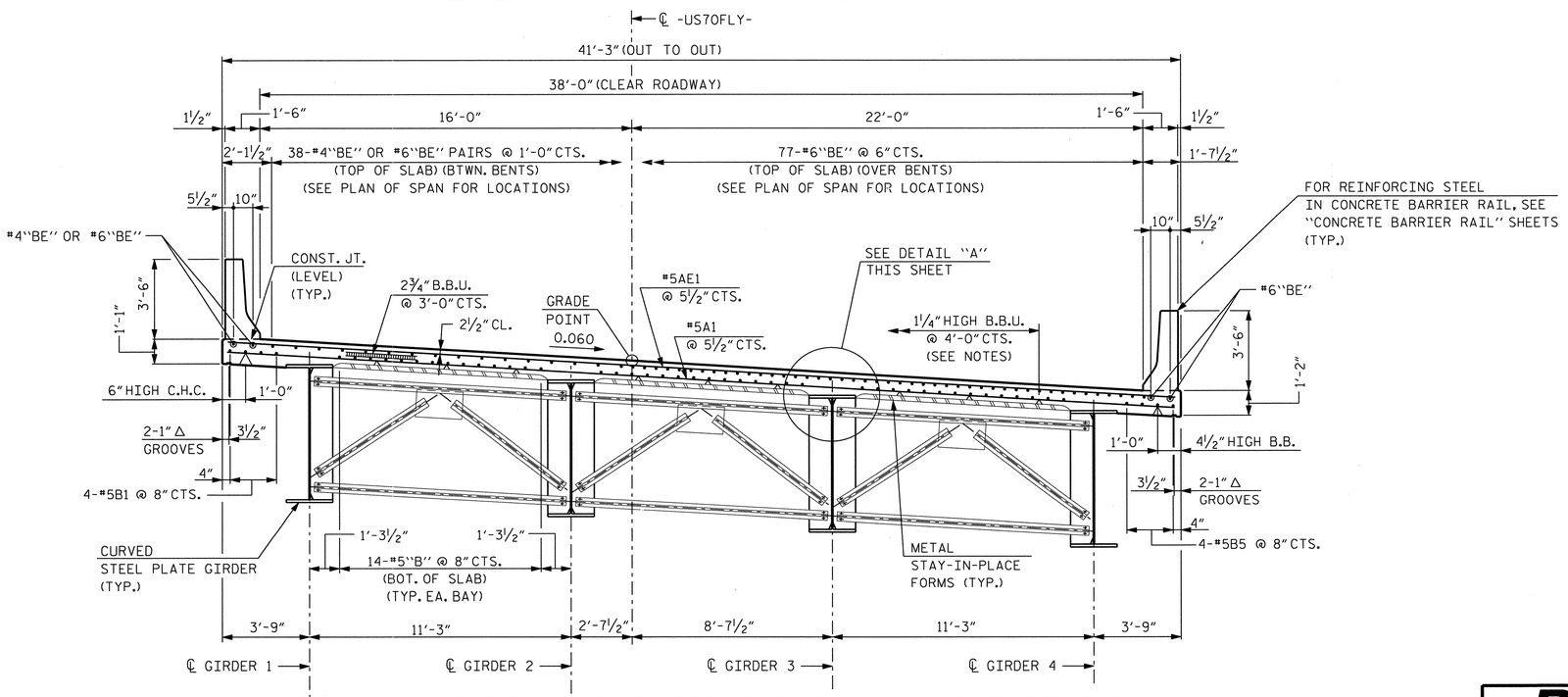

TYPICAL SECTION AT INTERMEDIATE AND BENT DIAPHRAGM

(ALL HORIZONTAL DIMENSIONS SHOWN ARE RADIAL TO ℄ -US70FLY-)

NOTES:

PROVIDE 1¼" HIGH BEAM BOLSTERS UPPER AT 4'-0" CTS. ATOP THE METAL STAY-IN-PLACE FORMS TO SUPPORT THE BOTTOM MAT OF "A" BARS. WHEN USING REMOVABLE FORMS, PROVIDE CONTINUOUS HIGH CHAIRS FOR METAL DECK (C.H.C.M.) @ 4'-0" CTS. WITH A HEIGHT TO SUPPORT THE BOTTOM MAT OF "A" BARS A CLEAR DISTANCE OF 2½" ABOVE THE TOP OF THE REMOVABLE FORM.

METAL STAY-IN-PLACE FORMS SHALL NOT BE WELDED TO BEAM OR GIRDER FLANGES IN THE ZONES REQUIRING CHARPY V-NOTCH TEST. SEE STRUCTURAL STEEL DETAIL SHEETS.

PREVIOUSLY CAST CONCRETE IN A CONTINUOUS UNIT SHALL HAVE ATTAINED A MINIMUM COMPRESSIVE STRENGTH OF 3,000 PSI BEFORE ADDITIONAL CONCRETE IS CAST IN THE UNIT.

BARRIER RAIL IN A CONTINUOUS UNIT SHALL NOT BE CAST UNTILL ALL SLAB CONCRETE IN THE UNIT HAS BEEN CAST AND HAS REACHED A MINIMUM COMPRESSIVE STRENGTH OF 3,000 PSI.

STRUCTURAL STEEL ERECTION IN A CONTINUOUS UNIT SHALL BE COMPLETE BEFORE FALSEWORK OR FORMS ARE PLACED ON THE UNIT.

#5GE1 BAR MAY BE SHIFITED SLIGHTLY, AS NECESSARY, TO CLEAR REINFORCING STEEL AND STIRRUPS.

THE CONTRACTOR MAY, WHEN NECESSARY, PROPOSE A SCHEME FOR AVOIDING INTERFERENCE BETWEEN METAL STAY-IN-PLACE FORM SUPPORTS OR FORMS AND BEAM/GIRDER STIFFENERS OR CONNECTOR PLATES. THE PROPOSAL SHALL BE INDICATED, AS APPROPRIATE, ON EITHER THE STEEL WORKING DRAWINGS OR THE METAL STAY-IN-PLACE FORM WORKING DRAWINGS.

THE CONTRACTOR SHALL ADJUST THE GIRDER BUILDUPS AS NECESSARY TO INCORPORATE A MAXIMUM PERMISSIBLE VARIATION IN POT BEARING DEPTH OF ½ INCH, SEE SPECIAL PROVISION FOR POT BEARINGS.

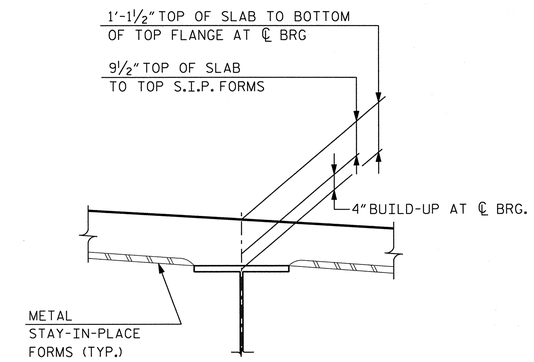

DETAIL "A"

PROJECT NO. U-0071

DURHAM COUNTY

STATION: 105+29.00 -L-

SHEET 1 OF 2

STATE OF NORTH CAROLINA
DEPARTMENT OF TRANSPORTATION
RALEIGH

SUPERSTRUCTURE
TYPICAL SECTION

DWG. NO. 7

NORTH CAROLINA PROFESSIONAL SEAL 031543 ENGINEER KENNETH M. WING, JR.
12/23/2013

RK&K
RUMMEL, KLEPPER & KAHL, LLP
900 RIDGEFIELD DRIVE SUITE 350
RALEIGH, NORTH CAROLINA 27609-3960
NC LICENSE NUMBER: F-0112

REVISIONS								SHEET NO.
NO.	BY:	DATE:	NO.	BY:	DATE:			5-235
1			3					TOTAL SHEETS
2			4					671

STR. #5

DRAWN BY : F.D. WEEDEN DATE : NOV. 2013
CHECKED BY : K.M. WING DATE : NOV. 2013
DESIGN ENGINEER OF RECORD : Y. TAN DATE : NOV. 2013

fweeden
12/23/2013 m:\projects\2011\11153_U0071 structures\structure\us70flyover\dgn\U0071_sd_typ.dgn

NOTE:
FOR NOTES, SEE SHEET 1 OF 2.

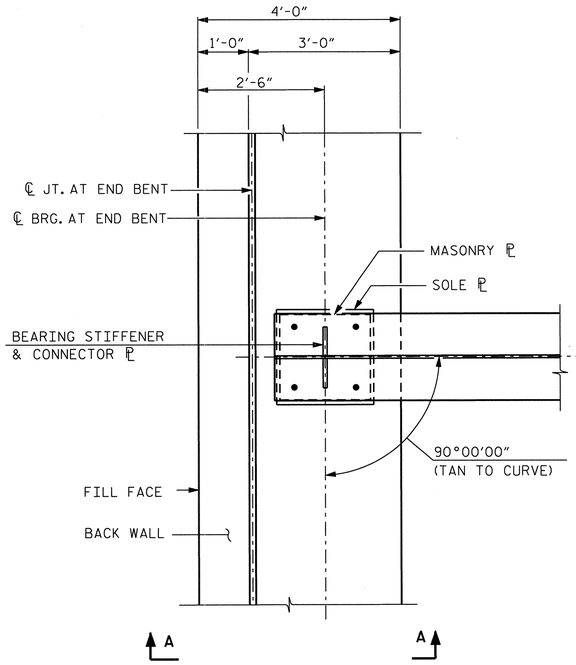

PLAN DETAIL OF END BENT

(END BENT 1 SHOWN, END BENT 2 SIMILAR)

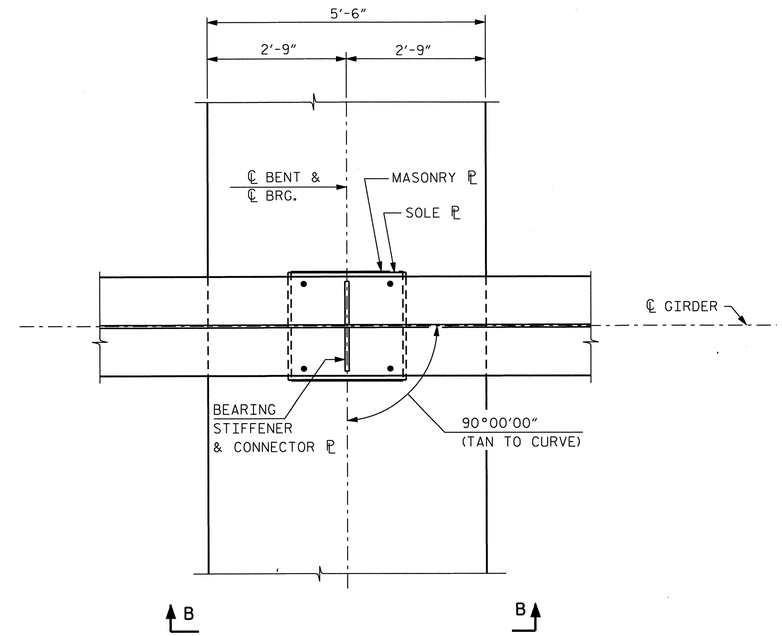

PLAN DETAIL OF BENT

(ALL BENTS SIMILAR)

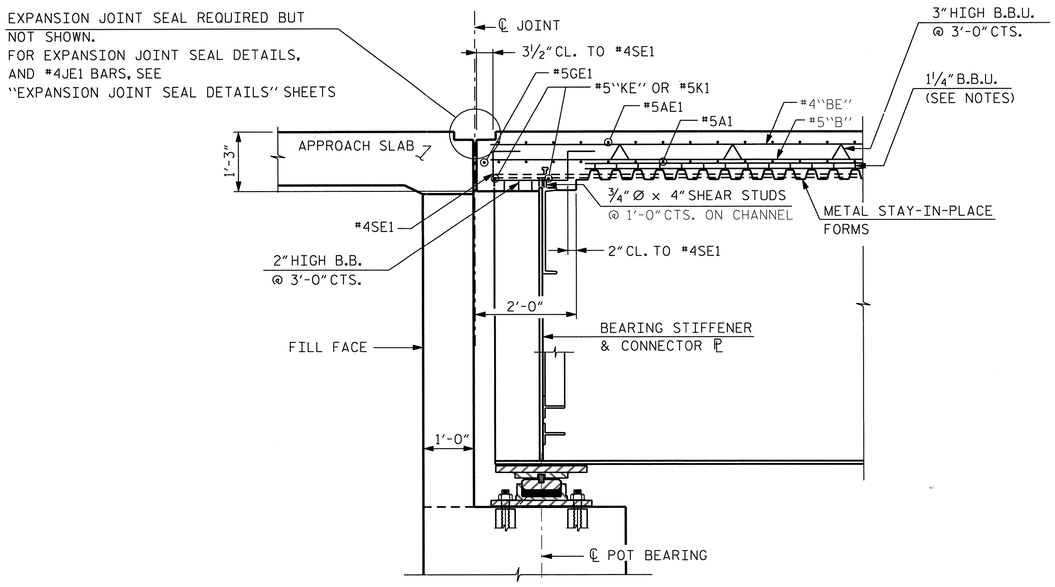

SECTION A-A

(DIMENSIONS SHOWN ARE NORMAL TO THE END BENT)

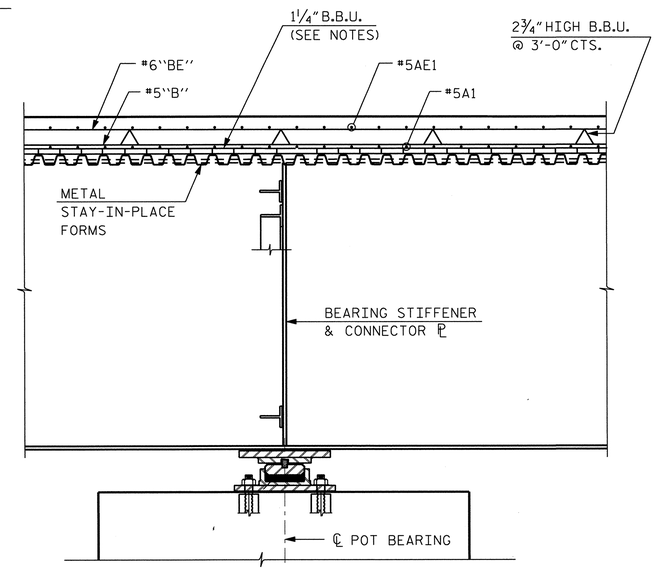

SECTION B-B

PROJECT NO. U-0071
DURHAM COUNTY
STATION: 105+29.00 -L-

SHEET 2 OF 2

STATE OF NORTH CAROLINA
DEPARTMENT OF TRANSPORTATION
RALEIGH

SUPERSTRUCTURE
TYPICAL SECTION
DETAILS

DWG. NO. 8

NORTH CAROLINA PROFESSIONAL SEAL 031543 ENGINEER KENNETH M. WING JR.
12/27/2013

RK&K
RUMMEL, KLEPPER & KAHL, LLP
900 RIDGEFIELD DRIVE SUITE 350
RALEIGH, NORTH CAROLINA 27609-3960
NC LICENSE NUMBER: F-0112

REVISIONS						
NO.	BY:	DATE:	NO.	BY:	DATE:	
1			3			
2			4			

SHEET NO. 5-236
TOTAL SHEETS 671

STR. #5

DRAWN BY :	F.D. WEEDEN	DATE :	NOV. 2013
CHECKED BY :	K.M. WING	DATE :	NOV. 2013
DESIGN ENGINEER OF RECORD :	Y. TAN	DATE :	NOV. 2013

fweeden
12/23/2013 m:\projects\2011\11153.u0071 structures\structure\us70flyover\dgn\U0071_sd_td.dgn

① 2-#5KE1
(TYP. OVER EA. EXT. GDR.)
(TYP. EA. END OF BRIDGE)

② 2-#5KE2
(TYP. OVER EA. INT. GDR.)
(TYP. EA. END OF BRIDGE)

③ 2-#5K1
(TYP. EA. BAY)
(TYP. EA. END OF BRIDGE)

④ 9-#4SE1 @ 1'-0" CTS.
(TYP. EA. BAY)
(TYP. EA. END OF BRIDGE)

NOTES:

FOR CONCRETE BARRIER RAIL REINFORCING, SEE "CONCRETE BARRIER RAIL" SHEETS.

#5"A" BARS ARE TO BE SPACED AT 5½" CTS. (MAX.) RADIALLY ALONG OUTSIDE LEFT EDGE OF SUPERSTRUCTURE.

FOR DECK REINFORCING DETAILS, SEE TABLE ON "SUPERSTRUCTURE PLAN OF SPANS C AND D" SHEET, SHEET 2 OF 2.

#4JE1 BARS ARE TO BE PLACED AS SPECIFIED ON THE "EXPANSION JOINT SEAL DETAILS" SHEETS.

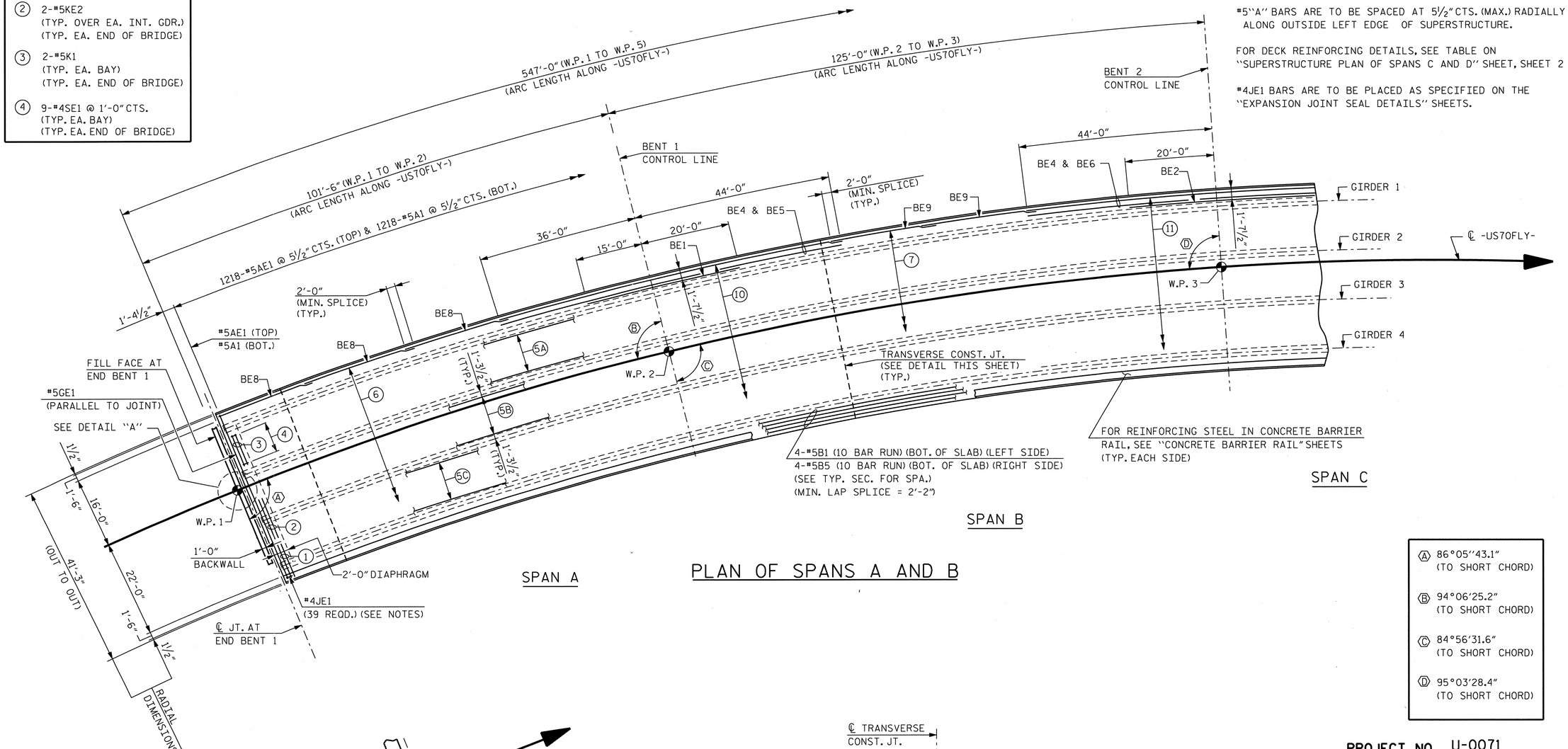

PLAN OF SPANS A AND B

Ⓐ 86°05'43.1"
(TO SHORT CHORD)

Ⓑ 94°06'25.2"
(TO SHORT CHORD)

Ⓒ 84°56'31.6"
(TO SHORT CHORD)

Ⓓ 95°03'28.4"
(TO SHORT CHORD)

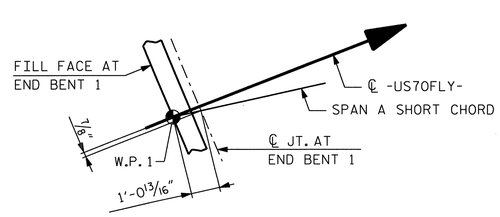

DETAIL "A"

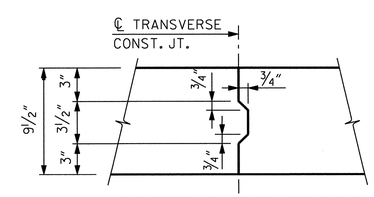

NOTE: REINFORCING STEEL IN SLAB NOT SHOWN.
LONGTITUDINAL STEEL SHALL BE CONTINUOUS
THROUGH JOINT.

TRANSVERSE CONSTRUCTION JOINT IN DECK SLAB

PROJECT NO. U-0071
DURHAM COUNTY
STATION: 105+29.00 -L-

SHEET 1 OF 2

STATE OF NORTH CAROLINA
DEPARTMENT OF TRANSPORTATION
RALEIGH

SUPERSTRUCTURE
PLAN OF SPANS A AND B

DWG. NO. 9

NORTH CAROLINA PROFESSIONAL SEAL 031543 ENGINEER KENNETH M. WING JR.
12/23/2013

RK&K
RUMMEL, KLEPPER & KAHL, LLP
900 RIDGEFIELD DRIVE SUITE 350
RALEIGH, NORTH CAROLINA 27609-3960
NC LICENSE NUMBER: F-0112

REVISIONS						SHEET NO.
NO.	BY:	DATE:	NO.	BY:	DATE:	S-237
1			3			TOTAL SHEETS
2			4			671

STR. #5

DRAWN BY : F.D. WEEDEN DATE : NOV. 2013
CHECKED BY : K.M. WING DATE : NOV. 2013
DESIGN ENGINEER OF RECORD : Y. TAN DATE : NOV. 2013

fweeden
12/23/2013 m:\projects\2011\11153_u0071 structures\structure\us70flyover\dgn\U0071_sd_ps.dgn

NOTES:

FOR CONCRETE BARRIER RAIL REINFORCING, SEE "CONCRETE BARRIER RAIL" SHEETS.

#5 "A" BARS ARE TO BE SPACED AT 5½" CTS. (MAX.) RADIALLY ALONG OUTSIDE LEFT EDGE OF SUPERSTRUCTURE.

FOR TRANSVERSE CONSTRUCTION JOINT DETAILS, SEE "SUPERSTRUCTURE PLAN OF SPANS A AND B" SHEET, SHEET 1 OF 2.

#4JE1 BARS ARE TO BE PLACED AS SPECIFIED ON THE "EXPANSION JOINT SEAL DETAILS" SHEETS.

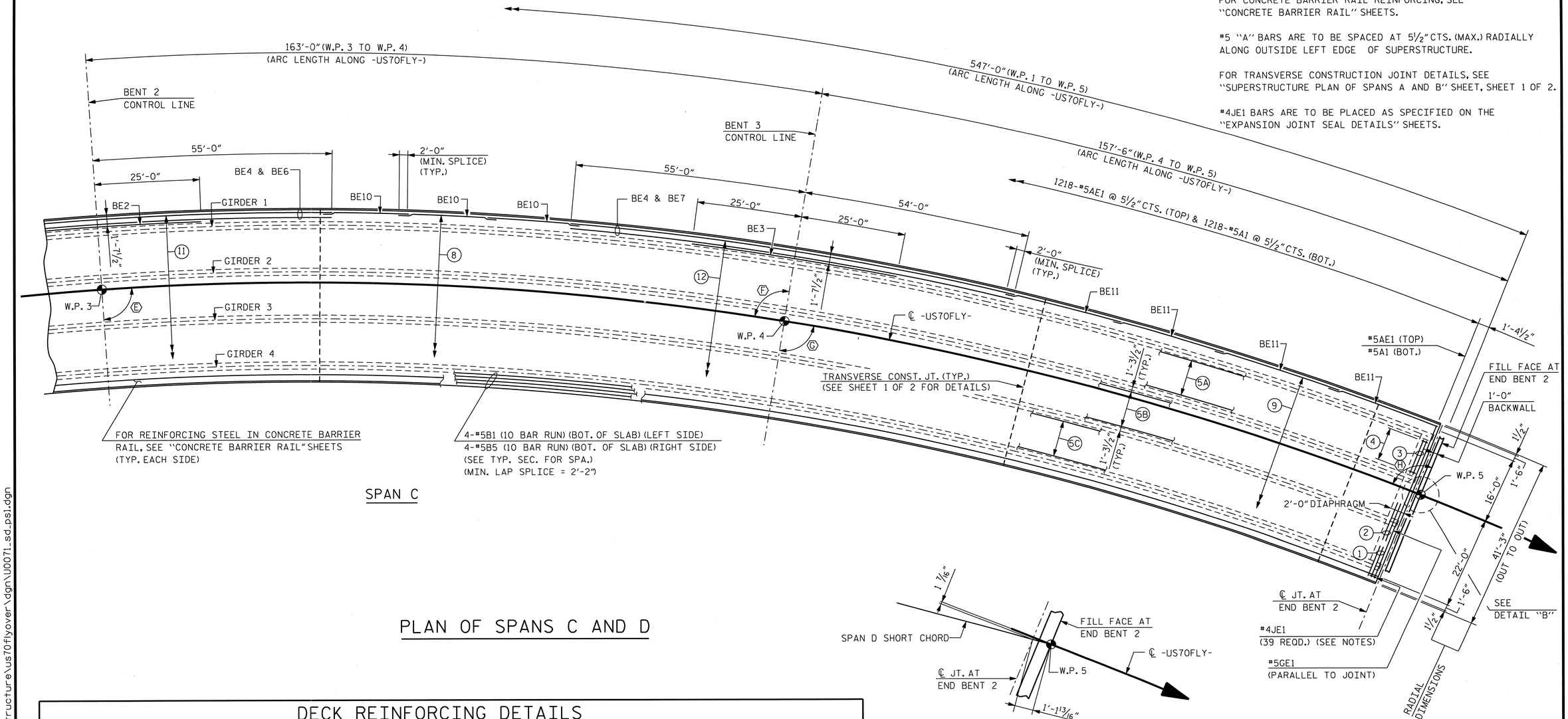

PLAN OF SPANS C AND D

DETAIL "B"

DECK REINFORCING DETAILS

(5A) 14-#5B2 @ 8" CTS.
(10 BAR RUN) (BOT. OF SLAB)
(MIN. LAP SPLICE = 2'-2")

(5B) 14-#5B3 @ 8" CTS.
(10 BAR RUN) (BOT. OF SLAB)
(MIN. LAP SPLICE = 2'-2")

(5C) 14-#5B4 @ 8" CTS.
(10 BAR RUN) (BOT. OF SLAB)
(MIN. LAP SPLICE = 2'-2")

(6) 42-#4BE8
(3 BAR RUN) (TOP OF SLAB)
(SEE TYPICAL SECTION FOR SPACING)

(7) 42-#4BE9
(2 BAR RUN) (TOP OF SLAB)
(SEE TYPICAL SECTION FOR SPACING)

(8) 42-#4BE10
(3 BAR RUN) (TOP OF SLAB)
(SEE TYPICAL SECTION FOR SPACING)

(9) 42-#4BE11
(4 BAR RUN) (TOP OF SLAB)
(SEE TYPICAL SECTION FOR SPACING)

(10) 42-#6BE4 SPLICED WITH 42-#6BE5
(ALTERNATE SPLICE LOCATION)
(MIN. LAP SPLICE = 3'-0")
(SEE TYPICAL SECTION FOR SPACING)
AND 39-#6BE1 @ 1'-0" CTS.
SPACED BETWEEN #6BE4 & #6BE5 (TOP OF SLAB)

(11) 42-#6BE4 SPLICED WITH 42-#6BE6
(ALTERNATE SPLICE LOCATION)
(MIN. LAP SPLICE = 3'-0")
(SEE TYPICAL SECTION FOR SPACING)
AND 39-#6BE2 @ 1'-0" CTS.
SPACED BETWEEN #6BE4 & #6BE6 (TOP OF SLAB)

(12) 42-#6BE4 SPLICED WITH 42-#6BE7
(ALTERNATE SPLICE LOCATION)
(MIN. LAP SPLICE = 3'-0")
(SEE TYPICAL SECTION FOR SPACING)
AND 39-#6BE3 @ 1'-0" CTS.
SPACED BETWEEN #6BE4 & #6BE7 (TOP OF SLAB)

(1) 2-#5KE1
(TYP. OVER EA. EXT. GDR.)
(TYP. EA. END OF BRIDGE)

(2) 2-#5KE2
(TYP. OVER EA. INT. GDR.)
(TYP. EA. END OF BRIDGE)

(3) 2-#5K1
(TYP. EA. BAY)
(TYP. EA. END OF BRIDGE)

(4) 9-#4SE1 @ 1'-0" CTS.
(TYP. EA. BAY)
(TYP. EA. END OF BRIDGE)

(E) 83°24'16.2"
(TO SHORT CHORD)

(F) 96°35'43.8"
(TO SHORT CHORD)

(G) 83°37'37.4"
(TO SHORT CHORD)

(H) 96°10'14.3"
(TO SHORT CHORD)

PROJECT NO. U-0071
DURHAM COUNTY
STATION: 105+29.00 -L-

SHEET 2 OF 2

STATE OF NORTH CAROLINA
DEPARTMENT OF TRANSPORTATION
RALEIGH

SUPERSTRUCTURE
PLAN OF SPANS C AND D

DWG. NO. 10

NORTH CAROLINA PROFESSIONAL SEAL 031543 ENGINEER KENNETH M. WING JR.
12/23/2013

RK&K
RUMMEL, KLEPPER & KAHL, LLP
900 RIDGEFIELD DRIVE SUITE 350
RALEIGH, NORTH CAROLINA 27609-3960
NC LICENSE NUMBER: F-0112

REVISIONS								SHEET NO.
NO.	BY:	DATE:	NO.	BY:	DATE:			5-238
1			3					TOTAL SHEETS
2			4					671

STR. #5

DRAWN BY : F.D. WEEDEN DATE : NOV. 2013
CHECKED BY : K.M. WING DATE : NOV. 2013
DESIGN ENGINEER OF RECORD : Y. TAN DATE : NOV. 2013

fweeden
12/23/2013 m:\projects\2011\11153_u0071 structures\structure\us70flyover\dgn\U0071_sd_ps1.dgn

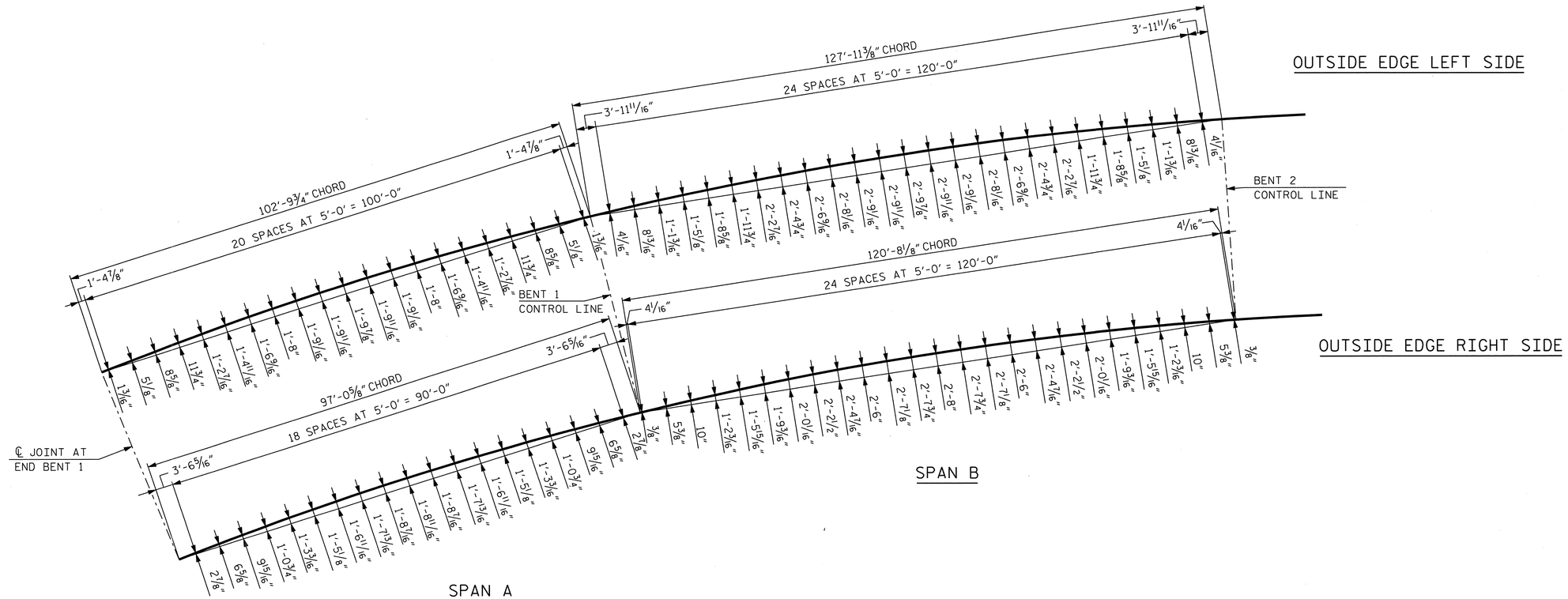

ARC OFFSETS SPANS A AND B

PROJECT NO. U-0071

DURHAM COUNTY

STATION: 105+29.00 -L-

SHEET 1 OF 2

STATE OF NORTH CAROLINA
DEPARTMENT OF TRANSPORTATION
RALEIGH

SUPERSTRUCTURE
ARC OFFSETS
SPANS A AND B

DWG. NO. 11

NORTH CAROLINA PROFESSIONAL SEAL 031543 ENGINEER KENNETH M. WING JR.
12/23/2013

RK&K
RUMMEL, KLEPPER & KAHL, LLP
900 RIDGEFIELD DRIVE SUITE 350
RALEIGH, NORTH CAROLINA 27609-3960
NC LICENSE NUMBER: F-0112

REVISIONS						SHEET NO.
NO.	BY:	DATE:	NO.	BY:	DATE:	5-239
1			3			TOTAL SHEETS
2			4			671

STR. #5

DRAWN BY : F.D. WEEDEN DATE : NOV. 2013
CHECKED BY : K.M. WING DATE : NOV. 2013
DESIGN ENGINEER OF RECORD : Y. TAN DATE : NOV. 2013

fweeden
12/23/2013 m:\projects\2011\11153_u0071 structures\structure\us70flyover\dgn\U0071_sd_co.dgn

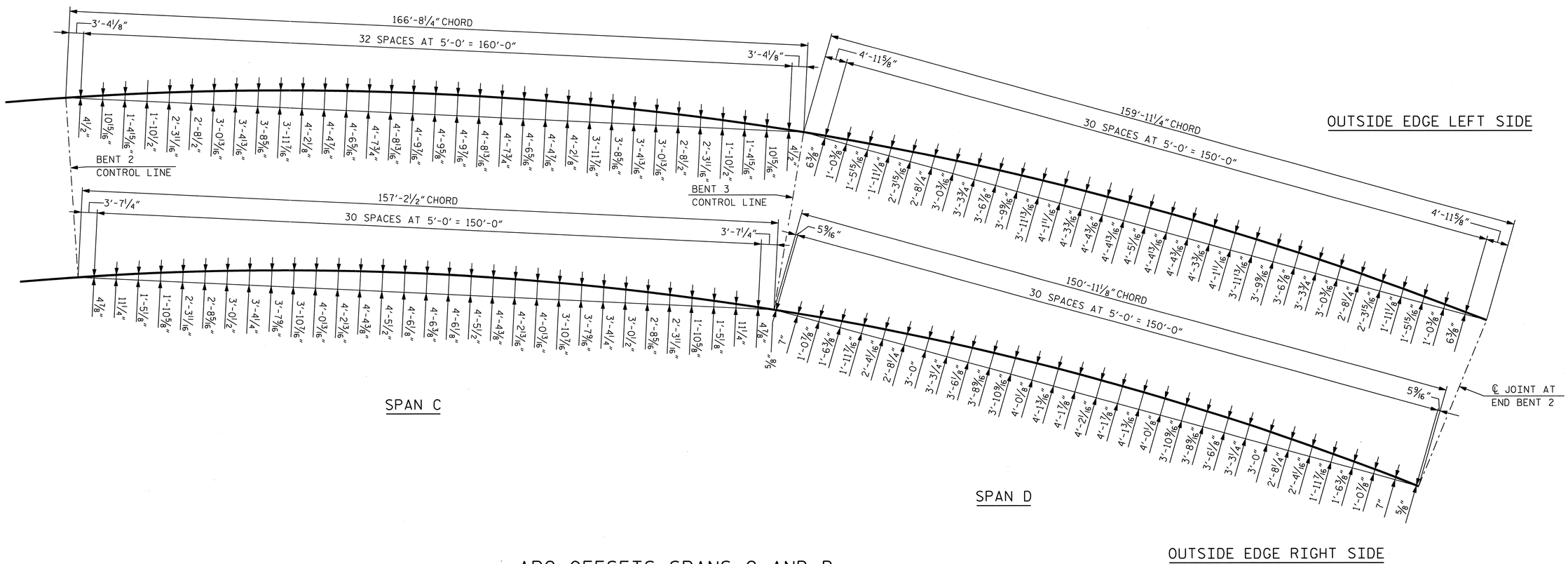

ARC OFFSETS SPANS C AND D

PROJECT NO. U-0071

DURHAM COUNTY

STATION: 105+29.00 -L-

SHEET 2 OF 2

STATE OF NORTH CAROLINA
DEPARTMENT OF TRANSPORTATION
RALEIGH

SUPERSTRUCTURE
ARC OFFSETS
SPANS C AND D

DWG. NO. 12

NORTH CAROLINA PROFESSIONAL SEAL 031543 ENGINEER KENNETH M. WING JR.
12/23/2013

RK&K
RUMMEL, KLEPPER & KAHL, LLP
900 RIDGEFIELD DRIVE SUITE 350
RALEIGH, NORTH CAROLINA 27609-3960
NC LICENSE NUMBER: F-0112

REVISIONS						
NO.	BY:	DATE:	NO.	BY:	DATE:	
1			3			
2			4			

SHEET NO. S-240
TOTAL SHEETS 671

STR. #5

DRAWN BY : F.D. WEEDEN DATE : NOV. 2013
CHECKED BY : K.M. WING DATE : NOV. 2013
DESIGN ENGINEER OF RECORD : Y. TAN DATE : NOV. 2013

fweeden
12/23/2013 m:\projects\2011\11153_U0071 structures\structure\us70flyover\dgn\U0071_sd.col.dgn

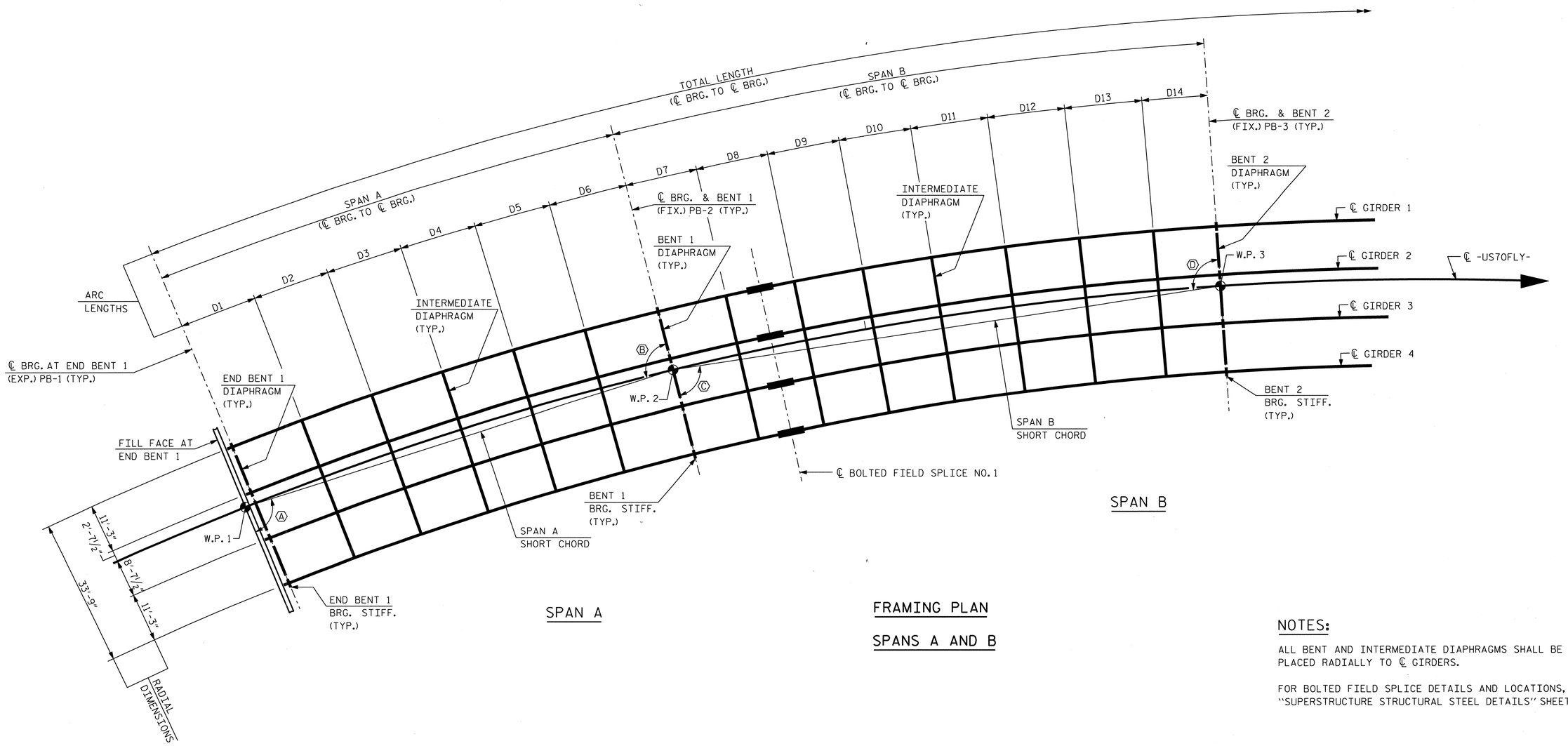

FRAMING PLAN

SPANS A AND B

NOTES:

ALL BENT AND INTERMEDIATE DIAPHRAGMS SHALL BE PLACED RADIALLY TO ℄ GIRDERS.

FOR BOLTED FIELD SPLICE DETAILS AND LOCATIONS, SEE "SUPERSTRUCTURE STRUCTURAL STEEL DETAILS" SHEETS.

GIRDER DIMENSION SCHEDULE

GIRDER NO.	TOTAL LENGTH (℄ BRG. TO ℄ BRG.)	SPAN A (℄ BRG. TO ℄ BRG.)	SPAN B (℄ BRG. TO ℄ BRG.)
1	552'-7 3/8"	100'-11 1/4"	127'-5 3/8"
2	544'-0 1/16"	99'-4 3/8"	125'-5 9/16"
3	535'-4 3/4"	97'-9 1/2"	123'-5 3/4"
4	526'-9 3/8"	96'-2 5/8"	121'-5 7/8"

ANGLE SCHEDULE

Ⓐ	86°05'43.1" (TO SHORT CHORD SPAN A)
Ⓑ	94°06'25.2" (TO SHORT CHORD SPAN A)
Ⓒ	84°56'31.6" (TO SHORT CHORD SPAN B)
Ⓓ	95°03'28.4" (TO SHORT CHORD SPAN B)

FIELD SPLICE SCHEDULE

GIRDER NO.	FIELD SPLICE NO. 1
1	TYPE -A-
2	TYPE -A-
3	TYPE -A-
4	TYPE -A-

DIAPHRAGM DIMENSION SCHEDULE

GIRDER NO.	D1	D2	D3	D4	D5	D6	D7	D8	D9	D10	D11	D12	D13	D14
1	16'-9 7/16"	16'-9 7/16"	16'-9 7/16"	16'-9 7/16"	16'-9 7/16"	17'-0 1/16"	15'-8 13/16"	15'-8 13/16"	15'-8 13/16"	15'-8 13/16"	15'-8 13/16"	15'-8 13/16"	15'-8 13/16"	17'-3 11/16"
2	16'-6 1/4"	16'-6 1/4"	16'-6 1/4"	16'-6 1/4"	16'-6 1/4"	16'-9 1/8"	15'-5 7/8"	15'-5 7/8"	15'-5 7/8"	15'-5 7/8"	15'-5 7/8"	15'-5 7/8"	15'-5 7/8"	17'-0 7/16"
3	16'-3 1/8"	16'-3 1/8"	16'-3 1/8"	16'-3 1/8"	16'-3 1/8"	16'-5 7/8"	15'-2 15/16"	15'-2 15/16"	15'-2 15/16"	15'-2 15/16"	15'-2 15/16"	15'-2 15/16"	15'-2 15/16"	16'-9 3/16"
4	16'-0"	16'-0"	16'-0"	16'-0"	16'-0"	16'-2 5/8"	15'-0"	15'-0"	15'-0"	15'-0"	15'-0"	15'-0"	15'-0"	16'-5 7/8"

NOTE: ALL GIRDER DIMENSIONS IN THE ABOVE TABLES ARE MEASURED ALONG ℄ GIRDER.
ALL DIMENSIONS SHOWN ARE HORIZONTAL, UNLESS OTHERWISE NOTED.

PROJECT NO. U-0071
DURHAM COUNTY
STATION: 105+29.00 -L-

SHEET 1 OF 2

STATE OF NORTH CAROLINA
DEPARTMENT OF TRANSPORTATION
RALEIGH

SUPERSTRUCTURE
FRAMING PLAN
SPANS A AND B

DWG. NO. 13

NORTH CAROLINA PROFESSIONAL SEAL 031543 ENGINEER KENNETH M. WING JR.
12/23/2013

RK&K
RUMMEL, KLEPPER & KAHL, LLP
900 RIDGEFIELD DRIVE SUITE 350
RALEIGH, NORTH CAROLINA 27609-3960
NC LICENSE NUMBER: F-0112

REVISIONS						
NO.	BY:	DATE:	NO.	BY:	DATE:	
1			3			
2			4			

SHEET NO. S-241
TOTAL SHEETS 671

STR. #5

DRAWN BY : F.D. WEEDEN DATE : NOV. 2013
CHECKED BY : K.M. WING DATE : NOV. 2013
DESIGN ENGINEER OF RECORD : Y. TAN DATE : NOV. 2013

fweeden
12/23/2013 m:\projects\2011\11153_u0071 structures\structure\us70flyover\dgn\U0071_sd_fp.dgn

NOTES:

ALL BENT AND INTERMEDIATE DIAPHRAGMS SHALL BE PLACED RADIALLY TO ℄ GIRDERS.

FOR BOLTED FIELD SPLICE DETAILS AND LOCATIONS, SEE "SUPERSTRUCTURE STRUCTURAL STEEL DETAILS" SHEETS.

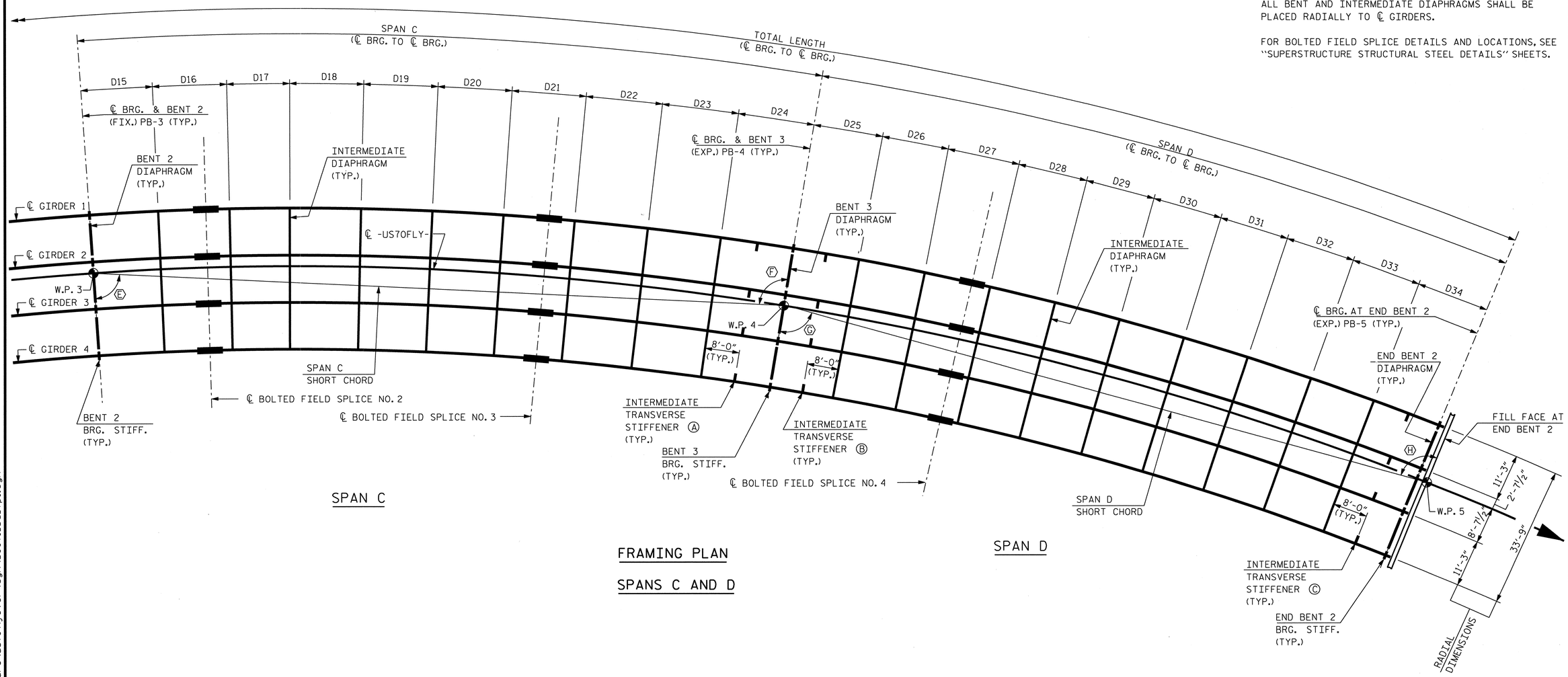

FRAMING PLAN

SPANS C AND D

GIRDER DIMENSION SCHEDULE

GIRDER NO.	TOTAL LENGTH (℄ BRG. TO ℄ BRG.)	SPAN C (℄ BRG. TO ℄ BRG.)	SPAN D (℄ BRG. TO ℄ BRG.)
1	552'-7 3/8"	166'-2 5/16"	158'-0 7/16"
2	544'-0 1/16"	163'-7 1/4"	155'-6 7/8"
3	535'-4 3/4"	161'-0 3/16"	153'-1 5/16"
4	526'-9 3/8"	158'-5 1/16"	150'-7 13/16"

ANGLE SCHEDULE

Ⓔ	83°24'16.2"(TO SHORT CHORD SPAN C)
Ⓕ	96°35'43.8"(TO SHORT CHORD SPAN C)
Ⓖ	83°37'37.4"(TO SHORT CHORD SPAN D)
Ⓗ	96°10'14.3"(TO SHORT CHORD SPAN D)

FIELD SPLICE SCHEDULE

GIRDER NO.	FIELD SPLICE NO. 2	FIELD SPLICE NO. 3	FIELD SPLICE NO. 4
1	TYPE -C-	TYPE -B-	TYPE -C-
2	TYPE -C-	TYPE -B-	TYPE -C-
3	TYPE -B-	TYPE -B-	TYPE -B-
4	TYPE -B-	TYPE -B-	TYPE -B-

DIAPHRAGM DIMENSION SCHEDULE

GIRDER NO.	D15	D16	D17	D18	D19	D20	D21	D22	D23	D24	D25	D26	D27	D28	D29	D30	D31	D32	D33	D34
1	16'-9 7/16"	16'-9 7/16"	16'-9 7/16"	16'-9 7/16"	16'-9 7/16"	16'-9 7/16"	16'-9 7/16"	16'-9 7/16"	16'-9 7/16"	15'-1 3/8"	15'-8 13/16"	15'-8 13/16"	15'-8 13/16"	15'-8 13/16"	15'-8 13/16"	15'-8 13/16"	15'-8 13/16"	15'-8 13/16"	15'-8 13/16"	16'-5 1/8"
2	16'-6 1/4"	16'-6 1/4"	16'-6 1/4"	16'-6 1/4"	16'-6 1/4"	16'-6 1/4"	16'-6 1/4"	16'-6 1/4"	16'-6 1/4"	14'-11"	15'-5 7/8"	15'-5 7/8"	15'-5 7/8"	15'-5 7/8"	15'-5 7/8"	15'-5 7/8"	15'-5 7/8"	15'-5 7/8"	15'-5 7/8"	16'-2"
3	16'-3 1/8"	16'-3 1/8"	16'-3 1/8"	16'-3 1/8"	16'-3 1/8"	16'-3 1/8"	16'-3 1/8"	16'-3 1/8"	16'-3 1/8"	14'-8 1/16"	15'-2 15/16"	15'-2 15/16"	15'-2 15/16"	15'-2 15/16"	15'-2 15/16"	15'-2 15/16"	15'-2 15/16"	15'-2 15/16"	15'-2 15/16"	15'-10 7/8"
4	16'-0"	16'-0"	16'-0"	16'-0"	16'-0"	16'-0"	16'-0"	16'-0"	16'-0"	14'-5 1/16"	15'-0"	15'-0"	15'-0"	15'-0"	15'-0"	15'-0"	15'-0"	15'-0"	15'-0"	15'-7 13/16"

NOTE: ALL GIRDER DIMENSIONS IN THE ABOVE TABLES ARE MEASURED ALONG ℄ GIRDER.
ALL DIMENSIONS SHOWN ARE HORIZONTAL, UNLESS OTHERWISE NOTED.

PROJECT NO. U-0071
DURHAM COUNTY
STATION: 105+29.00 -L-

SHEET 2 OF 2

STATE OF NORTH CAROLINA
DEPARTMENT OF TRANSPORTATION
RALEIGH

SUPERSTRUCTURE
FRAMING PLAN
SPANS C AND D

DWG. NO. 14

NORTH CAROLINA PROFESSIONAL SEAL 031543 ENGINEER KENNETH M. WING, JR.
12/23/2013

RK&K
RUMMEL, KLEPPER & KAHL, LLP
900 RIDGEFIELD DRIVE SUITE 350
RALEIGH, NORTH CAROLINA 27609-3960
NC LICENSE NUMBER: F-0112

REVISIONS						SHEET NO.
NO.	BY:	DATE:	NO.	BY:	DATE:	5-242
1			3			TOTAL SHEETS
2			4			671

STR. #5

DRAWN BY : F.D. WEEDEN DATE : NOV. 2013
CHECKED BY : K.M. WING DATE : NOV. 2013
DESIGN ENGINEER OF RECORD : Y. TAN DATE : NOV. 2013

fweeden
12/23/2013 m:\projects\2011\11153_u0071 structures\structure\us70flyover\dgn\U0071_sd_fp1.dgn

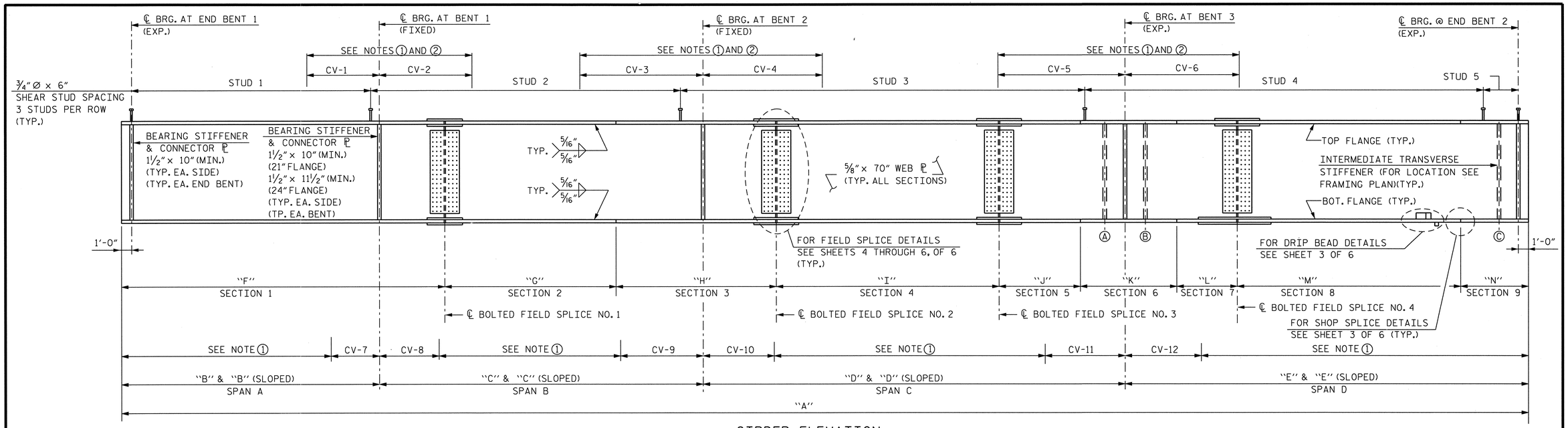

GIRDER ELEVATION

(DIAPHRAGM CONNECTOR PLATES NOT SHOWN)

SHEAR STUD SPACING

GIRDER NO.	STUD 1	STUD 2	STUD 3	STUD 4	STUD 5
1	195 SPA @ 7"	197 SPA @ 8"	407 SPA @ 9"	3 SPA @ 7"	1 SPA @ 6½"
2	199 SPA @ 6"	215 SPA @ 7"	218 SPA @ 9"	186 SPA @ 10"	1 SPA @ 7"
3	196 SPA @ 6"	212 SPA @ 7"	214 SPA @ 9"	183 SPA @ 10"	1 SPA @ 8¾"
4	154 SPA @ 7½"	183 SPA @ 8"	352 SPA @ 10"	22 SPA @ 8"	1 SPA @ 6½"

FIELD SPLICE SCHEDULE

GIRDER NO.	FIELD SPLICE NO. 1	FIELD SPLICE NO. 2	FIELD SPLICE NO. 3	FIELD SPLICE NO. 4
1	TYPE -A-	TYPE -C-	TYPE -B-	TYPE -C-
2	TYPE -A-	TYPE -C-	TYPE -B-	TYPE -C-
3	TYPE -A-	TYPE -B-	TYPE -B-	TYPE -B-
4	TYPE -A-	TYPE -B-	TYPE -B-	TYPE -B-

CHARPY V-NOTCH NOTES:

① CHARPY V-NOTCH TESTS ARE REQUIRED FOR ALL TOP OR BOTTOM FLANGE PLATES WHICH FALL WITHIN THESE LIMITS, ALL WEB PLATES AND ALL SPLICE PLATES. IF A PERMITTED SHOP FLANGE SPLICE IS NOT USED, CHARPY V-NOTCH TESTS WILL BE REQUIRED FOR THE ENTIRE FLANGE PLATE. FOR CHARPY V-NOTCH TESTS, SEE ARTICLE 1072-7 OF THE STANDARD SPECIFICATIONS.

② NO WELDING OF FORMS OR FALSEWORK TO THE TOP FLANGE WILL BE PERMITTED IN THIS REGION.

CHARPY V-NOTCH DIMENSIONS

		GRIDER 1	GRIDER 2	GRIDER 3	GRIDER 4
TOP FLANGE	CV-1	40'-6"	30'-0"	29'-6"	28'-6"
	CV-2	38'-6"	37'-6"	37'-0"	36'-6"
	CV-3	51'-0"	50'-0"	49'-6"	48'-6"
	CV-4	50'-0"	49'-0"	48'-0"	47'-6"
	CV-5	66'-6"	65'-6"	50'-6"	50'-0"
	CV-6	47'-6"	46'-6"	46'-0"	45'-0"
BOTTOM FLANGE	CV-7	20'-0"	20'-0"	19'-6"	19'-0"
	CV-8	26'-0"	25'-6"	24'-6"	23'-6"
	CV-9	38'-0"	33'-0"	32'-6"	32'-6"
	CV-10	30'-0"	30'-0"	29'-0"	28'-0"
	CV-11	49'-6"	33'-0"	32'-0"	31'-6"
	CV-12	31'-6"	31'-0"	30'-6"	30'-0"

GIRDER FLANGE SCHEDULE

GIRDER NO.		SECTION 1	SECTION 2	SECTION 3	SECTION 4	SECTION 5	SECTION 6	SECTION 7	SECTION 8	SECTION 9
1	TOP FLANGE	1¼" × 21"	1" × 21"	2" × 21"	1" × 21"	1½" × 24"	2¾" × 24"	1½" × 24"	1¼" × 21"	1¼" × 21"
	BOTTOM FLANGE	1¼" × 21"	1" × 21"	2" × 21"	1½" × 21"	1½" × 24"	2¾" × 24"	1½" × 24"	2" × 21"	1¼" × 21"
2	TOP FLANGE	1" × 21"	1" × 21"	1½" × 21"	1" × 21"	1½" × 24"	2¾" × 24"	1½" × 24"	1" × 21"	1" × 21"
	BOTTOM FLANGE	1¼" × 21"	1" × 21"	2" × 21"	1¼" × 21"	1½" × 24"	2¾" × 24"	1½" × 24"	2" × 21"	1¼" × 21"
3	TOP FLANGE	1" × 21"	1" × 21"	1½" × 21"	1" × 21"	1½" × 21"	2½" × 21"	1½" × 21"	1" × 21"	1" × 21"
	BOTTOM FLANGE	1¼" × 21"	1" × 21"	2" × 21"	1" × 21"	1½" × 21"	2¾" × 21"	1½" × 21"	1¼" × 21"	1" × 21"
4	TOP FLANGE	1" × 21"	1" × 21"	1½" × 21"	1" × 21"	1½" × 21"	2½" × 21"	1½" × 21"	1" × 21"	1" × 21"
	BOTTOM FLANGE	1" × 21"	1" × 21"	2" × 21"	1" × 21"	1½" × 21"	2½" × 21"	1½" × 21"	1¼" × 21"	1" × 21"

GIRDER DIMENSION SCHEDULE

GIRDER NO.	GIRDER RADIUS	"A"	"B"	"B" (SLOPED)	"C"	"C" (SLOPED)	"D"	"D" (SLOPED)	"E"	"E" (SLOPED)	"F"	"G"	"H"	"I"	"J"	"K"	"L"	"M"	"N"
1	721.875'	554'-7⅜"	101'-11¼"	100'-11¾"	127'-5⅜"	127'-6 15/16"	166'-2 5/16"	166'-4⅞"	159'-0 7/16"	158'-2¾"	128'-0"	67'-6"	64'-0"	84'-0"	34'-0"	36'-0"	25'-7⅜"	88'-0"	27'-6"
2	710.625'	546'-0 1/16"	100'-4⅜"	99'-4⅞"	125'-5 9/16"	125'-7 3/16"	163'-7¼"	163'-9 13/16"	156'-6⅞"	155'-9¼"	126'-0"	66'-6"	63'-0"	82'-6"	34'-0"	36'-0"	24'-0 1/16"	80'-0"	34'-0"
3	699.375'	537'-4¾"	98'-9½"	97'-10"	123'-5¾"	123'-7⅜"	161'-0 3/16"	161'-2 13/16"	154'-1 5/16"	153'-3 11/16"	123'-6"	66'-0"	62'-0"	81'-0"	35'-0"	30'-0"	27'-7¾"	70'-0"	42'-3"
4	688.125'	528'-9⅜"	97'-2⅝"	96'-3⅛"	121'-5⅞"	121'-7 9/16"	158'-5 1/16"	158'-7¾"	151'-7 13/16"	150'-10¼"	121'-0"	65'-0"	61'-0"	80'-0"	35'-0"	30'-0"	26'-3⅜"	70'-0"	40'-6"

NOTE: ALL GIRDER DIMENSIONS IN THE ABOVE TABLES ARE MEASURED ALONG ℄ GIRDER.
ALL DIMENSIONS SHOWN ARE HORIZONTAL, UNLESS OTHERWISE NOTED.

PROJECT NO. U-0071
DURHAM COUNTY
STATION: 105+29.00 -L-

SHEET 1 OF 6

STATE OF NORTH CAROLINA
DEPARTMENT OF TRANSPORTATION
RALEIGH

SUPERSTRUCTURE
STRUCTURAL STEEL
DETAILS

DWG. NO. 15

NORTH CAROLINA PROFESSIONAL SEAL 031543 ENGINEER KENNETH M. WING, JR.
12/23/2013

RK&K
RUMMEL, KLEPPER & KAHL, LLP
900 RIDGEFIELD DRIVE SUITE 350
RALEIGH, NORTH CAROLINA 27609-3960
NC LICENSE NUMBER: F-0112

DRAWN BY : F.D. WEEDEN DATE : NOV. 2013
CHECKED BY : K.M. WING DATE : NOV. 2013
DESIGN ENGINEER OF RECORD : Y. TAN DATE : NOV. 2013

REVISIONS						SHEET NO.
NO.	BY:	DATE:	NO.	BY:	DATE:	S-243
1			3			TOTAL SHEETS
2			4			671

STR. #5

fweeden
12/23/2013 m:\projects\2011\11153_u0071 structures\structure\us70flyover\dgn\U0071_sd_gd1.dgn

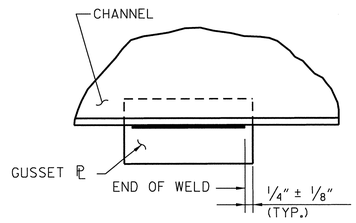

GUSSET PLATE CONNECTION TO CHANNEL

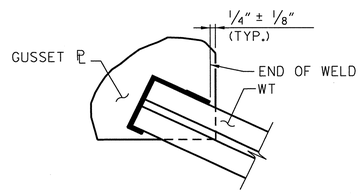

TYPICAL "WT" TO GUSSET PLATE CONNECTION

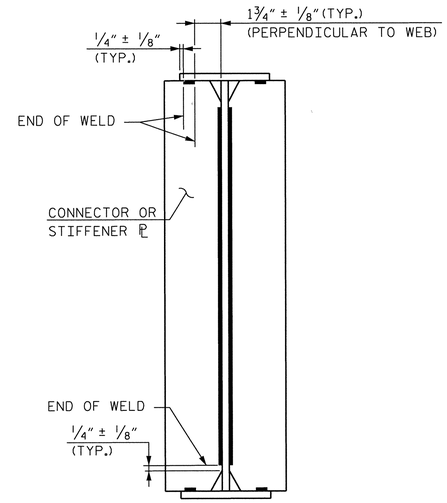

TYPICAL STIFFENER OR CONNECTOR PLATE CONNECTIONS

WELD TERMINATION DETAILS

NOTES:

ALL STRUCTURAL STEEL SHALL BE AASHTO M270 GRADE 50W AND PAINTED IN ACCORDANCE WITH SYSTEM 4 OF ARTICLE 442-8 OF THE STANDARD SPECIFICATIONS. UNLESS OTHERWISE NOTED ON THE PLANS.

ALL DIMENSIONS SHOWN ARE HORIZONTAL OR VERTICAL, UNLESS OTHERWISE NOTED.

ALL FIELD CONNECTIONS ARE TO BE 7/8" DIA. HIGH STRENGTH BOLTS UNLESS OTHERWISE NOTED.

BEARING STIPPENERS ARE TO BE PLACED NORMAL TO THE WEB OF THE GIRDER AND SHALL BE PLUMB.

PERMITTED FLANGE AND WEB SHOP SPLICES SHALL NOT BE LOCATED WITHIN 15 FEET OF MAXIMUM DEAD LOAD DEFLECTION (NOR WITHIN 15 FEET OF INTERMEDIATE BEARINGS OF CONTINUOUS UNITS). KEEP 2 FEET MINIMUM BETWEEN WEB AND FLANGE SHOP SPLICES. KEEP 6" MINIMUM BETWEEN CONNECTOR PLATE OR TRANSVERSE STIFFENER WELDS AND WEB OR FLANGE SHOP SPLICES.

STUDS ON GIRDERS MAY BE SHIFTED UP TO 1" IF NECESSARY TO CLEAR FLANGE SPLICE WELD.

TENSION ON THE ASTM A325 BOLTS SHALL BE CALIBRATED USING DIRECT TENSION INDICATOR WASHERS IN ACCORDANCE WITH ARTICAL 440-8 OF THE STANDARD SPECIFICATIONS.

END OF GIRDERS SHALL BE PLUMB.

BEARING STIFFENER MAY REQUIRE COPING IF WIDER THAN BOTTOM FLANGE.

FABRICATORS SHALL DETAIL DIAPHRAGM MEMBERS AND CONNECTIONS FOR NO LOAD FIT UP.

STRUCTURAL STEEL ERECTION IN A CONTINUOUS UNIT SHALL BE COMPLETE BEFORE FALSEWORK OR FORMS ARE PLACED ON THE UNIT.

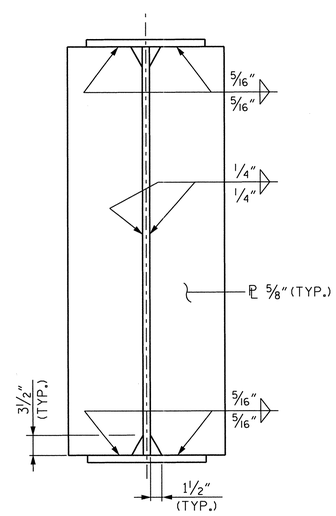

INTERMEDIATE DIAPHRAGM CONNECTOR PLATE

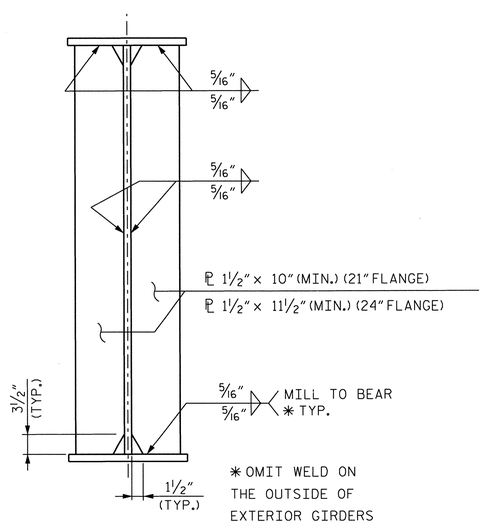

BEARING STIFFENER AND CONNECTOR ℙ

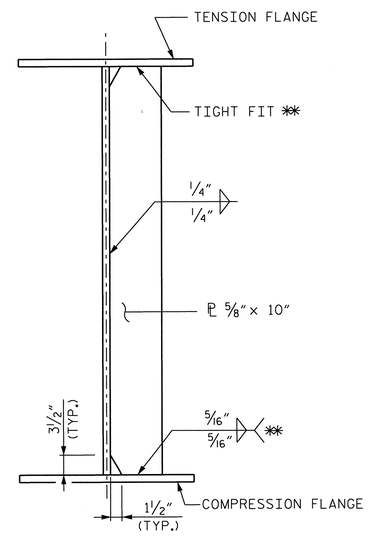

TRANSVERSE STIFFENER

** TIGHT FIT TO TENSION FLANGE (TRANSVERSE STIFF. Ⓐ & Ⓑ TOP AND TRANSVERSE STIFF. Ⓒ BOT.) AND WELD TO COMPRESION FLANGE (TRANS. STIFF. Ⓐ & Ⓑ BOT. AND TRANS. STIFF Ⓒ TOP).

PROJECT NO. U-0071
DURHAM COUNTY
STATION: 105+29.00 -L-

SHEET 2 OF 6

STATE OF NORTH CAROLINA
DEPARTMENT OF TRANSPORTATION
RALEIGH

SUPERSTRUCTURE
STRUCTURAL STEEL
DETAILS

DWG. NO. 16

NORTH CAROLINA PROFESSIONAL SEAL 031543 ENGINEER KENNETH M. WING, JR.
3/4/2014

RK&K
RUMMEL, KLEPPER & KAHL, LLP
900 RIDGEFIELD DRIVE SUITE 350
RALEIGH, NORTH CAROLINA 27609-3960
NC LICENSE NUMBER: F-0112

REVISIONS						
NO.	BY:	DATE:	NO.	BY:	DATE:	
1			3			
2			4			

SHEET NO. S-244
TOTAL SHEETS 671

STR. #5

DRAWN BY : F.D. WEEDEN DATE : NOV. 2013
CHECKED BY : K.M. WING DATE : NOV. 2013
DESIGN ENGINEER OF RECORD : Y. TAN DATE : NOV. 2013

fweeden
3/4/2014 M:\projects\2011\11153_U0071 Structures\Structure\US70Flyover\DGN\U0071_sd_gd3.dgn

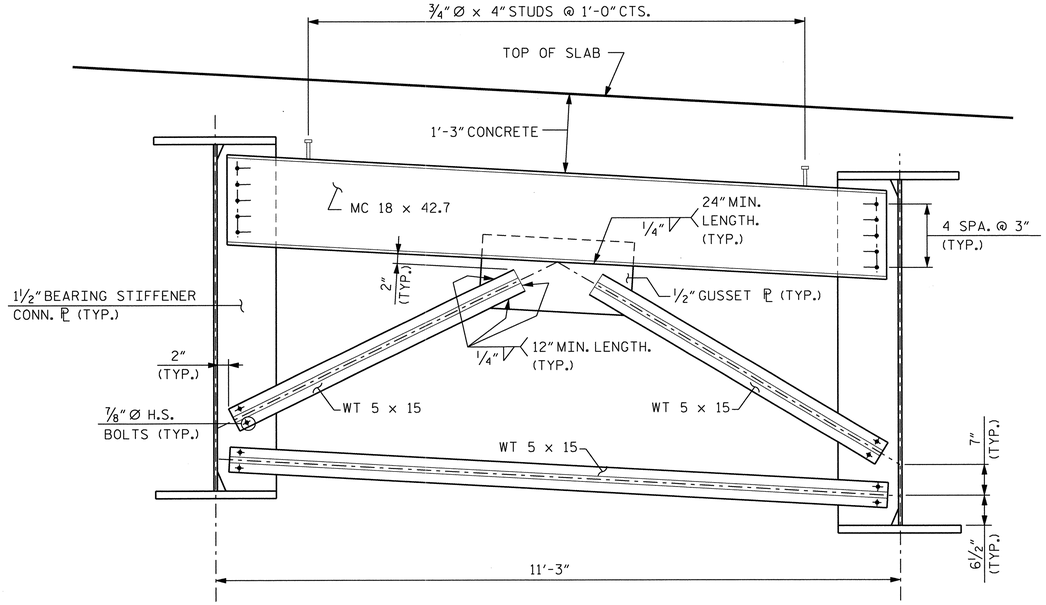

TYPICAL END BENT DIAPHRAGM

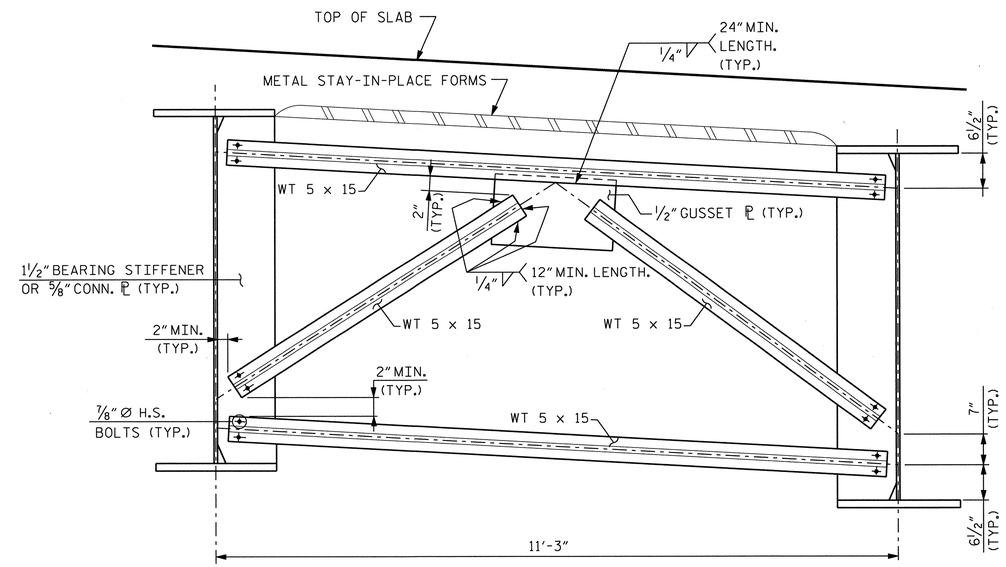

TYPICAL BENT AND INTERMEDIATE DIAPHRAGM

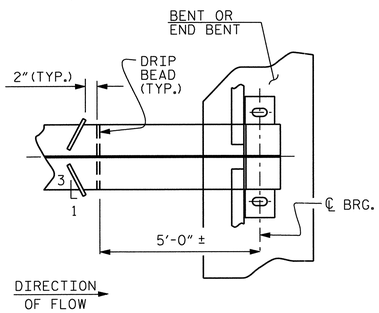

PART PLAN - BOTTOM FLANGE

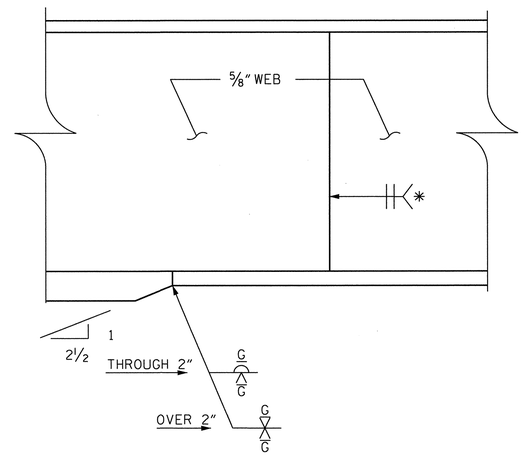

SHOP SPLICE DETAILS

* GRIND SMOOTH AND FLUSH ON OUTER FACE OF EXTERIOR GIRDERS

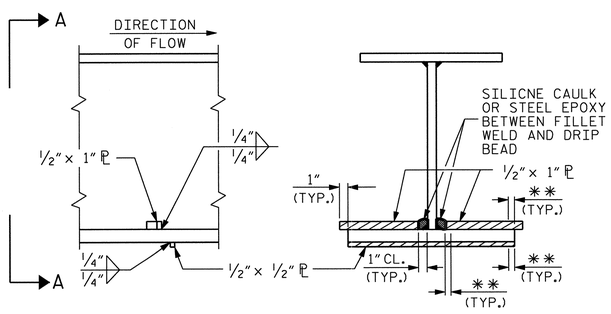

SECTION

VIEW A-A

** SEE "WELD TERMINATION DETAILS" SHEET 2 OF 6

DRIP BEAD DETAILS

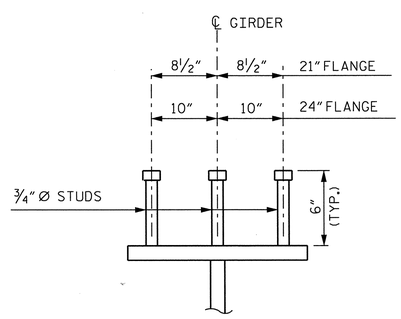

ON GIRDER

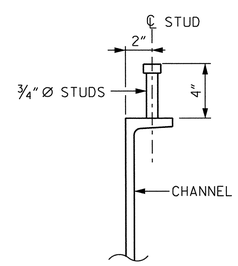

ON CHANNEL

SHEAR STUD CONNECTORS

PROJECT NO. U-0071

DURHAM COUNTY

STATION: 105+29.00 -L-

SHEET 3 OF 6

STATE OF NORTH CAROLINA
DEPARTMENT OF TRANSPORTATION
RALEIGH

SUPERSTRUCTURE
STRUCTURAL STEEL
DETAILS

DWG. NO. 17

NORTH CAROLINA PROFESSIONAL SEAL 031543 ENGINEER KENNETH M. WING, Jr.
12/23/2013

RK&K
RUMMEL, KLEPPER & KAHL, LLP
900 RIDGEFIELD DRIVE SUITE 350
RALEIGH, NORTH CAROLINA 27609-3960
NC LICENSE NUMBER: F-0112

REVISIONS						SHEET NO.
NO.	BY:	DATE:	NO.	BY:	DATE:	5-245
1			3			TOTAL SHEETS
2			4			671

STR. #5

DRAWN BY : F.D. WEEDEN DATE : NOV. 2013
CHECKED BY : K.M. WING DATE : NOV. 2013
DESIGN ENGINEER OF RECORD : Y. TAN DATE : NOV. 2013

fweeden
12/23/2013 m:\projects\2011\11153_u0071 structures\structure\us70flyover\dgn\U0071_sd_gd2.dgn

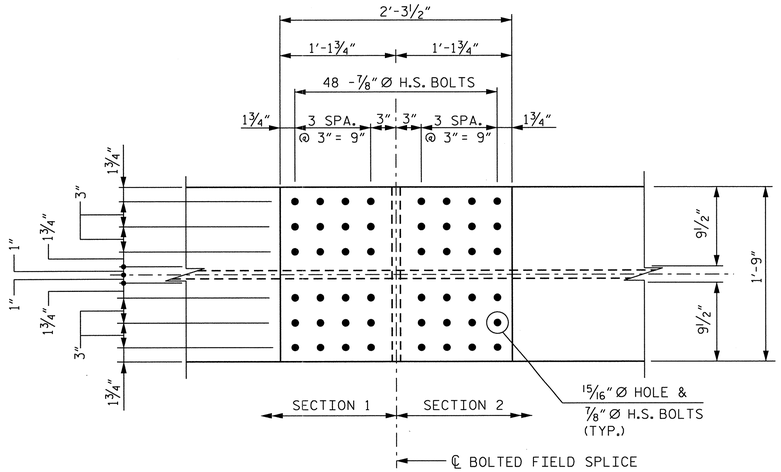

PLAN OF TOP FLANGE

(TOP VIEW SHOWN)

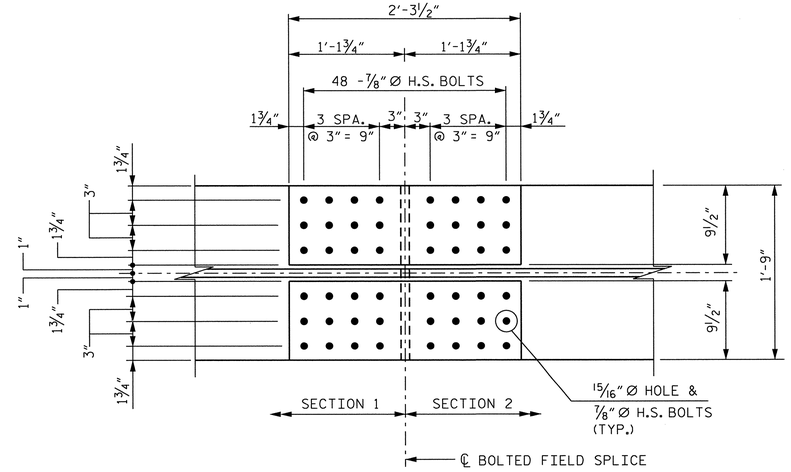

PLAN OF BOTTOM FLANGE

(TOP VIEW SHOWN)

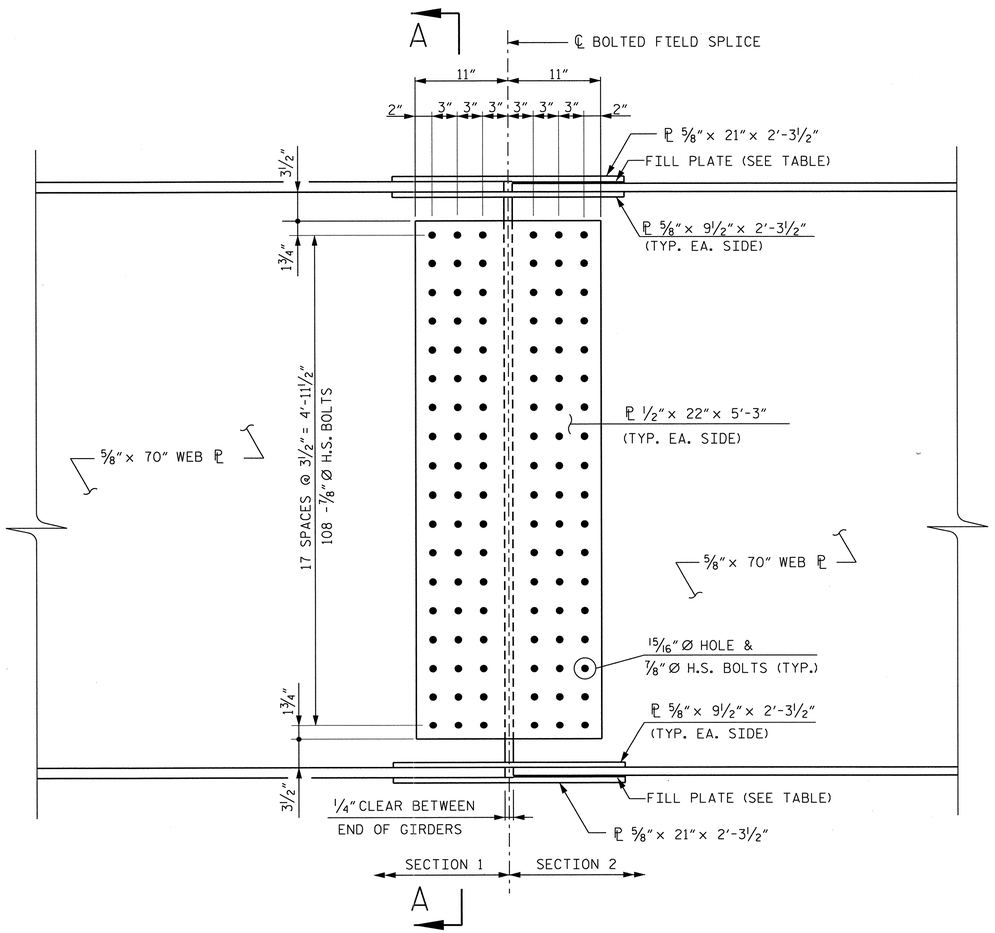

ELEVATION

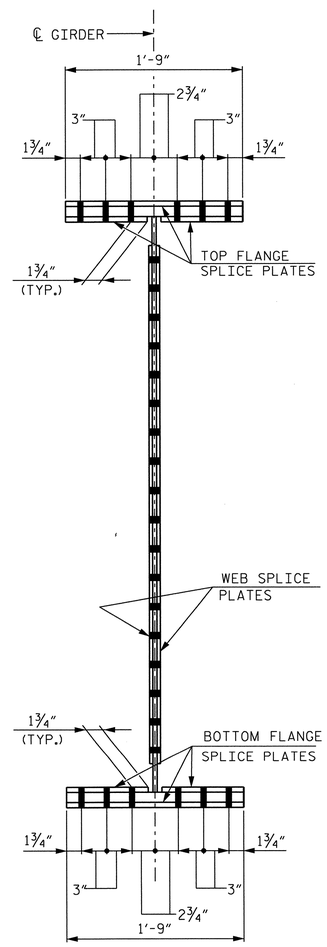

SECTION A-A

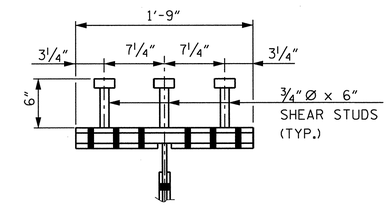

SHEAR STUD DETAIL
FOR TOP FLANGE SPLICE PLATE

FILL PLATES - SECTION 2		
GIRDER 1	TOP	ℙ ¼" x 21" x 1'-1⅝"
	BOT.	ℙ ¼" x 21" x 1'-1⅝"
GIRDER 2	TOP	N/A
	BOT.	ℙ ¼" x 21" x 1'-1⅝"
GIRDER 3	TOP	N/A
	BOT.	ℙ ¼" x 21" x 1'-1⅝"
GIRDER 4	TOP	N/A
	BOT.	N/A

PROJECT NO. U-0071

DURHAM COUNTY

STATION: 105+29.00 -L-

SHEET 4 OF 6

STATE OF NORTH CAROLINA
DEPARTMENT OF TRANSPORTATION
RALEIGH

SUPERSTRUCTURE
STRUCTURAL STEEL
FIELD SPLICE TYPE -A-
DETAILS

DWG. NO. 18

NORTH CAROLINA PROFESSIONAL SEAL 031543 ENGINEER KENNETH M. WING, JR.
12/23/2013

RK&K
RUMMEL, KLEPPER & KAHL, LLP
900 RIDGEFIELD DRIVE SUITE 350
RALEIGH, NORTH CAROLINA 27609-3960
NC LICENSE NUMBER: F-0112

REVISIONS						
NO.	BY:	DATE:	NO.	BY:	DATE:	
1			3			
2			4			

SHEET NO. S-246

TOTAL SHEETS 671

STR. #5

DRAWN BY : F.D. WEEDEN DATE : NOV. 2013
CHECKED BY : K.M. WING DATE : NOV. 2013
DESIGN ENGINEER OF RECORD : Y. TAN DATE : NOV. 2013

FIELD SPLICE DETAILS TYPE -A-

fweeden
12/23/2013 m:\projects\2011\1153_u0071 structures\structure\us70flyover\dgn\U0071_sd_gd4.dgn

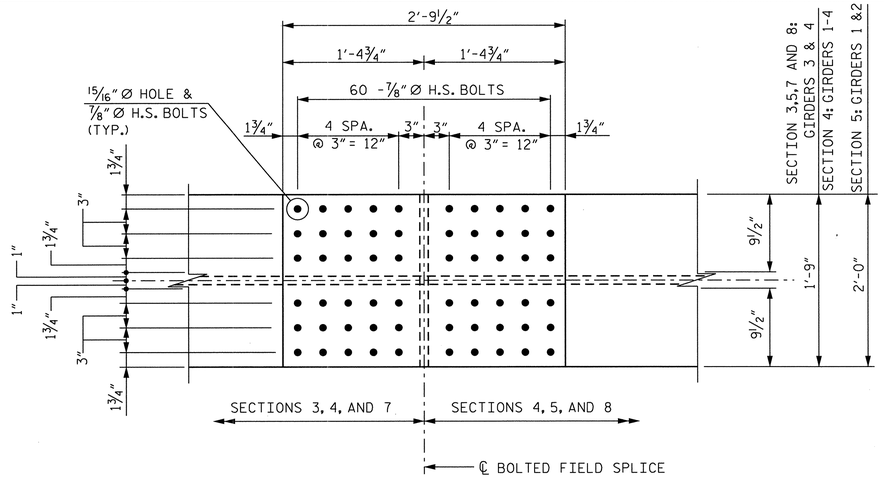

PLAN OF TOP FLANGE

(TOP VIEW SHOWN)

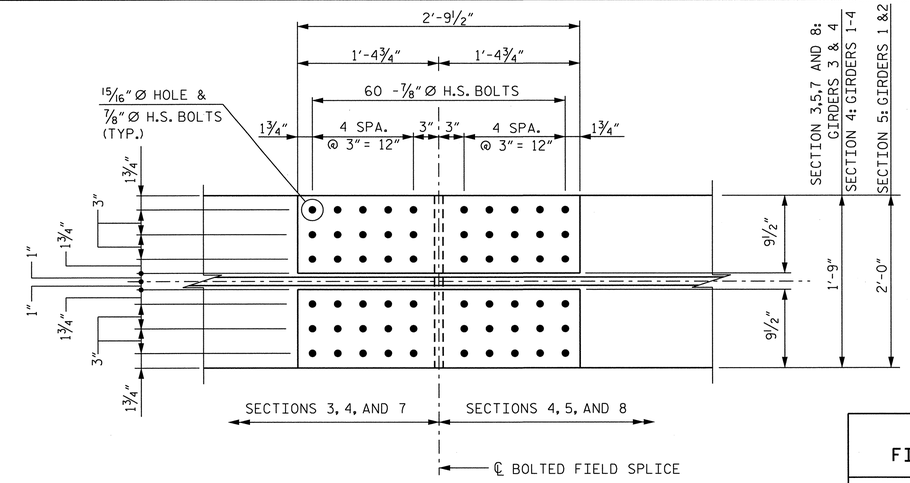

PLAN OF BOTTOM FLANGE

(TOP VIEW SHOWN)

FIELD SPLICE NO. 2 FILL PLATES - SECTION 4		
GIRDER 3	TOP	ℙ ½" x 21" x 1'-4⅝"
	BOT.	ℙ 1" x 21" x 1'-4⅝"
GIRDER 4	TOP	ℙ ½" x 21" x 1'-4⅝"
	BOT.	ℙ 1" x 21" x 1'-4⅝"

FIELD SPLICE NO. 3 FILL PLATES - SECTION 4		
GIRDER 1	TOP	ℙ ½" x 21" x 1'-4⅝"
	BOT.	N/A
GIRDER 2	TOP	ℙ ½" x 21" x 1'-4⅝"
	BOT.	ℙ ¼" x 21" x 1'-4⅝"
GIRDER 3	TOP	ℙ ½" x 21" x 1'-4⅝"
	BOT.	ℙ ½" x 21" x 1'-4⅝"
GIRDER 4	TOP	ℙ ½" x 21" x 1'-4⅝"
	BOT.	ℙ ½" x 21" x 1'-4⅝"

FIELD SPLICE NO. 4 FILL PLATES - SECTION 8		
GIRDER 3	TOP	ℙ ½" x 21" x 1'-4⅝"
	BOT.	ℙ ¼" x 21" x 1'-4⅝"
GIRDER 4	TOP	ℙ ½" x 21" x 1'-4⅝"
	BOT.	ℙ ¼" x 21" x 1'-4⅝"

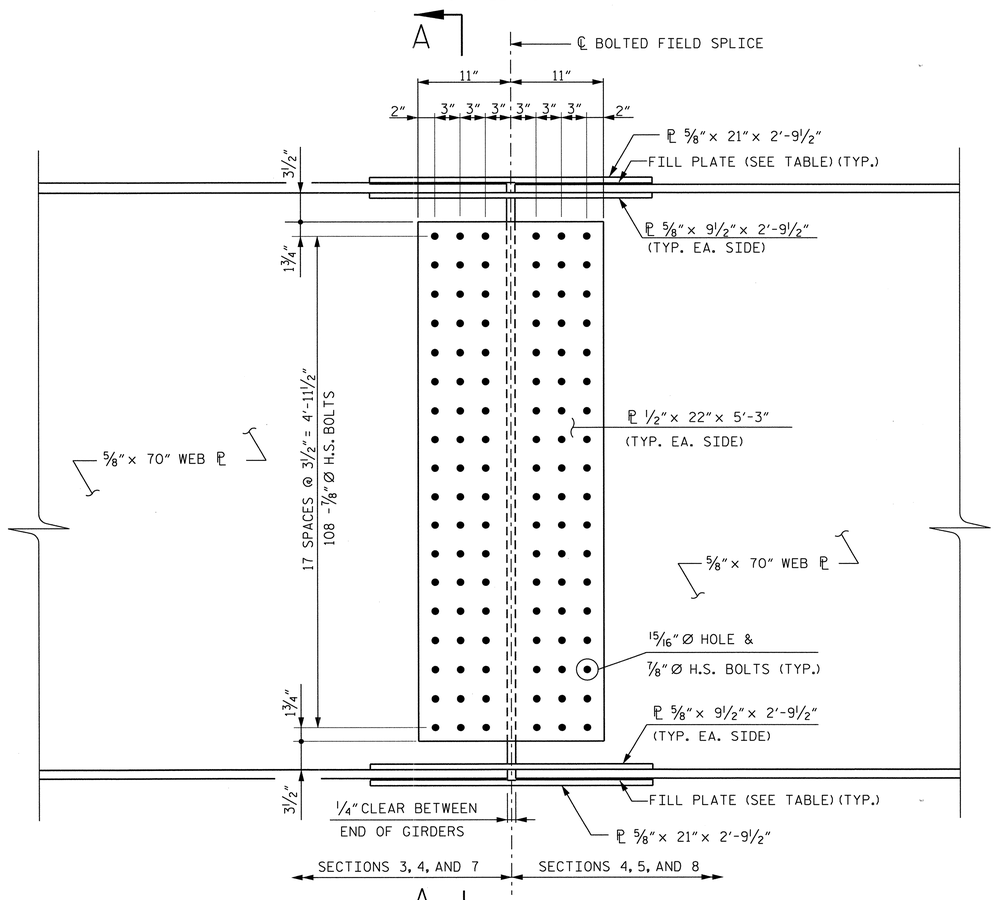

ELEVATION

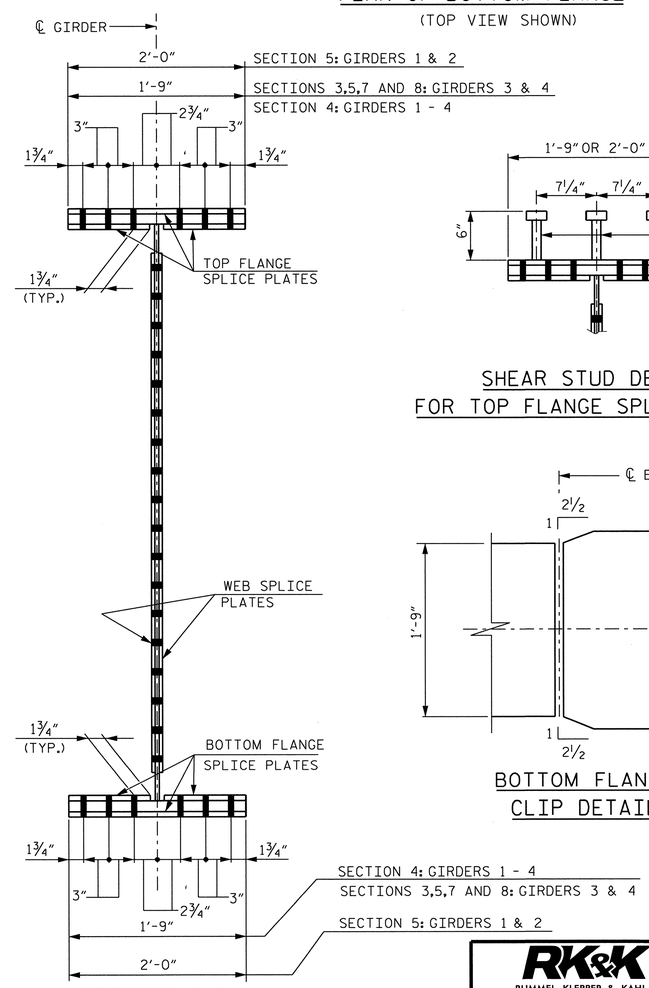

SECTION A-A

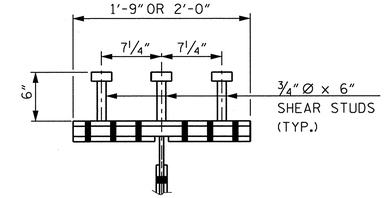

SHEAR STUD DETAIL
FOR TOP FLANGE SPLICE PLATE

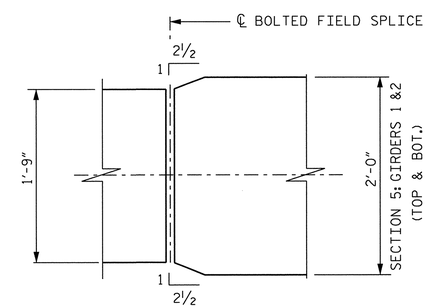

BOTTOM FLANGE
CLIP DETAIL

PROJECT NO. U-0071

DURHAM COUNTY

STATION: 105+29.00 -L-

SHEET 5 OF 6

STATE OF NORTH CAROLINA
DEPARTMENT OF TRANSPORTATION
RALEIGH

SUPERSTRUCTURE
STRUCTURAL STEEL
FIELD SPLICE TYPE -B-
DETAILS

DWG. NO. 19

NORTH CAROLINA PROFESSIONAL SEAL 031543 ENGINEER KENNETH M. WING, JR.
12/23/2013

RK&K
RUMMEL, KLEPPER & KAHL, LLP
900 RIDGEFIELD DRIVE SUITE 350
RALEIGH, NORTH CAROLINA 27609-3960
NC LICENSE NUMBER: F-0112

REVISIONS						SHEET NO.
NO.	BY:	DATE:	NO.	BY:	DATE:	5-247
1			3			TOTAL SHEETS
2			4			671

STR. #5

DRAWN BY : F.D. WEEDEN DATE : NOV. 2013
CHECKED BY : K.M. WING DATE : NOV. 2013
DESIGN ENGINEER OF RECORD : Y. TAN DATE : NOV. 2013

FIELD SPLICE DETAILS TYPE -B-

fweeden
12/23/2013 m:\projects\2011\11153_u0071 structures\structure\us70flyover\dgn\U0071_sd_gd4.dgn

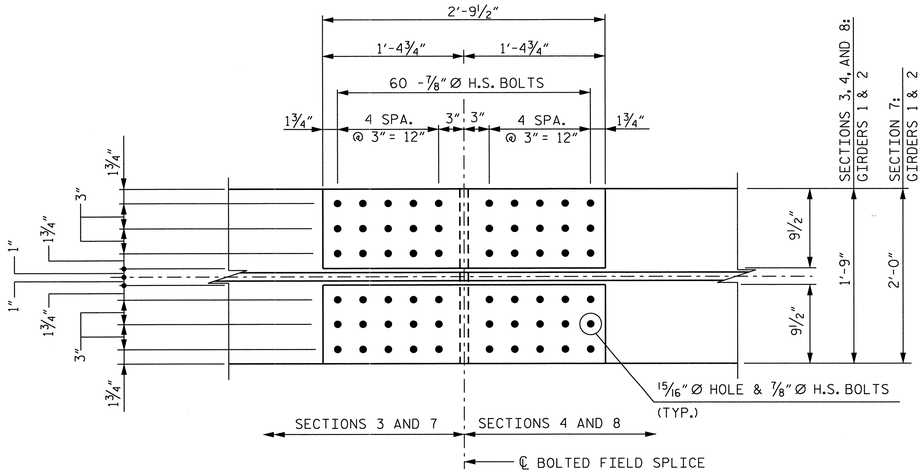

PLAN OF TOP FLANGE

(TOP VIEW SHOWN)

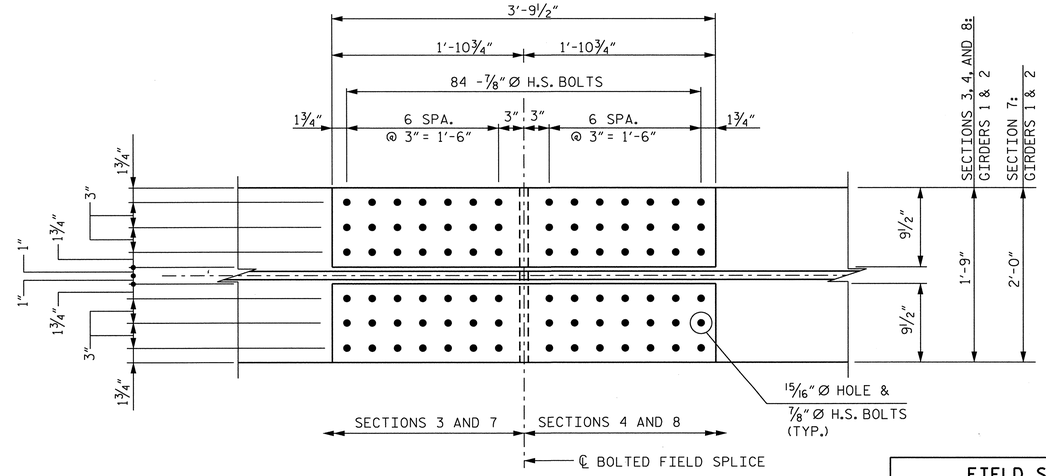

PLAN OF BOTTOM FLANGE

(TOP VIEW SHOWN)

FIELD SPLICE NO. 2 FILL PLATES - SECTION 4		
GIRDER 1	TOP	ℙ 1" x 21" x 1'-4⅝"
	BOT.	ℙ ½" x 21" x 1'-10⅝"
GIRDER 2	TOP	ℙ ½" x 21" x 1'-4⅝"
	BOT.	ℙ ¾" x 21" x 1'-10⅝"

FIELD SPLICE NO. 4 FILL PLATES - SECTION 7		
GIRDER 1	TOP	N/A
	BOT.	ℙ ½" x 21" x 1'-10⅝"
GIRDER 2	TOP	N/A
	BOT.	ℙ ½" x 21" x 1'-10⅝"

FIELD SPLICE NO. 4 FILL PLATES - SECTION 8		
GIRDER 1	TOP	ℙ ¼" x 21" x 1'-4⅝"
	BOT.	N/A
GIRDER 2	TOP	ℙ ½" x 21" x 1'-4⅝"
	BOT.	N/A

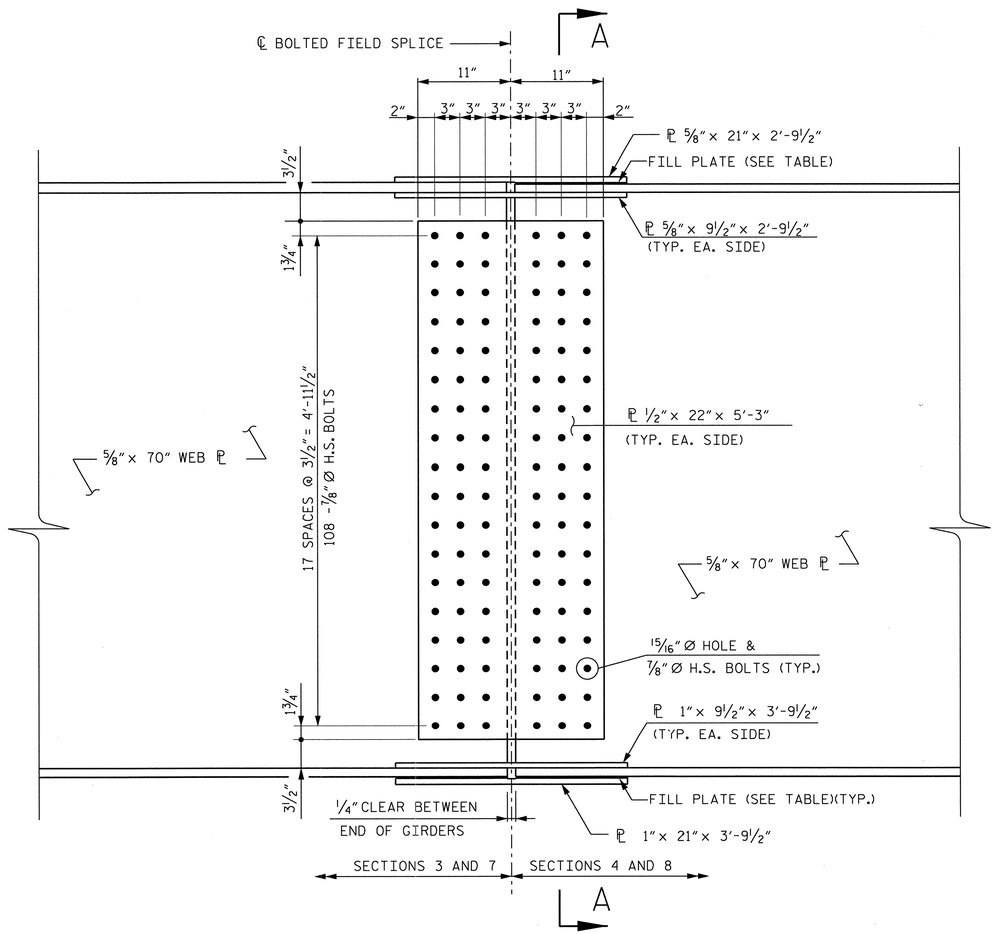

ELEVATION

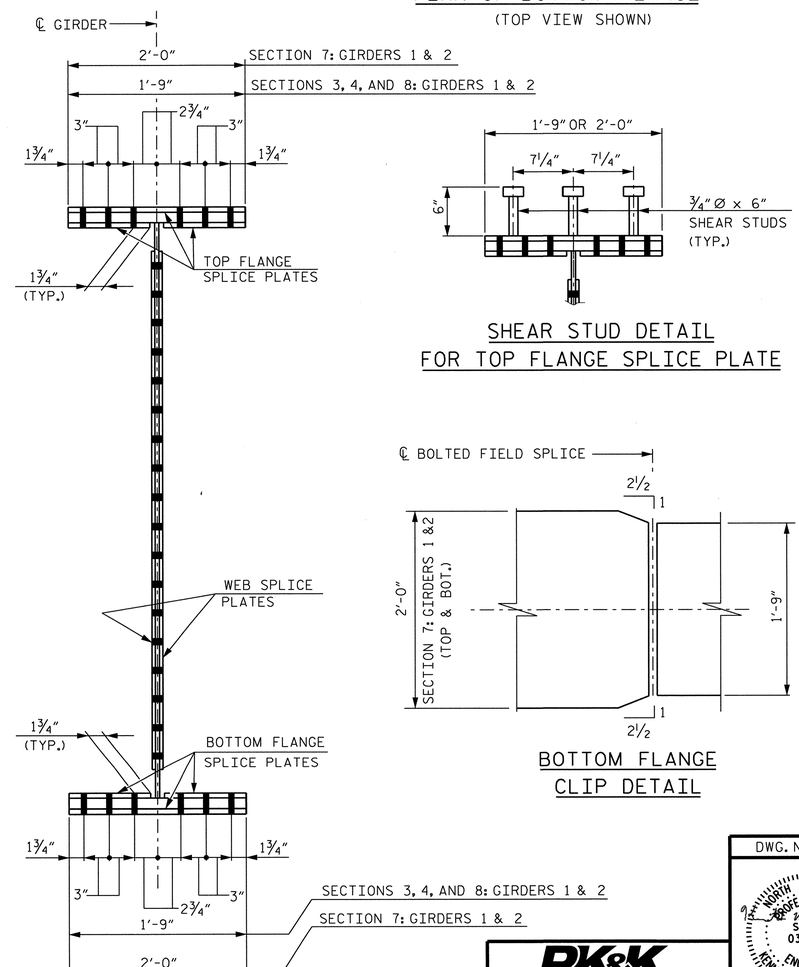

SHEAR STUD DETAIL
FOR TOP FLANGE SPLICE PLATE

SECTION A-A

BOTTOM FLANGE
CLIP DETAIL

PROJECT NO. U-0071

DURHAM COUNTY

STATION: 105+29.00 -L-

SHEET 6 OF 6

STATE OF NORTH CAROLINA
DEPARTMENT OF TRANSPORTATION
RALEIGH

SUPERSTRUCTURE
STRUCTURAL STEEL
FIELD SPLICE TYPE -C-
DETAILS

DWG. NO. 20

NORTH CAROLINA PROFESSIONAL SEAL 031543 ENGINEER KENNETH M. WING JR.
12/23/2013

RK&K
RUMMEL, KLEPPER & KAHL, LLP
900 RIDGEFIELD DRIVE SUITE 350
RALEIGH, NORTH CAROLINA 27609-3960
NC LICENSE NUMBER: F-0112

REVISIONS						SHEET NO.
NO.	BY:	DATE:	NO.	BY:	DATE:	5-248
1			3			TOTAL SHEETS
2			4			671

STR. #5

DRAWN BY : F.D. WEEDEN DATE : NOV. 2013
CHECKED BY : K.M. WING DATE : NOV. 2013
DESIGN ENGINEER OF RECORD : Y. TAN DATE : NOV. 2013

FIELD SPLICE DETAILS TYPE C-

fweeden 12/23/2013 m:\projects\2011\11153_u0071 structures\structure\us70flyover\dgn\U0071.sd.gd4.dgn

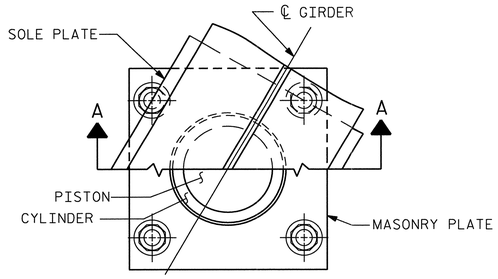

CUT-AWAY PLAN

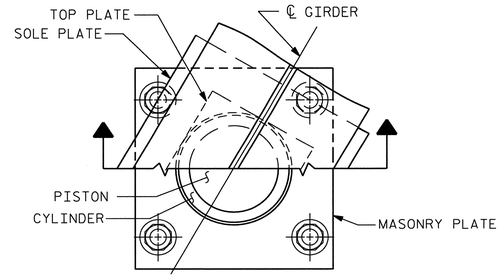

CUT-AWAY PLAN

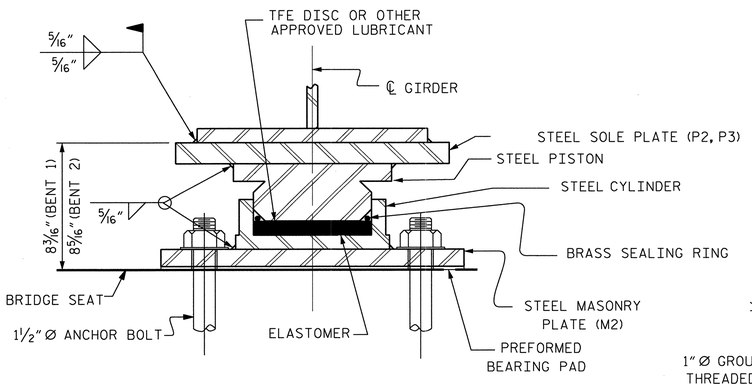

SECTION A-A

PB2, FIXED (4 REQ'D)
PB3, FIXED (4 REQ'D)

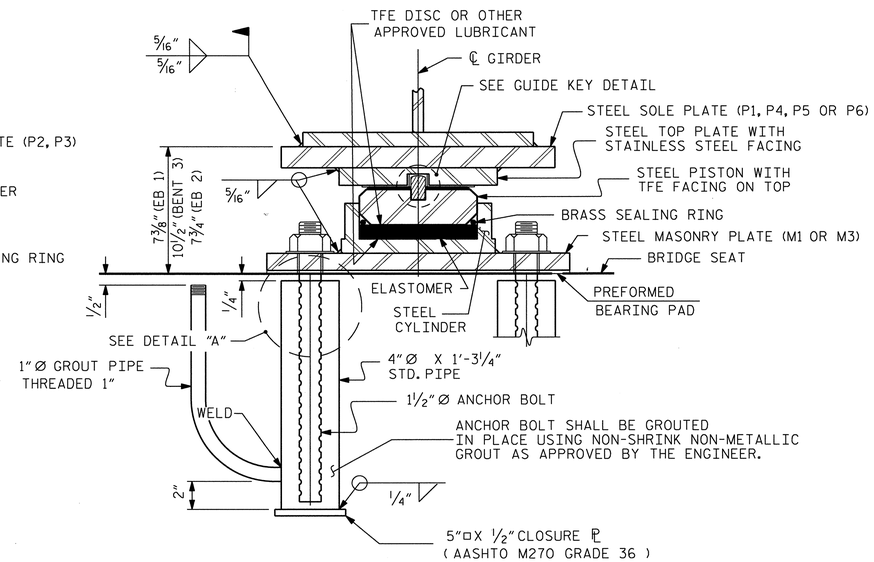

SECTION B-B

PB1, EXP. (4 REQ'D)
PB4, EXP. (4 REQ'D)
PB5, EXP. (4 REQ'D)

POT BEARING DETAILS

NOTES

FOR POT BEARINGS, SEE SPECIAL PROVISIONS.

AT ALL POINTS OF SUPPORT IN SPANS A, B, C & D, NUTS FOR ANCHOR BOLTS SHALL BE TIGHTENED FINGER TIGHT AND GIVEN AN ADDITIONAL 1/4 TURN. THE THREAD OF THE NUT AND BOLT SHALL THEN BE BURRED WITH A SHARP POINTED TOOL.

WHEN WELDING THE SOLE PLATE TO THE GIRDER, USE TEMPERATURE INDICATING WAX PENS, OR OTHER SUITABLE MEANS, TO ENSURE THAT THE TEMPERATURE OF THE BEARING DOES NOT EXCEED 250?F TEMPERATURES ABOVE THIS MAY DAMAGE THE TFE OR ELASTOMER.

AFTER BEARING ASSEMBLY IS IN PLACE AND ANCHOR BOLTS HAVE BEEN FINALLY POSITIONED. THEY SHALL BE GROUTED IN PLACE AS SHOWN.

THE CLOSURE PLATE, GROUT PIPE AND STANDARD PIPE FOR THIS ASSEMBLY NEED NOT BE GALVANIZED.

SOLE PLATES SHOULD BE WELDED TO BEAM FLANGES AND ANCHOR BOLTS SHOULD BE GROUTED BEFORE FALSEWORK IS PLACED.

ALL SURFACES OF BEARING PLATES SHALL BE SMOOTH AND STRAIGHT.

FOR THERMAL SPRAYED COATINGS (METALLIZATION), SEE SPECIAL PROVISIONS.

THE CONTRACTOR MAY SUBSTITUTE DISC BEARINGS FOR THE POT BEARINGS SHOWN. FOR OPTIONAL DISC BEARINGS, SEE SPECIAL PROVISIONS.

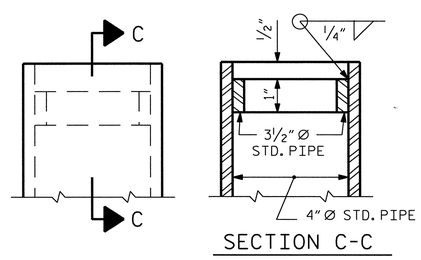

SECTION C-C

DETAIL "A"

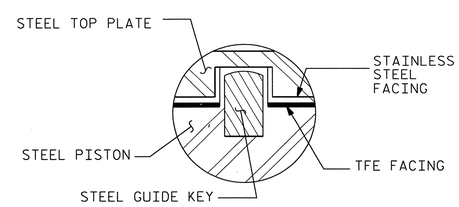

GUIDE KEY DETAIL

PROJECT NO. U-0071
DURHAM COUNTY
STATION: 105+29.00 -L-

SHEET 1 OF 2

STATE OF NORTH CAROLINA
DEPARTMENT OF TRANSPORTATION
RALEIGH

SUPERSTRUCTURE
POT BEARING
DETAILS

DWG. NO. 21

NORTH CAROLINA PROFESSIONAL SEAL 031543 ENGINEER KENNETH M. WING JR.
12/27/2013

RK&K
RUMMEL, KLEPPER & KAHL, LLP
900 RIDGEFIELD DRIVE SUITE 350
RALEIGH, NORTH CAROLINA 27609-3960
NC LICENSE NUMBER: F-0112

REVISIONS						
NO.	BY:	DATE:	NO.	BY:	DATE:	
1			3			
2			4			

SHEET NO. S-249
TOTAL SHEETS 671

STR. #5

DRAWN BY : F.D. WEEDEN DATE : NOV. 2013
CHECKED BY : K.M. WING DATE : NOV. 2013
DESIGN ENGINEER OF RECORD : Y. TAN DATE : NOV. 2013

fweeden
12/23/2013 m:\projects\2011\11153.u0071 structures\structure\us70flyover\dgn\U0071_sd_pb.dgn

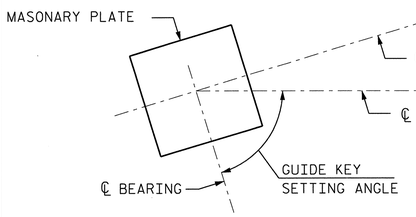

@ END BENT 1

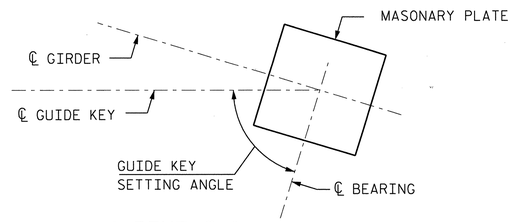

@ BENT 3 &
END BENT 2

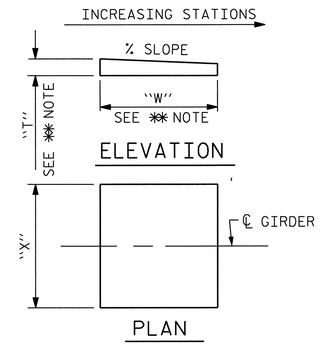

✱✱ NOTE:
DIMENSIONS "W" AND "T" ARE TO BE DETERMINED BY THE MANUFACTURER.

SOLE PLATE DETAILS

TABLE FOR LOADS AND MOVEMENT

BEARING	LOCATION	UNFACTORED VERTICAL LOAD (KIPS) DEAD DC	DW	LIVE LL+IM	TOTAL	FACTORED LATERAL LOAD (KIPS)	TOTAL MOVEMENT (INCHES)
PB1 (EXP.)	END BENT 1	100	15	120	235	44	1¼"
PB2 (FIXED)	BENT 1	290	40	205	535	109	0
PB3 (FIXED)	BENT 2	330	45	230	605	123	0
PB4 (EXP.)	BENT 3	500	65	255	820	174	1¾"
PB5 (EXP.)	END BENT 2	170	25	145	340	67	3"

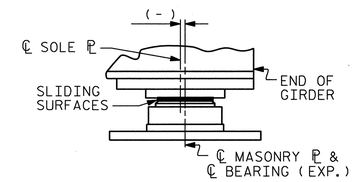

GUIDE KEY SETTING ANGLES

END BENT 1	85°59'38.9"
BENT 3	83°24'16.2"
END BENT 2	77°07'57.8"

SOLE PLATE DIMENSIONS

LOCATION	SOLE PLATE	NO. REQ'D	GIRDER	"X"	SLOPE
END BENT 1	P1	4	1,2,3,4	1'-11"	-2.0343%
BENT 1	P2	4	1,2,3,4	1'-11"	-3.6508%
BENT 2	P3	4	1,2,3,4	1'-11"	-5.1121%
BENT 3	P4	2	1,2	2'-2"	-5.1121%
	P5	2	3,4	1'-11"	-5.1121%
END BENT 2	P6	4	1,2,3,4	1'-11"	-5.1121%

TABLE FOR PLATE SETTING DATA

(EXPANSION POT BEARINGS)

TEMPERATURE AT TIME OF SETTING	45° F	60° F	90° F	✱
END BENT 1	-3/16"	0	3/8"	-1/8"
BENT 3	-1/4"	0	9/16"	+1/8"
END BENT 2	-7/16"	0	7/8"	-3/8"

✱ CORRECTION FOR END ROTATION DUE TO WEIGHT OF SLAB AND COMPOSITE DEAD LOAD.

TEMPERATURE SETTING DETAIL

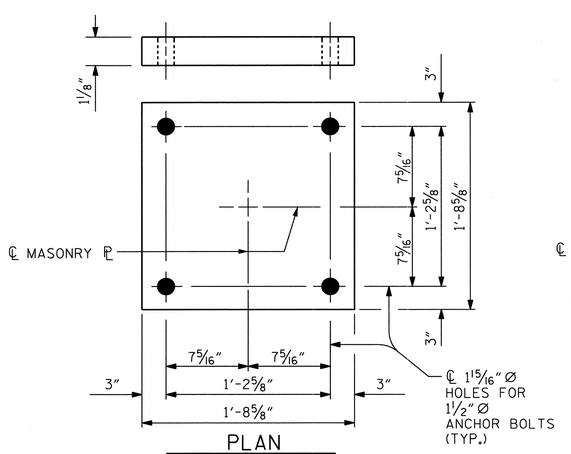

PLAN
M1 (8 REQ'D.)
(END BENTS 1 & 2)

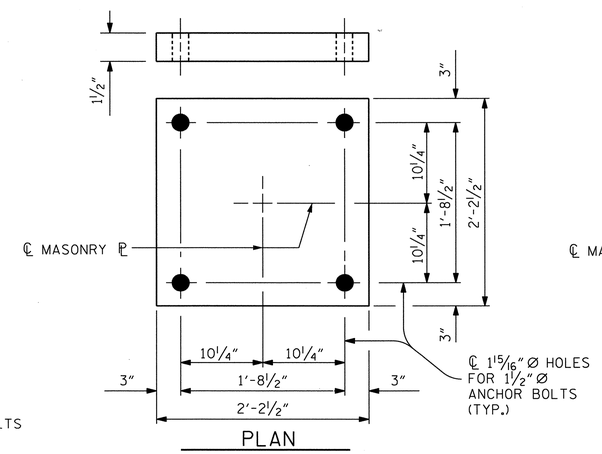

PLAN
M2 (8 REQ'D.)
(BENTS 1 & 2)

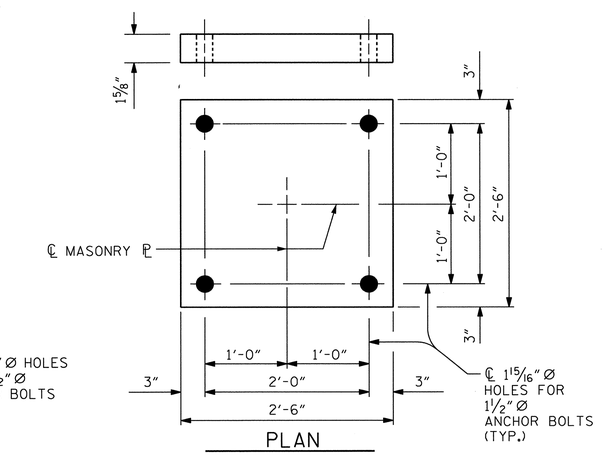

PLAN
M3 (4 REQ'D.)
(BENT 3)

MASONRY PLATE DETAILS

PROJECT NO. U-0071
DURHAM COUNTY
STATION: 105+29.00 -L-

SHEET 2 OF 2

STATE OF NORTH CAROLINA
DEPARTMENT OF TRANSPORTATION
RALEIGH

SUPERSTRUCTURE
POT BEARING
DETAILS

DWG. NO. 22

NORTH CAROLINA PROFESSIONAL SEAL 031543 ENGINEER KENNETH M. WING JR.
12/23/2013

RK&K
RUMMEL, KLEPPER & KAHL, LLP
900 RIDGEFIELD DRIVE SUITE 350
RALEIGH, NORTH CAROLINA 27609-3960
NC LICENSE NUMBER: F-0112

REVISIONS							SHEET NO.
NO.	BY:	DATE:	NO.	BY:	DATE:		S-250
1			3				TOTAL SHEETS
2			4				671

DRAWN BY : F.D. WEEDEN DATE : NOV. 2013
CHECKED BY : K.M. WING DATE : NOV. 2013
DESIGN ENGINEER OF RECORD : Y. TAN DATE : NOV. 2013

fweeden
12/23/2013 m:\projects\2011\11153_U0071 structures\structure\us70flyover\dgn\U0071_sd_pb.dgn

STR. #5

DEAD LOAD DEFLECTION TABLE FOR GIRDERS

SPAN A

GIRDER 1

TWENTIETH POINTS	0	0.05	0.10	0.15	0.20	0.25	0.30	0.35	0.40	0.45	0.50	0.55	0.60	0.65	0.70	0.75	0.80	0.85	0.90	0.95	0
DEFLECTION DUE TO WEIGHT OF STEEL	0	0.003	0.006	0.009	0.011	0.014	0.015	0.017	0.017	0.017	0.017	0.016	0.015	0.013	0.011	0.008	0.006	0.004	0.002	0.001	0
DEFLECTION DUE TO WEIGHT OF SLAB *	0	0.013	0.024	0.034	0.044	0.051	0.058	0.063	0.065	0.065	0.063	0.059	0.054	0.047	0.039	0.030	0.022	0.013	0.006	0.002	0
DEFLECTION DUE TO WEIGHT OF RAIL	0	0.001	0.002	0.003	0.004	0.005	0.006	0.006	0.006	0.006	0.006	0.006	0.005	0.005	0.004	0.003	0.002	0.001	0.001	0.000	0
TOTAL DEAD LOAD DEFLECTION	0	0.017	0.033	0.047	0.059	0.070	0.078	0.085	0.088	0.088	0.086	0.081	0.074	0.064	0.053	0.042	0.031	0.018	0.009	0.003	0
VERTICAL CURVE ORDINATE	0	0.038	0.072	0.102	0.128	0.150	0.168	0.182	0.192	0.198	0.200	0.198	0.192	0.182	0.168	0.150	0.128	0.102	0.072	0.038	0
SUPERELEVATION ORDINATE	0	0.000	0.000	0.000	0.000	0.000	0.000	0.000	0.000	0.000	0.000	0.000	0.000	0.000	0.000	0.000	0.000	0.000	0.000	0.000	0
CAMBER DUE TO DISSAPATION RESULTING FROM HEAT CURVING	0	0.003	0.006	0.008	0.010	0.012	0.013	0.015	0.015	0.015	0.015	0.014	0.013	0.011	0.009	0.007	0.005	0.003	0.002	0.001	0
REQUIRED CAMBER	0	11/16	1 5/16	1 7/8	2 3/8	2 13/16	3 1/8	3 3/8	3 9/16	3 5/8	3 5/8	3 1/2	3 5/16	3 1/16	2 3/4	2 3/8	1 15/16	1 1/2	1	1/2	0

GIRDER 2

TWENTIETH POINTS	0	0.05	0.10	0.15	0.20	0.25	0.30	0.35	0.40	0.45	0.50	0.55	0.60	0.65	0.70	0.75	0.80	0.85	0.90	0.95	0
DEFLECTION DUE TO WEIGHT OF STEEL	0	0.003	0.006	0.008	0.011	0.012	0.014	0.015	0.016	0.016	0.015	0.014	0.013	0.012	0.010	0.008	0.006	0.003	0.002	0.001	0
DEFLECTION DUE TO WEIGHT OF SLAB *	0	0.013	0.024	0.034	0.043	0.051	0.057	0.062	0.065	0.064	0.062	0.059	0.054	0.046	0.039	0.030	0.022	0.013	0.006	0.002	0
DEFLECTION DUE TO WEIGHT OF RAIL	0	0.001	0.002	0.003	0.004	0.004	0.005	0.005	0.005	0.006	0.005	0.005	0.005	0.004	0.003	0.003	0.002	0.001	0.001	0.000	0
TOTAL DEAD LOAD DEFLECTION	0	0.017	0.032	0.046	0.057	0.068	0.076	0.083	0.086	0.086	0.083	0.078	0.071	0.062	0.052	0.041	0.030	0.018	0.009	0.003	0
VERTICAL CURVE ORDINATE	0	0.038	0.072	0.102	0.128	0.150	0.168	0.182	0.192	0.198	0.200	0.198	0.192	0.182	0.168	0.150	0.128	0.102	0.072	0.038	0
SUPERELEVATION ORDINATE	0	0.000	0.000	0.000	0.000	0.000	0.000	0.000	0.000	0.000	0.000	0.000	0.000	0.000	0.000	0.000	0.000	0.000	0.000	0.000	0
CAMBER DUE TO DISSAPATION RESULTING FROM HEAT CURVING	0	0.003	0.006	0.008	0.010	0.012	0.014	0.015	0.016	0.015	0.015	0.014	0.013	0.011	0.009	0.007	0.005	0.003	0.002	0.001	0
REQUIRED CAMBER	0	11/16	1 5/16	1 7/8	2 3/8	2 3/4	3 1/16	3 3/8	3 1/2	3 9/16	3 9/16	3 1/2	3 5/16	3 1/16	2 3/4	2 3/8	1 15/16	1 1/2	1	1/2	0

GIRDER 3

TWENTIETH POINTS	0	0.05	0.10	0.15	0.20	0.25	0.30	0.35	0.40	0.45	0.50	0.55	0.60	0.65	0.70	0.75	0.80	0.85	0.90	0.95	0
DEFLECTION DUE TO WEIGHT OF STEEL	0	0.003	0.005	0.008	0.010	0.011	0.013	0.014	0.015	0.015	0.014	0.013	0.012	0.011	0.009	0.007	0.005	0.003	0.002	0.001	0
DEFLECTION DUE TO WEIGHT OF SLAB *	0	0.012	0.023	0.033	0.042	0.049	0.055	0.060	0.062	0.062	0.060	0.057	0.052	0.045	0.038	0.029	0.021	0.013	0.006	0.002	0
DEFLECTION DUE TO WEIGHT OF RAIL	0	0.001	0.002	0.003	0.004	0.004	0.005	0.005	0.005	0.005	0.005	0.005	0.004	0.004	0.003	0.003	0.002	0.001	0.001	0.000	0
TOTAL DEAD LOAD DEFLECTION	0	0.016	0.030	0.043	0.055	0.065	0.073	0.079	0.082	0.082	0.079	0.075	0.068	0.059	0.050	0.039	0.028	0.017	0.008	0.003	0
VERTICAL CURVE ORDINATE	0	0.038	0.072	0.102	0.128	0.150	0.168	0.182	0.192	0.198	0.200	0.198	0.192	0.182	0.168	0.150	0.128	0.102	0.072	0.038	0
SUPERELEVATION ORDINATE	0	0.000	0.000	0.000	0.000	0.000	0.000	0.000	0.000	0.000	0.000	0.000	0.000	0.000	0.000	0.000	0.000	0.000	0.000	0.000	0
CAMBER DUE TO DISSAPATION RESULTING FROM HEAT CURVING	0	0.003	0.006	0.008	0.010	0.012	0.014	0.015	0.016	0.015	0.015	0.014	0.013	0.011	0.009	0.007	0.005	0.003	0.002	0.001	0
REQUIRED CAMBER	0	11/16	1 5/16	1 13/16	2 5/16	2 3/4	3 1/16	3 5/16	3 1/2	3 9/16	3 9/16	3 7/16	3 1/4	3	2 3/4	2 3/8	1 15/16	1 7/16	1	1/2	0

GIRDER 4

TWENTIETH POINTS	0	0.05	0.10	0.15	0.20	0.25	0.30	0.35	0.40	0.45	0.50	0.55	0.60	0.65	0.70	0.75	0.80	0.85	0.90	0.95	0
DEFLECTION DUE TO WEIGHT OF STEEL	0	0.003	0.005	0.007	0.009	0.010	0.012	0.013	0.013	0.013	0.013	0.012	0.011	0.009	0.008	0.006	0.004	0.003	0.001	0.000	0
DEFLECTION DUE TO WEIGHT OF SLAB *	0	0.011	0.021	0.030	0.038	0.045	0.051	0.055	0.058	0.057	0.055	0.052	0.048	0.042	0.035	0.027	0.020	0.012	0.006	0.002	0
DEFLECTION DUE TO WEIGHT OF RAIL	0	0.001	0.002	0.003	0.003	0.004	0.004	0.005	0.005	0.005	0.005	0.005	0.004	0.004	0.003	0.002	0.002	0.001	0.001	0.000	0
TOTAL DEAD LOAD DEFLECTION	0	0.015	0.028	0.040	0.050	0.059	0.067	0.072	0.076	0.075	0.073	0.069	0.063	0.055	0.046	0.036	0.026	0.015	0.007	0.002	0
VERTICAL CURVE ORDINATE	0	0.038	0.072	0.102	0.128	0.150	0.168	0.182	0.192	0.198	0.200	0.198	0.192	0.182	0.168	0.150	0.128	0.102	0.072	0.038	0
SUPERELEVATION ORDINATE	0	0.000	0.000	0.000	0.000	0.000	0.000	0.000	0.000	0.000	0.000	0.000	0.000	0.000	0.000	0.000	0.000	0.000	0.000	0.000	0
CAMBER DUE TO DISSAPATION RESULTING FROM HEAT CURVING	0	0.003	0.006	0.008	0.011	0.012	0.014	0.015	0.016	0.016	0.015	0.014	0.013	0.011	0.010	0.007	0.005	0.003	0.002	0.000	0
REQUIRED CAMBER	0	11/16	1 1/4	1 13/16	2 1/4	2 11/16	3	3 1/4	3 3/8	3 7/16	3 7/16	3 3/8	3 3/16	3	2 11/16	2 5/16	1 15/16	1 7/16	1	1/2	0

SPAN B

GIRDER 1

TWENTIETH POINTS	0	0.05	0.10	0.15	0.20	0.25	0.30	0.35	0.40	0.45	0.50	0.55	0.60	0.65	0.70	0.75	0.80	0.85	0.90	0.95	0
DEFLECTION DUE TO WEIGHT OF STEEL	0	0.000	0.001	0.002	0.004	0.006	0.008	0.009	0.010	0.010	0.010	0.009	0.008	0.007	0.005	0.003	0.002	0.000	0.000	0.000	0
DEFLECTION DUE TO WEIGHT OF SLAB *	0	0.002	0.006	0.013	0.020	0.030	0.038	0.044	0.048	0.050	0.049	0.046	0.041	0.035	0.027	0.018	0.011	0.004	0.000	-0.001	0
DEFLECTION DUE TO WEIGHT OF RAIL	0	0.000	0.000	0.001	0.002	0.003	0.004	0.004	0.005	0.005	0.005	0.004	0.004	0.003	0.003	0.002	0.001	0.000	0.000	0.000	0
TOTAL DEAD LOAD DEFLECTION	0	0.002	0.007	0.016	0.026	0.039	0.049	0.057	0.062	0.064	0.064	0.060	0.053	0.044	0.035	0.023	0.013	0.005	0.000	-0.002	0
VERTICAL CURVE ORDINATE	0	0.055	0.105	0.147	0.184	0.213	0.237	0.254	0.265	0.269	0.267	0.259	0.244	0.223	0.196	0.163	0.131	0.098	0.065	0.033	0
SUPERELEVATION ORDINATE	0	0.000	0.000	0.000	0.000	0.000	0.000	0.000	0.000	0.000	0.000	0.000	0.000	0.000	0.000	0.000	0.000	0.000	0.000	0.000	0
CAMBER DUE TO DISSAPATION RESULTING FROM HEAT CURVING	0	0.000	0.001	0.003	0.004	0.006	0.008	0.009	0.010	0.010	0.010	0.010	0.009	0.007	0.006	0.004	0.002	0.001	0.000	0.000	0
REQUIRED CAMBER	0	11/16	1 3/8	2	2 9/16	3 1/8	3 1/2	3 7/8	4 1/16	4 1/8	4 1/8	3 15/16	3 11/16	3 5/16	2 13/16	2 5/16	1 3/4	1 1/4	13/16	3/8	0

GIRDER 2

TWENTIETH POINTS	0	0.05	0.10	0.15	0.20	0.25	0.30	0.35	0.40	0.45	0.50	0.55	0.60	0.65	0.70	0.75	0.80	0.85	0.90	0.95	0
DEFLECTION DUE TO WEIGHT OF STEEL	0	0.000	0.001	0.002	0.004	0.006	0.008	0.009	0.010	0.010	0.010	0.009	0.008	0.007	0.005	0.004	0.002	0.001	0.000	0.000	0
DEFLECTION DUE TO WEIGHT OF SLAB *	0	0.002	0.006	0.013	0.020	0.030	0.037	0.043	0.046	0.048	0.048	0.045	0.040	0.034	0.027	0.018	0.011	0.004	0.000	-0.001	0
DEFLECTION DUE TO WEIGHT OF RAIL	0	0.000	0.000	0.001	0.002	0.002	0.003	0.004	0.004	0.004	0.004	0.004	0.003	0.003	0.002	0.001	0.001	0.000	0.000	0.000	0
TOTAL DEAD LOAD DEFLECTION	0	0.002	0.007	0.016	0.026	0.038	0.048	0.055	0.060	0.062	0.062	0.058	0.052	0.043	0.034	0.023	0.014	0.005	0.000	-0.002	0
VERTICAL CURVE ORDINATE	0	0.055	0.105	0.147	0.184	0.213	0.237	0.254	0.265	0.269	0.267	0.259	0.244	0.223	0.196	0.163	0.131	0.098	0.065	0.033	0
SUPERELEVATION ORDINATE	0	0.000	0.000	0.000	0.000	0.000	0.000	0.000	0.000	0.000	0.000	0.000	0.000	0.000	0.000	0.000	0.000	0.000	0.000	0.000	0
CAMBER DUE TO DISSAPATION RESULTING FROM HEAT CURVING	0	0.000	0.001	0.003	0.005	0.007	0.009	0.010	0.011	0.011	0.011	0.010	0.009	0.008	0.006	0.004	0.002	0.001	0.000	0.000	0
REQUIRED CAMBER	0	11/16	1 3/8	2	2 9/16	3 1/8	3 1/2	3 13/16	4	4 1/8	4 1/16	3 15/16	3 11/16	3 5/16	2 13/16	2 5/16	1 3/4	1 1/4	13/16	3/8	0

GIRDER 3

TWENTIETH POINTS	0	0.05	0.10	0.15	0.20	0.25	0.30	0.35	0.40	0.45	0.50	0.55	0.60	0.65	0.70	0.75	0.80	0.85	0.90	0.95	0
DEFLECTION DUE TO WEIGHT OF STEEL	0	0.000	0.001	0.002	0.004	0.006	0.007	0.009	0.009	0.010	0.010	0.009	0.008	0.007	0.005	0.003	0.002	0.001	0.000	0.000	0
DEFLECTION DUE TO WEIGHT OF SLAB *	0	0.002	0.005	0.012	0.019	0.027	0.034	0.039	0.043	0.044	0.044	0.041	0.037	0.030	0.024	0.016	0.009	0.003	-0.001	-0.002	0
DEFLECTION DUE TO WEIGHT OF RAIL	0	0.000	0.000	0.001	0.002	0.002	0.003	0.003	0.004	0.004	0.004	0.004	0.003	0.003	0.002	0.001	0.001	0.000	0.000	0.000	0
TOTAL DEAD LOAD DEFLECTION	0	0.002	0.007	0.015	0.024	0.036	0.045	0.051	0.056	0.058	0.057	0.053	0.048	0.039	0.031	0.020	0.011	0.004	-0.001	-0.002	0
VERTICAL CURVE ORDINATE	0	0.055	0.105	0.147	0.184	0.213	0.237	0.254	0.265	0.269	0.267	0.259	0.244	0.223	0.196	0.163	0.131	0.098	0.065	0.033	0
SUPERELEVATION ORDINATE	0	0.000	0.000	0.000	0.000	0.000	0.000	0.000	0.000	0.000	0.000	0.000	0.000	0.000	0.000	0.000	0.000	0.000	0.000	0.000	0
CAMBER DUE TO DISSAPATION RESULTING FROM HEAT CURVING	0	0.000	0.001	0.003	0.005	0.007	0.009	0.010	0.011	0.011	0.011	0.010	0.009	0.008	0.006	0.004	0.002	0.001	0.000	0.000	0
REQUIRED CAMBER	0	11/16	1 5/16	1 13/16	2 5/16	2 3/4	3 1/16	3 5/16	3 1/2	3 9/16	4	3 7/8	3 5/8	3 1/4	2 13/16	2 1/4	1 3/4	1 1/4	3/4	3/8	0

GIRDER 4

TWENTIETH POINTS	0	0.05	0.10	0.15	0.20	0.25	0.30	0.35	0.40	0.45	0.50	0.55	0.60	0.65	0.70	0.75	0.80	0.85	0.90	0.95	0
DEFLECTION DUE TO WEIGHT OF STEEL	0	0.000	0.001	0.003	0.004	0.006	0.007	0.008	0.009	0.009	0.009	0.008	0.007	0.006	0.005	0.003	0.002	0.000	0.000	0.000	0
DEFLECTION DUE TO WEIGHT OF SLAB *	0	0.001	0.005	0.010	0.016	0.024	0.030	0.034	0.036	0.037	0.036	0.034	0.030	0.024	0.019	0.011	0.006	0.001	-0.002	-0.002	0
DEFLECTION DUE TO WEIGHT OF RAIL	0	0.000	0.000	0.001	0.002	0.002	0.003	0.003	0.003	0.004	0.004	0.003	0.003	0.002	0.002	0.001	0.001	0.000	0.000	0.000	0
TOTAL DEAD LOAD DEFLECTION	0	0.002	0.006	0.014	0.022	0.032	0.040	0.045	0.048	0.050	0.049	0.045	0.040	0.033	0.025	0.015	0.008	0.001	-0.002	-0.003	0
VERTICAL CURVE ORDINATE	0	0.055	0.105	0.147	0.184	0.213	0.237	0.254	0.265	0.269	0.267	0.259	0.244	0.223	0.196	0.163	0.131	0.098	0.065	0.033	0
SUPERELEVATION ORDINATE	0	0.000	0.000	0.000	0.000	0.000	0.000	0.000	0.000	0.000	0.000	0.000	0.000	0.000	0.000	0.000	0.000	0.000	0.000	0.000	0
CAMBER DUE TO DISSAPATION RESULTING FROM HEAT CURVING	0	0.000	0.001	0.003	0.005	0.007	0.009	0.010	0.011	0.011	0.011	0.010	0.009	0.007	0.006	0.003	0.002	0.000	-0.001	-0.001	0
REQUIRED CAMBER	0	11/16	1 5/16	1 15/16	2 1/2	3	3 7/16	3 11/16	3 7/8	3 15/16	3 15/16	3 3/4	3 1/2	3 3/16	2 11/16	2 3/16	1 11/16	1 3/16	3/4	3/8	0

DEFLECTIONS ARE IN FEET (DECIMAL FORM) AT TWENTIETH POINTS BETWEEN BEARINGS, REQUIRED CAMBER VALUES ARE IN INCHES (FRACTIONAL FORM).

* INCLUDES SLAB, BUILD-UPS AND STAY-IN-PLACE FORMS.

SIGN CONVENTION FOR DEAD LOAD DEFLECTION. - 0 +

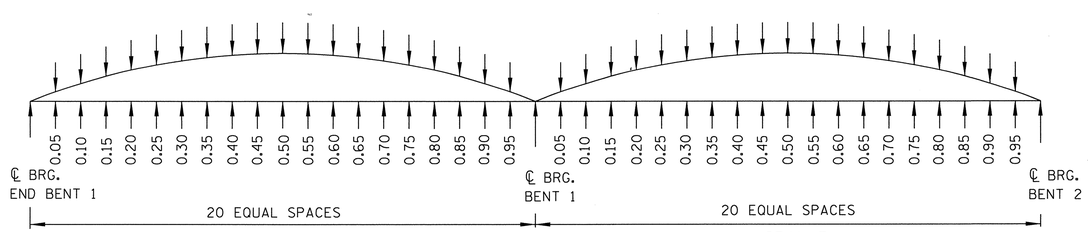

SCHEMATIC CAMBER ORDINATES

SLOPE FOR THE ZERO CAMBER BASE LINE VARIES.

PROJECT NO. U-0071

DURHAM COUNTY

STATION: 105+29.00 -L-

SHEET 1 OF 2

STATE OF NORTH CAROLINA
DEPARTMENT OF TRANSPORTATION
RALEIGH

SUPERSTRUCTURE
DEAD LOAD DEFLECTIONS
SPANS A AND B

DWG. NO. 23

NORTH CAROLINA PROFESSIONAL SEAL 031543 ENGINEER KENNETH M. WING JR.
12/23/2013

RK&K
RUMMEL, KLEPPER & KAHL, LLP
900 RIDGEFIELD DRIVE SUITE 350
RALEIGH, NORTH CAROLINA 27609-3960
NC LICENSE NUMBER: F-0112

REVISIONS									
NO.	BY:	DATE:	NO.	BY:	DATE:	SHEET NO.	TOTAL SHEETS
1			3			5-251	671
2			4				

STR. #5

DRAWN BY : F.D. WEEDEN DATE : NOV. 2013
CHECKED BY : K.M. WING DATE : NOV. 2013
DESIGN ENGINEER OF RECORD : Y. TAN DATE : NOV. 2013

fweeden
12/23/2013 m:\projects\2011\11153_U0071 structures\structure\us70flyover\dgn\U0071_sd_dl.dgn

DEAD LOAD DEFLECTION TABLE FOR GIRDERS

SPAN C

GIRDER 1

TWENTIETH POINTS	0	0.05	0.10	0.15	0.20	0.25	0.30	0.35	0.40	0.45	0.50	0.55	0.60	0.65	0.70	0.75	0.80	0.85	0.90	0.95	0
DEFLECTION DUE TO WEIGHT OF STEEL	0	0.003	0.006	0.011	0.016	0.021	0.025	0.028	0.029	0.030	0.028	0.025	0.021	0.017	0.011	0.007	0.002	-0.001	-0.002	-0.002	0
DEFLECTION DUE TO WEIGHT OF SLAB *	0	0.009	0.023	0.041	0.060	0.080	0.095	0.107	0.114	0.115	0.110	0.099	0.083	0.066	0.045	0.027	0.011	-0.001	-0.008	-0.007	0
DEFLECTION DUE TO WEIGHT OF RAIL	0	0.001	0.003	0.005	0.007	0.009	0.011	0.013	0.013	0.014	0.013	0.012	0.010	0.009	0.006	0.004	0.002	0.001	0.000	-0.001	0
TOTAL DEAD LOAD DEFLECTION	0	0.013	0.032	0.058	0.083	0.110	0.131	0.147	0.157	0.158	0.151	0.137	0.115	0.091	0.063	0.038	0.015	-0.001	-0.011	-0.010	0
VERTICAL CURVE ORDINATE	0	0.000	0.000	0.000	0.000	0.000	0.000	0.000	0.000	0.000	0.000	0.000	0.000	0.000	0.000	0.000	0.000	0.000	0.000	0.000	0
SUPERELEVATION ORDINATE	0	0.000	0.000	0.000	0.000	0.000	0.000	0.000	0.000	0.000	0.000	0.000	0.000	0.000	0.000	0.000	0.000	0.000	0.000	0.000	0
CAMBER DUE TO DISSAPATION RESULTING FROM HEAT CURVING	0	0.002	0.004	0.007	0.010	0.013	0.015	0.017	0.018	0.018	0.017	0.016	0.013	0.010	0.007	0.004	0.002	0.000	-0.001	-0.001	0
REQUIRED CAMBER	0	3/16	7/16	3/4	1 1/8	1 1/2	1 3/4	1 15/16	2 1/8	2 1/16	2	1 13/16	1 9/16	1 3/16	13/16	1/2	3/16	0	-1/8	-1/8	0

GIRDER 2

TWENTIETH POINTS	0	0.05	0.10	0.15	0.20	0.25	0.30	0.35	0.40	0.45	0.50	0.55	0.60	0.65	0.70	0.75	0.80	0.85	0.90	0.95	0
DEFLECTION DUE TO WEIGHT OF STEEL	0	0.003	0.006	0.011	0.016	0.021	0.024	0.027	0.030	0.030	0.029	0.027	0.023	0.019	0.014	0.010	0.005	0.002	0.000	-0.001	0
DEFLECTION DUE TO WEIGHT OF SLAB *	0	0.010	0.024	0.044	0.063	0.083	0.100	0.112	0.121	0.122	0.119	0.109	0.094	0.077	0.057	0.039	0.021	0.008	-0.001	-0.004	0
DEFLECTION DUE TO WEIGHT OF RAIL	0	0.001	0.003	0.005	0.007	0.009	0.011	0.012	0.013	0.013	0.013	0.012	0.011	0.009	0.007	0.005	0.003	0.001	0.000	0.000	0
TOTAL DEAD LOAD DEFLECTION	0	0.014	0.033	0.059	0.085	0.113	0.135	0.152	0.163	0.166	0.161	0.148	0.128	0.105	0.078	0.053	0.029	0.011	-0.002	-0.005	0
VERTICAL CURVE ORDINATE	0	0.000	0.000	0.000	0.000	0.000	0.000	0.000	0.000	0.000	0.000	0.000	0.000	0.000	0.000	0.000	0.000	0.000	0.000	0.000	0
SUPERELEVATION ORDINATE	0	0.000	0.000	0.000	0.000	0.000	0.000	0.000	0.000	0.000	0.000	0.000	0.000	0.000	0.000	0.000	0.000	0.000	0.000	0.000	0
CAMBER DUE TO DISSAPATION RESULTING FROM HEAT CURVING	0	0.002	0.004	0.007	0.010	0.013	0.016	0.018	0.019	0.019	0.019	0.017	0.015	0.012	0.009	0.006	0.003	0.001	0.000	-0.001	0
REQUIRED CAMBER	0	3/16	7/16	13/16	1 1/8	1 1/2	1 13/16	2	2 3/16	2 3/16	2 1/8	2	1 11/16	1 3/8	1 1/16	11/16	3/8	1/8	0	-1/16	0

GIRDER 3

TWENTIETH POINTS	0	0.05	0.10	0.15	0.20	0.25	0.30	0.35	0.40	0.45	0.50	0.55	0.60	0.65	0.70	0.75	0.80	0.85	0.90	0.95	0
DEFLECTION DUE TO WEIGHT OF STEEL	0	0.002	0.006	0.010	0.015	0.020	0.024	0.027	0.030	0.031	0.030	0.028	0.025	0.021	0.016	0.012	0.007	0.003	0.000	-0.001	0
DEFLECTION DUE TO WEIGHT OF SLAB *	0	0.010	0.024	0.044	0.064	0.085	0.102	0.115	0.125	0.128	0.125	0.117	0.103	0.086	0.066	0.047	0.027	0.013	0.001	-0.003	0
DEFLECTION DUE TO WEIGHT OF RAIL	0	0.001	0.003	0.005	0.007	0.009	0.011	0.012	0.013	0.013	0.013	0.012	0.011	0.009	0.007	0.005	0.003	0.002	0.000	0.000	0
TOTAL DEAD LOAD DEFLECTION	0	0.014	0.032	0.059	0.085	0.114	0.137	0.155	0.167	0.171	0.168	0.157	0.139	0.116	0.089	0.064	0.037	0.017	0.002	-0.003	0
VERTICAL CURVE ORDINATE	0	0.000	0.000	0.000	0.000	0.000	0.000	0.000	0.000	0.000	0.000	0.000	0.000	0.000	0.000	0.000	0.000	0.000	0.000	0.000	0
SUPERELEVATION ORDINATE	0	0.000	0.000	0.000	0.000	0.000	0.000	0.000	0.000	0.000	0.000	0.000	0.000	0.000	0.000	0.000	0.000	0.000	0.000	0.000	0
CAMBER DUE TO DISSAPATION RESULTING FROM HEAT CURVING	0	0.002	0.004	0.007	0.010	0.014	0.017	0.019	0.020	0.021	0.020	0.019	0.017	0.014	0.011	0.008	0.005	0.002	0.000	0.000	0
REQUIRED CAMBER	0	3/16	7/16	13/16	1 1/8	1 1/2	1 13/16	2 1/16	2 1/4	2 5/16	2 1/4	2 1/8	1 7/8	1 9/16	1 3/16	7/8	1/2	1/4	0	-1/16	0

GIRDER 4

TWENTIETH POINTS	0	0.05	0.10	0.15	0.20	0.25	0.30	0.35	0.40	0.45	0.50	0.55	0.60	0.65	0.70	0.75	0.80	0.85	0.90	0.95	0
DEFLECTION DUE TO WEIGHT OF STEEL	0	0.002	0.006	0.010	0.015	0.019	0.024	0.027	0.029	0.030	0.030	0.029	0.026	0.022	0.017	0.013	0.008	0.005	0.001	0.000	0
DEFLECTION DUE TO WEIGHT OF SLAB *	0	0.010	0.024	0.043	0.062	0.083	0.100	0.113	0.123	0.127	0.125	0.117	0.105	0.089	0.069	0.051	0.031	0.016	0.004	-0.001	0
DEFLECTION DUE TO WEIGHT OF RAIL	0	0.001	0.003	0.005	0.007	0.009	0.011	0.012	0.013	0.013	0.013	0.013	0.011	0.010	0.008	0.006	0.004	0.002	0.001	0.000	0
TOTAL DEAD LOAD DEFLECTION	0	0.014	0.032	0.058	0.084	0.111	0.134	0.152	0.165	0.170	0.168	0.159	0.141	0.121	0.095	0.069	0.043	0.023	0.006	-0.001	0
VERTICAL CURVE ORDINATE	0	0.000	0.000	0.000	0.000	0.000	0.000	0.000	0.000	0.000	0.000	0.000	0.000	0.000	0.000	0.000	0.000	0.000	0.000	0.000	0
SUPERELEVATION ORDINATE	0	0.000	0.000	0.000	0.000	0.000	0.000	0.000	0.000	0.000	0.000	0.000	0.000	0.000	0.000	0.000	0.000	0.000	0.000	0.000	0
CAMBER DUE TO DISSAPATION RESULTING FROM HEAT CURVING	0	0.002	0.004	0.007	0.011	0.014	0.017	0.019	0.021	0.022	0.021	0.020	0.018	0.015	0.012	0.009	0.005	0.003	0.001	0.000	0
REQUIRED CAMBER	0	3/16	7/16	13/16	1 1/8	1 1/2	1 13/16	2 1/16	2 1/4	2 5/16	2 1/4	2 1/8	1 15/16	1 5/8	1 1/4	15/16	9/16	5/16	1/16	0	0

SPAN D

GIRDER 1

TWENTIETH POINTS	0	0.05	0.10	0.15	0.20	0.25	0.30	0.35	0.40	0.45	0.50	0.55	0.60	0.65	0.70	0.75	0.80	0.85	0.90	0.95	0
DEFLECTION DUE TO WEIGHT OF STEEL	0	0.005	0.012	0.020	0.029	0.039	0.049	0.059	0.068	0.075	0.081	0.083	0.084	0.081	0.076	0.068	0.058	0.046	0.032	0.017	0
DEFLECTION DUE TO WEIGHT OF SLAB *	0	0.017	0.040	0.069	0.102	0.137	0.174	0.208	0.241	0.267	0.287	0.297	0.299	0.291	0.273	0.246	0.209	0.166	0.114	0.060	0
DEFLECTION DUE TO WEIGHT OF RAIL	0	0.002	0.004	0.007	0.011	0.015	0.019	0.022	0.026	0.028	0.030	0.031	0.031	0.030	0.028	0.026	0.022	0.017	0.012	0.006	0
TOTAL DEAD LOAD DEFLECTION	0	0.024	0.056	0.095	0.142	0.191	0.242	0.289	0.335	0.370	0.398	0.412	0.414	0.403	0.378	0.340	0.289	0.229	0.158	0.082	0
VERTICAL CURVE ORDINATE	0	0.000	0.000	0.000	0.000	0.000	0.000	0.000	0.000	0.000	0.000	0.000	0.000	0.000	0.000	0.000	0.000	0.000	0.000	0.000	0
SUPERELEVATION ORDINATE	0	0.000	0.000	0.000	0.000	0.000	0.000	0.000	0.000	0.000	0.000	0.000	0.000	0.000	0.000	0.000	0.000	0.000	0.000	0.000	0
CAMBER DUE TO DISSAPATION RESULTING FROM HEAT CURVING	0	0.002	0.005	0.008	0.012	0.016	0.020	0.024	0.028	0.031	0.033	0.035	0.035	0.034	0.032	0.029	0.024	0.019	0.013	0.007	0
REQUIRED CAMBER	0	5/16	3/4	1 1/4	1 7/8	2 1/2	3 1/8	3 3/4	4 3/8	4 13/16	5 3/16	5 3/8	5 3/8	5 1/4	4 15/16	4 7/16	3 3/4	3	2 1/16	1 1/16	0

GIRDER 2

TWENTIETH POINTS	0	0.05	0.10	0.15	0.20	0.25	0.30	0.35	0.40	0.45	0.50	0.55	0.60	0.65	0.70	0.75	0.80	0.85	0.90	0.95	0
DEFLECTION DUE TO WEIGHT OF STEEL	0	0.004	0.009	0.016	0.025	0.034	0.043	0.051	0.059	0.065	0.070	0.072	0.073	0.071	0.066	0.060	0.051	0.040	0.028	0.015	0
DEFLECTION DUE TO WEIGHT OF SLAB *	0	0.014	0.035	0.061	0.094	0.127	0.163	0.195	0.226	0.250	0.268	0.277	0.279	0.271	0.255	0.230	0.196	0.156	0.108	0.056	0
DEFLECTION DUE TO WEIGHT OF RAIL	0	0.002	0.004	0.006	0.010	0.013	0.017	0.020	0.023	0.025	0.027	0.028	0.028	0.027	0.025	0.023	0.019	0.015	0.011	0.006	0
TOTAL DEAD LOAD DEFLECTION	0	0.020	0.048	0.084	0.129	0.174	0.223	0.267	0.308	0.340	0.365	0.377	0.379	0.369	0.346	0.312	0.266	0.211	0.146	0.076	0
VERTICAL CURVE ORDINATE	0	0.000	0.000	0.000	0.000	0.000	0.000	0.000	0.000	0.000	0.000	0.000	0.000	0.000	0.000	0.000	0.000	0.000	0.000	0.000	0
SUPERELEVATION ORDINATE	0	0.000	0.000	0.000	0.000	0.000	0.000	0.000	0.000	0.000	0.000	0.000	0.000	0.000	0.000	0.000	0.000	0.000	0.000	0.000	0
CAMBER DUE TO DISSAPATION RESULTING FROM HEAT CURVING	0	0.002	0.004	0.008	0.012	0.016	0.021	0.025	0.029	0.032	0.034	0.035	0.036	0.035	0.032	0.029	0.025	0.020	0.014	0.007	0
REQUIRED CAMBER	0	1/4	5/8	1 1/8	1 11/16	2 5/16	2 15/16	3 1/2	4 1/16	4 7/16	4 13/16	4 15/16	5	4 13/16	4 9/16	4 1/16	3 1/2	2 3/4	1 15/16	1	0

GIRDER 3

TWENTIETH POINTS	0	0.05	0.10	0.15	0.20	0.25	0.30	0.35	0.40	0.45	0.50	0.55	0.60	0.65	0.70	0.75	0.80	0.85	0.90	0.95	0
DEFLECTION DUE TO WEIGHT OF STEEL	0	0.003	0.008	0.014	0.021	0.029	0.037	0.045	0.052	0.057	0.061	0.063	0.063	0.061	0.058	0.052	0.044	0.035	0.024	0.013	0
DEFLECTION DUE TO WEIGHT OF SLAB *	0	0.012	0.030	0.055	0.086	0.117	0.151	0.182	0.211	0.233	0.250	0.259	0.260	0.253	0.237	0.214	0.183	0.145	0.100	0.052	0
DEFLECTION DUE TO WEIGHT OF RAIL	0	0.001	0.003	0.006	0.009	0.012	0.015	0.018	0.021	0.023	0.025	0.026	0.026	0.025	0.023	0.021	0.018	0.014	0.010	0.005	0
TOTAL DEAD LOAD DEFLECTION	0	0.016	0.041	0.074	0.116	0.158	0.204	0.245	0.283	0.313	0.336	0.347	0.349	0.339	0.318	0.287	0.245	0.194	0.134	0.070	0
VERTICAL CURVE ORDINATE	0	0.000	0.000	0.000	0.000	0.000	0.000	0.000	0.000	0.000	0.000	0.000	0.000	0.000	0.000	0.000	0.000	0.000	0.000	0.000	0
SUPERELEVATION ORDINATE	0	0.000	0.000	0.000	0.000	0.000	0.000	0.000	0.000	0.000	0.000	0.000	0.000	0.000	0.000	0.000	0.000	0.000	0.000	0.000	0
CAMBER DUE TO DISSAPATION RESULTING FROM HEAT CURVING	0	0.002	0.004	0.008	0.012	0.016	0.021	0.025	0.029	0.032	0.035	0.036	0.036	0.035	0.033	0.030	0.025	0.020	0.014	0.007	0
REQUIRED CAMBER	0	3/16	9/16	1	1 9/16	2 1/16	2 11/16	3 1/4	3 3/4	4 1/8	4 7/16	4 5/8	4 5/8	4 1/2	4 3/16	3 13/16	3 1/4	2 9/16	1 3/4	15/16	0

GIRDER 4

TWENTIETH POINTS	0	0.05	0.10	0.15	0.20	0.25	0.30	0.35	0.40	0.45	0.50	0.55	0.60	0.65	0.70	0.75	0.80	0.85	0.90	0.95	0
DEFLECTION DUE TO WEIGHT OF STEEL	0	0.002	0.006	0.011	0.018	0.024	0.031	0.038	0.044	0.048	0.052	0.053	0.054	0.052	0.049	0.044	0.037	0.030	0.020	0.011	0
DEFLECTION DUE TO WEIGHT OF SLAB *	0	0.011	0.027	0.050	0.078	0.107	0.137	0.165	0.191	0.211	0.227	0.234	0.235	0.229	0.215	0.193	0.165	0.130	0.090	0.047	0
DEFLECTION DUE TO WEIGHT OF RAIL	0	0.001	0.003	0.005	0.008	0.011	0.014	0.017	0.019	0.021	0.023	0.023	0.023	0.023	0.021	0.019	0.016	0.013	0.009	0.005	0
TOTAL DEAD LOAD DEFLECTION	0	0.014	0.036	0.066	0.103	0.142	0.183	0.219	0.254	0.281	0.301	0.311	0.312	0.303	0.284	0.256	0.218	0.173	0.119	0.062	0
VERTICAL CURVE ORDINATE	0	0.000	0.000	0.000	0.000	0.000	0.000	0.000	0.000	0.000	0.000	0.000	0.000	0.000	0.000	0.000	0.000	0.000	0.000	0.000	0
SUPERELEVATION ORDINATE	0	0.000	0.000	0.000	0.000	0.000	0.000	0.000	0.000	0.000	0.000	0.000	0.000	0.000	0.000	0.000	0.000	0.000	0.000	0.000	0
CAMBER DUE TO DISSAPATION RESULTING FROM HEAT CURVING	0	0.002	0.004	0.008	0.012	0.016	0.021	0.026	0.030	0.033	0.035	0.036	0.036	0.035	0.033	0.030	0.025	0.020	0.014	0.007	0
REQUIRED CAMBER	0	3/16	1/2	7/8	1 3/8	1 7/8	2 7/16	2 15/16	3 3/8	3 3/4	4	4 3/16	4 3/16	4 1/16	3 13/16	3 7/16	2 15/16	2 5/16	1 5/8	13/16	0

DEFLECTIONS ARE IN FEET (DECIMAL FORM) AT TWENTIETH POINTS BETWEEN BEARINGS. REQUIRED CAMBER VALUES ARE IN INCHES (FRACTIONAL FORM).

* INCLUDES SLAB, BUILD-UPS AND STAY-IN-PLACE FORMS.

SIGN CONVENTION FOR DEAD LOAD DEFLECTION. - 0 +

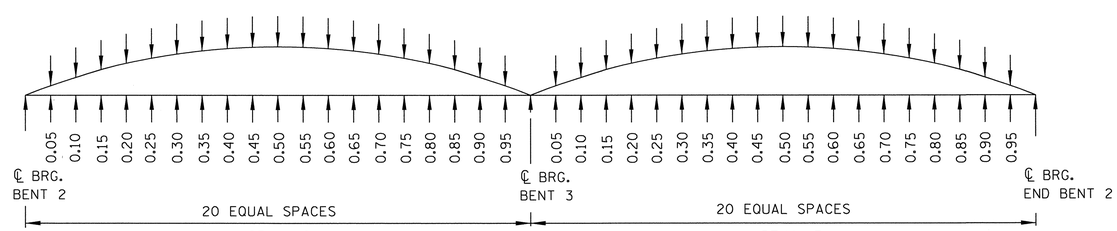

SCHEMATIC CAMBER ORDINATES

SLOPE FOR THE ZERO CAMBER BASE LINE VARIES.

PROJECT NO. U-0071

DURHAM COUNTY

STATION: 105+29.00 -L-

SHEET 2 OF 2

STATE OF NORTH CAROLINA
DEPARTMENT OF TRANSPORTATION
RALEIGH

SUPERSTRUCTURE
DEAD LOAD DEFLECTIONS
SPANS C AND D

DWG. NO. 24

NORTH CAROLINA PROFESSIONAL SEAL 031543 ENGINEER KENNETH M. WING JR.
12/23/2013

RK&K
RUMMEL, KLEPPER & KAHL, LLP
900 RIDGEFIELD DRIVE SUITE 350
RALEIGH, NORTH CAROLINA 27609-3960
NC LICENSE NUMBER: F-0112

REVISIONS									
NO.	BY:	DATE:	NO.	BY:	DATE:	SHEET NO.	TOTAL SHEETS
1			3			5-252	671
2			4				

STR. #5

DRAWN BY : F.D. WEEDEN DATE : NOV. 2013
CHECKED BY : K.M. WING DATE : NOV. 2013
DESIGN ENGINEER OF RECORD : Y. TAN DATE : NOV. 2013

fweeden
12/23/2013 m:\projects\2011\11153_u0071 structures\structure\us70flyover\dgn\U0071_sd_dl.dgn

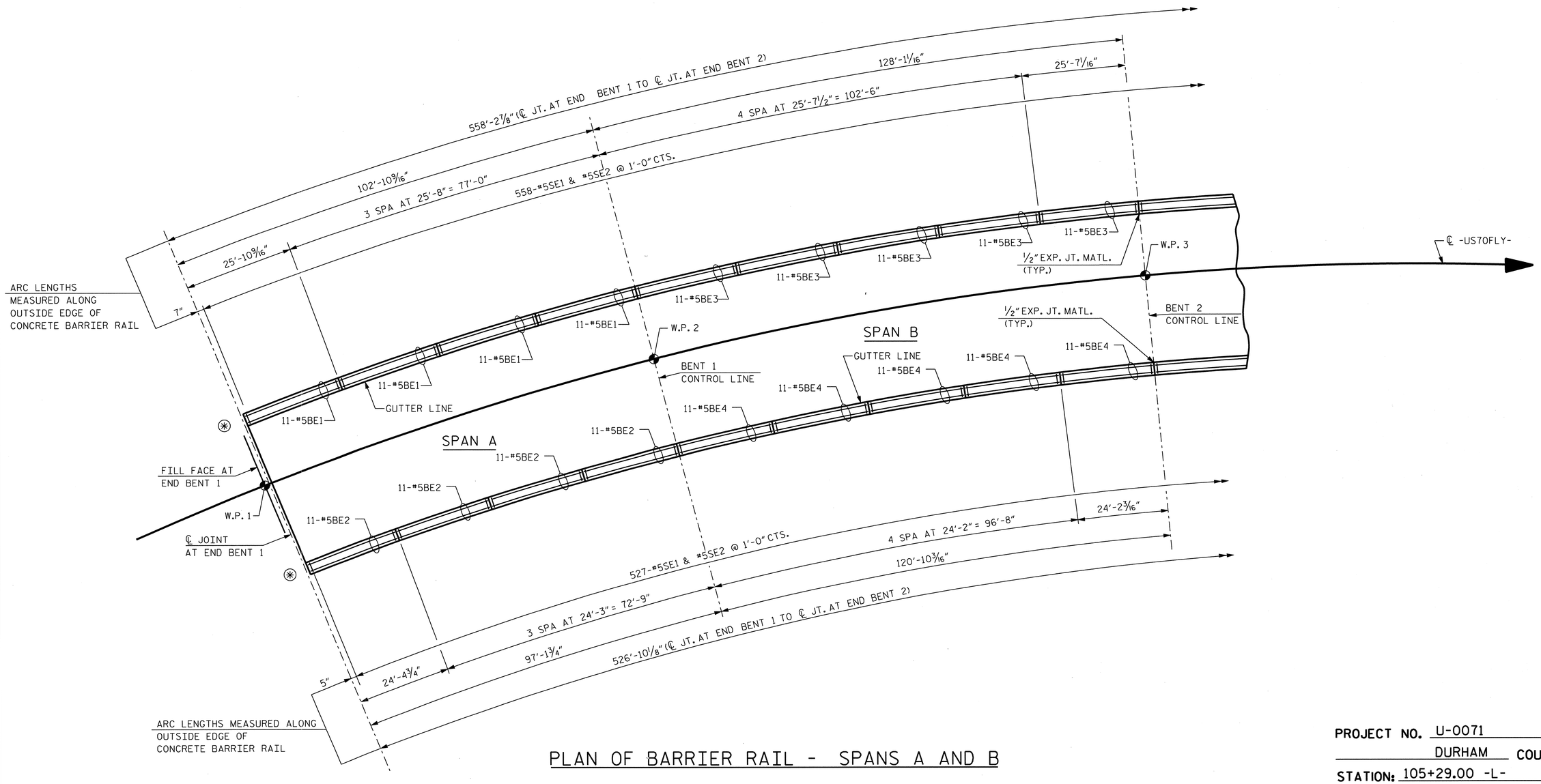

PLAN OF BARRIER RAIL - SPANS A AND B

(*) FOR DETAILS OF CONCRETE BARRIER RAIL ON APPROACH SLAB SEE "BRIDGE APPROACH SLAB DETAILS" SHEET, SHEET 2 OF 2.

PROJECT NO. U-0071

DURHAM COUNTY

STATION: 105+29.00 -L-

SHEET 1 OF 3

STATE OF NORTH CAROLINA
DEPARTMENT OF TRANSPORTATION
RALEIGH

SUPERSTRUCTURE
CONCRETE BARRIER RAIL
SPANS A AND B

DWG. NO. 25

NORTH CAROLINA PROFESSIONAL SEAL 031543 ENGINEER KENNETH M. WING JR.
12/23/2013

RK&K
RUMMEL, KLEPPER & KAHL, LLP
900 RIDGEFIELD DRIVE SUITE 350
RALEIGH, NORTH CAROLINA 27609-3960
NC LICENSE NUMBER: F-0112

REVISIONS								SHEET NO.
NO.	BY:	DATE:	NO.	BY:	DATE:			5-253
1			3					TOTAL SHEETS
2			4					671

STR. #5

DRAWN BY : F.D. WEEDEN DATE : NOV. 2013
CHECKED BY : K.M. WING DATE : NOV. 2013
DESIGN ENGINEER OF RECORD : Y. TAN DATE : NOV. 2013

fweeden
12/23/2013 m:\projects\2011\11153.u0071 structures\structure\us70flyover\dgn\U0071_sd_cbr1.dgn

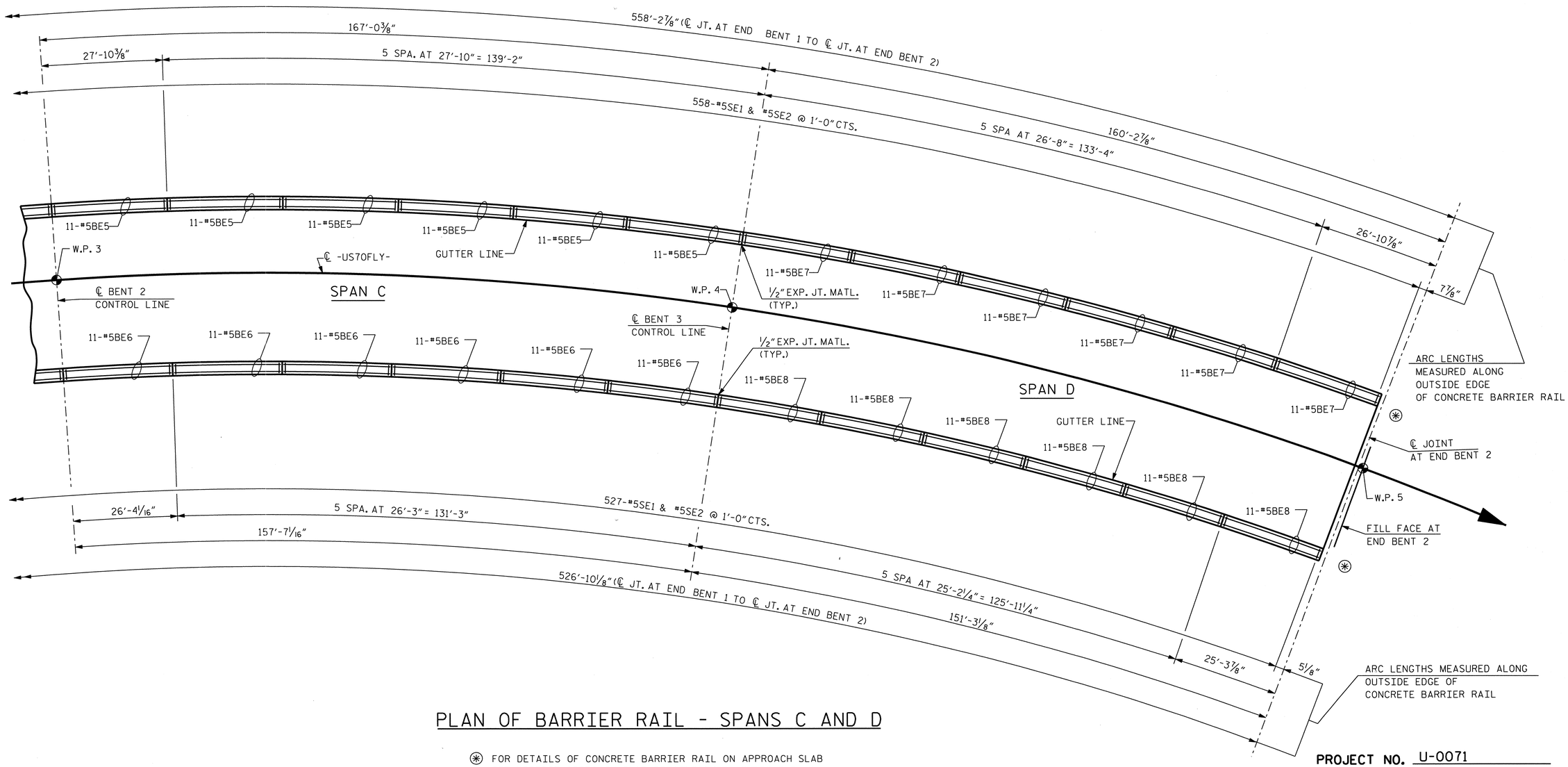

PLAN OF BARRIER RAIL - SPANS C AND D

(*) FOR DETAILS OF CONCRETE BARRIER RAIL ON APPROACH SLAB SEE "BRIDGE APPROACH SLAB DETAILS" SHEET, SHEET 2 OF 2.

PROJECT NO. U-0071

DURHAM **COUNTY**

STATION: 105+29.00 -L-

SHEET 2 OF 3

STATE OF NORTH CAROLINA
DEPARTMENT OF TRANSPORTATION
RALEIGH

SUPERSTRUCTURE
CONCRETE BARRIER RAIL
SPANS C AND D

DWG. NO. 26

NORTH CAROLINA PROFESSIONAL SEAL 031543 ENGINEER KENNETH M. WING JR.
12/23/2013

RK&K
RUMMEL, KLEPPER & KAHL, LLP
900 RIDGEFIELD DRIVE SUITE 350
RALEIGH, NORTH CAROLINA 27609-3960
NC LICENSE NUMBER: F-0112

REVISIONS						
NO.	BY:	DATE:	NO.	BY:	DATE:	
1			3			
2			4			

SHEET NO. 5-254
TOTAL SHEETS 671

STR. #5

DRAWN BY : F.D. WEEDEN DATE : NOV. 2013
CHECKED BY : K.M. WING DATE : NOV. 2013
DESIGN ENGINEER OF RECORD : Y. TAN DATE : NOV. 2013

fweeden
12/23/2013 m:\projects\2011\11153.u0071 structures\structure\us70flyover\dgn\U0071_sd_cbr2.dgn

NOTES

THE BARRIER RAIL A CONTINUOUS UNIT SHALL NOT BE CAST UNTIL ALL SLAB CONCRETE IN THAT SPAN HAS BEEN CAST AND HAS REACHED A MINIMUM COMPRESSIVE STRENGTH OF 3,000 PSI.

ALL REINFORCING STEEL IN BARRIER RAILS SHALL BE EPOXY COATED.

GROOVED CONTRACTION JOINTS, 1/2" IN DEPTH, SHALL BE TOOLED IN ALL EXPOSED FACES OF THE BARRIER RAIL AND IN ACCORDANCE WITH ARTICLE 825-10(B) OF THE STANDARD SPECIFICATIONS. THE CONTRACTION JOINT SHALL BE LOCATED AT EACH THIRD POINT BETWEEN BARRIER RAIL EXPANSION JOINTS. ONLY ONE CONTRACTION JOINT IS REQUIRED AT MIDPOINT OF BARRIER RAIL SEGMENTS LESS THAN 20 FEET IN LENGTH AND NO CONTRACTION JOINTS ARE REQUIRED FOR THOSE SEGMENTS LESS THAN 10 FEET IN LENGTH.

THE #5SE1 AND #5SE2 BARS MAY BE SHIFITED AS NECESSARY TO PROVIDE 2" MINIMUM CLEARANCE TO THE EXPANSION JOINTS IN THE BARRIER RAIL.

BAR TYPES

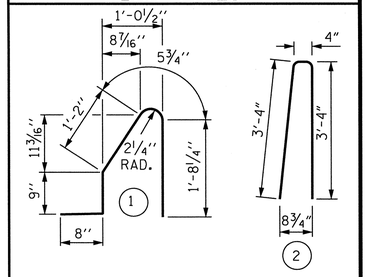

ALL BAR DIMENSIONS ARE OUT TO OUT

BILL OF MATERIAL

FOR CONCRETE BARRIER RAIL ONLY

BAR	NO.	SIZE	TYPE	LENGTH	WEIGHT
BE1	44	#5	STR.	25'-3"	1,159
BE2	44	#5	STR.	23'-10"	1,094
BE3	55	#5	STR.	25'-2"	1,444
BE4	55	#5	STR.	23'-9"	1,362
BE5	66	#5	STR.	27'-5"	1,887
BE6	66	#5	STR.	25'-10"	1,778
BE7	66	#5	STR.	26'-3"	1,807
BE8	66	#5	STR.	24'-9"	1,704
SE1	1085	#5	1	4'-9"	5,375
SE2	1085	#5	2	7'-0"	7,922

EPOXY COATED REINFORCING STEEL	25,532 LBS.
CLASS AA CONCRETE	147.4 CU. YDS.
CONCRETE BARRIER RAIL	
SUPERSTRUCTURE	1,085.08 LIN. FT.
⊛ APPROACH SLABS	40.00 LIN. FT.
TOTAL	1,125.08 LIN. FT.

⊛ FOR DETAILS OF CONCRETE BARRIER RAIL ON APPROACH SLAB SEE "BRIDGE APPROACH SLAB DETAILS" SHEET, SHEET 2 OF 2.

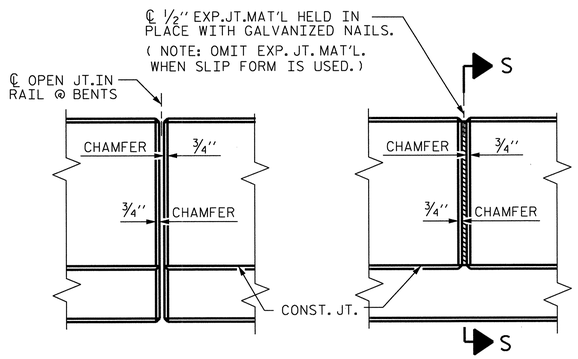

ELEVATION AT EXPANSION JOINTS

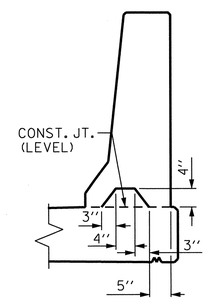

SECTION S-S

AT DAM IN OPEN JOINT
(THIS IS TO BE USED ONLY WHEN SLIP FORM IS USED)

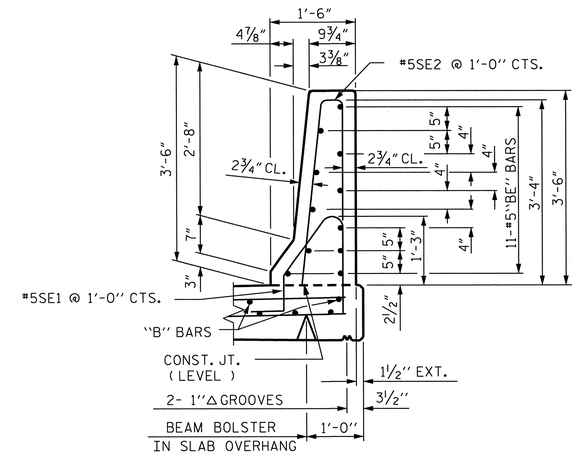

SECTION THRU RAIL

BARRIER RAIL DETAILS

PROJECT NO. U-0071

DURHAM COUNTY

STATION: 105+29.00 -L-

SHEET 3 OF 3

STATE OF NORTH CAROLINA
DEPARTMENT OF TRANSPORTATION
RALEIGH

SUPERSTRUCTURE
CONCRETE BARRIER RAIL
DETAILS

DWG. NO. 27

NORTH CAROLINA PROFESSIONAL SEAL 031543 ENGINEER KENNETH M. WING JR.
12/23/2013

RK&K
RUMMEL, KLEPPER & KAHL, LLP
900 RIDGEFIELD DRIVE SUITE 350
RALEIGH, NORTH CAROLINA 27609-3960
NC LICENSE NUMBER: F-0112

REVISIONS						
NO.	BY:	DATE:	NO.	BY:	DATE:	
1			3			
2			4			

SHEET NO. S-255
TOTAL SHEETS 671

STR. #5

DRAWN BY : F.D. WEEDEN	DATE :	NOV. 2013
CHECKED BY : K.M. WING	DATE :	NOV. 2013
DESIGN ENGINEER OF RECORD : Y. TAN	DATE :	NOV. 2013

fweeden
12/23/2013 m:\projects\2011\11153_u0071 structures\structure\us70flyover\dgn\U0071_sd_cbr_dgn

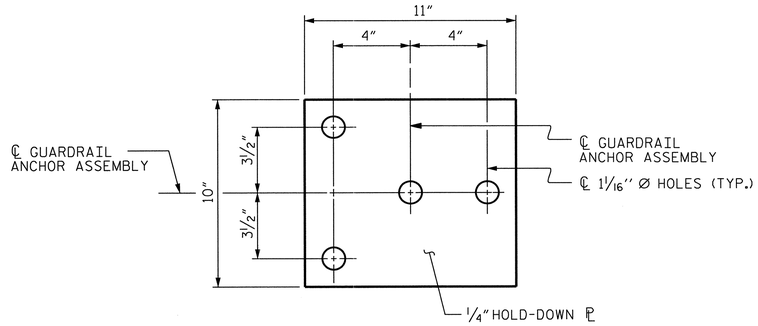

PLAN

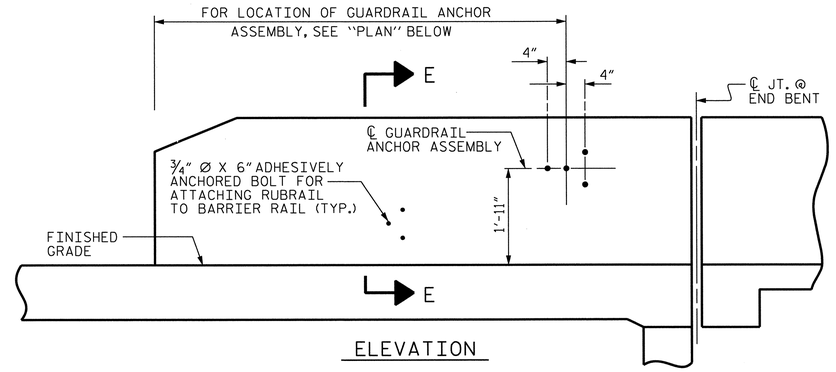

ELEVATION

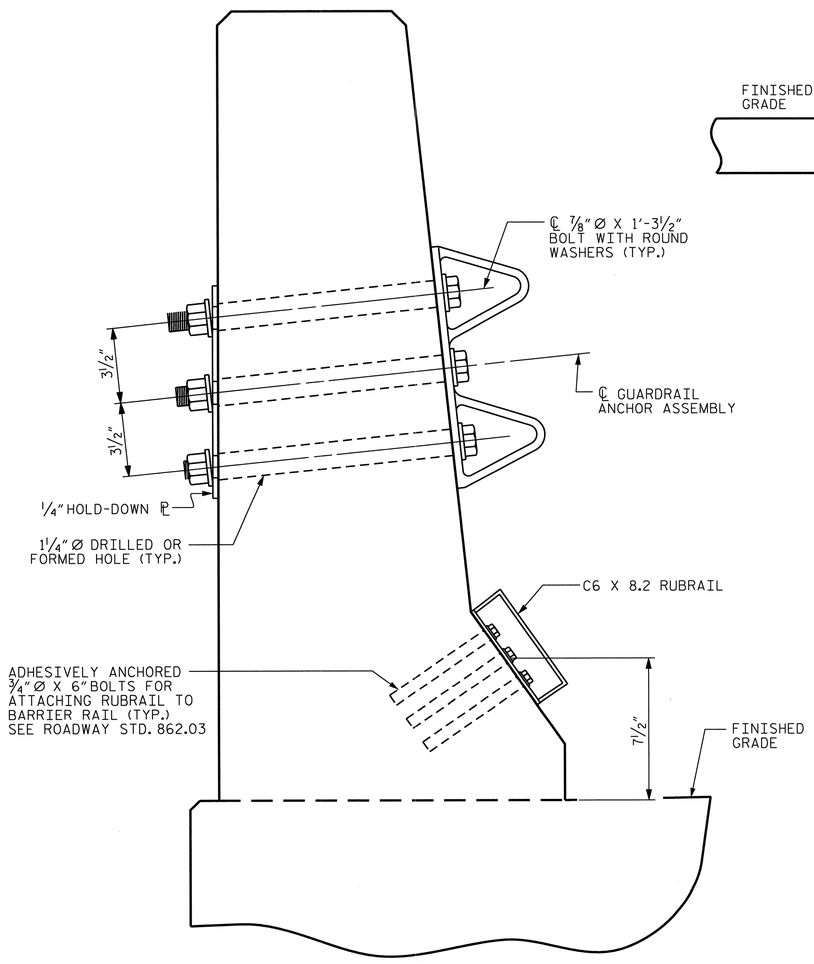

SECTION E-E

GUARDRAIL ANCHOR ASSEMBLY DETAILS

NOTES

THE GUARDRAIL ANCHOR ASSEMBLY SHALL CONSIST OF A 1/4" HOLD-DOWN PLATE AND 4 - 7/8" Ø BOLTS WITH NUTS AND WASHERS, RUBRAIL, AND ADHESIVELY ANCHORED BOLTS.

THE HOLD-DOWN PLATE SHALL CONFORM TO AASHTO M270 GRADE 36. AFTER FABRICATION, THE HOLD-DOWN PLATE SHALL BE HOT-DIP GALVANIZED IN ACCORDANCE WITH AASHTO M111.

BOLTS SHALL CONFORM TO THE REQUIREMENTS OF ASTM A307 AND NUTS SHALL CONFORM TO THE REQUIREMENTS OF AASHTO M291. BOLTS, NUTS AND WASHERS SHALL BE GALVANIZED. (AT THE CONTRACTOR'S OPTION, STAINLESS STEEL BOLTS, NUTS AND WASHERS MAY BE USED AS AN ALTERNATE FOR THE 7/8" Ø GALVANIZED BOLTS, NUTS AND WASHERS. THEY SHALL CONFORM TO OR EXCEED THE MECHANICAL REQUIREMENTS OF ASTM A307. THE USE OF THIS ALTERNATE SHALL BE APPROVED BY THE ENGINEER.)

THE GUARDRAIL ANCHOR ASSEMBLY IS REQUIRED AT ALL POINTS WHERE APPROACH GUARDRAIL IS TO BE ATTACHED TO THE END OF BARRIER RAIL. FOR POINTS OF ATTACHMENT, SEE SKETCH.

AFTER INSTALLATION, THE EXPOSED THREAD OF THE BOLT SHALL BE BURRED WITH A SHARP POINTED TOOL.

THE COST OF THE GUARDRAIL ANCHOR ASSEMBLY SHALL BE INCLUDED IN THE UNIT CONTRACT PRICE BID FOR CONCRETE BARRIER RAIL.

THE 1 1/4" Ø HOLES SHALL BE FORMED OR DRILLED WITH A CORE BIT. IMPACT TOOLS WILL NOT BE PERMITTED. ANY CONCRETE DAMAGED BY THIS WORK SHALL BE REPAIRED TO THE SATISFACTION OF THE ENGINEER.

THE C6 X 8.2 RUBRAIL IS TO BE ADHESIVELY ANCHORED TO THE RAIL USING THREE 3/4" Ø X 6" BOLTS WITH WASHERS. LEVEL ONE FIELD TESTING IS REQUIRED, AND THE YIELD LOAD OF THE 3/4" Ø BOLT IS 12 KIPS. FOR ADHESIVELY ANCHORED ANCHOR BOLTS OR DOWELS, SEE STANDARD SPECIFICATIONS. SEE ROADWAY STANDARD 862.03 FOR DETAILS AND LOCATION OF THE RUBRAIL.

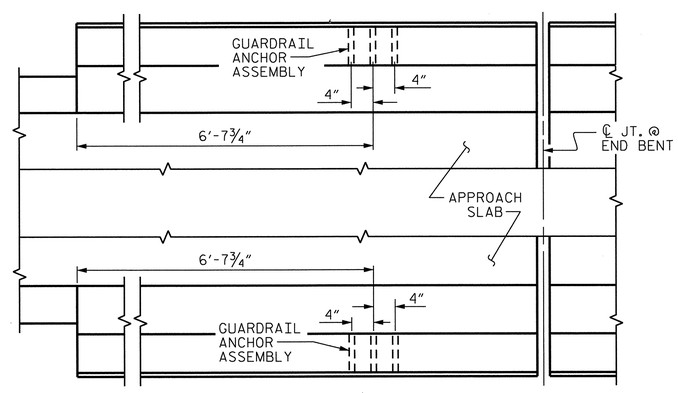

PLAN

LOCATION OF ANCHORS FOR GUARDRAIL

END BENT #1 SHOWN, END BENT #2 SIMILAR.

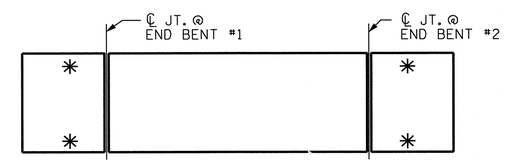

SKETCH SHOWING POINTS OF ATTACHMENTS

✳ DENOTES GUARDRAIL ANCHOR ASSEMBLY

PROJECT NO. U-0071

DURHAM COUNTY

STATION: 105+29.00 -L-

STATE OF NORTH CAROLINA
DEPARTMENT OF TRANSPORTATION
RALEIGH

GUARDRAIL ANCHORAGE FOR BARRIER RAIL

DWG. NO. 28

NORTH CAROLINA PROFESSIONAL SEAL 031543 ENGINEER KENNETH M. WING, JR.
12/23/2013

RK&K
RUMMEL, KLEPPER & KAHL, LLP
900 RIDGEFIELD DRIVE SUITE 350
RALEIGH, NORTH CAROLINA 27609-3960
NC LICENSE NUMBER: F-0112

REVISIONS								SHEET NO.
NO.	BY:	DATE:	NO.	BY:	DATE:			S-256
1			3					TOTAL SHEETS
2			4					671

STR. #5

DRAWN BY : F.D. WEEDEN DATE : NOV. 2013
CHECKED BY : K.M. WING DATE : NOV. 2013
DESIGN ENGINEER OF RECORD : Y. TAN DATE : NOV. 2013

fweeden
12/23/2013 m:\projects\2011\11153_u0071 structures\structure\us70flyover\dgn\U0071_sd_gra.dgn

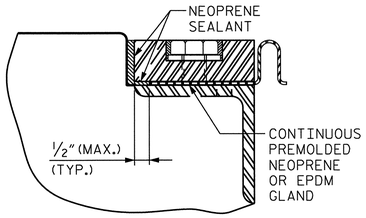

DETAIL "A"

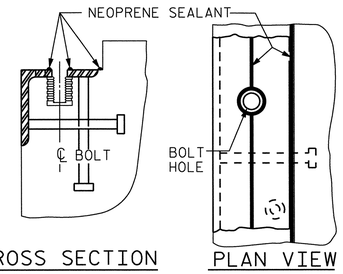

INSTALLATION SKETCH

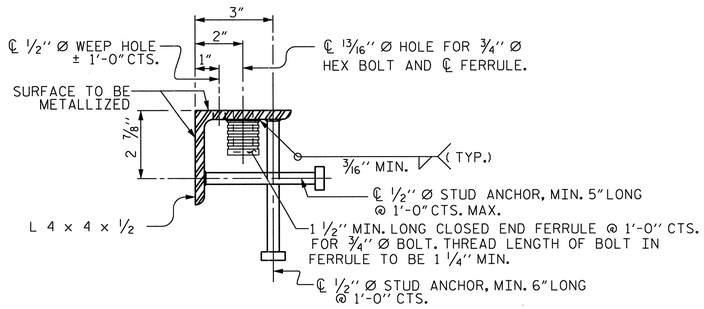

TYPICAL SECTION OF BASE ANGLE ASSEMBLY

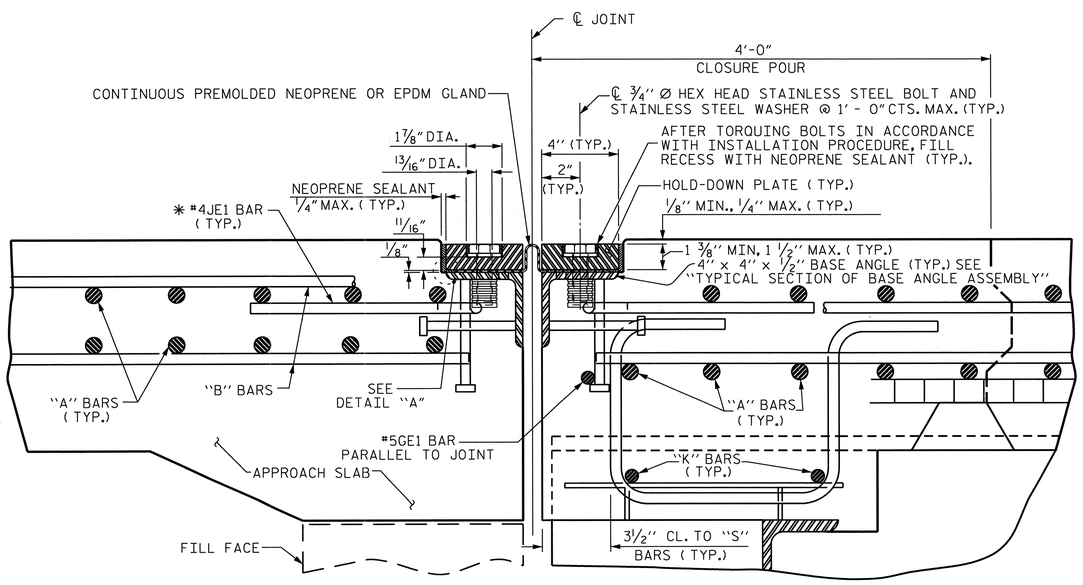

EXPANSION JOINT DETAILS

SECTION NORMAL TO JOINT -- STEEL SUPERSTRUCTURE

* THE QUANTITY OF #4JE1 BARS ON THE BILL OF MATERIAL IS BASED ON 1'-0" CENTERS. JE1 BARS SHALL BE PLACED AT EACH VERTICAL STUD ANCHOR BOLT. IN THE EVENT THAT THE NUMBER OF VERTICAL STUD ANCHORS EXCEEDS THE NUMBER OF JE1 BARS SPECIFIED, ADDITIONAL JE1 BARS WILL NOT BE REQUIRED.

INSTALLATION PROCEDURE

1. A TEMPLATE OR OTHER SUITABLE DEVICE SHALL BE USED TO FORM THE TOP OF THE EXPANSION JOINT SEAL BLOCKOUT TO THE PROPER DEPTH AND WIDTH. THE TEMPLATE SHALL BE 4 1/8" TO 4 1/4" WIDE AND OF SUCH THICKNESS AS TO PROVIDE FOR CORRECT FINAL ELEVATION OF TOP OF HOLD-DOWN PLATES. THE TEMPLATE SHALL BE ATTACHED TO THE BASE ANGLE ASSEMBLY WITH THE 3/4" Ø HEX HEAD BOLTS PROVIDED FOR THE HOLD-DOWN PLATES. A 1" Ø HOLE SHALL BE PROVIDED IN THE TEMPLATE CENTERED OVER EACH WEEP HOLE IN THE 4" X 4" X 1/2" BASE ANGLE. OTHER METHODS OF INSURING DRAINAGE THROUGH WEEP HOLES MAY BE EMPLOYED SUBJECT TO ENGINEER'S APPROVAL.
2. AFTER THE CONCRETE HAS BEEN CAST ON BOTH SIDES OF THE JOINT, REMOVE THE TEMPLATE. THOROUGHLY CLEAN THE BOLT HOLES AND THE ANGLE PLATE. REMOVE ANY EXCESS CONCRETE THAT COMES OUT OF THE WEEP HOLES. ANY DAMAGED STEEL SHALL BE COATED WITH A MINIMUM THICKNESS OF 4 DRY MILS OF ZINC-RICH PAINT IN ACCORDANCE WITH THE STANDARD SPECIFICATIONS.
3. LAY THE GLAND ON THE BASE ANGLE AND FIELD MARK THE GLAND FOR THE BOLT HOLES. HOLES IN THE GLAND SHALL BE PUNCHED 7/8" IN DIAMETER WITH A HAND PUNCH.
4. IN ORDER TO CHECK FOR PROPER ALIGNMENT, PLACE THE GLAND AND HOLD-DOWN PLATES ON THE BASE ANGLE. DO NOT APPLY NEOPRENE SEALANT. BOLT THE HOLD-DOWN PLATES TO THE BASE ANGLE BUT DO NOT TIGHTEN. THE ENGINEER SHALL INSPECT THE JOINT SEAL DEVICE FOR PROPER ALIGNMENT.
5. AFTER INSPECTION, REMOVE THE HOLD-DOWN PLATES AND GLAND. APPLY NEOPRENE SEALANT TO THE BASE ANGLE IN ACCORDANCE WITH THE "INSTALLATION SKETCH". PLACE GLAND AND HOLD-DOWN PLATES ON THE BASE ANGLE. BOLT THE HOLD-DOWN PLATES TO THE BASE ANGLE ASSEMBLY AND TORQUE THE BOLTS TO 88 FT-LBS WITH A TORQUE WRENCH. CHECK THE TORQUE AFTER THREE (3) HOURS AND, IF NECESSARY, RETIGHTEN TO 88 FT-LBS. A FINAL CHECK SHALL BE MADE AT SEVEN (7) DAYS. TORQUE SHALL NOT BE LESS THAN 80 FT-LBS AFTER SEVEN (7) DAYS.
6. AFTER PROPER TORQUING, CLEAN THE BOLT HOLE RECESSES AND THE RECESS BETWEEN THE JOINT SEAL DEVICE AND CONCRETE, COMPLETELY FILL THESE RECESSES WITH NEOPRENE SEALANT.

GENERAL NOTES

1. FOR EXPANSION JOINT SEALS, SEE SPECIAL PROVISIONS.
2. ALL PLATES AND ANGLES SHALL CONFORM TO AASHTO M270 GRADE 36 STEEL OR APPROVED EQUAL. ALL HOLD-DOWN BOLTS SHALL CONFORM TO ASTM F593 ALLOY 304 STAINLESS STEEL AND WASHERS SHALL CONFORM TO ASTM F844 EXCEPT THEY SHALL BE MADE FROM ALLOY 304 STAINLESS STEEL. ALL STUD ANCHORS SHALL CONFORM TO AASHTO M169, GRADES 1010 THRU 1020 OR APPROVED EQUAL. ALL CONCRETE INSERTS SHALL BE CLOSED END AND SHALL CONFORM TO AASHTO M169, GRADE 12L14. TENSILE CAPACITY SHALL BE 3000 LBS. MIN.
3. A PREMOLDED CORRUGATED OR NON-CORRUGATED GLAND SHALL BE USED FOR JOINTS SKEWED BETWEEN 50° THRU 130°. FOR JOINTS SKEWED LESS THAN 50° OR MORE THAN 130°, ONLY A CORRUGATED GLAND SHALL BE USED.
4. CLOSED END FERRULES AND STUD ANCHORS SHALL BE SHOP WELDED AND ALL HOLES SHALL BE SHOP DRILLED AS SHOWN ON PLANS. STUD ANCHORS SHALL BE ELECTRIC ARC END WELDED WITH COMPLETE FUSION.
5. SURFACES COMING IN CONTACT WITH NEOPRENE SHALL BE GROUND SMOOTH PRIOR TO METALLIZING.
6. UPON COMPLETION OF SHOP FABRICATION, THE HOLD DOWN PLATE AND BASE ANGLE ASSEMBLY, AS SHOWN IN THE " TYPICAL SECTION OF BASE ANGLE ASSEMBLY", SHALL BE METALLIZED. SEE SPECIAL PROVISION FOR THERMAL SPRAYED COATINGS (METALLIZATION).
7. BASE ANGLE ASSEMBLY SHALL BE CONTINUOUS FOR THE LENGTH OF THE JOINT. AT CROWN BREAKS, THE ENDS OF THE BASE ANGLE ASSEMBLY SHALL BE CUT PARALLEL TO THE BRIDGE CENTERLINE FOR SKEWS LESS THAN 80° AND GREATER THAN 100°. FINISHED WELD SHALL BE GROUND SMOOTH AND COATED WITH A MINIMUM THICKNESS OF 4 DRY MILS OF ZINC-RICH PAINT IN ACCORDANCE WITH THE STANDARD SPECIFICATIONS.
8. FIELD SPLICES OF HOLD-DOWN PLATES SHALL BE KEPT TO A MINIMUM. CONTRACTOR SHALL FURNISH DETAILED PLANS SHOWING PROPOSED SPLICE LOCATIONS FOR APPROVAL. HOLD-DOWN PLATES SHALL NOT EXCEED 20' LENGTHS UNLESS APPROVED BY THE ENGINEER.
9. NO ALTERNATE JOINT DETAILS SHALL BE PERMITTED IN LIEU OF THOSE SHOWN ON THESE PLANS.
10. THE CONTRACTOR MAY, AT HIS OPTION, USE ADHESIVELY ANCHORED ANCHOR BOLTS IN PLACE OF CONCRETE INSERTS FOR COVER PLATES. THE YIELD LOAD OF THE 3/4" Ø BOLT IS 10 KIPS. FIELD TESTING OF THE ADHESIVE BONDING SYSTEM IS NOT REQUIRED.

MOVEMENT AND SETTING AT JOINT					
BENT NO.	SKEW ANGLE *	TOTAL MOVEMENT (ALONG ℄ RDWY)	PERPENDICULAR JOINT OPENING AT 45° F	PERPENDICULAR JOINT OPENING AT 60° F	PERPENDICULAR JOINT OPENING AT 90° F
EB1	90°12'08"	1 1/4"	1 13/16"	1 5/8"	1 1/4"
EB2	89°47'51"	2 1/2"	2 5/8"	2 1/4"	1 1/2"

* SKEW ANGLE IS BETWEEN FILL FACE AND TANGENT TO CURVE.

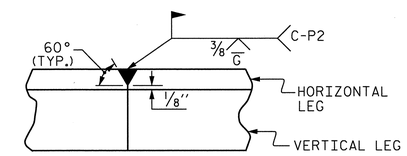

DETAIL- FIELD WELD SPLICE OF BASE ANGLE

PROJECT NO. U-0071
DURHAM COUNTY
STATION: 105+29.00 -L-

SHEET 1 OF 2

STATE OF NORTH CAROLINA
DEPARTMENT OF TRANSPORTATION
RALEIGH

SUPERSTRUCTURE
EXPANSION JOINT
SEAL DETAILS

DWG. NO. 29

NORTH CAROLINA PROFESSIONAL SEAL 031543 ENGINEER KENNETH M. WING JR.
12/23/2013

RK&K
RUMMEL, KLEPPER & KAHL, LLP
900 RIDGEFIELD DRIVE SUITE 350
RALEIGH, NORTH CAROLINA 27609-3960
NC LICENSE NUMBER: F-0112

REVISIONS						
NO.	BY:	DATE:	NO.	BY:	DATE:	
1			3			
2			4			

SHEET NO. S-257
TOTAL SHEETS 671
STR. #5

DRAWN BY : F.D. WEEDEN DATE : NOV. 2013
CHECKED BY : K.M. WING DATE : NOV. 2013
DESIGN ENGINEER OF RECORD : Y. TAN DATE : NOV. 2013

fweeden
12/23/2013 m:\projects\2011\11153_u0071 structures\structure\us70flyover\dgn\U0071_sd_ej.dgn

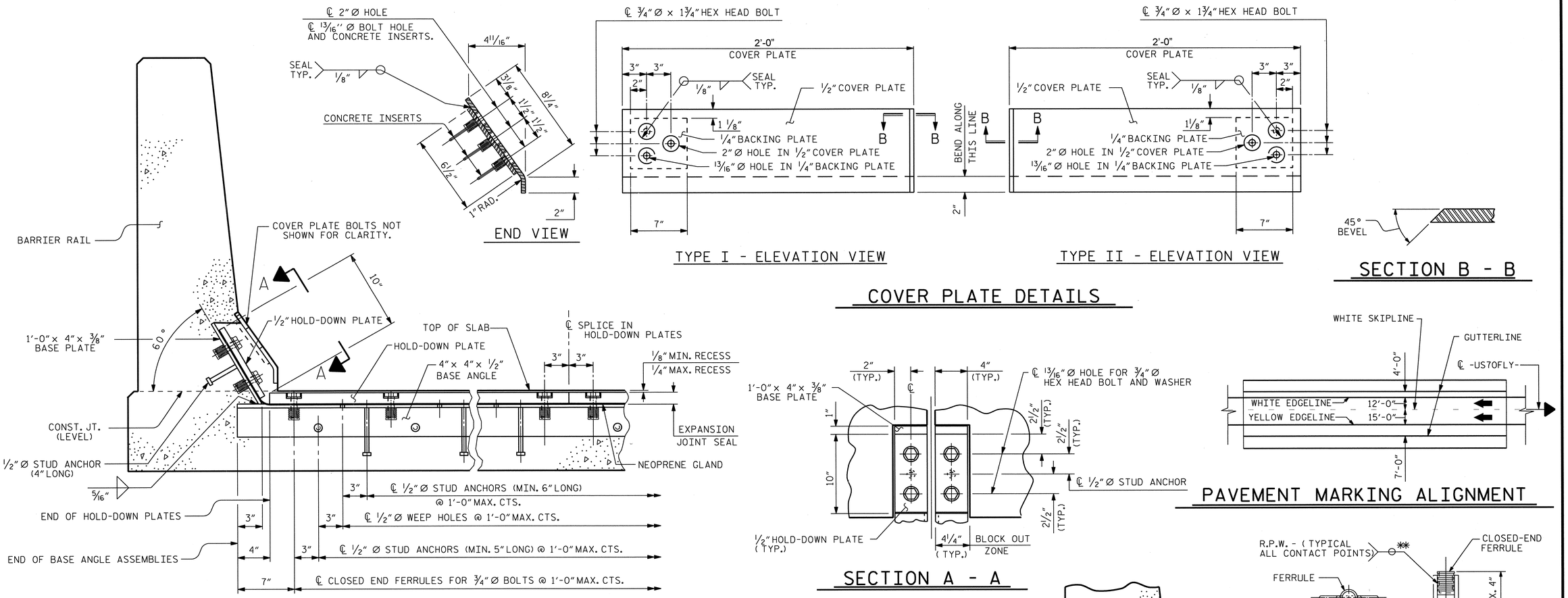
℄ 2" Ø HOLE
℄ 13/16" Ø BOLT HOLE AND CONCRETE INSERTS.
SEAL TYP.
1/8"
4 11/16"
3 1/8"
8 1/4"
1 1/2"
1 1/2"
CONCRETE INSERTS
6 1/2"
1" RAD.
2"
END VIEW
℄ 3/4" Ø x 1 3/4" HEX HEAD BOLT
2'-0" COVER PLATE
3" 3"
2"
SEAL TYP.
1/8"
1/2" COVER PLATE
1 1/8"
1/4" BACKING PLATE
2" Ø HOLE IN 1/2" COVER PLATE
13/16" Ø HOLE IN 1/4" BACKING PLATE
B
B
BEND ALONG THIS LINE
2"
7"
TYPE I - ELEVATION VIEW
℄ 3/4" Ø x 1 3/4" HEX HEAD BOLT
2'-0" COVER PLATE
1/2" COVER PLATE
SEAL TYP.
1/8"
3" 3"
2"
1 1/8"
1/4" BACKING PLATE
2" Ø HOLE IN 1/2" COVER PLATE
13/16" Ø HOLE IN 1/4" BACKING PLATE
7"
TYPE II - ELEVATION VIEW
COVER PLATE DETAILS
45° BEVEL
SECTION B - B
BARRIER RAIL
COVER PLATE BOLTS NOT SHOWN FOR CLARITY.
A
A
10"
1/2" HOLD-DOWN PLATE
1'-0" x 4" x 3/8" BASE PLATE
60°
TOP OF SLAB
℄ SPLICE IN HOLD-DOWN PLATES
HOLD-DOWN PLATE
4" x 4" x 1/2" BASE ANGLE
3" 3"
1/8" MIN. RECESS
1/4" MAX. RECESS
EXPANSION JOINT SEAL
NEOPRENE GLAND
CONST. JT. (LEVEL)
1/2" Ø STUD ANCHOR (4" LONG)
5/16"
END OF HOLD-DOWN PLATES
END OF BASE ANGLE ASSEMBLIES
3"
℄ 1/2" Ø STUD ANCHORS (MIN. 6" LONG) @ 1'-0" MAX. CTS.
℄ 1/2" Ø WEEP HOLES @ 1'-0" MAX. CTS.
℄ 1/2" Ø STUD ANCHORS (MIN. 5" LONG) @ 1'-0" MAX. CTS.
4"
7"
℄ CLOSED END FERRULES FOR 3/4" Ø BOLTS @ 1'-0" MAX. CTS.
SECTION THRU RAIL NORMAL TO JOINT
2" (TYP.)
4" (TYP.)
℄ 13/16" Ø HOLE FOR 3/4" Ø HEX HEAD BOLT AND WASHER
1'-0" x 4" x 3/8" BASE PLATE
1"
10"
2 1/2" (TYP.)
2 1/2" (TYP.)
℄ 1/2" Ø STUD ANCHOR
2 1/2" (TYP.)
1/2" HOLD-DOWN PLATE (TYP.)
4 1/4" (TYP.)
BLOCK OUT ZONE
SECTION A - A
WHITE SKIPLINE
GUTTERLINE
℄ -US70FLY-
4'-0"
WHITE EDGELINE
YELLOW EDGELINE
12'-0"
15'-0"
7'-0"
PAVEMENT MARKING ALIGNMENT
R.P.W. - (TYPICAL ALL CONTACT POINTS)
CLOSED-END FERRULE
FERRULE
WIRE STRUT
APPROX. 4"
PLAN
ELEVATION
CONCRETE INSERT
1 1/2"
1'-6" BARRIER RAIL
TOE OF CURB
℄ SPLICE IN HOLD-DOWN PLATES
HOLD-DOWN PLATES
3" 3"
1/4"
3/4"
9 1/4"
2'-0" COVER PLATE (TYPE II)
3- 3/4" Ø CONC. INSERTS
RECESSED AREA ON FACE OF BARRIER RAIL
℄ EXP. JT. SEAL
EXPANSION JT. SEAL
1"
1/2" RECESS FOR COVER PLATE
1 13/16" @ 45° F
1 5/8" @ 60° F
1 1/4" @ 90° F
END BENT 1
2 5/8" @ 45° F
2 1/4" @ 60° F
1 1/2" @ 90° F
END BENT 2
FLOW OF TRAFFIC
1'-0" x 4" x 3/8" BASE PLATE
BLOCK OUT ZONE
1/4" CL.
1 1/4" MIN.
BLOCK OUT DETAIL
SEE " SECTION A - A " FOR OTHER DETAILS.
** EACH WELDED ATTACHMENT OF WIRE TO FERRULE SHALL DEVELOP THE TENSILE STRENGTH OF THE WIRE.
PROJECT NO. U-0071
DURHAM COUNTY
STATION: 105+29.00 -L-
SHEET 2 OF 2
STATE OF NORTH CAROLINA
DEPARTMENT OF TRANSPORTATION
RALEIGH
SUPERSTRUCTURE
EXPANSION JOINT
SEAL DETAILS
FOR BARRIER RAIL
DWG. NO. 30
NORTH CAROLINA PROFESSIONAL SEAL 031543 ENGINEER KENNETH M. WING JR.
12/23/2013
RK&K
RUMMEL, KLEPPER & KAHL, LLP
900 RIDGEFIELD DRIVE SUITE 350
RALEIGH, NORTH CAROLINA 27609-3960
NC LICENSE NUMBER: F-0112
REVISIONS
NO. BY: DATE: NO. BY: DATE:
1 2 3 4
SHEET NO. 5-258
TOTAL SHEETS 671
STR. #5
DRAWN BY : F.D. WEEDEN DATE : NOV. 2013
CHECKED BY : K.M. WING DATE : NOV. 2013
DESIGN ENGINEER OF RECORD : Y. TAN DATE : NOV. 2013
PLAN OF EXPANSION JOINT SEAL
fweeden
12/23/2013 m:\projects\2011\11153_u0071 structures\structure\us70flyover\dgn\U0071_sd_ej1.dgn

REINFORCING BAR SCHEDULE

SPANS A, B, C AND D

EPOXY COATED						NON-EPOXY COATED					
BAR	NO.	SIZE	TYPE	LENGTH	WEIGHT	BAR	NO.	SIZE	TYPE	LENGTH	WEIGHT
AE1	1218	#5	STR.	40'-11"	51,980	A1	1218	#5	STR.	40'-11"	51,980
BE1	39	#6	STR.	35'-0"	2,050	B1	40	#5	STR.	57'-9"	2,409
BE2	39	#6	STR.	45'-0"	2,636	B2	140	#5	STR.	57'-4"	8,372
BE3	39	#6	STR.	50'-0"	2,929	B3	140	#5	STR.	56'-6"	8,250
BE4	126	#6	STR.	60'-0"	11,355	B4	140	#5	STR.	55'-8"	8,128
BE5	42	#6	STR.	23'-0"	1,451	B5	40	#5	STR.	54'-10"	2,288
BE6	42	#6	STR.	42'-0"	2,650						
BE7	42	#6	STR.	52'-0"	3,280						
BE8	126	#4	STR.	24'-4"	2,048						
BE9	84	#4	STR.	23'-1"	1,295						
BE10	126	#4	STR.	21'-8"	1,824						
BE11	168	#4	STR.	28-7"	3,208						
KE1	8	#5	1	7'-11"	66	K1	12	#5	STR.	8'-10"	111
KE2	8	#5	2	8'-10"	74						
SE1	54	#4	3	3'-10"	138						
GE1	2	#5	STR.	40'-11"	85						
JE1	78	#4	4	1'-5"	74						

SUPERSTRUCTURE REINFORCING STEEL LENGTHS ARE BASED ON THE FOLLOWING MINIMUM SPLICE LENGTHS

BAR SIZE	SUPERSTRUCTURE EXCEPT APPROACH SLABS, PARAPET, AND BARRIER RAIL		APPROACH SLABS		PARAPET AND BARRIER RAIL
	EPOXY COATED	UNCOATED	EPOXY COATED	UNCOATED	
#4	2'-0"	1'-9"	2'-0"	1'-9"	2'-9"
#5	2'-6"	2'-2"	2'-6"	2'-2"	3'-5"
#6	3'-0"	2'-7"	3'-10"	2'-7"	4'-4"
#7	5'-3"	3'-6"			
#8	6'-10"	4'-7"			

GROOVING BRIDGE FLOORS

APPROACH SLABS	1,680	SQ.FT.
BRIDGE DECK	18,970	SQ.FT.
TOTAL	20,650	SQ.FT.

BAR TYPES

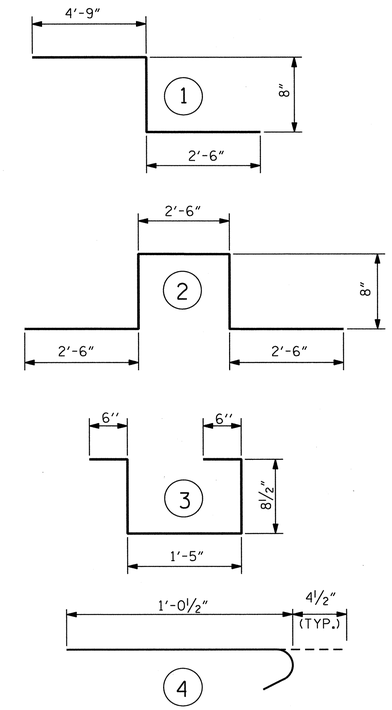

ALL BAR DIMENSIONS ARE OUT TO OUT

SUPERSTRUCTURE BILL OF MATERIAL

	CLASS AA CONCRETE	REINFORCING STEEL	EPOXY COATED REINFORCING STEEL
	(CU.YDS.)	(LBS.)	(LBS.)
POUR 1	148.1		
POUR 2	235.7		
POUR 3	195.2		
POUR 4	197.3		
POUR 5	12.2		
TOTALS**	788.5	81,538	87,143

**QUANTITIES FOR CONCRETE BARRIER RAIL ARE NOT INCLUDED

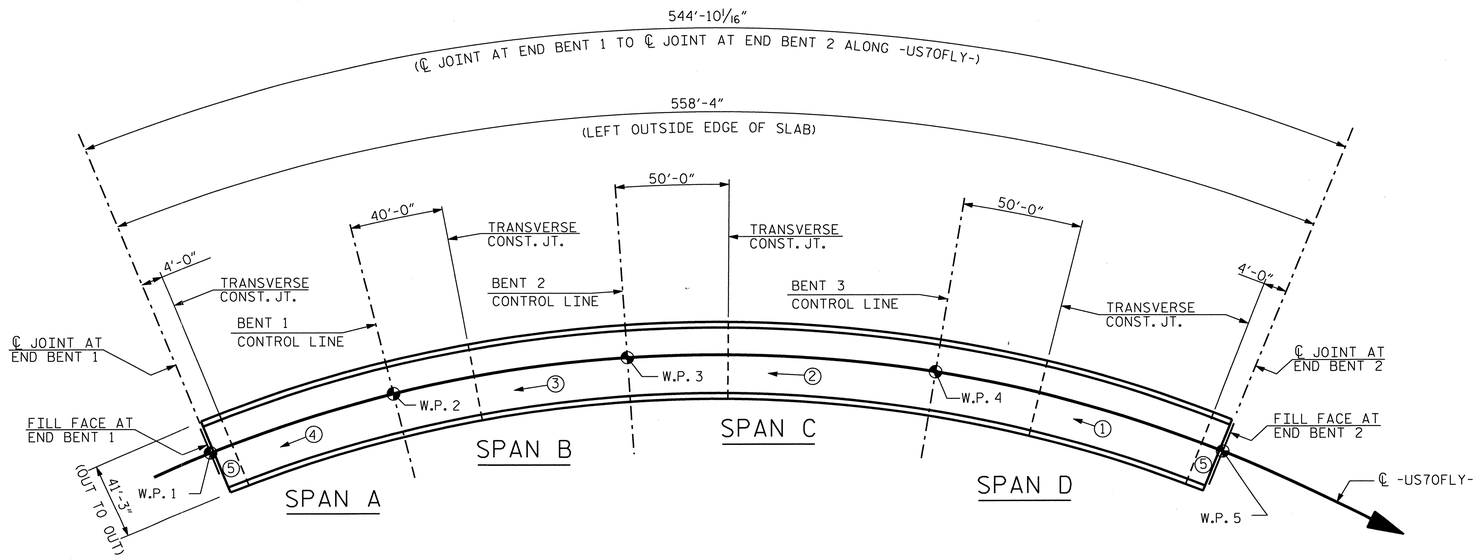

SLAB POURING SEQUENCE
LAYOUT FOR COMPUTING AREA
OF REINFORCED CONCRETE DECK SLAB
(SQ. FT. = 22,475)

PROJECT NO. U-0071
DURHAM COUNTY
STATION: 105+29.00 -L-

STATE OF NORTH CAROLINA
DEPARTMENT OF TRANSPORTATION
RALEIGH

SUPERSTRUCTURE
BILL OF MATERIALS

DWG. NO. 31

NORTH CAROLINA PROFESSIONAL SEAL 031543 ENGINEER KENNETH M. WING JR.
12/23/2013

RK&K
RUMMEL, KLEPPER & KAHL, LLP
900 RIDGEFIELD DRIVE SUITE 350
RALEIGH, NORTH CAROLINA 27609-3960
NC LICENSE NUMBER: F-0112

REVISIONS						
NO.	BY:	DATE:	NO.	BY:	DATE:	
1			3			
2			4			

SHEET NO. S-259
TOTAL SHEETS 671

STR. #5

DRAWN BY : F.D. WEEDEN DATE : NOV. 2013
CHECKED BY : K.M. WING DATE : NOV. 2013
DESIGN ENGINEER OF RECORD : Y. TAN DATE : NOV. 2013

fweeden
12/23/2013 m:\projects\2011\11153_u0071 structures\structure\us70flyover\dgn\U0071_sd_bom.dgn

NOTES:

FOR NOTES, SECTION A-A AND TEMPORARY DRAINAGE, SEE "END BENT 1 DETAILS" SHEET, SHEET 2 OF 3.

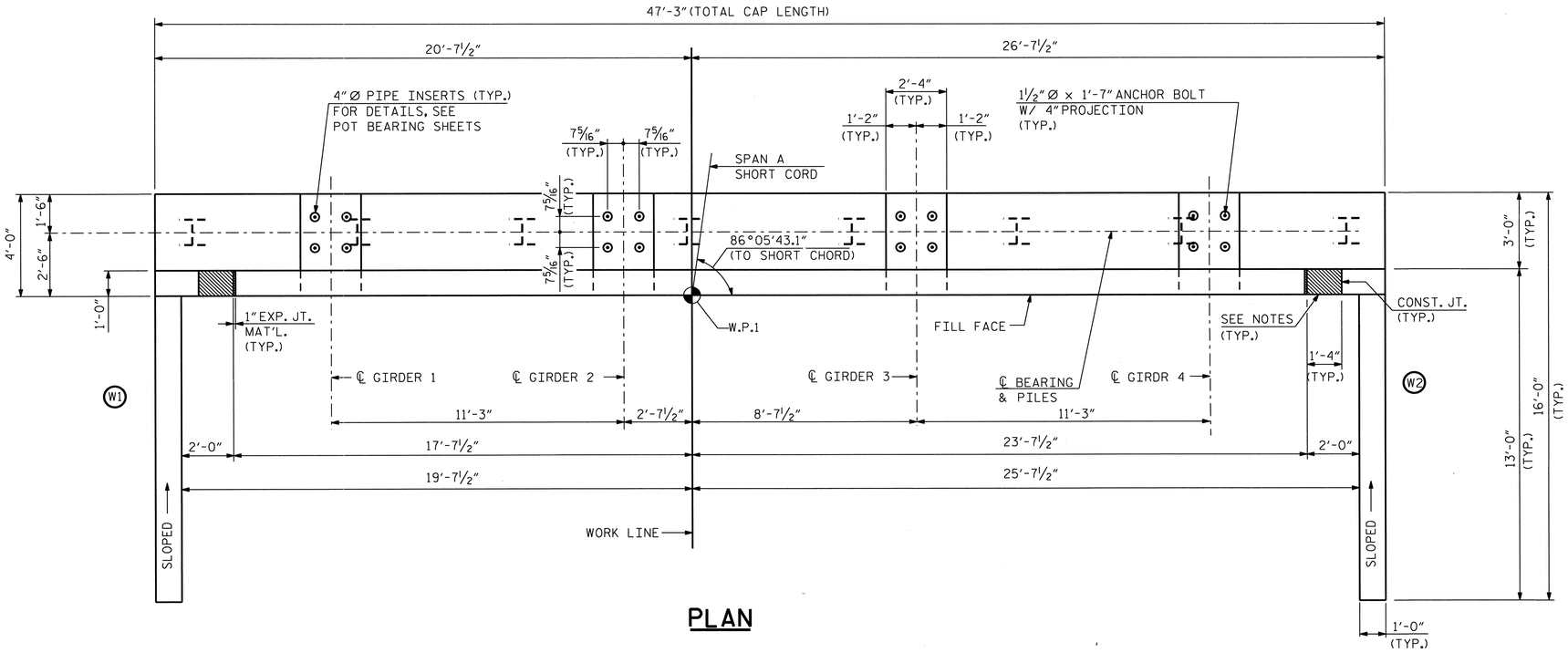

PLAN

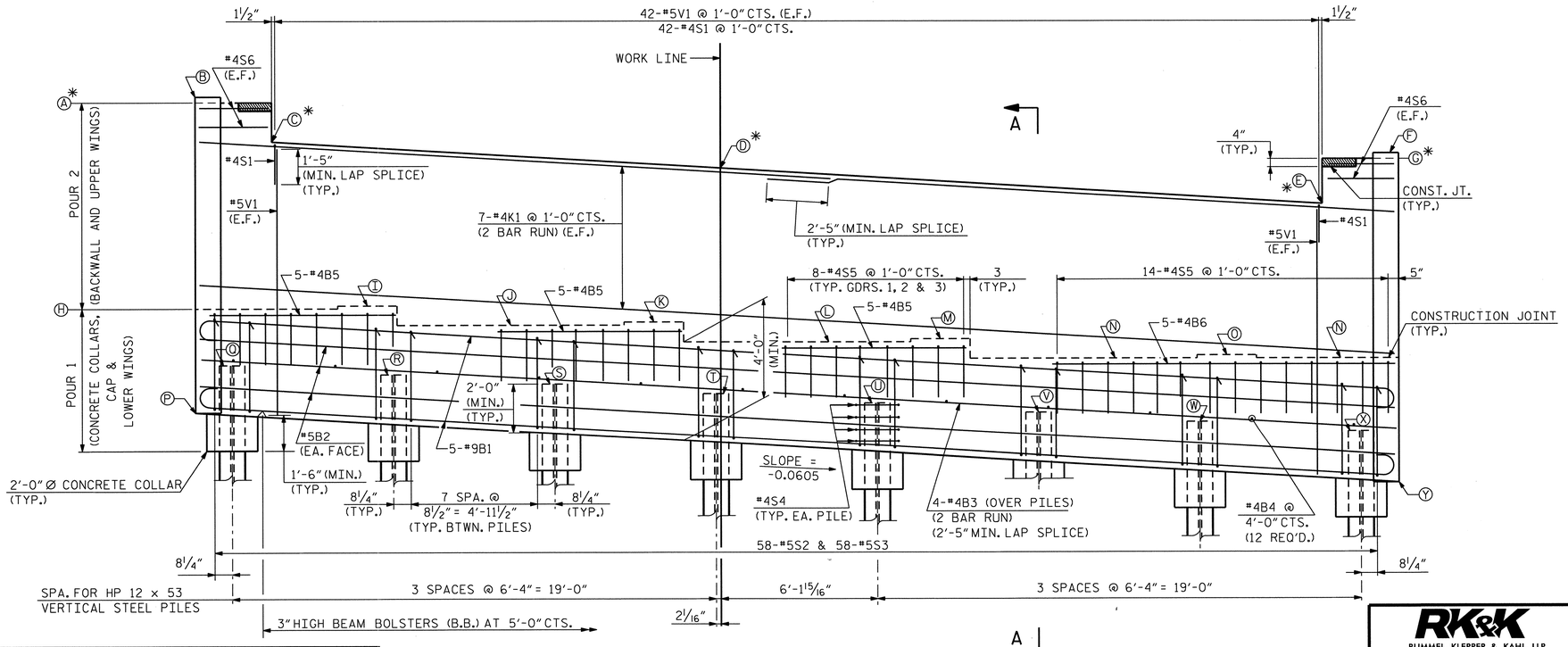

ELEVATION

ELEVATION TABLE	
A *	420.81
B	421.04
C *	419.25
D *	418.20
E *	416.77
F	418.77
G *	418.54
H	412.51
I	412.63
J	411.84
K	411.96
L	411.16
M	411.28
N	410.51
O	410.63
P	408.32
Q	410.26
R	409.88
S	409.49
T	409.11
U	408.73
V	408.35
W	407.96
X	407.58
Y	405.46

* AT FILL FACE

PROJECT NO. U-0071

DURHAM COUNTY

STATION: 105+29.00 -L-

SHEET 1 OF 3

STATE OF NORTH CAROLINA
DEPARTMENT OF TRANSPORTATION
RALEIGH

SUBSTRUCTURE
END BENT 1

DWG. NO. 32

NORTH CAROLINA PROFESSIONAL SEAL 031543 ENGINEER KENNETH M. WING, P.E.
12/23/2013

RK&K
RUMMEL, KLEPPER & KAHL, LLP
900 RIDGEFIELD DRIVE SUITE 350
RALEIGH, NORTH CAROLINA 27609-3960
NC LICENSE NUMBER: F-0112

REVISIONS							SHEET NO.
NO.	BY:	DATE:	NO.	BY:	DATE:		S-260
1			3				TOTAL SHEETS
2			4				671

STR. #5

DRAWN BY : F.D. WEEDEN	DATE : NOV. 2013		
CHECKED BY : K.M. WING	DATE : NOV. 2013		
DESIGN ENGINEER OF RECORD : Y. TAN	DATE : NOV. 2013		

fweeden
12/23/2013 m:\projects\2011\1153_u0071 structures\structure\us70flyover\dgn\U0071_sd_eb1.dgn

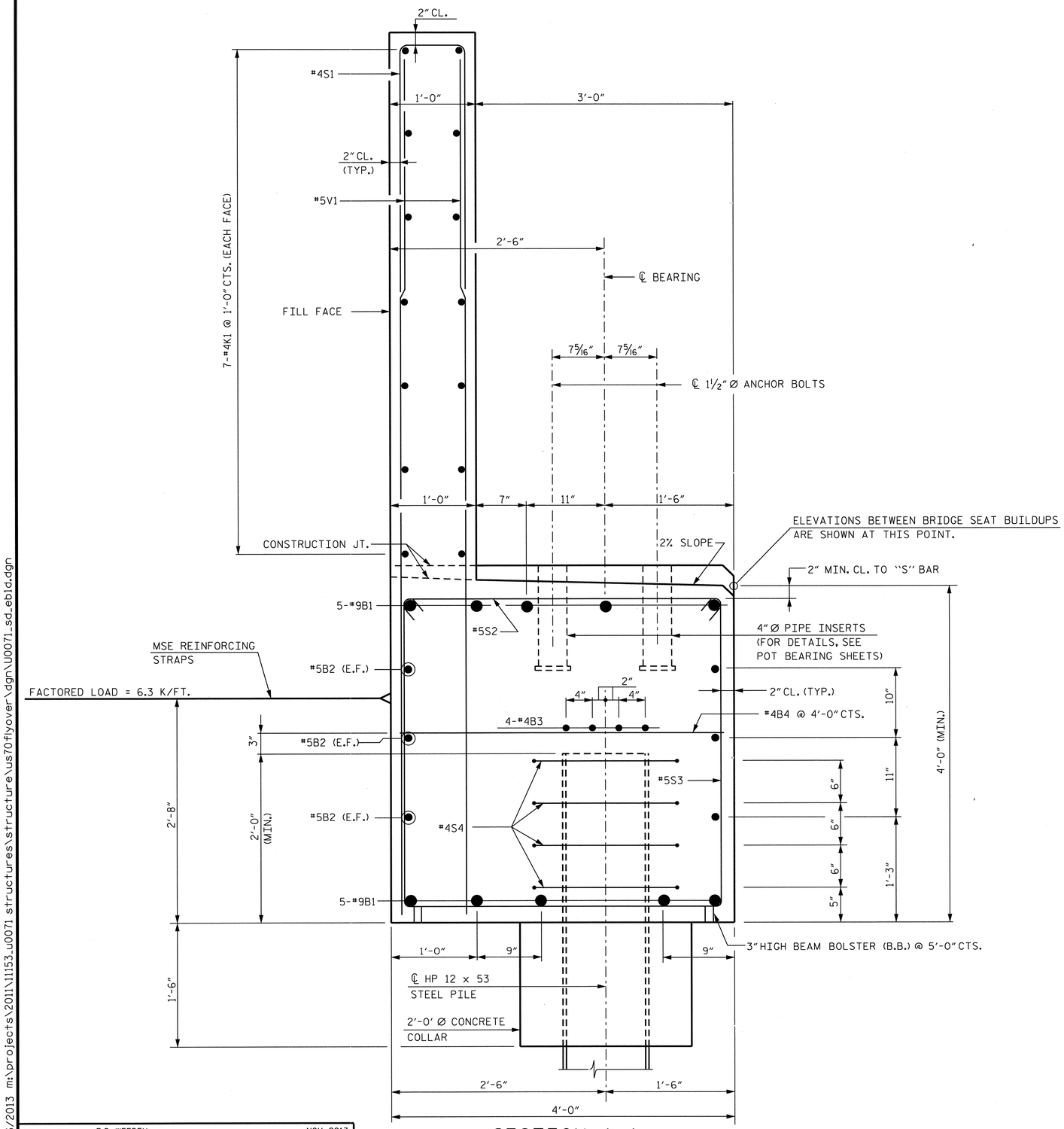

SECTION A-A

NOTES:

FOR PILE SPLICE DETAILS, SEE "END BENT 2 DETAILS" SHEET 2 OF 3.

STIRRUPS IN THE CAP MAY BE SHIFTED SLIGHTLY AS NECESSARY TO CLEAR ANCHOR BOLTS.

FOR PIPE INSERT DETAILS, SEE POT BEARING SHEETS.

BACKWALL SHALL BE PLACED BEFORE APPLYING THE EPOXY PROTECTIVE COATING.

THE TOP SURFACE AREAS OF THE END BENT CAP SHALL BE CURED IN ACCORDANCE WITH THE STANDARD SPECIFICATIONS EXCEPT THE MEMBRANE CURING COMPOUND METHOD SHALL NOT BE USED.

THE TOP SURFACE OF THE END BENT CAP, EXCEPT THE BRIDGE SEAT BUILDUPS, SHALL BE SLOPED TRANSVERSELY FROM THE FILL FACE TO THE BACK FACE AT THE RATE OF 2%.

THE CONCRETE IN THE SHADED AREA OF THE WING SHALL BE POURED AFTER THE CONCRETE BARRIER RAIL IS CAST IF SLIP FORMING IS USED.

FOR MSE REINFORCING STRAP DETAILS, SEE MSE WALL PLANS AND SPECIAL PROVISIONS.

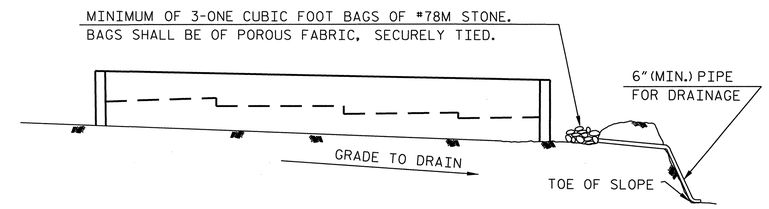

TEMPORARY DRAINAGE AT END BENT

BAGGED STONE AND PIPE SHALL BE PLACED IMMEDIATELY AFTER COMPLETION OF END BENT EXCAVATION. PIPE MAY BE EITHER CONCRETE, CORRUGATED STEEL, CORRUGATED ALUMINUM ALLOY, OR CORRUGATED PLASTIC. PERFORATED PIPE WILL NOT BE ALLOWED.

BAGGED STONE SHALL REMAIN IN PLACE UNTIL THE ENGINEER DIRECTS THAT IT BE REMOVED. THE CONTRACTOR SHALL REMOVE AND DISPOSE OF SILT ACCUMULATIONS AT BAGGED STONE WHEN SO DIRECTED BY THE ENGINEER. BAGS SHALL BE REMOVED AND REPLACED WHENEVER THE ENGINEER DETERMINES THAT THEY HAVE DETERIORATED AND LOST THEIR EFFECTIVENESS.

NO SEPARATE PAYMENT WILL BE MADE FOR THIS WORK AND THE ENTIRE COST OF THIS WORK SHALL BE INCLUDED IN THE UNIT CONTRACT PRICE FOR THE SEVERAL PAY ITEMS.

PROJECT NO. U-0071
DURHAM COUNTY
STATION: 105+29.00 -L-

SHEET 2 OF 3

STATE OF NORTH CAROLINA
DEPARTMENT OF TRANSPORTATION
RALEIGH

SUBSTRUCTURE
END BENT 1
DETAILS

DWG. NO. 33

NORTH CAROLINA PROFESSIONAL SEAL 031543 ENGINEER KENNETH M. WING JR.
12/23/2013

RK&K
RUMMEL, KLEPPER & KAHL, LLP
900 RIDGEFIELD DRIVE SUITE 350
RALEIGH, NORTH CAROLINA 27609-3960
NC LICENSE NUMBER: F-0112

REVISIONS								SHEET NO.
NO.	BY:	DATE:	NO.	BY:	DATE:			S-261
1			3					TOTAL SHEETS
2			4					671

DRAWN BY : F.D. WEEDEN DATE : NOV. 2013
CHECKED BY : K.M. WING DATE : NOV. 2013
DESIGN ENGINEER OF RECORD : Y. TAN DATE : NOV. 2013

fweeden
12/23/2013 m:\projects\2011\11153.u0071 structures\structure\us70flyover\dgn\U0071_sd_ebld.dgn

STR. #5

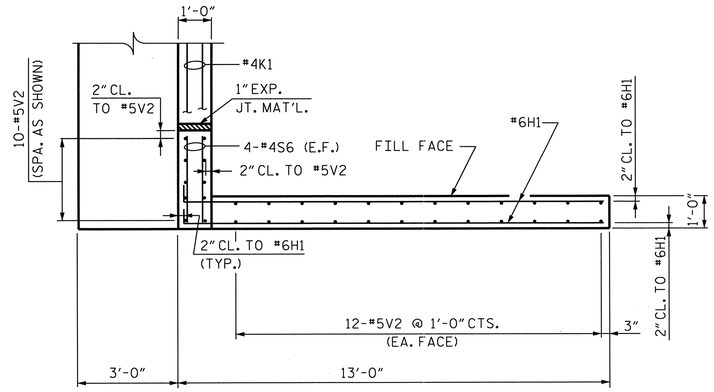

PLAN OF LEFT WING (W1)

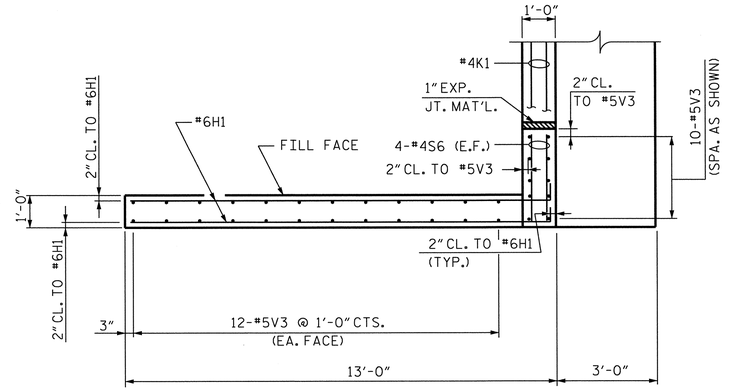

PLAN OF RIGHT WING (W2)

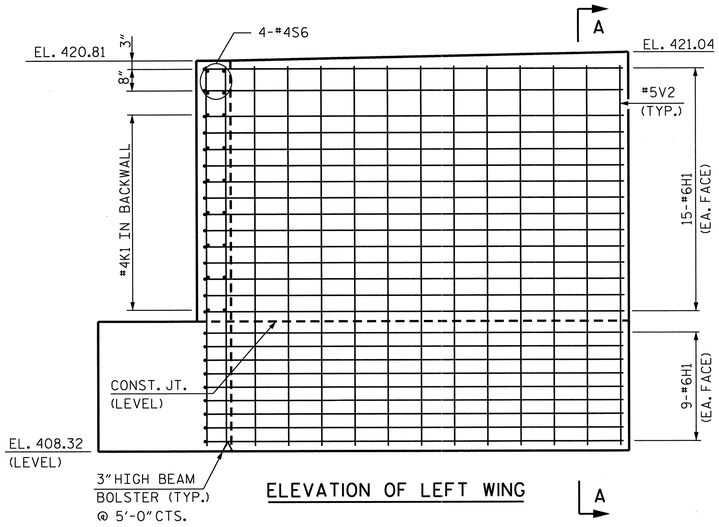

ELEVATION OF LEFT WING

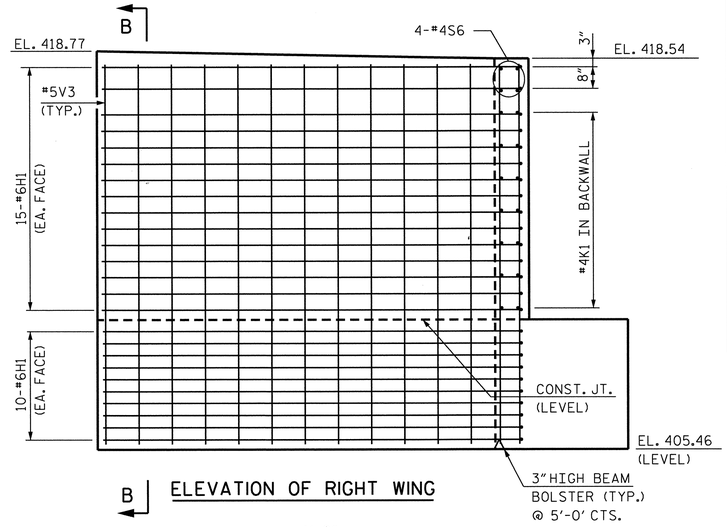

ELEVATION OF RIGHT WING

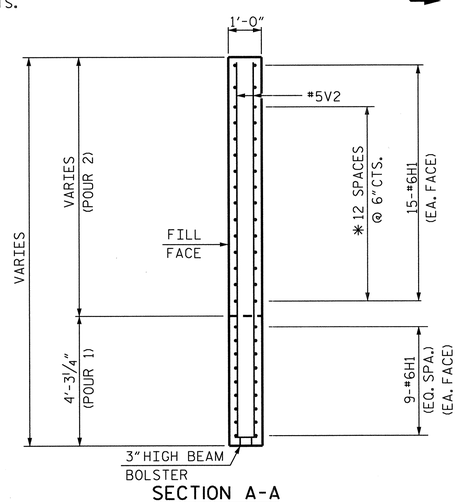

SECTION A-A

* MATCH TO #4K1 IN BACKWALL

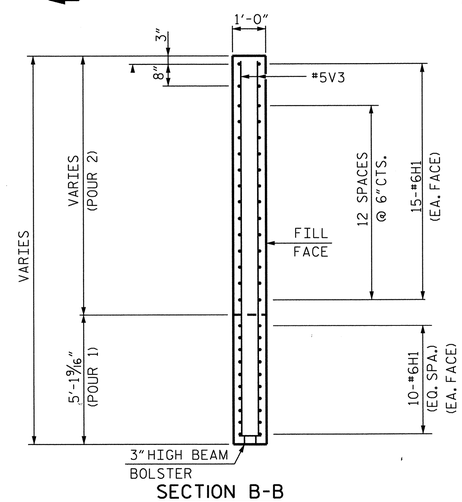

SECTION B-B

* MATCH TO #4K1 IN BACKWALL

BAR TYPES

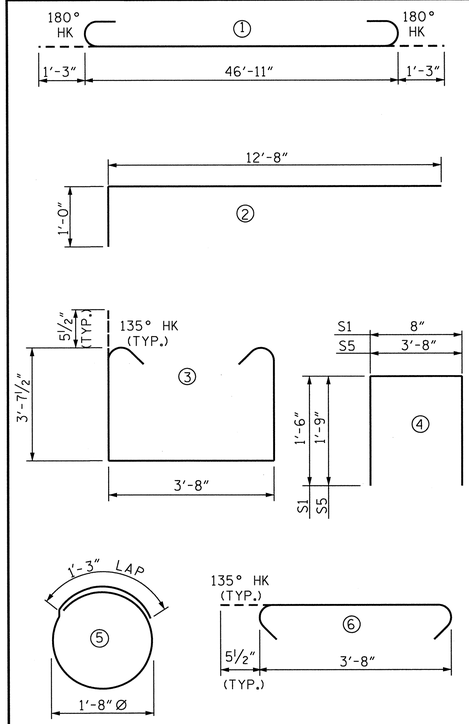

NOTE: ALL BAR DIMENSIONS ARE OUT TO OUT.

BILL OF MATERIAL

END BENT 1

BAR	NO.	SIZE	TYPE	LENGTH	WEIGHT
B1	10	#9	1	49'-5"	1,680
B2	6	#5	STR.	46'-11"	294
B3	8	#4	STR.	24'-8"	132
B4	12	#4	STR.	3'-8"	29
B5	15	#4	STR.	7'-6"	75
B6	5	#4	STR.	13'-6"	45
H1	98	#6	2	13'-8"	2,012
K1	14	#4	STR.	24'-8"	231
S1	42	#4	4	3'-8"	103
S2	58	#5	6	4'-7"	277
S3	58	#5	3	11'-10"	716
S4	32	#4	5	6'-6"	139
S5	38	#4	4	7'-2"	182
S6	8	#4	STR.	2'-8"	14
V1	84	#5	STR.	10'-8"	935
V2	34	#5	STR.	12'-1"	429
V3	34	#5	STR.	12'-6"	443

REINFORCING STEEL	7736 LBS.
CLASS "A" CONCRETE	
POUR 1 (CONCRETE COLLARS, CAP & LOWER WINGS)	37.8 C.Y.
POUR 2 (BACKWALL & UPPER WINGS)	20.6 C.Y.
TOTAL	58.4 C.Y.
HP12X53 STEEL PILES	
NO.	8
L.F.	360

PROJECT NO. U-0071

DURHAM COUNTY

STATION: 105+29.00 -L-

SHEET 3 OF 3

STATE OF NORTH CAROLINA
DEPARTMENT OF TRANSPORTATION
RALEIGH

SUBSTRUCTURE
END BENT 1 B.O.M.
AND WING WALL DETAILS

DWG. NO. 34

NORTH CAROLINA PROFESSIONAL SEAL 031543 ENGINEER KENNETH M. WING JR.
12/27/2013

RK&K
RUMMEL, KLEPPER & KAHL, LLP
900 RIDGEFIELD DRIVE SUITE 350
RALEIGH, NORTH CAROLINA 27609-3960
NC LICENSE NUMBER: F-0112

REVISIONS						
NO.	BY:	DATE:	NO.	BY:	DATE:	
1			3			
2			4			

SHEET NO. S-262
TOTAL SHEETS 671

STR. #5

DRAWN BY : F.D. WEEDEN DATE : NOV. 2013
CHECKED BY : K.M. WING DATE : NOV. 2013
DESIGN ENGINEER OF RECORD : Y. TAN DATE : NOV. 2013

fweeden
12/23/2013 m:\projects\2011\11153.u0071 structures\structure\us70flyover\dgn\U0071_sd_eb1w.dgn

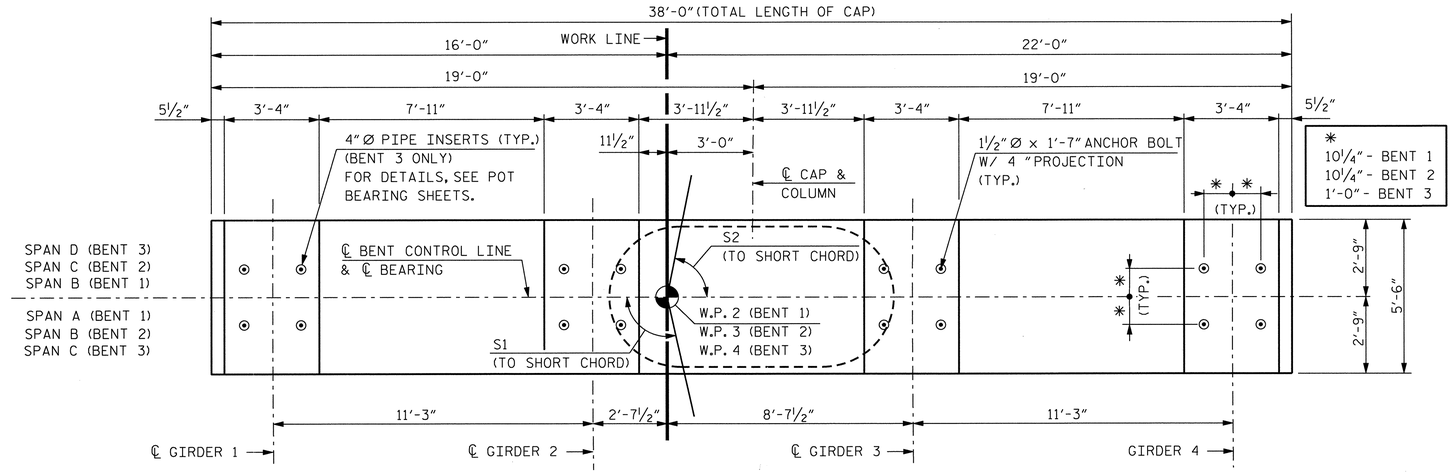

PLAN

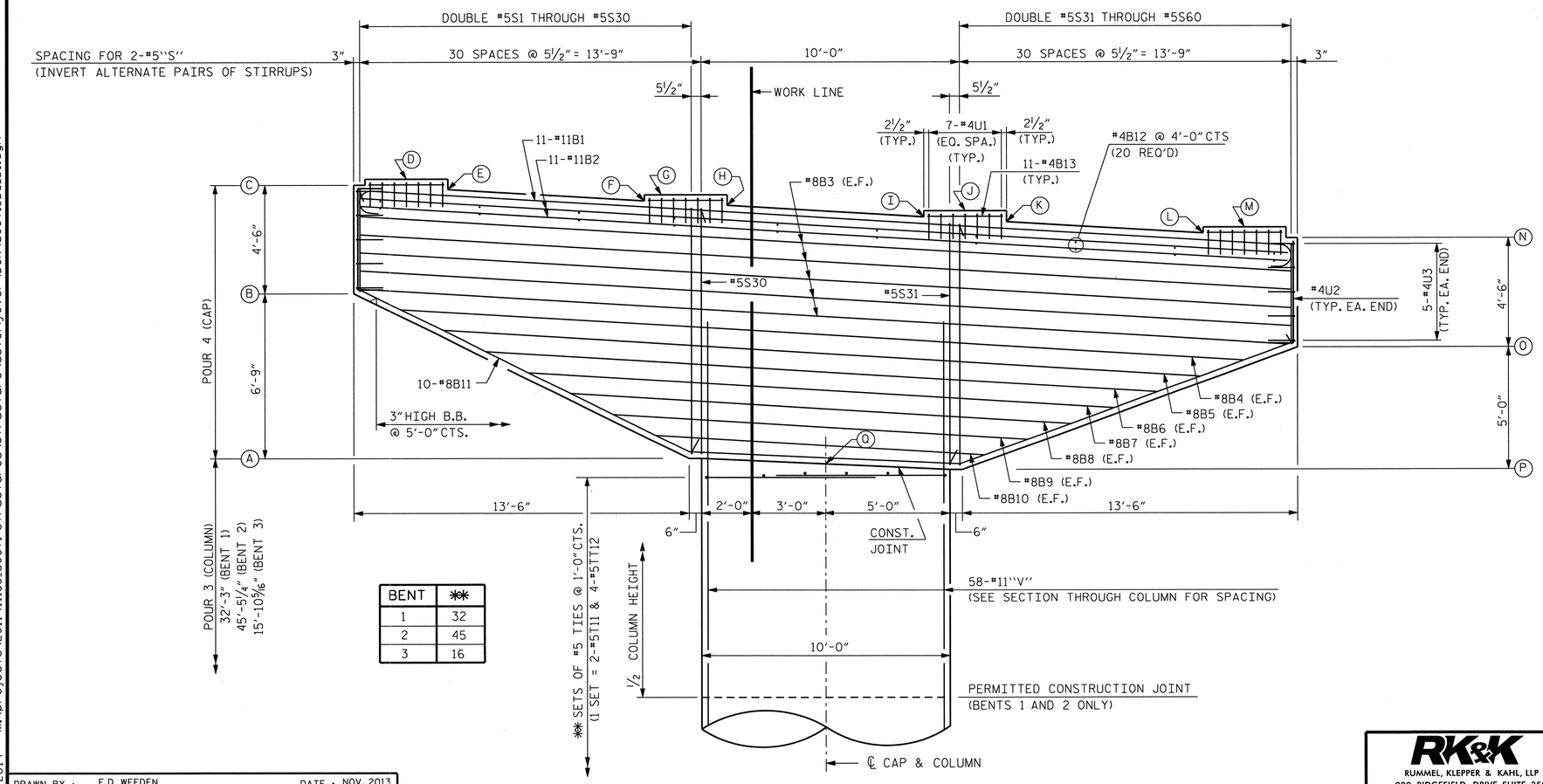

BENT	**
1	32
2	45
3	16

ELEVATION

NOTES:

STIRRUPS AND "U" BARS IN CAP MAY BE SHIFTED AS NECESSARY TO CLEAR ANCHOR BOLTS.

#11T1 BARS IN FOOTING MAY BE SHIFTED AS NECESSARY TO CLEAR #11M1 BARS IN THE COLUMN AND #11"M" BARS IN THE DRILLED PIERS.

HOOKS ON #11"M" BARS MAY BE TURNED AS NECESSARY FOR PLACING REINFORCING STEEL.

DETAILED DRAWINGS FOR FALSEWORK AND FORMS FOR THESE HAMMERHEAD BENTS SHALL BE SUBMITTED. SEE SHEET SN.

FOR PIPE INSERT DETAILS, SEE POT BEARING SHEETS.

ALL STEEL IN THE DRILLED PIERS IS INCLUDED IN THE PAY ITEMS FOR "REINFORCING STEEL" AND "SPIRAL COLUMN REINFORCING STEEL".

THE CONTRACTOR'S ATTENTION IS CALLED TO THE FACT THAT THE LONGITUDINAL REINFORCEMENT FOR THE DRILLED PIERS IS DETAILED WITH 3 FEET OF EXTRA LENGTH.

FOR MASS CONCRETE, SEE SPECIAL PROVISIONS.

ANGLE TABLE			
	BENT 1	BENT 2	BENT 3
S1	94°06'25.2"	95°03'28.4"	96°35'43.8"
S2	84°56'31.6"	83°24'16.2"	83°37'37.4"

ELEVATION TABLE			
	BENT 1	BENT 2	BENT 3
A	398.25	392.44	383.86
B	405.00	399.19	390.61
C	409.50	403.69	395.11
D	409.75	403.94	395.36
E	409.30	403.49	394.91
F	408.82	403.01	394.44
G	409.07	403.26	394.69
H	408.63	402.82	394.24
I	408.15	402.34	393.76
J	408.40	402.59	394.01
K	407.97	402.20	393.59
L	407.49	401.66	393.11
M	407.74	401.91	393.36
N	407.29	401.46	392.91
O	402.79	396.96	388.41
P	397.79	391.96	383.41
Q	398.02	392.20	383.64
TOP OF FOOTING	* R	366.00	347.00	368.00
BOT. OF FOOTING	* S	360.50	341.50	362.50
BOT. OF DRILLED PIER	* T	325.00	317.00	324.00

* SEE SHEET 2 OF 4 FOR LOCATION OF ELEVATIONS

PROJECT NO. U-0071
DURHAM COUNTY
STATION: 105+29.00 -L-

SHEET 1 OF 4

STATE OF NORTH CAROLINA
DEPARTMENT OF TRANSPORTATION
RALEIGH

SUBSTRUCTURE
BENT PLAN AND ELEVATION

DWG. NO. 35

NORTH CAROLINA PROFESSIONAL SEAL 031543 ENGINEER KENNETH M. WING, JR.
2/5/2014

RK&K
RUMMEL, KLEPPER & KAHL, LLP
900 RIDGEFIELD DRIVE SUITE 350
RALEIGH, NORTH CAROLINA 27609-3960
NC LICENSE NUMBER: F-0112

REVISIONS						SHEET NO.
NO.	BY:	DATE:	NO.	BY:	DATE:	S-263
1			3			TOTAL SHEETS
2			4			671

STR. #5

DRAWN BY : F.D. WEEDEN DATE : NOV. 2013
CHECKED BY : K.M. WING DATE : NOV. 2013
DESIGN ENGINEER OF RECORD : Y. TAN DATE : NOV. 2013

fweeden
2/4/2014 M:\projects\2011\11153_U0071 Structures\Structure\US70Flyover\DGN\U0071_sd_b1.dgn

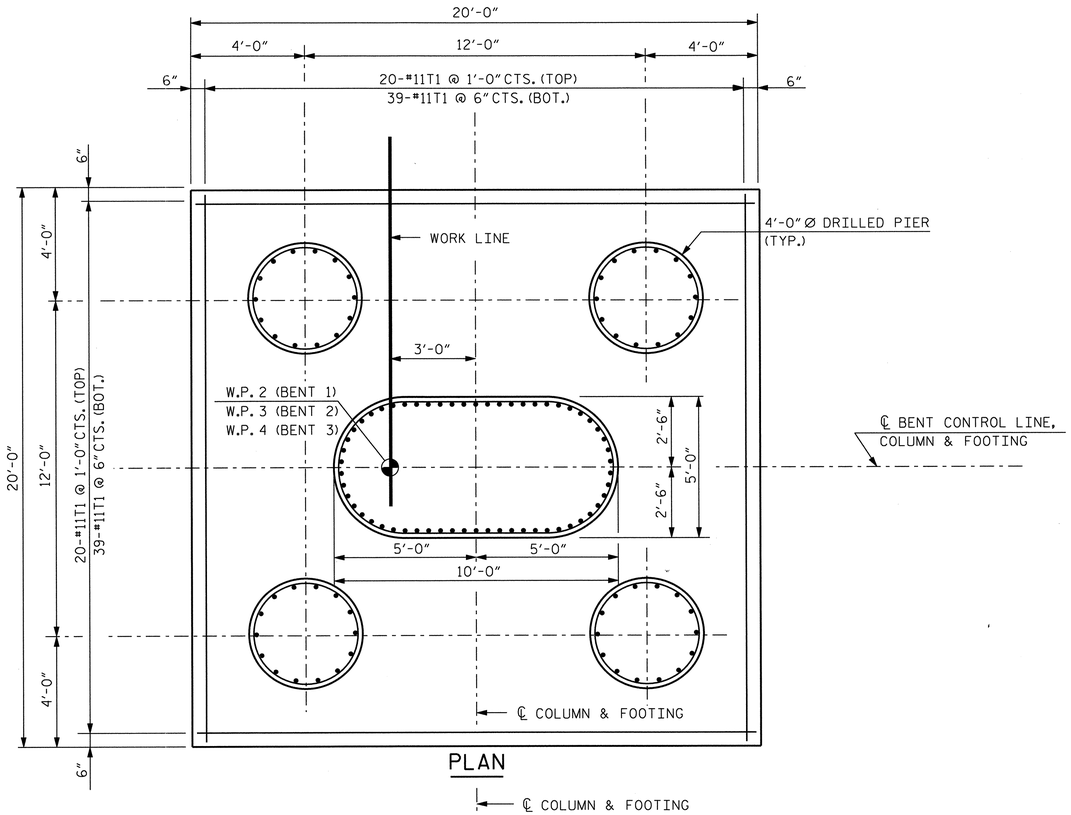

PLAN

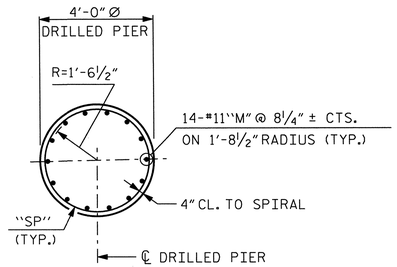

SECTION THROUGH DRILLED PIER

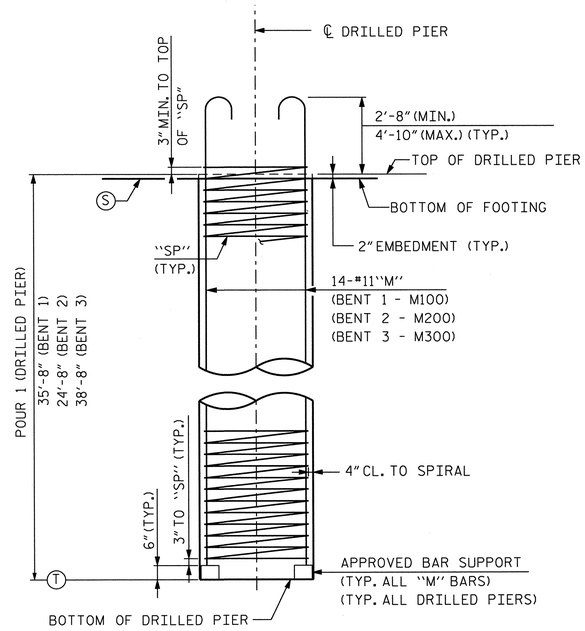

DRILLED PIER ELEVATION

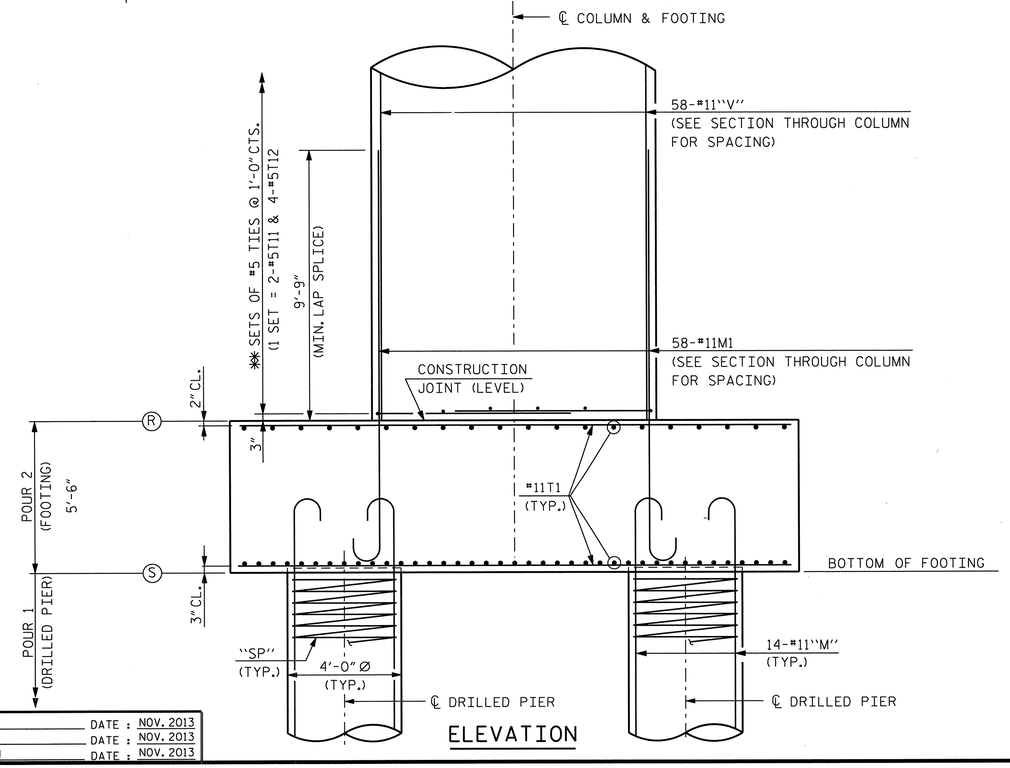

ELEVATION

NOTE:

FOR NOTES, ELEVATIONS AND ✱✱ TABLES SEE "BENT PLAN AND ELEVATION" SHEET, SHEET 1 OF 4.

PROJECT NO. U-0071
DURHAM COUNTY
STATION: 105+29.00 -L-

SHEET 2 OF 4

STATE OF NORTH CAROLINA
DEPARTMENT OF TRANSPORTATION
RALEIGH

SUBSTRUCTURE
BENT DETAILS

DWG. NO. 36

NORTH CAROLINA PROFESSIONAL SEAL 031543 ENGINEER KENNETH M. WING, JR.
12/23/2013

RK&K
RUMMEL, KLEPPER & KAHL, LLP
900 RIDGEFIELD DRIVE SUITE 350
RALEIGH, NORTH CAROLINA 27609-3960
NC LICENSE NUMBER: F-0112

REVISIONS						SHEET NO.
NO.	BY:	DATE:	NO.	BY:	DATE:	S-264
1			3			TOTAL SHEETS
2			4			671

STR. #5

DRAWN BY : F.D. WEEDEN DATE : NOV. 2013
CHECKED BY : K.M. WING DATE : NOV. 2013
DESIGN ENGINEER OF RECORD : Y. TAN DATE : NOV. 2013

fweeden
12/23/2013 m:\projects\2011\11153_u0071 structures\structure\us70flyover\dgn\U0071_sd_b1.dgn

NOTE:

FOR NOTES, ELEVATIONS AND ✱✱ TABLES SEE "BENT PLAN AND ELEVATION" SHEET, SHEET 1 OF 4.

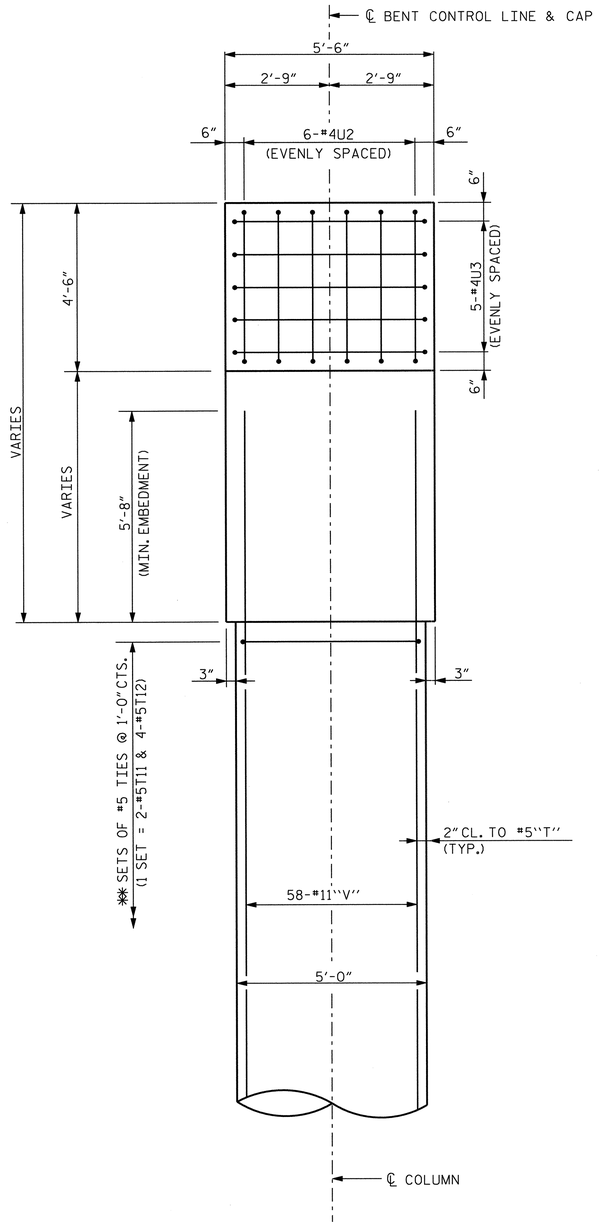

END ELEVATION

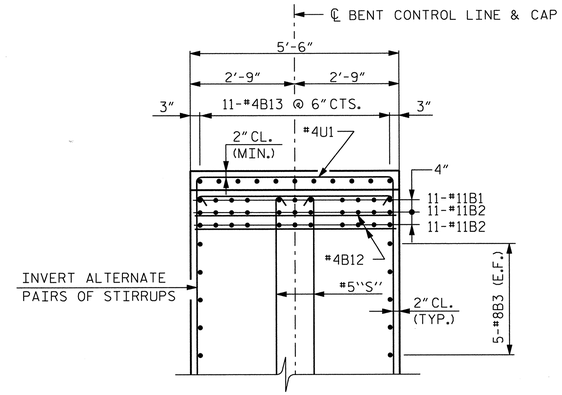

PARTIAL SECTION THROUGH BEARING

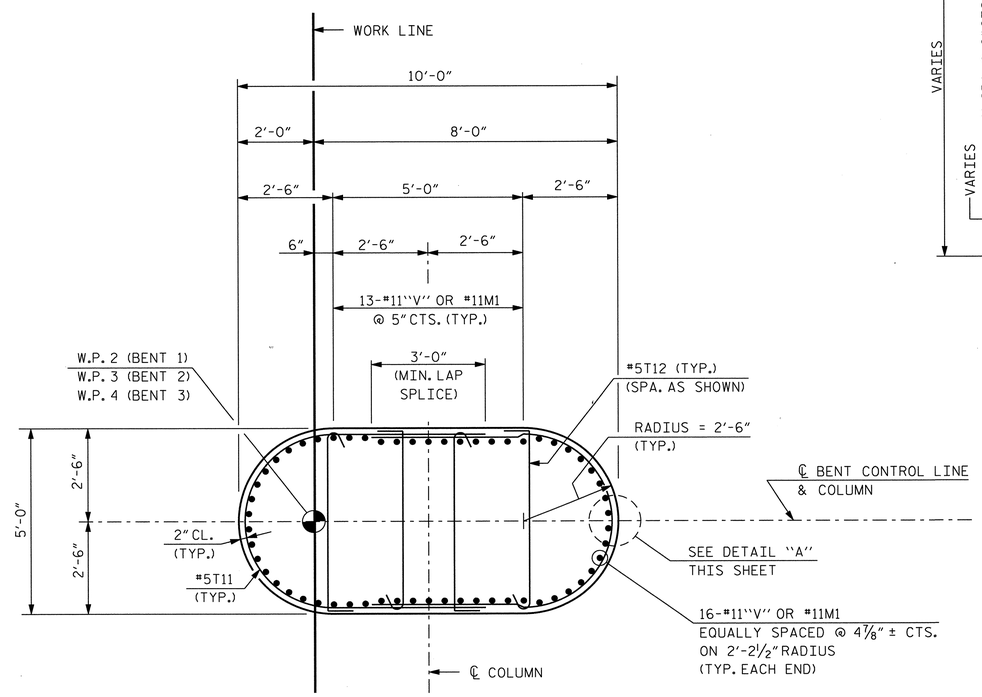

SECTION THROUGH COLUMN

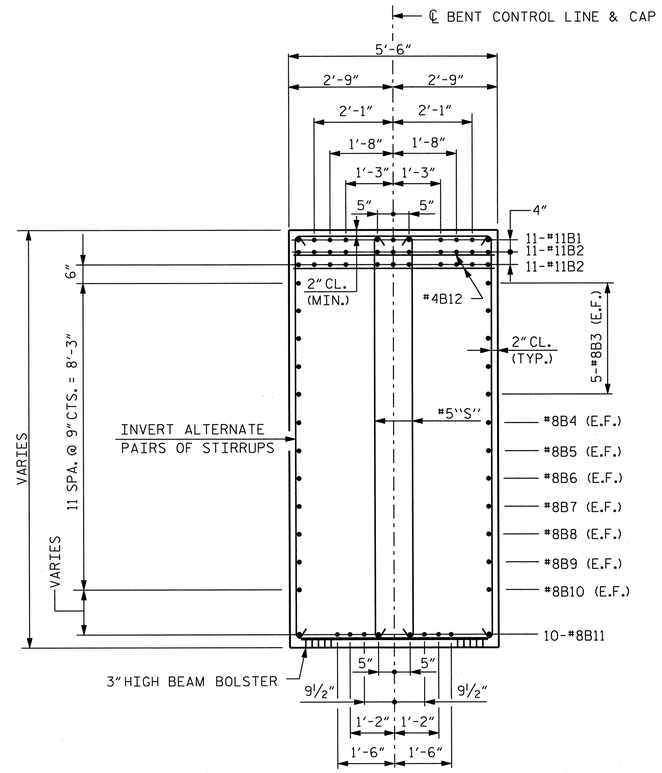

SECTION THROUGH CAP

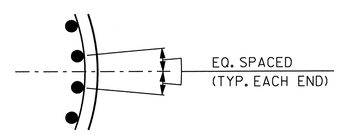

DETAIL "A"

PROJECT NO. U-0071

DURHAM COUNTY

STATION: 105+29.00 -L-

SHEET 3 OF 4

STATE OF NORTH CAROLINA
DEPARTMENT OF TRANSPORTATION
RALEIGH

SUBSTRUCTURE
BENT DETAILS

DWG. NO. 37

NORTH CAROLINA PROFESSIONAL SEAL 031543 ENGINEER KENNETH M. WING JR.
12/23/2013

RK&K
RUMMEL, KLEPPER & KAHL, LLP
900 RIDGEFIELD DRIVE SUITE 350
RALEIGH, NORTH CAROLINA 27609-3960
NC LICENSE NUMBER: F-0112

REVISIONS								SHEET NO.
NO.	BY:	DATE:	NO.	BY:	DATE:			S-265
1			3					TOTAL SHEETS
2			4					671

STR. #5

DRAWN BY : F.D. WEEDEN DATE : NOV. 2013
CHECKED BY : K.M. WING DATE : NOV. 2013
DESIGN ENGINEER OF RECORD : Y. TAN DATE : NOV. 2013

fweeden
12/23/2013 m:\projects\2011\11153_u0071 structures\structure\us70flyover\dgn\U0071_sd_b1.dgn

BENT 1

BAR	NO.	SIZE	TYPE	LENGTH	WEIGHT
B1	11	#11	1	40'-10"	2,386
B2	22	#11	STR.	37'-8"	4,403
B3	10	#8	STR.	37'-8"	1,006
B4	2	#8	STR.	33'-9"	180
B5	2	#8	STR.	30'-3"	162
B6	2	#8	STR.	26'-10"	143
B7	2	#8	STR.	23'-4"	125
B8	2	#8	STR.	19'-11"	106
B9	2	#8	STR.	16'-5"	88
B10	2	#8	STR.	13'-0"	69
B11	10	#8	7	40'-1"	1,070
B12	20	#4	STR.	5'-2"	69
B13	44	#4	STR.	3'-0"	88
S1	2	#5	6	12'-6"	26
S2	2	#5	6	12'-11"	27
S3	2	#5	6	13'-4"	28
S4	2	#5	6	13'-9"	29
S5	2	#5	6	14'-2"	30
S6	2	#5	6	14'-6"	30
S7	2	#5	6	14'-11"	31
S8	2	#5	6	15'-4"	32
S9	2	#5	6	15'-9"	33
S10	2	#5	6	16'-2"	34
S11	2	#5	6	16'-7"	35
S12	2	#5	6	16'-11"	35
S13	2	#5	6	17'-4"	36
S14	2	#5	6	17'-9"	37
S15	2	#5	6	18'-2"	38
S16	2	#5	6	18'-7"	39
S17	2	#5	6	19'-0"	40
S18	2	#5	6	19'-4"	40
S19	2	#5	6	19'-9"	41
S20	2	#5	6	20'-2"	42
S21	2	#5	6	20'-7"	43
S22	2	#5	6	21'-0"	44
S23	2	#5	6	21'-5"	45
S24	2	#5	6	21'-9"	45
S25	2	#5	6	22'-2"	46
S26	2	#5	6	22'-7"	47
S27	2	#5	6	23'-0"	48
S28	2	#5	6	23'-5"	49
S29	2	#5	6	23'-10"	50
S30	4	#5	6	24'-2"	101
S31	4	#5	6	23'-11"	100
S32	2	#5	6	23'-6"	49
S33	2	#5	6	23'-1"	48
S34	2	#5	6	22'-9"	47
S35	2	#5	6	22'-4"	47
S36	2	#5	6	21'-11"	46
S37	2	#5	6	21'-6"	45
S38	2	#5	6	21'-2"	44
S39	2	#5	6	20'-9"	43
S40	2	#5	6	20'-4"	42
S41	2	#5	6	19'-11"	42
S42	2	#5	6	19'-7"	41
S43	2	#5	6	19'-2"	40
S44	2	#5	6	18'-9"	39
S45	2	#5	6	18'-4"	38
S46	2	#5	6	18'-0"	38
S47	2	#5	6	17'-7"	37
S48	2	#5	6	17'-2"	36
S49	2	#5	6	16'-9"	35
S50	2	#5	6	16'-5"	34
S51	2	#5	6	16'-0"	33
S52	2	#5	6	15'-7"	33
S53	2	#5	6	15'-2"	32
S54	2	#5	6	14'-10"	31
S55	2	#5	6	14'-5"	30
S56	2	#5	6	14'-0"	29
S57	2	#5	6	13'-8"	29
S58	2	#5	6	13'-3"	28
S59	2	#5	6	12'-10"	27
S60	2	#5	6	12'-5"	26
T1	118	#11	STR.	19'-6"	12,225
T11	64	#5	8	15'-4"	1,024
T12	128	#5	5	5'-9"	768
U1	28	#4	3	8'-2"	153
U2	12	#4	3	6'-8"	53
U3	10	#4	3	8'-0"	53
M1	58	#11	2	16'-4"	5,033
M100	56	#11	2	42'-5"	12,620
V100	58	#11	STR.	37'-11"	11,684
SP100	4	✱✱✱	4	902'-0"	2,410

BENT 2

BAR	NO.	SIZE	TYPE	LENGTH	WEIGHT
B1	11	#11	1	40'-10"	2,386
B2	22	#11	STR.	37'-8"	4,403
B3	10	#8	STR.	37'-8"	1,006
B4	2	#8	STR.	33'-9"	180
B5	2	#8	STR.	30'-3"	162
B6	2	#8	STR.	26'-10"	143
B7	2	#8	STR.	23'-4"	125
B8	2	#8	STR.	19'-11"	106
B9	2	#8	STR.	16'-5"	88
B10	2	#8	STR.	13'-0"	69
B11	10	#8	7	40'-1"	1,070
B12	20	#4	STR.	5'-2"	69
B13	44	#4	STR.	3'-0"	88
S1	2	#5	6	12'-6"	26
S2	2	#5	6	12'-11"	27
S3	2	#5	6	13'-4"	28
S4	2	#5	6	13'-9"	29
S5	2	#5	6	14'-2"	30
S6	2	#5	6	14'-6"	30
S7	2	#5	6	14'-11"	31
S8	2	#5	6	15'-4"	32
S9	2	#5	6	15'-9"	33
S10	2	#5	6	16'-2"	34
S11	2	#5	6	16'-7"	35
S12	2	#5	6	16'-11"	35
S13	2	#5	6	17'-4"	36
S14	2	#5	6	17'-9"	37
S15	2	#5	6	18'-2"	38
S16	2	#5	6	18'-7"	39
S17	2	#5	6	19'-0"	40
S18	2	#5	6	19'-4"	40
S19	2	#5	6	19'-9"	41
S20	2	#5	6	20'-2"	42
S21	2	#5	6	20'-7"	43
S22	2	#5	6	21'-0"	44
S23	2	#5	6	21'-5"	45
S24	2	#5	6	21'-9"	45
S25	2	#5	6	22'-2"	46
S26	2	#5	6	22'-7"	47
S27	2	#5	6	23'-0"	48
S28	2	#5	6	23'-5"	49
S29	2	#5	6	23'-10"	50
S30	4	#5	6	24'-2"	101
S31	4	#5	6	23'-11"	100
S32	2	#5	6	23'-6"	49
S33	2	#5	6	23'-1"	48
S34	2	#5	6	22'-9"	47
S35	2	#5	6	22'-4"	47
S36	2	#5	6	21'-11"	46
S37	2	#5	6	21'-6"	45
S38	2	#5	6	21'-2"	44
S39	2	#5	6	20'-9"	43
S40	2	#5	6	20'-4"	42
S41	2	#5	6	19'-11"	42
S42	2	#5	6	19'-7"	41
S43	2	#5	6	19'-2"	40
S44	2	#5	6	18'-9"	39
S45	2	#5	6	18'-4"	38
S46	2	#5	6	18'-0"	38
S47	2	#5	6	17'-7"	37
S48	2	#5	6	17'-2"	36
S49	2	#5	6	16'-9"	35
S50	2	#5	6	16'-5"	34
S51	2	#5	6	16'-0"	33
S52	2	#5	6	15'-7"	33
S53	2	#5	6	15'-2"	32
S54	2	#5	6	14'-10"	31
S55	2	#5	6	14'-5"	30
S56	2	#5	6	14'-0"	29
S57	2	#5	6	13'-8"	29
S58	2	#5	6	13'-3"	28
S59	2	#5	6	12'-10"	27
S60	2	#5	6	12'-5"	26
T1	118	#11	STR.	19'-6"	12,225
T11	90	#5	8	15'-4"	1,439
T12	180	#5	5	5'-9"	1,080
U1	28	#4	3	8'-2"	153
U2	12	#4	3	6'-8"	53
U3	10	#4	3	8'-0"	53
M1	58	#11	2	16'-4"	5,033
M200	56	#11	2	31'-5"	9,347
V200	58	#11	STR.	51'-2"	15,767
SP200	4	✱✱✱	4	630'-0"	1,683

BENT 3

BAR	NO.	SIZE	TYPE	LENGTH	WEIGHT
B1	11	#11	1	40'-10"	2,386
B2	22	#11	STR.	37'-8"	4,403
B3	10	#8	STR.	37'-8"	1,006
B4	2	#8	STR.	33'-9"	180
B5	2	#8	STR.	30'-3"	162
B6	2	#8	STR.	26'-10"	143
B7	2	#8	STR.	23'-4"	125
B8	2	#8	STR.	19'-11"	106
B9	2	#8	STR.	16'-5"	88
B10	2	#8	STR.	13'-0"	69
B11	10	#8	7	40'-1"	1,070
B12	20	#4	STR.	5'-2"	69
B13	44	#4	STR.	3'-0"	88
S1	2	#5	6	12'-6"	26
S2	2	#5	6	12'-11"	27
S3	2	#5	6	13'-4"	28
S4	2	#5	6	13'-9"	29
S5	2	#5	6	14'-2"	30
S6	2	#5	6	14'-6"	30
S7	2	#5	6	14'-11"	31
S8	2	#5	6	15'-4"	32
S9	2	#5	6	15'-9"	33
S10	2	#5	6	16'-2"	34
S11	2	#5	6	16'-7"	35
S12	2	#5	6	16'-11"	35
S13	2	#5	6	17'-4"	36
S14	2	#5	6	17'-9"	37
S15	2	#5	6	18'-2"	38
S16	2	#5	6	18'-7"	39
S17	2	#5	6	19'-0"	40
S18	2	#5	6	19'-4"	40
S19	2	#5	6	19'-9"	41
S20	2	#5	6	20'-2"	42
S21	2	#5	6	20'-7"	43
S22	2	#5	6	21'-0"	44
S23	2	#5	6	21'-5"	45
S24	2	#5	6	21'-9"	45
S25	2	#5	6	22'-2"	46
S26	2	#5	6	22'-7"	47
S27	2	#5	6	23'-0"	48
S28	2	#5	6	23'-5"	49
S29	2	#5	6	23'-10"	50
S30	4	#5	6	24'-2"	101
S31	4	#5	6	23'-11"	100
S32	2	#5	6	23'-6"	49
S33	2	#5	6	23'-1"	48
S34	2	#5	6	22'-9"	47
S35	2	#5	6	22'-4"	47
S36	2	#5	6	21'-11"	46
S37	2	#5	6	21'-6"	45
S38	2	#5	6	21'-2"	44
S39	2	#5	6	20'-9"	43
S40	2	#5	6	20'-4"	42
S41	2	#5	6	19'-11"	42
S42	2	#5	6	19'-7"	41
S43	2	#5	6	19'-2"	40
S44	2	#5	6	18'-9"	39
S45	2	#5	6	18'-4"	38
S46	2	#5	6	18'-0"	38
S47	2	#5	6	17'-7"	37
S48	2	#5	6	17'-2"	36
S49	2	#5	6	16'-9"	35
S50	2	#5	6	16'-5"	34
S51	2	#5	6	16'-0"	33
S52	2	#5	6	15'-7"	33
S53	2	#5	6	15'-2"	32
S54	2	#5	6	14'-10"	31
S55	2	#5	8	14'-5"	30
S56	2	#5	5	14'-0"	29
S57	2	#5	6	13'-8"	29
S58	2	#5	6	13'-3"	28
S59	2	#5	6	12'-10"	27
S60	2	#5	6	12'-5"	26
T1	118	#11	STR.	19'-6"	12,225
T11	32	#5	8	15'-4"	512
T12	64	#5	5	5'-9"	384
U1	28	#4	3	8'-2"	153
U2	12	#4	3	6'-8"	53
U3	10	#4	3	8'-0"	53
M1	58	#11	2	16'-4"	5,033
M300	56	#11	2	45'-5"	13,512
V300	58	#11	STR.	21'-7"	6,651
SP300	4	✱✱✱	4	976'-6"	2,609

BAR TYPES

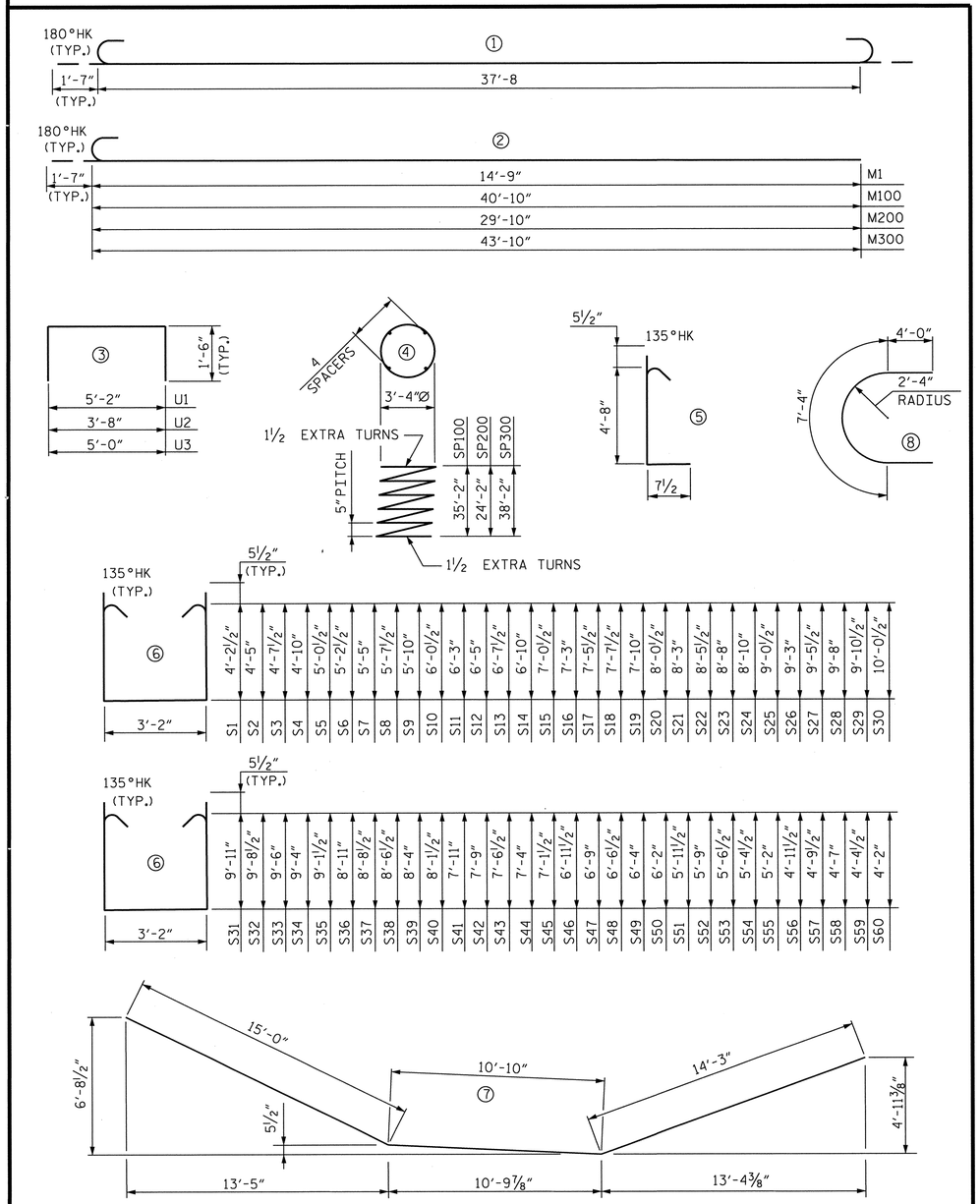

ALL BAR DIMENSIONS ARE OUT TO OUT

BILL OF MATERIAL
BENT 1

SPIRAL COLUMN REINFORCING STEEL	2,410 LBS.
REINFORCING STEEL	55,898 LBS.
DRILLED PIER CONCRETE POUR 1 (DRILLED PIERS)	66.4 C.Y.
CLASS A CONCRETE	
POUR 2 (FOOTING)	81.5 C.Y.
POUR 3 (COLUMN)	53.3 C.Y.
POUR 4 (CAP)	65.3 C.Y.
TOTAL	200.1 C.Y.
4'-0" Ø D.P. IN SOIL	70 L.F.
4'-0" Ø D.P. NOT IN SOIL	72 L.F.

BILL OF MATERIAL
BENT 2

SPIRAL COLUMN REINFORCING STEEL	1,683 LBS.
REINFORCING STEEL	57,435 LBS.
DRILLED PIER CONCRETE POUR 1 (DRILLED PIERS)	46.0 C.Y.
CLASS A CONCRETE	
POUR 2 (FOOTING)	81.5 C.Y.
POUR 3 (COLUMN)	75.1 C.Y.
POUR 4 (CAP)	65.3 C.Y.
TOTAL	221.9 C.Y.
4'-0" Ø D.P. IN SOIL	21 L.F.
4'-0" Ø D.P. NOT IN SOIL	77 L.F.

BILL OF MATERIAL
BENT 3

SPIRAL COLUMN REINFORCING STEEL	2,609 LBS.
REINFORCING STEEL	50,861 LBS.
DRILLED PIER CONCRETE POUR 1 (DRILLED PIERS)	72.0 C.Y.
CLASS A CONCRETE	
POUR 2 (FOOTING)	81.5 C.Y.
POUR 3 (COLUMN)	26.2 C.Y.
POUR 4 (CAP)	65.3 C.Y.
TOTAL	173.0 C.Y.
4'-0" Ø D.P. IN SOIL	90 L.F.
4'-0" Ø D.P. NOT IN SOIL	64 L.F.

PROJECT NO. U-0071
DURHAM COUNTY
STATION: 105+29.00 -L-

SHEET 4 OF 4

✱✱✱ THE "SP" SPIRAL REINFORCING STEEL SHALL BE W31 OR D31 COLD DRAWN WIRE OR #5 PLAIN OR DEFORMED BAR.

DRAWN BY : F.D. WEEDEN DATE : NOV. 2013
CHECKED BY : K.M. WING DATE : NOV. 2013
DESIGN ENGINEER OF RECORD : Y. TAN DATE : NOV. 2013

RK&K
RUMMEL, KLEPPER & KAHL, LLP
900 RIDGEFIELD DRIVE SUITE 350
RALEIGH, NORTH CAROLINA 27609-3960
NC LICENSE NUMBER: F-0112

DWG. NO. 38

NORTH CAROLINA PROFESSIONAL SEAL 031543 ENGINEER KENNETH M. WING JR.
12/23/2013

STATE OF NORTH CAROLINA
DEPARTMENT OF TRANSPORTATION
RALEIGH

SUBSTRUCTURE
BENTS 1, 2 AND 3 B.O.M.

REVISIONS								SHEET NO.
NO.	BY:	DATE:	NO.	BY:	DATE:			5-266
1			3					TOTAL SHEETS
2			4					671

STR. #5

fweeden
12/23/2013 m:\projects\2011\11153_u0071 structures\structure\us70flyover\dgn\U0071_sd_bld.dgn

NOTES:

FOR NOTES, SECTION A-A AND PILE SPLICE DETAILS, SEE "END BENT 2 DETAILS" SHEET, SHEET 2 OF 3.

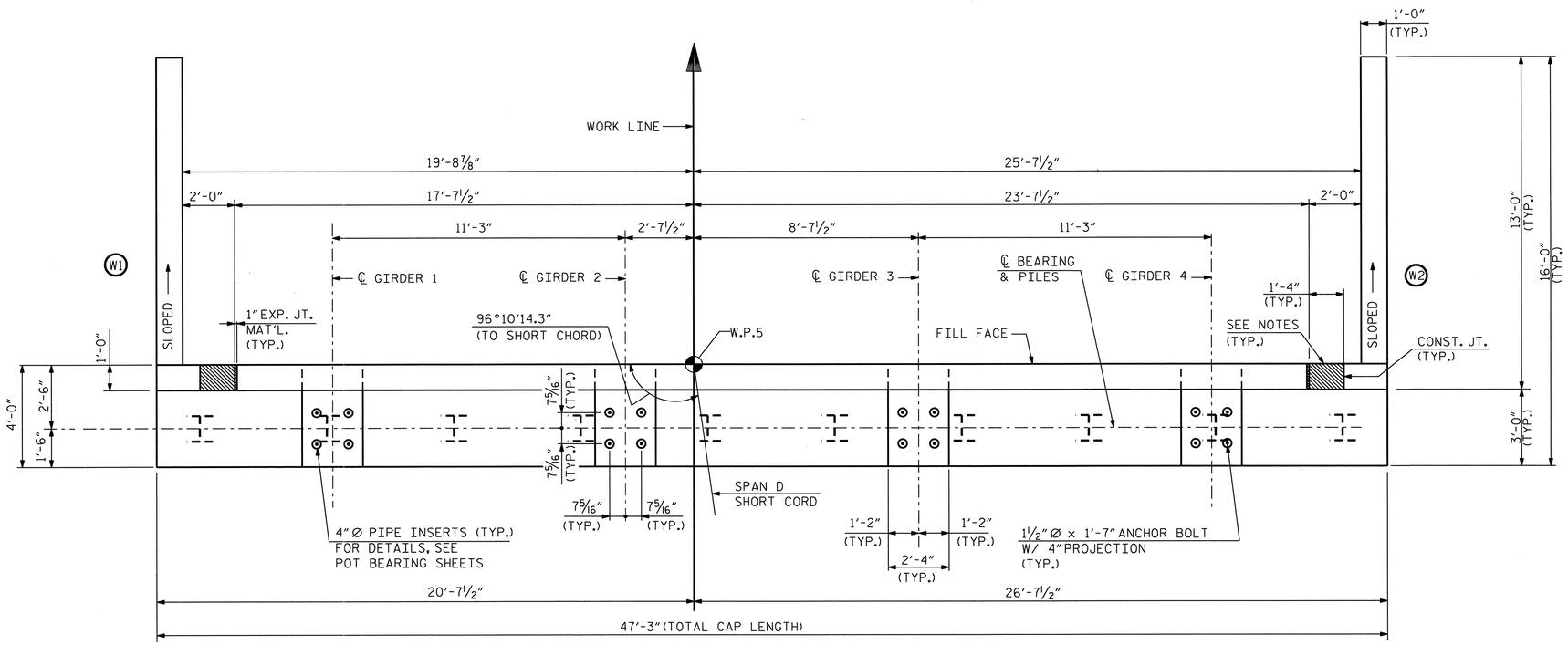

PLAN

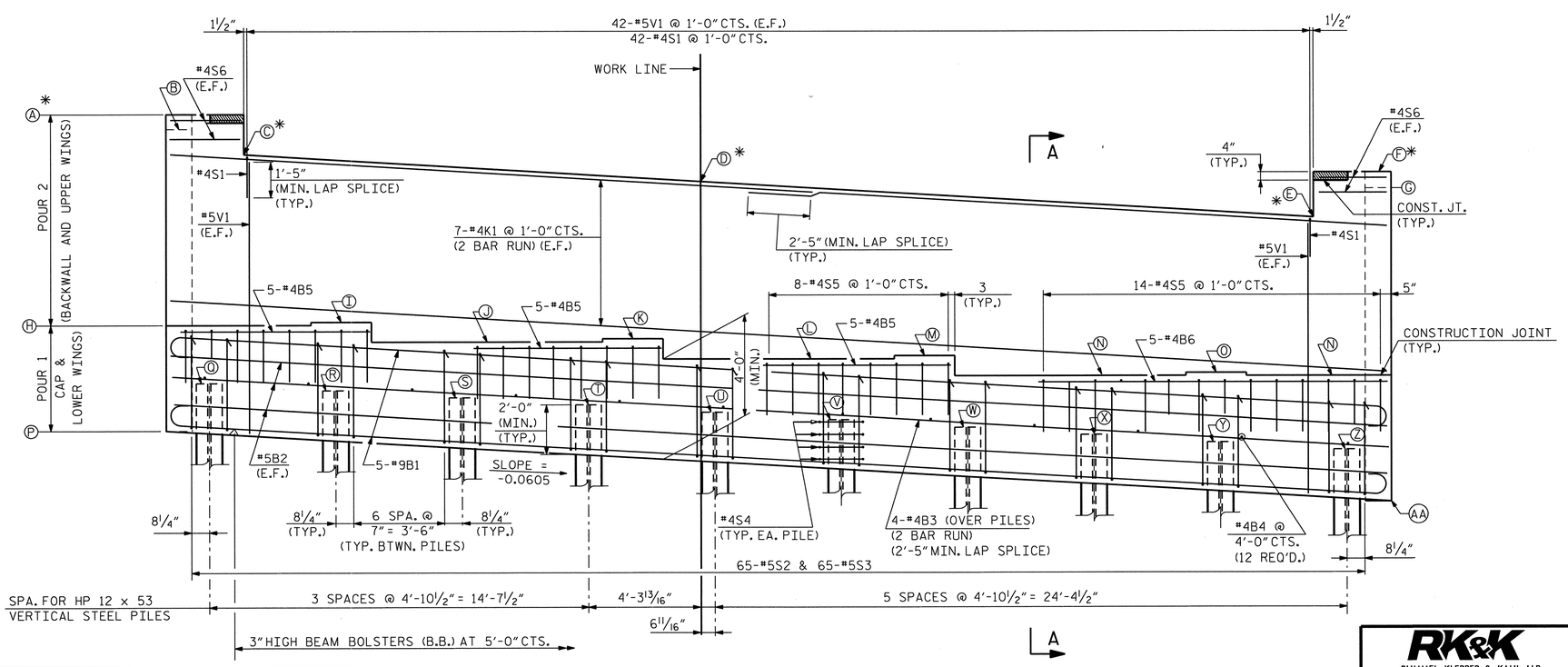

ELEVATION

ELEVATION TABLE	
A ✳	395.83
B	395.24
C ✳	394.27
D ✳	393.21
E ✳	391.77
F ✳	393.55
G	392.91
H	387.67
I	387.79
J	387.00
K	387.12
L	386.34
M	386.46
N	385.67
O	385.79
P	383.48
Q	385.41
R	385.12
S	384.82
T	384.53
U	384.23
V	383.94
W	383.64
X	383.35
Y	383.05
Z	382.76
AA	380.62

✳ AT FILL FACE

PROJECT NO. U-0071

DURHAM COUNTY

STATION: 105+29.00 -L-

SHEET 1 OF 3

STATE OF NORTH CAROLINA
DEPARTMENT OF TRANSPORTATION
RALEIGH

SUBSTRUCTURE
END BENT 2

DWG. NO. 39

NORTH CAROLINA PROFESSIONAL SEAL 031543 ENGINEER KENNETH M. WING JR.
12/23/2013

RK&K
RUMMEL, KLEPPER & KAHL, LLP
900 RIDGEFIELD DRIVE SUITE 350
RALEIGH, NORTH CAROLINA 27609-3960
NC LICENSE NUMBER: F-0112

REVISIONS								SHEET NO.
NO.	BY:	DATE:	NO.	BY:	DATE:			S-267
1			3					TOTAL SHEETS
2			4					671

STR. #5

DRAWN BY :	F.D. WEEDEN	DATE :	NOV. 2013
CHECKED BY :	K.M. WING	DATE :	NOV. 2013
DESIGN ENGINEER OF RECORD :	Y. TAN	DATE :	NOV. 2013

fweeden 12/23/2013 m:\projects\2011\11153_u0071 structures\structure\us70flyover\dgn\U0071_sd_eb2.dgn

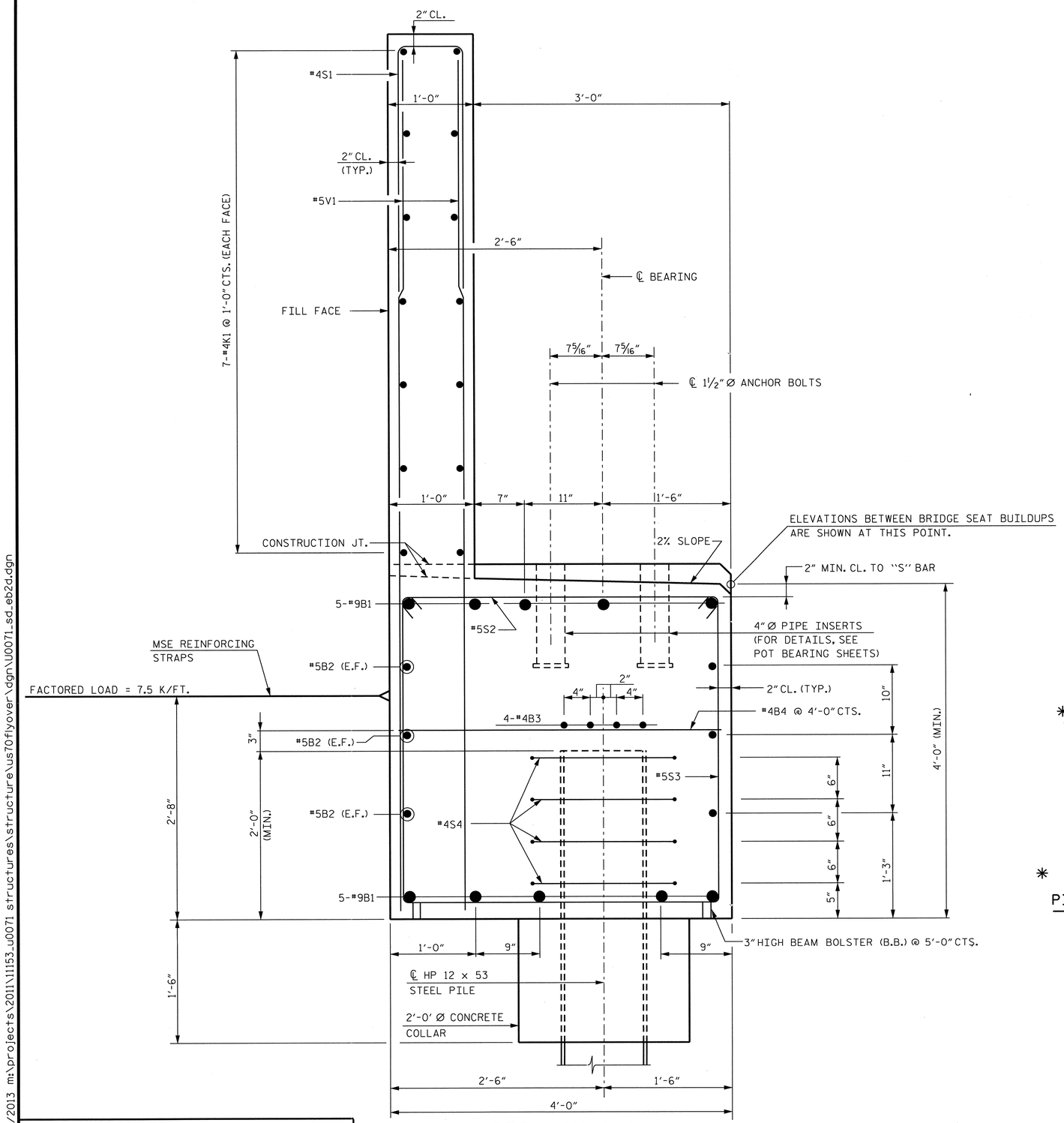

SECTION A-A

NOTES:

FOR TEMPORARY DRAINAGE, SEE "END BENT 1 DETAILS" SHEET 2 OF 3.

STIRRUPS IN THE CAP MAY BE SHIFTED SLIGHTY AS NECESSARY TO CLEAR ANCHOR BOLTS.

FOR PIPE INSERT DETAILS, SEE POT BEARING SHEETS.

BACKWALL SHALL BE PLACED BEFORE APPLYING THE EPOXY PROTECTIVE COATING.

THE TOP SURFACE AREAS OF THE END BENT CAPS SHALL BE CURED IN ACCORDANCE WITH THE STANDARD SPECIFICATIONS EXCEPT THE MEMBRANE CURING COMPOUND METHOD SHALL NOT BE USED.

THE TOP SURFACE OF THE END BENT CAP, EXCEPT THE BRIDGE SEAT BUILDUPS, SHALL BE SLOPED TRANSVERSELY FROM THE FILL FACE TO THE BACK FACE AT THE RATE OF 2%.

THE CONCRETE IN THE SHADED AREA OF THE WING SHALL BE POURED AFTER THE CONCRETE BARRIER RAIL IS CAST IF SLIP FORMING IS USED.

THE MSE WALL IS NOT SHOWN, FOR MSE WALL AND MSE REINFORCING STRAP DETAILS, SEE MSE WALL PLANS AND SPECIAL PROVISIONS.

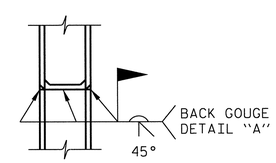

✱ PILE VERTICAL

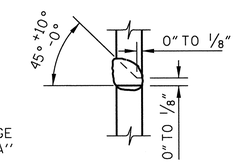

DETAIL "A"

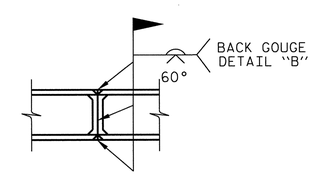

✱ PILE HORIZONTAL OR VERTICAL

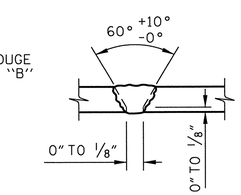

DETAIL "B"

PILE SPLICE DETAILS

✱ POSITION OF PILE DURING WELDING.

PROJECT NO. U-0071
DURHAM COUNTY
STATION: 105+29.00 -L-

SHEET 2 OF 3

STATE OF NORTH CAROLINA
DEPARTMENT OF TRANSPORTATION
RALEIGH

SUBSTRUCTURE
END BENT 2
DETAILS

DWG. NO. 40

NORTH CAROLINA PROFESSIONAL SEAL 031543 ENGINEER KENNETH M. WING, JR.
12/23/2013

RK&K
RUMMEL, KLEPPER & KAHL, LLP
900 RIDGEFIELD DRIVE SUITE 350
RALEIGH, NORTH CAROLINA 27609-3960
NC LICENSE NUMBER: F-0112

REVISIONS								SHEET NO.
NO.	BY:	DATE:	NO.	BY:	DATE:			5-268
1			3					TOTAL SHEETS
2			4					671

STR. #5

DRAWN BY : F.D. WEEDEN DATE : NOV. 2013
CHECKED BY : K.M. WING DATE : NOV. 2013
DESIGN ENGINEER OF RECORD : Y. TAN DATE : NOV. 2013

fweeden
12/23/2013 m:\projects\2011\11153_u0071 structures\structure\us70flyover\dgn\U0071_sd_eb2d.dgn

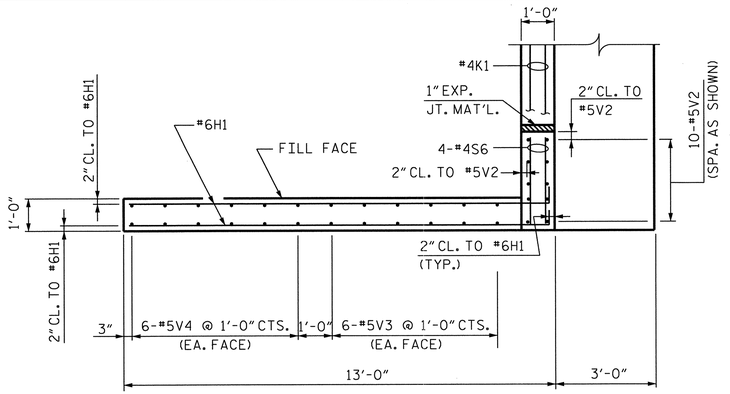

PLAN OF LEFT WING (W1)

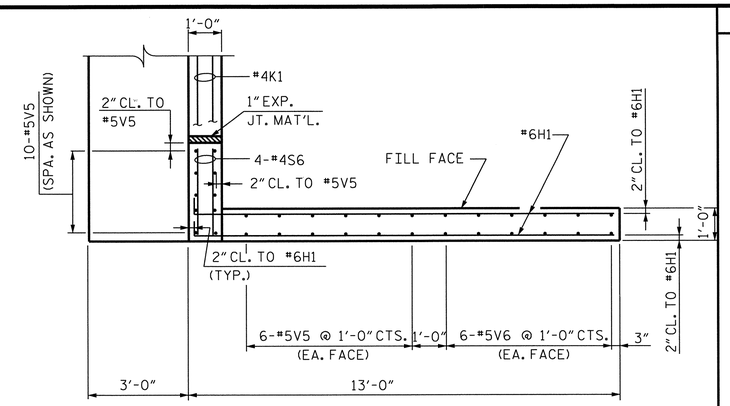

PLAN OF RIGHT WING (W2)

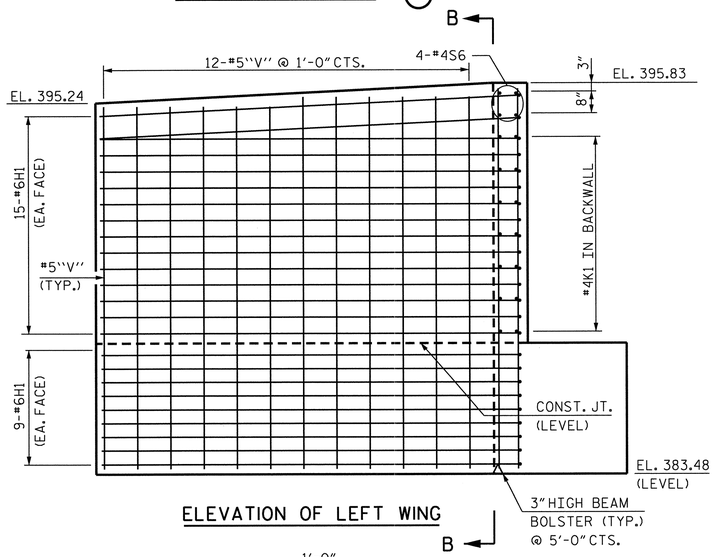

ELEVATION OF LEFT WING

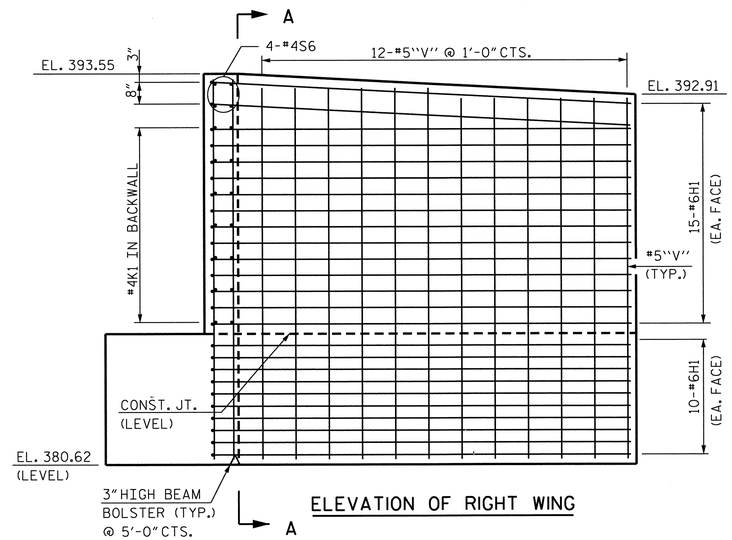

ELEVATION OF RIGHT WING

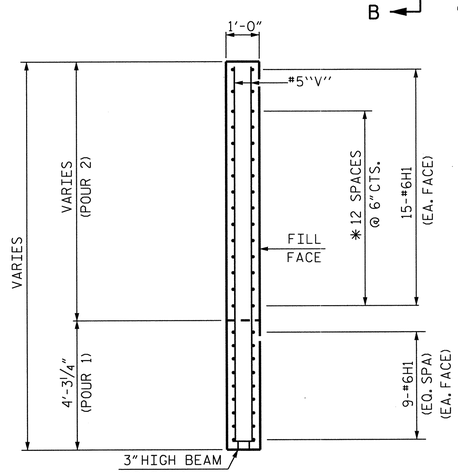

SECTION B-B

*MATCH TO #4K1 IN BACKWALL

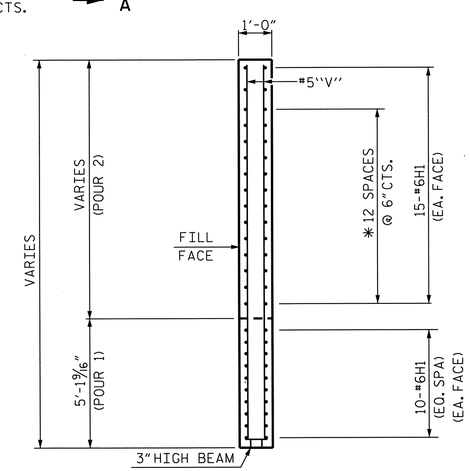

SECTION A-A

*MATCH TO #4K1 IN BACKWALL

BAR TYPES

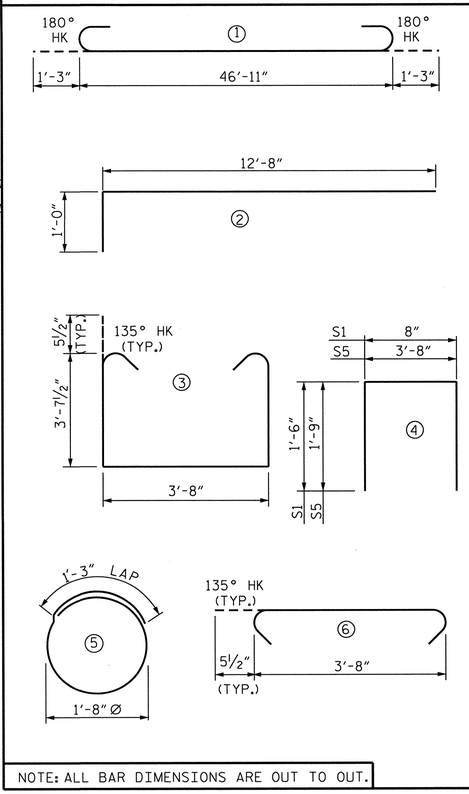

NOTE: ALL BAR DIMENSIONS ARE OUT TO OUT.

BILL OF MATERIAL

END BENT 2

BAR	NO.	SIZE	TYPE	LENGTH	WEIGHT
B1	10	#9	1	49'-5"	1,680
B2	6	#5	STR.	46'-11"	294
B3	8	#4	STR.	24'-8"	132
B4	12	#4	STR.	3'-8"	29
B5	15	#4	STR.	7'-6"	75
B6	5	#4	STR.	13'-6"	45
H1	98	#6	2	13'-8"	2,012
K1	14	#4	STR.	24'-8"	231
S1	42	#4	4	3'-8"	103
S2	65	#5	6	4'-7"	311
S3	65	#5	3	11'-10"	802
S4	40	#4	5	6'-6"	174
S5	38	#4	4	7'-2"	182
S6	8	#4	STR.	2'-8"	14
V1	84	#5	STR.	10'-6"	920
V2	10	#5	STR.	11'-11"	124
V3	12	#5	STR.	11'-8"	146
V4	12	#5	STR.	11'-4"	142
V5	22	#5	STR.	12'-3"	281
V6	12	#5	STR.	11'-11"	149

REINFORCING STEEL	7,846 LBS.
CLASS "A" CONCRETE	
POUR 1 (CAP & LOWER WINGS)	36.4 C.Y.
POUR 2 (BACKWALL & UPPER WINGS)	19.7 C.Y.
TOTAL	56.1 C.Y.
HP12X53 STEEL PILES	
NO.	10
L.F.	300

PROJECT NO. U-0071

DURHAM COUNTY

STATION: 105+29.00 -L-

SHEET 3 OF 3

STATE OF NORTH CAROLINA
DEPARTMENT OF TRANSPORTATION
RALEIGH

SUBSTRUCTURE
END BENT 2 B.O.M.
AND WING WALL DETAILS

DWG. NO. 41

NORTH CAROLINA PROFESSIONAL SEAL 031543 ENGINEER KENNETH M. WING JR.
12/23/2013

RK&K
RUMMEL, KLEPPER & KAHL, LLP
900 RIDGEFIELD DRIVE SUITE 350
RALEIGH, NORTH CAROLINA 27609-3960
NC LICENSE NUMBER: F-0112

REVISIONS							SHEET NO.
NO.	BY:	DATE:	NO.	BY:	DATE:		5-269
1			3				TOTAL SHEETS
2			4				671

STR. #5

DRAWN BY : F.D. WEEDEN DATE : NOV. 2013
CHECKED BY : K.M. WING DATE : NOV. 2013
DESIGN ENGINEER OF RECORD : Y. TAN DATE : NOV. 2013

fweeden
12/23/2013 m:\projects\2011\11153_u0071 structures\structure\us70flyover\dgn\U0071_sd_eb2w.dgn

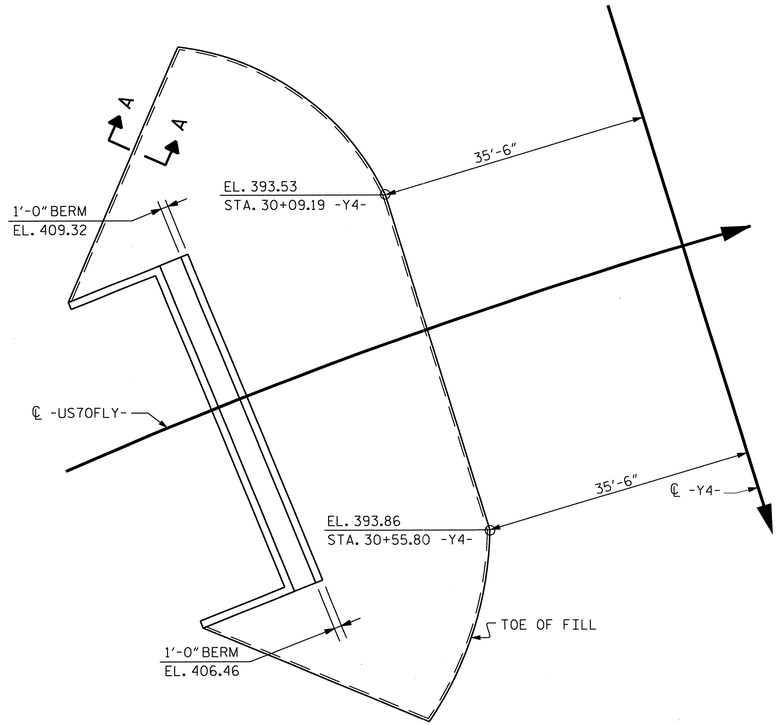

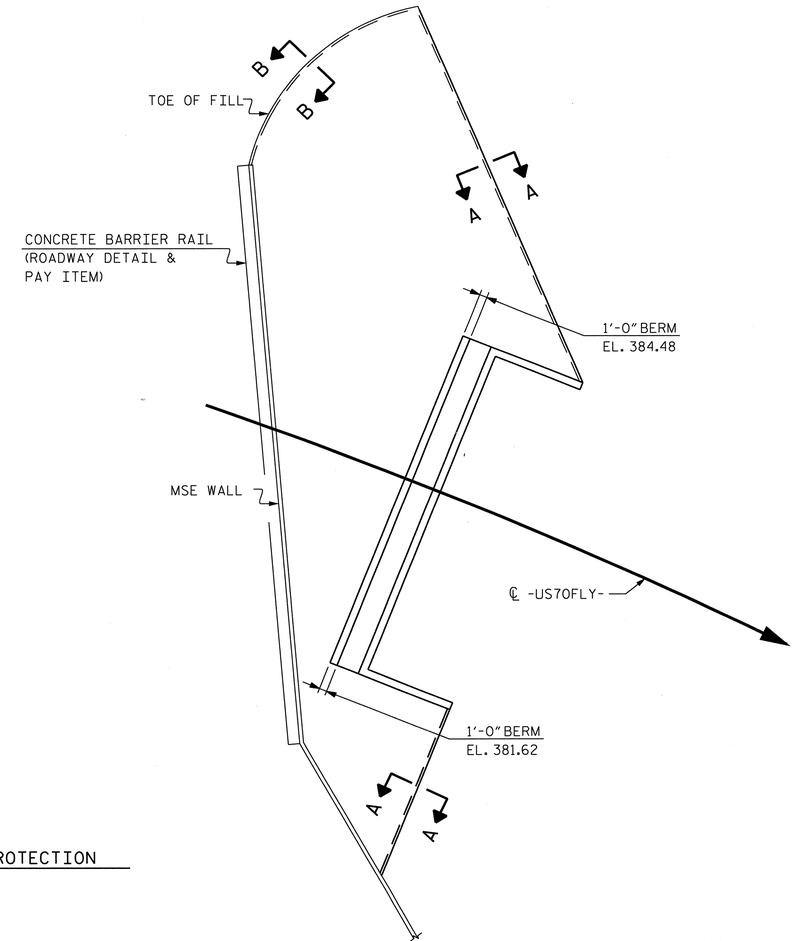

PLAN OF SLOPE PROTECTION

NOTES

SLOPE PROTECTION SHALL BE PLACED UNDER THE ENDS OF THE BRIDGE AS SHOWN IN THE DETAILS. MEASUREMENT AND PAYMENT SHALL BE AS PRESCRIBED IN SECTION 462 OF THE STANDARD SPECIFICATIONS. FOR BERM WIDTH, SEE GENERAL DRAWING.

SLOPE PROTECTION SHALL CONSIST OF 4" POURED-IN-PLACE CONCRETE PAVING AS SHOWN IN THE DETAILS ON THIS SHEET. CONCRETE SHALL BE CLASS "B". THE CONCRETE SURFACE SHALL BE FLOATED WITH A WOODEN FLOAT AND FINISHED. WELDED WIRE FABRIC REINFORCING SHALL BE 6 X 6 - W1.4 X W1.4, 60" WIDE. SLOPE PROTECTION SHALL BE POURED IN 5' STRIPS AS SHOWN IN THE "POURING DETAIL" WITH 2'-0" LONG #4 BARS PLACED ALONG THE SLOPE BETWEEN STRIPS AT 1'-6" MAXIMUM SPACING. SLOPE PROTECTION MAY BE POURED IN ALTERNATE 4' AND 5' STRIPS AS SHOWN IN THE "OPTIONAL POURING DETAIL" WITH ADJACENT RUNS OF WELDED WIRE FABRIC LAPPING AT LEAST 6". THE COST OF THE WELDED WIRE FABRIC AND #4 BARS, IF USED, SHALL BE INCLUDED IN THE CONTRACT UNIT PRICE BID PER SQUARE YARD FOR SLOPE PROTECTION.

BRIDGE @ STA. 105+29.00 -L-	4 INCH SLOPE PROTECTION	* WELDED WIRE FABRIC 60 INCHES WIDE
	SQUARE YARDS	APPROX. L.F.
END BENT 1	405	730
END BENT 2	335	605

* QUANTITY SHOWN IS BASED ON 5' POURS.

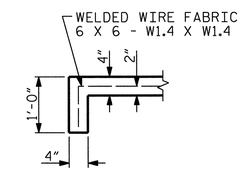

SECTION A-A

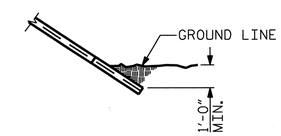

SECTION B-B

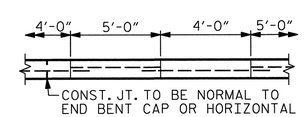

POUR A 4'-0" STRIP FIRST. STRIP WIDTHS MAY VARY IN CURVED PORTION.

OPTIONAL POURING DETAIL

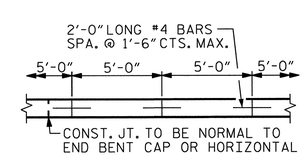

STRIP WIDTHS MAY VARY IN CURVED PORTION.

POURING DETAIL

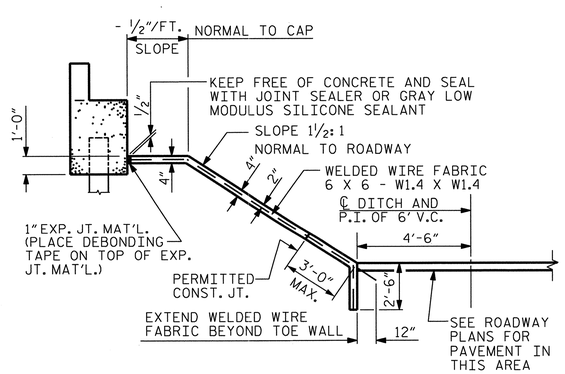

SECTION ALONG ℄ ROADWAY AT END BENT 1

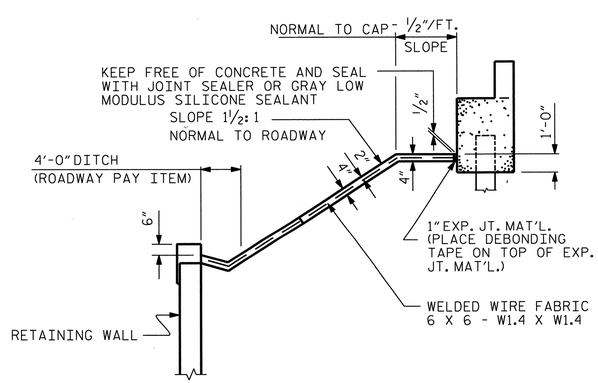

SECTION ALONG ℄ ROADWAY AT END BENT 2

PROJECT NO. U-0071
DURHAM COUNTY
STATION: 105+29.00 -L-

STATE OF NORTH CAROLINA
DEPARTMENT OF TRANSPORTATION
RALEIGH

SLOPE PROTECTION
DETAILS

DWG. NO. 42

NORTH CAROLINA PROFESSIONAL SEAL 031543 ENGINEER KENNETH M. WING JR.
12/27/2013

RK&K
RUMMEL, KLEPPER & KAHL, LLP
900 RIDGEFIELD DRIVE SUITE 350
RALEIGH, NORTH CAROLINA 27609-3960
NC LICENSE NUMBER: F-0112

REVISIONS							SHEET NO.
NO.	BY:	DATE:	NO.	BY:	DATE:		S-270
1			3				TOTAL SHEETS
2			4				671

STR. #5

DRAWN BY : F.D. WEEDEN DATE : NOV. 2013
CHECKED BY : K.M. WING DATE : NOV. 2013
DESIGN ENGINEER OF RECORD : Y. TAN DATE : NOV. 2013

fweeden
12/23/2013 m:\projects\2011\11153_u0071 structures\structure\us70flyover\dgn\U0071_sd_sp1.dgn

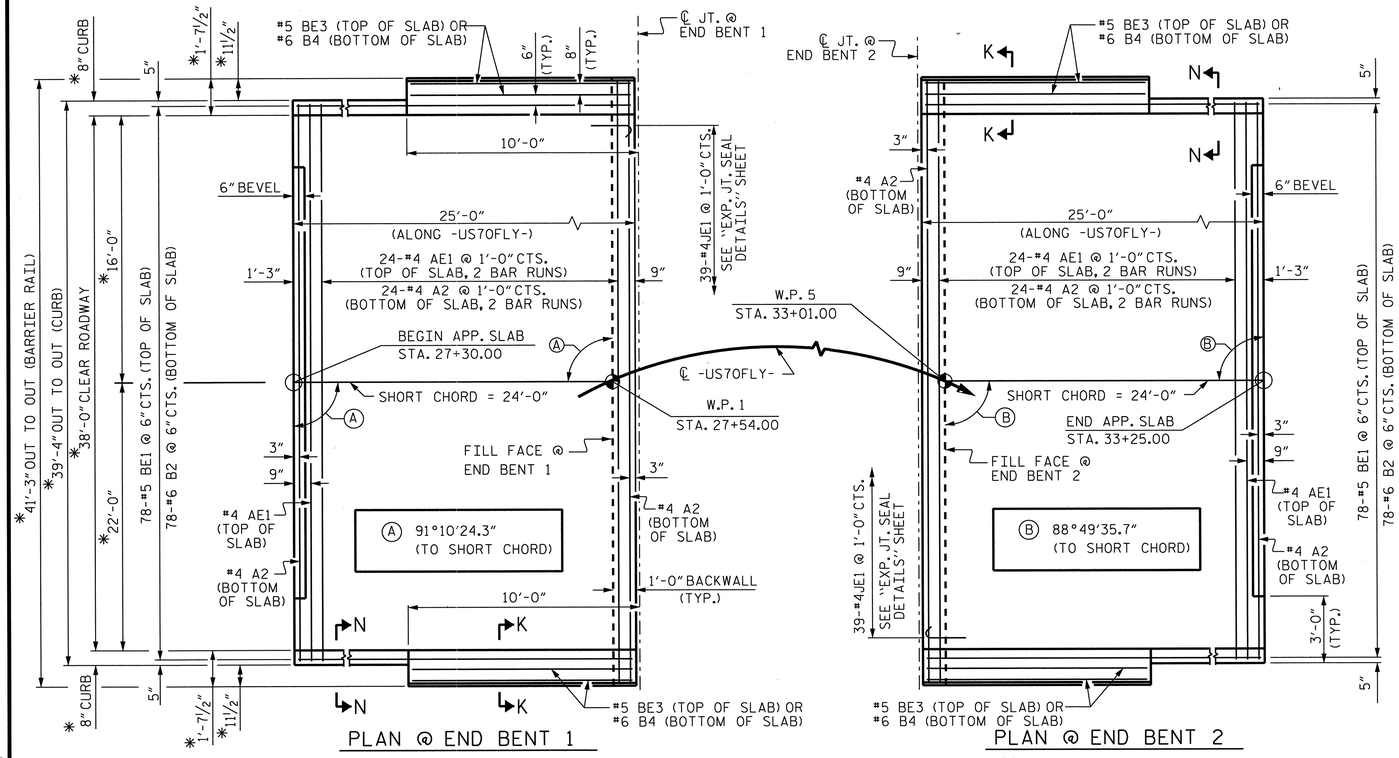

PLAN @ END BENT 1

PLAN @ END BENT 2

DIMENSIONS SHOWN ARE TYPICAL FOR BOTH APPROACH SLABS

* RADIAL DIMENSIONS

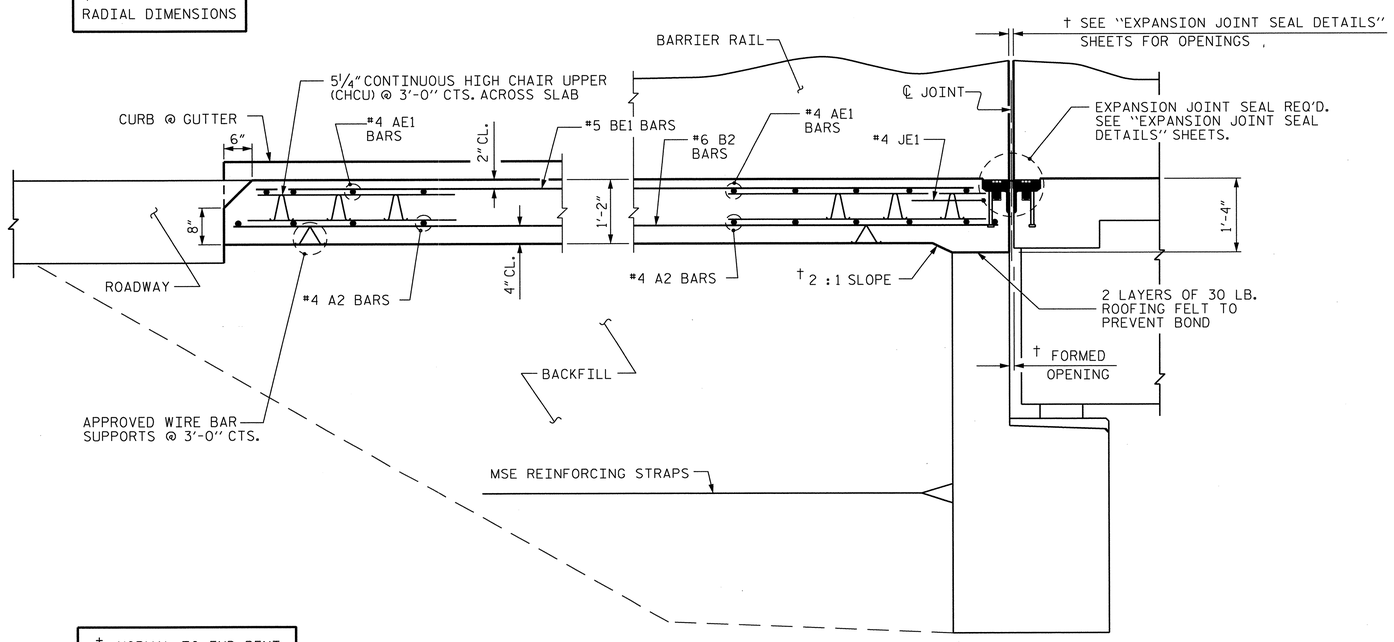

† NORMAL TO END BENT

SECTION THRU SLAB

NOTES

APPROACH SLAB SHALL NOT BE CONSTRUCTED PRIOR TO COMPLETION OF THE BRIDGE DECK.

AREA BETWEEN THE WINGWALL AND APPROACH SLAB SHALL BE GRADED TO DRAIN THE WATER AWAY FROM THE FILL FACE OF THE BRIDGE AND SHALL BE PAVED. SEE ROADWAY PLANS.

FOR EXPANSION JOINT SEALS, SEE SPECIAL PROVISIONS.

FOR BACKFILL MATERIAL, SEE MSE RETAINING WALL PLANS AND SPECIAL PROVISIONS.

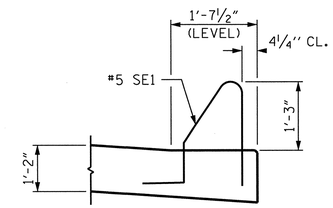

SECTION K-K

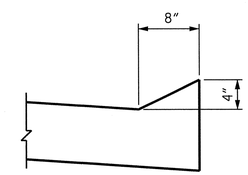

SECTION N-N

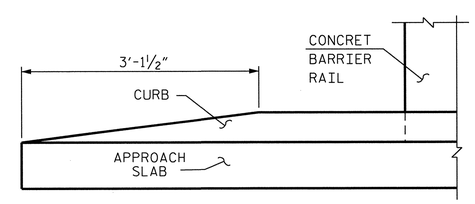

END OF CURB WITHOUT SHOULDER BERM GUTTER

BILL OF MATERIAL

APPROACH SLAB AT EB 1

BAR	NO.	SIZE	TYPE	LENGTH	WEIGHT
AE1	50	#4	STR.	21'-6"	718
A2	52	#4	STR.	21'-4"	741
BE1	78	#5	STR.	23'-10"	1,939
B2	78	#6	STR.	24'-8"	2,890
BE3	4	#5	STR.	9'-4"	39
B4	4	#6	STR.	9'-8"	58
JE1	39	#4	1	1'-5"	37
REINFORCING STEEL			**	3,689	LBS.
EPOXY COATED REINFORCING STEEL			**	2,733	LBS.
CLASS AA CONCRETE			**	43.7	C.Y.

APPROACH SLAB AT EB 2

BAR	NO.	SIZE	TYPE	LENGTH	WEIGHT
AE1	50	#4	STR.	21'-6"	718
A2	52	#4	STR.	21'-4"	741
BE1	78	#5	STR.	23'-10"	1,939
B2	78	#6	STR.	24'-8"	2,890
BE3	4	#5	STR.	9'-4"	39
B4	4	#6	STR.	9'-8"	58
JE1	39	#4	1	1'-5"	37
REINFORCING STEEL			**	3,689	LBS.
EPOXY COATED REINFORCING STEEL			**	2,733	LBS.
CLASS AA CONCRETE			**	43.7	C.Y.

BAR TYPE

ALL BAR DIMENSIONS ARE OUT TO OUT

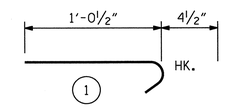

E = EPOXY COATED REINFORCING STEEL

** QUANTITIES FOR BARRIER RAIL ARE NOT INCLUDED. SEE SHEET 2 OF 2.

THE QUANTITY OF #4JE1 BARS ON THE BILL OF MATERIAL IS BASED ON 1'-0" CENTERS. JE1 BARS SHALL BE PLACED AT EACH VERTICAL STUD ANCHOR BOLT. IN THE EVENT THAT THE NUMBER OF VERTICAL STUD ANCHORS EXCEEDS THE NUMBER OF J1 BARS SPECIFIED, ADDITIONAL J1 BARS WILL NOT BE REQUIRED.

SPLICE LENGTHS

BAR SIZE	EPOXY COATED	UNCOATED
#4	2'-0"	1'-9"
#5	2'-6"	2'-2"
#6	3'-10"	2'-7"

PROJECT NO. U-0071

DURHAM COUNTY

STATION: 105+29.00 -L-

SHEET 1 OF 2

STATE OF NORTH CAROLINA
DEPARTMENT OF TRANSPORTATION
RALEIGH

BRIDGE APPROACH SLAB FOR FLEXIBLE PAVEMENT

DWG. NO. 43

NORTH CAROLINA PROFESSIONAL SEAL 031543 ENGINEER KENNETH M. WING, JR.
12/23/2013

RK&K
RUMMEL, KLEPPER & KAHL, LLP
900 RIDGEFIELD DRIVE SUITE 350
RALEIGH, NORTH CAROLINA 27609-3960
NC LICENSE NUMBER: F-0112

REVISIONS						SHEET NO.
NO.	BY:	DATE:	NO.	BY:	DATE:	5-271
1			3			TOTAL SHEETS
2			4			671

STR. #5

DRAWN BY : F.D. WEEDEN DATE : NOV. 2013
CHECKED BY : K.M. WING DATE : NOV. 2013
DESIGN ENGINEER OF RECORD : Y. TAN DATE : NOV. 2013

fweeden
12/23/2013 M:\projects\2011\11153.U0071 Structures\Structure\US70Flyover\DGN\U0071_sd_asl.dgn

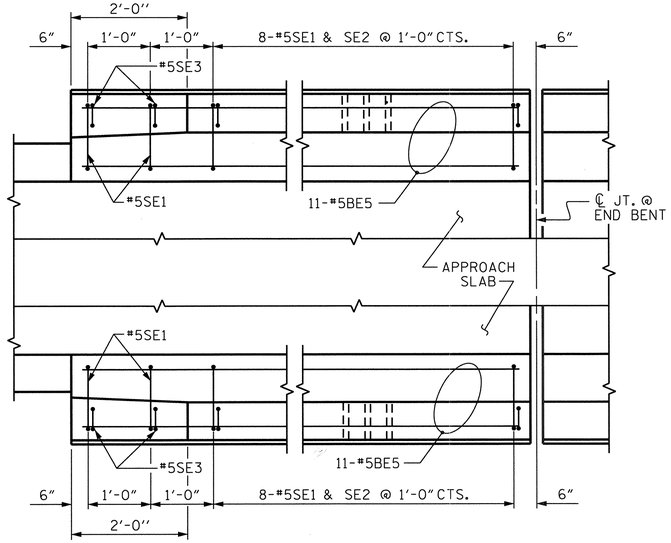

END BENT 1

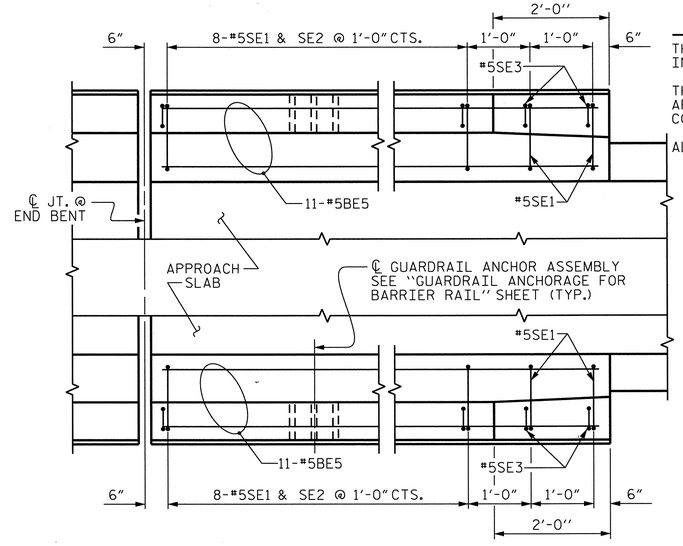

END BENT 2

PLAN OF BARRIER RAIL

NOTES

THE COST OF THE BARRIER RAIL ON THE APPROACH SLAB SHALL BE INCLUDED IN THE LINEAR FOOT CONTRACT PRICE BID FOR "CONCRETE BARRIER RAIL".

THE BARRIER RAIL ON EACH APPROACH SLAB SHALL NOT BE CAST UNTIL ALL APPROACH SLAB CONCRETE HAS BEEN CAST AND HAS REACHED A MINIMUM COMPRESSIVE STRENGTH OF 3,000 PSI.

ALL REINFORCING STEEL IN BARRIER RAILS SHALL BE EPOXY COATED.

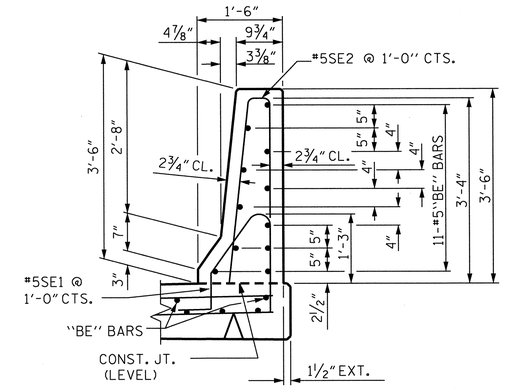

SECTION THRU RAIL

BAR TYPES

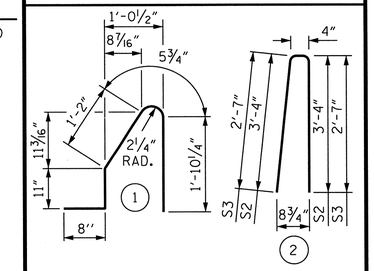

ALL BAR DIMENSIONS ARE OUT TO OUT

BILL OF MATERIAL

BARRIER RAIL ONLY

BAR	NO.	SIZE	TYPE	LENGTH	WEIGHT
BE5	44	#5	STR.	9'-6"	436
SE1	40	#5	1	5'-1"	212
SE2	32	#5	2	7'-0"	234
SE3	8	#5	2	5'-6"	46
EPOXY COATED REINFORCING STEEL				LBS.	928
CLASS AA CONCRETE				C.Y.	5.5
CONCRETE BARRIER RAIL				40.0	LIN. FT.

E = EPOXY COATED REINFORCING STEEL

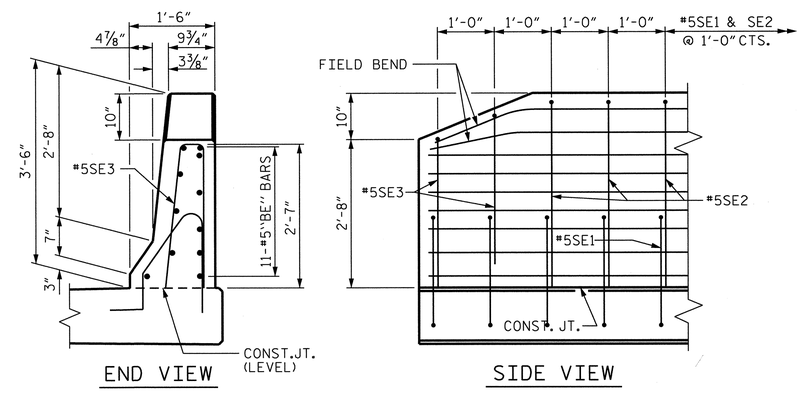

END OF RAIL DETAILS

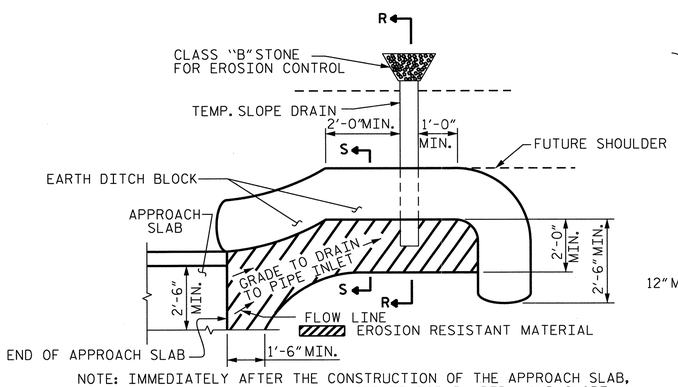

NOTE: IMMEDIATELY AFTER THE CONSTRUCTION OF THE APPROACH SLAB, THE CONTRACTOR SHALL PROVIDE TEMPORARY BERM AND SLOPE DRAIN. CONTRACTOR SHALL GRADE TO PIPE INLET AND PROVIDE EROSION RESISTANT MATERIAL AS SHOWN. THE EROSION RESISTANT MATERIAL SHALL BE EITHER 1) ASPHALT PLANT MIX, TYPE 1 OR TYPE 2, MIN. 2" DEPTH, 2) EROSION CONTROL MAT, OR 3) CONCRETE, AS DIRECTED BY THE ENGINEER. THE SLOPE DRAIN SHALL CONSIST OF A NON-PERFORATED TEMPORARY DRAINAGE PIPE, 12 INCHES IN DIAMETER.

PLAN VIEW

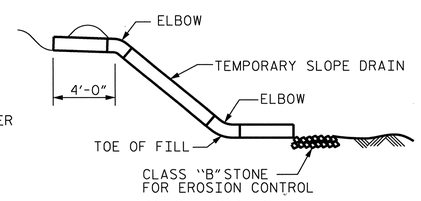

SECTION R-R

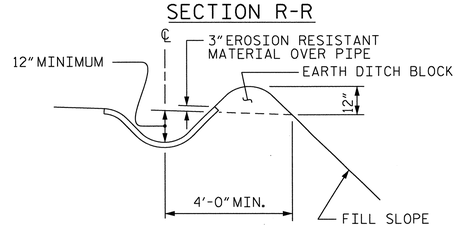

SECTION S-S

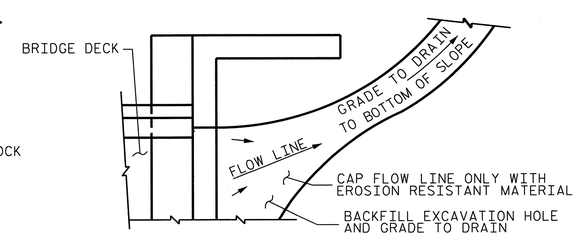

NOTE: IF THE APPROACH SLAB IS NOT CONSTRUCTED IMMEDIATELY AFTER THE BACKFILLING OF THE END BENT EXCAVATION, GRADE TO DRAIN TO THE BOTTOM OF THE SLOPE AND PROVIDE EROSION RESISTANT MATERIAL, SUCH AS FIBERGLASS ROVING OR AS DIRECTED BY THE ENGINEER TO PREVENT SOIL EROSION AND TO PROTECT THE AREA ADJACENT TO THE STRUCTURE. THE CONTRACTOR WILL BE REQUIRED TO REMOVE THESE MATERIALS PRIOR TO CONSTRUCTION OF THE APPROACH SLAB.

TEMPORARY DRAINAGE DETAIL

TEMPORARY BERM AND SLOPE DRAIN DETAILS

(TO BE USED WHEN SHOULDER BERM GUTTER IS REQUIRED)

PROJECT NO. U-0071
DURHAM COUNTY
STATION: 105+29.00 -L-

SHEET 2 OF 2

STATE OF NORTH CAROLINA
DEPARTMENT OF TRANSPORTATION
RALEIGH

BRIDGE APPROACH SLAB DETAILS

DWG. NO. 44

NORTH CAROLINA PROFESSIONAL SEAL 031543 ENGINEER KENNETH M. WING, JR.
12/23/2013

RK&K
RUMMEL, KLEPPER & KAHL, LLP
900 RIDGEFIELD DRIVE SUITE 350
RALEIGH, NORTH CAROLINA 27609-3960
NC LICENSE NUMBER: F-0112

REVISIONS						SHEET NO.
NO.	BY:	DATE:	NO.	BY:	DATE:	S-212
1			3			TOTAL SHEETS
2			4			671

STR. #5

DRAWN BY : F.D. WEEDEN DATE : NOV. 2013
CHECKED BY : K.M. WING DATE : NOV. 2013
DESIGN ENGINEER OF RECORD : Y. TAN DATE : NOV. 2013

fweeden
12/23/2013 m:\projects\2011\11153_u0071 structures\structure\us70flyover\dgn\U0071_sd_gs2.dgn