STATE	STATE PROJECT REFERENCE NO.	SHEET NO.	TOTAL SHEETS
N.C.	U-0071	UC-1	39

STATE OF NORTH CAROLINA
DIVISION OF HIGHWAYS

DURHAM COUNTY

LOCATION: DURHAM EAST END CONNECTOR, FROM NC 147 (BUCK DEAN FREEWAY) TO NORTH OF NC 98

TYPE OF WORK: UTILITIES CONSTRUCTION

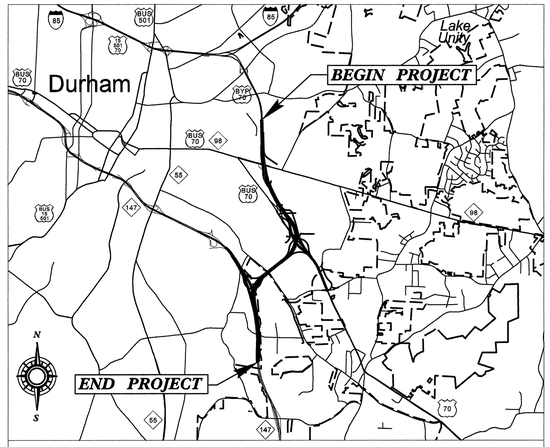

VICINITY MAP

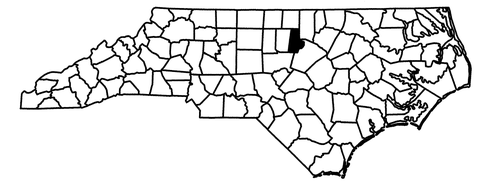

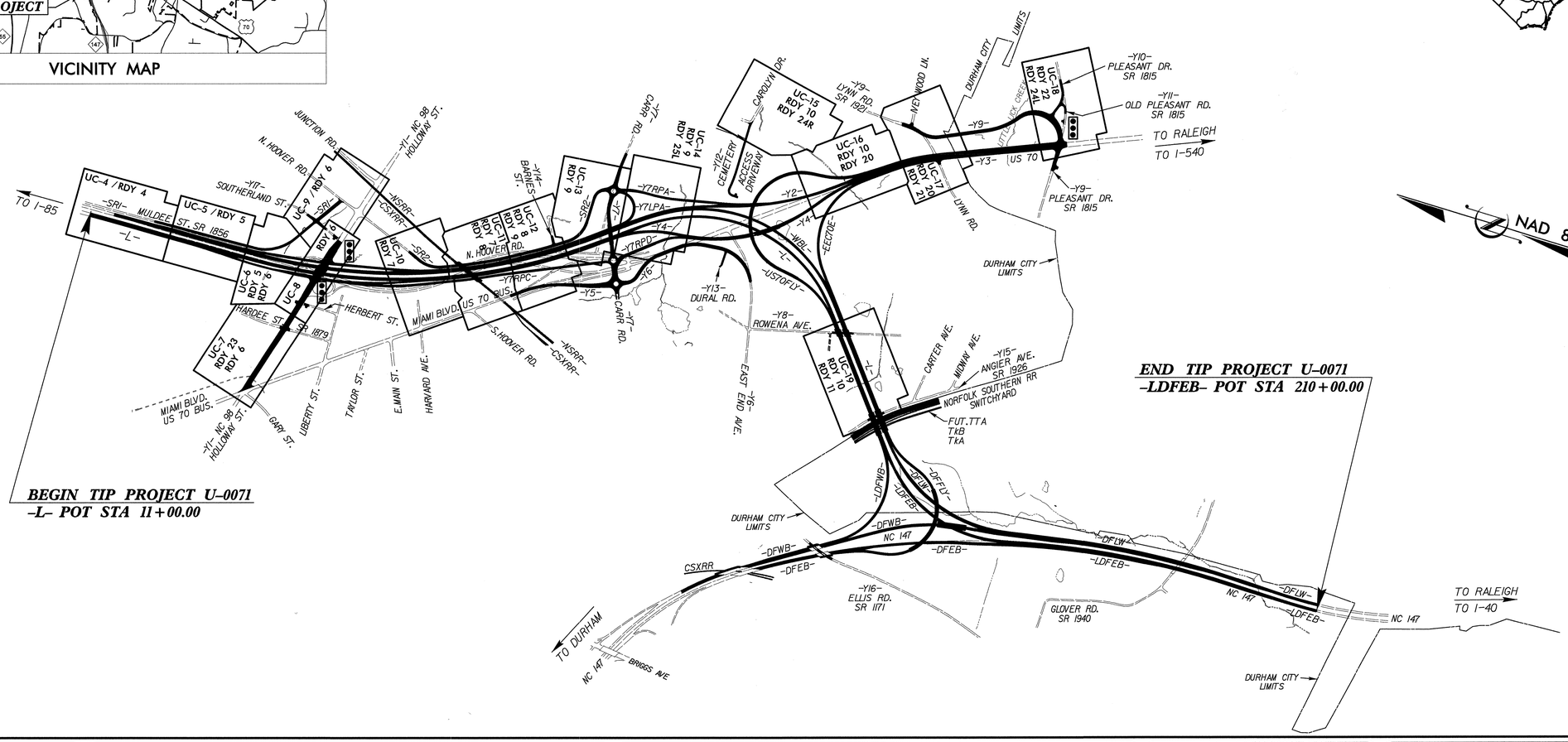

BEGIN TIP PROJECT U-0071
-L- POT STA 11+00.00

END TIP PROJECT U-0071
-LDFEB- POT STA 210+00.00

TIP PROJECT: U-0071

CONTRACT:

GRAPHIC SCALES

50 25 0 50 100
PLANS

50 25 0 50 100
PROFILE (HORIZONTAL)

10 5 0 10 20
PROFILE (VERTICAL)

INDEX OF SHEETS

SHEET NO.	DESCRIPTION
UC-1	TITLE SHEET
UC-2	SYMBOLOGY SHEET
UC-3	NOTES SHEET
UC-3A TO UC-3G	DETAIL SHEETS
UC-4 TO UC-19	PLAN SHEETS
UC-20 TO UC-30	PROFILE SHEETS

UTILITY OWNERS ON THIS PROJECT:

WATER - CITY OF DURHAM
SANITARY SEWER - CITY OF DURHAM

UTILITY DESIGN ENGINEER

NORTH CAROLINA PROFESSIONAL SEAL 027661 ENGINEER KEVIN C. ZDEB

2014-MAY-29

UTILITY DESIGN BY:

MA Engineering CONSULTANTS, INC.
598 East Chatham Street Suite 137 Cary, NC 27511
Phone: 919.297.0220 Fax: 919.297.0221

PLANS PREPARED FOR:
NORTH CAROLINA
DEPARTMENT OF TRANSPORTATION
UTILITIES UNIT
RALEIGH, NC

NCDOT ENGINEER:
ROGER WORTHINGTON, P.E.

09/08/99
$$$$SYSTIME$$$$
$$$$DGN$$$$
$$$$USERNAME$$$$

PROJECT REFERENCE NO.	SHEET NO.
U-0071	UC-2

STATE OF NORTH CAROLINA
DIVISION OF HIGHWAYS

UTILITIES PLAN SHEET SYMBOLS

2013-DEC-10

PROPOSED WATER SYMBOLS

- Water Line (Sized as Shown) — 12" WL
- 11¼ Degree Bend
- 22½ Degree Bend
- 45 Degree Bend
- 90 Degree Bend
- Plug
- Tee
- Cross
- Reducer
- Gate Valve — GV
- Butterfly Valve — BV
- Tapping Valve — TGV
- Line Stop — LS
- Line Stop with Bypass — LS/BP
- Blow Off — BO
- Fire Hydrant — PFH
- Relocate Fire Hydrant — REH
- Remove Fire Hydrant — REM FH
- Water Meter — PWM
- Relocate Water Meter — RWM
- Remove Water Meter — REM WM
- Water Pump Station — PS(W)
- RPZ Backflow Preventer — PBPZ
- DCV Backflow Preventer — PBFP
- Relocate RPZ Backflow Preventer — RBPZ
- Relocate DCV Backflow Preventer — RBFP

PROPOSED SEWER SYMBOLS

- Gravity Sewer Line (Sized as Shown) — 12" SS
- Force Main Sewer Line (Sized as Shown) — 12" FSS
- Manhole (Sized per Note)
- Sewer Pump Station — PS(SS)

PROPOSED MISCELLANOUS UTILITIES SYMBOLS

- Power Pole
- Telephone Pole
- Joint Use Pole
- Telephone Pedestal — TEL PED
- Utility Line by Others (Type as Shown) — PROP O/H POW LINES
- Trenchless Installation — 12" TL INSTALL
- Encasement by Open Cut — 24" ENCAS BY OC
- Encasement — 24" ENCASEMENT
- Thrust Block
- Air Release Valve — AR
- Utility Vault — UV
- Concrete Pier — CP
- Steel Pier — SP
- Plan Note — NOTE
- Pay Item Note — PAY ITEM

EXISTING UTILITIES SYMBOLS

- Power Pole
- Telephone Pole
- Joint Use Pole
- Utility Pole
- Utility Pole with Base
- H-Frame Pole
- Power Transmission Line Tower
- Water Manhole
- Power Manhole
- Telephone Manhole
- Sanitary Sewer Manhole
- Hand Hole for Cable
- Power Transformer
- Telephone Pedestal
- CATV Pedestal
- Gas Valve
- Gas Meter
- Located Miscellaneous Utility Object
- Abandoned According to Utility Records — AATUR
- End of Information — E.O.I.
- *Underground Power Line — P
- *Underground Telephone Cable — T
- *Underground Telephone Conduit — TC
- *Underground Fiber Optics Telephone Cable — T FO
- *Underground TV Cable — TV
- *Underground Fiber Optics TV Cable — TV FO
- *Underground Gas Pipeline — G
- Aboveground Gas Pipeline — A/G Gas
- *Underground Water Line — W
- Aboveground Water Line — A/G Water
- *Underground Gravity Sanitary Sewer Line — SS
- Aboveground Gravity Sanitary Sewer Line — A/G Sanitary Sewer
- *Underground SS Forced Main Line — FSS
- Underground Unknown Utility Line — ?UTL
- SUE Test Hole
- Water Meter
- Water Valve
- Fire Hydrant
- Sanitary Sewer Cleanout

*For Existing Utilities

- Utility Line Drawn from Record (Type as Shown) — W
- Designated Utility Line (Type as Shown) — V

REV: 2/1/2012

5/14/99

R:\Utilities\Roadway\Proj\U0071uc_psh02_sym.dgn 12/6/2013 8:14:43 AM

UTILITY DESIGN ENGINEER

NORTH CAROLINA PROFESSIONAL SEAL 027681 ENGINEER KEVIN C. ZDEB

2014-AUG-11

MA Engineering CONSULTANTS, INC.
598 E. Chatham Street, Suite 137
Cary, N. C. 27511

UTILITY CONSTRUCTION

GENERAL NOTES:

1. THE PROPOSED UTILITY CONSTRUCTION SHALL MEET THE APPLICABLE REQUIREMENTS OF THE NC DEPARTMENT OF TRANSPORTATION'S "STANDARD SPECIFICATIONS FOR ROADS AND STRUCTURES" DATED JANUARY 2012.

2. THE EXISTING WET UTILITIES BELONG TO THE CITY OF DURHAM.

   UTILITIES PRESENT:
   WATER LINE - VARIOUS SIZES
   GRAVITY SEWER - VARIOUS SIZES
   SANITARY FORCE MAIN - VARIOUS SIZES

   CONTACT: JEFF LECKY
   PHONE: 919-560-4326 EXT 30273

3. ALL WATER LINES TO BE INSTALLED WITHIN COMPLIANCE OF THE RULES AND REGULATIONS OF THE NORTH CAROLINA DEPARTMENT OF ENVIRONMENTAL AND NATURAL RESOURCES, DIVISION OF ENVIRONMENTAL HEALTH. ALL SEWER LINES TO BE INSTALLED WITHIN COMPLIANCE OF THE RULES AND REGULATIONS OF THE NORTH CAROLINA DEPARTMENT OF ENVIRONMENT AND NATURAL RESOURCES, DIVISION OF WATER QUALITY. PERFORM ALL WORK IN ACCORDANCE WITH THE APPLICABLE PLUMBING CODES.

4. THE UTILITY OWNER OWNS THE EXISTING UTILITY FACILITIES AND WILL OWN THE NEW UTILITY FACILITIES AFTER ACCEPTANCE BY THE DEPARTMENT. THE DEPARTMENT OWNS THE CONSTRUCTION CONTRACT AND HAS ADMINISTRATIVE AUTHORITY. COMMUNICATIONS AND DECISIONS BETWEEN THE CONTRACTOR AND UTILITY OWNER ARE NOT BINDING UPON THE DEPARTMENT OR THIS CONTRACT UNLESS AUTHORIZED BY THE ENGINEER. AGREEMENTS BETWEEN THE UTILITY OWNER AND CONTRACTOR FOR THE WORK THAT IS NOT PART OF THIS CONTRACT OR IS SECONDARY TO THIS CONTRACT ARE ALLOWED, BUT ARE NOT BINDING UPON THE DEPARTMENT.

5. PROVIDE ACCESS FOR THE DEPARTMENT PERSONNEL AND THE OWNER'S REPRESENTATIVES TO ALL PHASES OF CONSTRUCTION. NOTIFY DEPARTMENT PERSONNEL AND THE UTILITY OWNER TWO WEEKS PRIOR TO COMMENCEMENT OF ANY WORK AND ONE WEEK PRIOR TO SERVICE INTERRUPTION. KEEP UTILITY OWNERS' REPRESENTATIVES INFORMED OF WORK PROGRESS AND PROVIDE OPPROTUNITY FOR INSPECTION OF CONSTRUCTION AND TESTING.

6. THE PLANS DEPICT THE BEST AVAILABLE INFORMATION FOR THE LOCATION, SIZE, AND TYPE OF MATERIAL FOR ALL EXISTING UTILITIES. MAKE INVESTIGATIONS FOR DETERMINING THE EXACT LOCATION, SIZE, AND TYPE MATERIAL OF THE EXISTING FACILITIES AS NECESSARY FOR THE CONSTRUCTION OF THE PROPOSED UTILITIES AND FOR AVOIDING DAMAGE TO EXISTING FACILITIES. REPAIR ANY DAMAGE INCURRED TO EXISTING FACILITIES TO THE ORIGINAL OR BETTER CONDITION AT NO ADDITONAL COST TO THE DEPARTMENT.

7. MAKE FINAL CONNECTIONS OF THE NEW WORK TO THE EXISTING SYSTEM WHERE INDICATED ON THE PLANS, AS REQUIRED TO FIT THE ACTUAL CONDITIONS, OR AS DIRECTED.

8. MAKE CONNECTIONS BETWEEN EXISTING AND PROPOSED UTILITIES AT TIMES MOST CONVENIENT TO THE PUBLIC, WITHOUT ENDANGERING THE UTILITY SERVICE, AND IN ACCORDANCE WITH THE UTILITY OWNER'S REQUIREMENTS. MAKE CONNECTIONS ON WEEKENDS, AT NIGHT, AND ON HOLIDAYS IF NECESSARY.

9. ALL UTILITY MATERIALS SHALL BE APPROVED PRIOR TO DELIVERY TO THE PROJECT. SEE 1500-7, " SUBMITTALS AND RECORDS" IN SECTION 1500 OF THE STANDARD SPECIFICATIONS.

PROJECT SPECIFIC NOTES:

1. ALL WATER LINE , 6-INCHES THROUGH 24-INCHES, SHALL BE DUCTILE IRON THICKNESS CLASS 50, EXCEPT WHERE NOTED ON THE PLANS. 4-INCH WATER LINE SHALL BE DUCTILE IRON THICKNESS CLASS 51.

2. ALL SANITARY GRAVITY SEWER PIPE SHALL BE PVC SDR-35, EXCEPT AS FOLLOWS: SANITARY GRAVITY SEWER PIPE SHALL BE DUCTILE IRON AT ROAD CROSSINGS; WHERE SEPARATION WITH STORM DRAINAGE IS LESS THAN 2'; AND WHERE DEPTH OF COVER FROM FINAL GRADE IS 20' AND GREATER, OR LESS THAN 3'.

3. ALL WATER LINE AND FORCE MAIN SEWER FITTINGS, 4-INCHES THROUGH 24-INCHES IN DIAMETER, SHALL BE PRESSURE CLASS 350 DUCTILE IRON RESTRAINED JOINT IN ACCORDANCE WITH ANSI A21.10 / AWWA C110 AND ANSI A21.4 / AWWA C104.

4. CONTRACTOR'S ATTENTION IS DIRECTED TO SECTIONS 102, 107, AND 1550 OF THE STANDARD SPECIFICATIONS CONCERNING TRENCHLESS INSTALLATION. IT IS CONTRACTOR'S RESPONSIBILITY TO HAVE BORE PATH DESIGNED AND SEALED BY A LICENSED NORTH CAROLINA PROFESSIONAL ENGINEER. NO DAMAGE IS ALLOWED TO RIVER, WETLANDS, OR BUFFER ZONES.

5. PROVIDE THRUST RESTRAINT ON THE EXISTING WATER LINE AND EXISTING FORCE MAIN SEWER LINE WHERE TIE-INS ARE MADE AS NECESSARY.

6. CONTRACTOR SHALL NOT OPERATE ANY VALVES ON THE EXISTING UTILITY SYSTEMS. CONTRACTOR SHALL CONTACT THE UTILITY OWNER TO CONDUCT STRATEGIC OPERATION OF VALVES FOR SERVICE INTERRUPTION IN ORDER TO PERFORM SPECIFIC WORK.

7. THE CITY OF DURHAM SHALL SUPPLY CONTRACTOR WITH NEW WATER METERS FOR INSTALLATION. THE CITY OF DURHAM SHALL RETAIN OWNERSHIP OF EXISTING WATER METERS TO BE REPLACED.

8. THE CITY OF DURHAM SHALL RETAIN OWNERSHIP OF EXISTING FIRE HYDRANTS TO BE REPLACED.

9. WHERE WATER LINE AND SANITARY FORCE MAIN AND SANITARY GRAVITY SEWER ARE TO BE INSTALLED WITHIN A STEEL ENCASEMENT PIPE, THE CARRIER PIPE SHALL BE RESTRAINED JOINT DUCTILE IRON SUCH AS TR-FLEX, OR APPROVED EQUAL.

10. ALL WATER SERVICE LINES SHALL BE ¾ -INCH OR 1-INCH TYPE "K" COPPER PIPE UNLESS OTHERWISE NOTED.

11. ALL VALVES, 12" AND UNDER, SHALL BE RESILIENT WEDGE GATE VALVE.

12. ALL VALVES, 14" AND LARGER, SHALL BE BUTTERFLY VALVE AND INSTALLED INSIDE A PRECAST MANHOLE.

13. UTILITY MANHOLE SPACING SHALL NOT EXCEED 400 FEET, EXCEPT WHERE NOTED ON THE PLANS.

14. JACK AND BORE PITS SHALL HAVE THE FOLLOWING MINIMUM DIMENSIONS (W x L):
    BORE PIT: 10 FT BY 30 FT
    RECEIVING PIT: 10 FT BY 10 FT

15. WHERE CROSSINGS BETWEEN WATER LINE OR SEWER LINE WITH STORM DRAINAGE IS LESS THAN 12", A CONCRETE CRADLE WILL BE REQUIRED.

5/28/99
$$$$$$SYSTIME$$$$$
$$$$$$$$$$DGN$$$$$$$$$$$$$$$$
$$$$USERNAME$$$$

PROJECT REFERENCE NO.	SHEET NO.
U-0071	UC-3A

UTILITY DESIGN ENGINEER

NORTH CAROLINA PROFESSIONAL SEAL 040361 ENGINEER KEVIN C. ZOES

2013-DEC-10

MA Engineering CONSULTANTS, INC.
598 E. Chatham Street, Suite 137
Cary, N. C. 27511

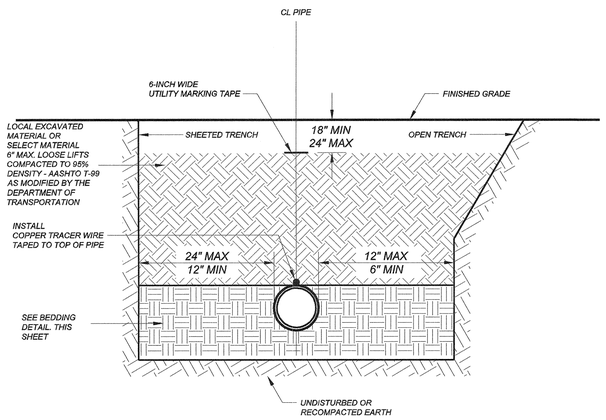

NOTES:
1. ALL SHORING & TRENCHING SHALL COMPLY WITH OSHA SAFETY STANDARDS FOR THE CONSTRUCTION INDUSTRY.
2. BELL HOLES NOT SHOWN.
3. ALL BACKFILL MATERIAL SHALL BE FREE OF ROCKS, FOREIGN MATERIAL, AND FROZEN EARTH.

GENERAL TRENCH DETAIL
NTS

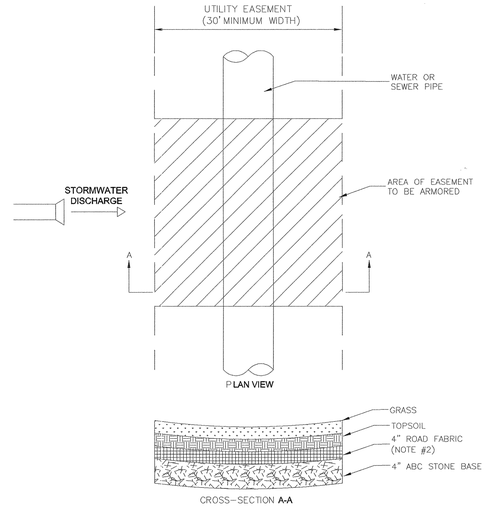

NOTES:
1. THE ARMOR FOR THE EASEMENT SHALL BE WIDE ENOUGH TO ENCOMPASS THE ENTIRE FLOW ACROSS THE EASEMENT.
2. PROVIDE MIRAFI X-SERIES WOVEN POLYPROPYLENE GEOTEXTILES (500X PRODUCT) ROAD FABRIC OR APPROVED EQUAL.
3. ARMOR FOR THE EASEMENT SHALL BE INSTALLED EVEN IF LEVEL SPREADERS ARE INSTALLED FOR THE STORM DRAINAGE DISCHARGE.

UTILITY EASEMENT ARMORING
NTS

MAXIMUM TAP SIZES FOR DUCTILE IRON PIPES

THE FOLLOWING TABLE SUMMARIZES THE MAXIMUM TAP SIZES FOR VARIOUS CLASSES OF DUCTILE IRON PIPE:

PIPE DIAMETER (INCHES)	MAXIMUM TAP SIZE FOR CLASS 50 /51 PIPE (INCHES)	MAXIMUM TAP SIZE FOR CLASS 250 /350 PIPE (INCHES)
4	3/4	3/4
6	3/4	3/4
8	1-1/2	1
10	1-1/2	1-1/2
12	1-1/2	1-1/2
14	2	1-1/2
16	2	2

THIS TABLE IS BASED ON INFORMATION FROM TABLES 50.16 AND 50.5 OF ANSI / AWWA C150/A21.51-91 FOR CLASS 50 /50 AND CLASS 250 /350 PIPE, RESPECTIVELY; AND FROM TABLE A.2 OF APPENDIX A FROM ANSI / AWWA C151/A21.51-91 FOR TAPS WITH TWO THREADS USING STANDARD CORPORATION STOPS. IF TAP REQUIREMENTS EXCEED TWO THREADS, OR IF THE REQUIRED TAP SIZES EXCEED THE MAXIMUM TAP SIZES LISTED IN THIS TABLE,TAPPING SADDLES MAY BE USED TO MAKE THE TAP.

MAXIMUM TAP SIZES FOR DUCTILE IRON PIPES

PIPE BEDDING DETAIL

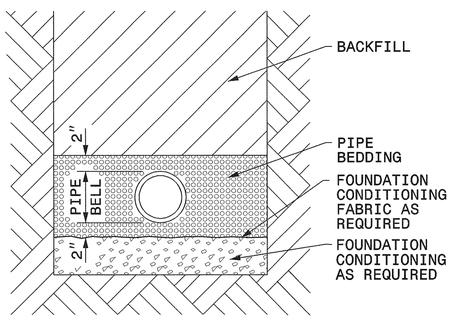

PLACE FOUNDATION CONDITIONING MATERIAL BELOW BEDDING IF REQUIRED, AS DIRECTED BY ENGINEER. PIPE BEDDED IN SELECT MATERIAL, CLASS II (TYPE 1) OR CLASS III. TRENCH BACKFILLED IN LOOSE 6" LAYERS COMPACTED TO TOP OF TRENCH USING LOCAL EXCAVATED MATERIAL IF APPROVED BY THE ENGINEER, OR SELECT MATERIAL. ALL MATERIAL SHALL BE FREE OF ROCKS, FOREIGN MATERIAL, AND FROZEN EARTH. COMPACTION SHALL BE TO APPROXIMATELY 95% DENSITY IN ACCORDANCE WITH AASHTO T-99 AS MODIFIED BY THE DEPARTMENT OF TRANSPORTATION.

MAXIMUM TRENCH WIDTH AT TOP OF PIPE

NOMINAL PIPE SIZE (INCHES)	TRENCH WIDTH (INCHES)
4	28
6	30
8	32
10	34
12	36
14	38
16	40
18	42
20	44
24	48
30	54
36	60
42	66
48	72
54	78

GENERAL UTILITY DETAILS

5/28/99
12/6/2013
R:\Utilities\Rdy_Ut\Proj\Details\u0071_uc_psh03A_pln.dgn
8:42:28 AM

5/28/99

PROJECT REFERENCE NO.	SHEET NO.
U-0071	UC-3B

UTILITY DESIGN ENGINEER

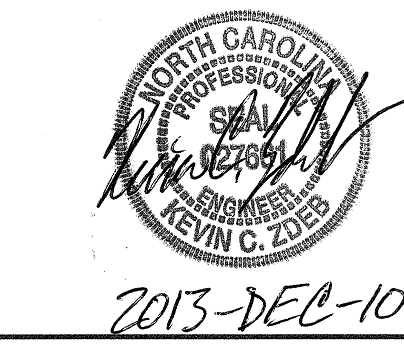

MA Engineering CONSULTANTS, INC.
598 E. Chatham Street,
Suite 137
Cary, N. C. 27511

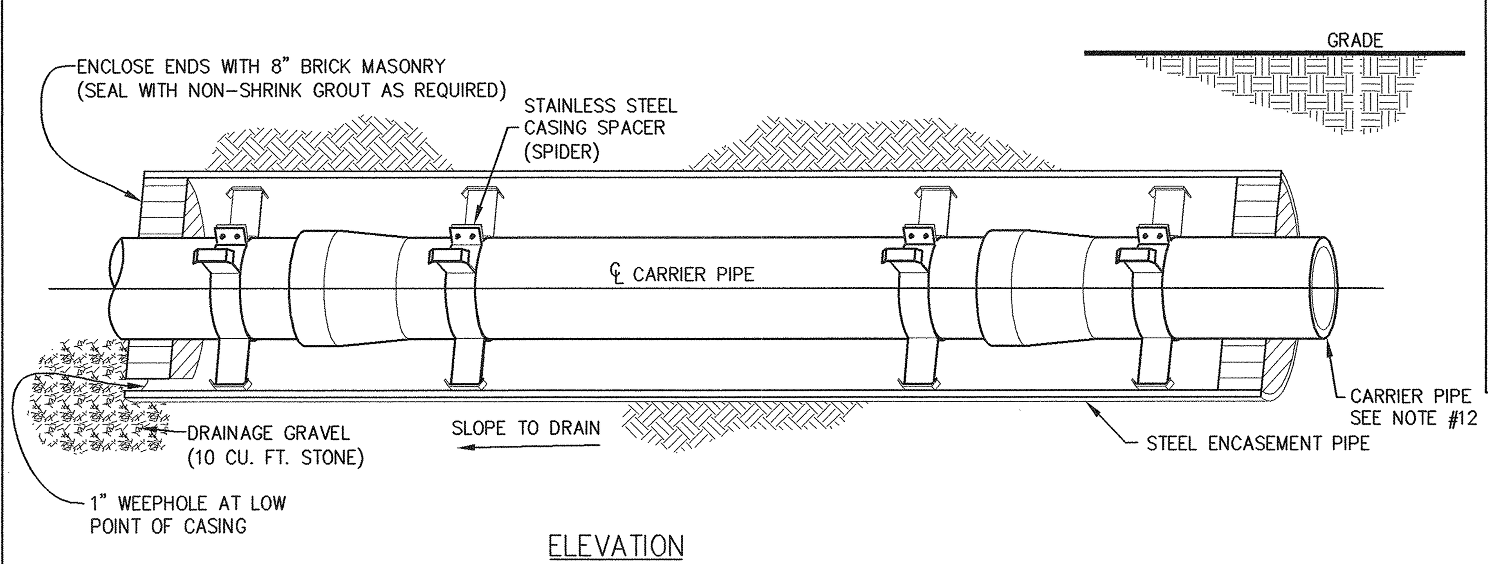

ELEVATION

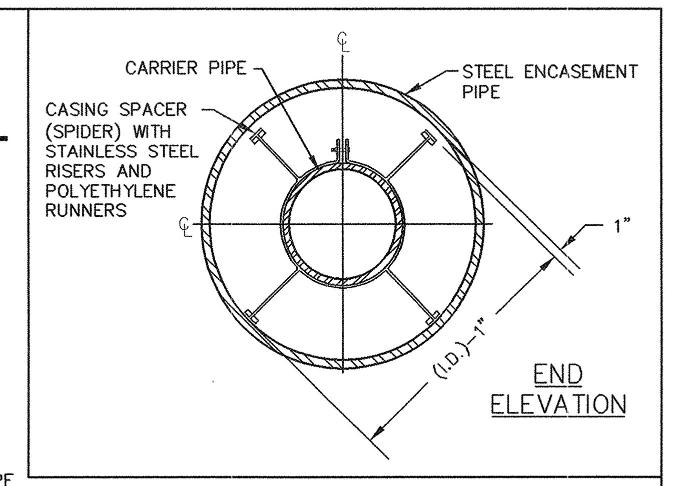

END
ELEVATION

NOTES:

1. CASING SPACERS "SPIDERS" SHALL BE USED FOR SUPPORT OF THE CARRIER PIPE WITHIN THE STEEL ENCASEMENT PIPE. SPIDERS SHALL BE CENTERED AND RESTRAINED. SPIDERS SHALL HAVE A STAINLESS STEEL SHEE AND STAINLESS STEEL RISERS WITH POLYETHYLENE RUNNERS. MANUFACTURED BY CASCADE WATERWORKS MFG. COMPANY, OR APPROVED EQUAL.
2. A MINIMUM SPACING OF 2 SPIDERS PER JOINT OF CARRIER PIPE SHALL BE REQUIRED IN ORDER TO PREVENT SAGGING OF CARRIER PIPE. REFER TO THE MANUFACTURER'S RECOMMENDATIONS FOR SPACING AND SIZE OF SPACERS BASED ON THE SIZE AND TYPE OF THE CARRIER PIPE.
3. THE SPIDERS SHALL BE SPACED EVENLY ALONG THE CARRIER PIPE SUCH THAT EACH SPIDER SUPPORTS THE SAME UNIT WEIGHT OF THE CARRIER MAIN.
4. REFER TO PLAN SHEETS AND PROFILE SHEETS FOR LENGTH AND DIAMETER OF PROPOSED STEEL ENCASEMENT PIPES FOR EACH CROSSING.
5. STEEL ENCASEMENT PIPES SHALL EXTEND AS A MINIMUM: TO 3 FEET BEHIND BACK OF CURB LINES; TO 5 FEET BEYOND THE TOE OF SLOPE IN FILL SECTIONS, AND; FROM DITCH LINE TO DITCH LINE IN CUT SECTIONS.
6. THE TOP OF ENCASEMENT PIPE SHALL PROVIDE THE FOLLOWING MINIMUM BURY DEPTHS: 3 FEET BELOW THE TRAVEL SURFACE OF ROADWAYS, AND; 2 FEET BELOW PAVED OR UNPAVED DITCH ELEVATIONS; UNLESS OTHERWISE NOTED ON THE PLANS.
7. THE INSIDE DIAMETER OF THE ENCASEMENT PIPE SHALL BE AT LEAST 2 INCHES GREATER THAN THE LARGEST OUTSIDE DIAMETER OF THE CARRIER PIPE JOINTS OR COUPLINGS FOR CARRIER PIPE LESS THAN 6 INCHES IN DIAMETER; AND AT LEAST 4 INCHES GREATER FOR CARRIER PIPE 6 INCHES AND LARGER IN DIAMETER.
8. ALL JOINTS BETWEEN THE SECTIONS OF ENCASEMENT PIPE SHALL BE FULLY WELDED AROUND THE COMPLETE CIRCUMFERENCE OF THE PIPE.
9. FOR EXISTING UTILITY PIPE INSTALLATIONS, THE STEEL ENCASEMENT PIPE SHALL BE A SPLIT STEEL ENCASEMENT PIPE MADE UP OF TWO (2) SEMI-CIRCULAR SECTIONS JOINED BY A CONTINUOUS WELD FROM ONE END TO THE OTHER WITHOUT ANY TRACEABLE VOIDS. JOINTS BETWEEN HORIZONTAL SECTIONS OF ENCASEMENT PIPE SHALL BE FULLY WELDED AROUND THE COMPLETE CIRCUMFERENCE OF THE PIPE.
10. STEEL ENCASEMENT PIPES SHALL BE EITHER SMOOTH WALL OR SPIRAL WELDED AND HAVE A SPECIFIED MINIMUM YIELD STRENGTH OF AT LEAST 35,000 PSI.
11. UNCOATED AND UNPROTECTED STEEL ENCASEMENT PIPE SHALL HAVE A MINIMUM WALL THICKNESS AS NOTED BELOW FOR THE FOLLOWING OUTSIDE DIAMETER OF PIPES:

0.188 INCHES FOR 12" AND SMALLER	0.312 INCHES FOR 26"
0.250 INCHES FOR 14"	0.312 INCHES FOR 28"
0.250 INCHES FOR 16"	0.312 INCHES FOR 30"
0.250 INCHES FOR 18"	0.375 INCHES FOR 36"
0.250 INCHES FOR 20"	0.500 INCHES FOR 42"
0.250 INCHES FOR 24"	0.500 INCHES FOR 48"

STEEL ENCASEMENT PIPE UNDER ROADS

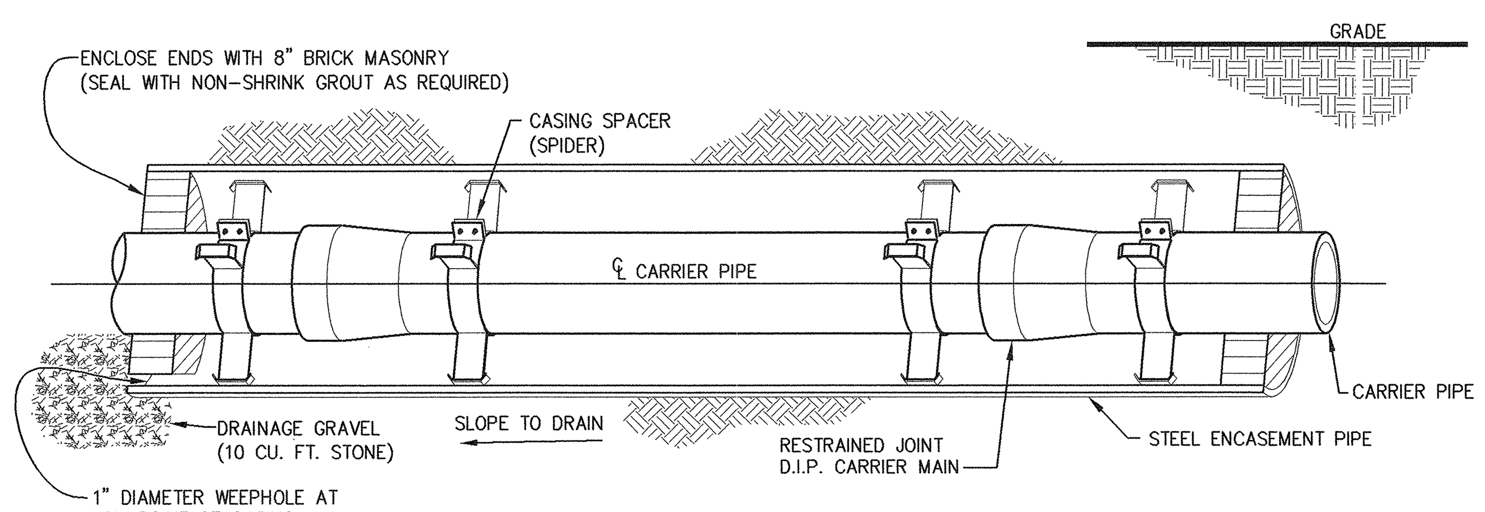

ELEVATION

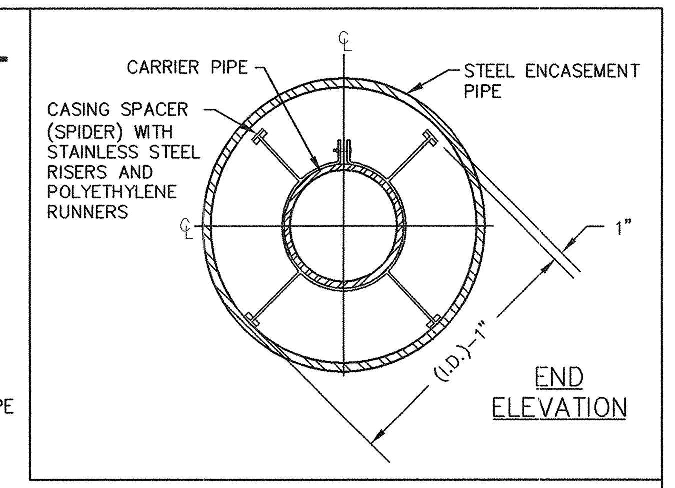

END
ELEVATION

NOTES:

1. CASING SPACERS "SPIDERS" SHALL BE USED FOR SUPPORT OF THE CARRIER PIPE WITHIN THE STEEL ENCASEMENT PIPE. SPIDERS SHALL BE CENTERED AND RESTRAINED. SPIDERS SHALL HAVE A STAINLESS STEEL SHELL AND STAINLESS STEEL RISERS WITH POLYETHYLENE RUNNERS. MANUFACTURED BY CASCADE WATERWORKS MFG. COMPANY OR APPROVED EQUAL.
2. A MINIMUM SPACING OF 2 SPIDERS PER JOINT OF CARRIER PIPE SHALL BE REQUIRED IN ORDER TO PREVENT SAGGING OF CARRIER PIPE. REFER TO THE MANUFACTURER'S RECOMMENDATIONS FOR SPACING AND SIZE OF SPACERS BASED ON THE SIZE OF THE CARRIER PIPE.
3. THE SPIDERS SHALL BE SPACED EVENLY ALONG THE CARRIER PIPE SUCH THAT EACH SPIDER SUPPORTS THE SAME UNIT WEIGHT OF THE CARRIER PIPE.
4. STEEL ENCASEMENT PIPES SHALL EXTEND TO THE RAILROAD RIGHT-OF-WAY LINES OR AS SHOWN ON THE PLANS.
5. STEEL ENCASEMENT PIPES TO BE INSTALLED UNDER TRACK AND WITHIN 45 FEET OF THE CENTERLINE OF THE OUTERMOST EXISTING TRACK SHALL BE INSTALLED BY BORE AND JACK.
6. REFER TO PLAN SHEETS AND PROFILE SHEETS FOR LENGTH AND INSIDE DIAMETER OF PROPOSED STEEL ENCASEMENT PIPES FOR EACH CROSSING.
7. THE INSIDE DIAMETER OF THE ENCASEMENT PIPE SHALL BE: AT LEAST 2 INCHES GREATER THAN THE LARGEST OUTSIDE DIAMETER OF THE CARRIER PIPE JOINTS OR COUPLINGS FOR CARRIER PIPE LESS THAN 6 INCHES IN DIAMETER; AND AT LEAST 4 INCHES GREATER FOR CARRIER PIPE 6 INCHES AND LARGER IN DIAMETER.
8. ALL JOINTS BETWEEN THE SECTIONS OF ENCASEMENT PIPE SHALL BE FULLY WELDED AROUND THE COMPLETE CIRCUMFERENCE OF THE PIPE.
8. FOR EXISTING UTILITY PIPE INSTALLATIONS, THE STEEL ENCASEMENT PIPE SHALL BE A SPLIT STEEL ENCASEMENT PIPE MADE UP OF TWO (2) SEMI-CIRCULAR SECTIONS JOINED BY A CONTINUOUS WELD FROM ONE END TO THE OTHER WITHOUT ANY TRACEABLE VOIDS. JOINTS BETWEEN HORIZONTAL SECTIONS OF ENCASEMENT PIPE SHALL BE FULLY WELDED AROUND THE COMPLETE CIRCUMFERENCE OF THE PIPE.
9. STEEL ENCASEMENT PIPES SHALL BE SPIRAL WELDED STEEL AND HAVE A SPECIFIED MINIMUM YIELD STRENGTH OF AT LEAST 35,000 PSI IN ACCORDANCE WITH ASTM A139 AND A283.
10. UNCOATED AND UNPROTECTED STEEL ENCASEMENT PIPE WITH A MINIMUM COVER OF 5.5 FEET FROM BASE OF RAIL SHALL HAVE A MINIMUM WALL THICKNESS AS NOTED BELOW FOR THE FOLLOWING OUTSIDE DIAMETER OF PIPES:

0.188 INCH FOR 10" AND SMALLER	0.562 INCH FOR 38"
0.250 INCH FOR 12" AND 14"	0.594 INCH FOR 40"
0.312 INCH FOR 18"	0.625 INCH FOR 42"
0.344 INCH FOR 20" AND 22"	0.657 INCH FOR 44" AND 46"
0.375 INCH FOR 24"	0.688 INCH FOR 48"
0.406 INCH FOR 26"	0.719 INCH FOR 50"
0.438 INCH FOR 28"	0.750 INCH FOR 52"
0.469 INCH FOR 30"	0.781 INCH FOR 54"
0.500 INCH FOR 32"	0.812 INCH FOR 56" AND 58"
0.532 INCH FOR 34" AND 36"	0.844 INCH FOR 60"

STEEL ENCASEMENT PIPE UNDER RAILROADS

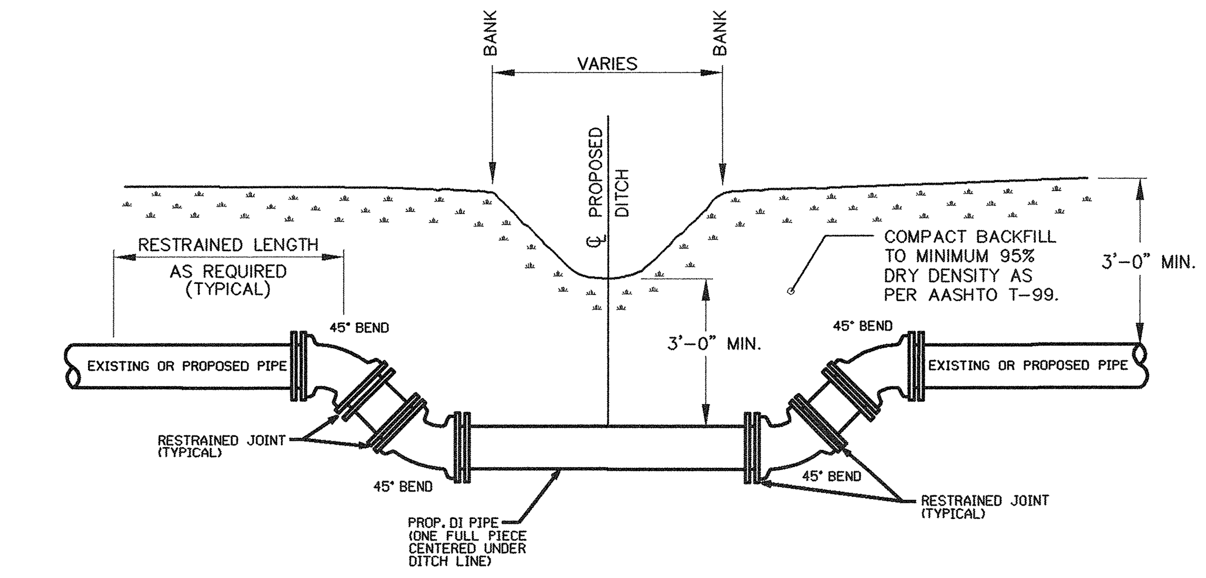

CROSS SECTION

FORCE MAIN / WATER LINE AT DITCH/STREAM/CREEK CROSSING

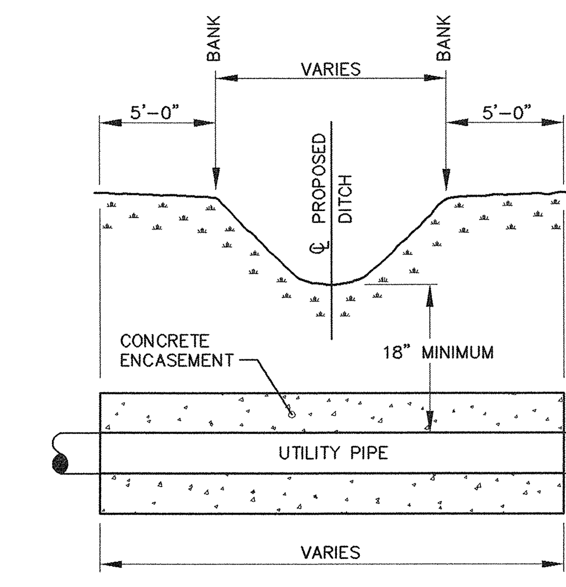

CROSS SECTION

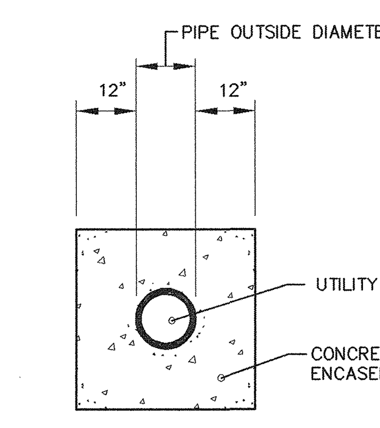

END VIEW

NOTES:

1. CONCRETE SHALL BE CLASS B – 2,500 P.S.I. MIN. COMPRESSIVE STRENGTH.
2. CONCRETE ENCASEMENT IS NOT REQUIRED WHEN PIPE IS AT LEAST THREE (3) FEET UNDER CENTERLINE OF CREEK BOTTOM.

UTILITY PIPE CONCRETE ENCASEMENT FOR DITCH/CREEK/STREAM CROSSING

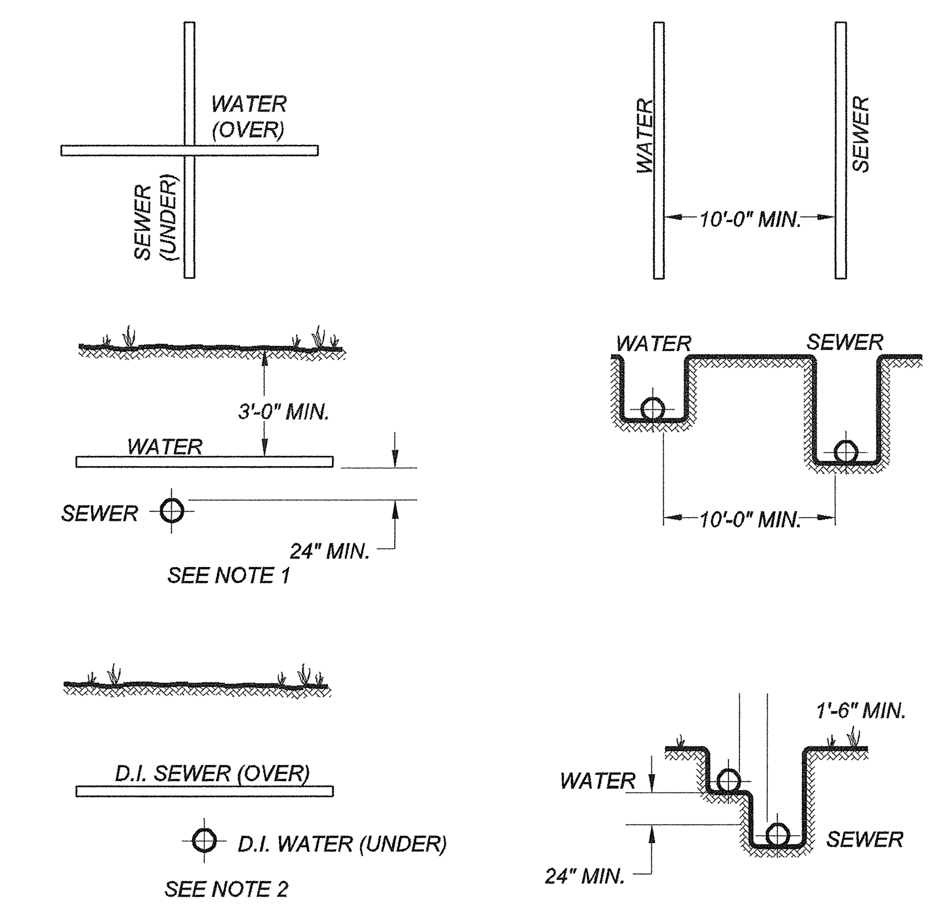

NOTES:

1. *WHERE THE WATER MAIN IS INSTALLED ABOVE THE SEWER, BUT LESS THAN 24" CLEAR, BOTH THE WATER AND THE SEWER MAINS SHALL BE CONSTRUCTED OF DUCTILE IRON PIPE WITH WATER MAIN STANDARD JOINTS FOR A LATERAL DISTANCE OF AT LEAST 10 FEET ON EACH SIDE OF THE POINT OF CROSSING.*
2. *WHERE THE WATER PIPE IS LAID UNDER SEWER, BOTH THE WATER AND THE SEWER MAINS SHALL BE CONSTRUCTED OF DUCTILE IRON PIPE WITH WATER MAIN STANDARD JOINTS FOR A LATERAL DISTANCE OF AT LEAST 10 FEET ON EACH SIDE OF THE POINT OF CROSSING.*
3. *"SEWER" SHALL BE CONSIDERED TO MEAN EITHER SANITARY SEWER OR STORM SEWER.*

TYPICAL PIPE CROSSING AND PARALLELS
NTS

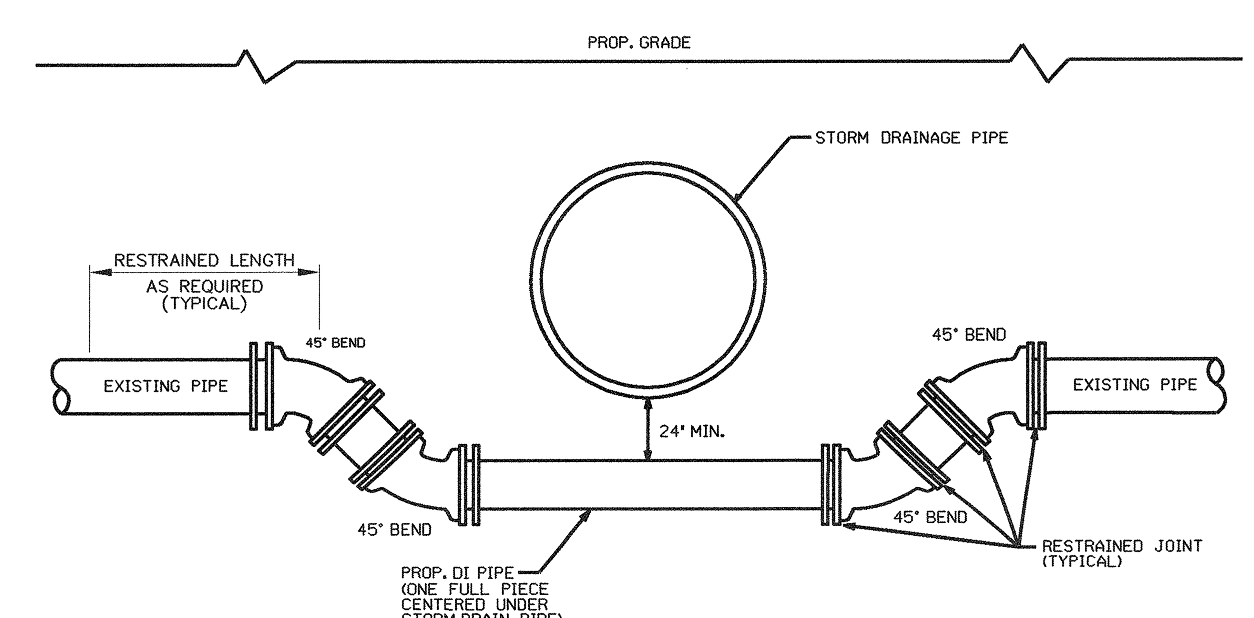

PROFILE

NTS

NOTES:
1. ALL FITTINGS AND JOINTS SHALL BE RESTRAINED JOINT DESIGN.
2. PROVIDE APPROPRIATE RESTRAINED LENGTH AS PER TABLE HEREIN.

FORCE MAIN / WATER MAIN CROSSING UNDER STORM DRAINAGE PIPE

PIPE CROSSING AND ENCASEMENT DETAILS

12/6/2013
R:\Utilities\Rdy_Ut\Proj\Details\u0071_uc_psh03B_pln.dgn
8:24:30 AM

PROJECT REFERENCE NO.	SHEET NO.
U-0071	UC-3C

UTILITY DESIGN ENGINEER

NORTH CAROLINA PROFESSIONAL SEAL 19431 ENGINEER KEVIN C. ZOYES

2013-DEC-10

MA Engineering CONSULTANTS, INC.
598 E. Chatham Street, Suite 137
Cary, N. C. 27511

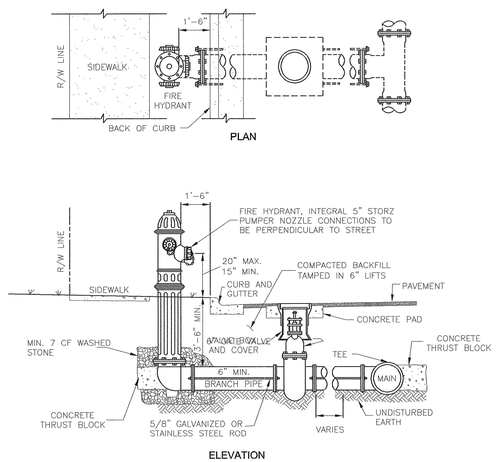

GENERAL NOTES:

1. ALL CONCRETE BLOCKING SHALL BE 3000 P.S.I. MINIMUM.
2. ALL HYDRANT VALVES SHALL BE RODDED TO MAIN LINE.
3. CONCRETE PAD REQUIRED ON ALL VALVES. (SEE DETAIL SHEET UC-3D).
4. HYDRANT TO BE LOCATED 10' FROM P.T. OR P.C. AT INTERSECTIONS.
5. THE HYDRANT PUMPER NOZZLE SHALL BE OF ONE-PIECE DESIGN.
6. THE NOZZLE SHALL BE AN INTEGRAL PART OF THE FIRE HYDRANT AND MUST BE FURNISHED BY THE MANUFACTURER OR AUTHORIZED DISTRIBUTOR. ADAPTERS WILL NOT BE ACCEPTED.

FIRE HYDRANT INSTALLATION STANDARD CURB AND GUTTER

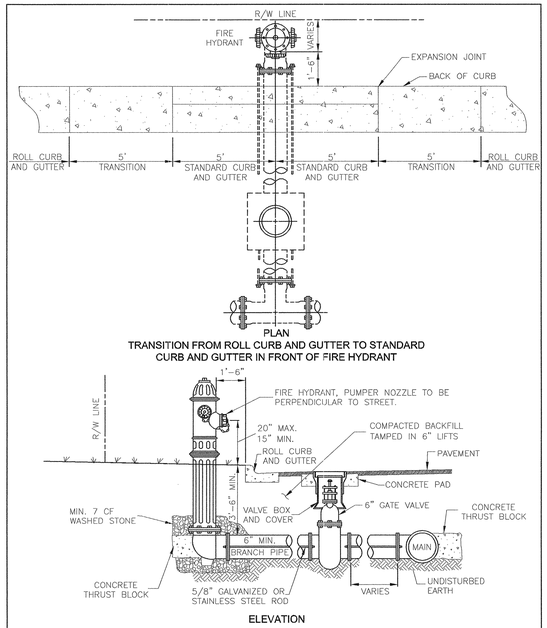

GENERAL NOTES:

1. ALL CONCRETE BLOCKING SHALL BE 3000 P.S.I. MINIMUM.
2. ALL HYDRANT VALVES SHALL BE RODDED TO MAIN LINE.
3. CONCRETE PAD REQUIRED ON ALL VALVES (SEE DETAIL SHEET UC-3D).
4. HYDRANT TO BE LOCATED 10' FROM P.T. OR P.C. AT INTERSECTIONS.

FIRE HYDRANT INSTALLATION ROLL CURB AND GUTTER

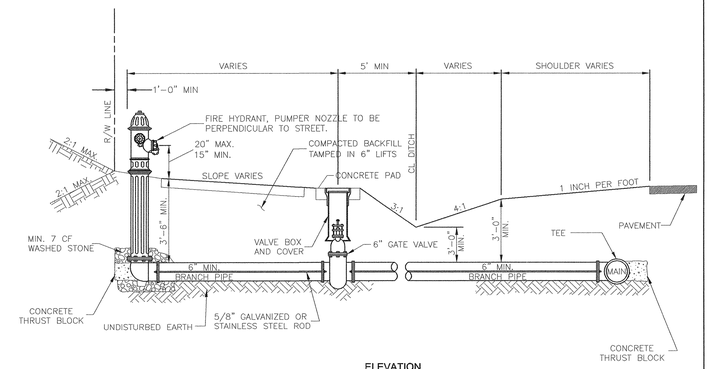

GENERAL NOTES:

1. ALL CONCRETE BLOCKING SHALL BE 3000 P.S.I. MINIMUM.
2. ALL HYDRANT VALVES SHALL BE RODDED TO MAIN LINE.
3. CONCRETE PAD REQUIRED ON ALL VALVES (SEE DETAIL SHEET UC-3D).
4. HYDRANT TO BE LOCATED 10' FROM P.T. OR P.C. AT INTERSECTIONS.

FIRE HYDRANT INSTALLATION PAVEMENT WITH DITCH

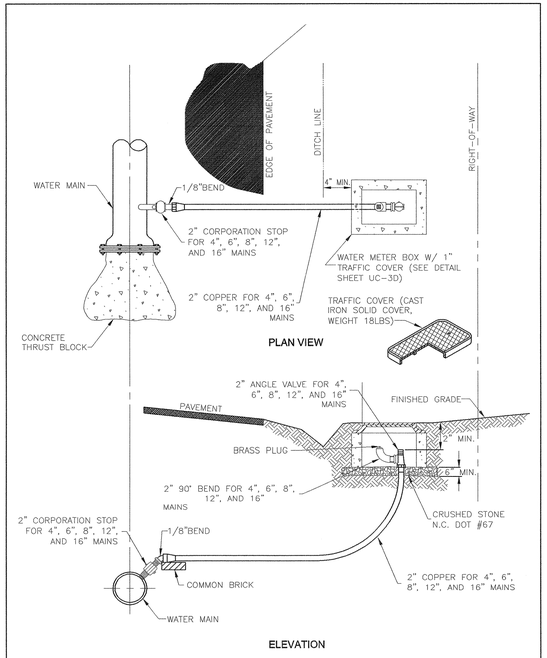

NOTE:
1. EZ HYDRANTS CAN BE REQUIRED AT THE OWNER'S DIRECTION.

BLOW-OFF ASSEMBLY FOR 4",6",8",12", AND 16" WATER MAINS

WATER LINE DETAILS

5/28/99
12/6/2013
R:\Utilities\Rdy_Ut\Proj\Details\U0071_uc_psh03C_pln.dgn
8:24:35 AM

PROJECT REFERENCE NO.	SHEET NO.
U-0071	UC-3D

UTILITY DESIGN ENGINEER

NORTH CAROLINA PROFESSIONAL SEAL 027661 ENGINEER KEVIN C. ZOLEB

2013-DEC-10

MA Engineering CONSULTANTS, INC.
598 E. Chatham Street, Suite 137
Cary, N. C. 27511

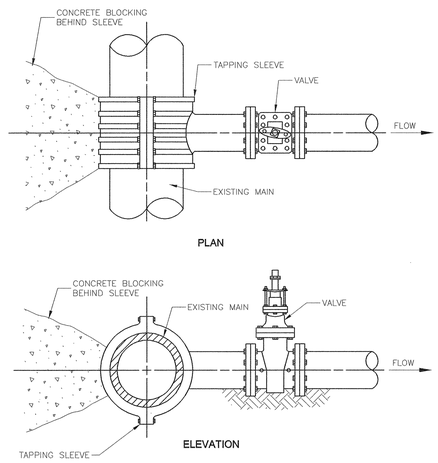

GENERAL NOTES:

1. 3000 P.S.I. SOLID CONCRETE BLOCKING BEHIND SLEEVE.
2. CONCRETE SHALL NOT CONTACT BOLTS OR ENDS OF MECHANICAL JOINT FITTINGS.
3. 12" X 12" AND 16" X 16" TAPPING SLEEVE IS NOT ALLOWED.

STANDARD TAPPING SLEEVE AND VALVE ASSEMBLY

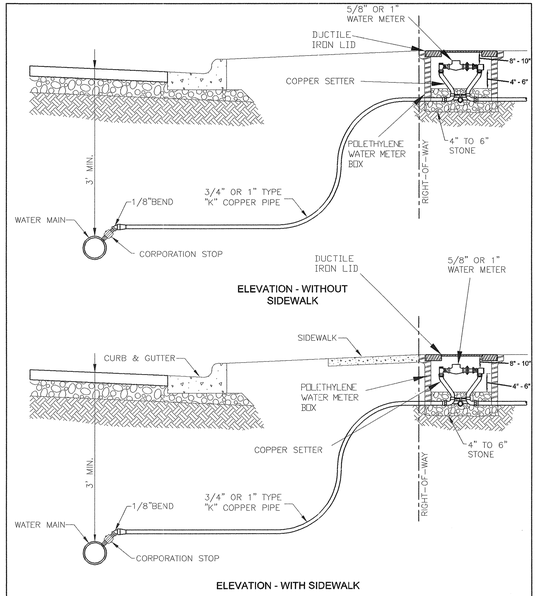

3/4" OR 1" WATER CONNECTION FOR 5/8" OR 1" WATER METERS

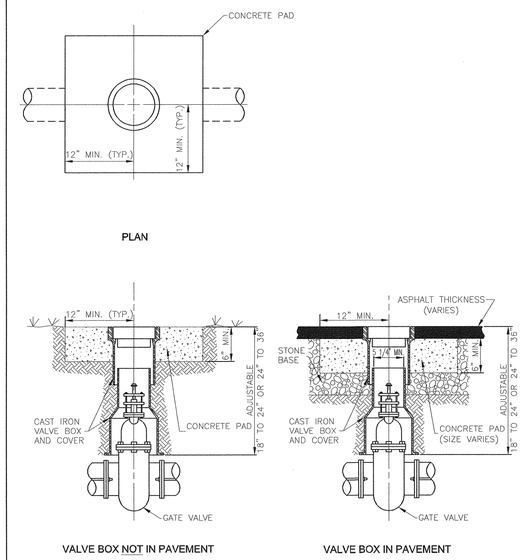

WATER VALVE BOX INSTALLATION FOR 4", 6", 8", AND 12" GATE VALVES

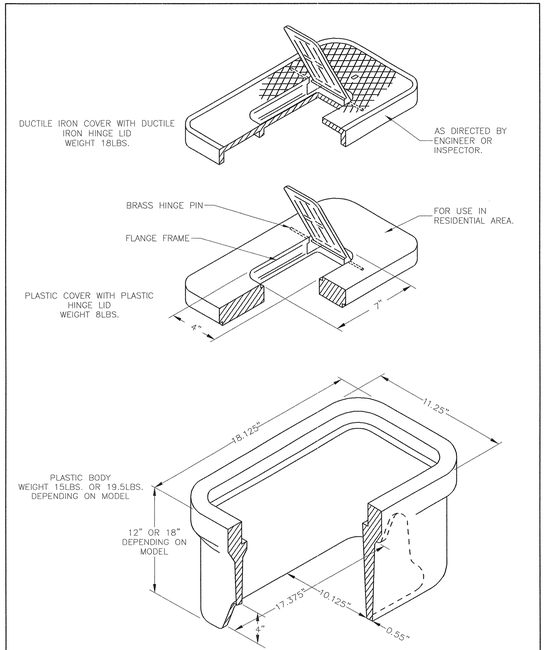

PLASTIC METER BOX FOR 5/8" AND 1" WATER METERS

VALVE, VALVE BOX, AND METER DETAILS

5/28/99

12/6/2013
R:\Utilities\Rdy_Ut\Proj\Details\u0071_uc_psh03D_pln.dgn
8:24:44 AM

PROJECT REFERENCE NO.	SHEET NO.
U-0071	UC-3E

UTILITY DESIGN ENGINEER

NORTH CAROLINA PROFESSIONAL SEAL 027602 ENGINEER KEVIN C. ZUEB

2014-AUG-11

MA Engineering CONSULTANTS, INC.
598 E. Chatham Street, Suite 137
Cary, N. C. 27511

1. ALL PRE CAST CONCRETE MANHOLES SHALL CONFORM TO THE LATEST REVISION OF ASTM C478.
2. CONCRETE SHALL BE 4000 PSI AT 28 DAYS MINIMUM.
3. STEEL REINFORCEMENT SHALL BE GRADE 40 BILLET STEEL CONFORMING TO THE LATEST REVISION OF ASTM-A-185 FOR WALL REINFORCEMENT, AND THE LATEST REVISION OF ASTM-A615 FOR THE BASE REINFORCEMENT.
4. STANDARD JOINTS SHALL BE; SEALED WITH PUTTY TYPE PLASTIC CEMENT PER FED. SPEC. SS-C-153 OR AN O-RING TYPE JOINT CONFORMING TO THE LATEST REVISION OF ASTM-C443.
5. MANHOLE INLETS AND OUTLETS SHALL BE CAST IN PLACE FLEXIBLE RUBBER SLEEVES BOOTS PER THE LATEST REVISION OF ASTM-C923.
6. INVERTS TO BE CONSTRUCTED OF BRICK WITH A CONCRETE BENCH (SEE SANITARY SEWER MANHOLE INVERT DETAIL ON SHEET UC-3F).
7. THE MAXIMUM SEPARATION OR INVERT IN TO INVERT OUT WITHIN A MANHOLE IS 0.50 FEET. WHEN THE SEPARATION IS GREATER THAN 0.5 FEET A DROP MANHOLE MUST BE USED.
8. MANHOLES GREATER THAN 18 FEET IN DEPTH SHALL HAVE AN INSIDE DIAMETER OR 5'-0". FOR SANITARY SEWER MAINS GREATER THAN EIGHTEEN INCHES (18") IN DIAMETER, MANHOLES SHALL BE A MINIMUM OF 5'-0" IN DIAMETER.
9. RIM ELEVATIONS SHALL BE AT GRADE IN STREETS & PARKING LOTS.
10. RIM ELEVATIONS ALONG OUTFALLS SHALL BE A MINIMUM OF 3' ABOVE EXISTING GROUND ELEVATION. IF THE OUTFALL IS LOCATED WITHIN THE FLOOD PLAIN, RIM ELEVATIONS SHALL BE 2' ABOVE THE 100-YEAR FLOOD ELEVATION (WHILE STILL MAINTAINING THE 3' ABOVE THE EXISTING GROUND ELEVATION MINIMUM REQUIREMENT). THE 100-YEAR FLOOD ELEVATION SHALL BE NOTED ON THE CONSTRUCTION DRAWINGS.
11. DEPENDING UPON THE HEIGHT OF THE MANHOLE, THE UTILITY OWNER MAY REQUIRE FLAT MANHOLES, EXTERIOR STEPS AND SAFETY BARS ON TOP OF THE MANHOLE.
12. MANHOLES 4 FEET IN DIAMETER SHALL HAVE 5 INCH THICK WALLS. MANHOLES 5 FEET IN DIAMETER SHALL HAVE 6 INCH THICK WALLS. MANHOLES 7 FEET IN DIAMETER SHALL HAVE 8 INCH THICK WALLS.

PRECAST CONCRETE SANITARY SEWER MANHOLE NOTES

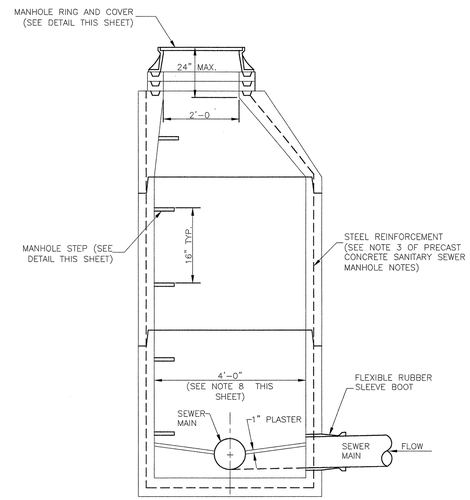

PRECAST CONCRETE SANITARY SEWER MANHOLE

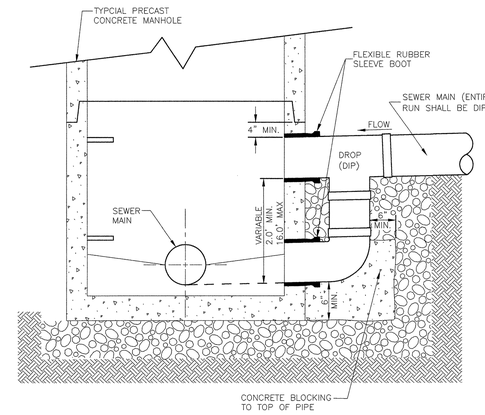

SANITARY SEWER DROP MANHOLE

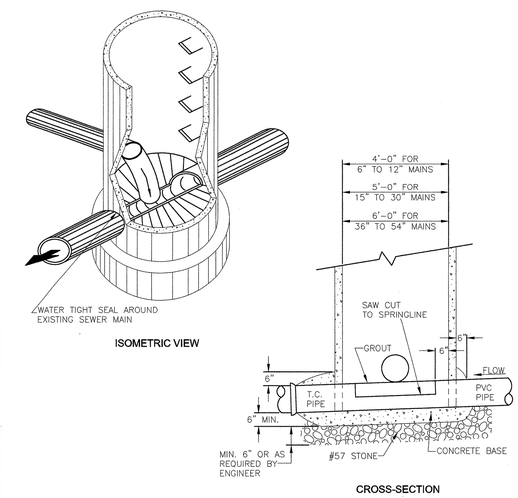

NOTES:
1. MANHOLE TO BE SET ON CONCRETE BASE AND BASE TO BE ONE POUR.
2. FOR VITRIFIED CLAY PIPE, CONCRETE SHALL BE POURED TO NEXT EXISTING JOINT (BOTH SIDES OF MANHOLE).
3. PIPE OPENING SHALL BE PRECAST BY MANUFACTURER.
4. FLOW SHALL BE MAINTAINED DURING CONSTRUCTION.
5. MINIMUM OF 4000 PSI CONCRETE REQUIRED.
6. THE CONTRACTOR SHALL PROVIDE A MINIMUM 6" COMPACTED #57 STONE BASE.
7. INVERT TO BE BUILT FROM PROPOSED PIPE TO EFFLUENT PIPE, ACCORDING TO DETAIL ON INVERTS.

DOGHOUSE MANHOLE INSTALLATION OVER EXISTING SEWER MAIN

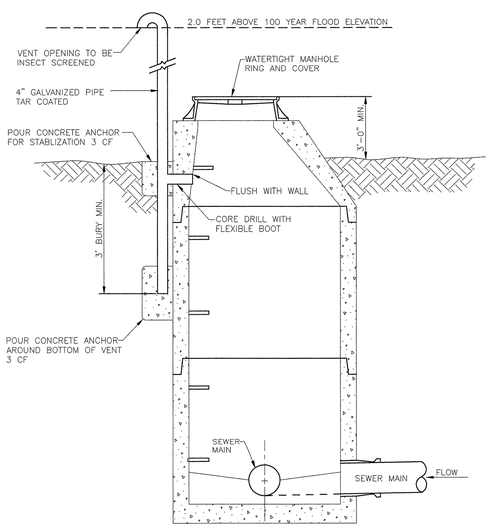

SANITARY SEWER MANHOLE VENT

NOTES:
1. ALL PIPE ENTERING & EXITING MANHOLES IS 8" DUCTILE IRON.
2. AN OUTSIDE DROP SHALL BE INSTALLED FOR ONE INVERT IN ON SMH L-2.
3. PLAN VIEWS OF SMH L-1 AND L-2 DEPICT DESIGN ORIENTATION OF PIPES.

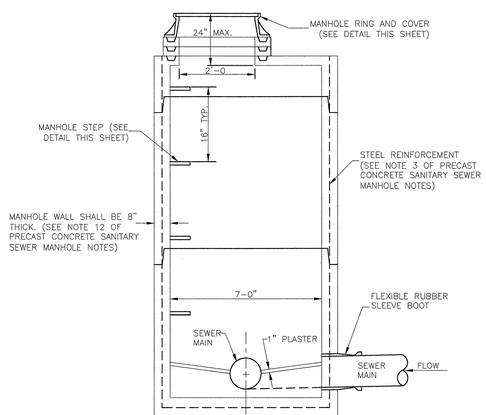

MANHOLE SECTION

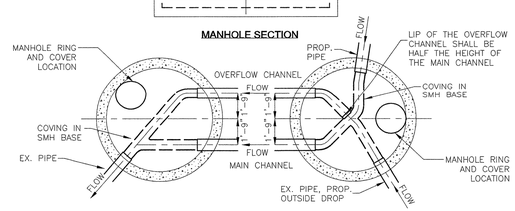

PLAN VIEW DOWNSTREAM SMH L-1 | PLAN VIEW UPSTREAM SMH L-2

7' DIA. PRECAST CONCRETE MANHOLE FOR PARALLEL LINES NTS

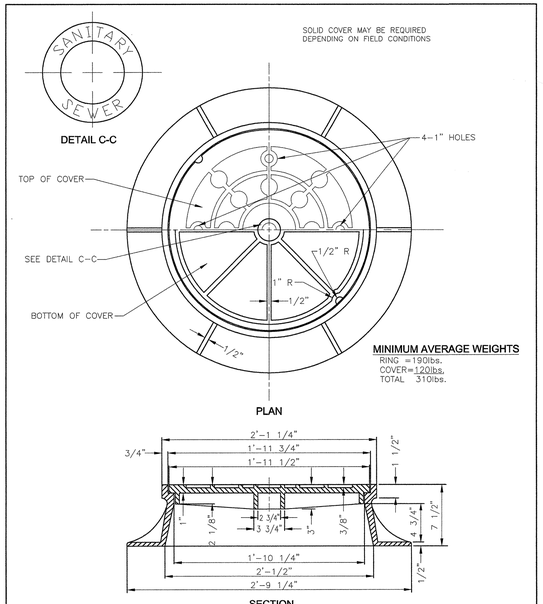

PROVIDE MANHOLE INSERTS MANUFACTURED FROM HIGH DENSITY POLYETHYLENE, MEETING THE REQUIREMENTS OF ASTM D-1248, CLASS A, CATEGORY 5, TYPE III. INSERTS SHALL BE EQUIPPED WITH 1 GAS RELIEF VALVE, 1 VACUUM RELIEF VALVE, A CROSS-LINKED POLYETHYLENE GASKET AND ONE HEAVY WEIGHT POLYPROPYLENE LIFTING STRAP.

SANITARY SEWER MANHOLE RING AND COVER

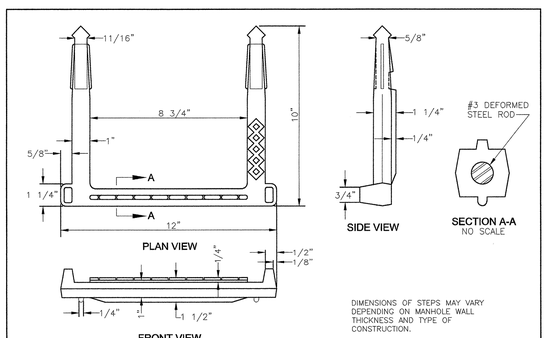

DIMENSIONS OF STEPS MAY VARY DEPENDING ON MANHOLE WALL THICKNESS AND TYPE OF CONSTRUCTION.

PLASTIC COATED MANHOLE STEPS

SANITARY SEWER AND MANHOLE DETAILS

5/28/99

$$$$$SYSTIME$$$$
$$$$$DGN$$$$
$$$$$DGN$$$$
$$$$$DGN$$$$

PROJECT REFERENCE NO.	SHEET NO.
U-0071	UC-3F

UTILITY DESIGN ENGINEER

NORTH CAROLINA PROFESSIONAL SEAL 037867 ENGINEER KEVIN C. ZUIES

2013-DEC-10

MA Engineering CONSULTANTS, INC.
598 E. Chatham Street, Suite 137
Cary, N. C. 27511

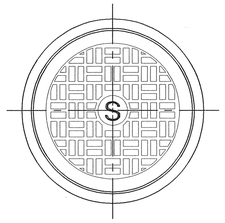

PLAN VIEW

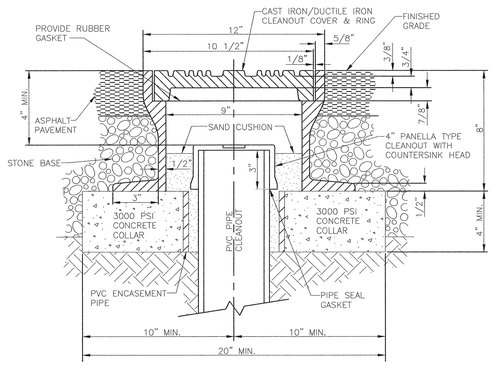

SECTION VIEW

SANITARY SEWER TRAFFIC BEARING CLEANOUT

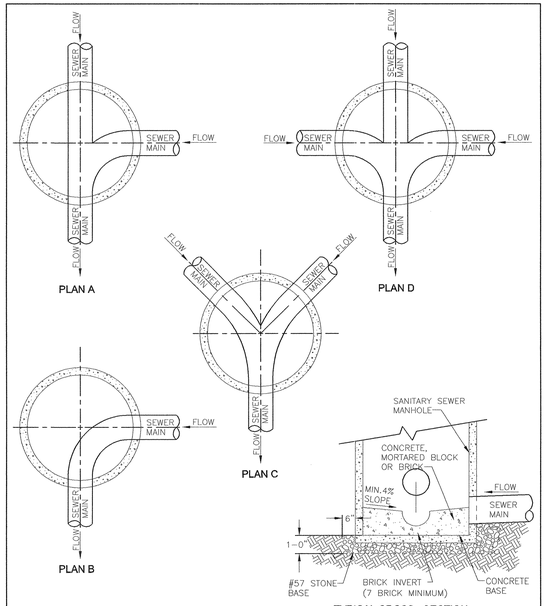

TYPICAL CROSS - SECTION

NOTES:

1. INVERT MATERIAL SHALL BE CONCRETE CAST IN PLACE WITH A SMOOTH FINISH.
2. WIDTH OF INVERT SHALL MATCH INSIDE DIAMETER OF INCOMING AND OUTGOING PIPES.
3. BRICK INVERT SHALL BE FORMED AS SHOWN.
4. ALL INVERT ELEVATIONS SHALL BE AS SHOWN ON APPROVED CONSTRUCTION PLANS.
5. BENCHES TO BE BUILT OUT OF CONCRETE, MORTARED BLOCK OR BRICK. STONE IS NOT ACCEPTABLE.

SANITARY SEWER MANHOLE INVERT

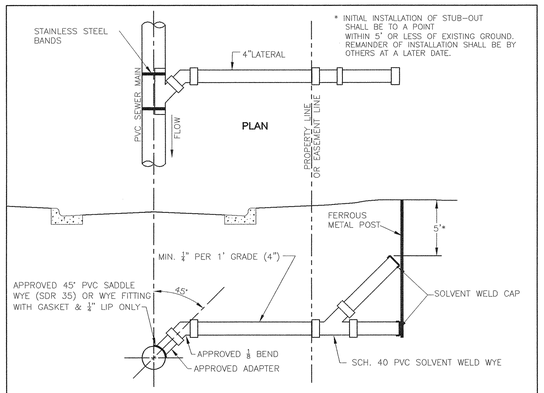

SECTION

STANDARD SEWER MAIN LATERAL STUB-OUT

PVC SEWER MAIN

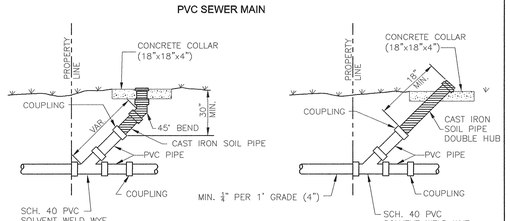

CLEAN OUT DETAILS
(FOR RECONNECTION OR RELOCATION)

SANITARY SEWER 4" LATERAL

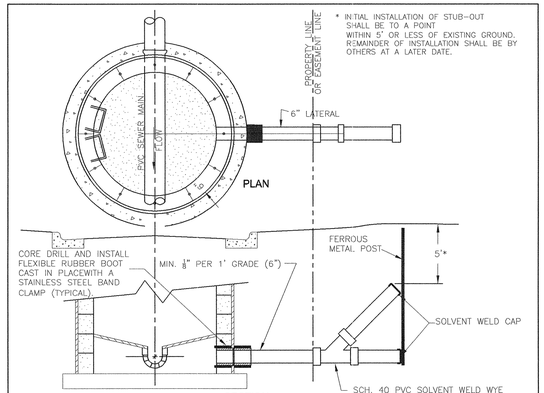

SECTION

STANDARD SEWER MAIN LATERAL STUB-OUT

PVC SEWER MAIN

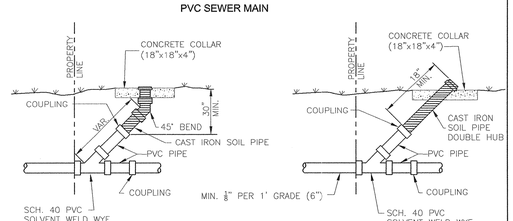

CLEAN OUT DETAILS
(FOR RECONNECTION OR RELOCATION)

SANITARY SEWER 6" LATERAL

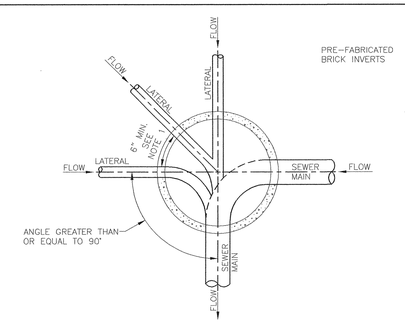

PLAN

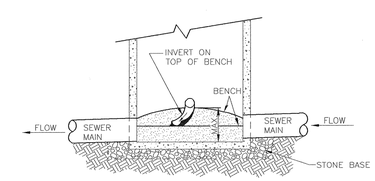

ELEVATION

NOTES:

1. THE MINIMUM SPACING FROM THE EDGE OF A CORE FOR A LATERAL TO THE EDGE OF THE NEXT CORE SHALL BE 6 INCHES.
2. SEWER LATERAL SHALL NOT ENTER A MANHOLE AT AN ANGLE LESS THAN 90° TO THE EFFLUENT PIPE.
3. ALL LATERALS TO BE INSTALLED AT THE TOP OF THE BENCH.
4. PROVIDE BRICK OR CONCRETE FOR INVERT.
5. INVERTS TO BE BUILT FROM LATERAL TO EFFLUENT PIPE.
6. THE MAXIMUM NUMBER OF LATERALS FOR ANY ONE MANHOLE IS FIVE (5).
7. ALL NEW LATERALS INTO MANHOLES MUST BE CORE DRILLED AND INSTALLED WITH A FLEXIBLE RUBBER BOOT.

SANITARY SEWER LATERAL AT MANHOLE

SANITARY SEWER AND LATERAL DETAILS

5/28/99

12/6/2013
R:\Utilities\Rdy_Utl\Proj\Details\u0071_uc_psh03F_pln.dgn
8:24:39 AM

PROJECT REFERENCE NO.	SHEET NO.
U-0071	UC-3G

UTILITY DESIGN ENGINEER

NORTH CAROLINA PROFESSIONAL SEAL ENGINEER KEVIN C. ZOCCO

2013-DEC-10

MA Engineering CONSULTANTS, INC.
598 E. Chatham Street, Suite 137
Cary, N. C. 27511

RESTRAINED JOINT DESIGN TABLE FOR DUCTILE IRON PIPE

FITTING	REQUIRED RESTRAINED LENGTH (FT) OF BARE D.I. PIPE BY DEPTH OF COVER							
HORIZONTAL BENDS	**3 FT**	**4 FT**	**5 FT**	**6 FT**	**7 FT**	**8 FT**	**9 FT**	**10 FT**
6 INCH DIA - 11.25 DEG	3	2	2	2	2	1	1	1
6 INCH DIA - 22.5 DEG	5	4	4	3	3	3	3	2
6 INCH DIA - 45 DEG	11	9	8	7	7	6	5	5
6 INCH DIA - 90 DEG	26	22	19	17	16	14	13	12
8 INCH DIA - 11.25 DEG	3	3	2	2	2	2	2	2
8 INCH DIA - 22.5 DEG	7	6	5	5	4	4	3	3
8 INCH DIA - 45 DEG	14	12	10	9	8	8	7	7
8 INCH DIA - 90 DEG	33	29	25	23	20	19	17	16
12 INCH DIA - 11.25 DEG	5	4	4	3	3	3	2	2
12 INCH DIA - 22.5 DEG	9	8	7	6	6	5	5	5
12 INCH DIA - 45 DEG	20	17	15	13	12	11	10	10
12 INCH DIA - 90 DEG	47	41	36	33	29	27	25	23
16 INCH DIA - 11.25 DEG	6	5	5	4	4	3	3	3
16 INCH DIA - 22.5 DEG	12	11	9	8	8	7	6	6
16 INCH DIA - 45 DEG	25	22	19	17	16	14	13	12
20 INCH DIA - 11.25 DEG	7	6	6	5	5	4	4	4
20 INCH DIA -22.5 DEG	15	13	11	10	9	9	8	7
20 INCH DIA - 45 DEG	31	27	24	21	19	18	16	15
20 INCH DIA - 90 DEG	74	65	57	52	47	43	40	37
VERTICAL BENDS - DOWN	**3 FT**	**4 FT**	**5 FT**	**6 FT**	**7 FT**	**8 FT**	**9 FT**	**10 FT**
6 INCH DIA - 11.25 DEG	7	6	6	5	4	4	4	3
6 INCH DIA - 22.5 DEG	15	13	11	10	9	8	8	7
6 INCH DIA - 45 DEG	31	27	23	21	19	17	16	15
8 INCH DIA - 11.25 DEG	10	8	7	6	6	5	5	5
8 INCH DIA - 22.5 DEG	19	17	15	13	12	11	10	9
8 INCH DIA - 45 DEG	40	35	30	27	25	22	21	19
12 INCH DIA - 11.25 DEG	14	12	10	9	8	8	7	7
12 INCH DIA - 22.5 DEG	28	24	21	19	17	16	14	13
12 INCH DIA - 45 DEG	57	50	44	39	35	32	30	28
16 INCH DIA - 11.25 DEG	18	15	14	12	11	10	9	9
16 INCH DIA - 22.5 DEG	36	31	27	25	22	20	19	17
16 INCH DIA - 45 DEG	74	65	57	51	46	42	39	36
20 INCH DIA - 11.25 DEG	22	19	17	15	14	12	11	11
20 INCH DIA -22.5 DEG	44	38	34	30	27	25	23	21
20 INCH DIA - 45 DEG	91	79	70	63	57	52	48	44
VERTICAL BENDS - UP	**3 FT**	**4 FT**	**5 FT**	**6 FT**	**7 FT**	**8 FT**	**9 FT**	**10 FT**
6 INCH DIA - 11.25 DEG	3	2	2	2	2	1	1	1
6 INCH DIA - 22.5 DEG	5	4	4	3	3	3	3	2
6 INCH DIA - 45 DEG	11	9	8	7	7	6	5	5
8 INCH DIA - 11.25 DEG	3	3	2	2	2	2	2	2
8 INCH DIA - 22.5 DEG	7	6	5	5	4	4	3	3
8 INCH DIA - 45 DEG	14	12	10	9	8	8	7	7
12 INCH DIA - 11.25 DEG	5	4	4	3	3	3	2	2
12 INCH DIA - 22.5 DEG	9	8	7	6	6	5	5	5
12 INCH DIA - 45 DEG	20	17	15	13	12	11	10	10
16 INCH DIA - 11.25 DEG	6	5	5	4	4	3	3	3
16 INCH DIA - 22.5 DEG	12	11	9	8	8	7	6	6
16 INCH DIA - 45 DEG	25	22	19	17	16	14	13	12
20 INCH DIA - 11.25 DEG	7	6	6	5	5	4	4	4
20 INCH DIA -22.5 DEG	15	13	11	10	9	9	8	7
20 INCH DIA - 45 DEG	31	27	24	21	19	18	16	15
DEAD ENDS / VALVES	**3 FT**	**4 FT**	**5 FT**	**6 FT**	**7 FT**	**8 FT**	**9 FT**	**10 FT**
6 INCH DIA	50	45	41	38	35	33	31	29
8 INCH DIA	65	59	54	50	46	43	40	38
10 INCH DIA	80	72	66	61	56	52	49	46
12 INCH DIA	94	85	78	72	66	62	58	54
16 INCH DIA	123	111	102	94	87	81	76	71
20 INCH DIA	151	137	125	115	107	100	93	88
REDUCERS	**3 FT**	**4 FT**	**5 FT**	**6 FT**	**7 FT**	**8 FT**	**9 FT**	**10 FT**
12 INCH X 8 INCH	50	45	41	38	35	33	31	29
TEES	**3 FT**	**4 FT**	**5 FT**	**6 FT**	**7 FT**	**8 FT**	**9 FT**	**10 FT**
8" RUN X 8" BRANCH : RL = 1 FT	64	58	53	48	44	41	38	36
8" RUN X 8" BRANCH : RL = 5 FT	59	52	47	42	39	35	32	30
12" RUN X 12" BRANCH : RL = 1 FT	93	84	77	70	65	60	56	53
12" RUN X 12" BRANCH : RL = 5 FT	88	79	71	65	59	54	50	47

ASSUMPTIONS

LAYING CONDITION = TYPE 4
SOIL DESIGNATION = COHESIVE-GRANULAR
DESIGN PRESSURE = 200 PSI (TEST PRESSURE)
SAFETY FACTOR = 1.5

NOTES

1. RESTRAINED LENGTH IS MEASURED AS FOLLOWS:
   A. HORIZONTAL/VERTICAL BENDS: ALONG EACH SIDE OF BEND.
   B. HORIZONTAL/VERTICAL BENDS - OFFSET: ALONG THE OUTER SIDE OF EACH BEND.
   ALL PIPE BETWEEN THE TWO BENDS SHALL BE RESTRAINED JOINT.
2. WHEN IT IS NOT POSSIBLE TO INSTALL THE RESTRAINED LENGTHS AS NOTED BY THIS TABLE, CONTRACTOR SHALL INSTALL THE APPROPRIATE CONCRETE THRUST RESTRAINTS AS PER THE DETAILS HEREIN.

BASED ON TEST PRESSURE OF 200 P.S.I.

HORIZONTAL RESTRAINT
(ALL AREAS GIVEN ARE IN SQUARE FEET)

PIPE SIZE	DEGREE OF BEND	LBS. STATIC THRUST *	ALLOWABLE SOIL BEARING (PSF) 1000	2000	3000	4000	5000	6000	7000	8000
4"	11/4°	686	1	1	1	1	1	1	1	1
	22 1/2°	1,726	2	1	1	1	1	1	1	1
	45°	2,805	2	1	1	1	1	1	1	1
	90°	4,444	3	2	1	1	1	1	1	1
	TEE/PLUG	3,143	3	2	1	1	1	1	1	1
6"	11/4°	1,185	2	1	1	1	1	1	1	1
	22 1/2°	2,788	3	2	1	1	1	1	1	1
	45°	5,409	5	3	2	2	1	1	1	1
	90°	9,999	10	5	3	3	2	2	2	1
	TEE/PLUG	7,081	7	4	3	2	2	1	1	1
8"	11/4°	2,354	3	1	1	1	1	1	1	1
	22 1/2°	4,961	5	3	2	1	1	1	1	1
	45°	9,669	10	5	3	2	2	2	2	1
	90°	17,771	18	9	6	4	4	3	3	2
	TEE/PLUG	12,568	13	6	4	3	3	2	2	2
10"	11/4°	3,686	4	2	2	1	1	1	1	1
	22 1/2°	7,661	8	4	3	2	2	2	1	1
	45°	15,098	15	8	5	4	3	3	2	2
	90°	27,768	28	14	9	7	6	5	4	3
	TEE/PLUG	19,635	20	10	7	5	4	3	3	2
12"	11/4°	5,533	6	3	2	2	1	1	1	1
	22 1/2°	11,032	11	6	4	3	2	2	2	2
	45°	21,651	22	11	7	5	4	4	3	3
	90°	39,987	40	20	13	10	8	7	6	5
	TEE/PLUG	28,274	28	14	9	7	6	5	4	4
14"	11/4°	7,544	8	4	3	2	2	2	1	1
	22 1/2°	15,038	15	8	5	4	3	3	2	2
	45°	29,485	29	15	10	7	6	5	4	4
	90°	54,498	54	27	18	14	11	9	8	7
	TEE/PLUG	38,485	38	19	13	10	8	6	5	5
16"	11/4°	9,854	10	5	3	3	2	2	2	2
	22 1/2°	19,662	20	10	7	5	4	3	3	3
	45°	38,571	38	17	13	10	8	6	5	5
	90°	71,285	71	36	24	18	14	12	10	9
	TEE/PLUG	50,265	50	25	17	13	10	8	7	6
20"	11/4°	15,397	16	8	6	4	3	3	2	2
	22 1/2°	30,845	31	15	11	8	7	6	5	4
	45°	60,498	61	30	20	15	12	10	9	8
	90°	111,977	112	56	37	28	23	19	16	14
	TEE/PLUG	78,540	79	40	27	20	16	14	12	10

* INCLUDES 1.25 SAFETY FACTOR

VERTICAL RESTRAINT
(ALL VOLUMES GIVEN ARE IN CUBIC YARDS)**

PIPE SIZE	RESTRAINING RODS NO.REQ'D	DIA.	DEGREE OF BEND 11 1/4°	22 1/2°	45°
4"	2	1/2"	0.25	0.50	0.75
6"	2	1/2"	0.50	1.0	1.75
8"	2	5/8"	0.75	1.50	3.0
10"	2	3/4"	1.25	2.25	4.50
12"	2	7/8"	1.75	3.25	6.50
14"	4	5/8"	2.25	4.50	8.75
16"	4	3/4"	3.0	6.0	11.50
20"	4	7/8"	5.3	10.4	19.2

**INCLUDES 1.50 SAFETY FACTOR

GENERAL NOTES:
1. CONCRETE SHALL BE CLASS "B".
2. CONCRETE SHALL NOT CONTACT BOLTS ENDS OF MECHANICAL JOINT FITTINGS.
3. CONSULT WITH ENGINEER FOR CONCRETE REQUIREMENTS ON MAINS LARGER THAN 16 INCHES. (FOR VERTICAL & HORIZONTAL BENDS)
4. ALLOWABLE SOIL BEARING SHALL BE DETERMINED BY THE ENGINEER.

REVISIONS		
NO.	DATE	DESCRIPTION

THRUST RESTRAINT FOR WATER MAINS

STATE OF NORTH CAROLINA
DIVISION OF HIGHWAYS
RALEIGH, N.C.

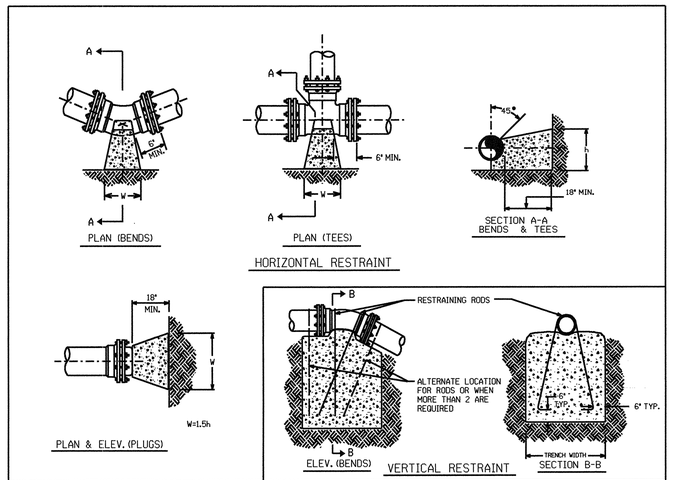

THRUST RESTRAINT FOR PIPE LINES

PIPE RESTRAINT DETAILS

5/28/99

12/6/2013
R:\Utilities\Rdy_Ut\Proj\Details\u0071_uc_psh03g_pln.dgn
8:24:41 AM

NOTES:

1. CONTRACTOR RESPONSIBLE FOR LOCATING AND RECONNECTING EXISTING SEWER CONNECTIONS. INSTALL NEW CLEANOUT AT PROPOSED RIGHT OF WAY LINE AS NECESSARY.

SEE SHEET UC-23 FOR SL-1 PROFILE
SEE SHEET UC-23 FOR SL-2 PROFILE
SEE SHEET UC-24 FOR SL-3 PROFILE
SEE SHEET UC-24 FOR SL-3A PROFILE

UTILITY OWNERS ON THIS PROJECT:

1. *CITY OF DURHAM*
   UTILITY: WATER/SEWER
   CONTACT: JEFF LECKY, PE
   PHONE: (919) 560-4326 EXT. 30259

PROJECT REFERENCE NO.	SHEET NO.
U-0071	UC-4

UTILITY DESIGN ENGINEER

NORTH CAROLINA PROFESSIONAL SEAL 027681 ENGINEER KEVIN C. ZUBB

2013-DEC-10

MA Engineering CONSULTANTS, INC.
598 E. Chatham Street, Suite 137
Cary, N. C. 27511

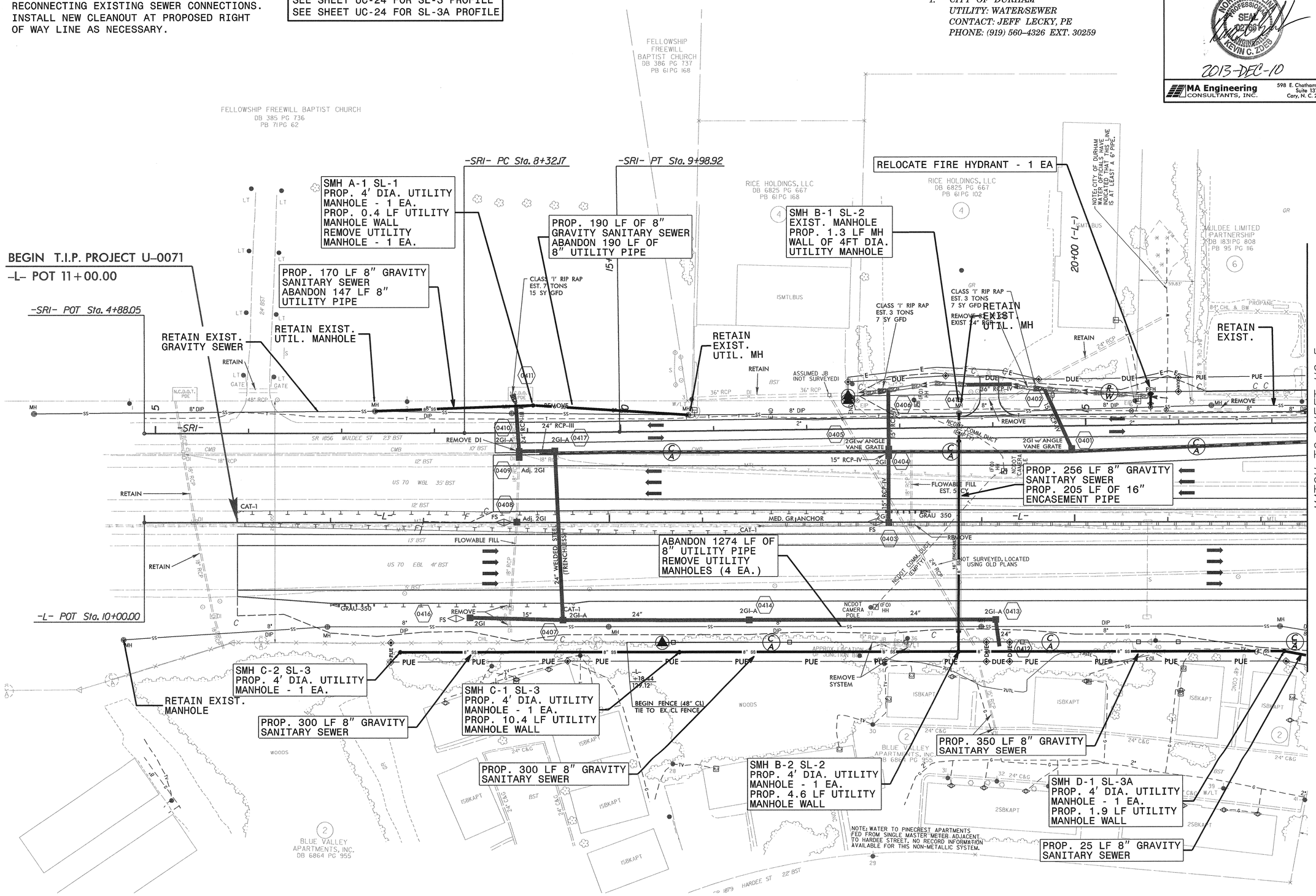

REVISIONS

8/17/99

12/6/2013
R:\Utilities\Rdy_Utl\Proj\u0071_uc_psh04_pln.dgn
8:15:03 AM

PROJECT REFERENCE NO.	SHEET NO.
U-0071	UC-5

UTILITY DESIGN ENGINEER

NORTH CAROLINA PROFESSIONAL SEAL 027861 ENGINEER KEVIN C. ZIPPS

2013-DEC-10

MA Engineering CONSULTANTS, INC.
598 E. Chatham Street, Suite 137
Cary, N. C. 27511

UTILITY OWNERS ON THIS PROJECT:

1. *CITY OF DURHAM*
   UTILITY: WATER/SEWER
   CONTACT: JEFF LECKY, PE
   PHONE: (919) 560-4326 EXT. 30259

SEE SHEET UC-24 FOR SL-3A PROFILE

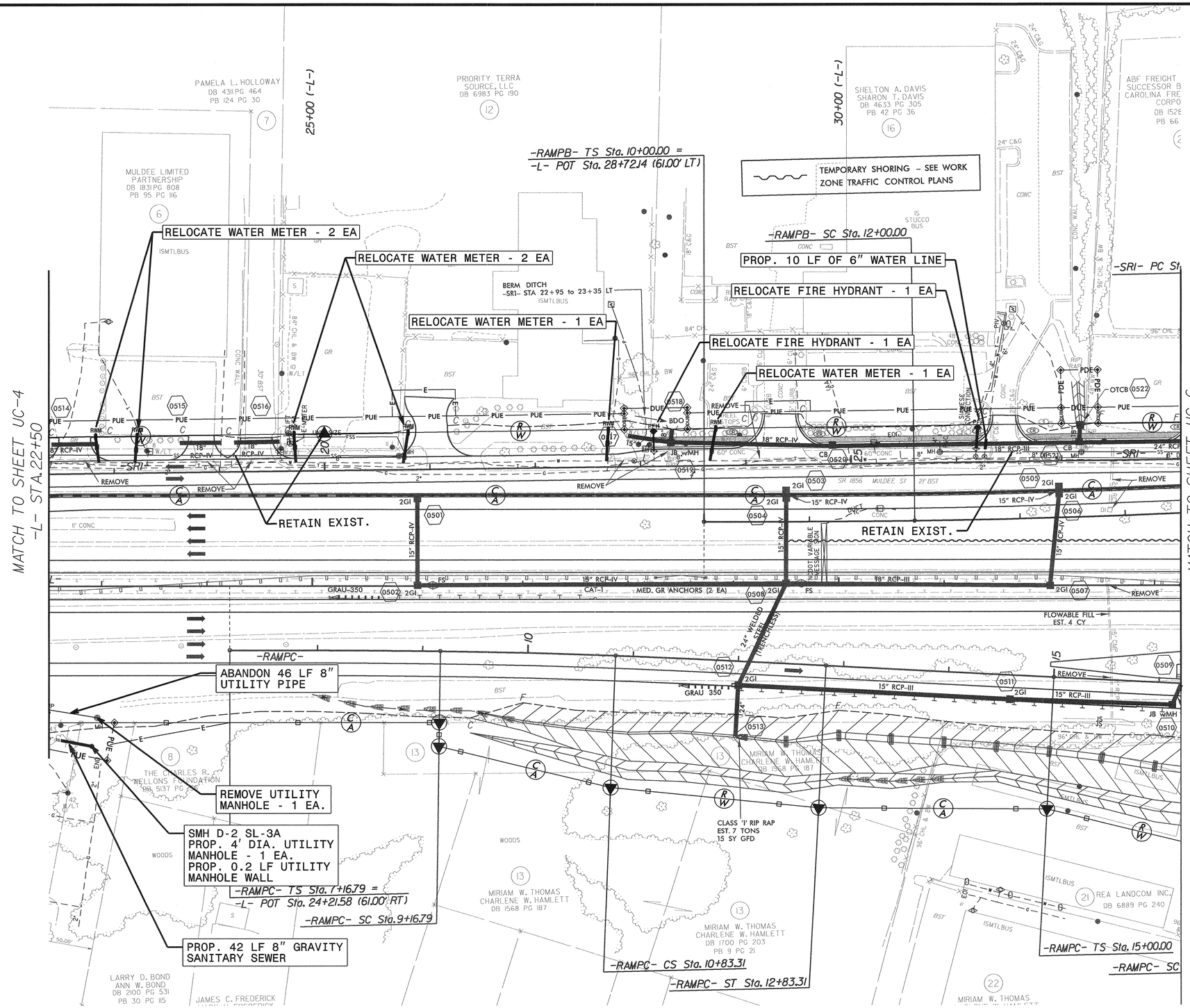

NOTES:

1. CONTRACTOR RESPONSIBLE FOR LOCATING AND RECONNECTING EXISTING SEWER CONNECTIONS. INSTALL NEW CLEANOUT AT PROPOSED RIGHT OF WAY LINE AS NECESSARY.

REVISIONS

8/17/99

12/6/2013
R:\Utilities\Rdy_Ut\Proj\u0071_uc_psh05_pln.dgn
8:15:04 AM

PROJECT REFERENCE NO.	SHEET NO.
U-0071	UC-6

UTILITY DESIGN ENGINEER

NORTH CAROLINA PROFESSIONAL SEAL ENGINEER KEVIN C. ZUEB

2013-DEC-10

MA Engineering CONSULTANTS, INC. 598 E. Chatham Street, Suite 137 Cary, N. C. 27511

SEE SHEET UC-20 FOR WL-1 PROFILE
SEE SHEET UC-25 FOR SL-4 PROFILE
SEE SHEET UC-25 FOR SL-5 PROFILE

NAD 83/95

UTILITY OWNERS ON THIS PROJECT:

1. *CITY OF DURHAM*
   UTILITY: WATER/SEWER
   CONTACT: JEFF LECKY, PE
   PHONE: (919) 560-4326 EXT. 30259

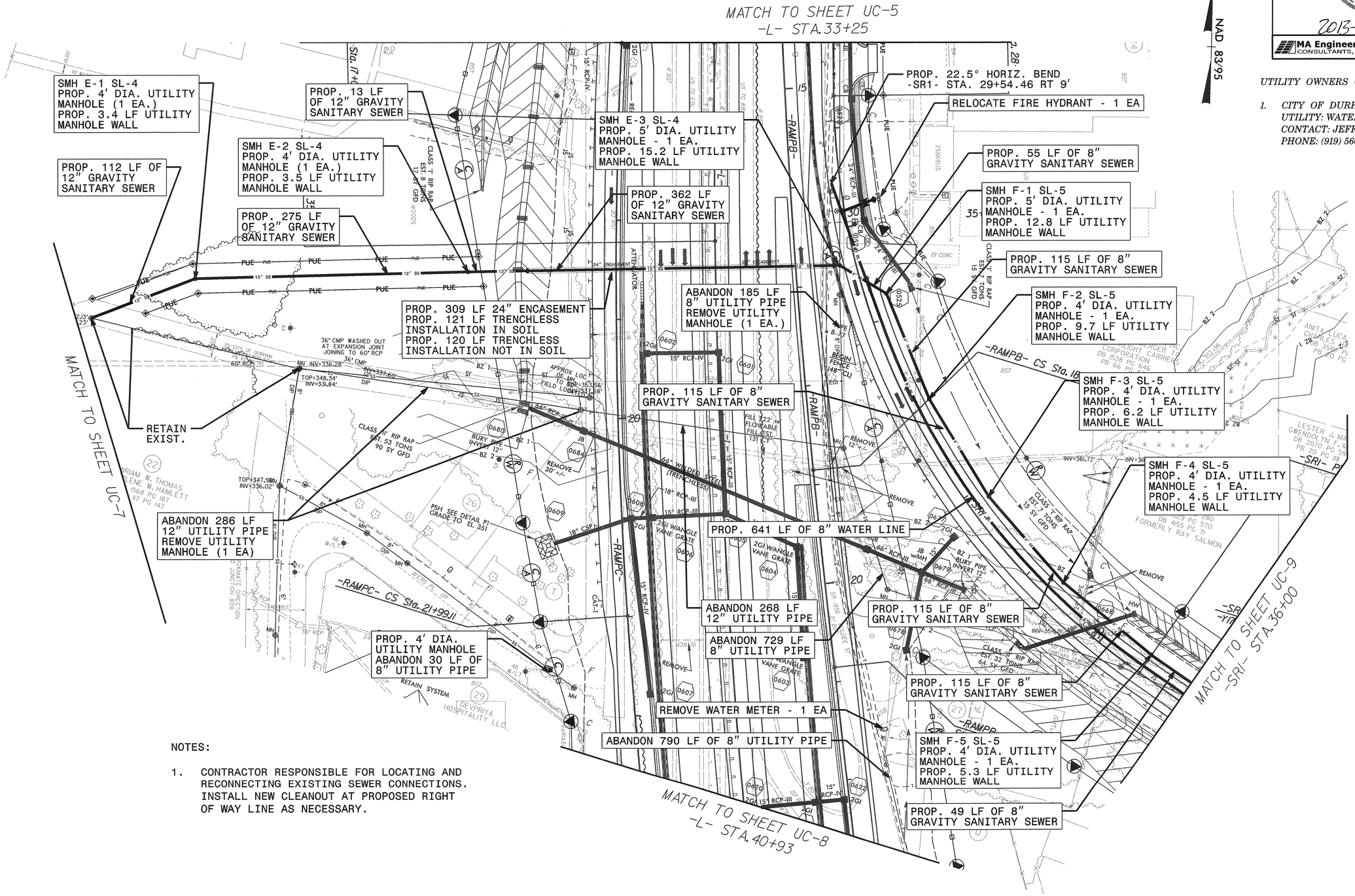

NOTES:

1. CONTRACTOR RESPONSIBLE FOR LOCATING AND RECONNECTING EXISTING SEWER CONNECTIONS. INSTALL NEW CLEANOUT AT PROPOSED RIGHT OF WAY LINE AS NECESSARY.

REVISIONS

8/17/99

12/6/2013
R:\Utilities\Rdy_Utl\Proj\u0071_uc_psh06.pln.dgn
8:45:07 AM

PROJECT REFERENCE NO.	SHEET NO.
U-0071	UC-7

UTILITY DESIGN ENGINEER

NORTH CAROLINA PROFESSIONAL SEAL ENGINEER KEVIN C. ZOEB

2013-DEC-10

MA Engineering CONSULTANTS, INC.
598 E. Chatham Street, Suite 137
Cary, N. C. 27511

SEE SHEET UC-22 FOR WL-5 PROFILE

UTILITY OWNERS ON THIS PROJECT:

1. *CITY OF DURHAM*
   UTILITY: WATER/SEWER
   CONTACT: JEFF LECKY, PE
   PHONE: (919) 560-4326 EXT. 30259

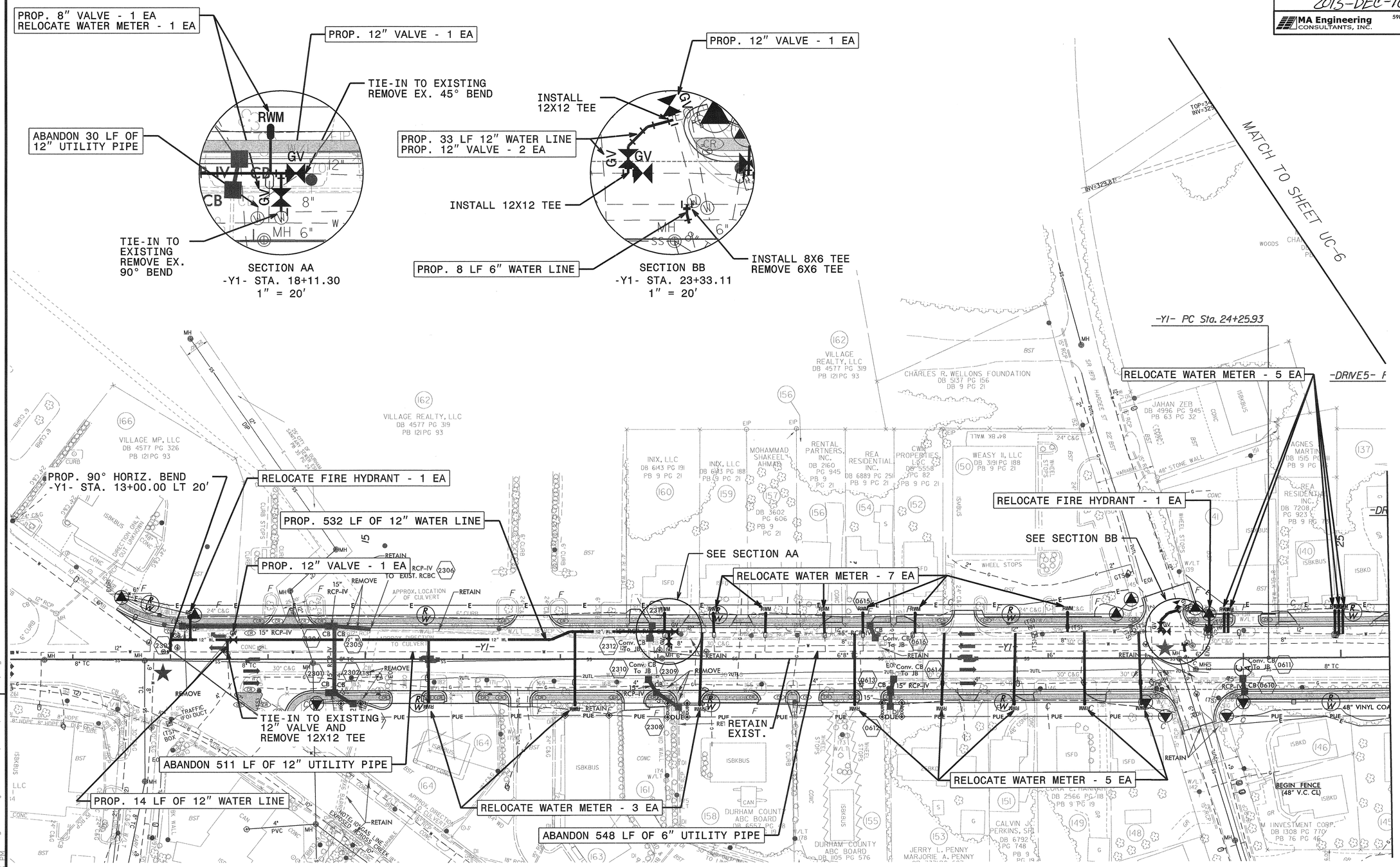

REVISIONS

8/17/99

12/10/2013
R:\Utilities\Rdy_Ut\Proj\u0071uc_psh07.pln -Bowup.dgn
2:36 PM

PROJECT REFERENCE NO.	SHEET NO.
U-0071	UC-8

UTILITY DESIGN ENGINEER

NORTH CAROLINA PROFESSIONAL SEAL 026861 ENGINEER KEVIN C. ZUEB

2013-DEC-10

MA Engineering CONSULTANTS, INC.
598 E. Chatham Street, Suite 137
Cary, N. C. 27511

UTILITY OWNERS ON THIS PROJECT:

1. *CITY OF DURHAM*
   UTILITY: WATER/SEWER
   CONTACT: JEFF LECKY, PE
   PHONE: (919) 560-4326 EXT. 30259

NAD 83/95

MATCH TO SHEET UC-6
-L- STA.40+93

MATCH TO SHEET UC-7
-Y1- STA.25+50

MATCH TO SHEET UC-9
-Y1- STA.39+45

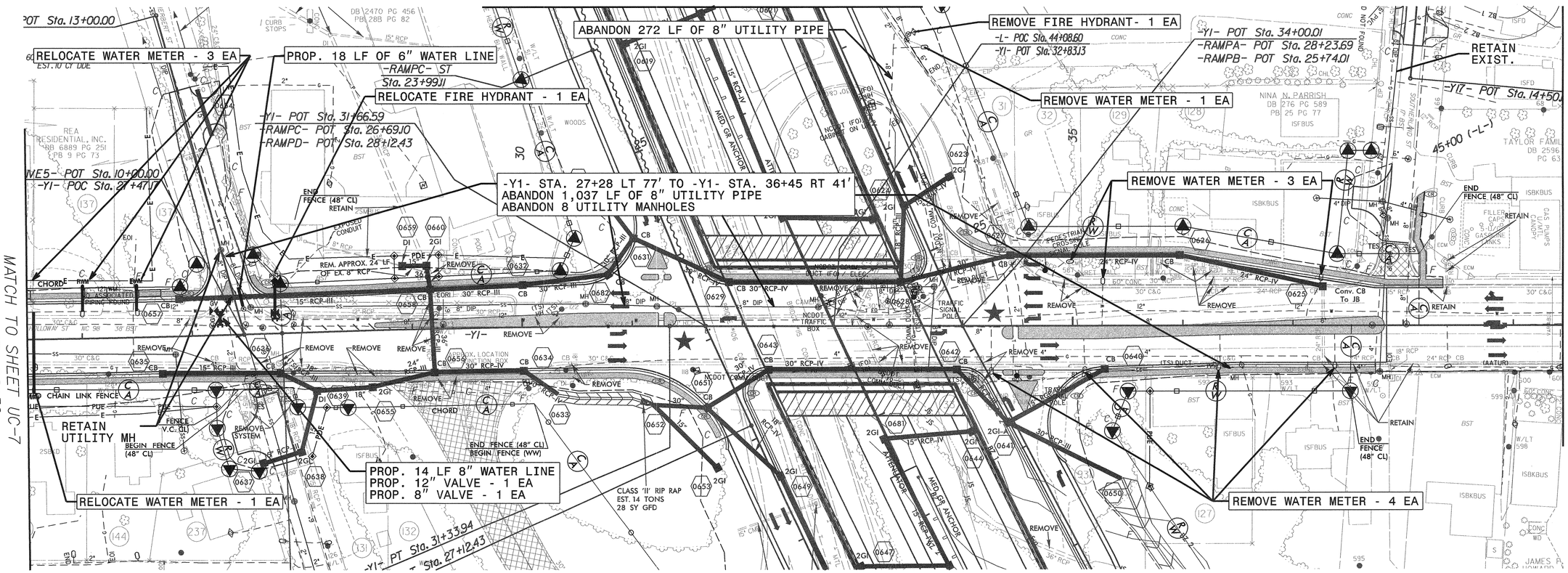

REVISIONS

8/17/99

12/10/2013
R:\Utilities\Rdy_Utl\Proj\u0071uc_psh08_pln.dgn
9:00:27 AM

PROJECT REFERENCE NO.	SHEET NO.
U-0071	UC-9

UTILITY DESIGN ENGINEER

NORTH CAROLINA PROFESSIONAL SEAL ENGINEER KEVIN C. ZOES

2013-DEC-10

MA Engineering CONSULTANTS, INC.
598 E. Chatham Street, Suite 137
Cary, N. C. 27511

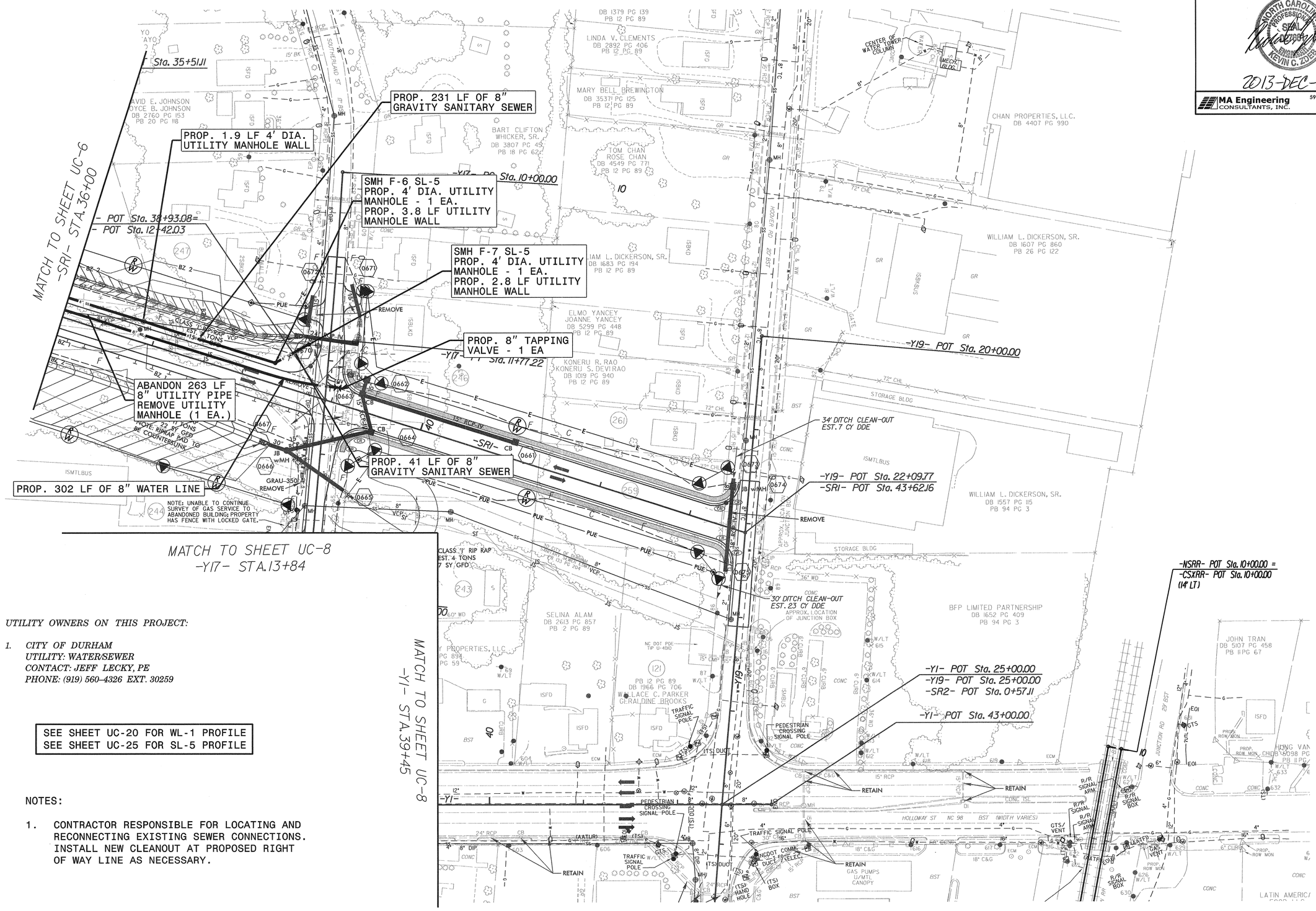

UTILITY OWNERS ON THIS PROJECT:

1. *CITY OF DURHAM*
   UTILITY: WATER/SEWER
   CONTACT: JEFF LECKY, PE
   PHONE: (919) 560-4326 EXT. 30259

SEE SHEET UC-20 FOR WL-1 PROFILE
SEE SHEET UC-25 FOR SL-5 PROFILE

NOTES:

1. CONTRACTOR RESPONSIBLE FOR LOCATING AND RECONNECTING EXISTING SEWER CONNECTIONS. INSTALL NEW CLEANOUT AT PROPOSED RIGHT OF WAY LINE AS NECESSARY.

REVISIONS

8/17/99

12/6/2013
R:\Utilities\Rdy_Ut\Proj\U0071_uc_psh09_pln.dgn
8:15:18 AM

NOTES:

1. EXISTING SANITARY SEWER LIFT STATION TO BE REMOVED FROM PARCEL 40. ALL PARCELS SERVED BY LIFT STATION SHALL BE NEGOTIATED AND SETTLED BY THE NCDOT RIGHT OF WAY UNIT.

2. ALL PROPOSED WATER LINE ON THIS SHEET SHALL BE DUCTILE IRON RESTRAINED JOINT PIPE.

PROJECT REFERENCE NO.	SHEET NO.
U-0071	UC-10

UTILITY DESIGN ENGINEER

NORTH CAROLINA PROFESSIONAL SEAL ENGINEER KEVIN C. EDGE

2013-DEC-10

MA Engineering CONSULTANTS, INC.
598 E. Chatham Street, Suite 137
Cary, N. C. 27511

UTILITY OWNERS ON THIS PROJECT:

1. *CITY OF DURHAM*
UTILITY: WATER/SEWER
CONTACT: JEFF LECKY, PE
PHONE: (919) 560-4326 EXT. 30259

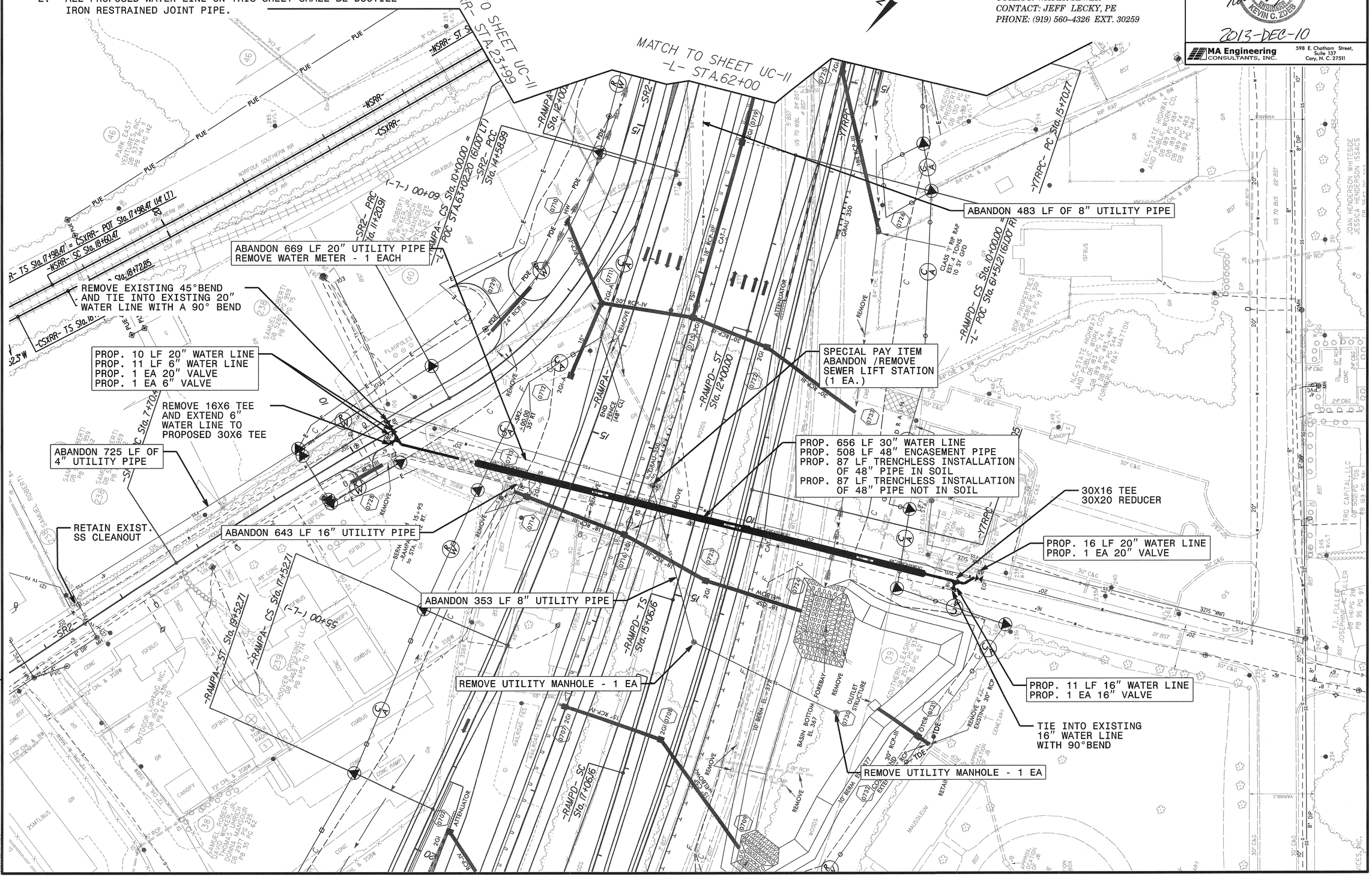

REVISIONS

8/17/99

12/6/2013
R:\Utilities\Rdy_Ut\Proj\u0071_uc_psh10_pln.dgn
8:19:21 AM

PROJECT REFERENCE NO.	SHEET NO.
U-0071	UC-11

UTILITY DESIGN ENGINEER

NORTH CAROLINA PROFESSIONAL SEAL 036161 ENGINEER KEVIN C. ZOLLES

2013-DEC-10

MA Engineering CONSULTANTS, INC. 598 E. Chatham Street, Suite 137 Cary, N. C. 27511

UTILITY OWNERS ON THIS PROJECT:

1. *CITY OF DURHAM*
   UTILITY: WATER/SEWER
   CONTACT: JEFF LECKY, PE
   PHONE: (919) 560-4326 EXT. 30259

SEE SHEET UC-20 FOR WL-2A PROFILE
SEE SHEET UC-21 FOR WL-4 PROFILE

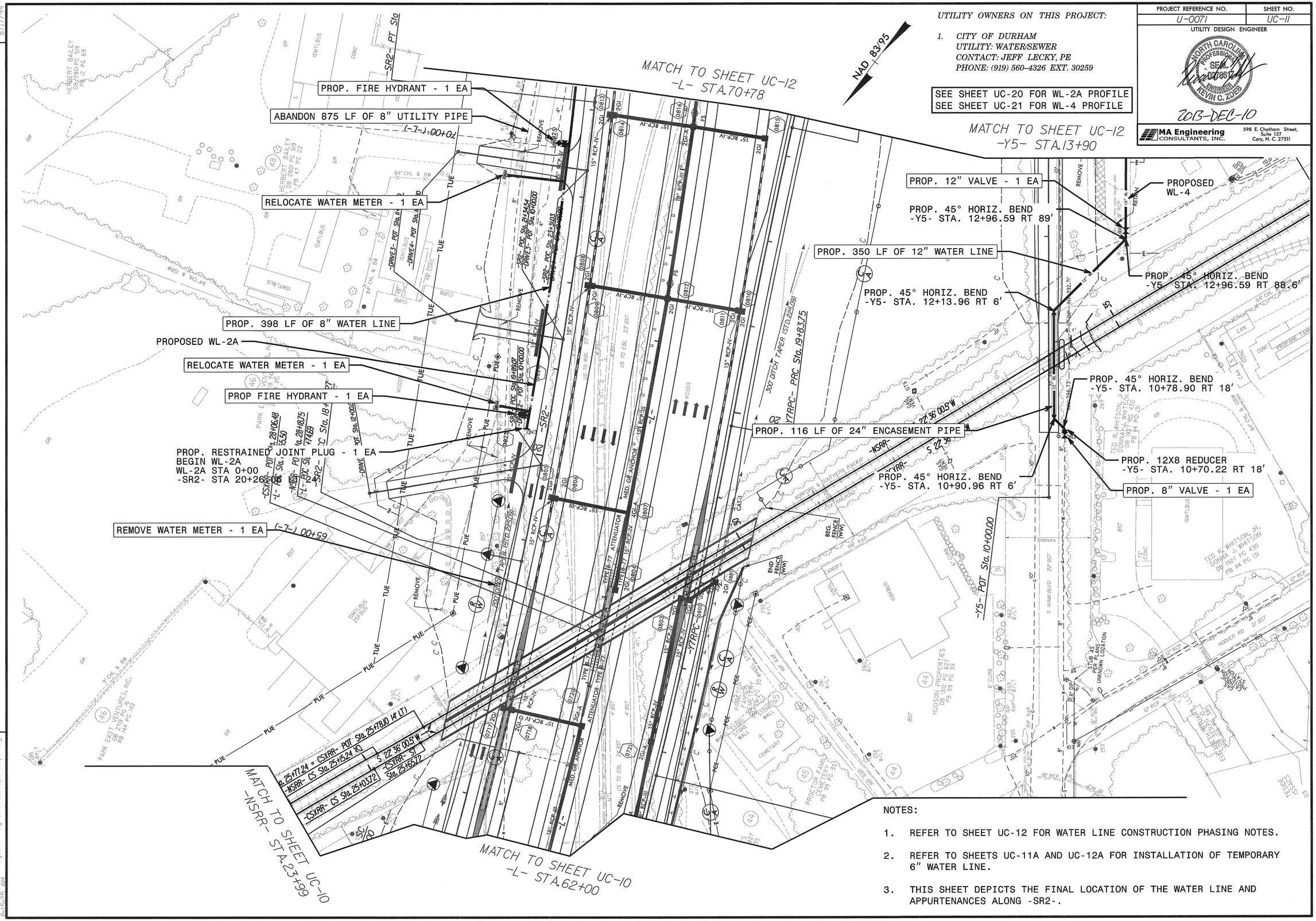

NOTES:

1. REFER TO SHEET UC-12 FOR WATER LINE CONSTRUCTION PHASING NOTES.
2. REFER TO SHEETS UC-11A AND UC-12A FOR INSTALLATION OF TEMPORARY 6" WATER LINE.
3. THIS SHEET DEPICTS THE FINAL LOCATION OF THE WATER LINE AND APPURTENANCES ALONG -SR2-.

REVISIONS

8/17/99

12/6/2013
R:\Utilities\Rdy_Ut\Proj\u0071_uc_psh11_pln.dgn
8:15:26 AM

PROJECT REFERENCE NO.	SHEET NO.
U-0071	UC-11A

UTILITY DESIGN ENGINEER

NORTH CAROLINA PROFESSIONAL SEAL 027663 ENGINEER KEVIN C. ZOLEB

2014-JUL-08

MA Engineering CONSULTANTS, INC.
598 E. Chatham Street, Suite 137
Cary, N. C. 27511

UTILITY OWNERS ON THIS PROJECT:

1. *CITY OF DURHAM*
   UTILITY: WATER/SEWER
   CONTACT: JEFF LECKY, PE
   PHONE: (919) 560-4326 EXT. 30259

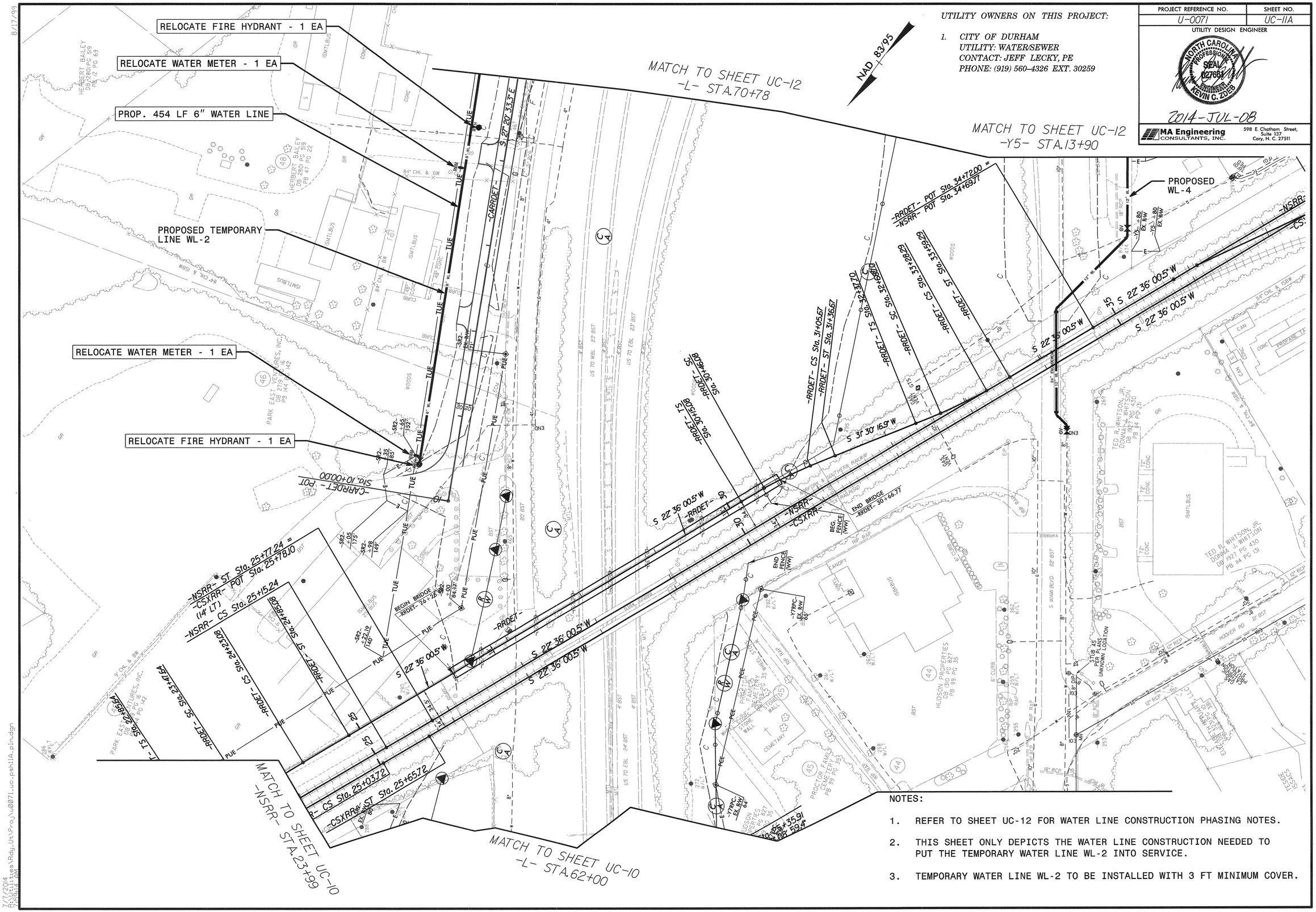

NOTES:

1. REFER TO SHEET UC-12 FOR WATER LINE CONSTRUCTION PHASING NOTES.
2. THIS SHEET ONLY DEPICTS THE WATER LINE CONSTRUCTION NEEDED TO PUT THE TEMPORARY WATER LINE WL-2 INTO SERVICE.
3. TEMPORARY WATER LINE WL-2 TO BE INSTALLED WITH 3 FT MINIMUM COVER.

8/17/99

7/7/2014
R:\Utilities\Rdy_Ut\Proj\U0071_uc_psh11a_pln.dgn
7:59:14 AM

PROJECT REFERENCE NO.	SHEET NO.
U-0071	UC-12

UTILITY DESIGN ENGINEER

NORTH CAROLINA PROFESSIONAL SEAL ENGINEER KEVIN C. ZDIEB

2013-DEC-10

MA Engineering CONSULTANTS, INC. 598 E. Chatham Street, Suite 137 Cary, N. C. 27511

UTILITY OWNERS ON THIS PROJECT:

1. *CITY OF DURHAM*
   UTILITY: WATER/SEWER
   CONTACT: JEFF LECKY, PE
   PHONE: (919) 560-4326 EXT. 30259

SEE SHEET UC-20 FOR WL-2 PROFILE
SEE SHEET UC-21 FOR WL-3 PROFILE
SEE SHEET UC-21 FOR WL-4 PROFILE

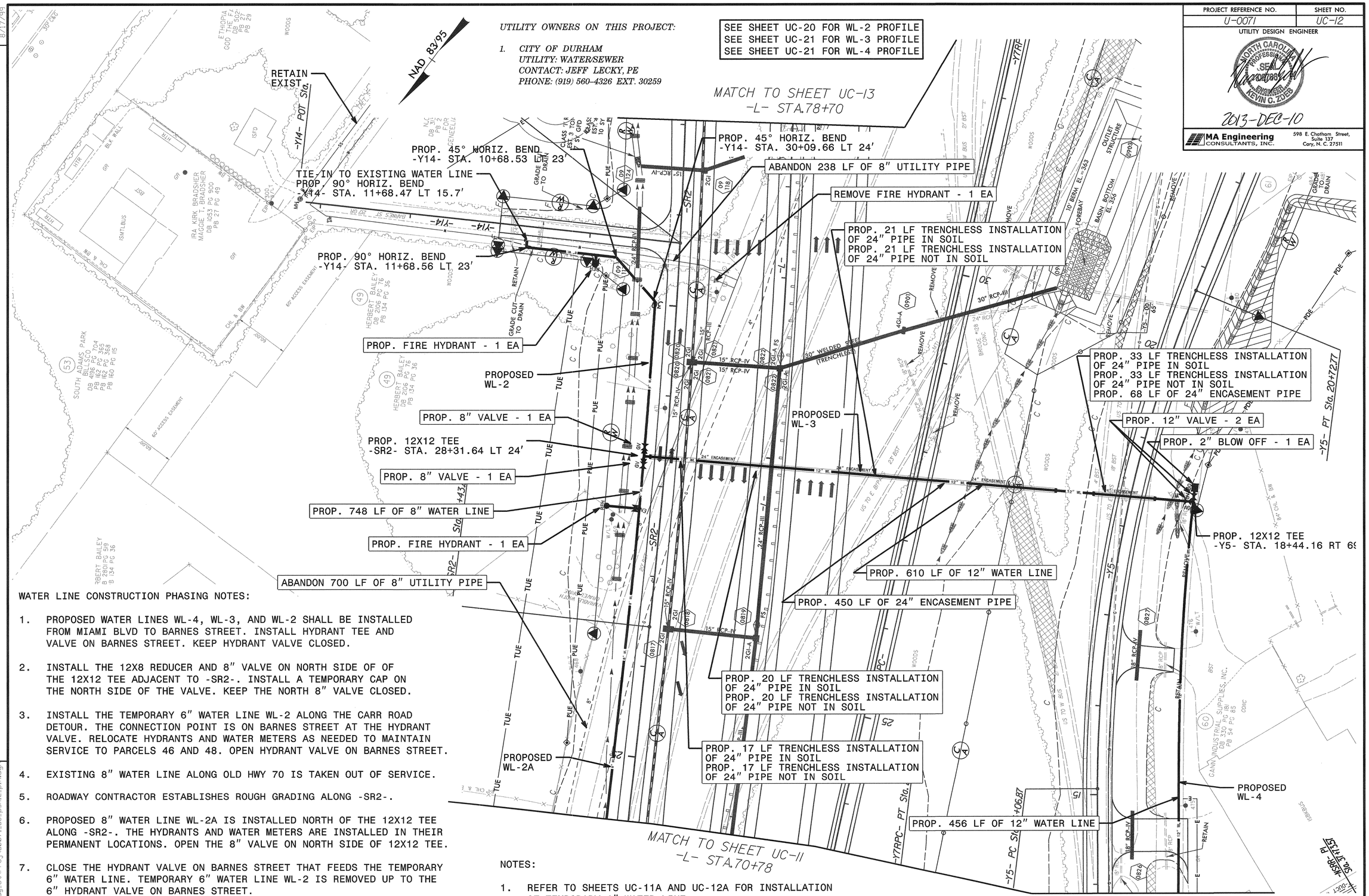

WATER LINE CONSTRUCTION PHASING NOTES:

1. PROPOSED WATER LINES WL-4, WL-3, AND WL-2 SHALL BE INSTALLED FROM MIAMI BLVD TO BARNES STREET. INSTALL HYDRANT TEE AND VALVE ON BARNES STREET. KEEP HYDRANT VALVE CLOSED.

2. INSTALL THE 12X8 REDUCER AND 8" VALVE ON NORTH SIDE OF OF THE 12X12 TEE ADJACENT TO -SR2-. INSTALL A TEMPORARY CAP ON THE NORTH SIDE OF THE VALVE. KEEP THE NORTH 8" VALVE CLOSED.

3. INSTALL THE TEMPORARY 6" WATER LINE WL-2 ALONG THE CARR ROAD DETOUR. THE CONNECTION POINT IS ON BARNES STREET AT THE HYDRANT VALVE. RELOCATE HYDRANTS AND WATER METERS AS NEEDED TO MAINTAIN SERVICE TO PARCELS 46 AND 48. OPEN HYDRANT VALVE ON BARNES STREET.

4. EXISTING 8" WATER LINE ALONG OLD HWY 70 IS TAKEN OUT OF SERVICE.

5. ROADWAY CONTRACTOR ESTABLISHES ROUGH GRADING ALONG -SR2-.

6. PROPOSED 8" WATER LINE WL-2A IS INSTALLED NORTH OF THE 12X12 TEE ALONG -SR2-. THE HYDRANTS AND WATER METERS ARE INSTALLED IN THEIR PERMANENT LOCATIONS. OPEN THE 8" VALVE ON NORTH SIDE OF 12X12 TEE.

7. CLOSE THE HYDRANT VALVE ON BARNES STREET THAT FEEDS THE TEMPORARY 6" WATER LINE. TEMPORARY 6" WATER LINE WL-2 IS REMOVED UP TO THE 6" HYDRANT VALVE ON BARNES STREET.

8. PROPOSED HYDRANT IS INSTALLED ON BARNES STREET CONNECTING TO THE HYDRANT VALVE. OPEN HYDRANT VALVE.

NOTES:

1. REFER TO SHEETS UC-11A AND UC-12A FOR INSTALLATION OF TEMPORARY 6" WATER LINE.

2. THIS SHEET DEPICTS THE FINAL LOCATION OF THE WATER LINE AND APPURTENANCES ALONG -SR2-.

REVISIONS

8/17/99

12/6/2013
R:\Utilities\Rdy_Utl\Proj\u0071_uc_psh12_pln.dgn
8:18:34 AM

PROJECT REFERENCE NO.	SHEET NO.
U-0071	UC-12A

UTILITY DESIGN ENGINEER

NORTH CAROLINA PROFESSIONAL SEAL 027861 ENGINEER KEVIN C. ZDEB

2014-JUL-08

MA Engineering CONSULTANTS, INC.
598 E. Chatham Street, Suite 137
Cary, N. C. 27511

UTILITY OWNERS ON THIS PROJECT:

1. *CITY OF DURHAM*
   UTILITY: WATER/SEWER
   CONTACT: JEFF LECKY, PE
   PHONE: (919) 560-4326 EXT. 30259

NAD 83/95

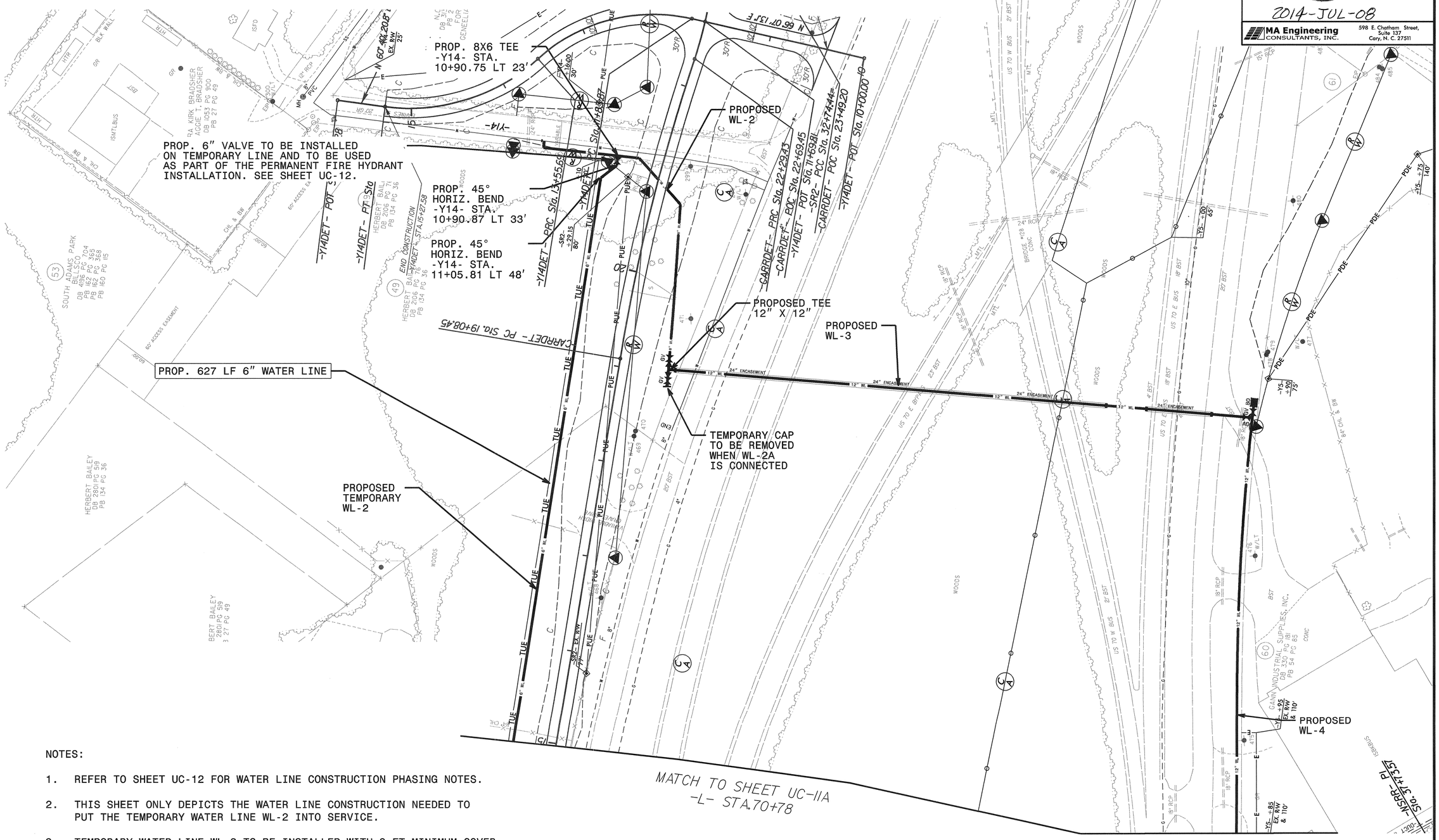

NOTES:

1. REFER TO SHEET UC-12 FOR WATER LINE CONSTRUCTION PHASING NOTES.
2. THIS SHEET ONLY DEPICTS THE WATER LINE CONSTRUCTION NEEDED TO PUT THE TEMPORARY WATER LINE WL-2 INTO SERVICE.
3. TEMPORARY WATER LINE WL-2 TO BE INSTALLED WITH 3 FT MINIMUM COVER.

8/17/99

7/7/2014
R:\Utilities\Rdy_Ut\Proj\u0071_uc_psh12A_pln.dgn
8:01:52 AM

PROJECT REFERENCE NO.	SHEET NO.
U-0071	UC-13

UTILITY DESIGN ENGINEER

NORTH CAROLINA PROFESSIONAL SEAL 026861 ENGINEER KEVIN C. ZUDES

2014-AUG-11

MA Engineering CONSULTANTS, INC.
598 E. Chatham Street, Suite 132
Cary, N. C. 27511

REVISIONS

8/17/99

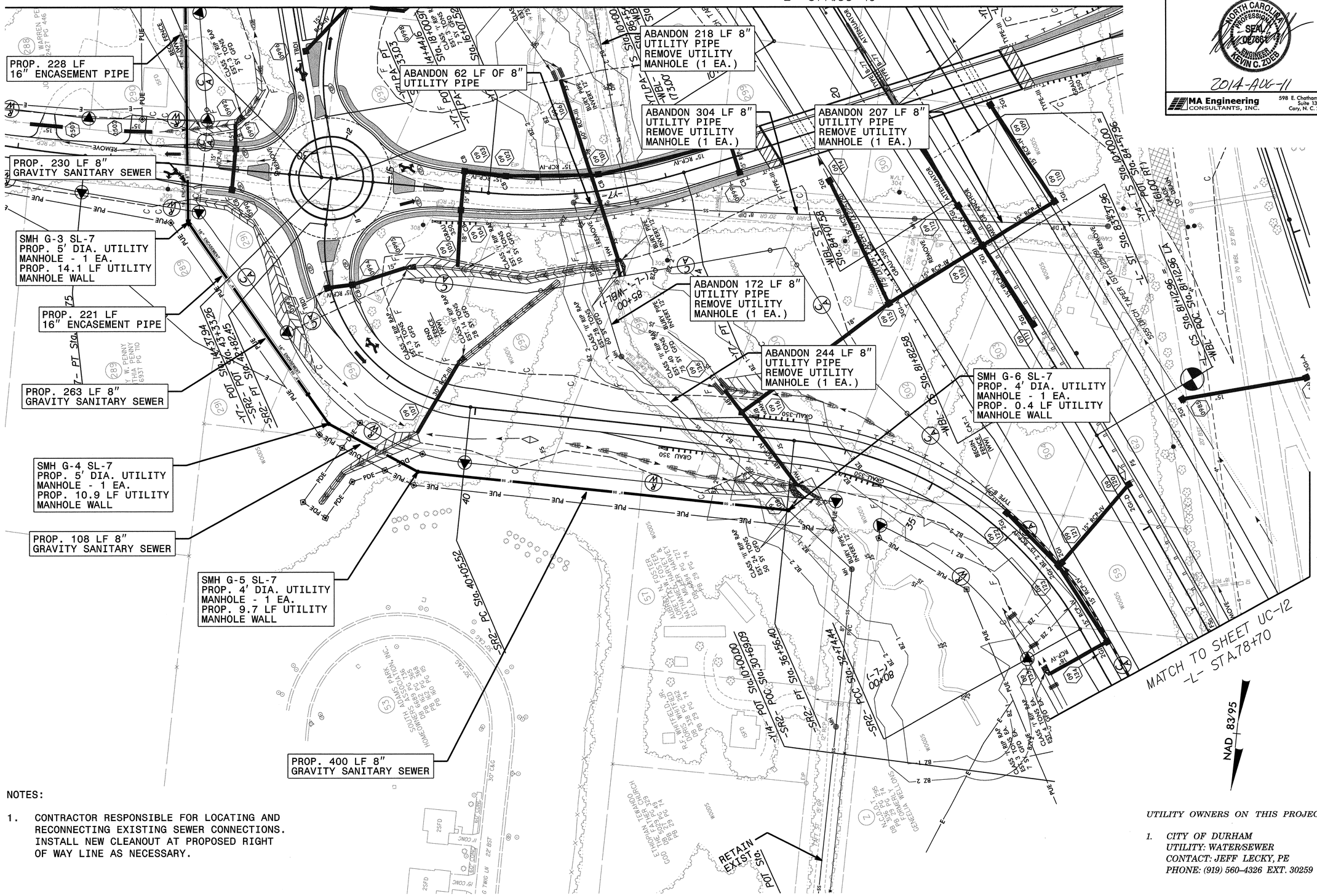

NOTES:

1. CONTRACTOR RESPONSIBLE FOR LOCATING AND RECONNECTING EXISTING SEWER CONNECTIONS. INSTALL NEW CLEANOUT AT PROPOSED RIGHT OF WAY LINE AS NECESSARY.

UTILITY OWNERS ON THIS PROJECT:

1. *CITY OF DURHAM*
   UTILITY: WATER/SEWER
   CONTACT: JEFF LECKY, PE
   PHONE: (919) 560-4326 EXT. 30259

SEE SHEET UC-26 FOR SL-7 PROFILE

8/8/2014
R:\Utilities\Rdy_Ut\Proj\u0071_uc_psh13_pln.dgn
8:37:43 AM

NOTES:

1. PROPOSED 12" GRAVITY SEWER LINE SPAN BETWEEN PROPOSED MANHOLE SMH H-1 AND PROPOSED MANHOLE SMH G-1 (SHEET UC-12) SHALL BE 500 FEET DUE TO CONTROLLED ACCESS.
2. PROPOSED 8" GRAVITY SEWER LINE SPAN BETWEEN PROPOSED MANHOLE SMH G-3 AND PROPOSED MANHOLE SMH G-4 SHALL BE 485 FEET DUE TO CONTROLLED ACCESS.
3. NCDOT SHALL PROVIDE ACCESS TO CITY OF DURHAM FOR PROPOSED MANHOLES LOCATED INSIDE CONTROLLED ACCESS.
4. CONTRACTOR RESPONSIBLE FOR LOCATING AND RECONNECTING EXISTING SEWER CONNECTIONS. INSTALL NEW CLEANOUT AT PROPOSED RIGHT OF WAY LINE AS NECESSARY.

UTILITY OWNERS ON THIS PROJECT:

1. *CITY OF DURHAM*
   UTILITY: WATER/SEWER
   CONTACT: JEFF LECKY, PE
   PHONE: (919) 560-4326 EXT. 30259

SEE SHEET UC-26 FOR SL-7 PROFILE
SEE SHEET UC-27 FOR SL-8 PROFILE

PROJECT REFERENCE NO.	SHEET NO.
U-0071	UC-14

UTILITY DESIGN ENGINEER

NORTH CAROLINA PROFESSIONAL SEAL 027661 ENGINEER KEVIN C. ZUEGG

2014-AUG-11

MA Engineering CONSULTANTS, INC.
598 E. Chatham Street, Suite 137
Cary, N. C. 27511

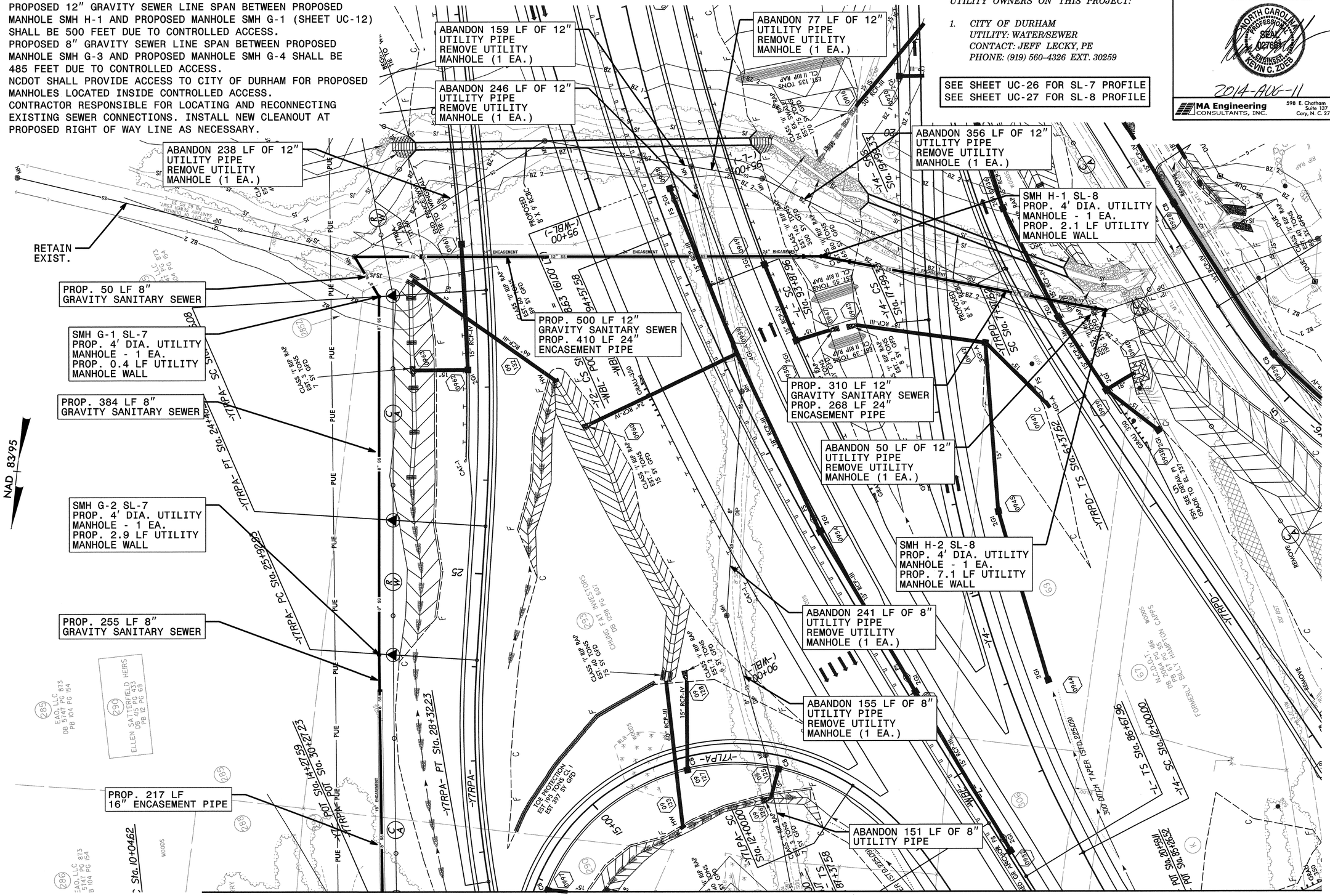

REVISIONS

8/17/99

8/8/2014
R:\Utilities\Rdy_Ut\Proj\U0071-uc_psh14_pln.dgn
8:34:49 AM

PROJECT REFERENCE NO.	SHEET NO.
U-0071	UC-15

UTILITY DESIGN ENGINEER

NORTH CAROLINA PROFESSIONAL SEAL 027261 ENGINEER KEVIN G. ZOBEL

2014-JAN-17

MA Engineering CONSULTANTS, INC.
598 E. Chatham Street, Suite 137
Cary, N. C. 27511

UTILITY OWNERS ON THIS PROJECT:

1. *CITY OF DURHAM*
   UTILITY: WATER/SEWER
   CONTACT: JEFF LECKY, PE
   PHONE: (919) 560-4326 EXT. 30259

REVISIONS

8/17/99

1/17/2014
R:\Utilities\Rdy_Ut\Proj\u0071_uc_psh15_plh.dgn
11:48:26 AM

PROJECT REFERENCE NO.	SHEET NO.
U-0071	UC-16

UTILITY DESIGN ENGINEER

NORTH CAROLINA PROFESSIONAL SEAL 041661 ENGINEER KEVIN C. ZUPKO

2013-DEC-10

MA Engineering CONSULTANTS, INC.
598 E. Chatham Street, Suite 137
Cary, N. C. 27511

UTILITY OWNERS ON THIS PROJECT:

1. *CITY OF DURHAM*
   UTILITY: WATER/SEWER
   CONTACT: JEFF LECKY, PE
   PHONE: (919) 560-4326 EXT. 30259

NOTES:

1. CONTRACTOR RESPONSIBLE FOR LOCATING AND RECONNECTING EXISTING SEWER CONNECTIONS. INSTALL NEW CLEANOUT AT PROPOSED RIGHT OF WAY LINE AS NECESSARY.

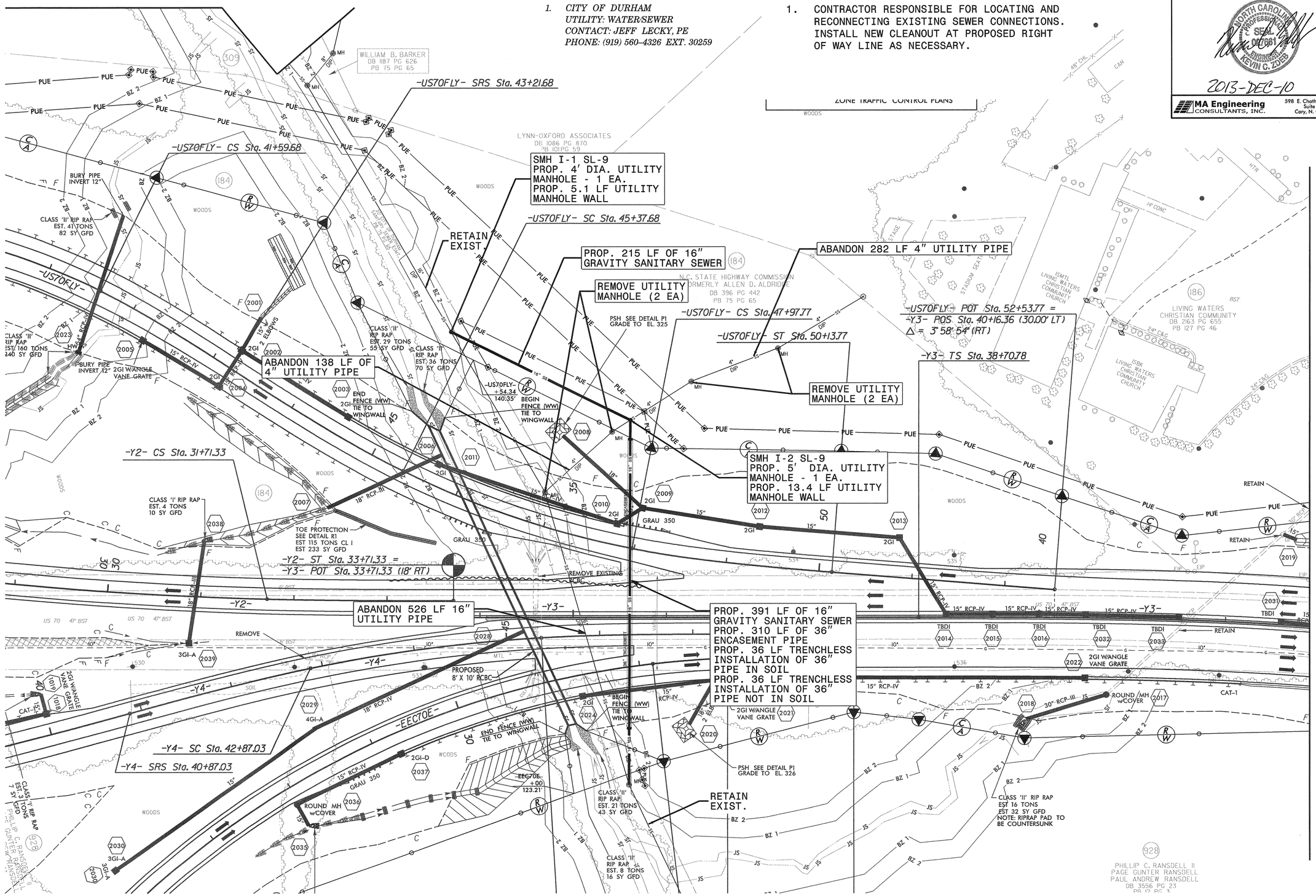

REVISIONS

8/17/99

12/6/2013
K:\Projects\Rdy_Ut\Proj\U0071_uc_psh16_pln.dgn
8:16:54 AM

PROJECT REFERENCE NO.	SHEET NO.
U-0071	UC-17

UTILITY DESIGN ENGINEER

NORTH CAROLINA PROFESSIONAL SEAL 031681 ENGINEER KEVIN C. ZIEB

2013-DEC-10

MA Engineering CONSULTANTS, INC.
598 E. Chatham Street, Suite 137
Cary, N. C. 27511

SEE SHEET UC-28 FOR SL-10 PROFILE

UTILITY OWNERS ON THIS PROJECT:

1. *CITY OF DURHAM*
   UTILITY: WATER/SEWER
   CONTACT: JEFF LECKY, PE
   PHONE: (919) 560-4326 EXT. 30259

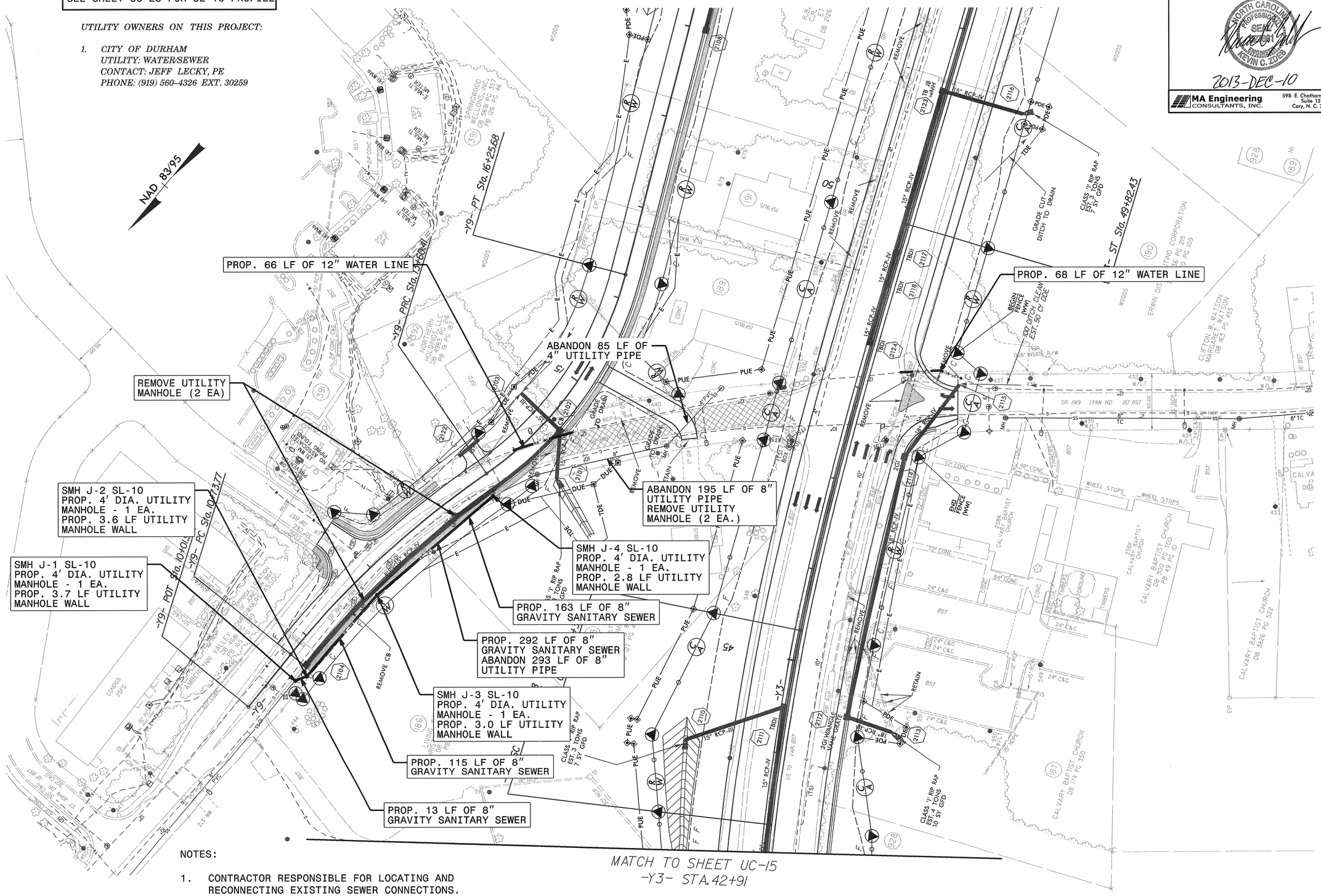

NOTES:

1. CONTRACTOR RESPONSIBLE FOR LOCATING AND RECONNECTING EXISTING SEWER CONNECTIONS. INSTALL NEW CLEANOUT AT PROPOSED RIGHT OF WAY LINE AS NECESSARY.

REVISIONS

8/17/99

12/6/2013
R:\Utilities\Rdy_Ut\Proj\U0071_uc_psh17_pln.dgn
8:18:57 AM

PROJECT REFERENCE NO.	SHEET NO.
U-0071	UC-18

UTILITY DESIGN ENGINEER

NORTH CAROLINA PROFESSIONAL ENGINEER SEAL 027661 KEVIN C. ZOEB

2014-JULY-29

MA Engineering CONSULTANTS, INC.
598 E. Chatham Street, Suite 137
Cary, N. C. 27511

UTILITY OWNERS ON THIS PROJECT:

1. *CITY OF DURHAM*
   UTILITY: WATER/SEWER
   CONTACT: JEFF LECKY, PE
   PHONE: (919) 560-4326 EXT. 30259

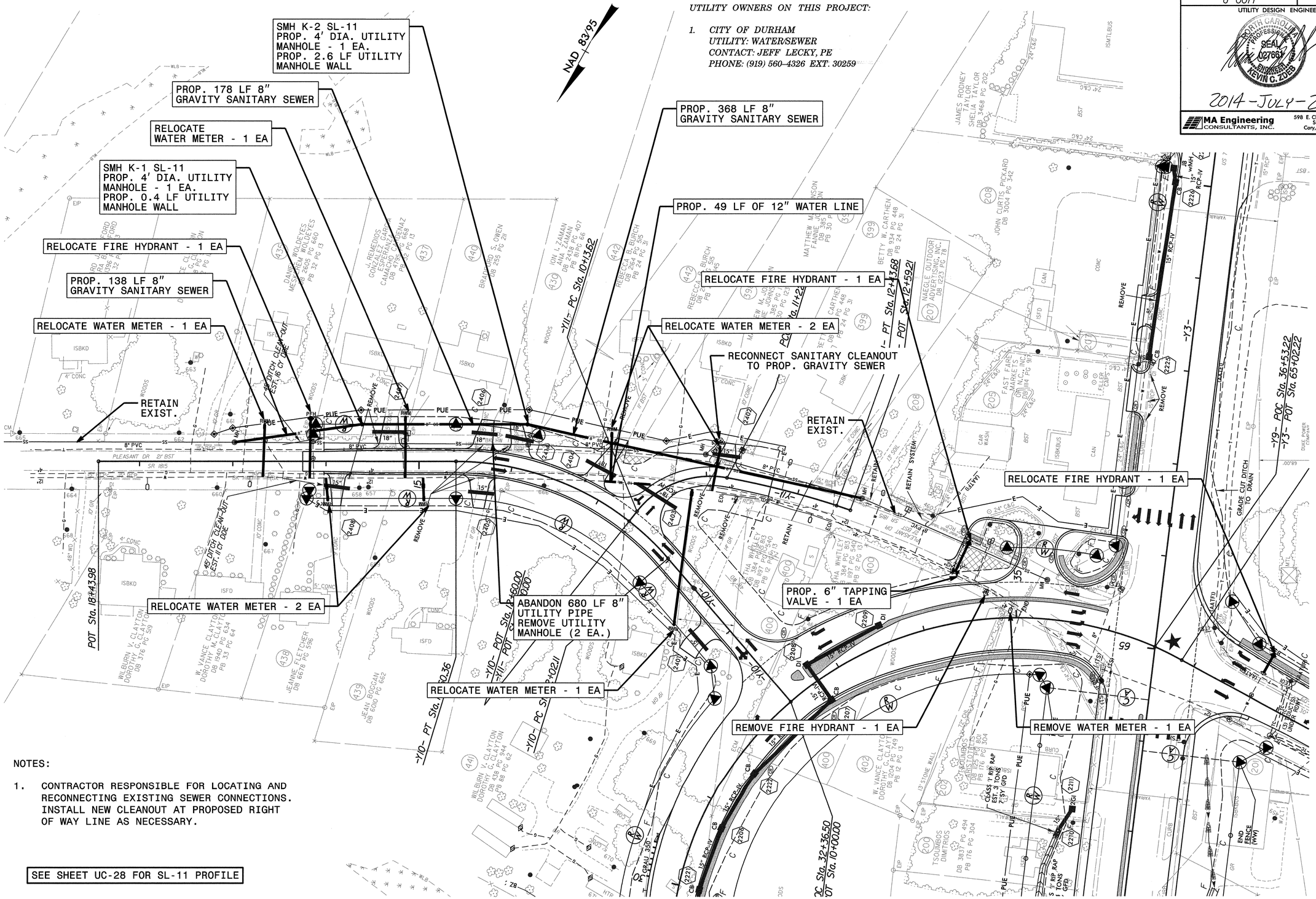

NOTES:

1. CONTRACTOR RESPONSIBLE FOR LOCATING AND RECONNECTING EXISTING SEWER CONNECTIONS. INSTALL NEW CLEANOUT AT PROPOSED RIGHT OF WAY LINE AS NECESSARY.

SEE SHEET UC-28 FOR SL-11 PROFILE

REVISIONS

8/17/95

7/29/2014
R:\Utilities\Rdy_Ut\Proj\u0071_uc_psh18_pln.dgn
8:46:46 AM

PROJECT REFERENCE NO.	SHEET NO.
U-0071	UC-19

UTILITY DESIGN ENGINEER

NORTH CAROLINA PROFESSIONAL SEAL 022665 ENGINEER KEVIN C. ZOEB

2014-AUG-11

MA Engineering CONSULTANTS, INC. 598 E. Chatham Street, Suite 137 Cary, N. C. 27511

UTILITY OWNERS ON THIS PROJECT:

1. *CITY OF DURHAM*
   UTILITY: WATER/SEWER
   CONTACT: JEFF LECKY, PE
   PHONE: (919) 560-4326 EXT. 30259

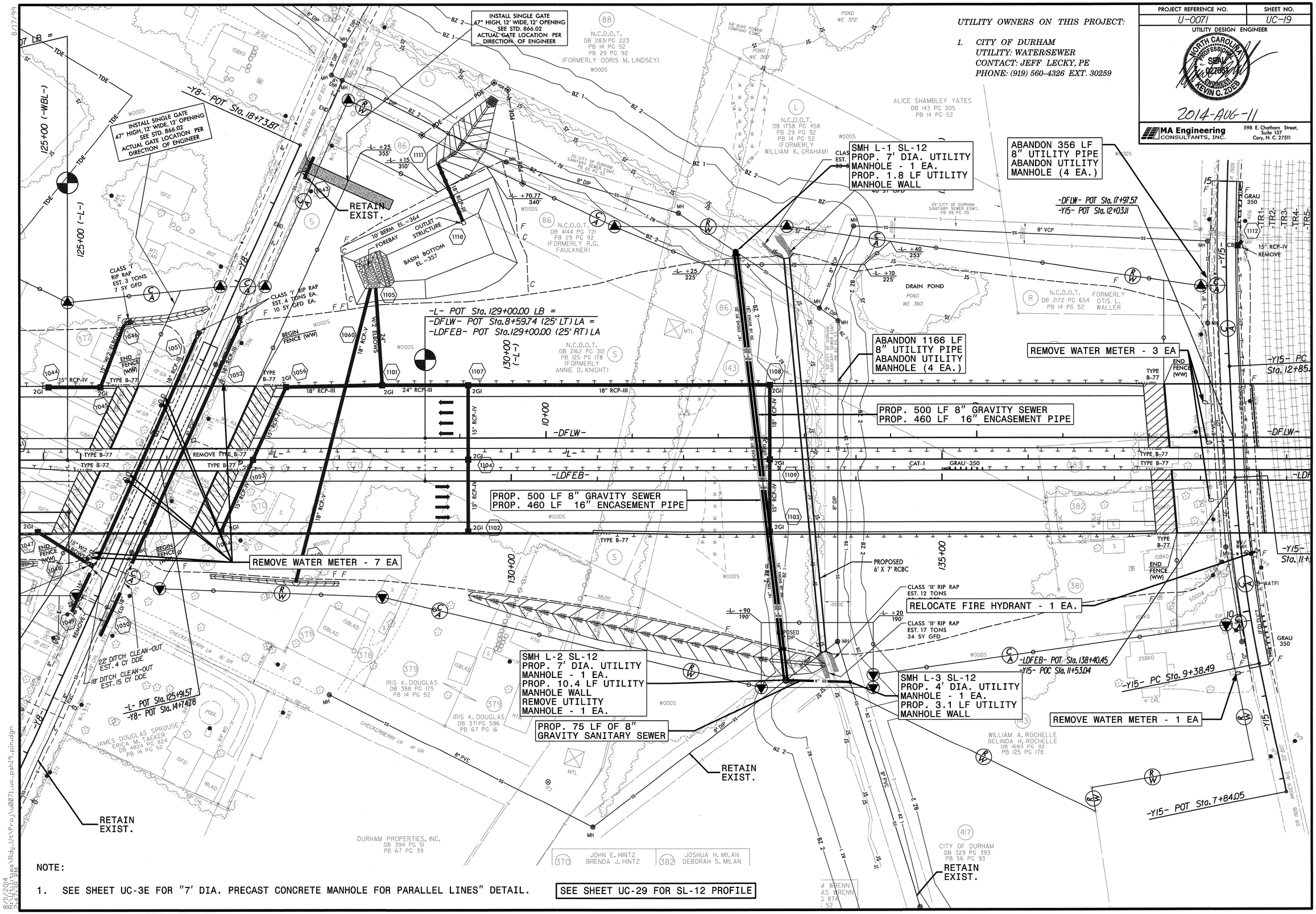

NOTE:

1. SEE SHEET UC-3E FOR "7' DIA. PRECAST CONCRETE MANHOLE FOR PARALLEL LINES" DETAIL.

SEE SHEET UC-29 FOR SL-12 PROFILE

8/17/99

8/11/2014 8:24:38 PM

PROJECT REFERENCE NO.	SHEET NO.
U-0071	UC-20

UTILITY DESIGN ENGINEER

NORTH CAROLINA PROFESSIONAL SEAL 022661 ENGINEER KEVIN C. ZUPES

2013-DEC-10

MA Engineering CONSULTANTS, INC.
598 E. Chatham Street, Suite 137
Cary, N. C. 27511

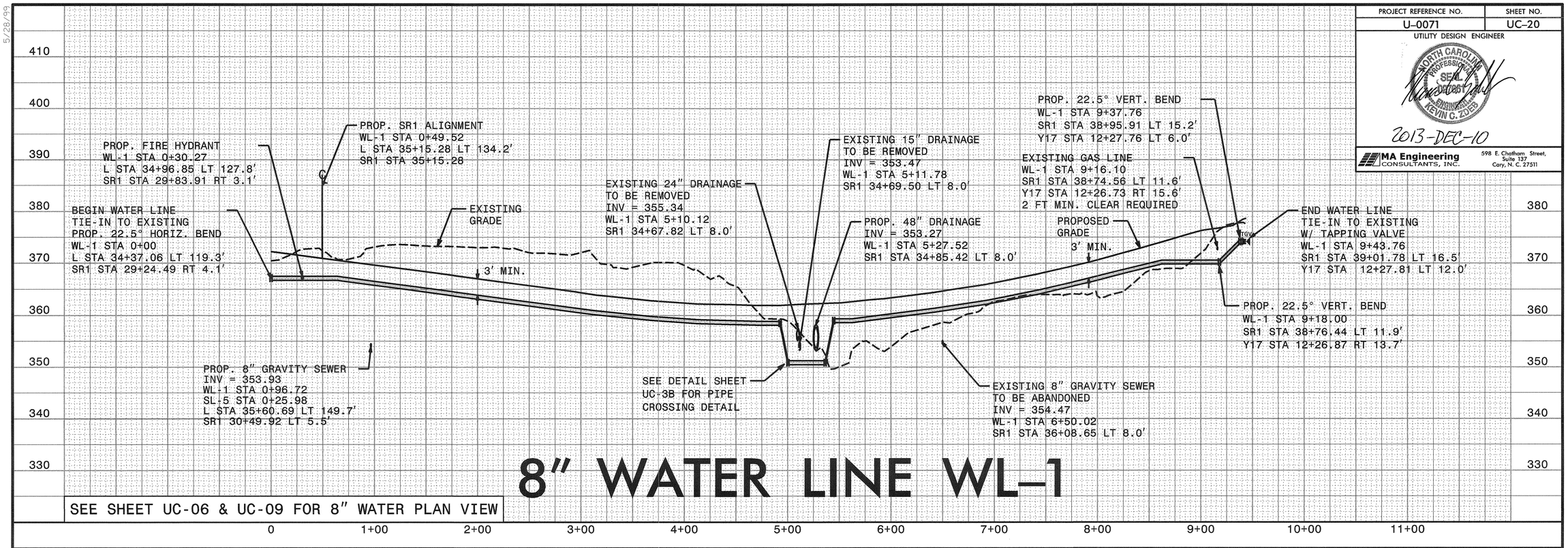

5/28/99

12/6/2013
R:\Utilities\Rdy_Ut\Pro_\U0071_uc_psh20_pfl.dgn
8:27:15 AM

PROJECT REFERENCE NO.	SHEET NO.
U-0071	UC-21

UTILITY DESIGN ENGINEER

NORTH CAROLINA PROFESSIONAL SEAL ENGINEER KEVIN C. ZOLES

2013-DEC-10

MA Engineering CONSULTANTS, INC.
598 E. Chatham Street, Suite 137
Cary, N. C. 27511

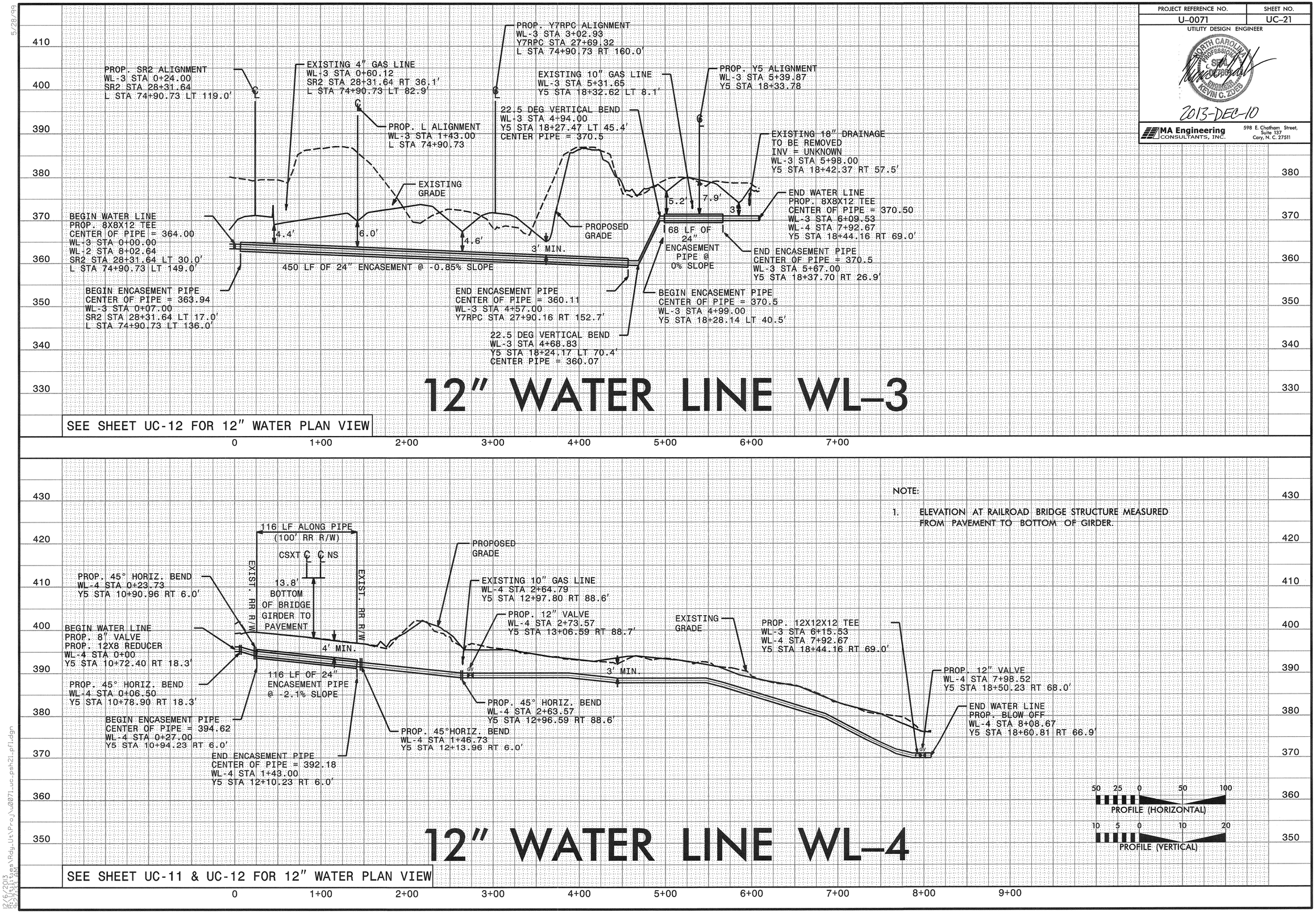

12" WATER LINE WL-3

SEE SHEET UC-12 FOR 12" WATER PLAN VIEW

12" WATER LINE WL-4

SEE SHEET UC-11 & UC-12 FOR 12" WATER PLAN VIEW

5/28/99

12/6/2013
R:\Utilities\Rdy_Uts\Proj\U0071_uc_psh21_pfl.dgn
12:23:33 AM

PROJECT REFERENCE NO.	SHEET NO.
U-0071	UC-22

UTILITY DESIGN ENGINEER

NORTH CAROLINA PROFESSIONAL SEAL ENGINEER KEVIN C. ZOFES

2013-DEC-10

MA Engineering CONSULTANTS, INC. 598 E. Chatham Street, Suite 137 Cary, N. C. 27511

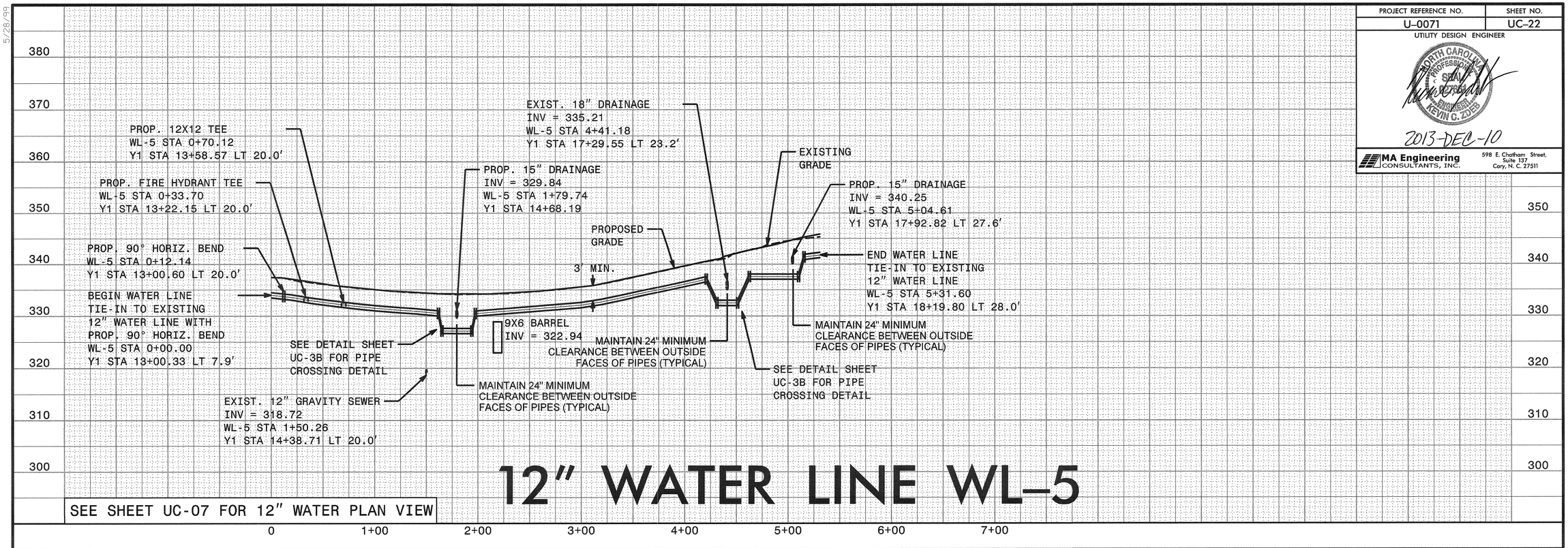

12" WATER LINE WL-5

SEE SHEET UC-07 FOR 12" WATER PLAN VIEW

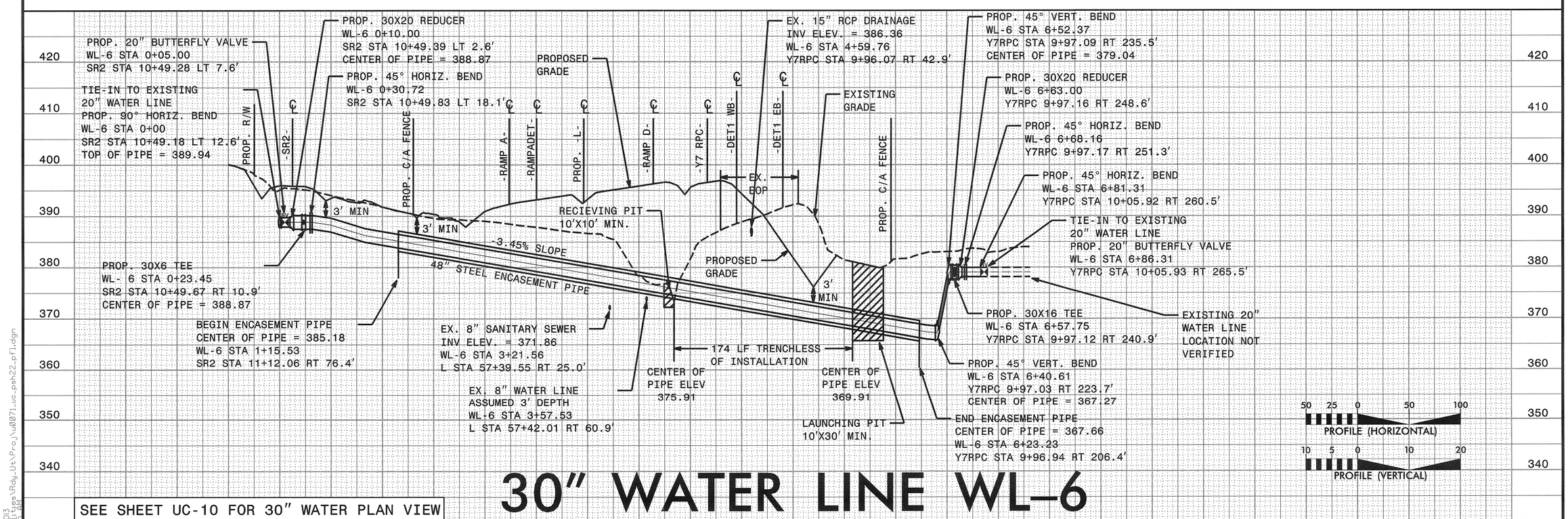

30" WATER LINE WL-6

SEE SHEET UC-10 FOR 30" WATER PLAN VIEW

5/28/99

12/6/2013
R:\Roadways\Rdy_Ut\Proj\u0071_uc_psh22.pfl.dgn
8:27:36 AM

PROJECT REFERENCE NO.	SHEET NO.
U-0071	UC-23

UTILITY DESIGN ENGINEER

NORTH CAROLINA PROFESSIONAL SEAL ENGINEER KEVIN C. ZOLEB

2013-DEC-10

MA Engineering CONSULTANTS, INC.
598 E. Chatham Street, Suite 137
Cary, N. C. 27511

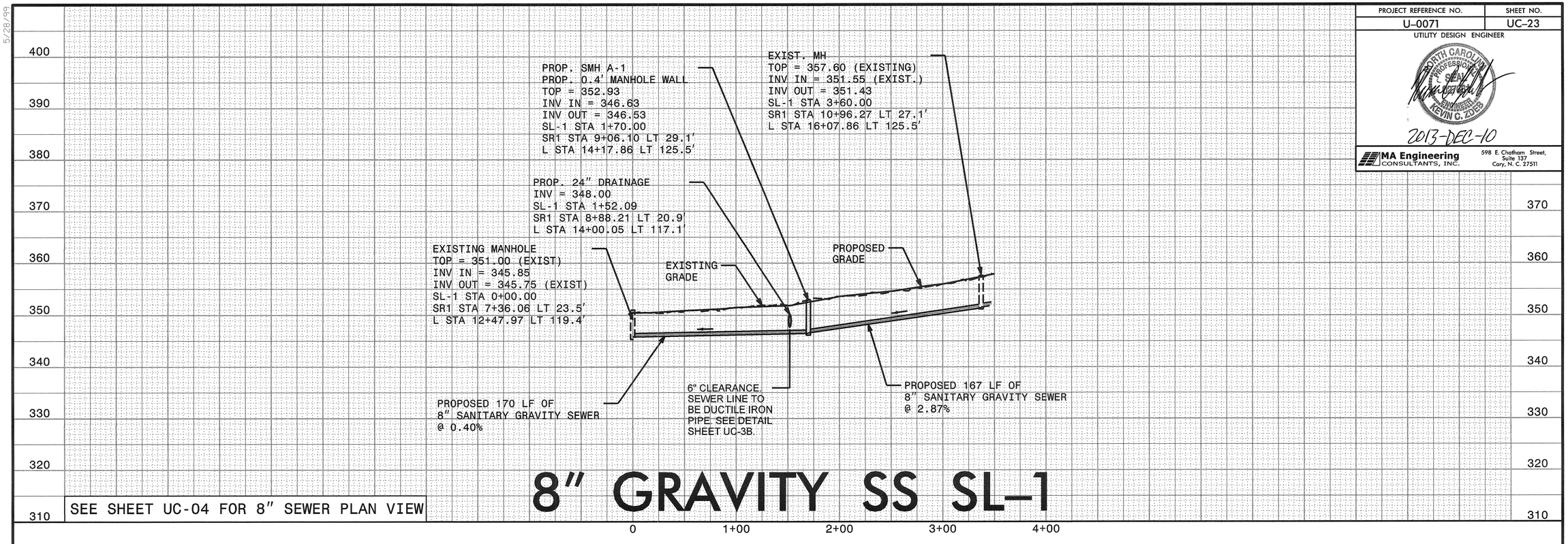

SEE SHEET UC-04 FOR 8" SEWER PLAN VIEW

8" GRAVITY SS SL-1

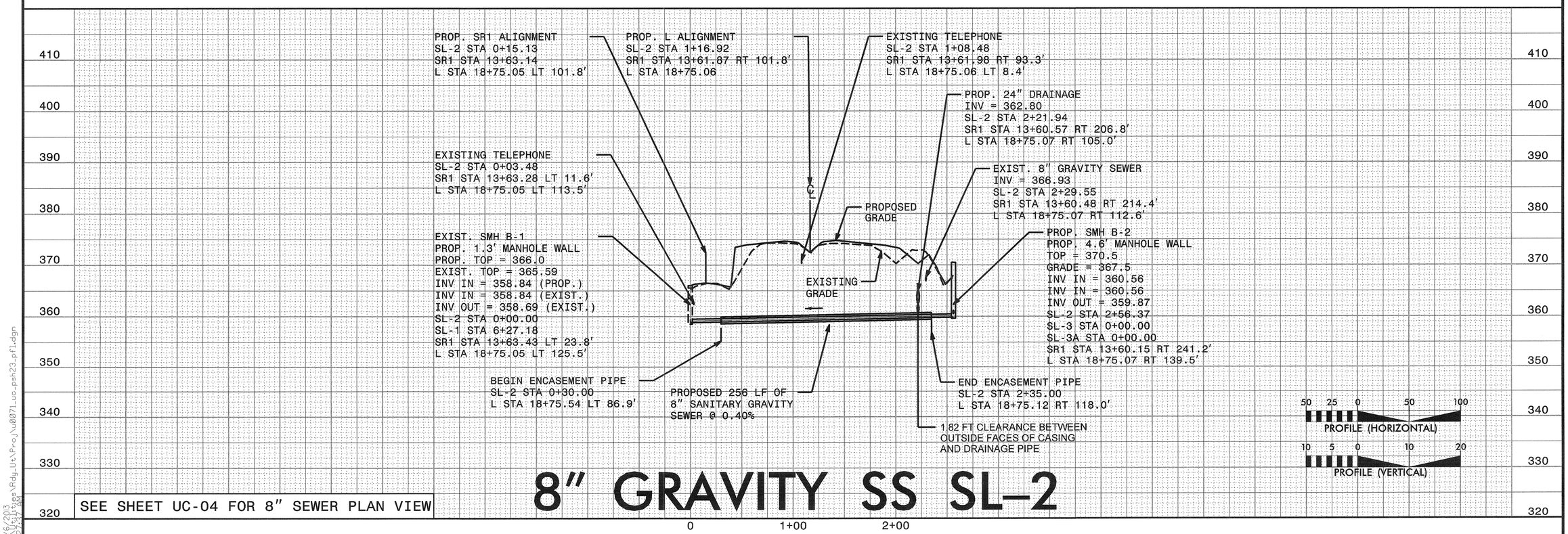

SEE SHEET UC-04 FOR 8" SEWER PLAN VIEW

8" GRAVITY SS SL-2

5/28/99
12/6/2013
R:\Utilities\Rdy_Ut\Proj\u0071uc_psht23_pfl.dgn
8:27:37 AM

PROJECT REFERENCE NO.	SHEET NO.
U-0071	UC-24

UTILITY DESIGN ENGINEER

NORTH CAROLINA PROFESSIONAL SEAL ENGINEER KEVIN C. ZOPF

2013-DEC-10

MA Engineering CONSULTANTS, INC.
598 E. Chatham Street, Suite 137
Cary, N. C. 27511

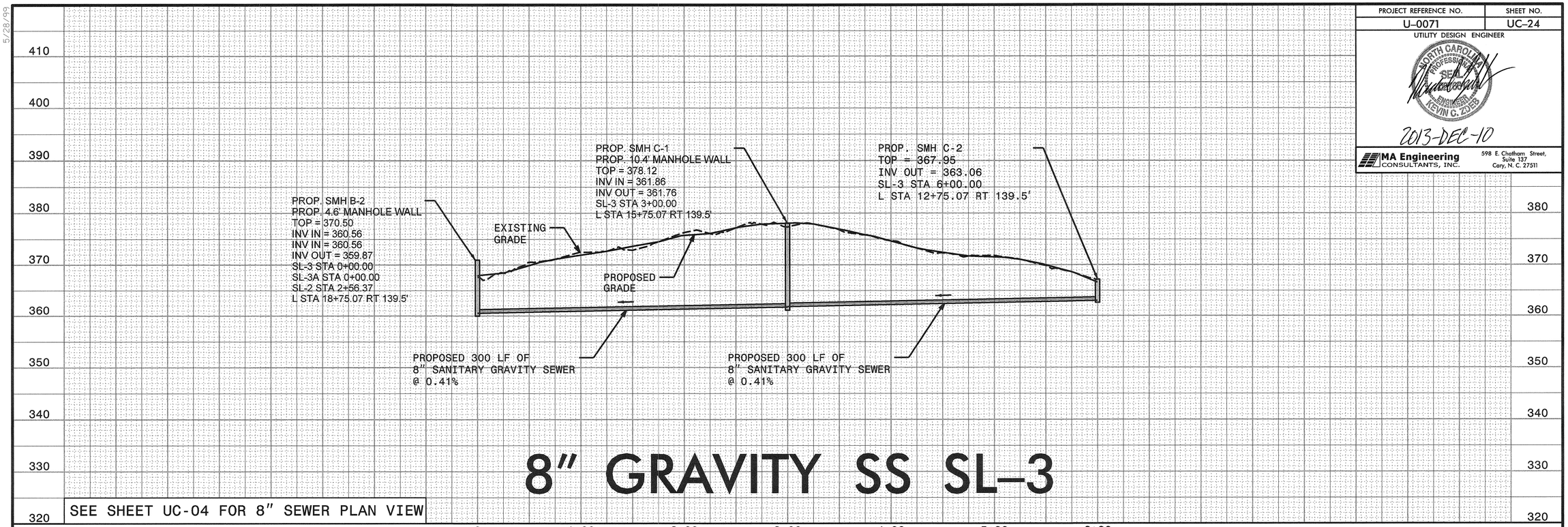

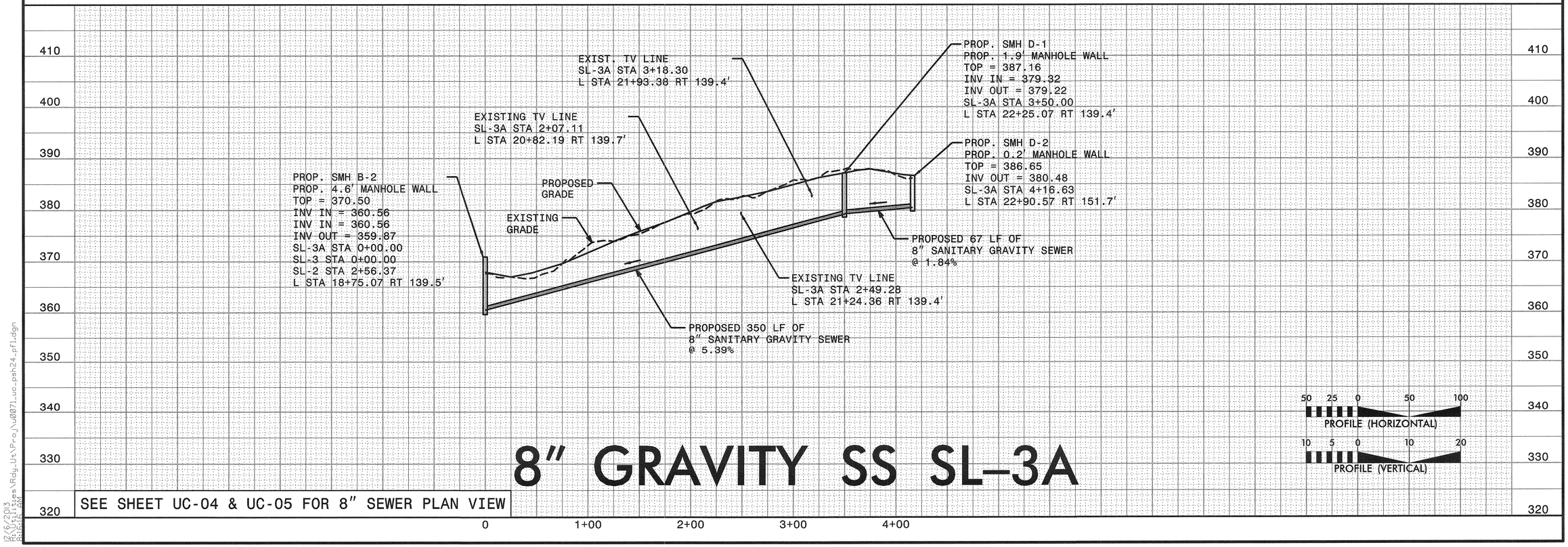

5/28/99

12/6/2013
R:\Utilities\Rdy_Ut\Proj\U0071_uc_psh24_pfl.dgn
8:16:16 AM

PROJECT REFERENCE NO.	SHEET NO.
U-0071	UC-25

UTILITY DESIGN ENGINEER

NORTH CAROLINA PROFESSIONAL SEAL ENGINEER KEVIN C. ZOBEL

2013-DEC-10

MA Engineering CONSULTANTS, INC.
598 E. Chatham Street, Suite 137
Cary, N. C. 27511

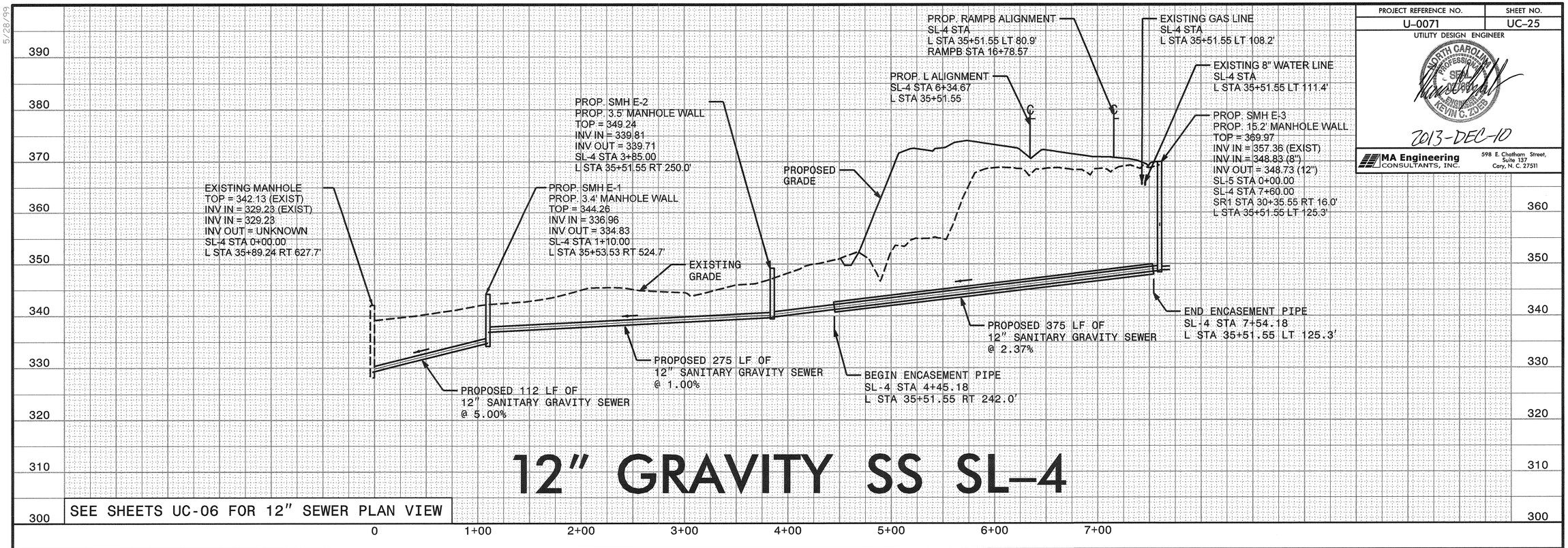

12" GRAVITY SS SL-4

SEE SHEETS UC-06 FOR 12" SEWER PLAN VIEW

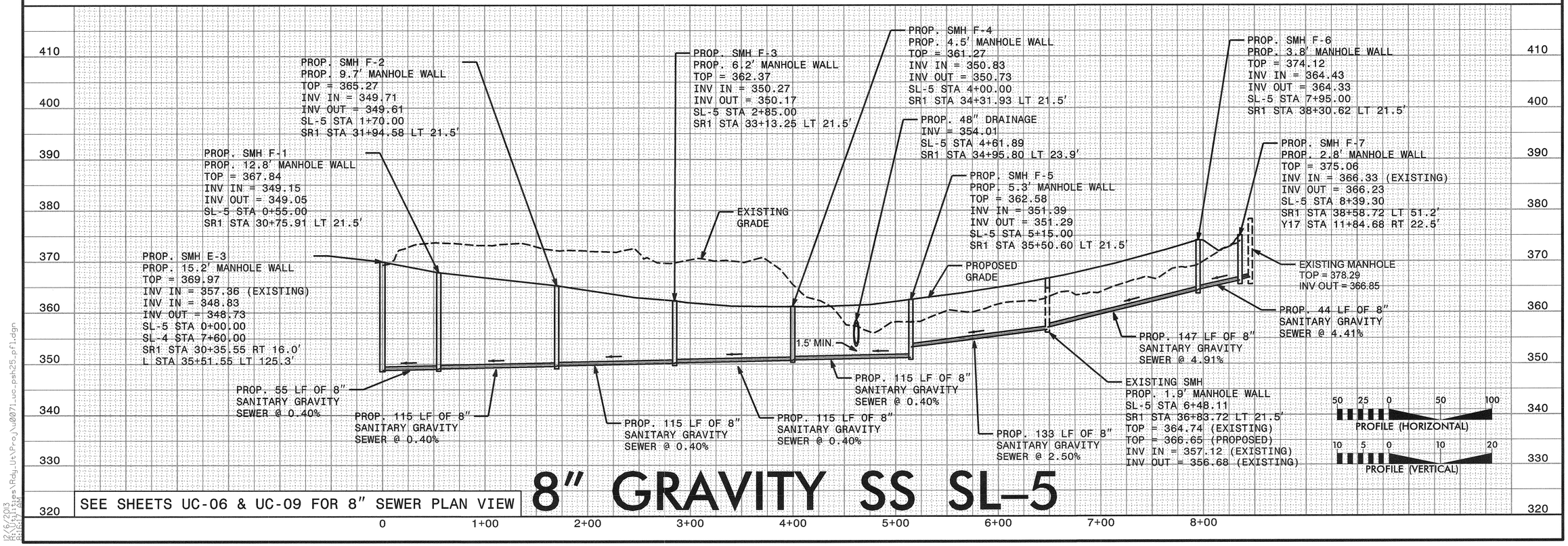

8" GRAVITY SS SL-5

SEE SHEETS UC-06 & UC-09 FOR 8" SEWER PLAN VIEW

5/28/99

12/6/2013
R:\Utilities\Rdy_Ut\Proj\u0071_uc_psh25_pfl.dgn
8:16:17 AM

PROJECT REFERENCE NO.	SHEET NO.
U-0071	UC-26

UTILITY DESIGN ENGINEER

NORTH CAROLINA PROFESSIONAL SEAL 027661 ENGINEER KEVIN C. ZOBEL

2014-AUG-11

MA Engineering CONSULTANTS, INC.
598 E. Chatham Street, Suite 137
Cary, N. C. 27511

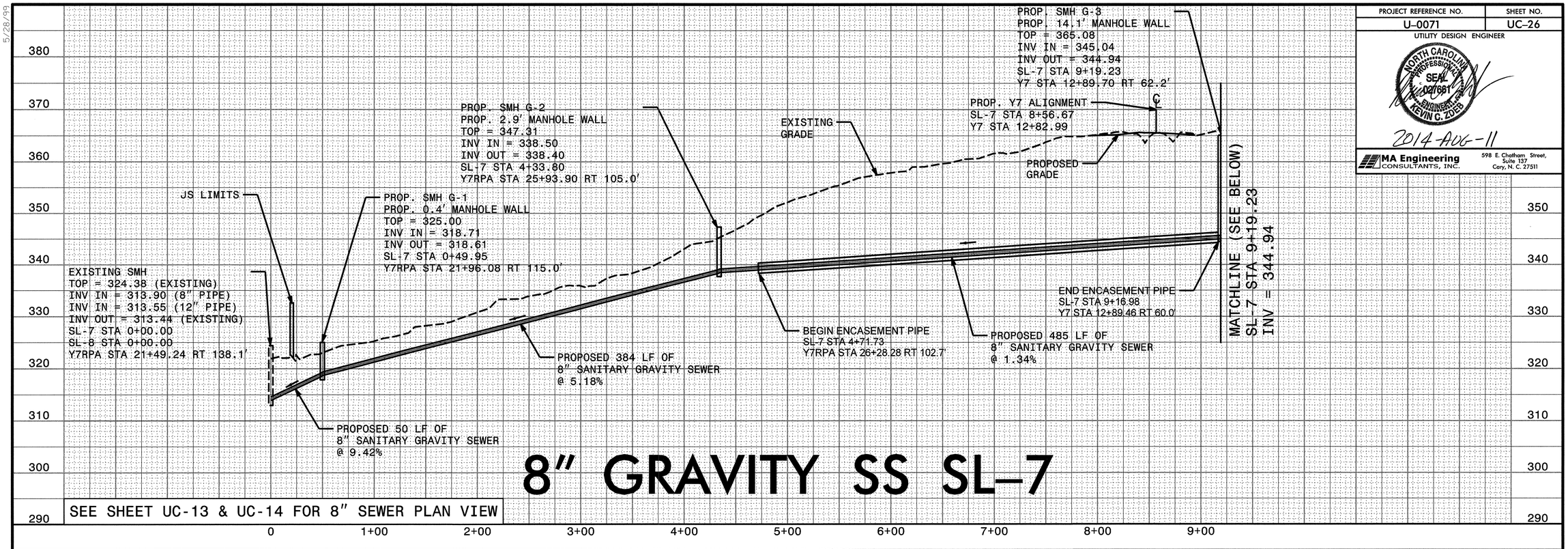

8" GRAVITY SS SL-7

SEE SHEET UC-13 & UC-14 FOR 8" SEWER PLAN VIEW

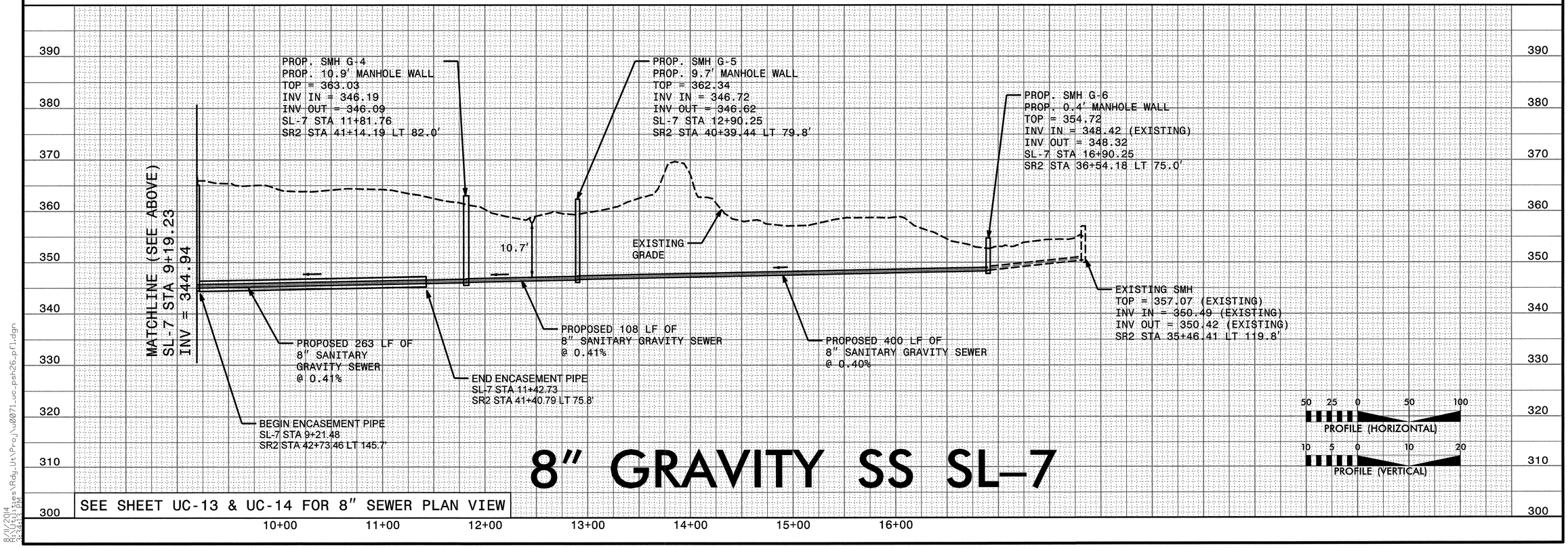

8" GRAVITY SS SL-7

SEE SHEET UC-13 & UC-14 FOR 8" SEWER PLAN VIEW

5/28/99

8/11/2014
R:\Utilities\Rdy_Ut\Proj\u0071_uc_psh26_pfl.dgn
3:34:13 PM

PROJECT REFERENCE NO.	SHEET NO.
U-0071	UC-27

UTILITY DESIGN ENGINEER

NORTH CAROLINA PROFESSIONAL SEAL ENGINEER KEVIN C. ZOES

2013-DEC-10

MA Engineering CONSULTANTS, INC.
598 E. Chatham Street, Suite 137
Cary, N. C. 27511

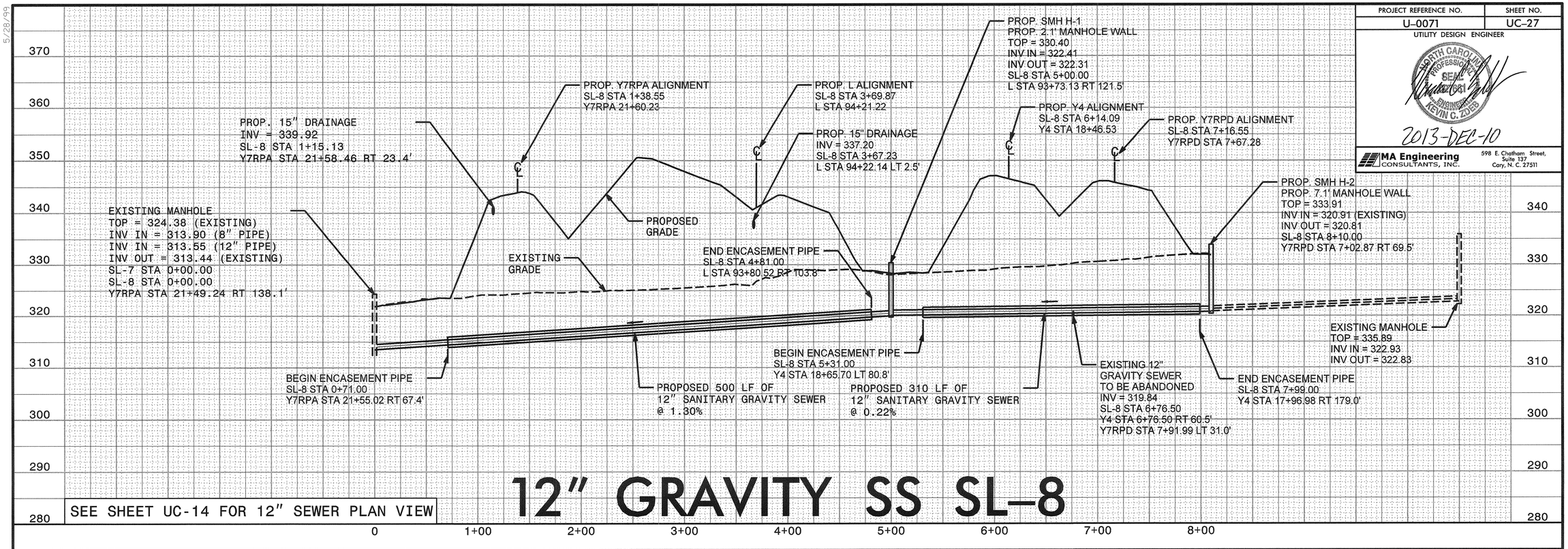

SEE SHEET UC-14 FOR 12" SEWER PLAN VIEW

12" GRAVITY SS SL-8

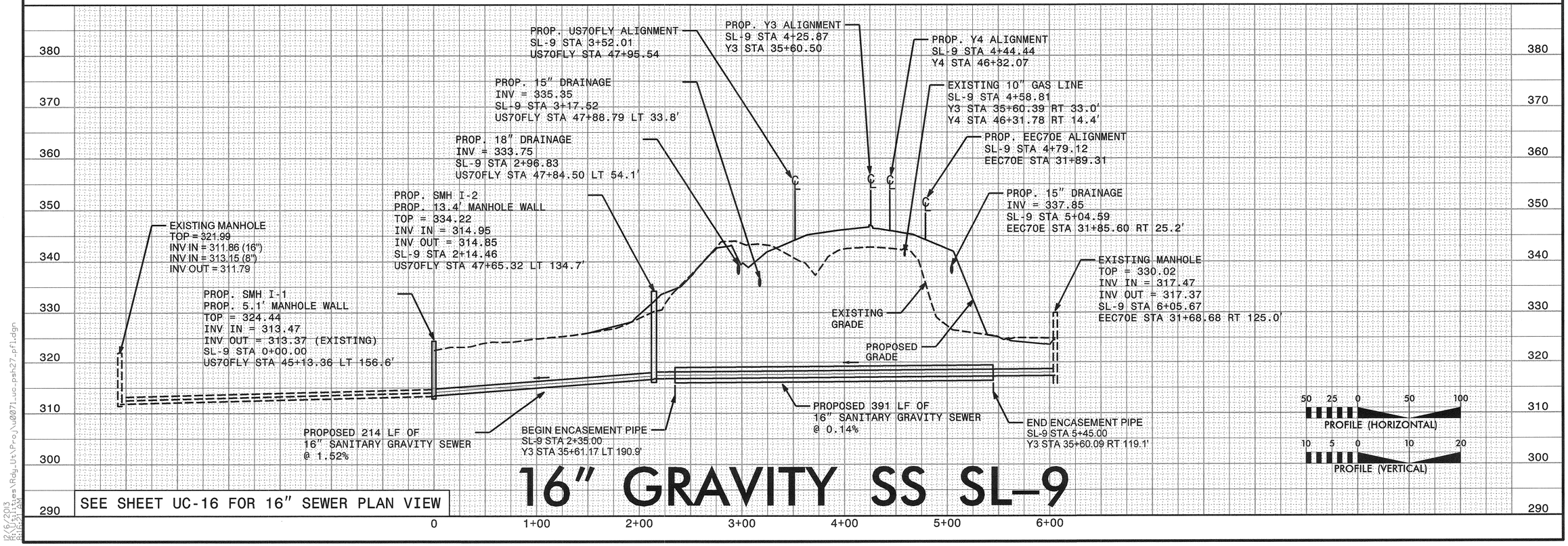

SEE SHEET UC-16 FOR 16" SEWER PLAN VIEW

16" GRAVITY SS SL-9

5/28/99

12/6/2013
R:\Utilities\Rdy_Ut\Pro_\u0071_uc_psh27_pfl.dgn
8:29:21 AM

PROJECT REFERENCE NO.	SHEET NO.
U-0071	UC-28

UTILITY DESIGN ENGINEER

NORTH CAROLINA PROFESSIONAL SEAL ENGINEER KEVIN C. JONES

2013-DEC-10

MA Engineering CONSULTANTS, INC.
598 E. Chatham Street, Suite 137
Cary, N. C. 27511

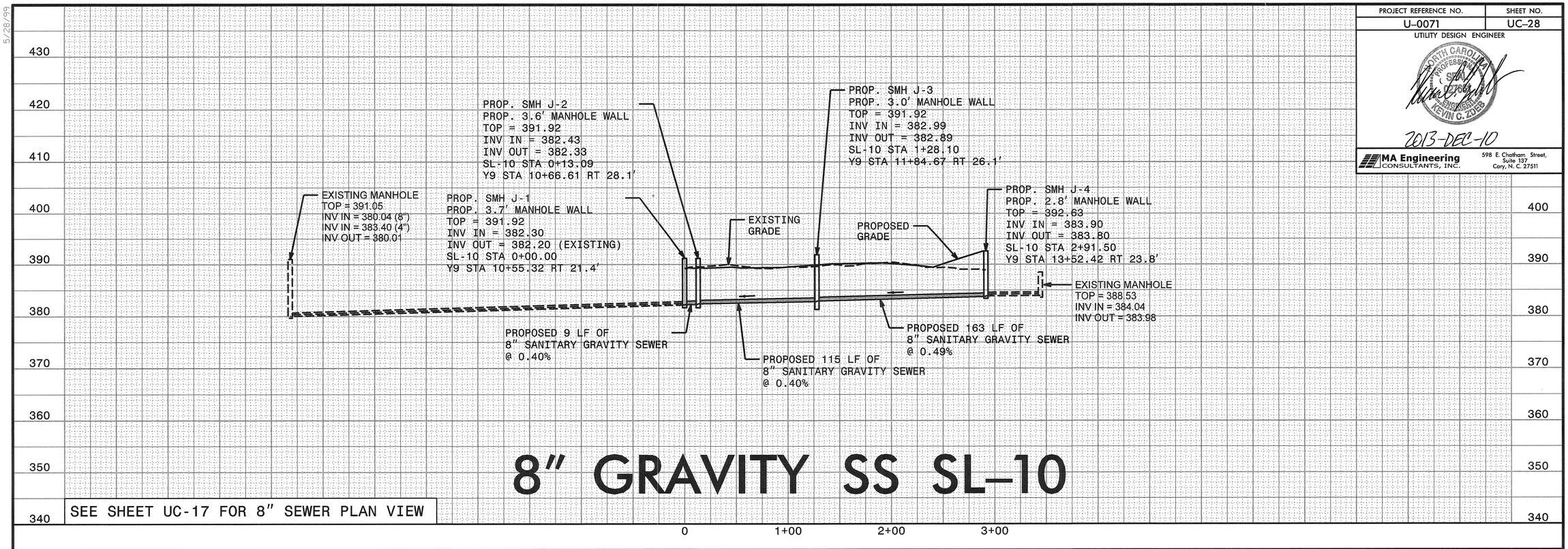

8" GRAVITY SS SL-10

SEE SHEET UC-17 FOR 8" SEWER PLAN VIEW

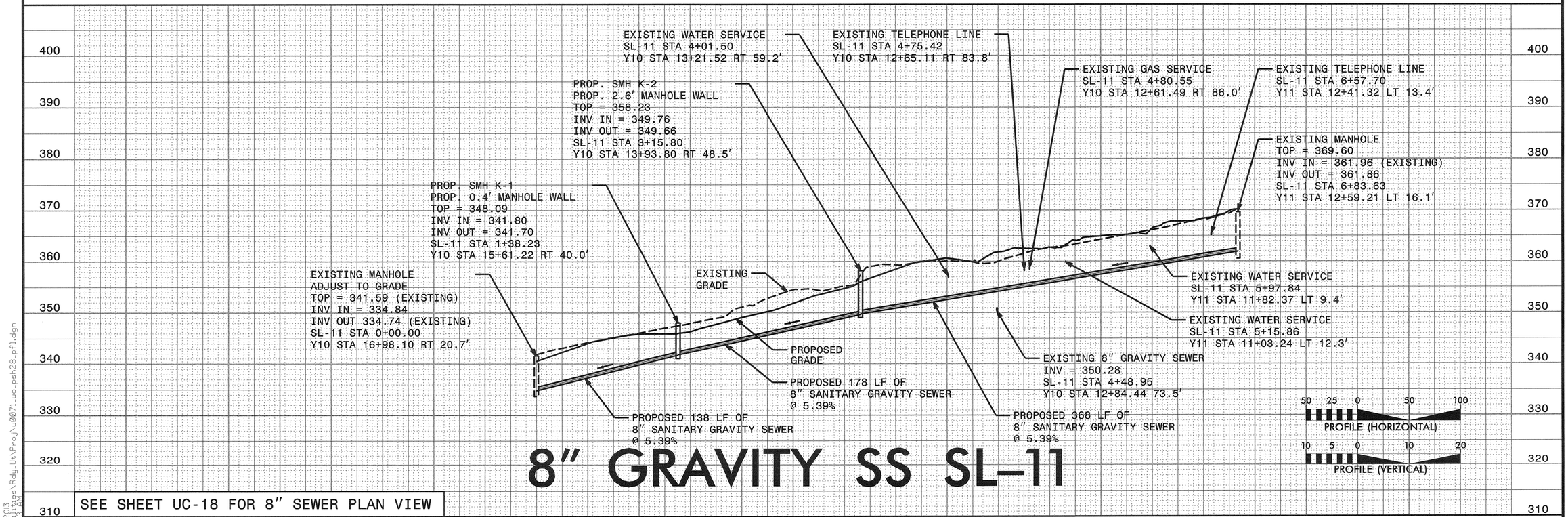

8" GRAVITY SS SL-11

SEE SHEET UC-18 FOR 8" SEWER PLAN VIEW

5/28/99

12/6/2013
R:\Utilities\Rdy_Ut\Proj\U0071_uc_psh28_pfl.dgn
8:16:23 AM

PROJECT REFERENCE NO.	SHEET NO.
U-0071	UC-29

UTILITY DESIGN ENGINEER

NORTH CAROLINA PROFESSIONAL SEAL 027861 ENGINEER KEVIN C. ZOLER

2014-AUG-11

MA Engineering CONSULTANTS, INC.
598 E. Chatham Street, Suite 137
Cary, N. C. 27511

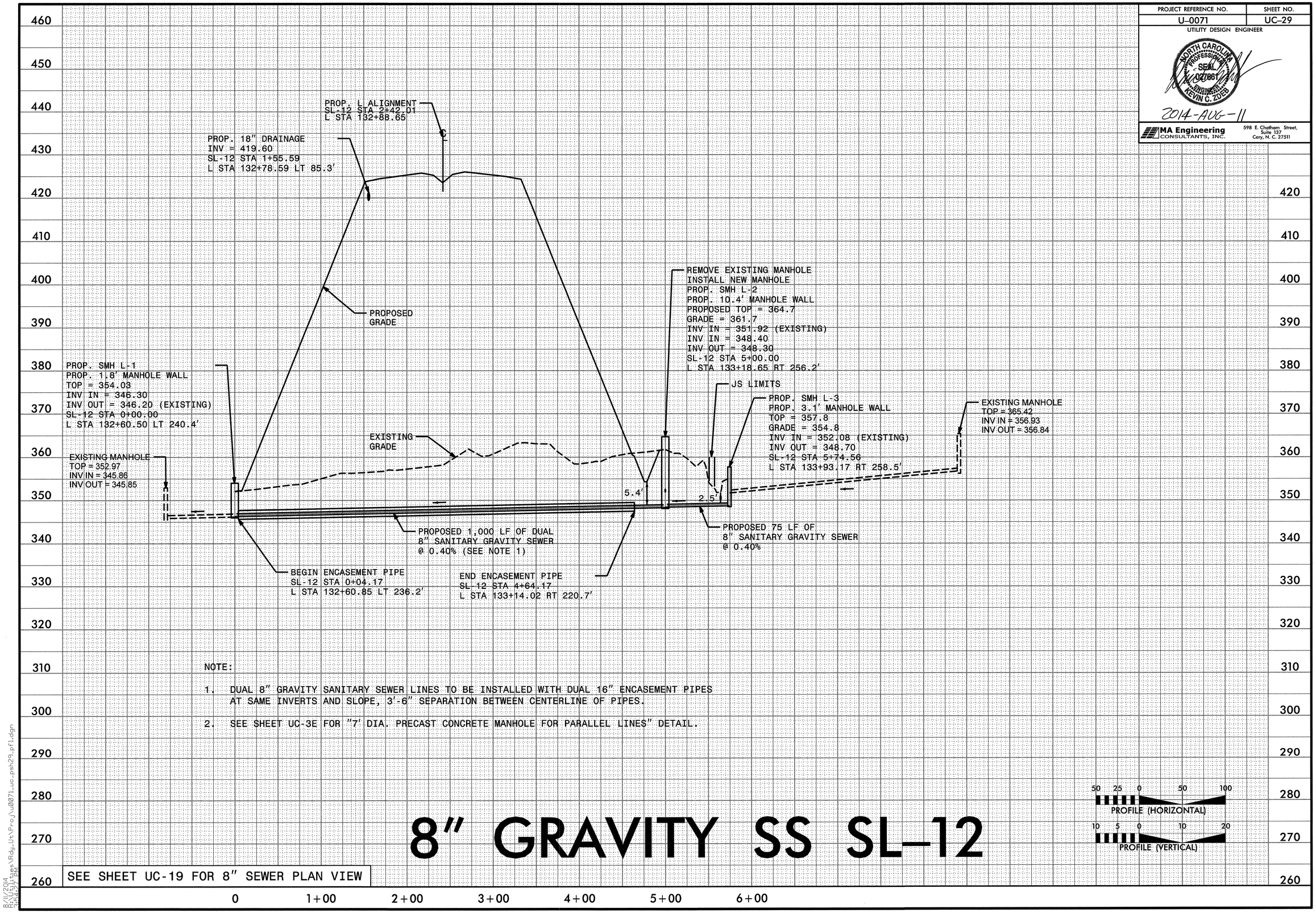

NOTE:

1. DUAL 8" GRAVITY SANITARY SEWER LINES TO BE INSTALLED WITH DUAL 16" ENCASEMENT PIPES AT SAME INVERTS AND SLOPE, 3'-6" SEPARATION BETWEEN CENTERLINE OF PIPES.
2. SEE SHEET UC-3E FOR "7' DIA. PRECAST CONCRETE MANHOLE FOR PARALLEL LINES" DETAIL.

8" GRAVITY SS SL-12

SEE SHEET UC-19 FOR 8" SEWER PLAN VIEW

8/11/2014
R:\Utilities\Rdy_Ut\Proj\U0071_uc_psh29.pfl.dgn
3:42:27 PM

PROJECT REFERENCE NO.	SHEET NO.
U-0071	UC-30

UTILITY DESIGN ENGINEER

NORTH CAROLINA PROFESSIONAL SEAL 022661 ENGINEER KEVIN C. ZDIEB

2014-MAY-27

MA Engineering CONSULTANTS, INC.
598 E. Chatham Street, Suite 137
Cary, N. C. 27511

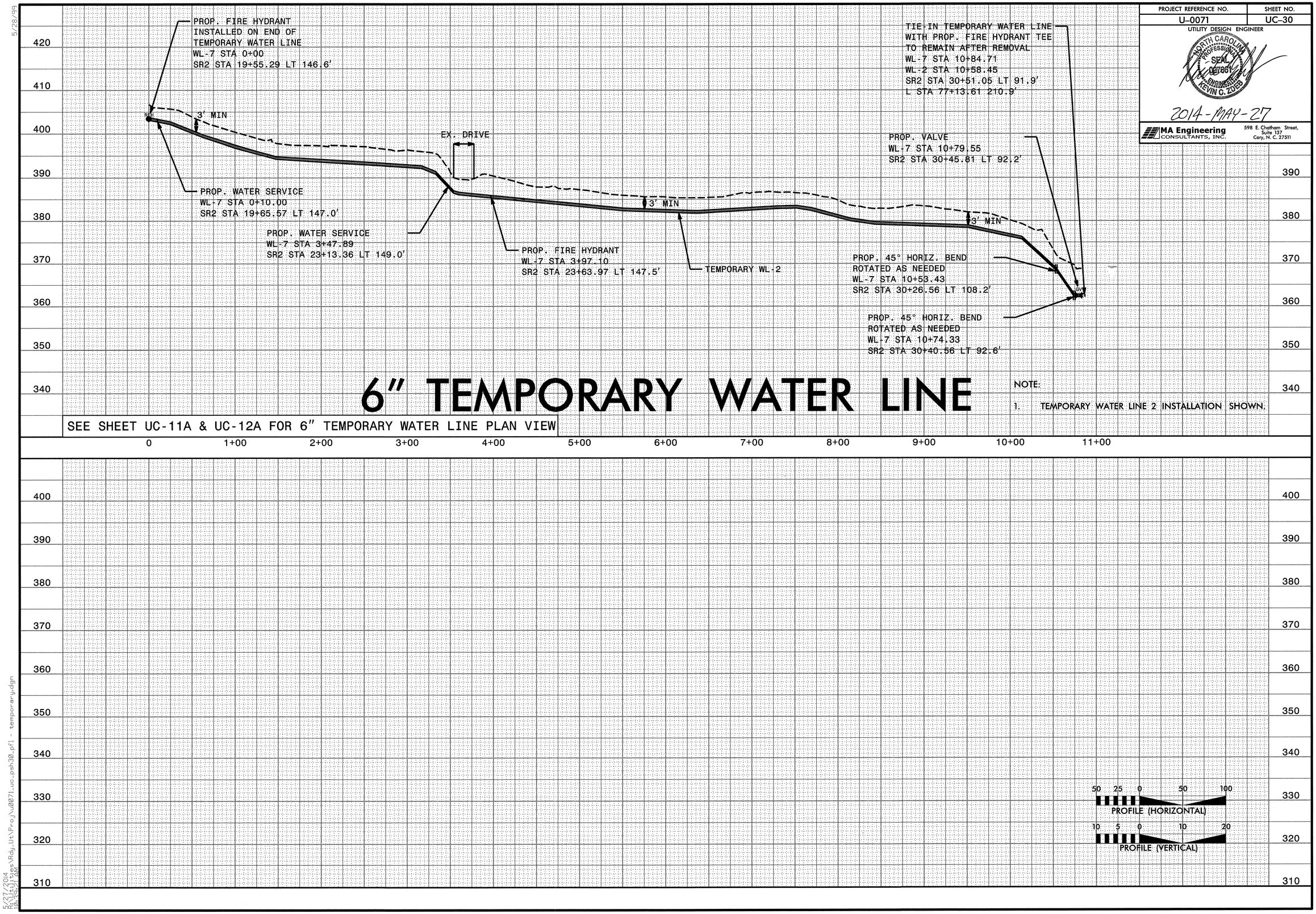

6" TEMPORARY WATER LINE

SEE SHEET UC-11A & UC-12A FOR 6" TEMPORARY WATER LINE PLAN VIEW

NOTE:

1. TEMPORARY WATER LINE 2 INSTALLATION SHOWN.

5/28/99

5/27/2014
R:\Roadway\Proj\U0071_uc_psh30_pfl - temporary.dgn
10:39:21 AM

TIP PROJECT: U-0071

See Sheet 1-A For Index of Sheets

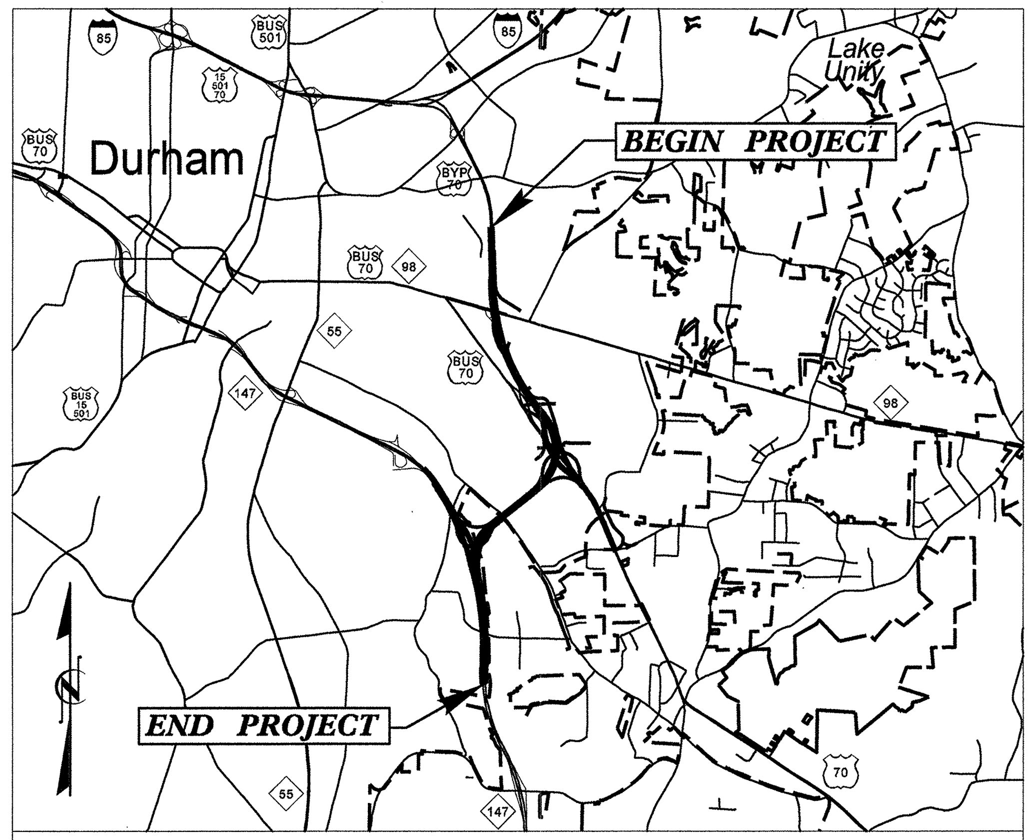

VICINITY MAP

STATE OF NORTH CAROLINA
DIVISION OF HIGHWAYS

UTILITIES BY OTHERS PLANS
DURHAM COUNTY

LOCATION: DURHAM EAST END CONNECTOR, FROM NC 147 (BUCK DEAN FREEWAY) TO NORTH OF NC 98

TYPE OF WORK: UTILITY BY OTHERS RELOCATIONS

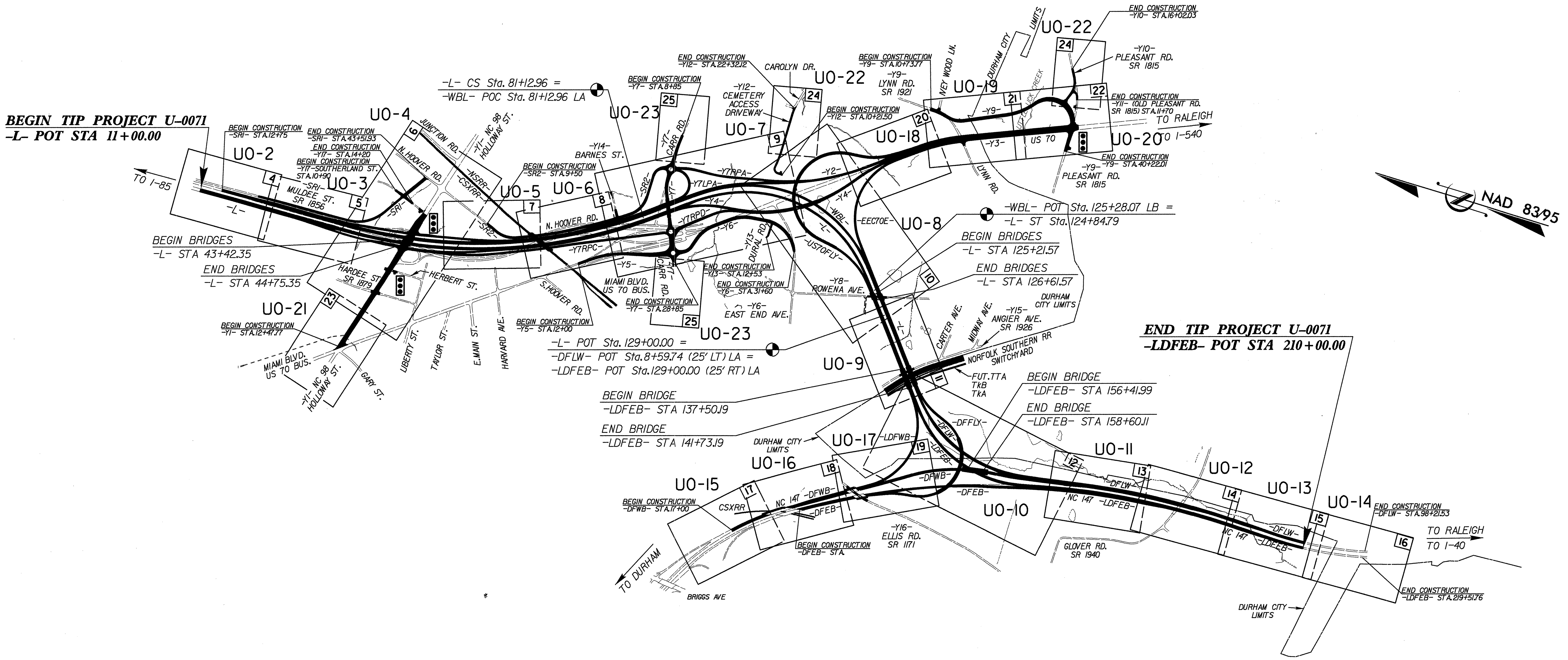

GRAPHIC SCALES
50 25 0 50 100 PLANS
50 25 0 50 100 PROFILE (HORIZONTAL)
10 5 0 10 20 PROFILE (VERTICAL)

INDEX OF SHEETS

SHEET NO.	DESCRIPTION
UO-1	TITLE SHEET
UO-2 THRU UO-23	UTILITY BY OTHERS PLAN SHEETS

UTILITY OWNERS ON PROJECT

(1) POWER – DUKE ENERGY PROGRESS (DISTRIBUTION)
(2) POWER – DUKE ENERGY PROGRESS (TRANSMITION)
(3) TELEPHONE – FRONTIER COMMUNICATIONS
(4) CATV – TIME WARNER CABLE
(5) GAS – PSNC GAS

UTILITY DESIGN BY:
MA Engineering CONSULTANTS, INC.
598 East Chatham Street Suite 137 Cary, NC 27511
Phone: 919.297.0220 Fax: 919.297.0221

NCDOT PROJECT ENGINEER:
RON WILKINS, P.E.
PREPARED FOR:
NORTH CAROLINA
DEPARTMENT OF TRANSPORTATION
UTILITIES UNIT
RALEIGH, NC

09/08/99
$$$$$$SYSTIME$$$$
$$$$$$$$$DGN$$$$$$$$$$$$$$$$$
$$$$$$USERNAME$$$$

PROJECT REFERENCE NO.	SHEET NO.
U-0071	U0-2

UTILITIES BY OTHERS

NOTE:
ALL PROPOSED UTILITY WORK SHOWN ON THIS SHEET WILL BE DONE BY OTHERS

MA Engineering CONSULTANTS, INC.
598 E. Chatham Street, Suite 137
Cary, N. C. 27511

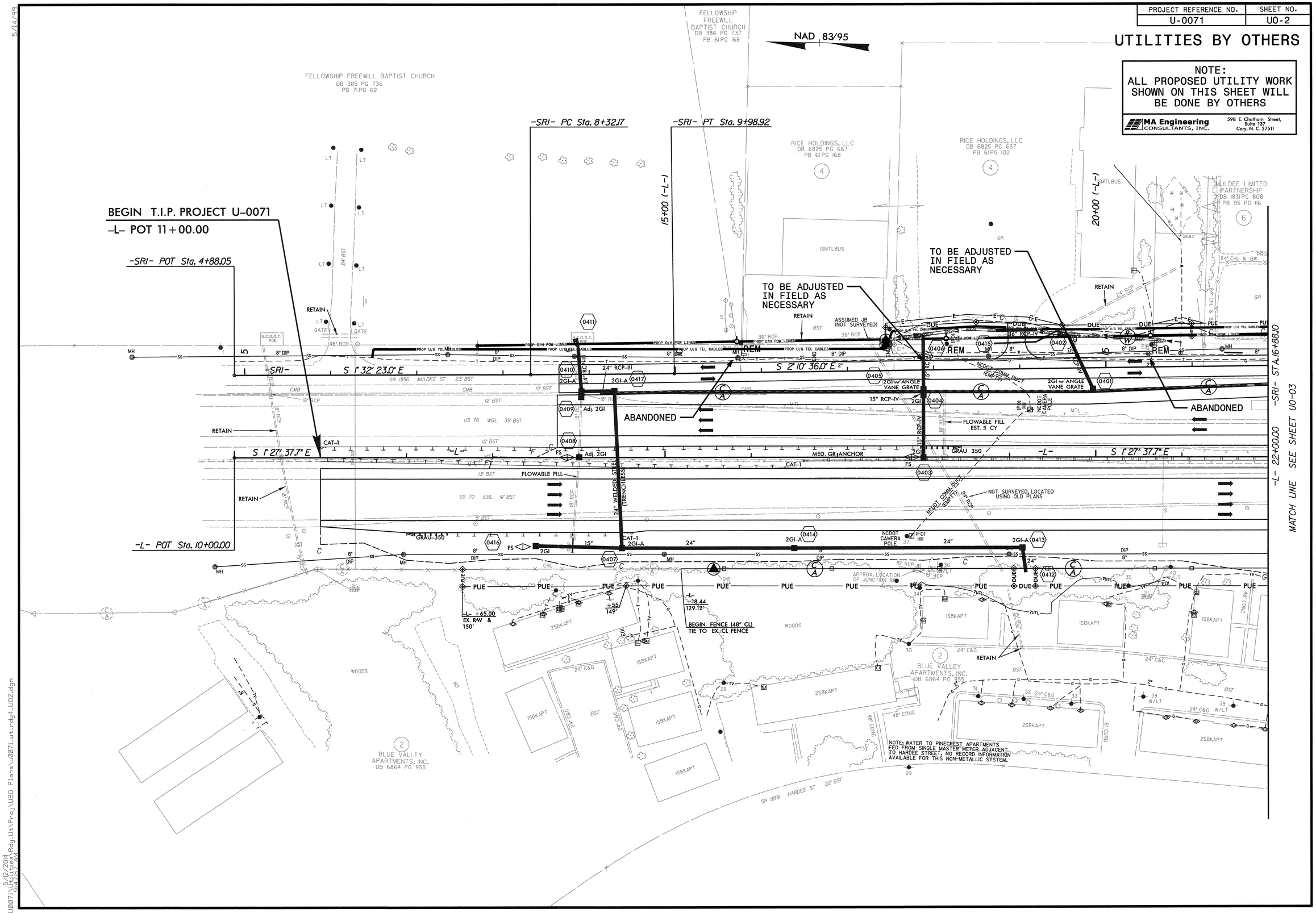

5/14/99

78\U071\Utilities\Rdy_Ut\Proj\UBO Plans\U071_ut_rdy4_U02.dgn 5/12/2014 9:44:47 AM

PROJECT REFERENCE NO.	SHEET NO.
U-0071	U0-3

UTILITIES BY OTHERS

NOTE:
ALL PROPOSED UTILITY WORK SHOWN ON THIS SHEET WILL BE DONE BY OTHERS

MA Engineering CONSULTANTS, INC.
598 E. Chatham Street, Suite 137
Cary, N. C. 27511

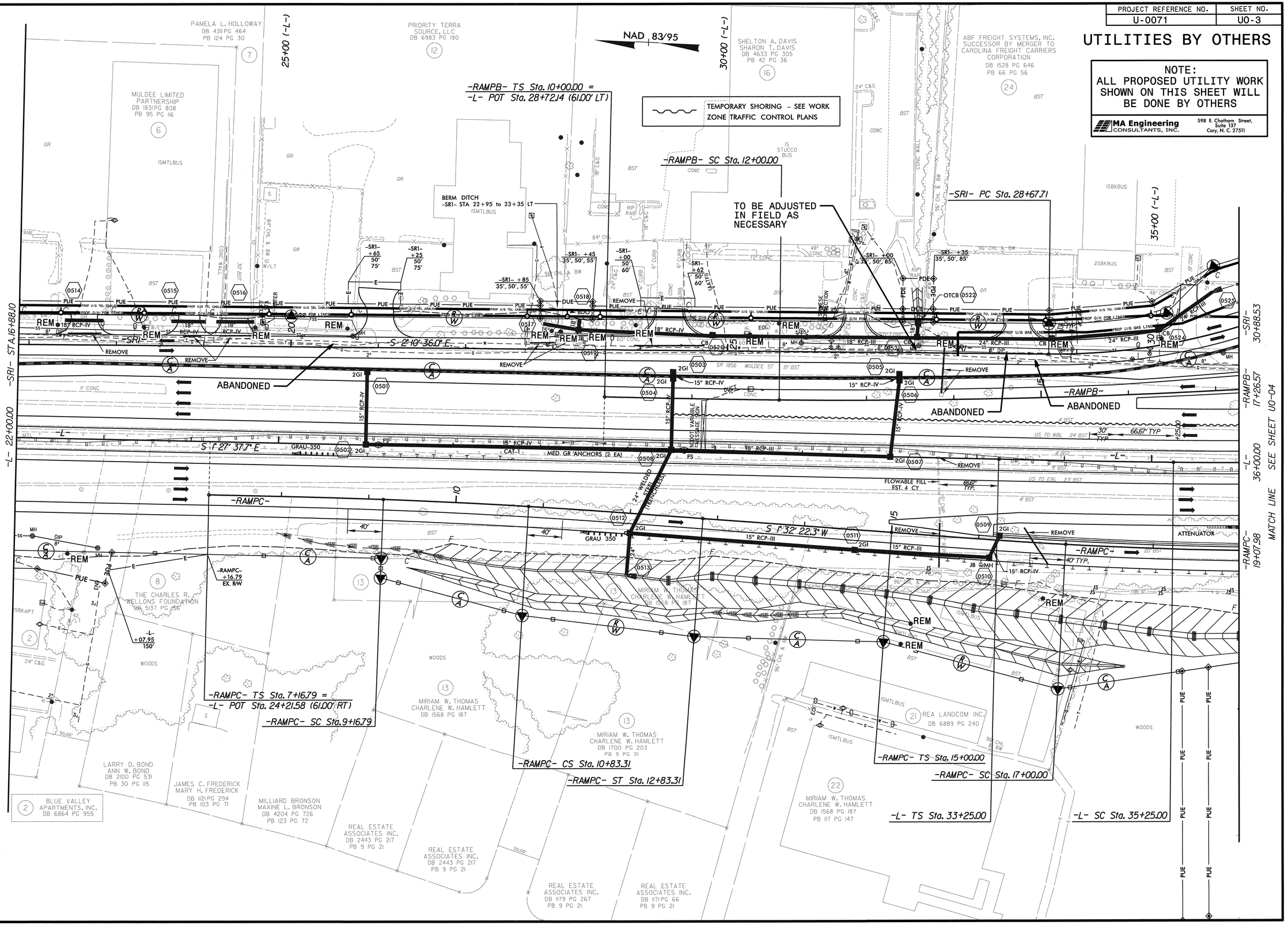

5/14/99

5/12/2014
9:15:29 AM
76\U0071\Plans\Rdy_Ut\Proj\UBO Plans\U0071_ut_rdy5_U03.dgn

REVISIONS

PROJECT REFERENCE NO.	SHEET NO.
U-0071	UO-4

UTILITIES BY OTHERS

NOTE:
ALL PROPOSED UTILITY WORK SHOWN ON THIS SHEET WILL BE DONE BY OTHERS

MA Engineering CONSULTANTS, INC.
318 S. Quality Street, Suite 200
Gen.N.C.27201

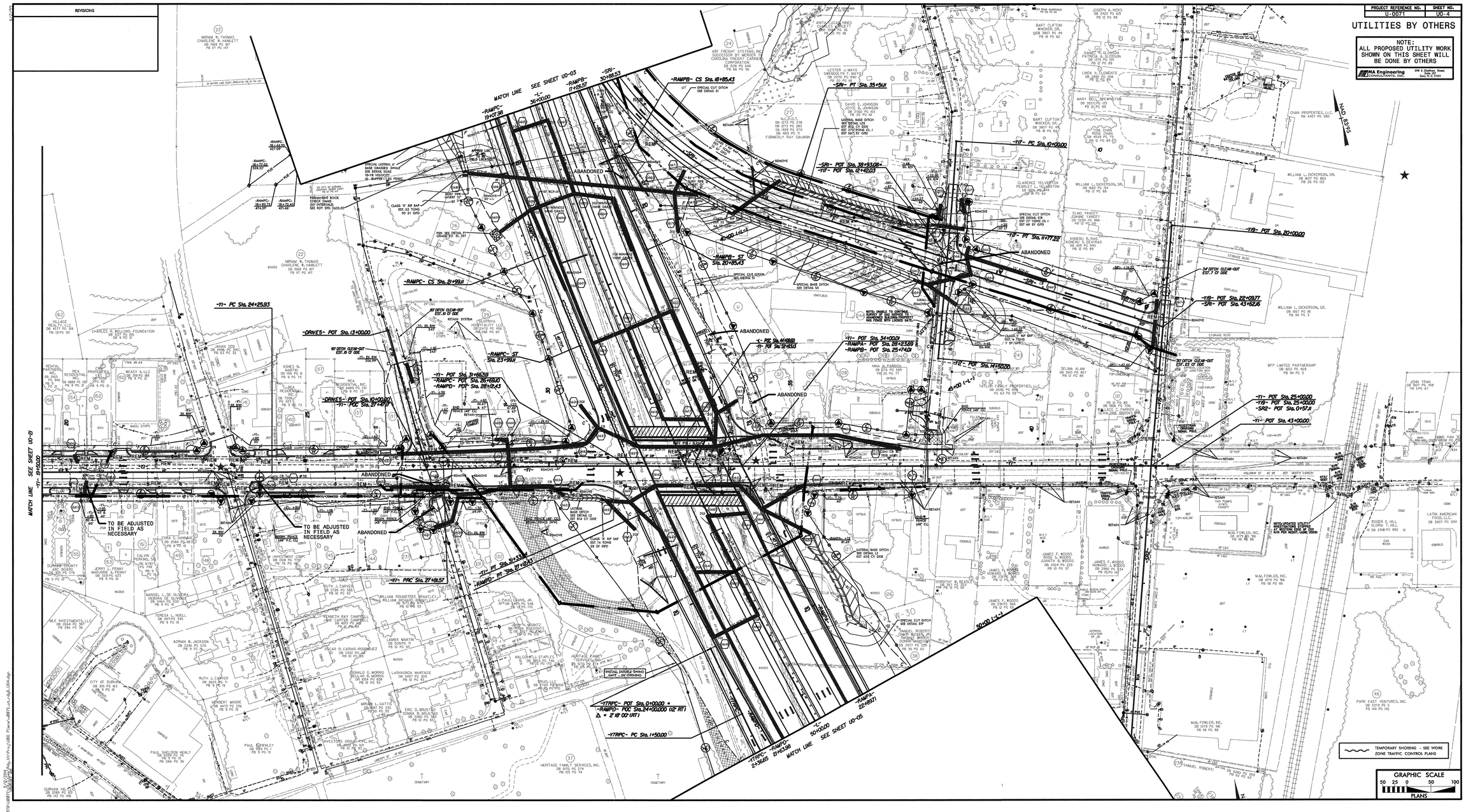

PROJECT REFERENCE NO.	SHEET NO.
U-0071	U0-5

UTILITIES BY OTHERS

NOTE:
ALL PROPOSED UTILITY WORK SHOWN ON THIS SHEET WILL BE DONE BY OTHERS

MA Engineering CONSULTANTS, INC.
598 E. Chatham Street, Suite 137
Cary, N. C. 27511

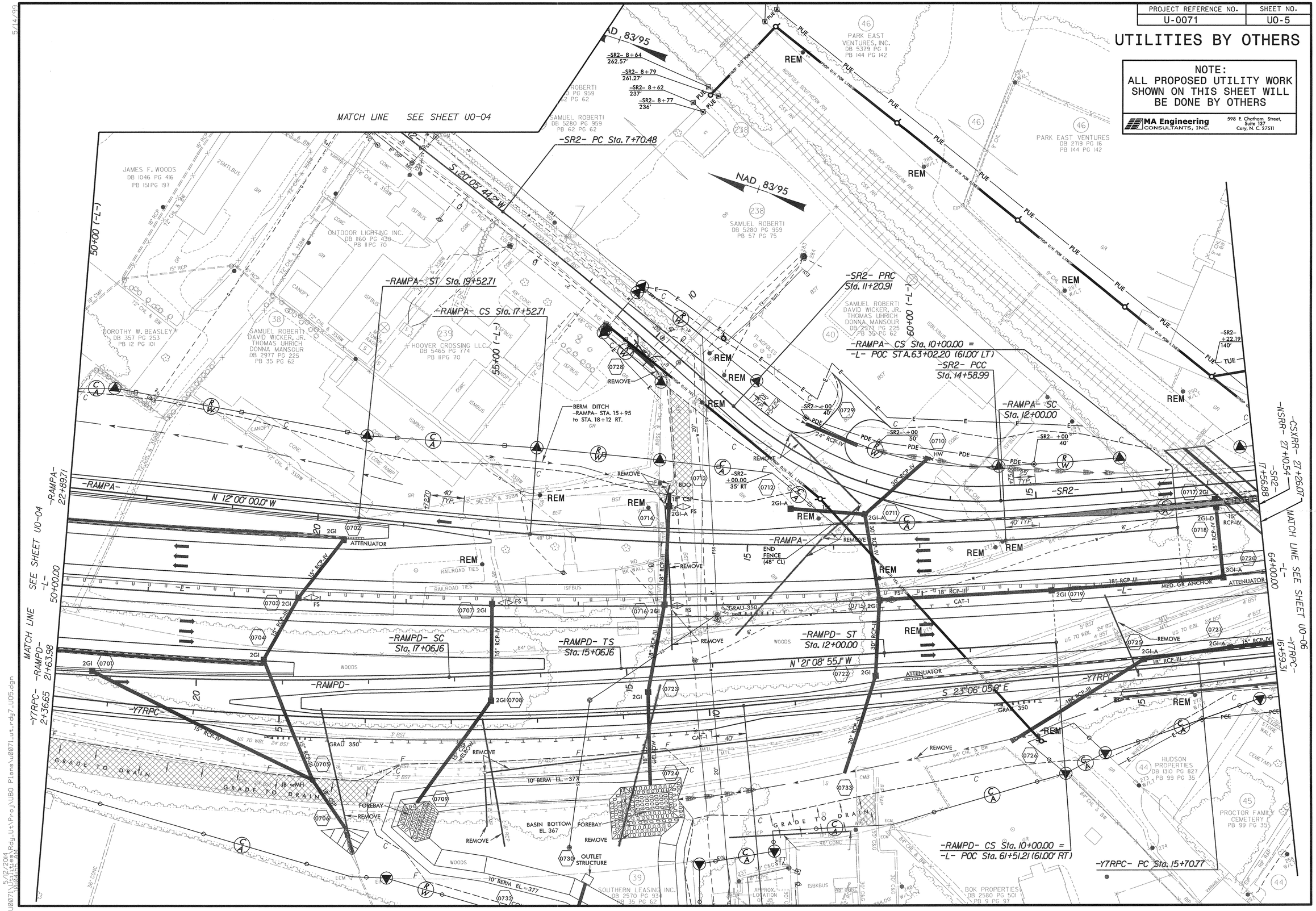

5/14/99

5/12/2014
10:24:15 AM
78\U0071\Utilities\Rdy_Utl\Proj\UBO Plans\u0071_utl_rdy7_U05.dgn

PROJECT REFERENCE NO.	SHEET NO.
U-0071	U0-6

UTILITIES BY OTHERS

NOTE:
ALL PROPOSED UTILITY WORK SHOWN ON THIS SHEET WILL BE DONE BY OTHERS

MA Engineering CONSULTANTS, INC.
598 E. Chatham Street, Suite 137
Cary, N. C. 27511

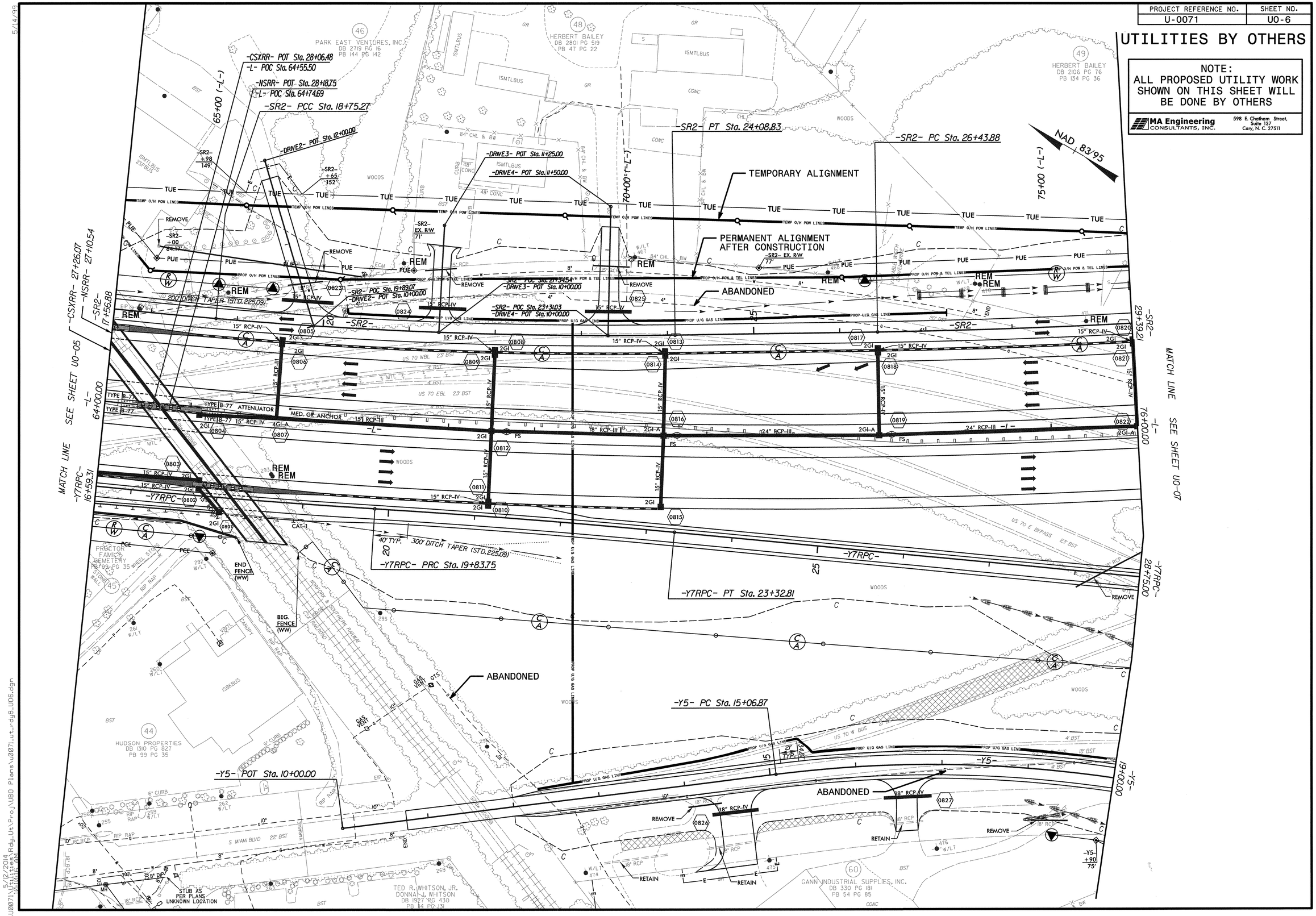

PROJECT REFERENCE NO.	SHEET NO.
U-0071	U0-7

UTILITIES BY OTHERS

NOTE:
ALL PROPOSED UTILITY WORK SHOWN ON THIS SHEET WILL BE DONE BY OTHERS

7MA Engineering CONSULTANTS, INC.
216 E Chatham Street, Suite 101
Cary, N.C. 27511

REVISIONS

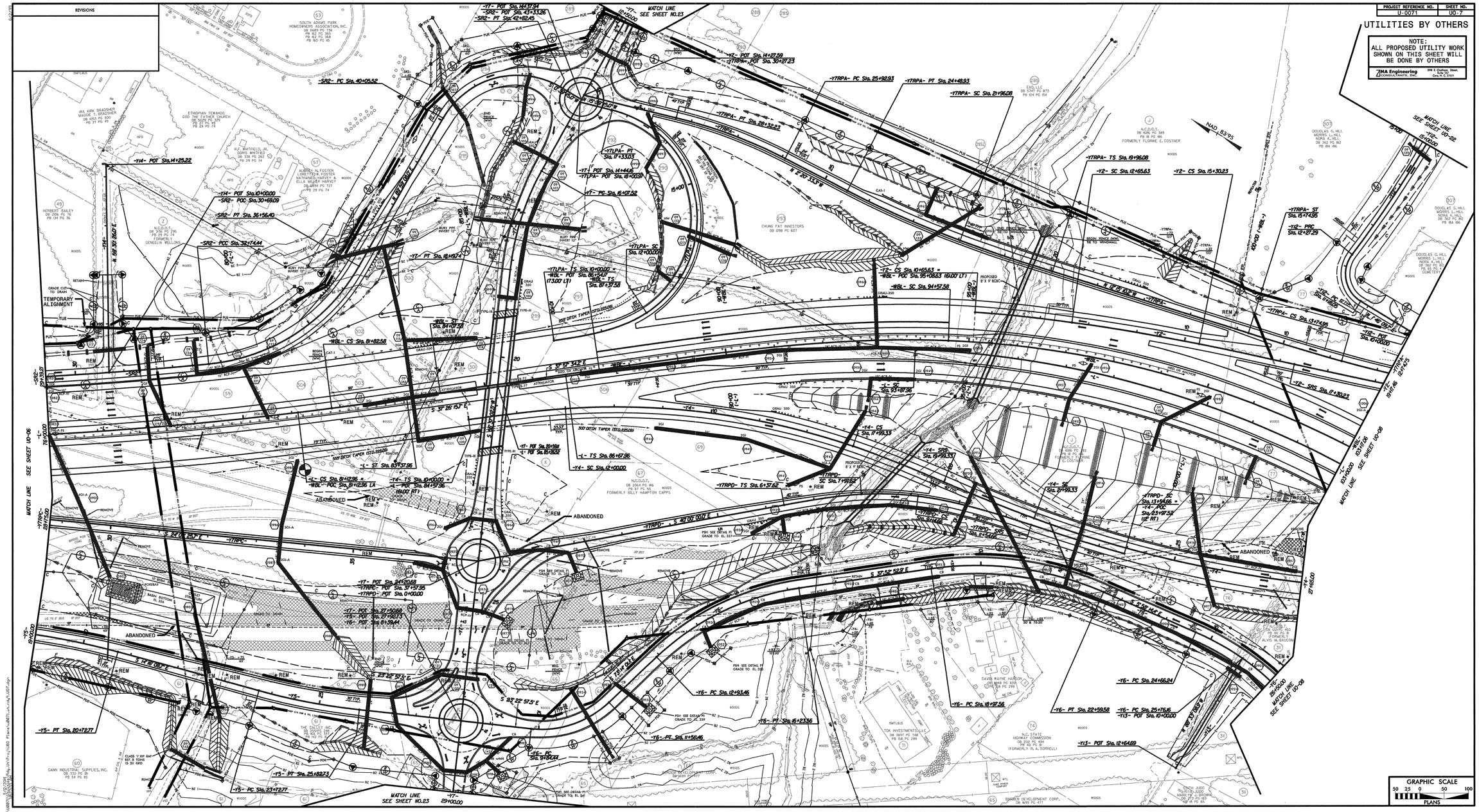

PROJECT REFERENCE NO.	SHEET NO.
U-0071	U0-8

UTILITIES BY OTHERS

NOTE:
ALL PROPOSED UTILITY WORK SHOWN ON THIS SHEET WILL BE DONE BY OTHERS

HMA Engineering CONSULTANTS, INC.
208 S. Dawson Street, Suite 1
Raleigh, N. C. 27601

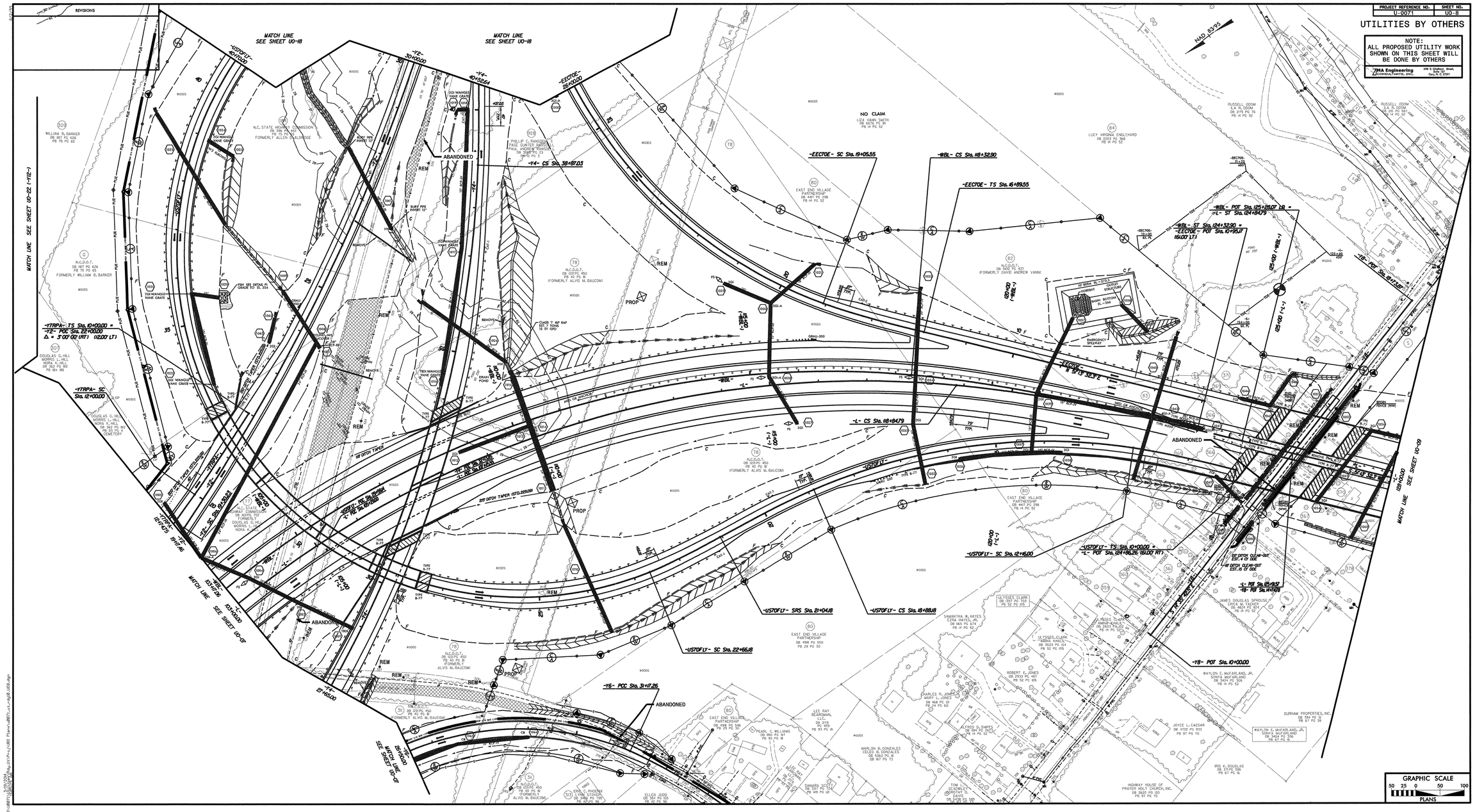

GRAPHIC SCALE
50 25 0 50 100
PLANS

PROJECT REFERENCE NO.	SHEET NO.
U-0071	U0-9

UTILITIES BY OTHERS

NOTE:
ALL PROPOSED UTILITY WORK SHOWN ON THIS SHEET WILL BE DONE BY OTHERS

MA Engineering CONSULTANTS, INC.
598 E. Chatham Street, Suite 137
Cary, N. C. 27511

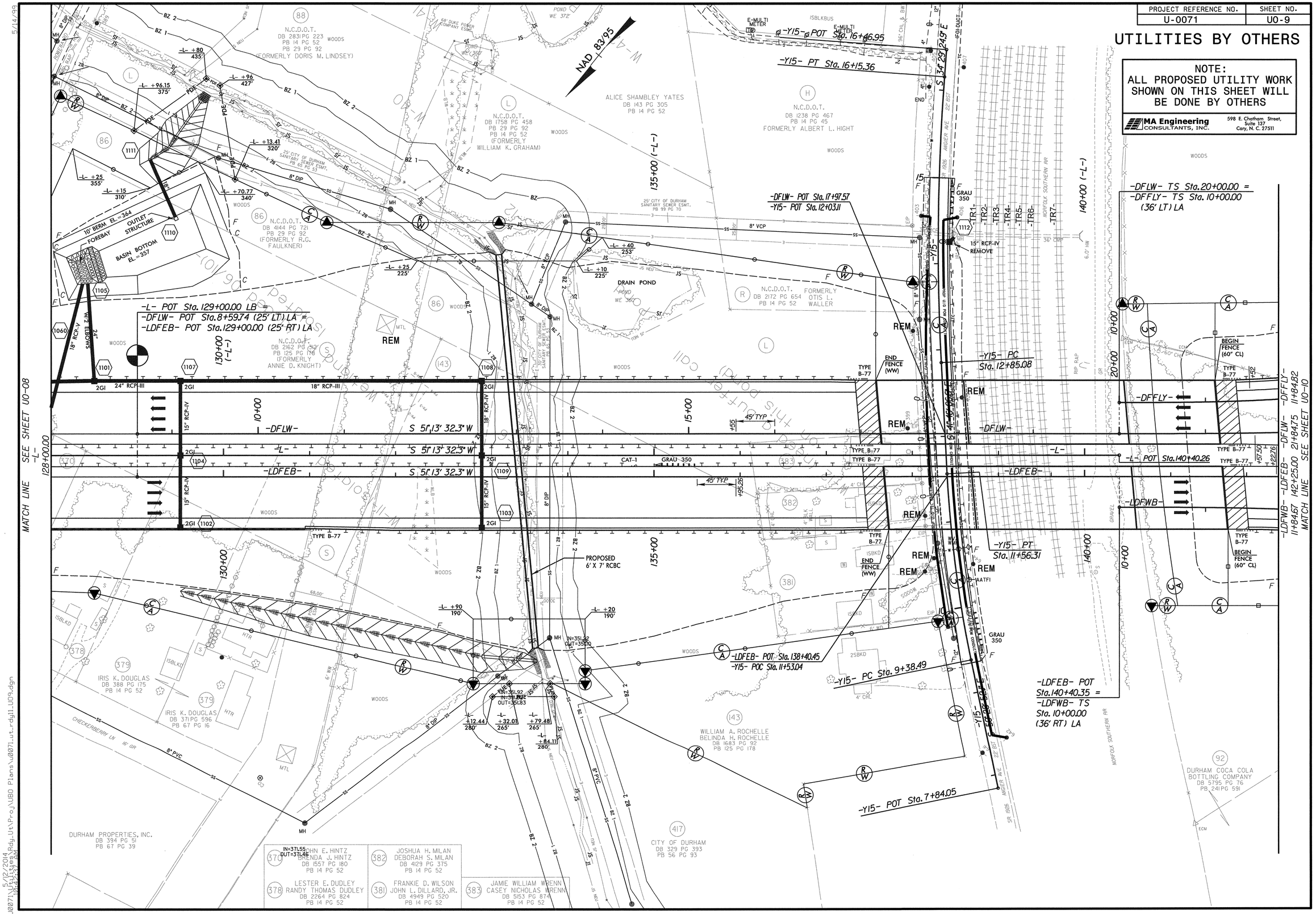

5/14/99

5/12/2014 10:32:39 AM
U:\0071\U0071\U0071_Rdy_Utl\Proj\UBO Plans\u0071_utl_rdy11_U09.dgn

REVISIONS

PROJECT REFERENCE NO.	SHEET NO.
U-0071	UO-10

UTILITIES BY OTHERS

NOTE:
ALL PROPOSED UTILITY WORK SHOWN ON THIS SHEET WILL BE DONE BY OTHERS

MA Engineering & CONSULTANTS, INC.
316 S. Chatham Street
Suite 101
Cary, N.C. 27511

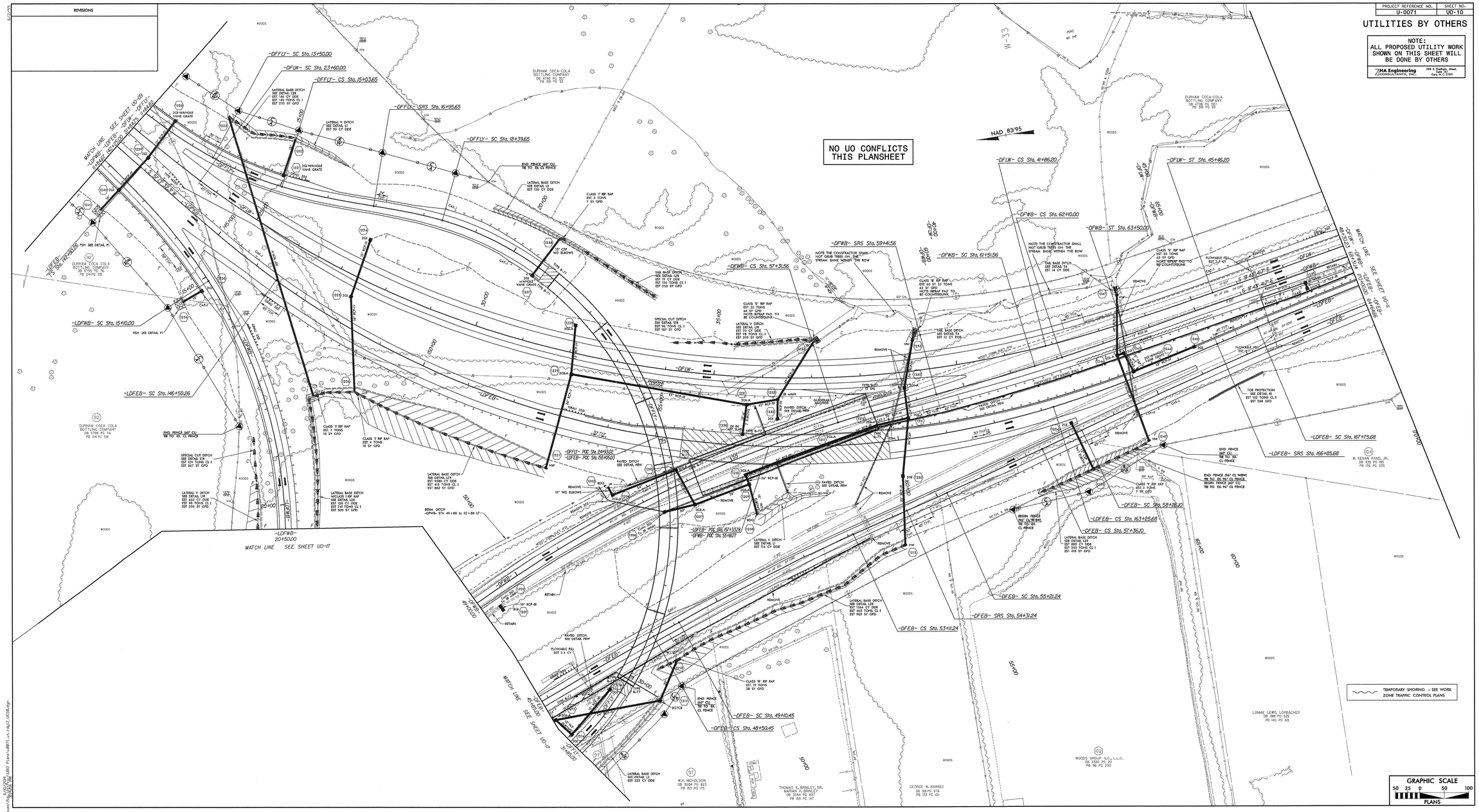

PROJECT REFERENCE NO.	SHEET NO.
U-0071	U0-11

UTILITIES BY OTHERS

NO UO CONFLICTS THIS PLANSHEET

NAD 83/95

NOTE:
ALL PROPOSED UTILITY WORK SHOWN ON THIS SHEET WILL BE DONE BY OTHERS

MA Engineering CONSULTANTS, INC.
598 E. Chatham Street, Suite 137
Cary, N. C. 27511

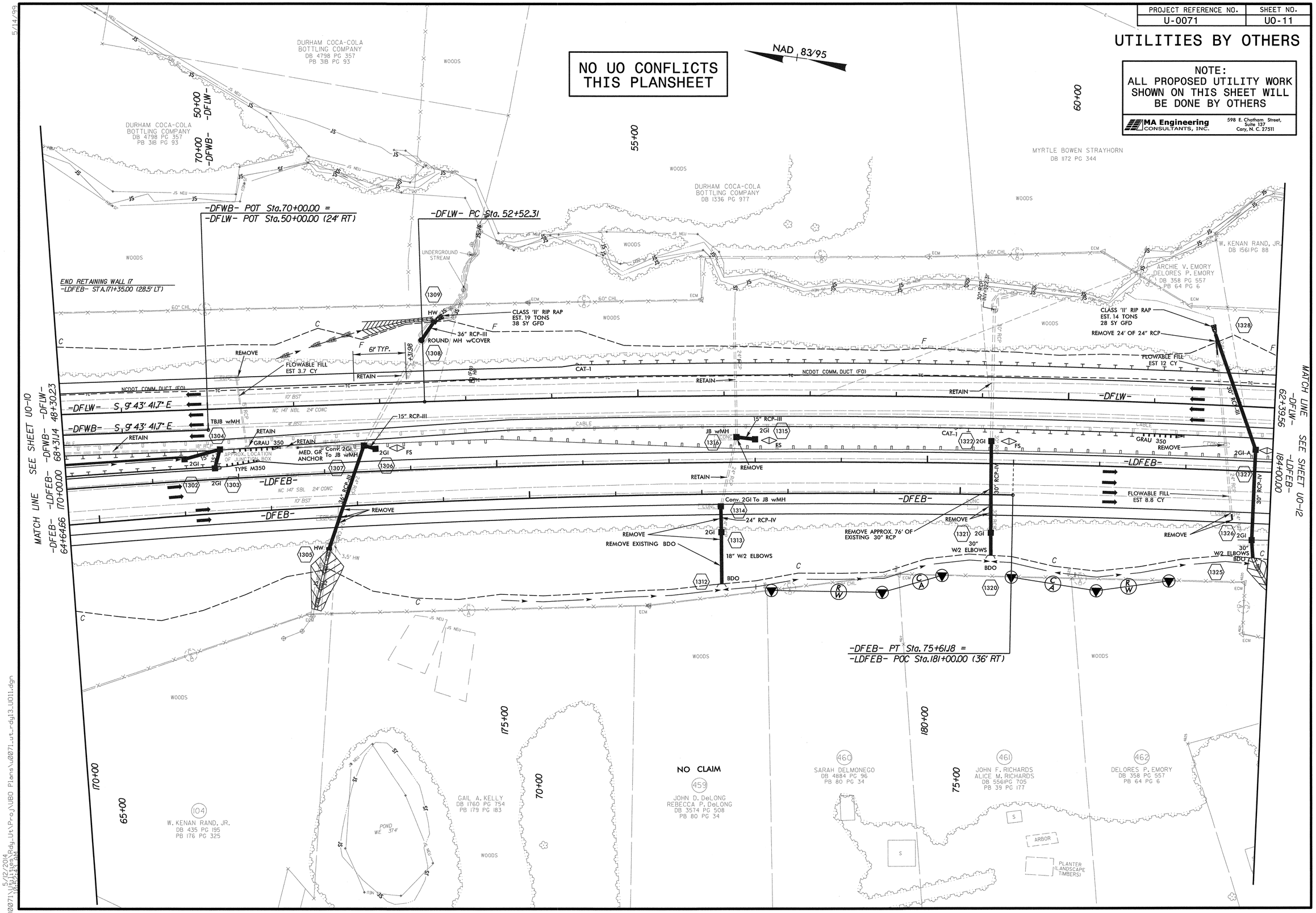

5/14/99

5/12/2014 10:42:43 AM
8\U0071\Utilities\Rdy_Ut\Proj\UBO Plans\u0071_ut_rdy13_U011.dgn

PROJECT REFERENCE NO.	SHEET NO.
U-0071	U0-12

UTILITIES BY OTHERS

NOTE:
ALL PROPOSED UTILITY WORK SHOWN ON THIS SHEET WILL BE DONE BY OTHERS

MA Engineering CONSULTANTS, INC.
598 E. Chatham Street, Suite 137
Cary, N. C. 27511

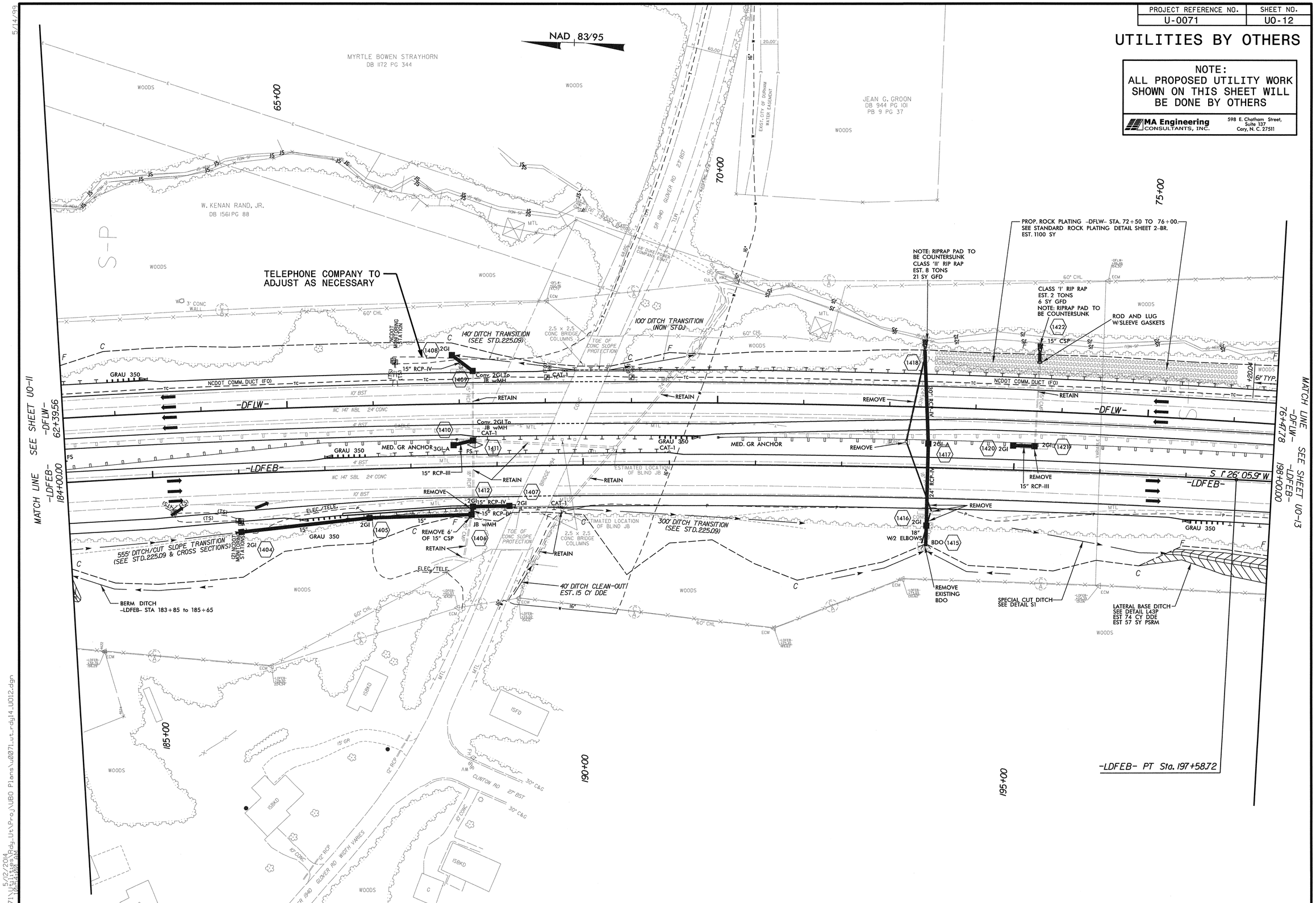

5/14/99

5/12/2014
10:24:00 AM
8\U0071\Utilities\Rdy_Ut\Proj\UBO Plans\u0071_ut_rdy14_U012.dgn

PROJECT REFERENCE NO.	SHEET NO.
U-0071	U0-13

UTILITIES BY OTHERS

NOTE:
ALL PROPOSED UTILITY WORK SHOWN ON THIS SHEET WILL BE DONE BY OTHERS

MA Engineering CONSULTANTS, INC.
598 E. Chatham Street, Suite 137
Cary, N. C. 27511

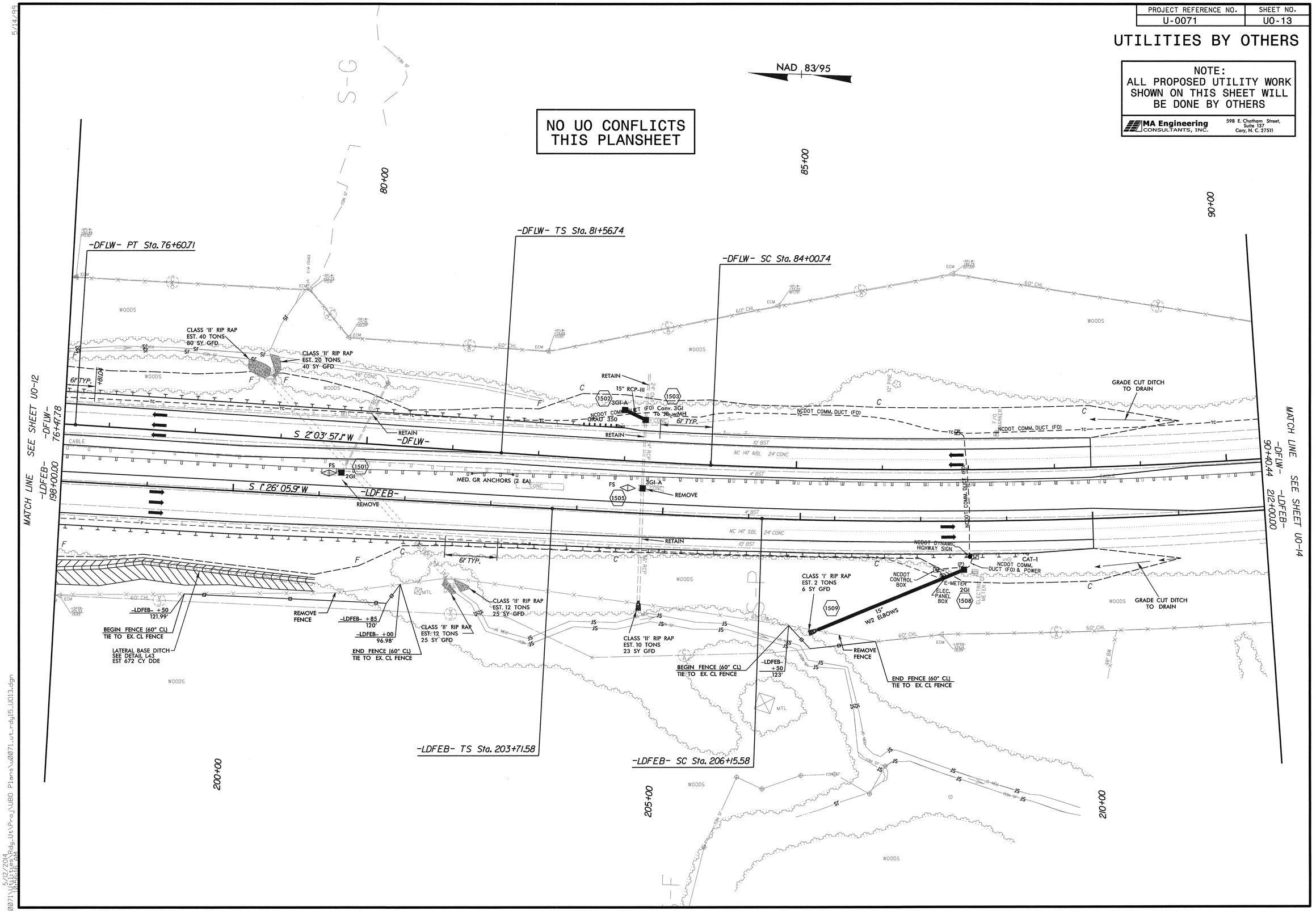

5/14/99

8\U0071\Utilities\Rdy_Ut\Proj\UBO Plans\U0071_ut_rdy15_U013.dgn
5/12/2014
10:26:16 AM

PROJECT REFERENCE NO.	SHEET NO.
U-0071	U0-14

UTILITIES BY OTHERS

NOTE:
ALL PROPOSED UTILITY WORK SHOWN ON THIS SHEET WILL BE DONE BY OTHERS

MA Engineering CONSULTANTS, INC.
598 E. Chatham Street, Suite 137
Cary, N. C. 27511

NAD 83/95

NO UO CONFLICTS THIS PLANSHEET

END T.I.P. PROJECT U-0071
-LDFEB- POC 219+89.32 =
-DFLW- POC 98+21.53

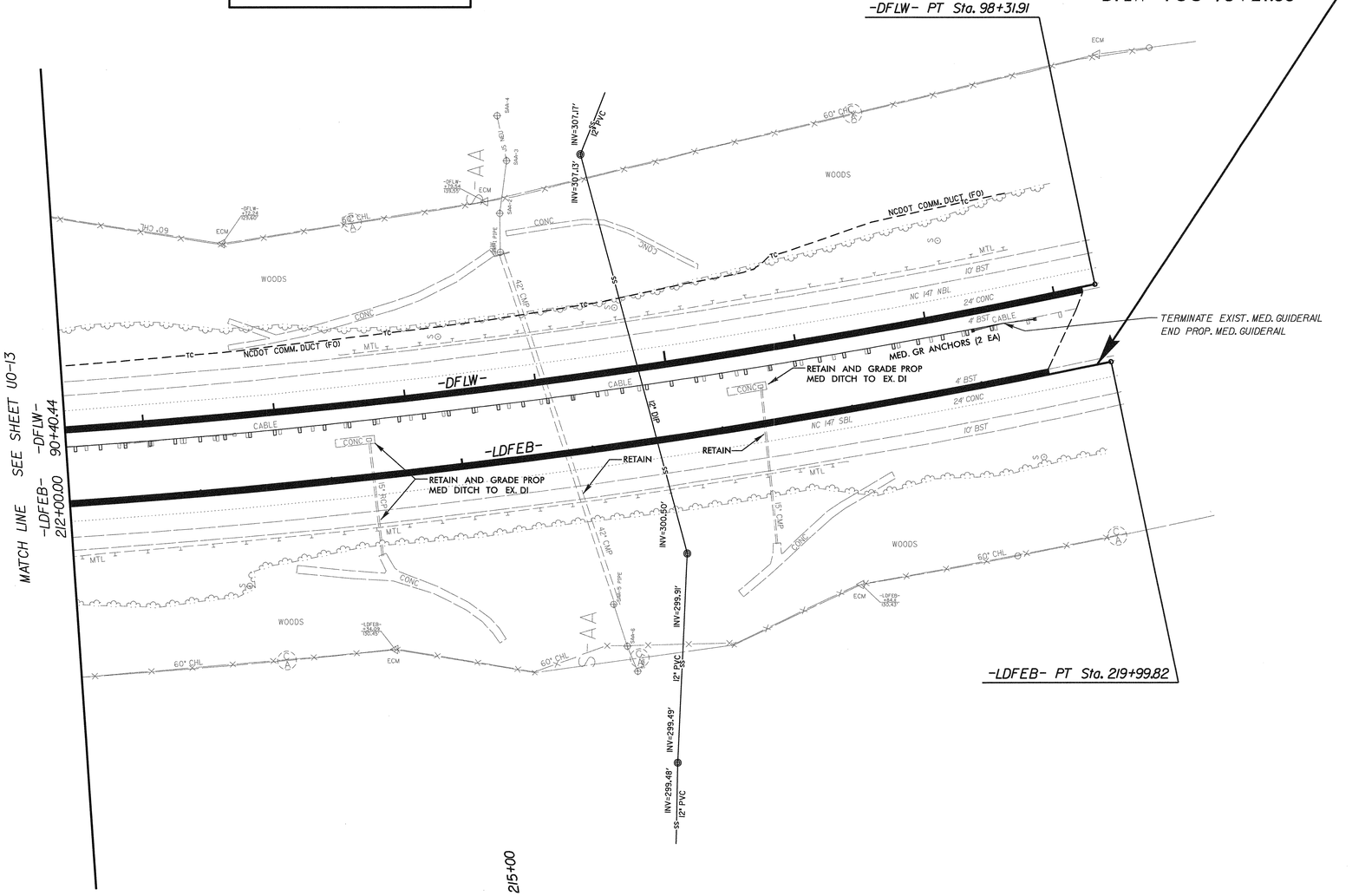

5/14/99
8\U0071\Utilities\Rdy_Ut\Proj\UBO Plans\u0071_ut_rdy16_U014.dgn
5/12/2014
10:18:12 AM

PROJECT REFERENCE NO.	SHEET NO.
U-0071	U0-15

UTILITIES BY OTHERS

NOTE:
ALL PROPOSED UTILITY WORK SHOWN ON THIS SHEET WILL BE DONE BY OTHERS

MA Engineering CONSULTANTS, INC.
598 E. Chatham Street, Suite 137
Cary, N. C. 27511

NO UO CONFICTS THIS PLANSHEET

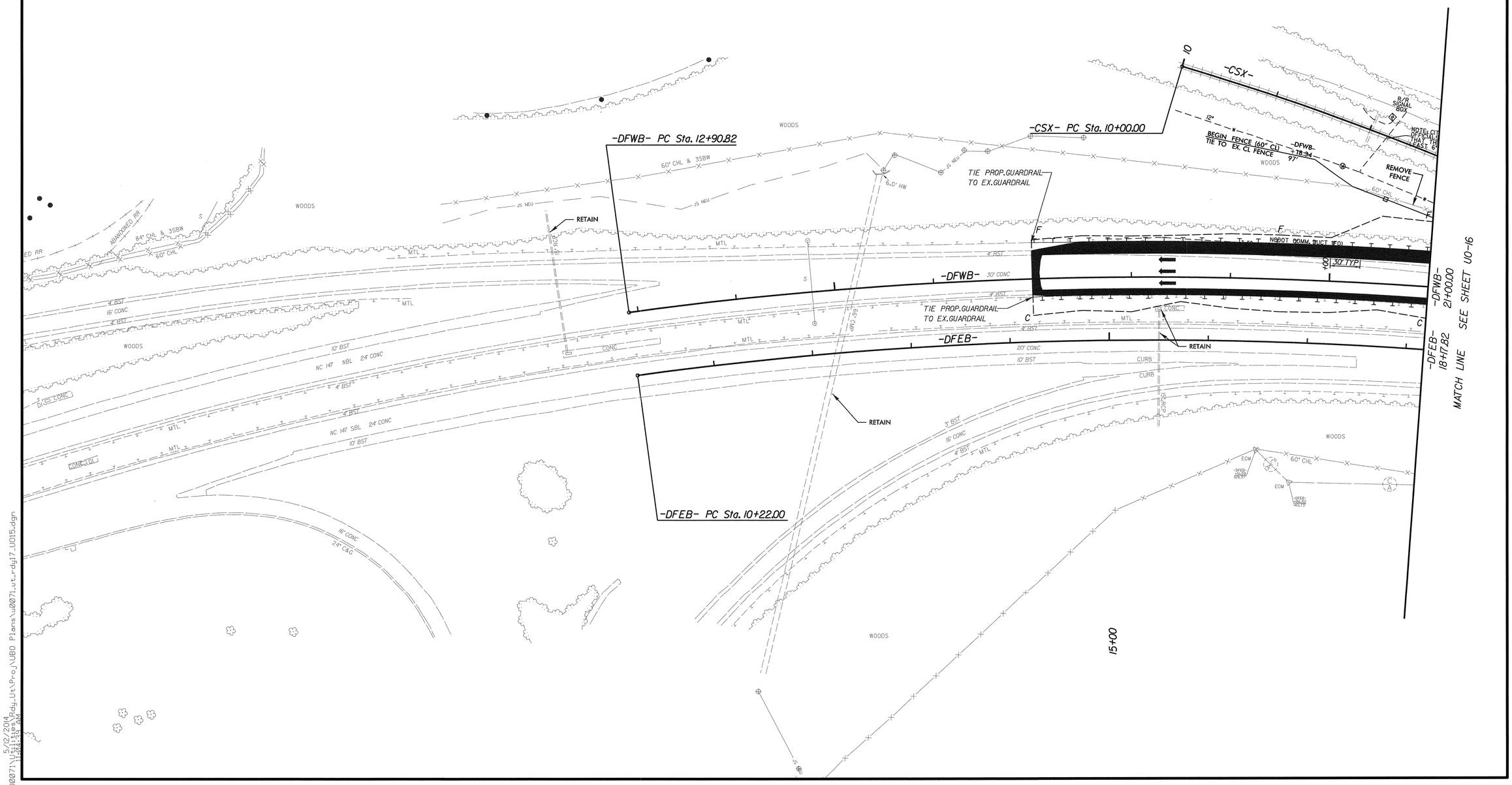

5/14/99

5/12/2014
1:44:19 AM
8\U0071\Utilities\Rdy_Ut\Proj\U00 Plans\U0071_ut_rdy17_U015.dgn

PROJECT REFERENCE NO.	SHEET NO.
U-0071	U0-16

UTILITIES BY OTHERS

NOTE:
ALL PROPOSED UTILITY WORK SHOWN ON THIS SHEET WILL BE DONE BY OTHERS

MA Engineering CONSULTANTS, INC.
598 E. Chatham Street, Suite 137
Cary, N. C. 27511

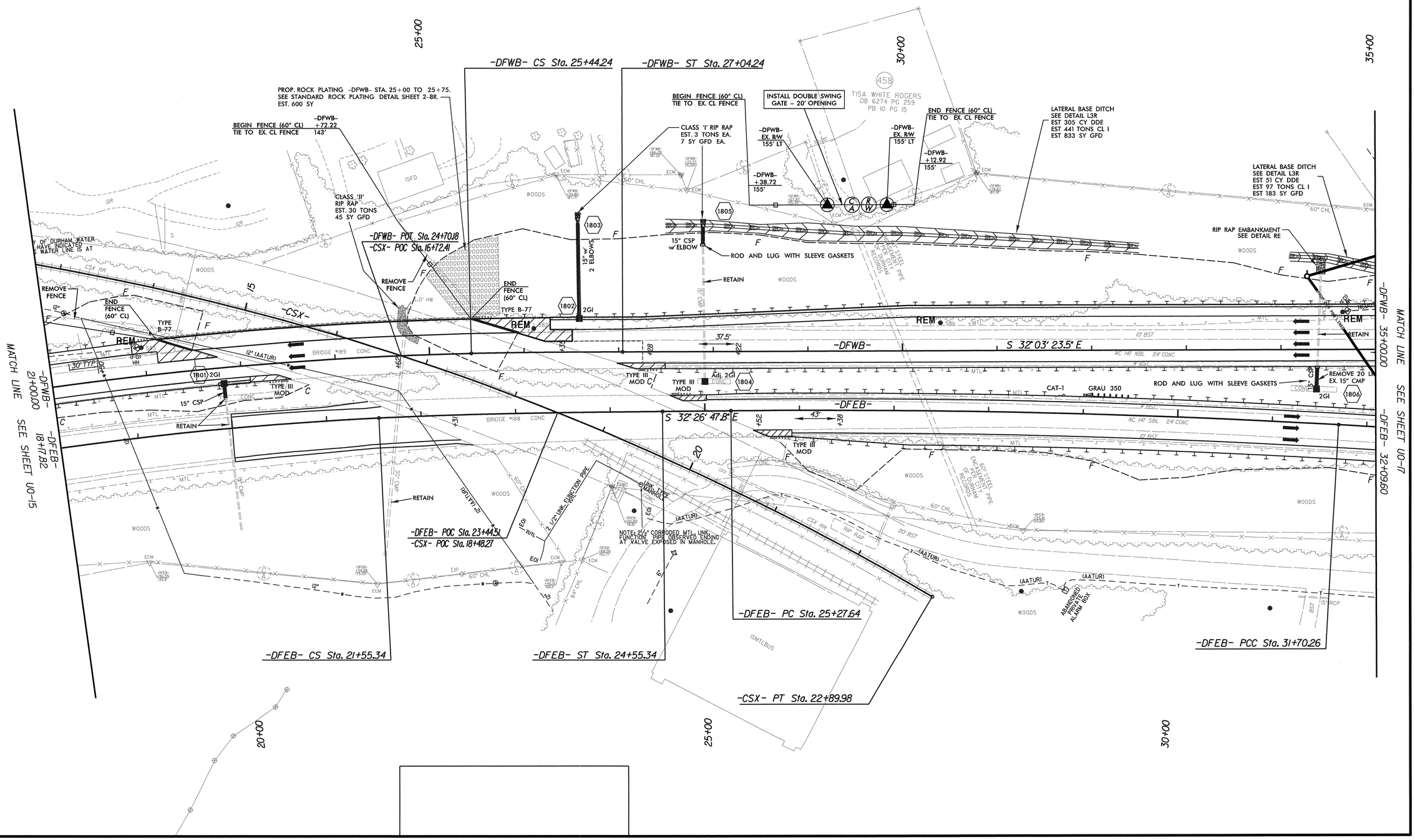

5/14/99

5/12/2014
8:\U0071\U0071_Rdy_Ut\Proj\UB0 Plans\u0071_ut_rdy18_U016.dgn

PROJECT REFERENCE NO.	SHEET NO.
U-0071	U0-17

UTILITIES BY OTHERS

NOTE:
ALL PROPOSED UTILITY WORK SHOWN ON THIS SHEET WILL BE DONE BY OTHERS

MA Engineering CONSULTANTS, INC.
598 E. Chatham Street, Suite 137
Cary, N. C. 27511

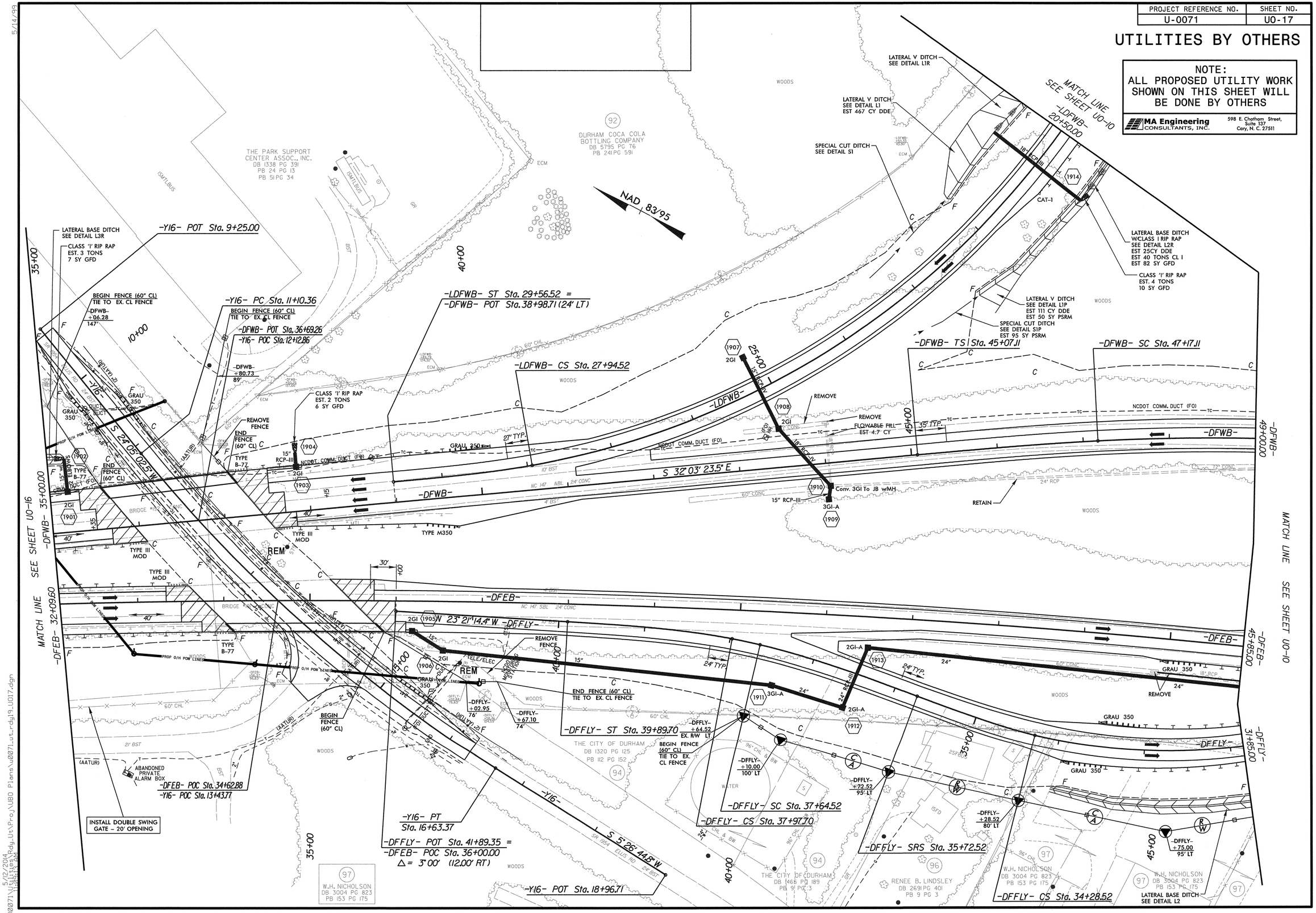

5/14/99

5/12/2014 11:28:15 AM
8:\U0071\Utilities\Rdy_Ut\Proj\U80 Plans\U0071_ut_rdy19_U017.dgn

PROJECT REFERENCE NO.	SHEET NO.
U-0071	U0-18

UTILITIES BY OTHERS

NOTE:
ALL PROPOSED UTILITY WORK SHOWN ON THIS SHEET WILL BE DONE BY OTHERS

MA Engineering CONSULTANTS, INC.
598 E. Chatham Street, Suite 137
Cary, N. C. 27511

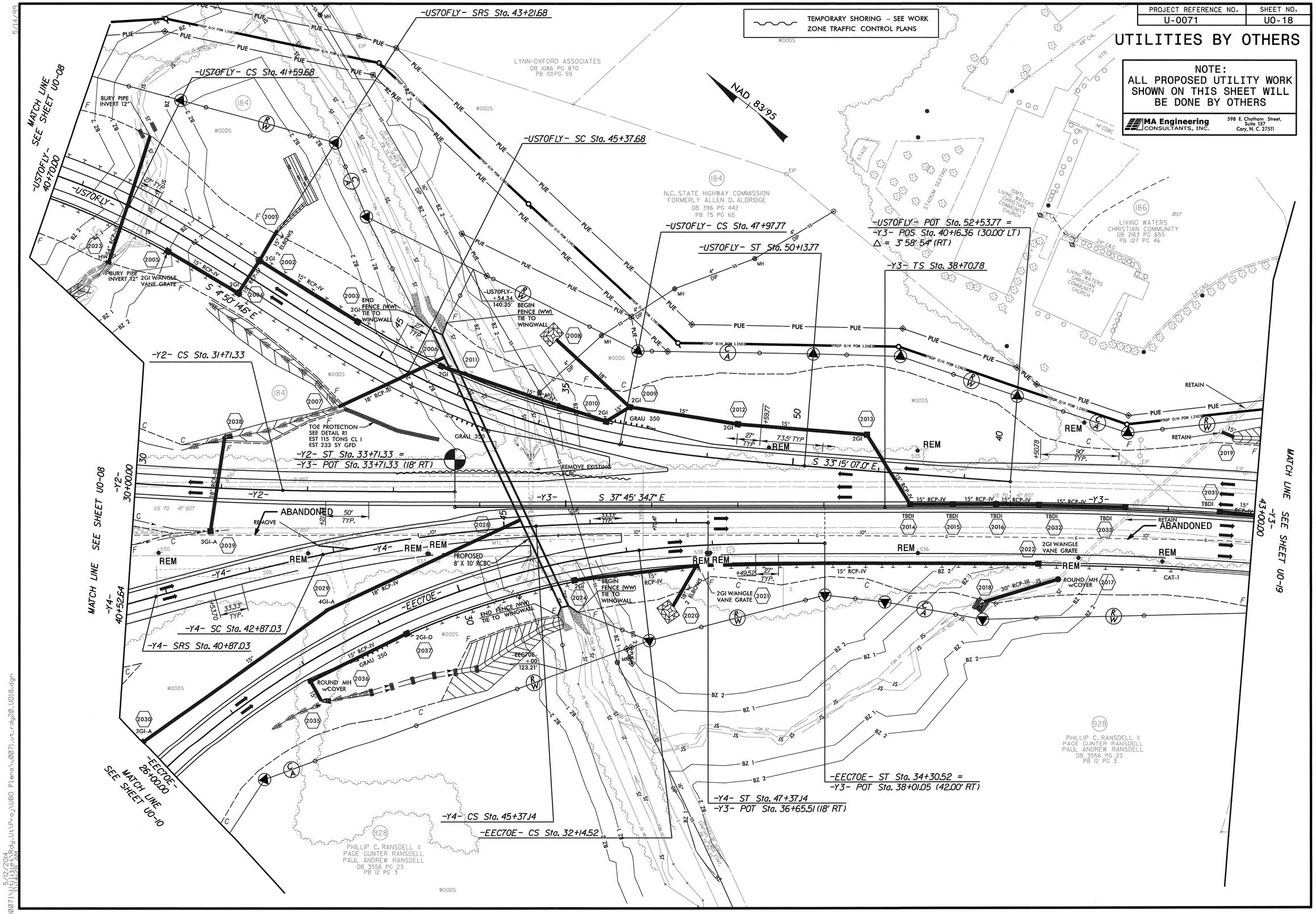

5/14/99

5/12/2014 11:14:28 AM

PROJECT REFERENCE NO.	SHEET NO.
U-0071	U0-19

UTILITIES BY OTHERS

NOTE:
ALL PROPOSED UTILITY WORK SHOWN ON THIS SHEET WILL BE DONE BY OTHERS

MA Engineering CONSULTANTS, INC.
598 E. Chatham Street, Suite 137
Cary, N. C. 27511

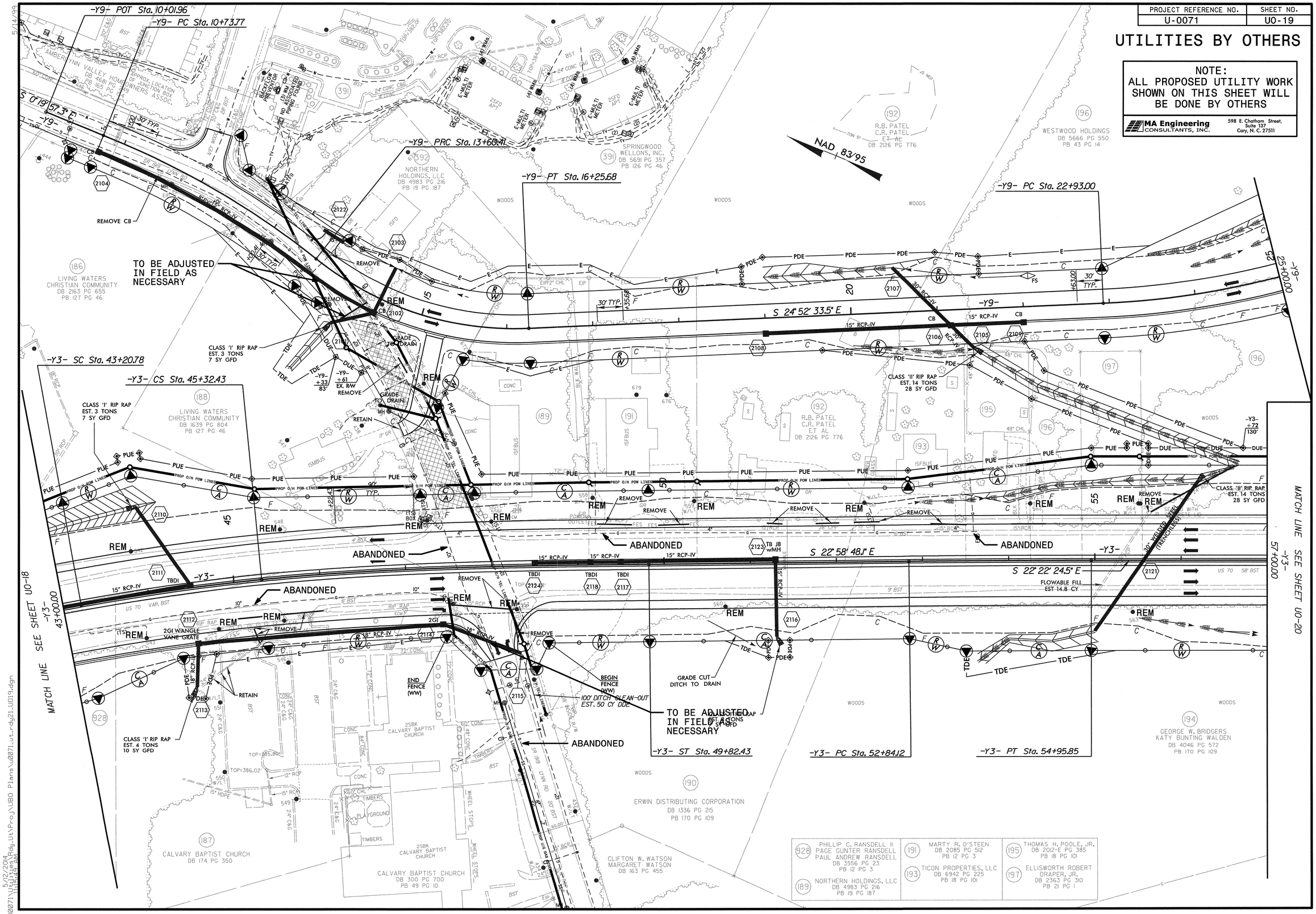

5/14/99

5/12/2014 11:16:49 AM
8:\U0071\Utilities\Rdy_Ut\Proj\UBO Plans\u0071_ut_rdy21_U019.dgn

PROJECT REFERENCE NO.	SHEET NO.
U-0071	U0-20

UTILITIES BY OTHERS

NOTE:
ALL PROPOSED UTILITY WORK SHOWN ON THIS SHEET WILL BE DONE BY OTHERS

MA Engineering CONSULTANTS, INC.
598 E. Chatham Street, Suite 137
Cary, N. C. 27511

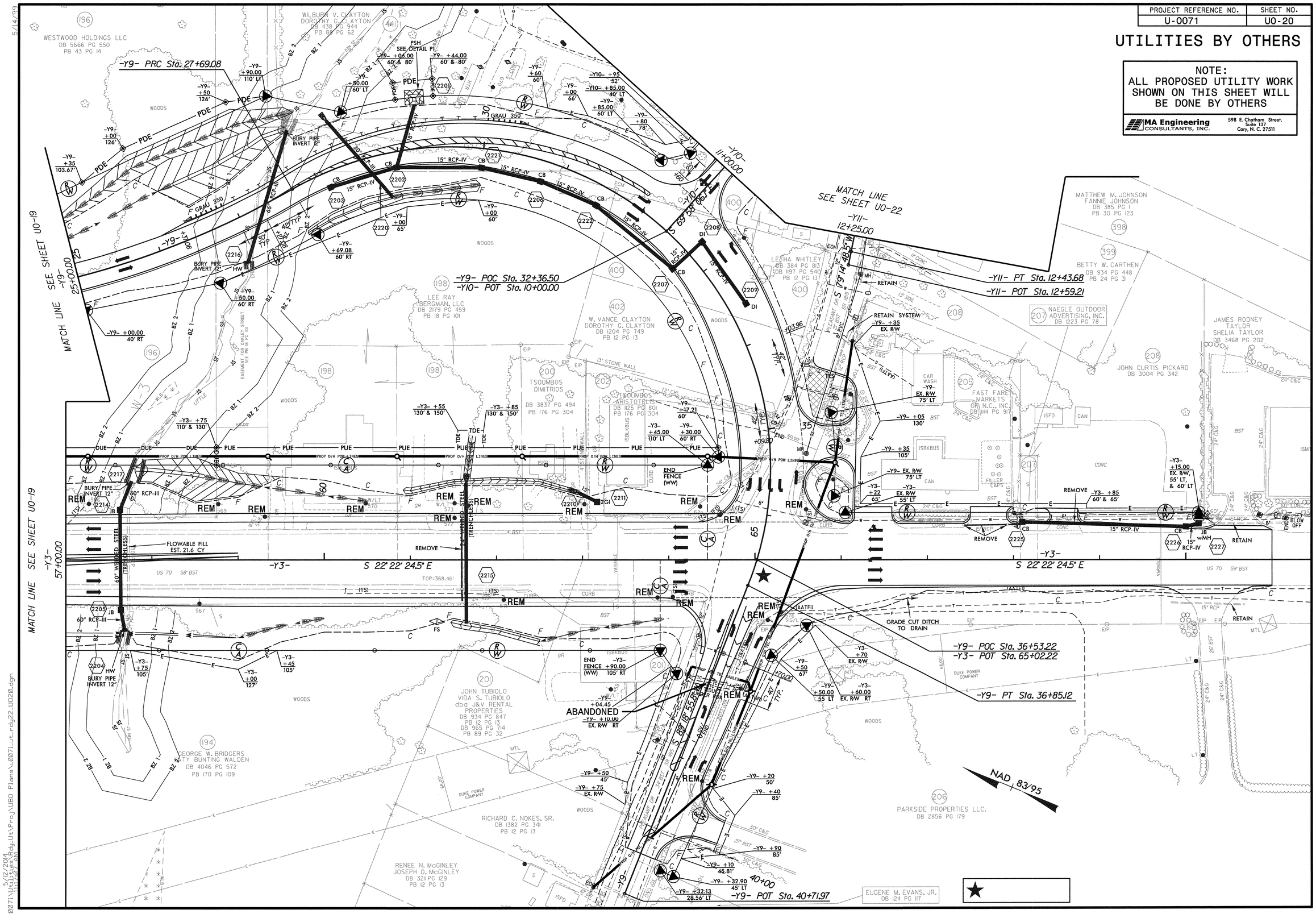

5/14/99

5/12/2014
3:\U0071\Utilities\Rdy_Ut\Proj\UBO Plans\u0071_ut_rdy22_U020.dgn
11:12:07 AM

PROJECT REFERENCE NO.	SHEET NO.
U-0071	U0-21

UTILITIES BY OTHERS

NOTE:
ALL PROPOSED UTILITY WORK SHOWN ON THIS SHEET WILL BE DONE BY OTHERS

MA Engineering CONSULTANTS, INC.
598 E. Chatham Street, Suite 137
Cary, N. C. 27511

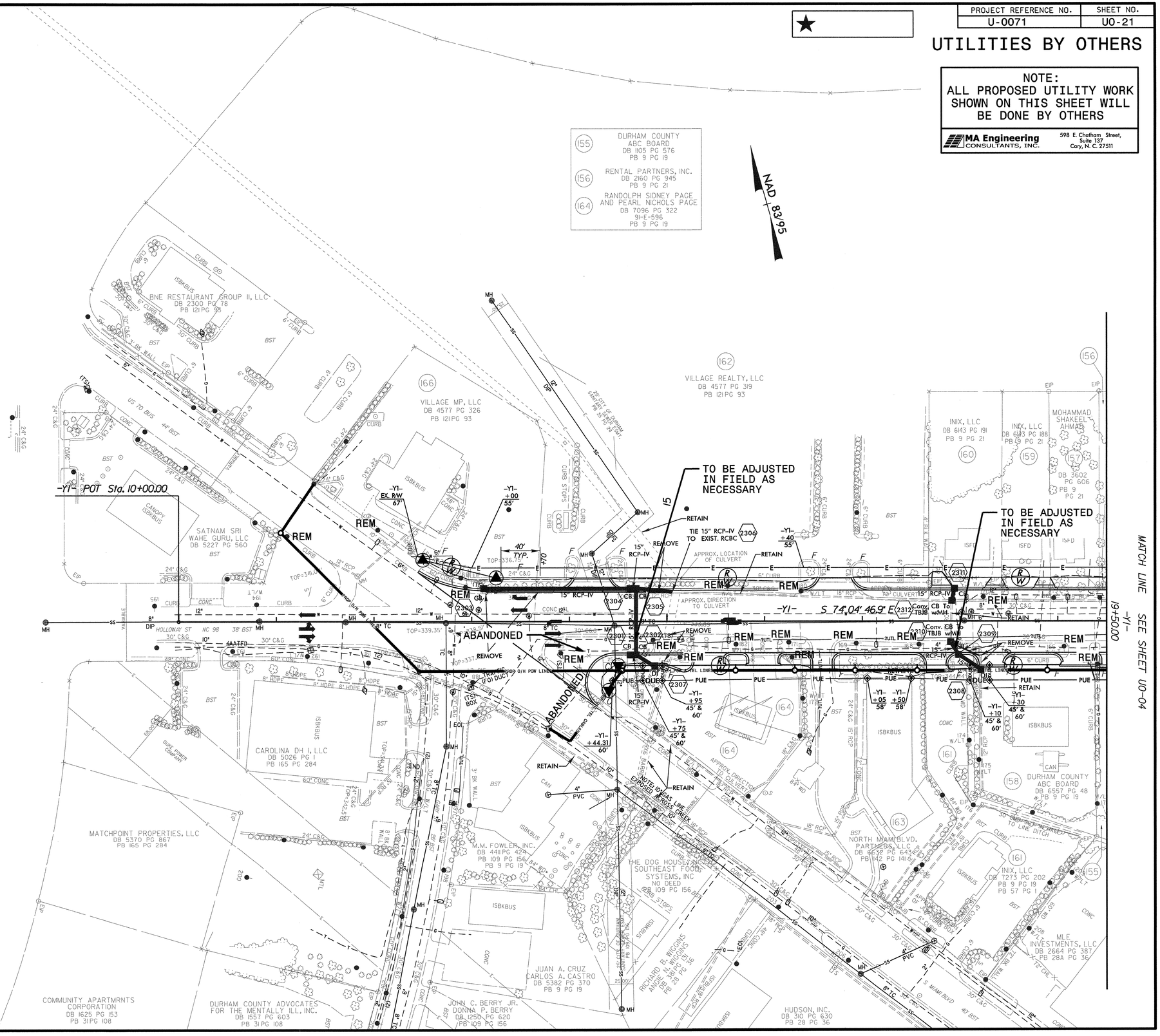

5/14/99

8\U0071\U0071_Utilities\Rdy_Ut\Proj\UBO Plans\0071_ut_rdy23_U021.dgn
5/12/2014
11:18:13 AM

PROJECT REFERENCE NO.	SHEET NO.
U-0071	U0-22

UTILITIES BY OTHERS

NOTE:
ALL PROPOSED UTILITY WORK SHOWN ON THIS SHEET WILL BE DONE BY OTHERS

MA Engineering CONSULTANTS, INC.
598 E. Chatham Street, Suite 137
Cary, N. C. 27511

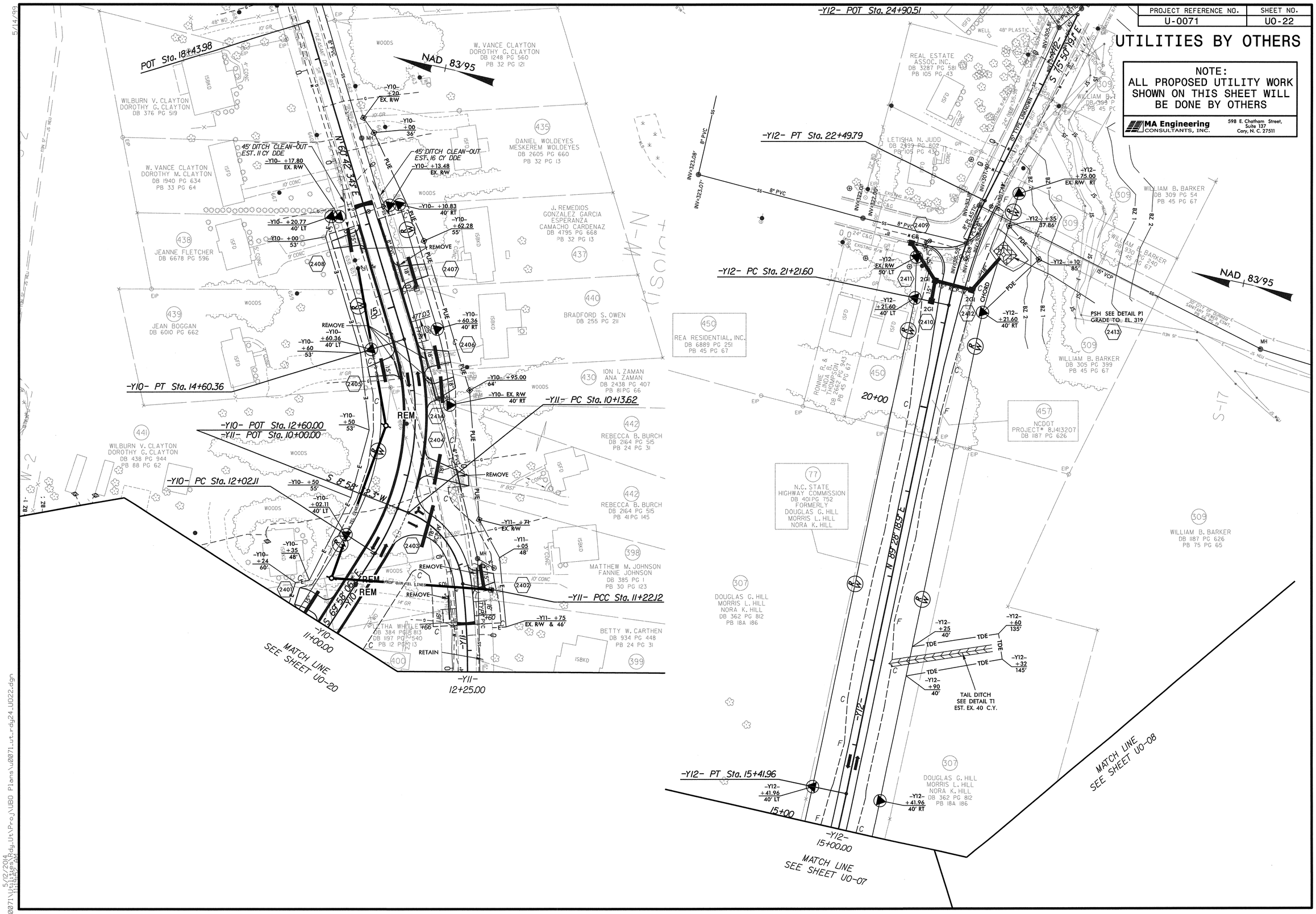

5/14/99

5/12/2014
11:45:35 AM
U0071\U0071_Utilities_Rdy_Ut\Proj\UBO Plans\U0071_ut_rdy24_U022.dgn

PROJECT REFERENCE NO.	SHEET NO.
U-0071	U0-23

UTILITIES BY OTHERS

NOTE:
ALL PROPOSED UTILITY WORK SHOWN ON THIS SHEET WILL BE DONE BY OTHERS

MA Engineering CONSULTANTS, INC.
598 E. Chatham Street, Suite 137
Cary, N. C. 27511

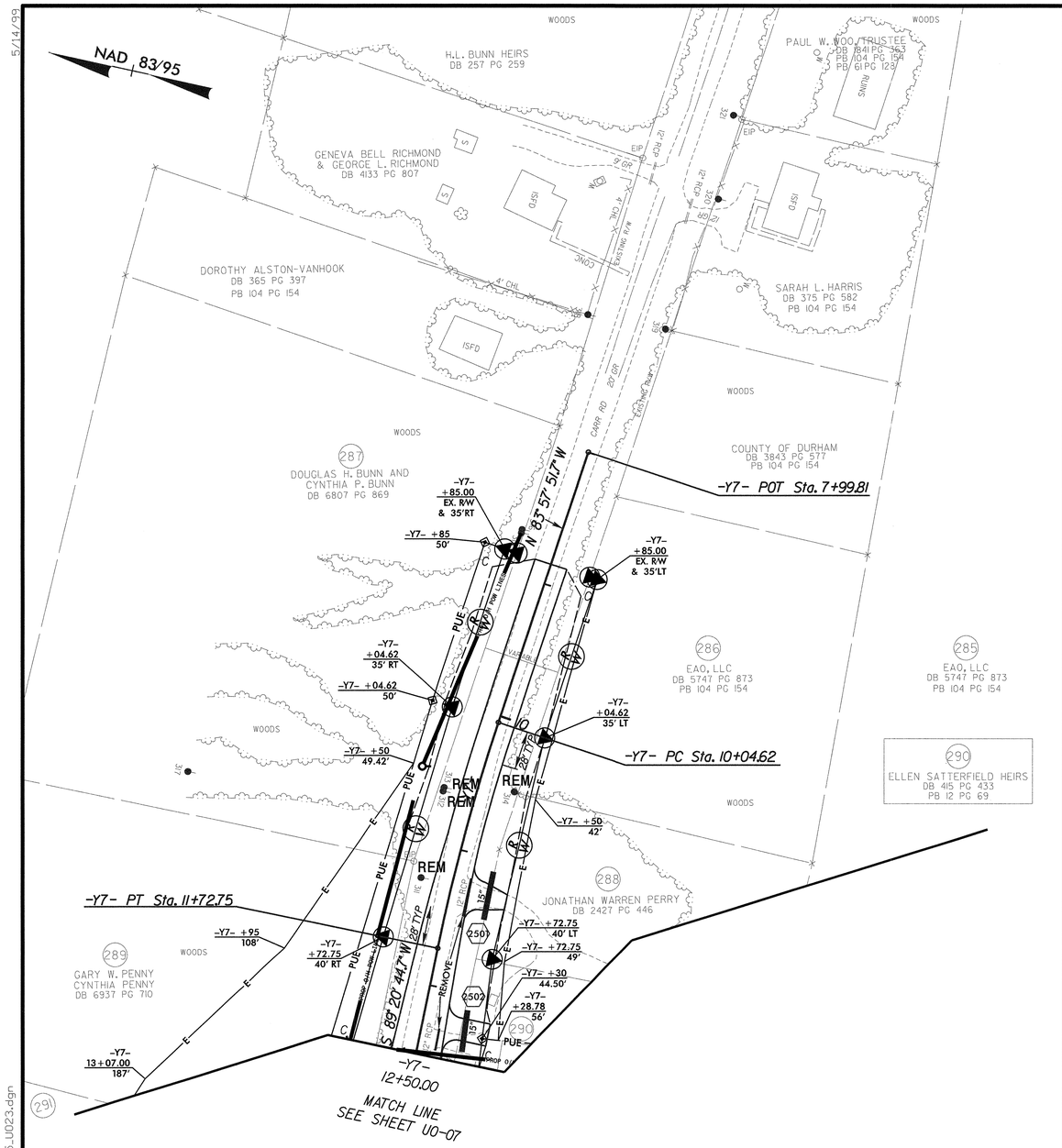

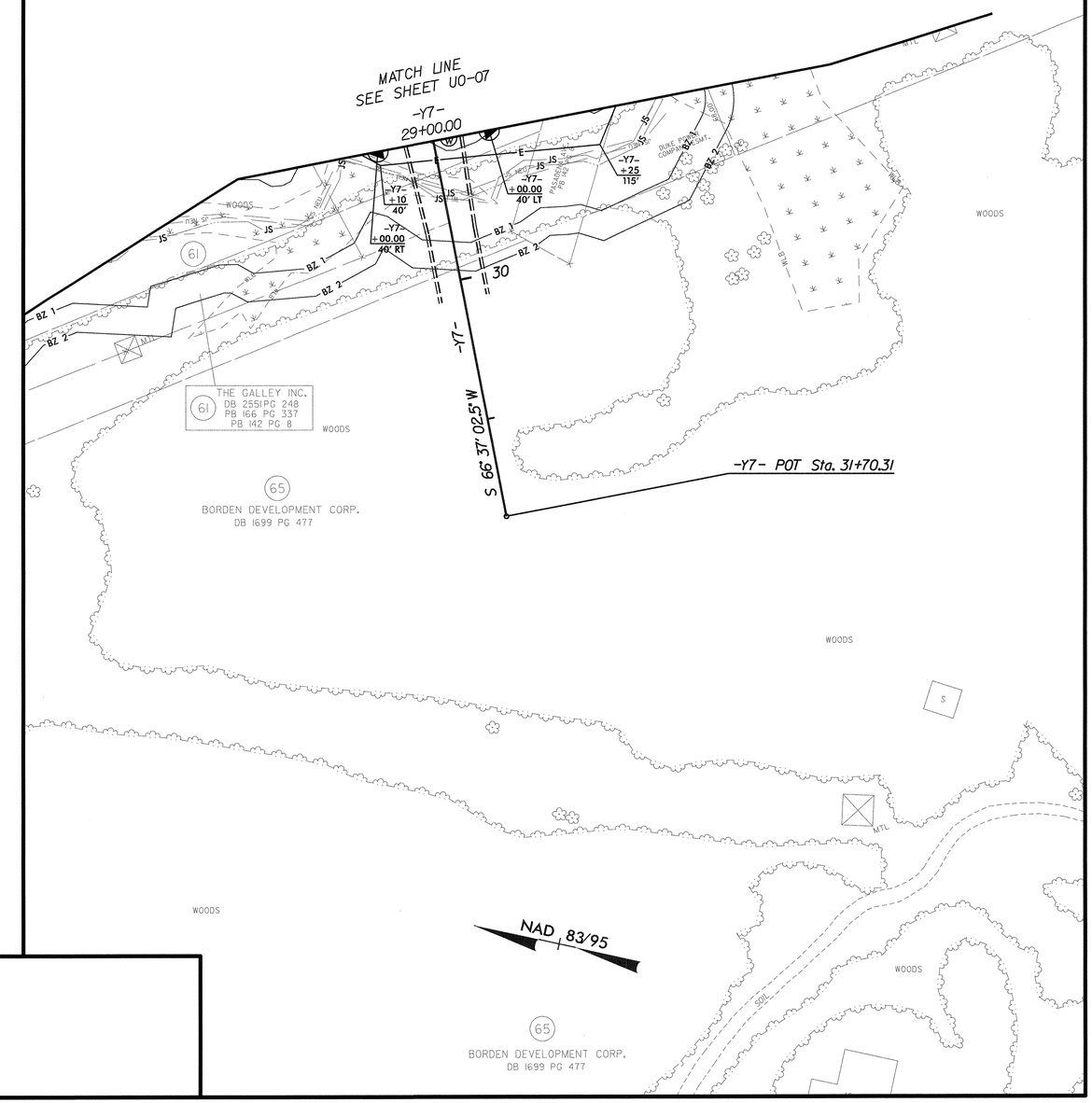

5/14/99
5/12/2014
3\U0071\Utilities\Rdy_Ut\Proj\UB0 Plans\u0071_ut_rdy25_U023.dgn
11:21:13 AM