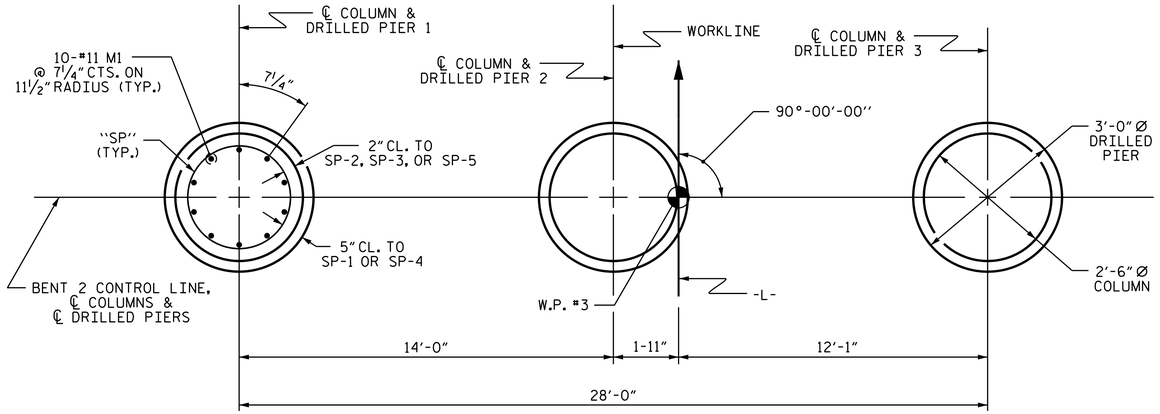

PLAN OF DRILLED PIERS & COLUMNS

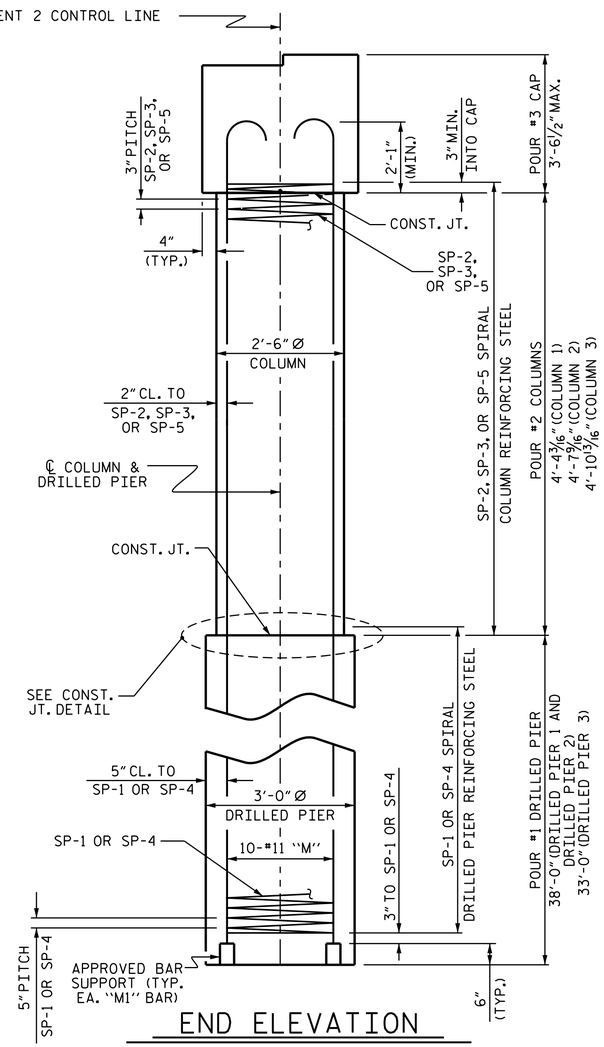

END ELEVATION

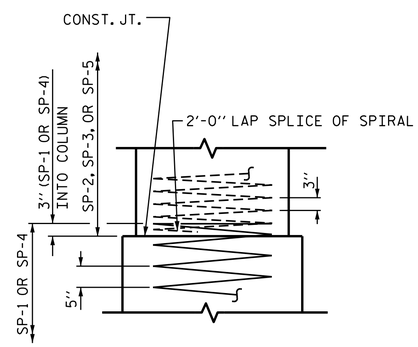

CONSTRUCTION JOINT DETAIL

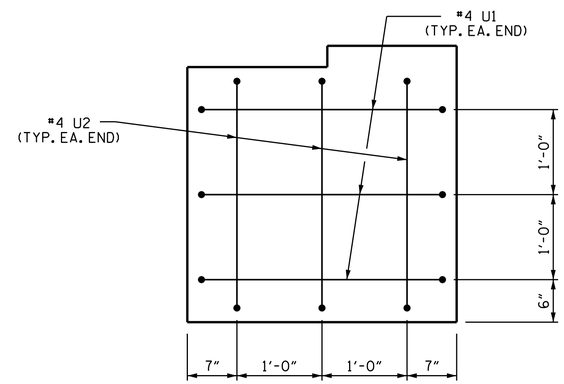

END OF CAP VIEW

(TYPICAL BOTH ENDS)

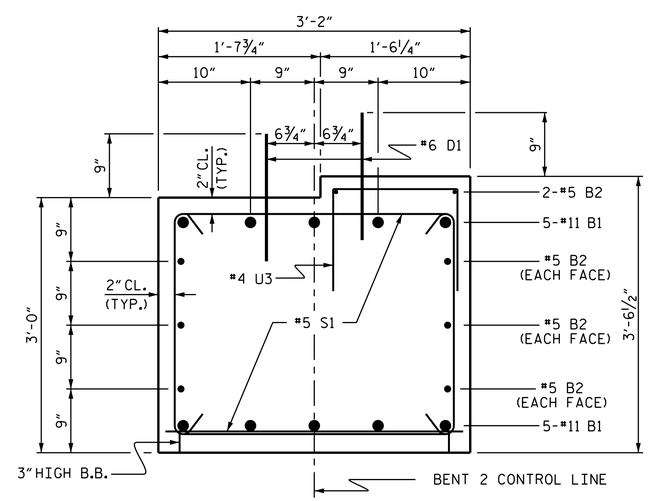

SECTION THRU CAP

BAR TYPES

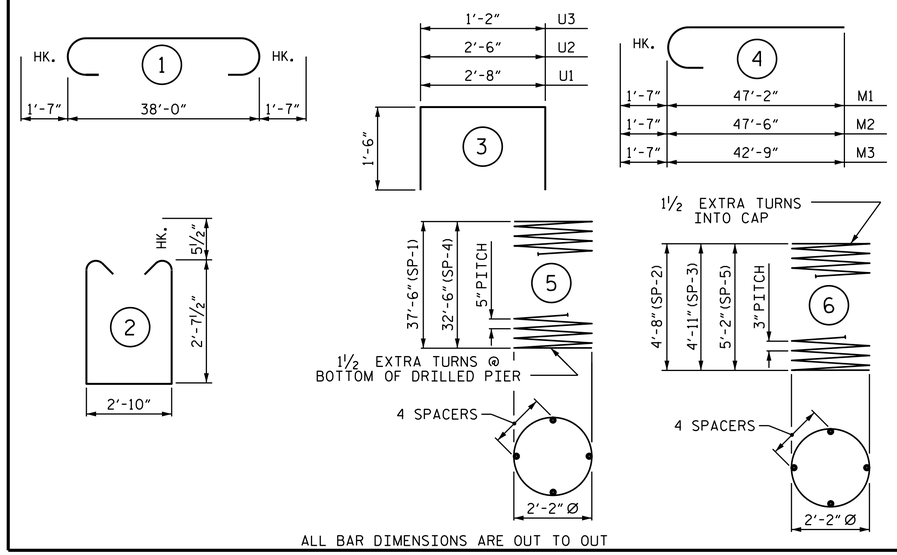

ALL BAR DIMENSIONS ARE OUT TO OUT

BILL OF MATERIAL

FOR ONE BENT

BAR	NO.	SIZE	TYPE	LENGTH	WEIGHT
B1	10	#11	1	41'-2"	2187
B2	8	#5	STR	38'-2"	318
D1	48	#6	STR	1'-6"	108
M1	10	#11	4	48'-9"	2590
M2	10	#11	4	49'-1"	2608
M3	10	#11	4	44'-4"	2355
S1	68	#5	2	9'-0"	638
U1	6	#4	3	5'-8"	23
U2	6	#4	3	5'-6"	22
U3	38	#4	3	4'-2"	106

REINFORCING STEEL (FOR ONE BENT) 10955

SP-1	2	*	5	612'-5"	1278
SP-2	1	**	6	133'-8"	89
SP-3	1	**	6	147'-0"	98
SP-4	1	*	5	532'-6"	555
SP-5	1	**	6	153'-8"	103

SPIRAL COLUMN REINFORCING STEEL (FOR ONE BENT) 2123 LBS.

* THE SP-1 AND SP-4 SPIRAL REINFORCING STEEL SHALL BE W31 OR D-31 COLD DRAWN WIRE OR #5 PLAIN OR DEFORMED BAR

** THE SP-2, SP-3, AND SP-5 SPIRAL REINFORCING STEEL SHALL BE W20 OR D-20 COLD DRAWN WIRE OR #4 PLAIN OR DEFORMED BAR

CLASS A CONCRETE BREAKDOWN (FOR ONE BENT)

POUR #2 (COLUMNS)	2.5 C.Y.
POUR #3 (CAP)	14.7 C.Y.
TOTAL CLASS A CONCRETE	17.2 C.Y.

DRILLED PIERS: (FOR ONE BENT)

DRILLED PIER CONCRETE POUR #1 (DRILLED PIERS)	28.5 C.Y.
3'-0" Ø DRILLED PIER	109.0 LIN. FT.
CSL TUBES	454.0 LIN. FT.

PROJECT NO. B-5325

FRANKLIN COUNTY

STATION: 17+86.40 -L-

SHEET 2 OF 2

STATE OF NORTH CAROLINA
DEPARTMENT OF TRANSPORTATION
RALEIGH

SUBSTRUCTURE

BENT 2

NORTH CAROLINA PROFESSIONAL SEAL 29441 ENGINEER KRISTY W. ALFORD

9/18/2014

DocuSigned by: F245838930BF40E...

REVISIONS						
NO.	BY:	DATE:	NO.	BY:	DATE:	
1			3			
2			4			

SHEET NO. S-26

TOTAL SHEETS 28

ASSEMBLED BY :	A.C. OUTLAW	DATE :	2/21/14
CHECKED BY :	F. LEA	DATE :	3/18/14
DRAWN BY :	DGE	03/10	
CHECKED BY :	MKT	03/10	

17-SEP-2014 07:34
R:\Structures\Plans\Substructure\B5325_SD_B*.dgn
jpadams

STD. NO. DP_BT_36_90S_<50'