NOTES

FOR BERM WIDTH DIMENSIONS, SEE GENERAL DRAWING.

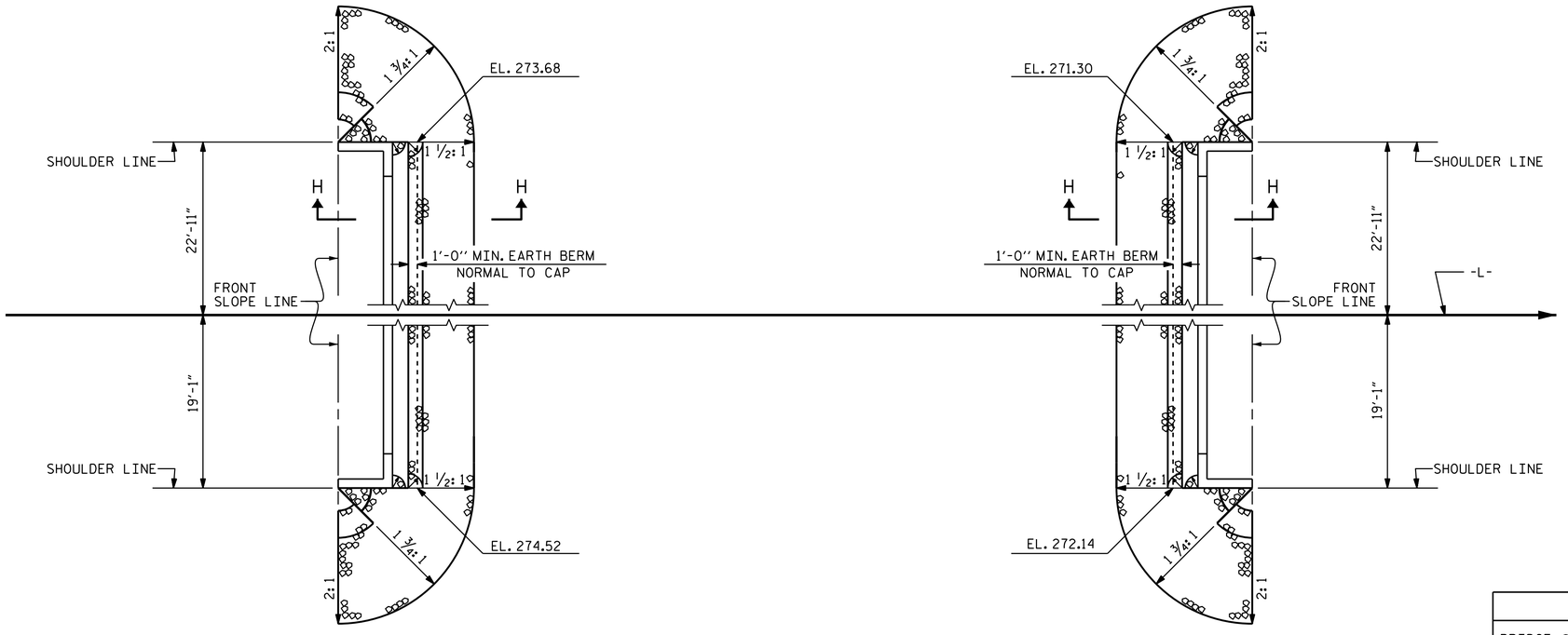

END BENT 1

END BENT 2

PLAN OF RIP RAP

ESTIMATED QUANTITIES		
BRIDGE @ STA. 17+86.40 -L-	RIP RAP CLASS II (2'-0" THICK)	GEOTEXTILE FOR DRAINAGE
	TONS	SQUARE YARDS
END BENT 1	145	165
END BENT 2	125	140

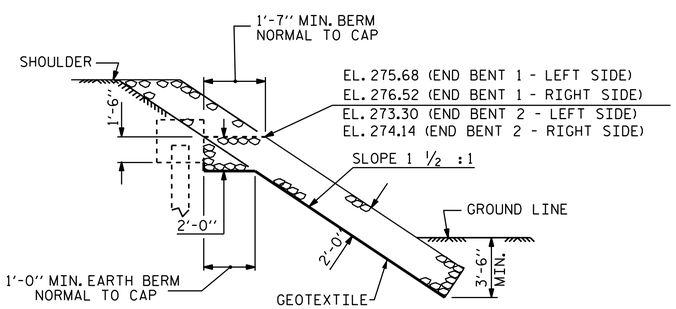

SECTION H-H

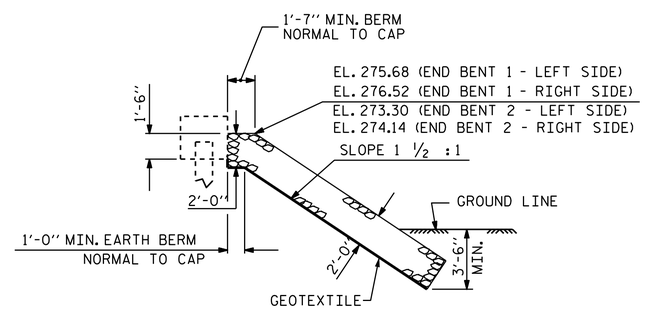

℄ SECTION BERM RIP RAPPED

PROJECT NO. B-5325

FRANKLIN COUNTY

STATION: 17+86.40 -L-

STATE OF NORTH CAROLINA
DEPARTMENT OF TRANSPORTATION
RALEIGH

STANDARD

RIP RAP DETAILS

9/18/2014

NORTH CAROLINA PROFESSIONAL SEAL 29441 ENGINEER KRISTY W. ALCORD

DocuSigned by:

REVISIONS							SHEET NO.
NO.	BY:	DATE:	NO.	BY:	DATE:		S-27
1			3				TOTAL SHEETS
2			4				28

ASSEMBLED BY : A.C. OUTLAW		DATE : 7/25/13	
CHECKED BY : E. I. OMILE		DATE : 8/16/13	
DRAWN BY : FCJ 2/88	REV. 5/1/06R	TLA/GM	
CHECKED BY : ARB 8/88	REV. 10/1/11	MAA/GM	
	REV. 12/21/11	MAA/GM	

17-SEP-2014 07:34
R:\Structures\Plans\Miscellaneous\B5325_SD_RR.dgn
jpadams

STD. NO. RR2