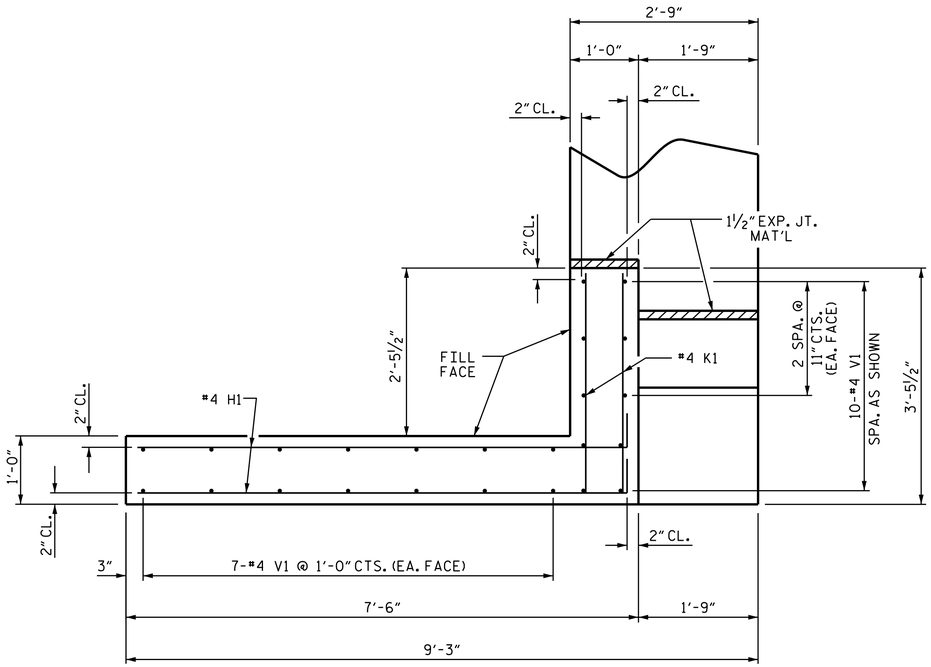

PLAN OF WING (W1)

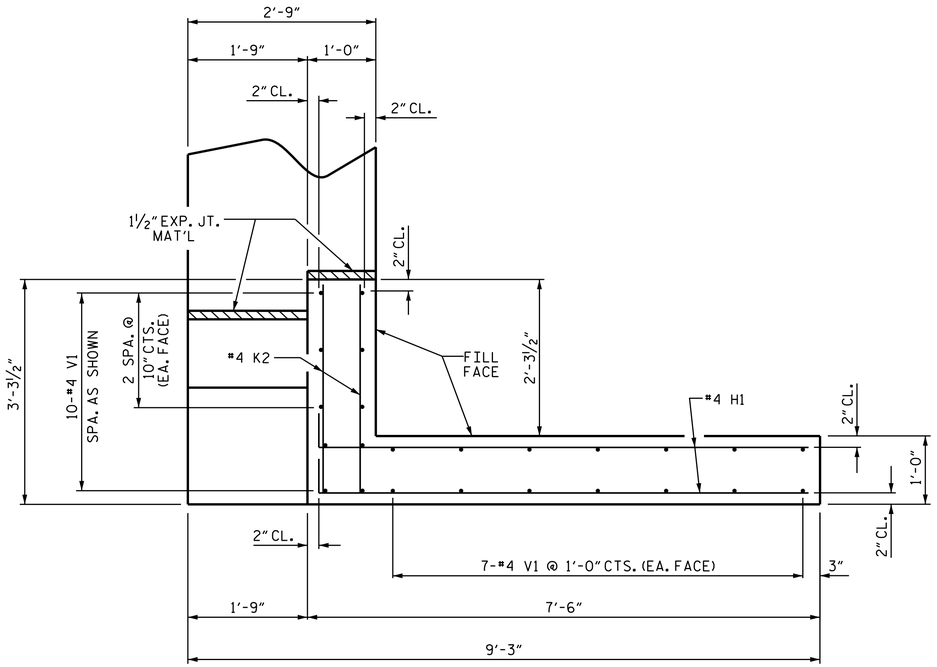

PLAN OF WING (W2)

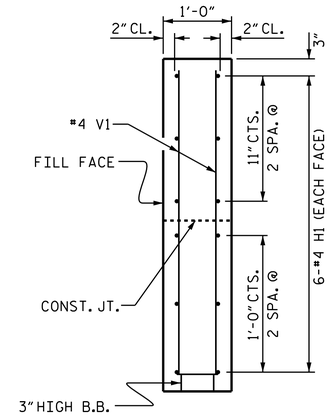

SECTION X-X

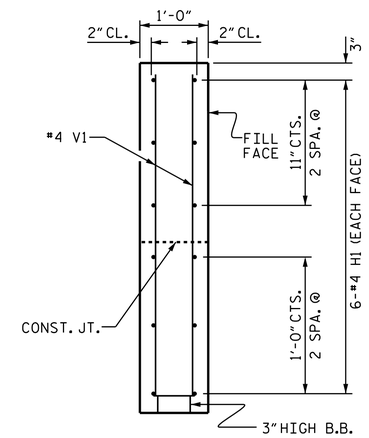

SECTION Y-Y

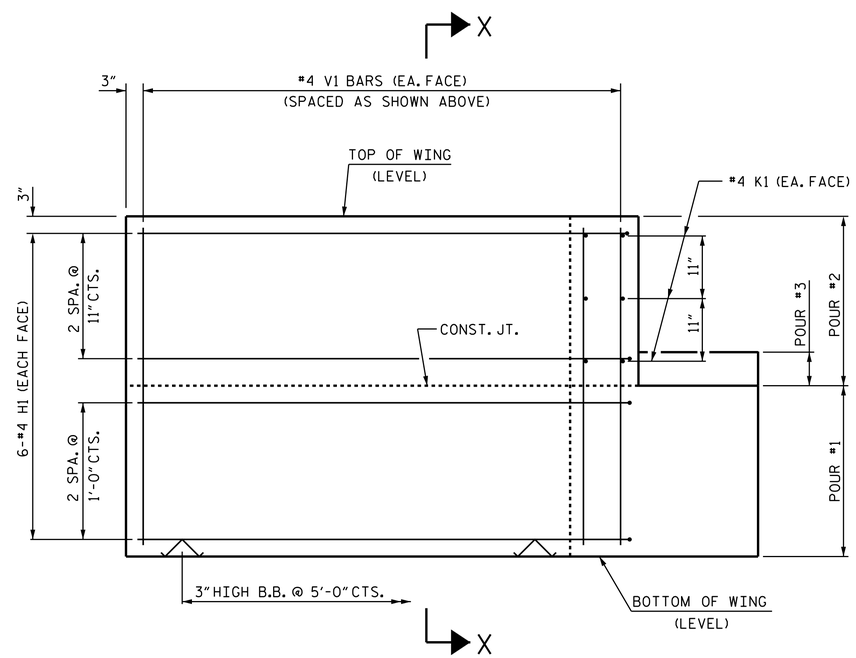

ELEVATION OF WING (W1)

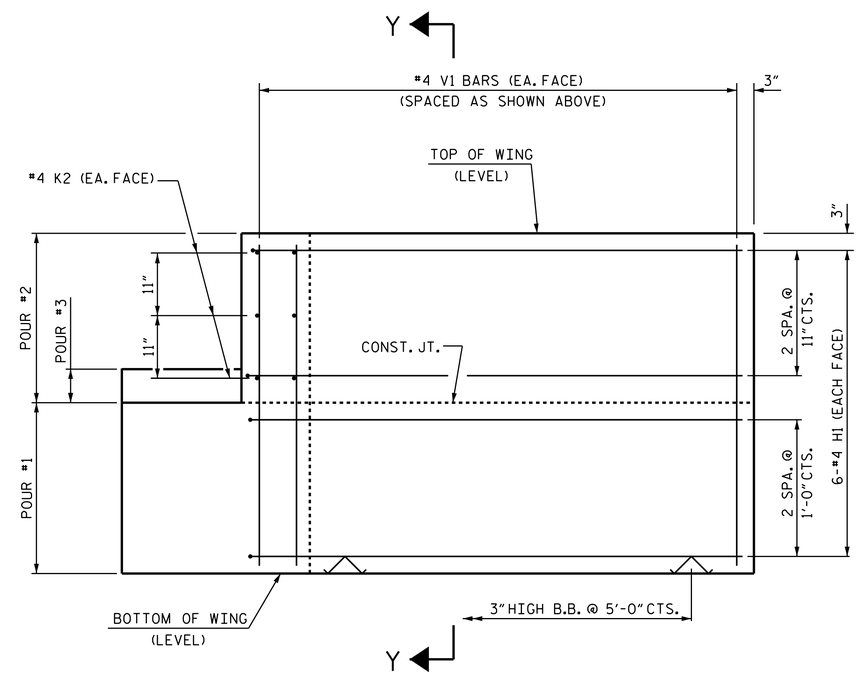

ELEVATION OF WING (W2)

WING DETAILS

PROJECT NO. B-5325

FRANKLIN COUNTY

STATION: 17+86.40 -L-

SHEET 4 OF 5

STATE OF NORTH CAROLINA
DEPARTMENT OF TRANSPORTATION
RALEIGH

SUBSTRUCTURE

END BENT 2
WING DETAILS

9/18/2014

NORTH CAROLINA PROFESSIONAL SEAL 29441 ENGINEER KRISTY W. ALFORD

DocuSigned by:
F2458389300BF40E...

REVISIONS						SHEET NO.
NO.	BY:	DATE:	NO.	BY:	DATE:	S-21
1			3			TOTAL SHEETS
2			4			28

ASSEMBLED BY :	A.C. OUTLAW	DATE :	7/25/13
CHECKED BY :	E. I. OMILE	DATE :	8/16/13
DRAWN BY :	DGE	02/10	
CHECKED BY :	MKT	02/10	

17-SEP-2014 07:34
R:\Structures\Plans\Substructure\B5325_SD_E*.dgn
jpadams

STD. NO. EB_36_90S