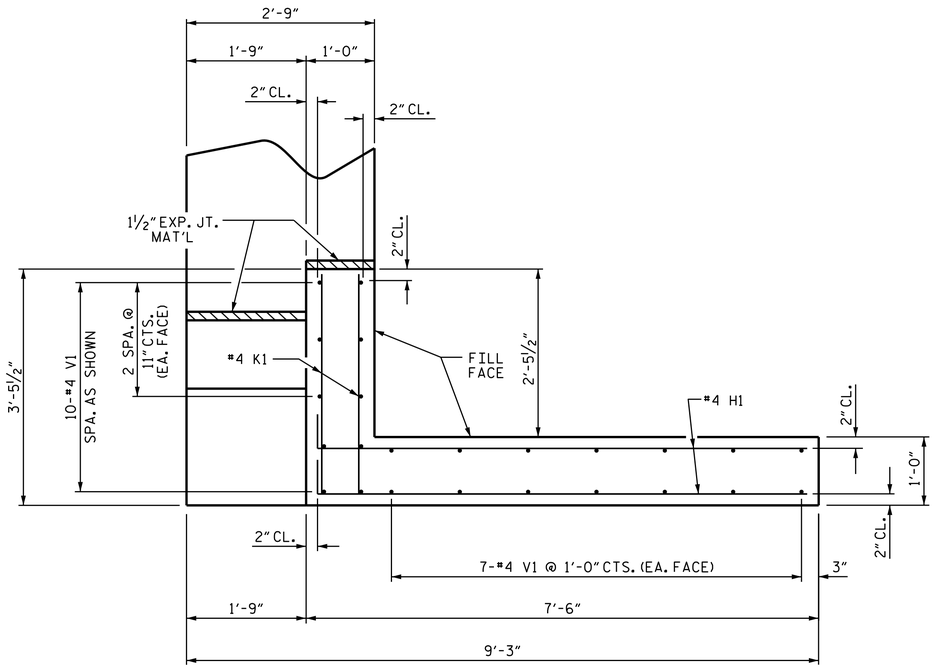

PLAN OF WING (W1)

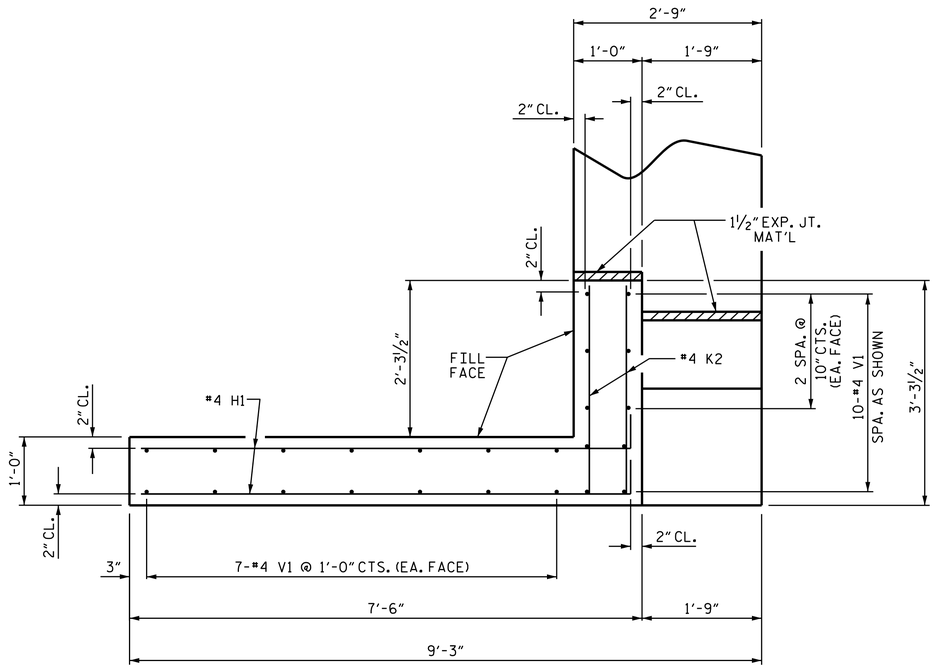

PLAN OF WING (W2)

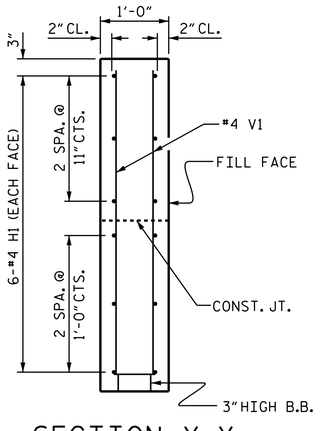

SECTION X-X

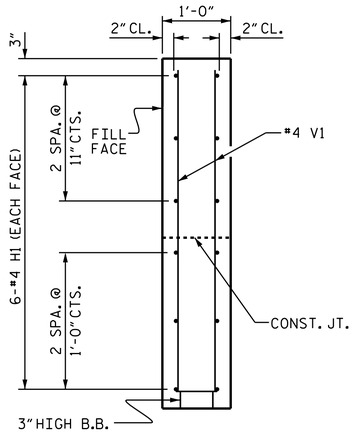

SECTION Y-Y

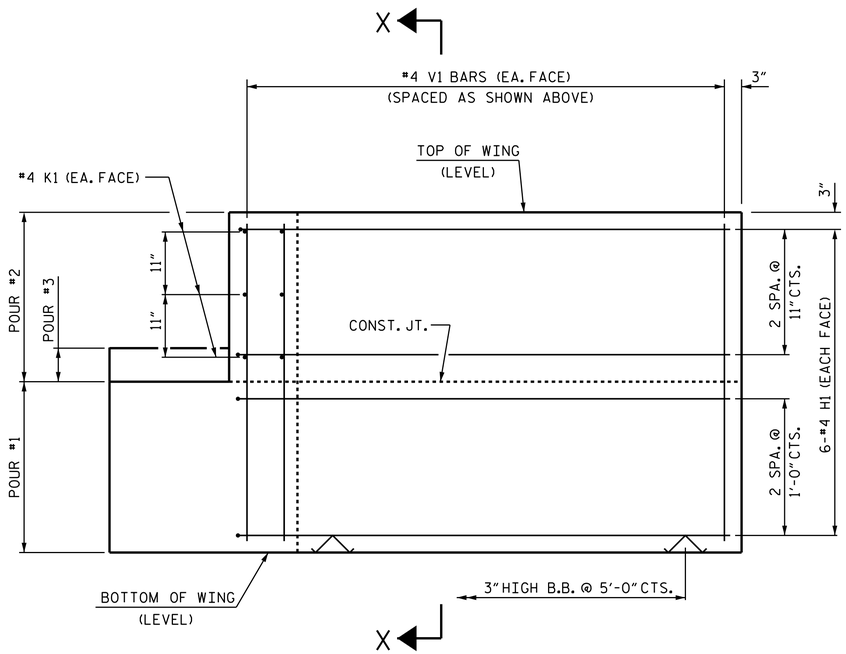

ELEVATION OF WING (W1)

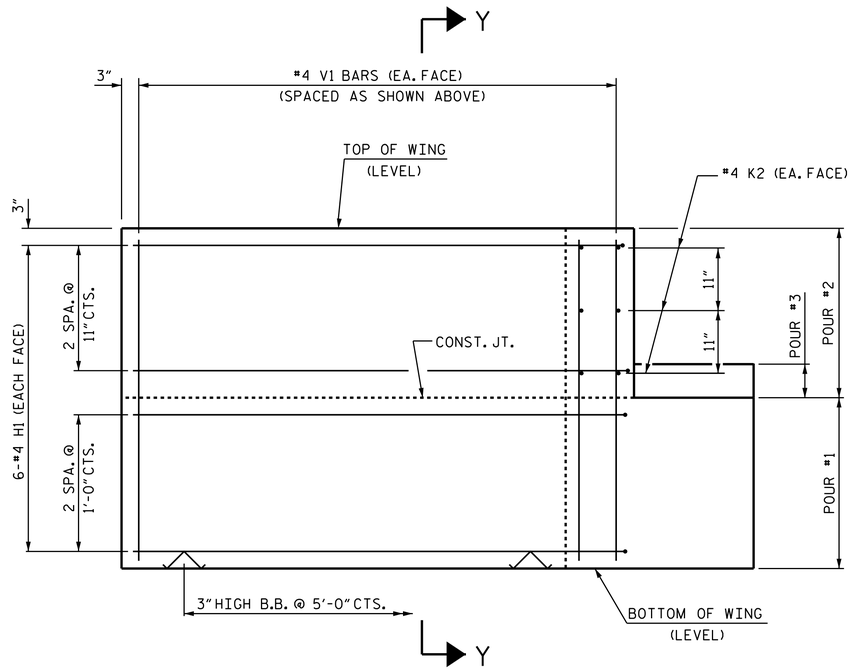

ELEVATION OF WING (W2)

WING DETAILS

PROJECT NO. B-5325

FRANKLIN COUNTY

STATION: 17+86.40 -L-

SHEET 2 OF 5

STATE OF NORTH CAROLINA
DEPARTMENT OF TRANSPORTATION
RALEIGH

SUBSTRUCTURE

END BENT 1
WING DETAILS

NORTH CAROLINA PROFESSIONAL SEAL 29441 ENGINEER KRISTY W. ALFORD

DocuSigned by: F24583893038F40E...
9/18/2014

REVISIONS						SHEET NO.
NO.	BY:	DATE:	NO.	BY:	DATE:	S-19
1			3			TOTAL SHEETS
2			4			28

ASSEMBLED BY : A.C. OUTLAW	DATE : 7/25/13
CHECKED BY : E.I. OMILE	DATE : 8/16/13
DRAWN BY : DGE	02/10
CHECKED BY : MKT	02/10

17-SEP-2014 07:34
R:\Structures\Plans\Substructure\B5325_SD_E*.dgn
jpadams

STD. NO. EB_36_90S