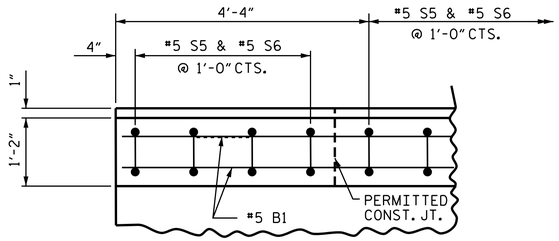

PLAN OF PARAPET

PARAPET AT END BENT 1 SHOWN.
PARAPET AT END BENT 2 SIMILAR BY ROTATION.

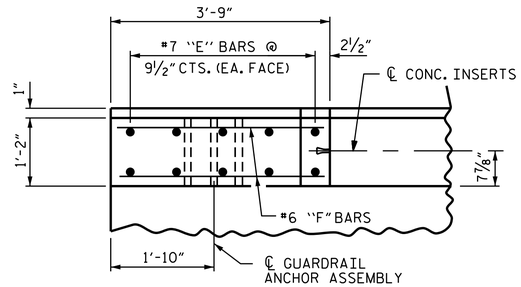

PLAN OF END POST

END POST AT END BENT 1 SHOWN.
END POST AT END BENT 2 SIMILAR BY ROTATION.

BAR TYPE

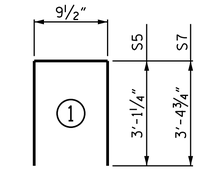

ALL BAR DIMENSIONS
ARE OUT TO OUT

BILL OF MATERIAL

PARAPETS AND END POSTS

BAR	NO.	SIZE	TYPE	LENGTH	WEIGHT
✱ B1	20	#5	STR	29'-7"	617
✱ B3	30	#5	STR	22'-11"	717
✱ E1	4	#7	STR	2'-9"	22
✱ E2	4	#7	STR	3'-3"	27
✱ E3	4	#7	STR	3'-9"	31
✱ E4	4	#7	STR	4'-3"	35
✱ E5	4	#7	STR	4'-8"	38
✱ F1	4	#6	STR	1'-10"	11
✱ F2	4	#6	STR	3'-0"	18
✱ F3	4	#6	STR	3'-4"	20
✱ S5	60	#5	1	7'-0"	438
✱ S7	70	#5	1	7'-7"	554
✱ EPOXY COATED REINF. STEEL					2528
CLASS AA CONCRETE					20.3 C.Y.
1'-2" x 3'-8⅞" CONCRETE PARAPET					130.25 L.F.

NOTES

ALL REINFORCING STEEL IN PARAPET SHALL BE EPOXY COATED.

THE #5 "S" BARS MAY BE SHIFTED SLIGHTLY IN ORDER TO MAINTAIN A 2" MINIMUM CLEARANCE TO THE ½" EXPANSION JOINT MATERIAL IN PARAPET.

FOR DETAILS FOR CONCRETE INSERTS IN END POSTS, SEE "RAIL POST SPACINGS AND END OF RAIL DETAILS" SHEET.

FOR DETAILS OF GUARDRAIL ANCHOR ASSEMBLIES, SEE "GUARDRAIL ANCHORAGE DETAILS FOR METAL RAIL" SHEET.

GROOVED CONTRACTION JOINTS, ½" IN DEPTH, SHALL BE TOOLED IN ALL EXPOSED FACES OF THE PARAPET AND IN ACCORDANCE WITH ARTICLE 825-10(B) OF THE STANDARD SPECIFICATIONS. A CONTRACTION JOINT SHALL BE LOCATED AT EACH THIRD POINT BETWEEN PARAPET EXPANSION JOINTS. ONLY ONE CONTRACTION JOINT IS REQUIRED AT MIDPOINT OF PARAPET SEGMENTS LESS THAN 20 FEET IN LENGTH AND NO CONTRACTION JOINTS ARE REQUIRED FOR THOSE SEGMENTS LESS THAN 10 FEET IN LENGTH.

★ #5 S6 AND #5 S8 BARS INCLUDED IN BILL OF MATERIAL FOR LEFT EXTERIOR CORED SLAB UNIT.

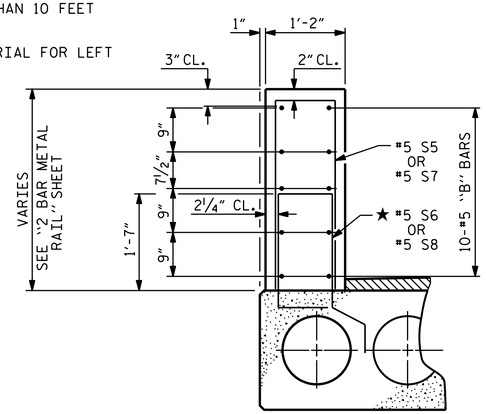

TWO BAR METAL RAIL PARAPET SECTION

(LEFT EXTERIOR UNIT ONLY)

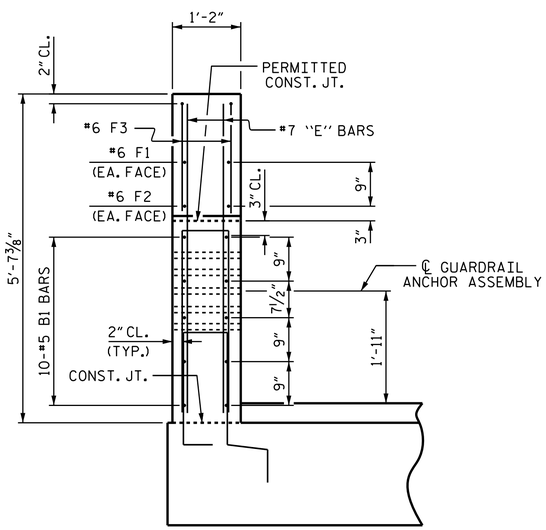

END VIEW

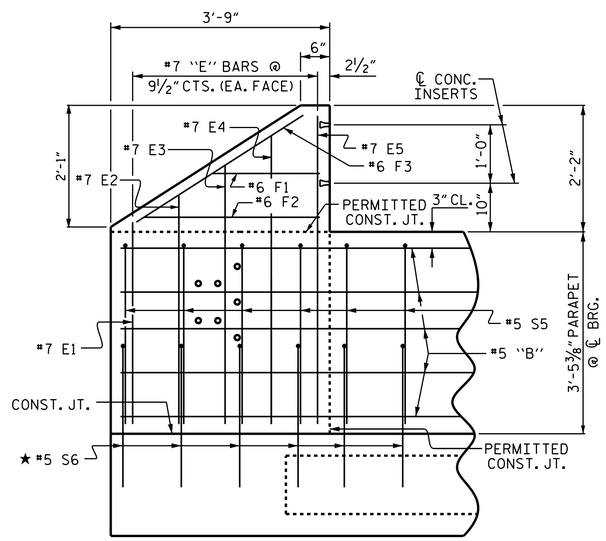

ELEVATION

PARAPET AND END POST FOR TWO BAR RAIL

PROJECT NO. B-5325
FRANKLIN COUNTY
STATION: 17+86.40 -L-

STATE OF NORTH CAROLINA
DEPARTMENT OF TRANSPORTATION
RALEIGH

SUPERSTRUCTURE

CONCRETE PARAPET DETAILS

9/18/2014

NORTH CAROLINA PROFESSIONAL SEAL 29441 ENGINEER KRISTY W. ALFORD

DocuSigned by:
F245839930BF40E...

REVISIONS						SHEET NO.
NO.	BY:	DATE:	NO.	BY:	DATE:	S-12
1			3			TOTAL SHEETS
2			4			28

DRAWN BY : A.C. OUTLAW DATE : 7/22/13
CHECKED BY : E. I. OMILE DATE : 8/13/13
DESIGN ENGINEER OF RECORD: A. C. OUTLAW DATE : 8/5/14

17-SEP-2014 07:34
R:\Structures\Plans\Superstructure\B5325_SD_2MR.dgn
jpadams