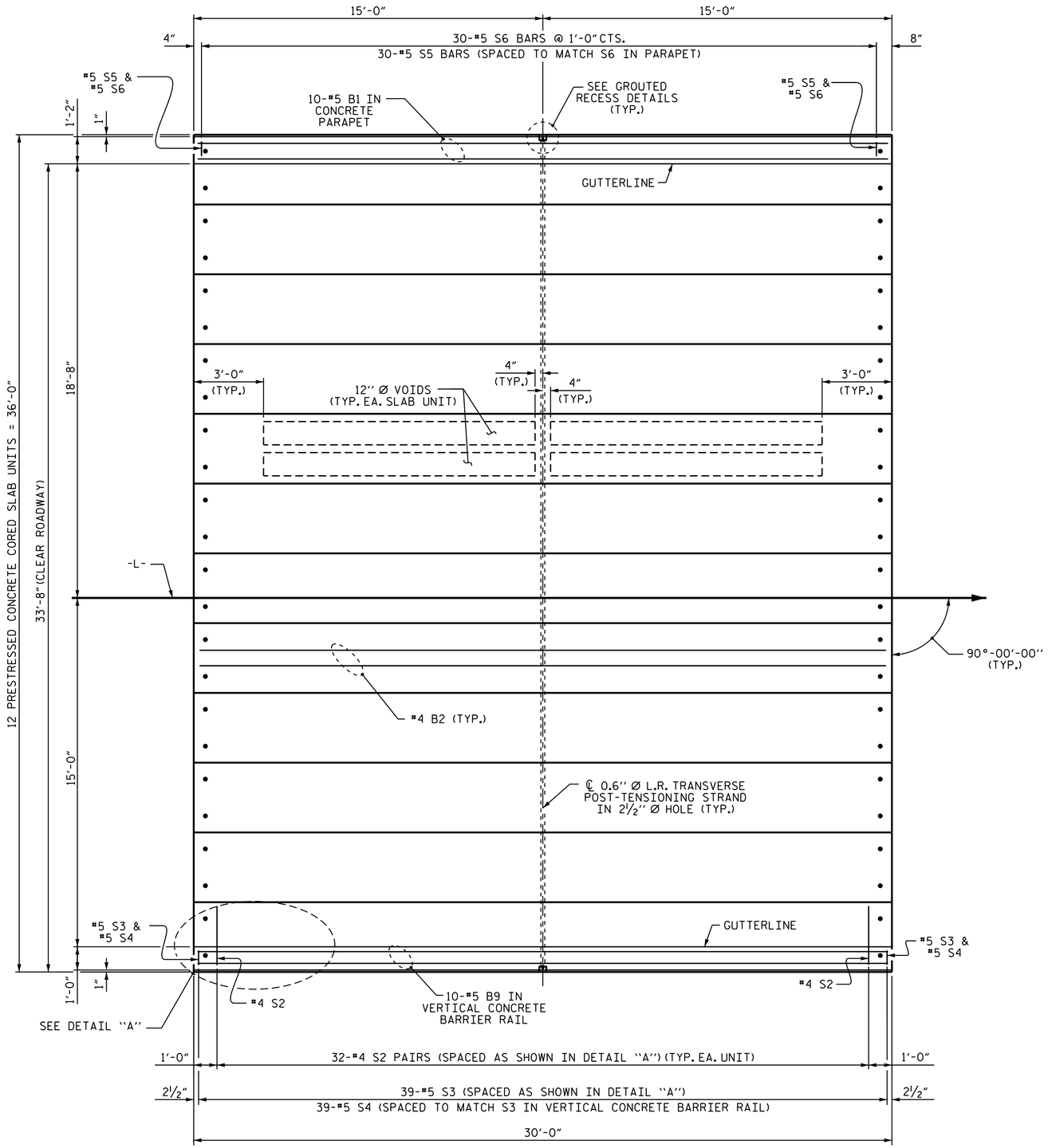

PLAN OF SPAN 'A'

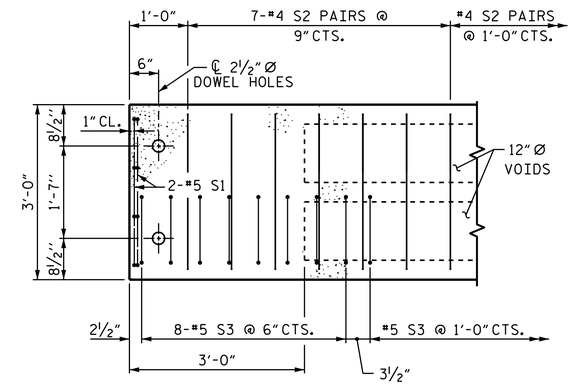

DETAIL "A"

NOTE: RT. EXTERIOR UNIT SHOWN - INTERIOR UNIT SIMILAR EXCEPT OMIT #5 S3 BARS. LEFT EXTERIOR UNIT SIMILAR EXCEPT OMIT #5 S3 BARS, AND INCLUDE #5 S6 BARS AS SHOWN IN PLAN.

PROJECT NO. B-5325

FRANKLIN COUNTY

STATION: 17+86.40 -L-

SHEET 3 OF 7

STATE OF NORTH CAROLINA
DEPARTMENT OF TRANSPORTATION
RALEIGH

PLAN OF 30' UNIT 33'-8" CLEAR ROADWAY 90° SKEW

9/18/2014

NORTH CAROLINA PROFESSIONAL SEAL 29441 ENGINEER KRISTY W. ALFORD

DocuSigned by:
F24B3B8B0DBF4E...

ASSEMBLED BY : A.C. OUTLAW	DATE : 7/22/13		
CHECKED BY : E. I. OMILE	DATE : 8/12/13		
DRAWN BY : DGE 5/09	REV. 12/5/11 MAA/AAC		
CHECKED BY: BCH 6/09			

REVISIONS						SHEET NO.
NO.	BY:	DATE:	NO.	BY:	DATE:	S-6
1			3			TOTAL SHEETS
2			4			28

17-SEP-2014 07:34
R:\Structures\Plans\Superstructure\B5325_SD_CS.dgn
jpadams

STD. NO. 21" PCS_36_90S_30L