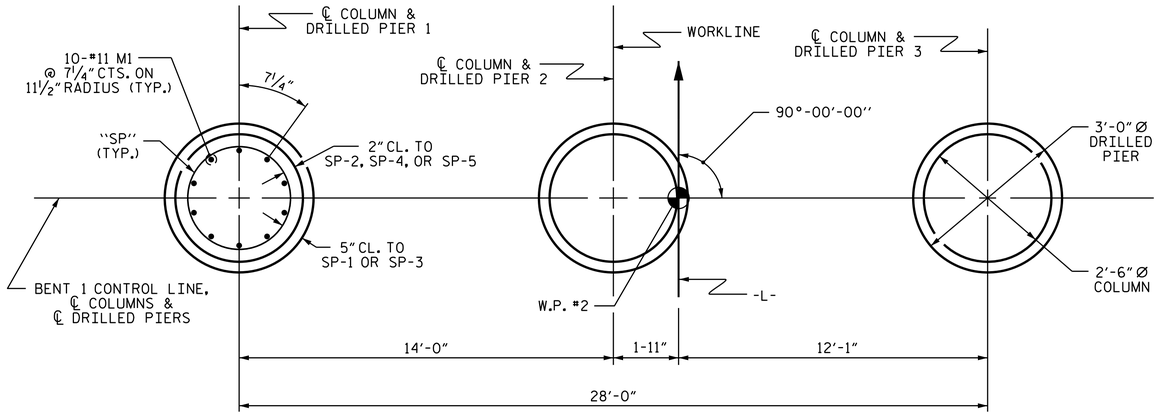

PLAN OF DRILLED PIERS & COLUMNS

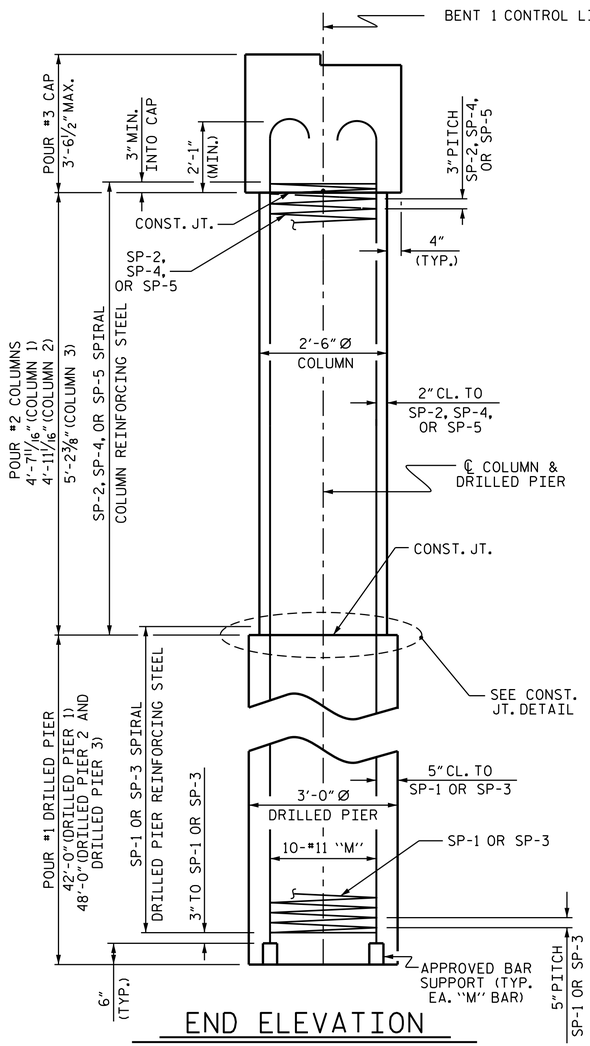

END ELEVATION

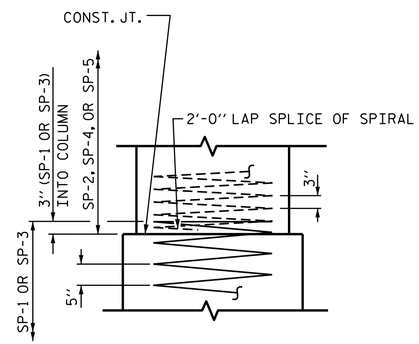

CONSTRUCTION JOINT DETAIL

BAR TYPES

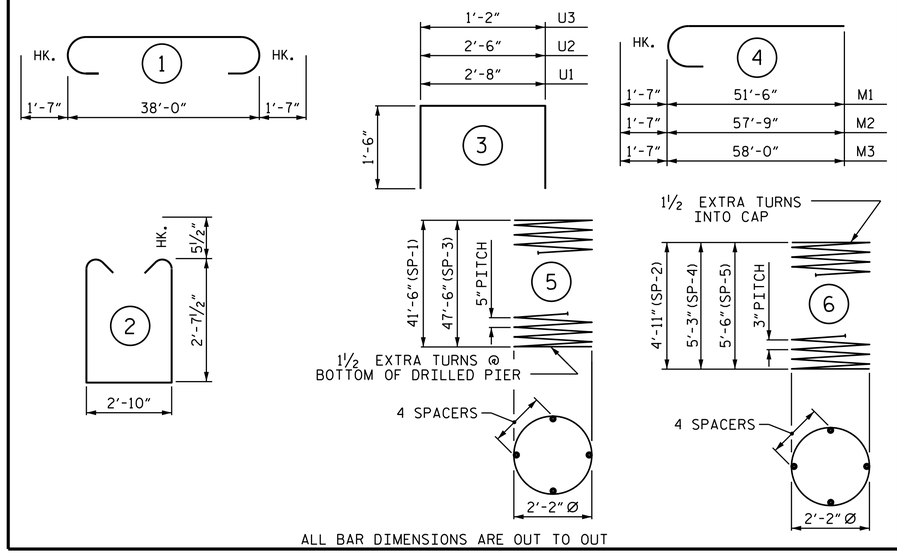

ALL BAR DIMENSIONS ARE OUT TO OUT

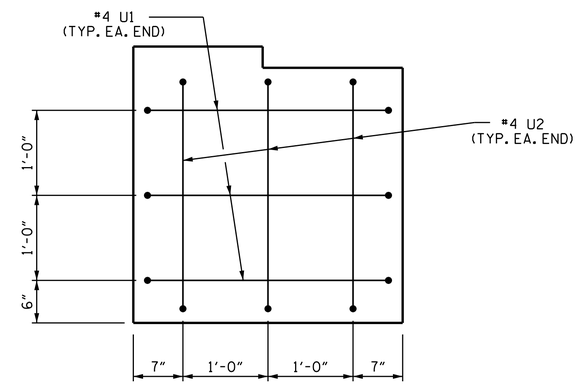

END OF CAP VIEW

(TYPICAL BOTH ENDS)

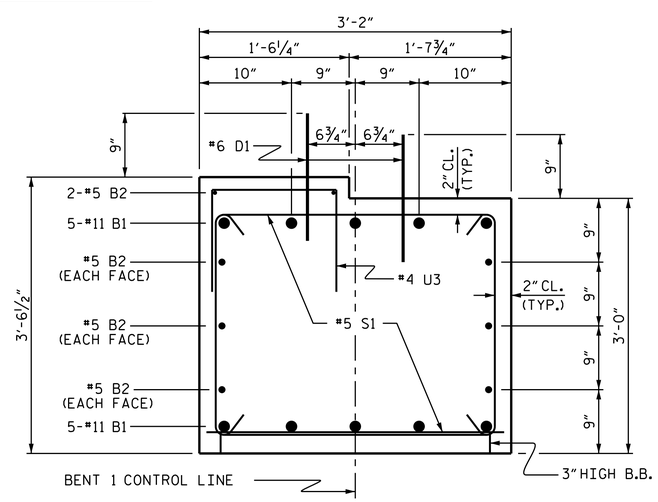

SECTION THRU CAP

BILL OF MATERIAL
FOR ONE BENT

BAR	NO.	SIZE	TYPE	LENGTH	WEIGHT
B1	10	#11	1	41'-2"	2187
B2	8	#5	STR	38'-2"	318
D1	48	#6	STR	1'-6"	108
M1	10	#11	4	53'-1"	2820
M2	10	#11	4	59'-4"	3152
M3	10	#11	4	59'-7"	3166
S1	68	#5	2	9'-0"	638
U1	6	#4	3	5'-8"	23
U2	6	#4	3	5'-6"	22
U3	38	#4	3	4'-2"	106
REINFORCING STEEL (FOR ONE BENT)					12540 LBS.
SP-1	1	*	5	679'-0"	708
SP-2	1	**	6	147'-0"	98
SP-3	2	*	5	772'-2"	1611
SP-4	1	**	6	153'-8"	103
SP-5	1	**	6	160'-5"	107
SPIRAL COLUMN REINFORCING STEEL (FOR ONE BENT)					2627 LBS.

* THE SP-1 AND SP-3 SPIRAL REINFORCING STEEL SHALL BE W31 OR D-31 COLD DRAWN WIRE OR #5 PLAIN OR DEFORMED BAR

** THE SP-2, SP-4, AND SP-5 SPIRAL REINFORCING STEEL SHALL BE W20 OR D-20 COLD DRAWN WIRE OR #4 PLAIN OR DEFORMED BAR

CLASS A CONCRETE BREAKDOWN (FOR ONE BENT)

POUR #2 (COLUMNS)	2.7 C.Y.
POUR #3 (CAP)	14.7 C.Y.
TOTAL CLASS A CONCRETE	17.4 C.Y.

DRILLED PIERS: (FOR ONE BENT)

DRILLED PIER CONCRETE POUR #1 (DRILLED PIERS)	36.1 C.Y.
3'-0" Ø DRILLED PIER	138.0 LIN. FT.
CSL TUBES	570.0 LIN. FT.

PROJECT NO. B-5325

FRANKLIN COUNTY

STATION: 17+86.40 -L-

SHEET 2 OF 2

STATE OF NORTH CAROLINA
DEPARTMENT OF TRANSPORTATION
RALEIGH

SUBSTRUCTURE

BENT 1

ASSEMBLED BY : A.C. OUTLAW	DATE : 2/20/14
CHECKED BY : F. LEA	DATE : 3/17/14
DRAWN BY : DGE 03/10	
CHECKED BY : MKT 03/10	

9/18/2014

NORTH CAROLINA PROFESSIONAL SEAL 29441 ENGINEER KRISTY W. ALFORD

DocuSigned by:

REVISIONS						SHEET NO.
NO.	BY:	DATE:	NO.	BY:	DATE:	S-24
1			3			TOTAL SHEETS
2			4			28

17-SEP-2014 07:34
R:\Structures\Plans\Substructure\B5325_SD_B*.dgn
jpadams

STD. NO. DP_BT_36_90S_<50'