NOTES

GROOVED CONTRACTION JOINTS, ½" IN DEPTH, SHALL BE TOOLED IN ALL EXPOSED FACES OF THE BARRIER RAIL AND IN ACCORDANCE WITH ARTICLE 825-10(B) OF THE STANDARD SPECIFICATIONS. A CONTRACTION JOINT SHALL BE LOCATED AT EACH THIRD POINT BETWEEN BARRIER RAIL EXPANSION JOINTS. ONLY ONE CONTRACTION JOINT IS REQUIRED AT MIDPOINT OF BARRIER RAIL SEGMENTS LESS THAN 20 FEET IN LENGTH AND NO CONTRACTION JOINTS ARE REQUIRED FOR THOSE SEGMENTS LESS THAN 10 FEET IN LENGTH.

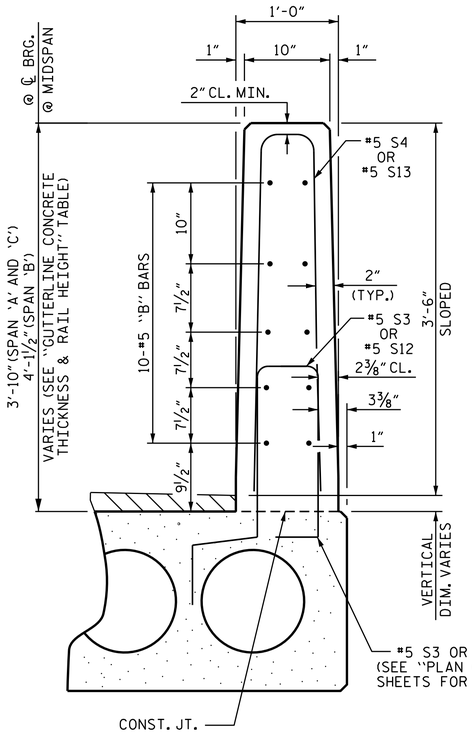

VERTICAL CONCRETE BARRIER RAIL SECTION

#5 S3 AND #5 S12 BARS ARE INCLUDED IN THE BILL OF MATERIAL FOR THE RIGHT EXTERIOR CORED SLAB UNITS.

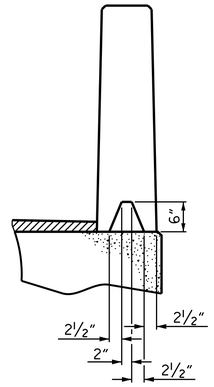

SECTION S-S

AT DAM IN OPEN JOINT
(THIS IS TO BE USED ONLY WHEN SLIP FORM IS USED)

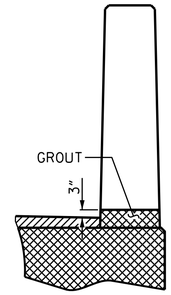

SECTION T-T

AT OPEN JOINT AT BENT
(THIS IS TO BE USED WHERE FOAM JOINT IS NOT USED)

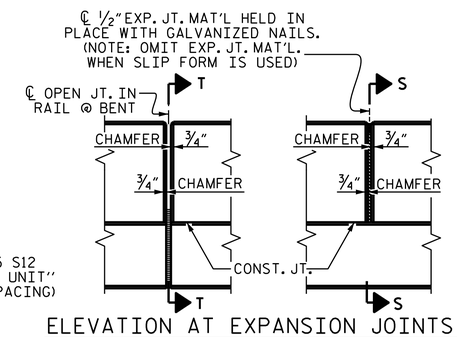

ELEVATION AT EXPANSION JOINTS

BILL OF MATERIAL FOR VERTICAL CONCRETE BARRIER RAIL						
BAR	BARS PER RIGHT EXTERIOR UNIT	TOTAL NO.	SIZE	TYPE	LENGTH	WEIGHT
	30' UNIT					
✳ B9	10	20	#5	STR	29'-7"	617
✳ S4	39	78	#5	1	7'-2"	583
✳ EPOXY COATED REINFORCING STEEL				LBS.		1200
CLASS AA CONCRETE				CU.YDS.		7.9
TOTAL VERTICAL CONCRETE BARRIER RAIL				LN. FT.		60.125

BILL OF MATERIAL FOR VERTICAL CONCRETE BARRIER RAIL						
BAR	BARS PER RIGHT EXTERIOR UNIT	TOTAL NO.	SIZE	TYPE	LENGTH	WEIGHT
	70' UNIT					
✳ B25	30	30	#5	STR	22'-11"	717
✳ S13	79	79	#5	1	7'-2"	591
✳ EPOXY COATED REINFORCING STEEL				LBS.		1308
CLASS AA CONCRETE				CU.YDS.		9.5
TOTAL VERTICAL CONCRETE BARRIER RAIL				LN. FT.		70.125

BAR TYPES

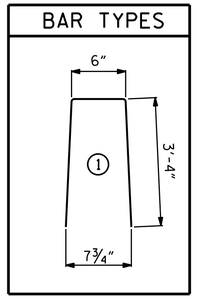

ALL BAR DIMENSIONS ARE OUT TO OUT

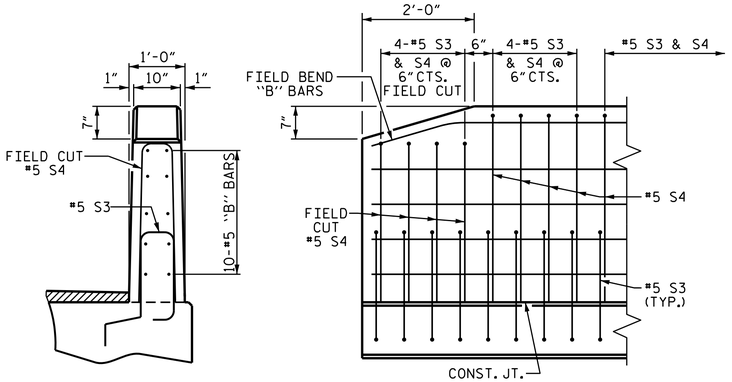

END VIEW

SIDE VIEW

END OF RAIL DETAILS

PROJECT NO. B-5325

FRANKLIN COUNTY

STATION: 17+86.40 -L-

STATE OF NORTH CAROLINA
DEPARTMENT OF TRANSPORTATION
RALEIGH

STANDARD

VERTICAL CONCRETE BARRIER RAIL

90° SKEW

9/18/2014

NORTH CAROLINA PROFESSIONAL SEAL 29441 ENGINEER KRISTY W. ALFORD

DocuSigned by: F245838930BF40E...

REVISIONS						SHEET NO.
NO.	BY:	DATE:	NO.	BY:	DATE:	S-11
1			3			TOTAL SHEETS
2			4			28

ASSEMBLED BY : A.C. OUTLAW DATE : 7/22/13
CHECKED BY : E. I. OMILE DATE : 8/13/13

DRAWN BY : DGE 5/09
CHECKED BY : BCH 6/09

REV. 12/11 MAA/AAC

17-SEP-2014 07:34
R:\Structures\Plans\Superstructure\B5325_SD_CS.dgn
jpadams