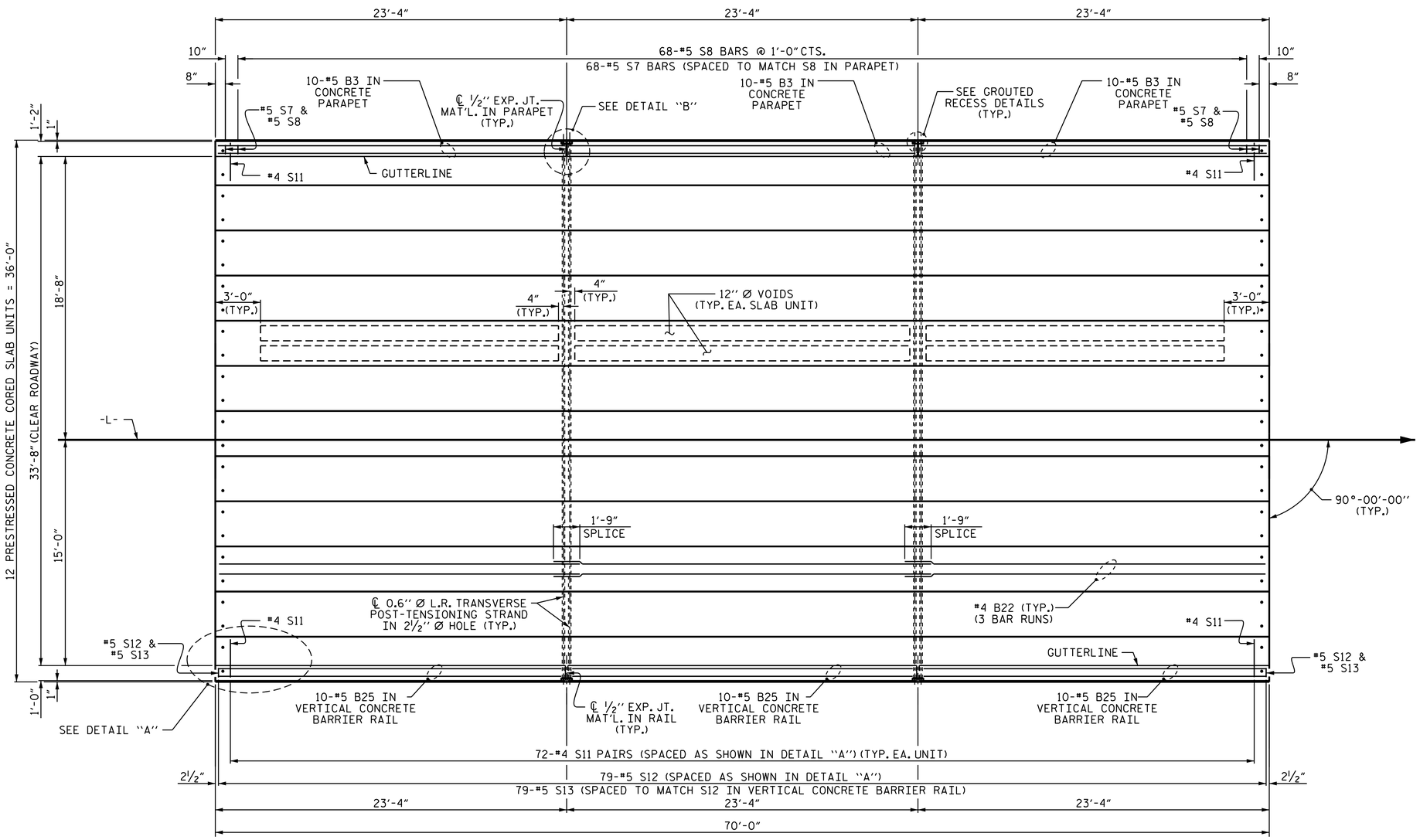

PLAN OF SPAN 'B'

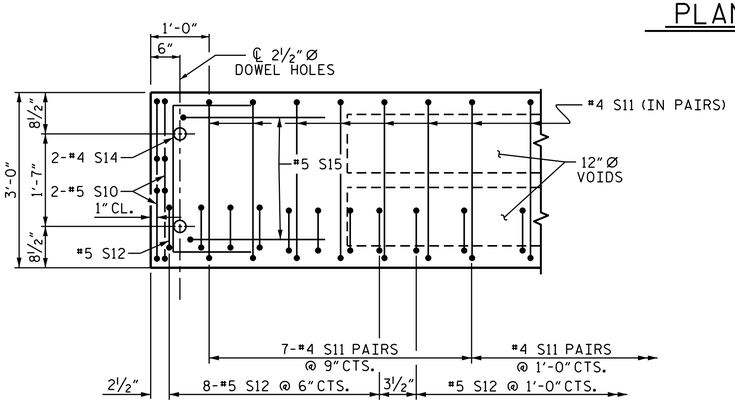

DETAIL "A"

NOTE: RT. EXTERIOR UNIT SHOWN - INTERIOR UNIT SIMILAR EXCEPT OMIT #5 S12 BARS. LEFT EXTERIOR UNIT SIMILAR EXCEPT OMIT #5 S12 BARS AND INCLUDE #5 S8 BARS AS SHOWN IN PLAN.

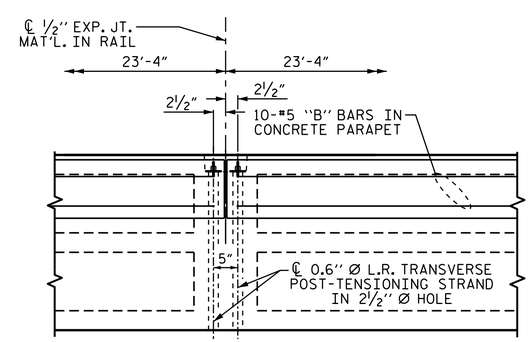

DETAIL "B"

#4 S11 BARS MAY BE SHIFTED AS NECESSARY TO MAINTAIN 1" CLEAR TO GROUTED RECESS AND 2 1/2" Ø TRANSVERSE POST-TENSIONING STRAND HOLES

ASSEMBLED BY : A.C. OUTLAW	DATE : 7/22/13		
CHECKED BY : E. I. OMILE	DATE : 8/12/13		
DRAWN BY : MAA 6/10	REV. 12/5/11 MAA/AAC		
CHECKED BY : MKT 7/10			

17-SEP-2014 07:34
R:\Structures\Plans\Superstructure\B5325_SD_CS.dgn
jpadams

9/18/2014

NORTH CAROLINA PROFESSIONAL SEAL 29441 ENGINEER KRISTY W. ALLORD

DocuSigned by:

PROJECT NO. B-5325
FRANKLIN COUNTY
STATION: 17+86.40 -L-

SHEET 4 OF 7

STATE OF NORTH CAROLINA
DEPARTMENT OF TRANSPORTATION
RALEIGH

PLAN OF 70' UNIT
33'-8" CLEAR ROADWAY
90° SKEW

REVISIONS						SHEET NO.
NO.	BY:	DATE:	NO.	BY:	DATE:	S-7
1			3			TOTAL SHEETS
2			4			28

STD. NO. 24PCS_36_90S_70L