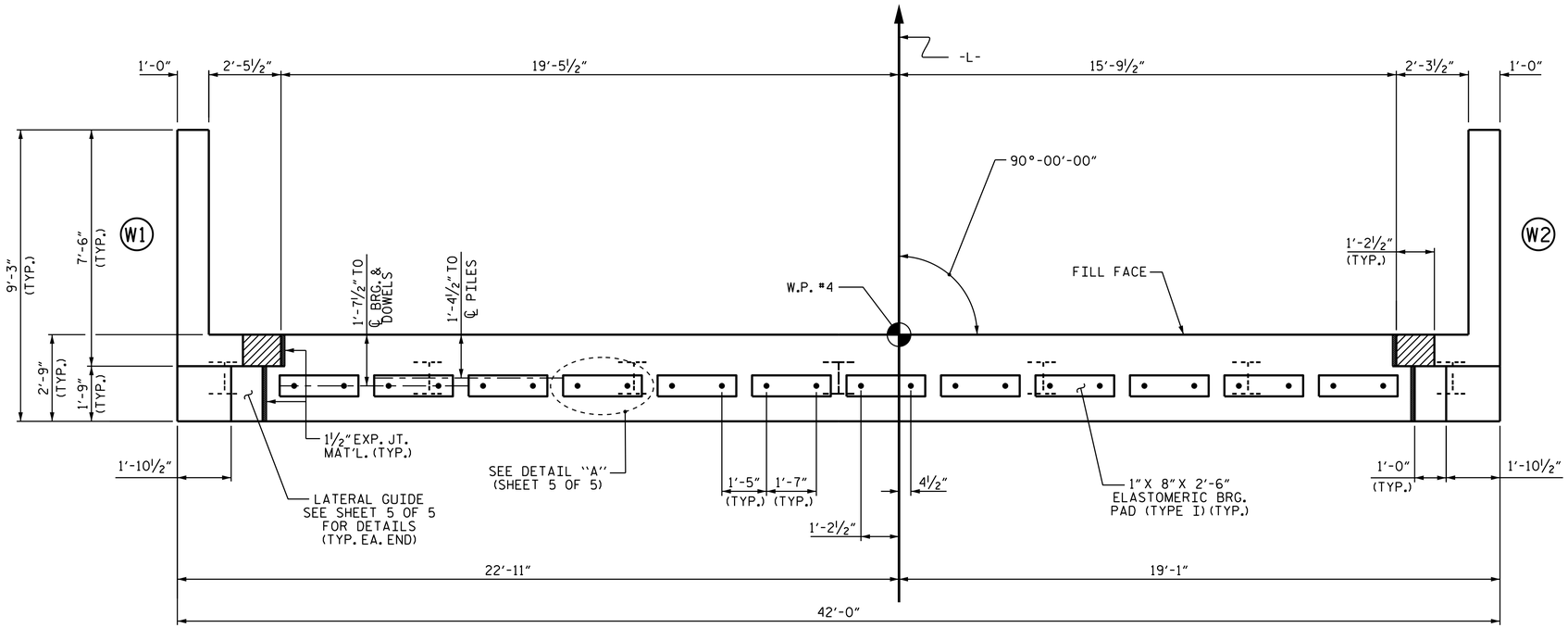

PLAN

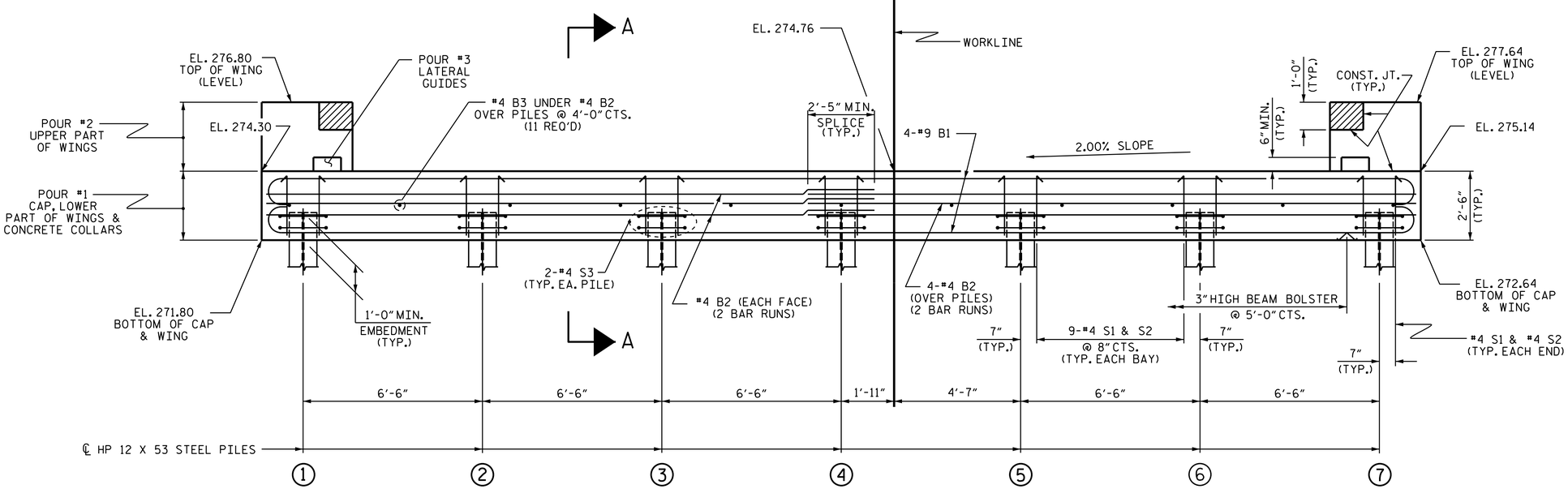

ELEVATION

WINGS NOT SHOWN FOR CLARITY.
FOR SECTION A-A, SEE SHEET 5 OF 5.
CONCRETE COLLARS FOR STEEL PILES NOT SHOWN IN PLAN AND ELEVATION VIEWS FOR CLARITY.
SEE "CORROSION PROTECTION FOR STEEL PILES DETAIL", SHEET 5 OF 5.

NOTES

STIRRUPS IN CAP MAY BE SHIFTED AS NECESSARY TO CLEAR DOWELS.

THE LATERAL GUIDES ARE NOT TO BE POURED UNTIL AFTER THE CORED SLAB UNITS ARE IN PLACE.

THE CONCRETE IN THE SHADED AREA OF THE WING SHALL BE POURED AFTER THE VERTICAL CONCRETE BARRIER RAIL AND THE CONCRETE PARAPET ARE CAST IF SLIP FORMING IS USED.

FOR PILE SPLICE DETAILS, SEE SHEET 5 OF 5.

FOR WING DETAILS, SEE SHEET 4 OF 5.

THE CONTRACTOR HAS THE OPTION TO OMIT THE LATERAL GUIDE IF APPROVED BY THE ENGINEER.

TOP OF PILE ELEVATIONS	
1	272.84
2	272.97
3	273.10
4	273.23
5	273.36
6	273.49
7	273.62

PROJECT NO. B-5325
FRANKLIN COUNTY
STATION: 17+86.40 -L-

SHEET 3 OF 5

STATE OF NORTH CAROLINA
DEPARTMENT OF TRANSPORTATION
RALEIGH

SUBSTRUCTURE

END BENT 2

9/18/2014

NORTH CAROLINA PROFESSIONAL SEAL 29441 ENGINEER WATSTY W. ALFORD

DocuSigned by:
F245838930BF40E...

ASSEMBLED BY : A.C. OUTLAW	DATE : 7/25/13
CHECKED BY : E. I. OMILE	DATE : 8/16/13
DRAWN BY : DGE	02/10
CHECKED BY : MKT	02/10

17-SEP-2014 07:34
R:\Structures\Plans\Substructure\B5325_SD_E*.dgn
jpadams

REVISIONS						SHEET NO.
NO.	BY:	DATE:	NO.	BY:	DATE:	S-20
1			3			TOTAL SHEETS
2			4			28

STD. NO. EB_36_90S