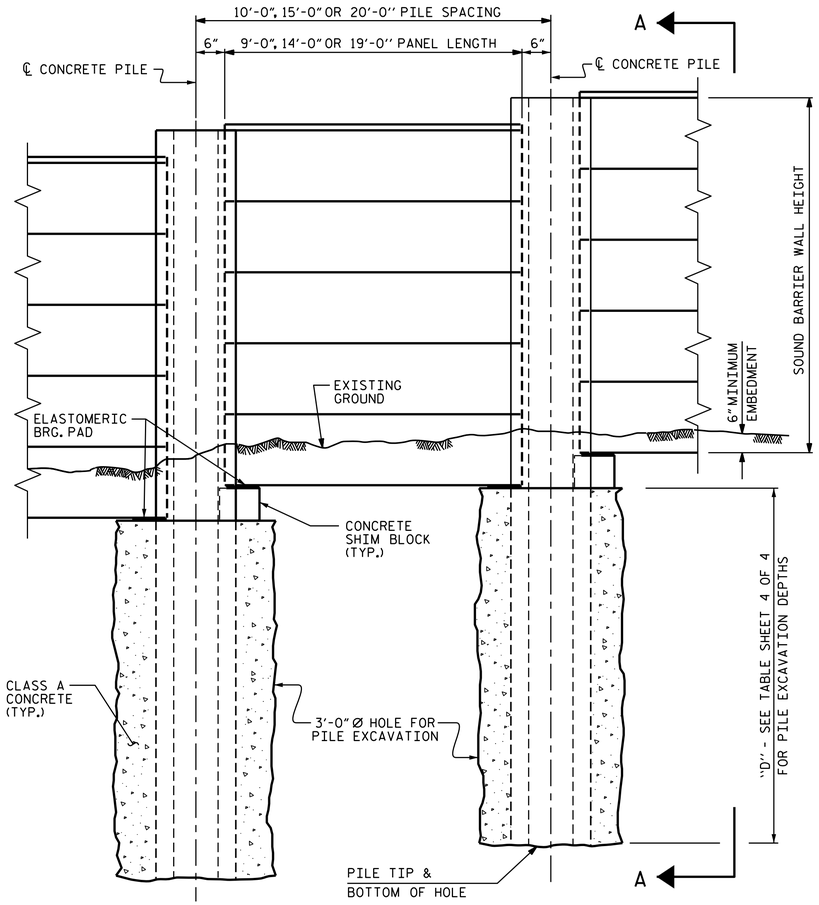

ELEVATION

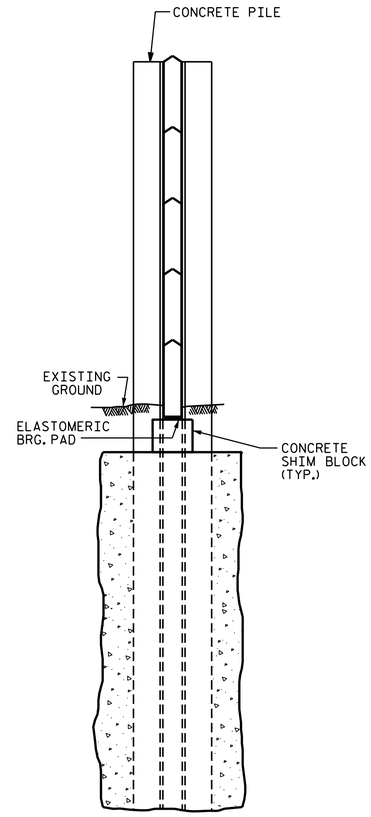

SECTION A-A

BILL OF MATERIAL	
SOUND BARRIER WALL NO.	EXPOSED AREA
NWL1	35,736 S.F.
NWL2	41,159 S.F.
NWL3	39,812 S.F.
NWY4RPA	3,909 S.F.
NWY41	37,775 S.F.
NWY42	21,991 S.F.
NWY4RPBD1	20,194 S.F.
NWY4RPBD2	30,198 S.F.
NWCD2	25,208 S.F.
TOTAL	255,982 S.F.
QUANTITIES PROVIDED ARE APPROXIMATE AND ARE FOR BID PURPOSES ONLY.	

NOTES

FOR SOUND BARRIER WALL, SEE SPECIAL PROVISIONS.

FOR ARCHITECTURAL CONCRETE SURFACE TREATMENT, SEE SPECIAL PROVISIONS.

FOR FALSEWORK AND FORMWORK, SEE SPECIAL PROVISIONS.

FOR SUBMITTAL OF WORKING DRAWINGS, SEE SPECIAL PROVISIONS.

CONSTRUCT SOUND BARRIER WALL TO LINES AND GRADES SHOWN ON THE ROADWAY PLANS.

PROVIDE PANELS WITH A FLAT BOTTOM.

VERIFY THE LOCATION OF UNDERGROUND UTILITIES BEFORE DRILLING HOLES TO ENSURE SUFFICIENT CLEARANCE IS AVAILABLE.

ADJUST PILE EXCAVATION ELEVATIONS TO MAINTAIN 6" MINIMUM EMBEDMENT OF THE BOTTOM PANEL.

USE CLASS AA FOR PANELS AND CLASS A CONCRETE PILE EXCAVATION BACKFILL, IN ACCORDANCE WITH ARTICLE 1000-4 OF THE STANDARD SPECIFICATIONS.

AT THE CONTRACTOR'S OPTION, USE 10 FOOT, 15 FOOT, OR 20 FOOT PILE SPACINGS. STANDARD PRECAST CONCRETE PANELS MAY BE USED WITH THE 10 FOOT AND 15 FOOT PILE SPACING. FOR 20 FOOT PILE SPACING, PANELS DESIGNED AND MANUFACTURED BY A THIRD PARTY VENDER SHALL BE USED.

FOR SOUND BARRIER WALL STATIONS, OFFSETS, AND WALL ENVELOPE, SEE ROADWAY PLANS.

PLACE 1" Ø BACKER RODS FULL HEIGHT ON EACH SIDE OF THE PRECAST PANELS. SET AND SEAL THE BACKER ROD IN PLACE WITH SEALANT THAT CONFORMS WITH ARTICLE 1028-3 OF THE STANDARD SPECIFICATIONS.

PILE REINFORCING STEEL
DESIGN WIND PRESSURE = 40 PSF

PILE TYPE I				PILE TYPE III			
PILE SPACING	MAXIMUM WALL HEIGHT (H)	VERTICAL REINFORCING STEEL	TIES	PILE SPACING	MAXIMUM WALL HEIGHT (H)	VERTICAL REINFORCING STEEL	TIES
10'-0"	H ≤ 25'	4 - #8 EA. FACE	#3 @ 1'-4" CTS.	10'-0"	H ≤ 25'	3 - #9 SHORT FACE 4 - #9 LONG FACE	#3 @ 1'-4" CTS.
15'-0"	H ≤ 20'	4 - #8 EA. FACE	#3 @ 1'-4" CTS.	15'-0"	H ≤ 20'	3 - #9 SHORT FACE 4 - #9 LONG FACE	#3 @ 1'-4" CTS.
	20' < H ≤ 25'	4 - #10 EA. FACE	#3 @ 1'-4" CTS.		20' < H ≤ 25'	3 - #11 SHORT FACE 4 - #11 LONG FACE	#3 @ 1'-4" CTS.
20'-0"	H ≤ 20'	4 - #9 EA. FACE	#3 @ 1'-4" CTS.	20'-0"	H ≤ 20'	3 - #10 SHORT FACE 4 - #10 LONG FACE	#3 @ 1'-4" CTS.
	20' < H ≤ 25'	4 - #11 EA. FACE	#3 @ 1'-4" CTS.				

PILE TYPE II				PILE TYPE III ALT.			
PILE SPACING	MAXIMUM WALL HEIGHT (H)	VERTICAL REINFORCING STEEL	TIES	PILE SPACING	MAXIMUM WALL HEIGHT (H)	VERTICAL REINFORCING STEEL	TIES
10'-0"	H ≤ 25'	4 - #6 EA. FACE	#3 @ 1'-4" CTS.	10'-0"	H ≤ 25'	3 - #9 SHORT FACE 4 - #9 LONG FACE	#3 @ 1'-4" CTS.
15'-0"	H ≤ 20'	4 - #6 EA. FACE	#3 @ 1'-4" CTS.	15'-0"	H ≤ 20'	3 - #9 SHORT FACE 4 - #9 LONG FACE	#3 @ 1'-4" CTS.
		4 - #7 EA. FACE	#3 @ 1'-4" CTS.		20' < H ≤ 25'	3 - #11 SHORT FACE 4 - #11 LONG FACE	#3 @ 1'-4" CTS.
20'-0"	H ≤ 20'	4 - #6 EA. FACE	#3 @ 1'-4" CTS.	20'-0"	H ≤ 20'	3 - #10 SHORT FACE 4 - #10 LONG FACE	#3 @ 1'-4" CTS.
	20' < H ≤ 25'	4 - #8 EA. FACE	#3 @ 1'-4" CTS.				

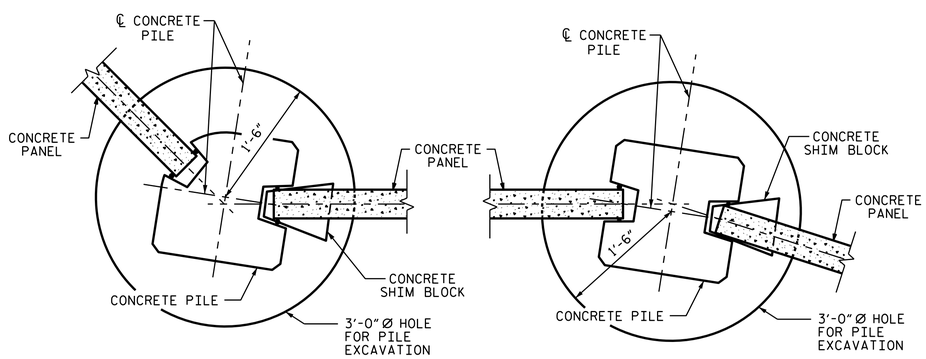

15° TO 45° TURNS
(PILE TYPE III)

0° TO 15° TURNS
(PILE TYPE I)

TYPICAL WALL TURN DETAILS

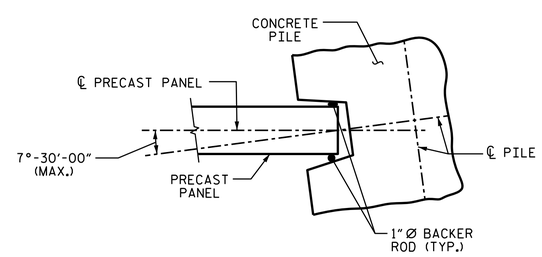

PILE ROTATION LIMIT FOR WALL TURN

(ROTATE THE CONCRETE PILE ±7°-30'-00" TO ACCOMMODATE WALL TURN.)

PROJECT NO. U-2579B
FORSYTH COUNTY
STATION: SEE TABLE
SHEET 4 OF 4

SHEET 1 OF 4

STATE OF NORTH CAROLINA
DEPARTMENT OF TRANSPORTATION
RALEIGH

STANDARD

SOUND BARRIER WALL

NORTH CAROLINA PROFESSIONAL SEAL 23371 ENGINEER VIPUL A. PATEL

DocuSigned by: Vipul A. Patel
339B086CBE1C486...
8/5/2014

REVISIONS						SHEET NO.
NO.	BY:	DATE:	NO.	BY:	DATE:	W-10
1			3			TOTAL SHEETS
2			4			13

STD. NO. SBW1

ASSEMBLED BY : T. H. CARROLL	DATE : 5/13/14
CHECKED BY : V. A. PATEL	DATE : 5/14/14
DRAWN BY : MAA 6/11	ADDED 10/1/11
CHECKED BY : GM 6/11	REV. 1/15/14 RWW/TMG

04-AUG-2014 16:00
R:\Structures\Plans\Walls\U2579B_SD_SBW.dgn
lsutton