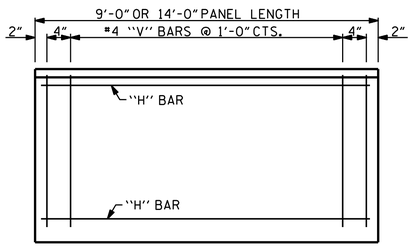

FRONT ELEVATION OF UPPER PRECAST PANELS

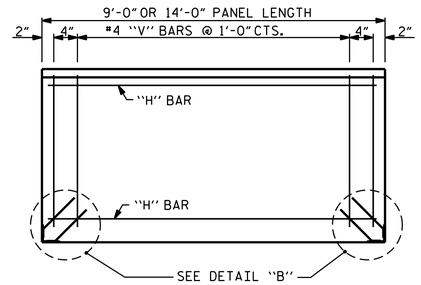

FRONT ELEVATION OF BOTTOM PRECAST PANEL

QUANTITIES FOR ONE PRECAST PANEL (FOR 10'-0" PILE SPACING)													
PANEL HEIGHT	CLASS AA CONCRETE	BAR TYPES											
		HORIZONTAL						VERTICAL					
	C.Y.	NO.	BAR	SIZE	TYPE	LENGTH	WEIGHT (lb)	NO.	BAR	SIZE	TYPE	LENGTH	WEIGHT (lb)
2'-0"	0.22	3	H1	#4	STR	8'-8"	17	11	V1	#4	STR	1'-8"	12
3'-0"	0.33	4	H2	#4	STR	8'-8"	23	11	V2	#4	STR	2'-8"	20
4'-0"	0.44	5	H3	#4	STR	8'-8"	29	11	V3	#4	STR	3'-8"	27

QUANTITIES FOR ONE PRECAST PANEL (FOR 15'-0" PILE SPACING)													
PANEL HEIGHT	CLASS AA CONCRETE	BAR TYPES											
		HORIZONTAL						VERTICAL					
	C.Y.	NO.	BAR	SIZE	TYPE	LENGTH	WEIGHT (lb)	NO.	BAR	SIZE	TYPE	LENGTH	WEIGHT (lb)
3'-0"	0.52	5	H1	#4	STR	13'-8"	46	16	V1	#4	STR	2'-8"	29
4'-0"	0.69	6	H2	#4	STR	13'-8"	55	16	V2	#4	STR	3'-8"	39
5'-0"	0.86	7	H3	#4	STR	13'-8"	64	16	V3	#4	STR	4'-8"	50
6'-0"	1.04	8	H4	#4	STR	13'-8"	73	16	V4	#4	STR	5'-8"	61

ADDITIONAL BARS FOR ONE BOTTOM PANEL					
NO.	BAR	SIZE	TYPE	LENGTH	WEIGHT (lb)
4	S1	#5	1	1'-6"	6

BAR TYPE

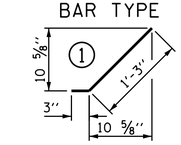

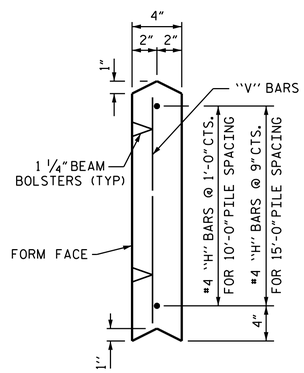

UPPER PANEL

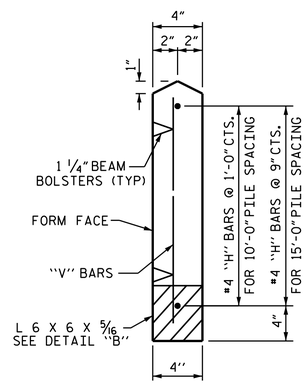

BOTTOM PANEL

SECTION THROUGH PRECAST PANELS

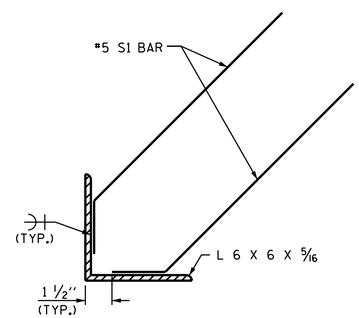

DETAIL "B"

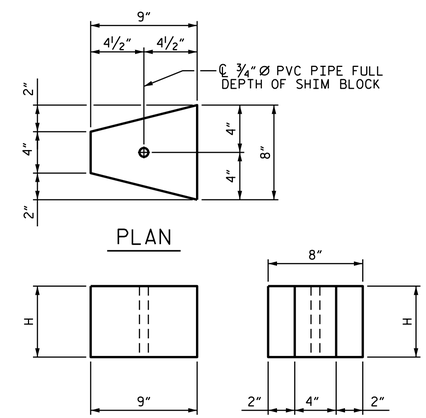

CONCRETE SHIM BLOCK

H = 3", 6" or 1'-0"

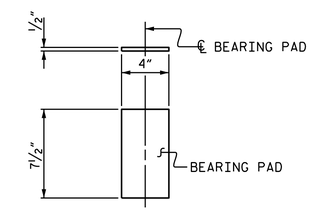

ELASTOMERIC BEARING DETAILS

ELASTOMER IN BEARINGS SHALL BE 50 DUROMETER HARDNESS.

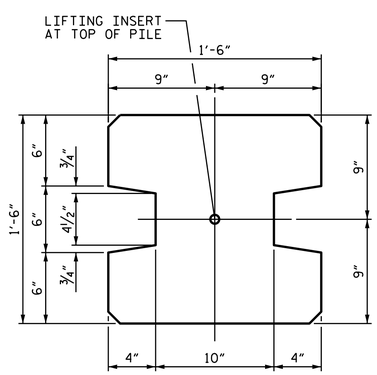

TYPE - I
(AREA = 1.9444 SQ. FT.)

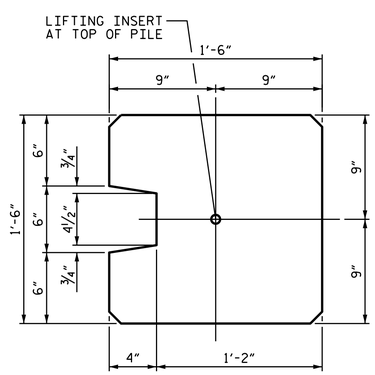

TYPE - II
(AREA = 2.0903 SQ. FT.)

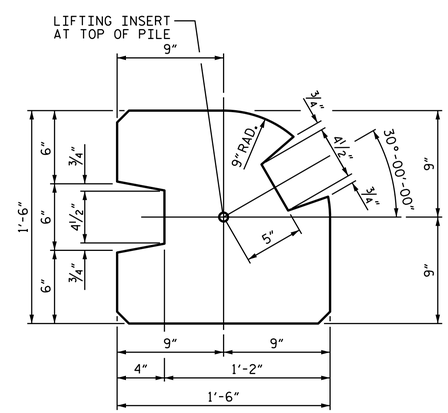

TYPE - III
(AREA = 1.8336 SQ. FT.)

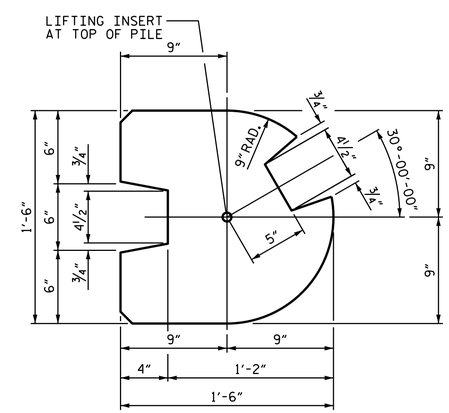

TYPE - III (ALT.)
(AREA = 1.7163 SQ. FT.)

PILE DETAIL

(ALL CORNERS TO BE CHAMFERED 1")

PROJECT NO. U-2579B
FORSYTH COUNTY
STATION: SEE TABLE
SHEET 4 OF 4

SHEET 2 OF 4

STATE OF NORTH CAROLINA
DEPARTMENT OF TRANSPORTATION
RALEIGH

STANDARD

SOUND BARRIER WALL DETAILS

NORTH CAROLINA PROFESSIONAL SEAL 23371 ENGINEER VIPUL A. PATEL

DocuSigned by: Vipul A. Patel
339B086C8E1C486...
8/5/2014

ASSEMBLED BY : T. H. CARROLL	DATE : 5/13/14
CHECKED BY : V. A. PATEL	DATE : 5/14/14

DRAWN BY : MAA 6/11	ADDED 8/31/11
CHECKED BY : GM 6/11	REV. 1/15/14 RWW/TMG

REVISIONS						SHEET NO.
NO.	BY:	DATE:	NO.	BY:	DATE:	W-11
1			3			TOTAL SHEETS
2			4			13

04-AUG-2014 16:00
R:\Structures\Plans\Walls\U2579B_SD_SBW.dgn
lsutton

STD. NO. SBW2