GEOTECHNICAL ENGINEER	ENGINEER
NORTH CAROLINA PROFESSIONAL SEAL 028669 ENGINEER RICHARD SCOTT WEBB	
DocuSigned by: RICHARD SCOTT WEBB 8/5/2014 4E66C281ADBC458...	
SIGNATURE DATE	SIGNATURE DATE

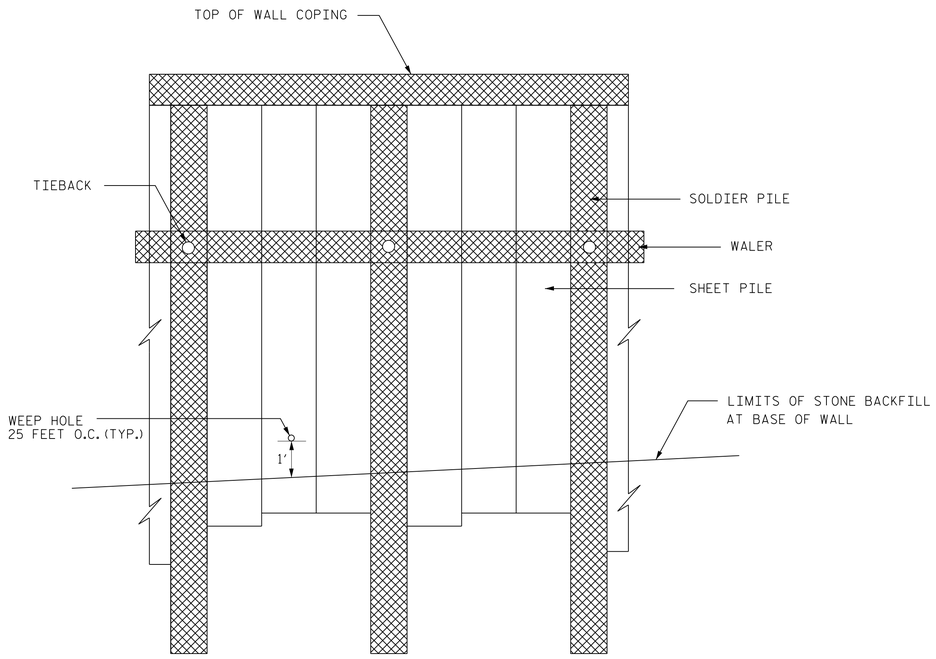

ELEVATION VIEW

(BOTTOM OF WALL NOT SHOWN)

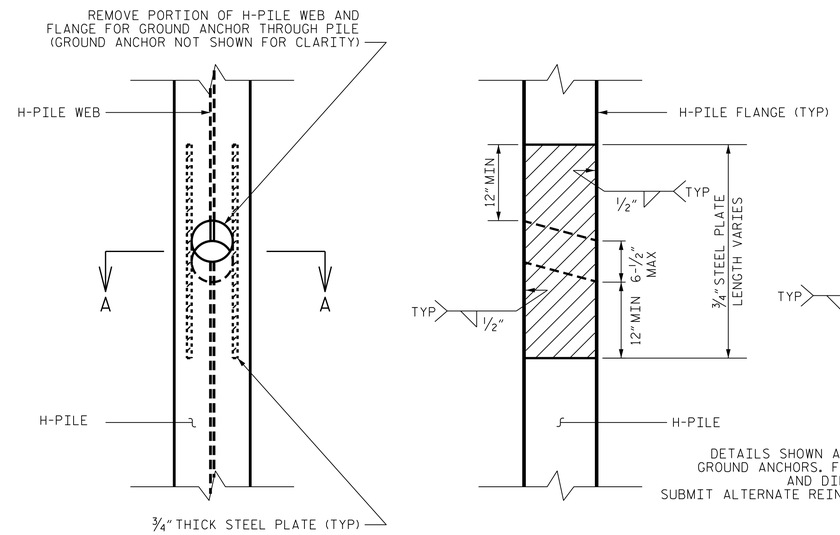

FRONT VIEW

SIDE VIEW

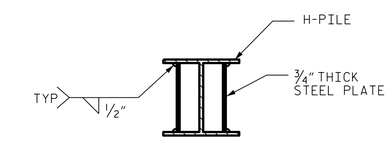

SECTION A-A

DETAILS SHOWN ARE FOR 12"H-PILES WITH 6"DIA.
GROUND ANCHORS. FOR DIFFERENT DIAMETER ANCHORS,
AND DIFFERANT SIZED PILES,
SUBMIT ALTERNATE REINFORCED WEB DETAILS FOR ACCEPTANCE.

REINFORCED WEB DETAILS

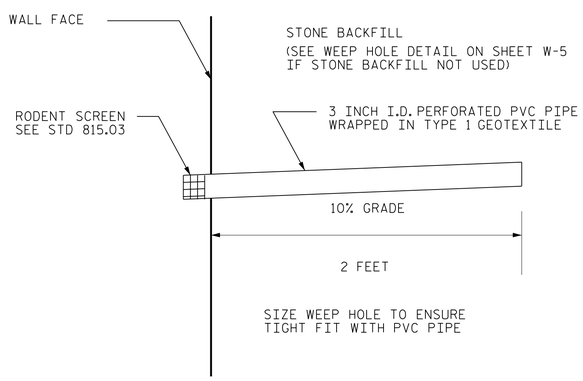

WEEP HOLE DETAIL

PROJECT NO.: U-2579B

FORSYTH ***COUNTY***

STATION: Y4WB 50+50± to 55+50 ±

SHEET 2 OF 4

GEOTECHNICAL ENGINEERING UNIT

☐ *EASTERN REGIONAL OFFICE*

☐ *WESTERN REGIONAL OFFICE*

☒ *CONTRACT OFFICE*

STATE OF NORTH CAROLINA
DEPARTMENT OF TRANSPORTATION
RALEIGH

ANCHORED SOLDIER PILE
WITH SHEET PILES
RETAINING WALL
FOR WALL 3

REVISIONS						SHEET NO.
NO.	BY	DATE	NO.	BY	DATE	W-7
1			3			TOTAL SHEETS
2			4			

PREPARED BY: RSW	DATE: 5-28-14
REVIEWED BY:	DATE: