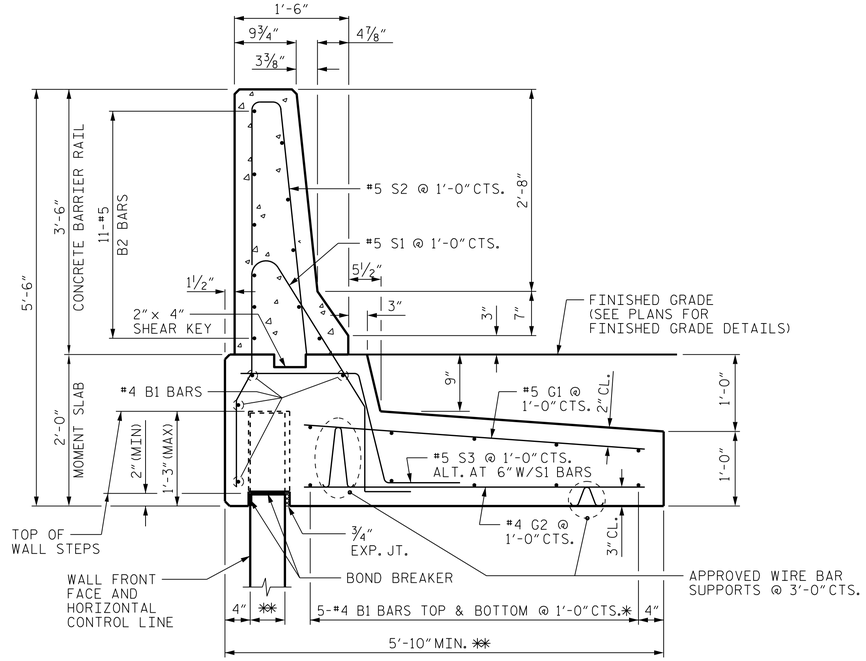

CONCRETE BARRIER RAIL WITH MOMENT SLAB

✱✱MODIFY DIMENSIONS AS NEEDED TO ACCOMODATE PILES

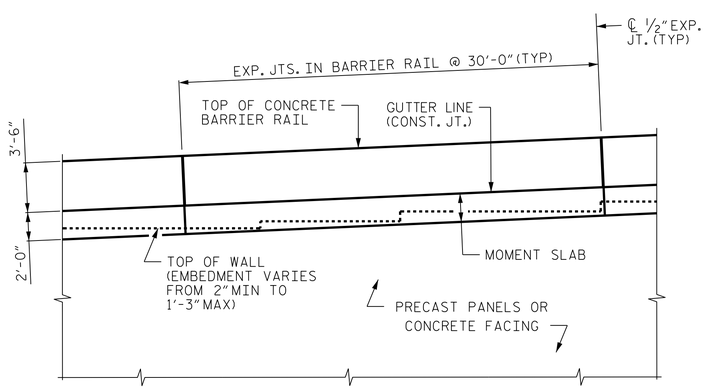

CONCRETE BARRIER RAIL WITH MOMENT SLAB - PARTIAL ELEVATION

NOTES:

FOR CONCRETE BARRIER RAIL WITH MOMENT SLAB, SEE CONCRETE BARRIER RAIL WITH MOMENT SLAB PROVISION.

CONCRETE BARRIER RAIL WITH MOMENT SLAB SHALL BE A MINIMUM OF 15' IN LENGTH.

EXPANSION JOINTS SHALL BE PLACED IN THE BARRIER RAIL AND MOMENT SLAB AT A MAXIMUM SPACING OF 30'.

GROOVED CONTRACTION JOINTS, 1/2" IN DEPTH, SHALL BE TOOLED IN ALL EXPOSED SURFACES OF THE BARRIER RAIL AND IN ACCORDANCE WITH ARTICLE 825-10(B) OF THE STANDARD SPECIFICATIONS. A CONTRACTION JOINT SHALL BE LOCATED AT EACH THIRD POINT BETWEEN BARRIER RAIL EXPANSION JOINTS. ONLY ONE CONTRACTION JOINT IS REQUIRED AT MID-POINT OF BARRIER RAIL SEGMENTS LESS THAN 20' IN LENGTH.

THE BARRIER RAIL SHALL NOT BE CAST UNTIL THE MOMENT SLAB HAS ATTAINED AN AGE OF THREE CURING DAYS OR A MINIMUM COMPRESSIVE STRENGTH OF 2,000 PSI. IN ADDITION, NO FILL MATERIAL, ASPHALT, OR CONSTRUCTION EQUIPMENT IS ALLOWED ON THE MOMENT SLAB PRIOR TO SATISFYING THE MINIMUM CONCRETE CURING AND STRENGTH REQUIREMENTS.

ALL REINFORCING STEEL IN THE BARRIER RAIL SHALL BE EPOXY COATED.

IF EXISTING OR FUTURE OBSTRUCTIONS SUCH AS FOUNDATIONS, BARRIERS, PIPES, INLETS OR UTILITIES WILL INTERFERE WITH CONCRETE BARRIER RAIL WITH MOMENT SLAB OR CONCRETE FACING FOR RETAINING WALL WILL BE THICKER THAN 8", CONCRETE BARRIER RAIL WITH MOMENT SLAB DETAILS SHALL BE REVISED AND SUBMITTED FOR APPROVAL.

CONCRETE BARRIER RAIL WITH MOMENT SLAB
PAY LENGTH = 500 LIN FT

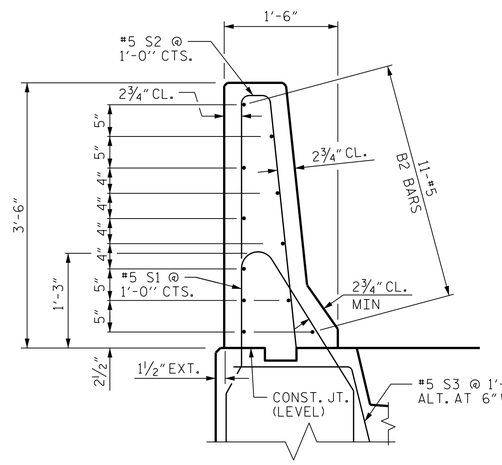

SECTION THRU RAIL

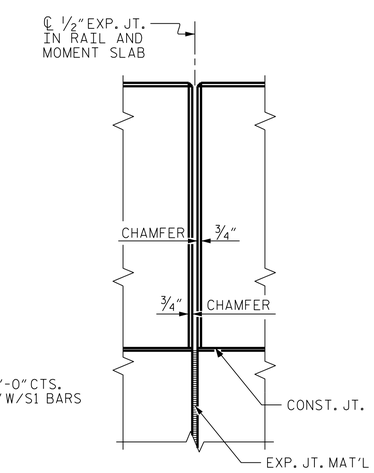

ELEV. @ EXP. JOINTS

BARRIER RAIL DETAILS

GEOTECHNICAL ENGINEER

NORTH CAROLINA PROFESSIONAL SEAL 028669 ENGINEER RICHARD SCOTT WEBB

DocuSigned by: RICHARD SCOTT WEBB 8/5/2014

4E66C2B1A8B6488...

SIGNATURE DATE

ENGINEER

SIGNATURE DATE

SIGNATURE DATE

SIGNATURE DATE

BAR TYPES

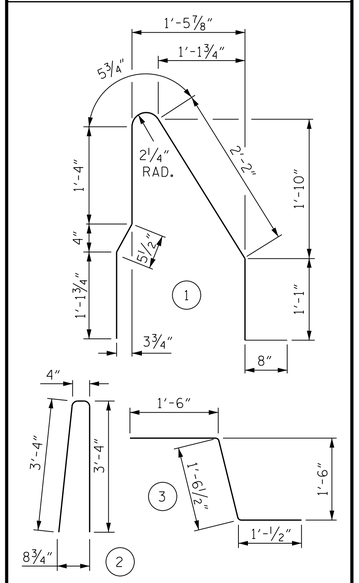

ALL BAR DIMENSIONS ARE OUT TO OUT

BILL OF MATERIAL

FOR ONE 30'-0" SECTION OF CONCRETE BARRIER RAIL WITH MOMENT SLAB

BAR	NO.	SIZE	TYPE	LENGTH	WEIGHT
B1	14	#4	STR	29'-7"	277
✱ B2	11	#5	STR	29'-7"	339
G1	31	#5	STR	4'-4"	140
G2	31	#4	STR	4'-4"	90
✱ S1	31	#5	1	7'-3"	234
✱ S2	31	#5	2	7'-0"	226
S3	30	#5	3	4'-1"	128

REINFORCING STEEL	635 LB
✱ EPOXY COATED REINFORCING STEEL	799 LB
CLASS AA CONCRETE BARRIER RAIL	4.1 CY
CLASS A CONCRETE MOMENT SLAB	9.1 CY
CONCRETE BARRIER RAIL WITH MOMENT SLAB	30 LIN FT

PROJECT NO.: U-2579B

FORSYTH ***COUNTY***

STATION: Y4WB 50+50± to 55+50±

SHEET 4 OF 4

GEOTECHNICAL ENGINEERING UNIT

☐ *EASTERN REGIONAL OFFICE*

☐ *WESTERN REGIONAL OFFICE*

☒ *CONTRACT OFFICE*

STATE OF NORTH CAROLINA
DEPARTMENT OF TRANSPORTATION
RALEIGH

ANCHORED SOLDIER PILE WITH SHEET PILES RETAINING WALL FOR WALL 3

REVISIONS						SHEET NO.
NO.	BY	DATE	NO.	BY	DATE	W-9
1			3			TOTAL SHEETS
2			4			

PREPARED BY: RSW	DATE: 5-28-14
REVIEWED BY:	DATE: