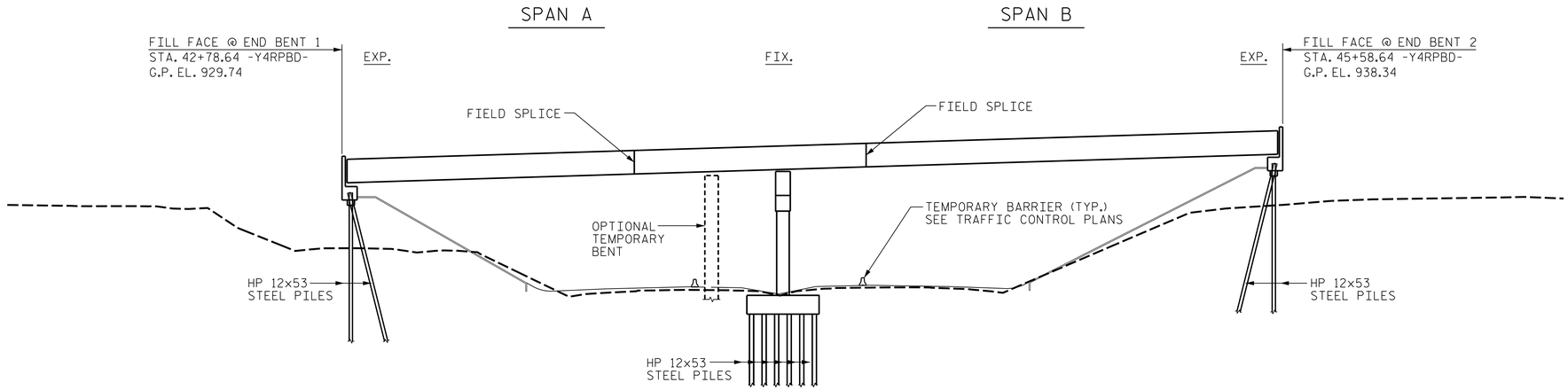

SECTION ALONG -Y4RPBD-

SECTIONS AT END BENTS AND BENT ARE AT RIGHT ANGLES

ERECTION NOTES

THE FIRST TWO GIRDERS SHALL BE ERECTED SIMULTANEOUSLY AND ALL CROSSFRAMES SHALL BE INSTALLED BETWEEN THE ERECTED GIRDER SECTIONS PRIOR TO RELEASING THE GIRDERS. THE CROSSFRAMES BETWEEN EACH ADDITIONAL ERECTED GIRDER SHALL BE INSTALLED PRIOR TO ITS RELEASE.

THE STRUCTURAL STEEL SHALL BE SUPPORTED DURING ERECTION IN ITS CAMBERED POSITION. ONE TEMPORARY BENT MAY BE USED IN SPAN A.

TEMPORARY BENT, IF USED, SHALL SUPPORT ALL GIRDERS IN THE TYPICAL SECTION.

TEMPORARY BENT, IF USED, SHALL REMAIN IN PLACE UNTIL ALL CROSSFRAMES ARE IN PLACE AND HIGH STRENGTH BOLTS ARE TIGHTENED.

PLACEMENT OF TEMPORARY BENT, IF USED, SHALL BE COORDINATED WITH TRAFFIC PHASING REQUIREMENTS. SEE TRAFFIC CONTROL PLANS.

THE CONTRACTOR'S ERECTION PLANS SHALL INCLUDE A METHOD OF TEMPORARY BENT REMOVAL (IF ONE IS USED) THAT WILL UNIFORMLY APPLY THE STRUCTURAL STEEL WEIGHT TO THE GIRDERS AND DIAPHRAGMS.

THE CONTRACTOR MAY SUBMIT ALTERNATE ERECTION METHODS. PLANS FOR SUCH ERECTION METHODS SHALL BE APPROVED BY THE ENGINEER.

PLANS FOR TEMPORARY BENT, ERECTION SEQUENCE, AND TEMPORARY BENT REMOVAL SHALL BE SUBMITTED TO THE ENGINEER FOR REVIEW.

DURING THE GIRDER ERECTION PROCEDURE, THE CONTRACTOR IS RESPONSIBLE FOR PROVIDING TEMPORARY LATERAL BRACING AND OTHER MEANS OF SUPPORT, AS REQUIRED, TO ENSURE STABILITY OF THE GIRDERS AND, TO AVOID UPLIFT OF THE GIRDERS AT POINTS OF SUPPORT.

THE CONTRACTOR IS RESPONSIBLE FOR DESIGNING THE TEMPORARY BENT. THE DESIGNS SHALL FOLLOW THE AASHTO GUIDE DESIGN SPECIFICATIONS FOR BRIDGE TEMPORARY WORKS, 1995, INCLUDING 2008 INTERIM REVISION, AND SHALL BE COMPLETED BY A PROFESSIONAL ENGINEER REGISTERED IN NORTH CAROLINA. THE CONTRACTOR SHALL SUBMIT SIGNED AND SEALED WORKING DRAWINGS AND CALCULATIONS FOR APPROVAL BY THE ENGINEER.

NO SEPARATE MEASUREMENT OR PAYMENT WILL BE MADE FOR PROVIDING THE TEMPORARY BENT. THE COST FOR ALL MATERIALS, EQUIPMENT, TOOLS, LABOR AND ANY INCIDENTALS NECESSARY TO PROVIDE THE TEMPORARY BENT SHALL BE CONSIDERED INCIDENTAL TO THE LUMP SUM BID PRICE FOR STRUCTURAL STEEL.

FOR TEMPORARY BENTS, SEE SPECIAL PROVISIONS.

PROJECT NO. U-2579B
FORSYTH COUNTY
STATION: 44+08.64 -Y4RPBD-

STATE OF NORTH CAROLINA
DEPARTMENT OF TRANSPORTATION
RALEIGH

GIRDER ERECTION DETAILS

DESIGNED BY:	B. LOFLIN	DATE :	FEB 2014
DRAWN BY:	R. KHARWA	DATE :	FEB 2014
CHECKED BY:	J. DOUGHTY	DATE :	APR 2014
DESIGN ENGINEER OF RECORD:	J. DOUGHTY	DATE :	MAY 2014

PARSONS BRINCKERHOFF
434 FAYETTEVILLE STREET
SUITE 1500
RALEIGH, NC 27601
LICENSE NO. F-0165

NORTH CAROLINA PROFESSIONAL SEAL 032967 ENGINEER JASON R. DOUGHTY
6/2/2014
DocuSigned by: Jason R Doughty
00F1C86448274F7...

REVISIONS						
NO.	BY:	DATE:	NO.	BY:	DATE:	
1			3			
2			4			

SHEET NO. S-549
TOTAL SHEETS 707

STR. #15

6/2/2014
I73498C_SD_ED_1501.dgn