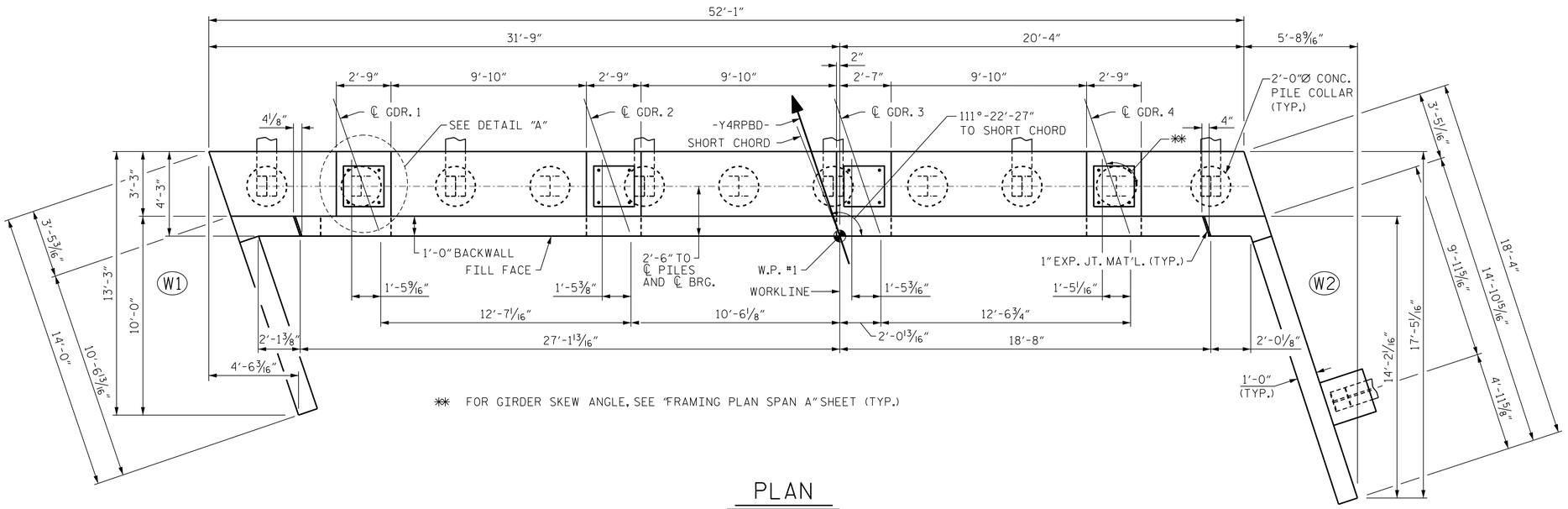

✱✱ FOR GIRDER SKEW ANGLE, SEE "FRAMING PLAN SPAN A" SHEET (TYP.)

PLAN

NOTES

STIRRUPS IN CAP MAY BE SHIFTED AS NECESSARY TO CLEAR ANCHOR BOLTS.

THE #6V1 BARS SHALL BE PLACED 2" CLEAR FROM THE TOP OF THE BACKWALL.

BACKWALL SHALL BE PLACED BEFORE APPLYING THE EPOXY PROTECTIVE COATING.

THE TOP SURFACE AREAS OF THE END BENT CAP SHALL BE CURED IN ACCORDANCE WITH THE STANDARD SPECIFICATIONS EXCEPT THE MEMBRANE CURING COMPOUND METHOD SHALL NOT BE USED.

THE TOP SURFACE OF THE CAP EXCEPT THE BRIDGE SEAT BUILDUPS SHALL BE SLOPED TRANSVERSELY FROM THE FILL FACE TO THE BACK FACE AT THE RATE OF 2%.

THE CONCRETE IN THE SHADED AREA OF THE WING SHALL BE POURED AFTER THE BARRIER RAIL IS CAST IF SLIP FORMING IS USED.

FOR PIPE INSERT DETAILS, SEE DISC BEARING DETAILS.

THE CONTRACTOR SHALL PROVIDE FOR INSTALLATION OF THE 4" DIA. DRAIN PIPE THROUGH THE WING WALL AS REQUIRED FOR REINFORCED BRIDGE APPROACH FILLS, SEE ROADWAY PLANS. REINFORCING STEEL IN THE WING WALL MAY BE SHIFTED AS NECESSARY TO CLEAR THE DRAIN PIPE.

STAIN EXPOSED PART OF WINGS AND FACE OF CAP IN ACCORDANCE WITH THE ARCHITECTURAL CONCRETE SURFACE TREATMENTS SPECIAL PROVISION.

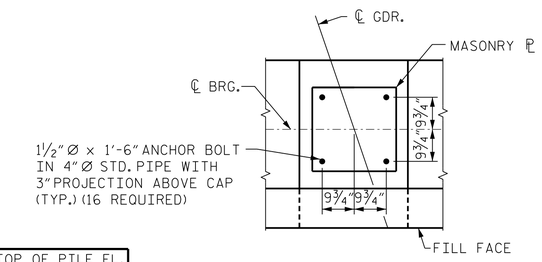

DETAIL "A"

(TYP. AT EACH BRIDGE SEAT)

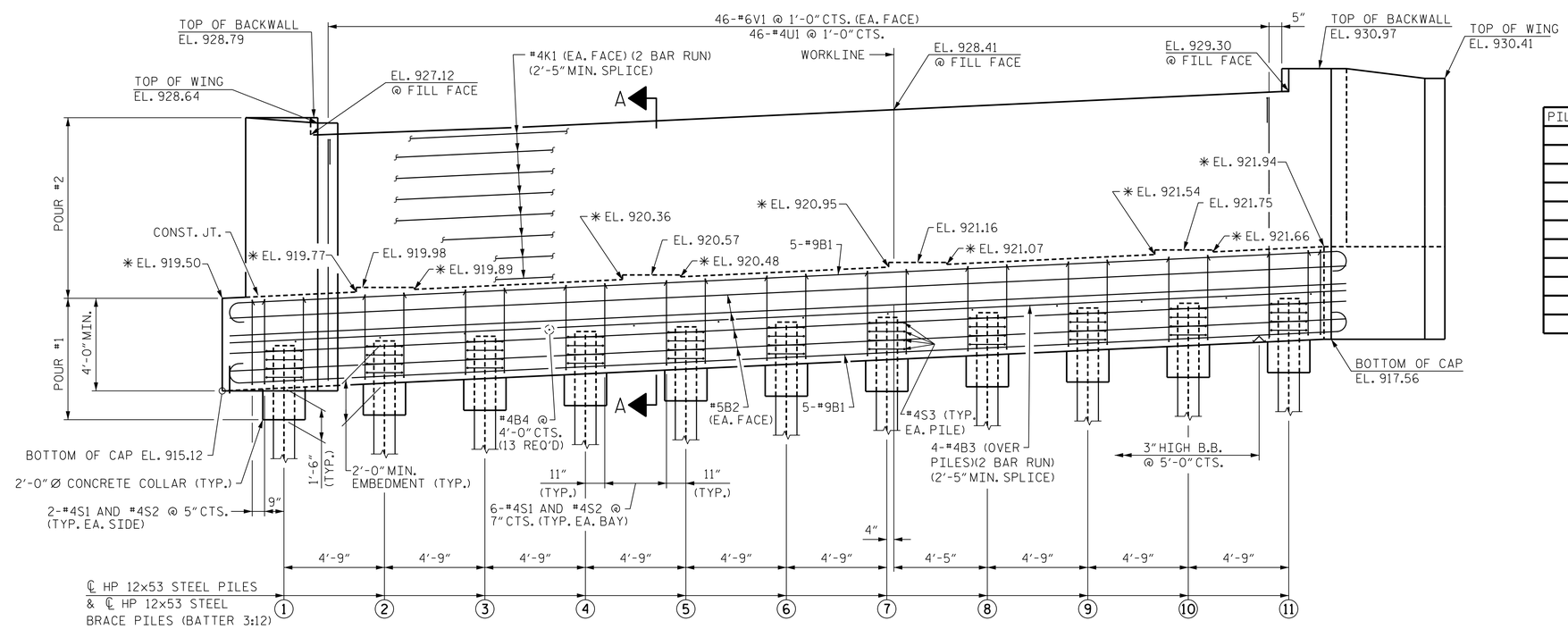

ELEVATION

✱ FOR LOCATION OF ELEVATIONS BETWEEN BUILDUPS, SEE SECTION A-A ON SHEET 4 OF 4.

PILE NO.	TOP OF PILE EL.
1	917.23
2	917.45
3	917.67
4	917.89
5	918.12
6	918.34
7	918.56
8	918.79
9	919.01
10	919.23
11	919.45

PROJECT NO. U-2579B

FORSYTH COUNTY

STATION: 44+08.64 -Y4RPBD-

SHEET 1 OF 4

STATE OF NORTH CAROLINA
DEPARTMENT OF TRANSPORTATION
RALEIGH

SUBSTRUCTURE

END BENT 1

DESIGNED BY:	J. SMITH	DATE :	MAR 2014
DRAWN BY:	K. WHITE	DATE :	MAR 2014
CHECKED BY:	J. SHERMAN	DATE :	APR 2014
DESIGN ENGINEER OF RECORD:	J. DOUGHTY	DATE :	MAY 2014

PARSONS BRINCKERHOFF
434 FAYETTEVILLE STREET
SUITE 1500
RALEIGH, NC 27601
LICENSE NO. F-0165

NORTH CAROLINA PROFESSIONAL SEAL 032967 ENGINEER JASON R. DOUGHTY

8/5/2014

DocuSigned by: Jason R Doughty
00F1C86448274F7...

REVISIONS								SHEET NO.
NO.	BY:	DATE:	NO.	BY:	DATE:			S-570
1			3					TOTAL SHEETS
2			4					707

STR. #15

8/5/2014
173498C_SD_EB_1511.dgn