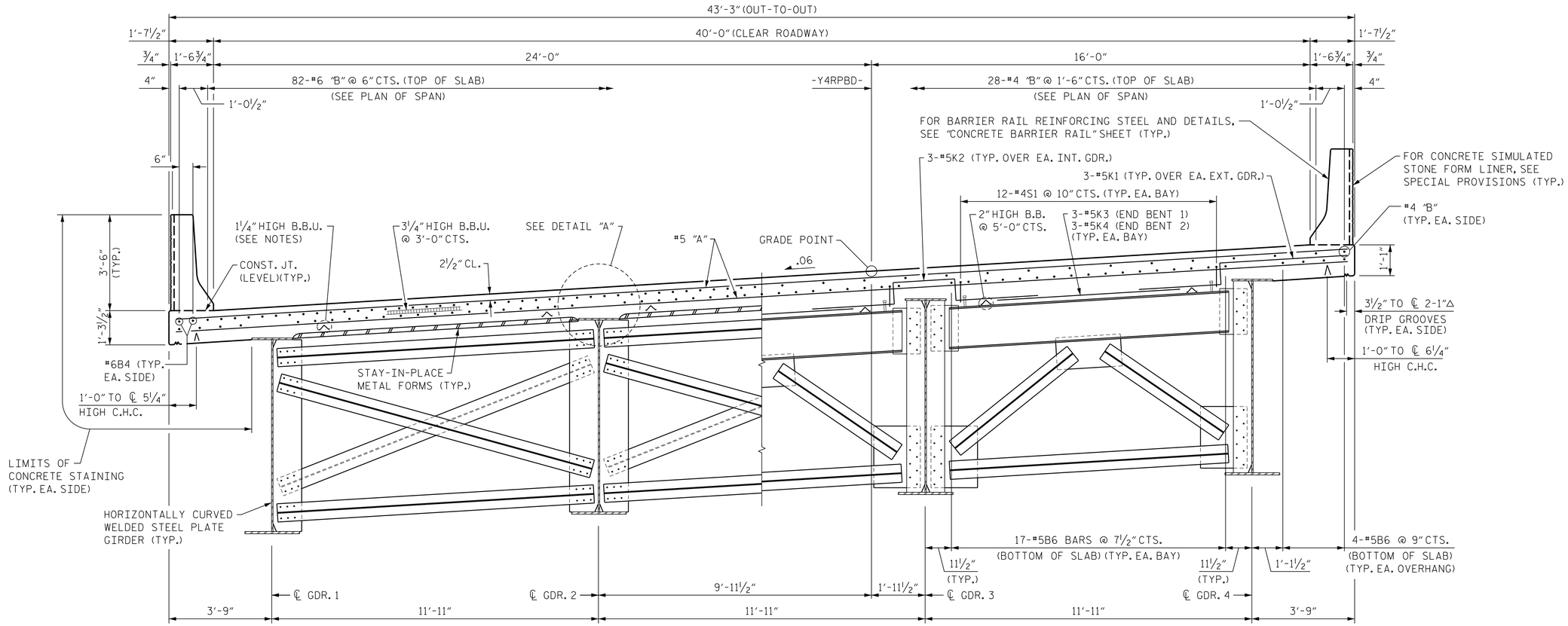

INTERMEDIATE CROSSFRAME

END BENT CROSSFRAME

TYPICAL SECTION

DIMENSIONS ARE RADIAL UNLESS NOTED OTHERWISE

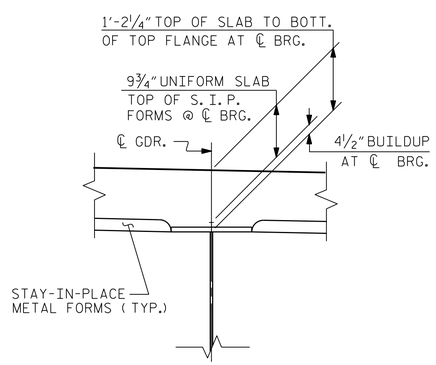

DETAIL "A"

NOTES

PROVIDE 1¼" HIGH BEAM BOLSTERS UPPER AT 3'-0" CTS. ATOP THE METAL STAY-IN-PLACE FORMS TO SUPPORT THE BOTTOM MAT OF "A" BARS. WHEN USING REMOVABLE FORMS, PROVIDE CONTINUOUS HIGH CHAIRS FOR METAL DECK (C.H.C.M.) @ 4'-0" CTS. WITH A HEIGHT TO SUPPORT THE BOTTOM MAT OF "A" BARS A CLEAR DISTANCE OF 2½" ABOVE THE TOP OF THE REMOVABLE FORM.

METAL STAY-IN-PLACE FORMS SHALL NOT BE WELDED TO BEAM OR GIRDER FLANGES IN THE ZONES REQUIRING CHARPY V-NOTCH TEST. SEE STRUCTURAL STEEL DETAIL SHEET.

PREVIOUSLY CAST CONCRETE IN A CONTINUOUS UNIT SHALL HAVE ATTAINED A MINIMUM COMPRESSIVE STRENGTH OF 3,000 PSI BEFORE ADDITIONAL CONCRETE IS CAST IN THE UNIT.

EXTERIOR FACE OF BARRIER RAILS, FACE OF OVERHANGS, AND BOTTOM OF OVERHANGS SHALL BE STAINED. FOR CONCRETE STAINING, SEE SPECIAL PROVISION FOR ARCHITECTURAL CONCRETE SURFACE TREATMENTS.

BARRIER RAIL IN A CONTINUOUS UNIT SHALL NOT BE CAST UNTIL ALL SLAB CONCRETE IN THE UNIT HAS BEEN CAST AND HAS REACHED A MINIMUM COMPRESSIVE STRENGTH OF 3,000 PSI.

STRUCTURAL STEEL ERECTION IN A CONTINUOUS UNIT SHALL BE COMPLETE BEFORE FALSEWORK OR FORMS ARE PLACED ON THE UNIT.

THE CONTRACTOR MAY, WHEN NECESSARY, PROPOSE A SCHEME FOR AVOIDING INTERFERENCE BETWEEN METAL STAY-IN-PLACE FORM SUPPORTS OR FORMS AND GIRDER STIFFENERS OR CONNECTOR PLATES. THE PROPOSAL SHALL BE INDICATED, AS APPROPRIATE, ON EITHER THE STEEL WORKING DRAWINGS OR THE METAL STAY-IN-PLACE FORM WORKING DRAWINGS.

THE CONTRACTOR SHALL ADJUST THE GIRDER BUILDUPS AS NECESSARY TO INCORPORATE A MAXIMUM POSSIBLE VARIATION IN DISC BEARING HEIGHT OF ½", SEE SPECIAL PROVISIONS FOR DISC BEARINGS.

PROJECT NO. U-2579B
FORSYTH COUNTY
STATION: 44+08.64 -Y4RPBD-

STATE OF NORTH CAROLINA
DEPARTMENT OF TRANSPORTATION
RALEIGH

SUPERSTRUCTURE

TYPICAL SECTION

DESIGNED BY:	B. LOFLIN	DATE :	FEB 2014
DRAWN BY:	K. WHITE	DATE :	FEB 2014
CHECKED BY:	J. DOUGHTY	DATE :	APR 2014
DESIGN ENGINEER OF RECORD:	J. DOUGHTY	DATE :	MAY 2014

PARSONS BRINCKERHOFF
434 FAYETTEVILLE STREET
SUITE 1500
RALEIGH, NC 27601
LICENSE NO. F-0165

NORTH CAROLINA PROFESSIONAL SEAL 032967 ENGINEER JASON R. DOUGHTY
7/24/2014
DocuSigned by: Jason R Doughty
00F1C86448274F7...

REVISIONS							SHEET NO.
NO.	BY:	DATE:	NO.	BY:	DATE:		S-550
1			3				TOTAL SHEETS
2			4				707

STR. #15

7/24/2014
173498C_SD_TS_1501.dgn