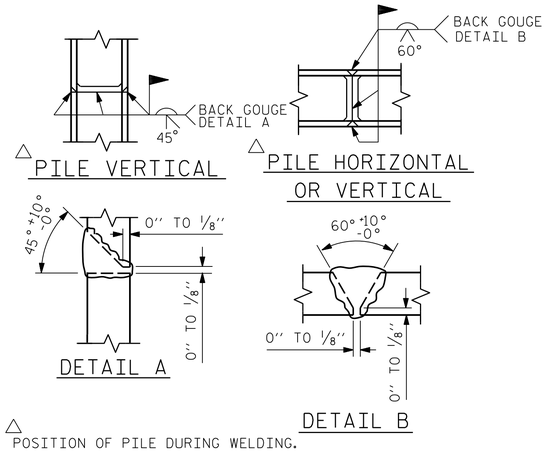

PILE SPLICE DETAILS

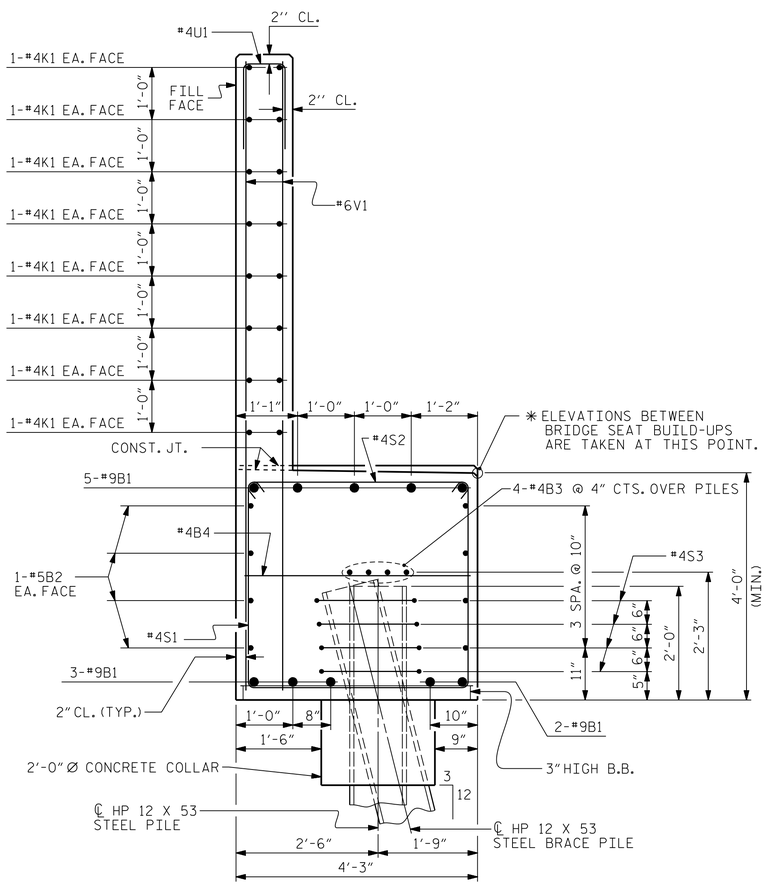

SECTION A-A

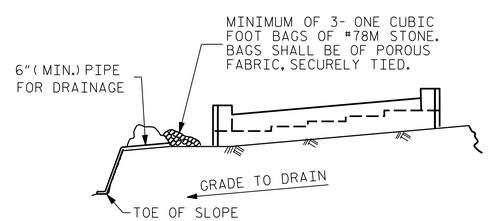

BAGGED STONE AND PIPE SHALL BE PLACED IMMEDIATELY AFTER COMPLETION OF END BENT EXCAVATION. PIPE MAY BE EITHER CONCRETE, CORRUGATED STEEL, CORRUGATED ALUMINUM ALLOY, OR CORRUGATED PLASTIC. PERFORATED PIPE WILL NOT BE ALLOWED.

BAGGED STONE SHALL REMAIN IN PLACE UNTIL THE ENGINEER DIRECTS THAT IT BE REMOVED. THE CONTRACTOR SHALL REMOVE AND DISPOSE OF SILT ACCUMULATIONS AT BAGGED STONE WHEN SO DIRECTED BY THE ENGINEER. BAGS SHALL BE REMOVED AND REPLACED WHENEVER THE ENGINEER DETERMINES THAT THEY HAVE DETERIORATED AND LOST THEIR EFFECTIVENESS.

NO SEPARATE PAYMENT WILL BE MADE FOR THIS WORK AND THE ENTIRE COST OF THIS WORK SHALL BE INCLUDED IN THE UNIT CONTRACT PRICE BID FOR THE SEVERAL PAY ITEMS.

TEMPORARY DRAINAGE AT END BENT

BAR TYPES

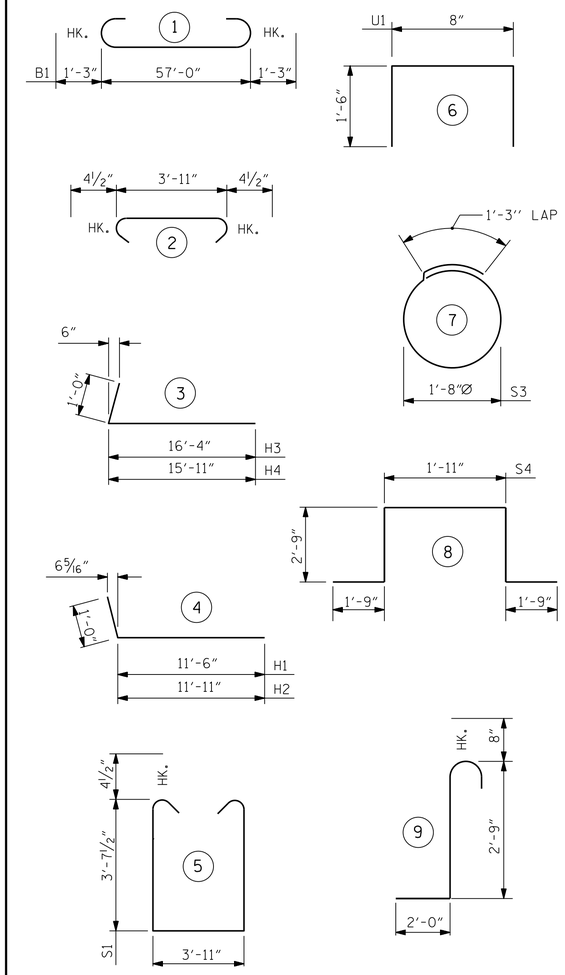

ALL BAR DIMENSIONS ARE OUT TO OUT.

BILL OF MATERIAL
END BENT 2

BAR	NUMBER	SIZE	TYPE	LENGTH	WEIGHT
B1	10	#9	1	59'-6"	2023
B2	8	#5	STR	57'-0"	476
B3	8	#4	STR	29'-9"	159
B4	14	#4	STR	3'-11"	37
H1	33	#6	4	12'-6"	620
H2	33	#6	4	12'-11"	640
H3	16	#4	3	17'-4"	185
H4	16	#4	3	16'-11"	181
K1	32	#4	STR	29'-9"	636
K2	4	#4	STR	3'-3"	9
K3	4	#4	STR	3'-1"	8
S1	68	#4	5	11'-11"	541
S2	68	#4	2	4'-8"	212
S3	48	#4	7	6'-6"	208
S4	3	#6	8	10'-11"	49
S5	3	#6	9	5'-5"	24
U1	50	#4	6	3'-8"	122
V1	100	#6	STR	13'-0"	1953
V2	64	#5	STR	8'-1"	540
V3	82	#5	STR	7'-10"	670

REINFORCING STEEL	LBS.	9293
CLASS A CONCRETE:		
POUR #1 - CAP, LOWER WINGS AND CONCRETE COLLARS	C.Y.	47.0
POUR #2 - BACKWALL AND UPPER WINGS	C.Y.	26.0
CLASS A CONCRETE	C.Y.	73.0
HP 12x53 STEEL PILES 13 REQUIRED.	LIN. FT.	520.0
CONCRETE STAINING	SQ. FT.	400

PROJECT NO. U-2579B
FORSYTH COUNTY
STATION: 44+08.64 -Y4RPBD-

SHEET 4 OF 4

STATE OF NORTH CAROLINA
DEPARTMENT OF TRANSPORTATION
RALEIGH

SUBSTRUCTURE
END BENT 2

DESIGNED BY:	J. SMITH	DATE :	APR 2014
DRAWN BY:	K. WHITE	DATE :	APR 2014
CHECKED BY:	J. SHERMAN	DATE :	APR 2014
DESIGN ENGINEER OF RECORD:	J. DOUGHTY	DATE :	MAY 2014

PARSONS BRINCKERHOFF
434 FAYETTEVILLE STREET
SUITE 1500
RALEIGH, NC 27601
LICENSE NO. F-0165

NORTH CAROLINA PROFESSIONAL SEAL 032967 ENGINEER JASON R. DOUGHTY
7/24/2014
DocuSigned by: Jason R Doughty
00F1C86448274F7...

REVISIONS						SHEET NO.
NO.	BY:	DATE:	NO.	BY:	DATE:	S-580
1			3			TOTAL SHEETS
2			4			707

STR. #15

7/24/2014
173498C_SD_EB_1524.dgn