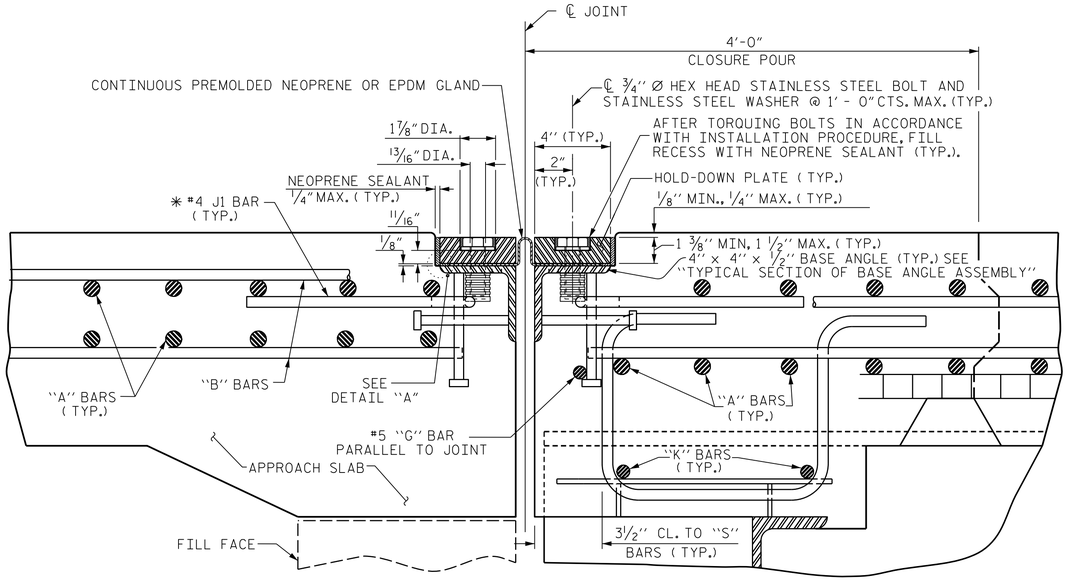

EXPANSION JOINT DETAILS

SECTION NORMAL TO JOINT

✳ THE QUANTITY OF #4 J1 BARS ON THE BILL OF MATERIAL IS BASED ON 1'-0" CENTERS. J1 BARS SHALL BE PLACED AT EACH VERTICAL STUD ANCHOR BOLT. IN THE EVENT THAT THE NUMBER OF VERTICAL STUD ANCHORS EXCEEDS THE NUMBER OF J1 BARS SPECIFIED, ADDITIONAL J1 BARS WILL NOT BE REQUIRED.

INSTALLATION PROCEDURE

1. A TEMPLATE OR OTHER SUITABLE DEVICE SHALL BE USED TO FORM THE TOP OF THE EXPANSION JOINT SEAL BLOCKOUT TO THE PROPER DEPTH AND WIDTH. THE TEMPLATE SHALL BE 4⅛" TO 4¼" WIDE AND OF SUCH THICKNESS AS TO PROVIDE FOR CORRECT FINAL ELEVATION OF TOP OF HOLD-DOWN PLATES. THE TEMPLATE SHALL BE ATTACHED TO THE BASE ANGLE ASSEMBLY WITH THE ¾" Ø HEX HEAD BOLTS PROVIDED FOR THE HOLD-DOWN PLATES. A 1" Ø HOLE SHALL BE PROVIDED IN THE TEMPLATE CENTERED OVER EACH WEEP HOLE IN THE 4" X 4" X ½" BASE ANGLE. OTHER METHODS OF INSURING DRAINAGE THROUGH WEEP HOLES MAY BE EMPLOYED SUBJECT TO ENGINEER'S APPROVAL.
2. AFTER THE CONCRETE HAS BEEN CAST ON BOTH SIDES OF THE JOINT, REMOVE THE TEMPLATE. THOROUGHLY CLEAN THE BOLT HOLES AND THE ANGLE PLATE. REMOVE ANY EXCESS CONCRETE THAT COMES OUT OF THE WEEP HOLES. ANY DAMAGED STEEL SHALL BE COATED WITH A MINIMUM THICKNESS OF 4 DRY MILS OF ZINC-RICH PAINT IN ACCORDANCE WITH THE STANDARD SPECIFICATIONS.
3. LAY THE GLAND ON THE BASE ANGLE AND FIELD MARK THE GLAND FOR THE BOLT HOLES. HOLES IN THE GLAND SHALL BE PUNCHED ⅞" IN DIAMETER WITH A HAND PUNCH.
4. IN ORDER TO CHECK FOR PROPER ALIGNMENT, PLACE THE GLAND AND HOLD-DOWN PLATES ON THE BASE ANGLE. DO NOT APPLY NEOPRENE SEALANT. BOLT THE HOLD-DOWN PLATES TO THE BASE ANGLE BUT DO NOT TIGHTEN. THE ENGINEER SHALL INSPECT THE JOINT SEAL DEVICE FOR PROPER ALIGNMENT.
5. AFTER INSPECTION, REMOVE THE HOLD-DOWN PLATES AND GLAND. APPLY NEOPRENE SEALANT TO THE BASE ANGLE IN ACCORDANCE WITH THE "INSTALLATION SKETCH". PLACE GLAND AND HOLD-DOWN PLATES ON THE BASE ANGLE. BOLT THE HOLD-DOWN PLATES TO THE BASE ANGLE ASSEMBLY AND TOROUE THE BOLTS TO 88 FT-LBS WITH A TOROUE WRENCH. CHECK THE TOROUE AFTER THREE (3) HOURS AND, IF NECESSARY, RETIGHTEN TO 88 FT-LBS. A FINAL CHECK SHALL BE MADE AT SEVEN (7) DAYS. TOROUE SHALL NOT BE LESS THAN 80 FT-LBS AFTER SEVEN (7) DAYS.
6. AFTER PROPER TOROUING, CLEAN THE BOLT HOLE RECESSES AND THE RECESS BETWEEN THE JOINT SEAL DEVICE AND CONCRETE, COMPLETELY FILL THESE RECESSES WITH NEOPRENE SEALANT.

GENERAL NOTES

1. FOR EXPANSION JOINT SEALS, SEE SPECIAL PROVISIONS.
2. ALL PLATES AND ANGLES SHALL CONFORM TO AASHTO M270 GRADE 36 STEEL OR APPROVED EQUAL. ALL HOLD-DOWN BOLTS SHALL CONFORM TO ASTM F593 ALLOY 304 STAINLESS STEEL AND WASHERS SHALL CONFORM TO ASTM F844 EXCEPT THEY SHALL BE MADE FROM ALLOY 304 STAINLESS STEEL. ALL STUD ANCHORS SHALL CONFORM TO AASHTO M169, GRADES 1010 THRU 1020 OR APPROVED EQUAL. ALL CONCRETE INSERTS SHALL BE CLOSED END AND SHALL CONFORM TO AASHTO M169, GRADE 12L14. TENSILE CAPACITY SHALL BE 3000 LBS. MIN.
3. A PREMOLDED CORRUGATED OR NON-CORRUGATED GLAND SHALL BE USED FOR JOINTS SKEWED BETWEEN 50° THRU 130°. FOR JOINTS SKEWED LESS THAN 50° OR MORE THAN 130°, ONLY A CORRUGATED GLAND SHALL BE USED.
4. CLOSED END FERRULES AND STUD ANCHORS SHALL BE SHOP WELDED AND ALL HOLES SHALL BE SHOP DRILLED AS SHOWN ON PLANS. STUD ANCHORS SHALL BE ELECTRIC ARC END WELDED WITH COMPLETE FUSION.
5. SURFACES COMING IN CONTACT WITH NEOPRENE SHALL BE GROUND SMOOTH PRIOR TO METALLIZING.
6. UPON COMPLETION OF SHOP FABRICATION, THE HOLD DOWN PLATE AND BASE ANGLE ASSEMBLY, AS SHOWN IN THE "TYPICAL SECTION OF BASE ANGLE ASSEMBLY", SHALL BE METALLIZED. SEE SPECIAL PROVISION FOR THERMAL SPRAYED COATINGS (METALLIZATION).
7. BASE ANGLE ASSEMBLY SHALL BE CONTINUOUS FOR THE LENGTH OF THE JOINT. AT CROWN BREAKS, THE ENDS OF THE BASE ANGLE ASSEMBLY SHALL BE CUT PARALLEL TO THE BRIDGE CENTERLINE FOR SKEWS LESS THAN 80° AND GREATER THAN 100°. FINISHED WELD SHALL BE GROUND SMOOTH AND COATED WITH A MINIMUM THICKNESS OF 4 DRY MILS OF ZINC-RICH PAINT IN ACCORDANCE WITH THE STANDARD SPECIFICATIONS.
8. FIELD SPLICES OF HOLD-DOWN PLATES SHALL BE KEPT TO A MINIMUM. CONTRACTOR SHALL FURNISH DETAILED PLANS SHOWING PROPOSED SPLICE LOCATIONS FOR APPROVAL. HOLD-DOWN PLATES SHALL NOT EXCEED 20' LENGTHS UNLESS APPROVED BY THE ENGINEER.
9. NO ALTERNATE JOINT DETAILS SHALL BE PERMITTED IN LIEU OF THOSE SHOWN ON THESE PLANS.
10. THE CONTRACTOR MAY, AT HIS OPTION, USE ADHESIVELY ANCHORED ANCHOR BOLTS IN PLACE OF CONCRETE INSERTS FOR COVER PLATES. THE YIELD LOAD OF THE ¾" Ø BOLT IS 10 KIPS. FIELD TESTING OF THE ADHESIVE BONDING SYSTEM IS NOT REQUIRED.

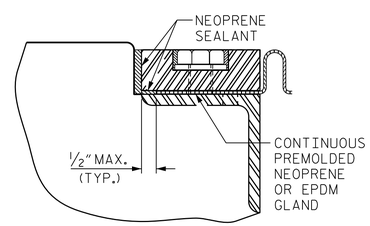

DETAIL "A"

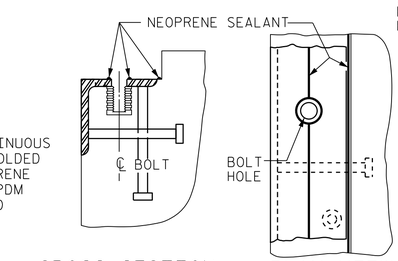

CROSS SECTION PLAN VIEW

INSTALLATION SKETCH

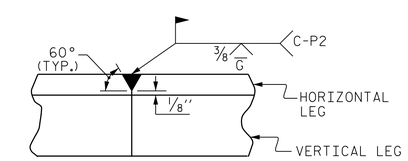

DETAIL- FIELD WELD SPLICE OF BASE ANGLE

MOVEMENT AND SETTING AT JOINT					
END BENT NO.	SKEW ANGLE	TOTAL MOVEMENT (ALONG ℄ RDWY)	PERPENDICULAR JOINT OPENING AT 45° F	PERPENDICULAR JOINT OPENING AT 60° F	PERPENDICULAR JOINT OPENING AT 90° F
1	111°-22'-27"	1"	1⅞"	1¾"	1⁷⁄₁₆"
2	117°-24'-19"	1⅛"	1¹⁵⁄₁₆"	1¾"	1⅜"

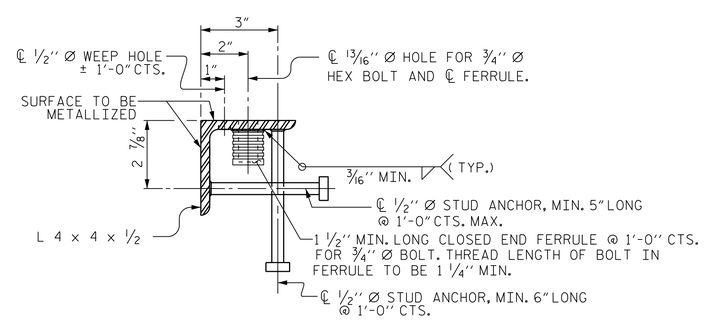

TYPICAL SECTION OF BASE ANGLE ASSEMBLY

PROJECT NO. U-2579B
FORSYTH COUNTY
STATION: 44+08.64 -Y4RPBD-

SHEET 1 OF 2

STATE OF NORTH CAROLINA
DEPARTMENT OF TRANSPORTATION
RALEIGH

STANDARD

EXPANSION JOINT SEAL DETAILS

PARSONS BRINCKERHOFF
434 FAYETTEVILLE STREET
SUITE 1500
RALEIGH, NC 27601
LICENSE NO. F-0165

NORTH CAROLINA PROFESSIONAL SEAL 032967 ENGINEER JASON R. DOUGHTY
DocuSigned by: 6/2/2014
Jason R Doughty
00F1C86448274F7...

REVISIONS								SHEET NO.
NO.	BY:	DATE:	NO.	BY:	DATE:			S-567
1			3					TOTAL SHEETS
2			4					707

DESIGNED BY:	J. SMITH	DATE :	APR 2014		
DRAWN BY:	K. WHITE	DATE :	APR 2014		
CHECKED BY:	B. LOFLIN	DATE :	APR 2014		
DESIGN ENGINEER OF RECORD:	J. DOUGHTY	DATE :	MAY 2014		

DRAWN BY :	REK	9/87	REV. 5/7/03R	RWW/JTE
CHECKED BY :	CRK	10/87	REV. 5/1/06R	TLA/GM
			REV. 10/1/11	MAA/GM

6/2/2014
173498C_SD_EJ_15+td.dgn

STR. #15 STD. NO. EJS1 (SHT 2a)