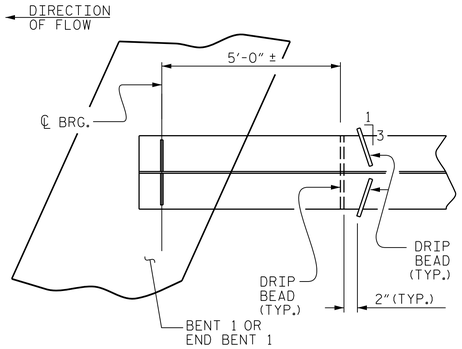

PART PLAN - BOTTOM FLANGE

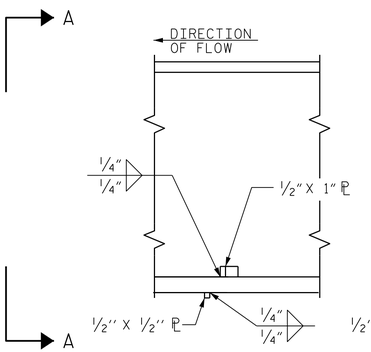

SECTION

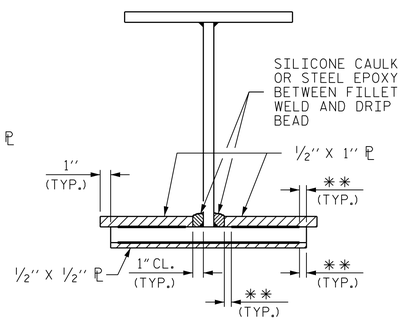

VIEW A-A

**SEE "WELD TERMINATION DETAILS"

DRIP BEAD DETAILS

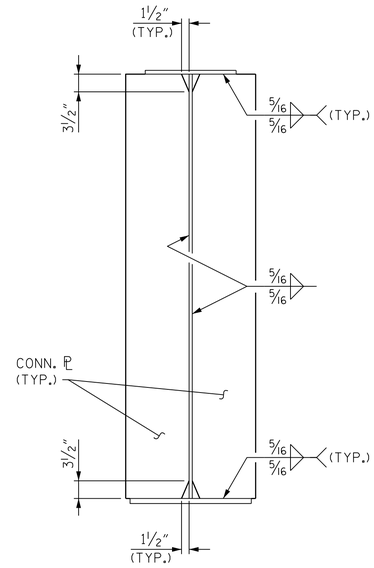

CONNECTOR PLATE DETAIL

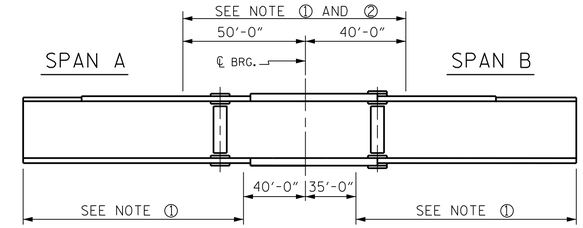

GIRDER MAKE UP

NOTE ① : CHARPY V-NOTCH TESTS ARE REQUIRED FOR ALL TOP OR BOTTOM FLANGE PLATES WHICH FALL WITHIN THESE LIMITS, ALL WEB PLATES, AND ALL SPLICE PLATES. IF A PERMITTED SHOP FLANGE SPLICE IS NOT USED, CHARPY V-NOTCH TESTS WILL BE REQUIRED FOR THE ENTIRE FLANGE PLATE. FOR CHARPY V-NOTCH TESTS, SEE ARTICLE 1072-7 OF THE STANDARD SPECIFICATIONS.

NOTE ② : NO WELDING OF FORMS OR FALSEWORK TO THE TOP FLANGE WILL BE PERMITTED IN THIS REGION

CHARPY V-NOTCH TESTS FOR CONTINUOUS PLATE GIRDERS

DIMENSIONS SHOWN APPLY TO ALL GIRDERS

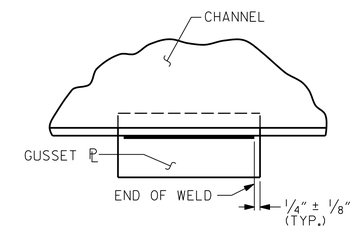

TYPICAL GUSSET PLATE CONNECTION

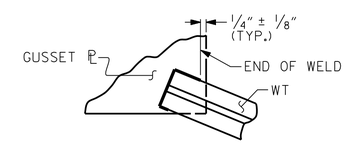

TYPICAL "TEE" TO GUSSET PLATE CONNECTION

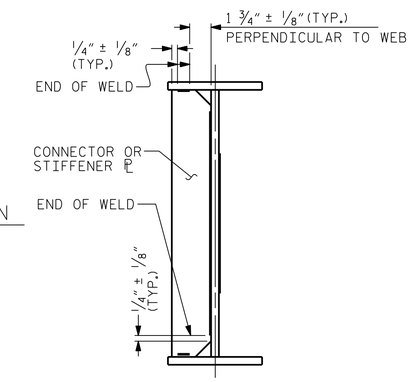

TYPICAL STIFFENER OR CONNECTOR PLATE CONNECTIONS

WELD TERMINATION DETAILS

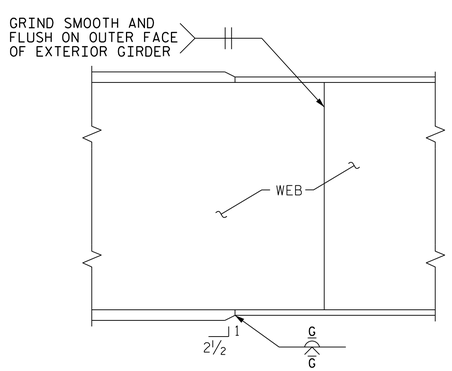

TYPICAL FLANGE AND WEB BUTT JOINT

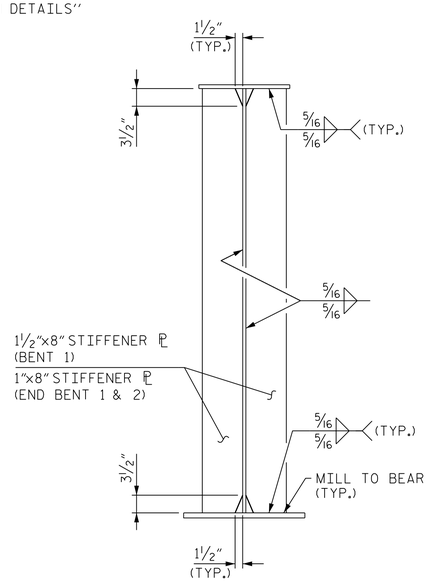

BEARING STIFFENER

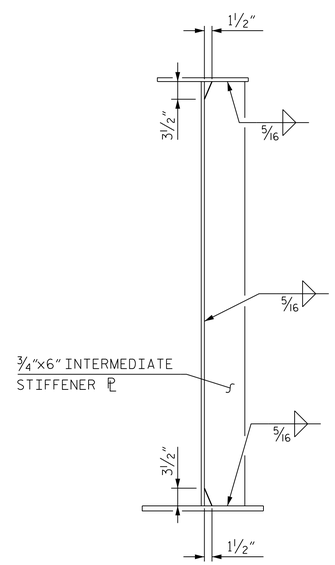

INTERMEDIATE STIFFENER

GIRDERS 1, 2 AND 3 SHOWN, GIRDER 4 OPPOSITE HAND.

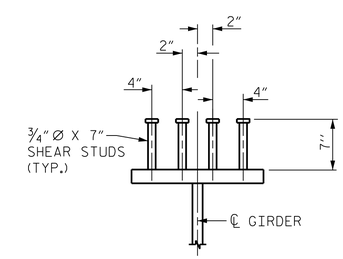

SHEAR STUD DETAILS

FOR SHEAR STUD LAYOUT AT FIELD SPLICE, SEE BOLTED FIELD SPLICE SHEETS.

PROJECT NO. U-2579B

FORSYTH COUNTY

STATION: 44+08.64 -Y4RPBD-

STATE OF NORTH CAROLINA
DEPARTMENT OF TRANSPORTATION
RALEIGH

SUPERSTRUCTURE

STRUCTURAL STEEL DETAILS

DESIGNED BY:	B. LOFLIN	DATE :	MAR 2014
DRAWN BY:	K. WHITE	DATE :	MAR 2014
CHECKED BY:	J. DOUGHTY	DATE :	APR 2014
DESIGN ENGINEER OF RECORD:	J. DOUGHTY	DATE :	MAY 2014

PARSONS BRINCKERHOFF
434 FAYETTEVILLE STREET
SUITE 1500
RALEIGH, NC 27601
LICENSE NO. F-0165

NORTH CAROLINA PROFESSIONAL SEAL 032967 ENGINEER JASON R. DOUGHTY
7/2/2014

DocuSigned by: Jason Doughty
00F1C86448274F7...

REVISIONS						SHEET NO.
NO.	BY:	DATE:	NO.	BY:	DATE:	S-559
1			3			TOTAL SHEETS
2			4			707

STR. #15

7/2/2014
I73498C_SD_SS_1501.dgn