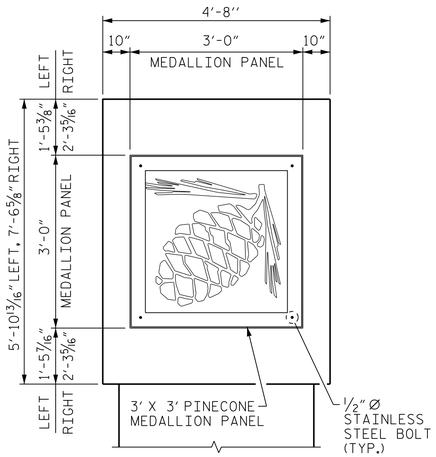

END VIEW

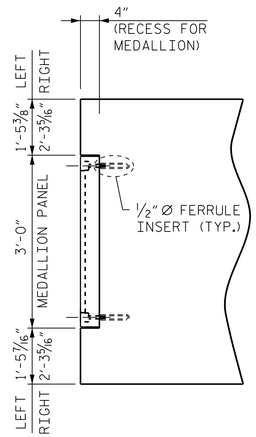

SECTION THRU CAP

ATTACHMENT OF MEDALLION TO BENT

NOTES :

ADJUST DIMENSIONS AS NECESSARY TO CENTER PANEL ON END OF BENT CAP AND ALIGN PANEL WITHIN RECESS.

USE CLASS "A" CONCRETE WITH PEA GRAVEL AGGREGATE IN THE DECORATIVE PANELS. IN ADDITION TO THE #3 REINFORCING BARS, CONCRETE TO BE REINFORCED WITH POLYPROPYLENE FIBERS PER THE MANUFACTURERS' RECOMMENDATIONS.

PREFORMED BEARING PAD SHALL CONFORM TO SECTION 1079-1 OF THE STANDARD SPECIFICATIONS. AT THE CONTRACTOR'S OPTION, AN UNREINFORCED PLAIN ELASTOMERIC PAD MAY BE USED.

FOR STAIN COLORS SEE ARCHITECTURAL CONCRETE SURFACE TREATMENTS SPECIAL PROVISION.

FERRULES SHALL BE MADE FROM ALLOY 304 STAINLESS STEEL AND SHALL HAVE A MINIMUM LENGTH OF THREADS OF 1 1/2" FOR 1/2" DIAMETER FERRULES.

BOLTS SHALL MEET THE REQUIREMENTS OF ASTM F593 ALLOY 304 STAINLESS STEEL WITH MINIMUM 75,000 PSI TENSILE STRENGTH, AND WASHERS SHALL MEET THE REQUIREMENTS OF ASTM F844 EXCEPT THEY SHALL BE MADE FROM ALLOY 304 STAINLESS STEEL.

THE CONTRACTOR MAY USE 1/2" DIAMETER ADHESIVELY ANCHORED THREADED ROD IN PLACE OF THE FERRULE ANCHOR INSERTS. FIELD TESTING OF THE ADHESIVE ANCHORS IS NOT REQUIRED.

WHEN ADHESIVELY ANCHORED THREADED RODS ARE USED, RODS SHALL MEET THE REQUIREMENTS OF ASTM A276, ALLOY 304 STAINLESS STEEL WITH MINIMUM 75,000 PSI TENSILE STRENGTH, NUTS SHALL MEET THE REQUIREMENTS OF ASTM F594 ALLOY 304 STAINLESS STEEL AND WASHERS SHALL MEET THE REQUIREMENTS OF ASTM F844 EXCEPT THEY SHALL BE MADE FROM ALLOY 304 STAINLESS STEEL.

THE COST OF THE ATTACHMENT ANCHORS WITH BOLTS AND WASHER IN PLACE SHALL BE INCLUDED IN THE PRICE BID PER EACH FOR THE CONCRETE MEDALLION PANEL.

DETAILS ON THIS SHEET HAVE BEEN PROVIDED BY NCDOT.

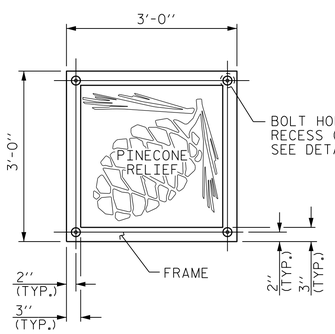

FRONT VIEW

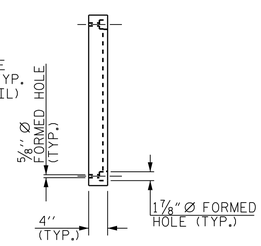

SIDE VIEW

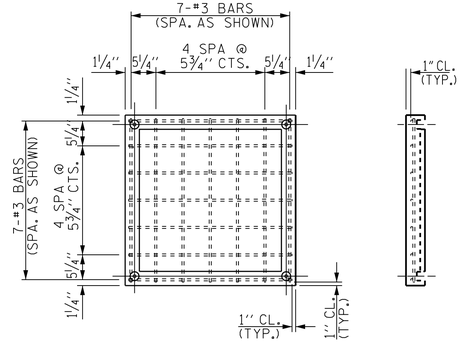

REINFORCING STEEL

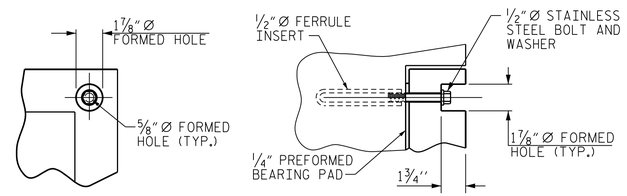

ATTACHMENT DETAILS

PINE CONE MEDALLION PANEL DETAILS

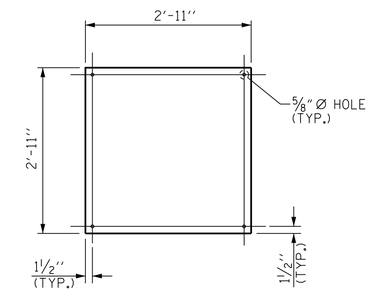

1/4" PREFORMED BEARING PAD

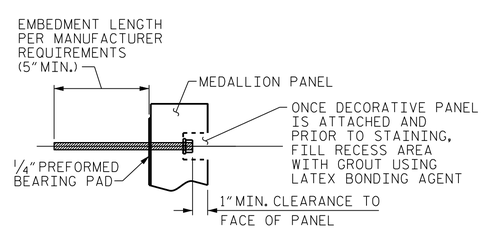

OPTIONAL ATTACHMENT DETAIL

(SEE NOTES)

PROJECT NO. U-2579B

FORSYTH COUNTY

STATION: 44+08.64 -Y4RPBD-

STATE OF NORTH CAROLINA
DEPARTMENT OF TRANSPORTATION
RALEIGH

DECORATIVE PANEL DETAILS

DESIGNED BY:	B. LOFLIN	DATE :	JULY 2014
DRAWN BY:	K. WHITE	DATE :	JULY 2014
CHECKED BY:	J. DOUGHTY	DATE :	JULY 2014
DESIGN ENGINEER OF RECORD:	J. DOUGHTY	DATE :	JULY 2014

PARSONS BRINCKERHOFF
434 FAYETTEVILLE STREET
SUITE 1500
RALEIGH, NC 27601
LICENSE NO. F-0165

NORTH CAROLINA PROFESSIONAL SEAL 032967 ENGINEER JASON R. DOUGHTY
7/24/2014
DocuSigned by: Jason R Doughty
00F1C86448274F7...

REVISIONS

NO.	BY:	DATE:	NO.	BY:	DATE:
1			3		
2			4		

SHEET NO. S-576A
TOTAL SHEETS 707

STR. #15

7/24/2014
173498C_SD_IB_1503A.dgn