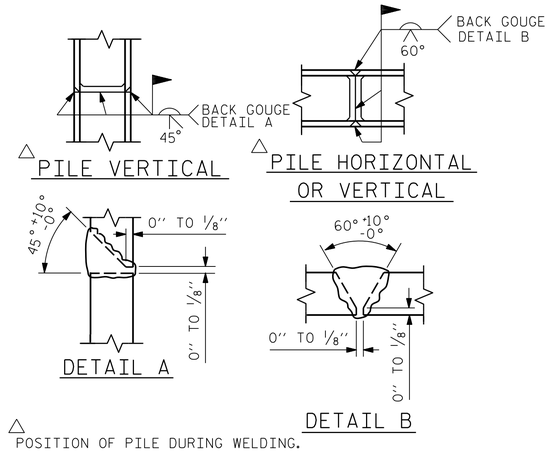

PILE SPLICE DETAILS

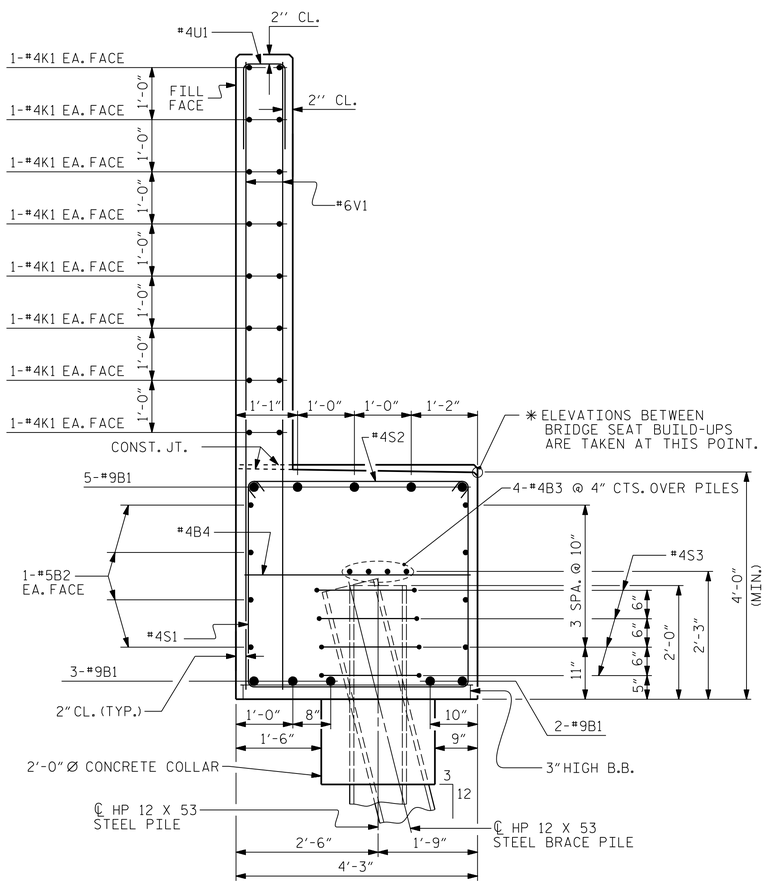

SECTION A-A

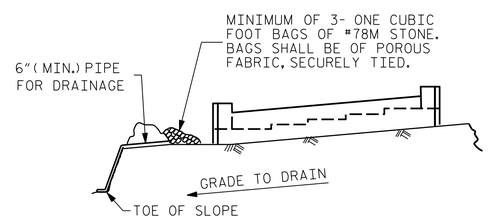

BAGGED STONE AND PIPE SHALL BE PLACED IMMEDIATELY AFTER COMPLETION OF END BENT EXCAVATION. PIPE MAY BE EITHER CONCRETE, CORRUGATED STEEL, CORRUGATED ALUMINUM ALLOY, OR CORRUGATED PLASTIC. PERFORATED PIPE WILL NOT BE ALLOWED.

BAGGED STONE SHALL REMAIN IN PLACE UNTIL THE ENGINEER DIRECTS THAT IT BE REMOVED. THE CONTRACTOR SHALL REMOVE AND DISPOSE OF SILT ACCUMULATIONS AT BAGGED STONE WHEN SO DIRECTED BY THE ENGINEER. BAGS SHALL BE REMOVED AND REPLACED WHENEVER THE ENGINEER DETERMINES THAT THEY HAVE DETERIORATED AND LOST THEIR EFFECTIVENESS.

NO SEPARATE PAYMENT WILL BE MADE FOR THIS WORK AND THE ENTIRE COST OF THIS WORK SHALL BE INCLUDED IN THE UNIT CONTRACT PRICE BID FOR THE SEVERAL PAY ITEMS.

TEMPORARY DRAINAGE AT END BENT

BAR TYPES

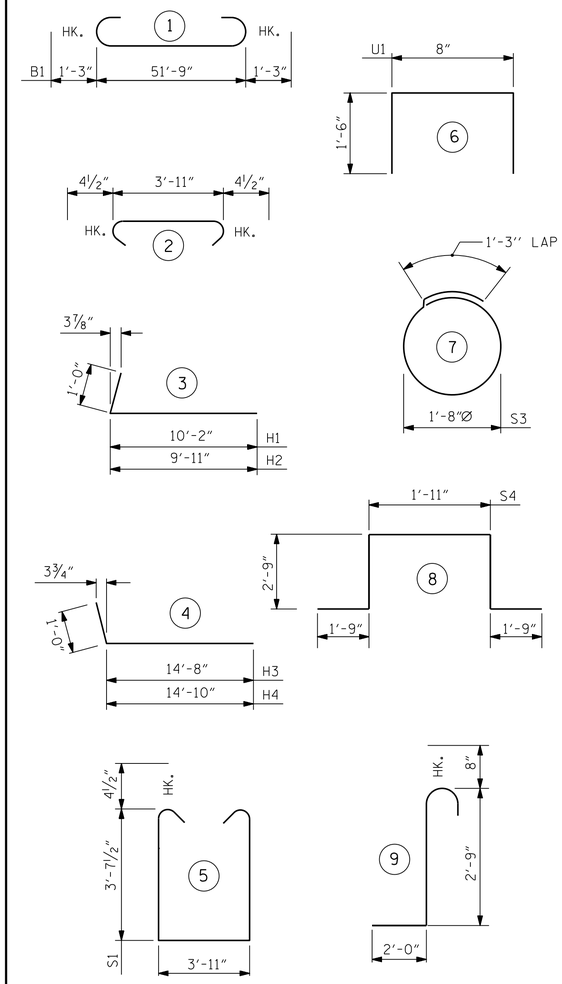

ALL BAR DIMENSIONS ARE OUT TO OUT.

BILL OF MATERIAL
END BENT 1

BAR	NUMBER	SIZE	TYPE	LENGTH	WEIGHT
B1	10	#9	1	54'-3"	1845
B2	8	#5	STR	51'-9"	432
B3	8	#4	STR	27'-1"	145
B4	13	#4	STR	3'-11"	34
H1	22	#6	3	11'-2"	369
H2	22	#6	3	10'-11"	361
H3	15	#4	4	15'-8"	157
H4	15	#4	4	15'-10"	159
K1	32	#4	STR	27'-1"	579
K2	4	#4	STR	2'-8"	7
K3	4	#4	STR	2'-7"	7
S1	64	#4	5	11'-11"	509
S2	64	#4	2	4'-8"	200
S3	44	#4	7	6'-6"	191
S4	3	#6	8	10'-11"	49
S5	3	#6	9	5'-5"	24
U1	46	#4	6	3'-8"	113
V1	92	#6	STR	11'-3"	1555
V2	56	#5	STR	7'-8"	448
V3	72	#5	STR	7'-7"	569

REINFORCING STEEL LBS. 7753

CLASS A CONCRETE:
POUR #1 - CAP, LOWER WINGS AND CONCRETE COLLARS C.Y. 43.0
POUR #2 - BACKWALL AND UPPER WINGS C.Y. 23.0
CLASS A CONCRETE C.Y. 66.0

HP 12x53 STEEL PILES
12 REQUIRED. LIN. FT. 840.0

CONCRETE STAINING SQ. FT. 360

PROJECT NO. U-2579B
FORSYTH COUNTY
STATION: 44+08.64 -Y4RPBD-

SHEET 4 OF 4

STATE OF NORTH CAROLINA
DEPARTMENT OF TRANSPORTATION
RALEIGH
SUBSTRUCTURE
END BENT 1

DESIGNED BY:	J. SMITH	DATE :	APR 2014
DRAWN BY:	K. WHITE	DATE :	APR 2014
CHECKED BY:	J. SHERMAN	DATE :	APR 2014
DESIGN ENGINEER OF RECORD:	J. DOUGHTY	DATE :	MAY 2014

PARSONS BRINCKERHOFF
434 FAYETTEVILLE STREET
SUITE 1500
RALEIGH, NC 27601
LICENSE NO. F-0165

NORTH CAROLINA PROFESSIONAL SEAL 032967 ENGINEER JASON R. DOUGHTY
7/24/2014
DocuSigned by: Jason R Doughty
00F1C86448274F7...

REVISIONS						SHEET NO.
NO.	BY:	DATE:	NO.	BY:	DATE:	S-573
1			3			TOTAL SHEETS
2			4			707

STR. #15

7/24/2014
173498C_SD_EB_1514.dgn