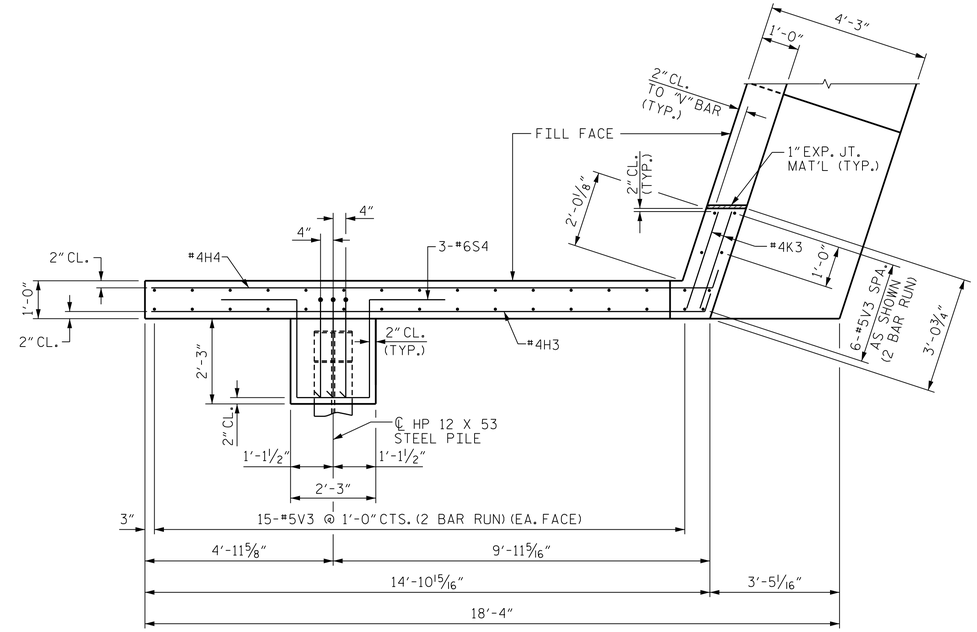

PLAN OF WING - (W2)

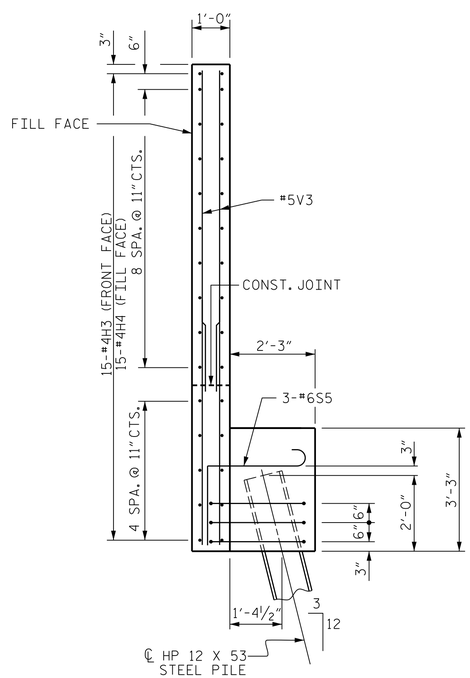

SECTION Y-Y

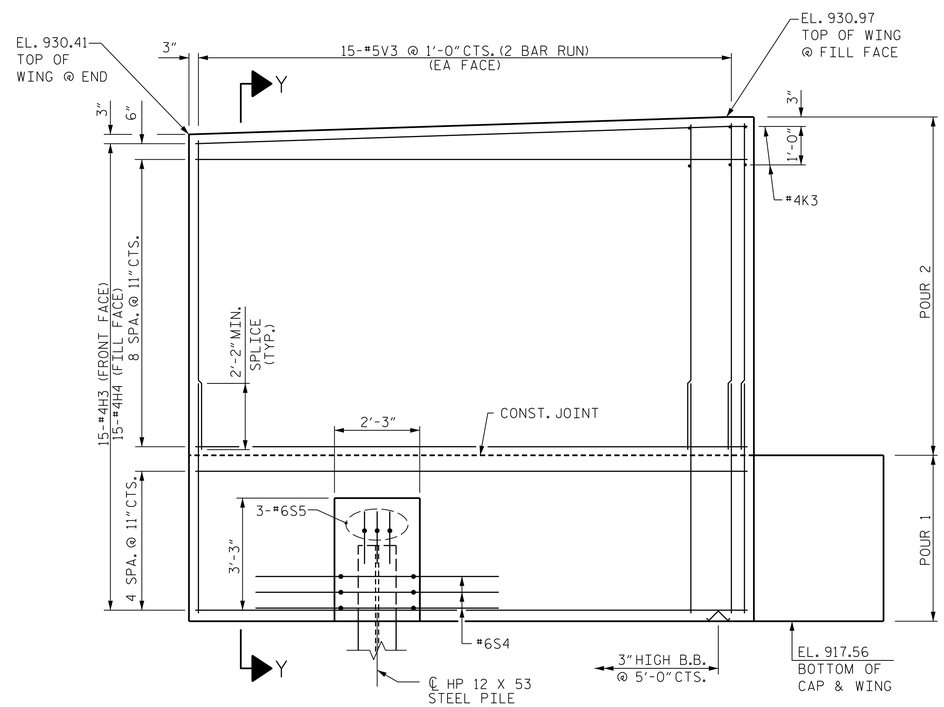

ELEVATION OF WING - (W2)

PROJECT NO. U-2579B

FORSYTH COUNTY

STATION: 44+08.64 -Y4RPBD-

SHEET 3 OF 4

STATE OF NORTH CAROLINA
DEPARTMENT OF TRANSPORTATION
RALEIGH

SUBSTRUCTURE

END BENT 1

DESIGNED BY:	J. SMITH	DATE :	MAR 2014
DRAWN BY:	K. WHITE	DATE :	MAR 2014
CHECKED BY:	J. SHERMAN	DATE :	APR 2014
DESIGN ENGINEER OF RECORD:	J. DOUGHTY	DATE :	MAY 2014

PARSONS BRINCKERHOFF
434 FAYETTEVILLE STREET
SUITE 1500
RALEIGH, NC 27601
LICENSE NO. F-0165

NORTH CAROLINA PROFESSIONAL SEAL 032967 ENGINEER JASON R. DOUGHTY

DocuSigned by: Jason R Doughty 00F1C86448274F7... 6/2/2014

REVISIONS						SHEET NO.
NO.	BY:	DATE:	NO.	BY:	DATE:	S-572
1			3			TOTAL SHEETS
2			4			707

STR. #15

6/2/2014
173498C_SD_EB_1513.dgn