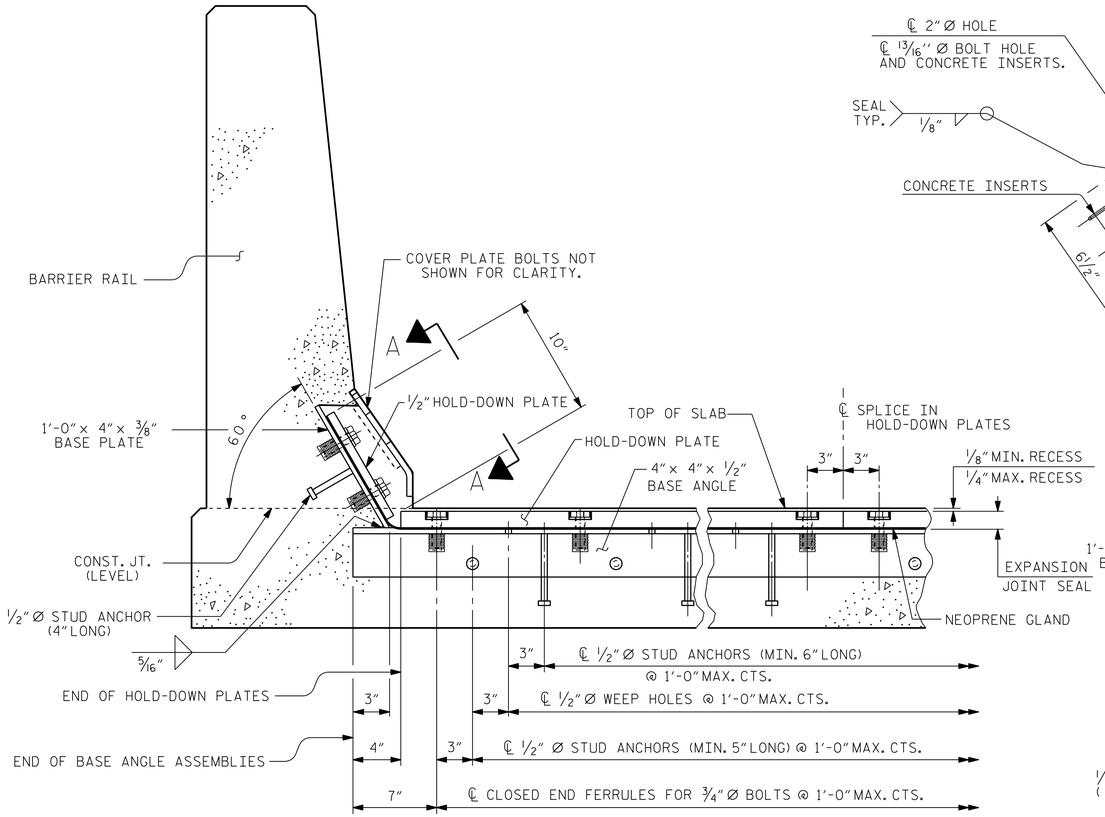

SECTION THRU RAIL NORMAL TO JOINT

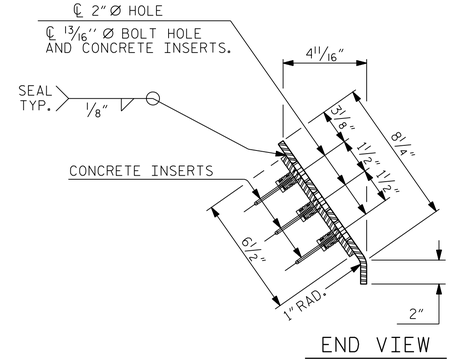

END VIEW

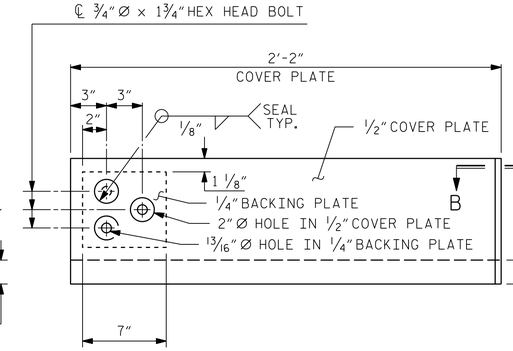

TYPE I - ELEVATION VIEW

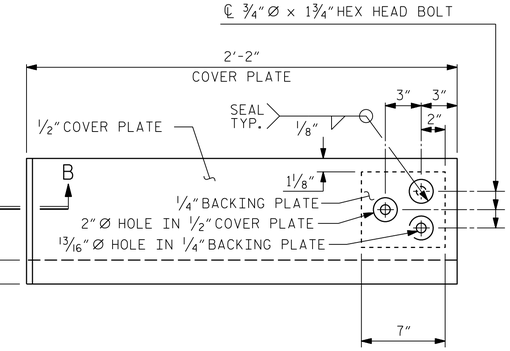

TYPE II - ELEVATION VIEW

COVER PLATE DETAILS

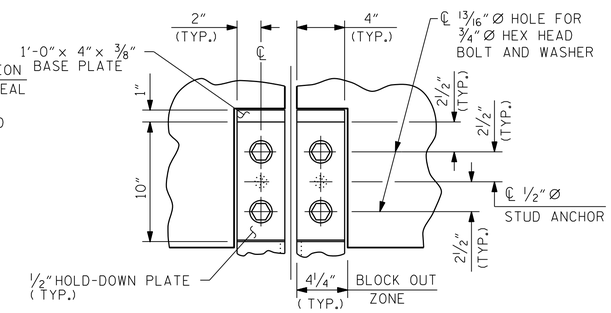

SECTION A - A

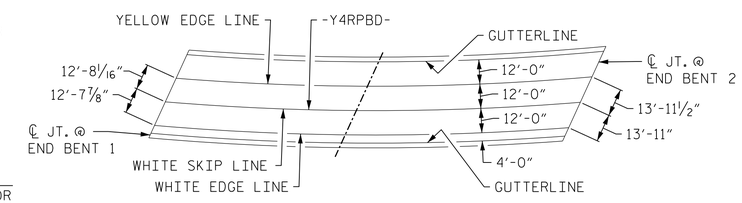

PAVEMENT MARKING ALIGNMENT

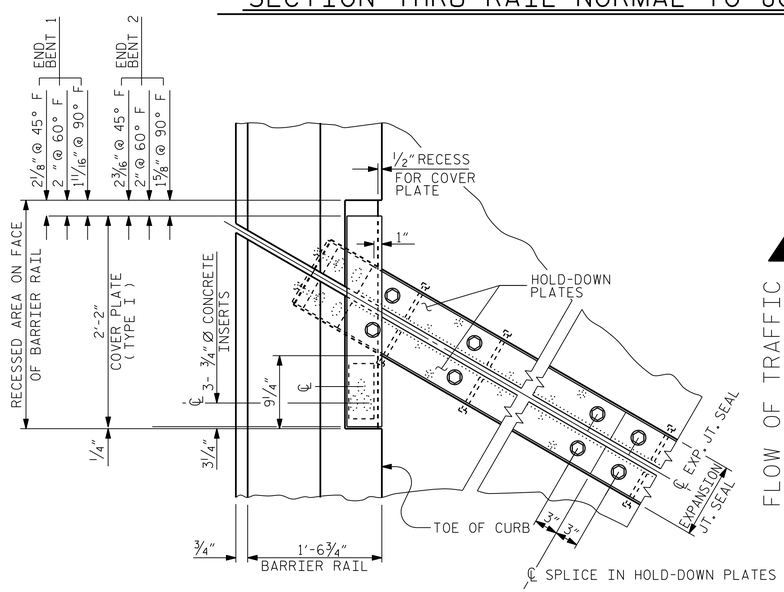

PLAN OF EXPANSION JOINT SEAL

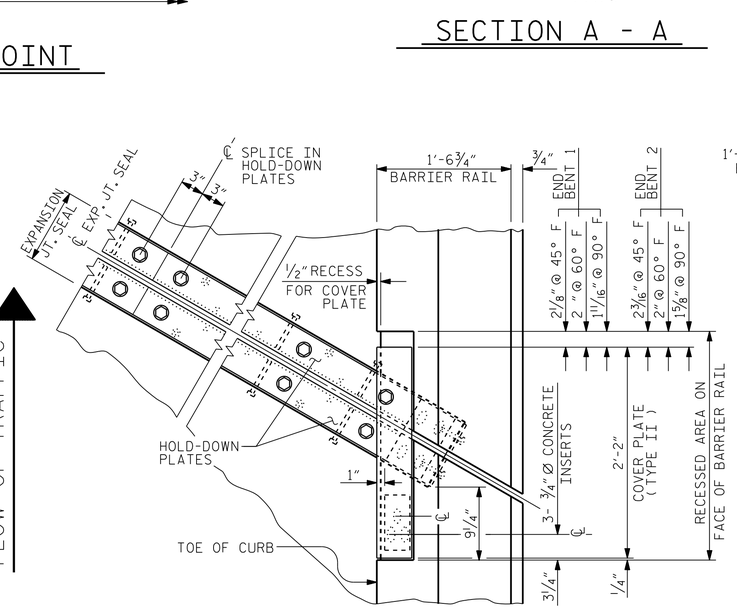

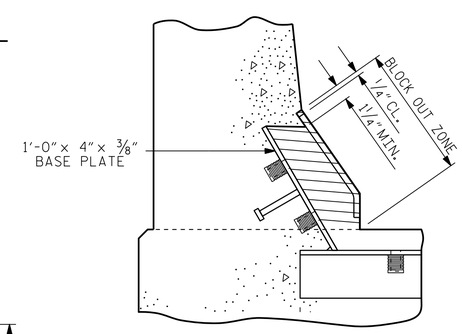

BLOCK OUT DETAIL

SEE "SECTION A - A" FOR OTHER DETAILS.

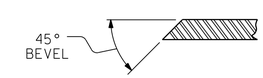

SECTION B - B

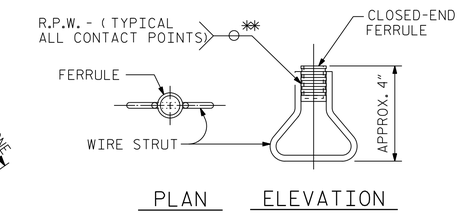

CONCRETE INSERT

** EACH WELDED ATTACHMENT OF WIRE TO FERRULE SHALL DEVELOP THE TENSILE STRENGTH OF THE WIRE.

PROJECT NO. U-2579B

FORSYTH COUNTY

STATION: 44+08.64 -Y4RPBD-

SHEET 2 OF 2

STATE OF NORTH CAROLINA
DEPARTMENT OF TRANSPORTATION
RALEIGH

STANDARD

EXPANSION JOINT SEAL DETAILS FOR BARRIER RAIL

DESIGNED BY:	J. SMITH	DATE :	APR 2014
DRAWN BY:	K. WHITE	DATE :	APR 2014
CHECKED BY:	B. LOFLIN	DATE :	APR 2014
DESIGN ENGINEER OF RECORD:	J. DOUGHTY	DATE :	MAY 2014

DRAWN BY : REK 9/87
CHECKED BY : CRK 10/87

REV. 10/1/11 MAA/GM
REV. 7/12 MAA/GM
REV. 6/13 MAA/GM

PARSONS BRINCKERHOFF
434 FAYETTEVILLE STREET
SUITE 1500
RALEIGH, NC 27601
LICENSE NO. F-0165

NORTH CAROLINA PROFESSIONAL SEAL 032967 ENGINEER JASON R. DOUGHTY

DocuSigned by: Jason R Doughty 6/2/2014
00F1C86448274F7...

REVISIONS						SHEET NO.
NO.	BY:	DATE:	NO.	BY:	DATE:	S-568
1			3			TOTAL SHEETS
2			4			707

STR. #15 STD. NO. EJS2 SHT 2

6/2/2014
173498C_SD_EJ2_15std.dgn