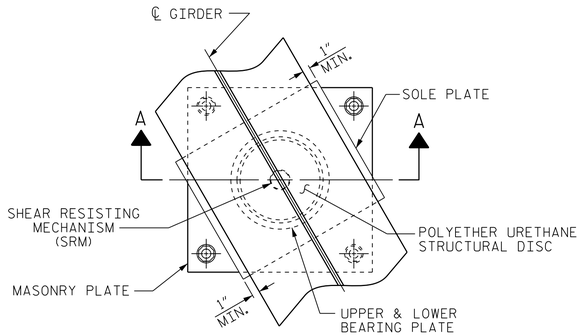

PLAN

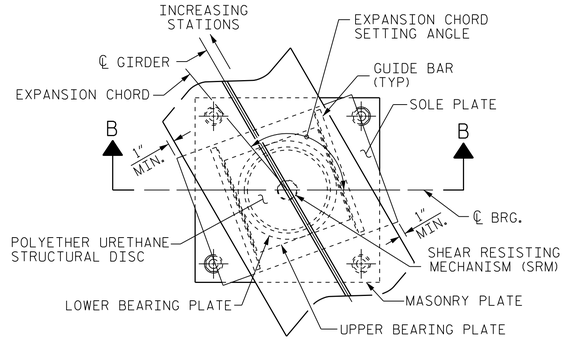

PLAN

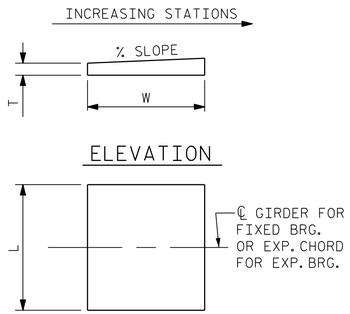

PLAN

NOTE:
DIMENSIONS "L", "W", AND "T" SHALL BE DETERMINED BY THE BEARING MANUFACTURER. SET DIMENSION "L" SUCH THAT THE MINIMUM EDGE DISTANCE TO THE GIRDER FLANGE IS 1".

SOLE PLATE DETAILS

NOTES

FOR DISC BEARINGS, SEE SPECIAL PROVISIONS.

ALL BEARING PLATES SHALL BE AASHTO M270 GRADE 50W OR GRADE 50.

AT ALL POINTS OF SUPPORT, NUTS FOR ANCHOR BOLTS SHALL BE FINGER-TIGHTENED PLUS AN ADDITIONAL 1/4 TURN. THE THREAD OF THE NUT AND BOLT SHALL THEN BE BURRED WITH A SHARP POINTED TOOL.

WHEN WELDING THE SOLE PLATE TO THE GIRDER, USE TEMPERATURE INDICATING WAX PENS, OR OTHER SUITABLE MEANS, TO ENSURE THAT THE TEMPERATURE OF THE BEARING DOES NOT EXCEED 250°F. TEMPERATURES ABOVE THIS MAY DAMAGE THE TFE OR URETHANE DISC.

AFTER BEARING ASSEMBLY IS IN PLACE AND ANCHOR BOLTS HAVE BEEN FINALLY POSITIONED, THEY SHALL BE GROUTED IN PLACE AS SHOWN.

THE CLOSURE PLATE, GROUT PIPE, AND STANDARD PIPE FOR THIS ASSEMBLY NEED NOT BE GALVANIZED.

SOLE PLATES SHOULD BE WELDED TO GIRDER FLANGES AND ANCHOR BOLTS SHOULD BE GROUTED BEFORE FALSEWORK IS PLACED.

ALL SURFACES OF BEARING PLATES SHALL BE SMOOTH AND STRAIGHT.

FOR ATTACHMENT OF THE STAINLESS STEEL SHEETS TO THE STEEL SOLE PLATE AND GUIDE BARS, AS WELL AS THE TOP AND SIDE PTFE SHEETS TO THE STEEL UPPER BEARING PLATE, SEE SPECIAL PROVISIONS.

FOR THERMAL SPRAYED COATINGS (METALLIZATION), SEE SPECIAL PROVISIONS.

THE MINIMUM ROTATIONAL CAPACITY FOR ALL BEARINGS SHALL BE 0.02 RADIANS.

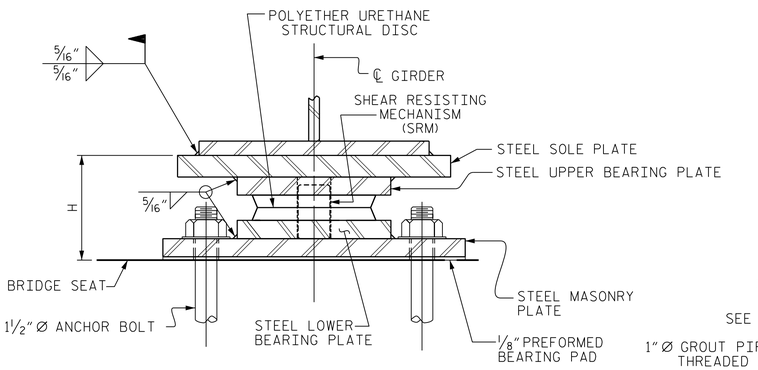

SECTION A-A

DB1, FIXED

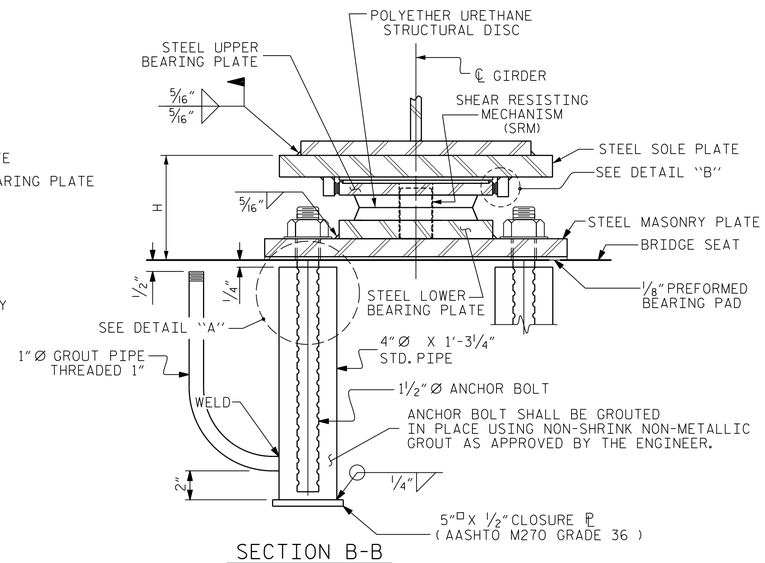

SECTION B-B

DB2, EXP.

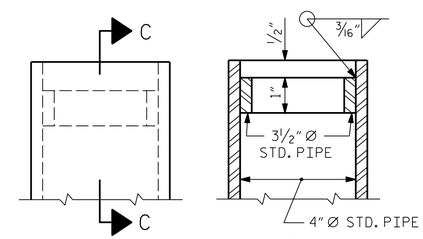

SECTION C-C

DETAIL "A"

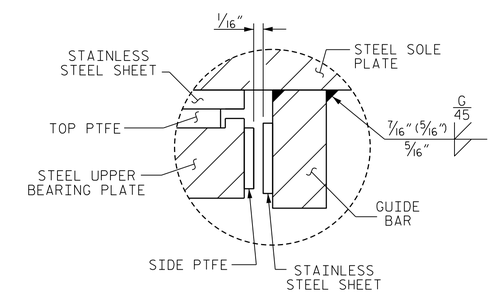

DETAIL "B"

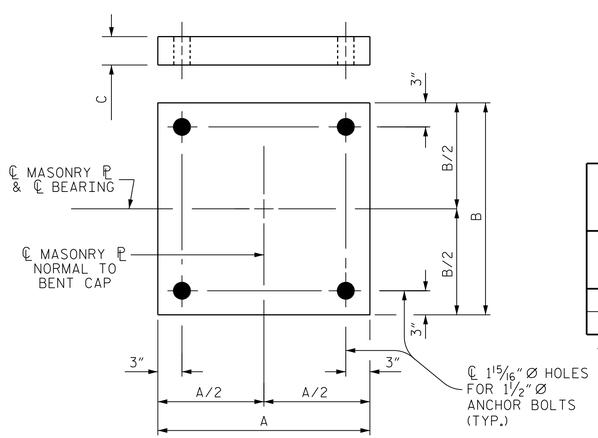

PLAN

MASONRY PLATE DETAILS

PLATE SETTING DATA

(EXPANSION DISC BEARINGS)

LOCATION	TEMPERATURE AT TIME OF SETTING			*
	45° F	60° F	90° F	
END BENT 1	- 1/8"	0	5/16"	- 1/16"
END BENT 2	- 3/16"	0	3/8"	- 3/8"

* CORRECTION FOR END ROTATION DUE TO WEIGHT OF SLAB AND COMPOSITE DEAD LOAD.

TEMPERATURE SETTING DETAIL

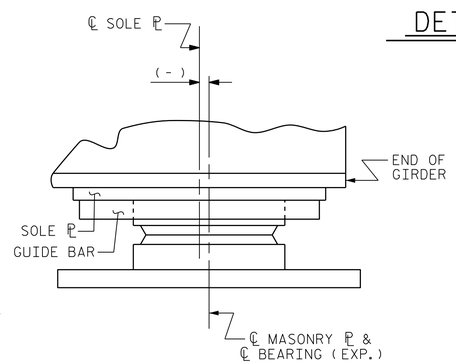

EXPANSION CHORD SETTING ANGLES

(EXPANSION DISC BEARINGS)

GIRDER	LOCATION	
	END BENT 1	END BENT 2
GDR. 1	111°-48'-31"	117°-50'-29"
GDR. 2	111°-36'-04"	117°-34'-03"
GDR. 3	111°-23'-52"	117°-17'-57"
GDR. 4	111°-11'-54"	117°-02'-10"

DESIGNATIONS		LOCATION	NUMBER OF BEARINGS	DIMENSIONS					LOADS AND MOVEMENT				
				BEARING	MASONRY PLATE			SOLE PLATE	UNFACTORED VERTICAL LOAD (KIPS)			FACTORED HORIZONTAL LOAD (KIPS)	ONE-WAY MOVEMENT (IN.)
									DEAD		LIVE		
BEARINGS	MASONRY PL			H (IN.)	A (IN.)	B (IN.)	C (IN.)	TOP SLOPE (%)	DC	DW	LL+IM		
DB2 (EXP.)	M2	END BENT 1	4	5 7/8"	2'-1 1/2"	2'-1 1/2"	3/4"	3.07%	105	15	125	46	1"
DB1 (FIXED)	M1	BENT 1	4	7 3/8"	2'-4 1/2"	2'-4 1/2"	1"	3.07%	435	65	265	158	-
DB2 (EXP.)	M2	END BENT 2	4	5 7/8"	2'-1 1/2"	2'-1 1/2"	3/4"	3.07%	140	20	140	58	1 1/8"

PROJECT NO. U-2579B
FORSYTH COUNTY
STATION: 44+08.64 -Y4RPBD-

STATE OF NORTH CAROLINA
DEPARTMENT OF TRANSPORTATION
RALEIGH

STANDARD

DISC BEARING DETAILS

PARSONS BRINCKERHOFF
434 FAYETTEVILLE STREET
SUITE 1500
RALEIGH, NC 27601
LICENSE NO. F-0165

NORTH CAROLINA PROFESSIONAL SEAL 032967 ENGINEER JASON R. DOUGHTY
DocuSigned by: Jason R Doughty 00F1C86448274F7... 6/2/2014

DESIGNED BY:	B. LOFLIN	DATE :	APR 2014
DRAWN BY:	K. WHITE	DATE :	APR 2014
CHECKED BY:	J. DOUGHTY	DATE :	APR 2014
DESIGN ENGINEER OF RECORD:	J. DOUGHTY	DATE :	MAY 2014

DRAWN BY : TMG 08/13 REV.
CHECKED BY : EKP 10/13 REV.

REVISIONS						
NO.	BY:	DATE:	NO.	BY:	DATE:	
1			3			
2			4			

SHEET NO. S-562
TOTAL SHEETS 707

STR. #15 STD. NO. DB1 (SHT 2)

6/2/2014
173498C_SD_DB_15std.dgn