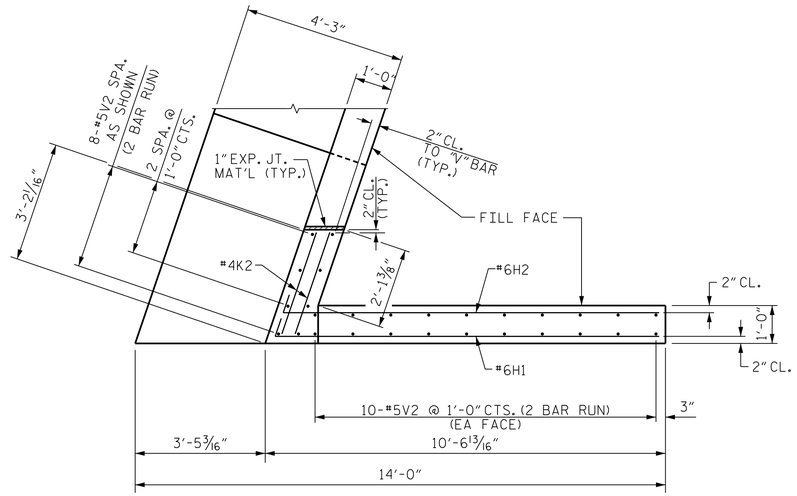

PLAN OF WING - (W1)

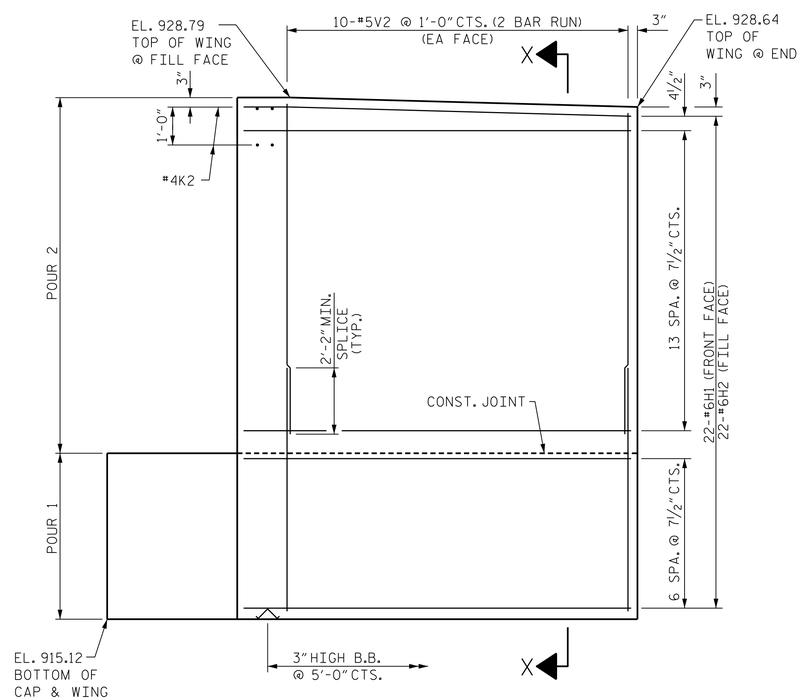

ELEVATION OF WING - (W1)

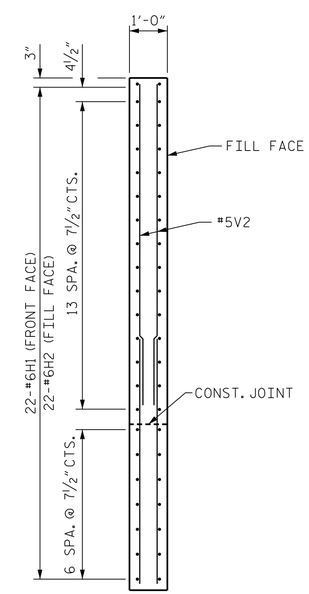

SECTION X-X

PROJECT NO. U-2579B

FORSYTH COUNTY

STATION: 44+08.64 -Y4RPBD-

SHEET 2 OF 4

STATE OF NORTH CAROLINA
DEPARTMENT OF TRANSPORTATION
RALEIGH

SUBSTRUCTURE

END BENT 1

DESIGNED BY:	J. SMITH	DATE :	MAR 2014
DRAWN BY:	K. WHITE	DATE :	MAR 2014
CHECKED BY:	J. SHERMAN	DATE :	APR 2014
DESIGN ENGINEER OF RECORD:	J. DOUGHTY	DATE :	MAY 2014

PARSONS BRINCKERHOFF
434 FAYETTEVILLE STREET
SUITE 1500
RALEIGH, NC 27601
LICENSE NO. F-0165

NORTH CAROLINA PROFESSIONAL SEAL 032967 ENGINEER JASON R. DOUGHTY
6/2/2014
DocuSigned by: Jason R Doughty
00F1C86448274F7...

REVISIONS								SHEET NO.
NO.	BY:	DATE:	NO.	BY:	DATE:			S-571
1			3					TOTAL SHEETS
2			4					707

STR. #15

6/2/2014
173498C_SD_EB_1512.dgn