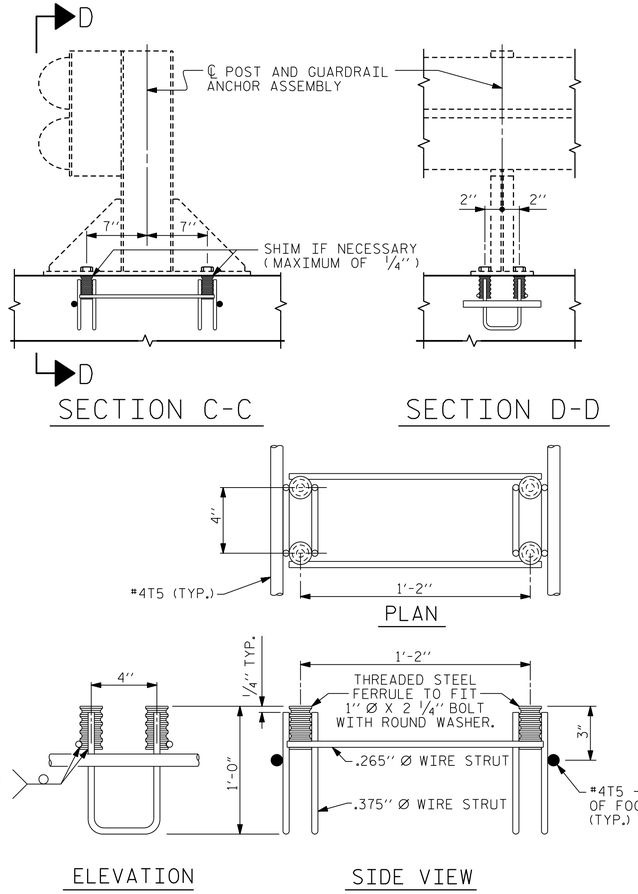

GUARDRAIL ANCHOR ASSEMBLY

NOTES

THE GUARDRAIL ANCHOR ASSEMBLY SHALL CONSIST OF THE FOLLOWING COMPONENTS :

A. FERRULES SHALL BE MADE FROM STEEL MEETING THE REQUIREMENTS OF AASHTO M169, GRADE 12L14 AND SHALL HAVE A MINIMUM LENGTH OF THREADS OF 2½".

B. 4 - 1" Ø X 2 ¼" BOLTS WITH WASHERS, BOLTS SHALL CONFORM TO THE REQUIREMENTS OF ASTM A307. BOLTS AND WASHERS SHALL BE GALVANIZED. (AT THE CONTRACTOR'S OPTION, STAINLESS STEEL BOLTS AND WASHERS MAY BE USED AS AN ALTERNATE FOR THE 1" Ø X 2¼" GALVANIZED BOLTS AND WASHERS. THEY SHALL CONFORM TO OR EXCEED THE MECHANICAL REQUIREMENTS OF ASTM A307. THE USE OF THIS ALTERNATE SHALL BE APPROVED BY THE ENGINEER.)

C. WIRE STRUTS SHOWN IN THE GUARDRAIL ANCHOR ASSEMBLY DETAIL ARE MINIMUM ALLOWABLE SIZE AND SHALL HAVE A MINIMUM TENSILE STRENGTH OF 100,000 P.S.I. AS AN OPTION, A 7/16" Ø WIRE STRUT WITH A MINIMUM TENSILE STRENGTH OF 90,000 PSI IS ACCEPTABLE.

GUARDRAIL ANCHOR ASSEMBLY WITH BOLTS SHALL BE ASSEMBLED IN THE SHOP. BOLT THREADS MAY BE RECUT AS NECESSARY TO ENSURE FIT.

THE COST OF THE GUARDRAIL ANCHOR ASSEMBLY COMPLETE IN PLACE, SHALL BE INCLUDED IN THE UNIT CONTRACT PRICE BID FOR CLASS "A" CONCRETE.

FERRULES TO BE PLUGGED DURING POURING OF FOOTING AS RECOMMENDED BY THE MANUFACTURER.

AT THE CONTRACTOR'S OPTION, FERRULES WITH OPEN OR CLOSED ENDS MAY BE USED.

PAYMENT FOR GUARDRAIL, POSTS, AND POST BASE PLATES IS INCLUDED IN ROADWAY PAY ITEMS.

FOOTING REINFORCING STEEL MAY BE SHIFTED AS NECESSARY TO CLEAR GUARDRAIL ANCHOR ASSEMBLY. CARE SHOULD BE TAKEN TO KEEP THE SHIFTING OF REINFORCING STEEL TO A MINIMUM.

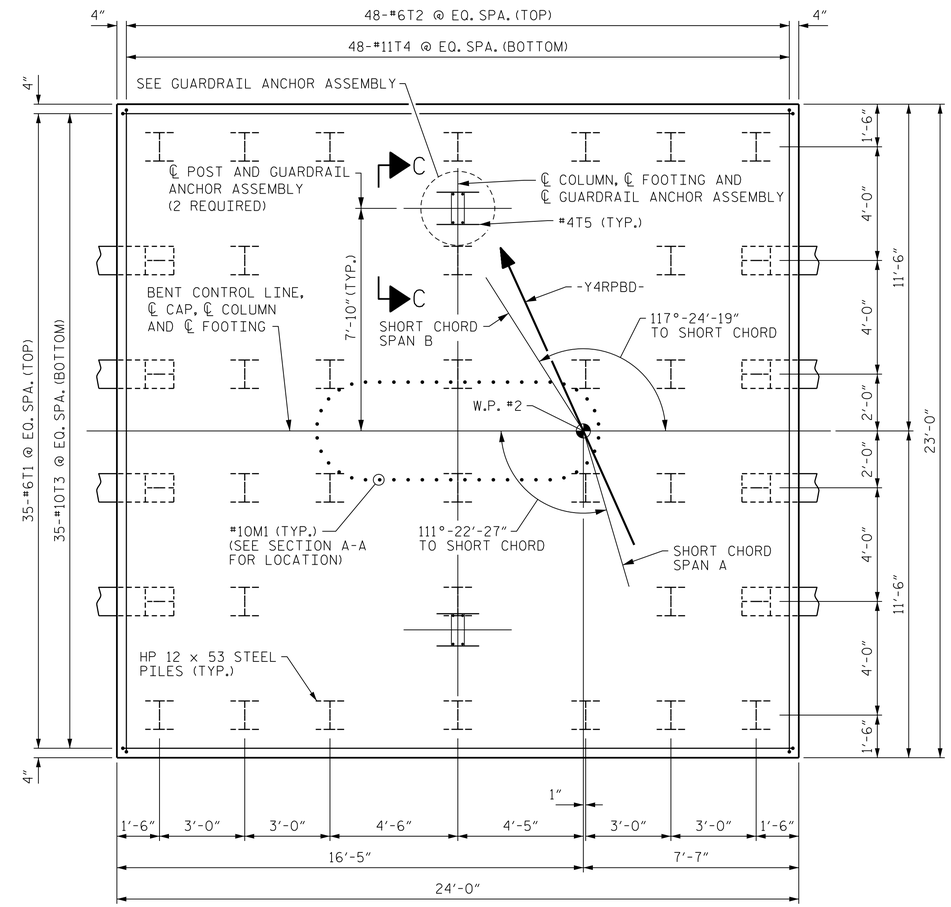

FOOTING PLAN

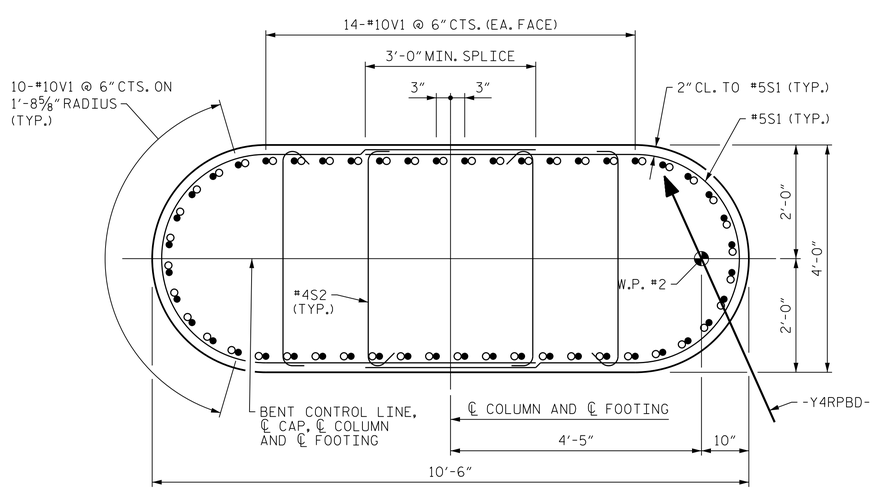

SECTION A-A

○ = M1 BAR
● = V1 BAR

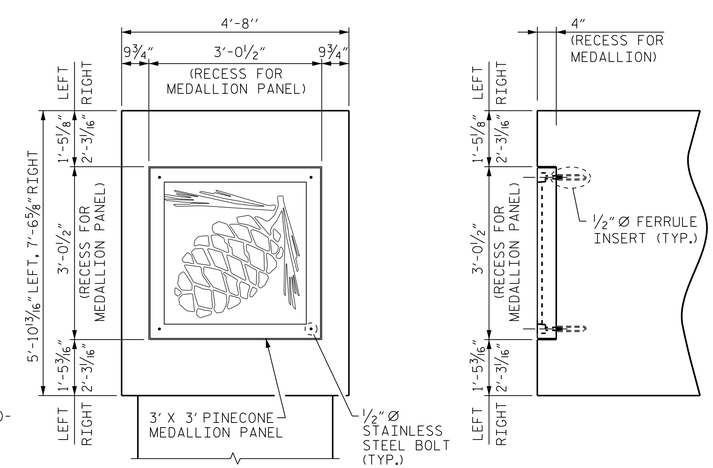

ATTACHMENT OF MEDALLION TO BENT CAP

REFER TO "DECORATIVE PANEL DETAILS" SHEET FOR ADDITIONAL DIMENSIONS AND DETAILS

PROJECT NO. U-2579B
FORSYTH COUNTY
STATION: 44+08.64 -Y4RPBD-

SHEET 2 OF 3

STATE OF NORTH CAROLINA
DEPARTMENT OF TRANSPORTATION
RALEIGH

SUBSTRUCTURE
BENT 1

DESIGNED BY:	B. LOFLIN	DATE :	APR 2014
DRAWN BY:	K. WHITE	DATE :	APR 2014
CHECKED BY:	J. DOUGHTY	DATE :	APR 2014
DESIGN ENGINEER OF RECORD:	J. DOUGHTY	DATE :	MAY 2014

PARSONS BRINCKERHOFF
434 FAYETTEVILLE STREET
SUITE 1500
RALEIGH, NC 27601
LICENSE NO. F-0165

NORTH CAROLINA PROFESSIONAL SEAL 032967 ENGINEER JASON R. DOUGHTY
7/24/2014
DocuSigned by: Jason R Doughty
00F1C86448274F7...

REVISIONS								SHEET NO.
NO.	BY:	DATE:	NO.	BY:	DATE:			S-575
1			3					TOTAL SHEETS
2			4					707

STR. #15

7/24/2014
173498C_SD_IB_1502.dgn