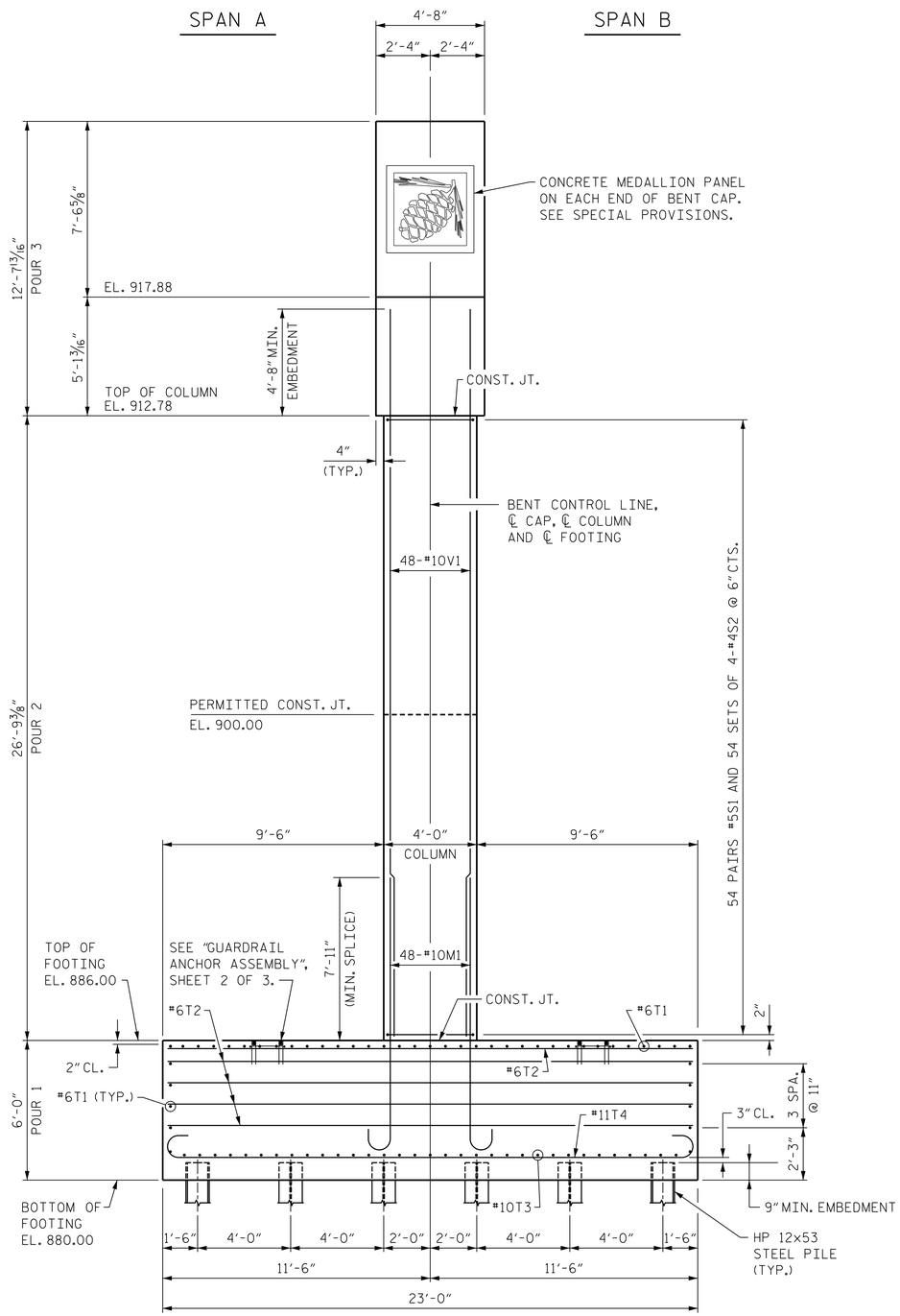

END ELEVATION

BAR TYPES

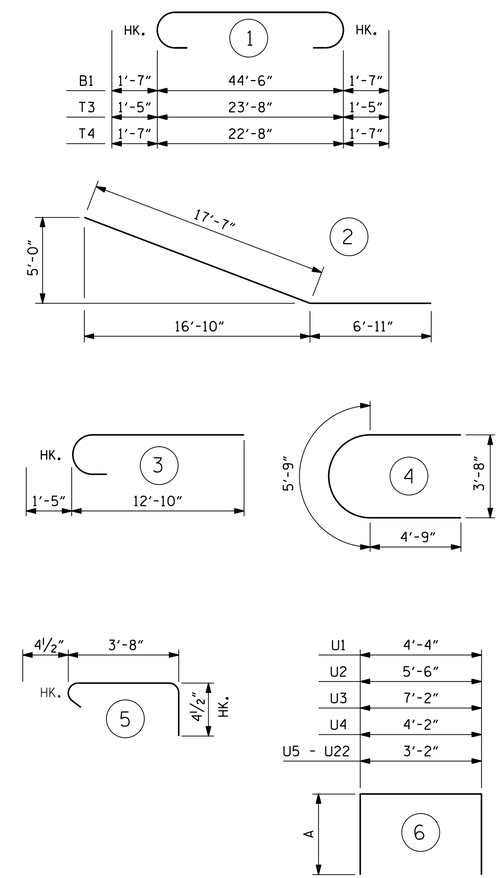

ALL BAR DIMENSIONS ARE OUT TO OUT.

BILL OF MATERIAL

BAR	NUMBER	SIZE	TYPE	DIM "A"	LENGTH	WEIGHT
B1	9	#11	1	-	47'-8"	2279
B2	18	#11	STR	-	44'-6"	4256
B3	18	#6	2	-	24'-6"	662
B4	27	#4	STR	-	8'-0"	144
B5	9	#4	STR	-	5'-6"	33
B6	30	#4	STR	-	4'-4"	87
B7	2	#6	STR	-	15'-0"	45
B8	2	#6	STR	-	37'-0"	111
B9	8	#6	STR	-	44'-6"	535
B10	2	#6	STR	-	38'-7"	116
B11	2	#6	STR	-	31'-9"	95
B12	2	#6	STR	-	25'-0"	75
B13	2	#6	STR	-	18'-3"	55
M1	48	#10	3	-	14'-3"	2943
S1	108	#5	4	-	15'-3"	1718
S2	216	#4	5	-	4'-5"	637
T1	43	#6	STR	-	23'-8"	1529
T2	56	#6	STR	-	22'-8"	1907
T3	35	#10	1	-	26'-6"	3991
T4	48	#11	1	-	25'-10"	6588
T5	4	#4	STR	-	3'-0"	8
U1	34	#4	6	1'-10"	8'-0"	182
U2	4	#4	6	1'-10"	9'-2"	24
U3	4	#4	6	1'-10"	10'-10"	29
U4	21	#4	6	1'-10"	7'-10"	110
U5	198	#5	6	3'-0"	9'-2"	1893
U6	10	#5	6	4'-11"	13'-0"	136
U7	10	#5	6	5'-7"	14'-4"	149
U8	10	#5	6	6'-4"	15'-10"	165
U9	10	#5	6	7'-0"	17'-2"	179
U10	10	#5	6	7'-9"	18'-8"	195
U11	10	#5	6	8'-5"	20'-0"	209
U12	10	#5	6	9'-2"	21'-6"	224
U13	10	#5	6	9'-10"	22'-10"	238
U14	10	#5	6	10'-0"	23'-2"	242
U15	18	#5	6	10'-4"	23'-10"	447
U16	10	#5	6	10'-5"	24'-0"	250
U17	10	#5	6	10'-4"	23'-10"	249
U18	10	#5	6	9'-9"	22'-8"	236
U19	10	#5	6	9'-3"	21'-8"	226
U20	10	#5	6	8'-9"	20'-8"	216
U21	10	#5	6	8'-2"	19'-6"	203
U22	10	#5	6	7'-8"	18'-6"	193
U23	10	#5	6	7'-2"	17'-6"	183
U24	10	#5	6	6'-7"	16'-4"	170
V1	48	#10	STR	-	31'-6"	6506

REINFORCING STEEL	LBS.	40,668
CLASS "A" CONCRETE BREAKDOWN		
CAP		76.8 C.Y.
COLUMN		38.3 C.Y.
FOOTING		122.7 C.Y.
CLASS "A" CONCRETE		237.8 C.Y.
HP 12 X 53 STEEL PILES: NO. 38	LIN. FT.	760
STEEL PILE POINTS	EA.	38
CONCRETE MEDALLION PANEL	EA.	2
CONCRETE STAINING	SQ. FT.	1,777

PROJECT NO. U-2579B

FORSYTH COUNTY

STATION: 44+08.64 -Y4RPBD-

SHEET 3 OF 3

STATE OF NORTH CAROLINA
DEPARTMENT OF TRANSPORTATION
RALEIGH

SUBSTRUCTURE

BENT 1

DESIGNED BY:	B. LOFLIN	DATE :	APR 2014
DRAWN BY:	K. WHITE	DATE :	APR 2014
CHECKED BY:	J. DOUGHTY	DATE :	APR 2014
DESIGN ENGINEER OF RECORD:	J. DOUGHTY	DATE :	MAY 2014

PARSONS BRINCKERHOFF
434 FAYETTEVILLE STREET
SUITE 1500
RALEIGH, NC 27601
LICENSE NO. F-0165

NORTH CAROLINA PROFESSIONAL SEAL 032967 ENGINEER JASON R. DOUGHTY
7/24/2014
DocuSigned by: Jason R Doughty
00F1C86448274F7...

REVISIONS								SHEET NO.
NO.	BY:	DATE:	NO.	BY:	DATE:			S-576
1			3					TOTAL SHEETS
2			4					707

STR. #15

7/24/2014
173498C_SD_IB.1503.dgn