DocuSign Envelope ID: DA0292F4-91E7-4ED7-B36C-F5050A8A9399

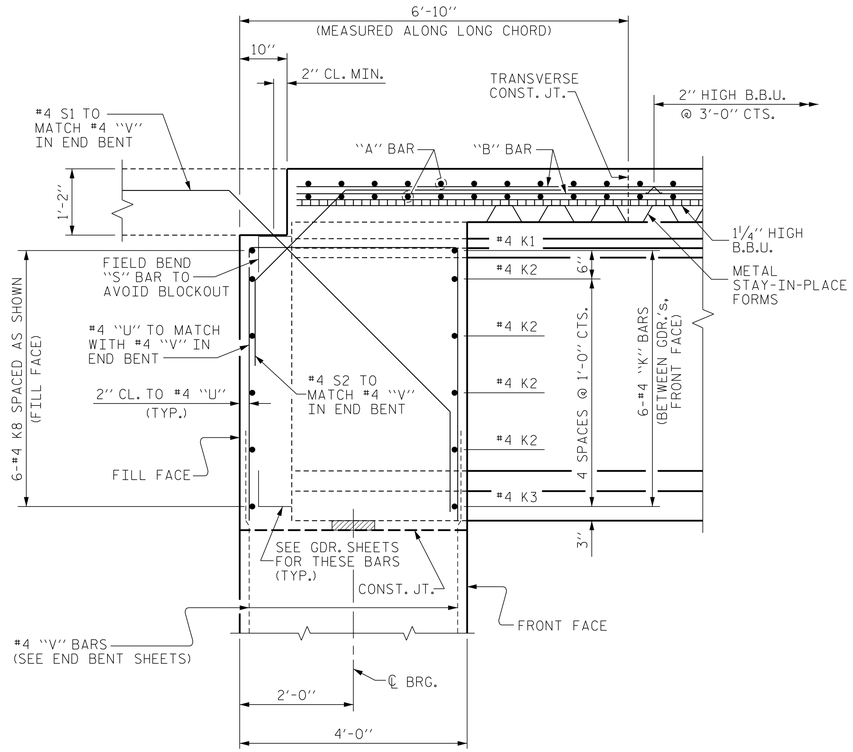

SECTION THRU INTEGRAL END BENT DIAPHRAGM

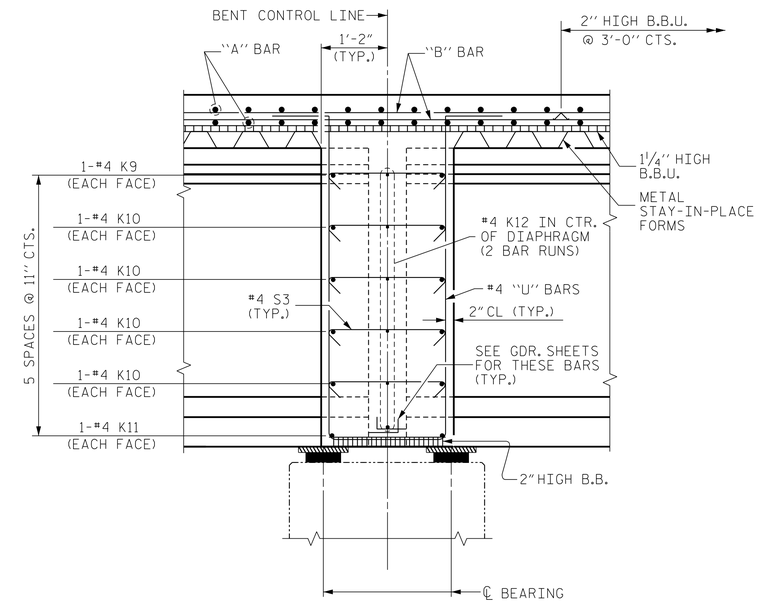

SECTION THRU CONTINUOUS BENT DIAPHRAGM

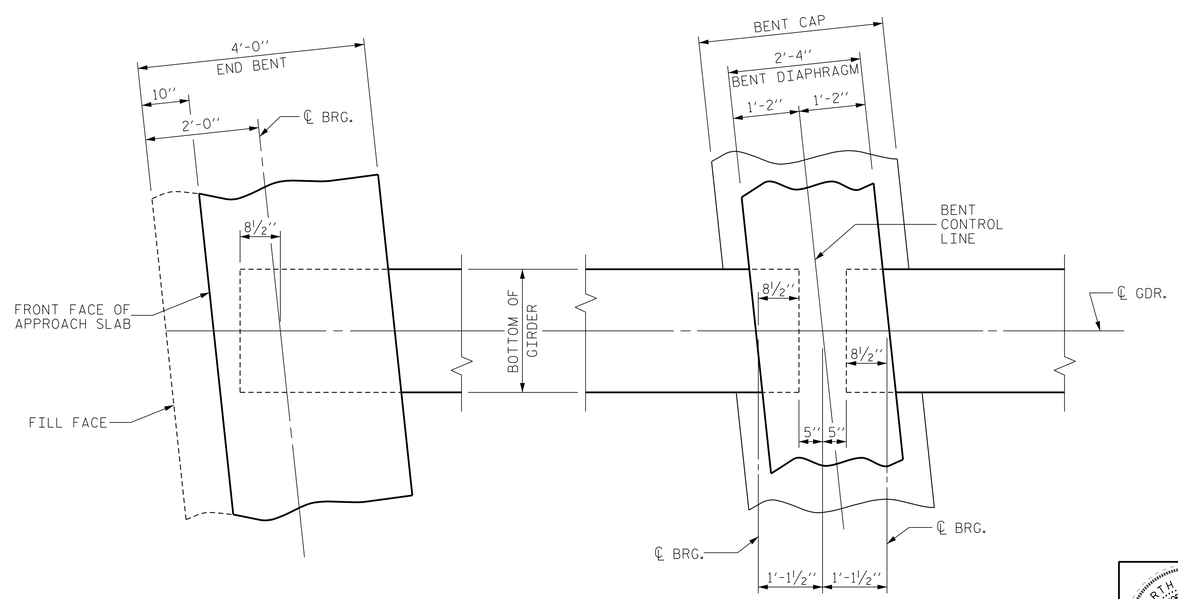

END BENT

BENT DIAPHRAGM

PLAN OF DIAPHRAGMS

P:\2013\13109.22 U-2579B\Structures\DGN\Str 13 (L-LtLane)\U2579B_SD_STR13_TS_WE1.dgn
6/9/2014 2:00:36 PM

DRAWN BY :	J.M. BRITT	DATE :	10-2-13
CHECKED BY :	B.C. HUNT	DATE :	4-1-14
DESIGN ENGINEER OF RECORD :	T. DIFFEE	DATE :	4-15-14

NORTH CAROLINA PROFESSIONAL SEAL 026891 ENGINEER JOHN T. DIFFEE
Digitally signed by John T. Diffee

WETHERILL ENGINEERING
559 Jones Franklin Rd. Suite 164
Raleigh, N.C. 27606
Bus: 919 851 8077
Fax: 919 851 8107
License: F-0377

TRANSPORTATION PLANNING/DESIGN - BRIDGE/STRUCTURE DESIGN
CIVIL/SITE DESIGN - GIS/GPS - CONSTRUCTION OBSERVATION

PROJECT NO. U-2579B
FORSYTH COUNTY
STATION: 642+81.42 -L-

SHEET 3 OF 3

STATE OF NORTH CAROLINA
DEPARTMENT OF TRANSPORTATION
RALEIGH

SUPERSTRUCTURE

TYPICAL SECTION

(LEFT LANE)

REVISIONS						SHEET NO.
NO.	BY:	DATE:	NO.	BY:	DATE:	S-477
1			3			TOTAL SHEETS
2			4			707