DocuSign Envelope ID: DA0292F4-91E7-4ED7-B36C-F5050A8A9399

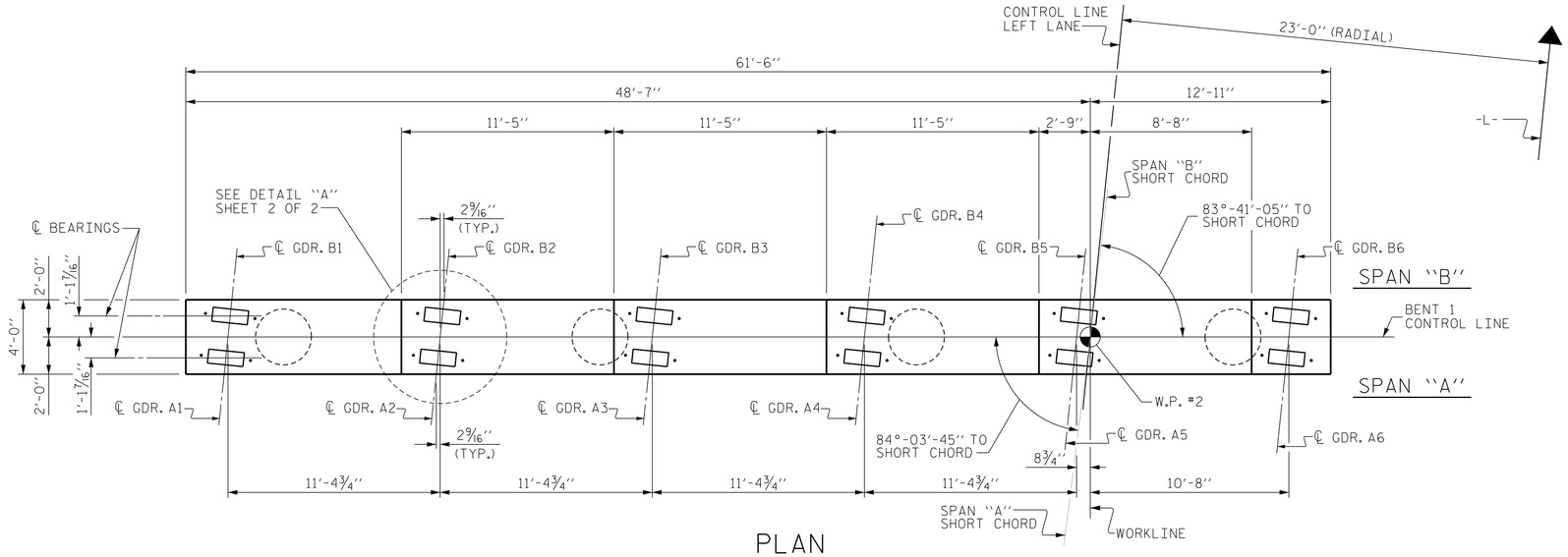

PLAN

(NOTE : ALL GIRDERS ARE PARALLEL TO THE LONG CHORD)

NOTES :

FOR REINFORCING STEEL IN END OF CAP, SEE VIEW X-X, SHEET 2 OF 2. (TYPICAL FOR EACH END OF CAP)

FOR SECTION A-A, SEE SHEET 2 OF 2.

HOOKS ON "V" BARS MAY BE TURNED AS NECESSARY FOR PLACING REINFORCING STEEL.

STIRRUPS & U1 BARS IN CAP MAY BE SHIFTED AS NECESSARY TO CLEAR ANCHOR BOLTS.

FOR PILE SPLICE DETAILS, SEE INTEGRAL END BENT 1, SHEET 2 OF 3.

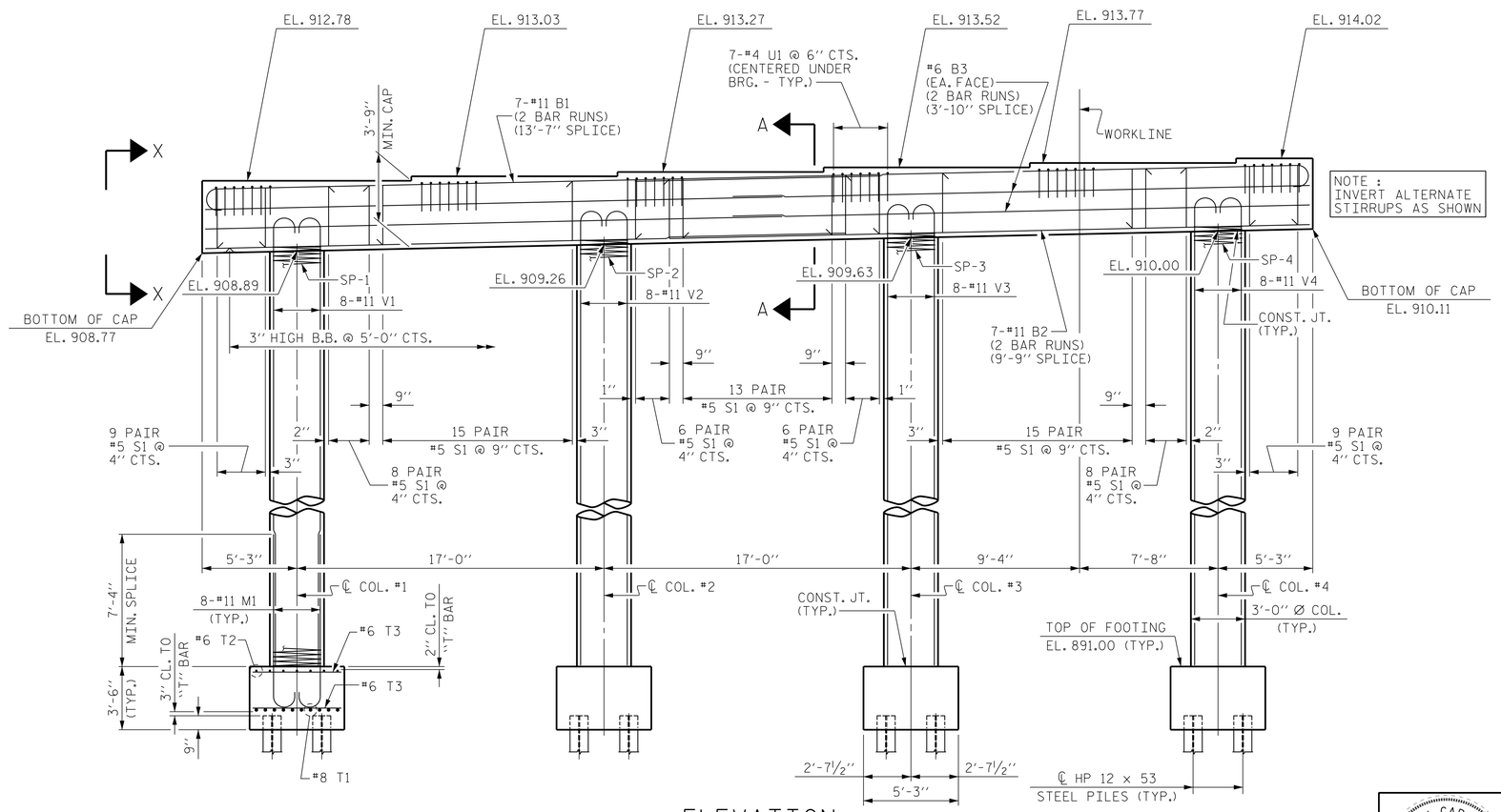

ELEVATION

DIMENSIONS AND REINFORCING STEEL ARE TYPICAL FOR EACH FOOTING

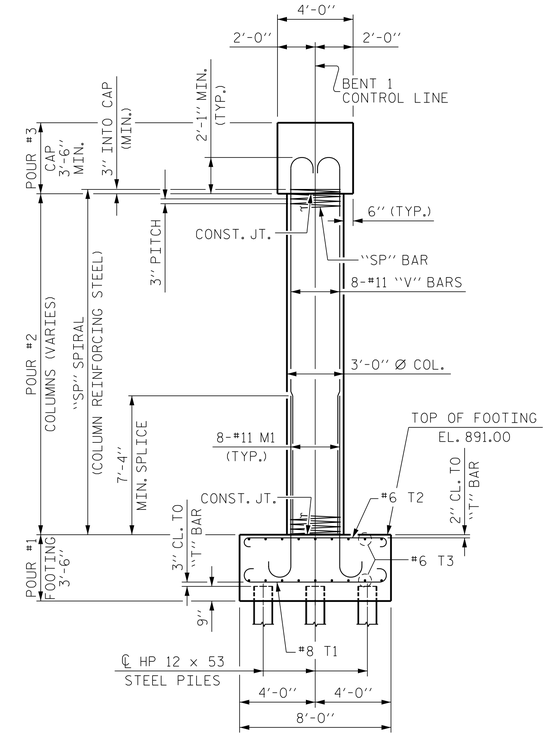

END ELEVATION

DIMENSIONS AND REINFORCING STEEL ARE TYPICAL FOR EACH FOOTING

PROJECT NO. U-2579B

FORSYTH COUNTY

STATION: 642+81.42 -L-

SHEET 1 OF 2

STATE OF NORTH CAROLINA
DEPARTMENT OF TRANSPORTATION
RALEIGH

SUBSTRUCTURE

BENT 1

(LEFT LANE)

NORTH CAROLINA PROFESSIONAL SEAL 026891 ENGINEER JOHN T. DIFFEE

DOCUSIGNED BY: John T. Diffee 6/9/2014

WETHERILL ENGINEERING
559 Jones Franklin Rd. Suite 164
Raleigh, N.C. 27606
Bus: 919 851 8077
Fax: 919 851 8107
License: F-0377

TRANSPORTATION PLANNING/DESIGN - BRIDGE/STRUCTURE DESIGN
CIVIL/SITE DESIGN - GIS/GPS - CONSTRUCTION OBSERVATION

REVISIONS						SHEET NO.
NO.	BY:	DATE:	NO.	BY:	DATE:	S-499
1			3			TOTAL SHEETS
2			4			707

DRAWN BY : J.M. BRITT DATE : 3-25-14
CHECKED BY : B.C. HUNT DATE : 4-14-14
DESIGN ENGINEER OF RECORD : T. DIFFEE DATE : 4-15-14

P:\2013\13109.22 U-2579B\Structures\DGN\Str 13 (L-LtLane)U2579B_SD_STR13_BT1_WEI.dgn
6/9/2014 4:01:16 PM