DocuSign Envelope ID: DA0292F4-91E7-4ED7-B36C-F5050A8A9399

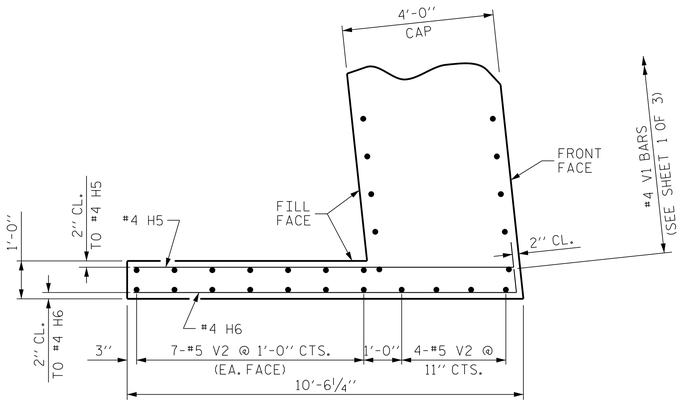

PLAN OF WING (W3)

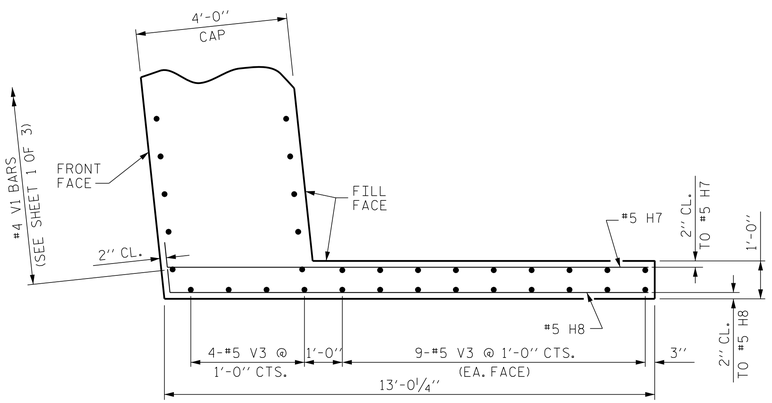

PLAN OF WING (W4)

BILL OF MATERIAL

END BENT 2

BAR	No.	SIZE	TYPE	LENGTH	WEIGHT
B1	12	#9	1	40'-7''	1656
B2	12	#10	1	40'-4''	2083
B3	18	#4	STR	3'-8''	44
B4	12	#5	STR	36'-6''	457
B5	12	#4	STR	24'-11''	200
H5	5	#4	6	10'-9''	36
H6	5	#4	6	10'-10''	36
H7	5	#5	5	13'-7''	71
H8	5	#5	5	13'-6''	70
S1	60	#5	2	11'-10''	741
S2	60	#5	3	4'-7''	287
S3	44	#4	4	6'-6''	191
V1	110	#4	STR	6'-0''	441
V2	18	#5	STR	10'-5''	196
V3	22	#5	STR	10'-3''	235

REINFORCING STEEL	6,744 LBS.
CLASS A CONCRETE	47.5 CU. YDS.
HP 12 x 53 STEEL PILES No. 11	660 LIN. FT.

BAR TYPES

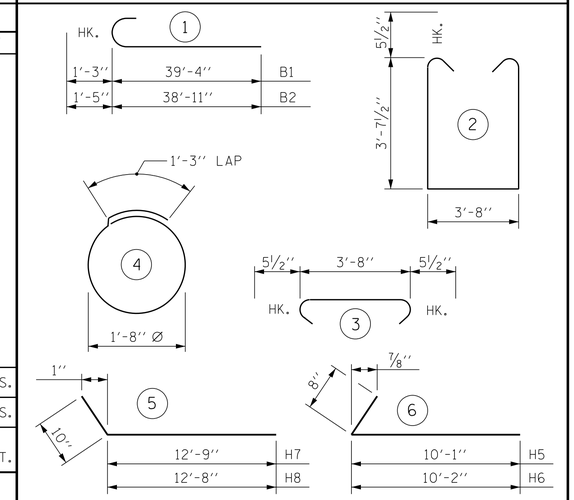

ALL BAR DIMENSIONS ARE OUT TO OUT.

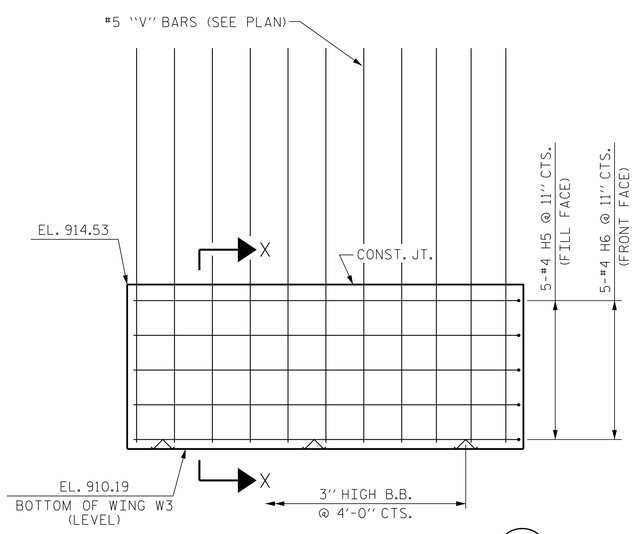

ELEVATION OF WING (W3)

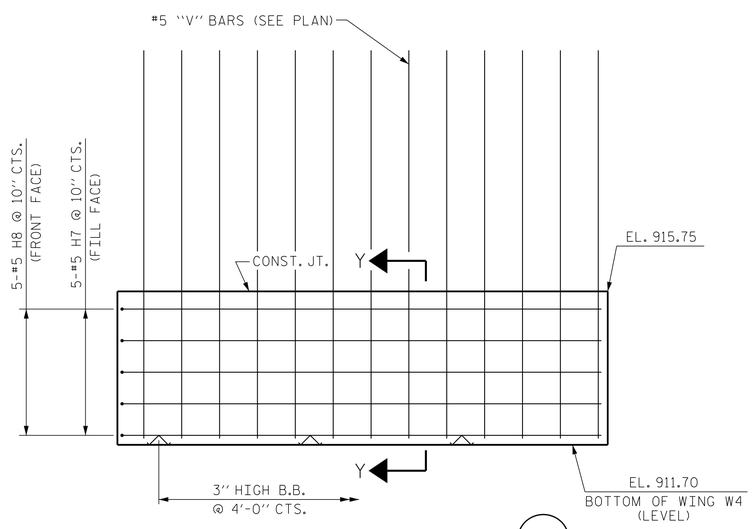

ELEVATION OF WING (W4)

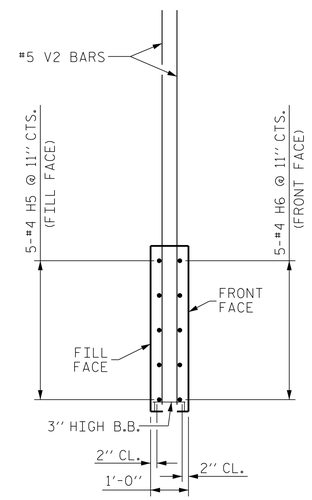

SECTION X-X

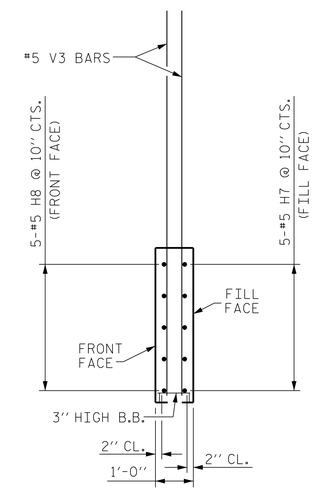

SECTION Y-Y

PROJECT NO. U-2579B
FORSYTH COUNTY
STATION: 642+81.42 -L-

SHEET 3 OF 3

STATE OF NORTH CAROLINA
DEPARTMENT OF TRANSPORTATION
RALEIGH

SUBSTRUCTURE

INTEGRAL END BENT 2

(LEFT LANE)

REVISIONS							SHEET NO.
NO.	BY:	DATE:	NO.	BY:	DATE:		S-503
1			3				TOTAL SHEETS
2			4				707

NORTH CAROLINA PROFESSIONAL SEAL 022897 ENGINEER JOHN T. DIFFEE
DocuSigned by: John T. Diffee 9/9/2014

WETHERILL ENGINEERING
559 Jones Franklin Rd. Suite 164
Raleigh, N.C. 27606
Bus: 919 851 8077
Fax: 919 851 8107
License: F-0377

TRANSPORTATION PLANNING/DESIGN - BRIDGE/STRUCTURE DESIGN
CIVIL/SITE DESIGN - GIS/GPS - CONSTRUCTION OBSERVATION

DRAWN BY : J.M. BRITT DATE : 2-25-14
CHECKED BY : B.C. HUNT DATE : 4-9-14
DESIGN ENGINEER OF RECORD : T. DIFFEE DATE : 4-15-14

P:\2013\13109.22 U-2579B\Structures\DGN\Str 13 (L-U1Lane)U2579B_SD_STR13_EB2_WE1.dgn
6/9/2014 4:03:19 PM