DocuSign Envelope ID: DA0292F4-91E7-4ED7-B36C-F5050A8A9399

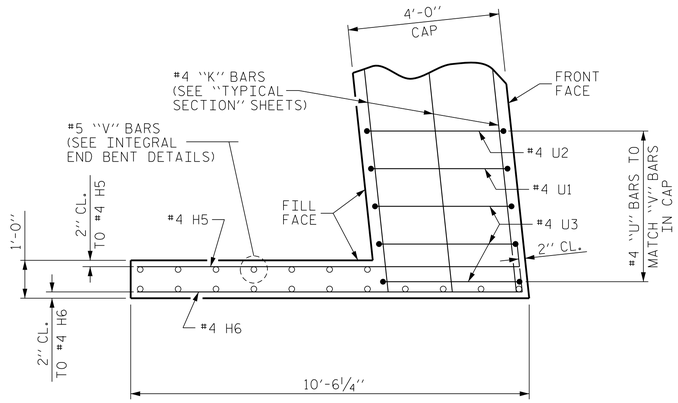

PLAN OF WING (W3)

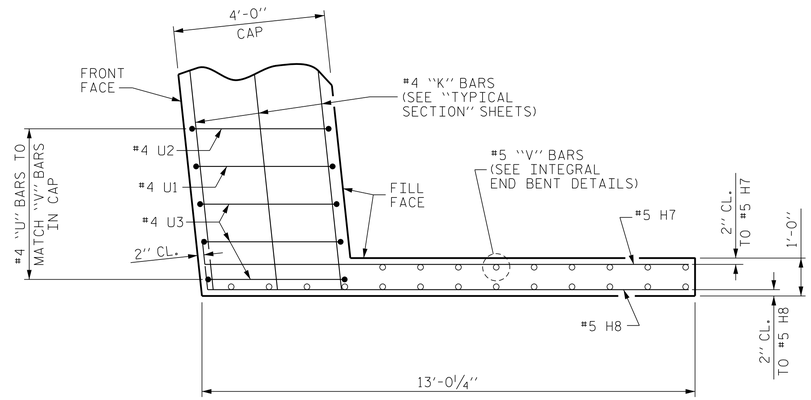

PLAN OF WING (W4)

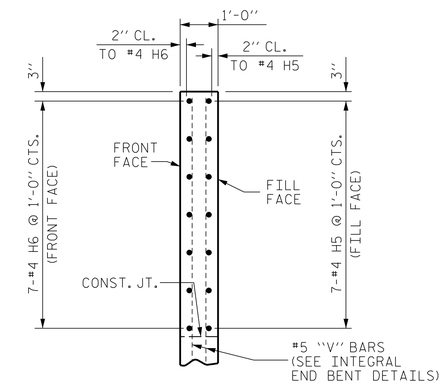

SECTION Y-Y

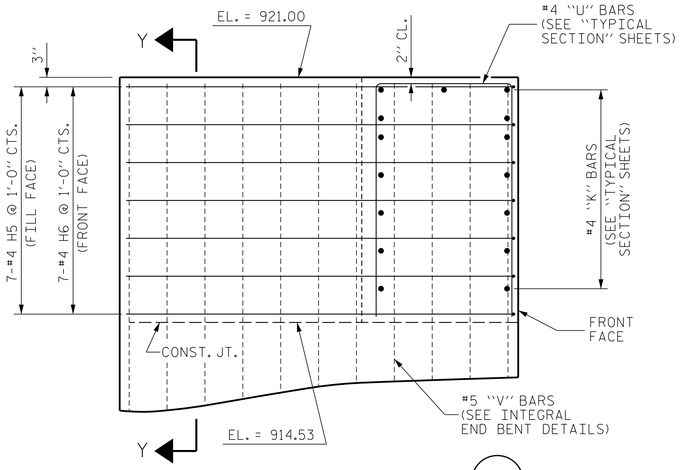

ELEVATION OF WING (W3)

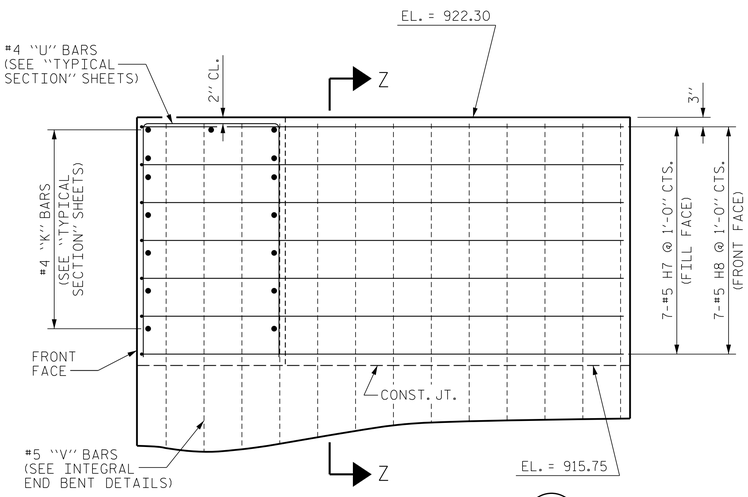

ELEVATION OF WING (W4)

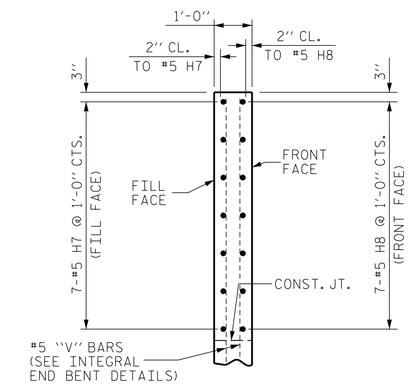

SECTION Z-Z

PROJECT NO. U-2579B
FORSYTH COUNTY
STATION: 642+81.42 -L-

SHEET 5 OF 5

STATE OF NORTH CAROLINA
DEPARTMENT OF TRANSPORTATION
RALEIGH

SUPERSTRUCTURE

PLAN OF SPAN
DETAILS @ END BENT 2
(LEFT LANE)

NORTH CAROLINA PROFESSIONAL SEAL ENGINEER JOHN T. DIFFEE 022897 DocuSigned by: June 7, 2017

WETHERILL ENGINEERING
559 Jones Franklin Rd. Suite 164
Raleigh, N.C. 27606
Bus: 919 851 8077
Fax: 919 851 8107
License: F-0377

TRANSPORTATION PLANNING/DESIGN - BRIDGE/STRUCTURE DESIGN
CIVIL/SITE DESIGN - GIS/GPS - CONSTRUCTION OBSERVATION

REVISIONS						SHEET NO.
NO.	BY:	DATE:	NO.	BY:	DATE:	S-482
1			3			TOTAL SHEETS
2			4			707

DRAWN BY : J.M. BRITT DATE : 1-22-14
CHECKED BY : B.C. HUNT DATE : 4-1-14
DESIGN ENGINEER OF RECORD : T. DIFFEE DATE : 4-15-14

P:\2013\13109.22 U-2579B\Structures\DGN\Str 13 (L-LtLane)U2579B_SD_STR13_PS_WE1.dgn
6/9/2014 2:41:22 PM