DocuSign Envelope ID: DA0292F4-91E7-4ED7-B36C-F5050A8A9399

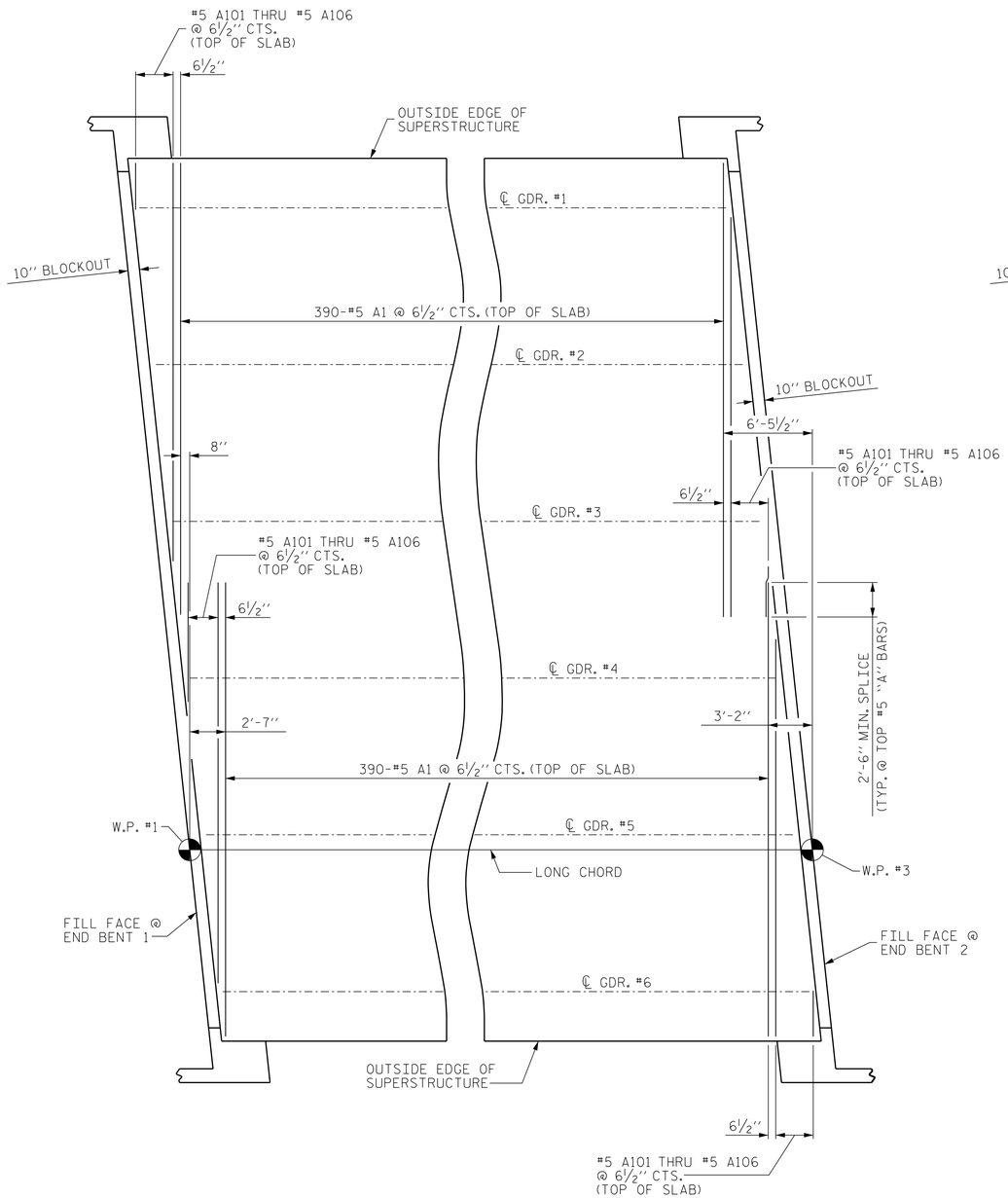

TOP "A" BAR PLACEMENT DETAIL

ALL "A" BARS ARE TO BE PLACED PERPENDICULAR TO THE LONG CHORD

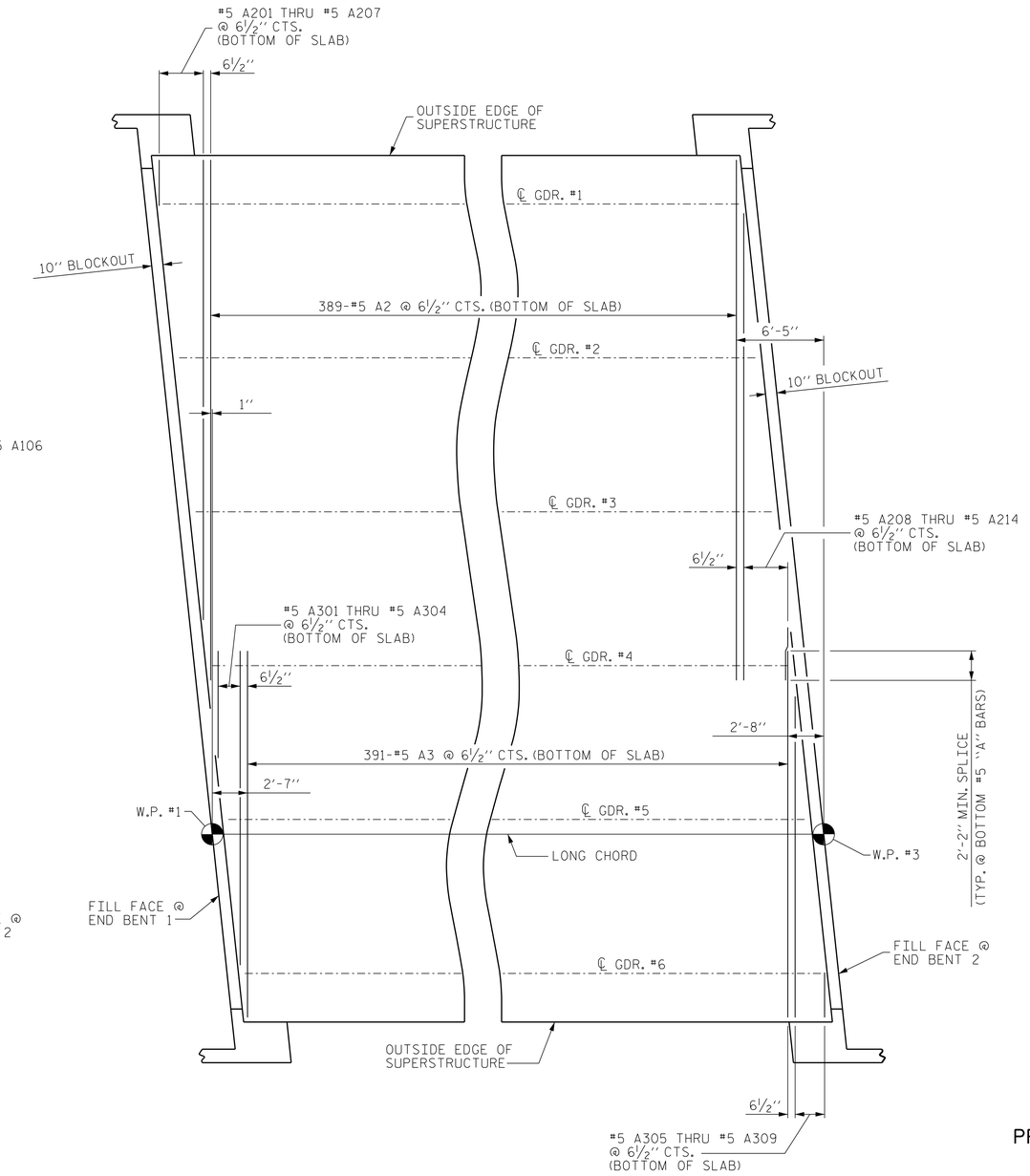

BOTTOM "A" BAR PLACEMENT DETAIL

ALL "A" BARS ARE TO BE PLACED PERPENDICULAR TO THE LONG CHORD

PROJECT NO. U-2579B
FORSYTH COUNTY
STATION: 642+81.42 -L-

SHEET 3 OF 5

STATE OF NORTH CAROLINA
DEPARTMENT OF TRANSPORTATION
RALEIGH

SUPERSTRUCTURE
"A" BAR PLACEMENT DETAILS
(LEFT LANE)

REVISIONS							SHEET NO.
NO.	BY:	DATE:	NO.	BY:	DATE:		S-480
1			3				TOTAL SHEETS
2			4				707

NORTH CAROLINA PROFESSIONAL SEAL 029891 ENGINEER JOHN T. DIFFEE
Digitally signed by John T. Diffee
DocuSigned by:

WETHERILL ENGINEERING
559 Jones Franklin Rd. Suite 164
Raleigh, N.C. 27606
Bus: 919 851 8077
Fax: 919 851 8107
License: F-0377

TRANSPORTATION PLANNING/DESIGN - BRIDGE/STRUCTURE DESIGN
CIVIL/SITE DESIGN - GIS/GPS - CONSTRUCTION OBSERVATION

DRAWN BY :	J.M. BRITT	DATE :	10-2-13
CHECKED BY :	B.C. HUNT	DATE :	4-1-14
DESIGN ENGINEER OF RECORD :	T. DIFFEE	DATE :	4-15-14

P:\2013\13109.22 U-2579B\Structures\DGN\Str 13 (L-LtLane)\U2579B_SD_STR13_PS_WE1.dgn
6/9/2014 2:19:46 PM