DocuSign Envelope ID: DA0292F4-91E7-4ED7-B36C-F5050A8A9399

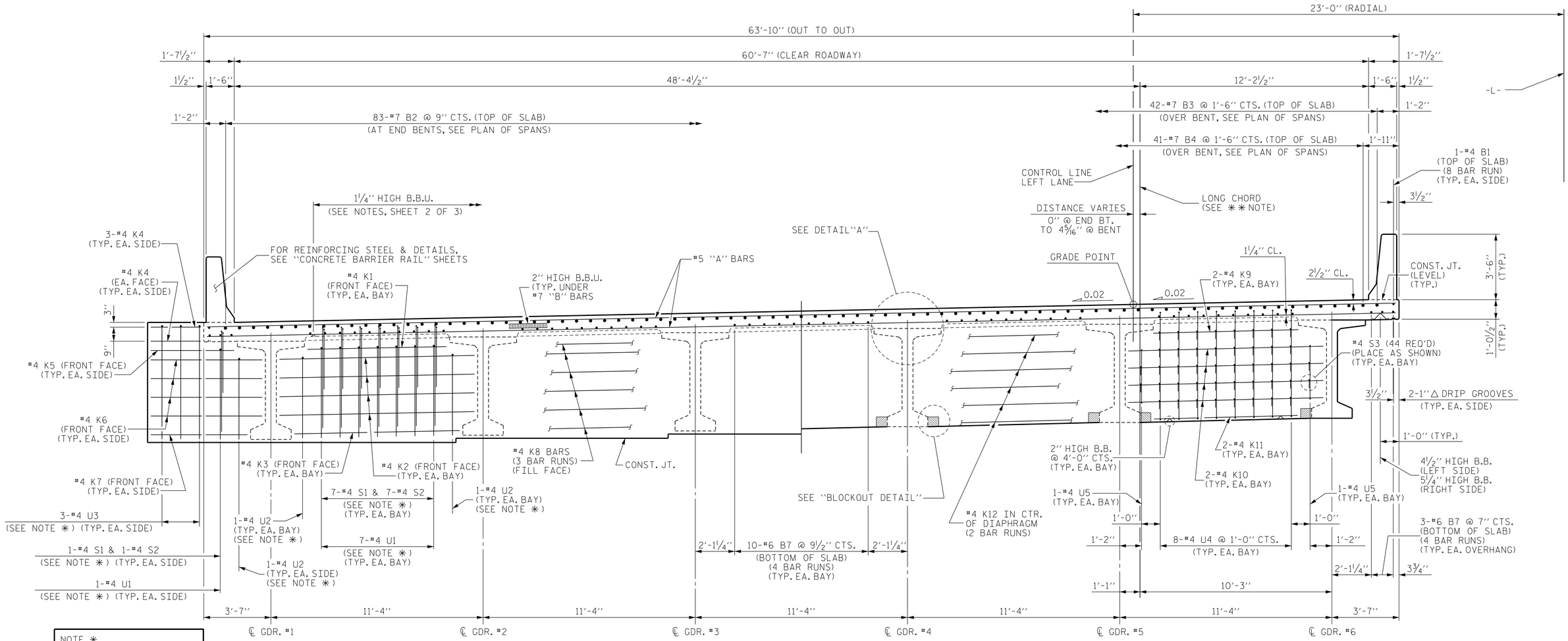

NOTE *
THESE BARS ARE TO MATCH
#4 "V" BARS IN END BENT

HALF SECTION - INTEGRAL END BENT DIAPHRAGM

HALF SECTION - BENT DIAPHRAGM

TYPICAL SECTION

** NOTE : GIRDERS AND OUTSIDE EDGES OF SUPERSTRUCTURE ARE PARALLEL TO THE LONG CHORD

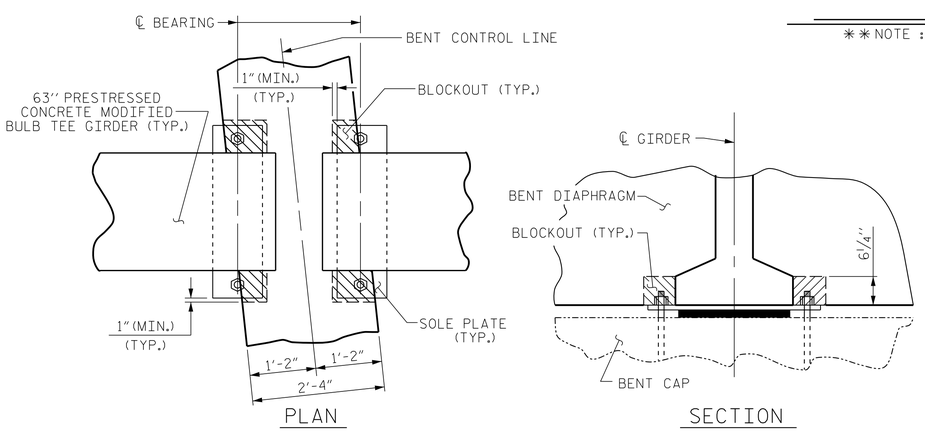

BENT DIAPHRAGM BLOCK-OUT DETAIL

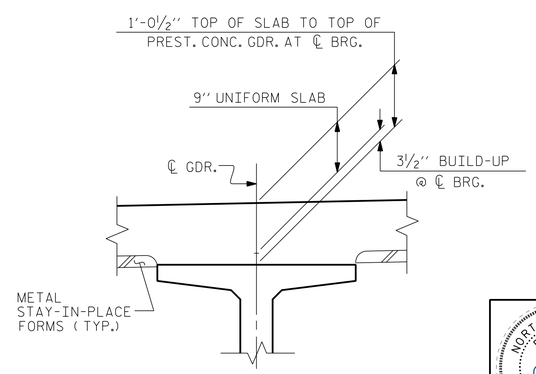

DETAIL "A"

PROJECT NO. U-2579B
FORSYTH COUNTY
STATION: 642+81.42 -L-

SHEET 1 OF 3

STATE OF NORTH CAROLINA
DEPARTMENT OF TRANSPORTATION
RALEIGH

SUPERSTRUCTURE
TYPICAL SECTION
(LEFT LANE)

REVISIONS						SHEET NO.
NO.	BY:	DATE:	NO.	BY:	DATE:	S-475
1			3			TOTAL SHEETS
2			4			707

NORTH CAROLINA PROFESSIONAL SEAL 026891 ENGINEER JOHN T. DIFFEE
DocSigned by: John T. Diffee 4/15/2014

WETHERILL ENGINEERING
559 Jones Franklin Rd. Suite 164
Raleigh, N.C. 27606
Bus: 919 851 8077
Fax: 919 851 8107
License: F-0377

TRANSPORTATION PLANNING/DESIGN - BRIDGE/STRUCTURE DESIGN
CIVIL/SITE DESIGN - GIS/GPS - CONSTRUCTION OBSERVATION

DRAWN BY : J.M. BRITT DATE : 10-2-13
CHECKED BY : B.C. HUNT DATE : 4-1-14
DESIGN ENGINEER OF RECORD : T. DIFFEE DATE : 4-15-14

P:\2013\13109.22 U-2579B\Structures\DGN\Str 13 (L-LtLaneNU2579B_SD_STR13_TS_WE1.dgn
6/9/2014 1:59:49 PM