PROJECT REFERENCE NO.	SHEET NO.
U-2579B	RF-3
R/W SHEET NO.	
ROADWAY DESIGN ENGINEER	HYDRAULICS ENGINEER

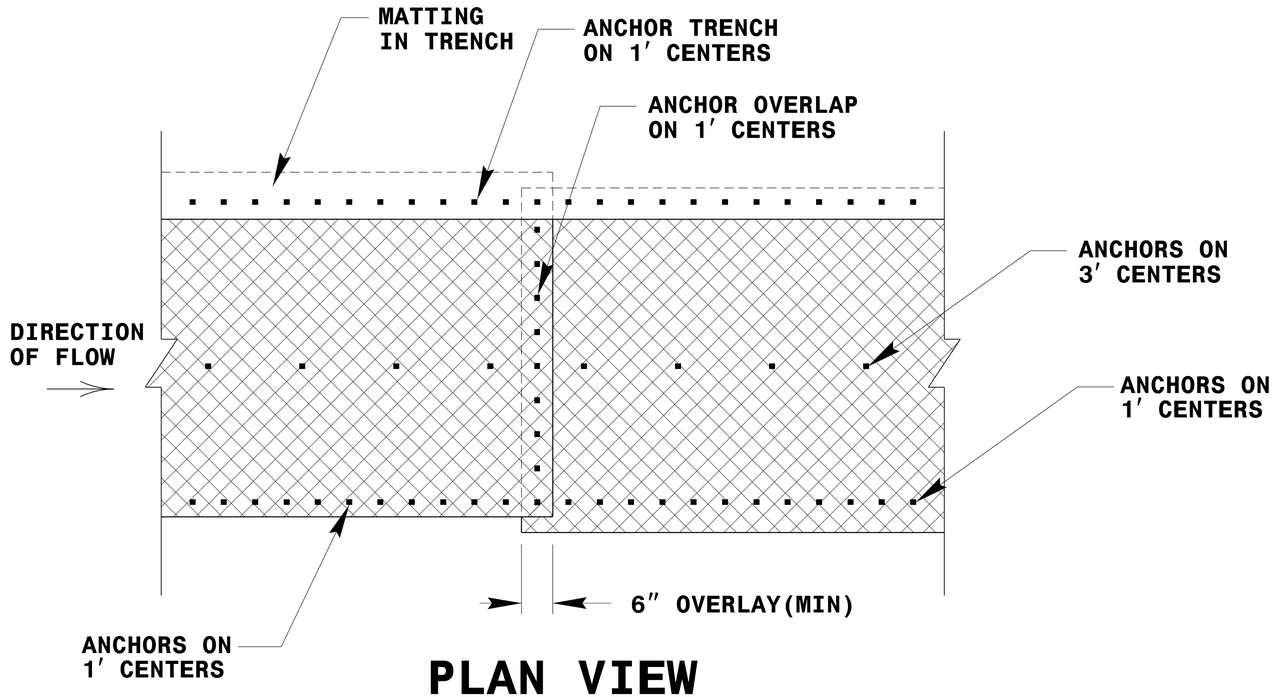

PLAN VIEW

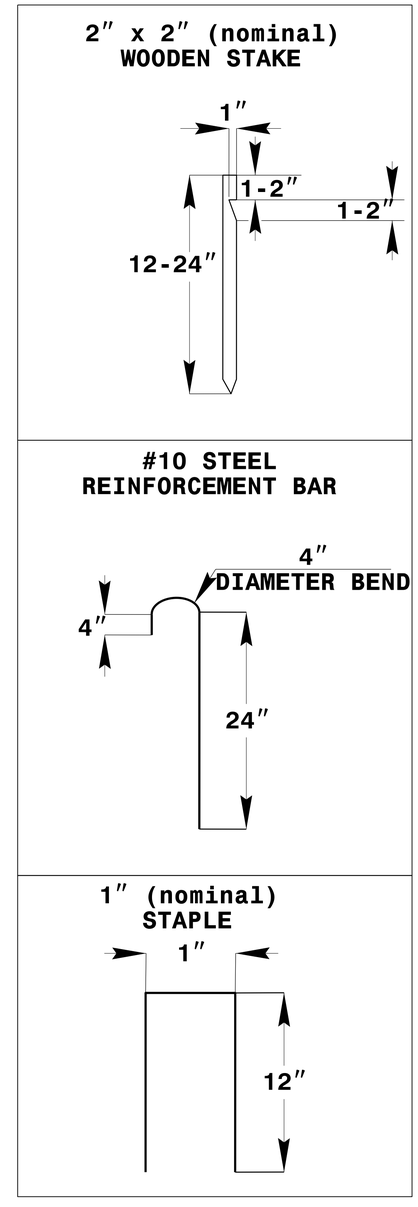

ANCHOR OPTIONS

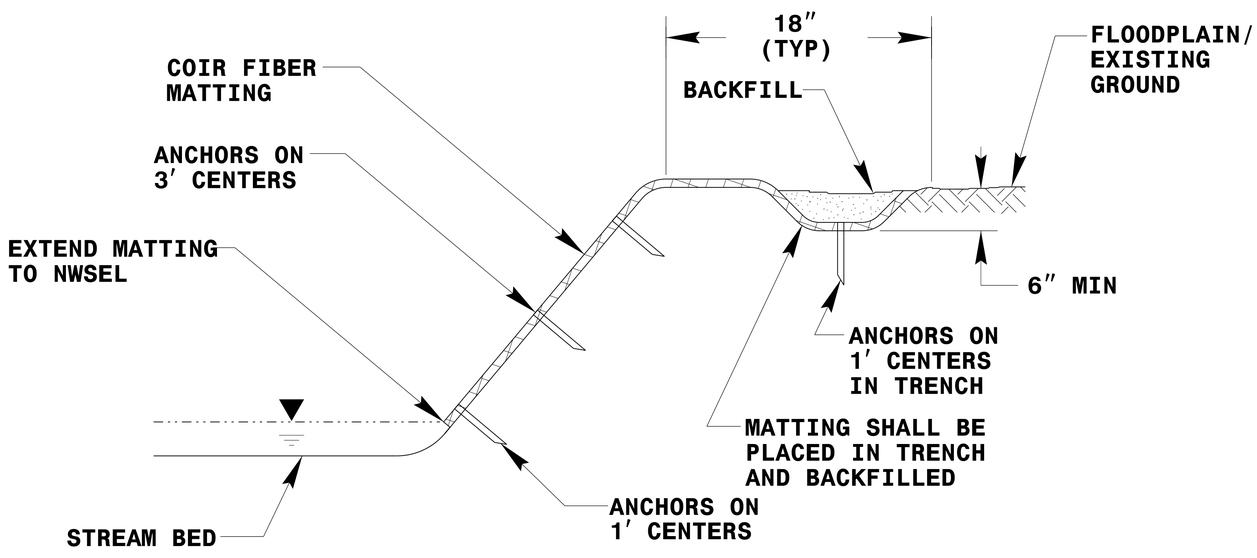

TYPICAL CROSS SECTION

COIR FIBER MATTING DETAIL

NOT TO SCALE

STREAMBANK REFORESTATION

DETAIL SHEET 2 OF 2

N.C.D.O.T. - ROADSIDE ENVIRONMENTAL UNIT