0353DEL_P15

# TIP PROJECT: P-5204

# CONTRACT: C203489

See Sheet 1-A For Index of Sheets

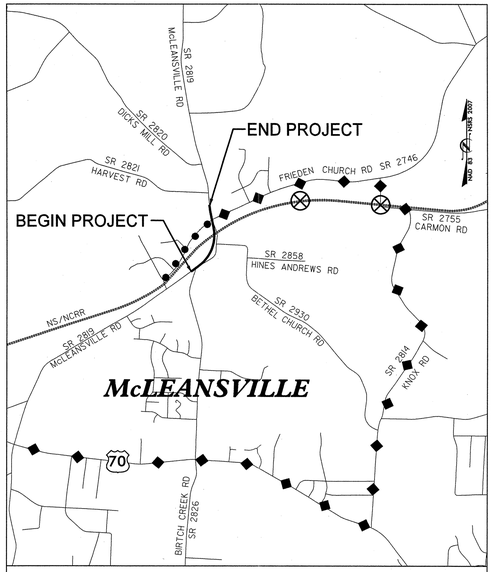


## VICINITY MAP

DETOURS

RAIL CROSSING CLOSURE

NOTE: SEE SHEET 2-E THRU 2-G FOR RAIL CROSSING CLOSURES

# STATE OF NORTH CAROLINA
# RAIL DIVISIONS

# GUILFORD COUNTY

| STATE | STATE PROJECT REFERENCE NO. | SHEET NO. | TOTAL SHEETS |
|---|---|---|---|
| N.C. | P-5204 | 1 | |

| STATE PROJ. NO. | F.A. PROJ. NO. | DESCRIPTION |
|---|---|---|
| 52400.1.STR03T1B | | PE, PE UTIL |
| 43219.2.STR01P5204 | | ROW |
| 52400.3.STR01T4 | FRA-FR-HSR-0006-10-01-00 | UTIL CONST/CONST |

**LOCATION: SR 2819 (McLEANSVILLE ROAD) GRADE SEPARATION OVER NS/NCRR RAILROAD FROM SR 2826 TO NORTH OF SR 2746**

**TYPE OF WORK: GRADING, DRAINAGE, PAVING, AND STRUCTURE**

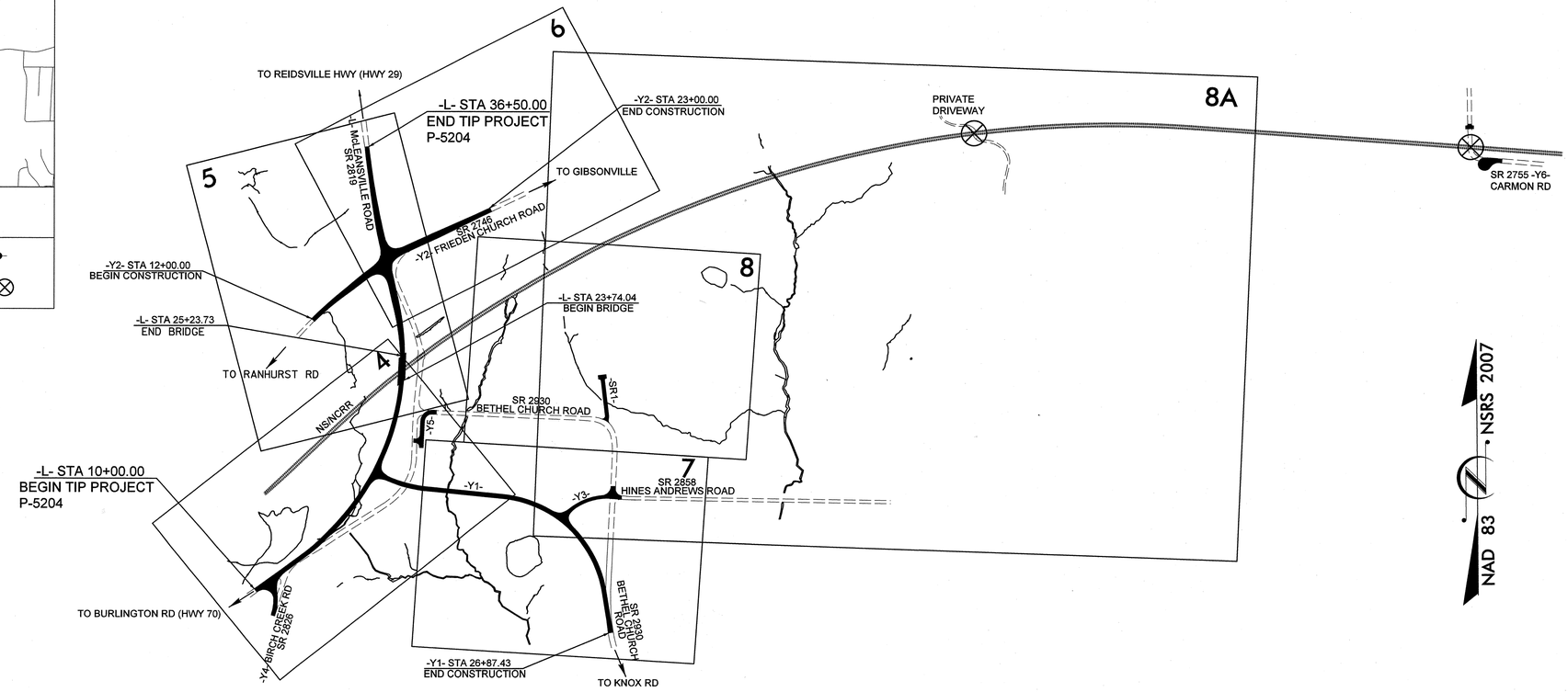


### GRAPHIC SCALES

50 25 0 50 100
PLANS

100 25 0 50 100
PROFILE (HORIZONTAL)

10 5 0 10 20
PROFILE (VERTICAL)

### DESIGN DATA

ADT 2012 = 6,600
ADT 2035 = 10,000
DHV = 10 %
D = 70 %
T = 8 % *
V = 50 MPH
*TTST =1% DUAL=7%
FUNC CLASS = COLLECTOR
SUB-REGIONAL TIER

### PROJECT LENGTH

LENGTH ROADWAY TIP PROJECT P-5204 = 0.474 MILES
LENGTH STRUCTURE TIP PROJECT P-5204 = 0.028 MILES
TOTAL LENGTH TIP PROJECT P-5204 = 0.502 MILES

NCDOT CONTACT:
SANDRA STEPNEY, PE
PROJECT ENGINEER

Prepared In the Office of:
ATKINS
1616 EAST MILLBROOK ROAD, SUITE 310
RALEIGH, NORTH CAROLINA 27609
(919) 876-6888 NCBEES #F-0326

2012 STANDARD SPECIFICATIONS

RIGHT OF WAY DATE:
OCTOBER 28, 2013

LETTING DATE:
SEPTEMBER 16, 2014

DAVID BASS, PE
PROJECT ENGINEER

BRYAN LAMBETH, PE
PROJECT DESIGN ENGINEER

HYDRAULICS ENGINEER
NORTH CAROLINA PROFESSIONAL SEAL 032721 ENGINEER JOHN E. CAREY
6/19/14
SIGNATURE: P.E.

ROADWAY DESIGN
NORTH CAROLINA PROFESSIONAL SEAL 20107 ENGINEER DAVID W. BASS
6/19/14
SIGNATURE: P.E.

NC DEPARTMENT OF TRANSPORTATION
RAIL DIVISION
ENGINEERING COORDINATION AND SAFETY

| PROJECT REFERENCE NO. | SHEET NO. |
|---|---|
| P-5204 | 1-A |

ROADWAY DESIGN ENGINEER

NORTH CAROLINA PROFESSIONAL SEAL 20102 ENGINEER DAVID W. BASS 6/26/14

INDEX OF SHEETS

| SHEET NUMBER | SHEET |
|---|---|
| 1 | TITLE SHEET |
| 1A | INDEX OF SHEETS. GENERAL NOTES. AND LIST OF STANDARD DRAWINGS |
| 1B | CONVENTIONAL SYMBOLS |
| 1C THRU 1F | SURVEY CONTROL SHEET |
| 1G | CENTERLINE COORDINATE LIST |
| 2 THRU 2D | PAVEMENT SCHEDULE. TYPICAL SECTIONS. AND WEDGING DETAILS |
| 2E THRU 2G | CROSSING CLOSURE DETAILS |
| 2H | TEMPORARY DETOUR |
| 2I | TEMPORARY CONTAINMENT OF CONTAMINATED SOIL DETAIL |
| 2J THRU 2O | TEMPORARY SHORING |
| 2P THRU 2R | GUARDRAIL ANCHOR UNITS AND BICYCLE SAFE GRATE AND FRAME STANDARD DRAWINGS |
| 3A | SUMMARY OF DRAINAGE QUANTITIES |
| 3B | SUMMARY OF GUARDRAIL. EARTHWORK SUMMARY. ASPHALT PAVEMENT REMOVAL SUMMARY. BREAKING OF EXISTING ASPHALT PAVEMENT SUMMARY. SHOULDER BERM GUTTER SUMMARY. AND PARCEL INDEX |
| 4 THRU 8A | PLAN SHEETS |
| 9 THRU 14 | PROFILE SHEETS |
| TMP-1 THRU TMP-21 | TRAFFIC CONTROL PLANS |
| PMP-1 THRU PMP-5 | PAVEMENT MARKING PLANS |
| EC-1 THRU EC-20 | EROSION CONTROL PLANS |
| RF-1 THRU RF-2 | REFORESTATION PLANS |
| SIGN-1 THRU SIGN-6 | SIGNING PLANS |
| UC-1 THRU UC-8 | UTILITY CONSTRUCTION PLANS |
| UO-1 THRU UO-5 | UTILITIES BY OTHERS PLANS |
| X-0A THRU X-0B | CROSS SECTION INDEX SHEET AND CROSS SECTION SUMMARY SHEET |
| X-1 THRU X-36 | CROSS-SECTIONS |
| S-1 THRU S-27 | STRUCTURE PLANS |

GENERAL NOTES:

2012 SPECIFICATIONS
EFFECTIVE: 01-17-2012
REVISED: 07-30-2012

GRADING AND SURFACING OR RESURFACING AND WIDENING:

THE GRADE LINES SHOWN DENOTE THE FINISHED ELEVATION OF THE PROPOSED SURFACING AT GRADE POINTS SHOWN ON THE TYPICAL SECTIONS. WHERE NO GRADE LINES ARE SHOWN. THE PROFILES SHOWN DENOTE THE TOP ELEVATION OF THE EXISTING PAVEMENT ALONG THE CENTER LINE OF SURVEY ON WHICH THE PROPOSED RESURFACING WILL BE PLACED. GRADE LINES MAY BE ADJUSTED BY THE ENGINEER IN ORDER TO SECURE A PROPER TIE-IN.

CLEARING:

CLEARING ON THIS PROJECT SHALL BE PERFORMED TO THE LIMITS ESTABLISHED BY METHOD II.

SUPERELEVATION:

ALL CURVES ON THIS PROJECT SHALL BE SUPERELEVATED IN ACCORDANCE WITH STD. NO. 225.04
SUPERELEVATION IS TO BE REVOLVED ABOUT THE GRADE POINTS SHOWN ON THE TYPICAL SECTIONS.

SHOULDER CONSTRUCTION:

ASPHALT. EARTH. AND CONCRETE SHOULDER CONSTRUCTION ON THE HIGH SIDE OF SUPERELEVATED CURVES SHALL BE IN ACCORDANCE WITH STD. 560.01

SIDE ROADS:

THE CONTRACTOR WILL BE REQUIRED TO DO ALL NECESSARY WORK TO PROVIDE SUITABLE CONNECTIONS WITH ALL ROADS. STREETS. AND DRIVES ENTERING THIS PROJECT. THIS WORK WILL BE PAID FOR AT THE CONTRACT UNIT PRICE FOR THE PARTICULAR ITEMS INVOLVED.

UNDERDRAINS:

UNDERDRAINS SHALL BE CONSTRUCTED IN ACCORDANCE WITH STD. NO. 815.03 AT LOCATIONS DIRECTED BY THE ENGINEER.

GUARDRAIL:

THE GUARDRAIL LOCATIONS SHOWN ON THE PLANS MAY BE ADJUSTED DURING CONSTRUCTION AS DIRECTED BY THE ENGINEER. THE CONTRACTOR SHOULD CONSULT WITH THE ENGINEER PRIOR TO ORDERING GUARDRAIL MATERIAL.

TEMPORARY SHORING:

SHORING REQUIRED FOR THE MAINTENANCE OF TRAFFIC NOT SHOWN ON THE PLANS WILL BE PAID FOR AT THE CONTRACT PRICE FOR "TEMPORARY SHORING".

END BENTS:

THE ENGINEER SHALL CHECK THE STRUCTURE END BENT PLANS. DETAILS. AND CROSS-SECTION PRIOR TO SETTING OF THE SLOPE STAKES FOR THE EMBANKMENT OR EXCAVATION APPROACHING A BRIDGE.

UTILITIES:

UTILITY OWNERS ON THIS PROJECT ARE

DUKE ENERGY PROGRESS. AT&T. PNG. CITY OF GREENSBORO. TIME WARNER CABLE.

AND VERIZON/MCI

ANY RELOCATION OF EXISTING UTILITIES WILL BE ACCOMPLISHED BY OTHERS. EXCEPT AS SHOWN ON THE PLANS.

RIGHT-OF-WAY MARKERS:

ALL RIGHT-OF-WAY MARKERS ON THIS PROJECT SHALL BE PLACED BY OTHERS.

EFF. 01-17-2012
REV. 10-30-2012

2012 ROADWAY ENGLISH STANDARD DRAWINGS

The following Roadway Standards as appear in "Roadway Standard Drawings" Highway Design Branch - N. C. Department of Transportation - Raleigh. N. C.. Dated January. 2012 are applicable to this project and by reference hereby are considered a part of these plans:

| STD.NO. | TITLE |
|---|---|
| DIVISION 2 - EARTHWORK | |
| 200.02 | Method of Clearing - Method II |
| 225.02 | Guide for Grading Subgrade - Secondary and Local |
| 225.04 | Method of Obtaining Superelevation - Two Lane Pavement |
| 225.06 | Method of Grading Sight Distance at Intersections |
| DIVISION 3 - PIPE CULVERTS | |
| 300.01 | Method of Pipe Installation |
| 310.10 | Driveway Pipe Construction |
| DIVISION 5 - SUBGRADE. BASES AND SHOULDERS | |
| 560.01 | Method of Shoulder Construction - High Side of Superelevated Curve - Method I |
| DIVISION 6 - ASPHALT BASES AND PAVEMENTS | |
| 654.01 | Pavement Repairs |
| DIVISION 8 - INCIDENTALS | |
| 806.01 | Concrete Right-of-Way Marker |
| 806.02 | Granite Right-of-Way Marker |
| 815.03 | Pipe Underdrain and Blind Drain |
| 838.01 | Concrete Endwall for Single and Double Pipe Culverts - 15" thru 48" Pipe 90 Skew |
| 838.11 | Brick Endwall for Single and Double Pipe Culverts - 15" thru 48" Pipe 90 Skew |
| 838.80 | Precast Endwalls - 12" thru 72" Pipe 90 Skew |
| 840.00 | Concrete Base Pad for Drainage Structures |
| 840.18 | Concrete Grated Drop Inlet Type 'B' - 12" thru 36" Pipe |
| 840.25 | Anchorage for Frames - Brick or Concrete or Precast |
| 840.27 | Brick Grated Drop Inlet Type 'B' - 12" thru 36" Pipe |
| 840.29 | Frames and Narrow Slot Flat Grates |
| 840.31 | Concrete Junction Box - 12" thru 66" Pipe |
| 840.32 | Brick Junction Box - 12" thru 66" Pipe |
| 840.35 | Traffic Bearing Grated Drop Inlet - for Cast Iron Double Frame and Grates |
| 840.45 | Precast Drainage Structure |
| 840.46 | Traffic Bearing Precast Drainage Structure |
| 840.54 | Manhole Frame and Cover |
| 840.66 | Drainage Structure Steps |
| 840.72 | Pipe Collar |
| 846.01 | Concrete Curb. Gutter and Curb & Gutter |
| 846.04 | Drop Inlet Installation in Shoulder Berm Gutter |
| 862.01 | Guardrail Placement |
| 862.02 | Guardrail Installation |
| 876.02 | Guide for Rip Rap at Pipe Outlets |
| 876.04 | Drainage Ditches with Class 'B' Rip Rap |

DGN 0353DEL_P15

*Note: Not to Scale*

**S.U.E. = Subsurface Utility Engineering*

STATE OF NORTH CAROLINA
RAIL DIVISION

# CONVENTIONAL PLAN SHEET SYMBOLS

| PROJECT REFERENCE NO. | SHEET NO. |
|---|---|
| P-5204 | 1-B |

ATKINS 1616 EAST MILLBROOK ROAD, SUITE 310 RALEIGH, NORTH CAROLINA 27609 (919) 876-6888 NCBEES #F-0326

## *BOUNDARIES AND PROPERTY:*

- State Line
- County Line
- Township Line
- City Line
- Reservation Line
- Property Line
- Existing Iron Pin — EIP
- Property Corner
- Property Monument — ECM
- Parcel/Sequence Number — 123
- Existing Fence Line
- Proposed Woven Wire Fence
- Proposed Chain Link Fence
- Proposed Barbed Wire Fence
- Existing Wetland Boundary — WLB
- Proposed Wetland Boundary — WLB
- Existing Endangered Animal Boundary — EAB
- Existing Endangered Plant Boundary — EPB
- Known Soil Contamination: Area or Site
- Potential Soil Contamination: Area or Site

## *BUILDINGS AND OTHER CULTURE:*

- Gas Pump Vent or U/G Tank Cap
- Sign — S
- Well — W
- Small Mine
- Foundation
- Area Outline
- Cemetery
- Building
- School
- Church
- Dam

## *HYDROLOGY:*

- Stream or Body of Water
- Hydro, Pool or Reservoir
- Jurisdictional Stream — JS
- Buffer Zone 1 — BZ 1
- Buffer Zone 2 — BZ 2
- Flow Arrow
- Disappearing Stream
- Spring
- Wetland
- Proposed Lateral, Tail, Head Ditch — FLOW
- False Sump

## *RAILROADS:*

- Standard Gauge — CSX TRANSPORTATION
- RR Signal Milepost — MILEPOST 35
- Switch — SWITCH
- RR Abandoned
- RR Dismantled

## *RIGHT OF WAY:*

- Baseline Control Point
- Existing Right of Way Marker
- Existing Right of Way Line
- Proposed Right of Way Line — RW
- Proposed Right of Way Line with Iron Pin and Cap Marker — RW
- Proposed Right of Way Line with Concrete or Granite Marker — RW
- Existing Control of Access — CA
- Proposed Control of Access — CA
- Existing Easement Line — E
- Proposed Temporary Construction Easement — E
- Proposed Temporary Drainage Easement — TDE
- Proposed Permanent Drainage Easement — PDE
- Proposed Permanent Drainage / Utility Easement — DUE
- Proposed Permanent Utility Easement — PUE
- Proposed Temporary Utility Easement — TUE
- Proposed Aerial Utility Easement — AUE
- Proposed Permanent Easement with Iron Pin and Cap Marker

## *ROADS AND RELATED FEATURES:*

- Existing Edge of Pavement
- Existing Curb
- Proposed Slope Stakes Cut — C
- Proposed Slope Stakes Fill — F
- Proposed Curb Ramp — CR
- Existing Metal Guardrail
- Proposed Guardrail
- Existing Cable Guiderail
- Proposed Cable Guiderail
- Equality Symbol
- Pavement Removal

## *VEGETATION:*

- Single Tree
- Single Shrub
- Hedge
- Woods Line
- Orchard
- Vineyard — Vineyard

## *EXISTING STRUCTURES:*

MAJOR:

- Bridge, Tunnel or Box Culvert — CONC
- Bridge Wing Wall, Head Wall and End Wall — CONC WW

MINOR:

- Head and End Wall — CONC HW
- Pipe Culvert
- Footbridge
- Drainage Box: Catch Basin, DI or JB — CB
- Paved Ditch Gutter
- Storm Sewer Manhole — S
- Storm Sewer — S

## *UTILITIES:*

POWER:

- Existing Power Pole
- Proposed Power Pole
- Existing Joint Use Pole
- Proposed Joint Use Pole
- Power Manhole — P
- Power Line Tower
- Power Transformer
- U/G Power Cable Hand Hole
- H-Frame Pole
- Recorded U/G Power Line — P
- Designated U/G Power Line (S.U.E.*) — P

TELEPHONE:

- Existing Telephone Pole
- Proposed Telephone Pole
- Telephone Manhole — T
- Telephone Booth
- Telephone Pedestal — T
- Telephone Cell Tower
- U/G Telephone Cable Hand Hole — HH
- Recorded U/G Telephone Cable — T
- Designated U/G Telephone Cable (S.U.E.*) — T
- Recorded U/G Telephone Conduit — TC
- Designated U/G Telephone Conduit (S.U.E.*) — TC
- Recorded U/G Fiber Optics Cable — T FO
- Designated U/G Fiber Optics Cable (S.U.E.*) — T FO

WATER:

- Water Manhole — W
- Water Meter
- Water Valve
- Water Hydrant
- Recorded U/G Water Line — W
- Designated U/G Water Line (S.U.E.*) — W
- Above Ground Water Line — A/G Water

TV:

- TV Satellite Dish
- TV Pedestal — C
- TV Tower
- U/G TV Cable Hand Hole — HH
- Recorded U/G TV Cable — TV
- Designated U/G TV Cable (S.U.E.*) — TV
- Recorded U/G Fiber Optic Cable — TV FO
- Designated U/G Fiber Optic Cable (S.U.E.*) — TV FO

GAS:

- Gas Valve
- Gas Meter
- Recorded U/G Gas Line — G
- Designated U/G Gas Line (S.U.E.*) — G
- Above Ground Gas Line — A/G Gas

SANITARY SEWER:

- Sanitary Sewer Manhole
- Sanitary Sewer Cleanout
- U/G Sanitary Sewer Line — SS
- Above Ground Sanitary Sewer — A/G Sanitary Sewer
- Recorded SS Forced Main Line — FSS
- Designated SS Forced Main Line (S.U.E.*) — FSS

MISCELLANEOUS:

- Utility Pole
- Utility Pole with Base
- Utility Located Object
- Utility Traffic Signal Box — S
- Utility Unknown U/G Line — ?UTL
- U/G Tank; Water, Gas, Oil
- Underground Storage Tank, Approx. Loc. — UST
- A/G Tank; Water, Gas, Oil
- Geoenvironmental Boring
- U/G Test Hole (S.U.E.*)
- Abandoned According to Utility Records — AATUR
- End of Information — E.O.I.

| PROJECT REFERENCE NO. | SHEET NO. |
|---|---|
| 52400.1 | 1C |
| Location and Surveys | |

# P-5204 SURVEY CONTROL SHEET

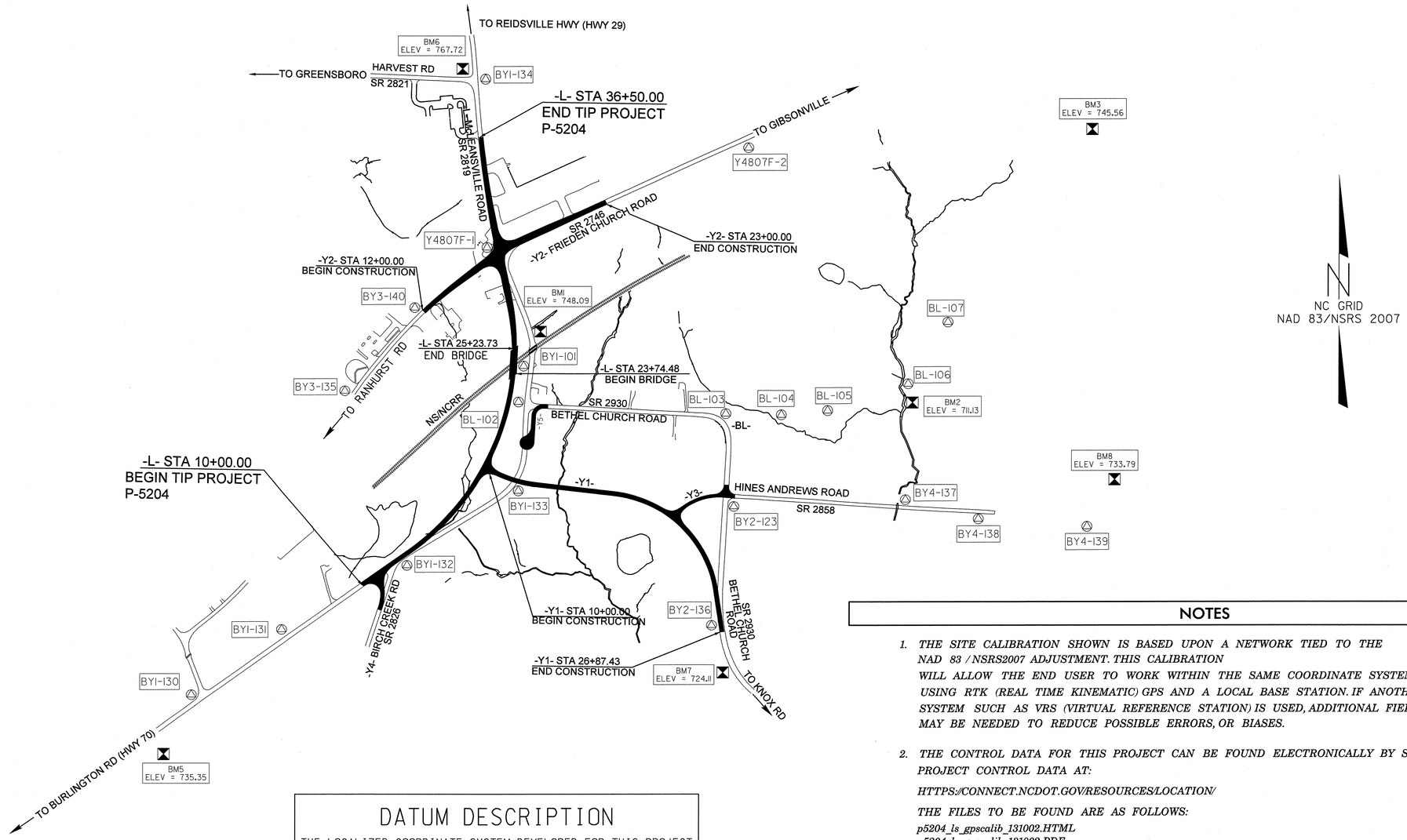


## DATUM DESCRIPTION

THE LOCALIZED COORDINATE SYSTEM DEVELOPED FOR THIS PROJECT IS BASED ON THE STATE PLANE COORDINATES ESTABLISHED BY NCDOT FOR MONUMENT "Y4807F-1"
WITH NAD 83/NSRS 2007 STATE PLANE GRID COORDINATES OF
NORTHING: 858709.3260(ft) EASTING: 1805511.6750(ft)
ELEVATION: 762.73'(ft)
THE AVERAGE COMBINED GRID FACTOR USED ON THIS PROJECT (GROUND TO GRID) IS: 0.999952493
THE N.C. LAMBERT GRID BEARING AND LOCALIZED HORIZONTAL GROUND DISTANCE FROM "Y4807F-1" TO -L- STATION 10+00.00 IS
S 20°20'32" W 1888.67'
ALL LINEAR DIMENSIONS ARE LOCALIZED HORIZONTAL DISTANCES
VERTICAL DATUM USED IS NAVD 88

## NOTES

1. *THE SITE CALIBRATION SHOWN IS BASED UPON A NETWORK TIED TO THE NAD 83 / NSRS2007 ADJUSTMENT. THIS CALIBRATION WILL ALLOW THE END USER TO WORK WITHIN THE SAME COORDINATE SYSTEM WHEN USING RTK (REAL TIME KINEMATIC) GPS AND A LOCAL BASE STATION. IF ANOTHER SYSTEM SUCH AS VRS (VIRTUAL REFERENCE STATION) IS USED, ADDITIONAL FIELD TIES MAY BE NEEDED TO REDUCE POSSIBLE ERRORS, OR BIASES.*

2. *THE CONTROL DATA FOR THIS PROJECT CAN BE FOUND ELECTRONICALLY BY SELECTING PROJECT CONTROL DATA AT:*

   *HTTPS://CONNECT.NCDOT.GOV/RESOURCES/LOCATION/*

   *THE FILES TO BE FOUND ARE AS FOLLOWS:*

   *p5204_ls_gpscalib_131002.HTML*
   *p5204_ls_gpscalib_131002.PDF*
   *p5204_ls_wgs84_131002.TXT*
   *p5204_ls_local_131002.TXT*
   *p5204_ls_control_131002.TXT*

   *THE WGS84 AND LOCAL FILES ARE COMMA DELIMITED AND CAN BE USED TO REPRODUCE THE SITE CALIBRATION FOR THE END USER'S GPS EQUIPMENT. IF FURTHER INFORMATION IS NEEDED, PLEASE CONTACT THE LOCATION AND SURVEYS UNIT.*

△ *INDICATES GEODETIC CONTROL MONUMENTS USED OR SET FOR HORIZONTAL PROJECT CONTROL BY THE NCDOT LOCATION AND SURVEYS UNIT.*

*PROJECT CONTROL ESTABLISHED USING GLOBAL POSITIONING SYSTEM.*

*SEE GPS CALIBRATION SHEET FOR HORIZONTAL AND VERTICAL COORDINATE VALUES.*

*NOTE: DRAWING NOT TO SCALE*


DGN 0353DEL_P15 12/01/2005
18-JUN-2014 16:09
R:\Roadway\Proj\p5204_rdy_SCS_1C.dgn
$$$$USERNAME$$$$

# P-5204 SURVEY CONTROL SHEET

| PROJECT REFERENCE NO. | SHEET NO. |
|---|---|
| 52400.1 | 1D |
| Location and Surveys | |

## BASELINE DATA

BL

| POINT | DESC. | NORTH | EAST | ELEVATION | L STATION | OFFSET |
|---|---|---|---|---|---|---|
| 102 | BL-102 | 857865.7850 | 1805675.5720 | 739.52 | 22+37.65 | 77.69 RT |
| 103 | BL-103 | 857811.3470 | 1806706.9240 | 745.37 | 23+29.56 | 1102.44 RT |
| 104 | BL-104 | 857805.5350 | 1806993.2090 | 731.69 | 23+47.08 | 1386.73 RT |
| 105 | BL-105 | 857846.2250 | 1807234.5210 | 733.24 | 23+79.34 | 1621.36 RT |
| 106 | BL-106 | 857987.8100 | 1807620.7090 | 711.09 | 24+51.45 | 1994.96 RT |
| 107 | BL-107 | 858309.6220 | 1807850.1750 | 730.42 | 25+74.74 | 2222.77 RT |
| 108 | BL-108 | 858677.2260 | 1807968.0630 | 734.70 | 27+03.19 | 2373.73 RT |
| 109 | BL-109 | 858944.7080 | 1808163.3360 | 738.43 | 27+82.18 | 2611.71 RT |
| 110 | BL-110 | 859041.3080 | 1808303.0370 | 743.29 | 28+48.92 | 2767.88 RT |
| 111 | BL-111 | 859254.3870 | 1808546.4490 | 742.96 | 30+09.09 | 3048.95 RT |
| 112 | BL-112 | 859186.5760 | 1808761.4800 | 741.65 | 28+99.70 | 3246.10 RT |
| 113 | BL-113 | 859205.2010 | 1809027.5530 | 731.57 | 28+64.81 | 3510.54 RT |
| 114 | BL-114 | 859207.5280 | 1809379.8300 | 734.38 | 27+96.73 | 3856.18 RT |
| 115 | BL-115 | 859185.7740 | 1809672.6350 | 734.20 | 27+66.59 | 4139.13 RT |
| 116 | BL-116 | 859159.7080 | 1809979.2850 | 740.78 | 27+47.73 | 4436.02 RT |
| 117 | BL-117 | 859143.6820 | 1810199.2810 | 734.99 | 27+35.93 | 4650.14 RT |
| 118 | BL-118 | 859134.9290 | 1810375.0820 | 728.84 | 27+27.95 | 4822.21 RT |
| 119 | BL-119 | 859128.1780 | 1810640.2240 | 737.17 | 27+18.02 | 5083.11 RT |
| 120 | BL-120 | 859084.5180 | 1811135.8920 | 751.55 | 26+95.67 | 5567.50 RT |
| 121 | BL-121 | 859108.9460 | 1811531.8140 | 757.14 | 26+90.50 | 5963.18 RT |
| 122 | BL-122 | 859000.0650 | 1812167.0670 | 767.15 | 26+59.05 | 6581.16 RT |

BY1

| POINT | DESC. | NORTH | EAST | ELEVATION | L STATION | OFFSET |
|---|---|---|---|---|---|---|
| 134 | BY1-134 | 859577.6771 | 1805450.5239 | 764.90 | OUTSIDE PROJECT LIMITS | |
| GPS1 | Y4807F-1 | 858709.3260 | 1805511.6750 | 762.73 | 30+81.12 | 33.54 LT |
| 101 | BY1-101 | 858116.3270 | 1805706.5660 | 746.26 | 24+76.26 | 76.94 RT |
| BL102 | BL-102 | 857865.7850 | 1805675.5720 | 739.52 | 22+37.65 | 77.69 RT |
| 133 | BY1-133 | 857460.7090 | 1805666.0697 | 731.16 | 18+91.12 | 209.24 RT |
| 132 | BY1-132 | 857038.6149 | 1805039.4997 | 737.22 | 12+08.08 | 26.97 RT |
| 131 | BY1-131 | 856681.0101 | 1804469.9486 | 746.06 | OUTSIDE PROJECT LIMITS | |
| 130 | BY1-130 | 856349.0040 | 1804006.1197 | 736.59 | OUTSIDE PROJECT LIMITS | |

BY2

| POINT | DESC. | NORTH | EAST | ELEVATION | Y1 STATION | OFFSET |
|---|---|---|---|---|---|---|
| BL103 | BL-103 | 857811.3470 | 1806706.9240 | 745.37 | 19+55.17 | 576.32 LT |
| 123 | BY2-123 | 857384.5280 | 1806744.6740 | 739.53 | 21+37.23 | 277.51 LT |
| 136 | BY2-136 | 856723.6067 | 1806676.1943 | 729.72 | 26+52.27 | 17.00 RT |

BY3

| POINT | DESC. | NORTH | EAST | ELEVATION | Y2 STATION | OFFSET |
|---|---|---|---|---|---|---|
| 135 | BY3-135 | 857943.6307 | 1804799.2065 | 751.84 | OUTSIDE PROJECT LIMITS | |
| 140 | BY3-140 | 858377.6152 | 1805154.4645 | 757.56 | 11+97.83 | 17.38 LT |
| BYGPS1 | Y4807F-1 | 858709.3260 | 1805511.6750 | 762.73 | 16+78.99 | 48.24 LT |
| GPS2 | Y4807F-2 | 859256.6620 | 1806819.6700 | 759.72 | OUTSIDE PROJECT LIMITS | |

BY4

| POINT | DESC. | NORTH | EAST | ELEVATION | Y3 STATION | OFFSET |
|---|---|---|---|---|---|---|
| BY123 | BY2-123 | 857384.5280 | 1806744.6740 | 739.53 | 13+36.89 | 19.16 RT |
| 137 | BY4-137 | 857358.0213 | 1807600.8180 | 702.86 | 21+93.00 | 13.02 LT |
| 138 | BY4-138 | 857298.1895 | 1808037.9112 | 726.59 | 26+32.55 | 22.34 RT |
| 139 | BY4-139 | 857281.8377 | 1808563.7304 | 729.55 | OUTSIDE PROJECT LIMITS | |

## BENCHMARK DATA

```
****************************************
BM1       ELEVATION = 748.09
N 858256      E 1805739
L STATION 26+06.00 111 RIGHT
RR SPIKE IN BASE OF POWER POLE
****************************************
****************************************
BM2       ELEVATION = 711.13
N 857894      E 1807633
L STATION 24+15.00 2014 RIGHT
RR SPIKE IN BASE OF 18IN GUM
****************************************
****************************************
BM3       ELEVATION = 745.56
N 859354      E 1808590
L STATION 30+98.00 3111 RIGHT
RR SPIKE IN BASE OF 15IN PINE TREE
****************************************
****************************************
BM4       ELEVATION = 751.78
N 859319      E 1811099
L STATION 27+41.00 5566 RIGHT
RR SPIKE IN BASE OF 12IN GUM TREE
****************************************
```

```
****************************************
BM5       ELEVATION = 735.35
N 856123      E 1803764
L STATION 10+00.00
 S 53°13'50.07" W  DIST   1361.76
RR-SPIKE IN BASE OF POWER POLE
****************************************
****************************************
BM6       ELEVATION = 767.72
N 859625      E 1805367
L STATION 10+00.00
 N 10°47'19.09" E  DIST   2734.85
RR-SPIKE IN BASE OF 36IN OAK TREE
****************************************
****************************************
BM7       ELEVATION = 724.11
N 856489      E 1806732
Y1 STATION 26+87.00
 S 09°30'39.84" E  DIST    205.00
RR-SPIKE IN BASE OF POWER POLE
****************************************
****************************************
BM8       ELEVATION = 733.79
N 857490      E 1808721
Y3 STATION 10+00.00
 N 84°59'39.30" E  DIST   2284.72
RR-SPIKE IN BASE OF POWER POLE
****************************************
```

## DATUM DESCRIPTION

THE LOCALIZED COORDINATE SYSTEM DEVELOPED FOR THIS PROJECT IS BASED ON THE STATE PLANE COORDINATES ESTABLISHED BY NCDOT FOR MONUMENT "Y4807F-1"
WITH NAD 83/NSRS 2007 STATE PLANE GRID COORDINATES OF
NORTHING: 858709.3260(ft) EASTING: 1805511.6750(ft)
ELEVATION: 762.73'(ft)
THE AVERAGE COMBINED GRID FACTOR USED ON THIS PROJECT (GROUND TO GRID) IS: 0.999952493
THE N.C. LAMBERT GRID BEARING AND LOCALIZED HORIZONTAL GROUND DISTANCE FROM "Y4807F-1" TO -L- STATION 10+00.00 IS
S 20°20'32" W 1888.67'
ALL LINEAR DIMENSIONS ARE LOCALIZED HORIZONTAL DISTANCES
VERTICAL DATUM USED IS NAVD 88

## NOTES

1. *THE CONTROL DATA FOR THIS PROJECT CAN BE FOUND ELECTRONICALLY BY SELECTING PROJECT CONTROL DATA AT:*

   *HTTPS://CONNECT.NCDOT.GOV/RESOURCES/LOCATION/*

   *THE FILES TO BE FOUND ARE AS FOLLOWS:*

   *P5204_LS_CONTROL_131002.txt*
   *P5204_LS_GPSCALIB_131002.HTML*
   *P5204_LS_GPSCALIB_131002.pdf*
   *P5204_LS_WGS84_131002.txt*
   *P5204_LS_LOCAL_131002.txt*

△ *INDICATES GEODETIC CONTROL MONUMENTS USED OR SET FOR HORIZONTAL PROJECT CONTROL BY THE NCDOT LOCATION AND SURVEYS UNIT.*

*PROJECT CONTROL ESTABLISHED USING GLOBAL POSITIONING SYSTEM.*

*NOTE: DRAWING NOT TO SCALE*

18-JUN-2014 16:09
R:\Roadway\Proj\p5204_rdy_SCS_1D.dgn
$$$$USERNAME$$$$

| PROJECT REFERENCE NO. | SHEET NO. |
|---|---|
| 52400.1 | 1E |
| Location and Surveys | |

# P-5204 SURVEY CONTROL SHEET

## GPS Calibration Report

*Project : y4807f_sc*

| | | | |
|---|---|---|---|
| **TIP Number** | Y-4807-F | | |
| **User name** | khudson | **Date & Time** | 11:34:20 AM 9/30/2013 |
| **Coordinate System** | US State Plane 1983(at ground) | **Zone** | North Carolina 3200 |
| **Horizontal Datum** | NAD 1983 (Conus) | | |
| **Vertical Datum** | NAVD88 | **Geoid Model** | G09NC |
| **Coordinate Units** | US survey feet | | |
| **Distance Units** | US survey feet | | |
| **Height Units** | US survey feet | | |

**LOCAL SITE INFORMATION**

| | |
|---|---|
| Localized around | Y4807F-1 |
| Latitude | 36°06'27.32388"N |
| Longitude | 79°39'30.18036"W |
| Site Scale Factor | 1.0000475096 |
| Height | 662.322sft |

**The North Carolina Department of Transportation uses a Localized Coordinate System which is very similar to North Carolina Zone 3200 from which it is derived.**
**Please take care in utilizing these coordinates to eliminate confusion of the two systems.**
**This file is to aid in the use of Real Time Kinematic (RTK) GPS during construction layout.**

### Datum Transformation Parameters

Datum Transformation computation not requested

### Updated Default Projection (Transverse Mercator) Definition

Updated default projection not requested

### Horizontal Adjustment Parameters

| | |
|---|---|
| **Northing coordinate of rotation center** | 858187.456sft |
| **Easting coordinate of rotation center** | 1808903.621sft |
| **Rotation about the center point** | 0°00'00" |
| **Translation north** | 0.005sft |
| **Translation east** | -0.008sft |
| **Scale factor** | 0.99999818 |

### Vertical Adjustment Parameters

| | |
|---|---|
| **Northing coordinate of origin point** | 858709.328sft |
| **Easting coordinate of origin point** | 1805511.680sft |
| **Vertical separation at origin** | 0.019sft |
| **Slope north** | -3.735ppm |
| **Slope east** | 0.138ppm |

### Geoid Model Definition

G09NC

### Residual Differences Between GPS (WGS84) And Local Coordinates

**Summary**

| | Maximum error | Root Mean Square error | Point |
|---|---|---|---|
| **Horizontal** | 0.006sft | 0.002 | Y4807F-3_GPS |
| **Vertical** | 0.000sft | 0.000 | Y4807F-1_GPS |
| **Three-dimensional** | 0.006sft | 0.002 | Y4807F-3_GPS |

**Point Residuals**

| WGS84 Coordinates | | Calculated point FOR DISPLAY ONLY | | Local Coordinates | |
|---|---|---|---|---|---|
| **Point** | Y4807F-1_GPS | **Northing** | 858709.328sft | **Point** | Y4807F-1 |
| **Latitude** | 36°06'27.32386"N | **Easting** | 1805511.680sft | **Northing** | 858709.326sft |
| **Longitude** | 79°39'30.18028"W | **Elevation** | 762.732sft | **Easting** | 1805511.675sft |
| **Height** | 662.303sft | **Horz error** | 0.005sft | **Elevation** | 762.732sft |
| | | **Vert error** | 0.000sft | **Utilized** | Horz and Vert |
| | | **3D error** | 0.005sft | **Quality** | Adjusted quality |
| **Point** | Y4807F-2_GPS | **Northing** | 859256.661sft | **Point** | Y4807F-2 |
| **Latitude** | 36°06'32.82159"N | **Easting** | 1806819.665sft | **Northing** | 859256.662sft |
| **Longitude** | 79°39'14.28533"W | **Elevation** | 759.718sft | **Easting** | 1806819.670sft |
| **Height** | 659.314sft | **Horz error** | 0.005sft | **Elevation** | 759.719sft |
| | | **Vert error** | 0.000sft | **Utilized** | Horz and Vert |
| | | **3D error** | 0.005sft | **Quality** | Adjusted quality |
| **Point** | Y4807F-3_GPS | **Northing** | 856854.999sft | **Point** | Y4807F-3 |
| **Latitude** | 36°06'09.37397"N | **Easting** | 1811496.628sft | **Northing** | 856855.002sft |
| **Longitude** | 79°38'17.10335"W | **Elevation** | 751.004sft | **Easting** | 1811496.622sft |
| **Height** | 650.804sft | **Horz error** | 0.006sft | **Elevation** | 751.004sft |
| | | **Vert error** | 0.000sft | **Utilized** | Horz and Vert |
| | | **3D error** | 0.006sft | **Quality** | Adjusted quality |
| **Point** | Y4807F-4_GPS | **Northing** | 857928.856sft | **Point** | Y4807F-4 |
| **Latitude** | 36°06'20.01113"N | **Easting** | 1811786.479sft | **Northing** | 857928.855sft |
| **Longitude** | 79°38'13.65546"W | **Elevation** | 761.576sft | **Easting** | 1811786.484sft |
| **Height** | 661.357sft | **Horz error** | 0.005sft | **Elevation** | 761.576sft |
| | | **Vert error** | 0.000sft | **Utilized** | Horz and Vert |
| | | **3D error** | 0.005sft | **Quality** | Adjusted quality |

## DATUM DESCRIPTION

THE LOCALIZED COORDINATE SYSTEM DEVELOPED FOR THIS PROJECT IS BASED ON THE STATE PLANE COORDINATES ESTABLISHED BY NCDOT FOR MONUMENT "Y4807F-1"
WITH NAD 83/NSRS 2007 STATE PLANE GRID COORDINATES OF NORTHING: 858709.3260(ft) EASTING: 1805511.6750(ft)
ELEVATION: 762.73'(ft)
THE AVERAGE COMBINED GRID FACTOR USED ON THIS PROJECT (GROUND TO GRID) IS: 0.999952493
THE N.C. LAMBERT GRID BEARING AND LOCALIZED HORIZONTAL GROUND DISTANCE FROM "Y4807F-1" TO -L- STATION 10+00.00 IS
S 20°20'32" W 1888.67'
ALL LINEAR DIMENSIONS ARE LOCALIZED HORIZONTAL DISTANCES
VERTICAL DATUM USED IS NAVD 88

*NOTES:*

1. *THE SITE CALIBRATION SHOWN IS BASED UPON A NETWORK TIED TO THE NAD 83 / NSRS2007 ADJUSTMENT. THIS CALIBRATION WILL ALLOW THE END USER TO WORK WITHIN THE SAME COORDINATE SYSTEM WHEN USING RTK (REAL TIME KINEMATIC) GPS AND A LOCAL BASE STATION. IF ANOTHER SYSTEM SUCH AS VRS (VIRTUAL REFERENCE STATION) IS USED, ADDITIONAL FIELD TIES MAY BE NEEDED TO REDUCE POSSIBLE ERRORS, OR BIASES.*

2. *THE CONTROL DATA FOR THIS PROJECT CAN BE FOUND ELECTRONICALLY BY SELECTING PROJECT CONTROL DATA AT:*

   *HTTPS://CONNECT.NCDOT.GOV/RESOURCES/LOCATION/*

   *THE FILES TO BE FOUND ARE AS FOLLOWS:*
   *p5204_ls_gpscalib_131002.HTML*
   *p5204_ls_gpscalib_131002.PDF*
   *p5204_ls_wgs84_131002.TXT*
   *p5204_ls_local_131002.TXT*
   *p5204_ls_control_131002.TXT*

   *THE WGS84 AND LOCAL FILES ARE COMMA DELIMITED AND CAN BE USED TO REPRODUCE THE SITE CALIBRATION FOR THE END USER'S GPS EQUIPMENT. IF FURTHER INFORMATION IS NEEDED, PLEASE CONTACT THE LOCATION AND SURVEYS UNIT.*

△ *INDICATES GEODETIC CONTROL MONUMENTS USED OR SET FOR HORIZONTAL PROJECT CONTROL BY THE NCDOT LOCATION AND SURVEYS UNIT.*
*PROJECT CONTROL ESTABLISHED USING GLOBAL POSITIONING SYSTEM.*

*SEE GPS CALIBRATION SHEET FOR HORIZONTAL AND VERTICAL COORDINATE VALUES.*

*NOTE: DRAWING NOT TO SCALE*

DCN 0353DEL_P15



| PROJECT REFERENCE NO. | SHEET NO. |
|---|---|
| P-5204 | 1F |
| Location and Surveys | |



# SURVEY CONTROL SHEET P-5204
# FINAL

L

| TYPE | STATION | NORTH | EAST |
|---|---|---|---|
| POT | 10+00.00 | 856938.4489 | 1804855.1266 |
| PC | 12+93.28 | 857110.4192 | 1805092.7021 |
| PT | 27+82.19 | 858423.1227 | 1805604.2435 |
| PC | 31+10.96 | 858745.2655 | 1805538.5819 |
| PT | 37+73.56 | 859401.1862 | 1805447.9130 |
| POT | 39+48.68 | 859575.8303 | 1805435.0273 |

Y1

| TYPE | STATION | NORTH | EAST |
|---|---|---|---|
| POT | 10+00.00 | 857554.4398 | 1805478.9397 |
| PC | 10+54.04 | 857529.1245 | 1805526.6779 |
| PT | 12+78.24 | 857463.0920 | 1805739.5789 |
| PC | 16+81.37 | 857417.2724 | 1806140.0892 |
| PT | 24+65.68 | 856910.6416 | 1806665.1824 |
| POT | 26+87.43 | 856691.3726 | 1806698.2528 |

Y2

| TYPE | STATION | NORTH | EAST |
|---|---|---|---|
| POT | 10+00.00 | 858219.6881 | 1805032.7513 |
| PC | 10+34.22 | 858245.6807 | 1805055.0098 |
| PT | 14+12.69 | 858506.8129 | 1805328.0905 |
| PC | 16+27.77 | 858639.2660 | 1805497.5479 |
| PT | 18+13.26 | 858735.6099 | 1805655.5716 |
| POT | 26+93.59 | 859103.8536 | 1806455.1854 |

Y3

| TYPE | STATION | NORTH | EAST |
|---|---|---|---|
| PC | 10+00.00 | 857290.8694 | 1806445.2201 |
| PT | 12+90.83 | 857406.3642 | 1806699.8198 |
| POT | 13+97.27 | 857400.1048 | 1806806.0789 |
| POT | 16+61.47 | 857384.5686 | 1807069.8185 |
| POT | 19+71.62 | 857361.0044 | 1807379.0720 |
| POT | 22+16.77 | 857343.3210 | 1807623.5834 |
| POT | 25+21.80 | 857324.4684 | 1807928.0303 |
| POT | 27+14.68 | 857317.5823 | 1808120.7891 |

Y4

| TYPE | STATION | NORTH | EAST |
|---|---|---|---|
| POT | 10+00.00 | 856730.9333 | 1804919.0253 |
| PC | 10+89.38 | 856815.9758 | 1804946.5347 |
| PT | 12+58.65 | 856981.9731 | 1804942.2711 |
| POT | 12+75.05 | 856997.2996 | 1804936.4284 |

Y5

| TYPE | STATION | NORTH | EAST |
|---|---|---|---|
| POT | 10+00.00 | 857867.3690 | 1805797.3792 |
| PC | 10+16.60 | 857868.2224 | 1805780.7974 |
| PT | 10+95.58 | 857820.4219 | 1805728.2730 |
| POT | 12+31.08 | 857685.0507 | 1805722.4918 |

Y6

| TYPE | STATION | NORTH | EAST |
|---|---|---|---|
| POT | 10+00.00 | 859108.7253 | 1811360.3255 |
| PC | 11+68.34 | 859123.2886 | 1811192.6163 |
| PT | 12+64.97 | 859188.2058 | 1811133.2397 |
| POT | 14+44.74 | 859367.9738 | 1811133.6847 |

SR1

| TYPE | STATION | NORTH | EAST |
|---|---|---|---|
| POT | 10+00.00 | 857795.1774 | 1806680.1192 |
| PC | 10+13.70 | 857806.5530 | 1806687.7546 |
| PT | 10+45.66 | 857836.8205 | 1806696.1815 |
| POT | 12+59.33 | 858050.2447 | 1806685.9161 |

D1

| TYPE | STATION | NORTH | EAST |
|---|---|---|---|
| POT | 10+00.00 | 857287.5763 | 1805706.5285 |
| PC | 10+91.78 | 857378.6550 | 1805695.1678 |
| PT | 11+36.43 | 857423.1222 | 1805696.2674 |
| POT | 11+82.21 | 857468.2161 | 1805704.1726 |

ROW MARKER IRON PIN AND CAP-E

| ALIGN | STATION | OFFSET | NORTH | EAST |
|---|---|---|---|---|
| L | 10+00.00 | -30.10 | 856962.8284 | 1804837.4794 |
| L | 10+00.00 | 29.90 | 856914.2254 | 1804872.6610 |
| L | 10+75.00 | -46.00 | 857019.6883 | 1804888.9079 |
| L | 11+92.57 | 50.79 | 857010.2193 | 1805040.8987 |
| L | 12+50.00 | -46.00 | 857122.3012 | 1805030.6668 |
| L | 13+50.00 | 56.00 | 857100.7786 | 1805172.6879 |
| L | 13+50.00 | -78.00 | 857205.7954 | 1805089.4564 |
| L | 14+00.00 | 70.00 | 857123.3215 | 1805222.0396 |
| L | 14+34.53 | 74.73 | 857143.8598 | 1805252.5228 |
| L | 14+50.00 | -73.00 | 857263.2878 | 1805164.2053 |
| L | 14+52.90 | 56.95 | 857170.0084 | 1805254.7274 |
| L | 17+00.00 | -123.00 | 857468.7493 | 1805280.5246 |
| L | 19+00.00 | -123.00 | 857622.5465 | 1805375.7645 |
| L | 21+38.00 | -128.69 | 857823.5477 | 1805451.3271 |
| L | 25+10.00 | -97.32 | 858153.4983 | 1805533.0748 |
| L | 29+17.00 | -64.00 | 858542.4341 | 1805514.6086 |
| L | 29+49.00 | 68.21 | 858600.1938 | 1805637.7608 |
| L | 30+95.00 | -53.00 | 858719.0448 | 1805489.8366 |
| L | 31+41.00 | 50.00 | 858784.4232 | 1805581.7163 |
| L | 33+40.00 | -53.00 | 858962.3404 | 1805445.4459 |
| L | 36+20.03 | -49.70 | 859243.1426 | 1805412.0344 |
| L | 36+50.12 | 29.87 | 859281.1030 | 1805488.1803 |
| L | 36+50.21 | 43.00 | 859282.4634 | 1805501.2444 |

ROW MARKER IRON PIN AND CAP-E

| ALIGN | STATION | OFFSET | NORTH | EAST |
|---|---|---|---|---|
| Y1 | 11+69.93 | 88.35 | 857400.4783 | 1805608.0170 |
| Y1 | 12+10.23 | -192.65 | 857662.3277 | 1805715.9924 |
| Y1 | 12+24.50 | -90.71 | 857560.4197 | 1805704.8616 |
| Y1 | 12+67.78 | -198.70 | 857661.3630 | 1805755.2210 |
| Y1 | 14+30.00 | -110.27 | 857555.3942 | 1805902.8849 |
| Y1 | 14+60.00 | 80.00 | 857362.9517 | 1805911.0646 |
| Y1 | 15+00.00 | -80.00 | 857517.3683 | 1805968.9912 |
| Y1 | 17+00.00 | 45.00 | 857370.3393 | 1806152.0658 |
| Y1 | 17+95.00 | -45.00 | 857436.7209 | 1806264.5335 |
| Y1 | 19+05.00 | 45.00 | 857311.7327 | 1806331.4382 |
| Y1 | 19+50.00 | -68.00 | 857386.5477 | 1806427.6471 |
| Y1 | 20+50.00 | 50.00 | 857231.6305 | 1806437.9722 |
| Y1 | 23+50.00 | 50.00 | 857005.8738 | 1806589.9473 |
| Y1 | 23+71.48 | -82.69 | 857027.2791 | 1806722.7258 |
| Y1 | 26+87.43 | -30.39 | 856695.9042 | 1806728.3037 |
| Y1 | 26+87.43 | 29.61 | 856686.9566 | 1806668.9727 |

ROW MARKER IRON PIN AND CAP-E

| ALIGN | STATION | OFFSET | NORTH | EAST |
|---|---|---|---|---|
| Y2 | 12+00.00 | -25.37 | 858384.8580 | 1805150.4326 |
| Y2 | 12+00.00 | -34.00 | 858391.0199 | 1805144.3930 |
| Y2 | 12+29.00 | 24.62 | 858369.0376 | 1805206.0189 |
| Y2 | 13+50.00 | 40.00 | 858436.7158 | 1805305.0065 |
| Y2 | 13+65.00 | -54.00 | 858518.6755 | 1805256.5800 |
| Y2 | 15+52.00 | -62.00 | 858641.4551 | 1805399.6715 |
| Y2 | 15+56.00 | 40.00 | 858563.5547 | 1805465.6375 |
| Y2 | 16+35.00 | -46.00 | 858680.1943 | 1805475.2709 |
| Y2 | 17+89.00 | -50.00 | 858769.8901 | 1805611.4115 |
| Y2 | 17+98.00 | 49.62 | 858684.4286 | 1805663.3828 |
| Y2 | 23+00.00 | -50.00 | 858984.6293 | 1806076.7674 |
| Y2 | 23+00.00 | -29.38 | 858965.9025 | 1806085.3916 |

ROW MARKER IRON PIN AND CAP-E

| ALIGN | STATION | OFFSET | NORTH | EAST |
|---|---|---|---|---|
| Y3 | 11+75.00 | -56.00 | 857443.9907 | 1806567.7462 |
| Y3 | 12+50.26 | -35.00 | 857440.9063 | 1806656.6109 |
| Y3 | 12+78.57 | -70.44 | 857477.2652 | 1806688.8459 |

ROW MARKER IRON PIN AND CAP-E

| ALIGN | STATION | OFFSET | NORTH | EAST |
|---|---|---|---|---|
| Y4 | 10+80.00 | -30.00 | 856816.2833 | 1804915.1036 |

ROW MARKER IRON PIN AND CAP-E

| ALIGN | STATION | OFFSET | NORTH | EAST |
|---|---|---|---|---|
| Y5 | 10+58.66 | -20.00 | 857839.4117 | 1805756.9180 |

ROW MARKER IRON PIN AND CAP-E

| ALIGN | STATION | OFFSET | NORTH | EAST |
|---|---|---|---|---|
| Y6 | 10+83.78 | -34.06 | 859082.0421 | 1811273.9175 |
| Y6 | 11+50.00 | -90.00 | 859032.0394 | 1811203.1019 |
| Y6 | 11+97.65 | -45.21 | 859093.3755 | 1811141.8043 |

ROW MARKER IRON PIN AND CAP-E

| ALIGN | STATION | OFFSET | NORTH | EAST |
|---|---|---|---|---|
| SR1 | 10+22.13 | 28.55 | 857802.2111 | 1806717.8826 |
| SR1 | 10+23.17 | 33.28 | 857801.8600 | 1806722.8920 |
| SR1 | 10+46.56 | -25.00 | 857836.5153 | 1806671.1673 |
| SR1 | 12+59.33 | -25.00 | 858049.0437 | 1806660.9450 |
| SR1 | 12+59.33 | 25.07 | 858051.4492 | 1806710.9575 |

PERMANENT EASEMENT REBAR

| ALIGN | STATION | OFFSET | NORTH | EAST |
|---|---|---|---|---|
| L | 11+76.12 | -46.00 | 857078.9787 | 1804970.8172 |
| L | 12+02.38 | -63.98 | 857108.9450 | 1804981.5461 |
| L | 12+03.57 | -56.12 | 857103.2702 | 1804987.1198 |
| L | 12+12.27 | -65.48 | 857115.9522 | 1804988.6805 |
| L | 12+13.83 | -55.00 | 857108.3830 | 1804996.0901 |
| L | 12+83.10 | -57.37 | 857150.9155 | 1805050.8146 |
| L | 14+20.21 | 89.12 | 857122.9861 | 1805250.7693 |
| L | 24+19.26 | 134.44 | 858051.5650 | 1805760.5062 |
| L | 25+23.09 | 285.90 | 858166.2791 | 1805916.3361 |
| L | 25+35.76 | 274.77 | 858181.6088 | 1805905.1022 |
| L | 26+78.74 | 164.37 | 858340.9629 | 1805784.0101 |
| L | 28+08.92 | 93.03 | 858467.8938 | 1805690.0607 |
| L | 28+36.50 | -88.00 | 858458.7626 | 1805507.1697 |
| L | 28+36.50 | -76.47 | 858461.0663 | 1805518.4718 |
| L | 28+63.50 | -88.00 | 858485.2186 | 1805501.7772 |
| L | 28+63.50 | -72.28 | 858488.3573 | 1805517.1761 |
| L | 30+78.55 | -63.31 | 858700.8697 | 1805483.0225 |
| L | 31+60.80 | 50.65 | 858803.7930 | 1805578.5866 |
| L | 32+32.07 | -68.87 | 858852.0263 | 1805447.9893 |
| L | 32+38.37 | -51.60 | 858861.3457 | 1805463.8730 |
| L | 32+41.32 | -72.34 | 858860.6513 | 1805442.9288 |
| L | 32+45.04 | -62.17 | 858866.1380 | 1805452.2802 |
| L | 34+25.13 | -60.12 | 859046.3849 | 1805425.6423 |
| L | 34+29.91 | -65.58 | 859050.4145 | 1805419.5610 |
| L | 34+42.15 | -70.59 | 859062.0059 | 1805412.8820 |
| L | 34+51.24 | -59.87 | 859072.5859 | 1805422.2580 |
| L | 34+52.00 | -69.83 | 859071.9985 | 1805412.2817 |
| L | 35+46.11 | 48.45 | 859180.4622 | 1805517.7255 |
| L | 35+60.97 | 47.80 | 859195.0106 | 1805515.3748 |
| L | 35+66.92 | 65.83 | 859202.9076 | 1805532.6116 |
| L | 35+73.43 | 58.17 | 859208.4347 | 1805524.2779 |

PERMANENT EASEMENT REBAR

| ALIGN | STATION | OFFSET | NORTH | EAST |
|---|---|---|---|---|
| Y1 | 14+75.73 | 133.81 | 857307.6989 | 1805920.5780 |
| Y1 | 14+75.73 | 77.71 | 857363.4388 | 1805926.9548 |
| Y1 | 15+16.91 | 71.72 | 857364.7137 | 1805968.5453 |
| Y1 | 15+16.91 | 133.81 | 857303.0187 | 1805961.4872 |
| Y1 | 18+00.00 | 105.00 | 857292.3189 | 1806223.6648 |
| Y1 | 19+10.00 | 100.00 | 857261.1536 | 1806309.3922 |
| Y1 | 21+84.49 | 116.88 | 857101.2241 | 1806465.5556 |
| Y1 | 21+85.09 | 66.93 | 857129.7400 | 1806506.5629 |
| Y1 | 22+17.39 | 66.87 | 857105.9386 | 1806522.5856 |
| Y1 | 22+18.55 | 116.67 | 857078.5504 | 1806480.9896 |
| Y1 | 23+43.12 | -96.04 | 857062.4223 | 1806724.7816 |
| Y1 | 23+69.27 | -92.09 | 857032.5452 | 1806730.9106 |
| Y1 | 23+72.00 | -101.29 | 857032.3100 | 1806740.6401 |
| Y1 | 23+77.49 | -89.06 | 857022.6003 | 1806730.8459 |
| Y1 | 23+80.11 | -98.05 | 857022.3180 | 1806740.3304 |
| Y1 | 24+04.18 | -72.76 | 856989.0332 | 1806723.3696 |

PERMANENT EASEMENT REBAR

| ALIGN | STATION | OFFSET | NORTH | EAST |
|---|---|---|---|---|
| Y2 | 11+78.83 | -25.35 | 858369.7441 | 1805135.2098 |
| Y2 | 11+86.85 | -55.98 | 858397.2047 | 1805119.3759 |
| Y2 | 11+96.24 | -58.52 | 858405.8136 | 1805124.4637 |
| Y2 | 11+98.93 | -48.13 | 858400.3412 | 1805133.7233 |
| Y2 | 13+84.94 | -64.55 | 858539.8349 | 1805265.8642 |
| Y2 | 13+84.94 | -74.98 | 858547.9598 | 1805259.3201 |
| Y2 | 13+95.07 | -75.51 | 858554.9653 | 1805267.2121 |
| Y2 | 13+95.07 | -65.13 | 858546.8446 | 1805273.6817 |
| Y2 | 17+87.70 | -66.00 | 858783.5853 | 1805603.0219 |
| Y2 | 20+41.34 | -75.03 | 858899.1651 | 1805831.3573 |
| Y2 | 20+41.34 | -65.47 | 858890.4880 | 1805835.3533 |
| Y2 | 20+53.93 | -75.32 | 858904.6913 | 1805842.6657 |
| Y2 | 20+53.93 | -65.17 | 858895.4718 | 1805846.9115 |
| Y2 | 25+36.25 | -37.27 | 859071.8886 | 1806296.6822 |
| Y2 | 25+36.25 | -29.94 | 859065.2357 | 1806299.7460 |

PERMANENT EASEMENT REBAR

| ALIGN | STATION | OFFSET | NORTH | EAST |
|---|---|---|---|---|
| Y3 | 13+35.78 | 46.73 | 857357.0723 | 1806741.9437 |
| Y3 | 14+99.90 | -30.00 | 857424.0175 | 1806910.2993 |
| Y3 | 14+99.90 | -48.80 | 857442.7851 | 1806911.4016 |
| Y3 | 15+05.00 | 34.13 | 857359.7034 | 1806911.6163 |
| Y3 | 15+05.00 | 30.00 | 857363.8216 | 1806911.8589 |
| Y3 | 15+09.90 | -48.80 | 857442.1971 | 1806921.3843 |
| Y3 | 15+09.90 | -30.00 | 857423.4294 | 1806920.2820 |

PERMANENT EASEMENT REBAR

| ALIGN | STATION | OFFSET | NORTH | EAST |
|---|---|---|---|---|
| Y4 | 11+57.34 | -94.29 | 856886.5345 | 1804864.2455 |
| Y4 | 11+74.11 | -78.65 | 856897.3840 | 1804879.9591 |
| Y4 | 11+81.00 | -104.47 | 856900.7195 | 1804853.9908 |

PERMANENT EASEMENT REBAR

| ALIGN | STATION | OFFSET | NORTH | EAST |
|---|---|---|---|---|
| Y5 | 9+50.81 | -30.00 | 857834.8800 | 1805844.9667 |
| Y5 | 9+52.25 | -38.52 | 857826.4460 | 1805843.0873 |
| Y5 | 9+60.95 | -30.00 | 857835.4013 | 1805834.8376 |
| Y5 | 9+62.11 | -36.85 | 857828.6210 | 1805833.3267 |
| Y5 | 10+35.45 | 36.00 | 857899.7726 | 1805750.7259 |

PERMANENT EASEMENT REBAR

| ALIGN | STATION | OFFSET | NORTH | EAST |
|---|---|---|---|---|
| SR1 | 10+72.00 | 25.02 | 857864.3315 | 1806719.9048 |
| SR1 | 10+86.00 | 40.00 | 857879.0351 | 1806734.1973 |
| SR1 | 11+19.00 | 25.00 | 857911.2761 | 1806717.6244 |

## DATUM DESCRIPTION

THE LOCALIZED COORDINATE SYSTEM DEVELOPED FOR THIS PROJECT IS BASED ON THE STATE PLANE COORDINATES ESTABLISHED BY NCDOT FOR MONUMENT "Y4807F-1"
WITH NAD 83/NSRS 2007 STATE PLANE GRID COORDINATES OF NORTHING: 858709.326(ft) EASTING: 1805511.675(ft)
ELEVATION: 762.732(ft)
THE AVERAGE COMBINED GRID FACTOR USED ON THIS PROJECT (GROUND TO GRID) IS: 0.999952493
THE N.C. LAMBERT GRID BEARING AND LOCALIZED HORIZONTAL GROUND DISTANCE FROM "Y4807F-1" TO -L- STATION 10+00.00 IS
S 20°20'31.7" W 1888.67'
ALL LINEAR DIMENSIONS ARE LOCALIZED HORIZONTAL DISTANCES
VERTICAL DATUM USED IS NAVD 88

*NOTE: DRAWING NOT TO SCALE*

## NOTES

1. *THE SITE CALIBRATION SHOWN IS BASED UPON A NETWORK TIED TO THE NAD 83 / NSRS2007 ADJUSTMENT. THIS CALIBRATION WILL ALLOW THE END USER TO WORK WITHIN THE SAME COORDINATE SYSTEM WHEN USING RTK (REAL TIME KINEMATIC) GPS AND A LOCAL BASE STATION. IF ANOTHER SYSTEM SUCH AS VRS (VIRTUAL REFERENCE STATION) IS USED, ADDITIONAL FIELD TIES MAY BE NEEDED TO REDUCE POSSIBLE ERRORS, OR BIASES.*

2. *THE CONTROL DATA FOR THIS PROJECT CAN BE FOUND ELECTRONICALLY BY SELECTING PROJECT CONTROL DATA AT:*

   *HTTPS://CONNECT.NCDOT.GOV/RESOURCES/LOCATION/*

   *THE FILES TO BE FOUND ARE AS FOLLOWS:*
   *p5204_ls_gpscalib_131002.HTML*
   *p5204_ls_gpscalib_131002.PDF*
   *p5204_ls_wgs84_131002.TXT*
   *p5204_ls_local_131002.TXT*
   *p5204_ls_control_131002.TXT*

   *THE WGS84 AND LOCAL FILES ARE COMMA DELIMITED AND CAN BE USED TO REPRODUCE THE SITE CALIBRATION FOR THE END USER'S GPS EQUIPMENT. IF FURTHER INFORMATION IS NEEDED, PLEASE CONTACT THE LOCATION AND SURVEYS UNIT.*

   *PROJECT CONTROL ESTABLISHED USING GLOBAL POSITIONING SYSTEM.*
   *SEE GPS CALIBRATION SHEET FOR HORIZONTAL AND VERTICAL COORDINATE VALUES.*

28-JUL-2014 16:59
O:\Transportation\Roadway\NCDOT\Mcleansville\LocationSurveys\p5204_ls_1f.dgn
BASS6290 AT LUS290902

| PROJECT REFERENCE NO. | SHEET NO. |
|---|---|
| P-5204 | 1-G |

ATKINS 1616 EAST MILLBROOK ROAD, SUITE 310
RALEIGH, NORTH CAROLINA 27609
(919) 876-6888 NCBEES #F-0326

STATE OF NORTH CAROLINA
RAIL DIVISIONS

# CENTERLINE COORDINATE LIST

| POINT # | CHAIN | STATION | NORTHING (Y) | EASTING (X) |
|---|---|---|---|---|
| 1 | -L- | 10+00.00 | 856,938.45 | 1,804,855.13 |
| 2 | -L- | 11+00.00 | 856,997.08 | 1,804,936.13 |
| 3 | -L- | 12+00.00 | 857,055.72 | 1,805,017.14 |
| 4 | -L- | 13+00.00 | 857,114.37 | 1,805,098.13 |
| 5 | -L- | 14+00.00 | 857,176.47 | 1,805,176.48 |
| 6 | -L- | 15+00.00 | 857,244.40 | 1,805,249.83 |
| 7 | -L- | 16+00.00 | 857,317.77 | 1,805,317.74 |
| 8 | -L- | 17+00.00 | 857,396.15 | 1,805,379.81 |
| 9 | -L- | 18+00.00 | 857,479.06 | 1,805,435.68 |
| 10 | -L- | 19+00.00 | 857,566.02 | 1,805,485.00 |
| 11 | -L- | 20+00.00 | 857,656.51 | 1,805,527.50 |
| 12 | -L- | 21+00.00 | 857,750.00 | 1,805,562.92 |
| 13 | -L- | 22+00.00 | 857,845.94 | 1,805,591.05 |
| 14 | -L- | 23+00.00 | 857,943.75 | 1,805,611.73 |
| 15 | -L- | 24+00.00 | 858,042.86 | 1,805,624.83 |
| 16 | -L- | 25+00.00 | 858,142.69 | 1,805,630.27 |
| 17 | -L- | 26+00.00 | 858,242.64 | 1,805,628.02 |
| 18 | -L- | 27+00.00 | 858,342.12 | 1,805,618.10 |
| 19 | -L- | 28+00.00 | 858,440.57 | 1,805,600.69 |
| 20 | -L- | 29+00.00 | 858,538.56 | 1,805,580.71 |
| 21 | -L- | 30+00.00 | 858,636.54 | 1,805,560.74 |
| 22 | -L- | 31+00.00 | 858,734.53 | 1,805,540.77 |
| 23 | -L- | 32+00.00 | 858,832.66 | 1,805,521.55 |
| 24 | -L- | 33+00.00 | 858,931.15 | 1,805,504.20 |
| 25 | -L- | 34+00.00 | 859,029.94 | 1,805,488.75 |
| 26 | -L- | 35+00.00 | 859,129.02 | 1,805,475.21 |
| 27 | -L- | 36+00.00 | 859,228.34 | 1,805,463.57 |
| 28 | -L- | 37+00.00 | 859,327.86 | 1,805,453.84 |
| 29 | -L- | 38+00.00 | 859,427.55 | 1,805,445.97 |
| 30 | -L- | 39+00.00 | 859,527.28 | 1,805,438.61 |
| 31 | -L- | 39+48.68 | 859,575.83 | 1,805,435.03 |
| | | | | |
| 32 | -Y1- | 10+00.00 | 857,554.44 | 1,805,478.94 |
| 33 | -Y1- | 11+00.00 | 857,509.17 | 1,805,568.07 |
| 34 | -Y1- | 12+00.00 | 857,477.02 | 1,805,662.64 |
| 35 | -Y1- | 13+00.00 | 857,460.62 | 1,805,761.19 |
| 36 | -Y1- | 14+00.00 | 857,449.25 | 1,805,860.55 |
| 37 | -Y1- | 15+00.00 | 857,437.89 | 1,805,959.90 |
| 38 | -Y1- | 16+00.00 | 857,426.52 | 1,806,059.25 |
| 39 | -Y1- | 17+00.00 | 857,414.87 | 1,806,158.57 |
| 40 | -Y1- | 18+00.00 | 857,392.26 | 1,806,255.86 |
| 41 | -Y1- | 19+00.00 | 857,353.83 | 1,806,348.05 |
| 42 | -Y1- | 20+00.00 | 857,300.63 | 1,806,432.59 |
| 43 | -Y1- | 21+00.00 | 857,234.15 | 1,806,507.14 |
| 44 | -Y1- | 22+00.00 | 857,156.22 | 1,806,569.62 |
| 45 | -Y1- | 23+00.00 | 857,069.01 | 1,806,618.31 |
| 46 | -Y1- | 24+00.00 | 856,974.93 | 1,806,651.85 |
| 47 | -Y1- | 25+00.00 | 856,876.71 | 1,806,670.30 |
| 48 | -Y1- | 26+00.00 | 856,777.83 | 1,806,685.21 |
| 49 | -Y1- | 26+87.43 | 856.691.37 | 1,806,698.25 |
| | | | | |
| 50 | -Y2- | 10+00.00 | 858,219.69 | 1,805,032.75 |
| 51 | -Y2- | 11+00.00 | 858,294.89 | 1,805,098.65 |
| 52 | -Y2- | 12+00.00 | 858,366.74 | 1,805,168.19 |
| 53 | -Y2- | 13+00.00 | 858,434.83 | 1,805,241.42 |
| 54 | -Y2- | 14+00.00 | 858,498.97 | 1,805,318.12 |
| 55 | -Y2- | 15+00.00 | 858,560.58 | 1,805,396.88 |
| 56 | -Y2- | 16+00.00 | 858,622.17 | 1,805,475.67 |
| 57 | -Y2- | 17+00.00 | 858,681.12 | 1,805,556.39 |
| 58 | -Y2- | 18+00.00 | 858,729.96 | 1,805,643.57 |
| 59 | -Y2- | 19+00.00 | 858,771.89 | 1,805,734.36 |
| 60 | -Y2- | 20+00.00 | 858,813.72 | 1,805,825.19 |
| 61 | -Y2- | 21+00.00 | 858,855.55 | 1,805,916.02 |
| 62 | -Y2- | 22+00.00 | 858,897.38 | 1,806,006.85 |
| 63 | -Y2- | 23+00.00 | 858,939.21 | 1,806,097.68 |
| 64 | -Y2- | 24+00.00 | 858,981.04 | 1,806,188.51 |
| 65 | -Y2- | 25+00.00 | 859,022.87 | 1,806,279.34 |
| 66 | -Y2- | 26+00.00 | 859,064.70 | 1,806,370.18 |
| 67 | -Y2- | 26+93.59 | 859,103.85 | 1,806,455.19 |

| POINT # | CHAIN | STATION | NORTHING (Y) | EASTING (X) |
|---|---|---|---|---|
| 68 | -Y3- | 10+00.00 | 857,290.87 | 1,806,445.22 |
| 69 | -Y3- | 11+00.00 | 857,358.27 | 1,806,518.46 |
| 70 | -Y3- | 12+00.00 | 857,398.00 | 1,806,609.73 |
| 71 | -Y3- | 13+00.00 | 857,405.82 | 1,806,708.98 |
| 72 | -Y3- | 14+00.00 | 857,399.94 | 1,806,808.80 |
| 73 | -Y3- | 15+00.00 | 857,394.06 | 1,806,908.63 |
| 74 | -Y3- | 16+00.00 | 857,388.18 | 1,807,008.46 |
| 75 | -Y3- | 17+00.00 | 857,381.64 | 1,807,108.24 |
| 76 | -Y3- | 18+00.00 | 857,374.04 | 1,807,207.95 |
| 77 | -Y3- | 19+00.00 | 857,366.45 | 1,807,307.66 |
| 78 | -Y3- | 20+00.00 | 857,358.96 | 1,807,407.38 |
| 79 | -Y3- | 21+00.00 | 857,351.74 | 1,807,507.12 |
| 80 | -Y3- | 22+00.00 | 857,344.53 | 1,807,606.86 |
| 81 | -Y3- | 23+00.00 | 857,338.18 | 1,807,706.66 |
| 82 | -Y3- | 24+00.00 | 857,332.00 | 1,807,806.47 |
| 83 | -Y3- | 25+00.00 | 857,325.82 | 1,807,906.28 |
| 84 | -Y3- | 26+00.00 | 857,321.68 | 1,808,006.18 |
| 85 | -Y3- | 27+00.00 | 857,318.11 | 1,808,106.12 |
| 86 | -Y3- | 27+14.68 | 857,317.58 | 1,808,120.79 |
| | | | | |
| 87 | -Y4- | 10+00.00 | 856,730.93 | 1,804,919.03 |
| 88 | -Y4- | 11+00.00 | 856,826.15 | 1,804,949.59 |
| 89 | -Y4- | 12+00.00 | 856,925.23 | 1,804,956.57 |
| 90 | -Y4- | 12+75.05 | 856,997.30 | 1,804,936.43 |
| | | | | |
| 91 | -Y5- | 10+00.00 | 857,867.37 | 1,805,797.38 |
| 92 | -Y5- | 11+00.00 | 857,816.01 | 1,805,728.08 |
| 93 | -Y5- | 12+00.00 | 857,716.10 | 1,805,723.82 |
| 94 | -Y5- | 12+31.08 | 857,685.05 | 1,805,722.49 |
| | | | | |
| 95 | -Y6- | 10+00.00 | 859,108.73 | 1,811,360.33 |
| 96 | -Y6- | 11+00.00 | 859,117.38 | 1,811,260.70 |
| 97 | -Y6- | 12+00.00 | 859,113.45 | 1,811,162.96 |
| 98 | -Y6- | 13+00.00 | 859,223.23 | 1,811,133.33 |
| 99 | -Y6- | 14+00.00 | 859,323.23 | 1,811,133.57 |
| 100 | -Y6- | 14+44.74 | 859,367.97 | 1,811,133.68 |
| | | | | |
| 101 | -D1- | 10+00.00 | 857,287.58 | 1,805,706.53 |
| 102 | -D1- | 11+00.00 | 857,386.83 | 1,805,694.37 |
| 103 | -D1- | 11+82.21 | 857,468.22 | 1,805,704.17 |
| | | | | |
| 104 | -SR1- | 10+00.00 | 857,795.18 | 1,806,680.12 |
| 105 | -SR1- | 11+00.00 | 857,891.10 | 1,806,693.57 |
| 106 | -SR1- | 12+00.00 | 857,990.98 | 1,806,688.77 |
| 107 | -SR1- | 12+49.33 | 858,040.26 | 1,806,686.40 |
| | | | | |
| 108 | -DETOUR1- | 10+00.00 | 858,348.21 | 1,805,683.29 |
| 109 | -DETOUR1- | 11+00.00 | 858,443.62 | 1,805,653.49 |
| 110 | -DETOUR1- | 12+00.00 | 858,541.54 | 1,805,633.37 |
| 111 | -DETOUR1- | 13+00.00 | 858,639.58 | 1,805,613.90 |
| 112 | -DETOUR1- | 14+00.00 | 858,735.20 | 1,805,584.75 |
| 113 | -DETOUR1- | 15+00.00 | 858,827.83 | 1,805,547.14 |
| 114 | -DETOUR1- | 16+00.00 | 858,922.34 | 1,805,514.57 |
| 115 | -DETOUR1- | 17+00.00 | 859,019.62 | 1,805,491.60 |
| 116 | -DETOUR1- | 17+50.80 | 859,069.80 | 1,805,483.68 |
| | | | | |
| 117 | -DETOUR2- | 8+00.00 | 858,587.83 | 1,805,431.65 |
| 118 | -DETOUR2- | 9+00.00 | 858,649.26 | 1,805,510.55 |
| 119 | -DETOUR2- | 10+00.00 | 858,699.85 | 1,805,596.75 |
| 120 | -DETOUR2- | 11+00.00 | 858,746.18 | 1,805,685.36 |
| 121 | -DETOUR2- | 12+00.00 | 858,789.28 | 1,805,775.60 |
| 122 | -DETOUR2- | 12+28.94 | 858,801.44 | 1,805,801.85 |

| POINT # | CHAIN | STATION | NORTHING (Y) | EASTING (X) |
|---|---|---|---|---|

| POINT # | CHAIN | STATION | NORTHING (Y) | EASTING (X) |
|---|---|---|---|---|

| POINT # | CHAIN | STATION | NORTHING (Y) | EASTING (X) |
|---|---|---|---|---|

DGN 0353DEL_P15

| PROJECT REFERENCE NO. | SHEET NO. |
|---|---|
| P-5204 | 2 |
| ROADWAY DESIGN ENGINEER | PAVEMENT DESIGN ENGINEER |

NORTH CAROLINA PROFESSIONAL SEAL 20107 ENGINEER DAVID W. BASS JR. 7/11/14

NORTH CAROLINA PROFESSIONAL SEAL 031484 ENGINEER VLADIMIR G. MILOSHEVICH 07/17/14

ATKINS 1616 EAST MILLBROOK ROAD, SUITE 310 RALEIGH, NORTH CAROLINA 27609 (919) 876-6888 NCBEES #F-0326

# PAVEMENT SCHEDULE

| | |
|---|---|
| C1 | PROP. APPROX. 1½" ASPHALT CONCRETE SURFACE COURSE, TYPE S9.5B, AT AN AVERAGE RATE OF 168 LBS. PER SQ. YD. |
| C2 | PROP. APPROX. 2" ASPHALT CONCRETE SURFACE COURSE, TYPE S9.5B, AT AN AVERAGE RATE OF 224 LBS. PER SQ. YD. |
| C3 | PROP. APPROX. 3" ASPHALT CONCRETE SURFACE COURSE, TYPE S9.5B, AT AN AVERAGE RATE OF 168 LBS. PER SQ. YD. IN EACH OF TWO LAYERS. |
| C4 | PROP. VAR. DEPTH ASPHALT CONCRETE SURFACE COURSE, TYPE S9.5B, AT AN AVERAGE RATE OF 112 LBS. PER SQ. YD. PER 1" DEPTH. TO BE PLACED IN LAYERS NOT TO EXCEED 2" IN DEPTH. |
| D1 | PROP. APPROX. 2½" ASPHALT CONCRETE INTERMEDIATE COURSE, TYPE I19.0B, AT AN AVERAGE RATE OF 285 LBS. PER SQ. YD. |
| D2 | PROP. VAR. DEPTH ASPHALT CONCRETE INTERMEDIATE COURSE, TYPE I19.0B, AT AN AVERAGE RATE OF 114 LBS. PER SQ. YD. PER 1" DEPTH, TO BE PLACED IN LAYERS NOT LESS THAN 2½" IN DEPTH OR GREATER THAN 4" IN DEPTH. |
| E1 | PROP. APPROX. 4" ASPHALT CONCRETE BASE COURSE, TYPE B25.0B, AT AN AVERAGE RATE OF 456 LBS. PER SQ. YD. |
| E2 | PROP. APPROX. 5½" ASPHALT CONCRETE BASE COURSE, TYPE B25.0B, AT AN AVERAGE RATE OF 627 LBS. PER SQ. YD. |
| E3 | PROP. VAR. DEPTH ASPHALT CONCRETE BASE COURSE, TYPE B25.0B, AT AN AVERAGE RATE OF 114 LBS. PER SQ. YD. PER 1" DEPTH. TO BE PLACED IN LAYERS NOT LESS THAN 3" IN DEPTH OR GREATER THAN 5½" IN DEPTH. |
| J1 | PROP. 8" AGGREGATE BASE COURSE |
| K | Stabilized Sub-Grade. |
| N | Geotextile for Pavement Stabilization. |
| P | PRIME COAT AT THE RATE OF .35 GAL. PER SQ. YD. |
| R1 | 3' SHOULDER BERM GUTTER |
| T | EARTH MATERIAL. |
| U | EXISTING PAVEMENT. |
| V | INCIDENTAL MILLING. (SEE INCIDENTAL MILLING DETAIL) |
| W | VARIABLE DEPTH ASPHALT PAVEMENT (SEE STANDARD WEDGING DETAIL THIS SHEET) |

NOTE: PAVEMENT EDGE SLOPES ARE 1:1 UNLESS OTHERWISE NOTED

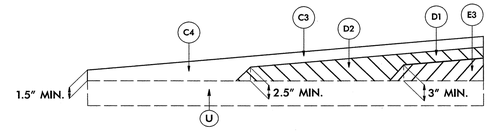


Wedging Detail 1

USE IN CONJUNCTION WITH -L-,-Y1-,& -Y2-

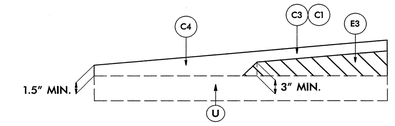


Wedging Detail 2

USE IN CONJUNCTION WITH -Y4- & -Y5-

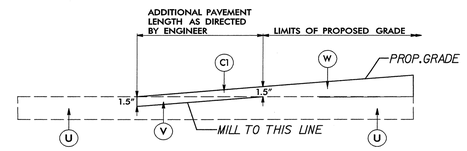


Detail for Incidental Milling

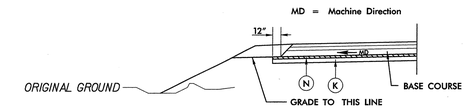


Pavement Stabilization Inset

USE IN CONJUNCTION WITH TYPICAL 1 AND 3 AS FOLLOWS
-L- STA.13+50.00 TO 30+00.00
-Y1- STA.10+12.00 TO 16+50.00

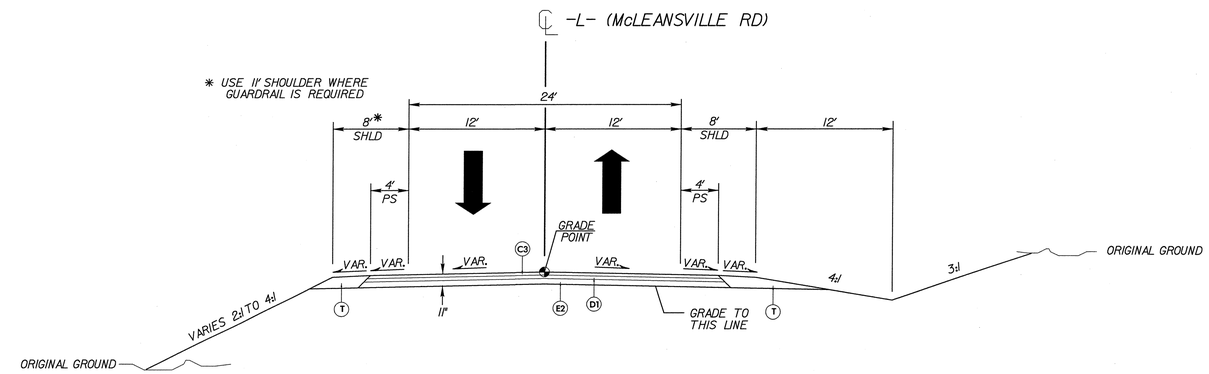


TYPICAL SECTION NO.1

-L- Sta.12+55.00 THRU Sta.23+74.04 (BEGIN BRIDGE)

-L- Sta.25+23.73 (END BRIDGE) THRU Sta.30+45.00

NOTE: SEE PLANS FOR SUPER ELEVATION

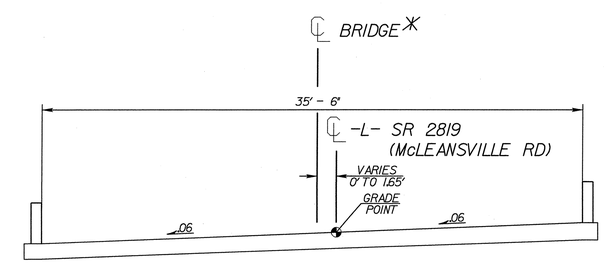


TYPICAL SECTION NO.2

TYPICAL SECTION ON STRUCTURE

-L- STA 23+74.04 TO 25+23.73

* NOTE: OFFSET CENTERLINE DUE TO ROADWAY ALIGNMENT IN HORIZONTAL CURVE WITH TANGENT STRUCTURE DESIGN

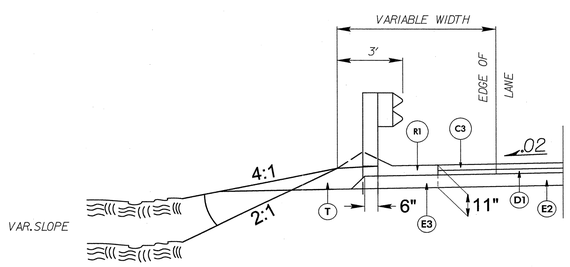


DETAIL FOR SHOULDER BERM GUTTER

USE IN CONJUNCTION WITH TYPICAL SECTION *1

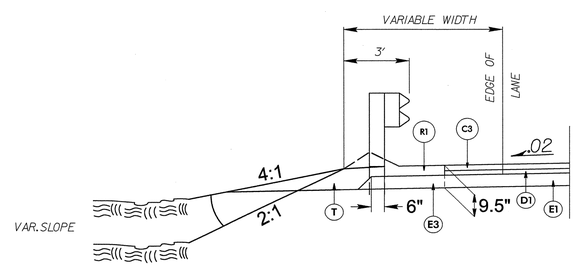


DETAIL FOR SHOULDER BERM GUTTER

USE IN CONJUNCTION WITH TYPICAL SECTION *3

I:\JUL-2014 11:58
R:\Roadway\Proj\P5204_rdy_typ.dgn
$$$$USERNAME$$$$

0353DEL_P15

DGN

| PROJECT REFERENCE NO. | SHEET NO. |
|---|---|
| P-5204 | 2-A |

ROADWAY DESIGN ENGINEER

NORTH CAROLINA PROFESSIONAL SEAL 20107 ENGINEER DAVID W. BASS
6/9/14

PAVEMENT DESIGN ENGINEER

NORTH CAROLINA PROFESSIONAL SEAL 031484 ENGINEER VLADIMIR G. MITCHEV
6/17/14

ATKINS 1616 EAST MILLBROOK ROAD, SUITE 310
RALEIGH, NORTH CAROLINA 27609
(919) 876-6888 NCBEES #F-0326

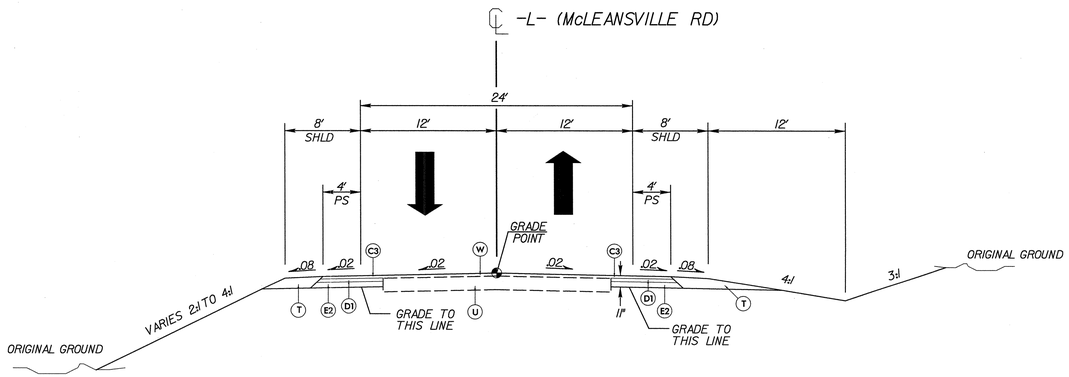


TYPICAL SECTION NO.1A
-L- Sta.10+00.00 THRU Sta.12+55.00
-L- Sta.30+45.00 THRU Sta.36+50.00

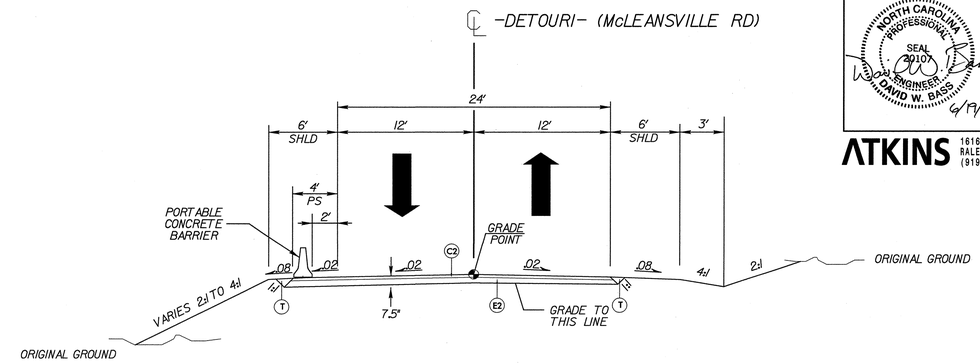


TYPICAL SECTION NO.1B
-DETOURI- Sta.10+00.00 THRU Sta.12+93.00

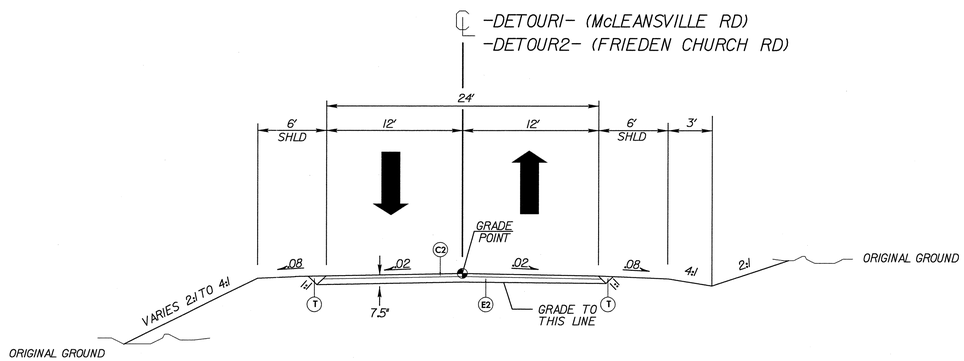


TYPICAL SECTION NO.1C
-DETOURI- Sta.12+93.00 THRU Sta.17+50.80
-DETOUR2- Sta.10+12.00 THRU Sta.11+75.00

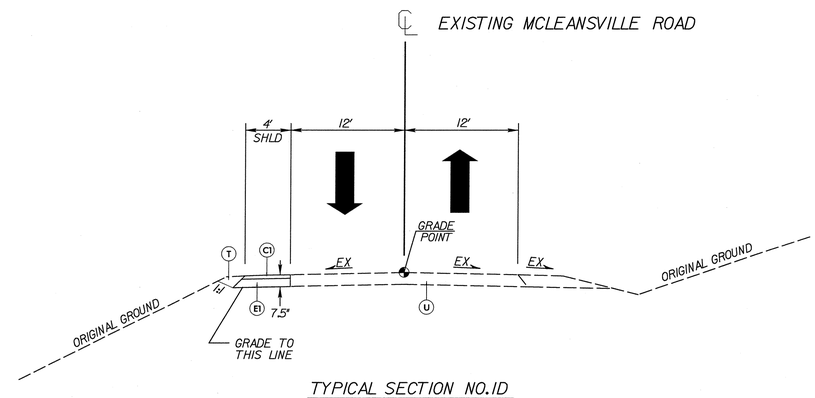


TYPICAL SECTION NO.1D
SEE TMP PLANS FOR LOCATION

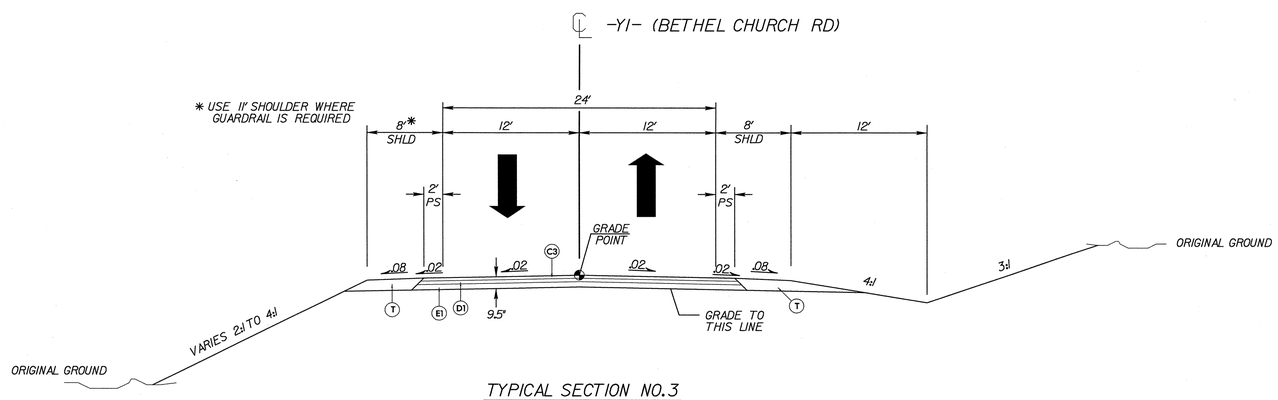


TYPICAL SECTION NO.3
-Y1- Sta.10+12.00 THRU 24+75.00

| | |
|---|---|
| C1 | 1½" S9.5B |
| C2 | 2" S9.5B |
| C3 | 3" S9.5B |
| D1 | 2½" I19.0B |
| E1 | 4" B25.0B |
| E2 | 5½" B25.0B |
| T | EARTH MATERIAL |
| U | EXIST. PAVEMENT |
| W | WEDGING |

18-JUN-2014 16:09
R:\Roadway\Proj\P5204_rdy_typ.dgn
$$$$USERNAME$$$$

0353DEL_P15

DKN

| PROJECT REFERENCE NO. | SHEET NO. |
|---|---|
| P-5204 | 2-B |

ROADWAY DESIGN ENGINEER

NORTH CAROLINA PROFESSIONAL SEAL 20107 ENGINEER DAVID W. BASS

6/19/14

PAVEMENT DESIGN ENGINEER

NORTH CAROLINA PROFESSIONAL SEAL 031484 ENGINEER VLADIMIR G. MITCHOV

07/17/14

ATKINS 1616 EAST MILLBROOK ROAD, SUITE 310 RALEIGH, NORTH CAROLINA 27609 (919) 876-6888 NCBEES #F-0326

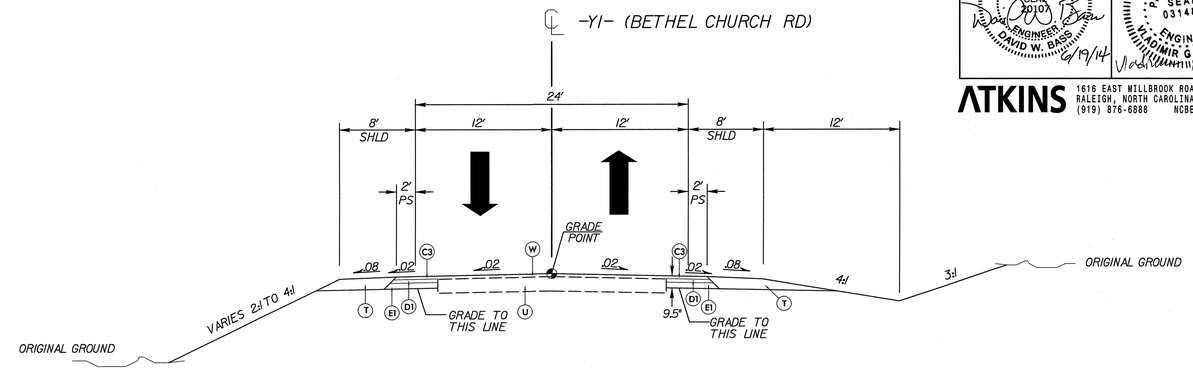


TYPICAL SECTION NO.3A

-Y1- Sta.24+75.00 THRU 26+87.43

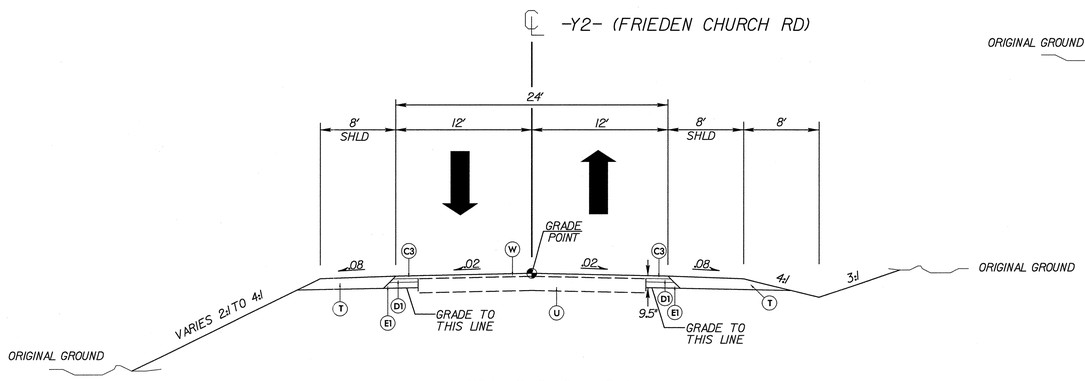


TYPICAL SECTION NO.4

-Y2- Sta.12+00.00 THRU Sta.16+75.55

-Y2- Sta.17+14.30 THRU Sta.23+00.00

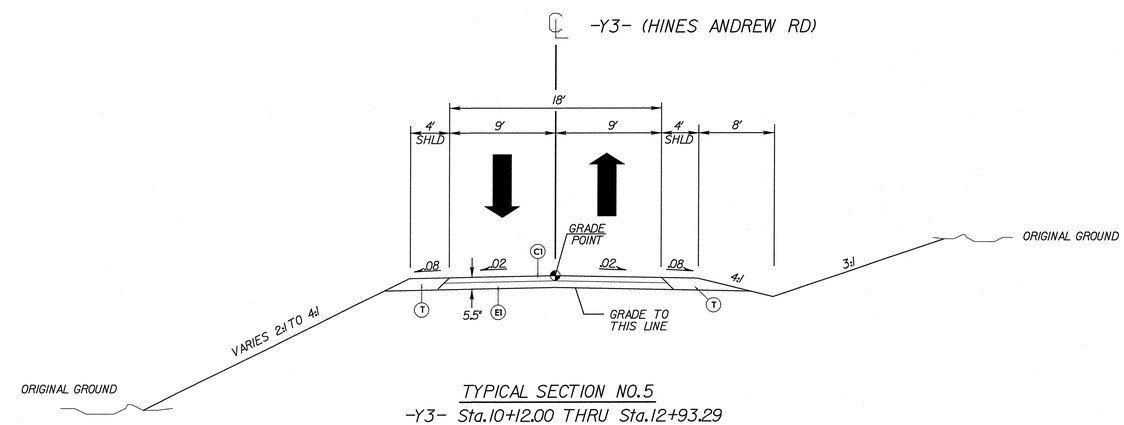


TYPICAL SECTION NO.5

-Y3- Sta.10+12.00 THRU Sta.12+93.29

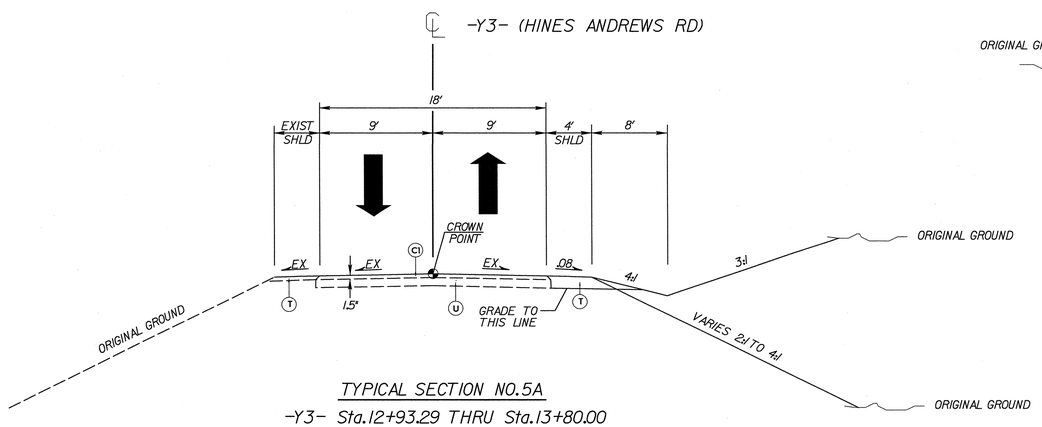


TYPICAL SECTION NO.5A

-Y3- Sta.12+93.29 THRU Sta.13+80.00

| | |
|---|---|
| C1 | 1½" S9.5B |
| C3 | 3" S9.5B |
| D1 | 2½" I19.0B |
| E1 | 4" B25.0B |
| T | EARTH MATERIAL |
| U | EXIST. PAVEMENT |
| W | WEDGING |

18-JUN-2014 16:09
R:\Roadway\Proj\P5204_rdy_typ.dgn
$$$$USERNAME$$$$

0353DEL_P15

| PROJECT REFERENCE NO. | SHEET NO. |
|---|---|
| P-5204 | 2-C |
| ROADWAY DESIGN ENGINEER | PAVEMENT DESIGN ENGINEER |

NORTH CAROLINA PROFESSIONAL SEAL 20107 ENGINEER DAVID W. BASS 6/19/14

NORTH CAROLINA PROFESSIONAL SEAL 031484 ENGINEER VLADIMIR G. MITCHEV 07/17/14

ATKINS 1616 EAST MILLBROOK ROAD, SUITE 310 RALEIGH, NORTH CAROLINA 27609 (919) 876-6888 NCBEES #F-0326

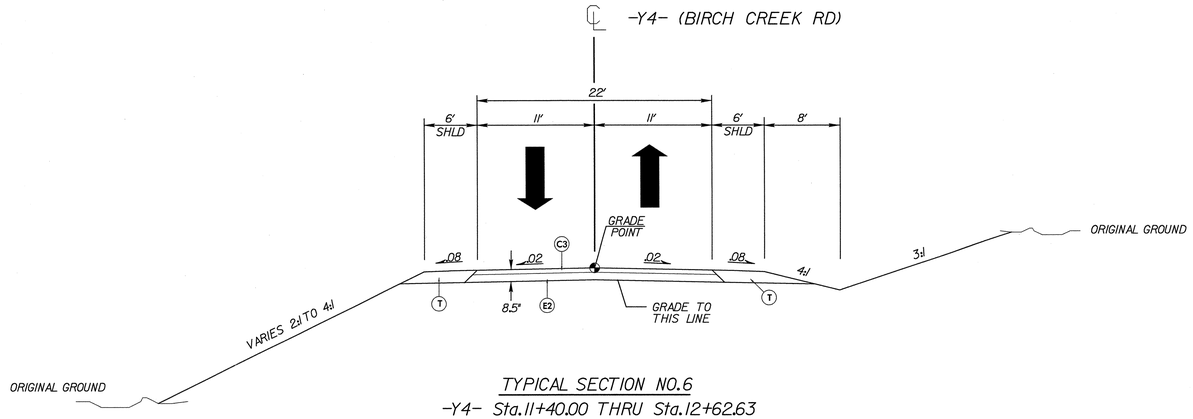


TYPICAL SECTION NO.6
-Y4- Sta.11+40.00 THRU Sta.12+62.63

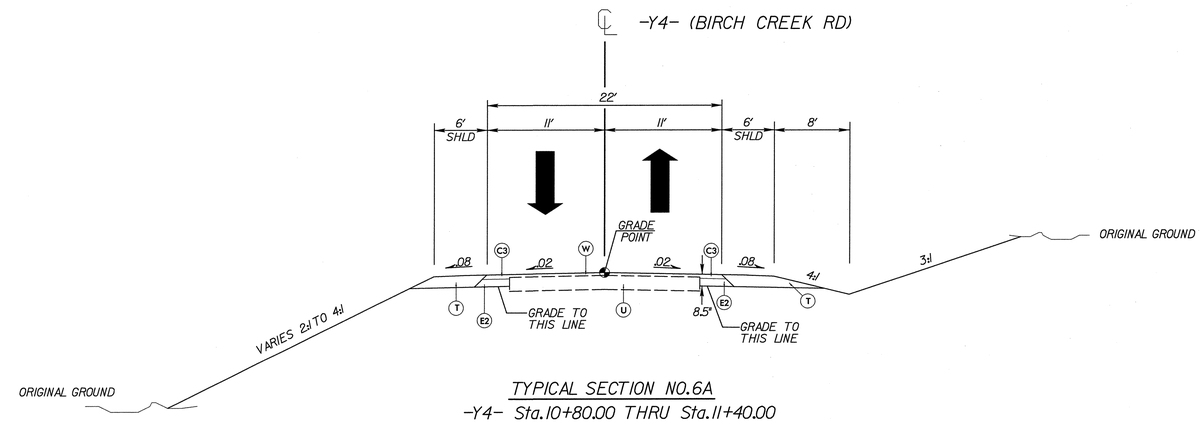


TYPICAL SECTION NO.6A
-Y4- Sta.10+80.00 THRU Sta.11+40.00

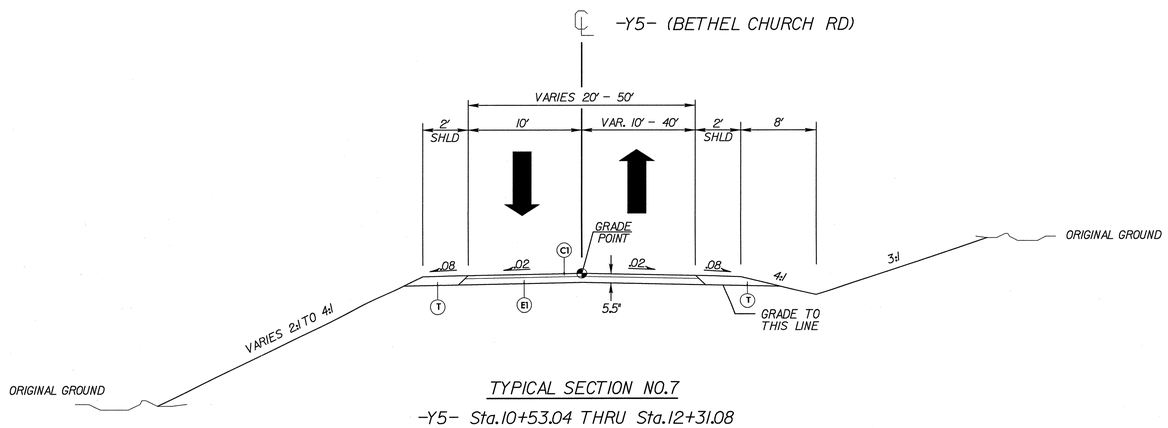


TYPICAL SECTION NO.7
-Y5- Sta.10+53.04 THRU Sta.12+31.08

| | |
|---|---|
| C1 | 1½" S9.5B |
| C3 | 3" S9.5B |
| E1 | 4" B25.0B |
| E2 | 5½" B25.0B |
| T | EARTH MATERIAL |
| U | EXIST. PAVEMENT |
| W | WEDGING |

18-JUN-2014 16:09
R:\Roadway\Proj\P5204_rdy_typ.dgn
$$$$USERNAME$$$$

0353DEL_P15

| PROJECT REFERENCE NO. | SHEET NO. |
|---|---|
| P-5204 | 2-D |
| ROADWAY DESIGN ENGINEER | PAVEMENT DESIGN ENGINEER |

NORTH CAROLINA PROFESSIONAL SEAL 20107 ENGINEER DAVID W. BASS 11/9/14

NORTH CAROLINA PROFESSIONAL SEAL 031484 ENGINEER VLADIMIR G. MITCHEV 07/17/14

ATKINS 1616 EAST MILLBROOK ROAD, SUITE 310 RALEIGH, NORTH CAROLINA 27609 (919) 876-6888 NCBEES #F-0326

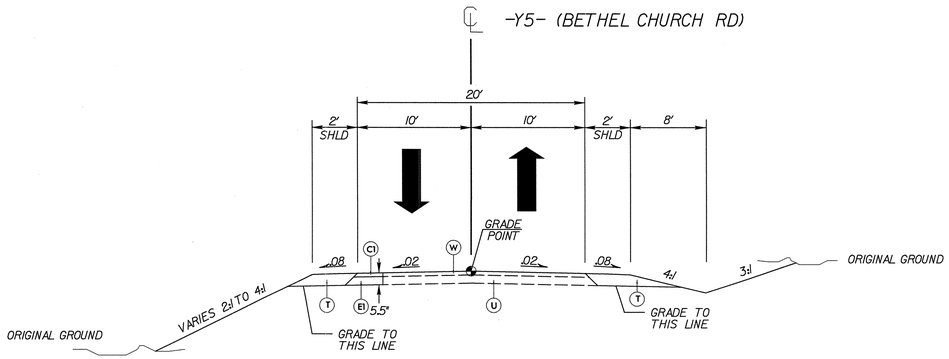


TYPICAL SECTION NO.7A

-Y5- Sta.10+00.00 THRU Sta.10+53.04

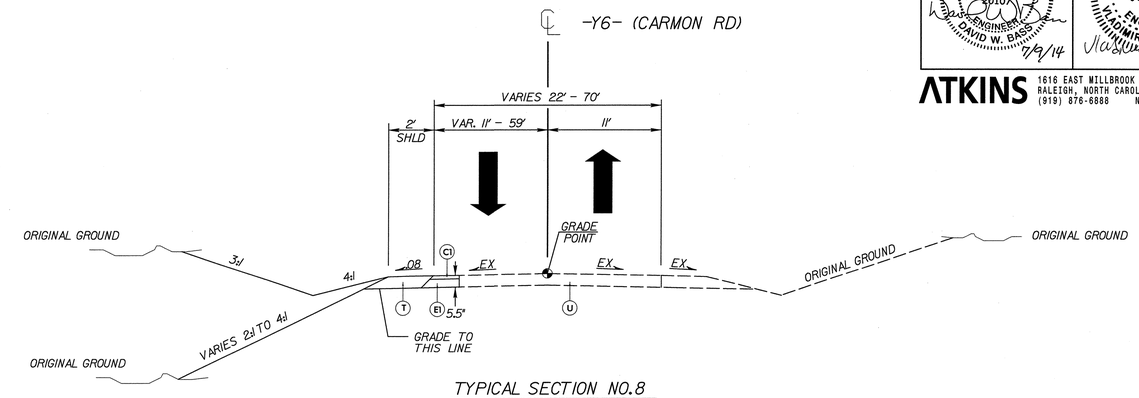


TYPICAL SECTION NO.8

35' MIN.RADIUS FOR PROPOSED CUL-DE-SACS

-Y6- Sta.10+60.00 THRU Sta.11+75.15

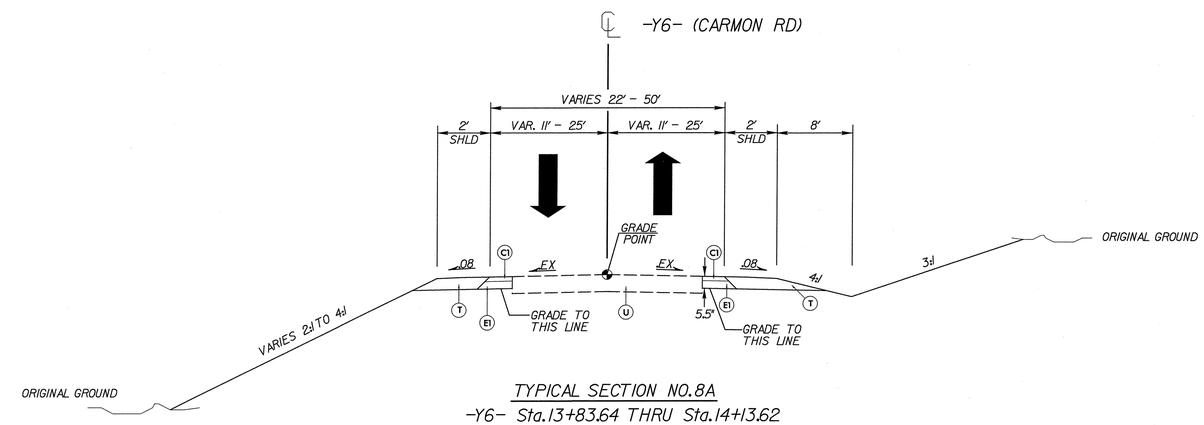


TYPICAL SECTION NO.8A

-Y6- Sta.13+83.64 THRU Sta.14+13.62

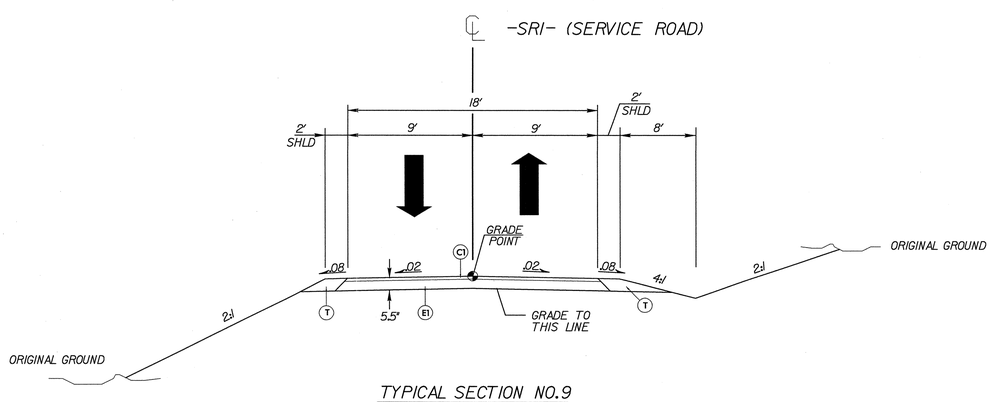


TYPICAL SECTION NO.9

-SR1- Sta.10+00.00 THRU Sta.12+49.33

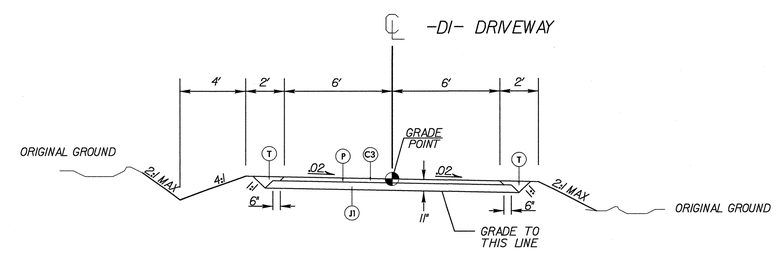


TYPICAL SECTION NO.10

-D1- Sta.10+00.00 THRU Sta.11+70.21

| | |
|---|---|
| C1 | 1½" S9.5B |
| C3 | 3" S9.5B |
| E1 | 4" B25.0B |
| J1 | 8" ABC |
| P | .35 PRIME COAT |
| T | EARTH MATERIAL |
| U | EXIST. PAVEMENT |
| W | WEDGING |

09-JUL-2014 10:24
R:\Roadway\Proj\P5204_rdy_typ.dgn
$$$$USERNAME$$$$

# McLeansville Road Crossing Closure Detail

| PROJECT REFERENCE NO. | SHEET NO. |
|---|---|
| P-5204 | 2-E |
| R/W SHEET NO. | |
| ROADWAY DESIGN ENGINEER | HYDRAULICS ENGINEER |

NORTH CAROLINA PROFESSIONAL SEAL 20107 ENGINEER DAVID W. BASS 6/19/14

NORTH CAROLINA PROFESSIONAL SEAL 23276 ENGINEER JOHN F. OGLESBY 6/19/14

GRAPHIC SCALE
20 10 0 20 40
PLANS

ATKINS 1616 EAST MILLBROOK ROAD, SUITE 310 RALEIGH, NORTH CAROLINA 27609 (919) 876-6888 NCBEES #F-0326

NAD 83 NSRS 2007

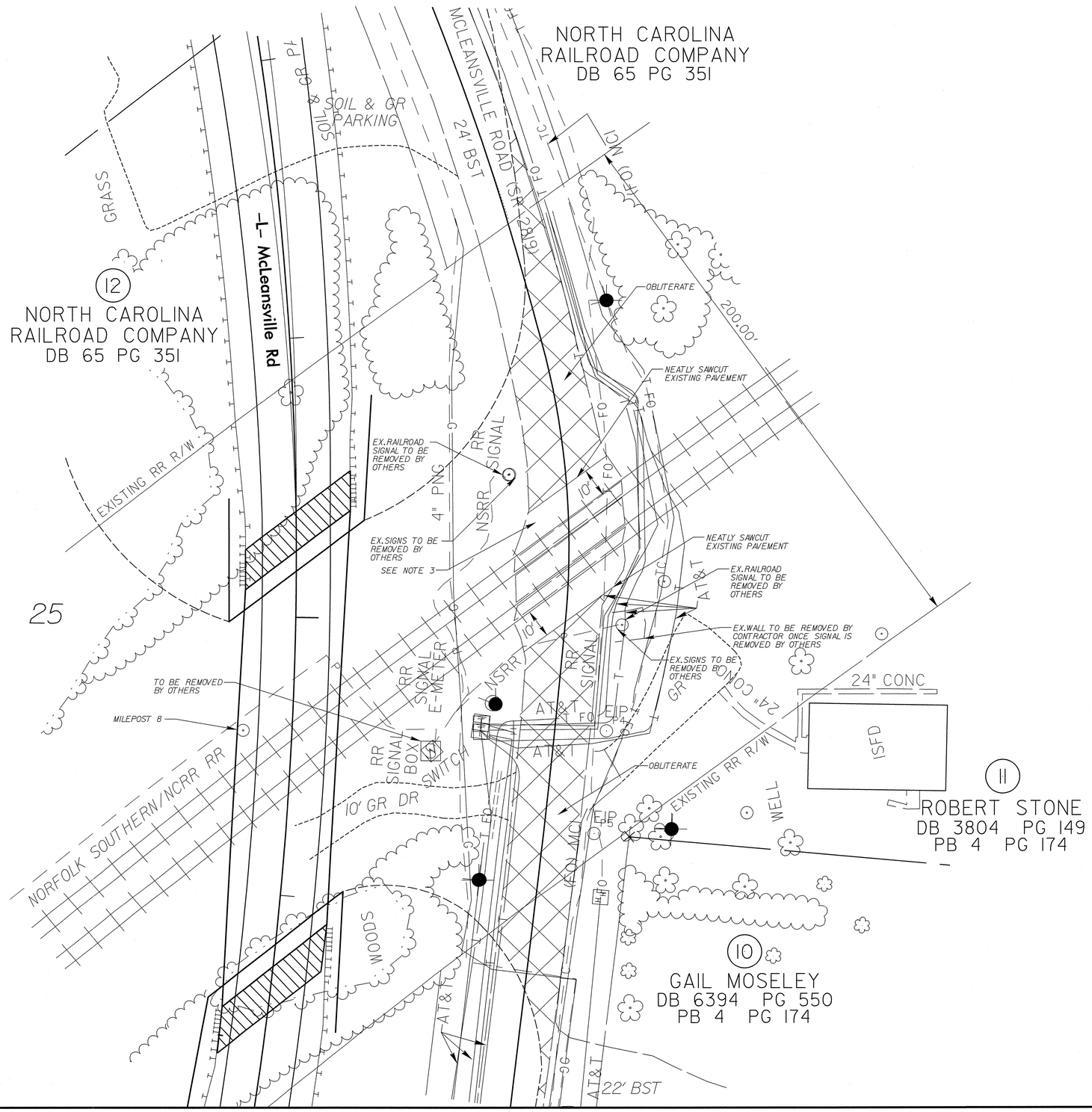


NOTES:

1. CONTACT THE NCDOT RESIDENT ENGINEER TO SCHEDULE THE CLOSURE OF MCLEANSVILLE ROAD.

2. THE RAILROAD SIGNALS, SIGNAL BOX, AND OVERHEAD POWER LINE/POLES TO SERVICE THE SIGNAL BOX WILL BE REMOVED BY OTHERS.

3. THE EXISTING PAVEMENT INSIDE THE NORFOLK SOUTHERN RAILROAD BALLAST LINE WILL BE REMOVED BY OTHERS. THE RAIL SEAL AND ASPHALT OVER THE TIES WILL ALSO BE REMOVED BY OTHERS. THE EXISTING RAILROAD CROSSBUCKS SHALL BE REMOVED BY OTHERS.

4. CONTRACTOR SHALL SEED AND MULCH THE DISTURBED AREA OUTSIDE THE RAILROAD BALLAST LINE.

5. CONTRACTOR SHALL CONTACT NORTH CAROLINA 811 TO LOCATE ALL UNDERGROUND UTILITIES IN THE WORK AREA.

6. CONTRACTOR SHALL REMOVE EXISTING ROADBED AND GRADE AREA TO MATCH ADJACENT TOPOGRAPHY AND GRADE EXISTING DITCHES TO DRAIN. ANY EXISTING CULVERTS IN THE RAILROAD DITCHES SHALL BE REMOVED AS WELL. CONTRACTOR SHALL COORDINATE WITH THE ENGINEER ON HAULING AWAY ANY ASPHALT LEFT BY THE REMOVAL BY OTHERS.

0353DEL_P15

18-JUN-2014 16:10
O:\Transportation\Roadway\NCDOT\Mcleansville\Roadway\Proj\P5204_Rdy_psh02E.dgn
$$$$USERNAME$$$$

# Private Crossing Closure Detail

| PROJECT REFERENCE NO. | SHEET NO. |
|---|---|
| P-5204 | 2-F |
| R/W SHEET NO. | |

ROADWAY DESIGN ENGINEER: NORTH CAROLINA PROFESSIONAL SEAL 20107 ENGINEER DAVID W. BASS 6/19/14

HYDRAULICS ENGINEER: NORTH CAROLINA PROFESSIONAL SEAL 036272 ENGINEER JOHN F. OGLESBY 6/19/14

NAD 83 • NSRS 2007

GRAPHIC SCALE: 20 10 0 20 40

PLANS

ATKINS 1616 EAST MILLBROOK ROAD, SUITE 310 RALEIGH, NORTH CAROLINA 27609 (919) 876-6888 NCBEES #F-0326

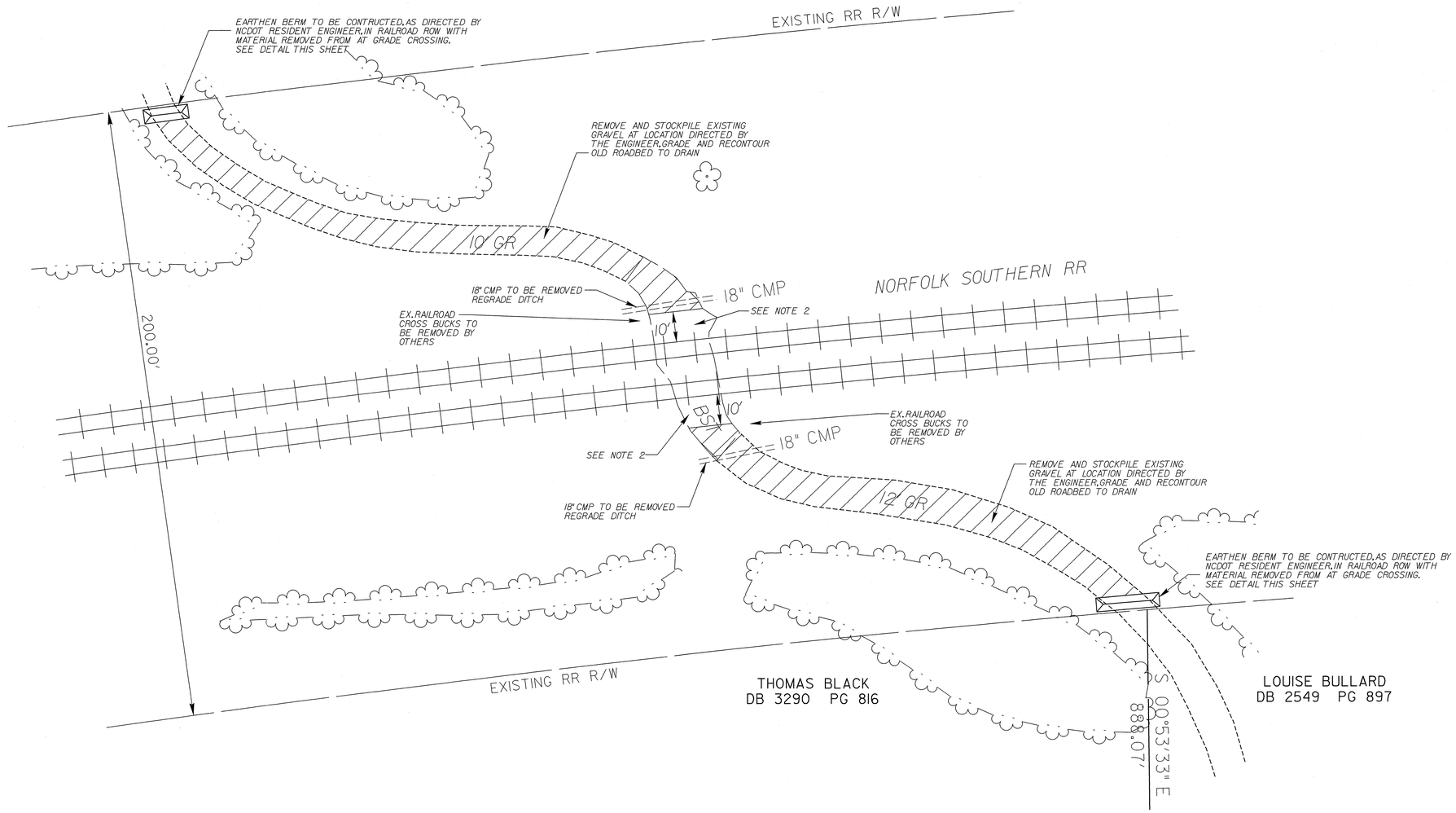


NOTES:

1.CONTACT THE NCDOT RESIDENT ENGINEER TO SCHEDULE THE CLOSURE OF DRIVE.

2.THE EXISTING PAVEMENT INSIDE THE NORFOLK SOUTHERN RAILROAD BALLAST LINE WILL BE REMOVED BY OTHERS.THE TIMBER FLANGES WILL ALSO BE REMOVED BY OTHERS.THE RAILROAD SIGNALS,SIGNAL BOX,AND OVERHEAD POWER LINE/POLES TO SERVICE THE SIGNAL BOX WILL BE REMOVED BY OTHERS.

3.CONTRACTOR SHALL SEED AND MULCH THE DISTURBED AREA OUTSIDE THE RAILROAD BALLAST LINE.

4.CONTRACTOR SHALL CONTACT NORTH CAROLINA 811TO LOCATE ALL UNDERGROUND UTILITIES IN THE WORK AREA.

5.CONTRACTOR SHALL REMOVE EXISTING ROADBED AND GRADE AREA TO MATCH ADJACENT TOPOGRAPHY AND GRADE EXISTING DITCHES TO DRAIN. ANY EXISTING CULVERTS IN THE RAILROAD DITCHES SHALL BE REMOVED AS WELL. CONTRACTOR SHALL COORDINATE WITH THE ENGINEER ON HAULING AWAY ANY ASPHALT LEFT BY THE REMOVAL BY OTHERS.

## EARTHEN BERM DETAIL

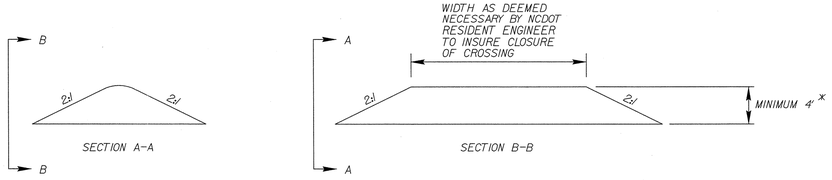


* EXCESS MATERIAL FROM CROSSING REMOVAL SHOULD BE USED TO INCREASE HEIGHT OF BERM

OBLITERATE

0353DEL_P15

DKN

18-JUN-2014 16:10
O:\transportation\Roadway\NCDOT\Mcleansville\Roadway\Proj\P5204_Rdy_psh02F.dgn
$$$$USERNAME$$$$

# Carmon Road Crossing Closure Detail

0353DEL_P15

| PROJECT REFERENCE NO. | SHEET NO. |
|---|---|
| P-5204 | 2-G |
| R/W SHEET NO. | |
| ROADWAY DESIGN ENGINEER | HYDRAULICS ENGINEER |

NORTH CAROLINA PROFESSIONAL SEAL 20107 ENGINEER DAVID W. BASS 6/19/14

NORTH CAROLINA PROFESSIONAL SEAL 032720 ENGINEER JOHN F. DOLESKI 6/19/14

NAD 83 • NSRS 2007

GRAPHIC SCALE
20 10 0 20 40
PLANS

ATKINS 1616 EAST MILLBROOK ROAD, SUITE 310
RALEIGH, NORTH CAROLINA 27609
(919) 876-6888 NCBEES #F-0326

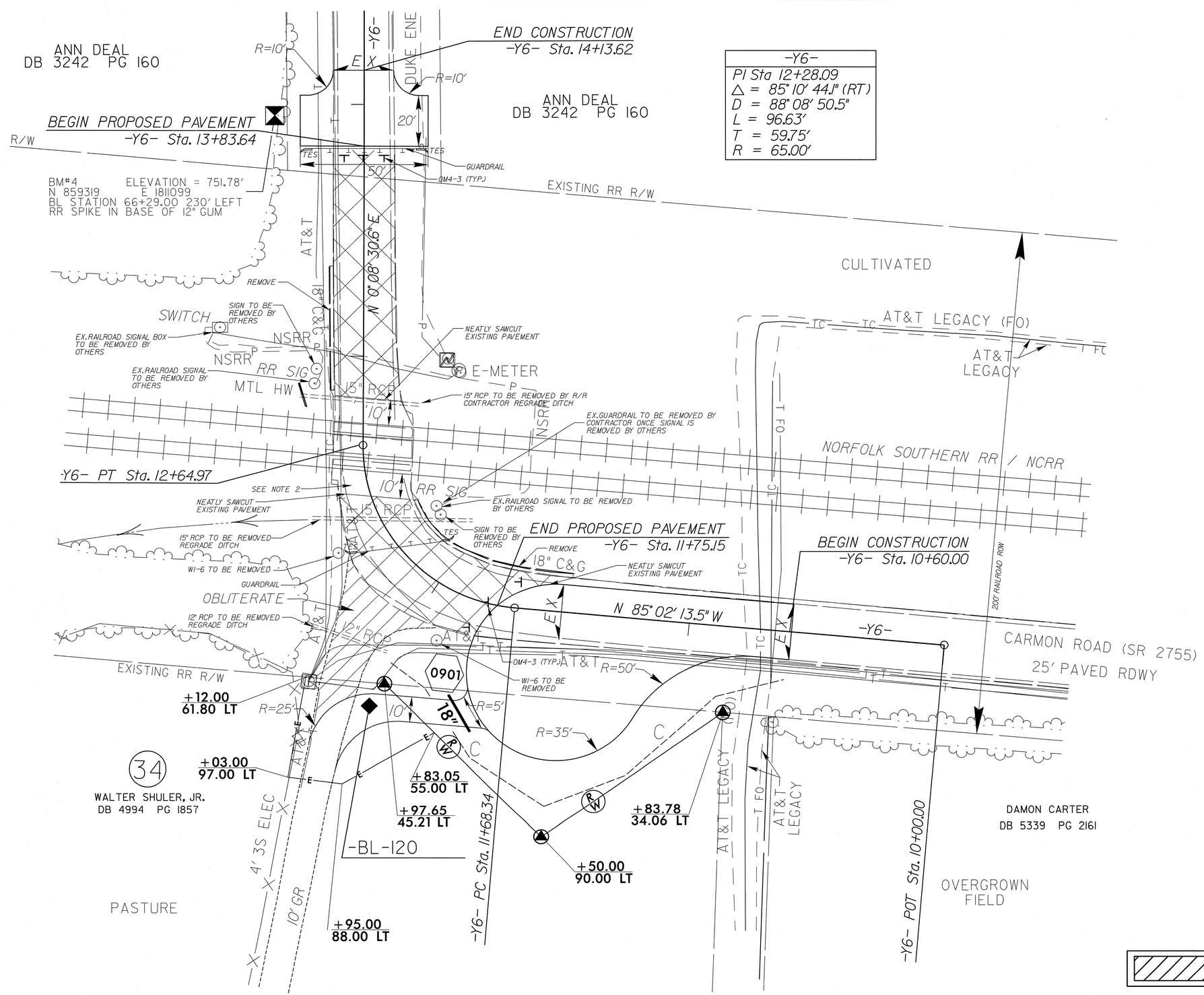


OBLITERATE

NOTES:

1. CONTACT THE NCDOT RESIDENT ENGINEER TO SCHEDULE THE CLOSURE OF CARMON ROAD.

2. THE EXISTING PAVEMENT INSIDE THE NORFOLK SOUTHERN RAILROAD BALLAST LINE WILL BE REMOVED BY OTHERS. THE TIMBER AND RAIL SEAL FLANGES WILL ALSO BE REMOVED BY OTHERS. THE RAILROAD SIGNALS, SIGNAL BOX, AND OVERHEAD POWER LINE/POLES TO SERVICE THE SIGNAL BOX WILL BE REMOVED BY OTHERS.

3. CONTRACTOR SHALL SEED AND MULCH THE DISTURBED AREA OUTSIDE THE RAILROAD BALLAST LINE.

4. CONTRACTOR SHALL CONTACT NORTH CAROLINA 811 TO LOCATE ALL UNDERGROUND UTILITIES IN THE WORK AREA.

5. CONTRACTOR SHALL REMOVE EXISTING ROADBED AND GRADE AREA TO MATCH ADJACENT TOPOGRAPHY AND GRADE EXISTING DITCHES TO DRAIN. ANY EXISTING CULVERTS IN THE RAILROAD DITCHES SHALL BE REMOVED AS WELL. CONTRACTOR SHALL COORDINATE WITH THE ENGINEER ON HAULING AWAY ANY ASPHALT LEFT BY THE REMOVAL BY OTHERS.

6. THE RR CROSSING ADVANCE WARNING PAVEMENT MARKINGS ON CARMON ROAD ON THE NORTH AND SOUTH SIDE OF THE RR CROSSING NEED TO BE REMOVED AS WELL.

7. PROVIDE PERMANENT SIGNING AS SHOWN.

8. PROVIDE SIGNING AND DEVICES REQUIRED TO CLOSE THE ROAD ACCORDING TO THE ROADWAY STANDARD DRAWINGS AND TRAFFIC CONTROL PLANS.

9. ENSURE ALL NECESSARY SIGNING IS IN PLACE PRIOR TO ALTERING ANY TRAFFIC PATTERN.

10. CONTRACTOR TO INSTALL "DEAD END" SIGN 40' WEST OF INTERSECTION AT CARMON & KNOX ROAD FOR WESTBOUND CARMON ROAD TRAFFIC.

-Y6-
PI Sta 12+28.09
△ = 85° 10' 44.1" (RT)
D = 88° 08' 50.5"
L = 96.63'
T = 59.75'
R = 65.00'

0353DEL_P15

# McLeansville Road Temporary Detour

| PROJECT REFERENCE NO. | SHEET NO. |
|---|---|
| P-5204 | 2-H |
| R/W SHEET NO. | |

ROADWAY DESIGN ENGINEER — NORTH CAROLINA PROFESSIONAL SEAL 20107 ENGINEER DAVID W. BASS 6/19/14

HYDRAULICS ENGINEER — NORTH CAROLINA PROFESSIONAL SEAL 022761 ENGINEER JOHN F. OGLESBY 6/19/14

ATKINS 1616 EAST MILLBROOK ROAD, SUITE 310 RALEIGH, NORTH CAROLINA 27609 (919) 876-6888 NCBEES #F-0326

NAD 83 / NSRS 2007

**-DETOUR1-**

| | | |
|---|---|---|
| PI Sta 11+02.05 | PI Sta 13+36.47 | PI Sta 16+10.35 |
| Δ = 11° 39' 13.4" (RT) | Δ = 15° 09' 37.8" (LT) | Δ = 16° 12' 13.3" (RT) |
| D = 5° 43' 46.5" | D = 5° 43' 46.5" | D = 5° 43' 46.5" |
| L = 203.40' | L = 264.60' | L = 282.81' |
| T = 102.05' | T = 133.08' | T = 142.35' |
| R = 1,000.00' | R = 1,000.00' | R = 1,000.00' |

**-DETOUR2-**

| | |
|---|---|
| PI Sta 9+08.40 | PI Sta 10+89.64 |
| Δ = 7° 46' 50.3" (RT) | Δ = 3° 48' 10.9" (RT) |
| D = 21° 29' 19.8" | D = 2° 07' 19.4" |
| L = 36.21' | L = 179.21' |
| T = 18.13' | T = 89.64' |
| R = 266.63' | R = 2,700.00' |

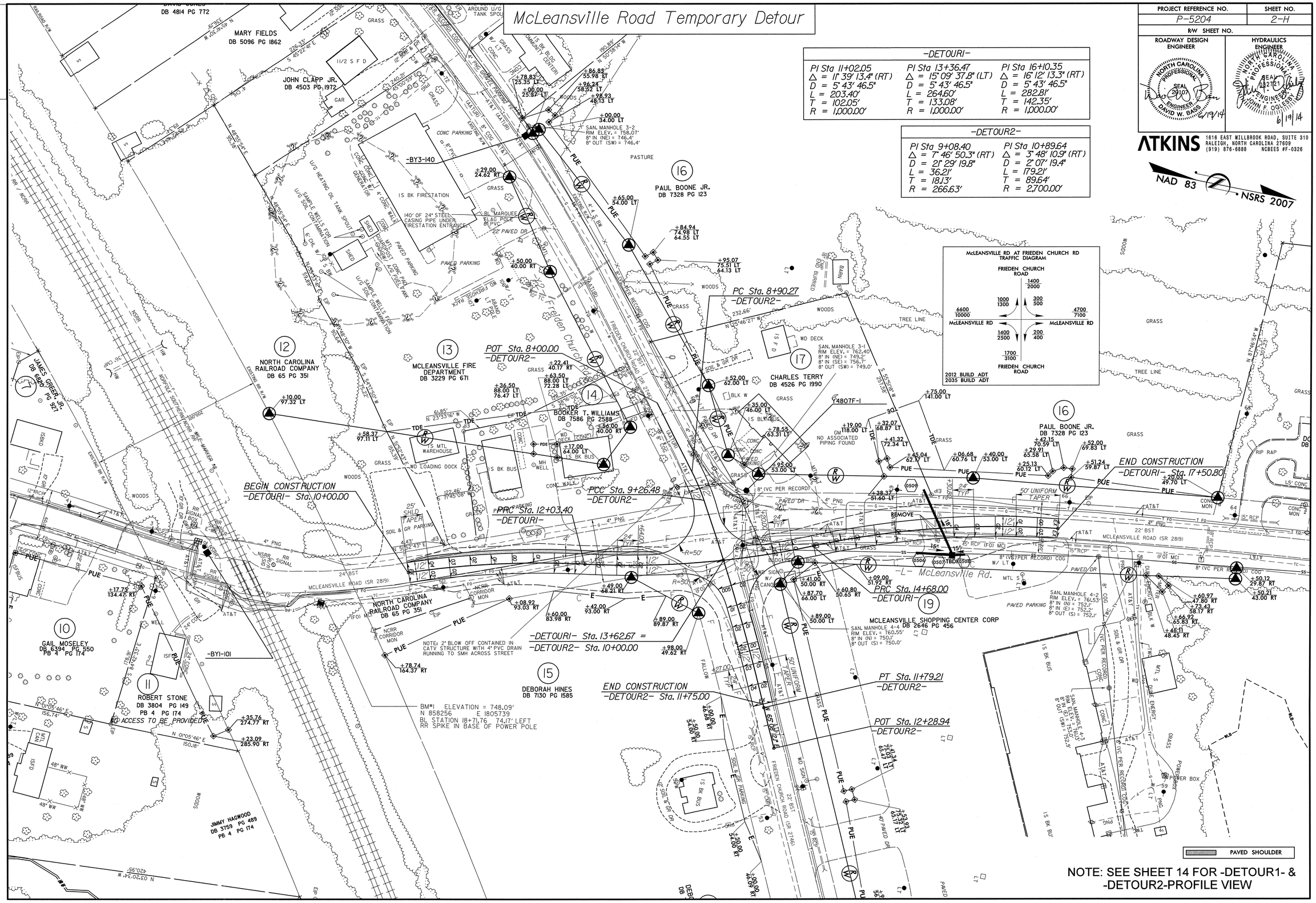

DGN 0353DEL_P15

| PROJECT REFERENCE NO. | SHEET |
|---|---|
| P-5204 | 2-I |

GEOTECHNICAL ENGINEER

NORTH CAROLINA PROFESSIONAL SEAL 31499 ENGINEER CARLIE F. PARKER

SIGNATURE DATE

ENGINEER

SIGNATURE DATE

# Detail for Temporary Containment of Contaminated Soil

## Cross-Section View

NOTE:
The Contractor shall stockpile all contaminated soil excavated from a property in a location within the property boundaries of the source parcel. If the volume of contaminated material exceeds available space on site, the Contractor shall obtain a permit from the NCDENR UST Section for off-site temporary storage.

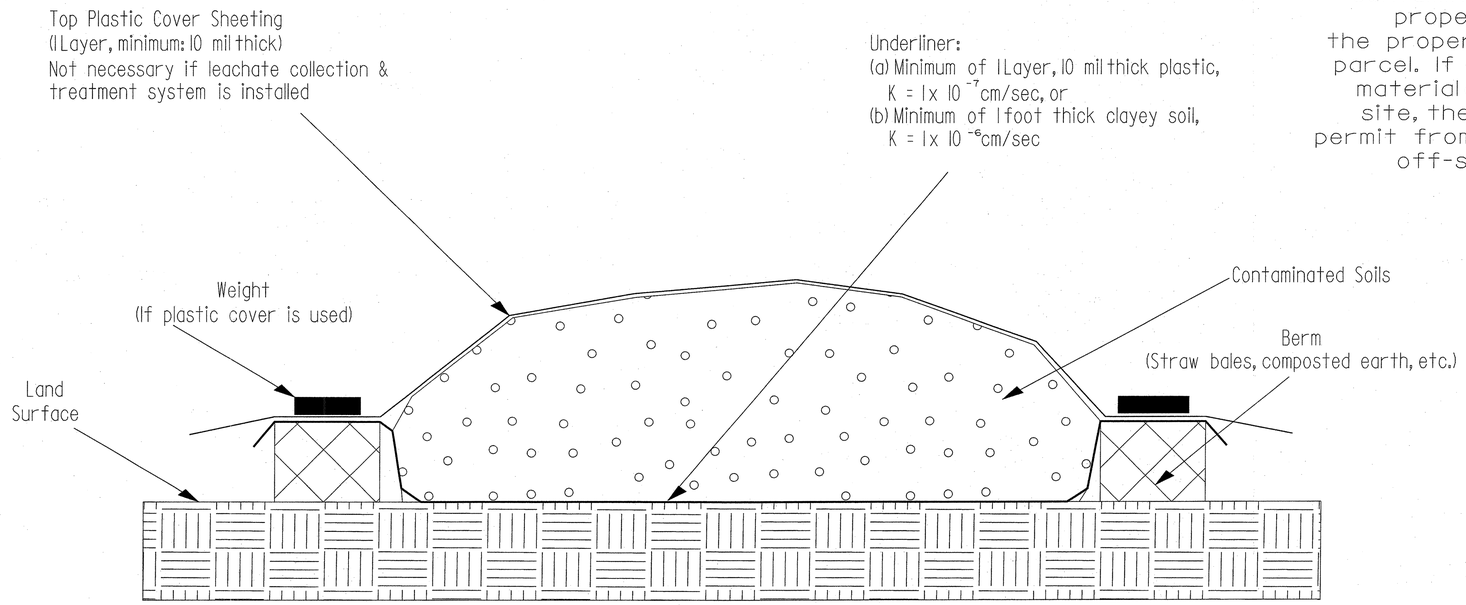


## Map View

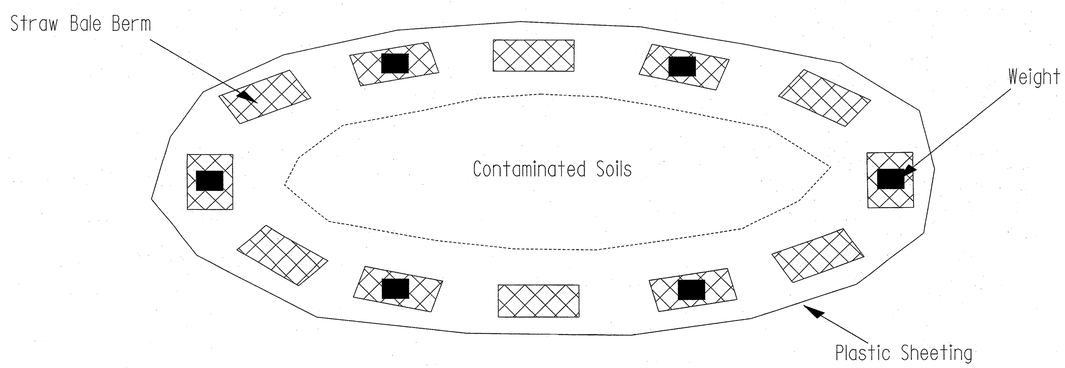


| PREPARED BY: | DATE: |
|---|---|
| REVIEWED BY: | DATE: |

**GEOTECHNICAL ENGINEERING UNIT**

☐ EASTERN REGIONAL OFFICE
☐ WESTERN REGIONAL OFFICE
☒ CONTRACT OFFICE

STATE OF NORTH CAROLINA DEPARTMENT OF TRANSPORTATION RALEIGH

STOCKPILE CONTAINMENT DETAIL

REVISIONS

| NO. | BY | DATE | NO. | BY | DATE |
|---|---|---|---|---|---|
| 1 | | | 3 | | |
| 2 | | | 4 | | |

# Detail of Temporary Shoring -S1-

| PROJECT REFERENCE NO. | SHEET NO. |
|---|---|
| P-5204 | 2-J |
| R/W SHEET NO. | |
| ROADWAY DESIGN ENGINEER | HYDRAULICS ENGINEER |

0353DEL_P15

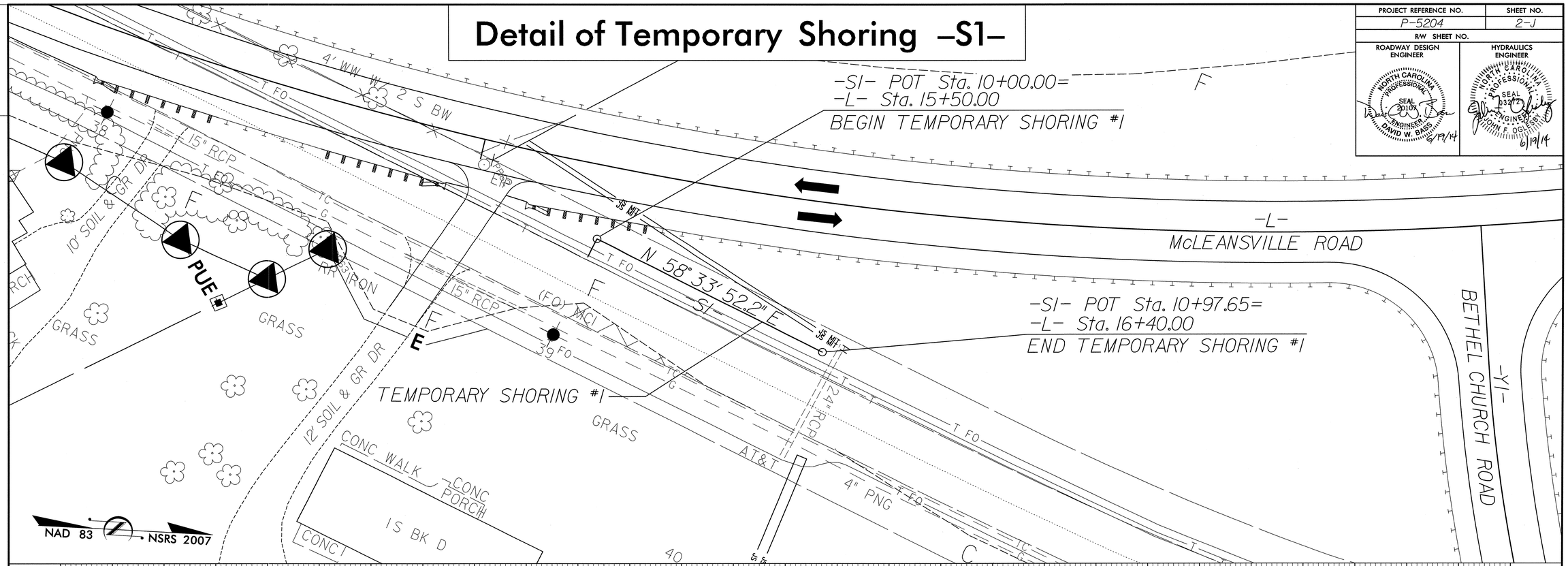


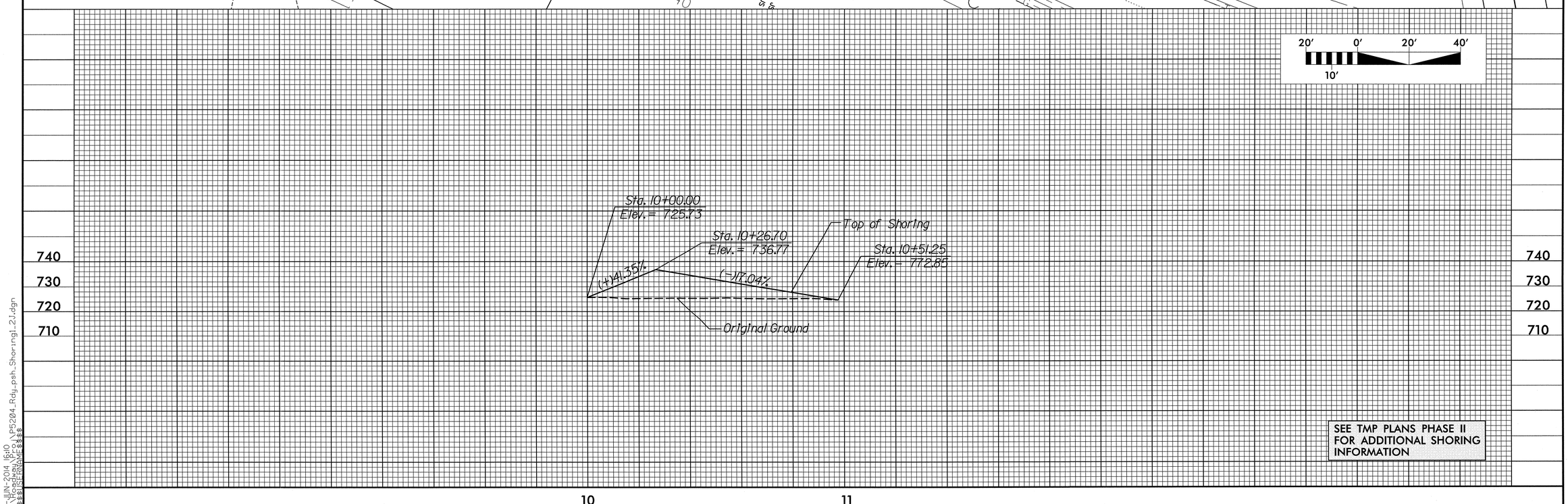


SEE TMP PLANS PHASE II FOR ADDITIONAL SHORING INFORMATION

18-JUN-2014 16:10
R:\Roadway\Proj\P5204_Rdy_psh_Shoring1_2J.dgn
$$$$USERNAME$$$$

# Detail of Temporary Shoring –S2–

| PROJECT REFERENCE NO. | SHEET NO. |
|---|---|
| P-5204 | 2-K |
| R/W SHEET NO. | |

ROADWAY DESIGN ENGINEER: NORTH CAROLINA PROFESSIONAL SEAL 20107 ENGINEER DAVID W. BASS 6/19/14

HYDRAULICS ENGINEER: NORTH CAROLINA PROFESSIONAL SEAL 032121 ENGINEER JOHN F. OGLESBY 6/19/14

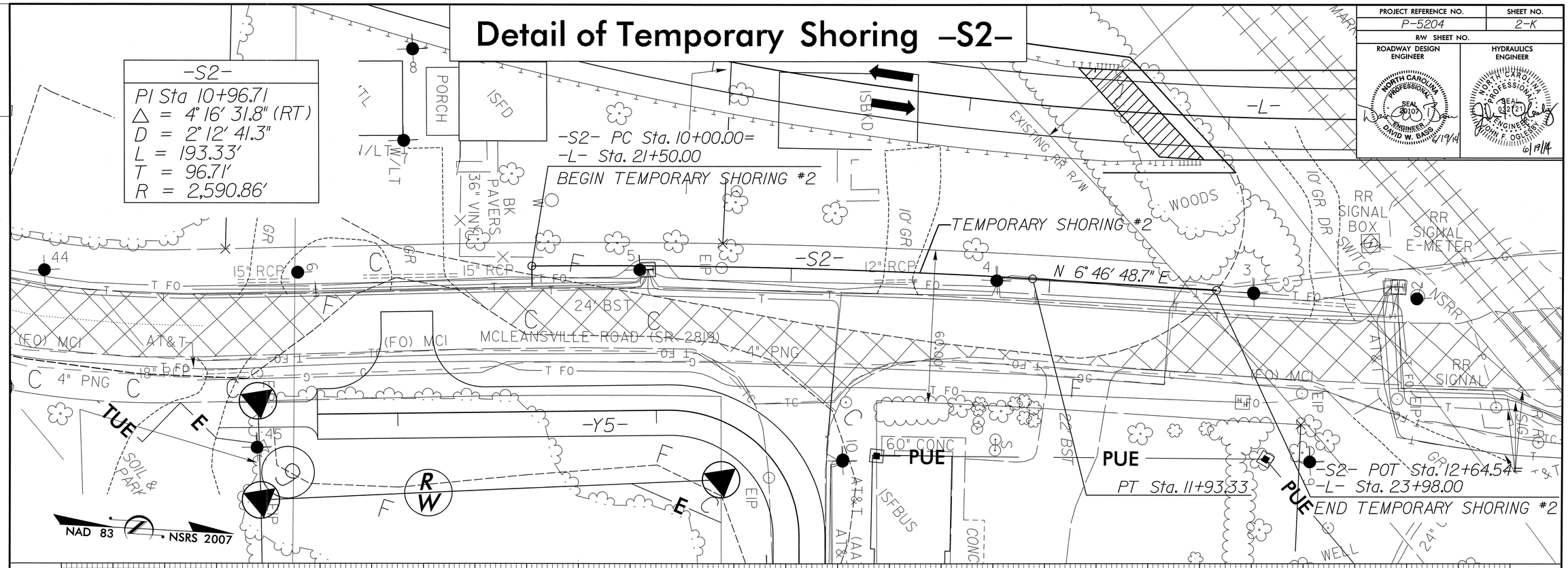


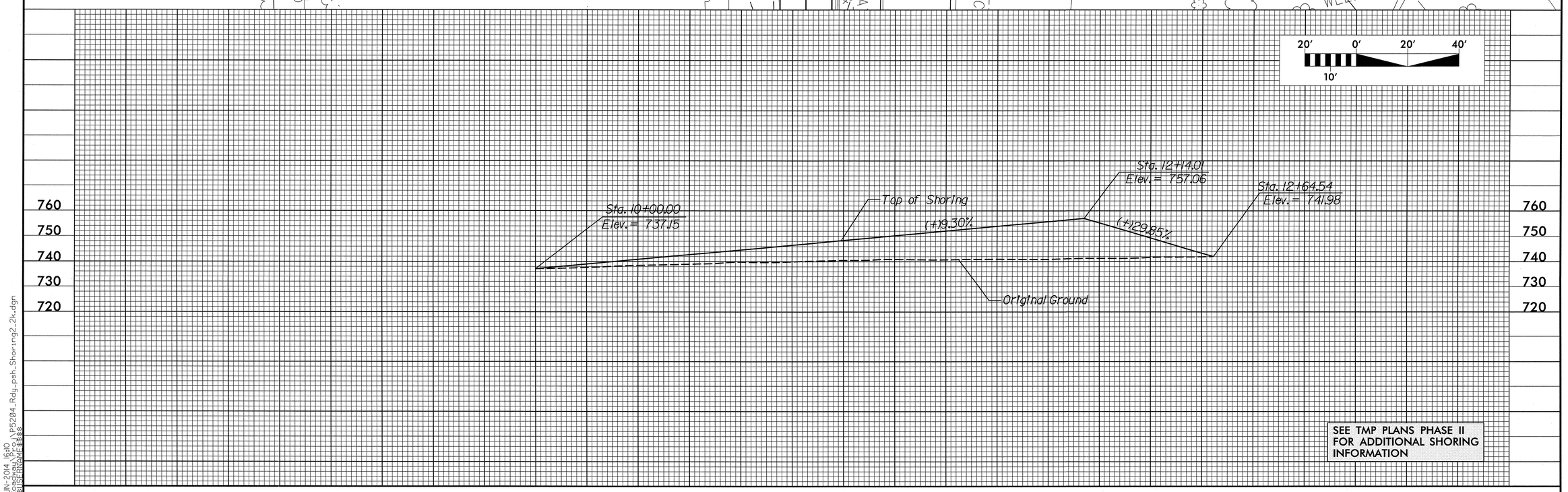


SEE TMP PLANS PHASE II FOR ADDITIONAL SHORING INFORMATION

0353DEL_P15

18-JUN-2014 16:10
R:\Roadway\Proj\P5204_Rdy_psh_Shoring2_2k.dgn
$$$$USERNAME$$$$

# Detail of Temporary Shoring –S3–

| PROJECT REFERENCE NO. | SHEET NO. |
|---|---|
| P-5204 | 2-L |
| R/W SHEET NO. | |
| ROADWAY DESIGN ENGINEER | HYDRAULICS ENGINEER |

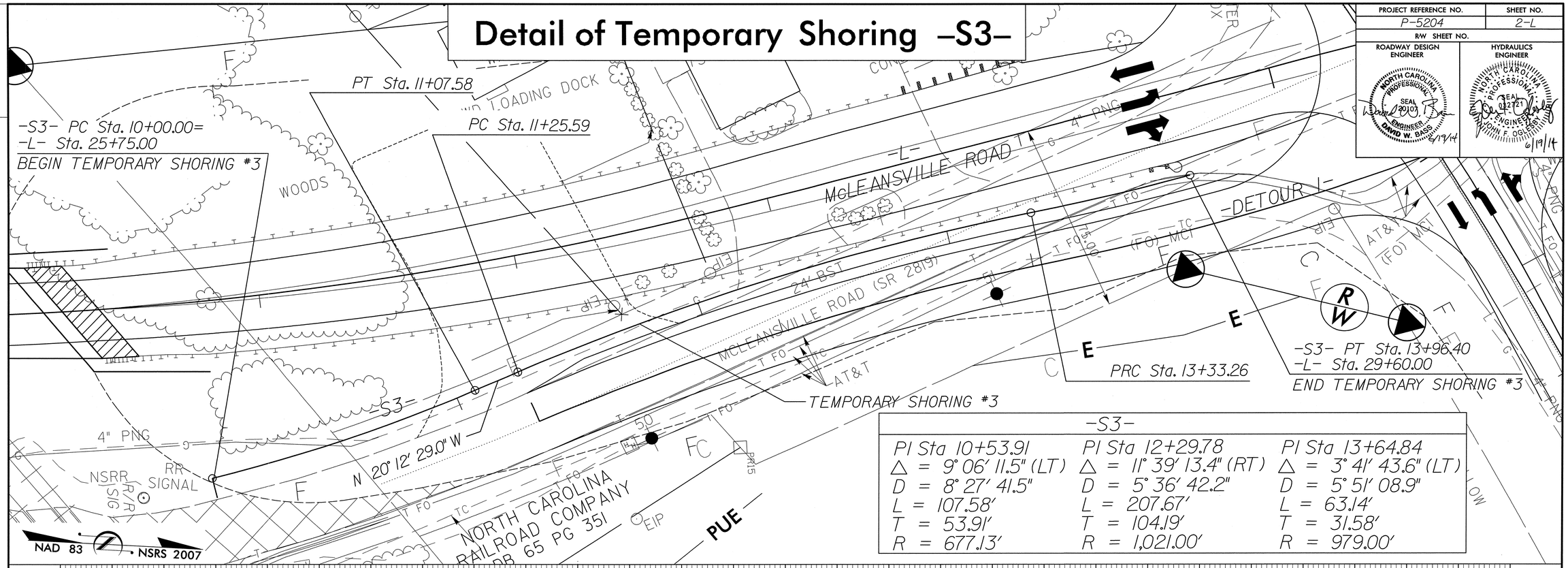


| -S3- | | |
|---|---|---|
| PI Sta 10+53.91 | PI Sta 12+29.78 | PI Sta 13+64.84 |
| Δ = 9° 06' 11.5" (LT) | Δ = 11° 39' 13.4" (RT) | Δ = 3° 41' 43.6" (LT) |
| D = 8° 27' 41.5" | D = 5° 36' 42.2" | D = 5° 51' 08.9" |
| L = 107.58' | L = 207.67' | L = 63.14' |
| T = 53.91' | T = 104.19' | T = 31.58' |
| R = 677.13' | R = 1,021.00' | R = 979.00' |

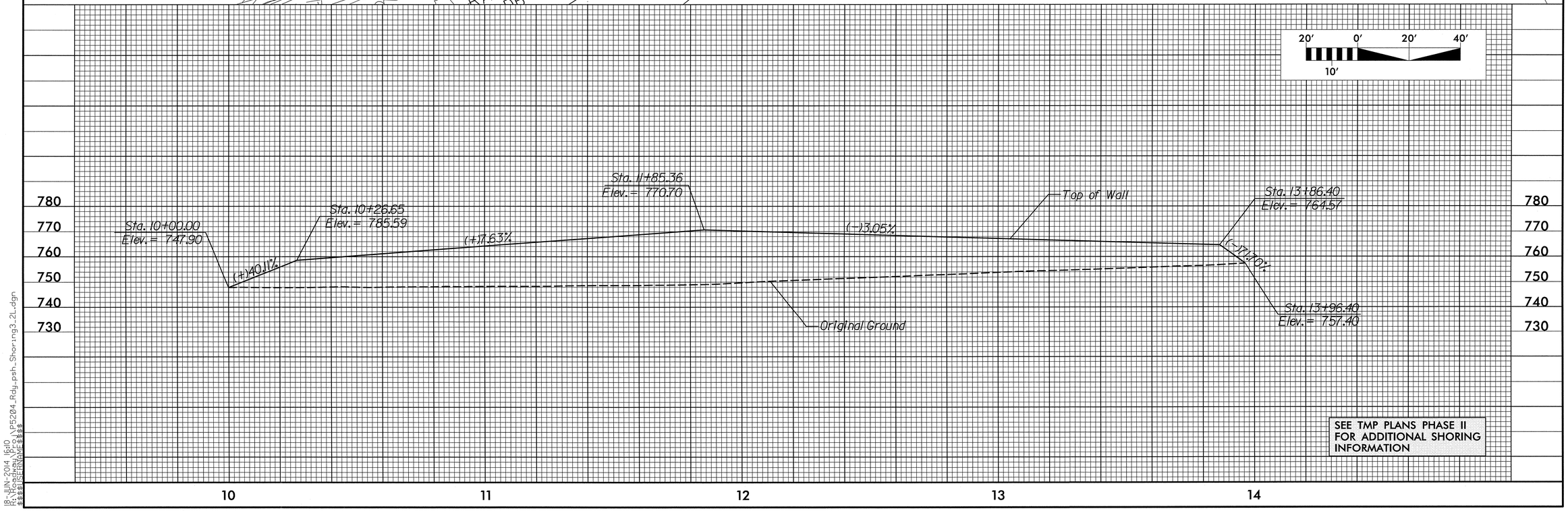


SEE TMP PLANS PHASE II FOR ADDITIONAL SHORING INFORMATION

0353DEL_P15

18-JUN-2014 16:10
R:\Structures\P5204_Rdy_psh_Shoring3_2L.dgn
$$$$USERNAME$$$$

| PROJECT REFERENCE NO. | SHEET |
|---|---|
| P-5204 | 2-M |

GEOTECHNICAL ENGINEER

NORTH CAROLINA PROFESSIONAL SEAL 22246 ENGINEER SCOTT A. HIDDEN

DocuSigned by: Scott A. Hidden 7/23/2014 F760CAEB9C0C4DF...

SIGNATURE DATE

ENGINEER

SIGNATURE DATE

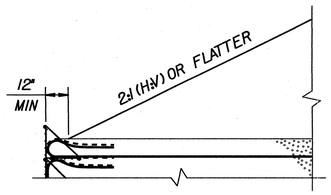


SLOPE CASE

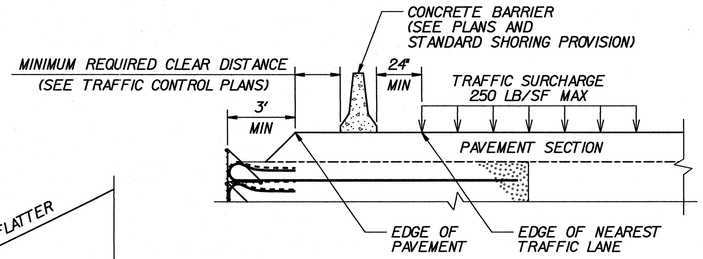


SURCHARGE CASE

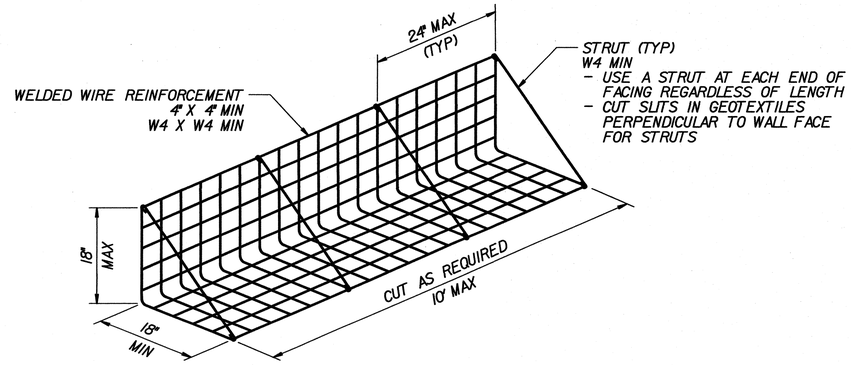


FACING DETAIL

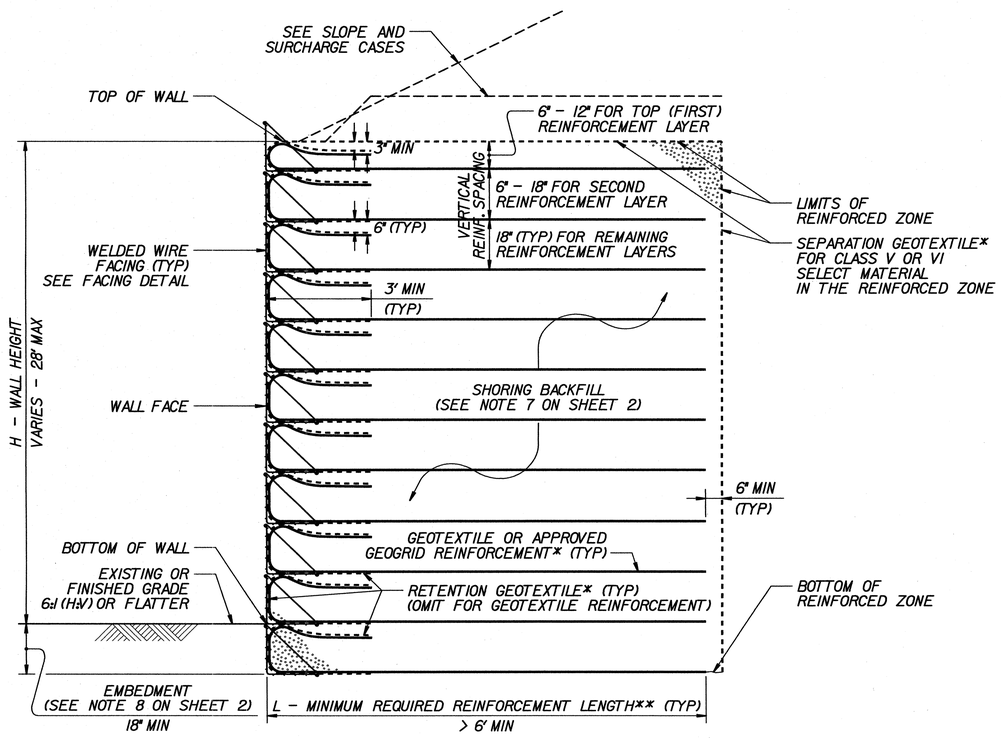


STANDARD TEMPORARY WALL

(FOR STANDARD TEMPORARY WALLS ON STRUCTURES, SEE TEMPORARY WALL ON STRUCTURE DETAIL ON SHEET 2.)
*SEE GEOSYNTHETIC PLACEMENT DETAILS ON SHEET 2.
**SEE REINFORCEMENT TABLES ON SHEET 3.

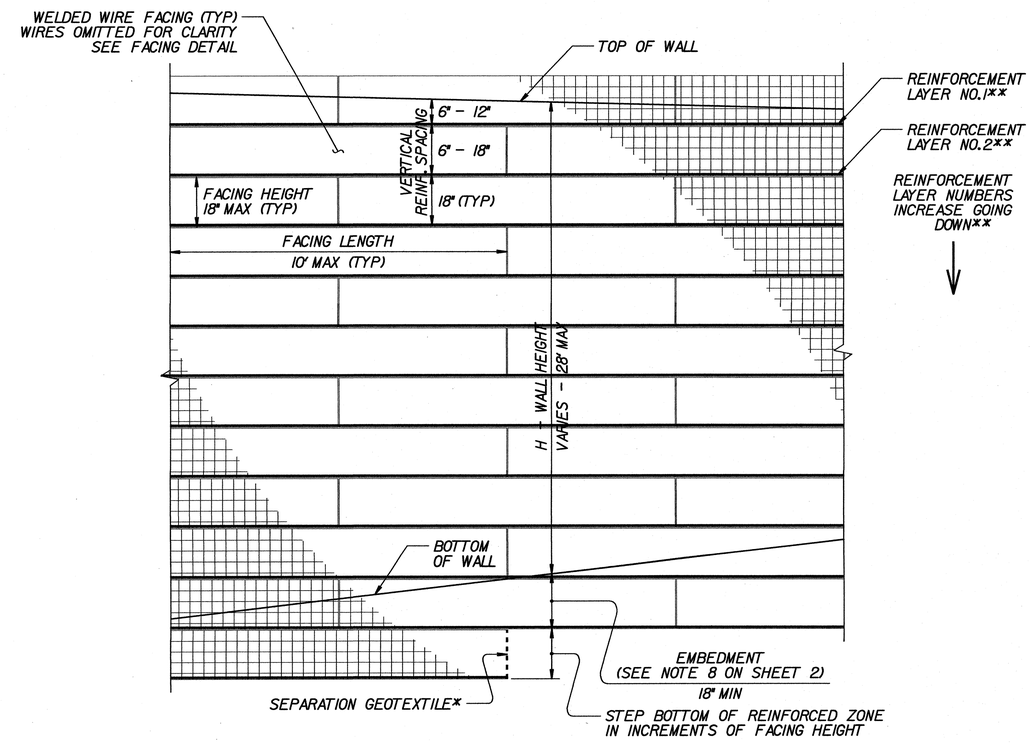


STANDARD TEMPORARY WALL – PARTIAL ELEVATION

*SEE GEOSYNTHETIC PLACEMENT DETAILS ON SHEET 2.
**SEE REINFORCEMENT TABLES ON SHEET 3.

STATE OF NORTH CAROLINA DEPARTMENT OF TRANSPORTATION

**GEOTECHNICAL ENGINEERING UNIT**

**STATE OF NORTH CAROLINA DEPARTMENT OF TRANSPORTATION RALEIGH**

**STANDARD DRAWING NO. 1801.02**

STANDARD TEMPORARY WALL SHEET 1 OF 3

DATE: 11-19-13

| PROJECT REFERENCE NO. | SHEET |
|---|---|
| P-5204 | 2-N |

GEOTECHNICAL ENGINEER

NORTH CAROLINA PROFESSIONAL SEAL 22246 ENGINEER SCOTT A. HIDDEN

DocuSigned by: Scott A. Hidden 7/23/2014

F76DCAE8B9A4D0... SIGNATURE DATE

ENGINEER

SIGNATURE DATE

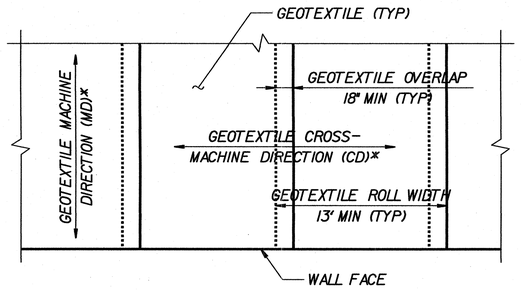


GEOTEXTILE PLACEMENT

(100% COVERAGE MIN FOR GEOTEXTILE REINFORCEMENT)

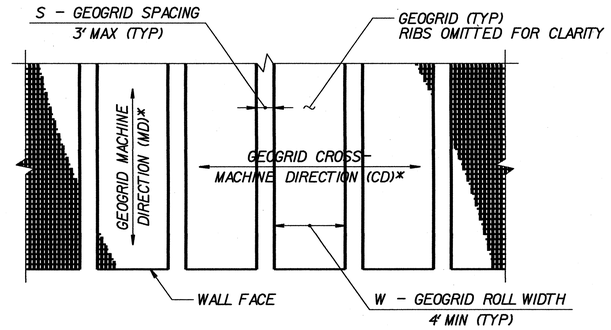


GEOGRID PLACEMENT

(80% COVERAGE MIN FOR GEOGRID REINFORCEMENT – $\frac{W}{W+S} \times 100 \geq 80\%$, SEE NOTE 11)

GEOSYNTHETIC PLACEMENT DETAILS

(PLAN VIEW)

*SEE NOTE 12.

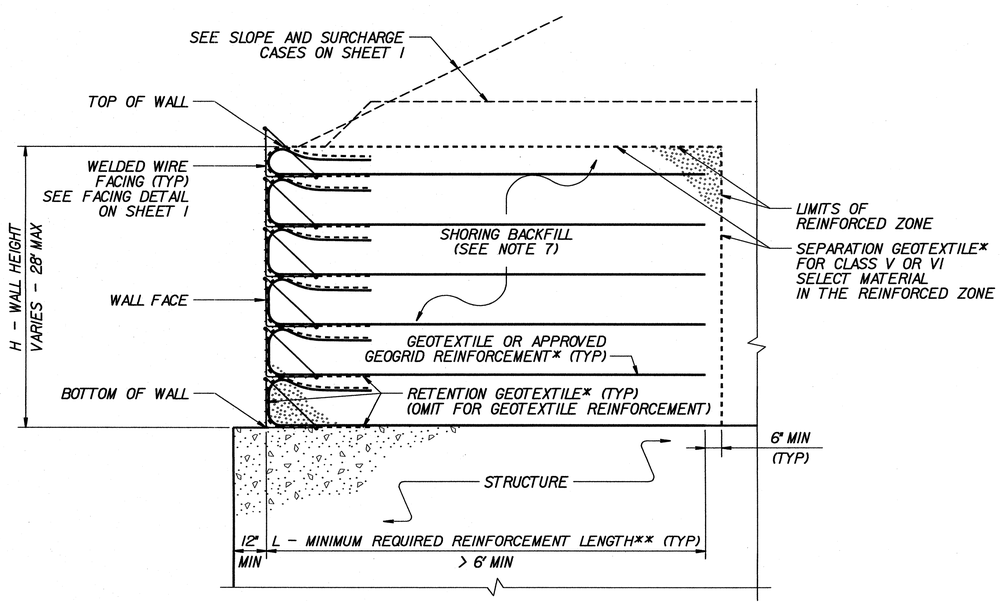


TEMPORARY WALL ON STRUCTURE DETAIL

*SEE GEOSYNTHETIC PLACEMENT DETAILS.

**SEE REINFORCEMENT TABLES ON SHEET 3.

## NOTES:

1. AT THE CONTRACTOR'S OPTION, USE STANDARD TEMPORARY WALLS AS NOTED IN THE PLANS.
2. FOR STANDARD TEMPORARY WALLS, SEE STANDARD SHORING PROVISION.
3. STANDARD TEMPORARY WALLS ARE BASED ON THE FOLLOWING IN-SITU ASSUMED SOIL PARAMETERS:
   UNIT WEIGHT, $\gamma$ = 120 LB/CF
   FRICTION ANGLE, $\phi$ = 30 DEGREES
   COHESION, c = 0 LB/SF
4. DO NOT USE STANDARD TEMPORARY WALLS IF ASSUMED SOIL PARAMETERS ARE NOT APPLICABLE.
5. DO NOT USE STANDARD TEMPORARY WALLS WHEN VERY LOOSE OR SOFT SOIL OR MUCK IS BELOW TEMPORARY WALLS.
6. USE GROUNDWATER ELEVATION NOTED IN THE PLANS. IF NO GROUNDWATER ELEVATION IS SHOWN IN THE PLANS, ASSUME GROUNDWATER DEPTH IS LESS THAN 7' BELOW BOTTOM OF REINFORCED ZONE. DO NOT USE STANDARD TEMPORARY WALLS IF GROUNDWATER IS ABOVE BOTTOM OF REINFORCED ZONE.
7. DO NOT USE A-2-4 SOIL FOR STANDARD TEMPORARY WALLS AROUND CULVERTS OR IN THE REINFORCED ZONE OF STANDARD TEMPORARY WALLS FOR SLOPE CASES. DO NOT USE CLASS VI SELECT MATERIAL IN THE REINFORCED ZONE OF STANDARD TEMPORARY WALLS WITH GEOTEXTILE REINFORCEMENT.
8. EMBEDMENT IS NOT REQUIRED FOR STANDARD TEMPORARY WALLS ON STRUCTURES OR ROCK AS DETERMINED BY THE ENGINEER.
9. DO NOT USE MORE THAN 4 DIFFERENT REINFORCEMENT STRENGTHS FOR EACH STANDARD TEMPORARY WALL.
10. GEOGRIDS ARE TYPICALLY APPROVED FOR ULTIMATE TENSILE STRENGTHS IN THE MACHINE DIRECTION (MD) AND CROSS-MACHINE DIRECTION (CD) OR SHORT-TERM DESIGN STRENGTHS FOR A 3-YEAR DESIGN LIFE IN THE MD BASED ON MATERIAL TYPE. THE LIST OF APPROVED GEOGRIDS WITH DESIGN STRENGTHS IS AVAILABLE FROM:
    connect.ncdot.gov/resources/Materials/Pages/SoilsLaboratory.aspx
    DEFINE MATERIAL TYPE FROM THE WEBSITE ABOVE FOR SHORING BACKFILL AS FOLLOWS:

| MATERIAL TYPE | SHORING BACKFILL |
|---|---|
| BORROW | A-2-4 SOIL |
| FINE AGGREGATE | CLASS II, TYPE I OR CLASS III SELECT MATERIAL |
| COARSE AGGREGATE | CLASS V OR VI SELECT MATERIAL |

    IF THE WEBSITE DOES NOT LIST A SHORT-TERM DESIGN STRENGTH FOR AN APPROVED GEOGRID, USE A SHORT-TERM DESIGN STRENGTH EQUAL TO THE ULTIMATE TENSILE STRENGTH DIVIDED BY 3.5 FOR THE GEOGRID REINFORCEMENT.
11. FOR GEOGRID REINFORCEMENT WITH LESS THAN 100% COVERAGE, STAGGER REINFORCEMENT SO GEOGRIDS ARE CENTERED OVER GAPS IN THE REINFORCEMENT LAYER BELOW.
12. AT THE CONTRACTOR'S OPTION, REINFORCEMENT MAY BE INSTALLED WITH THE MD PARALLEL TO THE WALL FACE IF BOTH OF THE FOLLOWING CONDITIONS OCCUR:
    - W (REINFORCEMENT ROLL WIDTH) ≥ (MINIMUM REQUIRED REINFORCEMENT LENGTH) + 4.5' AND
    - REINFORCEMENT STRENGTH IN CD ≥ MINIMUM REQUIRED REINFORCEMENT STRENGTH IN MD.
13. SUBMIT A "STANDARD TEMPORARY WALL SELECTION FORM" AT LEAST 7 DAYS BEFORE STARTING TEMPORARY WALL CONSTRUCTION. STANDARD SHORING SELECTION FORMS ARE AVAILABLE FROM:
    connect.ncdot.gov/resources/Geological/Pages/Geotech_Forms_Details.aspx
14. DO NOT PLACE SHORING BACKFILL OR REINFORCEMENT UNTIL EXCAVATION DIMENSIONS AND FOUNDATION MATERIAL ARE APPROVED.
15. FOR STANDARD TEMPORARY WALLS WITH PILE FOUNDATIONS IN THE REINFORCED ZONE, DRIVE PILES THROUGH REINFORCEMENT AFTER CONSTRUCTING TEMPORARY WALLS.
16. DO NOT SPLICE OR OVERLAP REINFORCEMENT SO SEAMS ARE PARALLEL TO THE WALL FACE.
17. CONTACT THE ENGINEER WHEN EXISTING OR FUTURE OBSTRUCTIONS SUCH AS FOUNDATIONS, PAVEMENTS, PIPES, INLETS OR UTILITIES WILL INTERFERE WITH REINFORCEMENT.
18. FOR STANDARD TEMPORARY WALLS WITH INTERIOR ANGLES LESS THAN 90 DEGREES, WRAP GEOSYNTHETICS AT ACUTE CORNERS AS DIRECTED BY THE ENGINEER.
19. FOR STANDARD TEMPORARY WALLS WITH TOP OF WALL WITHIN 5' OF FINISHED GRADE, REMOVE TOP FACING AND INCORPORATE TOP REINFORCEMENT LAYER INTO FILL WHEN PLACING FILL IN FRONT OF WALL.

STATE OF NORTH CAROLINA DEPARTMENT OF TRANSPORTATION

**GEOTECHNICAL ENGINEERING UNIT**

**STATE OF NORTH CAROLINA**
**DEPARTMENT OF TRANSPORTATION**
**RALEIGH**

**STANDARD DRAWING NO. 1801.02**

STANDARD
TEMPORARY WALL
SHEET 2 OF 3

DATE: 11-19-13

| PROJECT REFERENCE NO. | SHEET |
|---|---|
| P-5204 | 2-O |

GEOTECHNICAL ENGINEER

NORTH CAROLINA PROFESSIONAL SEAL 22246 ENGINEER SCOTT A. HIDDEN

DocuSigned by: Scott A. Hidden 7/23/2014
F760CAEB9C4D4D... SIGNATURE DATE

ENGINEER

SIGNATURE DATE

| SLOPE OR SURCHARGE CASE | GROUNDWATER DEPTH BELOW BOTTOM OF REINFORCED ZONE (SEE NOTE 6 ON SHEET 2) (FT) | SHORING BACKFILL TYPE IN THE REINFORCED ZONE (SEE NOTE 7 ON SHEET 2) | H – WALL HEIGHT (FT) | | | | | | | | | | | | | | | | | | | | | | | | |
|---|---|---|---|---|---|---|---|---|---|---|---|---|---|---|---|---|---|---|---|---|---|---|---|---|---|---|---|
| | | | < 4 | 5 | 6 | 7 | 8 | 9 | 10 | 11 | 12 | 13 | 14 | 15 | 16 | 17 | 18 | 19 | 20 | 21 | 22 | 23 | 24 | 25 | 26 | 27 | 28 |
| SLOPE CASE | > 0 | CLASS II,TYPE I, CLASS III,CLASS V OR CLASS VI SELECT MATERIAL | 6 | 6 | 7 | 8 | 9 | 11 | 12 | 13 | 13 | 14 | 15 | 16 | 17 | 18 | 19 | 20 | 21 | 22 | 23 | 24 | 24 | 25 | 26 | 27 | 27 |
| SURCHARGE CASE | > 0 TO 7 FOR H < 20′<br>> 0 TO 10 FOR H ≥ 20′ | ALL SHORING BACKFILL TYPES | 6 | 7 | 7 | 8 | 8 | 9 | 9 | 10 | 11 | 11 | 12 | 12 | 13 | 14 | 14 | 15 | 16 | 17 | 17 | 18 | 19 | 19 | 20 | 21 | 22 |
| | > 7 FOR H < 20′<br>> 10 FOR H ≥ 20′ | A-2-4 SOIL | 6 | 6 | 7 | 8 | 8 | 9 | 9 | 10 | 11 | 11 | 12 | 12 | 13 | 14 | 14 | 15 | 16 | 16 | 17 | 18 | 18 | 19 | 20 | 20 | 21 |
| | | CLASS II,TYPE I OR CLASS III SELECT MATERIAL | 6 | 6 | 7 | 7 | 8 | 8 | 9 | 10 | 10 | 11 | 11 | 12 | 12 | 13 | 14 | 15 | 15 | 16 | 16 | 17 | 17 | 18 | 18 | 19 | 20 |
| | | CLASS V OR CLASS VI SELECT MATERIAL | 6 | 6 | 7 | 7 | 7 | 8 | 8 | 9 | 9 | 10 | 10 | 11 | 12 | 13 | 13 | 14 | 14 | 15 | 15 | 16 | 17 | 17 | 18 | 19 | 19 |

## L – MINIMUM REQUIRED REINFORCEMENT LENGTH (FT)

(FOR ALL REINFORCEMENT TYPES)

| WALL HEIGHT (H) + EMBEDMENT (FT) | NUMBER OF REINFORCEMENT LAYERS* |
|---|---|
| 2.5 – 4 | 3 |
| 4 – 5.5 | 4 |
| 5.5 – 7 | 5 |
| 7 – 8.5 | 6 |
| 8.5 – 10 | 7 |
| 10 – 11.5 | 8 |
| 11.5 – 13 | 9 |
| 13 – 14.5 | 10 |
| 14.5 – 16 | 11 |
| 16 – 17.5 | 12 |
| 17.5 – 19 | 13 |
| 19 – 20.5 | 14 |
| 20.5 – 22 | 15 |
| 22 – 23.5 | 16 |
| 23.5 – 25 | 17 |
| 25 – 26.5 | 18 |
| 26.5 – 28 | 19 |
| 28 – 29.5 | 20 |

*BASED ON VERTICAL REINFORCEMENT SPACING SHOWN ON SHEET 1.

| REINFORCEMENT LAYER NUMBER* | SHORING BACKFILL TYPE IN THE REINFORCED ZONE (SEE NOTE 7 ON SHEET 2) | | | | |
|---|---|---|---|---|---|
| | SLOPE CASE | | SURCHARGE CASE | | |
| | CLASS II,TYPE I OR CLASS III SELECT MATERIAL | CLASS V SELECT MATERIAL | A-2-4 SOIL | CLASS II,TYPE I OR CLASS III SELECT MATERIAL | CLASS V SELECT MATERIAL |
| 1 | 2400 | 2400 | 2400 | 2400 | 2400 |
| 2 | 2400 | 2400 | 2400 | 2400 | 2400 |
| 3 | 2400 | 2400 | 2400 | 2400 | 2400 |
| 4 | 2400 | 2400 | 2500 | 2400 | 2400 |
| 5 | 2500 | 2400 | 3000 | 2400 | 2400 |
| 6 | 3000 | 2400 | 3500 | 2800 | 2400 |
| 7 | 3500 | 2700 | 4000 | 3200 | 2600 |
| 8 | 4000 | 3100 | 4500 | 3600 | 2900 |
| 9 | 4500 | 3500 | 5000 | 4000 | 3200 |
| 10 | 5000 | 3900 | 5500 | 4400 | 3500 |
| 11 | 5500 | 4300 | 6000 | 4800 | 3800 |
| 12 | 6000 | 4700 | 6500 | 5200 | 4100 |
| 13 | 6500 | 5100 | 7000 | 5600 | 4400 |
| 14 | 7000 | 5400 | 7500 | 6000 | 4700 |
| 15 | 7500 | 5800 | 8000 | 6400 | 5000 |
| 16 | 8000 | 6200 | 8500 | 6800 | 5300 |
| 17 | 8500 | 6600 | 9000 | 7200 | 5600 |
| 18 | 9000 | 7000 | 9500 | 7600 | 5900 |
| 19 | 9500 | 7400 | 10000 | 8000 | 6200 |
| 20 | 10000 | 7800 | 10500 | 8400 | 6500 |

GEOTEXTILE REINFORCEMENT
ULTIMATE TENSILE STRENGTH (LB/FT)

| REINFORCEMENT LAYER NUMBER* | SHORING BACKFILL TYPE IN THE REINFORCED ZONE (SEE NOTE 7 ON SHEET 2) | | | | |
|---|---|---|---|---|---|
| | SLOPE CASE | | SURCHARGE CASE | | |
| | CLASS II,TYPE I OR CLASS III SELECT MATERIAL | CLASS V OR CLASS VI SELECT MATERIAL | A-2-4 SOIL | CLASS II,TYPE I OR CLASS III SELECT MATERIAL | CLASS V OR CLASS VI SELECT MATERIAL |
| 1 | 240 | 200 | 340 | 290 | 240 |
| 2 | 380 | 310 | 520 | 430 | 350 |
| 3 | 530 | 420 | 700 | 570 | 460 |
| 4 | 690 | 550 | 870 | 720 | 570 |
| 5 | 860 | 690 | 1050 | 860 | 680 |
| 6 | 1030 | 830 | 1220 | 1000 | 790 |
| 7 | 1200 | 970 | 1400 | 1150 | 900 |
| 8 | 1370 | 1110 | 1580 | 1290 | 1010 |
| 9 | 1550 | 1240 | 1750 | 1430 | 1120 |
| 10 | 1720 | 1380 | 1930 | 1580 | 1230 |
| 11 | 1890 | 1520 | 2100 | 1720 | 1340 |
| 12 | 2060 | 1660 | 2280 | 1860 | 1450 |
| 13 | 2240 | 1800 | 2450 | 2010 | 1560 |
| 14 | 2410 | 1940 | 2630 | 2150 | 1670 |
| 15 | 2580 | 2080 | 2800 | 2290 | 1780 |
| 16 | 2750 | 2220 | 2980 | 2440 | 1890 |
| 17 | 2930 | 2360 | 3160 | 2580 | 2000 |
| 18 | 3100 | 2500 | 3330 | 2720 | 2110 |
| 19 | 3270 | 2640 | 3510 | 2860 | 2220 |
| 20 | 3440 | 2780 | 3690 | 3000 | 2330 |

GEOGRID REINFORCEMENT
SHORT-TERM DESIGN STRENGTH (LB/FT)
(SEE NOTE 10 ON SHEET 2.)

MINIMUM REQUIRED REINFORCEMENT STRENGTH IN MD
(SEE NOTE 9 ON SHEET 2.)
*SEE PARTIAL ELEVATION ON SHEET 1
FOR REINFORCEMENT LAYER NUMBERING.

STATE OF NORTH CAROLINA DEPARTMENT OF TRANSPORTATION

**GEOTECHNICAL ENGINEERING UNIT**

STATE OF NORTH CAROLINA
DEPARTMENT OF TRANSPORTATION
RALEIGH

STANDARD DRAWING NO. 1801.02

STANDARD
TEMPORARY WALL
SHEET 3 OF 3

DATE: 11-19-13

$$$$$$SYSTIME$$$$$
$$$$$$$$$$$$$$$DGN$$$$$$$$$$$$$$$$
$$$$USERNAME$$$$

DCN
0353DEL_P15

STATE OF
NORTH CAROLINA
DEPT. OF TRANSPORTATION
DIVISION OF HIGHWAYS
RALEIGH, N.C.

ENGLISH DETAIL DRAWING FOR
**STRUCTURE ANCHOR UNITS**
GUARDRAIL ANCHOR UNIT, TYPE III FOR ATTACHMENT TO
RAIL ON BRIDGE - SUB REGIONAL TIER

SHEET 2 OF 7
**862d03**

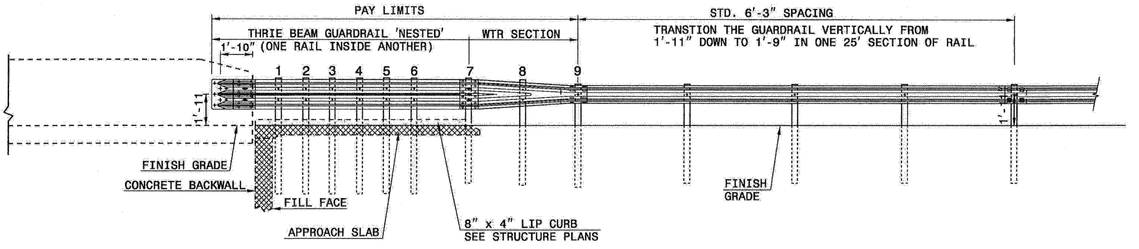


**ELEVATION**

NOTE:
**POST NOT REQUIRED FOR SKEW ANGLES GREATER THAN 150° OR LESS THAN 30° UNLESS OTHERWISE DIRECTED BY THE ENGINEER.
*THE DISTANCE FROM END OF BRIDGE RAIL TO CENTER LINE OF THE FIRST POST SHOULD BE 11½" IF CONCRETE BACKWALL IS NOT PRESENT.
-SHOULDER BERM GUTTER MUST BE INSTALLED TO THE LIMITS 8" x 4" LIP CURB IS SHOWN IF ANCHOR UNIT IS NOT ADJACENT TO AN APPROACH SLAB.
-MEASURE GUARDRAIL HEIGHT FROM THE TOP OF ADJACENT SURFACE (SHOULDER, BERM, OR GUTTER).
-LAP JOINTS IN THE DIRECTION OF TRAFFIC FLOW.
-SEE SHEET 5 FOR POST SECTIONS 1 THRU 9.

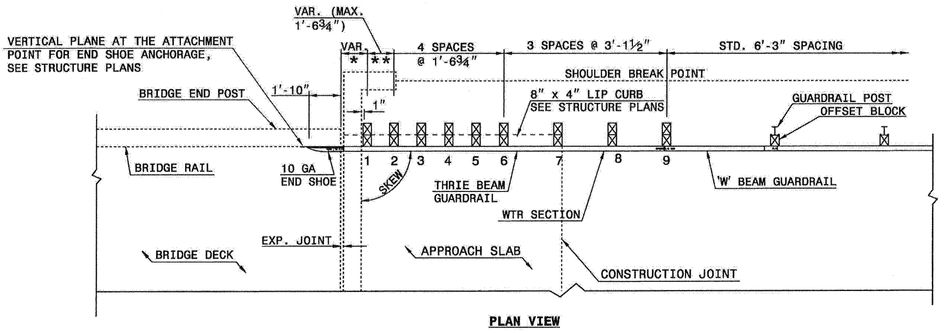


**PLAN VIEW**

## GUARDRAIL ANCHOR UNIT, TYPE III FOR ATTACHMENT TO RAIL ON BRIDGE - SUB REGIONAL TIER


STATE OF
NORTH CAROLINA
DEPT. OF TRANSPORTATION
DIVISION OF HIGHWAYS
RALEIGH, N.C.

ENGLISH DETAIL DRAWING FOR
**STRUCTURE ANCHOR UNITS**
GUARDRAIL ANCHOR UNIT, TYPE III FOR ATTACHMENT TO
RAIL ON BRIDGE - SUB REGIONAL TIER

SHEET 2 OF 7
**862d03**


STATE OF
NORTH CAROLINA
DEPT. OF TRANSPORTATION
DIVISION OF HIGHWAYS
RALEIGH, N.C.

ENGLISH DETAIL DRAWING FOR
**STRUCTURE ANCHOR UNITS**
GUARDRAIL ANCHOR UNIT, TYPE III

SHEET 3 OF 7
**862d03**

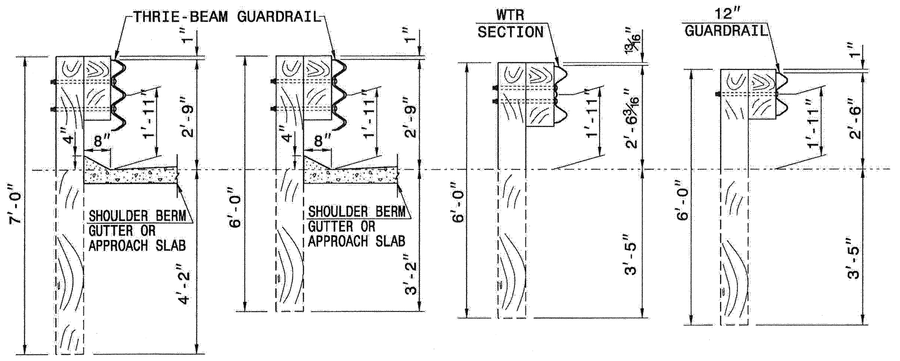


**SECTION OF THRIE BEAM POSTS 1 THRU 6**

**SECTION OF THRIE BEAM POST 7**

**SECTION OF WTR BEAM POST 8**

**SECTION OF 'W' BEAM POST 9**

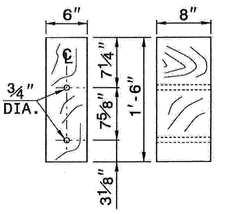


**THRIE BEAM OFFSET BLOCK**

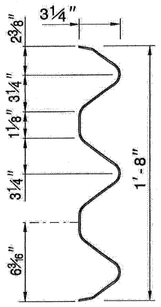


**THRIE-BEAM SECTION**

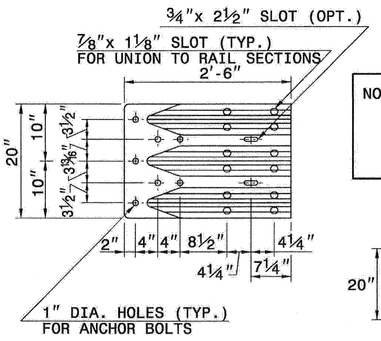


**END SHOE**

NOTE: THE MID POST AND OFFSET BLOCK OF THE WTR SECTION WILL REQUIRE SPECIAL BOLT HOLE DRILLING IN THE THRIE BEAM OFFSET BLOCK AND LINE POST.

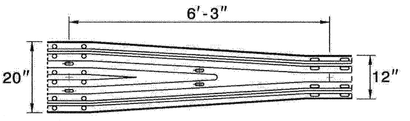


**WTR SECTION**
ELEVATION VIEW

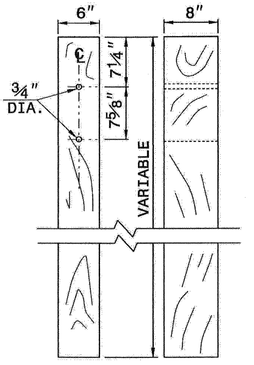


**THRIE BEAM LINE POST**


STATE OF
NORTH CAROLINA
DEPT. OF TRANSPORTATION
DIVISION OF HIGHWAYS
RALEIGH, N.C.

ENGLISH DETAIL DRAWING FOR
**STRUCTURE ANCHOR UNITS**
GUARDRAIL ANCHOR UNIT, TYPE III

SHEET 3 OF 7
**862d03**


**CONTRACT STANDARDS AND DEVELOPMENT UNIT**
Office 919-707-6950 FAX 919-250-4119

**SEE TITLE BLOCK**

ORIGINAL BY: J. HOWERTON DATE: 06-22-12
MODIFIED BY: DATE:
CHECKED BY: DATE:
FILE SPEC.:

NORTH CAROLINA PROFESSIONAL SEAL 02968 ENGINEER

PROJECT REFERENCE NO. P-5204
SHEET NO. 2-P

DCN 0353DEL_P15

| PROJECT REFERENCE NO. | SHEET NO. |
| --- | --- |
| P-5204 | 2-Q |

ENGLISH DETAIL DRAWING FOR
STRUCTURE ANCHOR UNIT
GUARDRAIL ANCHOR UNIT TYPE B-77
FOR F-SHAPE BARRIER
STATE OF NORTH CAROLINA DEPT. OF TRANSPORTATION DIVISION OF HIGHWAYS RALEIGH, N.C.
SHEET 5 OF 7 862D03

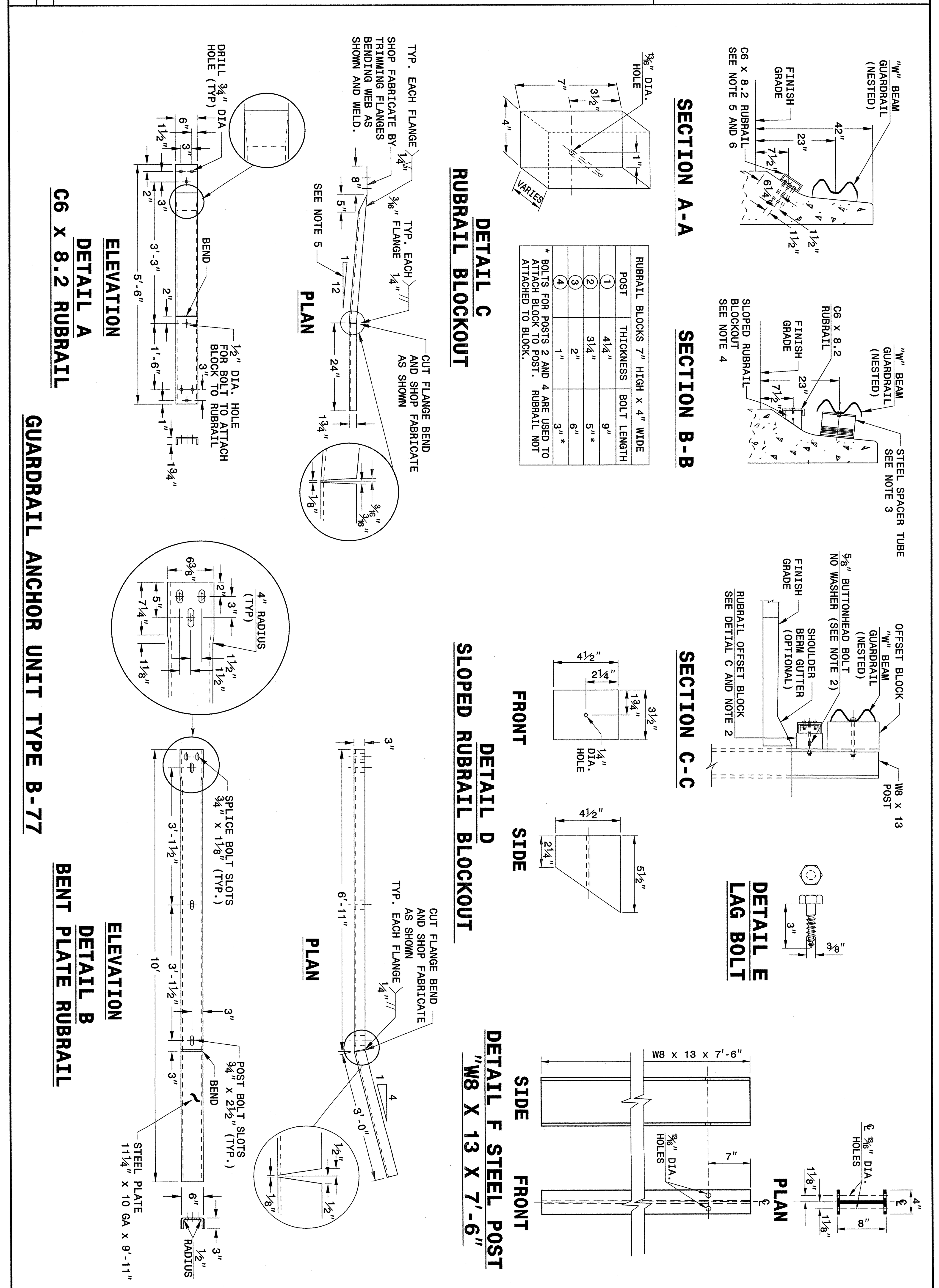


| RUBRAIL BLOCKS 7" HIGH x 4" WIDE | | |
| --- | --- | --- |
| POST | THICKNESS | BOLT LENGTH |
| (1) | 4¼" | 9" |
| (2) | 3¼" | 5" * |
| (3) | 2" | 6" |
| (4) | 1" | 3" * |

* BOLTS FOR POSTS 2 AND 4 ARE USED TO ATTACH BLOCK TO POST. RUBRAIL NOT ATTACHED TO BLOCK.

ENGLISH DETAIL DRAWING FOR
**STRUCTURE ANCHOR UNIT**
GUARDRAIL ANCHOR UNIT TYPE B-77
FOR F-SHAPE BARRIER

STATE OF
NORTH CAROLINA
DEPT. OF TRANSPORTATION
DIVISION OF HIGHWAYS
RALEIGH, N.C.

SHEET 5 OF 7
**862D03**

ENGLISH DETAIL DRAWING FOR
GUARDRAIL ANCHOR UNIT
GUARDRAIL ANCHOR UNIT TYPE B-77
FOR F-SHAPE BARRIER
STATE OF NORTH CAROLINA DEPT. OF TRANSPORTATION DIVISION OF HIGHWAYS RALEIGH, N.C.
SHEET 4 OF 7 862D03

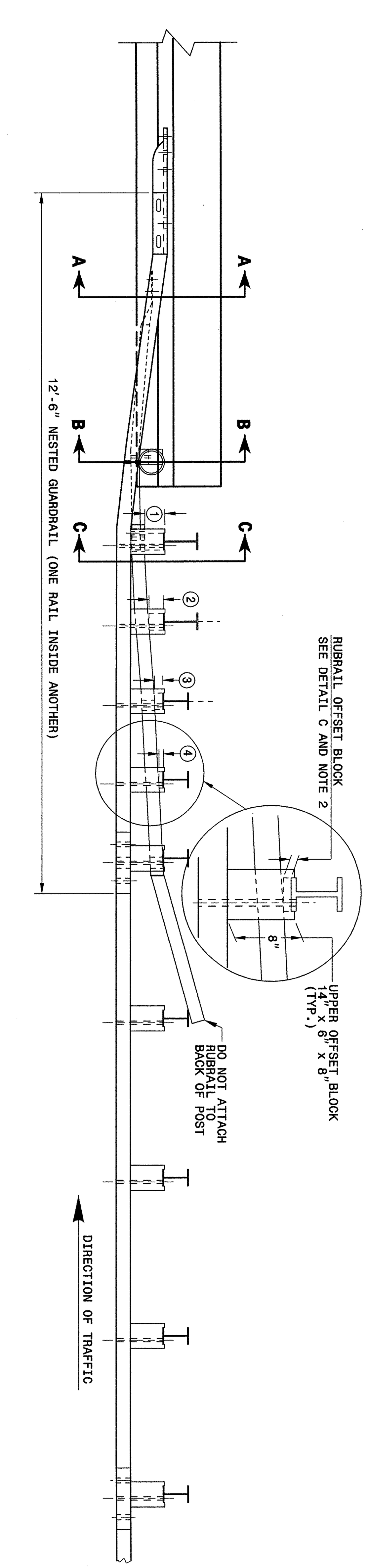


GENERAL NOTES:

1) POSTS 1 THROUGH 5 REQUIRE AN ADDITIONAL HOLE TO ATTACH LOWER BLOCKOUTS AND/OR RUBRAIL.
2) RUBRAIL BLOCKOUTS LOCATED ON POSTS 1 THROUGH 4 ARE OFFSET DRILLED AND SECURED WITH 5/8" BUTTONHEAD BOLTS (SEE CHART FOR BOLT LENGTHS). SECURE BLOCKS ONLY TO POSTS 2 AND 4. SECURE RUBRAIL AND BLOCKOUTS TO POSTS 1 AND 3. RUBRAIL IS SECURED TO POST 5 WITH A 5/8" x 4½" BUTTONHEAD BOLT. RUBRAIL IS FLARED TO BACK OF POST 6 AND NOT SECURED.
3) STEEL SPACER TUBE IS A SCHEDULE 40 GALVANIZED PIPE 6" INSIDE DIAMETER x 9" LONG. ATTACH TUBE TO GUARDRAIL ONLY WITH 5/8" x 1¼" LONG BUTTONHEAD BOLT AND RECTANGULAR PLATE WASHER.
4) SEE DETAIL D FOR SLOPED RUBRAIL BLOCKOUT. BLOCKOUT IS ATTACHED TO RAIL ELEMENT ONLY. USE 3/8" x 3" LAG BOLT WITH FLAT WASHER.
5) SHOP FABRICATE THE C6 x 8.2 RUBRAIL END TO BE CONSISTENT WITH THE SLOPE OF THE F SHAPE AND ATTACH FLUSH WITH THE SLOPED TOE OF THE BARRIER OR BRIDGE RAIL.
6) ANCHORAGE:
   (a) AT EXISTING BRIDGE RAIL AND NEW OR EXISTING BARRIERS, ANCHOR RUBRAIL USING THREE 5/8" x 6" CHEMICALLY ANCHORED BOLTS WITH WASHERS. MAXIMUM PROJECTION FOR BOLTS IS ½".
   (b) AT EXISTING BRIDGE RAIL AND NEW OR EXISTING BARRIERS, ANCHOR THE W-BEAM END SHOE USING A 4 BOLT HOLD DOWN PLATE (SEE STD. DWG. 862.04). A 4 BOLT INSERT ASSEMBLY IS ALLOWED ON PRECAST REINFORCED CONCRETE BARRIER (SEE STD. DWG. 857.01). INSTALL THE W-BEAM END SHOE BEHIND THE NESTED W-BEAM ELEMENTS.
   (c) AT NEW BRIDGE RAIL, ANCHOR THE W-BEAM END SHOE AND RUBRAIL AS DETAILED ON THE STRUCTURE PLANS.
7) POSTS 1 AND 2 ARE W8 x 13, 7'-6" LONG. ALL OTHER POSTS IN THE ANCHOR UNIT ARE W6 x 8.5.

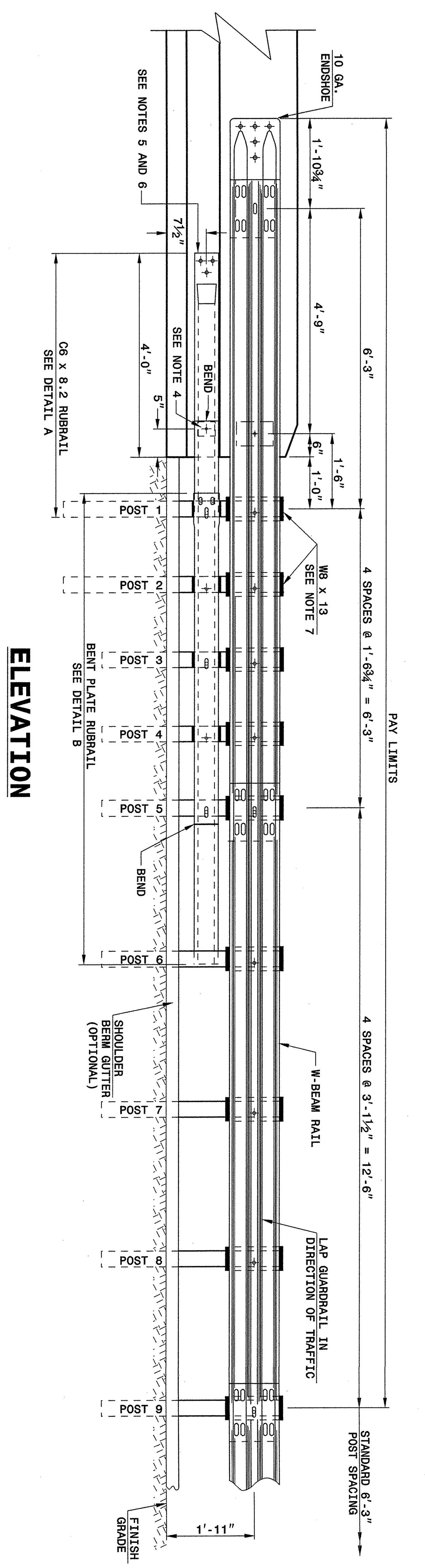


ENGLISH DETAIL DRAWING FOR
**STRUCTURE ANCHOR UNIT**
GUARDRAIL ANCHOR UNIT TYPE B-77
FOR F-SHAPE BARRIER

STATE OF
NORTH CAROLINA
DEPT. OF TRANSPORTATION
DIVISION OF HIGHWAYS
RALEIGH, N.C.

SHEET 4 OF 7
**862D03**

**CONTRACT STANDARDS AND DEVELOPMENT UNIT**
Office 919-707-6950 FAX 919-250-4119

**SEE TITLE BLOCK**

ORIGINAL BY: J HOWERTON DATE: 06-22-12
MODIFIED BY: DATE:
CHECKED BY: DATE:
FILE SPEC.:

$$$$$$SYSTIME$$$$$
$$$$$$$$$DGN$$$$$$$$$$$$$$$
$$$$USERNAME$$$$$

DCN 0353DEL_P15

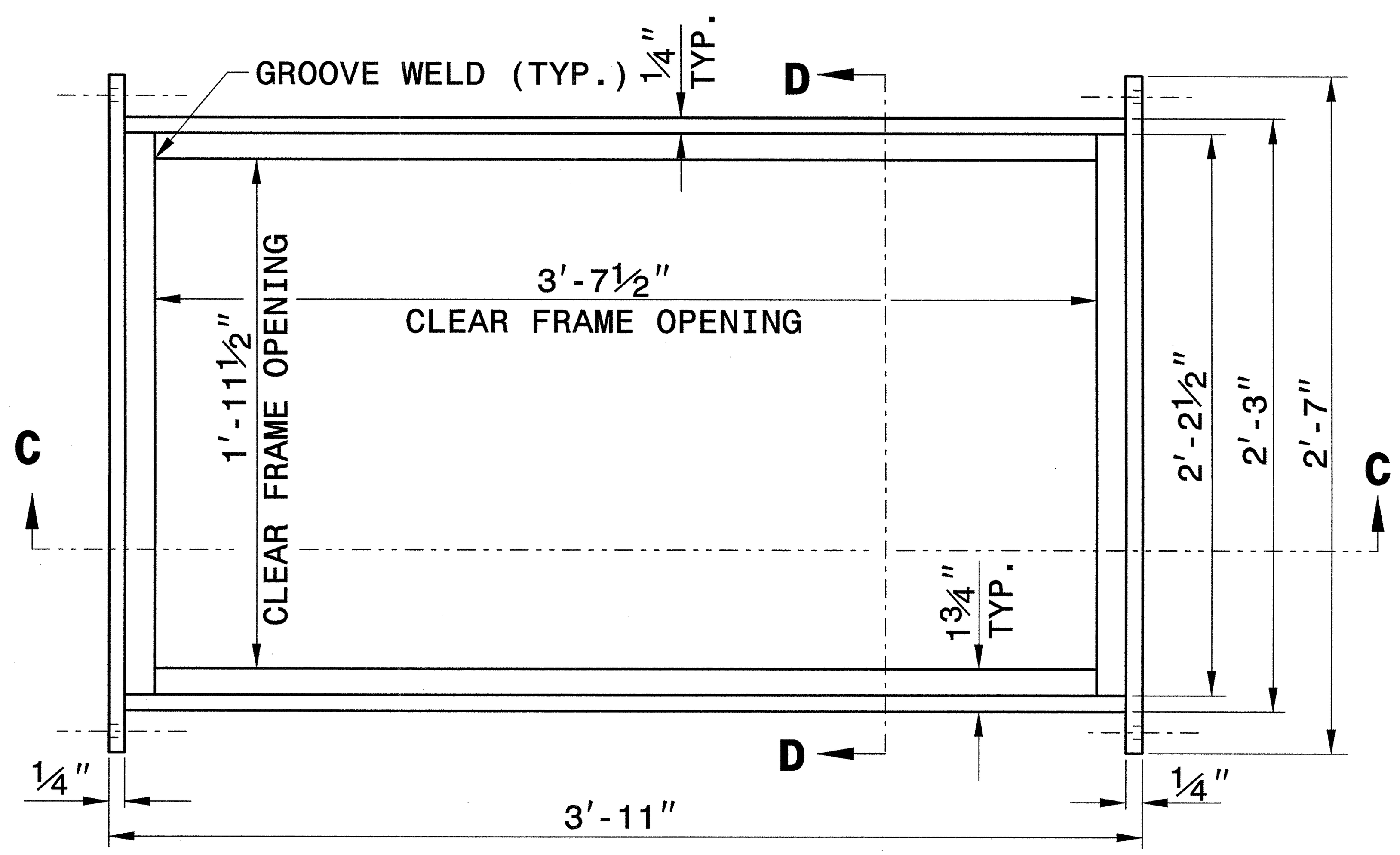


**PLAN VIEW**

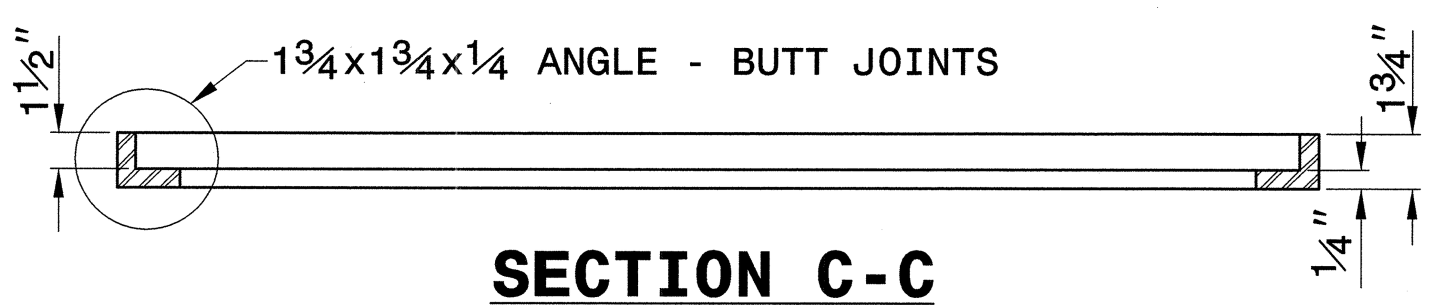


**SECTION C-C**
**FRAME**

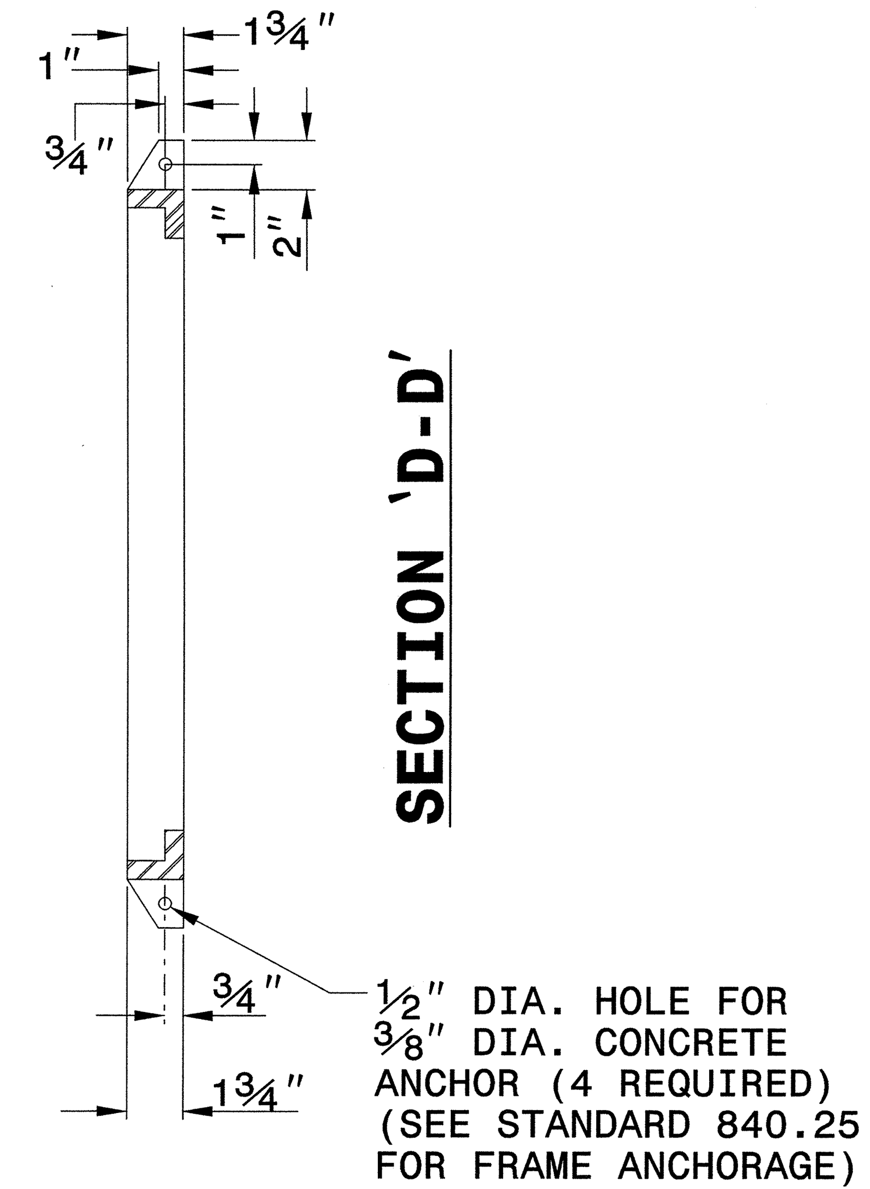


NOTES:

1. HOT DIP GALVANIZE FRAME AND GRATE IN ACCORDANCE WITH ASTM DESIGNATION A-123 AND AASHTO M-111.
2. GRATE SHOULD MEET HS-20 LOADING.
3. PROVIDE STEEL CONFORMING TO THE REQUIREMENTS OF A.S.T.M. DESIGNATION A-36.
4. WELD IN ACCORDANCE WITH THE ANSI/AASHTO/AWS D1.5 WELDING CODE. SEAL WELD ALL CONNECTIONS ALONG TOP AND BOTTOM HORIZONTAL SEAMS OF CONNECTIONS IN ADDITION TO ANY REQUIRED STRUCTURAL WELDS.
5. SEE STANDARD DRAWING 840.25 FOR FRAME ANCHORAGE.

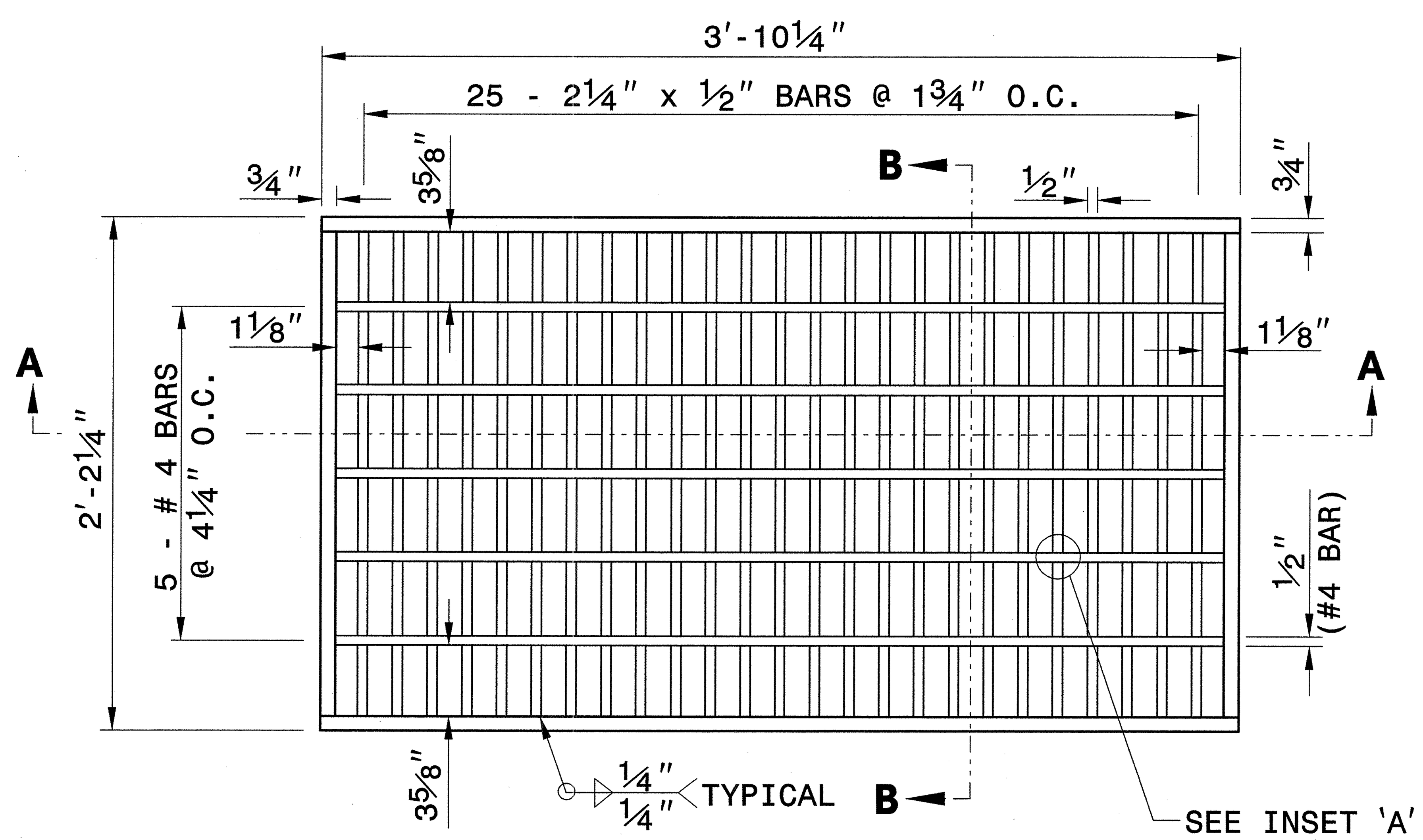


**PLAN VIEW**

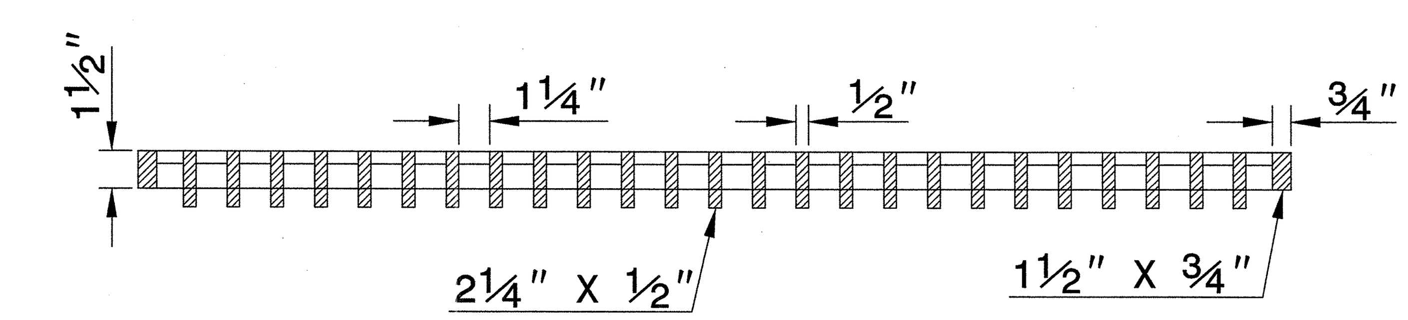


**SECTION A-A**
**GRATE**

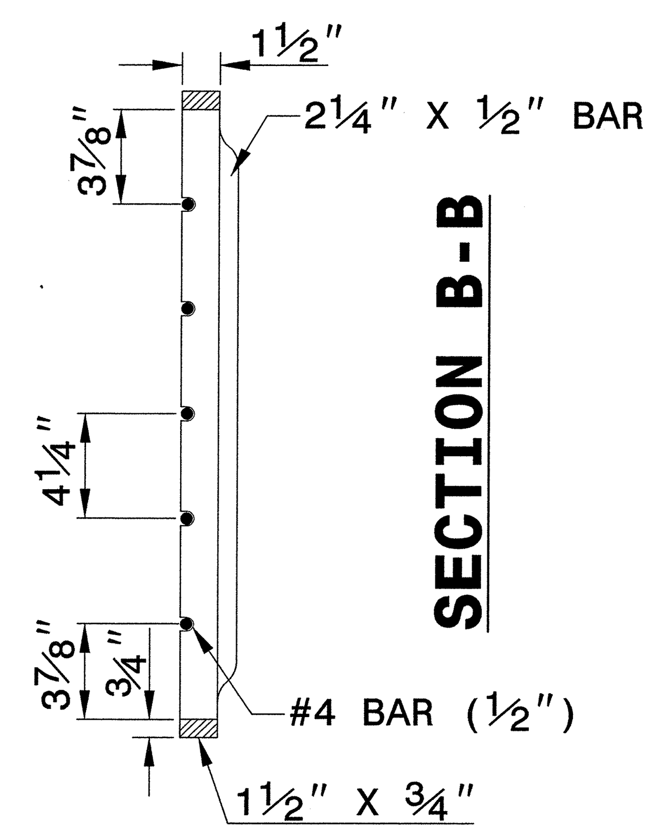


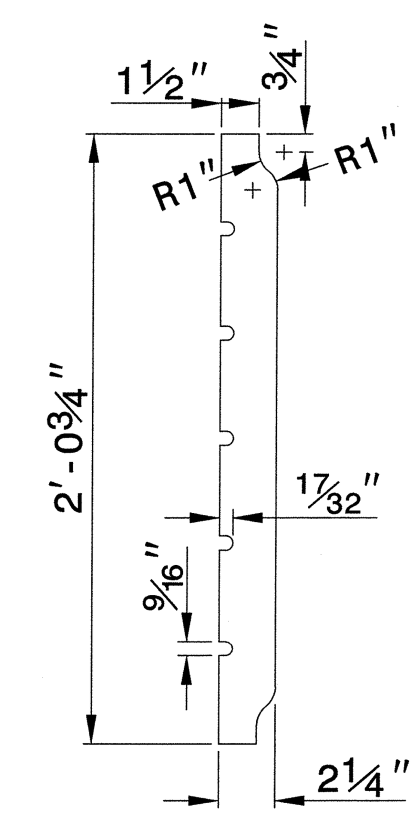


**DETAIL OF BEARING BAR**

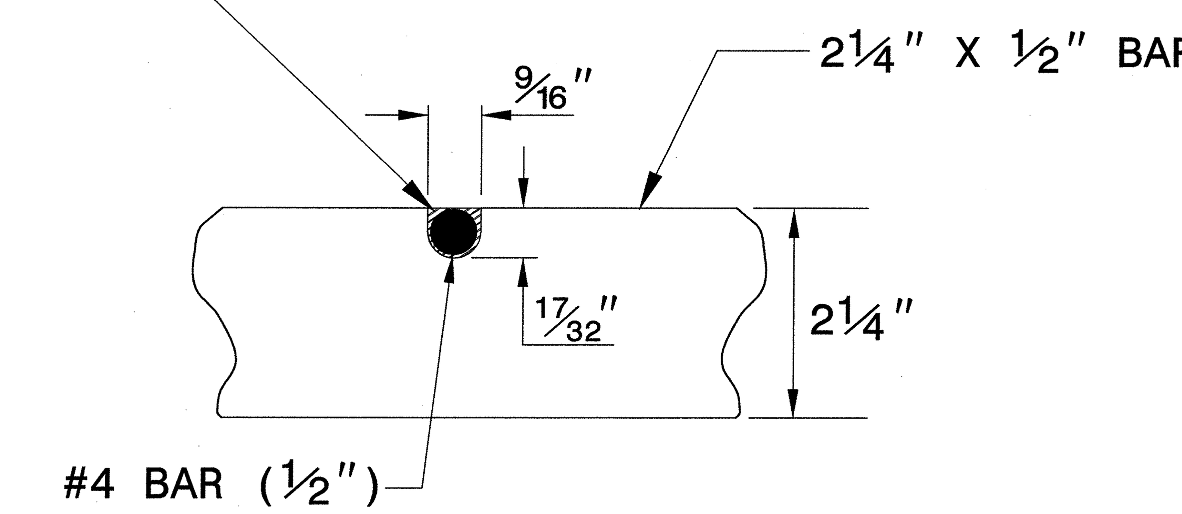


**INSET 'A'**

(17/32" X 9/16" NOTCH IN 2¼" X ½" BAR)

REVISED 10-10-02
FOR HS-20 LOADING

NORTH CAROLINA PROFESSIONAL SEAL 022966 ENGINEER JOEL S. HOWERTON
7/24/14

**CONTRACT STANDARDS AND DEVELOPMENT UNIT**
Office 919-707-6950 FAX 919-250-4119

# BICYCLE SAFE STEEL GRATE AND FRAME

| | |
|---|---|
| ORIGINAL BY: E.E. WARD | DATE: 11-12-98 |
| MODIFIED BY: E.E. WARD | DATE: 10-10-02 |
| CHECKED BY: | DATE: |
| FILE SPEC.: /usr/stand/details/bicyclesafe.dgn | |

$$$$$$SYSTIME$$$$$
$$$$$$$$$$$$$$DGN$$$$$$$$$$$$$$$$
$$$$USERNAME$$$$

| COMPUTED BY: JFO | DATE: 5/30/14 |
|---|---|
| CHECKED BY: BSL | DATE: 5/30/14 |

DCN 0353DEL_P15 4/04/06

NOTE: Invert Elevations are for Bid Purposes only and shall not be used for project construction stakeout.
See "Standard Specifications For Roads and Structures, Section 300–5".

STATE OF NORTH CAROLINA
RAIL DIVISIONS

# SUB–REGIONAL

# LIST OF PIPES, ENDWALLS, ETC. (FOR PIPES 48" & UNDER)

| PROJECT REFERENCE NO. | SHEET NO. |
|---|---|
| P-5204 | 3-A |

ATKINS 1616 EAST MILLBROOK ROAD, SUITE 310
RALEIGH, NORTH CAROLINA 27609
(919) 876-6888 NCBEES #F-0326

| STATION / SIZE / THICKNESS OR GAUGE | LOCATION (LT,RT, OR CL) | STRUCTURE NO. FROM | STRUCTURE NO. TO | TOP ELEVATION | INVERT ELEVATION | INVERT ELEVATION | SLOPE CRITICAL |
|---|---|---|---|---|---|---|---|
| -Y4- 12+29 | CL | 401 | | | 737.7 | 735.98 | |
| -Y4- 12+17 | RT | 402 | | | | | |
| -Y4- 11+38 | RT | 403 | | | | | |
| -L- 12+64 | LT | 404 | | 734.14 | 730.39 | | |
| -L- 13+07 | LT | 404 | 408 | | 730.39 | 729.46 | |
| -L- 13+50 | RT | 405 | 408 | | 733.10 | 729.46 | |
| -L- 14+88 | RT | 406 | | | | | |
| -L- 16+66 | CL | 407 | | | 722.05 | 719.30 | |
| -L- 13+50 | LT | 408 | | 737.85 | 729.46 | | |
| -L- 13+50 | LT | 408 | 409 | | 729.46 | 725.30 | |
| -L- 19+50 | LT | 410 | | 761.29 | 758.54 | | |
| -L- 19+50 | LT | 410 | 411 | | 758.54 | 729.72 | |
| -Y1- 11+34 | RT | 412 | | 758.88 | 756.12 | | |
| -Y1- 11+34 | RT | 412 | 413 | | 756.12 | 724.36 | |
| -Y1- 11+42 | CL | 414 | | | 730.60 | 725.60 | |
| -L- 28+50 | LT | 501 | | 770.00 | 767.25 | | |
| -L- 28+50 | LT | 501 | 502 | | 767.25 | 756.00 | |
| -Y2- 13+70 | LT | 503 | 504 | | | 752.26 | |
| -Y2- 15+30 | LT | 505 | | | | | |
| -L- 32+98 | RT | 506 | 507 | | 756.80 | 756.25 | |
| -L- 33+20 | RT | 507 | | 759.50 | 756.00 | | |
| -L- 33+02 | CL | 507 | 509 | | 756.00 | 755.20 | |
| -L- 33+29 | RT | 508 | 507 | | 756.75 | 756.25 | |
| -L- 34+75 | RT | 510 | | | | | |
| -Y2- 19+70 | RT | 601 | | | | | |
| -Y2- 20+27 | RT | 602 | | | | | |
| -Y2- 21+00 | LT | 603 | | | | | |
| -Y1- 14+80 | CL | 701 | | | 716.20 | 715.20 | |
| -Y3- 10+38 | CL | 702 | | | 729.12 | 728.53 | |
| -Y1- 22+00 | CL | 703 | | | 727.40 | 721.00 | |
| -Y1- 25+05 | LT | 704 | | | | | |
| -Y1- 25+88 | LT | 705 | | | | | |
| -Y1- 15+50 | LT | 706 | | 739.44 | 735.94 | | |
| -Y1- 15+50 | CL | 706 | 707 | | 735.94 | 735.83 | |
| -Y1- 15+50 | RT | 707 | | 739.33 | 735.83 | | |
| -Y1- 16+00 | RT | 707 | 708 | | 735.83 | 731.50 | |
| -Y1- 16+50 | RT | 708 | | 735.00 | 731.50 | | |
| -Y1- 17+00 | RT | 708 | 709 | | 733.75 | 728.45 | |
| -Y1- 17+50 | RT | 709 | | 732.10 | 728.45 | | |
| -Y1- 17+50 | RT | 709 | 710 | | 728.45 | 728.35 | |
| -SR1- 11+07 | CL | 801 | | | 739.78 | 738.00 | |
| -Y6- 11+80 | LT | 901 | | | | | |
| -Y6- 12+35 | CL | | | | | | |
| -Y6- 12+85 | CL | | | | | | |
| PRIVATE X-ING | CL | | | | | | |
| SHEET TOTALS | | | | | | | |

| STATION | DRAINAGE PIPE (RCP, CSP, CAAP, HDPE, or PVC) 12" | 15" | 18" | 24" | 30" | 36" | 42" | 48" | DO NOT USE RCP | DO NOT USE CSP | DO NOT USE CAAP | DO NOT USE HDPE | C.S. PIPE 12" .064 | 15" .064 | 18" .064 | 24" .064 | 36" .079 | 42" .109 | 48" .109 |
|---|---|---|---|---|---|---|---|---|---|---|---|---|---|---|---|---|---|---|---|
| -Y4- 12+29 | | | 96 | | | | | | | | | | | | | | | | |
| -Y4- 12+17 | | | | | | | | | | | | | | | | | | | |
| -Y4- 11+38 | | | | | | | | | | | | | | | | | | | |
| -L- 12+64 | | | | | | | | | | | | | | | | | | | |
| -L- 13+07 | | | 84 | | | | | | | | | | | | | | | | |
| -L- 13+50 | | | 60 | | | | | | | | | | | | | | | | |
| -L- 14+88 | | | | | | | | | | | | | | | | | | | |
| -L- 16+66 | | | | | | | | | | | | | | | | | | | |
| -L- 13+50 | | | | | | | | | | | | | | | | | | | |
| -L- 13+50 | | | | 40 | | | | | X | | | | | | | | | | |
| -L- 19+50 | | | | | | | | | | | | | | | | | | | |
| -L- 19+50 | | 76 | | | | | | | X | | | | | | | | | | |
| -Y1- 11+34 | | | | | | | | | | | | | | | | | | | |
| -Y1- 11+34 | | 68 | | | | | | | X | | | | | | | | | | |
| -Y1- 11+42 | | | | | | | | | | | | | | | | | | | |
| -L- 28+50 | | | | | | | | | | | | | | | | | | | |
| -L- 28+50 | | 48 | | | | | | | X | | | | | | | | | | |
| -Y2- 13+70 | | | | | | | | | | | | | | | | | | | |
| -Y2- 15+30 | | | | | | | | | | | | | | | | | | | |
| -L- 32+98 | | | | | | | | | | | | | | | | | | | |
| -L- 33+20 | | | | | | | | | | | | | | | | | | | |
| -L- 33+02 | | | | | | | | | | | | | | | | | | | |
| -L- 33+29 | | | | | | | | | | | | | | | | | | | |
| -L- 34+75 | | | | | | | | | | | | | | | | | | | |
| -Y2- 19+70 | | | | | | | | | | | | | | | | | | | |
| -Y2- 20+27 | | | | | | | | | | | | | | | | | | | |
| -Y2- 21+00 | | 60 | | | | | | | | | | | | | | | | | |
| -Y1- 14+80 | | | | | | | | | | | | | | | | | | | |
| -Y3- 10+38 | | | 92 | | | | | | | | | | | | | | | | |
| -Y1- 22+00 | | | | 100 | | | | | | | | | | | | | | | |
| -Y1- 25+05 | | | | | | | | | | | | | | | | | | | |
| -Y1- 25+88 | | | | | | | | | | | | | | | | | | | |
| -Y1- 15+50 | | | | | | | | | | | | | | | | | | | |
| -Y1- 15+50 | | | | | | | | | | | | | | | | | | | |
| -Y1- 15+50 | | | | | | | | | | | | | | | | | | | |
| -Y1- 16+00 | | | | | | | | | | | | | | | | | | | |
| -Y1- 16+50 | | | | | | | | | | | | | | | | | | | |
| -Y1- 17+00 | | | | | | | | | | | | | | | | | | | |
| -Y1- 17+50 | | | | | | | | | | | | | | | | | | | |
| -Y1- 17+50 | | | | | | | | | | | | | | | | | | | |
| -SR1- 11+07 | | | | | 52 | | | | | | | | | | | | | | |
| -Y6- 11+80 | | | | | | | | | | | | | | | | | | | |
| -Y6- 12+35 | | | | | | | | | | | | | | | | | | | |
| -Y6- 12+85 | | | | | | | | | | | | | | | | | | | |
| PRIVATE X-ING | | | | | | | | | | | | | | | | | | | |
| SHEET TOTALS | | 252 | 332 | 140 | 52 | | | | | | | | | | | | | | |

| STATION | R.C. PIPE (CLASS III) 15" | 18" | 24" | 30" | 36" | 42" | 48" | R.C. PIPE (CLASS IV) 12" | 15" | 18" | 24" | 30" | 36" | 42" | 48" | **" R. C. PIPE (CLASS V) | **" R. C. PIPE CULVERTS, CONTRACTOR DESIGN PIPE | **" R. C. PIPE CULVERTS, CONTRACTOR DESIGN PIPE | 15" SIDE DRAIN PIPE | 18" SIDE DRAIN PIPE |
|---|---|---|---|---|---|---|---|---|---|---|---|---|---|---|---|---|---|---|---|---|
| -Y4- 12+29 | | | | | | | | | | | | | | | | | | | | |
| -Y4- 12+17 | | | | | | | | | | | | | | | | | | | 24 | |
| -Y4- 11+38 | | | | | | | | | | | | | | | | | | | 24 | |
| -L- 12+64 | | | | | | | | | | | | | | | | | | | | |
| -L- 13+07 | | | | | | | | | | | | | | | | | | | | |
| -L- 13+50 | | | | | | | | | | | | | | | | | | | | |
| -L- 14+88 | | | | | | | | | | | | | | | | | | | 24 | |
| -L- 16+66 | | | | | | | | | | | | | | 160 | | | | | | |
| -L- 13+50 | | | | | | | | | | | | | | | | | | | | |
| -L- 13+50 | | | | | | | | | | | | | | | | | | | | |
| -L- 19+50 | | | | | | | | | | | | | | | | | | | | |
| -L- 19+50 | | | | | | | | | | | | | | | | | | | | |
| -Y1- 11+34 | | | | | | | | | | | | | | | | | | | | |
| -Y1- 11+34 | | | | | | | | | | | | | | | | | | | | |
| -Y1- 11+42 | | | | | | | | | | 172 | | | | | | | | | | |
| -L- 28+50 | | | | | | | | | | | | | | | | | | | | |
| -L- 28+50 | | | | | | | | | | | | | | | | | | | | |
| -Y2- 13+70 | 16 | | | | | | | | | | | | | | | | | | | |
| -Y2- 15+30 | | | | | | | | | | | | | | | | | | | 20 | |
| -L- 32+98 | 40 | | | | | | | | | | | | | | | | | | | |
| -L- 33+20 | | | | | | | | | | | | | | | | | | | | |
| -L- 33+02 | | 84 | | | | | | | | | | | | | | | | | | |
| -L- 33+29 | 12 | | | | | | | | | | | | | | | | | | | |
| -L- 34+75 | 72 | | | | | | | | | | | | | | | | | | | |
| -Y2- 19+70 | | | | | | | | | | | | | | | | | | | 20 | |
| -Y2- 20+27 | | | | | | | | | | | | | | | | | | | 24 | |
| -Y2- 21+00 | | | | | | | | | | | | | | | | | | | | |
| -Y1- 14+80 | | | | | | | | | | | | | | 144 | | | | | | |
| -Y3- 10+38 | | | | | | | | | | | | | | | | | | | | |
| -Y1- 22+00 | | | | | | | | | | | | | | | | | | | | |
| -Y1- 25+05 | | | | | | | | | | | | | | | | | | | | 24 |
| -Y1- 25+88 | | | | | | | | | | | | | | | | | | | | 24 |
| -Y1- 15+50 | | | | | | | | | | | | | | | | | | | | |
| -Y1- 15+50 | 36 | | | | | | | | | | | | | | | | | | | |
| -Y1- 15+50 | | | | | | | | | | | | | | | | | | | | |
| -Y1- 16+00 | 100 | | | | | | | | | | | | | | | | | | | |
| -Y1- 16+50 | | | | | | | | | | | | | | | | | | | | |
| -Y1- 17+00 | 96 | | | | | | | | | | | | | | | | | | | |
| -Y1- 17+50 | | | | | | | | | | | | | | | | | | | | |
| -Y1- 17+50 | 16 | | | | | | | | | | | | | | | | | | | |
| -SR1- 11+07 | | | | | | | | | | | | | | | | | | | | |
| -Y6- 11+80 | | | | | | | | | | | | | | | | | | | | 20 |
| -Y6- 12+35 | | | | | | | | | | | | | | | | | | | | |
| -Y6- 12+85 | | | | | | | | | | | | | | | | | | | | |
| PRIVATE X-ING | | | | | | | | | | | | | | | | | | | | |
| SHEET TOTALS | 388 | 84 | | | | | | | | 172 | | | | 304 | | | | | 136 | 68 |

| STATION | ENDWALLS STD. 838.01, STD. 838.11 OR STD. 838.80 (UNLESS NOTED OTHERWISE) CU. YDS. R.C.P. | C.S.P. | QUANTITIES FOR DRAINAGE STRUCTURES PER EACH (0' THRU 5.0') | * TOTAL L.F. FOR PAY QUANTITY SHALL BE COL. 'A' + (1.3 X COL.'B') LIN. *FT. A 5.0' THRU 10.0' | B 10.0' AND ABOVE | C.B. STD. 840.01 OR STD. 840.02 | FRAME, GRATES AND HOOD STANDARD 840.03 TYPE OF GRATE E | F | G | | CATCH BASIN | G.D.I. TYPE "B" STD. 840.18 OR 840.27 | M.H. FRAME & COVER STD. 840.54 | J.B. STD. 840.31 OR 840.32 | G.D.I. (N.S.) FRAME WITH TWO GRATES STD. 840.29 | G.D.I. (N.S.) FRAME WITH GRATE STD. 840.24 | T.B.D.I. STD. 840.35 | BICYCLE SAFE STEEL GRATE AND FRAME (SEE SHEET 2-R FOR DETAIL) | DRAINAGE PIPE ELBOWS NO. & SIZE | CONC. COLLARS CL. "B" C.Y. STD 840.72 | CONC. & BRICK PIPE PLUG, C.Y. STD. 840.71 | PIPE REMOVAL LIN.FT. | REMARKS |
|---|---|---|---|---|---|---|---|---|---|---|---|---|---|---|---|---|---|---|---|---|---|---|---|
| -Y4- 12+29 | | | | | | | | | | | | | | | | | | | | | | 110 | EXISTING 18" RCP |
| -Y4- 12+17 | | | | | | | | | | | | | | | | | | | | | | 36 | 2 EXISTING 15" RCP |
| -Y4- 11+38 | | | | | | | | | | | | | | | | | | | | | | 32 | EXISTING 15" RCP |
| -L- 12+64 | | | 1 | | | | | | | | | 1 | | | 1 | | | | | | | | |
| -L- 13+07 | | | | | | | | | | | | | | | | | | | | | | | |
| -L- 13+50 | | | | | | | | | | | | | | | | | | | | | | 16 | EXISTING 15" RCP |
| -L- 14+88 | | | | | | | | | | | | | | | | | | | | | | 52 | EXISTING 15" RCP |
| -L- 16+66 | 9 | | | | | | | | | | | | | | | | | | | | | 52 | EXISTING 24" RCP |
| -L- 13+50 | | | 1 | 3.39 | | | | | | | | 1 | | | 1 | | | | | | | | |
| -L- 13+50 | | | | | | | | | | | | | | | | | | | 2 @ 24" | | | | |
| -L- 19+50 | | | 1 | | | | | | | | | 1 | | | 1 | | | | | | | | |
| -L- 19+50 | | | | | | | | | | | | | | | | | | | 2 @ 15" | | | 72 | 2 EXISTING 15" RCP & 1 EXISTING 12" RCP |
| -Y1- 11+34 | | | 1 | | | | | | | | | 1 | | | 1 | | | | | | | | |
| -Y1- 11+34 | | | | | | | | | | | | | | | | | | | 2 @ 15" | | | | |
| -Y1- 11+42 | | | | | | | | | | | | | | | | | | | | | | | |
| -L- 28+50 | | | 1 | | | | | | | | | 1 | | | 1 | | | | | | | | |
| -L- 28+50 | | | | | | | | | | | | | | | | | | | 2 @ 15" | | | | |
| -Y2- 13+70 | | | | | | | | | | | | | | | | | | | | 0.399 | | | |
| -Y2- 15+30 | | | | | | | | | | | | | | | | | | | | | | 44 | 2 EXISTING 15" RCP (RT & LT) |
| -L- 32+98 | | | | | | | | | | | | | | | | | | | | | | 20 | EXISTING 15" RCP |
| -L- 33+20 | | | 1 | | | | | | | | | | | | | | 1 | 1 | | | | | REMOVE EXISITNG DI |
| -L- 33+02 | | | | | | | | | | | | | | | | | | | | | | 32 | EXISTING 15" RCP |
| -L- 33+29 | | | | | | | | | | | | | | | | | | | | | | 40 | EXISTING 15" RCP |
| -L- 34+75 | | | | | | | | | | | | | | | | | | | | | | 52 | EXISTING 15" RCP |
| -Y2- 19+70 | | | | | | | | | | | | | | | | | | | | | | 40 | EXISTING 15" RCP |
| -Y2- 20+27 | | | | | | | | | | | | | | | | | | | | | | 48 | EXISTING 15" RCP |
| -Y2- 21+00 | | | | | | | | | | | | | | | | | | | | | | 60 | EXISTING 15" RCP |
| -Y1- 14+80 | 9 | | | | | | | | | | | | | | | | | | | | | | |
| -Y3- 10+38 | | | | | | | | | | | | | | | | | | | | | | | |
| -Y1- 22+00 | | | | | | | | | | | | | | | | | | | | | | | |
| -Y1- 25+05 | | | | | | | | | | | | | | | | | | | | | | 20 | EXISTING 12" RCP |
| -Y1- 25+88 | | | | | | | | | | | | | | | | | | | | | | 20 | EXISTING 12" RCP |
| -Y1- 15+50 | | | 1 | | | | | | | | | 1 | | | 1 | | | | | | | | |
| -Y1- 15+50 | | | | | | | | | | | | | | | | | | | | | | | |
| -Y1- 15+50 | | | 1 | | | | | | | | | 1 | | | 1 | | | | | | | | |
| -Y1- 16+00 | | | | | | | | | | | | | | | | | | | | | | | |
| -Y1- 16+50 | | | 1 | | | | | | | | | 1 | | | 1 | | | | | | | | |
| -Y1- 17+00 | | | | | | | | | | | | | | | | | | | | | | | |
| -Y1- 17+50 | | | 1 | | | | | | | | | | 1 | 1 | | | | | | | | | |
| -Y1- 17+50 | | | | | | | | | | | | | | | | | | | | | | | |
| -SR1- 11+07 | | | | | | | | | | | | | | | | | | | | | | 28 | EXISTING 15" CMP |
| -Y6- 11+80 | | | | | | | | | | | | | | | | | | | | | | 32 | EXISTING 12" RCP (SHT. 2-G) |
| -Y6- 12+35 | | | | | | | | | | | | | | | | | | | | | | 60 | EXISTING 15" RCP (SHT. 2-G) |
| -Y6- 12+85 | | | | | | | | | | | | | | | | | | | | | | 44 | EXISTING 15" RCP (SHT. 2-G) |
| PRIVATE X-ING | | | | | | | | | | | | | | | | | | | | | | 52 | 2 EXISTING 18" CMP (SHT. 2-F) |
| SHEET TOTALS | 18 | | 10 | 3.39 | | | | | | | | 8 | 1 | 1 | 8 | | 1 | 1 | 6 @ 15"<br>2 @ 24" | 0.399 | | 962 | |

ABBREVIATIONS

| | |
|---|---|
| C.B. | CATCH BASIN |
| N.D.I. | NARROW DROP INLET |
| D.I. | DROP INLET |
| G.D.I. | GRATED DROP INLET |
| G.D.I. (N.S.) | GRATED DROP INLET (NARROW SLOT) |
| J.B. | JUNCTION BOX |
| M.H. | MANHOLE |
| T.B.D.I. | TRAFFIC BEARING DROP INLET |
| T.B.J.B. | TRAFFIC BEARING JUNCTION BOX |

19-JUN-2014 09:34
\Roadway\NCDOT\Mcleansville\Roadway\Proj\P5204_Rdy_psh03a.dgn
$$$$USERNAME$$$$

DGN 0353DEL_P15 12/06/07

COMPUTED BY: BSL DATE: 5/30/14
CHECKED BY: DWB DATE: 5/30/14

STATE OF NORTH CAROLINA
RAIL DIVISIONS

| PROJECT REFERENCE NO. | SHEET NO. |
|---|---|
| P-5204 | 3-B |

ATKINS 1616 EAST MILLBROOK ROAD, SUITE 310 RALEIGH, NORTH CAROLINA 27609 (919) 876-6888 NCBEES #F-0326

## SUMMARY OF EARTHWORK

| STATION | STATION | UNCL. EXCAV. | UNDERCUT EXCAV. | EMBANK. +20% | BORROW | WASTE |
|---|---|---|---|---|---|---|
| -L- 10+00 | -L- 23+74.04 | 1,043 | 2,000 | 119,768 | 118,725 | 2,000 |
| -Y1- 10+12 | -Y1- 26+50.87 | 1,042 | 0 | 73,892 | 72,850 | 0 |
| -Y3- 10+12 | -Y3- 13+80 | 1,541 | 0 | 0 | 0 | 1,541 |
| -Y4- 10+80 | -Y4- 12+50 | 977 | 0 | 7 | 0 | 970 |
| -Y5- 10+00 | -Y5- 12+31 | 196 | 0 | 96 | 0 | 100 |
| -SR1- 10+00 | -SR1- 12+40 | 3 | 0 | 406 | 403 | 0 |
| -D1- 10+00 | -D1- 11+62 | 17 | 0 | 2,470 | 2,453 | 0 |
| SUBTOTALS: #1 | | 4,819 | 2,000 | 196,639 | 194,431 | 4,611 |
| | | | | | | |
| -L- 25+23.73 | -L- 36+50 | 914 | 0 | 45,538 | 44,624 | 0 |
| -Y2- 12+00 | -Y2- 23+00 | 697 | 0 | 1,153 | 456 | 0 |
| SUBTOTALS: #2 | | 1,611 | 0 | 46,691 | 45,080 | 0 |
| | | | | | | |
| -DETOUR1- 10+00 | -DETOUR1- 17+50.80 | 154 | 0 | 941 | 787 | 0 |
| -DETOUR2- 10+00 | -DETOUR2- 11+75 | 3 | 0 | 90 | 87 | 0 |
| SUBTOTALS: #3 | | 157 | 0 | 1,031 | 874 | 0 |
| | | | | | | |
| TOTALS: | | 6,587 | 2,000 | 244,361 | 240,385 | 4,611 |
| | | | | | | |
| CONTINGENCY UNDERCUT EXCAVATION PER GEOTECH | | | 1,500 | | | 1,500 |
| ESTIMATED SHOULDER MATERIAL | | | | 4,140 | 4,140 | |
| CLASS III SELECT GRANULAR MATERIAL FOR MSE BACKFILL | | | | -5,040 | -5,040 | |
| USE SUIT. WASTE TO REPLACE BORROW | | | | | -2,611 | -2,611 |
| PROJECT TOTALS: | | 6,587 | 3,500 | 243,461 | 236,874 | 3,500 |
| | | | | | | |
| REPLACE TOPSOIL ON BORROW PIT (5%) | | | | | 11,844 | |
| GRAND TOTALS: | | 6,587 | 3,500 | 243,461 | 248,717 | 3,500 |
| | | | | | | |
| SAY: | | 6,600 | 3,500 | | 248,800 | |

SELECT GRANULAR MATERIAL = 4,500 CY
DDE = 7,050 CY

## SUMMARY OF AGGREGATE SUBGRADE /STABILIZATION

| LINE | STATION | STATION | UNDERCUT EXCAV. (CY) | SUBGRADE STABILIZATION (TONS) | GEOTEXTILE FOR SOIL STABILIZATION (SY) | SELECT GRANULAR MATERIAL (CY) |
|---|---|---|---|---|---|---|
| -L- | 19+50 | 22+70 | 2,000 | | 2,000 | 2,000 |
| | | | | | | |
| CONTINGENCY | | | 1,500 | | 2,000 | 2,500 |
| EROSION CONTROL | | | | | 900 | |
| | | | | | | |
| TOTAL CY/TONS/SY: | | | 3,500 | | 4,900 | 4,500 |

Note: Approximate quantities only. Unclassified Excavation, Fine Grading, Clearing and Grubbing, Breaking of Existing Pavement, and Removal of Existing Pavement will be paid for at the contract lump sum price for *Grading.*

"N" = DISTANCE FROM EDGE OF LANE TO FACE OF GUARDRAIL.
TOTAL SHOULDER WIDTH = DISTANCE FROM EDGE OF TRAVEL LANE TO SHOULDER BREAK POINT.
FLARE LENGTH = DISTANCE FROM LAST SECTION OF PARALLEL GUARDRAIL TO END OF GUARDRAIL.
W = TOTAL WIDTH OF FLARE FROM BEGINNING OF TAPER TO END OF GUARDRAIL.
G = GATING IMPACT ATTENUATOR TYPE 350
NG = NON-GATING IMPACT ATTENUATOR TYPE 350

## SUMMARY OF EXISTING ASPHALT PAVEMENT REMOVAL

| SURVEY LINE | STATION | STATION | LOCATION LT/RT/CL | $YD^2$ |
|---|---|---|---|---|
| -L- | 15+35 | 18+20 | RT | 834.25 |
| -L- | 19+60 | 21+02 | RT | 449.16 |
| -L- | 21+20 | 25+11 | RT | 1,394.03 |
| -L- | 25+36 | 26+77 | RT | 231.00 |
| -Y1- | 21+17 | 26+35 | LT | 1,605.56 |
| -Y4- | 11+10 | 12+75 | RT | 449.67 |
| -Y6- | 11+75 | 12+44 | CL | 250.00 |
| -Y6- | 12+83 | 13+83 | CL | 271.67 |
| -Detour 1- | 10+00 | 13+49 | CL | 806.25 |
| -Detour 1- | 14+02 | 16+37 | CL | 402.70 |
| | | | | |
| | | | | |
| | | | TOTAL: | 6,694.28 |
| | | | | |
| | | | SAY: | 6,700 |

## SUMMARY OF BREAKING EXISTING ASPHALT PAVEMENT

| SURVEY LINE | STATION | STATION | LOCATION LT/RT/CL | $YD^2$ |
|---|---|---|---|---|
| -L- | 12+55 | 15+35 | CL | 755.43 |
| -L- | 26+76 | 29+77 | RT | 1020.61 |
| -Y1- | 11+28 | 12+02 | CL | 466.86 |
| | | | | |
| | | | TOTAL: | 2,242.90 |
| | | | | |
| | | | SAY: | 2,250 |

## PARCEL INDEX

| PARCEL NO. | SHEET NO. | PROPERTY OWNER NAME |
|---|---|---|
| 1 & 5 | 4 | COMMUNITY FOUNDATION REAL ESTATE MANAGEMENT FUND INC |
| 2 | 4 | EDWARD AND ETHEL ADAMS FAMILY TRUST |
| 3 | 4 | ANDREW CLEMENT |
| 4 | 4 & 7 | MELINDA COLEMAN |
| 6 | 4 | NICKY THELEN |
| 7 | 4 | JAMES GREER, JR. |
| 8 | 4 | THE COMMUNITY FOUNDATION REAL ESTATE |
| 9 | 4 | JOHN LOWE |
| 10 | 5 | GAIL MOSELEY |
| 11 | 5 | ROBERT STONE |
| 12 | 5 | NORTH CAROLINA RAILROAD COMPANY |
| 13 | 5 | MCLEANSVILLE FIRE DEPARTMENT |
| 14 | 5 | BOOKER T. WILLIAMS |
| 15 | 5 & 6 | DEBORAH HINES |
| 16 | 5 | PAUL BOONE JR. |
| 17 | 5 | CHARLES TERRY |
| 19 | 5 & 6 | MCLEANSVILLE SHOPPING CENTER CORP |
| 20 | 7 | BARBARA PEARCE ETAL |
| 21 | 7 | STEVEN L. COBB LIVING TRUST |
| 22 | 7 | STEVEN COBB |
| 23 | 7 | STEVEN L. COBB & THE RALPH MICHAEL COBB & SUSAN COBB REVOCABLE TRUST |
| 24 | 8 & 8A | JERRY KING |
| 25 | 8 & 8A | MARK WILSON |
| 26 | 8 & 8A | THOMAS BLACK |
| 27 | 8A | DEAN WILLIAMS |
| 28 | 8A | ROBERT BRADSHAAW |
| 29 | 7 | RALPH AND SUSAN COBB TRUSTEES OF SUSAN C COBB REVOCABLE LIVING TRUST |
| 30 | 7 | TERESA PINNIX |
| 31 | 4 | WILLIE FOUST |
| 32 | 6 | CHRISTOPHER WALSH |
| 33 | 8A | PAMELA BABB SYKES, TRUSTEE FOR THE EUGENE & LOUISE BULLARD LIVING TRUST |
| 34 | 2-G | WALTER SHULER, JR. |

## SHOULDER BERM GUTTER SUMMARY

| SURVEY LINE | STATION | STATION | LENGTH |
|---|---|---|---|
| -L- LT | 13+48.00 | 23+43.50 | 995.5' |
| -L- LT | 25+24.50 | 28+52.00 | 327.5' |
| -Y1- RT | 10+15.50 | 11+37.50 | 148' |
| -Y1- LT | 11+59.00 | 15+52.00 | 393' |
| -Y1- RT | 13+28.50 | 16+52.00 | 323.5' |
| | | | |
| | | | |
| | | TOTAL: | 2,187.5' |
| | | SAY: | 2,188' |

## SUMMARY OF BRIDGE WAITING PERIODS

| BRIDGE DESCRIPTION | END BENT / BENT NO. | MONTHS |
|---|---|---|
| Bridge on McLeansville Road Over NCRR Corridor | END BENT 1 | 1 |
| Bridge on McLeansville Road Over NCRR Corridor | END BENT 2 | 1 |
| | | |

Note: Observe a 1 month waiting period after constructing the MSE wall, end bent, and reinforced bridge approach fill, if applicable, before beginning approach slab construction at end bents No. 1 & 2.

## SUMMARY OF SUBSURFACE DRAINAGE

| LINE | STATION | STATION | LOCATION LT/RT/CL | DRAIN TYPE* UD/BD/SD | LF |
|---|---|---|---|---|---|
| | | | | | |
| CONTINGENCY | | | | UD | 500 |
| | | | | | |
| TOTAL LF: | | | | | 500 |

*UD=Underdrain BD=Blind Drain SD=Subsurface Drain

## GUARDRAIL SUMMARY

| SURVEY LINE | BEG. STA. | END STA. | LOCATION | LENGTH: STRAIGHT | LENGTH: SHOP CURVED | LENGTH: TEMP STRAIGHT | LENGTH: TEMP SHOP CURVED | WARRANT POINT: APPROACH END | WARRANT POINT: TRAILING END | "N" DIST. FROM E.O.L. | TOTAL SHOUL. WIDTH | FLARE LENGTH: APPROACH END | FLARE LENGTH: TRAILING END | W: APPROACH END | W: TRAILING END | ANCHORS: XI MOD | ANCHORS: XI | ANCHORS: GRAU 350 | ANCHORS: M-350 | ANCHORS: TYPE III | ANCHORS: CAT-1 | ANCHORS: TERMINAL END | ANCHORS: TEMP AT-1 | ANCHORS: TEMP B-77 | IMPACT ATTENUATOR TYPE 350: EA | IMPACT ATTENUATOR TYPE 350: G | IMPACT ATTENUATOR TYPE 350: NG | SINGLE FACED GUARDRAIL | REMOVE EXISTING GUARDRAIL | REMOVE AND STOCKPILE EXISTING GUARDRAIL | REMARKS |
|---|---|---|---|---|---|---|---|---|---|---|---|---|---|---|---|---|---|---|---|---|---|---|---|---|---|---|---|---|---|---|---|
| -L- | 13+00.00 | 23+57.50 | LT | 1,062.5 | | | | BRIDGE | 14+00.00 | 8' | 11' | | 50' | | 1' | | | 1 | | 1 | | | | | | | | | | | |
| -L- | 13+50.00 | 14+90.00 | RT | 150 | | | | 14+50.00 | 14+50.00 | 8' | 11' | 50' | 50' | 1' | 1' | | | 2 | | | | | | | | | | | | | |
| -L- | 15+21.00 | 18+67.85 | RT | 312.5 | 62.5 | | | 16+00.00 | 18+30.00 | 8' | 11' | 50' | | 1' | | | | 1 | | | | | | | | | | | | | |
| -L- | 19+06.00 | 23+91.00 | RT | 450 | 62.5 | | | 19+50.00 | BRIDGE | 8' | 11' | | | | | | | | | 1 | | | | | | | | | | | |
| -L- | 25+10.00 | 29+08.50 | LT | 400 | | | | 28+00.00 | BRIDGE | 8' | 11' | 50' | | 1' | | | | 1 | | 1 | | | | | | | | | | | |
| -L- | 25+38.00 | 29+56.00 | RT | 425 | | | | BRIDGE | 28+50.00 | 8' | 11' | | | | | | | | | 1 | 1 | | | | | | | | | | |
| -Y1- | 10+61.00 | 17+00.00 | LT | 637.5 | | | | 16+00.00 | 10+60.00 | 8' | 11' | 50' | | 1' | | | | 1 | | | | | | | | | | | | | |
| -Y1- | 10+60.00 | 12+29.00 | RT | 175 | | | | 10+60.00 | 12+00.00 | 8' | 11' | | 50' | | 1' | | | 1 | | | | | | | | | | | | | |
| -Y1- | 12+56.00 | 17+05.00 | RT | 450 | | | | 13+00.00 | 16+00.00 | 8' | 11' | 50' | 50' | 1' | 1' | | | 2 | | | | | | | | | | | | | |
| -DETOUR1- | 12+60.00 | 13+20.00 | LT | | | 25 | 50 | 12+75.00 | 12+60.00 | 2' | 5' | 12.5' | | 4' | | | | | | | | | 1 | 1 | | | | | | | TEMPORARY GUARDRAIL (SHT TMP-8) |
| -Y6- | 13+83.00 | 13+83.00 | CL | 50 | | | | | | | | | | | | | | | | | | 2 | | | | | | | | | GUARDRAIL FOR CROSSING CLOSURE (SHT 2-G) |
| -Y6- | 12+21.00 | 12+21.00 | CL | 50 | | | | | | | | | | | | | | | | | | 2 | | | | | | | | | GUARDRAIL FOR CROSSING CLOSURE (SHT 2-G) |
| SUBTOTAL: | | | | 4,162.5 | 125 | 25 | 50 | | | | | | | | | | | 9 | | 4 | 1 | 4 | 1 | 1 | | | | | | | |
| LESS 9 GRAU-350 @ 50' EACH | | | | 450 | | | | | | | | | | | | | | | | | | | | | | | | | | | |
| LESS 1 CAT-1 @ 12.5' EACH | | | | 12.5 | | | | | | | | | | | | | | | | | | | | | | | | | | | |
| LESS 1 AT-1 @ 6.25' EACH | | | | | | | 6.25 | | | | | | | | | | | | | | | | | | | | | | | | |
| LESS 1 B-77 ANCHORS @ 18.75' EACH | | | | | | 18.75 | | | | | | | | | | | | | | | | | | | | | | | | | |
| LESS 4 TYPE III ANCHORS @ 18.75' EACH | | | | 75 | | | | | | | | | | | | | | | | | | | | | | | | | | | |
| PROJECT TOTALS: | | | | 3,625 | 125 | 6.25 | 43.75 | | | | | | | | | | | 9 | | 4 | 1 | 4 | 1 | 1 | | | | | | | |
| SAY: | | | | 3,625 | 125 | 12.5 | 50 | | | | | | | | | | | 9 | | 4 | 1 | 4 | 1 | 1 | | | | | | | ADDITIONAL GURADRAIL POSTS = 5 |

18-JUN-2014 16:10
$$$$$$$$$$$$$$$

0353DEL_P15

DKN

| PROJECT REFERENCE NO. | SHEET NO. |
|---|---|
| P-5204 | 4 |
| R/W SHEET NO. | |
| ROADWAY DESIGN ENGINEER | HYDRAULICS ENGINEER |

NORTH CAROLINA PROFESSIONAL SEAL 019107 ENGINEER DAVID W. BASS 5/19/14

NORTH CAROLINA PROFESSIONAL SEAL 032721 ENGINEER JOHN F. OGDEN 6/19/14

ATKINS 1616 EAST MILLBROOK ROAD, SUITE 310 RALEIGH, NORTH CAROLINA 27609 (919) 876-6888 NCBEES #F-0326

| -L- | -Y1- | -Y4- | -Y5- | -D1- |
|---|---|---|---|---|
| PI Sta 21+31.42 | PI Sta 11+67.46 | PI Sta 11+77.40 | PI Sta 10+67.04 | PI Sta 11+14.27 |
| △ = 65° 37' 17.6" (LT) | △ = 21° 24' 37.2" (LT) | △ = 38° 47' 35.0" (LT) | △ = 90° 30' 03.2" (LT) | △ = 17° 03' 11.8" (RT) |
| D = 4° 24' 26.5" | D = 9° 32' 57.5" | D = 22° 55' 05.9" | D = 11° 4' 35.9" | D = 38° 11' 49.9" |
| L = 1,488.91' | L = 224.21' | L = 169.27' | L = 78.98' | L = 44.65' |
| T = 838.14' | T = 113.43' | T = 88.02' | T = 50.44' | T = 22.49' |
| R = 1,300.00' | R = 600.00' | R = 250.00' | R = 50.00' | R = 150.00' |
| SE = .06 | SE = SEE PLANS | SE = SEE PLANS | SE = SEE PLANS | SE = .02 |
| DS = 50MPH | DS = 40MPH | DS = 30MPH | DS = 15 MPH | |

**DETAIL A**
SPECIAL CUT DITCH
( Not to Scale)

Natural Ground, 3:1, D, 4:1 or Flatter, Front Ditch Slope
Min. D= 1.0 Ft.

FROM -L- STA. 12+00 TO -L- STA. 13+00 (LT)
FROM -Y4- STA. 10+80 TO -Y4- STA. 12+00 (LT)
FROM -Y4- STA. 10+80 TO -Y4- STA. 11+50 (RT)

**DETAIL B**
SPECIAL CUT DITCH
( Not to Scale)

Natural Ground, 3:1, D, 4:1 or Flatter, Front Ditch Slope
Min. D= 1.0 Ft.

FROM -L- STA. 11+35.59 TO -L- STA. 13+50 (RT)

**DETAIL E**
LATERAL BASE DITCH
( Not to Scale)

Natural Ground, 3:1, D, B, 3:1, b, 1'/Ft., Fill Slope
Min. D= 2.0 Ft.
B= 3.0 Ft.
b= 5.0 Ft.

FROM -L- STA. 13+50 TO -L- STA. 23+00 (LT)

**DETAIL F**
STANDARD BASE TAIL DITCH
( Not to Scale)

Natural Ground, 3:1, d, D, B, Geotextile
Min. D= 6.0 Ft.
Max. d= 2.0 Ft.
B= 4.0 Ft.
*When B is < 6.0'
Type of Liner= CLASS B Rip-Rap

-L- STA. 16+40

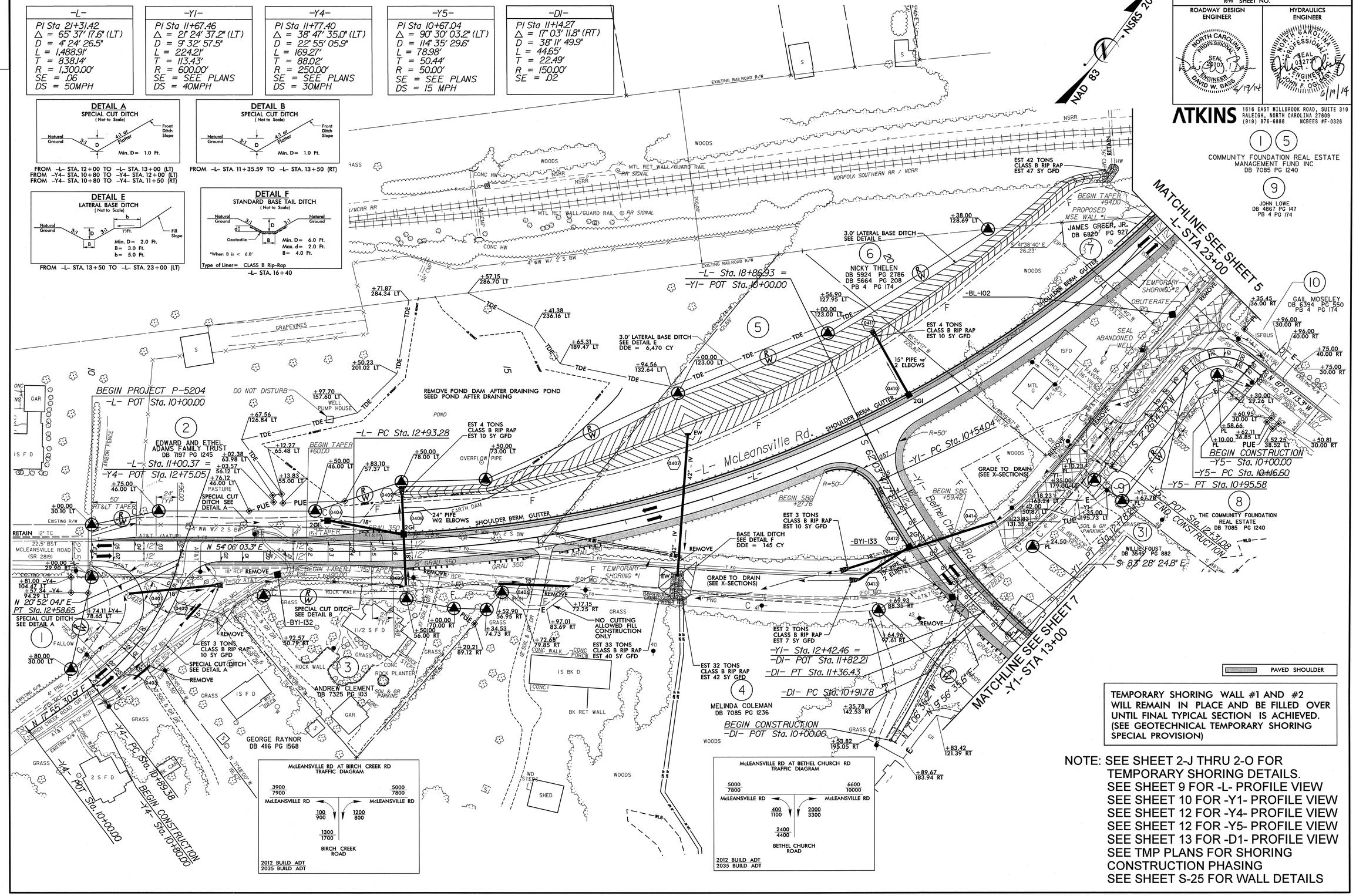


TEMPORARY SHORING WALL #1 AND #2 WILL REMAIN IN PLACE AND BE FILLED OVER UNTIL FINAL TYPICAL SECTION IS ACHIEVED. (SEE GEOTECHNICAL TEMPORARY SHORING SPECIAL PROVISION)

NOTE: SEE SHEET 2-J THRU 2-O FOR TEMPORARY SHORING DETAILS.
SEE SHEET 9 FOR -L- PROFILE VIEW
SEE SHEET 10 FOR -Y1- PROFILE VIEW
SEE SHEET 12 FOR -Y4- PROFILE VIEW
SEE SHEET 12 FOR -Y5- PROFILE VIEW
SEE SHEET 13 FOR -D1- PROFILE VIEW
SEE TMP PLANS FOR SHORING CONSTRUCTION PHASING
SEE SHEET S-25 FOR WALL DETAILS

0353DEL_P15

DCN

| PROJECT REFERENCE NO. | SHEET NO. |
|---|---|
| P-5204 | 5 |
| R/W SHEET NO. | |
| ROADWAY DESIGN ENGINEER | HYDRAULICS ENGINEER |

NORTH CAROLINA PROFESSIONAL SEAL 20107 ENGINEER DAVID W. BASS 7/28/14

NORTH CAROLINA PROFESSIONAL SEAL 032724 ENGINEER JOHN F. OGLESBY 7/28/14

ATKINS 1616 EAST MILLBROOK ROAD, SUITE 310 RALEIGH, NORTH CAROLINA 27609 (919) 876-6888 NCBEES #F-0326

NAD 83 / NSRS 2007

## DETAIL H
SPECIAL CUT DITCH
( Not to Scale)




FROM -Y2- STA. 12+50 TO -Y2- STA. 15+50 (LT)

## DETAIL J
SPECIAL CUT DITCH
( Not to Scale)




FROM -L- STA. 33+00 TO -L- STA. 34+00 (LT)
FROM -Y2- STA. 18+00 TO -Y2- STA. 22+50 (LT)

| -L- | |
|---|---|
| PI Sta 21+31.42 | PI Sta 34+42.71 |
| Δ = 65° 37' 17.6" (LT) | Δ = 7° 18' 03.1" (RT) |
| D = 4° 24' 26.5" | D = 1° 06' 06.6" |
| L = 1,488.91' | L = 662.61' |
| T = 838.14' | T = 331.75' |
| R = 1,300.00' | R = 5,200.00' |
| SE = .06 | SE = .03 |
| DS = 50MPH | DS = 50MPH |

| -Y2- | |
|---|---|
| PI Sta 12+24.08 | PI Sta 17+20.93 |
| Δ = 11° 24' 46.4" (RT) | Δ = 13° 17' 05.8" (RT) |
| D = 3° 00' 56.0" | D = 7° 09' 43.1" |
| L = 378.47' | L = 185.49' |
| T = 189.86' | T = 93.16' |
| R = 1,900.00' | R = 800.00' |
| SE = .04 | SE = SEE PLANS |
| DS = 40MPH | DS = 40MPH |




SKETCH SHOWING THE RELATIONSHIP OF THE BRIDGE TO THE PAVEMENT

## PREFORMED SCOUR HOLE
*NOT TO SCALE




STA. 28+08 -L- LT

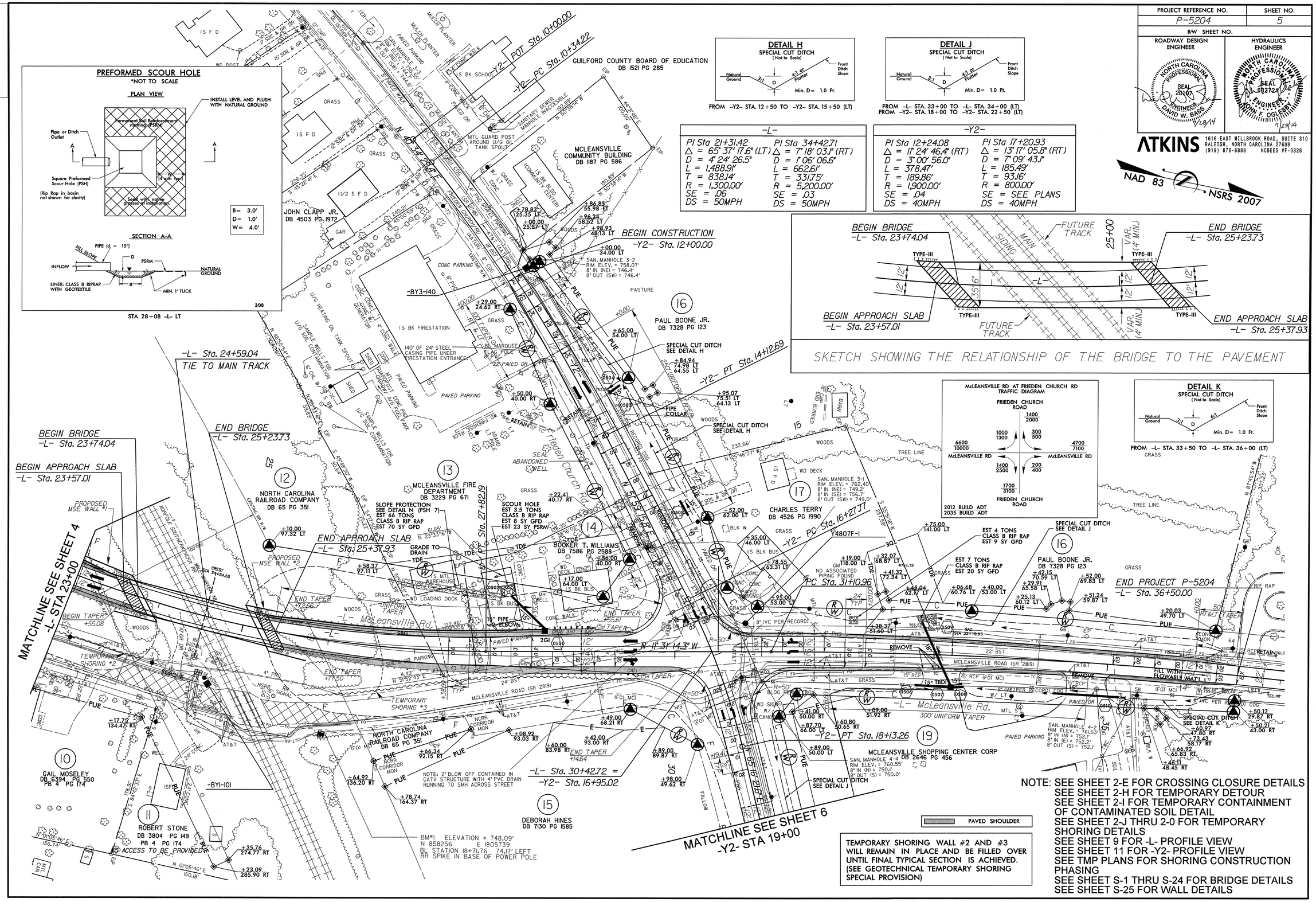


NOTE: SEE SHEET 2-E FOR CROSSING CLOSURE DETAILS
SEE SHEET 2-H FOR TEMPORARY DETOUR
SEE SHEET 2-I FOR TEMPORARY CONTAINMENT OF CONTAMINATED SOIL DETAIL
SEE SHEET 2-J THRU 2-O FOR TEMPORARY SHORING DETAILS
SEE SHEET 9 FOR -L- PROFILE VIEW
SEE SHEET 11 FOR -Y2- PROFILE VIEW
SEE TMP PLANS FOR SHORING CONSTRUCTION PHASING
SEE SHEET S-1 THRU S-24 FOR BRIDGE DETAILS
SEE SHEET S-25 FOR WALL DETAILS

| PROJECT REFERENCE NO. | SHEET NO. |
|---|---|
| P-5204 | 6 |
| R/W SHEET NO. | |
| ROADWAY DESIGN ENGINEER | HYDRAULICS ENGINEER |

NORTH CAROLINA PROFESSIONAL SEAL 20107 ENGINEER DAVID W. BASS 6/19/14

NORTH CAROLINA PROFESSIONAL SEAL 032721 ENGINEER JOHN F. OGLESBY 6/19/14

ATKINS 1616 EAST MILLBROOK ROAD, SUITE 310 RALEIGH, NORTH CAROLINA 27609 (919) 876-6888 NCBEES #F-0326

0353DEL_P15

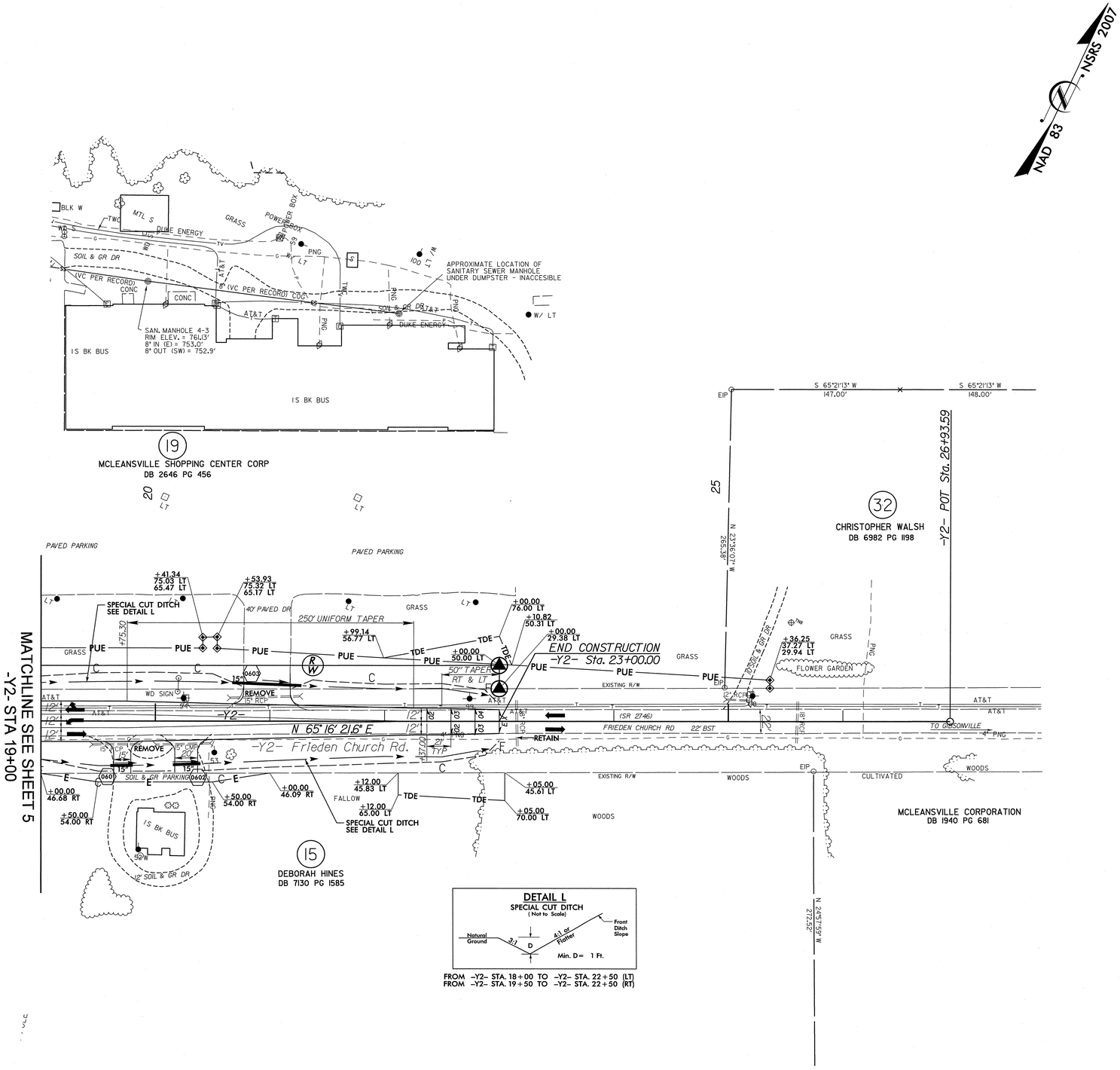


NOTE: SEE SHEET 11 FOR -Y2- PROFILE VIEW

18-JUN-2014 16:10
R:\Roadway\Proj\P5204_Rdy_psh06.dgn
$$$$USERNAME$$$$

0353DEL_P15

| PROJECT REFERENCE NO. | SHEET NO. |
|---|---|
| P-5204 | 7 |
| R/W SHEET NO. | |

ROADWAY DESIGN ENGINEER — NORTH CAROLINA PROFESSIONAL SEAL 20107 ENGINEER DAVID W. BASS 7/18/14

HYDRAULICS ENGINEER — NORTH CAROLINA PROFESSIONAL SEAL 062724 ENGINEER JOHN F. OGLESBY 7/18/14

ATKINS 1616 EAST MILLBROOK ROAD, SUITE 310 RALEIGH, NORTH CAROLINA 27609 (919) 876-6888 NCBEES #F-0326

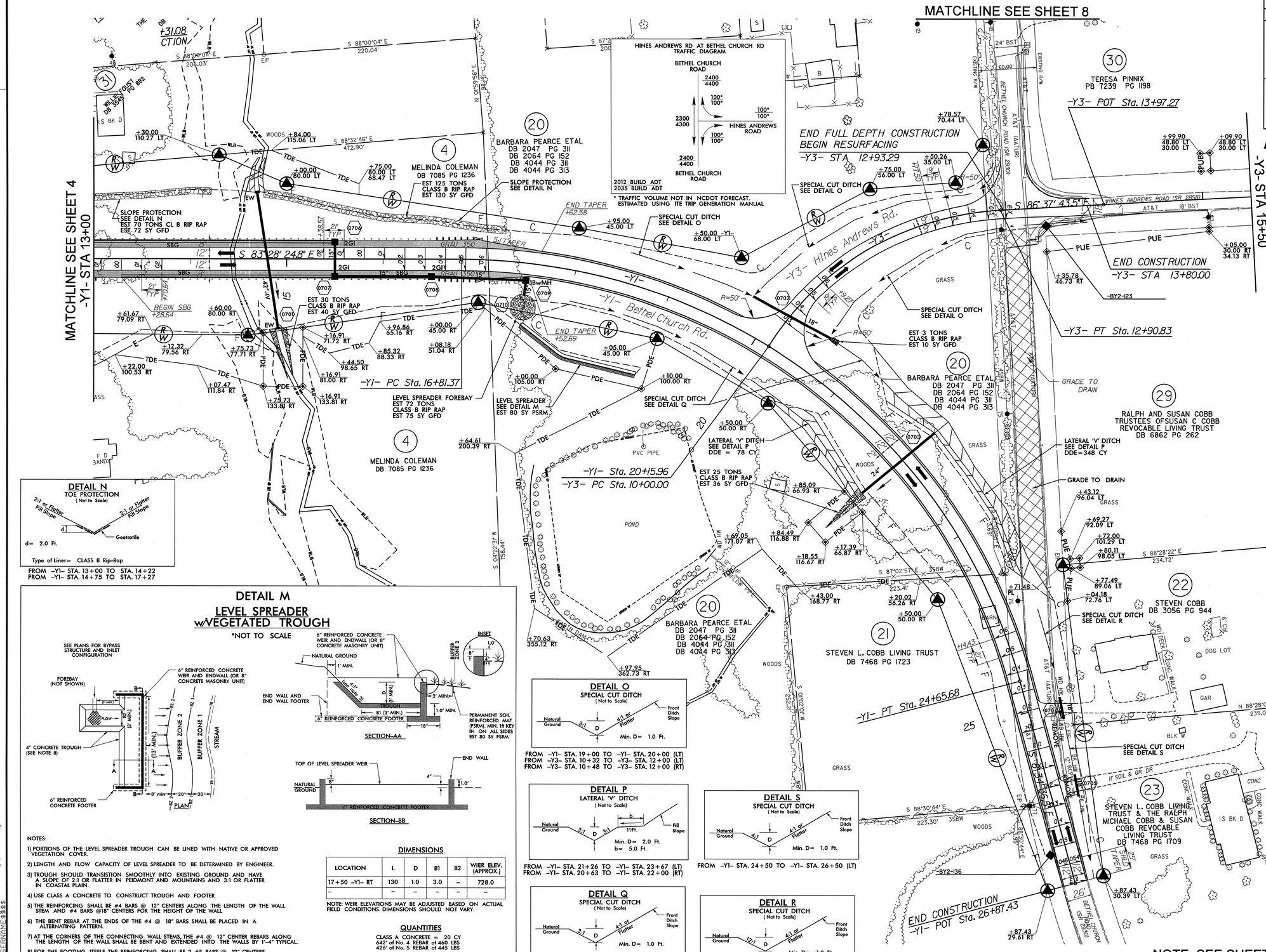





FROM -Y1- STA. 13+00 TO STA. 14+22
FROM -Y1- STA. 14+75 TO STA. 17+27




NOTES:

1) PORTIONS OF THE LEVEL SPREADER TROUGH CAN BE LINED WITH NATIVE OR APPROVED VEGETATION COVER.

2) LENGTH AND FLOW CAPACITY OF LEVEL SPREADER TO BE DETERMINED BY ENGINEER.

3) TROUGH SHOULD TRANSISTION SMOOTHLY INTO EXISTING GROUND AND HAVE A SLOPE OF 2:1 OR FLATTER IN PEIDMONT AND MOUNTAINS AND 3:1 OR FLATTER IN COASTAL PLAIN.

4) USE CLASS A CONCRETE TO CONSTRUCT TROUGH AND FOOTER

5) THE REINFORCING SHALL BE #4 BARS @ 12" CENTERS ALONG THE LENGTH OF THE WALL STEM AND #4 BARS @18" CENTERS FOR THE HEIGHT OF THE WALL

6) THE BENT REBAR AT THE ENDS OF THE #4 @ 18" BARS SHALL BE PLACED IN A ALTERNATING PATTERN.

7) AT THE CORNERS OF THE CONNECTING WALL STEMS, THE #4 @ 12" CENTER REBARS ALONG THE LENGTH OF THE WALL SHALL BE BENT AND EXTENDED INTO THE WALLS BY 1'-4" TYPICAL.

8) FOR THE FOOTING ITSELF THE REINFORCING SHALL BE 2 #5 BARS @ 12" CENTERS.

DIMENSIONS

| LOCATION | L | D | B1 | B2 | WIER ELEV. (APPROX.) |
|---|---|---|---|---|---|
| 17+50 -Y1- RT | 130 | 1.0 | 3.0 | – | 728.0 |
| – | – | – | – | – | – |

NOTE: WEIR ELEVATIONS MAY BE ADJUSTED BASED ON ACTUAL FIELD CONDITIONS. DIMENSIONS SHOULD NOT VARY.

QUANTITIES

CLASS A CONCRETE = 20 CY
642' of No. 4 REBAR at 460 LBS
426' of No. 5 REBAR at 445 LBS

FROM STA. 17+70 TO STA. 19+00 -Y1- RT




FROM -Y1- STA. 19+00 TO -Y1- STA. 20+00 (LT)
FROM -Y3- STA. 10+32 TO -Y3- STA. 12+00 (LT)
FROM -Y3- STA. 10+48 TO -Y3- STA. 12+00 (RT)




FROM -Y1- STA. 21+26 TO -Y1- STA. 23+67 (LT)
FROM -Y1- STA. 20+63 TO -Y1- STA. 22+00 (RT)




FROM -Y1- STA. 24+50 TO -Y1- STA. 26+50 (LT)

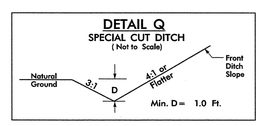


FROM -Y1- STA. 20+61 TO -Y1- STA. 21+00 (LT)
FROM -Y1- STA. 18+50 TO -Y1- STA. 20+63 (RT)

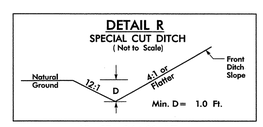


-Y1- STA. 24+00 (LT)

NOTE: SEE SHEET 10 FOR -Y1- PROFILE VIEW
SEE SHEET 11 FOR -Y3- PROFILE VIEW

18-JUL-2014 13:55
R:\Roadway\Proj\P5204_Rdy_psh07.dgn
$$$$USERNAME$$$$

| PROJECT REFERENCE NO. | SHEET NO. |
|---|---|
| P-5204 | 8 |
| R/W SHEET NO. | |
| ROADWAY DESIGN ENGINEER | HYDRAULICS ENGINEER |

NORTH CAROLINA PROFESSIONAL SEAL 20107 ENGINEER DAVID W. BASS 6/19/14

NORTH CAROLINA PROFESSIONAL SEAL 32772 ENGINEER JOHN F. OGLESBY 6/19/14

ATKINS 1616 EAST MILLBROOK ROAD, SUITE 310 RALEIGH, NORTH CAROLINA 27609 (919) 876-6888 NCBEES #F-0326

0353DEL_P15

MATCHLINE SEE SHEET 7

NOTE: SEE SHEET 13 FOR -SR1- PROFILE VIEW
SEE SHEET 8A FOR ADDITIONAL
ROW PARCELS EAST OF -SR1-

18-JUN-2014 16:10
O:\transportation\Roadway\NCDOT\Mcleansville\Roadway\Proj\P5204_Rdy_psh08.dgn
$$$$USERNAME$$$$

0353DEL_P15

DGN

| PROJECT REFERENCE NO. | SHEET NO. |
|---|---|
| P-5204 | 8A |
| RW SHEET NO. | |
| ROADWAY DESIGN ENGINEER | HYDRAULICS ENGINEER |

NORTH CAROLINA PROFESSIONAL SEAL 20107 ENGINEER DAVID W. BASS 6/24/14

GRAPHIC SCALE
100 50 0 100 200
PLANS

ATKINS 1616 EAST MILLBROOK ROAD, SUITE 310
RALEIGH, NORTH CAROLINA 27609
(919) 876-6888 NCBEES #F-0326

NSRS 2007
NAD 83

NORFOLK SOUTHERN RR / NCRR

-BL-111
-BL-112
-BL-113
-BL-110
-BL-109
-BL-108
-BL-107
-BL-106
-BL-105
-BL-104
-BL-103

33
PAMELA BABB SYKES, TRUSTEE FOR THE EUGENE & LOUISE BULLARD LIVING TRUST
DB 4195 PG 394

28
ROBERT BRADSHAW
DB 5714 PG 1354

27
DEAN WILLIAMS
DB 6160 PG 715

26
THOMAS BLACK
DB 3290 PG 816

24
JERRY KING
DB 3680 PG 1352

25
MARK WILSON
DB 680 PG 1589

ANNIE BROWN
DB 4044 PG 31

JANNIE BROWN
DB 686 PG 203

THEODORE ANDERSON
PB 43 PG 316

JOHN BOODY, JR.
DB 6900 PG 796
PB 73 PG 316

HARRY BOODY
DB 3118 PG 788
PB 73 PG 316

TERESA PINNIX
DB 3118 PG 784
PB 73 PG 316

BONNIE WILLIAMS
DB 4241 PG 828
PB 73 PG 316

BONNIE WILLIAMS
DB 2960 PG 373
PB 73 PG 316

KIMBERLY AND TOOD FUQUAY
DB 7147 PG 1567
PB 73 PG 316

KIMBERLY FUQUAY
DB 3699 PG 1758

HARRY BOODY JR.
DB 5203 PG 1140

POT Sta. 12+59.33
END CONSTRUCTION

END PROPOSED PAVEMENT
Sta. 12+49.33

BEGIN CONSTRUCTION
Sta. 10+75.39

PT Sta. 10+45.66

N 33°52' 11.4" E

PC Sta. 10+37.0

POT Sta. 10+00.00

PI Sta. 8+46.61

PI Sta. 15+71.62

PI Sta. 22+16.57

PI Sta. 25+10.80

POT Sta. 27+14.62

-BX4-137

S 86°37' 43.5" E

S 86°36' 33.9" E

S 86°52' 48.5" E

S 86°27' 21.5" E

S 87°14' 15.5" E

HINES ANDREWS ROAD (SR 2858)

MATCHLINE
SEE SHEET 7
-Y3- STA 15+50

NOTE: THIS SHEET FOR ROW PURPOSES ONLY
SEE SHEET 2-F FOR CROSSING CLOSURE DETAILS
SEE SHEET 8 FOR -SR1- PLAN VIEW

18-JUN-2014 16:10
R:\Roadway\Proj\P5204_Rdy_psh07a.dgn
$$$$USERNAME$$$$

0353DEL_P15

5/28/99

| PROJECT REFERENCE NO. | SHEET NO. |
|---|---|
| P-5204 | 9 |

ROADWAY DESIGN ENGINEER — NORTH CAROLINA PROFESSIONAL SEAL 20107 ENGINEER DAVID W. BASS — 6/19/14

HYDRAULICS ENGINEER — NORTH CAROLINA PROFESSIONAL SEAL 30721 ENGINEER JOHN F. OGLESBY — 6/19/14

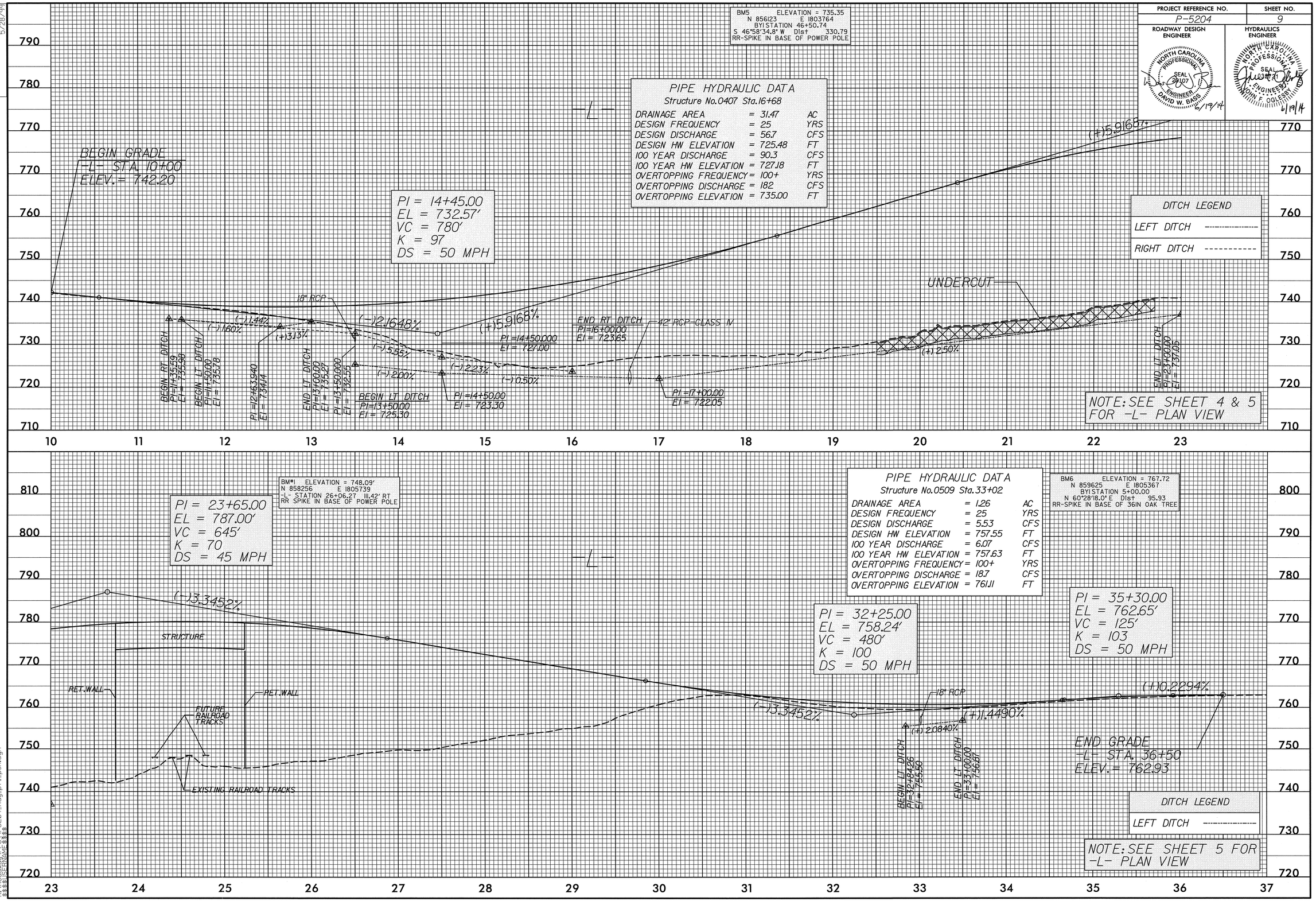


18-JUN-2014 16:10
R:\Roadway\Proj\P5204_Rdy_pf1_psh.dgn
$$$$USERNAME$$$$

0353DEL_P15 5/28/99

| PROJECT REFERENCE NO. | SHEET NO. |
|---|---|
| P-5204 | 10 |

ROADWAY DESIGN ENGINEER — NORTH CAROLINA PROFESSIONAL SEAL 20103 ENGINEER DAVID W. BASS 6/19/14

HYDRAULICS ENGINEER — NORTH CAROLINA PROFESSIONAL SEAL 032742 ENGINEER JOHN F. DOLESKY 6/19/14

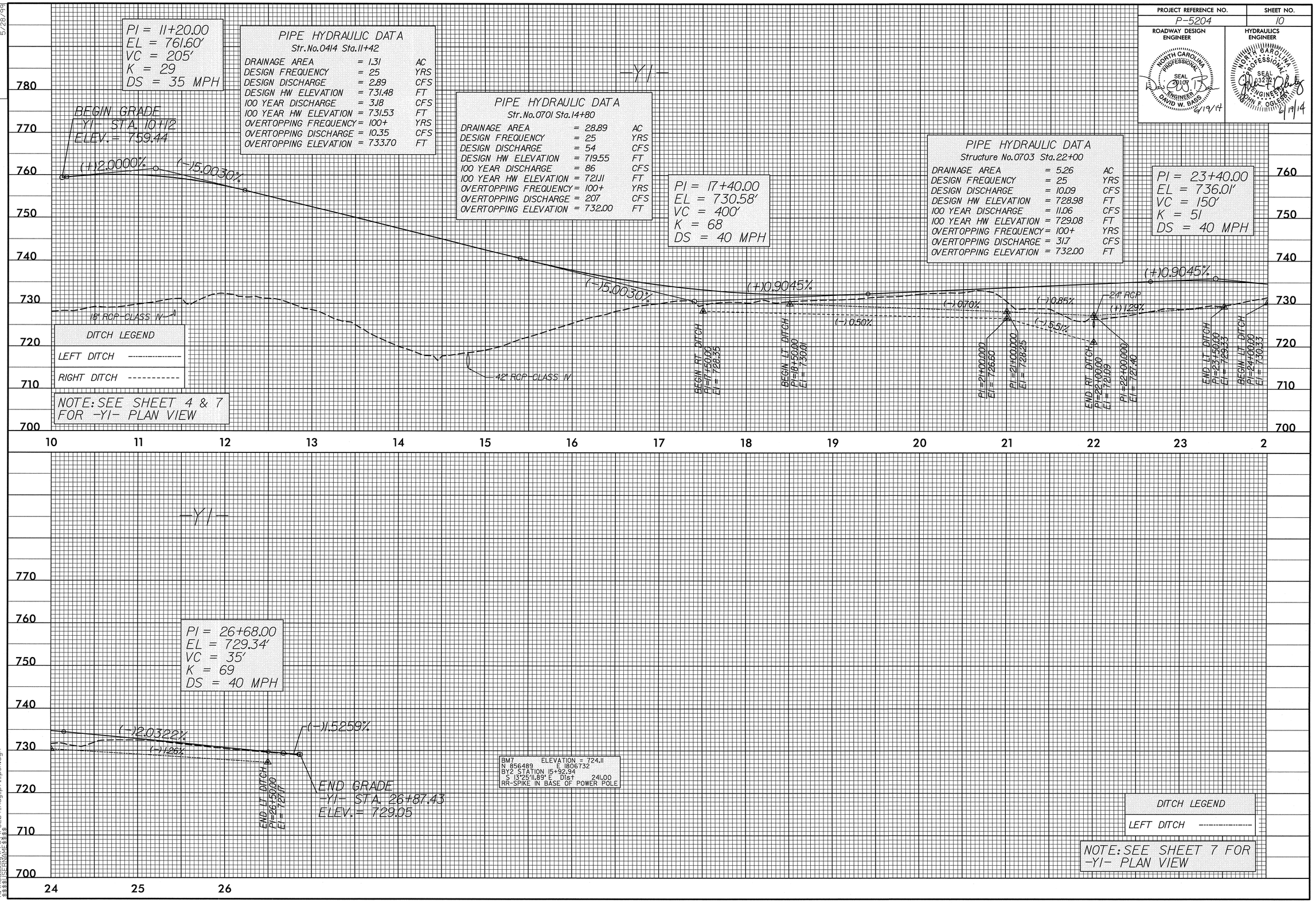


18-JUN-2014 16:10
R:\Hydraulics\Proj\P5204_Rdg_pf1_psh.dgn
$$$$USERNAME$$$$

0353DEL_P15 5/28/99

| PROJECT REFERENCE NO. | SHEET NO. |
|---|---|
| P-5204 | 11 |

ROADWAY DESIGN ENGINEER — NORTH CAROLINA PROFESSIONAL SEAL 20107 ENGINEER DAVID W. BASS — 6/19/14

HYDRAULICS ENGINEER — NORTH CAROLINA PROFESSIONAL SEAL 032720 ENGINEER JOHN F. OGLESBY — 6/19/14

NOTE: SEE SHEET 5 & 6 FOR -Y2- PLAN VIEW

| DITCH LEGEND | |
|---|---|
| LEFT DITCH | ---------- |
| RIGHT DITCH | ---------- |

## -Y2-

### PIPE HYDRAULIC DATA
Structure No.0504 Sta.13+74

| | | |
|---|---|---|
| DRAINAGE AREA | = 0.84 | AC |
| DESIGN FREQUENCY | = 25 | YRS |
| DESIGN DISCHARGE | = 2.29 | CFS |
| DESIGN HW ELEVATION | = 753.15 | FT |
| 100 YEAR DISCHARGE | = 2.73 | CFS |
| 100 YEAR HW ELEVATION | = 753.08 | FT |
| OVERTOPPING FREQUENCY | = 100+ | YRS |
| OVERTOPPING DISCHARGE | = 13.7 | CFS |
| OVERTOPPING ELEVATION | = 761.11 | FT |

PI = 16+10.00
EL = 764.04'
VC = 130'
K = 45
DS = 40 MPH

PI = 18+40.00
EL = 760.49'
VC = 160'
K = 66
DS = 40 MPH

PI = 21+45.00
EL = 758.35'
VC = 50'
K = 228
DS = 75 MPH

PI = 21+90.00
EL = 757.97'
VC = 20'
K = 398'
DS = 80 MPH

PI = 20+25.00
EL = 759.61'
VC = 100'
K = 173
DS = 60 MPH

PI = 13+80.00
EL = 756.20'
VC = 275'
K = 66
DS = 40 MPH

END GRADE
-Y2- STA. 16+75.55
ELEV. = 764.39

BEGIN GRADE
-Y2- STA. 17+14.30
ELEV. = 764.13

BEGIN GRADE
-Y2- STA. 12+00
ELEV. = 757.56

END GRADE
-Y2- STA. 23+00
ELEV. = 757.11

(-)0.7563%
(-)3.59%
(-)2.30%
(+)2.39%
(+)3.409%
(+)0.5407%
(-)2.9000%
(-)1.00%
(-)0.4747%
(-)1.0529%
(-)0.50%
(-)0.8335%
(-)0.50%
(-)0.7833%
(-)1.43%
(-)1.26%

BEGIN LT. DITCH PI=12+00.00 EI=757.41
PI=13+00.00 EI=753.83
PI=13+68.090 EI=752.26
EXISTING 15" RCP
PI=15+50.000 EI=755.60
BEGIN LT. DITCH PI=18+00.00 EI=758.10
BEGIN RT. DITCH PI=19+50.00 EI=755.80
PI=20+50.000 EI=755.60
PI=22+00.000 EI=754.85
PI=22+00.000 EI=754.35
END RT. DITCH PI=23+00.00 EI=753.09
END LT. DITCH PI=23+00.00 EI=753.42

770 760 750 740 730
10 11 12 13 14 15 16 17 18 19 20 21 22 23

## -Y3-

BM#2 ELEVATION = 711.13'
N 857894 E 1807633
BL STATION 24+54.00 92' RIGHT
RR SPIKE IN BASE OF 18" GUM

PI = 11+50.00
EL = 740.69'
VC = 220'
K = 46
DS = 40MPH

### PIPE HYDRAULIC DATA
Structure No.0702 Sta.10+38

| | | |
|---|---|---|
| DRAINAGE AREA | = 3.85 | AC |
| DESIGN FREQUENCY | = 25 | YRS |
| DESIGN DISCHARGE | = 7.78 | CFS |
| DESIGN HW ELEVATION | = 730.79 | FT |
| 100 YEAR DISCHARGE | = 8.54 | CFS |
| 100 YEAR HW ELEVATION | = 730.89 | FT |
| OVERTOPPING FREQUENCY | = 100+ | YRS |
| OVERTOPPING DISCHARGE | = 14.7 | CFS |
| OVERTOPPING ELEVATION | = 732.83 | FT |

BEGIN GRADE
-Y3- STA. 10+12.00
ELEV. = 733.795

END GRADE
BEGIN 3" RESURFACING
-Y3- STA. 12+93.29
ELEV. = 741.00

END RESURFACING
-Y3- STA. 13+80.00

(+)5.0000%
(+)0.2129%
(+)4.64%
(+)4.77%
18" RCP

BEGIN LT. DITCH PI=10+31.87 EI=729.12
BEGIN RT. DITCH PI=10+47.36 EI=726.33
PI=12+50.00 EI=738.18
END LT. DITCH PI=12+50.00 EI=739.23
END RT. DITCH PI=13+50.00 EI=738.26

740 730 720 710 700 690
10 11 12 13 14 15 16 17 18 19 20 21 22 23 24

| DITCH LEGEND | |
|---|---|
| LEFT DITCH | ---------- |
| RIGHT DITCH | ---------- |

NOTE: SEE SHEET 7 FOR -Y3- PLAN VIEW

18-JUN-2014 16:10
R:\Roadway\Proj\P5204_Rdy_pfl_psh.dgn
$$$$USERNAME$$$$

| PROJECT REFERENCE NO. | SHEET NO. |
|---|---|
| P-5204 | 12 |

ROADWAY DESIGN ENGINEER

NORTH CAROLINA PROFESSIONAL SEAL 20107 ENGINEER DAVID W. BASS 6/19/14

HYDRAULICS ENGINEER

NORTH CAROLINA PROFESSIONAL SEAL 032727 ENGINEER JOHN F. OGLESBY 6/19/14

0353DEL_P15 5/28/99

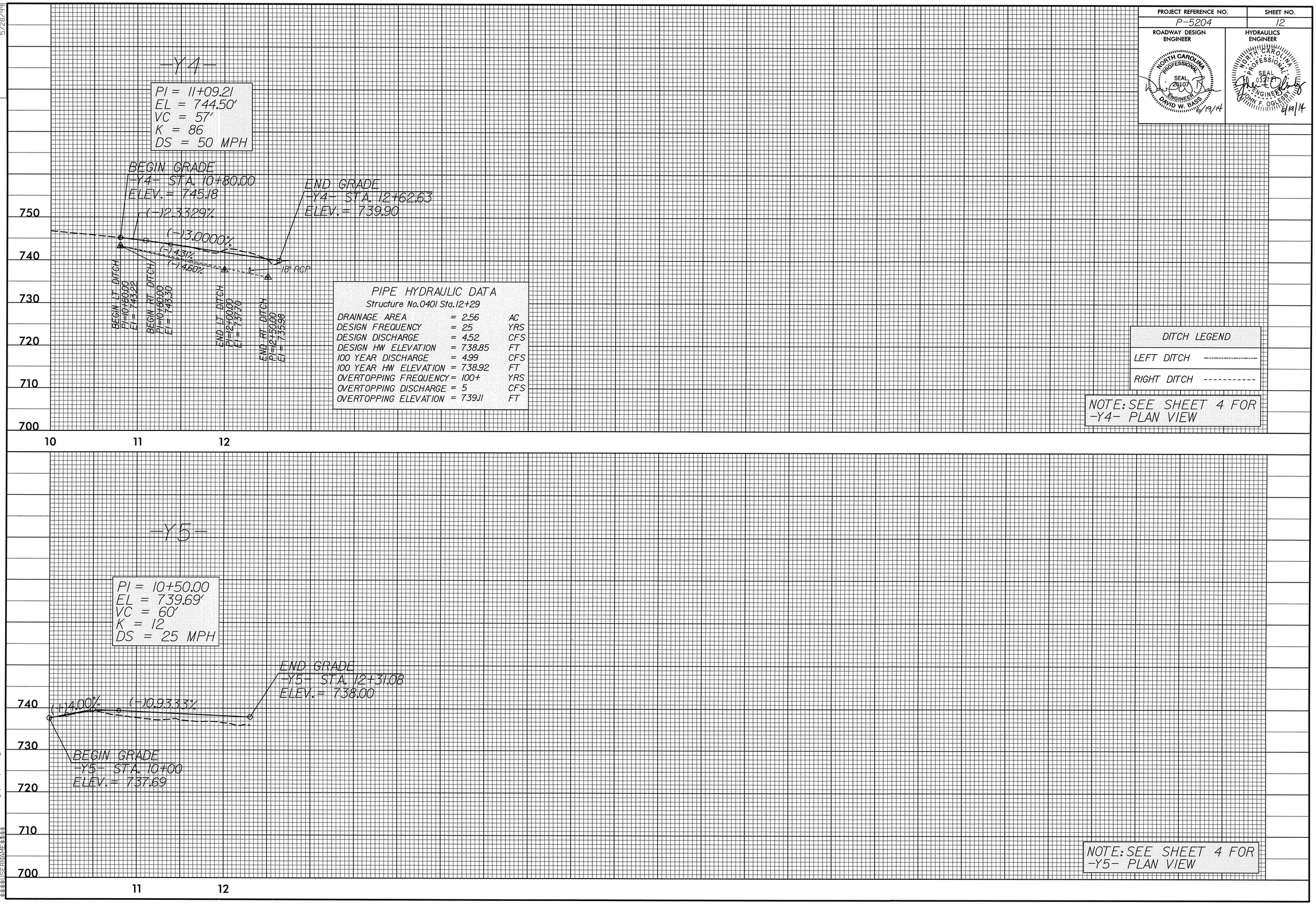


PIPE HYDRAULIC DATA

Structure No.0401 Sta.12+29

| | | |
|---|---|---|
| DRAINAGE AREA | = 2.56 | AC |
| DESIGN FREQUENCY | = 25 | YRS |
| DESIGN DISCHARGE | = 4.52 | CFS |
| DESIGN HW ELEVATION | = 738.85 | FT |
| 100 YEAR DISCHARGE | = 4.99 | CFS |
| 100 YEAR HW ELEVATION | = 738.92 | FT |
| OVERTOPPING FREQUENCY | = 100+ | YRS |
| OVERTOPPING DISCHARGE | = 5 | CFS |
| OVERTOPPING ELEVATION | = 739.11 | FT |

DITCH LEGEND

LEFT DITCH ----------

RIGHT DITCH ----------

NOTE: SEE SHEET 4 FOR -Y4- PLAN VIEW

NOTE: SEE SHEET 4 FOR -Y5- PLAN VIEW

18-JUN-2014 16:10
R:\Roadway\Proj\P5204_Rdy_pfl_psh.dgn
$$$$USERNAME$$$$

DGN 0353DEL_P15 5/28/99

| PROJECT REFERENCE NO. | SHEET NO. |
|---|---|
| P-5204 | 13 |

ROADWAY DESIGN ENGINEER

NORTH CAROLINA PROFESSIONAL SEAL ENGINEER DAVID W. BASS 6/19/14

HYDRAULICS ENGINEER

NORTH CAROLINA PROFESSIONAL SEAL ENGINEER JOHN F. DOLLESBY 6/19/14

## -DI-

PI = 10+41.50
EL = 727.78'
VC = 70'
K = 3

PI = 11+49.00
EL = 754.66'

PI = 11+54.00
EL = 755.41'

PI = 11+59.00
EL = 755.61'

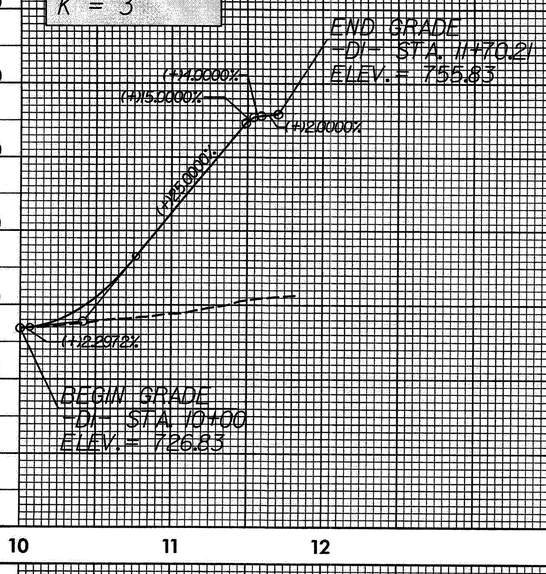


NOTE: SEE SHEET 4 FOR -DI- PLAN VIEW

## -SRI-

PI = 10+40.00
EL = 746.74'
VC = 40'
K = 7
DS = 20 MPH

PI = 11+50.00
EL = 741.78'
VC = 165'
K = 17
DS = 20 MPH

PIPE HYDRAULIC DATA
Structure No.0801 Sta.11+07

| | | | |
|---|---|---|---|
| DRAINAGE AREA | = | 5.26 | AC |
| DESIGN FREQUENCY | = | 25 | YRS |
| DESIGN DISCHARGE | = | 33.8 | CFS |
| DESIGN HW ELEVATION | = | 742.96 | FT |
| 100 YEAR DISCHARGE | = | 53.8 | CFS |
| 100 YEAR HW ELEVATION | = | 745.26 | FT |
| OVERTOPPING FREQUENCY | = | 25+ | YRS |
| OVERTOPPING DISCHARGE | = | 36.8 | CFS |
| OVERTOPPING ELEVATION | = | 743.24 | FT |

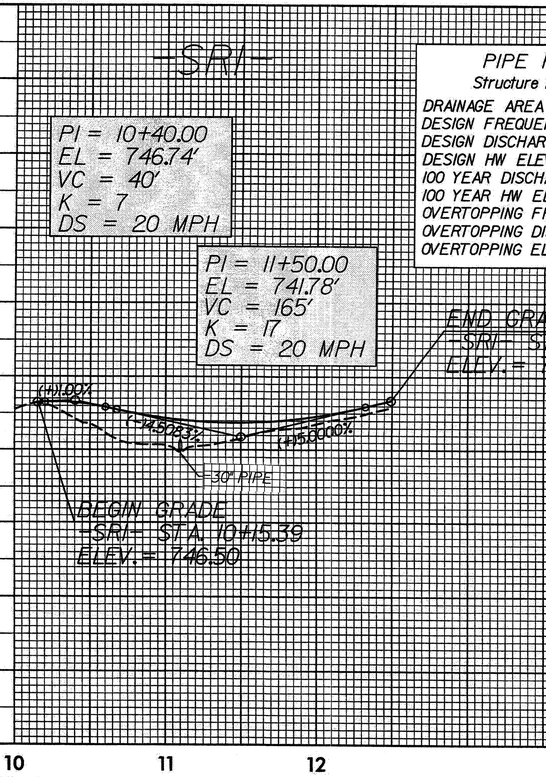


NOTE: SEE SHEET 8 FOR -SRI- PLAN VIEW

18-JUN-2014 16:10
R:\Roadway\Proj\P5204_Rdy_prf1_psh.dgn
$$$$USERNAME$$$$

| PROJECT REFERENCE NO. | SHEET NO. |
|---|---|
| P-5204 | 14 |
| ROADWAY DESIGN ENGINEER | HYDRAULICS ENGINEER |

NORTH CAROLINA PROFESSIONAL SEAL 20107 ENGINEER DAVID W. BAGGS 6/19/14

NORTH CAROLINA PROFESSIONAL SEAL 030724 ENGINEER JOHN F. OGLESBY 6/19/14

0353DEL_P15 5/28/99

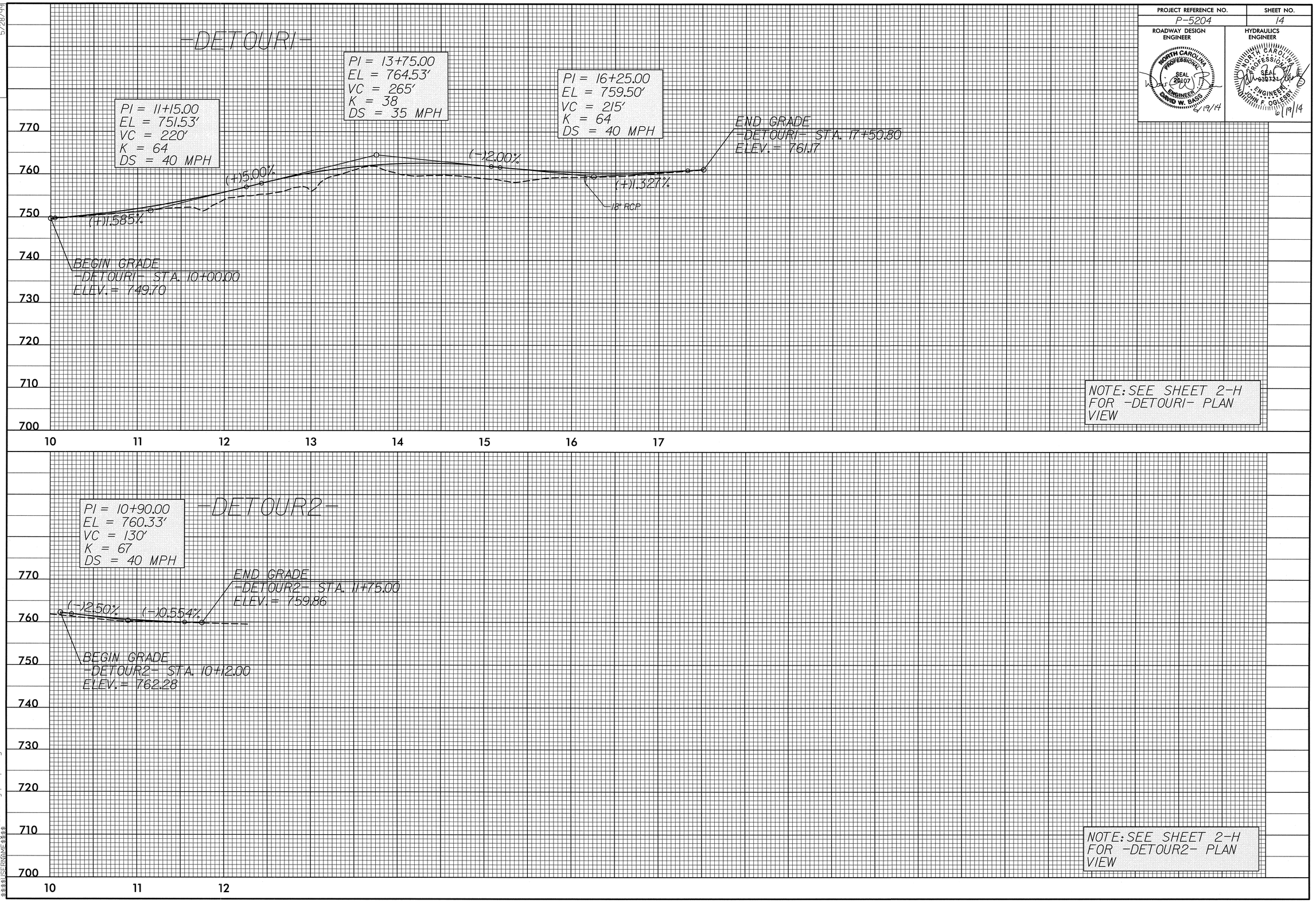


18-JUN-2014 16:10
R:\Roadway\Proj\P5204_Rdy_pfl_psh.dgn
$$$$USERNAME$$$$