PROJECT REFERENCE NO.	SHEET NO.
R-3620	2-D

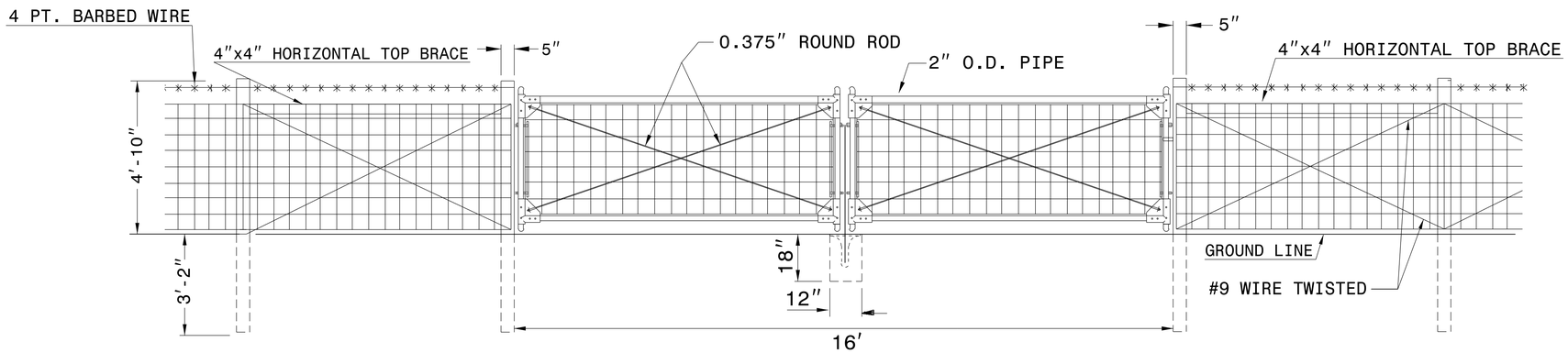

GENERAL NOTES:

CONSTRUCT FENCE GATE AS DETAILED AND, IN CONJUNCTION WITH ROADWAY STANDARD DRAWING 866.02
USE LATCH DEVICE APPROVED BY THE ENGINEER.
HINGE ASSEMBLY, AS DETAILED, IS SUGGESTED.
SUBSTITUTION MAY BE MADE SUBJECT TO THE APPROVAL OF THE ENGINEER.

NORTH CAROLINA PROFESSIONAL SEAL 022966 ENGINEER Joel S. Howerton

DocuSigned by: Joel Howerton 873F3D170DCDC45F... 4/30/2014

CONTRACTS STANDARDS AND DEVELOPMENT UNIT
Office 919-707-6950 FAX 919-250-4119

16' WOVEN WIRE GATE

ORIGINAL BY: K KEMPF DATE: 2-8-13
MODIFIED BY: DATE:
CHECKED BY: DATE:
FILE SPEC.: KEMPF\ENGLISH\R2303B_866D0301.DGN

$$$$SYSTIME$$$$
$$$$USERNAME$$$$
$$$$DGNSPEC$$$$