TIP PROJECT: R-4047

CONTRACT: C203393

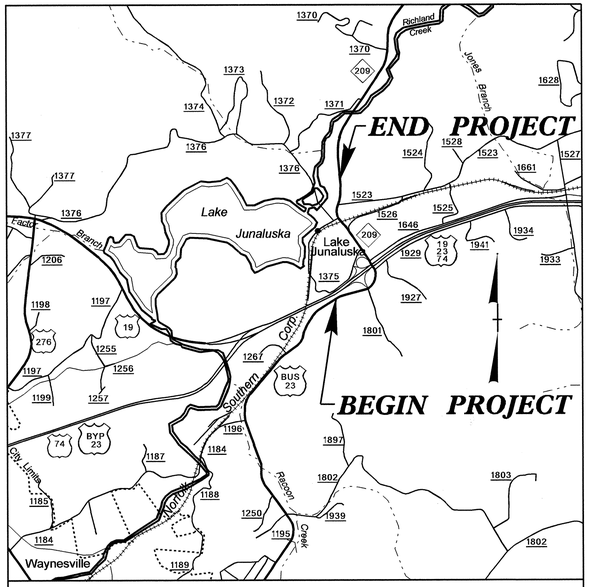

VICINITY MAP

STATE OF NORTH CAROLINA
DIVISION OF HIGHWAYS

HAYWOOD COUNTY

STATE	STATE PROJECT REFERENCE NO.	SHEET NO.	TOTAL SHEETS
N.C.	R–4047		

STATE PROJ. NO.	F. A. PROJ. NO.	DESCRIPTION
34599.1.1	STP–209(2)	PE
34599.3.1	STP–209(6)	R/W & UTL.
34599.2.FR1	STP–209(6)	CONST.

LOCATION: NC 209 FROM US 23 BUS. TO NORTH OF SR 1523 (OLD CLYDE RD.)

TYPE OF WORK: GRADING, DRAINAGE, PAVING, RAILROAD REALGNMENT, RETAINING WALL, CULVERT, SIGNALS AND STRUCTURE

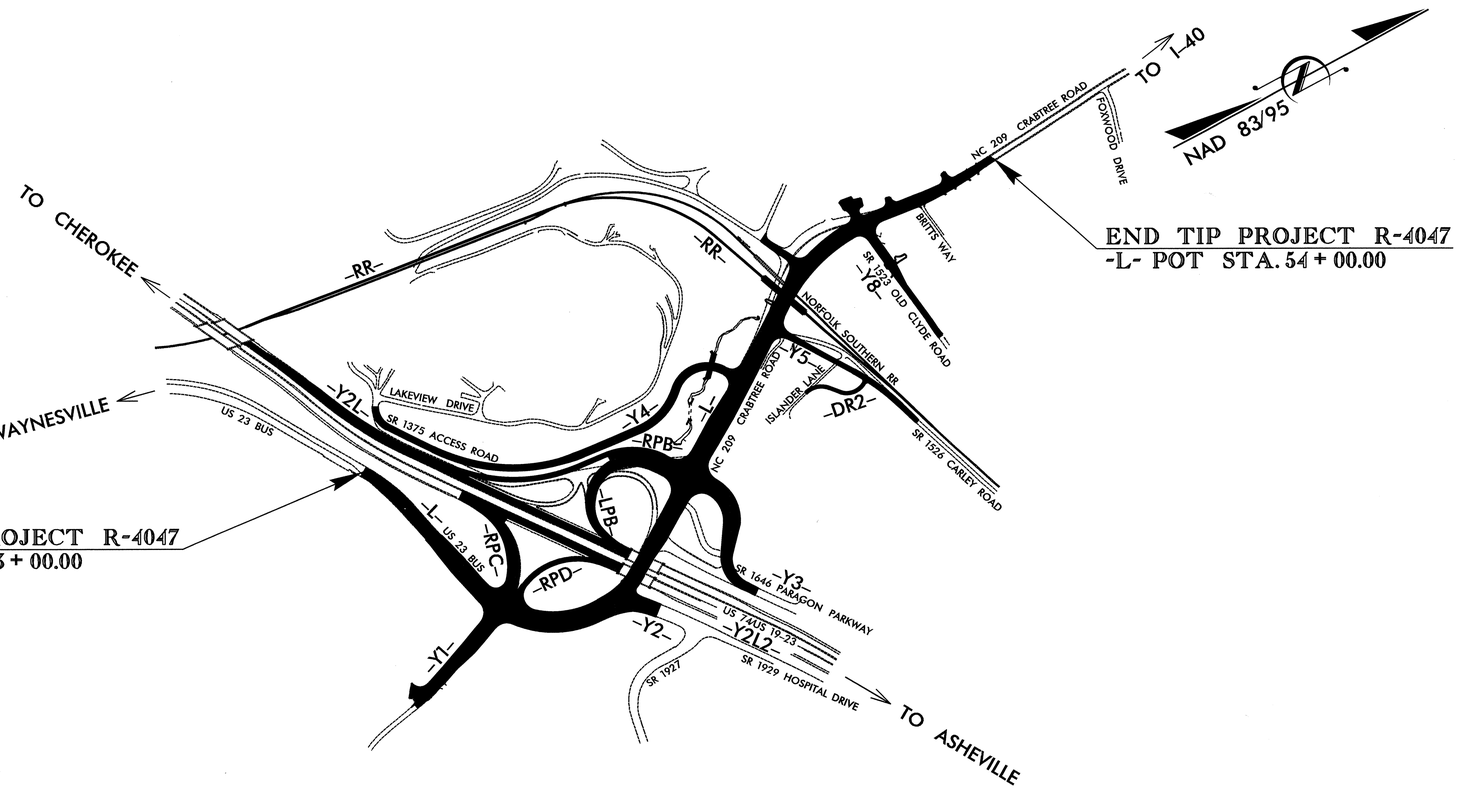

END TIP PROJECT R-4047
-L- POT STA. 54 + 00.00

BEGIN TIP PROJECT R-4047
-L- POT STA. 13 + 00.00

STRUCTURES

DESIGN DATA	
ADT 2014	= 21,650
ADT 2034	= 28,650
K	= 10 %
D	= 60 %
T	= 5 % *
V	= 35 MPH
FUNC. CLASS.	= COLLECTOR
* TTST 1 %	DUAL 4 %
STATEWIDE TIER	

PROJECT LENGTH

LENGTH ROADWAY TIP PROJECT R–4047 = 0.777 MI.

TOTAL LENGTH OF TIP PROJECT R–4047 = 0.777 MI.

Prepared In the Office of:
DIVISION OF HIGHWAYS
1000 Birch Ridge Dr.
Raleigh, NC 27610

2012 STANDARD SPECIFICATIONS

LETTING DATE:
JUNE 17, 2014

STATE OF NORTH CAROLINA • DEPARTMENT OF TRANSPORTATION •

21-FEB-2014 13:43
$$$$$$$$$$$$$$$$DGN$$$$$$$$$$$$$$$$

F. A. PROJ. NO.: STP-209(6)

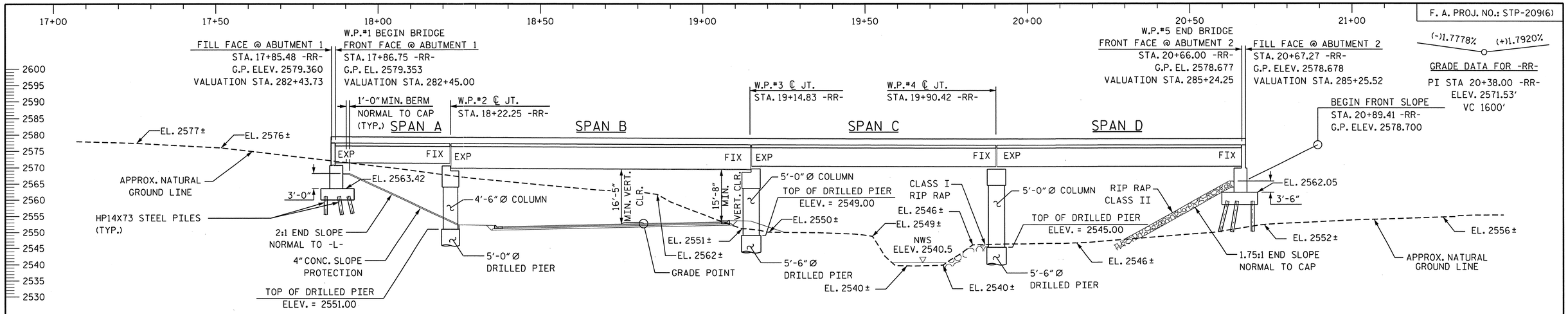

SECTION ALONG -RR-

SECTIONS AT ABUTMENTS AND PIERS ARE AT RIGHT ANGLES

HORIZONTAL CURVE DATA FOR -L-
PI Sta 45+27.56
△ = 39° 19' 05.1" (RT)
D = 7° 09' 43.1"
L = 548.98'
T = 285.80'
R = 800.00'

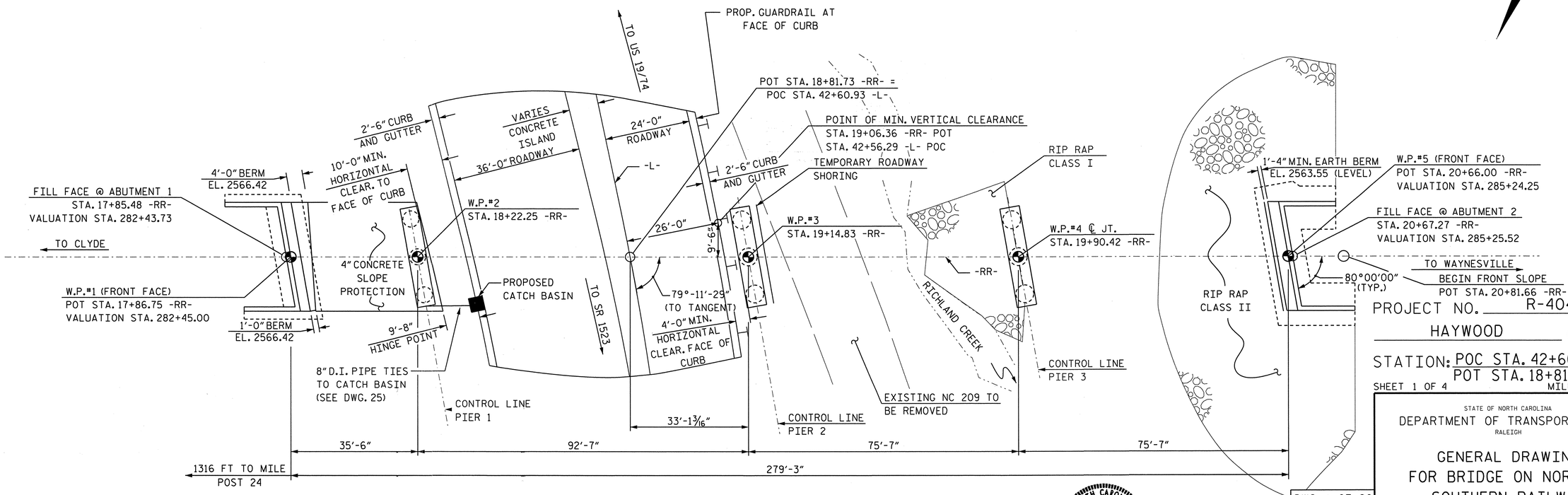

PLAN

NOTES: ABUTMENTS AND PIERS ARE PARALLEL.
PILES NOT SHOWN FOR CLARITY.

NAD 83/95

PROJECT NO. R-4047

HAYWOOD COUNTY

STATION: POC STA. 42+60.93 -L-
POT STA. 18+81.73 -RR-

SHEET 1 OF 4 MILEPOST T-24.3

STATE OF NORTH CAROLINA
DEPARTMENT OF TRANSPORTATION
RALEIGH

GENERAL DRAWING
FOR BRIDGE ON NORFOLK
SOUTHERN RAILWAY
OVER NC 209

NORTH CAROLINA PROFESSIONAL ENGINEER SEAL 11725 DAVID R. RUGGLES
2-20-14

STEWART

DWG. 1 OF 60

Firm License No. C-1051
421 Fayetteville St,
Suite 400
Raleigh, NC 27601
T 919.380.8750
www.stewartinc.com

REVISIONS					
NO.	BY:	DATE:	NO.	BY:	DATE:
1			3		
2			4		

SHEET NO. S-1
TOTAL SHEETS 60

DRAWN BY: J. ABRIL	DATE : 01/14	
CHECKED BY: D. RUGGLES	DATE : 01/14	
DESIGN ENGINEER OF RECORD: D. RUGGLES	DATE : 01/14	

2/20/2014
...\Final\01-General Drawing.dgn
USER:jabril

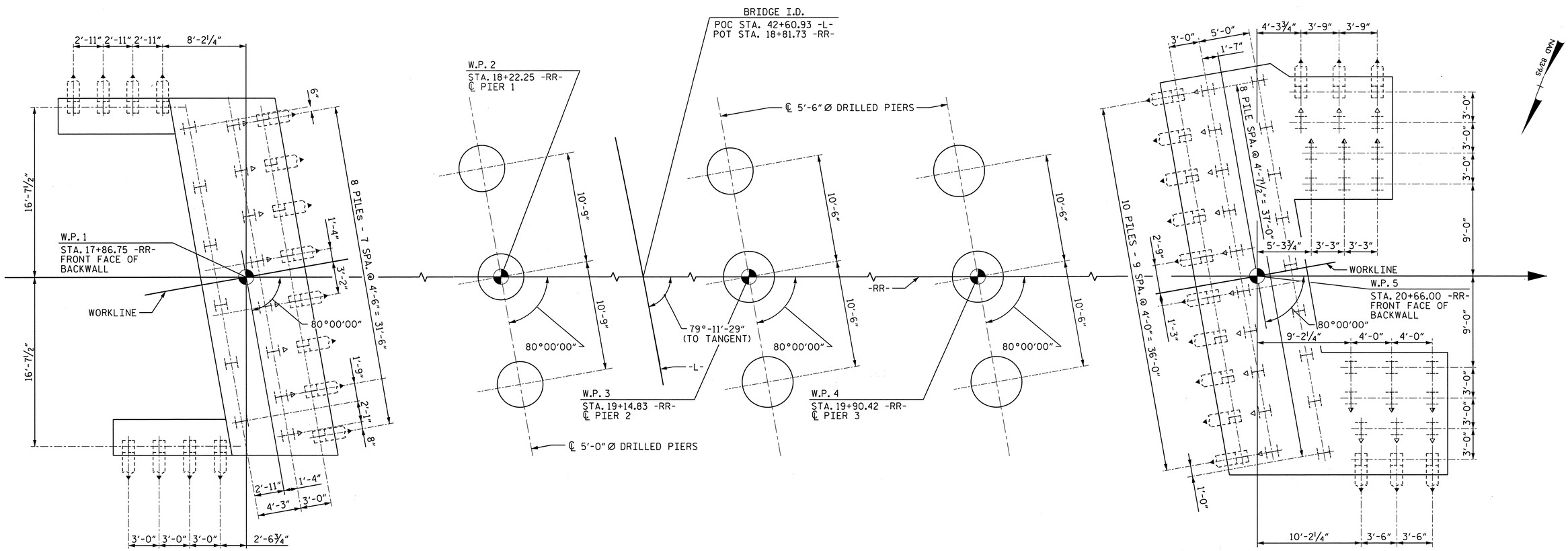

FOUNDATION NOTES

1. FOR PILES, SEE SPECIAL PROVISIONS
2. DRIVE PILES AT ABUTMENT NO. 1 TO A REQUIRED BEARING CAPACITY OF 220 TONS PER PILE. THE REQUIRED BEARING CAPACITY IS EQUAL TO THE ALLOWABLE BEARING CAPACITY WITH A MINIMUM FACTOR OF SAFETY OF TWO.
3. DRIVE PILES AT ABUTMENT NO. 2 TO A REQUIRED BEARING CAPACITY OF 220 TONS PER PILE. THE REQUIRED BEARING CAPACITY IS EQUAL TO THE ALLOWABLE BEARING CAPACITY WITH A MINIMUM FACTOR OF SAFETY OF TWO.
4. STEEL PILE POINTS (WITH TEETH) ARE REQUIRED FOR STEEL PILES AT ABUTMENT NO. 1 AND ABUTMENT NO. 2.
5. TESTING PILES WITH THE PILE DRIVING ANALYZER (PDA) DURING DRIVING, RESTRIKING OR REDRIVING MAY BE REQUIRED. THE ENGINEER WILL DETERMINE THE NEED FOR PDA TESTING. FOR PILE DRIVING ANALYZER, SEE SPECIAL PROVISIONS
6. IT HAS BEEN ESTIMATED THAT A HAMMER WITH AN EQUIVALENT RATED ENERGY OF 30 TO 45 KIP-FT PER BLOW WILL BE REQUIRED TO DRIVE PILES AT ABUTMENTS. THE ESTIMATED ENERGY RANGE DOES NOT RELEASE THE CONTRACTOR FROM PROVIDING EQUIPMENT IN ACCORDANCE WITH PILE PROVISION.
7. FOR DRILLED PIERS, SEE SPECIAL PROVISIONS.
8. DRILLED PIERS AT PIER NO. 1 ARE DESIGNED FOR BOTH SKIN FRICTION AND END BEARING. CHECK FIELD CONDITIONS FOR THE REQUIRED END BEARING CAPACITY OF 25 TSF.
9. DRILLED PIERS AT PIER NO. 2 ARE DESIGNED FOR BOTH SKIN FRICTION AND END BEARING. CHECK FIELD CONDITIONS FOR THE REQUIRED END BEARING CAPACITY OF 25 TSF.
10. DRILLED PIERS AT PIER NO. 3 ARE DESIGNED FOR BOTH SKIN FRICTION AND END BEARING. CHECK FIELD CONDITIONS FOR THE REQUIRED END BEARING CAPACITY OF 25 TSF.
11. INSTALL DRILLED PIERS AT PIER NO. 1 TO EXTEND TO AN ELEVATION NO HIGHER THAN 2489 FT AND SATISFY THE REQUIRED BEARING CAPACITY.
12. INSTALL DRILLED PIERS AT PIER NO. 2 TO EXTEND TO AN ELEVATION NO HIGHER THAN 2480 FT AND SATISFY THE REQUIRED BEARING CAPACITY.
13. INSTALL DRILLED PIERS AT PIER NO. 3 TO EXTEND TO AN ELEVATION NO HIGHER THAN 2475 FT AND SATISFY THE REQUIRED BEARING CAPACITY.
14. SID INSPECTIONS ARE REQUIRED FOR DRILLED PIERS AT PIER NO. 1, PIER NO.2, AND PIER NO. 3.
15. CSL TUBES AND TESTING ARE REQUIRED FOR DRILLED PIERS AT PIER NO. 1, PIER NO. 2, AND PIER NO. 3. THE ENGINEER WILL DETERMINE THE NEED FOR CSL TESTING. FOR CROSSHOLE SONIC LOGGING, SEE SPECIAL PROVISIONS.
17. THE SCOUR CRITICAL ELEVATION FOR PIER NO. 3 IS ELEVATION 2538 FT. SCOUR CRITICAL ELEVATIONS ARE USED TO MONITOR SCOUR PROBLEMS DURING THE LIFE OF THE STRUCTURE.

▲ DENOTES DIRECTION OF 3:12 BATTER
△ DENOTES DIRECTION OF 2:12 BATTER
◭ DENOTES DIRECTION OF 1:12 BATTER

18. DRILLED PIERS AT PIER NO. 1 ARE DESIGNED FOR AN APPLIED LOAD OF 937 TONS EACH AT THE TOP OF THE COLUMN.
19. DRILLED PIERS AT PIER NO. 2 ARE DESIGNED FOR AN APPLIED LOAD OF 1044 TONS EACH AT THE TOP OF THE COLUMN.
20. DRILLED PIERS AT PIER NO. 3 ARE DESIGNED FOR AN APPLIED LOAD OF 922.5 TONS EACH AT THE TOP OF THE COLUMN.
21. PERMANENT STEEL CASINGS MAY BE REQUIRED FOR DRILLED PIERS AT PIER NO. 3. IF REQUIRED, DO NOT EXTEND PERMANENT CASINGS BELOW ELEVATION 2537 FT WITHOUT PRIOR APPROVAL FROM THE ENGINEER. THE ENGINEER WILL DETERMINE THE NEED FOR PERMANENT CASINGS.
22. SPT TESTING IS REQUIRED FOR DRILLED PIERS AT PIER NO. 1 , PIER NO. 2, AND PIER NO. 3.

DRAWN BY:	P. JACOB	DATE :	01/14
CHECKED BY:	D. RUGGLES	DATE :	01/14
DESIGN ENGINEER OF RECORD:	D. RUGGLES	DATE :	01/14

NORTH CAROLINA PROFESSIONAL SEAL 11725 ENGINEER DAVID R. RUGGLES
2-20-14

STEWART
Firm License No. C-1051
421 Fayetteville St.
Suite 400
Raleigh, NC 27601
T 919.380.8750
www.stewartinc.com

PROJECT NO. R-4047
HAYWOOD COUNTY
STATION: POC STA. 42+60.93 -L-
POT STA. 18+81.73 -RR-
SHEET 2 OF 4

STATE OF NORTH CAROLINA
DEPARTMENT OF TRANSPORTATION
RALEIGH

FOUNDATION LAYOUT

DWG. 2 OF 60

REVISIONS						SHEET NO.
NO.	BY:	DATE:	NO.	BY:	DATE:	S-2
1			3			TOTAL SHEETS
2			4			60

2/20/2014
...\Final\02-Foundation Layout.dgn
USER:jabril

BM #6 - 8" SPIKE SET IN BASE OF 12" WILD CHERRY TREE, 138.67' LT. OF -RR- STA. 18+02.80, ELEV. 2574.029

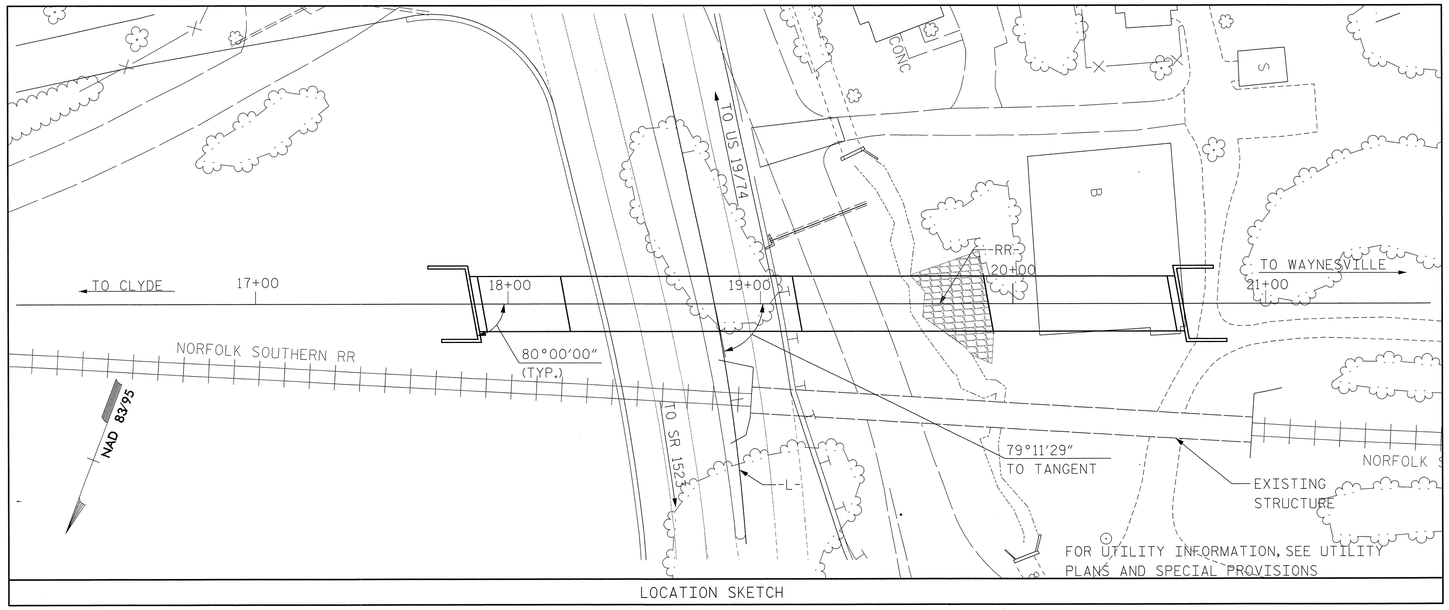

LOCATION SKETCH

TOTAL BILL OF MATERIAL

	TEMPORARY RAILROAD SHORING	REMOVAL OF EXISTING STRUCTURE	FOUNDATION EXCAVATION FOR ABUT No. 1	5'-0" DIA. DRILLED PIER NOT IN SOIL	5'-0" DIA. DRILLED PIER IN SOIL	5'-6" DIA. DRILLED PIER NOT IN SOIL	5'-6" DIA. DRILLED PIER IN SOIL	PERMANENT STEEL CASING FOR 5'-6" DIA. DRILLED PIER	PDA TESTING	SID INSPECTION	SPT TESTING	CSL TESTING	REINFORCED CONCRETE DECK SLAB	CLASS AA CONCRETE	REINFORCING STEEL	SPIRAL COLUMN REINFORCING STEEL
	LUMP SUM	LUMP SUM	LUMP SUM	LF	LF	LF	LF	LF	EACH	EACH	EACH	EACH	SQ.FT.	CU.YDS.	LBS.	LBS.
SUPERSTRUCTURE	—	—	—	—	—	—	—	—	—	—	—	—	6,140	—	—	—
ABUTMENT NO. 1	LUMP SUM	—	LUMP SUM	—	—	—	—	—	—	—	—	—	—	124.3	17,153	—
PIER NO. 1	LUMP SUM	—	—	30	156	—	—	—	—	3	3	3	—	54.1	52,847	7,539
PIER NO. 2	—	—	—	—	—	24	183	—	—	3	3	3	—	63.7	79,555	9,435
PIER NO. 3	—	—	—	—	—	27	183	24	—	3	3	3	—	71.6	88,745	10,092
ABUTMENT NO. 2	LUMP SUM	—	—	—	—	—	—	—	—	—	—	—	—	177.7	22,255	—
TOTAL	LUMP SUM	LUMP SUM	LUMP SUM	30	156	51	366	24	1	9	9	9	6,140	491.4	260,555	27,066

TOTAL BILL OF MATERIAL (CONT'D.)

	STRUCTURAL STEEL APPROXIMATE 612,300 LBS	PAINTING STRUCTURAL STEEL	HP 14 X 73 STEEL PILES		STEEL PILE POINTS	METHOD B DAMP-PROOFING	MEMBRANE LAYER WATER-PROOFING FOR DECK	ONE INCH ASPHALT PLANKING PROTECTIVE COURSE FOR DECK	TWO PART MEMBRANE WATER-PROOFING SYSTEM	METAL HANDRAIL WITH FENCING	1'-0"x2'-0" CONCRETE PARAPET	CONDUIT IN PARAPET @ STA. 18+81.73 -RR-	4" SLOPE PROTECTION	RIP RAP CLASS I	RIP RAP CLASS II (2'-0" THICK)	GEOTEXTILE FOR DRAINAGE	SELF-LUBRICATING EXPANSION BEARING ASSEMBLIES	STRUCTURE DRAINAGE SYSTEM @ STA. 18+81.73 -RR-
	LUMP SUM	LUMP SUM	NO.	LIN.FT.	EA.	SY	SY	SY	SY	LF	LF	LUMP SUM	SQ. YDS.	TONS	TONS	SQ. YDS.	LUMP SUM	LUMP SUM
SUPERSTRUCTURE	LUMP SUM	LUMP SUM	—	—	—	—	682	682	—	635	558	LUMP SUM	—	—	—	—	LUMP SUM	LUMP SUM
ABUTMENT NO. 1	—	—	30	1,800	30	94.0	—	—	15.8	—	—	—	137	—	—	—	—	—
PIER NO. 1	—	—	—	—	—	14.1	—	—	—	—	—	—	—	—	—	—	—	LUMP SUM
PIER NO. 2	—	—	—	—	—	5.2	—	—	—	—	—	—	—	—	—	—	—	—
PIER NO. 3	—	—	—	—	—	5.2	—	—	—	—	—	—	—	65	—	35	—	—
ABUTMENT NO. 2	—	—	54	2,430	54	99.3	—	—	19.4	—	—	—	—	—	544	789	—	—
TOTAL	LUMP SUM	LUMP SUM	84	4,230	84	217.8	682	682	35.2	635	558	LUMP SUM	137	65	544	824	LUMP SUM	LUMP SUM

PROJECT NO. R-4047

HAYWOOD COUNTY

STATION: POC STA. 42+60.93 -L-
POT STA. 18+81.73 -RR-

SHEET 3 OF 4

STATE OF NORTH CAROLINA
DEPARTMENT OF TRANSPORTATION
RALEIGH

GENERAL DRAWING

LOCATION SKETCH AND
TOTAL BILL OF MATERIAL

DWG. 3 OF 60

DRAWN BY: P. JACOB DATE : 06/14
CHECKED BY: D. RUGGLES DATE : 06/14
DESIGN ENGINEER OF RECORD: D. RUGGLES DATE : 06/14

NORTH CAROLINA PROFESSIONAL SEAL 11725 ENGINEER DAVID R. RUGGLES
6-6-14

STEWART
Firm License No. C-1051
421 Fayetteville St,
Suite 400
Raleigh, NC 27601
T 919.380.8750
www.stewartinc.com

REVISIONS

NO.	BY:	DATE:	NO.	BY:	DATE:
1			3		
2			4		

SHEET NO. 3-3
TOTAL SHEETS 60

6/6/2014
...\03-Location Sketch_bom.dgn
USER:pjacob

GENERAL NOTES:

1. ASSUMED LIVE LOAD = COOPER E-80 LOADING WITH FULL DIESEL IMPACT AND THE ALTERNATE LIVE LOAD.

2. DESIGN SPEED = 15 MPH

3. FOR EROSION CONTROL MEASURES, SEE EROSION CONTROL PLANS.

4. THIS BRIDGE HAS BEEN DESIGNED IN ACCORDANCE WITH THE REQUIREMENTS OF THE CURRENT EDITION OF AREMA'S "MANUAL FOR RAILWAY ENGINEERING, VOL. 2, STRUCTURES", AND NORFOLK SOUTHERN CORPORATION'S "GUIDELINES FOR DESIGN OF HIGHWAY SEPARATION STRUCTURES UNDER RAILROAD (UNDERPASS GRADE SEPARATION)".

5. THIS BRIDGE HAS BEEN DESIGNED IN ACCORDANCE WITH THE REQUIREMENTS OF THE AASHTO BRIDGE DESIGN SPECIFICATIONS FOR SEISMIC ZONE 1

6. REINFORCING STEEL SHALL BE ASTM A615, GRADE 60. ALL DIMENSIONS RELATING TO BAR SPACING ARE TO BAR CENTERS UNLESS NOTED. FABRICATION TO BE IN ACCORDANCE WITH THE "MANUAL OF STANDARD PRACTICE", ACI 315-80. ALL REINFORCING IN THE CONCRETE DECK SLAB AND PARAPETS SHALL BE EPOXY COATED.

7. EXPANSION JOINT MATERIAL SHALL BE EITHER RUBBER OR CORK CONFORMING WITH AASHTO SPECIFICATIONS M-153-84 EXCEPT AS SHOWN ON THE PLANS OR IN THE SPECIAL PROVISIONS. CELLULAR AND BULB TYPE WATERSTOPS AND RUBBER JOINT COMPOUNDS SHALL BE AS SHOWN ON THE PLANS AND IN THE SPECIAL PROVISIONS.

8. STRUCTURE DRAINAGE SYSTEM: METAL DRAINS BEHIND ABUTMENTS AND IN BALLAST TROUGH OF BRIDGE, INCLUDING DUCTILE IRON PIPE COLLECTOR SYSTEM, SHALL BE AS SHOWN ON THE PLANS AND OUTLINED IN THE SPECIAL PROVISIONS. DETAILS OF THE DRAINAGE SYSTEM SHALL BE SUBMITTED TO THE CHIEF ENGINEER, BRIDGES AND STRUCTURES, NORFOLK SOUTHERN CORPORATION, ATLANTA, GA FOR APPROVAL.

9. DAMPPROOFING: PIER COLUMNS UP TO GROUND LINE, BACK OF BACKWALLS AND ABUTMENT SEATS, AND BACK OF WINGS SHALL BE DAMP PROOFED WITH METHOD "B" DAMPPROOFING, USING ASPHALT PRIMER AND ASPHALT, IN ACCORDANCE WITH AREMA SPECIFICATIONS, CHAPTER 8, SECTIONS 29.3, 29.15, 29.16, AND 29.17.

10. WATERPROOFING: THE BRIDGE DECK AND ALL CONSTRUCTION JOINTS WHICH WILL BE COVERED BY FILL SHALL BE WATERPROOFED WITH A MEMBRANE WATERPROOFING SYSTEM.

11. THE CONTRACTOR SHALL PROVIDE INDEPENDENT ASSURANCE SAMPLES OF REINFORCING STEEL AS FOLLOWS: FOR PROJECTS REQUIRING UP TO 400 TONS OF REINFORCING STEEL, ONE 30 INCH SAMPLE OF EACH SIZE BAR USED, AND FOR PROJECTS REQUIRING OVER 400 TONS OF REINFORCING STEEL, TWO 30 INCH SAMPLES OF EACH SIZE BAR USED. THE BARS FROM WHICH THE SAMPLES ARE TAKEN MUST THEN BE SPLICED WITH REPLACEMENT BARS OF THE SIZE AND LENGTH OF THE SAMPLE, PLUS A MINIMUM LAP SPLICE OF THIRTY BAR DIAMETERS. PAYMENT FOR THE SAMPLES OF REINFORCING STEEL SHALL BE CONSIDERED INCIDENTAL TO VARIOUS PAY ITEMS.

12. ALL MATERIALS AND WORKMANSHIP SHALL BE IN ACCORDANCE WITH "STANDARD SPECIFICATIONS FOR ROADS AND STRUCTURES", JANUARY 2012, NORTH CAROLINA DEPARTMENT OF TRANSPORTATION (HEREIN CALLED STANDARD SPECIFICATIONS), EXCEPT AS NOTED HEREIN, ELSEWHERE ON PLANS, OR IN THE SPECIAL PROVISIONS (STRUCTURAL STEEL IN ACCORDANCE WITH CURRENT AREMA SPECIFICATIONS).

13. ALL CONCRETE USED IN SUPERSTRUCTURES AND SUBSTRUCTURES SHALL BE 4,500 PSI CLASS AA CONCRETE WITH NO. 57 OR 67 COARSE AGGREGATE AND SHALL BE AIR-ENTRAINED. MINIMUM CEMENT PER CUBIC YARD OF CONCRETE SHALL BE 6.5 BAGS. NO SUBSTITUTION OF FLYASH, BLAST FURNACE SLAG OR OTHER MATERIAL WILL BE PERMITTED IN MEETING THIS MINIMUM CEMENT REQUIREMENT. CHAMFER ALL EXPOSED EDGES AND CORNERS EXCEPT AS NOTED. THE USE OF GROUND GRANULATED BLAST FURNACE SLAG IS NOT PERMITTED IN THIS STRUCTURE.

14. CONTROL OF WORK: ALL WORK INVOLVED IN THE CONSTRUCTION OF THE RAILWAY STRUCTURE SHALL BE PERFORMED SATISFACTORY TO THE ENGINEER AND/OR NORFOLK SOUTHERN RAILWAY COMPANY. ALL METHODS OF HANDLING THE WORK AFFECTING THE SAFETY OF RAIL OPERATIONS MUST BE APPROVED BY THE RAILWAY COMPANY BEFORE PROCEEDING WITH THAT PORTION OF THE WORK. RAIL TRAFFIC SHALL, AT ALL TIMES, BE MAINTAINED AND PROTECTED. THE CONTRACTOR SHALL NOT AT ANY TIME DELAY OR INTERFERE WITH RAIL OPERATIONS.

15. ALL CONSTRUCTION JOINTS SHOWN ON THESE PLANS SHALL BE REQUIRED UNLESS SHOWN AS OPTIONAL. CONSTRUCTION JOINTS SHALL NOT BE PERMITTED EXCEPT AS SHOWN ON PLANS, OR WHERE WRITTEN APPROVAL HAS BEEN OBTAINED.

16. NEEDLE BEAMS WILL NOT BE ALLOWED UNLESS OTHERWISE CALLED FOR ON THE PLANS OR APPROVED BY THE ENGINEER.

17. FOR METAL HANDRAIL WITH FENCING, SEE SPECIAL PROVISIONS.

18. FOR SELF-LUBRICATING EXPANSION BEARING ASSEMBLIES, SEE SPECIAL PROVISIONS.

19. FOR CONDUIT IN PARAPETS, SEE SPECIAL PROVISIONS.

20. FOR PORTLAND CEMENT, SEE SPECIAL PROVISIONS.

21. FOR FINE AND COARSE AGGREGATE, SEE SPECIAL PROVISIONS.

22. SEE "STRUCTURAL STEEL DETAILS" SHEET FOR STRUCTURAL STEEL NOTES.

23. FOR BACKFILL BEHIND ABUTMENTS AND OTHER BACKFILL AROUND THE STRUCTURE, SEE SPECIAL PROVISION "BACKFILLING AROUND STRUCTURES".

24. FOR PAINTING STRUCTURAL STEEL, SEE SPECIAL PROVISIONS.

25. FOR PROTECTION OF PAINTED STEEL, SEE SPECIAL PROVISIONS.

26. FOR ELASTOMERIC FLASHING, SEE SPECIAL PROVISIONS.

27. FOR RUBBER JOINT COMPOUNDS, SEE SPECIAL PROVISIONS.

28. FOR STRUCTURE DRAINAGE SYSTEM, SEE SPECIAL PROVISIONS.

29. FOR STRUCTURAL STEEL, SEE SPECIAL PROVISIONS.

30. FOR WATERSTOPS, SEE SPECIAL PROVISIONS.

31. FOR SUBMITTAL OF WORKING DRAWINGS, SEE SPECIAL PROVISIONS.

32. FOR FALSEWORK AND FORMWORK, SEE SPECIAL PROVISIONS.

33. FOR CRANE SAFETY, SEE SPECIAL PROVISIONS.

34. FOR GROUT FOR STRUCTURES, SEE SPECIAL PROVISIONS.

35. FOR WATERPROOFING, SEE SPECIAL PROVISIONS.

36. FOR REINFORCED CONCRETE DECK SLAB, SEE SPECIAL PROVISIONS.

37. FOR TEMPORARY RAILROAD SHORING, SEE SPECIAL PROVISIONS.

38. FOR FOUNDATION EXCAVATION, SEE SPECIAL PROVISIONS.

39. FOR PROTECTION OF RAILWAY INTERESTS, SEE SPECIAL PROVISIONS.

40. FOR RAILROAD ROADBED, SEE SPECIAL PROVISIONS.

41. STEEL SHEET PILING REQUIRED FOR SHORING SHALL BE HOT ROLLED.

42. FOR LIMITS OF TEMPORARY SHORING FOR MAINTENANCE OF TRAFFIC, SEE TRAFFIC CONTROL PLANS. FOR PAY ITEMS FOR TEMPORARY SHORING FOR MAINTENANCE OF TRAFFIC, SEE ROADWAY PLANS.

43. THE SUBSTRUCTURE OF THE EXISTING BRIDGE INDICATED ON THE PLANS IS FROM THE BEST INFORMATION AVAILABLE. THIS INFORMATION IS SHOWN FOR THE CONVENIENCE OF THE CONTRACTOR. THE CONTRACTOR SHALL HAVE NO CLAIM WHATSOEVER AGAINST THE DEPARTMENT OF TRANSPORTATION FOR ANY DELAYS OR ADDITIONAL COST INCURRED BASED ON DIFFERENCES BETWEEN THE EXISTING BRIDGE SUBSTRUCTURE SHOWN ON THE PLANS AND THE ACTUAL CONDITIONS AT THE PROJECT SITE.

44. REMOVAL OF THE EXISTING BRIDGE SHALL BE PERFORMED IN A MANNER THAT PREVENTS DEBRIS FROM FALLING INTO THE WATER. THE CONTRACTOR SHALL SUBMIT DEMOLITION PLANS FOR REVIEW AND REMOVE THE BRIDGE IN ACCORDANCE WITH ARTICLE 402-2 OF THE STANDARD SPECIFICATIONS.

45. THIS STRUCTURE HAS BEEN DESIGNED IN ACCORDANCE WITH "HEC 18-EVALUATING SCOUR AT BRIDGES".

PROJECT NO. R-4047

HAYWOOD COUNTY

STATION: POC STA. 42+60.93 -L-
POT STA. 18+81.73 -RR-

SHEET 4 OF 4

STATE OF NORTH CAROLINA
DEPARTMENT OF TRANSPORTATION
RALEIGH

GENERAL DRAWING

GENERAL NOTES

DWG. 4 OF 60

REVISIONS						SHEET NO.
NO.	BY:	DATE:	NO.	BY:	DATE:	S-4
1			3			TOTAL SHEETS
2			4			60

NORTH CAROLINA PROFESSIONAL ENGINEER SEAL 11725 DAVID R. RUGGLES
2-20-14

Firm License No. C-1051
421 Fayetteville St,
Suite 400
Raleigh, NC 27601
T 919.380.8750
www.stewartinc.com
STEWART

DRAWN BY:	P. JACOB	DATE :	01/14
CHECKED BY:	D. RUGGLES	DATE :	01/14
DESIGN ENGINEER OF RECORD:	D. RUGGLES	DATE :	01/14

2/20/2014
...\Final\04-GeneralNotes.dgn
USER:jabrll

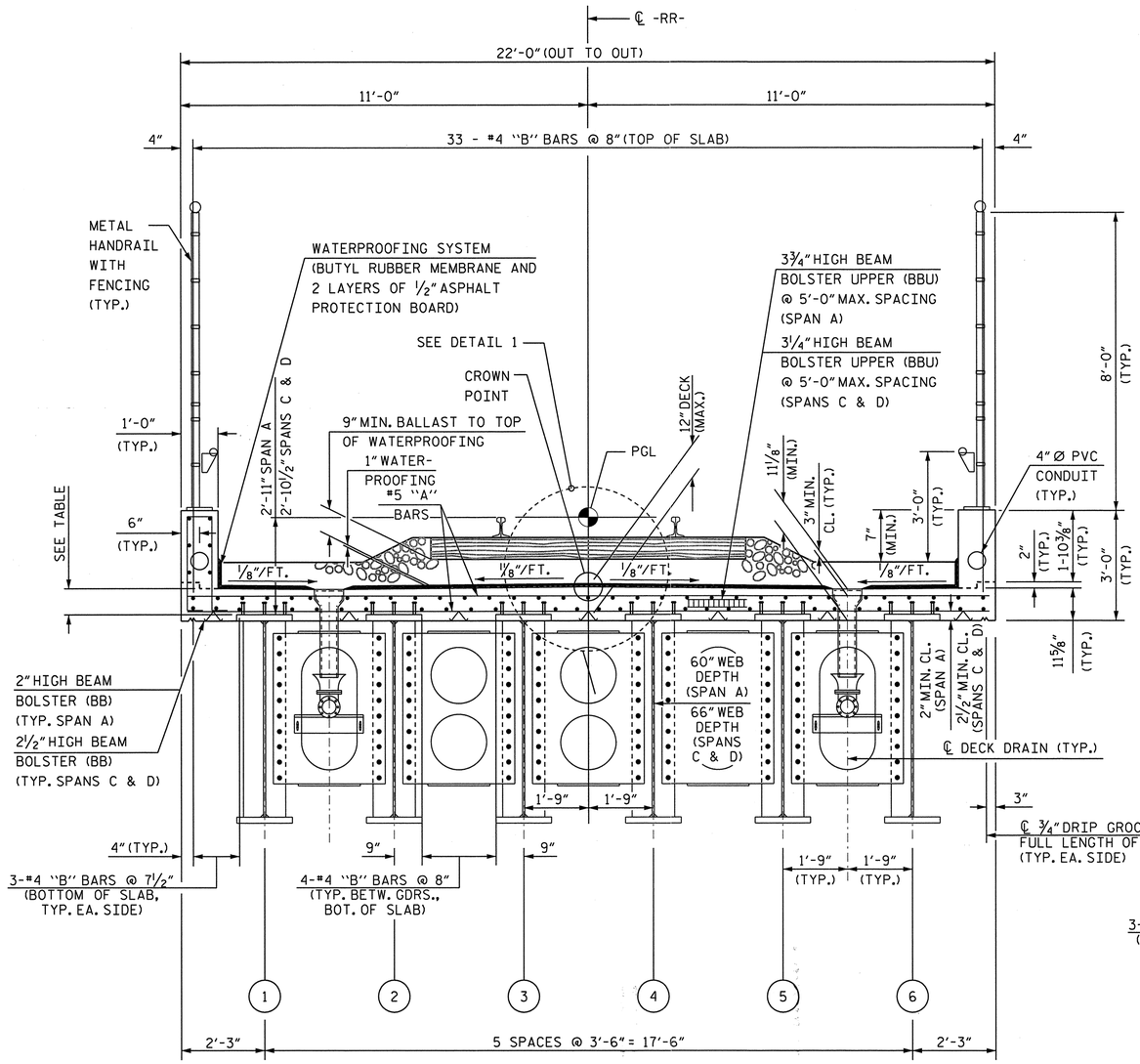

SPANS A, C, & D

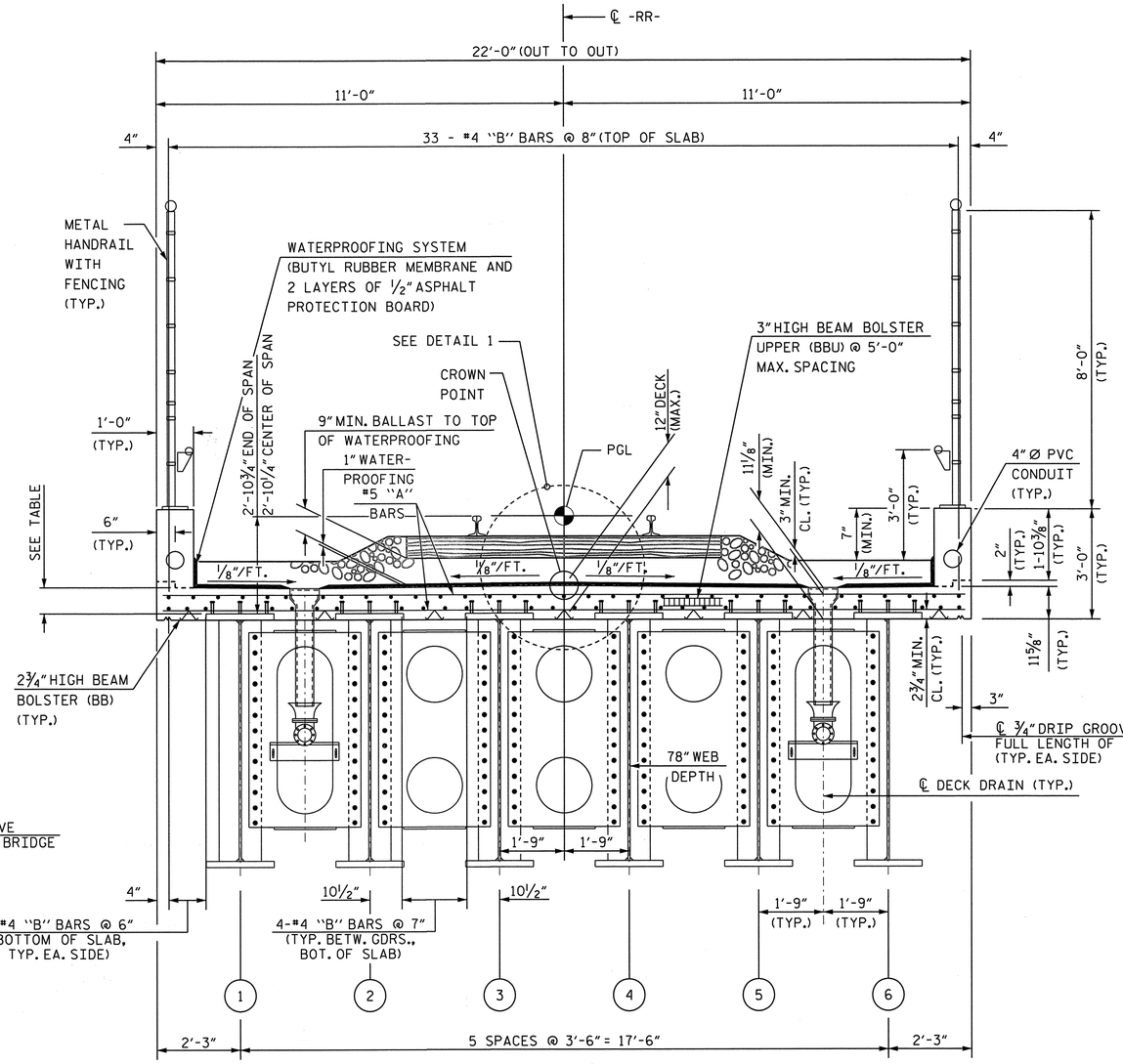

SPAN B

TYPICAL SECTIONS

TABLE SHOWING MINIMUM DECK THICKNESS - TOP OF FLANGE TO TOP OF DECK	
SPAN A	10 1/8"
SPAN B AT ENDS OF SPAN	9 7/8"
SPAN B AT CENTER OF SPAN	9 3/8"
SPAN C	9 5/8"
SPAN D	9 5/8"

DECK THICKNESS TABLE

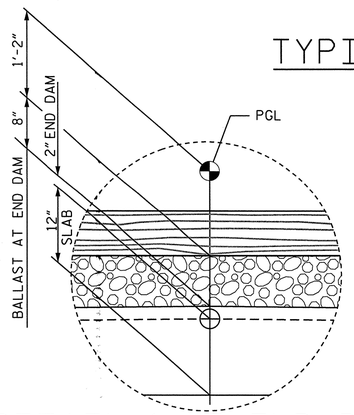

DETAIL 1 AT END DAM

REINFORCEMENT NOT SHOWN FOR CLARITY.

PROJECT NO. R-4047

HAYWOOD COUNTY

STATION: POC STA. 42+60.93 -L-
POT STA. 18+81.73 -RR-

SHEET 1 OF 2

STATE OF NORTH CAROLINA
DEPARTMENT OF TRANSPORTATION
RALEIGH

TYPICAL SECTION

DRAWN BY: P. JACOB DATE: 01/14
CHECKED BY: D. RUGGLES DATE: 01/14
DESIGN ENGINEER OF RECORD: D. RUGGLES DATE: 01/14

NORTH CAROLINA PROFESSIONAL SEAL 11725 ENGINEER DAVID T. RUGGLES
2-20-14

DWG. 5 OF 60

Firm License No. C-1051
421 Fayetteville St,
Suite 400
Raleigh, NC 27601
T 919.380.8750
www.stewartinc.com

STEWART

REVISIONS						SHEET NO.
NO.	BY:	DATE:	NO.	BY:	DATE:	S-5
1			3			TOTAL SHEETS
2			4			60

2/20/2014
...\Final\05-Typical Section.dgn
USER:jabril

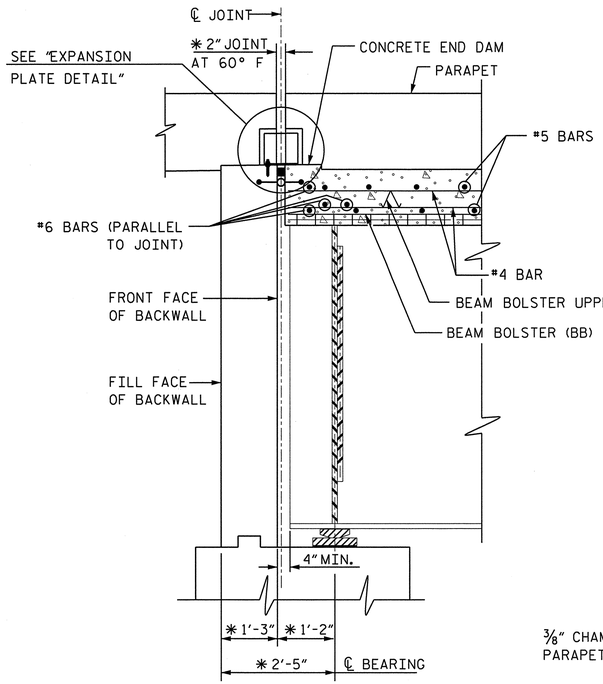

SECTION A-A

ABUTMENT 1 SHOWN,
ABUTMENT 2 SIMILAR

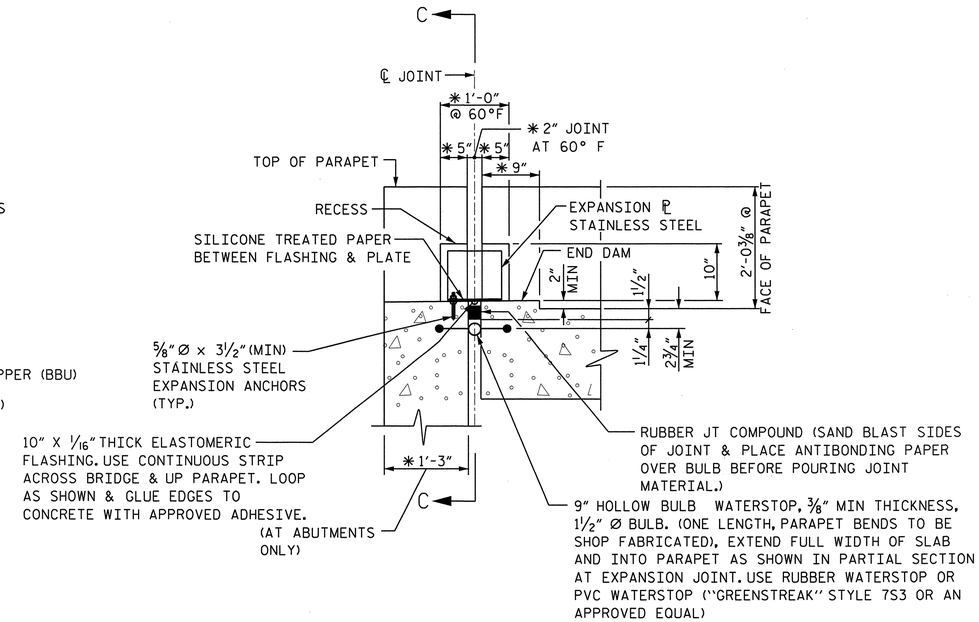

EXPANSION PLATE DETAIL

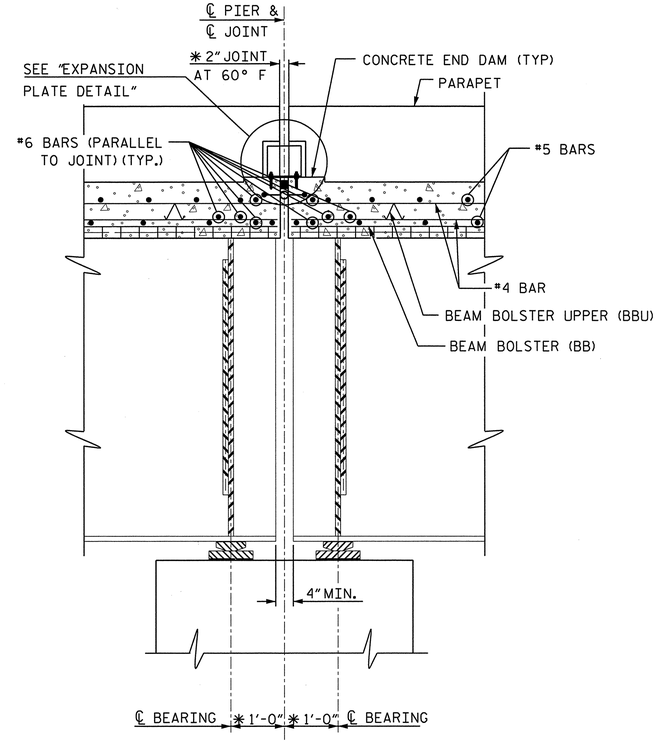

SECTION B-B

PIER 3 SHOWN,
PIERS 1 AND 2 SIMILAR

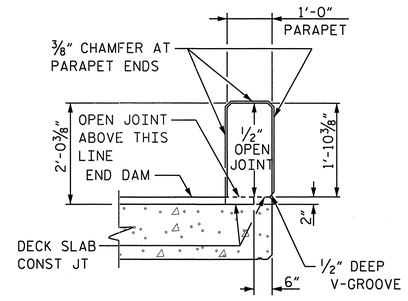

SECTION THRU OPEN JOINT IN PARAPET

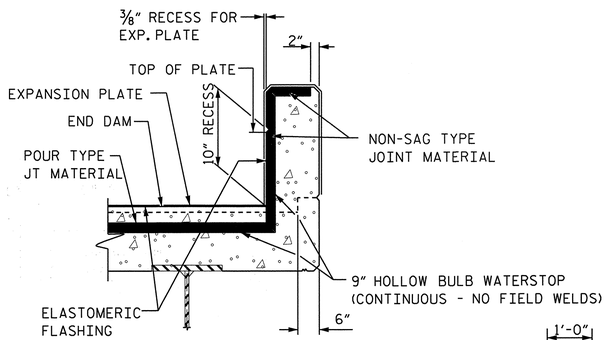

SECTION C-C

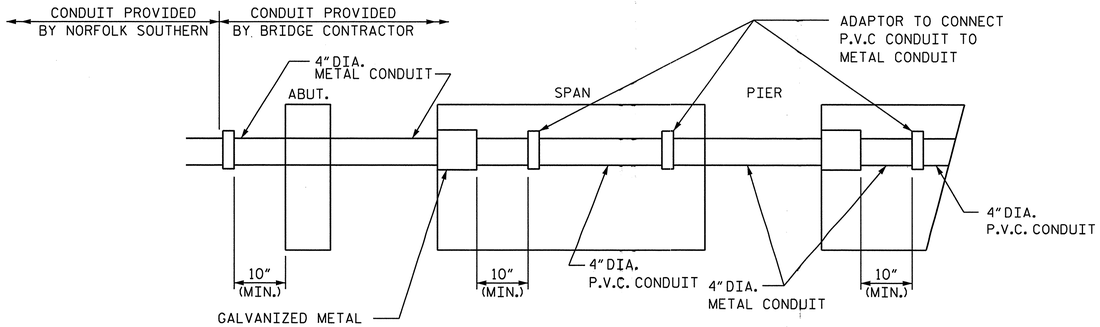

SIGNAL CONDUIT LAYOUT

NTS

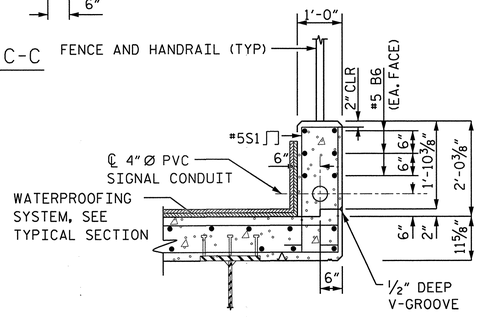

PARAPET REINFORCMENT DETAIL

NOTES:
✱ NORMAL TO ℄ JOINT

FOR SECTION A-A, B-B, & C-C CALLOUTS, SEE SLAB PLANS.

CONDUIT TO BE 4" DIA. IN ACCORDANCE WITH UNDERWRITERS'S LABORATORY SPECIFICATIONS.

EXPANSION FITTINGS OF CONDUIT SHALL BE LOCATED AT DECK JOINT AT ABUTMENT 1, ABUTMENT 2, AND PIERS 1, 2, AND 3.

COUPLING SHALL BE PROVIDED BEHIND BACKWALL OF ABUTMENT 1 AND 2 FOR CONNECTION TO 4" DIA. RIGID PIPE. (RIGID PIPE BY NORFOLK SOUTHERN)

PROJECT NO. R-4047

HAYWOOD COUNTY

STATION: POC STA. 42+60.93 -L-
POT STA. 18+81.73 -RR-

SHEET 2 OF 2

STATE OF NORTH CAROLINA
DEPARTMENT OF TRANSPORTATION
RALEIGH

SUPERSTRUCTURE

SPAN DETAILS

REVISIONS						SHEET NO.
NO.	BY:	DATE:	NO.	BY:	DATE:	S-6
1			3			TOTAL SHEETS
2			4			60

DRAWN BY: P. JACOB DATE : 01/14
CHECKED BY: D. RUGGLES DATE : 01/14
DESIGN ENGINEER OF RECORD: D. RUGGLES DATE : 01/14

NORTH CAROLINA PROFESSIONAL SEAL 11725 ENGINEER DAVID A RUGGLES
2-20-14

DWG. 6 OF 60

Firm License No. C-1051
421 Fayetteville St.
Suite 400
Raleigh, NC 27601
T 919.380.8750
www.stewartinc.com

STEWART

2/20/2014
...\06-TypicalDeck Details.dgn
USER:jabril

NOTES:

1. ALL REINFORCING SHALL BE EPOXY COATED
2. FOR SECTION A-A AND B-B SEE "SPAN DETAILS" SHEET.
3. PROVIDE LAP SPLICE FOR #4 LONGITUDINAL BARS IN DECK AS SHOWN. ALTERNATE SPLICE LOCATION IN ADJACENT BARS.
4. FOR DRAIN DETAIL, SEE "STRUCTURE DRAINAGE DETAILS", SHEET 1 OF 6 AND SHEET 6 OF 6.
5. D.I.P. = DUCTILE IRON PIPE
6. E.F. = EACH FACE

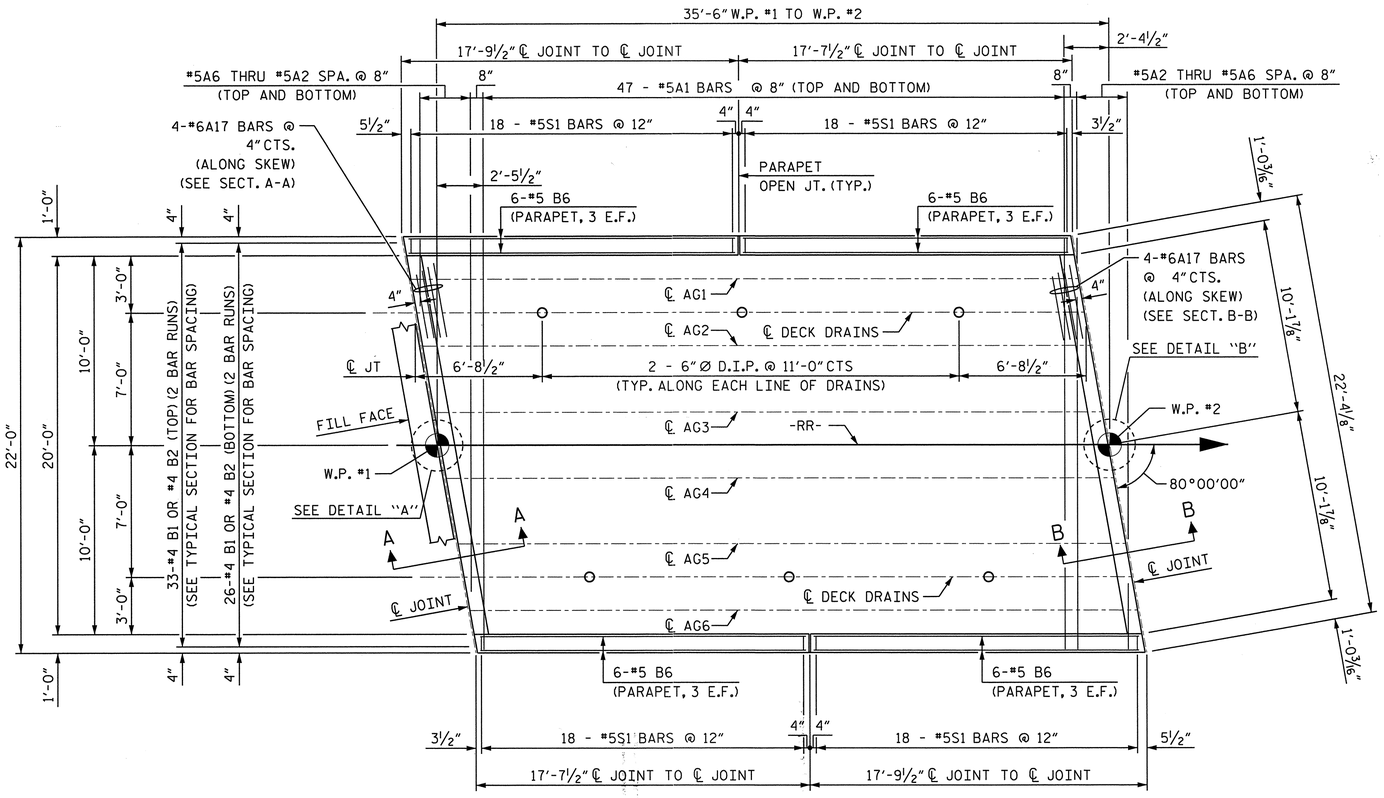

PLAN OF SPAN A

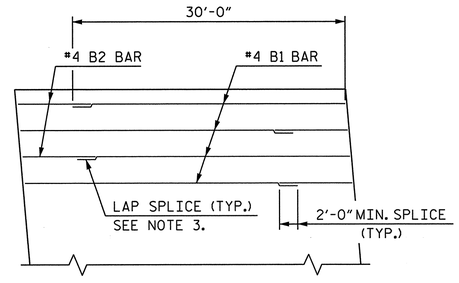

SPLICE LAYOUT

NTS

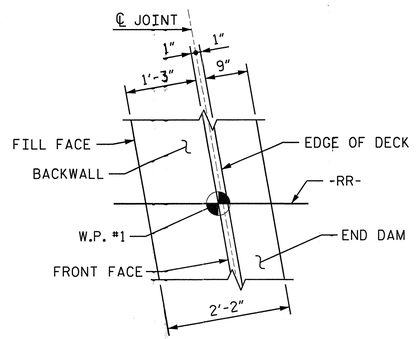

DETAIL "A"

(REINF. NOT SHOWN)

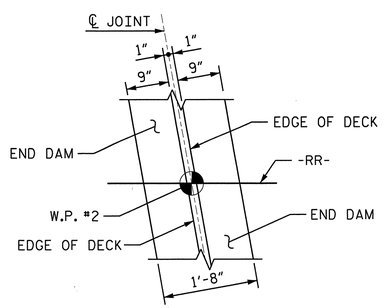

DETAIL "B"

(REINF. NOT SHOWN)

PROJECT NO. R-4047

HAYWOOD COUNTY

STATION: POC STA. 42+60.93 -L-
POT STA. 18+81.73 -RR-

SHEET 1 OF 4

STATE OF NORTH CAROLINA
DEPARTMENT OF TRANSPORTATION
RALEIGH

SUPERSTRUCTURE

PLAN OF SPAN A

DWG. 7 OF 60

REVISIONS						SHEET NO.
NO.	BY:	DATE:	NO.	BY:	DATE:	S-7
1			3			TOTAL SHEETS
2			4			60

NORTH CAROLINA SEAL 11725 ENGINEER DAVID R. RUGGLES
2-20-14

Firm License No. C-1051
421 Fayetteville St,
Suite 400
Raleigh, NC 27601
T 919.380.8750
www.stewartinc.com

STEWART

DRAWN BY: P. JACOB	DATE : 01/14	
CHECKED BY: D. RUGGLES	DATE : 01/14	
DESIGN ENGINEER OF RECORD: D. RUGGLES	DATE : 01/14	

2/20/2014
...\Final\07-Span A Slab Plan.dgn
USER:jabril

NOTES:

1. ALL REINFORCING SHALL BE EPOXY COATED
2. FOR SECTION B-B SEE "SPAN DETAILS" SHEET.
3. PROVIDE LAP SPLICE FOR #4 LONGITUDINAL BARS IN DECK AS SHOWN. ALTERNATE SPLICE LOCATION IN ADJACENT BARS.
4. FOR DRAIN DETAIL, SEE "STRUCTURE DRAINAGE DETAILS", SHEET 2 OF 6 AND SHEET 6 OF 6.
5. D.I.P. = DUCTILE IRON PIPE
6. E.F. = EACH FACE

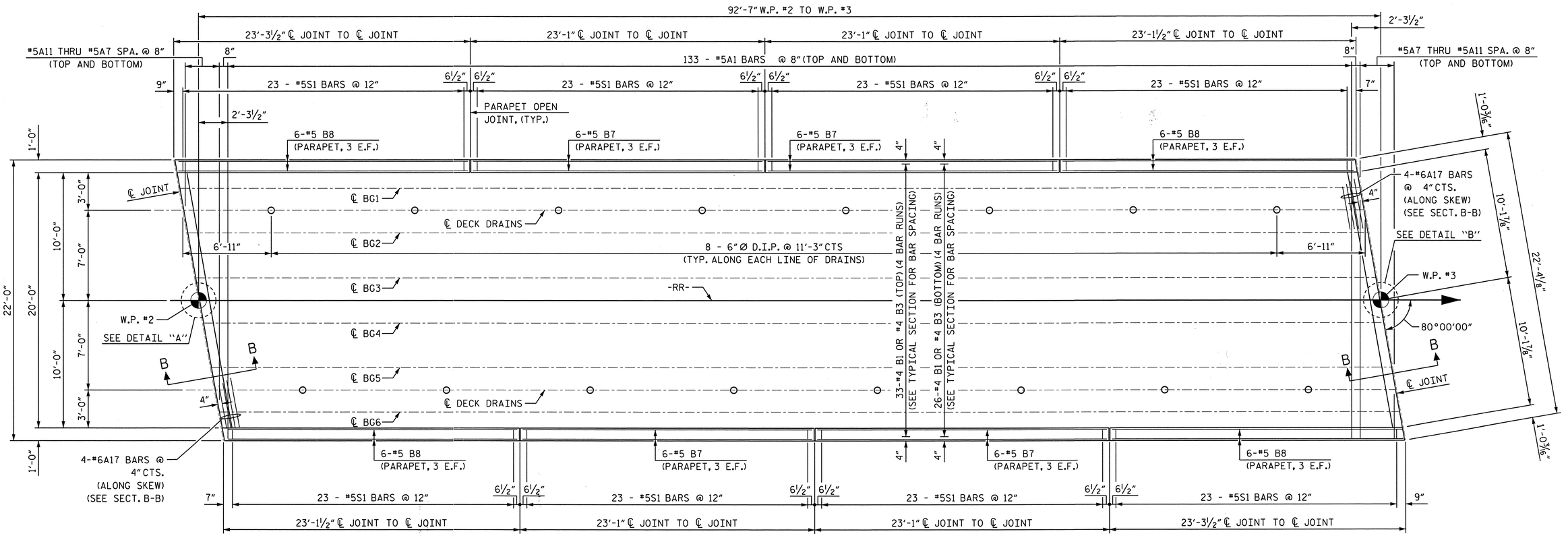

PLAN OF SPAN B

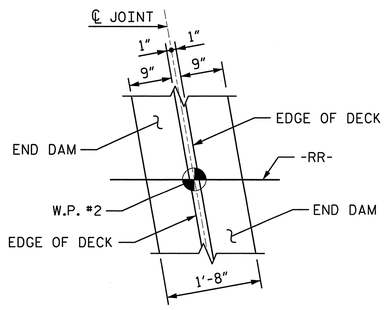

DETAIL "A"

(REINF. NOT SHOWN)

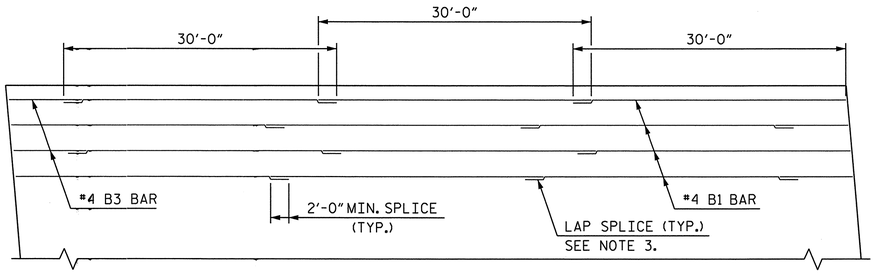

SPLICE LAYOUT

NTS

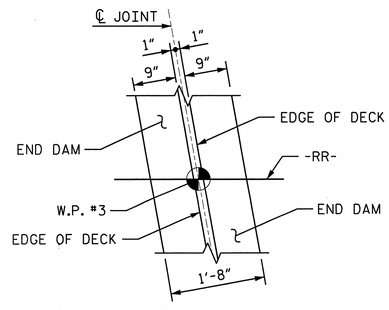

DETAIL "B"

(REINF. NOT SHOWN)

PROJECT NO. R-4047

HAYWOOD COUNTY

STATION: POC STA. 42+60.93 -L-
POT STA. 18+81.73 -RR-

SHEET 2 OF 4

STATE OF NORTH CAROLINA
DEPARTMENT OF TRANSPORTATION
RALEIGH

SUPERSTRUCTURE

PLAN OF SPAN B

DWG. 8 OF 60

DRAWN BY: P. JACOB	DATE : 01/14		
CHECKED BY: D. RUGGLES	DATE : 01/14		
DESIGN ENGINEER OF RECORD: D. RUGGLES	DATE : 01/14		

NORTH CAROLINA PROFESSIONAL ENGINEER SEAL 11725 DAVID R. RUGGLES
2-20-14

Firm License No. C-1051
421 Fayetteville St,
Suite 400
Raleigh, NC 27601
T 919.380.8750
www.stewartinc.com
STEWART

REVISIONS						SHEET NO.
NO.	BY:	DATE:	NO.	BY:	DATE:	S-8
1			3			TOTAL SHEETS
2			4			60

2/20/2014
...\Final\08-Span B Slab Plan.dgn
USER:jabril

NOTES:
1. ALL REINFORCING SHALL BE EPOXY COATED
2. FOR SECTION B-B SEE "DECK DETAILS" SHEET.
3. PROVIDE LAP SPLICE FOR #4 LONGITUDINAL BARS IN DECK AS SHOWN. ALTERNATE SPLICE LOCATION IN ADJACENT BARS.
4. FOR DRAIN DETAIL, SEE "STRUCTURE DRAINAGE DETAILS", SHEET 3 OF 6 AND SHEET 6 OF 6.
5. D.I.P. = DUCTILE IRON PIPE
6. E.F. = EACH FACE

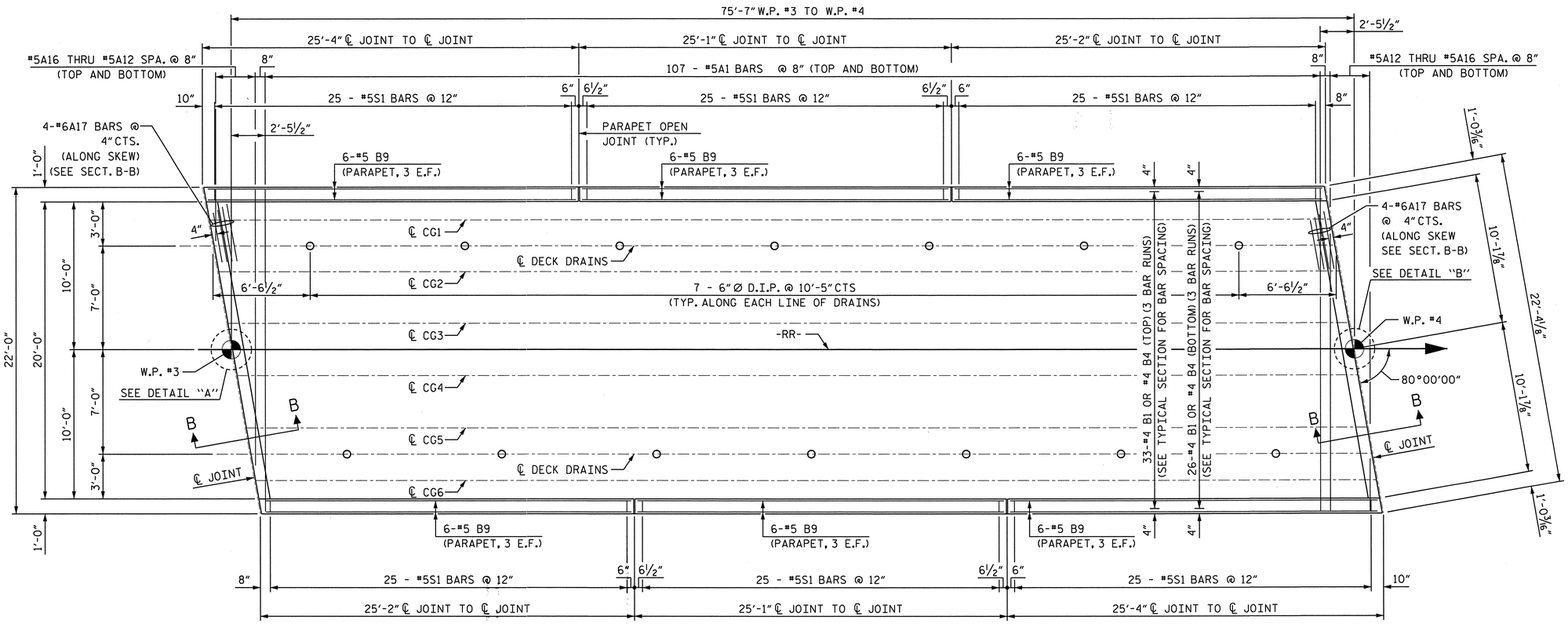

PLAN OF SPAN C

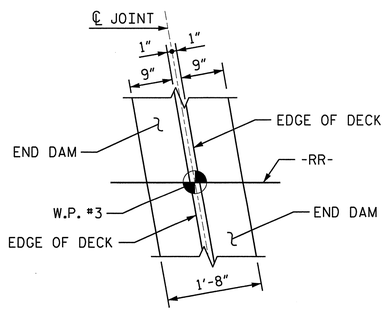

DETAIL "A"
(REINF. NOT SHOWN)

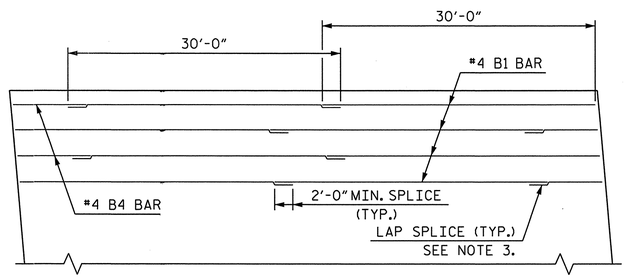

SPLICE LAYOUT
NTS

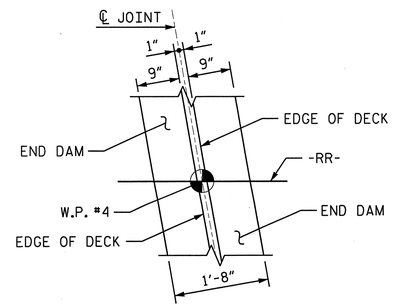

DETAIL "B"
(REINF. NOT SHOWN)

NORTH CAROLINA PROFESSIONAL ENGINEER SEAL 11725 DAVID R. RUGGLES
2-20-14

STEWART
Firm License No. C-1051
421 Fayetteville St, Suite 400
Raleigh, NC 27601
T 919.380.8750
www.stewartinc.com

PROJECT NO. R-4047
HAYWOOD COUNTY
STATION: POC STA. 42+60.93 -L-
POT STA. 18+81.73 -RR-
SHEET 3 OF 4

STATE OF NORTH CAROLINA
DEPARTMENT OF TRANSPORTATION
RALEIGH

SUPERSTRUCTURE

PLAN OF SPAN C

DWG. 9 OF 60

REVISIONS						SHEET NO.
NO.	BY:	DATE:	NO.	BY:	DATE:	S-9
1			3			TOTAL SHEETS
2			4			10

DRAWN BY: P. JACOB DATE : 01/14
CHECKED BY: D. RUGGLES DATE : 01/14
DESIGN ENGINEER OF RECORD: D. RUGGLES DATE : 01/14

2/20/2014
...\Final\09-Span C Slab Plan.dgn
USER:jabril

NOTES:
1. ALL REINFORCING SHALL BE EPOXY COATED
2. FOR SECTION A-A AND B-B SEE "SPAN DETAILS" SHEET.
3. PROVIDE LAP SPLICE FOR #4 LONGITUDINAL BARS IN DECK AS SHOWN. ALTERNATE SPLICE LOCATION IN ADJACENT BARS.
4. FOR DRAIN DETAIL, SEE "STRUCTURE DRAINAGE DETAILS", SHEET 4 OF 6 AND SHEET 6 OF 6.
5. D.I.P. = DUCTILE IRON PIPE
6. E.F. = EACH FACE

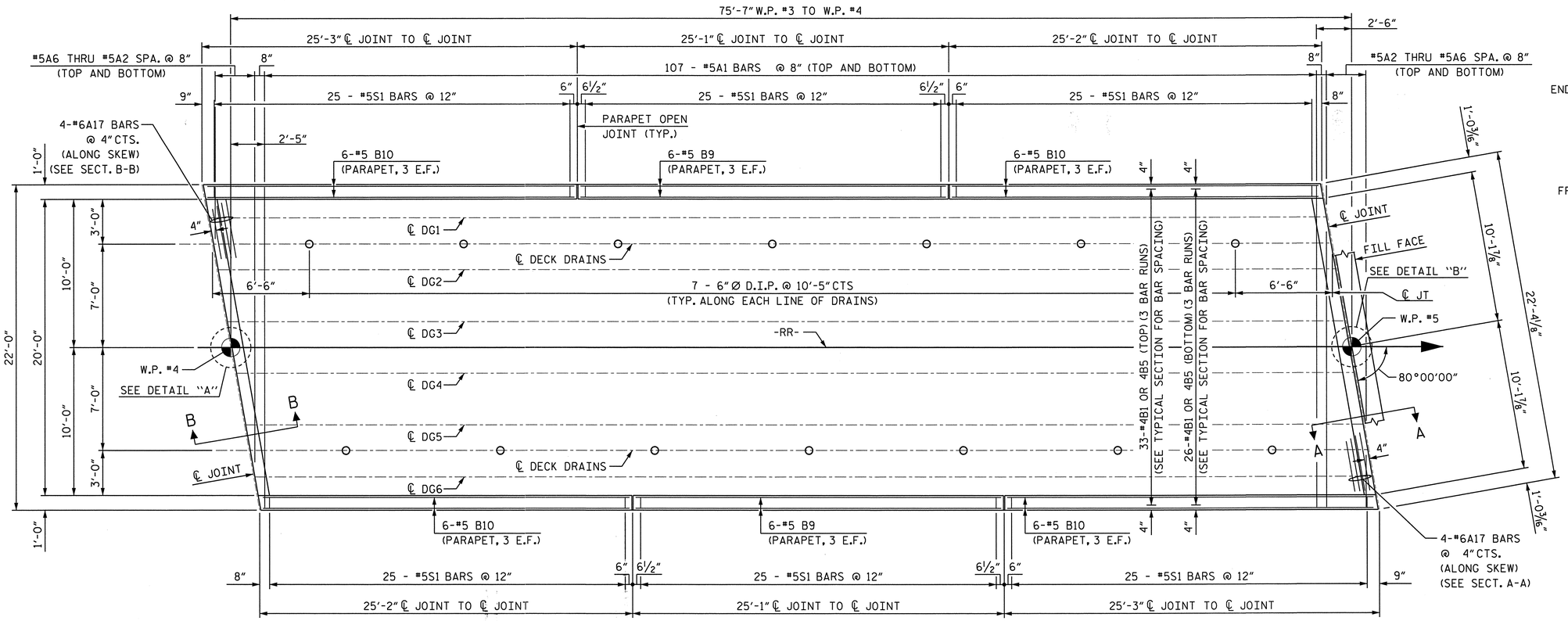

PLAN OF SPAN D

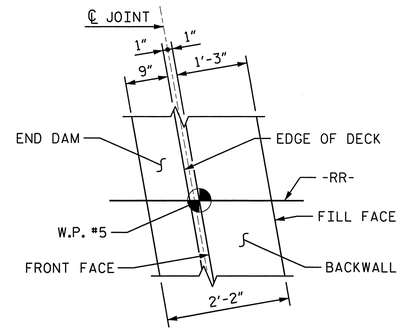

DETAIL "B"
(REINF. NOT SHOWN)

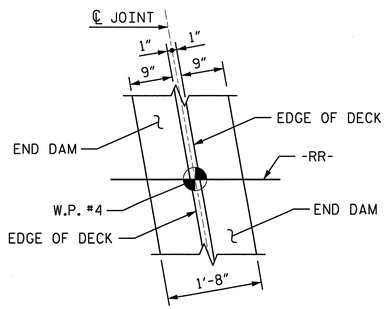

DETAIL "A"
(REINF. NOT SHOWN)

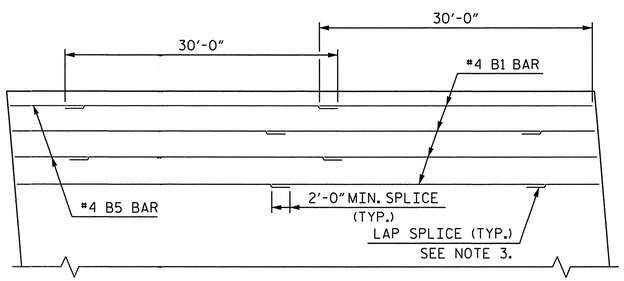

SPLICE LAYOUT
NTS

PROJECT NO. R-4047
HAYWOOD COUNTY
STATION: POC STA. 42+60.93 -L-
POT STA. 18+81.73 -RR-
SHEET 4 OF 4

STATE OF NORTH CAROLINA
DEPARTMENT OF TRANSPORTATION
RALEIGH

SUPERSTRUCTURE

PLAN OF SPAN D

DWG. 10 OF 60

REVISIONS						SHEET NO.
NO.	BY:	DATE:	NO.	BY:	DATE:	S-10
1			3			TOTAL SHEETS
2			4			60

NORTH CAROLINA PROFESSIONAL SEAL 11725 ENGINEER DAVID R. RUGGLES
2-20-14

Firm License No. C-1051
421 Fayetteville St,
Suite 400
Raleigh, NC 27601
T 919.380.8750
www.stewartinc.com
STEWART

DRAWN BY: J. ABRIL DATE: 01/14
CHECKED BY: P. JACOB DATE: 01/14
DESIGN ENGINEER OF RECORD: D. RUGGLES DATE: 01/14

2/20/2014
...\Final\10-Span D Slab Plan.dgn
USER:jabril

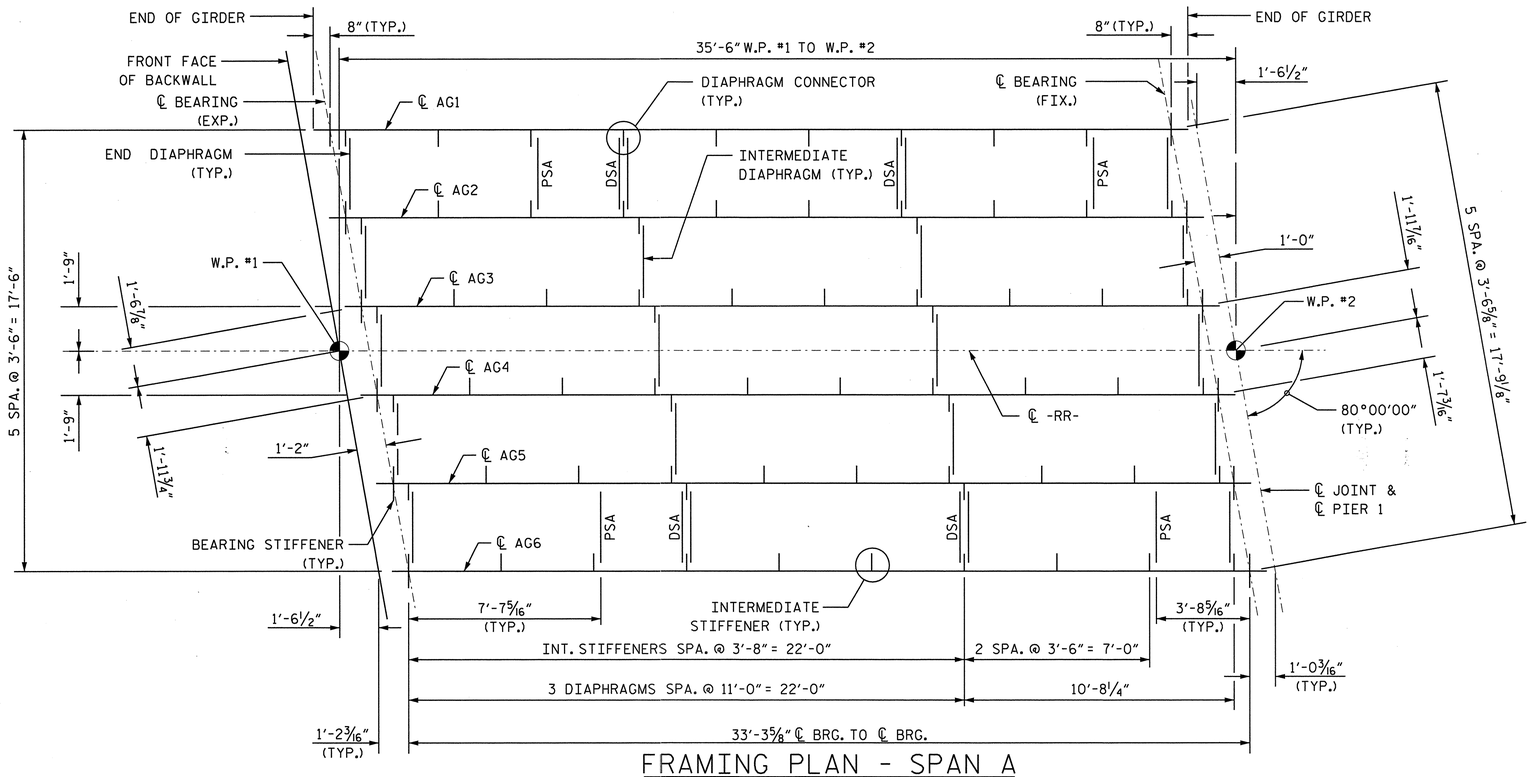

FRAMING PLAN - SPAN A

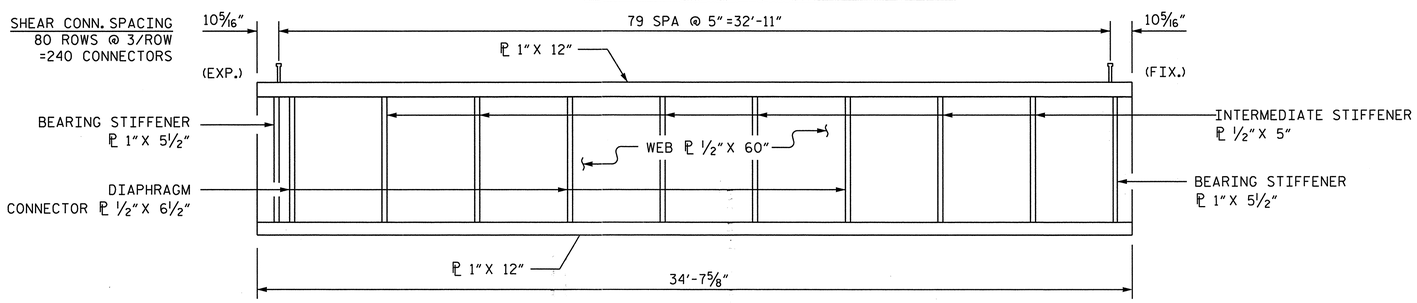

GIRDER ELEVATION - SPAN A

(GIRDER 1 SHOWN, OTHERS SIMILAR) (NTS)

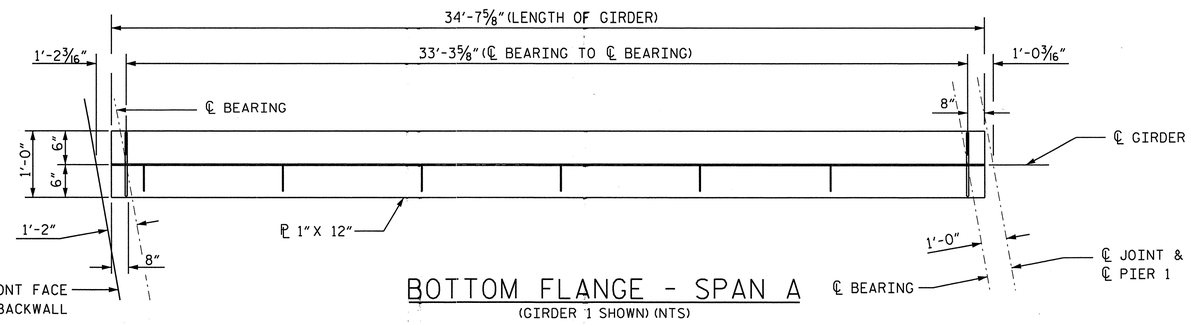

BOTTOM FLANGE - SPAN A

(GIRDER 1 SHOWN) (NTS)

NOTES:

1. PSA DENOTES PIPE SUPPORT ANGLE.
2. DSA DENOTES DIPHRAGM SUPPORT ANGLE.
3. SEE DWG. 21-26 FOR DRAINAGE DETAILS.

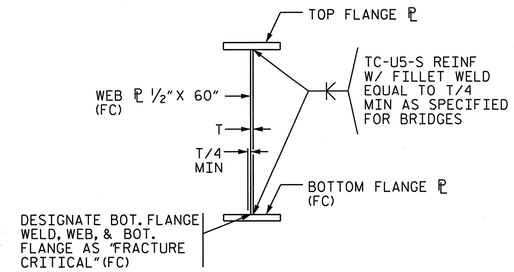

FLANGE TO WEB WELD

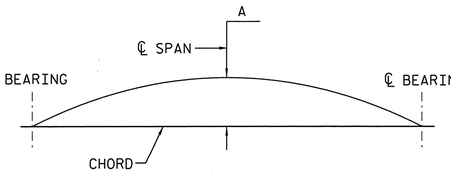

CAMBER DIAGRAM

NTS

DEFLECTION DUE TO WEIGHT OF:	INTERIOR GIRDERS	EXTERIOR GIRDERS
GIRDERS, DIAPHRAGMS, ETC.	0.007	0.006
SLAB	0.016	0.018
CURB AND FENCE	0.002	0.002
BALLAST, TIES, AND RAILS	0.007	0.007
DIMENSION "A"	⅜"	⅜"

DEFLECTIONS ARE SHOWN IN DECIMAL FEET.
DIMENSION "A" IS REPORTED IN INCHES.

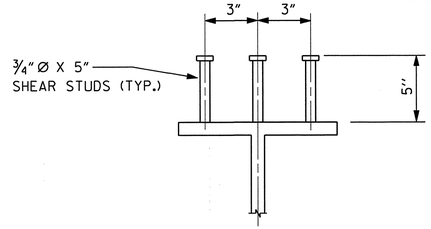

SHEAR STUD DETAILS

PROJECT NO. R-4047

HAYWOOD COUNTY

STATION: POC STA. 42+60.93 -L-
POT STA. 18+81.73 -RR-

SHEET 1 OF 4

STATE OF NORTH CAROLINA
DEPARTMENT OF TRANSPORTATION
RALEIGH

SUPERSTRUCTURE

FRAMING PLAN SPAN A

NORTH CAROLINA SEAL 11725 ENGINEER DAVID R. RUGGLES
2-20-14

STEWART

Firm License No. C-1051
421 Fayetteville St,
Suite 400
Raleigh, NC 27601
T 919.380.8750
www.stewartinc.com

DWG. 11 OF 60

REVISIONS						SHEET NO.
NO.	BY:	DATE:	NO.	BY:	DATE:	S-11
1			3			TOTAL SHEETS
2			4			60

DRAWN BY: J. ABRIL DATE : 01/14
CHECKED BY: D. RUGGLES DATE : 01/14
DESIGN ENGINEER OF RECORD: D. RUGGLES DATE : 01/14

2/20/2014
...\11-Span A Framing Plan.dgn
USER:jabril

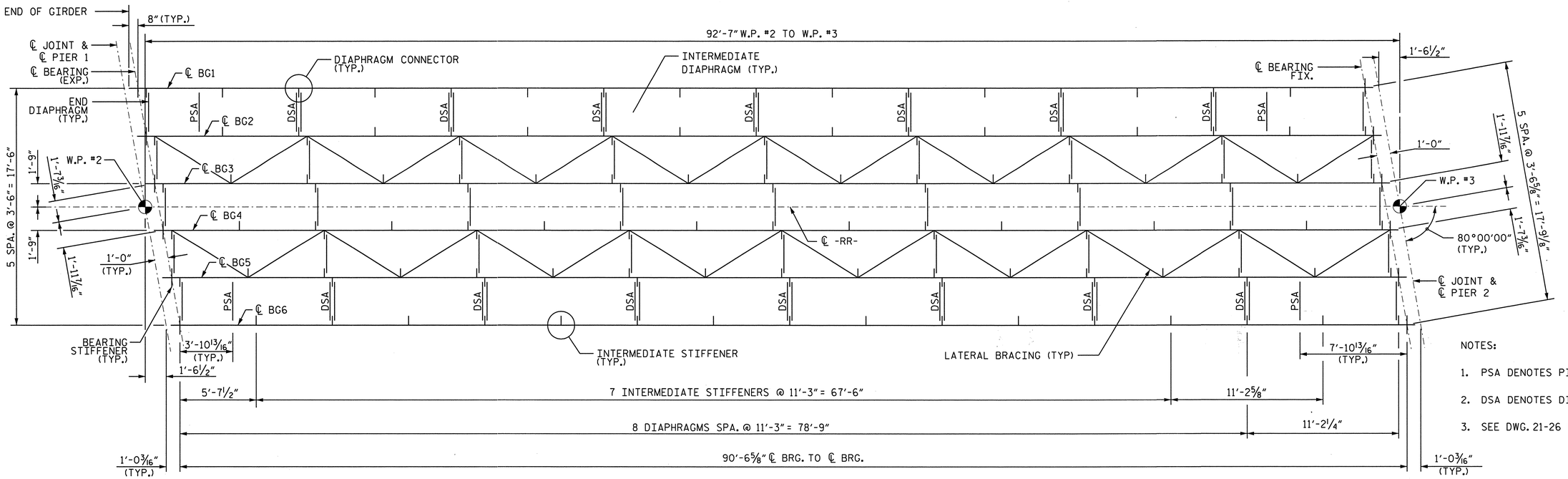

FRAMING PLAN - SPAN B

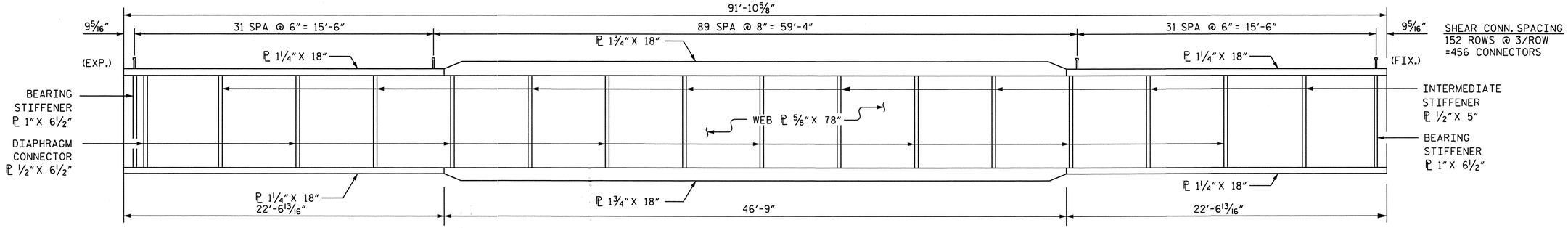

GIRDER ELEVATION - SPAN B

(GIRDER 1 SHOWN, OTHERS SIMILAR) (NTS)

NOTE:
FOR FLANGE TO WEB WELD & SHEAR STUD DETAILS, SEE SHEET 1 OF 4.

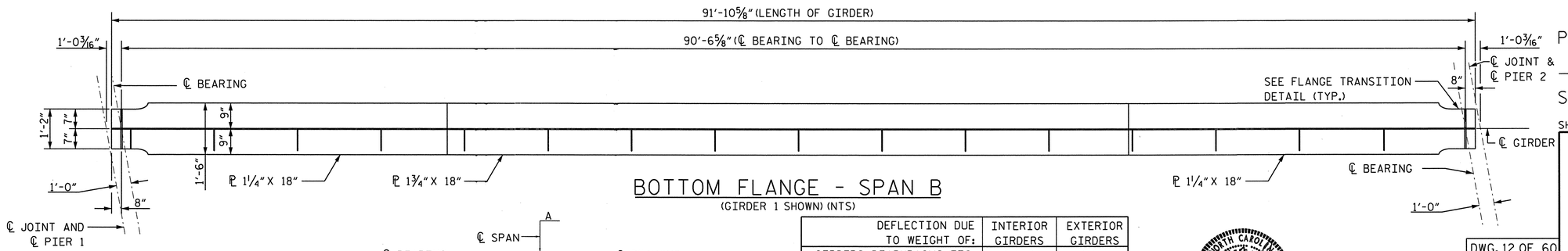

BOTTOM FLANGE - SPAN B

(GIRDER 1 SHOWN) (NTS)

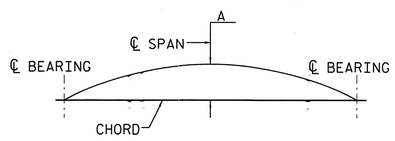

CAMBER DIAGRAM

NTS

DEFLECTION DUE TO WEIGHT OF:	INTERIOR GIRDERS	EXTERIOR GIRDERS
GIRDERS, DIAPHRAGMS, ETC.	0.120	0.111
SLAB	0.162	0.185
CURB AND FENCE	0.024	0.024
BALLAST, TIES, AND RAILS	0.107	0.107
DIMENSION "A"	4¹⁵⁄16"	5⅛"

DEFLECTIONS ARE SHOWN IN DECIMAL FEET.
DIMENSION "A" IS REPORTED IN INCHES.

NOTES:

1. PSA DENOTES PIPE SUPPORT ANGLE.
2. DSA DENOTES DIPHRAGM SUPPORT ANGLE.
3. SEE DWG. 21-26 FOR DRAINAGE DETAILS.

NORTH CAROLINA PROFESSIONAL ENGINEER SEAL 11725 DAVID R. RUGGLES
2-20-14

DRAWN BY: J. ABRIL DATE : 01/14
CHECKED BY: D. RUGGLES DATE : 01/14
DESIGN ENGINEER OF RECORD: D. RUGGLES DATE : 01/14

PROJECT NO. R-4047
HAYWOOD COUNTY
STATION: POC STA. 42+60.93 -L-
POT STA. 18+81.73 -RR-
SHEET 2 OF 4

STATE OF NORTH CAROLINA
DEPARTMENT OF TRANSPORTATION
RALEIGH

SUPERSTRUCTURE

FRAMING PLAN SPAN B

DWG. 12 OF 60

Firm License No. C-1051
421 Fayetteville St,
Suite 400
Raleigh, NC 27601
T 919.380.8750
www.stewartinc.com
STEWART

REVISIONS						SHEET NO.
NO.	BY:	DATE:	NO.	BY:	DATE:	S-12
1			3			TOTAL SHEETS
2			4			60

2/20/2014
...\12-Span B Framing Plan.dgn
USER:jabril

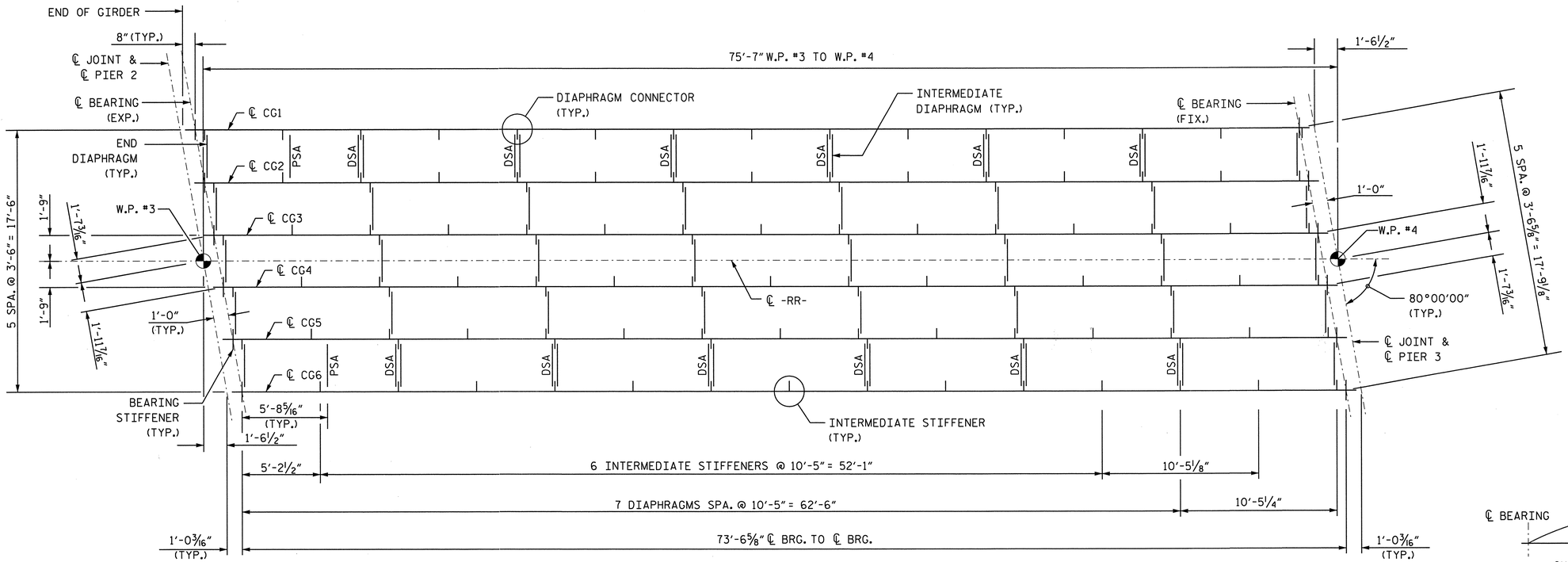

FRAMING PLAN - SPAN C

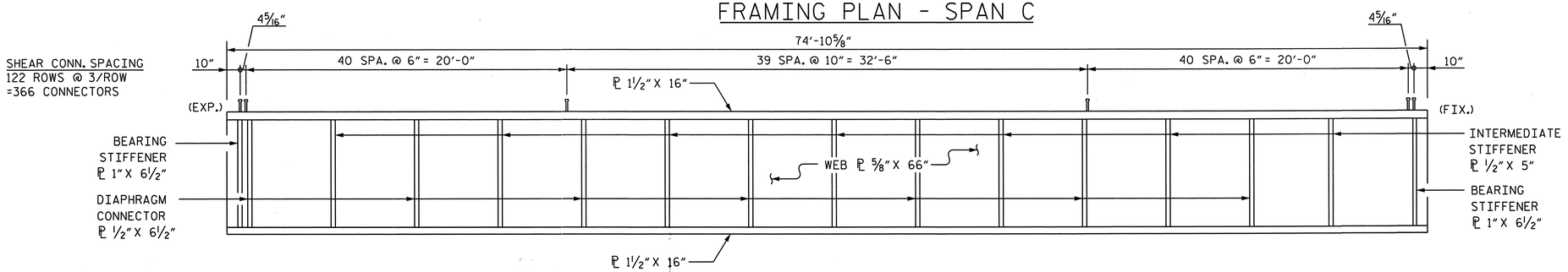

GIRDER ELEVATION - SPAN C

(GIRDER 1 SHOWN, OTHERS SIMILAR) (NTS)

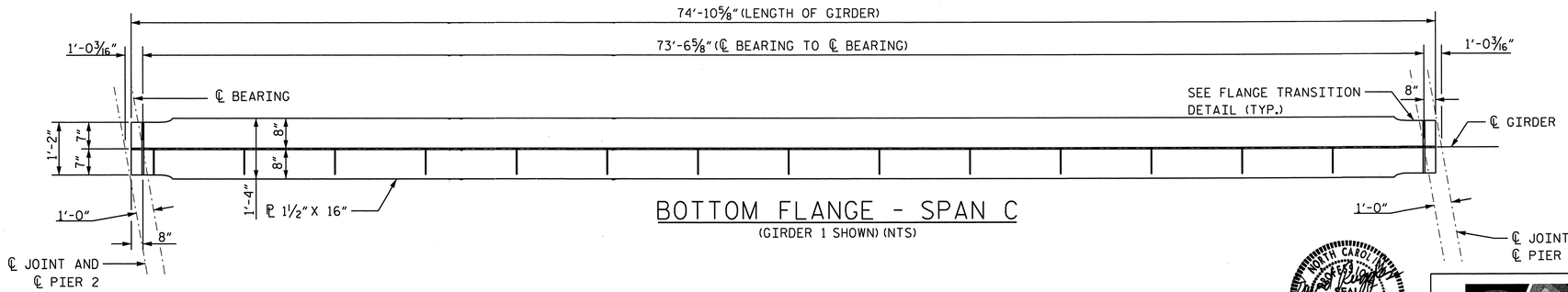

BOTTOM FLANGE - SPAN C

(GIRDER 1 SHOWN) (NTS)

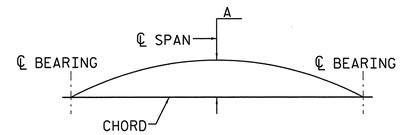

CAMBER DIAGRAM

NTS

DEFLECTION DUE TO WEIGHT OF:	INTERIOR GIRDERS	EXTERIOR GIRDERS
GIRDERS, DIAPHRAGMS, ETC.	0.119	0.111
SLAB	0.171	0.196
CURB AND FENCE	0.024	0.024
BALLAST, TIES, AND RAILS	0.103	0.103
DIMENSION "A"	5"	5 3/16"

DEFLECTIONS ARE SHOWN IN DECIMAL FEET.
DIMENSION "A" IS REPORTED IN INCHES.

NOTES:

1. FOR FLANGE TO WEB WELD & SHEAR STUD DETAILS, SEE SHEET 1 OF 4.
2. PSA DENOTES PIPE SUPPORT ANGLE.
3. DSA DENOTES DIAPHRAGM SUPPORT ANGLE.
4. SEE DWG. 21-26 FOR DRAINAGE DETAILS.

NOTE:
FOR FLANGE TO WEB WELD & SHEAR STUD DETAILS, SEE SHEET 1 OF 4.

PROJECT NO. R-4047

HAYWOOD COUNTY

STATION: POC STA. 42+60.93 -L-
POT STA. 18+81.73 -RR-

SHEET 3 OF 4

STATE OF NORTH CAROLINA
DEPARTMENT OF TRANSPORTATION
RALEIGH

SUPERSTRUCTURE

FRAMING PLAN SPAN C

REVISIONS						SHEET NO.
NO.	BY:	DATE:	NO.	BY:	DATE:	S-13
1			3			TOTAL SHEETS
2			4			60

DRAWN BY: J. ABRIL DATE : 01/14
CHECKED BY: D. RUGGLES DATE : 01/14
DESIGN ENGINEER OF RECORD: D. RUGGLES DATE : 01/14

NORTH CAROLINA PROFESSIONAL ENGINEER SEAL 11725 DAVID R. RUGGLES
2-20-14

DWG. 13 OF 60

STEWART
Firm License No. C-1051
421 Fayetteville St,
Suite 400
Raleigh, NC 27601
T 919.380.8750
www.stewartinc.com

2/20/2014
...\13-Span C Framing Plan.dgn
USER:jabril

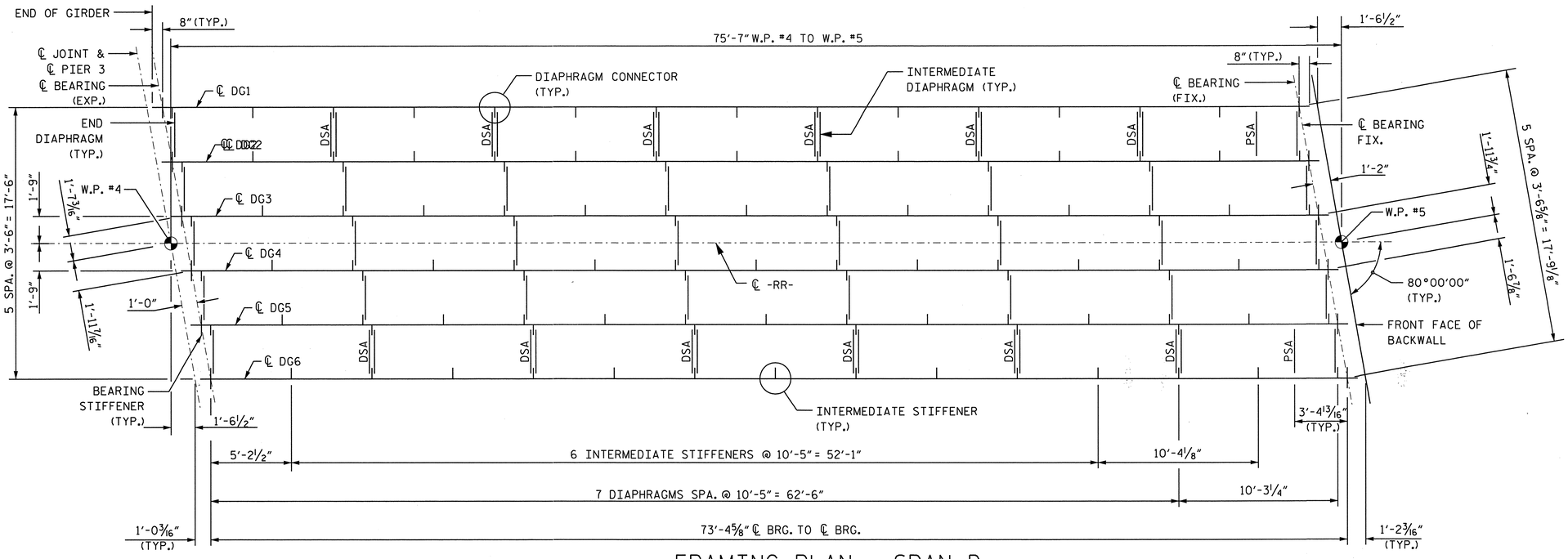

FRAMING PLAN - SPAN D

NOTES:

1. FOR FLANGE TO WEB WELD & SHEAR STUD DETAILS, SEE SHEET 1 OF 4.
2. PSA DENOTES PIPE SUPPORT ANGLE.
3. DSA DENOTES DIAPHRAGM SUPPORT ANGLE.
4. SEE DWG. 21-26 FOR DRAINAGE DETAILS.

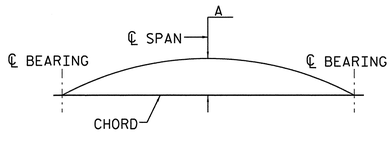

CAMBER DIAGRAM

NTS

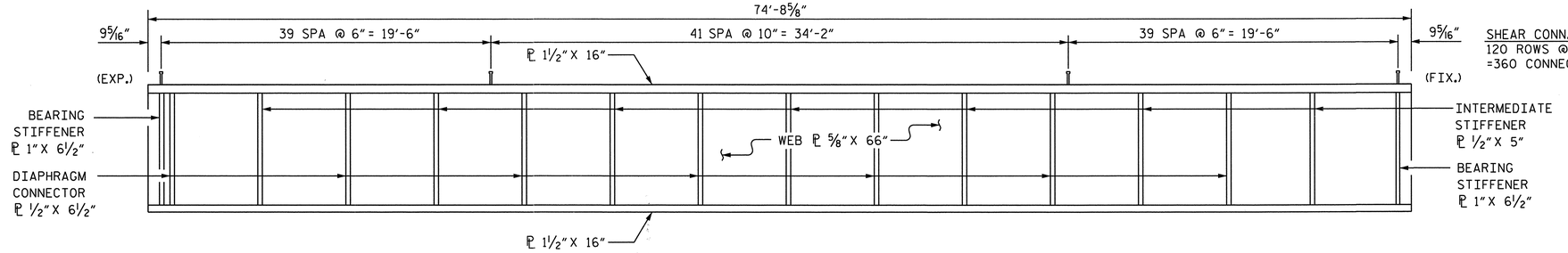

SHEAR CONN. SPACING
120 ROWS @ 3/ROW
=360 CONNECTORS

GIRDER ELEVATION - SPAN D

(GIRDER 1 SHOWN, OTHERS SIMILAR) (NTS)

DEFLECTION DUE TO WEIGHT OF:	INTERIOR GIRDERS	EXTERIOR GIRDERS
GIRDERS, DIAPHRAGMS, ETC.	0.118	0.110
SLAB	0.170	0.194
CURB AND FENCE	0.023	0.023
BALLAST, TIES, AND RAILS	0.102	0.102
DIMENSION "A"	4¹⁵⁄₁₆"	5⅛"

DEFLECTIONS ARE SHOWN IN DECIMAL FEET.
DIMENSION "A" IS REPORTED IN INCHES.

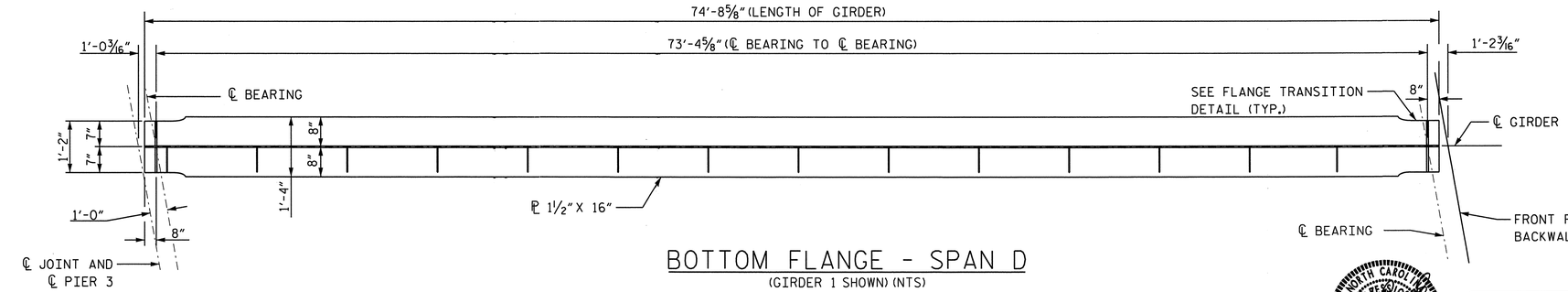

BOTTOM FLANGE - SPAN D

(GIRDER 1 SHOWN) (NTS)

PROJECT NO. R-4047

HAYWOOD COUNTY

STATION: POC STA. 42+60.93 -L-
POT STA. 18+81.73 -RR-

SHEET 4 OF 4

STATE OF NORTH CAROLINA
DEPARTMENT OF TRANSPORTATION
RALEIGH

SUPERSTRUCTURE

FRAMING PLAN SPAN D

NORTH CAROLINA PROFESSIONAL SEAL 11725 ENGINEER DAVID R. RUGGLES
2-20-14

DWG. 14 OF 60

STEWART
Firm License No. C-1051
421 Fayetteville St,
Suite 400
Raleigh, NC 27601
T 919.380.8750
www.stewartinc.com

REVISIONS						SHEET NO.
NO.	BY:	DATE:	NO.	BY:	DATE:	S-14
1			3			TOTAL SHEETS
2			4			60

DRAWN BY: J. ABRIL DATE: 01/14
CHECKED BY: D. RUGGLES DATE: 01/14
DESIGN ENGINEER OF RECORD: D. RUGGLES DATE: 01/14

2/20/2014
...\14-Span D Framing Plan.dgn
USER:jabril

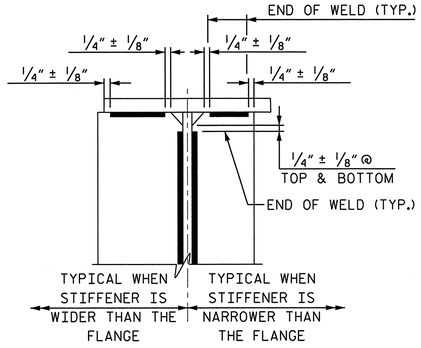

DETAIL 1

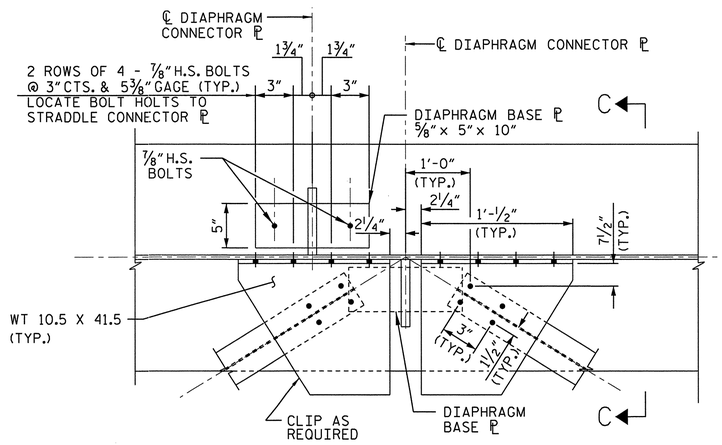

LATERAL BRACING DETAIL

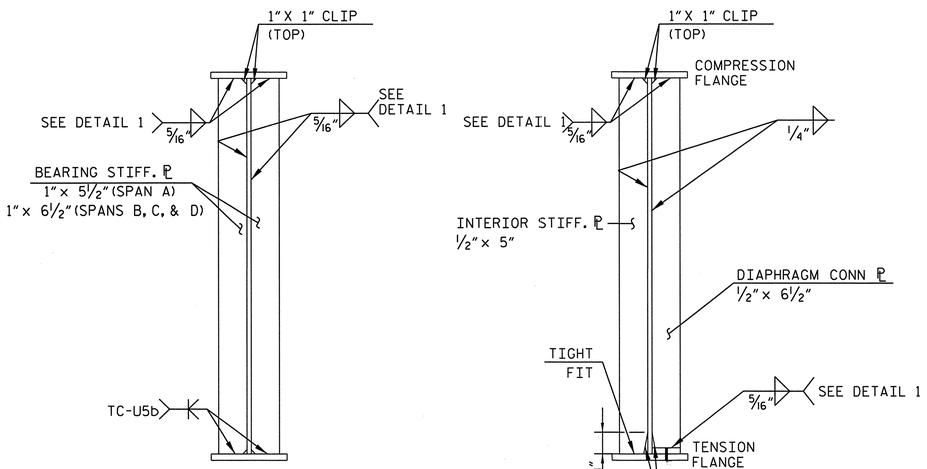

STIFF. CONNECTOR ℙ DETAILS

NOTE: WELD AFTER PLATE IS BOLTED TO FLANGE - NO RETURNS

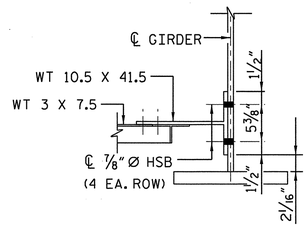

SECTION C-C

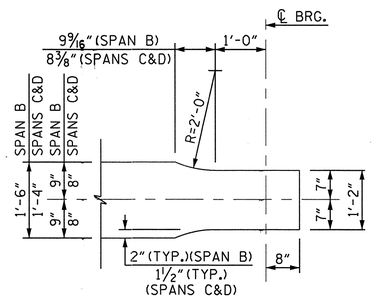

FLANGE TRANSITION DETAIL

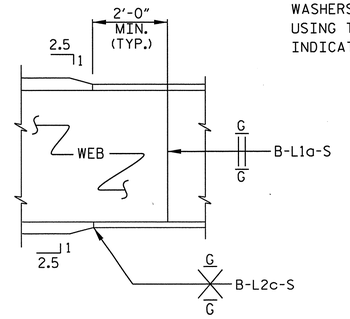

SHOP SPLICE DETAILS

NTS

NOTE: ELECTROSLAG WELDING IS NOT PERMITTED. ULTRASONIC OR RADIOGRAPHIC INSPECTION IS REQUIRED FOR ALL FLANGE AND WEB SPLICE WELDS. SEE SPECIAL PROVISIONS.

GRIND IN DIRECTION OF STRESS ONLY (I.E. PARALLEL TO ℄ GIRDER)

NOTES:

1. SPECIFICATIONS: NORFOLK SOUTHERN PUBLIC PROJECTS MANUAL AND CURRENT AREMA.
2. FOR STRUCTURAL STEEL, SEE SPECIAL PROVISIONS.
3. STRUCTURAL STEEL: fs = 27.5ksi STRUCTURAL STEEL SHALL CONFORM TO THE FOLLOWING ASTM SPECIFICATIONS:

   BOTTOM FLANGES AND WEBS OF GIRDERS:
   A709, GRADE 50, WITH SUPPLEMENTALS S5-F2, S29 AND S93 APPLYING, AND WITH IMPACT TEST REQUIREMENT OF 25 ft-lb @ 40°F AS GOVERNED BY ASTM A673 FOR TEST FREQUENCY "P".

   TOP FLANGES OF MAIN GIRDERS:
   A709, GRADE 50 WITH SUPPLEMENTALS S5-T2 AND S29 APPLYING, AND WITH IMPACT TEST REQUIREMENT OF 15 ft-lb @ 40°F AS GOVERNED BY ASTM A673 FOR TEST FREQUENCY "H".

   MISCELLANEOUS MATERIAL: A709 GRADE 50

   ANCHOR BOLTS FOR BEARING DEVICE SHALL CONFORM TO ASTM F-1554. ANCHOR BOLTS, NUTS AND PLATE WASHERS SHALL BE MECHANICALLY GALVANIZED IN ACCORDANCE WITH ASTM A153.
4. ALL DIMENSIONS SHOWN ARE HORIZONTAL OR VERTICAL UNLESS OTHERWISE NOTED.
5. GIRDER BOTTOM FLANGE PLATE INCLUDING WEB TO FLANGE WELD AND WEB PLATE ARE DESIGNATED FRACTURE CRITICAL (FC) MEMBERS AND SHALL MEET IMPACT TEST REQUIREMENTS SET FORTH IN THE FRACTURE CONTROL PLAN OF THE AREMA MANUAL, CHAPTER 15, SECTION 1.14. NOTCH TOUGHNESS REQUIREMENTS AND TESTING SHALL BE BASED ON ZONE 2 REQUIREMENTS.
6. MILL TEST REPORTS: NORFOLK SOUTHERN CORPORATION SHALL BE FURNISHED COPIES OF MILL TEST REPORTS FOR ALL MATERIALS EXCEPT MISCELLANEOUS PLATES AND SHAPES. REPORTS SHALL INDICATE COMPLIANCE WITH ALL SPECIFIED REQUIREMENTS.
7. INSPECTION: SHOP INSPECTION BY NORFOLK SOUTHERN CORPORATION OR ITS AUTHORIZED AGENT. SEE SPECIAL PROVISIONS FOR ADDITIONAL WELDING INSPECTION OF FLANGE PLATE TO WEB PLATE WELDS.
8. PAINTING STRUCTURAL STEEL: FOR PAINT SYSTEM FOR STRUCTURAL STEEL, SEE SPECIAL PROVISIONS.
9. BOLTED CONNECTIONS SHALL BE MADE WITH 7"8" Ø ASTM A325, TYPE 1 HIGH STRENGTH BOLTS WITH HARDENED WASHERS IN ACCORDANCE WITH AREMA SPECIFICATIONS USING THE TURN OF THE NUT METHOD. DIRECT TENSION INDICATORS SHALL NOT BE USED.
10. SHOP DRAWINGS: SHOP DRAWING SHALL BE APPROVED BY THE CHIEF ENGINEER - BRIDGE & STRUCTURES, NORFOLK SOUTHERN CORPORATION, ATLANTA, GEORGIA. MATERIAL SHALL NOT BE FABRICATED UNTIL DRAWINGS HAVE BEEN APPROVED. COPIES OF APPROVED SHOP DRAWINGS ARE TO BE FURNISHED TO NCDOT. SHOP DRAWINGS SHALL BE LABELED "NORFOLK SOUTHERN MP T-24.3, LAKE JUNALUSKA".
11. HOLES: OPEN HOLES AS NOTED.
12. HIGH STRENGTH BOLTS, NUTS & WASHERS: ASTM DESIGNATION A325. ALL HIGH STRENGTH BOLTS, NUTS & WASHERS SHALL BE MECHANICALLY GALVANIZED. HOT-DIPPED GALVANIZED BOLTS WILL NOT BE ALLOWED.
13. ANCHOR BOLTS SHALL BE 1 1/2 " Ø IN ACCORDANCE WITH AREMA SPECIFICATIONS AND SHALL BE GROUTED IN FORMED HOLES AFTER GIRDERS ARE ERECTED.
14. FOR CAMBER REQUIREMENTS SEE FRAMING PLANS.
15. CAMBERED GIRDER LENGTHS SHALL BE ADJUSTED AND BEARINGS PLACED ON CAMBERED GIRDERS SO AS TO BE ALIGNED WITH THE ANCHORS AFTER DEAD LOAD DEFLECTION HAS OCCURRED. SHOP PLANS SHALL BE PREPARED ACCORDINGLY.
16. BEARING PADS SHALL BE USED WHENEVER STEEL MASONRY PLATE, OR OTHER STEEL BEARING PLATE, BEARS ON CONCRETE. PADS SHALL BE PREFORMED FABRIC BEARING PADS, 1/2 " THICK. PREFORMED FABRIC BEARING PADS SHALL BE SHOCK PAD STYLE NO. 15175 AS MANUFACTURED BY ALERT MANUFACTURING AND SUPPLY COMPANY, CHICAGO, ILLINOIS, OR FABREEKA PADS AS MANUFACTURED BY FABREEKA PRODUCTS COMPANY, BOSTON, MASSACHUSETTS, OR SORBTEX PADS AS MANUFACTURED BY VOSS ENGINEERING, INC., CHICAGO, ILLINOIS, OR APPROVED EQUAL.
17. SHEAR CONNECTORS ON GIRDERS MAY BE SHIFTED UP TO 1" TO CLEAR FLANGE SPLICE WELDS.
18. WEB SHOP SPLICES ARE PERMITTED TO LIMIT THE MAXIMUM REQUIRED WEB PIECE LENGTH TO 45 FEET. PERMITTED WEB SHOP SPLICES SHALL NOT BE LOCATED WITHIN 15 FEET OF MAXIMUM DEAD LOAD DEFLECTION AND SHALL BE LOCATED 6"MIN. FROM CONNECTOR PLATE OR INTERMEDIATE STIFFENER WELDS. FLANGE SHOP SPLICES SHALL NOT BE PERMITTED UNLESS NOTED.
19. ELECTROSLAG WELDING IS NOT PERMITTED.
20. FOR FABRICATION OF STRUCTURAL STEEL, SEE SPECIAL PROVISIONS.

PROJECT NO. R-4047

HAYWOOD COUNTY

STATION: POC STA. 42+60.93 -L-
POT STA. 18+81.73 -RR-

SHEET 1 OF 2

NORTH CAROLINA PROFESSIONAL ENGINEER SEAL 11729 DAVID R. RUGGLES

2-20-14

STATE OF NORTH CAROLINA
DEPARTMENT OF TRANSPORTATION
RALEIGH

SUPERSTRUCTURE

STRUCTURAL STEEL DETAILS

DWG. 15 OF 60

REVISIONS						SHEET NO.
NO.	BY:	DATE:	NO.	BY:	DATE:	S-15
1			3			TOTAL SHEETS
2			4			60

DRAWN BY:	J. ABRIL	DATE : 01/14
CHECKED BY:	D. RUGGLES	DATE : 01/14
DESIGN ENGINEER OF RECORD:	D. RUGGLES	DATE : 01/14

STEWART
Firm License No. C-1051
421 Fayetteville St,
Suite 400
Raleigh, NC 27601
T 919.380.8750
www.stewartinc.com

2/20/2014
...\15-Structural Steel Details 1.dgn
USER:jabril

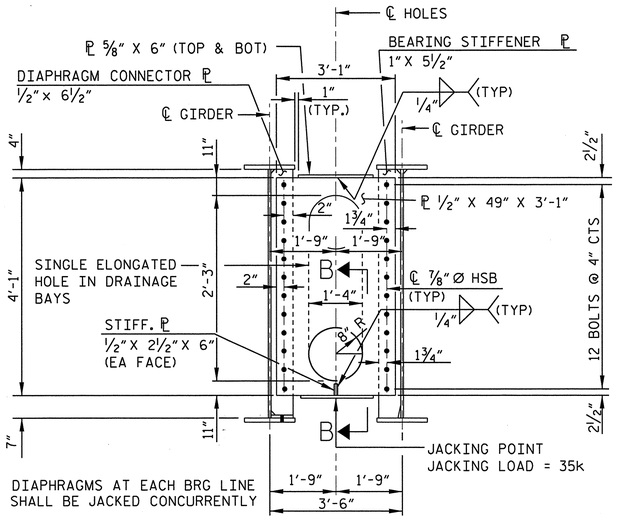

SECTION @ END DIAPHRAGM

SPAN A

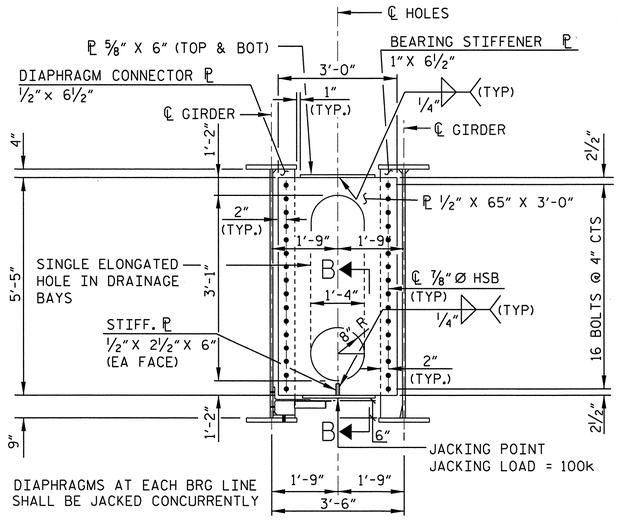

SECTION @ END DIAPHRAGM

SPAN B

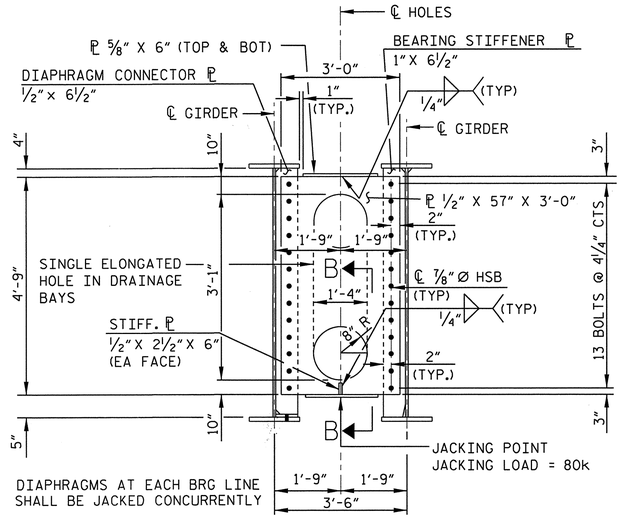

SECTION @ END DIAPHRAGM

SPANS C & D

NOTE:
1. FOR DIAPHRAGM SUPPORT ANGLE (DSA) BOLT HOLE SCHEDULE, SEE DRAWING 26.

SECTION @ INTERIOR DIAPHRAGM

SPAN A

SECTION @ INTERIOR DIAPHRAGM

SPAN B

SECTION @ INTERIOR DIAPHRAGM

SPANS C & D

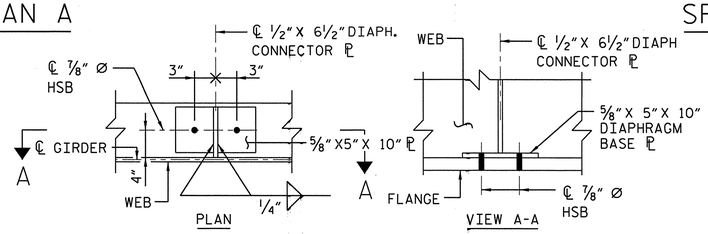

CONN. ℄ BOLTED DETAIL

NOTE: 5/8" ℄ SHALL BE BOLTED TO FLANGE PRIOR TO PLACEMENT OF FILLET WELD.

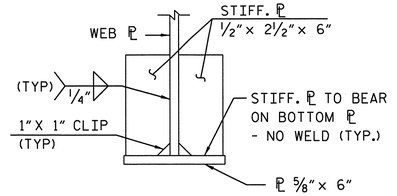

SECTION B-B

NTS

2-20-14

DRAWN BY: J. ABRIL	DATE : 01/14	PROJECT NO. R-4047	
CHECKED BY: D. RUGGLES	DATE : 01/14	HAYWOOD COUNTY	
DESIGN ENGINEER OF RECORD: D. RUGGLES	DATE : 01/14	STATION: POC STA. 42+60.93 -L- POT STA. 18+81.73 -RR-	

SHEET 2 OF 2

Firm License No. C-1051
421 Fayetteville St,
Suite 400
Raleigh, NC 27601
T 919.380.8750
www.stewartinc.com

STEWART

STATE OF NORTH CAROLINA
DEPARTMENT OF TRANSPORTATION
RALEIGH

SUPERSTRUCTURE

STRUCTURAL STEEL DETAILS

DWG. 16 OF 60

REVISIONS						SHEET NO.
NO.	BY:	DATE:	NO.	BY:	DATE:	S-16
1			3			TOTAL SHEETS
2			4			60

2/20/2014
...\16-StructuralSteelDetails 2.dgn
USER:jabril

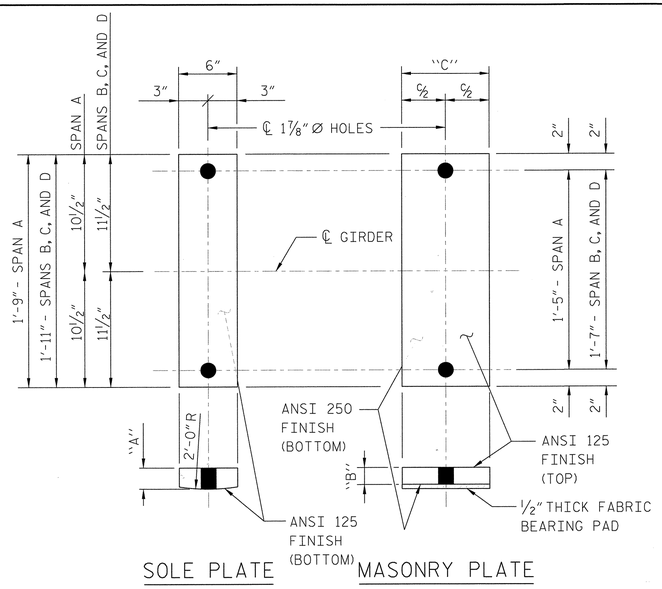

SOLE PLATE MASONRY PLATE

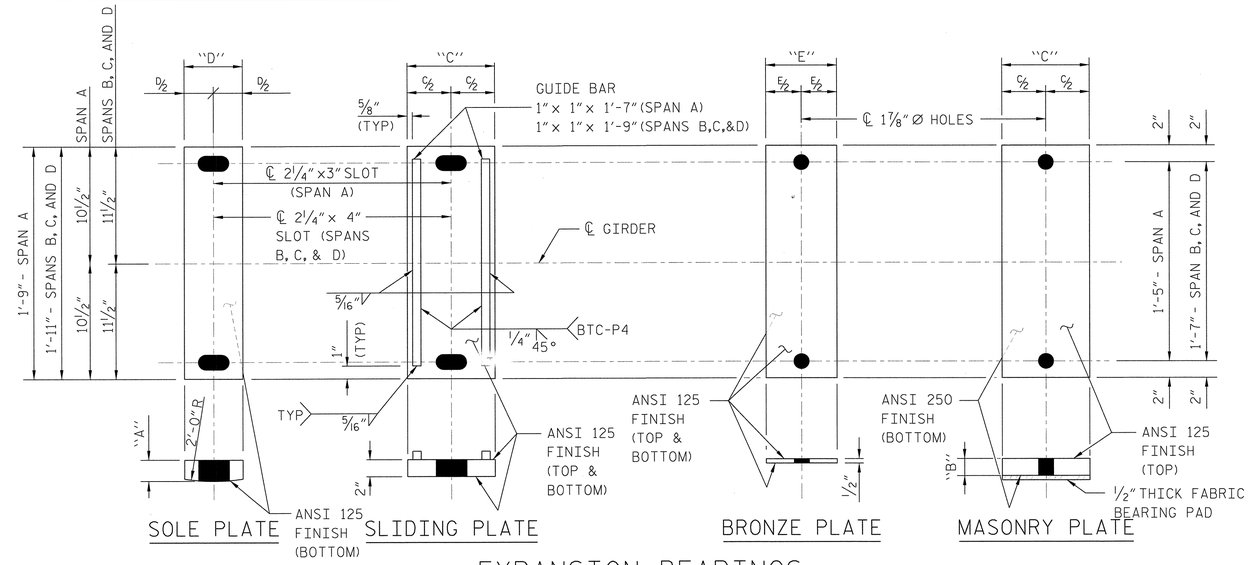

SOLE PLATE SLIDING PLATE BRONZE PLATE MASONRY PLATE

FIXED BEARINGS

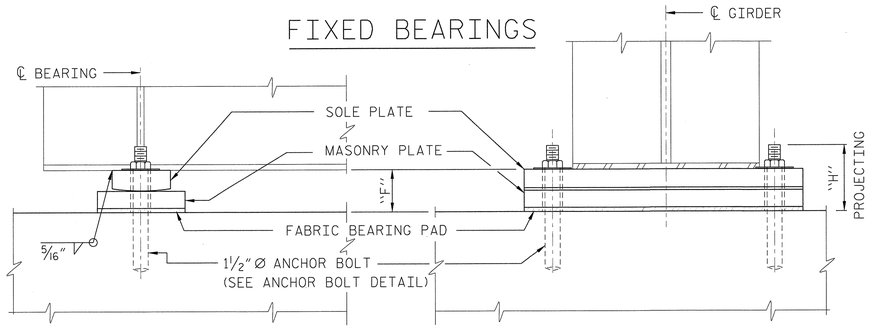

FIXED BEARING ASSEMBLY

(24 REQ'D)

EXPANSION BEARINGS

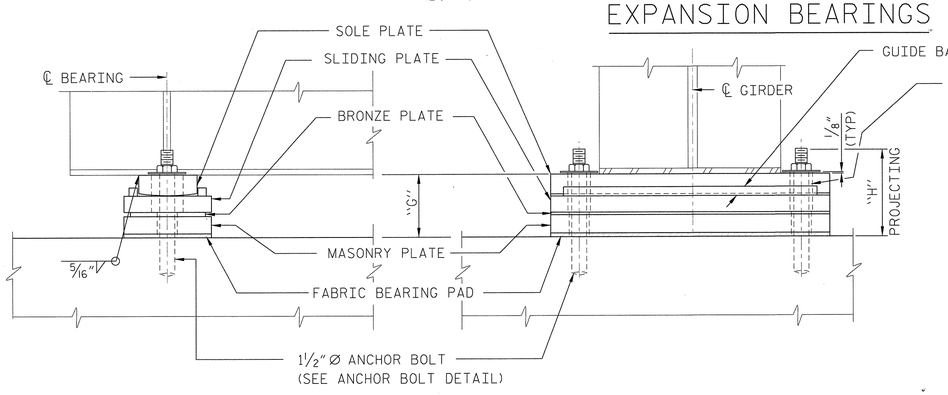

EXPANSION BEARING ASSEMBLY

(24 REQ'D)

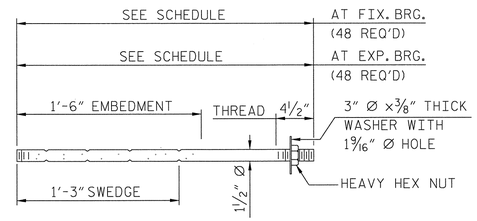

ANCHOR BOLT DETAIL

BEARING PLATE SCHEDULE

SPAN	DIMENSIONS						
	"A"	"B"	"C"	"D"	"E"	"F"	"G"
A	2½"	SEE TABLE	10"	6"	8"	SEE TABLE	SEE TABLE
B	3"	SEE TABLE	13"	8"	11"	SEE TABLE	SEE TABLE
C (PIER 2, GRD. 1)	2½"	SEE TABLE	12"	8"	10"	-	8⅝"
C (PIER 2, GRD. 2)	2½"	SEE TABLE	12"	8"	10"	-	8 9/16"
C (PIER 2, GRD. 3-6)	2½"	SEE TABLE	12"	8"	10"	-	8½"
C (PIER 3)	2½"	SEE TABLE	12"	8"	10"	8½"	-
D	2½"	SEE TABLE	12"	8"	10"	6"	8½"

MASONRY PLATE SCHEDULE - "B"

GIRDER No.	SPAN A		SPAN B		SPAN C		SPAN D
	ABUT. 1	PIER 1	PIER 1	PIER 2	PIER 2	PIER 3	
1	2 11/16"	2 11/16"	3 11/16"	3⅝"	3⅛"	* 5½"	3"
2	2 11/16"	2⅝"	3⅝"	3 9/16"	3 1/16"	* 5½"	3"
3	2⅝"	2⅝"	3⅝"	3½"	3"	* 5½"	3"
4	2 9/16"	2 9/16"	3 9/16"	3½"	3"	* 5½"	3"
5	2½"	2½"	3½"	3½"	3"	* 5½"	3"
6	2½"	2½"	3½"	3½"	3"	* 5½"	3"

* THE 5½" THICKNESS SHALL BE PROVIDED BY USING A 3" MASONRY PLATE AND A 2½" FILL PLATE. ADJUST ANSI FINISH AS REQUIRED FOR THESE PLATES.

BEARING PLATE SCHEDULE

GIRDER No.	"F"		"G"	
	SPAN A	SPAN B	SPAN A	SPAN B
	PIER 1	PIER 2	ABUT. 1	PIER 1
1	5 11/16"	7⅛"	8 3/16"	9 11/16"
2	5⅝"	7 1/16"	8 3/16"	9⅝"
3	5⅝"	7"	8⅛"	9⅝"
4	5 9/16"	7"	8 1/16"	9 9/16"
5	5½"	7"	8"	9½"
6	5½"	7"	8"	9½"

NOTES:

1. ANCHOR BOLTS, SLIDING PLATE (EXP BEARINGS), MASONRY PLATE (FIXED AND EXP BEARINGS), AND FILL PLATE SHALL BE HOT-DIPPED GALVANIZED.

2. ALL PLATE SURFACES SHALL BE PAINTED WITH A 3 COAT PAINT SYSTEM EXCEPT AS SPECIFIED BELOW:
   (A) SLIDING PLATE (EXP BEARING) SHALL NOT BE PAINTED BUT SHALL RECEIVE A COAT OF LUBRICATION.
   (B) MASONRY PLATE (FIXED AND EXP BEARINGS) SHALL NOT BE PAINTED.
   (C) BOTTOM SURFACE OF SOLE PLATE SHALL NOT BE PAINTED BUT SHALL RECEIVE A SINGLE COAT OF PRIMER APPLIED IN THE SHOP.
   (D) TOP SURFACE OF SOLE PLATE SHALL NOT BE PAINTED IN VICINITY OF WELD BETWEEN SOLE PLATE AND BOTTOM FLANGE.

3. FOR SELF-LUBRICATING EXPANSION BEARING ASSEMBLIES, SEE SPECIAL PROVISIONS.

4. AT THE CONTRACTOR'S OPTION GUIDE BARS ON SLIDING PLATE MAY BE MADE INTERGRAL BY MACHINING FROM THE SOLID.

5. AFTER NUTS FOR ANCHOR BOLTS ARE TIGHTENED, THE THREADS OF THE BOLT SHALL BE BURRED WITH A SHARP POINTED TOOL.

ANCHOR BOLT SCHEDULE

SPAN	TYPE	LENGTH	H
A	EXP	2'-4½"	10½"
A	FIX	2'-2"	8"
B	EXP	2'-6"	12"
B	FIX	2'-3½"	9½"
C	EXP	2'-5"	11"
C	FIX	2'-5"	11"
D	EXP	2'-5"	11"
D	FIX	2'-2½"	8½"

DRAWN BY: P. JACOB DATE : 03/14
CHECKED BY: D. RUGGLES DATE : 03/14
DESIGN ENGINEER OF RECORD: D. RUGGLES DATE : 03/14

NORTH CAROLINA PROFESSIONAL ENGINEER 11724 DAVID R. RUGGLES
3-27-14

STEWART
Firm License No. C-1051
421 Fayetteville St, Suite 400
Raleigh, NC 27601
T 919.380.8750
www.stewartinc.com

PROJECT NO. R-4047
HAYWOOD COUNTY
STATION: POC STA. 42+60.93 -L-
POT STA. 18+81.73 -RR-

STATE OF NORTH CAROLINA
DEPARTMENT OF TRANSPORTATION
RALEIGH

SUPERSTRUCTURE

BEARING DETAILS

DWG. 17 OF 60

REVISIONS						SHEET NO.
NO.	BY:	DATE:	NO.	BY:	DATE:	S-17
1			3			TOTAL SHEETS
2			4			60

3-27-2014
... final 17-Bearing Details.dgn
U:\EB\drugglesd

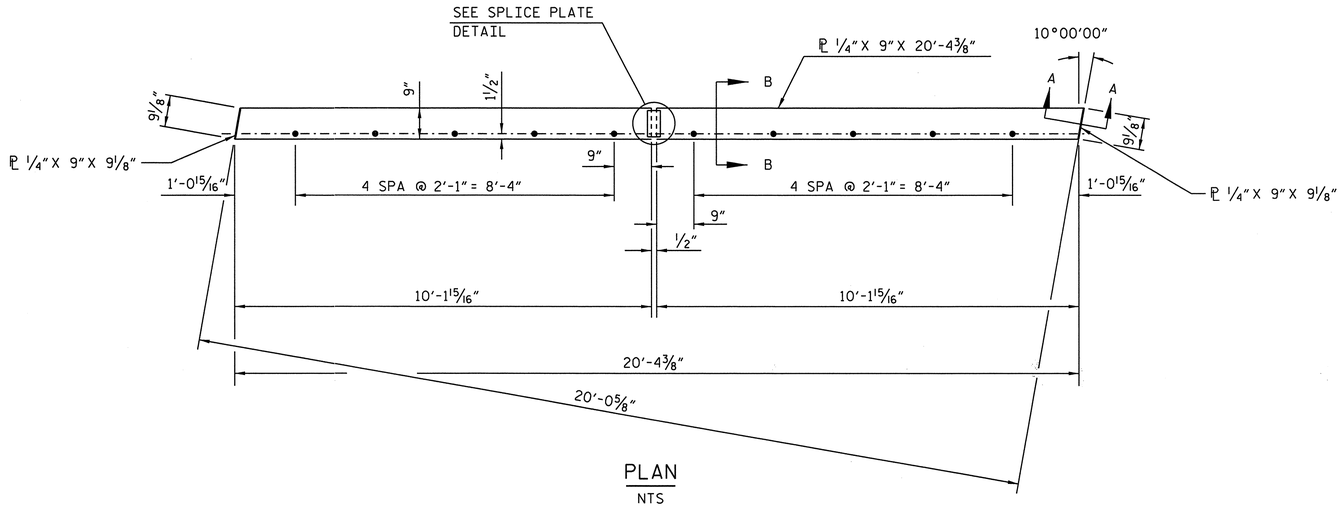

PLAN
NTS

ELEVATION
NTS

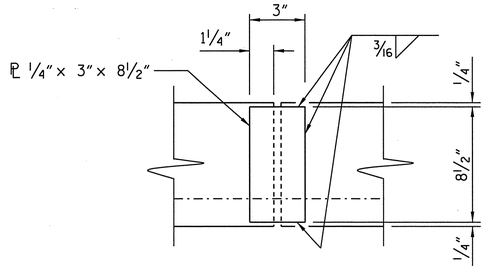

SPLICE PLATE DETAIL

EXPANSION PLATE ASSEMBLIES

(5 REQUIRED)

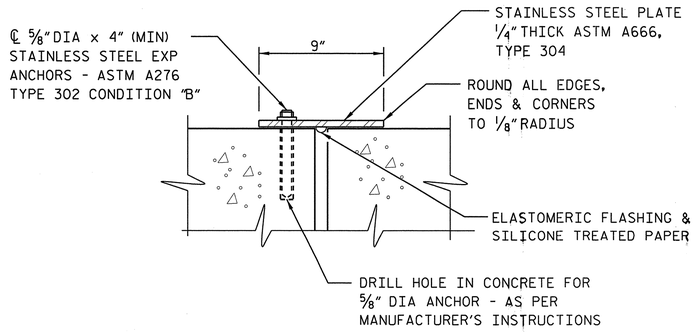

SECTION B-B

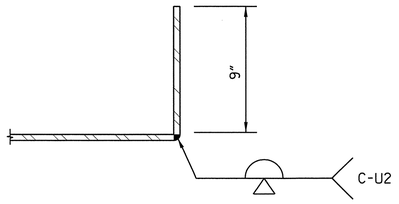

SECTION A-A

PROJECT NO. R-4047

HAYWOOD COUNTY

STATION: POC STA. 42+60.93 -L-
POT STA. 18+81.73 -RR-

STATE OF NORTH CAROLINA
DEPARTMENT OF TRANSPORTATION
RALEIGH

SUPERSTRUCTURE

DECK JOINT DETAILS

DRAWN BY: J. ABRIL DATE : 01/14
CHECKED BY: D. RUGGLES DATE : 01/14
DESIGN ENGINEER OF RECORD: D. RUGGLES DATE : 01/14

NORTH CAROLINA PROFESSIONAL ENGINEER SEAL 11725 DAVID R. RUGGLES
2-20-14

STEWART
Firm License No. C-1051
421 Fayetteville St,
Suite 400
Raleigh, NC 27601
T 919.380.8750
www.stewartinc.com

DWG. 18 OF 60

REVISIONS						SHEET NO.
NO.	BY:	DATE:	NO.	BY:	DATE:	S-18
1			3			TOTAL SHEETS
2			4			60

2/20/2014
...\18-Deck Joint Details.dgn
USER:jabril

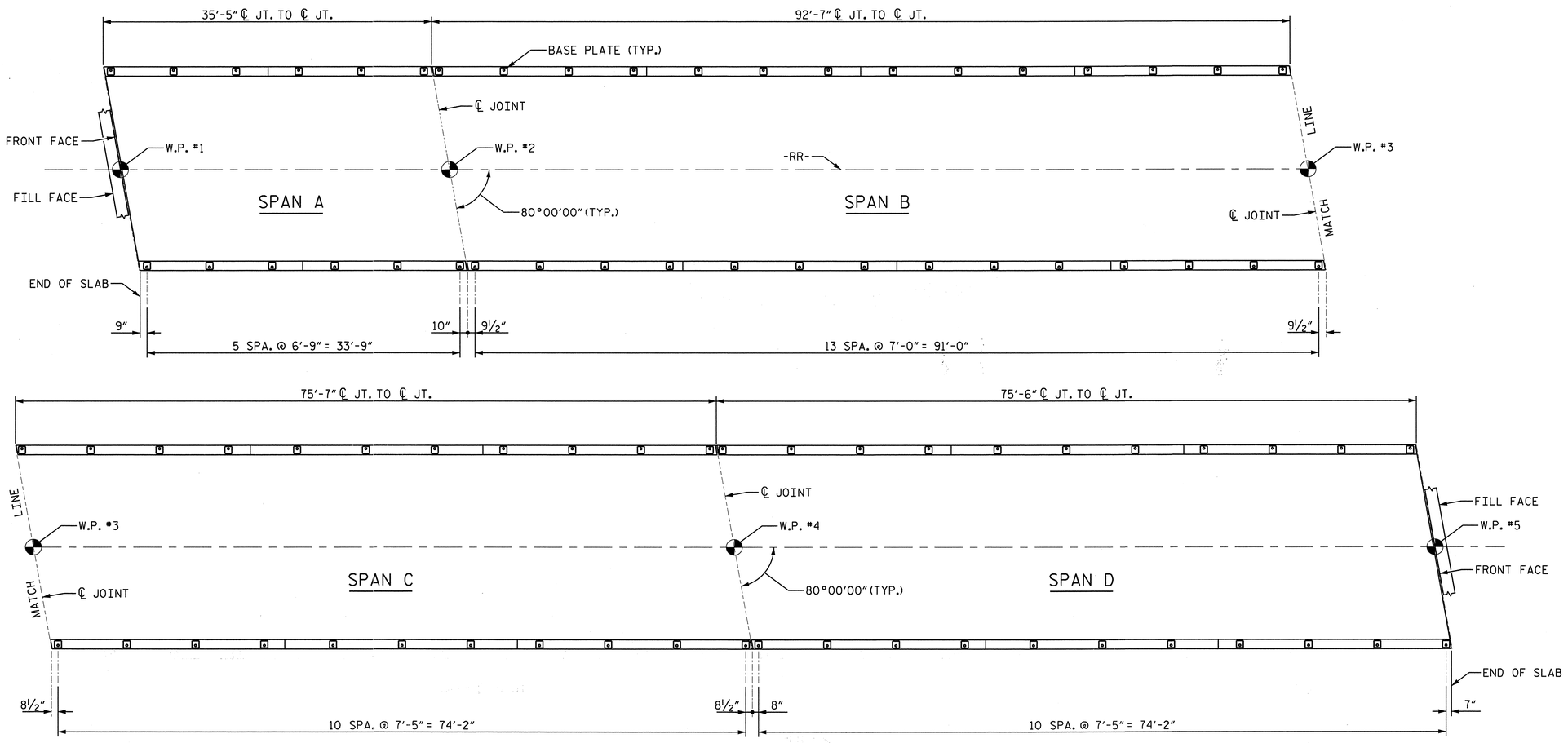

FENCE AND HANDRAIL POST SPACING

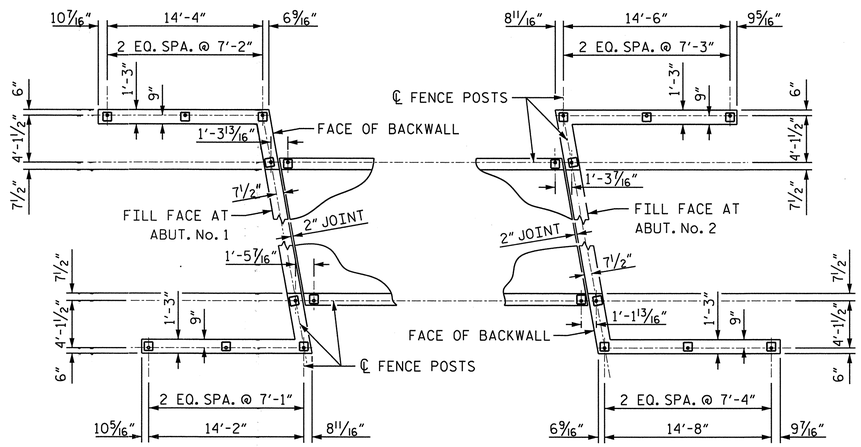

FENCE AND HANDRAIL POST SPACING - WING DETAILS

PROJECT NO. R-4047

HAYWOOD COUNTY

STATION: POC STA. 42+60.93 -L-
POT STA. 18+81.73 -RR-

SHEET 1 OF 2

STATE OF NORTH CAROLINA
DEPARTMENT OF TRANSPORTATION
RALEIGH

METAL HANDRAIL WITH FENCING LAYOUT

DWG. 19 OF 60

REVISIONS						SHEET NO.
NO.	BY:	DATE:	NO.	BY:	DATE:	3-19
1			3			TOTAL SHEETS
2			4			60

NORTH CAROLINA PROFESSIONAL ENGINEER SEAL 11725 DAVID R RUGGLES
2-20-14

Firm License No. C-1051
421 Fayetteville St,
Suite 400
Raleigh, NC 27601
T 919.380.8750
www.stewartinc.com
STEWART

DRAWN BY:	P. JACOB	DATE :	01/14
CHECKED BY:	D. RUGGLES	DATE :	01/14
DESIGN ENGINEER OF RECORD:	D. RUGGLES	DATE :	01/14

2/20/2014
...\19-FENCE_DETAILS_1_OF_2.dgn
USER:jbrill

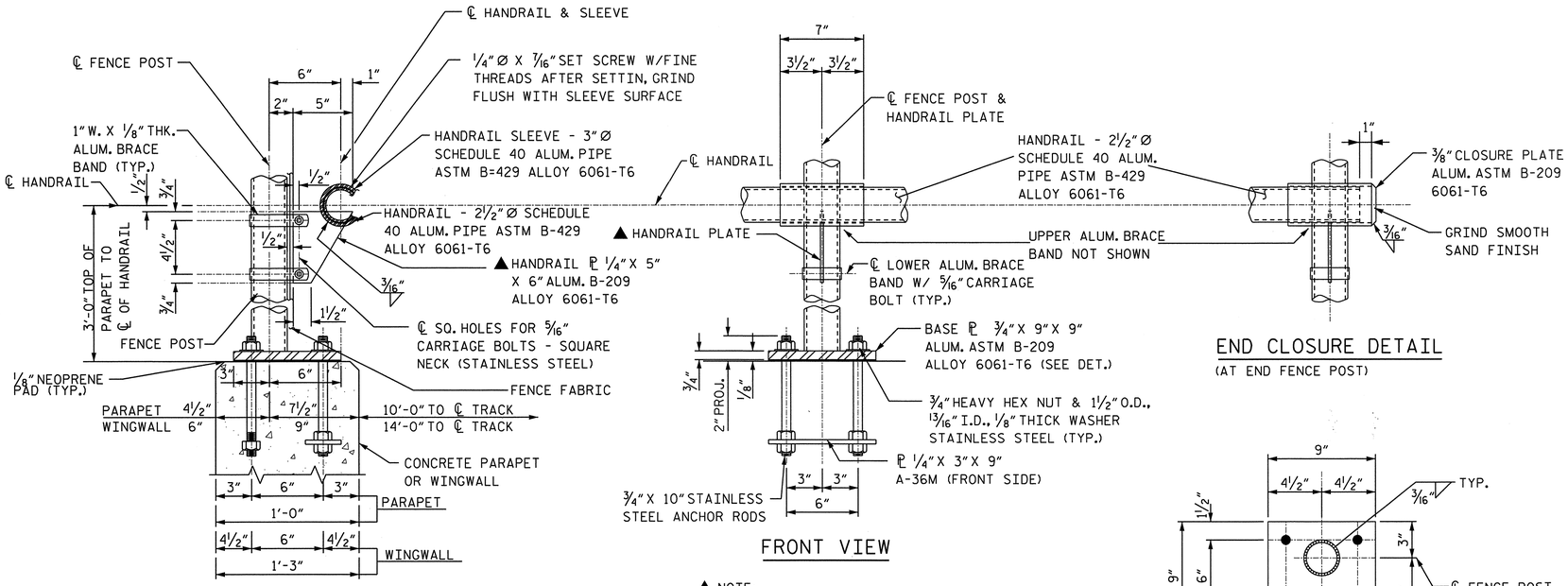

FRONT VIEW

▲ NOTE:
ALL EDGES ON HANDRAIL PLATE TO BE ROUNDED - 1/16 RADIUS

END CLOSURE DETAIL
(AT END FENCE POST)

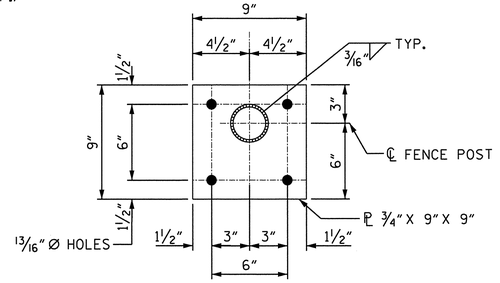

BASE PLATE DETAIL

DETAILS FOR PIPE RAILING

NOTES:
1. ALL HANDRAIL PIPE, SLEEVES, AND EXPANSION JOINTS TO BE SMOOTH AND FREE OF SHARP EDGES.
2. ALUMINUM PIPE TO BE ASTM B-429. ALLOY 6061-T6, ALUMINUM BASE PLATE, CLOSURE PLATE, AND HANDRAIL PLATE TO BE ASTM B 209, ALLOY 6061-T6.
3. FENCE FABRIC TO BE TYPE III ALUMINUM ALLOY WIRE ASTM B 211, ALLOY 6061-T89 OR T94.
4. BRACE RAIL AND BRACE ENDS, POST TOPS, TURNBUCKLES TRUSS RODS, GATE HINGES AND LATCHES, STRETCHER BARS, AND BAR BANDS IN ACCORDANCE WITH AASHTO M181 (ASTM A 392).
5. STAINLESS STEEL BOLTS, NUTS, AND ANCHOR RODS TO BE ASTM A 276, TYPE 304.
6. STAINLESS STEEL WASHERS TO BE ASTM A 276, TYPE 302. ANCHOR ROD THREADS SHALL BE ROLLED, NOT CUT.
7. POST TO BE SET PERPENDICULAR TO TOP OF CURB AND RAILS SHALL BE PLACED PARALLEL TO THE GRADE OF THE BRIDGE.
8. BOTTOM OF BASE PLATE SHALL BE THOROUGHLY COATED WITH ALUMINUM IMPREGNATED CAULKING COMPOUND OF APPROVED QUALITY.
9. CERTIFIED MILL REPORTS ARE REQUIRED FOR POST, RAIL, AND FENCE FABRIC. SHOP INSPECTION IS REQUIRED.
10. AFTER ANCHOR BOLT AND OTHER BOLT NUTS HAVE BEEN TIGHTENED, THREADS SHALL BE NICKED TO LOCK NUTS.
11. THE ALUMINUM BRACE BANDS USED TO SECURE HANDRAIL SLEEVE SHALL BE OF SUCH SIZE NECESSARY TO CLAMP TIGHTLY TO FENCE POST.
12. THE LENGTH OF HANDRAIL AND FENCE TO BE PAID FOR SHALL BE THE CONTINUOUS LENGTH FROM END OF RAIL AND FENCE.
13. WELDING SHALL BE IN ACCORDANCE WITH THE CURRENT AWS STRUCTURAL WELDING CODE - ALUMINUM.
14. ANCHOR PLATE SHALL BE STEEL CONFORMING TO ASTM SPECIFICATION A36.
15. UPPER ANCHOR ROD NUTS SHALL BE HEAVY HEX NUTS, PER ASTM A 276 TYPE 302 OR 304 STAINLESS STEEL.
16. LOWER ANCHOR ROD NUTS SHALL BE HEAVY HEX NUTS, PER ASTM A 563.
17. FOR CHAIN LINK FENCE AND FOR PROTECTION OF RAILROAD, SEE SPECIAL PROVISIONS, METAL HANDRAIL WITH FENCING.
18. SHOP DRAWINGS SHALL BE REQUIRED.

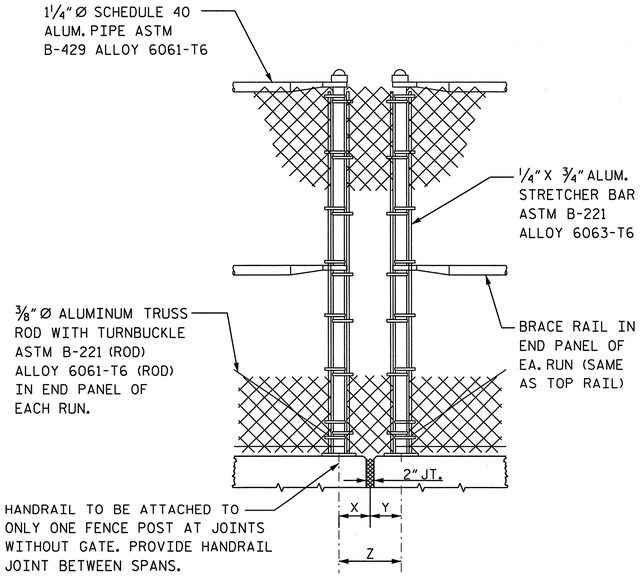

DETAIL AT JOINT
(WITHOUT GATE)
FOR DIMENSIONS X, Y, AND Z, SEE DWG. 19.

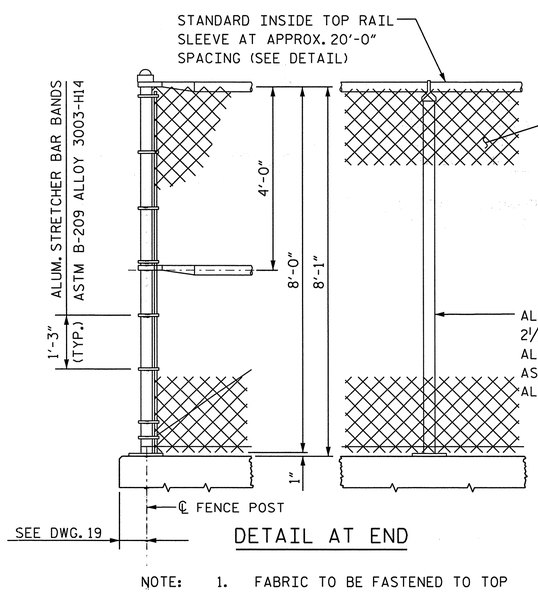

DETAIL AT END

NOTE:
1. FABRIC TO BE FASTENED TO TOP RAIL AT 2'-0" ± INTERVALS WITH 9 GAGE ALUMINUM WIRE TIES
2. HANDRAIL IN FRONT OF FENCE NOT SHOWN

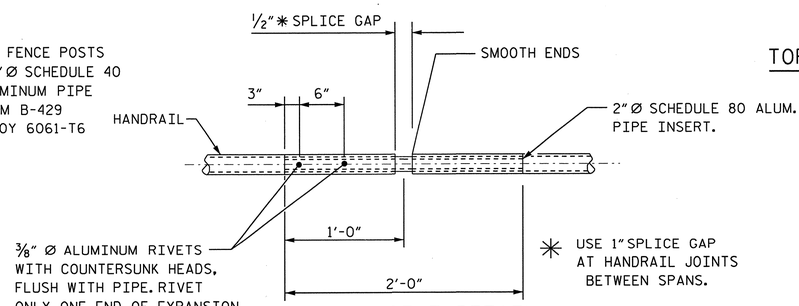

HANDRAIL JOINT DETAIL

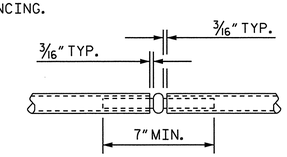

TOP RAIL SLEEVE DETAIL

DETAILS FOR CHAIN LINK FENCE

PROJECT NO. R-4047
HAYWOOD COUNTY
STATION: POC STA. 42+60.93 -L-
POT STA. 18+81.73 -RR-
SHEET 2 OF 2

STATE OF NORTH CAROLINA
DEPARTMENT OF TRANSPORTATION
RALEIGH

METAL HANDRAIL WITH FENCING

DETAILS

DRAWN BY: J. ABRIL DATE : 01/14
CHECKED BY: M. KRANNITZ DATE : 01/14
DESIGN ENGINEER OF RECORD: D. RUGGLES DATE : 01/14

NORTH CAROLINA SEAL 11725 ENGINEER DAVID R. RUGGLES
2-20-14

DWG. 20 OF 60

STEWART
Firm License No. C-1051
421 Fayetteville St,
Suite 400
Raleigh, NC 27601
T 919.380.8750
www.stewartinc.com

REVISIONS						SHEET NO.
NO.	BY:	DATE:	NO.	BY:	DATE:	S-20
1			3			TOTAL SHEETS
2			4			60

2/20/2014
...\20-FENCE_DETAILS_2_OF_2.dgn
USER:jabril

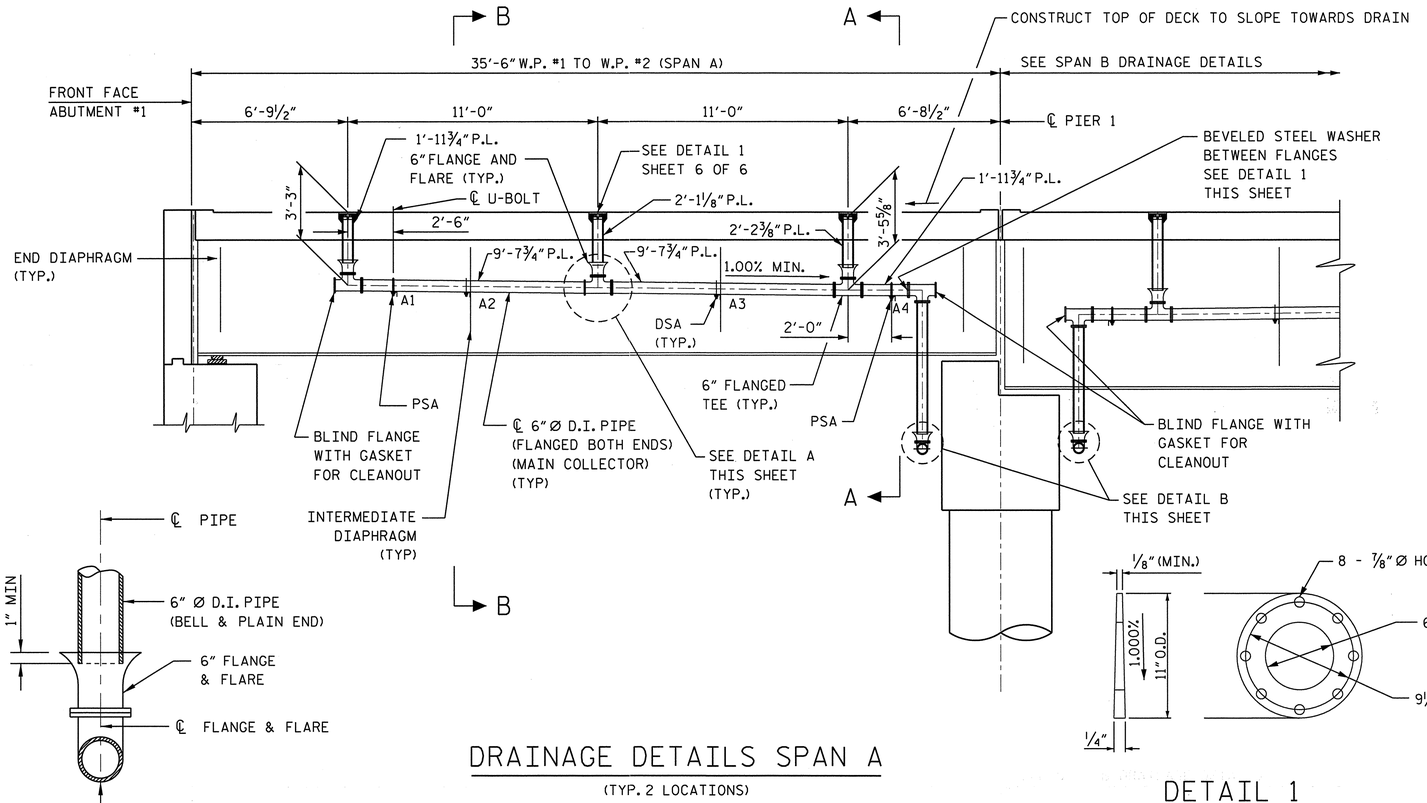

DRAINAGE DETAILS SPAN A

(TYP. 2 LOCATIONS)

(SEE SHEET 6 OF 6 FOR SECTIONS A-A AND B-B)

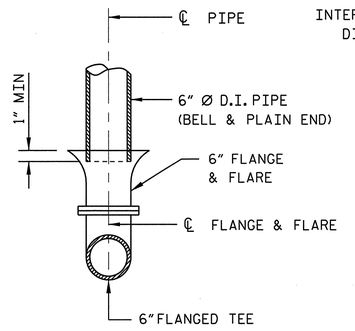

DETAIL A

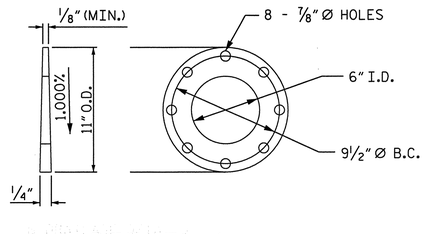

DETAIL 1

BEVELED STEEL WASHER FOR 6"D.I. FLANGED PIPE

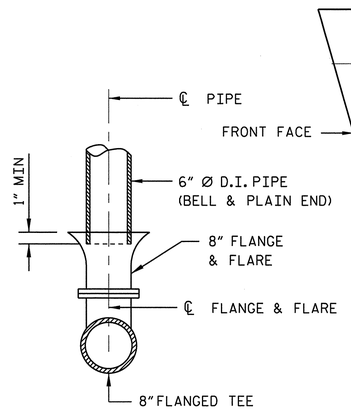

DETAIL B

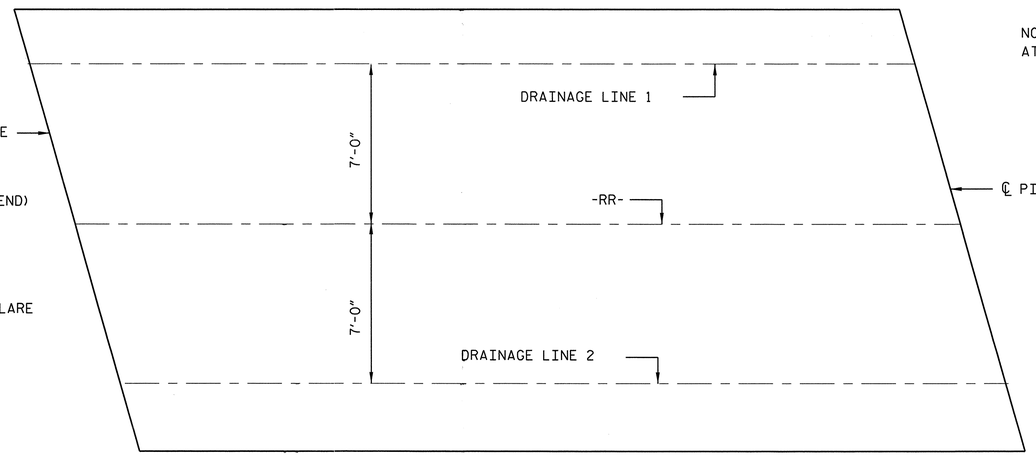

DRAINAGE LAYOUT

NTS

NOTE: CENTERLINE OF PIPE AND FLANGE AND FLARE LINE UP AT 60° F.

STRUCTURE DRAINAGE SYSTEM ESTIMATED QUANTITIES

ITEM	QUANTITY	UNIT
8" I.D. OFFSET PIPE CLAMPS	8	EA.
8" I.D. DUCTILE IRON WATER PIPE, CLASS 53, (FLG. X FLG.)	57	FT.
8" I.D. DUCTILE IRON WATER PIPE, CLASS 53, (FLG. X PLAIN END)	15	FT.
8" I.D. DUCTILE IRON WATER PIPE FITTINGS, 250LB WP	1,360	LB.
8" I.D. BEVELED STEEL WASHERS	3	EA.
8" I.D. DUCTILE IRON BLIND FLANGES	210	LB.
6" I.D. OFFSET PIPE CLAMPS	2	EA.
6" I.D. DUCTILE IRON WATER PIPE, CLASS 53, (BELL & PLAIN END)	132	FT.
6" I.D. DUCTILE IRON WATER PIPE, CLASS 53, (FLG. X FLG.)	447	FT.
6" I.D. DUCTILE IRON WATER PIPE, CLASS 53, (FLG. X PLAIN END)	21	FT.
6" I.D. DUCTILE IRON WATER PIPE FITTINGS, 250LB WP	7,430	LB.
6" I.D. FLANGED EXPANSION JOINT (2" MOVEMENT)	2	EA.
6" I.D. BEVELED STEEL WASHER	6	EA.
6" I.D. DUCTILE IRON BLIND FLANGES	400	LB.
SOIL PIPE GRATES, "NEENAH" 4373 SERIES OR EQUAL	50	EA.
DIAPHRAGM SUPPORT ANGLES (DSA)	46	EA.
PIPE SUPPORT ANGLES (PSA)	12	EA.

NOTES:

1. ALL DIMENSIONS ARE SUBJECT TO ADJUSTMENTS TO FIT MEASUREMENTS TAKEN AFTER DECKS HAVE BEEN POURED.
2. ABBREVIATIONS:
   D.I. = DUCTILE IRON
   PSA = PIPE SUPPORT ANGLE
   DSA = DIAPHRAGM SUPPORT ANGLE
   P.L. = PIPE LENGTH
   B.C. = BOLT CIRCLE
3. 6"Ø VERTICAL DECK DRAINS SHALL NOT BE RIGIDLY JOINED TO 6"FLANGE AND FLARE. SEE DETAIL 1 ON SHEET 6 OF 6.

PROJECT NO. R-4047

HAYWOOD COUNTY

STATION: POC STA. 42+60.93 -L-
POT STA. 18+81.73 -RR-

SHEET 1 OF 6

STATE OF NORTH CAROLINA
DEPARTMENT OF TRANSPORTATION
RALEIGH

STRUCTURE DRAINAGE DETAILS

SPAN A

DWG. 21 OF 60

NORTH CAROLINA SEAL 11725 ENGINEER DAVID R. RUGGLES
2-20-14

STEWART

Firm License No. C-1051
421 Fayetteville St,
Suite 400
Raleigh, NC 27601
T 919.380.8750
www.stewartinc.com

REVISIONS						SHEET NO.
NO.	BY:	DATE:	NO.	BY:	DATE:	S-21
1			3			TOTAL SHEETS
2			4			60

DRAWN BY: M. BURNS DATE : 01/14
CHECKED BY: M. KRANNITZ DATE : 01/14
DESIGN ENGINEER OF RECORD: D. RUGGLES DATE : 01/14

2/20/2014
...\21-Span A Drainage Details.dgn
USER:jabril

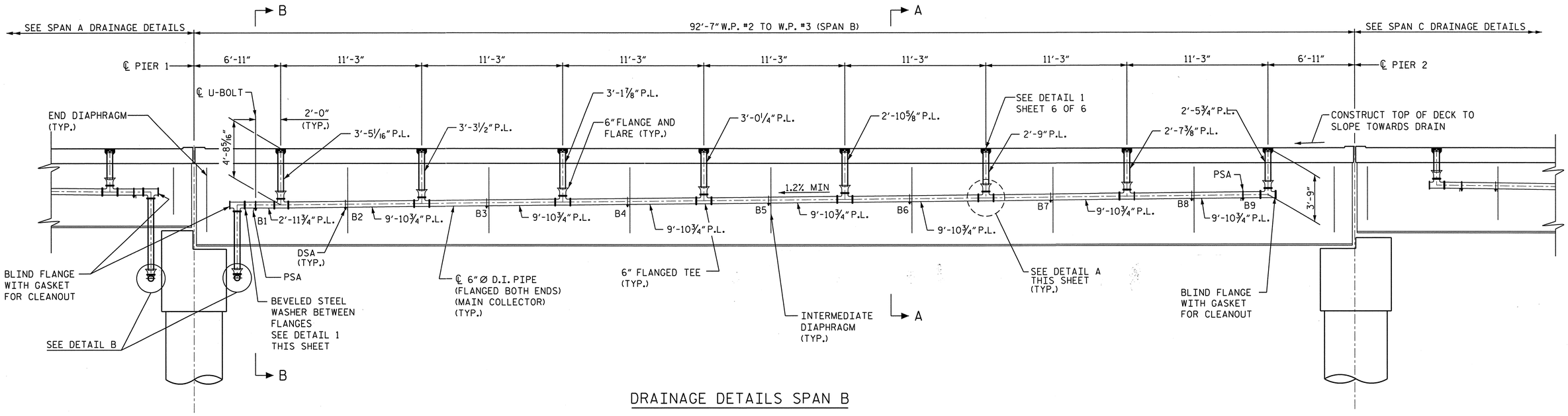

DRAINAGE DETAILS SPAN B

(TYP. 2 LOCATIONS)
(SEE SHEET 6 OF 6 FOR SECTIONS A-A AND B-B)

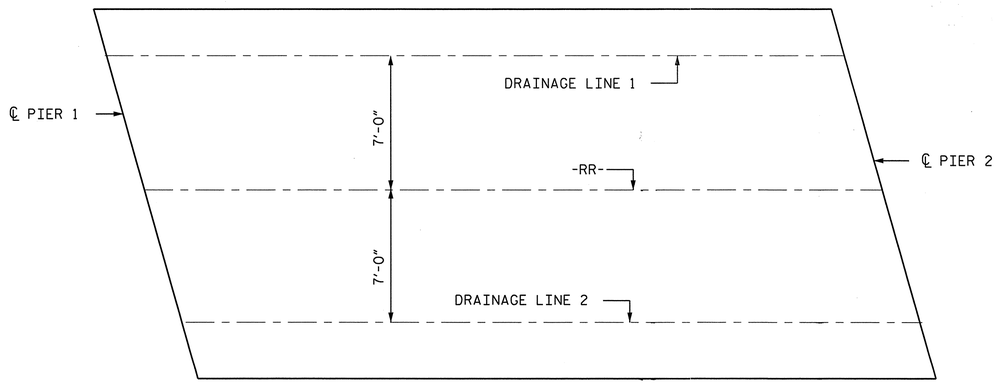

DRAINAGE LAYOUT
NTS

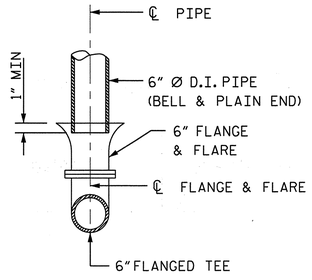

DETAIL A

NOTE: CENTERLINE OF PIPE AND FLANGE AND FLARE LINE UP AT 60° F.

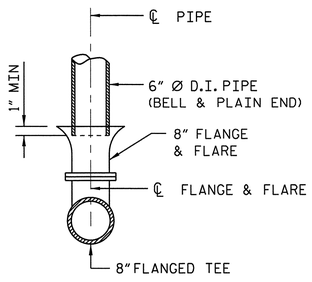

DETAIL B

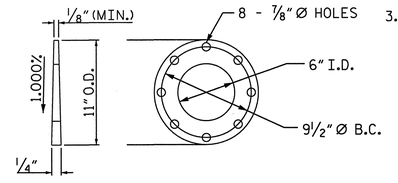

DETAIL 1
BEVELED STEEL WASHER FOR 6" D.I. FLANGED PIPE

NOTES:

1. ALL DIMENSIONS ARE SUBJECT TO ADJUSTMENTS TO FIT MEASUREMENTS TAKEN AFTER DECKS HAVE BEEN POURED.
2. ABBREVATIONS
   D.I. = DUCTILE IRON
   PSA = PIPE SUPPORT ANGLE
   DSA = DIAPHRAGM SUPPORT ANGLE
   P.L. = PIPE LENGTH
   B.C. = BOLT CIRCLE
3. 6" Ø VERTICAL DECK DRAINS SHALL NOT BE RIGIDLY JOINED TO 6" FLANGE AND FLARE. SEE DETAIL 1 ON SHEET 6 OF 6.

PROJECT NO. R-4047
HAYWOOD COUNTY
STATION: POC STA. 42+60.93 -L-
POT STA. 18+81.73 -RR-
SHEET 2 OF 6

STATE OF NORTH CAROLINA
DEPARTMENT OF TRANSPORTATION
RALEIGH

STRUCTURE DRAINAGE DETAIL

SPAN B

REVISIONS						SHEET NO.
NO.	BY:	DATE:	NO.	BY:	DATE:	S-22
1			3			TOTAL SHEETS
2			4			60

NORTH CAROLINA PROFESSIONAL SEAL 11725 ENGINEER DAVID R. RUGGLES
2-20-14

DWG. 22 OF 60

Firm License No. C-1051
421 Fayetteville St,
Suite 400
Raleigh, NC 27601
T 919.380.8750
www.stewartinc.com
STEWART

DRAWN BY:	M. BURNS	DATE :	01/14
CHECKED BY:	M. KRANNITZ	DATE :	01/14
DESIGN ENGINEER OF RECORD:	D. RUGGLES	DATE :	01/14

2/20/2014
...\22-Span B Drainage Details.dgn
USER:jabril

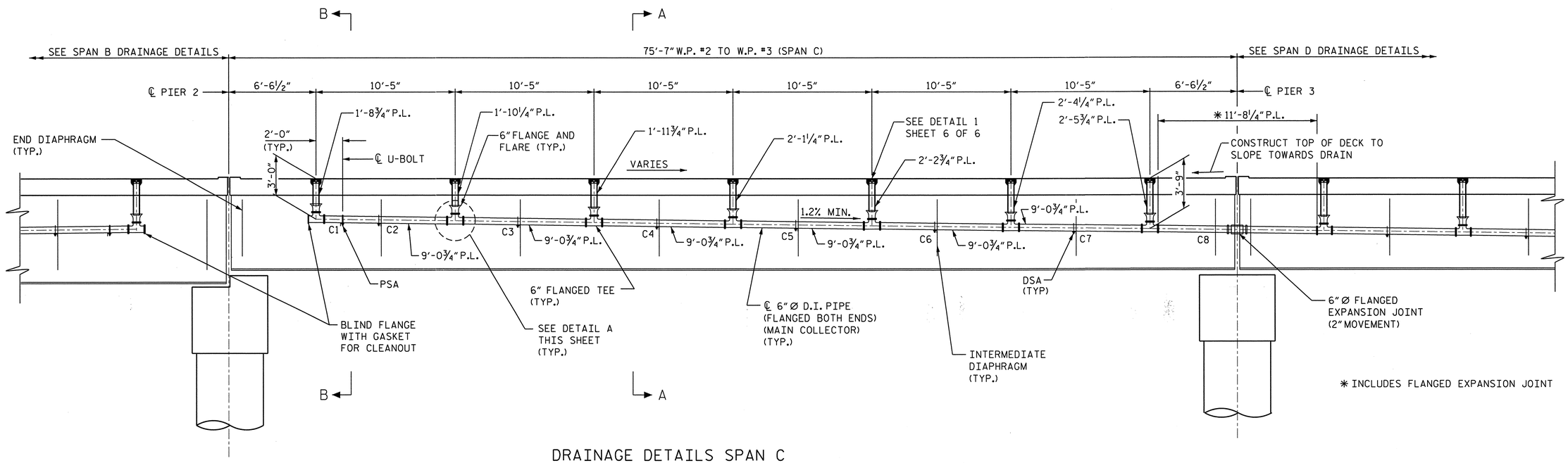

DRAINAGE DETAILS SPAN C

(TYP. 2 LOCATIONS)
(SEE SHEET 6 OF 6 FOR SECTIONS A-A AND B-B)

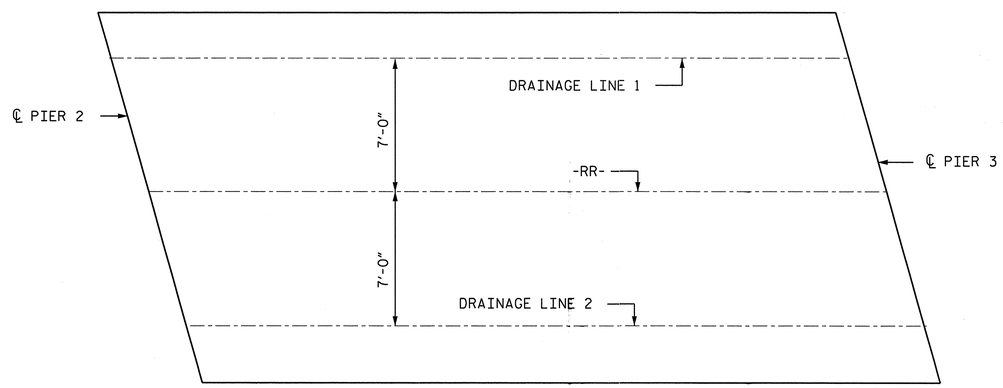

DRAINAGE LAYOUT

NTS

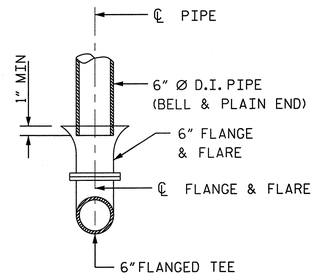

DETAIL A

NOTE: CENTERLINE OF PIPE AND FLANGE AND FLARE LINE UP AT 60° F.

NOTES:

1. ALL DIMENSIONS ARE SUBJECT TO ADJUSTMENTS TO FIT MEASUREMENTS TAKEN AFTER DECKS HAVE BEEN POURED.
2. ABBREVATIONS
   D.I. = DUCTILE IRON
   PSA = PIPE SUPPORT ANGLE
   DSA = DIAPHRAGM SUPPORT ANGLE
   P.L. = PIPE LENGTH
3. 6"Ø VERTICAL DECK DRAINS SHALL NOT BE RIGIDLY JOINED TO 6"FLANGE AND FLARE. SEE DETAIL 1 ON SHEET 6 OF 6.

PROJECT NO. R-4047

HAYWOOD COUNTY

STATION: POC STA. 42+60.93 -L-
POT STA. 18+81.73 -RR-

SHEET 3 OF 6

STATE OF NORTH CAROLINA
DEPARTMENT OF TRANSPORTATION
RALEIGH

STRUCTURE DRAINAGE DETAILS

SPAN C

REVISIONS						SHEET NO.
NO.	BY:	DATE:	NO.	BY:	DATE:	S-23
1			3			TOTAL SHEETS
2			4			60

DWG. 23 OF 60

Firm License No. C-1051
421 Fayetteville St,
Suite 400
Raleigh, NC 27601
T 919.380.8750
www.stewartinc.com

STEWART

NORTH CAROLINA PROFESSIONAL ENGINEER SEAL 11725 DAVID R. RUGGLES
2-20-14

DRAWN BY: M. BURNS	DATE : 01/14	
CHECKED BY: M. KRANNITZ	DATE : 01/14	
DESIGN ENGINEER OF RECORD: D. RUGGLES	DATE : 01/14	

2/20/2014
...\23-Span C Drainage Details.dgn
USER:jbrill

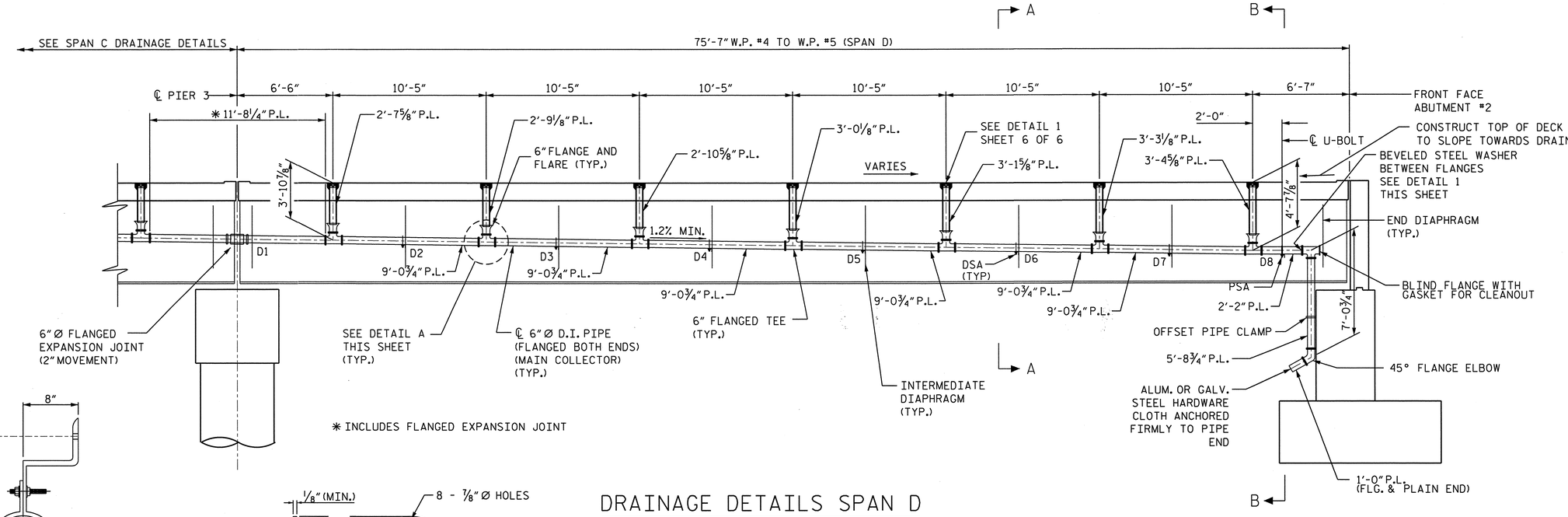

DRAINAGE DETAILS SPAN D

(TYP. 2 LOCATIONS)
(SEE SHEET 6 OF 6 FOR SECTIONS A-A AND B-B)

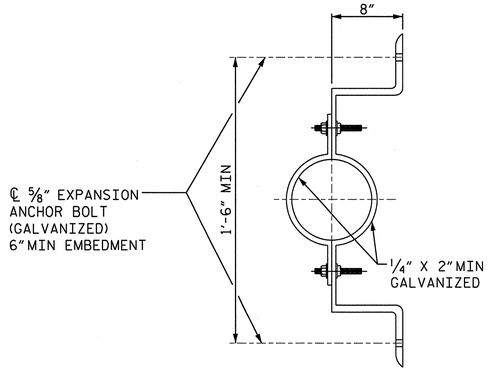

OFFSET PIPE CLAMP DETAIL

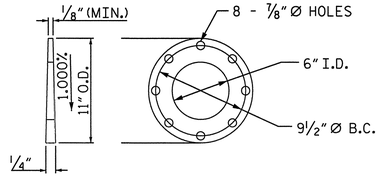

DETAIL 1

BEVELED STEEL WASHER FOR
6" D.I. FLANGED PIPE

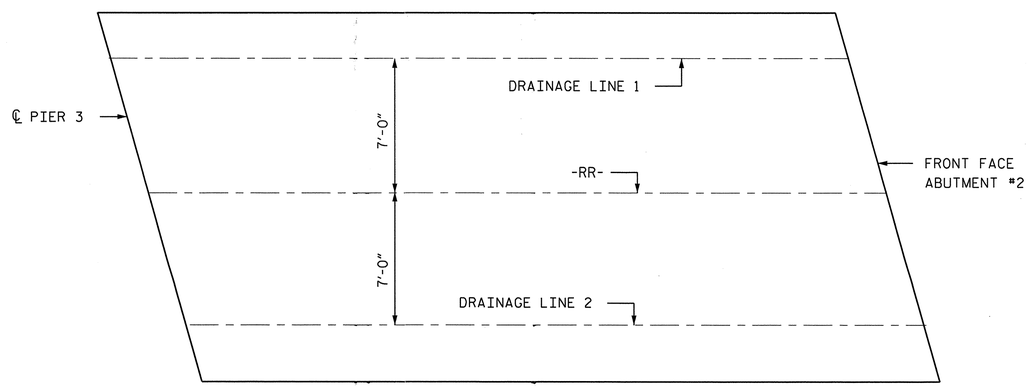

DRAINAGE LAYOUT

NTS

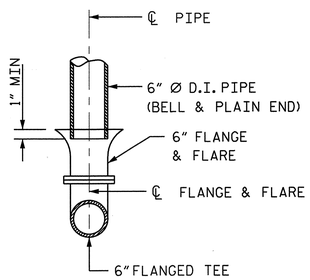

DETAIL A

NOTE: CENTERLINE OF PIPE AND FLANGE AND FLARE LINE UP AT 60° F.

NOTES:

1. ALL DIMENSIONS ARE SUBJECT TO ADJUSTMENTS TO FIT MEASUREMENTS TAKEN AFTER DECKS HAVE BEEN POURED.
2. ABBREVATIONS
   D.I. = DUCTILE IRON
   PSA = PIPE SUPPORT ANGLE
   DSA = DIAPHRAGM SUPPORT ANGLE
   P.L. = PIPE LENGTH
   B.C. = BOLT CIRCLE
3. 6" Ø VERTICAL DECK DRAINS SHALL NOT BE RIGIDLY JOINED TO 6" FLANGE AND FLARE. SEE DETAIL 1 ON SHEET 6 OF 6.

PROJECT NO. R-4047

HAYWOOD COUNTY

STATION: POC STA. 42+60.93 -L-
POT STA. 18+81.73 -RR-

SHEET 4 OF 6

STATE OF NORTH CAROLINA
DEPARTMENT OF TRANSPORTATION
RALEIGH

STRUCTURE DRAINAGE DETAIL

SPAN D

DWG. 24 OF 60

REVISIONS						SHEET NO.
NO.	BY:	DATE:	NO.	BY:	DATE:	S-24
1			3			TOTAL SHEETS
2			4			60

Firm License No. C-1051
421 Fayetteville St.
Suite 400
Raleigh, NC 27601
T 919.380.8750
www.stewartinc.com
STEWART

NORTH CAROLINA PROFESSIONAL ENGINEER SEAL 11725 ENGINEER DAVID R. RUGGLES
2-20-14

DRAWN BY: M. BURNS	DATE : 01/14	
CHECKED BY: M. KRANNITZ	DATE : 01/14	
DESIGN ENGINEER OF RECORD: D. RUGGLES	DATE : 01/14	

2/20/2014
...\24-Span D Drainage Details.dgn
USER:jabril

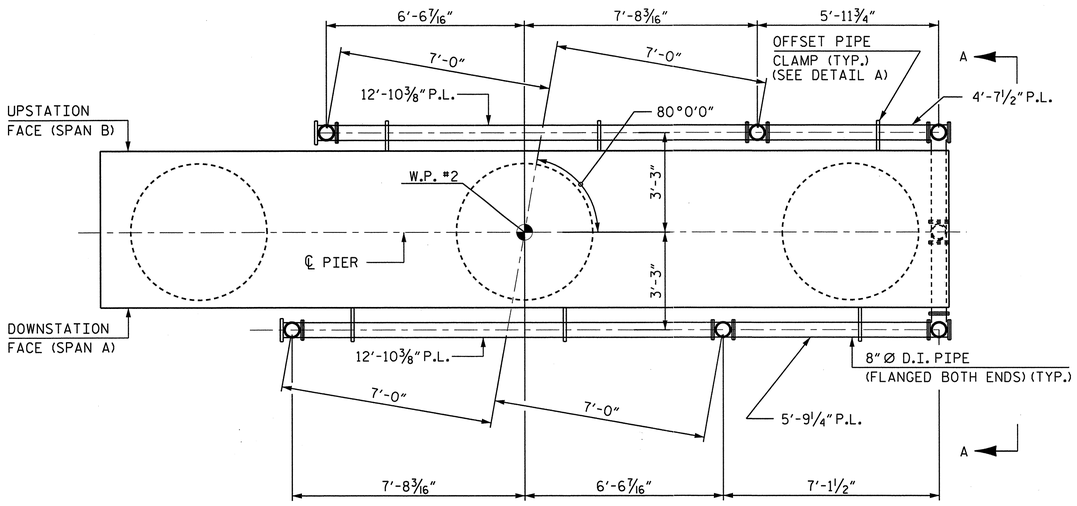

DRAINAGE DETAILS AT PIER

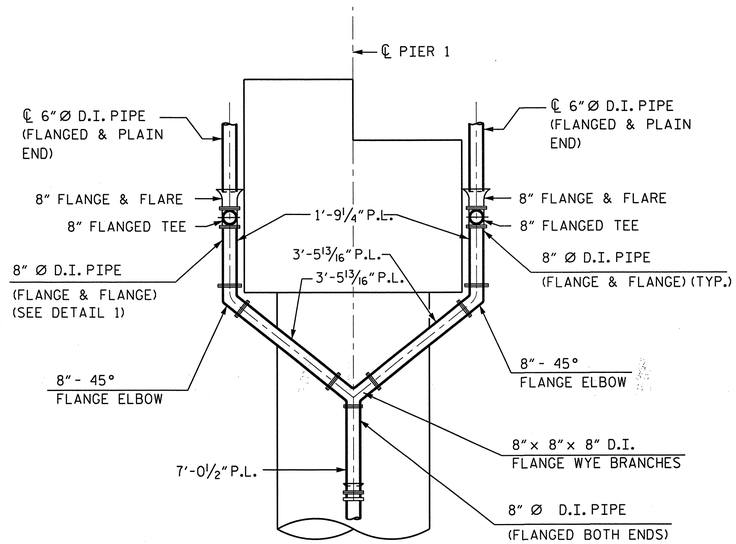

SECTION A-A

NOTES:

1. ALL DIMENSIONS ARE SUBJECT TO ADJUSTMENTS TO FIT MEASUREMENTS TAKEN AFTER DECKS HAVE BEEN POURED.
2. ABBREVIATIONS:
   D.I. = DUCTILE IRON
   PSA = PIPE SUPPORT ANGLE
   DSA = DIAPHRAGM SUPPORT ANGLE
   B.C. = BOLT CIRCLE
3. 6"Ø VERTICAL DRAIN PIPES SHALL NOT BE RIGIDLY JOINED TO FLANGE AND FLARE.

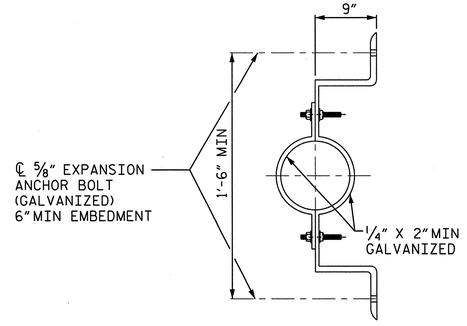

OFFSET PIPE CLAMP - DETAIL A

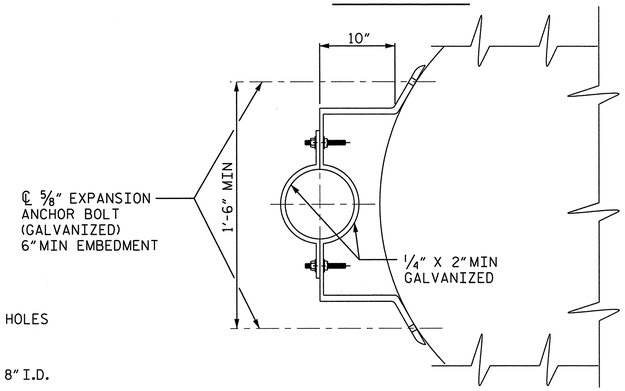

OFFSET PIPE CLAMP - DETAIL B

ELEVATION

(LOOKING UPSTATION @ PIER 1)

ORIENT WYE TO POINT IN THE DIRECTION OF ADJACENT CATCH BASIN, ADDITIONAL ELBOWS MAY BE NECESSARY FOR FINAL CONNECTION

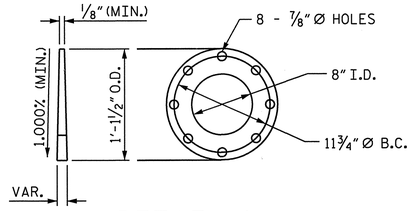

DETAIL 1

BEVELED STEEL WASHER FOR 8" D.I. FLANGED PIPE

DIMENSION					
LOCATION	A	B	C	D	E
PIER 1, SPAN A	7'-4 7/16"	7'-6 1/8"	3'-0"	3'-4" ≠	8'-8 1/4"
PIER 1, SPAN B	5'-9 15/16"	5'-11 5/8"	3'-0"	3'-4" ≠	8'-8 1/4"

≠ VERTICAL PROJECTION

PROJECT NO. R-4047

HAYWOOD COUNTY

STATION: POC STA. 42+60.93 -L-
POT STA. 18+81.73 -RR-

SHEET 5 OF 6

STATE OF NORTH CAROLINA
DEPARTMENT OF TRANSPORTATION
RALEIGH

STRUCTURE DRAINAGE DETAILS

DWG. 25 OF 60

REVISIONS						SHEET NO.
NO.	BY:	DATE:	NO.	BY:	DATE:	S-25
1			3			TOTAL SHEETS
2			4			60

NORTH CAROLINA SEAL 11725 ENGINEER DAVID R. RUGGLES 2-20-14

STEWART
Firm License No. C-1051
421 Fayetteville St, Suite 400
Raleigh, NC 27601
T 919.380.8750
www.stewartinc.com

DRAWN BY:	M. BURNS	DATE :	01/14
CHECKED BY:	M. KRANNITZ	DATE :	01/14
DESIGN ENGINEER OF RECORD:	D. RUGGLES	DATE :	01/14

2/20/2014
...\25-Structure Drainage Details i.dgn
USER:jabril

NOTES:

1. ALL PIPES, FLANGES AND FITTINGS SHALL BE CLASS 53 DUCTLE IRON, AND ALL HARDWARE SHALL BE GALVANIZED.

2. ALL BENDS TO BE SHORT RADIUS, INCLUDING FLANGE & FLARE BENDS, UNLESS OTHERWISE NOTED.

3. PIPE LENGTHS SHOWN ALLOW FOR 1/8"THICK GASKETS TO BE USED AT ALL BOLTED FLANGE CONNECTIONS.

4. LAYOUT IS BASED ON DIMENSIONS GIVEN IN DUCTILE IRON PIPE MANUALS PUBLISHED BY THE U.S. PIPE AND FOUNDRY COMPANY.

5. FOR LOCATIONS AND DESIGNATIONS OF DSA & PSA, SEE SHEETS 1 THRU 4 OF 6.

6. MAKE FINAL PIPE ALIGNMENT AND TIGHTEN U-BOLTS AFTER RAILROAD TRACK HAS BEEN LAID ACROSS THE BRIDGE. TRACKWORK IS BY TRACKWORK CONTRACTOR.

7. PAYMENT FOR ALL MATERIALS, FABRICATION, INSTALLATION AND ADJUSTMENTS RELATED TO STRUCTURE DRAINAGE SHALL BE INCLUDED IN THE CONTRACT LUMP SUM PRICE BID FOR "STRUCTURE DRAINAGE SYSTEM". NO SEPARATE MEASUREMENT OR PAYMENT SHALL BE MADE FOR ANY COMPONENT OF THE STRUCTURE DRAINAGE SYSTEM INCLUDING, BUT NOT LIMITED TO:

   . DUCTILE IRON PIPE AND FITTINGS AND CAST IRON GRATES
   . GASKETS AND PVC OR NEOPRENE COATED STRIPS
   . STEEL SUPPORT ANGLES AND PLATES
   . U-BOLTS AND HSB WASHERS AND NUTS
   . OFFSET PIPE CLAMPS AND EXPANSION ANCHOR BOLTS

8. PROVIDE PVC OR NEOPRENE-COATED STRIPS, EPOXY-CEMENTED TO THE U-BOLT OR PIPE FOR STRAY CURRENT PROTECTION.

9. THE DRAINAGE SYSTEM SHALL RECEIVE A PRIMER COAT AND TOP COAT FROM THE SAME APPROVED PAINT SYSTEM AS SPECIFIED FOR THE STRUCTURAL STEEL.

10. FOR STRUCTRUE DRAINAGE SYSTEM, SEE SPECIAL PROVISIONS.

11. D.I. = DUCTILE IRON

12. GRADE ON MAIN COLLECTOR PIPE = 1.00% MIN. SPAN A
    = 1.20% MIN. SPANS B, C, & D

13. FOR WATERPROOFING SYSTEM, SEE SPECIAL PROVISION "WATERPROOFING".

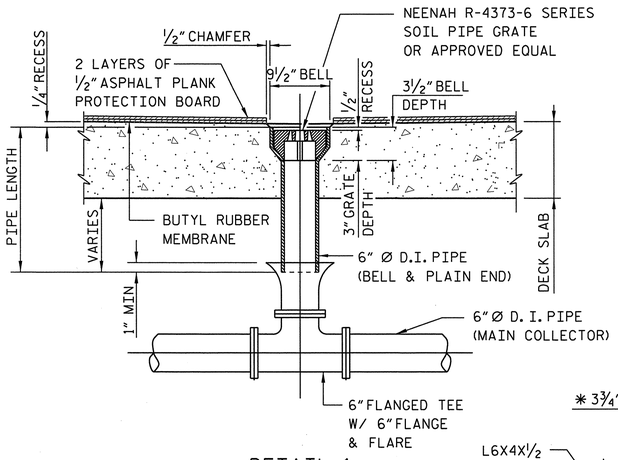

DETAIL 1

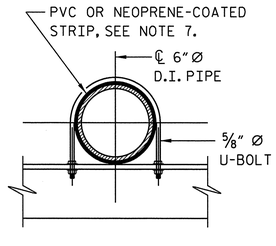

DETAIL 2

DRAINAGE LINE 1	"Y"
A1	2'-10 5/8"
A2	2'-11"
A3	3'-0 5/16"
A4	3'-1 3/16"
B1	4'-3 15/16"
B2	4'-2 7/8"
B3	4'-1 1/4"
B4	3'-11 5/8"
B5	3'-10 1/16"
B6	3'-8 7/16"
B7	3'-6 13/16"
B8	3'-5 3/16"
B9	3'-4 5/8"

DRAINAGE LINE 1	"Y"
C1	2'-7 5/8"
C2	2'-8"
C3	2'-9 1/2"
C4	2'-11"
C5	3'-0 1/2"
C6	3'-2"
C7	3'-3 1/2"
C8	3'-5 1/8"
D1	3'-5 7/16"
D2	3'-6 15/16"
D3	3'-8 7/16"
D4	3'-9 15/16"
D5	3'-11 7/16"
D6	4'-0 15/16"
D7	4'-2 7/16"
D8	4'-3 1/2"

DRAINAGE LINE 2	"Y"
A1	2'-10 5/8"
A2	2'-11"
A3	3'-0 5/16"
A4	3'-1 3/16"
B1	4'-3 15/16"
B2	4'-2 7/8"
B3	4'-1 1/4"
B4	3'-11 5/8"
B5	3'-10 1/16"
B6	3'-8 7/16"
B7	3'-6 13/16"
B8	3'-5 3/16"
B9	3'-4 5/8"

DRAINAGE LINE 2	"Y"
C1	2'-7 5/8"
C2	2'-8"
C3	2'-9 1/2"
C4	2'-11"
C5	3'-0 1/2"
C6	3'-2"
C7	3'-3 1/2"
C8	3'-5 1/8"
D1	3'-5 7/16"
D2	3'-6 15/16"
D3	3'-8 7/16"
D4	3'-9 15/16"
D5	3'-11 7/16"
D6	4'-0 15/16"
D7	4'-2 7/16"
D8	4'-3 1/2"

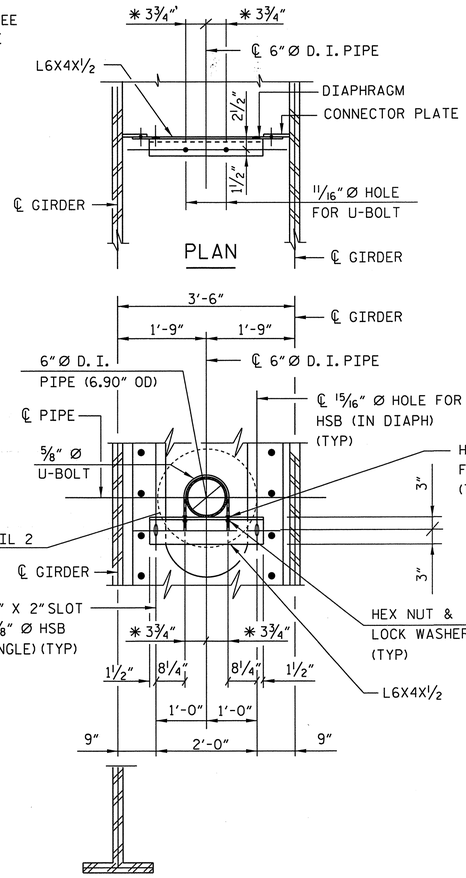

SECTION A-A
DIAPHRAGM SUPPORT ANGLE (DSA)

* ADJUST AS NECESSARY TO ALLOW FOR STRAY CURRENT PROTECTION, SEE NOTE 7.

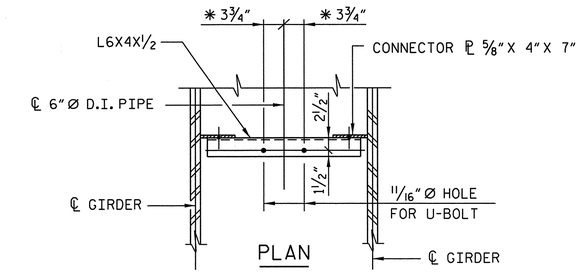

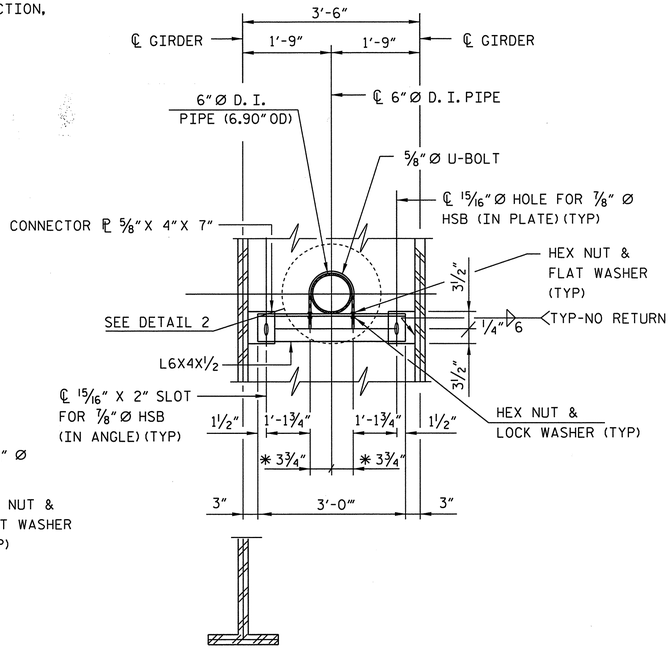

SECTION B-B
PIPE SUPPORT ANGLE (PSA)

PROJECT NO. R-4047

HAYWOOD COUNTY

STATION: POC STA. 42+60.93 -L-
POT STA. 18+81.73 -RR-

SHEET 6 OF 6

STATE OF NORTH CAROLINA
DEPARTMENT OF TRANSPORTATION
RALEIGH

STRUCTURE DRAINAGE DETAILS

DWG. 26 OF 60

REVISIONS						SHEET NO.
NO.	BY:	DATE:	NO.	BY:	DATE:	S-26
1			3			TOTAL SHEETS
2			4			60

Firm License No. C-1051
421 Fayetteville St,
Suite 400
Raleigh, NC 27601
T 919.380.8750
www.stewartinc.com
STEWART

NORTH CAROLINA PROFESSIONAL ENGINEER SEAL 11725 DAVID R. RUGGLES
2-20-14

DRAWN BY:	M. BURNS	DATE : 01/14
CHECKED BY:	M. KRANNITZ	DATE : 01/14
DESIGN ENGINEER OF RECORD:	D. RUGGLES	DATE : 01/14

2/20/2014
...\26-Structure Drainage Details 2.dgn
USER:jabril

BAR TYPES

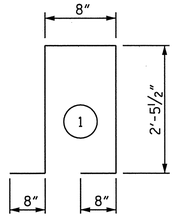

ALL BAR DIMENSIONS ARE OUT TO OUT.

REINFORCING BAR SCHEDULE

SPAN A						SPAN B						SPAN C						SPAN D					
BAR	NO.	SIZE	TYPE	LENGTH	WEIGHT	BAR	NO.	SIZE	TYPE	LENGTH	WEIGHT	BAR	NO.	SIZE	TYPE	LENGTH	WEIGHT	BAR	NO.	SIZE	TYPE	LENGTH	WEIGHT
A1	94	#5	STR.	21'-7"	2,116	A1	266	#5	STR.	21'-7"	5,988	A1	214	#5	STR.	21'-7"	4,817	A1	214	#5	STR.	21'-7"	4,817
A2	4	#5	STR.	18'-10"	79	A7	4	#5	STR.	18'-4"	76	A12	4	#5	STR.	19'-3"	80	A2	4	#5	STR.	18'-10"	79
A3	4	#5	STR.	15'-1"	63	A8	4	#5	STR.	14'-6"	60	A13	4	#5	STR.	15'-6"	65	A3	4	#5	STR.	15'-1"	63
A4	4	#5	STR.	1'-4"	6	A9	4	#5	STR.	10'-9"	45	A14	4	#5	STR.	11'-8"	49	A4	4	#5	STR.	11'-4"	47
A5	4	#5	STR.	7'-6"	31	A10	4	#5	STR.	6'-11"	29	A15	4	#5	STR.	7'-11"	33	A5	4	#5	STR.	7'-6"	31
A6	4	#5	STR.	3'-9"	16	A11	4	#5	STR.	3'-2"	13	A16	4	#5	STR.	4'-2"	17	A6	4	#5	STR.	3'-9"	16
A17	8	#6	STR.	21'-11"	263	A17	8	#6	STR.	21'-11"	263	A17	8	#6	STR.	21'-11"	263	A17	8	#6	STR.	21'-11"	263
B1	59	#4	STR.	30'-0"	1,182	B1	177	#4	STR.	30'-0"	3,547	B1	118	#4	STR.	30'-0"	2,365	B1	118	#4	STR.	30'-0"	2,365
B2	59	#4	STR.	6'-11"	273	B3	59	#4	STR.	8'-1"	319	B4	59	#4	STR.	19'-2"	755	B5	59	#4	STR.	19'-0"	749
B6	24	#5	STR.	17'-2"	430	B7	24	#5	STR.	22'-8"	567	B9	36	#5	STR.	24'-8"	926	B9	12	#5	STR.	24'-8"	309
						B8	24	#5	STR.	22'-7"	565							B10	24	#5	STR.	24'-7"	615
S1	72	#5	1	6'-11"	519							S1	150	#5	1	6'-11"	1,082						
						S1	184	#5	1	6'-11"	1,327							S1	150	#5	1	6'-11"	1,082

SUPERSTRUCTURE BILL OF MATERIAL

	SUPERSTRUCTURE CONCRETE		EPOXY COATED REINFORCING STEEL	
	DECK SLAB (CU. YARDS)	PARAPET (CU. YARDS)	DECK SLAB (LB)	PARAPET (LB)
SPAN A	27.2	4.9	4,548	430
SPAN B	69.0	12.8	11,667	1,132
SPAN C	56.7	10.4	9,526	926
SPAN D	56.6	10.4	9,512	924
TOTALS	209.5	38.5	35,253	3,412

REINFORCED CONCRETE DECK SLAB 6,140 SQ. FT.

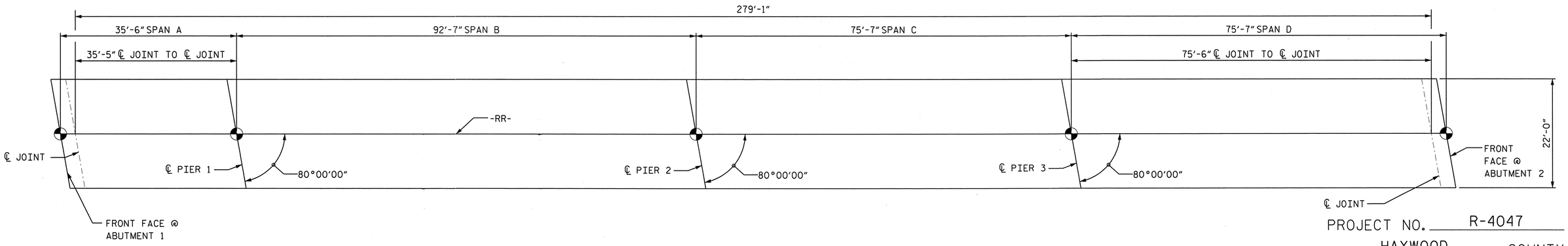

LAYOUT FOR COMPUTING AREA OF REINFORCED CONCRETE DECK SLAB

(SQ. FT. = 6,140)

PROJECT NO. R-4047

HAYWOOD COUNTY

STATION: POC STA. 42+60.93 -L-
POT STA. 18+81.73 -RR-

STATE OF NORTH CAROLINA
DEPARTMENT OF TRANSPORTATION
RALEIGH

SUPERSTRUCTURE

BILL OF MATERIAL

NORTH CAROLINA PROFESSIONAL ENGINEER SEAL 11725 DAVID R. RUGGLES
2-20-14

DWG. 27 OF 60

Firm License No. C-1051
421 Fayetteville St,
Suite 400
Raleigh, NC 27601
T 919.380.8750
www.stewartinc.com

STEWART

REVISIONS						SHEET NO.
NO.	BY:	DATE:	NO.	BY:	DATE:	S-27
1			3			TOTAL SHEETS
2			4			60

DRAWN BY: P. JACOB DATE : 01/14
CHECKED BY: D. RUGGLES DATE : 01/14
DESIGN ENGINEER OF RECORD: D. RUGGLES DATE : 01/14

2/20/2014
...\27-Superstructure BOM.dgn
USER:jabril

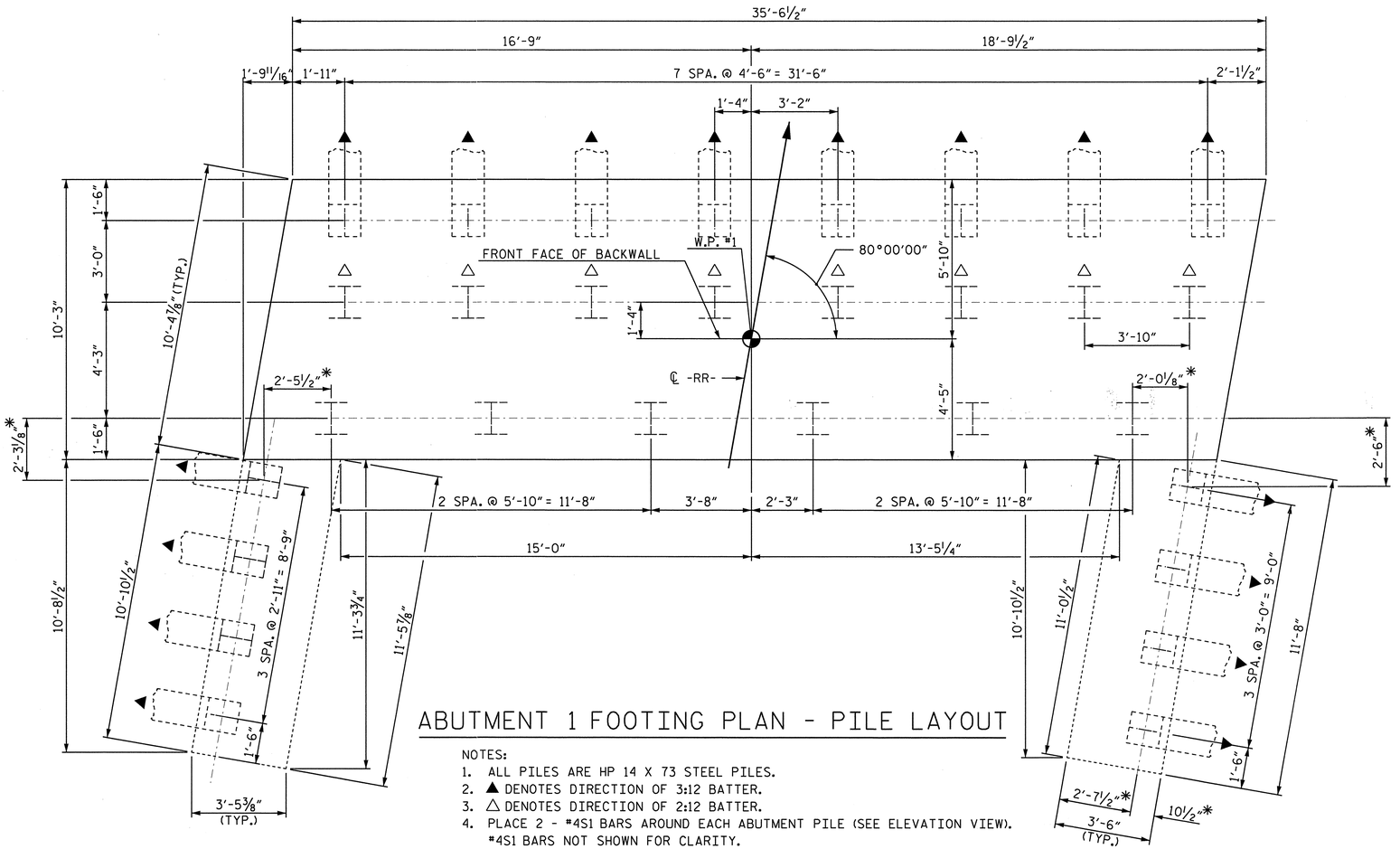

ABUTMENT 1 FOOTING PLAN - PILE LAYOUT

NOTES:
1. ALL PILES ARE HP 14 X 73 STEEL PILES.
2. ▲ DENOTES DIRECTION OF 3:12 BATTER.
3. △ DENOTES DIRECTION OF 2:12 BATTER.
4. PLACE 2 - #4S1 BARS AROUND EACH ABUTMENT PILE (SEE ELEVATION VIEW). #4S1 BARS NOT SHOWN FOR CLARITY.
5. FOR WINGWALL PILE REINFORCEMENT, SEE SHEET 5 OF 8.
6. * DIMENSION SHOWN IS TO ℄ PILE AT BOTTOM OF WINGWALL.

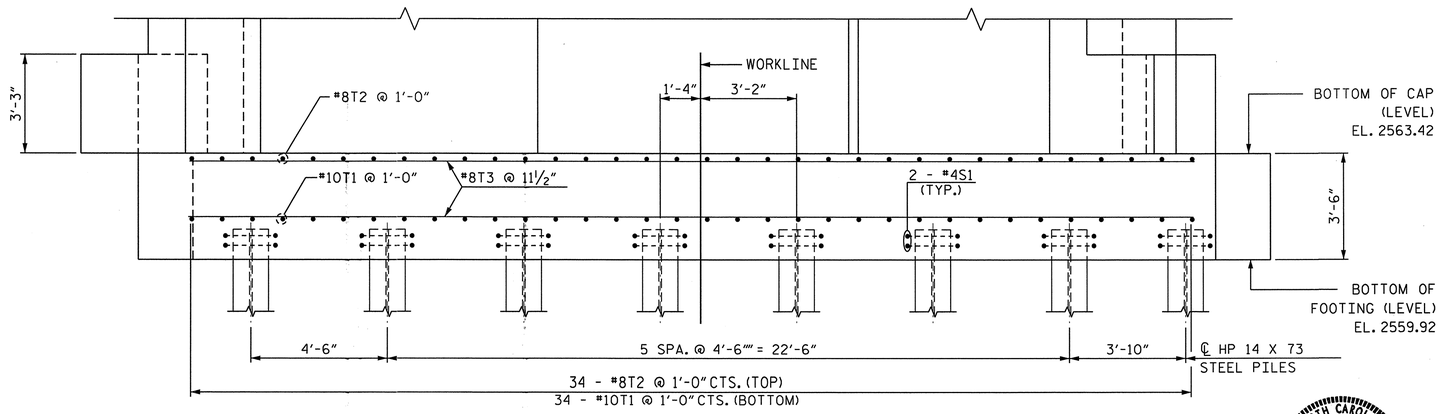

ABUTMENT 1 FOOTING ELEVATION

NOTE: CAP REINFORCEMENT AND WINGWALL PILES AND REINFORCEMENT NOT SHOWN FOR CLARITY

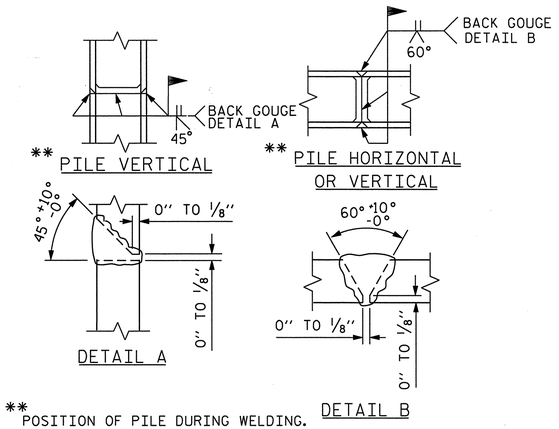

** POSITION OF PILE DURING WELDING.

PILE SPLICE DETAILS

PROJECT NO. R-4047

HAYWOOD COUNTY

STATION: POC STA. 42+60.93 -L-
POT STA. 18+81.73 -RR-

SHEET 1 OF 8

STATE OF NORTH CAROLINA
DEPARTMENT OF TRANSPORTATION
RALEIGH

SUBSTRUCTURE

ABUTMENT 1
FOOTING PLAN - PILES

DWG. 28 OF 60

REVISIONS						SHEET NO.
NO.	BY:	DATE:	NO.	BY:	DATE:	S-28
1			3			TOTAL SHEETS
2			4			60

DRAWN BY: J. ABRIL DATE : 01/14
CHECKED BY: D. RUGGLES DATE : 01/14
DESIGN ENGINEER OF RECORD: D. RUGGLES DATE : 01/14

NORTH CAROLINA PROFESSIONAL SEAL 11725 ENGINEER DAVID R. RUGGLES
2-20-14

STEWART
Firm License No. C-1051
421 Fayetteville St,
Suite 400
Raleigh, NC 27601
T 919.380.8750
www.stewartinc.com

2/20/2014
...\28-Abutment 1 - Piles.dgn
USER:jabril

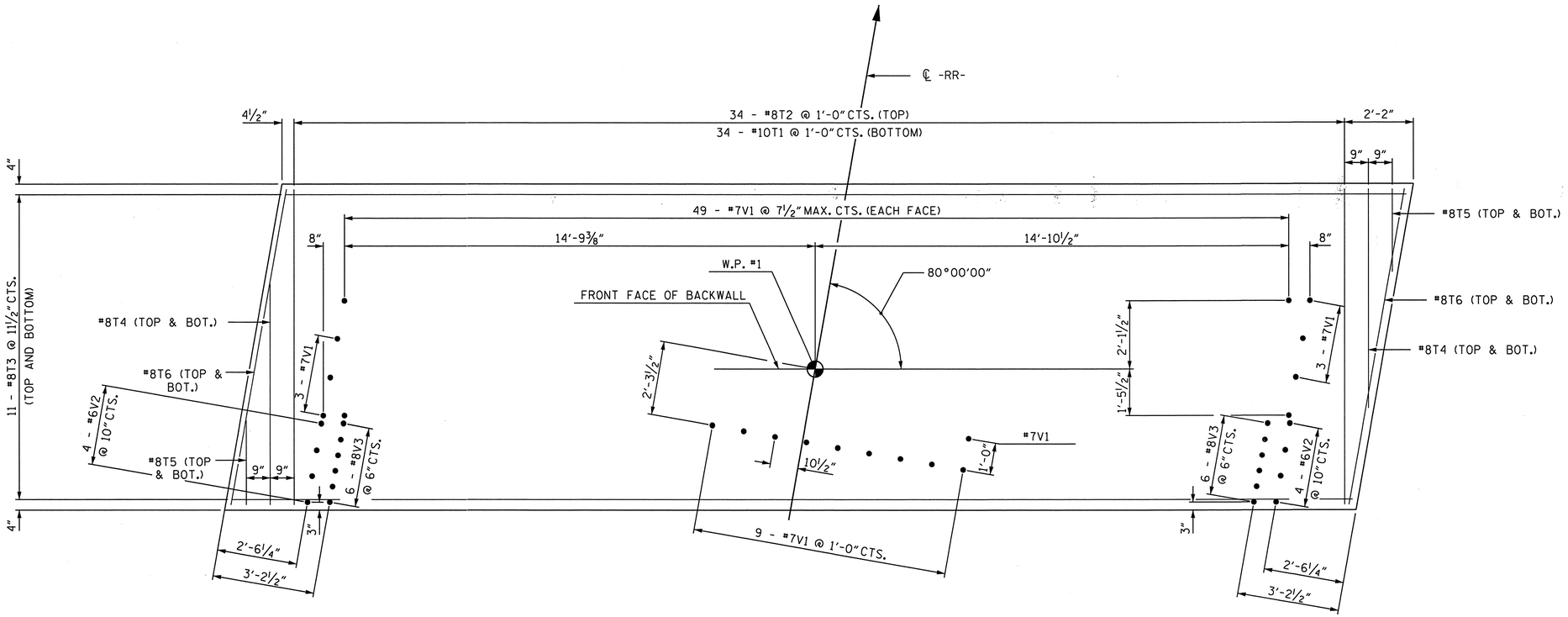

ABUTMENT 1 FOOTING PLAN - REINFORCEMENT

NOTES:

1. FOR PILE HOOP REINFORCEMENT, SEE SHEET 1 OF 8.
2. FOR WINGWALL FOOTINGS, SEE SHEET 5 OF 8. WINGWALL FOOTINGS ARE PLACED WITH POUR No. 2.

PROJECT NO. R-4047

HAYWOOD COUNTY

STATION: POC STA. 42+60.93 -L-
POT STA. 18+81.73 -RR-

SHEET 2 OF 8

STATE OF NORTH CAROLINA
DEPARTMENT OF TRANSPORTATION
RALEIGH

SUBSTRUCTURE

ABUTMENT 1
FOOTING PLAN -
REINFORCEMENT

DWG. 29 OF 60

REVISIONS						SHEET NO.
NO.	BY:	DATE:	NO.	BY:	DATE:	S-29
1			3			TOTAL SHEETS
2			4			

STEWART
Firm License No. C-1051
421 Fayetteville St,
Suite 400
Raleigh, NC 27601
T 919.380.8750
www.stewartinc.com

NORTH CAROLINA PROFESSIONAL SEAL 11725 ENGINEER DAVID R. RUGGLES
2-20-14

DRAWN BY: J. ABRIL DATE: 01/14
CHECKED BY: D. RUGGLES DATE: 01/14
DESIGN ENGINEER OF RECORD: D. RUGGLES DATE: 01/14

2/20/2014
...\29-Abutment 1 - Reinforcement.dgn
USER:jabril

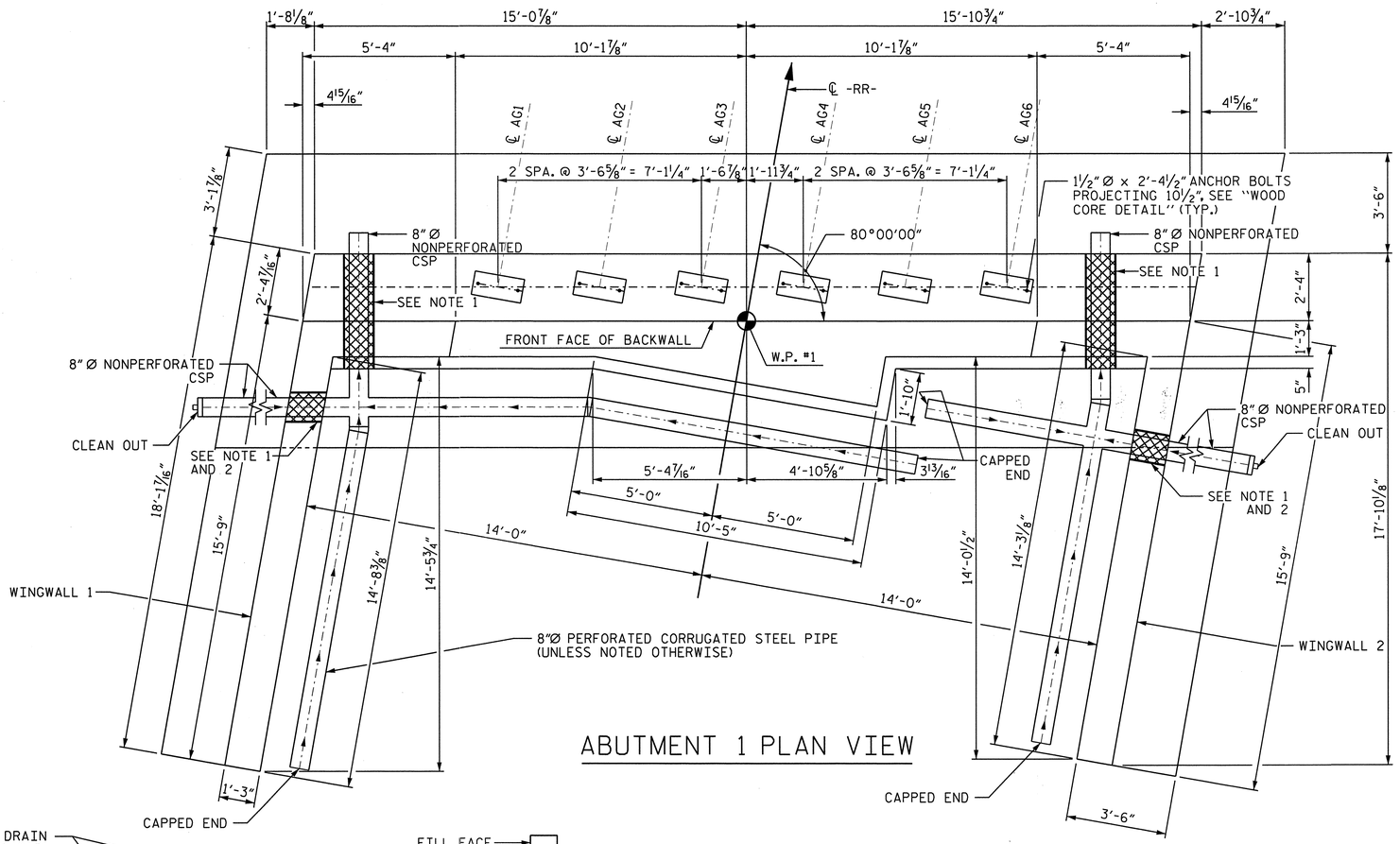

ABUTMENT 1 PLAN VIEW

NOTES:

1. 12" Ø I.D. STEEL PIPE SLEEVE (3/8" WALL THICKNESS) TO BE FLUSH WITH BOTH FACES OF CAP. FIELD BEND REINFORCING STEEL AS NECESSARY TO PROVIDE FOR SLEEVE. SEE "SECTION THRU CAP" FOR DETAILS. INSTALL CSP WITH A MINIMUM OF 1/8" PER 1'-0" SLOPE.
2. EXTEND PIPE AT WINGWALLS AS REQUIRED TO DAYLIGHT CLEAN OUT. METHOD OF EXTENSION SHALL BE APPROVED BY ENGINEER.
3. FOR FENCE POST BASE PLATE INSTALLATION, SEE DWG. 19.

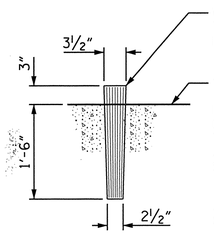

NOTE:
CARE SHALL BE TAKEN TO SET REINFORCING STEEL AS TO CLEAR HOLE LOCATION. IF FREEZING CONDITIONS ARE ENCOUNTERED, FILL HOLES WITH ANTIFREEZE AND SAWDUST.

ANCHOR BOLTS SHALL BE GROUTED IN PLACE. GROUT TO BE APPROVED BY ENGINEER.

WOOD CORE DETAIL

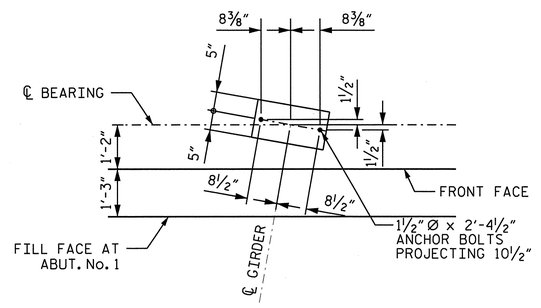

BEARING DETAIL

TYP. GIRDER 1 THRU 6

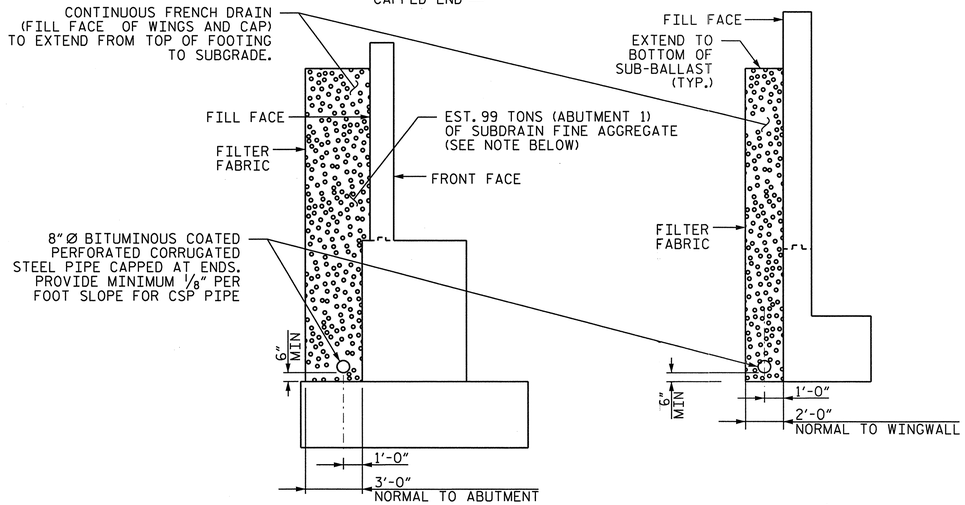

CONTINUOUS UNDERDRAIN DETAIL

NOTE: SUBDRAIN FINE AGGREGATE TO CONFORM TO SECTION 1044 OF NCDOT STD. SPECIFICATIONS. COST OF SUBDRAIN FINE AGGREGATE, 8" Ø STEEL PIPE, AND ALL REQUIRED MATERIALS TO BE INCLUDED WITH THE PAY ITEM "STRUCTURE DRAINAGE SYSTEM".

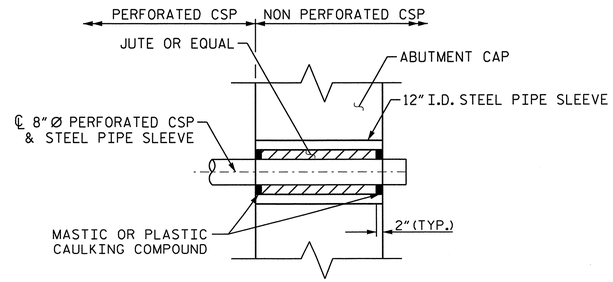

SECTION THRU CAP

PROJECT NO. R-4047

HAYWOOD COUNTY

STATION: POC STA. 42+60.93 -L-
POT STA. 18+81.73 -RR-

SHEET 3 OF 8

STATE OF NORTH CAROLINA
DEPARTMENT OF TRANSPORTATION
RALEIGH

SUBSTRUCTURE

ABUTMENT 1
PLAN VIEW

DWG. 30 OF 60

REVISIONS						SHEET NO.
NO.	BY:	DATE:	NO.	BY:	DATE:	S-30
1			3			TOTAL SHEETS
2			4			60

DRAWN BY:	J. ABRIL	DATE : 01/14
CHECKED BY:	D. RUGGLES	DATE : 01/14
DESIGN ENGINEER OF RECORD:	D. RUGGLES	DATE : 01/14

NORTH CAROLINA PROFESSIONAL ENGINEER SEAL 11725 DAVID R. RUGGLES
2-20-14

Firm License No. C-1051
421 Fayetteville St,
Suite 400
Raleigh, NC 27601
T 919.380.8750
www.stewartinc.com
STEWART

2/20/2014
...\Final\30-Abutment 1 - Plan.dgn
USER:jabril

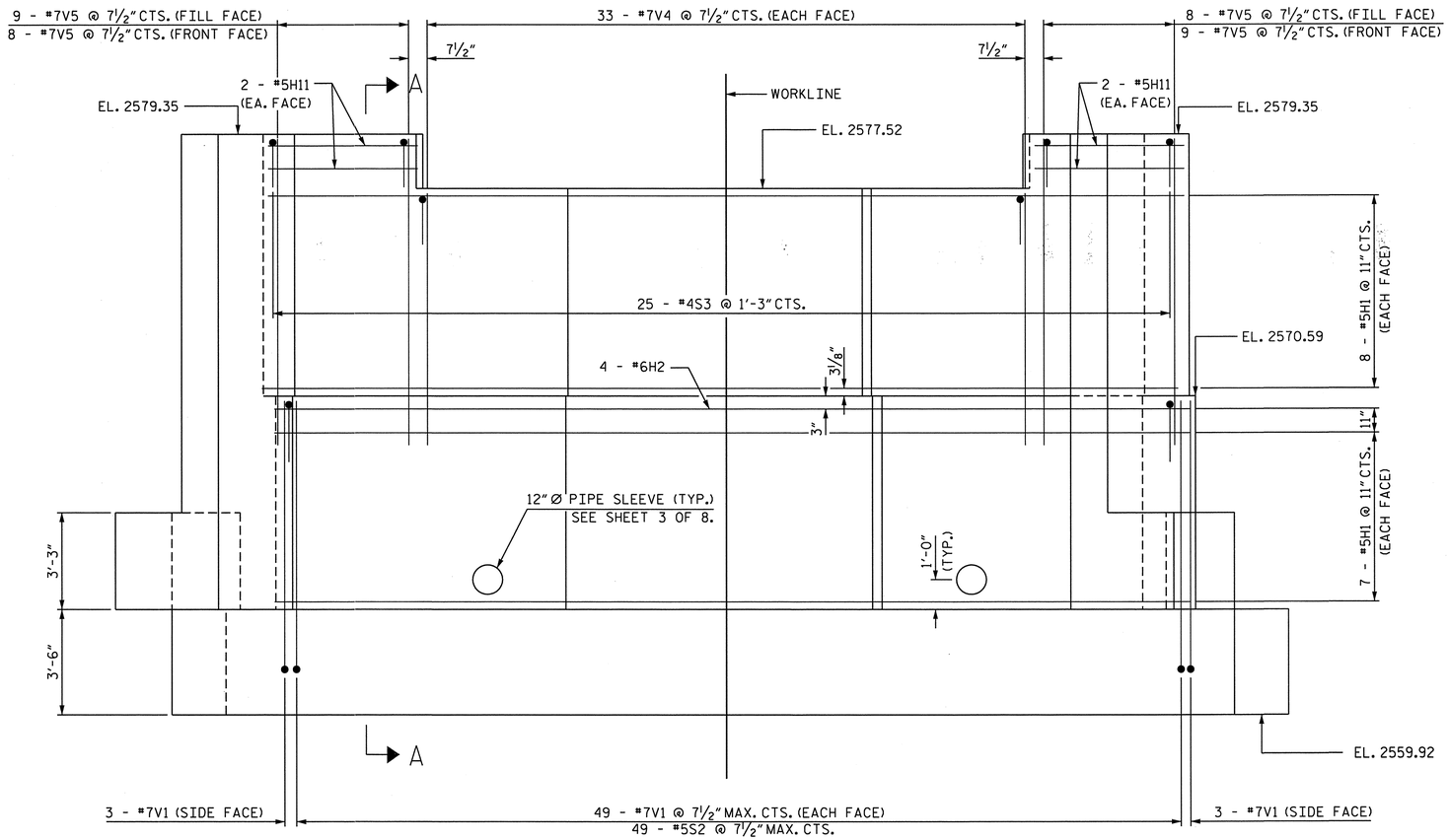

ABUTMENT 1 ELEVATION

FOR SECTION A-A, SEE SHEET 8 OF 8.

NOTES:

1. FOR SECTION A-A, SEE SHEET 8 OF 8.
2. #4S3 BARS MAY BE SHIFTED AS NECESSARY TO CLEAR ANCHOR BOLTS.
3. PAYMENT FOR PIPE SLEEVE INSERT AS SHOWN ON SECTION THRU CAP ON SHEET 3 OF 8 IS CONSIDERED INCIDENTAL TO THE CONSTRUCTION OF THE ABUTMENT.
4. PVC CORRUGATED PIPE SHALL BE ASTM F 949 AND MEET THE REQUIREMENTS OF ASTM D 1784, MINIMUM CELL CLASS 12454-B. PAYMENT FOR CORRUGATED PVC PIPE SHALL BE INCLUDED IN LUMP SUM PAYMENT FOR "STRUCTURE DRAINAGE SYSTEM".
5. DAMPPROOFING LIMITS: TOPS OF FOOTINGS, BACK OF BACKWALL, BACK OF ABUTMENT SEAT, AND BACK OF WINGWALLS.

PROJECT NO. R-4047

HAYWOOD COUNTY

STATION: POC STA. 42+60.93 -L-
POT STA. 18+81.73 -RR-

SHEET 4 OF 8

STATE OF NORTH CAROLINA
DEPARTMENT OF TRANSPORTATION
RALEIGH

SUBSTRUCTURE

ABUTMENT 1
ELEVATION

DWG. 31 OF 60

REVISIONS						SHEET NO.
NO.	BY:	DATE:	NO.	BY:	DATE:	S-31
1			3			TOTAL SHEETS
2			4			60

Firm License No. C-1051
421 Fayetteville St,
Suite 400
Raleigh, NC 27601
T 919.380.8750
www.stewartinc.com

STEWART

NORTH CAROLINA PROFESSIONAL ENGINEER SEAL 11725 DAVID E. RUGGLES
2-20-14

DRAWN BY: J. ABRIL	DATE : 01/14	
CHECKED BY: D. RUGGLES	DATE : 01/14	
DESIGN ENGINEER OF RECORD: D. RUGGLES	DATE : 01/14	

2/20/2014
...\31-Abutment 1 - Elevation.dgn
USER:jabril

NOTES:

1. REINFORCING STEEL MAY BE ADJUSTED AS REQUIRED TO CLEAR 12"Ø PIPE SLEEVE.

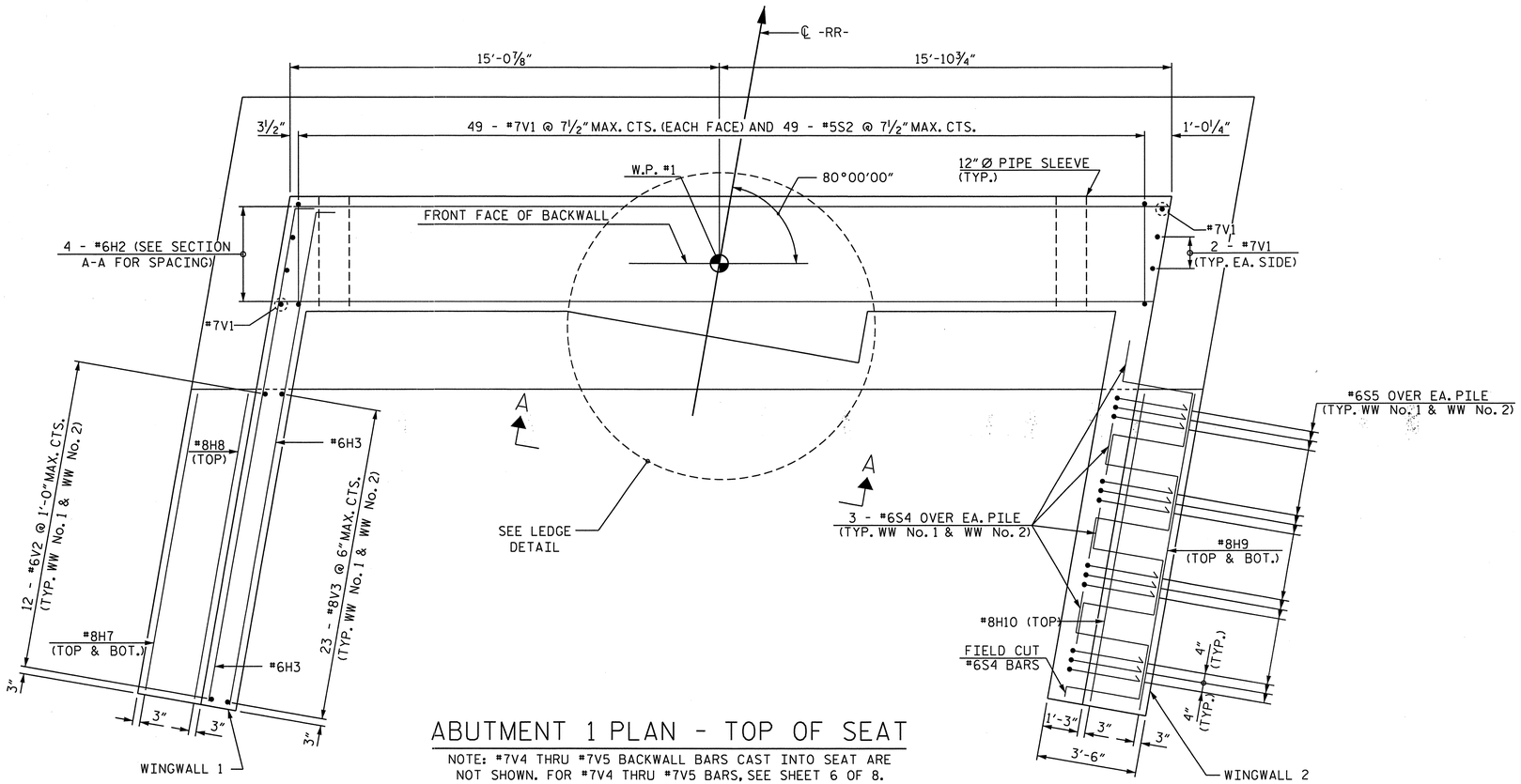

ABUTMENT 1 PLAN - TOP OF SEAT

NOTE: #7V4 THRU #7V5 BACKWALL BARS CAST INTO SEAT ARE NOT SHOWN. FOR #7V4 THRU #7V5 BARS, SEE SHEET 6 OF 8. FOR WINGWALL BARS CAST INTO FOOTING (#6V2 AND #8V3), SEE FOOTING REINFORCEMENT PLAN (SHEET 2 OF 8)

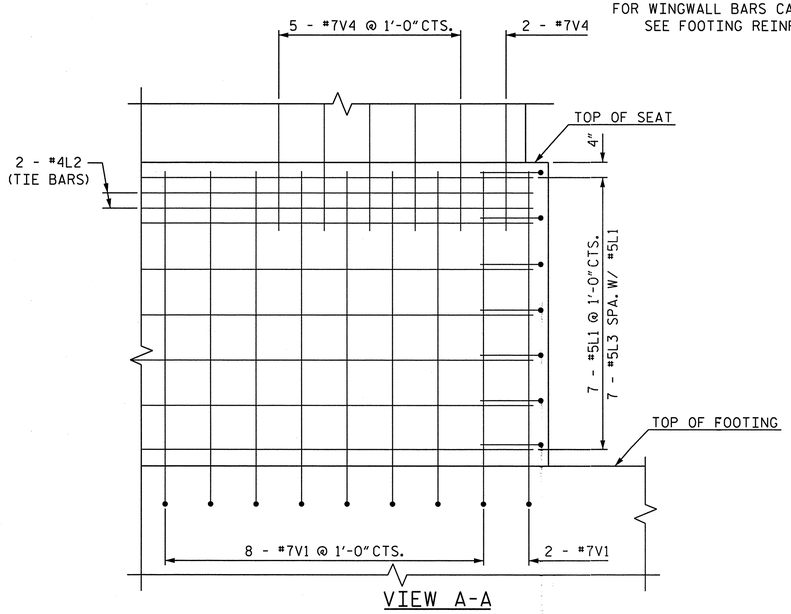

VIEW A-A

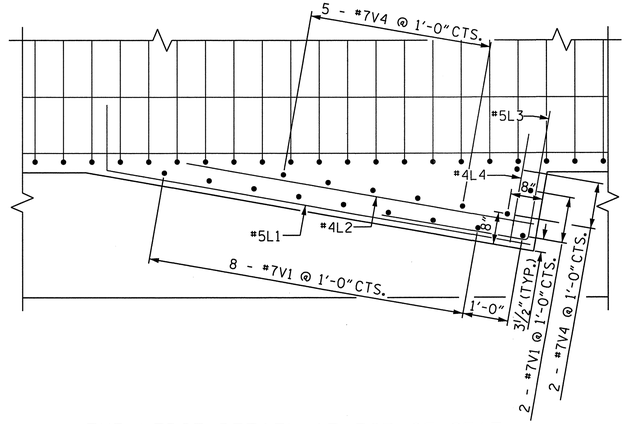

TYP. LEDGE DETAIL AT TOP OF SEAT

NOTE: #4L2 & #4L4 ARE TIE BARS

PROJECT NO. R-4047

HAYWOOD COUNTY

STATION: POC STA. 42+60.93 -L-
POT STA. 18+81.73 -RR-

SHEET 5 OF 8

STATE OF NORTH CAROLINA
DEPARTMENT OF TRANSPORTATION
RALEIGH

SUBSTRUCTURE

ABUTMENT 1 PLAN
TOP OF SEAT

DRAWN BY: J. ABRIL DATE : 01/14
CHECKED BY: D. RUGGLES DATE : 01/14
DESIGN ENGINEER OF RECORD: D. RUGGLES DATE : 01/14

NORTH CAROLINA PROFESSIONAL SEAL 11725 ENGINEER DAVID R. RUGGLES
2-20-14

DWG. 32 OF 60

Firm License No. C-1051
421 Fayetteville St,
Suite 400
Raleigh, NC 27601
T 919.380.8750
www.stewartinc.com

STEWART

REVISIONS						SHEET NO.
NO.	BY:	DATE:	NO.	BY:	DATE:	S-32
1			3			TOTAL SHEETS
2			4			60

2/20/2014
...\32-Abutment 1 - Top of Seat.dgn
USER:jabril

NOTES:

1. REINFORCING STEEL MAY BE ADJUSTED AS REQUIRED TO CLEAR 12"Ø PIPE SLEEVE.

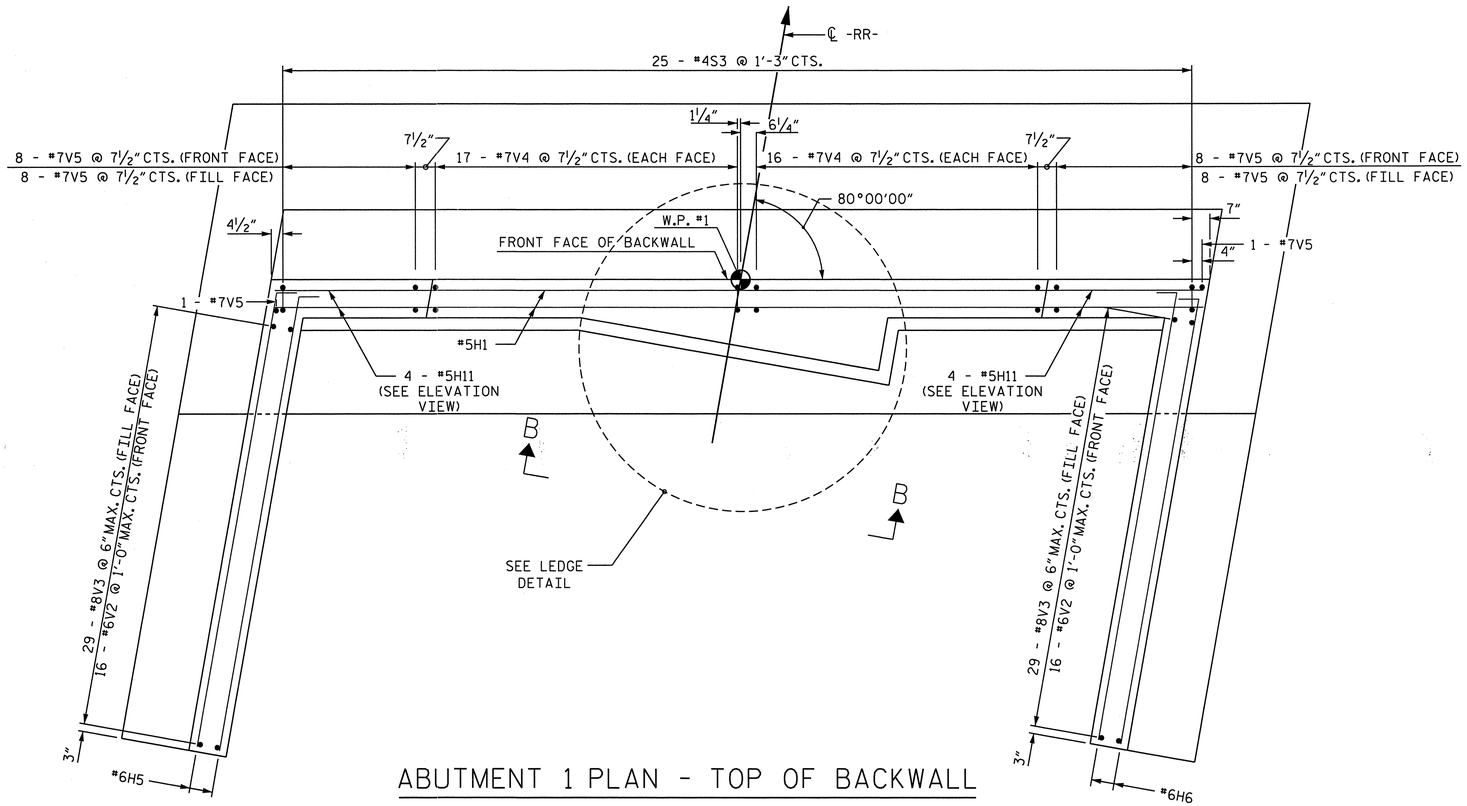

ABUTMENT 1 PLAN - TOP OF BACKWALL

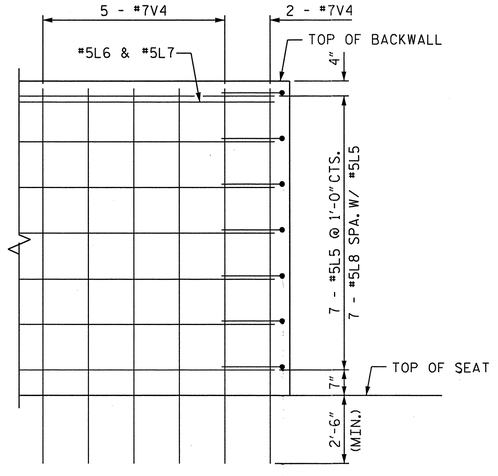

VIEW B-B

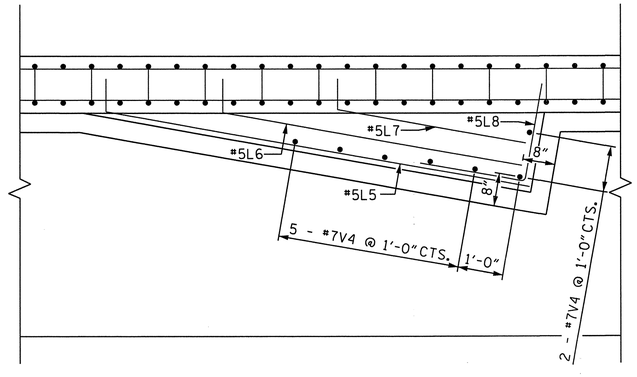

TYP. LEDGE DETAIL AT TOP OF BACKWALL

PROJECT NO. R-4047

HAYWOOD COUNTY

STATION: POC STA. 42+60.93 -L-
POT STA. 18+81.73 -RR-

SHEET 6 OF 8

STATE OF NORTH CAROLINA
DEPARTMENT OF TRANSPORTATION
RALEIGH

SUBSTRUCTURE

ABUTMENT 1 PLAN
TOP OF BACKWALL

REVISIONS						SHEET NO.
NO.	BY:	DATE:	NO.	BY:	DATE:	S-33
1			3			TOTAL SHEETS
2			4			60

DRAWN BY: J. ABRIL DATE : 01/14
CHECKED BY: D. RUGGLES DATE : 01/14
DESIGN ENGINEER OF RECORD: D. RUGGLES DATE : 01/14

NORTH CAROLINA SEAL 11725 ENGINEER DAVID R. RUGGLES
2-20-14

DWG. 33 OF 60

Firm License No. C-1051
421 Fayetteville St,
Suite 400
Raleigh, NC 27601
T 919.380.8750
www.stewartinc.com

STEWART

2/20/2014
...\33-Abutment 1 - Top of Backwall.dgn
USER:jabril

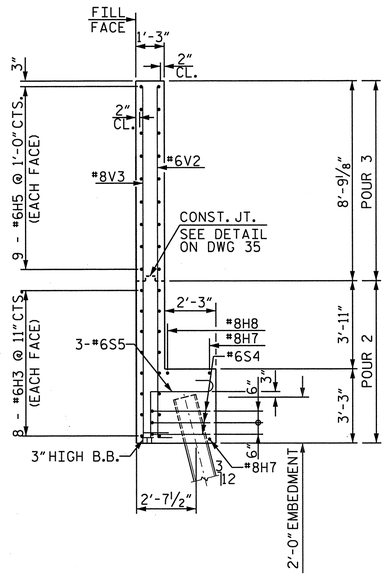

SECTION B-B
WINGWALL 1

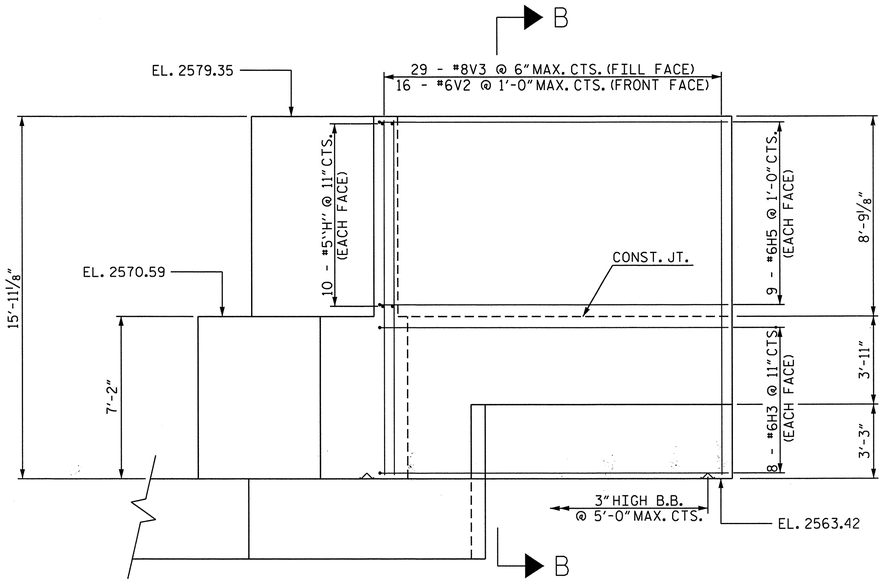

WINGWALL 1 ELEVATION (LEFT SIDE)

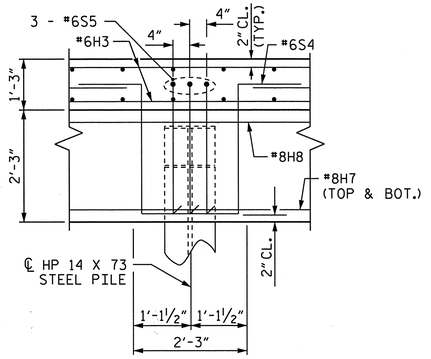

TYPICAL REINFORCEMENT AT WINGWALL PILE (PLAN VIEW)

NOTE: WINGWALL 1 SHOWN, WINGWALL 2 SIMILAR.

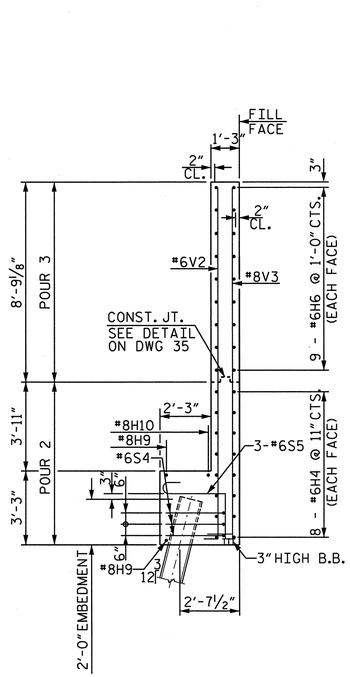

SECTION C-C
WINGWALL 2

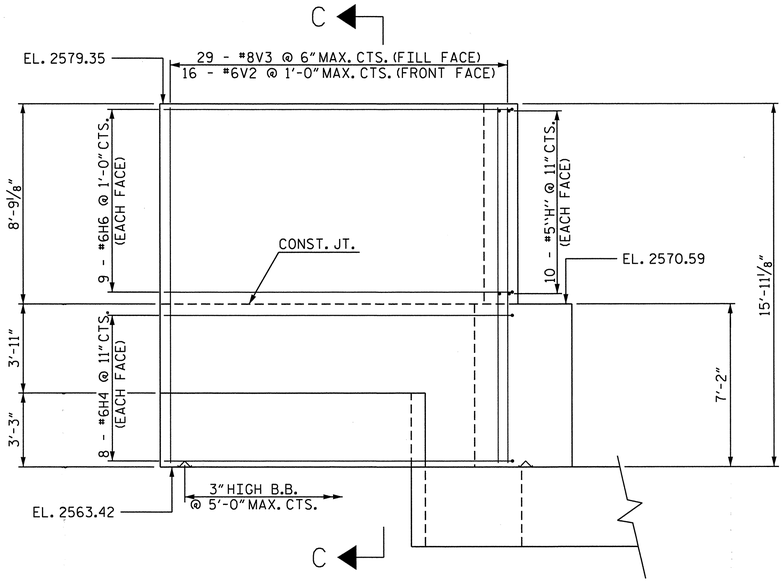

WINGWALL 2 ELEVATION (RIGHT SIDE)

NOTE: WINGWALL PILE REINFORCEMENT AND PILES NOT SHOWN FOR CLARITY.

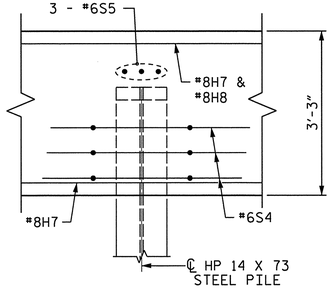

TYPICAL REINFORCEMENT AT WINGWALL PILE (ELEVATION VIEW)

NOTE: WINGWALL 1 SHOWN, WINGWALL 2 SIMILAR.

PROJECT NO. R-4047

HAYWOOD COUNTY

STATION: POC STA. 42+60.93 -L-
POT STA. 18+81.73 -RR-

SHEET 7 OF 8

DRAWN BY: J. ABRIL	DATE : 01/14	
CHECKED BY: D. RUGGLES	DATE : 01/14	
DESIGN ENGINEER OF RECORD: D. RUGGLES	DATE : 01/14	

NORTH CAROLINA PROFESSIONAL SEAL 11725 ENGINEER DAVID R. RUGGLES
2-20-14

STEWART

DWG. 34 OF 60

Firm License No. C-1051
421 Fayetteville St.
Suite 400
Raleigh, NC 27601
T 919.380.8750
www.stewartinc.com

STATE OF NORTH CAROLINA
DEPARTMENT OF TRANSPORTATION
RALEIGH

SUBSTRUCTURE

ABUTMENT 1 WINGWALL ELEVATIONS AND SECTIONS

REVISIONS						SHEET NO.
NO.	BY:	DATE:	NO.	BY:	DATE:	S-34
1			3			TOTAL SHEETS
2			4			60

2/20/2014
...\34-Abutment 1 - WingwallElevation and Sections.dgn
USER:jabril

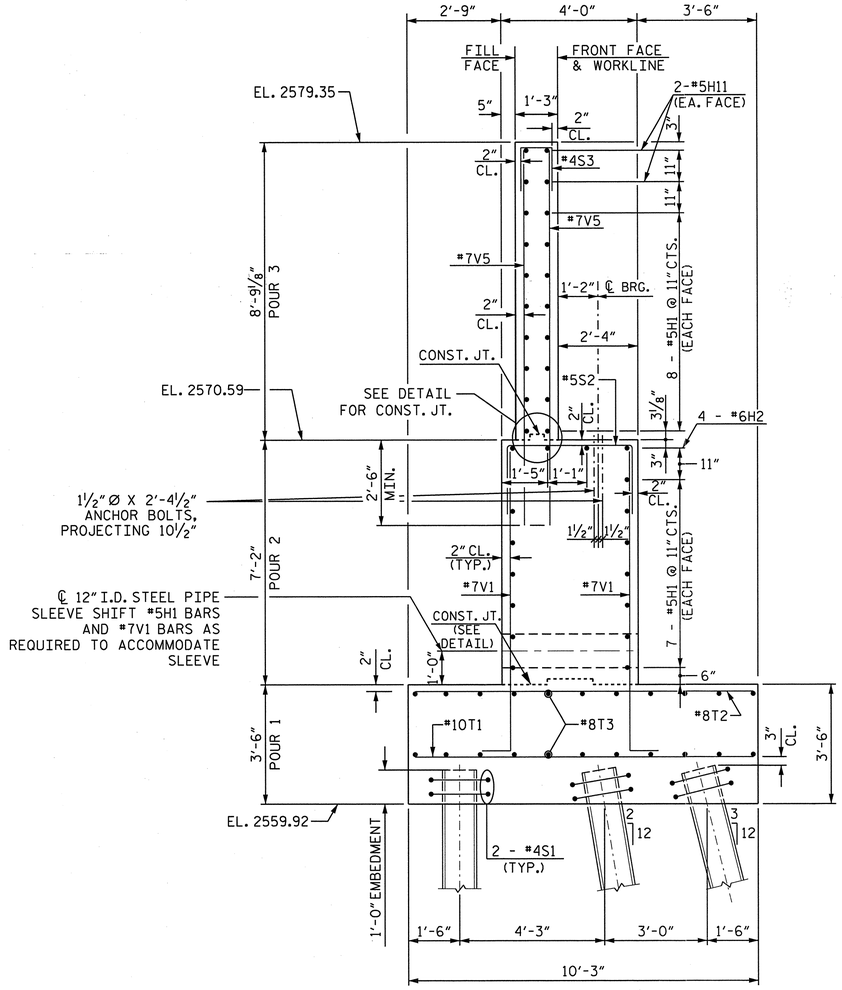

SECTION A-A
ABUTMENT 1

FOR SECTION A-A CUT LOCATION, SEE SHEET 4 OF 8.

BAR TYPES

ALL BAR DIMENSIONS ARE OUT TO OUT

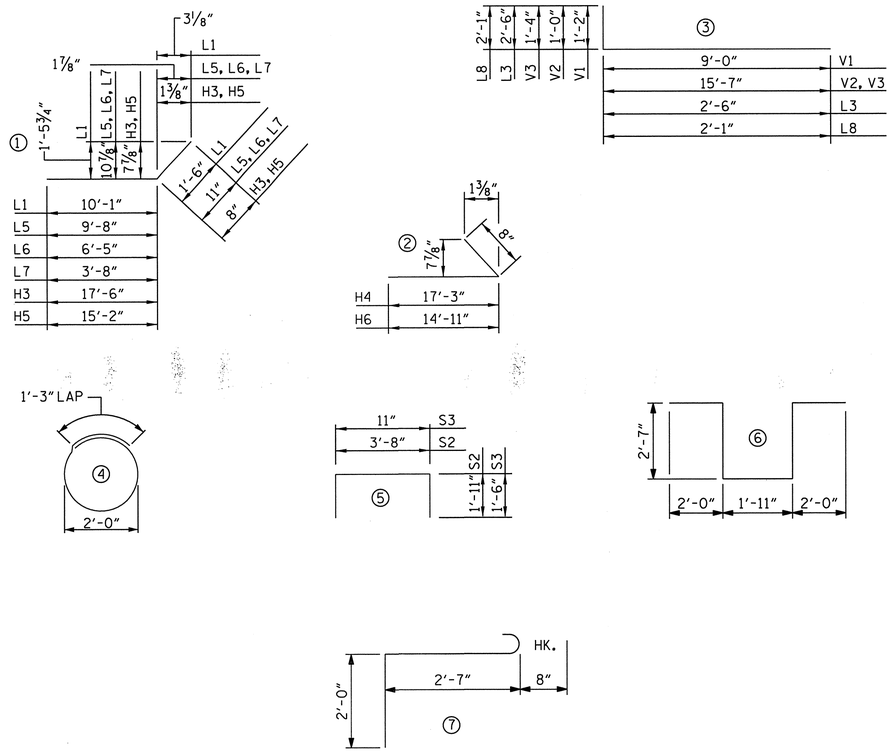

BILL OF MATERIAL

ABUTMENT 1

BAR	NO.	SIZE	TYPE	LENGTH	WEIGHT
H1	30	#5	STR.	30'-7"	957
H2	4	#6	STR.	30'-7"	184
H3	16	#6	1	18'-2"	437
H4	16	#6	2	17'-11"	431
H5	18	#6	1	15'-10"	428
H6	18	#6	2	15'-7"	421
H7	2	#8	STR.	10'-6"	56
H8	1	#8	STR.	10-10"	29
H9	2	#8	STR.	11'-3"	60
H10	1	#8	STR.	10'-11"	29
H11	8	#5	STR.	5'-0"	42
L1	7	#5	1	11'-7"	85
L2	2	#4	STR.	6'-5"	9
L3	7	#5	3	5'-0"	37
L4	2	#4	STR.	2'-8"	4
L5	7	#5	1	10'-7"	77
L6	1	#5	1	7'-4"	8
L7	1	#5	1	4'-7"	5
L8	7	#5	3	4'-2"	30
S1	44	#4	4	7'-6"	220
S2	49	#5	5	7'-6"	383
S3	25	#4	5	3'-11"	65
S4	24	#6	6	11'-1"	400
S5	24	#6	7	5'-3"	189
T1	34	#10	STR.	9'-11"	1451
T2	34	#8	STR.	9'-11"	900
T3	22	#8	STR.	35'-2"	2066
T4	4	#8	STR.	7'-0"	75
T5	4	#8	STR.	3'-0"	32
T6	4	#8	STR.	10'-0"	107
V1	114	#7	3	10'-2"	2369
V2	32	#6	3	16'-7"	797
V3	58	#8	3	16'-11"	2620
V4	73	#7	STR.	9'-3"	1380
V5	34	#7	STR.	11'-1"	770

NOTE: THE "L" BARS SHALL BE CONSIDERED "STIRRUP" OR "TIE" BARS WHEN ESTABLISHING BEND DIAMETERS.

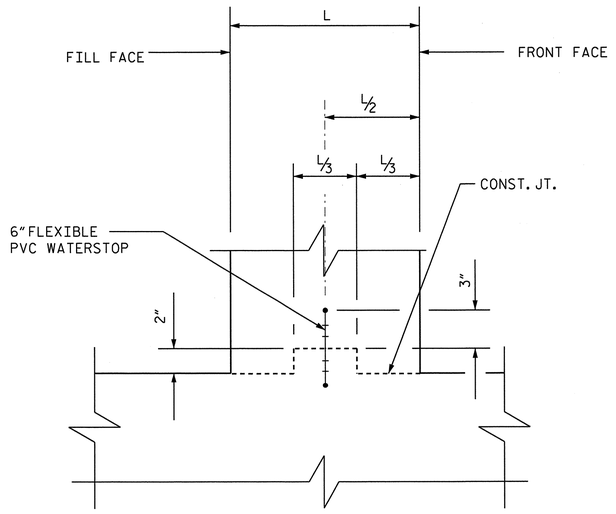

CONSTRUCTION JOINT DETAIL

QUANTITIES - ABUTMENT 1		
REINFORCING STEEL:	LBS.	17,153
CLASS AA CONCRETE:		
	POUR 1 CU. YARDS	47.2
	POUR 2 CU. YARDS	51.1
	POUR 3 CU. YARDS	26.0
	TOTAL CU. YARDS	124.3
HP 14 X 73 STEEL PILES	NO.	30
	LIN. FEET	1,800
STEEL PILE POINTS	NO.	30

PROJECT NO. R-4047

HAYWOOD COUNTY

STATION: POC STA. 42+60.93 -L-
POT STA. 18+81.73 -RR-

SHEET 8 OF 8

STATE OF NORTH CAROLINA
DEPARTMENT OF TRANSPORTATION
RALEIGH

SUBSTRUCTURE

ABUTMENT 1
BILL OF MATERIAL

DRAWN BY: J. ABRIL DATE : 01/14
CHECKED BY: D. RUGGLES DATE : 01/14
DESIGN ENGINEER OF RECORD: D. RUGGLES DATE : 01/14

NORTH CAROLINA PROFESSIONAL ENGINEER SEAL 11725 DAVID R. RUGGLES
2-20-14

DWG. 35 OF 60

Firm License No. C-1051
421 Fayetteville St,
Suite 400
Raleigh, NC 27601
T 919.380.8750
www.stewartinc.com
STEWART

REVISIONS						SHEET NO.
NO.	BY:	DATE:	NO.	BY:	DATE:	S-35
1			3			TOTAL SHEETS
2			4			60

2/20/2014
...\Final\35-Abutment 1 - BOM.dgn
USER:jabril

NOTES:

1. ALL CONCRETE IN PIER SHALL HAVE A MINIMUM COMPRESSIVE STRENGTH OF 4500 PSI AT 28 DAYS.
2. FOR SECTIONS A-A AND B-B, SEE SHEET 2 OF 4.
3. STURRUPS IN CAP MAY BE SHIFTED AS NECESSARY TO CLEAR ANCHOR BOLTS.

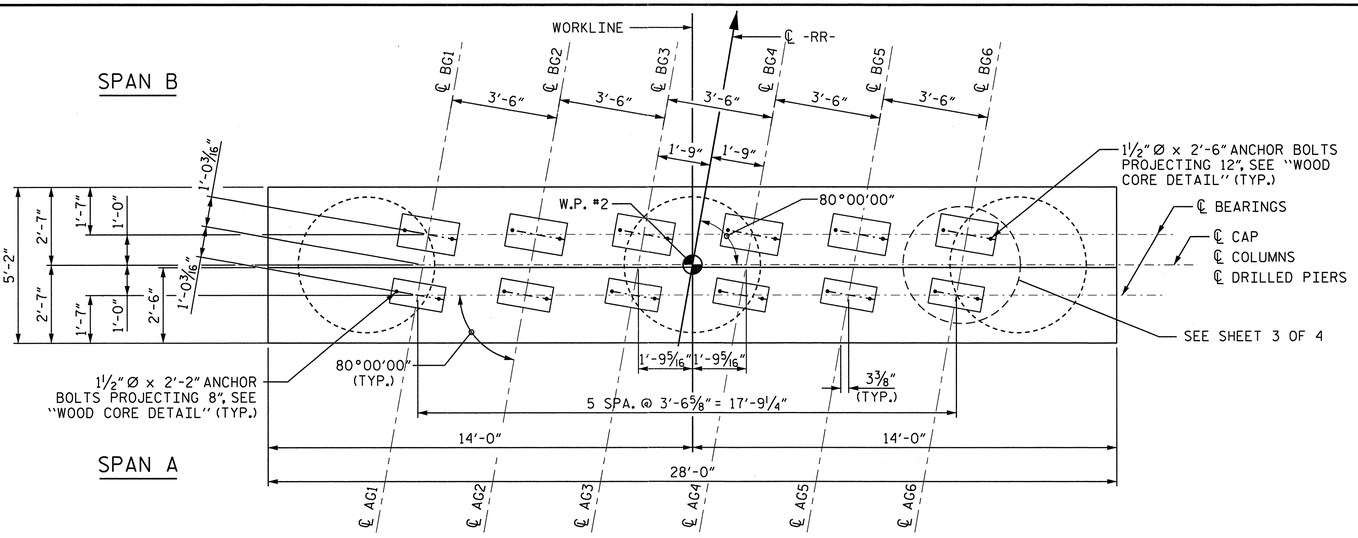

PLAN

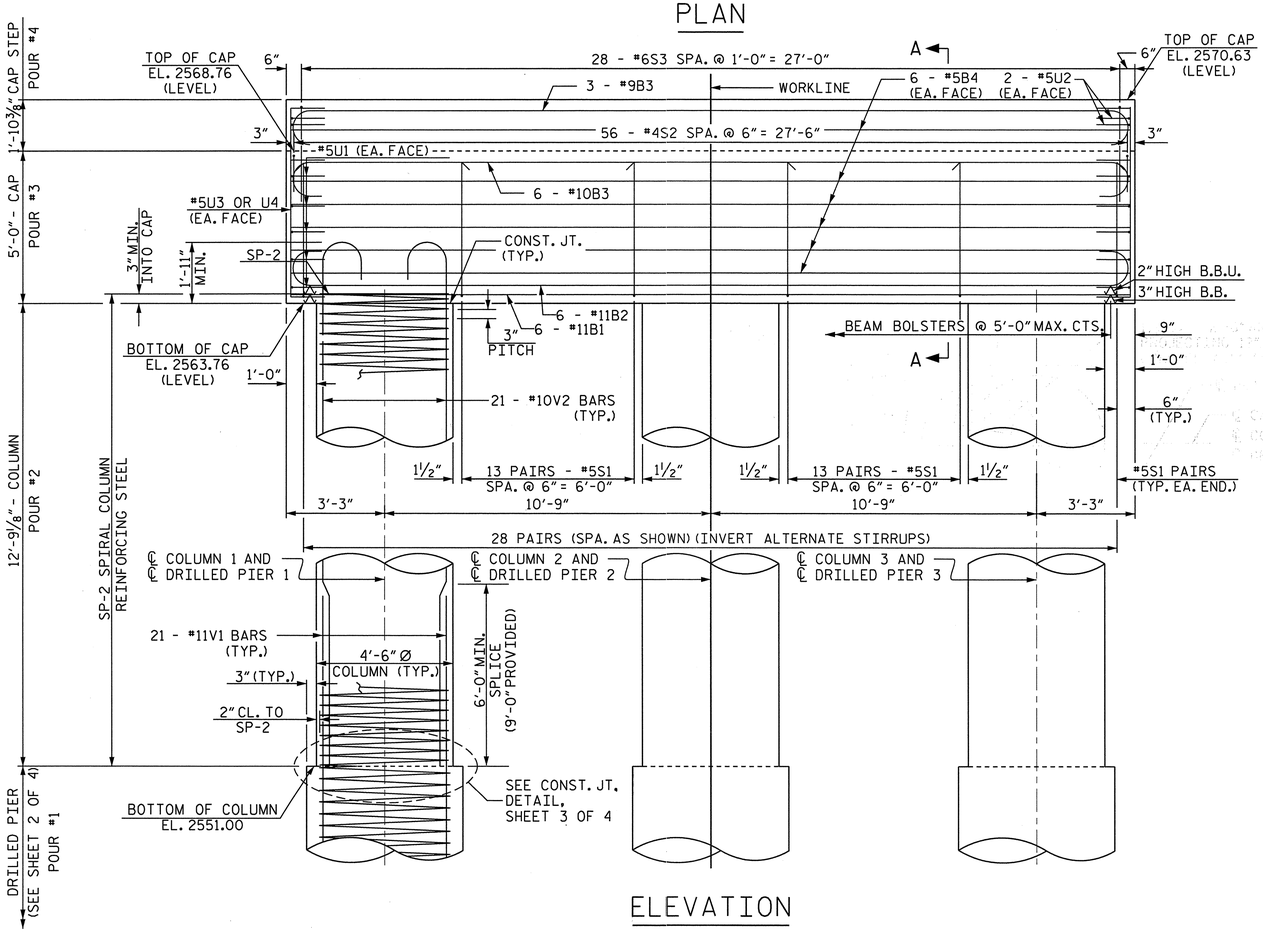

ELEVATION

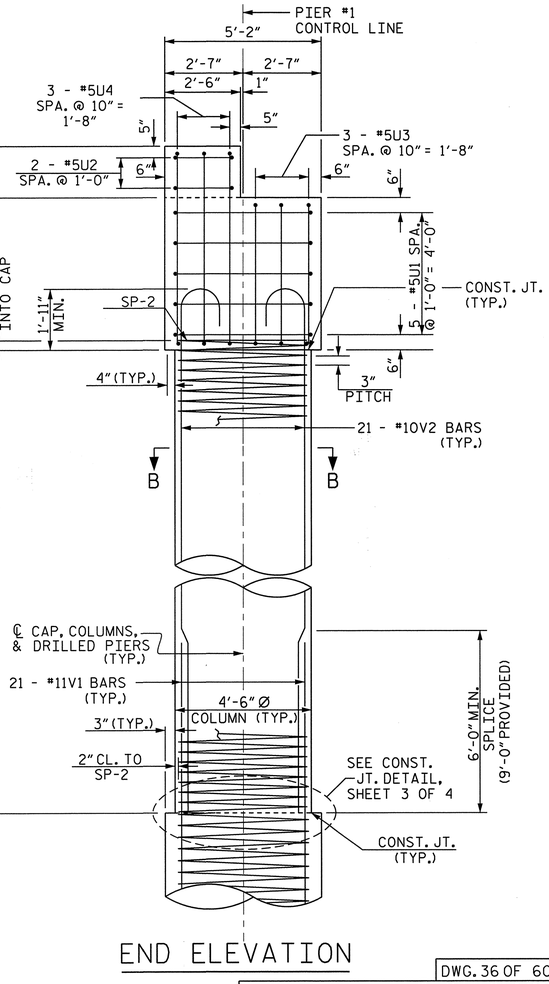

END ELEVATION

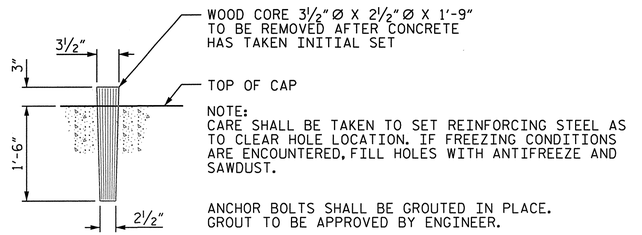

WOOD CORE DETAIL

NORTH CAROLINA SEAL 11725 ENGINEER DAVID R. RUGGLES
2-20-14

PROJECT NO. R-4047

HAYWOOD COUNTY

STATION: POC STA. 42+60.93 -L-
POT STA. 18+81.73 -RR-

SHEET 1 OF 4

STATE OF NORTH CAROLINA
DEPARTMENT OF TRANSPORTATION
RALEIGH

SUBSTRUCTURE

PIER 1
PLAN AND ELEVATION

DWG. 36 OF 60

REVISIONS						SHEET NO.
NO.	BY:	DATE:	NO.	BY:	DATE:	S-3C
1			3			TOTAL SHEETS
2			4			60

STEWART
Firm License No. C-1051
421 Fayetteville St,
Suite 400
Raleigh, NC 27601
T 919.380.8750
www.stewartinc.com

DRAWN BY:	J. ABRIL	DATE :	01/14
CHECKED BY:	P. JACOB	DATE :	01/14
DESIGN ENGINEER OF RECORD:	D. RUGGLES	DATE :	01/14

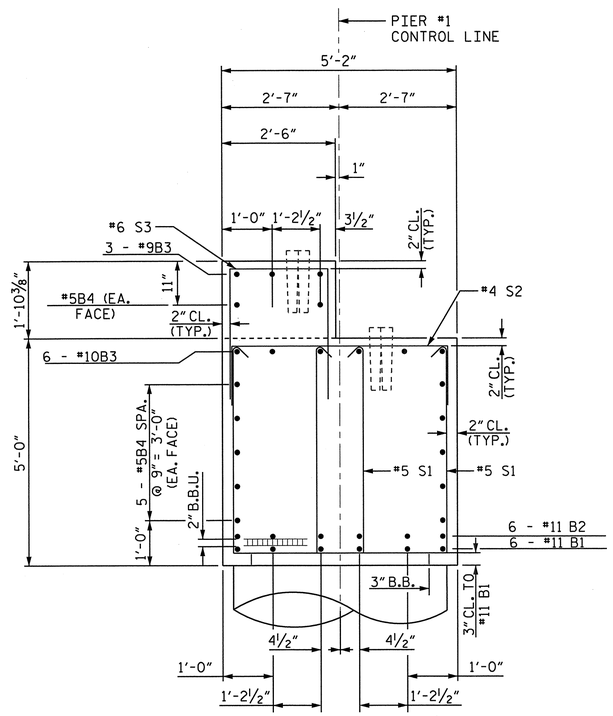

SECTION A-A

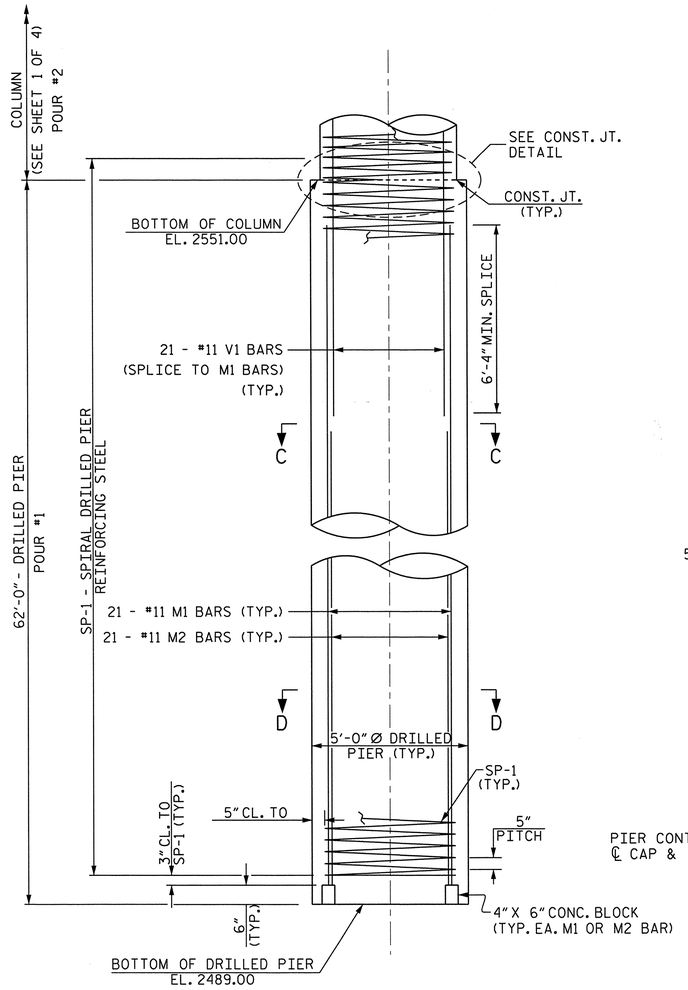

ELEVATION - DRILLED PIERS

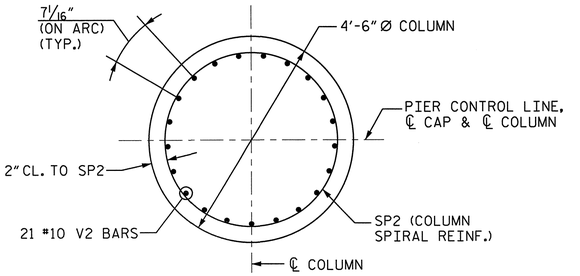

SECTION B-B

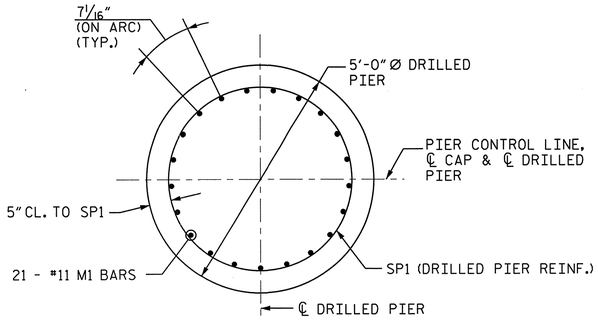

SECTION C-C

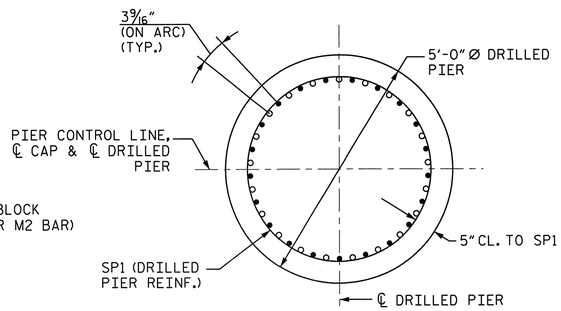

SECTION D-D

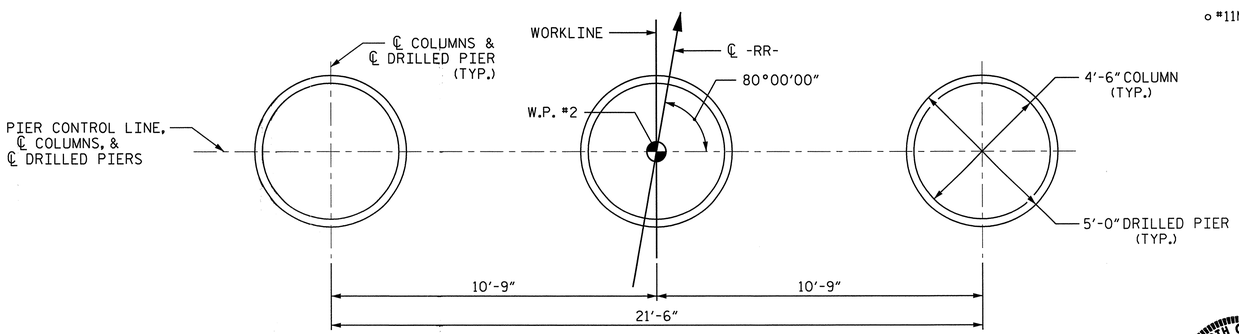

FOOTING PLAN

- • #11M1
- ○ #11M2

PROJECT NO. R-4047

HAYWOOD COUNTY

STATION: POC STA. 42+60.93 -L-
POT STA. 18+81.73 -RR-

SHEET 2 OF 4

STATE OF NORTH CAROLINA
DEPARTMENT OF TRANSPORTATION
RALEIGH

SUBSTRUCTURE

PIER 1
SECTIONS AND DETAILS

DWG. 37 OF 60

REVISIONS						SHEET NO.
NO.	BY:	DATE:	NO.	BY:	DATE:	S-37
1			3			TOTAL SHEETS
2			4			60

NORTH CAROLINA PROFESSIONAL SEAL 11725 ENGINEER DAVID R. RUGGLES
2-20-14

STEWART
Firm License No. C-1051
421 Fayetteville St,
Suite 400
Raleigh, NC 27601
T 919.380.8750
www.stewartinc.com

DRAWN BY:	J. ABRIL	DATE :	01/14
CHECKED BY:	P. JACOB	DATE :	01/14
DESIGN ENGINEER OF RECORD:	D. RUGGLES	DATE :	01/14

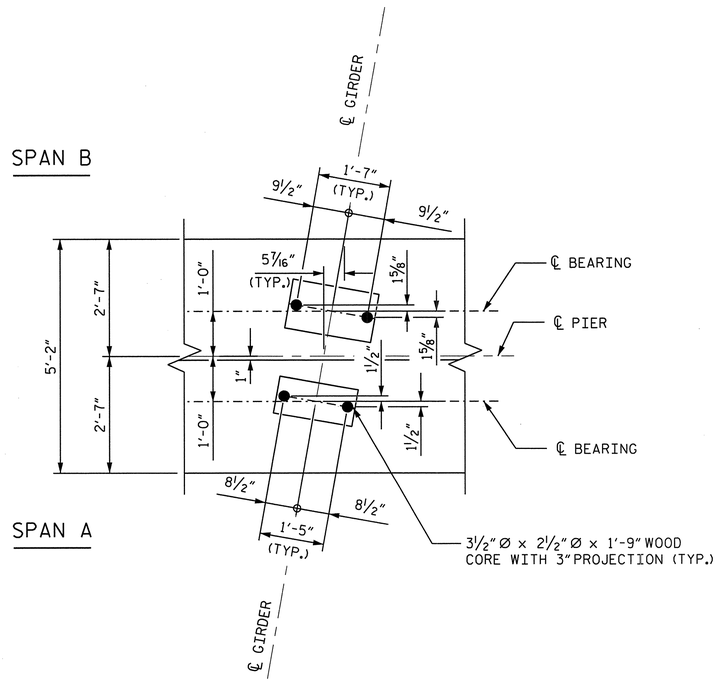

BEARING DETAIL

TYP. GIRDER 1 THRU 6

BAR TYPES

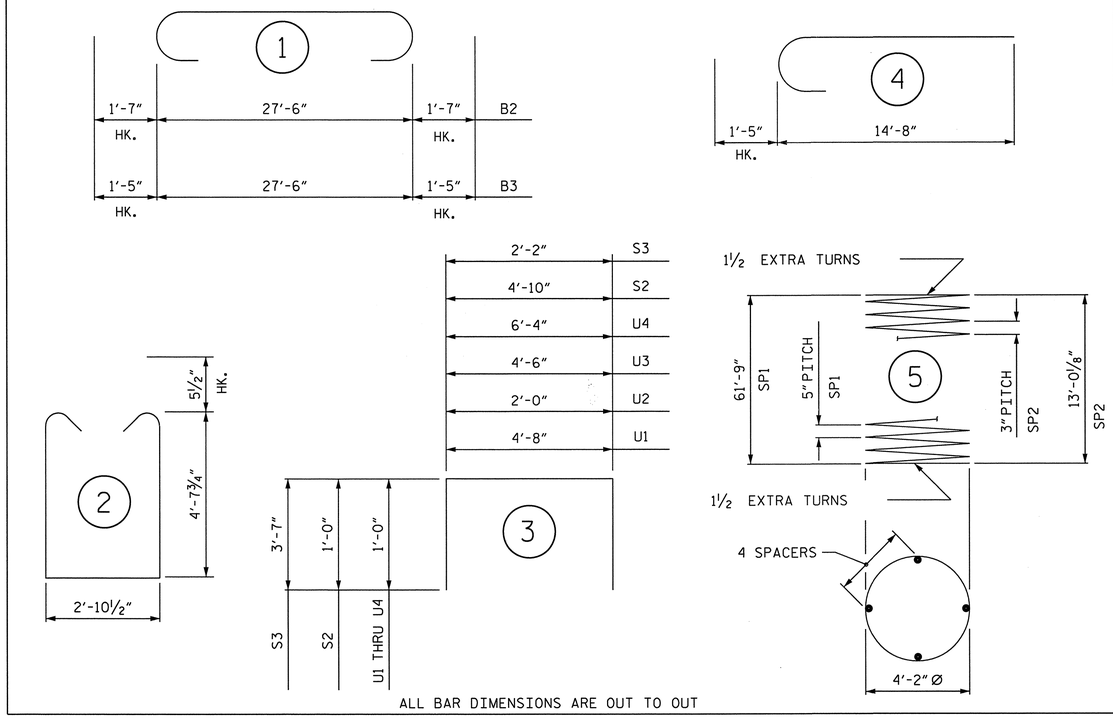

ALL BAR DIMENSIONS ARE OUT TO OUT

BILL OF MATERIAL

BAR	NO.	SIZE	TYPE	LENGTH	WEIGHT
B1	6	#11	STR.	27'-8"	882
B2	6	#11	1	30'-8"	978
B3	9	#10	1	30'-4"	1175
B4	12	#5	STR.	27'-8"	346
S1	56	#5	2	13'-1"	764
S2	56	#4	3	6'-10"	256
S3	28	#6	3	9'-4"	393
U1	10	#5	3	6'-8"	70
U2	4	#5	3	4'-0"	17
U3	6	#5	3	6'-6"	41
U4	6	#5	3	8-4"	52
V1	63	#11	STR.	16'-10"	5,634
V2	63	#10	4	16'-1"	4,360
M1	63	#11	STR.	60'-0"	20,083
M2	63	#11	STR.	53'-2"	17,796
REINFORCING STEEL				LBS.	52,847
SP1	3	**	5	1953'-0"	6,111
SP2	3	***	5	712'-6"	1,428
SPIRAL COLUMN REINFORCING STEEL				LBS.	7,539

** THE SP1 SPIRAL COLUMN REINFORCING STEEL SHALL BE W31 OR D31 COLD DRAWN STEEL WIRE OR #5 PLAIN OR DEFORMED BAR.

*** THE SP2 SPIRAL COLUMN REINFORCING STEEL SHALL BE W20 OR D20 COLD DRAWN WIRE OR #4 PLAIN OR DEFORMED BAR.

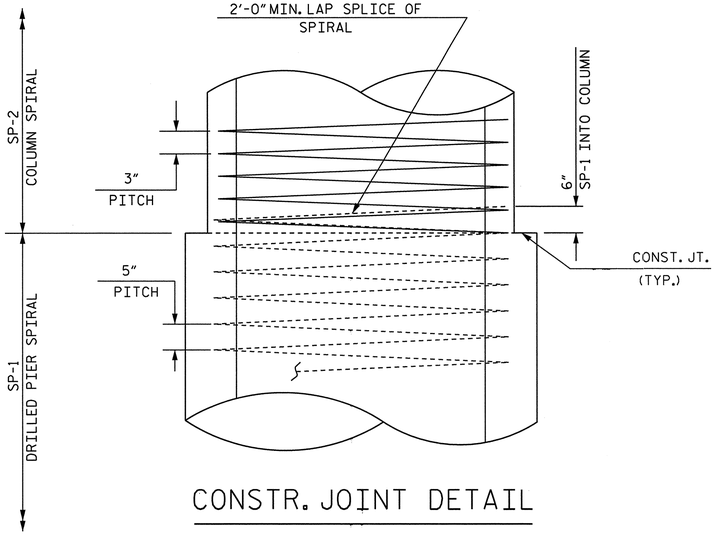

CONSTR. JOINT DETAIL

PIER 1 TOTAL QUANTITIES

CLASS AA CONCRETE		
POUR 2 (COLUMNS)	C.Y.	22.5
POUR 3 (CAP)	C.Y.	26.8
POUR 4 (CAP STEP)	C.Y.	4.8
TOTAL CLASS AA CONCRETE	C.Y.	54.1
DRILLED PIERS, CONCRETE		
POUR 1	C.Y.	135.3
5'-0"Ø DRILLED PIERS IN SOIL	LIN. FT.	156
5'-0"Ø DRILLED PIERS NOT IN SOIL	LIN. FT.	30
CSL TUBES	LIN. FT.	953

NOTES

THE CONTRACTOR'S ATTENTION IS CALLED TO THE FACT THAT THE LONGITUDINAL REINFORCEMENT FOR THE DRILLED PIERS IS DETAILED WITH 3 FEET OF EXTRA LENGTH.

ALL STEEL IN THE DRILLED PIERS IS INCLUDED IN THE PAY ITEMS FOR "REINFORCING STEEL" AND "SPIRAL COLUMN REINFORCING STEEL".

THE LOCATION OF THE CONSTRUCTION JOINT IN THE DRILLED PIERS IS BASED ON AN APPROXIMATE GROUND LINE ELEVATION. IF THE CONSTRUCTION JOINT IS ABOVE THE ACTUAL GROUND ELEVATION, THE CONTRACTOR SHALL PLACE THE CONSTRUCTION JOINT 1 FOOT BELOW THE GROUND LINE.

PROJECT NO. R-4047

HAYWOOD COUNTY

STATION: POC STA. 42+60.93 -L-
POT STA. 18+81.73 -RR-

SHEET 3 OF 4

DRAWN BY: M. BURNS DATE : 01/14
CHECKED BY: P. JACOB DATE : 01/14
DESIGN ENGINEER OF RECORD: D. RUGGLES DATE : 01/14

NORTH CAROLINA PROFESSIONAL SEAL 11725 ENGINEER DAVID R. RUGGLES
2-20-14

STEWART
Firm License No. C-1051
421 Fayetteville St,
Suite 400
Raleigh, NC 27601
T 919.380.8750
www.stewartinc.com

DWG. 38 OF 60

STATE OF NORTH CAROLINA
DEPARTMENT OF TRANSPORTATION
RALEIGH

SUBSTRUCTURE
PIER 1
DETAILS AND
BILL OF MATERIAL

REVISIONS						SHEET NO.
NO.	BY:	DATE:	NO.	BY:	DATE:	S-38
1			3			TOTAL SHEETS
2			4			60

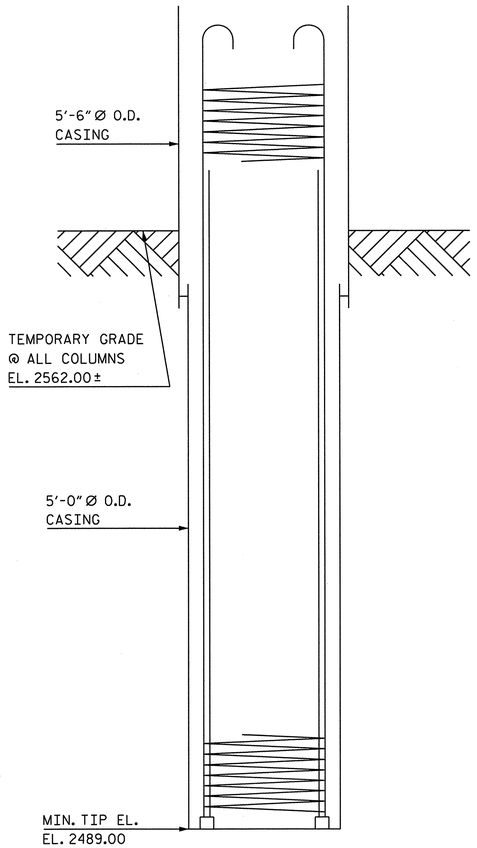

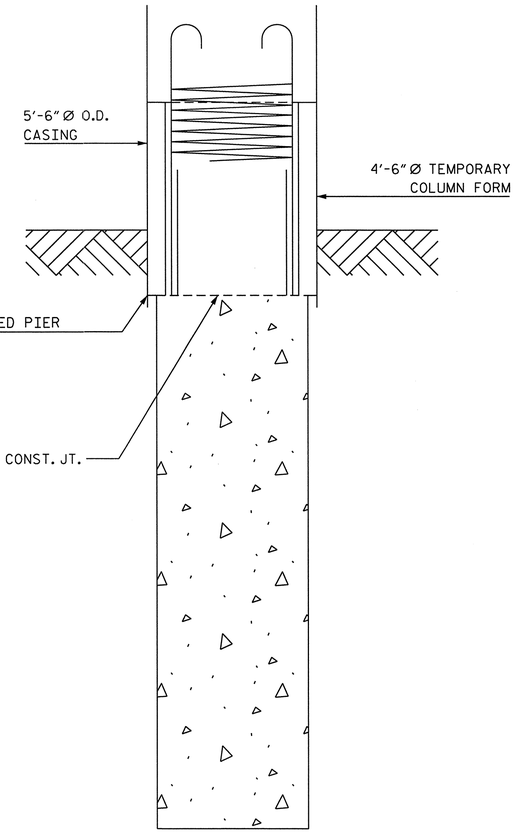

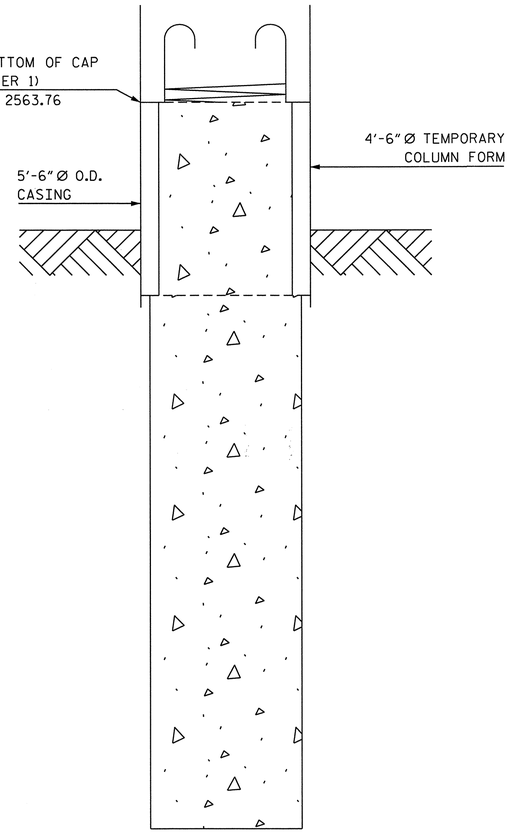

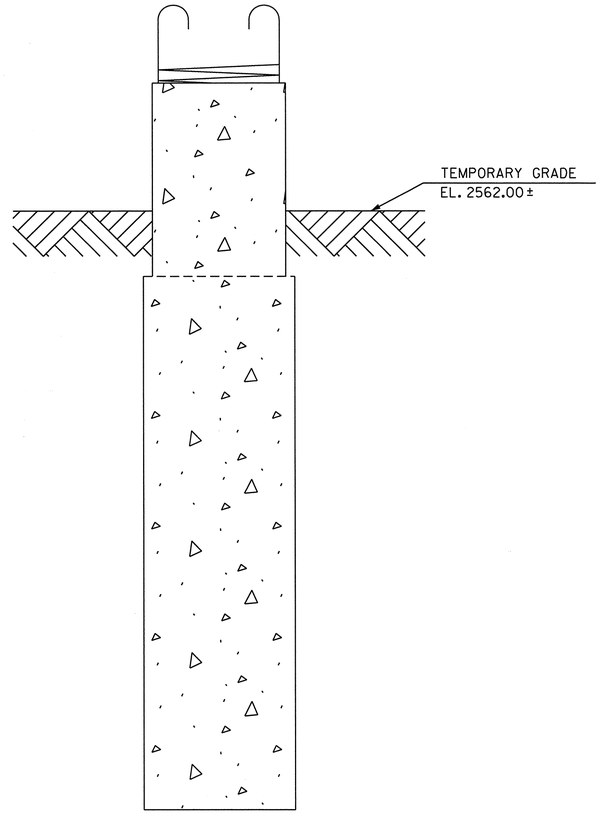

STEP 1

1. AUGER AND INSTALL 5'-6"Ø O.D. CASING TO ELEVATION SHOWN.
2. AUGER AND INSTALL 5'-0"Ø O.D. CASING TO MINIMUM TIP ELEVATION SHOWN.
3. INSTALL REBAR CAGE.

STEP 2

1. POUR CONCRETE TO TOP OF DRILLED PIER ELEVATION AS SHOWN WHILE EXTRACTING 5'-0"Ø O.D. CASING.
2. INSTALL 4'-6"Ø O.D. TEMPORARY COLUMN FORM.

STEP 3

1. POUR CONCRETE TO BOTTOM OF CAP ELEVATION AS SHOWN.
2. EXTRACT 5'-6"Ø O.D. CASING AFTER CONCRETE HAS REACHED A MINIMUM COMPRESSIVE STRENGTH OF 3000 PSI.

STEP 4

1. EXCAVATE TO FINISH GRADE ELEVATION AS SHOWN.
2. REMOVE 4'-6"Ø TEMPORARY COLUMN FORM.
3. PATCH COLUMN SURFACE AS NECESSARY TO ESTABLISH ACCEPTABLE APPEARANCE.

NOTES:

1. EXCAVATION AGAINST THE COLUMNS (STEP 4) WILL REQUIRE CAREFUL DIGGING IN ORDER TO AVOID DAMAGING THE COLUMNS. ANY SUBSTANTIAL DAMAGE WILL BE CAUSE FOR REJECTION OF THAT PARTICULAR COLUMN.
2. THE COST TO PERFORM THIS WORK SHALL BE INCLUDED IN THE UNIT PRICE BID FOR 5'-0"Ø DRILLED PIERS.
3. PERMANENT STEEL CASING IS NOT REQUIRED FOR DRILLED PIERS AT PIER NO. 1.

DRILLED PIER CONSTRUCTION SEQUENCE

(FOR DRILLED PIERS AND COLUMNS AT PIER 1)

(NTS)

DRAWN BY: M. BURNS DATE : 01/14
CHECKED BY: P. JACOBS DATE : 01/14
DESIGN ENGINEER OF RECORD: D. RUGGLES DATE : 01/14

NORTH CAROLINA PROFESSIONAL ENGINEER SEAL 11725 DAVID R. RUGGLES
2-20-14

STEWART
Firm License No. C-1051
421 Fayetteville St.
Suite 400
Raleigh, NC 27601
T 919.380.8750
www.stewartinc.com

DWG. 39 OF 60

STATE OF NORTH CAROLINA
DEPARTMENT OF TRANSPORTATION
RALEIGH

SUBSTRUCTURE

DRILLED PIER DETAIL

REVISIONS						SHEET NO.
NO.	BY:	DATE:	NO.	BY:	DATE:	S-39
1			3			TOTAL SHEETS
2			4			60

PROJECT NO. R-4047
HAYWOOD COUNTY
STATION: POC STA. 42+60.93 -L-
POT STA. 18+81.73 -RR-
SHEET 4 OF 4

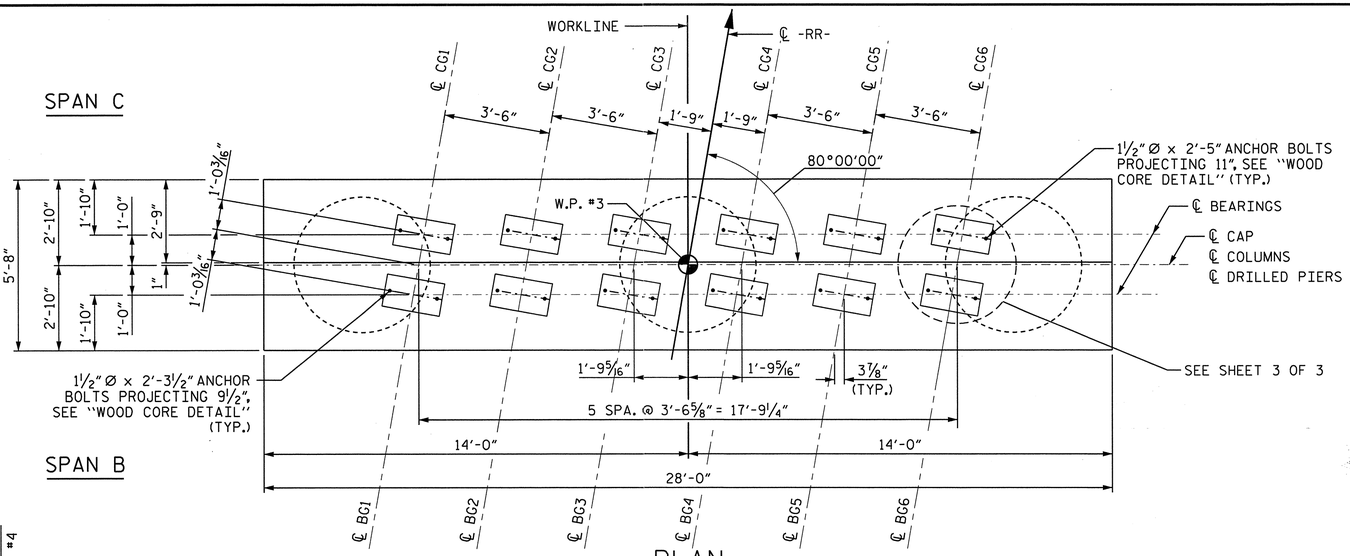

PLAN

NOTES:

1. ALL CONCRETE IN PIER SHALL HAVE A MINIMUM COMPRESSIVE STRENGTH OF 4500 PSI AT 28 DAYS.
2. FOR SECTIONS A-A AND B-B, SEE SHEET 2 OF 3.
3. STIRRUPS IN CAP MAY BE SHIFTED AS NECESSARY TO CLEAR ANCHOR BOLTS.

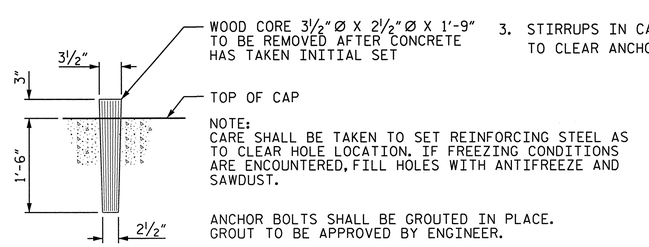

WOOD CORE DETAIL

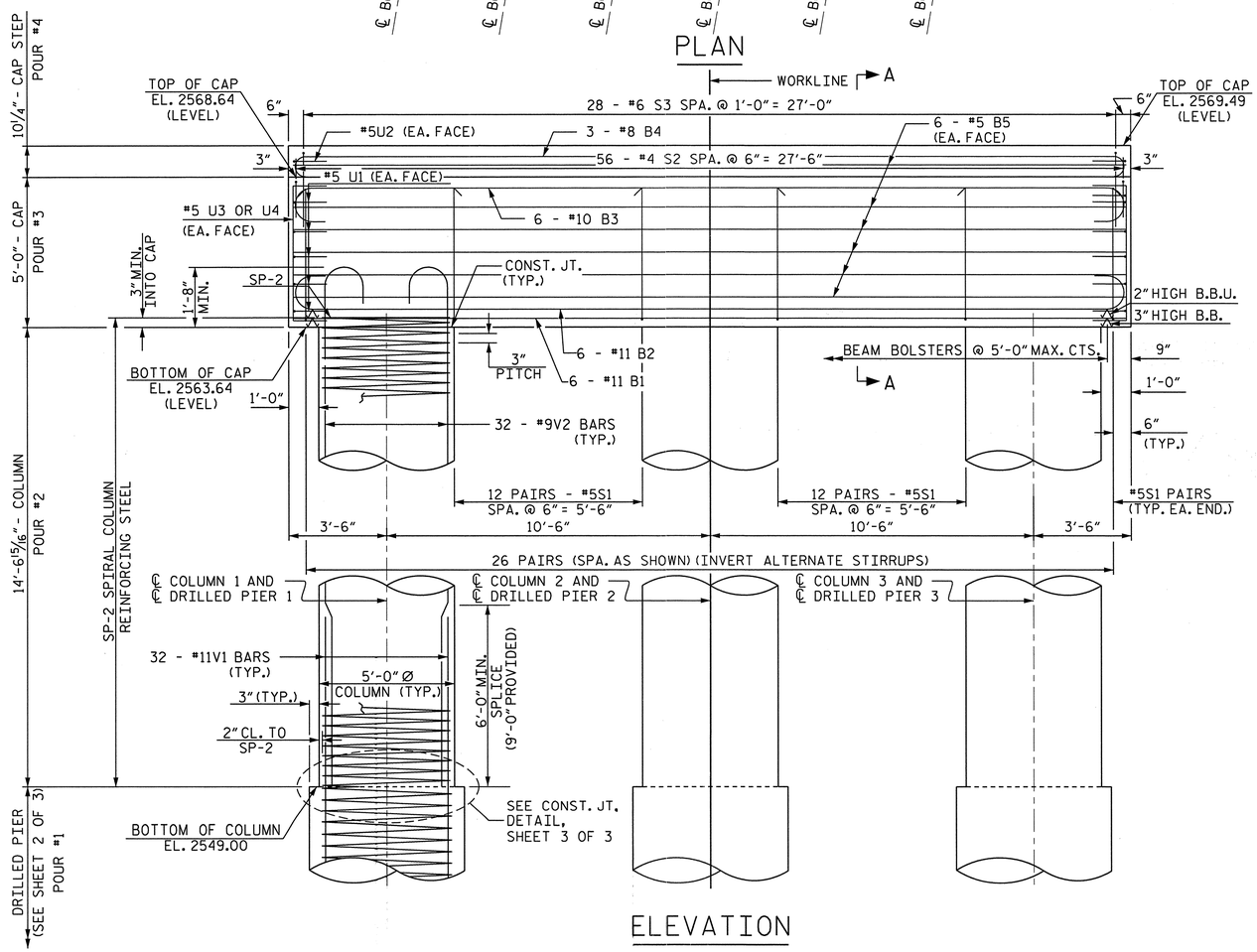

ELEVATION

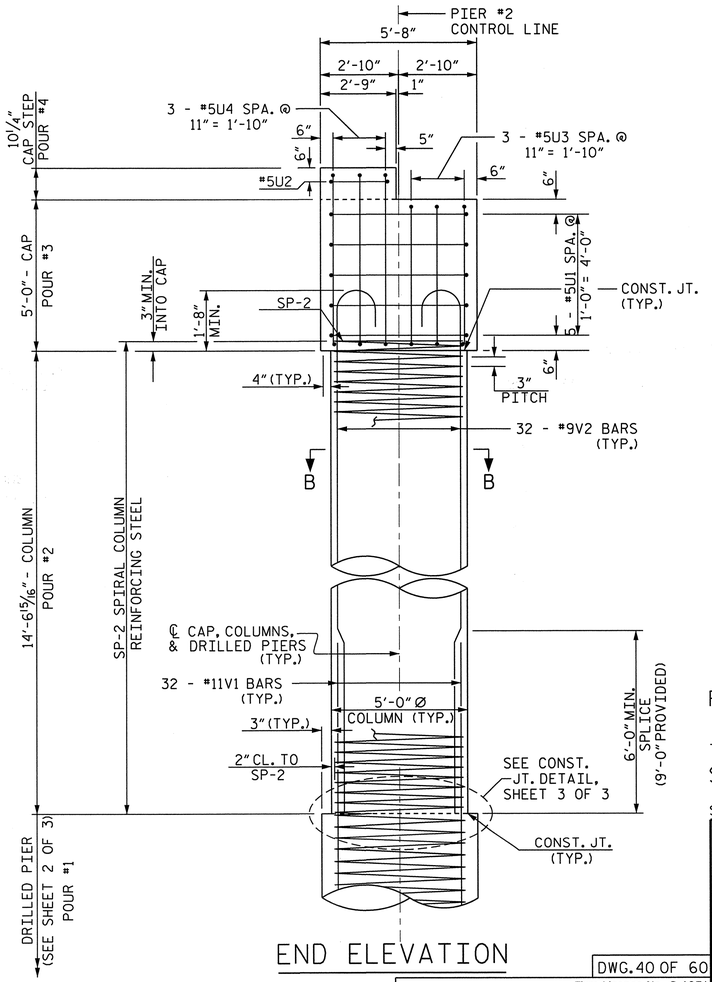

END ELEVATION

PROJECT NO. R-4047

HAYWOOD COUNTY

STATION: POC STA. 42+60.93 -L-
POT STA. 18+81.73 -RR-

SHEET 1 OF 3

STATE OF NORTH CAROLINA
DEPARTMENT OF TRANSPORTATION
RALEIGH

SUBSTRUCTURE

PIER 2
PLAN AND ELEVATION

DRAWN BY: J. ABRIL	DATE : 01/14				
CHECKED BY: P. JACOB	DATE : 01/14				
DESIGN ENGINEER OF RECORD: D. RUGGLES	DATE : 01/14				

STEWART
Firm License No. C-1051
421 Fayetteville St,
Suite 400
Raleigh, NC 27601
T 919.380.8750
www.stewartinc.com

DWG. 40 OF 60

REVISIONS					
NO.	BY:	DATE:	NO.	BY:	DATE:
1			3		
2			4		

SHEET NO. S-40

TOTAL SHEETS 60

2/20/2014
...\40-Pier 2 - Plan and Elevation.dgn
USER:jabril

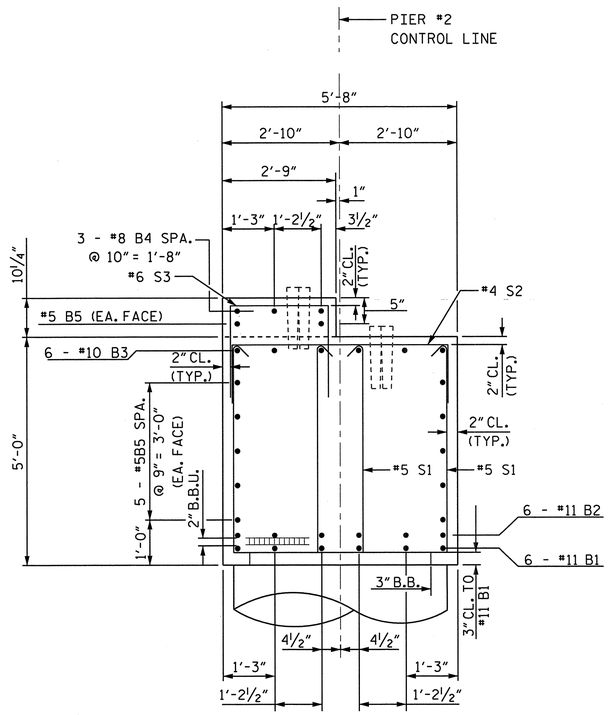

SECTION A-A

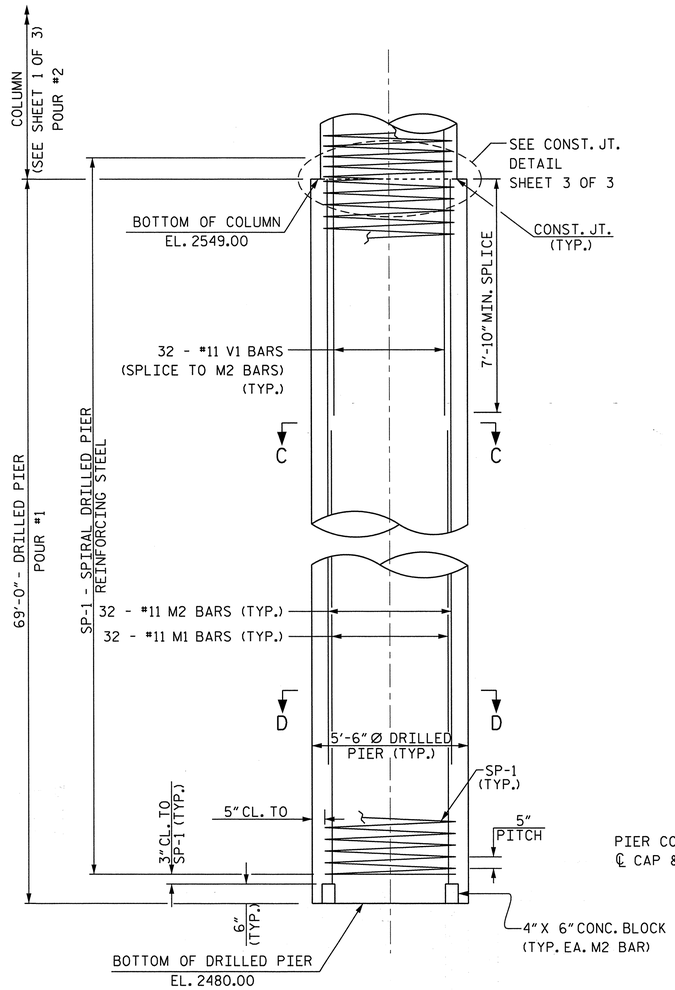

ELEVATION - DRILLED PIERS

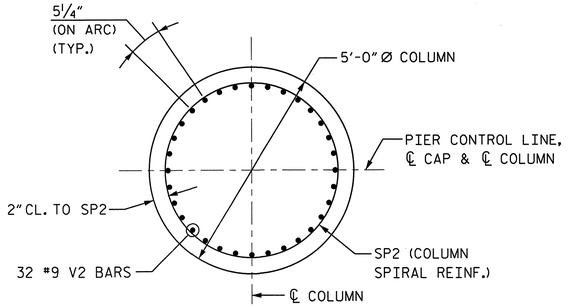

SECTION B-B

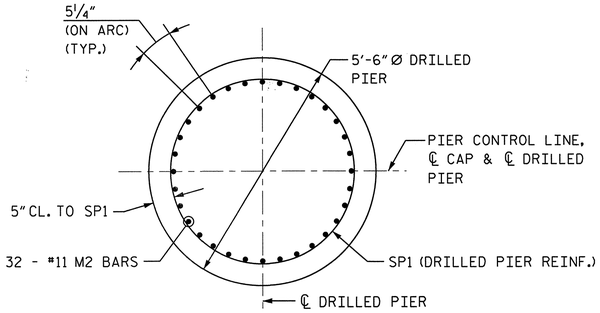

SECTION C-C

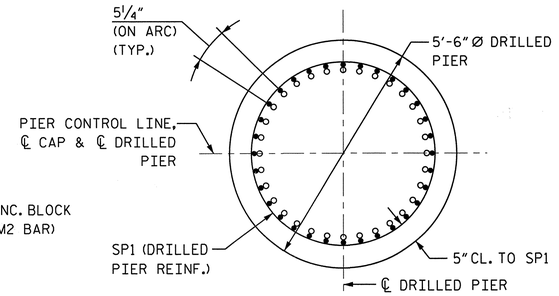

SECTION D-D

- ○ #11M1
- ● #11M2

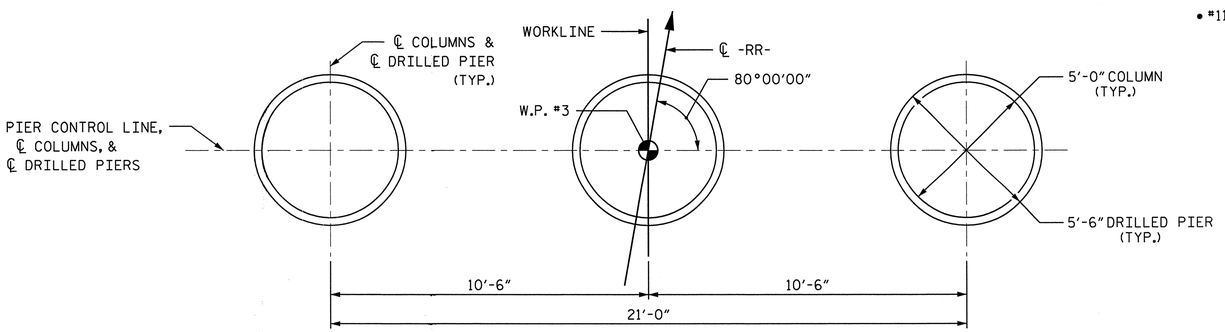

FOOTING PLAN

PROJECT NO. R-4047

HAYWOOD COUNTY

STATION: POC STA. 42+60.93 -L-
POT STA. 18+81.73 -RR-

SHEET 2 OF 3

NORTH CAROLINA
DAVID R. RUGGLES
SEAL
11725
ENGINEER
DAVID R. RUGGLES
2-20-14

STATE OF NORTH CAROLINA
DEPARTMENT OF TRANSPORTATION
RALEIGH

SUBSTRUCTURE

PIER 2
SECTIONS AND DETAILS

DWG. 41 OF 60

STEWART
Firm License No. C-1051
421 Fayetteville St.
Suite 400
Raleigh, NC 27601
T 919.380.8750
www.stewartinc.com

REVISIONS						SHEET NO.
NO.	BY:	DATE:	NO.	BY:	DATE:	S-41
1			3			TOTAL SHEETS
2			4			60

DRAWN BY: J. ABRIL	DATE : 01/14	
CHECKED BY: P. JACOB	DATE : 01/14	
DESIGN ENGINEER OF RECORD: D. RUGGLES	DATE : 01/14	

2/20/2014
...\41-Pier 2 - Sections and Details.dgn
USER:jabril

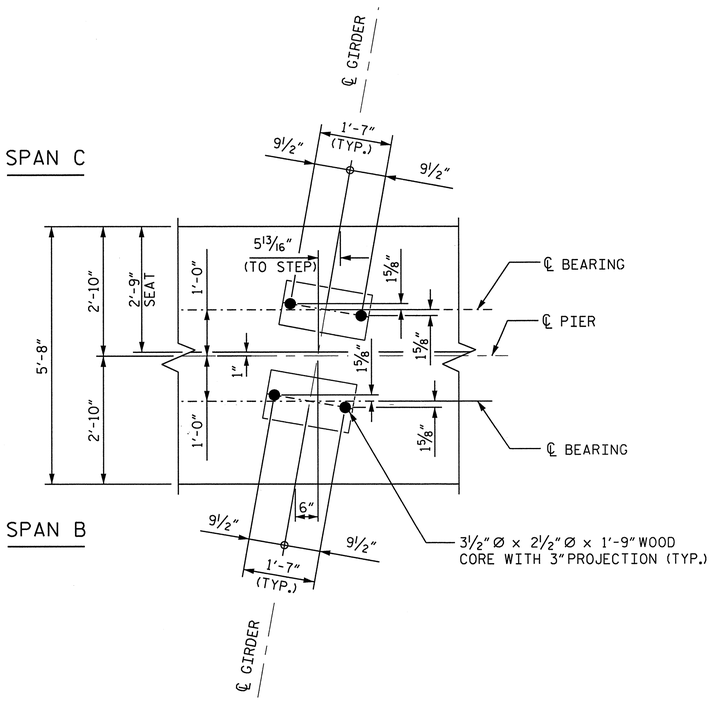

BEARING DETAIL

TYP. GIRDER 1 THRU 6

BAR TYPES

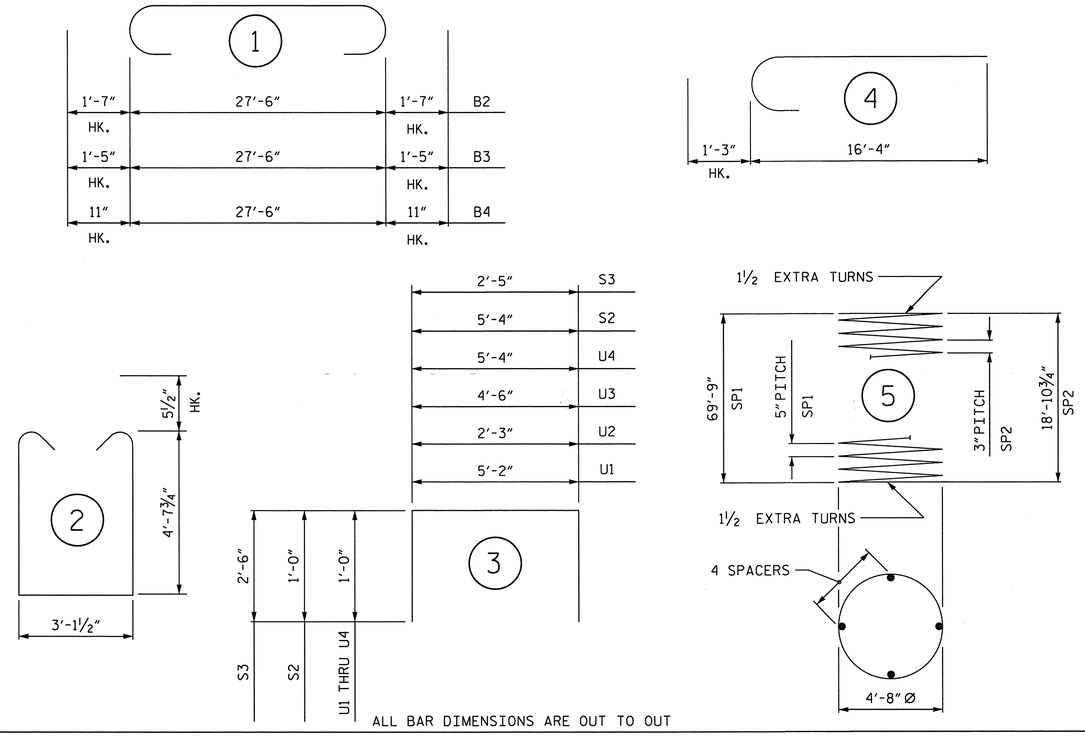

ALL BAR DIMENSIONS ARE OUT TO OUT

BILL OF MATERIAL

BAR	NO.	SIZE	TYPE	LENGTH	WEIGHT
B1	6	#11	STR.	27'-8"	882
B2	6	#11	1	30'-8"	978
B3	6	#10	1	30'-4"	783
B4	3	#8	1	29'-4"	235
B5	12	#5	STR.	27'-8"	346
S1	52	#5	2	13'-4"	723
S2	56	#4	3	7'-4"	274
S3	28	#6	4	7'-5"	312
U1	10	#5	3	7'-2"	75
U2	2	#5	3	4'-3"	9
U3	6	#5	3	6'-6"	41
U4	6	#5	3	7'-4"	46
V1	96	#11	STR.	17'-4"	8,841
V2	96	#9	4	17'-7"	5,739
M1	96	#11	STR.	58'-2"	29,668
M2	96	#11	STR.	60'-0"	30,603
REINFORCING STEEL				LBS.	79,555
SP1	3	**	5	2433'-10"	7,615
SP2	3	***	5	908'-2"	1,820
SPIRAL COLUMN REINFORCING STEEL				LBS.	9,435

** THE SP1 SPIRAL COLUMN REINFORCING STEEL SHALL BE W31 OR D31 COLD DRAWN STEEL WIRE OR #5 PLAIN OR DEFORMED BAR.

*** THE SP2 SPIRAL COLUMN REINFORCING STEEL SHALL BE W20 OR D20 COLD DRAWN WIRE OR #4 PLAIN OR DEFORMED BAR.

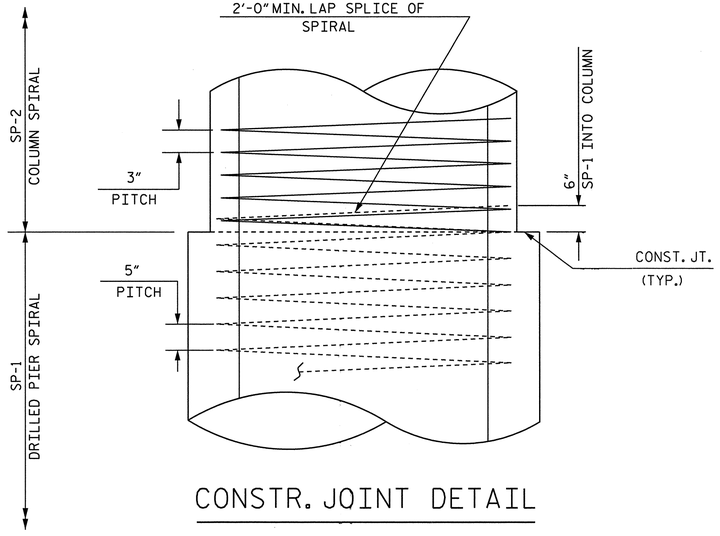

CONSTR. JOINT DETAIL

PIER 2 TOTAL QUANTITIES

CLASS AA CONCRETE		
POUR 2 (COLUMNS)	C.Y.	31.9
POUR 3 (CAP)	C.Y.	29.4
POUR 4 (CAP STEP)	C.Y.	2.4
TOTAL CLASS AA CONCRETE	C.Y.	63.7
DRILLED PIERS, CONCRETE		
POUR 1	C.Y.	182.1
5'-6" Ø DRILLED PIERS IN SOIL	LIN. FT.	183.0
5'-6" Ø DRILLED PIERS NOT IN SOIL	LIN. FT.	24.0
CSL TUBES	LIN. FT.	1269.0

NOTES

THE CONTRACTOR'S ATTENTION IS CALLED TO THE FACT THAT THE LONGITUDINAL REINFORCEMENT FOR THE DRILLED PIERS IS DETAILED WITH 3 FEET OF EXTRA LENGTH.

ALL STEEL IN THE DRILLED PIERS IS INCLUDED IN THE PAY ITEMS FOR "REINFORCING STEEL" AND "SPIRAL COLUMN REINFORCING STEEL".

THE LOCATION OF THE CONSTRUCTION JOINT IN THE DRILLED PIERS IS BASED ON AN APPROXIMATE GROUND LINE ELEVATION. IF THE CONSTRUCTION JOINT IS ABOVE THE ACTUAL GROUND ELEVATION, THE CONTRACTOR SHALL PLACE THE CONSTRUCTION JOINT 1 FOOT BELOW THE GROUND LINE.

PROJECT NO. R-4047

HAYWOOD COUNTY

STATION: POC STA. 42+60.93 -L-
POT STA. 18+81.73 -RR-

SHEET 3 OF 3

NORTH CAROLINA PROFESSIONAL SEAL 11725 ENGINEER DAVID R. RUGGLES
2-20-14

STATE OF NORTH CAROLINA
DEPARTMENT OF TRANSPORTATION
RALEIGH

SUBSTRUCTURE
PIER 2
DETAILS AND
BILL OF MATERIAL

DWG. 42 OF 60

Firm License No. C-1051
421 Fayetteville St,
Suite 400
Raleigh, NC 27601
T 919.380.8750
www.stewartinc.com
STEWART

REVISIONS						SHEET NO.
NO.	BY:	DATE:	NO.	BY:	DATE:	S-42
1			3			TOTAL SHEETS
2			4			60

DRAWN BY:	M. BURNS	DATE : 01/14
CHECKED BY:	P. JACOB	DATE : 01/14
DESIGN ENGINEER OF RECORD:	D. RUGGLES	DATE : 01/14

2/20/2014
...\42-Pier 2 - Details and BOM.dgn
USER:jabril

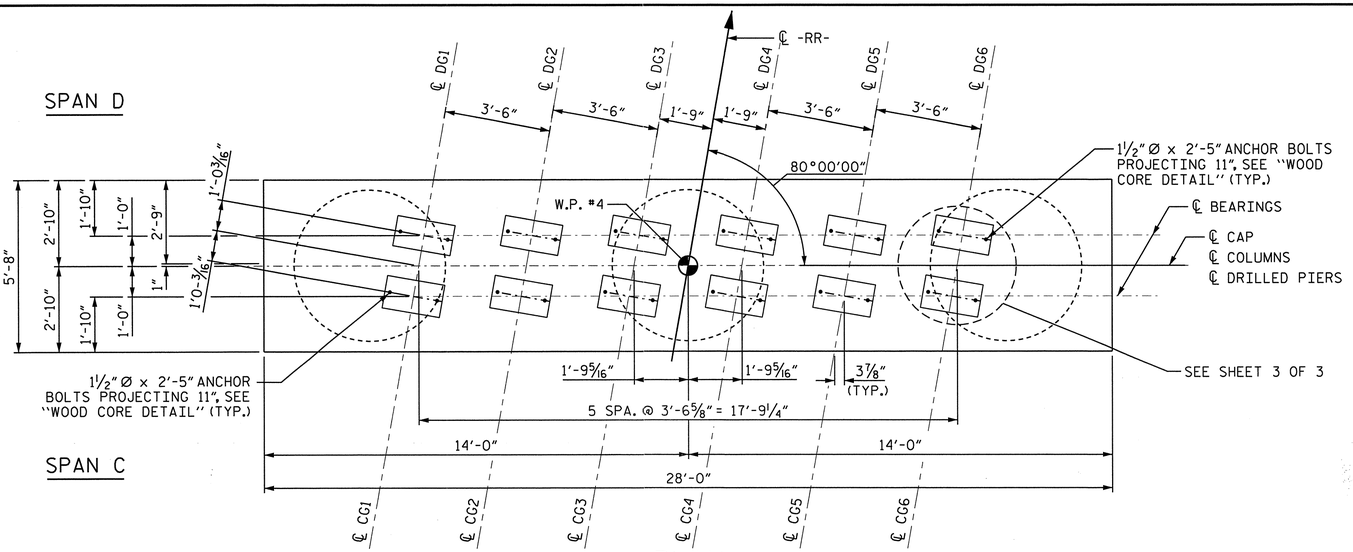

PLAN

NOTES:

1. ALL CONCRETE IN PIER SHALL HAVE A MINIMUM COMPRESSIVE STRENGTH OF 4500 PSI AT 28 DAYS.
2. FOR SECTIONS A-A AND B-B, SEE SHEET 2 OF 3.
3. STIRRUPS IN CAP MAY BE SHIFTED AS NECESSARY TO CLEAR ANCHOR BOLTS.

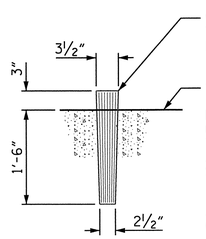

WOOD CORE DETAIL

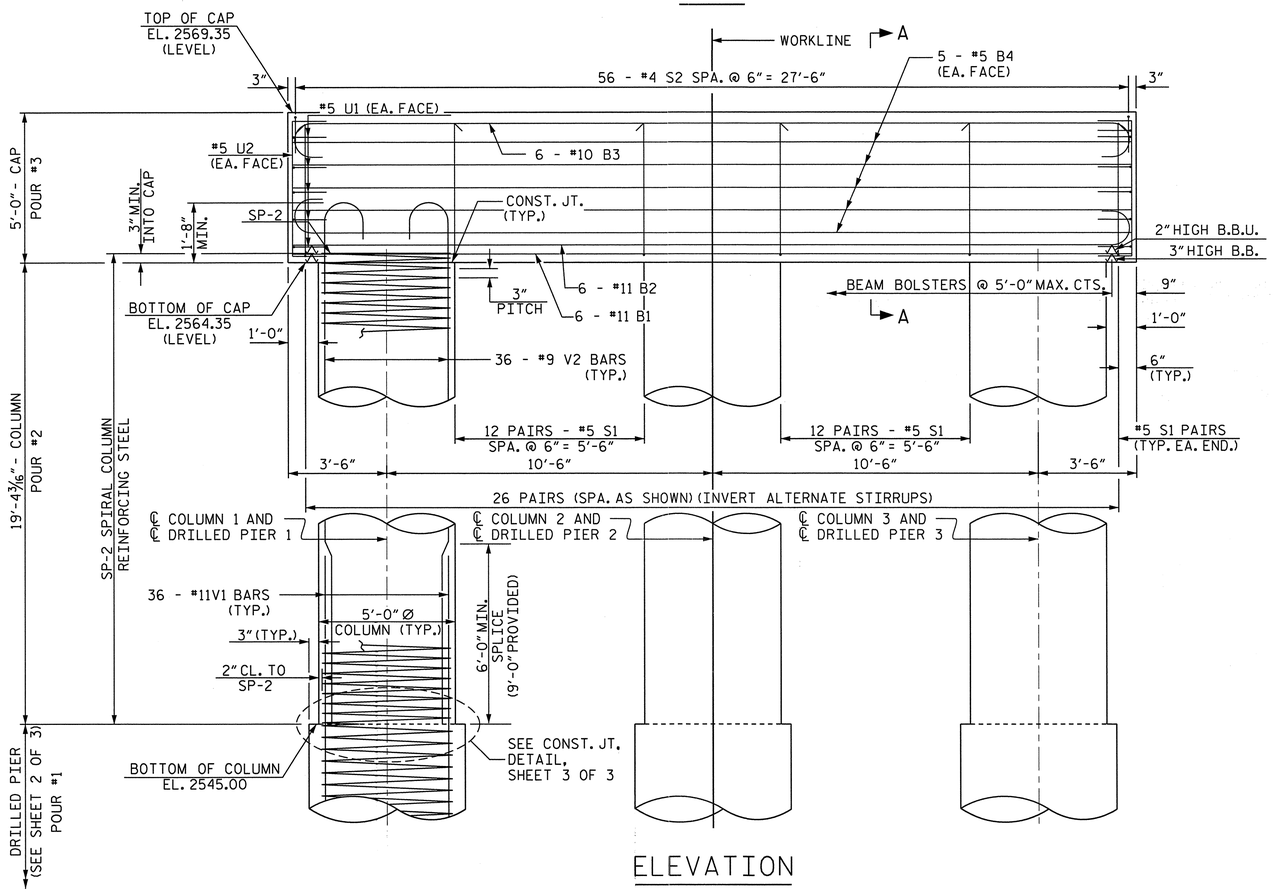

ELEVATION

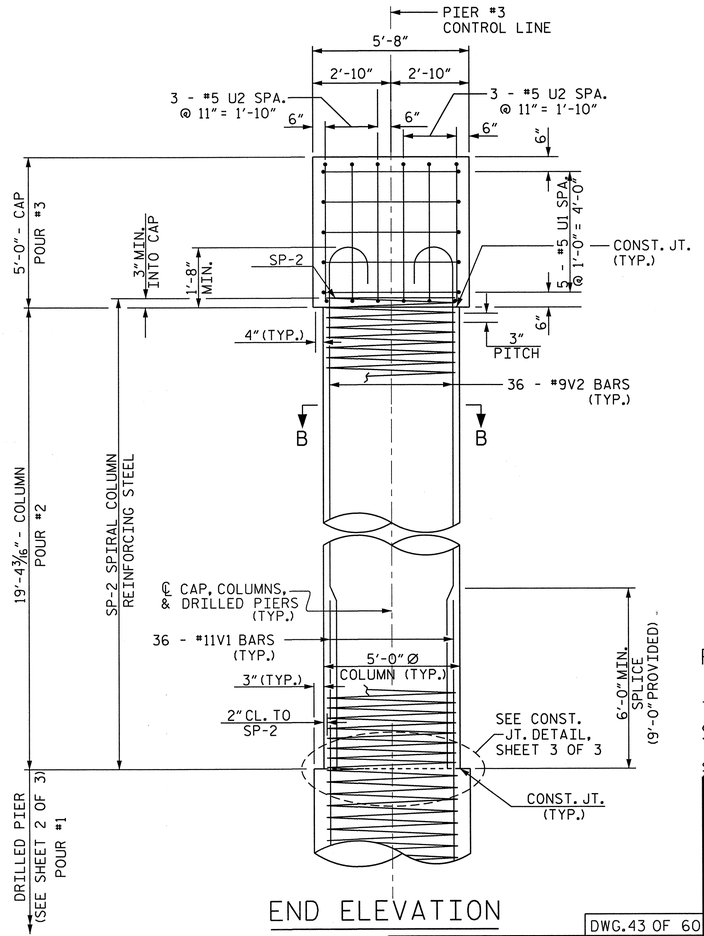

END ELEVATION

NORTH CAROLINA PROFESSIONAL ENGINEER SEAL 11725 DAVID R. RUGGLES
2-20-14

PROJECT NO. R-4047

HAYWOOD COUNTY

STATION: POC STA. 42+60.93 -L-
POT STA. 18+81.73 -RR-

SHEET 1 OF 3

STATE OF NORTH CAROLINA
DEPARTMENT OF TRANSPORTATION
RALEIGH

SUBSTRUCTURE

PIER 3
PLAN AND ELEVATION

DWG. 43 OF 60

STEWART
Firm License No. C-1051
421 Fayetteville St, Suite 400
Raleigh, NC 27601
T 919.380.8750
www.stewartinc.com

REVISIONS						SHEET NO.
NO.	BY:	DATE:	NO.	BY:	DATE:	S-43
1			3			TOTAL SHEETS
2			4			60

DRAWN BY: J. ABRIL	DATE : 01/14	
CHECKED BY: P. JACOB	DATE : 01/14	
DESIGN ENGINEER OF RECORD: D. RUGGLES	DATE : 01/14	

2/20/2014
...\43-Pier 3 - Plan and Elevation.dgn
USER:jabril

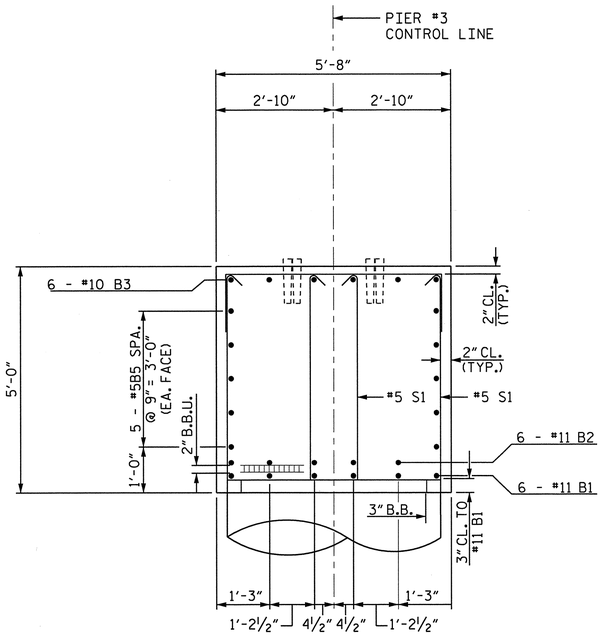

SECTION A-A

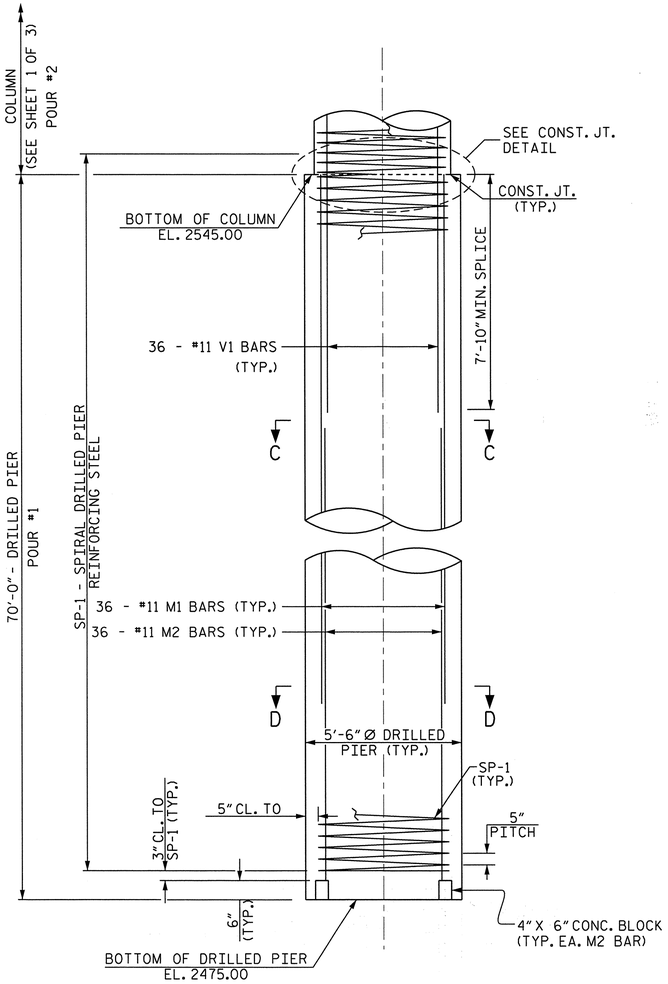

ELEVATION - DRILLED PIERS

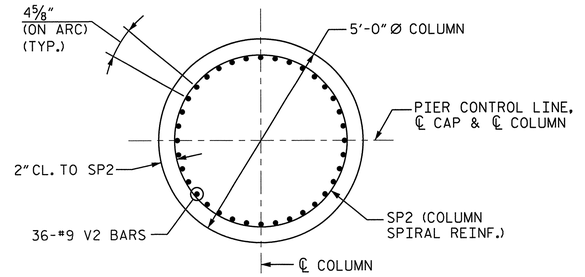

SECTION B-B

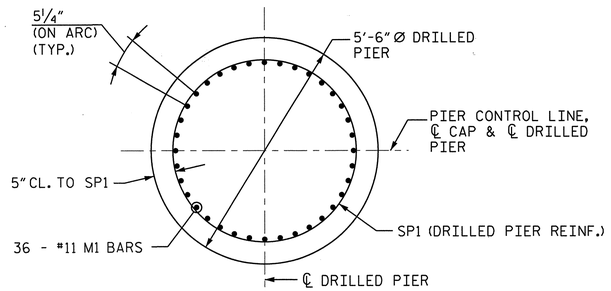

SECTION C-C

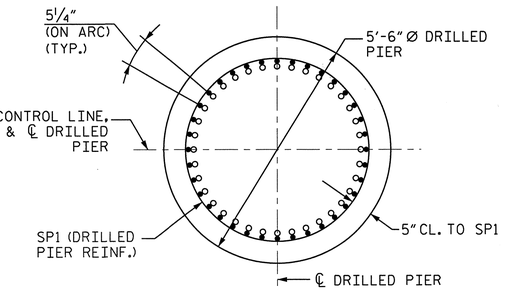

SECTION D-D

- #11M1
- #11M2

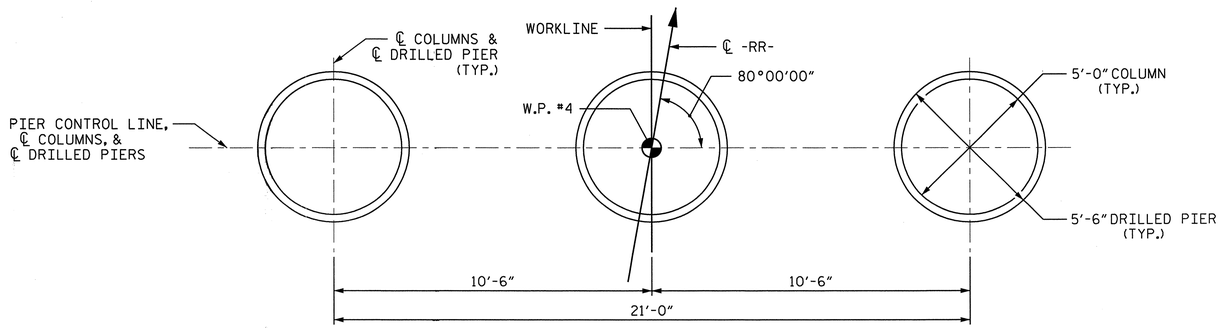

FOOTING PLAN

PROJECT NO. R-4047

HAYWOOD COUNTY

STATION: POC STA. 42+60.93 -L-
POT STA. 18+81.73 -RR-

SHEET 2 OF 3

NORTH CAROLINA PROFESSIONAL ENGINEER SEAL 11725 DAVID R. RUGGLES
2-20-14

STATE OF NORTH CAROLINA
DEPARTMENT OF TRANSPORTATION
RALEIGH

SUBSTRUCTURE

PIER 3
SECTIONS AND DETAILS

DWG. 44 OF 60

STEWART
Firm License No. C-1051
421 Fayetteville St,
Suite 400
Raleigh, NC 27601
T 919.380.8750
www.stewartinc.com

REVISIONS					
NO.	BY:	DATE:	NO.	BY:	DATE:
1			3		
2			4		

SHEET NO. S-44

TOTAL SHEETS 60

DRAWN BY: J. ABRIL DATE : 01/14
CHECKED BY: P. JACOB DATE : 01/14
DESIGN ENGINEER OF RECORD: D. RUGGLES DATE : 01/14

2/20/2014
...\44-Pier 3 - Sections and Details.dgn
USER:jabril

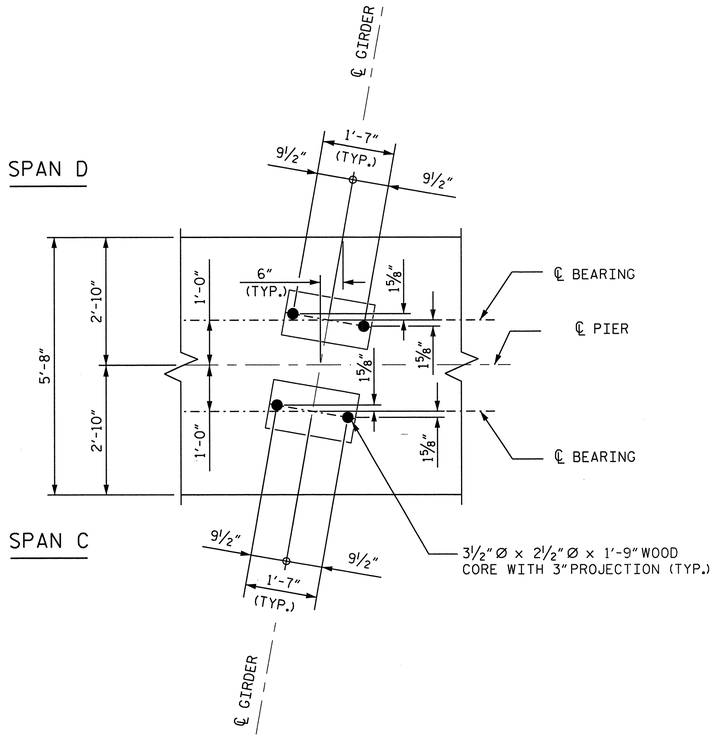

BEARING DETAIL

TYP. GIRDER 1 THRU 6

BAR TYPES

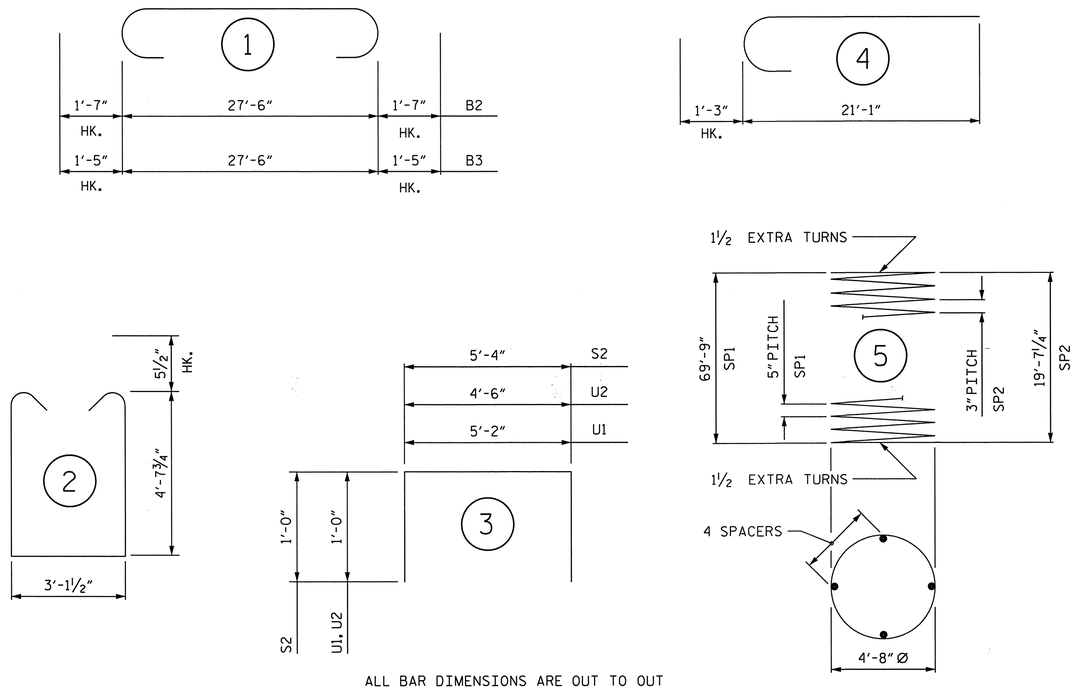

ALL BAR DIMENSIONS ARE OUT TO OUT

BILL OF MATERIAL

BAR	NO.	SIZE	TYPE	LENGTH	WEIGHT
B1	6	#11	STR.	27'-8"	882
B2	6	#11	1	30'-8"	978
B3	6	#10	1	30'-4"	783
B4	10	#5	STR.	27'-8"	289
S1	52	#5	2	13'-4"	723
S2	56	#4	3	7'-4"	274
U1	10	#5	3	7'-2"	75
U2	12	#5	3	6'-6"	81
V1	108	#11	STR.	17'-1"	9,802
V2	108	#9	4	22'-4"	8,201
M1	108	#11	STR.	60'-0"	34,428
M2	108	#11	STR.	56'-2"	32,229
REINFORCING STEEL				LBS.	88,745
SP1	3	**	5	2468'-7"	7,724
SP2	3	***	5	1181'-7"	2,368
SPIRAL COLUMN REINFORCING STEEL				LBS.	10,092

** THE SP1 SPIRAL COLUMN REINFORCING STEEL SHALL BE W31 OR D31 COLD DRAWN STEEL WIRE OR #5 PLAIN OR DEFORMED BAR.

*** THE SP2 SPIRAL COLUMN REINFORCING STEEL SHALL BE W20 OR D20 COLD DRAWN WIRE OR #4 PLAIN OR DEFORMED BAR.

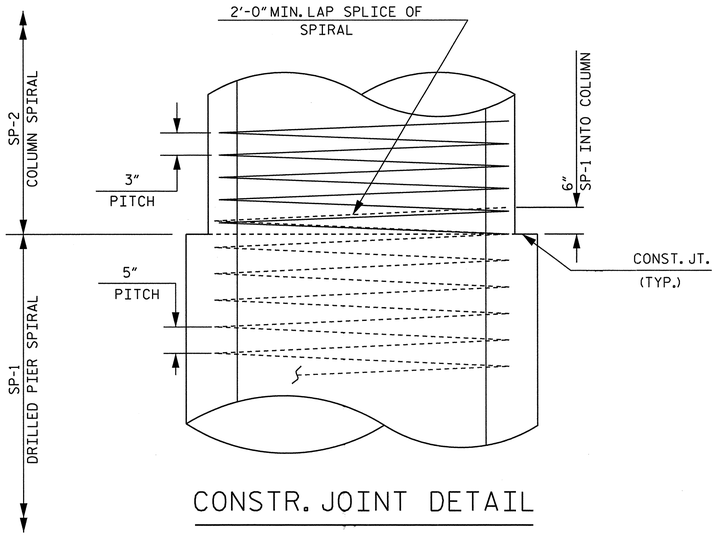

CONSTR. JOINT DETAIL

PIER 3 TOTAL QUANTITIES

CLASS AA CONCRETE		
POUR 2 (COLUMNS)	C.Y.	42.2
POUR 3 (CAP)	C.Y.	29.4
TOTAL CLASS AA CONCRETE	C.Y.	71.6
DRILLED PIERS, CONCRETE		
POUR 1	C.Y.	184.8
5'-6"Ø DRILLED PIERS IN SOIL	LIN. FT.	183.0
5'-6"Ø DRILLED PIERS NOT IN SOIL	LIN. FT.	27.0
CSL TUBES	LIN. FT.	1287.0
PERMANENT STEEL CASING	LIN. FT.	24.0

NOTES

THE CONTRACTOR'S ATTENTION IS CALLED TO THE FACT THAT THE LONGITUDINAL REINFORCEMENT FOR THE DRILLED PIERS IS DETAILED WITH 3 FEET OF EXTRA LENGTH.

ALL STEEL IN THE DRILLED PIERS IS INCLUDED IN THE PAY ITEMS FOR "REINFORCING STEEL" AND "SPIRAL COLUMN REINFORCING STEEL".

THE LOCATION OF THE CONSTRUCTION JOINT IN THE DRILLED PIERS IS BASED ON AN APPROXIMATE GROUND LINE ELEVATION. IF THE CONSTRUCTION JOINT IS ABOVE THE ACTUAL GROUND ELEVATION, THE CONTRACTOR SHALL PLACE THE CONSTRUCTION JOINT 1 FOOT BELOW THE GROUND LINE.

PROJECT NO. R-4047

HAYWOOD COUNTY

STATION: POC STA. 42+60.93 -L-
POT STA. 18+81.73 -RR-

SHEET 3 OF 3

NORTH CAROLINA PROFESSIONAL SEAL 11725 ENGINEER DAVID R. RUGGLES
2-20-14

DWG. 45 OF 60

Firm License No. C-1051
421 Fayetteville St.
Suite 400
Raleigh, NC 27601
T 919.380.8750
www.stewartinc.com
STEWART

STATE OF NORTH CAROLINA
DEPARTMENT OF TRANSPORTATION
RALEIGH

SUBSTRUCTURE PIER 3 DETAILS AND BILL OF MATERIAL

REVISIONS						SHEET NO.
NO.	BY:	DATE:	NO.	BY:	DATE:	S-45
1			3			TOTAL SHEETS
2			4			60

DRAWN BY: M. BURNS DATE : 01/14
CHECKED BY: P. JACOB DATE : 01/14
DESIGN ENGINEER OF RECORD: D. RUGGLES DATE : 01/14

2/20/2014
...\45-Pier 3 - Details and BOM.dgn
USER:jabril

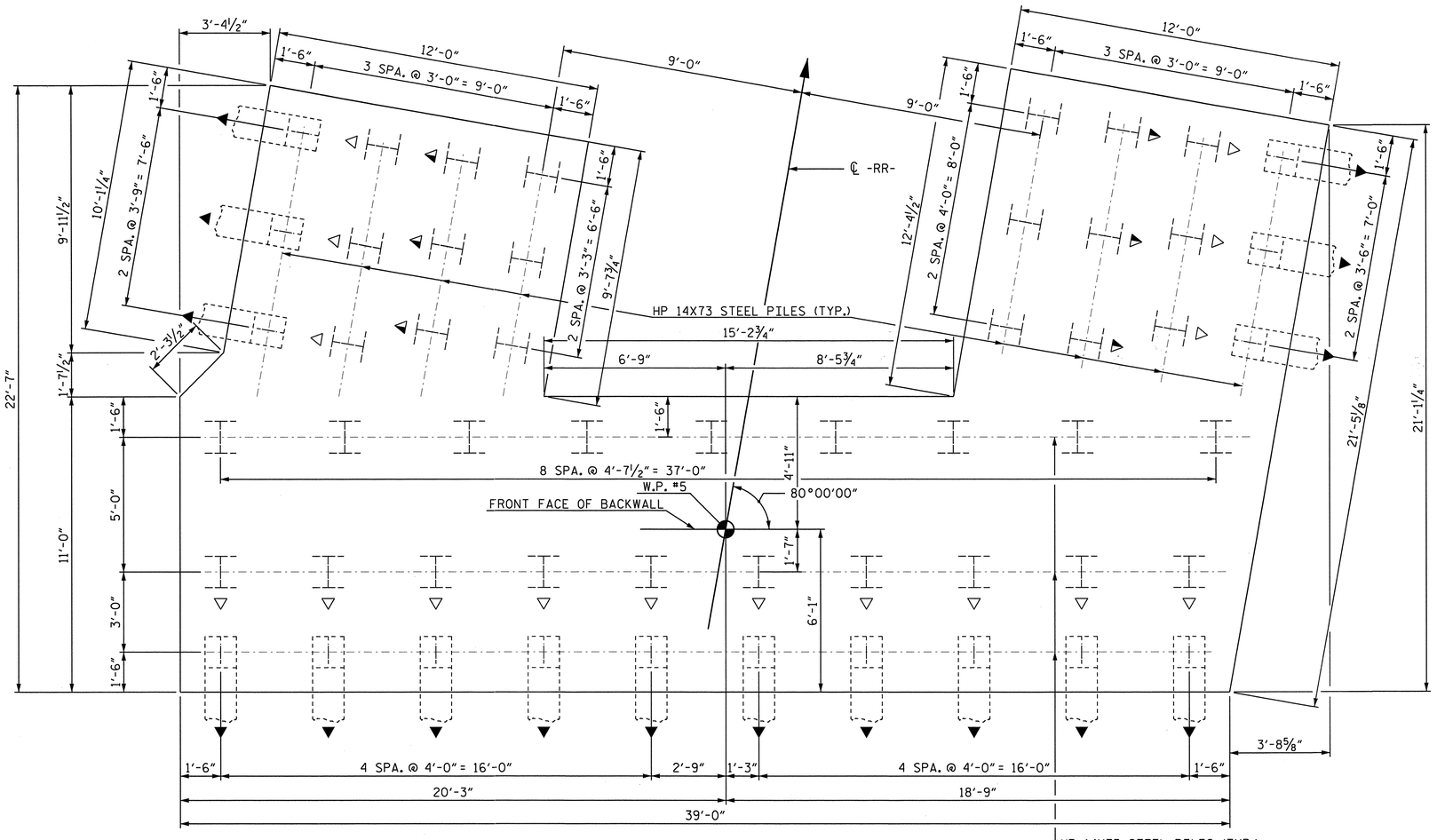

ABUTMENT 2 FOOTING PLAN - PILE LAYOUT

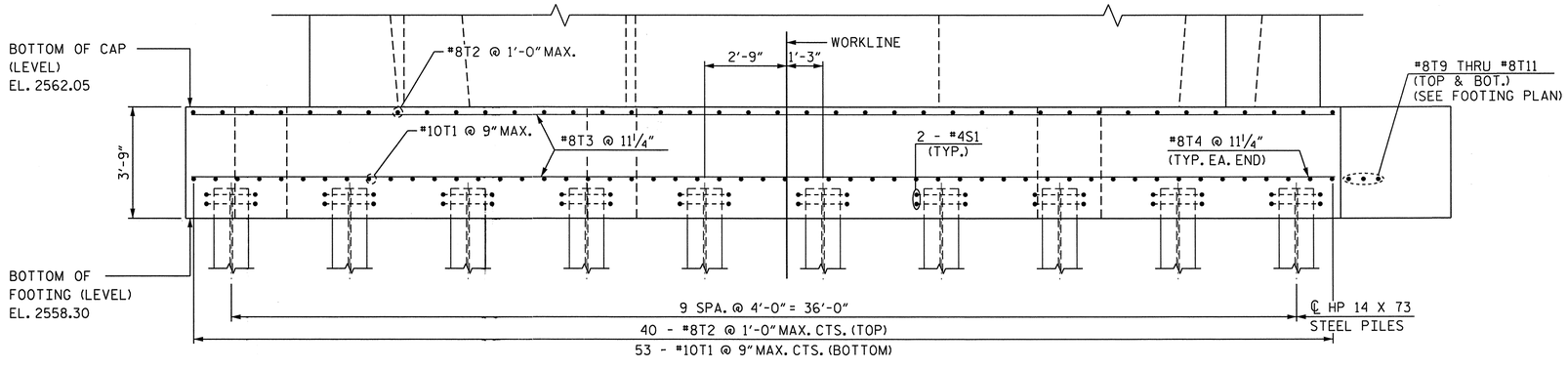

ABUTMENT 2 FOOTING ELEVATION

NOTE: CAP REINFORCEMENT AND WINGWALL
REINFORCEMENT NOT SHOWN FOR CLARITY

NOTES:
1. ALL PILES ARE HP 14 X 73 STEEL PILES
2. ▲ DENOTES DIRECTION OF 3:12 BATTER
3. △ DENOTES DIRECTION OF 2:12 BATTER
4. ◭ DENOTES DIRECTION OF 1:12 BATTER
5. PLACE 2 - #4S1 BARS AROUND EACH PILE (SEE ELEVATION VIEW). #4S1 BARS NOT SHOWN FOR CLARITY

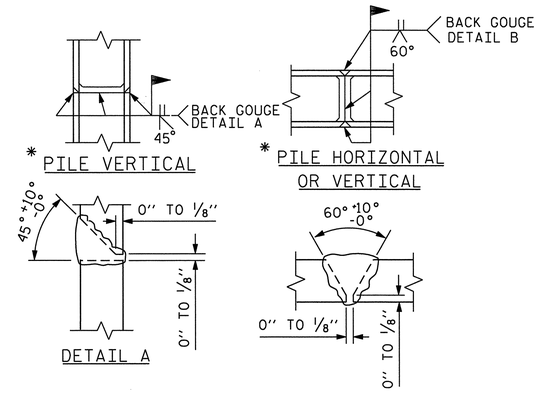

*POSITION OF PILE DURING WELDING.

PILE SPLICE DETAILS

PROJECT NO. R-4047

HAYWOOD COUNTY

STATION: POC STA. 42+60.93 -L-
POT STA. 18+81.73 -RR-

SHEET 1 OF 8

NORTH CAROLINA PROFESSIONAL ENGINEER SEAL 11725 ENGINEER DAVID R. RUGGLES
2-20-14

STATE OF NORTH CAROLINA
DEPARTMENT OF TRANSPORTATION
RALEIGH

SUBSTRUCTURE

ABUTMENT 2
FOOTING PLAN - PILES

DWG. 46 OF 60

Firm License No. C-1051
421 Fayetteville St,
Suite 400
Raleigh, NC 27601
T 919.380.8750
www.stewartinc.com
STEWART

REVISIONS						SHEET NO.
NO.	BY:	DATE:	NO.	BY:	DATE:	S-46
1			3			TOTAL SHEETS
2			4			66

DRAWN BY: J. ABRIL	DATE : 01/14	
CHECKED BY: D. RUGGLES	DATE : 01/14	
DESIGN ENGINEER OF RECORD: D. RUGGLES	DATE : 01/14	

2/20/2014
...\46-Abutment 2 - Piles.dgn
USER:jabril

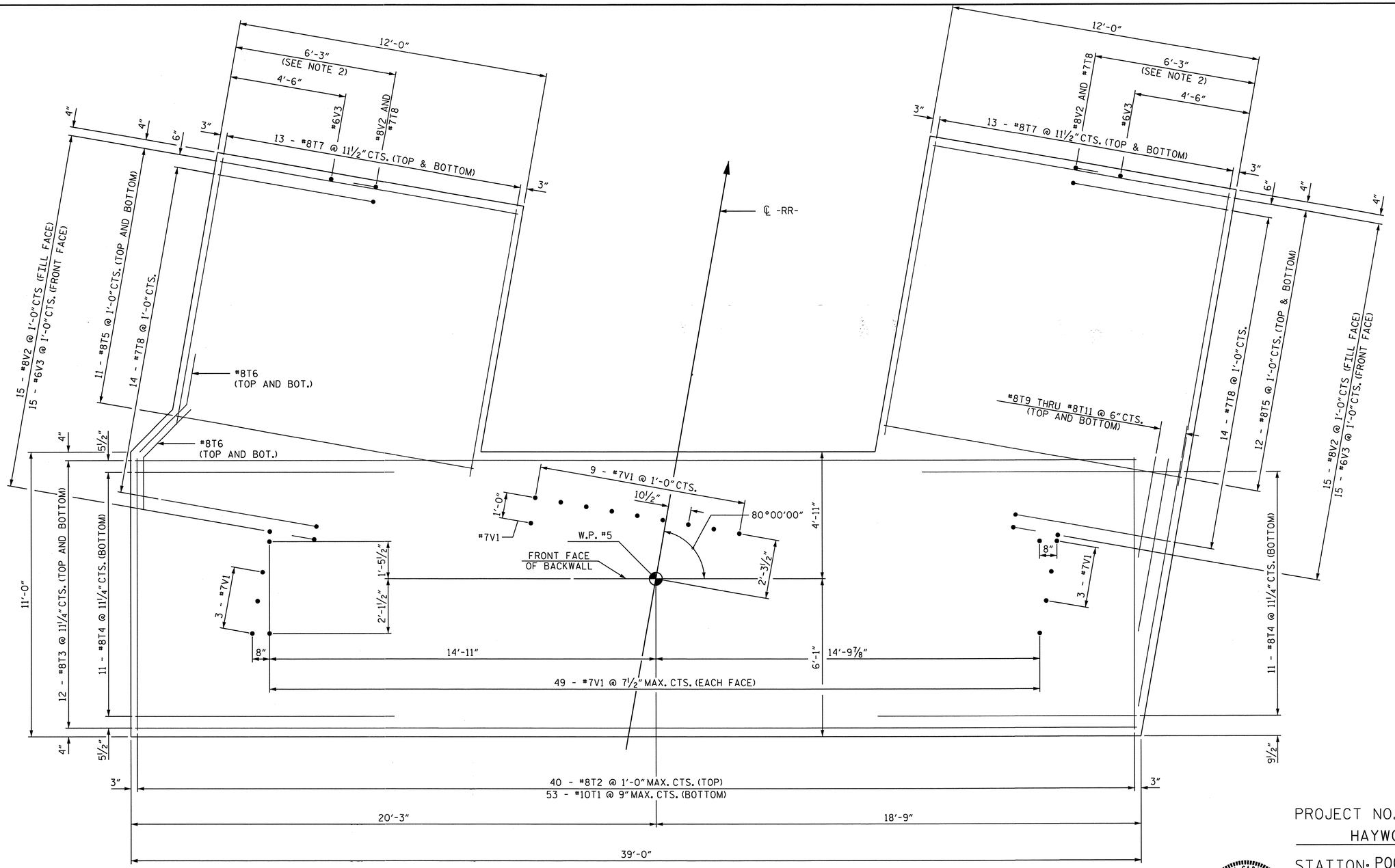

ABUTMENT 2 FOOTING PLAN - REINFORCEMENT

NOTES:

1. SEE "ABUTMENT 2 FOOTING PLAN - PILES" FOR PILE HOOP REINFORCEMENT.
2. THIS DIMENSION IS MEASURED AT TOP OF FOOTING.

PROJECT NO. R-4047

HAYWOOD COUNTY

STATION: POC STA. 42+60.93 -L-
POT STA. 18+81.73 -RR-

SHEET 2 OF 8

NORTH CAROLINA PROFESSIONAL SEAL 11725 ENGINEER DAVID R. RUGGLES

2-20-14

STATE OF NORTH CAROLINA
DEPARTMENT OF TRANSPORTATION
RALEIGH

SUBSTRUCTURE

ABUTMENT 2
FOOTING PLAN -
REINFORCEMENT

DWG. 47 OF 60

Firm License No. C-1051
421 Fayetteville St,
Suite 400
Raleigh, NC 27601
T 919.380.8750
www.stewartinc.com
STEWART

REVISIONS						SHEET NO.
NO.	BY:	DATE:	NO.	BY:	DATE:	S-47
1			3			TOTAL SHEETS
2			4			60

DRAWN BY:	J. ABRIL	DATE : 01/14
CHECKED BY:	D. RUGGLES	DATE : 01/14
DESIGN ENGINEER OF RECORD:	D. RUGGLES	DATE : 01/14

2/20/2014
...\47-Abutment 2 - Reinforcement.dgn
USER:jabril

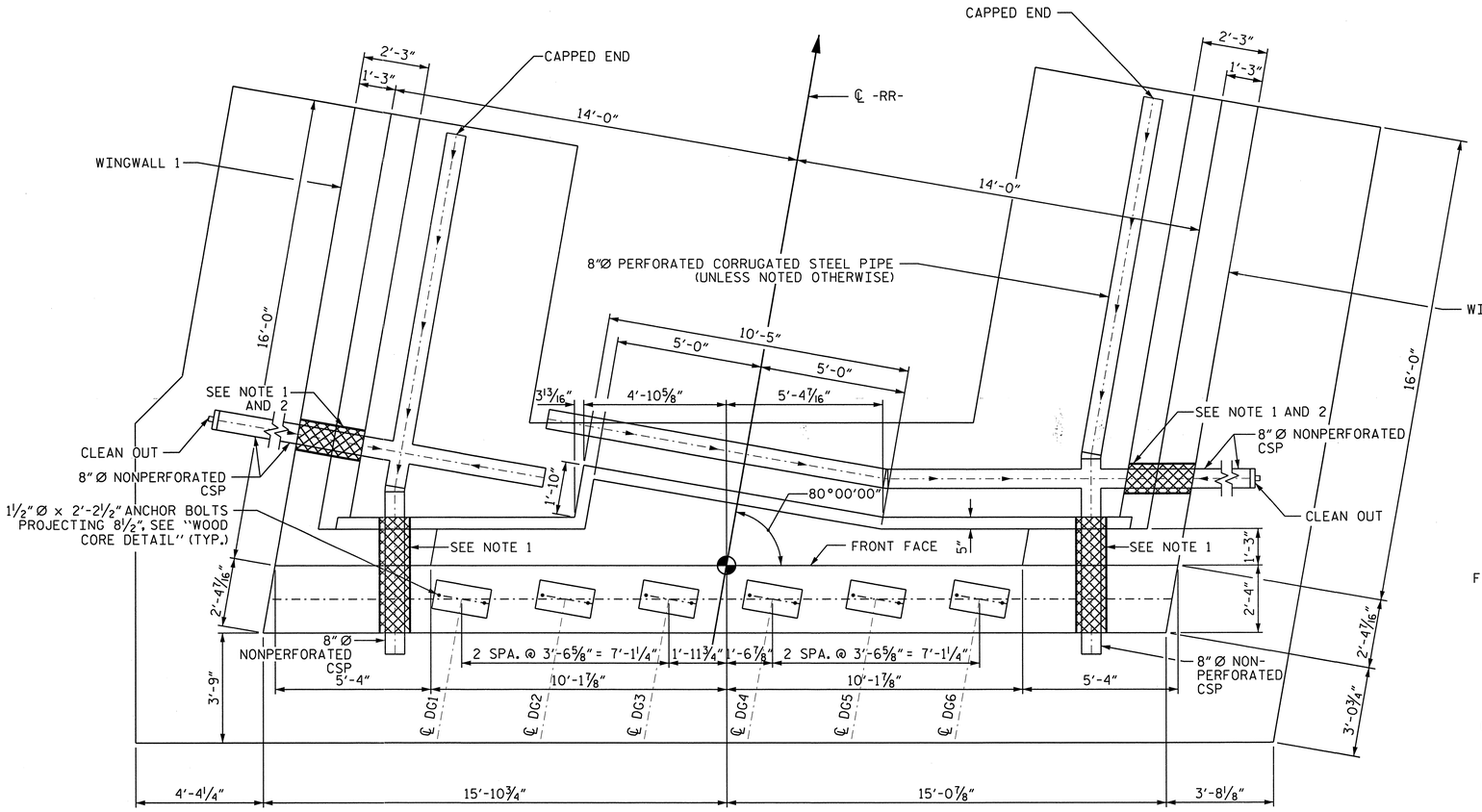

NOTES:

1. 12"Ø I.D. STEEL PIPE SLEEVE (3/8" WALL THICKNESS) TO BE FLUSH WITH BOTH FACES OF CAP. FIELD BEND REINFORCING STEEL AS NECESSARY TO PROVIDE FOR SLEEVE. SEE "SECTION THRU CAP" FOR DETAILS. INSTALL CSP WITH A MINIMUM OF 0 1/8" PER 1'-0" SLOPE.
2. EXTEND PIPE AT WINGWALLS AS REQUIRED TO DAYLIGHT CLEAN OUT. METHOD OF EXTENSION SHALL BE APPROVED BY ENGINEER.
3. FOR FENCEPOST BASE PLATE INSTALLATION, SEE DWG. 19.

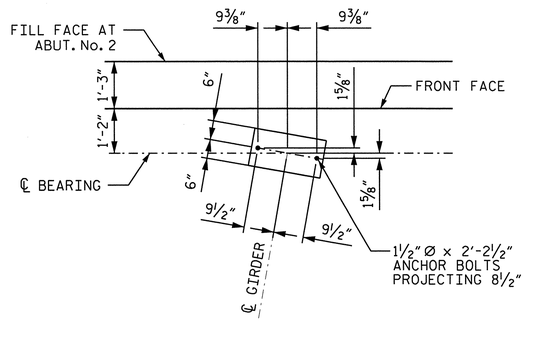

ABUTMENT 2 PLAN VIEW

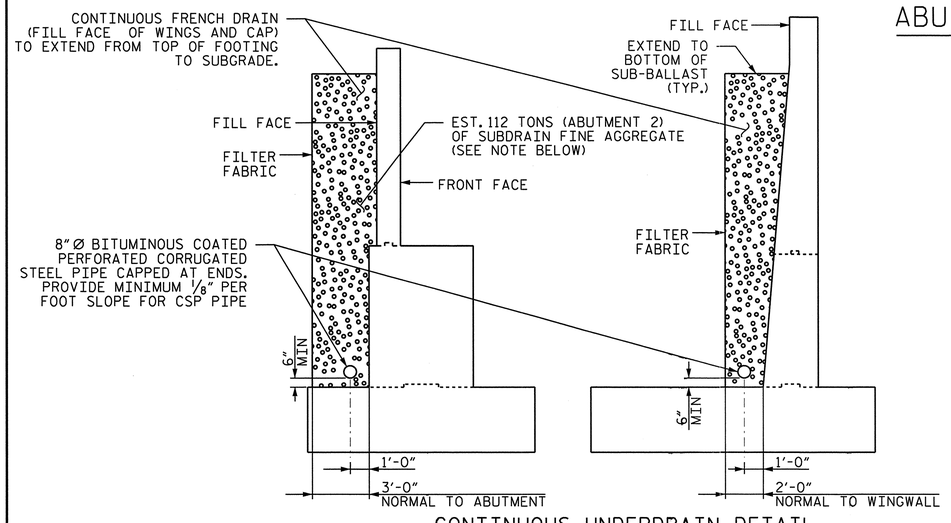

CONTINUOUS UNDERDRAIN DETAIL

NOTE: SUBDRAIN FINE AGGREGATE TO CONFORM TO SECTION 1044 OF NCDOT STD. SPECIFICATIONS. COST OF SUBDRAIN FINE AGGREGATE, 8"Ø STEEL PIPE, AND ALL RELATED MATERIALS TO BE INCLUDED WITH THE PAY ITEM "STRUCTURE DRANIAGE SYSTEM".

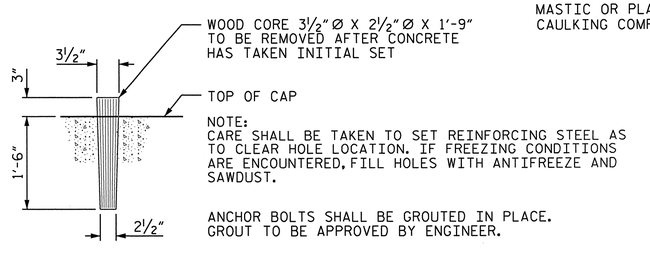

WOOD CORE DETAIL

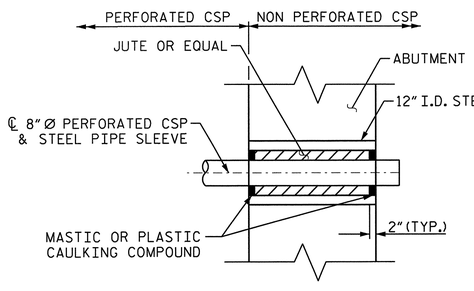

BEARING DETAIL

TYP. GIRDER 1 THRU 6

SECTION THRU CAP

NORTH CAROLINA PROFESSIONAL SEAL 11725 ENGINEER DAVID R. RUGGLES
2-20-14

PROJECT NO. R-4047
HAYWOOD COUNTY
STATION: POC STA. 42+60.93 -L-
POT STA. 18+81.73 -RR-
SHEET 3 OF 8

DRAWN BY: J. ABRIL	DATE : 01/14	
CHECKED BY: D. RUGGLES	DATE : 01/14	
DESIGN ENGINEER OF RECORD: D. RUGGLES	DATE : 01/14	

STATE OF NORTH CAROLINA
DEPARTMENT OF TRANSPORTATION
RALEIGH

SUBSTRUCTURE

ABUTMENT 2
PLAN VIEW

DWG. 48 OF 60

Firm License No. C-1051
421 Fayetteville St, Suite 400
Raleigh, NC 27601
T 919.380.8750
www.stewartinc.com
STEWART

REVISIONS						SHEET NO.
NO.	BY:	DATE:	NO.	BY:	DATE:	S-48
1			3			TOTAL SHEETS
2			4			60

2/20/2014
...\Final\48-Abutment 2 - Plan.dgn
USER:jabril

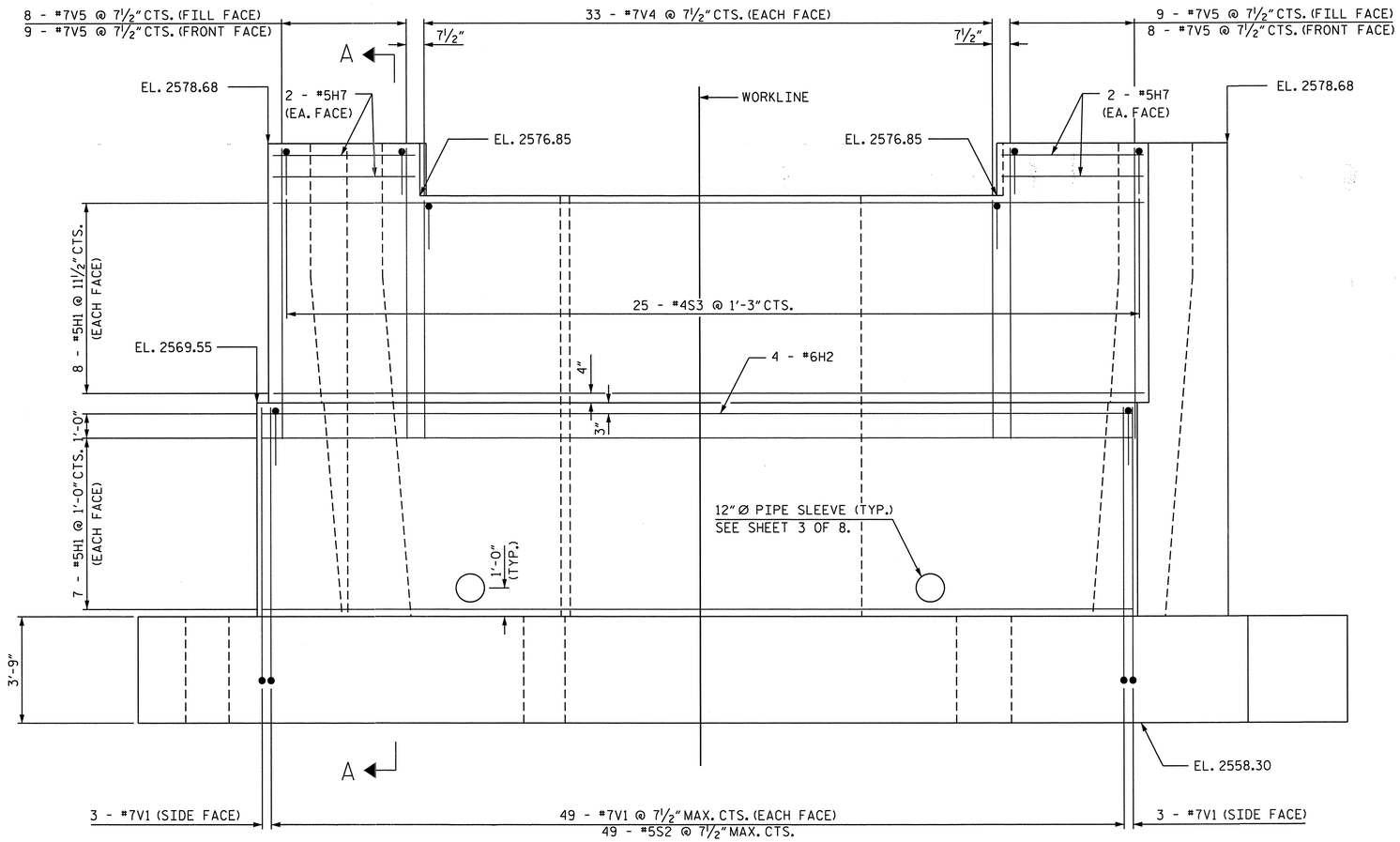

ABUTMENT 2 ELEVATION

FOR SECTION A-A, SEE SHEET 8 OF 8.

NOTES:

1. FOR SECTION A-A, SEE SHEET 8 OF 8.
2. #4S3 BARS MAY BE SHIFTED AS NECESSARY TO CLEAR ANCHOR BOLTS.
3. PAYMENT FOR PIPE SLEEVE INSERT AS SHOWN ON "SECTION THRU CAP" (SHEET 3 OF 8) IS CONSIDERED INCIDENTAL TO THE CONSTRUCTION OF THE ABUTMENT.
4. PVC CORRUGATED PIPE SHALL BE ASTM F 949 AND MEET THE REQUIREMENTS OF ASTM D 1784, MINIMUM CELL CLASS 12454-B. PAYMENT FOR CORRUGATED PVC PIPE SHALL BE INCLUDED IN LUMP SUM PAYMENT FOR "STRUCTURE DRAINAGE SYSTEM".
5. DAMPPROOFING LIMITS: TOPS OF FOOTINGS, BACK OF BACKWALL, BACK OF ABUTMENT SEAT, AND BACK OF WINGWALLS.

PROJECT NO. R-4047

HAYWOOD COUNTY

STATION: POC STA. 42+60.93 -L-
POT STA. 18+81.73 -RR-

SHEET 4 OF 8

NORTH CAROLINA PROFESSIONAL SEAL 11725 ENGINEER DAVID R. RUGGLES
2-20-14

DWG. 49 OF 60

Firm License No. C-1051
421 Fayetteville St,
Suite 400
Raleigh, NC 27601
T 919.380.8750
www.stewartinc.com
STEWART

STATE OF NORTH CAROLINA
DEPARTMENT OF TRANSPORTATION
RALEIGH

SUBSTRUCTURE

ABUTMENT 2
ELEVATION

REVISIONS						SHEET NO.
NO.	BY:	DATE:	NO.	BY:	DATE:	S-49
1			3			TOTAL SHEETS
2			4			60

DRAWN BY: J. ABRIL DATE : 01/14
CHECKED BY: D. RUGGLES DATE : 01/14
DESIGN ENGINEER OF RECORD: D. RUGGLES DATE : 01/14

2/20/2014
...\49-Abutment 2 - Elevation.dgn
USER:jabril

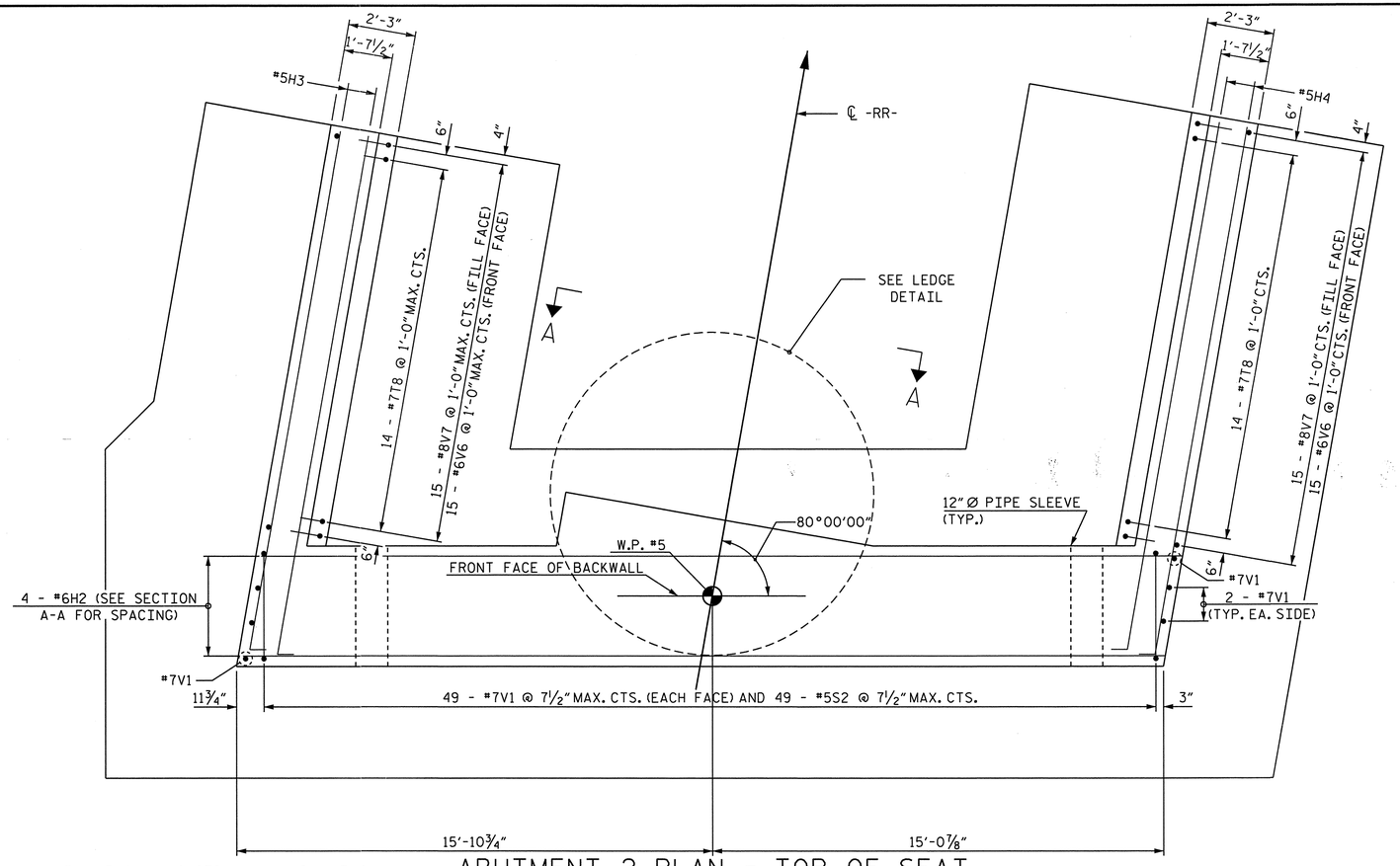

ABUTMENT 2 PLAN - TOP OF SEAT

NOTE: #7V4 THRU #7V5 BACKWALL BARS CAST INTO SEAT ARE NOT SHOWN. FOR #7V4 THRU #7V5 BARS, SEE SHEET 6 OF 8.

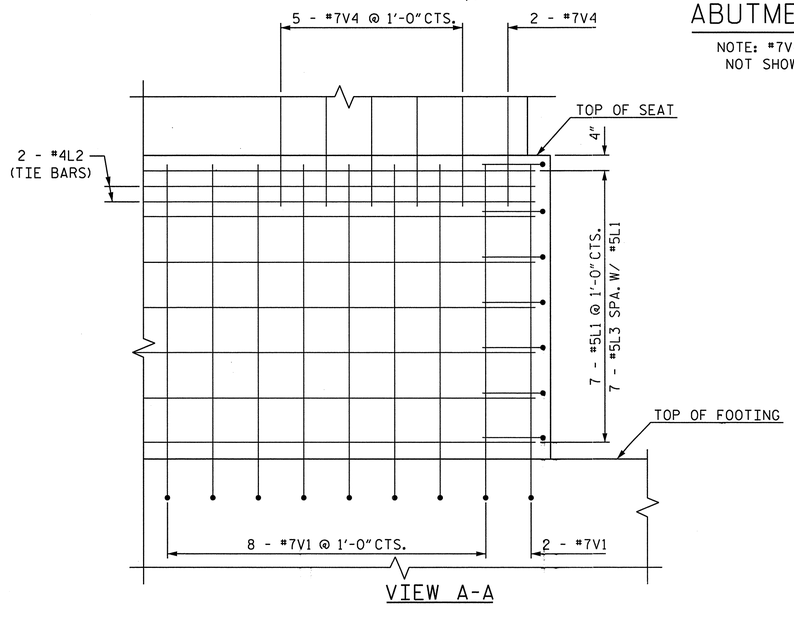

VIEW A-A

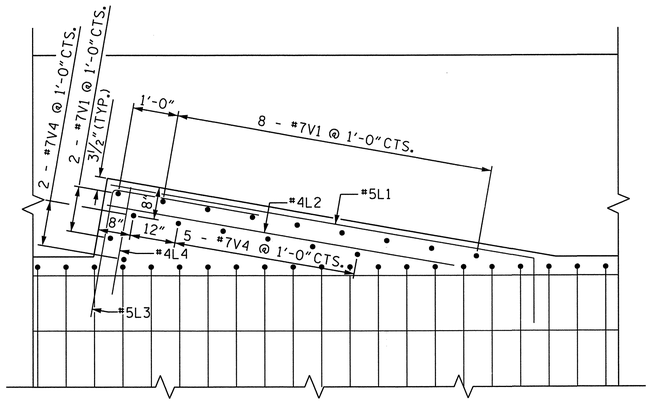

TYP. LEDGE DETAIL AT TOP OF SEAT

NOTE: #4L2 & #4L4 ARE TIE BARS

NOTES:

1. REINFORCING STEEL MAY BE ADJUSTED AS REQUIRED TO CLEAR 12" Ø PIPE SLEEVE.

PROJECT NO. R-4047

HAYWOOD COUNTY

STATION: POC STA. 42+60.93 -L-
POT STA. 18+81.73 -RR-

SHEET 5 OF 8

NORTH CAROLINA PROFESSIONAL SEAL 11725 ENGINEER DAVID K. RUGGLES

2-20-14

STATE OF NORTH CAROLINA
DEPARTMENT OF TRANSPORTATION
RALEIGH

SUBSTRUCTURE

ABUTMENT 2 PLAN
TOP OF SEAT

DWG. 50 OF 60

Firm License No. C-1051
421 Fayetteville St,
Suite 400
Raleigh, NC 27601
T 919.380.8750
www.stewartinc.com

STEWART

REVISIONS						SHEET NO.
NO.	BY:	DATE:	NO.	BY:	DATE:	S-50
1			3			TOTAL SHEETS
2			4			60

DRAWN BY: J. ABRIL	DATE : 01/14	
CHECKED BY: D. RUGGLES	DATE : 01/14	
DESIGN ENGINEER OF RECORD: D. RUGGLES	DATE : 01/14	

2/20/2014
...\50-Abutment 2 - Top of Seat.dgn
USER:jabril

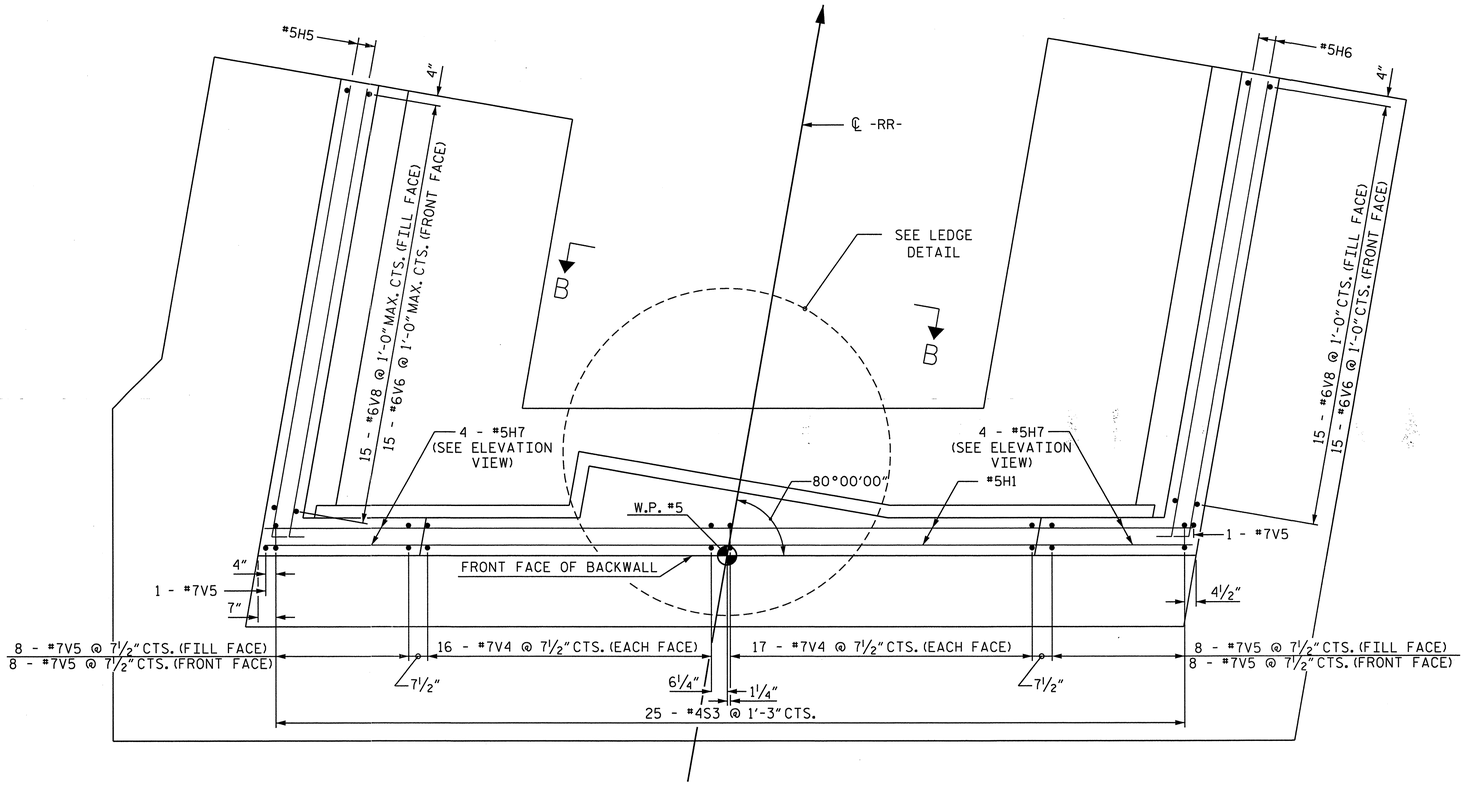

ABUTMENT 2 PLAN - TOP OF BACKWALL

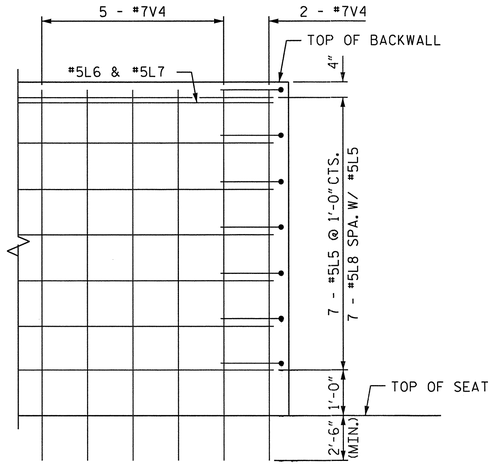

VIEW B-B

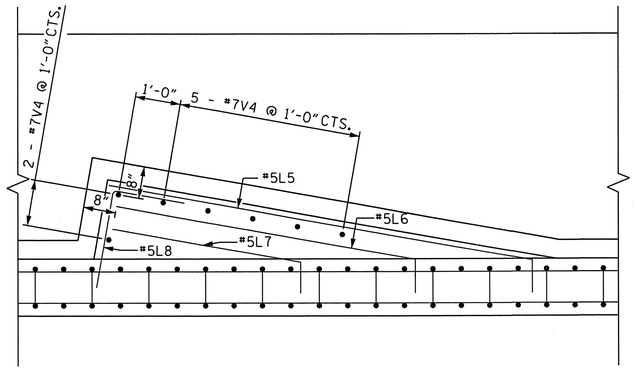

TYP. LEDGE DETAIL AT TOP OF BACKWALL

PROJECT NO. R-4047

HAYWOOD COUNTY

STATION: POC STA. 42+60.93 -L-
POT STA. 18+81.73 -RR-

SHEET 6 OF 8

NORTH CAROLINA PROFESSIONAL SEAL 11725 ENGINEER DAVID R. RUGGLES
2-20-14

STATE OF NORTH CAROLINA
DEPARTMENT OF TRANSPORTATION
RALEIGH

SUBSTRUCTURE

ABUTMENT 2 PLAN
TOP OF BACKWALL

DWG. 51 OF 60

Firm License No. C-1051
421 Fayetteville St,
Suite 400
Raleigh, NC 27601
T 919.380.8750
www.stewartinc.com
STEWART

REVISIONS						SHEET NO.
NO.	BY:	DATE:	NO.	BY:	DATE:	S-51
1			3			TOTAL SHEETS
2			4			66

DRAWN BY: J. ABRIL DATE : 01/14
CHECKED BY: D. RUGGLES DATE : 01/14
DESIGN ENGINEER OF RECORD: D. RUGGLES DATE : 01/14

2/20/2014
...\51-Abutment 2 - Top of Backwall.dgn
USER:jabril

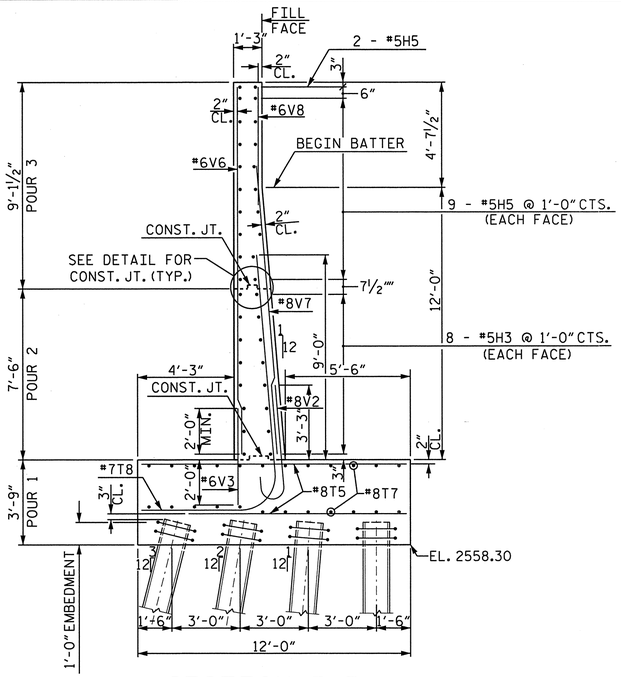

SECTION B-B
WINGWALL 1

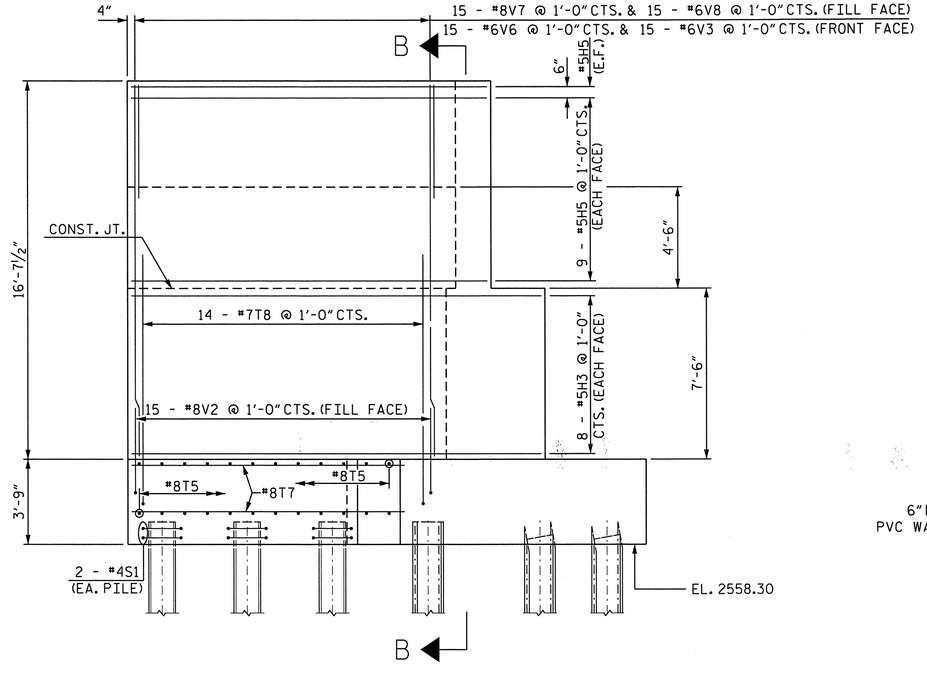

WINGWALL 1 ELEVATION (LEFT SIDE)

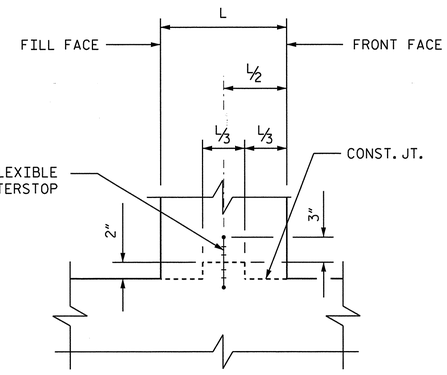

CONSTRUCTION JOINT DETAIL

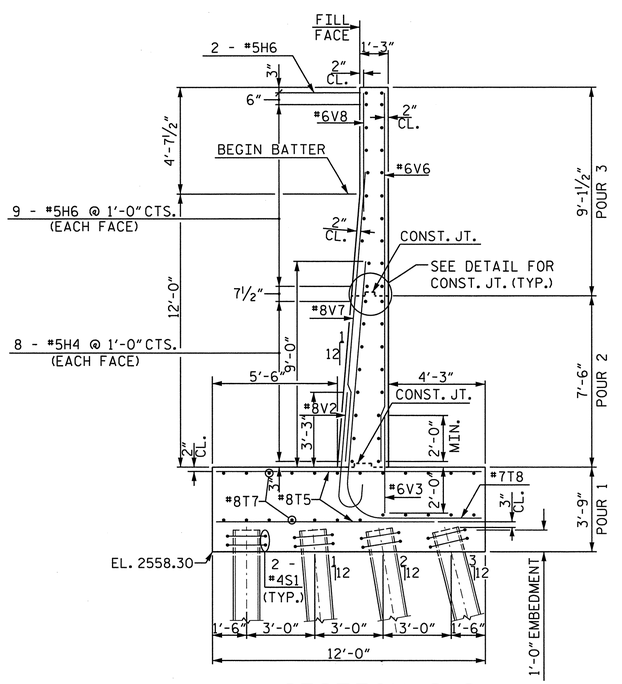

SECTION C-C
WINGWALL 2

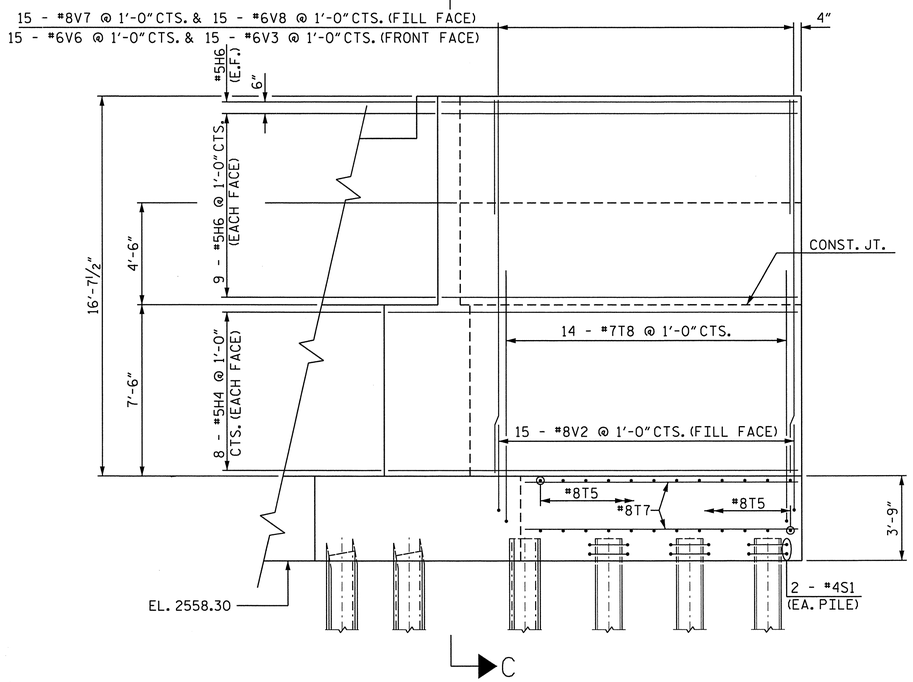

WINGWALL 2 ELEVATION (RIGHT SIDE)

PROJECT NO. R-4047

HAYWOOD COUNTY

STATION: POC STA. 42+60.93 -L-
POT STA. 18+81.73 -RR-

SHEET 7 OF 8

NORTH CAROLINA PROFESSIONAL ENGINEER SEAL 11725 DAVID R. RUGGLES
2-20-14

STATE OF NORTH CAROLINA
DEPARTMENT OF TRANSPORTATION
RALEIGH

SUBSTRUCTURE

ABUTMENT 2 WINGWALL ELEVATIONS AND SECTIONS

DWG. 52 OF 60

Firm License No. C-1051
421 Fayetteville St,
Suite 400
Raleigh, NC 27601
T 919.380.8750
www.stewartinc.com

STEWART

REVISIONS						SHEET NO.
NO.	BY:	DATE:	NO.	BY:	DATE:	S-52
1			3			TOTAL SHEETS
2			4			60

DRAWN BY: J. ABRIL DATE : 01/14
CHECKED BY: D. RUGGLES DATE : 01/14
DESIGN ENGINEER OF RECORD: D. RUGGLES DATE : 01/14

2/20/2014
...\52-Abutment 2 - WingwallElevation and Sections.dgn
USER:jabril

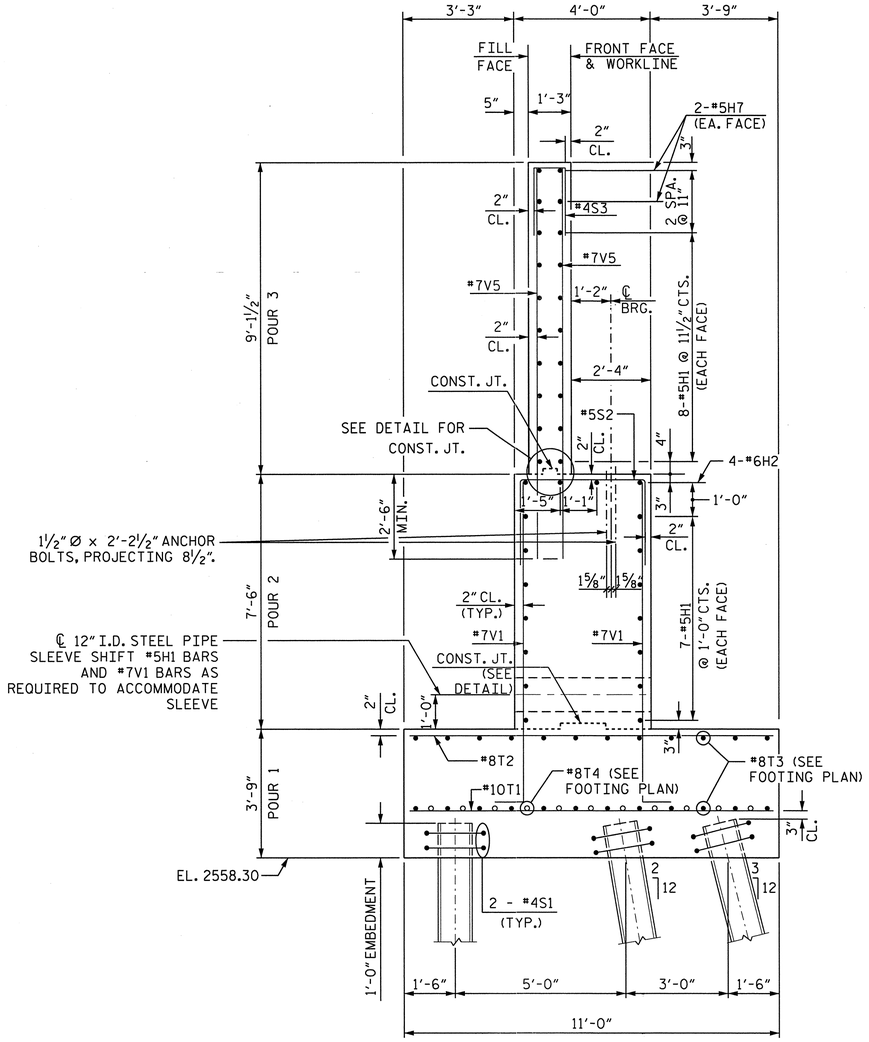

SECTION A-A
ABUTMENT 2

FOR SECTION A-A CUT LOCATION, SEE SHEET 4 OF 8.

BAR TYPES

ALL BAR DIMENSIONS ARE OUT TO OUT

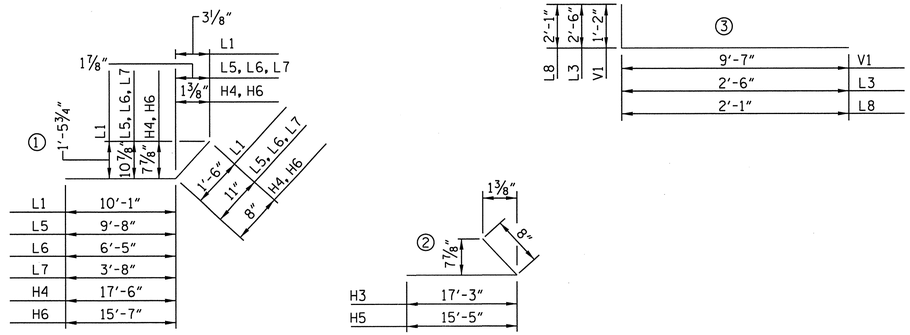

NOTE: THE "L" BARS SHALL BE CONSIDERED "STIRRUP" OR "TIE" BARS WHEN ESTABLISHING BEND DIAMETERS.

BILL OF MATERIAL
ABUTMENT 2

BAR	NO.	SIZE	TYPE	LENGTH	WEIGHT
H1	30	#5	STR.	30'-7"	957
H2	4	#6	STR.	30'-7"	184
H3	16	#5	2	17'-11"	299
H4	16	#5	1	18'-2"	303
H5	20	#5	2	16'-1"	335
H6	20	#5	1	16'-3"	339
H7	8	#5	STR.	5'-0"	42
L1	7	#5	1	11'-7"	85
L2	2	#4	STR.	6'-5"	9
L3	7	#5	3	5'-0"	37
L4	2	#4	STR.	2'-8"	4
L5	7	#5	1	10'-7"	77
L6	1	#5	1	7'-4"	8
L7	1	#5	1	4'-7"	5
L8	7	#5	3	4'-2"	30
S1	106	#4	4	7'-6"	531
S2	49	#5	5	7'-6"	383
S3	25	#4	5	3'-11"	65
T1	53	#10	STR.	10'-8"	2433
T2	40	#8	STR.	10'-8"	1139
T3	24	#8	STR.	38'-8"	2478
T4	22	#8	STR.	10'-0"	587
T5	46	#8	STR.	11'-8"	1433
T6	4	#8	8	4'-4"	46
T7	52	#8	STR.	13'-6"	1874
T8	28	#7	6	17'-4"	992
T9	2	#8	STR.	4'-0"	21
T10	2	#8	STR.	6'-10"	36
T11	2	#8	STR.	9'-3"	49
V1	114	#7	3	10'-9"	2505
V2	30	#8	7	5'-11"	474
V3	30	#6	STR.	4'-3"	192
V4	73	#7	STR.	9'-8"	1442
V5	34	#7	STR.	11'-6"	799
V6	30	#6	STR.	16'-4"	736
V7	30	#8	STR.	13'-1"	1048
V8	30	#6	STR.	6'-2"	278

QUANTITIES - ABUTMENT 2

REINFORCING STEEL:	LBS.	22,255
CLASS AA CONCRETE:		
	POUR 1 CU. YARDS	97.5
	POUR 2 CU. YARDS	52.9
	POUR 3 CU. YARDS	27.3
	TOTAL CU. YARDS	177.7
HP 12 X 53 STEEL PILES	NO.	54
	LIN. FEET	2,430
STEEL PILE POINTS	NO.	54

NORTH CAROLINA PROFESSIONAL ENGINEER SEAL 11725 DAVID R. RUGGLES
2-20-14

PROJECT NO. R-4047

HAYWOOD COUNTY

STATION: POC STA. 42+60.93 -L-
POT STA. 18+81.73 -RR-

SHEET 8 OF 8

STATE OF NORTH CAROLINA
DEPARTMENT OF TRANSPORTATION
RALEIGH

SUBSTRUCTURE

ABUTMENT 2
BILL OF MATERIAL

DWG. 53 OF 60

STEWART
Firm License No. C-1051
421 Fayetteville St,
Suite 400
Raleigh, NC 27601
T 919.380.8750
www.stewartinc.com

REVISIONS						SHEET NO.
NO.	BY:	DATE:	NO.	BY:	DATE:	S-53
1			3			TOTAL SHEETS
2			4			60

DRAWN BY: J. ABRIL DATE : 01/14
CHECKED BY: D. RUGGLES DATE : 01/14
DESIGN ENGINEER OF RECORD: D. RUGGLES DATE : 01/14

2/20/2014
...\Final\53-Abutment 2 - BOM.dgn
USER:jabril

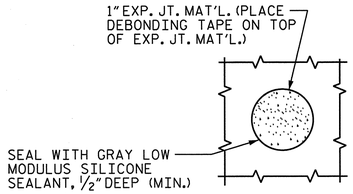

PLAN WHERE CONCRETE SLOPE PROTECTION MUST BE PLACED AROUND A BENT COLUMN OR DRAINAGE PIPE

NOTE: SLOPE PROTECTION SHALL BE CAST TO ALLOW ACCESS TO THE DRAINAGE PIPE CLEANOUT.

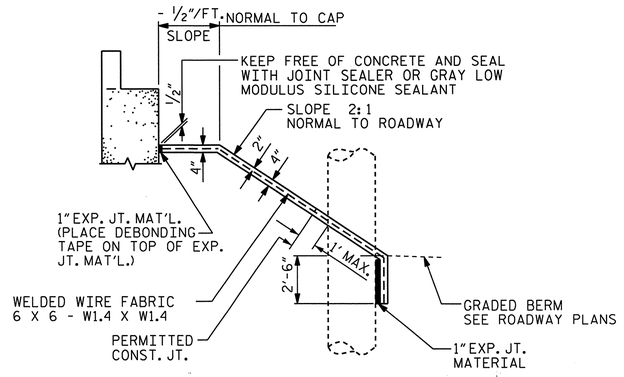

SECTION ALONG ℄ ROADWAY WITH SHOULDER PIER

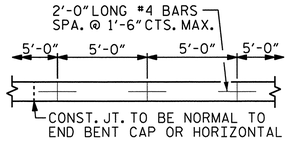

STRIP WIDTHS MAY VARY IN CURVED PORTION.

POURING DETAIL

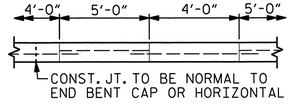

POUR A 4'-0" STRIP FIRST. STRIP WIDTHS MAY VARY IN CURVED PORTION.

OPTIONAL POURING DETAIL

GENERAL NOTES

SLOPE PROTECTION SHALL BE PLACED UNDER THE ENDS OF THE BRIDGE AS SHOWN IN THE DETAILS. STRAIGHT EDGING WILL NOT BE REQUIRED UNLESS, IN THE OPINION OF THE ENGINEER, VISUAL INSPECTION INDICATES A NEED FOR IT. MEASUREMENT AND PAYMENT SHALL BE AS PRESCRIBED IN SECTION 462 OF THE STANDARD SPECIFICATIONS. FOR BERM WIDTH, SEE GENERAL DRAWING.

SLOPE PROTECTION SHALL CONSIST OF 4" POURED-IN-PLACE CONCRETE PAVING AS SHOWN IN THE DETAILS ON THIS SHEET. CONCRETE SHALL BE CLASS "B". THE CONCRETE SURFACE SHALL BE FLOATED WITH A WOODEN FLOAT AND FINISHED. WELDED WIRE FABRIC REINFORCING SHALL BE 6 X 6 - W1.4 X W1.4, 60" WIDE. SLOPE PROTECTION SHALL BE POURED IN 5' STRIPS AS SHOWN IN THE "POURING DETAIL" WITH 2'-0" LONG #4 BARS PLACED ALONG THE SLOPE BETWEEN STRIPS AT 1'-6" MAXIMUM SPACING. SLOPE PROTECTION MAY BE POURED IN ALTERNATE 4' AND 5' STRIPS AS SHOWN IN THE "OPTIONAL POURING DETAIL" WITH ADJACENT RUNS OF WELDED WIRE FABRIC LAPPING AT LEAST 6". THE COST OF THE WELDED WIRE FABRIC AND #4 BARS, IF USED, SHALL BE INCLUDED IN THE CONTRACT UNIT PRICE BID PER SQUARE YARD FOR SLOPE PROTECTION.

FOR BERM WIDTHS, SEE GENERAL DRAWING

BRIDGE @ -RR- STA. 18+81.73	4 INCH SLOPE PROTECTION	* WELDED WIRE FABRIC 60 INCHES WIDE
	SQUARE YARDS	APPROX. L.F.
END BENT 1	137	283

* QUANTITY SHOWN IS BASED ON 5' POURS.

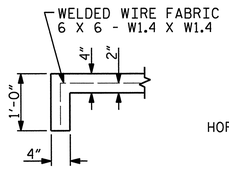

SECTION A-A

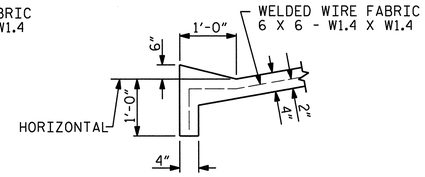

SECTION B-B

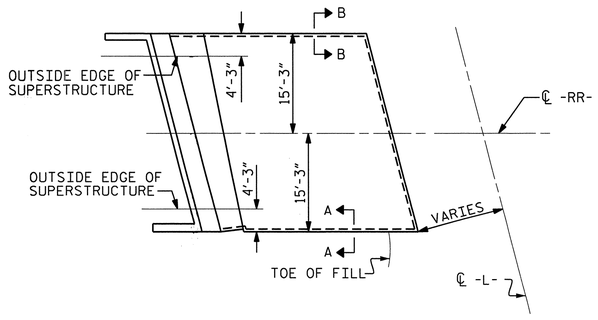

PROJECT NO. R-4047

HAYWOOD COUNTY

STATION: POC STA. 42+60.93 -L-
POT STA. 18+81.73 -RR-

NORTH CAROLINA PROFESSIONAL SEAL 11725 ENGINEER DAVID R. RUGGLES

2-20-14

STATE OF NORTH CAROLINA
DEPARTMENT OF TRANSPORTATION
RALEIGH

STANDARD

SLOPE PROTECTION DETAILS

DWG. 54 OF 60

Firm License No. C-1051
421 Fayetteville St,
Suite 400
Raleigh, NC 27601
T 919.380.8750
www.stewartinc.com

STEWART

REVISIONS						SHEET NO.
NO.	BY:	DATE:	NO.	BY:	DATE:	S-54
1			3			TOTAL SHEETS
2			4			60

ASSEMBLED BY :	P. JACOB	DATE :	01/14
CHECKED BY :	D. RUGGLES	DATE :	01/14
DRAWN BY : ELR	5/92	REV. 5/1/06	TLA/GM
CHECKED BY : GRP	6/92	REV. 10/1/11	MAA/GM
		REV. 12/21/11	MAA/GM

STD. NO. SP1

2/20/2014
...\54-Slope Protection Details.dgn

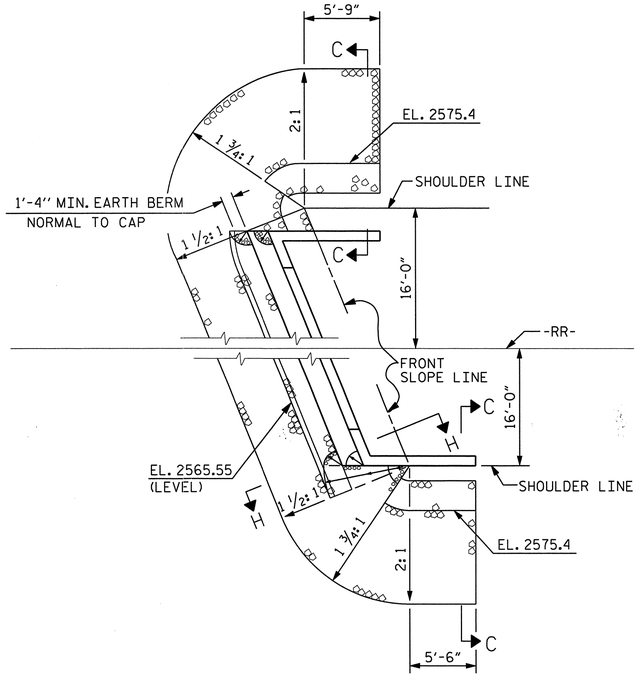

NOTES :

FOR BERM WIDTH DIMENSIONS, SEE GENERAL DRAWING.

ESTIMATED QUANTITIES			
BRIDGE @ -RR- STA. 18+81.73	RIP RAP CLASS I	RIP RAP CLASS II (2'-0" THICK)	GEOTEXTILE FOR DRAINAGE
	TONS	TONS	SQUARE YARDS
PIER 3 *	65		35
END BENT 2		544	789

*PLACE CLASS I RIP RAP TO THE LIMITS SHOWN ON THE GENERAL DRAWING. CLASS I RIP RAP IS TO BE PLACED BETWEEN PIER 3 AND THE STREAM TOP OF BANK TO ELEV. 2546.5±. CLASS I RIP RAP SHALL NOT BE TOED INTO THE BANK.

SHOULDER RIP RAP IS HIGHER THAN BERM RIP RAP

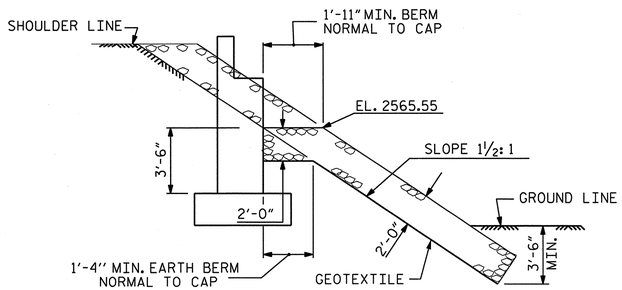

SECTION H-H

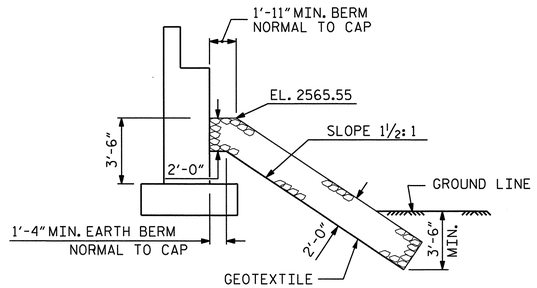

℄ SECTION
BERM RIP RAPPED

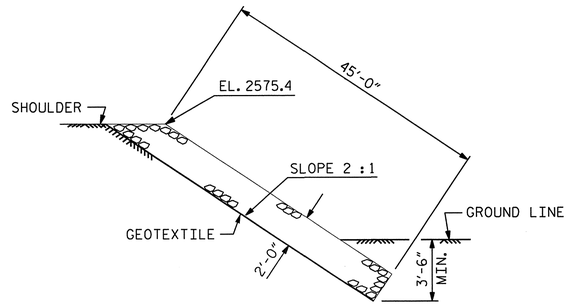

SECTION C-C

PROJECT NO. R-4047

HAYWOOD COUNTY

STATION: POC STA. 42+60.93 -L-
POT STA. 18+81.73 -RR-

NORTH CAROLINA PROFESSIONAL ENGINEER 11725 DAVID R. RUGGLES
2-20-14

STATE OF NORTH CAROLINA
DEPARTMENT OF TRANSPORTATION
RALEIGH

RIP RAP DETAILS

DWG. 55 OF 60

Firm License No. C-1051
421 Fayetteville St.
Suite 400
Raleigh, NC 27601
T 919.380.8750
www.stewartinc.com

STEWART

REVISIONS						SHEET NO.
NO.	BY:	DATE:	NO.	BY:	DATE:	S-55
1			3			TOTAL SHEETS
2			4			60

ASSEMBLED BY :	P. JACOB	DATE :	09/13
CHECKED BY :	D. RUGGLES	DATE :	09/13
DRAWN BY : REK 1/84	REV. 5/1/06R		TLA/GM
CHECKED BY : RDU 1/84	REV. 10/1/11		MAA/GM
	REV. 12/21/11		MAA/GM

2/20/2014
...\Final\55-Rip Rap Details.dgn
USER:labrill

STD. NO. RR1

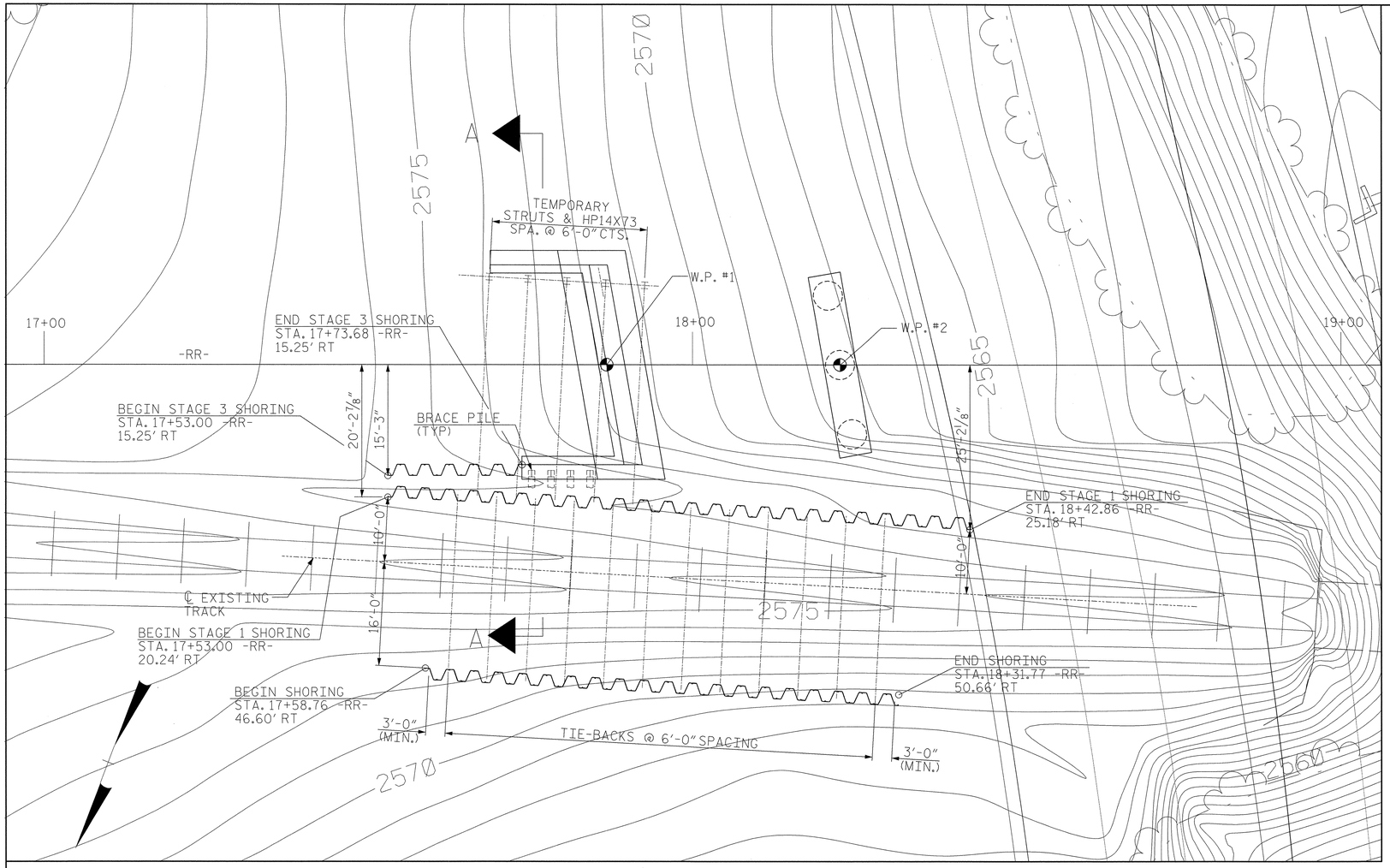

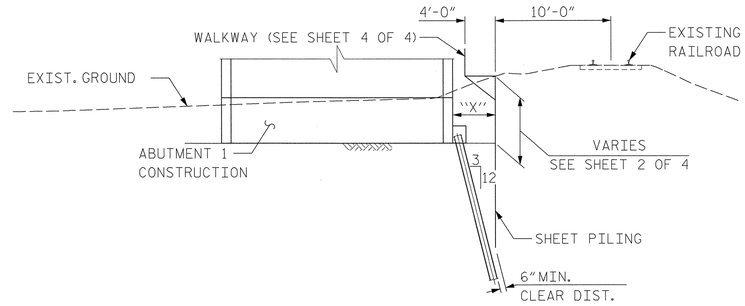

SECTION A-A

STRUTS AND LATERAL PILES NOT SHOWN FOR CLARITY, SEE SHEET 4 OF 5
TIE-BACKS NOT SHOWN FOR CLARITY. SEE SHEET 3 OF 5

CONSTRUCTION SEQUENCE:

1. PERFORM GRADING AS REQUIRED AWAY FROM EXISTING RAILROAD EMBANKMENT.
2. PLACE BOTH SETS OF SHORING.
3. INSTALL TEMPORARY WALERS, STRUTS, LATERAL PILES AND WALKWAY (SEE SHEET 4 OF 5).
4. EXCAVATE IN FRONT OF SHEETING TO SIX INCHES BELOW "PERMANENT" WALER ELEVATION AS SHOWN ON SHEET 2 OF 5.
5. INSTALL CASING PIPE. CONTRACTOR TO EVALUATE EXISTING GROUND ELEVATIONS TO ESTABLISH CASING PIPE INCLINATION.
6. INSTALL TIE-BACKS AND PERMANENT WALER BEAM. REMOVE TEMPORARY WALERS, STRUTS, AND LATERAL PILES.
7. EXCAVATE IN FRONT OF SHEETING. SEE SHEET 2 OF 5 FOR LIMITS OF EXCAVATION.
8. CONSTRUCT ABUTMENT 1 AND PIER 1.
9. BACKFILL TO SIX INCHES BELOW "PERMANENT" WALER ELEVATION. PLACE STAGE 3 SHEET PILING AS SHOWN.
10. COMPLETE BRIDGE, APPROACH FILL, TRACKWORK GRADING AND SUBBALLAST INSTALLATION. PROVIDE NS SIX MONTHS ADVANCE NOTICE FOR TRACKWORK.
11. NS FORCES TO INSTALL BALLAST, TRACK, AND CUT AND THROW TO NEW ALIGNMENT.
12. CONTRACTOR TO REMOVE WALERS, TIE RODS, AND STAGE 1 SHEET PILING. PLACE REMAINING FILL IN REGION NORTH OF ABUTMENT 1 RIGHT WINGWALL. REMOVE STAGE 3 SHEET PILING.
13. CONTRACTOR TO REMOVE EXISTING TRACK AND TIES ON OLD ALIGNMENT AND PERFORM FINAL GRADING ON EXISTING TRACKBED.

SHORING PLAN AT ABUTMENT 1 AND PIER 1

SHORING BEGIN OR END STA.	DISTANCE TO PROPOSED TRACK (-RR-)
17+53.00 -RR-	20'-2 7/8"
18+42.86 -RR-	25'-2 1/8"
17+58.76 -RR-	46'-7 1/4"
18+31.77 -RR-	50'-8"
17+53.00 -RR-	15'-3"
17+73.68 -RR-	15'-3"

SHORING DATA

STATION RANGE	SHORING TYPE	MIN. SECTION MODULUS	MIN. MOMENT OF INERTIA
STA. 17+53.00 -RR- TO STA. 18+42.86 -RR-	PZC41	76.1 IN^3/ FT	803.7 IN^4/ FT
STA. 17+58.76 -RR- TO STA. 18+31.77 -RR-	PZC41	76.1 IN^3/ FT	803.7 IN^4/ FT
STA. 17+53.00 -RR- TO STA. 17+73.68 -RR-	PZC41	76.1 IN^3/ FT	803.7 IN^4/ FT

NOTES:

TEMPORARY STRUTS AND TEMPORARY HP 14 X 73 LATERAL PILES ARE PLACED AT MIDPOINT BETWEEN TIE-BACKS.

DIMENSION "X" VARIES FROM 4'-4" TO 5'-1 1/2".

STAGE 1 SHEET PILING BETWEEN STA. 17+73.00 -RR- (10+20.00 -SH-) AND STA. 17+86.00 -RR- (10+33.00 -SH-) SHALL NOT EXTEND BELOW ELEVATION 2555.9.

SHEET PILING ON SOUTH SIDE OF TRACK SHALL BE INSTALLED TO THE MINIMUM EMBEDMENT DEPTHS SHOWN ON SHEET 2 OF 5. SHEET PILING ON NORTH SIDE OF TRACK SHALL BE INSTALLED WITH A MINIMUM EMBEDMENT AS SHOWN ON SHEET 3 OF 5. STAGE 3 SHEET PILING SHALL BE INSTALLED WITH A MINIMUM EMBEDMENT OF 24.5 FT. BELOW THE PERMANENT WALER ELEVATION.

FOR TEMPORARY RAILROAD SHORING, SEE SPECIAL PROVISIONS.

CONTRACTOR IS ALLOWED TO SUBSTITUTE AN ALTERNATIVE SHEET PILE SECTION PROVIDED THAT THE SECTION MODULUS AND MOMENT OF INERTIA IS GREATER THAN THE PZC41 SHEET PILE SECTION AND SUBJECT TO THE APPROVAL OF THE ENGINEER.

STEEL SHEET PILING REQUIRED FOR SHORING SHALL BE HOT ROLLED. ALL SHEET PILES SHALL BE IN A NEW CONDITION.

THE CONTRACTORS ATTENTION IS CALLED TO THE FACT THAT THE SHORING AND EXCAVATION PLANS HAVE BEEN SUBMITTED TO THE RAILROAD BY THE STATE. AS OF THE TIME OF PLAN PRINTING FOR ADVERTISEMENT FOR BIDS, RAILROAD APPROVAL HAS NOT BEEN RECEIVED. WHEN SUCH APPROVAL IS RECEIVED, THE CONTRACTOR WILL BE NOTIFIED BY ADDENDUM. IN THE EVENT RAILROAD APPROVAL IS NOT GIVEN PRIOR TO SUBMISSION OF BIDS, THE CONTRACTOR SHALL SUBMIT BIDS BASED ON THE CONTRACT PLANS. THE CONTRACTOR SHALL NOT BEGIN EXCAVATION AT THE LOCATIONS SHOWN ON THESE PLANS UNTIL NOTIFIED OF RAILROAD APPROVAL.

DRAWN BY: P. JACOB DATE : 06/14
CHECKED BY: D. RUGGLES DATE : 06/14
DESIGN ENGINEER OF RECORD: D. RUGGLES DATE : 06/14

NORTH CAROLINA PROFESSIONAL SEAL 11725 ENGINEER DAVID E. RUGGLES
6-6-14

DWG. 56 OF 60

STEWART
Firm License No. C-1051
421 Fayetteville St,
Suite 400
Raleigh, NC 27601
T 919.380.8750
www.stewartinc.com

PROJECT NO. R-4047
HAYWOOD COUNTY
STATION: POC STA. 42+60.93 -L-
POT STA. 18+81.73 -RR-
SHEET 1 OF 5

STATE OF NORTH CAROLINA
DEPARTMENT OF TRANSPORTATION
RALEIGH

SHORING PLAN
ABUTMENT 1 AND PIER 1

REVISIONS						SHEET NO.
NO.	BY:	DATE:	NO.	BY:	DATE:	S-56
1			3			TOTAL SHEETS
2			4			60

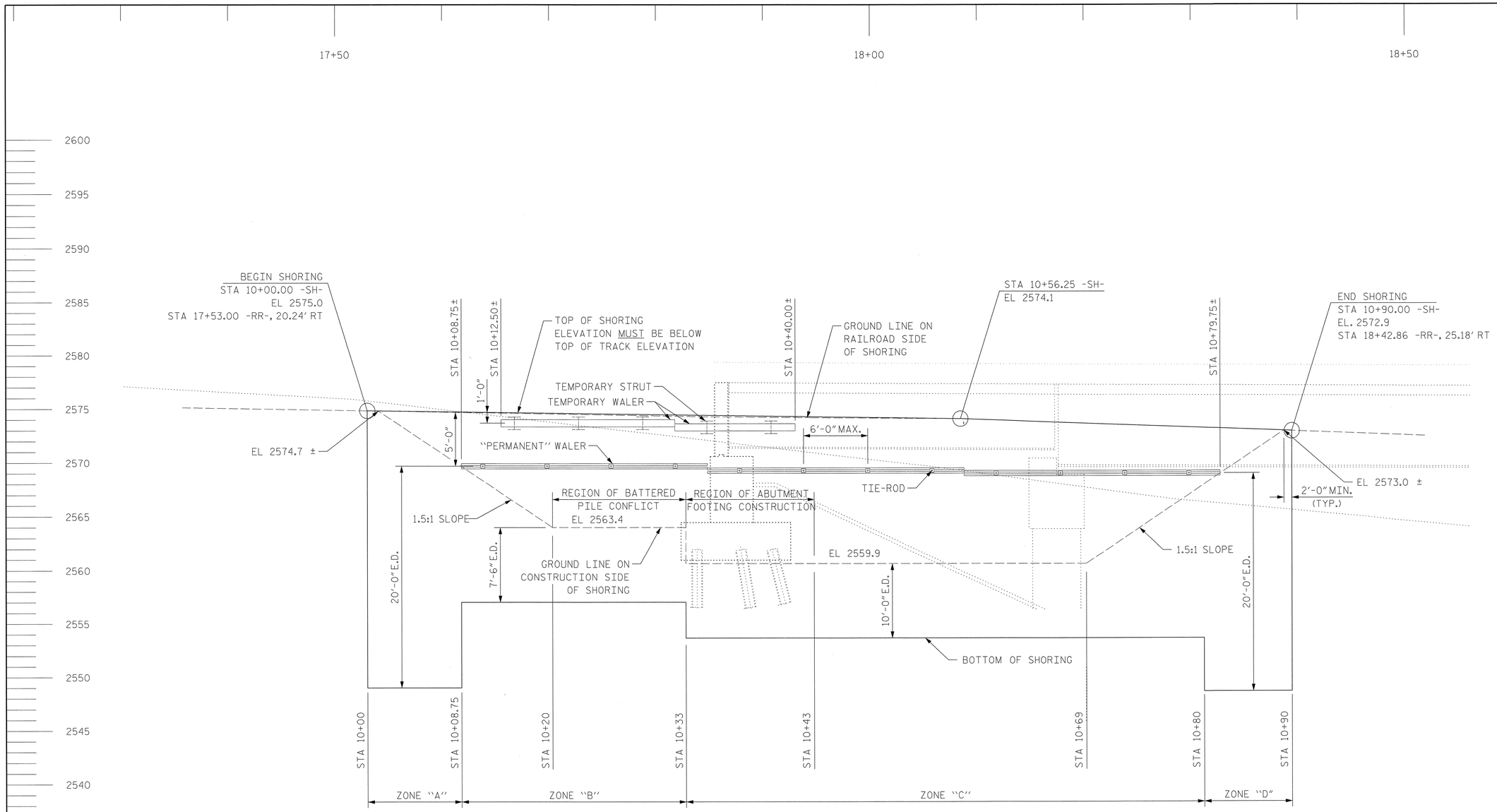

SHORING ELEVATION

NOTE: TOP OF SHORING SHALL BE AS CLOSE TO THE GROUND LINE ON RAILROAD SIDE AS POSSIBLE. TOP OF SHORING ELEVATION MUST BE BELOW TOP OF TRACK ELEVATION. A 4' WIDE WALKWAY SHALL BE CONSTRUCTED AT THE TOP OF THE SHORING. SEE SHEET 5 OF 5 FOR DETAILS.

SHORING IN ZONE "B" SHALL NOT BE DRIVEN BELOW ELEV. 2555.9.

E.D. DENOTES EMBEDMENT DEPTH.

PROJECT NO. R-4047

HAYWOOD COUNTY

STATION: POC STA. 42+60.93 -L-
POT STA. 18+81.73 -RR-

SHEET 2 OF 5

STATE OF NORTH CAROLINA
DEPARTMENT OF TRANSPORTATION
RALEIGH

SHORING ELEVATION

ABUTMENT 1 AND PIER 1

REVISIONS						SHEET NO.
NO.	BY:	DATE:	NO.	BY:	DATE:	S-57
1			3			TOTAL SHEETS
2			4			60

DWG. 57 OF 60

Firm License No. C-1051
421 Fayetteville St,
Suite 400
Raleigh, NC 27601
T 919.380.8750
www.stewartinc.com

STEWART

NORTH CAROLINA PROFESSIONAL ENGINEER SEAL 11725 DAVID RUGGLES
6-6-14

DRAWN BY:	P. JACOB	DATE : 06/14
CHECKED BY:	D. RUGGLES	DATE : 06/14
DESIGN ENGINEER OF RECORD:	D. RUGGLES	DATE : 06/14

6/6/2014
...\57-Shoring_EB1_Elevation.dgn
USER:pjacob

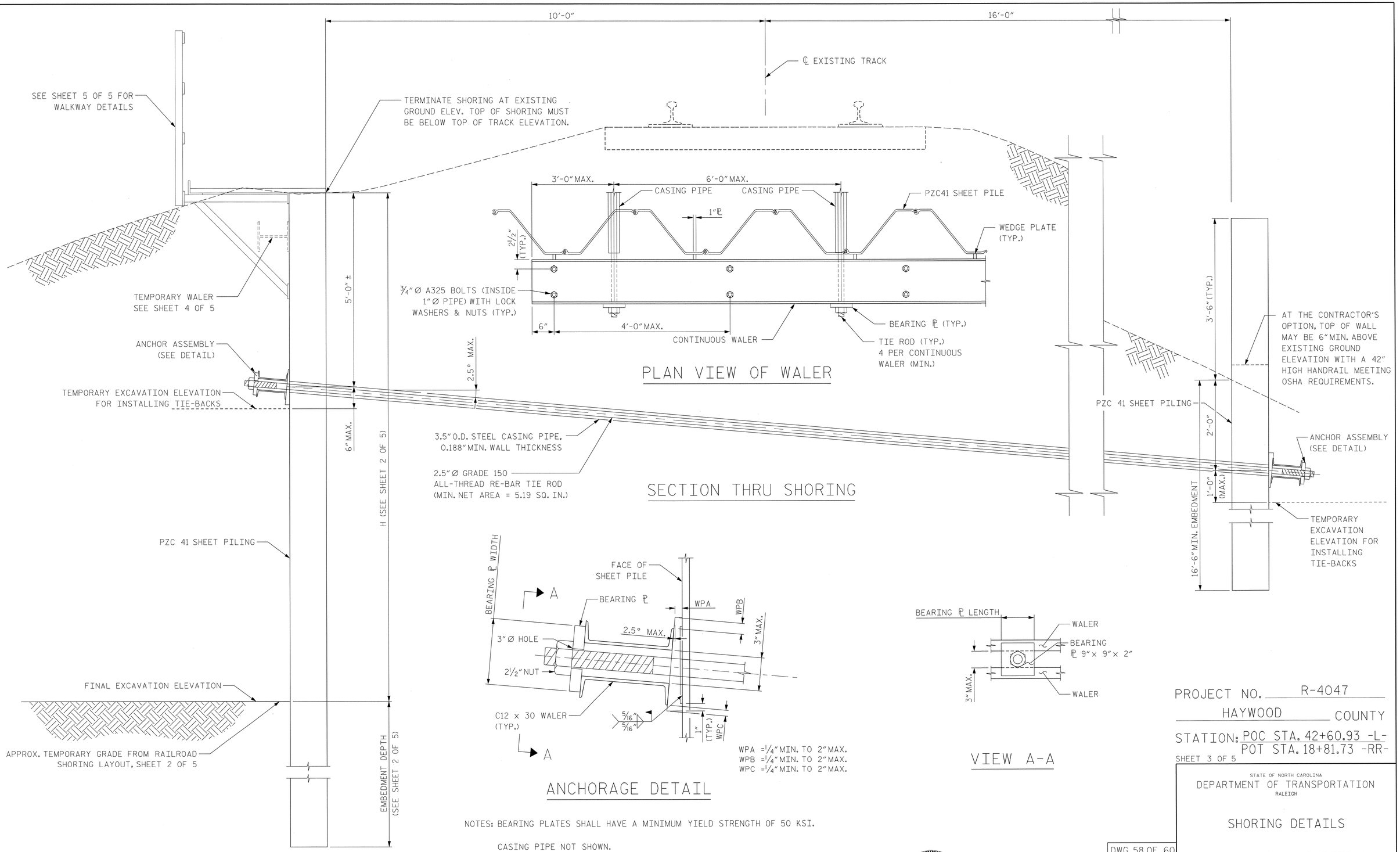

NOTES: BEARING PLATES SHALL HAVE A MINIMUM YIELD STRENGTH OF 50 KSI.

CASING PIPE NOT SHOWN.

CONTRACTOR TO EVALUATE EXISTING GROUND ELEVATIONS TO ESTABLISH CASING INCLINATION.

IF INCLINATION ANGLE IS ZERO, WEDGE PLATES MY BE ELIMINATED.

DRAWN BY:	P. JACOB	DATE :	06/14
CHECKED BY:	D. RUGGLES	DATE :	06/14
DESIGN ENGINEER OF RECORD:	D. RUGGLES	DATE :	06/14

NORTH CAROLINA ENGINEER SEAL 11725 DAVID R. RUGGLES 6-6-14

STEWART
Firm License No. C-1051
421 Fayetteville St,
Suite 400
Raleigh, NC 27601
T 919.380.8750
www.stewartinc.com

DWG. 58 OF 60

PROJECT NO. R-4047

HAYWOOD COUNTY

STATION: POC STA. 42+60.93 -L-
POT STA. 18+81.73 -RR-

SHEET 3 OF 5

STATE OF NORTH CAROLINA
DEPARTMENT OF TRANSPORTATION
RALEIGH

SHORING DETAILS

ABUTMENT 1 AND PIER 1

REVISIONS						SHEET NO.
NO.	BY:	DATE:	NO.	BY:	DATE:	S-58
1			3			TOTAL SHEETS
2			4			60

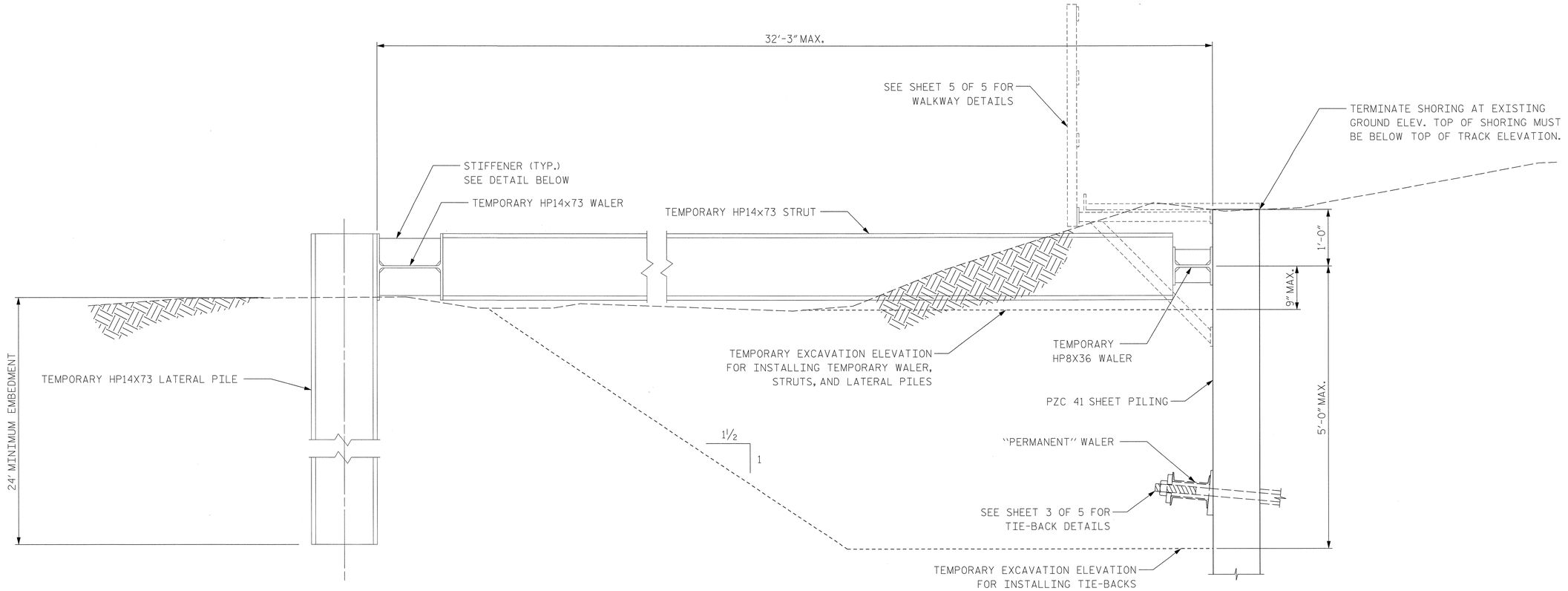

SECTION VIEW OF STRUT ASSEMBLY

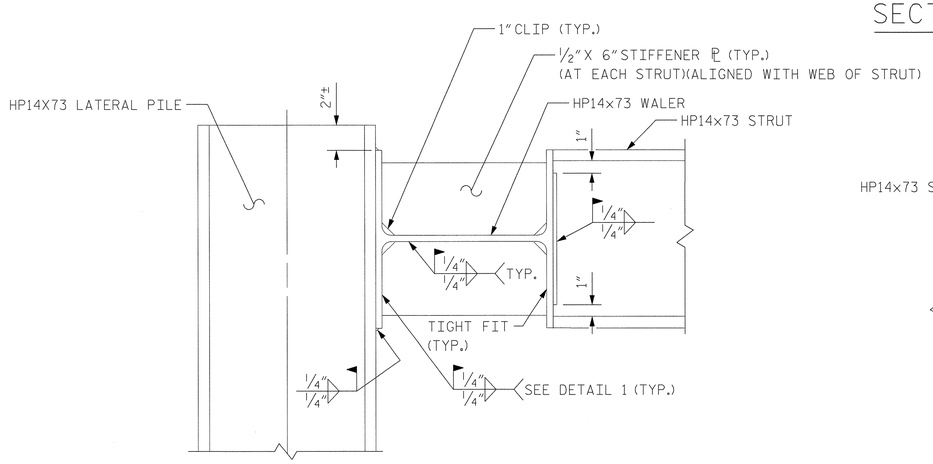

LATERAL PILE CONNECTION DETAILS

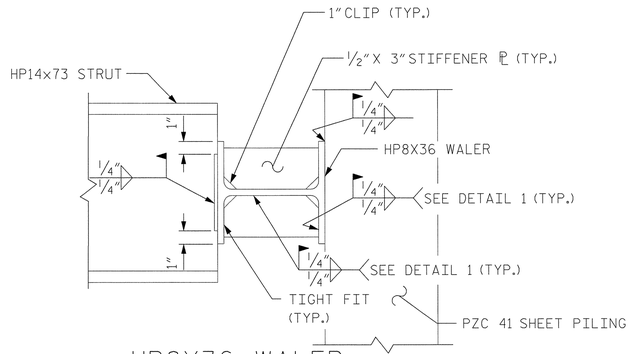

HP8X36 WALER CONNECTION DETAILS

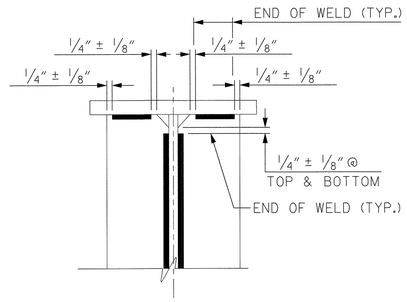

DETAIL 1

PROJECT NO. R-4047

HAYWOOD COUNTY

STATION: POC STA. 42+60.93 -L-
POT STA. 18+81.73 -RR-

SHEET 4 OF 5

STATE OF NORTH CAROLINA
DEPARTMENT OF TRANSPORTATION
RALEIGH

SHORING DETAILS

ABUTMENT 1 AND PIER 1

DWG. 58A OF 60

Firm License No. C-1051
421 Fayetteville St,
Suite 400
Raleigh, NC 27601
T 919.380.8750
www.stewartinc.com

STEWART

REVISIONS						SHEET NO.
NO.	BY:	DATE:	NO.	BY:	DATE:	S-58A
1			3			TOTAL SHEETS
2			4			60

DRAWN BY:	P. JACOB	DATE :	06/14
CHECKED BY:	D. RUGGLES	DATE :	06/14
DESIGN ENGINEER OF RECORD:	D. RUGGLES	DATE :	06/14

CONSTRUCTION SPECIFICATIONS:

NORTH CAROLINA DEPARTMENT OF TRANSPORTATION "STANDARD SPECIFICATIONS FOR ROADS AND STRUCTURES", JANUARY 2012 (HEREIN CALLED STANDARD SPECIFICATIONS).

DESIGN CRITERIA:

DESIGN IS IN ACCORDANCE WITH THE FOLLOWING:

1. NCDOT STRUCTURES DESIGN MANUAL DATED SEPTEMBER 2013
2. NORFOLK SOUTHERN CORPORATION'S "PUBLIC PROJECTS MANUAL"
3. CURRENT EDITION OF AREMA'S "MANUAL FOR RAILWAY ENGINEERING, VOL. 2, STRUCTURES"
4. AISC STEEL CONSTRUCTION MANUAL 14TH EDITION

UNLESS NOTED OTHERWISE, THE HORIZONTAL DEFLECTION OF THE WALLS SHALL NOT EXCEED 1 INCH.

THE DESIGN INCLUDES A LIVE LOAD SURCHARGE ALLOWANCE IN ACCORDANCE WITH AREMA ARTICLE 8-20.3.2.2. THE CONTRACTOR IS RESPONSIBLE FOR DETERMINING THE ADEQUACY OF THE WALL WITH RESPECT TO ANY ADDITIONAL LOADS RESULTING FROM THE CONTRACTOR'S CONSTRUCTION PROCEDURES OR OPERATIONS.

PLAN DIMENSIONS:

ALL DIMENSIONS IN THESE PLANS ARE MEASURED HORIZONTALLY (LEVEL) OR VERTICALLY (PLUMB) UNLESS OTHERWISE NOTED. DO NOT SCALE DRAWINGS. IF DIMENSIONS ARE IN QUESTION,CONTACT THE ENGINEER BEFORE CONTINUING WITH CONSTRUCTION.

STRUCTURAL STEEL:

STEEL PILE:	ASTM A572 OR A709, GRADE 50
WALERS:	ASTM A572 OR A709, GRADE 50
PLATES:	ASTM A572 OR A709, GRADE 50
HSS:	ASTM A500 GRADE B
ANGLES:	ASTM A36
BOLTS:	ASTM A325, TYPE I
ANCHOR NUTS:	STANDARD HEAVY DUTY HEXAGON HEAD TYPE CONFORMING TO ASTM A29 GRADE C-1045 GALVANIZE TIES, BOLTS, NUTS, AND WASHERS.

WELDING:

1. WELD METAL TO BE E70XX
2. WELDING DERAILS AND OPERATIONS SHALL BE IN ACCORDANCE WITH THE CURRENT EDITION OF THE AASHTOI AWS D1.5 BRIDGE WELDING CODE.
3. WELDS REQUIRING NON-DESTRUCTIVE TESTING SHALL BE TESTED IN ACCORDANCE WITH AASHTOI AWS D1.5 BRIDGE WELDING CODE.

CORROSION PROTECTION:

1. UNLESS NOTED OTHERWISE, NO CORROSION PROTECTION MEASURES ARE REQUIRED.
2. SECTION PROPERTIES DO NOT INCLUDE SACRIFICIAL THICKNESS FOR THE TEMPORARY WALL.

WALL DATA:

SHEET PILE WALL REQUIREMENTS DETAILED IN THE PLANS HAVE BEEN DESIGNED AS PER THE SOIL PROPERTIES:
SOIL UNIT WEIGHT = 120 PCF
SOIL FRICTION ANGLE = 30.0 DEGREES
IF FIELD CONDITIONS DIFFER FROM THOSE SHOWN, THE ENGINEER SHALL BE NOTIFIED AND WALL REDESIGN CONSIDERED.

ANCHORS:

THE ANCHOR FORCE IS GIVEN ALONG THE BAR (RESULTANT FORCE) UNLESS NOTED OTHERWISE. THE ANCHOR VERTICAL INSTALLATION ANGLE MUST BE WITHIN THE RANGE FROM 0 DEGREES TO 2.5 DEGREES (PERPENDICULAR TO WALL ALIGNMENT) AND THE HORIZONTAL INSTALLATION IS 0 DEGREES (PERPENDICULAR TO WALL ALIGNMENT).

THE SERVICE ANCHOR FORCE (ANCHOR DESIGN LOAD) ASSUMES LOAD FACTORS EQUAL TO 1.0 FOR ALL INCLUDED LOADS.

THE ANCHOR FORCE IS BASED ON THE MAXIMUM ANCHOR SPACING SHOWN ON PLANS. ANY ADJUSTMENTS TO THE ANCHOR SPACING OR THE ANCHOR VERTICAL INSTALLATION ANGLE (OUTSIDE OF 0° TO 2.5°) WILL REQUIRE MODIFICATIONS TO THE ANCHOR FORCE, WALER STRUCTURAL SECTION AND CONNECTIONS WHICH SHALL BE APPROVED BY THE ENGINEER.

ANCHOR BAR TYPE: DEFINITION OF ANCHOR BAR TYPE (UNLESS OTHERWISE NOTED): ANCHOR BAR TYPE IS ASTM A722, GRADE 150 KSI (AASHTO M275). ANCHOR BARS SHALL BE IN ACCORDANCE WITH CURRENT "RECOMMENDATIONS FOR PRESTRESSED ROCK AND SOIL ANCHORS" FROM THE POST-TENSIONING INSTITUTE.

CONSTRUCTION:

THE CONTRACTOR IS RESPONSIBLE FOR THE SAFETY AND STABILITY OF THE STRUCTURE AT EACH STAGE OF CONSTRUCTION.

THE CONTRACTOR IS RESPONSIBLE TO COORDINATE INSTALLATION OF FEATURES SUCH AS PILES, SHAFTS, DRAINAGE PIPES, DRAINAGE STRUCTURES, ETC. WITHIN THE ANCHORED REGION OF THE WALL TO ENSURE THE STRUCTURAL INTEGRITY OF THE ANCHORED WALL SYSTEM.

EXISTING OR PROPOSED FEATURES (INCLUDING BUT NOT LIMITED TO CONDUIT,PIPING, UTILITY LINES, EXISTING STRUCTURES) WHICH INTERFERE WITH THE INSTALLATION OF THE WALL SHALL BE LOCATED AND COORDINATED PRIOR TO THE START OF CONSTRUCTION BY THE CONTRACTOR.

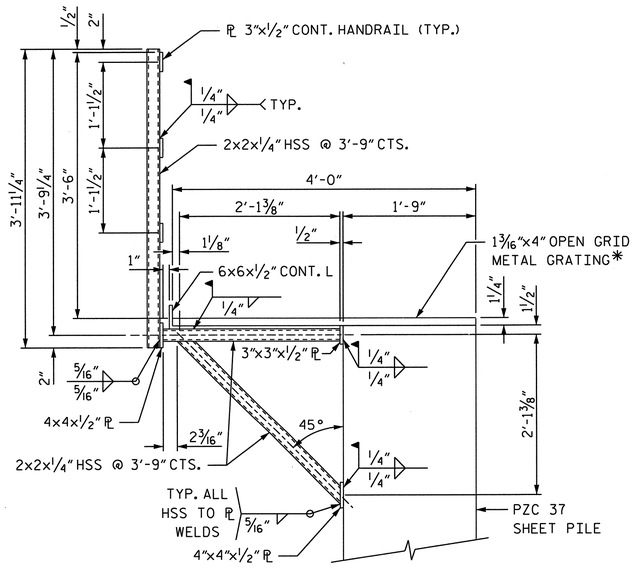

WALKWAY DETAIL

*OPEN GRID METAL GRATING SHALL BE SERRATED AND SHALL BE WELDED SECURELY TO SUPPORT ANGLE AND SHEET PILING.

CONSTRUCTION ENGINEERING NOTE:
CONSTRUCTION ENGINEERING FOR DETAILS NOT PROVIDED IN THESE PLANS SHALL BE THE RESPONSIBILITY OF THE CONTRACTOR. ALL CONSTRUCTION ENGINEERING SHALL BE PERFORMED BY A NORTH CAROLINA PROFESSIONAL ENGINEER. ALL CONSTRUCTION ENGINEERING MUST BE SUBMITTED TO THE ENGINEER FOR REVIEW.

TIE RODS SHALL BE LOCATED BY THE CONTRACTOR TO SATISFY MAXIMUM SPACING OF TIE RODS.

THE DESIGN OF THE TEMPORARY WALL IS BASED ON THE ASSUMPTION THAT EXCAVATION WILL EXTEND NO DEEPER THAN THE EXCAVATION ELEVATION. IF A CONDITION OTHER THAN THAT DETAILED EXISTS, THE ENGINEER SHALL BE CONTACTED TO DETERMINE THE NEED FOR MODIFICATIONS.

IF THE CONTRACTOR CANNOT DRIVE THE PILING TO THE MINIMUM EMBEDMENT DEPTH, THE ENGINEER SHALL BE CONTACTED TO DETERMINE THE NEED FOR MODIFICATIONS.

THE CONTRACTOR IS RESPONSIBLE FOR WATER RETENTION DURING CONSTRUCTION. UNLESS OTHERWISE NOTED THE CONTRACTOR SHALL ENSURE THE WATER LEVEL ON BOTH SIDES OF THE WALL IS LOWER THAN THE EXCAVATION LEVEL ANYTIME DURING THE CONSTRUCTION, IMPLEMENTING TEMPORARY DEWATERING OR OTHER WATER CONTROL MEASURES AS NEEDED.

UNLESS OTHERWISE NOTED THE WALER STRUCTURAL SECTION SHALL BE CONTINUOUS ACROSS A MINIMUM OF 4 ANCHORS. SHOP OR FIELD SPLICES OF WALER ARE SUBJECT TO THE "CONSTRUCTION ENGINEERING NOTE".

THE CONTRACTOR SHALL BE RESPONSIBLE FOR THE SPECIFIC CONSTRUCTION SEQUENCE OF THE SHEET PILE WALL. THE CONTRACTOR SHALL CONFORTM TO GENERAL CONSTRUCTION SEQUENCE SHOWN ON SHEET 1 OF 5.

DRAWN BY: P. JACOB DATE : 04/14
CHECKED BY: D. RUGGLES DATE : 04/14
DESIGN ENGINEER OF RECORD: D. RUGGLES DATE : 04/14

NORTH CAROLINA PROFESSIONAL SEAL 11725 ENGINEER DAVID R. RUGGLES
5-01-14

STEWART
Firm License No. C-1051
421 Fayetteville St,
Suite 400
Raleigh, NC 27601
T 919.380.8750
www.stewartinc.com

PROJECT NO. R-4047
HAYWOOD COUNTY
STATION: POC STA. 42+60.93 -L-
POT STA. 18+81.73 -RR-
SHEET 5 OF 5

STATE OF NORTH CAROLINA
DEPARTMENT OF TRANSPORTATION
RALEIGH

SHORING NOTES

ABUTMENT 1 AND PIER 1

REVISIONS						SHEET NO.
NO.	BY:	DATE:	NO.	BY:	DATE:	S-59
1			3			TOTAL SHEETS
2			4			60

DWG. 59 OF 60

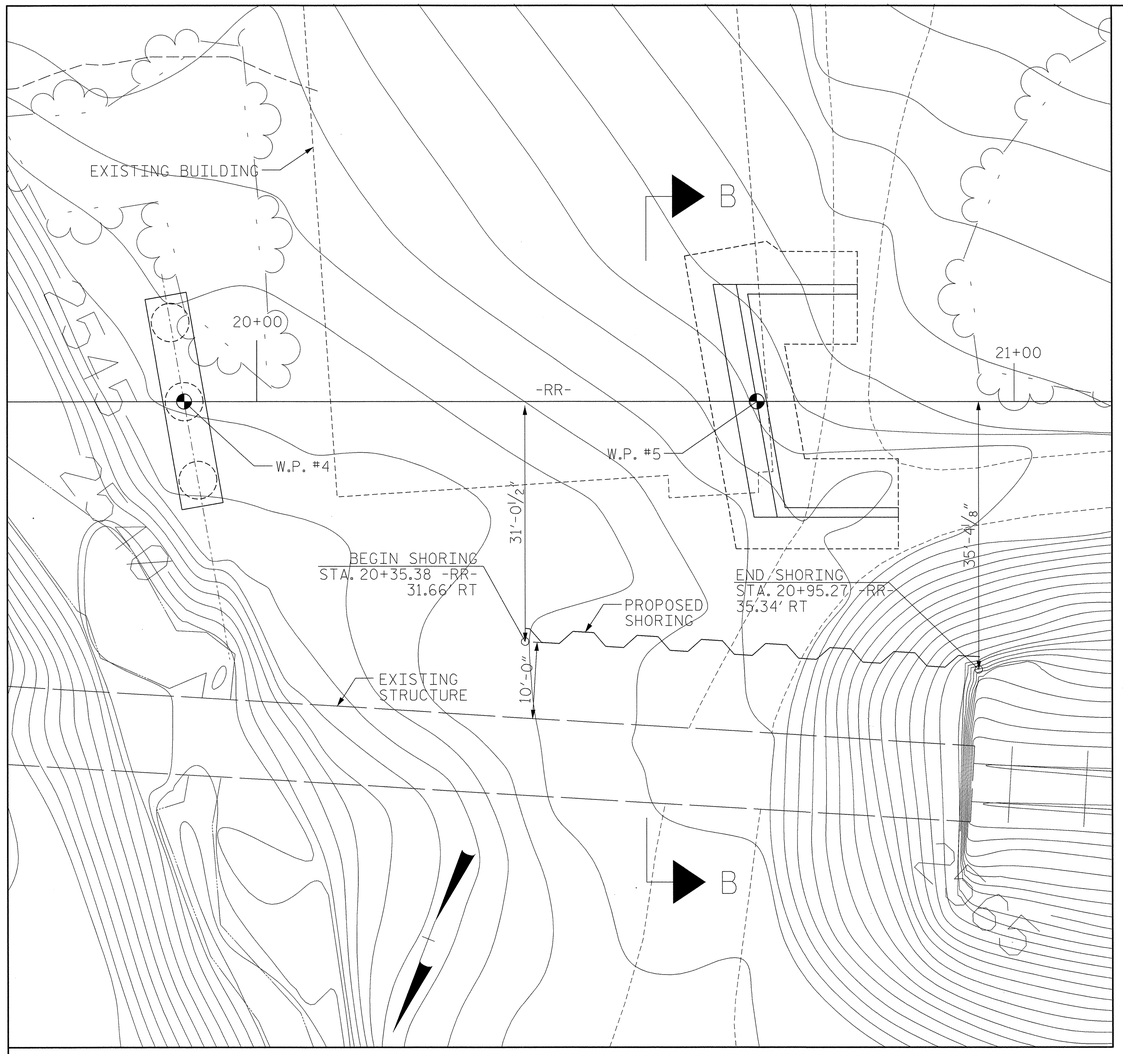

SHORING PLAN AT ABUTMENT 2

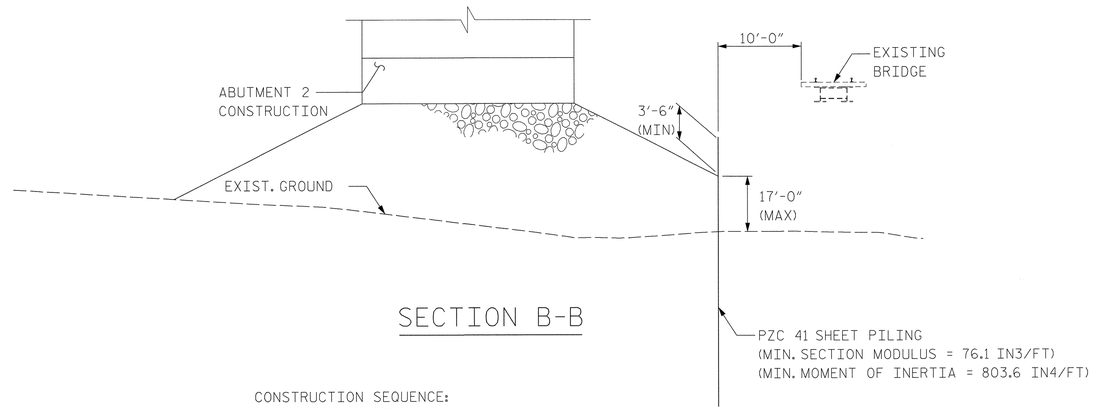

SECTION B-B

CONSTRUCTION SEQUENCE:

1. PLACE SHORING
2. PLACE RAILROAD EMBANKMENT
3. CONSTRUCT PROPOSED BRIDGE, TRACKWORK GRADING AND SUBBALLAST. PROVIDE NS 6 MONTH ADVANCE NOTICE FOR TRACKWORK
4. NS FORCES TO INSTALL BALLAST, TRACK, AND CUT AND THROW TO NEW ALIGNMENT.
5. CONTRACTOR TO REMOVE EXISTING TRACK AND TIES, AND EXISTING BRIDGE.
6. PLACE REMAINING EMBANKMENT IN FRONT OF SHORING.
7. REMOVE SHORING AND PERFORM FINAL GRADING.

NOTES:

SHORING FROM STA. 20+35.38 -RR- TO STA. 20+85 -RR- SHALL BE EMBEDDED A MINIMUM OF 33' BELOW THE EXISTING GROUND SURFACE.

SHORING FROM STA. 20+85 -RR- TO 20+95.27 -RR- SHALL BE EMBEDDED A MINIMUM OF 25' BELOW THE EXISTING GROUND SURFACE.

FOR TEMPORARY RAILROAD SHORING, SEE SPECIAL PROVISIONS.

CONTRACTOR IS ALLOWED TO SUBSTITUTE AN ALTERNATIVE SHEET PILE SECTION PROVIDED THAT THE SECTION MODULUS IS GREATER THAN THE PZC41 SHEET PILE SECTION AND SUBJECT TO THE APPROVAL OF THE ENGINEER.

STEEL SHEET PILING REQUIRED FOR SHORING SHALL BE HOT ROLLED. ALL SHEET PILES SHALL BE IN A NEW CONDITION.

THE CONTRACTORS ATTENTION IS CALLED TO THE FACT THAT THE SHORING AND EXCAVATION PLANS HAVE BEEN SUBMITTED TO THE RAILROAD BY THE STATE. AS OF THE TIME OF PLAN PRINTING FOR ADVERTISEMENT FOR BIDS, RAILROAD APPROVAL HAS NOT BEEN RECEIVED. WHEN SUCH APPROVAL IS RECEIVED, THE CONTRACTOR WILL BE NOTIFIED BY ADDENDUM. IN THE EVENT RAILROAD APPROVAL IS NOT GIVEN PRIOR TO SUBMISSION OF BIDS, THE CONTRACTOR SHALL SUBMIT BIDS BASED ON THE CONTRACT PLANS. THE CONTRACTOR SHALL NOT BEGIN EXCAVATION AT THE LOCATIONS SHOWN ON THESE PLANS UNTIL NOTIFIED OF RAILROAD APPROVAL.

PROJECT NO. R-4047

HAYWOOD COUNTY

STATION: POC STA. 42+60.93 -L-
POT STA. 18+81.73 -RR-

STATE OF NORTH CAROLINA
DEPARTMENT OF TRANSPORTATION
RALEIGH

SHORING PLAN

ABUTMENT 2

DRAWN BY: P. JACOB DATE : 06/14
CHECKED BY: D. RUGGLES DATE : 06/14
DESIGN ENGINEER OF RECORD: D. RUGGLES DATE : 06/14

NORTH CAROLINA SEAL 11725 ENGINEER DAVID T. RUGGLES

STEWART
Firm License No. C-1051
421 Fayetteville St,
Suite 400
Raleigh, NC 27601
T 919.380.8750
www.stewartinc.com

DWG. 60 OF 60

REVISIONS						SHEET NO.
NO.	BY:	DATE:	NO.	BY:	DATE:	S-60
1			3			TOTAL SHEETS
2			4			60

PROJECT REFERENCE NO.	SHEET NO.
R-4047	TW-1
MILEPOST: T-24.3	

STEWART

ROADWAY DESIGN ENGINEER — NORTH CAROLINA PROFESSIONAL ENGINEER SEAL 11725 DAVID R. RUGGLES — 5-5-14

HYDRAULICS ENGINEER — NORTH CAROLINA PROFESSIONAL ENGINEER SEAL 5/3/14 TIMOTHY R. SUMMERVILLE

STATE OF NORTH CAROLINA
DIVISION OF HIGHWAYS

R-4047 TRACKWORK

INDEX OF SHEETS

SHEET NUMBER	SHEET
TW-1	INDEX OF SHEETS
TW-2	DRAINAGE SUMMARY AND EARTHWORK SUMMARY
TW-3	TYPICAL SECTIONS
TW-4 THRU TW-7	PLAN / PROFILE SHEETS
TW-8 THRU TW-24	CROSS-SECTIONS

ESTIMATED QUANTITES - TRACKWORK

SEC	PAY ITEM DESCRIPTION	UNIT	QUANTITY
200	CLEARING & GRUBBING 0.6 ACRE	ACR	1
225	UNCLASSIFIED EXCAVATION	CY	29,627
226	SUPPLEMENTARY CLEARING AND GRUBBING	ACR	1
240	DRAINAGE DITCH EXCAVATION	CY	160
300	FOUNDATION CONDITIONING MATERIAL MINOR STR.	TON	20
300	FOUNDATION CONDITIONING GEOTEXTILE	SY	50
SP	36" WELDED STEEL PIPE (UNDER TRACKS)	LF	129
520	SUBBALLAST	TON	2242
838	ENDWALL	CY	3.4
876	RIP RAP CLASS B	TON	35
876	GEOTEXTILE FOR DRAINAGE	SY	75

GRAPHIC SCALES

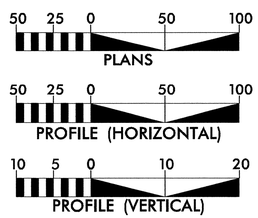

50 25 0 50 100
PLANS

50 25 0 50 100
PROFILE (HORIZONTAL)

10 5 0 10 20
PROFILE (VERTICAL)

REVISIONS

8/17/99

5/5/2014

4/24/06

COMPUTED BY: BRC DATE: 9-13
CHECKED BY: DRR DATE: 9-13

STATE OF NORTH CAROLINA
DIVISION OF HIGHWAYS

PROJECT REFERENCE NO.	SHEET NO.
R-4047	TW-2

LIST OF PIPES, ENDWALLS, ETC. (FOR PIPES 48" & UNDER)

| STATION | LOCATION (LT,RT, OR CL) | STRUCTURE NO. FROM | STRUCTURE NO. TO | TOP ELEVATION | INVERT ELEVATION | INVERT ELEVATION | SLOPE CRITICAL | CLASS IV R.C. PIPE (UNLESS NOTED OTHERWISE) 12" | 15" | 18" | 24" | 30" | 36" | 42" | 48" | BITUMINOUS COATED C.S. PIPE TYPE B (UNLESS NOTED OTHERWISE) 12" | 15" | 18" | 24" | 30" | 36" | 42" | 48" | CLASS III R.C. PIPE OR ALUMINIZED C.S. PIPE, TYPE IR OR HDPE PIPE, TYPE S OR D 12" | 15" | 18" | 24" | 30" | 36" | 42" | 48" | 36" WELDED STEEL PIPE (0.5" THICKNESS) | 18" SIDE DRAIN PIPE | 24" SIDE DRAIN PIPE | ENDWALLS STD. 838.01, STD. 838.11 OR STD. 838.80 (UNLESS NOTED OTHERWISE) CU. YDS. R.C.P. | CU. YDS. C.S.P. | QUANTITIES FOR DRAINAGE STRUCTURES * TOTAL L.F. FOR PAY QUANTITY SHALL BE COL. 'A' + (1.3 X COL.'B') PER EACH (0' THRU 5.0') | LIN. FT. A 5.0' THRU 10.0' | LIN. FT. B 10.0' AND ABOVE | C.B. STD. 840.01 OR STD. 840.02 | FRAME, GRATES AND HOOD STANDARD 840.03 TYPE OF GRATE E | F | G | SPRING BOX STD. 840.41 | D.I. STD. 840.14 OR STD. 840.15 | D.I. FRAME & GRATE STD. 840.16 | G.D.I. TYPE "A" STD. 840.17 OR 840.26 | G.D.I. TYPE "B" STD. 840.18 OR 840.27 | G.D.I. TYPE "D" STD. 840.19 OR 840.28 | G.D.I. FRAME WITH GRATE STD. 840.22 | G.D.I. FRAME WITH TWO GRATES STD. 840.22 | G.D.I. FRAME WITH GRATE STD. 840.24 | G.D.I. (N.S.) FRAME WITH TWO GRATES STD. 840.24 | G.D.I. (N.S.) FRAME WITH TWO GRATES STD. 840.24 | T.B.J.B. STD. 840.34 | CORR. STEEL ELBOWS NO. & SIZE | CONC. COLLARS CL. "B" C.Y. STD 840.72 | CONC. & BRICK PIPE PLUG, C.Y. STD. 840.71 | PIPE REMOVAL LIN.FT. | REMARKS |
|---|---|---

STEWART	PROJECT REFERENCE NO.	SHEET NO.
	R-4047	TW-3
	MILEPOST: T-24.3	
	ROADWAY DESIGN ENGINEER	HYDRAULICS ENGINEER
	5-5-14	5/5/14

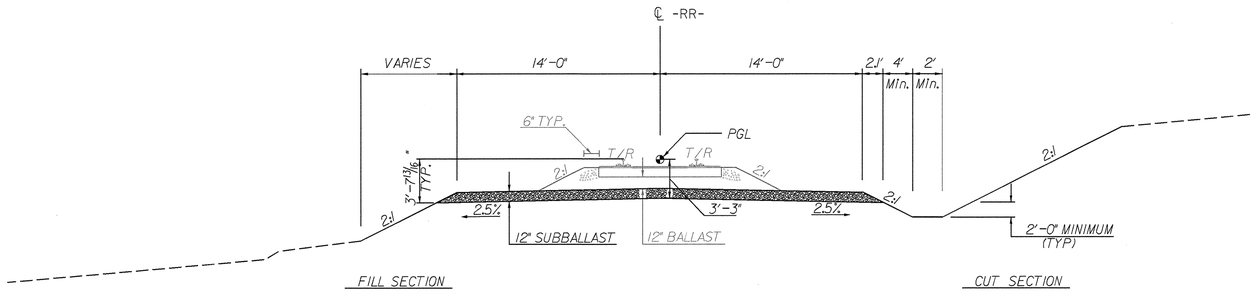

TYPICAL SECTION # 1

-RR- STA.10+00.00 TO STA.11+00.00
-RR- STA.13+24.00 TO STA.17+86.75
-RR- STA.20+66.00 TO STA.22+47.25

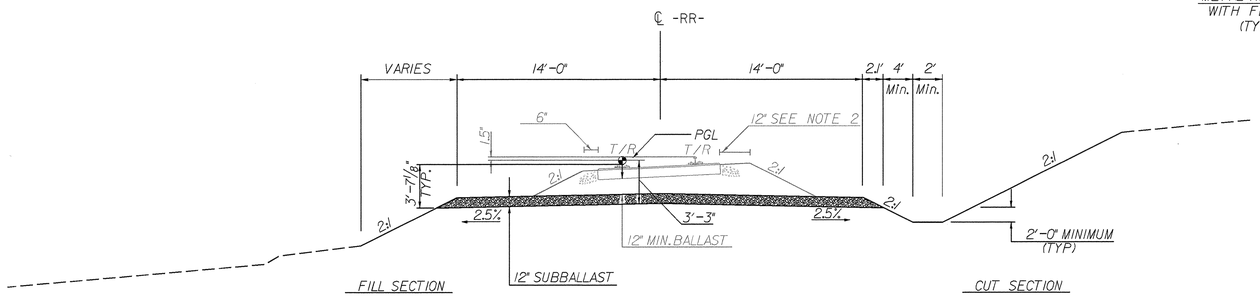

TYPICAL SECTION # 2

-RR- STA.11+00.00 TO STA.13+24.00
-RR- STA.22+47.25 TO STA.31+12.18

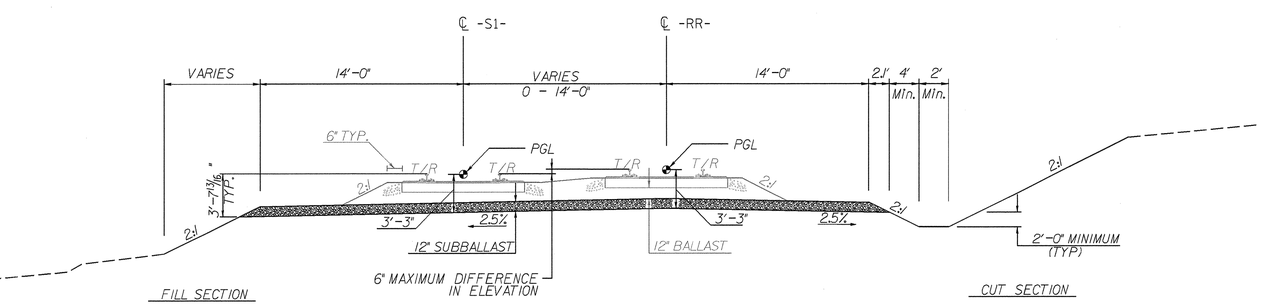

TYPICAL SECTION # 3

-RR- STA.31+12.18 TO STA.34+40.00

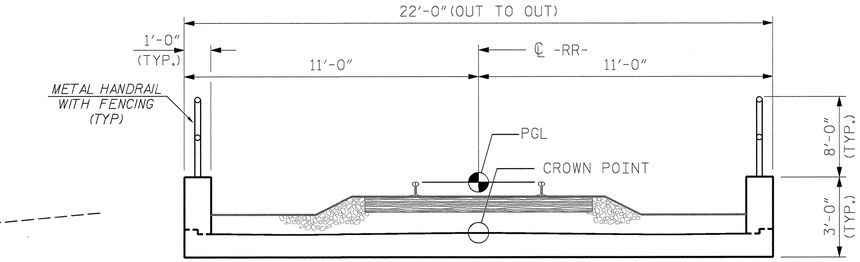

BRIDGE TYPICAL SECTION

-RR- STA.17+86.75 TO STA.20+66.00

NOTES:

1) ON CURVES, THE TRACK PROFILE IS THE ELEVATION OF THE TOP OF THE LOW RUNNING RAIL.

2) EXTEND 12" SHOULDER BALLAST 100 FEET INTO TANGENT SECTION

3) ALL TRACK CONSTRUCTION, INCLUDING BALLASTING AND RAIL INSTALLATION, WILL BE PERFORMED BY NS (ELEMENTS TO BE INSTALLED BY NS ARE SHOWN IN GRAY ON THIS SHEET).

4) CONTRACTOR SHALL PROVIDE ENGINEER & NS WITH A SIX (6) MONTH NOTICE TO THE TIME THAT CONTRACTOR WANTS NS RAILWAY WORK COMPLETED.

REVISIONS

8/17/99

5/5/2014
...\Proj\r4047_RR_PSH_03.dgn
USERdruggles

-RR- CURVE DATA			
PIs Sta 8+87.42 Θs = 0° 13' 14.7" Ls = 62.00' LT = 41.33' ST = 20.67' Eq = Existing S.E. = Existing DS = 25 MPH	PIs Sta 11+95.08 Θs = 0° 27' 54.0" Ls = 62.00' LT = 41.33' ST = 20.67' Eq = I" Eu = I" S.E. = I" DS = 25 MPH	PI Sta 12+74.29 Δ = 1° 45' 22.2" (LT) D = 1° 30' 00.0" L = 117.08' T = 58.54' R = 3,819.83' Eq = I" Eu = I" S.E. = I" DS = 25 MPH	PIs Sta 13+53.49 Θs = 0° 27' 54.0" Ls = 62.00' LT = 41.33' ST = 20.67' Eq = I" Eu = I" S.E. = I" DS = 25 MPH
CHORD DEFINITION			
NOTE: EXISTING RAIL ALIGNMENT BACK OF STA.8+66.75 IS A CURVE WITH RADIUS = 8046.32'			

STEWART

Firm License No. C-1681
421 Fayetteville St.
Suite 1100
Raleigh, NC 27601
T: 919.380.8750
www.stewartinc.com

PROJECT REFERENCE NO.	SHEET NO.
R-4047	TW-4
MILEPOST: T-24.3	

ROADWAY DESIGN ENGINEER

NORTH CAROLINA PROFESSIONAL ENGINEER SEAL 17725 DAVID R. RUGGLES

5-5-14

HYDRAULICS ENGINEER

NORTH CAROLINA PROFESSIONAL ENGINEER SEAL 35443 TIMOTHY E. SUMMERVILLE

REVISIONS

8/17/99

HAYWOOD COUNTY, A BODY POLITIC AND CORPORATE DB 790 PG 1285

THOMAS H. MCLEOD DB 739 PG 1039

THOMAS H. MCLEOD DB 739 PG 1039

HAYWOOD COUNTY, A BODY POLITIC AND CORPORATE DB 790 PG 1285

ST Sta. 9+28.75-RR-

CS Sta. 8+66.75-RR-

SC Sta. 12+15.75-RR-

TS Sta. 11+53.75-RR-

ST Sta. 13+94.83-RR-

CS Sta. 13+32.83-RR-

RAILROAD R/W = PROPERTY LINE

EXISTING R/W

NORFOLK SOUTHERN CORPORATION DB 6 PG 55

SR 1526 CARLEY ROAD

NORFOLK SOUTHERN RR

S 77° 43' 22.4" W

BEGIN CONSTRUCTION
TIE TO EXISTING TRACK
-RR- CS STA.8+66.75

LINE AND SURFACE EX. TRACK
CUT AND THROW EX. TRACK INTO PROP. TRACK

CONSTRUCT
PROPOSED TRACK

EXISTING TRACK TO BE REMOVED

NORFOLK SOUTHERN CORPORATION DB 6 PG 55

BEGIN BRIDGE
-RR- STA.17+86.75

SALLY FULTZ HENLEY
MARGARET ELAINE FULTZ
2004E PG 267
DB 475 PG 523
DB 256 PG 495

S 69° 02' 12.4" W

SEE BRIDGE PLANS FOR PROPOSED STRUCTURE DETAILS

CRABTREE ROAD

NORTH CAROLINA DEPARTMENT OF TRANSPORTATION DB 428 PG 107

MATCHLINE SEE SHEET TW-5
STA. 19+00.00 -RR-

FOR RIGHT OF WAY PARCEL NUMBERS AND OFFSETS, SEE ROADWAY PLANS

ENLOE BARBARA POTTS
ENLOE SAMUEL POTTS
2010E PG 01
DB 162 PG 107

PRIVATE 30' ROAD R/W

LONG'S CHAPEL UNITED METHODIST CHURCH
DB 796 PG 204
DB 600 PG 2137

PLE

PUE

BEGIN GRADE
TIE TO EXISTING GRADE
-RR- Sta.8+66.75
EL.2,592.60

LINE AND SURFACE EXISTING TRACK
CUT AND THROW EXISTING TRACK INTO PROPOSED TRACK

CONSTRUCT
PROPOSED TRACK

(-)1.8911%

(-)1.7778%

PVC = 10+38.00

PVI = 10+88.00

PVT = 11+38.00

PVC = 12+38.00

13+90.00

PI = 10+88.00
EL = 2,588.42'
VC = 100'
r = 0.11

PROPOSED TOP OF RAIL

EXISTING GROUND

BEGIN BRIDGE
Sta.17+86.75

2,578.94

PROP.T/R 2,589.86

EXIST.T/R 2,590.15

2,596.21	2,597.12	2,596.04	2,594.96	2,593.94	2,592.90	2591.97 2,591.88	2591.03 2,590.88	2590.08 2,589.91	2,589.14 2,588.99	2,588.21 2,588.09	2,587.31 2,587.20	2,586.42 2,586.35	2,585.54 2,585.54	2,584.69 2,584.75	2,583.90 2,583.95	2,583.16 2,583.15	2,582.48 2,582.33	2,581.86	2,581.29	2,580.78	2,580.32	2,579.92	2,579.57	2,579.28	2,579.05	2,578.87

6		7		8		9		10		11		12		13		14		15		16		17		18		19

5/5/2014
K:\Proj\R-4047_RR_PSH_04.dgn
USER:dgl_wgoles

STEWART
Firm License No. C-1051
421 Fayetteville St.
Suite 400
Raleigh, NC 27601
T 919.890.3750
www.stewartinc.com

PROJECT REFERENCE NO.	SHEET NO.
R-4047	TW-5

MILEPOST: T-24.3

ROADWAY DESIGN ENGINEER

NORTH CAROLINA PROFESSIONAL SEAL 11725 ENGINEER DAVID R. RUGG

6-6-14

HYDRAULICS ENGINEER

NORTH CAROLINA PROFESSIONAL SEAL 036418 ENGINEER JOHN R. SUMMERVILLE

6/6/14

REVISIONS

8/17/99

MATCHLINE SEE SHEET 4
STA. 19+00.00 -RR-

MATCHLINE SEE SHEET 6
STA. 31+00.00 -RR-

CONSTRUCTION

STANDARD BASE DITCH
SEE DETAIL 2

36" SMOOTH STEEL PIPE

END BRIDGE
-RR- STA. 20+66.00

SC Sta. 23+40.25-RR-

TS Sta. 22+47.25-RR-

CS Sta. 30+19.19-RR-

PRIVATE 16' ROAD R/W

LATERAL BASE DITCH
SEE DETAIL 1

EXISTING BRIDGE
TO BE REMOVED

HAYWOOD CONTRACTING COMPANY, INC.
DB 177 PG 453
DB 196 PG 352

DITCH DAYLIGHTS
-RR- Sta. 23+75 +/-

TYPICAL BASE DITCH

ACCESS ROAD SR 1375

SR 1376 COUNTY ROAD

LAKEVIEW DRIVE

SOUTH LAKESHORE DRIVE

PRIVATE R/W WIDTH

EXISTING TURNOUT
TO BE REMOVED

RETAINING WALL
SEE GEOTECHNICAL PLANS

CONSTRUCT
PROPOSED TRACK

LINE AND SURFACE EX TRACK
CUT AND THROW EX TRACK INTO PROP TRACK

29+00.00

JOANNE T. PERRY
DB 1747 PG 1450
DB 1747 PG 1450

WALTER A. BANYON
DB 476 PG 596

JUDY ANN HALL CAGLE, DOYE WILSON
99E PG 463
99E PG 7
DB 200 PG 7

RUTH CLARK
DB 185 PG 41

KEITH J. MCKINNISH
KELLIM MCKINNISH
DB 740 PG 1017

T. PAUL STARNES, JR.
DB 717 PG 1445

GEORGE M. HOWEY
DB 179 PG 298

NORFOLK SOUTHERN CORPORATION
DB 6 PG 55

POTTS, BILL HEIRS
ENLOE, BARBRA POTTS
2010E PG 01
DB 456 PG 201
DB 109 PG 31
DB 192 PG 349

LAKEWONT, LLC
DB 2427 PG 386

HAYWOOD CONTRACTING CO INC
DB 2856 PG 553

DETAIL 1
LATERAL BASE DITCH
(Not to Scale)

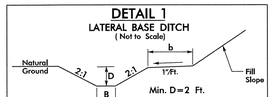

Min. D=2 Ft.
B=2 Ft.
b=5 Ft.

FROM -RR- STA. 21+50 TO STA. 23+00 LT

DETAIL 2
STANDARD BASE DITCH
(Not to Scale)

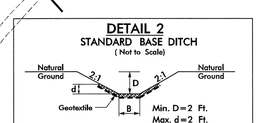

Min. D=2 Ft.
Max. d=2 Ft.
B=2 Ft.
*When B is < 6.0'

Type of Liner= Class B Rip-Rap

FROM STA. 19+60 -RR- TO STA.23+20 -RR-

-RR- CURVE DATA

PIs Sta 23+09.26	PI Sta 27+07.95	PIs Sta 30+50.20
Θs = 3° 43' 01.1"	Δ = 54° 18' 54.4" (LT)	Θs = 3° 43' 01.1"
Ls = 93.00'	D = 8° 00' 00.0"	Ls = 93.00'
LT = 62.01'	L = 678.94'	LT = 62.01'
ST = 31.01'	T = 367.70'	ST = 31.01'
Ea = 1.5"	R = 716.78'	Ea = 1.5"
Eu = 1"	Ea = 1.5"	Eu = 1"
S.E. = 1.5"	Eu = 1"	S.E. = 1.5"
DS = 25 MPH	S.E. = 1.5"	DS = 25 MPH
	DS = 25 MPH	

CHORD DEFINITION

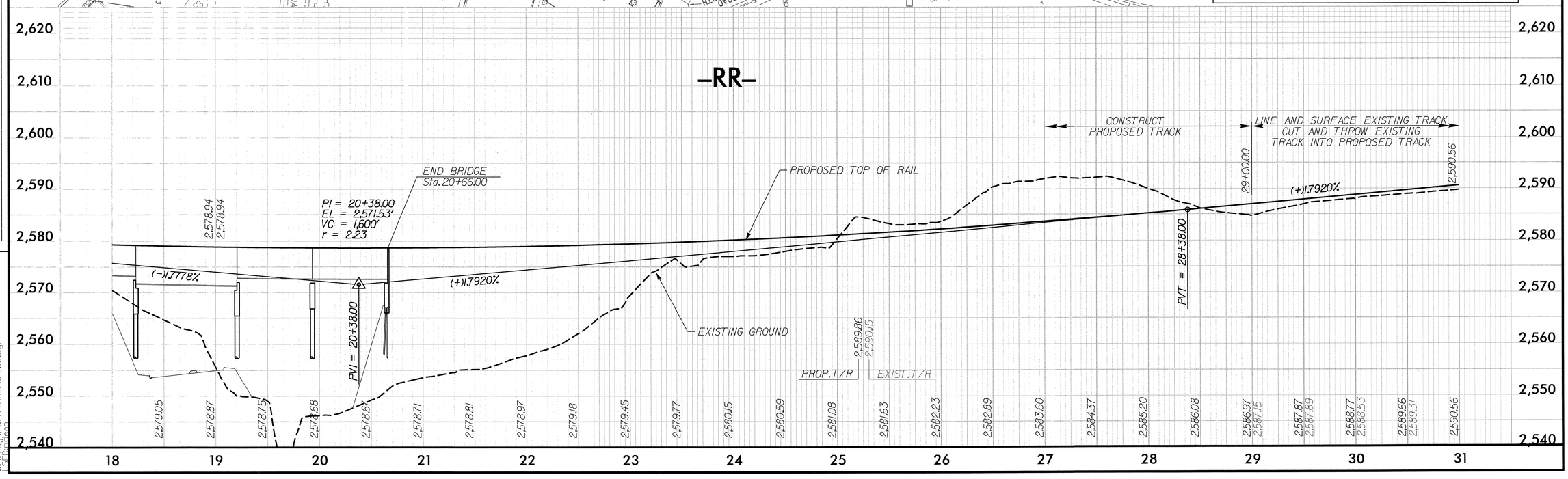

6/6/2014
\\Projects\R-4047_RR_PSH_05.dgn
jstephenson

PROJECT REFERENCE NO.	SHEET NO.
R-4047	TW-6

MILEPOST: T-24.3

ROADWAY DESIGN ENGINEER — NORTH CAROLINA PROFESSIONAL ENGINEER 11725 DAVID R. RUGGLES — 5-5-14

HYDRAULICS ENGINEER — NORTH CAROLINA PROFESSIONAL ENGINEER SEAL 5 13/14 TIMOTHY R. SUMMERVILLE

STEWART

MATCHLINE SEE SHEET 5
STA. 31+00.00 -RR-

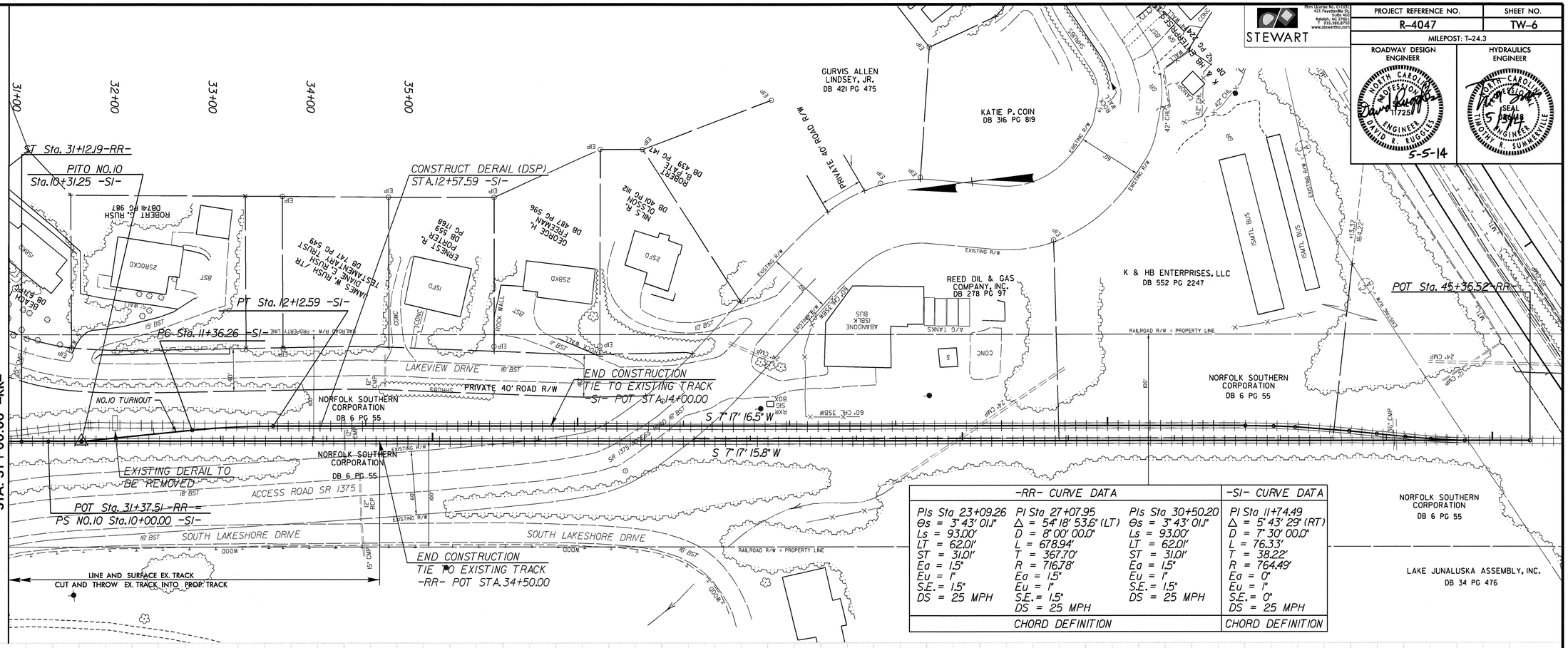

-RR- CURVE DATA			-SI- CURVE DATA
PIs Sta 23+09.26	PI Sta 27+07.95	PIs Sta 30+50.20	PI Sta 11+74.49
Θs = 3° 43' 01.1"	Δ = 54° 18' 53.6" (LT)	Θs = 3° 43' 01.1"	Δ = 5° 43' 29" (RT)
Ls = 93.00'	D = 8° 00' 00.0"	Ls = 93.00'	D = 7° 30' 00.0"
LT = 62.01'	L = 678.94'	LT = 62.01'	L = 76.33'
ST = 31.01'	T = 367.70'	ST = 31.01'	T = 38.22'
Ea = 1.5"	R = 716.78'	Ea = 1.5"	R = 764.49'
Eu = 1"	Ea = 1.5"	Eu = 1"	Ea = 0"
S.E. = 1.5"	Eu = 1"	S.E. = 1.5"	Eu = 1"
DS = 25 MPH	S.E. = 1.5"	DS = 25 MPH	S.E. = 0"
	DS = 25 MPH		DS = 25 MPH
CHORD DEFINITION			CHORD DEFINITION

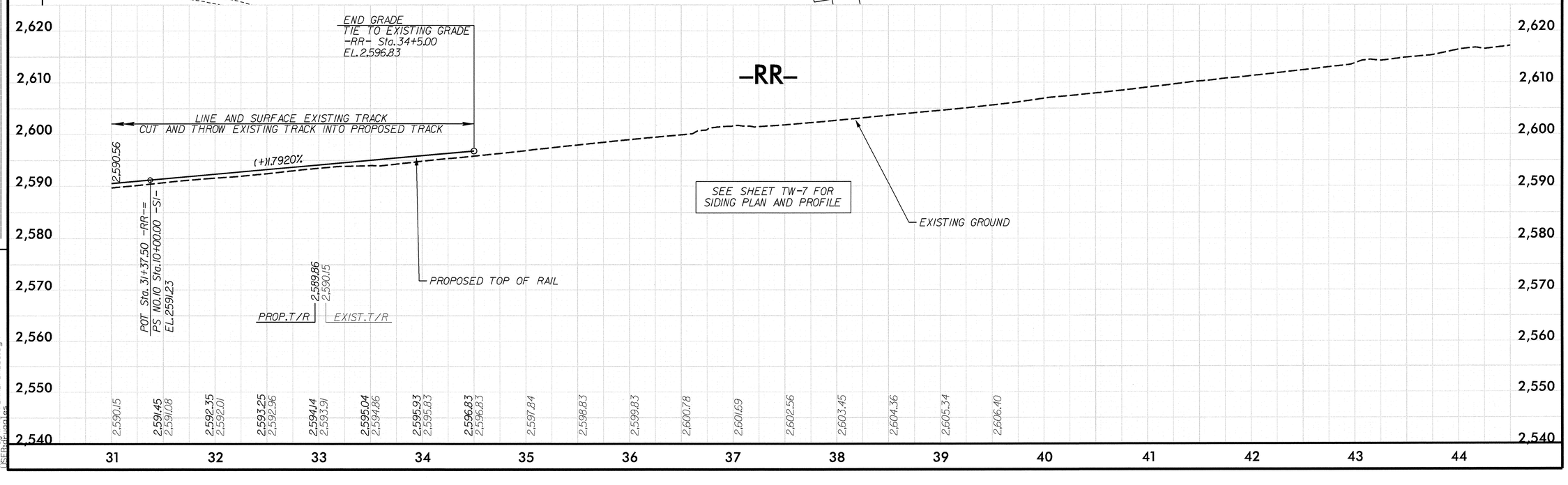

REVISIONS

8/17/99

5/5/2014

PROJECT REFERENCE NO.	SHEET NO.
R-4047	TW-7

MILEPOST: T-24.3

ROADWAY DESIGN ENGINEER — NORTH CAROLINA PROFESSIONAL ENGINEER 11725 DAVID R. RUGGLES — 5-5-14

HYDRAULICS ENGINEER — NORTH CAROLINA PROFESSIONAL ENGINEER SEAL 5 13/14 TIMOTHY R. SUMMERVILLE

STEWART

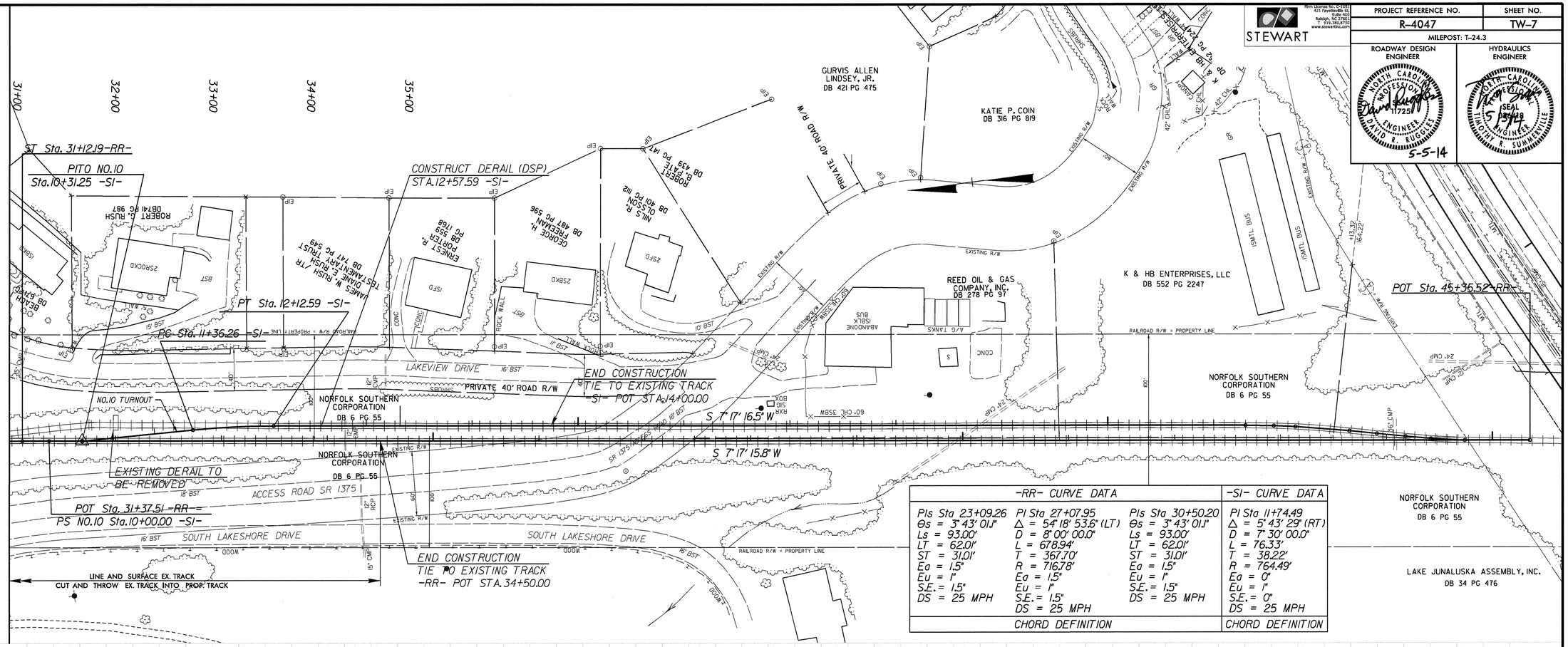

-RR- CURVE DATA			-SI- CURVE DATA
PIs Sta 23+09.26	PI Sta 27+07.95	PIs Sta 30+50.20	PI Sta 11+74.49
Θs = 3° 43' 01.1"	Δ = 54° 18' 53.6" (LT)	Θs = 3° 43' 01.1"	Δ = 5° 43' 29" (RT)
Ls = 93.00'	D = 8° 00' 00.0"	Ls = 93.00'	D = 7° 30' 00.0"
LT = 62.01'	L = 678.94'	LT = 62.01'	L = 76.33'
ST = 31.01'	T = 367.70'	ST = 31.01'	T = 38.22'
Ea = 1.5"	R = 716.78'	Ea = 1.5"	R = 764.49'
Eu = 1"	Ea = 1.5"	Eu = 1"	Ea = 0"
S.E. = 1.5"	Eu = 1"	S.E. = 1.5"	Eu = 1"
DS = 25 MPH	S.E. = 1.5"	DS = 25 MPH	S.E. = 0"
	DS = 25 MPH		DS = 25 MPH
CHORD DEFINITION			CHORD DEFINITION

REVISIONS

8/17/99

5/5/2014
\\Proj\r4047_RR_PSH_07.dgn
USER:druggles

0 5 10	PROJ. REFERENCE NO.	SHEET NO.
	R-4047	TW-8

150 140 130 120 110 100 90 80 70 60 50 40 30 20 10 0 10 20 30 40 50 60 70 80 90 100 110 120 130 140 150

PROP. T/R ELEV. 2591.63

9+50.00

PROP. T/R ELEV. 2591.97

9+00.00

PROP. T/R ELEV. 2592.60

EX. T/R ELEV. 2592.56

8+66.75

150 140 130 120 110 100 90 80 70 60 50 40 30 20 10 0 10 20 30 40 50 60 70 80 90 100 110 120 130 140 150

8/23/99

5/5/2014
I:\Roadway\XSC\R4047_RR_XPL.dgn
User:Rdrugales

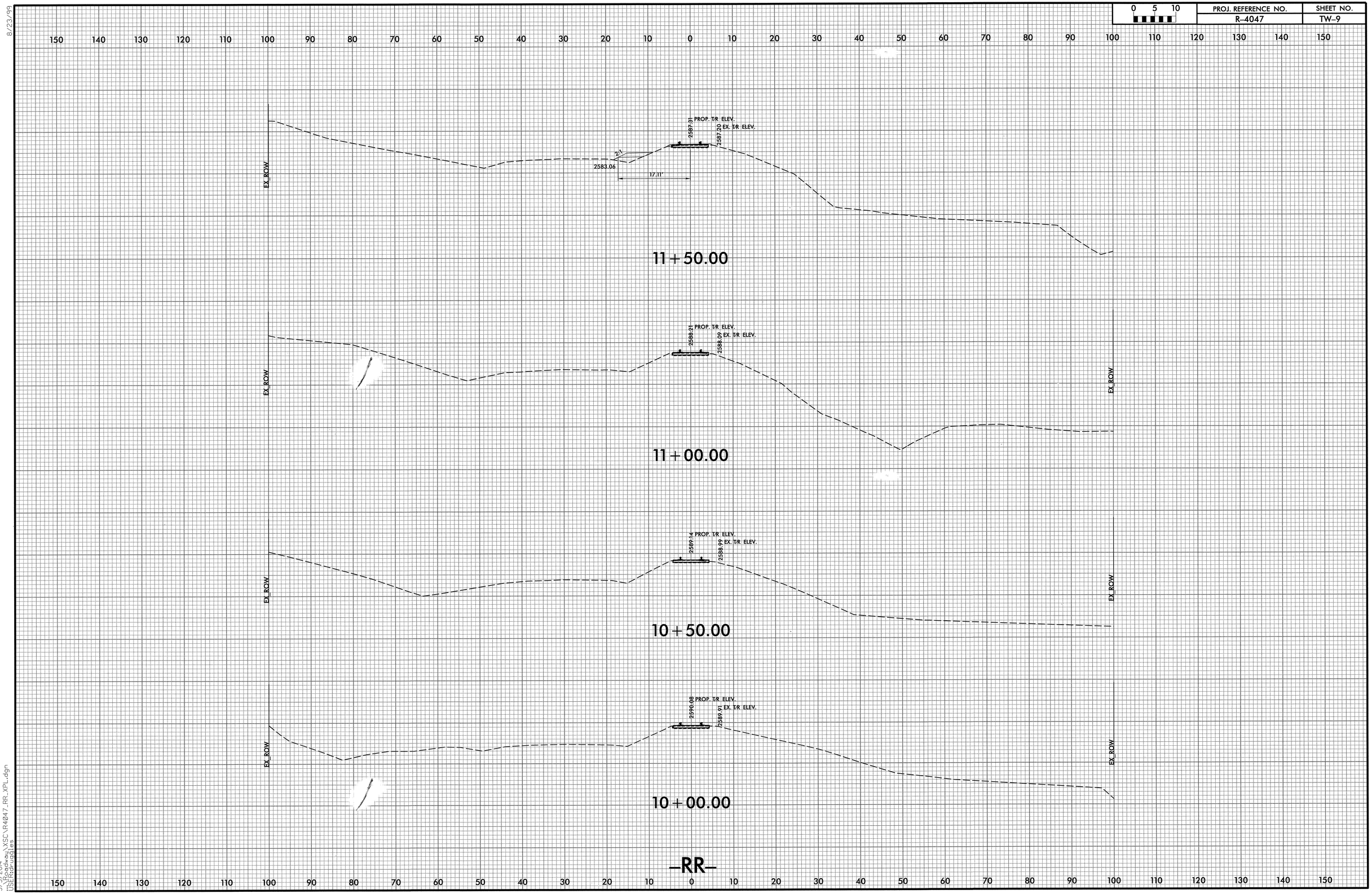

8/23/99

5/5/2014
::\Roadway\XSC\R4047_RR_XPL.dgn
USER:druggles

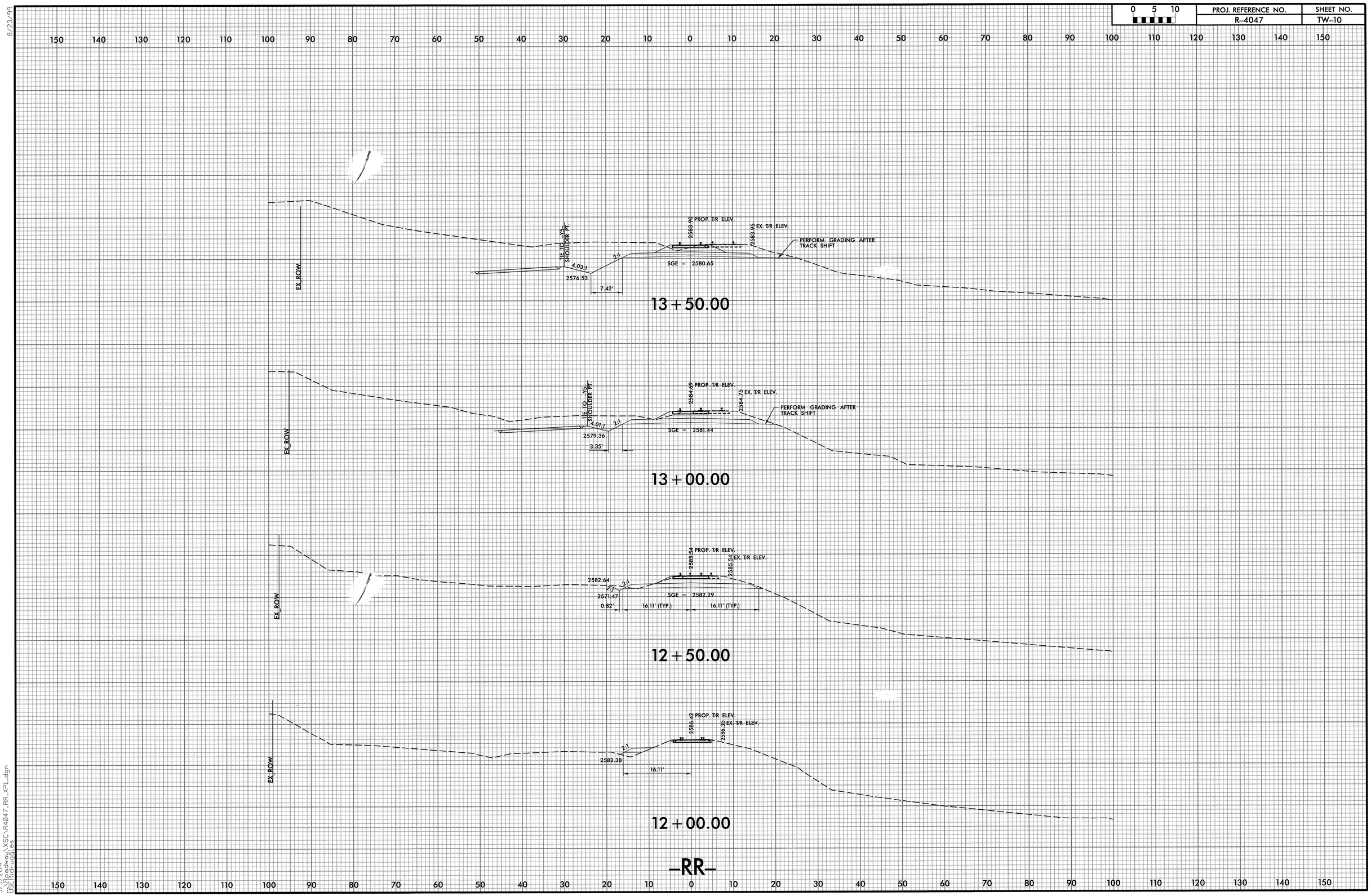

0 5 10
PROJ. REFERENCE NO.
R-4047
SHEET NO.
TW-10
8/23/99
EX. ROW
TIE TO -Y5- SHOULDER PT.
PROP. T/R ELEV.
EX. T/R ELEV.
PERFORM GRADING AFTER TRACK SHIFT
2583.90
2583.95
4.03:1
2:1
2576.53
7.42'
SGE = 2580.65
13+50.00
2584.69
2584.75
4.01:1
2579.36
3.35'
SGE = 2581.44
13+00.00
2585.54
2585.54
2582.64
2571.47
0.82'
16.11' (TYP.)
SGE = 2582.29
12+50.00
2586.42
2586.35
2582.38
16.11'
12+00.00
-RR-
5/5/2014
ii:\Roadway\XSC\R4047_RR_XPL.dgn
USER:druggles

0 5 10	PROJ. REFERENCE NO.	SHEET NO.
	R-4047	TW-11

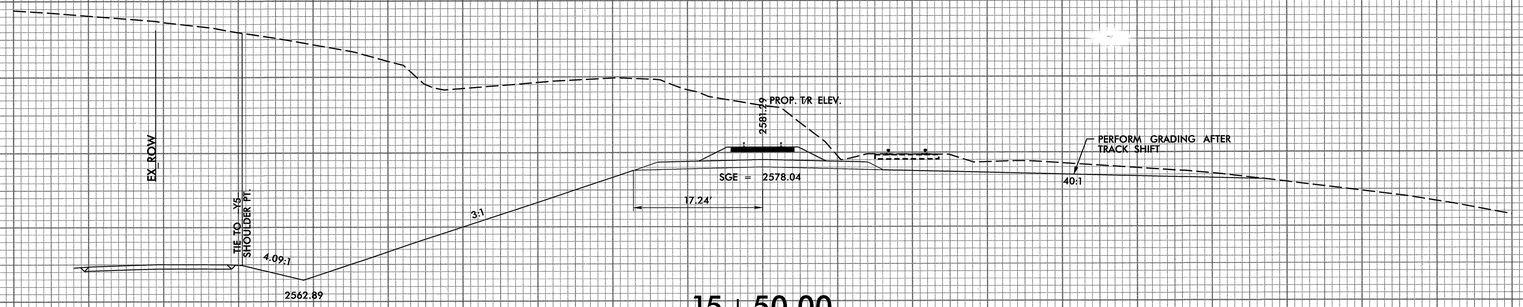

15+50.00

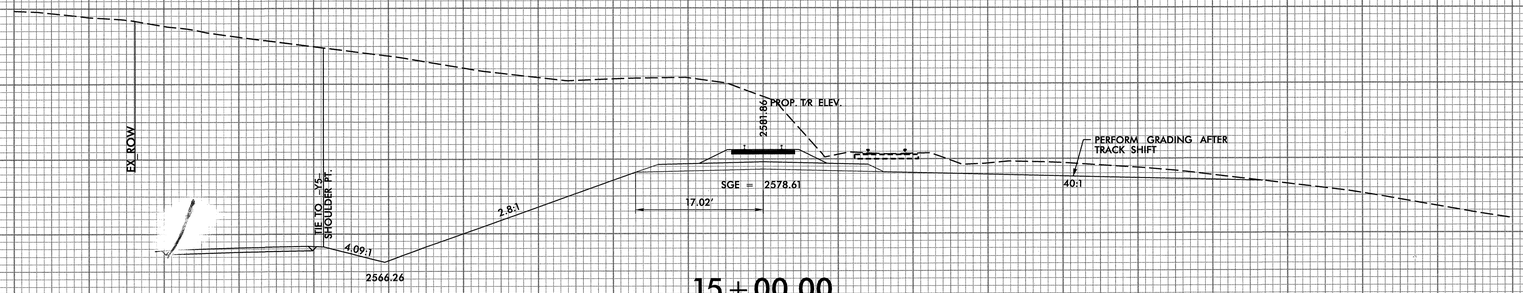

15+00.00

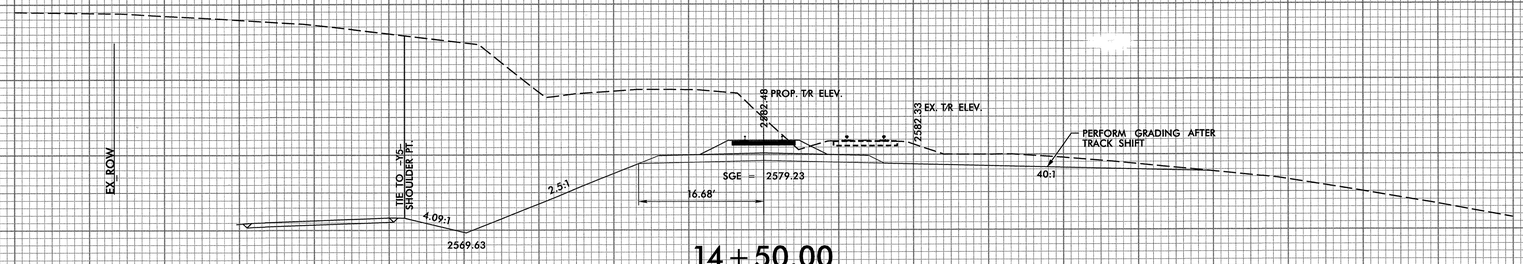

14+50.00

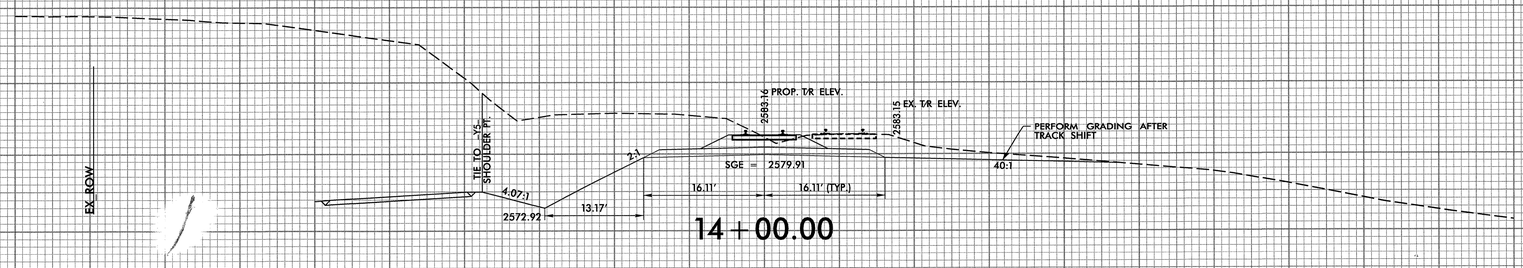

14+00.00

–RR–

8/23/99

5/5/2014
I:\Roadway\XSC\R4047_RR_XPL.dgn
User:rarugales

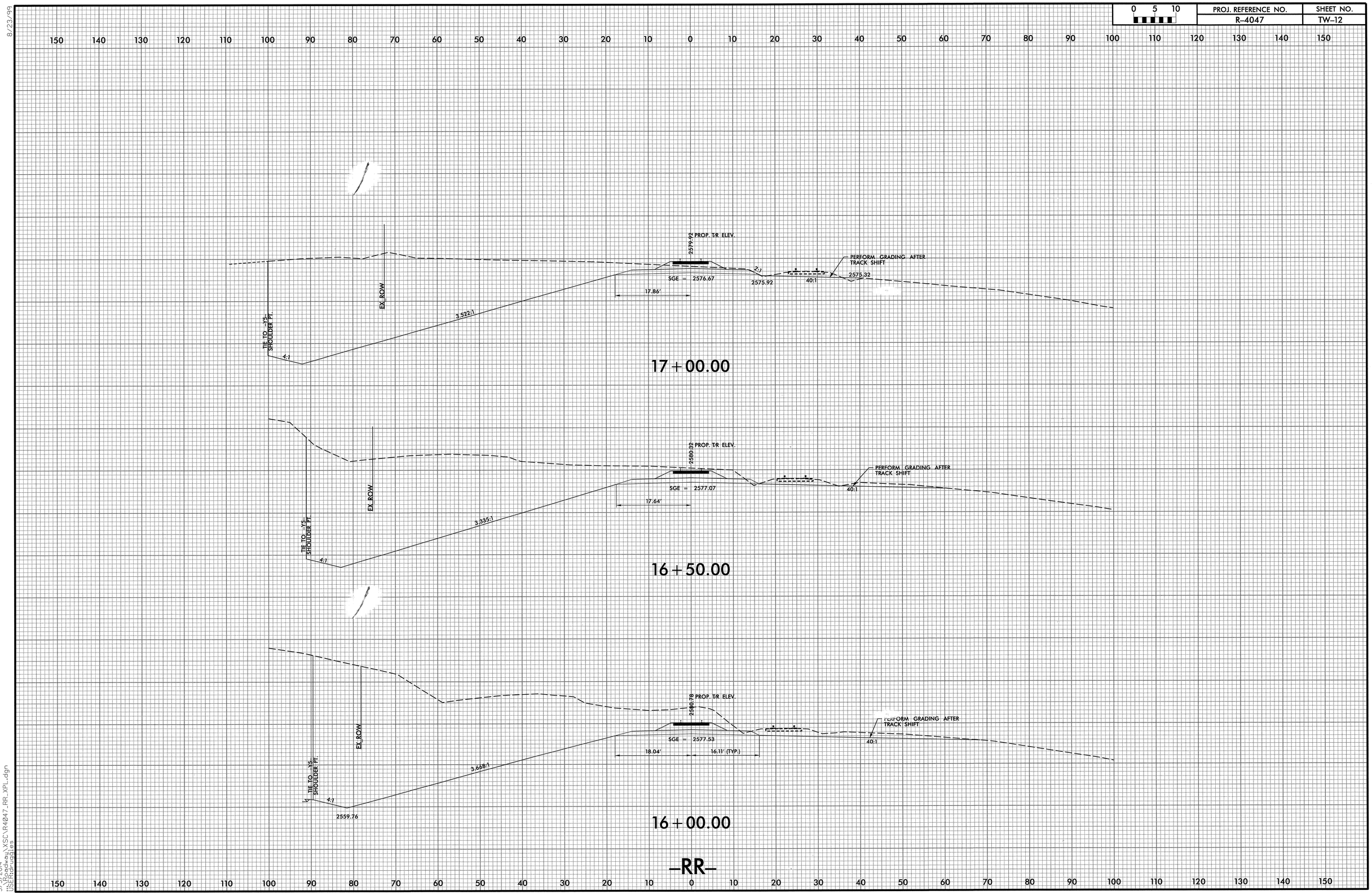

8/23/99

5/5/2014
i:\Roadway\XSC\R4047_RR_XPL.dgn
USER:druggles

8/23/99

0 5 10	PROJ. REFERENCE NO.	SHEET NO.
	R-4047	TW-13

150 140 130 120 110 100 90 80 70 60 50 40 30 20 10 0 10 20 30 40 50 60 70 80 90 100 110 120 130 140 150

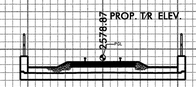

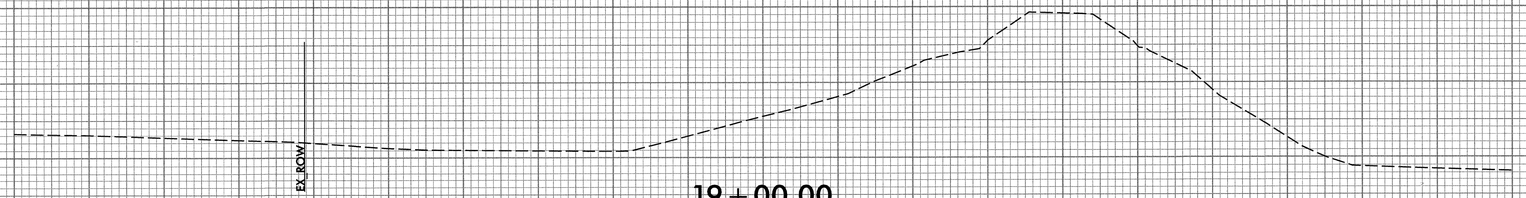

19+00.00

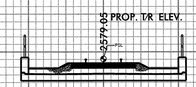

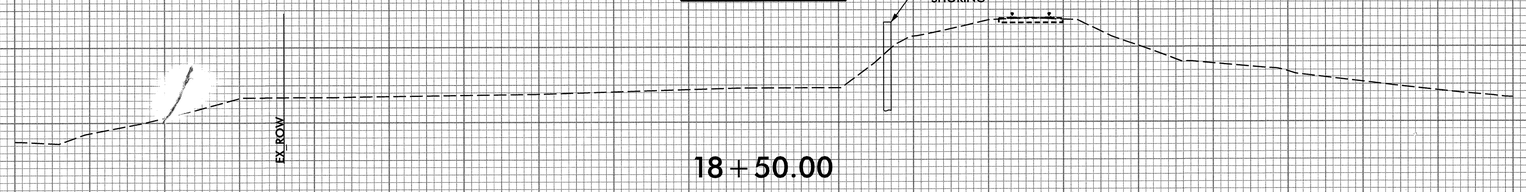

18+50.00

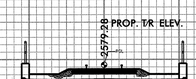

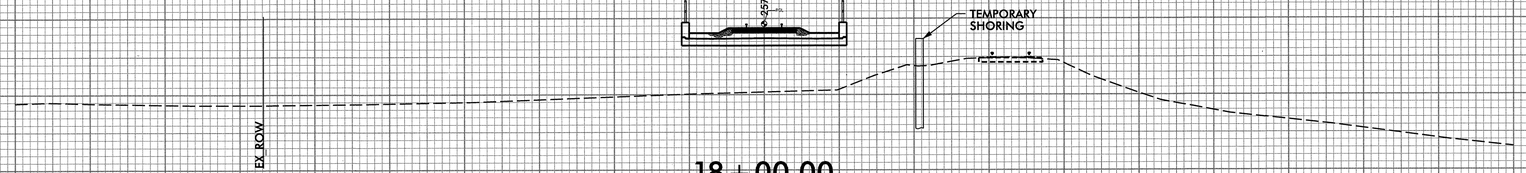

18+00.00

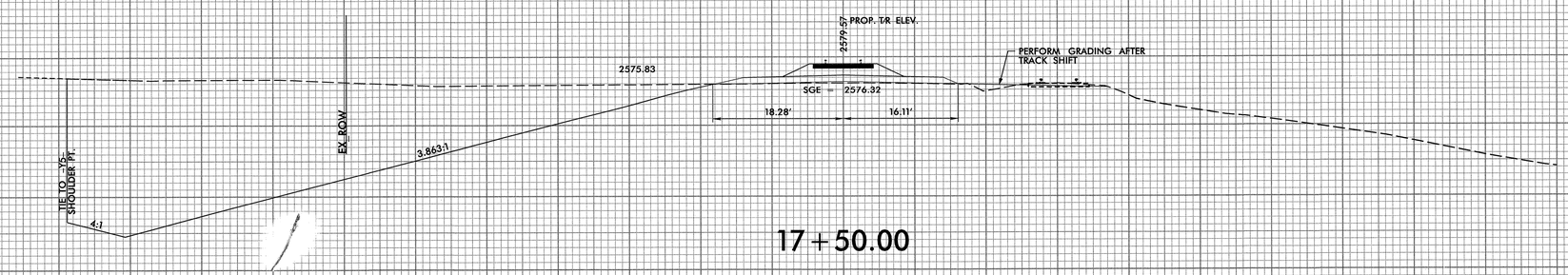

17+50.00

–RR–

150 140 130 120 110 100 90 80 70 60 50 40 30 20 10 0 10 20 30 40 50 60 70 80 90 100 110 120 130 140 150

5/5/2014
I:\Roadway\XSC\R4047_RR_XPL.dgn
USER:rsugales

8/23/99

0 5 10	PROJ. REFERENCE NO.	SHEET NO.
	R-4047	TW-14

150 140 130 120 110 100 90 80 70 60 50 40 30 20 10 0 10 20 30 40 50 60 70 80 90 100 110 120 130 140 150

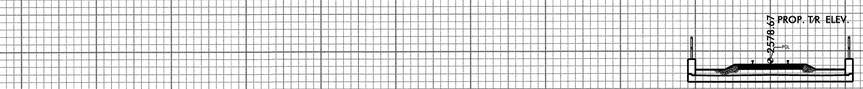

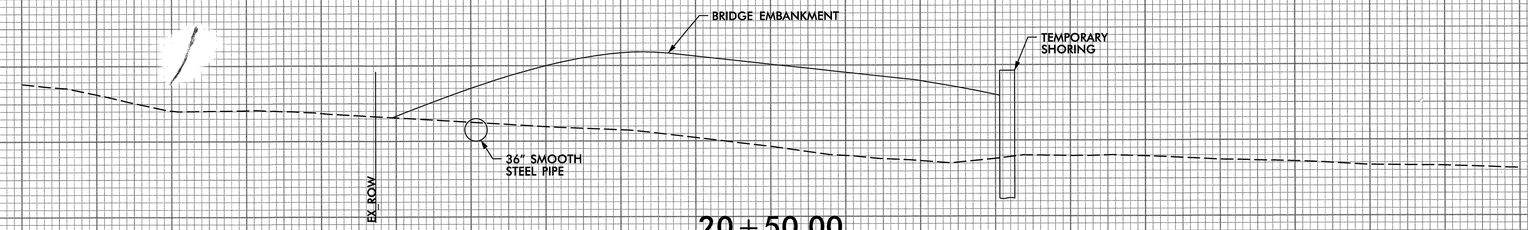

20+50.00

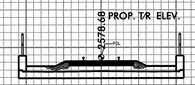

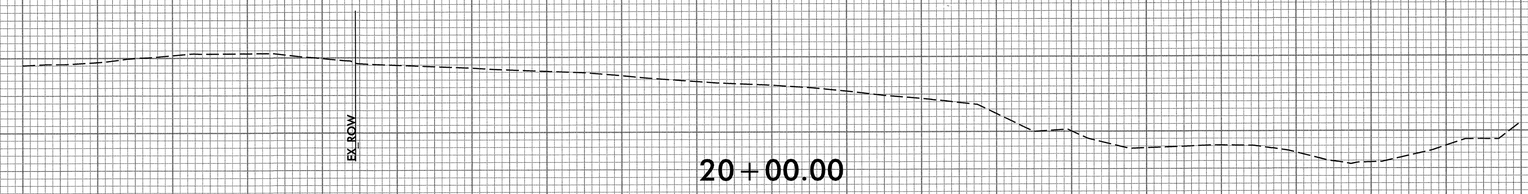

20+00.00

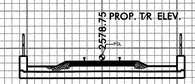

19+50.00

-RR-

150 140 130 120 110 100 90 80 70 60 50 40 30 20 10 0 10 20 30 40 50 60 70 80 90 100 110 120 130 140 150

5/5/2014
I:\Roadway\XSC\R4047_RR_XPL.dgn
User:Reprogles

8/23/99

0 5 10	PROJ. REFERENCE NO.	SHEET NO.
	R-4047	TW-15

150 140 130 120 110 100 90 80 70 60 50 40 30 20 10 0 10 20 30 40 50 60 70 80 90 100 110 120 130 140 150

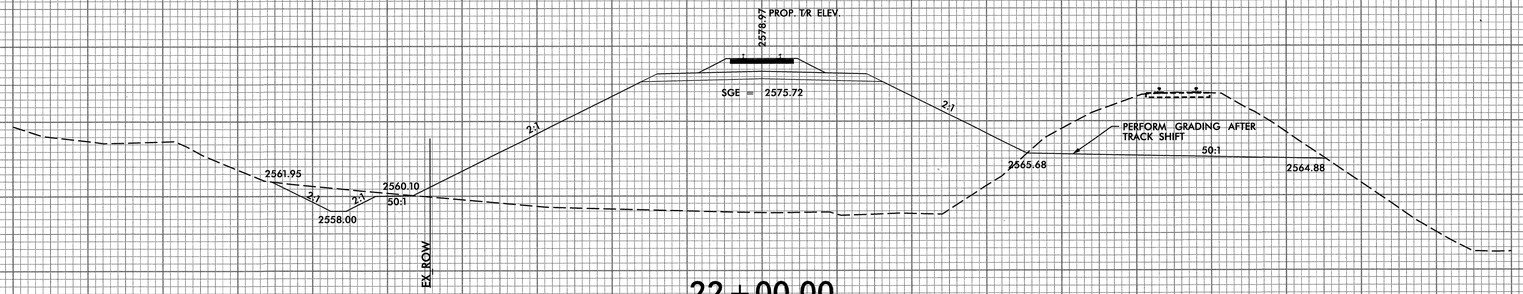

22+00.00

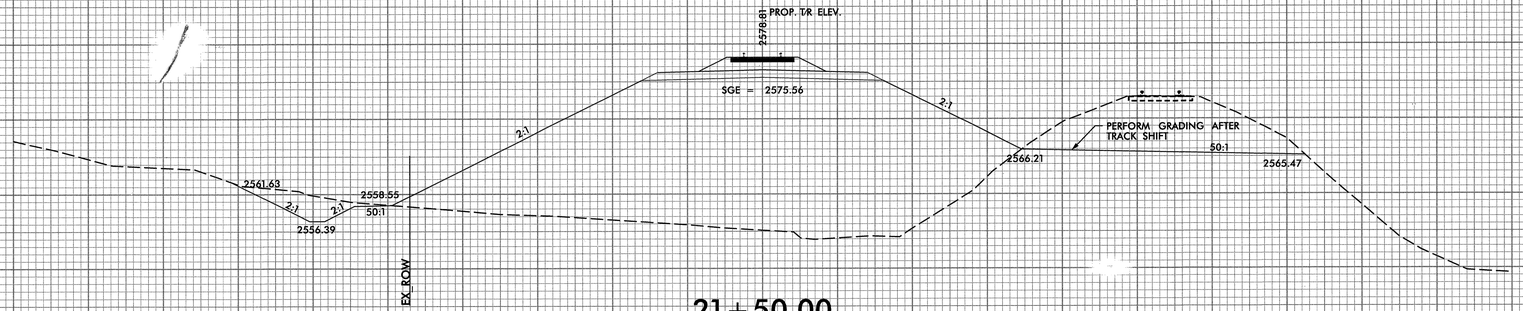

21+50.00

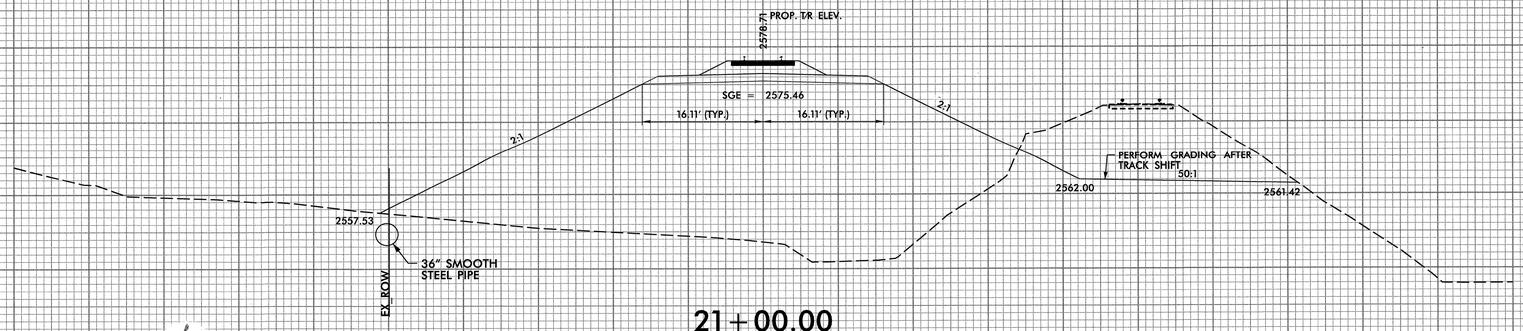

21+00.00

–RR–

150 140 130 120 110 100 90 80 70 60 50 40 30 20 10 0 10 20 30 40 50 60 70 80 90 100 110 120 130 140 150

5/5/2014
I:\Roadway\XSC\R4047_RR_XPL.dgn
USER:rdruggles

0 5 10	PROJ. REFERENCE NO.	SHEET NO.
	R-4047	TW-16

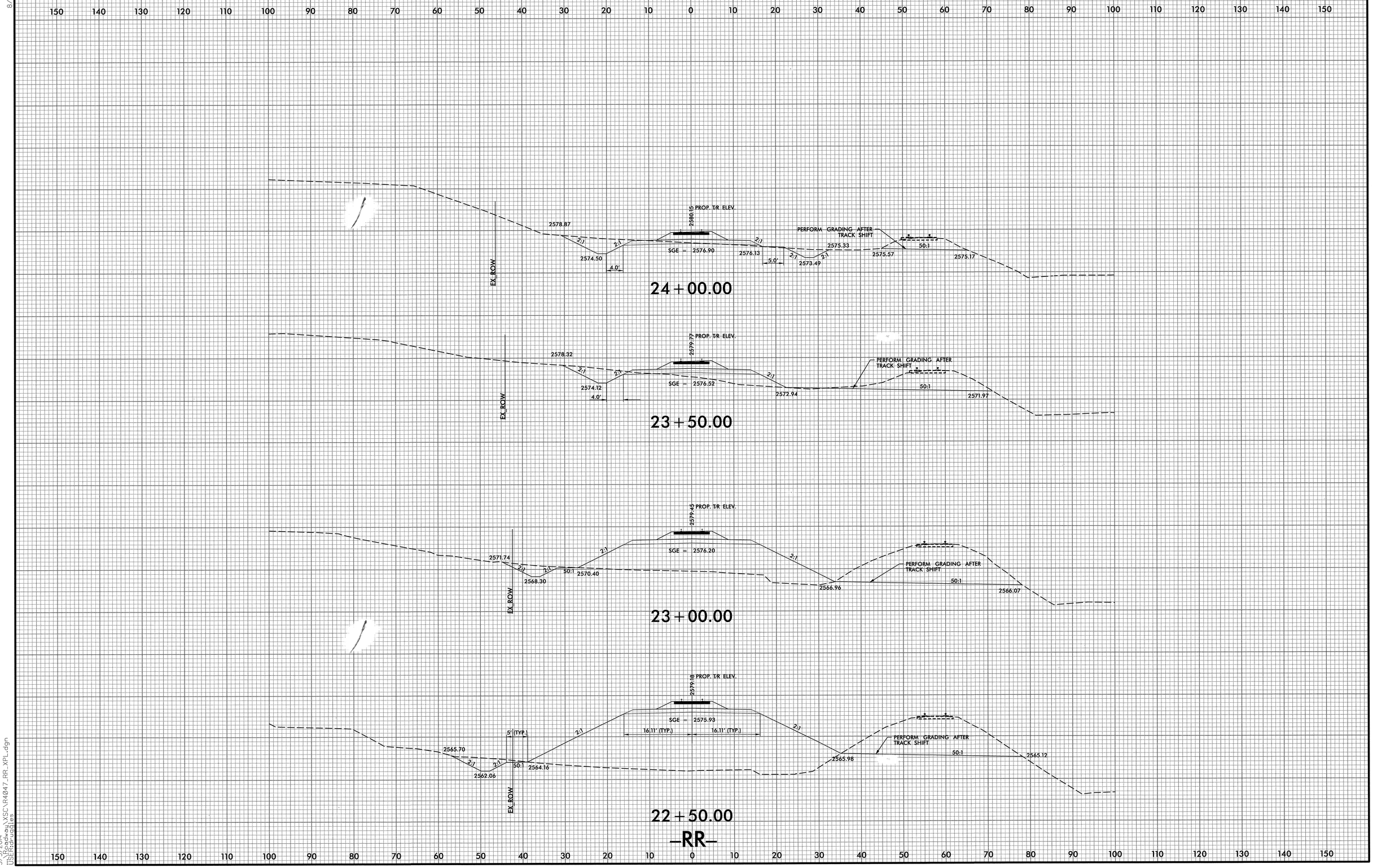

8/23/99

5/5/2014
\\Roadway\XSC\R4047_RR_XPL.dgn
USER:drugales

0 5 10	PROJ. REFERENCE NO.	SHEET NO.
	R-4047	TW-17

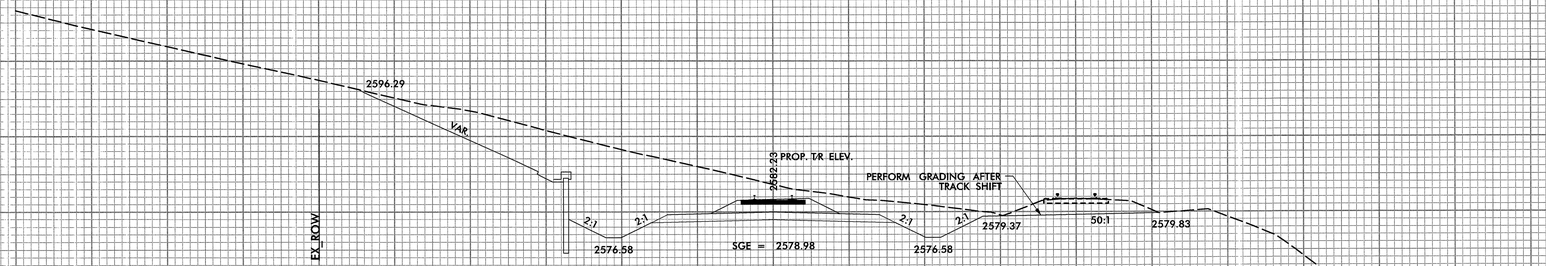

26+00.00

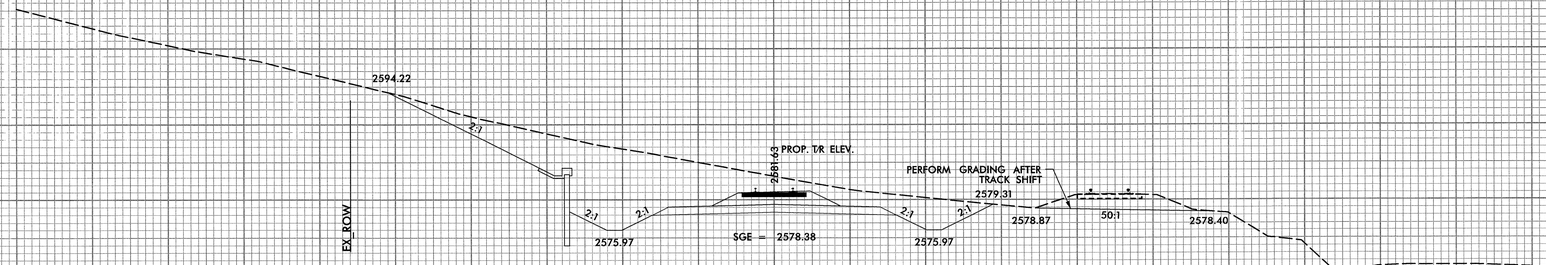

25+50.00

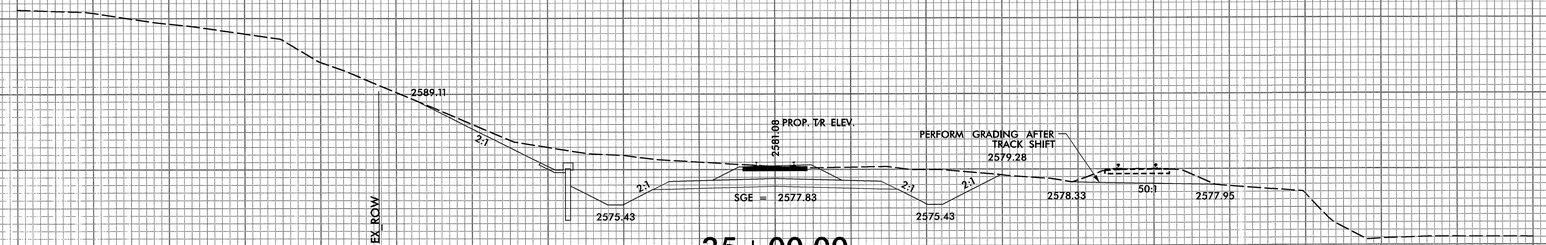

25+00.00

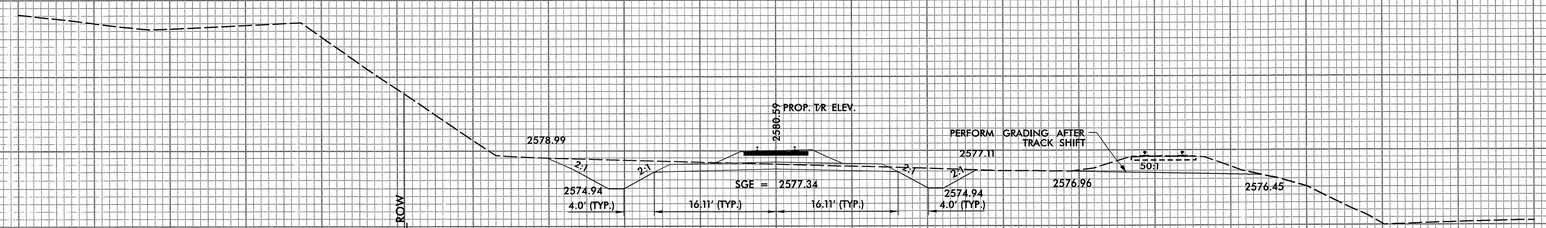

24+50.00

–RR–

8/23/99

6/6/2014
\\Roadway\SSC\R4047_RR_XPL.dgn
USER:rndean

8/23/99

0 5 10	PROJ. REFERENCE NO.	SHEET NO.
	R-4047	TW-18

150 140 130 120 110 100 90 80 70 60 50 40 30 20 10 0 10 20 30 40 50 60 70 80 90 100 110 120 130 140 150

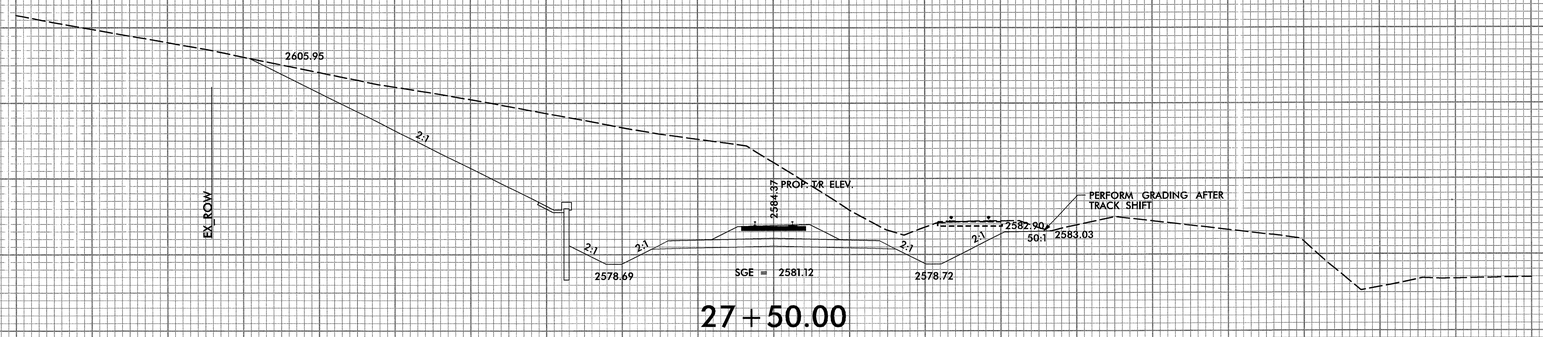

27+50.00

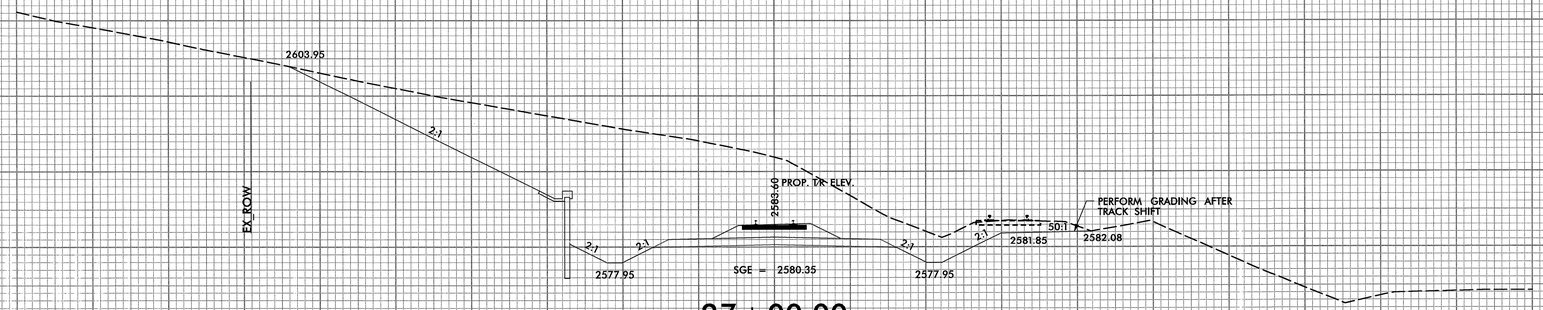

27+00.00

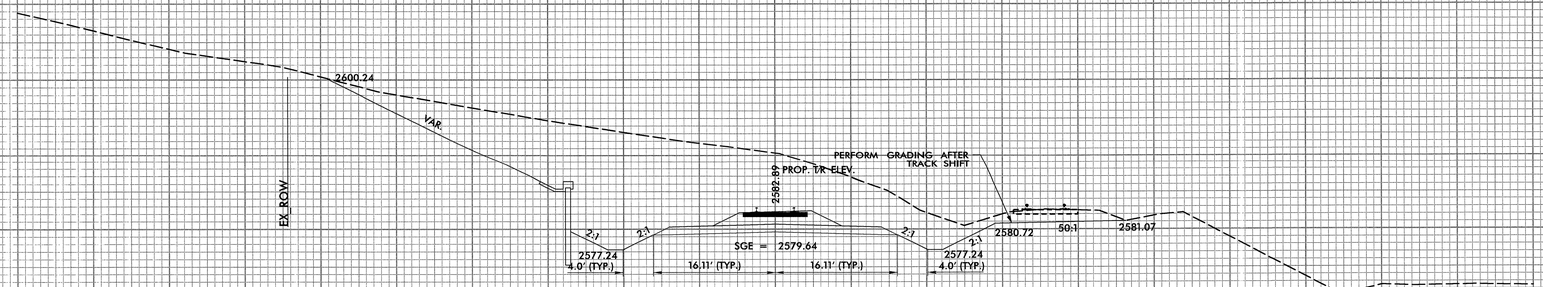

26+50.00

—RR—

150 140 130 120 110 100 90 80 70 60 50 40 30 20 10 0 10 20 30 40 50 60 70 80 90 100 110 120 130 140 150

6/6/2014
I:\Roadway\XSC\R4047_RR_XPL.dgn
User:hndean

8/23/99

0 5 10	PROJ. REFERENCE NO.	SHEET NO.
	R-4047	TW-19

150 140 130 120 110 100 90 80 70 60 50 40 30 20 10 0 10 20 30 40 50 60 70 80 90 100 110 120 130 140 150

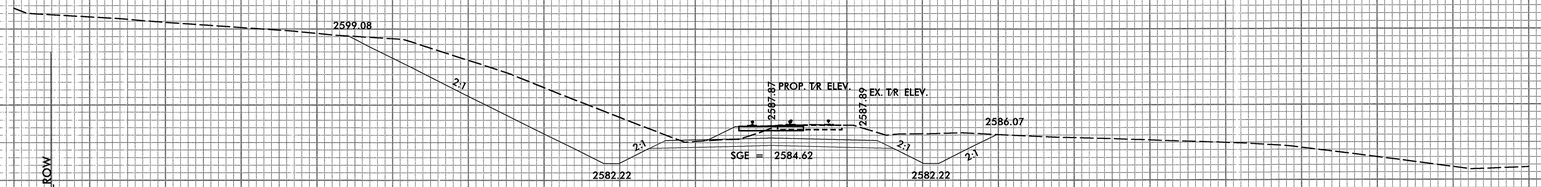

29+50.00

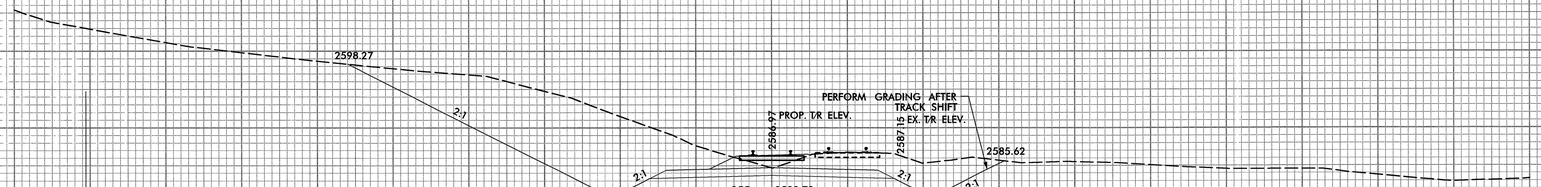

29+00.00

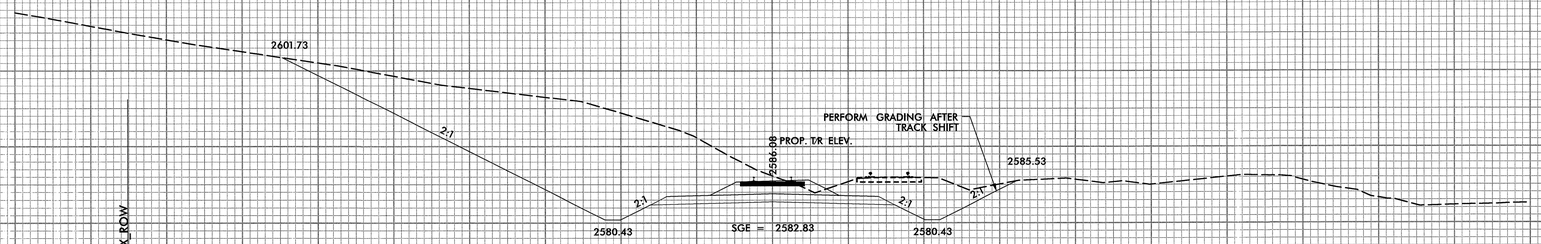

28+50.00

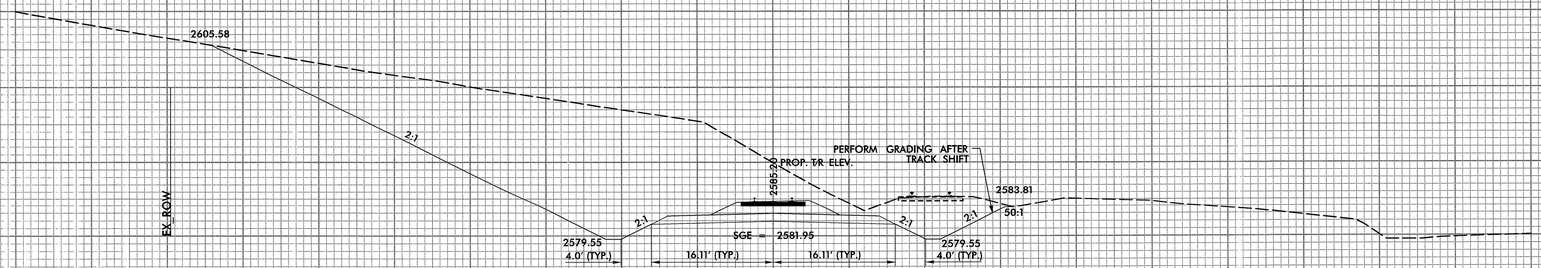

28+00.00

-RR-

150 140 130 120 110 100 90 80 70 60 50 40 30 20 10 0 10 20 30 40 50 60 70 80 90 100 110 120 130 140 150

6/6/2014
"\\Roadway\XSC\R4047_RR_XPL.dgn"
USER:tindean

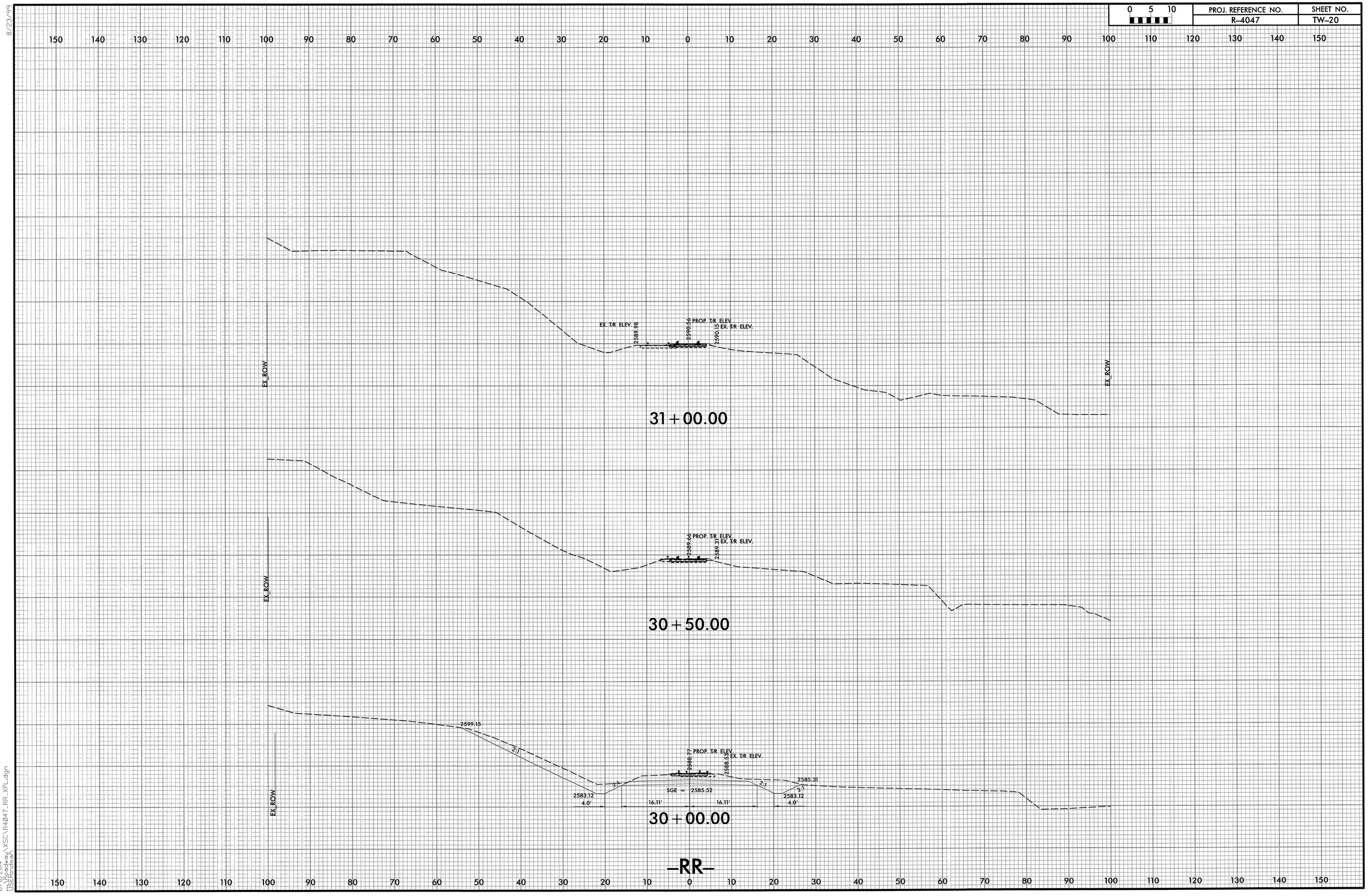

8/23/99

6/6/2014
\\Roadway\XSC\R4047_RR_XPL.dgn
USER:ndean

8/23/99

0 5 10	PROJ. REFERENCE NO.	SHEET NO.
	R-4047	TW-21

150 140 130 120 110 100 90 80 70 60 50 40 30 20 10 0 10 20 30 40 50 60 70 80 90 100 110 120 130 140 150

EX. ROW

EX. T/R ELEV. 2592.64

STL. Sta 11+12.90
PROP. T/R ELEV. 2593.25

2593.25 PROP. T/R ELEV.

EX. T/R ELEV. 2592.96

EX. ROW

32+50.00

EX. ROW

EX. T/R ELEV. 2591.58

STL. Sta 10+92.65
PROP. T/R ELEV. 2592.35

2592.35 PROP. T/R ELEV.

EX. T/R ELEV. 2592.01

EX. ROW

32+00.00

EX. ROW

EX. T/R ELEV. 2590.73

2591.45 PROP. T/R ELEV.

EX. T/R ELEV. 2591.08

EX. ROW

31+50.00

-RR-

150 140 130 120 110 100 90 80 70 60 50 40 30 20 10 0 10 20 30 40 50 60 70 80 90 100 110 120 130 140 150

5/5/2014
I:\Roadway\XSC\R4047_RR_XPL.dgn
User:rdgiles

8/23/99

0 5 10	PROJ. REFERENCE NO.	SHEET NO.
	R-4047	TW-22

150 140 130 120 110 100 90 80 70 60 50 40 30 20 10 0 10 20 30 40 50 60 70 80 90 100 110 120 130 140 150

EX. ROW

EX. T/R ELEV. 2595.30

SL Sta. 12+63.99
PROP. T/R ELEV. 2595.69

2595.93 PROP. T/R ELEV.

2595.83 EX. T/R ELEV.

EX. ROW

34+00.00

EX. ROW

EX. T/R ELEV. 2594.42

SL Sta. 12+13.99
PROP. T/R ELEV. 2594.74

2595.04 PROP. T/R ELEV.

2594.86 EX. T/R ELEV.

EX. ROW

33+50.00

EX. ROW

EX. T/R ELEV. 2593.98

SL Sta. 11+63.99
PROP. T/R ELEV. 2594.14

2594.14 PROP. T/R ELEV.

2593.91 EX. T/R ELEV.

EX. ROW

33+00.00

-RR-

150 140 130 120 110 100 90 80 70 60 50 40 30 20 10 0 10 20 30 40 50 60 70 80 90 100 110 120 130 140 150

5/5/2014
\Roadway\XSC\R4047_RR_XPL.dgn
USER:rdrugles

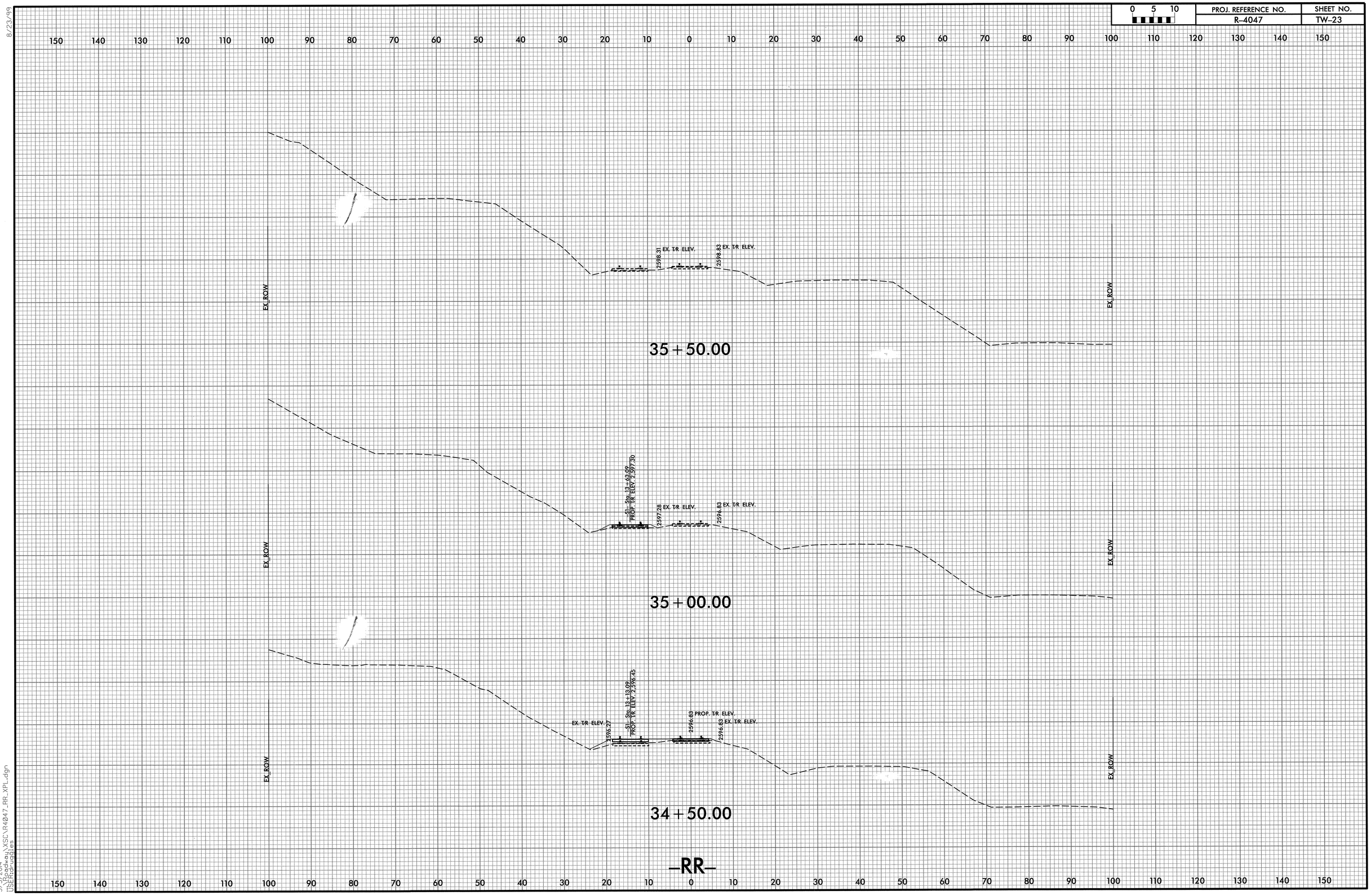

8/23/99

5/5/2014
\\Roadway\XSC\R4047_RR_XPL.dgn
USER:druggles

8/23/99

0 5 10	PROJ. REFERENCE NO.	SHEET NO.
	R-4047	TW-24

150 140 130 120 110 100 80 70 60 50 40 30 20 10 0 10 20 30 40 50 60 70 80 90 100 110 120 130 140 150

90

EX. ROW

EX. ROW

36+50.00

-RR-

EX. ROW

2599.34 EX. T/R ELEV.

2599.83 EX. T/R ELEV.

EX. ROW

36+00.00

-RR-

150 140 130 120 110 100 90 80 70 60 50 40 30 20 10 0 10 20 30 40 50 60 70 80 90 100 110 120 130 140 150

5/5/2014
\\Broadway\XSC\R4047_RR_XPL.dgn
USERNAME

19-FEB-2014 14:08
R:\Structures\Plans\Final Plans Culvert\R-4047_SD_CU.dgn
amlee

BM #6: 8" SPIKE SET IN BASE OF 12" WILD CHERRY TREE, 48.13 FT. RIGHT OF STA. 41+08.73 -L-, ELEV. 2574.03

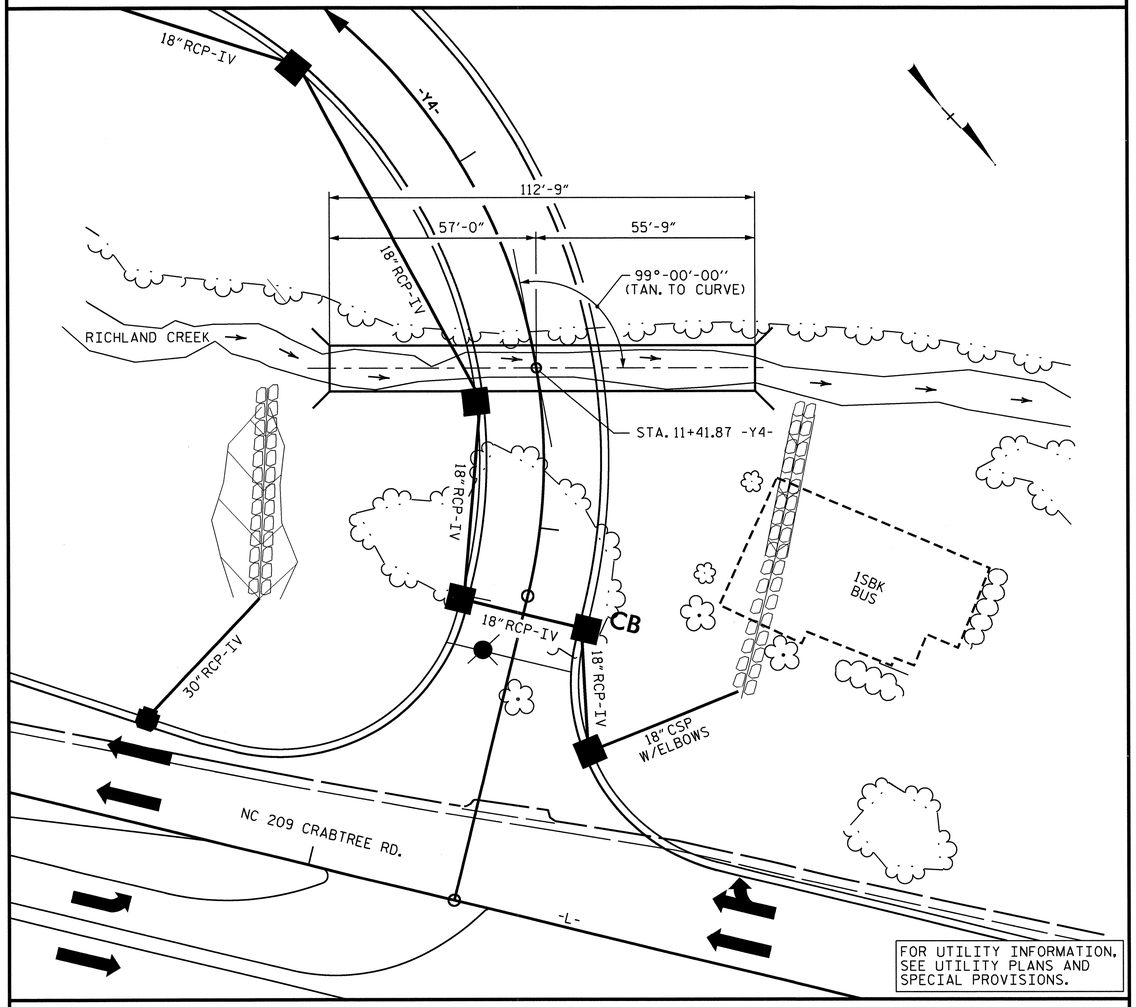

LOCATION SKETCH

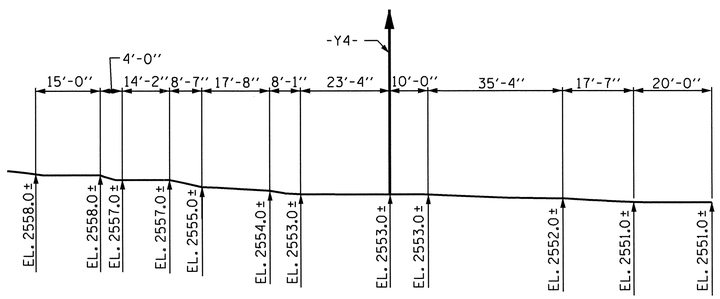

PROFILE ALONG ℄ CULVERT

ROADWAY DATA

GRADE POINT EL. @ STA. 11+41.87 -Y4- = 2568.78
BED EL. @ STA. 11+41.87 -Y4- = 2552.77
ROADWAY SLOPES = 2:1

HYDRAULIC DATA

DESIGN DISCHARGE = 520 C.F.S.
FREQUENCY OF DESIGN FLOOD = 25 YRS.
DESIGN HIGH WATER ELEVATION = 2560.80
DRAINAGE AREA = 0.56 SQ. MI.
BASE DISCHARGE (Q100) = 700 C.F.S.
BASIC HIGH WATER ELEVATION = 2562.40

OVERTOPPING FLOOD DATA

OVERTOPPING DISCHARGE = 1000+ C.F.S.
FREQUENCY OF OVERTOPPING FLOOD = 500+YRS.
OVERTOPPING FLOOD ELEVATION = 2567.91

TOTAL STRUCTURE QUANTITIES

CLASS A CONCRETE		
BARREL @ 1.226 CY/FT	138.2	C.Y.
WING ETC.	22.1	C.Y.
TOTAL	160.3	C.Y.
REINFORCING STEEL		
BARREL	26097	LBS.
WINGS ETC.	1335	LBS.
TOTAL	27432	LBS.
FOUNDATION COND. MAT'L	138	TONS
CULVERT EXCAVATION	LUMP SUM	

NOTES

ASSUMED LIVE LOAD HL93 OR ALTERNATE LOADING.

MAX. DESIGN FILL 11.86 FT.
MIN. DESIGN FILL 8.97 FT.

FOR OTHER DESIGN DATA AND NOTES SEE STANDARD NOTE SHEET.

3"Ø WEEP HOLES INDICATED TO BE IN ACCORDANCE WITH THE SPECIFICATIONS.

CONCRETE IN CULVERTS TO BE POURED IN THE FOLLOWING ORDER:

1. WING FOOTINGS AND FLOOR SLAB INCLUDING 4" OF ALL VERTICAL WALLS.
2. THE REMAINING PORTIONS OF THE WALLS AND WINGS FULL HEIGHT FOLLOWED BY ROOF SLAB AND HEADWALLS.

THE RESIDENT ENGINEER SHALL CHECK THE LENGTH OF CULVERT BEFORE STAKING IT OUT TO MAKE CERTAIN THAT IT WILL PROPERLY TAKE CARE OF THE FILL.

DIMENSIONS FOR WING LAYOUT AS WELL AS ADDITIONAL REINFORCING STEEL EMBEDDED IN BARREL ARE SHOWN ON WING SHEET.

TRANSVERSE CONSTRUCTION JOINTS SHALL BE USED IN THE BARREL, SPACED TO LIMIT THE POURS TO A MAXIMUM OF 70 FT. LOCATION OF JOINTS SHALL BE SUBJECT TO APPROVAL OF THE ENGINEER.

AT THE CONTRACTOR'S OPTION, HE MAY SPLICE THE VERTICAL REINFORCING STEEL IN THE INTERIOR FACE OF EXTERIOR WALL ABOVE LOWER WALL CONSTRUCTION JOINT. THE SPLICE LENGTH SHALL BE AS PROVIDED IN THE SPLICE LENGTH CHART SHOWN ON THE PLANS. EXTRA WEIGHT OF STEEL DUE TO THE SPLICES SHALL BE PAID FOR BY THE CONTRACTOR.

AT THE CONTRACTOR'S OPTION HE MAY SUBMIT, TO THE ENGINEER FOR APPROVAL, DESIGN AND DETAIL DRAWINGS FOR A PRECAST REINFORCED CONCRETE BOX CULVERT IN LIEU OF THE CAST-IN-PLACE CULVERT SHOWN ON THE PLANS. THE DESIGN SHALL PROVIDE THE SAME SIZE AND NUMBER OF BARRELS AS USED ON THE CAST-IN-PLACE DESIGN. FOR OPTIONAL PRECAST REINFORCED CONCRETE BOX CULVERT, SEE SPECIAL PROVISIONS.

THE CONTRACTOR SHALL PROVIDE INDEPENDENT ASSURANCE SAMPLES OF REINFORCING STEEL AS FOLLOWS: FOR PROJECTS REQUIRING UP TO 400 TONS OF REINFORCING STEEL, ONE 30 INCH SAMPLE OF EACH SIZE BAR USED, AND FOR PROJECTS REQUIRING OVER 400 TONS OF REINFORCING STEEL, TWO 30 INCH SAMPLES OF EACH SIZE BAR USED. THE BARS FROM WHICH THE SAMPLES ARE TAKEN MUST THEN BE SPLICED WITH REPLACEMENT BARS OF THE SIZE AND LENGTH OF THE SAMPLE, PLUS A MINIMUM LAP SPLICE OF THIRTY BAR DIAMETERS. PAYMENT FOR THE SAMPLES OF REINFORCING STEEL SHALL BE CONSIDERED INCIDENTAL TO VARIOUS PAY ITEMS.

FOR FALSEWORK AND FORMWORK, SEE SPECIAL PROVISIONS.

FOR GROUT FOR STRUCTURES, SEE SPECIAL PROVISIONS.

FOR SUBMITTAL OF WORKING DRAWINGS, SEE SPECIAL PROVISIONS.

FOR CRANE SAFETY, SEE SPECIAL PROVISIONS.

FOR CULVERT DIVERSION DETAILS, SEE EROSION CONTROL PLANS.

A 3 FOOT STRIP OF FILTER FABRIC SHALL BE ATTACHED TO THE FILL FACE OF THE WING COVERING THE ENTIRE LENGTH OF THE EXPANSION JOINT.

F. A. PROJECT NO. STP-209(6)

PROJECT NO. R-4047
HAYWOOD COUNTY
STATION: 11+41.87 -Y4-

SHEET 1 OF 5

STATE OF NORTH CAROLINA
DEPARTMENT OF TRANSPORTATION
RALEIGH

BARREL STANDARD
SINGLE 12FT. X 6FT.
CONCRETE BOX CULVERT
99° SKEW

NORTH CAROLINA PROFESSIONAL SEAL 13014 ENGINEER QUANG H. NGUYEN
Quang H. Nguyen 2-19-14

NORTH CAROLINA PROFESSIONAL SEAL 17230 ENGINEER WAEL S. ARAFAT
Wael S. Arafat 2-19-14

REVISIONS						SHEET NO.
NO.	BY:	DATE:	NO.	BY:	DATE:	C-1
1			3			TOTAL SHEETS 5
2			4			

STD. NO. CB11A

DRAWN BY : V.X. NGUYEN DATE : 12-20-13
CHECKED BY : A.M. LEE DATE : 12-31-13
DESIGN ENGINEER OF RECORD: A.M. LEE DATE : 1-6-14
DRAWN BY : R. WRIGHT DATE : AUG. 1989
CHECKED BY : A.R. BISSETTE DATE : AUG. 1989
STANDARD

REVISED 11-13-91 BY E.L.R. CHECKED BY G.R.P.
ADDED 8-22-89

19-FEB-2014 14:08
R:\Structures\Plans\Final Plans Culvert\R-4047_SD_CU.dgn
amlee

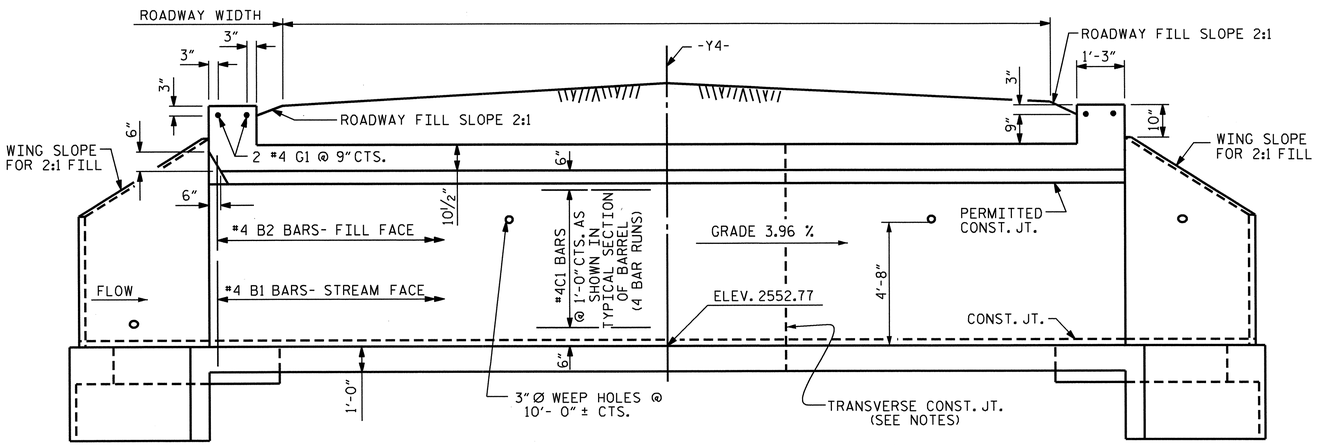

CULVERT SECTION NORMAL TO ROADWAY

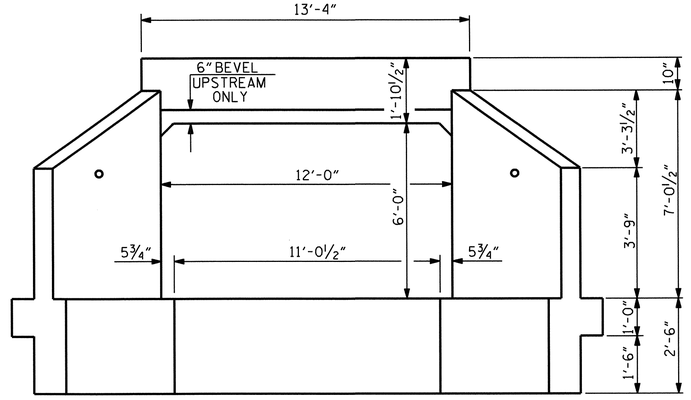

END ELEVATION

BILL OF MATERIAL

BAR	NO.	SIZE	TYPE	LENGTH	WEIGHT
A100	226	#7	STR	12'-11"	5967
A200	226	#7	STR	12'-11"	5967
A1	452	#5	1	7'-8"	3614
A2	452	#5	1	7'-4"	3457
B1	226	#4	STR	7'-4"	1107
B2	452	#5	STR	5'-4"	2514
C1	168	#4	STR	29'-9"	3339
D1	20	#6	STR	1'-7"	48
D2	30	#6	STR	1'-1"	49
G1	4	#4	STR	13'-0"	35

REINFORCING STEEL = 26097 LBS.

SPLICE LENGTH CHART

BAR	SIZE	SPLICE
B1	#4	1'-5"
C1	#4	1'-11"

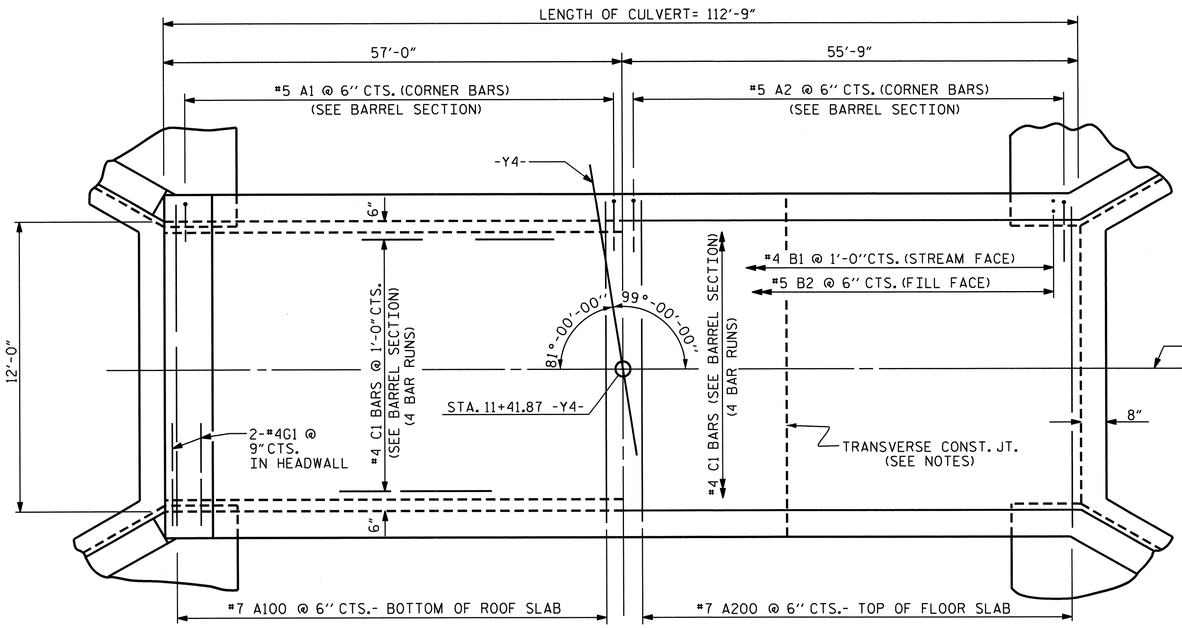

PART PLAN ROOF SLAB

PART PLAN FLOOR SLAB

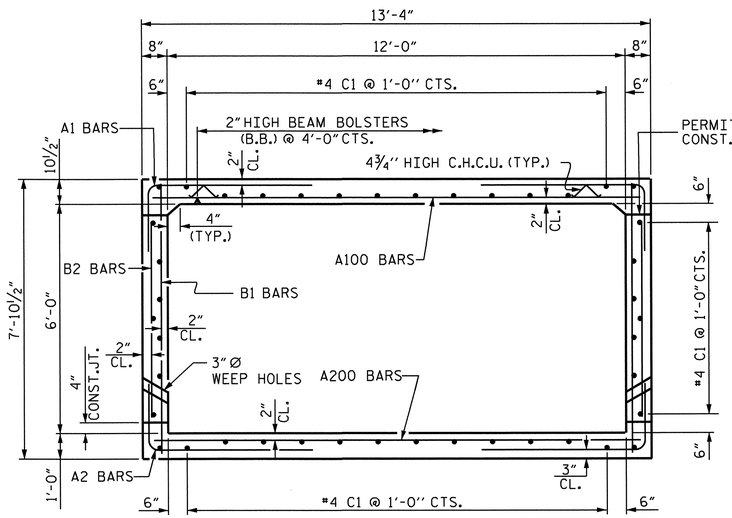

RIGHT ANGLE SECTION OF BARREL

THERE ARE 42 "C" BARS IN SECTION OF BARREL

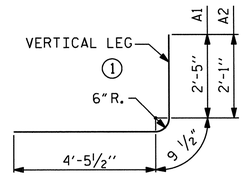

BAR TYPE

DIMENSIONS ARE OUT TO OUT

PROJECT NO. R-4047

HAYWOOD COUNTY

STATION: 11+41.87 -Y4-

SHEET 2 OF 5

STATE OF NORTH CAROLINA
DEPARTMENT OF TRANSPORTATION
RALEIGH

BARREL STANDARD SINGLE 12FT. X 6FT. CONCRETE BOX CULVERT 99° SKEW

REVISIONS						SHEET NO.
NO.	BY:	DATE:	NO.	BY:	DATE:	C-2
1			3			TOTAL SHEETS
2			4			5

STD. NO. CB11

NORTH CAROLINA PROFESSIONAL SEAL 17230 ENGINEER WAEL S. ARAFAT

Wael S. Arafat 2-19-14

DRAWN BY : V.X. NGUYEN DATE : 12-20-13
CHECKED BY : A.M. LEE DATE : 12-31-13
DESIGN ENGINEER OF RECORD: A.M. LEE DATE : 1-6-14

DRAWN BY : R. WRIGHT DATE : AUG. 1989
CHECKED BY : A.R. BISSETTE DATE : AUG. 1989

STANDARD

REVISED 8-28-92 BY E.L.R. CHECKED BY G.R.P.
REVISED 8-22-89 BY A.R.B. CHECKED BY C.R.K.
REDRAWN 8-22-1989

REVISED 11-19-99 BY M.M. CHECKED BY R.W.W.

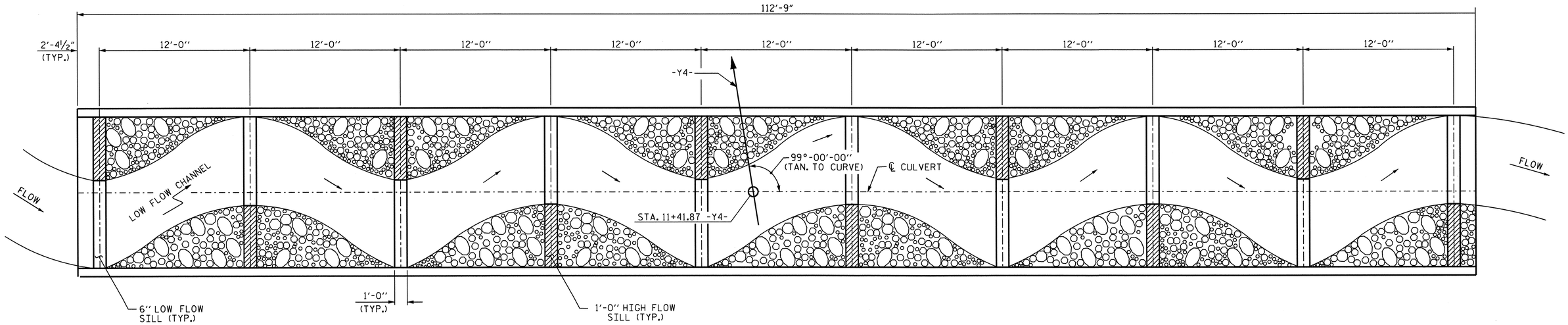

FLOOR SILL LAYOUT

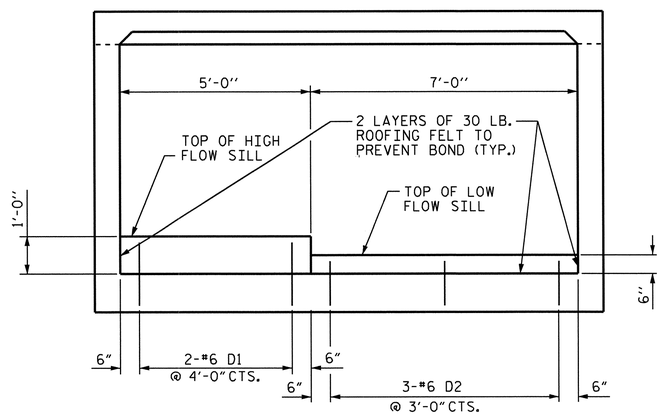

SILL DETAILS
LOOKING DOWNSTREAM

END ELEVATION

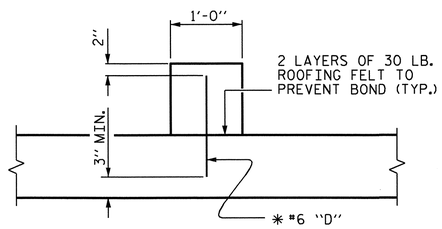

* DOWELS MAY BE PUSHED INTO GREEN CONCRETE AFTER SLAB HAS BEEN FLOAT FINISHED

SECTION THROUGH SILL

NOTES

BED MATERIAL PLACED BETWEEN SILLS IN THE CULVERT SHALL PROVIDE A CONTINUOUS LOW FLOW CHANNEL BETWEEN THE LOWER SILLS. THE MATERIAL SHALL BE NATURAL STONE WITH A GRADATION SIZE SIMILAR TO THAT OF CLASS "B" RIPRAP. STONES LARGER THAN 6 INCHES SHALL NOT BE PLACED WITHIN THE LOW FLOW CHANNEL. BED MATERIAL IS SUBJECT TO APPROVAL BY THE ENGINEER.

SILLS ARE TO BE 1.0 FT. WIDE AND CAST SEPARATELY AND ATTACHED BY DOWELS.

THE 1.0 FT. HIGH AND 0.5 FT. HIGH SILLS ARE TO BE SEPARATE UNITS.

THE TOP OF LOW FLOW SILL SHOULD MATCH STREAM BED ELEVATION IN LOW FLOW CHANNEL OF STREAM.

THE ENTIRE COST OF WORK REQUIRED TO PLACE THE BED MATERIAL AS SHOWN ON THE PLANS SHALL BE INCLUDED IN THE LUMP SUM PRICE BID FOR CULVERT EXCAVATION.

NORTH CAROLINA PROFESSIONAL SEAL 17230 ENGINEER WAEL S. ARAFAT

Wael S. Arafat 2-19-14

PROJECT NO. R-4047

HAYWOOD COUNTY

STATION: 11+41.87 -Y4-

SHEET 3 OF 5

STATE OF NORTH CAROLINA
DEPARTMENT OF TRANSPORTATION
RALEIGH

SINGLE 12FT. X 6FT. CONCRETE BOX CULVERT 99° SKEW

REVISIONS						SHEET NO.
NO.	BY:	DATE:	NO.	BY:	DATE:	C-3
1			3			TOTAL SHEETS
2			4			5

DRAWN BY : V.X. NGUYEN DATE : 12-20-13
CHECKED BY : A.M. LEE DATE : 12-31-13
DESIGN ENGINEER OF RECORD: A.M. LEE DATE : 1-6-14

19-FEB-2014 14:07
R:\Structures\Plans\FinalPlans Culvert\R-4047_SD_CU.dgn
amlee

19-FEB-2014 14:07
R:\Structures\Plans\Final Plans Culvert\R-4047_SD_CU.dgn
amlee

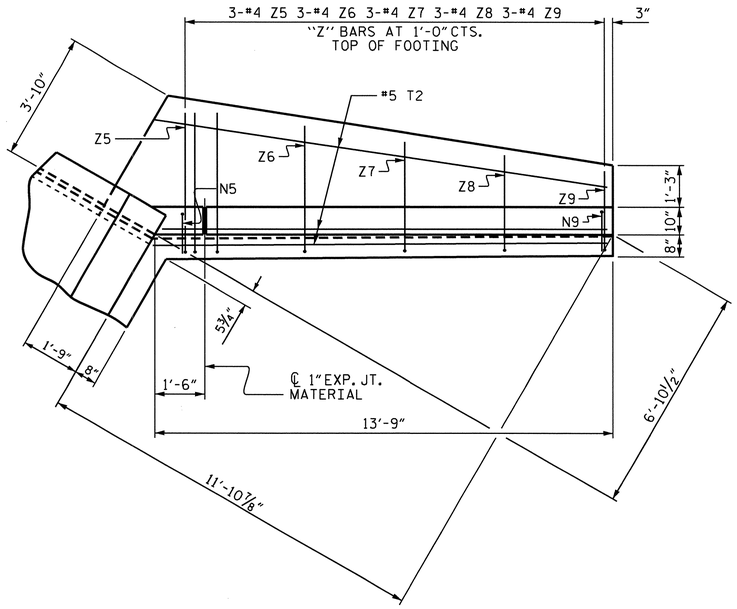

PLAN W1

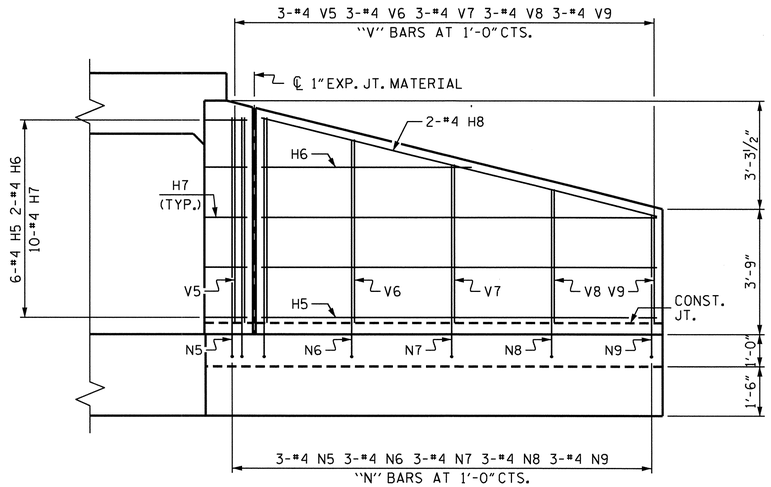

ELEVATION W1

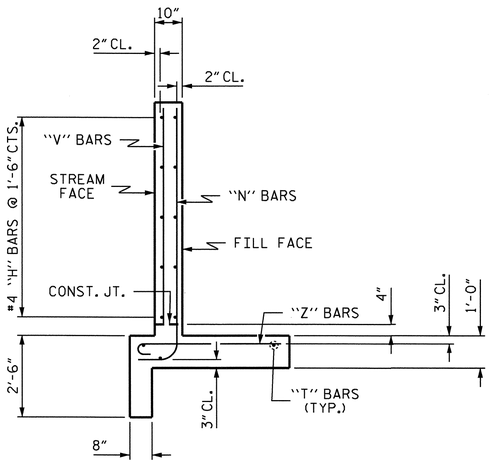

TYPICAL WING SECTION

BAR TYPES

ALL BAR DIMENSIONS ARE OUT TO OUT.

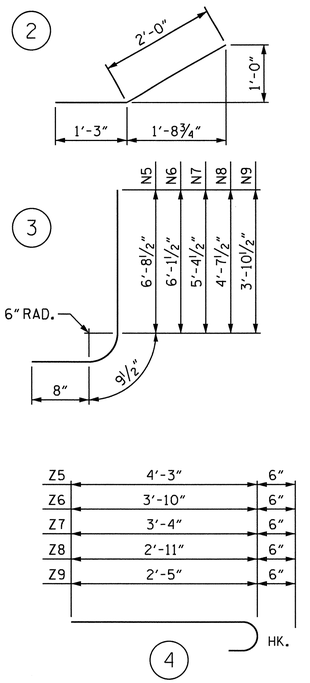

BILL OF MATERIAL

BAR	NO.	SIZE	TYPE	LENGTH	WEIGHT
H5	24	#4	STR	11'-10"	190
H6	8	#4	STR	6'-3"	33
H7	40	#4	2	3'-3"	87
H8	8	#4	STR	12'-2"	65
N5	12	#4	3	8'-2"	65
N6	12	#4	3	7'-7"	61
N7	12	#4	3	6'-10"	55
N8	12	#4	3	6'-1"	49
N9	12	#4	3	5'-4"	43
T2	24	#5	STR	13'-9"	344
V5	12	#4	STR	6'-2"	49
V6	12	#4	STR	5'-6"	44
V7	12	#4	STR	4'-9"	38
V8	12	#4	STR	4'-0"	32
V9	12	#4	STR	3'-3"	26
Z5	12	#4	4	4'-9"	38
Z6	12	#4	4	4'-4"	35
Z7	12	#4	4	3'-10"	31
Z8	12	#4	4	3'-5"	27
Z9	12	#4	4	2'-11"	23

REINFORCING STEEL FOR 4 WINGS 1335 LBS

CLASS A CONCRETE

4 WINGS	19.5	CY
2 HEADWALLS	1.2	CY
2 END CURTAIN WALLS	1.4	CY
TOTAL	22.1	CY

DRAWN BY :	V.X. NGUYEN	DATE : 12-20-13
CHECKED BY :	A.M. LEE	DATE : 12-31-13
DESIGN ENGINEER OF RECORD:	A.M. LEE	DATE : 1-6-14
DRAWN BY :	CCJ	DATE : 1/99
CHECKED BY :	RWW	DATE : 03/00

NORTH CAROLINA PROFESSIONAL SEAL 17230 ENGINEER WAEL S. ARAFAT

Wael S. Arafat 2-19-14

PROJECT NO. R-4047

HAYWOOD COUNTY

STATION: 11+41.87 -Y4-

SHEET 4 OF 5

STATE OF NORTH CAROLINA
DEPARTMENT OF TRANSPORTATION
RALEIGH

WINGS FOR CONCRETE BOX CULVERT

H = 6'-0" SLOPE = 2:1

90° SKEW

REVISIONS						SHEET NO.
NO.	BY:	DATE:	NO.	BY:	DATE:	C-4
1			3			TOTAL SHEETS
2			4			5

LOAD AND RESISTANCE FACTOR RATING (LRFR) SUMMARY FOR REINFORCED CONCRETE BOX CULVERTS

LEVEL		VEHICLE	WEIGHT (W) (TONS)	CONTROLLING LOAD RATING (#)	MINIMUM RATING FACTORS (RF)	TONS = W × RF	STRENGTH I LIMIT STATE									COMMENT NUMBER
								MOMENT				SHEAR				
							LIVE-LOAD FACTORS (γ_{LL})	RATING FACTOR	BOX NO.	ELEMENT TYPE	DISTANCE FROM LEFT END OF ELEMENT (ft)	RATING FACTOR	BOX NO.	ELEMENT TYPE	DISTANCE FROM LEFT END OF ELEMENT (ft)	
DESIGN LOAD RATING		HL-93 (INVENTORY)	N/A	1	1.08	--	1.75	1.71	1	TOP CORNER WALL	0.69	1.08	1	TOP SLAB	0.96	
		HL-93 (OPERATING)	N/A		1.40	--	1.35	2.21	1	TOP CORNER WALL	0.69	1.40	1	TOP SLAB	0.96	
		HS-20 (INVENTORY)	36.000	2	1.65	59.36	1.75	2.58	1	TOP CORNER WALL	0.69	1.65	1	TOP SLAB	0.96	
		HS-20 (OPERATING)	36.000		2.14	76.95	1.35	3.34	1	TOP CORNER WALL	0.69	2.14	1	TOP SLAB	0.96	
LEGAL LOAD RATING	SINGLE VEHICLE (SV)	SNSH	13.500		3.01	40.67	1.40	4.70	1	TOP CORNER WALL	0.69	3.01	1	TOP SLAB	0.96	
		SNGARBS2	20.000		2.80	55.95	1.40	4.33	1	TOP CORNER WALL	0.69	2.80	1	TOP SLAB	0.96	
		SNAGRIS2	22.000		3.01	66.28	1.40	4.70	1	TOP CORNER WALL	0.69	3.01	1	TOP SLAB	0.96	
		SNCOTTS3	27.250		1.35	36.80	1.40	2.13	1	TOP CORNER WALL	0.69	1.35	1	TOP SLAB	0.96	
		SNAGGRS4	34.925		1.37	47.99	1.40	2.16	1	TOP CORNER WALL	0.69	1.37	1	TOP SLAB	0.96	
		SNS5A	35.550	3	1.33	47.19	1.40	2.02	1	TOP CORNER WALL	0.69	1.33	1	TOP SLAB	0.96	
		SNS6A	39.950		1.33	53.04	1.40	2.02	1	TOP CORNER WALL	0.69	1.33	1	TOP SLAB	0.96	
		SNS7B	42.000		1.33	55.76	1.40	2.02	1	TOP CORNER WALL	0.69	1.33	1	TOP SLAB	0.96	
	TRUCK TRACTOR SEMI-TRAILER (TTST)	TNAGRIT3	33.000		1.96	64.62	1.40	3.05	1	TOP CORNER WALL	0.69	1.96	1	TOP SLAB	0.96	
		TNT4A	33.075		1.61	53.41	1.40	2.52	1	TOP CORNER WALL	0.69	1.61	1	TOP SLAB	0.96	
		TNT6A	41.600		1.37	57.16	1.40	2.16	1	TOP CORNER WALL	0.69	1.37	1	TOP SLAB	0.96	
		TNT7A	42.000		1.54	64.50	1.40	2.39	1	TOP CORNER WALL	0.69	1.54	1	TOP SLAB	0.96	
		TNT7B	42.000		1.40	58.74	1.40	2.23	1	TOP CORNER WALL	0.69	1.40	1	TOP SLAB	11.70	
		TNAGRIT4	43.000		1.54	66.04	1.40	2.41	1	TOP CORNER WALL	0.69	1.54	1	TOP SLAB	0.96	
		TNAGT5A	45.000		1.57	70.49	1.40	2.47	1	TOP CORNER WALL	0.69	1.57	1	TOP SLAB	0.96	
		TNAGT5B	45.000		1.61	72.67	1.40	2.52	1	TOP CORNER WALL	0.69	1.61	1	TOP SLAB	0.96	

LOAD FACTORS:

DESIGN LOAD RATING FACTORS

LOAD TYPE	MAX FACTOR	MIN FACTOR
DC	1.25	0.90
DW	1.50	0.65
EV	1.30	0.90
EH	1.35	0.90
ES	1.35	0.90
LS	1.75	--
WA	1.00	--

NOTE:

RATING FACTORS ARE BASED ON THE STRENGTH I LIMIT STATE.

COMMENTS:

1.
2.
3.
4.

(#) CONTROLLING LOAD RATING

1. DESIGN LOAD RATING (HL-93)
2. DESIGN LOAD RATING (HS-20)
3. LEGAL LOAD RATING **

** SEE CHART FOR VEHICLE TYPE

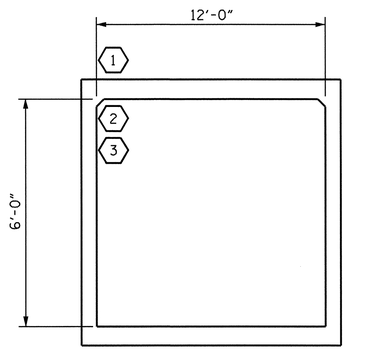

LRFR SUMMARY

(LOOKING DOWNSTREAM)

DESIGN ENGINEER OF RECORD: A.M. LEE, PE DATE : 1-6-2014

ASSEMBLED BY : V.X. NGUYEN DATE : 12-20-2013
CHECKED BY : A.M. LEE, PE DATE : 12-31-2013

DRAWN BY : WMC 7/11
CHECKED BY : GM 7/11

REV. 10/1/11 MAA/GM

19-FEB-2014 14:07
R:\Structures\Plans\FinalPlans Culvert\R-4047_SD_CU.dgn
amlee

NORTH CAROLINA PROFESSIONAL SEAL 17230 ENGINEER WAEL S. ARAFAT

Wael S. Arafat 2-19-14

PROJECT NO. R-4047

HAYWOOD COUNTY

STATION: 11+41.87 -Y4-

SHEET 5 OF 5

STATE OF NORTH CAROLINA
DEPARTMENT OF TRANSPORTATION
RALEIGH

STANDARD

LRFR SUMMARY FOR REINFORCED CONCRETE BOX CULVERTS
(NON-INTERSTATE TRAFFIC)

REVISIONS						SHEET NO.
NO.	BY:	DATE:	NO.	BY:	DATE:	C-5
1			3			TOTAL SHEETS
2			4			5

STD. NO. LRFR5

-WALL2-

PI Sta 12+99.34
Δ = 45° 06' 30.6" (LT)
D = 32° 00' 31.7"
L = 140.93'
T = 74.34'
R = 179.00'

PI Sta 14+87.20
Δ = 48° 13' 05.5" (RT)
D = 21° 08' 32.5"
L = 228.06'
T = 121.28'
R = 271.00'

NAD 83/95

-WALL2- PRC Sta. 13+65.93=
-Y4- PRC Sta. 13+43.09 (29'RT.)

BEGIN WALL
-WALL2- PC Sta. 12+00.00=
-Y4- POC Sta.12+00.00 (29'RT.)

-RPB- PT Sta. 17+52.37

-WALL2- PT Sta. 15+93.99=
-Y4- PT Sta. 15+95.56 (29'RT.)

END WALL
-WALL2- POT Sta. 18+76.00=
-Y4- POT Sta. 18+77.57 (29'RT.)

-Y4- PC Sta. 18+66.65

-RPB- PC Sta. 18+72.37

-WALL2-

-Y4-

S 5° 17' 50.6" W

S 5° 17' 50.6" W

N 5° 17' 50.6" E

15+00

20+00

-RPB-

BEGIN FENCE

CAT-1

-RPB- PT Sta. 21+42.32

-RPB- POT Sta. 22+70.27

GRAU-350

GRAU-350

GRAU-350

END FENCE

END FENCE

GEOTECHNICAL ENGINEER

NORTH CAROLINA PROFESSIONAL SEAL 18580 ENGINEER GARY R. TAYLOR

12-12-2013

Gary R. Taylor
SIGNATURE DATE

ENGINEER

SIGNATURE DATE

PRELIMINARY WALL ENVELOPE

-WALL2-

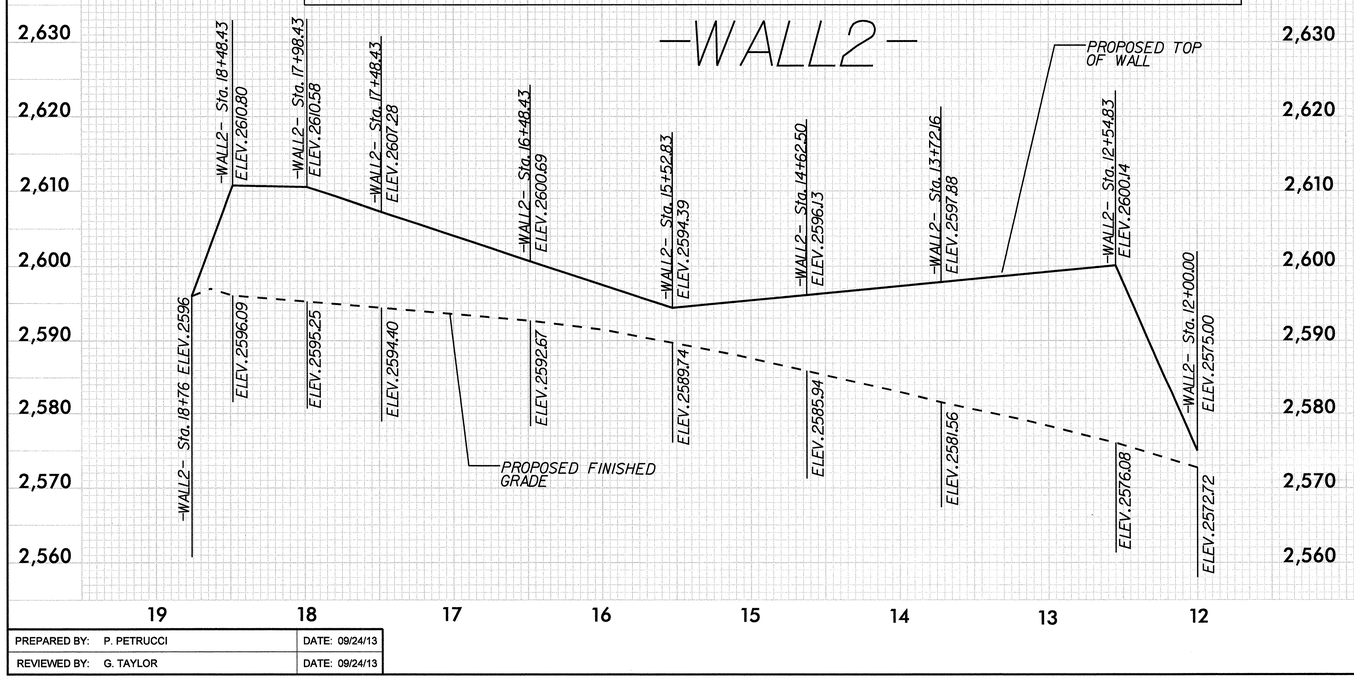

ESTIMATED SOIL NAIL WALL QUANTITIES			
RETAINING WALL NO.	SOIL NAIL RETAINING WALLS (SQUARE FEET)	SOIL NAIL VERIFICATION TESTS	SOIL NAIL PROOF TESTS
2	8643	2	4

PREPARED BY: P. PETRUCCI	DATE: 09/24/13
REVIEWED BY: G. TAYLOR	DATE: 09/24/13

PROJECT NO.: R-4047

HAYWOOD *COUNTY*

STATION: 12+00.00 -Y4- TO 18+55.73 -Y4-

SHEET 1 OF 2

GEOTECHNICAL ENGINEERING UNIT

☐ *EASTERN REGIONAL OFFICE*
☐ *WESTERN REGIONAL OFFICE*
☒ *CONTRACT OFFICE*

STATE OF NORTH CAROLINA
DEPARTMENT OF TRANSPORTATION
RALEIGH

RETAINING WALL NO. 2
SOIL NAIL WALL
DETAILS AND NOTES

REVISIONS						SHEET NO.
NO.	BY	DATE	NO.	BY	DATE	W-1
1			3			TOTAL SHEETS
2			4			2

GEOTECHNICAL ENGINEER	ENGINEER
NORTH CAROLINA PROFESSIONAL SEAL 18580 ENGINEER GARY R. TAYLOR 12-12-2012 SIGNATURE DATE 12/15/13	SIGNATURE DATE

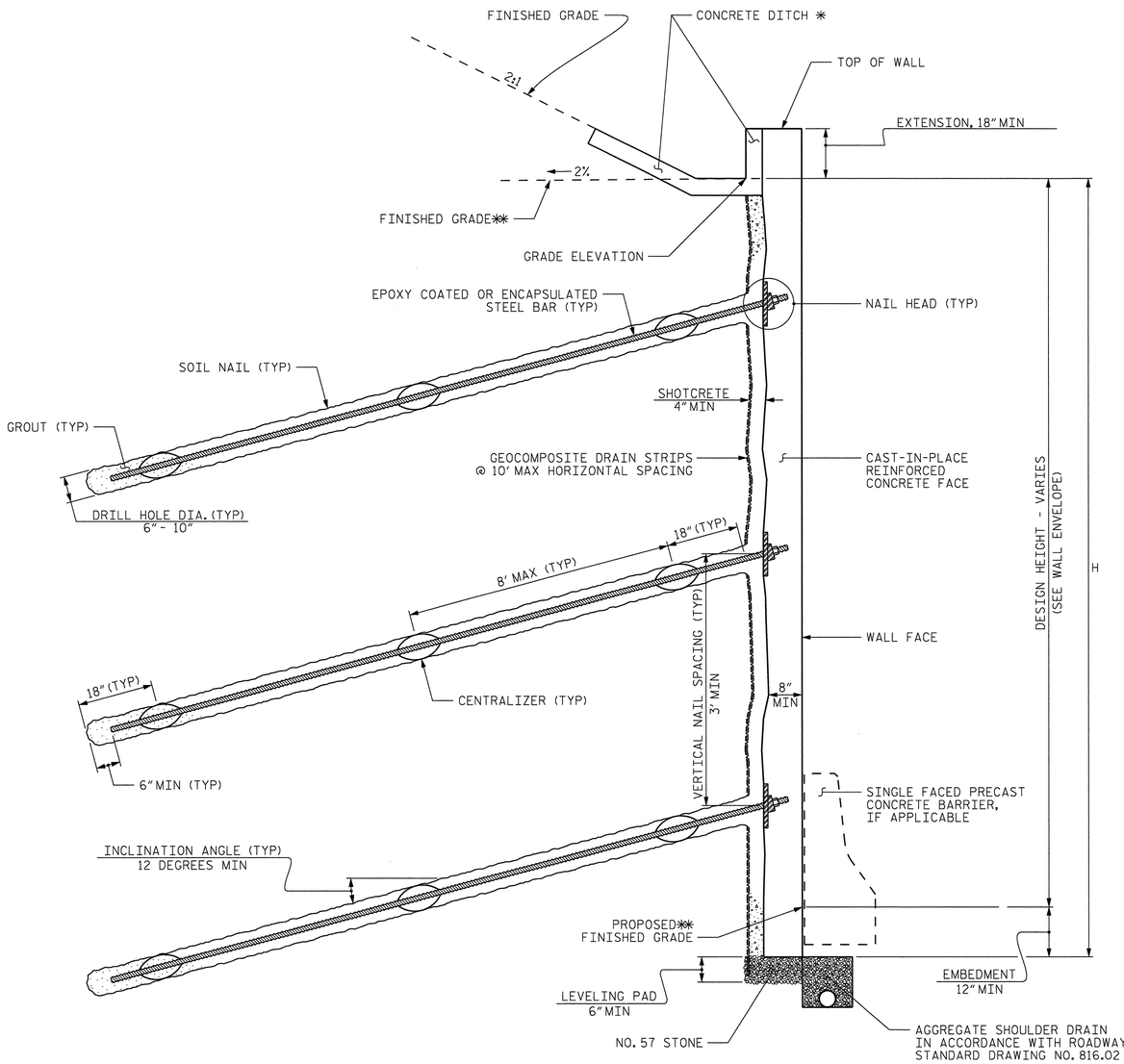

SOIL NAIL WALL - TYPICAL SECTION

*SEE CONCRETE DITCH BEHIND WALL DETAILS.
**SEE SHEET W-1 FOR FINISHED GRADE.

NOTES:

FOR SOIL NAIL RETAINING WALLS, SEE SOIL NAIL RETAINING WALLS PROVISION.

FOR SINGLE FACED PRECAST CONCRETE BARRIER, SEE ROADWAY PLANS AND SECTION 857 OF THE STANDARD SPECIFICATIONS.

BEFORE BEGINNING SOIL NAIL WALL DESIGN FOR RETAINING WALL NO. 2, SURVEY WALL LOCATION AND SUBMIT A REVISED WALL PROFILE VIEW (WALL ENVELOPE) FOR REVIEW. DO NOT START WALL DESIGN OR CONSTRUCTION UNTIL THE REVISED WALL ENVELOPE IS ACCEPTED.

DESIGN RETAINING WALL NO. 2 FOR THE FOLLOWING:
1) H = DESIGN HEIGHT + EMBEDMENT
2) DESIGN LIFE = 100 YEARS
3) MINIMUM EMBEDMENT = 1 FT
4) IN-SITU ASSUMED MATERIAL PARAMETERS ABOVE ELEVATION 2592 FT:
   UNIT WEIGHT, γ = 120 LB/CF
   FRICTION ANGLE, ϕ = 30 DEGREES
   COHESION, c = 0 LB/SF
5) IN-SITU ASSUMED MATERIAL PARAMETERS BELOW ELEVATION 2592 FT:
   UNIT WEIGHT, γ = 120 LB/C
   FRICTION ANGLE, ϕ = 32 DEGREES
   COHESION, c = 0 LB/SF

PERFORM GRADING BEHIND THE TOP OF WALL BEFORE BEGINNING WALL CONSTRUCTION.

FOUNDATIONS FOR SIGNS, LIGHTING or SIGNALS MAY BE LOCATED BEHIND RETAINING WALL NO. 2 AND MAY INTERFERE WITH SOIL NAILS. SUBMIT PROPOSED CONSTRUCTION METHODS FOR THESE FOUNDATIONS WITH THE SOIL NAIL WALL CONSTRUCTION PLAN.

EXISTING, PROPOSED, OR FUTURE OBSTRUCTIONS SUCH AS FOUNDATIONS, GUARDRAIL, FENCE OR HANDRAIL POSTS, PAVEMENTS, PIPES, INLETS OR UTILITIES MAY INTERFERE WITH SOIL NAILS FOR RETAINING WALL NO. 2.

SEISMIC DESIGN IS NOT REQUIRED FOR RETAINING WALL NO. 2.

AN ASHLAR STONE ARCHITECTUAL FINISH IS REQUIRED FOR THE CAST-IN-PLACE REINFORCED CONCRETE FACING FOR RETAINING WALL NO. 2. THE CONTRACTOR SHALL SUBMIT A SAMPLE OF THE ASHLAR FINISH TO THE ENGINEER FOR APPROVAL. THE FORM LINERS SHALL CREATE NO VISIBLE VERTICAL OR HORIZONTAL SEAMS OR CONSPICUOUS FORM LINER BUTT MARKS.

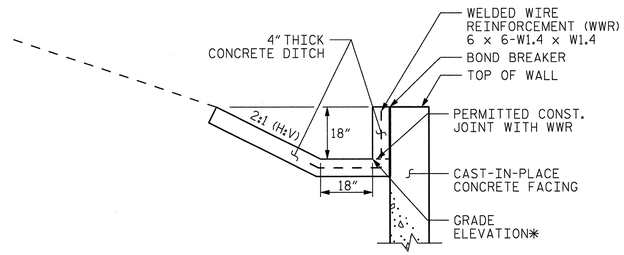

CONCRETE DITCH BEHIND WALL WITH CONCRETE FACING

*SEE WALL ENVELOPE SHEET W-1 FOR GRADE ELEVATIONS.

PROJECT NO.: R-4047
HAYWOOD ***COUNTY***
STATION: 12+00.00 -Y4- TO 18+55.73 -Y4-
SHEET 2 OF 2

PREPARED BY: P. PETRUCCI	DATE: 09/24/13
REVIEWED BY: G. TAYLOR	DATE: 09/24/13

GEOTECHNICAL ENGINEERING UNIT
☐ ***EASTERN REGIONAL OFFICE***
☐ ***WESTERN REGIONAL OFFICE***
☒ ***CONTRACT OFFICE***
STATE OF NORTH CAROLINA
DEPARTMENT OF TRANSPORTATION
RALEIGH

RETAINING WALL NO. 2 SOIL NAIL WALL DETAILS AND NOTES

REVISIONS						SHEET NO.
NO.	BY	DATE	NO.	BY	DATE	W-2
1			3			TOTAL SHEETS
2			4			2

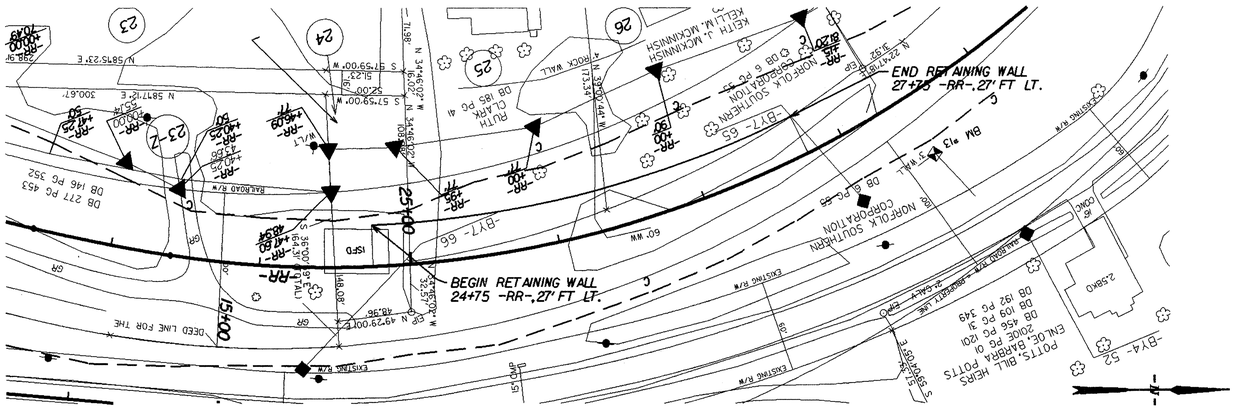

LOCATION SKETCH

ESTIMATED WALL QUANTITIES	
RETAINING WALL	SOLDIER PILE RETAINING WALLS (SQUARE FEET)
STATION 24+75 TO STA. 27+75 -RR-	630 SQ. FT.

GEOTECHNICAL ENGINEER

NORTH CAROLINA PROFESSIONAL SEAL 29869 ENGINEER SHANE C CLARK

SIGNATURE 6/8/14 DATE

ENGINEER

SIGNATURE DATE

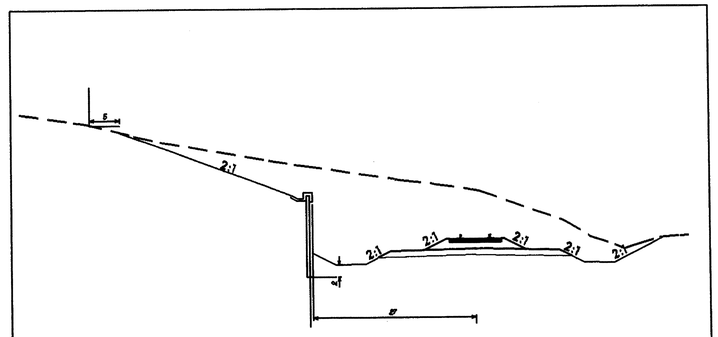

TYPICAL SECTION

POINT	STA.	OFFSET	ELEV.
A	24+75	27.5(LT)	2575.18
B	25+00	27.5(LT)	2579.97
C	25+50	27.5(LT)	2583.27
D	27+00	27.5(LT)	2586.40
E	27+50	27.5(LT)	2585.87
F	27+75	27.5(LT)	2579.13

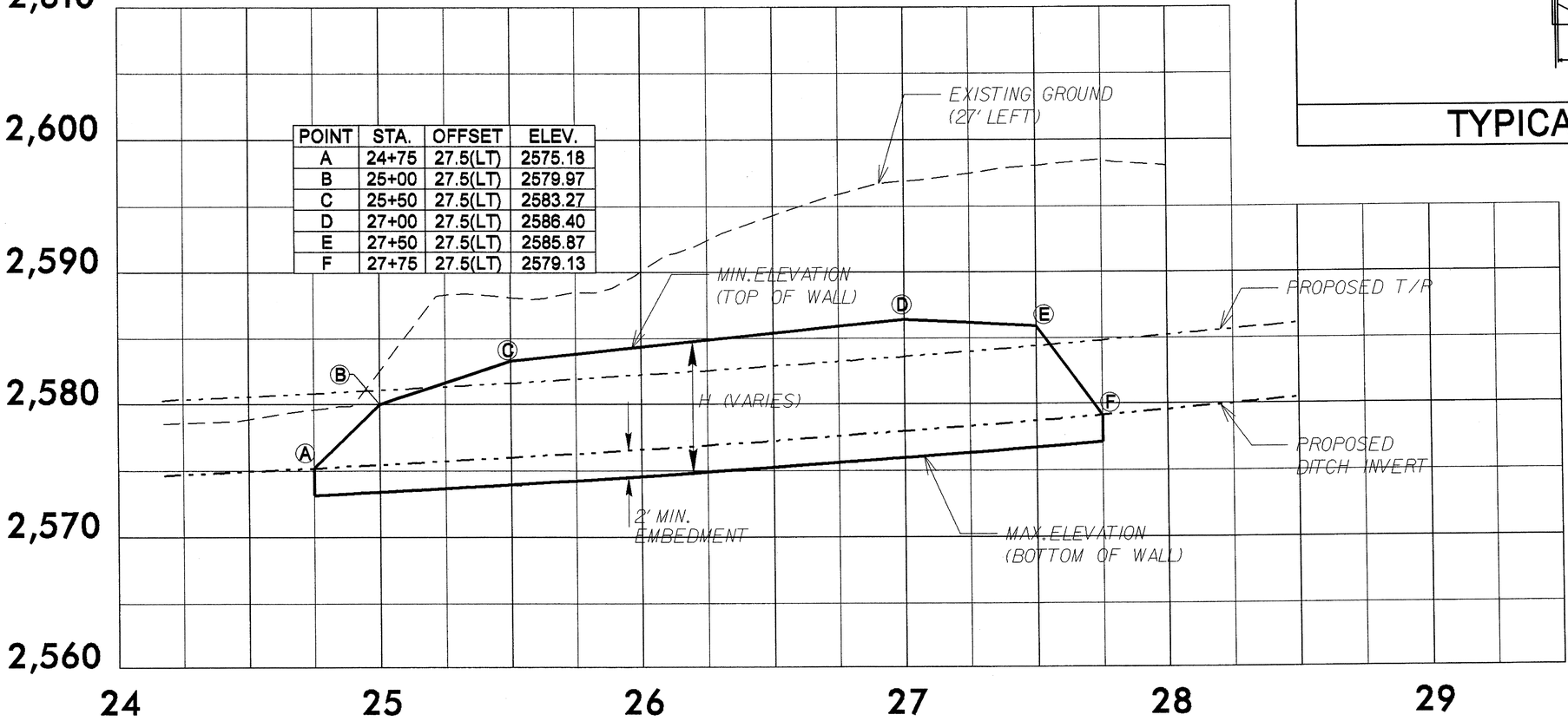

PROJECT NO.: R-4047

HAYWOOD COUNTY

STATION: 24+75 TO 27+75 -RR-

SHEET 1 OF 2

GEOTECHNICAL ENGINEERING UNIT

☐ EASTERN REGIONAL OFFICE

☒ WESTERN REGIONAL OFFICE

☐ CONTRACT OFFICE

STATE OF NORTH CAROLINA
DEPARTMENT OF TRANSPORTATION
RALEIGH

SOLDIER PILE RETAINING WALL ALONG RR

REVISIONS						SHEET NO.
NO.	BY	DATE	NO.	BY	DATE	W-3
1			3			TOTAL SHEETS
2			4			

PREPARED BY: SCC	DATE: 8-8-14
REVIEWED BY: ENW	DATE: 8-8-14

GEOTECHNICAL ENGINEER

NORTH CAROLINA PROFESSIONAL SEAL 29869 ENGINEER SHANE C CLARK

SIGNATURE 6/18/14 DATE

ENGINEER

SIGNATURE DATE

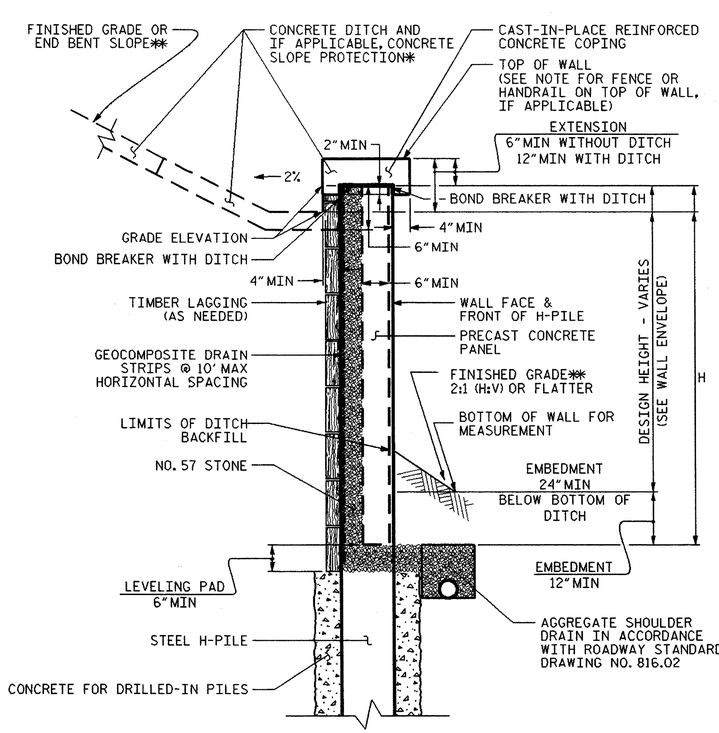

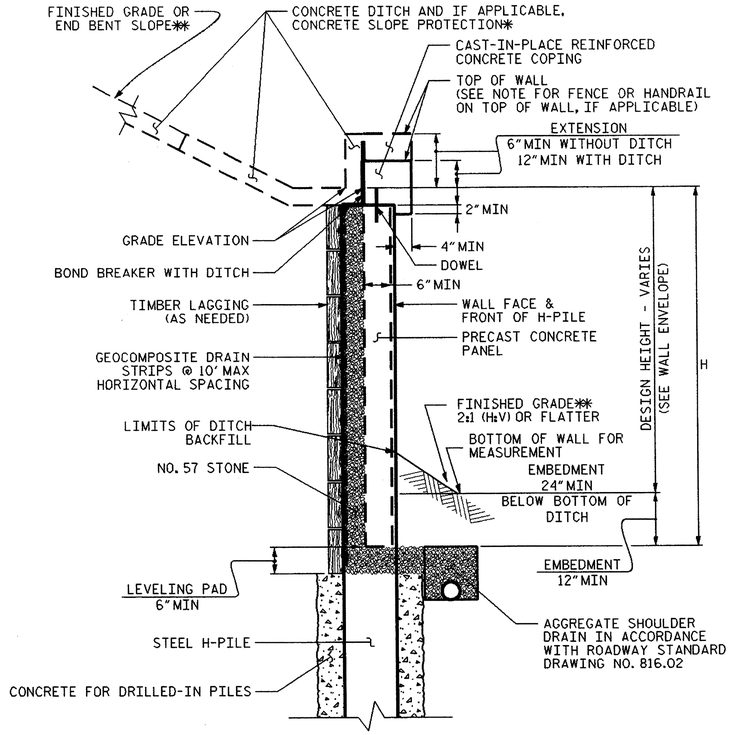

SOLDIER PILE WALL WITH PRECAST PANEL - TYPICAL SECTIONS

AT THE CONTRACTOR'S OPTION, CONNECT COPING TO PANELS WITH DOWELS OR EXTEND COPING DOWN BACK OF PANELS AND PILES.
*SEE CONCRETE DITCH BEHIND WALL DETAILS.
**SEE PLANS FOR FINISHED GRADE OR END BENT SLOPE DETAILS.

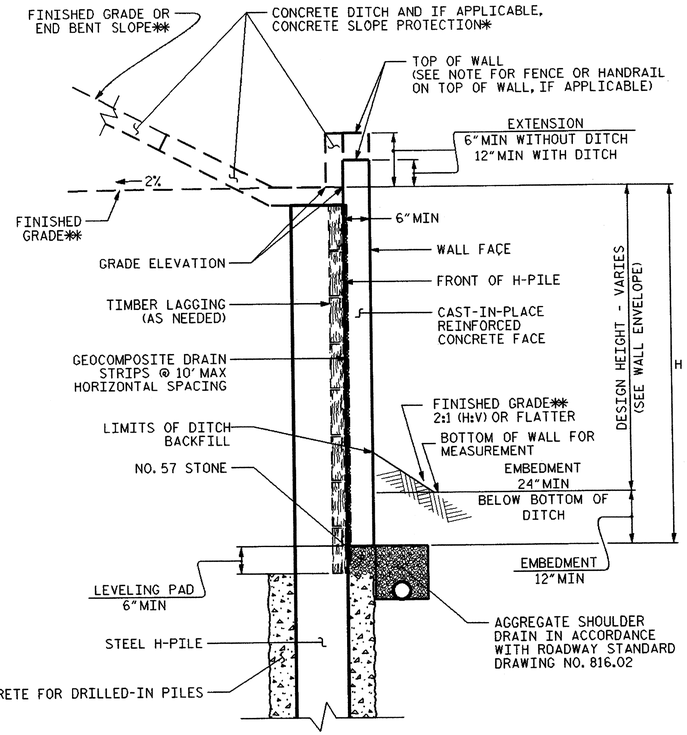

SOLDIER PILE WALL WITH CAST-IN-PLACE FACE - TYPICAL SECTION

*SEE CONCRETE DITCH BEHIND WALL DETAILS.
**SEE PLANS FOR FINISHED GRADE OR END BENT SLOPE DETAILS.

NOTES:

FOR SOLDIER PILE RETAINING WALLS, SEE SOLDIER PILE RETAINING WALLS PROVISION.

AT THE CONTRACTOR'S OPTION, USE DRIVEN OR DRILLED IN H-PILES FOR RETAINING WALL.

USE A SOLDIER PILE RETAINING WALL WITH PRECAST CONCRETE PANELS THAT MEET SECTION 1077 OF THE STANDARD SPECIFICATIONS, OR PROVIDE A CAST-IN-PLACE REINFORCED CONCRETE FACE FOR RETAINING WALL.

WALL QUANTITY ESTIMATE DOES NOT INCLUDE ADDITIONAL 2 FT OF EMBEDMENT BELOW LOW POINT IN DITCH.

BEFORE BEGINNING SOLDIER PILE WALL DESIGN FOR RETAINING WALL, SURVEY WALL LOCATION AND SUBMIT A REVISED WALL PROFILE VIEW (WALL ENVELOPE) FOR REVIEW. DO NOT START WALL DESIGN OR CONSTRUCTION UNTIL THE REVISED WALL ENVELOPE IS ACCEPTED.

DESIGN RETAINING WALL NO. FOR THE FOLLOWING:
1) H = DESIGN HEIGHT + EMBEDMENT
2) DESIGN LIFE = 75 YEARS
3) MINIMUM EMBEDMENT ELEVATION = 2 FT BELOW BOTTOM OF DITCH
4) IN-SITU ASSUMED MATERIAL PARAMETERS :
   UNIT WEIGHT, γ = 120 LB/CF
   FRICTION ANGLE, ϕ = 30DEGREES
   COHESION, c = 0 LB/SF

IF REQUIRED, DESIGN RETAINING WALL FOR A PIPE EXTENDING UNDER OR THROUGH THE WALL AS SHOWN. IF APPLICABLE, VERIFY PIPE LOCATION AND ELEVATION BEFORE BEGINNING SOLDIER PILE WALL DESIGN OR CONSTRUCTION.

AT THE CONTRACTOR'S OPTION, USE A TEMPORARY SLOPE INSTEAD OF TEMPORARY SUPPORT OF EXCAVATIONS FOR RETAINING WALL.

ALLOW 30 CALENDAR DAYS MINIUM FOR REVIEW OF RETAINING WALL PLANS.

THE CONTRACTOR IS TO INCLUDE THE WALL DESIGNER AND RAILROAD CONSTRUCTION REPRESENTATIVE IN THE PRECONSTRUCTION MEETING AS OUTLINED IN THE PROJECT SPECIAL PROVISIONS.

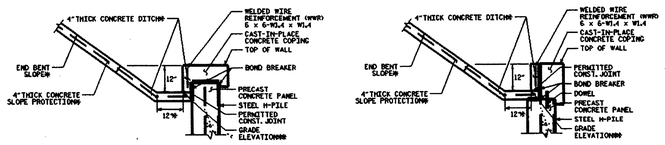

SOLDIER PILE WALL WITH PRECAST PANELS

PROJECT NO.: R-4047

HAYWOOD **COUNTY**

STATION: 24+75 TO 27+75 -RR-

SHEET 2 OF 2

PREPARED BY: SCC	DATE: 8-8-14
REVIEWED BY: ENW	DATE: 8-8-14

GEOTECHNICAL ENGINEERING UNIT

- ☐ EASTERN REGIONAL OFFICE
- ☒ WESTERN REGIONAL OFFICE
- ☐ CONTRACT OFFICE

STATE OF NORTH CAROLINA DEPARTMENT OF TRANSPORTATION RALEIGH

SOLDIER PILE WALL ALONG RR DETAILS AND NOTES

REVISIONS						SHEET NO.
NO.	BY	DATE	NO.	BY	DATE	W-4
1			3			TOTAL SHEETS
2			4			

STANDARD NOTES

DESIGN DATA:

SPECIFICATIONS	A.A.S.H.T.O. (CURRENT)
LIVE LOAD	SEE PLANS
IMPACT ALLOWANCE	SEE A.A.S.H.T.O.
STRESS IN EXTREME FIBER OF	
STRUCTURAL STEEL - AASHTO M270 GRADE 36	20,000 LBS. PER SQ. IN.
- AASHTO M270 GRADE 50W	27,000 LBS. PER SQ. IN.
- AASHTO M270 GRADE 50	27,000 LBS. PER SQ. IN.
REINFORCING STEEL IN TENSION	
GRADE 60	24,000 LBS. PER SQ. IN.
CONCRETE IN COMPRESSION	1,200 LBS. PER SQ. IN.
CONCRETE IN SHEAR	SEE A.A.S.H.T.O.
STRUCTURAL TIMBER - TREATED OR	
UNTREATED - EXTREME FIBER STRESS	1,800 LBS. PER SQ. IN.
COMPRESSION PERPENDICULAR TO GRAIN OF TIMBER	375 LBS. PER SQ. IN.
EQUIVALENT FLUID PRESSURE OF EARTH	30 LBS. PER CU. FT. (MINIMUM)

MATERIAL AND WORKMANSHIP:

EXCEPT AS MAY OTHERWISE BE SPECIFIED ON PLANS OR IN THE SPECIAL PROVISIONS, ALL MATERIAL AND WORKMANSHIP SHALL BE IN ACCORDANCE WITH THE 2012 "STANDARD SPECIFICATIONS FOR ROADS AND STRUCTURES" OF THE N. C. DEPARTMENT OF TRANSPORTATION.

STEEL SHEET PILING FOR PERMANENT OR TEMPORARY APPLICATIONS SHALL BE HOT ROLLED.

CONCRETE:

UNLESS OTHERWISE REQUIRED ON PLANS, CLASS A CONCRETE SHALL BE USED FOR ALL PORTIONS OF ALL STRUCTURES WITH THE EXCEPTION THAT: CLASS AA CONCRETE SHALL BE USED IN BRIDGE SUPERSTRUCTURES, ABUTMENT BACKWALLS, AND APPROACH SLABS; AND CLASS B CONCRETE SHALL BE USED FOR SLOPE PROTECTION AND RIP RAP.

CONCRETE CHAMFERS:

UNLESS OTHERWISE NOTED ON THE PLANS, ALL EXPOSED CORNERS ON STRUCTURES SHALL BE CHAMFERED 3/4" WITH THE FOLLOWING EXCEPTIONS: TOP CORNERS OF CURBS MAY BE ROUNDED TO 1-1/2" RADIUS WHICH IS BUILT INTO CURB FORMS; CORNERS OF TRANSVERSE FLOOR EXPANSION JOINTS SHALL BE ROUNDED WITH A 1/4" FINISHING TOOL UNLESS OTHERWISE REQUIRED ON PLANS; AND CORNERS OF EXPANSION JOINTS IN THE ROADWAY FACES AND TOPS OF CURBS AND SIDEWALKS SHALL BE ROUNDED TO A 1/4" RADIUS WITH A FINISHING STONE OR TOOL UNLESS OTHERWISE REQUIRED ON PLANS.

DOWELS:

DOWELS WHEN INDICATED ON PLANS AS FOR CULVERT EXTENSIONS, SHALL BE EMBEDDED AT LEAST 12" INTO THE OLD CONCRETE AND GROUTED INTO PLACE WITH 1:2 CEMENT MORTAR.

ALLOWANCE FOR DEAD LOAD DEFLECTION, SETTLEMENT, ETC. IN CASTING SUPERSTRUCTURES:

BRIDGES SHALL BE BUILT ON THE GRADE OR VERTICAL CURVE SHOWN ON PLANS. SLABS, CURBS AND PARAPETS SHALL CONFORM TO THE GRADE OR CURVE.

ALL DIMENSIONS WHICH ARE GIVEN IN SECTION AND ARE AFFECTED BY DEAD LOAD DEFLECTIONS ARE DIMENSIONS AT CENTER LINE OF BEARING UNLESS OTHERWISE NOTED ON PLANS. IN SETTING FORMS FOR STEEL BEAM BRIDGES AND PRESTRESSED CONCRETE GIRDER BRIDGES, ADJUSTMENTS SHALL BE MADE DUE TO THE DEAD LOAD DEFLECTIONS FOR THE ELEVATIONS SHOWN. WHERE BLOCKS ARE SHOWN OVER BEAMS FOR BUILDING UP TO THE SLAB, THE VERTICAL DIMENSIONS OF THE BLOCKS SHALL BE ADJUSTED BETWEEN BEARINGS TO COMPENSATE FOR DEAD LOAD DEFLECTIONS, VERTICAL CURVE ORDINATE, AND ACTUAL BEAM CAMBER. WHERE BOTTOM OF SLAB IS IN LINE WITH BOTTOM OF TOP FLANGES, DEPTH OF SLAB BETWEEN BEARINGS SHALL BE ADJUSTED TO COMPENSATE FOR DEAD LOAD DEFLECTION, VERTICAL CURVE ORDINATE, AND ACTUAL BEAM CAMBER.

IN SETTING FALSEWORK AND FORMS FOR REINFORCED CONCRETE SPANS, AN ALLOWANCE SHALL BE MADE FOR DEAD LOAD DEFLECTIONS, SETTLEMENT OF FALSEWORK, AND PERMANENT CAMBER WHICH SHALL BE PROVIDED FOR IN ADDITION TO THE ELEVATIONS SHOWN. AFTER REMOVAL OF THE FALSEWORK, THE FINISHED STRUCTURES SHALL CONFORM TO THE PROFILE AND ELEVATIONS SHOWN ON THE PLANS AND CONSTRUCTION ELEVATIONS FURNISHED BY THE ENGINEER.

DETAILED DRAWINGS FOR FALSEWORK OR FORMS FOR BRIDGE SUPERSTRUCTURE AND ANY STRUCTURE OR PARTS OF A STRUCTURE AS NOTED ON THE PLANS SHALL BE SUBMITTED TO THE ENGINEER FOR APPROVAL BEFORE CONSTRUCTION OF THE FALSEWORK OR FORMS IS STARTED.

REINFORCING STEEL:

ALL REINFORCING STEEL SHALL BE DEFORMED. DIMENSIONS RELATIVE TO PLACEMENT OF REINFORCING ARE TO CENTERS OF BARS UNLESS OTHERWISE INDICATED IN THE PLANS. DIMENSIONS ON BAR DETAILS ARE TO CENTERS OF BARS OR ARE OUT TO OUT AS INDICATED ON PLANS.

WIRE BAR SUPPORTS SHALL BE PROVIDED FOR REINFORCING STEEL WHERE INDICATED ON THE PLANS. WHEN BAR SUPPORT PIECES ARE PLACED IN CONTINUOUS LINES, THEY SHALL BE SO PLACED THAT THE ENDS OF THE SUPPORTING WIRES SHALL BE LAPPED TO LOCK LEGS ON ADJOINING PIECES.

STRUCTURAL STEEL:

AT THE CONTRACTOR'S OPTION, HE MAY SUBSTITUTE 7/8" Ø SHEAR STUDS FOR THE 3/4" Ø STUDS SPECIFIED ON THE PLANS. THIS SUBSTITUTION SHALL BE MADE AT THE RATE OF 3 - 7/8" Ø STUDS FOR 4 - 3/4" Ø STUDS, AND STUD SPACING CHANGES SHALL BE MADE AS NECESSARY TO PROVIDE THE SAME EQUIVALENT NUMBER OF 7/8" Ø STUDS ALONG THE BEAM AS SHOWN FOR 3/4" Ø STUDS BASED ON THE RATIO OF 3 - 7/8" Ø STUDS FOR 4 - 3/4" Ø STUDS. STUDS OF THE LENGTH SPECIFIED ON THE PLANS MUST BE PROVIDED. THE MAXIMUM SPACING SHALL BE 2'-0".

EXCEPT AT THE INTERIOR SUPPORTS OF CONTINUOUS BEAMS WHERE THE COVER PLATE IS IN CONTACT WITH BEARING PLATE, THE CONTRACTOR MAY, AT HIS OPTION, SUBSTITUTE FOR THE COVER PLATES DESIGNATED ON THE PLANS COVER PLATES OF THE EQUIVALENT AREA PROVIDED THESE PLATES ARE AT LEAST 5/16" IN THICKNESS AND DO NOT EXCEED A WIDTH EQUAL TO THE FLANGE WIDTH LESS 2" OR A THICKNESS EQUAL TO 2 TIMES THE FLANGE THICKNESS. THE SIZE OF FILLET WELDS SHALL CONFORM TO THE REQUIREMENTS OF THE CURRENT ANSI/AASHTO/AWS "BRIDGE WELDING CODE". ELECTROSLAG WELDING WILL NOT BE PERMITTED.

WITH THE SOLE EXCEPTION OF EDGES AT SURFACES WHICH BEAR ON OTHER SURFACES, ALL SHARP EDGES AND ENDS OF SHAPES AND PLATES SHALL BE SLIGHTLY ROUNDED BY SUITABLE MEANS TO A RADIUS OF APPROXIMATELY 1/16 INCH OR EQUIVALENT FLAT SURFACE AT A SUITABLE ANGLE PRIOR TO PAINTING, GALVANIZING, OR METALLIZING.

HANDRAILS AND POSTS:

METAL STANDARDS AND FACES OF THE CONCRETE END POSTS FOR THE METAL RAIL SHALL BE SET NORMAL TO THE GRADE OF THE CURB, UNLESS OTHERWISE SHOWN ON PLANS. THE METAL RAIL AND TOPS OF CONCRETE POSTS USED WITH THE ALUMINUM RAIL SHALL BE BUILT PARALLEL TO THE GRADE OF THE CURB.

METAL HANDRAILS SHALL BE IN ACCORDANCE WITH THE PLANS. RAILS SHALL BE AS MANUFACTURED FOR BRIDGE RAILING. CASTINGS SHALL BE OF A UNIFORM APPEARANCE. FINS AND OTHER DEFORMATIONS RESULTING FROM CASTING OR OTHERWISE SHALL BE REMOVED IN A MANNER SO THAT A UNIFORM COLORING OF THE COMPLETED CASTING SHALL BE OBTAINED. CASTINGS WITH DISCOLORATIONS OR OF NON-UNIFORM COLORING WILL NOT BE ACCEPTED. CERTIFIED MILL REPORTS ARE REQUIRED FOR METAL RAILS AND POSTS.

SPECIAL NOTES:

GENERALLY, IN CASE OF DISCREPANCY, THIS STANDARD SHEET OF NOTES SHALL GOVERN OVER THE SPECIFICATIONS, BUT THE REMAINDER OF THE PLANS SHALL GOVERN OVER NOTES HEREON, AND SPECIAL PROVISIONS SHALL GOVERN OVER ALL. SEE SPECIFICATIONS ARTICLE 105-4.

ENGLISH

JANUARY, 1990

STD. NO. SN

REV. 6-16-95 EEM @ RGW REV. 5-7-03 RWW @ JTE REV. 10-1-11 MAA @ GM
REV. 8-16-99 RWW @ LES REV. 5-1-06 TLA @ GM