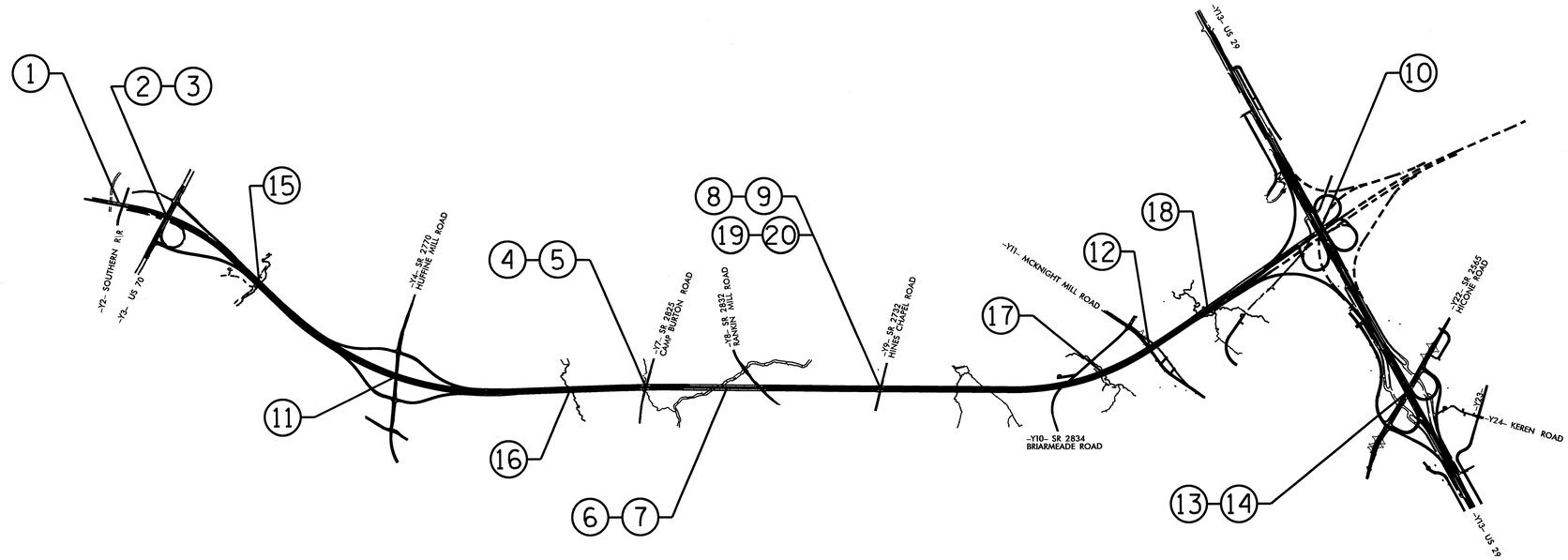

STRUCTURE INDEX

NO.	STATION	DESCRIPTION	SHEETS
1	14+99.25 -L-	BRIDGE ON GREENSBORO EASTERN LOOP OVER OLD BURLINGTON RD. AND NORFOLK SOUTHERN RR	S-1 thru S-44
2	26+21.65 -L-	BRIDGE ON GREENSBORO EASTERN LOOP OVER US 70 (LEFT LANE)	S-45 thru S-74
3	26+21.65 -L-	BRIDGE ON GREENSBORO EASTERN LOOP OVER US 70 (RIGHT LANE)	S-75 thru S-109
4	129+37.56 -L-	BRIDGE ON GREENSBORO EASTERN LOOP OVER CAMP BURTON RD. (LEFT LANE)	S-110 thru S-140
5	129+37.56 -L-	BRIDGE ON GREENSBORO EASTERN LOOP OVER CAMP BURTON RD. (RIGHT LANE)	S-141 thru S-172
6	144+90.00 -L-	BRIDGE ON GREENSBORO EASTERN LOOP OVER NORTH BUFFALO CREEK AND SR 2832 (LEFT LANE)	S-173 thru S-233
7	144+60.63 -L-	BRIDGE ON GREENSBORO EASTERN LOOP OVER NORTH BUFFALO CREEK AND SR 2832 (RIGHT LANE)	S-234 thru S-296
8	174+72.46 -L-	BRIDGE ON GREENSBORO EASTERN LOOP OVER SR 2835 (LEFT LANE)	S-297 thru S-320
9	174+72.46 -L-	BRIDGE ON GREENSBORO EASTERN LOOP OVER SR 2835 (RIGHT LANE)	S-321 thru S-345
10	268+22.89 -L-	BRIDGE ON GREENSBORO EASTERN LOOP OVER US 29	S-346 thru S-388
11	80+74.41 -L-	BRIDGE ON HUFFINE MILL RD. OVER GREENSBORO EASTERN LOOP	S-389 thru S-418
12	228+23.81 -L-	BRIDGE ON McKNIGHT MILL RD. OVER GREENSBORO EASTERN LOOP	S-419 thru S-452
13	26+17.64 -Y22-	BRIDGE ON HICONE RD. OVER US 29 (LEFT LANE)	S-453 thru S-500
14	26+17.64 -Y22-	BRIDGE ON HICONE RD. OVER US 29 (RIGHT LANE)	S-501 thru S-541
15	48+65.00 -L-	DOUBLE 9'X9' RCBC	C-1 thru C-5
16	114+55.00 -L-	DOUBLE 7'X8' RCBC	C-6 thru C-10
17	218+00.00 -L-	DOUBLE 7'X8' RCBC	C-11 thru C-15
18	241+96.00 -L-	DOUBLE 8'X8' RCBC	C-16 thru C-20
19	10+73.00 -Y9-	MSE RETAINING WALL NO. 1	W1 thru W4
20	10+49.00 -Y9-	MSE RETAINING WALL NO. 2	

PART 1: NO. 1 – NO. 5
PART 2: NO. 6 – NO. 10
PART 3: NO. 11 – NO. 20

PART 3 OF 3

PROJECT NO. U-2525B
GUILFORD COUNTY
STATION:

STATE OF NORTH CAROLINA
DEPARTMENT OF TRANSPORTATION
RALEIGH

INDEX

REVISIONS					
NO.	BY:	DATE:	NO.	BY:	DATE:
1			3		
2			4		

DRAWN BY : W.D. CRUTCHER DATE : 2-14-14
CHECKED BY : E.G. ALLEN DATE : 2-18-14

18-FEB-2014 11:17
S:\PEF\ALL INDIVIDUAL FOLDERS\Darrell\u2525b_title_index.dgn
darrutcher

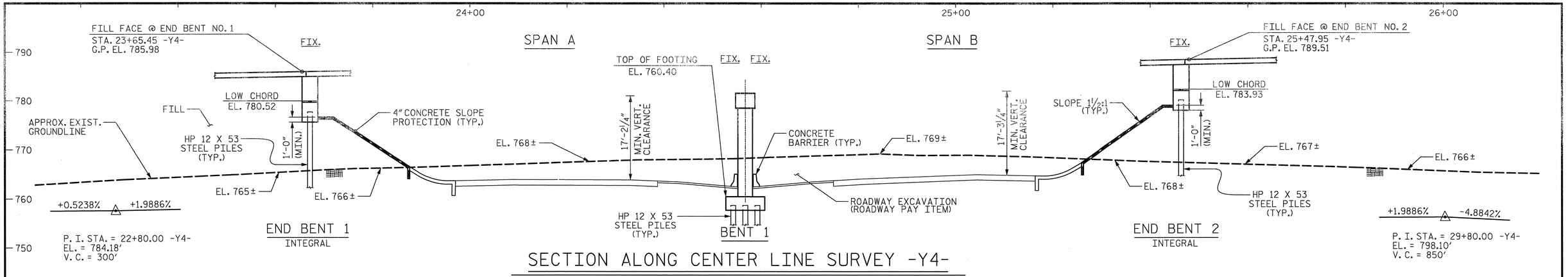

VERTICAL CURVE DATA -Y4-

VERTICAL CURVE DATA -Y4-

SECTION ALONG CENTER LINE SURVEY -Y4-

(SECTIONS AT INTEGRAL END BENTS AND BENT ARE TAKEN AT RIGHT ANGLES)

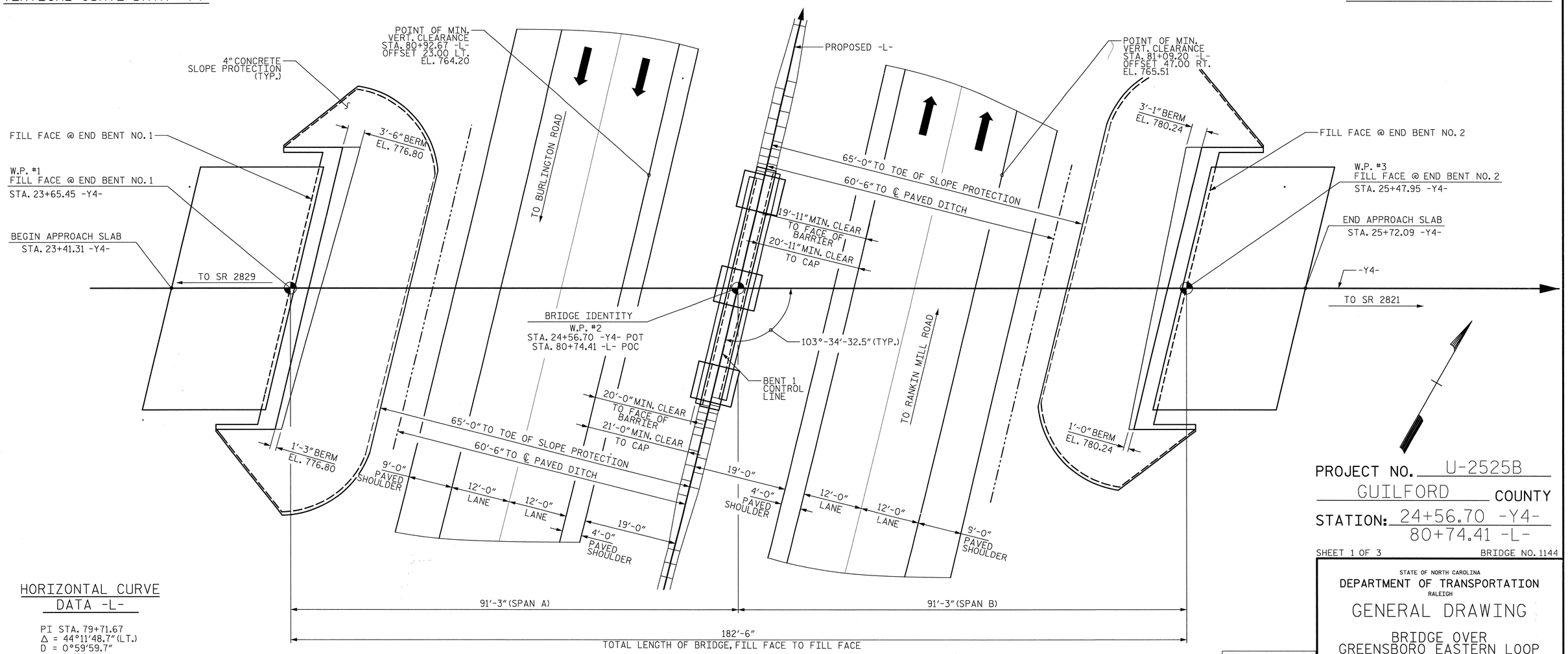

PLAN

(PILES NOT SHOWN IN PLAN VIEW)

HORIZONTAL CURVE DATA -L-

PI STA. 79+71.67
Δ = 44°11'48.7" (LT.)
D = 0°59'59.7"
L = 4,420.01'
T = 2,326.53'
R = 5,730.00'
SE = 0.04

DRAWN BY : J.M. KEPICH	DATE : 03/07/13		
CHECKED BY : R.F. WERTMAN	DATE : 03/15/13		
DESIGN ENGINEER OF RECORD : R.F. WERTMAN	DATE : 03/15/13		

PLANS PREPARED BY:
Gannett Fleming
Excellence Delivered As Promised
1121 Situs Court
Suite 170
Raleigh NC 27606-4279
(919) 859-4880
NC Lic. No. F-0270

NORTH CAROLINA PROFESSIONAL SEAL 037180 ENGINEER RICHARD F. WERTMAN

PROJECT NO. U-2525B
GUILFORD COUNTY
STATION: 24+56.70 -Y4-
80+74.41 -L-

SHEET 1 OF 3 BRIDGE NO. 1144

STATE OF NORTH CAROLINA
DEPARTMENT OF TRANSPORTATION
RALEIGH

GENERAL DRAWING

BRIDGE OVER
GREENSBORO EASTERN LOOP
ON HUFFINE MILL ROAD
BETWEEN SR 2829
& SR 2821

REVISIONS							SHEET NO.
NO.	BY:	DATE:	NO.	BY:	DATE:		S-389
1			3				TOTAL SHEETS
2			4				541

STR. NO. 11

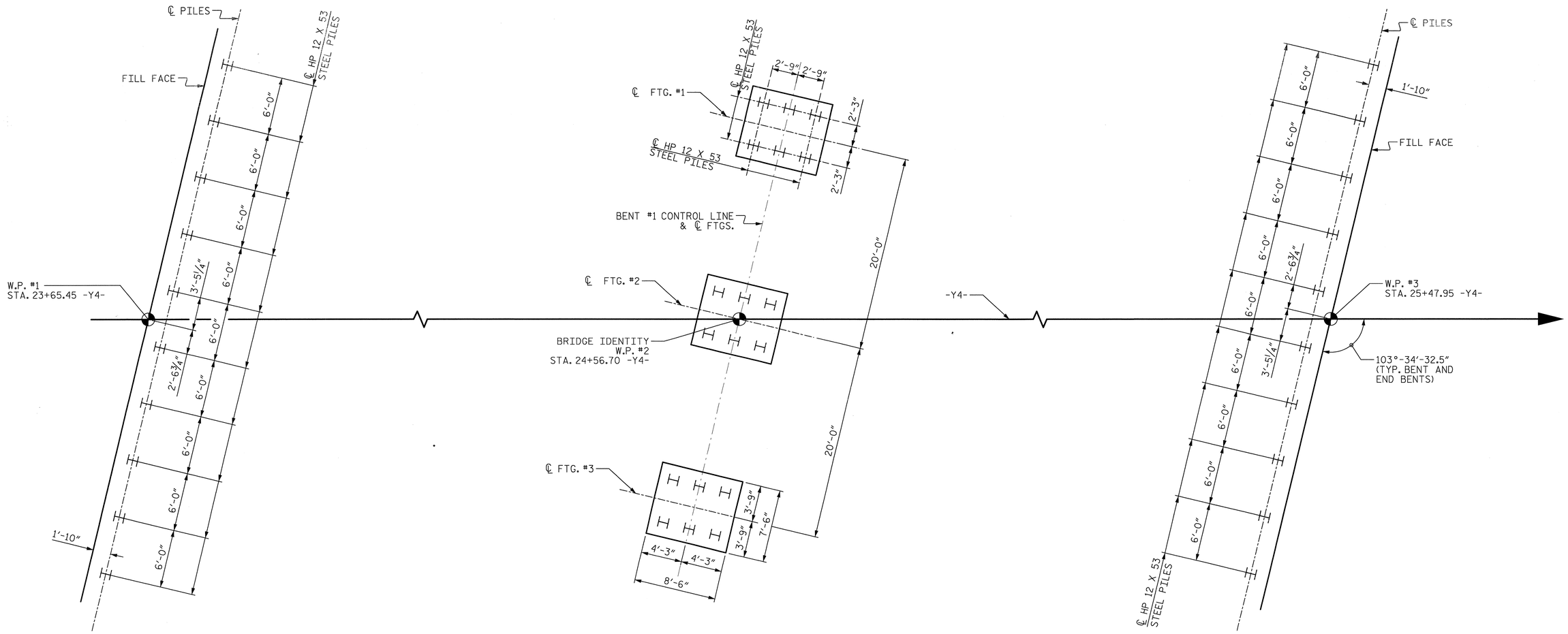

FOUNDATION LAYOUT

DIMENSIONS LOCATING PILES ARE SHOWN TO PILE CENTERLINE.
ALL COLUMN FOOTINGS AND PILE SPACINGS ARE IDENTICAL AT BENT.

PROJECT NO. U-2525B
GUILFORD COUNTY
STATION: 24+56.70 -Y4-
80+74.41 -L-
SHEET 2 OF 3

NOTES:

FOR PILES, SEE SECTION 450 OF THE STANDARD SPECIFICATIONS.

PILES AT END BENT NO. 1 AND END BENT NO. 2 ARE DESIGNED FOR A FACTORED RESISTANCE OF 110 TONS PER PILE.

PILES AT BENT NO. 1 ARE DESIGNED FOR A FACTORED RESISTANCE OF 120 TONS PER PILE.

DRIVE PILES AT END BENT NO.1 AND END BENT NO. 2 TO A REQUIRED DRIVING RESISTANCE OF 185 TONS PER PILE.

DRIVE PILES AT BENT NO. 1 TO A REQUIRED DRIVING RESISTANCE OF 200 TONS PER PILE.

STATE OF NORTH CAROLINA
DEPARTMENT OF TRANSPORTATION
RALEIGH

GENERAL DRAWING

BRIDGE OVER
GREENSBORO EASTERN LOOP
ON HUFFINE MILL ROAD
BETWEEN SR 2829
& SR 2821

REVISIONS						SHEET NO.
NO.	BY:	DATE:	NO.	BY:	DATE:	S-390
1			3			TOTAL SHEETS
2			4			541

DRAWN BY : L.M. SAMPLES DATE : 04/01/13
CHECKED BY : R.F. WERTMAN DATE : 04/01/13
DESIGN ENGINEER OF RECORD : R.F. WERTMAN DATE : 05/09/13

PLANS PREPARED BY:
Gannett Fleming
Excellence Delivered As Promised
1121 Situs Court
Suite 170
Raleigh NC 27606-4279
(919) 859-4880
NC Lic. No. F-0270

NORTH CAROLINA PROFESSIONAL SEAL 037165 ENGINEER RICHARD F. WERTMAN

STR. NO. 61

BENCH MARK #26: 176.84' RIGHT OF STA. 25+99.81 -Y4- EL. 773.52'. R/R SPIKE SET IN 12" PINE

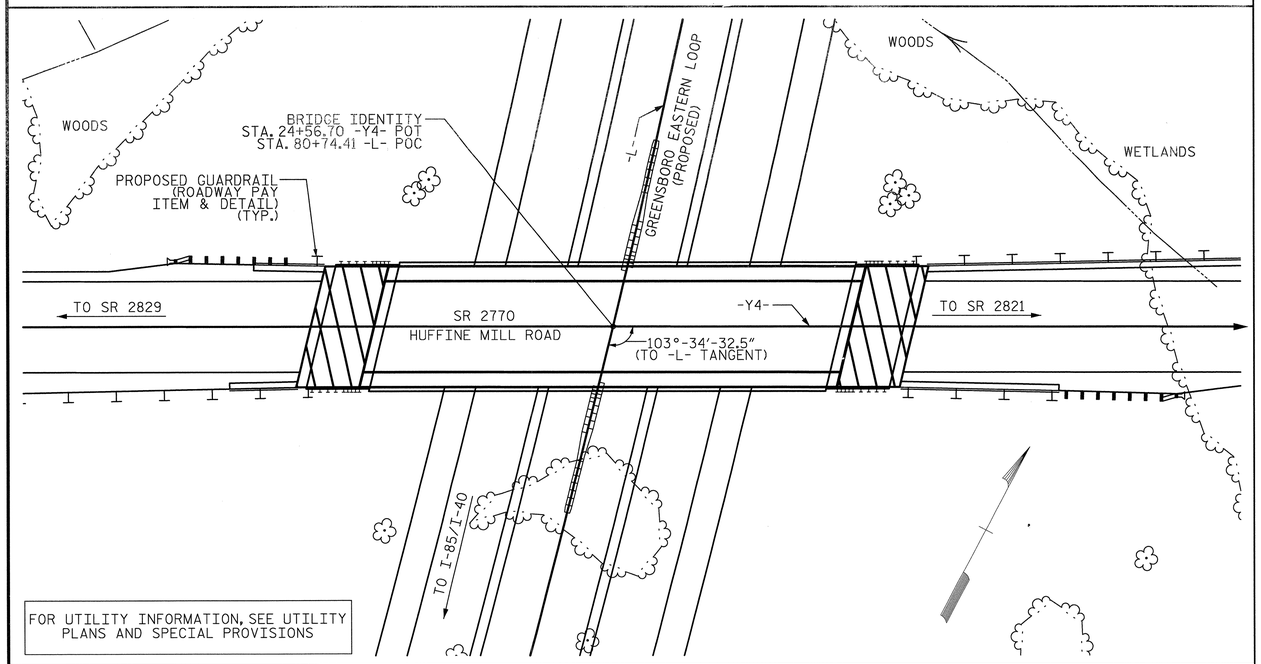

LOCATION SKETCH

NOTES:

ASSUMED LIVE LOAD = HL-93 OR ALTERNATE LOADING.

THIS BRIDGE HAS BEEN DESIGNED IN ACCORDANCE WITH THE AASHTO LRFD BRIDGE DESIGN SPECIFICATIONS.

THIS BRIDGE IS LOCATED IN SEISMIC ZONE 1.

FOR OTHER DESIGN DATA AND GENERAL NOTES, SEE SHEET SN.

FOR SUBMITTAL OF WORKING DRAWINGS, SEE SPECIAL PROVISIONS.

FOR FALSEWORK AND FORMWORK, SEE SPECIAL PROVISIONS.

FOR CRANE SAFETY, SEE SPECIAL PROVISIONS.

FOR GROUT FOR STRUCTURES, SEE SPECIAL PROVISIONS.

REMOVABLE FORMS MAY BE USED IN LIEU OF METAL STAY-IN-PLACE FORMS IN ACCORDANCE WITH ARTICLE 420-3 OF THE STANDARD SPECIFICATIONS.

NEEDLE BEAMS WILL NOT BE ALLOWED UNLESS OTHERWISE CALLED FOR ON THE PLANS OR APPROVED BY THE ENGINEERS.

WORK SHALL NOT BE STARTED ON THIS BRIDGE UNTIL ROADWAY SECTION HAS BEEN EXCAVATED.

FOR PLACING LOAD ON STRUCTURE MEMBERS, SEE SPECIAL PROVISIONS.

TOTAL BILL OF MATERIAL

	FOUNDATION EXCAVATION FOR BENT 1	REINFORCED CONCRETE DECK SLAB	GROOVING BRIDGE FLOORS	CLASS A CONCRETE	BRIDGE APPROACH SLABS	REINFORCING STEEL	SPIRAL COLUMN REINFORCING STEEL	54" PRESTRESSED CONCRETE GIRDERS		HP 12 X 53 STEEL PILES		CONCRETE BARRIER RAIL	4" SLOPE PROTECTION	ELASTOMERIC BEARINGS
	LUMP SUM	SQ.FT.	SQ.FT.	CU.YDS.	LUMP SUM	LBS.	LBS.	NO.	LIN.FT.	NO.	LIN.FT.	LIN.FT.	SQ.YDS.	LUMP SUM
SUPERSTRUCTURE		9,353	10,293					10	896.56			361.60		LUMP SUM
END BENT 1				37.7		5,036				10	250		267	
BENT 1	LUMP SUM			62.8		10,201	1,219			18	480			
END BENT 2				38.2		5,054				10	450		269	
TOTAL	LUMP SUM	9,353	10,293	138.7	LUMP SUM	20,291	1,219	10	896.56	38	1,180	361.60	536	LUMP SUM

PROJECT NO. U-2525B
GUILFORD COUNTY
STATION: 24+56.70 -Y4-
80+74.41 -L-
SHEET 3 OF 3

STATE OF NORTH CAROLINA
DEPARTMENT OF TRANSPORTATION
RALEIGH

GENERAL DRAWING

BRIDGE OVER GREENSBORO EASTERN LOOP ON HUFFINE MILL ROAD BETWEEN SR 2829 & SR 2821

REVISIONS						SHEET NO.
NO.	BY:	DATE:	NO.	BY:	DATE:	S-391
1			3			TOTAL SHEETS
2			4			541

DRAWN BY : J.M. KEPICH DATE : 05/29/13
CHECKED BY : R.F. WERTMAN DATE : 05/29/13
DESIGN ENGINEER OF RECORD : R.F. WERTMAN DATE : 05/29/13

PLANS PREPARED BY:
Gannett Fleming
Excellence Delivered As Promised
1121 Situs Court
Suite 170
Raleigh NC 27606-4279
(919) 859-4880
NC Lic. No. F-0270

NORTH CAROLINA PROFESSIONAL SEAL 037182 ENGINEER RICHARD F. WERTMAN

STR. NO. 11

LOAD AND RESISTANCE FACTOR RATING (LRFR) SUMMARY FOR PRESTRESSED CONCRETE GIRDERS

LEVEL		VEHICLE	WEIGHT (W) (TONS)	CONTROLLING LOAD RATING (#)	MINIMUM RATING FACTORS (RF)	TONS = W × RF	STRENGTH I LIMIT STATE											SERVICE III LIMIT STATE						COMMENT NUMBER
								MOMENT					SHEAR						MOMENT					
							LIVE-LOAD FACTORS (γ_{LL})	DISTRIBUTION FACTORS (DF)	RATING FACTOR	SPAN	GIRDER LOCATION	DISTANCE FROM LEFT END OF SPAN (ft)	DISTRIBUTION FACTORS (DF)	RATING FACTOR	SPAN	GIRDER LOCATION	DISTANCE FROM LEFT END OF SPAN (ft)	LIVE-LOAD FACTORS (γ_{LL})	DISTRIBUTION FACTORS (DF)	RATING FACTOR	SPAN	GIRDER LOCATION	DISTANCE FROM LEFT END OF SPAN (ft)	
DESIGN LOAD RATING		HL-93 (INVENTORY)	N/A	1	1.14	--	1.75	0.847	1.44	B	I	44.1	1.073	1.55	B	I	35.2	0.80	0.847	1.14	B	I	44.1	1
		HL-93 (OPERATING)	N/A		1.87	--	1.35	0.847	1.87	B	I	44.1	1.073	2.82	B	I	35.2	N/A	--	--	--	--	--	1
		HS-20 (INVENTORY)	36.000	2	1.56	56.16	1.75	0.847	1.97	B	I	44.1	1.073	2.44	B	I	35.2	0.80	0.847	1.56	B	I	44.1	1
		HS-20 (OPERATING)	36.000		2.55	91.80	1.35	0.847	2.55	B	I	44.1	1.073	3.88	B	I	35.2	N/A	--	--	--	--	--	1
LEGAL LOAD RATING	SINGLE VEHICLE (SV)	SNSH	13.500		3.65	49.28	1.40	0.847	5.76	B	I	44.1	1.073	8.97	B	I	35.2	0.80	0.847	3.65	B	I	44.1	1
		SNGARBS2	20.000		3.65	73.00	1.40	0.847	4.20	B	I	44.1	1.073	6.39	B	I	35.2	0.80	0.847	2.66	B	I	44.1	1
		SNAGRIS2	22.000		2.66	58.52	1.40	0.847	3.94	B	I	44.1	1.073	5.94	B	I	35.2	0.80	0.847	2.50	B	I	44.1	1
		SNCOTTS3	27.250		2.50	68.13	1.40	0.847	2.86	B	I	44.1	1.073	4.37	B	I	35.2	0.80	0.847	1.81	B	I	44.1	1
		SNAGGRS4	34.925		1.81	63.21	1.40	0.847	2.36	B	I	44.1	1.073	3.64	B	I	35.2	0.80	0.847	1.49	B	I	44.1	1
		SNS5A	35.550		1.49	52.97	1.40	0.847	2.31	B	I	44.1	1.073	3.72	B	I	35.2	0.80	0.847	1.46	B	I	44.1	1
		SNS6A	39.950		1.46	58.33	1.40	0.847	2.10	B	I	44.1	1.073	3.37	B	I	35.2	0.80	0.847	1.33	B	I	44.1	1
		SNS7B	42.000		1.33	55.86	1.40	0.847	2.00	B	I	44.1	1.073	3.29	B	I	35.2	0.80	0.847	1.27	B	I	44.1	1
	TRUCK TRACTOR SEMI-TRAILER (TTST)	TNAGRIT3	33.000		1.62	53.46	1.40	0.847	2.56	B	I	44.1	1.073	4.06	B	I	35.2	0.80	0.847	1.62	B	I	44.1	1
		TNT4A	33.075		1.63	53.91	1.40	0.847	2.57	B	I	44.1	1.073	3.93	B	I	35.2	0.80	0.847	1.63	B	I	44.1	1
		TNT6A	41.600		1.32	54.91	1.40	0.847	2.08	B	I	44.1	1.073	3.65	B	I	35.2	0.80	0.847	1.32	B	I	44.1	1
		TNT7A	42.000		1.32	55.44	1.40	0.847	2.09	B	I	44.1	1.073	3.48	B	I	35.2	0.80	0.847	1.32	B	I	44.1	1
		TNT7B	42.000		1.36	57.12	1.40	0.847	2.14	B	I	44.1	1.073	3.05	B	I	35.2	0.80	0.847	1.36	B	I	44.1	1
		TNAGRIT4	43.000		1.30	55.90	1.40	0.847	2.05	B	I	44.1	1.073	2.80	B	I	35.2	0.80	0.847	1.30	B	I	44.1	1
		TNAGT5A	45.000		1.23	55.35	1.40	0.847	1.94	B	I	44.1	1.073	2.80	B	I	53.1	0.80	0.847	1.23	B	I	44.1	1
		TNAGT5B	45.000	3	1.22	54.90	1.40	0.847	1.92	B	I	44.1	1.073	2.48	B	I	35.2	0.80	0.847	1.22	B	I	44.1	1

LOAD FACTORS:

DESIGN LOAD RATING FACTORS	LIMIT STATE	γ_{DC}	γ_{DW}
	STRENGTH I	1.25	1.50
	SERVICE III	1.00	1.00

NOTES:

MINIMUM RATING FACTORS ARE BASED ON THE STRENGTH I AND SERVICE III LIMIT STATES.

ALLOWABLE STRESSES FOR SERVICE III LIMIT STATE ARE AS REQUIRED FOR DESIGN.

COMMENTS:

1. SPAN A RATING FACTORS ARE EQUAL TO SPAN B LENGTH AND RATING FACTORS.

(#) CONTROLLING LOAD RATING

(1) DESIGN LOAD RATING (HL-93)

(2) DESIGN LOAD RATING (HS-20)

(3) LEGAL LOAD RATING **

** SEE CHART FOR VEHICLE TYPE

GIRDER LOCATION

I - INTERIOR GIRDER
EL - EXTERIOR LEFT GIRDER
ER - EXTERIOR RIGHT GIRDER

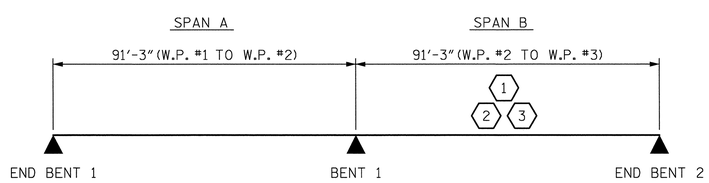

LRFR SUMMARY

PROJECT NO. U-2525B
GUILFORD COUNTY
STATION: 24+56.70 -Y4-
80+74.41 -L-

STATE OF NORTH CAROLINA
DEPARTMENT OF TRANSPORTATION
RALEIGH

STANDARD
LRFR SUMMARY FOR PRESTRESSED CONCRETE GIRDERS
(NON-INTERSTATE TRAFFIC)

REVISIONS								SHEET NO.
NO.	BY:	DATE:	NO.	BY:	DATE:			S-392
1			3					TOTAL SHEETS
2			4					541

ASSEMBLED BY : J.M. KEPICH DATE : 03/07/13
CHECKED BY : R.F. WERTMAN DATE : 03/15/13
DRAWN BY : MAA 1/08 REV. 11/12/08RR MAA/GM
CHECKED BY : GM/DI 2/08 REV. 10/1/11 MAA/GM

PLANS PREPARED BY:
Gannett Fleming
Excellence Delivered As Promised
1121 Situs Court
Suite 170
Raleigh NC 27606-4279
(919) 859-4880
NC Lic. No. F-0270

THESE PLANS HAVE BEEN PROPERLY EXAMINED BY THE UNDERSIGNED. I HAVE DETERMINED THAT THEY COMPLY WITH EXISTING NORTH CAROLINA CODES, AND HAVE BEEN PROPERLY ADAPTED FOR USE IN THIS AREA.

NORTH CAROLINA PROFESSIONAL SEAL 037186 ENGINEER RICHARD F. WERTMAN

STR. NO. 11

STD. NO. LRFR1

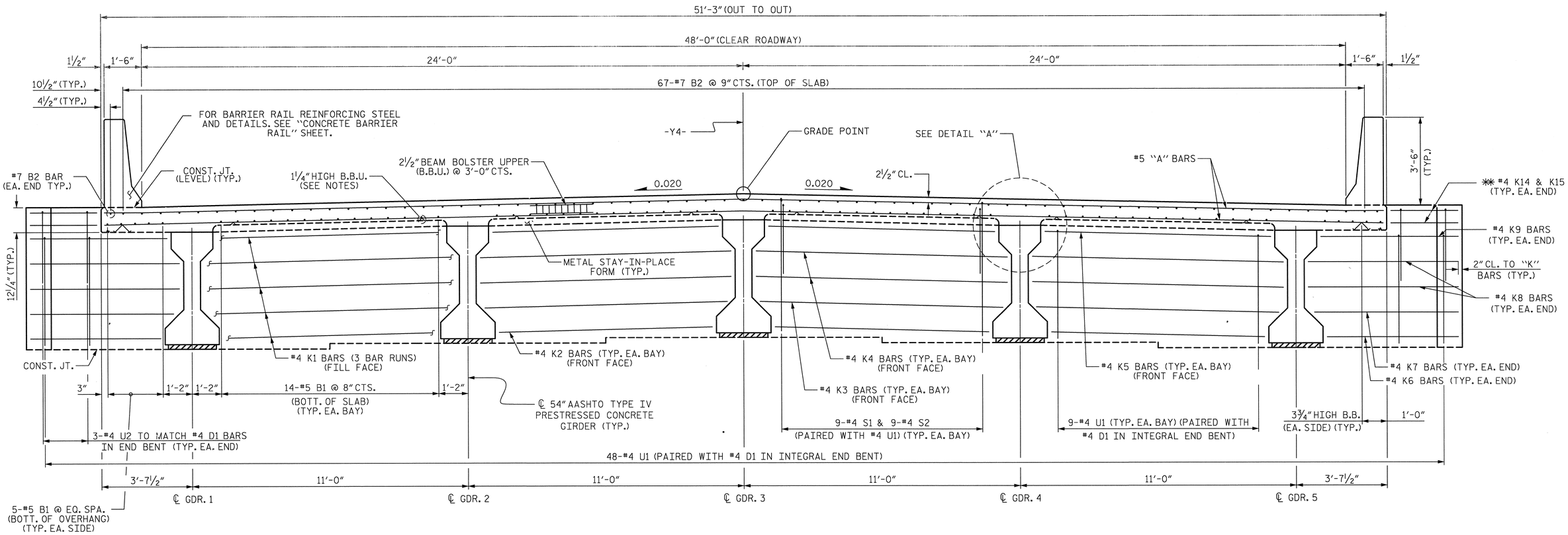

TYPICAL SECTION AT INTEGRAL END BENT

END BENT 1 SHOWN, END BENT 2 SIMILAR
FOR SECTION THRU END BENT, SEE SHEET 3 OF 3.
✱✱ FOR WING WALLS OF INTEGRAL END BENT, SEE SHEET NO. 10 - "TOP OF WINGS @ END BENT # 1" & SHEET NO. 11 - "TOP OF WINGS @ END BENT #2".

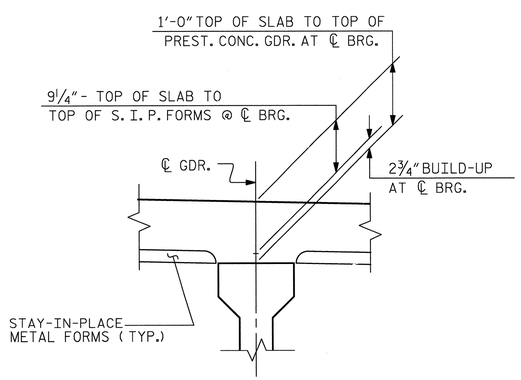

DETAIL "A"

NOTES:

PROVIDE 1¼" HIGH BEAM BOLSTERS UPPER AT 4'-0" CTS. ATOP THE METAL STAY-IN-PLACE FORMS TO SUPPORT THE BOTTOM MAT OF 'A' BARS. WHEN USING REMOVABLE FORMS, PROVIDE CONTINUOUS HIGH CHAIRS FOR METAL DECK (C.H.C.M.) @ 4'-0" CTS. WITH A HEIGHT TO SUPPORT THE BOTTOM MAT OF 'A' BARS A CLEAR DISTANCE OF 2½" ABOVE THE TOP OF THE REMOVABLE FORM.

LONGITUDINAL STEEL MAY BE SHIFTED SLIGHTLY, AS NECESSARY, TO AVOID INTERFERENCE WITH STIRRUPS IN PRESTRESSED CONCRETE GIRDERS.

BARRIER RAIL IN EACH SPAN SHALL NOT BE CAST UNTIL ALL SLAB CONCRETE IN THAT SPAN HAS BEEN CAST AND HAS REACHED A MINIMUM COMPRESSION STRENGTH OF 3,000 PSI.

PREVIOUSLY CAST CONCRETE IN A CONTINUOUS UNIT SHALL HAVE ATTAINED A MINIMUM COMPRESSIVE STRENGTH OF 3,000 PSI BEFORE ADDITIONAL CONCRETE IS CAST IN THE UNIT.

PROJECT NO. U-2525B
GUILFORD COUNTY
STATION: 24+56.70 -Y4-
80+74.41 -L-
SHEET 1 OF 3

STATE OF NORTH CAROLINA
DEPARTMENT OF TRANSPORTATION
RALEIGH
SUPERSTRUCTURE

TYPICAL SECTION

REVISIONS						SHEET NO.
NO.	BY:	DATE:	NO.	BY:	DATE:	S-393
1			3			TOTAL SHEETS
2			4			541

DRAWN BY : J.M. KEPICH DATE : 03/01/13
CHECKED BY : R.F. WERTMAN DATE : 03/15/13
DESIGN ENGINEER OF RECORD : R.F. WERTMAN DATE : 03/15/13

PLANS PREPARED BY:
Gannett Fleming
Excellence Delivered As Promised
1121 Situs Court
Suite 170
Raleigh NC 27606-4279
(919) 859-4880
NC Lic. No. F-0270

NORTH CAROLINA PROFESSIONAL SEAL 037180-1 ENGINEER RICHARD F. WERTMAN

STR. NO. 61

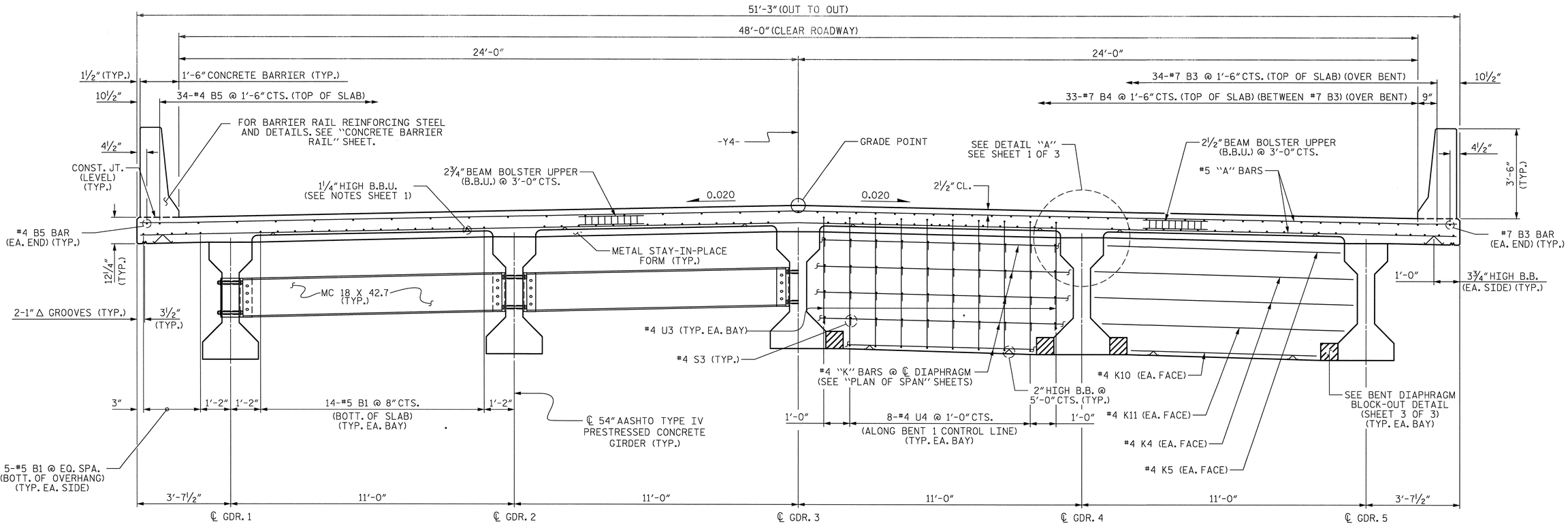

PARTIAL TYPICAL SECTION
(SHOWING INTERMEDIATE DIAPHRAGMS)

PARTIAL TYPICAL SECTION
(SHOWING CONTINUOUS FOR LIVE LOAD BENT DIAPHRAGM)

TYPICAL SECTION

FOR INTERMEDIATE STEEL DIAPHRAGM DETAILS SEE "INTERMEDIATE STEEL DIAPHRAGMS FOR TYPE IV PRESTRESSED CONCRETE GIRDERS" .

FOR SECTION THRU BENT DIAPHRAGM, SEE SHEET 3 OF 3.

PROJECT NO. U-2525B
GUILFORD COUNTY
STATION: 24+56.70 -Y4-
80+74.41 -L-
SHEET 2 OF 3

STATE OF NORTH CAROLINA
DEPARTMENT OF TRANSPORTATION
RALEIGH
SUPERSTRUCTURE

TYPICAL SECTION

REVISIONS						SHEET NO.
NO.	BY:	DATE:	NO.	BY:	DATE:	S-394
1			3			TOTAL SHEETS
2			4			541

DRAWN BY : J.M. KEPICH DATE : 03/01/13
CHECKED BY : R.F. WERTMAN DATE : 03/19/13
DESIGN ENGINEER OF RECORD : R.F. WERTMAN DATE : 03/19/13

PLANS PREPARED BY:
Gannett Fleming
Excellence Delivered As Promised
1121 Situs Court
Suite 170
Raleigh NC 27606-4279
(919) 859-4880
NC Lic. No. F-0270

NORTH CAROLINA PROFESSIONAL SEAL 037186 ENGINEER RICHARD F. WERTMAN

STR. NO. 11

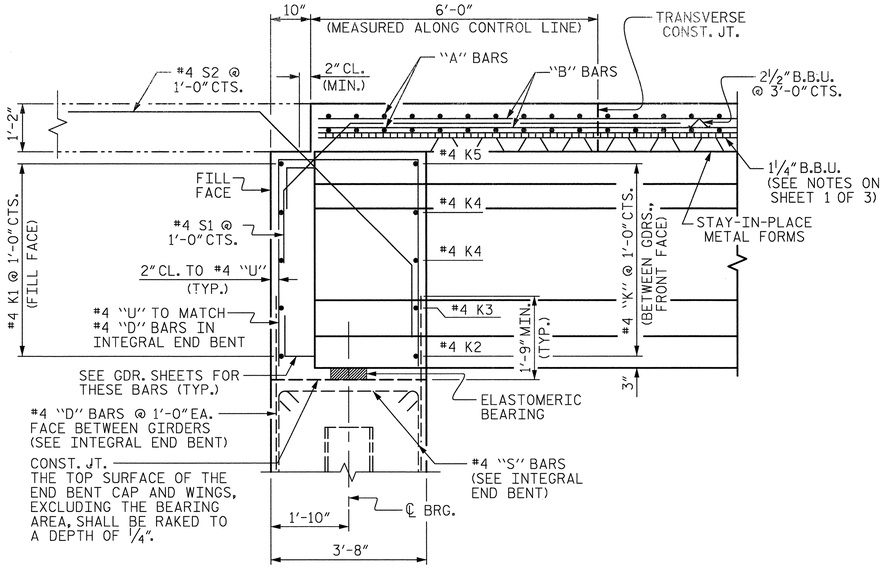

SECTION A-A

(AT INTEGRAL END BENT)

(FOR SECTION LOCATION, SEE PLAN OF SPAN SHEET 1 OF 4 & 2 OF 4)

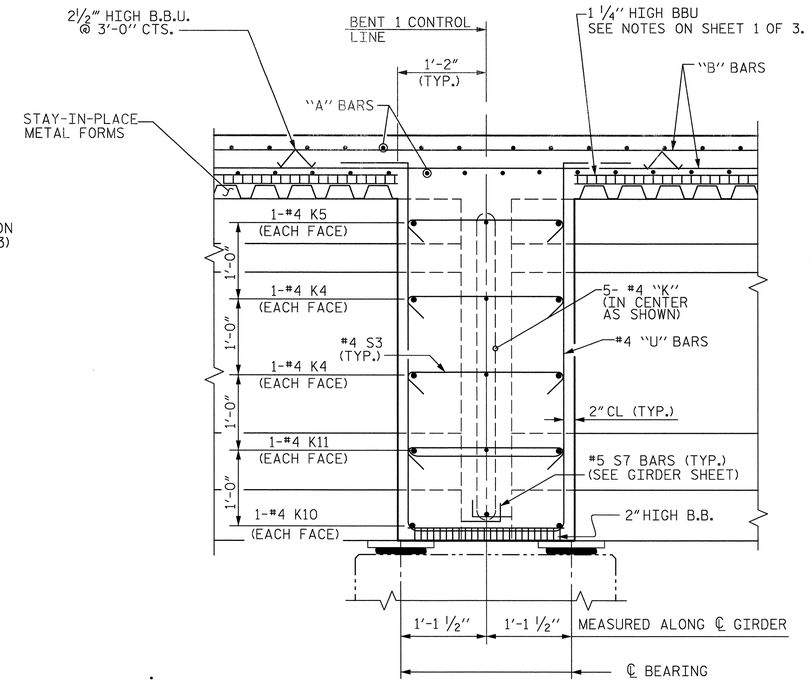

SECTION B-B

(FOR SECTION LOCATION, SEE PLAN OF SPAN SHEET 1 OF 4 & 2 OF 4)

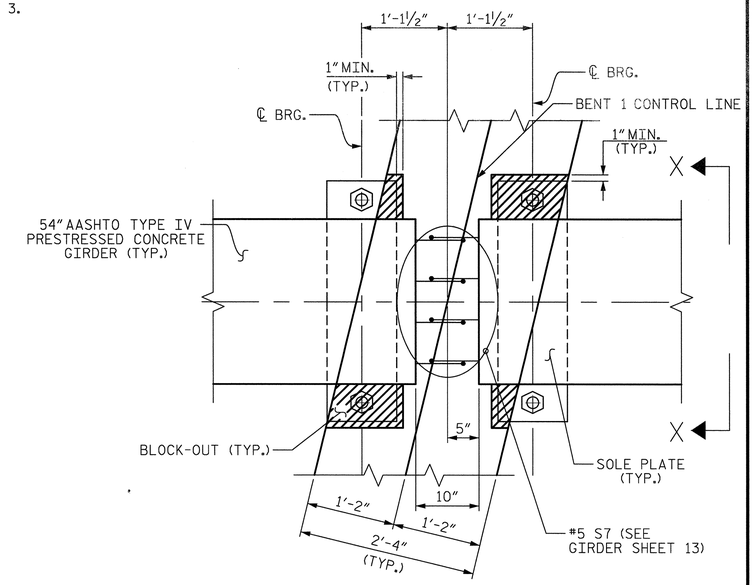

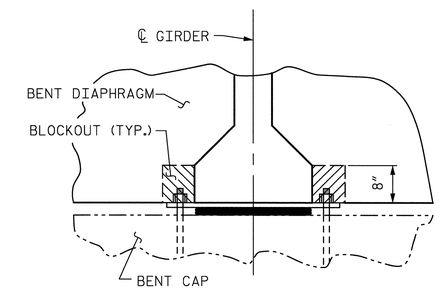

SECTION X-X

BENT DIAPHRAGM BLOCKOUT DETAIL

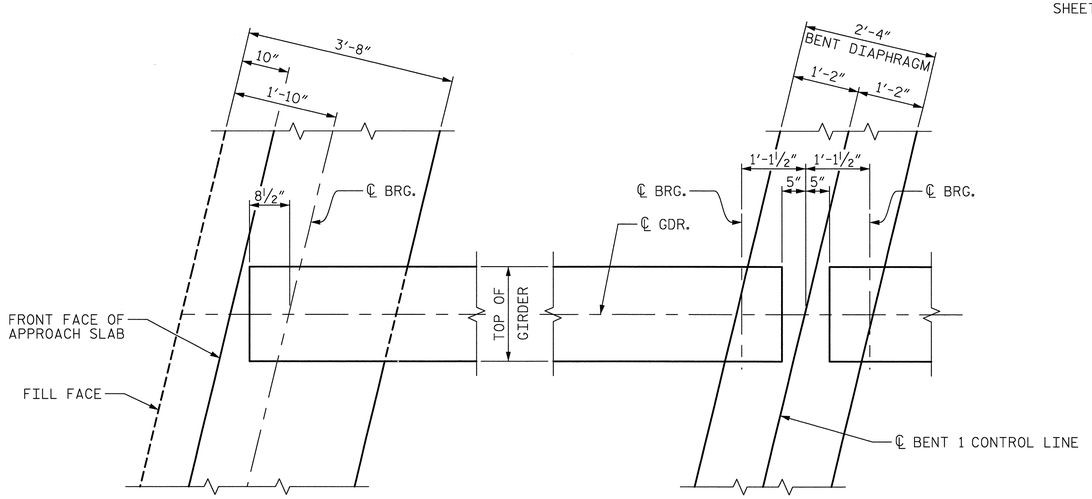

END BENT

BENT DIAPHRAGM

PLAN OF DIAPHRAGMS

PROJECT NO. U-2525B

GUILFORD COUNTY

STATION: 24+56.70 -Y4-
80+74.41 -L-

SHEET 3 OF 3

STATE OF NORTH CAROLINA
DEPARTMENT OF TRANSPORTATION
RALEIGH

SUPERSTRUCTURE

TYPICAL SECTION DETAILS

REVISIONS							SHEET NO.
NO.	BY:	DATE:	NO.	BY:	DATE:		S-395
1			3				TOTAL SHEETS
2			4				541

DRAWN BY : J.M. KEPICH DATE : 03/01/13
CHECKED BY : R.F. WERTMAN DATE : 03/19/13
DESIGN ENGINEER OF RECORD : R.F. WERTMAN DATE : 03/19/13

PLANS PREPARED BY:
Gannett Fleming
Excellence Delivered As Promised
1121 Situs Court
Suite 170
Raleigh NC 27606-4279
(919) 859-4880
NC Lic. No. F-0270

NORTH CAROLINA PROFESSIONAL SEAL 037185 ENGINEER RICHARD F. WERTMAN

STR. NO. 11

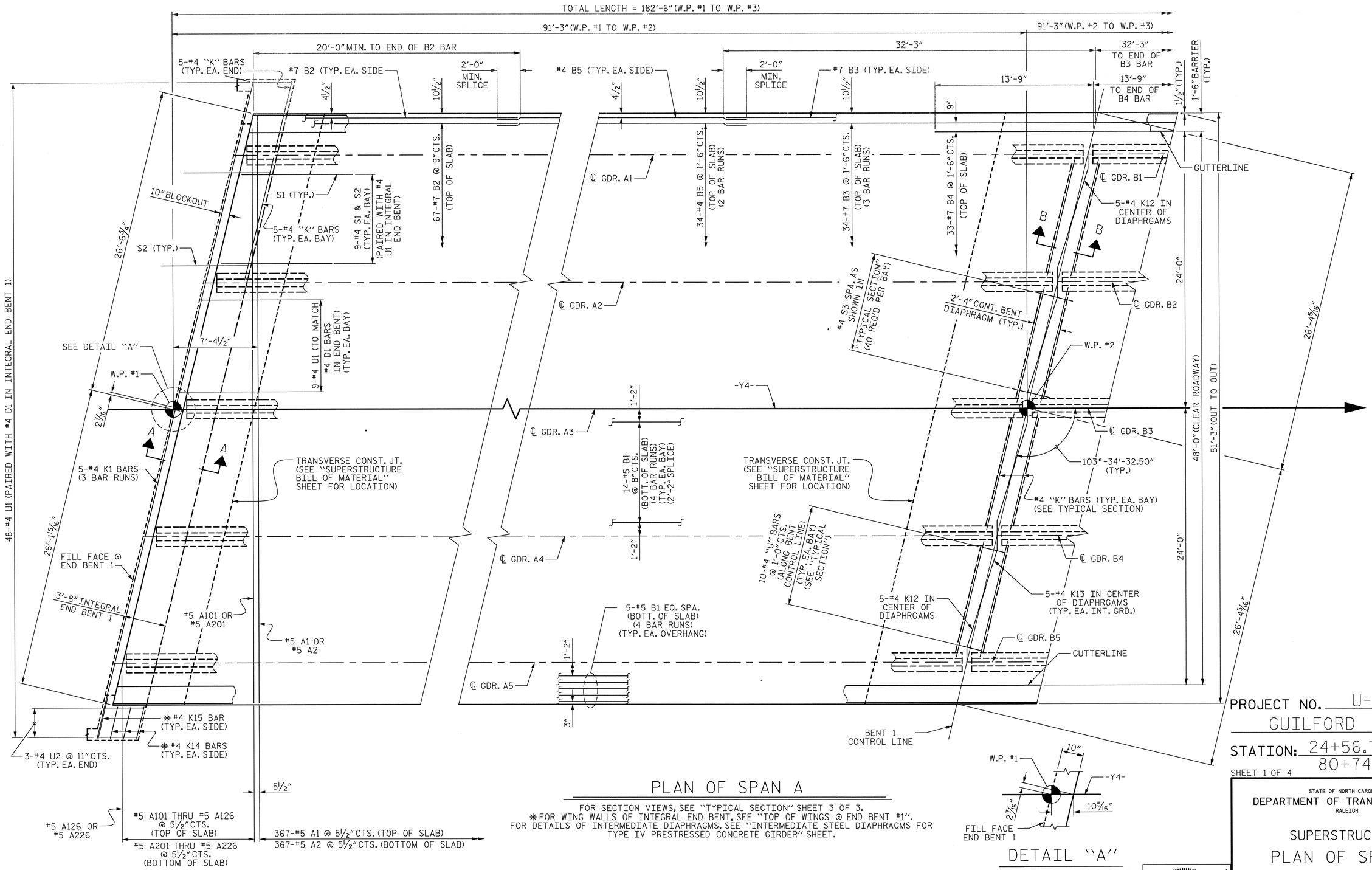

PLAN OF SPAN A

FOR SECTION VIEWS, SEE "TYPICAL SECTION" SHEET 3 OF 3.
✳ FOR WING WALLS OF INTEGRAL END BENT, SEE "TOP OF WINGS @ END BENT #1".
FOR DETAILS OF INTERMEDIATE DIAPHRAGMS, SEE "INTERMEDIATE STEEL DIAPHRAGMS FOR TYPE IV PRESTRESSED CONCRETE GIRDER" SHEET.

DETAIL "A"

PROJECT NO. U-2525B
GUILFORD COUNTY
STATION: 24+56.70 -Y4-
80+74.41 -L-

SHEET 1 OF 4

STATE OF NORTH CAROLINA
DEPARTMENT OF TRANSPORTATION
RALEIGH

SUPERSTRUCTURE
PLAN OF SPAN A

REVISIONS								SHEET NO.
NO.	BY:	DATE:	NO.	BY:	DATE:	NO.	BY:	DATE:	S-396
1			3						TOTAL SHEETS
2			4						541

PLANS PREPARED BY:
Gannett Fleming
Excellence Delivered As Promised
1121 Situs Court
Suite 170
Raleigh NC 27606-4279
(919) 859-4880
NC Lic. No. F-0270

NORTH CAROLINA PROFESSIONAL SEAL 03/18/05 ENGINEER RICHARD F. WERTMAN

DRAWN BY : J.M. KEPICH	DATE : 03/04/13		
CHECKED BY : R.F. WERTMAN	DATE : 03/19/13		
DESIGN ENGINEER OF RECORD : R.F. WERTMAN	DATE : 03/19/13		

STR. NO. 11

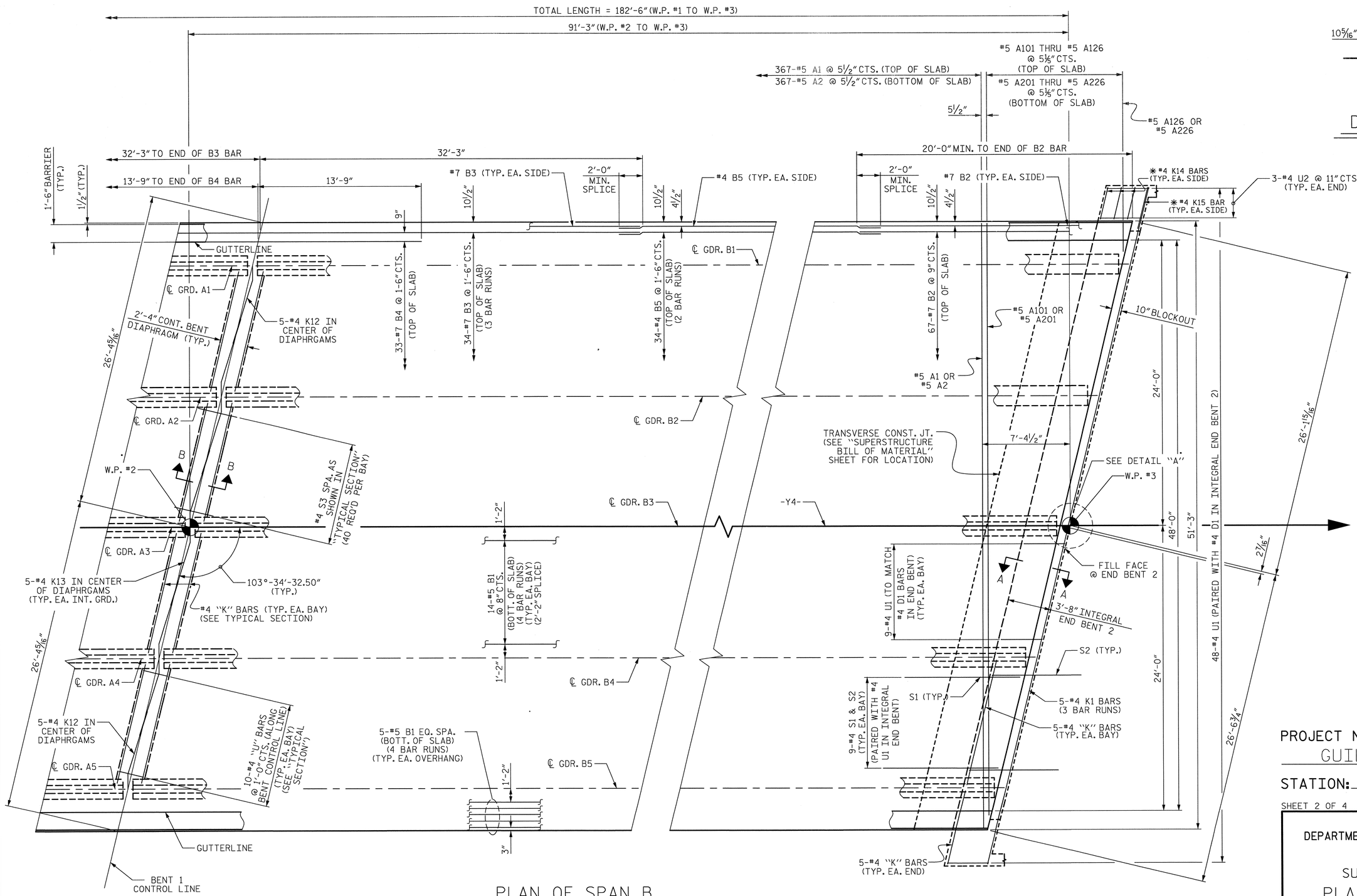

DETAIL "A"

PLAN OF SPAN B

FOR SECTION VIEWS, SEE "TYPICAL SECTION" SHEET 3 OF 3.
✱ FOR WING WALLS OF INTEGRAL END BENT, SEE "TOP OF WINGS @ END BENT #2".
FOR DETAILS OF INTERMEDIATE DIAPHRAGMS, SEE "INTERMEDIATE STEEL DIAPHRAGMS FOR TYPE IV PRESTRESSED CONCRETE GIRDER" SHEET.

PROJECT NO. U-2525B
GUILFORD COUNTY
STATION: 24+56.70 -Y4-
80+74.41 -L-

SHEET 2 OF 4

STATE OF NORTH CAROLINA
DEPARTMENT OF TRANSPORTATION
RALEIGH

SUPERSTRUCTURE
PLAN OF SPAN B

REVISIONS							SHEET NO.
NO.	BY:	DATE:	NO.	BY:	DATE:		S-397
1			3				TOTAL SHEETS
2			4				541

DRAWN BY : J.M. KEPICH DATE : 03/04/13
CHECKED BY : R.F. WERTMAN DATE : 03/19/13
DESIGN ENGINEER OF RECORD : R.F. WERTMAN DATE : 03/19/13

PLANS PREPARED BY:
Gannett Fleming
Excellence Delivered As Promised
1121 Situs Court
Suite 170
Raleigh NC 27606-4279
(919) 859-4880
NC Lic. No. F-0270

NORTH CAROLINA PROFESSIONAL SEAL 037180 ENGINEER RICHARD F. WERTMAN

STR. NO. 11

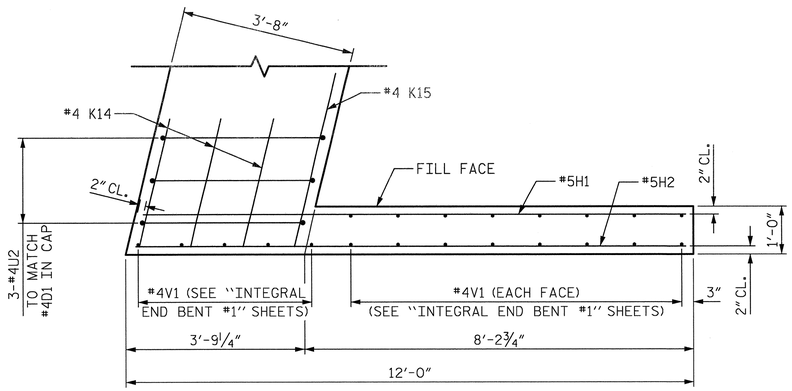

PLAN OF WING (W1)

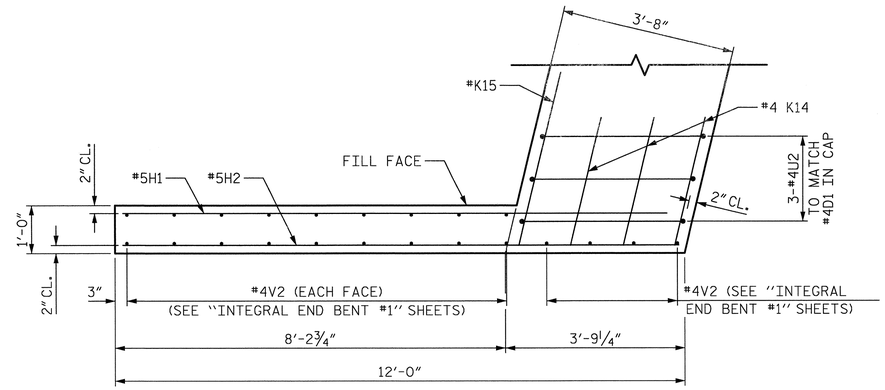

PLAN OF WING (W2)

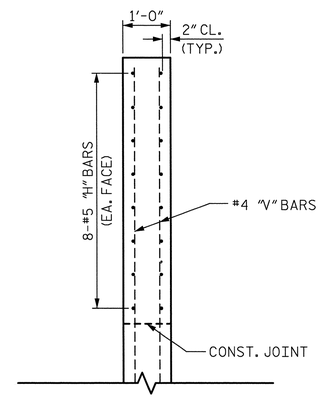

SECTION Y-Y

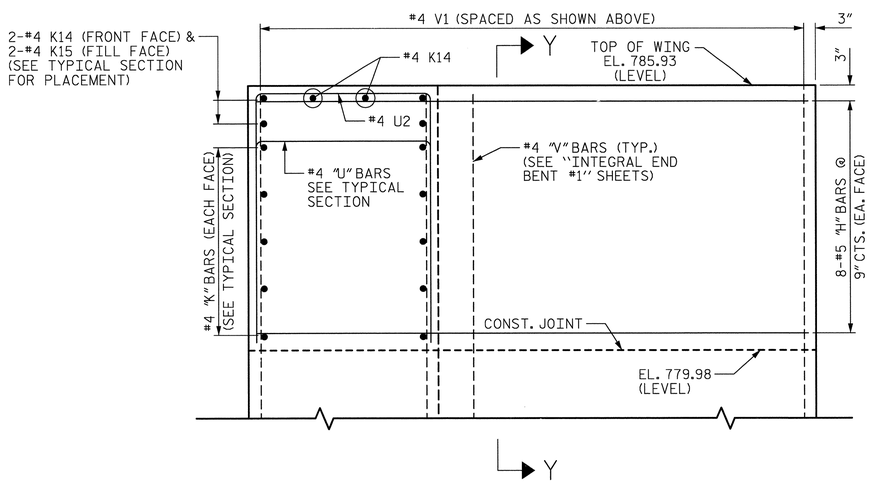

ELEVATION OF WING (W1)

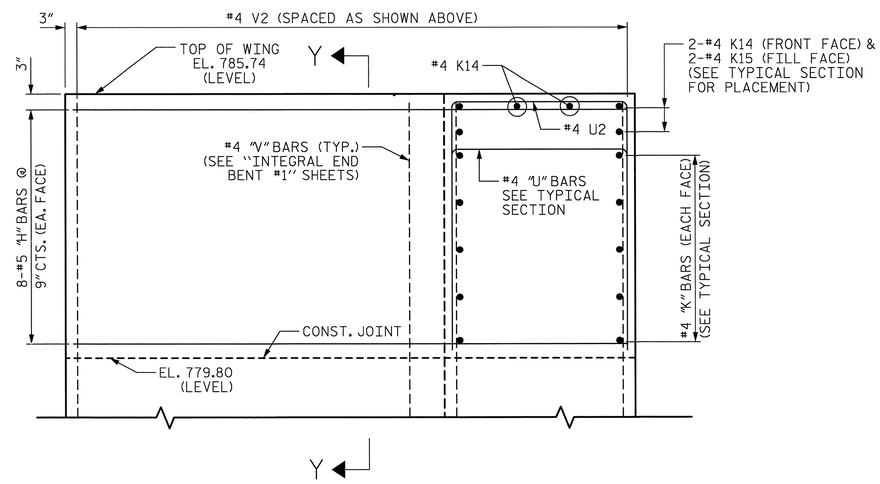

ELEVATION OF WING (W2)

PROJECT NO. U-2525B

GUILFORD COUNTY

STATION: 24+56.70 -Y4-
80+74.41 -L-

SHEET 3 OF 4

STATE OF NORTH CAROLINA
DEPARTMENT OF TRANSPORTATION
RALEIGH

SUPERSTRUCTURE

TOP OF WINGS @ END BENT #1

REVISIONS						SHEET NO.
NO.	BY:	DATE:	NO.	BY:	DATE:	S-398
1			3			TOTAL SHEETS
2			4			541

DRAWN BY : L.M. SAMPLES DATE : 04/01/13
CHECKED BY : R.F. WERTMAN DATE : 05/02/13
DESIGN ENGINEER OF RECORD : R.F. WERTMAN DATE : 05/02/13

PLANS PREPARED BY:
Gannett Fleming
Excellence Delivered As Promised
1121 Situs Court
Suite 170
Raleigh NC 27606-4279
(919) 859-4880
NC Lic. No. F-0270

NORTH CAROLINA PROFESSIONAL SEAL 037180 ENGINEER RICHARD F. WERTMAN

STR. NO. 11.

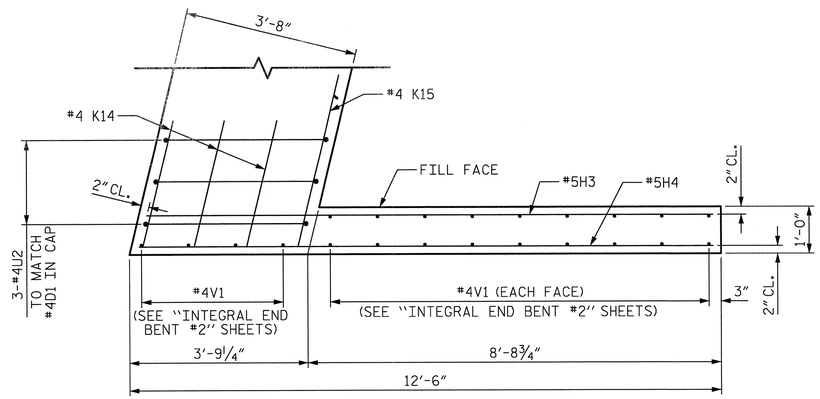

PLAN OF WING (W3)

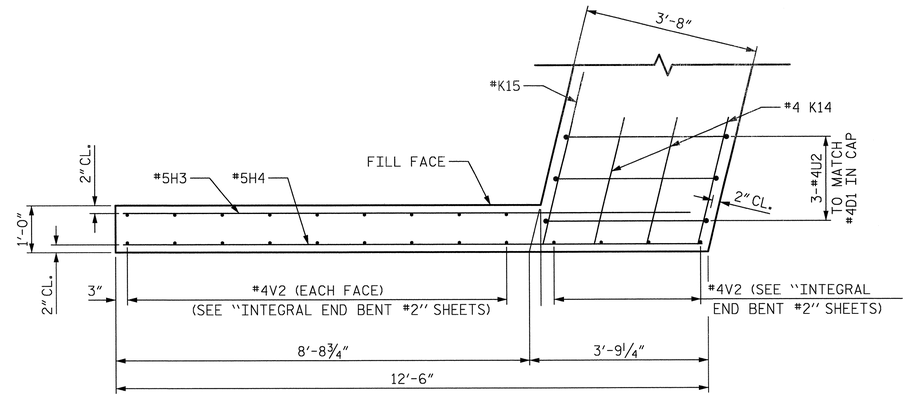

PLAN OF WING (W4)

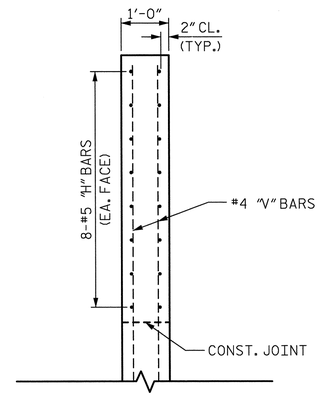

SECTION Y-Y

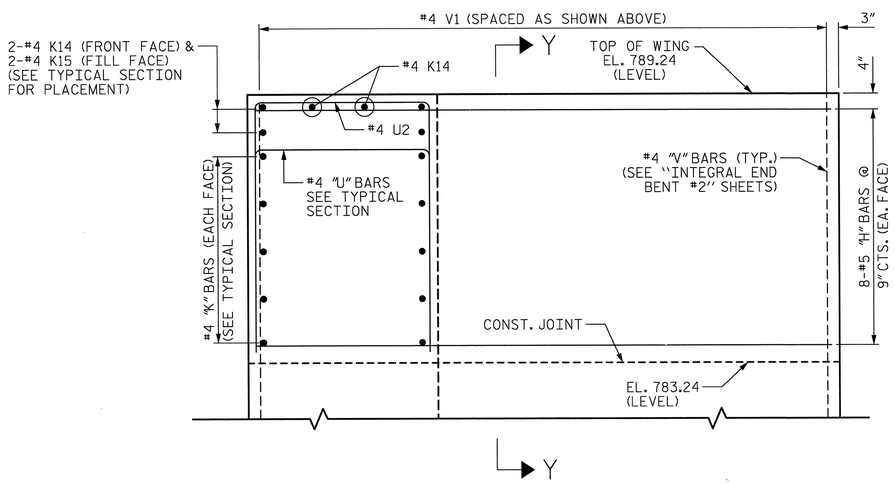

ELEVATION OF WING (W3)

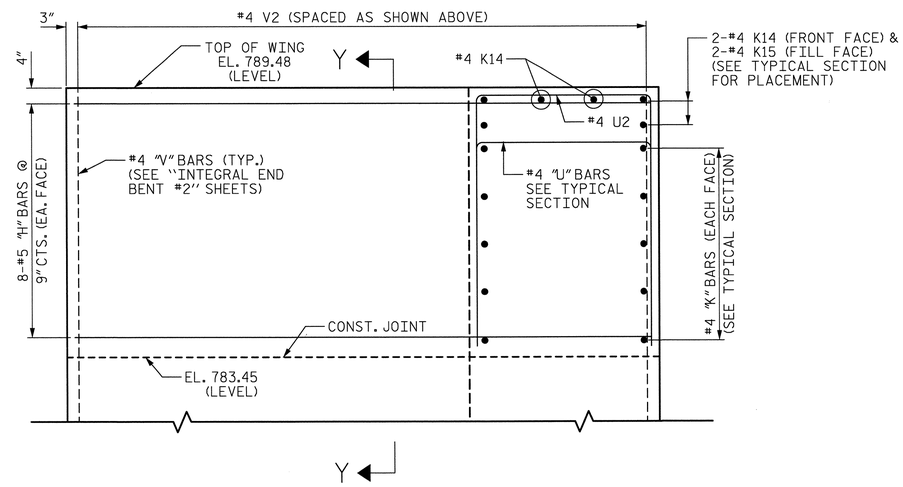

ELEVATION OF WING (W4)

PROJECT NO. U-2525B

GUILFORD COUNTY

STATION: 24+56.70 -Y4-
80+74.41 -L-

SHEET 4 OF 4

STATE OF NORTH CAROLINA
DEPARTMENT OF TRANSPORTATION
RALEIGH

SUPERSTRUCTURE

TOP OF WINGS @ END BENT #2

REVISIONS							SHEET NO.
NO.	BY:	DATE:	NO.	BY:	DATE:		S-399
1			3				TOTAL SHEETS
2			4				541

DRAWN BY : L.M. SAMPLES DATE : 04/01/13
CHECKED BY : R.F. WERTMAN DATE : 05/02/13
DESIGN ENGINEER OF RECORD : R.F. WERTMAN DATE : 05/02/13

PLANS PREPARED BY:
Gannett Fleming
Excellence Delivered As Promised
1121 Situs Court
Suite 170
Raleigh NC 27606-4279
(919) 859-4880
NC Lic. No. F-0270

NORTH CAROLINA PROFESSIONAL SEAL 037180 ENGINEER RICHARD F. WERTMAN

STR. NO. 11

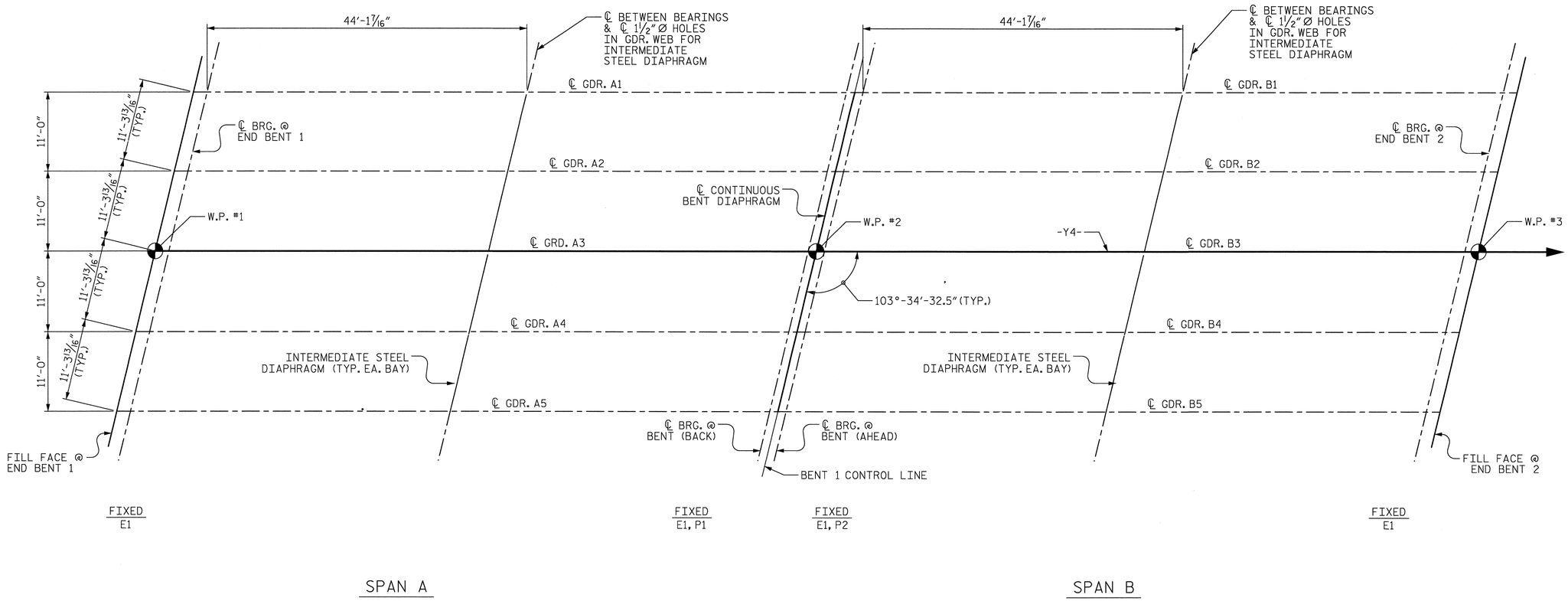

GIRDER LAYOUT

PROJECT NO. U-2525B
GUILFORD COUNTY
STATION: 24+56.70 -Y4-
80+74.41 -L-

STATE OF NORTH CAROLINA
DEPARTMENT OF TRANSPORTATION
RALEIGH

SUPERSTRUCTURE
GIRDER LAYOUT

REVISIONS						SHEET NO.
NO.	BY:	DATE:	NO.	BY:	DATE:	S-400
1			3			TOTAL SHEETS
2			4			541

DRAWN BY : J.M. KEPICH DATE : 03/04/13
CHECKED BY : R.F. WERTMAN DATE : 05/22/13
DESIGN ENGINEER OF RECORD : R.F. WERTMAN DATE : 05/22/13

PLANS PREPARED BY:
Gannett Fleming
Excellence Delivered As Promised
1121 Situs Court
Suite 170
Raleigh NC 27606-4279
(919) 859-4880
NC Lic. No. F-0270

NORTH CAROLINA PROFESSIONAL SEAL 037180 ENGINEER RICHARD F. WERTMAN

STR. NO. 11

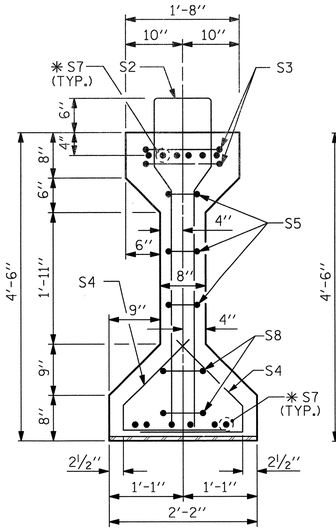

SECTION A-A

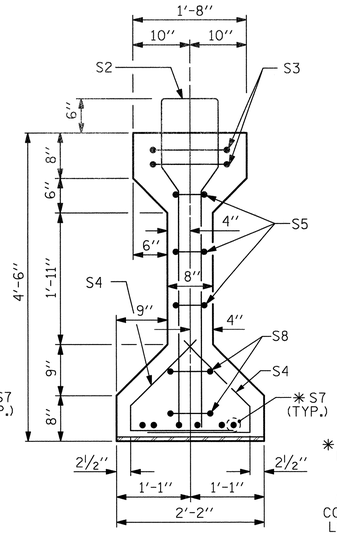

SECTION B-B

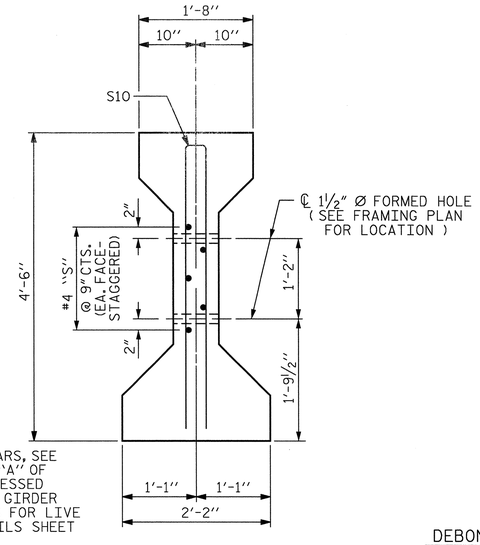

SECTION C-C

(S1 BARS NOT SHOWN)

✱ FOR S7 BARS, SEE DETAIL "A" OF PRESTRESSED CONCRETE GIRDER CONTINUOUS FOR LIVE LOAD DETAILS SHEET

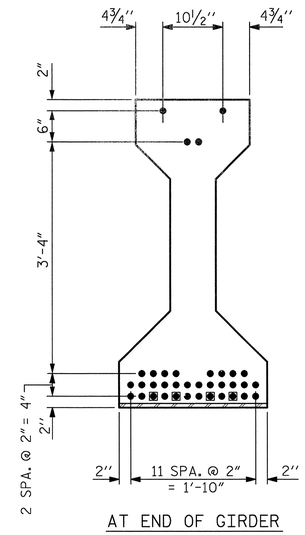

AT END OF GIRDER

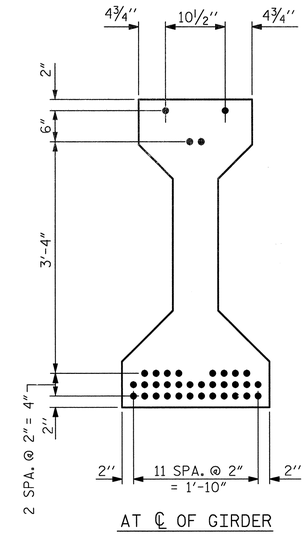

AT ℄ OF GIRDER

0.6" Ø LOW RELAXATION STRAND LAYOUT

DEBONDING LEGEND

- ● FULLY BONDED STRANDS
- ✱ STRANDS DEBONDED FOR 10'-0" FROM ENDS OF GIRDER

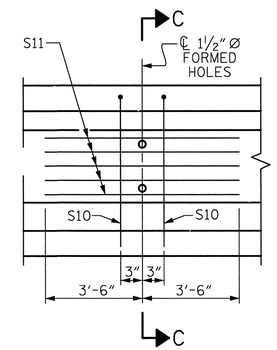

PARTIAL ELEVATION

SHOWING INTERMEDIATE DIAPHRAGM REINFORCING STEEL FOR ALL GIRDERS

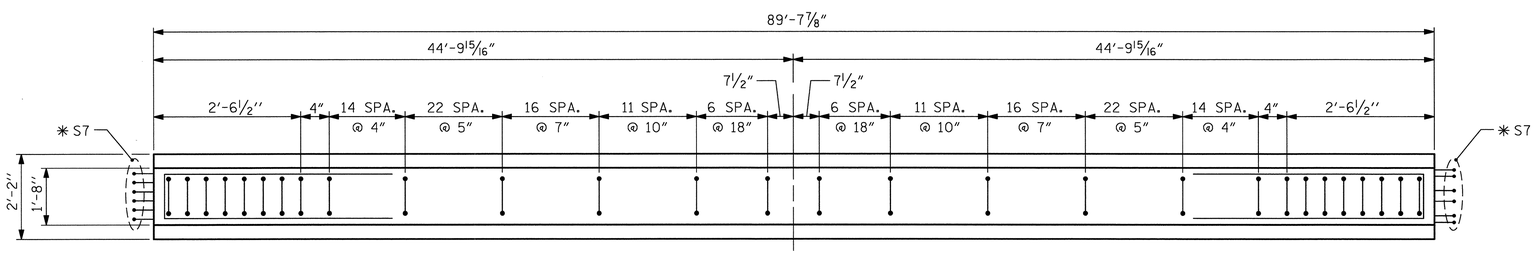

PLAN OF GIRDER

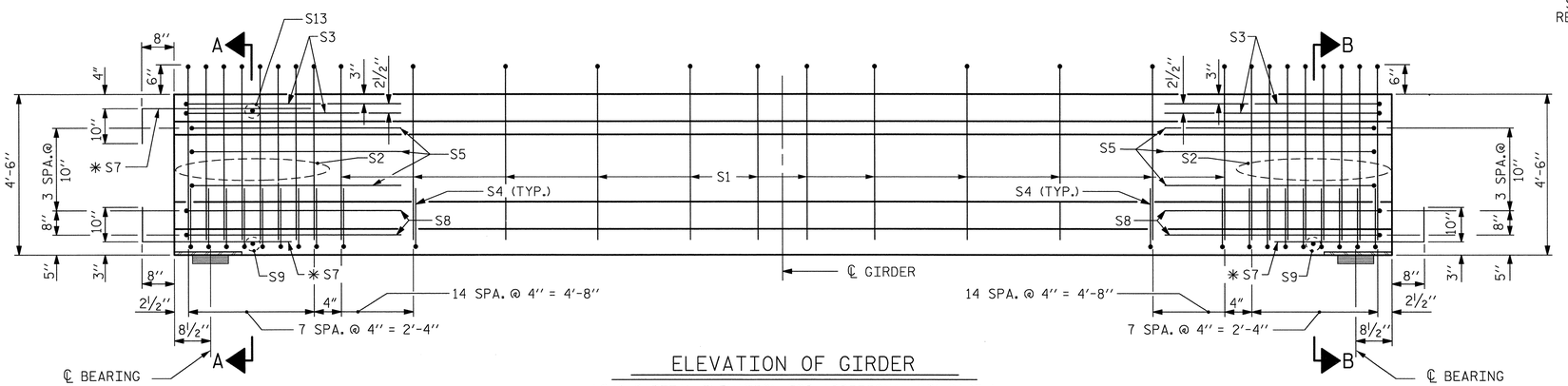

ELEVATION OF GIRDER

(SEE PARTIAL ELEVATION FOR ADDITIONAL "S" BARS)

0.6" Ø L. R. GRADE 270 STRANDS

AREA (SQUARE INCHES)	ULTIMATE STRENGTH (LBS. PER STRAND)	APPLIED PRESTRESS (LBS. PER STRAND)
0.217	58,600	43,950

REINFORCING STEEL FOR ONE GIRDER

BAR	NUMBER	SIZE	TYPE	LENGTH	WEIGHT
S1	140	#4	1	10'-8"	998
S2	16	#6	1	10'-8"	256
S3	4	#4	2	9'-1"	24
S4	92	#4	3	3'-5"	210
S5	6	#4	2	8'-5"	34
✱ S7	18	#5	STR	3'-8"	69
S8	4	#4	2	8'-7"	23
S9	2	#3	STR	1'-10"	1
S10	2	#5	2	8'-8"	18
S11	5	#4	STR	7'-0"	23
S13	1	#3	STR	1'-4"	1

✱ NOTE: S7 BARS SHALL BE BENT BEFORE SHIPMENT. HEAT BENDING SHALL NOT BE ALLOWED.

BAR TYPES

ALL BAR DIMENSIONS ARE OUT-TO-OUT

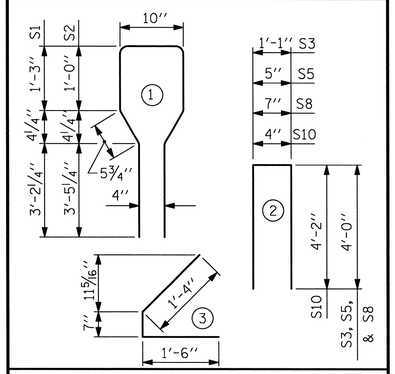

QUANTITIES FOR ONE GIRDER

	REINFORCING STEEL LB.	8000 PSI CONCRETE C.Y.	0.6" Ø L.R. STRANDS No.
GIRDERS NO. 1 THRU 5	1657	18.2	36

GIRDERS REQUIRED

NUMBER	LENGTH	TOTAL LENGTH
10	89'-7⅞"	896.56'

PROJECT NO. U-2525B

GUILFORD COUNTY

STATION: 24+56.70 -Y4-
80+74.41 -L-

SHEET 1 OF 2

STATE OF NORTH CAROLINA
DEPARTMENT OF TRANSPORTATION
RALEIGH

STANDARD
AASHTO TYPE IV
PRESTRESSED CONCRETE GIRDER
CONTINUOUS FOR LIVE LOAD
SPANS A & B

ASSEMBLED BY : J.M. KEPICH	DATE : 3/05/13
CHECKED BY : R.F. WERTMAN	DATE : 3/22/13
DRAWN BY : ELR 8/91	REV. 10/17/00 RWW/LES
CHECKED BY : GRP 8/91	REV. 5/1/06 TLA/GM
	REV. 10/1/11 MAA/GM

PLANS PREPARED BY:
Gannett Fleming
Excellence Delivered As Promised
1121 Situs Court
Suite 170
Raleigh NC 27606-4279
(919) 859-4880
NC Lic. No. F-0270

THESE PLANS HAVE BEEN PROPERLY EXAMINED BY THE UNDERSIGNED. I HAVE DETERMINED THAT THEY COMPLY WITH EXISTING NORTH CAROLINA CODES, AND HAVE BEEN PROPERLY ADAPTED FOR USE IN THIS AREA.

NORTH CAROLINA PROFESSIONAL SEAL 037180 ENGINEER RICHARD F. WERTMAN

REVISIONS							SHEET NO.
NO.	BY:	DATE:	NO.	BY:	DATE:		S-401
1			3				TOTAL SHEETS
2			4				54

STR. NO. 11

STD. NO. PCG6 (Sht. 2)

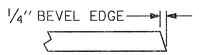

SECTION "G"

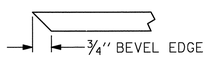

SECTION "F"

(SEE NOTES)

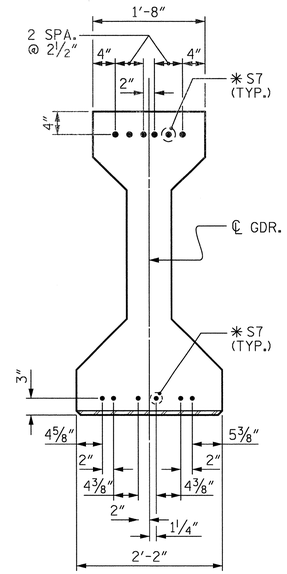

DETAIL "A"

(FOR AASHTO TYPE IV GIRDERS)

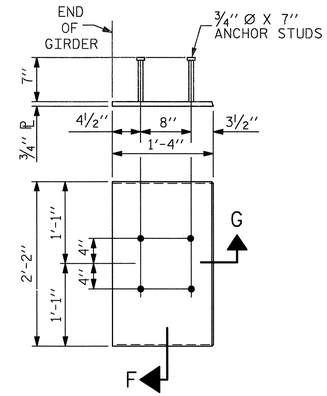

EMBEDDED PLATE "B-1" DETAILS FOR AASHTO TYPE IV GIRDER

(2 REQ'D PER GIRDER)

NOTES

ALL PRESTRESSING STRANDS SHALL BE 7-WIRE LOW-RELAXATION GRADE 270 STRANDS AND SHALL CONFORM TO AASHTO M203 EXCEPT FOR SAMPLING REQUIREMENTS WHICH SHALL BE IN ACCORDANCE WITH THE STANDARD SPECIFICATIONS.

ALL REINFORCING STEEL SHALL BE GRADE 60.

EMBEDDED PLATE "B-1" SHALL BE GALVANIZED IN ACCORDANCE WITH THE STANDARD SPECIFICATIONS. BEVEL EDGES OF PLATE "B-1" TO GIVE CLOSE FIT BUT NOT TIGHT FIT TO STEEL CASTING FORM.

ANCHOR STUDS SHALL CONFORM TO AASHTO M169 GRADES 1010 THROUGH 1020 OR APPROVED EQUAL, AND SHALL MEET THE TYPE "B" REQUIREMENTS OF SUBSECTION 7.3 OF THE ANSI/AASHTO/AWS D1.5 BRIDGE WELDING CODE.

AT ENDS OF GIRDERS TO BE EMBEDDED IN CONCRETE DIAPHRAGMS OR END WALLS, PRESTRESSING STRANDS MAY EXTEND A MAXIMUM OF 2" BEYOND THE GIRDER ENDS. OTHERWISE, PRESTRESSING STRANDS SHALL BE CUT FLUSH WITH THE GIRDER ENDS.

THE TRANSFER OF LOAD FROM THE ANCHORAGES TO THE GIRDER SHALL BE DONE WHEN CONCRETE HAS REACHED A COMPRESSIVE STRENGTH OF NOT LESS THAN 6400 PSI.

DEPENDING ON THE TYPE OF SYSTEM USED TO SUPPORT THE DECK SLAB FORMS, PRESET ANCHORS MAY BE NECESSARY IN THE PRESTRESSED CONCRETE GIRDER.

THE TOP SURFACE OF THE GIRDER, EXCLUDING THE OUTSIDE 4", SHALL BE RAKED TO A DEPTH OF 1/4".

WHEN DRAPED STRANDS ARE DETAILED, THE LONGITUDINAL LOCATION OF THE HOLD DOWN DEVICES SHALL BE WITHIN 6" OF THE LOCATION SHOWN AND THE CENTER OF GRAVITY OF THE GROUP OF DRAPED STRANDS SHALL BE LOCATED WITHIN 1/2" OF THE THEORETICAL LOCATION SHOWN.

THE CONTRACTOR HAS THE OPTION TO PROVIDE, AT NO ADDITIONAL COST TO THE DEPARTMENT, 2 ADDITIONAL STRANDS AT THE TOP OF THE GIRDER TO FACILITATE TYING OF THE REINFORCING STEEL. THESE STRANDS SHALL BE PULLED TO A LOAD OF 4500 lbs.

DEAD LOAD DEFLECTION TABLE FOR GIRDERS

0.6" Ø LOW RELAXATION	SPANS A & SPAN B										
	GIRDERS A1, A5, B1, & B5										
TENTH POINTS	0	.1	.2	.3	.4	.5	.6	.7	.8	.9	0
CAMBER (GIRDER ALONE IN PLACE) ↑	0.000	0.094	0.164	0.212	0.240	0.249	0.240	0.212	0.164	0.094	0.000
✳ DEFLECTION DUE TO SUPERIMPOSED D.L. ↓	0.000	0.035	0.070	0.096	0.113	0.119	0.114	0.097	0.070	0.036	0.000
FINAL CAMBER ↑	0	11/16"	1 1/8"	1 3/8"	1 1/2"	1 9/16"	1 1/2"	1 3/8"	1 1/8"	11/16"	0

0.6" Ø LOW RELAXATION	SPANS A & SPAN B										
	GIRDERS A2, A4, B2, & B4										
TENTH POINTS	0	.1	.2	.3	.4	.5	.6	.7	.8	.9	0
CAMBER (GIRDER ALONE IN PLACE) ↑	0.000	0.094	0.164	0.212	0.240	0.249	0.240	0.212	0.164	0.094	0.000
✳ DEFLECTION DUE TO SUPERIMPOSED D.L. ↓	0.000	0.041	0.080	0.112	0.131	0.138	0.132	0.112	0.081	0.041	0.000
FINAL CAMBER ↑	0	5/8"	1"	1 3/16"	1 5/16"	1 5/16"	1 5/16"	1 3/16"	1"	5/8"	0

0.6" Ø LOW RELAXATION	SPANS A & SPAN B										
	GIRDERS A3 & B3										
TENTH POINTS	0	.1	.2	.3	.4	.5	.6	.7	.8	.9	0
CAMBER (GIRDER ALONE IN PLACE) ↑	0.000	0.094	0.164	0.212	0.240	0.249	0.240	0.212	0.164	0.094	0.000
✳ DEFLECTION DUE TO SUPERIMPOSED D.L. ↓	0.000	0.042	0.082	0.113	0.134	0.141	0.134	0.114	0.082	0.042	0.000
FINAL CAMBER ↑	0	5/8"	1"	1 3/16"	1 1/4"	1 5/16"	1 1/4"	1 3/16"	1"	5/8"	0

✳ INCLUDES FUTURE WEARING SURFACE
ALL VALUES ARE SHOWN IN FEET (DECIMAL FORM), EXCEPT "FINAL CAMBER", WHICH IS GIVEN IN INCHES (FRACTION FORM).

PROJECT NO. U-2525B
GUILFORD COUNTY
STATION: 24+56.70 -Y4-
80+74.41 -L-
SHEET 2 OF 2

STATE OF NORTH CAROLINA
DEPARTMENT OF TRANSPORTATION
RALEIGH

STANDARD

PRESTRESSED CONCRETE GIRDER CONTINUOUS FOR LIVE LOAD DETAILS

ASSEMBLED BY : J.M. KEPICH	DATE : 3/05/13
CHECKED BY : R.F. WERTMAN	DATE : 3/22/13
DRAWN BY : ELR 11/91	REV. 7/10/01 RR LES/RDR
CHECKED BY : GRP 11/91	REV. 5/1/06 TLA/GM
	REV. 10/1/11 MAA/GM

PLANS PREPARED BY:
Gannett Fleming
Excellence Delivered As Promised
1121 Situs Court
Suite 170
Raleigh NC 27606-4279
(919) 859-4880
NC Lic. No. F-0270

THESE PLANS HAVE BEEN PROPERLY EXAMINED BY THE UNDERSIGNED. I HAVE DETERMINED THAT THEY COMPLY WITH EXISTING NORTH CAROLINA CODES, AND HAVE BEEN PROPERLY ADAPTED FOR USE IN THIS AREA.

NORTH CAROLINA PROFESSIONAL SEAL 037180 ENGINEER RICHARD F. WERTMAN

REVISIONS									SHEET NO.
NO.	BY:	DATE:	NO.	BY:	DATE:				5-4.02
1			3						TOTAL SHEETS
2			4						54

STR. NO. 11

STD. NO. PCG9 (Sht. 3a)

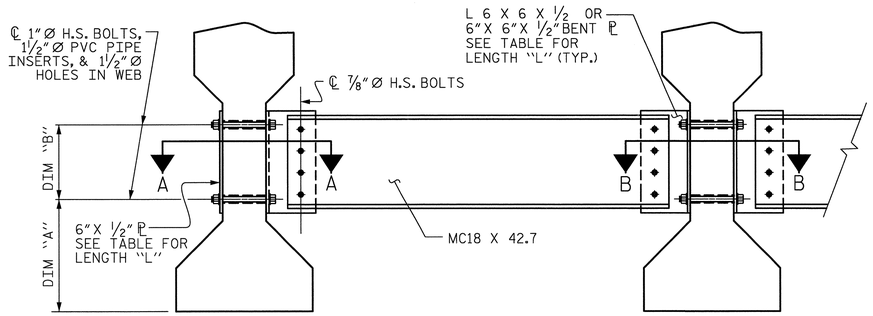

EXTERIOR GIRDER

INTERIOR GIRDER

PART SECTION AT INTERMEDIATE DIAPHRAGM

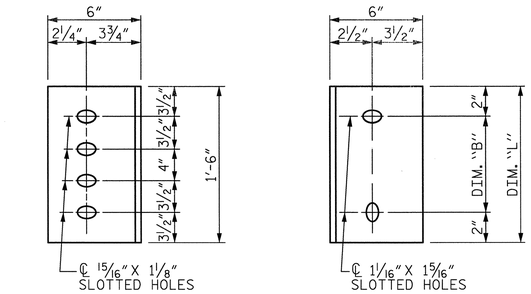

DIAPHRAGM FACE

WEB FACE

CONNECTOR PLATE DETAILS

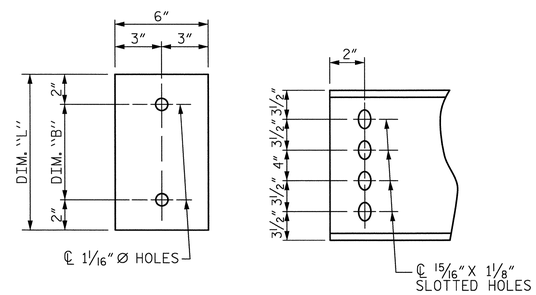

PLATE DETAILS

CHANNEL END

STRUCTURAL STEEL NOTES

ALL INTERMEDIATE DIAPHRAGM STEEL AND CONNECTOR PLATES SHALL BE AASHTO M270 GRADE 50 OR APPROVED EQUAL.

TENSION ON THE ASTM A325 BOLTS THROUGH THE CHANNEL MEMBER SHALL BE CALIBRATED USING DIRECT TENSION INDICATOR WASHERS IN ACCORDANCE WITH THE STANDARD SPECIFICATIONS.

TENSION ON THE ASTM A449 BOLTS THROUGH THE GIRDER WEB SHALL BE SNUG TIGHTENED FOLLOWED BY AN ADDITIONAL ¼ TURN.

THE PLATES, BENT PLATES, CHANNELS, AND ANGLES SHALL BE GALVANIZED OR METALLIZED IN ACCORDANCE WITH THE STANDARD SPECIFICATIONS. FOR THERMAL SPRAYED COATINGS (METALLIZATION), SEE SPECIAL PROVISIONS.

FOR METALLIZATION, APPLY AN 8 MIL THICK 99.99 PERCENT ZINC (W-Zn-1) THERMAL SPRAYED COATING WITH A 0.5 MIL THICK SEAL COAT TO ALL STEEL DIAPHRAGM SURFACES IN ACCORDANCE WITH THE THERMAL SPRAYED COATINGS SPECIAL PROVISION AND SECTION 442 OF THE STANDARD SPECIFICATIONS.

GALVANIZE THE HIGH STRENGTH BOLTS, NUTS, WASHERS AND DIRECT TENSION INDICATORS IN ACCORDANCE WITH THE STANDARD SPECIFICATIONS.

USE AN ASTM F436 HARDENED WASHER WITH STANDARD AND SLOTTED HOLES UNDER EACH BOLT HEAD AND NUT.

FOR BOLTS THROUGH THE GIRDER WEB, PROVIDE SUFFICIENT LENGTH OF THREADS ON ALL BOLTS TO ACCOMMODATE WASHERS AND THE THICKNESS OF CONNECTING MEMBER PLUS AT LEAST ¼"PROJECTION BEYOND THE NUT.

INTERMEDIATE DIAPHRAGM ASSEMBLY SHALL COMPLY WITH SECTION 1072 OF THE STANDARD SPECIFICATIONS.

SUBMIT TWO SETS OF WORKING DRAWINGS FOR THE INTERMEDIATE DIAPHRAGM ASSEMBLY FOR REVIEW, COMMENTS AND ACCEPTANCE. AFTER REVIEW, COMMENTS, AND ACCEPTANCE, SUBMIT SEVEN SETS FOR DISTRIBUTION.

IN THE EXTERIOR BAYS, PLACE TEMPORARY STRUTS BETWEEN PRESTRESSED GIRDERS ADJACENT TO THE STEEL DIAPHRAGMS. STRUTS SHALL REMAIN IN PLACE 3 DAYS AFTER CONCRETE IS PLACED.

THE COST OF THE STEEL DIAPHRAGMS AND ASSEMBLIES SHALL BE INCLUDED IN THE UNIT PRICE BID FOR PRESTRESSED CONCRETE GIRDERS.

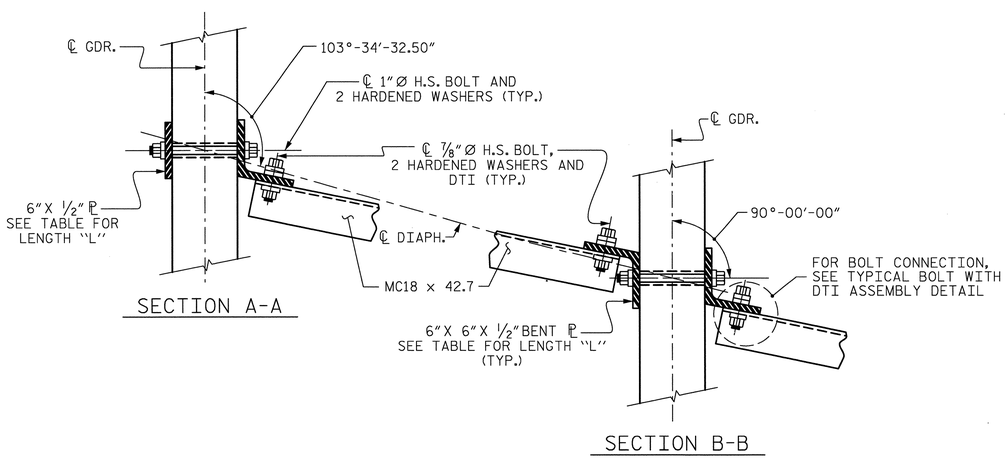

SECTION A-A

SECTION B-B

CONNECTION DETAILS

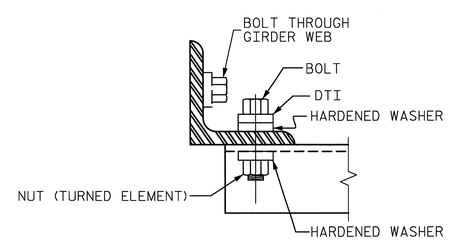

BOLT WITH DTI ASSEMBLY DETAIL

TABLE

GIRDER TYPE	CHANNEL SIZE	DIM "A"	DIM "B"	DIM "L"
IV	MC 18 x 42.7	1'-9½"	1'-2"	1'-6"

PROJECT NO. U-2525B

GUILFORD COUNTY

STATION: 24+56.70 -Y4-
80+74.41 -L-

STATE OF NORTH CAROLINA
DEPARTMENT OF TRANSPORTATION
RALEIGH

STANDARD

INTERMEDIATE STEEL DIAPHRAGMS FOR TYPE IV PRESTRESSED CONCRETE GIRDERS

ASSEMBLED BY : J.M. KEPICH	DATE : 3/05/13
CHECKED BY : R.F. WERTMAN	DATE : 3/22/13
DRAWN BY : TLA 6/05	ADDED 10/21/05
CHECKED BY : VC 6/05	REV. 5/1/06RRR KMM/GM REV. 10/1/11 MAA/GM

PLANS PREPARED BY:
Gannett Fleming
Excellence Delivered As Promised
1121 Situs Court
Suite 170
Raleigh NC 27606-4279
(919) 859-4880
NC Lic. No. F-0270

THESE PLANS HAVE BEEN PROPERLY EXAMINED BY THE UNDERSIGNED. I HAVE DETERMINED THAT THEY COMPLY WITH EXISTING NORTH CAROLINA CODES, AND HAVE BEEN PROPERLY ADAPTED FOR USE IN THIS AREA.

NORTH CAROLINA PROFESSIONAL SEAL 037186 ENGINEER RICHARD F. WERTMAN

REVISIONS								SHEET NO.
NO.	BY:	DATE:	NO.	BY:	DATE:			S-403
1			3					TOTAL SHEETS
2			4					54-1

STR. NO. 11 STD. NO. PCG10 (SHT 4)

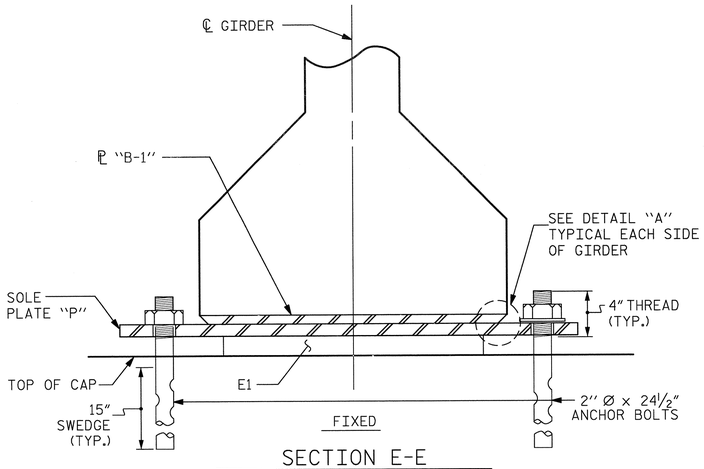

SECTION E-E

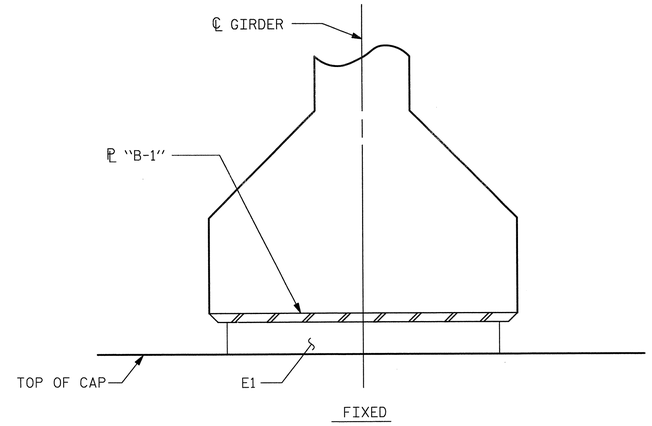

SECTION F-F

MAXIMUM ALLOWABLE SERVICE LOADS	
D.L.+L.L. (NO IMPACT)	
TYPE V	365 k

NOTES

AT ALL FIXED POINTS OF SUPPORT, NUTS FOR ANCHOR BOLTS ARE TO BE TIGHTENED FINGER TIGHT AND THEN BACKED OFF ½ TURN. THE THREAD OF THE NUT AND BOLT SHALL THEN BE BURRED WITH A SHARP POINTED TOOL.

THE 2" Ø PIPE SLEEVE SHALL BE CUT FROM SCHEDULE 40 PVC PLASTIC PIPE. THE PVC PLASTIC PIPE SHALL MEET THE REQUIREMENTS OF ASTM D1785.

STEEL SOLE PLATES, ANCHOR BOLTS, NUTS, AND WASHERS SHALL BE GALVANIZED IN ACCORDANCE WITH THE STANDARD SPECIFICATIONS.

PRIOR TO WELDING, GRIND THE GALVANIZED SURFACE OF THE PORTION OF THE EMBEDDED PLATE AND SOLE PLATE THAT ARE TO BE WELDED. AFTER WELDING, DAMAGED GALVANIZED SURFACES SHALL BE REPAIRED IN ACCORDANCE WITH THE STANDARD SPECIFICATIONS.

WHEN WELDING THE SOLE PLATE TO THE EMBEDDED PLATE IN THE GIRDER, USE TEMPERATURE INDICATING WAX PENS, OR OTHER SUITABLE MEANS, TO ENSURE THAT THE TEMPERATURE OF THE SOLE PLATE DOES NOT EXCEED 300°F. TEMPERATURES ABOVE THIS MAY DAMAGE THE ELASTOMER.

SOLE PLATE "P", BOLTS, NUTS, WASHERS, AND PIPE SLEEVE SHALL BE INCLUDED IN THE PAY ITEM FOR PRESTRESSED CONCRETE GIRDERS.

ANCHOR BOLTS SHALL MEET THE REQUIREMENTS OF ASTM A449. NUTS SHALL MEET THE REQUIREMENTS OF AASHTO M291-DH OR AASHTO M292-2H. WASHERS SHALL MEET THE REQUIREMENTS OF AASHTO M293. NO SHOP DRAWINGS ARE REQUIRED FOR ANCHOR BOLTS, NUTS AND WASHERS. SHOP INSPECTION IS REQUIRED.

ALL SURFACES OF BEARING PLATES SHALL BE SMOOTH AND STRAIGHT.

THE ELASTOMER IN THE STEEL REINFORCED BEARINGS SHALL HAVE A SHEAR MODULUS OF 0.160 KSI, IN ACCORDANCE WITH AASHTO M251.

FOR STEEL REINFORCED ELASTOMERIC BEARINGS, SEE SPECIAL PROVISIONS.

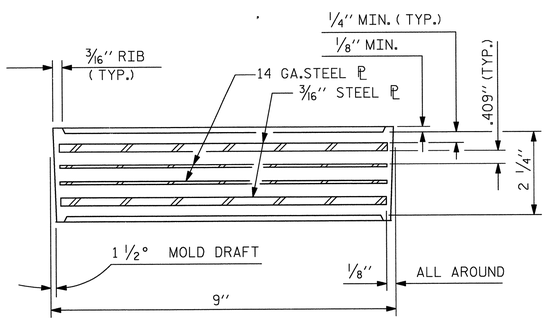

TYPICAL SECTION OF ELASTOMERIC BEARINGS

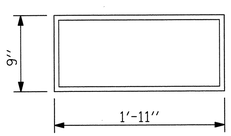

E1 (20 REQ'D)

PLAN VIEW OF ELASTOMERIC BEARING

TYPE V

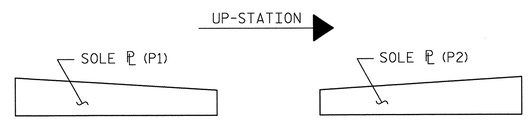

SOLE ℗ PLACEMENT DETAIL

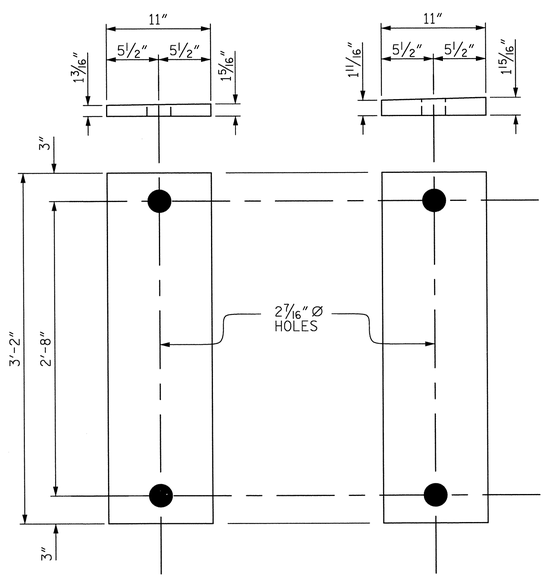

SOLE PLATE DETAILS ("P")

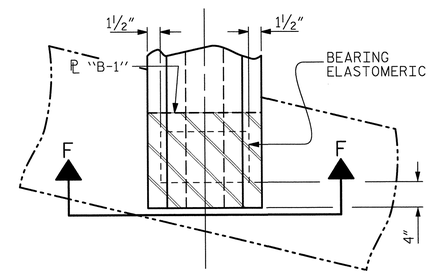

TYPICAL PLAN

(SHOWING INTEGRAL END BENT)

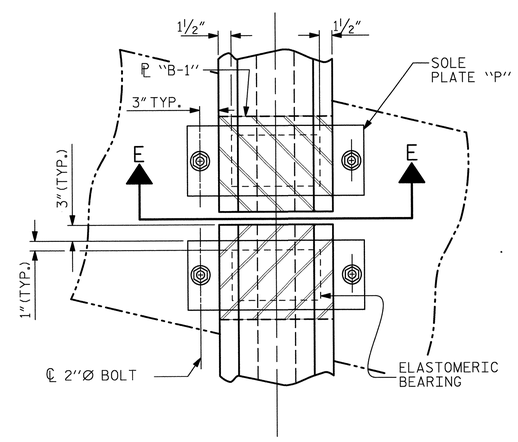

TYPICAL HALF-PLAN

(SHOWING CONTINUOUS BENT)

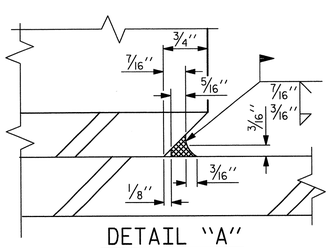

DETAIL "A"

PROJECT NO. U-2525B

GUILFORD COUNTY

STATION: 24+56.70 -Y4-
80+74.41 -L-

STATE OF NORTH CAROLINA
DEPARTMENT OF TRANSPORTATION
RALEIGH

STANDARD
ELASTOMERIC BEARING DETAILS

PRESTRESSED CONCRETE GIRDER SUPERSTRUCTURE

ASSEMBLED BY : J.M. KEPICH	DATE : 3/05/13
CHECKED BY : R.F. WERTMAN	DATE : 3/22/13
DRAWN BY : WJH 8/89	REV. 5/1/06 TLA/GM
CHECKED BY : CRK 8/89	REV. 10/1/11 MAA/GM
	REV. 10/24/12 AAC/MAA

PLANS PREPARED BY:
Gannett Fleming
Excellence Delivered As Promised
1121 Situs Court
Suite 170
Raleigh NC 27606-4279
(919) 859-4880
NC Lic. No. F-0270

THESE PLANS HAVE BEEN PROPERLY EXAMINED BY THE UNDERSIGNED. I HAVE DETERMINED THAT THEY COMPLY WITH EXISTING NORTH CAROLINA CODES, AND HAVE BEEN PROPERLY ADAPTED FOR USE IN THIS AREA.

NORTH CAROLINA PROFESSIONAL SEAL 037180 ENGINEER RICHARD F. WERTMAN

REVISIONS								SHEET NO.
NO.	BY:	DATE:	NO.	BY:	DATE:			S-404
1			3					TOTAL SHEETS
2			4					541

STR. NO. 11 STD. NO. EB3 (SHT 3)

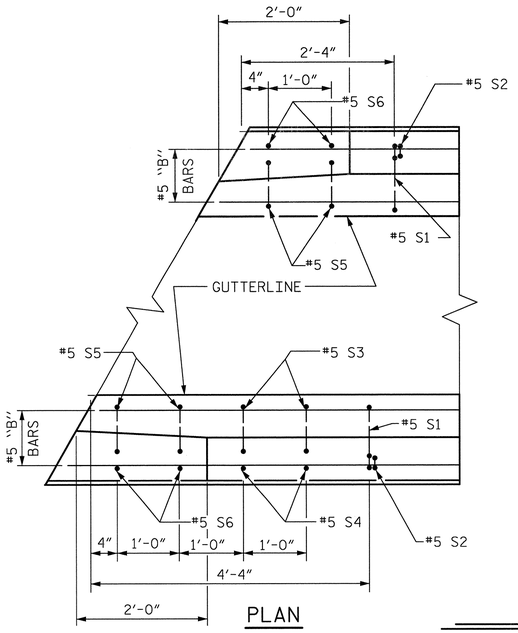

PLAN

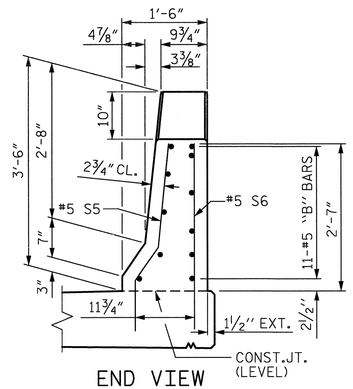

END VIEW

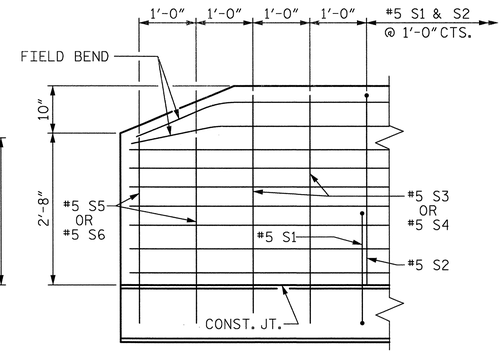

SIDE VIEW

END OF RAIL DETAILS

FOR ADHESIVE ANCHORING AT SAWED JOINTS

NOTES

THE BARRIER RAIL IN EACH SPAN SHALL NOT BE CAST UNTIL ALL SLAB CONCRETE IN THAT SPAN HAS BEEN CAST AND HAS REACHED A MINIMUM COMPRESSIVE STRENGTH OF 3,000 PSI.

WHEN FOAM JOINT SEAL IS REQUIRED, THE JOINT IN THE DECK SHALL BE SAWED PRIOR TO THE CASTING OF BARRIER RAIL.

ALL REINFORCING STEEL IN BARRIER RAILS SHALL BE EPOXY COATED.

THE #5 S3, S4, S5 AND S6 BARS SHALL BE INSTALLED, USING AN ADHESIVE ANCHORING SYSTEM, AFTER SAWING THE JOINT. THE YIELD LOAD FOR THE #5 S3, S4, S5 AND S6 BARS IS 18.6 KIPS. FIELD TESTING FOR THE ADHESIVE BONDING SYSTEM IS NOT REQUIRED.

GROOVED CONTRACTION JOINTS, 1/2" IN DEPTH, SHALL BE TOOLED IN ALL EXPOSED FACES OF THE BARRIER RAIL AND IN ACCORDANCE WITH ARTICLE 825-10(B) OF THE STANDARD SPECIFICATIONS. THE CONTRACTION JOINT SHALL BE LOCATED AT EACH THIRD POINT BETWEEN BARRIER RAIL EXPANSION JOINTS. ONLY ONE CONTRACTION JOINT IS REQUIRED AT MIDPOINT OF BARRIER RAIL SEGMENTS LESS THAN 20 FEET IN LENGTH AND NO CONTRACTION JOINTS ARE REQUIRED FOR THOSE SEGMENTS LESS THAN 10 FEET IN LENGTH.

BAR TYPES

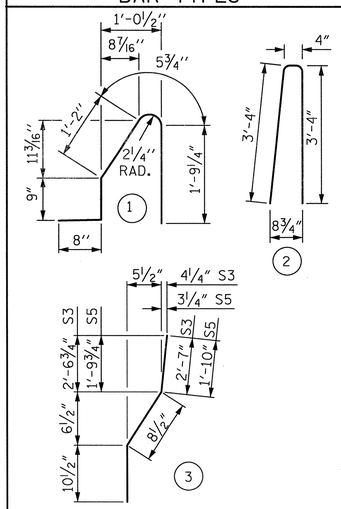

ALL BAR DIMENSIONS ARE OUT TO OUT

BILL OF MATERIAL

FOR CONCRETE BARRIER RAIL ONLY

BAR	NO.	SIZE	TYPE	LENGTH	WEIGHT
* S1	350	#5	1	4'-10"	1764
* S2	350	#5	2	7'-0"	2555
* S3	4	#5	3	4'-2"	17
* S4	4	#5	STR	4'-0"	17
* S5	8	#5	3	3'-5"	29
* S6	8	#5	STR	3'-3"	27
* B1	88	#5	STR	13'-1"	1201
* B2	132	#5	STR	22'-2"	3052

* EPOXY COATED REINFORCING STEEL	8662 LBS.
CLASS AA CONCRETE	48.8 CU. YDS.
CONCRETE BARRIER RAIL	361.6 LIN. FT.

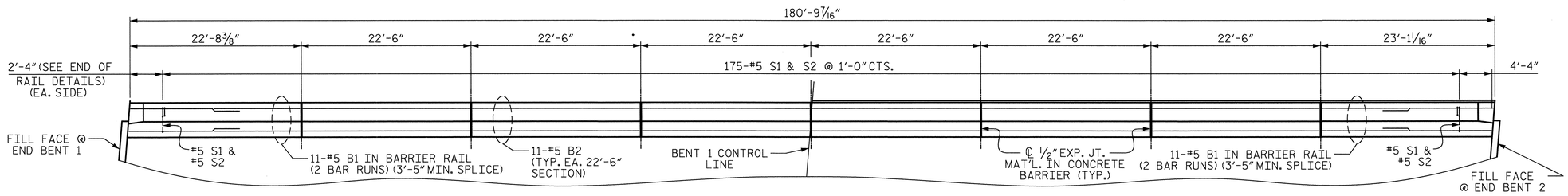

SPAN A

SPAN B

PLAN OF BARRIER

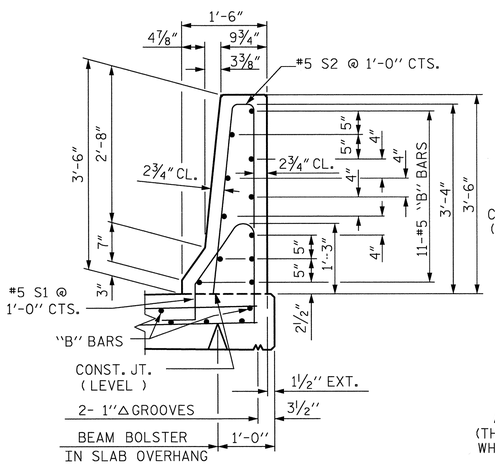

SECTION THRU RAIL

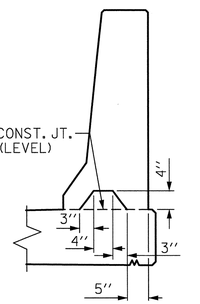

SECTION S-S

AT DAM IN OPEN JOINT (THIS IS TO BE USED ONLY WHEN SLIP FORM IS USED)

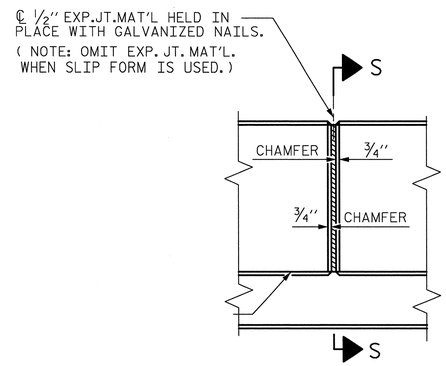

ELEVATION AT EXPANSION JOINTS

BARRIER RAIL DETAILS

PROJECT NO. U-2525B

GUILFORD COUNTY

STATION: 24+56.70 -Y4-
80+74.41 -L-

STATE OF NORTH CAROLINA
DEPARTMENT OF TRANSPORTATION
RALEIGH

STANDARD

CONCRETE BARRIER RAIL

DRAWN BY : J.M. KEPICH DATE : 03/06/13
CHECKED BY : R.F. WERTMAN DATE : 03/25/13
DESIGN ENGINEER OF RECORD : R.F. WERTMAN DATE : 03/26/13

PLANS PREPARED BY: Gannett Fleming — Excellence Delivered As Promised
1121 Situs Court, Suite 170, Raleigh NC 27606-4279, (919) 859-4880, NC Lic. No. F-0270

NORTH CAROLINA PROFESSIONAL SEAL 037180 ENGINEER RICHARD F. WERTMAN

REVISIONS						
NO.	BY:	DATE:	NO.	BY:	DATE:	
1			3			
2			4			

SHEET NO. S-405
TOTAL SHEETS 54-1

STR. NO. 11

STD. NO. CBR1 (SHT 2)

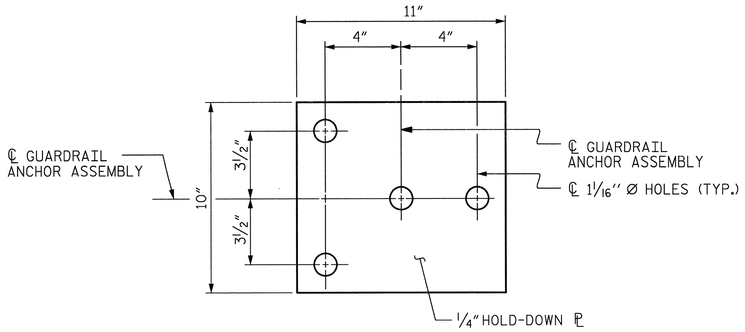

PLAN

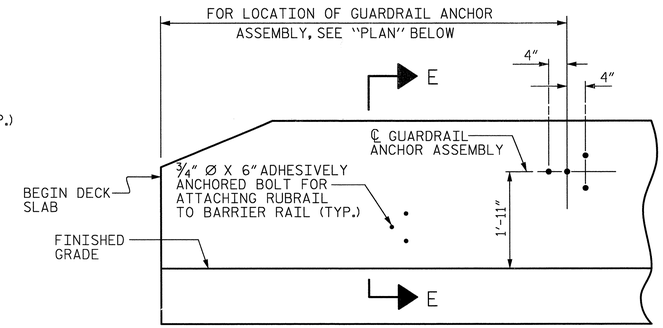

ELEVATION

NOTES

THE GUARDRAIL ANCHOR ASSEMBLY SHALL CONSIST OF A 1/4" HOLD-DOWN PLATE AND 4 - 7/8" Ø BOLTS WITH NUTS AND WASHERS, RUBRAIL, AND ADHESIVELY ANCHORED BOLTS.

THE HOLD-DOWN PLATE SHALL CONFORM TO AASHTO M270 GRADE 36. AFTER FABRICATION, THE HOLD-DOWN PLATE SHALL BE HOT-DIP GALVANIZED IN ACCORDANCE WITH AASHTO M111.

BOLTS SHALL CONFORM TO THE REQUIREMENTS OF ASTM A307 AND NUTS SHALL CONFORM TO THE REQUIREMENTS OF AASHTO M291. BOLTS, NUTS AND WASHERS SHALL BE GALVANIZED. (AT THE CONTRACTOR'S OPTION, STAINLESS STEEL BOLTS, NUTS AND WASHERS MAY BE USED AS AN ALTERNATE FOR THE 7/8" Ø GALVANIZED BOLTS, NUTS AND WASHERS. THEY SHALL CONFORM TO OR EXCEED THE MECHANICAL REQUIREMENTS OF ASTM A307. THE USE OF THIS ALTERNATE SHALL BE APPROVED BY THE ENGINEER.)

THE GUARDRAIL ANCHOR ASSEMBLY IS REQUIRED AT ALL POINTS WHERE APPROACH GUARDRAIL IS TO BE ATTACHED TO THE END OF BARRIER RAIL. FOR POINTS OF ATTACHMENT, SEE SKETCH.

AFTER INSTALLATION, THE EXPOSED THREAD OF THE BOLT SHALL BE BURRED WITH A SHARP POINTED TOOL.

THE COST OF THE GUARDRAIL ANCHOR ASSEMBLY SHALL BE INCLUDED IN THE UNIT CONTRACT PRICE BID FOR CONCRETE BARRIER RAIL.

THE 1 1/4" Ø HOLES SHALL BE FORMED OR DRILLED WITH A CORE BIT. IMPACT TOOLS WILL NOT BE PERMITTED. ANY CONCRETE DAMAGED BY THIS WORK SHALL BE REPAIRED TO THE SATISFACTION OF THE ENGINEER.

THE C6 X 8.2 RUBRAIL IS TO BE ADHESIVELY ANCHORED TO THE RAIL USING THREE 3/4" Ø X 6" BOLTS WITH WASHERS. LEVEL ONE FIELD TESTING IS REQUIRED, AND THE YIELD LOAD OF THE 3/4" Ø BOLT IS 12 KIPS. FOR ADHESIVELY ANCHORED ANCHOR BOLTS OR DOWELS, SEE STANDARD SPECIFICATIONS. SEE ROADWAY STANDARD 862.03 FOR DETAILS AND LOCATION OF THE RUBRAIL.

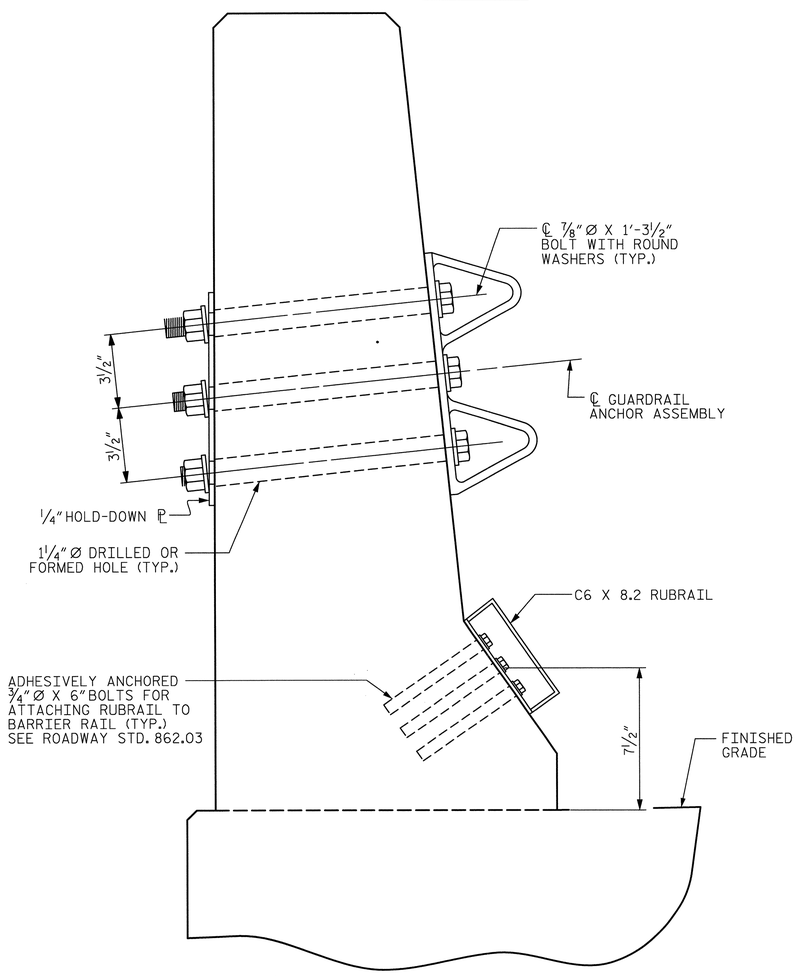

SECTION E-E

GUARDRAIL ANCHOR ASSEMBLY DETAILS

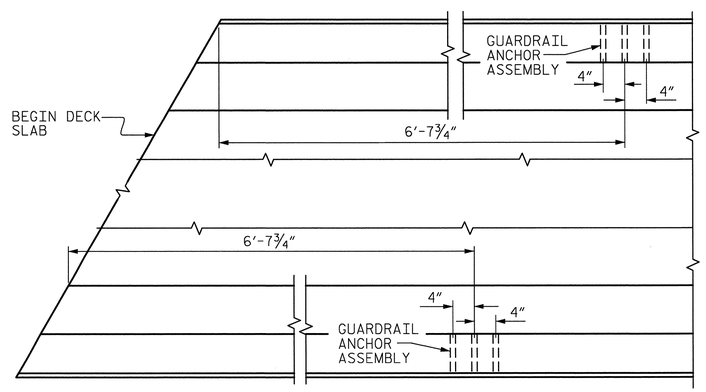

PLAN

LOCATION OF ANCHORS FOR GUARDRAIL

END BENT 1 SHOWN, END BENT 2 SIMILAR.

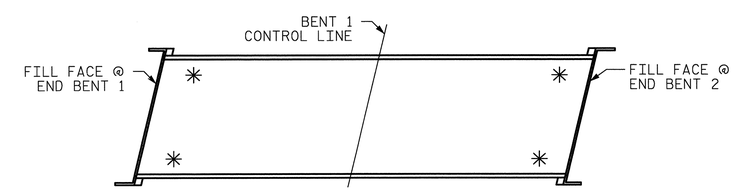

SKETCH SHOWING POINTS OF ATTACHMENTS

✳ DENOTES GUARDRAIL ANCHOR ASSEMBLY

PROJECT NO. U-2525B
GUILFORD COUNTY
STATION: 24+56.70 -Y4-
80+74.41 -L-

STATE OF NORTH CAROLINA
DEPARTMENT OF TRANSPORTATION
RALEIGH

STANDARD
GUARDRAIL ANCHORAGE FOR BARRIER RAIL

ASSEMBLED BY : J.M. KEPICH		DATE : 3/07/13	
CHECKED BY : R.F. WERTMAN		DATE : 3/25/13	
DRAWN BY : TLA 5/06	REV. 10/1/11	MAA/GM	
CHECKED BY : GM 5/06	REV. 7/12	MAA/GM	
	REV. 10/12	MAA/GM	

PLANS PREPARED BY:
Gannett Fleming
Excellence Delivered As Promised
1121 Situs Court
Suite 170
Raleigh NC 27606-4279
(919) 859-4880
NC Lic. No. F-0270

THESE PLANS HAVE BEEN PROPERLY EXAMINED BY THE UNDERSIGNED. I HAVE DETERMINED THAT THEY COMPLY WITH EXISTING NORTH CAROLINA CODES, AND HAVE BEEN PROPERLY ADAPTED FOR USE IN THIS AREA.

NORTH CAROLINA PROFESSIONAL SEAL 037160 ENGINEER RICHARD F. WERTMAN

REVISIONS						SHEET NO.
NO.	BY:	DATE:	NO.	BY:	DATE:	S-406
1			3			TOTAL SHEETS
2			4			541

STR. NO. 11 (SHT 1b) STD. NO. GRA2

BAR TYPES

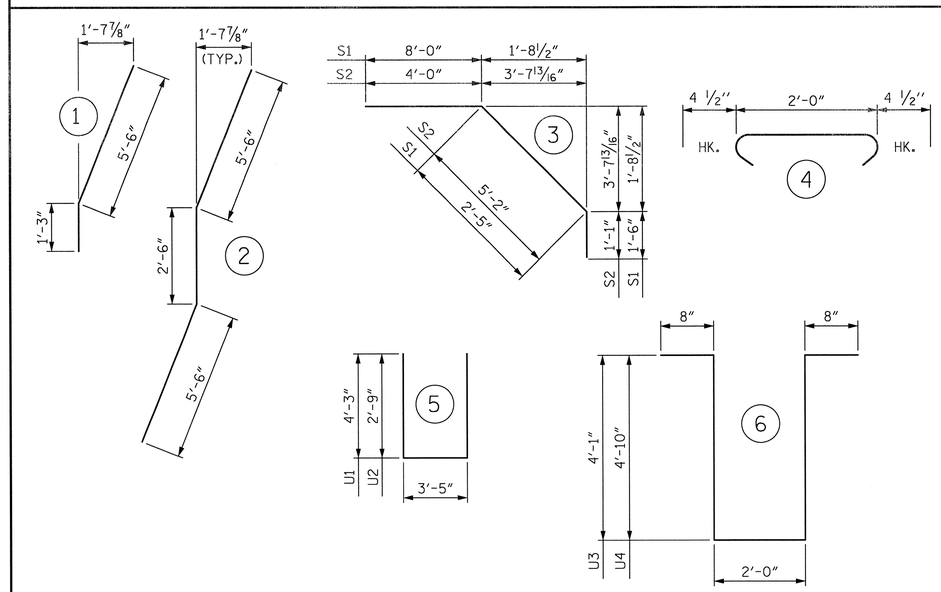

ALL BAR DIMENSIONS ARE OUT TO OUT

BILL OF MATERIAL

BAR	NO.	SIZE	TYPE	LENGTH	WEIGHT	BAR	NO.	SIZE	TYPE	LENGTH	WEIGHT	BAR	NO.	SIZE	TYPE	LENGTH	WEIGHT
✳ A1	367	#5	STR	50'-11"	19490	A204	2	#5	STR	44'-2"	92	H3	16	#5	STR	12'-0"	200
A2	367	#5	STR	50'-11"	19490	A205	2	#5	STR	42'-3"	88	H4	16	#5	STR	12'-2"	203
						A206	2	#5	STR	40'-4"	84						
✳ A101	2	#5	STR	49'-10"	104	A207	2	#5	STR	38'-5"	80	K1	30	#4	STR	20'-9"	416
✳ A102	2	#5	STR	47'-11"	100	A208	2	#5	STR	36'-7"	76	K2	8	#4	STR	8'-9"	47
✳ A103	2	#5	STR	46'-0"	96	A209	2	#5	STR	34'-8"	72	K3	8	#4	STR	9'-11"	53
✳ A104	2	#5	STR	44'-2"	92	A210	2	#5	STR	32'-9"	68	K4	32	#4	STR	10'-3"	219
✳ A105	2	#5	STR	42'-3"	88	A211	2	#5	STR	30'-10"	64	K5	16	#4	STR	9'-3"	99
✳ A106	2	#5	STR	40'-4"	84	A212	2	#5	STR	29'-0"	60	K6	4	#4	STR	5'-4"	14
✳ A107	2	#5	STR	38'-5"	80	A213	2	#5	STR	27'-1"	56	K7	4	#4	STR	5'-10"	16
✳ A108	2	#5	STR	36'-7"	76	A214	2	#5	STR	25'-2"	52	K8	8	#4	STR	6'-1"	33
✳ A109	2	#5	STR	34'-8"	72	A215	2	#5	STR	23'-3"	48	K9	4	#4	STR	5'-7"	15
✳ A110	2	#5	STR	32'-9"	68	A216	2	#5	STR	21'-4"	45	K10	8	#4	STR	7'-4"	39
✳ A111	2	#5	STR	30'-10"	64	A217	2	#5	STR	19'-6"	41	K11	8	#4	STR	9'-7"	51
✳ A112	2	#5	STR	29'-0"	60	A218	2	#5	STR	17'-7"	37	K12	10	#4	1	6'-9"	45
✳ A113	2	#5	STR	27'-1"	56	A219	2	#5	STR	15'-8"	33	K13	15	#4	2	13'-6"	135
✳ A114	2	#5	STR	25'-2"	52	A220	2	#5	STR	13'-9"	29	K14	16	#4	STR	2'-9"	29
✳ A115	2	#5	STR	23'-3"	48	A221	2	#5	STR	11'-11"	25	K15	8	#4	STR	3'-9"	20
✳ A116	2	#5	STR	21'-4"	45	A222	2	#5	STR	10'-0"	21						
✳ A117	2	#5	STR	19'-6"	41	A223	2	#5	STR	8'-1"	17	✳ S1	72	#4	3	11'-11"	573
✳ A118	2	#5	STR	17'-7"	37	A224	2	#5	STR	6'-2"	13	✳ S2	72	#4	3	10'-3"	493
✳ A119	2	#5	STR	15'-8"	33	A225	2	#5	STR	4'-4"	9	S3	160	#4	4	2'-9"	294
✳ A120	2	#5	STR	13'-9"	29	A226	2	#5	STR	2'-4"	5						
✳ A121	2	#5	STR	11'-11"	25							U1	96	#4	5	11'-11"	764
✳ A122	2	#5	STR	10'-0"	21	B1	264	#5	STR	47'-0"	12942	U2	12	#4	5	8'-11"	71
✳ A123	2	#5	STR	8'-1"	17	✳ B2	138	#7	STR	20'-0"	5641	U3	8	#4	6	11'-6"	61
✳ A124	2	#5	STR	6'-2"	13	✳ B3	108	#7	STR	25'-0"	5519	U4	32	#4	6	13'-0"	278
✳ A125	2	#5	STR	4'-4"	9	✳ B4	33	#7	STR	27'-6"	1855						
✳ A126	2	#5	STR	2'-4"	5	✳ B5	144	#4	STR	23'-0"	2212						
A201	2	#5	STR	49'-10"	104							REINFORCING STEEL					37336 LBS.
A202	2	#5	STR	47'-11"	100	H1	16	#5	STR	11'-6"	192	EPOXY COATED					
A203	2	#5	STR	46'-0"	96	H2	16	#5	STR	11'-8"	195	REINFORCING STEEL					37198 LBS.

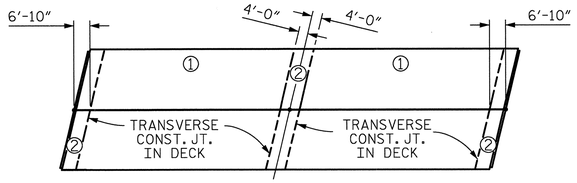

OPTIONAL DECK POUR DETAIL

POUR ② SHALL NOT BE STARTED UNTIL BOTH ADJACENT ① POURS REACH A MINIMUM OF 3000 PSI

GROOVING BRIDGE FLOORS		
APPROACH SLABS	2173	SQ.FT.
BRIDGE DECK	8120	SQ.FT.
TOTAL	10293	SQ.FT.

SUPERSTRUCTURE REINFORCING STEEL LENGTHS ARE BASED ON THE FOLLOWING MINIMUM SPLICE LENGTHS

BAR SIZE	SUPERSTRUCTURE EXCEPT APPROACH SLABS, PARAPET, AND BARRIER RAIL		APPROACH SLABS		PARAPET AND BARRIER RAIL
	EPOXY COATED	UNCOATED	EPOXY COATED	UNCOATED	
#4	2'-0"	1'-9"	2'-0"	1'-9"	2'-9"
#5	2'-6"	2'-2"	2'-6"	2'-2"	3'-5"
#6	3'-0"	2'-7"	3'-10"	2'-7"	4'-4"
#7	5'-3"	3'-6"			
#8	6'-10"	4'-7"			

SUPERSTRUCTURE BILL OF MATERIAL

	CLASS AA CONCRETE	REINFORCING STEEL	EPOXY COATED REINFORCING STEEL
	(CU. YDS.)	(LBS.)	(LBS.)
POUR #1	130.0		
POUR #2	174.0		
POUR #3	100.1		
TOTALS✳✳	404.1	37336	37198

✳✳QUANTITIES FOR BARRIER RAIL ARE NOT INCLUDED

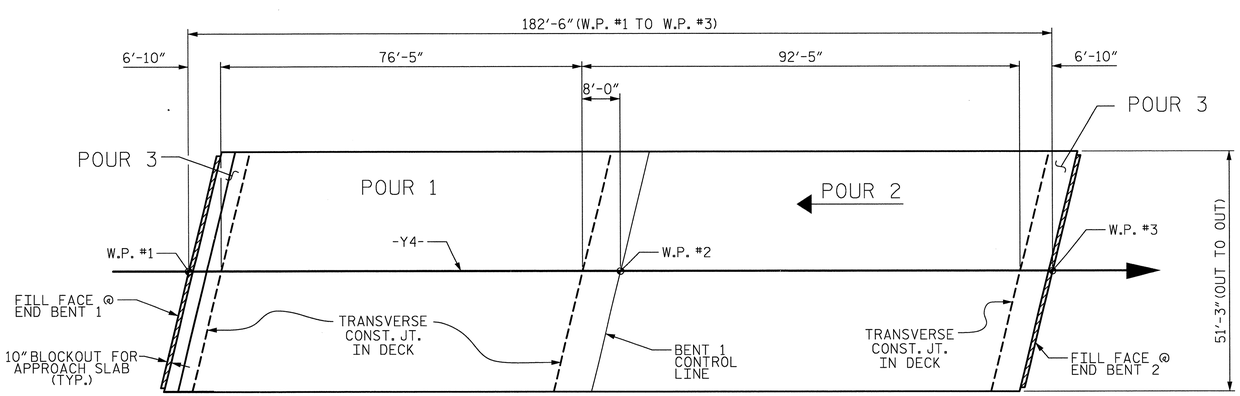

LAYOUT FOR COMPUTING AREA REINFORCED CONCRETE DECK SLAB (SQ. FT. = 9.353)

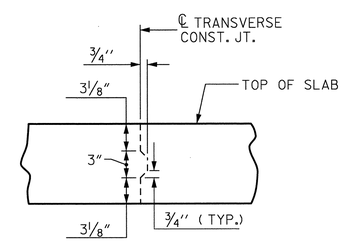

TRANSVERSE CONSTRUCTION JOINT DETAIL

NOTE: REINFORCING STEEL IN SLAB NOT SHOWN. LONGITUDINAL REINFORCING STEEL SHALL BE CONTINUOUS THRU JOINT

PROJECT NO. U-2525B
GUILFORD COUNTY
STATION: 24+56.70 -Y4-
80+74.41 -L-

STATE OF NORTH CAROLINA
DEPARTMENT OF TRANSPORTATION
RALEIGH

SUPERSTRUCTURE
BILL OF MATERIAL

REVISIONS						SHEET NO.
NO.	BY:	DATE:	NO.	BY:	DATE:	S-407
1			3			TOTAL SHEETS
2			4			541

DRAWN BY : J.M. KEPICH DATE : 03/05/13
CHECKED BY : R.F. WERTMAN DATE : 03/22/13
DESIGN ENGINEER OF RECORD : R.F. WERTMAN DATE : 03/22/13

PLANS PREPARED BY:
Gannett Fleming
Excellence Delivered As Promised
1121 Situs Court
Suite 170
Raleigh NC 27606-4279
(919) 859-4880
NC Lic. No. F-0270

NORTH CAROLINA PROFESSIONAL SEAL 037188 ENGINEER RICHARD F. WERTMAN

STR. NO. 11

NOTES:

INSTALL THE 4" DIA. DRAIN PIPE THROUGH THE WING WALL AS REQUIRED FOR REINFORCED BRIDGE APPROACH FILLS. SEE THE ROADWAY PLANS. REINFORCING STEEL IN THE WING WALL MAY BE SHIFTED AS NECESSARY TO CLEAR THE DRAIN PIPE.

#4 D1 BARS MAY BE SHIFTED SLIGHTLY TO AVOID STIRRUPS IN CAP.

SEE SUPERSTRUCTURE SHEETS FOR UPPER PART OF INTEGRAL END BENT DETAILS.

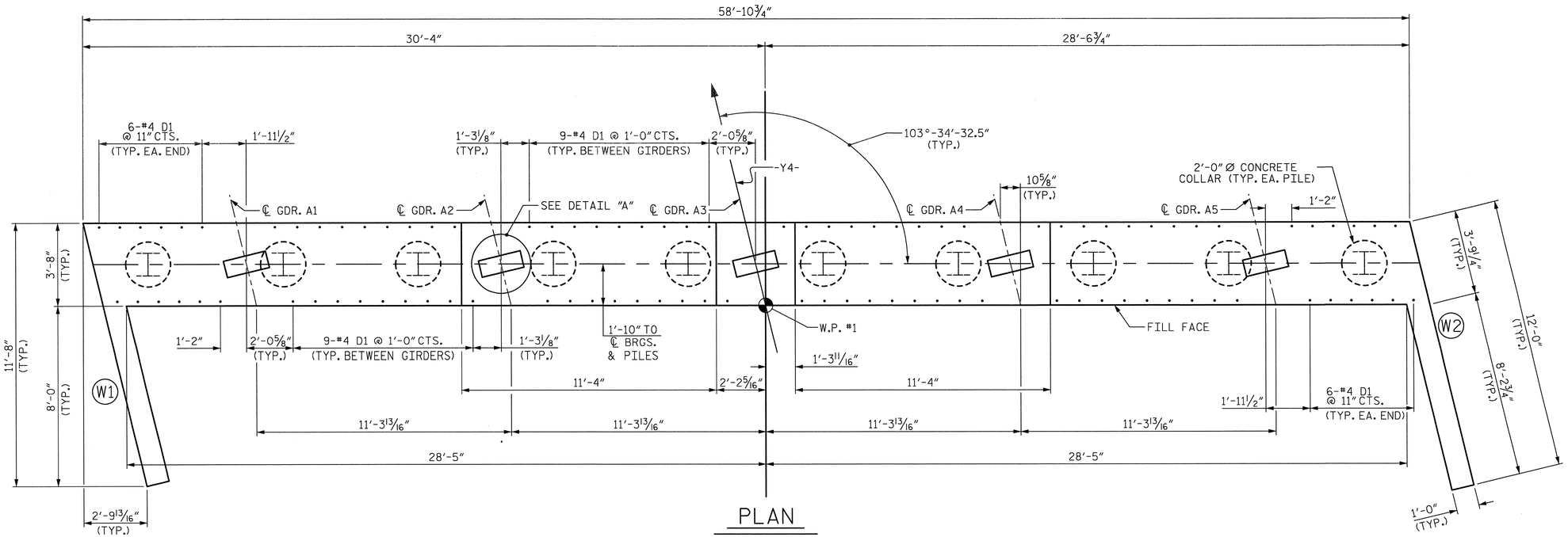

PLAN

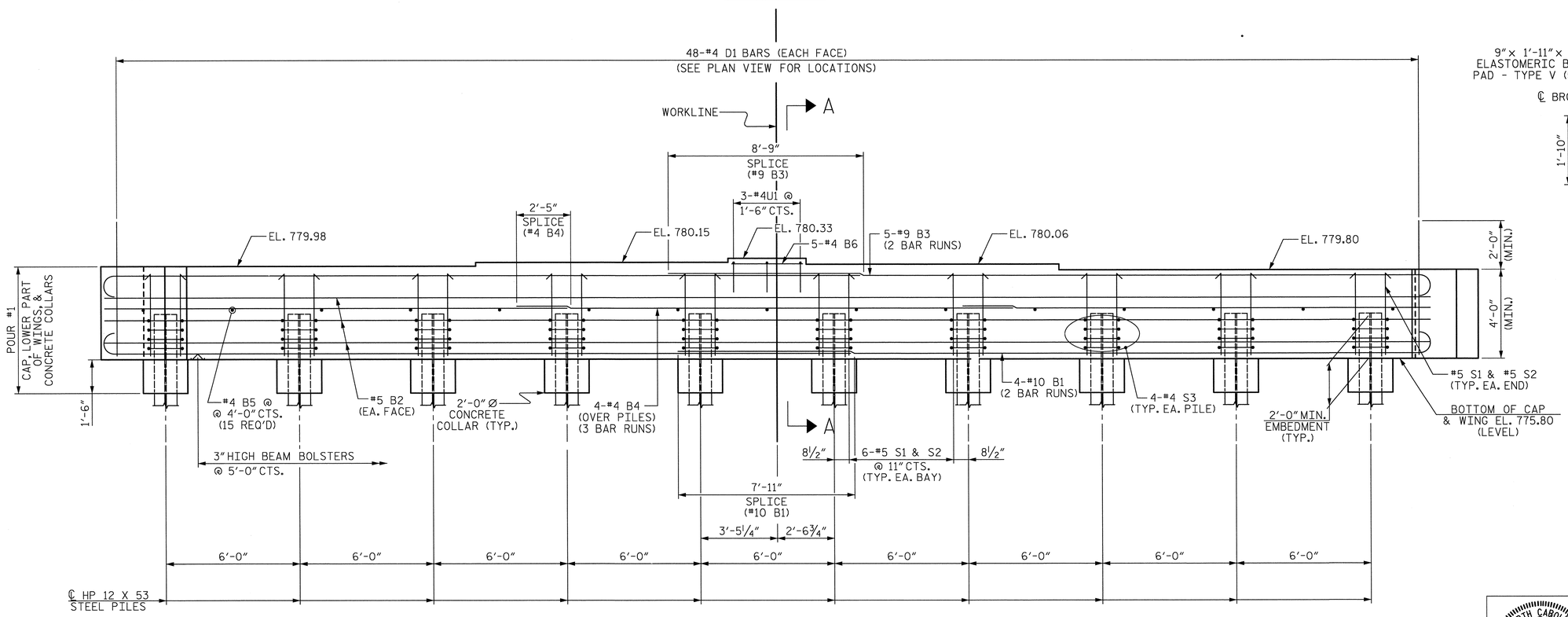

ELEVATION

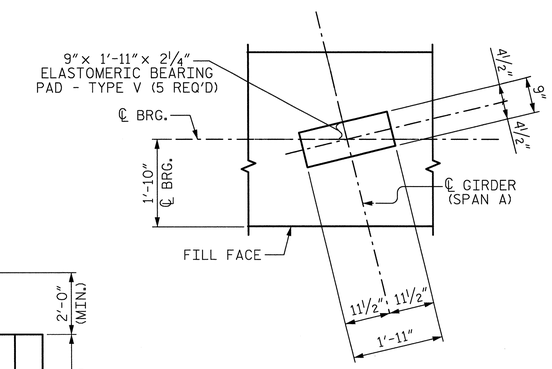

DETAIL "A"

(TYP. EA. GIRDER)

PROJECT NO. U-2525B

GUILFORD COUNTY

STATION: 24+56.70 -Y4-
80+74.41 -L-

SHEET 1 OF 3

STATE OF NORTH CAROLINA
DEPARTMENT OF TRANSPORTATION
RALEIGH

SUBSTRUCTURE

INTEGRAL END BENT #1

REVISIONS						SHEET NO.
NO.	BY:	DATE:	NO.	BY:	DATE:	5-408
1			3			TOTAL SHEETS
2			4			541

DRAWN BY : L.M. SAMPLES DATE : 04/01/13
CHECKED BY : R.F. WERTMAN DATE : 05/01/13
DESIGN ENGINEER OF RECORD : R.F. WERTMAN DATE : 05/01/13

PLANS PREPARED BY:
Gannett Fleming
Excellence Delivered As Promised
1121 Situs Court
Suite 170
Raleigh NC 27606-4279
(919) 859-4880
NC Lic. No. F-0270

NORTH CAROLINA PROFESSIONAL SEAL 037180 ENGINEER RICHARD F. WERTMAN

STR. NO. 11

NOTES:

THE UPPER PORTION OF THE WINGS SHALL BE POURED WITH THE SUPERSTRUCTURE. FOR DETAILS AND REINFORCING STEEL, SEE SUPERSTRUCTURE DETAILS.

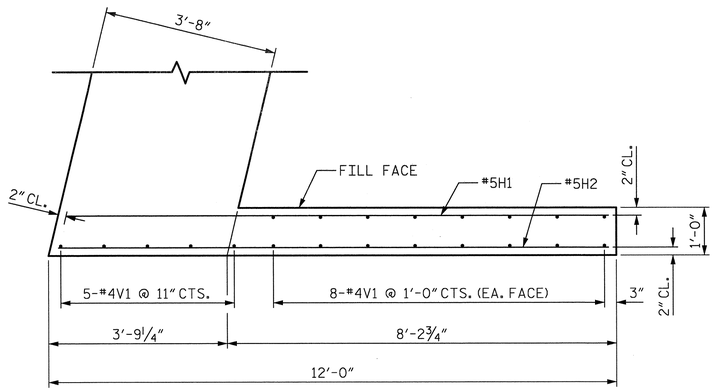

PLAN OF WING (W1)

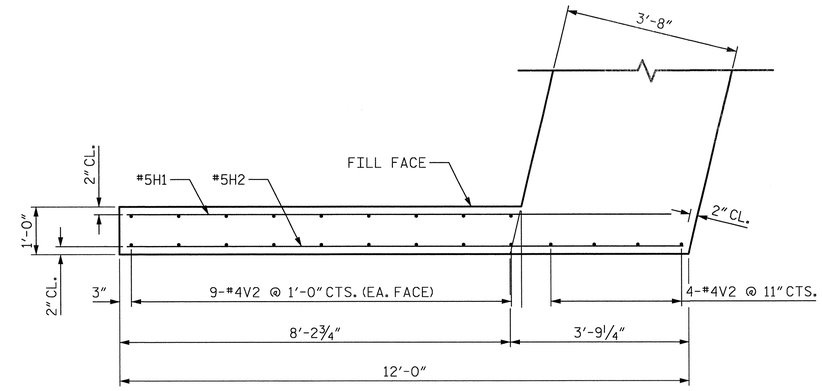

PLAN OF WING (W2)

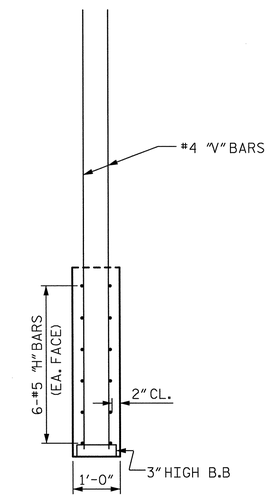

SECTION X-X

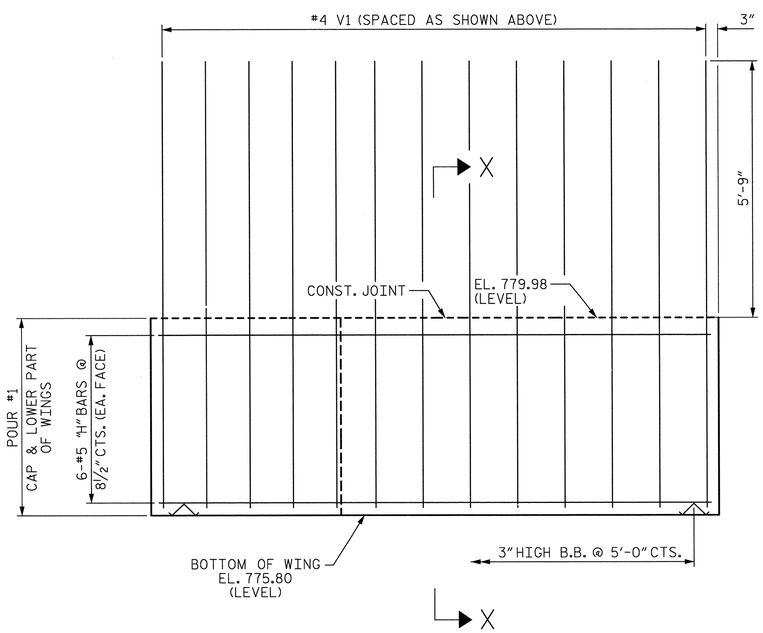

ELEVATION OF WING (W1)

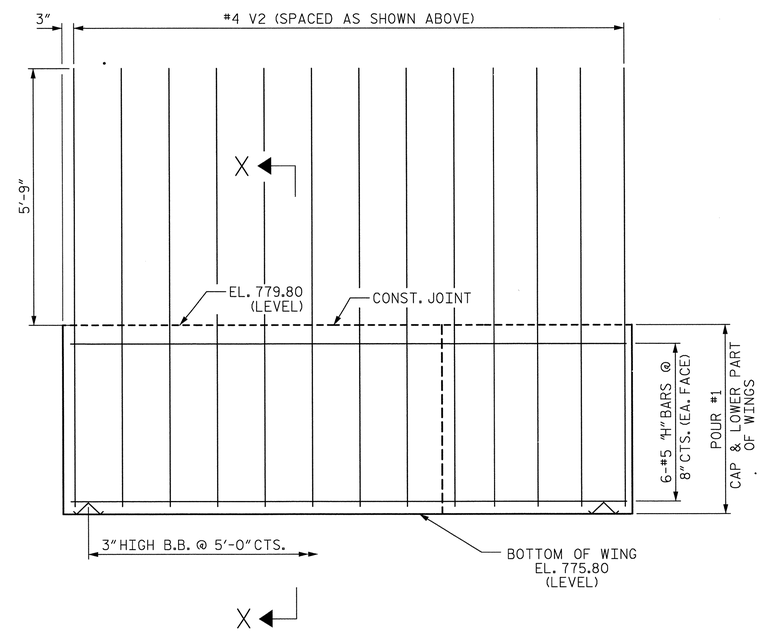

ELEVATION OF WING (W2)

PROJECT NO. U-2525B

GUILFORD COUNTY

STATION: 24+56.70 -Y4-
80+74.41 -L-

SHEET 2 OF 3

STATE OF NORTH CAROLINA
DEPARTMENT OF TRANSPORTATION
RALEIGH

SUBSTRUCTURE

INTEGRAL END BENT #1

REVISIONS						SHEET NO.
NO.	BY:	DATE:	NO.	BY:	DATE:	S-409
1			3			TOTAL SHEETS
2			4			541

DRAWN BY : L.M. SAMPLES DATE : 04/01/13
CHECKED BY : R.F. WERTMAN DATE : 05/02/13
DESIGN ENGINEER OF RECORD : R.F. WERTMAN DATE : 05/02/13

PLANS PREPARED BY:
Gannett Fleming
Excellence Delivered As Promised
1121 Situs Court
Suite 170
Raleigh NC 27606-4279
(919) 859-4880
NC Lic. No. F-0270

NORTH CAROLINA PROFESSIONAL SEAL 037180 ENGINEER RICHARD F. WERTMAN

STR. NO. 11

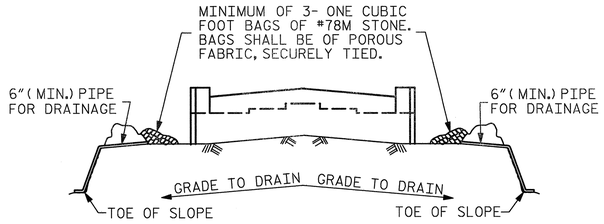

BAGGED STONE AND PIPE SHALL BE PLACED IMMEDIATELY AFTER COMPLETION OF END BENT EXCAVATION. PIPE MAY BE EITHER CONCRETE, CORRUGATED STEEL, CORRUGATED ALUMINUM ALLOY, OR CORRUGATED PLASTIC. PERFORATED PIPE WILL NOT BE ALLOWED.

BAGGED STONE SHALL REMAIN IN PLACE UNTIL THE ENGINEER DIRECTS THAT IT BE REMOVED. THE CONTRACTOR SHALL REMOVE AND DISPOSE OF SILT ACCUMULATIONS AT BAGGED STONE WHEN SO DIRECTED BY THE ENGINEER. BAGS SHALL BE REMOVED AND REPLACED WHENEVER THE ENGINEER DETERMINES THAT THEY HAVE DETERIORATED AND LOST THEIR EFFECTIVENESS.

NO SEPARATE PAYMENT WILL BE MADE FOR THIS WORK AND THE ENTIRE COST OF THIS WORK SHALL BE INCLUDED IN THE UNIT CONTRACT PRICE BID FOR THE SEVERAL PAY ITEMS.

TEMPORARY DRAINAGE AT END BENT

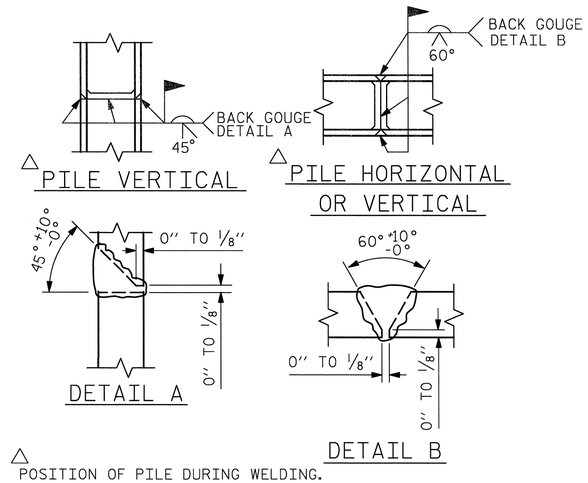

△ POSITION OF PILE DURING WELDING.

PILE SPLICE DETAILS

BAR TYPES

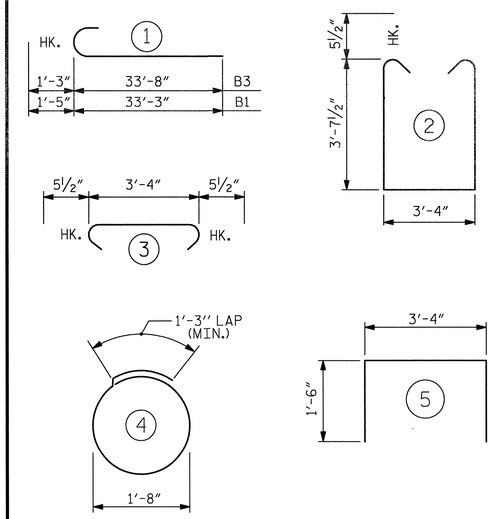

ALL BAR DIMENSIONS ARE OUT TO OUT.

BILL OF MATERIAL

END BENT #1

BAR	No.	SIZE	TYPE	LENGTH	WEIGHT
B1	8	#10	1	34'-8"	1193
B2	6	#5	STR	58'-6"	366
B3	10	#9	1	34'-11"	1187
B4	12	#4	STR	21'-2"	170
B5	15	#4	STR	3'-4"	33
B6	5	#4	STR	3'-2"	11
D1	96	#4	STR	6'-3"	401
H1	12	#5	STR	11'-6"	144
H2	12	#5	STR	11'-8"	146
S1	56	#5	2	11'-6"	672
S2	56	#5	3	4'-3"	248
S3	40	#4	4	6'-6"	174
U1	3	#4	5	6'-4"	13
V1	21	#4	STR	9'-8"	136
V2	22	#4	STR	9'-8"	142

REINFORCING STEEL 5036 LBS.

CLASS A CONCRETE

POUR #1 (CAP, LOWER WINGS & COLLARS) 37.7 C.Y.

TOTAL 37.7 C.Y.

HP 12 X 53 STEEL PILES

No. = 10 250 LIN. FT.

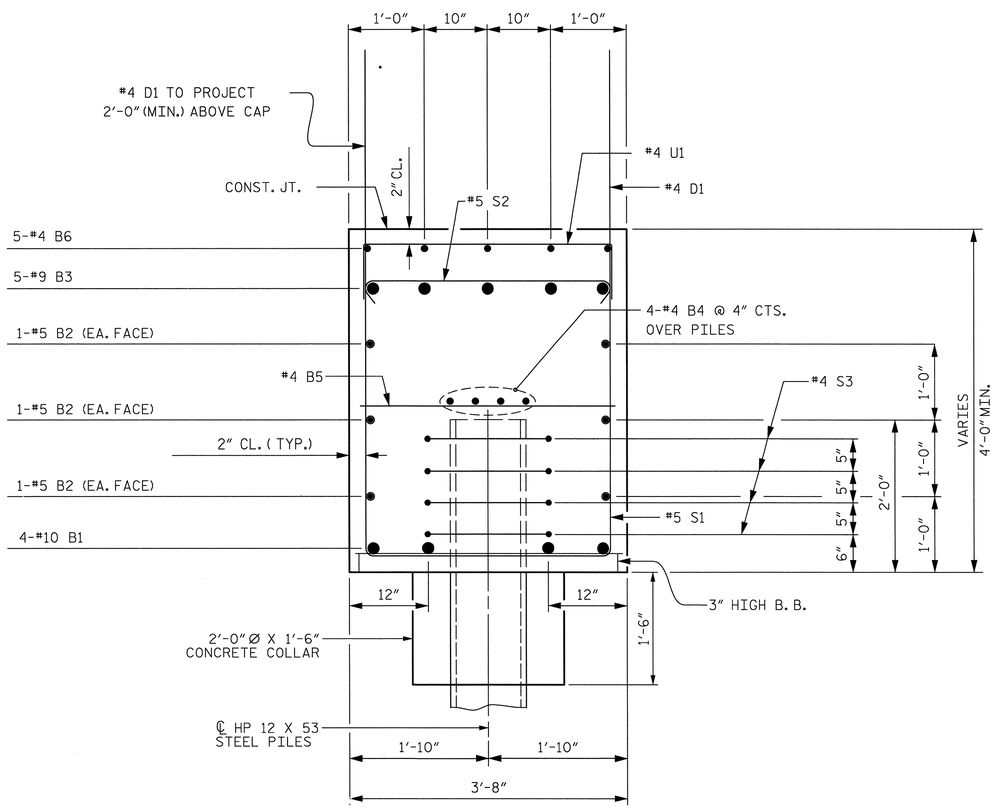

SECTION A-A

PROJECT NO. U-2525B

GUILFORD COUNTY

STATION: 24+56.70 -Y4-
80+74.41 -L-

SHEET 3 OF 3

STATE OF NORTH CAROLINA
DEPARTMENT OF TRANSPORTATION
RALEIGH

SUBSTRUCTURE

INTEGRAL END BENT #1

REVISIONS						SHEET NO.
NO.	BY:	DATE:	NO.	BY:	DATE:	S-410
1			3			TOTAL SHEETS
2			4			54

DRAWN BY : L.M. SAMPLES DATE : 04/04/13
CHECKED BY : R.F. WERTMAN DATE : 05/01/13
DESIGN ENGINEER OF RECORD : R.F. WERTMAN DATE : 05/01/13

PLANS PREPARED BY:
Gannett Fleming
Excellence Delivered As Promised
1121 Situs Court
Suite 170
Raleigh NC 27606-4279
(919) 859-4880
NC Lic. No. F-0270

NORTH CAROLINA PROFESSIONAL SEAL 032790 ENGINEER RICHARD F. WERTMAN

STR. NO. 11

NOTES

STIRRUPS IN CAP MAY BE SHIFTED AS NECESSARY TO CLEAR ANCHOR BOLTS.

HOOKS ON V1 BARS MAY BE TURNED AS NECESSARY FOR PLACING REINFORCING STEEL.

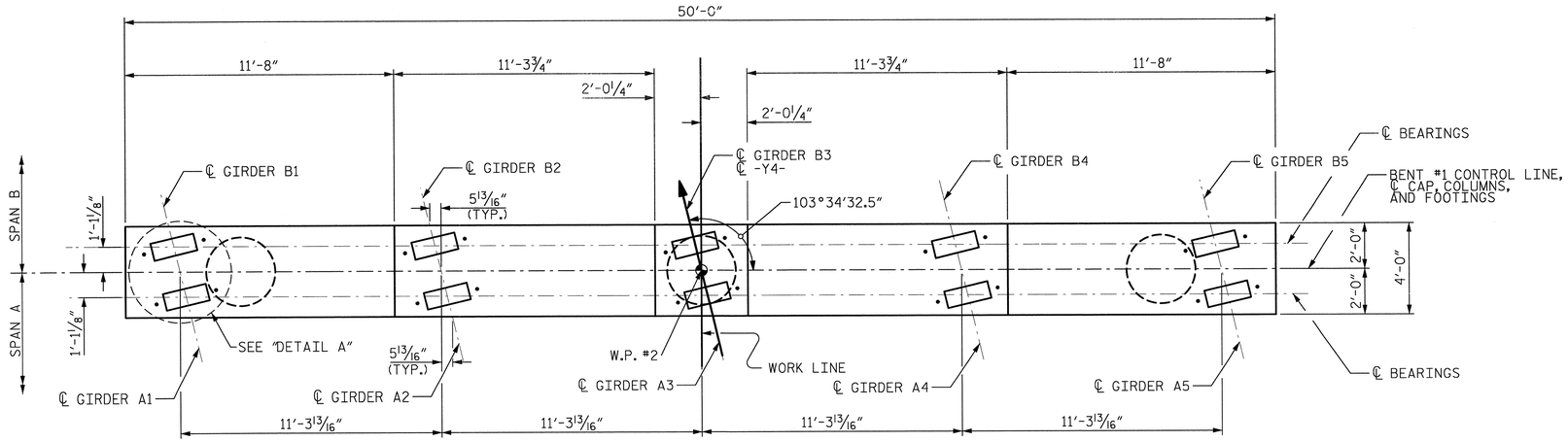

PLAN

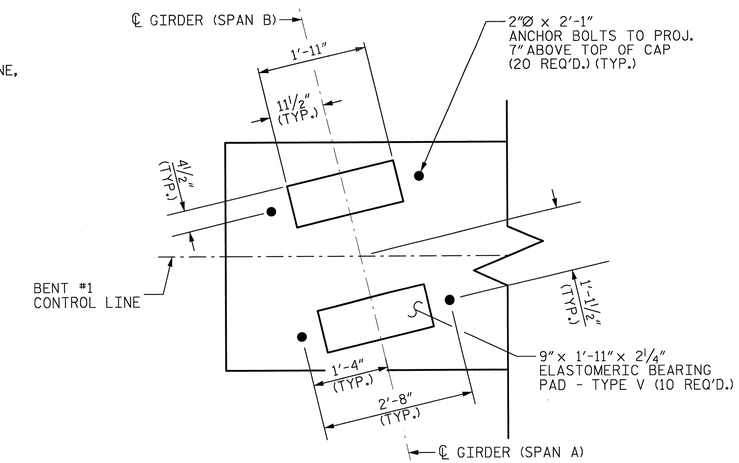

DETAIL A

(TYP. EA. GIRDER)

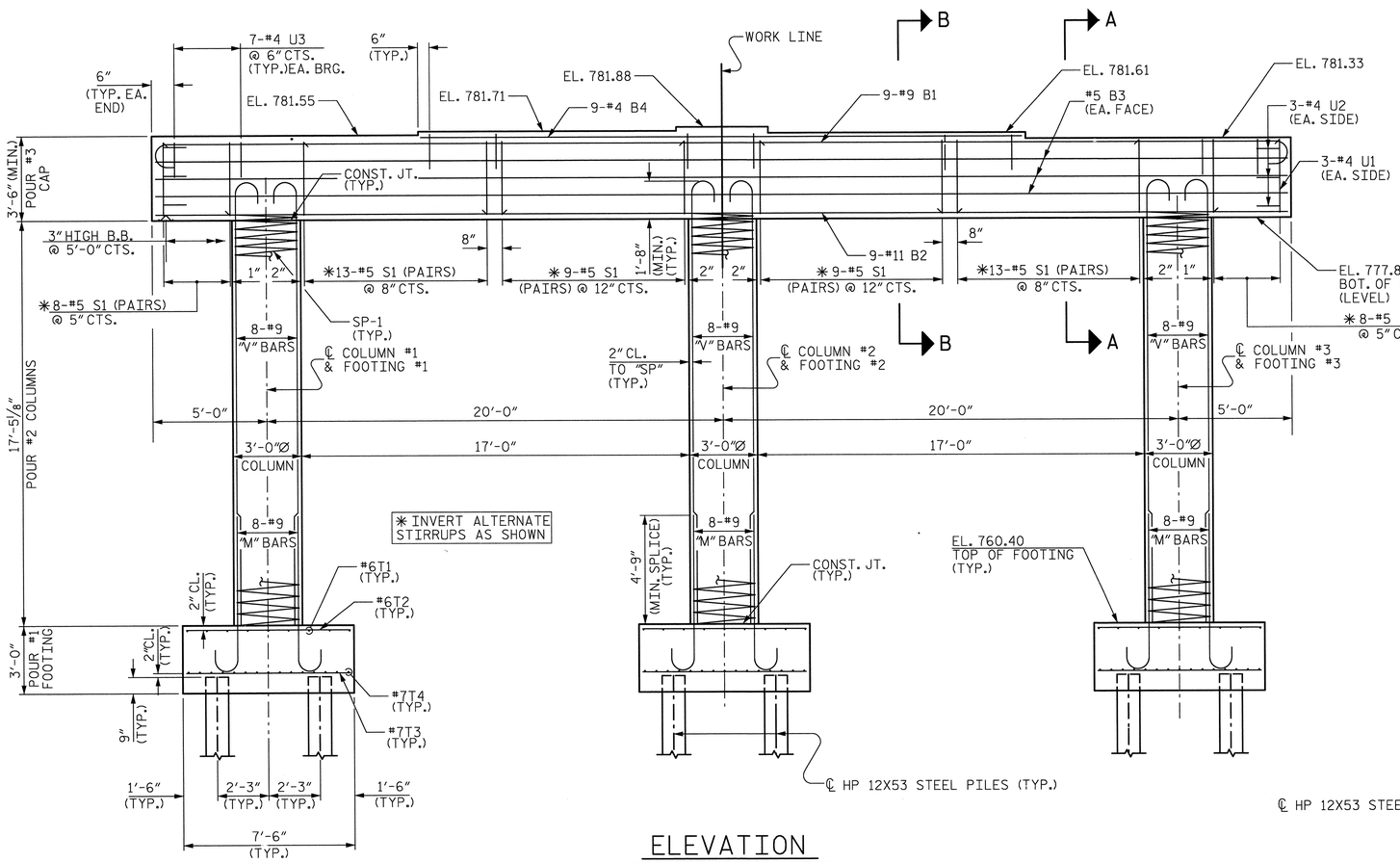

ELEVATION

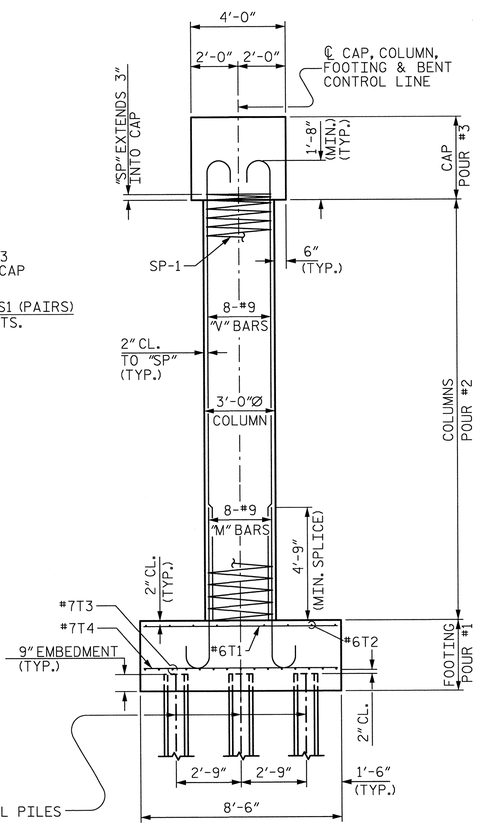

END ELEVATION

PROJECT NO. U-2525B

GUILFORD COUNTY

STATION: 24+56.70 -Y4-
80+74.41 -L-

SHEET 1 OF 2

STATE OF NORTH CAROLINA
DEPARTMENT OF TRANSPORTATION
RALEIGH

SUBSTRUCTURE

BENT #1

REVISIONS								SHEET NO.
NO.	BY:	DATE:	NO.	BY:	DATE:			S-413
1			3					TOTAL SHEETS
2			4					541

PLANS PREPARED BY:

Gannett Fleming
Excellence Delivered As Promised

1121 Situs Court
Suite 170
Raleigh NC 27606-4279
(919) 859-4880
NC Lic. No. F-0270

NORTH CAROLINA PROFESSIONAL SEAL 037186 ENGINEER RICHARD F. WERTMAN

DRAWN BY :	J. S. HOBSON	DATE :	3/11/13
CHECKED BY :	R. F. WERTMAN	DATE :	5/14/13
DESIGN ENGINEER OF RECORD :	R. F. WERTMAN	DATE :	5/14/13

STR. NO. 11

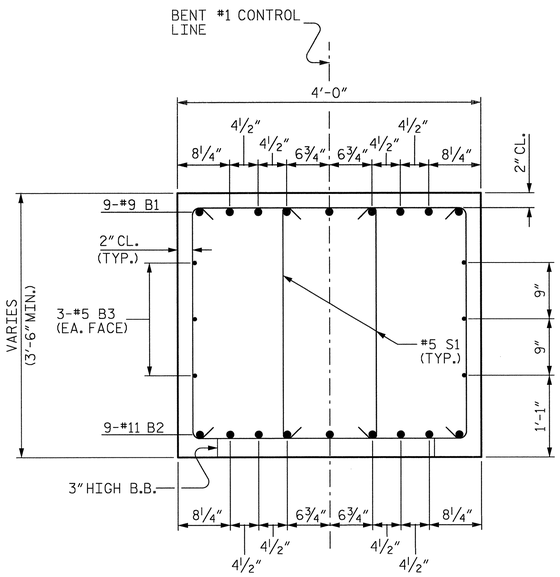

SECTION A-A

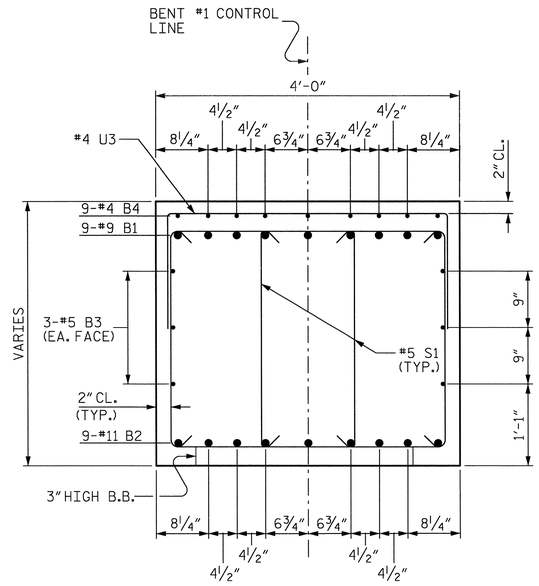

SECTION B-B

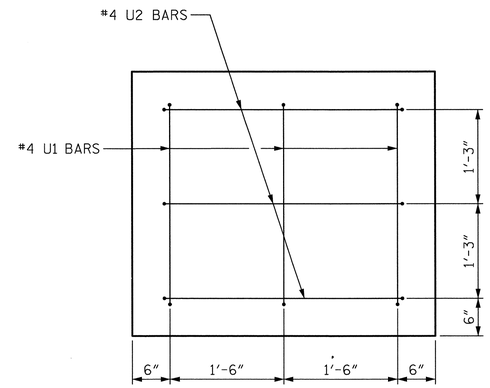

END VIEW

(TYP. EA. END)

BAR TYPES

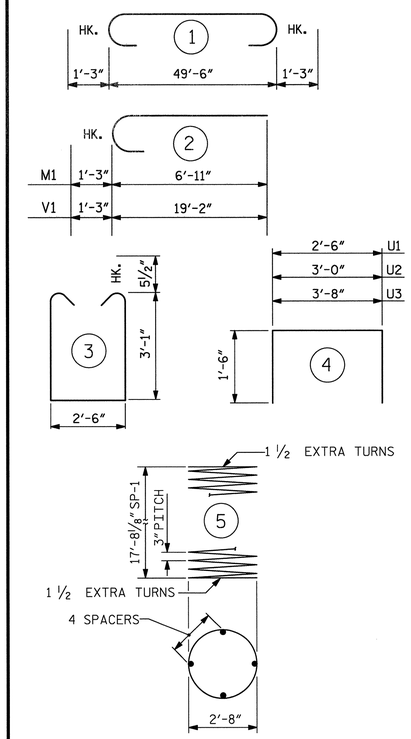

ALL BAR DIMENSIONS ARE OUT TO OUT.

BILL OF MATERIAL

BENT #1

BAR	NO.	SIZE	TYPE	LENGTH	WEIGHT
B1	9	#9	1	52'-0"	1591
B2	9	#11	STR.	49'-8"	2375
B3	6	#5	STR.	49'-8"	311
B4	9	#4	STR.	26'-4"	158
M1	24	#9	2	8'-2"	667
S1	120	#5	3	9'-7"	1199
U1	6	#4	4	5'-6"	22
U2	6	#4	4	6'-0"	24
U3	35	#4	4	6'-8"	156
V1	24	#9	2	20'-5"	1666
T1	27	#6	STR.	8'-2"	331
T2	27	#6	STR.	7'-2"	291
T3	45	#7	STR.	7'-2"	659
T4	45	#7	STR.	8'-2"	751

REINFORCING STEEL 10201 LBS.

SP-1	3	✱✱	5	608'-3"	1219

SPIRAL COLUMN REINFORCING STEEL 1219 LBS.

CLASS A CONCRETE BREAKDOWN

POUR 1 (FOOTINGS)	21.3 C.Y.
POUR 2 (COLUMNS)	13.7 C.Y.
POUR 3 (CAP)	27.8 C.Y.
TOTAL CLASS A CONCRETE	62.8 C.Y.

HP 12 X 53 STEEL PILES NO. 18
LIN. FEET 480

FOUNDATION EXCAVATION LUMP SUM

✱✱ THE SP-1 SPIRAL REINFORCING STEEL SHALL BE W20 OR D-20 COLD DRAWN WIRE OR #4 PLAIN OR DEFORMED BAR.

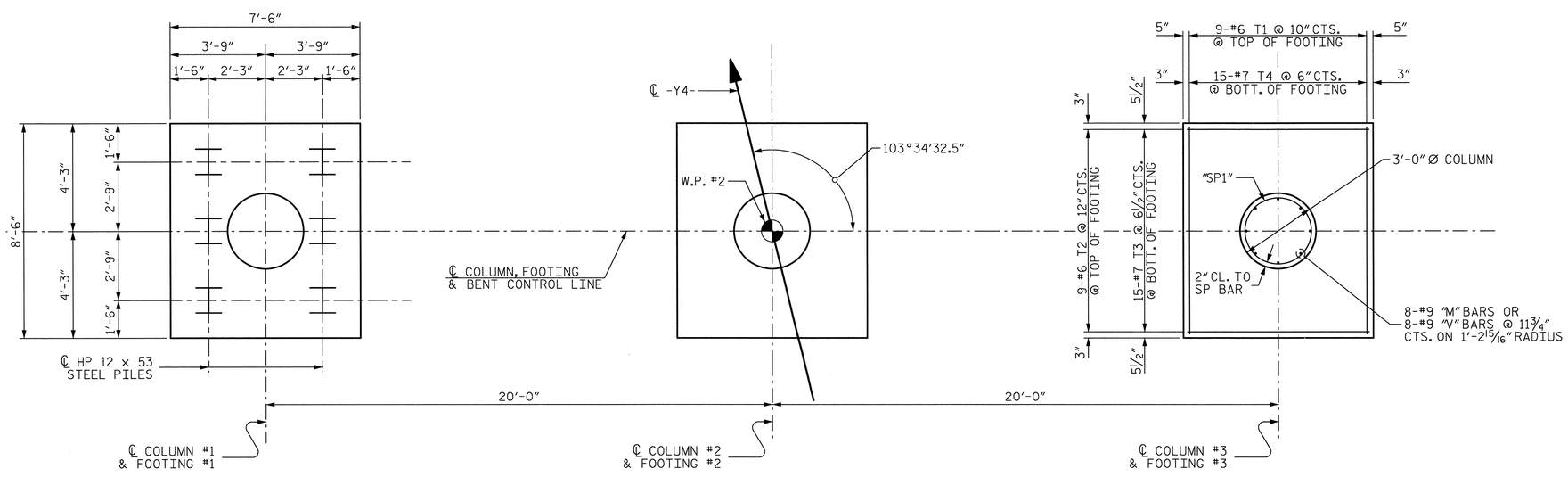

PLAN OF COLUMNS AND FOOTINGS

(ALL PILES, FOOTINGS, COLUMNS, DIMENSIONS, AND REINFORCING STEEL ARE TYPICAL)

PROJECT NO. U-2525B
GUILFORD COUNTY
STATION: 24+56.70 -Y4-
80+74.41 -L-

SHEET 2 OF 2

STATE OF NORTH CAROLINA
DEPARTMENT OF TRANSPORTATION
RALEIGH

SUBSTRUCTURE

BENT #1

REVISIONS								SHEET NO.
NO.	BY:	DATE:	NO.	BY:	DATE:			S-412
1			3					TOTAL SHEETS
2			4					541

DRAWN BY : J. S. HOBSON DATE : 3/11/13
CHECKED BY : R. F. WERTMAN DATE : 5/14/13
DESIGN ENGINEER OF RECORD : R. F. WERTMAN DATE : 5/14/13

PLANS PREPARED BY:
Gannett Fleming
Excellence Delivered As Promised
1121 Situs Court
Suite 170
Raleigh NC 27606-4279
(919) 859-4880
NC Lic. No. F-0270

NORTH CAROLINA PROFESSIONAL SEAL 03780 ENGINEER RICHARD F. WERTMAN

STR. NO. 11

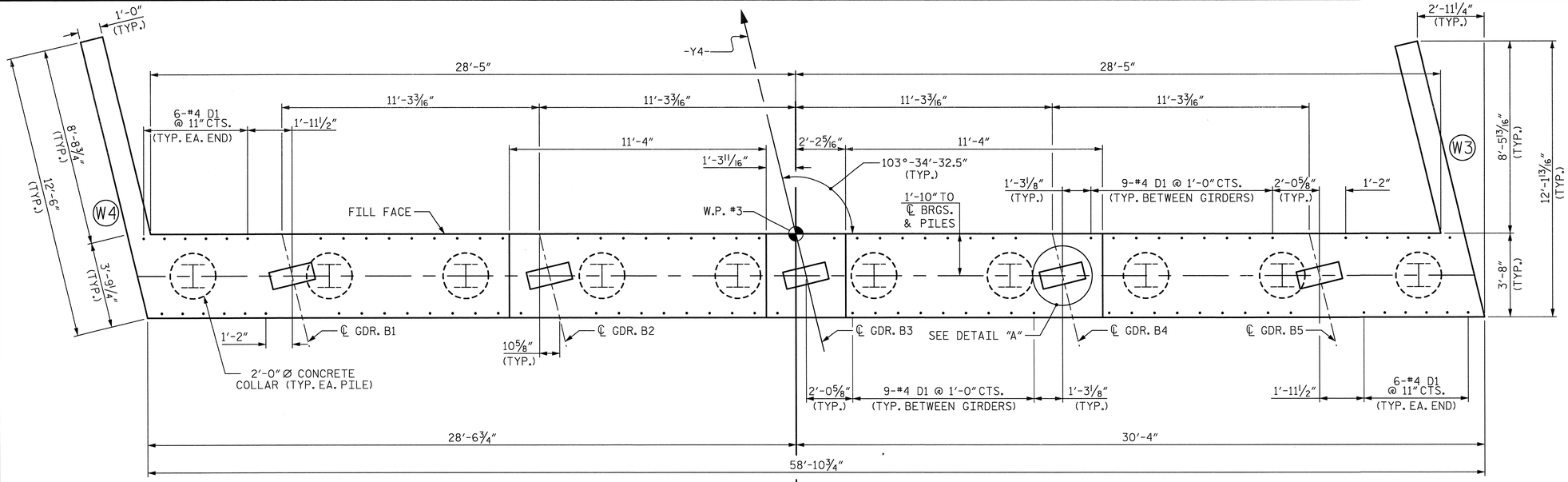

PLAN

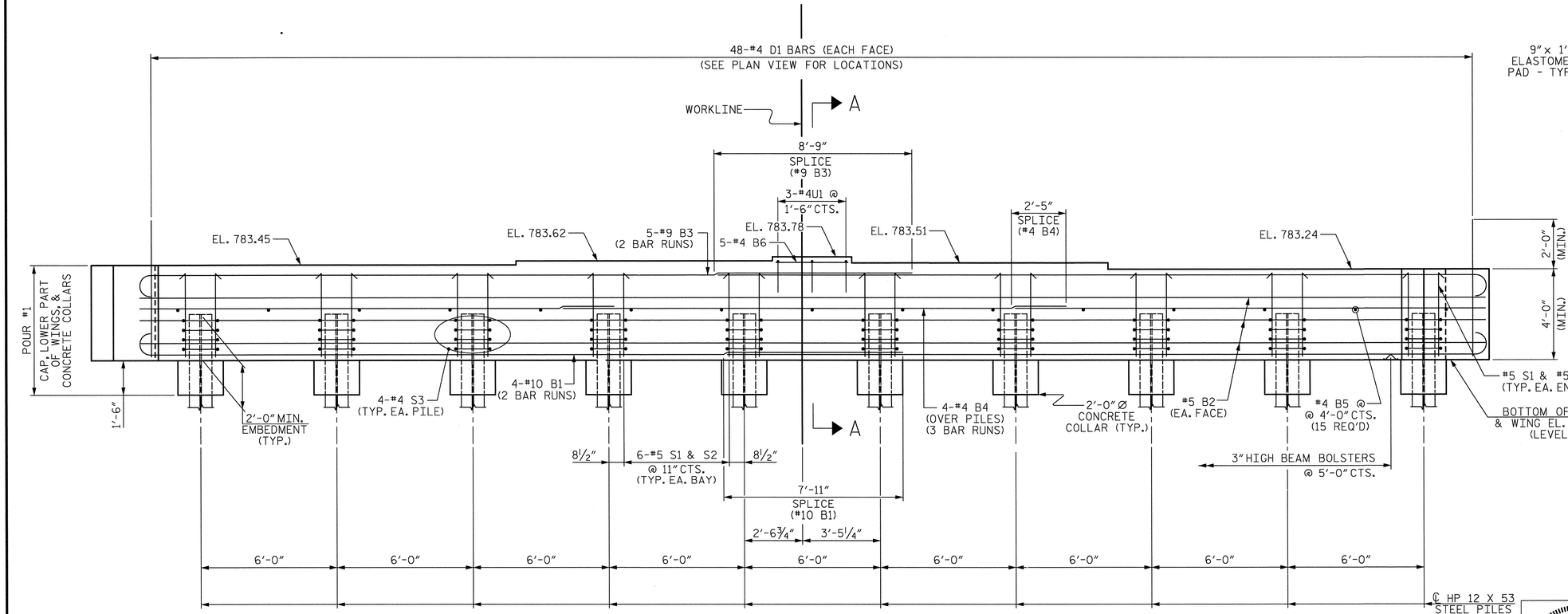

ELEVATION

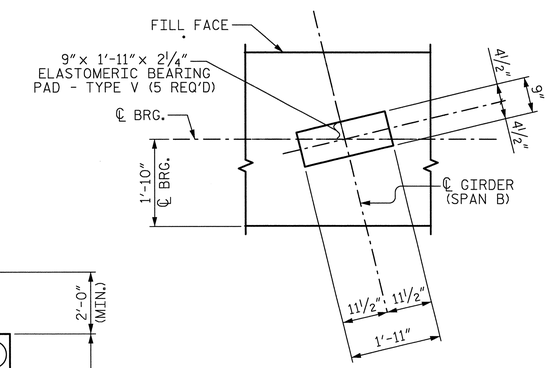

DETAIL "A"

(TYP. EA. GIRDER)

NOTES:

INSTALL THE 4" DIA. DRAIN PIPE THROUGH THE WING WALL AS REQUIRED FOR REINFORCED BRIDGE APPROACH FILLS. SEE THE ROADWAY PLANS. REINFORCING STEEL IN THE WING WALL MAY BE SHIFTED AS NECESSARY TO CLEAR THE DRAIN PIPE.

#4 D1 BARS MAY BE SHIFTED SLIGHTLY TO AVOID STIRRUPS IN CAP.

SEE SUPERSTRUCTURE SHEETS FOR UPPER PART OF INTEGRAL END BENT DETAILS.

PROJECT NO. U-2525B

GUILFORD COUNTY

STATION: 24+56.70 -Y4-
80+74.41 -L-

SHEET 1 OF 3

STATE OF NORTH CAROLINA
DEPARTMENT OF TRANSPORTATION
RALEIGH

SUBSTRUCTURE

INTEGRAL END BENT #2

DRAWN BY : L.M. SAMPLES	DATE : 04/01/13				
CHECKED BY : R.F. WERTMAN	DATE : 05/02/13				
DESIGN ENGINEER OF RECORD : R.F. WERTMAN	DATE : 05/02/13				

PLANS PREPARED BY:
Gannett Fleming
Excellence Delivered As Promised
1121 Situs Court
Suite 170
Raleigh NC 27606-4279
(919) 859-4880
NC Lic. No. F-0270

NORTH CAROLINA PROFESSIONAL SEAL 037180 ENGINEER RICHARD F. WERTMAN

REVISIONS								SHEET NO.
NO.	BY:	DATE:	NO.	BY:	DATE:			S-413
1			3					TOTAL SHEETS
2			4					541

STR. NO. 11

NOTES:

THE UPPER PORTION OF THE WINGS SHALL BE POURED WITH THE SUPERSTRUCTURE. FOR DETAILS AND REINFORCING STEEL, SEE SUPERSTRUCTURE DETAILS.

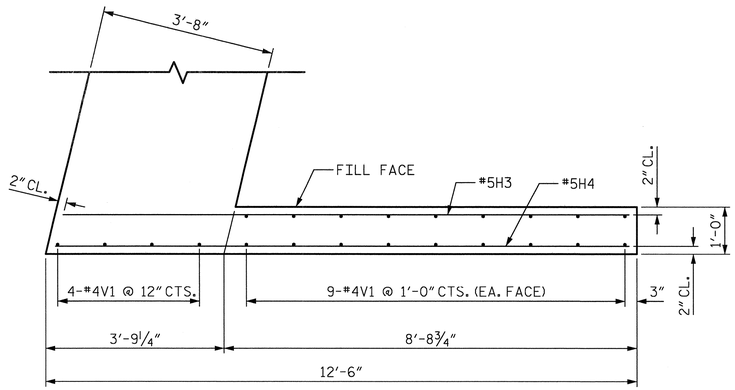

PLAN OF WING (W3)

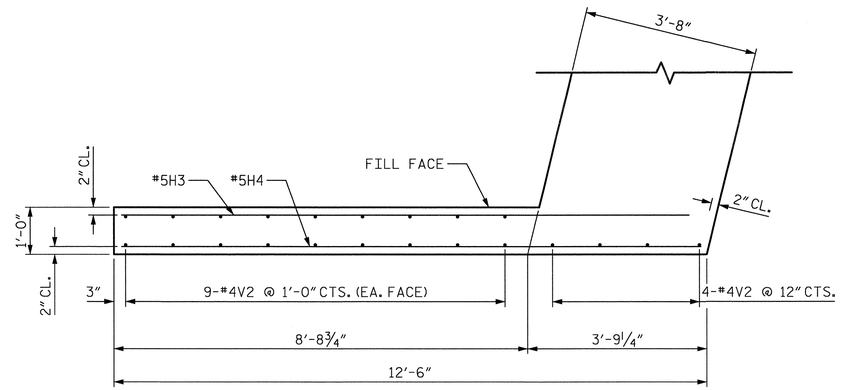

PLAN OF WING (W4)

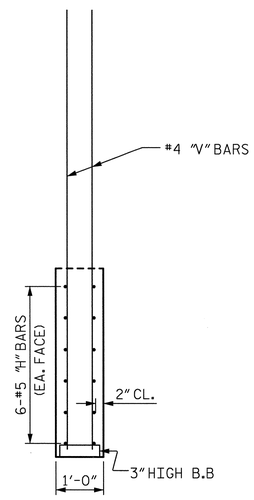

SECTION X-X

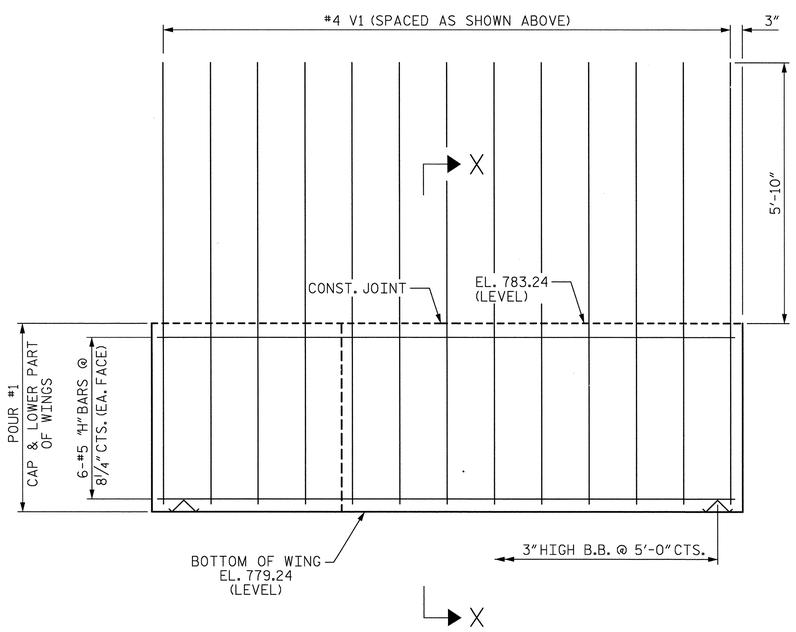

ELEVATION OF WING (W3)

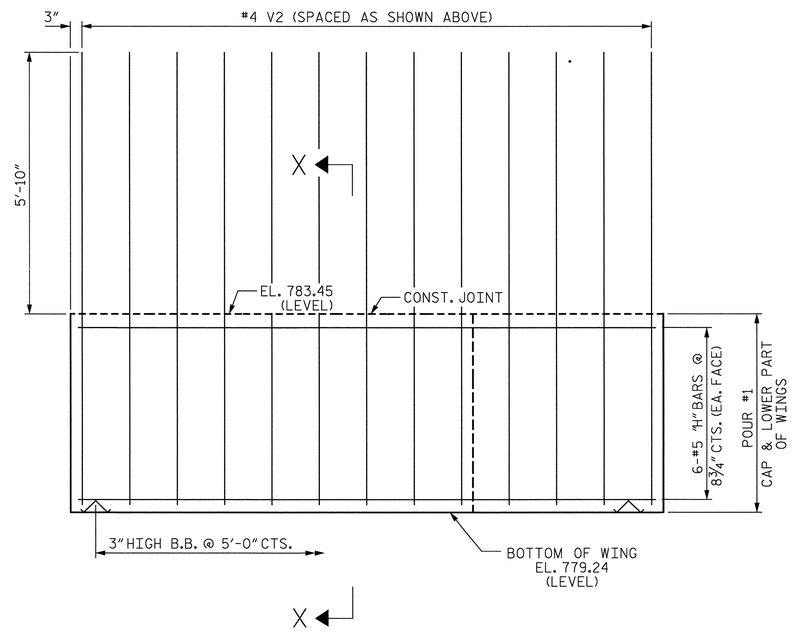

ELEVATION OF WING (W4)

PROJECT NO. U-2525B

GUILFORD COUNTY

STATION: 24+56.70 -Y4-
80+74.41 -L-

SHEET 2 OF 3

STATE OF NORTH CAROLINA
DEPARTMENT OF TRANSPORTATION
RALEIGH

SUBSTRUCTURE

INTEGRAL END BENT #2

REVISIONS						SHEET NO.
NO.	BY:	DATE:	NO.	BY:	DATE:	5-414
1			3			TOTAL SHEETS
2			4			541

DRAWN BY : L.M. SAMPLES DATE : 04/01/13
CHECKED BY : R.F. WERTMAN DATE : 05/02/13
DESIGN ENGINEER OF RECORD : R.F. WERTMAN DATE : 05/02/13

PLANS PREPARED BY:
Gannett Fleming
Excellence Delivered As Promised
1121 Situs Court
Suite 170
Raleigh NC 27606-4279
(919) 859-4880
NC Lic. No. F-0270

NORTH CAROLINA PROFESSIONAL SEAL 037180 ENGINEER RICHARD F. WERTMAN

STR. NO. 11

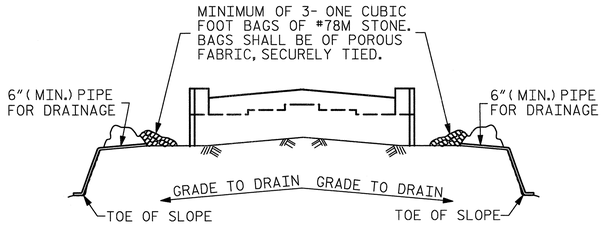

BAGGED STONE AND PIPE SHALL BE PLACED IMMEDIATELY AFTER COMPLETION OF END BENT EXCAVATION. PIPE MAY BE EITHER CONCRETE, CORRUGATED STEEL, CORRUGATED ALUMINUM ALLOY, OR CORRUGATED PLASTIC. PERFORATED PIPE WILL NOT BE ALLOWED.

BAGGED STONE SHALL REMAIN IN PLACE UNTIL THE ENGINEER DIRECTS THAT IT BE REMOVED. THE CONTRACTOR SHALL REMOVE AND DISPOSE OF SILT ACCUMULATIONS AT BAGGED STONE WHEN SO DIRECTED BY THE ENGINEER. BAGS SHALL BE REMOVED AND REPLACED WHENEVER THE ENGINEER DETERMINES THAT THEY HAVE DETERIORATED AND LOST THEIR EFFECTIVENESS.

NO SEPARATE PAYMENT WILL BE MADE FOR THIS WORK AND THE ENTIRE COST OF THIS WORK SHALL BE INCLUDED IN THE UNIT CONTRACT PRICE BID FOR THE SEVERAL PAY ITEMS.

TEMPORARY DRAINAGE AT END BENT

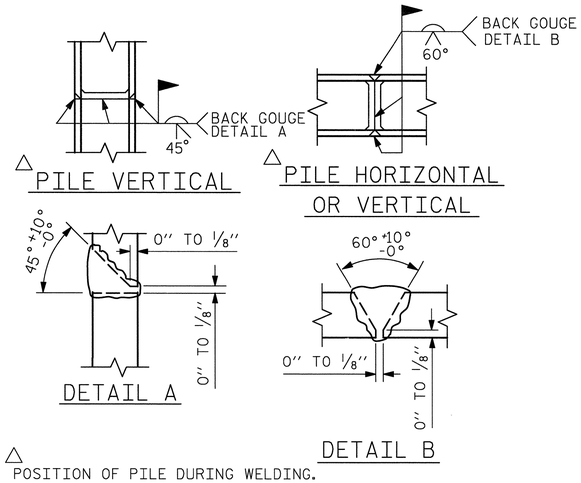

△ POSITION OF PILE DURING WELDING.

PILE SPLICE DETAILS

BAR TYPES

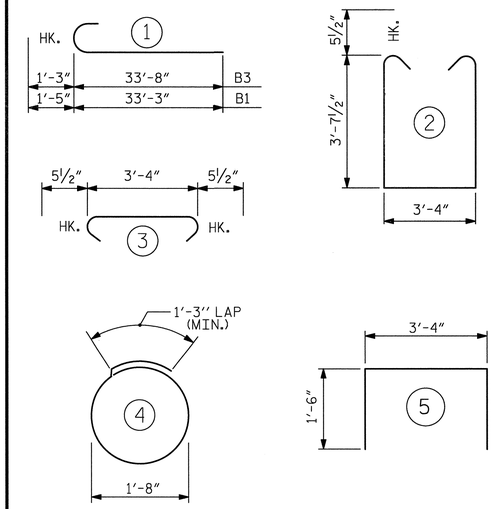

ALL BAR DIMENSIONS ARE OUT TO OUT.

BILL OF MATERIAL
END BENT #2

BAR	No.	SIZE	TYPE	LENGTH	WEIGHT
B1	8	#10	1	34'-8"	1193
B2	6	#5	STR	58'-6"	366
B3	10	#9	1	34'-11"	1187
B4	12	#4	STR	21'-2"	170
B5	15	#4	STR	3'-4"	33
B6	5	#4	STR	3'-2"	11
D1	96	#4	STR	6'-3"	401
H3	12	#5	STR	12'-0"	150
H4	12	#5	STR	12'-2"	152
S1	56	#5	2	11'-6"	672
S2	56	#5	3	4'-3"	248
S3	40	#4	4	6'-6"	174
U1	3	#4	5	6'-4"	13
V1	22	#4	STR	9'-7"	141
V2	22	#4	STR	9'-9"	143

REINFORCING STEEL 5054 LBS.

CLASS A CONCRETE

POUR #1 (CAP, LOWER WINGS & COLLARS) 38.2 C.Y.

TOTAL 38.2 C.Y.

HP 12 X 53 STEEL PILES

No. = 10 450 LIN. FT.

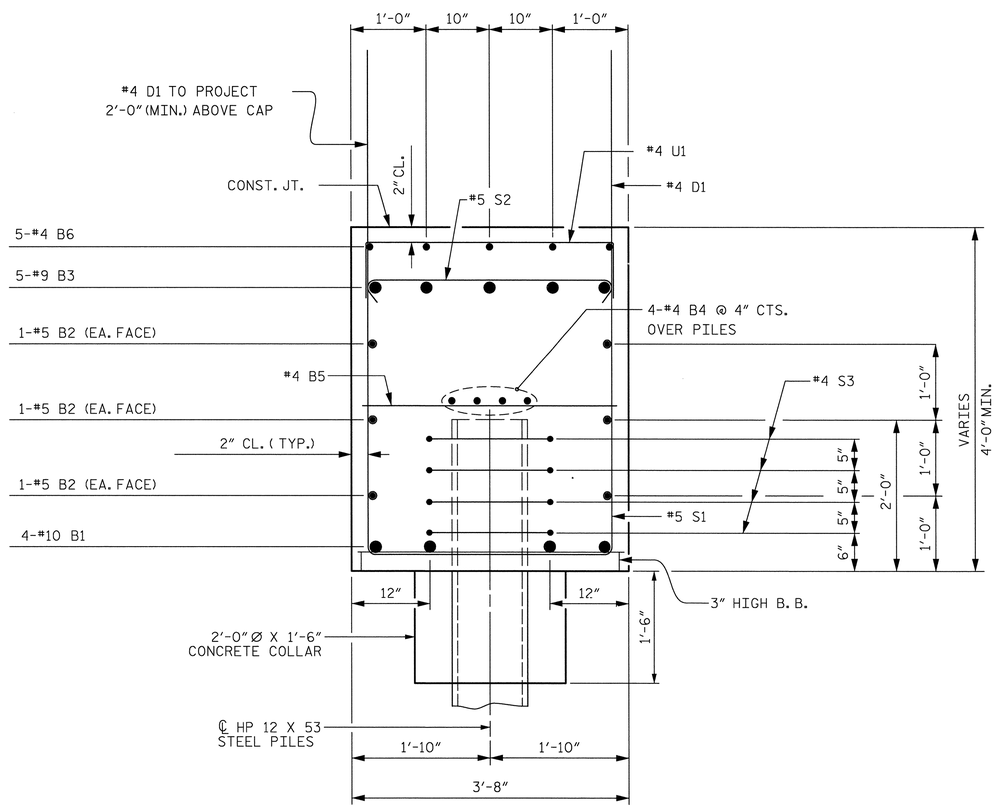

SECTION A-A

PROJECT NO. U-2525B
GUILFORD COUNTY
STATION: 24+56.70 -Y4-
80+74.41 -L-
SHEET 3 OF 3

STATE OF NORTH CAROLINA
DEPARTMENT OF TRANSPORTATION
RALEIGH

SUBSTRUCTURE

INTEGRAL END BENT #2

REVISIONS						SHEET NO.
NO.	BY:	DATE:	NO.	BY:	DATE:	S-415
1			3			TOTAL SHEETS
2			4			541

DRAWN BY : L.M. SAMPLES DATE : 04/04/13
CHECKED BY : R.F. WERTMAN DATE : 05/02/13
DESIGN ENGINEER OF RECORD : R.F. WERTMAN DATE : 05/02/13

PLANS PREPARED BY:
Gannett Fleming
Excellence Delivered As Promised
1121 Situs Court
Suite 170
Raleigh NC 27606-4279
(919) 859-4880
NC Lic. No. F-0270

NORTH CAROLINA PROFESSIONAL SEAL 037185 ENGINEER RICHARD F. WERTMAN
DATE

STR. NO. 11

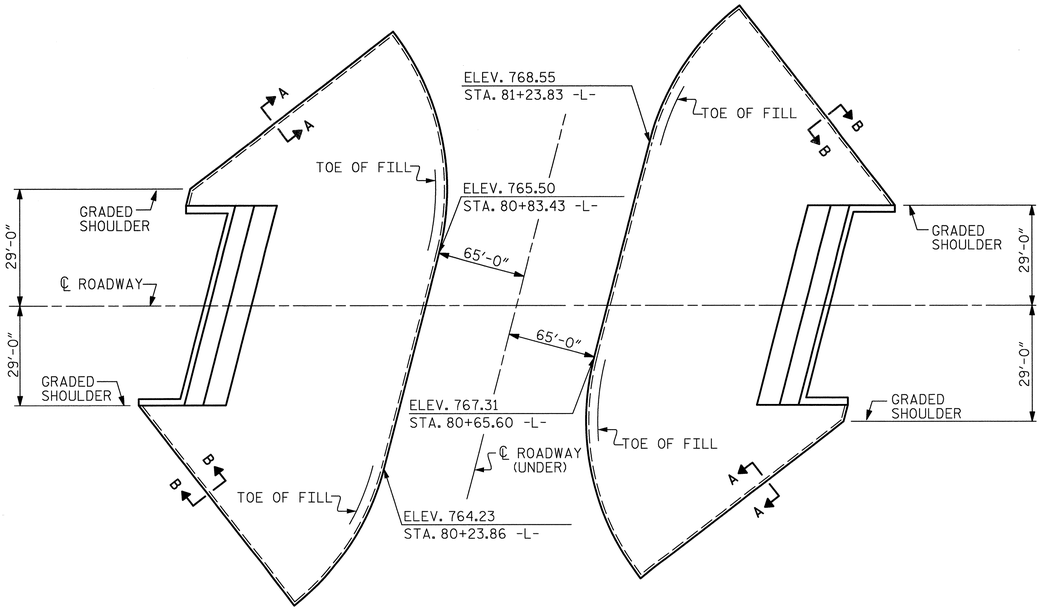

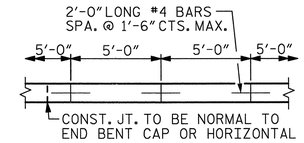

STRIP WIDTHS MAY VARY IN CURVED PORTION.

POURING DETAIL

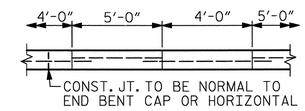

POUR A 4'-0" STRIP FIRST. STRIP WIDTHS MAY VARY IN CURVED PORTION.

OPTIONAL POURING DETAIL

GENERAL NOTES

SLOPE PROTECTION SHALL BE PLACED UNDER THE ENDS OF THE BRIDGE AS SHOWN IN THE DETAILS. THE CONTRACTOR, AT HIS OPTION, MAY USE ALTERNATE "B" ONLY FOR HIGHWAY OVER HIGHWAY GRADE SEPARATIONS WITH 2:1 END BENT SLOPE IN RURAL, UNPOPULATED AREAS. STRAIGHT EDGING WILL NOT BE REQUIRED UNLESS, IN THE OPINION OF THE ENGINEER, VISUAL INSPECTION INDICATES A NEED FOR IT. MEASUREMENT AND PAYMENT SHALL BE AS PRESCRIBED IN SECTION 462 OF THE STANDARD SPECIFICATIONS. FOR BERM WIDTH, SEE GENERAL DRAWING.

ALTERNATE "A"

ALTERNATE "A" SHALL CONSIST OF 4" POURED-IN-PLACE CONCRETE PAVING AS SHOWN IN THE DETAILS ON THIS SHEET. CONCRETE SHALL BE CLASS "B". THE CONCRETE SURFACE SHALL BE FLOATED WITH A WOODEN FLOAT AND FINISHED. WELDED WIRE FABRIC REINFORCING SHALL BE 6 X 6 - W1.4 X W1.4, 60" WIDE. SLOPE PROTECTION SHALL BE POURED IN 5' STRIPS AS SHOWN IN THE "POURING DETAIL" WITH 2'-0" LONG #4 BARS PLACED ALONG THE SLOPE BETWEEN STRIPS AT 1'-6" MAXIMUM SPACING. SLOPE PROTECTION MAY BE POURED IN ALTERNATE 4' AND 5' STRIPS AS SHOWN IN THE "OPTIONAL POURING DETAIL" WITH ADJACENT RUNS OF WELDED WIRE FABRIC LAPPING AT LEAST 6". THE COST OF THE WELDED WIRE FABRIC AND #4 BARS, IF USED, SHALL BE INCLUDED IN THE CONTRACT UNIT PRICE BID PER SQUARE YARD FOR SLOPE PROTECTION.

BRIDGE @ STA. 24+56.70 -Y4-	4 INCH SLOPE PROTECTION	* WELDED WIRE FABRIC 60 INCHES WIDE
	SQUARE YARDS	APPROX. L.F.
END BENT 1	267	534
END BENT 2	269	538
TOTAL	536	1072

* QUANTITY SHOWN IS BASED ON 5' POURS.

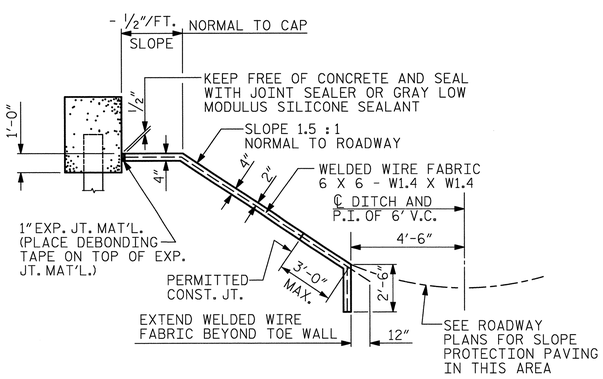

SECTION ALONG ℄ ROADWAY WHEN FILL CATCHES IN DITCH

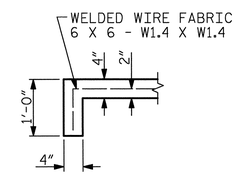

SECTION A-A

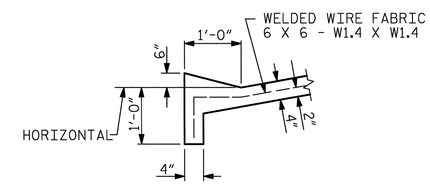

SECTION B-B

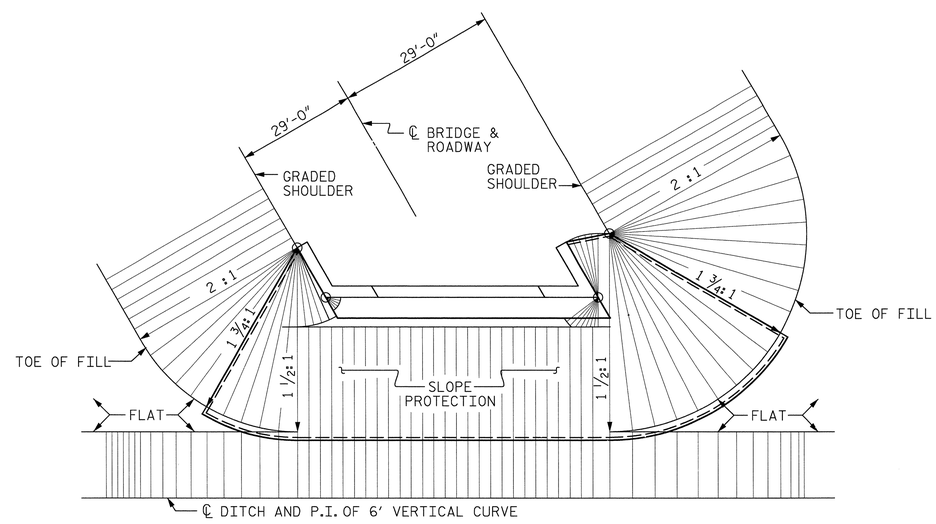

PLAN - END BENT WITH SWEPT BACK WINGS - SKEWED

(1 1/2 : 1 SLOPE)

PROJECT NO. U-2525B
GUILFORD COUNTY
STATION: 24+56.70 -Y4-
80+74.41 -L-

STATE OF NORTH CAROLINA
DEPARTMENT OF TRANSPORTATION
RALEIGH

STANDARD
SLOPE PROTECTION DETAILS

ASSEMBLED BY : J. S. HOBSON	DATE : 4/11/13
CHECKED BY : J. M. KEPICH	DATE : 5/22/13

DRAWN BY : ELR 5/92	REV. 5/1/06	TLA/GM
CHECKED BY : GRP 6/92	REV. 10/1/11	MAA/GM
	REV. 12/21/11	MAA/GM

PLANS PREPARED BY:
Gannett Fleming
Excellence Delivered As Promised
1121 Situs Court
Suite 170
Raleigh NC 27606-4279
(919) 859-4880
NC Lic. No. F-0270

THESE PLANS HAVE BEEN PROPERLY EXAMINED BY THE UNDERSIGNED. I HAVE DETERMINED THAT THEY COMPLY WITH EXISTING NORTH CAROLINA CODES, AND HAVE BEEN PROPERLY ADAPTED FOR USE IN THIS AREA.

NORTH CAROLINA PROFESSIONAL SEAL 03780 ENGINEER RICHARD F. WERTMAN

REVISIONS								SHEET NO.
NO.	BY:	DATE:	NO.	BY:	DATE:			S-416
1			3					TOTAL SHEETS
2			4					541

STR. NO. 11

STD. NO. SP1 (SHT 6)

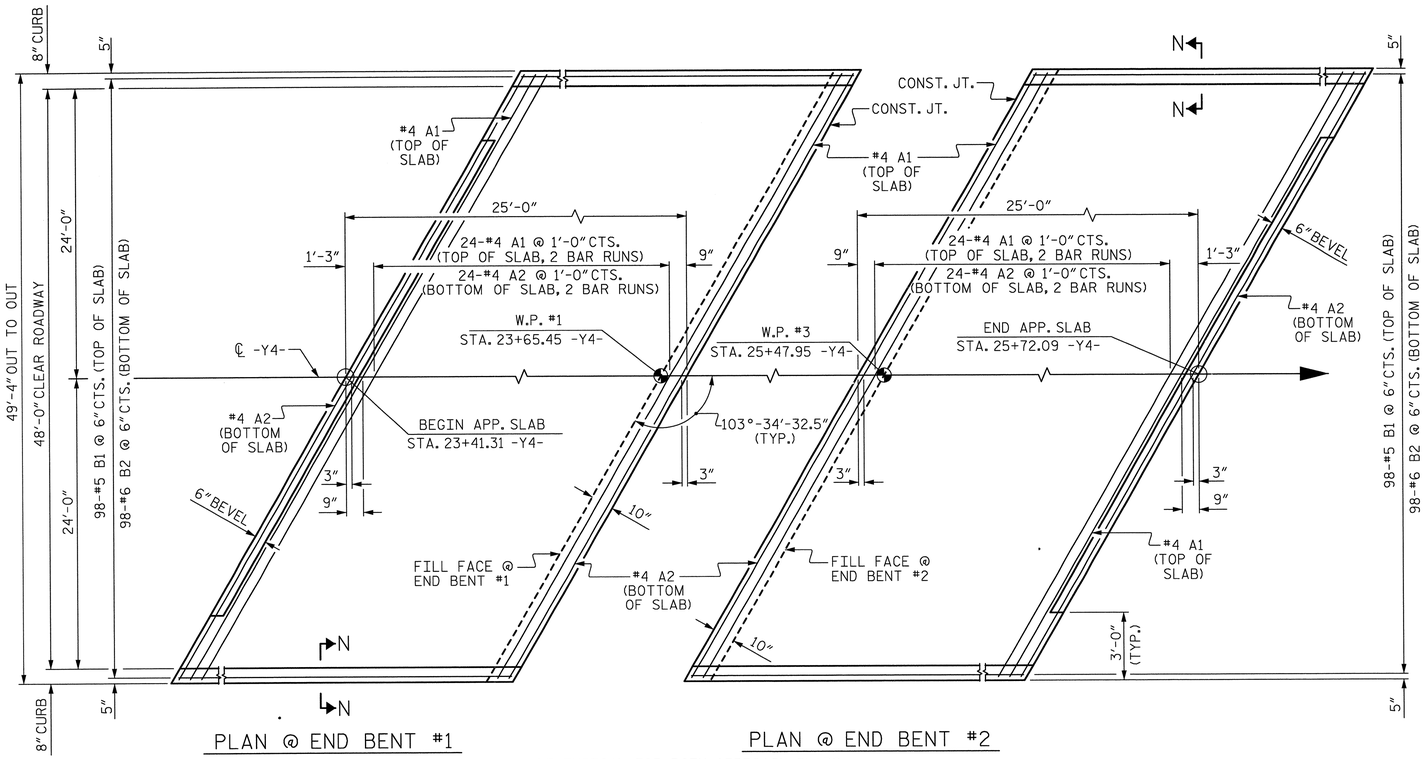

PLAN @ END BENT #1

PLAN @ END BENT #2

DIMENSIONS SHOWN ARE TYPICAL FOR BOTH APPROACH SLABS

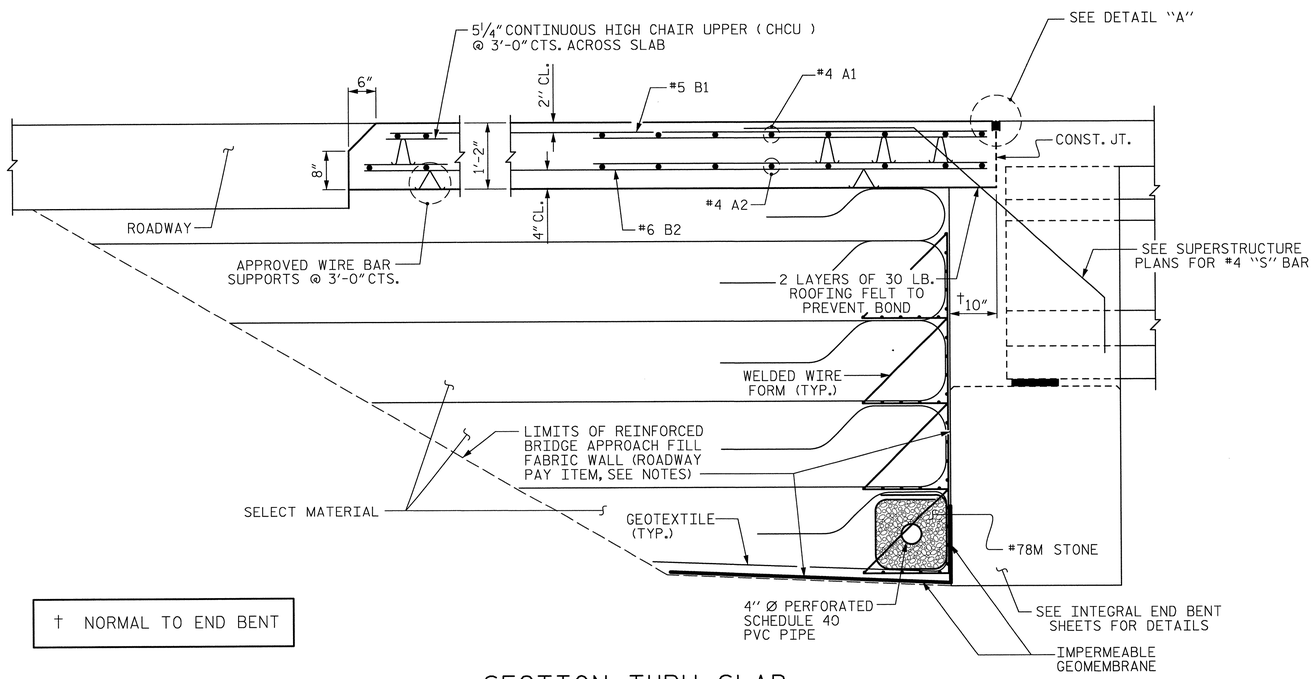

† NORMAL TO END BENT

SECTION THRU SLAB

NOTES

APPROACH SLAB SHALL NOT BE CONSTRUCTED PRIOR TO COMPLETION OF THE BRIDGE DECK.

FOR REINFORCED BRIDGE APPROACH FILL FABRIC WALL INCLUDING GEOTEXTILE, IMPERMEABLE GEOMEMBRANE, 4" Ø DRAINAGE PIPE, #78M STONE, WELDED WIRE FORM, AND SELECT MATERIAL, SEE ROADWAY PLANS.

AREA BETWEEN THE WINGWALL AND APPROACH SLAB SHALL BE GRADED TO DRAIN THE WATER AWAY FROM THE FILL FACE OF THE BRIDGE AND SHALL BE PAVED. SEE ROADWAY PLANS.

THE JOINT OPENING AT THE APPROACH SLAB/DECK INTERFACE SHALL BE SAWED NO MORE THAN 12 HOURS AFTER THE APPROACH SLAB IS CAST. THE JOINT SHALL BE CLEANED OF ALL DEBRIS BEFORE THE SEALANT IS APPLIED. THE JOINT SEALER MATERIAL SHALL CONFORM TO THE REQUIREMENTS OF SECTION 1028-3 OF THE STANDARD SPECIFICATIONS.

BILL OF MATERIAL

APPROACH SLAB AT EB #1

BAR	NO.	SIZE	TYPE	LENGTH	WEIGHT
* A1	52	#4	STR	26'-3"	912
A2	52	#4	STR	26'-1"	906
* B1	98	#5	STR	24'-2"	2470
B2	98	#6	STR	24'-8"	3631

REINFORCING STEEL 4537 LBS.

* EPOXY COATED REINFORCING STEEL 3382 LBS.

CLASS AA CONCRETE 53.1 C.Y.

APPROACH SLAB AT EB #2

BAR	NO.	SIZE	TYPE	LENGTH	WEIGHT
* A1	52	#4	STR	26'-3"	912
A2	52	#4	STR	26'-1"	906
* B1	98	#5	STR	24'-2"	2470
B2	98	#6	STR	24'-8"	3631

REINFORCING STEEL 4537 LBS.

* EPOXY COATED REINFORCING STEEL 3382 LBS.

CLASS AA CONCRETE 53.1 C.Y.

SPLICE LENGTHS CHART		
BAR SIZE	EPOXY COATED	UNCOATED
#4	2'-0"	1'-9"
#5	2'-6"	2'-2"
#6	3'-10"	2'-7"

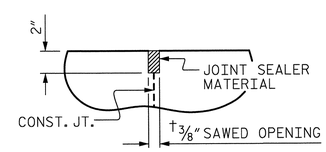

DETAIL "A"

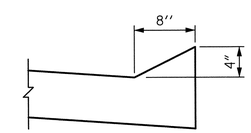

SECTION N-N

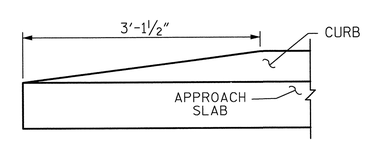

END OF CURB WITHOUT SHOULDER BERM GUTTER

PROJECT NO. U-2525B

GUILFORD COUNTY

STATION: 24+56.70 -Y4-
80+74.41 -L-

SHEET 1 OF 2

STATE OF NORTH CAROLINA
DEPARTMENT OF TRANSPORTATION
RALEIGH

STANDARD

BRIDGE APPROACH SLAB FOR INTEGRAL ABUTMENT

ASSEMBLED BY : J.S. HOBSON	DATE : 4/08/13
CHECKED BY : J.M. KEPICH	DATE : 5/17/13
DRAWN BY : TLA 10/05	ADDED 5/1/06RR KMM/GM
CHECKED BY : GM 5/06	REV. 10/1/11 MAA/GM
	REV. 12/21/11 MAA/GM

PLANS PREPARED BY: Gannett Fleming — Excellence Delivered As Promised
1121 Situs Court, Suite 170, Raleigh NC 27606-4279, (919) 859-4880, NC Lic. No. F-0270

THESE PLANS HAVE BEEN PROPERLY EXAMINED BY THE UNDERSIGNED. I HAVE DETERMINED THAT THEY COMPLY WITH EXISTING NORTH CAROLINA CODES, AND HAVE BEEN PROPERLY ADAPTED FOR USE IN THIS AREA.

NORTH CAROLINA PROFESSIONAL SEAL 027180 ENGINEER RICHARD F WERTMAN

REVISIONS						
NO.	BY:	DATE:	NO.	BY:	DATE:	
1			3			
2			4			

SHEET NO. 5-417
TOTAL SHEETS 54-1

STR. NO. 11

STD. NO. BAS5 (SHT 2b)

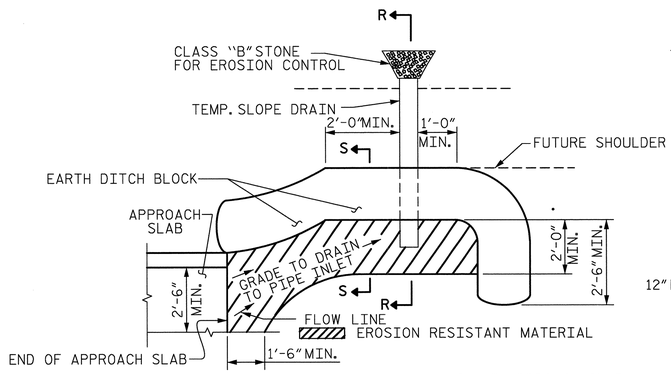

NOTE: IMMEDIATELY AFTER THE CONSTRUCTION OF THE APPROACH SLAB, THE CONTRACTOR SHALL PROVIDE TEMPORARY BERM AND SLOPE DRAIN. CONTRACTOR SHALL GRADE TO PIPE INLET AND PROVIDE EROSION RESISTANT MATERIAL AS SHOWN. THE EROSION RESISTANT MATERIAL SHALL BE EITHER 1) ASPHALT PLANT MIX, TYPE 1 OR TYPE 2, MIN. 2" DEPTH, 2) EROSION CONTROL MAT, OR 3) CONCRETE, AS DIRECTED BY THE ENGINEER. THE SLOPE DRAIN SHALL CONSIST OF A NON-PERFORATED TEMPORARY DRAINAGE PIPE, 12 INCHES IN DIAMETER.

PLAN VIEW

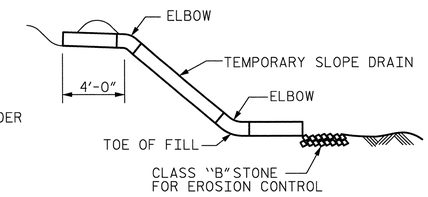

SECTION R-R

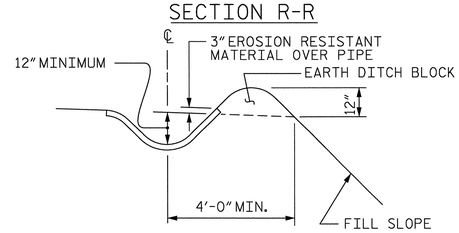

SECTION S-S

TEMPORARY BERM AND SLOPE DRAIN DETAILS

(TO BE USED WHEN SHOULDER BERM GUTTER IS REQUIRED)

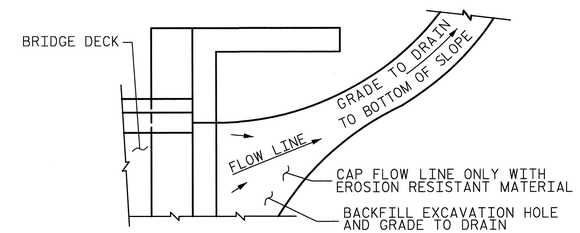

NOTE: IF THE APPROACH SLAB IS NOT CONSTRUCTED IMMEDIATELY AFTER THE BACKFILLING OF THE END BENT EXCAVATION, GRADE TO DRAIN TO THE BOTTOM OF THE SLOPE AND PROVIDE EROSION RESISTANT MATERIAL, SUCH AS FIBERGLASS ROVING OR AS DIRECTED BY THE ENGINEER TO PREVENT SOIL EROSION AND TO PROTECT THE AREA ADJACENT TO THE STRUCTURE. THE CONTRACTOR WILL BE REQUIRED TO REMOVE THESE MATERIALS PRIOR TO CONSTRUCTION OF THE APPROACH SLAB.

TEMPORARY DRAINAGE DETAIL

PROJECT NO. U-2525B

GUILFORD COUNTY

STATION: 24+56.70 -Y4-
80+74.41 -L-

SHEET 2 OF 2

STATE OF NORTH CAROLINA
DEPARTMENT OF TRANSPORTATION
RALEIGH

STANDARD

BRIDGE APPROACH
SLAB DETAILS

ASSEMBLED BY :	J. S. HOBSON	DATE :	4/8/13
CHECKED BY :	J. M. KEPICH	DATE :	5/17/13

DRAWN BY : FCJ	11/88	REV. 5/7/03	RWW/JTE
CHECKED BY : ARB	11/88	REV. 5/1/06RRR	MAA/KMM
		REV. 10/1/11	MAA/GM

PLANS PREPARED BY:
Gannett Fleming
Excellence Delivered As Promised
1121 Situs Court
Suite 170
Raleigh NC 27606-4279
(919) 859-4880
NC Lic. No. F-0270

THESE PLANS HAVE BEEN PROPERLY EXAMINED BY THE UNDERSIGNED. I HAVE DETERMINED THAT THEY COMPLY WITH EXISTING NORTH CAROLINA CODES, AND HAVE BEEN PROPERLY ADAPTED FOR USE IN THIS AREA.

NORTH CAROLINA PROFESSIONAL SEAL 037160 ENGINEER RICHARD F. WERTMAN

REVISIONS								SHEET NO.
NO.	BY:	DATE:	NO.	BY:	DATE:			S-418
1			3					TOTAL SHEETS
2			4					541

STR. NO. 11

STD. NO. BAS4

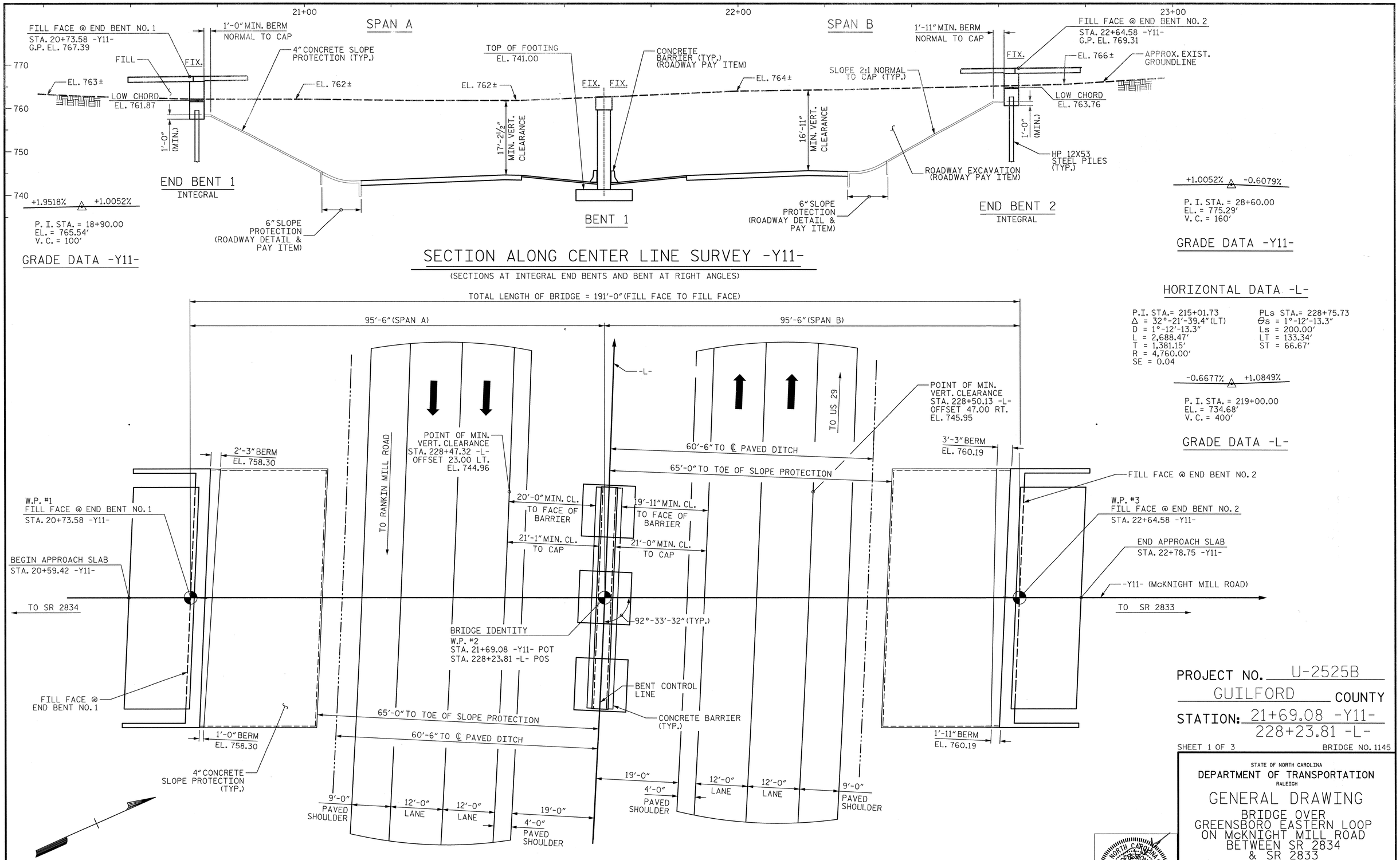

HORIZONTAL DATA -L-

P.I. STA.= 215+01.73	PLs STA.= 228+75.73
Δ = 32°-21'-39.4" (LT)	Θs = 1°-12'-13.3"
D = 1°-12'-13.3"	Ls = 200.00'
L = 2,688.47'	LT = 133.34'
T = 1,381.15'	ST = 66.67'
R = 4,760.00'	
SE = 0.04	

-0.6677% △ +1.0849%

P. I. STA. = 219+00.00
EL. = 734.68'
V. C. = 400'

GRADE DATA -L-

PROJECT NO. U-2525B

GUILFORD COUNTY

STATION: 21+69.08 -Y11-
228+23.81 -L-

SHEET 1 OF 3 BRIDGE NO. 1145

STATE OF NORTH CAROLINA
DEPARTMENT OF TRANSPORTATION
RALEIGH

GENERAL DRAWING

BRIDGE OVER GREENSBORO EASTERN LOOP ON McKNIGHT MILL ROAD BETWEEN SR 2834 & SR 2833

REVISIONS						SHEET NO.
NO.	BY:	DATE:	NO.	BY:	DATE:	S-419
1			3			TOTAL SHEETS
2			4			541

DRAWN BY : J.M. KEPICH DATE : 06/03/13
CHECKED BY : R.F. WERTMAN DATE : 06/06/13
DESIGN ENGINEER OF RECORD : R.F. WERTMAN DATE : 06/06/13

PLANS PREPARED BY:
Gannett Fleming
Excellence Delivered As Promised
1121 Situs Court
Suite 170
Raleigh NC 27606-4279
(919) 859-4880
NC Lic. No. F-0270

NORTH CAROLINA PROFESSIONAL SEAL 037180 ENGINEER RICHARD F. WERTMAN

STR. NO. 12

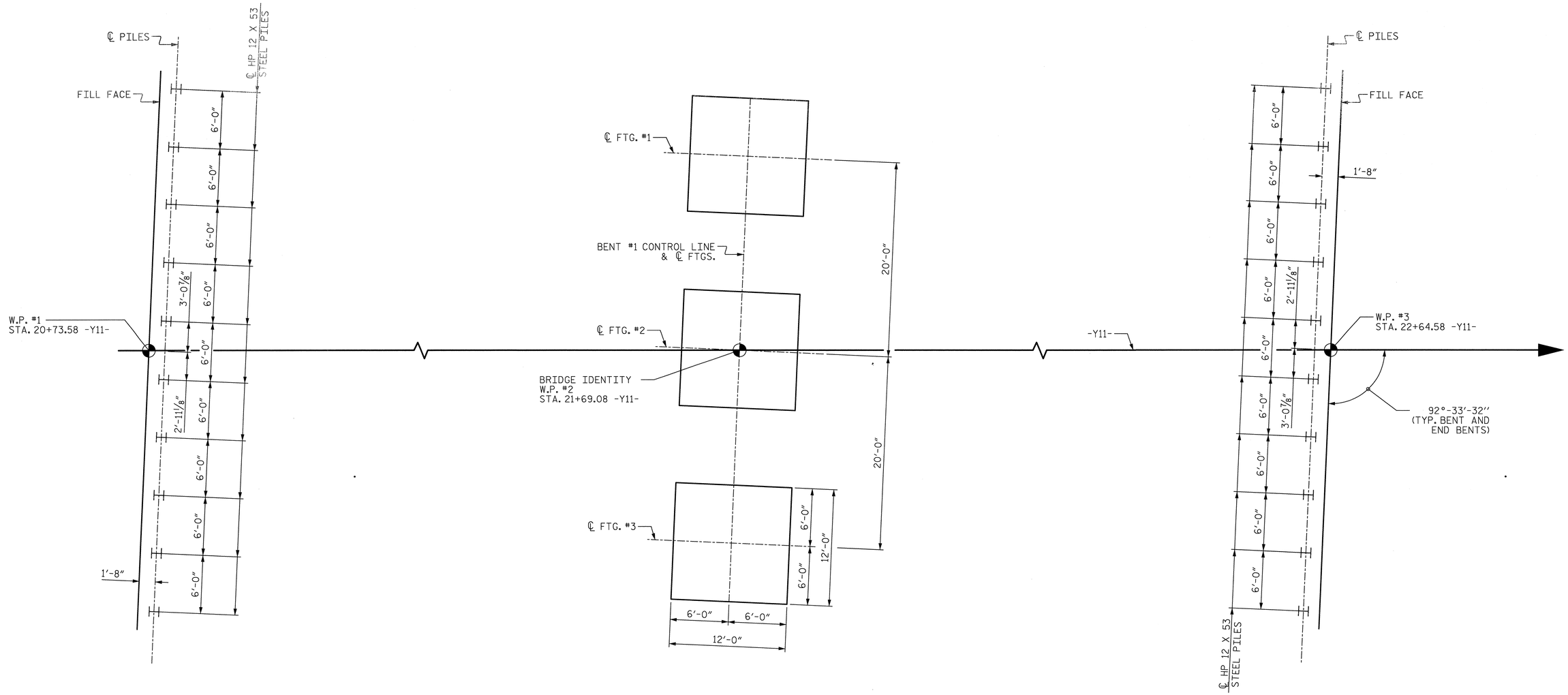

FOUNDATION LAYOUT

DIMENSIONS LOCATING PILES ARE SHOWN TO PILE CENTERLINE.
ALL COLUMN FOOTINGS ARE IDENTICAL AT BENT.

PROJECT NO. U-2525B
GUILFORD COUNTY
STATION: 21+69.08 -Y11-
228+23.81 -L-

SHEET 2 OF 3

FOUNDATION NOTES:

FOR PILES, SEE SECTION 450 OF THE STANDARD SPECIFICATIONS.

PILES AT END BENT NO. 1 AND END BENT NO. 2 ARE DESIGNED FOR A FACTORED RESISTANCE OF 115 TONS PER PILE.

DRIVE PILES AT END BENT NO. 2 TO A REQUIRED DRIVING RESISTANCE OF 195 TONS PER PILE.

STEEL H-PILE POINTS ARE REQUIRED FOR STEEL H-PILES AT END BENT NO. 2. FOR STEEL PILE POINTS, SEE SECTION 450 OF THE STANDARD SPECIFICATIONS.

PILE EXCAVATION IS REQUIRED TO INSTALL PILES AT END BENT NO. 1. EXCAVATE HOLES AT PILE LOCATIONS TO ELEVATION 747.1 FT. FOR PILE EXCAVATION, SEE SECTION 450 OF THE STANDARD SPECIFICATION.

FOUNDATION NOTES (CONTINUED):

CONCRETE OR GROUT IS REQUIRED TO FILL HOLES FOR PILE EXCAVATION TO WITHIN 5 FT. OF THE TOP OF THE HOLE AT END BENT NO. 1 AND FILL THE TOP 5 FT. WITH SELECT GRANULAR MATERIAL AFTER CONCRETE OR GROUT SETS. THE PAYMENT OF SELECT GRANULAR MATERIAL BACKFILL SHALL BE INCLUDED IN THE UNIT COST FOR PILE EXCAVATION IN SOIL OR PILE EXCAVATION NOT IN SOIL IN SECTION 450-4 OF THE STANDARD SPECIFICATIONS.

THE SPREAD FOOTINGS AT BENT NO. 1 ARE DESIGNED FOR A FACTORED RESISTANCE OF 5 TSF. CHECK FIELD CONDITIONS FOR THE REQUIRED RESISTANCE OF 12 TSF JUST BEFORE PLACING CONCRETE.

FOR BLASTING ADJACENT TO HIGHWAY STRUCTURES, SEE ARTICLE 410-9 OF THE STANDARD SPECIFICATIONS.

DRAWN BY : J.M. KEPICH	DATE : 06/03/13		
CHECKED BY : R.F. WERTMAN	DATE : 06/06/13		
DESIGN ENGINEER OF RECORD : R.F. WERTMAN	DATE : 06/06/13		

PLANS PREPARED BY:
Gannett Fleming
Excellence Delivered As Promised
1121 Situs Court
Suite 170
Raleigh NC 27606-4279
(919) 859-4880
NC Lic. No. F-0270

NORTH CAROLINA PROFESSIONAL SEAL 037180 ENGINEER RICHARD F. WERTMAN

STATE OF NORTH CAROLINA
DEPARTMENT OF TRANSPORTATION
RALEIGH

GENERAL DRAWING
BRIDGE OVER GREENSBORO EASTERN LOOP ON McKNIGHT MILL ROAD BETWEEN SR 2834 & SR 2833

REVISIONS						SHEET NO.
NO.	BY:	DATE:	NO.	BY:	DATE:	S-420
1			3			TOTAL SHEETS
2			4			541

STR. NO. 12

BENCH MARK #35: 140.22' LEFT OF STA. 19+75.79 -Y11- EL. 768.35'. R/R SPIKE SET IN 14" PINE TREE

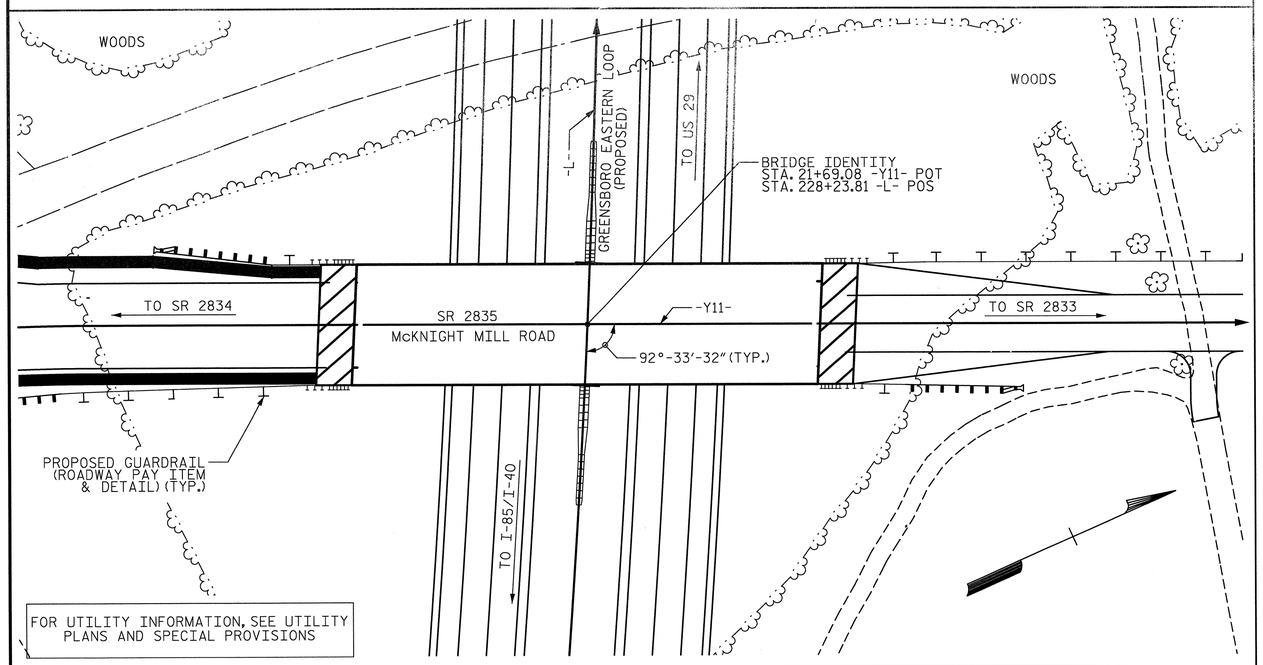

LOCATION SKETCH

NOTES:

ASSUMED LIVE LOAD = HL-93 OR ALTERNATE LOADING.

THIS BRIDGE HAS BEEN DESIGNED IN ACCORDANCE WITH THE AASHTO LRFD BRIDGE DESIGN SPECIFICATIONS.

THIS BRIDGE IS LOCATED IN SEISMIC ZONE 1.

FOR OTHER DESIGN DATA AND GENERAL NOTES, SEE SHEET SN.

FOR SUBMITTAL OF WORKING DRAWINGS, SEE SPECIAL PROVISIONS.

FOR FALSEWORK AND FORMWORK, SEE SPECIAL PROVISIONS.

FOR CRANE SAFETY, SEE SPECIAL PROVISIONS.

FOR GROUT FOR STRUCTURES, SEE SPECIAL PROVISIONS.

REMOVABLE FORMS MAY BE USED IN LIEU OF METAL STAY-IN-PLACE FORMS IN ACCORDANCE WITH ARTICLE 420-3 OF THE STANDARD SPECIFICATIONS.

NEEDLE BEAMS WILL NOT BE ALLOWED UNLESS OTHERWISE CALLED FOR ON THE PLANS OR APPROVED BY THE ENGINEERS.

WORK SHALL NOT BE STARTED ON THIS BRIDGE UNTIL ROADWAY SECTION HAS BEEN EXCAVATED.

FOR PLACING LOAD ON STRUCTURE MEMBERS, SEE SPECIAL PROVISONS.

TOTAL BILL OF MATERIAL

	FOUNDATION EXCAVATION	PILE EXCAVATION IN SOIL	PILE EXCAVATION NOT IN SOIL	REINFORCED CONCRETE DECK SLAB	GROOVING BRIDGE FLOORS	CLASS A CONCRETE	BRIDGE APPROACH SLABS	REINFORCING STEEL	SPIRAL COLUMN REINFORCING STEEL	54" PRESTRESSED CONCRETE GIRDERS		HP 12 X 53 STEEL PILES		STEEL PILE POINTS	THREE BAR METAL RAIL	4" SLOPE PROTECTION	ELASTOMERIC BEARINGS
	LUMP SUM	LIN.FT.	LIN.FT.	SQ.FT.	SQ.FT.	CU.YDS.	LUMP SUM	LBS.	LBS.	NO.	LIN.FT.	NO.	LIN.FT.	EA.	LIN.FT.	SQ.YDS.	LUMP SUM
SUPERSTRUCTURE				10,234	8,040					12	1129.50				363.67		LUMP SUM
END BENT 1		58	42			36.5		6,038				10	100			222	
BENT 1	LUMP SUM					91.1		12,925	1,199								
END BENT 2						36.6		6,068				10	150	10		223	
TOTAL	LUMP SUM	58	42	10,234	8,040	164.2	LUMP SUM	25,031	1,199	12	1129.50	20	250	10	363.67	445	LUMP SUM

PROJECT NO. U-2525B

GUILFORD COUNTY

STATION: 21+69.08 -Y11-
228+23.81 -L-

SHEET 3 OF 3

STATE OF NORTH CAROLINA
DEPARTMENT OF TRANSPORTATION
RALEIGH

GENERAL DRAWING
BRIDGE OVER
GREENSBORO EASTERN LOOP
ON McKNIGHT MILL ROAD
BETWEEN SR 2834
& SR 2833

REVISIONS						SHEET NO.
NO.	BY:	DATE:	NO.	BY:	DATE:	S-42-1
1			3			TOTAL SHEETS
2			4			541

DRAWN BY : J.M. KEPICH DATE : 06/03/13
CHECKED BY : R.F. WERTMAN DATE : 06/07/13
DESIGN ENGINEER OF RECORD : R.F. WERTMAN DATE : 06/07/13

PLANS PREPARED BY:
Gannett Fleming
Excellence Delivered As Promised
1121 Situs Court
Suite 170
Raleigh NC 27606-4279
(919) 859-4880
NC Lic. No. F-0270

NORTH CAROLINA PROFESSIONAL SEAL 037180 ENGINEER RICHARD F. WERTMAN

STR. NO. 12

LOAD AND RESISTANCE FACTOR RATING (LRFR) SUMMARY FOR PRESTRESSED CONCRETE GIRDERS

LEVEL		VEHICLE	WEIGHT (W) (TONS)	CONTROLLING LOAD RATING (#)	MINIMUM RATING FACTORS (RF)	TONS = W x RF	STRENGTH I LIMIT STATE											SERVICE III LIMIT STATE						COMMENT NUMBER
							LIVE-LOAD FACTORS (γ_{LL})	MOMENT					SHEAR					LIVE-LOAD FACTORS (γ_{LL})	MOMENT					
								DISTRIBUTION FACTORS (DF)	RATING FACTOR	SPAN	GIRDER LOCATION	DISTANCE FROM LEFT END OF SPAN (ft)	DISTRIBUTION FACTORS (DF)	RATING FACTOR	SPAN	GIRDER LOCATION	DISTANCE FROM LEFT END OF SPAN (ft)		DISTRIBUTION FACTORS (DF)	RATING FACTOR	SPAN	GIRDER LOCATION	DISTANCE FROM LEFT END OF SPAN (ft)	
DESIGN LOAD RATING		HL-93 (INVENTORY)	N/A	1	1.10	--	1.75	0.836	1.33	B	E	46.4	0.926	1.76	B	I	55.8	0.80	0.753	1.10	B	I	46.4	1
		HL-93 (OPERATING)	N/A		1.72	--	1.35	0.836	1.72	B	E	46.4	0.926	3.12	B	I	55.8	N/A	--	--	--	--	--	1
		HS-20 (INVENTORY)	36.000	2	1.52	54.72	1.75	0.836	1.83	B	E	46.4	0.926	2.75	B	I	55.8	0.80	0.753	1.52	B	I	46.4	1
		HS-20 (OPERATING)	36.000		2.38	85.68	1.35	0.836	2.38	B	E	46.4	0.926	4.43	B	I	18.1	N/A	--	--	--	--	--	1
LEGAL LOAD RATING	SINGLE VEHICLE (SV)	SNSH	13.500		3.58	48.33	1.40	0.836	5.41	B	E	46.4	0.926	10.59	B	I	18.1	0.80	0.753	3.58	B	I	46.4	1
		SNGARBS2	20.000		2.60	52.00	1.40	0.836	3.93	B	E	46.4	0.926	7.42	B	I	18.1	0.80	0.753	2.60	B	I	46.4	1
		SNAGRIS2	22.000		2.43	53.46	1.40	0.836	3.68	B	E	46.4	0.926	6.85	B	I	18.1	0.80	0.753	2.43	B	I	46.4	1
		SNCOTTS3	27.250		1.78	48.51	1.40	0.836	2.69	B	E	46.4	0.926	5.18	B	I	36.9	0.80	0.753	1.78	B	I	46.4	1
		SNAGGRS4	34.925		1.46	50.99	1.40	0.836	2.21	B	E	46.4	0.926	4.23	B	I	18.1	0.80	0.753	1.46	B	I	46.4	1
		SNS5A	35.550		1.43	50.84	1.40	0.836	2.16	B	E	46.4	0.926	4.26	B	I	18.1	0.80	0.753	1.43	B	I	46.4	1
		SNS6A	39.950		1.30	51.94	1.40	0.836	1.97	B	E	46.4	0.926	3.73	B	I	55.8	0.80	0.753	1.30	B	I	46.4	1
		SNS7B	42.000		1.24	52.08	1.40	0.836	1.87	B	E	46.4	0.926	3.63	B	I	55.8	0.80	0.753	1.24	B	I	46.4	1
	TRUCK TRACTOR SEMI-TRAILER (TTST)	TNAGRIT3	33.000		1.59	52.47	1.40	0.836	2.39	B	E	46.4	0.926	4.64	B	I	18.1	0.80	0.753	1.59	B	I	46.4	1
		TNT4A	33.075		1.59	52.59	1.40	0.836	2.40	B	E	46.4	0.926	4.54	B	I	18.1	0.80	0.753	1.59	B	I	46.4	1
		TNT6A	41.600		1.29	53.66	1.40	0.836	1.95	B	E	46.4	0.926	3.99	B	I	18.1	0.80	0.753	1.29	B	I	46.4	1
		TNT7A	42.000		1.29	54.18	1.40	0.836	1.95	B	E	46.4	0.926	3.91	B	I	18.1	0.80	0.753	1.29	B	I	46.4	1
		TNT7B	42.000		1.32	55.44	1.40	0.836	1.99	B	E	46.4	0.926	3.40	B	I	55.8	0.80	0.753	1.32	B	I	46.4	1
		TNAGRIT4	43.000		1.27	54.61	1.40	0.836	1.91	B	E	46.4	0.926	3.14	B	I	55.8	0.80	0.753	1.27	B	I	46.4	1
		TNAGT5A	45.000		1.20	54.00	1.40	0.836	1.81	B	E	46.4	0.926	3.15	B	I	55.8	0.80	0.753	1.20	B	I	46.4	1
		TNAGT5B	45.000	3	1.19	53.55	1.40	0.836	1.80	B	E	46.4	0.926	2.80	B	I	55.8	0.80	0.753	1.19	B	I	46.4	1

LOAD FACTORS:

DESIGN LOAD RATING FACTORS	LIMIT STATE	γ_{DC}	γ_{DW}
	STRENGTH I	1.25	1.50
	SERVICE III	1.00	1.00

NOTES:

MINIMUM RATING FACTORS ARE BASED ON THE STRENGTH I AND SERVICE III LIMIT STATES.

ALLOWABLE STRESSES FOR SERVICE III LIMIT STATE ARE AS REQUIRED FOR DESIGN.

COMMENTS:

1. SPAN A RATING FACTORS ARE EQUAL TO SPAN B LENGTH AND RATING FACTORS.

(#) CONTROLLING LOAD RATING
(1) DESIGN LOAD RATING (HL-93)
(2) DESIGN LOAD RATING (HS-20)
(3) LEGAL LOAD RATING **
** SEE CHART FOR VEHICLE TYPE

GIRDER LOCATION
I - INTERIOR GIRDER
EL - EXTERIOR LEFT GIRDER
ER - EXTERIOR RIGHT GIRDER

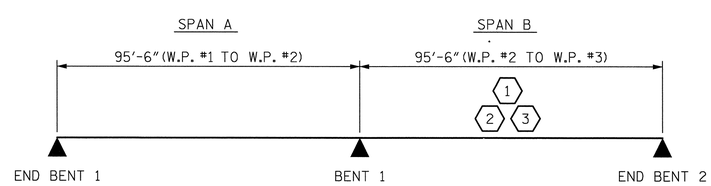

LRFR SUMMARY

PROJECT NO. U-2525B
GUILFORD COUNTY
STATION: 21+69.08 -Y11-
228+23.81 -L-

STATE OF NORTH CAROLINA
DEPARTMENT OF TRANSPORTATION
RALEIGH

STANDARD
LRFR SUMMARY FOR PRESTRESSED CONCRETE GIRDERS
(NON-INTERSTATE TRAFFIC)

REVISIONS						SHEET NO.
NO.	BY:	DATE:	NO.	BY:	DATE:	S-422
1			3			TOTAL SHEETS
2			4			54-1

ASSEMBLED BY : J.M. KEPICH	DATE : 3/11/13
CHECKED BY : R.F. WERTMAN	DATE : 5/20/13
DRAWN BY : MAA 1/08	REV. 11/12/08RR MAA/GM
CHECKED BY : GM/DI 2/08	REV. 10/1/11 MAA/GM

PLANS PREPARED BY:
Gannett Fleming
Excellence Delivered As Promised
1121 Situs Court
Suite 170
Raleigh NC 27606-4279
(919) 859-4880
NC Lic. No. F-0270

THESE PLANS HAVE BEEN PROPERLY EXAMINED BY THE UNDERSIGNED. I HAVE DETERMINED THAT THEY COMPLY WITH EXISTING NORTH CAROLINA CODES, AND HAVE BEEN PROPERLY ADAPTED FOR USE IN THIS AREA.

NORTH CAROLINA PROFESSIONAL ENGINEER SEAL 037180 RICHARD F. WERTMAN

STR. NO. 12

STD. NO. LRFR1

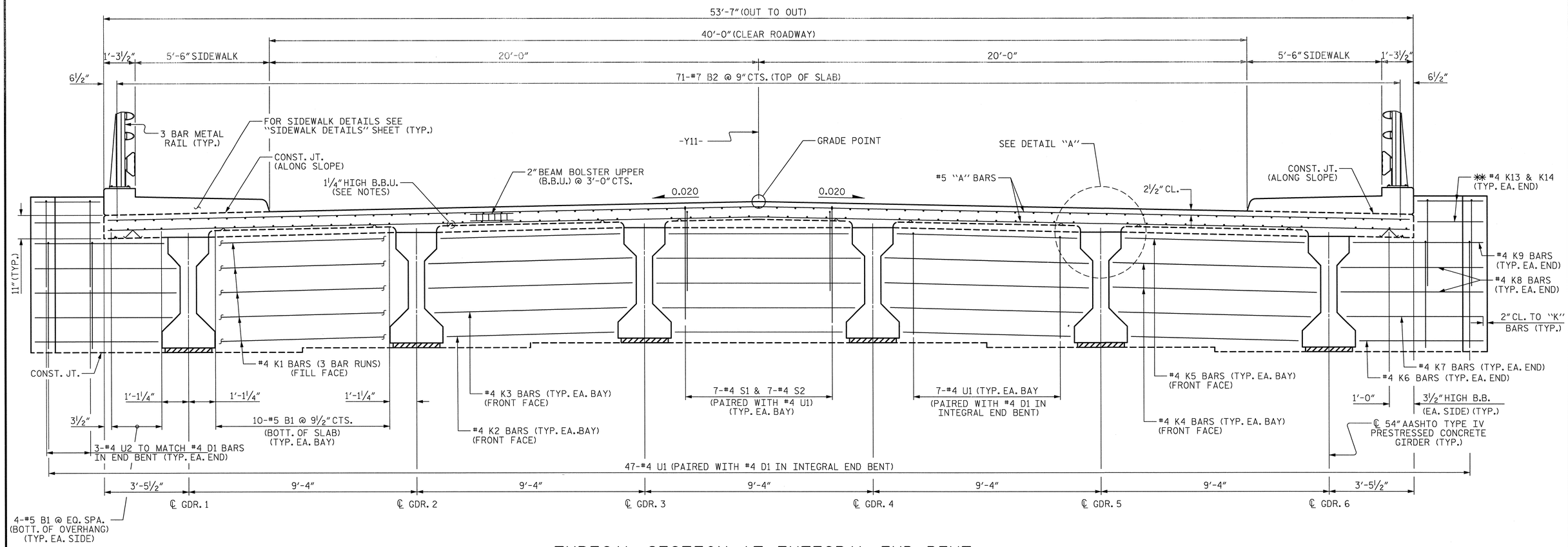

TYPICAL SECTION AT INTEGRAL END BENT

END BENT 1 SHOWN, END BENT 2 SIMILAR
FOR SECTION THRU END BENT, SEE SHEET 3 OF 3.
✱✱ FOR WING WALLS OF INTEGRAL END BENT, SEE SHEET NO. 10 - "TOP OF WINGS @ END BENT #1" & SHEET NO. 11 - "TOP OF WINGS @ END BENT #2".

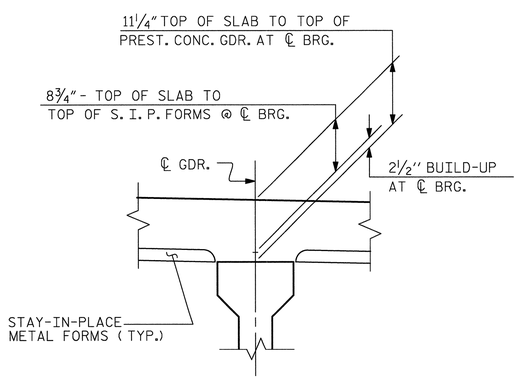

DETAIL "A"

NOTES:

PROVIDE 1¼" HIGH BEAM BOLSTERS UPPER AT 4'-0" CTS. ATOP THE METAL STAY-IN-PLACE FORMS TO SUPPORT THE BOTTOM MAT OF 'A' BARS. WHEN USING REMOVABLE FORMS, PROVIDE CONTINUOUS HIGH CHAIRS FOR METAL DECK (C.H.C.M.) @ 4'-0" CTS. WITH A HEIGHT TO SUPPORT THE BOTTOM MAT OF 'A' BARS A CLEAR DISTANCE OF 2½" ABOVE THE TOP OF THE REMOVABLE FORM.

LONGITUDINAL STEEL MAY BE SHIFTED SLIGHTLY, AS NECESSARY, TO AVOID INTERFERENCE WITH STIRRUPS IN PRESTRESSED CONCRETE GIRDERS.

PREVIOUSLY CAST CONCRETE IN A CONTINUOUS UNIT SHALL HAVE ATTAINED A MINIMUM COMPRESSIVE STRENGTH OF 3,000 PSI BEFORE ADDITIONAL CONCRETE IS CAST IN THE UNIT.

PROJECT NO. U-2525B
GUILFORD COUNTY
STATION: 21+69.08 -Y11-
228+23.81 -L-
SHEET 1 OF 3

STATE OF NORTH CAROLINA
DEPARTMENT OF TRANSPORTATION
RALEIGH
SUPERSTRUCTURE

TYPICAL SECTION

REVISIONS						SHEET NO.
NO.	BY:	DATE:	NO.	BY:	DATE:	S-423
1			3			TOTAL SHEETS
2			4			541

DRAWN BY : J.M. KEPICH DATE : 05/09/13
CHECKED BY : R.F. WERTMAN DATE : 05/20/13
DESIGN ENGINEER OF RECORD : R.F. WERTMAN DATE : 05/20/13

PLANS PREPARED BY:
Gannett Fleming
Excellence Delivered As Promised
1121 Situs Court
Suite 170
Raleigh NC 27606-4279
(919) 859-4880
NC Lic. No. F-0270

NORTH CAROLINA PROFESSIONAL SEAL 037180 ENGINEER RICHARD F. WERTMAN

STR. NO. 12

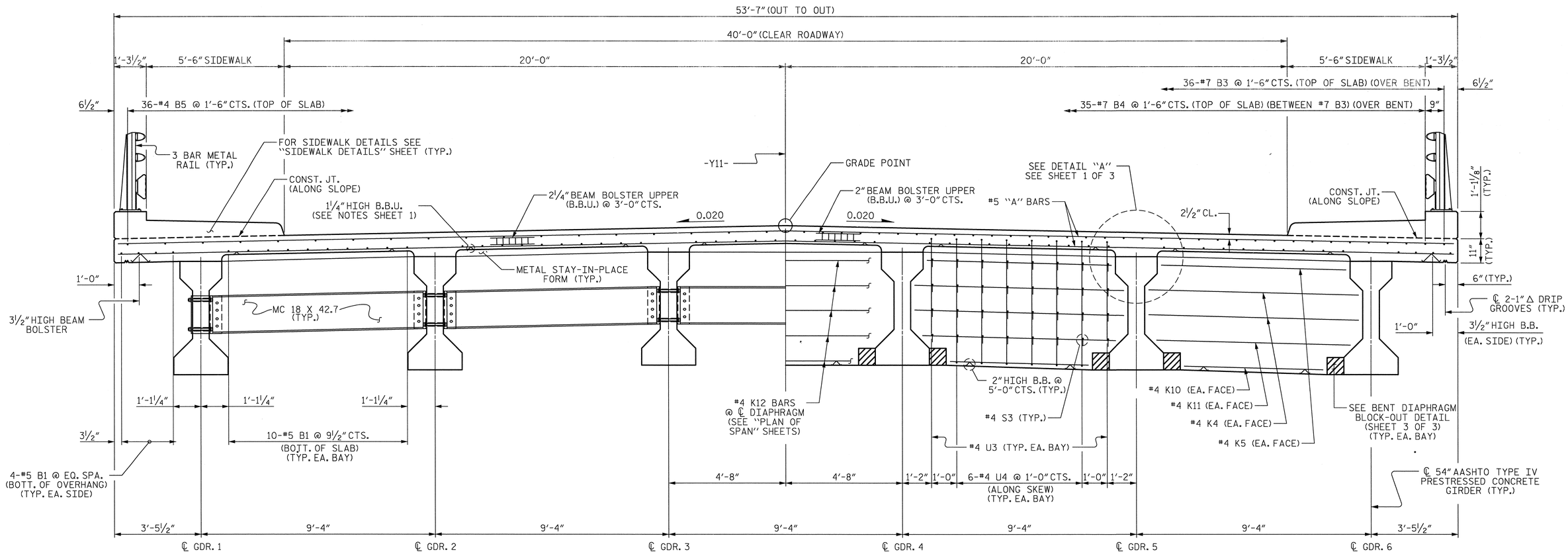

PARTIAL TYPICAL SECTION
(SHOWING INTERMEDIATE DIAPHRAGMS)

PARTIAL TYPICAL SECTION
(SHOWING CONTINUOUS FOR LIVE LOAD BENT DIAPHRAGM)

TYPICAL SECTION

FOR INTERMEDIATE STEEL DIAPHRAGM DETAILS SEE "INTERMEDIATE STEEL DIAPHRAGMS FOR TYPE IV PRESTRESSED CONCRETE GIRDERS" SHEET

FOR SECTION THRU BENT DIAPHRAGM, SEE SHEET 3 OF 3.

PROJECT NO. U-2525B
GUILFORD COUNTY
STATION: 21+69.08 -Y11-
228+23.81 -L-
SHEET 2 OF 3

STATE OF NORTH CAROLINA
DEPARTMENT OF TRANSPORTATION
RALEIGH
SUPERSTRUCTURE

TYPICAL SECTION

REVISIONS						SHEET NO.
NO.	BY:	DATE:	NO.	BY:	DATE:	S-424
1			3			TOTAL SHEETS
2			4			541

DRAWN BY : J.M. KEPICH DATE : 03/12/13
CHECKED BY : R.F. WERTMAN DATE : 05/21/13
DESIGN ENGINEER OF RECORD : R.F. WERTMAN DATE : 05/21/13

PLANS PREPARED BY:
Gannett Fleming
Excellence Delivered As Promised
1121 Situs Court
Suite 170
Raleigh NC 27606-4279
(919) 859-4880
NC Lic. No. F-0270

NORTH CAROLINA PROFESSIONAL SEAL 03780 ENGINEER RICHARD F. WERTMAN

STR. NO. 12

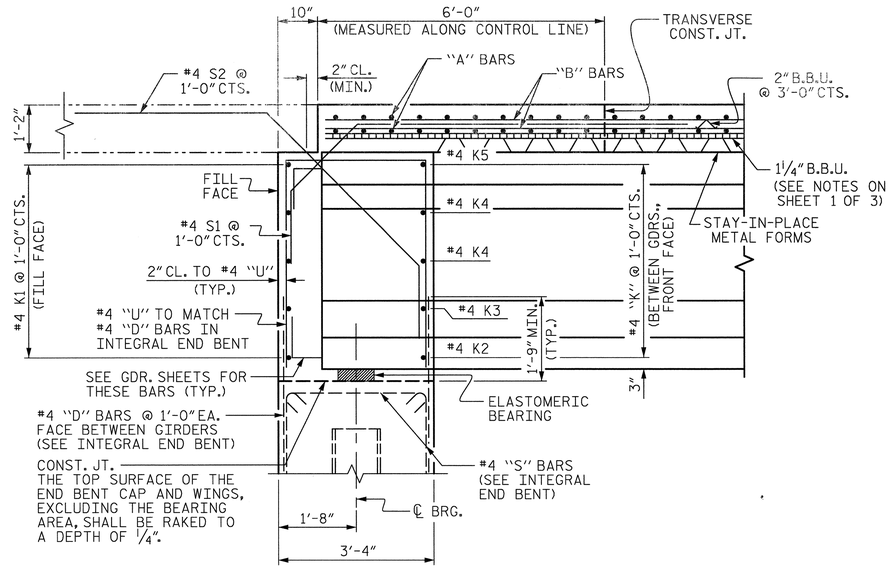

SECTION A-A

(AT INTEGRAL END BENT)

(FOR SECTION LOCATION, SEE PLAN OF SPAN SHEET 1 OF 4 & 2 OF 4)

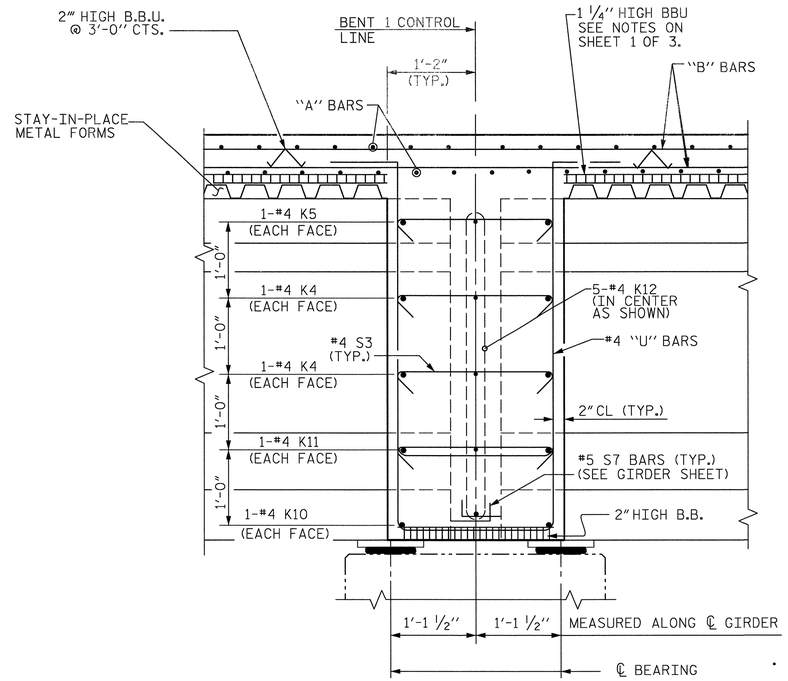

SECTION B-B

(FOR SECTION LOCATION, SEE PLAN OF SPAN SHEET 1 OF 4 & 2 OF 4)

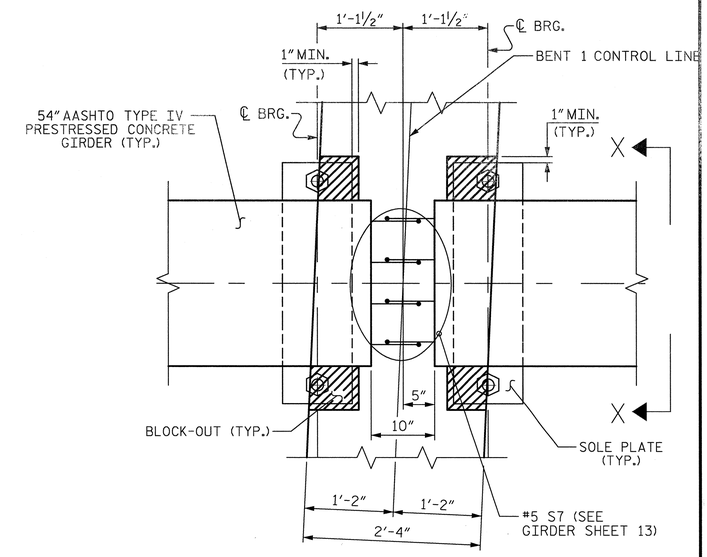

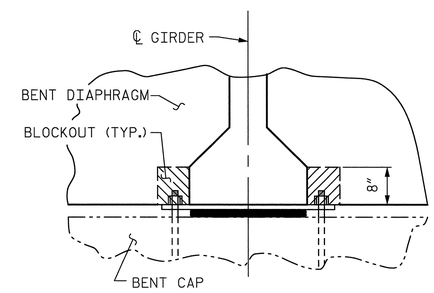

SECTION X-X

BENT DIAPHRAGM BLOCKOUT DETAIL

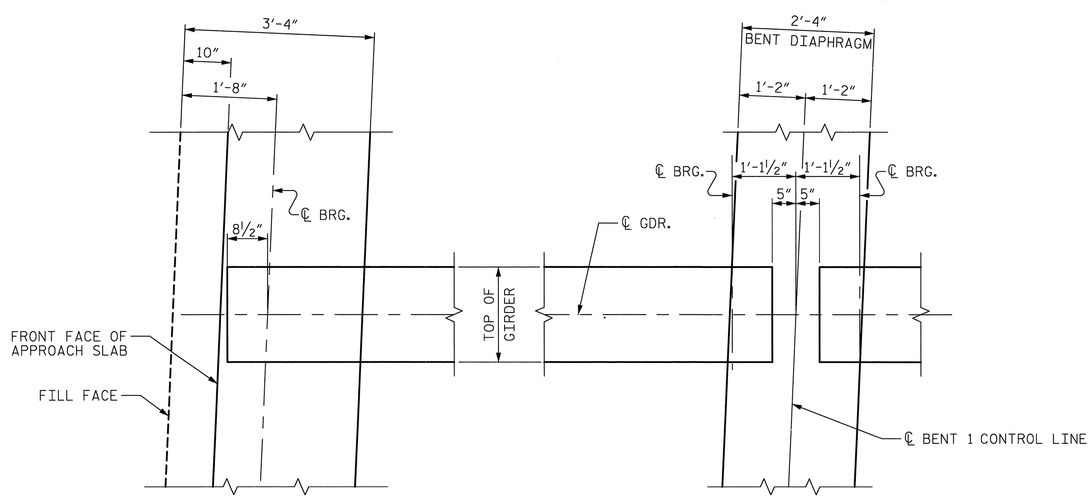

END BENT

BENT DIAPHRAGM

PLAN OF DIAPHRAGMS

PROJECT NO. U-2525B

GUILFORD COUNTY

STATION: 21+69.08 -Y11- 228+23.81 -L-

SHEET 3 OF 3

STATE OF NORTH CAROLINA
DEPARTMENT OF TRANSPORTATION
RALEIGH

SUPERSTRUCTURE

TYPICAL SECTION DETAILS

REVISIONS							SHEET NO.
NO.	BY:	DATE:	NO.	BY:	DATE:		S-425
1			3				TOTAL SHEETS
2			4				541

DRAWN BY : J.M. KEPICH DATE : 03/12/13
CHECKED BY : R.F. WERTMAN DATE : 05/21/13
DESIGN ENGINEER OF RECORD : R.F. WERTMAN DATE : 05/21/13

PLANS PREPARED BY:
Gannett Fleming
Excellence Delivered As Promised
1121 Situs Court
Suite 170
Raleigh NC 27606-4279
(919) 859-4880
NC Lic. No. F-0270

NORTH CAROLINA PROFESSIONAL SEAL 037180 ENGINEER RICHARD F. WERTMAN

STR. NO. 12

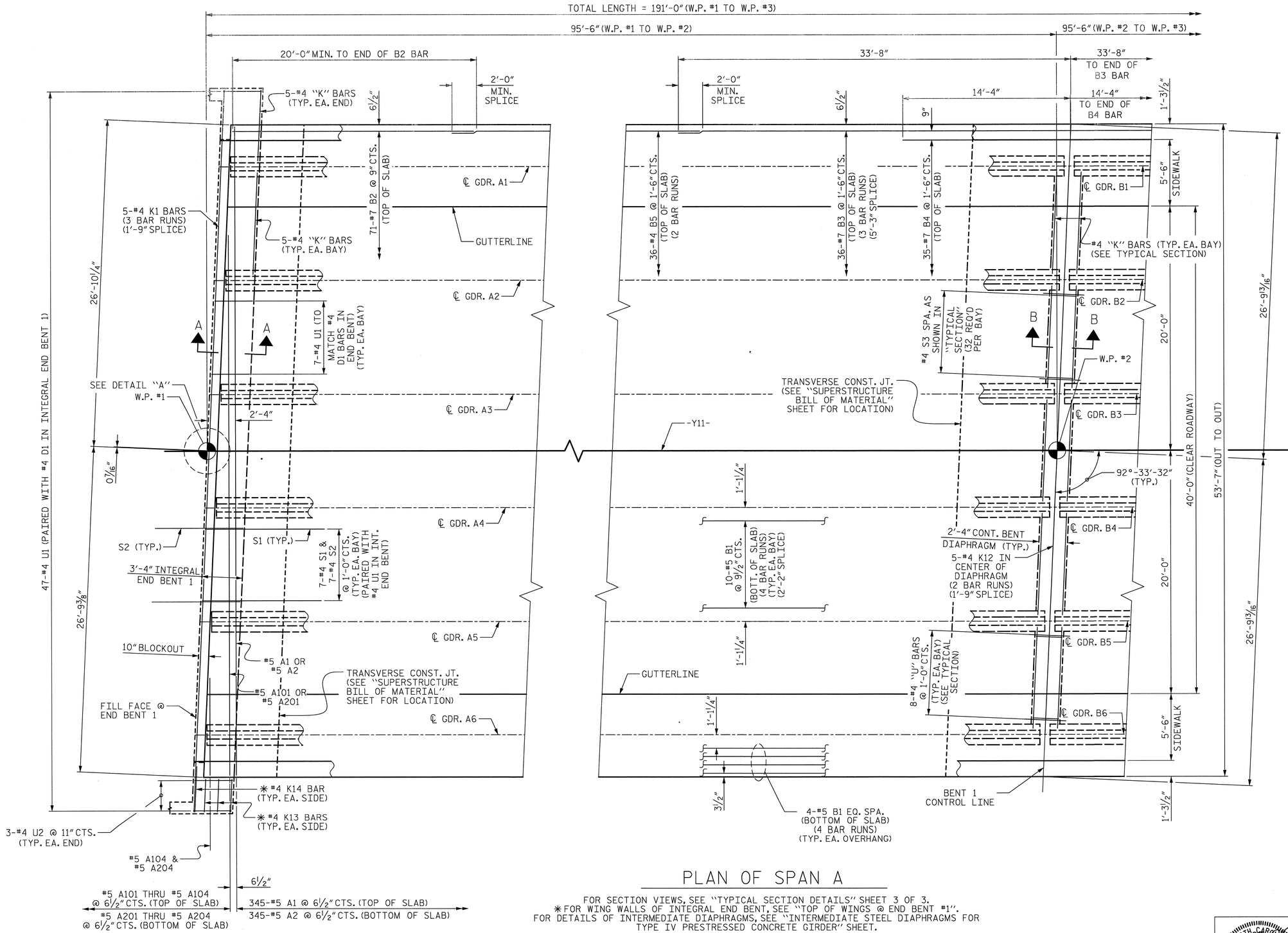

PLAN OF SPAN A

FOR SECTION VIEWS, SEE "TYPICAL SECTION DETAILS" SHEET 3 OF 3.
✱ FOR WING WALLS OF INTEGRAL END BENT, SEE "TOP OF WINGS @ END BENT #1".
FOR DETAILS OF INTERMEDIATE DIAPHRAGMS, SEE "INTERMEDIATE STEEL DIAPHRAGMS FOR TYPE IV PRESTRESSED CONCRETE GIRDER" SHEET.

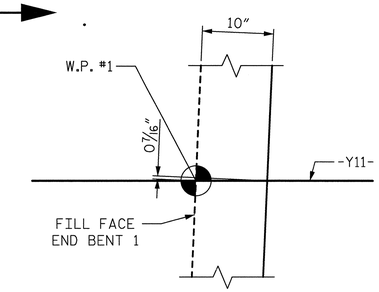

DETAIL "A"

PROJECT NO. U-2525B
GUILFORD COUNTY
STATION: 21+69.08 -Y11-
228+23.81 -L-

SHEET 1 OF 4

STATE OF NORTH CAROLINA
DEPARTMENT OF TRANSPORTATION
RALEIGH

SUPERSTRUCTURE
PLAN OF SPAN A

REVISIONS						SHEET NO.
NO.	BY:	DATE:	NO.	BY:	DATE:	S-426
1			3			TOTAL SHEETS
2			4			54-1

DRAWN BY : J.M. KEPICH DATE : 03/15/13
CHECKED BY : R.F. WERTMAN DATE : 05/21/13
DESIGN ENGINEER OF RECORD : R.F. WERTMAN DATE : 05/21/13

PLANS PREPARED BY:
Gannett Fleming
Excellence Delivered As Promised
1121 Situs Court
Suite 170
Raleigh NC 27606-4279
(919) 859-4880
NC Lic. No. F-0270

NORTH CAROLINA PROFESSIONAL SEAL 032180 ENGINEER RICHARD F. WERTMAN

STR. NO. 12

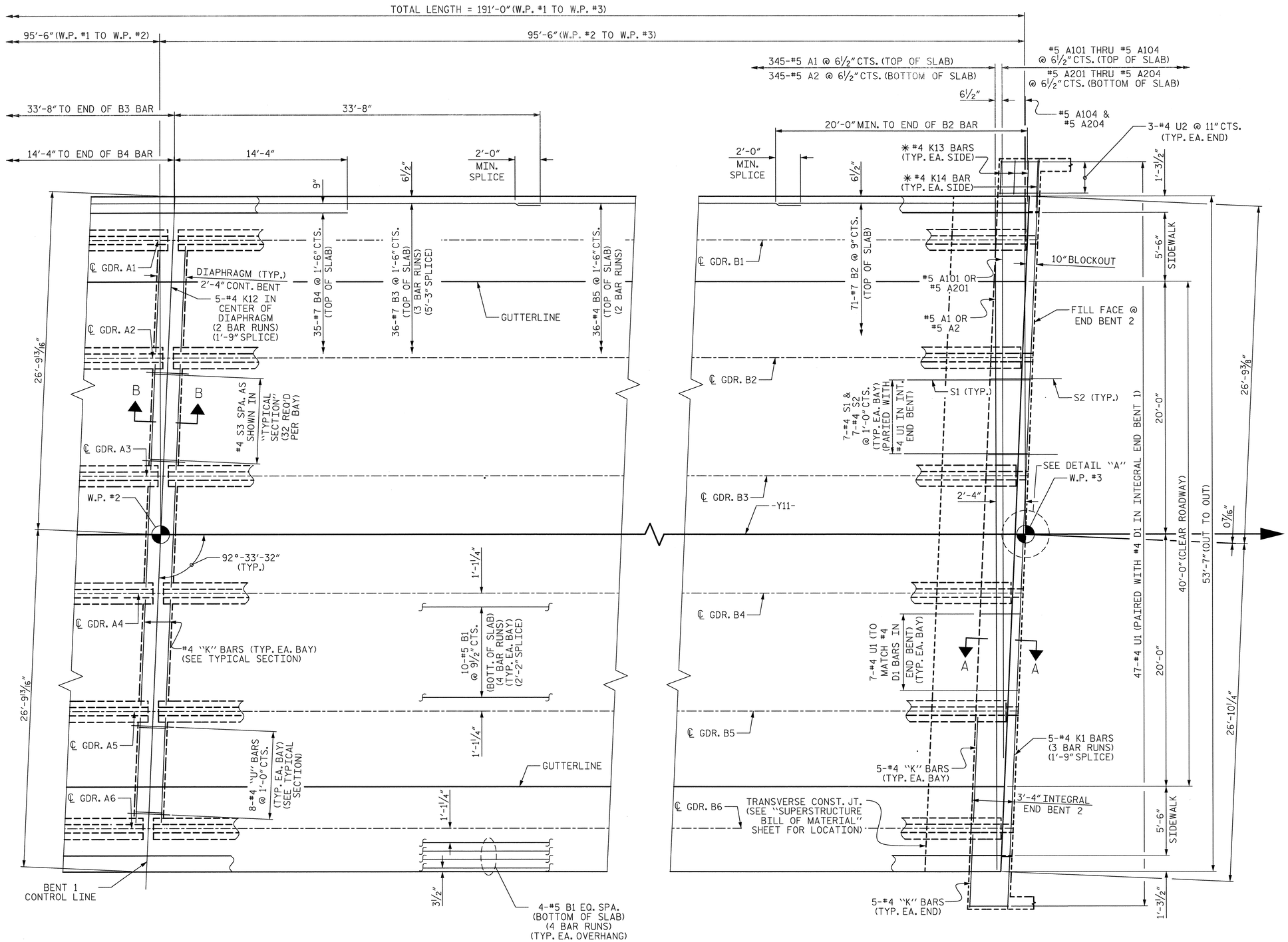

DETAIL "A"

PLAN OF SPAN B

FOR SECTION VIEWS, SEE "TYPICAL SECTION DETAILS" SHEET 3 OF 3.
✱ FOR WING WALLS OF INTEGRAL END BENT, SEE "TOP OF WINGS @ END BENT #2".
FOR DETAILS OF INTERMEDIATE DIAPHRAGMS, SEE "INTERMEDIATE STEEL DIAPHRAGMS FOR TYPE IV PRESTRESSED CONCRETE GIRDER" SHEET.

PROJECT NO. U-2525B
GUILFORD COUNTY
STATION: 21+69.08 -Y11-
228+23.81 -L-
SHEET 2 OF 4

STATE OF NORTH CAROLINA
DEPARTMENT OF TRANSPORTATION
RALEIGH

SUPERSTRUCTURE
PLAN OF SPAN B

DRAWN BY : J.M. KEPICH	DATE : 03/15/13
CHECKED BY : R.F. WERTMAN	DATE : 05/23/13
DESIGN ENGINEER OF RECORD : R.F. WERTMAN	DATE : 05/23/13

PLANS PREPARED BY:
Gannett Fleming
Excellence Delivered As Promised
1121 Situs Court
Suite 170
Raleigh NC 27606-4279
(919) 859-4880
NC Lic. No. F-0270

NORTH CAROLINA PROFESSIONAL SEAL 037180 ENGINEER RICHARD F. WERTMAN

REVISIONS								SHEET NO.
NO.	BY:	DATE:	NO.	BY:	DATE:			S-427
1			3					TOTAL SHEETS
2			4					541

STR.NO.12

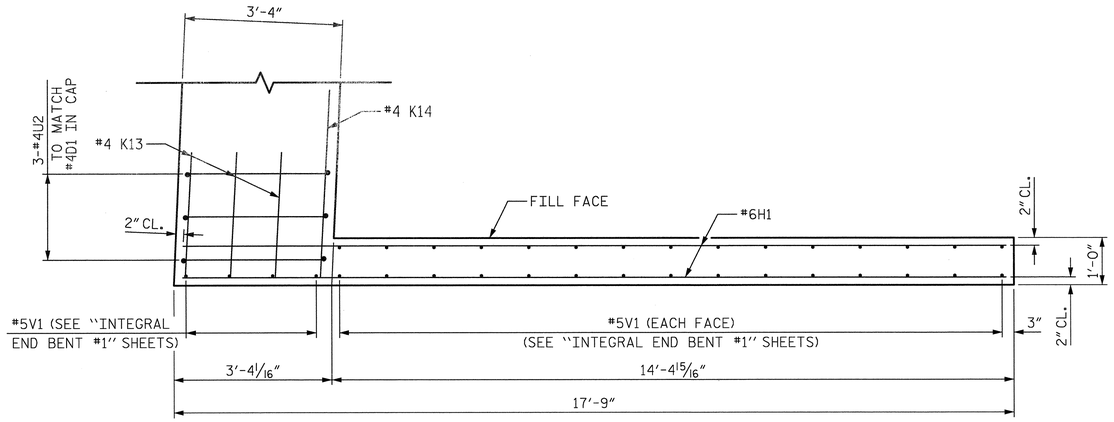

PLAN OF WING (W1)

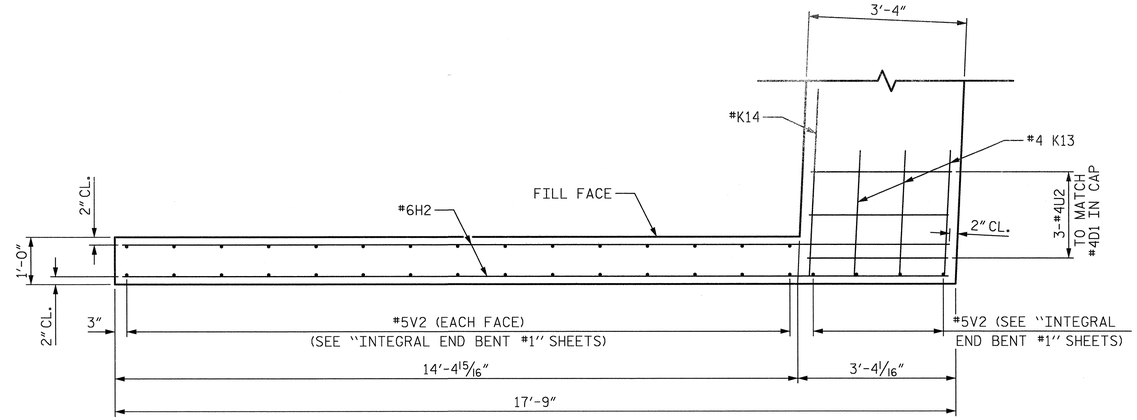

PLAN OF WING (W2)

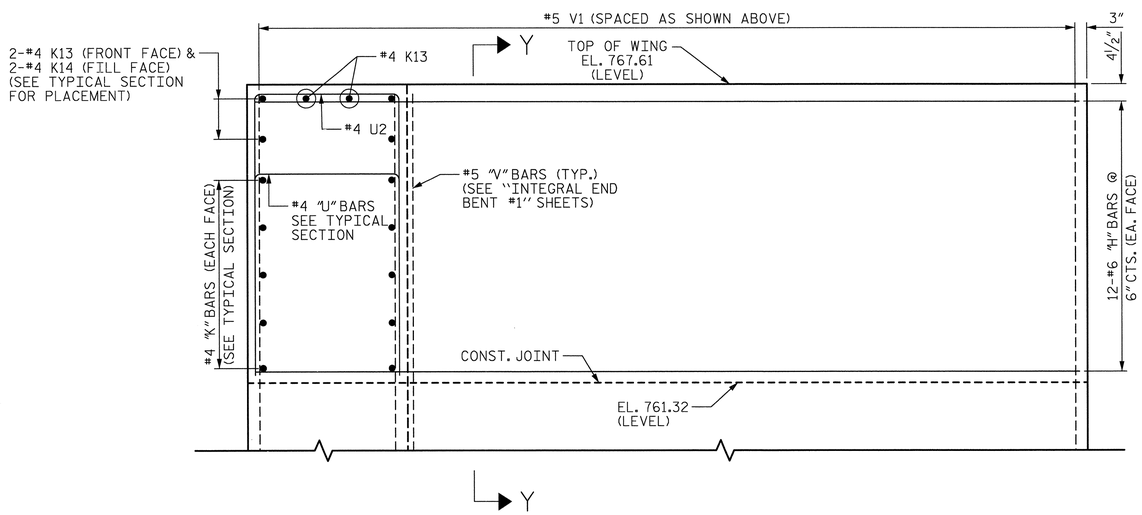

ELEVATION OF WING (W1)

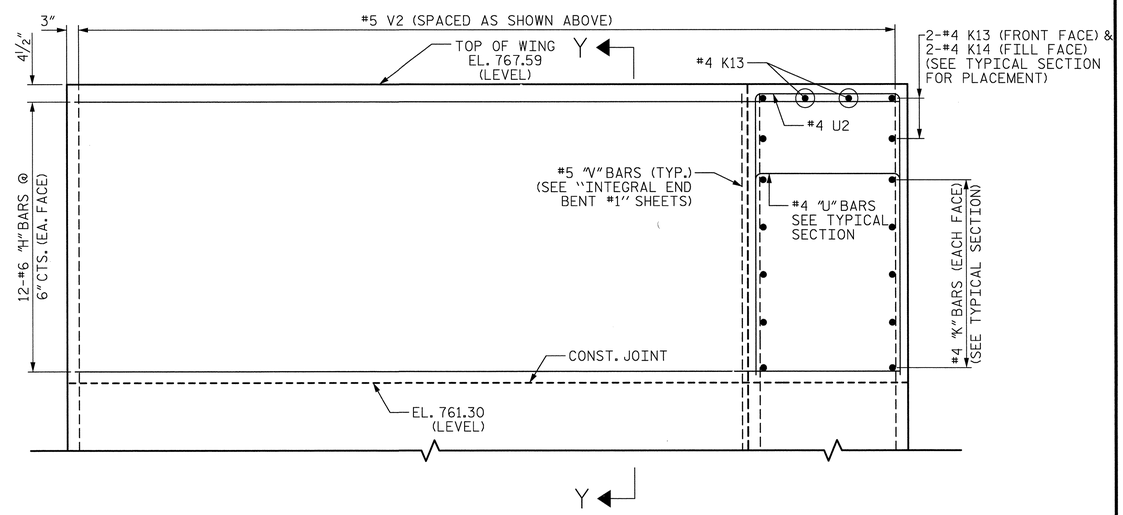

ELEVATION OF WING (W2)

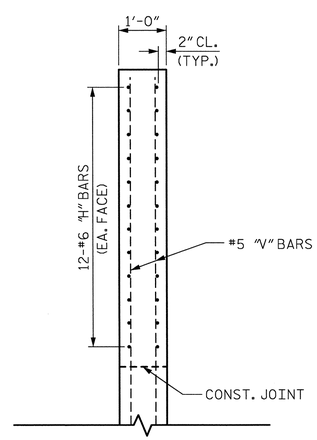

SECTION Y-Y

PROJECT NO. U-2525B

GUILFORD COUNTY

STATION: 21+69.08 -Y11- 228+23.81 -L-

SHEET 3 OF 4

STATE OF NORTH CAROLINA
DEPARTMENT OF TRANSPORTATION
RALEIGH

SUPERSTRUCTURE

TOP OF WINGS @ END BENT #1

DRAWN BY : L.M. SAMPLES	DATE : 05/01/13		
CHECKED BY : R.F. WERTMAN	DATE : 05/31/13		
DESIGN ENGINEER OF RECORD : R.F. WERTMAN	DATE : 05/31/13		

PLANS PREPARED BY:
Gannett Fleming
Excellence Delivered As Promised
1121 Situs Court
Suite 170
Raleigh NC 27606-4279
(919) 859-4880
NC Lic. No. F-0270

NORTH CAROLINA PROFESSIONAL SEAL 037180 ENGINEER RICHARD F. WERTMAN

REVISIONS							
NO.	BY:	DATE:	NO.	BY:	DATE:	SHEET NO.	
1			3			S-428	
2			4			TOTAL SHEETS	
						54	

STR. NO. 12

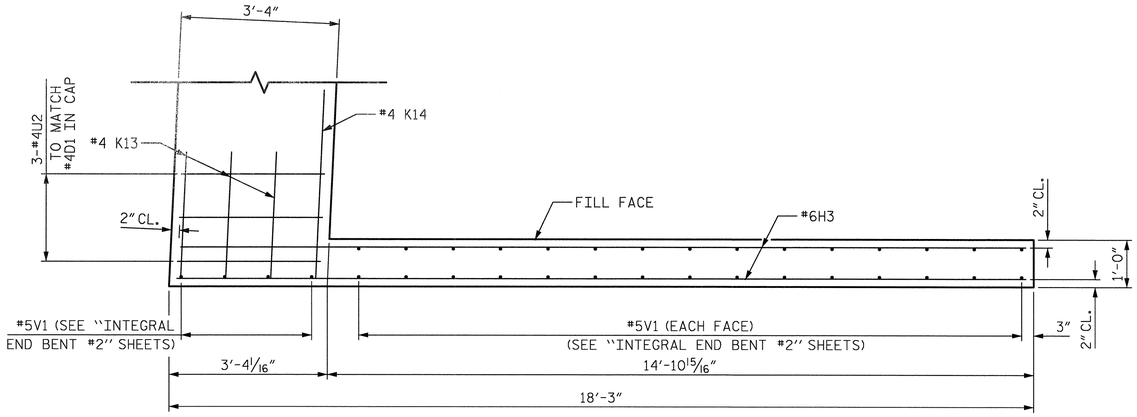

PLAN OF WING (W3)

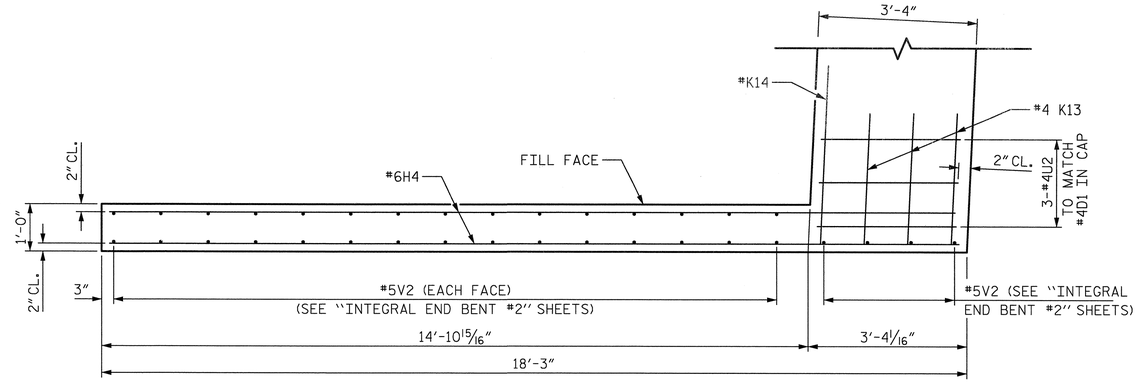

PLAN OF WING (W4)

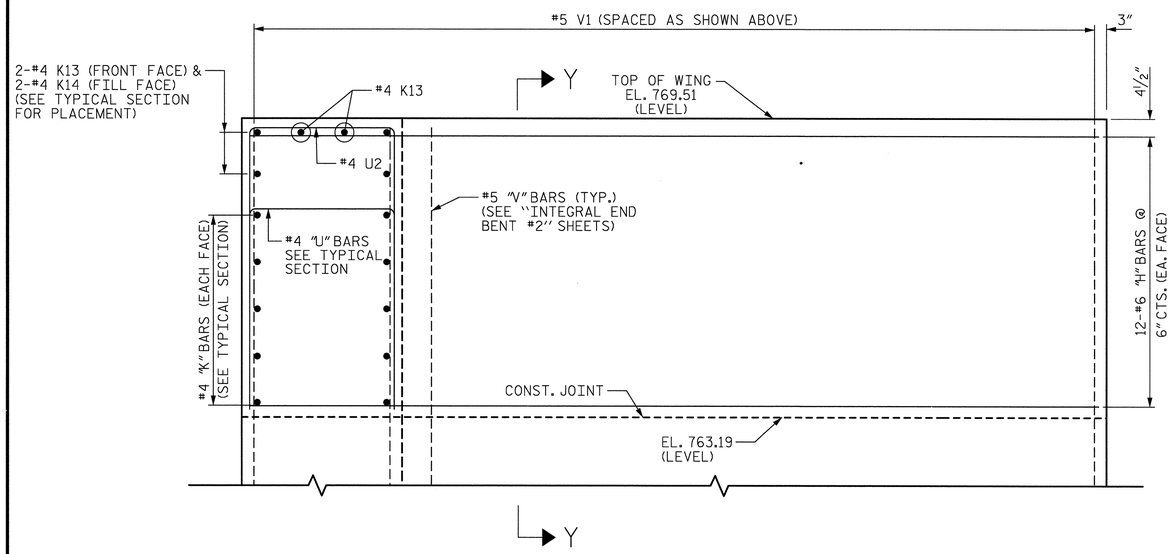

ELEVATION OF WING (W3)

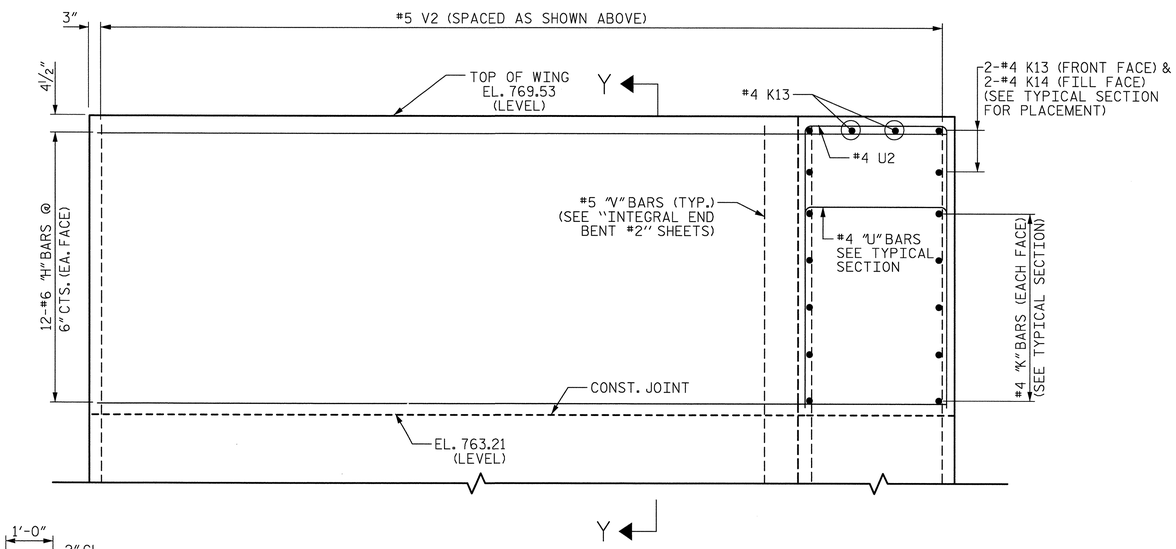

ELEVATION OF WING (W4)

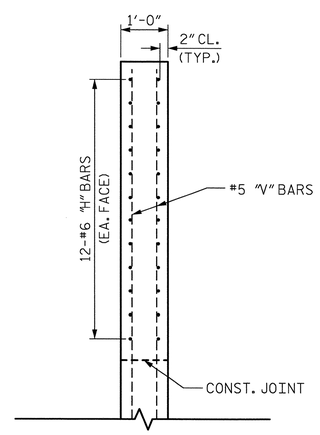

SECTION Y-Y

PROJECT NO. U-2525B
GUILFORD COUNTY
STATION: 21+69.08 -Y11-
228+23.81 -L-
SHEET 3 OF 4

STATE OF NORTH CAROLINA
DEPARTMENT OF TRANSPORTATION
RALEIGH

SUPERSTRUCTURE

TOP OF WINGS @ END BENT #2

REVISIONS						SHEET NO.
NO.	BY:	DATE:	NO.	BY:	DATE:	S-429
1			3			TOTAL SHEETS
2			4			541

DRAWN BY : J.M. KEPICH DATE : 05/28/13
CHECKED BY : R.F. WERTMAN DATE : 06/04/13
DESIGN ENGINEER OF RECORD : R.F. WERTMAN DATE : 06/04/13

PLANS PREPARED BY:
Gannett Fleming
Excellence Delivered As Promised
1121 Situs Court
Suite 170
Raleigh NC 27606-4279
(919) 859-4880
NC Lic. No. F-0270

NORTH CAROLINA PROFESSIONAL SEAL 037180 ENGINEER RICHARD F. WERTMAN

STR. NO. 12

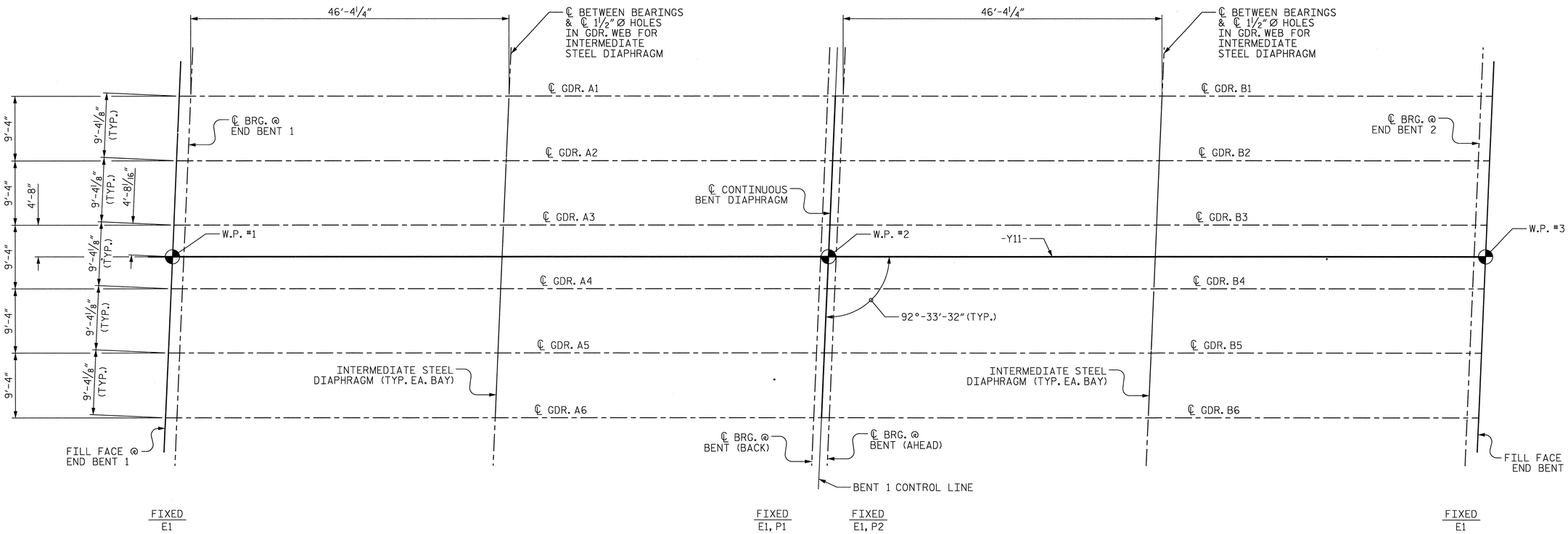

GIRDER LAYOUT

PROJECT NO. U-2525B
GUILFORD COUNTY
STATION: 21+69.08 -Y11-
228+23.81 -L-

STATE OF NORTH CAROLINA
DEPARTMENT OF TRANSPORTATION
RALEIGH
SUPERSTRUCTURE

GIRDER LAYOUT

REVISIONS						SHEET NO.
NO.	BY:	DATE:	NO.	BY:	DATE:	S-430
1			3			TOTAL SHEETS
2			4			54-1

PLANS PREPARED BY:
Gannett Fleming
Excellence Delivered As Promised
1121 Situs Court
Suite 170
Raleigh NC 27606-4279
(919) 859-4880
NC Lic. No. F-0270

NORTH CAROLINA PROFESSIONAL SEAL 03780 ENGINEER RICHARD F. WERTMAN

DRAWN BY : J.M. KEPICH DATE : 03/15/13
CHECKED BY : R.F. WERTMAN DATE : 05/23/13
DESIGN ENGINEER OF RECORD : R.F. WERTMAN DATE : 05/23/13

STR. NO. 12

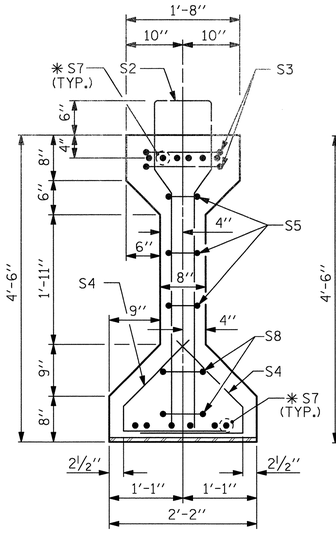

SECTION A-A

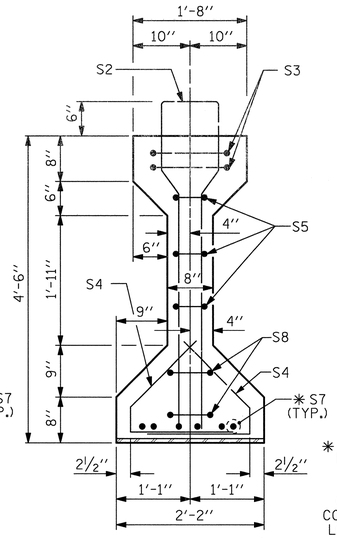

SECTION B-B

✱ FOR S7 BARS, SEE DETAIL "A" OF PRESTRESSED CONCRETE GIRDER CONTINUOUS FOR LIVE LOAD DETAILS SHEET

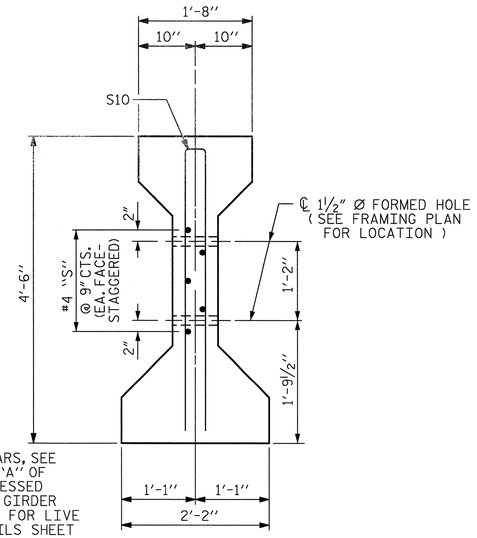

SECTION C-C

(S1 BARS NOT SHOWN)

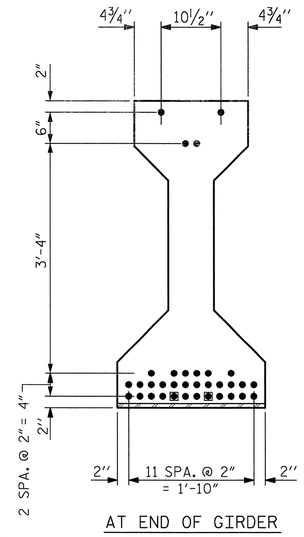

AT END OF GIRDER

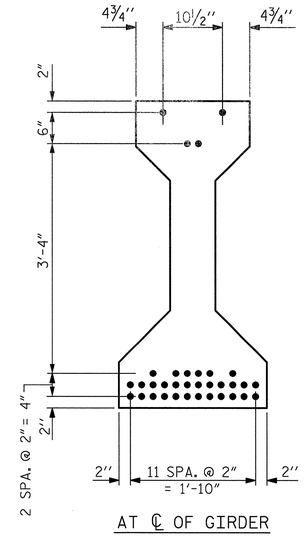

AT ℄ OF GIRDER

0.6" Ø LOW RELAXATION STRAND LAYOUT

DEBONDING LEGEND

- ● FULLY BONDED STRANDS
- ◙ STRANDS DEBONDED FOR 10'-0" FROM ENDS OF GIRDER

0.6" Ø L. R. GRADE 270 STRANDS

AREA (SQUARE INCHES)	ULTIMATE STRENGTH (LBS. PER STRAND)	APPLIED PRESTRESS (LBS. PER STRAND)
0.217	58,600	43,950

REINFORCING STEEL FOR ONE GIRDER

BAR	NUMBER	SIZE	TYPE	LENGTH	WEIGHT
S1	122	#4	1	10'-8"	869
S2	12	#6	1	10'-8"	192
S3	4	#4	2	9'-1"	24
S4	60	#4	3	3'-5"	137
S5	6	#4	2	8'-5"	34
✱ S7	18	#5	STR	3'-8"	69
S8	4	#4	2	8'-7"	23
S9	2	#3	STR	1'-10"	1
S10	2	#5	2	8'-8"	18
S11	5	#4	STR	7'-0"	23
S13	1	#3	STR	1'-4"	1

✱ NOTE: S7 BARS SHALL BE BENT BEFORE SHIPMENT. HEAT BENDING SHALL NOT BE ALLOWED.

BAR TYPES

ALL BAR DIMENSIONS ARE OUT-TO-OUT

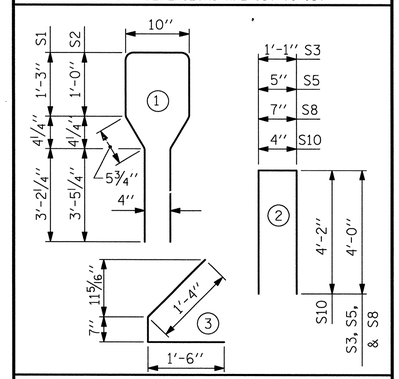

QUANTITIES FOR ONE GIRDER

	REINFORCING STEEL LB.	8000 PSI CONCRETE C.Y.	0.6" Ø L. R. STRANDS No.
GIRDERS NO. 1 THRU 6	1391	19.1	34

GIRDERS REQUIRED

NUMBER	LENGTH	TOTAL LENGTH
12	94'-1½"	1129.50'

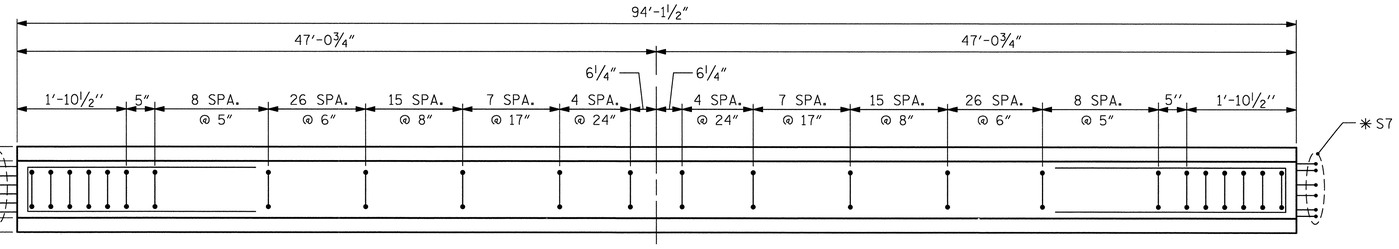

PLAN OF GIRDER

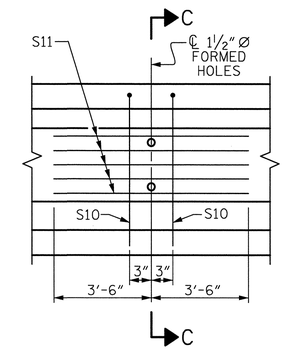

PARTIAL ELEVATION

SHOWING INTERMEDIATE DIAPHRAGM REINFORCING STEEL FOR ALL GIRDERS

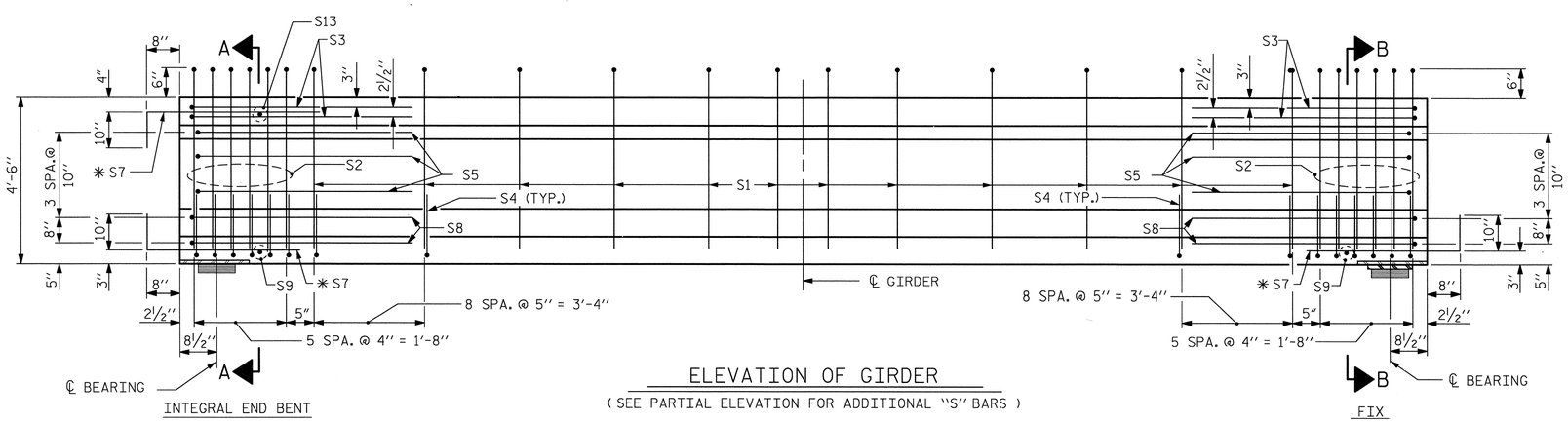

ELEVATION OF GIRDER

(SEE PARTIAL ELEVATION FOR ADDITIONAL "S" BARS)

PROJECT NO. U-2525B

GUILFORD COUNTY

STATION: 21+69.08 -Y11-
228+23.81 -L-

SHEET 1 OF 3

STATE OF NORTH CAROLINA
DEPARTMENT OF TRANSPORTATION
RALEIGH

STANDARD
AASHTO TYPE IV
PRESTRESSED CONCRETE GIRDER
CONTINUOUS FOR LIVE LOAD
SPANS A & B

ASSEMBLED BY : J.M. KEPICH	DATE : 03/15/13
CHECKED BY : R.F. WERTMAN	DATE : 05/23/13

DRAWN BY : ELR 8/91	REV. 10/17/00R RWW/LES
CHECKED BY : GRP 8/91	REV. 5/1/06R TLA/GM
	REV. 10/1/11 MAA/GM

PLANS PREPARED BY:
Gannett Fleming
Excellence Delivered As Promised
1121 Situs Court
Suite 170
Raleigh NC 27606-4279
(919) 859-4880
NC Lic. No. F-0270

THESE PLANS HAVE BEEN PROPERLY EXAMINED BY THE UNDERSIGNED. I HAVE DETERMINED THAT THEY COMPLY WITH EXISTING NORTH CAROLINA CODES, AND HAVE BEEN PROPERLY ADAPTED FOR USE IN THIS AREA.

NORTH CAROLINA PROFESSIONAL SEAL 037180 ENGINEER RICHARD F. WERTMAN

REVISIONS							SHEET NO.
NO.	BY:	DATE:	NO.	BY:	DATE:		S-431
1			3				TOTAL SHEETS
2			4				541

STR. NO 12

STD. NO. PCG6 (Sht. 2)

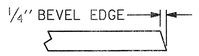

SECTION "G"

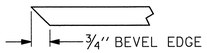

SECTION "F"

(SEE NOTES)

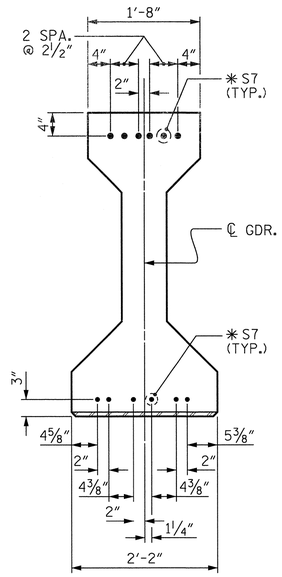

DETAIL "A"

(FOR AASHTO TYPE IV GIRDERS)

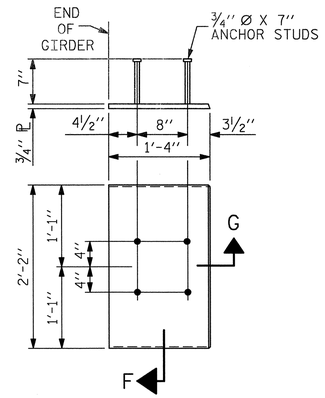

EMBEDDED PLATE "B-1" DETAILS FOR AASHTO TYPE IV GIRDER

(2 REQ'D PER GIRDER)

NOTES

ALL PRESTRESSING STRANDS SHALL BE 7-WIRE LOW-RELAXATION GRADE 270 STRANDS AND SHALL CONFORM TO AASHTO M203 EXCEPT FOR SAMPLING REQUIREMENTS WHICH SHALL BE IN ACCORDANCE WITH THE STANDARD SPECIFICATIONS.

ALL REINFORCING STEEL SHALL BE GRADE 60.

EMBEDDED PLATE "B-1" SHALL BE GALVANIZED IN ACCORDANCE WITH THE STANDARD SPECIFICATIONS. BEVEL EDGES OF PLATE "B-1" TO GIVE CLOSE FIT BUT NOT TIGHT FIT TO STEEL CASTING FORM.

ANCHOR STUDS SHALL CONFORM TO AASHTO M169 GRADES 1010 THROUGH 1020 OR APPROVED EQUAL, AND SHALL MEET THE TYPE "B" REQUIREMENTS OF SUBSECTION 7.3 OF THE ANSI/AASHTO/AWS D1.5 BRIDGE WELDING CODE.

AT ENDS OF GIRDERS TO BE EMBEDDED IN CONCRETE DIAPHRAGMS OR END WALLS, PRESTRESSING STRANDS MAY EXTEND A MAXIMUM OF 2" BEYOND THE GIRDER ENDS. OTHERWISE, PRESTRESSING STRANDS SHALL BE CUT FLUSH WITH THE GIRDER ENDS.

THE TRANSFER OF LOAD FROM THE ANCHORAGES TO THE GIRDER SHALL BE DONE WHEN CONCRETE HAS REACHED A COMPRESSIVE STRENGTH OF NOT LESS THAN 6400 PSI.

DEPENDING ON THE TYPE OF SYSTEM USED TO SUPPORT THE DECK SLAB FORMS, PRESET ANCHORS MAY BE NECESSARY IN THE PRESTRESSED CONCRETE GIRDER.

THE TOP SURFACE OF THE GIRDER, EXCLUDING THE OUTSIDE 4", SHALL BE RAKED TO A DEPTH OF 1/4".

WHEN DRAPED STRANDS ARE DETAILED, THE LONGITUDINAL LOCATION OF THE HOLD DOWN DEVICES SHALL BE WITHIN 6" OF THE LOCATION SHOWN AND THE CENTER OF GRAVITY OF THE GROUP OF DRAPED STRANDS SHALL BE LOCATED WITHIN 1/2" OF THE THEORETICAL LOCATION SHOWN.

THE CONTRACTOR HAS THE OPTION TO PROVIDE, AT NO ADDITIONAL COST TO THE DEPARTMENT, 2 ADDITIONAL STRANDS AT THE TOP OF THE GIRDER TO FACILITATE TYING OF THE REINFORCING STEEL. THESE STRANDS SHALL BE PULLED TO A LOAD OF 4500 lbs.

DEAD LOAD DEFLECTION TABLE FOR GIRDERS

0.6" Ø LOW RELAXATION	SPANS A & SPAN B										
	GIRDERS A1, A6, B1, & B6										
TENTH POINTS	0	.1	.2	.3	.4	.5	.6	.7	.8	.9	0
CAMBER (GIRDER ALONE IN PLACE) ↑	0.000	0.091	0.158	0.202	0.227	0.235	0.227	0.202	0.158	0.091	0.000
* DEFLECTION DUE TO SUPERIMPOSED D.L. ↓	0.000	0.036	0.070	0.097	0.115	0.121	0.115	0.097	0.071	0.036	0.000
FINAL CAMBER ↑	0	11/16"	1 1/16"	1 1/4"	1 3/8"	1 3/8"	1 3/8"	1 1/4"	1 1/16"	11/16"	0

0.6" Ø LOW RELAXATION	GIRDERS A2, A5, B2, & B5										
TENTH POINTS	0	.1	.2	.3	.4	.5	.6	.7	.8	.9	0
CAMBER (GIRDER ALONE IN PLACE) ↑	0.000	0.091	0.158	0.202	0.227	0.235	0.227	0.202	0.158	0.091	0.000
* DEFLECTION DUE TO SUPERIMPOSED D.L. ↓	0.000	0.041	0.080	0.111	0.131	0.138	0.131	0.112	0.081	0.041	0.000
FINAL CAMBER ↑	0	5/8"	15/16"	1 1/16"	1 1/8"	1 3/16"	1 1/8"	1 1/16"	15/16"	5/8"	0

0.6" Ø LOW RELAXATION	GIRDERS A3, A4, B3, & B4										
TENTH POINTS	0	.1	.2	.3	.4	.5	.6	.7	.8	.9	0
CAMBER (GIRDER ALONE IN PLACE) ↑	0.000	0.091	0.158	0.202	0.227	0.235	0.227	0.202	0.158	0.091	0.000
* DEFLECTION DUE TO SUPERIMPOSED D.L. ↓	0.000	0.040	0.079	0.109	0.128	0.135	0.129	0.109	0.079	0.041	0.000
FINAL CAMBER ↑	0	5/8"	15/16"	1 1/8"	1 3/16"	1 3/16"	1 3/16"	1 1/8"	15/16"	5/8"	0

* INCLUDES FUTURE WEARING SURFACE
ALL VALUES ARE SHOWN IN FEET (DECIMAL FORM), EXCEPT "FINAL CAMBER", WHICH IS GIVEN IN INCHES (FRACTION FORM).

PROJECT NO. U-2525B
GUILFORD COUNTY
STATION: 21+69.08 -Y11-
228+23.81 -L-
SHEET 2 OF 3

STATE OF NORTH CAROLINA
DEPARTMENT OF TRANSPORTATION
RALEIGH

STANDARD

PRESTRESSED CONCRETE GIRDER CONTINUOUS FOR LIVE LOAD DETAILS

REVISIONS						SHEET NO.
NO.	BY:	DATE:	NO.	BY:	DATE:	S-432
1			3			TOTAL SHEETS
2			4			541

ASSEMBLED BY : J.M. KEPICH		DATE : 3/05/13	
CHECKED BY : R.F. WERTMAN		DATE : 5/24/13	
DRAWN BY : ELR 11/91	REV. 7/10/01RR	LES/RDR	
CHECKED BY : GRP 11/91	REV. 5/1/06	TLA/GM	
	REV. 10/1/11	MAA/GM	

PLANS PREPARED BY:
Gannett Fleming
Excellence Delivered As Promised
1121 Situs Court
Suite 170
Raleigh NC 27606-4279
(919) 859-4880
NC Lic. No. F-0270

THESE PLANS HAVE BEEN PROPERLY EXAMINED BY THE UNDERSIGNED. I HAVE DETERMINED THAT THEY COMPLY WITH EXISTING NORTH CAROLINA CODES, AND HAVE BEEN PROPERLY ADAPTED FOR USE IN THIS AREA.

NORTH CAROLINA PROFESSIONAL SEAL 027180 ENGINEER RICHARD F. WERTMAN

STR. NO. 12

STD. NO. PCG9 (Sht. 3a)

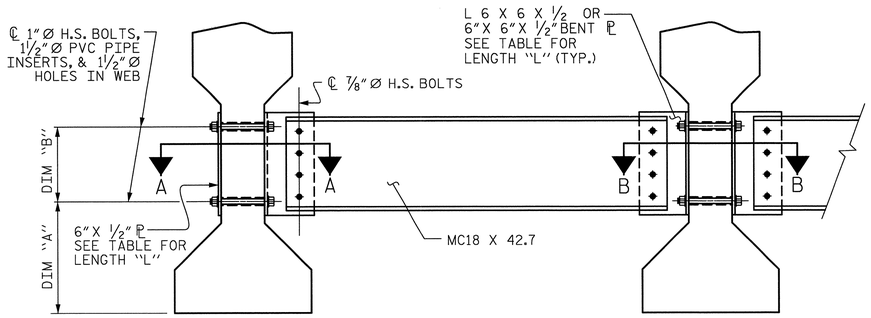

EXTERIOR GIRDER

INTERIOR GIRDER

PART SECTION AT INTERMEDIATE DIAPHRAGM

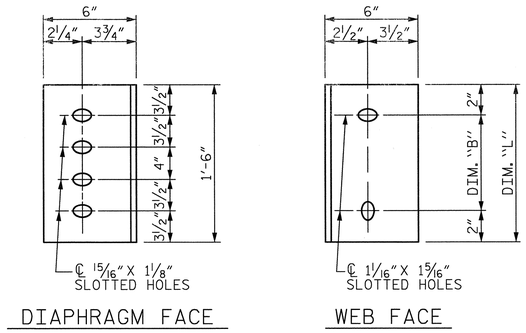

DIAPHRAGM FACE

WEB FACE

CONNECTOR PLATE DETAILS

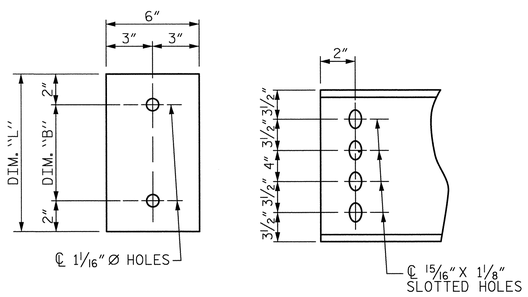

PLATE DETAILS

CHANNEL END

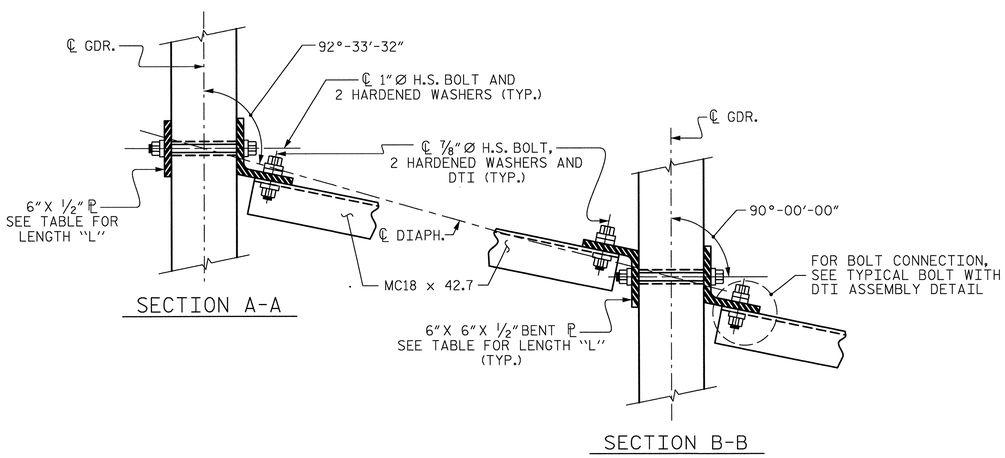

SECTION A-A

SECTION B-B

CONNECTION DETAILS

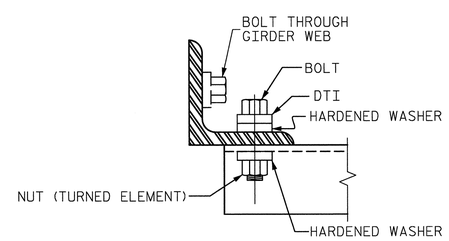

BOLT WITH DTI ASSEMBLY DETAIL

STRUCTURAL STEEL NOTES

ALL INTERMEDIATE DIAPHRAGM STEEL AND CONNECTOR PLATES SHALL BE AASHTO M270 GRADE 50 OR APPROVED EQUAL.

TENSION ON THE ASTM A325 BOLTS THROUGH THE CHANNEL MEMBER SHALL BE CALIBRATED USING DIRECT TENSION INDICATOR WASHERS IN ACCORDANCE WITH THE STANDARD SPECIFICATIONS.

TENSION ON THE ASTM A449 BOLTS THROUGH THE GIRDER WEB SHALL BE SNUG TIGHTENED FOLLOWED BY AN ADDITIONAL ¼ TURN.

THE PLATES, BENT PLATES, CHANNELS, AND ANGLES SHALL BE GALVANIZED OR METALLIZED IN ACCORDANCE WITH THE STANDARD SPECIFICATIONS. FOR THERMAL SPRAYED COATINGS (METALLIZATION), SEE SPECIAL PROVISIONS.

FOR METALLIZATION, APPLY AN 8 MIL THICK 99.99 PERCENT ZINC (W-Zn-1) THERMAL SPRAYED COATING WITH A 0.5 MIL THICK SEAL COAT TO ALL STEEL DIAPHRAGM SURFACES IN ACCORDANCE WITH THE THERMAL SPRAYED COATINGS SPECIAL PROVISION AND SECTION 442 OF THE STANDARD SPECIFICATIONS.

GALVANIZE THE HIGH STRENGTH BOLTS, NUTS, WASHERS AND DIRECT TENSION INDICATORS IN ACCORDANCE WITH THE STANDARD SPECIFICATIONS.

USE AN ASTM F436 HARDENED WASHER WITH STANDARD AND SLOTTED HOLES UNDER EACH BOLT HEAD AND NUT.

FOR BOLTS THROUGH THE GIRDER WEB, PROVIDE SUFFICIENT LENGTH OF THREADS ON ALL BOLTS TO ACCOMMODATE WASHERS AND THE THICKNESS OF CONNECTING MEMBER PLUS AT LEAST ¼" PROJECTION BEYOND THE NUT.

INTERMEDIATE DIAPHRAGM ASSEMBLY SHALL COMPLY WITH SECTION 1072 OF THE STANDARD SPECIFICATIONS.

SUBMIT TWO SETS OF WORKING DRAWINGS FOR THE INTERMEDIATE DIAPHRAGM ASSEMBLY FOR REVIEW, COMMENTS AND ACCEPTANCE. AFTER REVIEW, COMMENTS, AND ACCEPTANCE, SUBMIT SEVEN SETS FOR DISTRIBUTION.

IN THE EXTERIOR BAYS, PLACE TEMPORARY STRUTS BETWEEN PRESTRESSED GIRDERS ADJACENT TO THE STEEL DIAPHRAGMS. STRUTS SHALL REMAIN IN PLACE 3 DAYS AFTER CONCRETE IS PLACED.

THE COST OF THE STEEL DIAPHRAGMS AND ASSEMBLIES SHALL BE INCLUDED IN THE UNIT PRICE BID FOR PRESTRESSED CONCRETE GIRDERS.

TABLE

GIRDER TYPE	CHANNEL SIZE	DIM "A"	DIM "B"	DIM "L"
IV	MC 18 x 42.7	1'-9½"	1'-2"	1'-6"

PROJECT NO. U-2525B

GUILFORD COUNTY

STATION: 21+69.08 -Y11- 228+23.81 -L-

SHEET 3 OF 3

STATE OF NORTH CAROLINA
DEPARTMENT OF TRANSPORTATION
RALEIGH

STANDARD

INTERMEDIATE STEEL DIAPHRAGMS FOR TYPE II, III, & IV PRESTRESSED CONCRETE GIRDERS

REVISIONS						SHEET NO.
NO.	BY:	DATE:	NO.	BY:	DATE:	S-433
1			3			TOTAL SHEETS
2			4			541

ASSEMBLED BY : J.M. KEPICH	DATE : 03/15/13
CHECKED BY : R.F. WERTMAN	DATE : 05/24/13
DRAWN BY : TLA 6/05	ADDED 10/21/05
CHECKED BY : VC 6/05	REV. 5/1/06RRR KMM/GM
	REV. 10/1/11 MAA/GM

PLANS PREPARED BY:
Gannett Fleming
Excellence Delivered As Promised
1121 Situs Court
Suite 170
Raleigh NC 27606-4279
(919) 859-4880
NC Lic. No. F-0270

THESE PLANS HAVE BEEN PROPERLY EXAMINED BY THE UNDERSIGNED. I HAVE DETERMINED THAT THEY COMPLY WITH EXISTING NORTH CAROLINA CODES, AND HAVE BEEN PROPERLY ADAPTED FOR USE IN THIS AREA.

NORTH CAROLINA PROFESSIONAL SEAL 05/7/80 ENGINEER RICHARD F. WERTMAN

STR. NO. 12 STD. NO. PCG10 (SHT 4)

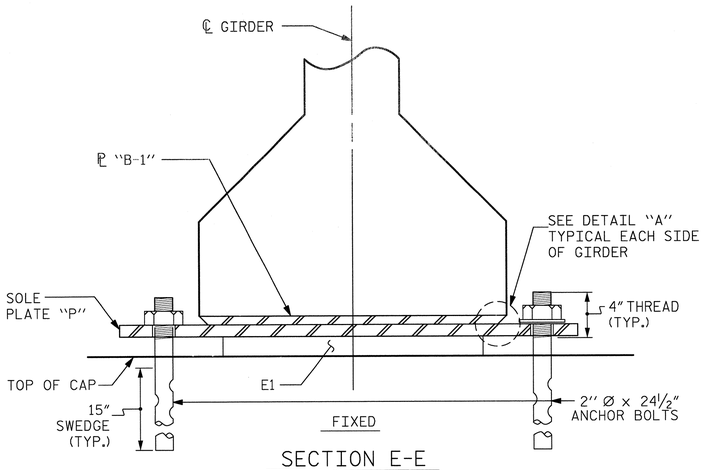

SECTION E-E

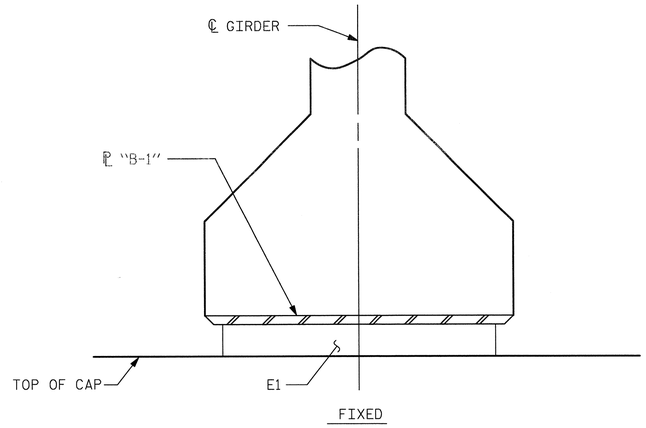

SECTION F-F

MAXIMUM ALLOWABLE SERVICE LOADS	
D.L.+L.L. (NO IMPACT)	
TYPE V	365 k

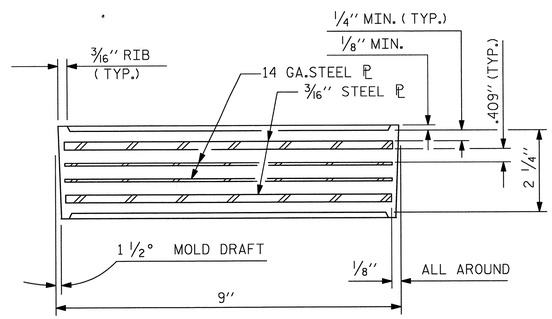

TYPICAL SECTION OF ELASTOMERIC BEARINGS

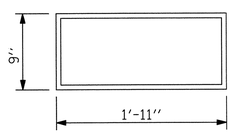

E1 (24 REQ'D)

PLAN VIEW OF ELASTOMERIC BEARING

TYPE V

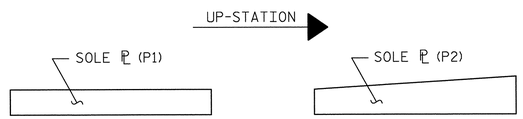

SOLE ℗ PLACEMENT DETAIL

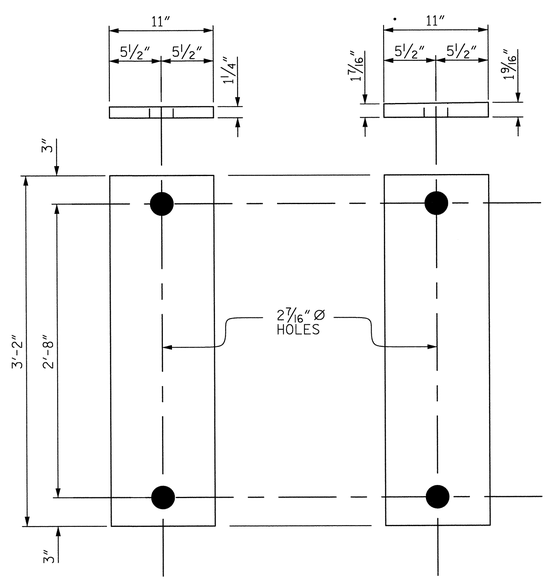

SOLE PLATE DETAILS ("P")

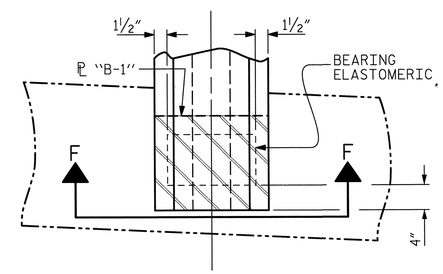

TYPICAL PLAN

(SHOWING INTEGRAL END BENT)

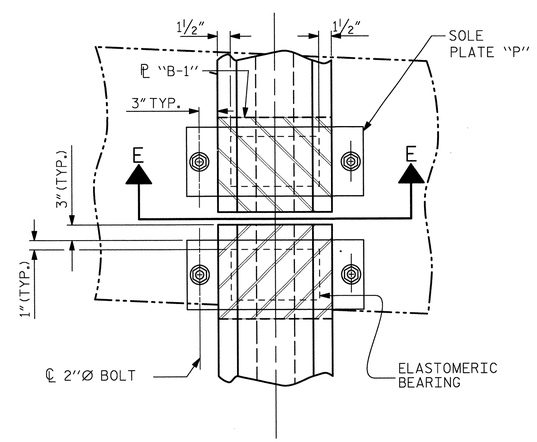

TYPICAL HALF-PLAN

(SHOWING CONTINUOUS BENT)

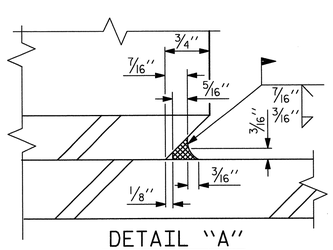

DETAIL "A"

NOTES

AT ALL FIXED POINTS OF SUPPORT, NUTS FOR ANCHOR BOLTS ARE TO BE TIGHTENED FINGER TIGHT AND THEN BACKED OFF ½ TURN. THE THREAD OF THE NUT AND BOLT SHALL THEN BE BURRED WITH A SHARP POINTED TOOL.

THE 2" Ø PIPE SLEEVE SHALL BE CUT FROM SCHEDULE 40 PVC PLASTIC PIPE. THE PVC PLASTIC PIPE SHALL MEET THE REQUIREMENTS OF ASTM D1785.

STEEL SOLE PLATES, ANCHOR BOLTS, NUTS, AND WASHERS SHALL BE GALVANIZED IN ACCORDANCE WITH THE STANDARD SPECIFICATIONS.

PRIOR TO WELDING, GRIND THE GALVANIZED SURFACE OF THE PORTION OF THE EMBEDDED PLATE AND SOLE PLATE THAT ARE TO BE WELDED. AFTER WELDING, DAMAGED GALVANIZED SURFACES SHALL BE REPAIRED IN ACCORDANCE WITH THE STANDARD SPECIFICATIONS.

WHEN WELDING THE SOLE PLATE TO THE EMBEDDED PLATE IN THE GIRDER, USE TEMPERATURE INDICATING WAX PENS, OR OTHER SUITABLE MEANS, TO ENSURE THAT THE TEMPERATURE OF THE SOLE PLATE DOES NOT EXCEED 300°F. TEMPERATURES ABOVE THIS MAY DAMAGE THE ELASTOMER.

SOLE PLATE "P", BOLTS, NUTS, WASHERS, AND PIPE SLEEVE SHALL BE INCLUDED IN THE PAY ITEM FOR PRESTRESSED CONCRETE GIRDERS.

ANCHOR BOLTS SHALL MEET THE REQUIREMENTS OF ASTM A449. NUTS SHALL MEET THE REQUIREMENTS OF AASHTO M291-DH OR AASHTO M292-2H. WASHERS SHALL MEET THE REQUIREMENTS OF AASHTO M293. NO SHOP DRAWINGS ARE REQUIRED FOR ANCHOR BOLTS, NUTS AND WASHERS. SHOP INSPECTION IS REQUIRED.

ALL SURFACES OF BEARING PLATES SHALL BE SMOOTH AND STRAIGHT.

THE ELASTOMER IN THE STEEL REINFORCED BEARINGS SHALL HAVE A SHEAR MODULUS OF 0.160 KSI, IN ACCORDANCE WITH AASHTO M251.

FOR STEEL REINFORCED ELASTOMERIC BEARINGS, SEE SPECIAL PROVISIONS.

PROJECT NO. U-2525B
GUILFORD COUNTY
STATION: 21+69.08 -Y11-
228+23.81 -L-

STATE OF NORTH CAROLINA
DEPARTMENT OF TRANSPORTATION
RALEIGH

STANDARD
ELASTOMERIC BEARING DETAILS
PRESTRESSED CONCRETE GIRDER SUPERSTRUCTURE

REVISIONS						SHEET NO.
NO.	BY:	DATE:	NO.	BY:	DATE:	S-434
1			3			TOTAL SHEETS
2			4			541

ASSEMBLED BY : J.M. KEPICH	DATE : 3/05/13		
CHECKED BY : R.F. WERTMAN	DATE : 05/29/13		
DRAWN BY : EEM 2/97	REV. 5/1/06	TLA/GM	
CHECKED BY : VAP 2/97	REV. 10/1/11	MAA/GM	
	REV. 10/24/12	AAC/MAA	

PLANS PREPARED BY:
Gannett Fleming
Excellence Delivered As Promised
1121 Situs Court
Suite 170
Raleigh NC 27606-4279
(919) 859-4880
NC Lic. No. F-0270

THESE PLANS HAVE BEEN PROPERLY EXAMINED BY THE UNDERSIGNED. I HAVE DETERMINED THAT THEY COMPLY WITH EXISTING NORTH CAROLINA CODES, AND HAVE BEEN PROPERLY ADAPTED FOR USE IN THIS AREA.

NORTH CAROLINA PROFESSIONAL SEAL 037180 ENGINEER RICHARD F. WERTMAN

STR. NO. 12

STD. NO. EB3 (SHT 3)

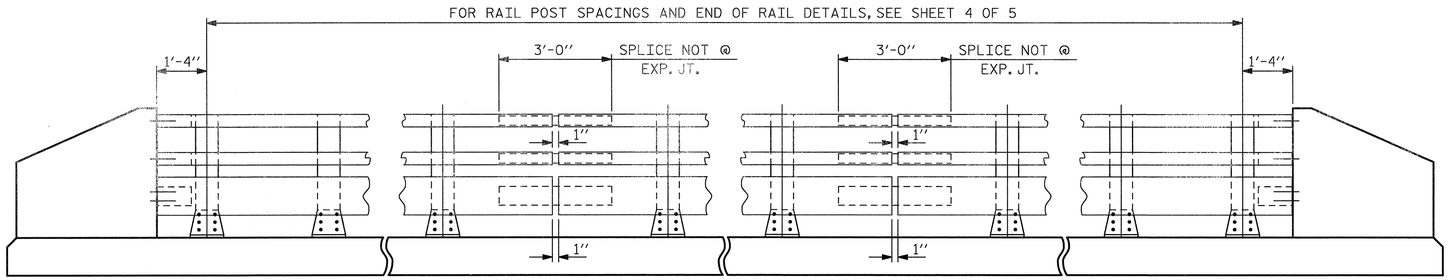

NOTE:
FOR ATTACHMENT OF METAL RAIL TO END POST, SEE "3 BAR METAL RAIL" SHEET 3 OF 3.

ELEVATION

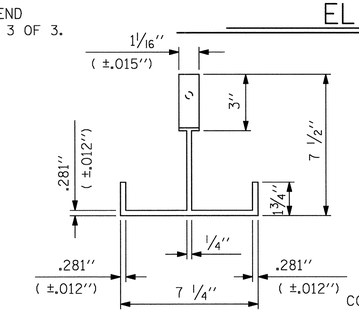

PLAN

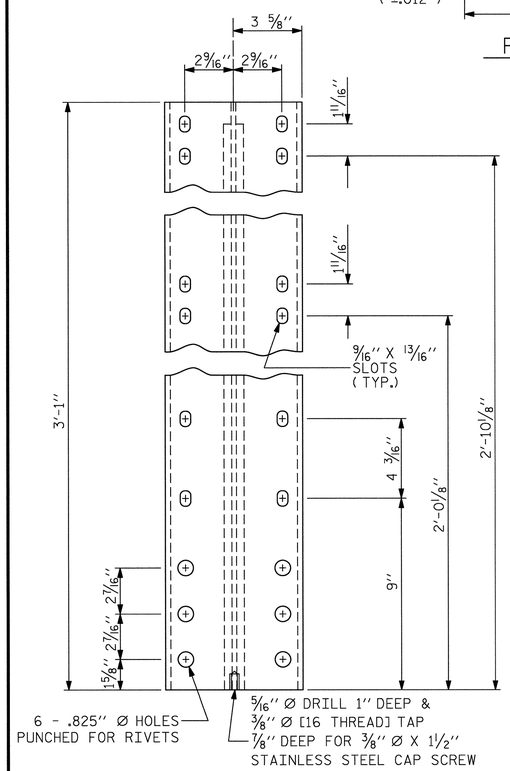

FRONT ELEVATION

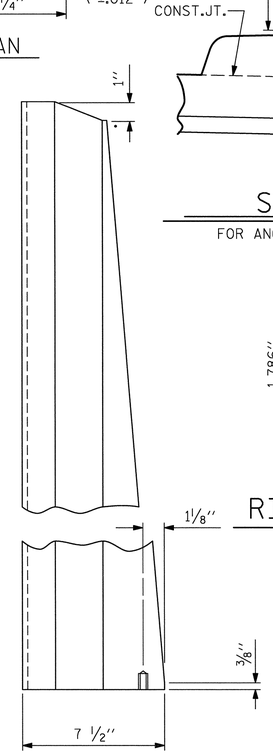

SIDE ELEVATION

DETAILS OF POST

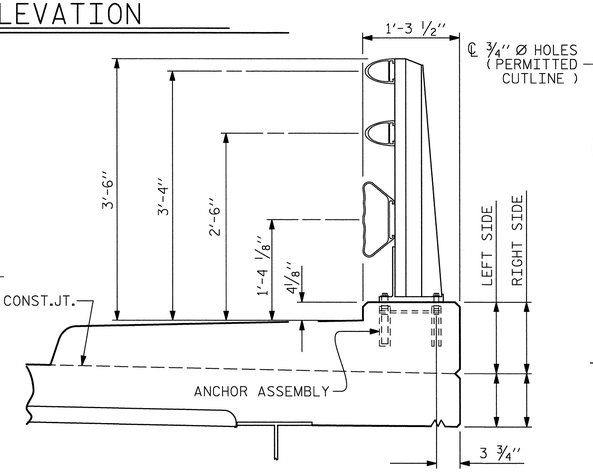

SECTION THRU RAIL

FOR ANCHOR ASSEMBLY, SEE "3 BAR METAL RAIL" STD.No.BMR6

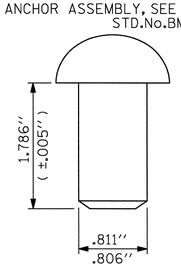

RIVET DETAIL

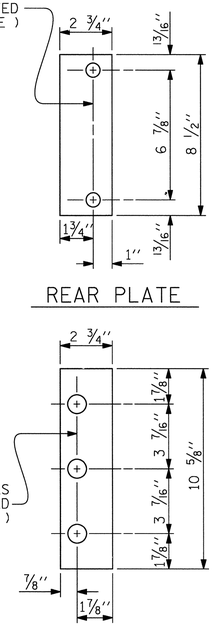

REAR PLATE

FRONT PLATE

SHIM DETAILS

NOTE :
SHIMS MAY BE CUT ALONG PERMITTED CUTLINE OR SLOTTED TO EDGE OF PLATE TO FACILITATE PLACEMENT.

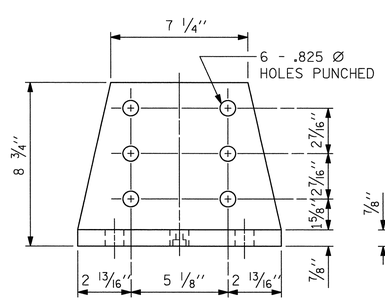

FRONT ELEVATION

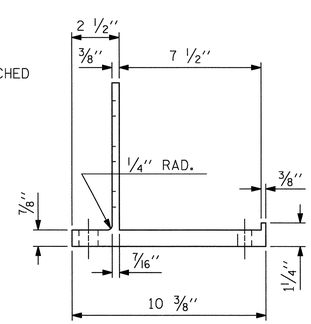

SIDE ELEVATION

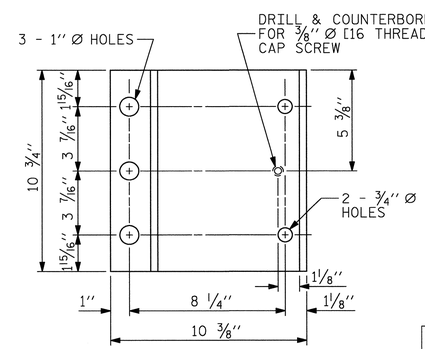

PLAN

POST BASE DETAILS

NOTES

AT THE CONTRACTOR'S OPTION, METAL RAIL MAY BE EITHER ALUMINUM OR GALVANIZED STEEL IN ACCORDANCE WITH THE REQUIREMENTS OF THE GENERAL NOTES AND THE FOLLOWING SPECIFICATIONS FOR THE ALTERNATE MATERIALS; HOWEVER, THE CONTRACTOR WILL BE REQUIRED TO USE THE SAME RAIL MATERIAL ON ALL STRUCTURES ON THE PROJECT FOR WHICH METAL RAIL IS DESIGNATED.

ALUMINUM RAILS

MATERIAL FOR POSTS, BASES AND RAILS, EXPANSION BARS AND CLAMP BARS SHALL BE ASTM B221 ALLOY 6061-T6.

MATERIAL FOR RIVETS SHALL BE ASTM B316 ALLOY 6061-T6. RIVETS SHALL BE STANDARD BUTTON HEAD AND CONE POINT COLD DRIVEN AS PER DRAWING.

THE BASE OF RAIL POSTS, OR ANY OTHER ALUMINUM SURFACE IN CONTACT WITH CONCRETE SHALL BE THOROUGHLY COATED WITH AN ALUMINUM IMPREGNATED CAULKING COMPOUND OF APPROVED QUALITY.

MATERIAL FOR SHIMS TO BE ASTM B209 ALLOY 6061-T6.

GALVANIZED STEEL RAILS

MATERIAL AND GALVANIZING ARE TO CONFORM TO THE FOLLOWING SPECIFICATIONS:

POST, POST BASES, RAILS, EXPANSION BARS AND CLAMP BARS : AASHTO M270 GRADE 36 STRUCTURAL STEEL - GALVANIZED TO AASHTO M111.

RIVETS: RIVETS SHALL MEET THE REQUIREMENTS OF ASTM A502 FOR GRADE 1 RIVETS.

THE CUT ENDS OF GALVANIZED STEEL RAILING, AFTER GRINDING SMOOTH SHALL BE GIVEN TWO COATS OF ZINC RICH PAINT MEETING THE REQUIREMENTS OF FEDERAL SPECIFICATION MIL-P-26915 USAF TYPE 1, OR OF FEDERAL SPECIFICATIONS TT-P-641.

SHIMS: SHIMS SHALL MEET THE REQUIREMENTS OF ASTM A570 FOR GRADE 33 OR A611 FOR GRADE C AND SHALL BE GALVANIZED IN ACCORDANCE WITH AASHTO M111.

RAIL CAPS: RAIL CAPS SHALL MEET THE REQUIREMENTS OF ASTM A570 FOR GRADE 33 OR A611 FOR GRADE C AND SHALL BE GALVANIZED IN ACCORDANCE WITH AASHTO M111.

GENERAL NOTES

RAILING SHALL BE CONTINUOUS FROM END POST TO END POST OF BRIDGE. EACH JOINT IN RAIL LENGTH SHALL BE SPLICED AS DETAILED. PANEL LENGTHS OF RAIL SHALL BE ATTACHED TO A MINIMUM OF THREE POSTS. PLACE ONE JOINT SPLICE JUST BEYOND THE 3RD RAIL POST FROM EACH END, TYPICALLY 14' FROM THE END. PLACE OTHER JOINTS AS NEEDED.

FOR END OF RAIL TO CLEAR FACE OF CONCRETE END POST DIMENSION, SEE STANDARD NO. BMR7.

CAP SCREWS SHALL BE ASTM F593 ALLOY 305 STAINLESS STEEL. WASHERS FOR RAIL ATTACHMENT SHALL MEET THE REQUIREMENTS OF ASTM F844 EXCEPT THEY SHALL BE MADE FROM ALLOY 304 STAINLESS STEEL.

CERTIFIED MILL REPORTS ARE REQUIRED FOR RAILS AND POSTS. SHOP INSPECTION IS NOT REQUIRED.

METAL RAIL POSTS SHALL BE SET NORMAL TO CURB GRADE.

METHOD OF MEASUREMENT FOR METAL RAILS: FOR LENGTH OF METAL RAILS TO BE PAID FOR, SEE THE STANDARD SPECIFICATIONS.

CURVED RAIL USAGE: WHERE RAILS ARE TO BE USED ON BRIDGES ON HORIZONTAL AND/OR VERTICAL CURVATURE THE CONTRACTOR MAY, AT HIS OPTION, HAVE THE REQUIRED CURVATURE IN THE RAIL FORMED IN THE SHOP OR IN THE FIELD. IN EITHER EVENT, THE RAIL SHALL CONFORM WITHOUT BUCKLING OR KINKING TO THE REQUIRED CURVATURE IN A UNIFORM MANNER ACCEPTABLE TO THE ENGINEER.

TO INSURE FUTURE IDENTIFICATION OF THE FABRICATOR, A PERMANENT IDENTIFYING MARK SHALL BE PLACED ON EACH POST. THE METHOD OF MARKING AND LOCATION SHALL BE SUCH THAT IT DOES NOT DETRACT FROM THE APPEARANCE OF THE POST, BUT REMAIN VISIBLE AFTER RAIL PLACEMENT.

SHIMS SHALL BE USED AS NECESSARY FOR POST ALIGNMENT.

ALLOY 6351-T5 MAY BE SUBSTITUTED FOR ALLOY 6061-T6 WHERE APPLICABLE.

MINOR VARIATIONS IN DETAILS OF METAL RAIL WILL BE CONSIDERED. DETAILS OF SUCH VARIATIONS, IF DESIRED, SHALL BE SUBMITTED FOR APPROVAL.

PAY LENGTH = 363.67 LIN.FT.

PROJECT NO. U-2525B
GUILFORD COUNTY
STATION: 21+69.08 -Y11-
228+23.81 -L-
SHEET 1 OF 5

STATE OF NORTH CAROLINA
DEPARTMENT OF TRANSPORTATION
RALEIGH
SUPERSTRUCTURE

3 BAR METAL RAIL

DRAWN BY : J.M. KEPICH DATE : 05/13/13
CHECKED BY : R.F. WERTMAN DATE : 05/24/13
DESIGN ENGINEER OF RECORD : R.F. WERTMAN DATE : 05/24/13

PLANS PREPARED BY:
Gannett Fleming
Excellence Delivered As Promised
1121 Situs Court
Suite 170
Raleigh NC 27606-4279
(919) 859-4880
NC Lic. No. F-0270

NORTH CAROLINA PROFESSIONAL SEAL 047180 ENGINEER RICHARD F. WERTMAN

REVISIONS						SHEET NO.
NO.	BY:	DATE:	NO.	BY:	DATE:	S-435
1			3			TOTAL SHEETS
2			4			541

STR. NO. 12

NOTES

STRUCTURAL CONCRETE ANCHOR ASSEMBLY

THE STRUCTURAL CONCRETE ANCHOR ASSEMBLY SHALL CONSIST OF THE FOLLOWING COMPONENTS:

A. FERRULES SHALL BE MADE FROM STEEL MEETING THE REQUIREMENTS OF AASHTO M169, GRADE 12L14 AND SHALL HAVE A MINIMUM LENGTH OF THREADS OF 2" FOR ¾" FERRULES AND 1¾" FOR ⅝" FERRULES.

B. 3 - ¾" Ø X 2½" BOLTS WITH WASHERS. BOLTS SHALL CONFORM TO THE REQUIREMENTS OF ASTM A307. BOLTS AND WASHERS SHALL BE GALVANIZED. AT THE CONTRACTOR'S OPTION, STAINLESS STEEL BOLTS AND WASHERS MAY BE USED AS AN ALTERNATE FOR THE ¾" Ø X 2½" GALVANIZED BOLTS AND WASHERS. THEY SHALL CONFORM TO OR EXCEED THE MECHANICAL REQUIREMENTS OF ASTM A307. THE USE OF THIS ALTERNATE SHALL BE APPROVED BY THE ENGINEER.

C. 2 - ⅝" Ø X 2¼" BOLTS WITH WASHERS. BOLTS SHALL CONFORM TO THE REQUIREMENTS OF ASTM A307. BOLTS AND WASHERS SHALL BE GALVANIZED. AT THE CONTRACTOR'S OPTION, STAINLESS STEEL BOLTS AND WASHERS MAY BE USED AS AN ALTERNATE FOR THE ⅝" Ø X 2¼" GALVANIZED BOLTS AND WASHERS. THEY SHALL CONFORM TO OR EXCEED THE MECHANICAL REQUIREMENTS OF ASTM A307. THE USE OF THIS ALTERNATE SHALL BE APPROVED BY THE ENGINEER.

D. WIRE STRUT SHOWN IN THE CONCRETE ANCHOR ASSEMBLY DETAIL IS THE MINIMUM ALLOWABLE SIZE AND SHALL HAVE A MINIMUM TENSILE STRENGTH OF 100,000 PSI. AS AN OPTION, A 7/16" Ø WIRE STRUT WITH A MINIMUM TENSILE STRENGTH OF 90,000 PSI IS ACCEPTABLE.

E. THE METAL RAIL ANCHOR ASSEMBLIES TO BE HOT DIPPED GALVANIZED TO CONFORM TO REQUIREMENTS OF AASHTO M111.

F. THE COST OF THE METAL RAIL ANCHOR ASSEMBLY WITH BOLTS AND WASHERS COMPLETE IN PLACE SHALL BE INCLUDED IN THE PRICE BID FOR LINEAR FEET OF METAL RAIL.

G. BOLTS TO BE TIGHTENED ONE-HALF TURN WITH A WRENCH FROM A FINGER-TIGHT POSITION.

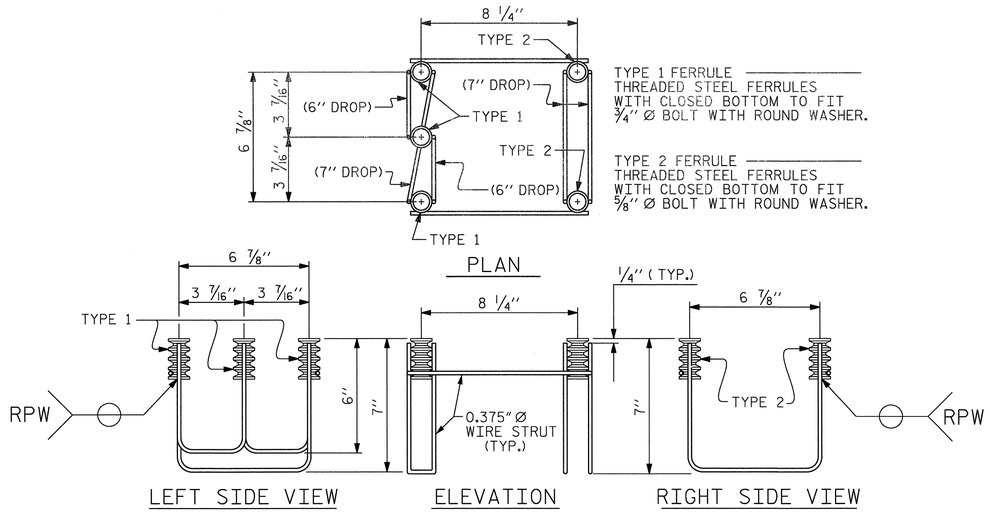

5-BOLT METAL RAIL ANCHOR ASSEMBLY

(64 ASSEMBLIES REQUIRED)

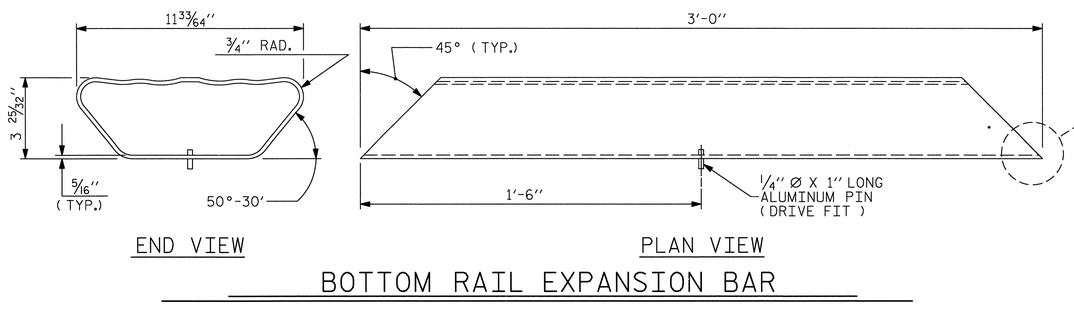

BOTTOM RAIL EXPANSION BAR

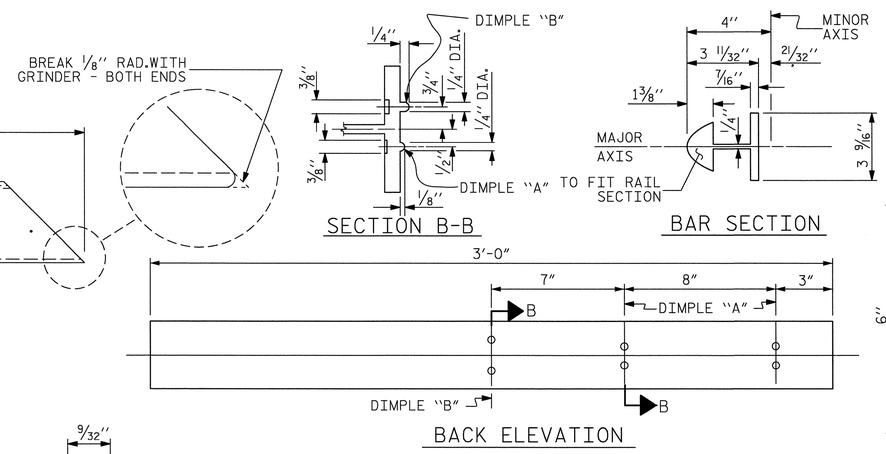

TOP & MIDDLE RAIL EXPANSION BAR

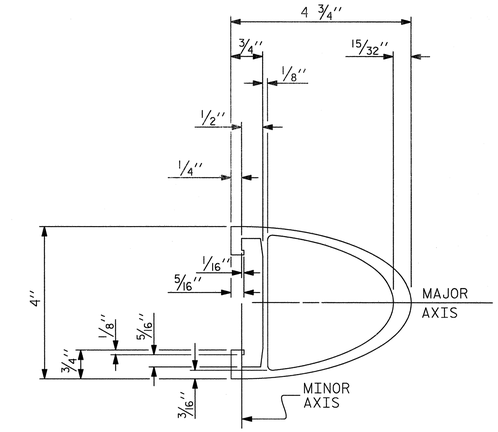

TOP & MIDDLE RAIL SECTION

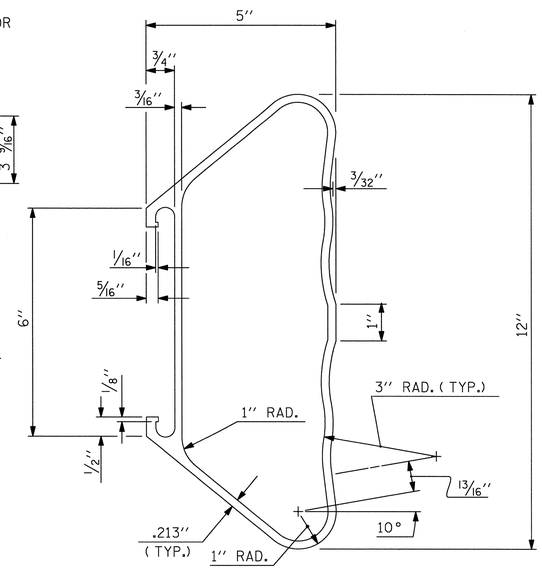

BOTTOM RAIL SECTION

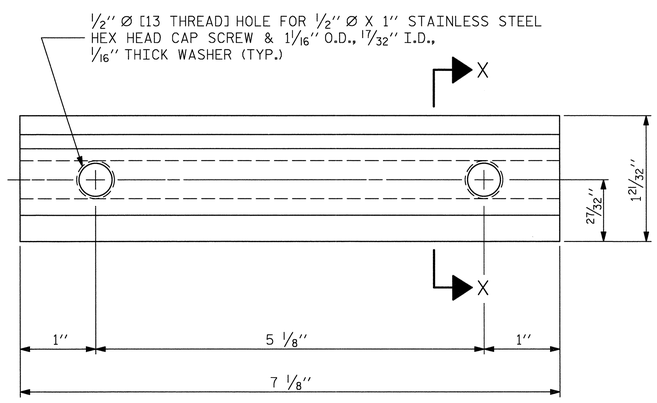

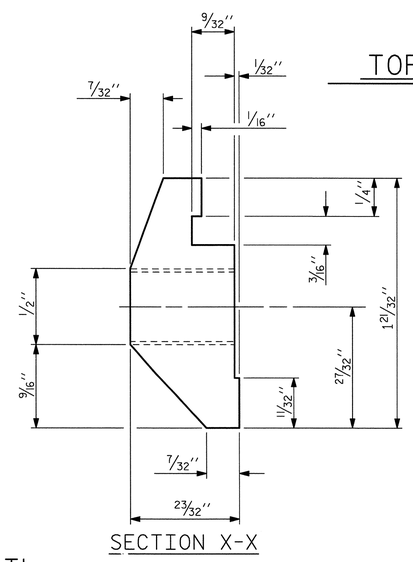

CLAMP BAR DETAIL

(6 REQUIRED PER POST)

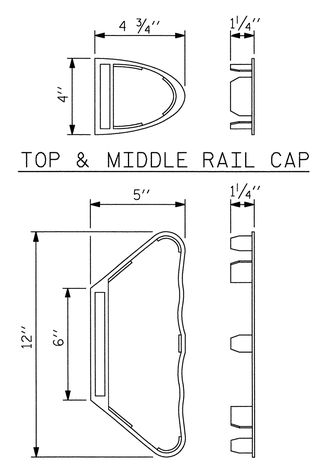

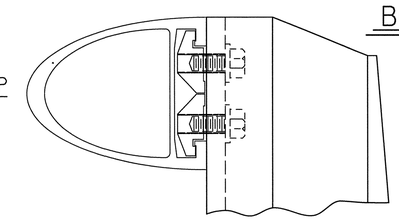

CLAMP ASSEMBLY

TOP RAIL SHOWN
(MIDDLE & BOTTOM RAIL ARE SIMILAR)

PROJECT NO. U-2525B

GUILFORD COUNTY

STATION: 21+69.08 -Y11-
228+23.81 -L-

SHEET 2 OF 5

STATE OF NORTH CAROLINA
DEPARTMENT OF TRANSPORTATION
RALEIGH

SUPERSTRUCTURE

3 BAR METAL RAIL

REVISIONS						SHEET NO.
NO.	BY:	DATE:	NO.	BY:	DATE:	S-436
1			3			TOTAL SHEETS
2			4			541

PLANS PREPARED BY:
Gannett Fleming
Excellence Delivered As Promised
1121 Situs Court
Suite 170
Raleigh NC 27606-4279
(919) 859-4880
NC Lic. No. F-0270

NORTH CAROLINA PROFESSIONAL SEAL 037160 ENGINEER RICHARD F. WERTMAN

DRAWN BY :	J.M. KEPICH	DATE :	05/13/13
CHECKED BY :	R.F. WERTMAN	DATE :	05/24/13
DESIGN ENGINEER OF RECORD :	R.F. WERTMAN	DATE :	05/24/13

STR. NO. 12

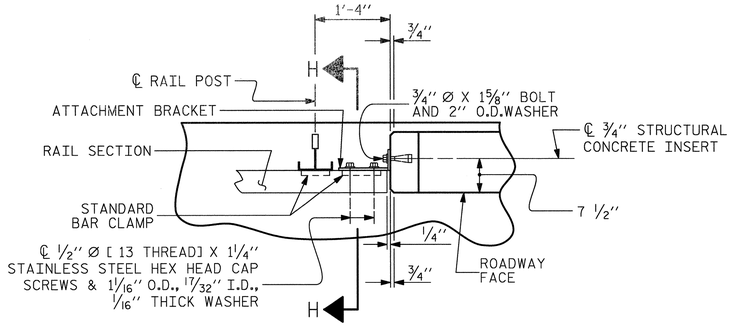

PLAN OF RAIL AND END POST

(STIFFENER ON 1/2" ℙ NOT SHOWN FOR CLARITY)

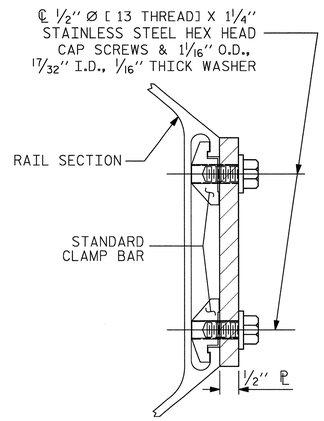

SECTION H-H

(FOR BOTTOM RAIL)

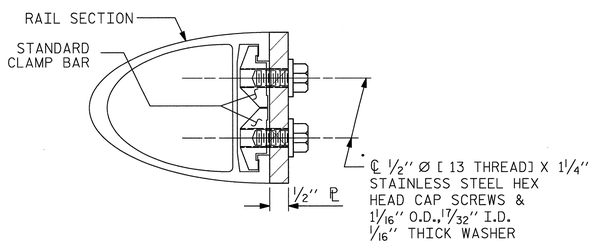

SECTION H-H

(FOR TOP & MIDDLE RAIL)

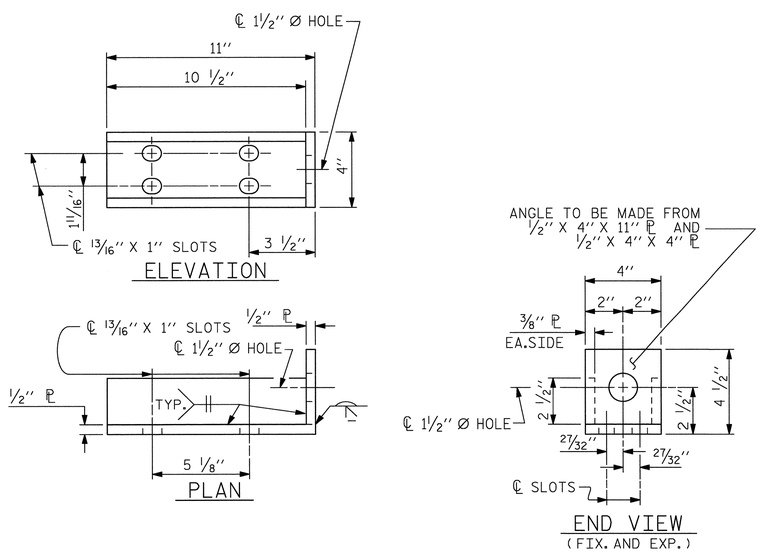

DETAILS FOR ATTACHMENT BRACKET

(TOP & MIDDLE RAIL ONLY)

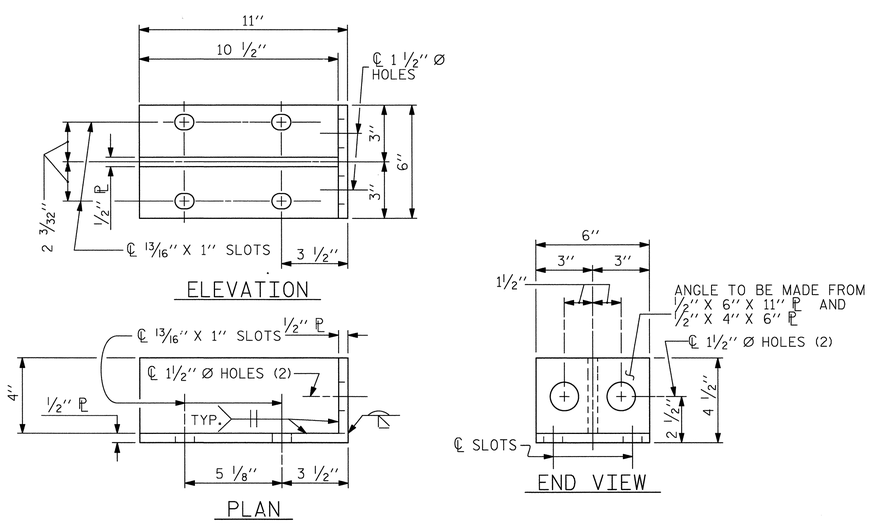

DETAILS FOR ATTACHMENT BRACKET

(BOTTOM RAIL ONLY)

NOTES

METAL RAIL TO END POST CONNECTION

THE METAL RAIL TO END POST CONNECTION SHALL CONSIST OF THE FOLLOWING COMPONENTS:

A. 1/2" PLATES SHALL CONFORM TO AASHTO M270 GRADE 36 AND SHALL BE GALVANIZED AFTER FABRICATION.

B. 3/4" STRUCTURAL CONCRETE INSERT SHALL HAVE A WORKING LOAD SHEAR CAPACITY OF 4800 LBS. THE FERRULES SHALL ENGAGE A 3/4" Ø X 1 5/8" BOLT WITH 2" O.D. WASHER IN PLACE. THE 3/4" Ø X 1 5/8" BOLT SHALL HAVE N. C. THREADS.

C. CAP SCREWS FOR RAIL ATTACHMENT TO ANGLE SHALL CONFORM TO THE REQUIREMENTS OF ASTM F593 ALLOY 305 STAINLESS STEEL. CAP SCREWS TO BE CENTERED IN SLOTS AT 60°F. WASHERS FOR RAIL ATTACHMENT SHALL MEET THE REQUIREMENTS OF ASTM F844 EXCEPT THEY SHALL BE MADE FROM ALLOY 304 STAINLESS STEEL.

D. STANDARD CLAMP BARS (STD. No. BMR6).

THE COST OF THE STANDARD CLAMP BARS AND CAP SCREWS USED IN THE METAL RAIL TO END POST CONNECTION SHALL BE INCLUDED IN THE UNIT CONTRACT PRICE BID FOR LINEAR FEET OF 3 BAR METAL RAIL.

THE 3/4" STRUCTURAL CONCRETE INSERT WITH BOLT SHALL BE ASSEMBLED IN THE SHOP.

THE COST OF THE 3/4" STRUCTURAL CONCRETE INSERT ASSEMBLY, AND THE 1/2" PLATES COMPLETE IN PLACE SHALL BE INCLUDED IN THE VARIOUS PAY ITEMS.

THE CONTRACTOR, AT HIS OPTION, MAY USE AN ADHESIVE BONDING SYSTEM IN LIEU OF THE STRUCTURAL CONCRETE INSERT EMBEDDED IN THE END POST. IF THE ADHESIVE BONDING SYSTEM IS USED, THE 3/4" Ø X 1 5/8" BOLT WITH WASHER SHALL BE REPLACED WITH A 3/4" Ø X 6 1/2" BOLT AND 2" O.D.WASHER. ALL SPECIFICATIONS THAT APPLY TO THE 3/4" Ø X 1 5/8" BOLT SHALL APPLY TO THE 3/4" Ø X 6 1/2" BOLT. FIELD TESTING OF THE ADHESIVE BONDING SYSTEM IS NOT REQUIRED.

NOTES

STRUCTURAL CONCRETE INSERT

THE STRUCTURAL CONCRETE INSERT ASSEMBLY SHALL CONSIST OF THE FOLLOWING COMPONENTS:

A. FERRULES SHALL BE MADE FROM STEEL MEETING THE REQUIREMENTS OF AASHTO M169, GRADE 12L14 AND SHALL HAVE A MINIMUM LENGTH OF THREADS OF 1 1/2".

B. 1 - 3/4" Ø X 1 5/8" BOLT WITH WASHER. BOLT SHALL CONFORM TO THE REQUIREMENTS OF ASTM A307. BOLT AND WASHER SHALL BE GALVANIZED. AT THE CONTRACTORS OPTION, STAINLESS STEEL BOLT AND WASHER MAY BE USED AS AN ALTERNATE FOR THE 3/4" Ø X 1 5/8" GALVANIZED BOLT AND WASHER. THEY SHALL CONFORM TO OR EXCEED THE MECHANICAL REQUIREMENTS OF ASTM A307. THE USE OF THIS ALTERNATE SHALL BE APPROVED BY THE ENGINEER.

C. WIRE STRUT SHOWN IN THE CONCRETE INSERT ASSEMBLY DETAIL IS THE MINIMUM ALLOWABLE SIZE AND SHALL HAVE A MINIMUM TENSILE STRENGTH OF 100,000 PSI. AS AN OPTION, A 7/16" Ø WIRE STRUT WITH A MINIMUM TENSILE STRENGTH OF 90,000 PSI IS ACCEPTABLE.

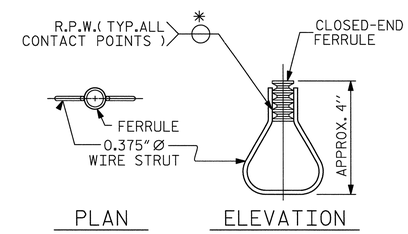

STRUCTURAL CONCRETE INSERT

* EACH WELDED ATTACHMENT OF WIRE TO FERRULE SHALL DEVELOP THE TENSILE STRENGTH OF THE WIRE.

PROJECT NO. U-2525B

GUILFORD COUNTY

STATION: 21+69.08 -Y11-
228+23.81 -L-

SHEET 3 OF 5

STATE OF NORTH CAROLINA
DEPARTMENT OF TRANSPORTATION
RALEIGH

SUPERSTRUCTURE

3 BAR METAL RAIL

REVISIONS						SHEET NO.
NO.	BY:	DATE:	NO.	BY:	DATE:	5-437
1			3			TOTAL SHEETS
2			4			541

DRAWN BY : J.M. KEPICH DATE : 05/13/13
CHECKED BY : R.F. WERTMAN DATE : 05/24/13
DESIGN ENGINEER OF RECORD : R.F. WERTMAN DATE : 05/24/13

PLANS PREPARED BY:
Gannett Fleming
Excellence Delivered As Promised
1121 Situs Court
Suite 170
Raleigh NC 27606-4279
(919) 859-4880
NC Lic. No. F-0270

NORTH CAROLINA PROFESSIONAL SEAL 037168 ENGINEER RICHARD F. WERTMAN

STR NO. 12

NOTES:

FOR DETAILS OF GUARDRAIL ANCHOR ASSEMBLIES, SEE "GUIDERAIL ANCHORAGE DETAILS" SHEET.

FOR REINFORCEMENT AND CONCRETE IN END POSTS, SEE SUPERSTRUCTURE "BILL OF MATERIALS" SHEET.

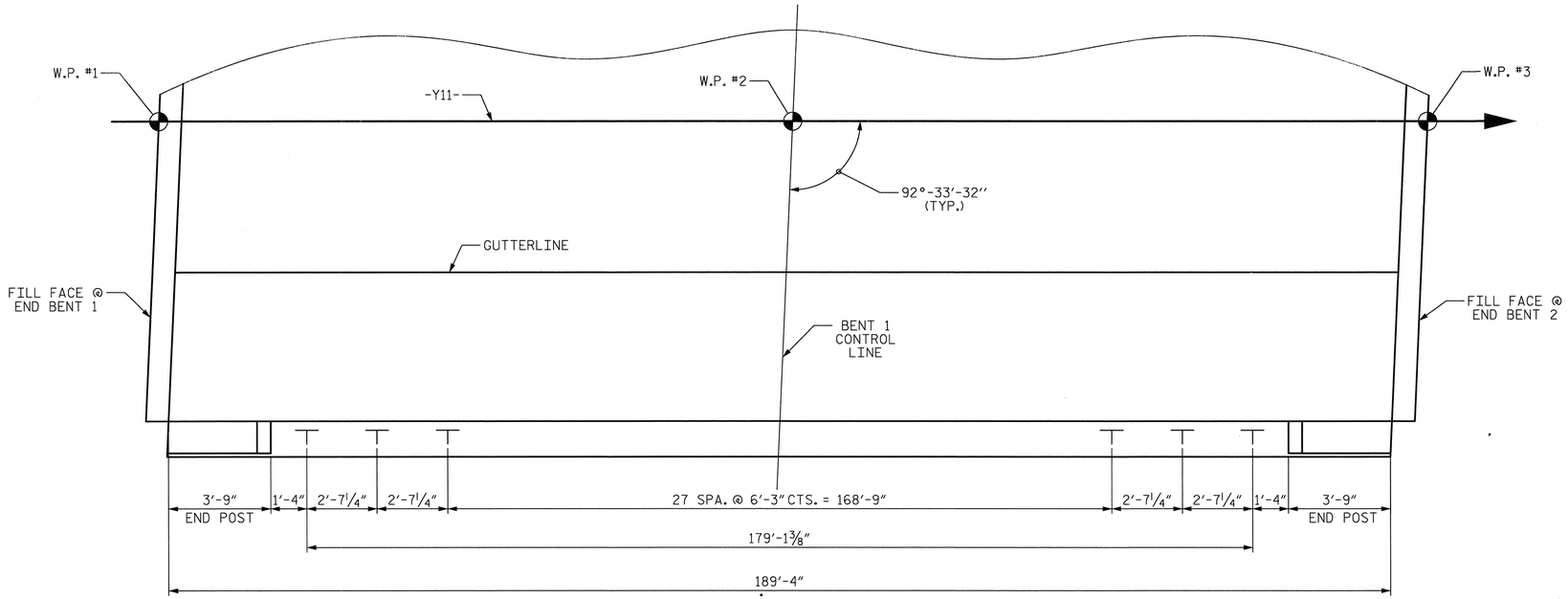

PLAN OF RAIL POST SPACINGS

RIGHT SIDE SHOWN, LEFT SIDE SIMILAR

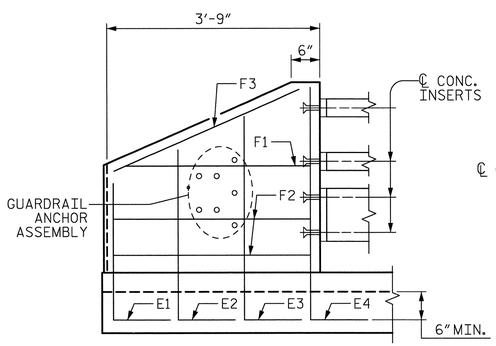

ELEVATION

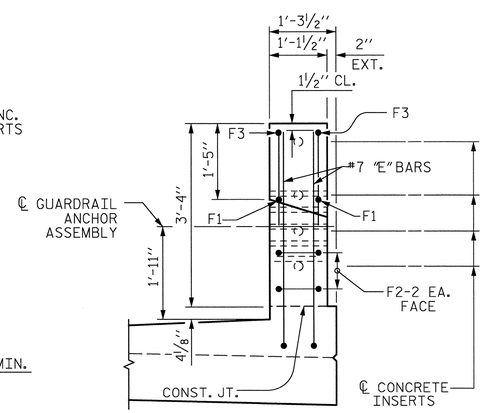

END VIEW

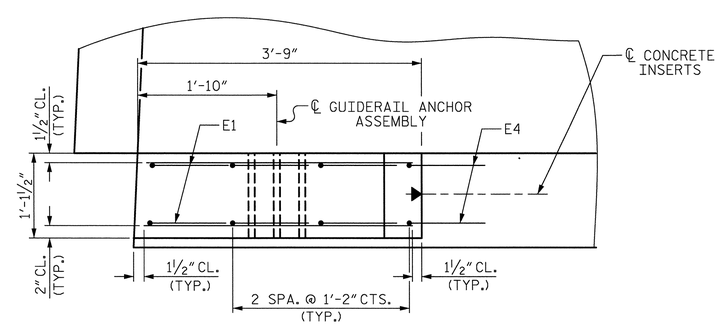

PLAN

END POST FOR THREE BAR METAL RAIL

END BENT 1 SHOWN, END BENT 2 SIMILAR

PROJECT NO. U-2525B

GUILFORD COUNTY

STATION: 21+69.08 -Y11-
228+23.81 -L-

SHEET 4 OF 5

STATE OF NORTH CAROLINA
DEPARTMENT OF TRANSPORTATION
RALEIGH

SUPERSTRUCTURE

END POST DETAILS
(3 BAR METAL RAIL)

REVISIONS						SHEET NO.
NO.	BY:	DATE:	NO.	BY:	DATE:	S-438
1			3			TOTAL SHEETS
2			4			541

DRAWN BY : J.M. KEPICH DATE : 05/13/13
CHECKED BY : R.F. WERTMAN DATE : 05/24/13
DESIGN ENGINEER OF RECORD : R.F. WERTMAN DATE : 05/24/13

PLANS PREPARED BY:
Gannett Fleming
Excellence Delivered As Promised
1121 Situs Court
Suite 170
Raleigh NC 27606-4279
(919) 859-4880
NC Lic. No. F-0270

NORTH CAROLINA PROFESSIONAL SEAL 037180 ENGINEER RICHARD F. WERTMAN

STR. NO. 12

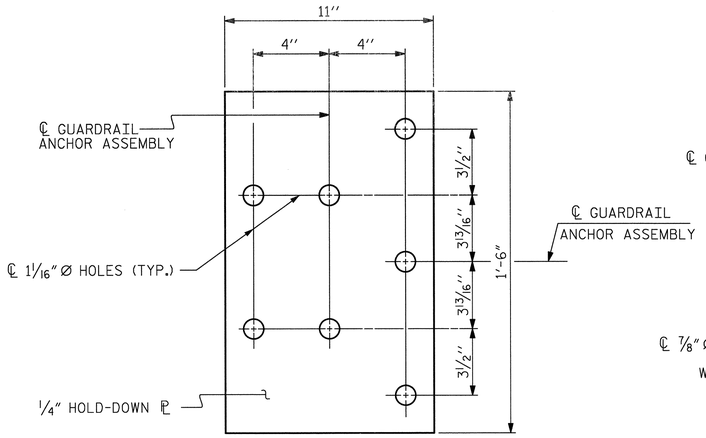

PLAN

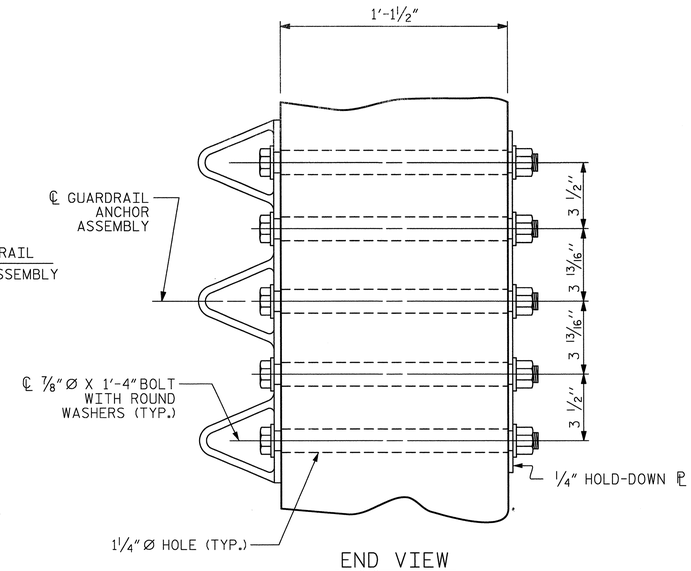

END VIEW

GUARDRAIL ANCHOR ASSEMBLY DETAILS

NOTES

THE GUARDRAIL ANCHOR ASSEMBLY SHALL CONSIST OF A 1/4'' HOLD DOWN PLATE AND 7 - 7/8'' Ø BOLTS WITH NUTS AND WASHERS.

THE HOLD-DOWN PLATE SHALL CONFORM TO AASHTO M270 GRADE 36. AFTER FABRICATION, THE HOLD-DOWN PLATE SHALL BE HOT-DIP GALVANIZED IN ACCORDANCE WITH AASHTO M111.

BOLTS SHALL CONFORM TO THE REQUIREMENTS OF ASTM A307 AND NUTS SHALL CONFORM TO THE REQUIREMENTS OF AASHTO M291. BOLTS, NUTS AND WASHERS SHALL BE GALVANIZED. AT THE CONTRACTOR'S OPTION, STAINLESS STEEL BOLTS, NUTS AND WASHERS MAY BE USED AS AN ALTERNATE FOR THE 7/8'' Ø GALVANIZED BOLTS, NUTS AND WASHERS. THEY SHALL CONFORM TO OR EXCEED THE MECHANICAL REQUIREMENTS OF ASTM A307. THE USE OF THIS ALTERNATE SHALL BE APPROVED BY THE ENGINEER.

THE GUARDRAIL ANCHOR ASSEMBLY IS REQUIRED AT ALL POINTS WHERE APPROACH GUARDRAIL IS TO BE ATTACHED TO THE END OF THE PARAPET. FOR POINTS OF ATTACHMENT, SEE SKETCH.

AFTER INSTALLATION, THE EXPOSED THREAD OF THE BOLT SHALL BE BURRED WITH A SHARP POINTED TOOL.

THE COST OF THE GUARDRAIL ANCHOR ASSEMBLIES WITH BOLTS, NUTS AND WASHERS COMPLETE IN PLACE, SHALL BE INCLUDED IN THE VARIOUS PAY ITEMS.

THE VERTICAL REINFORCING BARS MAY BE SHIFTED SLIGHTLY IN THE END POST TO CLEAR ASSEMBLY BOLTS.

THE 1 1/4'' Ø HOLES SHALL BE FORMED OR DRILLED WITH A CORE BIT. IMPACT TOOLS WILL NOT BE PERMITTED. ANY CONCRETE DAMAGED BY THIS WORK SHALL BE REPAIRED TO THE SATISFACTION OF THE ENGINEER.

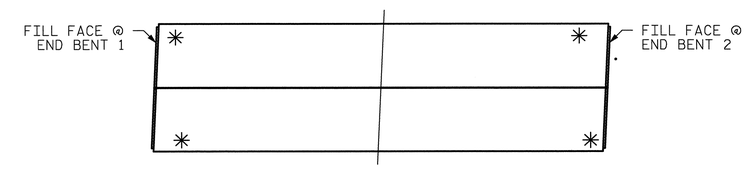

SKETCH SHOWING POINTS OF ATTACHMENT

✳ LOCATION OF GUARDRAIL ATTACHMENT

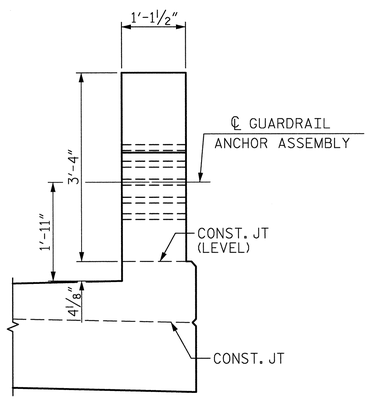

END VIEW
(THREE BAR METAL RAIL)

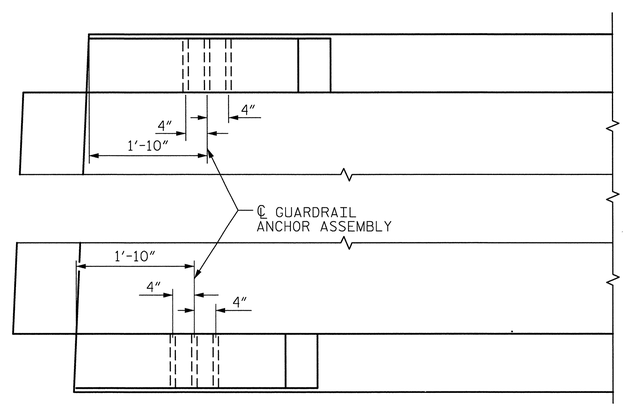

PLAN

LOCATION OF GUARDRAIL ANCHOR AT END POST

PROJECT NO. U-2525B
GUILFORD COUNTY
STATION: 21+69.08 -Y11-
228+23.81 -L-
SHEET 5 OF 5

STATE OF NORTH CAROLINA
DEPARTMENT OF TRANSPORTATION
RALEIGH

STANDARD
GUARDRAIL ANCHORAGE DETAILS FOR METAL RAILS

REVISIONS						SHEET NO.
NO.	BY:	DATE:	NO.	BY:	DATE:	S-439
1			3			TOTAL SHEETS
2			4			541

ASSEMBLED BY : J.M. KEPICH	DATE : 03/19/13
CHECKED BY : R.F. WERTMAN	DATE : 05/24/13
DRAWN BY : MAA 5/10	ADDED 5/6/10
CHECKED BY : GM 5/10	REV. 10/1/11 MAA/GM
	REV. 12/5/11 MAA/GM

PLANS PREPARED BY:
Gannett Fleming
Excellence Delivered As Promised
1121 Situs Court
Suite 170
Raleigh NC 27606-4279
(919) 859-4880
NC Lic. No. F-0270

THESE PLANS HAVE BEEN PROPERLY EXAMINED BY THE UNDERSIGNED. I HAVE DETERMINED THAT THEY COMPLY WITH EXISTING NORTH CAROLINA CODES, AND HAVE BEEN PROPERLY ADAPTED FOR USE IN THIS AREA.

NORTH CAROLINA PROFESSIONAL SEAL 037190 ENGINEER RICHARD F. WERTMAN

STR. NO. 12 (SHT 5) STD. NO. GRA3

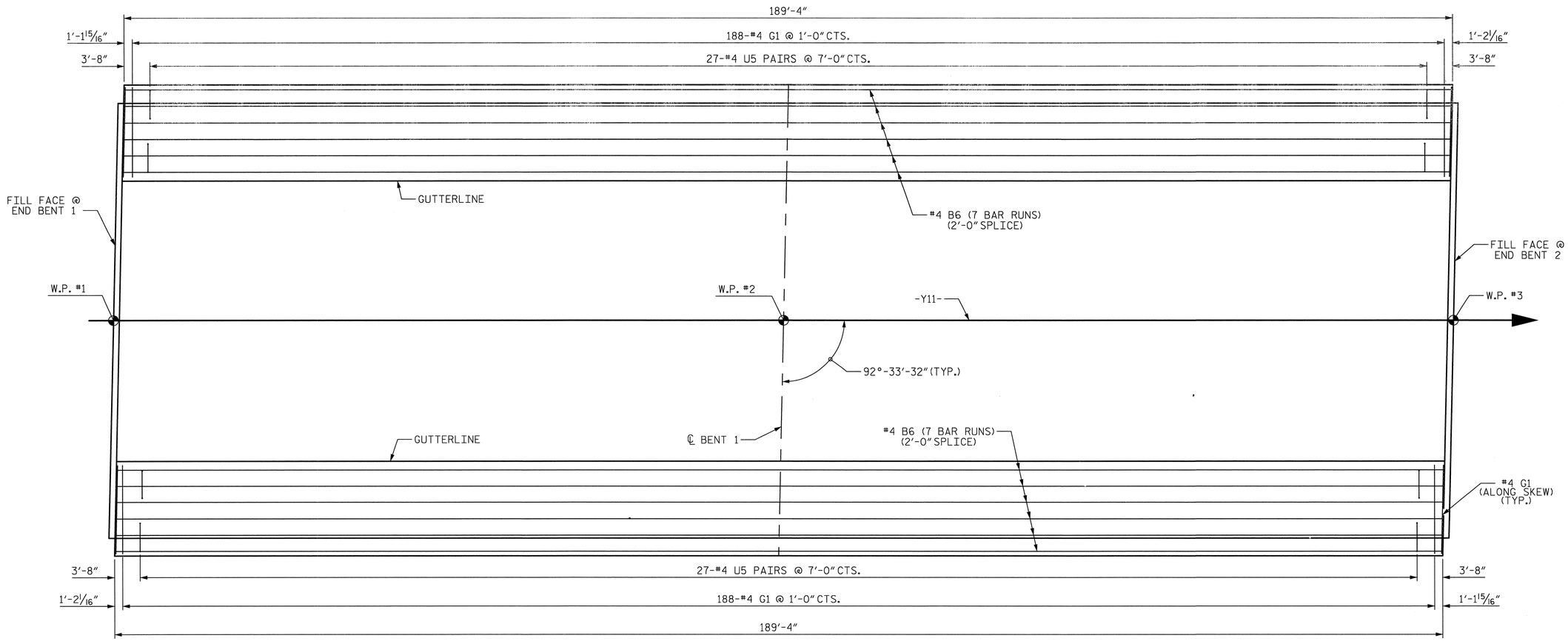

PLAN OF SIDEWALK

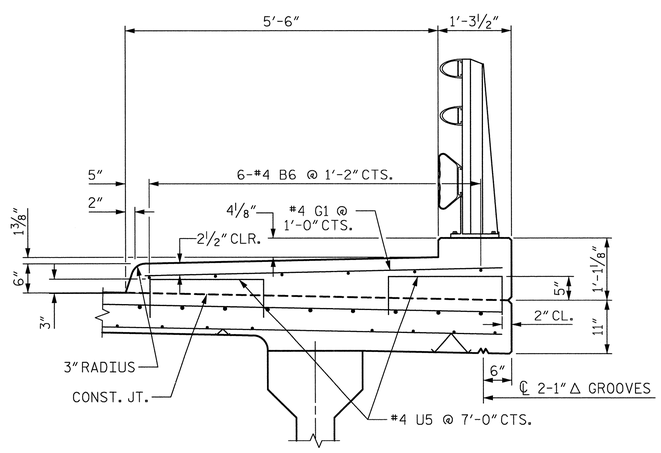

SECTION THRU SIDEWALK

NOTES:

ALL REINFORCING STEEL IN SIDEWALK SHALL BE EPOXY COATED.

GROOVED CONTRACTION JOINTS 1/2" IN DEPTH, SHALL BE TOOLED IN ALL EXPOSED FACES OF SIDEWALK IN ACCORDANCE WITH ARTICLE 825-10(B) OF THE STANDARD SPECIFICATIONS. THE CONTRACTION JOINTS SHALL BE LOCATED AT A SPACING OF 8 FEET TO 10 FEET BETWEEN EXPANSION JOINTS. NO CONTRACTION JOINTS WILL BE REQUIRED FOR SEGMENTS LESS THAN 10 FEET IN LENGTH.

FOR SIDEWALK REINFORCING STEEL AND CONCRETE QUANTITIES SEE SUPERSTRUCTURE "BILL OF MATERIAL" SHEET.

SIDEWALK IN A CONTINUOUS UNIT SHALL NOT BE CAST UNTIL ALL SLAB CONCRETE IN THE UNIT HAS BEEN CAST AND HAS REACHED A MINIMUM COMPRESSIVE STRENGTH OF 3000 PSI.

U5 BARS MAY BE PUSHED INTO GREEN CONCRETE AFTER SPAN HAS BEEN SCREEDED OFF.

PROJECT NO. U-2525B
GUILFORD COUNTY
STATION: 21+69.08 -Y11-
228+23.81 -L-

STATE OF NORTH CAROLINA
DEPARTMENT OF TRANSPORTATION
RALEIGH
SUPERSTRUCTURE

SIDEWALK DETAILS

REVISIONS						SHEET NO.
NO.	BY:	DATE:	NO.	BY:	DATE:	S-440
1			3			TOTAL SHEETS
2			4			541

DRAWN BY : J.M. KEPICH DATE : 03/18/13
CHECKED BY : R.F. WERTMAN DATE : 05/28/13
DESIGN ENGINEER OF RECORD : R.F. WERTMAN DATE : 05/28/13

PLANS PREPARED BY:
Gannett Fleming
Excellence Delivered As Promised
1121 Situs Court
Suite 170
Raleigh NC 27606-4279
(919) 859-4880
NC Lic. No. F-0270

NORTH CAROLINA PROFESSIONAL SEAL 03480 ENGINEER RICHARD F. WERTMAN

STR. NO. 12

SUPERSTRUCTURE REINFORCING STEEL LENGTHS ARE BASED ON THE FOLLOWING MINIMUM SPLICE LENGTHS

BAR SIZE	SUPERSTRUCTURE EXCEPT APPROACH SLABS, PARAPET, AND BARRIER RAIL		APPROACH SLABS		PARAPET AND BARRIER RAIL
	EPOXY COATED	UNCOATED	EPOXY COATED	UNCOATED	
#4	2'-0"	1'-9"	2'-0"	1'-9"	2'-9"
#5	2'-6"	2'-2"	2'-6"	2'-2"	3'-5"
#6	3'-0"	2'-7"	3'-10"	2'-7"	4'-4"
#7	5'-3"	3'-6"			
#8	6'-10"	4'-7"			

GROOVING BRIDGE FLOORS

APPROACH SLABS	1047	SQ.FT.
BRIDGE DECK	6993	SQ.FT.
TOTAL	8040	SQ.FT.

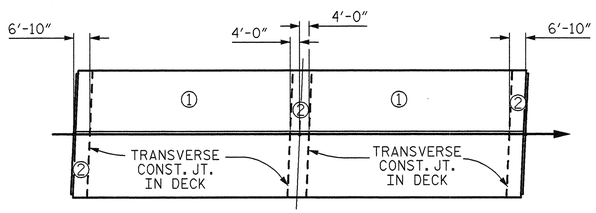

OPTIONAL DECK POUR DETAIL

POUR ② SHALL NOT BE STARTED UNTIL BOTH ADJACENT ① POURS REACH A MINIMUM OF 3000 PSI

BAR TYPES

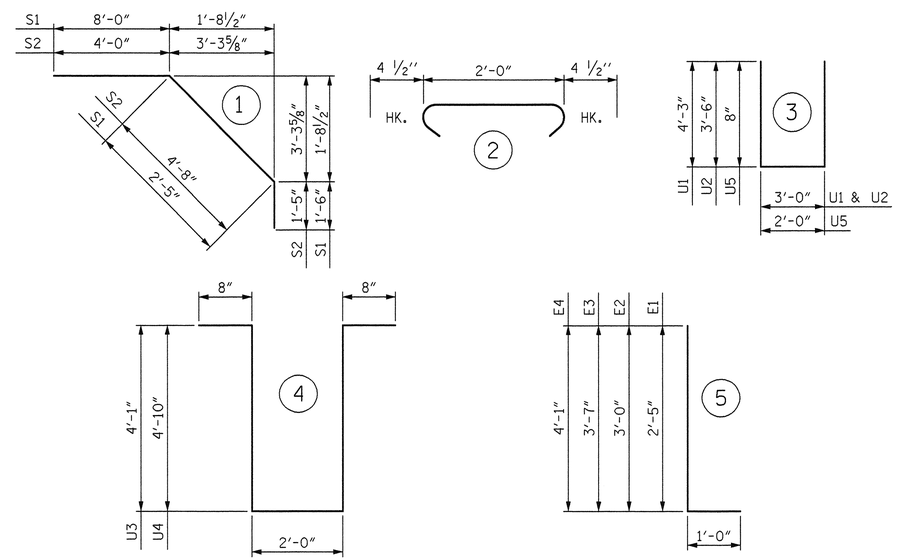

ALL BAR DIMENSIONS ARE OUT TO OUT

BILL OF MATERIAL

BAR	NO.	SIZE	TYPE	LENGTH	WEIGHT
✳ A1	345	#5	STR	53'-3"	19161
A2	345	#5	STR	53'-3"	19161
✳ A101	2	#5	STR	44'-4"	92
✳ A102	2	#5	STR	32'-2"	67
✳ A103	2	#5	STR	20'-1"	42
✳ A104	2	#5	STR	7'-11"	17
A201	2	#5	STR	44'-4"	92
A202	2	#5	STR	32'-2"	67
A203	2	#5	STR	20'-1"	42
A204	2	#5	STR	7'-11"	17
B1	232	#5	STR	48'-11"	11837
✳ B2	142	#7	STR	20'-0"	5805
✳ B3	108	#7	STR	26'-0"	5740
✳ B4	35	#7	STR	28'-8"	2051
✳ B5	144	#4	STR	23'-5"	2252
✳ B6	84	#4	STR	28'-9"	1613
✳ E1	8	#7	5	3'-5"	56
✳ E2	8	#7	5	4'-0"	65
✳ E3	8	#7	5	4'-7"	75
✳ E4	8	#7	5	5'-1"	83
✳ F1	8	#6	STR	3'-3"	39
✳ F2	16	#6	STR	3'-6"	84
✳ F3	8	#6	STR	3'-7"	43
✳ G1	380	#4	STR	6'-4"	1608
H1	24	#6	STR	17'-4"	625

BAR	NO.	SIZE	TYPE	LENGTH	WEIGHT
H2	24	#6	STR	17'-5"	628
H3	24	#6	STR	17'-10"	643
H4	24	#6	STR	17'-11"	646
K1	30	#4	STR	21'-0"	421
K2	10	#4	STR	6'-10"	46
K3	10	#4	STR	7'-10"	52
K4	40	#4	STR	8'-4"	223
K5	20	#4	STR	7'-4"	98
K6	4	#4	STR	5'-1"	14
K7	4	#4	STR	5'-7"	15
K8	8	#4	STR	5'-10"	31
K9	4	#4	STR	5'-4"	14
K10	10	#4	STR	5'-6"	37
K11	10	#4	STR	7'-8"	51
K12	10	#4	STR	24'-3"	162
K13	16	#4	STR	2'-9"	29
K14	8	#4	STR	3'-9"	20
✳ S1	70	#4	1	11'-11"	557
✳ S2	70	#4	1	10'-0"	468
S3	160	#4	2	2'-9"	294
U1	94	#4	3	11'-6"	722
U2	12	#4	3	10'-0"	80
✳ U3	10	#4	4	11'-6"	77
✳ U4	30	#4	4	13'-0"	261
✳ U5	108	#4	3	3'-4"	240
REINFORCING STEEL					36,067 LBS.
EPOXY COATED REINFORCING STEEL					40,496 LBS.

SUPERSTRUCTURE BILL OF MATERIAL

	CLASS AA CONCRETE	REINFORCING STEEL	EPOXY COATED REINFORCING STEEL
	(CU. YDS.)	(LBS.)	(LBS.)
POUR #1	135.4		
POUR #2	179.3		
POUR #3	100.2		
SIDEWALK	67.7		
TOTALS	482.6	36,067	40,496

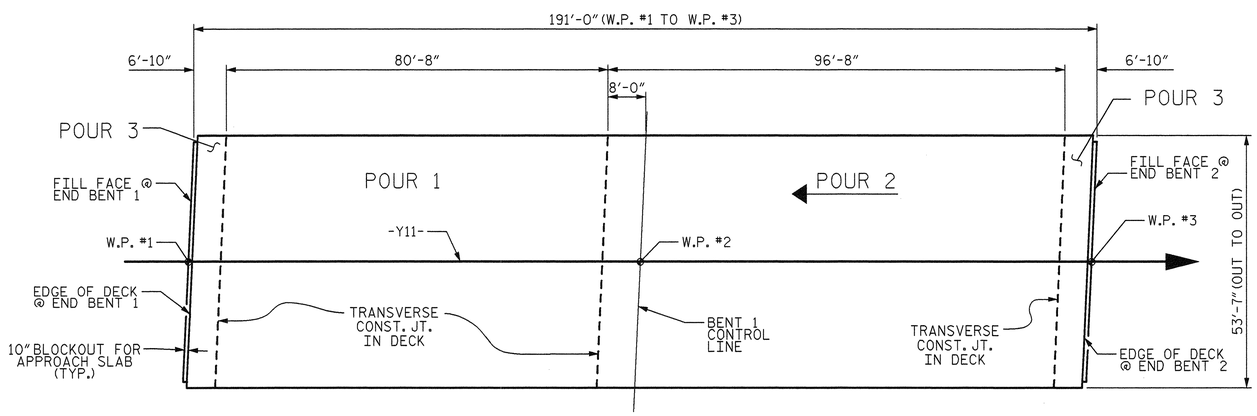

LAYOUT FOR COMPUTING AREA REINFORCED CONCRETE DECK SLAB (SQ. FT. = 10,234)

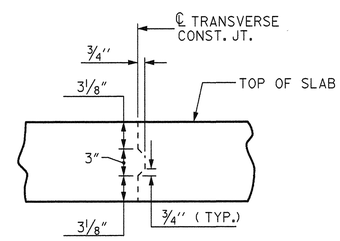

TRANSVERSE CONSTRUCTION JOINT DETAIL

NOTE: REINFORCING STEEL IN SLAB NOT SHOWN. LONGITUDINAL REINFORCING STEEL SHALL BE CONTINUOUS THRU JOINT

PROJECT NO. U-2525B
GUILFORD COUNTY
STATION: 21+69.08 -Y11-
228+23.81 -L-

STATE OF NORTH CAROLINA
DEPARTMENT OF TRANSPORTATION
RALEIGH

SUPERSTRUCTURE
BILL OF MATERIAL

DRAWN BY : J.M. KEPICH	DATE : 05/30/13	
CHECKED BY : R.F. WERTMAN	DATE : 06/04/13	
DESIGN ENGINEER OF RECORD : R.F. WERTMAN	DATE : 06/04/13	

PLANS PREPARED BY:
Gannett Fleming
Excellence Delivered As Promised
1121 Situs Court
Suite 170
Raleigh NC 27606-4279
(919) 859-4880
NC Lic. No. F-0270

NORTH CAROLINA PROFESSIONAL SEAL 037180 ENGINEER RICHARD F. WERTMAN

REVISIONS							
NO.	BY:	DATE:	NO.	BY:	DATE:	SHEET NO.	5-4-1
1			3			TOTAL SHEETS	54
2			4				

STR. NO. 12

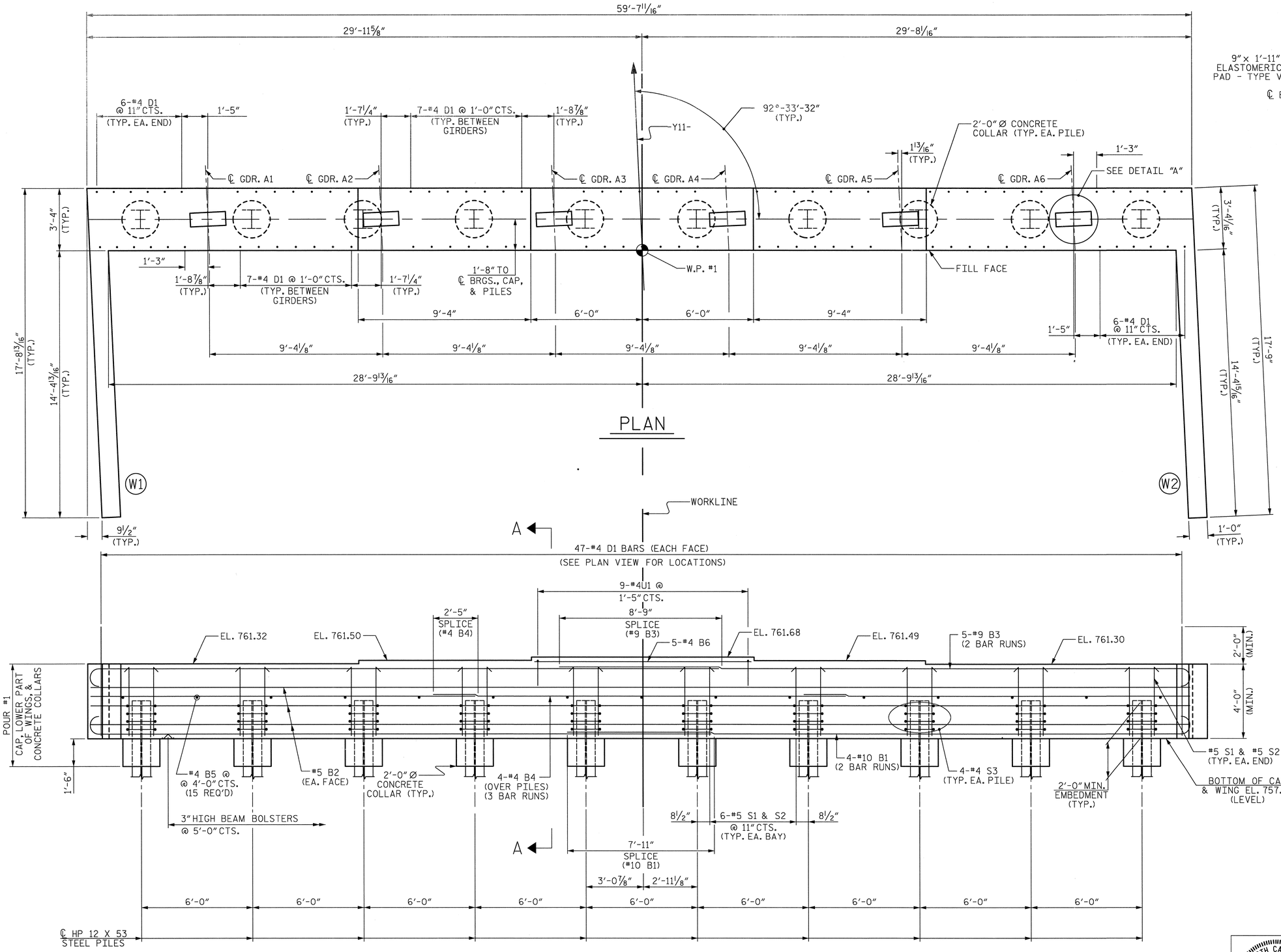

ELEVATION

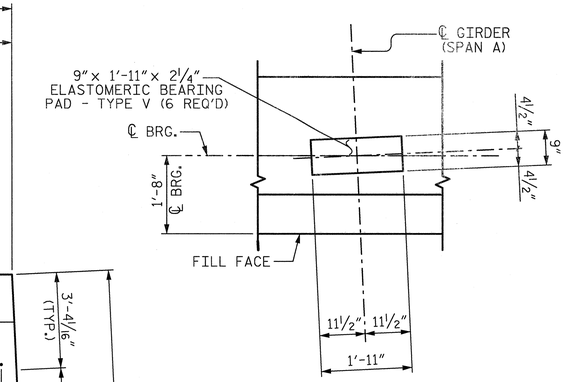

DETAIL "A"

(TYP. EA. GIRDER)

NOTES:

INSTALL THE 4" DIA. DRAIN PIPE THROUGH THE WING WALL AS REQUIRED FOR REINFORCED BRIDGE APPROACH FILLS. SEE THE ROADWAY PLANS. REINFORCING STEEL IN THE WING WALL MAY BE SHIFTED AS NECESSARY TO CLEAR THE DRAIN PIPE.

#4 D1 BARS MAY BE SHIFTED SLIGHTLY TO AVOID STIRRUPS IN CAP.

SEE SUPERSTRUCTURE SHEETS FOR UPPER PART OF INTEGRAL END BENT DETAILS.

PROJECT NO. U-2525B

GUILFORD COUNTY

STATION: 21+69.08 -Y11-
228+23.81 -L-

SHEET 1 OF 3

STATE OF NORTH CAROLINA
DEPARTMENT OF TRANSPORTATION
RALEIGH

SUBSTRUCTURE

INTEGRAL END BENT #1

REVISIONS							
NO.	BY:	DATE:	NO.	BY:	DATE:	SHEET NO.	S-442
1			3			TOTAL SHEETS	541
2			4				

DRAWN BY : L.M. SAMPLES DATE : 05/01/13
CHECKED BY : R.F. WERTMAN DATE : 05/29/13
DESIGN ENGINEER OF RECORD : R.F. WERTMAN DATE : 05/29/13

PLANS PREPARED BY:
Gannett Fleming
Excellence Delivered As Promised
1121 Situs Court
Suite 170
Raleigh NC 27606-4279
(919) 859-4880
NC Lic. No. F-0270

NORTH CAROLINA PROFESSIONAL SEAL 037180 ENGINEER RICHARD F. WERTMAN

STR. NO. 12

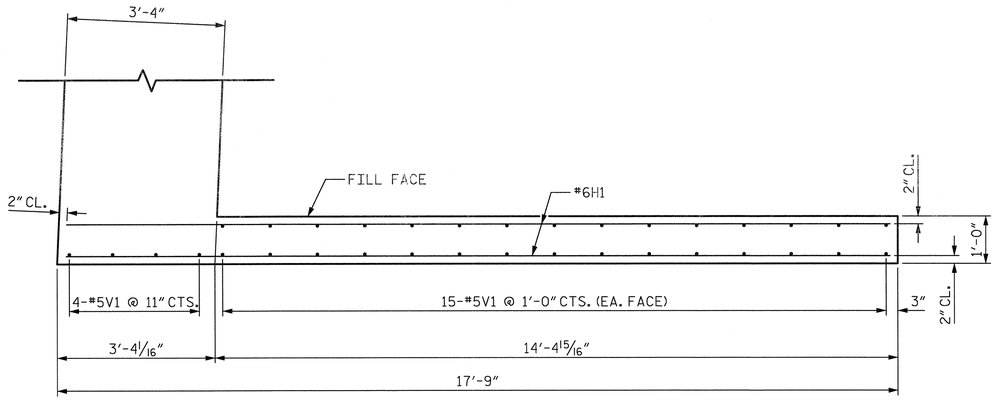

PLAN OF WING (W1)

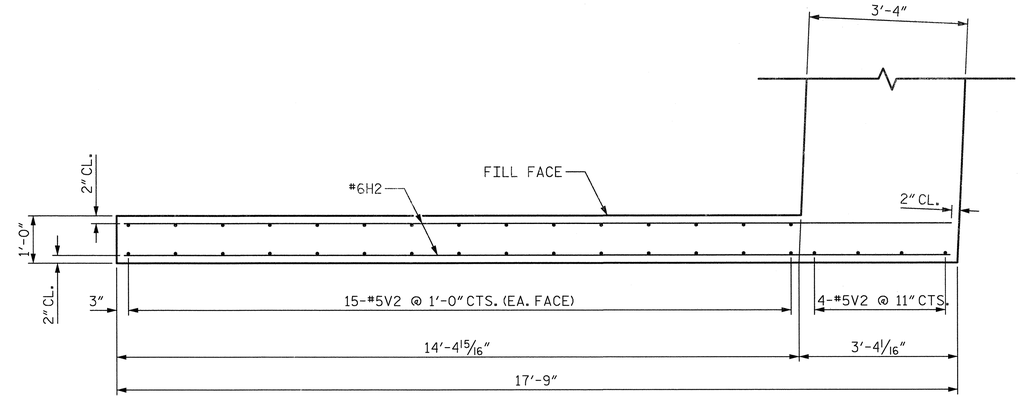

PLAN OF WING (W2)

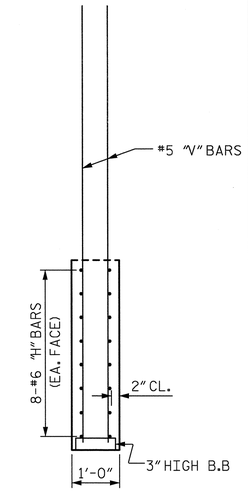

SECTION X-X

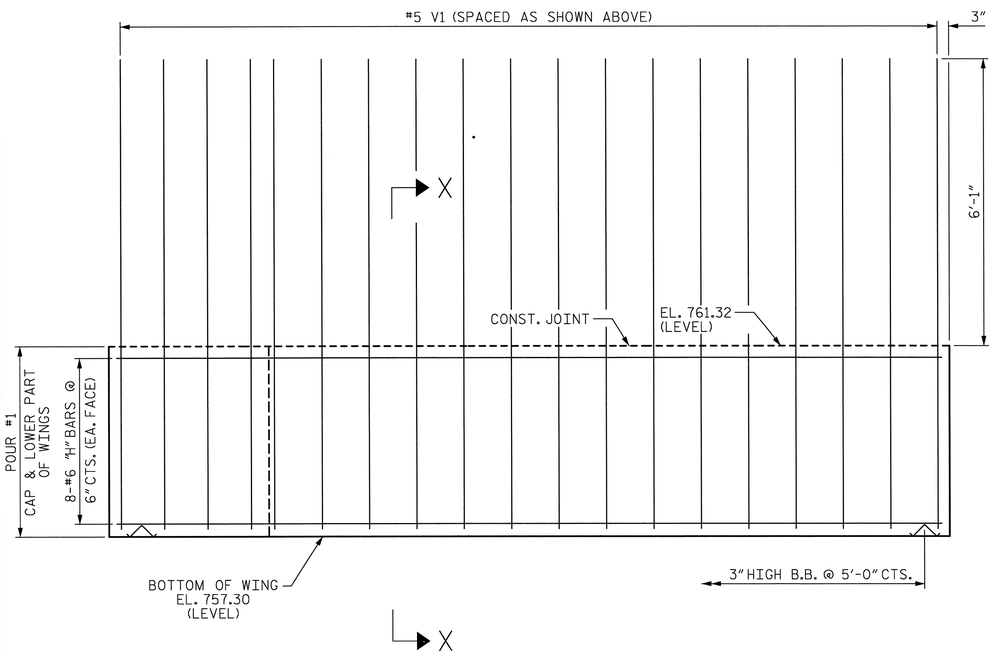

ELEVATION OF WING (W1)

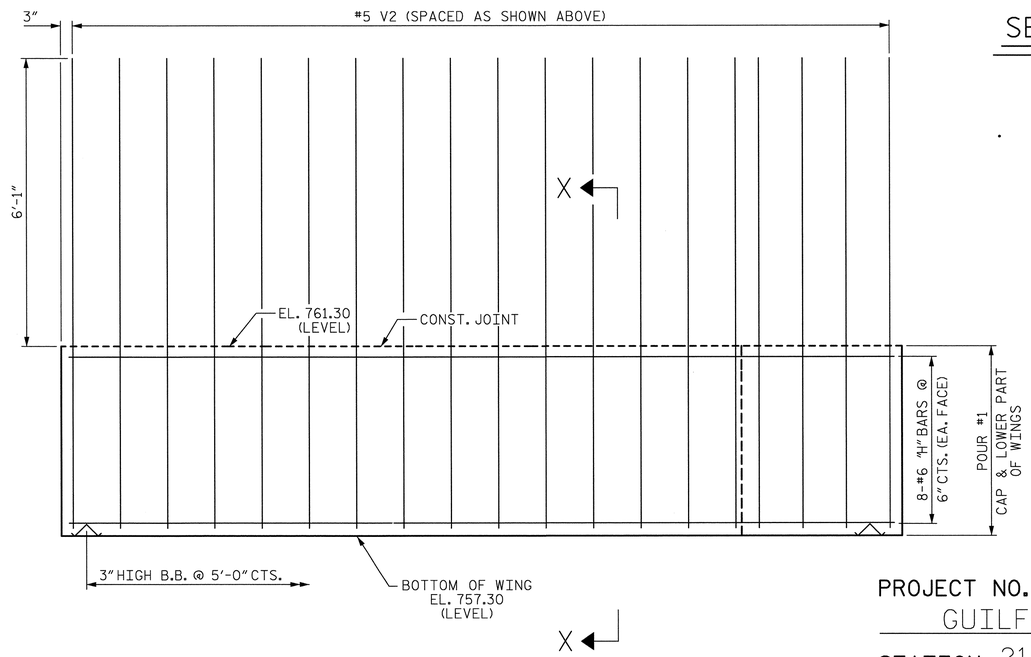

ELEVATION OF WING (W2)

PROJECT NO. U-2525B

GUILFORD COUNTY

STATION: 21+69.08 -Y11-
228+23.81 -L-

SHEET 2 OF 3

STATE OF NORTH CAROLINA
DEPARTMENT OF TRANSPORTATION
RALEIGH

SUBSTRUCTURE

INTEGRAL END BENT #1

NOTES:

THE UPPER PORTION OF THE WINGS SHALL BE POURED WITH THE SUPERSTRUCTURE. FOR DETAILS AND REINFORCING STEEL, SEE SUPERSTRUCTURE DETAILS.

DRAWN BY : L.M. SAMPLES DATE : 05/01/13
CHECKED BY : R.F. WERTMAN DATE : 05/31/13
DESIGN ENGINEER OF RECORD : R.F. WERTMAN DATE : 05/31/13

PLANS PREPARED BY:
Gannett Fleming
Excellence Delivered As Promised
1121 Situs Court
Suite 170
Raleigh NC 27606-4279
(919) 859-4880
NC Lic. No. F-0270

NORTH CAROLINA PROFESSIONAL SEAL 037180 ENGINEER RICHARD F. WERTMAN

REVISIONS						SHEET NO.
NO.	BY:	DATE:	NO.	BY:	DATE:	S-443
1			3			TOTAL SHEETS
2			4			541

STR. NO. 12

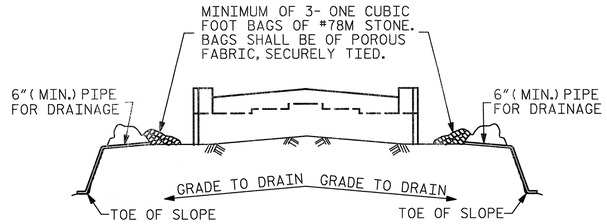

BAGGED STONE AND PIPE SHALL BE PLACED IMMEDIATELY AFTER COMPLETION OF END BENT EXCAVATION. PIPE MAY BE EITHER CONCRETE, CORRUGATED STEEL, CORRUGATED ALUMINUM ALLOY, OR CORRUGATED PLASTIC. PERFORATED PIPE WILL NOT BE ALLOWED.

BAGGED STONE SHALL REMAIN IN PLACE UNTIL THE ENGINEER DIRECTS THAT IT BE REMOVED. THE CONTRACTOR SHALL REMOVE AND DISPOSE OF SILT ACCUMULATIONS AT BAGGED STONE WHEN SO DIRECTED BY THE ENGINEER. BAGS SHALL BE REMOVED AND REPLACED WHENEVER THE ENGINEER DETERMINES THAT THEY HAVE DETERIORATED AND LOST THEIR EFFECTIVENESS.

NO SEPARATE PAYMENT WILL BE MADE FOR THIS WORK AND THE ENTIRE COST OF THIS WORK SHALL BE INCLUDED IN THE UNIT CONTRACT PRICE BID FOR THE SEVERAL PAY ITEMS.

TEMPORARY DRAINAGE AT END BENT

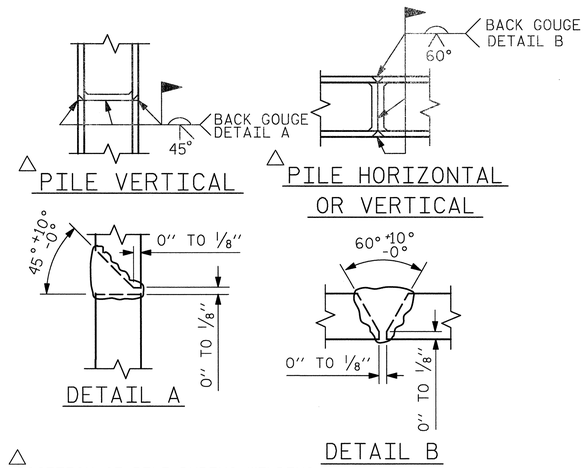

△ POSITION OF PILE DURING WELDING.

PILE SPLICE DETAILS

BAR TYPES

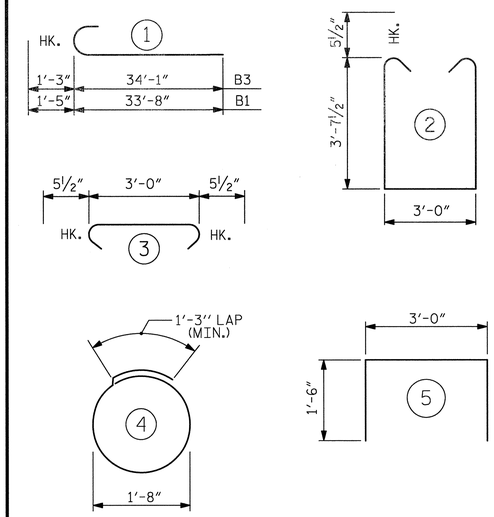

ALL BAR DIMENSIONS ARE OUT TO OUT.

BILL OF MATERIAL

END BENT #1

BAR	No.	SIZE	TYPE	LENGTH	WEIGHT
B1	8	#10	1	35'-1"	1208
B2	6	#5	STR	59'-3"	371
B3	10	#9	1	35'-4"	1201
B4	12	#4	STR	21'-6"	172
B5	15	#4	STR	3'-0"	30
B6	5	#4	STR	11'-8"	39
D1	94	#4	STR	6'-3"	392
H1	16	#6	STR	17'-4"	417
H2	16	#6	STR	17'-5"	419
S1	56	#5	2	11'-2"	652
S2	56	#5	3	3'-11"	229
S3	40	#4	4	6'-6"	174
U1	9	#4	5	6'-0"	36
V1	34	#5	STR	9'-10"	349
V2	34	#5	STR	9'-10"	349
REINFORCING STEEL					6038

CLASS A CONCRETE

POUR #1 (CAP, LOWER WINGS & COLLARS)	36.5 C.Y.
TOTAL	36.5 C.Y.

HP 12 X 53 STEEL PILES

No. = 10	100 LIN. FT.
PILE EXCAVATION IN SOIL	58 LIN. FT.
PILE EXCAVATION NOT IN SOIL	42 LIN. FT.

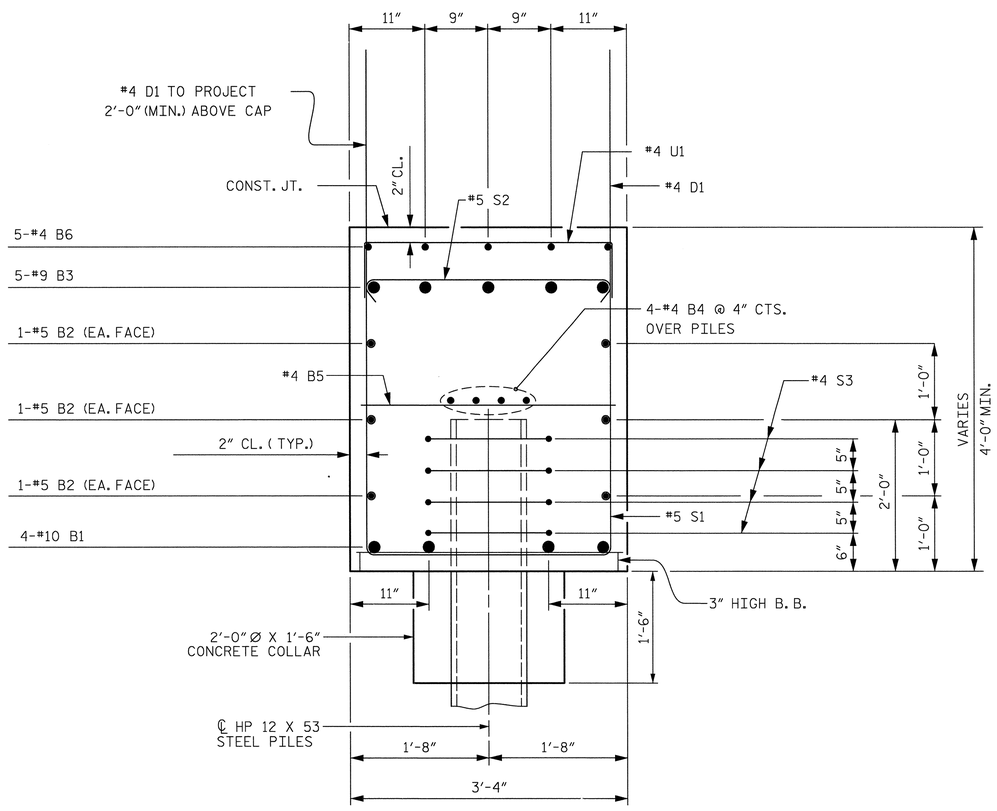

SECTION A-A

PROJECT NO. U-2525B
GUILFORD COUNTY
STATION: 21+69.08 -Y11-
228+23.81 -L-
SHEET 3 OF 3

STATE OF NORTH CAROLINA
DEPARTMENT OF TRANSPORTATION
RALEIGH

SUBSTRUCTURE

INTEGRAL END BENT #1

REVISIONS						SHEET NO.
NO.	BY:	DATE:	NO.	BY:	DATE:	S-444
1			3			TOTAL SHEETS
2			4			54

DRAWN BY :	L.M. SAMPLES	DATE :	05/04/13
CHECKED BY :	R.F. WERTMAN	DATE :	05/31/13
DESIGN ENGINEER OF RECORD :	R.F. WERTMAN	DATE :	05/31/13

PLANS PREPARED BY:
Gannett Fleming
Excellence Delivered As Promised
1121 Situs Court
Suite 170
Raleigh NC 27606-4279
(919) 859-4880
NC Lic. No. F-0270

NORTH CAROLINA PROFESSIONAL SEAL 037180 ENGINEER RICHARD F. WERTMAN

STR. NO. 12

NOTES

STIRRUPS IN CAP MAY BE SHIFTED AS NECESSARY TO CLEAR ANCHOR BOLTS.

HOOKS ON V1 BARS MAY BE TURNED AS NECESSARY FOR PLACING REINFORCING STEEL.

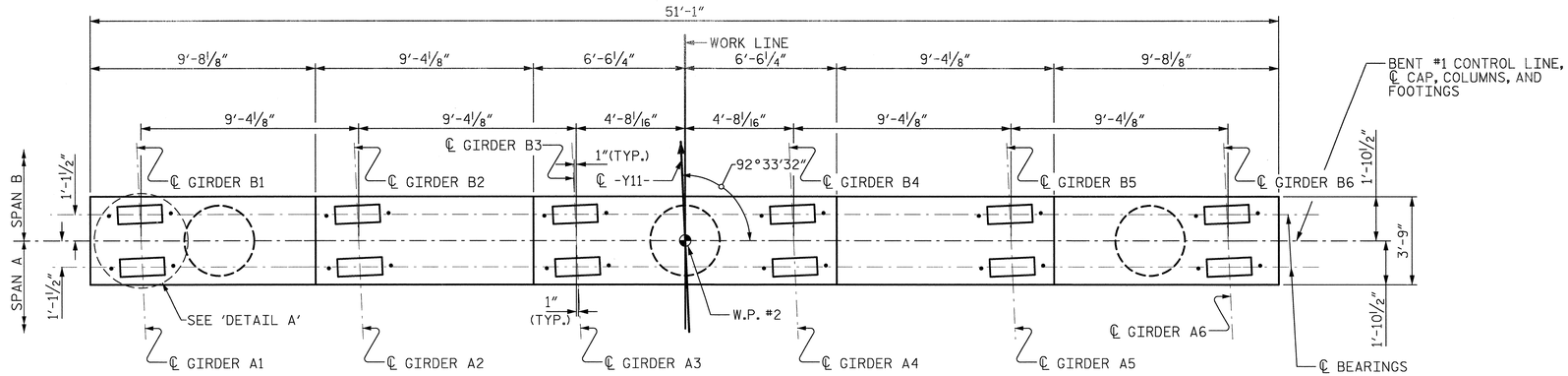

PLAN

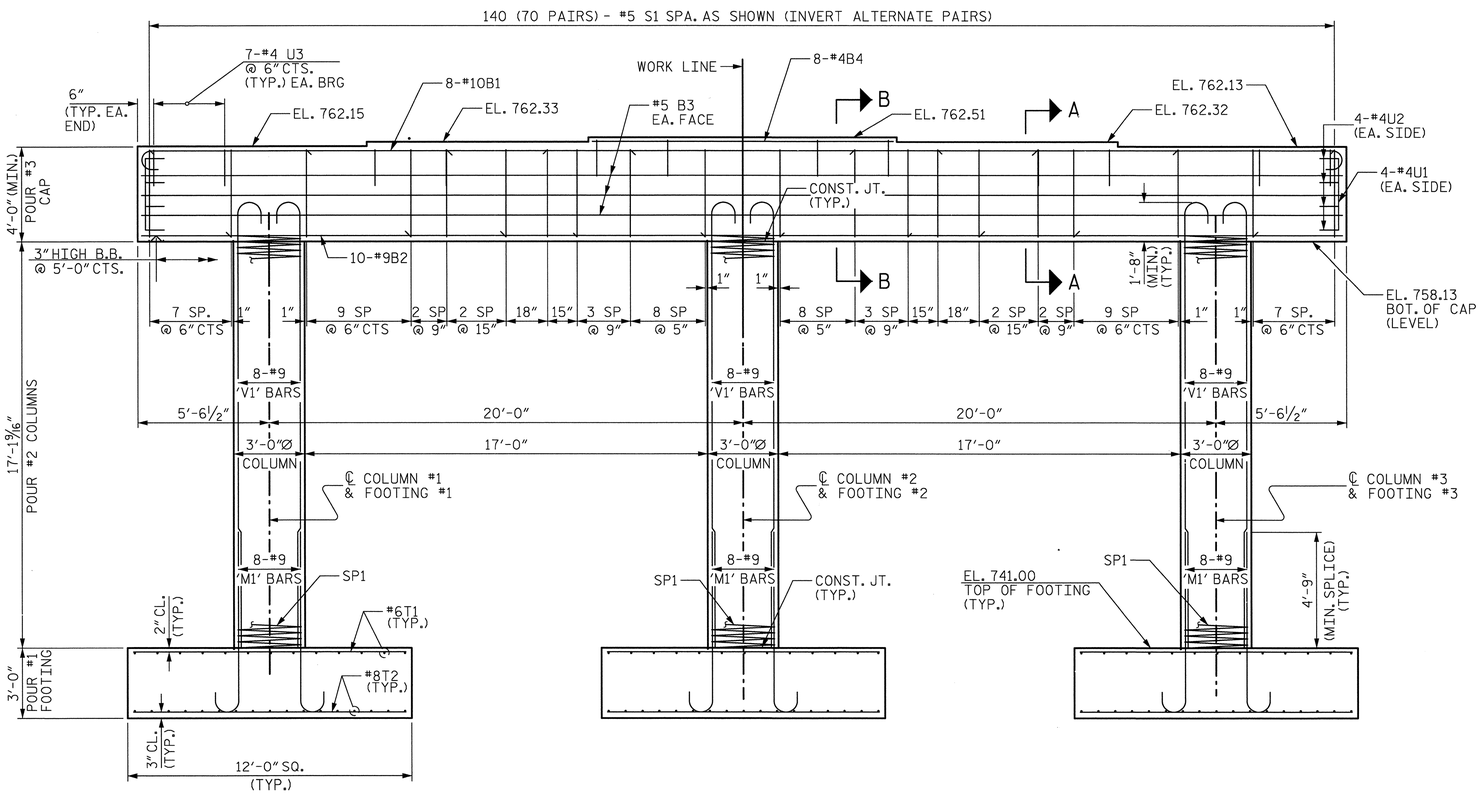

ELEVATION

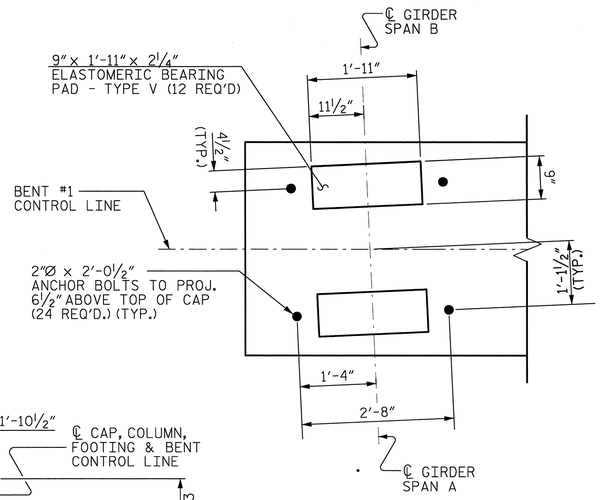

DETAIL A

(TYP. EA. GIRDER)

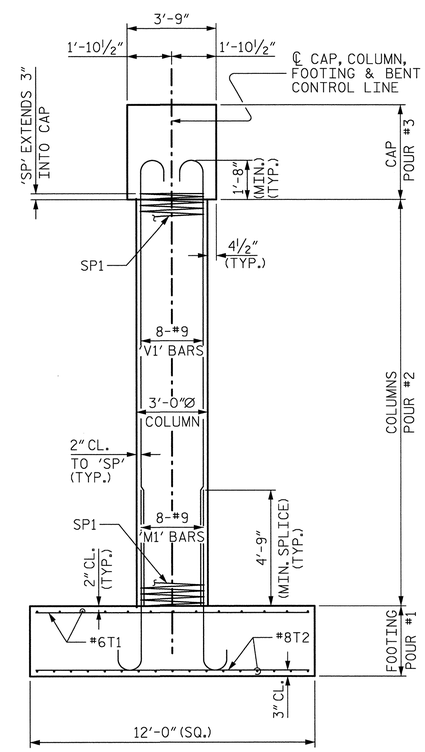

END ELEVATION

PROJECT NO. U-2525B

GUILFORD COUNTY

STATION: 21+69.08 -Y11-
228+23.81 -L-

SHEET 1 OF 2

STATE OF NORTH CAROLINA
DEPARTMENT OF TRANSPORTATION
RALEIGH

SUBSTRUCTURE

BENT #1

REVISIONS						SHEET NO.
NO.	BY:	DATE:	NO.	BY:	DATE:	5-44.5
1			3			TOTAL SHEETS
2			4			54-1

PLANS PREPARED BY:

Gannett Fleming
Excellence Delivered As Promised

1121 Situs Court
Suite 170
Raleigh NC 27606-4279
(919) 859-4880
NC Lic. No. F-0270

NORTH CAROLINA PROFESSIONAL SEAL 031180 ENGINEER RICHARD F. WERTMAN

DRAWN BY :	J. S. HOBSON	DATE :	3/19/13
CHECKED BY :	R. F. WERTMAN	DATE :	5/14/13
DESIGN ENGINEER OF RECORD :	R. F. WERTMAN	DATE :	5/14/13

STR. NO. 12

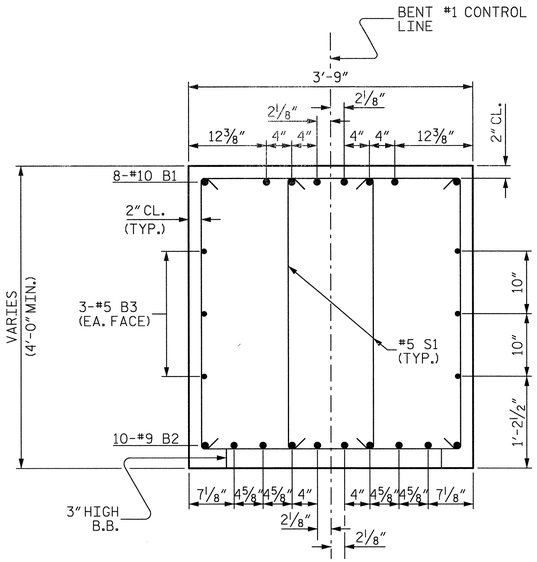

SECTION A-A

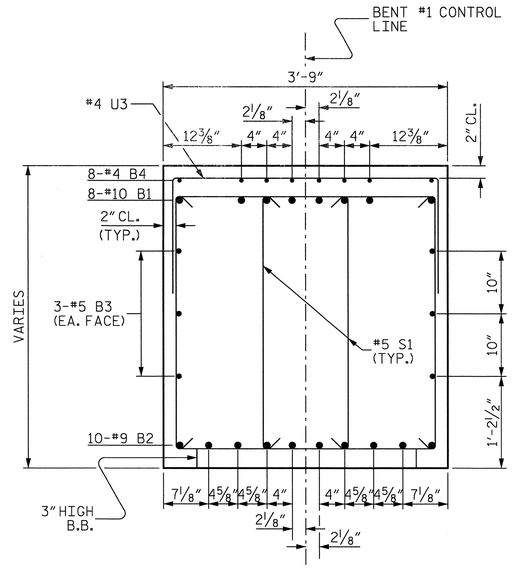

SECTION B-B

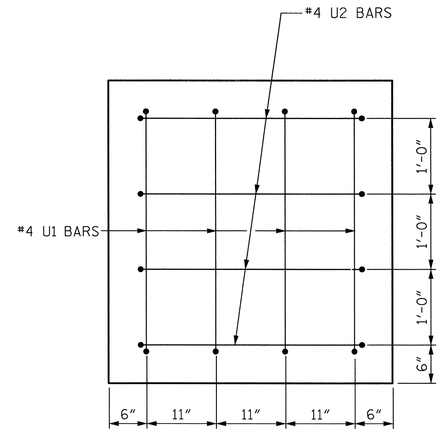

END VIEW

(TYP. EA. END)

BAR TYPES

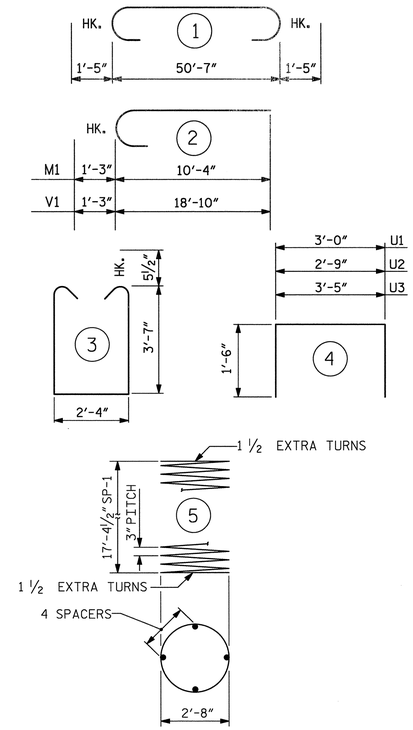

ALL BAR DIMENSIONS ARE OUT TO OUT.

BILL OF MATERIAL

BENT #1

BAR	NO.	SIZE	TYPE	LENGTH	WEIGHT
B1	8	#10	1	53'-5"	1839
B2	10	#9	STR.	50'-9"	1726
B3	6	#5	STR.	50'-9"	318
B4	8	#4	STR.	12'-8"	68
M1	24	#9	2	11'-7"	945
S1	140	#5	3	10'-5"	1521
U1	8	#4	4	6'-0"	32
U2	8	#4	4	5'-9"	31
U3	42	#4	4	6'-5"	180
V1	24	#9	2	20'-1"	1639
T1	72	#6	STR.	11'-8"	1262
T2	108	#8	STR.	11'-8"	3364
REINFORCING STEEL					12925 LBS.
SP-1	3	✱✱	5	598'-2"	1199
SPIRAL COLUMN REINFORCING STEEL					1199 LBS.
CLASS A CONCRETE BREAKDOWN					
POUR 1 (FOOTINGS)					48.0 C.Y.
POUR 2 (COLUMNS)					13.5 C.Y.
POUR 3 (CAP)					29.5 C.Y.
TOTAL CLASS A CONCRETE					91.1 C.Y.
FOUNDATION EXCAVATION					LUMP SUM

✱✱ THE SP-1 SPIRAL REINFORCING STEEL SHALL BE W20 OR D-20 COLD DRAWN WIRE OR #4 PLAIN OR DEFORMED BAR.

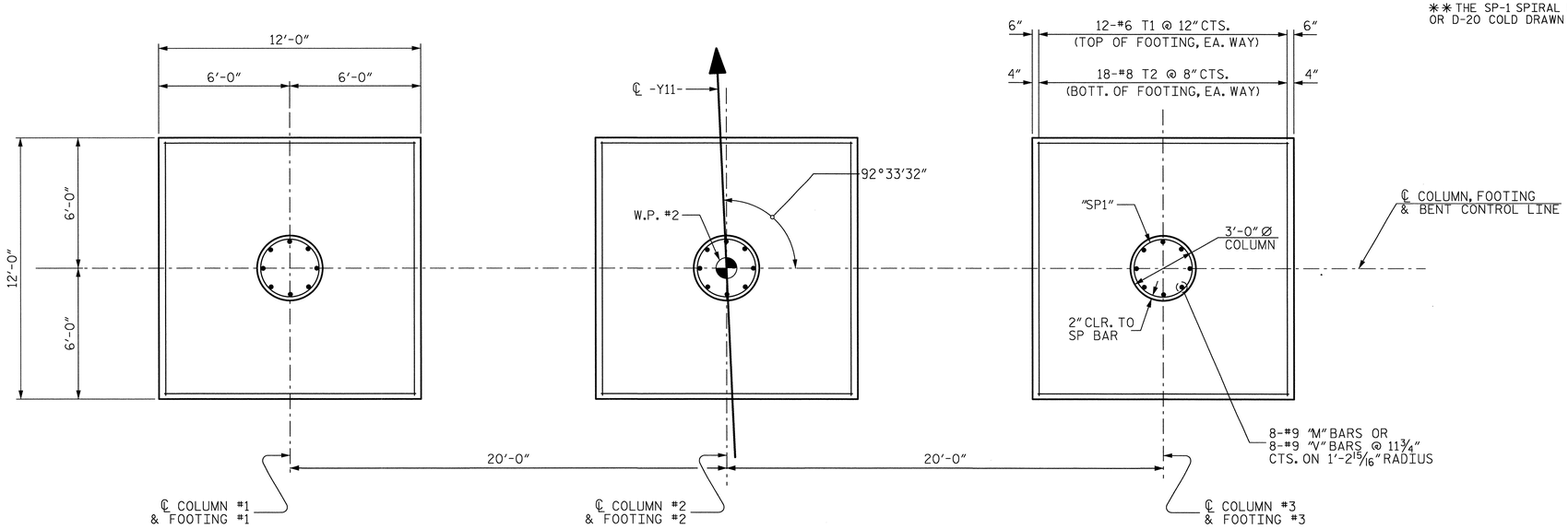

PLAN OF COLUMNS AND FOOTINGS

(ALL FOOTINGS, COLUMNS, DIMENSIONS, AND REINFORCING STEEL TYP.)

PROJECT NO. U-2525B

GUILFORD COUNTY

STATION: 21+69.08 -Y11-
228+23.81 -L-

SHEET 2 OF 2

STATE OF NORTH CAROLINA
DEPARTMENT OF TRANSPORTATION
RALEIGH

SUBSTRUCTURE

BENT #1

REVISIONS						SHEET NO.
NO.	BY:	DATE:	NO.	BY:	DATE:	S-446
1			3			TOTAL SHEETS
2			4			541

DRAWN BY : J. S. HOBSON DATE : 3/19/13
CHECKED BY : R. F. WERTMAN DATE : 5/14/13
DESIGN ENGINEER OF RECORD : R. F. WERTMAN DATE : 5/14/13

PLANS PREPARED BY:
Gannett Fleming
Excellence Delivered As Promised
1121 Situs Court
Suite 170
Raleigh NC 27606-4279
(919) 859-4880
NC Lic. No. F-0270

NORTH CAROLINA PROFESSIONAL SEAL 037180 ENGINEER RICHARD F. WERTMAN

STR. NO. 12

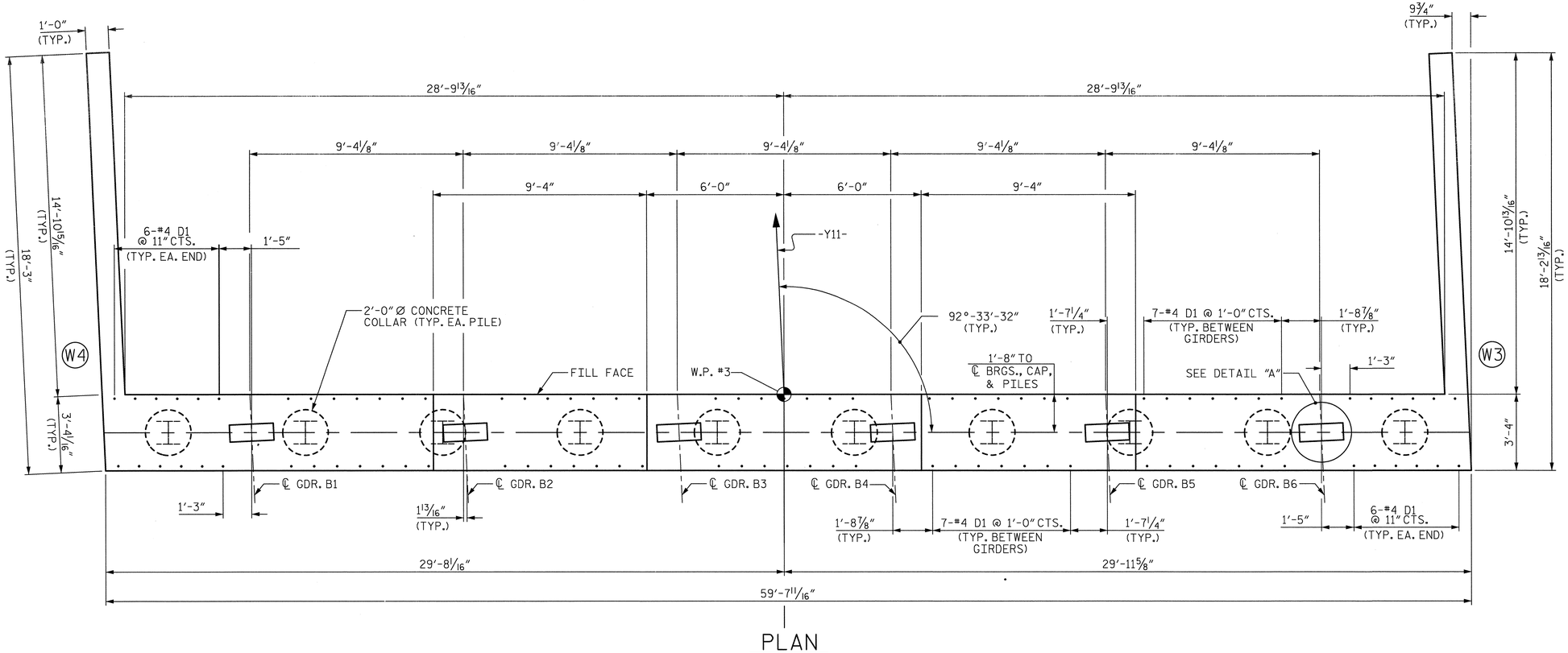

PLAN

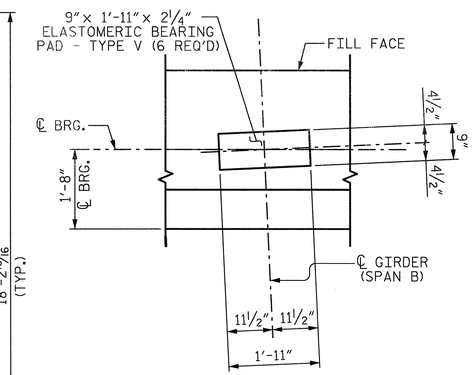

DETAIL "A"

(TYP. EA. GIRDER)

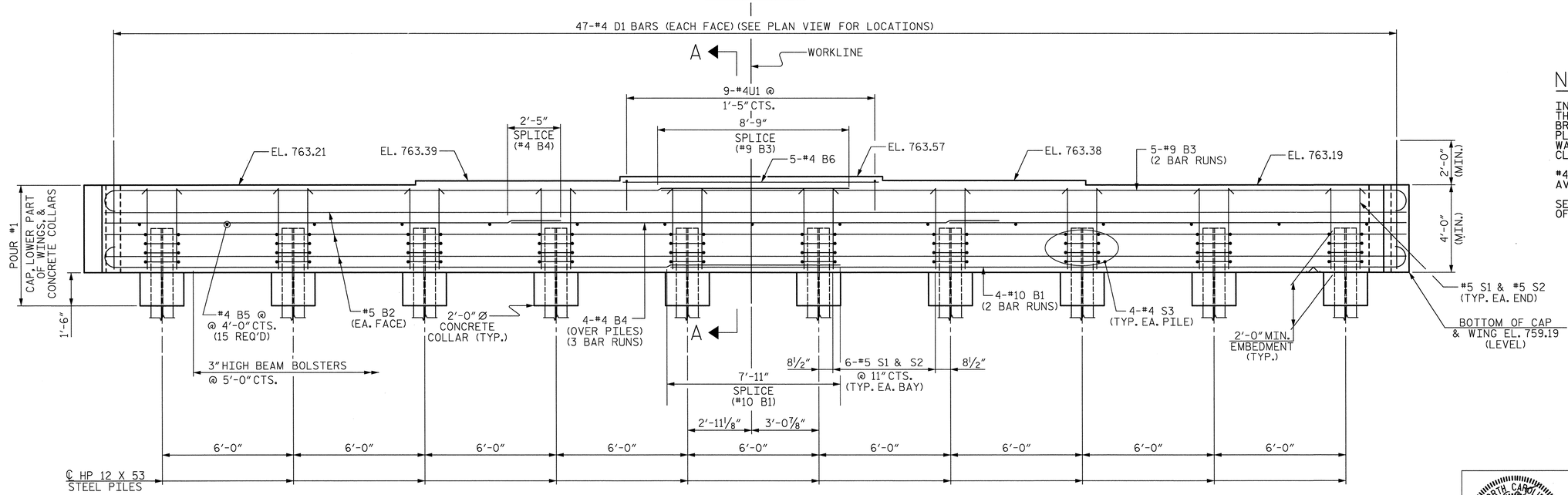

ELEVATION

NOTES:

INSTALL THE 4" DIA. DRAIN PIPE THROUGH THE WING WALL AS REQUIRED FOR REINFORCED BRIDGE APPROACH FILLS. SEE THE ROADWAY PLANS. REINFORCING STEEL IN THE WING WALL MAY BE SHIFTED AS NECESSARY TO CLEAR THE DRAIN PIPE.

#4 D1 BARS MAY BE SHIFTED SLIGHTLY TO AVOID STIRRUPS IN CAP.

SEE SUPERSTRUCTURE SHEETS FOR UPPER PART OF INTEGRAL END BENT DETAILS.

PROJECT NO. U-2525B

GUILFORD COUNTY

STATION: 21+69.08 -Y11-
228+23.81 -L-

SHEET 1 OF 3

STATE OF NORTH CAROLINA
DEPARTMENT OF TRANSPORTATION
RALEIGH

SUBSTRUCTURE

INTEGRAL END BENT #2

REVISIONS								SHEET NO.
NO.	BY:	DATE:	NO.	BY:	DATE:			S-447
1			3					TOTAL SHEETS
2			4					541

DRAWN BY : J.M. KEPICH DATE : 05/28/13
CHECKED BY : R.F. WERTMAN DATE : 06/03/13
DESIGN ENGINEER OF RECORD : R.F. WERTMAN DATE : 06/03/13

PLANS PREPARED BY:
Gannett Fleming
Excellence Delivered As Promised
1121 Situs Court
Suite 170
Raleigh NC 27606-4279
(919) 859-4880
NC Lic. No. F-0270

NORTH CAROLINA PROFESSIONAL SEAL 037180 ENGINEER RICHARD F. WERTMAN

STR. NO. 12

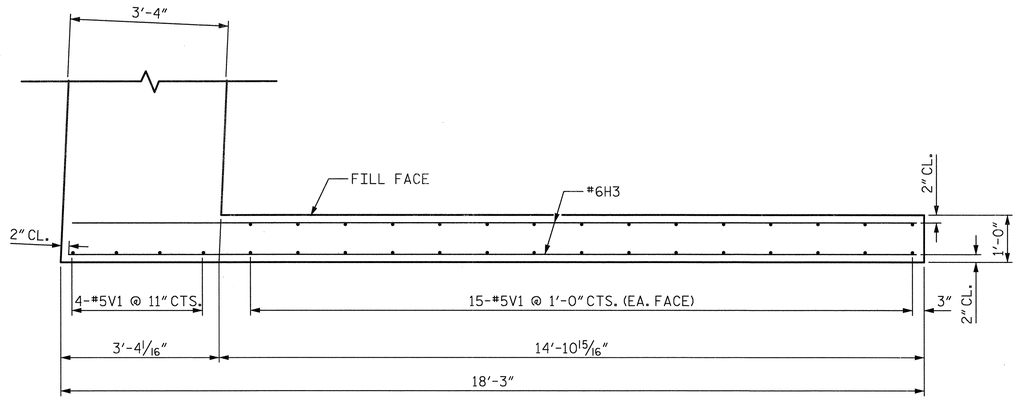

PLAN OF WING (W3)

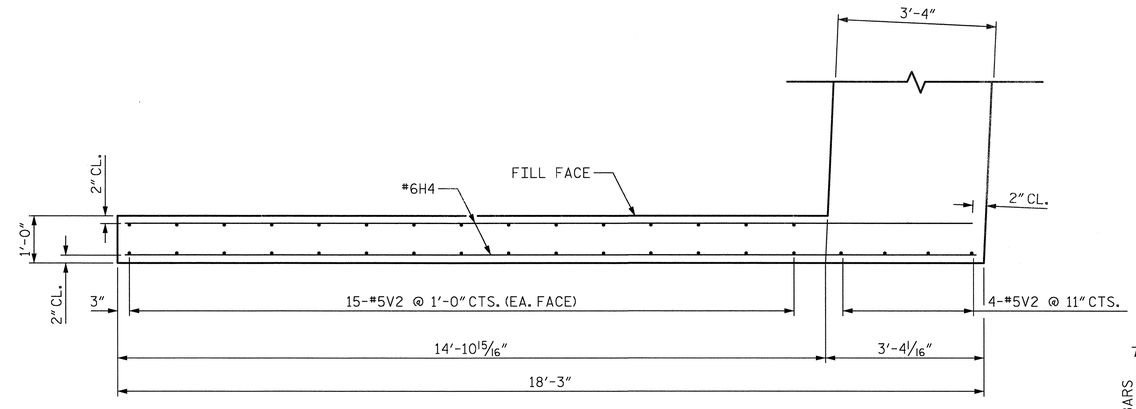

PLAN OF WING (W4)

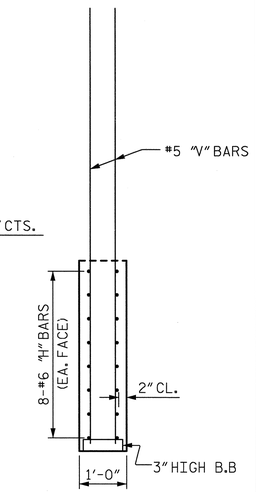

SECTION X-X

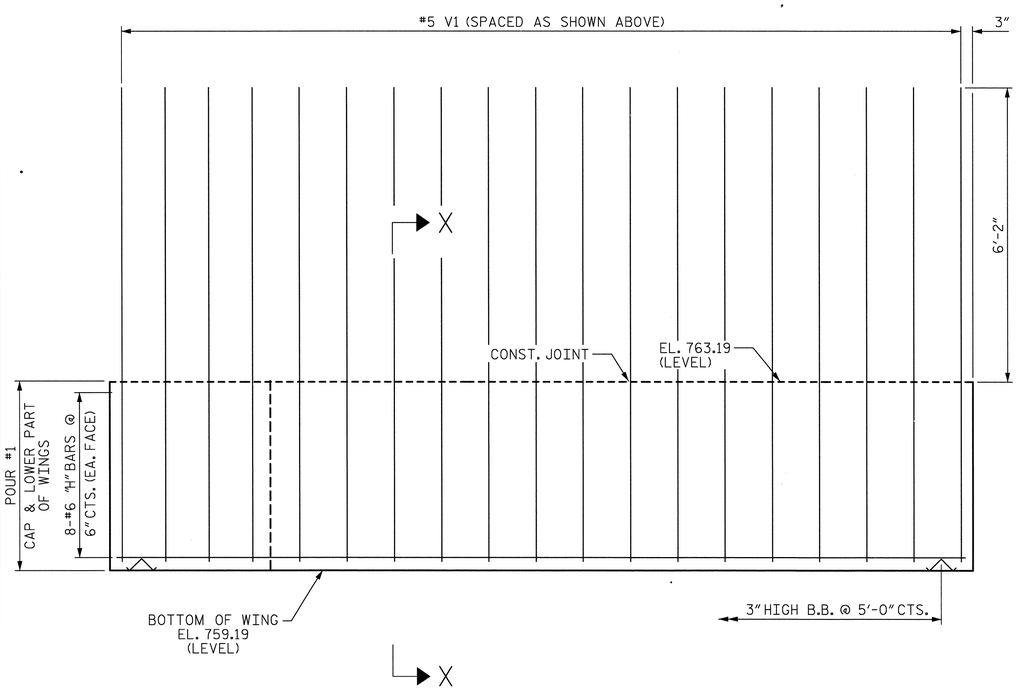

ELEVATION OF WING (W3)

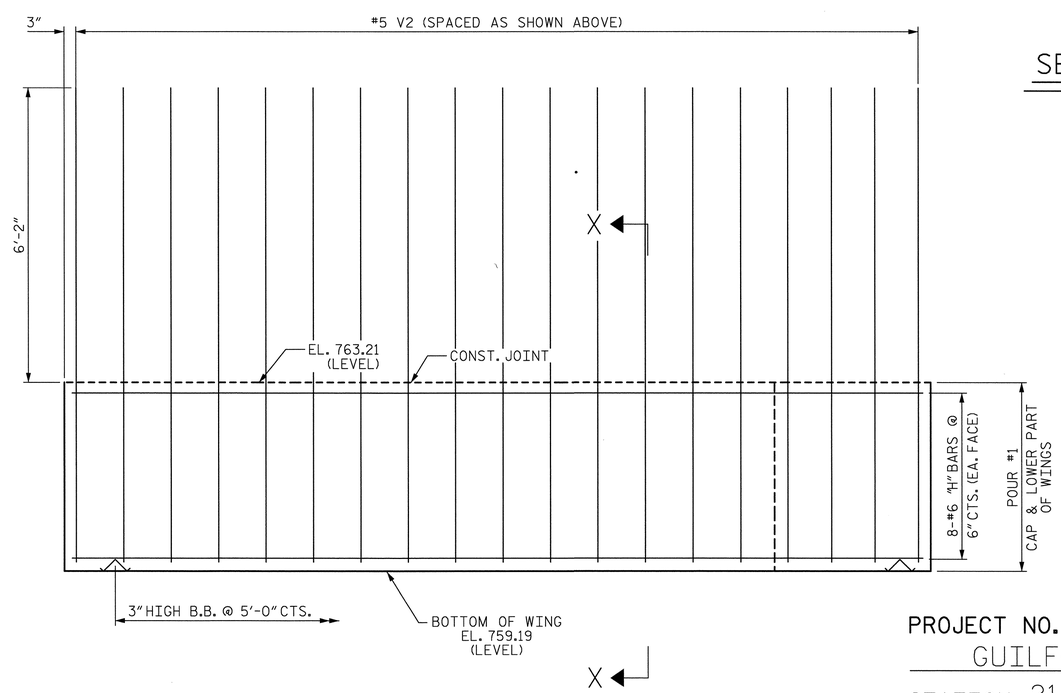

ELEVATION OF WING (W4)

PROJECT NO. U-2525B
GUILFORD COUNTY
STATION: 21+69.08 -Y11-
228+23.81 -L-
SHEET 2 OF 3

STATE OF NORTH CAROLINA
DEPARTMENT OF TRANSPORTATION
RALEIGH

SUBSTRUCTURE

INTEGRAL END BENT #2

NOTES:

THE UPPER PORTION OF THE WINGS SHALL BE POURED WITH THE SUPERSTRUCTURE. FOR DETAILS AND REINFORCING STEEL, SEE SUPERSTRUCTURE DETAILS.

DRAWN BY : J.M. KEPICH DATE : 05/28/13
CHECKED BY : R.F. WERTMAN DATE : 06/04/13
DESIGN ENGINEER OF RECORD : R.F. WERTMAN DATE : 06/04/13

PLANS PREPARED BY:
Gannett Fleming
Excellence Delivered As Promised
1121 Situs Court
Suite 170
Raleigh NC 27606-4279
(919) 859-4880
NC Lic. No. F-0270

NORTH CAROLINA PROFESSIONAL SEAL 037180 ENGINEER RICHARD F. WERTMAN

REVISIONS							SHEET NO.
NO.	BY:	DATE:	NO.	BY:	DATE:		S-448
1			3				TOTAL SHEETS
2			4				541

STR. NO. 12

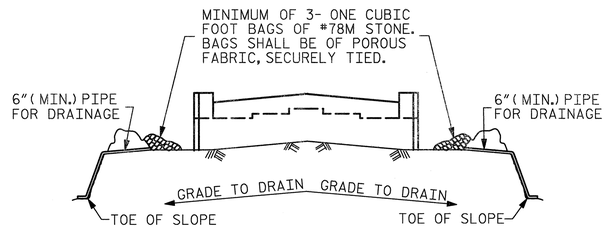

BAGGED STONE AND PIPE SHALL BE PLACED IMMEDIATELY AFTER COMPLETION OF END BENT EXCAVATION. PIPE MAY BE EITHER CONCRETE, CORRUGATED STEEL, CORRUGATED ALUMINUM ALLOY, OR CORRUGATED PLASTIC. PERFORATED PIPE WILL NOT BE ALLOWED.

BAGGED STONE SHALL REMAIN IN PLACE UNTIL THE ENGINEER DIRECTS THAT IT BE REMOVED. THE CONTRACTOR SHALL REMOVE AND DISPOSE OF SILT ACCUMULATIONS AT BAGGED STONE WHEN SO DIRECTED BY THE ENGINEER. BAGS SHALL BE REMOVED AND REPLACED WHENEVER THE ENGINEER DETERMINES THAT THEY HAVE DETERIORATED AND LOST THEIR EFFECTIVENESS.

NO SEPARATE PAYMENT WILL BE MADE FOR THIS WORK AND THE ENTIRE COST OF THIS WORK SHALL BE INCLUDED IN THE UNIT CONTRACT PRICE BID FOR THE SEVERAL PAY ITEMS.

TEMPORARY DRAINAGE AT END BENT

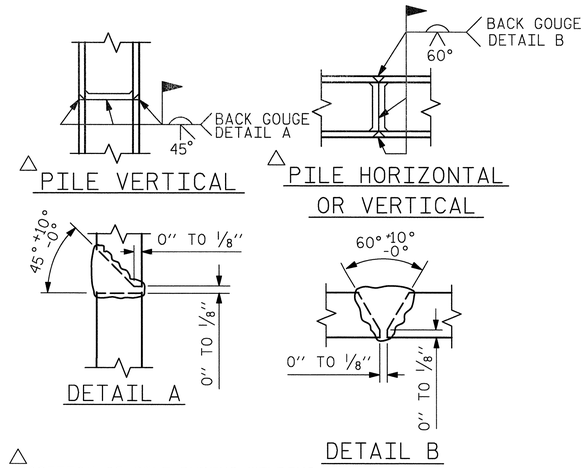

△ POSITION OF PILE DURING WELDING.

PILE SPLICE DETAILS

BAR TYPES

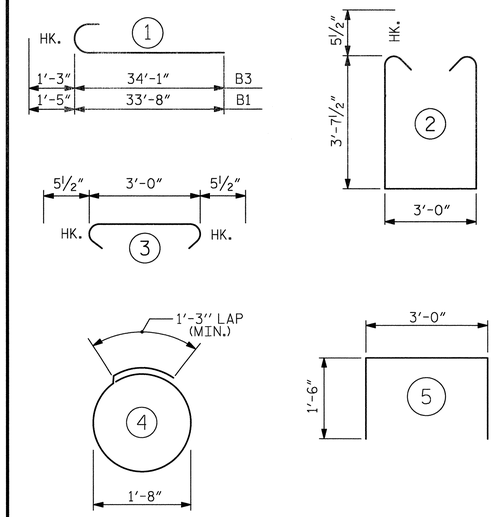

ALL BAR DIMENSIONS ARE OUT TO OUT.

BILL OF MATERIAL

END BENT #2

BAR	No.	SIZE	TYPE	LENGTH	WEIGHT
B1	8	#10	1	35'-1"	1208
B2	6	#5	STR	59'-3"	371
B3	10	#9	1	35'-4"	1201
B4	12	#4	STR	21'-6"	172
B5	15	#4	STR	3'-0"	30
B6	5	#4	STR	11'-8"	39
D1	94	#4	STR	6'-3"	392
H3	16	#6	STR	17'-10"	429
H4	16	#6	STR	17'-11"	431
S1	56	#5	2	11'-2"	652
S2	56	#5	3	3'-11"	229
S3	40	#4	4	6'-6"	174
U1	9	#4	5	6'-0"	36
V1	34	#5	STR	9'-11"	352
V2	34	#5	STR	9'-11"	352
REINFORCING STEEL					6068

CLASS A CONCRETE

POUR #1 (CAP, LOWER WINGS & COLLARS) 36.6 C.Y.

TOTAL 36.6 C.Y.

HP 12 X 53 STEEL PILES

No. = 10 150 LIN. FT.

STEEL PILE POINTS 10 EA.

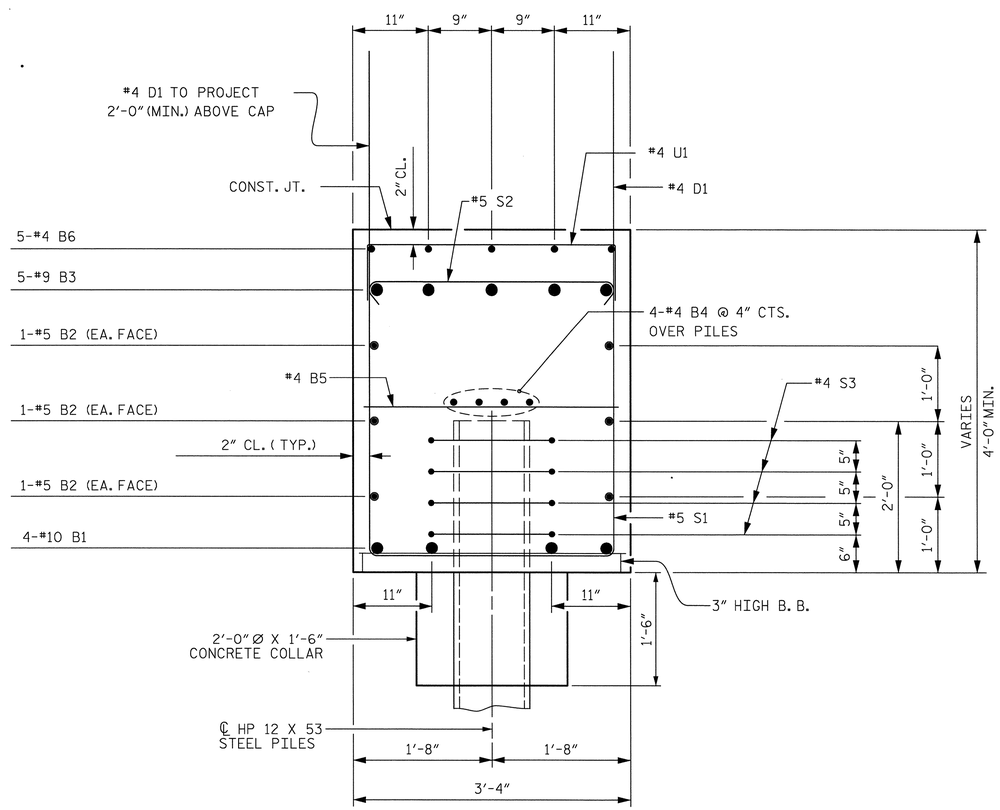

SECTION A-A

PROJECT NO. U-2525B

GUILFORD COUNTY

STATION: 21+69.08 -Y11- 228+23.81 -L-

SHEET 3 OF 3

STATE OF NORTH CAROLINA
DEPARTMENT OF TRANSPORTATION
RALEIGH

SUBSTRUCTURE

INTEGRAL END BENT #2

REVISIONS						SHEET NO.
NO.	BY:	DATE:	NO.	BY:	DATE:	S-449
1			3			TOTAL SHEETS
2			4			541

DRAWN BY : J.M. KEPICH DATE : 05/31/13
CHECKED BY : R.F. WERTMAN DATE : 06/04/13
DESIGN ENGINEER OF RECORD : R.F. WERTMAN DATE : 06/04/13

PLANS PREPARED BY:
Gannett Fleming
Excellence Delivered As Promised
1121 Situs Court
Suite 170
Raleigh NC 27606-4279
(919) 859-4880
NC Lic. No. F-0270

NORTH CAROLINA PROFESSIONAL SEAL 037180 ENGINEER RICHARD F. WERTMAN

STR. NO. 12

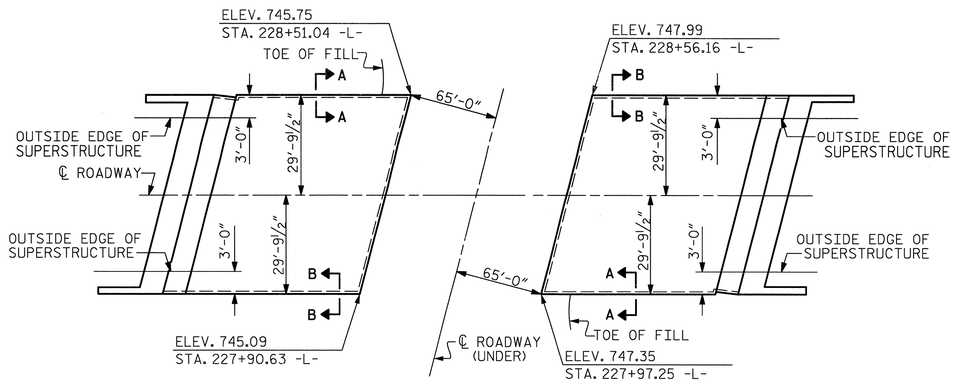

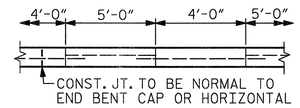

POUR A 4'-0" STRIP FIRST. STRIP WIDTHS MAY VARY IN CURVED PORTION.

OPTIONAL POURING DETAIL

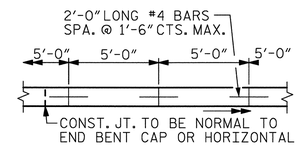

STRIP WIDTHS MAY VARY IN CURVED PORTION.

POURING DETAIL

GENERAL NOTES

SLOPE PROTECTION SHALL BE PLACED UNDER THE ENDS OF THE BRIDGE AS SHOWN IN THE DETAILS. THE CONTRACTOR, AT HIS OPTION, MAY USE ALTERNATE "B" ONLY FOR HIGHWAY OVER HIGHWAY GRADE SEPARATIONS WITH 2:1 END BENT SLOPE IN RURAL, UNPOPULATED AREAS. STRAIGHT EDGING WILL NOT BE REQUIRED UNLESS, IN THE OPINION OF THE ENGINEER, VISUAL INSPECTION INDICATES A NEED FOR IT. MEASUREMENT AND PAYMENT SHALL BE AS PRESCRIBED IN SECTION 462 OF THE STANDARD SPECIFICATIONS. FOR BERM WIDTH, SEE GENERAL DRAWING.

ALTERNATE "A"

ALTERNATE "A" SHALL CONSIST OF 4" POURED-IN-PLACE CONCRETE PAVING AS SHOWN IN THE DETAILS ON THIS SHEET. CONCRETE SHALL BE CLASS "B". THE CONCRETE SURFACE SHALL BE FLOATED WITH A WOODEN FLOAT AND FINISHED. WELDED WIRE FABRIC REINFORCING SHALL BE 6 X 6 - W1.4 X W1.4, 60" WIDE. SLOPE PROTECTION SHALL BE POURED IN 5' STRIPS AS SHOWN IN THE "POURING DETAIL" WITH 2'-0" LONG #4 BARS PLACED ALONG THE SLOPE BETWEEN STRIPS AT 1'-6" MAXIMUM SPACING. SLOPE PROTECTION MAY BE POURED IN ALTERNATE 4' AND 5' STRIPS AS SHOWN IN THE "OPTIONAL POURING DETAIL" WITH ADJACENT RUNS OF WELDED WIRE FABRIC LAPPING AT LEAST 6". THE COST OF THE WELDED WIRE FABRIC AND #4 BARS, IF USED, SHALL BE INCLUDED IN THE CONTRACT UNIT PRICE BID PER SQUARE YARD FOR SLOPE PROTECTION.

BRIDGE @ STA. 21+69.08 -Y11-	4 INCH SLOPE PROTECTION	* WELDED WIRE FABRIC 60 INCHES WIDE
	SQUARE YARDS	APPROX. L.F.
END BENT 1	222	444
END BENT 2	223	446
TOTAL	445	890

* QUANTITY SHOWN IS BASED ON 5' POURS.

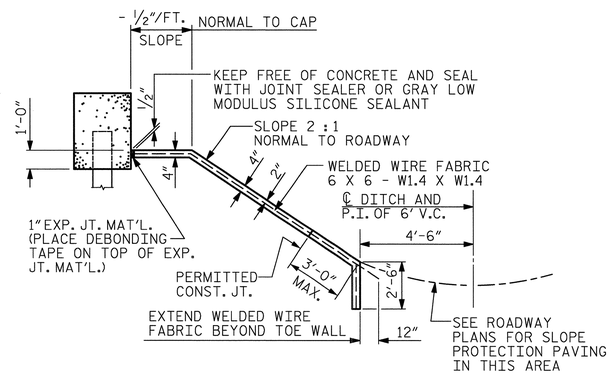

SECTION ALONG ℄ ROADWAY WHEN FILL CATCHES IN DITCH

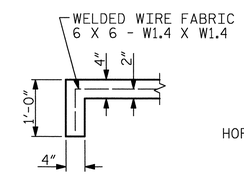

SECTION A-A

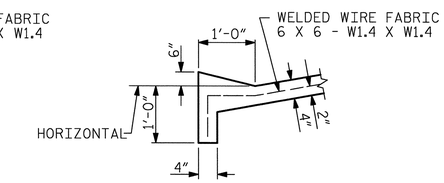

SECTION B-B

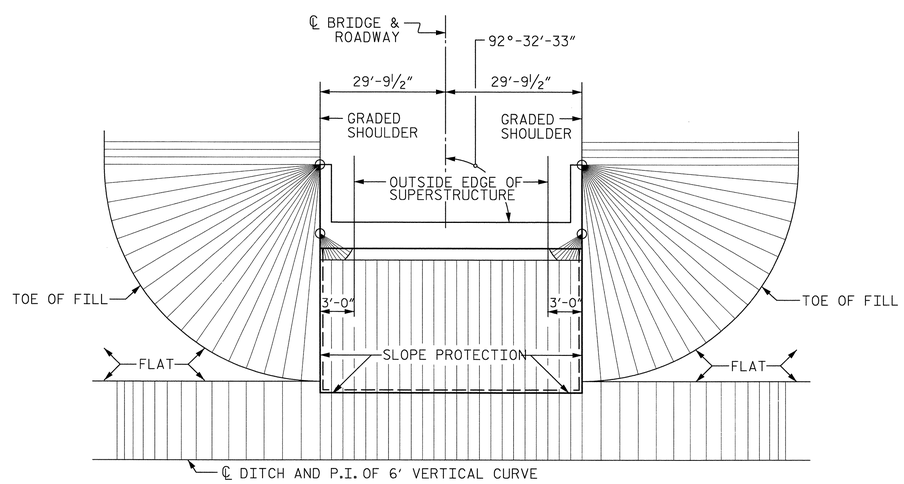

PLAN - END BENT WITH SWEPT BACK WINGS - SKEWED

(2:1 SLOPE)

PROJECT NO. U-2525B
GUILFORD COUNTY
STATION: 21+69.08 -Y11-
228+23.81 -L-

STATE OF NORTH CAROLINA
DEPARTMENT OF TRANSPORTATION
RALEIGH

STANDARD
SLOPE PROTECTION DETAILS

ASSEMBLED BY :	J. S. HOBSON	DATE :	4/16/13
CHECKED BY :	J. M. KEPICH	DATE :	5/20/13

DRAWN BY :	ELR	5/92	REV. 5/1/06	TLA/GM
CHECKED BY :	GRP	6/92	REV. 10/1/11	MAA/GM
			REV. 12/21/11	MAA/GM

PLANS PREPARED BY:
Gannett Fleming
Excellence Delivered As Promised
1121 Situs Court
Suite 170
Raleigh NC 27606-4279
(919) 859-4880
NC Lic. No. F-0270

THESE PLANS HAVE BEEN PROPERLY EXAMINED BY THE UNDERSIGNED. I HAVE DETERMINED THAT THEY COMPLY WITH EXISTING NORTH CAROLINA CODES, AND HAVE BEEN PROPERLY ADAPTED FOR USE IN THIS AREA.

NORTH CAROLINA PROFESSIONAL SEAL 037180 ENGINEER RICHARD F. WERTMAN

REVISIONS						
NO.	BY:	DATE:	NO.	BY:	DATE:	
1			3			
2			4			

SHEET NO. S-450
TOTAL SHEETS 541

STR. NO. 12

STD. NO. SP1 (SHT 3)

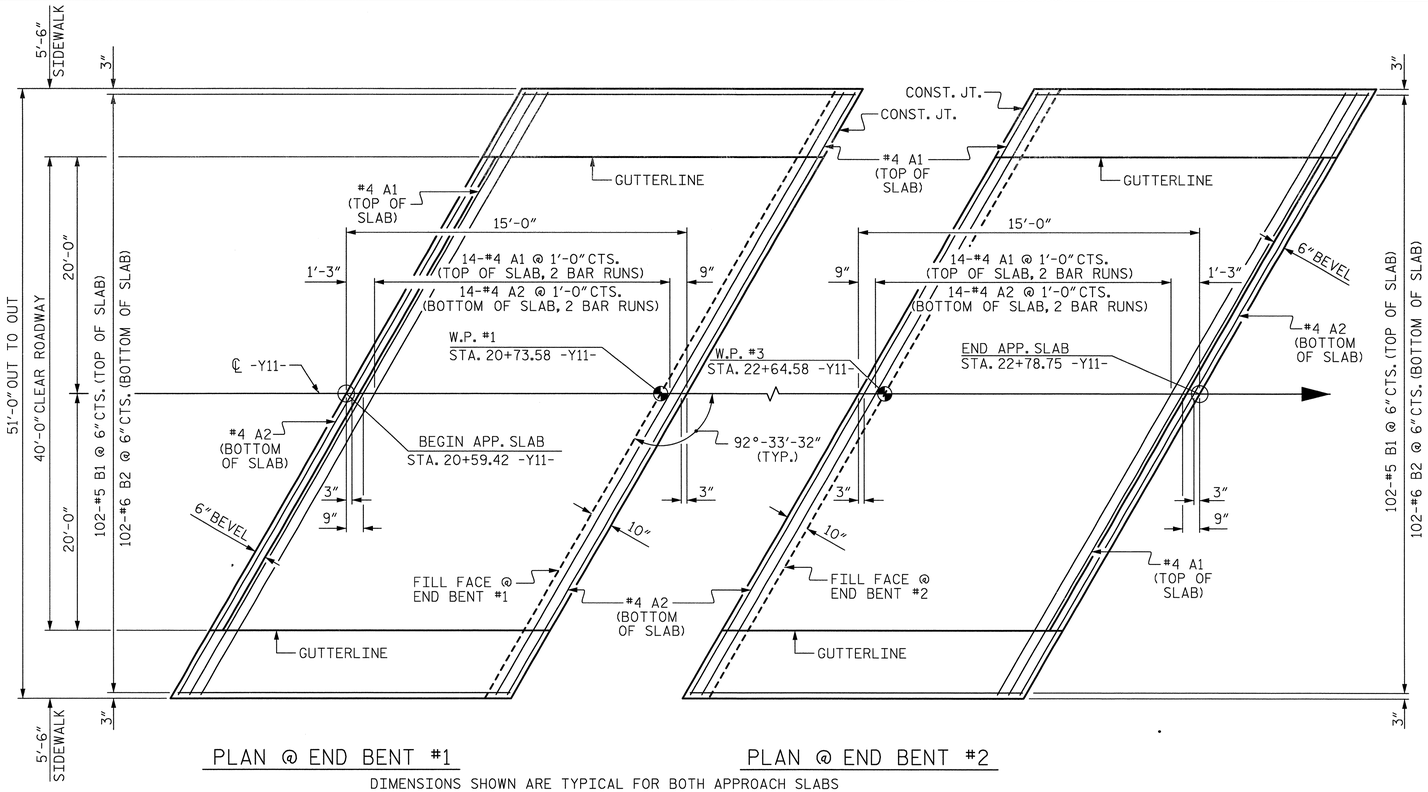

PLAN @ END BENT #1

PLAN @ END BENT #2

DIMENSIONS SHOWN ARE TYPICAL FOR BOTH APPROACH SLABS

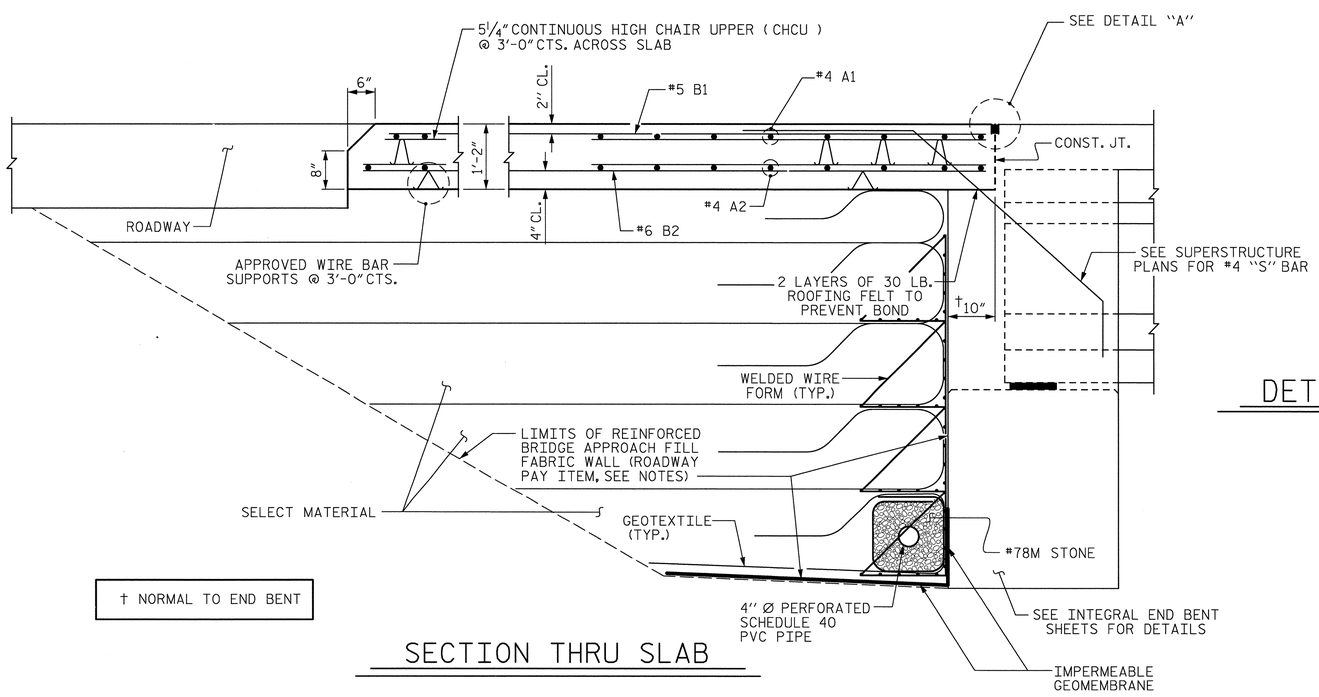

† NORMAL TO END BENT

SECTION THRU SLAB

NOTES

APPROACH SLAB SHALL NOT BE CONSTRUCTED PRIOR TO COMPLETION OF THE BRIDGE DECK.

FOR REINFORCED BRIDGE APPROACH FILL FABRIC WALL INCLUDING GEOTEXTILE, IMPERMEABLE GEOMEMBRANE, 4" Ø DRAINAGE PIPE, #78M STONE, WELDED WIRE FORM, AND SELECT MATERIAL, SEE ROADWAY PLANS.

AREA BETWEEN THE WINGWALL AND APPROACH SLAB SHALL BE GRADED TO DRAIN THE WATER AWAY FROM THE FILL FACE OF THE BRIDGE AND SHALL BE PAVED. SEE ROADWAY PLANS.

THE JOINT OPENING AT THE APPROACH SLAB/DECK INTERFACE SHALL BE SAWED NO MORE THAN 12 HOURS AFTER THE APPROACH SLAB IS CAST. THE JOINT SHALL BE CLEANED OF ALL DEBRIS BEFORE THE SEALANT IS APPLIED. THE JOINT SEALER MATERIAL SHALL CONFORM TO THE REQUIREMENTS OF SECTION 1028-3 OF THE STANDARD SPECIFICATIONS.

SPLICE LENGTHS CHART		
BAR SIZE	EPOXY COATED	UNCOATED
#4	2'-0"	1'-9"
#5	2'-6"	2'-2"
#6	3'-10"	2'-7"

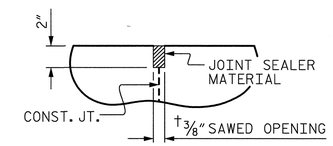

DETAIL "A"

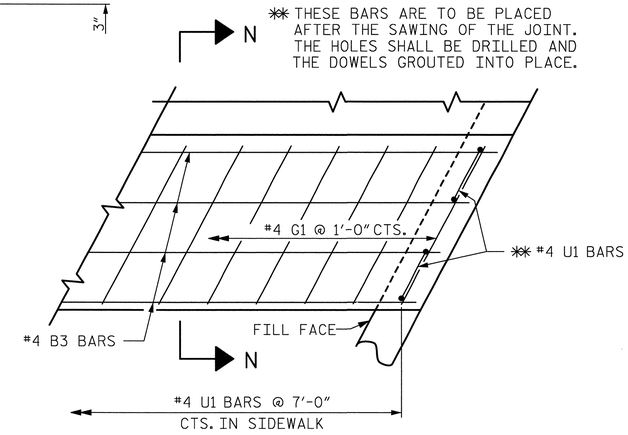

PARTIAL PLAN

DETAIL OF SIDEWALK ON APPROACH SLAB

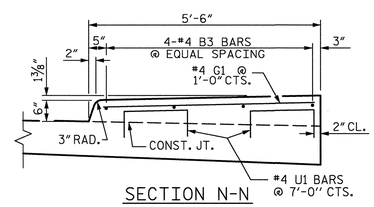

SECTION N-N

SIDEWALK DETAILS

BILL OF MATERIAL

APPROACH SLAB AT EB #1

BAR	NO.	SIZE	TYPE	LENGTH	WEIGHT
* A1	32	#4	STR	26'-5"	565
A2	32	#4	STR	26'-3"	561
* B1	102	#5	STR	14'-2"	1507
B2	102	#6	STR	14'-8"	2247
* B3	8	#4	STR	14'-8"	78
* G1	30	#4	STR	5'-2"	104
* U1	12	#4	1	3'-0"	24

REINFORCING STEEL 2808 LBS.

*EPOXY COATED REINFORCING STEEL 2278 LBS.

CLASS AA CONCRETE BREAKDOWN

POUR #1 SLAB 32.9 C. Y.

POUR #2 SIDEWALK 3.6 C. Y.

TOTAL CLASS AA CONCRETE 36.5 C. Y.

APPROACH SLAB AT EB #2

BAR	NO.	SIZE	TYPE	LENGTH	WEIGHT
* A1	32	#4	STR	26'-5"	565
A2	32	#4	STR	26'-3"	561
* B1	102	#5	STR	14'-2"	1507
B2	102	#6	STR	14'-8"	2247
* B3	8	#4	STR	14'-8"	78
* G1	30	#4	STR	5'-2"	104
* U1	12	#4	1	3'-0"	24

REINFORCING STEEL 2808 LBS.

*EPOXY COATED REINFORCING STEEL 2278 LBS.

CLASS AA CONCRETE BREAKDOWN

POUR #1 SLAB 32.9 C. Y.

POUR #2 SIDEWALK 3.6 C. Y.

TOTAL CLASS AA CONCRETE 36.5 C. Y.

BAR TYPE

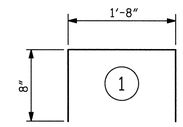

ALL BAR DIMENSIONS ARE OUT TO OUT.

PROJECT NO. U-2525B

GUILFORD COUNTY

STATION: 21+69.08 -Y11-
228+23.81 -L-

SHEET 1 OF 2

STATE OF NORTH CAROLINA
DEPARTMENT OF TRANSPORTATION
RALEIGH

STANDARD

BRIDGE APPROACH SLAB FOR INTEGRAL ABUTMENT

ASSEMBLED BY : J. S. HOBSON	DATE : 4/9/13
CHECKED BY : J. M. KEPICH	DATE : 5/17/13
DRAWN BY : TLA 10/05	ADDED 5/1/06RR KMM/GM
CHECKED BY : GM 5/06	REV. 10/1/11 MAA/GM
	REV. 12/21/11 MAA/GM

PLANS PREPARED BY:
Gannett Fleming
Excellence Delivered As Promised
1121 Situs Court
Suite 170
Raleigh NC 27606-4279
(919) 859-4880
NC Lic. No. F-0270

THESE PLANS HAVE BEEN PROPERLY EXAMINED BY THE UNDERSIGNED. I HAVE DETERMINED THAT THEY COMPLY WITH EXISTING NORTH CAROLINA CODES, AND HAVE BEEN PROPERLY ADAPTED FOR USE IN THIS AREA.

NORTH CAROLINA PROFESSIONAL SEAL 037180 ENGINEER RICHARD F. WERTMAN

REVISIONS							SHEET NO.
NO.	BY:	DATE:	NO.	BY:	DATE:		S-451
1			3				TOTAL SHEETS
2			4				54

STR. NO. 12

STD. NO. BAS5 (SHT 1b)

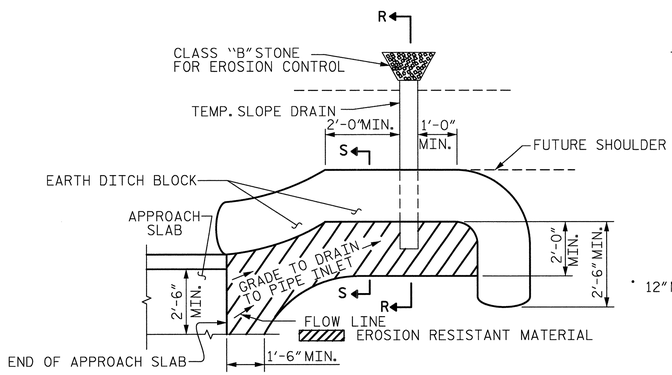

NOTE: IMMEDIATELY AFTER THE CONSTRUCTION OF THE APPROACH SLAB, THE CONTRACTOR SHALL PROVIDE TEMPORARY BERM AND SLOPE DRAIN. CONTRACTOR SHALL GRADE TO PIPE INLET AND PROVIDE EROSION RESISTANT MATERIAL AS SHOWN. THE EROSION RESISTANT MATERIAL SHALL BE EITHER 1) ASPHALT PLANT MIX, TYPE 1 OR TYPE 2, MIN. 2" DEPTH, 2) EROSION CONTROL MAT, OR 3) CONCRETE, AS DIRECTED BY THE ENGINEER. THE SLOPE DRAIN SHALL CONSIST OF A NON-PERFORATED TEMPORARY DRAINAGE PIPE, 12 INCHES IN DIAMETER.

PLAN VIEW

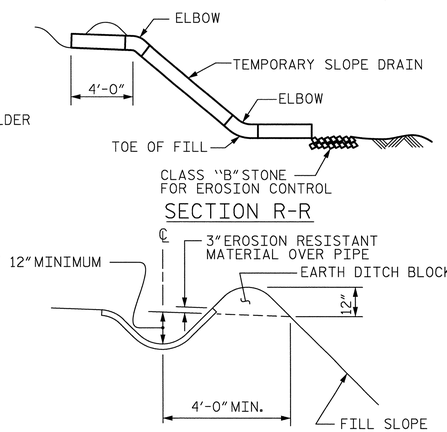

SECTION S-S

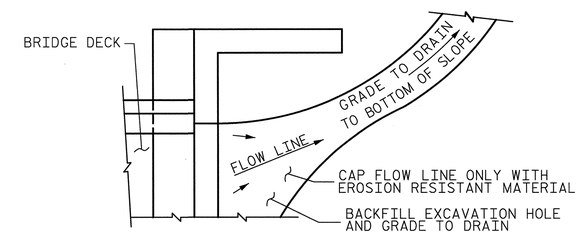

NOTE: IF THE APPROACH SLAB IS NOT CONSTRUCTED IMMEDIATELY AFTER THE BACKFILLING OF THE END BENT EXCAVATION, GRADE TO DRAIN TO THE BOTTOM OF THE SLOPE AND PROVIDE EROSION RESISTANT MATERIAL, SUCH AS FIBERGLASS ROVING OR AS DIRECTED BY THE ENGINEER TO PREVENT SOIL EROSION AND TO PROTECT THE AREA ADJACENT TO THE STRUCTURE. THE CONTRACTOR WILL BE REQUIRED TO REMOVE THESE MATERIALS PRIOR TO CONSTRUCTION OF THE APPROACH SLAB.

TEMPORARY DRAINAGE DETAIL

TEMPORARY BERM AND SLOPE DRAIN DETAILS

(TO BE USED WHEN SHOULDER BERM GUTTER IS REQUIRED)

PROJECT NO. U-2525B
GUILFORD COUNTY
STATION: 21+69.08 -Y11-
228+23.81 -L-
SHEET 2 OF 2

STATE OF NORTH CAROLINA
DEPARTMENT OF TRANSPORTATION
RALEIGH

STANDARD

BRIDGE APPROACH
SLAB DETAILS

ASSEMBLED BY :	J.S. HOBSON	DATE :	4/10/13
CHECKED BY :	J.M. KEPICH	DATE :	5/17/13

DRAWN BY : FCJ	11/88	REV. 5/7/03	RWW/JTE
CHECKED BY : ARB	11/88	REV. 5/1/06RRR	MAA/KMM
		REV. 10/1/11	MAA/GM

PLANS PREPARED BY:
Gannett Fleming
Excellence Delivered As Promised
1121 Situs Court
Suite 170
Raleigh NC 27606-4279
(919) 859-4880
NC Lic. No. F-0270

THESE PLANS HAVE BEEN PROPERLY EXAMINED BY THE UNDERSIGNED. I HAVE DETERMINED THAT THEY COMPLY WITH EXISTING NORTH CAROLINA CODES, AND HAVE BEEN PROPERLY ADAPTED FOR USE IN THIS AREA.

NORTH CAROLINA PROFESSIONAL SEAL 037180 ENGINEER RICHARD F. WERTMAN

REVISIONS							
NO.	BY:	DATE:	NO.	BY:	DATE:		
1			3				
2			4				

SHEET NO. S-452
TOTAL SHEETS 54-1

STR. NO. 12

STD. NO. BAS4 (SHT 2b)

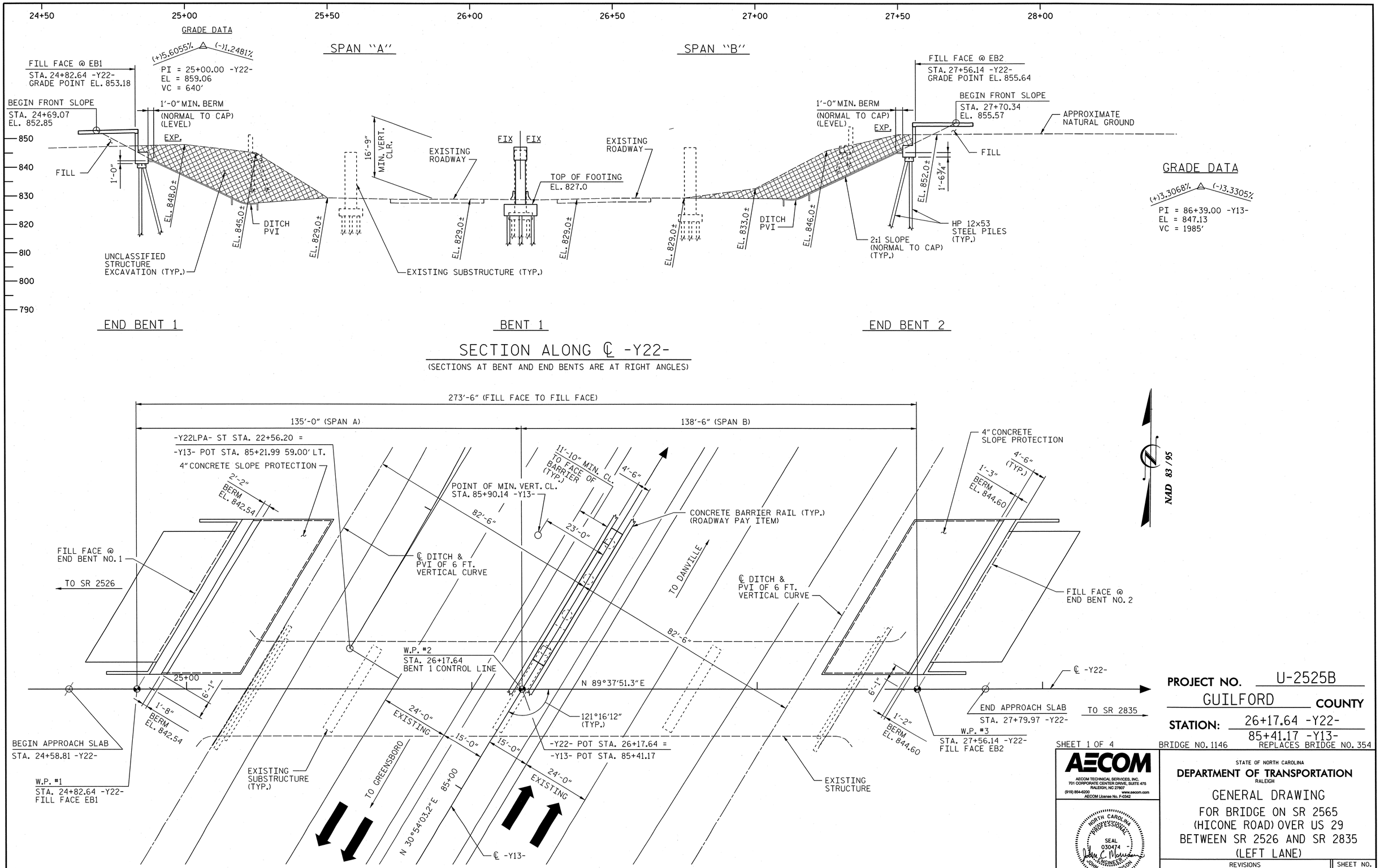

DATE: 3/25/2014
TIME: 9:36:54 AM

USER: beltsem
DGN: G:\5025\9356\400_Technical_Information_Disc_Files\450_NC\007Sft\edbelgin\Files\Structures\Bridge\4\Cadd\U2525B_SD_DSN_JMG_BPE.dgn

DRAWN BY : JWH	DATE : 03/14		
CHECKED BY : JCM	DATE : 03/14		

PROJECT NO. U-2525B
GUILFORD **COUNTY**
STATION: 26+17.64 -Y22-
85+41.17 -Y13-

SHEET 1 OF 4
BRIDGE NO. 1146
REPLACES BRIDGE NO. 354

AECOM
AECOM TECHNICAL SERVICES, INC.
701 CORPORATE CENTER DRIVE, SUITE 475
RALEIGH, NC 27607
(919) 854-6200 www.aecom.com
AECOM License No. F-0342

NORTH CAROLINA PROFESSIONAL SEAL 030474 ENGINEER JOHN C. MORRISON
3/25/14

R.N. 13-01

STATE OF NORTH CAROLINA
DEPARTMENT OF TRANSPORTATION
RALEIGH

GENERAL DRAWING
FOR BRIDGE ON SR 2565
(HICONE ROAD) OVER US 29
BETWEEN SR 2526 AND SR 2835
(LEFT LANE)

REVISIONS							SHEET NO.
NO.	BY:	DATE:	NO.	BY:	DATE:		S-453
1			3				TOTAL SHEETS
2			4				541

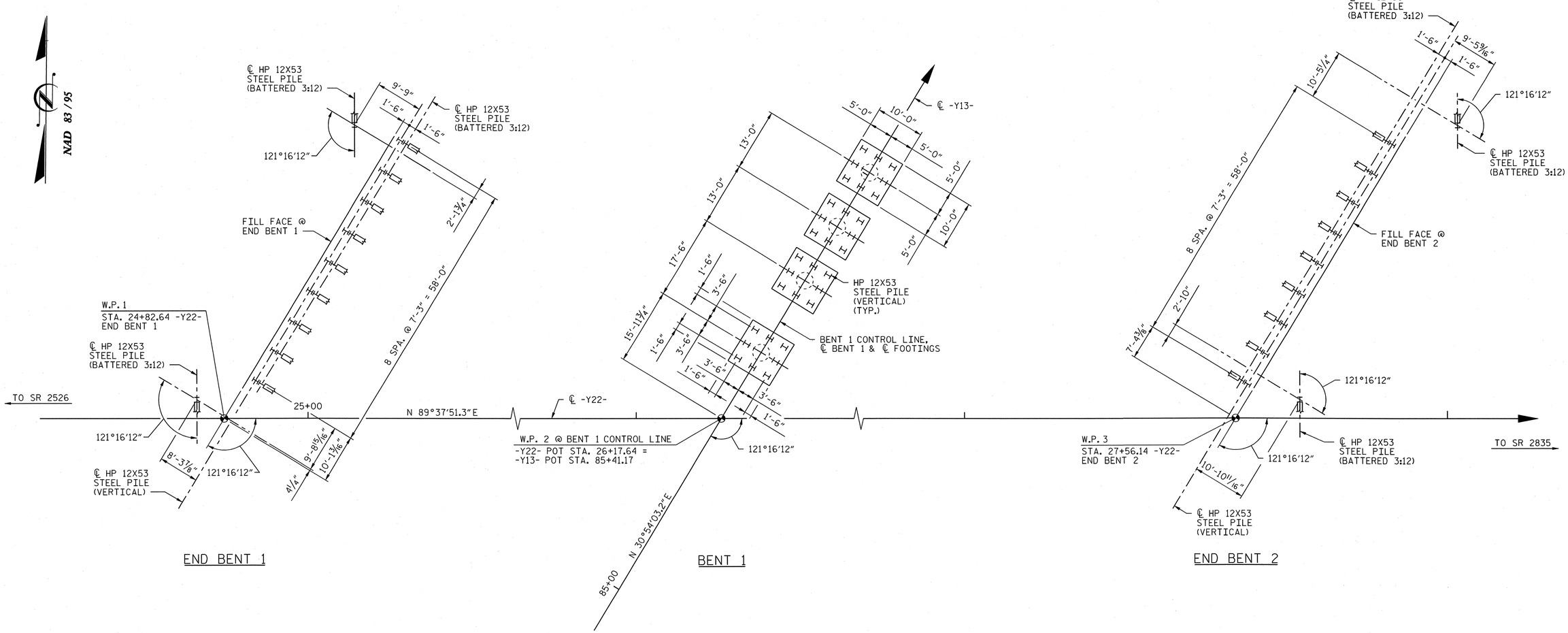

FOUNDATION LAYOUT

NOTES:

1. FOR PILES, SEE SECTION 450 OF THE STANDARD SPECIFICATIONS.
2. PILES AT END BENT NO. 1 ARE DESIGNED FOR A FACTORED RESISTANCE OF 110 TONS PER PILE.
3. DRIVE PILES AT END BENT NO. 1 TO A REQUIRED DRIVING RESISTANCE OF 185 TONS.
4. PILES AT END BENT NO. 2 ARE DESIGNED FOR A FACTORED RESISTANCE OF 105 TONS PER PILE.
5. DRIVE PILES AT END BENT NO. 2 TO A REQUIRED DRIVING RESISTANCE OF 175 TONS PER PILE.
6. PILES AT BENT NO. 1 ARE DESIGNED FOR A FACTORED RESISTANCE OF 95 TONS PER PILE.
7. DRIVE PILES AT BENT NO. 1 TO A REQUIRED DRIVING RESISTANCE OF 160 TONS PER PILE.
8. STEEL H-PILE POINTS ARE REQUIRED FOR STEEL H-PILES AT BENT NO. 1. FOR STEEL PILE POINTS, SEE SECTION 450 OF THE STANDARD SPECIFICATIONS.

PROJECT NO. U-2525B
GUILFORD COUNTY
STATION: 26+17.64 -Y22-
85+41.17 -Y13-
SHEET 2 OF 4

AECOM
AECOM TECHNICAL SERVICES, INC.
701 CORPORATE CENTER DRIVE, SUITE 475
RALEIGH, NC 27607
(919) 854-6200 www.aecom.com
AECOM License No. F-0342

NORTH CAROLINA PROFESSIONAL SEAL 030474 ENGINEER JOHN C. MORRISON
3/25/14
R.N. 13-02

STATE OF NORTH CAROLINA
DEPARTMENT OF TRANSPORTATION
RALEIGH

GENERAL DRAWING
FOR BRIDGE ON SR 2565
(HICONE ROAD) OVER US 29
BETWEEN SR 2526 AND SR 2835
(LEFT LANE)

REVISIONS						SHEET NO.
NO.	BY:	DATE:	NO.	BY:	DATE:	S-454
1			3			TOTAL SHEETS
2			4			541

DRAWN BY : DDL DATE : 03/14
CHECKED BY : JCM DATE : 03/14

DATE: 3/25/2014
TIME: 9:35:46 AM

USER: hollingr
DGN: U:\60279356\400_Technical_Information_Disc_Files\450_NCDOT Std Tech Dsls\prl Files\Structures\Bridge 1\Cold\U2525B_SD_DSN_Il46_FOUNDLAY.dgn

BENCH MARK: BM-13 RAILROAD SPIKE SET IN 15" SWEET GUM,
651' LEFT OF STA. 68+91 -Y13-
COORDINATES: N 873689 E 1783288
ELEV. 783.79

BENCH MARK: BM-14 RAILROAD SPIKE SET IN 24" STUMP,
105' LEFT OF STA. 11+79 -Y22-
COORDINATES: N 874866 E 1783255
ELEV. 829.24

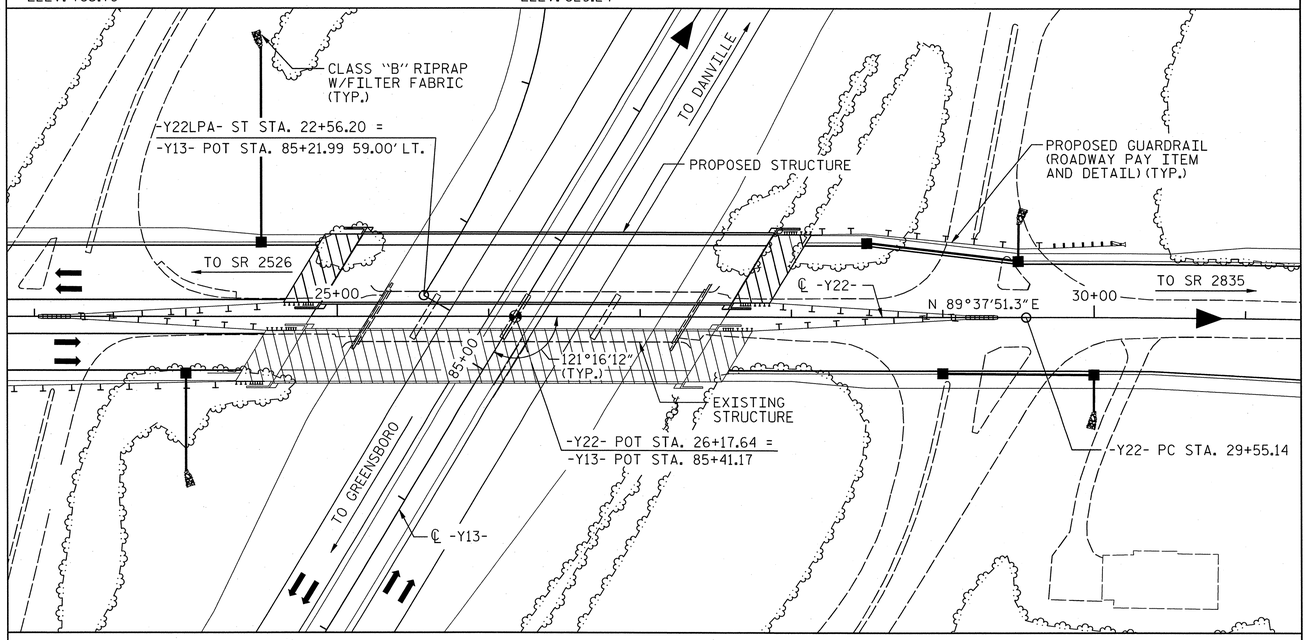

LOCATION SKETCH

FOR UTILITY INFORMATION, SEE UTILITY PLANS AND SPECIAL PROVISIONS

NAD 83 / 95

GENERAL NOTES:

ASSUMED LIVE LOAD = HL-93 OR ALTERNATE LOADING.

FOR EROSION CONTROL MEASURES, SEE EROSION CONTROL PLANS.

THIS BRIDGE HAS BEEN DESIGNED IN ACCORDANCE WITH THE REQUIREMENTS OF THE AASHTO LRFD BRIDGE DESIGN SPECIFICATIONS.

THIS BRIDGE IS LOCATED IN SEISMIC ZONE 1.

REMOVABLE FORMS MAY BE USED IN LIEU OF METAL STAY-IN-PLACE FORMS IN ACCORDANCE WITH ARTICLE 420-3 OF THE STANDARD SPECIFICATIONS.

PRESTRESSED CONCRETE DECK PANELS MAY BE USED IN LIEU OF METAL STAY-IN-PLACE FORMS IN ACCORDANCE WITH ARTICLE 420-3 OF THE STANDARD SPECIFICATIONS. THE SKEWED END CONDITION AT EACH END BENT AND BENT IS SUCH THAT THE USE OF 4' WIDE PRESTRESSED CONCRETE DECK PANELS IS NOT POSSIBLE: USE OF 8' WIDE PRESTRESSED CONCRETE DECK PANELS IS NECESSARY.

NEEDLE BEAMS WILL NOT BE ALLOWED UNLESS OTHERWISE CALLED FOR ON THE PLANS OR APPROVED BY THE ENGINEER.

THE CLASS AA CONCRETE IN THE BRIDGE DECK SHALL CONTAIN FLY ASH OR GROUND GRANULATED BLAST FURNACE SLAG AT THE SUBSTITUTION RATE SPECIFIED IN ARTICLE 1024-1 AND IN ACCORDANCE WITH ARTICLES 1024-5 AND 1024-6 OF THE STANDARD SPECIFICATIONS. NO PAYMENT WILL BE MADE FOR THIS SUBSTITUTION AS IT IS CONSIDERED INCIDENTAL TO THE COST OF THE REINFORCED CONCRETE DECK SLAB.

THE ELEVATION AND CLEARANCE SHOWN ON THE PLANS AT THE POINT OF MINIMUM VERTICAL CLEARANCE ARE FROM THE BEST INFORMATION AVAILABLE. PRIOR TO BEGINNING BRIDGE CONSTRUCTION, VERIFY THE ELEVATION ON THE EXISTING PAVEMENT AND CHECK THE CLEARANCE. REPORT ANY VARIATIONS TO THE ENGINEER. ANY PLAN REVISIONS NECESSARY TO ACHIEVE THE REQUIRED MINIMUM VERTICAL CLEARANCE WILL BE PROVIDED BY THE DEPARTMENT.

THE MATERIAL SHOWN IN THE CROSS-HATCHED AREA SHALL BE EXCAVATED FOR A DISTANCE OF 60* FT LEFT OF -Y22- AS DIRECTED BY THE ENGINEER. THIS WORK WILL BE PAID FOR AT THE CONTRACT LUMP SUM PRICE FOR UNCLASSIFIED STRUCTURE EXCAVATION. SEE SECTION 412 OF THE STANDARD SPECIFICATIONS.

THE SUBSTRUCTURE OF THE EXISTING BRIDGE INDICATED ON THE PLANS IS FROM THE BEST INFORMATION AVAILABLE. THIS INFORMATION IS SHOWN FOR THE CONVENIENCE OF THE CONTRACTOR. THE CONTRACTOR SHALL HAVE NO CLAIM WHATSOEVER AGAINST THE DEPARTMENT OF TRANSPORTATION FOR ANY DELAYS OR ADDITIONAL COST INCURRED BASED ON DIFFERENCES BETWEEN THE EXISTING BRIDGE SUBSTRUCTURE SHOWN ON THE PLANS AND THE ACTUAL CONDITIONS AT THE PROJECT SITE.

FOR CRANE SAFETY, SEE SPECIAL PROVISIONS.

FOR SUBMITTAL OF WORKING DRAWINGS, SEE SPECIAL PROVISIONS.

FOR FALSEWORK AND FORMWORK, SEE SPECIAL PROVISIONS.

FOR GROUT FOR STRUCTURES, SEE SPECIAL PROVISIONS.

FOR MAINTENANCE AND PROTECTION OF TRAFFIC BENEATH PROPOSED STRUCTURE, SEE SPECIAL PROVISIONS.

WORK SHALL NOT BE STARTED ON THIS BRIDGE UNTIL EXCAVATION IS COMPLETE.

FOR PLACING LOAD ON STRUCTURE MEMBERS, SEE SPECIAL PROVISIONS.

FOR OTHER DESIGN DATA AND GENERAL NOTES, SEE SHEET SN.

DRAWING INDEX:

13-01 GENERAL DRAWING - PLAN AND ELEVATION
13-02 GENERAL DRAWING - FOUNDATION LAYOUT
13-03 GENERAL DRAWING - LOCATION SKETCH, TOTAL BILL OF MATERIAL
13-04 GENERAL DRAWING - LRFR SUMMARY FOR PCG'S (NON-INTERSTATE TRAFFIC)
13-05 SUPERSTRUCTURE - TYPICAL SECTION
13-06 SUPERSTRUCTURE - TYPICAL SECTION DETAILS (1 OF 2)
13-07 SUPERSTRUCTURE - TYPICAL SECTION DETAILS (2 OF 2)
13-08 SUPERSTRUCTURE - PLAN OF SPAN "A"
13-09 SUPERSTRUCTURE - PLAN OF SPAN "B"
13-10 SUPERSTRUCTURE - FRAMING PLAN
13-11 72" MBT SPAN "A" (1 OF 2)
13-12 72" MBT SPAN "A" (2 OF 2)
13-13 72" MBT SPAN "B" (1 OF 2)
13-14 72" MBT SPAN "B" (2 OF 2)
13-15 PRESTRESSED CONCRETE GIRDER CONTINOUS FOR LIVE LOAD DETAILS
13-16 INTERMEDIATE STEEL DIAPHRAGMS FOR 72" MODIFIED BULB TEE PCG'S
13-17 ELASTOMERIC BEARING DETAILS
13-18 SUPERSTRUCTURE - GIRDER DEFLECTION AND CAMBER SCHEDULES (1 OF 2)
13-19 SUPERSTRUCTURE - GIRDER DEFLECTION AND CAMBER SCHEDULES (2 OF 2)
13-20 SUPERSTRUCTURE - CONCRETE PARAPET AND END POST DETAILS (1 OF 2)
13-21 SUPERSTRUCTURE - CONCRETE PARAPET AND END POST DETAILS (2 OF 2)
13-22 RAIL POST SPACINGS AND END OF RAIL DETAILS
13-23 2 BAR METAL RAIL (1 OF 2)
13-24 2 BAR METAL RAIL (2 OF 2)
13-25 GUARDRAIL ANCHORAGE DETAILS FOR METAL RAILS
13-26 SUPERSTRUCTURE BILL OF MATERIAL (1 OF 2)
13-27 SUPERSTRUCTURE BILL OF MATERIAL (2 OF 2)
13-28 SUBSTRUCTURE - END BENT 1 (1 OF 5)
13-29 SUBSTRUCTURE - END BENT 1 (2 OF 5)
13-30 SUBSTRUCTURE - END BENT 1 (3 OF 5)
13-31 SUBSTRUCTURE - END BENT 1 (4 OF 5)
13-32 SUBSTRUCTURE - END BENT 1 (5 OF 5)
13-33 SUBSTRUCTURE - BENT 1 (1 OF 3)
13-34 SUBSTRUCTURE - BENT 1 (2 OF 3)
13-35 SUBSTRUCTURE - BENT 1 (3 OF 3)
13-36 SUBSTRUCTURE - END BENT 2 (1 OF 5)
13-37 SUBSTRUCTURE - END BENT 2 (2 OF 5)
13-38 SUBSTRUCTURE - END BENT 2 (3 OF 5)
13-39 SUBSTRUCTURE - END BENT 2 (4 OF 5)
13-40 SUBSTRUCTURE - END BENT 2 (5 OF 5)
13-41 SLOPE PROTECTION DETAILS (1 OF 2)
13-42 SLOPE PROTECTION DETAILS (2 OF 2)
13-43 BRIDGE APPROACH SLAB FOR FLEXIBLE PAVEMENT (1 OF 4)
13-44 BRIDGE APPROACH SLAB FOR FLEXIBLE PAVEMENT (2 OF 4)
13-45 BRIDGE APPROACH SLAB DETAILS FOR FLEXIBLE PAVEMENT (3 OF 4)
13-46 BRIDGE APPROACH SLAB DETAILS FOR FLEXIBLE PAVEMENT (4 OF 4)

TOTAL BILL OF MATERIAL

	REMOVAL OF EXISTING STRUCTURE	FOUNDATION EXCAVATION	UNCLASSIFIED STRUCTURE EXCAVATION	REINFORCED CONCRETE DECK SLAB	GROOVING BRIDGE FLOORS	CLASS A CONCRETE	BRIDGE APPROACH SLABS	REINFORCING STEEL
	LUMP SUM	LUMP SUM	LUMP SUM	SQ. FT.	SQ. FT.	CU. YDS.	LUMP SUM	LBS.
SUPERSTRUCTURE	LUMP SUM	—	—	13034	13496	—	LUMP SUM	—
END BENT No. 1	—	—	LUMP SUM	—	—	78.6	—	9439
BENT No. 1	—	LUMP SUM	—	—	—	136.0	—	21983
END BENT No. 2	—	—	LUMP SUM	—	—	84.5	—	9928
TOTAL	LUMP SUM	LUMP SUM	LUMP SUM	13034	13496	299.1	LUMP SUM	41350

CONT. TOTAL BILL OF MATERIAL

	SPIRAL COLUMN REINFORCING STEEL	MODIFIED 72" PRESTRESSED CONCRETE GIRDERS		HP 12x53 STEEL PILES		STEEL PILE POINTS	TWO BAR METAL RAIL	1'-2" x 2'-6" CONCRETE PARAPET	4" SLOPE PROTECTION	ELASTOMERIC BEARINGS	FOAM JOINT SEALS
	LBS.	NO.	LIN. FT.	NO.	LIN. FT.	EA.	LIN. FT.	LIN. FT.	SQ. YDS.	LUMP SUM	LUMP SUM
SUPERSTRUCTURE	—	14	1877.75	—	—	—	525.6	540.6	—	LUMP SUM	LUMP SUM
END BENT No. 1	—	—	—	20	935	—	—	—	204	—	—
BENT No. 1	1680	—	—	32	760	32	—	—	—	—	—
END BENT No. 2	—	—	—	20	870	—	—	—	225	—	—
TOTAL	1680	14	1877.75	72	2565	32	525.6	540.6	429	LUMP SUM	LUMP SUM

PROJECT NO. U-2525B
GUILFORD COUNTY
STATION: 26+17.64 -Y22-
85+41.17 -Y13-

SHEET 3 OF 4

AECOM
AECOM TECHNICAL SERVICES, INC.
701 CORPORATE CENTER DRIVE, SUITE 475
RALEIGH, NC 27607
(919) 854-6200 www.aecom.com
AECOM License No. F-0342

NORTH CAROLINA PROFESSIONAL SEAL 030474 ENGINEER JOHN C. MORRISON
3/25/14

STATE OF NORTH CAROLINA
DEPARTMENT OF TRANSPORTATION
RALEIGH

GENERAL DRAWING
FOR BRIDGE ON SR 2565
(HICONE ROAD) OVER US 29
BETWEEN SR 2526 AND SR 2835
(LEFT LANE)

REVISIONS								SHEET NO.
NO.	BY:	DATE:	NO.	BY:	DATE:			S-455
1			3					TOTAL SHEETS
2			4					541

R.N. 13-03

DRAWN BY : DDL DATE : 03/14
CHECKED BY : JCM DATE : 03/14

DATE: 3/25/2014
TIME: 11:45:35 AM

USER: bellsilem
DGN: Q:\60279356\400_Technical_Information_Dise_Files\450_NCDOT Staff tech\Design Files\Structures\Bridge 14\Cond\U2525B_SD_DSN_LR46_L00.dgn

LOAD AND RESISTANCE FACTOR RATING (LRFR) SUMMARY FOR PRESTRESSED CONCRETE GIRDERS

LEVEL		VEHICLE	WEIGHT (W) (TONS)	CONTROLLING LOAD RATING (#)	MINIMUM RATING FACTORS (RF)	TONS = W × RF	STRENGTH I LIMIT STATE											SERVICE III LIMIT STATE						COMMENT NUMBER
							LIVE-LOAD FACTORS (γ_{LL})	MOMENT					SHEAR					LIVE-LOAD FACTORS (γ_{LL})	MOMENT					
								DISTRIBUTION FACTORS (DF)	RATING FACTOR	SPAN	GIRDER LOCATION	DISTANCE FROM LEFT END OF SPAN (ft)	DISTRIBUTION FACTORS (DF)	RATING FACTOR	SPAN	GIRDER LOCATION	DISTANCE FROM LEFT END OF SPAN (ft)		DISTRIBUTION FACTORS (DF)	RATING FACTOR	SPAN	GIRDER LOCATION	DISTANCE FROM LEFT END OF SPAN (ft)	
DESIGN LOAD RATING		HL-93 (INVENTORY)	N/A	1	1.18	--	1.75	0.726	1.46	B	ER	67.2	0.816	1.25	B	I	121.6	0.80	0.726	1.18	B	ER	67.2	
		HL-93 (OPERATING)	N/A		1.66	--	1.35	0.726	1.89	B	ER	67.2	0.816	1.66	B	I	121.6	N/A	--	--	--	--	--	
		HS-20 (INVENTORY)	36.000	2	1.77	64.1	1.75	0.726	2.20	B	ER	67.2	0.816	1.85	B	I	121.6	0.80	0.726	1.77	B	ER	67.2	
		HS-20 (OPERATING)	36.000		2.44	87.8	1.35	0.726	2.85	B	ER	67.2	0.816	2.44	B	I	121.6	N/A	--	--	--	--	--	
LEGAL LOAD RATING	SINGLE VEHICLE (SV)	SNSH	13.500		4.37	59.0	1.40	0.726	6.74	B	ER	67.2	0.816	6.12	B	I	121.6	0.80	0.726	4.37	B	ER	67.2	
		SNGARBS2	20.000		3.10	62.0	1.40	0.726	4.79	B	ER	67.2	0.816	4.20	B	I	121.6	0.80	0.726	3.10	B	ER	67.2	
		SNAGRIS2	22.000		2.87	63.1	1.40	0.726	4.44	B	ER	67.2	0.816	3.85	B	I	121.6	0.80	0.726	2.87	B	ER	67.2	
		SNCOTTS3	27.250		2.17	59.1	1.40	0.726	3.35	B	ER	67.2	0.816	2.99	B	I	121.6	0.80	0.726	2.17	B	ER	67.2	
		SNAGGRS4	34.925		1.75	61.1	1.40	0.726	2.71	B	ER	67.2	0.816	2.38	B	I	121.6	0.80	0.726	1.75	B	ER	67.2	
		SNS5A	35.550		1.72	61.1	1.40	0.726	2.65	B	ER	67.2	0.816	2.38	B	I	121.6	0.80	0.726	1.72	B	ER	67.2	
		SNS6A	39.950		1.55	61.9	1.40	0.726	2.40	B	ER	67.2	0.816	2.13	B	I	121.6	0.80	0.726	1.55	B	ER	67.2	
		SNS7B	42.000		1.48	62.2	1.40	0.726	2.28	B	ER	67.2	0.816	2.05	B	I	121.6	0.80	0.726	1.48	B	ER	67.2	
	TRUCK TRACTOR SEMI-TRAILER (TTST)	TNAGRIT3	33.000		1.89	62.4	1.40	0.726	2.91	B	ER	67.2	0.816	2.58	B	I	121.6	0.80	0.726	1.89	B	ER	67.2	
		TNT4A	33.075		1.89	62.5	1.40	0.726	2.92	B	ER	67.2	0.816	2.54	B	I	121.6	0.80	0.726	1.89	B	ER	67.2	
		TNT6A	41.600		1.49	62.0	1.40	0.726	2.30	B	ER	67.2	0.816	1.97	B	I	121.6	0.80	0.726	1.49	B	ER	67.2	
		TNT7A	42.000		1.41	59.2	1.40	0.726	2.18	B	ER	67.2	0.816	1.92	B	I	121.6	0.80	0.726	1.41	B	ER	67.2	
		TNT7B	42.000	3	1.40	58.8	1.40	0.726	2.17	B	ER	67.2	0.816	1.87	B	I	121.6	0.80	0.726	1.40	B	ER	67.2	
		TNAGRIT4	43.000		1.52	65.4	1.40	0.726	2.35	B	ER	67.2	0.816	2.13	B	I	121.6	0.80	0.726	1.52	B	ER	67.2	
		TNAGT5A	45.000		1.52	68.4	1.40	0.726	2.34	B	ER	67.2	0.816	2.10	B	I	121.6	0.80	0.726	1.52	B	ER	67.2	
		TNAGT5B	45.000		1.54	69.3	1.40	0.726	2.38	B	ER	67.2	0.816	2.03	B	I	121.6	0.80	0.726	1.54	B	ER	67.2	

LOAD FACTORS:

DESIGN LOAD RATING FACTORS	LIMIT STATE	γ_{DC}	γ_{DW}
	STRENGTH I	1.25	1.50
	SERVICE III	1.00	1.00

NOTES:

MINIMUM RATING FACTORS ARE BASED ON THE STRENGTH I AND SERVICE III LIMIT STATES.

ALLOWABLE STRESSES FOR SERVICE III LIMIT STATE ARE AS REQUIRED FOR DESIGN.

COMMENTS:

1. SPAN LENGTHS SHOWN ARE BEARING TO BEARING DIMENSIONS.
2. CONTROLLING INTERIOR GIRDER (I) IS GIRDER 6.

(#) CONTROLLING LOAD RATING

(1) DESIGN LOAD RATING (HL-93)

(2) DESIGN LOAD RATING (HS-20)

(3) LEGAL LOAD RATING **

** SEE CHART FOR VEHICLE TYPE

GIRDER LOCATION

I - INTERIOR GIRDER
EL - EXTERIOR LEFT GIRDER
ER - EXTERIOR RIGHT GIRDER

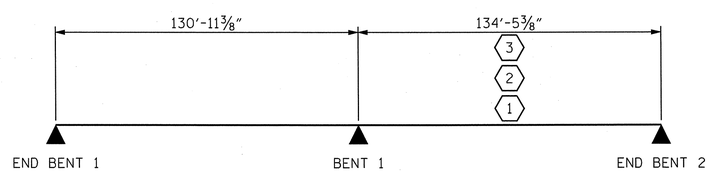

LRFR SUMMARY

PROJECT NO. U-2525B
GUILFORD COUNTY
STATION: 26+17.64 -Y22-
85+41.17 -Y13-

SHEET 4 OF 4

AECOM
AECOM TECHNICAL SERVICES, INC.
701 CORPORATE CENTER DRIVE, SUITE 475
RALEIGH, NC 27607
(919) 854-6200 www.aecom.com
AECOM License No. F-0342

NORTH CAROLINA PROFESSIONAL SEAL 030474 ENGINEER JOHN C. MORRISON
3/25/14
R.N. 13-04

STATE OF NORTH CAROLINA
DEPARTMENT OF TRANSPORTATION
RALEIGH

STANDARD

LRFR SUMMARY FOR PRESTRESSED CONCRETE GIRDERS (NON-INTERSTATE TRAFFIC)

REVISIONS						SHEET NO.
NO.	BY:	DATE:	NO.	BY:	DATE:	S-456
1			3			TOTAL SHEETS
2			4			541

STD. NO. LRFR1

ASSEMBLED BY : DDL		DATE : 03/14	
CHECKED BY : JCM		DATE : 03/14	
DRAWN BY : MAA 1/08	REV. 11/12/08RR	MAA/GM	
CHECKED BY : GM/DI 2/08	REV. 10/1/11	MAA/GM	

DATE: 3/25/2014 TIME: 11:45:58 AM
USER: bellsten DGN: GN8/27935bv400_Technical_Information_Files_FTIles1450_NC007SHdTechdesignFTIlesStructuresGIrdge 14Cadd\U2525B_SD_DSN_1146_LRFR.dgn

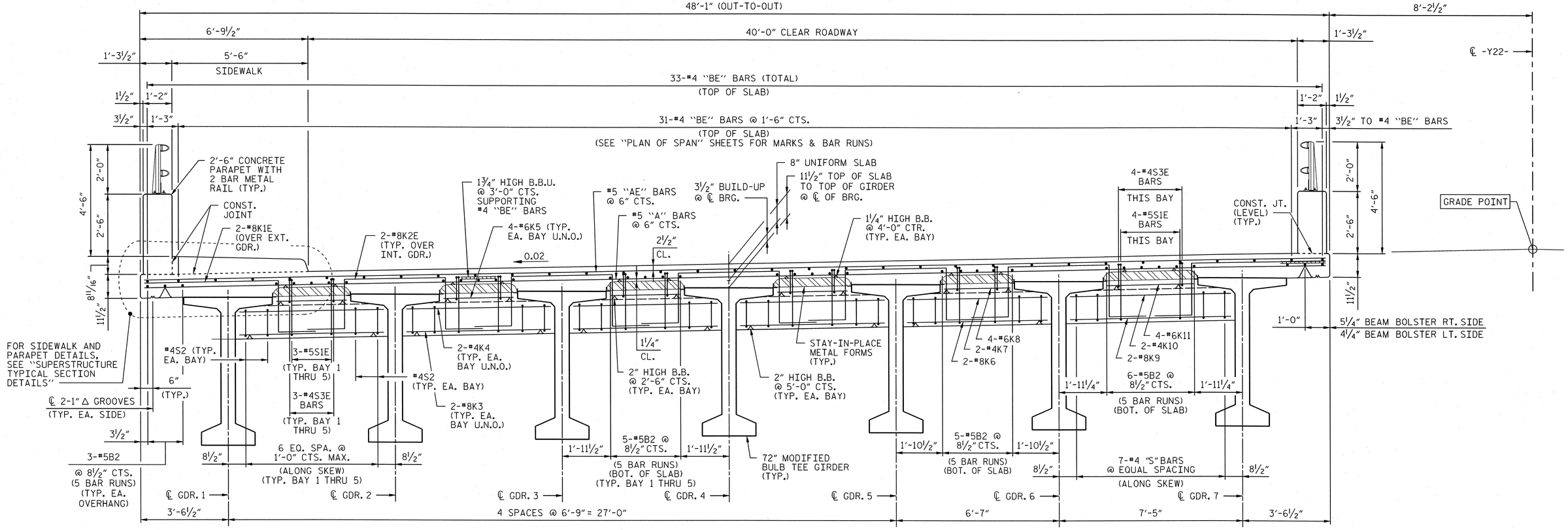

SECTION SHOWING END BENT 1 AND END BENT 2 END DIAPHRAGM

2 SPAN CONTINUOUS FOR LIVE LOAD WITH COMPOSITE DECK
ON 72" GIRDERS; STAY-IN-PLACE METAL FORMS

NOTES:

PROVIDE 1¼" HIGH BEAM BOLSTERS UPPER AT 4'-0" CTS. ATOP THE METAL STAY-IN-PLACE FORMS TO SUPPORT THE BOTTOM MAT OF "A" BARS. WHEN USING REMOVABLE FORMS, PROVIDE CONTINUOUS HIGH CHAIRS FOR METAL DECK (C.H.C.M.) AT 4'-0" CTS. WITH A HEIGHT TO SUPPORT THE BOTTOM MAT OF "A" BARS A CLEAR DISTANCE OF 2½" ABOVE THE TOP OF THE REMOVABLE FORM.

LONGITUDINAL STEEL MAY BE SHIFTED SLIGHTLY, AS NECESSARY, TO AVOID INTERFERENCE WITH STIRRUPS IN PRESTRESSED CONCRETE GIRDERS.

PARAPET SHALL NOT BE CAST UNTIL ALL SLAB CONCRETE IN THAT SPAN HAS BEEN CAST AND HAS REACHED A MINIMUM COMPRESSIVE STRENGTH OR 3,000 PSI.

SIDEWALK SHALL NOT BE CAST UNTIL CONCRETE PARAPET HAS BEEN CAST AND HAS REACHED A MINIMUM COMPRESSIVE STRENGTH OF 3,000 PSI.

THE JOINT IN DECK SHALL BE SAWED PRIOR TO THE CASTING OF THE SIDEWALK.

GROOVED CONTRACTION JOINTS, ½" IN DEPTH, SHALL BE TOOLED IN ALL EXPOSED FACES OF THE SIDEWALK IN ACCORDANCE WITH ARTICLE 825-10(B) OF THE STANDARD SPECIFICATIONS. THE CONTRACTION JOINTS SHALL BE LOCATED AT A SPACING OF 8PT. TO 10 PT. BETWEEN EXPANSION JOINTS. NO CONTRACTION JOINTS WILL BE REQUIRED FOR SEGMENTS LESS THAN 10 FEET IN LENGTH.

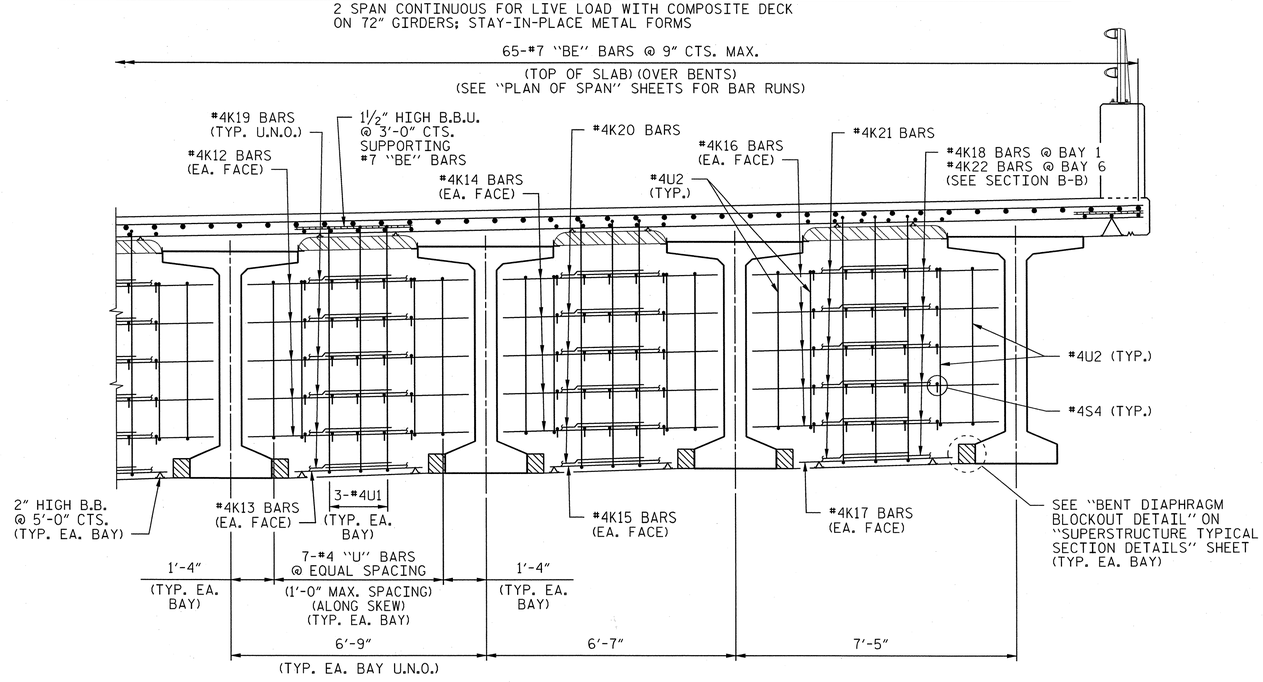

HALF SECTION SHOWING BENT 1 DIAPHRAGM

DRAWN BY : DDL DATE : 03/14
CHECKED BY : JCM DATE : 03/14

PROJECT NO. U-2525B
GUILFORD COUNTY
STATION: 26+17.64 -Y22-
85+41.17 -Y13-

AECOM
AECOM TECHNICAL SERVICES, INC.
701 CORPORATE CENTER DRIVE, SUITE 475
RALEIGH, NC 27607
(919) 854-6200 www.aecom.com
AECOM License No. F-0342

NORTH CAROLINA PROFESSIONAL SEAL 030479 ENGINEER JOHN C. MORRISON
3/25/14

R.N. 13-05

STATE OF NORTH CAROLINA
DEPARTMENT OF TRANSPORTATION
RALEIGH

SUPERSTRUCTURE
TYPICAL SECTION
(LEFT LANE)

REVISIONS						SHEET NO.
NO.	BY:	DATE:	NO.	BY:	DATE:	S-457
1			3			TOTAL SHEETS
2			4			541

DATE: 3/25/2014
TIME: 10:08:43 AM

USER: bellsiem
DGN: 0:\60279356\400_Technical_Information_Dist_Files\450_NC30T\StdTestDeclgnFiles\Structures\Bridge\4\Cadd\U2525B_SD_DSN_JI46_SEC.dgn

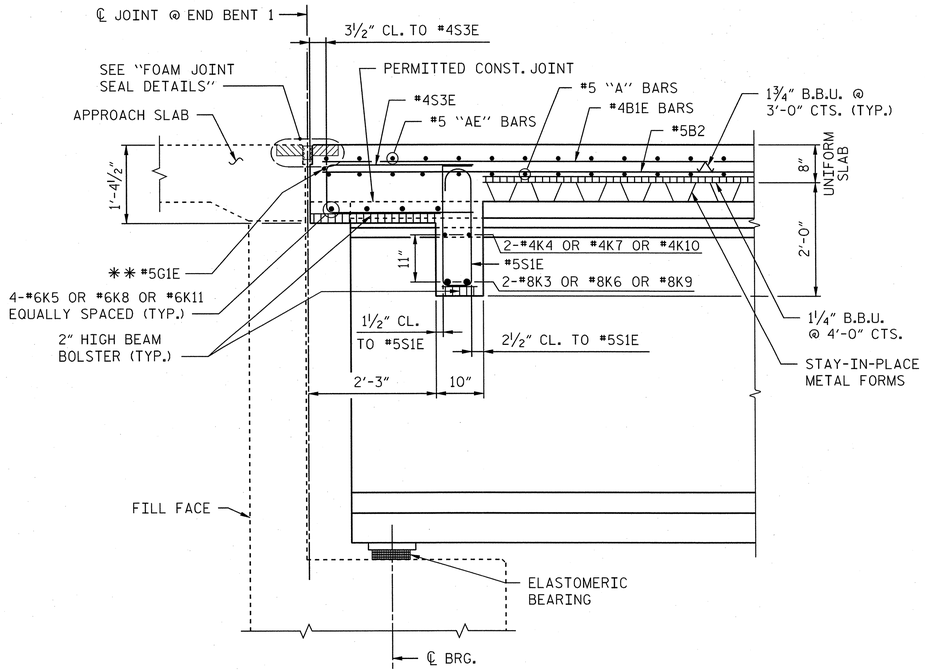

SECTION A-A

** #5 "GE" BAR MAY BE SHIFTED SLIGHTLY, AS NECESSARY, TO CLEAR REINFORCING STEEL AND STIRRUPS.

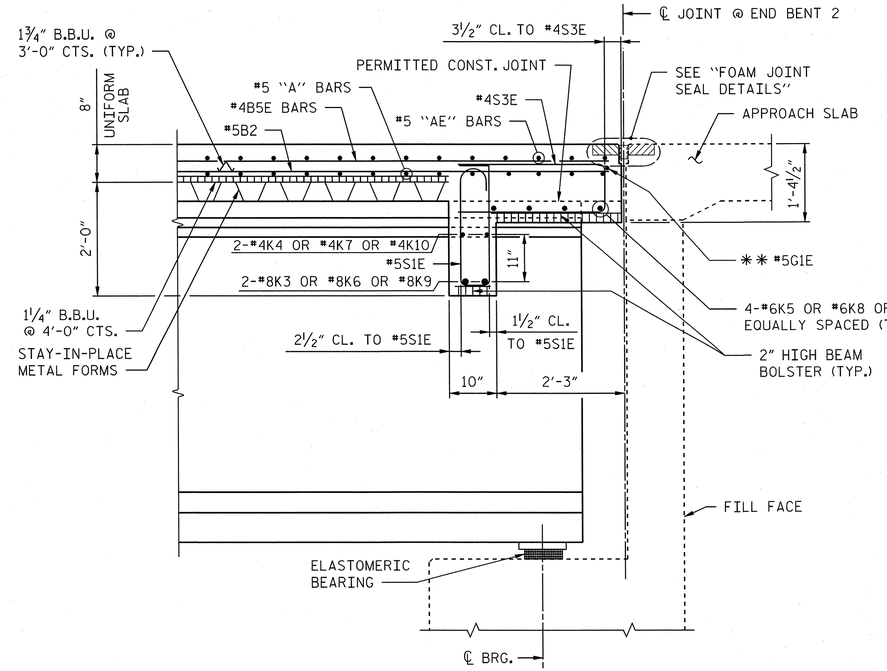

SECTION C-C

** #5 "GE" BAR MAY BE SHIFTED SLIGHTLY, AS NECESSARY, TO CLEAR REINFORCING STEEL AND STIRRUPS.

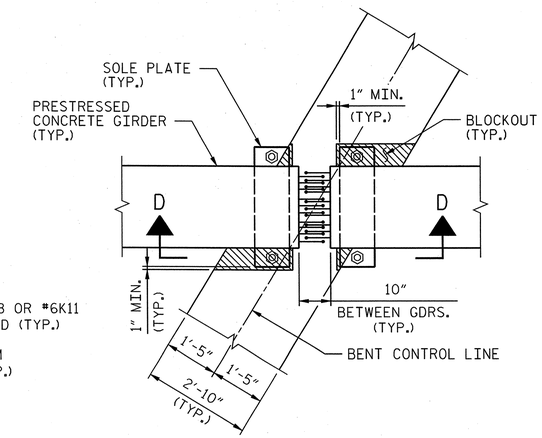

PLAN VIEW

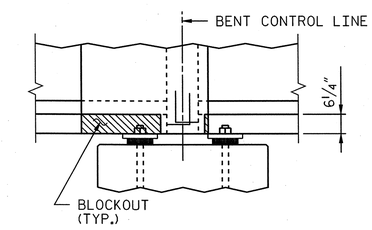

SECTION D-D

BENT DIAPHRAGM BLOCKOUT DETAIL

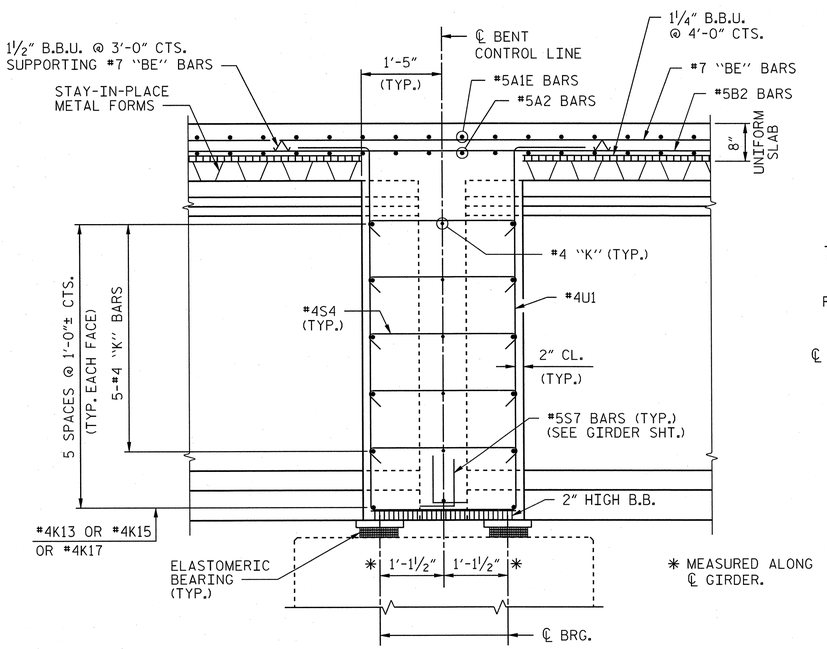

SECTION B-B

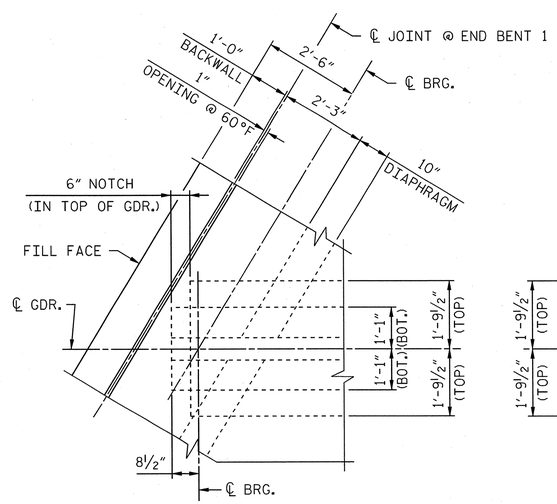

PLAN OF GIRDER END AT END BENT 1 JOINT

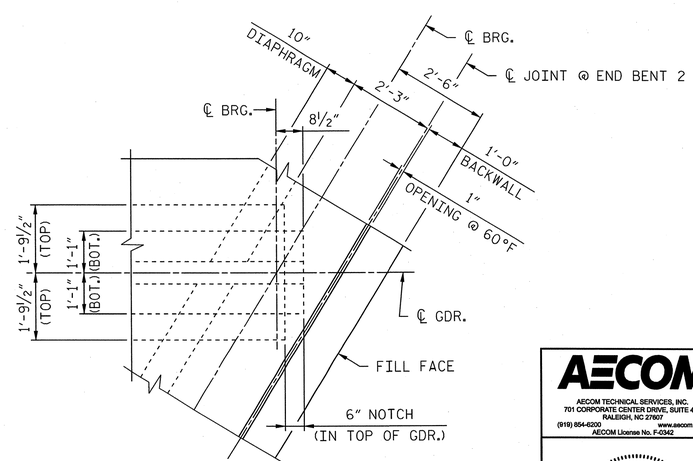

PLAN OF GIRDER END AT END BENT 2 JOINT

PROJECT NO. U-2525B

GUILFORD **COUNTY**

STATION: 26+17.64 -Y22-
85+41.17 -Y13-

SHEET 1 OF 2

AECOM
AECOM TECHNICAL SERVICES, INC.
701 CORPORATE CENTER DRIVE, SUITE 475
RALEIGH, NC 27607
(919) 854-6200 www.aecom.com
AECOM License No. F-0342

NORTH CAROLINA PROFESSIONAL SEAL 030474 ENGINEER JOHN C. MORRISON
3/25/14

R.N. 13-06

STATE OF NORTH CAROLINA
DEPARTMENT OF TRANSPORTATION
RALEIGH

SUPERSTRUCTURE

TYPICAL SECTION DETAILS

(LEFT LANE)

REVISIONS								SHEET NO.
NO.	BY:	DATE:	NO.	BY:	DATE:			S-458
1			3					TOTAL SHEETS
2			4					541

DRAWN BY : DDL DATE : 03/14
CHECKED BY : JCM DATE : 03/14

DATE: 3/25/2014
TIME: 11:48:24 AM

USER: bellisem
DGN: G:\02379356\400_Technical_Information_Disc_Files\450_NC00T Std Tech Design Files\Structures\Bridge 1\Cobb\U2525B_SD_DSN_1\R_TYP_DETS_1.dgn

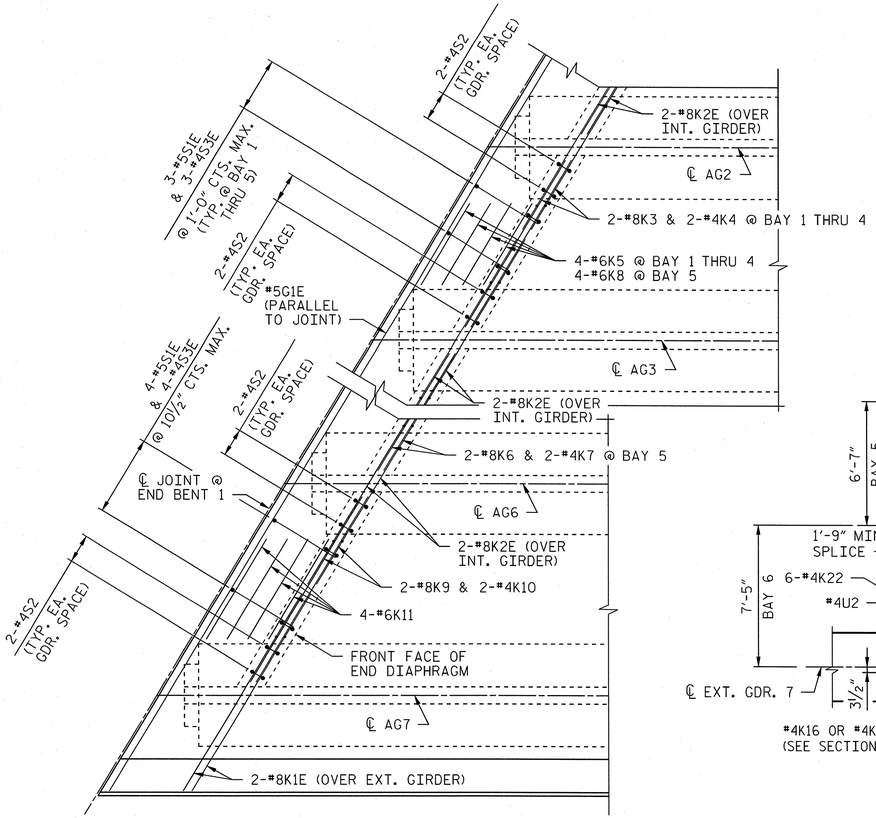

DETAIL "B"

"A" & "B" BARS NOT SHOWN

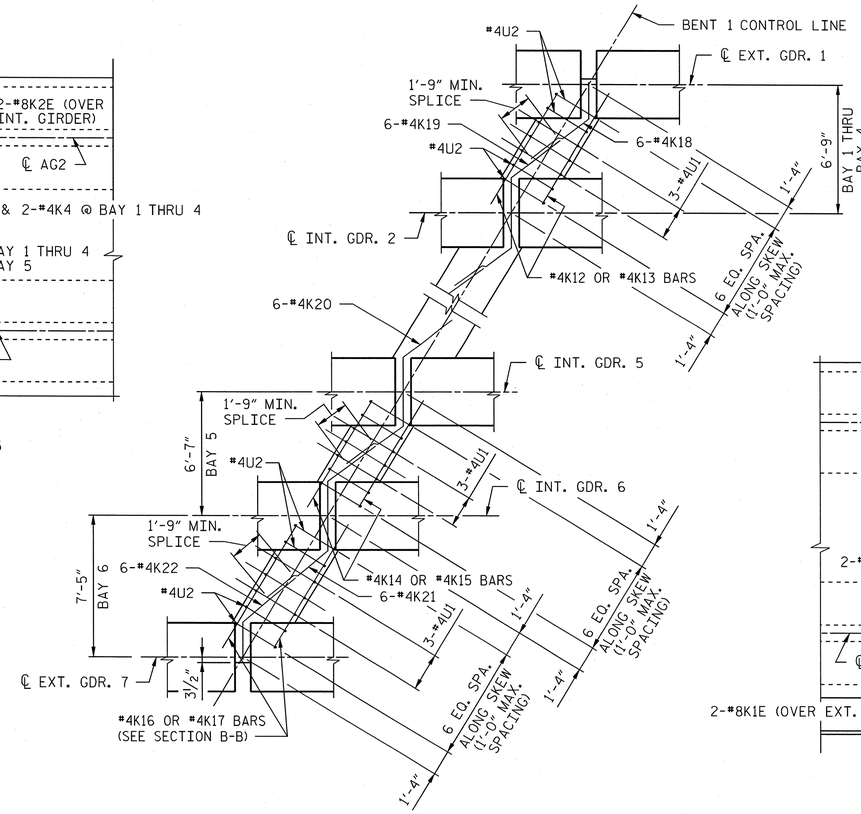

DETAIL "C"

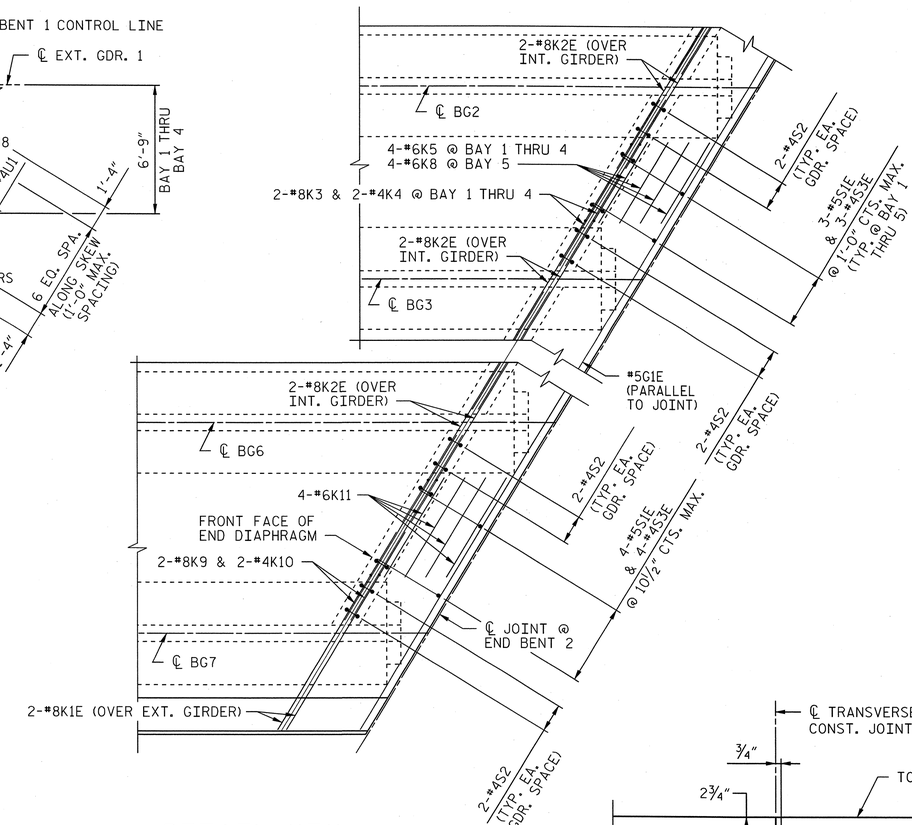

DETAIL "E"

"A" & "B" BARS NOT SHOWN

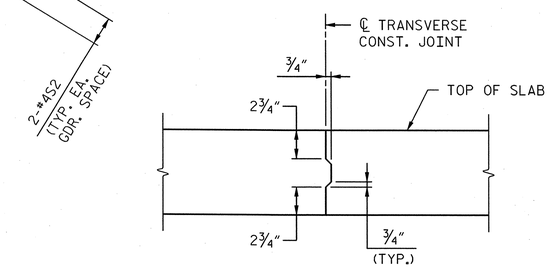

TRANSVERSE CONSTRUCTION JOINT DETAIL

NOTES: REINFORCING STEEL IN SLAB NOT SHOWN.

LONGITUDINAL REINFORCING STEEL SHALL BE CONTINUOUS THRU JOINT.

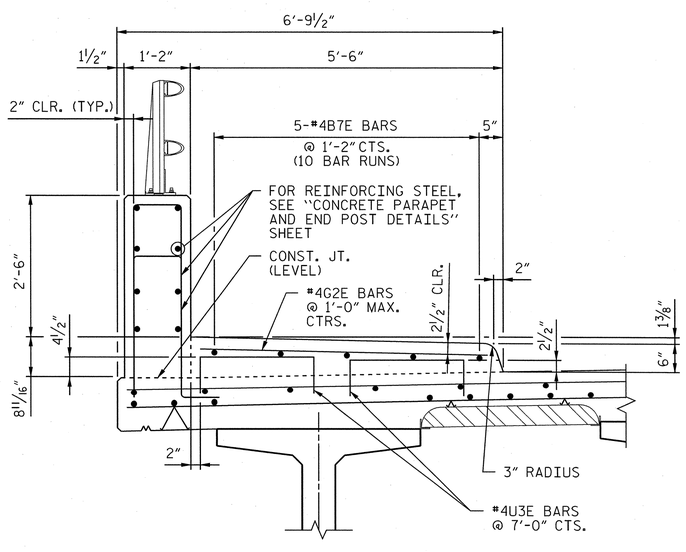

SECTION THRU SIDEWALK

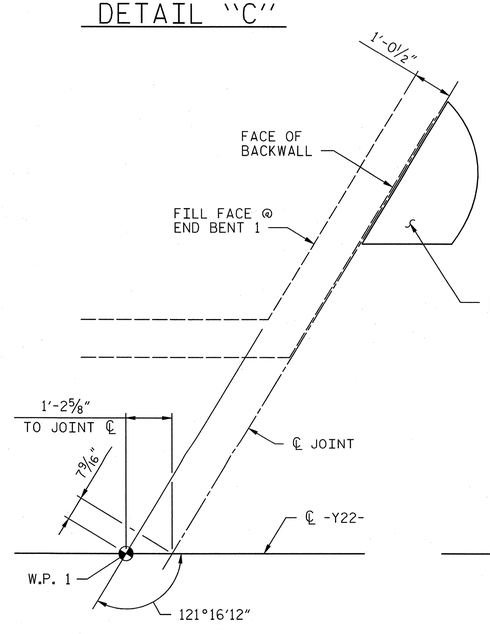

DETAIL "A"

NOTE: SKEWED DIMENSIONS AT END BENT 1 ARE BASED ON A JOINT OPENING OF 1" AT 60° F.

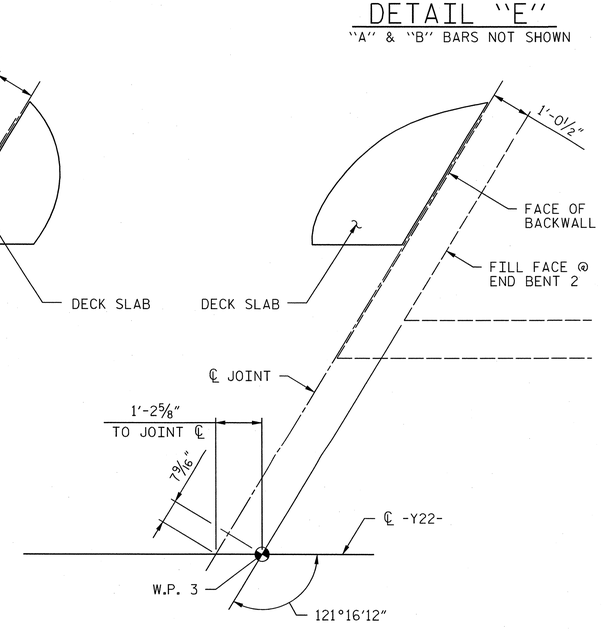

DETAIL "D"

NOTE: SKEWED DIMENSIONS AT END BENT 2 ARE BASED ON A JOINT OPENING OF 1" AT 60° F.

PROJECT NO. U-2525B

GUILFORD **COUNTY**

STATION: 26+17.64 -Y22-

85+41.17 -Y13-

SHEET 2 OF 2

AECOM

AECOM TECHNICAL SERVICES, INC.
701 CORPORATE CENTER DRIVE, SUITE 475
RALEIGH, NC 27607
(919) 854-6200 www.aecom.com
AECOM License No. F-0342

NORTH CAROLINA PROFESSIONAL SEAL 030474 ENGINEER JOHN C. MORRISON
3/25/14

R.N. 13-07

STATE OF NORTH CAROLINA
DEPARTMENT OF TRANSPORTATION
RALEIGH

SUPERSTRUCTURE

TYPICAL SECTION DETAILS

(LEFT LANE)

REVISIONS						SHEET NO.
NO.	BY:	DATE:	NO.	BY:	DATE:	S-459
1			3			TOTAL SHEETS
2			4			541

DRAWN BY : DDL DATE : 03/14
CHECKED BY : JCM DATE : 03/14

DATE: 3/25/2014
TIME: 11:50:36 AM

USER: bellsjen
DGN: C:\SDI\21935\B-V400_Technical_Information_D\sc_Files\450_NCDOT\SDI\Texas\Structures\Bridge 14\Cadd\U2525B_SD_DSN_JH6_TYP_DETS_2.dgn

NOTES:

FOR POURING SEQUENCE, SEE "SUPERSTRUCTURE BILL OF MATERIAL".

"A" AND "AE" BARS TO BE PLACED PERPENDICULAR TO -Y22-.

LONGITUDINAL STEEL MAY BE SHIFTED SLIGHTLY, AS NECESSARY, TO AVOID INTERFERENCE WITH STIRRUPS IN PRESTRESSED CONCRETE GIRDERS.

FOR REINFORCING STEEL IN CONCRETE PARAPET, SEE "CONCRETE PARAPET DETAIL".

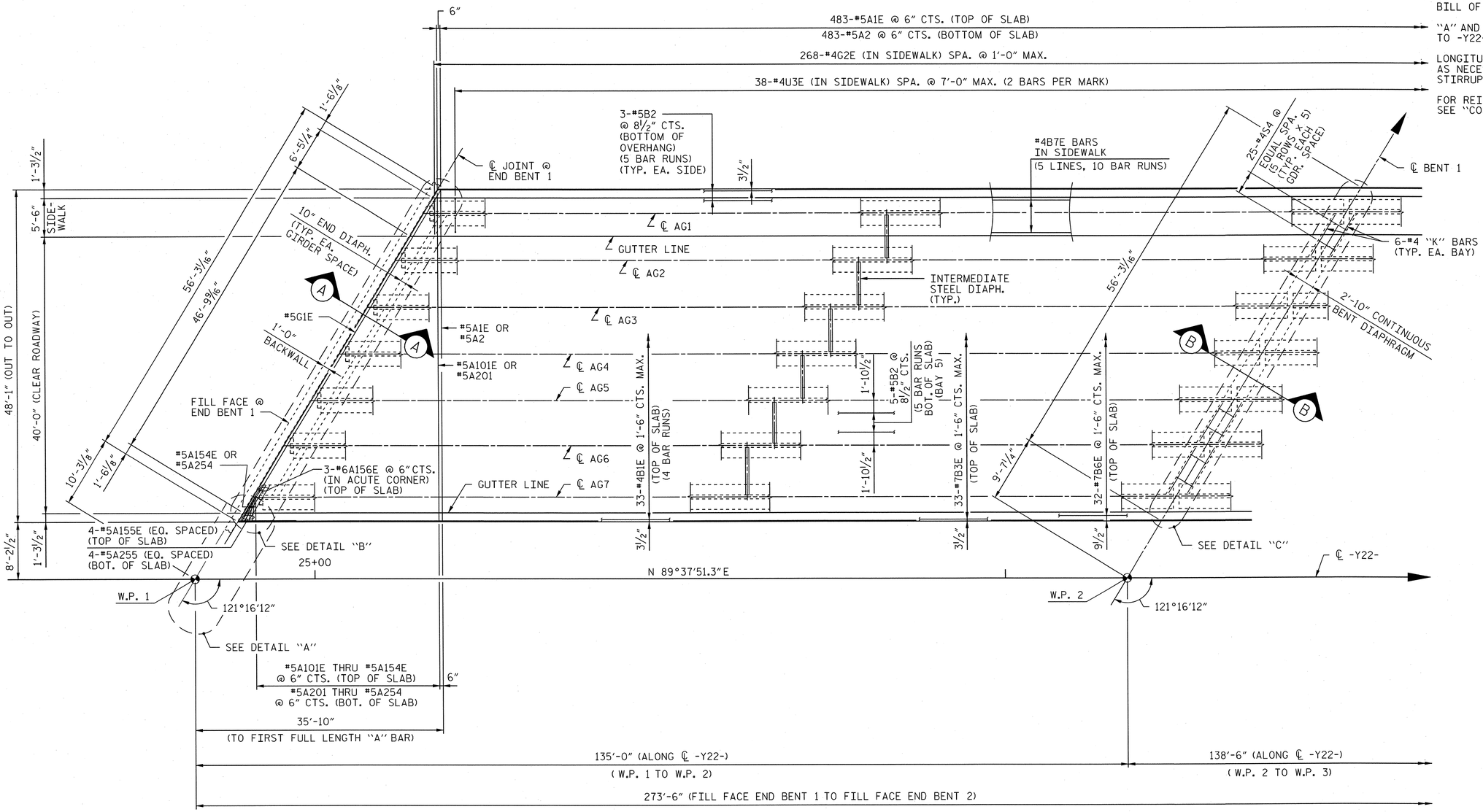

PLAN OF SPAN "A"

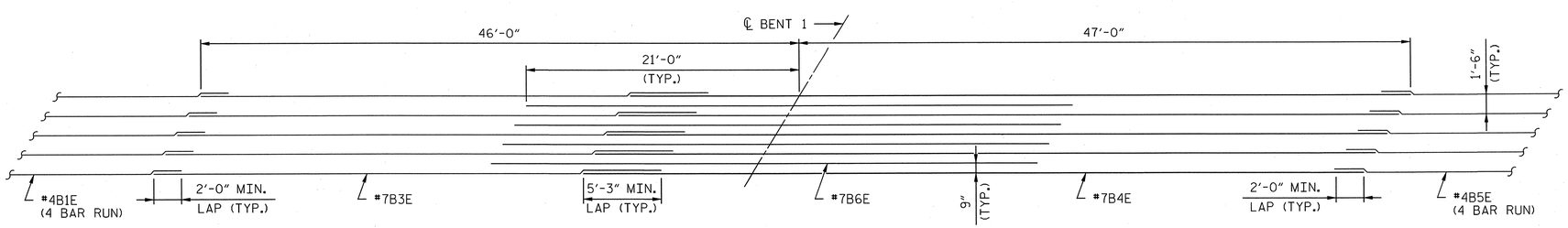

TOP OF SLAB REINFORCEMENT LAYOUT

PROJECT NO. U-2525B

GUILFORD **COUNTY**

STATION: 26+17.64 -Y22-
85+41.17 -Y13-

SHEET 1 OF 2

AECOM
AECOM TECHNICAL SERVICES, INC.
701 CORPORATE CENTER DRIVE, SUITE 475
RALEIGH, NC 27607
(919) 854-6200 www.aecom.com
AECOM License No. F-0342

NORTH CAROLINA PROFESSIONAL SEAL 030474 ENGINEER JOHN C. MORRISON
3/25/14

R.N. 13-08

STATE OF NORTH CAROLINA
DEPARTMENT OF TRANSPORTATION
RALEIGH

SUPERSTRUCTURE

PLAN OF SPAN "A"

(LEFT LANE)

REVISIONS								SHEET NO.
NO.	BY:	DATE:	NO.	BY:	DATE:			S-460
1			3					TOTAL SHEETS
2			4					541

DRAWN BY : DDL DATE : 03/14
CHECKED BY : JCM DATE : 03/14

DATE: 3/25/2014
TIME: 10:53:43 AM

USER: bellsiem
DGN: 0:\60279356\v00_Technical_Information_Disc_Files\v850_NC00T3\Technical\prefiles\Structures\Bridge 14\Cadd\U2525B_SD_DSN_1\46_PLAN_OF_SPAN_A.dgn

NOTES:

SEE SHEET 1 OF 2 FOR NOTES.

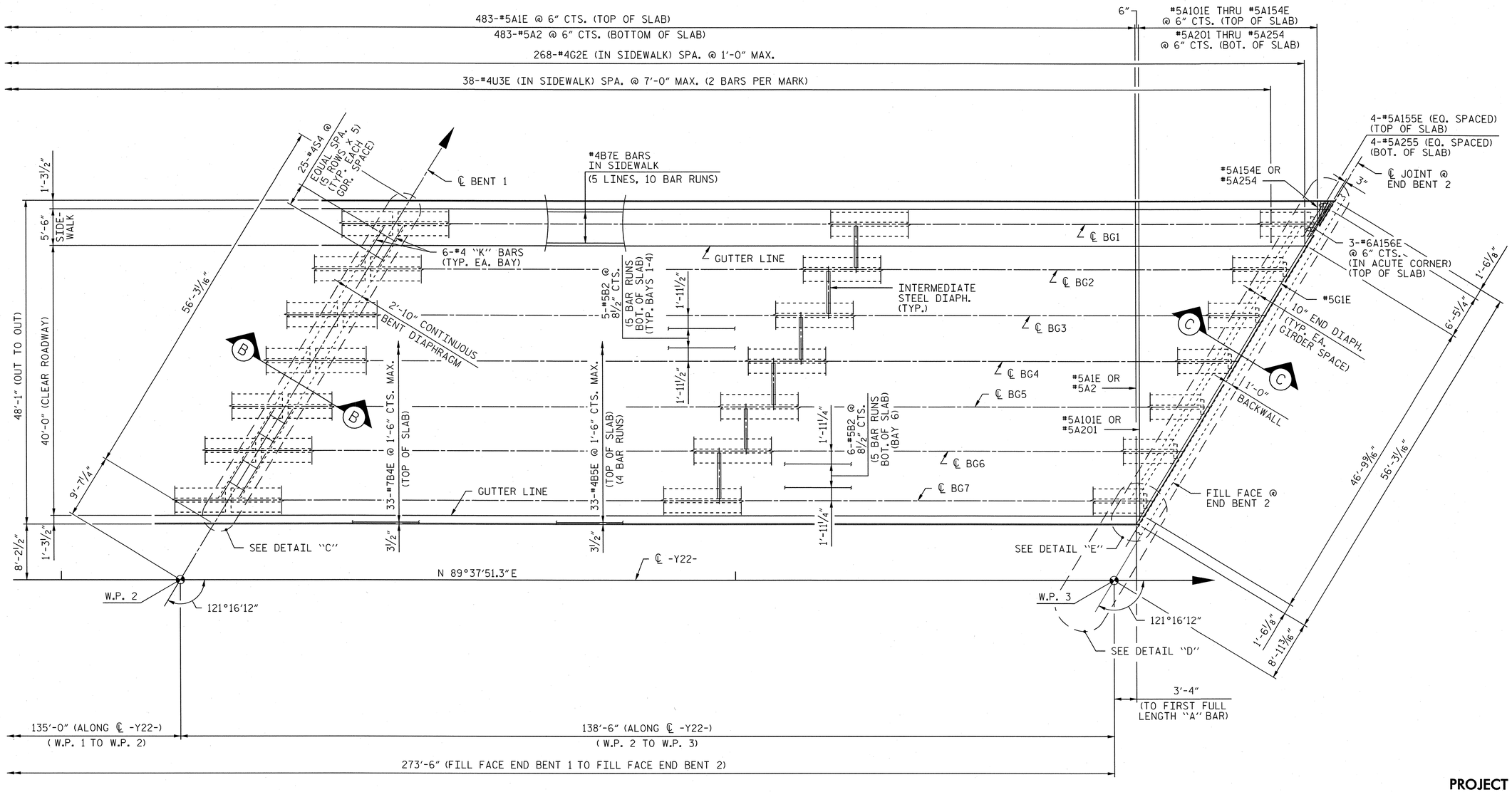

PLAN OF SPAN "B"

PROJECT NO. U-2525B

GUILFORD COUNTY

STATION: 26+17.64 -Y22-
85+41.17 -Y13-

SHEET 2 OF 2

AECOM

AECOM TECHNICAL SERVICES, INC.
701 CORPORATE CENTER DRIVE, SUITE 475
RALEIGH, NC 27607
(919) 854-6200 www.aecom.com
AECOM License No. F-0342

NORTH CAROLINA PROFESSIONAL SEAL 030474 ENGINEER JOHN C. MORRISON
3/25/14

R.N. 13-09

STATE OF NORTH CAROLINA
DEPARTMENT OF TRANSPORTATION
RALEIGH

SUPERSTRUCTURE

PLAN OF SPAN "B"

(LEFT LANE)

REVISIONS						SHEET NO.
NO.	BY:	DATE:	NO.	BY:	DATE:	S-461
1			3			TOTAL SHEETS
2			4			541

DRAWN BY : DDL DATE : 03/14
CHECKED BY : JCM DATE : 03/14

DATE: 3/25/2014
TIME: 10:44:51 AM

USER: bellsjam
DGN: QA\DOT\93356v400_Technical_Information_Disc_Files\450_NCDOT StdTechDesignFiles\Structures\Bridge 14\Cadd\U2525B_SD_DSN_IH6_PLAN_OF_SPAN_B.dgn

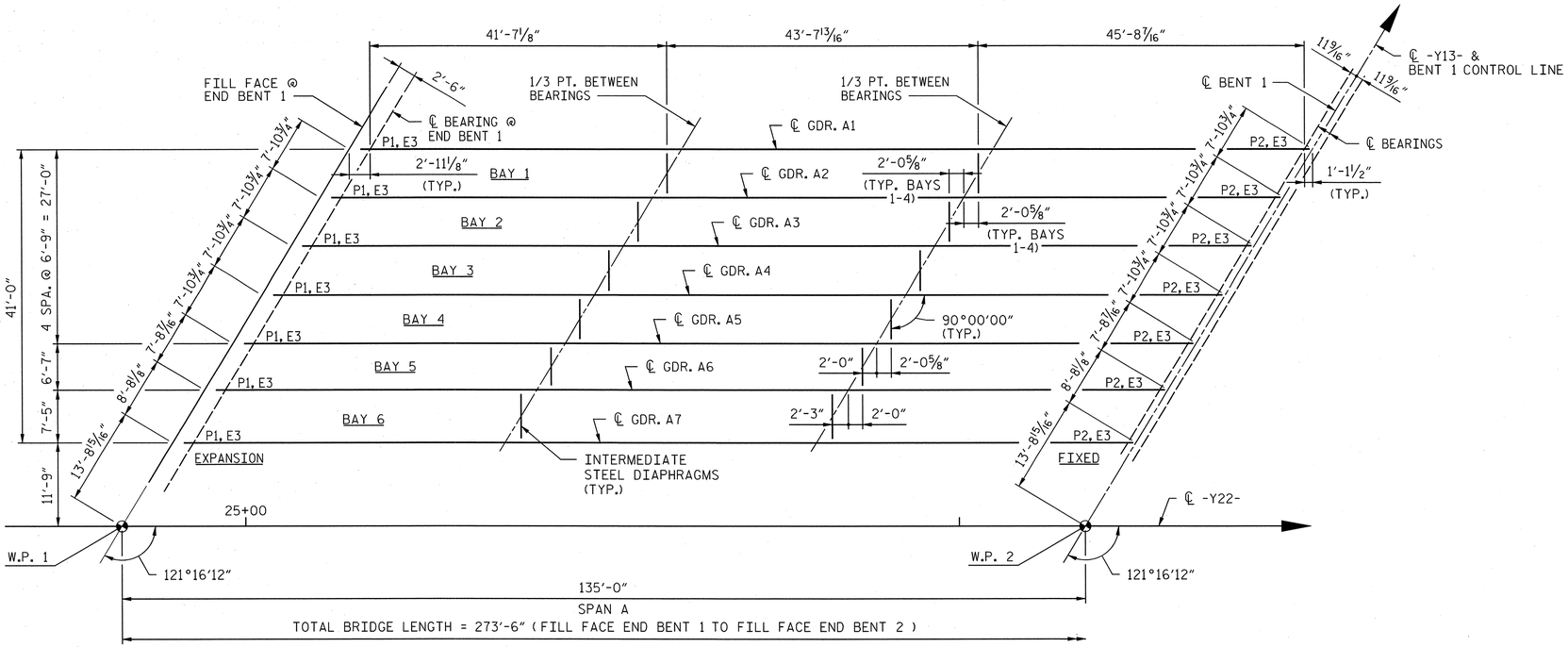

FRAMING PLAN OF SPAN "A"

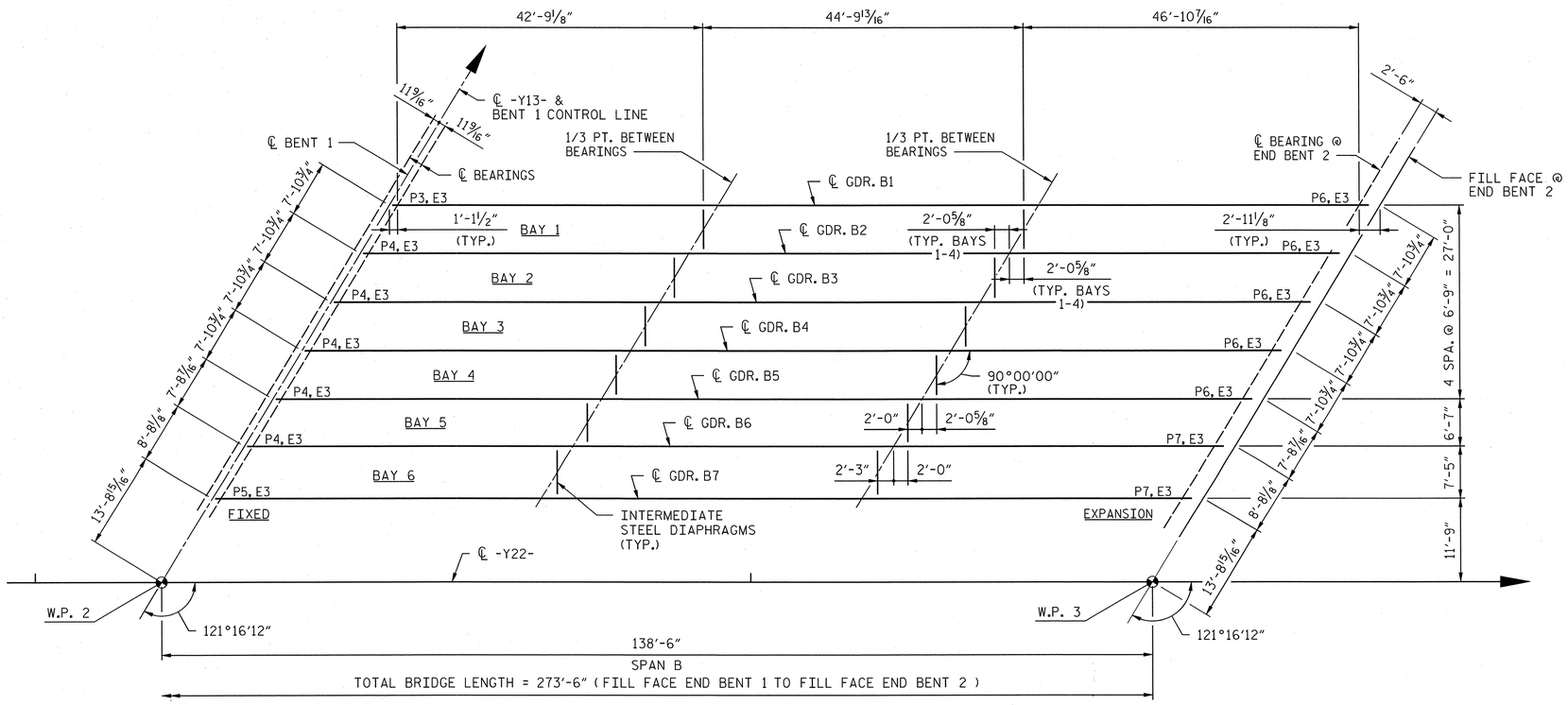

FRAMING PLAN OF SPAN "B"

NOTES:

1. ALL GIRDERS ARE PARALLEL TO ℄ -Y22-.
2. FOR STEEL DIAPHRAGM DETAILS, SEE "INTERMEDIATE STEEL DIAPHRAGM DETAILS" SHEET.
3. FOR BEARING AND SOLE PLATE SIZES, SEE "ELASTOMERIC BEARING DETAILS" SHEET.

PROJECT NO. U-2525B

GUILFORD COUNTY

STATION: 26+17.64 -Y22-
85+41.17 -Y13-

AECOM
AECOM TECHNICAL SERVICES, INC.
701 CORPORATE CENTER DRIVE, SUITE 475
RALEIGH, NC 27607
(919) 854-6200 www.aecom.com
AECOM License No. F-0342

NORTH CAROLINA PROFESSIONAL SEAL 030474 ENGINEER JOHN C. MORRISON
3/25/14

R.N. 13-10

STATE OF NORTH CAROLINA
DEPARTMENT OF TRANSPORTATION
RALEIGH

SUPERSTRUCTURE

FRAMING PLAN

(LEFT LANE)

REVISIONS								SHEET NO.
NO.	BY:	DATE:	NO.	BY:	DATE:			S-462
1			3					TOTAL SHEETS
2			4					541

DRAWN BY : DDL DATE : 03/14
CHECKED BY : JCM DATE : 03/14

DATE: 3/25/2014
TIME: 11:54:46 AM

USER: bellfleg
DGN: 0:\60287935\60-Technical_Information_Disc_Files\450_NCDOT\SHDTechDesignFiles\Structures\Bridge HPCad\U2525B_SD_DSN_JH6_FRAMING.dgn

NOTES:

FOR SECTIONS A-A, B-B, C-C AND BILL OF MATERIAL, SEE SHEET 2 OF 2.

FOR INTERMEDIATE STEEL DIAPHRAGM LOCATIONS, SEE "FRAMING PLAN".

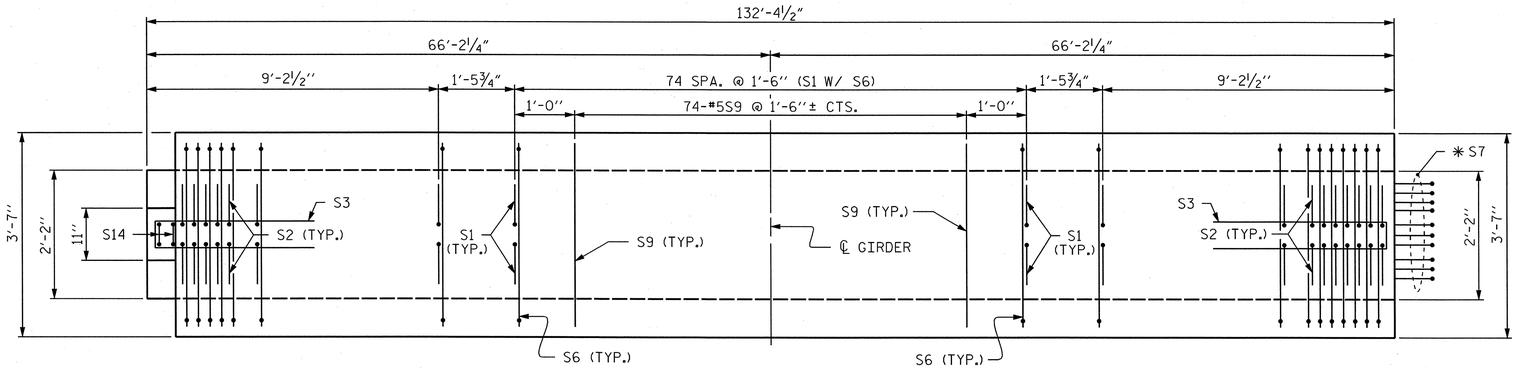

PLAN OF GIRDER

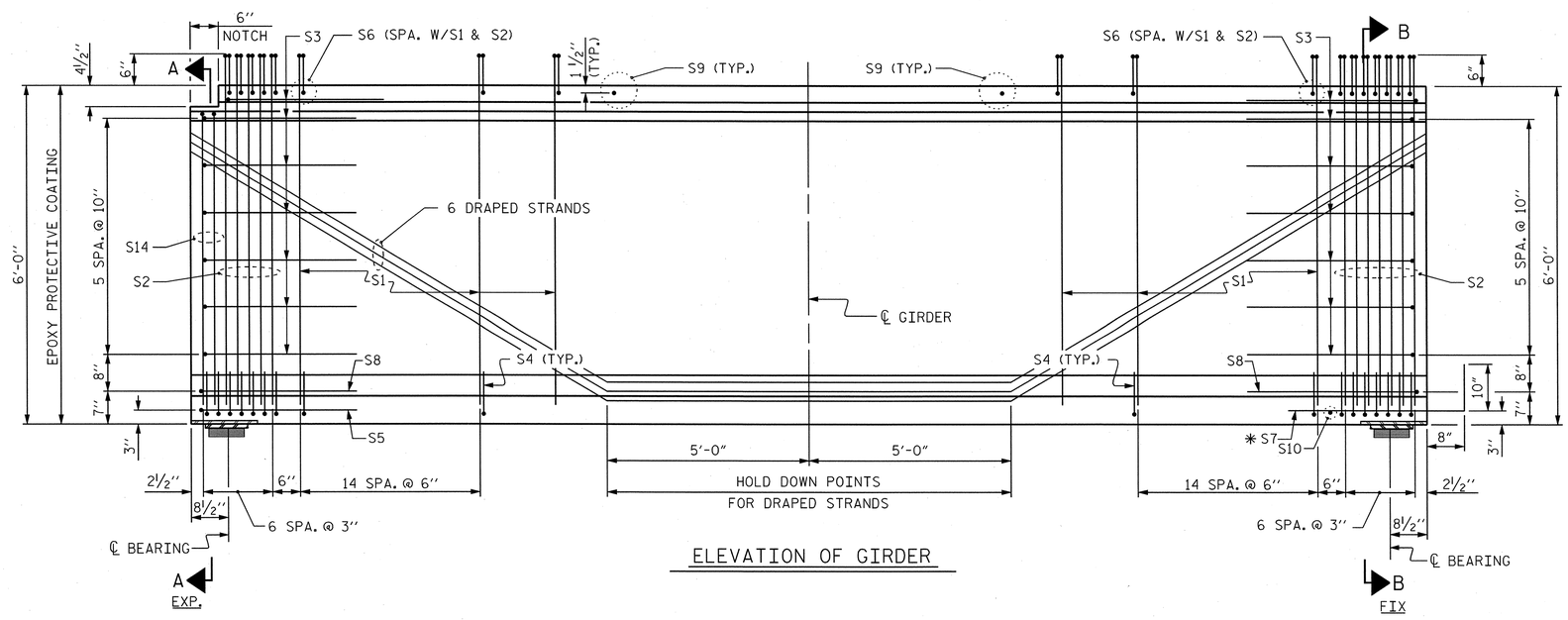

ELEVATION OF GIRDER

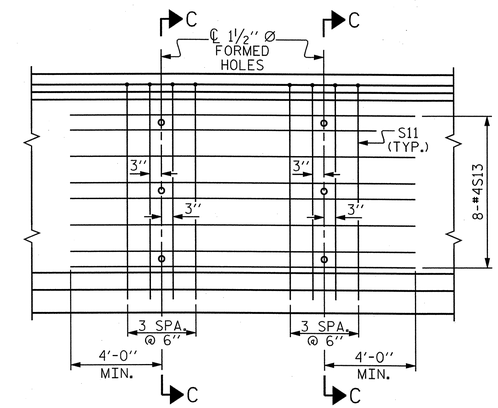

PARTIAL ELEVATION

SHOWING INTERMEDIATE STEEL DIAPHRAGM REINFORCING STEEL FOR GIRDER Nos. 2 THRU 6

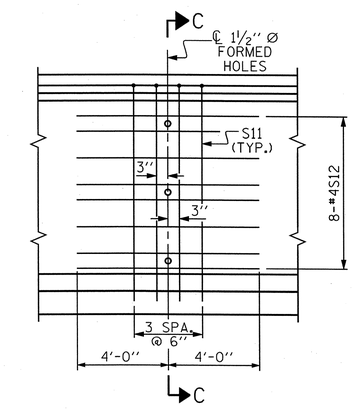

PARTIAL ELEVATION

SHOWING INTERMEDIATE STEEL DIAPHRAGM REINFORCING STEEL FOR GIRDER Nos. 1 & 7

PROJECT NO. U-2525B

GUILFORD COUNTY

STATION: 26+17.64 -Y22-
85+41.17 -Y13-

SHEET 1 OF 2

AECOM
AECOM TECHNICAL SERVICES, INC.
701 CORPORATE CENTER DRIVE, SUITE 475
RALEIGH, NC 27607
(919) 854-6200 www.aecom.com
AECOM License No. F-0342

NORTH CAROLINA PROFESSIONAL SEAL 030474 ENGINEER JOHN C. MORRISON
3/25/14
R.N. 13-11

STATE OF NORTH CAROLINA
DEPARTMENT OF TRANSPORTATION
RALEIGH

STANDARD

72" PRESTRESSED CONCRETE MODIFIED BULB TEE CONTINUOUS FOR LIVE LOAD

(SPAN A)

REVISIONS						SHEET NO.
NO.	BY:	DATE:	NO.	BY:	DATE:	S-463
1			3			TOTAL SHEETS
2			4			541

STD. NO. PCG8

ASSEMBLED BY :	DDL	DATE :	03/14
CHECKED BY :	JCM	DATE :	03/14

DRAWN BY : EEM 2/6/97	REV. 10/17/00	RWW/LES
CHECKED BY : VAP 2/6/97	REV. 5/1/06R	TLA/GM
	REV. 10/1/11	MAA/GM

DATE: 3/25/2014
TIME: 11:26:57 AM

USER: jwilliam
DGN: G:\60127935\400_Technical_Information_Disc_Files\450_NCDOT\SHT\ecl\DesignFiles\Structures\Bridge #4\Cadd\U2525B_SD_DSN_U46_PCG_SPAN-A.dgn

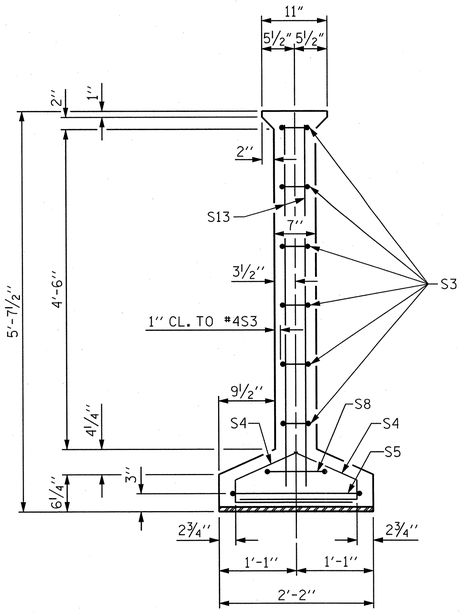

SECTION A-A

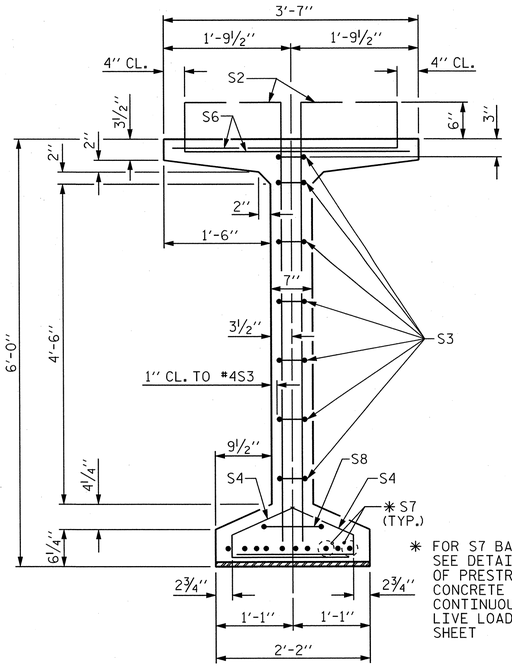

✱ FOR S7 BARS. SEE DETAIL "C" OF PRESTRESSED CONCRETE GIRDER CONTINUOUS FOR LIVE LOAD DETAILS SHEET

SECTION B-B

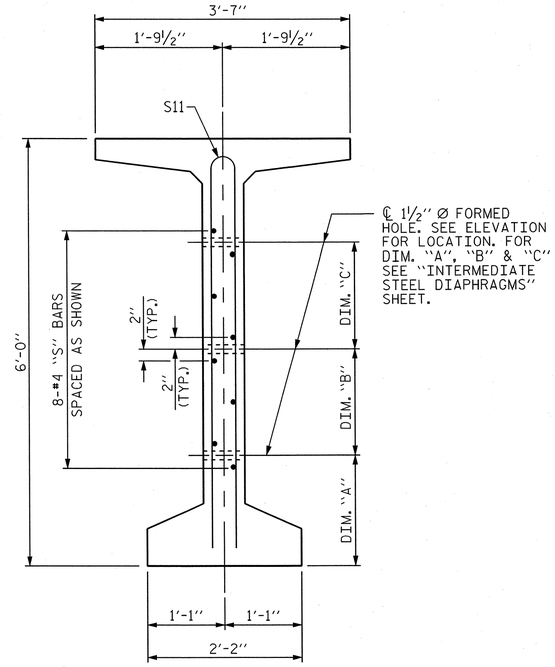

SECTION C-C

(S1, S6 AND S9 BARS NOT SHOWN)

0.6" Ø L. R. GRADE 270 STRANDS		
AREA (SQUARE INCHES)	ULTIMATE STRENGTH (LBS. PER STRAND)	APPLIED PRESTRESS (LBS. PER STRAND)
0.217	58,600	43,950

REINFORCING STEEL FOR ONE GDR

	BAR	NUMBER	SIZE	TYPE	LENGTH	WEIGHT
EXTERIOR GDR.	S1	210	#4	1	6'-10"	959
INTERIOR GDR.	S1	210	#4	1	6'-10"	959
	S2	24	#5	1	6'-10"	171
	S3	14	#4	2	8'-5"	79
	S4	88	#4	3	3'-0"	176
	S5	1	#5	2	9'-10"	10
EXTERIOR GDR.	S6	117	#5	4	4'-4"	528
INTERIOR GDR.	S6	117	#5	4	4'-4"	528
	✱ S7	10	#5	STR	3'-8"	38
	S8	2	#5	2	9'-0"	19
	S9	74	#5	STR	3'-3"	251
	S10	1	#3	STR	1'-10"	1
EXTERIOR GDR.	S11	8	#5	5	11'-6"	96
INTERIOR GDR.	S11	16	#5	5	11'-6"	192
EXTERIOR GDR.	S12	16	#4	STR	8'-0"	86
INTERIOR GDR.	S13	16	#4	STR	12'-2"	130
	S14	2	#5	2	10'-8"	22

✱ NOTE: S7 BARS SHALL BE BENT BEFORE SHIPMENT. HEAT BENDING SHALL NOT BE ALLOWED.

BAR TYPES

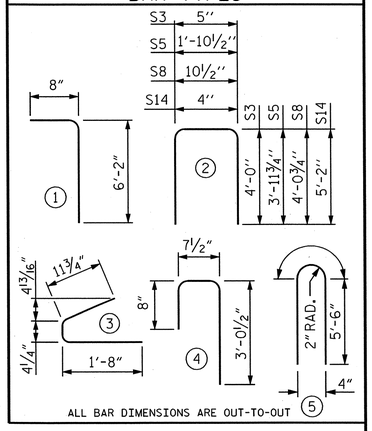

ALL BAR DIMENSIONS ARE OUT-TO-OUT

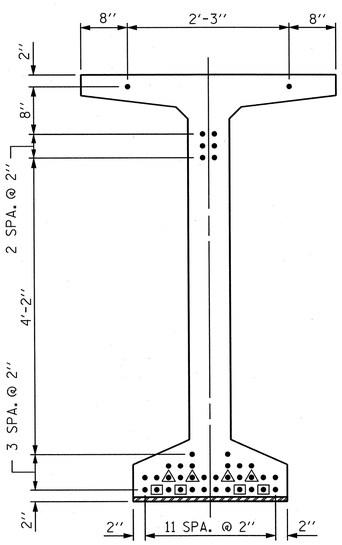

AT END OF GIRDER

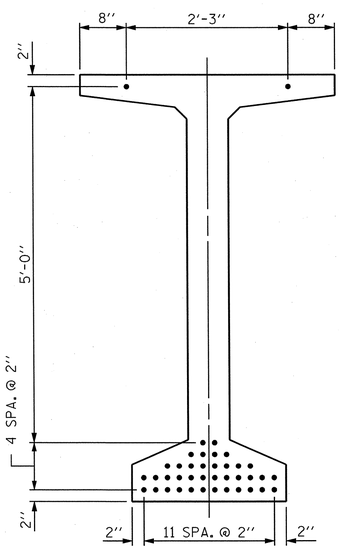

AT ℄ OF GIRDER

0.6" Ø LOW RELAXATION STRAND LAYOUT

DEBONDING LEGEND

- ● FULLY BONDED STRANDS
- ▣ STRANDS DEBONDED FOR 4'-0" FROM END OF GIRDER
- ◬ STRANDS DEBONDED FOR 6'-0" FROM END OF GIRDER

QUANTITIES FOR ONE GIRDER

	REINFORCING STEEL	8000 PSI CONCRETE	0.6" Ø L.R. STRANDS
	LB.	C.Y.	No.
EXTERIOR GIRDER	2366	28.4	40
INTERIOR GIRDER	2508	28.4	40

GIRDERS REQUIRED

NUMBER	LENGTH	TOTAL LENGTH
7	132'-4½"	926'-7½"

PROJECT NO. U-2525B

GUILFORD COUNTY

STATION: 26+17.64 -Y22-
85+41.17 -Y13-

SHEET 2 OF 2

AECOM
AECOM TECHNICAL SERVICES, INC.
701 CORPORATE CENTER DRIVE, SUITE 475
RALEIGH, NC 27607
(919) 854-6200 www.aecom.com
AECOM License No. F-0342

NORTH CAROLINA PROFESSIONAL SEAL 030474 ENGINEER JOHN C. MORRISON
3/25/14

R.N. 13-12

STATE OF NORTH CAROLINA
DEPARTMENT OF TRANSPORTATION
RALEIGH

STANDARD
72" PRESTRESSED CONCRETE MODIFIED BULB TEE CONTINUOUS FOR LIVE LOAD
(SPAN A)

REVISIONS						SHEET NO.
NO.	BY:	DATE:	NO.	BY:	DATE:	S-464
1			3			TOTAL SHEETS
2			4			541

STD. NO. PCG8

ASSEMBLED BY :	DDL	DATE :	03/14
CHECKED BY :	JCM	DATE :	03/14
DRAWN BY : EEM 2/6/97	REV. 10/17/00		RWW/LES
CHECKED BY : VAP 2/6/97	REV. 5/1/06R		TLA/GM
	REV. 10/1/11		MAA/GM

DATE: 3/25/2014
TIME: 11:58:43 AM
USER: bellsem
DGN: U:\60279350-400_Technical_Information_Disc_Files\450_NCDOT Staff Tech\Design Files\Structures\Bridge 1\Cadd\U2525B_SD_DSN_JHR_PCG_SPAN-A_2.dgn

NOTES:

FOR SECTIONS A-A, B-B, C-C AND BILL OF MATERIAL, SEE SHEET 2 OF 2.

FOR INTERMEDIATE STEEL DIAPHRAGM LOCATIONS, SEE "FRAMING PLAN".

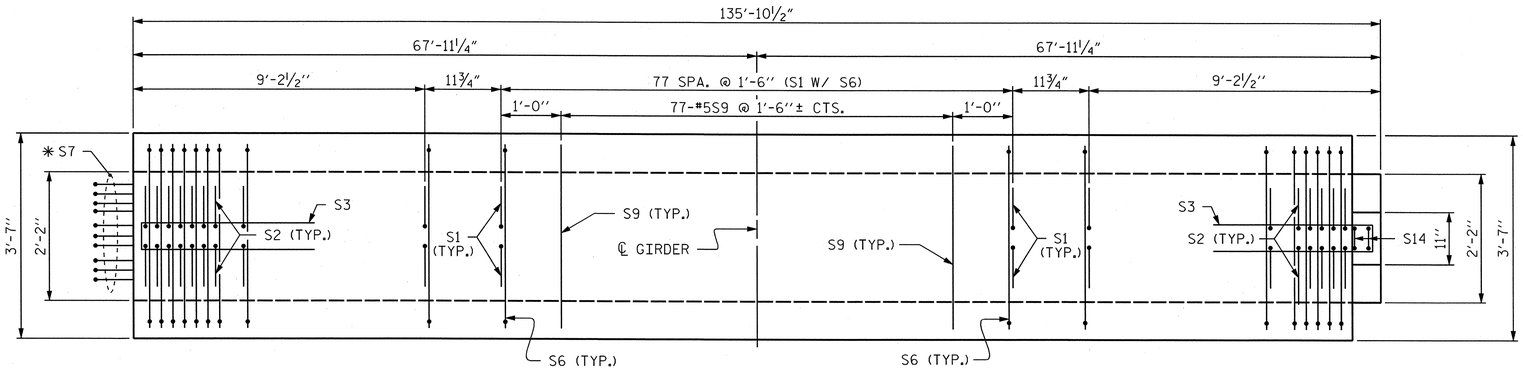

PLAN OF GIRDER

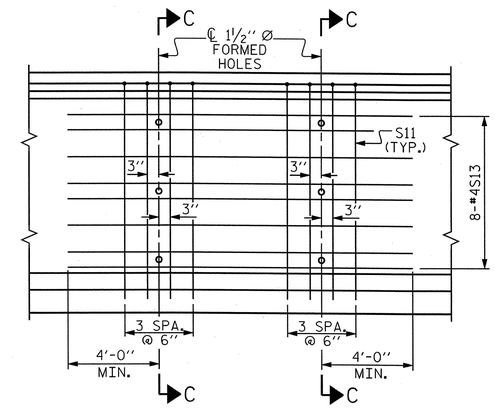

PARTIAL ELEVATION

SHOWING INTERMEDIATE STEEL DIAPHRAGM REINFORCING STEEL FOR GIRDER Nos. 2 THRU 6

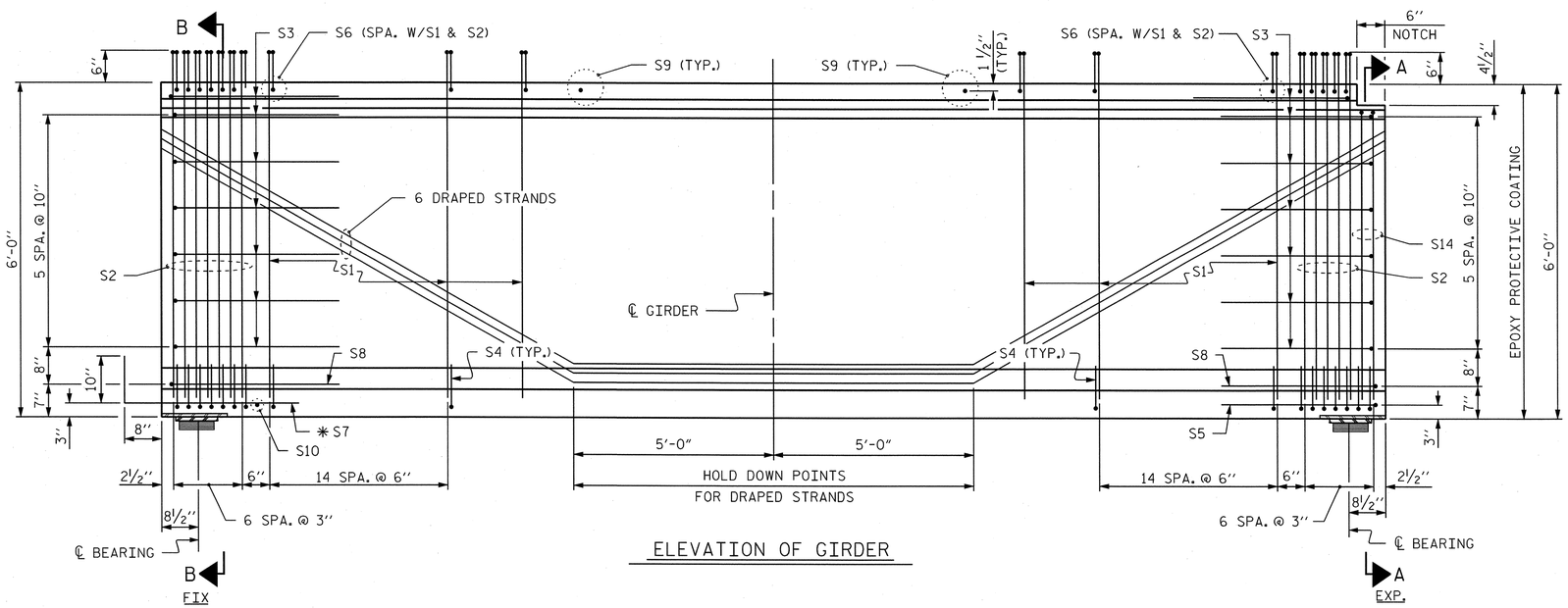

ELEVATION OF GIRDER

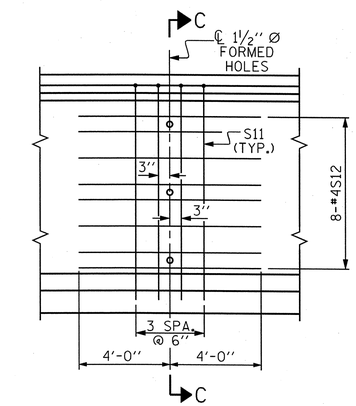

PARTIAL ELEVATION

SHOWING INTERMEDIATE STEEL DIAPHRAGM REINFORCING STEEL FOR GIRDER Nos. 1 & 7

PROJECT NO. U-2525B

GUILFORD COUNTY

STATION: 26+17.64 -Y22-
85+41.17 -Y13-

SHEET 1 OF 2

AECOM

AECOM TECHNICAL SERVICES, INC.
701 CORPORATE CENTER DRIVE, SUITE 475
RALEIGH, NC 27607
(919) 854-6200 www.aecom.com
AECOM License No. F-0342

NORTH CAROLINA PROFESSIONAL SEAL 030474 ENGINEER JOHN C. MORRISON
3/25/14

R.N. 13-13

STATE OF NORTH CAROLINA
DEPARTMENT OF TRANSPORTATION
RALEIGH

STANDARD

72" PRESTRESSED CONCRETE MODIFIED BULB TEE CONTINUOUS FOR LIVE LOAD

(SPAN B)

REVISIONS						SHEET NO.
NO.	BY:	DATE:	NO.	BY:	DATE:	S-465
1			3			TOTAL SHEETS
2			4			541

STD. NO. PCG8

ASSEMBLED BY :	DDL	DATE :	03/14
CHECKED BY :	JCM	DATE :	03/14
DRAWN BY : EEM 2/6/97	REV. 10/17/00		RWW/LES
CHECKED BY : VAP 2/6/97	REV. 5/1/06R		TLA/GM
	REV. 10/1/11		MAA/GM

DATE: 3/25/2014
TIME: 12:00:06 PM
USER: bellsilem
DGN: G:\60120793\56v400_Technical_Information_Disc_Files\450_NCDOT SHE\tech\Design\FiTles\Structures\Bridge INCode\U2525B_SD_DSN_IJ46_PCG_SPAN-B.dgn

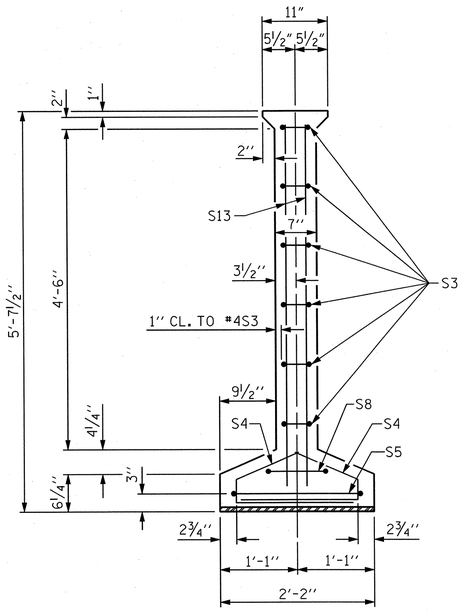

SECTION A-A

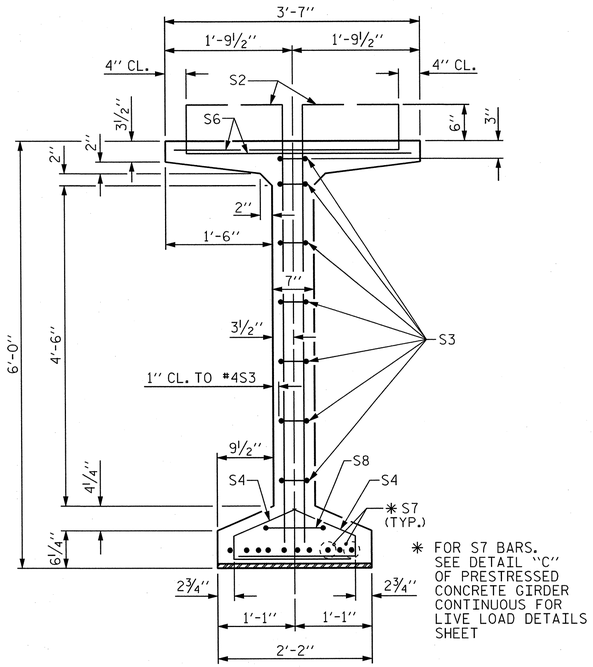

✱ FOR S7 BARS. SEE DETAIL "C" OF PRESTRESSED CONCRETE GIRDER CONTINUOUS FOR LIVE LOAD DETAILS SHEET

SECTION B-B

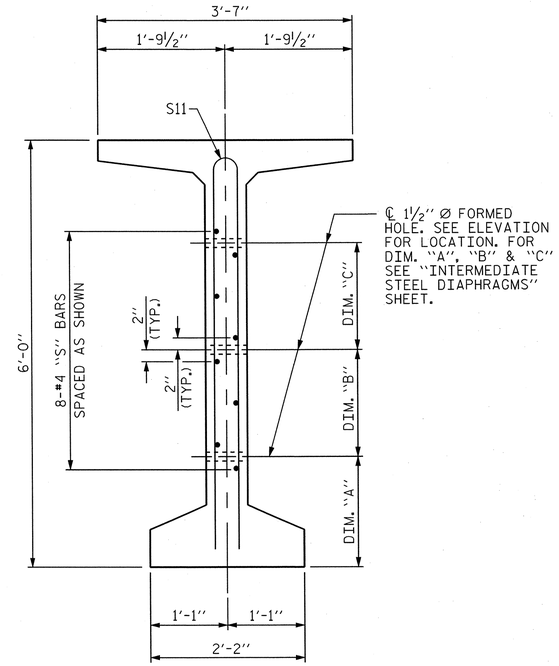

SECTION C-C

(S1, S6 AND S9 BARS NOT SHOWN)

0.6" Ø L. R. GRADE 270 STRANDS		
AREA (SQUARE INCHES)	ULTIMATE STRENGTH (LBS. PER STRAND)	APPLIED PRESTRESS (LBS. PER STRAND)
0.217	58,600	43,950

REINFORCING STEEL FOR ONE GDR

	BAR	NUMBER	SIZE	TYPE	LENGTH	WEIGHT
EXTERIOR GDR.	S1	216	#4	1	6'-10"	986
INTERIOR GDR.	S1	216	#4	1	6'-10"	986
	S2	24	#5	1	6'-10"	171
	S3	14	#4	2	8'-5"	79
	S4	88	#4	3	3'-0"	176
	S5	1	#5	2	9'-10"	10
EXTERIOR GDR.	S6	120	#5	4	4'-4"	542
INTERIOR GDR.	S6	120	#5	4	4'-4"	542
	✱ S7	10	#5	STR	3'-8"	38
	S8	2	#5	2	9'-0"	19
	S9	77	#5	STR	3'-3"	261
	S10	1	#3	STR	1'-10"	1
EXTERIOR GDR.	S11	8	#5	5	11'-6"	96
INTERIOR GDR.	S11	16	#5	5	11'-6"	192
EXTERIOR GDR.	S12	16	#4	STR	8'-0"	86
INTERIOR GDR.	S13	16	#4	STR	12'-2"	130
	S14	2	#5	2	10'-8"	22

✱ NOTE: S7 BARS SHALL BE BENT BEFORE SHIPMENT. HEAT BENDING SHALL NOT BE ALLOWED.

BAR TYPES

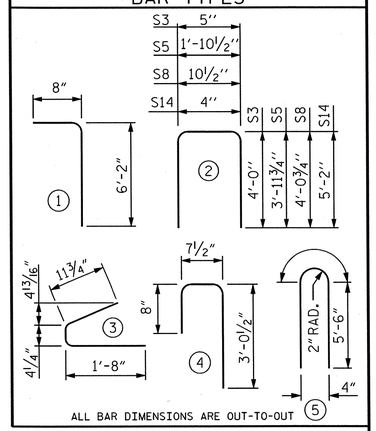

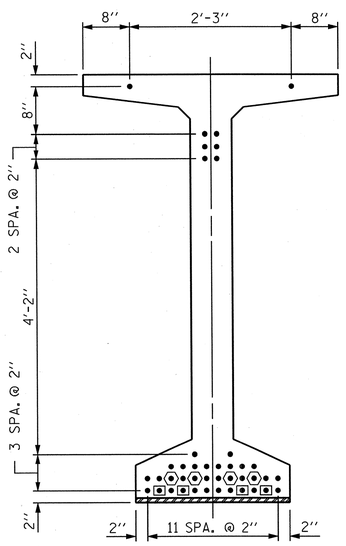

AT END OF GIRDER

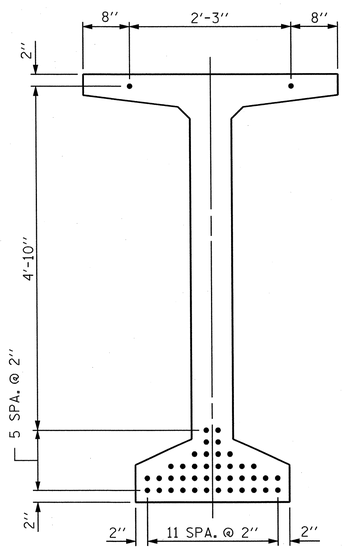

AT ℄ OF GIRDER

0.6" Ø LOW RELAXATION STRAND LAYOUT

DEBONDING LEGEND

- ● FULLY BONDED STRANDS
- ▣ STRANDS DEBONDED FOR 4'-0" FROM END OF GIRDER
- ⬡ STRANDS DEBONDED FOR 12'-0" FROM END OF GIRDER

QUANTITIES FOR ONE GIRDER

	REINFORCING STEEL	8000 PSI CONCRETE	0.6" Ø L.R. STRANDS
	LB.	C.Y.	No.
EXTERIOR GIRDER	2418	29.1	42
INTERIOR GIRDER	2558	29.1	42

GIRDERS REQUIRED

NUMBER	LENGTH	TOTAL LENGTH
7	135'-10½"	951'-1½"

PROJECT NO. U-2525B

GUILFORD COUNTY

STATION: 26+17.64 -Y22-
85+41.17 -Y13-

SHEET 2 OF 2

AECOM
AECOM TECHNICAL SERVICES, INC.
701 CORPORATE CENTER DRIVE, SUITE 475
RALEIGH, NC 27607
(919) 854-6200 www.aecom.com
AECOM License No. F-0342

NORTH CAROLINA PROFESSIONAL SEAL 030474 ENGINEER JOHN C. MORRISON
3/25/14

R.N. 13-14

STATE OF NORTH CAROLINA
DEPARTMENT OF TRANSPORTATION
RALEIGH

STANDARD

72" PRESTRESSED CONCRETE MODIFIED BULB TEE CONTINUOUS FOR LIVE LOAD

(SPAN B)

REVISIONS							
NO.	BY:	DATE:	NO.	BY:	DATE:		
1			3				
2			4				

SHEET NO. S-466

TOTAL SHEETS 541

STD. NO. PCG8

ASSEMBLED BY :	DDL	DATE :	03/14
CHECKED BY :	JCM	DATE :	03/14
DRAWN BY : EEM 2/6/97	REV. 10/17/00	RWW/LES	
CHECKED BY : VAP 2/6/97	REV. 5/1/06R	TLA/GM	
	REV. 10/1/11	MAA/GM	

USER: bellelem
DGN: G:\60279356\400_Technical_Information_Disc_Files\450_NCDOT StdTechDesignFiles\Structures\Bridge INCode\U2525B_SD_DSN_JH6_PCG_SPAN-B_2.dgn
DATE: 3/25/2014
TIME: 12:02:50 PM

NOTES

ALL PRESTRESSING STRANDS SHALL BE 7-WIRE LOW-RELAXATION GRADE 270 STRANDS AND SHALL CONFORM TO AASHTO M203 EXCEPT FOR SAMPLING REQUIREMENTS WHICH SHALL BE IN ACCORDANCE WITH THE STANDARD SPECIFICATIONS.

ALL REINFORCING STEEL SHALL BE GRADE 60.

APPLY EPOXY PROTECTIVE COATING TO END OF GIRDER SURFACES INDICATED IN ELEVATION VIEW.

EMBEDDED PLATE "B-1" SHALL BE GALVANIZED IN ACCORDANCE WITH THE STANDARD SPECIFICATIONS. BEVEL EDGES OF PLATE "B-1" TO GIVE CLOSE FIT BUT NOT TIGHT FIT TO STEEL CASTING FORM.

ANCHOR STUDS SHALL CONFORM TO AASHTO M169 GRADES 1010 THROUGH 1020 OR APPROVED EQUAL, AND SHALL MEET THE TYPE "B" REQUIREMENTS OF SUBSECTION 7.3 OF THE ANSI/AASHTO/AWS D1.5 BRIDGE WELDING CODE.

AT ENDS OF GIRDERS TO BE EMBEDDED IN CONCRETE DIAPHRAGMS OR END WALLS, PRESTRESSING STRANDS MAY EXTEND A MAXIMUM OF 2" BEYOND THE GIRDER ENDS. OTHERWISE, PRESTRESSING STRANDS SHALL BE CUT FLUSH WITH THE GIRDER ENDS.

THE TRANSFER OF LOAD FROM THE ANCHORAGES TO THE GIRDER SHALL BE DONE WHEN CONCRETE HAS REACHED A COMPRESSIVE STRENGTH OF NOT LESS THAN 6500 PSI.

DEPENDING ON THE TYPE OF SYSTEM USED TO SUPPORT THE DECK SLAB FORMS, PRESET ANCHORS MAY BE NECESSARY IN THE PRESTRESSED CONCRETE GIRDER.

THE TOP SURFACE OF THE GIRDER, EXCLUDING THE OUTSIDE 4", SHALL BE RAKED TO A DEPTH OF 1/4".

WHEN DRAPED STRANDS ARE DETAILED, THE LONGITUDINAL LOCATION OF THE HOLD DOWN DEVICES SHALL BE WITHIN 6" OF THE LOCATION SHOWN AND THE CENTER OF GRAVITY OF THE GROUP OF DRAPED STRANDS SHALL BE LOCATED WITHIN 1/2" OF THE THEORETICAL LOCATION SHOWN.

A 2" x 2" CHAMFER IS ALLOWED AT THE INTERSECTION OF THE WEB AND THE BOTTOM FLANGE OF THE 72" MODIFIED BULB TEES ONLY.

THE CONTRACTOR HAS THE OPTION TO PROVIDE, AT NO ADDITIONAL COST TO THE DEPARTMENT, 2 ADDITIONAL STRANDS AT THE TOP OF THE GIRDER TO FACILITATE TYING OF THE REINFORCING STEEL. THESE STRANDS SHALL BE PULLED TO A LOAD OF 4500 lbs.

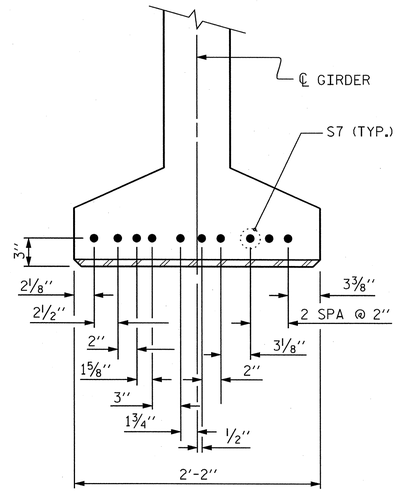

DETAIL "C"

(FOR 72" MODIFIED BULB TEE)

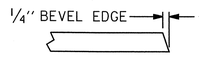

SECTION "G"

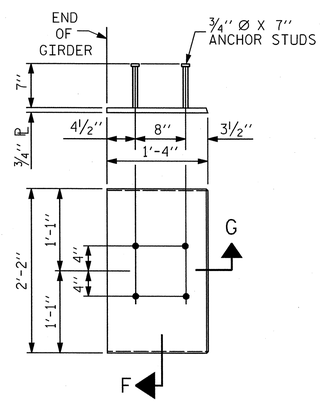

EMBEDDED PLATE "B-1" DETAILS

(2 REQ'D PER GIRDER)

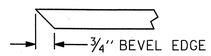

SECTION "F"

(SEE NOTES)

PROJECT NO. U-2525B

GUILFORD COUNTY

STATION: 26+17.64 -Y22-

85+41.17 -Y13-

AECOM

AECOM TECHNICAL SERVICES, INC.
701 CORPORATE CENTER DRIVE, SUITE 475
RALEIGH, NC 27607
(919) 854-6200 www.aecom.com
AECOM License No. F-0342

NORTH CAROLINA PROFESSIONAL SEAL 030474 ENGINEER JOHN C. MORRISON
3/25/14

R.N. 13-15

STATE OF NORTH CAROLINA
DEPARTMENT OF TRANSPORTATION
RALEIGH

STANDARD
PRESTRESSED CONCRETE GIRDER
CONTINUOUS FOR LIVE LOAD
DETAILS

REVISIONS						SHEET NO.
NO.	BY:	DATE:	NO.	BY:	DATE:	S-467
1			3			TOTAL SHEETS
2			4			541

STD. NO. PCG9 (Sht. 5)

ASSEMBLED BY :	DDL	DATE :	03/14
CHECKED BY :	JCM	DATE :	03/14
DRAWN BY : ELR 11/91	REV. 7/10/01	RR	LES/RDR
CHECKED BY : GRP 11/91	REV. 5/1/06		TLA/GM
	REV. 10/1/11		MAA/GM

USER: bellsilen
DGN: GN5027935v00_Technical_Information_Disc_Files\450_NCDOT Std Tech Design Files\Structures\Bridge 14\Cad\U2525B_SD_DSN_1146_PCG9_12.dgn
DATE: 3/25/2014
TIME: 12:25:07 PM

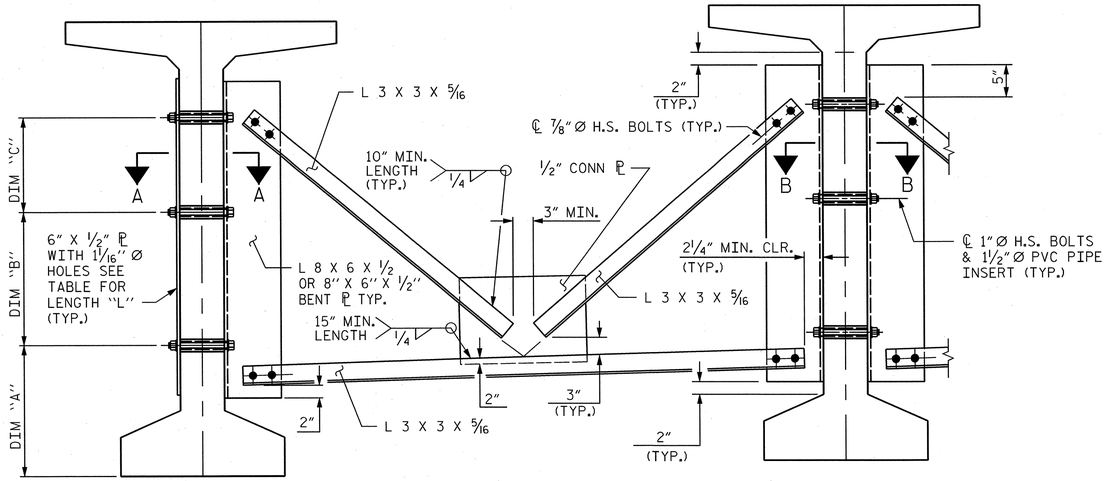

PART SECTION AT INTERMEDIATE DIAPHRAGM

(72" BULB TEE GIRDER SHOWN)

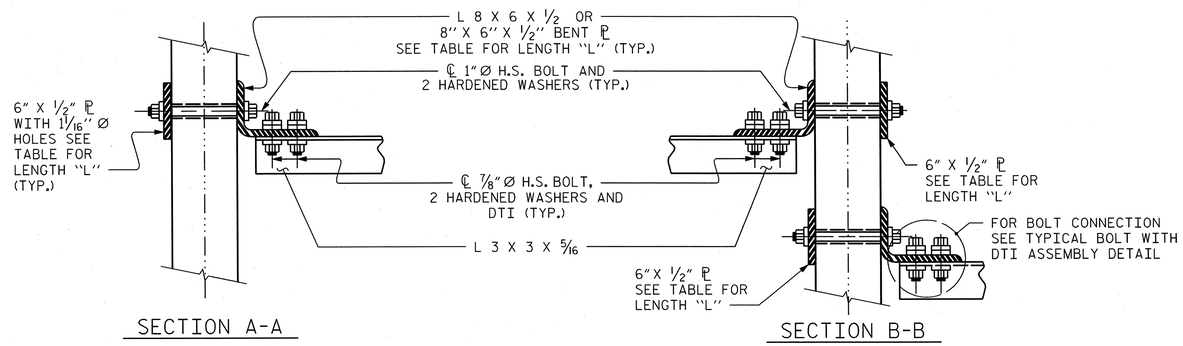

CONNECTION DETAILS

(FOR SKEW > 110°)

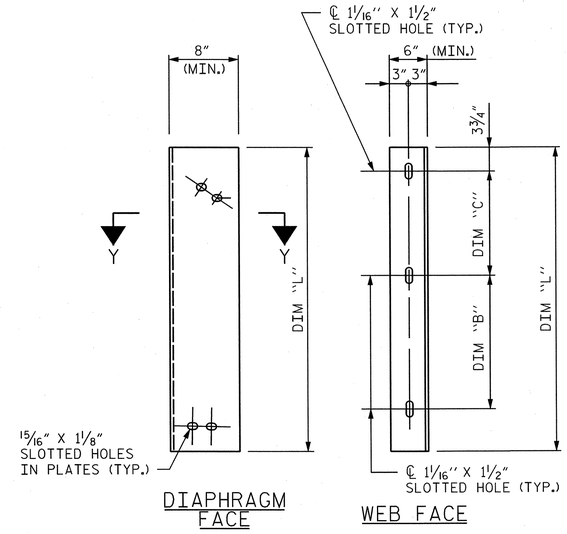

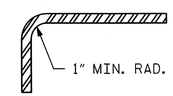

SECTION Y-Y

CONNECTOR PLATE DETAIL

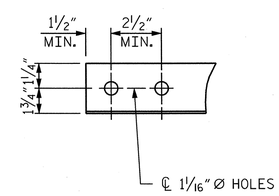

ANGLE END

(L 3 X 3 X 5/16)

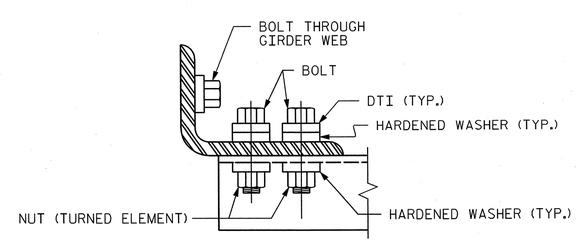

BOLT WITH DTI ASSEMBLY DETAIL

STRUCTURAL STEEL NOTES

ALL INTERMEDIATE DIAPHRAGM STEEL AND CONNECTOR PLATES SHALL BE AASHTO M270 GRADE 50 OR APPROVED EQUAL.

TENSION ON THE ASTM A325 BOLTS THROUGH THE ANGLE MEMBER SHALL BE CALIBRATED USING DIRECT TENSION INDICATOR WASHERS IN ACCORDANCE WITH THE STANDARD SPECIFICATIONS.

TENSION ON THE ASTM A449 BOLTS THROUGH THE GIRDER WEB SHALL BE SNUG TIGHTENED FOLLOWED BY AN ADDITIONAL 1/4 TURN.

THE PLATES, BENT PLATES, AND ANGLES SHALL BE GALVANIZED OR METALLIZED IN ACCORDANCE WITH THE STANDARD SPECIFICATIONS. FOR THERMAL SPRAYED COATINGS (METALLIZATION), SEE SPECIAL PROVISIONS.

FOR METALLIZATION, APPLY AN 8 MIL THICK 99.99 PERCENT ZINC (W-Zn-1) THERMAL SPRAYED COATING WITH A 0.5 MIL THICK SEAL COAT TO ALL STEEL DIAPHRAGM SURFACES IN ACCORDANCE WITH THE THERMAL SPRAYED COATINGS SPECIAL PROVISION AND SECTION 442 OF THE STANDARD SPECIFICATIONS.

GALVANIZE THE HIGH STRENGTH BOLTS, NUTS, WASHERS AND DIRECT TENSION INDICATORS IN ACCORDANCE WITH THE STANDARD SPECIFICATIONS.

USE AN ASTM F436 HARDENED WASHER WITH STANDARD AND SLOTTED HOLES UNDER EACH BOLT HEAD AND NUT.

FOR BOLTS THROUGH THE GIRDER WEB, PROVIDE SUFFICIENT LENGTH OF THREADS ON ALL BOLTS TO ACCOMMODATE WASHERS AND THE THICKNESS OF CONNECTING MEMBER PLUS AT LEAST 1/4" PROJECTION BEYOND THE NUT.

INTERMEDIATE DIAPHRAGM ASSEMBLY SHALL COMPLY WITH SECTION 1072 OF THE STANDARD SPECIFICATIONS.

SUBMIT TWO SETS OF WORKING DRAWINGS FOR THE INTERMEDIATE DIAPHRAGM ASSEMBLY FOR REVIEW, COMMENTS AND ACCEPTANCE. AFTER REVIEW, COMMENTS, AND ACCEPTANCE, SUBMIT SEVEN SETS FOR DISTRIBUTION.

IN THE EXTERIOR BAYS, PLACE TEMPORARY STRUTS BETWEEN PRESTRESSED GIRDERS ADJACENT TO THE STEEL DIAPHRAGMS. STRUTS SHALL REMAIN IN PLACE 3 DAYS AFTER CONCRETE IS PLACED.

THE COST OF THE STEEL DIAPHRAGMS AND ASSEMBLIES SHALL BE INCLUDED IN THE UNIT PRICE BID FOR PRESTRESSED CONCRETE GIRDERS.

TABLE

GIRDER TYPE	DIM "A"	DIM "B"	DIM "C"	DIM "L"
72" BULB TEE	1'-4"	1'-9"	1'-9"	4'-2"

PROJECT NO. U-2525B

GUILFORD COUNTY

STATION: 26+17.64 -Y22-
85+41.17 -Y13-

AECOM
AECOM TECHNICAL SERVICES, INC.
701 CORPORATE CENTER DRIVE, SUITE 475
RALEIGH, NC 27607
(919) 854-6200 www.aecom.com
AECOM License No. F-0342

NORTH CAROLINA PROFESSIONAL SEAL 030474 ENGINEER JOHN C. MORRISON
3/25/14

R.N. 13-16

STATE OF NORTH CAROLINA
DEPARTMENT OF TRANSPORTATION
RALEIGH

STANDARD
INTERMEDIATE
STEEL DIAPHRAGMS FOR
72" MODIFIED BULB TEE
PRESTRESSED CONCRETE
GIRDER

REVISIONS

NO.	BY:	DATE:	NO.	BY:	DATE:
1			3		
2			4		

SHEET NO. S-468

TOTAL SHEETS 541

STD. NO. PCG11 (SHT. 5)

ASSEMBLED BY : DDL	DATE : 03/14		
CHECKED BY : JCM	DATE : 03/14		
DRAWN BY : RWW 11/09	ADDED 11/23/09R		
CHECKED BY : GM 11/09	REV. 10/1/11 MAA/GM		

USER: bellsjen
DGN: 0:\60279356\400_Technical_Information_Disc_Files\450_NCDOT Std Tech\Design Files\Structures\Bridge 14\Cadd\U2525B_SD_DSN_1146_PCG11_12.dgn
DATE: 3/25/2014
TIME: 12:11:22 PM

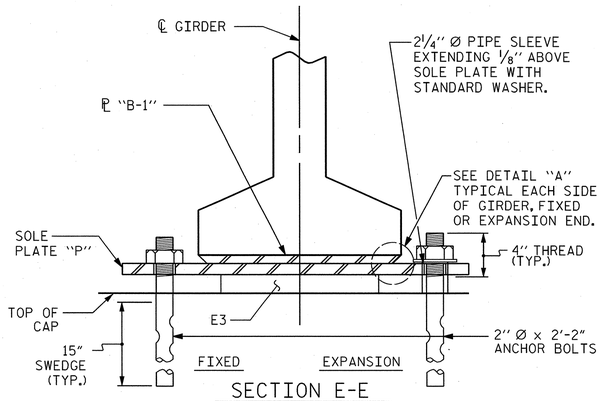

SECTION E-E

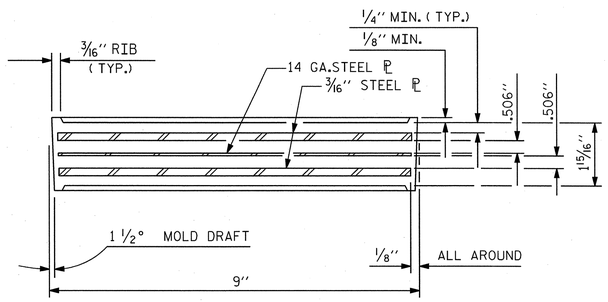

TYPICAL SECTION OF ELASTOMERIC BEARINGS

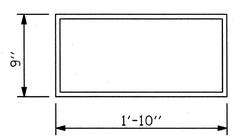

E3 (28 REQ'D)

PLAN VIEW OF ELASTOMERIC BEARING

TYPE IV

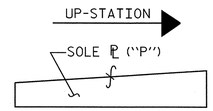

SOLE ℗ PLACEMENT DETAIL

(SOLE PLATES P1, P3, P4 & P5)

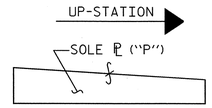

SOLE ℗ PLACEMENT DETAIL

(SOLE PLATE P6 & P7)

TABLE OF SOLE PLATES				
TYPE	F/E ✱	"A" (in)	"B" (in)	No.
P1	E	1¼"	1 3/16"	7
P2	F	1¼"	1¼"	7
P3	F	1⅜"	1½"	1
P4	F	1 7/16"	1 3/16"	5
P5	F	1½"	1 11/16"	1
P6	E	1 7/16"	1¼"	5
P7	E	1⅜"	1¼"	2

✱ DENOTES FIXED OR EXPANSION

MAXIMUM ALLOWABLE SERVICE LOADS	
D.L.+L.L. (NO IMPACT)	
TYPE IV	225 k

NOTES

AT ALL FIXED POINTS OF SUPPORT, NUTS FOR ANCHOR BOLTS ARE TO BE TIGHTENED FINGER TIGHT AND THEN BACKED OFF ½ TURN. THE THREAD OF THE NUT AND BOLT SHALL THEN BE BURRED WITH A SHARP POINTED TOOL.

THE 2" Ø PIPE SLEEVE SHALL BE CUT FROM SCHEDULE 40 PVC PLASTIC PIPE. THE PVC PLASTIC PIPE SHALL MEET THE REQUIREMENTS OF ASTM D1785.

ALL BEARING PLATES SHALL BE AASHTO M270 GRADE 36.

STEEL SOLE PLATES, ANCHOR BOLTS, NUTS, AND WASHERS SHALL BE GALVANIZED IN ACCORDANCE WITH THE STANDARD SPECIFICATIONS.

ALL SURFACES OF BEARING PLATES SHALL BE SMOOTH AND STRAIGHT.

PRIOR TO WELDING, GRIND THE GALVANIZED SURFACE OF THE PORTION OF THE EMBEDDED PLATE AND SOLE PLATE THAT ARE TO BE WELDED. AFTER WELDING, DAMAGED GALVANIZED SURFACES SHALL BE REPAIRED IN ACCORDANCE WITH THE STANDARD SPECIFICATIONS.

WHEN WELDING THE SOLE PLATE TO THE EMBEDDED PLATE IN THE GIRDER, USE TEMPERATURE INDICATING WAX PENS, OR OTHER SUITABLE MEANS, TO ENSURE THAT THE TEMPERATURE OF THE SOLE PLATE DOES NOT EXCEED 300°F. TEMPERATURES ABOVE THIS MAY DAMAGE THE ELASTOMER.

SOLE PLATE "P", BOLTS, NUTS, WASHERS, AND PIPE SLEEVE SHALL BE INCLUDED IN THE PAY ITEM FOR PRESTRESSED CONCRETE GIRDERS.

ANCHOR BOLTS SHALL MEET THE REQUIREMENTS OF ASTM A449. NUTS SHALL MEET THE REQUIREMENTS OF AASHTO M291-DH OR AASHTO M292-2H. WASHERS SHALL MEET THE REQUIREMENTS OF AASHTO M293. NO SHOP DRAWINGS ARE REQUIRED FOR ANCHOR BOLTS, NUTS AND WASHERS. SHOP INSPECTION IS REQUIRED.

THE ELASTOMER IN THE STEEL REINFORCED BEARINGS SHALL HAVE A SHEAR MODULUS OF 0.160 KSI, IN ACCORDANCE WITH AASHTO M251.

FOR STEEL REINFORCED ELASTOMERIC BEARINGS, SEE SPECIAL PROVISIONS.

FOR LOCATION OF SOLE PLATES AND BEARINGS, SEE "FRAMING PLAN".

ƒ - SURFACE FINISH

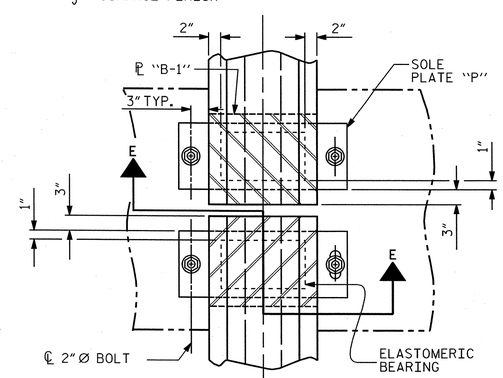

TYPICAL HALF-PLAN (SHOWING CONTINUOUS BENT)

TYPICAL HALF-PLAN (SHOWING SIMPLE SPAN BENT)

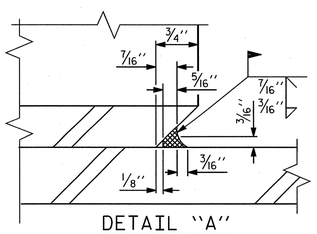

DETAIL "A"

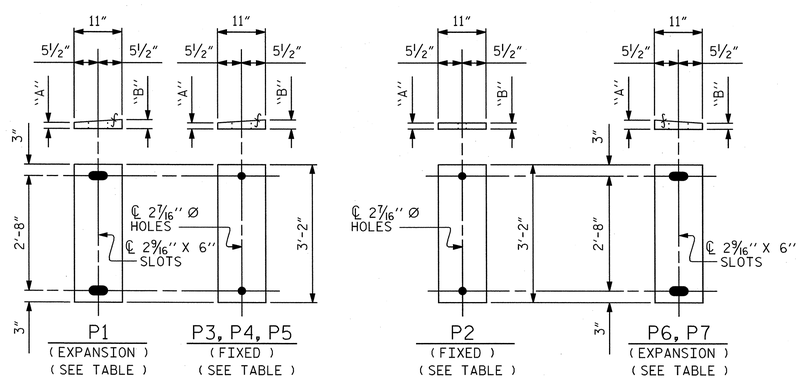

SOLE PLATE DETAILS ("P")

PROJECT NO. U-2525B

GUILFORD COUNTY

STATION: 26+17.64 -Y22-
85+41.17 -Y13-

AECOM
AECOM TECHNICAL SERVICES, INC.
701 CORPORATE CENTER DRIVE, SUITE 475
RALEIGH, NC 27607
(919) 854-6200 www.aecom.com
AECOM License No. F-0342

NORTH CAROLINA PROFESSIONAL SEAL 030474 ENGINEER JOHN C. MORRISON
3/25/14

R.N. 13-17

STATE OF NORTH CAROLINA
DEPARTMENT OF TRANSPORTATION
RALEIGH

STANDARD

ELASTOMERIC BEARING DETAILS

PRESTRESSED CONCRETE GIRDER SUPERSTRUCTURE

REVISIONS						
NO.	BY:	DATE:	NO.	BY:	DATE:	
1			3			
2			4			

SHEET NO. S-469

TOTAL SHEETS 541

STD. NO. EB3 (SHT 1)

ASSEMBLED BY :	DDL	DATE :	03/14
CHECKED BY :	JCM	DATE :	03/14
DRAWN BY : EEM 8/89	REV. 5/1/06	TLA/GM	
CHECKED BY : VAP 8/89	REV. 10/1/11	MAA/GM	
	REV. 6/13	AAC/MAA	

USER: bellisten
DGN: G:\50127\9356\400_Technical_Information_Disc_Files\450_NCDOT Std Tech Des\prFiles\Structure\Bridge #4\Cadd\U2525B_SD_DSN_JH6_EB4_1D.dgn
DATE: 3/25/2014
TIME: 12:59:12 PM

DEAD LOAD DEFLECTION TABLE FOR GIRDERS

0.6" DIA. LOW-RELAXATION	SPAN "A" GIRDER 1																				
TWENTIETH POINTS	BRG.	0.05	0.10	0.15	0.20	0.25	0.30	0.35	0.40	0.45	0.50	0.55	0.60	0.65	0.70	0.75	0.80	0.85	0.90	0.95	BRG.
CAMBER (GIRDER ALONE IN PLACE) ↑	0.000	0.077	0.146	0.204	0.255	0.298	0.331	0.358	0.377	0.389	0.393	0.389	0.377	0.358	0.331	0.298	0.255	0.205	0.146	0.077	0.000
* DEFLECTION DUE TO SUPERIMPOSED DL ↓	0.000	-0.031	-0.062	-0.092	-0.120	-0.144	-0.165	-0.182	-0.194	-0.202	-0.204	-0.202	-0.194	-0.182	-0.165	-0.144	-0.120	-0.092	-0.062	-0.031	0.000
** FINAL CAMBER (OR DEFLECTION) ↑	0"	9/16"	1"	1 3/8"	1 5/8"	1 13/16"	2"	2 1/8"	2 3/16"	2 1/4"	2 1/4"	2 1/4"	2 3/16"	2 1/8"	2"	1 13/16"	1 5/8"	1 3/8"	1"	9/16"	0"

DEAD LOAD DEFLECTION TABLE FOR GIRDERS

0.6" DIA. LOW-RELAXATION	SPAN "A" GIRDER 2, 3 AND 4																				
TWENTIETH POINTS	BRG.	0.05	0.10	0.15	0.20	0.25	0.30	0.35	0.40	0.45	0.50	0.55	0.60	0.65	0.70	0.75	0.80	0.85	0.90	0.95	BRG.
CAMBER (GIRDER ALONE IN PLACE) ↑	0.000	0.077	0.146	0.204	0.255	0.298	0.331	0.358	0.377	0.389	0.393	0.389	0.377	0.358	0.331	0.298	0.255	0.205	0.146	0.077	0.000
* DEFLECTION DUE TO SUPERIMPOSED DL ↓	0.000	-0.029	-0.058	-0.087	-0.113	-0.136	-0.157	-0.172	-0.184	-0.191	-0.193	-0.191	-0.184	-0.172	-0.157	-0.136	-0.113	-0.087	-0.058	-0.029	0.000
** FINAL CAMBER (OR DEFLECTION) ↑	0"	9/16"	1 1/16"	1 7/16"	1 11/16"	1 15/16"	2 1/8"	2 1/4"	2 5/16"	2 3/8"	2 3/8"	2 3/8"	2 5/16"	2 1/4"	2 1/8"	1 15/16"	1 11/16"	1 7/16"	1 1/16"	9/16"	0"

DEAD LOAD DEFLECTION TABLE FOR GIRDERS

0.6" DIA. LOW-RELAXATION	SPAN "A" GIRDER 5																				
TWENTIETH POINTS	BRG.	0.05	0.10	0.15	0.20	0.25	0.30	0.35	0.40	0.45	0.50	0.55	0.60	0.65	0.70	0.75	0.80	0.85	0.90	0.95	BRG.
CAMBER (GIRDER ALONE IN PLACE) ↑	0.000	0.077	0.146	0.204	0.255	0.298	0.331	0.358	0.377	0.389	0.393	0.389	0.377	0.358	0.331	0.298	0.255	0.205	0.146	0.077	0.000
* DEFLECTION DUE TO SUPERIMPOSED DL ↓	0.000	-0.029	-0.058	-0.086	-0.112	-0.135	-0.155	-0.171	-0.182	-0.189	-0.191	-0.189	-0.182	-0.171	-0.155	-0.135	-0.112	-0.086	-0.058	-0.029	0.000
** FINAL CAMBER (OR DEFLECTION) ↑	0"	9/16"	1 1/16"	1 7/16"	1 11/16"	1 15/16"	2 1/8"	2 1/4"	2 5/16"	2 3/8"	2 7/16"	2 3/8"	2 5/16"	2 1/4"	2 1/8"	1 15/16"	1 11/16"	1 7/16"	1 1/16"	9/16"	0"

DEAD LOAD DEFLECTION TABLE FOR GIRDERS

0.6" DIA. LOW-RELAXATION	SPAN "A" GIRDER 6																				
TWENTIETH POINTS	BRG.	0.05	0.10	0.15	0.20	0.25	0.30	0.35	0.40	0.45	0.50	0.55	0.60	0.65	0.70	0.75	0.80	0.85	0.90	0.95	BRG.
CAMBER (GIRDER ALONE IN PLACE) ↑	0.000	0.085	0.146	0.204	0.255	0.298	0.331	0.358	0.377	0.389	0.393	0.389	0.377	0.358	0.331	0.298	0.255	0.205	0.146	0.077	0.000
* DEFLECTION DUE TO SUPERIMPOSED DL ↓	0.000	-0.030	-0.060	-0.089	-0.116	-0.140	-0.160	-0.177	-0.189	-0.196	-0.198	-0.196	-0.189	-0.177	-0.160	-0.140	-0.116	-0.089	-0.060	-0.030	0.000
** FINAL CAMBER (OR DEFLECTION) ↑	0"	11/16"	1 1/16"	1 3/8"	1 11/16"	1 7/8"	2 1/16"	2 3/16"	2 1/4"	2 5/16"	2 5/16"	2 5/16"	2 1/4"	2 3/16"	2 1/16"	1 7/8"	1 11/16"	1 3/8"	1 1/16"	9/16"	0"

DEAD LOAD DEFLECTION TABLE FOR GIRDERS

0.6" DIA. LOW-RELAXATION	SPAN "A" GIRDER 7																				
TWENTIETH POINTS	BRG.	0.05	0.10	0.15	0.20	0.25	0.30	0.35	0.40	0.45	0.50	0.55	0.60	0.65	0.70	0.75	0.80	0.85	0.90	0.95	BRG.
CAMBER (GIRDER ALONE IN PLACE) ↑	0.000	0.077	0.146	0.204	0.255	0.298	0.331	0.358	0.377	0.389	0.393	0.389	0.377	0.358	0.331	0.298	0.255	0.205	0.146	0.077	0.000
* DEFLECTION DUE TO SUPERIMPOSED DL ↓	0.000	-0.032	-0.064	-0.095	-0.124	-0.149	-0.171	-0.188	-0.201	-0.209	-0.211	-0.209	-0.201	-0.188	-0.171	-0.149	-0.124	-0.095	-0.064	-0.032	0.000
** FINAL CAMBER (OR DEFLECTION) ↑	0"	9/16"	1"	1 5/16"	1 9/16"	1 13/16"	1 15/16"	2 1/16"	2 1/8"	2 3/16"	2 3/16"	2 3/16"	2 1/8"	2 1/16"	1 15/16"	1 13/16"	1 9/16"	1 5/16"	1"	9/16"	0"

* INCLUDES FUTURE WEARING SURFACE.

** POSITIVE NUMBER MEANS UPWARD MOVEMENT, NEGATIVE NUMBER MEANS DOWNWARD MOVEMENT.
ALL VALUES ARE SHOWN IN FEET (DECIMAL FORM), EXCEPT "FINAL CAMBER", WHICH IS GIVEN IN INCHES (FRACTION FORM).

PROJECT NO. U-2525B
GUILFORD COUNTY
STATION: 26+17.64 -Y22-
85+41.17 -Y13-
SHEET 1 OF 2

AECOM
AECOM TECHNICAL SERVICES, INC.
701 CORPORATE CENTER DRIVE, SUITE 475
RALEIGH, NC 27607
(919) 854-6200 www.aecom.com
AECOM License No. F-0342

NORTH CAROLINA PROFESSIONAL SEAL 030474 ENGINEER JOHN C. MORRISON
3/25/14

R.N. 13-18

STATE OF NORTH CAROLINA
DEPARTMENT OF TRANSPORTATION
RALEIGH

SUPERSTRUCTURE

GIRDER DEFLECTIONS AND CAMBER SCHEDULES

(LEFT LANE)

REVISIONS						SHEET NO.
NO.	BY:	DATE:	NO.	BY:	DATE:	S-470
1			3			TOTAL SHEETS
2			4			541

DRAWN BY : DDL DATE : 03/14
CHECKED BY : JCM DATE : 03/14

DATE: 3/25/2014
TIME: 10:28:31 PM
USER: bell/jem
DGN: 0:\60279356\450_Technical_Information_Disc_Files\450_NCDOT Staff sen Design Files\Structures\Bridge 14\Cadd\U2525B_SD_DSN_1\46_DL_DEFLECT_1.dgn

DEAD LOAD DEFLECTION TABLE FOR GIRDERS

0.6" DIA. LOW-RELAXATION	SPAN "B" GIRDER 1																				
TWENTIETH POINTS	BRG.	0.05	0.10	0.15	0.20	0.25	0.30	0.35	0.40	0.45	0.50	0.55	0.60	0.65	0.70	0.75	0.80	0.85	0.90	0.95	BRG.
CAMBER (GIRDER ALONE IN PLACE) ↑	0.000	0.085	0.161	0.224	0.278	0.325	0.361	0.390	0.411	0.423	0.428	0.423	0.411	0.390	0.361	0.325	0.278	0.224	0.161	0.085	0.000
* DEFLECTION DUE TO SUPERIMPOSED DL ↓	0.000	-0.035	-0.069	-0.102	-0.133	-0.160	-0.184	-0.202	-0.216	-0.225	-0.227	-0.225	-0.216	-0.202	-0.184	-0.160	-0.133	-0.102	-0.069	-0.035	0.000
** FINAL CAMBER (OR DEFLECTION) ↑	0"	5/8"	1 1/8"	1 7/16"	1 3/4"	2"	2 1/8"	2 1/4"	2 5/16"	2 3/8"	2 7/16"	2 3/8"	2 5/16"	2 1/4"	2 1/8"	2"	1 3/4"	1 7/16"	1 1/8"	5/8"	0"

DEAD LOAD DEFLECTION TABLE FOR GIRDERS

0.6" DIA. LOW-RELAXATION	SPAN "B" GIRDER 2, 3 AND 4																				
TWENTIETH POINTS	BRG.	0.05	0.10	0.15	0.20	0.25	0.30	0.35	0.40	0.45	0.50	0.55	0.60	0.65	0.70	0.75	0.80	0.85	0.90	0.95	BRG.
CAMBER (GIRDER ALONE IN PLACE) ↑	0.000	0.085	0.161	0.224	0.278	0.325	0.361	0.390	0.411	0.423	0.428	0.423	0.411	0.390	0.361	0.325	0.278	0.224	0.161	0.085	0.000
* DEFLECTION DUE TO SUPERIMPOSED DL ↓	0.000	-0.033	-0.065	-0.096	-0.126	-0.151	-0.174	-0.191	-0.204	-0.212	-0.215	-0.212	-0.204	-0.191	-0.174	-0.151	-0.126	-0.097	-0.065	-0.033	0.000
** FINAL CAMBER (OR DEFLECTION) ↑	0"	5/8"	1 3/16"	1 9/16"	1 13/16"	2 1/16"	2 1/4"	2 3/8"	2 1/2"	2 1/2"	2 9/16"	2 1/2"	2 1/2"	2 3/8"	2 1/4"	2 1/16"	1 13/16"	1 9/16"	1 3/16"	5/8"	0"

DEAD LOAD DEFLECTION TABLE FOR GIRDERS

0.6" DIA. LOW-RELAXATION	SPAN "B" GIRDER 5																				
TWENTIETH POINTS	BRG.	0.05	0.10	0.15	0.20	0.25	0.30	0.35	0.40	0.45	0.50	0.55	0.60	0.65	0.70	0.75	0.80	0.85	0.90	0.95	BRG.
CAMBER (GIRDER ALONE IN PLACE) ↑	0.000	0.085	0.161	0.224	0.278	0.325	0.361	0.390	0.411	0.423	0.428	0.423	0.411	0.390	0.361	0.325	0.278	0.224	0.161	0.085	0.000
* DEFLECTION DUE TO SUPERIMPOSED DL ↓	0.000	-0.032	-0.064	-0.096	-0.125	-0.150	-0.172	-0.190	-0.202	-0.210	-0.213	-0.210	-0.202	-0.190	-0.172	-0.150	-0.125	-0.096	-0.064	-0.032	0.000
** FINAL CAMBER (OR DEFLECTION) ↑	0"	5/8"	1 3/16"	1 9/16"	1 13/16"	2 1/8"	2 1/4"	2 7/16"	2 1/2"	2 9/16"	2 9/16"	2 9/16"	2 1/2"	2 7/16"	2 1/4"	2 1/8"	1 13/16"	1 9/16"	1 3/16"	5/8"	0"

DEAD LOAD DEFLECTION TABLE FOR GIRDERS

0.6" DIA. LOW-RELAXATION	SPAN "B" GIRDER 6																				
TWENTIETH POINTS	BRG.	0.05	0.10	0.15	0.20	0.25	0.30	0.35	0.40	0.45	0.50	0.55	0.60	0.65	0.70	0.75	0.80	0.85	0.90	0.95	BRG.
CAMBER (GIRDER ALONE IN PLACE) ↑	0.000	0.085	0.161	0.224	0.278	0.325	0.361	0.390	0.411	0.423	0.428	0.423	0.411	0.390	0.361	0.325	0.278	0.224	0.161	0.085	0.000
* DEFLECTION DUE TO SUPERIMPOSED DL ↓	0.000	-0.033	-0.066	-0.099	-0.129	-0.155	-0.178	-0.196	-0.209	-0.218	-0.220	-0.218	-0.209	-0.196	-0.178	-0.155	-0.129	-0.099	-0.066	-0.033	0.000
** FINAL CAMBER (OR DEFLECTION) ↑	0"	5/8"	1 1/8"	1 1/2"	1 13/16"	2 1/16"	2 3/16"	2 5/16"	2 7/16"	2 7/16"	2 1/2"	2 7/16"	2 7/16"	2 5/16"	2 3/16"	2 1/16"	1 13/16"	1 1/2"	1 1/8"	5/8"	0"

DEAD LOAD DEFLECTION TABLE FOR GIRDERS

0.6" DIA. LOW-RELAXATION	SPAN "B" GIRDER 7																				
TWENTIETH POINTS	BRG.	0.05	0.10	0.15	0.20	0.25	0.30	0.35	0.40	0.45	0.50	0.55	0.60	0.65	0.70	0.75	0.80	0.85	0.90	0.95	BRG.
CAMBER (GIRDER ALONE IN PLACE) ↑	0.000	0.085	0.161	0.224	0.278	0.325	0.361	0.390	0.411	0.423	0.428	0.423	0.411	0.390	0.361	0.325	0.278	0.224	0.161	0.085	0.000
* DEFLECTION DUE TO SUPERIMPOSED DL ↓	0.000	-0.036	-0.071	-0.105	-0.137	-0.165	-0.190	-0.209	-0.223	-0.232	-0.235	-0.232	-0.223	-0.209	-0.190	-0.165	-0.137	-0.105	-0.071	-0.036	0.000
** FINAL CAMBER (OR DEFLECTION) ↑	0"	5/8"	1 1/16"	1 7/16"	1 11/16"	1 15/16"	2 1/16"	2 3/16"	2 1/4"	2 5/16"	2 5/16"	2 5/16"	2 1/4"	2 3/16"	2 1/16"	1 15/16"	1 11/16"	1 7/16"	1 1/16"	5/8"	0"

* INCLUDES FUTURE WEARING SURFACE.

** POSITIVE NUMBER MEANS UPWARD MOVEMENT, NEGATIVE NUMBER MEANS DOWNWARD MOVEMENT.
ALL VALUES ARE SHOWN IN FEET (DECIMAL FORM), EXCEPT "FINAL CAMBER", WHICH IS GIVEN IN INCHES (FRACTION FORM).

DRAWN BY : DDL DATE : 03/14
CHECKED BY : JCM DATE : 03/14

PROJECT NO. U-2525B
GUILFORD COUNTY
STATION: 26+17.64 -Y22-
85+41.17 -Y13-

SHEET 2 OF 2

AECOM
AECOM TECHNICAL SERVICES, INC.
701 CORPORATE CENTER DRIVE, SUITE 475
RALEIGH, NC 27607
(919) 854-6200
www.aecom.com
AECOM License No. F-0342

NORTH CAROLINA PROFESSIONAL SEAL 030474 ENGINEER JOHN C. MORRISON
3/25/14

R.N. 13-19

STATE OF NORTH CAROLINA
DEPARTMENT OF TRANSPORTATION
RALEIGH

SUPERSTRUCTURE

GIRDER DEFLECTIONS AND CAMBER SCHEDULES

(LEFT LANE)

REVISIONS						SHEET NO.
NO.	BY:	DATE:	NO.	BY:	DATE:	S-471
1			3			TOTAL SHEETS
2			4			541

USER: bellsdam
DGN: 0:\60029355\v400_Technical_Information_Disc_Files\450_NCDOT Staff and Design\Files\Structures\Bridge 1\Code\U2525B_SD_DSN_JH6_DL_DEFLECT_2.dgn
DATE: 3/25/2014
TIME: 02:24:30 PM

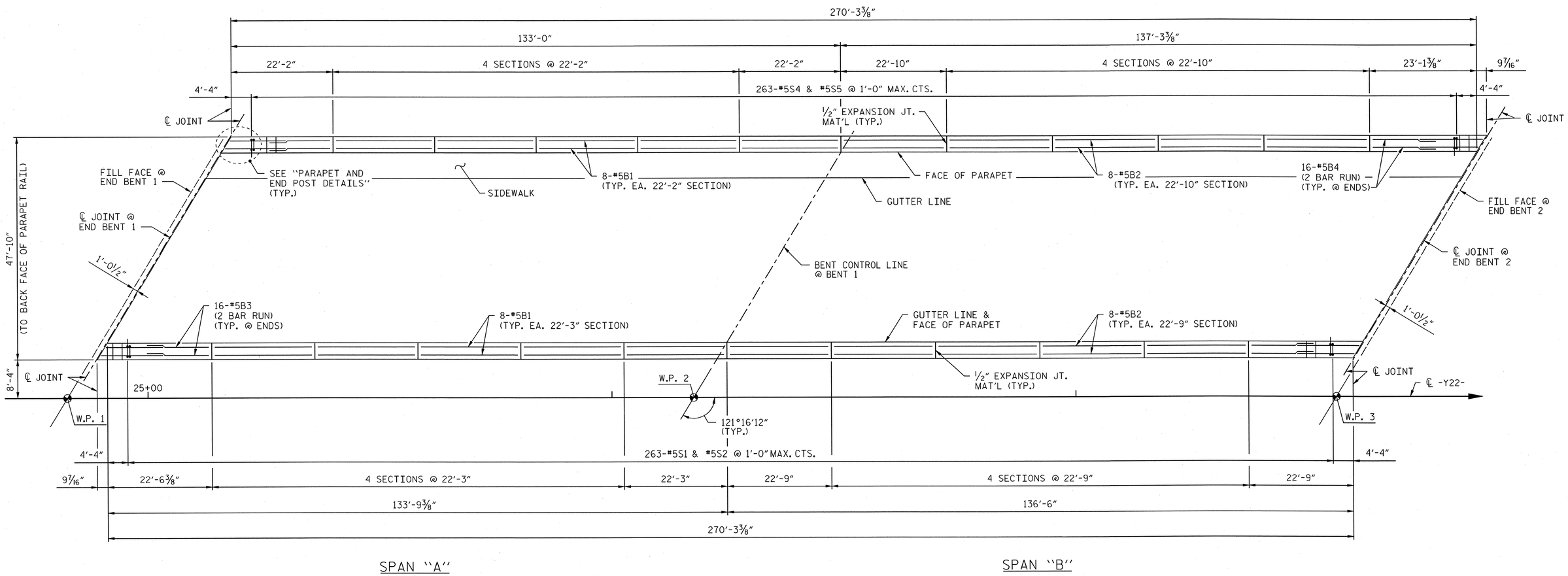

PLAN OF PARAPET REINFORCING

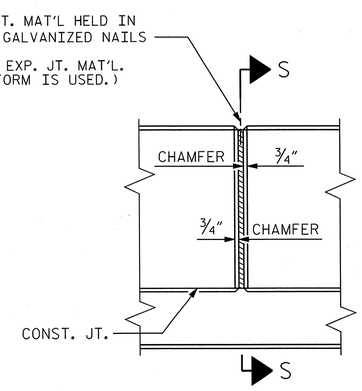

ELEVATION AT EXPANSION JOINTS

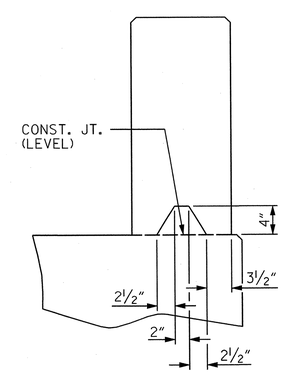

SECTION S-S

AT DAM IN OPEN JOINT (THIS IS TO BE USED ONLY WHEN SLIP FORM IS USED)

BARRIER RAIL DETAILS

NOTES:

THE JOINT AT ENDS OF DECK SHALL BE SAWED PRIOR TO THE CASTING OF PARAPET.

THE PARAPET RAIL IN A CONTINUOUS UNIT SHALL NOT BE CAST UNTIL ALL SLAB CONCRETE IN THAT UNIT HAS BEEN CAST AND HAS REACHED A MINIMUM COMPRESSIVE STRENGTH OF 3,000 PSI.

ALL REINFORCING STEEL IN PARAPET RAILS SHALL BE EPOXY COATED.

GROOVED CONTRACTION JOINTS ½" IN DEPTH SHALL BE TOOLED IN ALL EXPOSED FACES OF THE PARAPET RAIL AND IN ACCORDANCE WITH ARTICLE 825-10(B) OF THE STANDARD SPECIFICATIONS. A CONTRACTION JOINT SHALL BE LOCATED AT EACH THIRD POINT BETWEEN PARAPET EXPANSION JOINTS. ONLY ONE CONTRACTION JOINT IS REQUIRED AT MIDPOINT OF PARAPET RAIL SEGMENTS LESS THAN 20 FEET IN LENGTH AND NO CONTRACTION JOINTS ARE REQUIRED FOR THOSE SEGMENTS LESS THAN 10 FEET IN LENGTH.

FOR PLAN AND DETAILS OF PARAPET AND END POSTS, SEE "CONCRETE PARAPET AND END POST DETAILS" SHEET 2 OF 2.

DRAWN BY : DDL DATE : 03/14
CHECKED BY : JCM DATE : 03/14

PROJECT NO. U-2525B
GUILFORD COUNTY
STATION: 26+17.64 -Y22-
85+41.17 -Y13-
SHEET 1 OF 2

AECOM
AECOM TECHNICAL SERVICES, INC.
701 CORPORATE CENTER DRIVE, SUITE 475
RALEIGH, NC 27607
(919) 854-6200 www.aecom.com
AECOM License No. F-0342

NORTH CAROLINA PROFESSIONAL SEAL 030474 ENGINEER JOHN C. MORRISON
3/25/14

R.N. 13-20

STATE OF NORTH CAROLINA
DEPARTMENT OF TRANSPORTATION
RALEIGH

SUPERSTRUCTURE

CONCRETE PARAPET AND END POST DETAILS

(LEFT LANE)

REVISIONS						
NO.	BY:	DATE:	NO.	BY:	DATE:	
1			3			
2			4			

SHEET NO. S-472
TOTAL SHEETS 541

DATE: 3/25/2014
TIME: 12:26:39 PM
USER: bellsiem
DGN: GV60279356\400_Technical_Information_Disc_Files\450_NCDOT Staffed\DesignFiles\Structures\Bridge\PCode\U2525B_SD_DSN_LHS_PARAPET_L4.dgn

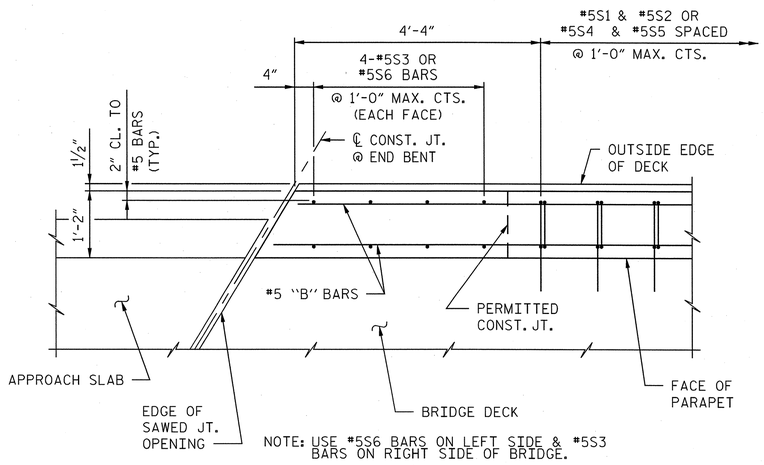

PLAN OF PARAPET

(#7 "E" BARS NOT
SHOWN FOR CLARITY)

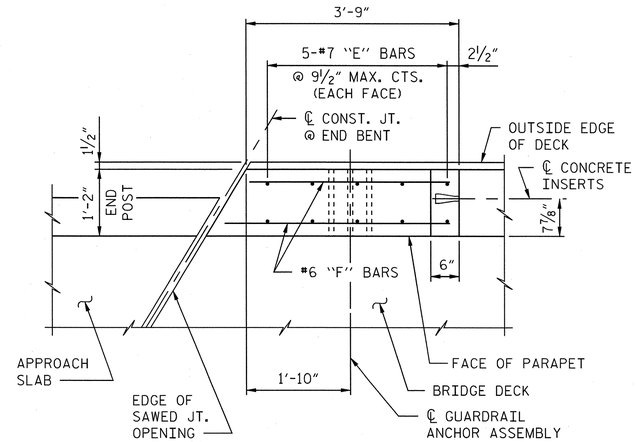

PLAN OF END POST

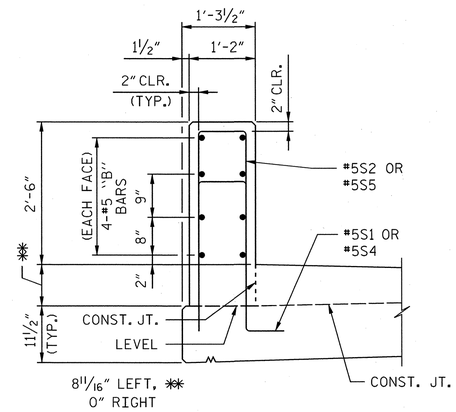

SECTION "A-A"

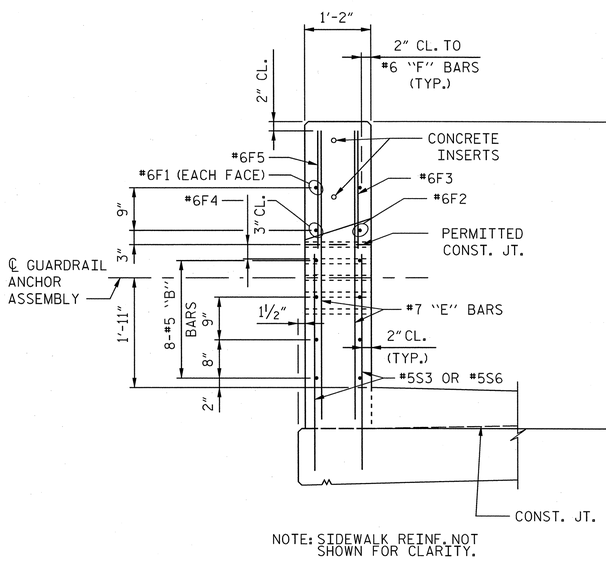

NOTE: SIDEWALK REINF. NOT
SHOWN FOR CLARITY.

END VIEW

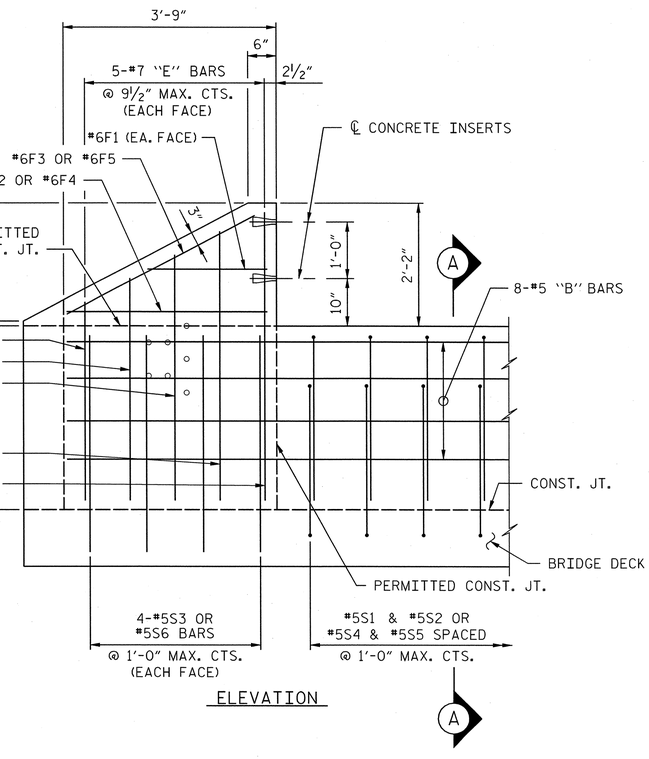

ELEVATION

PARAPET AND END POST FOR TWO BAR RAIL

TWO BAR METAL RAIL

BILL OF MATERIAL FOR PARAPET AND END POSTS

BAR	NO.	SIZE	TYPE	LENGTH	WEIGHT
* B1	80	#5	STR.	21'-9"	1815
* B2	80	#5	STR.	22'-4"	1863
* B3	32	#5	STR.	13'-3"	442
* B4	32	#5	STR.	13'-6"	451
* E1	4	#7	STR.	2'-6"	20
* E2	4	#7	STR.	3'-0"	25
* E3	4	#7	STR.	3'-6"	29
* E4	4	#7	STR.	4'-0"	33
* E5	4	#7	STR.	4'-4"	35
* E6	4	#7	STR.	3'-1"	25
* E7	4	#7	STR.	3'-7"	29
* E8	4	#7	STR.	4'-1"	33
* E9	4	#7	STR.	4'-7"	37
* E10	4	#7	STR.	4'-11"	40
* F1	8	#6	STR.	1'-9"	21
* F2	4	#6	STR.	2'-11"	18
* F3	4	#6	STR.	3'-9"	23
* F4	4	#6	STR.	3'-7"	22
* F5	4	#6	STR.	4'-5"	26
* S1	263	#5	1	5'-5"	1486
* S2	263	#5	2	5'-6"	1509
* S3	16	#5	STR.	3'-0"	50
* S4	263	#5	1	6'-7"	1806
* S5	263	#5	2	6'-8"	1829
* S6	16	#5	STR.	3'-7"	60
* EPOXY COATED REINFORCING STEEL				LBS.	11727
CLASS AA CONCRETE				C.Y.	66.3
CONCRETE PARAPET				L.F.	540.6

BAR TYPES

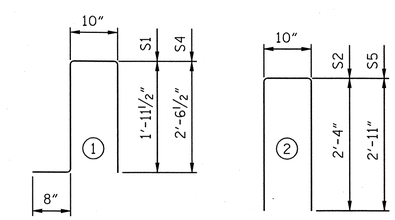

ALL BAR DIMENSIONS ARE OUT TO OUT.

NOTES:

THE #5S3 & #5S6 BARS SHALL BE INSTALLED USING AN ADHESIVE ANCHORING SYSTEM AFTER SAWING THE JOINT. LEVEL TWO FIELD TESTING IS REQUIRED, AND THE YIELD LOAD FOR THE #5S3 & #5S6 BAR IS 18.6 KIPS. FOR ADHESIVELY ANCHORED ANCHOR BOLTS OR DOWELS, SEE THE STANDARD SPECIFICATIONS.

PROJECT NO. U-2525B

GUILFORD **COUNTY**

STATION: 26+17.64 -Y22-
85+41.17 -Y13-

SHEET 2 OF 2

AECOM
AECOM TECHNICAL SERVICES, INC.
701 CORPORATE CENTER DRIVE, SUITE 475
RALEIGH, NC 27607
(919) 854-6200 www.aecom.com
AECOM License No. F-0342

NORTH CAROLINA PROFESSIONAL SEAL 030474 ENGINEER JOHN C. MORRISON
3/25/14

R.N. 13-21

STATE OF NORTH CAROLINA
DEPARTMENT OF TRANSPORTATION
RALEIGH

SUPERSTRUCTURE

CONCRETE PARAPET
AND END POST DETAILS

(LEFT LANE)

REVISIONS							SHEET NO.
NO.	BY:	DATE:	NO.	BY:	DATE:		S-473
1			3				TOTAL SHEETS
2			4				541

DRAWN BY : DDL DATE : 03/14
CHECKED BY : JCM DATE : 03/14

DATE: 3/25/2014
TIME: 12:28:46 PM

USER: bellsim
DGN: G:\60127935\v400_Technical_Information_Disc_Files\450_NCDOT\SidTechDesignFiles\Structures\Bridge #\Cadd\U2525B_SD_DSN_JH6_PARAPET_2.dgn

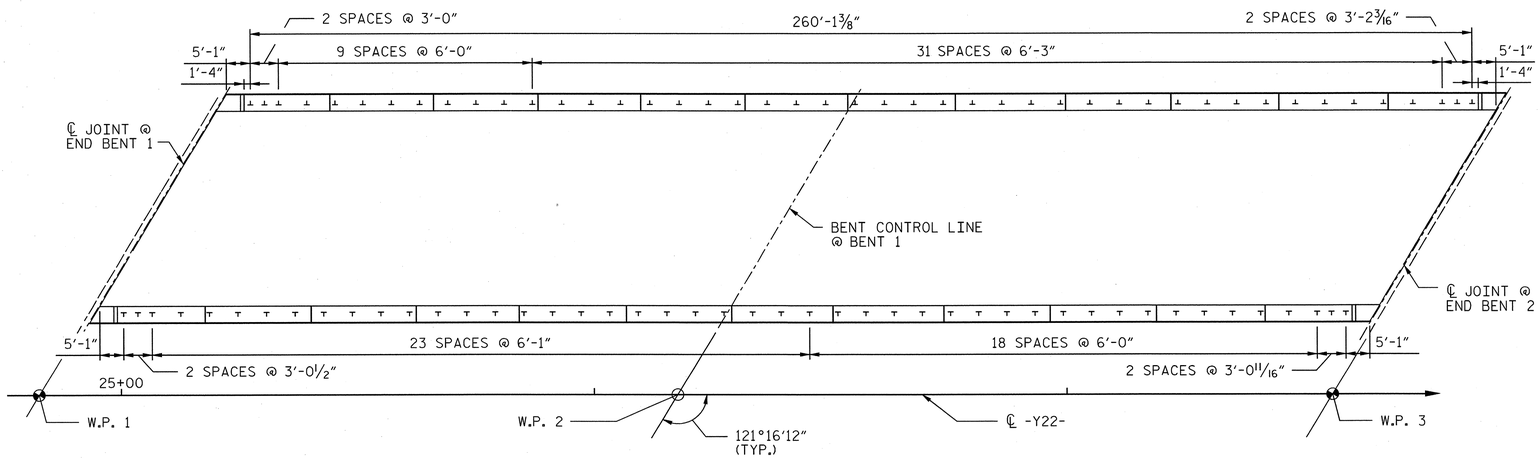

PLAN OF RAIL POST SPACINGS

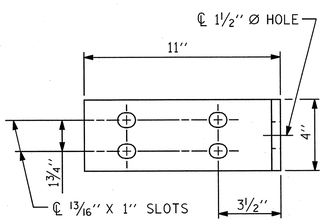

ELEVATION

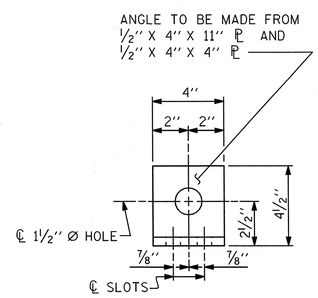

END VIEW (FIX AND EXP.)

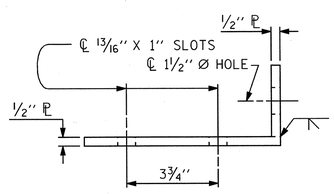

TOP VIEW

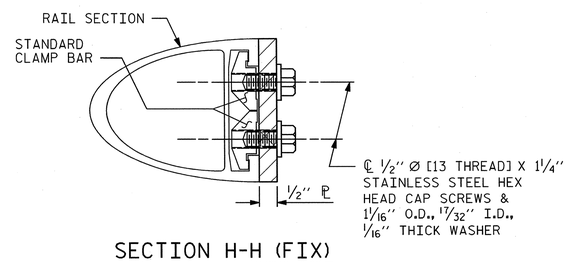

SECTION H-H (FIX)

FIXED

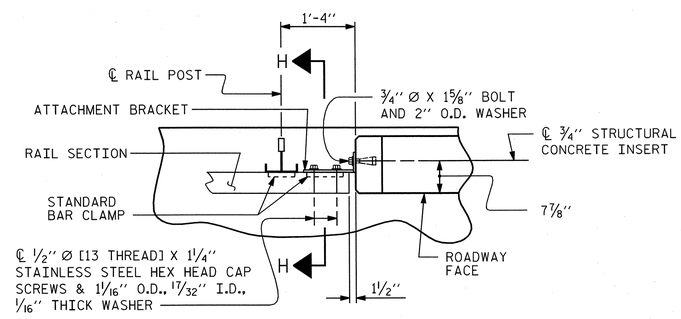

PLAN - RAIL AND END POST

NOTES

STRUCTURAL CONCRETE INSERT

THE STRUCTURAL CONCRETE INSERT ASSEMBLY SHALL CONSIST OF THE FOLLOWING COMPONENTS:

A. FERRULES SHALL BE MADE FROM STEEL MEETING THE REQUIREMENTS OF AASHTO M169, GRADE 12L14 AND SHALL HAVE A MINIMUM LENGTH OF THREADS OF 1 1/2".

B. 1 - 3/4" Ø X 1 5/8" BOLT WITH WASHER. BOLT SHALL CONFORM TO THE REQUIREMENTS OF ASTM A307. BOLT AND WASHER SHALL BE GALVANIZED. (AT THE CONTRACTOR'S OPTION, STAINLESS STEEL BOLT AND WASHER MAY BE USED AS AN ALTERNATE FOR THE 3/4" Ø X 1 5/8" GALVANIZED BOLT AND WASHER. THEY SHALL CONFORM TO OR EXCEED THE MECHANICAL REQUIREMENTS OF ASTM A307. THE USE OF THIS ALTERNATE SHALL BE APPROVED BY THE ENGINEER.)

C. WIRE STRUT SHOWN IN THE CONCRETE INSERT ASSEMBLY DETAIL IS THE MINIMUM ALLOWABLE SIZE AND SHALL HAVE A MINIMUM TENSILE STRENGTH OF 100,000 PSI. AS AN OPTION, A 7/16" Ø WIRE STRUT WITH A MINIMUM TENSILE STRENGTH OF 90,000 PSI IS ACCEPTABLE.

NOTES

METAL RAIL TO END POST CONNECTION

THE METAL RAIL TO END POST CONNECTION SHALL CONSIST OF THE FOLLOWING COMPONENTS:

A. 1/2" PLATES SHALL CONFORM TO AASHTO M270 GRADE 36 AND SHALL BE GALVANIZED AFTER FABRICATION.

B. 3/4" STRUCTURAL CONCRETE INSERT SHALL HAVE A WORKING LOAD SHEAR CAPACITY OF 4800 LBS. THE FERRULES SHALL ENGAGE A 3/4"Ø X 1 5/8" BOLT WITH 2" O.D. WASHER IN PLACE. THE 3/4"Ø X 1 5/8" BOLT SHALL HAVE N.C. THREADS.

C. CAP SCREWS FOR RAIL ATTACHMENT TO ANGLE SHALL CONFORM TO THE REQUIREMENTS OF ASTM F593 ALLOY 305 STAINLESS STEEL. CAP SCREWS TO BE CENTERED IN SLOTS AT 60°F.

D. STANDARD CLAMP BARS (SEE METAL RAIL SHEET).

E. 1/2" Ø PIPE SLEEVES (IF REQUIRED) TO BE GALVANIZED.

THE COST OF THE STANDARD CLAMP BARS AND CAP SCREWS USED IN THE METAL RAIL TO END POST CONNECTION SHALL BE INCLUDED IN THE UNIT CONTRACT PRICE BID FOR LINEAR FEET OF 1 OR 2 BAR METAL RAILS.

THE 3/4" STRUCTURAL CONCRETE INSERT WITH BOLT SHALL BE ASSEMBLED IN THE SHOP.

THE COST OF THE 3/4" STRUCTURAL CONCRETE INSERT ASSEMBLY, AND THE 1/2" PLATES COMPLETE IN PLACE SHALL BE INCLUDED IN THE VARIOUS PAY ITEMS.

THE CONTRACTOR, AT HIS OPTION, MAY USE AN ADHESIVE BONDING SYSTEM IN LIEU OF THE STRUCTURAL CONCRETE INSERT EMBEDDED IN THE END POST. IF THE ADHESIVE BONDING SYSTEM IS USED, THE 3/4" Ø X 1 5/8" BOLT WITH WASHER SHALL BE REPLACED WITH A 3/4" Ø X 6 1/2" BOLT AND 2" O.D. WASHER. ALL SPECIFICATIONS THAT APPLY TO THE 3/4" Ø X 1 5/8" BOLT SHALL APPLY TO THE 3/4" Ø X 6 1/2" BOLT. FIELD TESTING OF THE ADHESIVE BONDING SYSTEM IS NOT REQUIRED.

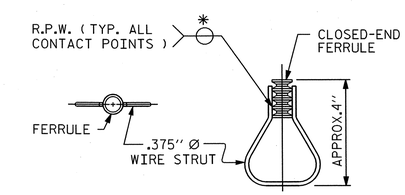

PLAN ELEVATION

STRUCTURAL CONCRETE INSERT

* EACH WELDED ATTACHMENT OF WIRE TO FERRULE SHALL DEVELOP THE TENSILE STRENGTH OF THE WIRE.

PROJECT NO. U-2525B

GUILFORD COUNTY

STATION: 26+17.64 -Y22-
85+41.17 -Y13-

AECOM
AECOM TECHNICAL SERVICES, INC.
701 CORPORATE CENTER DRIVE, SUITE 475
RALEIGH, NC 27607
(919) 854-6200 www.aecom.com
AECOM License No. F-0342

NORTH CAROLINA PROFESSIONAL SEAL 030474 ENGINEER JOHN C. MORRISON
3/25/14

R.N. 13-22

STATE OF NORTH CAROLINA
DEPARTMENT OF TRANSPORTATION
RALEIGH

STANDARD

RAIL POST SPACINGS AND END OF RAIL DETAILS

FOR ONE OR TWO BAR METAL RAILS

REVISIONS						
NO.	BY:	DATE:	NO.	BY:	DATE:	
1			3			
2			4			

SHEET NO. S-474

TOTAL SHEETS 541

STD. NO. BMR2

ASSEMBLED BY : DDL		DATE :	03/14
CHECKED BY : JCM		DATE :	03/14
DRAWN BY : FCJ 1/88	REV. 5/7/03		RWW/JTE
CHECKED BY : CRK 3/89	REV. 5/1/06		TLA/GM
	REV. 10/1/11		MAA/GM

DETAILS FOR ATTACHING METAL RAIL TO END POST

USER: kellsam
DGN: Q:\60027935\400_Technical_Information_Disc_Files\450_NC0013\Contract\Design Files\Structures\Bridge 14\Cadd\U2525B_SD_DSN_UI46_BMR2_12.dgn
DATE: 3/25/2014
TIME: 12:53:31 PM

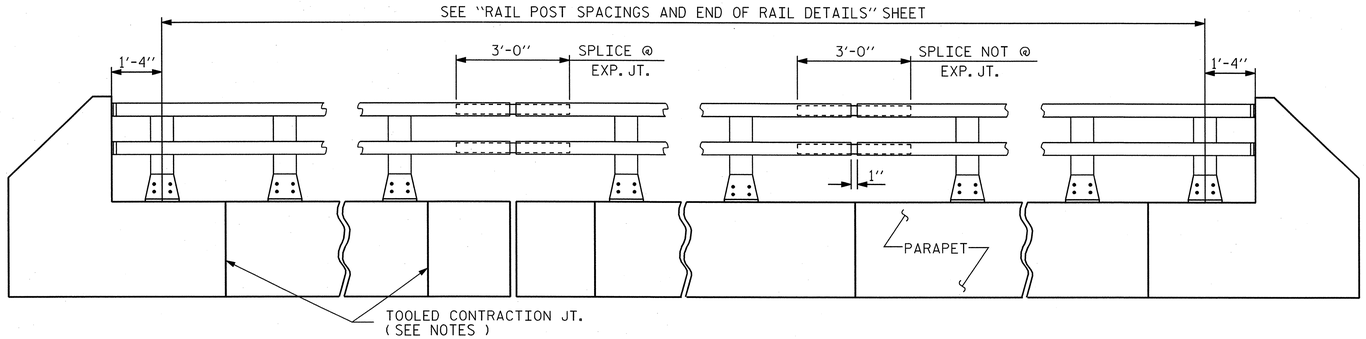

ELEVATION

NOTE : FOR ATTACHMENT OF METAL RAIL TO END POST, SEE STANDARD NO. BMR2.

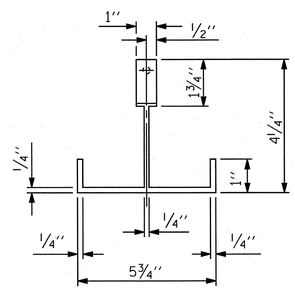

PLAN

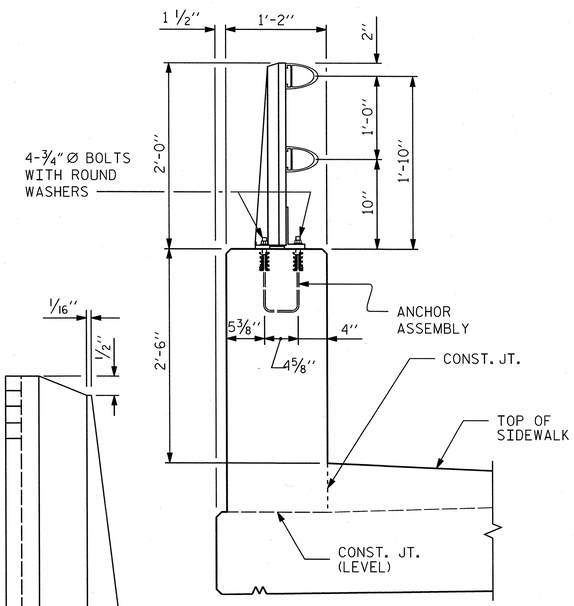

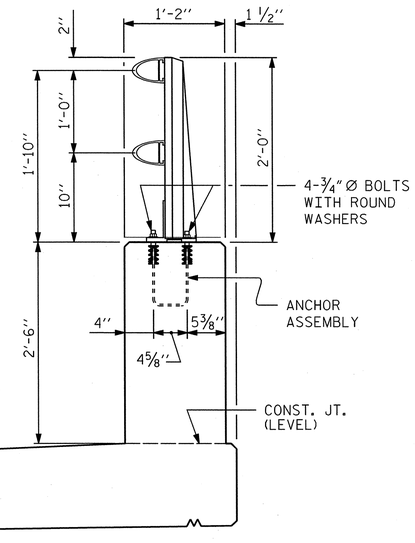

SECTIONS THRU PARAPET AND RAIL

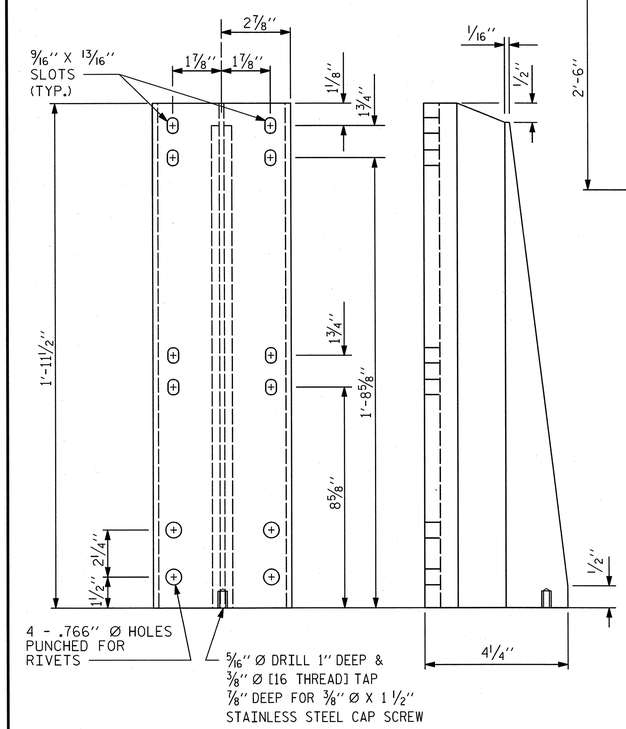

FRONT ELEVATION SIDE ELEVATION

DETAILS OF POST

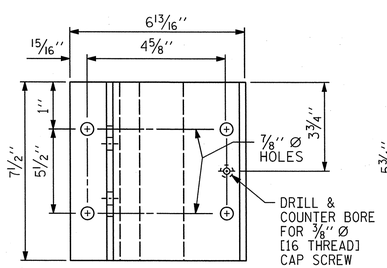

PLAN

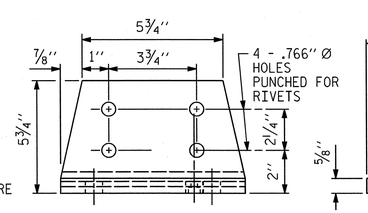

FRONT ELEVATION

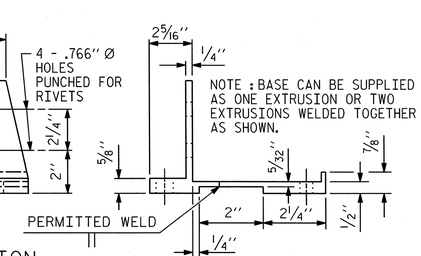

SIDE ELEVATION

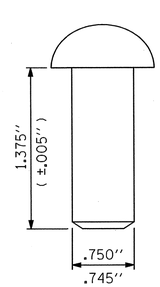

RIVET DETAIL

POST BASE DETAILS

NOTES

AT THE CONTRACTOR'S OPTION, METAL RAIL MAY BE EITHER ALUMINUM OR GALVANIZED STEEL IN ACCORDANCE WITH THE REQUIREMENTS OF THE GENERAL NOTES AND THE FOLLOWING SPECIFICATIONS FOR THE ALTERNATE MATERIALS; HOWEVER, THE CONTRACTOR WILL BE REQUIRED TO USE THE SAME RAIL MATERIAL ON ALL STRUCTURES ON THE PROJECT FOR WHICH METAL RAIL IS DESIGNATED.

UNLESS OTHERWISE REQUIRED IN THE CONTRACT DOCUMENTS, THE CONTRACTOR HAS THE OPTION TO USE AN ALTERNATE TO THE 2 BAR METAL RAIL. THE ALTERNATE RAIL SHALL MEET THE REQUIREMENTS OF THE AASHTO LRFD BRIDGE DESIGN SPECIFICATIONS AND MUST BE LISTED ON THE DEPARTMENT'S APPROVED PRODUCTS LIST (APL) UNDER "2 BAR METAL RAIL ALTERNATE". ADJUSTMENTS TO THE CONCRETE PARAPET WILL NOT BE ALLOWED.

ALUMINUM RAILS

MATERIAL FOR POSTS, BASES AND RAILS, EXPANSION BARS AND CLAMP BARS SHALL BE ASTM B-221 ALLOY 6061-T6.

MATERIAL FOR RIVETS SHALL BE ASTM B316 ALLOY 6061-T6. RIVETS SHALL BE STANDARD BUTTON HEAD AND CONE POINT COLD DRIVEN AS PER DRAWING.

THE BASE OF RAIL POSTS, OR ANY OTHER ALUMINUM SURFACE IN CONTACT WITH CONCRETE SHALL BE THOROUGHLY COATED WITH AN ALUMINUM IMPREGNATED CAULKING COMPOUND OF APPROVED QUALITY.

MATERIAL FOR SHIMS TO BE ASTM B209 ALLOY 6061-T6.

GALVANIZED STEEL RAILS

MATERIAL AND GALVANIZING ARE TO CONFORM TO THE FOLLOWING SPECIFICATIONS:

POST, POST BASES, RAILS, EXPANSION BARS AND CLAMP BARS: AASHTO M270 GRADE 36 STRUCTURAL STEEL - GALVANIZED TO AASHTO M111.

RIVETS: RIVETS SHALL MEET THE REQUIREMENTS OF ASTM A502 FOR GRADE 1 RIVETS.

THE CUT ENDS OF GALVANIZED STEEL RAILING, AFTER GRINDING SMOOTH SHALL BE GIVEN TWO COATS OF ZINC RICH PAINT MEETING THE REQUIREMENTS OF FEDERAL SPECIFICATION MIL-P-26915 USAF TYPE 1, OR OF FEDERAL SPECIFICATIONS TT-P-641.

SHIMS: SHIMS SHALL MEET THE REQUIREMENTS OF ASTM A570 FOR GRADE 33 OR A611 FOR GRADE C AND SHALL BE GALVANIZED IN ACCORDANCE WITH AASHTO M111.

RAIL CAPS: RAIL CAPS SHALL MEET THE REQUIREMENTS OF ASTM A570 FOR GRADE 33 OR A611 FOR GRADE C AND SHALL BE GALVANIZED IN ACCORDANCE WITH AASHTO M111.

GENERAL NOTES

RAILING SHALL BE CONTINUOUS FROM END POST TO END POST OF BRIDGE. EACH JOINT IN RAIL LENGTH SHALL BE SPLICED AS DETAILED. PANEL LENGTHS OF RAIL SHALL BE ATTACHED TO A MINIMUM OF THREE POSTS.

FOR END OF RAIL TO CLEAR FACE OF CONCRETE END POST DIMENSION, SEE STANDARD NO. BMR2.

CAP SCREWS SHALL BE ASTM F593 ALLOY 305 STAINLESS STEEL. WASHERS SHALL MEET THE REQUIREMENTS OF ASTM F844 EXCEPT THEY SHALL BE MADE FROM ALLOY 304 STAINLESS STEEL.

CERTIFIED MILL REPORTS ARE REQUIRED FOR RAILS AND POSTS. SHOP INSPECTION IS NOT REQUIRED.

METAL RAIL POSTS SHALL BE SET NORMAL TO CURB GRADE.

METHOD OF MEASUREMENT FOR METAL RAILS: FOR LENGTH OF METAL RAILS TO BE PAID FOR, SEE THE STANDARD SPECIFICATIONS.

CURVED RAIL USAGE: WHERE RAILS ARE TO BE USED ON BRIDGES ON HORIZONTAL AND/OR VERTICAL CURVATURE THE CONTRACTOR MAY, AT HIS OPTION, HAVE THE REQUIRED CURVATURE IN THE RAIL FORMED IN THE SHOP OR IN THE FIELD. IN EITHER EVENT, THE RAIL SHALL CONFORM WITHOUT BUCKLING OR KINKING TO THE REQUIRED CURVATURE IN A UNIFORM MANNER ACCEPTABLE TO THE ENGINEER.

TO INSURE FUTURE IDENTIFICATION OF THE FABRICATOR, A PERMANENT IDENTIFYING MARK SHALL BE PLACED ON EACH POST. THE METHOD OF MARKING AND LOCATION SHALL BE SUCH THAT IT DOES NOT DETRACT FROM THE APPEARANCE OF THE POST, BUT REMAINS VISIBLE AFTER RAIL PLACEMENT.

SHIMS SHALL BE USED AS NECESSARY FOR POST ALIGNMENT.

ALLOY 6351-T5 MAY BE SUBSTITUTED FOR ALLOY 6061-T6 WHERE APPLICABLE.

MINOR VARIATIONS IN DETAILS OF METAL RAIL WILL BE CONSIDERED. DETAILS OF SUCH VARIATIONS, IF DESIRED, SHALL BE SUBMITTED FOR APPROVAL.

GROOVED CONTRACTION JOINTS, 1/2" IN DEPTH, SHALL BE TOOLED IN ALL EXPOSED FACES OF THE PARAPET AND IN ACCORDANCE WITH ARTICLE 825-10(B) OF THE STANDARD SPECIFICATIONS. A CONTRACTION JOINT SHALL BE LOCATED AT EACH THIRD POINT BETWEEN PARAPET EXPANSION JOINTS. ONLY ONE CONTRACTION JOINT IS REQUIRED AT MIDPOINT OF PARAPET SEGMENTS LESS THAN 20 FEET IN LENGTH AND NO CONTRACTION JOINTS ARE REQUIRED FOR THOSE SEGMENTS LESS THAN 10 FEET IN LENGTH.

PAY LENGTH = 525.6 LIN. FT.

PROJECT NO. U-2525B
GUILFORD COUNTY
STATION: 26+17.64 -Y22-
85+41.17 -Y13-

SHEET 1 OF 2

ASSEMBLED BY :	DDL	DATE :	03/14
CHECKED BY :	JCM	DATE :	03/14

DRAWN BY :	EEM	6/94	REV. 5/1/06	TLA/GM
CHECKED BY :	RGW	6/94	REV. 10/1/11	MMA/GM
			REV. 6/13	MAA/GM

AECOM
AECOM TECHNICAL SERVICES, INC.
701 CORPORATE CENTER DRIVE, SUITE 475
RALEIGH, NC 27607
(919) 854-6200 www.aecom.com
AECOM License No. F-0342

NORTH CAROLINA PROFESSIONAL SEAL 030474 ENGINEER JOHN C. MORRISON
3/25/14
R.N. 13-23

STATE OF NORTH CAROLINA
DEPARTMENT OF TRANSPORTATION
RALEIGH

STANDARD

2 BAR METAL RAIL

REVISIONS							
NO.	BY:	DATE:	NO.	BY:	DATE:	SHEET NO.	S-475
1			3			TOTAL SHEETS	541
2			4				

STD. NO. BMR3

USER: bellgiam
DGN: GI60D279356v400_Technical_Information_D1sc_FTIes\450_NCDOT Std Textbeds\mFiles\Structures\Bridge 14\Cadd\U2525B_SD_DSN_1\46_BMR34_I2_1.dgn
DATE: 3/25/2014
TIME: 12:43:54 PM

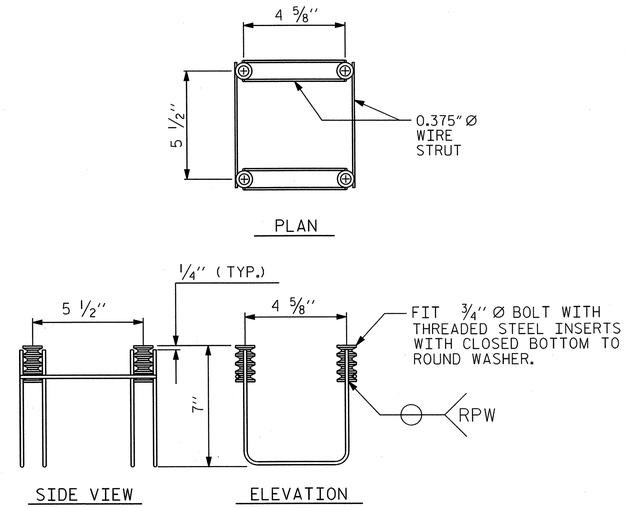

4-BOLT METAL RAIL ANCHOR ASSEMBLY

(91 ASSEMBLIES REQUIRED)

NOTES

STRUCTURAL CONCRETE ANCHOR ASSEMBLY

THE STRUCTURAL CONCRETE ANCHOR ASSEMBLY SHALL CONSIST OF THE FOLLOWING COMPONENTS :

A. FERRULES SHALL BE MADE FROM STEEL MEETING THE REQUIREMENTS OF AASHTO M169, GRADE 12L14 AND SHALL HAVE A MINIMUM LENGTH OF THREADS OF 2'' FOR 3/4'' FERRULES.

B. 4 - 3/4'' Ø X 2 1/2'' BOLTS WITH WASHERS. BOLTS SHALL CONFORM TO THE REQUIREMENTS OF ASTM A307. BOLTS AND WASHERS SHALL BE GALVANIZED. AT THE CONTRACTOR'S OPTION, STAINLESS STEEL BOLTS AND WASHERS MAY BE USED AS AN ALTERNATE FOR THE 3/4'' Ø X 2 1/2'' GALVANIZED BOLTS AND WASHERS. THEY SHALL CONFORM TO OR EXCEED THE MECHANICAL REQUIREMENTS OF ASTM A307. THE USE OF THIS ALTERNATE SHALL BE APPROVED BY THE ENGINEER.

C. WIRE STRUT SHOWN IN THE CONCRETE ANCHOR ASSEMBLY DETAIL IS THE MINIMUM ALLOWABLE SIZE AND SHALL HAVE A MINIMUM TENSILE STRENGTH OF 100,000 PSI. AS AN OPTION, A 7/16'' Ø WIRE STRUT WITH A MINIMUM TENSILE STRENGTH OF 90,000 PSI IS ACCEPTABLE.

D. THE METAL RAIL ANCHOR ASSEMBLIES TO BE HOT DIPPED GALVANIZED TO CONFORM TO REQUIREMENTS OF AASHTO M111.

E. THE COST OF THE METAL RAIL ANCHOR ASSEMBLY WITH BOLTS AND WASHERS COMPLETE IN PLACE SHALL BE INCLUDED IN THE PRICE BID FOR LINEAR FEET OF METAL RAIL.

F. BOLTS TO BE TIGHTENED ONE-HALF TURN WITH A WRENCH FROM A FINGER-TIGHT POSITION.

THE CONTRACTOR MAY USE ADHESIVELY ANCHORED ANCHOR BOLTS IN PLACE OF THE METAL RAIL ANCHOR ASSEMBLY. LEVEL ONE FIELD TESTING IS REQUIRED, AND THE YIELD LOAD OF THE 3/4"Ø BOLT IS 10 KIPS. FOR ADHESIVELY ANCHORED ANCHOR BOLTS OR DOWELS, SEE THE STANDARD SPECIFICATIONS.

WHEN ADHESIVELY ANCHORED ANCHOR BOLTS ARE USED, BOLTS SHALL MEET THE REQUIREMENTS OF ASTM F593 ALLOY 304 STAINLESS STEEL WITH MINIMUM 75,000 PSI ULTIMATE STRENGTH. NUTS SHALL MEET THE REQUIREMENTS OF ASTM F594 ALLOY 304 STAINLESS STEEL AND WASHERS SHALL MEET THE REQUIREMENTS OF ASTM F844 EXCEPT THEY SHALL BE MADE FROM ALLOY 304 STAINLESS STEEL.

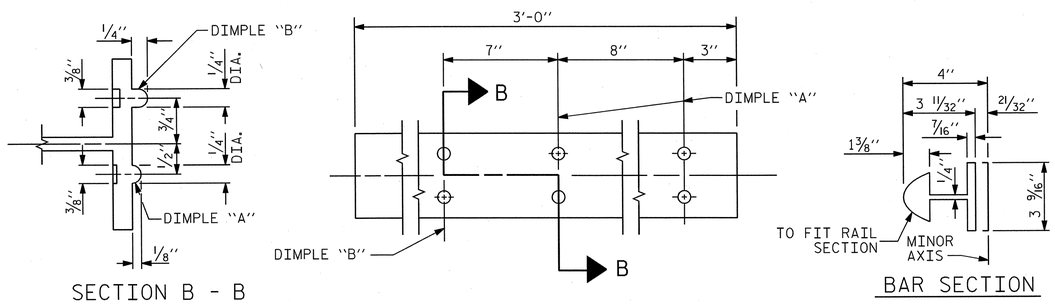

EXPANSION BAR DETAILS

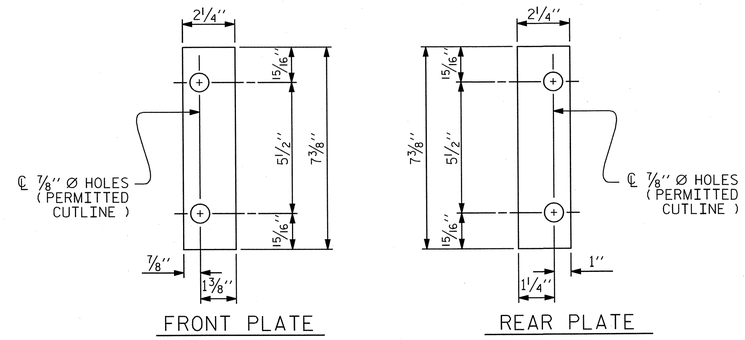

SHIM DETAILS

NOTE :
SHIMS MAY BE CUT ALONG PERMITTED CUTLINE OR SLOTTED TO EDGE OF PLATE TO FACILITATE PLACEMENT.

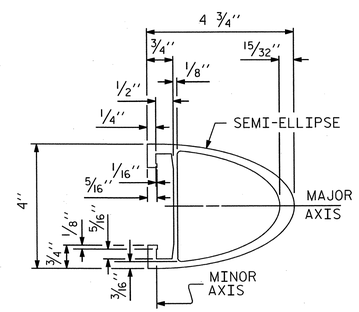

RAIL SECTION

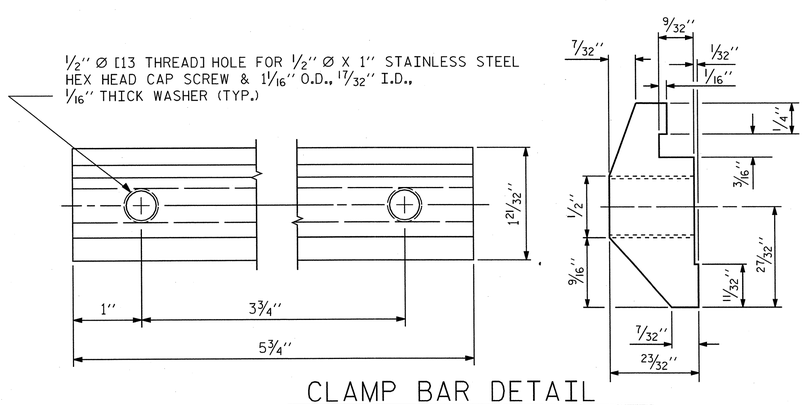

CLAMP BAR DETAIL

(4 REQUIRED PER POST)

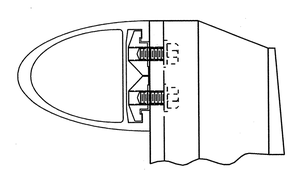

CLAMP ASSEMBLY

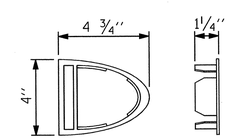

RAIL CAP

PROJECT NO. U-2525B

GUILFORD COUNTY

STATION: 26+17.64 -Y22-
85+41.17 -Y13-

SHEET 2 OF 2

AECOM
AECOM TECHNICAL SERVICES, INC.
701 CORPORATE CENTER DRIVE, SUITE 475
RALEIGH, NC 27607
(919) 854-6200 www.aecom.com
AECOM License No. F-0342

NORTH CAROLINA PROFESSIONAL SEAL 030474 ENGINEER JOHN C. MORRISON
3/25/14

R.N. 13-24

STATE OF NORTH CAROLINA
DEPARTMENT OF TRANSPORTATION
RALEIGH

STANDARD

2 BAR METAL RAIL

REVISIONS						
NO.	BY:	DATE:	NO.	BY:	DATE:	
1			3			
2			4			

SHEET NO. S-476

TOTAL SHEETS 541

STD. NO. BMR4

ASSEMBLED BY : DDL	DATE : 03/14		
CHECKED BY : JCM	DATE : 03/14		
DRAWN BY : EEM 6/94	REV. 8/16/99	MAB/LES	
CHECKED BY : RGW 6/94	REV. 5/1/06R	KMM/GM	
	REV. 10/1/11	MAA/GM	

USER: bellidem
DGN: 0:\60279356\400_Technical_Information_Disc_Files\450_NCDOT StdTechDesign\Files\Structures\Bridge 14\Cadd\U2525B_SD_DSN_U46_BMR34_J2_2.dgn
DATE: 3/25/2014
TIME: 12:46:13 PM

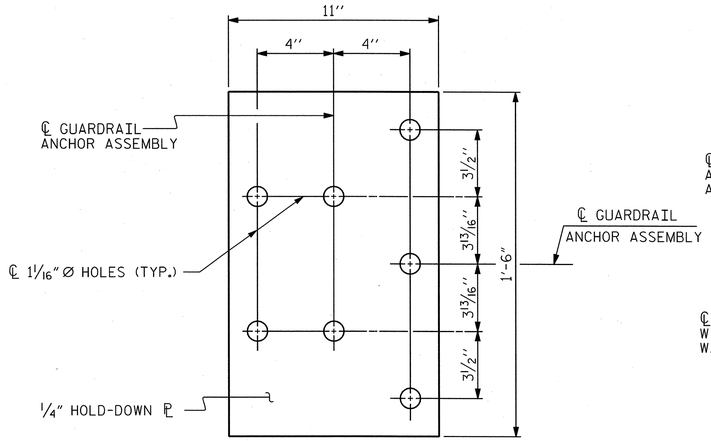

PLAN

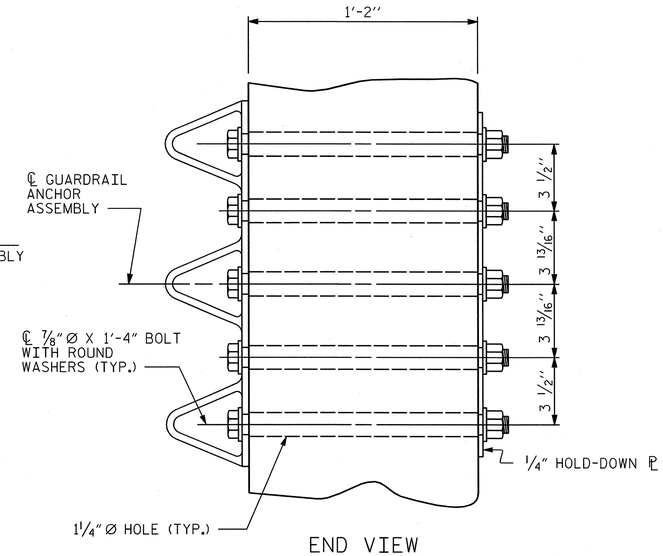

END VIEW

GUARDRAIL ANCHOR ASSEMBLY DETAILS

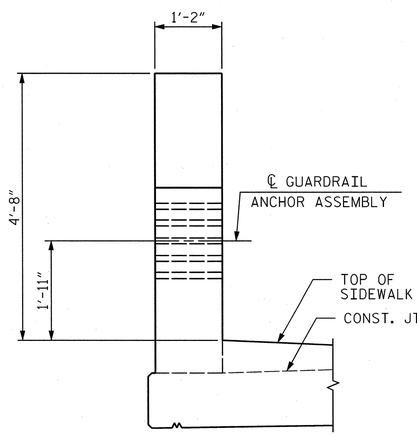

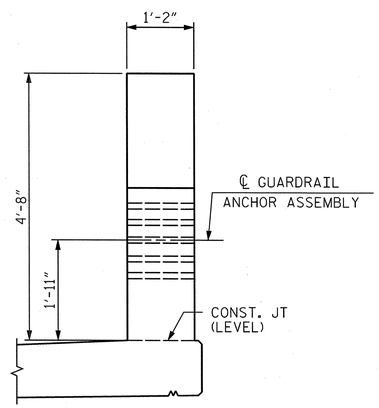

END VIEW
(TWO BAR METAL RAIL)

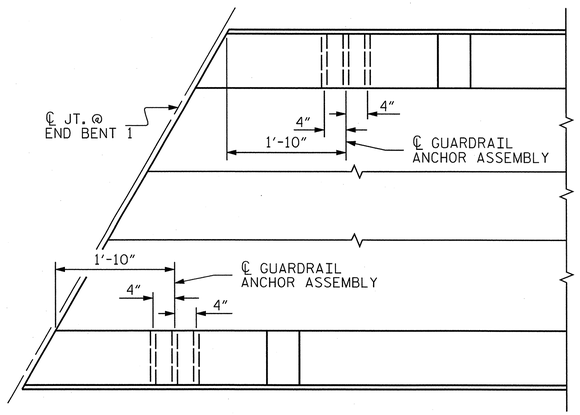

PLAN @ END BENT 1

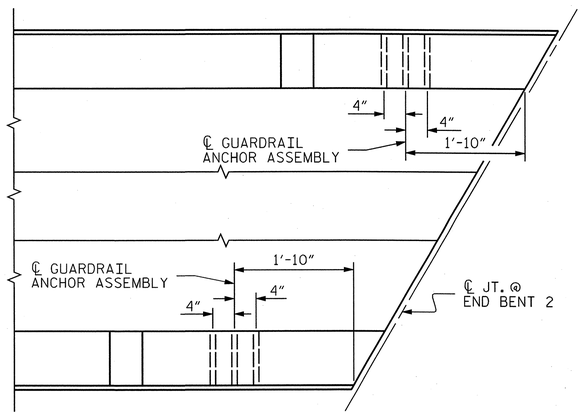

PLAN @ END BENT 2

LOCATION OF GUARDRAIL ANCHOR AT END POST

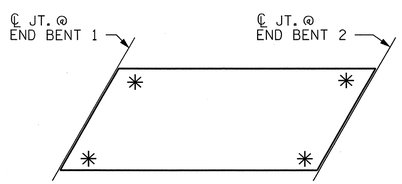

SKETCH SHOWING POINTS OF ATTACHMENT

✳ LOCATION OF GUARDRAIL ATTACHMENT

NOTES

THE GUARDRAIL ANCHOR ASSEMBLY SHALL CONSIST OF A 1/4" HOLD DOWN PLATE AND 7 - 7/8" Ø BOLTS WITH NUTS AND WASHERS.

THE HOLD-DOWN PLATE SHALL CONFORM TO AASHTO M270 GRADE 36. AFTER FABRICATION, THE HOLD-DOWN PLATE SHALL BE HOT-DIP GALVANIZED IN ACCORDANCE WITH AASHTO M111.

BOLTS SHALL CONFORM TO THE REQUIREMENTS OF ASTM A307 AND NUTS SHALL CONFORM TO THE REQUIREMENTS OF AASHTO M291. BOLTS, NUTS AND WASHERS SHALL BE GALVANIZED. AT THE CONTRACTOR'S OPTION, STAINLESS STEEL BOLTS, NUTS AND WASHERS MAY BE USED AS AN ALTERNATE FOR THE 7/8" Ø GALVANIZED BOLTS, NUTS AND WASHERS. THEY SHALL CONFORM TO OR EXCEED THE MECHANICAL REQUIREMENTS OF ASTM A307. THE USE OF THIS ALTERNATE SHALL BE APPROVED BY THE ENGINEER.

THE GUARDRAIL ANCHOR ASSEMBLY IS REQUIRED AT ALL POINTS WHERE APPROACH GUARDRAIL IS TO BE ATTACHED TO THE END OF THE PARAPET. FOR POINTS OF ATTACHMENT, SEE SKETCH.

AFTER INSTALLATION, THE EXPOSED THREAD OF THE BOLT SHALL BE BURRED WITH A SHARP POINTED TOOL.

THE COST OF THE GUARDRAIL ANCHOR ASSEMBLIES WITH BOLTS, NUTS AND WASHERS COMPLETE IN PLACE, SHALL BE INCLUDED IN THE VARIOUS PAY ITEMS.

THE VERTICAL REINFORCING BARS MAY BE SHIFTED SLIGHTLY IN THE END POST TO CLEAR ASSEMBLY BOLTS.

THE 1 1/4" Ø HOLES SHALL BE FORMED OR DRILLED WITH A CORE BIT. IMPACT TOOLS WILL NOT BE PERMITTED. ANY CONCRETE DAMAGED BY THIS WORK SHALL BE REPAIRED TO THE SATISFACTION OF THE ENGINEER.

PROJECT NO. U-2525B
GUILFORD COUNTY
STATION: 26+17.64 -Y22-
85+41.17 -Y13-

ASSEMBLED BY :	DDL	DATE :	03/14
CHECKED BY :	JCM	DATE :	03/14
DRAWN BY : MAA	5/10	ADDED 5/6/10	
CHECKED BY : GM	5/10	REV. 10/1/11	MAA/GM
		REV. 12/5/11	MAA/GM

AECOM
AECOM TECHNICAL SERVICES, INC.
701 CORPORATE CENTER DRIVE, SUITE 475
RALEIGH, NC 27607
(919) 854-6200 www.aecom.com
AECOM License No. F-0342

NORTH CAROLINA PROFESSIONAL SEAL 030474 ENGINEER JOHN C. MORRISON
3/25/14

R.N. 13-25

STATE OF NORTH CAROLINA
DEPARTMENT OF TRANSPORTATION
RALEIGH

STANDARD

GUARDRAIL ANCHORAGE DETAILS FOR METAL RAILS

REVISIONS							
NO.	BY:	DATE:	NO.	BY:	DATE:	SHEET NO.	S-477
1			3			TOTAL SHEETS	541
2			4				

STD. NO. GRA3 (SHT 5)

USER: bellsiem
DGN: GV60279356v400_TechTool_Information_Disc_Files\450_NCDOT StdTechDesignFiles\Structures\Bridge 14\Cadd\U2525B_SD_DSN_LN6_GRA3_12.dgn
DATE: 3/25/2014
TIME: 12:51:37 PM

REINFORCING STEEL SCHEDULE

BAR	NO.	SIZE	TYPE	LENGTH	WEIGHT	BAR	NO.	SIZE	TYPE	LENGTH	WEIGHT	BAR	NO.	SIZE	TYPE	LENGTH	WEIGHT
A1E	483	#5	STR.	47'-9"	24055	A201	2	#5	STR.	47'-4"	99	B1E	132	#4	STR.	24'-0"	2116
A2	483	#5	STR.	47'-9"	24055	A202	2	#5	STR.	46'-6"	97	B2	185	#5	STR.	56'-0"	10805
						A203	2	#5	STR.	45'-8"	95	B3E	33	#7	STR.	39'-0"	2631
A101E	2	#5	STR.	47'-4"	99	A204	2	#5	STR.	44'-10"	94	B4E	33	#7	STR.	60'-0"	4047
A102E	2	#5	STR.	46'-6"	97	A205	2	#5	STR.	44'-0"	92	B5E	132	#4	STR.	24'-9"	2182
A103E	2	#5	STR.	45'-8"	95	A206	2	#5	STR.	43'-2"	90	B6E	32	#7	STR.	42'-0"	2747
A104E	2	#5	STR.	44'-10"	94	A207	2	#5	STR.	42'-4"	88	B7E	50	#4	STR.	28'-11"	966
A105E	2	#5	STR.	44'-0"	92	A208	2	#5	STR.	41'-7"	87						
A106E	2	#5	STR.	43'-2"	90	A209	2	#5	STR.	40'-9"	85	G1E	2	#5	STR.	55'-10"	116
A107E	2	#5	STR.	42'-4"	88	A210	2	#5	STR.	39'-11"	83	G2E	268	#4	STR.	5'-1"	910
A108E	2	#5	STR.	41'-7"	87	A211	2	#5	STR.	39'-1"	82						
A109E	2	#5	STR.	40'-9"	85	A212	2	#5	STR.	38'-3"	80	K1E	8	#8	1	10'-3"	219
A110E	2	#5	STR.	39'-11"	83	A213	2	#5	STR.	37'-5"	78	K2E	20	#8	5	12'-8"	676
A111E	2	#5	STR.	39'-1"	82	A214	2	#5	STR.	36'-7"	76	K3	16	#8	STR.	6'-10"	292
A112E	2	#5	STR.	38'-3"	80	A215	2	#5	STR.	35'-9"	75	K4	16	#4	STR.	6'-10"	73
A113E	2	#5	STR.	37'-5"	78	A216	2	#5	STR.	35'-0"	73	K5	32	#6	STR.	3'-4"	160
A114E	2	#5	STR.	36'-7"	76	A217	2	#5	STR.	34'-2"	71	K6	4	#8	STR.	6'-8"	71
A115E	2	#5	STR.	35'-9"	75	A218	2	#5	STR.	33'-4"	70	K7	4	#4	STR.	6'-8"	18
A116E	2	#5	STR.	35'-0"	73	A219	2	#5	STR.	32'-6"	68	K8	8	#6	STR.	3'-2"	38
A117E	2	#5	STR.	34'-2"	71	A220	2	#5	STR.	31'-8"	66	K9	4	#8	STR.	7'-7"	81
A118E	2	#5	STR.	33'-4"	70	A221	2	#5	STR.	30'-10"	64	K10	4	#4	STR.	7'-7"	20
A119E	2	#5	STR.	32'-6"	68	A222	2	#5	STR.	30'-0"	63	K11	8	#6	STR.	4'-1"	49
A120E	2	#5	STR.	31'-8"	66	A223	2	#5	STR.	29'-2"	61	K12	40	#4	STR.	6'-10"	183
A121E	2	#5	STR.	30'-10"	64	A224	2	#5	STR.	28'-4"	59	K13	8	#4	STR.	3'-9"	20
A122E	2	#5	STR.	30'-0"	63	A225	2	#5	STR.	27'-7"	58	K14	10	#4	STR.	6'-8"	45
A123E	2	#5	STR.	29'-2"	61	A226	2	#5	STR.	26'-9"	56	K15	2	#4	STR.	3'-7"	5
A124E	2	#5	STR.	28'-4"	59	A227	2	#5	STR.	25'-11"	54	K16	10	#4	STR.	7'-7"	51
A125E	2	#5	STR.	27'-7"	58	A228	2	#5	STR.	25'-1"	52	K17	2	#4	STR.	4'-7"	6
A126E	2	#5	STR.	26'-9"	56	A229	2	#5	STR.	24'-3"	51	K18	6	#4	6	5'-8"	23
A127E	2	#5	STR.	25'-11"	54	A230	2	#5	STR.	23'-5"	49	K19	18	#4	7	10'-8"	128
A128E	2	#5	STR.	25'-1"	52	A231	2	#5	STR.	22'-7"	47	K20	6	#4	7	10'-7"	42
A129E	2	#5	STR.	24'-3"	51	A232	2	#5	STR.	21'-9"	45	K21	6	#4	7	10'-11"	43
A130E	2	#5	STR.	23'-5"	49	A233	2	#5	STR.	20'-11"	44	K22	6	#4	6	5'-7"	22
A131E	2	#5	STR.	22'-7"	47	A234	2	#5	STR.	20'-2"	42						
A132E	2	#5	STR.	21'-9"	45	A235	2	#5	STR.	19'-4"	40	S1E	38	#5	3	5'-10"	231
A133E	2	#5	STR.	20'-11"	44	A236	2	#5	STR.	18'-6"	39	S2	48	#4	9	3'-5"	110
A134E	2	#5	STR.	20'-2"	42	A237	2	#5	STR.	17'-8"	37	S3E	38	#4	2	6'-0"	152
A135E	2	#5	STR.	19'-4"	40	A238	2	#5	STR.	16'-10"	35	S4	150	#4	4	3'-3"	326
A136E	2	#5	STR.	18'-6"	39	A239	2	#5	STR.	16'-0"	33						
A137E	2	#5	STR.	17'-8"	37	A240	2	#5	STR.	15'-2"	32	U1	18	#4	8	17'-10"	214
A138E	2	#5	STR.	16'-10"	35	A241	2	#5	STR.	14'-4"	30	U2	24	#4	9	11'-7"	186
A139E	2	#5	STR.	16'-0"	33	A242	2	#5	STR.	13'-7"	28	U3E	76	#4	2	3'-4"	169
A140E	2	#5	STR.	15'-2"	32	A243	2	#5	STR.	12'-9"	27						
A141E	2	#5	STR.	14'-4"	30	A244	2	#5	STR.	11'-11"	25						
A142E	2	#5	STR.	13'-7"	28	A245	2	#5	STR.	11'-1"	23						
A143E	2	#5	STR.	12'-9"	27	A246	2	#5	STR.	10'-3"	21						
A144E	2	#5	STR.	11'-11"	25	A247	2	#5	STR.	9'-5"	20						
A145E	2	#5	STR.	11'-1"	23	A248	2	#5	STR.	8'-7"	18						
A146E	2	#5	STR.	10'-3"	21	A249	2	#5	STR.	7'-9"	16						
A147E	2	#5	STR.	9'-5"	20	A250	2	#5	STR.	7'-0"	15						
A148E	2	#5	STR.	8'-7"	18	A251	2	#5	STR.	6'-2"	13						
A149E	2	#5	STR.	7'-9"	16	A252	2	#5	STR.	5'-4"	11						
A150E	2	#5	STR.	7'-0"	15	A253	2	#5	STR.	4'-6"	9						
A151E	2	#5	STR.	6'-2"	13	A254	2	#5	STR.	3'-8"	7						
A152E	2	#5	STR.	5'-4"	11	A255	8	#5	STR.	3'-3"	27						
A153E	2	#5	STR.	4'-6"	9												
A154E	2	#5	STR.	3'-8"	7												
A155E	8	#5	STR.	3'-3"	27												
A156E	6	#6	STR.	6'-0"	54												

REINFORCING STEEL	39,966
EPOXY COATED REINFORCING STEEL	44,171

"E" DENOTES EPOXY COATED REINFORCING STEEL.

PROJECT NO. U-2525B

GUILFORD COUNTY

STATION: 26+17.64 -Y22-
85+41.17 -Y13-

SHEET 1 OF 2

AECOM

AECOM TECHNICAL SERVICES, INC.
701 CORPORATE CENTER DRIVE, SUITE 475
RALEIGH, NC 27607
(919) 854-6200 www.aecom.com
AECOM License No. F-0342

NORTH CAROLINA PROFESSIONAL SEAL 030474 ENGINEER JOHN C. MORRISON
3/25/14

R.N. 13-26

STATE OF NORTH CAROLINA
DEPARTMENT OF TRANSPORTATION
RALEIGH

SUPERSTRUCTURE

BILL OF MATERIAL

REVISIONS								
NO.	BY:	DATE:	NO.	BY:	DATE:			
1			3					
2			4					

SHEET NO. S-478

TOTAL SHEETS 541

DRAWN BY : DDL DATE : 03/14
CHECKED BY : JCM DATE : 03/14

DATE: 3/25/2014
TIME: 12:53:32 PM

USER: bellsteln
DGN: G:\2025\3356\400_Technical_Information_Disc_Files\450_NCDOT\Staff\Desktop\Files\Structures\Bridge 14\Cadd\U2525B_SD_DSN_JM6_SUPER-BOM-1_D.dgn

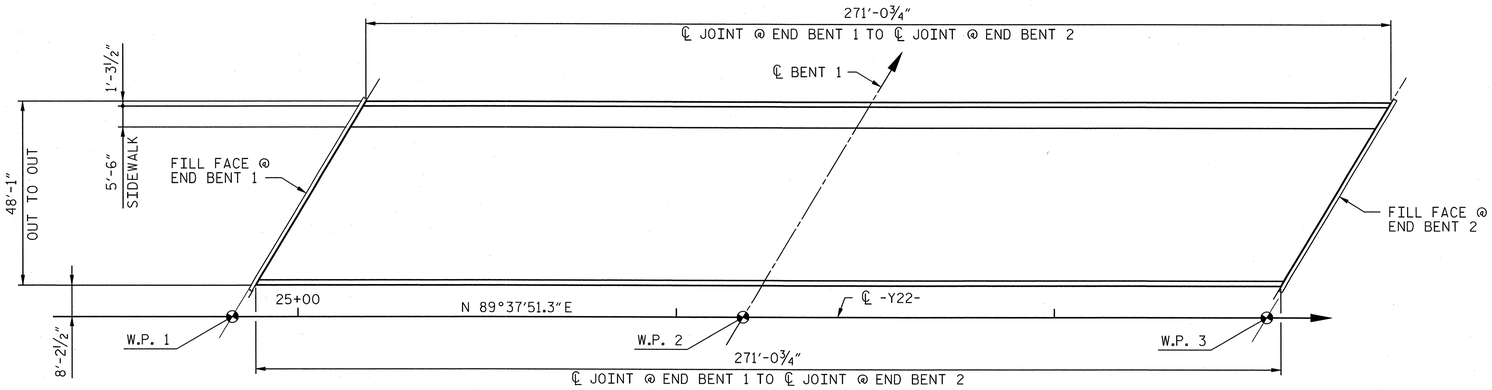

LAYOUT FOR COMPUTING AREA OF REINFORCED CONCRETE DECK SLAB

(SQ. FEET = 13,034)

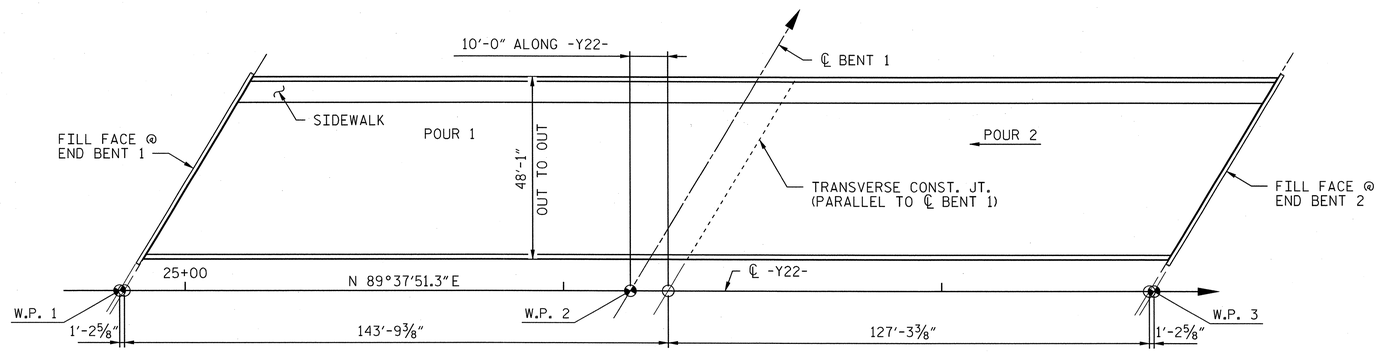

POURING SEQUENCE

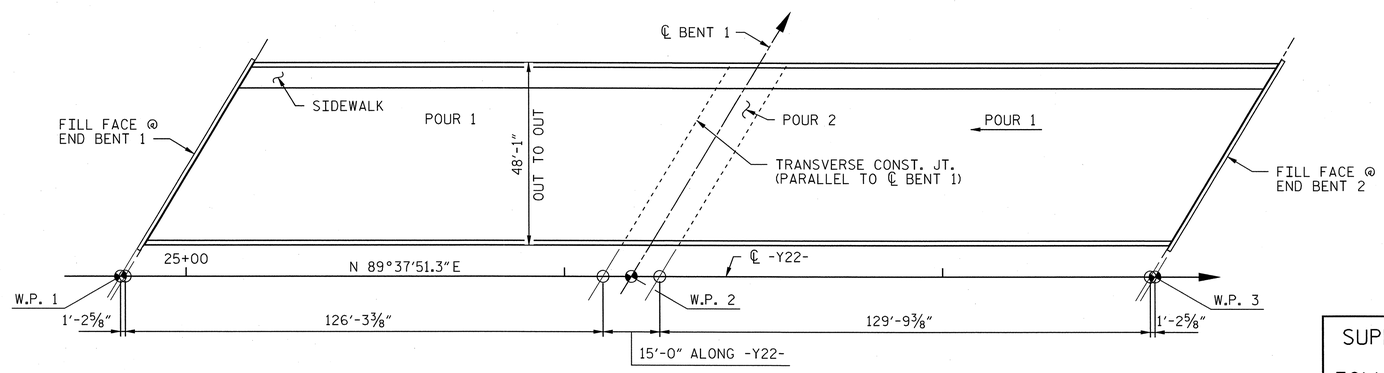

OPTIONAL POURING SEQUENCE

(POUR ② CAN NOT BE STARTED
UNTIL BOTH ADJACENT ① POURS
REACH A MINIMUM OF 3000 PSI)

BAR TYPES

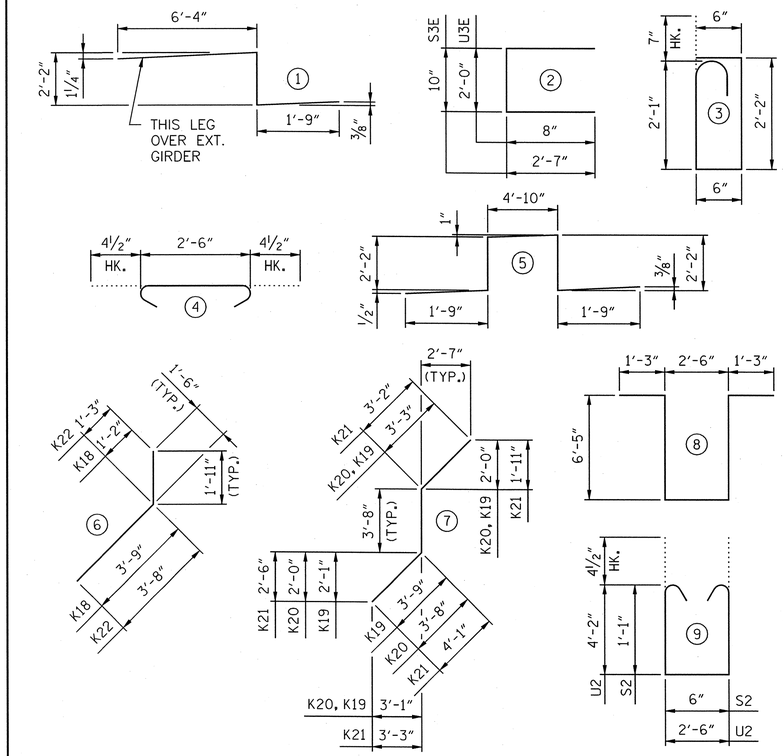

ALL BAR DIMENSIONS ARE OUT TO OUT

SUPERSTRUCTURE BILL OF MATERIAL

SPAN	CLASS AA CONCRETE	REINFORCING STEEL	EPOXY COATED REINFORCING STEEL
	(CU. YDS.)	(LBS.)	(LBS.)
POUR 1	214.5		
POUR 2	189.9		
**TOTALS	438.2	39,966	44,171

**QUANTITIES FOR PARAPET AND END POST ARE INCLUDED ON "CONCRETE PARAPET AND END POST DETAILS SHEET 2 OF 2.

QUANTITIES FOR APPROACH SLABS ARE INCLUDED ON "BRIDGE APPROACH SLAB FOR FLEXIBLE PAVEMENT" SHEET.

GROOVING BRIDGE FLOORS

APPROACH SLABS	2,029 SQ.FT.
BRIDGE DECK	11,467 SQ.FT.
TOTAL	13,496 SQ.FT.

NOTES:

PREVIOUSLY CAST CONCRETE IN A CONTINUOUS UNIT SHALL HAVE ATTAINED A MINIMUM COMPRESSIVE STRENGTH OF 3000 P.S.I. BEFORE ADDITIONAL CONCRETE IS CAST IN THE UNIT.

SUPERSTRUCTURE REINFORCING STEEL LENGTHS ARE BASED ON THE FOLLOWING MINIMUM SPLICE LENGTHS, EXCEPT AT MECHANICAL SPLICES

BAR SIZE	SUPERSTRUCTURE EXCEPT APPROACH SLABS, PARAPET AND BARRIER RAIL		APPROACH SLABS		PARAPET AND BARRIER RAIL
	EPOXY COATED	UNCOATED	EPOXY COATED	UNCOATED	
#4	2'-0"	1'-9"	2'-0"	1'-9"	2'-9"
#5	2'-6"	2'-2"	2'-6"	2'-2"	3'-5"
#6	3'-0"	2'-7"	3'-10"	2'-7"	4'-4"
#7	5'-3"	3'-6"			
#8	6'-10"	4'-7"			

PROJECT NO. U-2525B

GUILFORD COUNTY

STATION: 26+17.64 -Y22-
85+41.17 -Y13-

SHEET 2 OF 2

AECOM
AECOM TECHNICAL SERVICES, INC.
701 CORPORATE CENTER DRIVE, SUITE 475
RALEIGH, NC 27607
(919) 854-6200 www.aecom.com
AECOM License No. F-0342

NORTH CAROLINA PROFESSIONAL SEAL 030474 ENGINEER JOHN C. MORRISON
3/25/14

R.N. 13-27

STATE OF NORTH CAROLINA
DEPARTMENT OF TRANSPORTATION
RALEIGH

SUPERSTRUCTURE
BILL OF MATERIAL

REVISIONS							SHEET NO.
NO.	BY:	DATE:	NO.	BY:	DATE:		S-479
1			3				TOTAL SHEETS
2			4				541

DRAWN BY : DDL DATE : 03/14
CHECKED BY : JCM DATE : 03/14

DATE: 3/25/2014
TIME: 12:55:48 PM
USER: bellisim
DGN: U-2525B_SD_DSN_IM6_SUPER_BOM-2_2.dgn

NOTES:

SEE SHEET 2 OF 5 FOR NOTES.

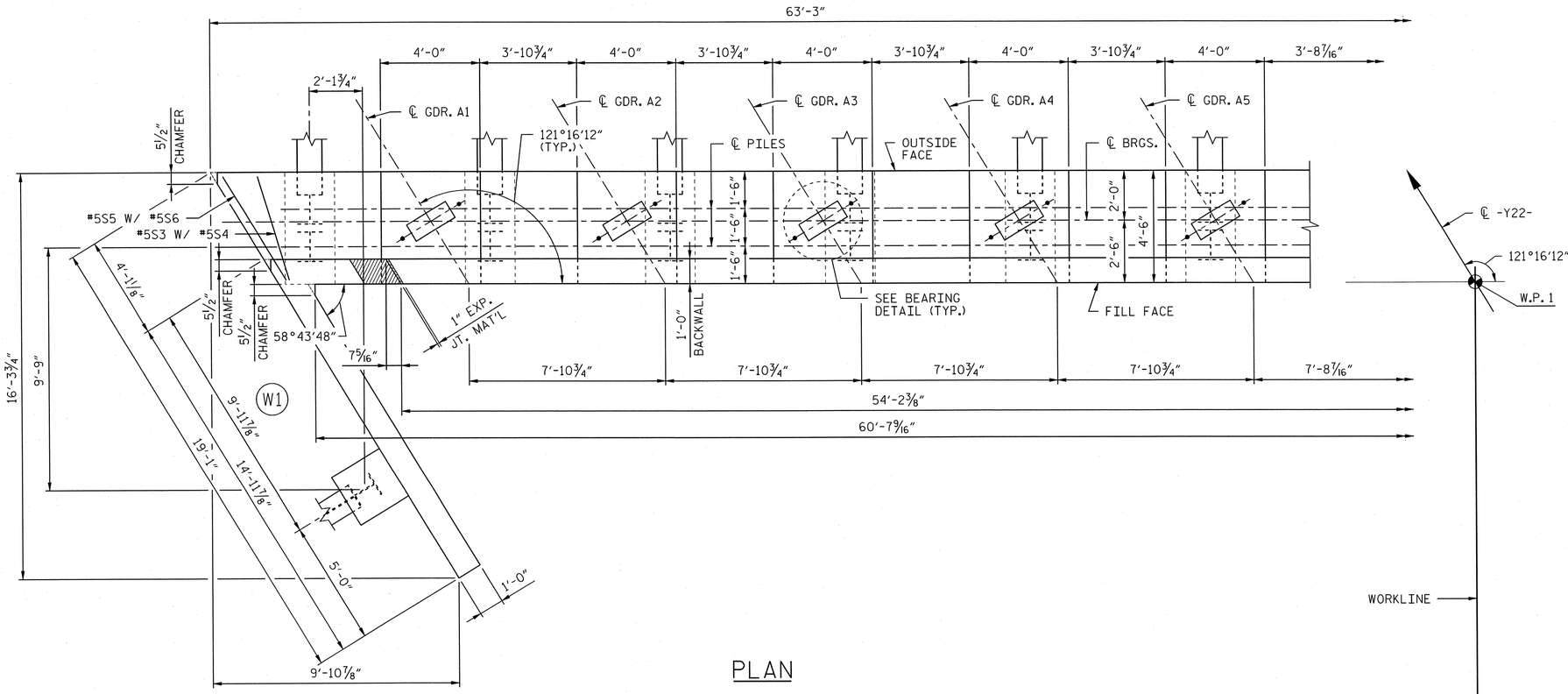

PLAN

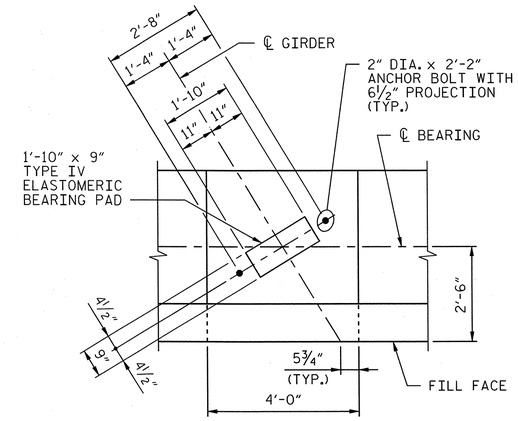

BEARING DETAIL

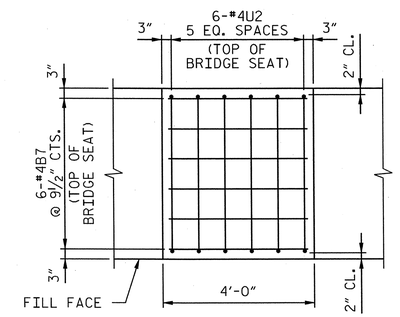

BUILDUP REINFORCEMENT

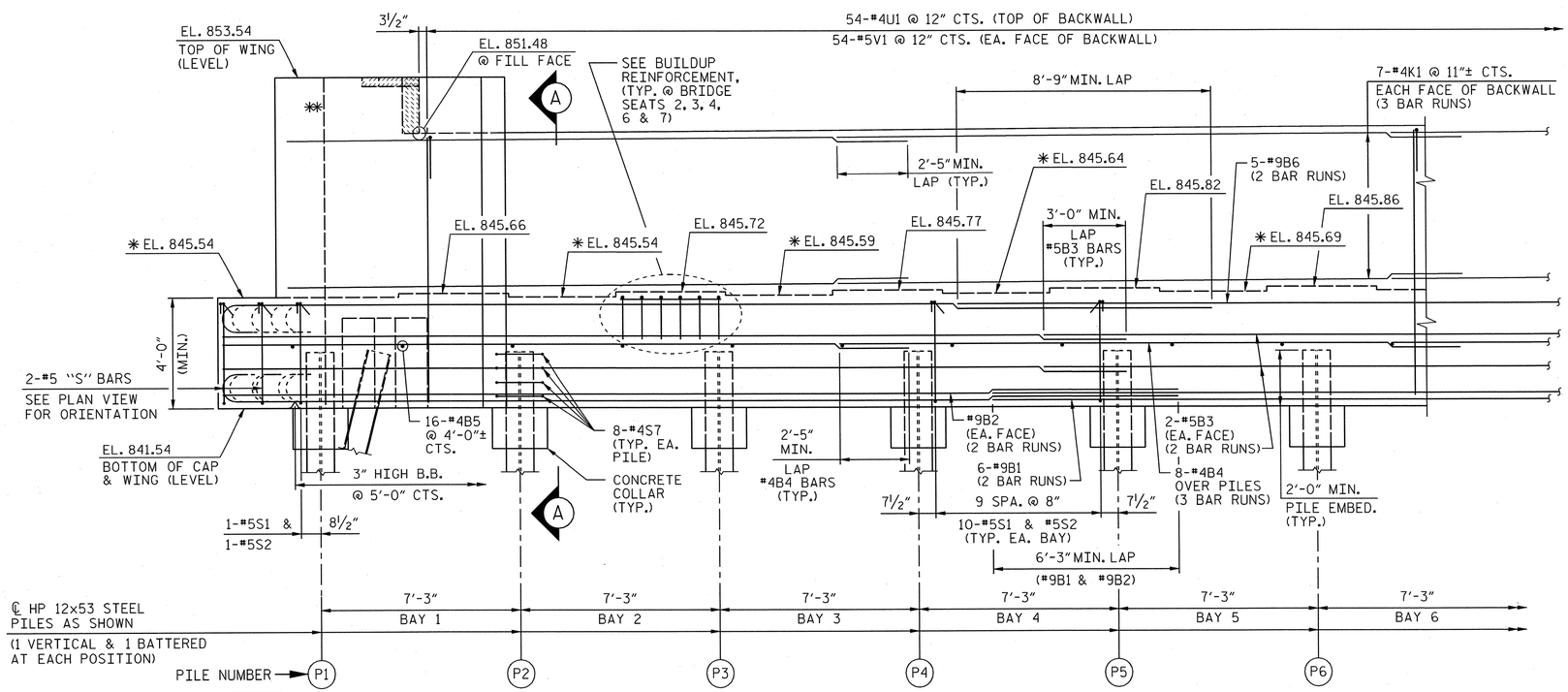

ELEVATION

PROJECT NO. U-2525B

GUILFORD COUNTY

STATION: 26+17.64 -Y22-
85+41.17 -Y13-

SHEET 1 OF 5

AECOM
AECOM TECHNICAL SERVICES, INC.
701 CORPORATE CENTER DRIVE, SUITE 475
RALEIGH, NC 27607
(919) 854-6200 www.aecom.com
AECOM License No. F-0342

NORTH CAROLINA PROFESSIONAL SEAL 030474 ENGINEER JOHN C. MORRISON
3/25/14

R.N. 13-28

STATE OF NORTH CAROLINA
DEPARTMENT OF TRANSPORTATION
RALEIGH

SUBSTRUCTURE

END BENT 1
PLAN AND ELEVATION
(LEFT LANE)

REVISIONS						SHEET NO.
NO.	BY:	DATE:	NO.	BY:	DATE:	S-480
1			3			TOTAL SHEETS
2			4			541

DRAWN BY : DDL DATE : 03/14
CHECKED BY : JCM DATE : 03/14

DATE: 3/25/2014
TIME: 11:06:08 AM

USER: bellsfam
DGN: 0:\50279356\400_Technical_Information_Disc_F\Tiles\450_NCDOT\Staff\entDesign\Tiles\Structures\Bridge HA\Cadd\U2525B_S3_DSN_HA5_END_BENT-1.dgn

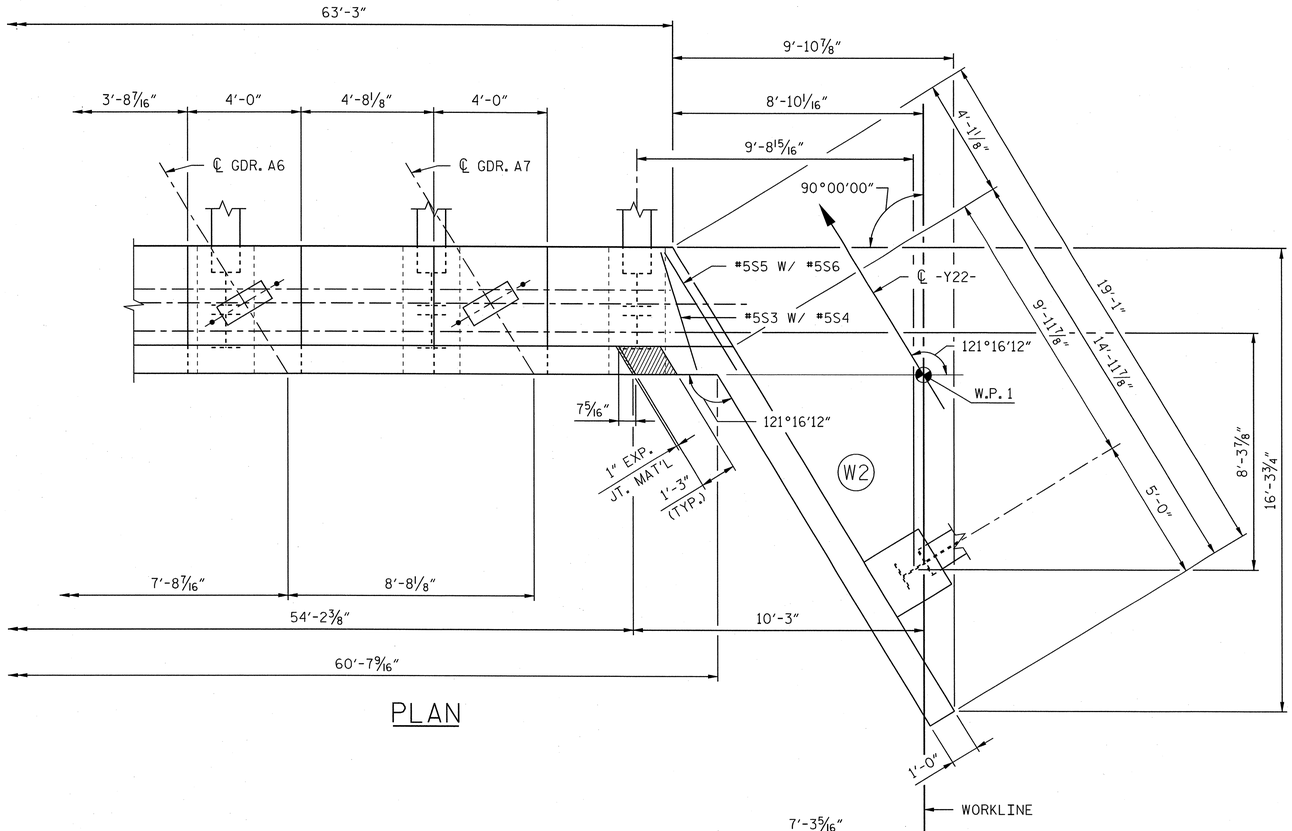

PLAN

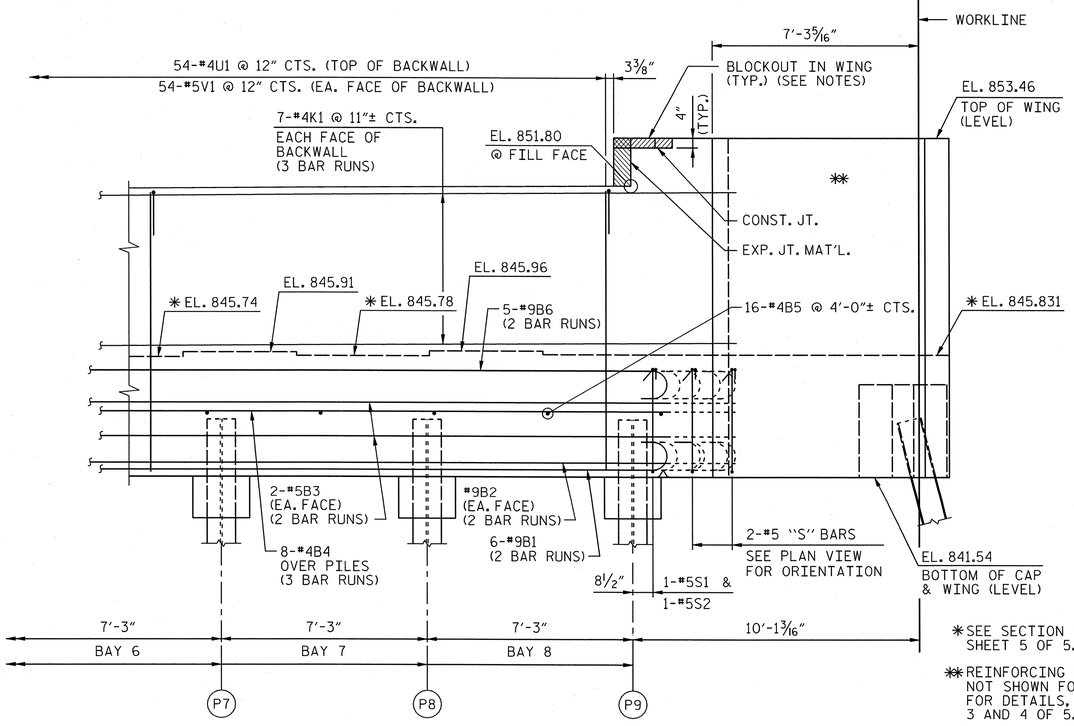

ELEVATION

* SEE SECTION "A-A", SHEET 5 OF 5.

** REINFORCING IN WING NOT SHOWN FOR CLARITY. FOR DETAILS, SEE SHEET 3 AND 4 OF 5.

NOTES:

STIRRUPS IN CAP MAY BE SHIFTED AS NECESSARY TO CLEAR ANCHOR BOLTS.

BACKWALL SHALL BE PLACED BEFORE APPLYING THE EPOXY PROTECTIVE COATING.

THE TOP SURFACE AREAS OF THE END BENT CAP SHALL BE CURED IN ACCORDANCE WITH THE STANDARD SPECIFICATIONS EXCEPT THAT THE MEMBRANE CURING COMPOUND METHOD SHALL NOT BE USED.

THE TOP SURFACE OF THE CAP EXCEPT THE BRIDGE SEAT BUILDUPS SHALL BE SLOPED TRANSVERSELY FROM THE FILL FACE TO THE FRONT FACE AT THE RATE OF 2%.

THE CONCRETE IN THE SHADED AREA OF THE WING SHALL BE POURED AFTER THE JOINT BETWEEN THE DECK AND THE APPROACH SLAB HAS BEEN SAWED AND THE PARAPET AND END POST ARE CAST IF SLIP FORMING IS USED.

INSTALL THE 4" DIA. DRAIN PIPE THROUGH THE WING WALL AS REQUIRED FOR REINFORCED BRIDGE APPROACH FILLS, SEE ROADWAY PLANS. REINFORCING STEEL IN THE WING WALL MAY BE SHIFTED AS NECESSARY TO CLEAR THE DRAIN PIPE.

FOR OTHER NOTES, SEE "GENERAL DRAWINGS".

PROJECT NO. U-2525B

GUILFORD COUNTY

STATION: 26+17.64 -Y22-
85+41.17 -Y13-

SHEET 2 OF 5

AECOM
AECOM TECHNICAL SERVICES, INC.
701 CORPORATE CENTER DRIVE, SUITE 475
RALEIGH, NC 27607
(919) 854-6200 www.aecom.com
AECOM License No. F-0342

NORTH CAROLINA PROFESSIONAL SEAL 030474 ENGINEER JOHN C. MORRISON
3/25/14

R.N. 13-29

STATE OF NORTH CAROLINA
DEPARTMENT OF TRANSPORTATION
RALEIGH

SUBSTRUCTURE

END BENT 1
PLAN AND ELEVATION

(LEFT LANE)

REVISIONS						SHEET NO.
NO.	BY:	DATE:	NO.	BY:	DATE:	S-481
1			3			TOTAL SHEETS
2			4			541

DRAWN BY : DDL DATE : 03/14
CHECKED BY : JCM DATE : 03/14

DATE: 3/25/2014
TIME: 12:58:42 PM

USER: bellsim
DGN: G:\2025\3350\400_Technical_Information_Disc_Files\450_NCDOT\SHDTech\Design\Files\Structures\Bridge 1\Add\U2525B_SD_DSN_U46_END_BENT_1_2.dgn

NOTES:

SEE SHEET 2 OF 5 FOR NOTES.

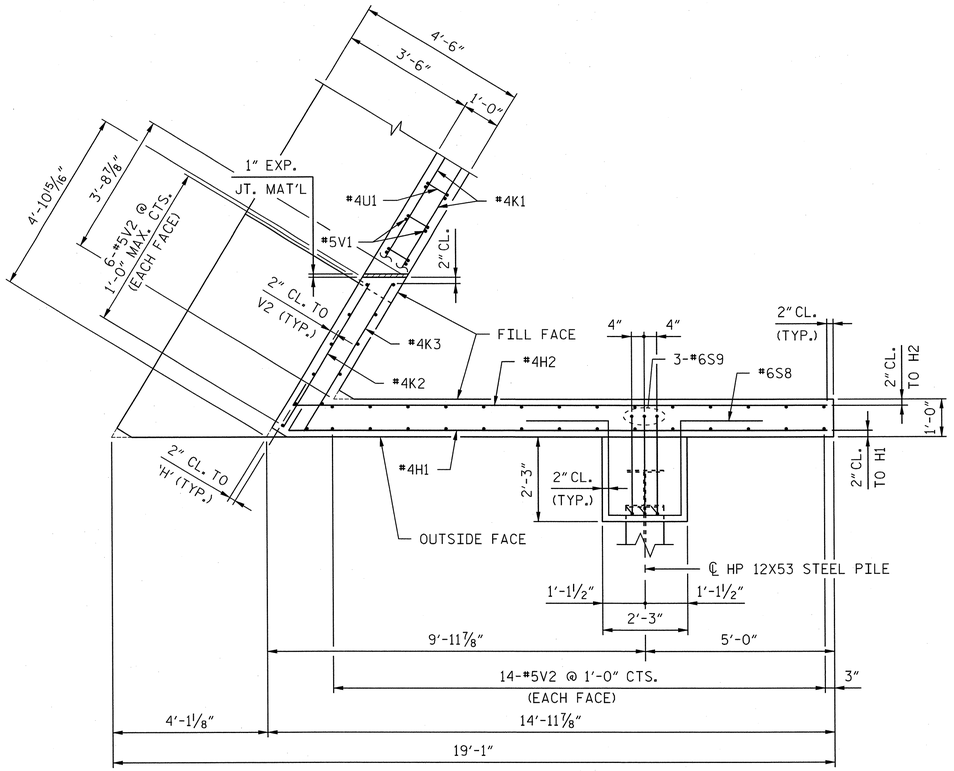

PLAN W1

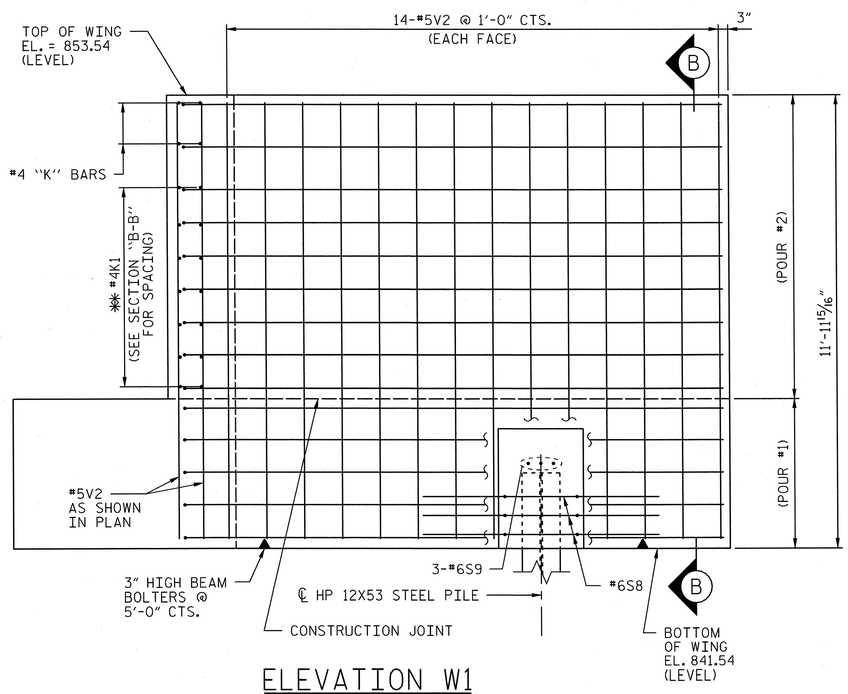

ELEVATION W1

✱✱ PLACE #4 'H' BARS TO MATCH #4K1 BARS IN BACKWALL

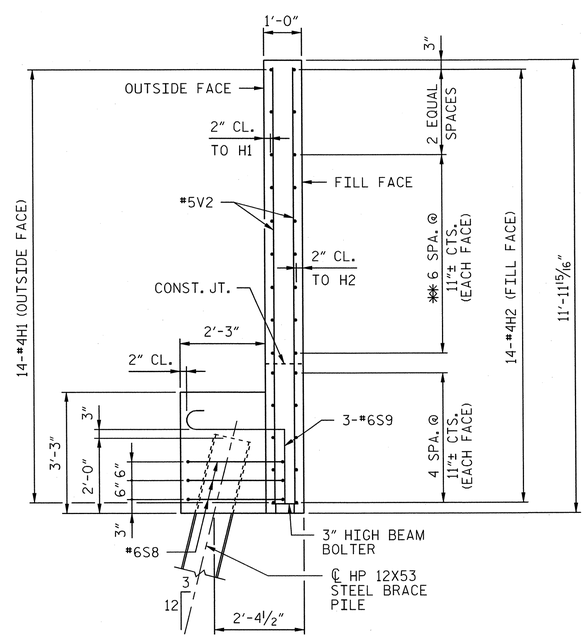

SECTION B-B

PROJECT NO. U-2525B

GUILFORD COUNTY

STATION: 26+17.64 -Y22-
85+41.17 -Y13-

SHEET 3 OF 5

AECOM
AECOM TECHNICAL SERVICES, INC.
701 CORPORATE CENTER DRIVE, SUITE 475
RALEIGH, NC 27607
(919) 854-6200 www.aecom.com
AECOM License No. F-0342

NORTH CAROLINA PROFESSIONAL SEAL 030474 ENGINEER JOHN C. MORRISON
3/25/14

R.N. 13-30

STATE OF NORTH CAROLINA
DEPARTMENT OF TRANSPORTATION
RALEIGH

SUBSTRUCTURE

END BENT 1
SECTIONS AND DETAILS

(LEFT LANE)

REVISIONS							
NO.	BY:	DATE:	NO.	BY:	DATE:		
1			3				
2			4				

SHEET NO. S-482

TOTAL SHEETS 541

DRAWN BY : DDL DATE : 03/14
CHECKED BY : JCM DATE : 03/14

DATE: 3/25/2014
TIME: 1:00:42 PM

USER: bellallen
DGN: D:\50027\9356\400_Technical_Information_Dfsc_Files\450_NCDOT\StdTechDesignFiles\Structures\Bridge 14\Cadd\U2525B_SD_DSN_J146_END_BENT_1_3.dgn

NOTES:

SEE SHEET 2 OF 5 FOR NOTES.

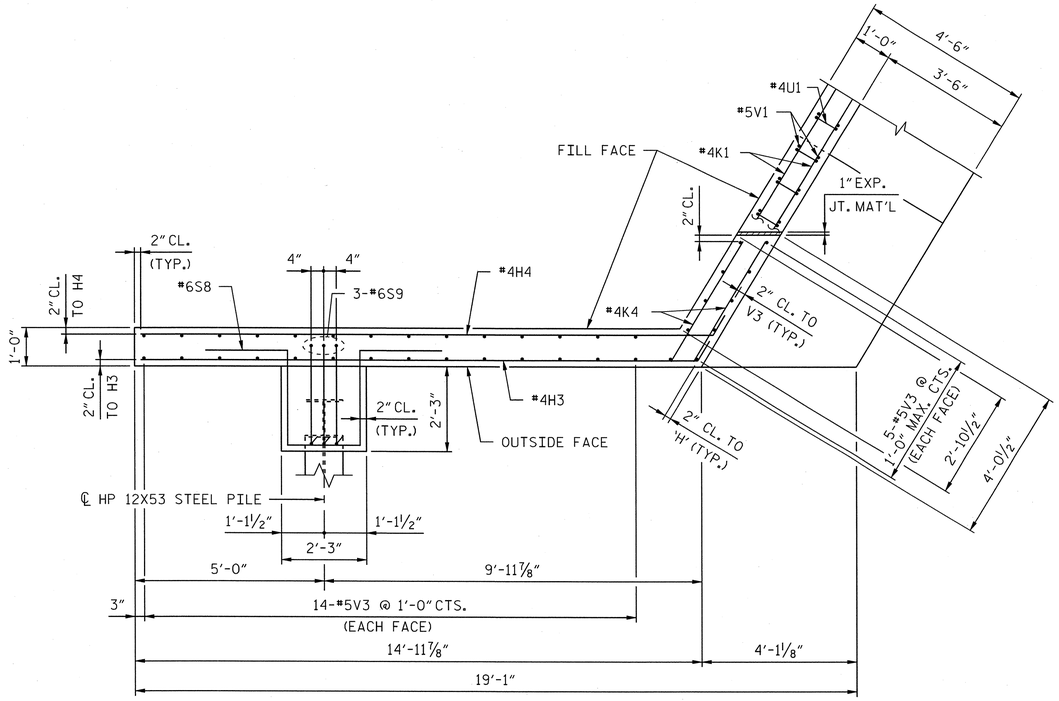

PLAN W2

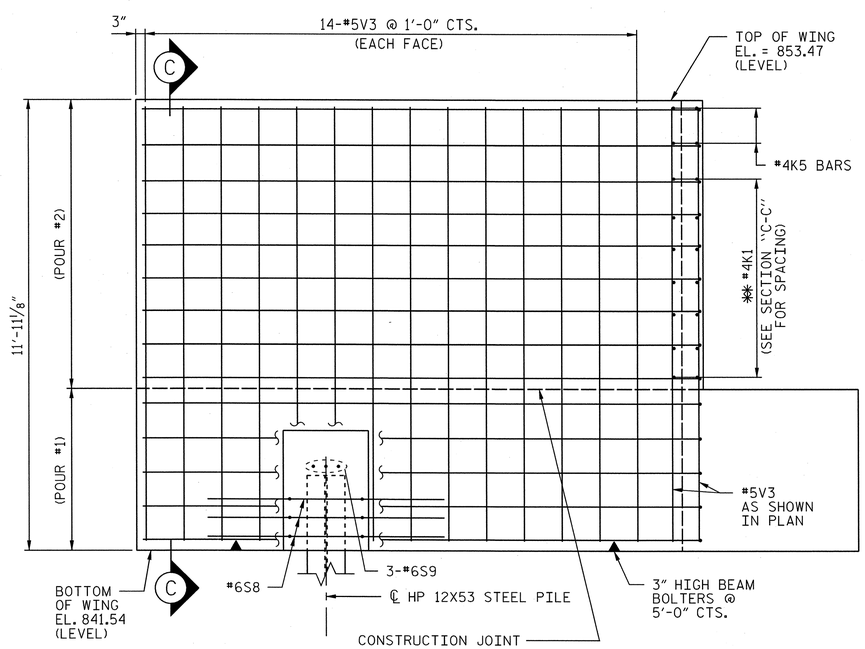

ELEVATION W2

✱✱ PLACE #4 'H' BARS TO MATCH #4K2 BARS IN BACKWALL

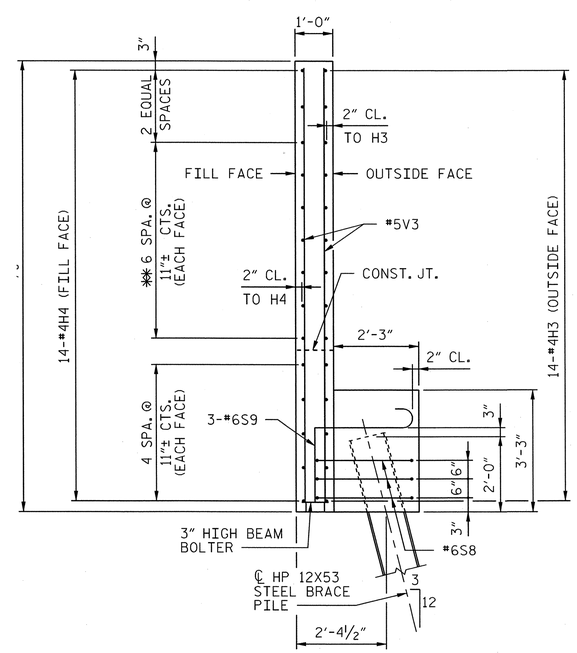

SECTION C-C

PROJECT NO. U-2525B

GUILFORD COUNTY

STATION: 26+17.64 -Y22-
85+41.17 -Y13-

SHEET 4 OF 5

AECOM
AECOM TECHNICAL SERVICES, INC.
701 CORPORATE CENTER DRIVE, SUITE 475
RALEIGH, NC 27607
(919) 854-6200 www.aecom.com
AECOM License No. F-0342

NORTH CAROLINA PROFESSIONAL SEAL 030474 ENGINEER JOHN C. MORRISON
3/25/14

R.N. 13-31

STATE OF NORTH CAROLINA
DEPARTMENT OF TRANSPORTATION
RALEIGH

SUBSTRUCTURE

END BENT 1
SECTIONS AND DETAILS

(LEFT LANE)

REVISIONS						
NO.	BY:	DATE:	NO.	BY:	DATE:	
1			3			
2			4			

SHEET NO. S-483

TOTAL SHEETS 541

DRAWN BY : DDL DATE : 03/14
CHECKED BY : JCM DATE : 03/14

DATE: 3/25/2014
TIME: 1:02:38 PM

USER: bellsam
DGN: Q:\60279356\400_Technical_Information_Disc_Files\450_NCDOT Staff tech Delight Files\Structures\Bridge 1\Octet\U2525B_SD_DSN_U46_END_BENT_1_4.dgn

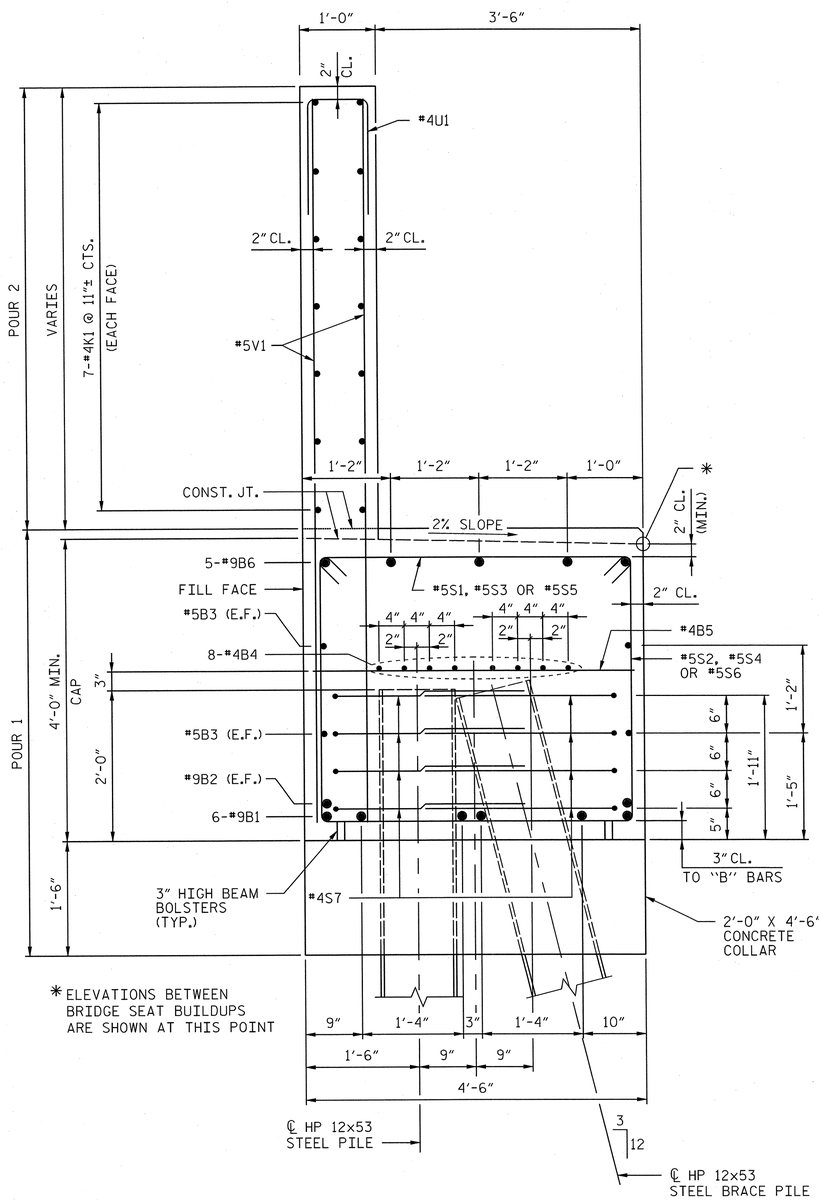

SECTION "A-A"

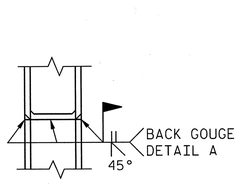

**PILE VERTICAL

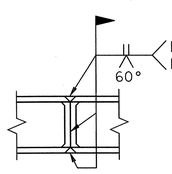

**PILE HORIZONTAL OR VERTICAL

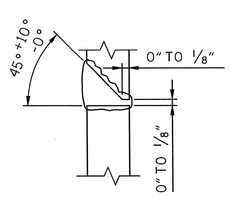

DETAIL A

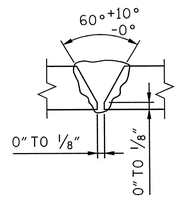

DETAIL B

**POSITION OF PILE DURING WELDING.

PILE SPLICE DETAILS

BAR TYPES

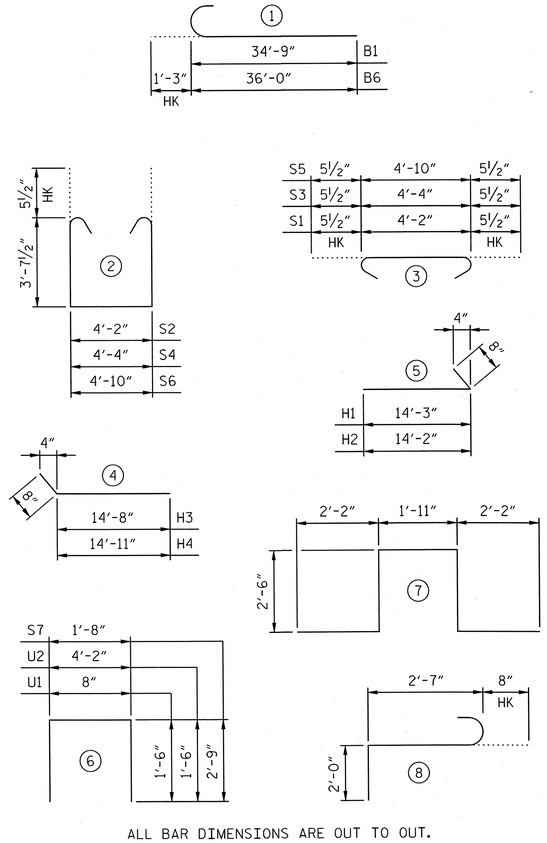

ALL BAR DIMENSIONS ARE OUT TO OUT.

BILL OF MATERIAL
END BENT 1

BAR	NO.	SIZE	TYPE	LENGTH	WEIGHT
B1	12	#9	1	36'-0"	1469
B2	4	#9	STR	34'-9"	473
B3	8	#5	STR	33'-0"	275
B4	24	#4	STR	22'-7"	362
B5	16	#4	STR	4'-2"	45
B6	10	#9	1	37'-3"	1267
B7	30	#4	STR	3'-8"	73
H1	14	#4	5	14'-11"	140
H2	14	#4	5	14'-10"	139
H3	14	#4	4	15'-4"	143
H4	14	#4	4	15'-7"	146
K1	42	#4	STR	22'-7"	634
K2	2	#4	STR	4'-5"	6
K3	2	#4	STR	4'-7"	6
K4	4	#4	STR	3'-8"	10
S1	82	#5	3	5'-1"	435
S2	82	#5	2	12'-4"	1055
S3	2	#5	3	5'-3"	11
S4	2	#5	2	12'-6"	26
S5	2	#5	3	5'-9"	12
S6	2	#5	2	13'-0"	27
S7	72	#4	6	7'-2"	345
S8	6	#6	7	11'-3"	101
S9	6	#6	8	5'-3"	47
U1	54	#4	6	3'-8"	132
U2	30	#4	6	7'-2"	144
V1	108	#5	STR	9'-7"	1080
V2	40	#5	STR	11'-8"	487
V3	34	#5	STR	9'-10"	349

TOTAL REINFORCING STEEL LBS. 9439

CLASS A CONCRETE

POUR 1 (COLLAR, CAP & LOWER WING) C.Y. 56.0
POUR 2 (BACKWALL & UPPER WING) C.Y. 22.6
TOTAL C.Y. 78.6

HP 12x53 STEEL PILES NO. 20
LIN. FT. 935

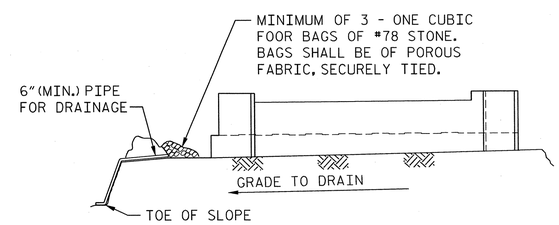

BAGGED STONE AND PIPE SHALL BE PLACED IMMEDIATELY AFTER COMPLETION OF END BENT EXCAVATION. PIPE MAY BE EITHER CONCRETE, CORRUGATED STEEL, CORRUGATED ALUMINUM ALLOY, OR CORRUGATED PLASTIC. PERFORATED PIPE WILL NOT BE ALLOWED.

BAGGED STONE SHALL REMAIN IN PLACE UNTIL THE ENGINEER DIRECTS THAT IT BE REMOVED. THE CONTRACTOR SHALL REMOVE AND DISPOSE OF SILT ACCUMULATIONS AT BAGGED STONE WHEN SO DIRECTED BY THE ENGINEER. BAGS SHALL BE REMOVED AND REPLACED WHENEVER THE ENGINEER DETERMINES THAT THEY HAVE DETERIORATED AND LOST THEIR EFFECTIVENESS.

NO SEPARATE PAYMENT WILL BE MADE FOR THIS WORK AND THE ENTIRE COST OF THIS WORK SHALL BE INCLUDED IN THE UNIT CONTRACT PRICE FOR THE SEVERAL PAY ITEMS.

TEMPORARY DRAINAGE AT END BENT

PROJECT NO. U-2525B
GUILFORD COUNTY
STATION: 26+17.64 -Y22-
85+41.17 -Y13-

SHEET 5 OF 5

AECOM
AECOM TECHNICAL SERVICES, INC.
701 CORPORATE CENTER DRIVE, SUITE 475
RALEIGH, NC 27607
(919) 854-6200 www.aecom.com
AECOM License No. F-0342

NORTH CAROLINA PROFESSIONAL SEAL 030474 ENGINEER JOHN C. MORRISON
3/25/14

R.N. 13-32

STATE OF NORTH CAROLINA
DEPARTMENT OF TRANSPORTATION
RALEIGH

SUBSTRUCTURE

END BENT 1
SECTIONS AND DETAILS

(LEFT LANE)

REVISIONS						SHEET NO.
NO.	BY:	DATE:	NO.	BY:	DATE:	S-484
1			3			TOTAL SHEETS
2			4			541

DRAWN BY : DDL DATE : 03/14
CHECKED BY : JCM DATE : 03/14

DATE: 3/25/2014
TIME: 11:50:05 AM
USER: bellsten
DGN: G:\52\79335\400_Technical_Information_Disc_Files\450_NCDOT\Staff\text\DesignFiles\Structures\Bridge (4Code)\U2525B_SD_DSN_U46_END_BENT-1_5.dgn

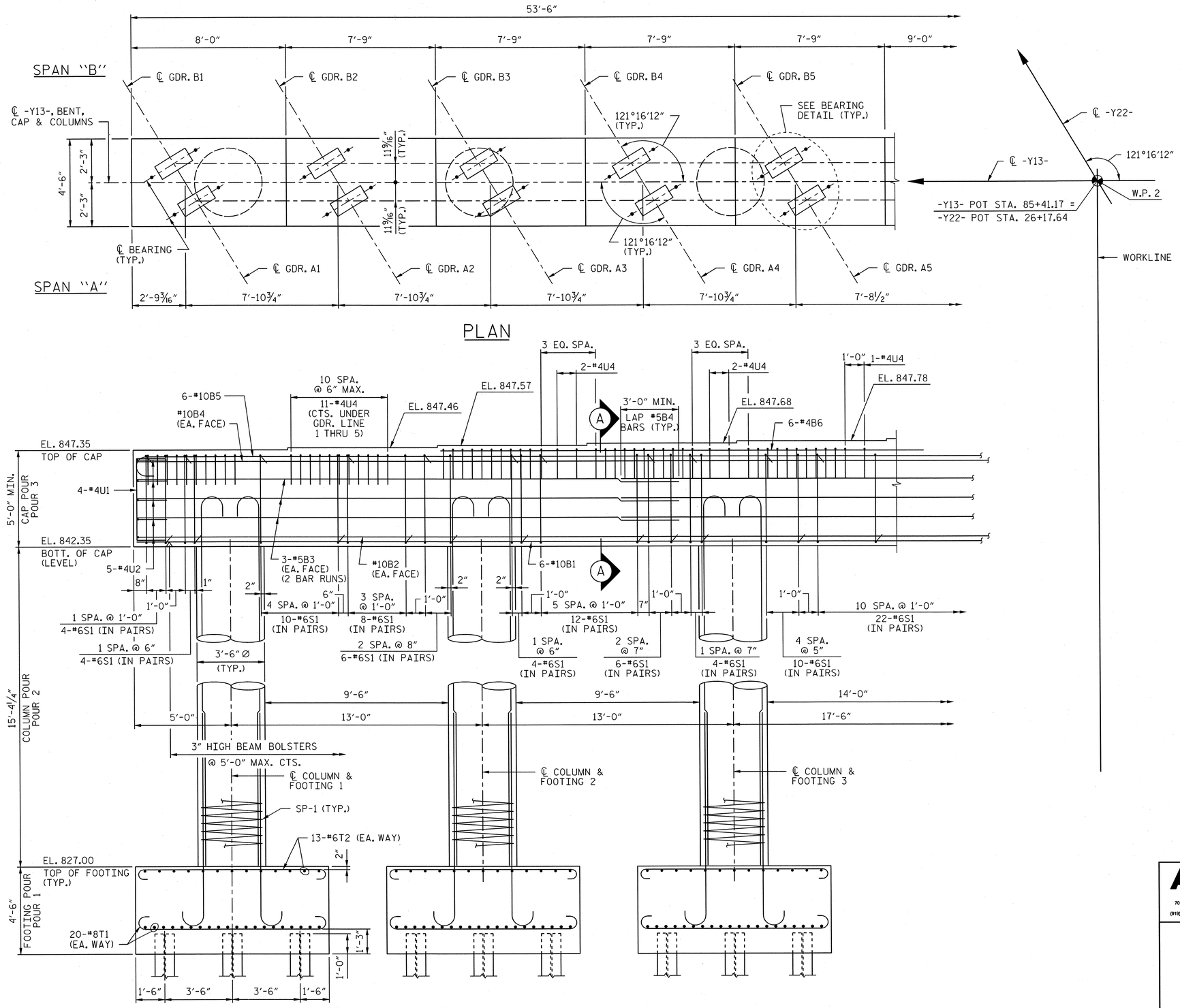

PROJECT NO. U-2525B

GUILFORD **COUNTY**

STATION: 26+17.64 -Y22-
85+41.17 -Y13-

SHEET 1 OF 3

AECOM
AECOM TECHNICAL SERVICES, INC.
701 CORPORATE CENTER DRIVE, SUITE 475
RALEIGH, NC 27607
(919) 854-6200 www.aecom.com
AECOM License No. F-0342

NORTH CAROLINA PROFESSIONAL SEAL 030474 ENGINEER JOHN C. MORRISON
3/25/14

R.N. 13-33

STATE OF NORTH CAROLINA
DEPARTMENT OF TRANSPORTATION
RALEIGH

SUBSTRUCTURE

BENT 1
PLAN AND ELEVATION
(LEFT LANE)

REVISIONS						SHEET NO.
NO.	BY:	DATE:	NO.	BY:	DATE:	S-485
1			3			TOTAL SHEETS
2			4			541

DRAWN BY : DDL DATE : 03/14
CHECKED BY : JCM DATE : 03/14

DATE: 3/25/2014
TIME: 10:58:22 PM

USER: bellsem
DGN: 0:\50279356\400_Technical_Information_Disc_Files\450_NCDOT\Staff\ectbelsfgn\Files\Structures\Bridge \#\Cadd\U2525B_SD_DSN_1\46_BENT-L.dgn

NOTES:

STIRRUPS IN CAP MAY BE SHIFTED AS NECESSARY TO CLEAR ANCHOR BOLTS.

HOOKS ON "V" BARS MAY BE TURNED AS NECESSARY FOR PLACING REINFORCING STEEL.

FOR OTHER NOTES, SEE "GENERAL DRAWINGS".

FOR PILE SPLICE DETAILS, SEE "END BENT" SHEETS.

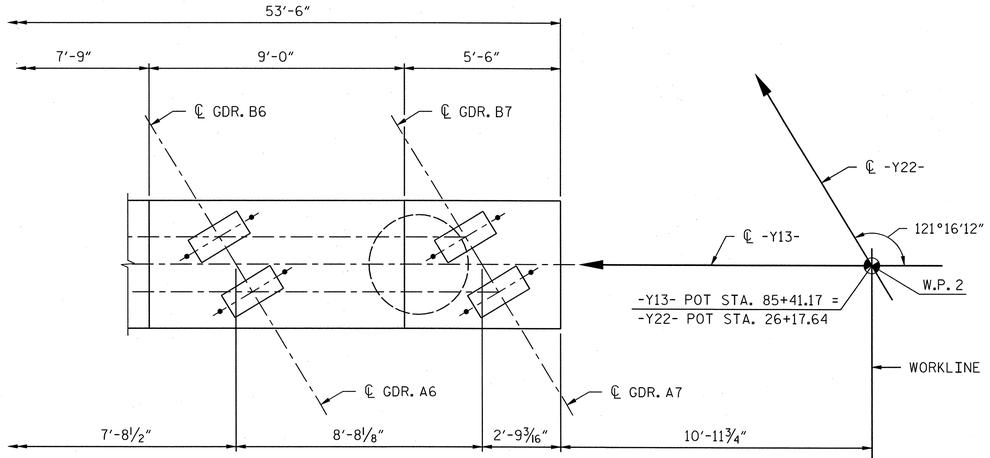

PLAN

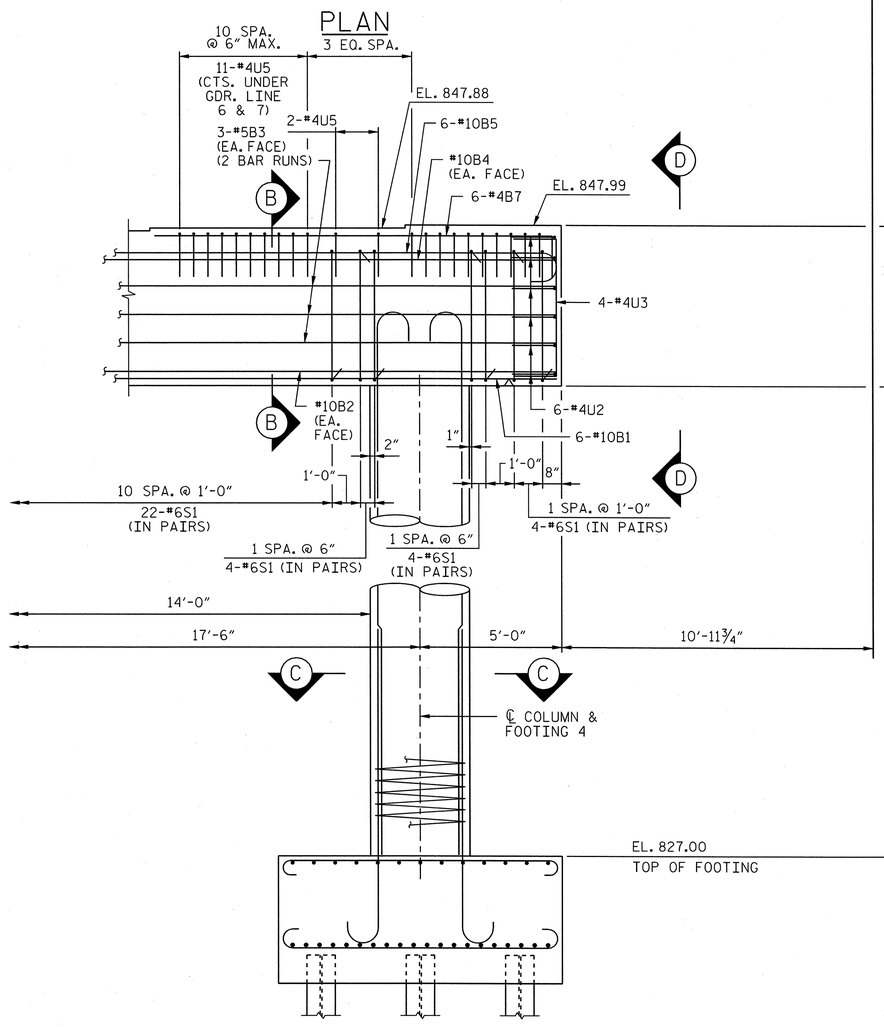

ELEVATION

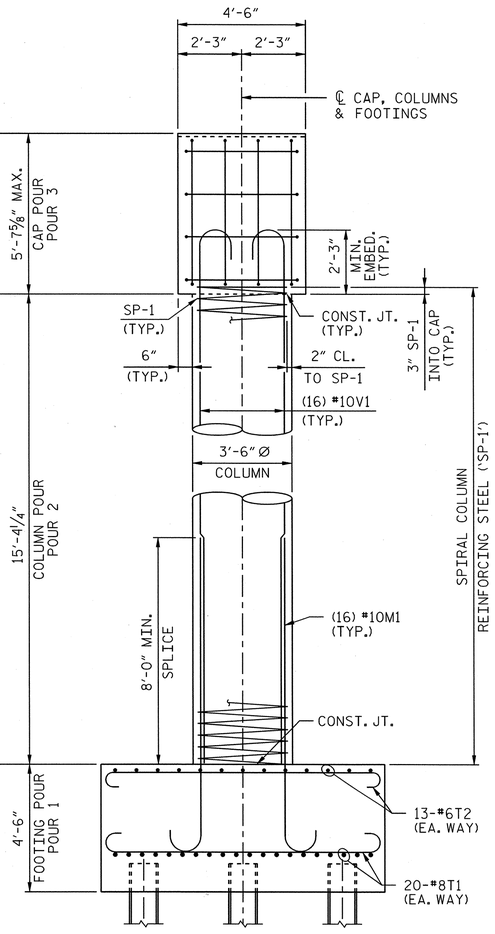

END VIEW

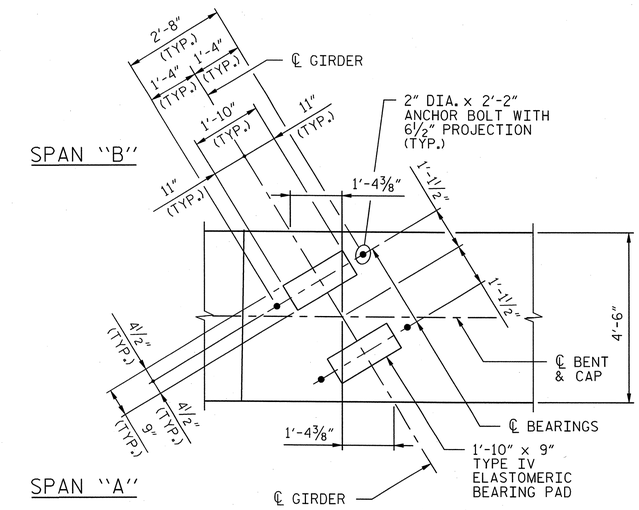

BEARING DETAIL

PROJECT NO. U-2525B

GUILFORD COUNTY

STATION: 26+17.64 -Y22-
85+41.17 -Y13-

SHEET 2 OF 3

AECOM
AECOM TECHNICAL SERVICES, INC.
701 CORPORATE CENTER DRIVE, SUITE 475
RALEIGH, NC 27607
(919) 854-6200 www.aecom.com
AECOM License No. F-0342

NORTH CAROLINA PROFESSIONAL SEAL 030474 ENGINEER JOHN C. MORRISON
3/25/14

R.N. 13-34

STATE OF NORTH CAROLINA
DEPARTMENT OF TRANSPORTATION
RALEIGH

SUBSTRUCTURE

BENT 1
PLAN AND ELEVATION
(LEFT LANE)

REVISIONS						SHEET NO.
NO.	BY:	DATE:	NO.	BY:	DATE:	S-486
1			3			TOTAL SHEETS
2			4			541

DRAWN BY : DDL DATE : 03/14
CHECKED BY : JCM DATE : 03/14

USER: bellsjam
DGN: Q:\60129336\400_Technical_Information_Disc_Files\450_NCDOT Std Tech Design Files\Structures\Bridge_M\Cadd\U2525B_SD_DSN_U46_BENT1_L2.dgn
DATE: 3/25/2014
TIME: 1:07:34 PM

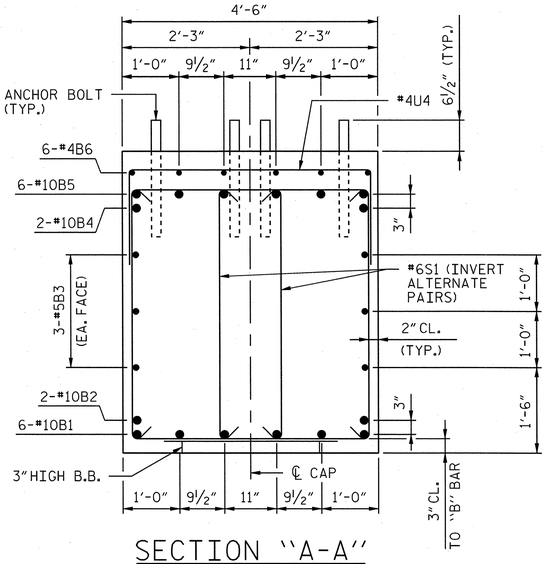

SECTION "A-A"

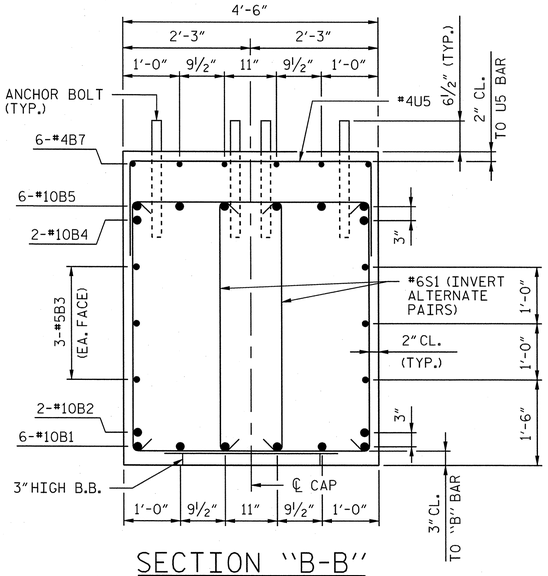

SECTION "B-B"

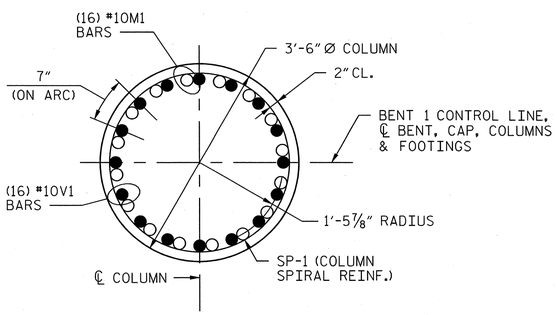

SECTION "C-C"

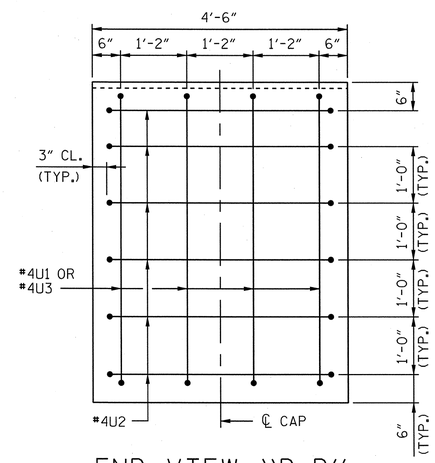

END VIEW "D-D"

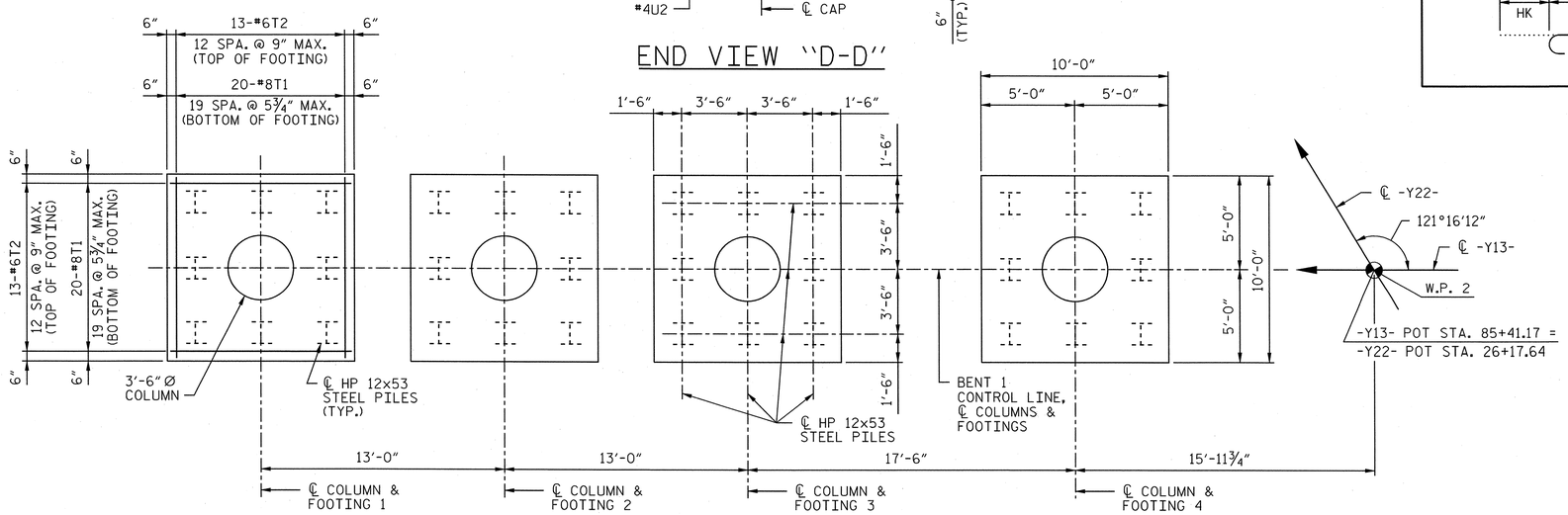

PLAN OF FOOTINGS

BAR TYPES

ALL BAR DIMENSIONS ARE OUT TO OUT.

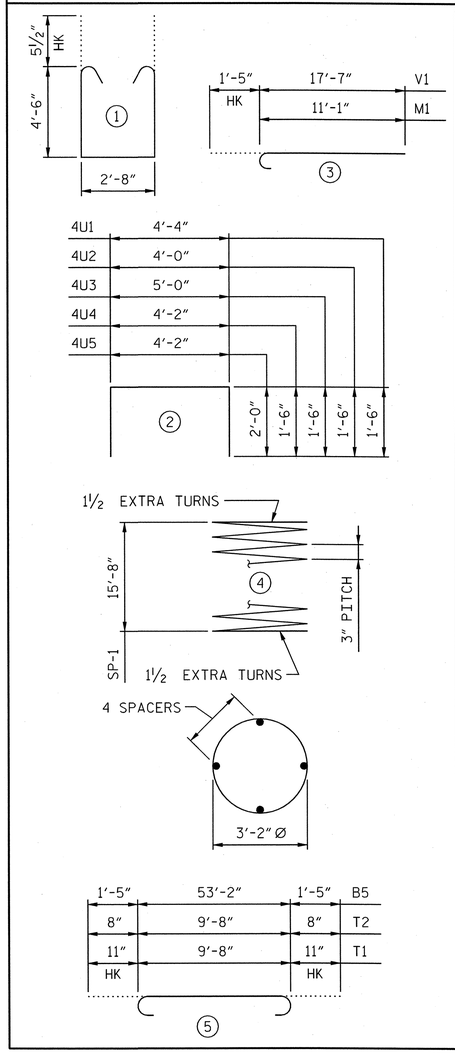

BILL OF MATERIAL

BENT 1

BAR	NO.	SIZE	TYPE	LENGTH	WEIGHT
B1	6	#10	STR	53'-2"	1373
B2	2	#10	STR	53'-2"	458
B3	12	#5	STR	27'-9"	347
B4	2	#10	STR	53'-2"	458
B5	6	#10	5	56'-0"	1446
B6	6	#4	STR	25'-0"	100
B7	6	#4	STR	14'-2"	57
M1	64	#10	3	12'-6"	3442
S1	102	#6	1	12'-7"	1929
T1	160	#8	5	11'-6"	4913
T2	104	#6	5	11'-0"	1718
U1	4	#4	2	7'-4"	20
U2	11	#4	2	7'-0"	51
U3	4	#4	2	8'-0"	21
U4	60	#4	2	7'-2"	287
U5	24	#4	2	8'-2"	131
V1	64	#10	3	19'-0"	5232
REINFORCING STEEL				LBS.	21983
SP-1	4	***	4	628'-6"	1680
SPIRAL COLUMN REINFORCING STEEL				LBS.	1680

*** THE "SP" SPIRAL REINFORCING STEEL SHALL BE W20 OR D-20 COLD DRAWN WIRE OR #4 PLAIN OR DEFORMED BAR.

CLASS A CONCRETE		
POUR 1 (FOOTINGS)	C.Y.	66.7
POUR 2 (COLUMNS)	C.Y.	21.9
POUR 3 (CAP)	C.Y.	47.4
TOTAL CLASS A CONCRETE	C.Y.	136.0
HP 12x53 STEEL PILES	NO.	32
	LIN. FT.	760
STEEL PILE POINTS	NO.	32

PROJECT NO. U-2525B

GUILFORD COUNTY

STATION: 26+17.64 -Y22-
85+41.17 -Y13-

SHEET 3 OF 3

AECOM
AECOM TECHNICAL SERVICES, INC.
701 CORPORATE CENTER DRIVE, SUITE 475
RALEIGH, NC 27607
(919) 854-6200 www.aecom.com
AECOM License No. F-0342

NORTH CAROLINA PROFESSIONAL SEAL 030474 ENGINEER JOHN C. MORRISON
3/25/14

R.N. 13-35

STATE OF NORTH CAROLINA
DEPARTMENT OF TRANSPORTATION
RALEIGH

SUBSTRUCTURE

BENT 1
SECTIONS AND DETAILS

(LEFT LANE)

REVISIONS						
NO.	BY:	DATE:	NO.	BY:	DATE:	
1			3			
2			4			

SHEET NO. S-487

TOTAL SHEETS 541

DRAWN BY : DDL DATE : 03/14
CHECKED BY : JCM DATE : 03/14

DATE: 3/25/2014
TIME: 1:26:22 AM
USER: bellsilem
DGN: QA\62\79356\400_Technical_Information_Disc_Files\450_NCDOT\SiteTechDesignFiles\Structures\Bridge 14\Cad\U2525B_SD_DSN_U46_BENT-1_3.dgn

NOTES:

SEE SHEET 2 OF 5 FOR NOTES.

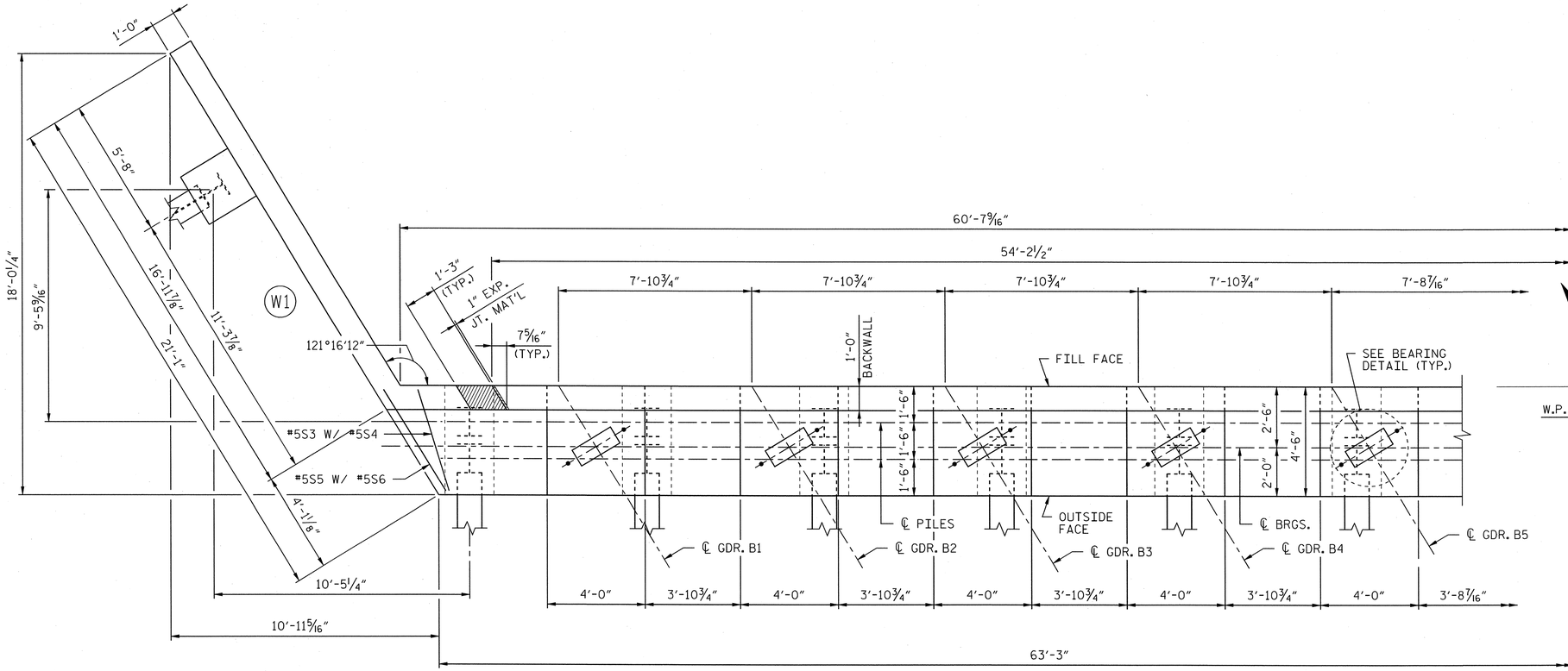

PLAN

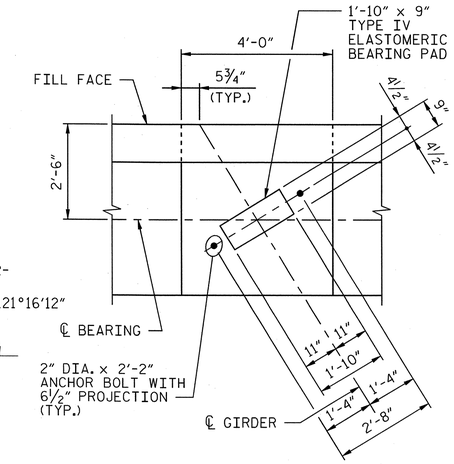

BEARING DETAIL

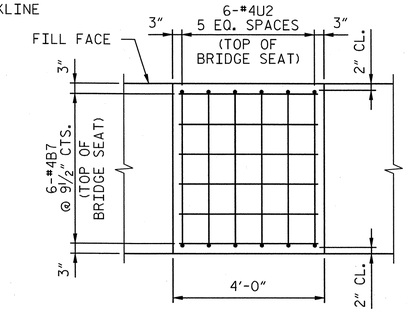

BUILDUP REINFORCEMENT

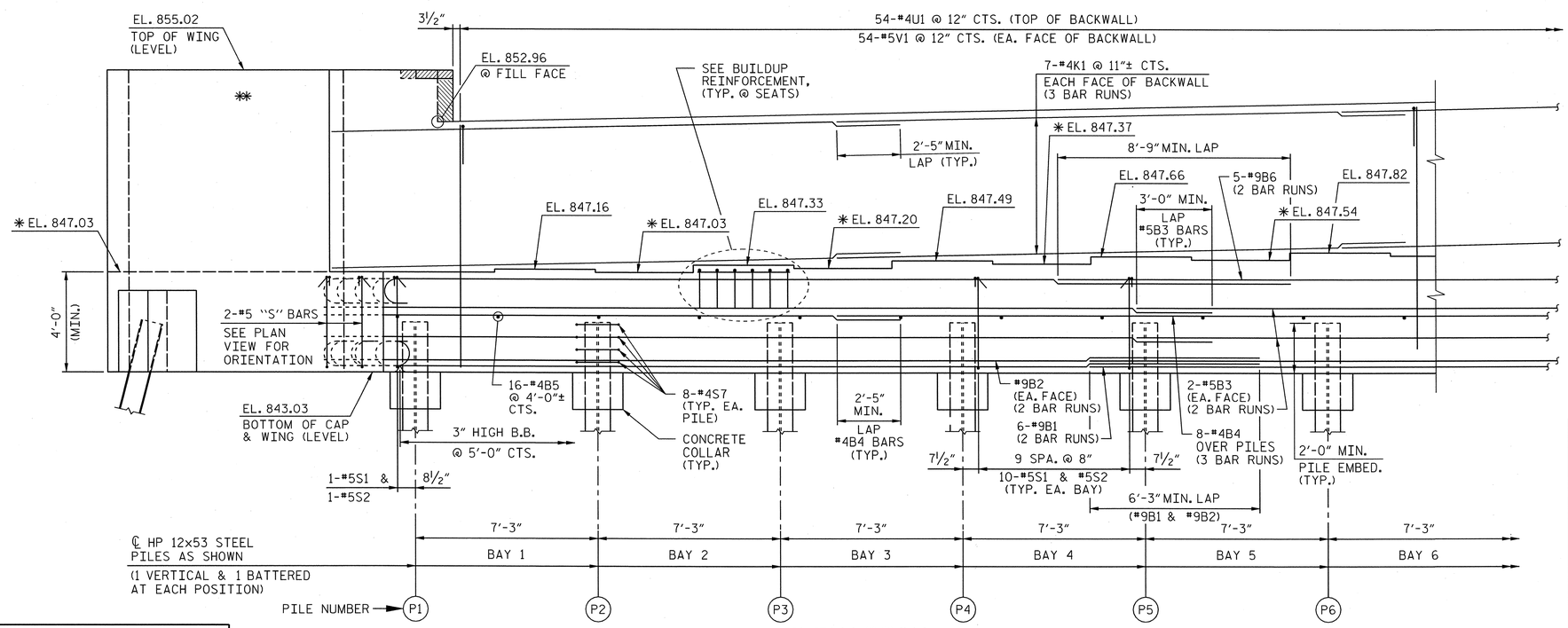

ELEVATION

PROJECT NO. U-2525B

GUILFORD **COUNTY**

STATION: 26+17.64 -Y22-
85+41.17 -Y13-

SHEET 1 OF 5

AECOM
AECOM TECHNICAL SERVICES, INC.
701 CORPORATE CENTER DRIVE, SUITE 475
RALEIGH, NC 27607
(919) 854-6200 www.aecom.com
AECOM License No. F-0342

NORTH CAROLINA PROFESSIONAL SEAL 030474 ENGINEER JOHN C. MORRISON
3/25/14

R.N. 13-36

STATE OF NORTH CAROLINA
DEPARTMENT OF TRANSPORTATION
RALEIGH

SUBSTRUCTURE

END BENT 2
PLAN AND ELEVATION

(LEFT LANE)

REVISIONS									SHEET NO.
NO.	BY:	DATE:	NO.	BY:	DATE:				S-488
1			3						TOTAL SHEETS
2			4						541

DRAWN BY : DDL DATE : 03/14
CHECKED BY : JCM DATE : 03/14

DATE: 3/25/2014
TIME: 11:32:42 AM

USER: bellisien
DGN: G:\60279356\400_Technical_Information_Dist_Files\450_NCDOT Std Tech Design Files\Structures\Bridge HVCad\U2525B_SD_DSN_U46_END_BENT-2_L4gn

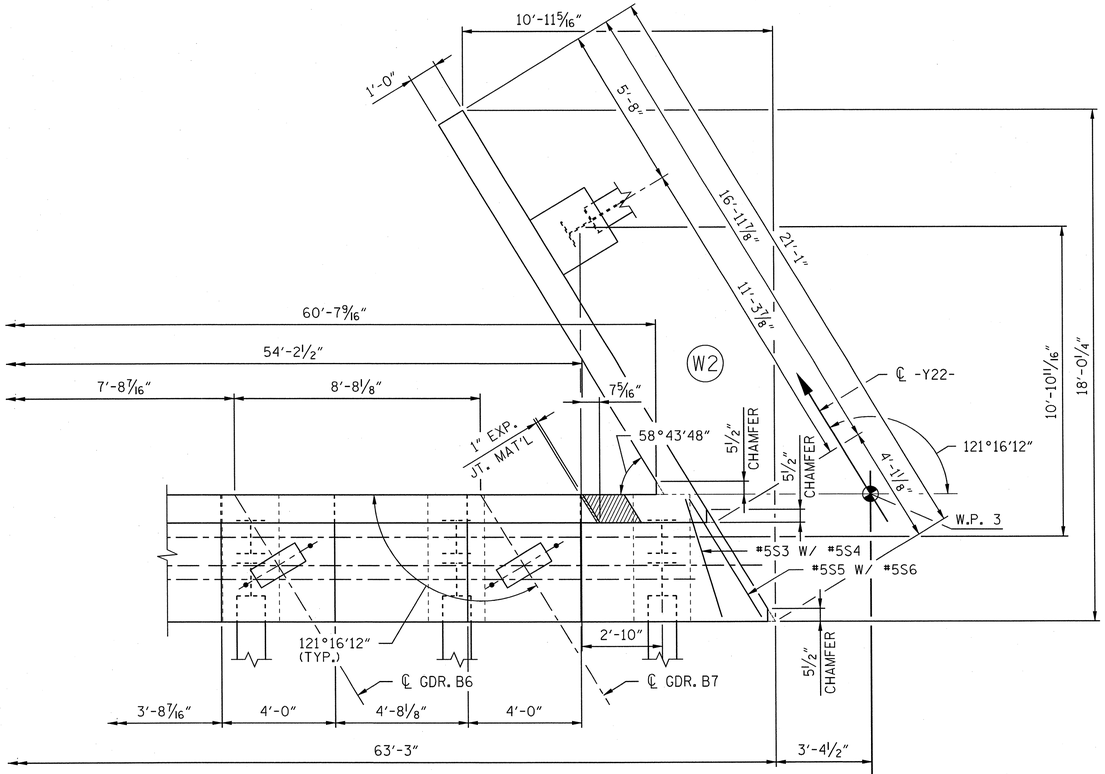

PLAN

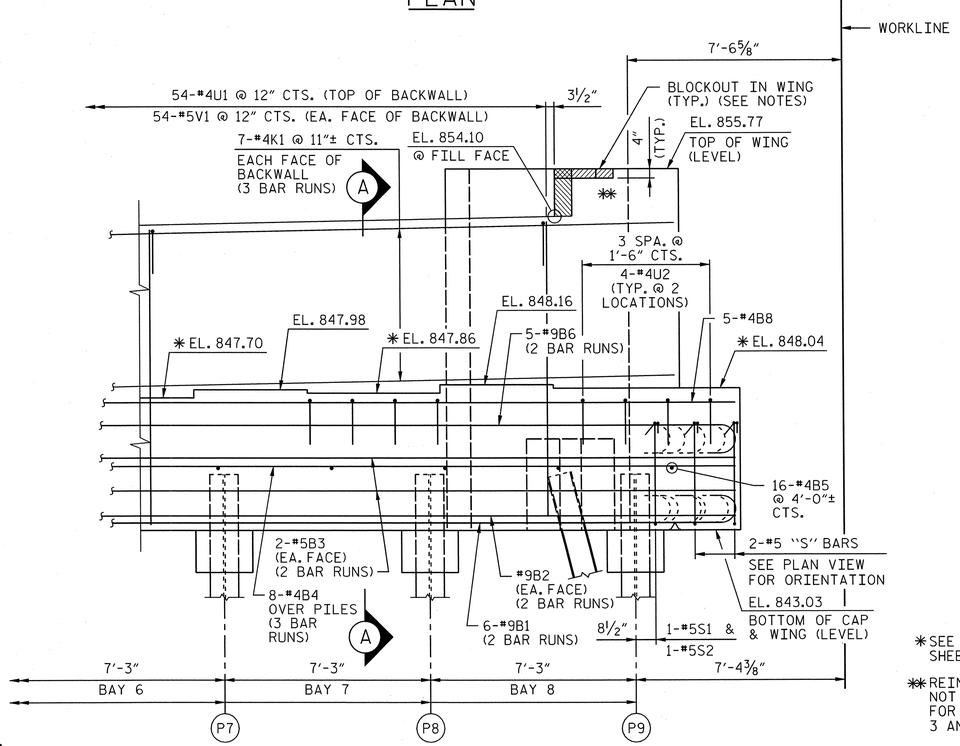

ELEVATION

* SEE SECTION "A-A", SHEET 5 OF 5.

** REINFORCING IN WING NOT SHOWN FOR CLARITY. FOR DETAILS, SEE SHEET 3 AND 4 OF 5.

NOTES:

STIRRUPS IN CAP MAY BE SHIFTED AS NECESSARY TO CLEAR ANCHOR BOLTS.

BACKWALL SHALL BE PLACED BEFORE APPLYING THE EPOXY PROTECTIVE COATING.

THE TOP SURFACE AREAS OF THE END BENT CAP SHALL BE CURED IN ACCORDANCE WITH THE STANDARD SPECIFICATIONS EXCEPT THAT THE MEMBRANE CURING COMPOUND METHOD SHALL NOT BE USED.

THE TOP SURFACE OF THE CAP EXCEPT THE BRIDGE SEAT BUILDUPS SHALL BE SLOPED TRANSVERSELY FROM THE FILL FACE TO THE FRONT FACE AT THE RATE OF 2%.

THE CONCRETE IN THE SHADED AREA OF THE WING SHALL BE POURED AFTER THE JOINT BETWEEN THE DECK AND THE APPROACH SLAB HAS BEEN SAWED AND THE PARAPET AND END POST ARE CAST IF SLIP FORMING IS USED.

INSTALL THE 4"DIA. DRAIN PIPE THROUGH THE WING WALL AS REQUIRED FOR REINFORCED BRIDGE APPROACH FILLS, SEE ROADWAY PLANS. REINFORCING STEEL IN THE WING WALL MAY BE SHIFTED AS NECESSARY TO CLEAR THE DRAIN PIPE.

FOR OTHER NOTES, SEE "GENERAL DRAWINGS".

PROJECT NO. U-2525B

GUILFORD COUNTY

STATION: 26+17.64 -Y22-
85+41.17 -Y13-

SHEET 2 OF 5

AECOM
AECOM TECHNICAL SERVICES, INC.
701 CORPORATE CENTER DRIVE, SUITE 475
RALEIGH, NC 27607
(919) 854-6200 www.aecom.com
AECOM License No. F-0342

NORTH CAROLINA PROFESSIONAL SEAL 030474 ENGINEER JOHN C. MORRISON
3/25/14

R.N. 13-37

STATE OF NORTH CAROLINA
DEPARTMENT OF TRANSPORTATION
RALEIGH

SUBSTRUCTURE

END BENT 2
PLAN AND ELEVATION
(LEFT LANE)

REVISIONS								
NO.	BY:	DATE:	NO.	BY:	DATE:			
1			3					
2			4					

SHEET NO. S-489

TOTAL SHEETS 541

DRAWN BY : DDL DATE : 03/14
CHECKED BY : JCM DATE : 03/14

DATE: 3/25/2014
TIME: 01:49 PM

USER: jwilkinson
DGN: 6:\50237\350\400_Technical_Information_Disc_Files\450_NCDOT Standards\Design Files\Structures\Bridge 1\Cadd\U2525B_SD_DSN_U46_END_BENT_2_2.dgn

NOTES:

SEE SHEET 2 OF 5 FOR NOTES.

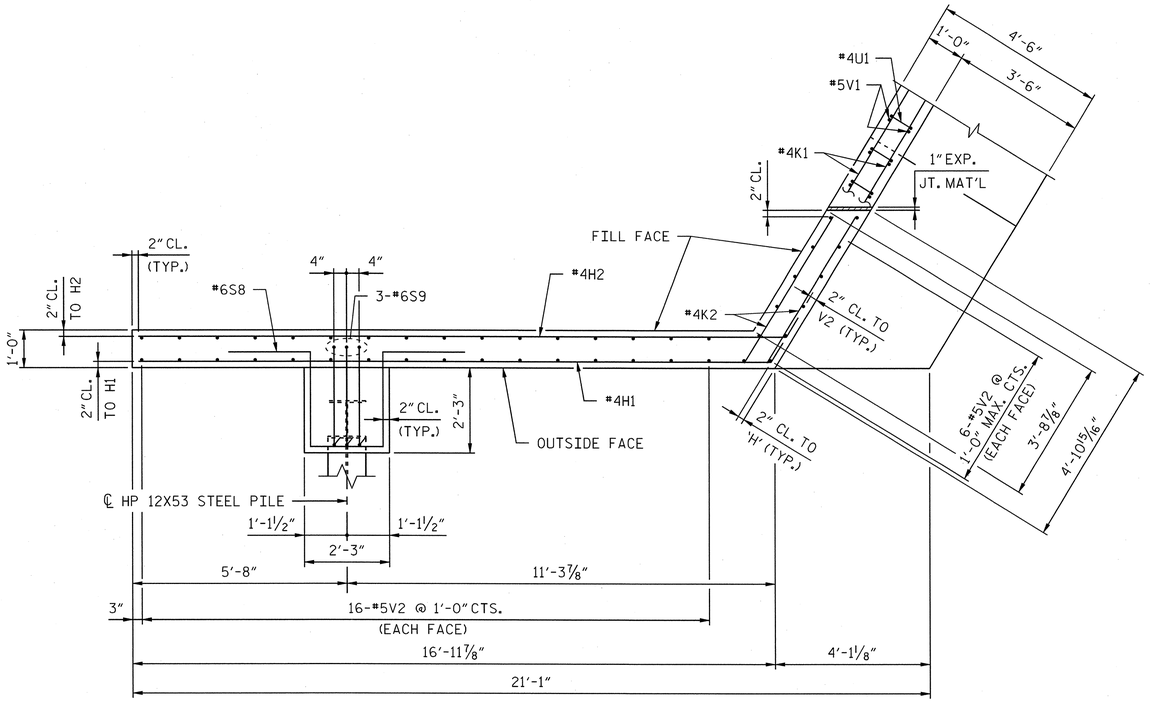

PLAN W1

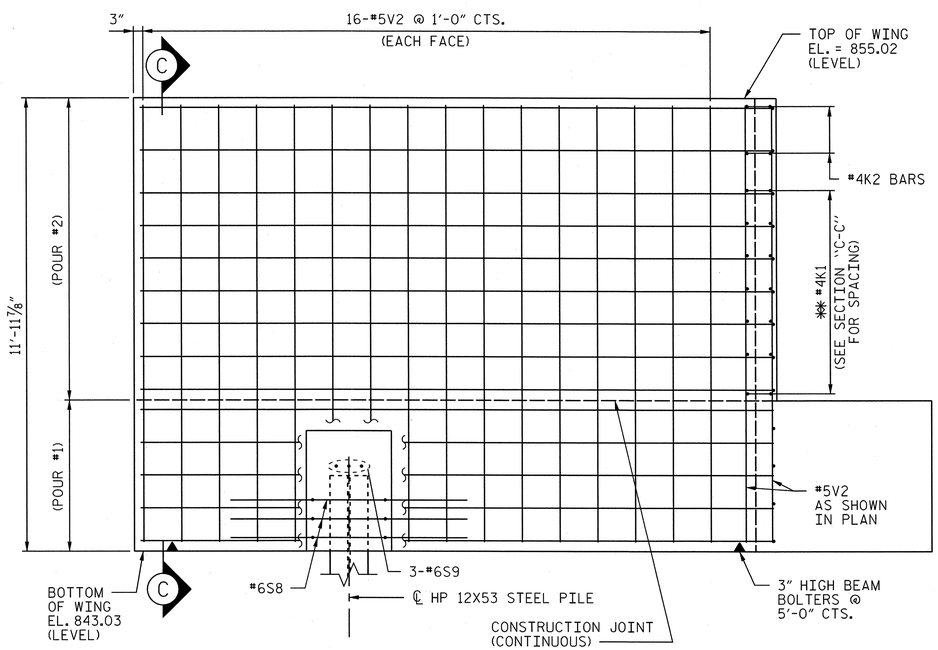

ELEVATION W1

✱✱ PLACE #4 'H' BARS TO MATCH #4K1 BARS IN BACKWALL

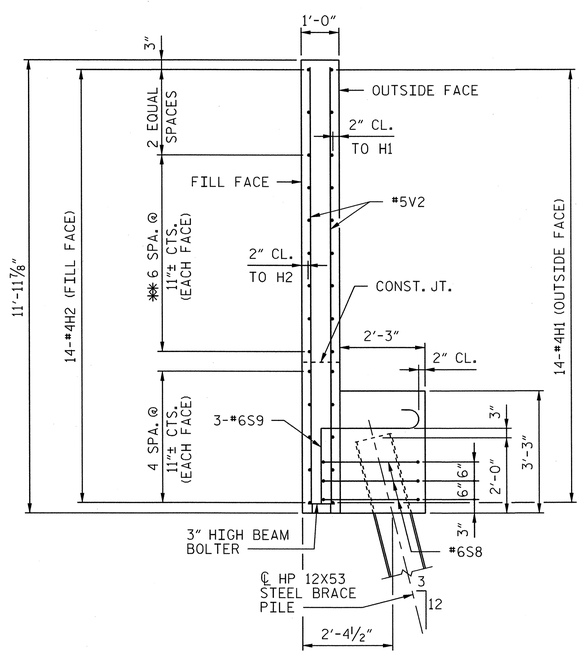

SECTION C-C

PROJECT NO. U-2525B

GUILFORD COUNTY

STATION: 26+17.64 -Y22-
85+41.17 -Y13-

SHEET 3 OF 5

AECOM
AECOM TECHNICAL SERVICES, INC.
701 CORPORATE CENTER DRIVE, SUITE 475
RALEIGH, NC 27607
(919) 854-6200 www.aecom.com
AECOM License No. F-0342

NORTH CAROLINA PROFESSIONAL SEAL 030474 ENGINEER JOHN C. MORRISON
3/25/14

R.N. 13-38

STATE OF NORTH CAROLINA
DEPARTMENT OF TRANSPORTATION
RALEIGH

SUBSTRUCTURE

END BENT 2
SECTIONS AND DETAILS

(LEFT LANE)

REVISIONS						SHEET NO.
NO.	BY:	DATE:	NO.	BY:	DATE:	S-490
1			3			TOTAL SHEETS
2			4			541

DRAWN BY : DDL DATE : 03/14
CHECKED BY : JCM DATE : 03/14

DATE: 3/25/2014
TIME: 10:35:31 AM

USER: bellsam
DGN: q:\60079358\400_Technical_Information_Disc_Files\450_NCDOT\SiteTech\Bellsam\FileS\Structures\Bridge \ACadd\U2525B_SD_DSN_JI46_END_BENT_2_3.dgn

NOTES:

SEE SHEET 2 OF 5 FOR NOTES.

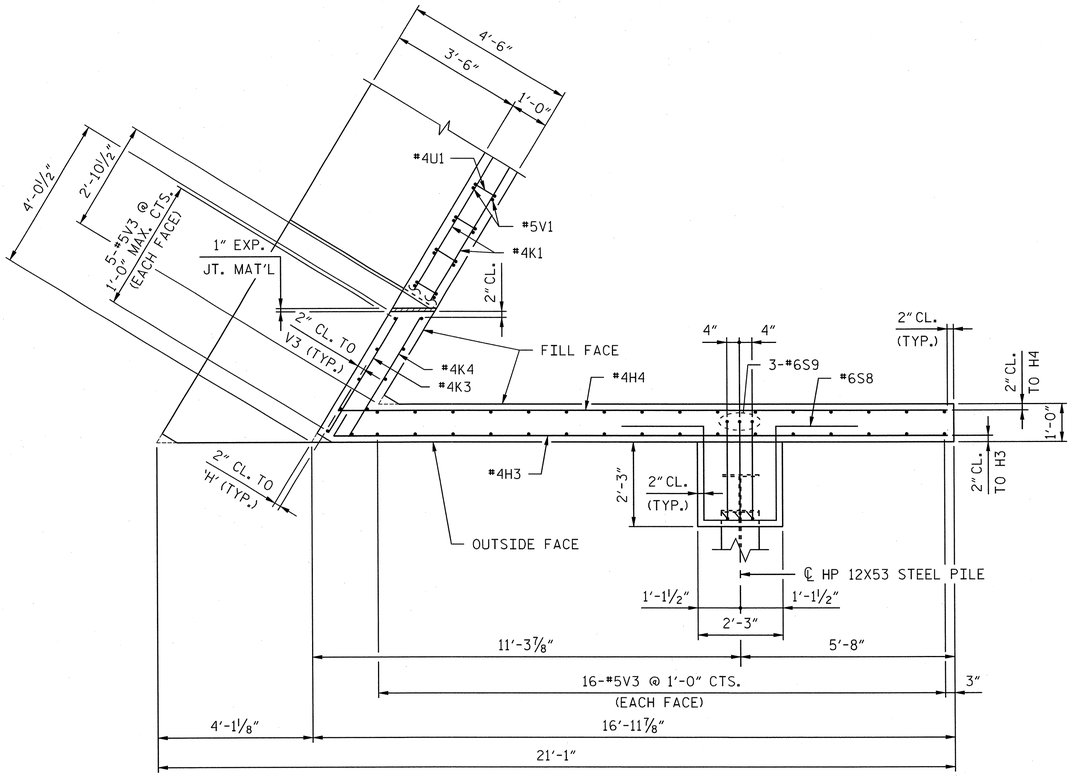

PLAN W2

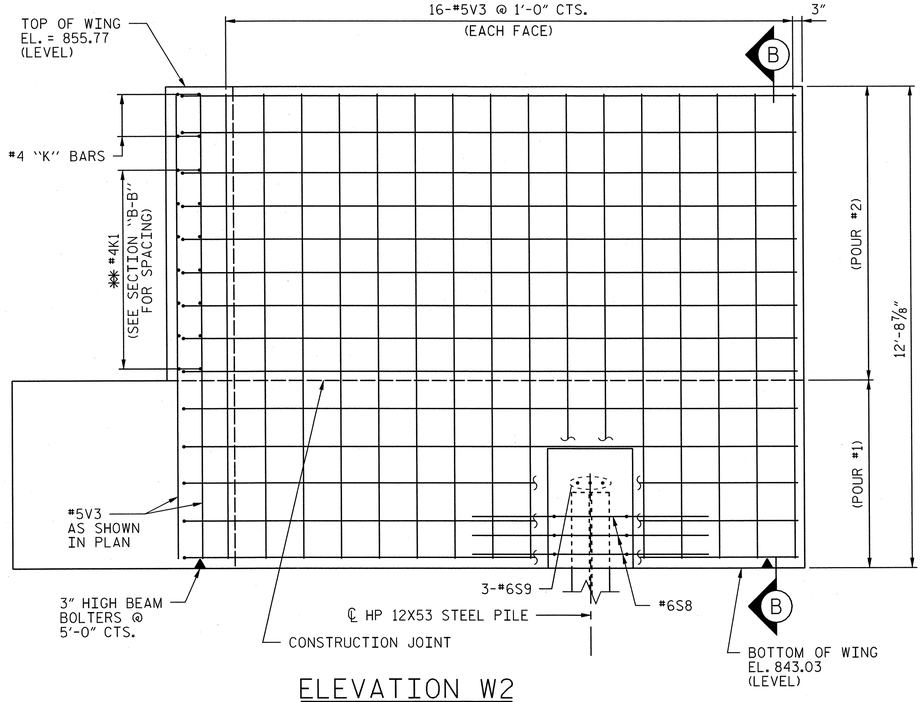

ELEVATION W2

✱✱ PLACE #4 'H' BARS TO MATCH #4K2 BARS IN BACKWALL

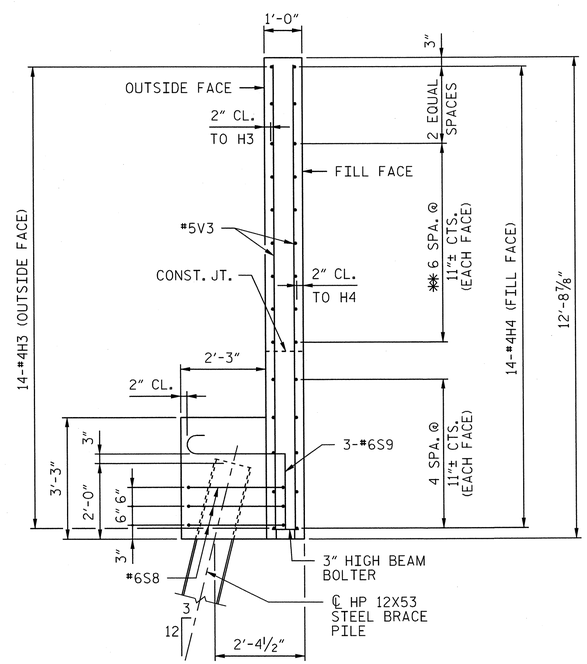

SECTION B-B

PROJECT NO. U-2525B

GUILFORD COUNTY

STATION: 26+17.64 -Y22-
85+41.17 -Y13-

SHEET 4 OF 5

AECOM

AECOM TECHNICAL SERVICES, INC.
701 CORPORATE CENTER DRIVE, SUITE 475
RALEIGH, NC 27607
(919) 854-6200 www.aecom.com
AECOM License No. F-0342

NORTH CAROLINA PROFESSIONAL SEAL 030474 ENGINEER JOHN C. MORRISON
3/25/14

R.N. 13-39

STATE OF NORTH CAROLINA
DEPARTMENT OF TRANSPORTATION
RALEIGH

SUBSTRUCTURE

END BENT 2
SECTIONS AND DETAILS

(LEFT LANE)

REVISIONS							SHEET NO.
NO.	BY:	DATE:	NO.	BY:	DATE:		S-491
1			3				TOTAL SHEETS
2			4				541

DRAWN BY : DDL DATE : 03/14
CHECKED BY : JCM DATE : 03/14

DATE: 3/25/2014
TIME: 1:06:32 PM

USER: bellisim
DGN: QA\02725356v400_Technical_Information_Disc_Files\450_NCDOT\StdTechDesignFiles\Structures\Bridge 140\dd\U2525B_SD_DSN_JH6_END_BENT_2_44.dgn

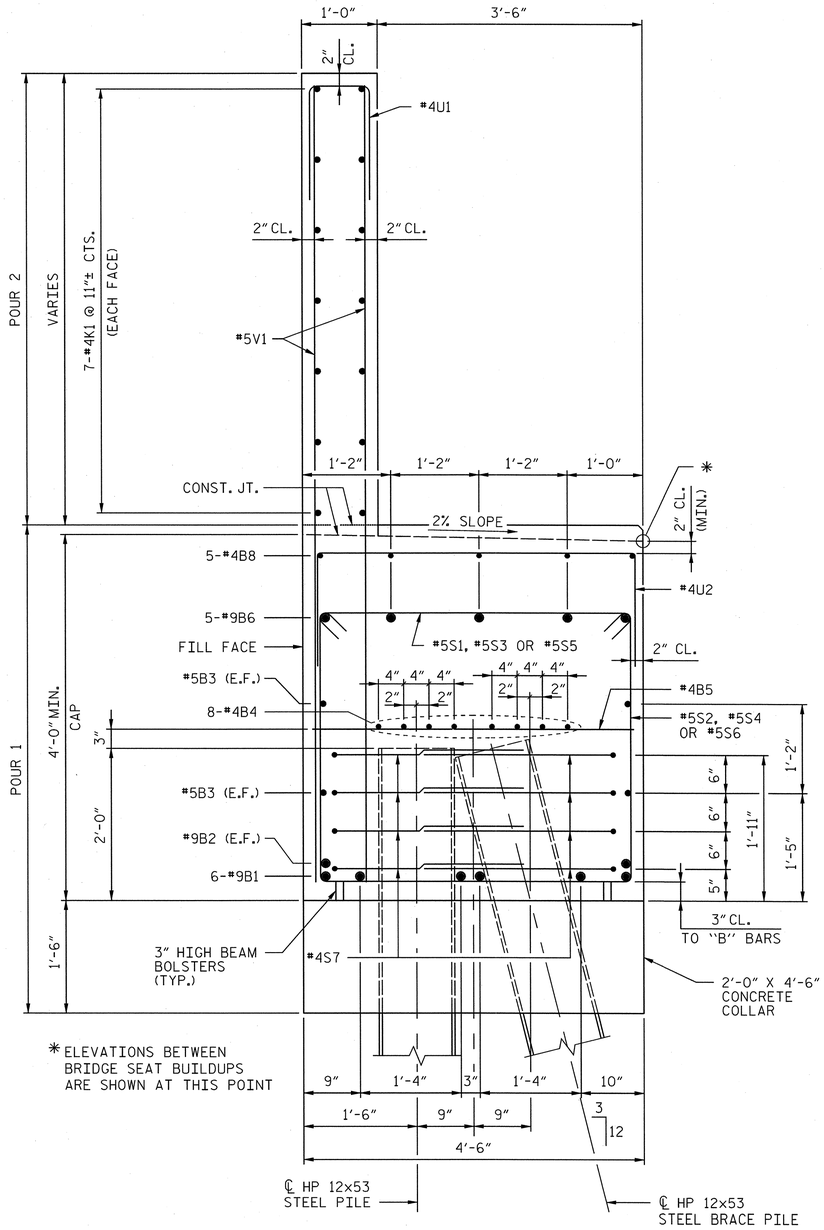

SECTION "A-A"

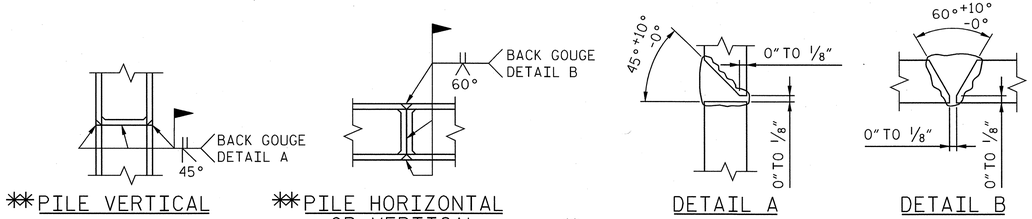

**PILE VERTICAL

**PILE HORIZONTAL OR VERTICAL

DETAIL A

DETAIL B

**POSITION OF PILE DURING WELDING.

PILE SPLICE DETAILS

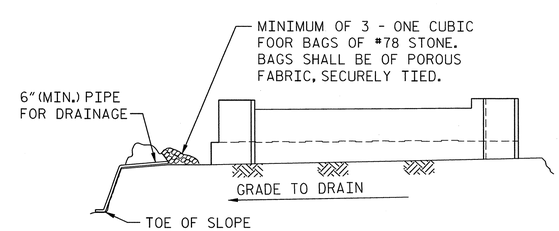

BAGGED STONE AND PIPE SHALL BE PLACED IMMEDIATELY AFTER COMPLETION OF END BENT EXCAVATION. PIPE MAY BE EITHER CONCRETE, CORRUGATED STEEL, CORRUGATED ALUMINUM ALLOY, OR CORRUGATED PLASTIC. PERFORATED PIPE WILL NOT BE ALLOWED.

BAGGED STONE SHALL REMAIN IN PLACE UNTIL THE ENGINEER DIRECTS THAT IT BE REMOVED. THE CONTRACTOR SHALL REMOVE AND DISPOSE OF SILT ACCUMULATIONS AT BAGGED STONE WHEN SO DIRECTED BY THE ENGINEER. BAGS SHALL BE REMOVED AND REPLACED WHENEVER THE ENGINEER DETERMINES THAT THEY HAVE DETERIORATED AND LOST THEIR EFFECTIVENESS.

NO SEPARATE PAYMENT WILL BE MADE FOR THIS WORK AND THE ENTIRE COST OF THIS WORK SHALL BE INCLUDED IN THE UNIT CONTRACT PRICE FOR THE SEVERAL PAY ITEMS.

TEMPORARY DRAINAGE AT END BENT

BAR TYPES

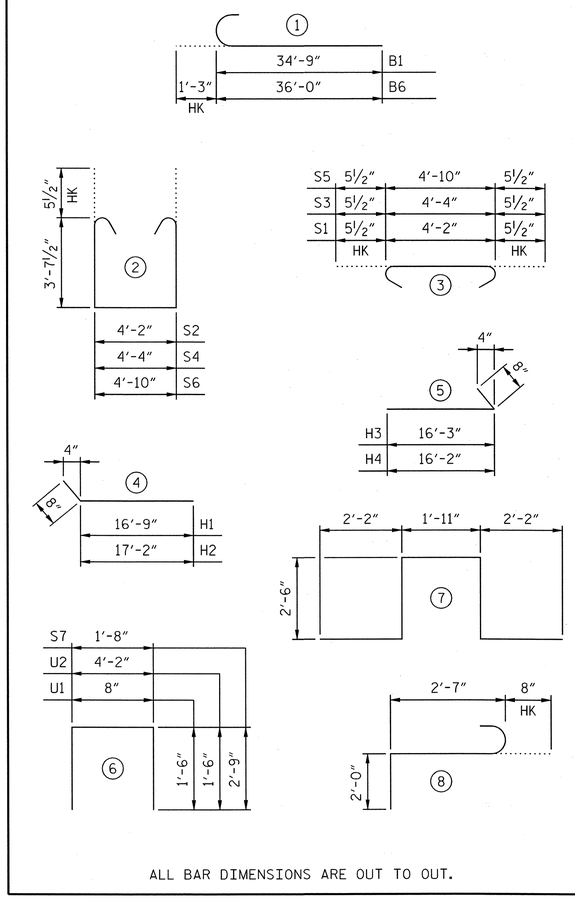

ALL BAR DIMENSIONS ARE OUT TO OUT.

BILL OF MATERIAL

END BENT 2

BAR	NO.	SIZE	TYPE	LENGTH	WEIGHT
B1	12	#9	1	36'-0"	1469
B2	4	#9	STR	34'-9"	473
B3	8	#5	STR	33'-0"	275
B4	24	#4	STR	22'-7"	362
B5	16	#4	STR	4'-2"	45
B6	10	#9	1	37'-3"	1267
B7	42	#4	STR	3'-8"	103
B8	5	#4	STR	26'-7"	89
H1	14	#4	4	17'-5"	163
H2	14	#4	4	17'-10"	167
H3	14	#4	5	16'-11"	158
H4	14	#4	5	16'-10"	157
K1	42	#4	STR	22'-7"	634
K2	4	#4	STR	4'-7"	12
K3	2	#4	STR	3'-7"	5
K4	2	#4	STR	3'-8"	5
S1	82	#5	3	5'-1"	435
S2	82	#5	2	12'-4"	1055
S3	2	#5	3	5'-3"	11
S4	2	#5	2	12'-6"	26
S5	2	#5	3	5'-9"	12
S6	2	#5	2	13'-0"	27
S7	72	#4	6	7'-2"	345
S8	6	#6	7	11'-3"	101
S9	6	#6	8	5'-3"	47
U1	54	#4	6	3'-8"	132
U2	42	#4	6	7'-2"	201
V1	108	#5	STR	9'-7"	1080
V2	44	#5	STR	11'-7"	532
V3	42	#5	STR	12'-4"	540

TOTAL REINFORCING STEEL	LBS.	9928
CLASS A CONCRETE		
POUR 1 (COLLAR, CAP & LOWER WING)	C.Y.	60.5
POUR 2 (BACKWALL & UPPER WING)	C.Y.	24.0
TOTAL	C.Y.	84.5
HP 12x53 STEEL PILES	NO.	20
	LIN. FT.	870

PROJECT NO. U-2525B

GUILFORD COUNTY

STATION: 26+17.64 -Y22-
85+41.17 -Y13-

SHEET 5 OF 5

AECOM
AECOM TECHNICAL SERVICES, INC.
701 CORPORATE CENTER DRIVE, SUITE 475
RALEIGH, NC 27607
(919) 854-6200 www.aecom.com
AECOM License No. F-0342

NORTH CAROLINA PROFESSIONAL SEAL 030474 ENGINEER JOHN C. MORRISON
3/25/14

R.N. 13-40

STATE OF NORTH CAROLINA
DEPARTMENT OF TRANSPORTATION
RALEIGH

SUBSTRUCTURE

END BENT 2
SECTIONS AND DETAILS
(LEFT LANE)

REVISIONS						SHEET NO.
NO.	BY:	DATE:	NO.	BY:	DATE:	S-492
1			3			TOTAL SHEETS
2			4			541

DRAWN BY : DDL DATE : 03/14
CHECKED BY : JCM DATE : 03/14

DATE: 3/25/2014
TIME: 1:02:52 PM

USER: kellsam
DGN: Q:\60279356\400_Technical_Information_Disc_Files\450_NCDOT STATE\TechDesignFiles\Structures\Bridge 1\Code\U2525B_SD_DSN_U46_END_BENT_2_5.dgn

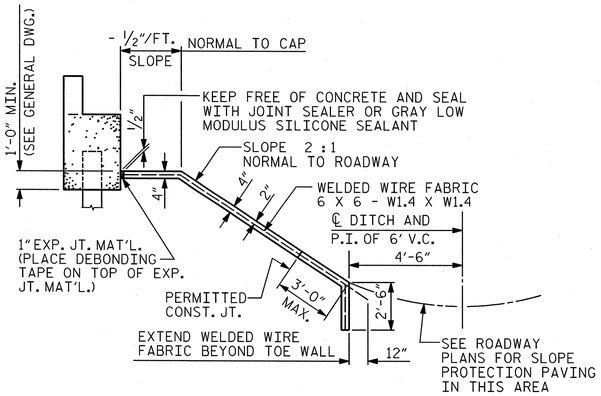

SECTION ALONG ℄ ROADWAY WHEN FILL CATCHES IN DITCH

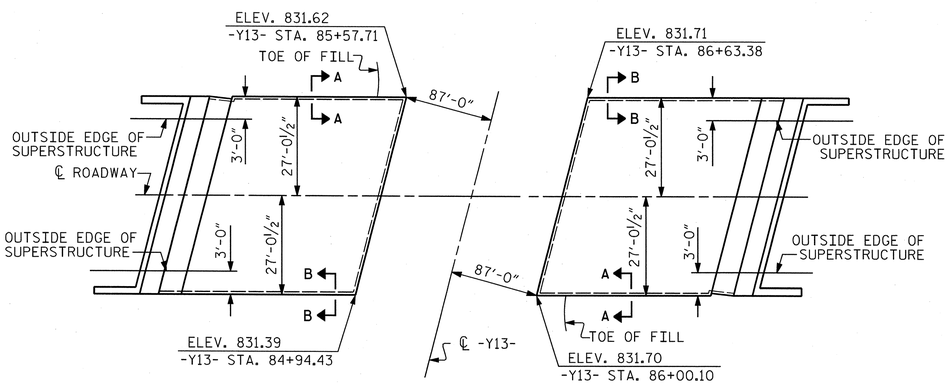

PLAN

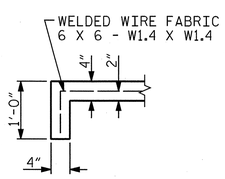

SECTION A-A

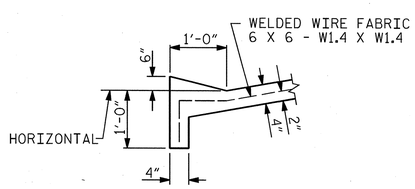

SECTION B-B

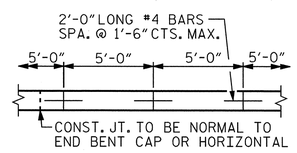

STRIP WIDTHS MAY VARY IN CURVED PORTION.

POURING DETAIL

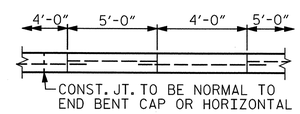

POUR A 4'-0" STRIP FIRST. STRIP WIDTHS MAY VARY IN CURVED PORTION.

OPTIONAL POURING DETAIL

NOTES:

SLOPE PROTECTION SHALL BE PLACED UNDER THE ENDS OF THE BRIDGE AS SHOWN IN THE DETAILS. MEASUREMENT AND PAYMENT SHALL BE AS PRESCRIBED IN SECTION 462 OF THE STANDARD SPECIFICATIONS. FOR BERM WIDTH, SEE GENERAL DRAWING.

SLOPE PROTECTION SHALL CONSIST OF 4" POURED-IN-PLACE CONCRETE PAVING AS SHOWN IN THE DETAILS ON THIS SHEET. CONCRETE SHALL BE CLASS "B". THE CONCRETE SURFACE SHALL BE FLOATED WITH A WOODEN FLOAT AND FINISHED. WELDED WIRE FABRIC REINFORCING SHALL BE 6 X 6 - W1.4 X W1.4, 60" WIDE. SLOPE PROTECTION SHALL BE POURED IN 5' STRIPS AS SHOWN IN THE "POURING DETAIL" WITH 2'-0" LONG #4 BARS PLACED ALONG THE SLOPE BETWEEN STRIPS AT 1'-6" MAXIMUM SPACING. SLOPE PROTECTION MAY BE POURED IN ALTERNATE 4' AND 5' STRIPS AS SHOWN IN THE "OPTIONAL POURING DETAIL" WITH ADJACENT RUNS OF WELDED WIRE FABRICLAPPING AT LEAST 6". THE COST OF THE WELDED WIRE FABRIC AND #4 BARS, IF USED, SHALL BE INCLUDED IN THE CONTRACT UNIT PRICE BID PER SQUARE YARD FOR SLOPE PROTECTION.

BRIDGE @ STA. 26+17.64 -Y22-	4" INCH SLOPE PROTECTION	* WELDED WIRE FABRIC 60 INCHES WIDE
	SQUARE YARDS	APPROX. L.F.
END BENT 1	204	368
END BENT 2	225	405

* QUANTITY SHOWN IS BASED ON 5' POURS.

PROJECT NO. U-2525B
GUILFORD COUNTY
STATION: 26+17.64 -Y22-
85+41.17 -Y13-
SHEET 1 OF 2

AECOM
AECOM TECHNICAL SERVICES, INC.
701 CORPORATE CENTER DRIVE, SUITE 475
RALEIGH, NC 27607
(919) 854-6200 www.aecom.com
AECOM License No. F-0342

NORTH CAROLINA PROFESSIONAL SEAL 030474 ENGINEER JOHN C. MORRISON
3/25/14
R.N. 13-41

STATE OF NORTH CAROLINA
DEPARTMENT OF TRANSPORTATION
RALEIGH

STANDARD

SLOPE PROTECTION DETAILS

REVISIONS						
NO.	BY:	DATE:	NO.	BY:	DATE:	
1			3			
2			4			

SHEET NO. S-493
TOTAL SHEETS 541

STD. NO. SP1

ASSEMBLED BY :	DDL	DATE :	03/14
CHECKED BY :	JCM	DATE :	03/14
DRAWN BY : ELR 5/92	REV. 5/1/06	TLA/GM	
CHECKED BY : GRP 6/92	REV. 10/1/11	MAA/GM	
	REV. 12/21/11	MAA/GM	

DATE: 3/25/2014
TIME: 12:42:22 PM

USER: bellsem
DGN: 0:\5207935\X400_Technical_Information_Disc_Files\450_NCDOT Staff and Design Files\Structures\Bridge 1\Code\U2525B_SD_DSN_1\46_SLOPE_PROTECTION_1.dgn

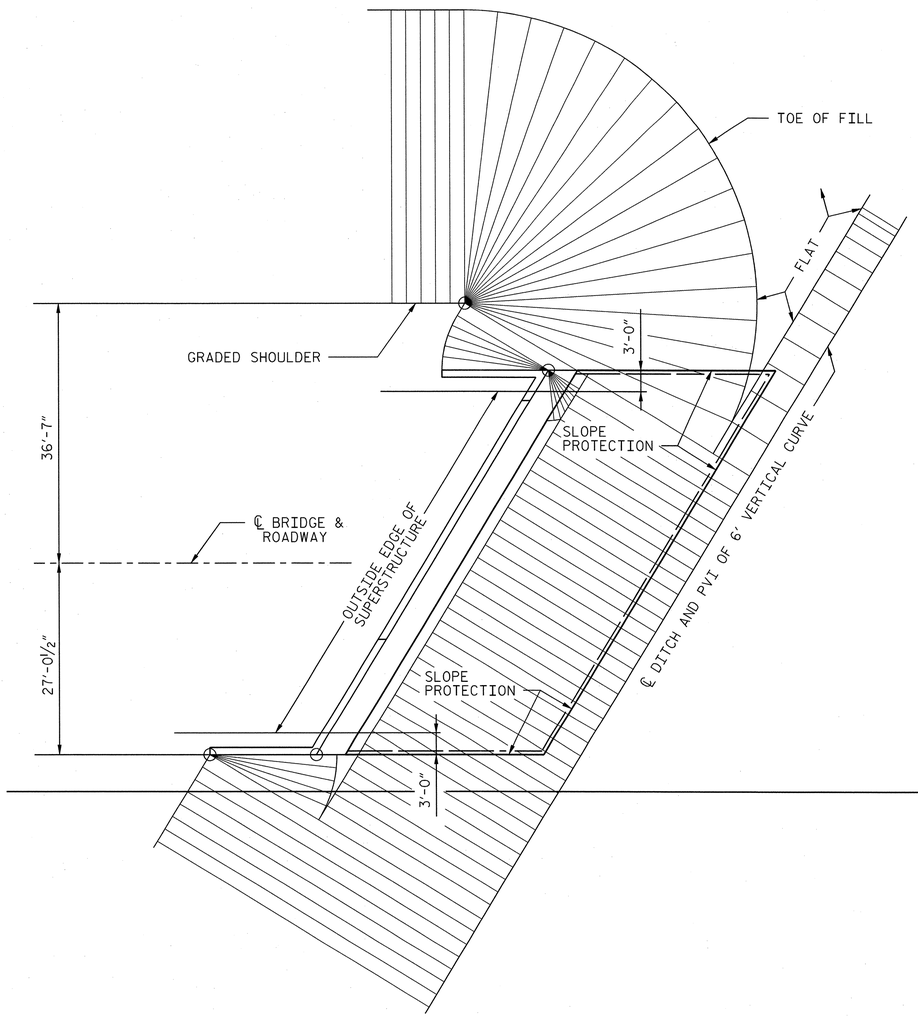

END BENT 1

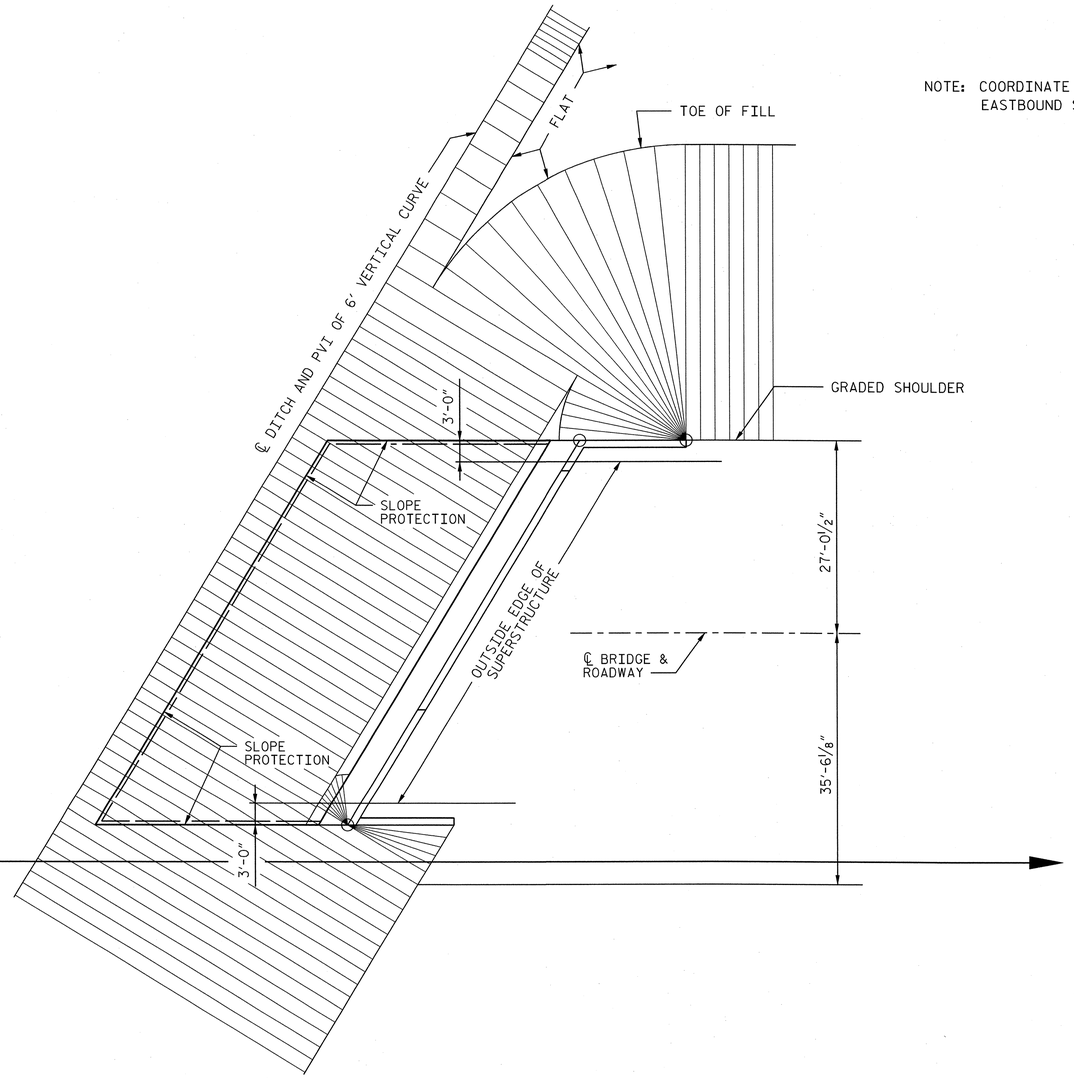

END BENT 2

NOTE: COORDINATE GRADING WITH EASTBOUND STRUCTURE.

PLAN - END BENT WITH SWEPT BACK WINGS - SKEWED

(2:1 SLOPE)

PROJECT NO. U-2525B

GUILFORD **COUNTY**

STATION: 26+17.64 -Y22-

85+41.17 -Y13-

SHEET 2 OF 2

ASSEMBLED BY : ZSP		DATE : 03/14	
CHECKED BY : JCM		DATE : 03/14	
DRAWN BY : WJH 10/88	REV. 7/17/98	REK/RWW	
CHECKED BY : FCJ 10/88	REV. 5/1/06	TLA/GM	
	REV. 10/1/11	MAA/GM	

AECOM
AECOM TECHNICAL SERVICES, INC.
701 CORPORATE CENTER DRIVE, SUITE 475
RALEIGH, NC 27607
(919) 854-6200 www.aecom.com
AECOM License No. F-0342

NORTH CAROLINA PROFESSIONAL SEAL 030474 ENGINEER JOHN C. MORRISON
3/25/14

R.N. 13-42

STATE OF NORTH CAROLINA
DEPARTMENT OF TRANSPORTATION
RALEIGH

STANDARD

SLOPE PROTECTION DETAILS

REVISIONS						SHEET NO.
NO.	BY:	DATE:	NO.	BY:	DATE:	S-494
1			3			TOTAL SHEETS
2			4			541

STD. NO. SP2

USER: bellsam
DGN: q:\60079335\400_Technical_Information_Disc_Files\450_NCDOT Std Tech Dwg\InFiles\Structures\Bridge 14\Cad\U2525B_SD_DSN_LI46_SLOPE_PROTECTION_2.dgn
DATE: 3/25/2014
TIME: 1:06:44 PM

NOTES

APPROACH SLAB SHALL NOT BE CONSTRUCTED PRIOR TO COMPLETION OF THE BRIDGE DECK.

FOR REINFORCED BRIDGE APPROACH FILL INCLUDING GEOTEXTILE, IMPERMEABLE GEOMEMBRANE, 4" Ø DRAINAGE PIPE, #78M STONE, AND SELECT MATERIAL, SEE ROADWAY PLANS.

AREA BETWEEN THE WINGWALL AND APPROACH SLAB SHALL BE GRADED TO DRAIN THE WATER AWAY FROM THE FILL FACE OF THE BRIDGE AND SHALL BE PAVED. SEE ROADWAY PLANS.

THE JOINT SHALL BE SAWED PRIOR TO THE CASTING OF THE BARRIER RAIL OR PARAPET AND END POST.

WITH FOAM JOINT SEAL

FOR FOAM JOINT SEALS, SEE SPECIAL PROVISIONS.

THE NOMINAL UNCOMPRESSED SEAL WIDTH OF THE FOAM JOINT SEAL SHALL BE 2".

FOR ELASTOMERIC CONCRETE, SEE SPECIAL PROVISIONS.

BAR TYPES

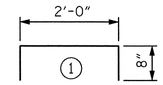

ALL BAR DIMENSIONS ARE OUT TO OUT.

BILL OF MATERIAL
APPROACH SLAB AT EB #1

BAR	NO.	SIZE	TYPE	LENGTH	WEIGHT
* A1	50	#4	STR	27'-11"	932
A2	52	#4	STR	27'-9"	964
* B1	92	#5	STR	24'-8"	2367
B2	92	#6	STR	24'-8"	3409
* B3	4	#4	STR	24'-8"	66
* G1	25	#4	STR	6'-1"	102
* U1	8	#4	1	3'-4"	18
REINFORCING STEEL				LBS.	4373
* EPOXY COATED REINFORCING STEEL				LBS.	3485
CLASS AA CONCRETE					
POUR 1 SLAB				C. Y.	50.0
POUR 2 SIDEWALK				C. Y.	3.0
CLASS AA CONCRETE				C. Y.	53.0

BILL OF MATERIAL
APPROACH SLAB AT EB #2

BAR	NO.	SIZE	TYPE	LENGTH	WEIGHT
* A1	50	#4	STR	27'-11"	932
A2	52	#4	STR	27'-9"	964
* B1	92	#5	STR	24'-8"	2367
B2	92	#6	STR	24'-8"	3409
* B3	4	#4	STR	24'-8"	66
* G1	25	#4	STR	6'-1"	102
* U1	8	#4	1	3'-4"	18
REINFORCING STEEL				LBS.	4373
* EPOXY COATED REINFORCING STEEL				LBS.	3485
CLASS AA CONCRETE					
POUR 1 SLAB				C. Y.	50.0
POUR 2 SIDEWALK				C. Y.	3.0
CLASS AA CONCRETE				C. Y.	53.0

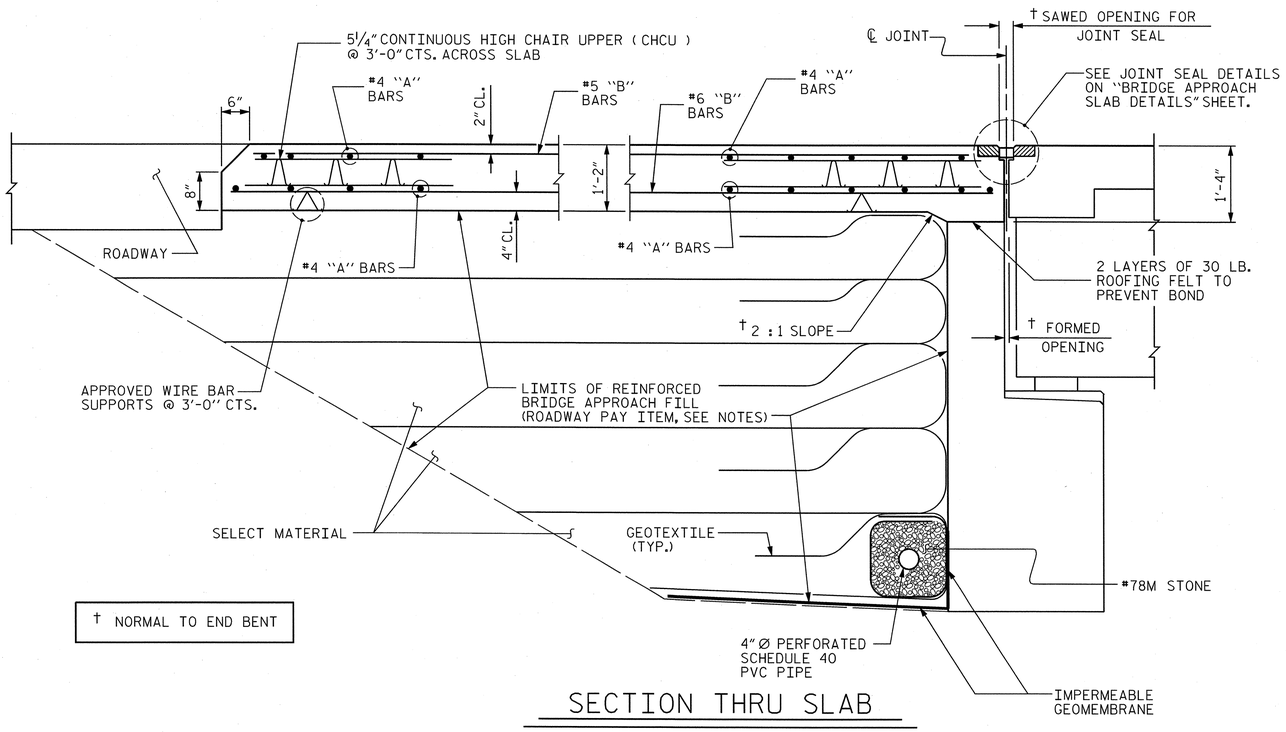

† NORMAL TO END BENT

SECTION THRU SLAB

SPLICE LENGTHS

BAR SIZE	EPOXY COATED	UNCOATED
#4	2'-0"	1'-9"
#5	2'-6"	2'-2"
#6	3'-10"	2'-7"

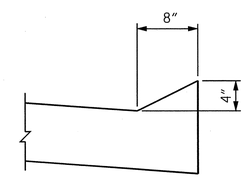

SECTION N-N

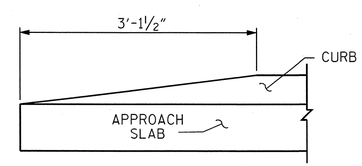

END OF CURB WITHOUT SHOULDER BERM GUTTER

CURB DETAILS

PROJECT NO. U-2525B
GUILFORD COUNTY
STATION: 26+17.64 -Y22-
85+41.17 -Y13-

SHEET 1 OF 4

AECOM
AECOM TECHNICAL SERVICES, INC.
701 CORPORATE CENTER DRIVE, SUITE 475
RALEIGH, NC 27607
(919) 854-6200 www.aecom.com
AECOM License No. F-0342

NORTH CAROLINA PROFESSIONAL SEAL 030474 ENGINEER JOHN C. MORRISON
3/25/14
R.N. 13-43

STATE OF NORTH CAROLINA
DEPARTMENT OF TRANSPORTATION
RALEIGH

STANDARD

BRIDGE APPROACH SLAB FOR FLEXIBLE PAVEMENT

(LEFT LANE)

REVISIONS						SHEET NO.
NO.	BY:	DATE:	NO.	BY:	DATE:	S-495
1			3			TOTAL SHEETS
2			4			541

STD. NO. BAS2

ASSEMBLED BY : DDL		DATE : 03/14	
CHECKED BY : JCM		DATE : 03/14	
DRAWN BY : EEM 3/95	REV. 10/1/11	MAA/GM	
CHECKED BY : VAP 3/95	REV. 12/21/11	MAA/GM	
	REV. 6/13	MAA/GM	

USER: williams
DGN: S:\0UD\9350\400_Technical_Information_Disc_Files\450_NCDOT\SHTechDesignFiles\Structures\Bridge 14\Cadd\U2525B_SD_DSN_U46_AppSlab.dgn
DATE: 3/25/2014
TIME: 10:54:40 PM

NOTES:

DIMENSIONS SHOWN ARE TYPICAL FOR BOTH APPROACH SLABS.

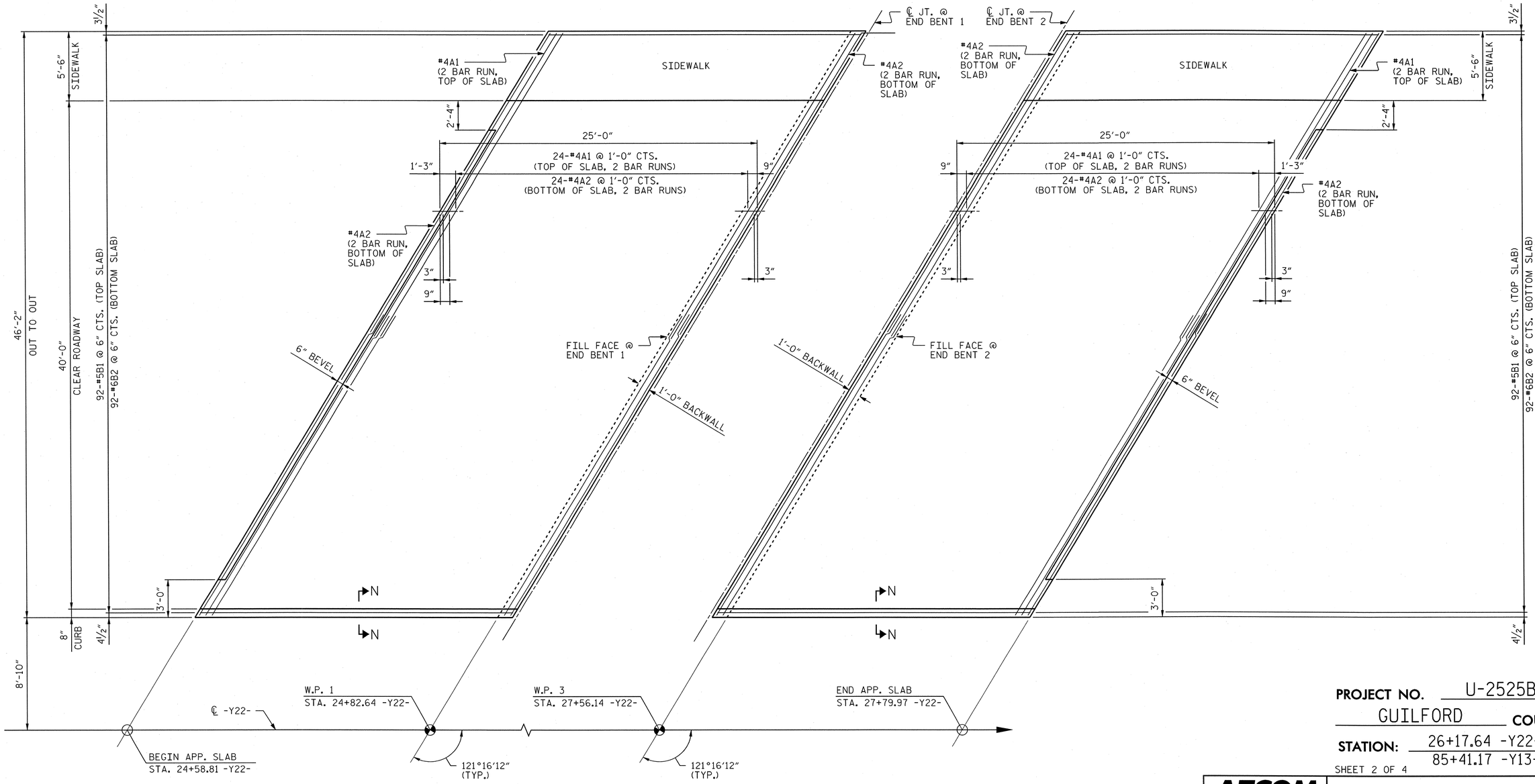

PLAN @ END BENT 1

PLAN @ END BENT 2

PROJECT NO. U-2525B

GUILFORD COUNTY

STATION: 26+17.64 -Y22-
85+41.17 -Y13-

SHEET 2 OF 4

AECOM

AECOM TECHNICAL SERVICES, INC.
701 CORPORATE CENTER DRIVE, SUITE 475
RALEIGH, NC 27607
(919) 854-6200 www.aecom.com
AECOM License No. F-0342

NORTH CAROLINA PROFESSIONAL SEAL 030474 ENGINEER JOHN C. MORRISON
3/25/14

R.N. 13-44

STATE OF NORTH CAROLINA
DEPARTMENT OF TRANSPORTATION
RALEIGH

BRIDGE APPROACH SLAB FOR FLEXIBLE PAVEMENT

(LEFT LANE)

REVISIONS						SHEET NO.
NO.	BY:	DATE:	NO.	BY:	DATE:	S-496
1			3			TOTAL SHEETS
2			4			541

DRAWN BY : DDL DATE : 03/14
CHECKED BY : JCM DATE : 03/14

DATE: 3/25/2014
TIME: 11:36:38 AM

USER: bellidim
DGN: O:\60279350\400_Technical_Information_Disc_Files\450_NCDOT Staff tech Design Files\Structures\Bridge 1\Cost\U2525B_SD_DSN_1\46_AppSlab2.dgn

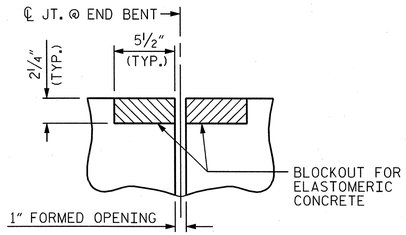

SECTION C-C

FOAM JOINT SEAL
(PRE-SAWED ELASTOMERIC
CONCRETE DIMENSIONS)

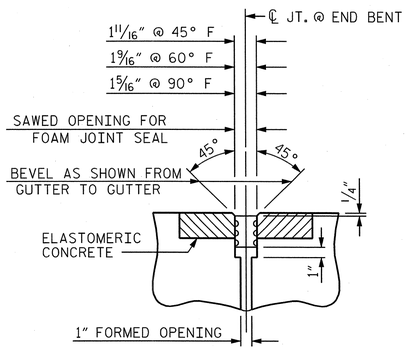

SECTION C-C

FOAM JOINT SEAL
(EXPANSION)

NOTE: JOINT OPENINGS ARE MEASURED PERPENDICULAR TO THE JOINT. THE NOMINAL UNCOMPRESSED SEAL WIDTH OF THE FOAM JOINT SEAL IS 2" AT E.B. 1 AND E.B. 2.

ELASTOMERIC CONCRETE	
END BENT NO.	ELASTOMERIC CONCRETE ✱ (CU. FT.)
1	8.76
2	8.76
TOTAL	17.52

✱ BASED ON THE MINIMUM BLOCKOUT SHOWN.

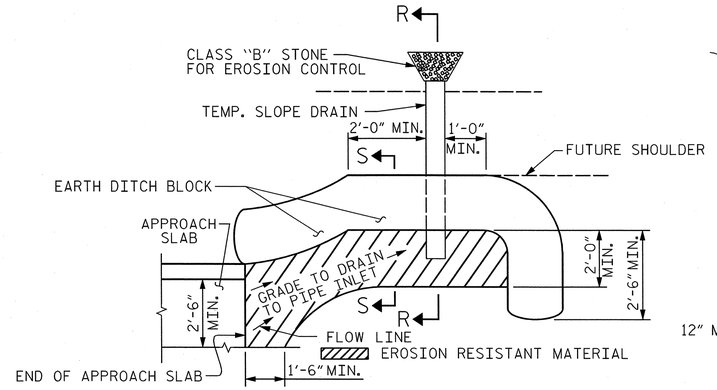

NOTE: IMMEDIATELY AFTER THE CONSTRUCTION OF THE APPROACH SLAB, THE CONTRACTOR SHALL PROVIDE TEMPORARY BERM AND SLOPE DRAIN. CONTRACTOR SHALL GRADE TO PIPE INLET AND PROVIDE EROSION RESISTANT MATERIAL AS SHOWN. THE EROSION RESISTANT MATERIAL SHALL BE EITHER 1) ASPHALT PLANT MIX, TYPE 1 OR TYPE 2, MIN. 2" DEPTH, 2) EROSION CONTROL MAT, OR 3) CONCRETE, AS DIRECTED BY THE ENGINEER. THE SLOPE DRAIN SHALL CONSIST OF A NON-PERFORATED TEMPORARY DRAINAGE PIPE, 12 INCHES IN DIAMETER.

PLAN VIEW

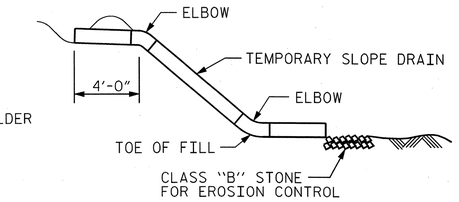

SECTION R-R

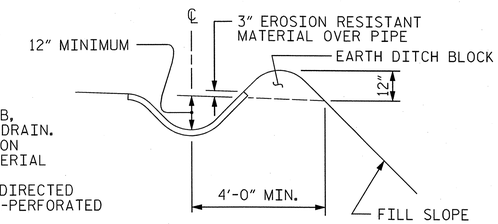

SECTION S-S

TEMPORARY BERM AND SLOPE DRAIN DETAILS

(TO BE USED WHEN SHOULDER BERM GUTTER IS REQUIRED)

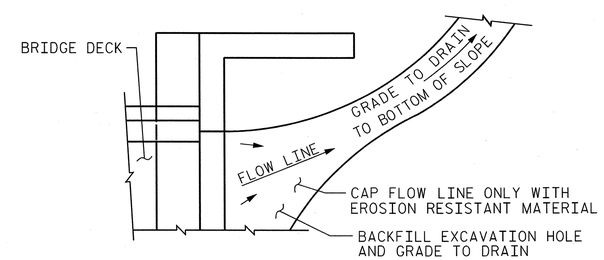

NOTE: IF THE APPROACH SLAB IS NOT CONSTRUCTED IMMEDIATELY AFTER THE BACKFILLING OF THE END BENT EXCAVATION, GRADE TO DRAIN TO THE BOTTOM OF THE SLOPE AND PROVIDE EROSION RESISTANT MATERIAL, SUCH AS FIBERGLASS ROVING OR AS DIRECTED BY THE ENGINEER TO PREVENT SOIL EROSION AND TO PROTECT THE AREA ADJACENT TO THE STRUCTURE. THE CONTRACTOR WILL BE REQUIRED TO REMOVE THESE MATERIALS PRIOR TO CONSTRUCTION OF THE APPROACH SLAB.

TEMPORARY DRAINAGE DETAIL

PROJECT NO. U-2525B
GUILFORD COUNTY
STATION: 26+17.64 -Y22-
85+41.17 -Y13-

SHEET 3 OF 4

AECOM
AECOM TECHNICAL SERVICES, INC.
701 CORPORATE CENTER DRIVE, SUITE 475
RALEIGH, NC 27607
(919) 854-6200
www.aecom.com
AECOM License No. F-0342

NORTH CAROLINA PROFESSIONAL SEAL 030474 ENGINEER JOHN C. MORRISON
3/25/14

R.N. 13-45

STATE OF NORTH CAROLINA
DEPARTMENT OF TRANSPORTATION
RALEIGH

STANDARD

BRIDGE APPROACH SLAB
DETAILS FOR FLEXIBLE PAVEMENT

(LEFT LANE)

REVISIONS						SHEET NO.
NO.	BY:	DATE:	NO.	BY:	DATE:	S-497
1			3			TOTAL SHEETS
2			4			541

STD. NO. BAS4

ASSEMBLED BY : DDL		DATE : 03/14	
CHECKED BY : JCM		DATE : 03/14	
DRAWN BY : FCJ 11/88	REV. 10/1/11	MAA/GM	
CHECKED BY : ARB 11/88	REV. 7/12	MAA/GM	
	REV. 6/13	MAA/GM	

USER: bellison
DGN: U:\2525B\3356\400_Technical_Information_Disc_Files\450_NCDOT Std Tech Design Files\Structures\Bridge 14\Cadd\U2525B_SD_DSN_U46_AppSlabDetails3.dgn
DATE: 3/25/2014
TIME: 1:25:27 PM

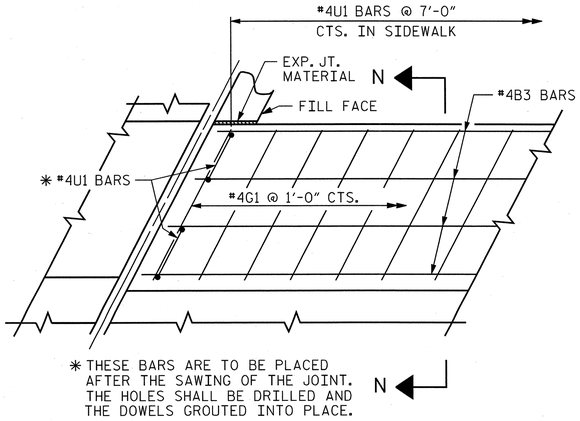

PLAN

DETAILS OF SIDEWALK ON APPROACH SLAB

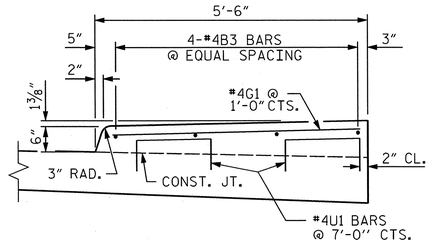

SECTION N-N

SIDEWALK DETAILS

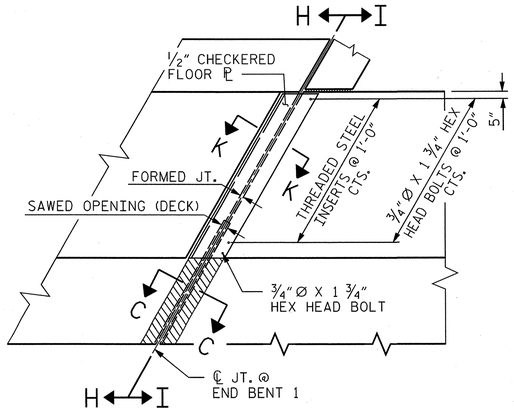

PLAN VIEW OF FOAM

JOINT SEAL @ END BENT FOR SIDEWALK

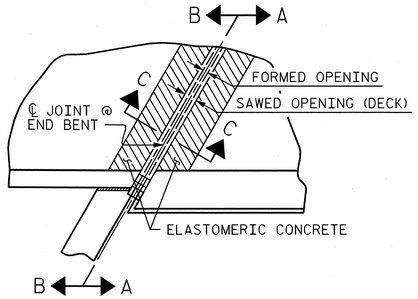

PLAN

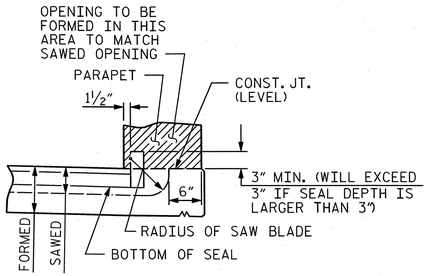

SECTION A-A

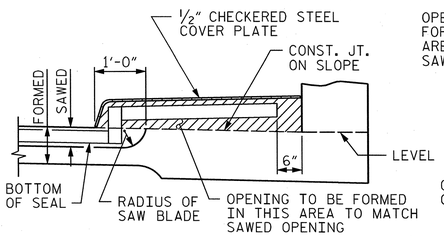

SECTION H-H

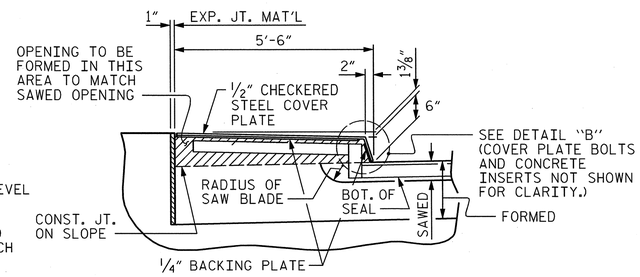

SECTION I-I

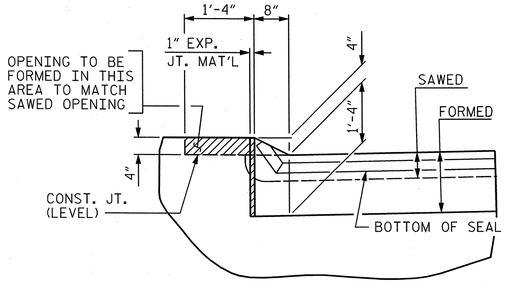

SECTION B-B

JOINT SEAL DETAILS @ END BENT

FOAM JOINT SEAL TO BE CUT, HEAT WELDED AND TURNED UP PARALLEL TO SLOPED FACE OF THE PARAPET.

THE JOINT SHALL BE SAWED PRIOR TO THE CASTING OF THE PARAPET.

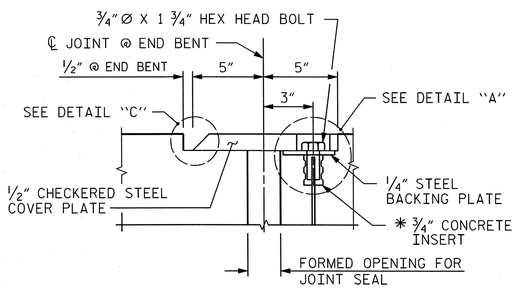

SECTION K-K

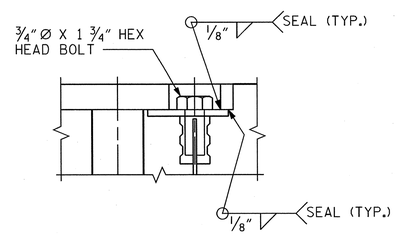

DETAIL "A"

*THE 3/4" CONCRETE INSERTS SHALL BE CLOSED-END FERRULES WITH LOOPED WIRE STRUTS ATTACHED TO THEM. THE INSERTS SHALL CONFORM TO AASHTO M169, GRADE 12L14 AND SHALL HAVE A TENSILE WORKING LOAD CAPACITY OF 3000 LBS.

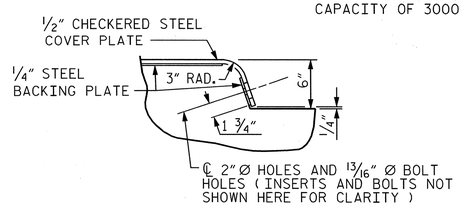

DETAIL "B"

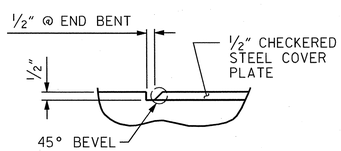

DETAIL "C"

JOINT SEAL DETAILS @ END BENT

THE STEEL PLATES SHALL CONFORM TO AASHTO M270 GRADE 36 OR APPROVED EQUAL. AFTER FABRICATION, THE PLATES SHALL BE COMMERCIALLY BLAST CLEANED AND EITHER COATED WITH A MINIMUM THICKNESS OF 4 MILS (DRY) OF ZINC-RICH PAINT, GALVANIZED OR METALLIZED TO A MINIMUM THICKNESS OF 6 MILS IN ACCORDANCE WITH THE STANDARD SPECIFICATIONS. FOR THERMAL SPRAYED COATINGS (METALLIZATION), SEE SPECIAL PROVISIONS.

THE 3/4" DIAMETER HEX HEAD BOLTS SHALL CONFORM TO ASTM F593 ALLOY 304 STAINLESS STEEL.

NO SEPARATE PAYMENT WILL BE MADE FOR FURNISHING AND INSTALLING THE COVER PLATE. THE ENTIRE COST OF THIS WORK SHALL BE INCLUDED IN THE LUMP SUM PRICE FOR "FOAM JOINT SEALS".

PROJECT NO. U-2525B
GUILFORD COUNTY
STATION: 26+17.64 -Y22-
85+41.17 -Y13-

SHEET 4 OF 4

AECOM
AECOM TECHNICAL SERVICES, INC.
701 CORPORATE CENTER DRIVE, SUITE 475
RALEIGH, NC 27607
(919) 854-6200 www.aecom.com
AECOM License No. F-0342

NORTH CAROLINA PROFESSIONAL SEAL 030474 ENGINEER JOHN C. MORRISON
3/25/14

R.N. 13-46

STATE OF NORTH CAROLINA
DEPARTMENT OF TRANSPORTATION
RALEIGH

STANDARD

BRIDGE APPROACH SLAB
DETAILS FOR FLEXIBLE PAVEMENT

(LEFT LANE)

REVISIONS						SHEET NO.
NO.	BY:	DATE:	NO.	BY:	DATE:	S-498
1			3			TOTAL SHEETS
2			4			541

STD. NO. BAS4

ASSEMBLED BY : DDL		DATE : 03/14	
CHECKED BY : JCM		DATE : 03/14	
DRAWN BY : FCJ	11/88	REV. 10/1/11	MAA/GM
CHECKED BY : ARB	11/88	REV. 7/12	MAA/GM
		REV. 6/13	MAA/GM

DATE: 3/25/2014
TIME: 1:35:06 PM

USER: bellsten
DGN: D:\SIDOT\3356\400_Technical_Information_Disc_Files\450_NCDOT Staff Tech Design Files\Structures\Bridge HAC\dd\U2525B_SD_DSN_HAC_AppSlabDetails4.dgn

SHEETS S-499 AND S-500 HAVE BEEN
INTENTIONALLY LEFT BLANK

PROJECT NO. U-2525B

GUILFORD COUNTY

STATION: 26+17.64 -Y22-
85+41.17 -Y13-

STATE OF NORTH CAROLINA
DEPARTMENT OF TRANSPORTATION
RALEIGH

REVISIONS							SHEET NO.
NO.	BY:	DATE:	NO.	BY:	DATE:		S-499
1			3				TOTAL SHEETS
2			4				541

DRAWN BY : _____ DATE : _____
CHECKED BY : _____ DATE : _____

USER: bellidgm
DGN: 0:\U2525\9350-V00_Technical_Information_Disc_Files\450_NCDOT Shf\techDesignFiles\Structures\Bridge HAOadd\U2525B_SD_DSH_UH6_S-499.dgn
DATE: 3/25/2014
TIME: 3:47:54 PM

SHEETS S-499 AND S-500 HAVE BEEN
INTENTIONALLY LEFT BLANK

PROJECT NO. U-2525B

GUILFORD COUNTY

STATION: 26+17.64 -Y22-
85+41.17 -Y13-

STATE OF NORTH CAROLINA
DEPARTMENT OF TRANSPORTATION
RALEIGH

REVISIONS						SHEET NO.
NO.	BY:	DATE:	NO.	BY:	DATE:	S-500
1			3			TOTAL SHEETS
2			4			541

DRAWN BY : _____ DATE : _____
CHECKED BY : _____ DATE : _____

DATE: 3/25/2014
TIME: 3:08:49 PM
USER: bellallen
DGN: 0:\60279356\400_Technical_Information_Disc_Files\450_NCDOT Staff\tech\Design Files\Structures\Bridge 14\Cad\U2525B_SD_DSN_U46_S-500.dgn

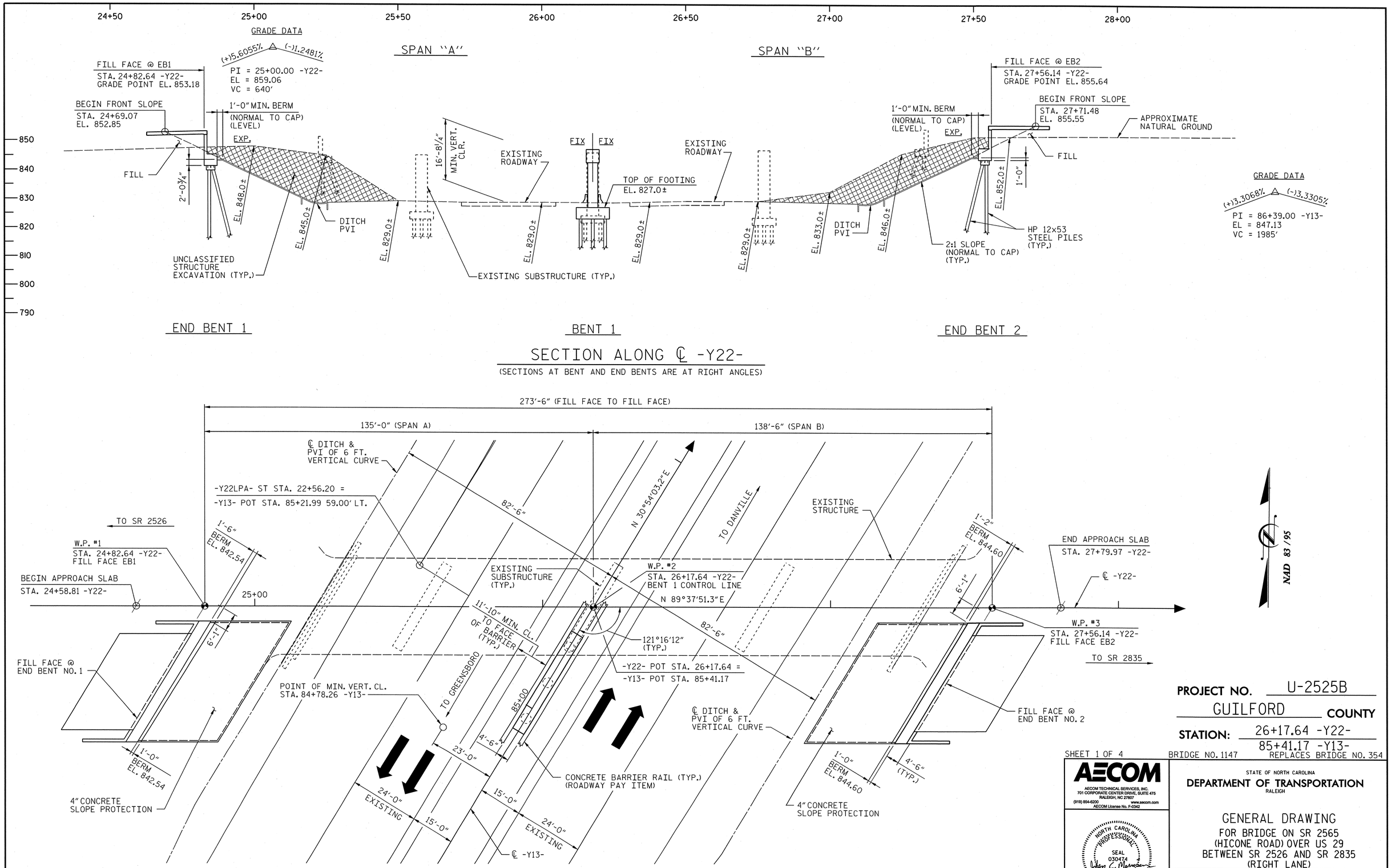

PROJECT NO. U-2525B

GUILFORD COUNTY

STATION: 26+17.64 -Y22-
85+41.17 -Y13-

SHEET 1 OF 4 BRIDGE NO. 1147 REPLACES BRIDGE NO. 354

AECOM
AECOM TECHNICAL SERVICES, INC.
701 CORPORATE CENTER DRIVE, SUITE 475
RALEIGH, NC 27607
(919) 854-6200 www.aecom.com
AECOM License No. F-0342

NORTH CAROLINA PROFESSIONAL SEAL 030474 ENGINEER JOHN C. MORRISON
12/13/13

STATE OF NORTH CAROLINA
DEPARTMENT OF TRANSPORTATION
RALEIGH

GENERAL DRAWING
FOR BRIDGE ON SR 2565
(HICONE ROAD) OVER US 29
BETWEEN SR 2526 AND SR 2835
(RIGHT LANE)

REVISIONS								SHEET NO.
NO.	BY:	DATE:	NO.	BY:	DATE:			S-501
1			3					TOTAL SHEETS
2			4					541

DRAWN BY : JWH DATE : 09/13
CHECKED BY : JCM DATE : 09/13

DATE: 12/9/2013
TIME: 1:07:39 PM

USER: Lowery
DGN: 0:\5025793350\400_Technical_Information_Disc_Files\450_NCDOT\SdfectDesignFiles\Structures\Bridge 15\Cadd\U2525B_SD_DSN_U47_GPE.dgn

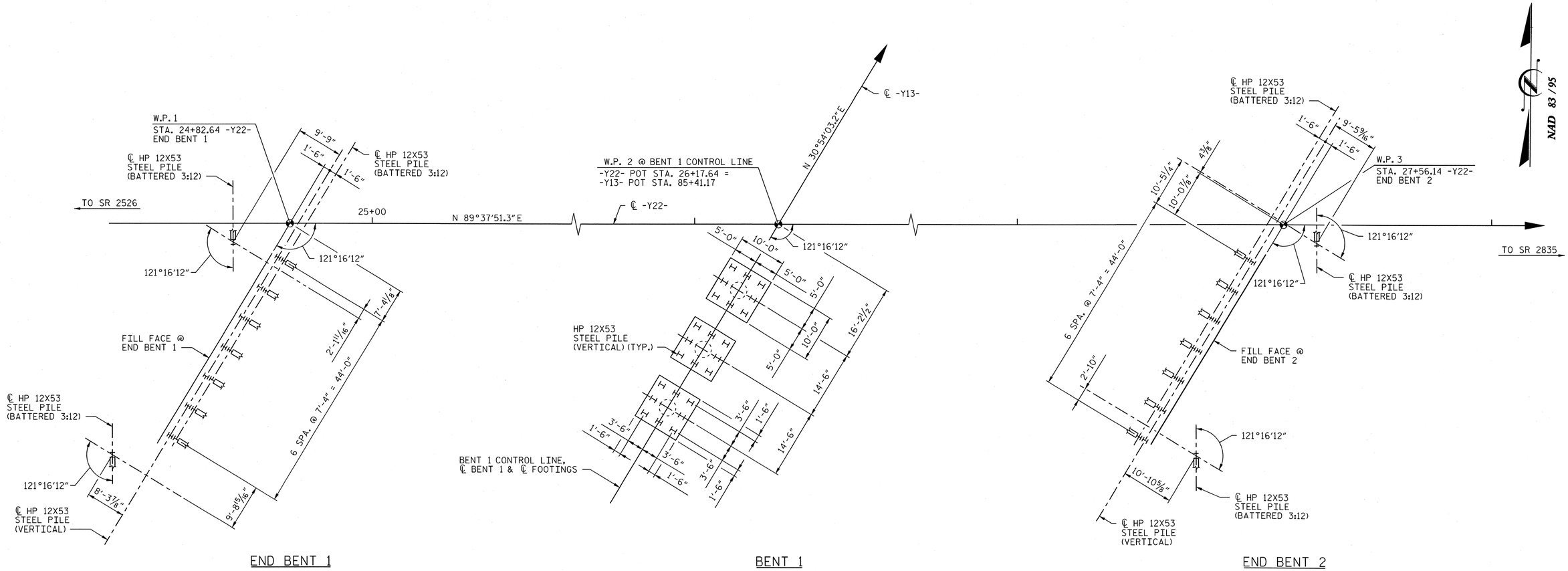

END BENT 1 BENT 1 END BENT 2

FOUNDATION LAYOUT

NOTES:

1. FOR PILES, SEE SECTION 450 OF THE STANDARD SPECIFICATIONS.
2. PILES AT END BENT NO. 1 AND END BENT NO. 2 ARE DESIGNED FOR A FACTORED RESISTANCE OF 100 TONS PER PILE.
3. DRIVE PILES AT END BENT NO. 1 AND END BENT NO. 2 TO A REQUIRED DRIVING RESISTANCE OF 167 TONS.
4. PILES AT BENT NO. 1 ARE DESIGNED FOR A FACTORED RESISTANCE OF 105 TONS PER PILE.
5. DRIVE PILES AT BENT NO. 1 TO A REQUIRED DRIVING RESISTANCE OF 175 TONS PER PILE.
6. STEEL H-PILE POINTS ARE REQUIRED AT BENT NO. 1. FOR STEEL PILE POINTS, SEE SECTION 450 OF THE STANDARD SPECIFICATIONS.

PROJECT NO. U-2525B
GUILFORD COUNTY
STATION: 26+17.64 -Y22-
85+41.17 -Y13-
SHEET 2 OF 4

AECOM
AECOM TECHNICAL SERVICES, INC.
701 CORPORATE CENTER DRIVE, SUITE 475
RALEIGH, NC 27607
(919) 854-6200 www.aecom.com
AECOM License No. F-0342

NORTH CAROLINA PROFESSIONAL SEAL 030474 ENGINEER JOHN C. MORRISON
12/13/13

STATE OF NORTH CAROLINA
DEPARTMENT OF TRANSPORTATION
RALEIGH

GENERAL DRAWING
FOR BRIDGE ON SR 2565
(HICONE ROAD) OVER US 29
BETWEEN SR 2526 AND SR 2835
(RIGHT LANE)

REVISIONS						SHEET NO.
NO.	BY:	DATE:	NO.	BY:	DATE:	S-502
						TOTAL SHEETS
						541

DRAWN BY : DDL DATE : 09/13
CHECKED BY : JCM DATE : 09/13

DATE: 12/9/2013
TIME: 1:08:15 PM

USER: lowery
DGN: U2525B_S35V400_Technical_Information_Disc_Files\450_NCDOT Std Tech Design Files\Structures\Bridge 15\Cadd\U2525B_S0_DSN_JHF_FOUNDLAY.dgn

BENCH MARK: BM-13 RAILROAD SPIKE SET IN 15" SWEET GUM,
651' LEFT OF STA. 68+91 -Y13-
COORDINATES: N 873689 E 1783288
ELEV. 783.79

BENCH MARK: BM-14 RAILROAD SPIKE SET IN 24" STUMP,
105' LEFT OF STA. 11+79 -Y22-
COORDINATES: N 874866 E 1783255
ELEV. 829.24

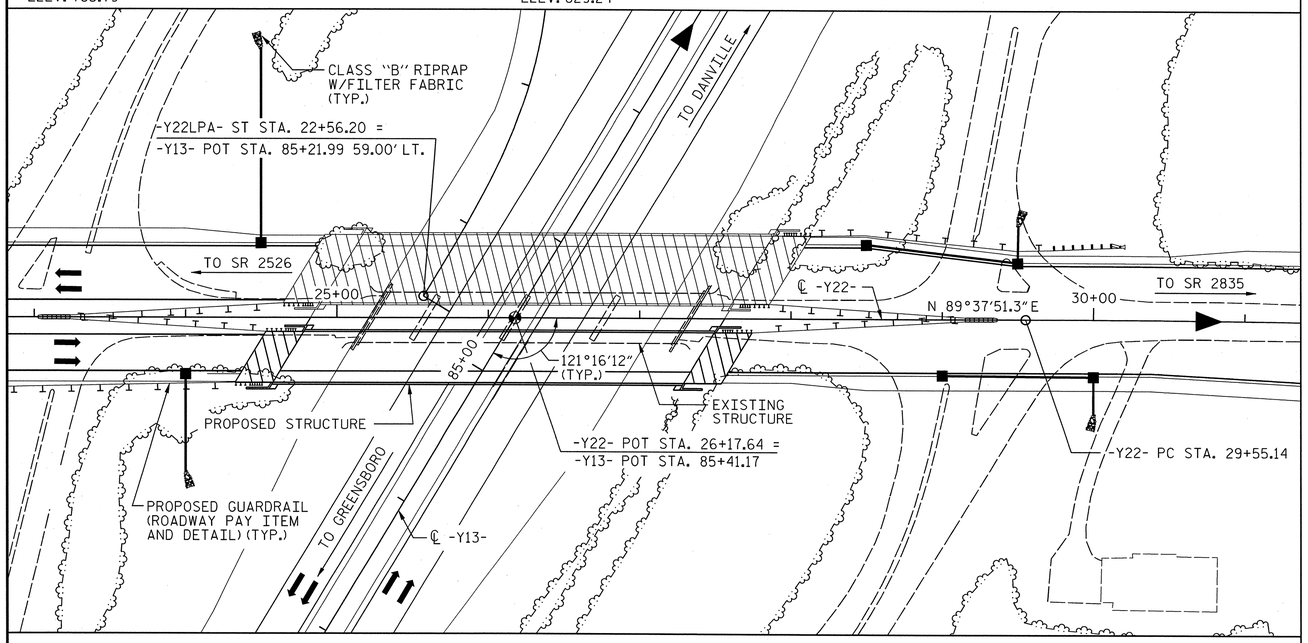

LOCATION SKETCH

FOR UTILITY INFORMATION, SEE UTILITY PLANS AND SPECIAL PROVISIONS

NAD 83 / 95

GENERAL NOTES:

ASSUMED LIVE LOAD = HL-93 OR ALTERNATE LOADING.

FOR EROSION CONTROL MEASURES, SEE EROSION CONTROL PLANS.

THIS BRIDGE HAS BEEN DESIGNED IN ACCORDANCE WITH THE REQUIREMENTS OF THE AASHTO LRFD BRIDGE DESIGN SPECIFICATIONS.

THIS BRIDGE IS LOCATED IN SEISMIC ZONE 1.

REMOVABLE FORMS MAY BE USED IN LIEU OF METAL STAY-IN-PLACE FORMS IN ACCORDANCE WITH ARTICLE 420-3 OF THE STANDARD SPECIFICATIONS.

PRESTRESSED CONCRETE DECK PANELS MAY BE USED IN LIEU OF METAL STAY-IN-PLACE FORMS IN ACCORDANCE WITH ARTICLE 420-3 OF THE STANDARD SPECIFICATIONS. THE SKEWED END CONDITION AT EACH END BENT AND BENT IS SUCH THAT THE USE OF 4' WIDE PRESTRESSED CONCRETE DECK PANELS IS NOT POSSIBLE: USE OF 8' WIDE PRESTRESSED CONCRETE DECK PANELS IS NECESSARY.

NEEDLE BEAMS WILL NOT BE ALLOWED UNLESS OTHERWISE CALLED FOR ON THE PLANS OR APPROVED BY THE ENGINEER.

THE CLASS AA CONCRETE IN THE BRIDGE DECK SHALL CONTAIN FLY ASH OR GROUND GRANULATED BLAST FURNACE SLAG AT THE SUBSTITUTION RATE SPECIFIED IN ARTICLE 1024-1 AND IN ACCORDANCE WITH ARTICLES 1024-5 AND 1024-6 OF THE STANDARD SPECIFICATIONS. NO PAYMENT WILL BE MADE FOR THIS SUBSTITUTION AS IT IS CONSIDERED INCIDENTAL TO THE COST OF THE REINFORCED CONCRETE DECK SLAB.

THE ELEVATION AND CLEARANCE SHOWN ON THE PLANS AT THE POINT OF MINIMUM VERTICAL CLEARANCE ARE FROM THE BEST INFORMATION AVAILABLE. PRIOR TO BEGINNING BRIDGE CONSTRUCTION, VERIFY THE ELEVATION ON THE EXISTING PAVEMENT AND CHECK THE CLEARANCE. REPORT ANY VARIATIONS TO THE ENGINEER. ANY PLAN REVISIONS NECESSARY TO ACHIEVE THE REQUIRED MINIMUM VERTICAL CLEARANCE WILL BE PROVIDED BY THE DEPARTMENT.

THE MATERIAL SHOWN IN THE CROSS-HATCHED AREA SHALL BE EXCAVATED FOR A DISTANCE OF 48± FEET RIGHT OF -Y22- AS DIRECTED BY THE ENGINEER. THIS WORK WILL BE MEASURED AND PAID FOR AT THE CONTRACT UNIT PRICE PER CUBIC YARD FOR UNCLASSIFIED STRUCTURE EXCAVATION. SEE SECTION 412 OF THE STANDARD SPECIFICATIONS.

THE SUBSTRUCTURE OF THE EXISTING BRIDGE INDICATED ON THE PLANS IS FROM THE BEST INFORMATION AVAILABLE. THIS INFORMATION IS SHOWN FOR THE CONVENIENCE OF THE CONTRACTOR. THE CONTRACTOR SHALL HAVE NO CLAIM WHATSOEVER AGAINST THE DEPARTMENT OF TRANSPORTATION FOR ANY DELAYS OR ADDITIONAL COST INCURRED BASED ON DIFFERENCES BETWEEN THE EXISTING BRIDGE SUBSTRUCTURE SHOWN ON THE PLANS AND THE ACTUAL CONDITIONS AT THE PROJECT SITE.

FOR CRANE SAFETY, SEE SPECIAL PROVISIONS.

FOR SUBMITTAL OF WORKING DRAWINGS, SEE SPECIAL PROVISIONS.

FOR FALSEWORK AND FORMWORK, SEE SPECIAL PROVISIONS.

FOR GROUT FOR STRUCTURES, SEE SPECIAL PROVISIONS.

FOR MAINTENANCE AND PROTECTION OF TRAFFIC BENEATH PROPOSED STRUCTURE, SEE SPECIAL PROVISIONS.

FOR PLACING LOAD ON STRUCTURE MEMBERS, SEE SPECIAL PROVISIONS.

WORK SHALL NOT BE STARTED ON THIS BRIDGE UNTIL EXCAVATION IS COMPLETE.

FOR OTHER DESIGN DATA AND GENERAL NOTES, SEE SHEET SN.

DRAWING INDEX:

15-01 GENERAL DRAWING - PLAN AND ELEVATION
15-02 GENERAL DRAWING - FOUNDATION LAYOUT & FOUNDATION NOTES
15-03 GENERAL DRAWING - LOCATION SKETCH, TOTAL BILL OF MATERIAL
15-04 GENERAL DRAWING - LRFR SUMMARY FOR PCG'S (NON-INTERSTATE TRAFFIC)
15-05 SUPERSTRUCTURE - TYPICAL SECTION
15-06 SUPERSTRUCTURE - TYPICAL SECTION DETAILS (1 OF 2)
15-07 SUPERSTRUCTURE - TYPICAL SECTION DETAILS (2 OF 2)
15-08 SUPERSTRUCTURE - PLAN OF SPAN "A"
15-09 SUPERSTRUCTURE - PLAN OF SPAN "B"
15-10 SUPERSTRUCTURE - FRAMING PLAN
15-11 72" MBT SPAN "A" (1 OF 2)
15-12 72" MBT SPAN "A" (2 OF 2)
15-13 72" MBT SPAN "B" (1 OF 2)
15-14 72" MBT SPAN "B" (2 OF 2)
15-15 PRESTRESSED CONCRETE GIRDER CONTINUOUS FOR LIVE LOAD DETAILS
15-16 INTERMEDIATE STEEL DIAPHRAGMS FOR 72" MODIFIED BULB TEE PCG'S
15-17 ELASTOMERIC BEARING DETAILS
15-18 SUPERSTRUCTURE - GIRDER DEFLECTION AND CAMBER SCHEDULES
15-19 SUPERSTRUCTURE - CONCRETE PARAPET AND END POST DETAILS (1 OF 2)
15-20 SUPERSTRUCTURE - CONCRETE PARAPET AND END POST DETAILS (2 OF 2)
15-21 RAIL POST SPACINGS AND END OF RAIL DETAILS
15-22 2 BAR METAL RAIL (1 OF 2)
15-23 2 BAR METAL RAIL (2 OF 2)
15-24 GUARDRAIL ANCHORAGE DETAILS FOR METAL RAILS
15-25 SUPERSTRUCTURE BILL OF MATERIAL (1 OF 2)
15-26 SUPERSTRUCTURE BILL OF MATERIAL (2 OF 2)
15-27 SUBSTRUCTURE - END BENT 1 PLAN AND ELEVATION (1 OF 4)
15-28 SUBSTRUCTURE - END BENT 1 SECTIONS AND DETAILS (2 OF 4)
15-29 SUBSTRUCTURE - END BENT 1 SECTIONS AND DETAILS (3 OF 4)
15-30 SUBSTRUCTURE - END BENT 1 SECTIONS AND DETAILS (4 OF 4)
15-31 SUBSTRUCTURE - BENT 1 (1 OF 2)
15-32 SUBSTRUCTURE - BENT 1 (2 OF 2)
15-33 SUBSTRUCTURE - END BENT 2 PLAN AND ELEVATION (1 OF 4)
15-34 SUBSTRUCTURE - END BENT 2 SECTIONS AND DETAILS (2 OF 4)
15-35 SUBSTRUCTURE - END BENT 2 SECTIONS AND DETAILS (3 OF 4)
15-36 SUBSTRUCTURE - END BENT 2 SECTIONS AND DETAILS (4 OF 4)
15-37 SLOPE PROTECTION DETAILS (1 OF 2)
15-38 SLOPE PROTECTION DETAILS (2 OF 2)
15-39 BRIDGE APPROACH SLAB FOR FLEXIBLE PAVEMENT (1 OF 3)
15-40 BRIDGE APPROACH SLAB FOR FLEXIBLE PAVEMENT (2 OF 3)
15-41 BRIDGE APPROACH SLAB DETAILS FOR FLEXIBLE PAVEMENT (3 OF 3)
SN STANDARD NOTES

TOTAL BILL OF MATERIAL

	FOUNDATION EXCAVATION	UNCLASSIFIED STRUCTURE	REINFORCED CONCRETE DECK SLAB	GROOVING BRIDGE FLOORS	CLASS A CONCRETE	BRIDGE APPROACH SLABS	REINFORCING STEEL	SPIRAL COLUMN REINFORCING STEEL	MODIFIED 72" PRESTRESSED CONCRETE GIRDERS		HP 12x53 STEEL PILES		STEEL PILE POINTS	TWO BAR METAL RAIL	1'-2" x 2'-6" CONCRETE PARAPET	4" SLOPE PROTECTION	ELASTOMERIC BEARINGS	FOAM JOINT SEALS
	LUMP SUM	LUMP SUM	SQ. FT.	SQ. FT.	CU. YDS.	LUMP SUM	LBS.	LBS.	NO.	LIN. FT.	NO.	LIN. FT.	EA.	LIN. FT.	LIN. FT.	SQ. YDS.	LUMP SUM	LUMP SUM
SUPERSTRUCTURE	—	—	9781	7939	—	LUMP SUM	—	—	10	1341.25	—	—	—	525.6	540.6	—	LUMP SUM	LUMP SUM
END BENT No. 1	—	LUMP SUM	—	—	67.8	—	8041	—	—	—	16	840	—	—	—	160	—	—
BENT No. 1	LUMP SUM	—	—	—	98.9	—	16769	1279	—	—	24	600	24	—	—	—	—	—
END BENT No. 2	—	LUMP SUM	—	—	67.4	—	8150	—	—	—	16	680	—	—	—	172	—	—
TOTAL	LUMP SUM	LUMP SUM	9781	7939	234.1	LUMP SUM	32960	1279	10	1341.25	56	2120	24	525.6	540.6	332	LUMP SUM	LUMP SUM

DRAWN BY : JWH DATE : 09/13
CHECKED BY : JCM DATE : 09/13

PROJECT NO. U-2525B
GUILFORD COUNTY
STATION: 26+17.64 -Y22-
85+41.17 -Y13-
SHEET 3 OF 4

AECOM
AECOM TECHNICAL SERVICES, INC.
701 CORPORATE CENTER DRIVE, SUITE 475
RALEIGH, NC 27607
(919) 854-6200 www.aecom.com
AECOM License No. F-0342

NORTH CAROLINA PROFESSIONAL SEAL 030474 ENGINEER JOHN C. MORRISON
12/13/13

STATE OF NORTH CAROLINA
DEPARTMENT OF TRANSPORTATION
RALEIGH

GENERAL DRAWING
FOR BRIDGE ON SR 2565
(HICONE ROAD) OVER US 29
BETWEEN SR 2526 AND SR 2835
(RIGHT LANE)

REVISIONS						SHEET NO.
NO.	BY:	DATE:	NO.	BY:	DATE:	S-503
						TOTAL SHEETS
						541

DATE: 12/9/2013
TIME: 10:08:59 PM
USER: Lwanyo
DGN: G:\U2525\9356\400_Technical_Information_Disc_Files\450_NCDOT Staff Tech Design Files\Structures\Bridge 15\Cadd\U2525B_SD_DSN_Unit_L00.dgn

LOAD AND RESISTANCE FACTOR RATING (LRFR) SUMMARY FOR PRESTRESSED CONCRETE GIRDERS

LEVEL		VEHICLE	WEIGHT (W) (TONS)	CONTROLLING LOAD RATING (#)	MINIMUM RATING FACTORS (RF)	TONS = W × RF	STRENGTH I LIMIT STATE											SERVICE III LIMIT STATE						COMMENT NUMBER
								MOMENT					SHEAR						MOMENT					
							LIVE-LOAD FACTORS (γ_{LL})	DISTRIBUTION FACTORS (DF)	RATING FACTOR	SPAN	GIRDER LOCATION	DISTANCE FROM LEFT END OF SPAN (ft)	DISTRIBUTION FACTORS (DF)	RATING FACTOR	SPAN	GIRDER LOCATION	DISTANCE FROM LEFT END OF SPAN (ft)	LIVE-LOAD FACTORS (γ_{LL})	DISTRIBUTION FACTORS (DF)	RATING FACTOR	SPAN	GIRDER LOCATION	DISTANCE FROM LEFT END OF SPAN (ft)	
DESIGN LOAD RATING		HL-93 (INVENTORY)	N/A	1	1.24	--	1.75	0.716	1.53	B	EL	67.2	0.805	1.40	B	EL	121.6	0.80	0.716	1.24	B	EL	67.2	
		HL-93 (OPERATING)	N/A		1.86	--	1.35	0.716	1.99	B	EL	67.2	0.805	1.86	B	EL	121.6	N/A	--	--	--	--	--	
		HS-20 (INVENTORY)	36.000	2	1.87	67.3	1.75	0.716	2.31	B	EL	67.2	0.805	2.08	B	EL	121.6	0.80	0.716	1.87	B	EL	67.2	
		HS-20 (OPERATING)	36.000		2.74	98.6	1.35	0.716	3.00	B	EL	67.2	0.805	2.74	B	EL	121.6	N/A	--	--	--	--	--	
LEGAL LOAD RATING	SINGLE VEHICLE (SV)	SNSH	13.500		4.60	62.1	1.40	0.716	7.10	B	EL	67.2	0.805	6.87	B	EL	121.6	0.80	0.716	4.60	B	EL	67.2	
		SNGARBS2	20.000		3.26	65.2	1.40	0.716	5.04	B	EL	67.2	0.805	4.71	B	EL	121.6	0.80	0.716	3.26	B	EL	67.2	
		SNAGRIS2	22.000		3.03	66.7	1.40	0.716	4.67	B	EL	67.2	0.805	4.32	B	EL	121.6	0.80	0.716	3.03	B	EL	67.2	
		SNCOTTS3	27.250		2.28	62.1	1.40	0.716	3.52	B	EL	67.2	0.805	3.35	B	EL	121.6	0.80	0.716	2.28	B	EL	67.2	
		SNAGGRS4	34.925		1.84	64.3	1.40	0.716	2.85	B	EL	67.2	0.805	2.67	B	EL	121.6	0.80	0.716	1.84	B	EL	67.2	
		SNS5A	35.550		1.81	64.3	1.40	0.716	2.79	B	EL	67.2	0.805	2.66	B	EL	121.6	0.80	0.716	1.81	B	EL	67.2	
		SNS6A	39.950		1.63	65.1	1.40	0.716	2.52	B	EL	67.2	0.805	2.38	B	EL	121.6	0.80	0.716	1.63	B	EL	67.2	
		SNS7B	42.000		1.55	65.1	1.40	0.716	2.40	B	EL	67.2	0.805	2.30	B	EL	121.6	0.80	0.716	1.55	B	EL	67.2	
	TRUCK TRACTOR SEMI-TRAILER (TTST)	TNAGRIT3	33.000		1.98	65.3	1.40	0.716	3.06	B	EL	67.2	0.805	2.89	B	EL	121.6	0.80	0.716	1.98	B	EL	67.2	
		TNT4A	33.075		1.99	65.8	1.40	0.716	3.07	B	EL	67.2	0.805	2.85	B	EL	121.6	0.80	0.716	1.99	B	EL	67.2	
		TNT6A	41.600		1.57	65.3	1.40	0.716	2.42	B	EL	67.2	0.805	2.20	B	EL	121.6	0.80	0.716	1.57	B	EL	67.2	
		TNT7A	42.000		1.49	62.6	1.40	0.716	2.30	B	EL	67.2	0.805	2.14	B	EL	121.6	0.80	0.716	1.49	B	EL	67.2	
		TNT7B	42.000	3	1.48	62.2	1.40	0.716	2.28	B	EL	67.2	0.805	2.09	B	EL	121.6	0.80	0.716	1.48	B	EL	67.2	
		TNAGRIT4	43.000		1.60	68.8	1.40	0.716	2.47	B	EL	67.2	0.805	2.39	B	EL	121.6	0.80	0.716	1.60	B	EL	67.2	
		TNAGT5A	45.000		1.60	72.0	1.40	0.716	2.47	B	EL	67.2	0.805	2.35	B	EL	121.6	0.80	0.716	1.60	B	EL	67.2	
		TNAGT5B	45.000		1.62	72.9	1.40	0.716	2.48	B	EL	67.2	0.805	2.27	B	EL	121.6	0.80	0.716	1.62	B	EL	67.2	

LOAD FACTORS:

DESIGN LOAD RATING FACTORS	LIMIT STATE	γ_{DC}	γ_{DW}
	STRENGTH I	1.25	1.50
	SERVICE III	1.00	1.00

NOTES:

MINIMUM RATING FACTORS ARE BASED ON THE STRENGTH I AND SERVICE III LIMIT STATES.

ALLOWABLE STRESSES FOR SERVICE III LIMIT STATE ARE AS REQUIRED FOR DESIGN.

COMMENTS:

1. SPAN LENGTHS SHOWN ARE BEARING TO BEARING DIMENSIONS.

(#) CONTROLLING LOAD RATING

(1) DESIGN LOAD RATING (HL-93)

(2) DESIGN LOAD RATING (HS-20)

(3) LEGAL LOAD RATING **

** SEE CHART FOR VEHICLE TYPE

GIRDER LOCATION

I - INTERIOR GIRDER
EL - EXTERIOR LEFT GIRDER
ER - EXTERIOR RIGHT GIRDER

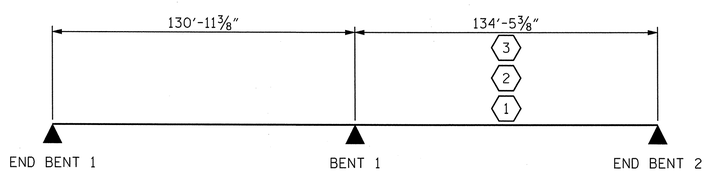

LRFR SUMMARY

PROJECT NO. U-2525B
GUILFORD COUNTY
STATION: 26+17.64 -Y22-
85+41.17 -Y13-

SHEET 4 OF 4

AECOM
AECOM TECHNICAL SERVICES, INC.
701 CORPORATE CENTER DRIVE, SUITE 475
RALEIGH, NC 27607
(919) 854-6200
www.aecom.com
AECOM License No. F-0342

NORTH CAROLINA PROFESSIONAL SEAL 030474 ENGINEER JOHN C. MORRISON
12/13/13

STATE OF NORTH CAROLINA
DEPARTMENT OF TRANSPORTATION
RALEIGH

STANDARD

LRFR SUMMARY FOR PRESTRESSED CONCRETE GIRDERS (NON-INTERSTATE TRAFFIC)

REVISIONS								SHEET NO.
NO.	BY:	DATE:	NO.	BY:	DATE:			S-504
1			3					TOTAL SHEETS
2			4					541

STD. NO. LRFR1

ASSEMBLED BY : DDL	DATE : 09/13		
CHECKED BY : JCM	DATE : 09/13		
DRAWN BY : MAA 1/08	REV. 11/12/08RR	MAA/GM	
CHECKED BY : GM/DI 2/08	REV. 10/1/11	MAA/GM	

DATE: 12/9/2013
TIME: 5:22:15 PM

USER: Lowery
DGN: U:\2025\9350-400_Technical_Information_Disc_Files\450_NCDOT Staff and Design Files\Structures\Bridge 15\Cad\U2525B_SD_DSN_1\4T_LRFR.dgn

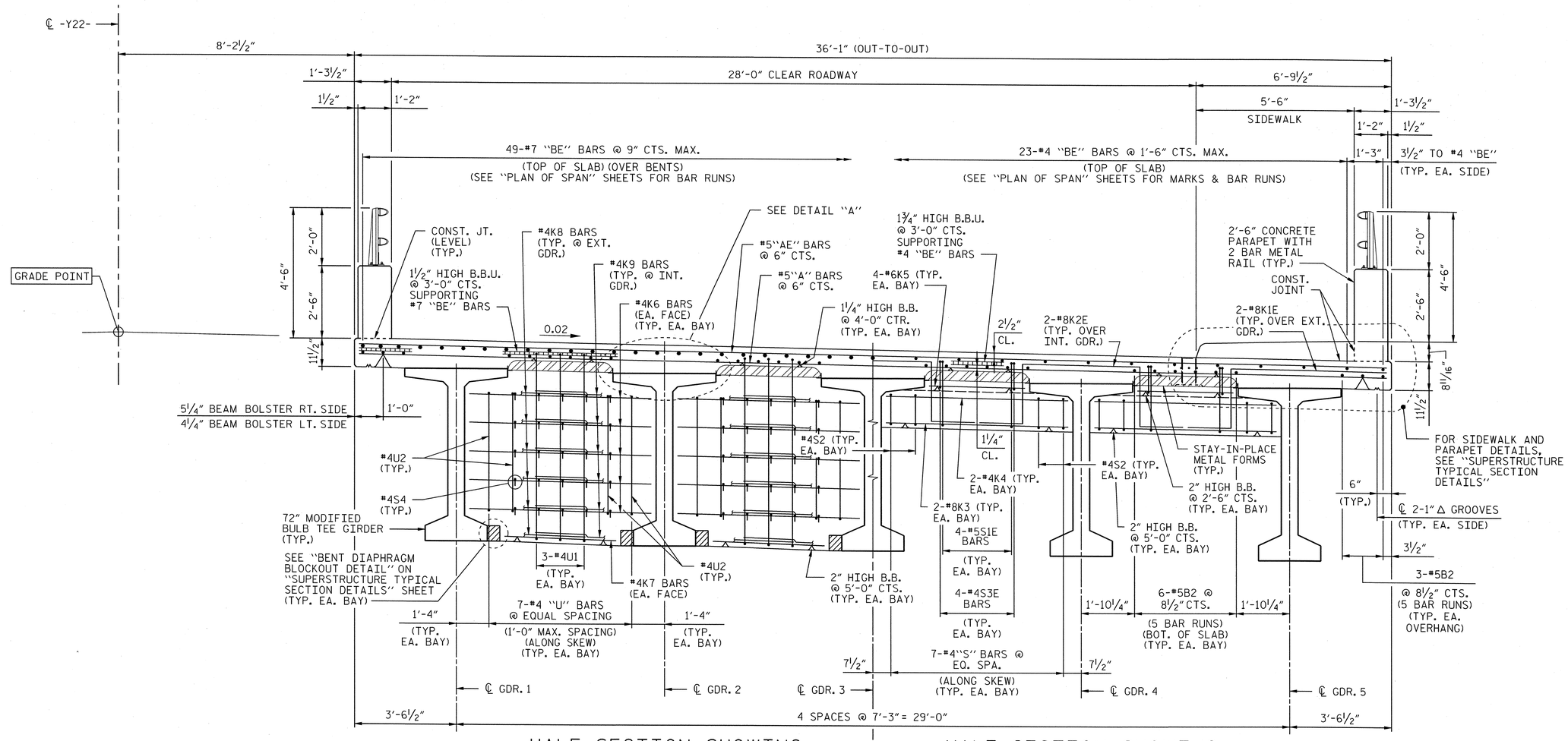

HALF SECTION SHOWING BENT 1 DIAPHRAGM

HALF SECTION SHOWING END DIAPHRAGM

2 SPAN CONTINUOUS FOR LIVE LOAD WITH COMPOSITE DECK ON 72" GIRDERS; STAY-IN-PLACE METAL FORMS

NOTES:

PROVIDE 1¼" HIGH BEAM BOLSTERS UPPER AT 4'-0" CTS. ATOP THE METAL STAY-IN-PLACE FORMS TO SUPPORT THE BOTTOM MAT OF "A" BARS. WHEN USING REMOVABLE FORMS, PROVIDE CONTINUOUS HIGH CHAIRS FOR METAL DECK (C.H.C.M.) AT 4'-0" CTS. WITH A HEIGHT TO SUPPORT THE BOTTOM MAT OF "A" BARS A CLEAR DISTANCE OF 2½" ABOVE THE TOP OF THE REMOVABLE FORM.

LONGITUDINAL STEEL MAY BE SHIFTED SLIGHTLY, AS NECESSARY, TO AVOID INTERFERENCE WITH STIRRUPS IN PRESTRESSED CONCRETE GIRDERS.

PARAPET SHALL NOT BE CAST UNTIL ALL SLAB CONCRETE IN THAT SPAN HAS BEEN CAST AND HAS REACHED A MINIMUM COMPRESSIVE STRENGTH OF 3000 PSI.

SIDEWALK SHALL NOT BE CAST UNTIL CONCRETE PARAPET HAS BEEN CAST AND HAS REACHED A MINIMUM COMPRESSIVE STRENGTH OF 3,000 PSI.

THE JOINT IN DECK SHALL BE SAWED PRIOR TO THE CASTING OF THE SIDEWALK.

GROOVED CONTRACTION JOINTS, ½" IN DEPTH, SHALL BE TOOLED IN ALL EXPOSED FACES OF THE SIDEWALK IN ACCORDANCE WITH ARTICLE 825-10(B) OF THE STANDARD SPECIFICATIONS. THE CONTRACTION JOINTS SHALL BE LOCATED AT A SPACING OF 8 FT. TO 10 FT. BETWEEN EXPANSION JOINTS. NO CONTRACTION JOINTS WILL BE REQUIRED FOR SEGMENTS LESS THAN 10 FEET IN LENGTH.

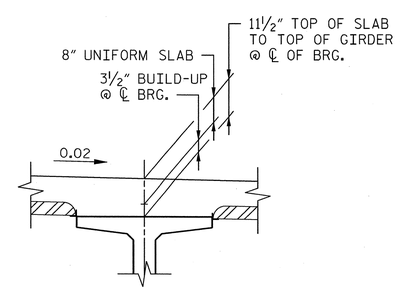

DETAIL "A"

PROJECT NO. U-2525B

GUILFORD COUNTY

STATION: 26+17.64 -Y22-
85+41.17 -Y13-

AECOM
AECOM TECHNICAL SERVICES, INC.
701 CORPORATE CENTER DRIVE, SUITE 475
RALEIGH, NC 27607
(919) 854-6200 www.aecom.com
AECOM License No. F-0342

NORTH CAROLINA PROFESSIONAL SEAL 030474 ENGINEER JOHN C. MORRISON
12/13/13

STATE OF NORTH CAROLINA
DEPARTMENT OF TRANSPORTATION
RALEIGH

SUPERSTRUCTURE

TYPICAL SECTION

(RIGHT LANE)

REVISIONS						SHEET NO.
NO.	BY:	DATE:	NO.	BY:	DATE:	S-505
						TOTAL SHEETS
						541

DRAWN BY : DDL DATE : 09/13
CHECKED BY : JCM DATE : 09/13

DATE: 12/3/2013
TIME: 1:30:04 PM

USER: Lwesley
DGN: C:\SDEP\9350-400_Technical_Information_Disc_Files\450_NC20TS\STechDesignFiles\Structures\Bridge 15\Cadd\U2525B_SD_DSN_U17_SEC.dgn

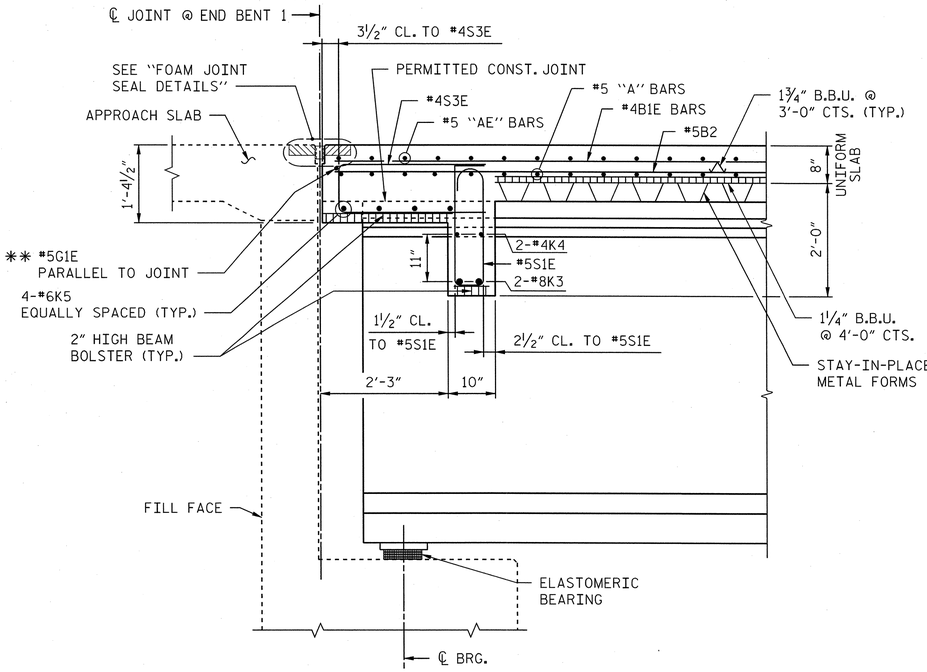

SECTION A-A

** #5G1E BAR MAY BE SHIFTED SLIGHTLY, AS NECESSARY, TO CLEAR REINFORCING STEEL AND STIRRUPS.

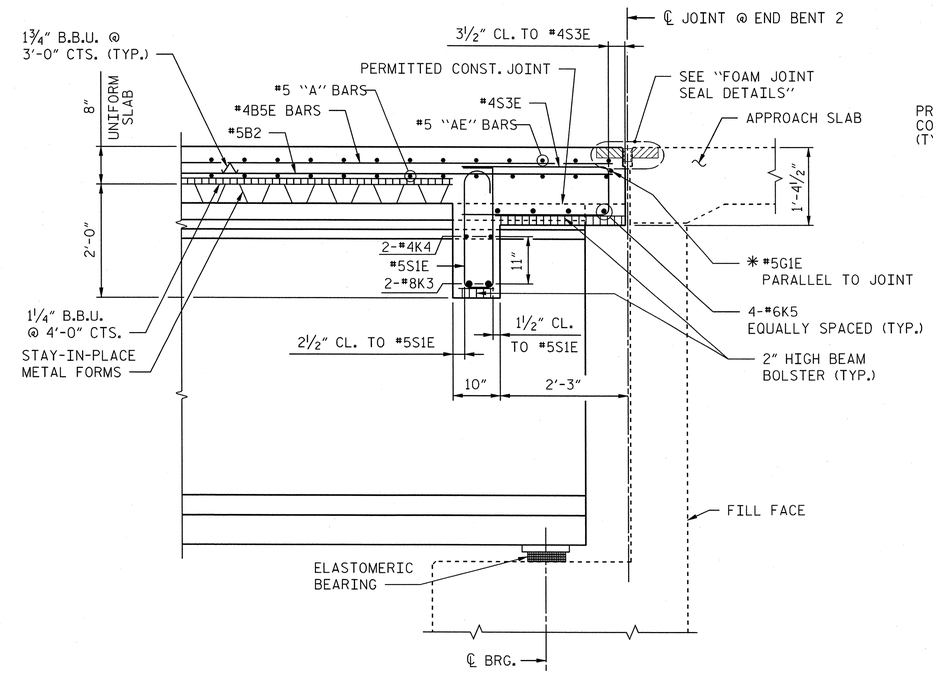

SECTION C-C

* #5G2E BAR MAY BE SHIFTED SLIGHTLY, AS NECESSARY, TO CLEAR REINFORCING STEEL AND STIRRUPS.

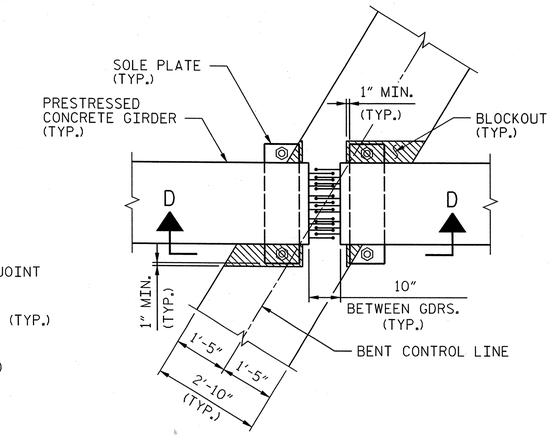

PLAN VIEW

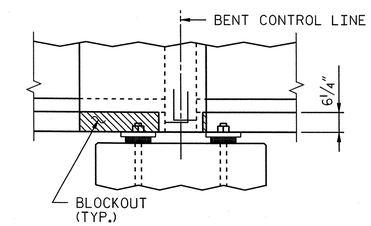

SECTION D-D

BENT DIAPHRAGM BLOCKOUT DETAIL

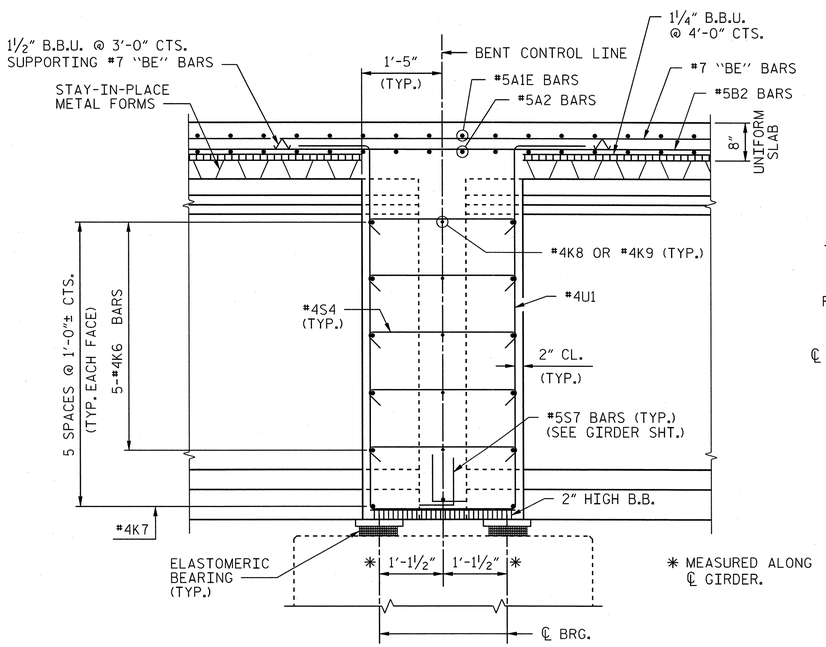

SECTION B-B

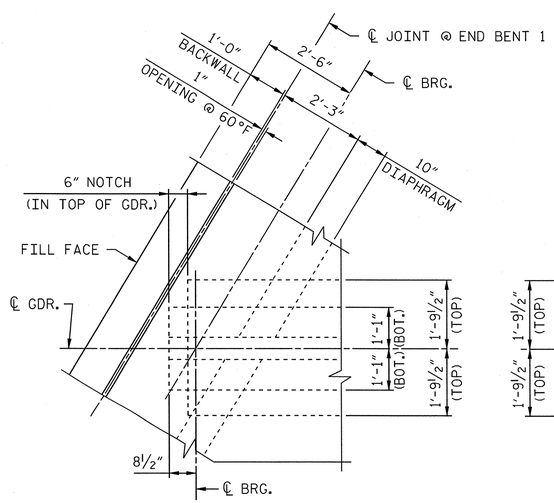

PLAN OF GIRDER END AT END BENT 1 JOINT

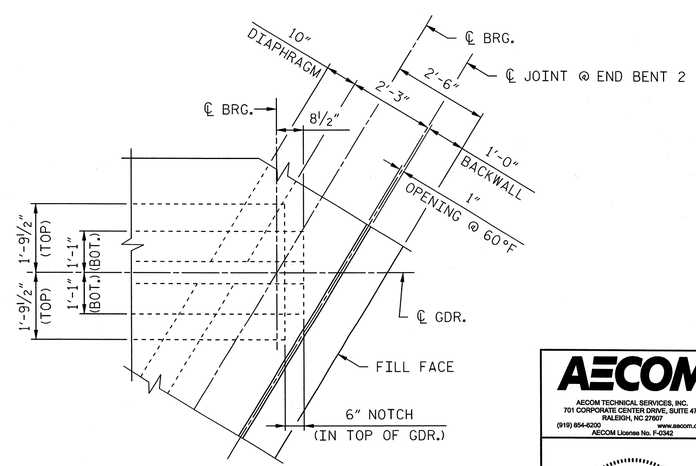

PLAN OF GIRDER END AT END BENT 2 JOINT

PROJECT NO. U-2525B

GUILFORD COUNTY

STATION: 26+17.64 -Y22-
85+41.17 -Y13-

SHEET 1 OF 2

AECOM
AECOM TECHNICAL SERVICES, INC.
701 CORPORATE CENTER DRIVE, SUITE 475
RALEIGH, NC 27607
(919) 854-6200 www.aecom.com
AECOM License No. F-0342

NORTH CAROLINA PROFESSIONAL SEAL 030474 ENGINEER JOHN C. MORRISON
12/13/13

STATE OF NORTH CAROLINA
DEPARTMENT OF TRANSPORTATION
RALEIGH

SUPERSTRUCTURE

TYPICAL SECTION DETAILS

(RIGHT LANE)

REVISIONS						SHEET NO.
NO.	BY:	DATE:	NO.	BY:	DATE:	S-506
						TOTAL SHEETS
						541

DRAWN BY : DDL DATE : 09/13
CHECKED BY : JCM DATE : 09/13

DATE: 12/9/2013
TIME: 1:05:35 PM

USER: Lowery
DGN: U:\2025\3356\400_Tech\cal_Information_Dtes_Files\450_NC03T Std Tech Data\pw Files\Structures\Bridge Files\Cadd\U2525B_SD_DSN_LI147_TYP_DETS.dgn

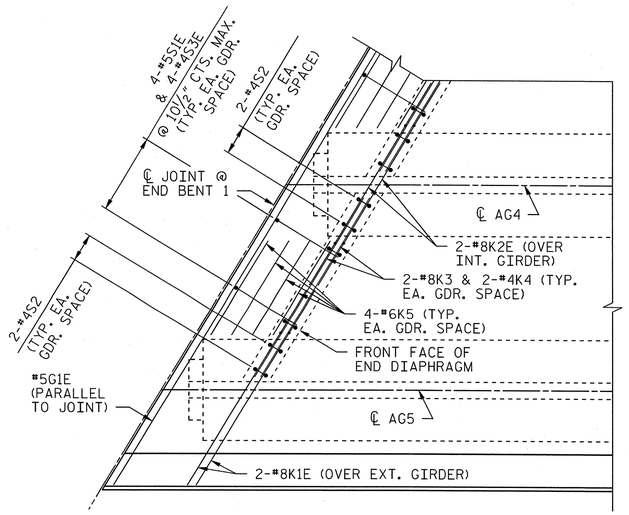

DETAIL "B"

"A" & "B" BARS NOT SHOWN

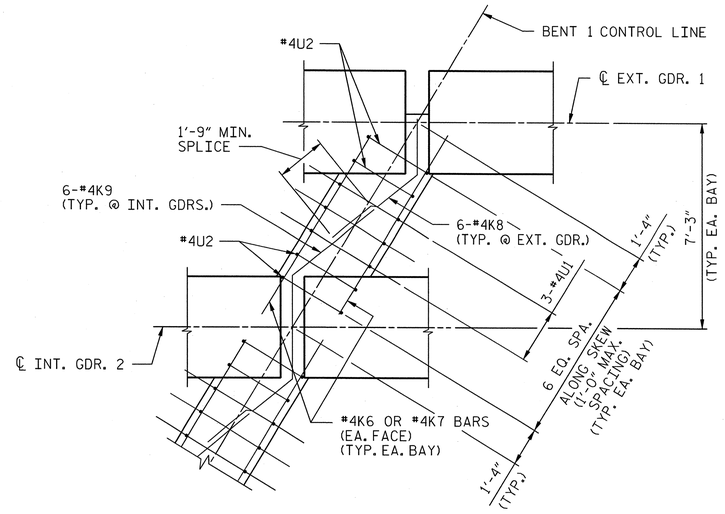

DETAIL "C"

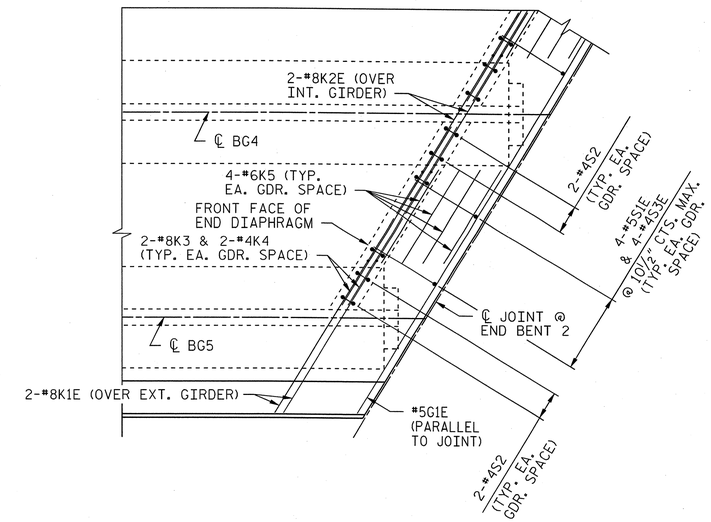

DETAIL "E"

"A" & "B" BARS NOT SHOWN

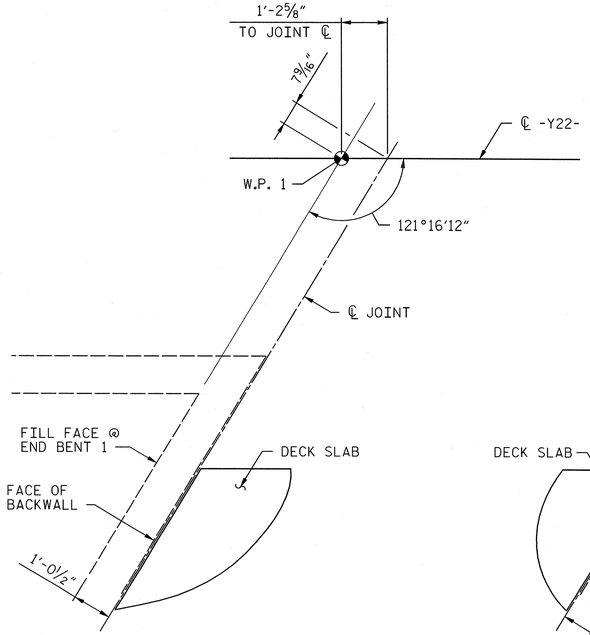

DETAIL "A"

NOTE: SKEWED DIMENSIONS AT END BENT 1 ARE BASED ON A JOINT OPENING OF 1" AT 60° F.

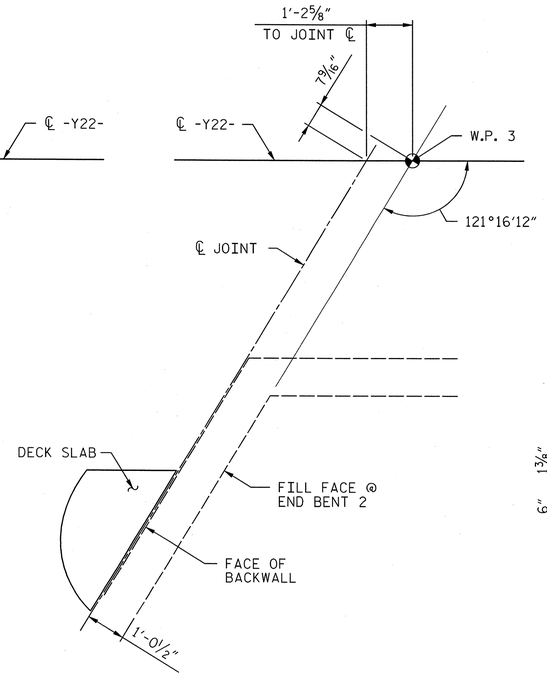

DETAIL "D"

NOTE: SKEWED DIMENSIONS AT END BENT 2 ARE BASED ON A JOINT OPENING OF 1" AT 60° F.

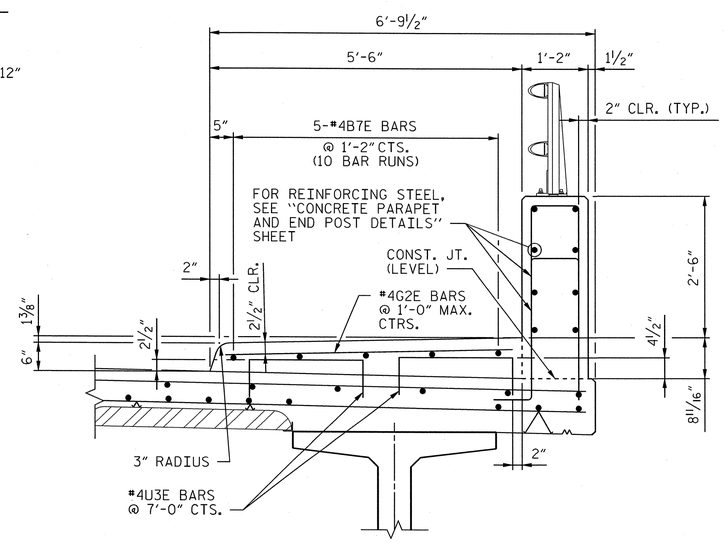

SECTION THRU SIDEWALK

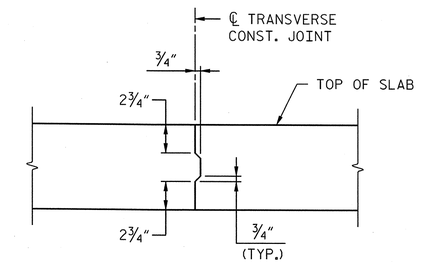

TRANSVERSE CONSTRUCTION JOINT DETAIL

NOTES: REINFORCING STEEL IN SLAB NOT SHOWN.

LONGITUDINAL REINFORCING STEEL SHALL BE CONTINUOUS THRU JOINT.

PROJECT NO. U-2525B

GUILFORD **COUNTY**

STATION: 26+17.64 -Y22-
85+41.17 -Y13-

SHEET 2 OF 2

AECOM
AECOM TECHNICAL SERVICES, INC.
701 CORPORATE CENTER DRIVE, SUITE 475
RALEIGH, NC 27607
(919) 854-6200 www.aecom.com
AECOM License No. F-0342

NORTH CAROLINA PROFESSIONAL SEAL 030474 ENGINEER JOHN C. MORRISON
12/13/13

STATE OF NORTH CAROLINA
DEPARTMENT OF TRANSPORTATION
RALEIGH

SUPERSTRUCTURE

TYPICAL SECTION DETAILS

(RIGHT LANE)

REVISIONS						SHEET NO.
NO.	BY:	DATE:	NO.	BY:	DATE:	S-507
						TOTAL SHEETS
						541

DRAWN BY : DDL DATE : 09/13
CHECKED BY : JCM DATE : 09/13

DATE: 12/9/2013
TIME: 1:26:37 PM

USER: Lowery
DGN: G:\2012\3350\400_Technical_Information_Disc_Files\450_NCDOT\StdTechDesign\Files\Structures\Bridge 15\Code\U2525B_SD_DSN_HI7_TYP_DETS_2.dgn

NOTES:

SEE SHEET 2 OF 2 FOR NOTES.

FOR SECTION A-A AND SECTION B-B, SEE "TYPICAL SECTION DETAILS" SHEET.

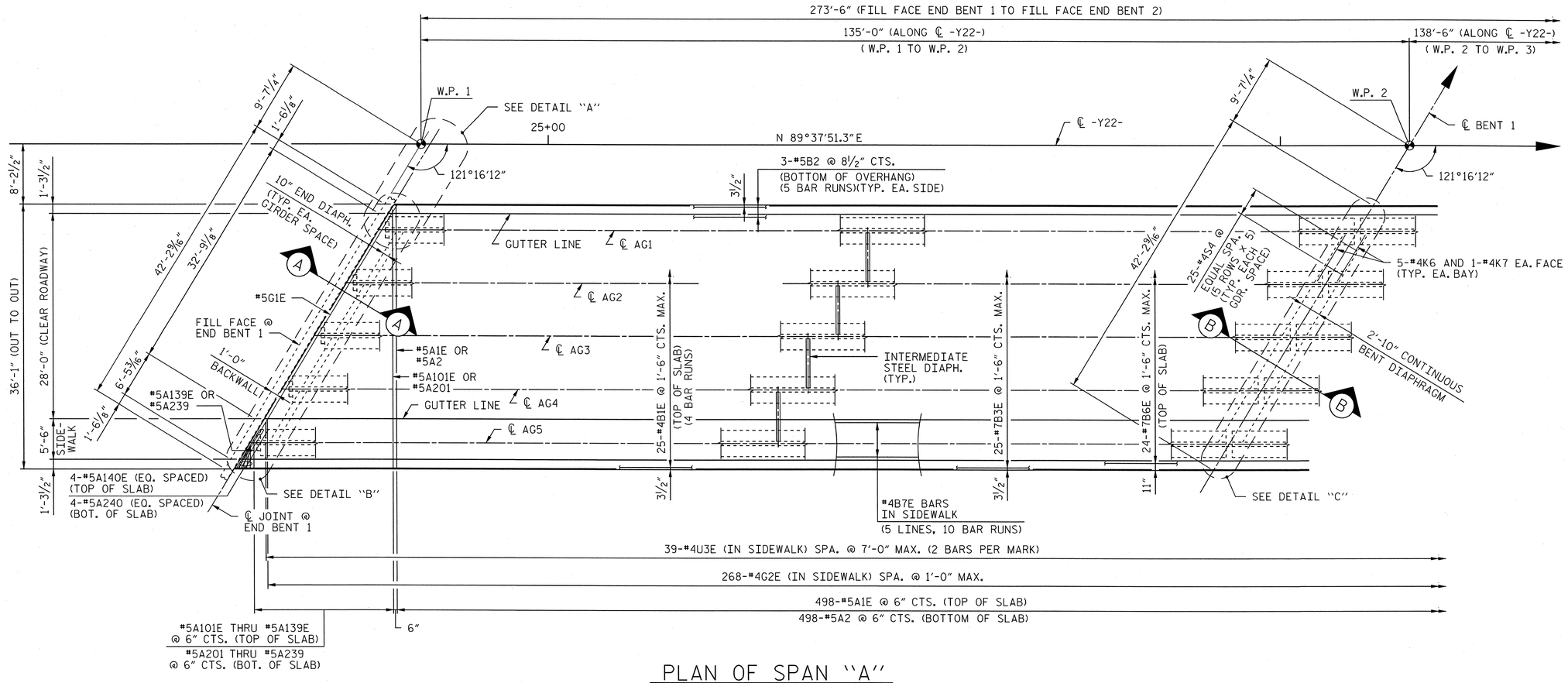

PLAN OF SPAN "A"

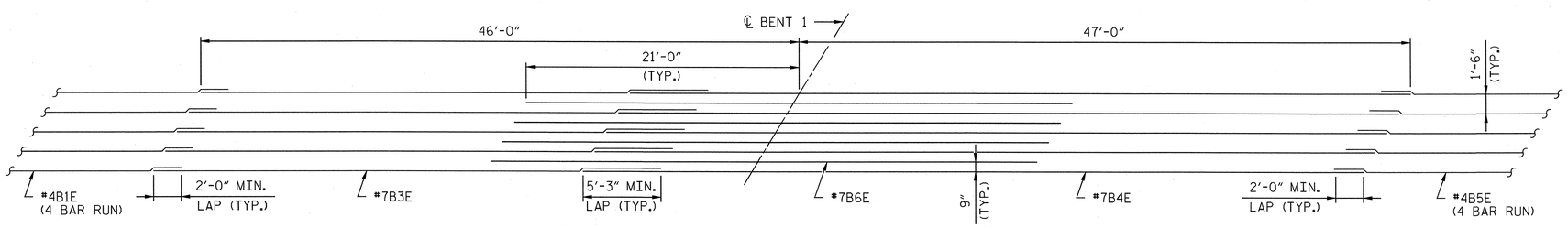

TOP OF SLAB REINFORCEMENT LAYOUT

DRAWN BY :	DDL	DATE :	09/13
CHECKED BY :	JCM	DATE :	09/13

PROJECT NO. U-2525B

GUILFORD COUNTY

STATION: 26+17.64 -Y22-
85+41.17 -Y13-

SHEET 1 OF 2

AECOM
AECOM TECHNICAL SERVICES, INC.
701 CORPORATE CENTER DRIVE, SUITE 475
RALEIGH, NC 27607
(919) 854-6200 www.aecom.com
AECOM License No. F-0342

NORTH CAROLINA PROFESSIONAL SEAL 030474 ENGINEER JOHN C. MORRISON
12/13/13

STATE OF NORTH CAROLINA
DEPARTMENT OF TRANSPORTATION
RALEIGH

SUPERSTRUCTURE

PLAN OF SPAN "A"

(RIGHT LANE)

REVISIONS						SHEET NO.
NO.	BY:	DATE:	NO.	BY:	DATE:	S-508
						TOTAL SHEETS 541

DATE: 12/9/2013
TIME: 1:35:56 PM

USER: Lawrynd
DGN: C:\SDP\2535\400_Technical_Information_Disc_Files\450_NCDOT Staff Tech Design Files\Structures\Bridge 15\Cadd\U2525B_SD_DSN_Unit_PLAN_DF_SPAN_Adgn

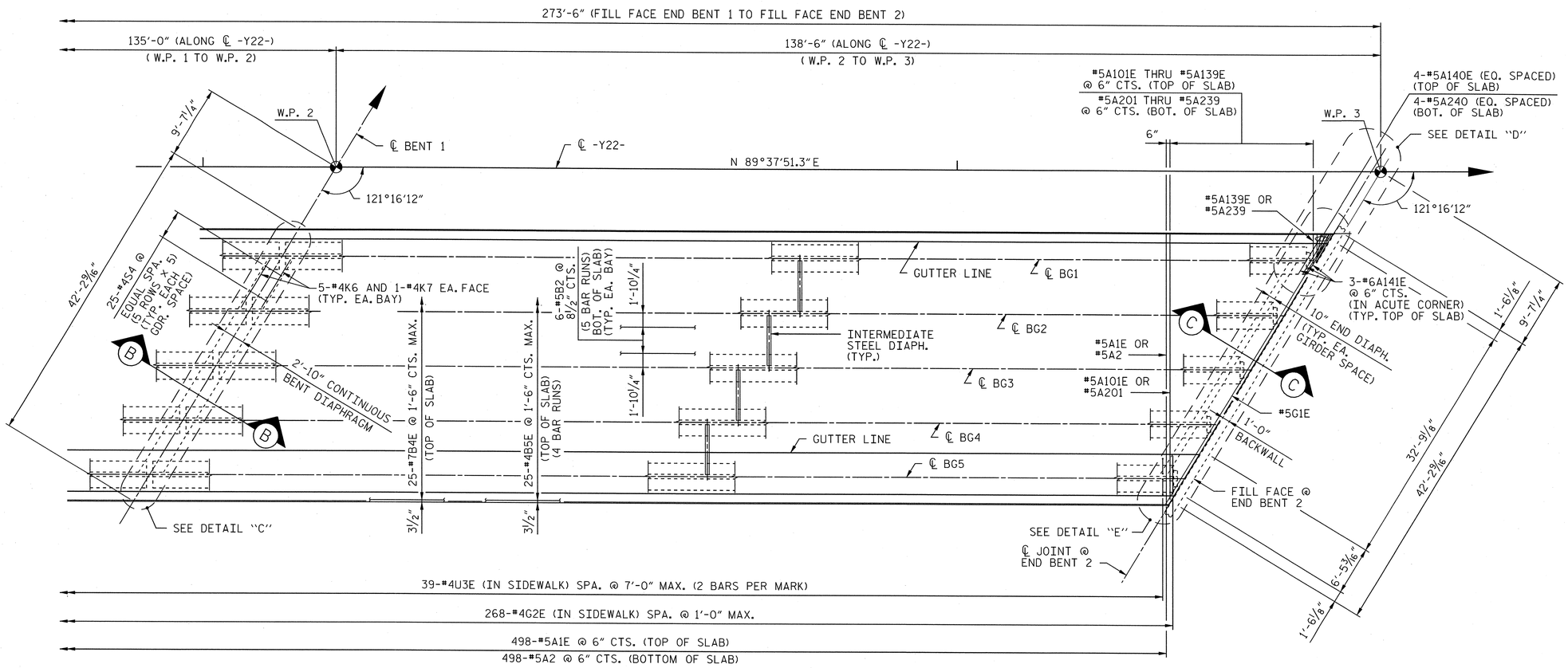

NOTES:

FOR POURING SEQUENCE, SEE "SUPERSTRUCTURE BILL OF MATERIAL".

"A" AND "AE" BARS TO BE PLACED PERPENDICULAR TO -Y22-.

LONGITUDINAL STEEL MAY BE SHIFTED SLIGHTLY, AS NECESSARY, TO AVOID INTERFERENCE WITH STIRRUPS IN PRESTRESSED CONCRETE GIRDERS.

FOR REINFORCING STEEL IN CONCRETE BARRIER RAIL, SEE "CONCRETE BARRIER RAIL".

FOR SECTION B-B AND SECTION C-C, SEE "TYPICAL SECTION DETAILS" SHEET.

PLAN OF SPAN "B"

PROJECT NO. U-2525B

GUILFORD COUNTY

STATION: 26+17.64 -Y22-
85+41.17 -Y13-

SHEET 2 OF 2

AECOM
AECOM TECHNICAL SERVICES, INC.
701 CORPORATE CENTER DRIVE, SUITE 475
RALEIGH, NC 27607
(919) 854-6200 www.aecom.com
AECOM License No. F-0342

NORTH CAROLINA PROFESSIONAL SEAL 030474 ENGINEER JOHN C. MORRISON
12/13/13

STATE OF NORTH CAROLINA
DEPARTMENT OF TRANSPORTATION
RALEIGH

SUPERSTRUCTURE

PLAN OF SPAN "B"

(RIGHT LANE)

REVISIONS						SHEET NO.
NO.	BY:	DATE:	NO.	BY:	DATE:	S-509
						TOTAL SHEETS
						541

DRAWN BY : DDL DATE : 09/13
CHECKED BY : JCM DATE : 09/13

DATE: 12/10/2013
TIME: 11:22:50 AM

USER: Legeyd
DGN: 0:\2012\9350\400_Technical_Information_Disc_Files\450_NCDOT\SHTechb\eSignFiles\Structures\Bridge 1\NCode\U2525B_SD_DSN_U4T_PLAN_OF_SPAN_B.dgn

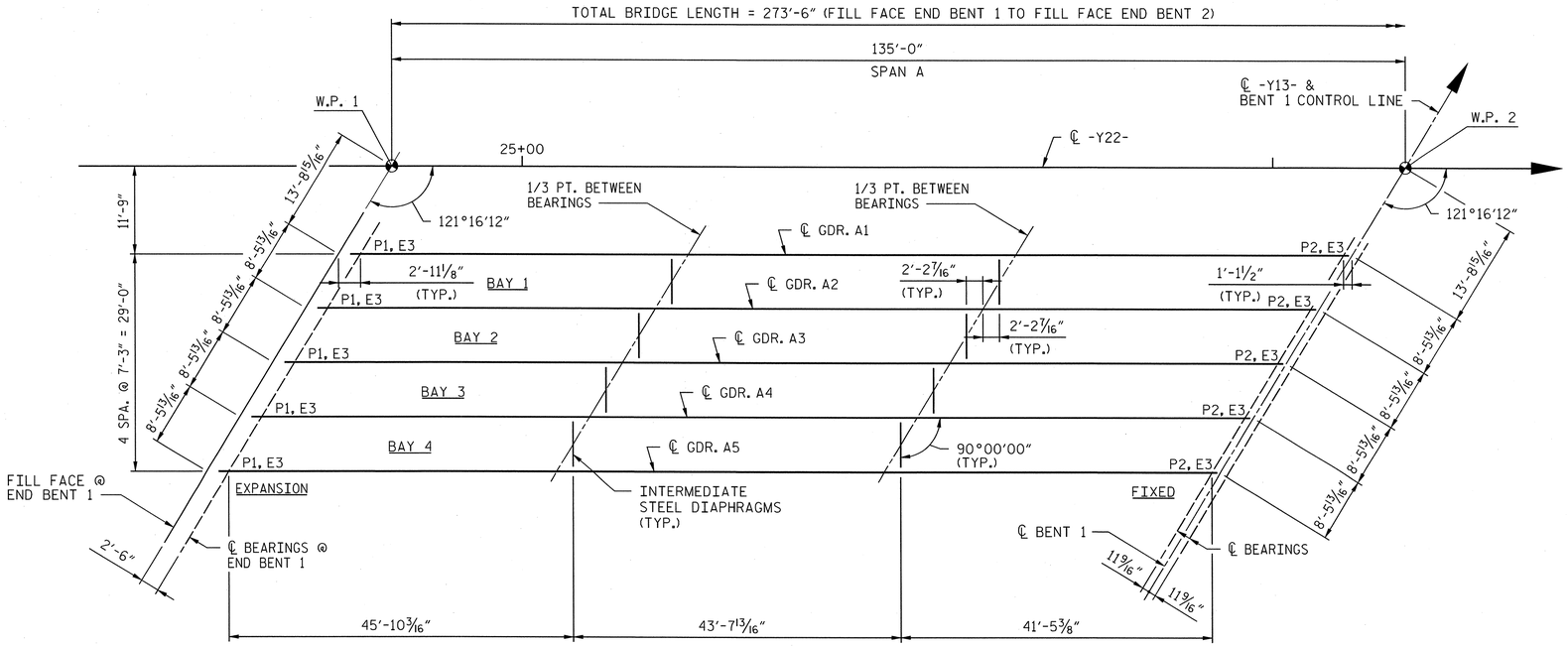

FRAMING PLAN OF SPAN "A"

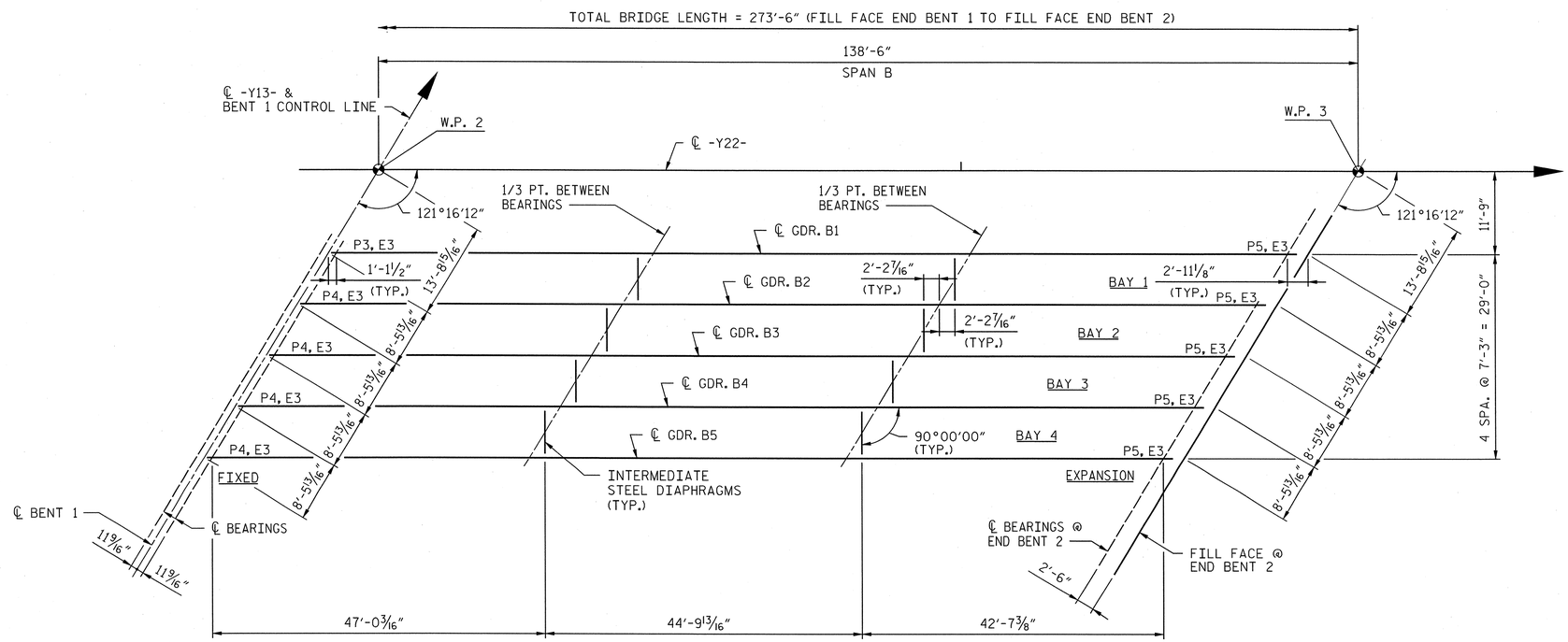

FRAMING PLAN OF SPAN "B"

NOTES:

1. ALL GIRDERS ARE PARALLEL TO ℄ -Y22-.
2. FOR STEEL DIAPHRAGM DETAILS, SEE "INTERMEDIATE STEEL DIAPHRAGM DETAILS" SHEET.
3. FOR BEARING AND SOLE PLATE SIZES, SEE "ELASTOMERIC BEARING DETAILS" SHEET.

PROJECT NO. U-2525B
GUILFORD COUNTY
STATION: 26+17.64 -Y22-
85+41.17 -Y13-

AECOM
AECOM TECHNICAL SERVICES, INC.
701 CORPORATE CENTER DRIVE, SUITE 475
RALEIGH, NC 27607
(919) 854-6200 www.aecom.com
AECOM License No. F-0342

NORTH CAROLINA PROFESSIONAL SEAL 030474 ENGINEER JOHN C. MORRISON
12/13/13

STATE OF NORTH CAROLINA
DEPARTMENT OF TRANSPORTATION
RALEIGH

SUPERSTRUCTURE
FRAMING PLAN
(RIGHT LANE)

REVISIONS						SHEET NO.
NO.	BY:	DATE:	NO.	BY:	DATE:	S-510
						TOTAL SHEETS
						54-1

DRAWN BY : DDL DATE : 09/13
CHECKED BY : JCM DATE : 09/13

USER: Lowryvd
DGN: U:\2525B\9356\400_Technical_Information_Dfiles_Files\450_NC30ST Std Tech Data\prFiles\Structures\Bridge 15\Cold\U2525B_SD_DSN_Unit_FRAMING.dgn
DATE: 12/9/2013
TIME: 1:26:52 PM

NOTES:

FOR SECTIONS A-A, B-B, C-C AND BILL OF MATERIAL, SEE SHEET 2 OF 2.

FOR INTERMEDIATE STEEL DIAPHRAGM LOCATIONS, SEE "FRAMING PLAN".

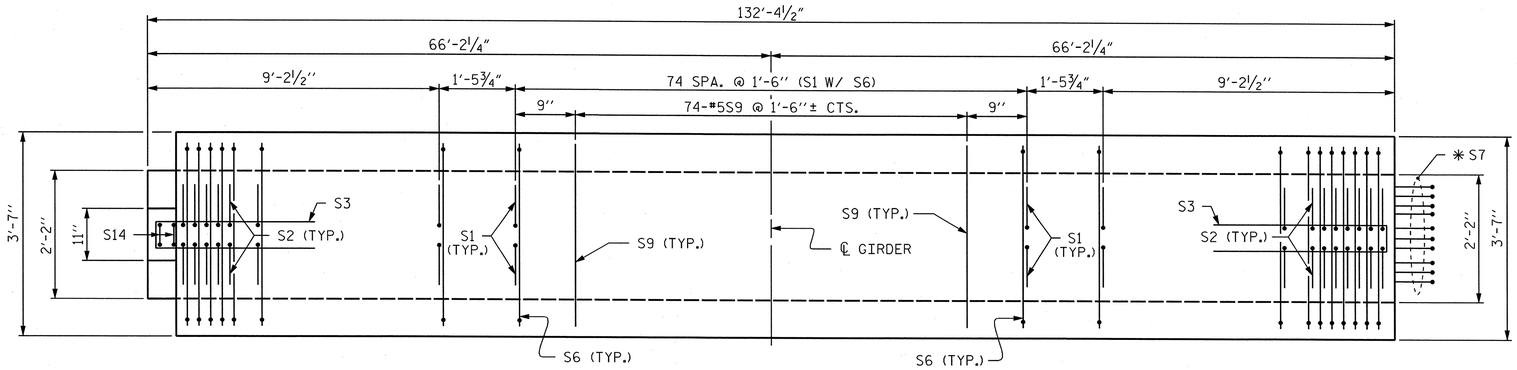

PLAN OF GIRDER

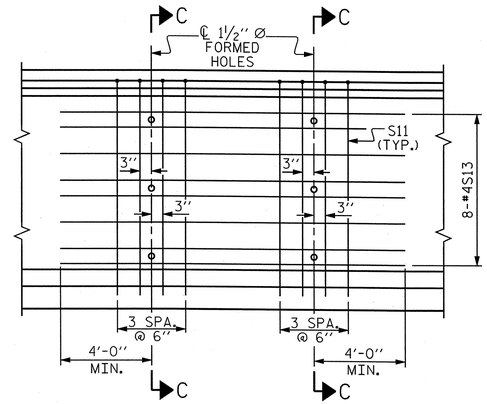

PARTIAL ELEVATION

SHOWING INTERMEDIATE STEEL DIAPHRAGM REINFORCING STEEL FOR GIRDER Nos. 2, 3 & 4

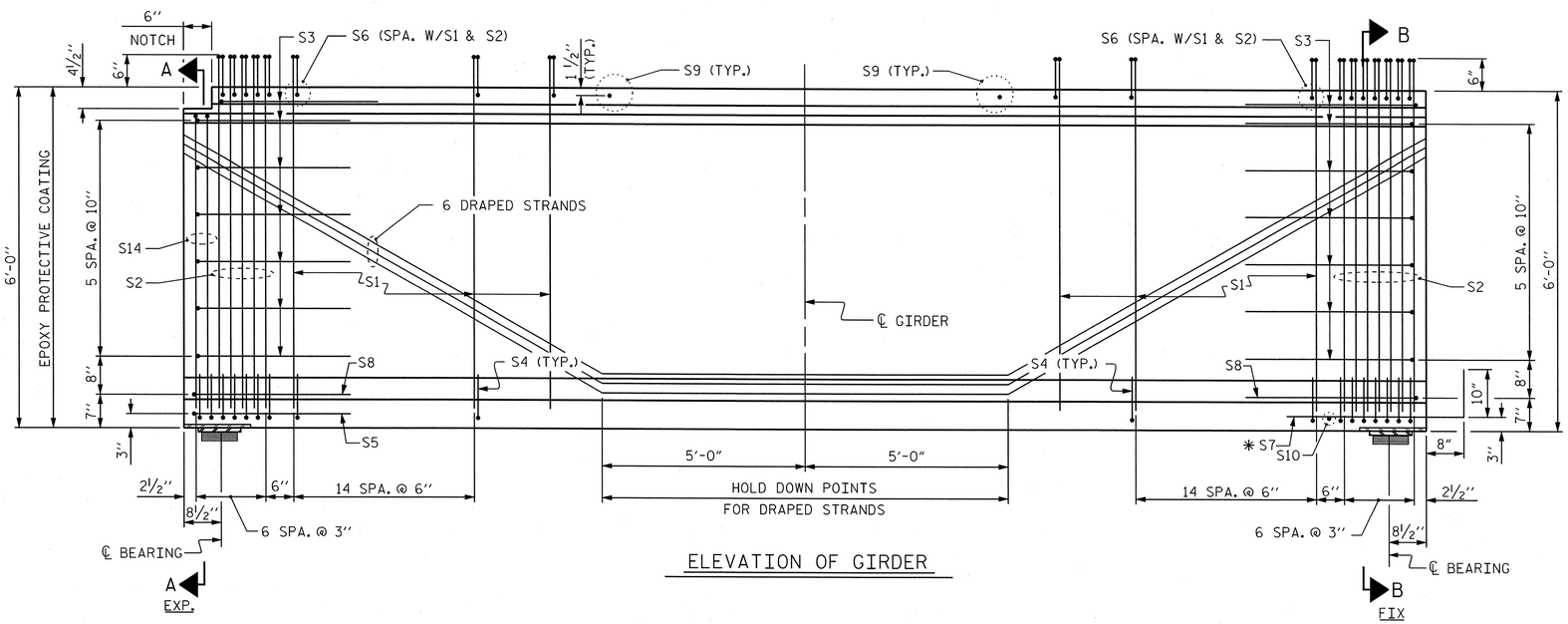

ELEVATION OF GIRDER

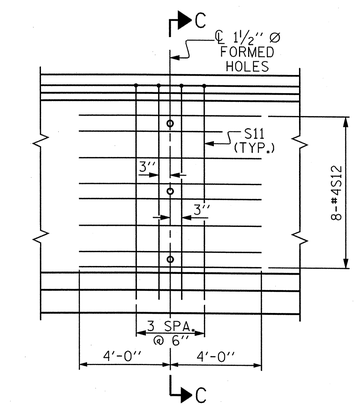

PARTIAL ELEVATION

SHOWING INTERMEDIATE STEEL DIAPHRAGM REINFORCING STEEL FOR GIRDER Nos. 1 & 5

PROJECT NO. U-2525B

GUILFORD COUNTY

STATION: 26+17.64 -Y22-
85+41.17 -Y13-

SHEET 1 OF 2

AECOM
AECOM TECHNICAL SERVICES, INC.
701 CORPORATE CENTER DRIVE, SUITE 475
RALEIGH, NC 27607
(919) 854-6200 www.aecom.com
AECOM License No. F-0342

NORTH CAROLINA PROFESSIONAL ENGINEER SEAL 030474 JOHN C. MORRISON
12/13/13

STATE OF NORTH CAROLINA
DEPARTMENT OF TRANSPORTATION
RALEIGH

STANDARD
72" PRESTRESSED CONCRETE MODIFIED BULB TEE CONTINUOUS FOR LIVE LOAD
(SPAN A)

REVISIONS						SHEET NO.
NO.	BY:	DATE:	NO.	BY:	DATE:	S-511
1			3			TOTAL SHEETS
2			4			541

ASSEMBLED BY :	DDL	DATE :	09/13
CHECKED BY :	JCM	DATE :	09/13
DRAWN BY : EEM 2/6/97	REV. 10/17/00	RWW/LES	
CHECKED BY : VAP 2/6/97	REV. 5/1/06R	TLA/GM	
	REV. 10/1/11	MAA/GM	

STD. NO. PCG8

USER: Lawrenjd
DGN: G:\U2525\B3350\400_Technical_Information_Disc_Files\450_NCDOT Std Tech Design Files\Structures\Bridge 15\Cadd\U2525B_SD_DSN_U14T_PCG_SPAN-A_1.dgn
DATE: 12/9/2013
TIME: 1:47:22 PM

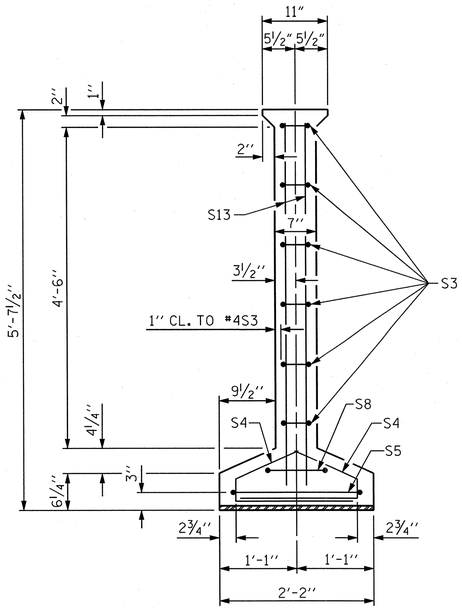

SECTION A-A

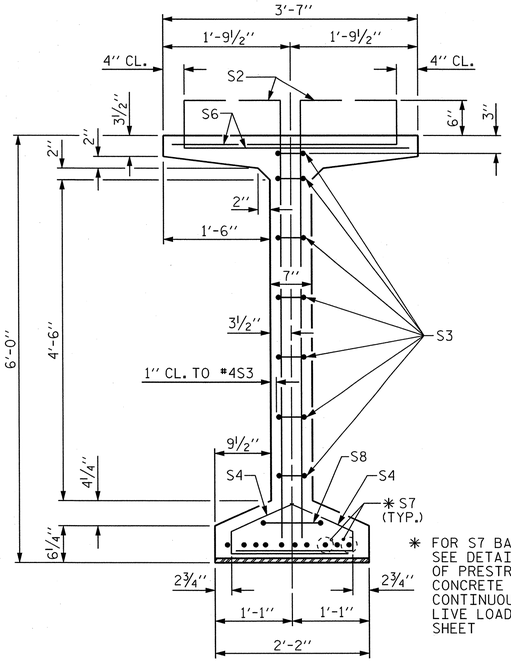

✱ FOR S7 BARS. SEE DETAIL "C" OF PRESTRESSED CONCRETE GIRDER CONTINUOUS FOR LIVE LOAD DETAILS SHEET

SECTION B-B

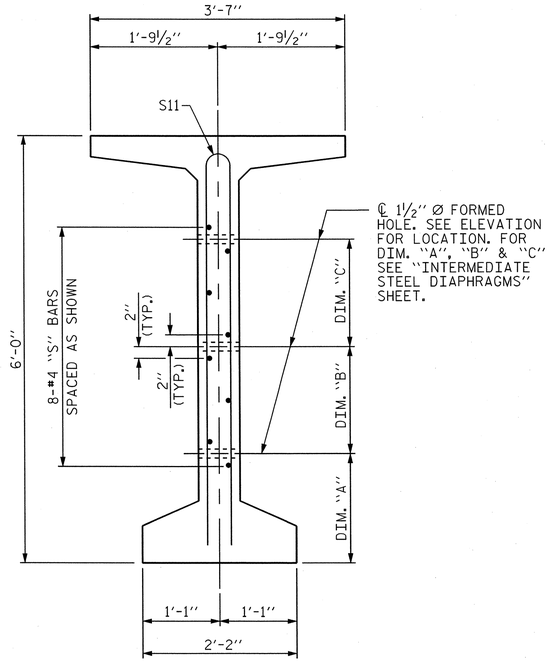

SECTION C-C

(S1, S6 AND S9 BARS NOT SHOWN)

0.6" Ø L. R. GRADE 270 STRANDS		
AREA (SQUARE INCHES)	ULTIMATE STRENGTH (LBS. PER STRAND)	APPLIED PRESTRESS (LBS. PER STRAND)
0.217	58,600	43,950

REINFORCING STEEL FOR ONE GDR

	BAR	NUMBER	SIZE	TYPE	LENGTH	WEIGHT
EXTERIOR GDR.	S1	210	#4	1	6'-10"	959
INTERIOR GDR.	S1	210	#4	1	6'-10"	959
	S2	24	#5	1	6'-10"	171
	S3	14	#4	2	8'-5"	79
	S4	88	#4	3	3'-0"	176
	S5	1	#5	2	9'-10"	10
EXTERIOR GDR.	S6	117	#5	4	4'-4"	528
INTERIOR GDR.	S6	117	#5	4	4'-4"	528
	✱ S7	10	#5	STR	3'-8"	38
	S8	2	#5	2	9'-0"	19
	S9	74	#5	STR	3'-3"	251
	S10	1	#3	STR	1'-10"	1
EXTERIOR GDR.	S11	8	#5	5	11'-6"	96
INTERIOR GDR.	S11	16	#5	5	11'-6"	192
EXTERIOR GDR.	S12	16	#4	STR	8'-0"	86
INTERIOR GDR.	S13	16	#4	STR	12'-2"	130
	S14	2	#5	2	10'-8"	22

✱ NOTE: S7 BARS SHALL BE BENT BEFORE SHIPMENT. HEAT BENDING SHALL NOT BE ALLOWED.

BAR TYPES

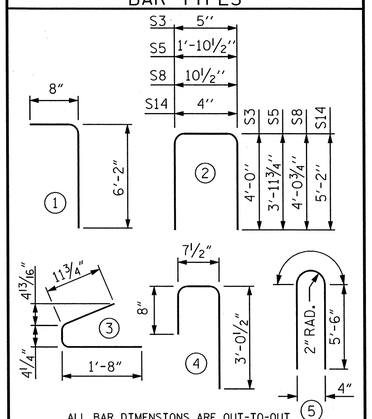

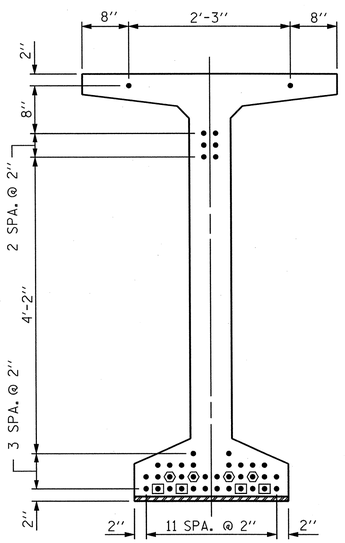

AT END OF GIRDER

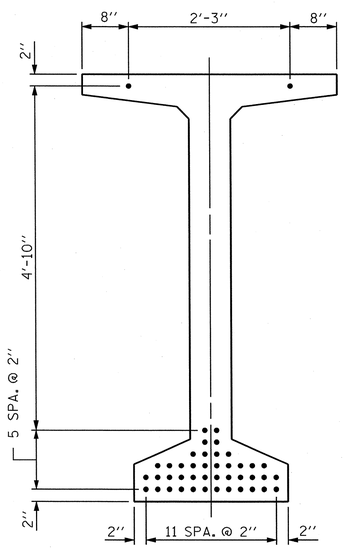

AT ℄ OF GIRDER

0.6" Ø LOW RELAXATION STRAND LAYOUT

DEBONDING LEGEND

- ● FULLY BONDED STRANDS
- ▣ STRANDS DEBONDED FOR 4'-0" FROM END OF GIRDER
- ⬡ STRANDS DEBONDED FOR 12'-0" FROM END OF GIRDER

QUANTITIES FOR ONE GIRDER

	REINFORCING STEEL	8000 PSI CONCRETE	0.6" Ø L.R. STRANDS
	LB.	C.Y.	No.
EXTERIOR GIRDER	2368	28.4	42
INTERIOR GIRDER	2508	28.4	42

GIRDERS REQUIRED

NUMBER	LENGTH	TOTAL LENGTH
5	132'-4½"	661'-10½"

PROJECT NO. U-2525B

GUILFORD COUNTY

STATION: 26+17.64 -Y22-
85+41.17 -Y13-

SHEET 2 OF 2

AECOM
AECOM TECHNICAL SERVICES, INC.
701 CORPORATE CENTER DRIVE, SUITE 475
RALEIGH, NC 27607
(919) 854-6200 www.aecom.com
AECOM License No. F-0342

NORTH CAROLINA PROFESSIONAL SEAL 030474 ENGINEER JOHN C. MORRISON
12/13/13

STATE OF NORTH CAROLINA
DEPARTMENT OF TRANSPORTATION
RALEIGH

STANDARD
72" PRESTRESSED CONCRETE MODIFIED BULB TEE CONTINUOUS FOR LIVE LOAD
(SPAN A)

REVISIONS						SHEET NO.
NO.	BY:	DATE:	NO.	BY:	DATE:	S-512
1			3			TOTAL SHEETS
2			4			541

ASSEMBLED BY : DDL	DATE : 09/13		
CHECKED BY : JCM	DATE : 09/13		
DRAWN BY : EEM 2/6/97	REV. 10/17/00	RWW/LES	
CHECKED BY : VAP 2/6/97	REV. 5/1/06R	TLA/GM	
	REV. 10/1/11	MAA/GM	

STD. NO. PCG8

DATE: 12/9/2013 TIME: 5:45:32 PM
USER: Lewinyl DGN: U2525B_9356v400_Technical_Information_Disc_Files\450_NCDOT Staff Tech Design Files\Structures\Bridge 15\Cadd\U2525B_SD_DSN_Unit_PCG_SPAN-A.dgn

NOTES:

FOR SECTIONS A-A, B-B, C-C AND BILL OF MATERIAL, SEE SHEET 2 OF 2.

FOR INTERMEDIATE STEEL DIAPHRAGM LOCATIONS, SEE "FRAMING PLAN".

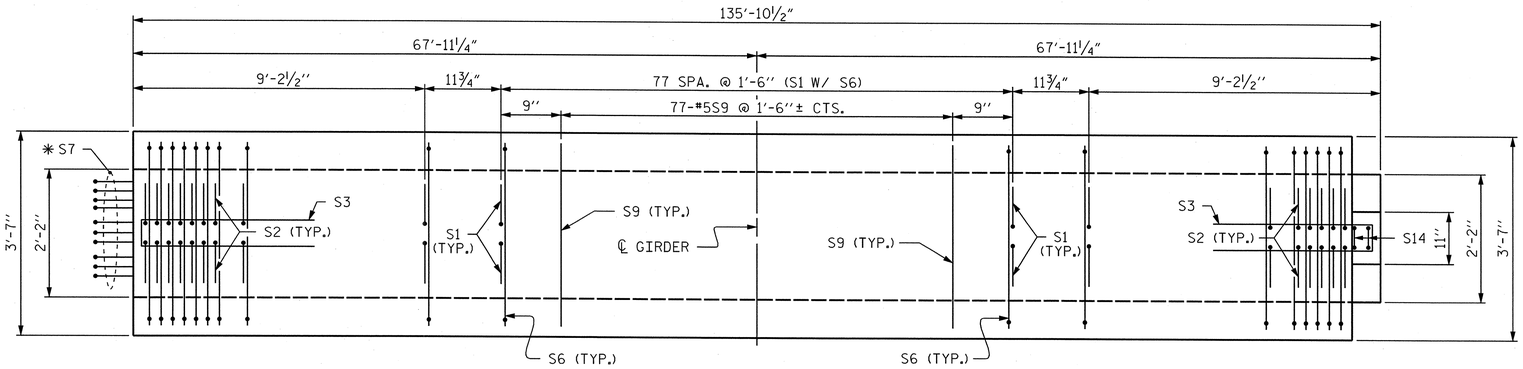

PLAN OF GIRDER

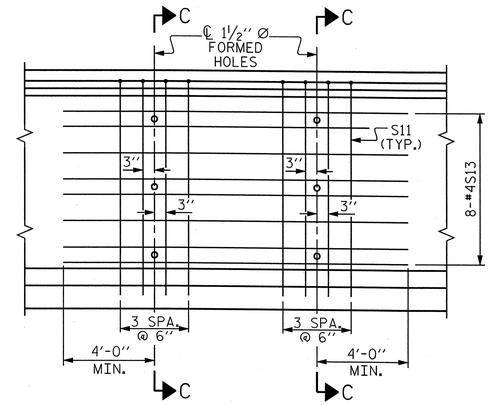

PARTIAL ELEVATION

SHOWING INTERMEDIATE STEEL DIAPHRAGM REINFORCING STEEL FOR GIRDER Nos. 2, 3 & 4

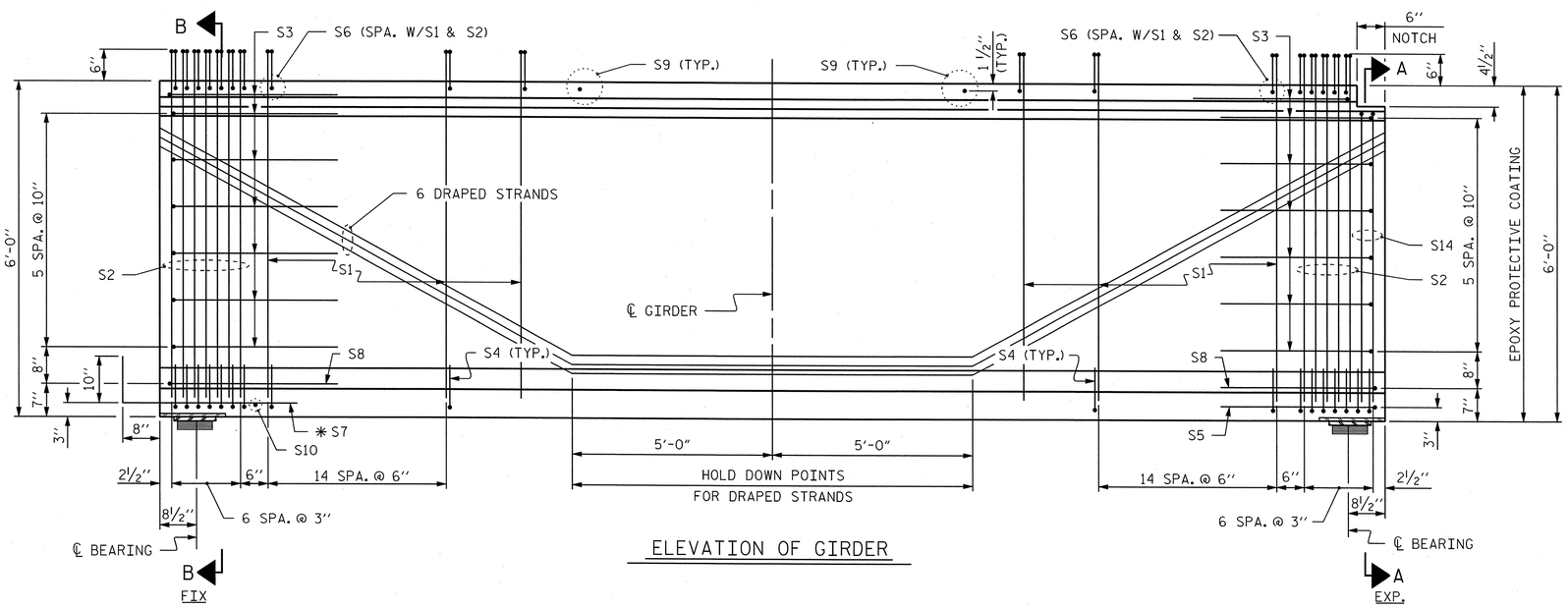

ELEVATION OF GIRDER

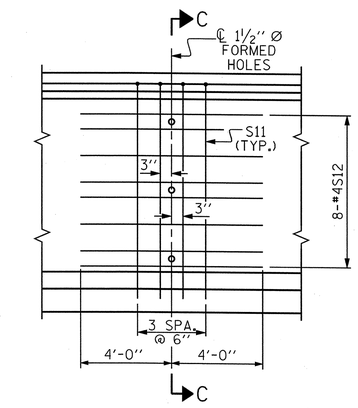

PARTIAL ELEVATION

SHOWING INTERMEDIATE STEEL DIAPHRAGM REINFORCING STEEL FOR GIRDER Nos. 1 & 5

PROJECT NO. U-2525B

GUILFORD COUNTY

STATION: 26+17.64 -Y22-
85+41.17 -Y13-

SHEET 1 OF 2

AECOM

AECOM TECHNICAL SERVICES, INC.
701 CORPORATE CENTER DRIVE, SUITE 475
RALEIGH, NC 27607
(919) 854-6200 www.aecom.com
AECOM License No. F-0342

NORTH CAROLINA PROFESSIONAL SEAL 030474 ENGINEER JOHN C. MORRISON
12/13/13

STATE OF NORTH CAROLINA
DEPARTMENT OF TRANSPORTATION
RALEIGH

STANDARD

72" PRESTRESSED CONCRETE MODIFIED BULB TEE CONTINUOUS FOR LIVE LOAD

(SPAN B)

REVISIONS						SHEET NO.
NO.	BY:	DATE:	NO.	BY:	DATE:	S-513
1			3			TOTAL SHEETS
2			4			541

ASSEMBLED BY :	DDL	DATE :	09/13
CHECKED BY :	JCM	DATE :	09/13
DRAWN BY : EEM 2/6/97	REV. 10/17/00		RWW/LES
CHECKED BY : VAP 2/6/97	REV. 5/1/06R		TLA/GM
	REV. 10/1/11		MAA/GM

STD. NO. PCG8

DATE: 12/31/2013
TIME: 5:44:05 PM

USER: Lawanyd
DGN: G:\5025\9356\400_Technical_Information_Disc_Files\450_NCDOT SiteTech Design Files\Structures\Bridge 1\Scd\U2525B_SD_DSN_1\HT_PCG_SPAN-B_1.dgn

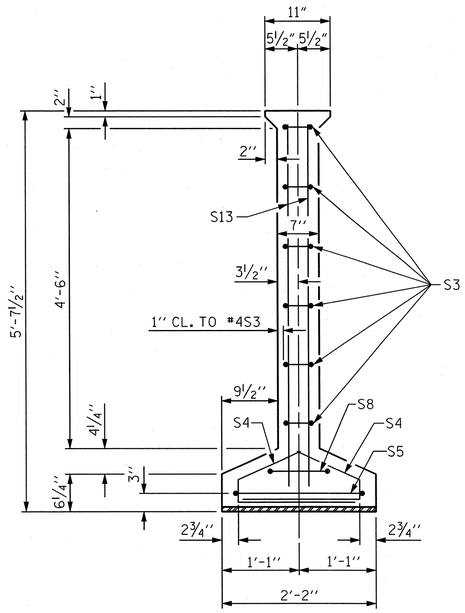

SECTION A-A

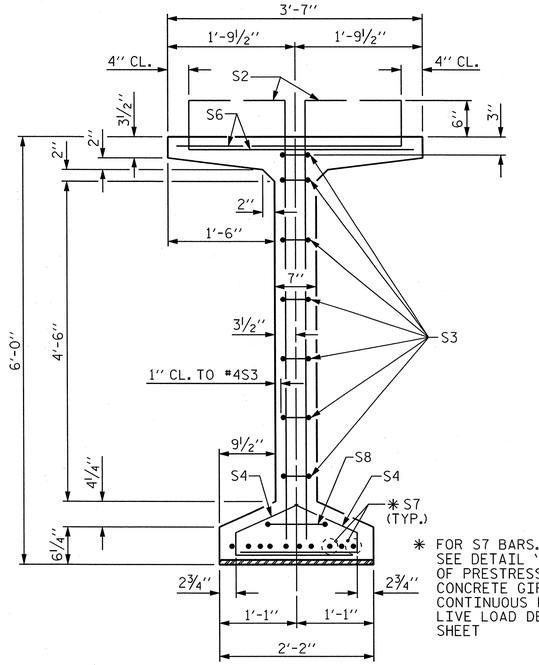

✱ FOR S7 BARS. SEE DETAIL "C" OF PRESTRESSED CONCRETE GIRDER CONTINUOUS FOR LIVE LOAD DETAILS SHEET

SECTION B-B

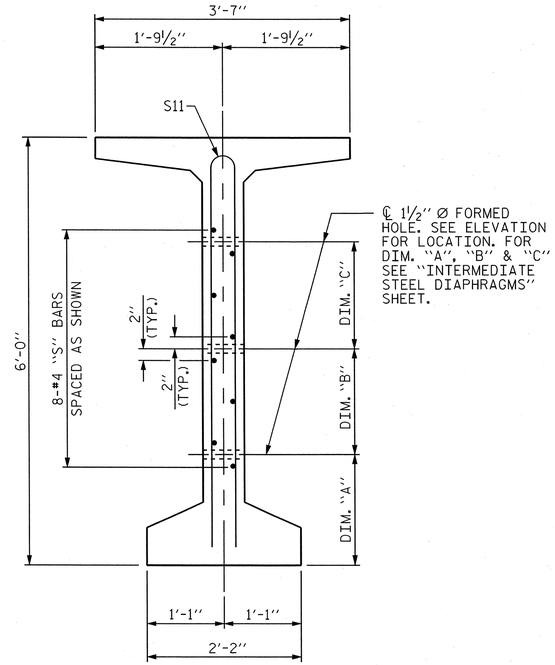

SECTION C-C

(S1, S6 AND S9 BARS NOT SHOWN)

0.6" Ø L. R. GRADE 270 STRANDS		
AREA (SQUARE INCHES)	ULTIMATE STRENGTH (LBS. PER STRAND)	APPLIED PRESTRESS (LBS. PER STRAND)
0.217	58,600	43,950

REINFORCING STEEL FOR ONE GDR

	BAR	NUMBER	SIZE	TYPE	LENGTH	WEIGHT
EXTERIOR GDR.	S1	216	#4	1	6'-10"	986
INTERIOR GDR.	S1	216	#4	1	6'-10"	986
	S2	24	#5	1	6'-10"	171
	S3	14	#4	2	8'-5"	79
	S4	88	#4	3	3'-0"	176
	S5	1	#5	2	9'-10"	10
EXTERIOR GDR.	S6	120	#5	4	4'-4"	542
INTERIOR GDR.	S6	120	#5	4	4'-4"	542
	✱ S7	10	#5	STR	3'-8"	38
	S8	2	#5	2	9'-0"	19
	S9	77	#5	STR	3'-3"	261
	S10	1	#3	STR	1'-10"	1
EXTERIOR GDR.	S11	8	#5	5	11'-6"	96
INTERIOR GDR.	S11	16	#5	5	11'-6"	192
EXTERIOR GDR.	S12	16	#4	STR	8'-0"	86
INTERIOR GDR.	S13	16	#4	STR	12'-6"	134
	S14	2	#5	2	10'-8"	22

✱ NOTE: S7 BARS SHALL BE BENT BEFORE SHIPMENT. HEAT BENDING SHALL NOT BE ALLOWED.

BAR TYPES

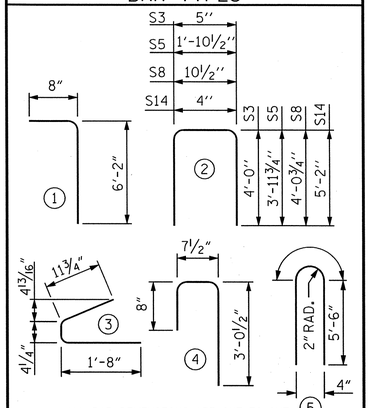

ALL BAR DIMENSIONS ARE OUT-TO-OUT

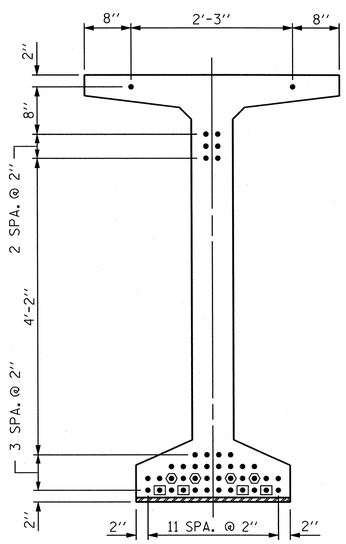

AT END OF GIRDER

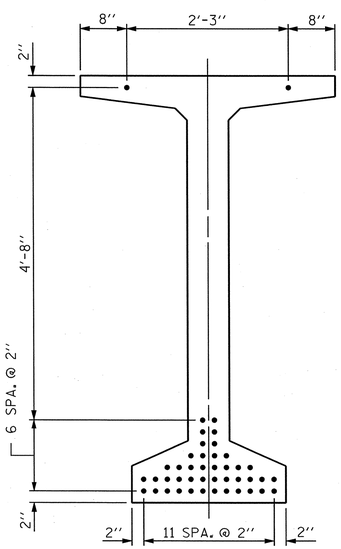

AT ℄ OF GIRDER

0.6" Ø LOW RELAXATION STRAND LAYOUT

DEBONDING LEGEND

- ● FULLY BONDED STRANDS
- ▣ STRANDS DEBONDED FOR 4'-0" FROM END OF GIRDER
- ⬡ STRANDS DEBONDED FOR 14'-0" FROM END OF GIRDER

QUANTITIES FOR ONE GIRDER

	REINFORCING STEEL	8000 PSI CONCRETE	0.6" Ø L.R. STRANDS
	LB.	C.Y.	No.
EXTERIOR GIRDER	2418	29.1	44
INTERIOR GIRDER	2558	29.1	44

GIRDERS REQUIRED

NUMBER	LENGTH	TOTAL LENGTH
5	135'-10½"	679'-4½"

PROJECT NO. U-2525B

GUILFORD COUNTY

STATION: 26+17.64 -Y22-
85+41.17 -Y13-

SHEET 2 OF 2

AECOM

AECOM TECHNICAL SERVICES, INC.
701 CORPORATE CENTER DRIVE, SUITE 475
RALEIGH, NC 27607
(919) 854-6200 www.aecom.com
AECOM License No. F-0342

NORTH CAROLINA PROFESSIONAL SEAL 030474 ENGINEER JOHN C. MORRISON
12/13/13

STATE OF NORTH CAROLINA
DEPARTMENT OF TRANSPORTATION
RALEIGH

STANDARD
72" PRESTRESSED CONCRETE MODIFIED BULB TEE CONTINUOUS FOR LIVE LOAD
(SPAN B)

REVISIONS						SHEET NO.
NO.	BY:	DATE:	NO.	BY:	DATE:	S-514
1			3			TOTAL SHEETS
2			4			541

ASSEMBLED BY :	DDL	DATE :	09/13
CHECKED BY :	JCM	DATE :	09/13
DRAWN BY : EEM 2/6/97	REV. 10/17/00		RWW/LES
CHECKED BY : VAP 2/6/97	REV. 5/1/06R		TLA/GM
	REV. 10/1/11		MAA/GM

STD. NO. PCG8

DATE: 12/9/2013
TIME: 5:45:48 PM
USER: Lawrence
DGN: U:\52279355\400_Technical_Information_Disc_Files\450_NCDOT\StdTechDesignFiles\Structures\Bridge 150\Cad\U252529_SD_DSN_IMF_PCG_SPAN-B.dgn

NOTES

ALL PRESTRESSING STRANDS SHALL BE 7-WIRE LOW-RELAXATION GRADE 270 STRANDS AND SHALL CONFORM TO AASHTO M203 EXCEPT FOR SAMPLING REQUIREMENTS WHICH SHALL BE IN ACCORDANCE WITH THE STANDARD SPECIFICATIONS.

ALL REINFORCING STEEL SHALL BE GRADE 60.

APPLY EPOXY PROTECTIVE COATING TO END OF GIRDER SURFACES INDICATED IN ELEVATION VIEW.

EMBEDDED PLATE "B-1" SHALL BE GALVANIZED IN ACCORDANCE WITH THE STANDARD SPECIFICATIONS. BEVEL EDGES OF PLATE "B-1" TO GIVE CLOSE FIT BUT NOT TIGHT FIT TO STEEL CASTING FORM.

ANCHOR STUDS SHALL CONFORM TO AASHTO M169 GRADES 1010 THROUGH 1020 OR APPROVED EQUAL, AND SHALL MEET THE TYPE "B" REQUIREMENTS OF SUBSECTION 7.3 OF THE ANSI/AASHTO/AWS D1.5 BRIDGE WELDING CODE.

AT ENDS OF GIRDERS TO BE EMBEDDED IN CONCRETE DIAPHRAGMS OR END WALLS, PRESTRESSING STRANDS MAY EXTEND A MAXIMUM OF 2" BEYOND THE GIRDER ENDS. OTHERWISE, PRESTRESSING STRANDS SHALL BE CUT FLUSH WITH THE GIRDER ENDS.

THE TRANSFER OF LOAD FROM THE ANCHORAGES TO THE GIRDER SHALL BE DONE WHEN CONCRETE HAS REACHED A COMPRESSIVE STRENGTH OF NOT LESS THAN 6500 PSI.

DEPENDING ON THE TYPE OF SYSTEM USED TO SUPPORT THE DECK SLAB FORMS, PRESET ANCHORS MAY BE NECESSARY IN THE PRESTRESSED CONCRETE GIRDER.

THE TOP SURFACE OF THE GIRDER, EXCLUDING THE OUTSIDE 4", SHALL BE RAKED TO A DEPTH OF 1/4".

WHEN DRAPED STRANDS ARE DETAILED, THE LONGITUDINAL LOCATION OF THE HOLD DOWN DEVICES SHALL BE WITHIN 6" OF THE LOCATION SHOWN AND THE CENTER OF GRAVITY OF THE GROUP OF DRAPED STRANDS SHALL BE LOCATED WITHIN 1/2" OF THE THEORETICAL LOCATION SHOWN.

A 2" x 2" CHAMFER IS ALLOWED AT THE INTERSECTION OF THE WEB AND THE BOTTOM FLANGE OF THE 72" MODIFIED BULB TEES ONLY.

THE CONTRACTOR HAS THE OPTION TO PROVIDE, AT NO ADDITIONAL COST TO THE DEPARTMENT, 2 ADDITIONAL STRANDS AT THE TOP OF THE GIRDER TO FACILITATE TYING OF THE REINFORCING STEEL. THESE STRANDS SHALL BE PULLED TO A LOAD OF 4500 lbs.

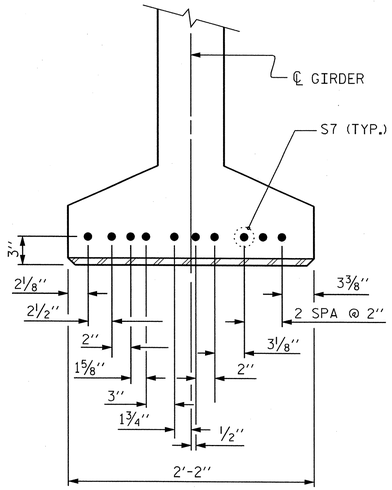

DETAIL "C"

(FOR 72" MODIFIED BULB TEES)

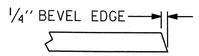

SECTION "G"

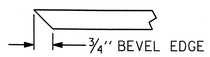

SECTION "F"

(SEE NOTES)

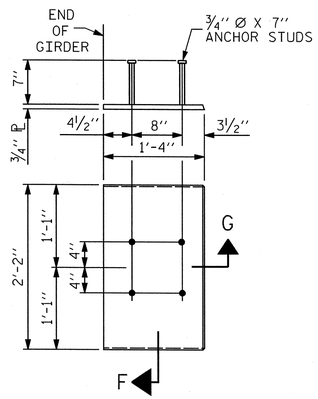

EMBEDDED PLATE "B-1" DETAILS

(2 REQ'D PER GIRDER)

PROJECT NO. U-2525B

GUILFORD COUNTY

STATION: 26+17.64 -Y22-
85+41.17 -Y13-

AECOM

AECOM TECHNICAL SERVICES, INC.
701 CORPORATE CENTER DRIVE, SUITE 475
RALEIGH, NC 27607
(919) 854-6200 www.aecom.com
AECOM License No. F-0342

NORTH CAROLINA PROFESSIONAL SEAL 030474 ENGINEER JOHN C. MORRISON
12/13/13

STATE OF NORTH CAROLINA
DEPARTMENT OF TRANSPORTATION
RALEIGH

STANDARD

PRESTRESSED CONCRETE GIRDER CONTINUOUS FOR LIVE LOAD DETAILS

REVISIONS						
NO.	BY:	DATE:	NO.	BY:	DATE:	
1			3			
2			4			

SHEET NO. S-515

TOTAL SHEETS 541

ASSEMBLED BY :	DDL	DATE :	09/13
CHECKED BY :	JCM	DATE :	09/13
DRAWN BY : ELR 11/91	REV. 7/10/01	RR	LES/RDR
CHECKED BY : GRP 11/91	REV. 5/1/06		TLA/GM
	REV. 10/1/11		MAA/GM

STD. NO. PCG9 (Sht. 5)

USER: Lawrenjd DGN: G:\60129356\400_Technical_Information_Disc_Files\450_NCDOT Std Tech Design Files\Structures\Bridge 15\Cadd\U2525B_SD_DSN_UHF_PCG9_12.dgn DATE: 12/9/2013 TIME: 5:38:58 PM

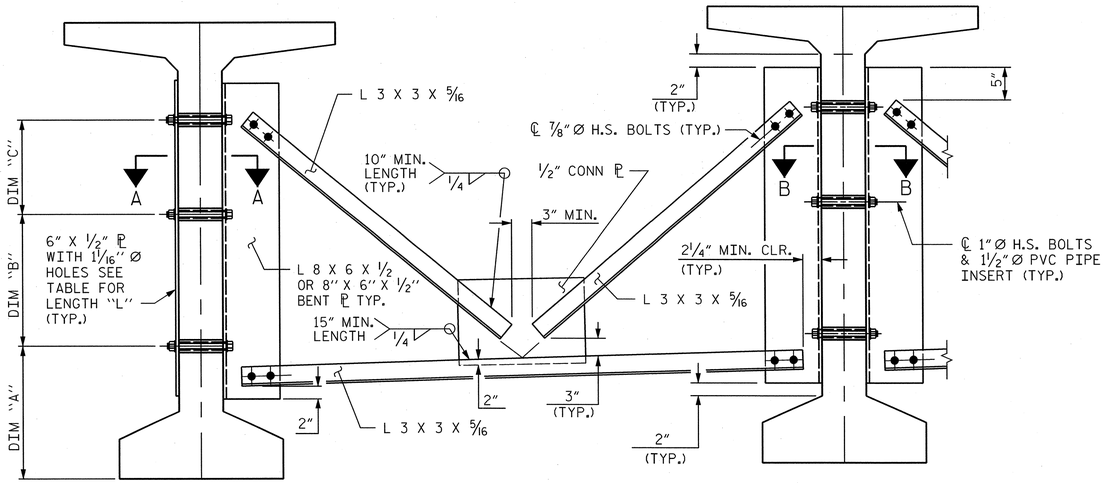

EXTERIOR GIRDER

INTERIOR GIRDER

PART SECTION AT INTERMEDIATE DIAPHRAGM

(72" BULB TEE GIRDER SHOWN)

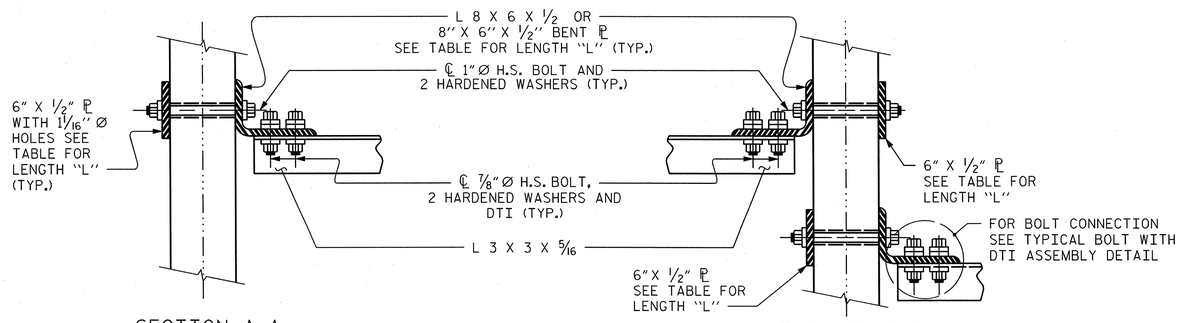

SECTION A-A

SECTION B-B

CONNECTION DETAILS

(FOR SKEW > 110°)

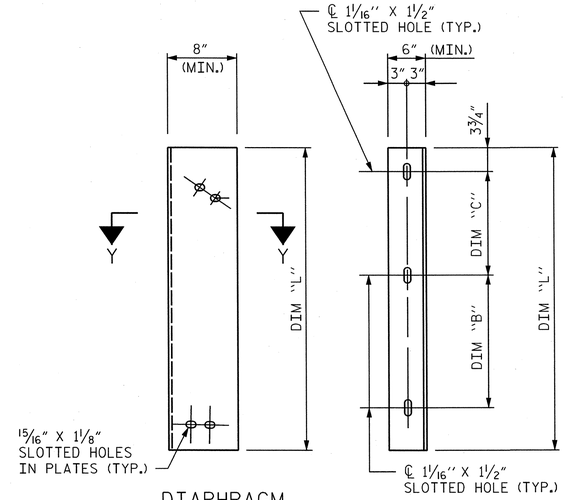

DIAPHRAGM FACE

WEB FACE

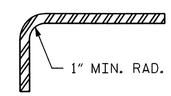

SECTION Y-Y

CONNECTOR PLATE DETAIL

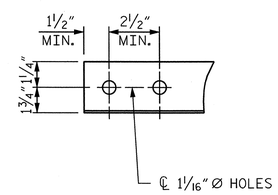

ANGLE END

(L 3 X 3 X 5/16)

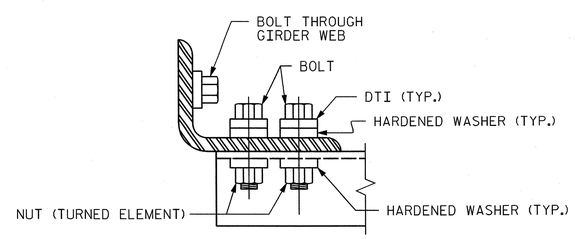

BOLT WITH DTI ASSEMBLY DETAIL

STRUCTURAL STEEL NOTES

ALL INTERMEDIATE DIAPHRAGM STEEL AND CONNECTOR PLATES SHALL BE AASHTO M270 GRADE 50 OR APPROVED EQUAL.

TENSION ON THE ASTM A325 BOLTS THROUGH THE ANGLE MEMBER SHALL BE CALIBRATED USING DIRECT TENSION INDICATOR WASHERS IN ACCORDANCE WITH THE STANDARD SPECIFICATIONS.

TENSION ON THE ASTM A449 BOLTS THROUGH THE GIRDER WEB SHALL BE SNUG TIGHTENED FOLLOWED BY AN ADDITIONAL 1/4 TURN.

THE PLATES, BENT PLATES, AND ANGLES SHALL BE GALVANIZED OR METALLIZED IN ACCORDANCE WITH THE STANDARD SPECIFICATIONS. FOR THERMAL SPRAYED COATINGS (METALLIZATION), SEE SPECIAL PROVISIONS.

FOR METALLIZATION, APPLY AN 8 MIL THICK 99.99 PERCENT ZINC (W-Zn-1) THERMAL SPRAYED COATING WITH A 0.5 MIL THICK SEAL COAT TO ALL STEEL DIAPHRAGM SURFACES IN ACCORDANCE WITH THE THERMAL SPRAYED COATINGS SPECIAL PROVISION AND SECTION 442 OF THE STANDARD SPECIFICATIONS.

GALVANIZE THE HIGH STRENGTH BOLTS, NUTS, WASHERS AND DIRECT TENSION INDICATORS IN ACCORDANCE WITH THE STANDARD SPECIFICATIONS.

USE AN ASTM F436 HARDENED WASHER WITH STANDARD AND SLOTTED HOLES UNDER EACH BOLT HEAD AND NUT.

FOR BOLTS THROUGH THE GIRDER WEB, PROVIDE SUFFICIENT LENGTH OF THREADS ON ALL BOLTS TO ACCOMMODATE WASHERS AND THE THICKNESS OF CONNECTING MEMBER PLUS AT LEAST 1/4" PROJECTION BEYOND THE NUT.

INTERMEDIATE DIAPHRAGM ASSEMBLY SHALL COMPLY WITH SECTION 1072 OF THE STANDARD SPECIFICATIONS.

SUBMIT TWO SETS OF WORKING DRAWINGS FOR THE INTERMEDIATE DIAPHRAGM ASSEMBLY FOR REVIEW, COMMENTS AND ACCEPTANCE. AFTER REVIEW, COMMENTS, AND ACCEPTANCE, SUBMIT SEVEN SETS FOR DISTRIBUTION.

IN THE EXTERIOR BAYS, PLACE TEMPORARY STRUTS BETWEEN PRESTRESSED GIRDERS ADJACENT TO THE STEEL DIAPHRAGMS. STRUTS SHALL REMAIN IN PLACE 3 DAYS AFTER CONCRETE IS PLACED.

THE COST OF THE STEEL DIAPHRAGMS AND ASSEMBLIES SHALL BE INCLUDED IN THE UNIT PRICE BID FOR PRESTRESSED CONCRETE GIRDERS.

TABLE

GIRDER TYPE	DIM "A"	DIM "B"	DIM "C"	DIM "L"
72" BULB TEE	1'-4"	1'-9"	1'-9"	4'-2"

PROJECT NO. U-2525B

GUILFORD COUNTY

STATION: 26+17.64 -Y22-
85+41.17 -Y13-

AECOM
AECOM TECHNICAL SERVICES, INC.
701 CORPORATE CENTER DRIVE, SUITE 475
RALEIGH, NC 27607
(919) 854-6200 www.aecom.com
AECOM License No. F-0342

NORTH CAROLINA PROFESSIONAL SEAL 030474 ENGINEER JOHN C. MORRISON
12/13/13

STATE OF NORTH CAROLINA
DEPARTMENT OF TRANSPORTATION
RALEIGH

STANDARD

INTERMEDIATE STEEL DIAPHRAGMS FOR 72" MODIFIED BULB TEE PRESTRESSED CONCRETE GIRDER

REVISIONS							SHEET NO.
NO.	BY:	DATE:	NO.	BY:	DATE:		S-516
1			3				TOTAL SHEETS
2			4				541

ASSEMBLED BY :	DDL	DATE :	09/13
CHECKED BY :	JCM	DATE :	09/13
DRAWN BY : RWW 11/09		ADDED 11/23/09R REV. 10/1/11 MAA/GM	
CHECKED BY : GM 11/09			

STD. NO. PCG11 (SHT 5)

USER: Lawanda
DGN: 0:\60079356\400_Technical_Information_Disc_Files\450_NCDOT Staff and Design Files\Structures\Bridge 150\cad\U2525B_SD_DSN_Int_PCG11_12.dgn
DATE: 12/9/2013
TIME: 5:34:41 PM

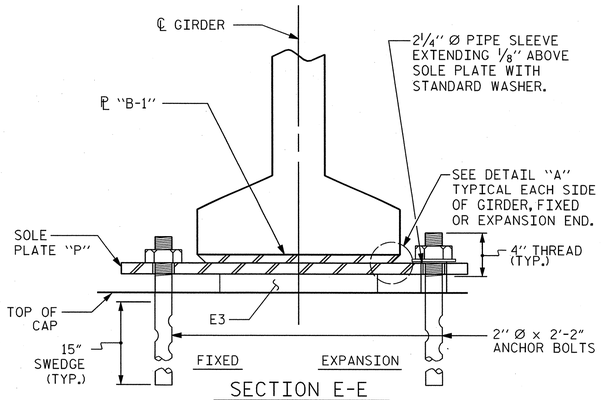

SECTION E-E

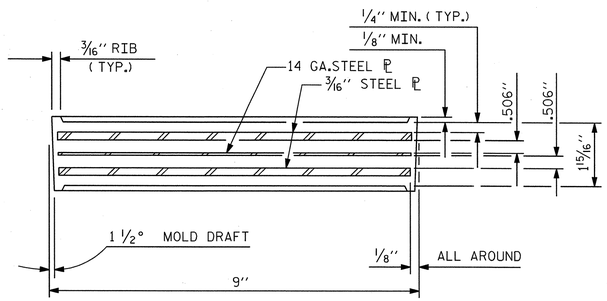

TYPICAL SECTION OF ELASTOMERIC BEARINGS

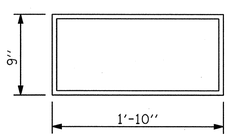

E3 (20 REQ'D)

PLAN VIEW OF ELASTOMERIC BEARING

TYPE IV

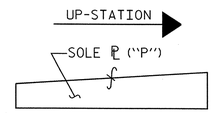

SOLE ℙ PLACEMENT DETAIL

(SOLE PLATES P1, P3, P4)

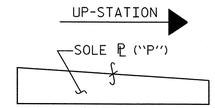

SOLE ℙ PLACEMENT DETAIL

(SOLE PLATE P5)

TABLE OF SOLE PLATES				
TYPE	F/E ✱	"A" (in)	"B" (in)	No.
P1	E	1¼	1⅝	5
P2	F	1¼	-	5
P3	F	1½	1 11/16	1
P4	F	1⅝	1¾	4
P5	E	1⅜	1¼	5

✱ DENOTES FIXED OR EXPANSION

MAXIMUM ALLOWABLE SERVICE LOADS	
D.L.+L.L. (NO IMPACT)	
TYPE IV	225 k

NOTES

AT ALL FIXED POINTS OF SUPPORT, NUTS FOR ANCHOR BOLTS ARE TO BE TIGHTENED FINGER TIGHT AND THEN BACKED OFF ½ TURN. THE THREAD OF THE NUT AND BOLT SHALL THEN BE BURRED WITH A SHARP POINTED TOOL.

THE 2" Ø PIPE SLEEVE SHALL BE CUT FROM SCHEDULE 40 PVC PLASTIC PIPE. THE PVC PLASTIC PIPE SHALL MEET THE REQUIREMENTS OF ASTM D1785.

STEEL SOLE PLATES, ANCHOR BOLTS, NUTS, AND WASHERS SHALL BE GALVANIZED IN ACCORDANCE WITH THE STANDARD SPECIFICATIONS.

PRIOR TO WELDING, GRIND THE GALVANIZED SURFACE OF THE PORTION OF THE EMBEDDED PLATE AND SOLE PLATE THAT ARE TO BE WELDED. AFTER WELDING, DAMAGED GALVANIZED SURFACES SHALL BE REPAIRED IN ACCORDANCE WITH THE STANDARD SPECIFICATIONS.

WHEN WELDING THE SOLE PLATE TO THE EMBEDDED PLATE IN THE GIRDER, USE TEMPERATURE INDICATING WAX PENS, OR OTHER SUITABLE MEANS, TO ENSURE THAT THE TEMPERATURE OF THE SOLE PLATE DOES NOT EXCEED 300°F. TEMPERATURES ABOVE THIS MAY DAMAGE THE ELASTOMER.

SOLE PLATE "P", BOLTS, NUTS, WASHERS, AND PIPE SLEEVE SHALL BE INCLUDED IN THE PAY ITEM FOR PRESTRESSED CONCRETE GIRDERS.

ANCHOR BOLTS SHALL MEET THE REQUIREMENTS OF ASTM A449. NUTS SHALL MEET THE REQUIREMENTS OF AASHTO M291-DH OR AASHTO M292-2H. WASHERS SHALL MEET THE REQUIREMENTS OF AASHTO M293. NO SHOP DRAWINGS ARE REQUIRED FOR ANCHOR BOLTS, NUTS AND WASHERS. SHOP INSPECTION IS REQUIRED.

ALL SURFACES OF BEARING PLATES SHALL BE SMOOTH AND STRAIGHT.

THE ELASTOMER IN THE STEEL REINFORCED BEARINGS SHALL HAVE A SHEAR MODULUS OF 0.160 KSI, IN ACCORDANCE WITH AASHTO M251.

FOR STEEL REINFORCED ELASTOMERIC BEARINGS, SEE SPECIAL PROVISIONS.

FOR LOCATION OF SOLE PLATES AND BEARINGS, SEE "FRAMING PLAN"

ƒ - SURFACE FINISH

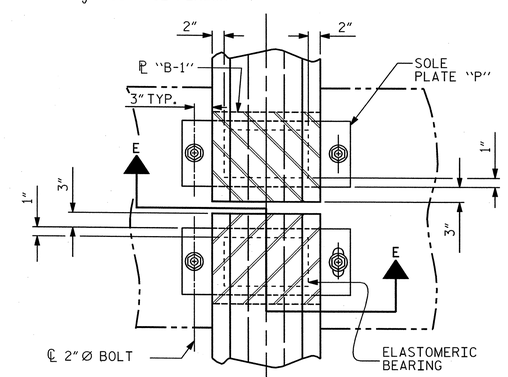

TYPICAL HALF-PLAN (SHOWING CONTINUOUS BENT)

TYPICAL HALF-PLAN (SHOWING SIMPLE SPAN BENT)

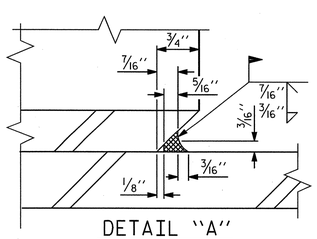

DETAIL "A"

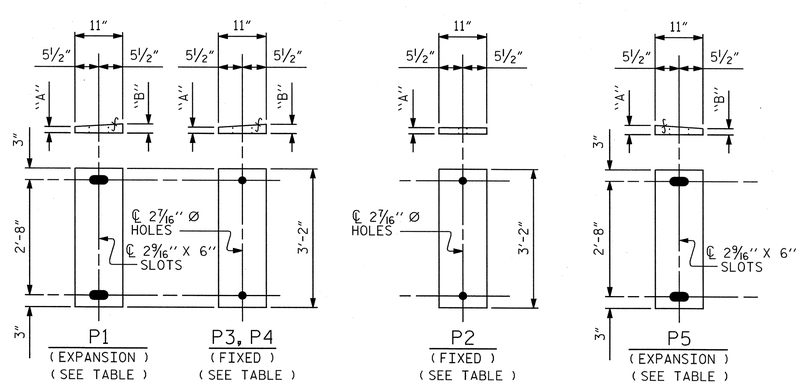

SOLE PLATE DETAILS ("P")

PROJECT NO. U-2525B

GUILFORD COUNTY

STATION: 26+17.64 -Y22-
85+41.17 -Y13-

AECOM
AECOM TECHNICAL SERVICES, INC.
701 CORPORATE CENTER DRIVE, SUITE 475
RALEIGH, NC 27607
(919) 854-6200 www.aecom.com
AECOM License No. F-0342

NORTH CAROLINA PROFESSIONAL SEAL 030474 ENGINEER KEVIN C. MORRISON
12/13/13

STATE OF NORTH CAROLINA
DEPARTMENT OF TRANSPORTATION
RALEIGH

STANDARD

ELASTOMERIC BEARING DETAILS

PRESTRESSED CONCRETE GIRDER SUPERSTRUCTURE

REVISIONS						
NO.	BY:	DATE:	NO.	BY:	DATE:	
1			3			
2			4			

SHEET NO. S-517

TOTAL SHEETS 541

ASSEMBLED BY :	DDL	DATE :	09/13
CHECKED BY :	JCM	DATE :	09/13
DRAWN BY : EEM	2/97	REV. 5/1/06	TLA/GM
CHECKED BY : VAP	2/97	REV. 10/1/11	MAA/GM
		REV. 10/24/12	AAC/MAA

STD. NO. EB4 (SHT 1)

USER: lawcyd
DGN: G:\60129356\400_Technical_Information_Disc_Files\450_NCDOT Std Tech Design Files\Structures\Bridge 19\Cadd\U2525B_SD_DSN_J4ft_EB4_12.dgn
DATE: 12/9/2013
TIME: 4:31:59 PM

DEAD LOAD DEFLECTION TABLE FOR GIRDERS

0.6" DIA. LOW-RELAXATION — SPAN "A" — GIRDERS 1 & 5

TWENTIETH POINTS	BRG.	0.05	0.10	0.15	0.20	0.25	0.30	0.35	0.40	0.45	0.50	0.55	0.60	0.65	0.70	0.75	0.80	0.85	0.90	0.95	BRG.
CAMBER (GIRDER ALONE IN PLACE) ↑	0.000	0.084	0.159	0.220	0.273	0.320	0.356	0.385	0.406	0.417	0.422	0.417	0.406	0.385	0.356	0.320	0.273	0.220	0.159	0.084	0.000
* DEFLECTION DUE TO SUPERIMPOSED DL ↓	0.000	-0.033	-0.065	-0.097	-0.127	-0.153	-0.175	-0.193	-0.206	-0.214	0.217	-0.214	-0.206	-0.193	-0.175	-0.153	-0.127	-0.097	-0.065	-0.033	0.000
** FINAL CAMBER (OR DEFLECTION) ↑	0"	5/8"	1 1/8"	1 1/2"	1 3/4"	2"	2 3/16"	2 5/16"	2 3/8"	2 7/16"	2 7/16"	2 7/16"	2 3/8"	2 5/16"	2 3/16"	2"	1 3/4"	1 1/2"	1 1/8"	5/8"	0"

DEAD LOAD DEFLECTION TABLE FOR GIRDERS

0.6" DIA. LOW-RELAXATION — SPAN "A" — GIRDERS 2, 3 & 4

TWENTIETH POINTS	BRG.	0.05	0.10	0.15	0.20	0.25	0.30	0.35	0.40	0.45	0.50	0.55	0.60	0.65	0.70	0.75	0.80	0.85	0.90	0.95	BRG.
CAMBER (GIRDER ALONE IN PLACE) ↑	0.000	0.084	0.159	0.220	0.273	0.320	0.356	0.385	0.406	0.417	0.422	0.417	0.406	0.385	0.356	0.320	0.273	0.220	0.159	0.084	0.000
* DEFLECTION DUE TO SUPERIMPOSED DL ↓	0.000	-0.032	-0.063	-0.094	-0.123	-0.148	-0.170	-0.187	-0.200	-0.208	0.210	-0.208	-0.200	-0.187	-0.170	-0.148	-0.123	-0.094	-0.063	-0.032	0.000
** FINAL CAMBER (OR DEFLECTION) ↑	0"	5/8"	1 1/8"	1 1/2"	1 13/16"	2 1/16"	2 1/4"	2 3/8"	2 7/16"	2 1/2"	2 9/16"	2 1/2"	2 7/16"	2 3/8"	2 1/4"	2 1/16"	1 13/16"	1 1/2"	1 1/8"	5/8"	0"

DEAD LOAD DEFLECTION TABLE FOR GIRDERS

0.6" DIA. LOW-RELAXATION — SPAN "B" — GIRDERS 1 & 5

TWENTIETH POINTS	BRG.	0.05	0.10	0.15	0.20	0.25	0.30	0.35	0.40	0.45	0.50	0.55	0.60	0.65	0.70	0.75	0.80	0.85	0.90	0.95	BRG.
CAMBER (GIRDER ALONE IN PLACE) ↑	0.000	0.090	0.169	0.238	0.297	0.346	0.386	0.418	0.440	0.453	0.457	0.453	0.440	0.418	0.386	0.346	0.297	0.238	0.169	0.090	0.000
* DEFLECTION DUE TO SUPERIMPOSED DL ↓	0.000	-0.037	-0.073	-0.108	-0.141	-0.170	-0.195	-0.214	-0.229	-0.238	0.241	-0.238	-0.229	-0.214	-0.195	-0.170	-0.141	-0.108	-0.073	-0.037	0.000
** FINAL CAMBER (OR DEFLECTION) ↑	0"	5/8"	1 1/8"	1 9/16"	1 7/8"	2 1/8"	2 5/16"	2 7/16"	2 1/2"	2 9/16"	2 5/8"	2 9/16"	2 1/2"	2 7/16"	2 5/16"	2 1/8"	1 7/8"	1 9/16"	1 1/8"	5/8"	0"

DEAD LOAD DEFLECTION TABLE FOR GIRDERS

0.6" DIA. LOW-RELAXATION — SPAN "B" — GIRDERS 2, 3 & 4

TWENTIETH POINTS	BRG.	0.05	0.10	0.15	0.20	0.25	0.30	0.35	0.40	0.45	0.50	0.55	0.60	0.65	0.70	0.75	0.80	0.85	0.90	0.95	BRG.
CAMBER (GIRDER ALONE IN PLACE) ↑	0.000	0.090	0.169	0.238	0.297	0.346	0.386	0.418	0.440	0.453	0.457	0.453	0.440	0.418	0.386	0.346	0.297	0.238	0.169	0.090	0.000
* DEFLECTION DUE TO SUPERIMPOSED DL ↓	0.000	-0.035	-0.070	-0.105	-0.137	-0.165	-0.189	-0.208	-0.222	-0.231	0.234	-0.231	-0.222	-0.208	-0.189	-0.165	-0.137	-0.105	-0.070	-0.035	0.000
** FINAL CAMBER (OR DEFLECTION) ↑	0"	5/8"	1 3/16"	1 5/8"	1 15/16"	2 3/16"	2 3/8"	2 1/2"	2 5/8"	2 11/16"	2 11/16"	2 11/16"	2 5/8"	2 1/2"	2 3/8"	2 3/16"	1 15/16"	1 5/8"	1 3/16"	5/8"	0"

DATE: 12/9/2013
TIME: 1:22:51 PM

USER: Lawrwd
DGN: G:\60279356\400_Technical_Information_Disc_Files\450_NC20T Std Tech Des\prFiles\Structures\Bridge 15\Cad\U2525B_SD_DSN_UNIT_DL_DEFLECT_1.dgn

DRAWN BY : DDL DATE : 09/13
CHECKED BY : JCM DATE : 09/13

PROJECT NO. U-2525B
GUILFORD **COUNTY**
STATION: 26+17.64 -Y22-
85+41.17 -Y13-

AECOM
AECOM TECHNICAL SERVICES, INC.
701 CORPORATE CENTER DRIVE, SUITE 475
RALEIGH, NC 27607
(919) 854-6200 www.aecom.com
AECOM License No. F-0342

NORTH CAROLINA PROFESSIONAL SEAL 030474 ENGINEER JOHN C. MORRISON
12/13/13

STATE OF NORTH CAROLINA
DEPARTMENT OF TRANSPORTATION
RALEIGH

SUPERSTRUCTURE
GIRDER DEFLECTION AND CAMBER SCHEDULES

(RIGHT LANE)

REVISIONS						SHEET NO.
NO.	BY:	DATE:	NO.	BY:	DATE:	S-518
						TOTAL SHEETS
						541

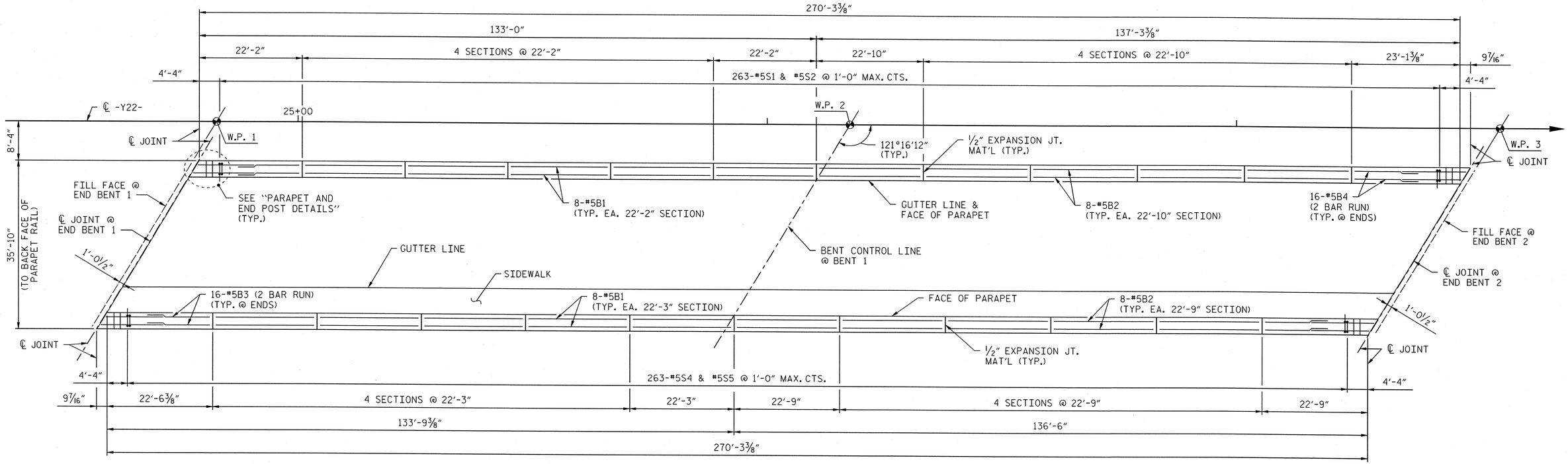

PLAN OF PARAPET REINFORCING

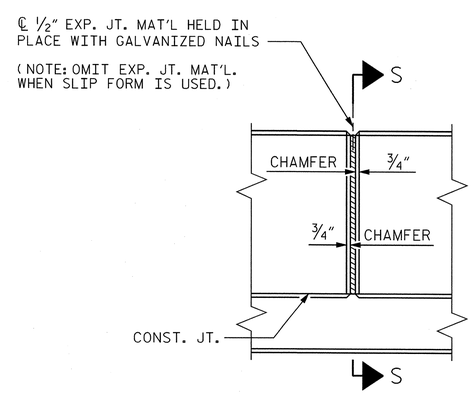

ELEVATION AT EXPANSION JOINTS

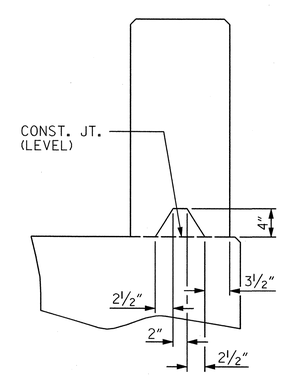

SECTION S-S

AT DAM IN OPEN JOINT
(THIS IS TO BE USED ONLY WHEN SLIP FORM IS USED)

BARRIER RAIL DETAILS

NOTES:

THE JOINT AT ENDS OF DECK SHALL BE SAWED PRIOR TO THE CASTING OF PARAPET.

THE PARAPET RAIL IN A CONTINUOUS UNIT SHALL NOT BE CAST UNTIL ALL SLAB CONCRETE IN THAT UNIT HAS BEEN CAST AND HAS REACHED A MINIMUM COMPRESSIVE STRENGTH OF 3,000 PSI.

ALL REINFORCING STEEL IN PARAPET RAILS SHALL BE EPOXY COATED.

GROOVED CONTRACTION JOINTS ½" IN DEPTH SHALL BE TOOLED IN ALL EXPOSED FACES OF THE PARAPET RAIL AND IN ACCORDANCE WITH ARTICLE 825-10(B) OF THE STANDARD SPECIFICATIONS. A CONTRACTION JOINT SHALL BE LOCATED AT EACH THIRD POINT BETWEEN PARAPET EXPANSION JOINTS. ONLY ONE CONTRACTION JOINT IS REQUIRED AT MIDPOINT OF PARAPET RAIL SEGMENTS LESS THAN 20 FEET IN LENGTH AND NO CONTRACTION JOINTS ARE REQUIRED FOR THOSE SEGMENTS LESS THAN 10 FEET IN LENGTH.

FOR PLAN AND DETAILS OF PARAPET AND END POSTS, SEE "CONCRETE PARAPET AND END POST DETAILS" SHEET 2 OF 2.

DRAWN BY : DDL DATE : 09/13
CHECKED BY : JCM DATE : 09/13

PROJECT NO. U-2525B
GUILFORD COUNTY
STATION: 26+17.64 -Y22-
85+41.17 -Y13-
SHEET 1 OF 2

AECOM
AECOM TECHNICAL SERVICES, INC.
701 CORPORATE CENTER DRIVE, SUITE 475
RALEIGH, NC 27607
(919) 854-6200 www.aecom.com
AECOM License No. F-0342

NORTH CAROLINA PROFESSIONAL SEAL 030474 ENGINEER JOHN C. MORRISON
12/13/13

STATE OF NORTH CAROLINA
DEPARTMENT OF TRANSPORTATION
RALEIGH

SUPERSTRUCTURE
CONCRETE PARAPET AND END POST DETAILS
(RIGHT LANE)

REVISIONS						SHEET NO.
NO.	BY:	DATE:	NO.	BY:	DATE:	S-5R
						TOTAL SHEETS
						541

DATE: 12/9/2013
TIME: 1:23:59 PM
USER: Lwarzyl
DGN: GVBDF9356V400_Technical_Information_Disc_Files\450_NCDOT Staff\enDesignFiles\Structures\Bridge 15\Cadd\U2525B_SD_DSN_Int_PARAPET_Ldgn

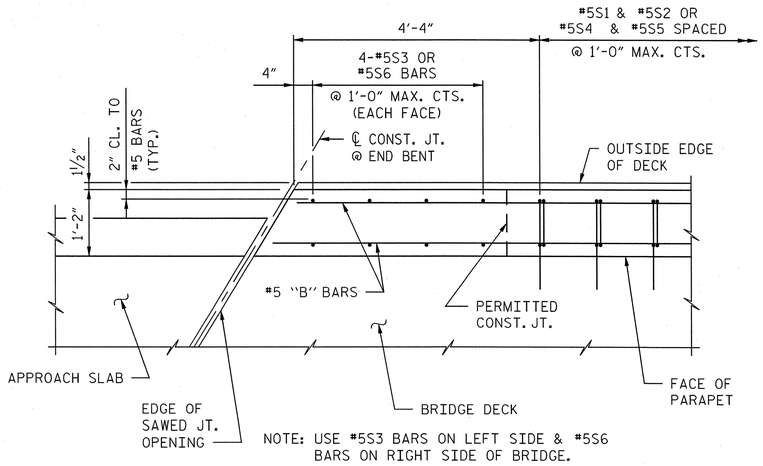

PLAN OF PARAPET

(#7 "E" BARS NOT
SHOWN FOR CLARITY)

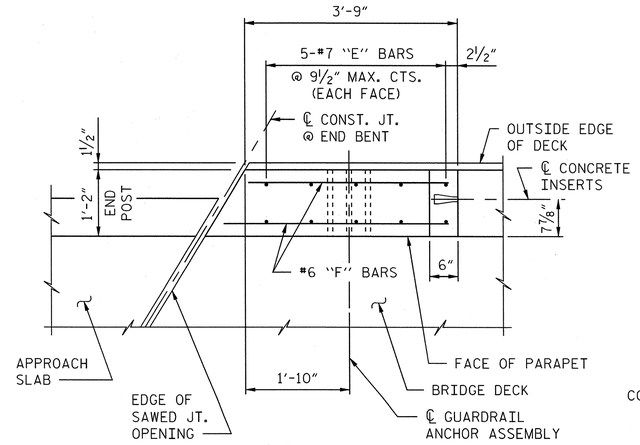

PLAN OF END POST

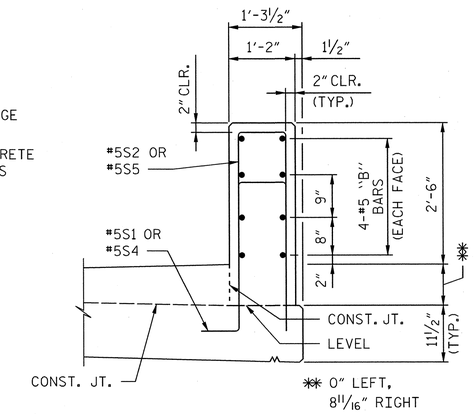

SECTION "A-A"

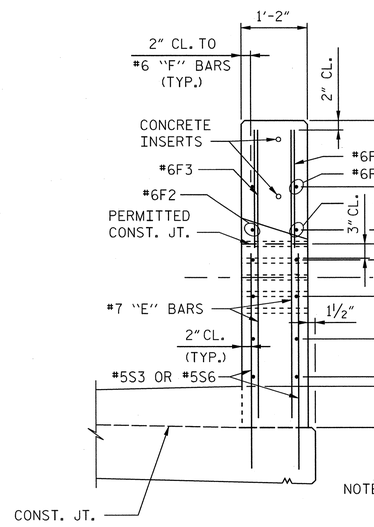

END VIEW

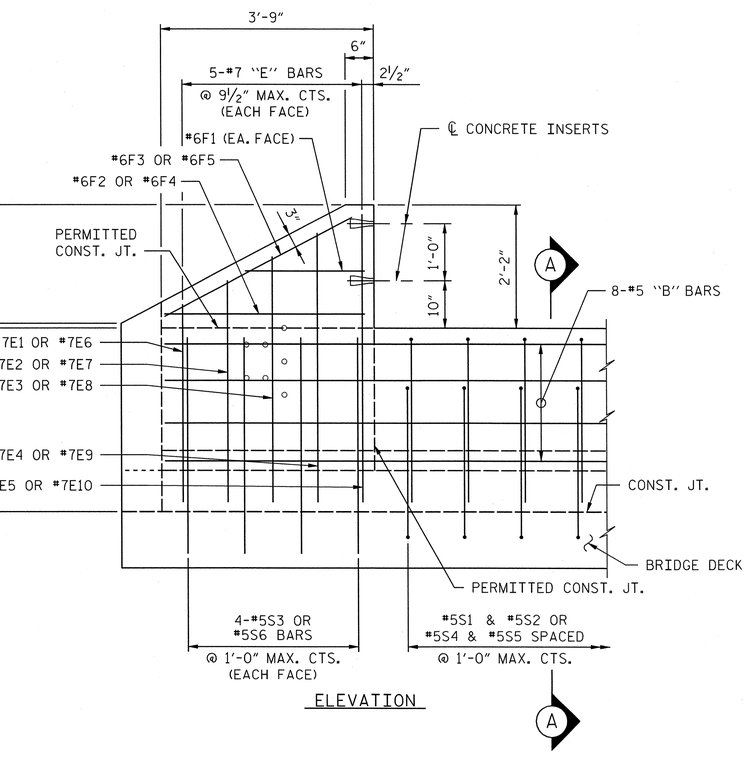

ELEVATION

PARAPET AND END POST FOR TWO BAR RAIL

TWO BAR METAL RAIL

BILL OF MATERIAL FOR PARAPET AND END POSTS

BAR	NO.	SIZE	TYPE	LENGTH	WEIGHT
✱B1	80	#5	STR.	21'-9"	1815
✱B2	80	#5	STR.	22'-4"	1863
✱B3	32	#5	STR.	13'-3"	442
✱B4	32	#5	STR.	13'-6"	451
✱E1	4	#7	STR.	2'-6'	20
✱E2	4	#7	STR.	3'-0"	25
✱E3	4	#7	STR.	3'-6"	29
✱E4	4	#7	STR.	4'-0"	33
✱E5	4	#7	STR.	4'-4"	35
✱E6	4	#7	STR.	3'-1"	25
✱E7	4	#7	STR.	3'-7"	29
✱E8	4	#7	STR.	4'-1"	33
✱E9	4	#7	STR.	4'-7"	37
✱E10	4	#7	STR.	4'-11"	40
✱F1	8	#6	STR.	1'-9"	21
✱F2	4	#6	STR.	2'-11"	18
✱F3	4	#6	STR.	3'-9"	23
✱F4	4	#6	STR.	3'-7"	22
✱F5	4	#6	STR.	4'-5"	26
✱S1	263	#5	1	5'-5"	1486
✱S2	263	#5	2	5'-6"	1509
✱S3	16	#5	STR.	3'-0"	50
✱S4	263	#5	1	6'-7"	1806
✱S5	263	#5	2	6'-8"	1829
✱S6	16	#5	STR.	3'-7"	60
✱EPOXY COATED REINFORCING STEEL				LBS.	11727
CLASS AA CONCRETE				C.Y.	66.3
CONCRETE PARAPET				L.F.	540.6

BAR TYPES

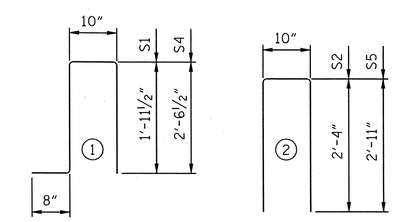

ALL BAR DIMENSIONS ARE OUT TO OUT.

NOTES:

THE #5S3 & #5S6 BARS SHALL BE INSTALLED USING AN ADHESIVE ANCHORING SYSTEM AFTER SAWING THE JOINT. LEVEL TWO FIELD TESTING IS REQUIRED, AND THE YIELD LOAD FOR THE #5S3 & #5S6 BAR IS 18.6 KIPS. FOR ADHESIVELY ANCHORED ANCHOR BOLTS OR DOWELS, SEE THE STANDARD SPECIFICATIONS.

PROJECT NO. U-2525B

GUILFORD **COUNTY**

STATION: 26+17.64 -Y22-
85+41.17 -Y13-

SHEET 2 OF 2

AECOM
AECOM TECHNICAL SERVICES, INC.
701 CORPORATE CENTER DRIVE, SUITE 475
RALEIGH, NC 27607
(919) 854-6200 www.aecom.com
AECOM License No. F-0342

NORTH CAROLINA PROFESSIONAL SEAL 030474 ENGINEER JOHN C. MORRISON
John C. Morrison
12/13/13

STATE OF NORTH CAROLINA
DEPARTMENT OF TRANSPORTATION
RALEIGH

SUPERSTRUCTURE

CONCRETE PARAPET
AND END POST DETAILS

REVISIONS						SHEET NO.
NO.	BY:	DATE:	NO.	BY:	DATE:	S-520
						TOTAL SHEETS
						541

DRAWN BY : DDL DATE : 09/13
CHECKED BY : JCM DATE : 09/13

DATE: 12/9/2013
TIME: 1:24:46 PM

USER: Laverdy
DGN: 0:\60079356\400_Technical_Information_Disc_Files\450_NCDOT\StdTechDesignFiles\Structures\Bridge 150\Cadd\U2525B_SD_DSN_Unit_PARAPET_2.dgn

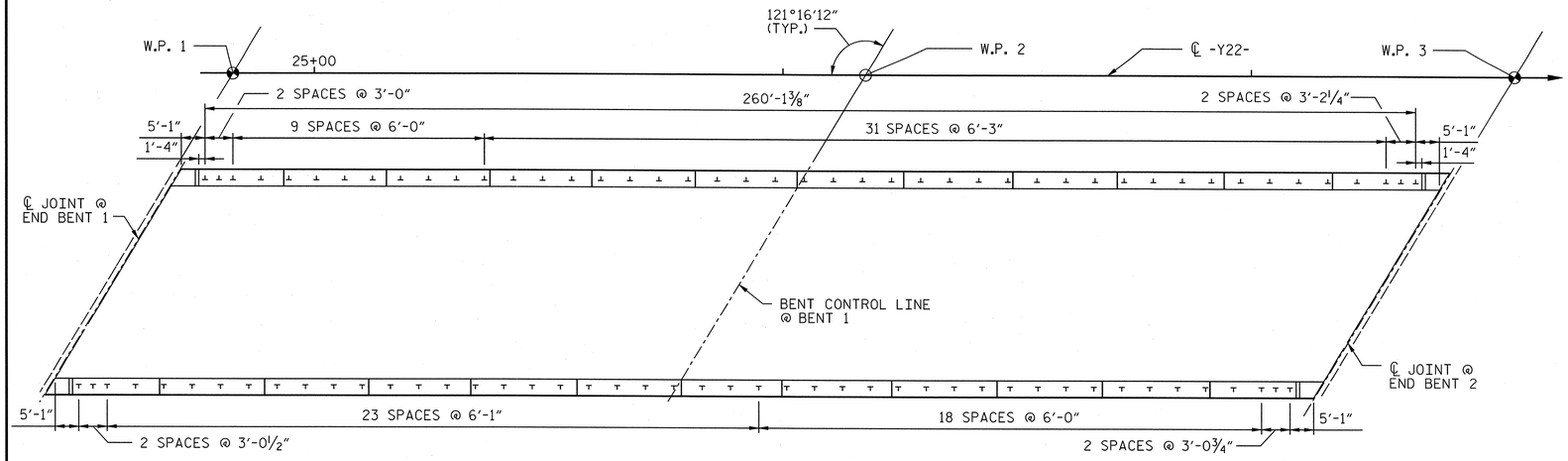

NOTES

STRUCTURAL CONCRETE INSERT

THE STRUCTURAL CONCRETE INSERT ASSEMBLY SHALL CONSIST OF THE FOLLOWING COMPONENTS:

A. FERRULES SHALL BE MADE FROM STEEL MEETING THE REQUIREMENTS OF AASHTO M169, GRADE 12L14 AND SHALL HAVE A MINIMUM LENGTH OF THREADS OF 1½".

B. 1 - ¾" Ø X 1⅝" BOLT WITH WASHER. BOLT SHALL CONFORM TO THE REQUIREMENTS OF ASTM A307. BOLT AND WASHER SHALL BE GALVANIZED. (AT THE CONTRACTOR'S OPTION, STAINLESS STEEL BOLT AND WASHER MAY BE USED AS AN ALTERNATE FOR THE ¾" Ø X 1⅝" GALVANIZED BOLT AND WASHER. THEY SHALL CONFORM TO OR EXCEED THE MECHANICAL REQUIREMENTS OF ASTM A307. THE USE OF THIS ALTERNATE SHALL BE APPROVED BY THE ENGINEER.)

C. WIRE STRUT SHOWN IN THE CONCRETE INSERT ASSEMBLY DETAIL IS THE MINIMUM ALLOWABLE SIZE AND SHALL HAVE A MINIMUM TENSILE STRENGTH OF 100,000 PSI. AS AN OPTION, A 7/16" Ø WIRE STRUT WITH A MINIMUM TENSILE STRENGTH OF 90,000 PSI IS ACCEPTABLE.

NOTES

METAL RAIL TO END POST CONNECTION

THE METAL RAIL TO END POST CONNECTION SHALL CONSIST OF THE FOLLOWING COMPONENTS:

A. ½" PLATES SHALL CONFORM TO AASHTO M270 GRADE 36 AND SHALL BE GALVANIZED AFTER FABRICATION.

B. ¾" STRUCTURAL CONCRETE INSERT SHALL HAVE A WORKING LOAD SHEAR CAPACITY OF 4800 LBS. THE FERRULES SHALL ENGAGE A ¾"Ø X 1⅝" BOLT WITH 2" O.D. WASHER IN PLACE. THE ¾"Ø X 1⅝" BOLT SHALL HAVE N.C. THREADS.

C. CAP SCREWS FOR RAIL ATTACHMENT TO ANGLE SHALL CONFORM TO THE REQUIREMENTS OF ASTM F593 ALLOY 305 STAINLESS STEEL. CAP SCREWS TO BE CENTERED IN SLOTS AT 60°F.

D. STANDARD CLAMP BARS (SEE METAL RAIL SHEET).

E. ½" Ø PIPE SLEEVES (IF REQUIRED) TO BE GALVANIZED.

THE COST OF THE STANDARD CLAMP BARS AND CAP SCREWS USED IN THE METAL RAIL TO END POST CONNECTION SHALL BE INCLUDED IN THE UNIT CONTRACT PRICE BID FOR LINEAR FEET OF 1 OR 2 BAR METAL RAILS.

THE ¾" STRUCTURAL CONCRETE INSERT WITH BOLT SHALL BE ASSEMBLED IN THE SHOP.

THE COST OF THE ¾" STRUCTURAL CONCRETE INSERT ASSEMBLY, AND THE ½" PLATES COMPLETE IN PLACE SHALL BE INCLUDED IN THE VARIOUS PAY ITEMS.

THE CONTRACTOR, AT HIS OPTION, MAY USE AN ADHESIVE BONDING SYSTEM IN LIEU OF THE STRUCTURAL CONCRETE INSERT EMBEDDED IN THE END POST. IF THE ADHESIVE BONDING SYSTEM IS USED, THE ¾" Ø X 1⅝" BOLT WITH WASHER SHALL BE REPLACED WITH A ¾" Ø X 6½" BOLT AND 2" O.D. WASHER. ALL SPECIFICATIONS THAT APPLY TO THE ¾" Ø X 1⅝" BOLT SHALL APPLY TO THE ¾" Ø X 6 ½" BOLT. FIELD TESTING OF THE ADHESIVE BONDING SYSTEM IS NOT REQUIRED.

PLAN OF RAIL POST SPACINGS

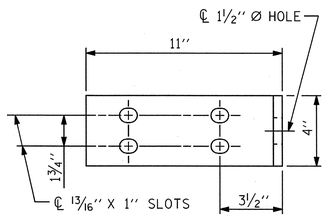

ELEVATION

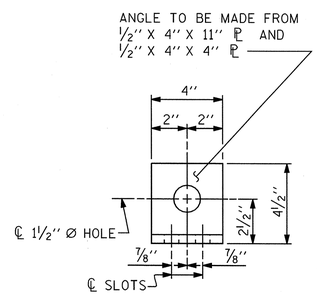

END VIEW (FIX AND EXP.)

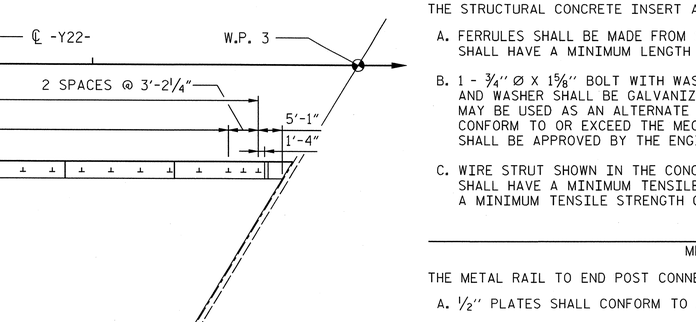

PLAN - RAIL AND END POST

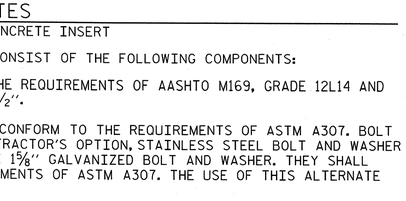

PLAN ELEVATION

STRUCTURAL CONCRETE INSERT

*EACH WELDED ATTACHMENT OF WIRE TO FERRULE SHALL DEVELOP THE TENSILE STRENGTH OF THE WIRE.

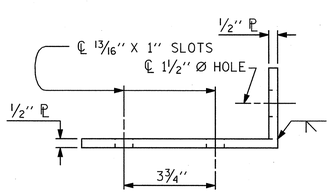

TOP VIEW

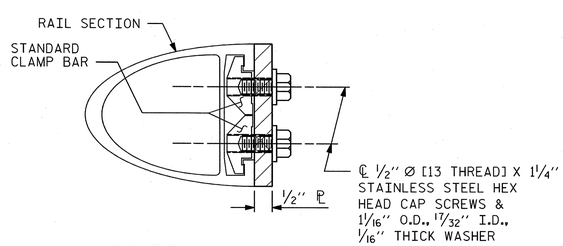

SECTION H-H (FIX)

FIXED

DETAILS FOR ATTACHING METAL RAIL TO END POST

PROJECT NO. U-2525B

GUILFORD COUNTY

STATION: 26+17.64 -Y22-
85+41.17 -Y13-

AECOM
AECOM TECHNICAL SERVICES, INC.
701 CORPORATE CENTER DRIVE, SUITE 475
RALEIGH, NC 27607
(919) 854-6200 www.aecom.com
AECOM License No. F-0342

NORTH CAROLINA PROFESSIONAL SEAL 030474 ENGINEER JOHN C. MORRISON
12/13/13

STATE OF NORTH CAROLINA
DEPARTMENT OF TRANSPORTATION
RALEIGH

STANDARD

RAIL POST SPACINGS AND END OF RAIL DETAILS

FOR ONE OR TWO BAR METAL RAILS

REVISIONS						SHEET NO.
NO.	BY:	DATE:	NO.	BY:	DATE:	S-521
1			3			TOTAL SHEETS
2			4			541

ASSEMBLED BY : DDL	DATE : 09/13		
CHECKED BY : JCM	DATE : 09/13		
DRAWN BY : FCJ 1/88	REV. 5/7/03	RWW/JTE	
CHECKED BY : CRK 3/89	REV. 5/1/06	TLA/GM	
	REV. 10/1/11	MAA/GM	

STD. NO. BMR2

USER: Lawanyd DATE: 12/9/2013
DGN: 0:\60129356\400_Technical_Information_Disc_Files\450_NCDOT\SUT\sut\Design\Files\Structures\Bridge\BCode\U2525B_SD_DSN_HT_BMR2_12.dgn TIME: 4:25:3 PM

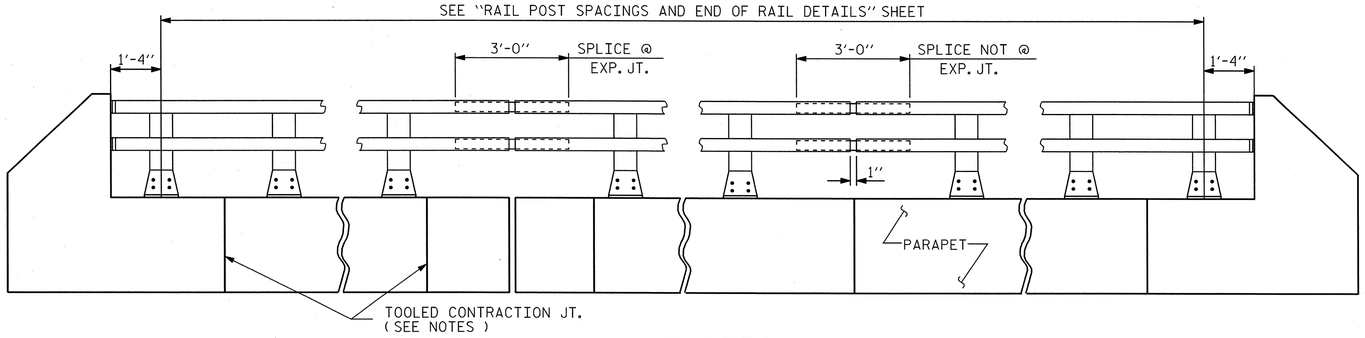

ELEVATION

NOTE : FOR ATTACHMENT OF METAL RAIL TO END POST, SEE STANDARD NO. BMR2.

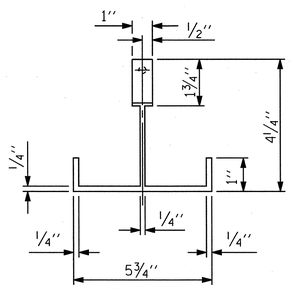

PLAN

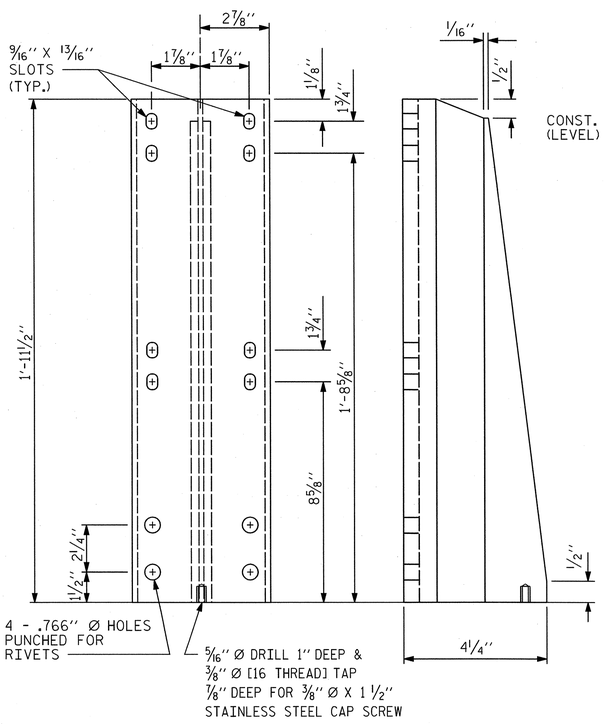

FRONT ELEVATION SIDE ELEVATION

DETAILS OF POST

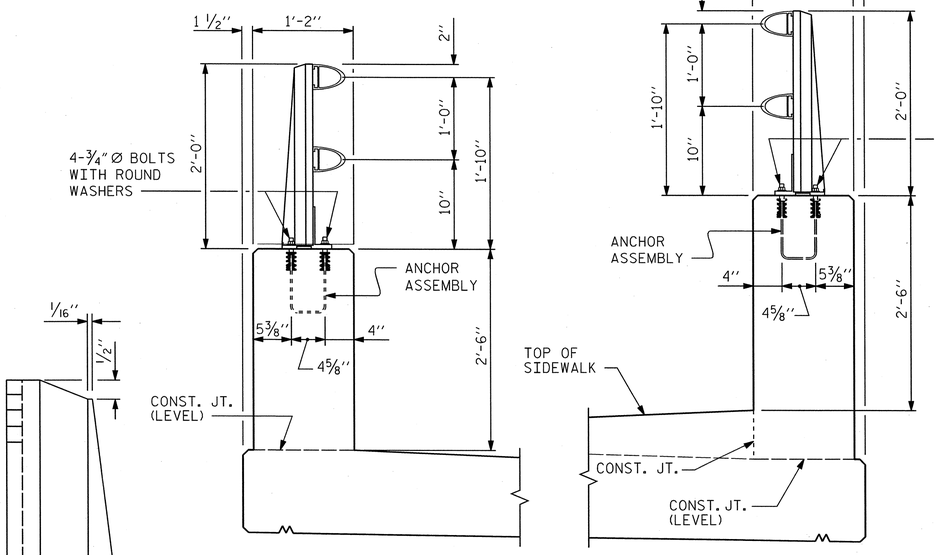

SECTIONS THRU PARAPET AND RAIL

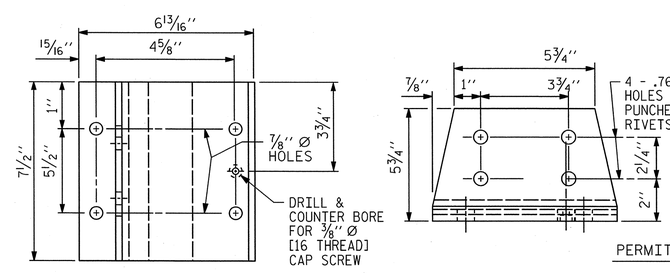

PLAN

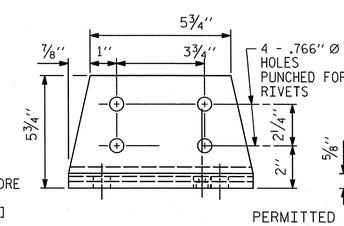

FRONT ELEVATION

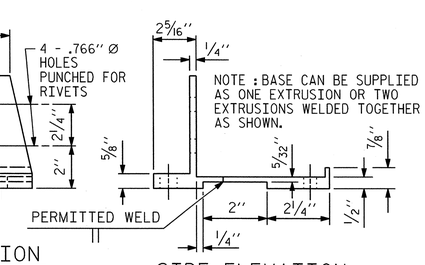

SIDE ELEVATION

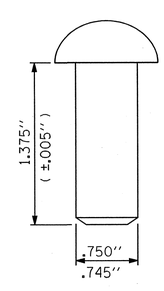

RIVET DETAIL

POST BASE DETAILS

NOTES

AT THE CONTRACTOR'S OPTION, METAL RAIL MAY BE EITHER ALUMINUM OR GALVANIZED STEEL IN ACCORDANCE WITH THE REQUIREMENTS OF THE GENERAL NOTES AND THE FOLLOWING SPECIFICATIONS FOR THE ALTERNATE MATERIALS; HOWEVER, THE CONTRACTOR WILL BE REQUIRED TO USE THE SAME RAIL MATERIAL ON ALL STRUCTURES ON THE PROJECT FOR WHICH METAL RAIL IS DESIGNATED.

UNLESS OTHERWISE REQUIRED IN THE CONTRACT DOCUMENTS, THE CONTRACTOR HAS THE OPTION TO USE AN ALTERNATE TO THE 2 BAR METAL RAIL. THE ALTERNATE RAIL SHALL MEET THE REQUIREMENTS OF THE AASHTO LRFD BRIDGE DESIGN SPECIFICATIONS AND MUST BE LISTED ON THE DEPARTMENT'S APPROVED PRODUCTS LIST (APL) UNDER "2 BAR METAL RAIL ALTERNATE". ADJUSTMENTS TO THE CONCRETE PARAPET WILL NOT BE ALLOWED.

ALUMINUM RAILS

MATERIAL FOR POSTS, BASES AND RAILS, EXPANSION BARS AND CLAMP BARS SHALL BE ASTM B-221 ALLOY 6061-T6.

MATERIAL FOR RIVETS SHALL BE ASTM B316 ALLOY 6061-T6. RIVETS SHALL BE STANDARD BUTTON HEAD AND CONE POINT COLD DRIVEN AS PER DRAWING.

THE BASE OF RAIL POSTS, OR ANY OTHER ALUMINUM SURFACE IN CONTACT WITH CONCRETE SHALL BE THOROUGHLY COATED WITH AN ALUMINUM IMPREGNATED CAULKING COMPOUND OF APPROVED QUALITY.

MATERIAL FOR SHIMS TO BE ASTM B209 ALLOY 6061-T6.

GALVANIZED STEEL RAILS

MATERIAL AND GALVANIZING ARE TO CONFORM TO THE FOLLOWING SPECIFICATIONS:

POST, POST BASES, RAILS, EXPANSION BARS AND CLAMP BARS: AASHTO M270 GRADE 36 STRUCTURAL STEEL - GALVANIZED TO AASHTO M111.

RIVETS: RIVETS SHALL MEET THE REQUIREMENTS OF ASTM A502 FOR GRADE 1 RIVETS.

THE CUT ENDS OF GALVANIZED STEEL RAILING, AFTER GRINDING SMOOTH SHALL BE GIVEN TWO COATS OF ZINC RICH PAINT MEETING THE REQUIREMENTS OF FEDERAL SPECIFICATION MIL-P-26915 USAF TYPE 1, OR OF FEDERAL SPECIFICATIONS TT-P-641.

SHIMS: SHIMS SHALL MEET THE REQUIREMENTS OF ASTM A570 FOR GRADE 33 OR A611 FOR GRADE C AND SHALL BE GALVANIZED IN ACCORDANCE WITH AASHTO M111.

RAIL CAPS: RAIL CAPS SHALL MEET THE REQUIREMENTS OF ASTM A570 FOR GRADE 33 OR A611 FOR GRADE C AND SHALL BE GALVANIZED IN ACCORDANCE WITH AASHTO M111.

GENERAL NOTES

RAILING SHALL BE CONTINUOUS FROM END POST TO END POST OF BRIDGE. EACH JOINT IN RAIL LENGTH SHALL BE SPLICED AS DETAILED. PANEL LENGTHS OF RAIL SHALL BE ATTACHED TO A MINIMUM OF THREE POSTS.

FOR END OF RAIL TO CLEAR FACE OF CONCRETE END POST DIMENSION, SEE STANDARD NO. BMR2.

CAP SCREWS SHALL BE ASTM F593 ALLOY 305 STAINLESS STEEL. WASHERS SHALL MEET THE REQUIREMENTS OF ASTM F844 EXCEPT THEY SHALL BE MADE FROM ALLOY 304 STAINLESS STEEL.

CERTIFIED MILL REPORTS ARE REQUIRED FOR RAILS AND POSTS. SHOP INSPECTION IS NOT REQUIRED.

METAL RAIL POSTS SHALL BE SET NORMAL TO CURB GRADE.

METHOD OF MEASUREMENT FOR METAL RAILS: FOR LENGTH OF METAL RAILS TO BE PAID FOR, SEE THE STANDARD SPECIFICATIONS.

CURVED RAIL USAGE: WHERE RAILS ARE TO BE USED ON BRIDGES ON HORIZONTAL AND/OR VERTICAL CURVATURE THE CONTRACTOR MAY, AT HIS OPTION, HAVE THE REQUIRED CURVATURE IN THE RAIL FORMED IN THE SHOP OR IN THE FIELD. IN EITHER EVENT, THE RAIL SHALL CONFORM WITHOUT BUCKLING OR KINKING TO THE REQUIRED CURVATURE IN A UNIFORM MANNER ACCEPTABLE TO THE ENGINEER.

TO INSURE FUTURE IDENTIFICATION OF THE FABRICATOR, A PERMANENT IDENTIFYING MARK SHALL BE PLACED ON EACH POST. THE METHOD OF MARKING AND LOCATION SHALL BE SUCH THAT IT DOES NOT DETRACT FROM THE APPEARANCE OF THE POST, BUT REMAINS VISIBLE AFTER RAIL PLACEMENT.

SHIMS SHALL BE USED AS NECESSARY FOR POST ALIGNMENT.

ALLOY 6351-T5 MAY BE SUBSTITUTED FOR ALLOY 6061-T6 WHERE APPLICABLE.

MINOR VARIATIONS IN DETAILS OF METAL RAIL WILL BE CONSIDERED. DETAILS OF SUCH VARIATIONS, IF DESIRED, SHALL BE SUBMITTED FOR APPROVAL.

GROOVED CONTRACTION JOINTS, 1/2" IN DEPTH, SHALL BE TOOLED IN ALL EXPOSED FACES OF THE PARAPET AND IN ACCORDANCE WITH ARTICLE 825-10(B) OF THE STANDARD SPECIFICATIONS. A CONTRACTION JOINT SHALL BE LOCATED AT EACH THIRD POINT BETWEEN PARAPET EXPANSION JOINTS. ONLY ONE CONTRACTION JOINT IS REQUIRED AT MIDPOINT OF PARAPET SEGMENTS LESS THAN 20 FEET IN LENGTH AND NO CONTRACTION JOINTS ARE REQUIRED FOR THOSE SEGMENTS LESS THAN 10 FEET IN LENGTH.

PAY LENGTH = 525.6 LIN. FT.

PROJECT NO. U-2525B
GUILFORD COUNTY
STATION: 26+17.64 -Y22-
85+41.17 -Y13-
SHEET 1 OF 2

AECOM
AECOM TECHNICAL SERVICES, INC.
701 CORPORATE CENTER DRIVE, SUITE 475
RALEIGH, NC 27607
(919) 854-6200 www.aecom.com
AECOM License No. F-0342

NORTH CAROLINA PROFESSIONAL SEAL 030474 ENGINEER JOHN C. MORRISON
12/13/13

STATE OF NORTH CAROLINA
DEPARTMENT OF TRANSPORTATION
RALEIGH

STANDARD

2 BAR METAL RAIL

ASSEMBLED BY :	DDL	DATE :	09/13
CHECKED BY :	JCM	DATE :	09/13

DRAWN BY : EEM 6/94	REV. 5/7/03R	RWW/JTE
CHECKED BY : RGW 6/94	REV. 5/1/06	TLA/GM
	REV. 10/1/11	MAA/GM

REVISIONS						
NO.	BY:	DATE:	NO.	BY:	DATE:	
1			3			
2			4			

SHEET NO. S-522
TOTAL SHEETS 541

STD. NO. BMR3

USER: Lowery4
DGN: GN6207p9356v400_Technical_Information_Disc_Files\450_NCDOT\StdTechDesignFiles\Structures\Bridge 15\Cadd\U2525B_SD_DSN_UHT_BMR34_12_Ldgn
DATE: 12/9/2013
TIME: 4:26:04 PM

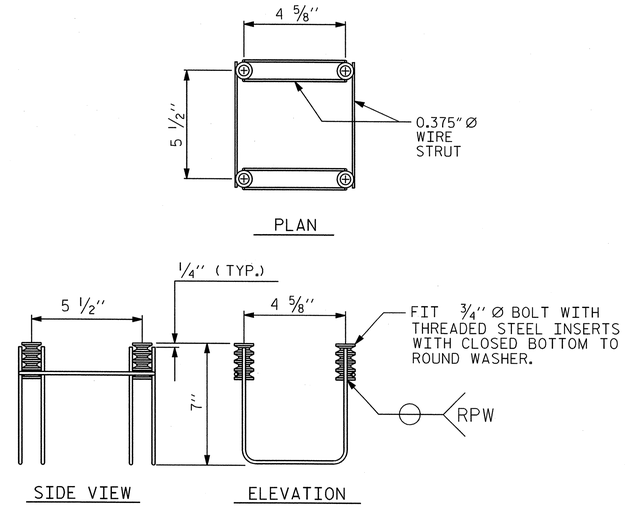

4-BOLT METAL RAIL ANCHOR ASSEMBLY

(91 ASSEMBLIES REQUIRED)

NOTES

STRUCTURAL CONCRETE ANCHOR ASSEMBLY

THE STRUCTURAL CONCRETE ANCHOR ASSEMBLY SHALL CONSIST OF THE FOLLOWING COMPONENTS :

A. FERRULES SHALL BE MADE FROM STEEL MEETING THE REQUIREMENTS OF AASHTO M169, GRADE 12L14 AND SHALL HAVE A MINIMUM LENGTH OF THREADS OF 2'' FOR 3/4'' FERRULES.

B. 4 - 3/4'' Ø X 2 1/2'' BOLTS WITH WASHERS. BOLTS SHALL CONFORM TO THE REQUIREMENTS OF ASTM A307. BOLTS AND WASHERS SHALL BE GALVANIZED. AT THE CONTRACTOR'S OPTION, STAINLESS STEEL BOLTS AND WASHERS MAY BE USED AS AN ALTERNATE FOR THE 3/4'' Ø X 2 1/2'' GALVANIZED BOLTS AND WASHERS. THEY SHALL CONFORM TO OR EXCEED THE MECHANICAL REQUIREMENTS OF ASTM A307. THE USE OF THIS ALTERNATE SHALL BE APPROVED BY THE ENGINEER.

C. WIRE STRUT SHOWN IN THE CONCRETE ANCHOR ASSEMBLY DETAIL IS THE MINIMUM ALLOWABLE SIZE AND SHALL HAVE A MINIMUM TENSILE STRENGTH OF 100,000 PSI. AS AN OPTION, A 7/16'' Ø WIRE STRUT WITH A MINIMUM TENSILE STRENGTH OF 90,000 PSI IS ACCEPTABLE.

D. THE METAL RAIL ANCHOR ASSEMBLIES TO BE HOT DIPPED GALVANIZED TO CONFORM TO REQUIREMENTS OF AASHTO M111.

E. THE COST OF THE METAL RAIL ANCHOR ASSEMBLY WITH BOLTS AND WASHERS COMPLETE IN PLACE SHALL BE INCLUDED IN THE PRICE BID FOR LINEAR FEET OF METAL RAIL.

F. BOLTS TO BE TIGHTENED ONE-HALF TURN WITH A WRENCH FROM A FINGER-TIGHT POSITION.

THE CONTRACTOR MAY USE ADHESIVELY ANCHORED ANCHOR BOLTS IN PLACE OF THE METAL RAIL ANCHOR ASSEMBLY. LEVEL ONE FIELD TESTING IS REQUIRED, AND THE YIELD LOAD OF THE 3/4''Ø BOLT IS 10 KIPS. FOR ADHESIVELY ANCHORED ANCHOR BOLTS OR DOWELS, SEE THE STANDARD SPECIFICATIONS.

WHEN ADHESIVELY ANCHORED ANCHOR BOLTS ARE USED, BOLTS SHALL MEET THE REQUIREMENTS OF ASTM F593 ALLOY 304 STAINLESS STEEL WITH MINIMUM 75,000 PSI ULTIMATE STRENGTH. NUTS SHALL MEET THE REQUIREMENTS OF ASTM F594 ALLOY 304 STAINLESS STEEL AND WASHERS SHALL MEET THE REQUIREMENTS OF ASTM F844 EXCEPT THEY SHALL BE MADE FROM ALLOY 304 STAINLESS STEEL.

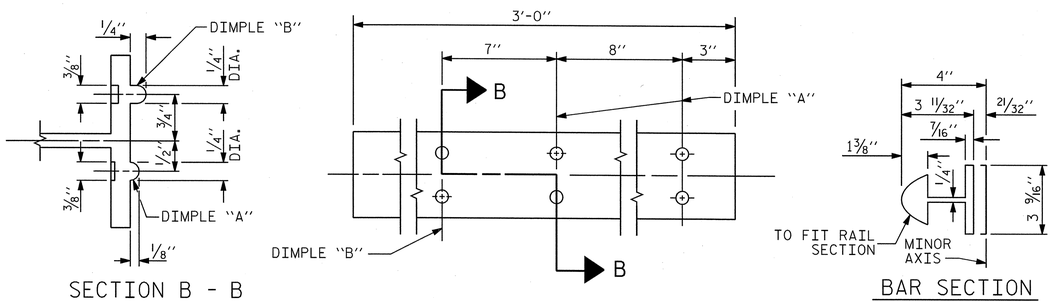

EXPANSION BAR DETAILS

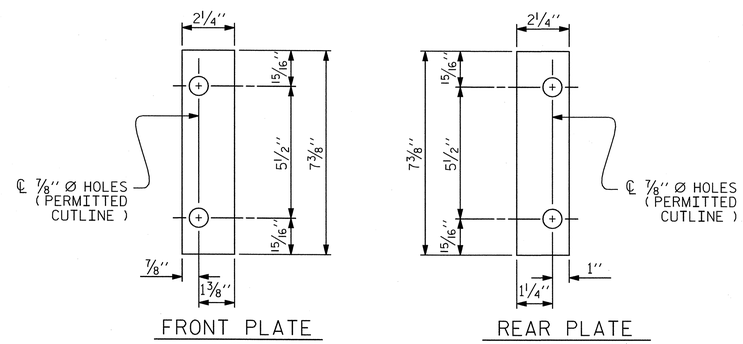

SHIM DETAILS

NOTE :
SHIMS MAY BE CUT ALONG PERMITTED CUTLINE OR SLOTTED TO EDGE OF PLATE TO FACILITATE PLACEMENT.

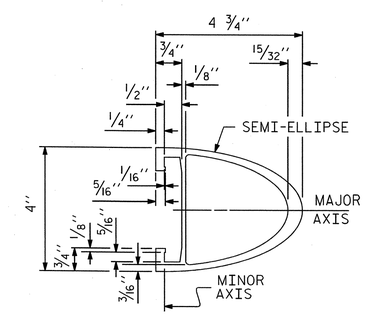

RAIL SECTION

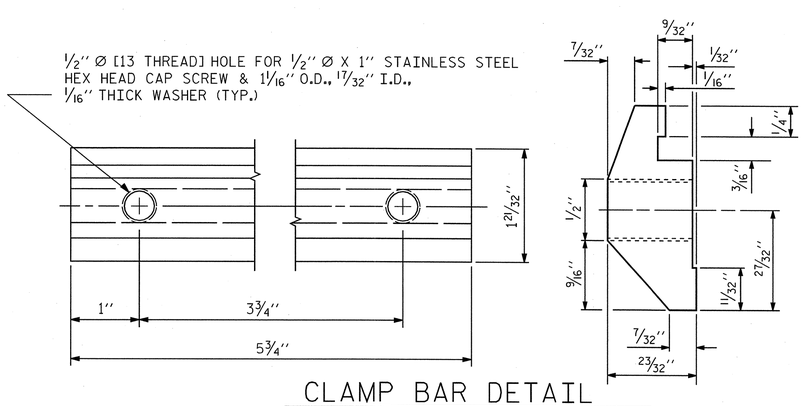

CLAMP BAR DETAIL

(4 REQUIRED PER POST)

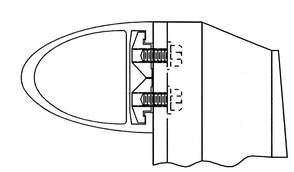

CLAMP ASSEMBLY

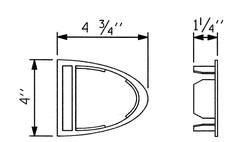

RAIL CAP

PROJECT NO. U-2525B

GUILFORD COUNTY

STATION: 26+17.64 -Y22-
85+41.17 -Y13-

SHEET 2 OF 2

AECOM
AECOM TECHNICAL SERVICES, INC.
701 CORPORATE CENTER DRIVE, SUITE 475
RALEIGH, NC 27607
(919) 854-6200 www.aecom.com
AECOM License No. F-0342

NORTH CAROLINA PROFESSIONAL SEAL 030474 ENGINEER JOHN C. MORRISON
12/13/13

STATE OF NORTH CAROLINA
DEPARTMENT OF TRANSPORTATION
RALEIGH

STANDARD

2 BAR METAL RAIL

REVISIONS						SHEET NO.
NO.	BY:	DATE:	NO.	BY:	DATE:	S-523
1			3			TOTAL SHEETS
2			4			541

STD. NO. BMR4

ASSEMBLED BY :	DDL	DATE :	09/13
CHECKED BY :	JCM	DATE :	09/13
DRAWN BY : EEM 6/94	REV. 8/16/99	MAB/LES	
CHECKED BY : RGW 6/94	REV. 5/1/06R	KMM/GM	
	REV. 10/1/11	MAA/GM	

USER: Lawrence
DGN: Q:\60279356\400_Technical_Information_Disc_Files\450_NCDOT Staff Design Files\Structures\Bridge 15\Cadd\U2525B_SD_DSN_UHF_BMR34_12_2.dgn
DATE: 12/9/2013
TIME: 4:24:52 PM

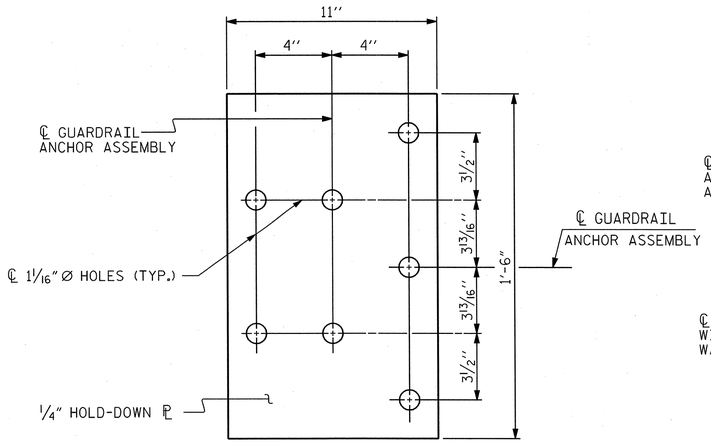

PLAN

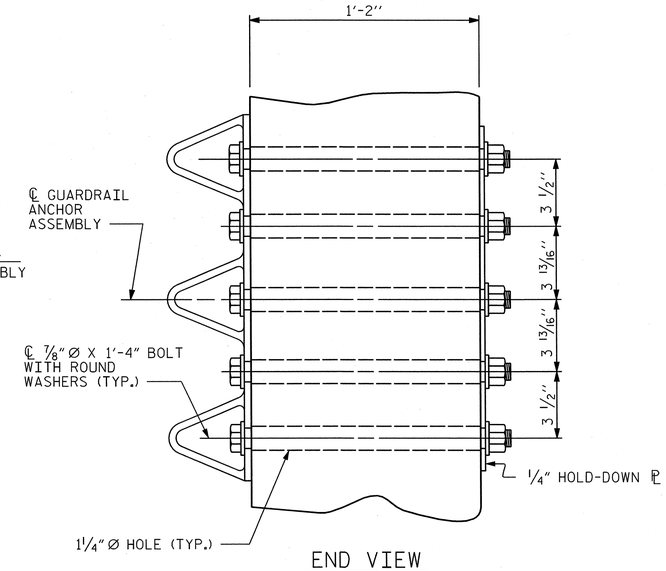

END VIEW

GUARDRAIL ANCHOR ASSEMBLY DETAILS

NOTES

THE GUARDRAIL ANCHOR ASSEMBLY SHALL CONSIST OF A 1/4'' HOLD DOWN PLATE AND 7 - 7/8'' Ø BOLTS WITH NUTS AND WASHERS.

THE HOLD-DOWN PLATE SHALL CONFORM TO AASHTO M270 GRADE 36. AFTER FABRICATION, THE HOLD-DOWN PLATE SHALL BE HOT-DIP GALVANIZED IN ACCORDANCE WITH AASHTO M111.

BOLTS SHALL CONFORM TO THE REQUIREMENTS OF ASTM A307 AND NUTS SHALL CONFORM TO THE REQUIREMENTS OF AASHTO M291. BOLTS, NUTS AND WASHERS SHALL BE GALVANIZED. AT THE CONTRACTOR'S OPTION, STAINLESS STEEL BOLTS, NUTS AND WASHERS MAY BE USED AS AN ALTERNATE FOR THE 7/8'' Ø GALVANIZED BOLTS, NUTS AND WASHERS. THEY SHALL CONFORM TO OR EXCEED THE MECHANICAL REQUIREMENTS OF ASTM A307. THE USE OF THIS ALTERNATE SHALL BE APPROVED BY THE ENGINEER.

THE GUARDRAIL ANCHOR ASSEMBLY IS REQUIRED AT ALL POINTS WHERE APPROACH GUARDRAIL IS TO BE ATTACHED TO THE END OF THE PARAPET. FOR POINTS OF ATTACHMENT, SEE SKETCH.

AFTER INSTALLATION, THE EXPOSED THREAD OF THE BOLT SHALL BE BURRED WITH A SHARP POINTED TOOL.

THE COST OF THE GUARDRAIL ANCHOR ASSEMBLIES WITH BOLTS, NUTS AND WASHERS COMPLETE IN PLACE, SHALL BE INCLUDED IN THE VARIOUS PAY ITEMS.

THE VERTICAL REINFORCING BARS MAY BE SHIFTED SLIGHTLY IN THE END POST TO CLEAR ASSEMBLY BOLTS.

THE 1 1/4'' Ø HOLES SHALL BE FORMED OR DRILLED WITH A CORE BIT. IMPACT TOOLS WILL NOT BE PERMITTED. ANY CONCRETE DAMAGED BY THIS WORK SHALL BE REPAIRED TO THE SATISFACTION OF THE ENGINEER.

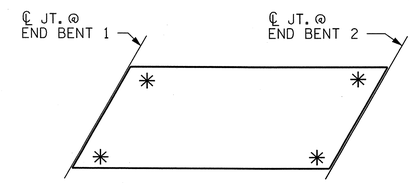

SKETCH SHOWING POINTS OF ATTACHMENT

✳ LOCATION OF GUARDRAIL ATTACHMENT

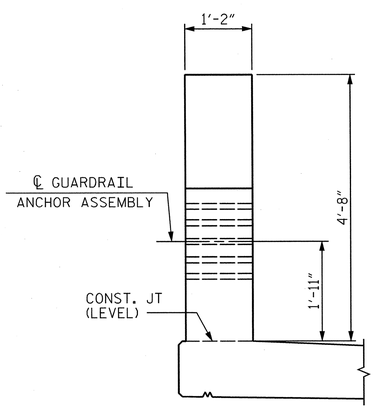

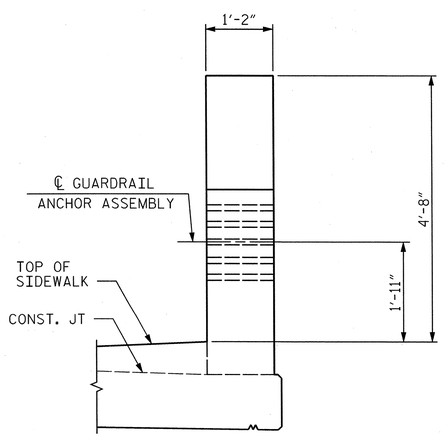

END VIEW
(TWO BAR METAL RAIL)

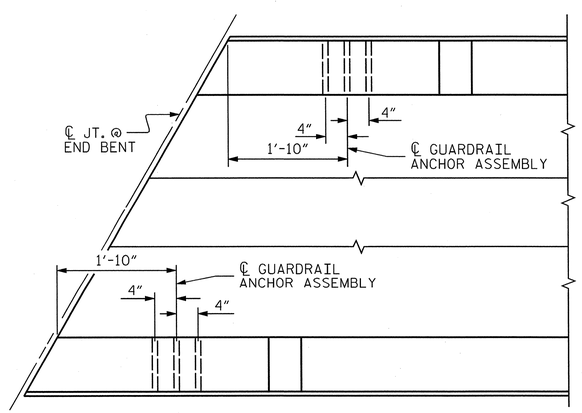

PLAN

LOCATION OF GUARDRAIL ANCHOR AT END POST

PROJECT NO. U-2525B
GUILFORD COUNTY
STATION: 26+17.64 -Y22-
85+41.17 -Y13-

AECOM
AECOM TECHNICAL SERVICES, INC.
701 CORPORATE CENTER DRIVE, SUITE 475
RALEIGH, NC 27607
(919) 854-6200 www.aecom.com
AECOM License No. F-0342

NORTH CAROLINA PROFESSIONAL SEAL 030474 ENGINEER JOHN C. MORRISON
12/13/13

STATE OF NORTH CAROLINA
DEPARTMENT OF TRANSPORTATION
RALEIGH

STANDARD
GUARDRAIL ANCHORAGE DETAILS FOR METAL RAILS

REVISIONS						
NO.	BY:	DATE:	NO.	BY:	DATE:	
1			3			
2			4			

SHEET NO. S-52A
TOTAL SHEETS 541

ASSEMBLED BY : DDL	DATE : 09/13		
CHECKED BY : JCM	DATE : 09/13		
DRAWN BY : MAA 5/10	ADDED 5/6/10		
CHECKED BY : GM 5/10	REV. 10/1/11	MAA/GM	
	REV. 12/5/11	MAA/GM	

STD. NO. GRA3

USER: Lowery4
DGN: G:\2012\3356\400_Technical_Information_Disc_Files\450_NCDOT\Staff edit\Design Files\Structures\Bridge 15\Cadd\U2525B_SD_DSN_HH_GRA3_12.dgn
DATE: 12/9/2013
TIME: 4:51:40 PM

REINFORCING STEEL SCHEDULE

BAR	NO.	SIZE	TYPE	LENGTH	WEIGHT	BAR	NO.	SIZE	TYPE	LENGTH	WEIGHT	BAR	NO.	SIZE	TYPE	LENGTH	WEIGHT
A1E	498	#5	STR.	35'-9"	18,569	A137E	2	#5	STR.	5'-6"	11	A235	2	#5	STR.	7'-2"	15
A2	498	#5	STR.	35'-9"	18,569	A138E	2	#5	STR.	4'-8"	10	A236	2	#5	STR.	6'-4"	13
						A139E	2	#5	STR.	3'-10"	8	A237	2	#5	STR.	5'-6"	11
A101E	2	#5	STR.	35'-2"	73	A140E	8	#5	STR.	3'-1"	26	A238	2	#5	STR.	4'-8"	10
A102E	2	#5	STR.	34'-4"	72	A141E	6	#6	STR.	6'-0"	54	A239	2	#5	STR.	3'-10"	8
A103E	2	#5	STR.	33'-6"	70	A201	2	#5	STR.	35'-2"	73	A240	8	#5	STR.	3'-1"	26
A104E	2	#5	STR.	32'-8"	68	A202	2	#5	STR.	34'-4"	72						
A105E	2	#5	STR.	31'-10"	66	A203	2	#5	STR.	33'-6"	70	B1E	100	#4	STR.	24'-0"	1,603
A106E	2	#5	STR.	31'-1"	65	A204	2	#5	STR.	32'-8"	68	B2	150	#5	STR.	56'-0"	8,761
A107E	2	#5	STR.	30'-3"	63	A205	2	#5	STR.	31'-10"	66	B3E	25	#7	STR.	39'-0"	1,993
A108E	2	#5	STR.	29'-5"	61	A206	2	#5	STR.	31'-1"	65	B4E	25	#7	STR.	60'-0"	3,066
A109E	2	#5	STR.	28'-7"	60	A207	2	#5	STR.	30'-3"	63	B5E	100	#4	STR.	24'-9"	1,653
A110E	2	#5	STR.	27'-9"	58	A208	2	#5	STR.	29'-5"	61	B6E	24	#7	STR.	42'-0"	2,060
A111E	2	#5	STR.	26'-11"	56	A209	2	#5	STR.	28'-7"	60	B7E	50	#4	STR.	28'-11"	966
A112E	2	#5	STR.	26'-1"	54	A210	2	#5	STR.	27'-9"	58						
A113E	2	#5	STR.	25'-3"	53	A211	2	#5	STR.	26'-11"	56	G1E	2	#5	STR.	41'-10"	87
A114E	2	#5	STR.	24'-5"	51	A212	2	#5	STR.	26'-1"	54						
A115E	2	#5	STR.	23'-8"	49	A213	2	#5	STR.	25'-3"	53	G2E	268	#4	STR.	5'-1"	910
A116E	2	#5	STR.	22'-10"	48	A214	2	#5	STR.	24'-5"	51						
A117E	2	#5	STR.	22'-0"	46	A215	2	#5	STR.	23'-8"	49	K1E	8	#8	1	10'-3"	217
A118E	2	#5	STR.	21'-2"	44	A216	2	#5	STR.	22'-10"	48	K2E	12	#8	5	12'-8"	401
A119E	2	#5	STR.	20'-4"	42	A217	2	#5	STR.	22'-0"	46	K3	16	#8	STR.	7'-5"	317
A120E	2	#5	STR.	19'-6"	41	A218	2	#5	STR.	21'-2"	44	K4	16	#4	STR.	7'-5"	79
A121E	2	#5	STR.	18'-8"	39	A219	2	#5	STR.	20'-4"	42	K5	32	#6	STR.	3'-11"	188
A122E	2	#5	STR.	17'-10"	37	A220	2	#5	STR.	19'-6"	41	K6	40	#4	STR.	7'-5"	198
A123E	2	#5	STR.	17'-0"	35	A221	2	#5	STR.	18'-8"	39	K7	8	#4	STR.	4'-5"	24
A124E	2	#5	STR.	16'-3"	34	A222	2	#5	STR.	17'-10"	37	K8	12	#4	6	5'-8"	45
A125E	2	#5	STR.	15'-5"	32	A223	2	#5	STR.	17'-0"	35	K9	18	#4	7	11'-2"	134
A126E	2	#5	STR.	14'-7"	30	A224	2	#5	STR.	16'-3"	34						
A127E	2	#5	STR.	13'-9"	29	A225	2	#5	STR.	15'-5"	32	S1E	32	#5	3	5'-10"	195
A128E	2	#5	STR.	12'-11"	27	A226	2	#5	STR.	14'-7"	30	S2	32	#4	9	3'-5"	73
A129E	2	#5	STR.	12'-1"	25	A227	2	#5	STR.	13'-9"	29	S3E	32	#4	2	6'-0"	128
A130E	2	#5	STR.	11'-3"	23	A228	2	#5	STR.	12'-11"	27	S4	100	#4	4	3'-3"	217
A131E	2	#5	STR.	10'-6"	22	A229	2	#5	STR.	12'-1"	25						
A132E	2	#5	STR.	9'-8"	20	A230	2	#5	STR.	11'-3"	23	U1	12	#4	8	17'-10"	143
A133E	2	#5	STR.	8'-10"	18	A231	2	#5	STR.	10'-6"	22	U2	16	#4	9	11'-7"	124
A134E	2	#5	STR.	8'-0"	17	A232	2	#5	STR.	9'-8"	20	U3E	78	#4	2	3'-4"	174
A135E	2	#5	STR.	7'-2"	15	A233	2	#5	STR.	8'-10"	18						
A136E	2	#5	STR.	6'-4"	13	A234	2	#5	STR.	8'-0"	17						

REINFORCING STEEL	30,483
EPOXY COATED REINFORCING STEEL	33,687

"E" DENOTES EPOXY COATED REINFORCING STEEL.

BAR TYPES

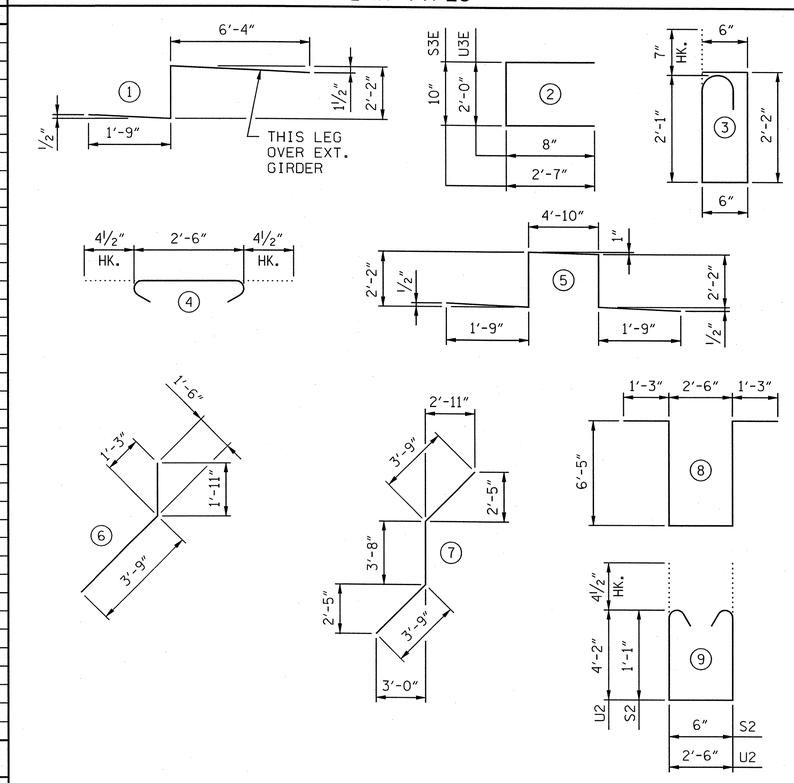

ALL BAR DIMENSIONS ARE OUT TO OUT

SUPERSTRUCTURE BILL OF MATERIAL

SPAN	CLASS AA CONCRETE	REINFORCING STEEL	EPOXY COATED REINFORCING STEEL
	(CU. YDS.)	(LBS.)	(LBS.)
POUR 1	185.8		
POUR 2	148.4		
SIDEWALK	33.8		
**TOTALS	368.0	30,483	43,751

** QUANTITIES FOR PARAPET AND END POST ARE INCLUDED ON "CONCRETE PARAPET AND END POST DETAILS" SHEET 2 OF 2.

QUANTITIES FOR APPROACH SLABS ARE INCLUDED ON "BRIDGE APPROACH SLAB FOR FLEXIBLE PAVEMENT" SHEET.

SUPERSTRUCTURE REINFORCING STEEL LENGTHS ARE BASED ON THE FOLLOWING MINIMUM SPLICE LENGTHS, EXCEPT AT MECHANICAL SPLICES

BAR SIZE	SUPERSTRUCTURE EXCEPT APPROACH SLABS, PARAPET AND BARRIER RAIL		APPROACH SLABS		PARAPET AND BARRIER RAIL
	EPOXY COATED	UNCOATED	EPOXY COATED	UNCOATED	
#4	2'-0"	1'-9"	2'-0"	1'-9"	2'-9"
#5	2'-6"	2'-2"	2'-6"	2'-2"	3'-5"
#6	3'-0"	2'-7"	3'-10"	2'-7"	4'-4"
#7	5'-3"	3'-6"			
#8	6'-10"	4'-7"			

GROOVING BRIDGE FLOORS

APPROACH SLABS	1,194 SQ.FT.
BRIDGE DECK	6,745 SQ.FT.
TOTAL	7,939 SQ.FT.

PROJECT NO. U-2525B

GUILFORD COUNTY

STATION: 26+17.64 -Y22-
85+41.17 -Y13-

SHEET 1 OF 2

AECOM
AECOM TECHNICAL SERVICES, INC.
701 CORPORATE CENTER DRIVE, SUITE 475
RALEIGH, NC 27607
(919) 854-6200 www.aecom.com
AECOM License No. F-0342

NORTH CAROLINA PROFESSIONAL SEAL 030474 ENGINEER JOHN C. MORRISON
12/13/13

STATE OF NORTH CAROLINA
DEPARTMENT OF TRANSPORTATION
RALEIGH

SUPERSTRUCTURE
BILL OF MATERIAL

REVISIONS						SHEET NO.
NO.	BY:	DATE:	NO.	BY:	DATE:	S-525
						TOTAL SHEETS
						54-1

DRAWN BY : DDL DATE : 09/13
CHECKED BY : JCM DATE : 09/13

USER: Lawrence
DGN: 0:\60207935\400_Technical_Information_Disc_Files\450_NCDOT Std Tech Design Files\Structures\Bridge 15\Cadd\U2525B_SD_DSN_II\ST_SUPER_BOM-1.2.dgn
DATE: 12/9/2013
TIME: 1:25:06 PM

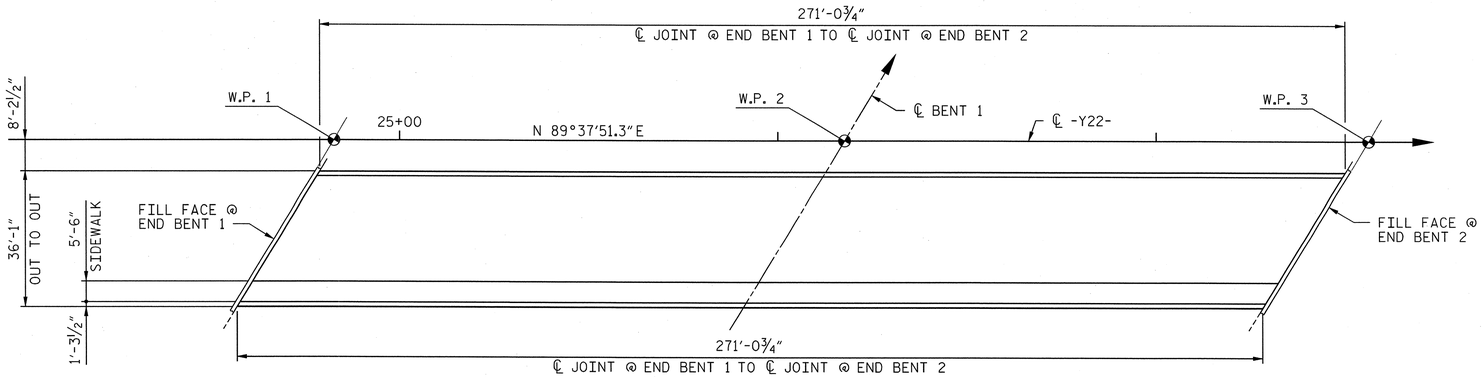

LAYOUT FOR COMPUTING AREA
OF REINFORCED CONCRETE DECK SLAB
(DECK - SQ. FEET = 9,781)

NOTES:

PREVIOUSLY CAST CONCRETE IN A CONTINUOUS UNIT SHALL HAVE ATTAINED A MINIMUM COMPRESSIVE STRENGTH OF 3000 P.S.I. BEFORE ADDITIONAL CONCRETE IS CAST IN THE UNIT.

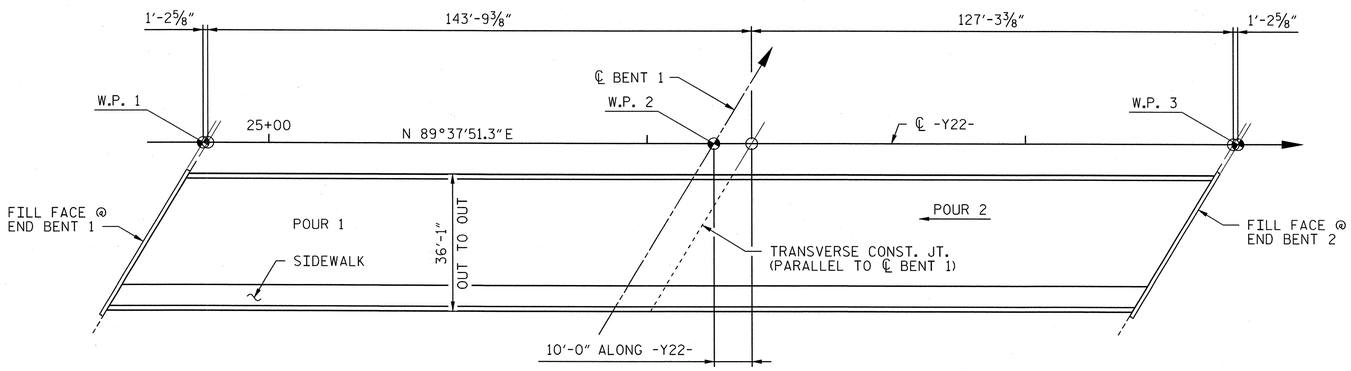

POURING SEQUENCE

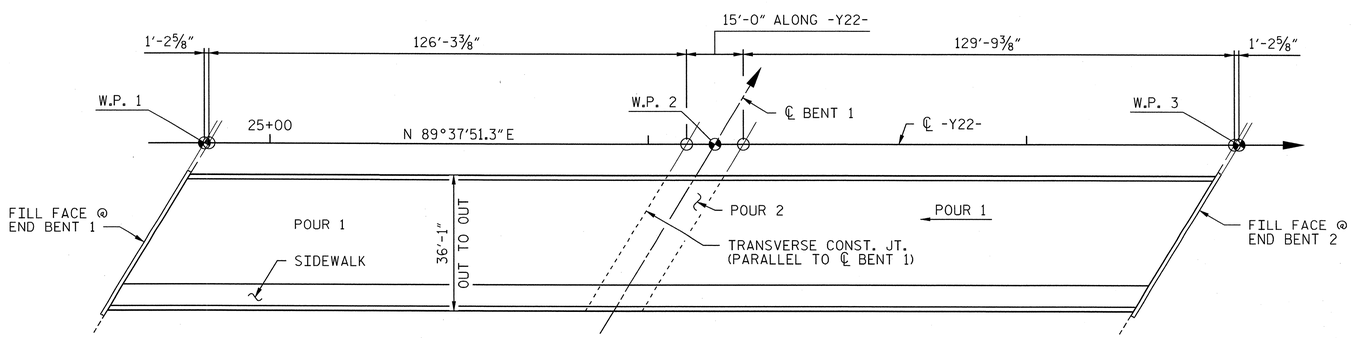

OPTIONAL POURING SEQUENCE

(POUR ② CAN NOT BE STARTED
UNTIL BOTH ADJACENT ① POURS
REACH A MINIMUM OF 3000 PSI)

PROJECT NO. U-2525B

GUILFORD COUNTY

STATION: 26+17.64 -Y22-
85+41.17 -Y13-

SHEET 2 OF 2

AECOM
AECOM TECHNICAL SERVICES, INC.
701 CORPORATE CENTER DRIVE, SUITE 475
RALEIGH, NC 27607
(919) 854-6200 www.aecom.com
AECOM License No. F-0342

NORTH CAROLINA PROFESSIONAL SEAL 030474 ENGINEER JOHN C. MORRISON
12/13/13

STATE OF NORTH CAROLINA
DEPARTMENT OF TRANSPORTATION
RALEIGH

SUPERSTRUCTURE
BILL OF MATERIAL

REVISIONS						SHEET NO.
NO.	BY:	DATE:	NO.	BY:	DATE:	S-526
						TOTAL SHEETS
						541

DRAWN BY : DDL DATE : 09/13
CHECKED BY : JCM DATE : 09/13

DATE: 12/9/2013
TIME: 1:25:46 PM

USER: Lawanyd
DGN: G:\60129356\400_Technical_Information_Disc_Files\450_NCDOT Std Tech Design Files\Structures\Bridge 19\Cadd\U2525B_SD_DSN_U47_SUPER_BOM-2_2.dgn

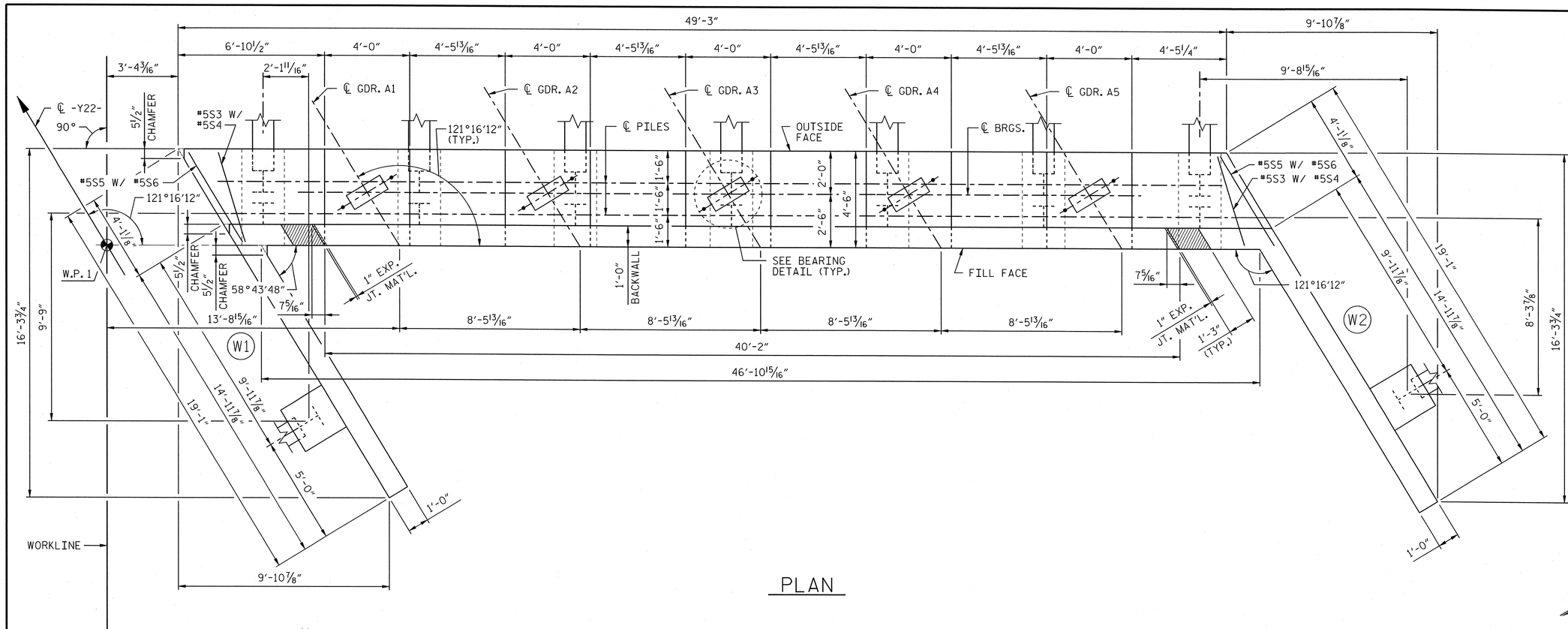

PLAN

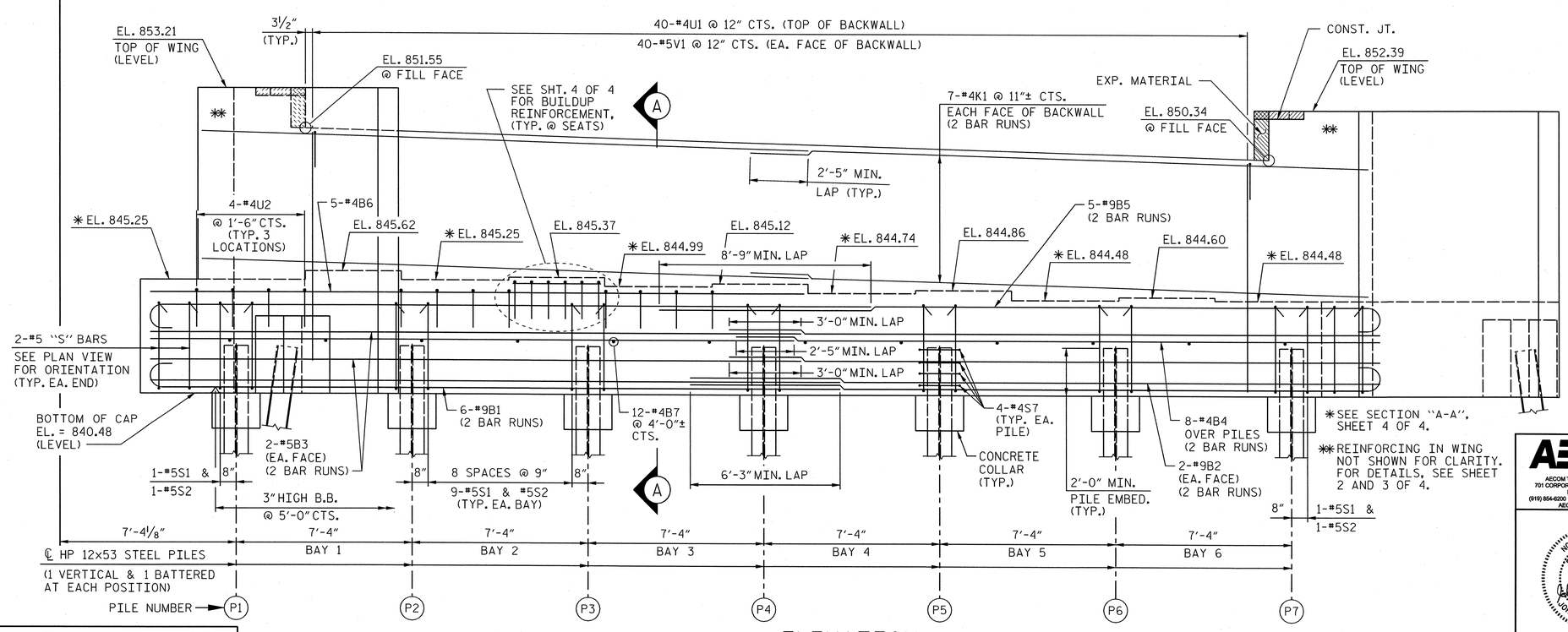

ELEVATION

NOTES:

STIRRUPS IN CAP MAY BE SHIFTED AS NECESSARY TO CLEAR ANCHOR BOLTS.

BACKWALL SHALL BE PLACED BEFORE APPLYING THE EPOXY PROTECTIVE COATING.

THE TOP SURFACE AREAS OF THE END BENT CAP SHALL BE CURED IN ACCORDANCE WITH THE STANDARD SPECIFICATIONS EXCEPT THAT THE MEMBRANE CURING COMPOUND METHOD SHALL NOT BE USED.

THE TOP SURFACE OF THE CAP EXCEPT THE BRIDGE SEAT BUILDUPS SHALL BE SLOPED TRANSVERSELY FROM THE FILL FACE TO THE FRONT FACE AT THE RATE OF 2%.

THE CONCRETE IN THE SHADED AREA OF THE WING SHALL BE POURED AFTER THE JOINT BETWEEN THE DECK AND THE APPROACH SLAB HAS BEEN SAWED AND THE PARAPET AND END POST ARE CAST IF SLIP FORMING IS USED.

INSTALL THE 4" DIA. DRAIN PIPE THROUGH THE WING WALL AS REQUIRED FOR REINFORCED BRIDGE APPROACH FILLS, SEE ROADWAY PLANS. REINFORCING STEEL IN THE WING WALL MAY BE SHIFTED AS NECESSARY TO CLEAR THE DRAIN PIPE.

FOR OTHER NOTES, SEE "GENERAL DRAWINGS".

NAD 83/95

PROJECT NO. U-2525B

GUILFORD COUNTY

STATION: 26+17.64 -Y22-
85+41.17 -Y13-

SHEET 1 OF 4

AECOM
AECOM TECHNICAL SERVICES, INC.
701 CORPORATE CENTER DRIVE, SUITE 475
RALEIGH, NC 27607
(919) 854-6200 www.aecom.com
AECOM License No. F-0342

NORTH CAROLINA PROFESSIONAL SEAL 030474 ENGINEER JOHN C. MORRISON
12/13/13

STATE OF NORTH CAROLINA
DEPARTMENT OF TRANSPORTATION
RALEIGH

SUBSTRUCTURE
END BENT 1
PLAN AND ELEVATION

(RIGHT LANE)

REVISIONS						SHEET NO.
NO.	BY:	DATE:	NO.	BY:	DATE:	S-527
1			3			TOTAL SHEETS
2			4			541

DRAWN BY : MTB DATE : 09/13
CHECKED BY : JCM DATE : 09/13

DATE: 12/9/2013
TIME: 1:26:44 PM

USER: Lowery4
DGN: G:\60129356\400_Technical_Information_Disc_Files\450_NCDOT\Shd\ent\Design\Files\Structures\Bridge 15\Code\U2525B_SD_DSN_JHT_EBT1_Ldgn

NOTES:

SEE SHEET 1 OF 4 FOR NOTES.

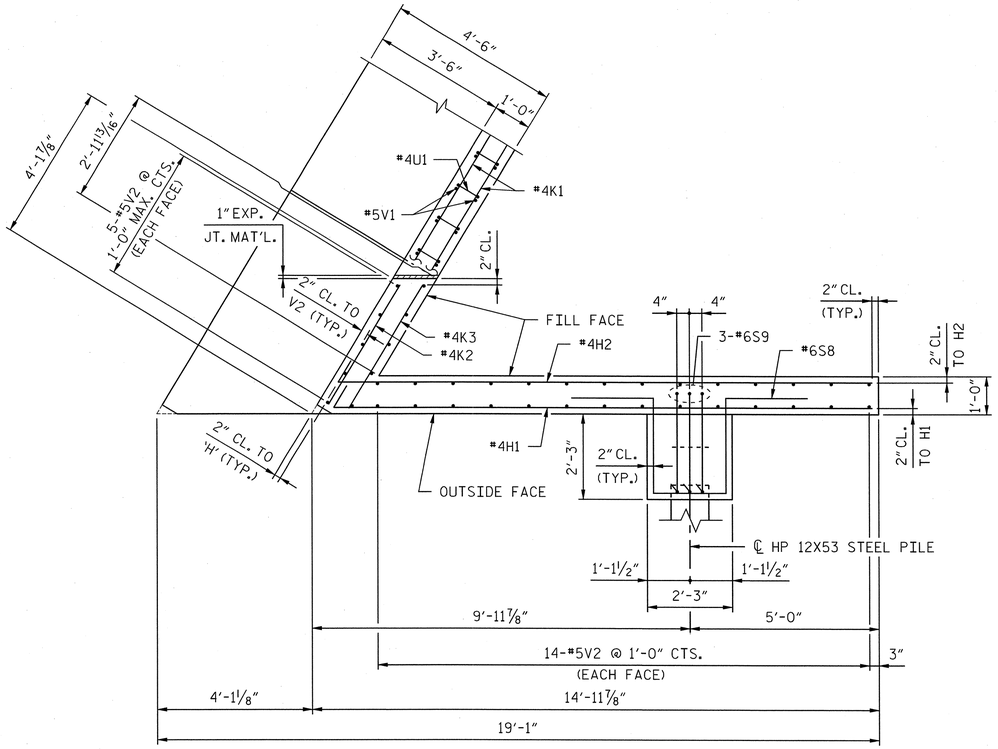

PLAN W1

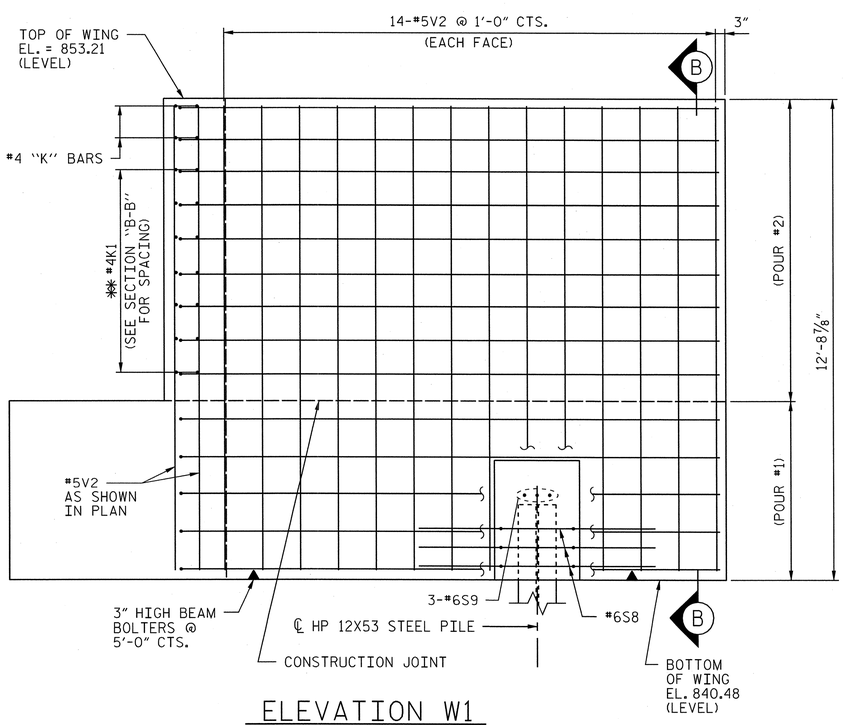

ELEVATION W1

✱✱ PLACE #4 'H' BARS TO MATCH #4K1 BARS IN BACKWALL

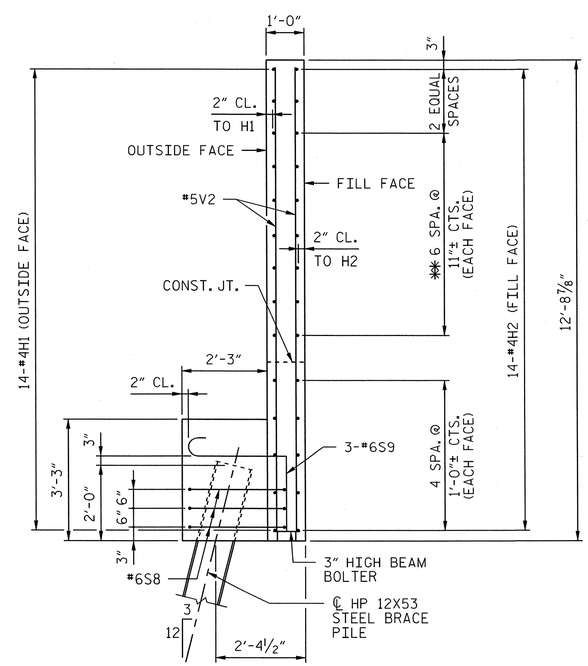

SECTION B-B

PROJECT NO. U-2525B

GUILFORD COUNTY

STATION: 26+17.64 -Y22-
85+41.17 -Y13-

SHEET 2 OF 4

AECOM
AECOM TECHNICAL SERVICES, INC.
701 CORPORATE CENTER DRIVE, SUITE 475
RALEIGH, NC 27607
(919) 854-6200 www.aecom.com
AECOM License No. F-0342

NORTH CAROLINA PROFESSIONAL SEAL 030474 ENGINEER JOHN C. MORRICON
12/13/13

STATE OF NORTH CAROLINA
DEPARTMENT OF TRANSPORTATION
RALEIGH

SUBSTRUCTURE
END BENT 1
SECTION AND DETAILS

(RIGHT LANE)

REVISIONS							SHEET NO.
NO.	BY:	DATE:	NO.	BY:	DATE:		S-528
1			3				TOTAL SHEETS
2			4				541

DRAWN BY : MTB DATE : 09/13
CHECKED BY : JCM DATE : 09/13

DATE: 12/9/2013
TIME: 1:27:55 PM

USER: Lowery4
DGN: Q:\60279356\400_Technical_Information_Disc_Files\450_NC207\StdTechDesignFiles\Structures\Bridge\SOrd\U2525B_SD_DSN_U47_EBT1_2.dgn

NOTES:

SEE SHEET 1 OF 4 FOR NOTES.

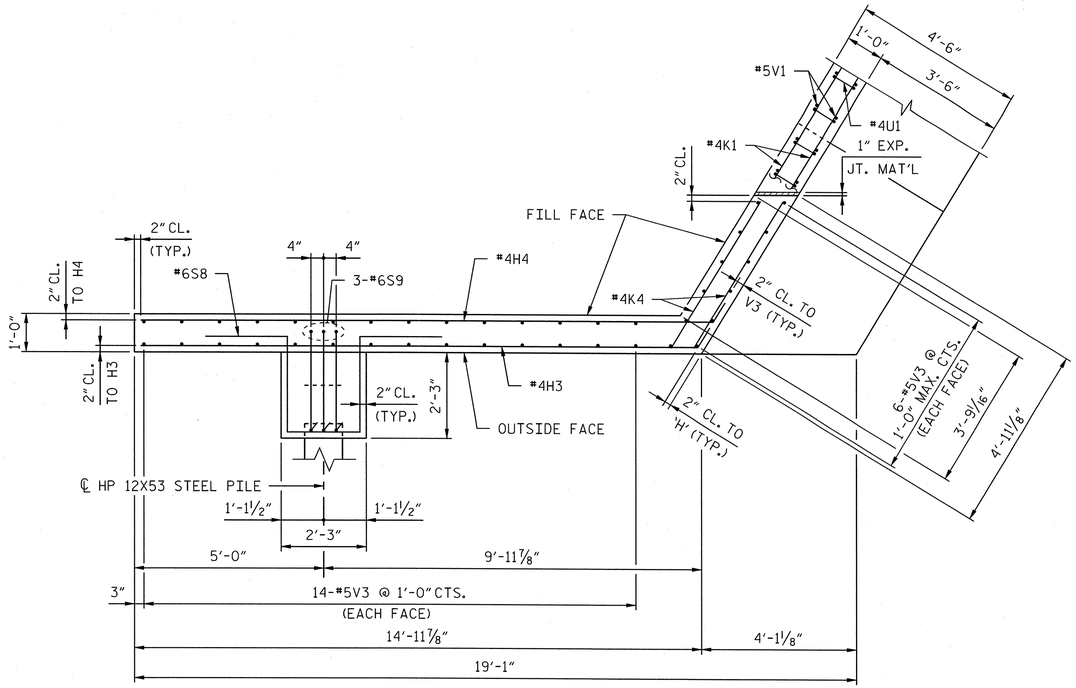

PLAN W2

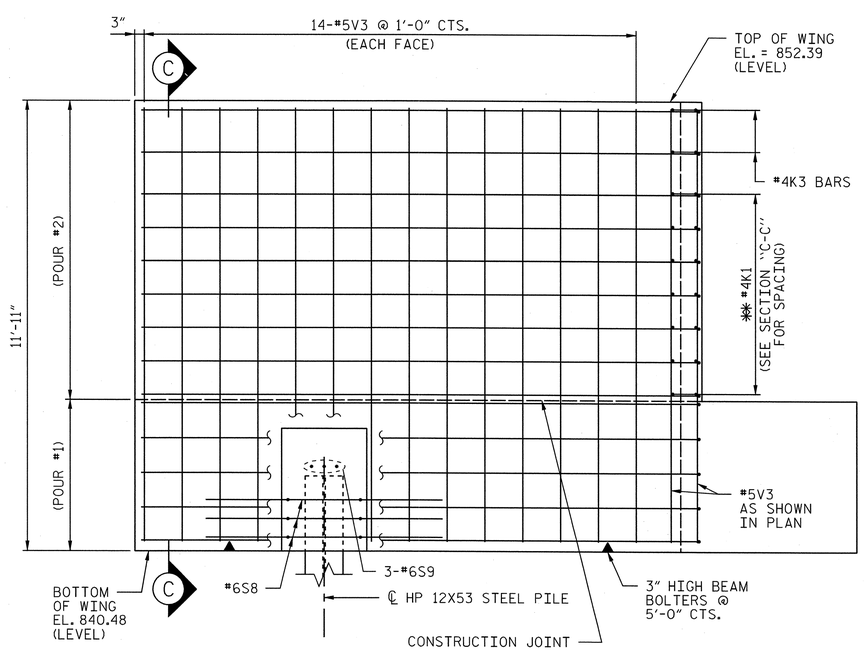

ELEVATION W2

✱✱ PLACE #4 'H' BARS TO MATCH
#4K1 BARS IN BACKWALL

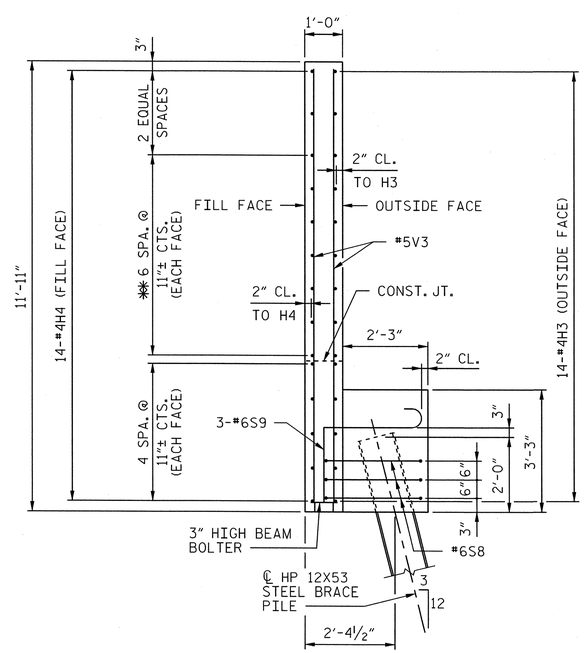

SECTION C-C

PROJECT NO. U-2525B

GUILFORD COUNTY

STATION: 26+17.64 -Y22-
85+41.17 -Y13-

SHEET 3 OF 4

AECOM
AECOM TECHNICAL SERVICES, INC.
701 CORPORATE CENTER DRIVE, SUITE 475
RALEIGH, NC 27607
(919) 854-6200 www.aecom.com
AECOM License No. F-0342

NORTH CAROLINA PROFESSIONAL SEAL 030474 ENGINEER JOHN C. MORRISON
12/13/13

STATE OF NORTH CAROLINA
DEPARTMENT OF TRANSPORTATION
RALEIGH

SUBSTRUCTURE
END BENT 1
SECTIONS AND DETAILS

(RIGHT LANE)

REVISIONS						SHEET NO.
NO.	BY:	DATE:	NO.	BY:	DATE:	S-529
1			3			TOTAL SHEETS
2			4			541

DRAWN BY : MTB DATE : 09/13
CHECKED BY : JCM DATE : 09/13

DATE: 12/3/2013
TIME: 1:25:22 PM

USER: Lowery
DGN: 0:\60279355\400_Technical_Information_Disc_Files\450_NCDOT\StaTechDesignFiles\Structures\Bridge i5\Cadd\U2525B_SD_DSN_U47_EBT1_3.dgn

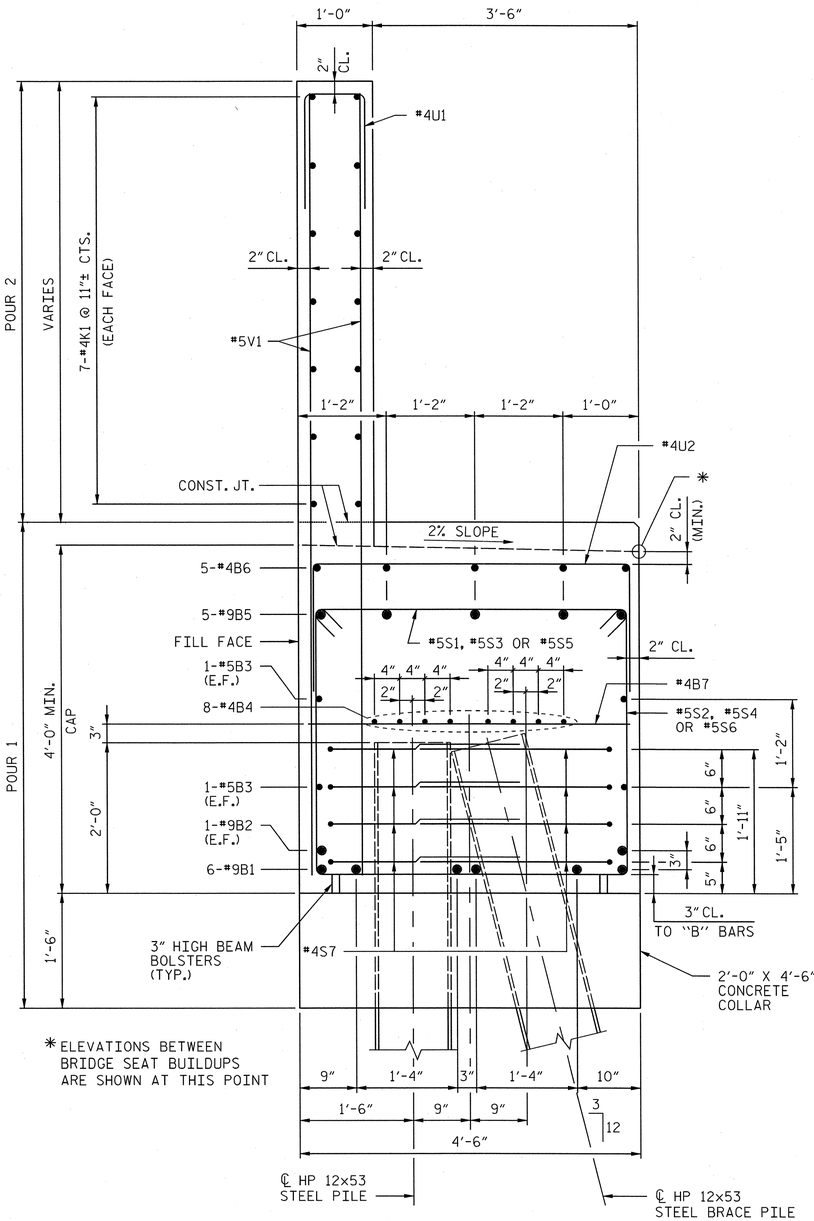

SECTION "A-A"

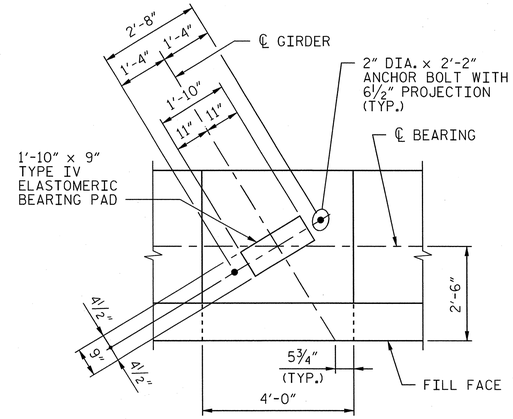

BEARING DETAIL

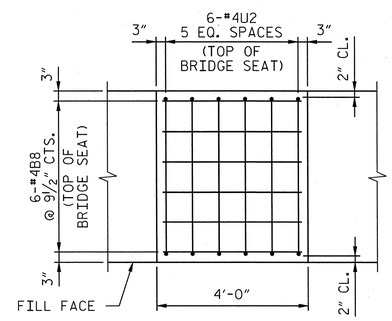

BUILDUP REINFORCEMENT

BAR TYPES

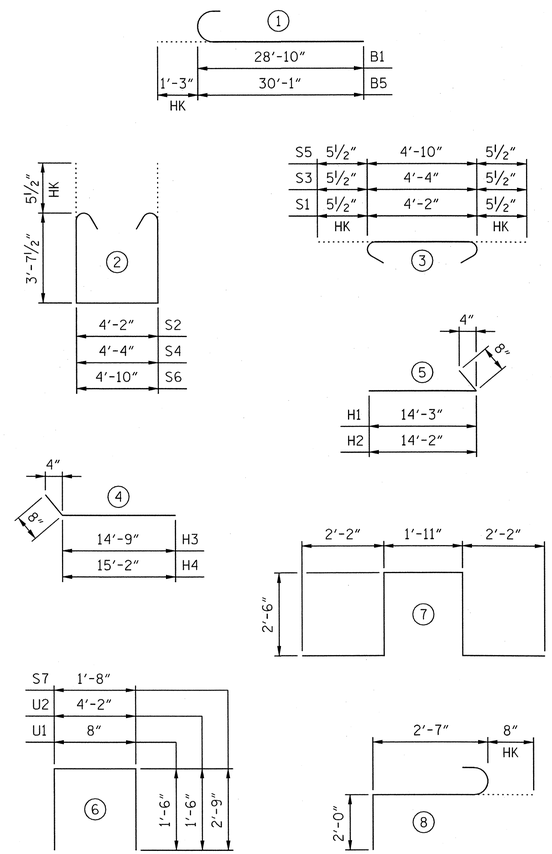

ALL BAR DIMENSIONS ARE OUT TO OUT.

BILL OF MATERIAL

END BENT 1

BAR	NO.	SIZE	TYPE	LENGTH	WEIGHT
B1	12	#9	1	30'-1"	1227
B2	4	#9	STR	28'-10"	392
B3	8	#5	STR	27'-2"	227
B4	16	#4	STR	26'-11"	288
B5	10	#9	1	31'-4"	1065
B6	5	#4	STR	27'-3"	91
B7	12	#4	STR	4'-2"	33
B8	30	#4	STR	3'-8"	73
H1	14	#4	5	14'-11"	140
H2	14	#4	5	14'-10"	139
H3	14	#4	4	15'-5"	144
H4	14	#4	4	15'-10"	148
K1	28	#4	STR	25'-9"	482
K2	2	#4	STR	3'-8"	5
K3	2	#4	STR	3'-10"	5
K4	4	#4	STR	4'-7"	12
S1	56	#5	3	5'-1"	297
S2	56	#5	2	12'-4"	720
S3	2	#5	3	5'-3"	11
S4	2	#5	2	12'-6"	26
S5	2	#5	3	5'-9"	12
S6	2	#5	2	13'-0"	27
S7	56	#4	6	7'-2"	268
S8	6	#6	7	11'-3"	101
S9	6	#6	8	5'-3"	47
U1	40	#4	6	3'-8"	98
U2	42	#4	6	7'-2"	201
V1	80	#5	STR	9'-6"	793
V2	38	#5	STR	12'-4"	489
V3	40	#5	STR	11'-6"	480
TOTAL REINFORCING STEEL				LBS.	8041

END BENT 1 TOTAL QUANTITIES

CLASS A CONCRETE		
POUR 1 (COLLAR, CAP & LOWER WING)	C.Y.	48.0
POUR 2 (BACKWALL & UPPER WING)	C.Y.	19.8
TOTAL	C.Y.	67.8
HP 12x53 STEEL PILES	NO.	16
	LIN. FT.	840

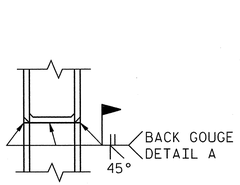

**PILE VERTICAL

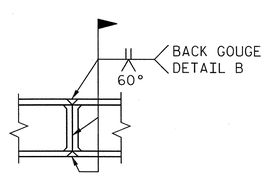

**PILE HORIZONTAL OR VERTICAL

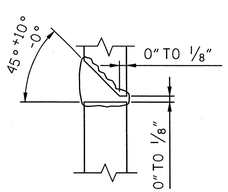

DETAIL A

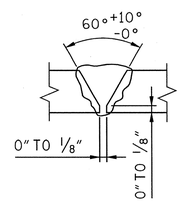

DETAIL B

**POSITION OF PILE DURING WELDING.

PILE SPLICE DETAILS

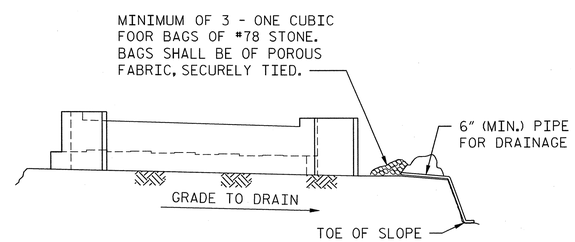

BAGGED STONE AND PIPE SHALL BE PLACED IMMEDIATELY AFTER COMPLETION OF END BENT EXCAVATION. PIPE MAY BE EITHER CONCRETE, CORRUGATED STEEL, CORRUGATED ALUMINUM ALLOY, OR CORRUGATED PLASTIC. PERFORATED PIPE WILL NOT BE ALLOWED.

BAGGED STONE SHALL REMAIN IN PLACE UNTIL THE ENGINEER DIRECTS THAT IT BE REMOVED. THE CONTRACTOR SHALL REMOVE AND DISPOSE OF SILT ACCUMULATIONS AT BAGGED STONE WHEN SO DIRECTED BY THE ENGINEER. BAGS SHALL BE REMOVED AND REPLACED WHENEVER THE ENGINEER DETERMINES THAT THEY HAVE DETERIORATED AND LOST THEIR EFFECTIVENESS.

NO SEPARATE PAYMENT WILL BE MADE FOR THIS WORK AND THE ENTIRE COST OF THIS WORK SHALL BE INCLUDED IN THE UNIT CONTRACT PRICE FOR THE SEVERAL PAY ITEMS.

TEMPORARY DRAINAGE END BENT

PROJECT NO. U-2525B
GUILFORD COUNTY
STATION: 26+17.64 -Y22-
85+41.17 -Y13-

SHEET 4 OF 4

AECOM
AECOM TECHNICAL SERVICES, INC.
701 CORPORATE CENTER DRIVE, SUITE 475
RALEIGH, NC 27607
(919) 854-6200 www.aecom.com
AECOM License No. F-0342

NORTH CAROLINA PROFESSIONAL SEAL 030474 ENGINEER JOHN C. MORRISON
12/13/13

STATE OF NORTH CAROLINA
DEPARTMENT OF TRANSPORTATION
RALEIGH

SUBSTRUCTURE
END BENT 1
SECTIONS AND DETAILS

(RIGHT LANE)

REVISIONS							
NO.	BY:	DATE:	NO.	BY:	DATE:	SHEET NO.	S-530
1			3			TOTAL SHEETS	541
2			4				

DRAWN BY : DDL DATE : 09/13
CHECKED BY : JCM DATE : 09/13

DATE: 12/10/2013
TIME: 3:54:58 PM
USER: Lowery
DGN: U:\2012\3350-400_Technical_Information_Disc_Files\450_NCDOT Staff tech\Design Files\Structures\Bridge 15\Cadd\U2525B_SD_DSN_1\4T_EBT1_4.dgn

NOTES:

STIRRUPS IN CAP MAY BE SHIFTED AS NECESSARY TO CLEAR ANCHOR BOLTS.

HOOKS ON "V" BARS MAY BE TURNED AS NECESSARY FOR PLACING REINFORCING STEEL.

FOR OTHER NOTES, SEE "GENERAL DRAWINGS".

FOR PILE SPLICE DETAILS, SEE "END BENT" SHEETS.

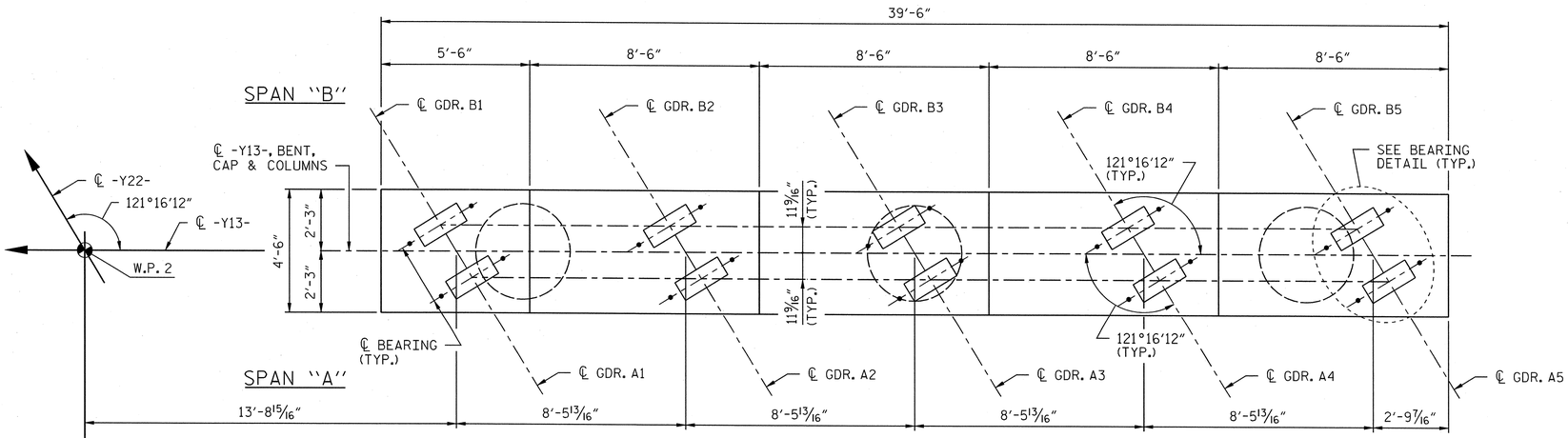

PLAN

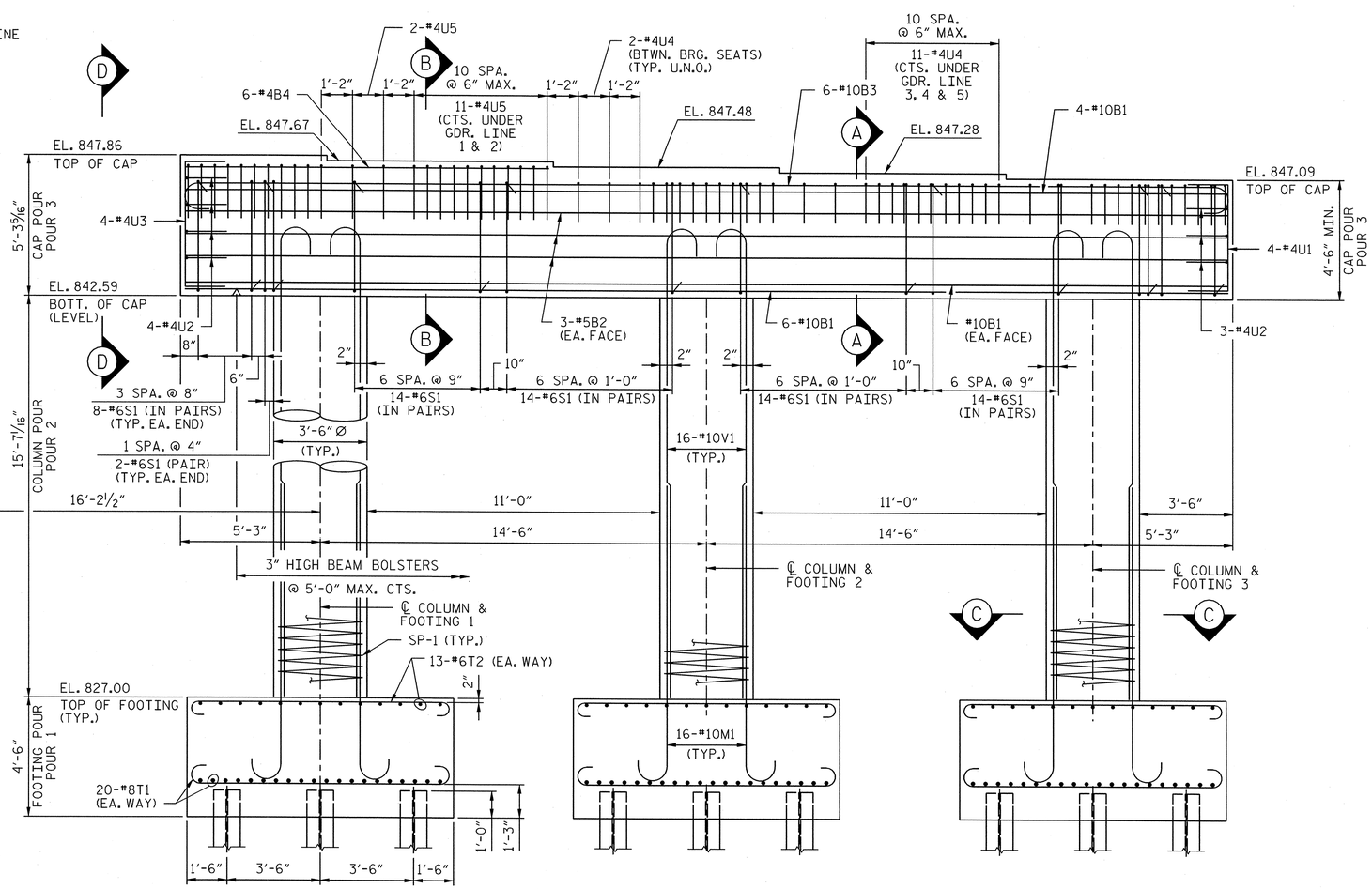

ELEVATION

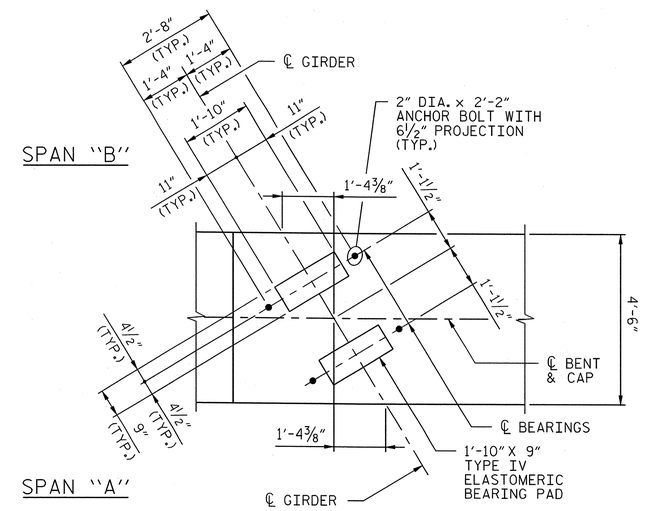

BEARING DETAIL

PROJECT NO. U-2525B

GUILFORD COUNTY

STATION: 26+17.64 -Y22-
85+41.17 -Y13-

SHEET 1 OF 2

AECOM
AECOM TECHNICAL SERVICES, INC.
701 CORPORATE CENTER DRIVE, SUITE 475
RALEIGH, NC 27607
(919) 854-6200 www.aecom.com
AECOM License No. F-0342

NORTH CAROLINA PROFESSIONAL SEAL 030474 ENGINEER JOHN C. MORRISON
12/13/13

STATE OF NORTH CAROLINA
DEPARTMENT OF TRANSPORTATION
RALEIGH

SUBSTRUCTURE
BENT 1
PLAN AND ELEVATION

(RIGHT LANE)

REVISIONS						SHEET NO.
NO.	BY:	DATE:	NO.	BY:	DATE:	S-531
						TOTAL SHEETS 541

DRAWN BY : MTB DATE : 09/13
CHECKED BY : JCM DATE : 09/13

DATE: 12/9/2013
TIME: 1:51:09 PM

USER: Lowerjd
DGN: Q:\60279356\400_Technical_Information_Disc_Files\450_NCDOT\Traffic\DesignFiles\Structures\Bridge 15\Cold\U2525B_SD_DSN_I\47_BENT-1_I.dgn

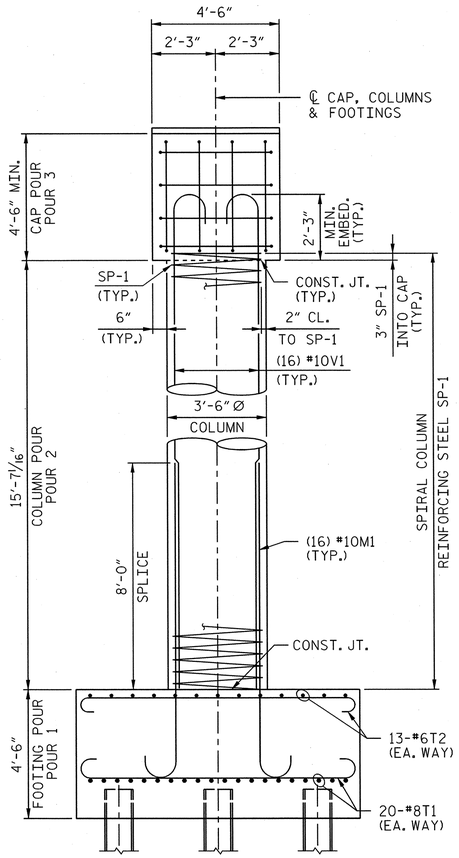

END VIEW

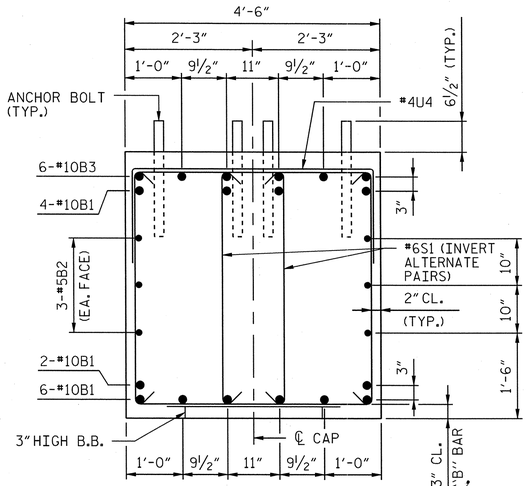

SECTION "A-A"

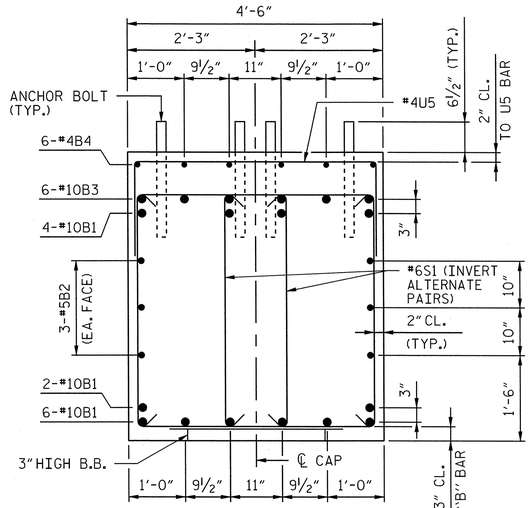

SECTION "B-B"

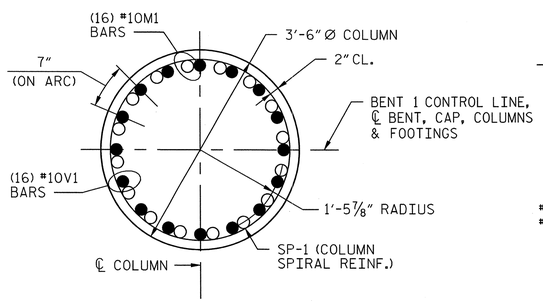

SECTION "C-C"

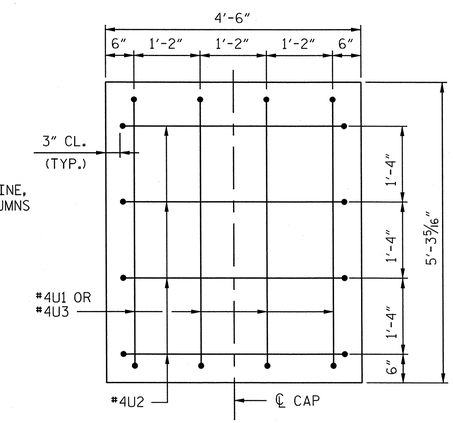

END VIEW "D-D"

BAR TYPES

ALL BAR DIMENSIONS ARE OUT TO OUT.

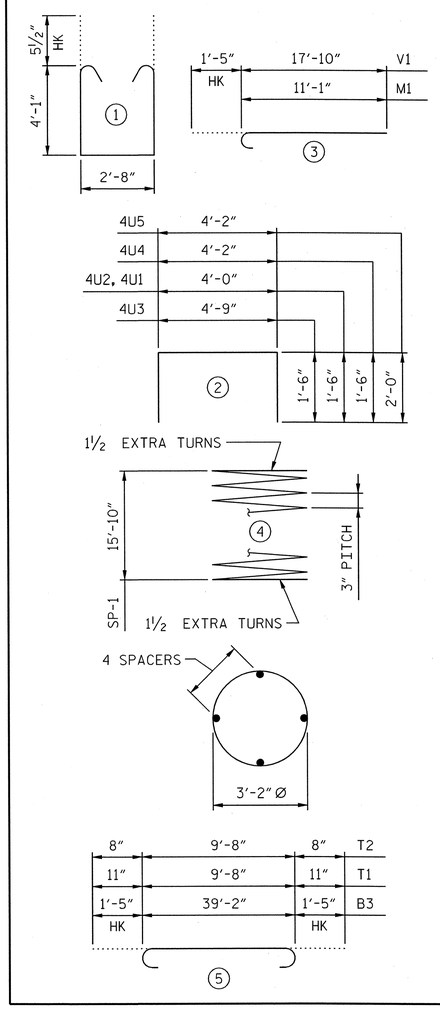

BILL OF MATERIAL

BENT 1

BAR	NO.	SIZE	TYPE	LENGTH	WEIGHT
B1	12	#10	STR	39'-2"	2022
B2	6	#5	STR	39'-2"	245
B3	6	#10	5	42'-0"	1084
B4	6	#4	STR	13'-8"	55
M1	48	#10	3	12'-6"	2582
S1	76	#6	1	11'-9"	1341
T1	120	#8	5	11'-6"	3685
T2	78	#6	5	11'-0"	1289
U1	4	#4	2	7'-0"	19
U2	7	#4	2	7'-0"	34
U3	4	#4	2	7'-9"	21
U4	41	#4	2	7'-2"	196
U5	22	#4	2	8'-2"	120
V1	48	#10	3	19'-3"	3976
REINFORCING STEEL				LBS.	16769
SP-1	3	***	4	638'-4"	1279
SPIRAL REINFORCING STEEL				LBS.	1279

*** THE "SP" SPIRAL REINFORCING STEEL SHALL BE W20 OR D-20 COLD DRAWN WIRE OR #4 PLAIN OR DEFORMED BAR.

BENT 1 TOTAL QUANTITIES

CLASS A CONCRETE		
POUR 1 (FOOTINGS)	C.Y.	50.0
POUR 2 (COLUMNS)	C.Y.	16.7
POUR 3 (CAP)	C.Y.	32.2
TOTAL CLASS A CONCRETE	C.Y.	98.9
HP 12x53 STEEL PILES	NO.	24
	LIN. FT.	600
STEEL PILE POINTS	NO.	24

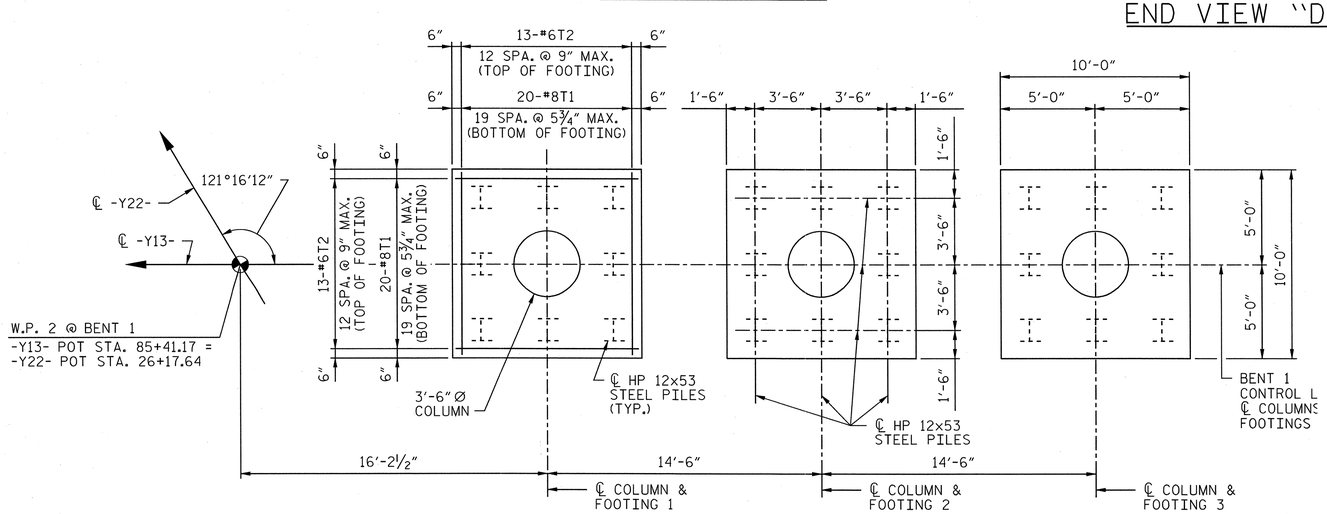

PLAN OF FOOTINGS

PROJECT NO. U-2525B

GUILFORD COUNTY

STATION: 26+17.64 -Y22-
85+41.17 -Y13-

SHEET 2 OF 2

AECOM
AECOM TECHNICAL SERVICES, INC.
701 CORPORATE CENTER DRIVE, SUITE 475
RALEIGH, NC 27607
(919) 854-6200 www.aecom.com
AECOM License No. F-0342

NORTH CAROLINA PROFESSIONAL SEAL 030474 ENGINEER JOHN C. MORRISON
12/13/13

STATE OF NORTH CAROLINA
DEPARTMENT OF TRANSPORTATION
RALEIGH

SUBSTRUCTURE
BENT 1
SECTIONS AND DETAILS

(RIGHT LANE)

REVISIONS						SHEET NO.
NO.	BY:	DATE:	NO.	BY:	DATE:	S-532
						TOTAL SHEETS 541

DRAWN BY : DDL DATE : 09/13
CHECKED BY : JCM DATE : 09/13

DATE: 12/9/2013
TIME: 1:31:59 PM

USER: Lowery
DGN: 0:\60279356\400_Technical_Information_Disc_Files\450_NCDOT Staff\DesignFiles\Structures\Bridge 15\Cadd\U2525B_SD_DSN_UHF_BENT_1_2.dgn

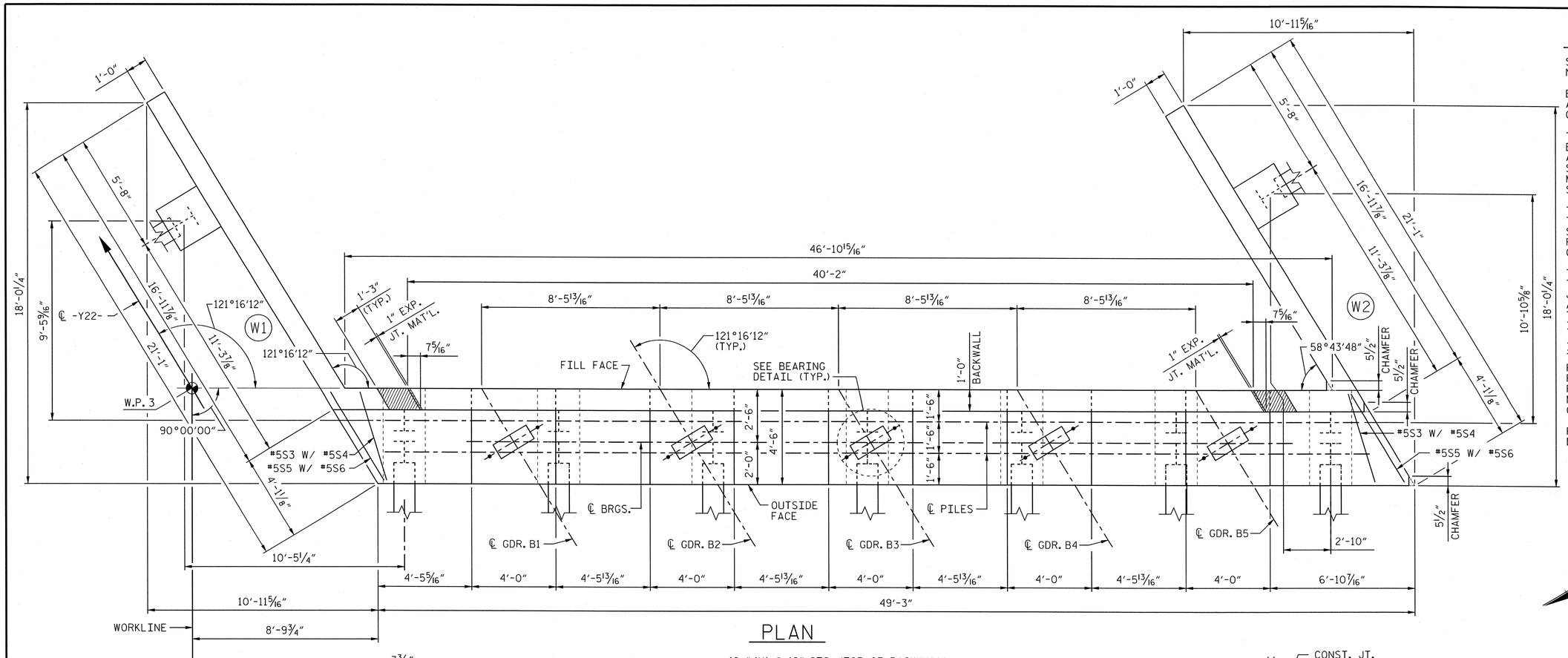

PLAN

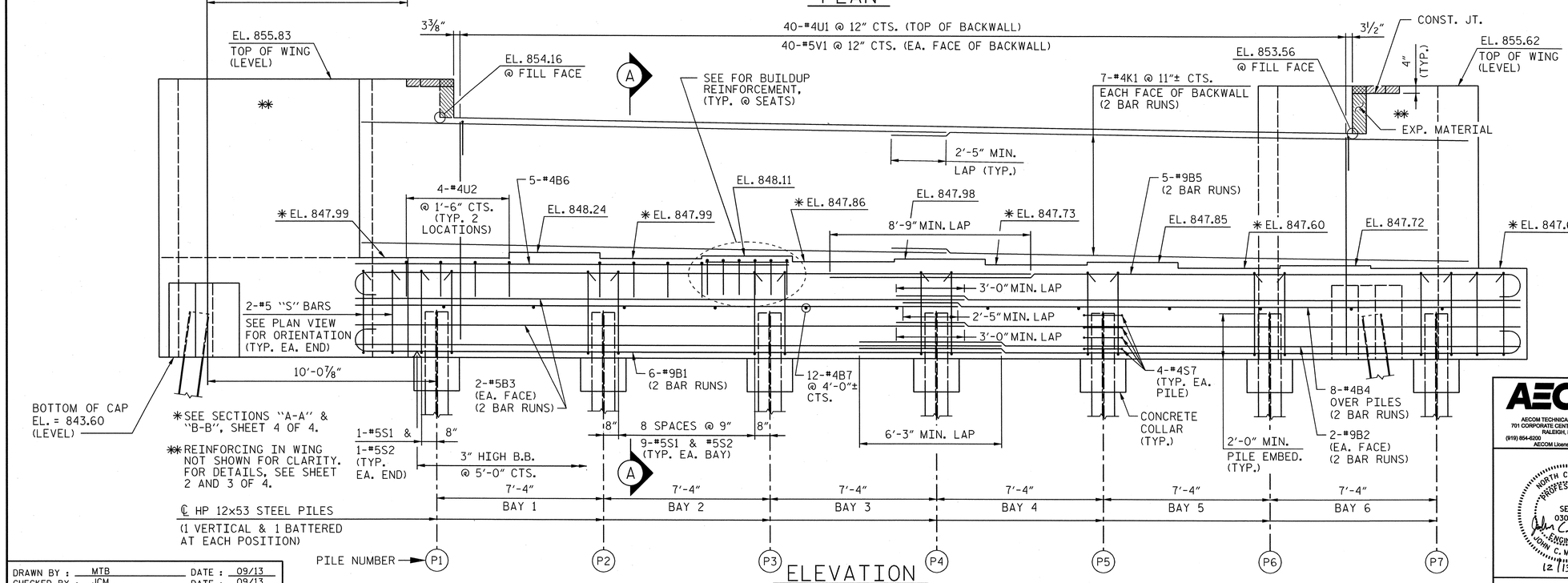

ELEVATION

NOTES:

STIRRUPS IN CAP MAY BE SHIFTED AS NECESSARY TO CLEAR ANCHOR BOLTS.

BACKWALL SHALL BE PLACED BEFORE APPLYING THE EPOXY PROTECTIVE COATING.

THE TOP SURFACE AREAS OF THE END BENT CAP SHALL BE CURED IN ACCORDANCE WITH THE STANDARD SPECIFICATIONS EXCEPT THAT THE MEMBRANE CURING COMPOUND METHOD SHALL NOT BE USED.

THE TOP SURFACE OF THE CAP EXCEPT THE BRIDGE SEAT BUILDUPS SHALL BE SLOPED TRANSVERSELY FROM THE FILL FACE TO THE FRONT FACE AT THE RATE OF 2%.

THE CONCRETE IN THE SHADED AREA OF THE WING SHALL BE POURED AFTER THE JOINT BETWEEN THE DECK AND THE APPROACH SLAB HAS BEEN SAWED AND THE PARAPET AND END POST ARE CAST IF SLIP FORMING IS USED.

INSTALL THE 4" DIA. DRAIN PIPE THROUGH THE WING WALL AS REQUIRED FOR REINFORCED BRIDGE APPROACH FILLS, SEE ROADWAY PLANS. REINFORCING STEEL IN THE WING WALL MAY BE SHIFTED AS NECESSARY TO CLEAR THE DRAIN PIPE.

FOR OTHER NOTES, SEE "GENERAL DRAWINGS".

NAD 83/95

PROJECT NO. U-2525B
GUILFORD COUNTY
STATION: 26+17.64 -Y22-
85+41.17 -Y13-

SHEET 1 OF 4

AECOM
AECOM TECHNICAL SERVICES, INC.
701 CORPORATE CENTER DRIVE, SUITE 475
RALEIGH, NC 27607
(919) 854-6200 www.aecom.com
AECOM License No. F-0342

NORTH CAROLINA PROFESSIONAL SEAL 030474 ENGINEER JOHN C. MORRISON
12/13/13

STATE OF NORTH CAROLINA
DEPARTMENT OF TRANSPORTATION
RALEIGH

SUBSTRUCTURE
END BENT 2
PLAN AND ELEVATION
(RIGHT LANE)

REVISIONS						SHEET NO.
NO.	BY:	DATE:	NO.	BY:	DATE:	S-533
1			3			TOTAL SHEETS
2			4			541

DRAWN BY : MTB DATE : 09/13
CHECKED BY : JCM DATE : 09/13

DATE: 12/9/2013
TIME: 1:32:42 PM

USER: Lewinyl
DGN: 0U2525B9356V400_Technical_Information_Disc_Files\450_NCDOT Staff tech Design Files\Structures\Bridge 150\Cad\U2525B_SD_DSN_Unit_EBT2_1.dgn

NOTES:

SEE SHEET 1 OF 4 FOR NOTES.

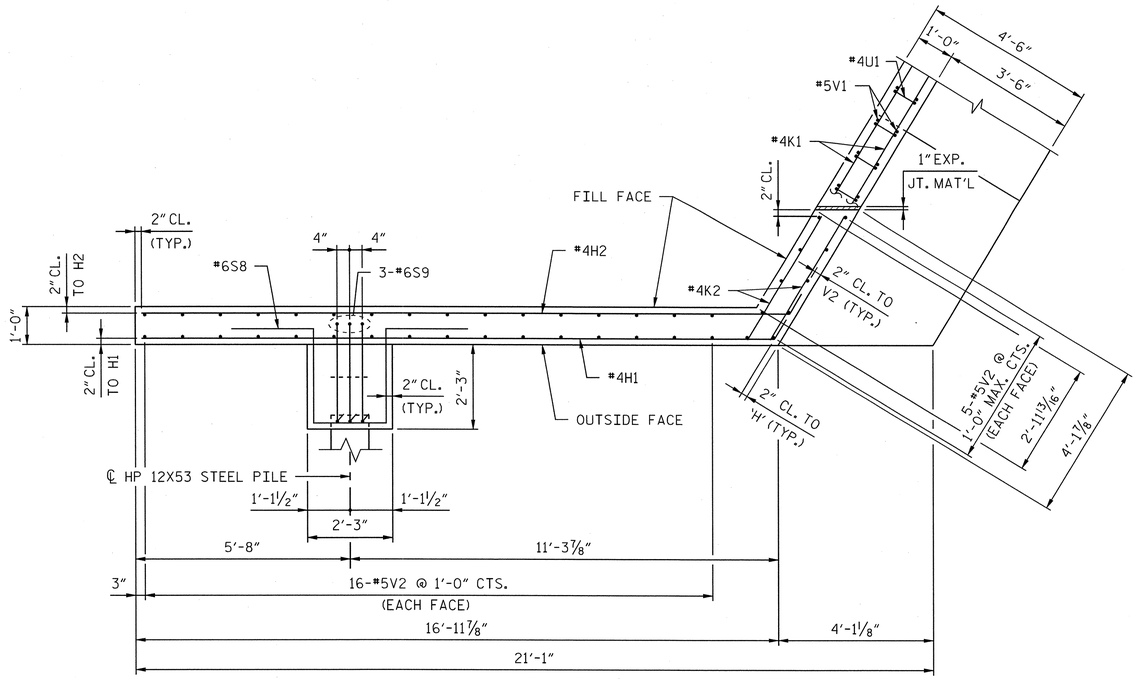

PLAN W1

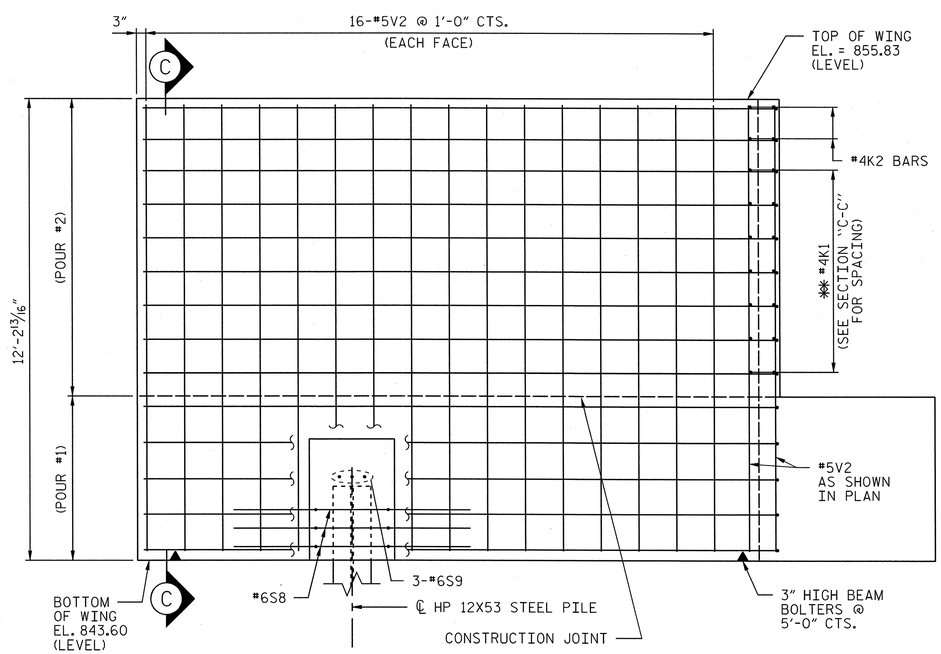

ELEVATION W1

✱✱ PLACE #4 'H' BARS TO MATCH #4K1 BARS IN BACKWALL

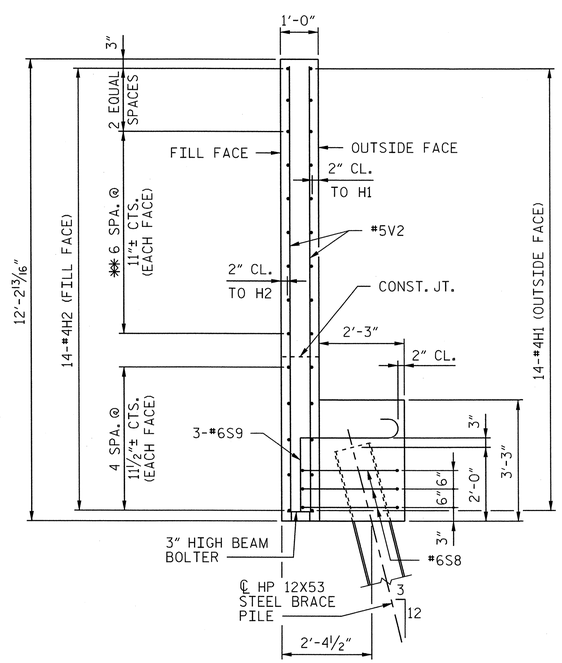

SECTION C-C

PROJECT NO. U-2525B

GUILFORD COUNTY

STATION: 26+17.64 -Y22-
85+41.17 -Y13-

SHEET 2 OF 4

AECOM
AECOM TECHNICAL SERVICES, INC.
701 CORPORATE CENTER DRIVE, SUITE 475
RALEIGH, NC 27607
(919) 854-6200 www.aecom.com
AECOM License No. F-0342

NORTH CAROLINA PROFESSIONAL SEAL 030474 ENGINEER JOHN C. MORRISON 12/13/13

STATE OF NORTH CAROLINA
DEPARTMENT OF TRANSPORTATION
RALEIGH

SUBSTRUCTURE
END BENT 2
SECTIONS AND DETAILS

(RIGHT LANE)

REVISIONS						SHEET NO.
NO.	BY:	DATE:	NO.	BY:	DATE:	S-534
1			3			TOTAL SHEETS
2			4			541

DRAWN BY : MTB DATE : 09/13
CHECKED BY : JCM DATE : 09/13

DATE: 12/9/2013
TIME: 1:33:25 PM

USER: Lowery
DGN: QA60279356\400_Technical_Information_Disc_Files\450_NC001Staff\eshDesignFiles\Structures\Bridge 15\Cadd\U2525B_SD_DSN_IHF_EBT2_2.dgn

NOTES:

SEE SHEET 1 OF 4 FOR NOTES.

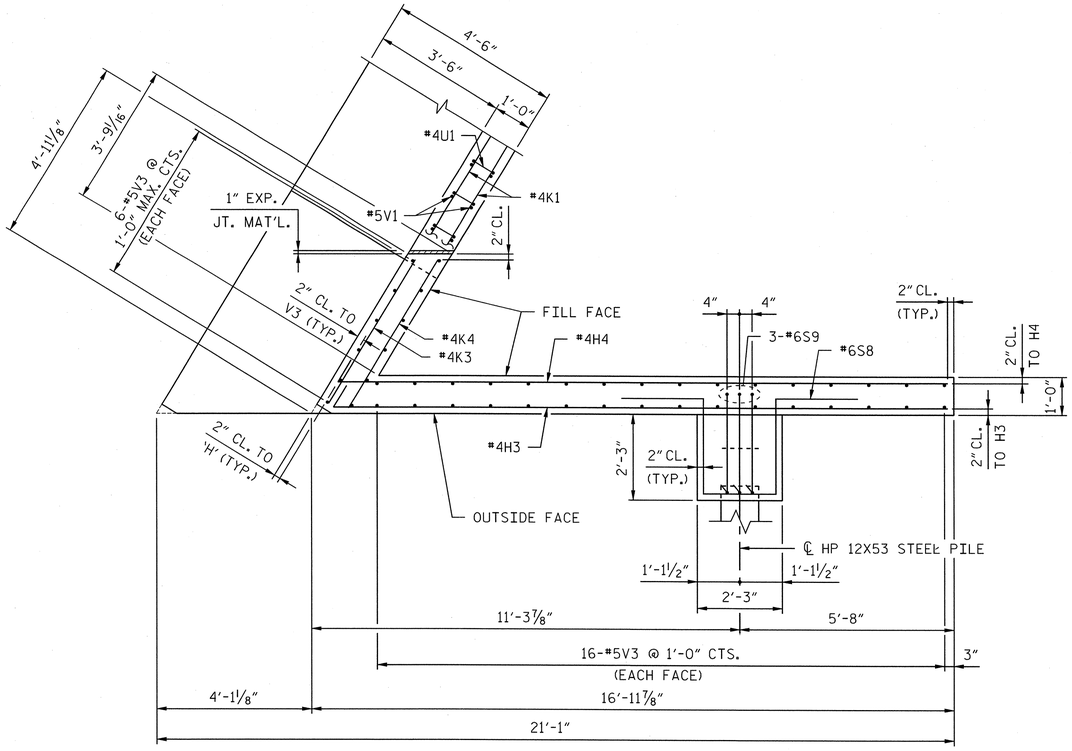

PLAN W2

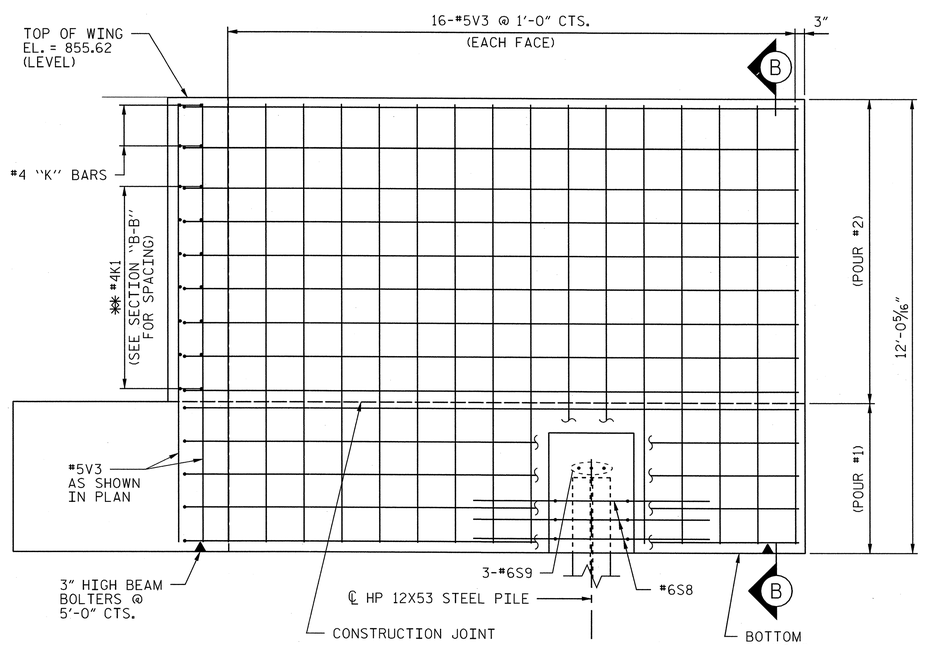

ELEVATION W2

✱✱ PLACE #4 'H' BARS TO MATCH #4K1 BARS IN BACKWALL

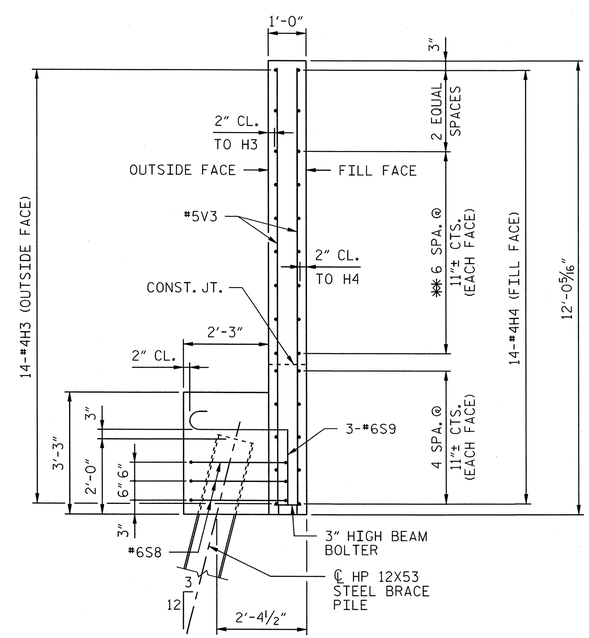

SECTION B-B

PROJECT NO. U-2525B

GUILFORD COUNTY

STATION: 26+17.64 -Y22-
85+41.17 -Y13-

SHEET 3 OF 4

AECOM
AECOM TECHNICAL SERVICES, INC.
701 CORPORATE CENTER DRIVE, SUITE 475
RALEIGH, NC 27607
(919) 854-6200 www.aecom.com
AECOM License No. F-0342

NORTH CAROLINA PROFESSIONAL SEAL 030474 ENGINEER JOHN C. MORRISON
12/13/13

STATE OF NORTH CAROLINA
DEPARTMENT OF TRANSPORTATION
RALEIGH

SUBSTRUCTURE
END BENT 2
SECTION AND DETAILS

(RIGHT LANE)

REVISIONS						SHEET NO.
NO.	BY:	DATE:	NO.	BY:	DATE:	S-535
1			3			TOTAL SHEETS
2			4			541

DRAWN BY : MTB DATE : 09/13
CHECKED BY : JCM DATE : 09/13

DATE: 12/9/2013
TIME: 1:34:25 PM

USER: Lowery
DGN: G:\60197356\400_Technical_Information_Disc_Files\450_NCDOT Staff ext\Design Files\Structures\Bridge ISV\cad\U2525B_SD_DSN_UHF_EBF2_3.dgn

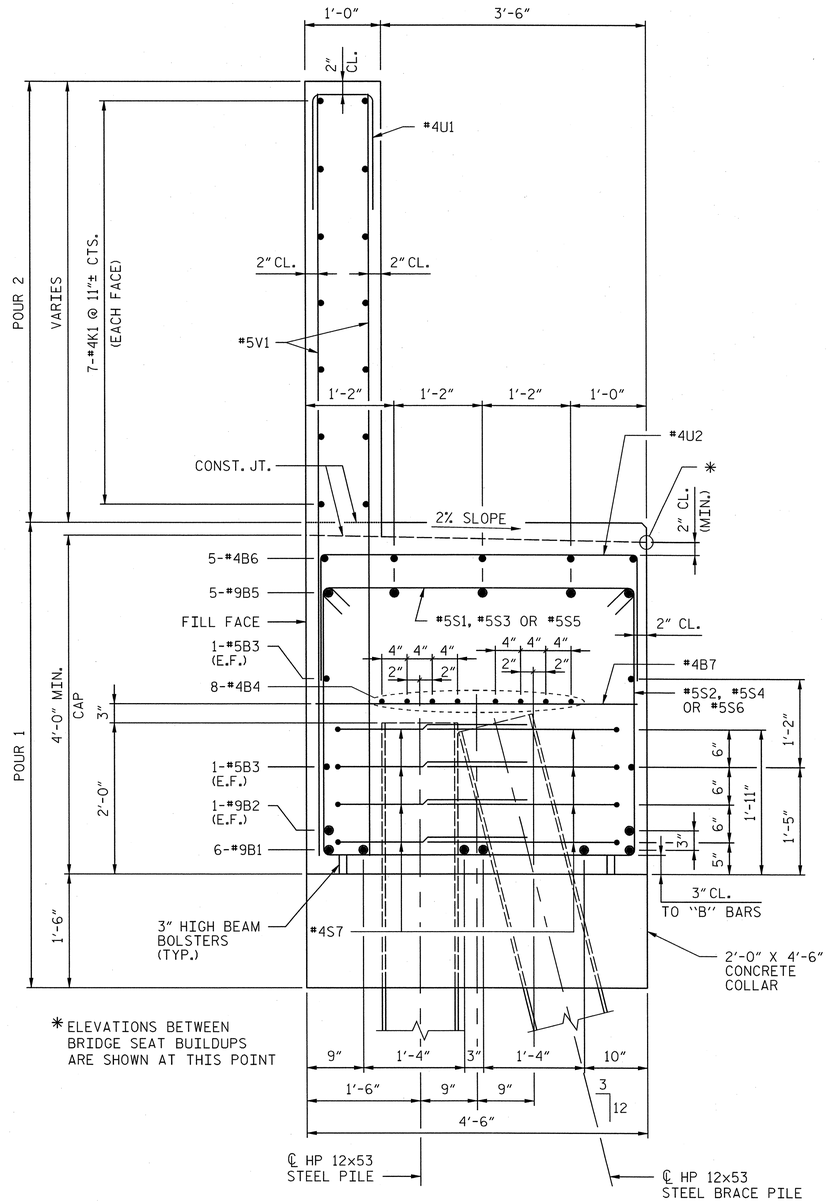

SECTION "A-A"

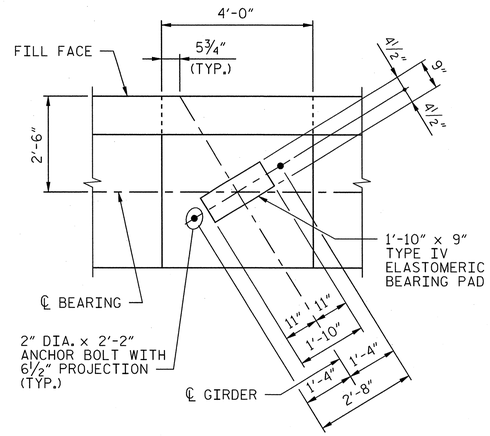

BEARING DETAIL

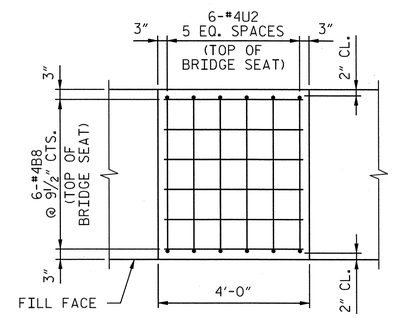

BUILDUP REINFORCEMENT

BAR TYPES

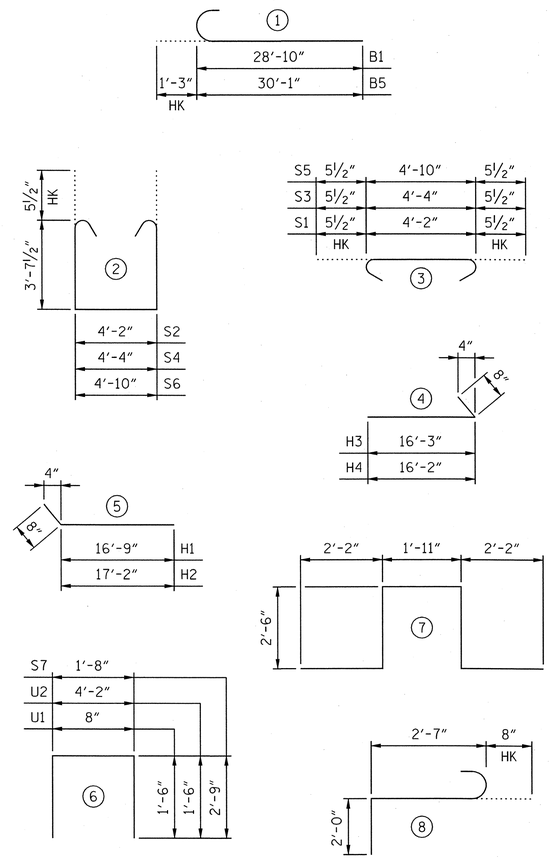

ALL BAR DIMENSIONS ARE OUT TO OUT.

BILL OF MATERIAL

END BENT 2

BAR	NO.	SIZE	TYPE	LENGTH	WEIGHT
B1	12	#9	1	30'-1"	1227
B2	4	#9	STR	28'-10"	392
B3	8	#5	STR	27'-2"	227
B4	16	#4	STR	26'-11"	288
B5	10	#9	1	31'-4"	1065
B6	5	#4	STR	19'-1"	64
B7	12	#4	STR	4'-2"	33
B8	30	#4	STR	3'-8"	73
H1	14	#4	5	17'-5"	163
H2	14	#4	5	17'-10"	167
H3	14	#4	4	16'-11"	158
H4	14	#4	4	16'-10"	157
K1	28	#4	STR	25'-9"	482
K2	4	#4	STR	3'-10"	10
K3	2	#4	STR	4'-5"	6
K4	2	#4	STR	4'-7"	6
S1	56	#5	3	5'-1"	297
S2	56	#5	2	12'-4"	720
S3	2	#5	3	5'-3"	11
S4	2	#5	2	12'-6"	26
S5	2	#5	3	5'-9"	12
S6	2	#5	2	13'-0"	27
S7	56	#4	6	7'-2"	268
S8	6	#6	7	11'-3"	101
S9	6	#6	8	5'-3"	47
U1	40	#4	6	3'-8"	98
U2	38	#4	6	7'-2"	182
V1	80	#5	STR	9'-6"	793
V2	42	#5	STR	11'-10"	518
V3	42	#5	STR	11'-7"	532
TOTAL REINFORCING STEEL				LBS.	8150

END BENT 2 TOTAL QUANTITIES

CLASS A CONCRETE		
POUR 1 (COLLAR, CAP & LOWER WING)	C.Y.	46.4
POUR 2 (BACKWALL & UPPER WING)	C.Y.	21.0
TOTAL	C.Y.	67.4
HP 12x53 STEEL PILES	NO.	16
	LIN. FT.	680

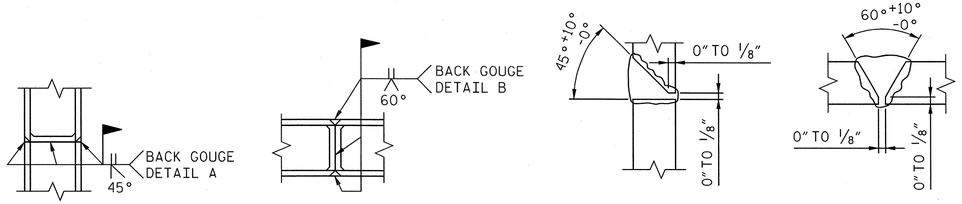

**PILE VERTICAL

**PILE HORIZONTAL OR VERTICAL

DETAIL A

DETAIL B

**POSITION OF PILE DURING WELDING.

PILE SPLICE DETAILS

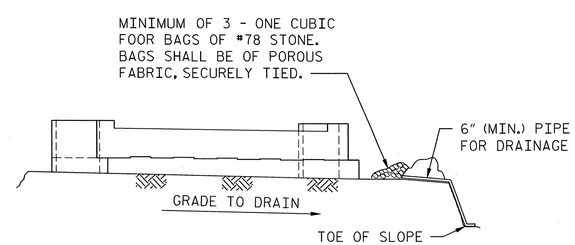

BAGGED STONE AND PIPE SHALL BE PLACED IMMEDIATELY AFTER COMPLETION OF END BENT EXCAVATION. PIPE MAY BE EITHER CONCRETE, CORRUGATED STEEL, CORRUGATED ALUMINUM ALLOY, OR CORRUGATED PLASTIC. PERFORATED PIPE WILL NOT BE ALLOWED.

BAGGED STONE SHALL REMAIN IN PLACE UNTIL THE ENGINEER DIRECTS THAT IT BE REMOVED. THE CONTRACTOR SHALL REMOVE AND DISPOSE OF SILT ACCUMULATIONS AT BAGGED STONE WHEN SO DIRECTED BY THE ENGINEER. BAGS SHALL BE REMOVED AND REPLACED WHENEVER THE ENGINEER DETERMINES THAT THEY HAVE DETERIORATED AND LOST THEIR EFFECTIVENESS.

NO SEPARATE PAYMENT WILL BE MADE FOR THIS WORK AND THE ENTIRE COST OF THIS WORK SHALL BE INCLUDED IN THE UNIT CONTRACT PRICE FOR THE SEVERAL PAY ITEMS.

TEMPORARY DRAINAGE END BENT

PROJECT NO. U-2525B

GUILFORD COUNTY

STATION: 26+17.64 -Y22-
85+41.17 -Y13-

SHEET 4 OF 4

AECOM
AECOM TECHNICAL SERVICES, INC.
701 CORPORATE CENTER DRIVE, SUITE 475
RALEIGH, NC 27607
(919) 854-6200 www.aecom.com
AECOM License No. F-0342

NORTH CAROLINA PROFESSIONAL SEAL 030474 ENGINEER JOHN C. MORRISON
John C. Morrison
12/13/13

STATE OF NORTH CAROLINA
DEPARTMENT OF TRANSPORTATION
RALEIGH

SUBSTRUCTURE
END BENT 2
SECTIONS AND DETAILS

(RIGHT LANE)

REVISIONS						
NO.	BY:	DATE:	NO.	BY:	DATE:	
1			3			
2			4			

SHEET NO. S-536

TOTAL SHEETS 54-1

DRAWN BY : DDL DATE : 09/13
CHECKED BY : JCM DATE : 09/13

DATE: 12/12/2013
TIME: 4:00:05 PM
USER: Lawendl
DGN: Q:\60279356\400_Technical_Information_Dise_Files\450_NCDOT Staff tech Design Files\Structures\Bridge 15\Cont\U2525B_SD_DSN_U47_EBT2_4.dgn

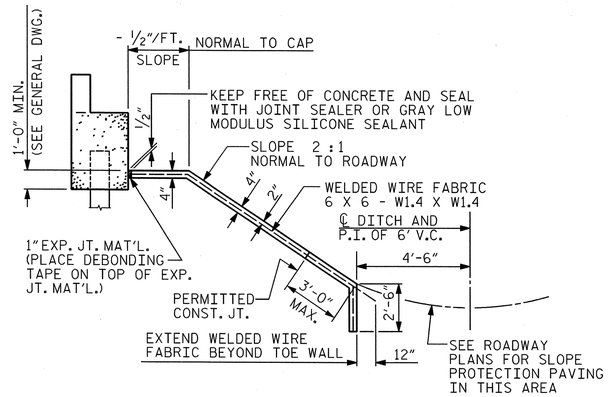

SECTION ALONG ℄ ROADWAY WHEN FILL CATCHES IN DITCH

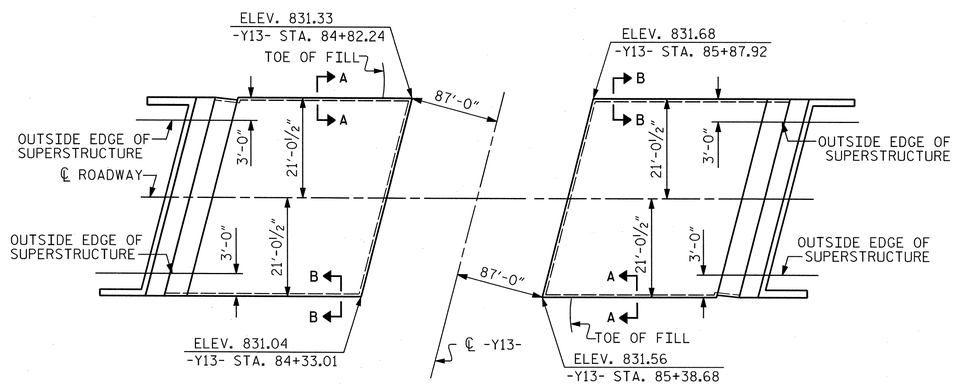

PLAN

NOTES:

SLOPE PROTECTION SHALL BE PLACED UNDER THE ENDS OF THE BRIDGE AS SHOWN IN THE DETAILS. MEASUREMENT AND PAYMENT SHALL BE AS PRESCRIBED IN SECTION 462 OF THE STANDARD SPECIFICATIONS. FOR BERM WIDTH, SEE GENERAL DRAWING.

SLOPE PROTECTION SHALL CONSIST OF 4" POURED-IN-PLACE CONCRETE PAVING AS SHOWN IN THE DETAILS ON THIS SHEET. CONCRETE SHALL BE CLASS "B". THE CONCRETE SURFACE SHALL BE FLOATED WITH A WOODEN FLOAT AND FINISHED. WELDED WIRE FABRIC REINFORCING SHALL BE 6 X 6 - W1.4 X W1.4, 60" WIDE. SLOPE PROTECTION SHALL BE POURED IN 5' STRIPS AS SHOWN IN THE "POURING DETAIL" WITH 2'-0" LONG #4 BARS PLACED ALONG THE SLOPE BETWEEN STRIPS AT 1'-6" MAXIMUM SPACING. SLOPE PROTECTION MAY BE POURED IN ALTERNATE 4' AND 5' STRIPS AS SHOWN IN THE "OPTIONAL POURING DETAIL" WITH ADJACENT RUNS OF WELDED WIRE FABRIC LAPPING AT LEAST 6". THE COST OF THE WELDED WIRE FABRIC AND #4 BARS, IF USED, SHALL BE INCLUDED IN THE CONTRACT UNIT PRICE BID PER SQUARE YARD FOR SLOPE PROTECTION.

BRIDGE @ STA. 26+17.64 -Y22-	4" INCH SLOPE PROTECTION	* WELDED WIRE FABRIC 60 INCHES WIDE
	SQUARE YARDS	APPROX. L.F.
END BENT 1	160	288
END BENT 2	172	317

* QUANTITY SHOWN IS BASED ON 5' POURS.

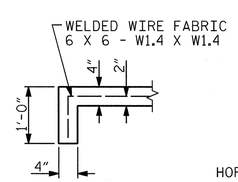

SECTION A-A

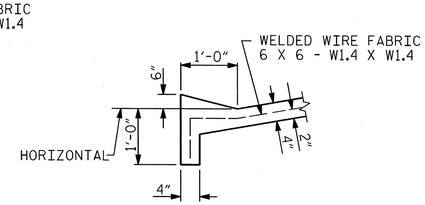

SECTION B-B

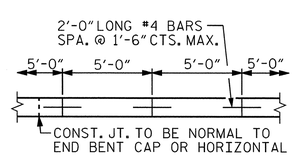

STRIP WIDTHS MAY VARY IN CURVED PORTION.

POURING DETAIL

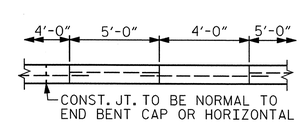

POUR A 4'-0" STRIP FIRST. STRIP WIDTHS MAY VARY IN CURVED PORTION.

OPTIONAL POURING DETAIL

PROJECT NO. U-2525B

GUILFORD COUNTY

STATION: 26+17.64 -Y22-
85+41.17 -Y13-

SHEET 1 OF 2

AECOM
AECOM TECHNICAL SERVICES, INC.
701 CORPORATE CENTER DRIVE, SUITE 475
RALEIGH, NC 27607
(919) 854-6200 www.aecom.com
AECOM License No. F-0342

NORTH CAROLINA PROFESSIONAL SEAL 030474 ENGINEER JOHN C. MORRISON
12/13/13

STATE OF NORTH CAROLINA
DEPARTMENT OF TRANSPORTATION
RALEIGH

STANDARD

SLOPE PROTECTION DETAILS

REVISIONS						SHEET NO.
NO.	BY:	DATE:	NO.	BY:	DATE:	S-537
1			3			TOTAL SHEETS
2			4			541

ASSEMBLED BY :	DDL	DATE :	09/13
CHECKED BY :	JCM	DATE :	09/13
DRAWN BY : ELR 5/92	REV. 5/1/06	TLA/GM	
CHECKED BY : GRP 6/92	REV. 10/1/11	MAA/GM	
	REV. 12/21/11	MAA/GM	

STD. NO. SP1

DATE: 12/9/2013
TIME: 5:52:50 PM
USER: Lawanyd
DGN: 0:\60129356\400_Technical_Information_Disc_Files\450_NCDOT\Sdt\eschDesign\Files\Structures\Bridge 19\Cadd\U2525B_SD_DSN_LWT_SLOPE_PROTECTION.Jdgn

NOTE:
COORDINATE GRADING WITH WEST BOUND STRUCTURE.

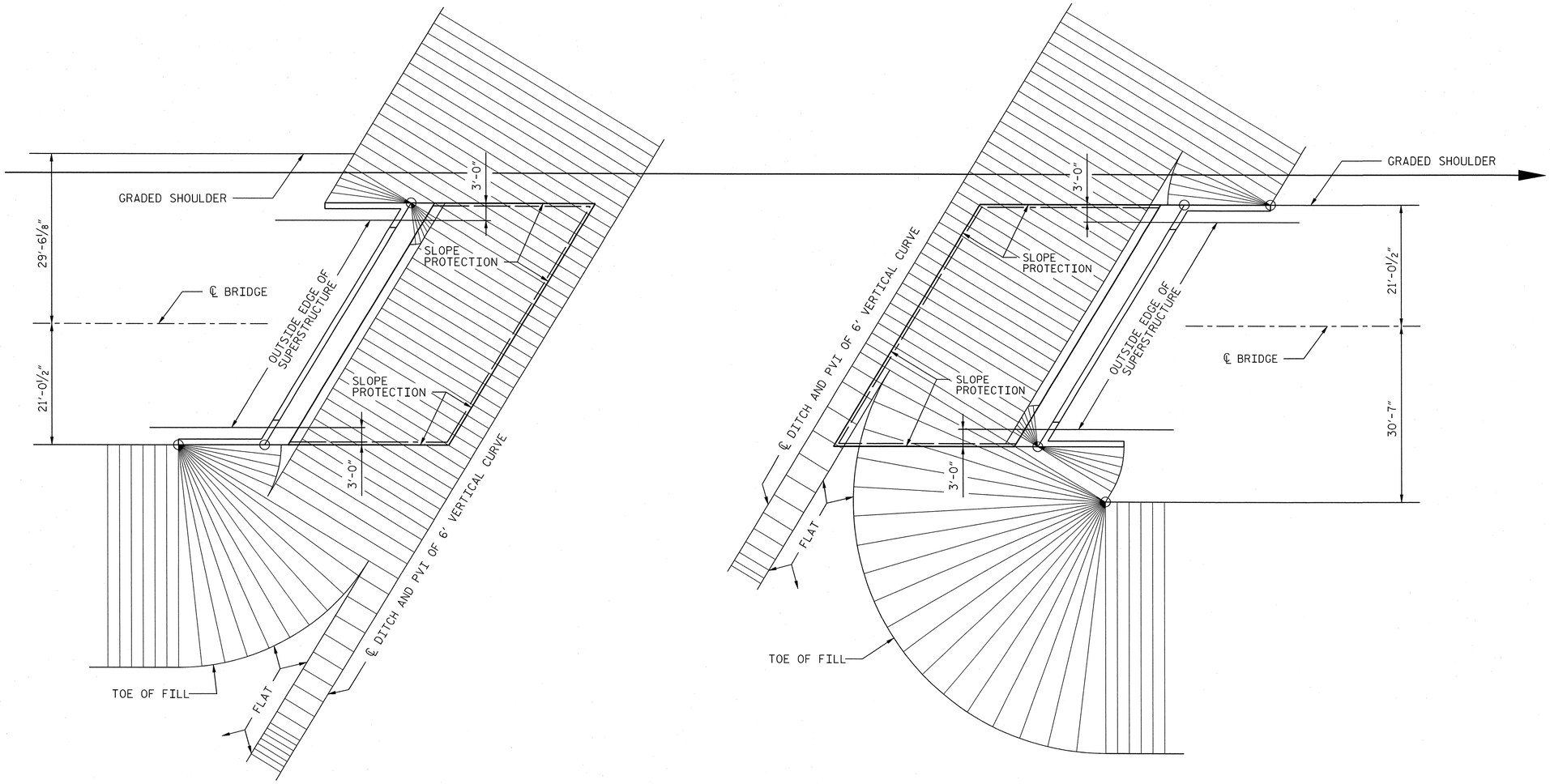

END BENT 1

END BENT 2

PLAN - END BENT WITH SWEPT BACK WINGS - SKEWED

(2:1 SLOPE)

ASSEMBLED BY : ZSP		DATE : 09/13	
CHECKED BY : JCM		DATE : 09/13	
DRAWN BY : WJH 10/88	REV. 7/17/98	REK/RWW	
CHECKED BY : FCJ 10/88	REV. 5/1/06	TLA/GM	
	REV. 10/1/11	MAA/GM	

PROJECT NO. U-2525B
GUILFORD COUNTY
STATION: 26+17.64 -Y22-
85+41.17 -Y13-
SHEET 2 OF 2

AECOM
AECOM TECHNICAL SERVICES, INC.
701 CORPORATE CENTER DRIVE, SUITE 475
RALEIGH, NC 27607
(919) 854-6200 www.aecom.com
AECOM License No. F-0342

NORTH CAROLINA PROFESSIONAL SEAL 030474 ENGINEER JOHN C. MORRISON
12/13/13

STATE OF NORTH CAROLINA
DEPARTMENT OF TRANSPORTATION
RALEIGH

STANDARD
SLOPE PROTECTION DETAILS

REVISIONS						
NO.	BY:	DATE:	NO.	BY:	DATE:	

SHEET NO. S-538
TOTAL SHEETS 541

STD. NO. SP2

USER: Lawsonj
DGN: G:\60039356\400_Technical_Information_Disc_Files\450_NCDOT SHT\TechDesignFiles\Structures\Bridge 15\Cadd\U2525B_SD_DSN_UNIT_SLOPE_PROTECTION_2.dgn
DATE: 12/10/2013
TIME: 2:57:27 PM

NOTES

APPROACH SLAB SHALL NOT BE CONSTRUCTED PRIOR TO COMPLETION OF THE BRIDGE DECK.

FOR REINFORCED BRIDGE APPROACH FILL INCLUDING GEOTEXTILE, IMPERMEABLE GEOMEMBRANE, 4" Ø DRAINAGE PIPE, #78M STONE, AND SELECT MATERIAL, SEE ROADWAY PLANS.

AREA BETWEEN THE WINGWALL AND APPROACH SLAB SHALL BE GRADED TO DRAIN THE WATER AWAY FROM THE FILL FACE OF THE BRIDGE AND SHALL BE PAVED. SEE ROADWAY PLANS.

THE JOINT SHALL BE SAWED PRIOR TO THE CASTING OF THE BARRIER RAIL OR PARAPET AND END POST.

WITH FOAM JOINT SEAL

FOR FOAM JOINT SEALS, SEE SPECIAL PROVISIONS.

THE NOMINAL UNCOMPRESSED SEAL WIDTH OF THE FOAM JOINT SEAL SHALL BE 2".

FOR ELASTOMERIC CONCRETE, SEE SPECIAL PROVISIONS.

BAR TYPES

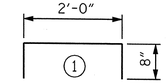

ALL BAR DIMENSIONS ARE OUT TO OUT.

BILL OF MATERIAL

APPROACH SLAB AT EB #1

BAR	NO.	SIZE	TYPE	LENGTH	WEIGHT
✱A1	50	#4	STR	20'-10"	696
A2	52	#4	STR	20'-8"	718
✱B1	68	#5	STR	24'-8"	1749
B2	68	#6	STR	24'-8"	2519
✱B3	4	#4	STR	24'-8"	66
✱G1	25	#4	STR	6'-1"	102
✱U1	8	#4	1	3'-4"	18

REINFORCING STEEL	LBS.	3237
✱EPOXY COATED REINFORCING STEEL	LBS.	2631
CLASS AA CONCRETE		
POUR 1 SLAB	C.Y.	37.0
POUR 2 SIDEWALK	C.Y.	3.0
CLASS AA CONCRETE	C.Y.	40.0

APPROACH SLAB AT EB #2

BAR	NO.	SIZE	TYPE	LENGTH	WEIGHT
✱A1	50	#4	STR	20'-10"	696
A2	52	#4	STR	20'-8"	718
✱B1	68	#5	STR	24'-8"	1749
B2	68	#6	STR	24'-8"	2519
✱B3	4	#4	STR	24'-8"	66
✱G1	25	#4	STR	6'-1"	102
✱U1	8	#4	1	3'-4"	18

REINFORCING STEEL	LBS.	3237
✱EPOXY COATED REINFORCING STEEL	LBS.	2631
CLASS AA CONCRETE		
POUR 1 SLAB	C.Y.	37.0
POUR 2 SIDEWALK	C.Y.	3.0
CLASS AA CONCRETE	C.Y.	40.0

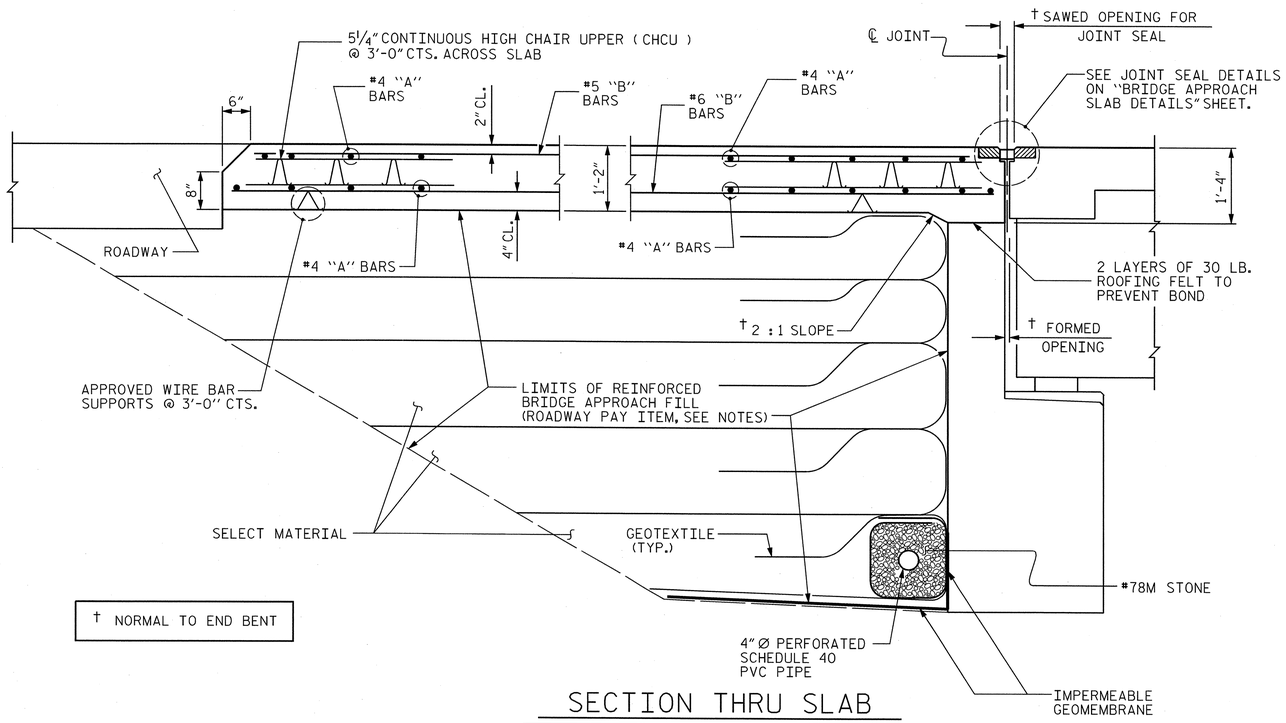

† NORMAL TO END BENT

SECTION THRU SLAB

SPLICE LENGTHS

BAR SIZE	EPOXY COATED	UNCOATED
#4	2'-0"	1'-9"
#5	2'-6"	2'-2"
#6	3'-10"	2'-7"

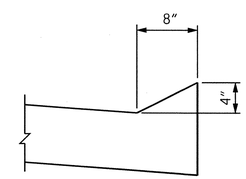

SECTION N-N

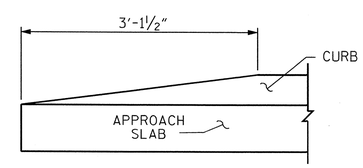

END OF CURB WITHOUT SHOULDER BERM GUTTER

CURB DETAILS

PROJECT NO. U-2525B

GUILFORD COUNTY

STATION: 26+17.64 -Y22-
85+41.17 -Y13-

SHEET 1 OF 3

AECOM
AECOM TECHNICAL SERVICES, INC.
701 CORPORATE CENTER DRIVE, SUITE 475
RALEIGH, NC 27607
(919) 854-6200 www.aecom.com
AECOM License No. F-0342

NORTH CAROLINA PROFESSIONAL SEAL 030474 ENGINEER JOHN C. MORRISON
12/13/13

STATE OF NORTH CAROLINA
DEPARTMENT OF TRANSPORTATION
RALEIGH

STANDARD

BRIDGE APPROACH SLAB FOR FLEXIBLE PAVEMENT

(RIGHT LANE)

REVISIONS						
NO.	BY:	DATE:	NO.	BY:	DATE:	
1			3			
2			4			

SHEET NO. S-539

TOTAL SHEETS 54-1

STD. NO. BAS2

ASSEMBLED BY : DDL		DATE : 09/13	
CHECKED BY : JCM		DATE : 09/13	
DRAWN BY : EEM 3/95	REV. 10/1/11	MAA/GM	
CHECKED BY : VAP 3/95	REV. 12/21/11	MAA/GM	
	REV. 6/13	MAA/GM	

DATE: 12/9/2013
TIME: 4:05:54 PM
USER: Lawrence
DGN: G:\60279356\400_Technical_Information_Disc_Files\450_NCDOT Std Tech Design Files\Structures\Bridge 15\Cadd\U2525B_SD_DSN_Unit_AppSlab.dgn

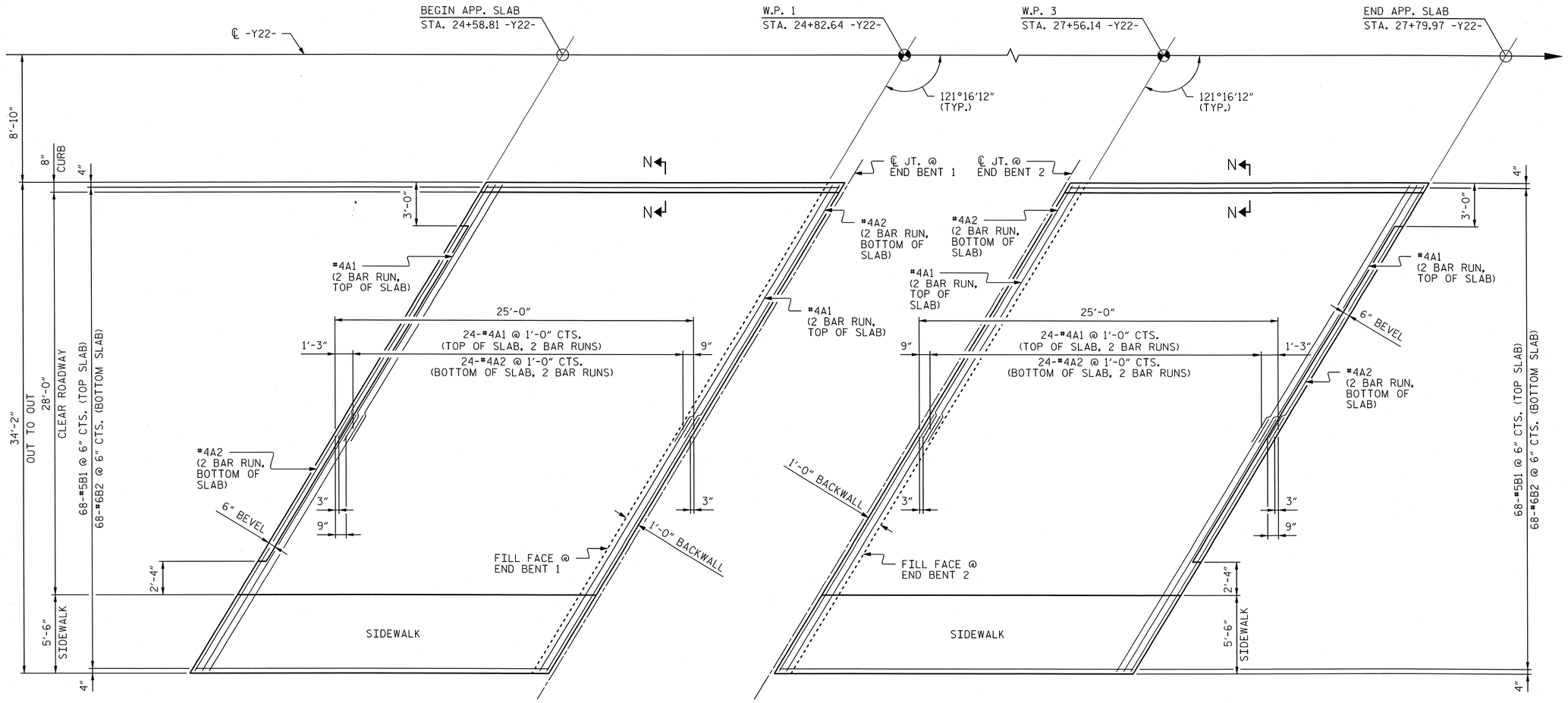

PLAN @ END BENT 1

PLAN @ END BENT 2

NOTES:

DIMENSIONS SHOWN ARE TYPICAL FOR BOTH APPROACH SLABS.

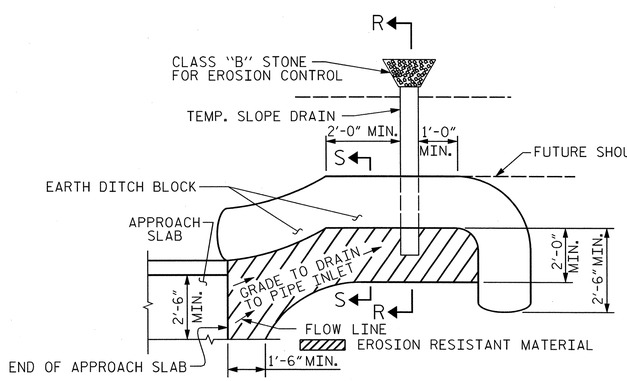

NOTE: IMMEDIATELY AFTER THE CONSTRUCTION OF THE APPROACH SLAB, THE CONTRACTOR SHALL PROVIDE TEMPORARY BERM AND SLOPE DRAIN. CONTRACTOR SHALL GRADE TO PIPE INLET AND PROVIDE EROSION RESISTANT MATERIAL AS SHOWN. THE EROSION RESISTANT MATERIAL SHALL BE EITHER 1) ASPHALT PLANT MIX, TYPE 1 OR TYPE 2, MIN. 2" DEPTH, 2) EROSION CONTROL MAT, OR 3) CONCRETE, AS DIRECTED BY THE ENGINEER. THE SLOPE DRAIN SHALL CONSIST OF A NON-PERFORATED TEMPORARY DRAINAGE PIPE, 12 INCHES IN DIAMETER.

PLAN VIEW

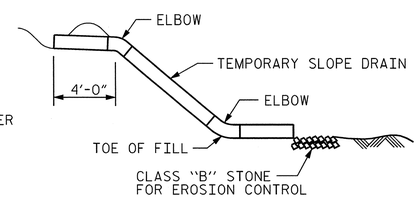

SECTION R-R

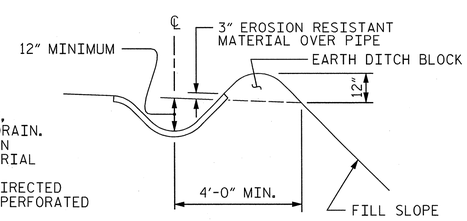

SECTION S-S

TEMPORARY BERM AND SLOPE DRAIN DETAILS

(TO BE USED WHEN SHOULDER BERM GUTTER IS REQUIRED)

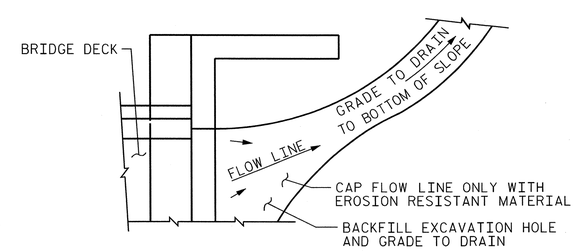

NOTE: IF THE APPROACH SLAB IS NOT CONSTRUCTED IMMEDIATELY AFTER THE BACKFILLING OF THE END BENT EXCAVATION, GRADE TO DRAIN TO THE BOTTOM OF THE SLOPE AND PROVIDE EROSION RESISTANT MATERIAL, SUCH AS FIBERGLASS ROVING OR AS DIRECTED BY THE ENGINEER TO PREVENT SOIL EROSION AND TO PROTECT THE AREA ADJACENT TO THE STRUCTURE. THE CONTRACTOR WILL BE REQUIRED TO REMOVE THESE MATERIALS PRIOR TO CONSTRUCTION OF THE APPROACH SLAB.

TEMPORARY DRAINAGE DETAIL

PROJECT NO. U-2525B
GUILFORD COUNTY
STATION: 26+17.64 -Y22-
85+41.17 -Y13-

SHEET 2 OF 3

AECOM
AECOM TECHNICAL SERVICES, INC.
701 CORPORATE CENTER DRIVE, SUITE 475
RALEIGH, NC 27607
(919) 854-6200 www.aecom.com
AECOM License No. F-0342

NORTH CAROLINA PROFESSIONAL SEAL 030474 ENGINEER JOHN C. MORRISON
12/13/13

STATE OF NORTH CAROLINA
DEPARTMENT OF TRANSPORTATION
RALEIGH

BRIDGE APPROACH SLAB FOR FLEXIBLE PAVEMENT

(RIGHT LANE)

REVISIONS						SHEET NO.
NO.	BY:	DATE:	NO.	BY:	DATE:	S-540
1			3			TOTAL SHEETS
2			4			541

DRAWN BY : DDL DATE : 09/13
CHECKED BY : JCM DATE : 09/13

DATE: 12/9/2013
TIME: 1:36:00 PM
USER: Lawerd
DGN: G:\60129356\400_Technical_Information_Disc_Files\450_NCDOT SHE\Design Files\Structures\Bridge 15\Cadd\U2525B_SD_DSN_JHT_AppSlab2.dgn

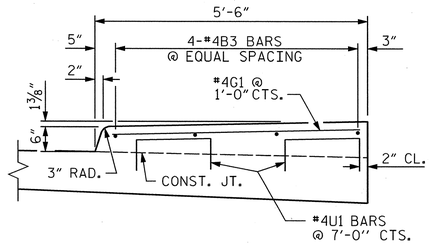

SECTION N-N

SIDEWALK DETAILS

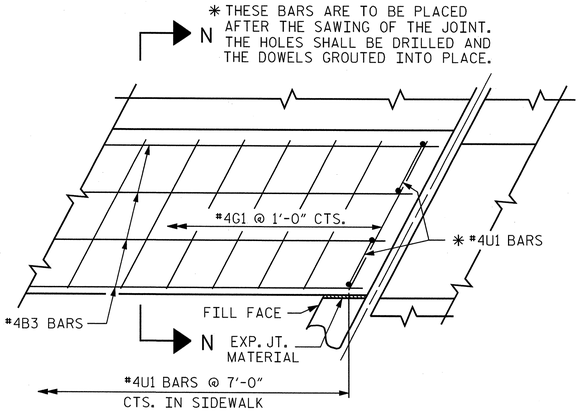

PLAN

DETAILS OF SIDEWALK ON APPROACH SLAB

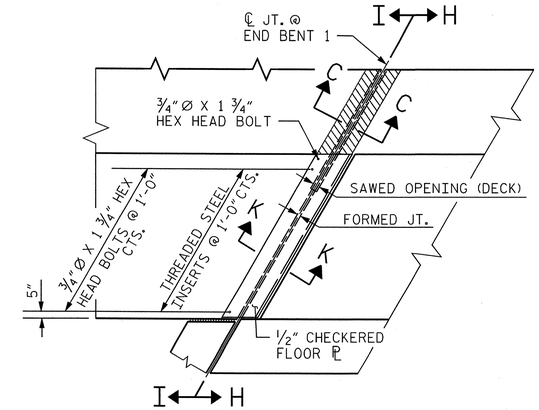

PLAN VIEW OF FOAM JOINT SEAL @ END BENT FOR SIDEWALK

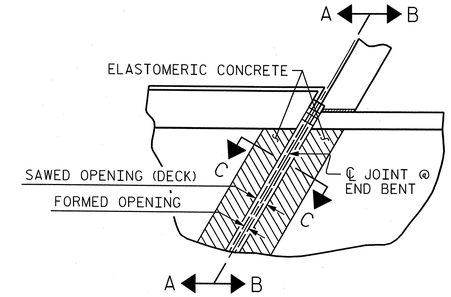

PLAN

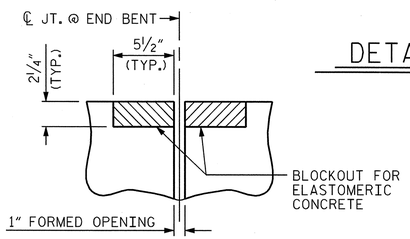

SECTION C-C

FOAM JOINT SEAL
(PRE-SAWED ELASTOMERIC CONCRETE DIMENSIONS)

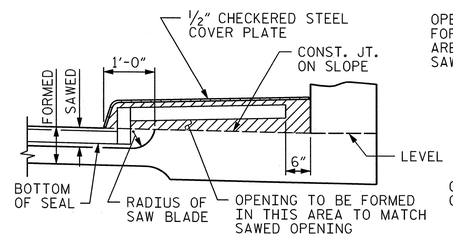

SECTION H-H

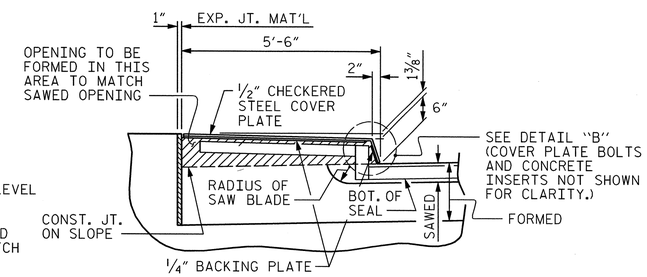

SECTION I-I

SECTION A-A

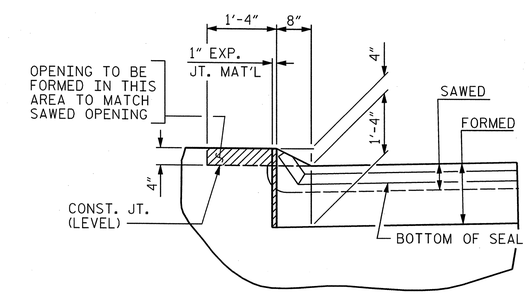

SECTION B-B

JOINT SEAL DETAILS @ END BENT

FOAM JOINT SEAL TO BE CUT, HEAT WELDED AND TURNED UP PARALLEL TO SLOPED FACE OF THE PARAPET.

THE JOINT SHALL BE SAWED PRIOR TO THE CASTING OF THE PARAPET.

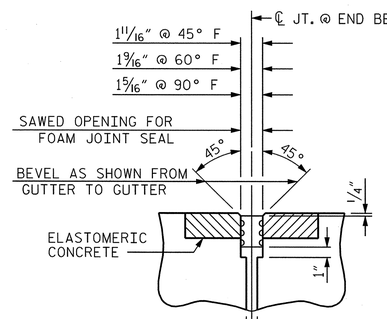

SECTION C-C

FOAM JOINT SEAL
(EXPANSION)

NOTE: JOINT OPENINGS ARE MEASURED PERPENDICULAR TO THE JOINT. THE NOMINAL UNCOMPRESSED SEAL WIDTH OF THE FOAM JOINT SEAL IS 2" AT E.B. 1 AND E.B. 2.

ELASTOMERIC CONCRETE	
END BENT NO.	ELASTOMERIC CONCRETE * (CU. FT.)
1	6.15
2	6.15
TOTAL	12.30

* BASED ON THE MINIMUM BLOCKOUT SHOWN.

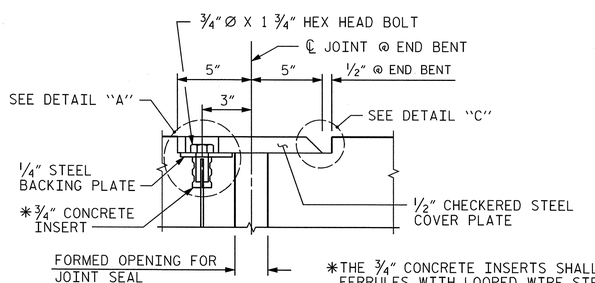

SECTION K-K

*THE 3/4" CONCRETE INSERTS SHALL BE CLOSED-END FERRULES WITH LOOPED WIRE STRUTS ATTACHED TO THEM. THE INSERTS SHALL CONFORM TO AASHTO M169, GRADE 12L14 AND SHALL HAVE A TENSILE WORKING LOAD CAPACITY OF 3000 LBS.

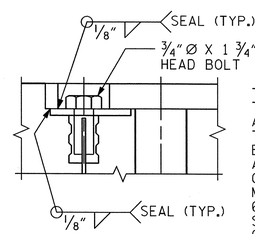

DETAIL "A"

THE STEEL PLATES SHALL CONFORM TO AASHTO M270 GRADE 36 OR APPROVED EQUAL. AFTER FABRICATION, THE PLATES SHALL BE COMMERCIALLY BLAST CLEANED AND EITHER COATED WITH A MINIMUM THICKNESS OF 4 MILS (DRY) OF ZINC-RICH PAINT, GALVANIZED OR METALLIZED TO A MINIMUM THICKNESS OF 6 MILS IN ACCORDANCE WITH THE STANDARD SPECIFICATIONS. FOR THERMAL SPRAYED COATINGS (METALLIZATION), SEE SPECIAL PROVISIONS.

THE 3/4" DIAMETER HEX HEAD BOLTS SHALL CONFORM TO ASTM F593 ALLOY 304 STAINLESS STEEL.

NO SEPARATE PAYMENT WILL BE MADE FOR FURNISHING AND INSTALLING THE COVER PLATE. THE ENTIRE COST OF THIS WORK SHALL BE INCLUDED IN THE LUMP SUM PRICE FOR "FOAM JOINT SEALS".

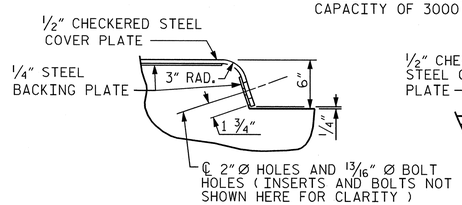

DETAIL "B"

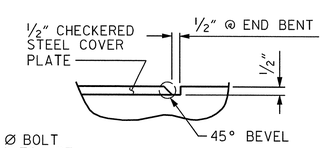

DETAIL "C"

JOINT SEAL DETAILS @ END BENT

PROJECT NO. U-2525B

GUILFORD COUNTY

STATION: 26+17.64 -Y22-
85+41.17 -Y13-

SHEET 3 OF 3

AECOM
AECOM TECHNICAL SERVICES, INC.
701 CORPORATE CENTER DRIVE, SUITE 475
RALEIGH, NC 27607
(919) 854-6200 www.aecom.com
AECOM License No. F-0342

NORTH CAROLINA PROFESSIONAL SEAL 030474 ENGINEER JOHN C. MORRISON
12/13/13

STATE OF NORTH CAROLINA
DEPARTMENT OF TRANSPORTATION
RALEIGH

STANDARD

BRIDGE APPROACH SLAB DETAILS FOR FLEXIBLE PAVEMENT

(RIGHT LANE)

REVISIONS						
NO.	BY:	DATE:	NO.	BY:	DATE:	
1			3			
2			4			

SHEET NO. S-541

TOTAL SHEETS 541

STD. NO. BAS4

ASSEMBLED BY : DDL		DATE : 09/13	
CHECKED BY : JCM		DATE : 09/13	
DRAWN BY : FCJ	11/88	REV. 10/1/11	MAA/GM
CHECKED BY : ARB	11/88	REV. 7/12	MAA/GM
		REV. 6/13	MAA/GM

DATE: 12/9/2013
TIME: 4:29:55 PM

USER: Lawrence
DGN: G:\60279356\400_Technical_Information_Disc_Files\450_NCDOT Staff and Design Files\Structures\Bridge 15\Details\U2525B_SD_DSN_INF_AppSlabDetails3.dgn

BENCHMARK #16 : RAILROAD SPIKE IN 24'' POPLAR, STA. 48+06.88 -L-, 203.33' LT., ELEV. = 702.24

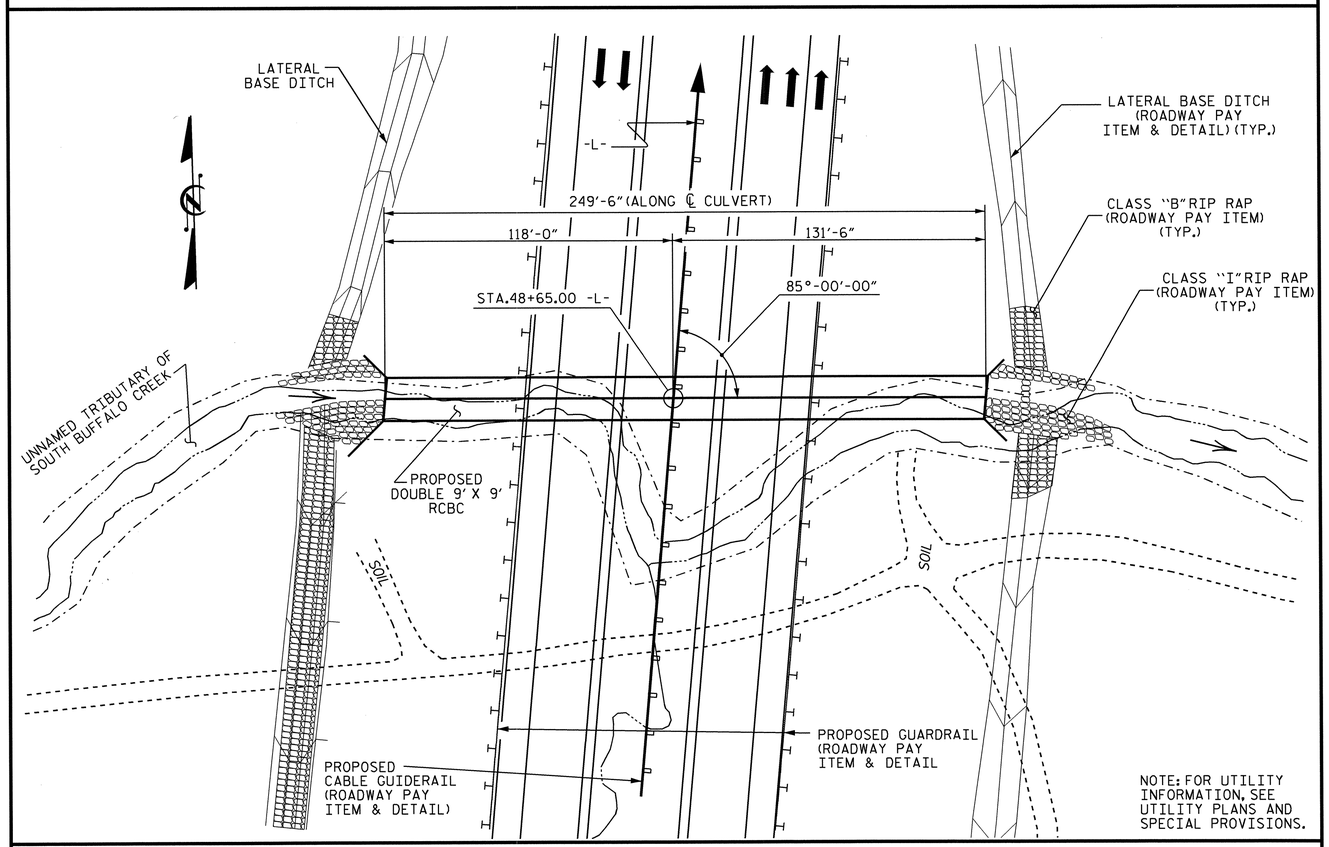

NOTE: FOR UTILITY INFORMATION, SEE UTILITY PLANS AND SPECIAL PROVISIONS.

LOCATION SKETCH

HYDRAULIC DATA

DESIGN DISCHARGE	= 1200 CFS
FREQUENCY OF DESIGN FLOOD	= 50 YRS.
DESIGN HIGH WATER ELEVATION	= 703.5
DRAINAGE AREA	= 1.6 SQ. MI.
BASE DISCHARGE (Q100)	= 1300 CFS
BASE HIGH WATER ELEVATION	= 704.9

OVERTOPPING FLOOD DATA

OVERTOPPING DISCHARGE	= N/A
FREQUENCY OF OVERTOPPING FLOOD	= >500 YRS.
OVERTOPPING FLOOD ELEVATION	= 730.9

GRADE DATA

GRADE POINT ELEVATION @ STA. 48+65.00 -L-	= 732.36
BED ELEVATION @ STA. 48+65.00 -L-	= 693.60
ROADWAY FILL SLOPES	= 2:1

TOTAL STRUCTURE QUANTITIES

CLASS A CONCRETE				
BARREL @	3.385	CY/FT	844.6	C.Y.
WINGS, ETC.			30.2	C.Y.
SILL			0.7	C.Y.
TOTAL			875.5	C.Y.
REINFORCING STEEL				
BARREL & SILLS			80687	LBS.
WINGS, ETC.			1803	LBS.
TOTAL			82490	LBS.
FOUNDATION COND. MAT'L.			364	TONS
CULVERT EXCAVATION			LUMP	SUM

NOTES

ASSUMED LIVE LOAD ---------- HL-93 OR ALTERNATE LOADING.

DESIGN FILL---------- 30.1 FT.

FOR OTHER DESIGN DATA AND NOTES, SEE STANDARD NOTES SHEET.

3"Ø WEEP HOLES INDICATED TO BE IN ACCORDANCE WITH THE SPECIFICATIONS.

CONCRETE IN CULVERTS TO BE POURED IN THE FOLLOWING ORDER:

1. WING FOOTINGS AND FLOOR SLAB INCLUDING 4" OF ALL VERTICAL WALLS.
2. THE REMAINING PORTIONS OF THE WALLS AND WINGS FULL HEIGHT FOLLOWED BY ROOF SLAB AND HEADWALLS.

THE RESIDENT ENGINEER SHALL CHECK THE LENGTH OF CULVERT BEFORE STAKING IT OUT TO MAKE CERTAIN THAT IT WILL PROPERLY TAKE CARE OF THE FILL.

DIMENSIONS FOR WING LAYOUT AS WELL AS ADDITIONAL REINFORCING STEEL EMBEDDED IN BARREL ARE SHOWN ON WING SHEET.

TRANSVERSE CONSTRUCTION JOINTS SHALL BE USED IN THE BARREL, SPACED TO LIMIT THE POURS TO A MAXIMUM OF 70 FEET. LOCATION OF JOINTS SHALL BE SUBJECT TO APPROVAL OF THE ENGINEER.

STEEL IN THE BOTTOM SLAB MAY BE SPLICED AT THE PERMITTED CONSTRUCTION JOINT AT THE CONTRACTOR'S OPTION. EXTRA WEIGHT OF STEEL DUE TO THE SPLICES SHALL BE PAID FOR BY THE CONTRACTOR.

AT THE CONTRACTOR'S OPTION, HE MAY SPLICE THE VERTICAL REINFORCING STEEL IN THE INTERIOR FACE OF THE EXTERIOR WALL AND BOTH FACES OF INTERIOR WALLS ABOVE LOWER WALL CONSTRUCTION JOINT. THE SPLICE LENGTH SHALL BE PROVIDED IN THE SPLICE LENGTH CHART SHOWN ON THE PLANS. EXTRA WEIGHT OF STEEL DUE TO THE SPLICES SHALL BE PAID FOR BY THE CONTRACTOR.

FOR SUBMITTAL OF WORKING DRAWINGS, SEE SPECIAL PROVISIONS.

FOR CULVERT DIVERSION DETAILS, SEE EROSION CONTROL PLANS.

NO PRECAST REINFORCED BOX CULVERT OPTION WILL BE ALLOWED.

FOR FALSEWORK AND FORMWORK, SEE SPECIAL PROVISIONS.

FOR CRANE SAFETY, SEE SPECIAL PROVISIONS.

FOR GROUT FOR STRUCTURES, SEE SPECIAL PROVISIONS.

DETAILED DRAWINGS FOR FALSEWORK AND FORMS FOR THIS CULVERT SHALL BE SUBMITTED. SEE SHEET SN.

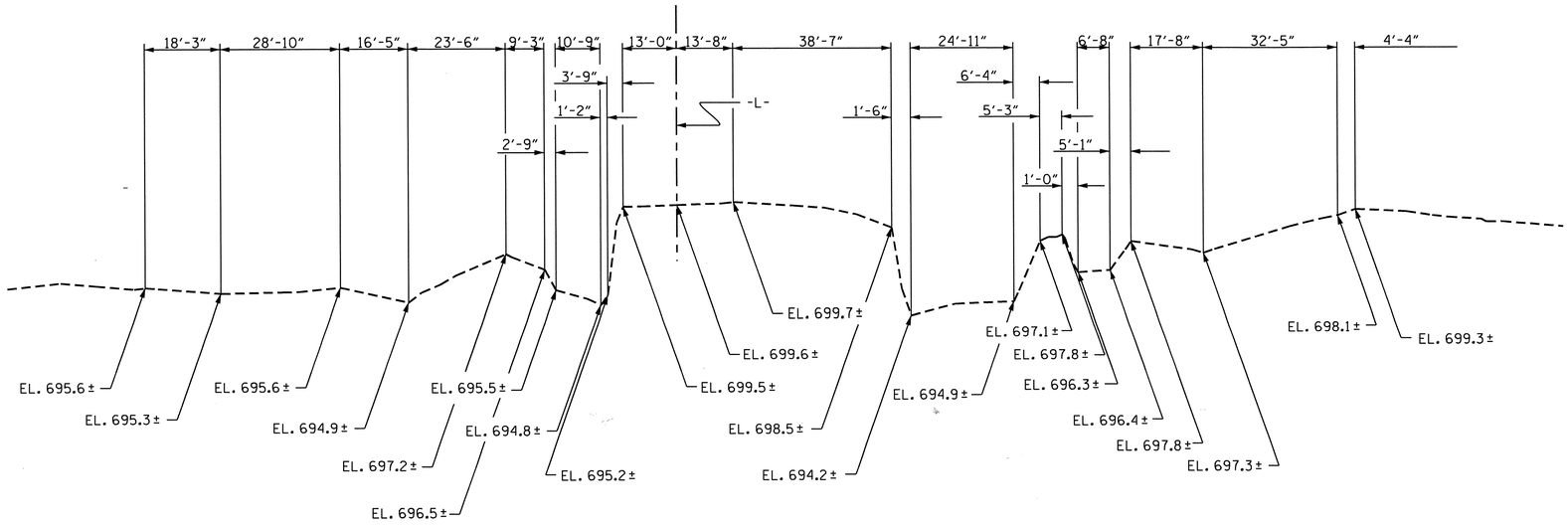

PROFILE ALONG ℄ CULVERT

PROJECT NO. U-2525B
GUILFORD COUNTY
STATION: 48+65.00 -L-

SHEET 1 OF 5

STATE OF NORTH CAROLINA
DEPARTMENT OF TRANSPORTATION
RALEIGH

DOUBLE 9 FT. X 9 FT. CONCRETE BOX CULVERT 85° SKEW

NORTH CAROLINA PROFESSIONAL SEAL 13014 ENGINEER QUANG H. NGUYEN
Quang H. Nguyen 2-19-14

NORTH CAROLINA PROFESSIONAL SEAL 20125 ENGINEER MARSHALL E. DICK, JR.
2-19-14

REVISIONS						SHEET NO.
NO.	BY:	DATE:	NO.	BY:	DATE:	C-1
1			3			TOTAL SHEETS
2			4			20

DRAWN BY :	J. LAMBERT	DATE :	09/11
CHECKED BY :	J. R. MCROY	DATE :	10/11

19-FEB-2014 07:17
R:\Structures\Final Plans\U-2525B_SD_CU_15.dgn
bngrady

STR. #15

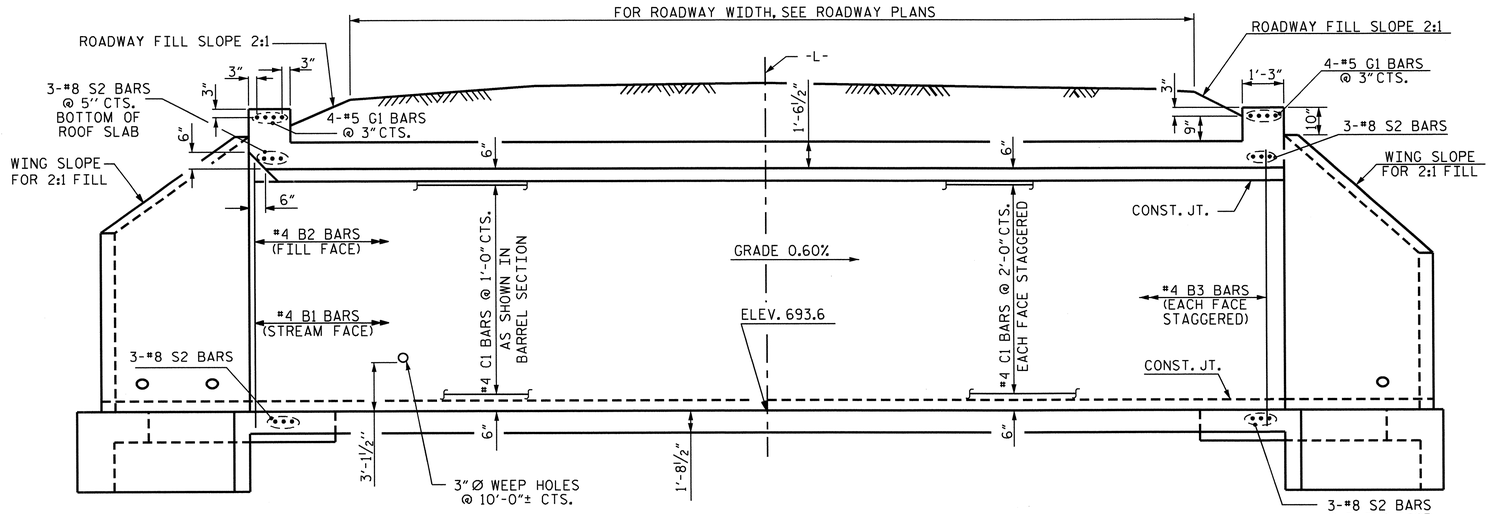

CULVERT SECTION NORMAL TO ROADWAY

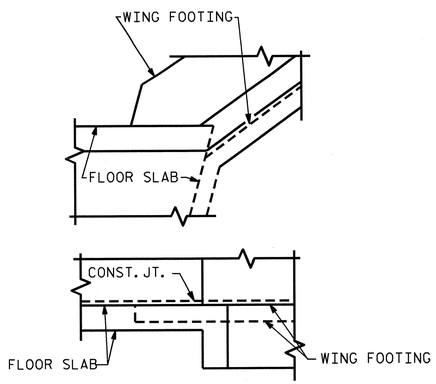

DETAIL

CONNECTION OF WING FOOTING AND FLOOR SLAB WHEN SLAB IS THICKER THAN FOOTING

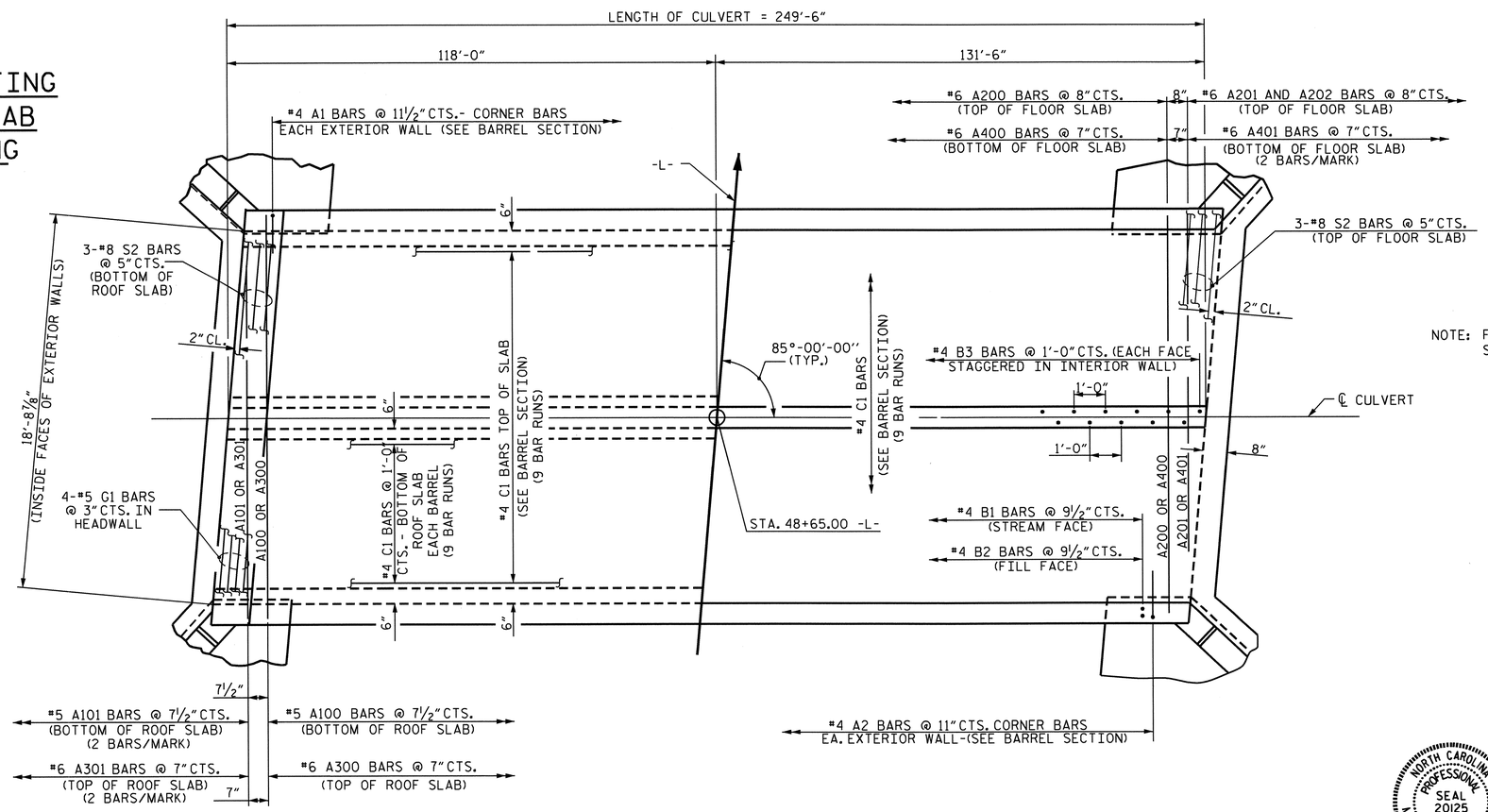

NOTE: FOR S1 BARS IN FLOOR SLAB & WING FOOTINGS, SEE WING SHEET.

PART PLAN - ROOF SLAB

PART PLAN - FLOOR SLAB

PROJECT NO. U-2525B
GUILFORD COUNTY
STATION: 48+65.00 -L-

SHEET 2 OF 5

STATE OF NORTH CAROLINA
DEPARTMENT OF TRANSPORTATION
RALEIGH

DOUBLE 9 FT. X 9FT. CONCRETE BOX CULVERT 85° SKEW

NORTH CAROLINA PROFESSIONAL SEAL 20125 ENGINEER
2-21-14

REVISIONS						DATE:	SHEET NO.
NO.	BY:	DATE:	NO.	BY:	DATE:		C-2
1			3				TOTAL SHEETS
2			4				20

DRAWN BY :	J. LAMBERT	DATE :	09-12
CHECKED BY :	J. R. MCROY	DATE :	10-11
DESIGN ENGINEER OF RECORD:	R. Z. DEAN	DATE :	11-13

07-JAN-2014 13:03
R:\Structures\Final Plans\U-2525B_SD_CU_16.dgn
mpoole

STR. #15

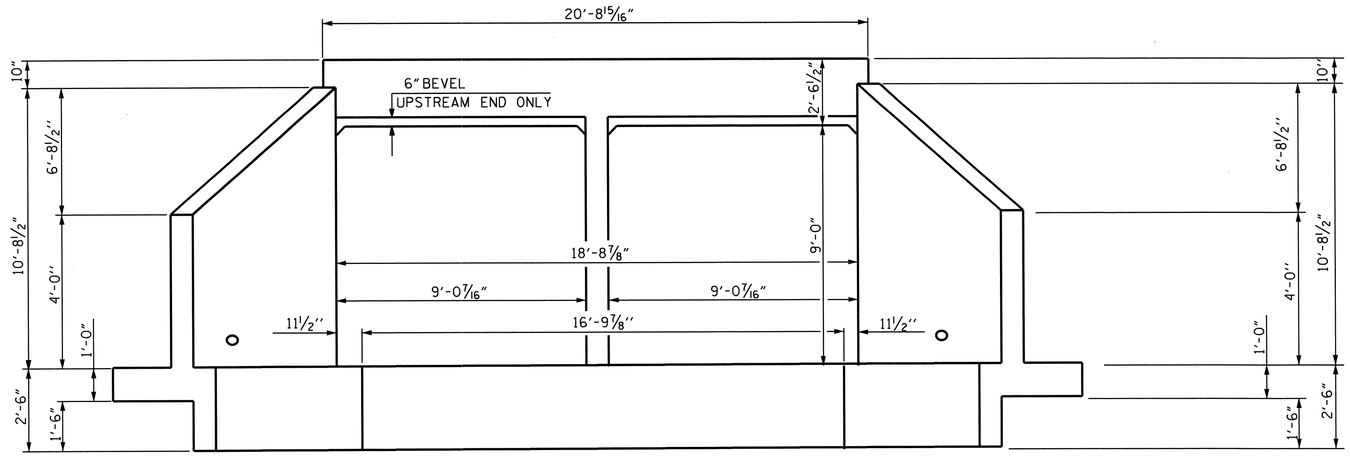

END ELEVATION NORMAL TO SKEW

BAR TYPE

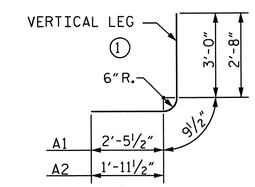

BAR DIMENSIONS ARE OUT TO OUT

SPLICE LENGTH CHART

BAR	SIZE	LENGTH
C1	#4	1'-11"
B1	#4	1'-9"
B3	#4	1'-9"

BAR SCHEDULE

BAR	NO.	SIZE	TYPE	LENGTH	WEIGHT
A1	522	#4	1	6'-3"	2179
A2	546	#4	1	5'-5"	1976
A100	397	#5	STR	20'-3"	8385
A101	4	#5	STR	4'-3"	18
A200	372	#6	STR	20'-3"	11315
A201	2	#6	STR	10'-11"	33
A202	2	#6	STR	3'-4"	10
A300	425	#6	STR	20'-3"	12927
A301	4	#6	STR	5'-3"	32
A400	425	#6	STR	20'-3"	12927
A401	4	#6	STR	5'-3"	32
B1	632	#4	STR	11'-9"	4961
B2	632	#4	STR	8'-4"	3518
B3	500	#4	STR	11'-9"	3925
C1	891	#4	STR	29'-7"	17608
D1	4	#6	STR	3'-3"	20
G1	8	#5	STR	20'-4"	170
S2	12	#8	STR	20'-4"	651

REINFORCING STEEL = 80,687 LBS.

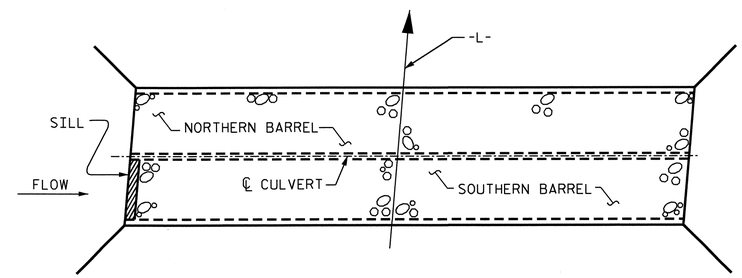

PLAN OF SILL LOCATION

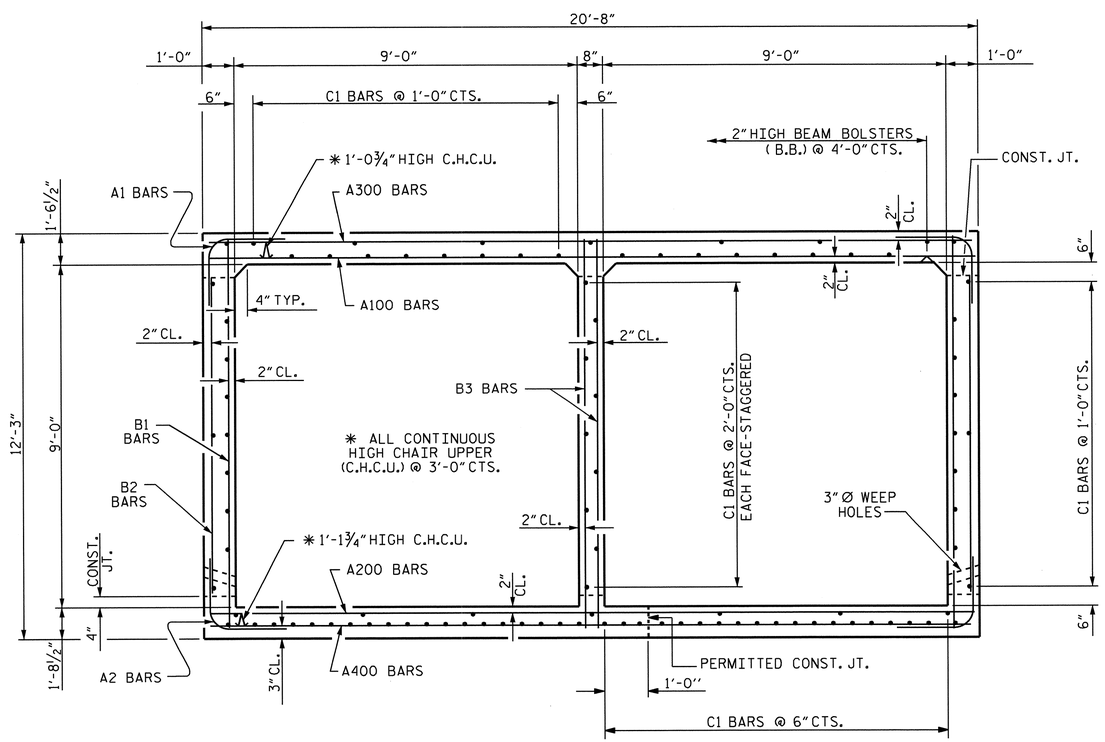

RIGHT ANGLE SECTION OF BARREL

THERE ARE 99 "C" BARS IN SECTION OF BARREL.

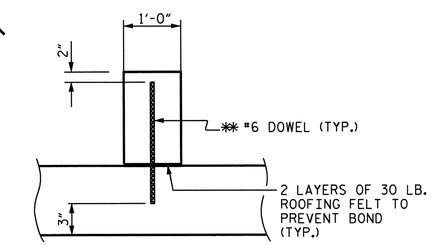

SECTION THROUGH SILL

✱✱ DOWELS MAY BE PUSHED INTO GREEN CONCRETE AFTER SLAB HAS BEEN FLOAT FINISHED.

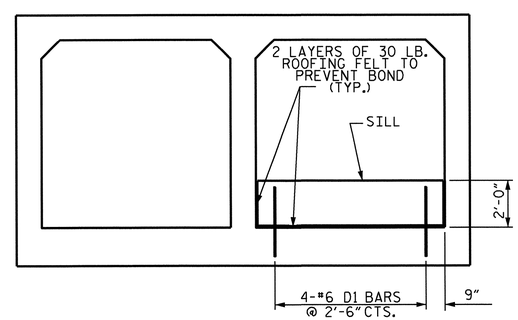

ELEVATION

CULVERT SILL DETAILS

(LOOKING DOWNSTREAM)

NOTES

MATERIAL EXCAVATED FROM THE EXISTING BED SHALL BE STOCKPILED FOR USE IN THE PROPOSED CULVERT. THE MATERIAL SHALL BE PLACED IN THE SOUTHERN BARREL TO A DEPTH OF 2 FEET. AT THE DIRECTION OF THE ENGINEER, EXCESS MATERIAL MAY BE PLACED IN THE NORTHERN BARREL TO A DEPTH OF 1 FOOT. BED MATERIAL SHALL BE SUPPLEMENTED WITH CLASS 'B' RIP RAP AS NECESSARY. BED MATERIAL SHALL BE SUBJECT TO APPROVAL BY THE ENGINEER.

THE ENTIRE COST OF WORK REQUIRED TO PLACE THE EXCAVATED MATERIAL OR SUPPLEMENTAL MATERIAL AS SHOWN ON THE PLANS SHALL BE INCLUDED IN THE CONTACT LUMP SUM PRICE BID FOR CULVERT EXCAVATION.

THE ENTIRE COST OF WORK REQUIRED TO CONSTRUCT THE SILL SHALL BE INCLUDED IN THE VARIOUS PAY ITEMS.

NORTH CAROLINA PROFESSIONAL SEAL 20125 ENGINEER MARSHALL A. REEK, JR.
2-19-14

PROJECT NO. U-2525B
GUILFORD COUNTY
STATION: 48+65.00 -L-

SHEET 3 OF 5

STATE OF NORTH CAROLINA
DEPARTMENT OF TRANSPORTATION
RALEIGH

DOUBLE 9 FT. X 9 FT.
CONCRETE BOX CULVERT
85° SKEW

REVISIONS						SHEET NO.
NO.	BY:	DATE:	NO.	BY:	DATE:	C-3
1			3			TOTAL SHEETS
2			4			20

DRAWN BY :	J. LAMBERT	DATE :	9/11
CHECKED BY :	J. R. MCROY	DATE :	10/11
DESIGN ENGINEER OF RECORD:	R. Z. DEAN	DATE :	11/13

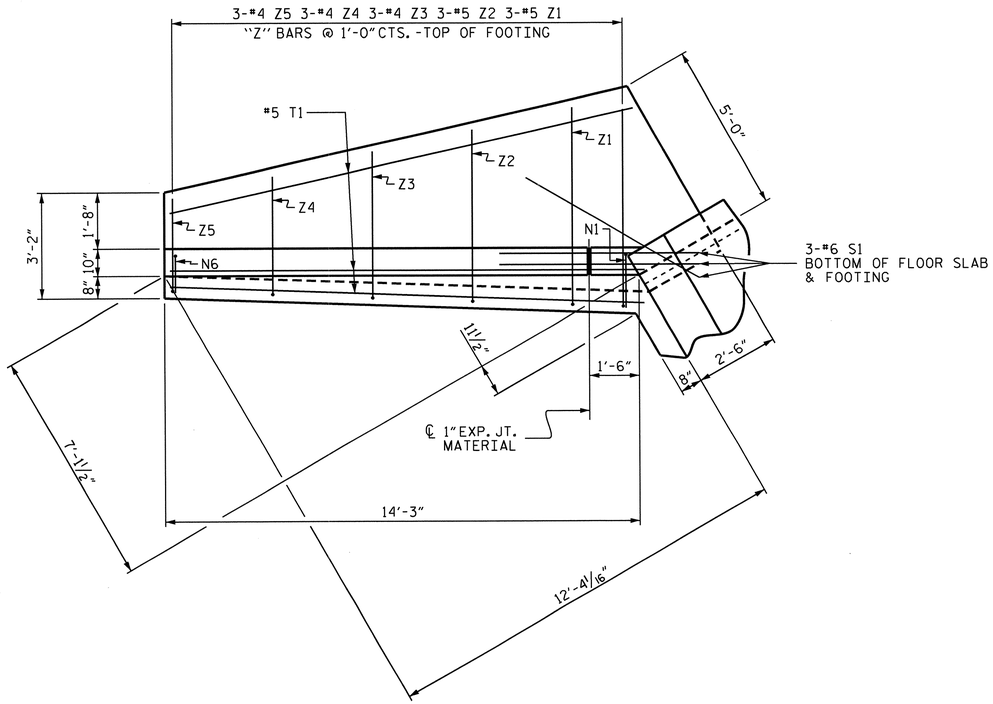

PLAN

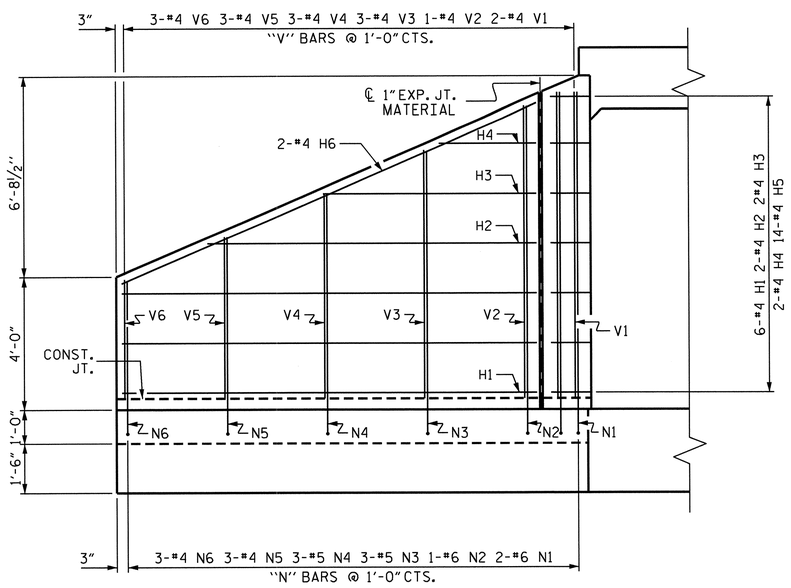

ELEVATION

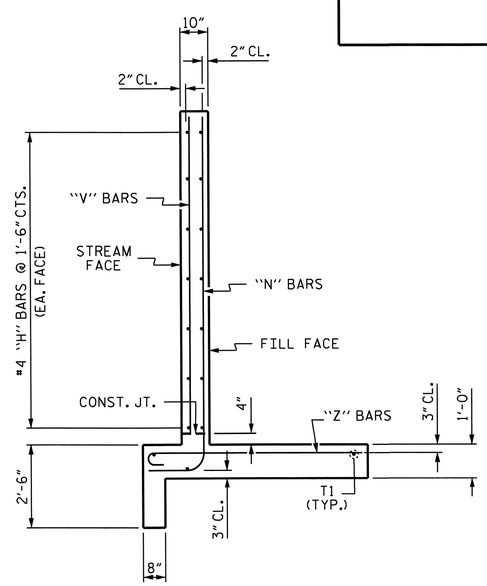

TYPICAL WING SECTION

BAR TYPES

ALL BAR DIMENSIONS ARE OUT TO OUT.

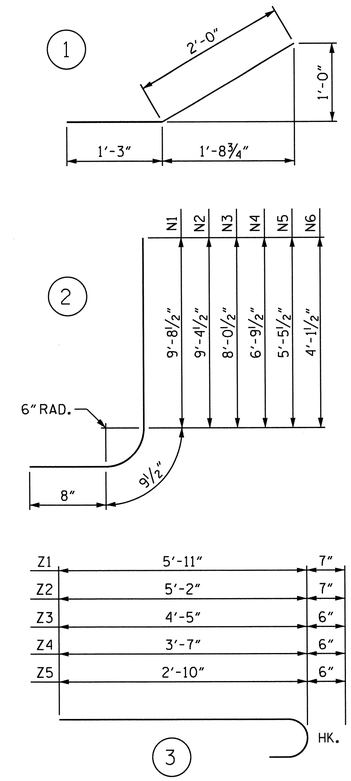

BILL OF MATERIAL

BAR	NO.	SIZE	TYPE	LENGTH	WEIGHT
H1	24	#4	STR	12'-5"	199
H2	8	#4	STR	9'-10"	53
H3	8	#4	STR	6'-5"	34
H4	8	#4	STR	2'-11"	16
H5	56	#4	1	3'-3"	122
H6	8	#4	STR	13'-6"	72
N1	8	#6	2	11'-2"	134
N2	4	#6	2	10'-10"	65
N3	12	#5	2	9'-6"	119
N4	12	#5	2	8'-3"	103
N5	12	#4	2	6'-11"	55
N6	12	#4	2	5'-7"	45
S1	12	#6	STR	6'-0"	108
T1	12	#5	STR	14'-3"	178
V1	8	#4	STR	9'-2"	49
V2	4	#4	STR	8'-9"	23
V3	12	#4	STR	7'-5"	59
V4	12	#4	STR	6'-2"	49
V5	12	#4	STR	4'-10"	39
V6	12	#4	STR	3'-7"	29
Z1	12	#5	3	6'-6"	81
Z2	12	#5	3	5'-9"	72
Z3	12	#4	3	4'-11"	39
Z4	12	#4	3	4'-1"	33
Z5	12	#4	3	3'-4"	27

REINFORCING STEEL
FOR 4 WINGS 1803 LBS.

CLASS A CONCRETE
4 WINGS 26.2 C.Y.
2 HEADWALLS 1.9 C.Y.
2 END CURTAIN WALLS 2.1 C.Y.
TOTAL 30.2 C.Y.

NOTE : A 3 FOOT STRIP OF FILTER FABRIC SHALL BE ATTACHED TO THE FILL FACE OF THE WING COVERING THE ENTIRE LENGTH OF THE EXPANSION JOINT.

PROJECT NO. U-2525B
GUILFORD COUNTY
STATION: 48+65.00 -L-

SHEET 4 OF 5

STATE OF NORTH CAROLINA
DEPARTMENT OF TRANSPORTATION
RALEIGH

STANDARD WINGS FOR CONCRETE BOX CULVERT

H = 9'-0" SLOPE = 2:1
90° SKEW

NORTH CAROLINA PROFESSIONAL SEAL 20125 ENGINEER MARSHALL G. CHEEK, JR.
2-19-14

REVISIONS						SHEET NO.
NO.	BY:	DATE:	NO.	BY:	DATE:	C-4
1			3			TOTAL SHEETS
2			4			20

ASSEMBLED BY :	M. POOLE	DATE :	02/13
CHECKED BY :	M. G. CHEEK	DATE :	02/13
DRAWN BY :	CCJ 10/99		
CHECKED BY :	RWW 03/00		

STR. #15

STD. NO. CW9009

LOAD AND RESISTANCE FACTOR RATING (LRFR) SUMMARY FOR REINFORCED CONCRETE BOX CULVERTS

LEVEL		VEHICLE	WEIGHT (W) (TONS)	CONTROLLING LOAD RATING (#)	MINIMUM RATING FACTORS (RF)	TONS = W × RF	STRENGTH I LIMIT STATE									COMMENT NUMBER
							LIVE-LOAD FACTORS $\gamma_{(LL)}$	MOMENT				SHEAR				
								RATING FACTOR	BOX NO.	ELEMENT TYPE	DISTANCE FROM LEFT END OF ELEMENT (ft)	RATING FACTOR	BOX NO.	ELEMENT TYPE	DISTANCE FROM LEFT END OF ELEMENT (ft)	
DESIGN LOAD RATING		HL-93 (INVENTORY)	N/A	1	2.32	--	1.75	2.48	1	EXTERIOR WALL	0.80	2.32	1	EXTERIOR WALL	1.48	
		HL-93 (OPERATING)	N/A		3.01	--	1.35	3.21	1	EXTERIOR WALL	0.80	3.01	1	EXTERIOR WALL	1.48	
		HS-20 (INVENTORY)	36.000	2	2.32	83.48	1.75	2.48	1	EXTERIOR WALL	0.80	2.32	1	EXTERIOR WALL	1.48	
		HS-20 (OPERATING)	36.000		3.01	108.21	1.35	3.21	1	EXTERIOR WALL	0.80	3.01	1	EXTERIOR WALL	1.48	
LEGAL LOAD RATING	SINGLE VEHICLE (SV)	SH	12.500	3	2.89	36.09	1.40	3.07	1	EXTERIOR WALL	0.80	2.89	1	EXTERIOR WALL	1.48	
		S3C	21.500		2.89	62.07	1.40	3.07	1	EXTERIOR WALL	0.80	2.89	1	EXTERIOR WALL	1.48	
		S3A	22.750		2.89	65.88	1.40	3.07	1	EXTERIOR WALL	0.80	2.89	1	EXTERIOR WALL	1.48	
		S4A	26.750		2.89	77.22	1.40	3.07	1	EXTERIOR WALL	0.80	2.89	1	EXTERIOR WALL	1.48	
		S5A	30.500		2.89	88.05	1.40	3.07	1	EXTERIOR WALL	0.80	2.89	1	EXTERIOR WALL	1.48	
		S6A	34.500		2.89	99.60	1.40	3.07	1	EXTERIOR WALL	0.80	2.89	1	EXTERIOR WALL	1.48	
		S7B	38.500		2.89	111.15	1.40	3.07	1	EXTERIOR WALL	0.80	2.89	1	EXTERIOR WALL	1.48	
		S7A	40.000		2.89	115.48	1.40	3.07	1	EXTERIOR WALL	0.80	2.89	1	EXTERIOR WALL	1.48	
	TRUCK TRACTOR SEMI-TRAILER (TTST)	T4A	28.250		2.89	81.56	1.40	3.07	1	EXTERIOR WALL	0.80	2.89	1	EXTERIOR WALL	1.48	
		T5B	32.000		2.89	92.38	1.40	3.07	1	EXTERIOR WALL	0.80	2.89	1	EXTERIOR WALL	1.48	
		T6A	36.000		2.89	103.93	1.40	3.07	1	EXTERIOR WALL	0.80	2.89	1	EXTERIOR WALL	1.48	
		T7A	40.000		2.89	115.48	1.40	3.07	1	EXTERIOR WALL	0.80	2.89	1	EXTERIOR WALL	1.48	
		T7B	40.000		2.89	115.48	1.40	3.07	1	EXTERIOR WALL	0.80	2.89	1	EXTERIOR WALL	1.48	

LOAD FACTORS:

DESIGN LOAD RATING FACTORS

LOAD TYPE	MAX FACTOR	MIN FACTOR
DC	1.25	0.90
DW	1.50	0.65
EV	1.30	0.90
EH	1.35	0.90
ES	1.35	0.90
LS	1.75	--
WA	1.00	--

NOTE:

RATING FACTORS ARE BASED ON THE STRENGTH I LIMIT STATE.

COMMENTS:

1.
2.
3.
4.

(#) CONTROLLING LOAD RATING

(1) DESIGN LOAD RATING (HL-93)

(2) DESIGN LOAD RATING (HS-20)

(3) LEGAL LOAD RATING **

** SEE CHART FOR VEHICLE TYPE

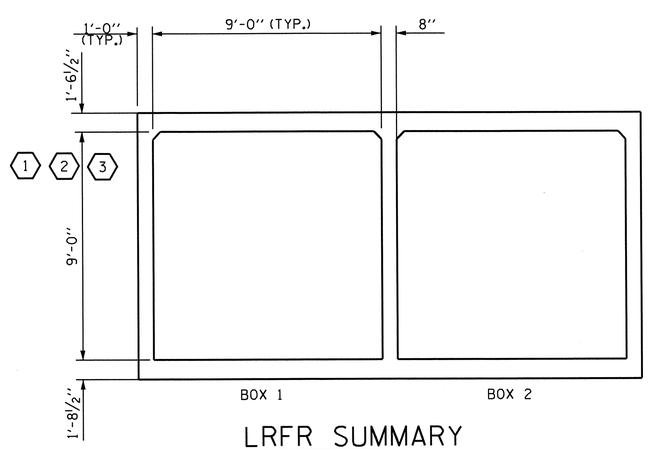

LRFR SUMMARY

PROJECT NO. U-2525B

GUILFORD COUNTY

STATION: 48+65.00 -L-

SHEET 5 OF 5

STATE OF NORTH CAROLINA
DEPARTMENT OF TRANSPORTATION
RALEIGH

STANDARD

LRFR SUMMARY FOR REINFORCED CONCRETE BOX CULVERTS
(INTERSTATE TRAFFIC)

NORTH CAROLINA PROFESSIONAL SEAL 20125 ENGINEER M.G. CHEEK, JR.
2-19-14

REVISIONS						SHEET NO.
NO.	BY:	DATE:	NO.	BY:	DATE:	C-5
1			3			TOTAL SHEETS
2			4			20

DRAWN BY : M. POOLE DATE : 2/13

CHECKED BY : M.G. CHEEK DATE : 2/13

07-JAN-2014 13:02
R:\Structures\Final Plans\U-2525B_SD_CU_16.dgn
mpoole

STR. #15

STD. NO. LRFR6

BENCHMARK #29: R/R SPIKE SET IN 14" RIVER BIRCH, STA. 115+62.96 -L-, 273.01' RT., ELEV. = 703.31

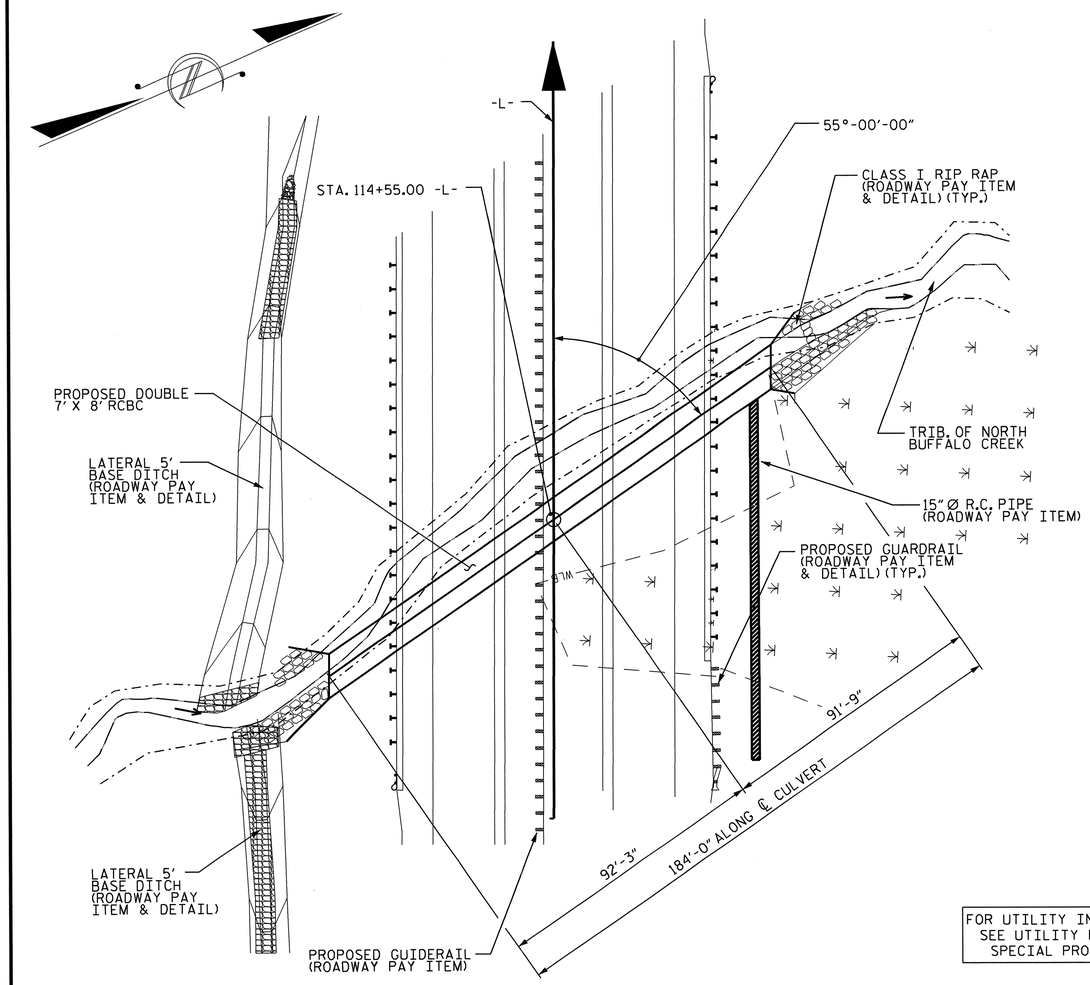

FOR UTILITY INFORMATION, SEE UTILITY PLANS AND SPECIAL PROVISIONS.

LOCATION SKETCH

HYDRAULIC DATA

DESIGN DISCHARGE	= 700 CFS
FREQUENCY OF DESIGN FLOOD	= 50 YRS. ±
DESIGN HIGH WATER ELEVATION	= 706.5
DRAINAGE AREA	= 0.70 SQ. MI.
BASE DISCHARGE (Q100)	= 800 CFS
BASE HIGH WATER ELEVATION	= 707.1

OVERTOPPING FLOOD DATA

OVERTOPPING DISCHARGE	= N/A
FREQUENCY OF OVERTOPPING FLOOD	= > 500 YRS.
OVERTOPPING FLOOD ELEVATION	= 713.3

GRADE DATA

GRADE POINT ELEVATION @ STA. 114+55.00 -L-	= 713.42
BED ELEVATION @ STA. 114+55.00 -L-	= 698.0
ROADWAY FILL SLOPES	= 2:1

TOTAL STRUCTURE QUANTITIES

CLASS A CONCRETE

BARREL @	1.440	CY/FT	265.0	C.Y.
WINGS, ETC.			28.1	C.Y.
SILL			0.6	C.Y.
TOTAL			293.7	C.Y.

REINFORCING STEEL

BARREL & SILLS	31,564	LBS.
WINGS, ETC.	1661	LBS.
TOTAL	33,225	LBS.

FOUNDATION CONDITIONING MATERIAL	208	TONS
CULVERT EXCAVATION	LUMP SUM	

NOTES

ASSUMED LIVE LOAD ----------HL-93 OR ALTERNATE LOADING.

DESIGN FILL----------7.6 FT.

FOR OTHER DESIGN DATA AND NOTES, SEE STANDARD NOTES SHEET.

3" Ø WEEP HOLES INDICATED TO BE IN ACCORDANCE WITH THE SPECIFICATIONS.

CONCRETE IN CULVERTS TO BE POURED IN THE FOLLOWING ORDER:

1. WING FOOTINGS AND FLOOR SLAB INCLUDING 4" OF ALL VERTICAL WALLS.
2. THE REMAINING PORTIONS OF THE WALLS AND WINGS FULL HEIGHT FOLLOWED BY ROOF SLAB AND HEADWALLS.

THE RESIDENT ENGINEER SHALL CHECK THE LENGTH OF CULVERT BEFORE STAKING IT OUT TO MAKE CERTAIN THAT IT WILL PROPERLY TAKE CARE OF THE FILL.

DIMENSIONS FOR WING LAYOUT AS WELL AS ADDITIONAL REINFORCING STEEL EMBEDDED IN BARREL ARE SHOWN ON WING SHEET.

TRANSVERSE CONSTRUCTION JOINTS SHALL BE USED IN THE BARREL, SPACED TO LIMIT THE POURS TO A MAXIMUM OF 70 FEET. LOCATION OF JOINTS SHALL BE SUBJECT TO APPROVAL OF THE ENGINEER.

STEEL IN THE BOTTOM SLAB MAY BE SPLICED AT THE PERMITTED CONSTRUCTION JOINT AT THE CONTRACTOR'S OPTION. EXTRA WEIGHT OF STEEL DUE TO THE SPLICES SHALL BE PAID FOR BY THE CONTRACTOR.

AT THE CONTRACTOR'S OPTION, HE MAY SPLICE THE VERTICAL REINFORCING STEEL IN THE INTERIOR FACE OF EXTERIOR WALL AND BOTH FACES OF INTERIOR WALLS ABOVE LOWER WALL CONSTRUCTION JOINT. THE SPLICE LENGTH SHALL BE AS PROVIDED IN THE SPLICE LENGTH CHART SHOWN ON THE PLANS. EXTRA WEIGHT OF STEEL DUE TO THE SPLICES SHALL BE PAID FOR BY THE CONTRACTOR.

AT THE CONTRACTOR'S OPTION HE MAY SUBMIT, TO THE ENGINEER FOR APPROVAL, DESIGN AND DETAIL DRAWINGS FOR A PRECAST REINFORCED CONCRETE BOX CULVERT IN LIEU OF THE CAST-IN-PLACE CULVERT SHOWN ON THE PLANS. THE DESIGN SHALL PROVIDE THE SAME SIZE AND NUMBER OF BARRELS AS USED ON THE CAST-IN-PLACE DESIGN. FOR OPTIONAL PRECAST REINFORCED CONCRETE BOX CULVERT, SEE SPECIAL PROVISIONS.

THE 15" Ø PIPE THROUGH THE SIDEWALL OF THE CULVERT SHALL BE LOCATED BY THE ENGINEER. THE REINFORCING STEEL SHALL BE FIELD BENT AS NECESSARY TO CLEAR THE PIPE.

FOR GROUT FOR STRUCTURES, SEE SPECIAL PROVISIONS.

FOR CULVERT DIVERSION DETAILS AND PAY ITEM, SEE EROSION CONTROL PLANS.

FOR CRANE SAFETY, SEE SPECIAL PROVISIONS.

FOR FALSEWORK AND FORMWORK, SEE SPECIAL PROVISIONS.

FOR SUBMITTAL OF WORKING DRAWINGS, SEE SPECIAL PROVISIONS.

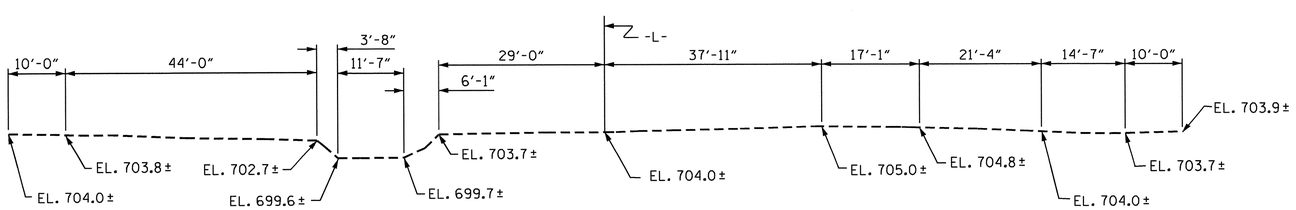

PROFILE ALONG ℄ CULVERT

ASSEMBLED BY : J.R. MCROY DATE : 09/21/11
CHECKED BY : M.A. LEBLANC DATE : 02/13

NORTH CAROLINA PROFESSIONAL SEAL 13014 ENGINEER QUANG H. NGUYEN
Quang H. Nguyen 2-19-14

NORTH CAROLINA PROFESSIONAL SEAL 20125 ENGINEER MARSHALL A. CHEEK, JR.
7-19-14

PROJECT NO. U-2525B
GUILFORD COUNTY
STATION: 114+55.00 -L-

SHEET 1 OF 5

STATE OF NORTH CAROLINA
DEPARTMENT OF TRANSPORTATION
RALEIGH

DOUBLE 7 FT X 8 FT CONCRETE BOX CULVERT

55° SKEW

REVISIONS						SHEET NO.
NO.	BY:	DATE:	NO.	BY:	DATE:	C-6
1			3			TOTAL SHEETS
2			4			20

STR. #16

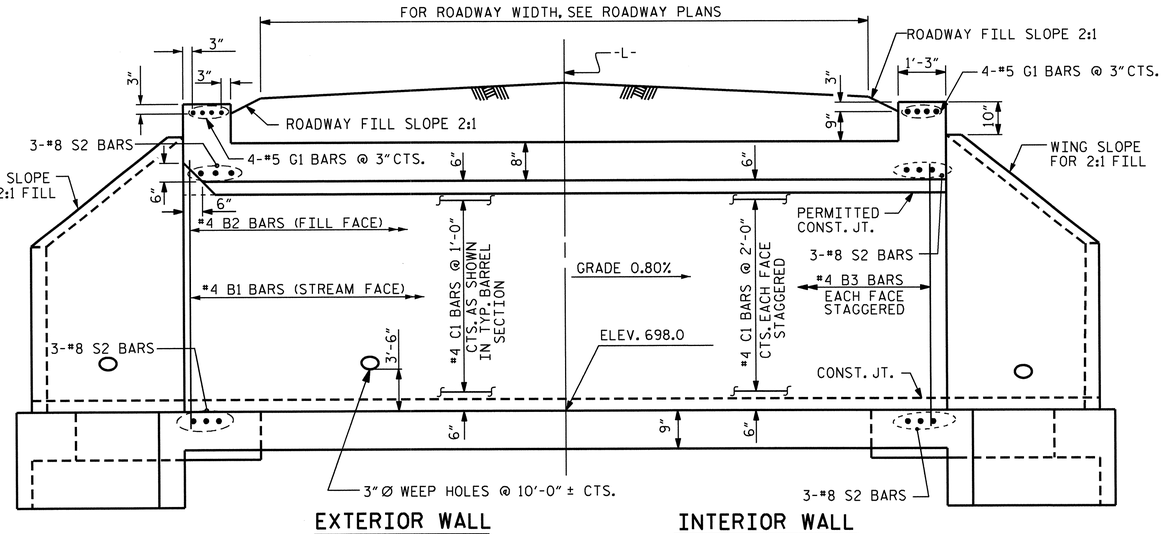

CULVERT SECTION NORMAL TO ROADWAY

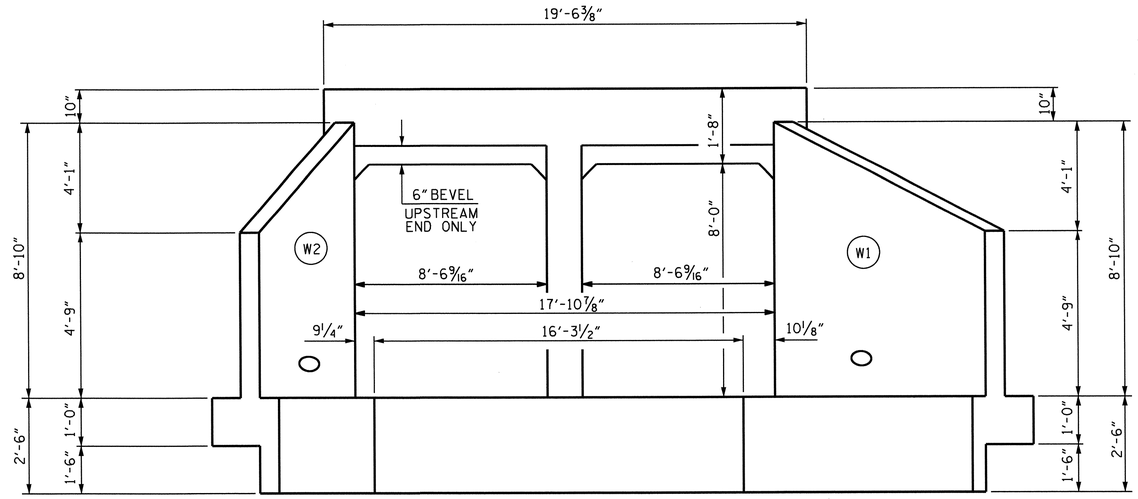

END ELEVATION NORMAL TO SKEW

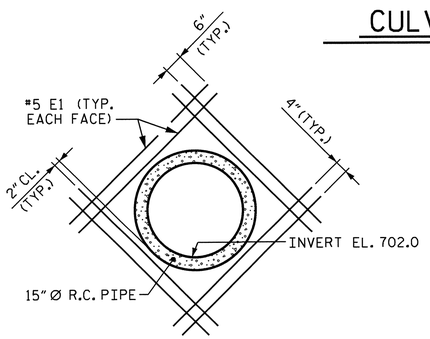

DETAIL A

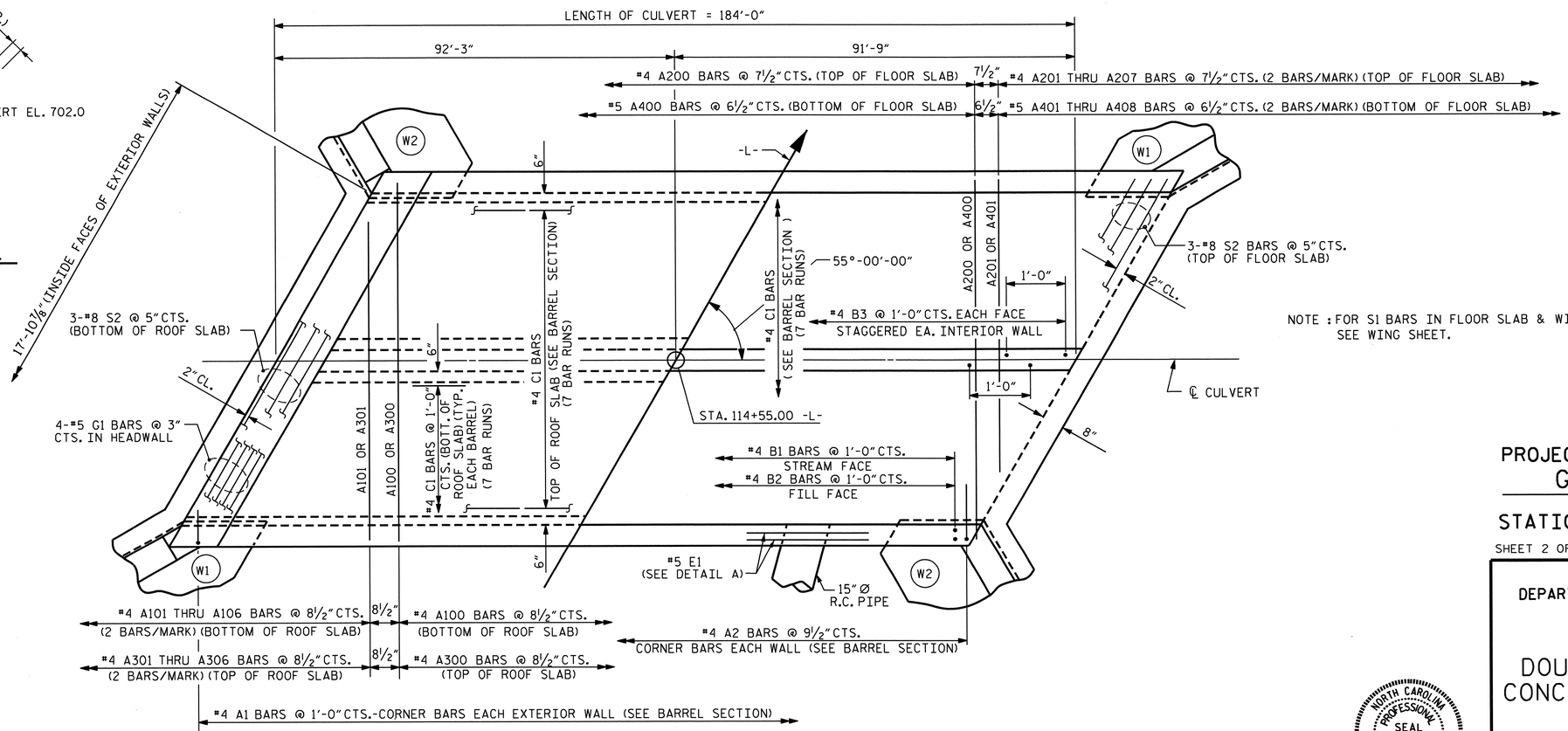

PART PLAN - ROOF SLAB

PART PLAN - FLOOR SLAB

NOTE : FOR S1 BARS IN FLOOR SLAB & WING FOOTINGS, SEE WING SHEET.

PROJECT NO. U-2525B
GUILFORD COUNTY
STATION: 114+55.00 -L-

SHEET 2 OF 5

STATE OF NORTH CAROLINA
DEPARTMENT OF TRANSPORTATION
RALEIGH

DOUBLE 7 FT X 8 FT
CONCRETE BOX CULVERT
55° SKEW

NORTH CAROLINA PROFESSIONAL SEAL 20125 ENGINEER WARSHAL G. CHEEK, JR.
2-19-14

REVISIONS						SHEET NO.
NO.	BY:	DATE:	NO.	BY:	DATE:	C-7
1			3			TOTAL SHEETS
2			4			20

STR. #16

ASSEMBLED BY : J.R. MCROY DATE : 09/21/11
CHECKED BY : M.A. LEBLANC DATE : 02/13
ENG. OF RECORD : M.A. LEBLANC DATE : 11/13

REVISED 11-19-99 BY M.M. CHECKED BY R.W.W.
REDRAWN 10-1-90 BY P. DONOVAN CHECKED BY ARB

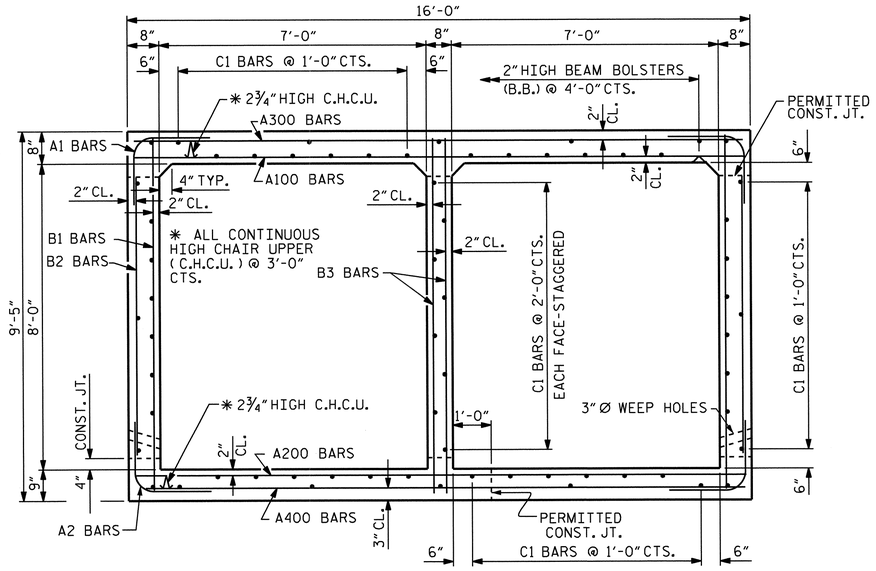

RIGHT ANGLE SECTION OF BARREL

THERE ARE 64 "C" BARS IN SECTION OF BARREL.

BAR TYPE

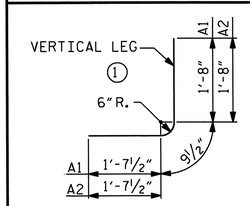

BAR DIMENSIONS ARE OUT TO OUT

SPLICE LENGTH CHART

BAR	SIZE	LENGTH
C1	#4	1'-11"
B1	#4	1'-9"
B3	#4	1'-9"

BAR SCHEDULE

BAR	NO.	SIZE	TYPE	LENGTH	WEIGHT
A100	244	#4	STR	15'-7"	2540
A101	4	#4	STR	13'-6"	36
A102	4	#4	STR	11'-5"	31
A103	4	#4	STR	9'-5"	25
A104	4	#4	STR	7'-5"	20
A105	4	#4	STR	5'-5"	14
A106	4	#4	STR	3'-4"	9
A200	277	#4	STR	15'-7"	2883
A201	4	#4	STR	13'-9"	37
A202	4	#4	STR	11'-11"	32
A203	4	#4	STR	10'-2"	27
A204	4	#4	STR	8'-4"	22
A205	4	#4	STR	6'-7"	18
A206	4	#4	STR	4'-9"	13
A207	4	#4	STR	3'-0"	8
A300	244	#4	STR	15'-7"	2540
A301	4	#4	STR	13'-6"	36
A302	4	#4	STR	11'-5"	31
A303	4	#4	STR	9'-5"	25
A304	4	#4	STR	7'-5"	20
A305	4	#4	STR	5'-5"	14
A306	4	#4	STR	3'-4"	9

BAR	NO.	SIZE	TYPE	LENGTH	WEIGHT
A400	319	#5	STR	15'-7"	5185
A401	4	#5	STR	13'-11"	58
A402	4	#5	STR	12'-5"	52
A403	4	#5	STR	10'-10"	45
A404	4	#5	STR	9'-4"	39
A405	4	#5	STR	7'-9"	32
A406	4	#5	STR	6'-3"	26
A407	4	#5	STR	4'-8"	19
A408	4	#5	STR	3'-1"	13
A1	368	#4	1	4'-1"	1004
A2	466	#4	1	4'-1"	1271
B1	368	#4	STR	8'-11"	2192
B2	368	#4	STR	7'-4"	1803
B3	368	#4	STR	8'-11"	2192
C1	448	#4	STR	28'-1"	8404
D1	3	#6	STR	2'-4"	11
G1	8	#5	STR	19'-1"	159
S2	12	#8	STR	19'-1"	611
E1	16	#5	STR	3'-6"	58

REINFORCING STEEL = 31,564 LBS.

NOTES

MATERIAL EXCAVATED FROM THE EXISTING BED SHALL BE STOCKPILED FOR USE IN THE PROPOSED CULVERT. UPON COMPLETION OF THE PROPOSED CULVERT, THE MATERIAL SHALL BE PLACED IN THE EASTERN BARREL TO A DEPTH OF 2 FEET. AT THE DIRECTION OF THE ENGINEER, EXCESS MATERIAL MAY BE PLACED IN THE WESTERN BARREL TO A DEPTH OF 1 FOOT. BED MATERIAL SHALL BE SUPPLEMENTED WITH CLASS 'B' RIP RAP AS NECESSARY. BED MATERIAL SHALL BE SUBJECT TO APPROVAL BY THE ENGINEER.

THE ENTIRE COST OF THE WORK REQUIRED TO PLACE THE EXCAVATED MATERIAL OR SUPPLEMENTAL MATERIAL SHALL BE INCLUDED IN THE CONTRACT LUMP SUM PRICE BID FOR CULVERT EXCAVATION.

THE ENTIRE COST OF WORK REQUIRED TO CONSTRUCT THE SILL SHALL BE INCLUDED IN THE VARIOUS PAY ITEMS.

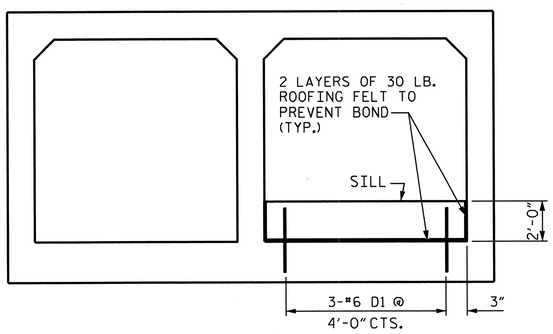

ELEVATION

(LOOKING DOWNSTREAM)

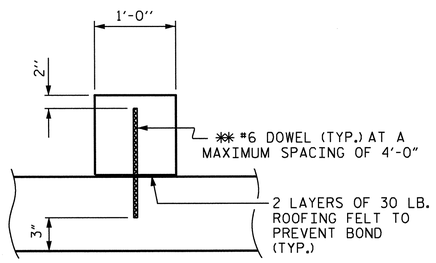

SECTION THROUGH SILL

✱✱ DOWELS MAY BE PUSHED INTO GREEN CONCRETE AFTER SLAB HAS BEEN FLOAT FINISHED.

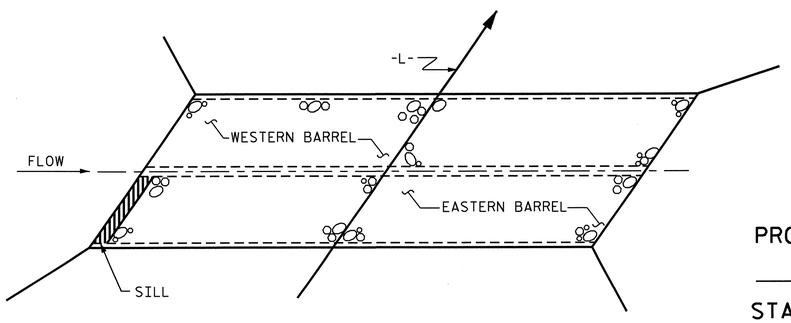

PLAN OF SILL LOCATION

CULVERT SILL DETAILS

PROJECT NO. U-2525B
GUILFORD COUNTY
STATION: 114+55.00 -L-

SHEET 3 OF 5

STATE OF NORTH CAROLINA
DEPARTMENT OF TRANSPORTATION
RALEIGH

DOUBLE 7 FT X 8 FT CONCRETE BOX CULVERT

55° SKEW

NORTH CAROLINA PROFESSIONAL SEAL 20125 ENGINEER MARSHALL M. CHEEK, JR.
2-19-14

REVISIONS							SHEET NO.
NO.	BY:	DATE:	NO.	BY:	DATE:		C-8
1			3				TOTAL SHEETS
2			4				20

ASSEMBLED BY : J.R. MCROY DATE : 09/21/11
CHECKED BY : M.A. LEBLANC DATE : 02/13
ENG. OF RECORD : M.A. LEBLANC DATE : 11/13

STR. #16

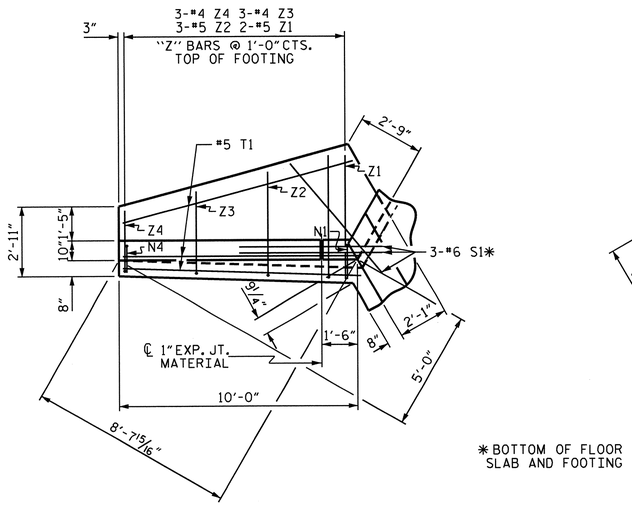

PLAN W2

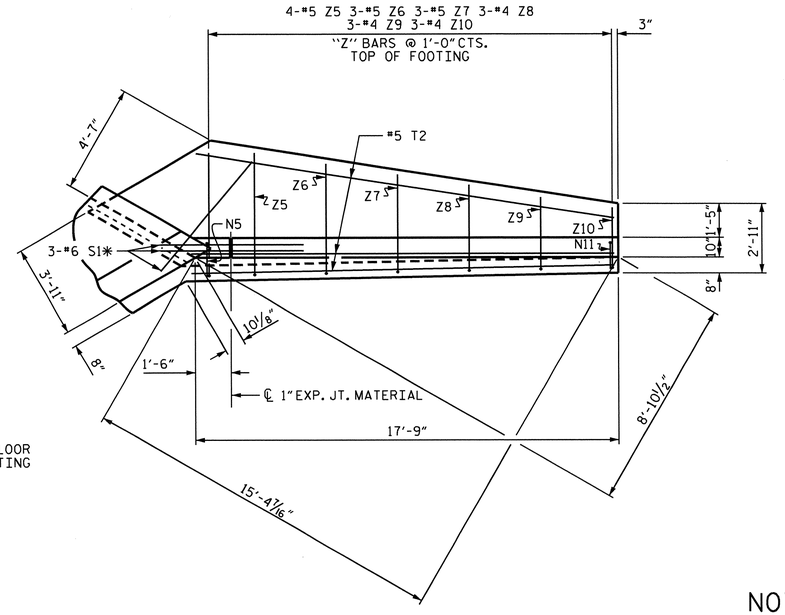

PLAN W1

* BOTTOM OF FLOOR SLAB AND FOOTING

NOTE:

A THREE FOOT STRIP OF FILTER FABRIC SHALL BE ATTACHED TO THE FILL FACE OF THE WING COVERING THE ENTIRE LENGTH OF THE EXPANSION JOINT.

BAR TYPES

ALL BAR DIMENSIONS ARE OUT TO OUT.

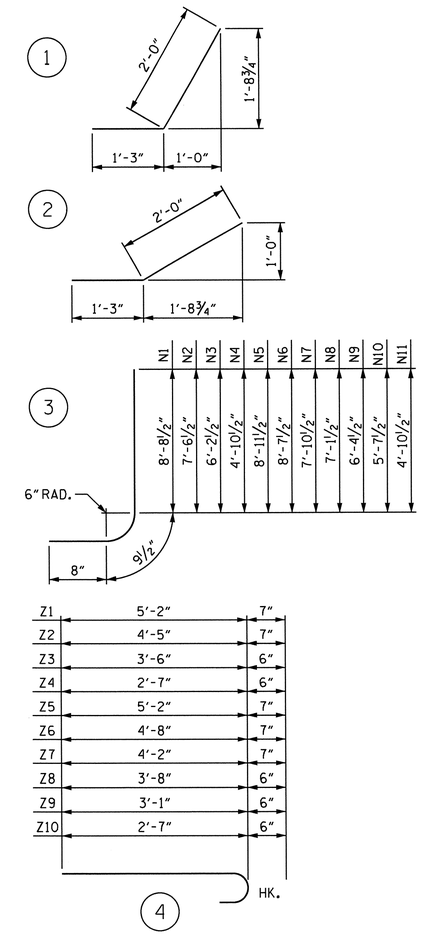

BILL OF MATERIAL

BAR	NO.	SIZE	TYPE	LENGTH	WEIGHT
H1	12	#4	STR	8'-1"	65
H2	4	#4	STR	7'-3"	19
H3	4	#4	STR	3'-11"	10
H4	24	#4	1	3'-3"	52
H5	4	#4	STR	8'-10"	24
H6	12	#4	STR	15'-10"	127
H7	4	#4	STR	14'-4"	38
H8	4	#4	STR	8'-3"	22
H9	4	#4	STR	2'-3"	6
H10	24	#4	2	3'-3"	52
H11	4	#4	STR	16'-4"	44
N1	4	#5	3	10'-2"	42
N2	6	#5	3	9'-0"	56
N3	6	#4	3	7'-8"	31
N4	6	#4	3	6'-4"	25
N5	4	#5	3	10'-5"	43
N6	4	#5	3	10'-1"	42
N7	6	#5	3	9'-4"	58
N8	6	#5	3	8'-7"	54
N9	6	#4	3	7'-10"	31
N10	6	#4	3	7'-1"	28
N11	6	#4	3	6'-4"	25
S1	12	#6	STR	6'-0"	108
T1	6	#5	STR	10'-0"	63
T2	6	#5	STR	17'-9"	111
V1	4	#4	STR	8'-1"	22
V2	6	#4	STR	7'-0"	28
V3	6	#4	STR	5'-8"	23
V4	6	#4	STR	4'-4"	17
V5	4	#4	STR	8'-4"	22
V6	4	#4	STR	8'-0"	21
V7	6	#4	STR	7'-3"	29
V8	6	#4	STR	6'-6"	26
V9	6	#4	STR	5'-9"	23
V10	6	#4	STR	5'-0"	20
V11	6	#4	STR	4'-3"	17
Z1	4	#5	4	5'-9"	24
Z2	6	#5	4	5'-0"	31
Z3	6	#4	4	4'-0"	16
Z4	6	#4	4	3'-1"	12
Z5	8	#5	4	5'-9"	48
Z6	6	#5	4	5'-3"	33
Z7	6	#5	4	4'-9"	30
Z8	6	#4	4	4'-2"	17
Z9	6	#4	4	3'-7"	14
Z10	6	#4	4	3'-1"	12

REINFORCING STEEL FOR 4 WINGS 1661 LBS.

CLASS A CONCRETE
4 WINGS 24.3 C.Y.
2 HEADWALLS 1.8 C.Y.
2 END CURTAIN WALLS 2.0 C.Y.
TOTAL 28.1 C.Y.

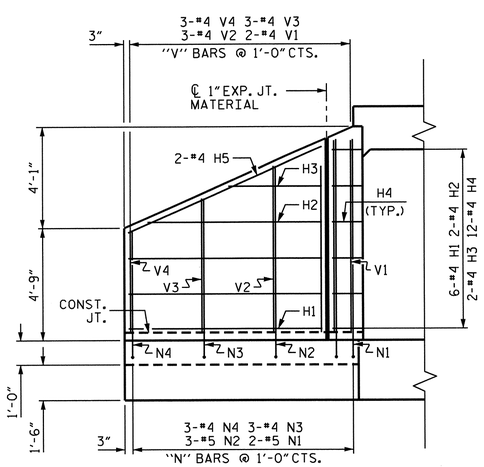

ELEVATION W2

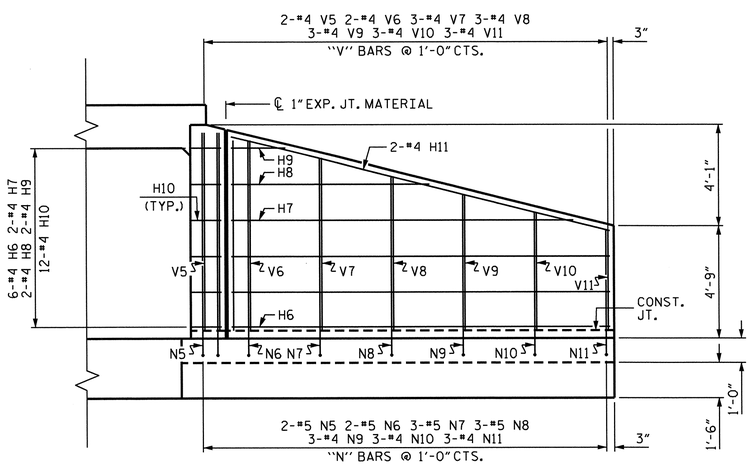

ELEVATION W1

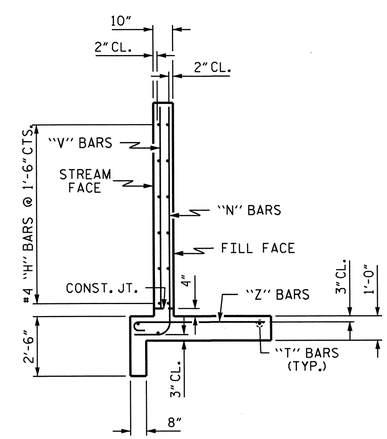

TYPICAL WING SECTION

PROJECT NO. U-2525B

GUILFORD COUNTY

STATION: 114+55.00 -L-

SHEET 4 OF 5

STATE OF NORTH CAROLINA
DEPARTMENT OF TRANSPORTATION
RALEIGH

STANDARD WINGS FOR CONCRETE BOX CULVERT

H = 8'-0" SLOPE = 2:1

NORTH CAROLINA PROFESSIONAL SEAL 20125 ENGINEER MARSHALL LOCHEER, JR.

2-19-14

ASSEMBLED BY : J.R. MCROY	DATE : 09-19-11
CHECKED BY : M.A. LEBLANC	DATE : 02/13
DRAWN BY : CCJ 11/99	
CHECKED BY : RWW 03/00	

REVISIONS							SHEET NO.
NO.	BY:	DATE:	NO.	BY:	DATE:		C-9
1			3				TOTAL SHEETS
2			4				20

STR. #16 STD. NO. CW6008

LOAD AND RESISTANCE FACTOR RATING (LRFR) SUMMARY FOR REINFORCED CONCRETE BOX CULVERTS

LEVEL		VEHICLE	WEIGHT (W) (TONS)	CONTROLLING LOAD RATING (#)	MINIMUM RATING FACTORS (RF)	TONS = W × RF	STRENGTH I LIMIT STATE									COMMENT NUMBER
							LIVE-LOAD FACTORS (γ_{LL})	MOMENT				SHEAR				
								RATING FACTOR	BOX NO.	ELEMENT TYPE	DISTANCE FROM LEFT END OF ELEMENT (ft)	RATING FACTOR	BOX NO.	ELEMENT TYPE	DISTANCE FROM LEFT END OF ELEMENT (ft)	
DESIGN LOAD RATING		HL-93 (INVENTORY)	N/A	1	1.22	--	1.75	1.66	1	TOP SLAB	3.45	1.22	1	TOP SLAB	6.85	
		HL-93 (OPERATING)	N/A		1.58	--	1.35	2.15	1	TOP SLAB	3.45	1.58	1	TOP SLAB	6.85	
		HS-20 (INVENTORY)	36.000	2	1.83	65.84	1.75	2.42	1	TOP SLAB	3.45	1.83	1	TOP SLAB	6.85	
		HS-20 (OPERATING)	36.000		2.37	85.35	1.35	3.13	1	TOP SLAB	3.45	2.37	1	TOP SLAB	6.85	
LEGAL LOAD RATING	SINGLE VEHICLE (SV)	SH	12.500		3.63	45.36	1.40	3.87	1	BOTT. COR. WALL	8.49	3.63	1	TOP SLAB	6.85	
		S3C	21.500		1.99	42.80	1.40	2.72	1	TOP SLAB	3.45	1.99	1	TOP SLAB	6.85	
		S3A	22.750		1.97	44.88	1.40	2.72	1	TOP SLAB	3.45	1.97	1	TOP SLAB	6.85	
		S4A	26.750		1.97	52.77	1.40	2.72	1	TOP SLAB	3.45	1.97	1	TOP SLAB	6.85	
		S5A	30.500	3	1.84	56.09	1.40	2.70	1	TOP SLAB	3.45	1.84	1	TOP SLAB	6.85	
		S6A	34.500		1.84	63.60	1.40	2.70	1	TOP SLAB	3.45	1.84	1	TOP SLAB	6.85	
		S7B	38.500		1.84	70.95	1.40	2.76	1	TOP SLAB	3.45	1.84	1	TOP SLAB	6.85	
		S7A	40.000		1.86	74.30	1.40	2.70	1	TOP SLAB	3.45	1.86	1	TOP SLAB	6.85	
	TRUCK TRACTOR SEMI-TRAILER (TTST)	T4A	28.250		1.99	56.22	1.40	2.72	1	TOP SLAB	3.45	1.99	1	TOP SLAB	6.85	
		T5B	32.000		1.97	63.06	1.40	2.83	1	TOP SLAB	3.45	1.97	1	TOP SLAB	6.85	
		T6A	36.000		1.93	69.46	1.40	2.76	1	TOP SLAB	3.45	1.93	1	TOP SLAB	6.85	
		T7A	40.000		1.97	78.83	1.40	2.81	1	TOP SLAB	3.45	1.97	1	TOP SLAB	6.85	
		T7B	40.000		1.99	79.61	1.40	2.72	1	TOP SLAB	3.45	1.99	1	TOP SLAB	6.85	

LOAD FACTORS:

DESIGN LOAD RATING FACTORS

LOAD TYPE	MAX FACTOR	MIN FACTOR
DC	1.25	0.90
DW	1.50	0.65
EV	1.30	0.90
EH	1.35	0.90
ES	1.35	0.90
LS	1.75	--
WA	1.00	--

NOTE:

RATING FACTORS ARE BASED ON THE STRENGTH I LIMIT STATE.

COMMENTS:

1.
2.
3.
4.

(#) CONTROLLING LOAD RATING

(1) DESIGN LOAD RATING (HL-93)

(2) DESIGN LOAD RATING (HS-20)

(3) LEGAL LOAD RATING **

** SEE CHART FOR VEHICLE TYPE

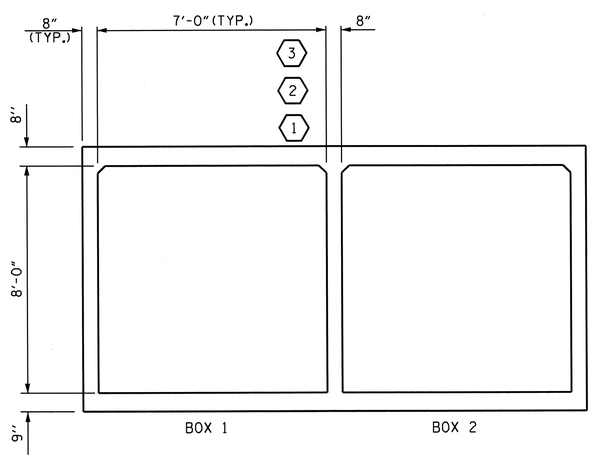

LRFR SUMMARY

(LOOKING DOWNSTREAM)

PROJECT NO. U-2525B

GUILFORD COUNTY

STATION: 114+55.00 -L-

SHEET 5 OF 5

STATE OF NORTH CAROLINA
DEPARTMENT OF TRANSPORTATION
RALEIGH

STANDARD

LRFR SUMMARY FOR REINFORCED CONCRETE BOX CULVERTS (INTERSTATE TRAFFIC)

NORTH CAROLINA PROFESSIONAL SEAL 20125 ENGINEER MARSHALL GICKEE, JR.
2-19-14

REVISIONS						SHEET NO.
NO.	BY:	DATE:	NO.	BY:	DATE:	C-10
1			3			TOTAL SHEETS
2			4			20

STR. #16 STD. NO. LRFR6

ASSEMBLED BY : J.R. MCROY DATE : 09/26/11
CHECKED BY : M.A. LEBLANC DATE : 02/13

DRAWN BY : WMC 7/11
CHECKED BY : GM 7/11

REV. 10/1/11 MAA/GM

07-JAN-2014 13:08
R:\Structures\Final Plans\U-2525B_SD_CU_17.dgn
mpoole

BENCHMARK #19: RAILROAD SPIKE IN 11" GUM, STA. 219+41.95 -L, 385.40' RT., EL. 729.67

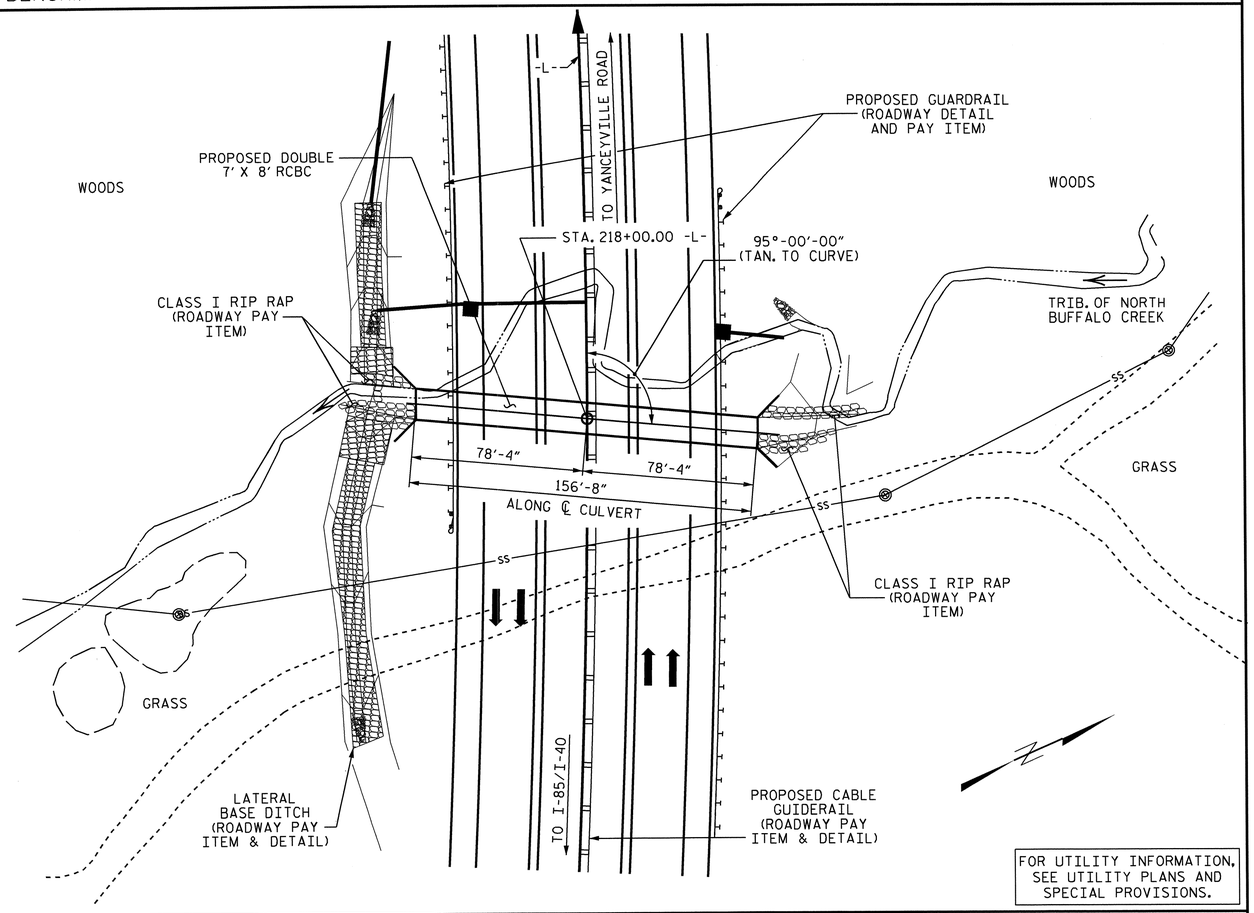

FOR UTILITY INFORMATION, SEE UTILITY PLANS AND SPECIAL PROVISIONS.

LOCATION SKETCH

HYDRAULIC DATA

DESIGN DISCHARGE	= 650 CFS
FREQUENCY OF DESIGN FLOOD	= 50 YRS.
DESIGN HIGH WATER ELEVATION	= 727.8
DRAINAGE AREA	= 0.66 SQ. MI.
BASE DISCHARGE (Q100)	= 750 CFS
BASE HIGH WATER ELEVATION	= 728.7

OVERTOPPING FLOOD DATA

OVERTOPPING DISCHARGE	= N/A
FREQUENCY OF OVERTOPPING FLOOD	= > 500 YRS.
OVERTOPPING FLOOD ELEVATION	= 736.1

GRADE DATA

GRADE POINT ELEVATION @ STA. 218+00.00 -L-	= 735.57
BED ELEVATION @ STA. 218+00.00 -L-	= 719.30
ROADWAY FILL SLOPES	= 2:1

TOTAL STRUCTURE QUANTITIES

CLASS A CONCRETE				
BARREL @	1.490	CY/FT	233.4	C.Y.
WINGS, ETC.			24.5	C.Y.
SILL			0.5	C.Y.
TOTAL			258.4	C.Y.
REINFORCING STEEL				
BARREL & SILL			28,857	LBS.
WINGS, ETC.			1,453	LBS.
TOTAL			30,310	LBS.
FOUNDATION CONDITIONING MATERIAL			177	TONS
CULVERT EXCAVATION			LUMP SUM	

NOTES

ASSUMED LIVE LOAD ----------HL-93 OR ALTERNATE LOADING.

DESIGN FILL---------- 8.6 FT.

FOR OTHER DESIGN DATA AND NOTES, SEE STANDARD NOTES SHEET.

3"Ø WEEP HOLES INDICATED TO BE IN ACCORDANCE WITH THE SPECIFICATIONS.

CONCRETE IN CULVERTS TO BE POURED IN THE FOLLOWING ORDER:

1. WING FOOTINGS AND FLOOR SLAB INCLUDING 4" OF ALL VERTICAL WALLS.
2. THE REMAINING PORTIONS OF THE WALLS AND WINGS FULL HEIGHT FOLLOWED BY ROOF SLAB AND HEADWALLS.

THE RESIDENT ENGINEER SHALL CHECK THE LENGTH OF CULVERT BEFORE STAKING IT OUT TO MAKE CERTAIN THAT IT WILL PROPERLY TAKE CARE OF THE FILL.

DIMENSIONS FOR WING LAYOUT AS WELL AS ADDITIONAL REINFORCING STEEL EMBEDDED IN BARREL ARE SHOWN ON WING SHEET.

AT THE CONTRACTOR'S OPTION, HE MAY SPLICE THE VERTICAL REINFORCING STEEL IN THE INTERIOR FACE OF EXTERIOR WALL AND BOTH FACES OF INTERIOR WALLS ABOVE LOWER WALL CONSTRUCTION JOINTS. THE SPLICE LENGTH SHALL BE AS PROVIDED IN THE SPLICE LENGTH CHART SHOWN ON THE PLANS. EXTRA WEIGHT OF STEEL DUE TO THE SPLICES SHALL BE PAID FOR BY THE CONTRACTOR.

FOR SUBMITTAL OF WORKING DRAWINGS, SEE SPECIAL PROVISIONS.

FOR CRANE SAFETY, SEE SPECIAL PROVISIONS.

FOR FALSEWORK AND FORMWORK, SEE SPECIAL PROVISIONS.

FOR CULVERT DIVERSION DETAILS, SEE EROSION CONTROL PLANS.

FOR GROUT FOR STRUCTURES, SEE SPECIAL PROVISIONS.

TRANSVERSE CONSTRUCTION JOINTS SHALL BE USED IN THE BARREL, SPACED TO LIMIT THE POURS TO A MAXIMUM OF 70 FEET. LOCATION OF JOINTS SHALL BE SUBJECT TO APPROVAL OF THE ENGINEER.

STEEL IN THE BOTTOM SLAB MAY BE SPLICED AT THE PERMITTED CONSTRUCTION JOINT AT THE CONTRACTOR'S OPTION. EXTRA WEIGHT OF STEEL DUE TO THE SPLICES WILL BE PAID FOR BY THE CONTRACTOR.

AT THE CONTRACTOR'S OPTION HE MAY SUBMIT, TO THE ENGINEER FOR APPROVAL, DESIGN AND DETAILED DRAWINGS FOR A PRECAST REINFORCED CONCRETE BOX CULVERT IN LIEU OF THE CAST-IN-PLACE CULVERT SHOWN ON THE PLANS. THE DESIGN SHALL PROVIDE THE SAME SIZE AND NUMBER OF BARRELS AS USED ON THE CAST-IN-PLACE DESIGN. FOR OPTIONAL PRECAST REINFORCED CONCRETE BOX CULVERT, SEE SPECIAL PROVISIONS.

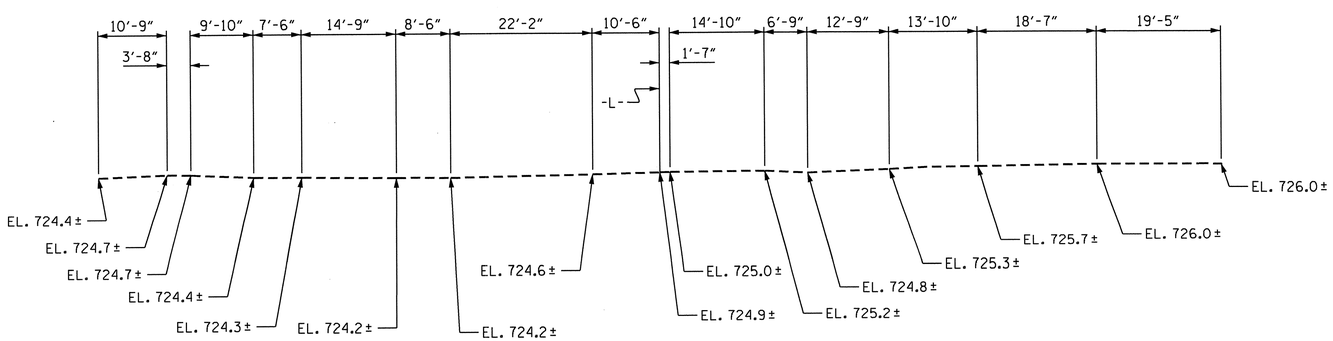

PROFILE ALONG ℄ CULVERT

PROJECT NO. U-2525B
GUILFORD COUNTY
STATION: 218+00.00 -L-

SHEET 1 OF 5

STATE OF NORTH CAROLINA
DEPARTMENT OF TRANSPORTATION
RALEIGH

DOUBLE 7 FT. X 8 FT. CONCRETE BOX CULVERT 95° SKEW

NORTH CAROLINA PROFESSIONAL SEAL 13014 ENGINEER QUANG H. NGUYEN
Quang H. Nguyen 2-19-14

NORTH CAROLINA PROFESSIONAL SEAL 20125 ENGINEER MARSHALL G. CHEEK, JR.
2-19-14

REVISIONS						SHEET NO.
NO.	BY:	DATE:	NO.	BY:	DATE:	C-11
1			3			TOTAL SHEETS
2			4			20

DRAWN BY :	A. SORSENGINH	DATE :	9/20/11
ASSEMBLED BY :	J.R. MCROY	DATE :	10/12/11

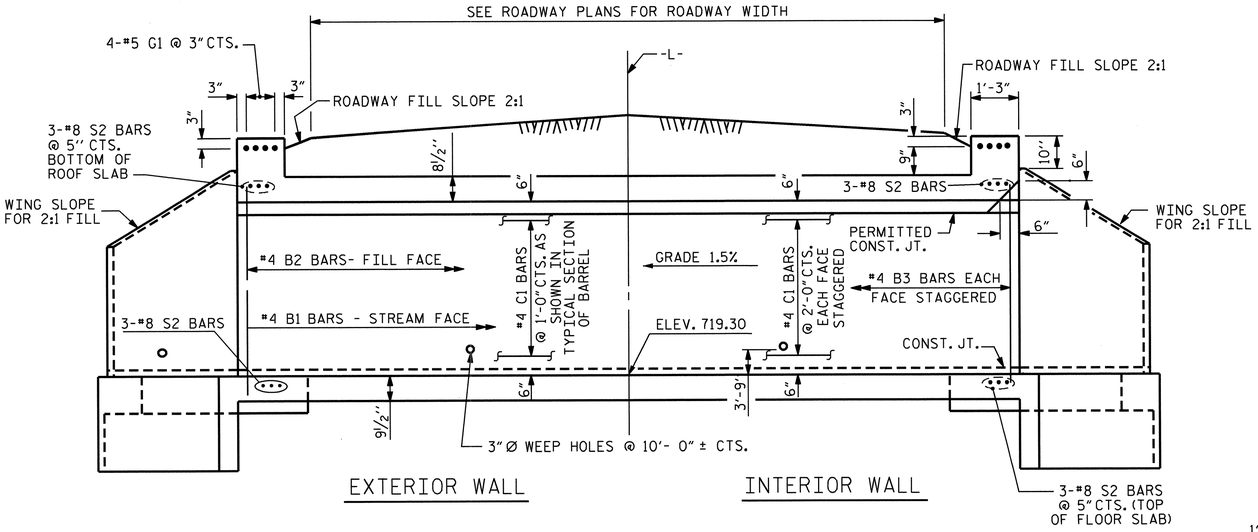

CULVERT SECTION NORMAL TO ROADWAY

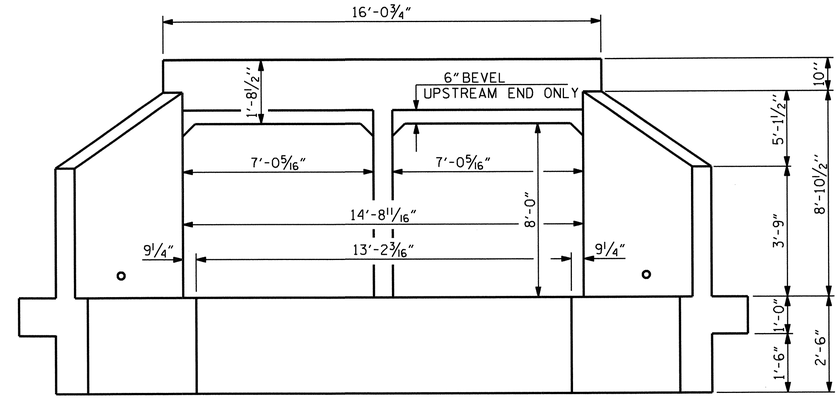

END ELEVATION NORMAL TO SKEW

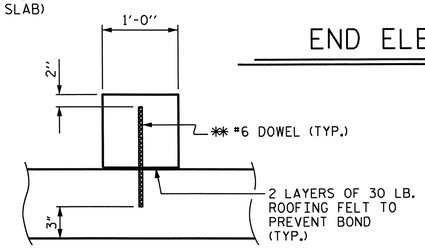

SECTION THROUGH SILL

** DOWELS MAY BE PUSHED INTO GREEN CONCRETE AFTER SLAB HAS BEEN FLOAT FINISHED.

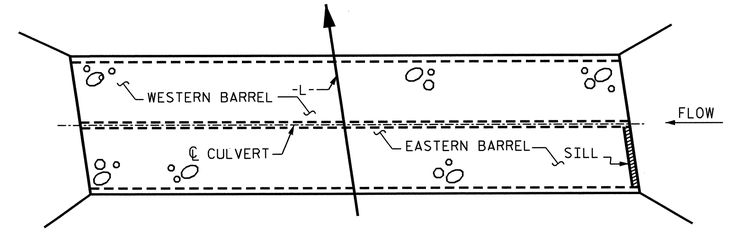

PLAN OF SILL LOCATION

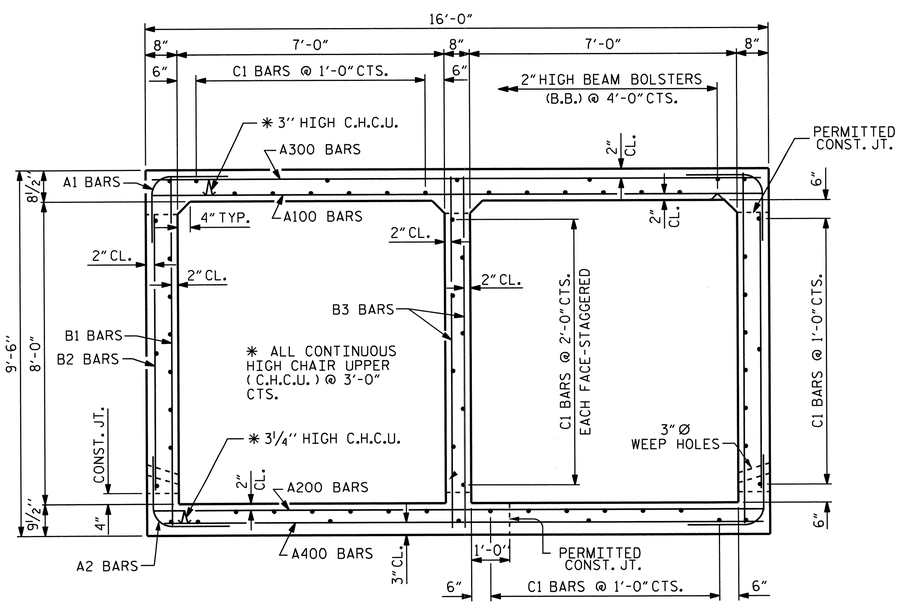

RIGHT ANGLE SECTION OF BARREL

THERE ARE 64 C1 BARS IN SECTION OF BARREL.

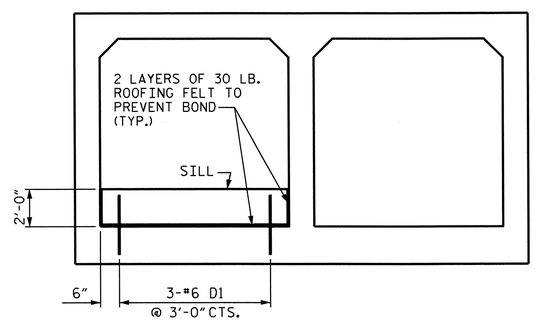

ELEVATION

CULVERT SILL DETAILS

(LOOKING DOWNSTREAM)

NOTES

MATERIAL EXCAVATED FROM THE EXISTING BED SHALL BE STOCKPILED FOR USE IN THE PROPOSED CULVERT. THE MATERIAL SHALL BE PLACED IN THE EASTERN BARREL TO A DEPTH OF 2 FEET AT THE DIRECTION OF THE ENGINEER. EXCESS MATERIAL MAY BE PLACED IN THE WESTERN BARREL TO A DEPTH OF 1 FOOT. BED MATERIAL SHALL BE SUPPLEMENTED WITH CLASS 'B' RIP RAP AS NECESSARY. BED MATERIAL SHALL BE SUBJECT TO APPROVAL BY THE ENGINEER.

THE ENTIRE COST OF WORK REQUIRED TO PLACE THE EXCAVATED MATERIAL OR SUPPLEMENTAL MATERIAL AS SHOWN ON THE PLANS SHALL BE INCLUDED IN THE CONTACT LUMP SUM PRICE BID FOR CULVERT EXCAVATION.

THE ENTIRE COST OF WORK REQUIRED TO CONSTRUCT THE SILL SHALL BE INCLUDED IN THE VARIOUS PAY ITEMS.

NORTH CAROLINA PROFESSIONAL SEAL 20125 ENGINEER MARSHALL L. CREEK, JR.
2-19-14

PROJECT NO. U-2525B
GUILFORD COUNTY
STATION: 218+00.00 -L-

SHEET 2 OF 5

STATE OF NORTH CAROLINA
DEPARTMENT OF TRANSPORTATION
RALEIGH

DOUBLE 7 FT. X 8 FT. CONCRETE BOX CULVERT 95° SKEW

REVISIONS								SHEET NO.
NO.	BY:	DATE:	NO.	BY:	DATE:			C-12
1			3					TOTAL SHEETS
2			4					20

DRAWN BY :	A. SORSENGINH	DATE :	9/20/11
CHECKED BY :	J.R. MCROY	DATE :	10/12/11
DESIGN ENGINEER OF RECORD:	R. Z. DEAN	DATE :	11/13

REVISED 11-19-99 BY M.M. CHECKED BY R.W.W.
REDRAWN NOV. 1990 BY TSS CHECKED BY ARB

BAR TYPE

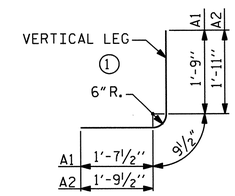

BAR DIMENSIONS ARE OUT TO OUT

SPLICE LENGTH CHART

BAR	SIZE	LENGTH
C1	#4	1'-11"
B1	#4	1'-9"
B3	#4	1'-9"

BAR SCHEDULE

BAR	NO.	SIZE	TYPE	LENGTH	WEIGHT
A1	314	#4	1	4'-2"	874
A2	314	#5	1	4'-6"	1474
A100	220	#5	STR	15'-7"	3576
A101	2	#5	STR	5'-9"	12
A200	249	#4	STR	15'-7"	2592
A201	2	#4	STR	6'-9"	9
A300	156	#5	STR	15'-7"	2536
A301	2	#5	STR	2'-5"	5
A400	287	#5	STR	15'-7"	4665
A401	2	#5	STR	7'-8"	16
B1	314	#4	STR	9'-0"	1888
B2	314	#4	STR	7'-4"	1538
B3	314	#4	STR	9'-0"	1888
C1	384	#4	STR	27'-10"	7140
D1	3	#6	STR	2'-4"	11
G1	8	#5	STR	15'-8"	131
S2	12	#8	STR	15'-8"	502
REINFORCING STEEL = 28,857 LBS.					

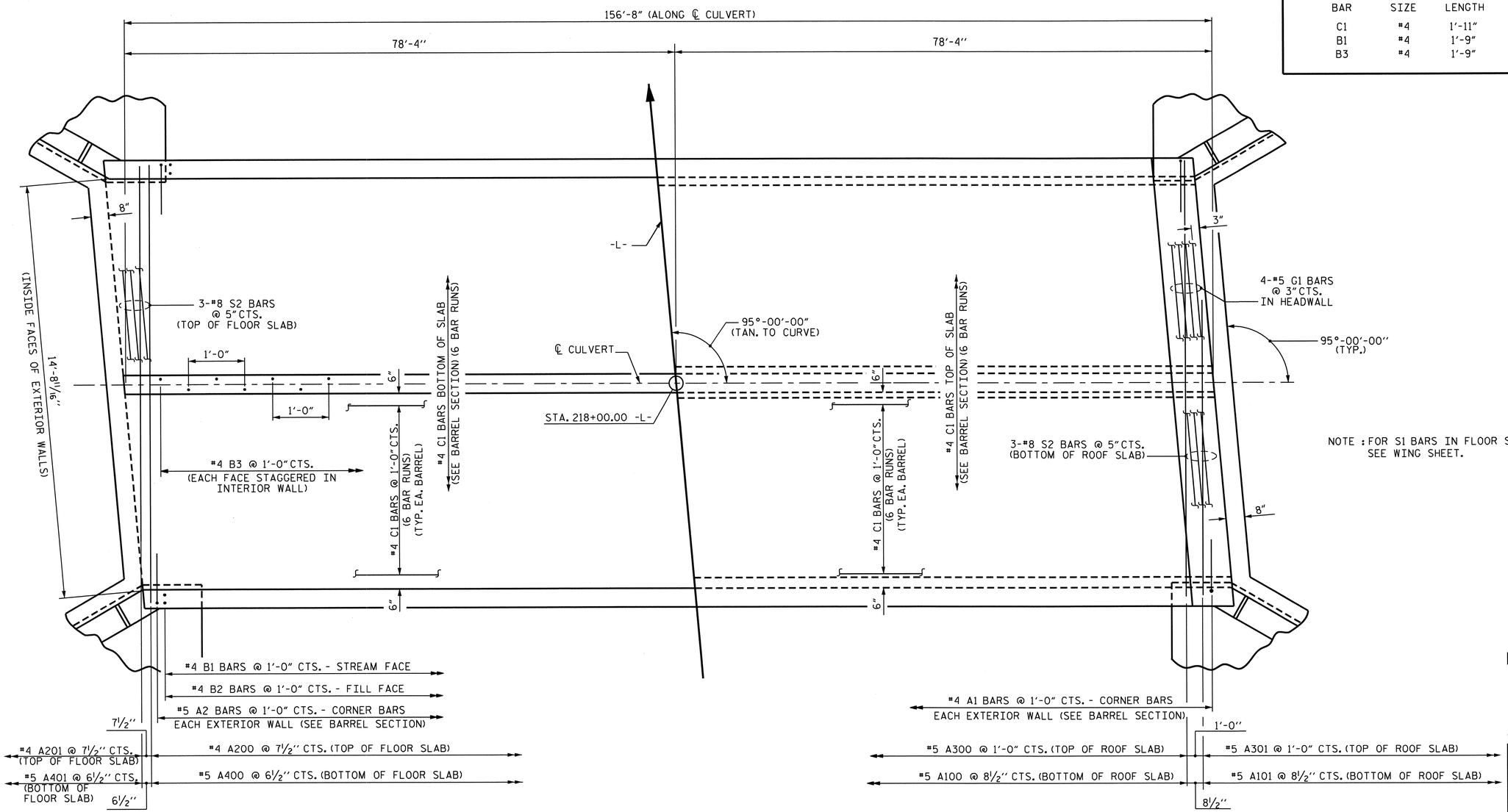

NOTE : FOR S1 BARS IN FLOOR SLAB & WING FOOTINGS, SEE WING SHEET.

PLAN OF FLOOR SLAB

PLAN OF ROOF SLAB

PROJECT NO. U-2525B
GUILFORD COUNTY
STATION: 218+00.00 -L-

SHEET 3 OF 5

STATE OF NORTH CAROLINA
DEPARTMENT OF TRANSPORTATION
RALEIGH

DOUBLE 7 FT. X 8 FT. CONCRETE BOX CULVERT

NORTH CAROLINA PROFESSIONAL SEAL 20125 ENGINEER MARSHALL A. OLEK, JR.
2-19-14

REVISIONS						SHEET NO.
NO.	BY:	DATE:	NO.	BY:	DATE:	C-13
1			3			TOTAL SHEETS
2			4			20

STR. #17

DRAWN BY : M. POOLE DATE : 2/13
CHECKED BY : J.R. MCROY DATE : 2/13
DESIGN ENGINEER OF RECORD: R. Z. DEAN DATE : 11/13

REVISED 11-19-99 BY M.M. CHECKED BY R.W.W.
REDRAWN NOV. 1990 BY TSS CHECKED BY ARB

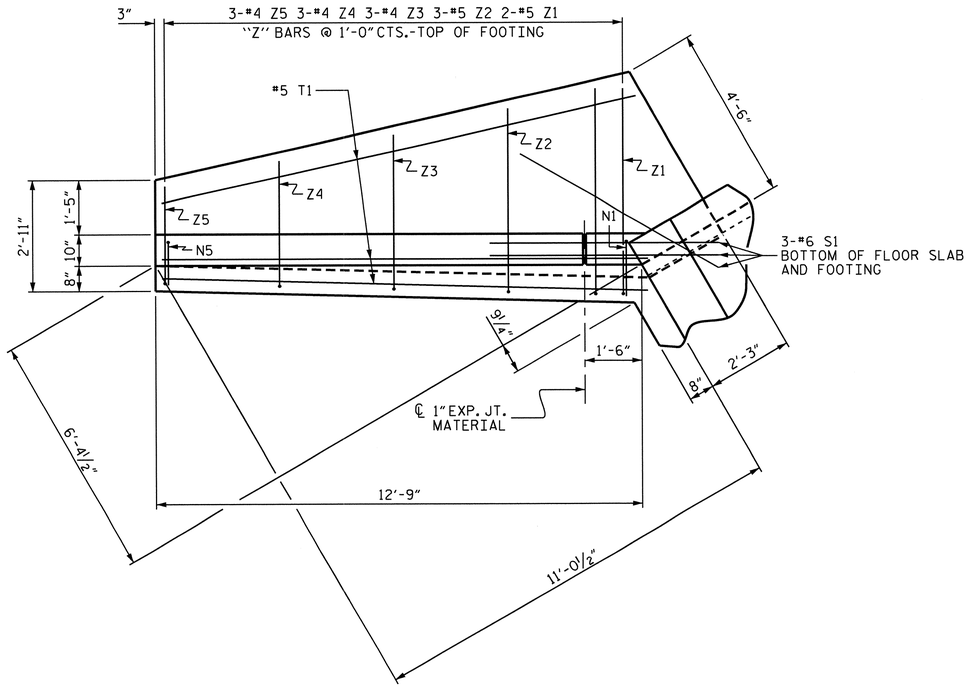

PLAN

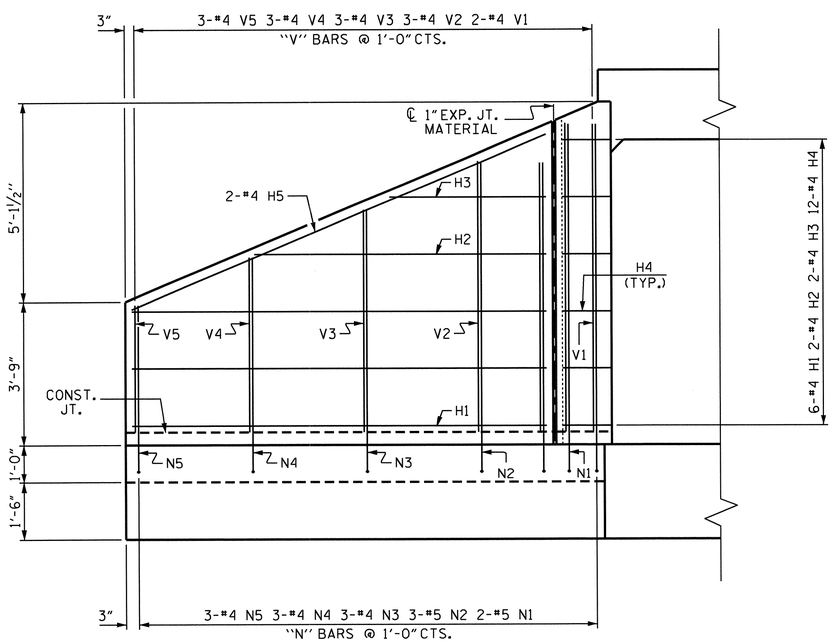

ELEVATION

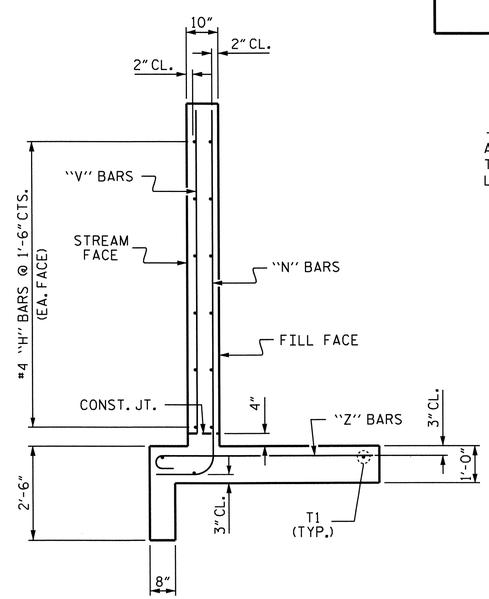

TYPICAL WING SECTION

BAR TYPES

ALL BAR DIMENSIONS ARE OUT TO OUT.

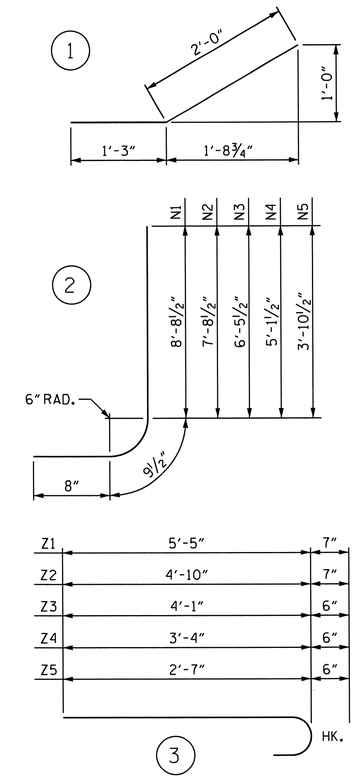

BILL OF MATERIAL

BAR	NO.	SIZE	TYPE	LENGTH	WEIGHT
H1	24	#4	STR	10'-10"	174
H2	8	#4	STR	7'-8"	41
H3	8	#4	STR	4'-1"	22
H4	48	#4	1	3'-3"	104
H5	8	#4	STR	11'-9"	63
N1	8	#5	2	10'-2"	85
N2	12	#5	2	9'-2"	115
N3	12	#4	2	7'-11"	63
N4	12	#4	2	6'-7"	53
N5	12	#4	2	5'-4"	43
S1	12	#6	STR	6'-0"	108
T1	12	#5	STR	12'-9"	160
V1	8	#4	STR	8'-1"	43
V2	12	#4	STR	7'-1"	57
V3	12	#4	STR	5'-10"	47
V4	12	#4	STR	4'-7"	37
V5	12	#4	STR	3'-4"	27
Z1	8	#5	3	6'-0"	50
Z2	12	#5	3	5'-5"	68
Z3	12	#4	3	4'-7"	37
Z4	12	#4	3	3'-10"	31
Z5	12	#4	3	3'-1"	25

REINFORCING STEEL
FOR 4 WINGS 1453 LBS.

CLASS A CONCRETE
4 WINGS 21.4 C.Y.
2 HEADWALLS 1.5 C.Y.
2 END CURTAIN WALLS 1.6 C.Y.
TOTAL 24.5 C.Y.

NOTE

A 3 FOOT STRIP OF FILTER FABRIC SHALL BE ATTACHED TO THE FILL FACE OF THE WING COVERING THE ENTIRE LENGTH OF THE EXPANSION JOINT.

PROJECT NO. U-2525B
GUILFORD COUNTY
STATION: 218+00.00 -L-

SHEET 4 OF 5

STATE OF NORTH CAROLINA
DEPARTMENT OF TRANSPORTATION
RALEIGH

STANDARD WINGS FOR CONCRETE BOX CULVERT

H = 8'-0" SLOPE = 2:1
90° SKEW

NORTH CAROLINA PROFESSIONAL SEAL 20125 ENGINEER MARSHALL C. CHEEK, JR. 2-19-14

REVISIONS						SHEET NO.
NO.	BY:	DATE:	NO.	BY:	DATE:	C-14
1			3			TOTAL SHEETS
2			4			20

STR. #17

ASSEMBLED BY : A. SORSENGINH DATE : 9/20/11
CHECKED BY : JR MCROY DATE : 10/12/11

DRAWN BY : CCJ 10/99
CHECKED BY : RWW 03/00

LOAD AND RESISTANCE FACTOR RATING (LRFR) SUMMARY FOR REINFORCED CONCRETE BOX CULVERTS

LEVEL		VEHICLE	WEIGHT (W) (TONS)	CONTROLLING LOAD RATING (#)	MINIMUM RATING FACTORS (RF)	TONS = W × RF	STRENGTH I LIMIT STATE									COMMENT NUMBER
							LIVE-LOAD FACTORS γ_{LL}	MOMENT				SHEAR				
								RATING FACTOR	BOX NO.	ELEMENT TYPE	DISTANCE FROM LEFT END OF ELEMENT (ft)	RATING FACTOR	BOX NO.	ELEMENT TYPE	DISTANCE FROM LEFT END OF ELEMENT (ft)	
DESIGN LOAD RATING		HL-93 (INVENTORY)	N/A	1	1.50	--	1.75	2.50	1	BOTTOM SLAB	7.48	1.50	1	TOP SLAB	6.82	
		HL-93 (OPERATING)	N/A		1.94	--	1.35	3.25	1	BOTTOM SLAB	7.48	1.94	1	TOP SLAB	6.82	
		HS-20 (INVENTORY)	36.000	2	2.26	81.27	1.75	3.30	1	TOP CORNER WALL	0.66	2.26	1	TOP SLAB	6.82	
		HS-20 (OPERATING)	36.000		2.93	105.36	1.35	4.28	1	TOP CORNER WALL	0.66	2.93	1	TOP SLAB	6.82	
LEGAL LOAD RATING	SINGLE VEHICLE (SV)	SH	12.500		4.51	56.44	1.40	4.69	1	BOTT CORNER WALL	8.53	4.51	1	TOP SLAB	6.82	
		S3C	21.500		2.43	52.30	1.40	3.88	1	TOP CORNER WALL	0.66	2.43	1	TOP SLAB	6.82	
		S3A	22.750		2.43	55.35	1.40	3.88	1	TOP CORNER WALL	0.66	2.43	1	TOP SLAB	6.82	
		S4A	26.750		2.43	65.08	1.40	3.88	1	TOP CORNER WALL	0.66	2.43	1	TOP SLAB	6.82	
		S5A	30.500		2.17	66.25	1.40	3.41	1	BOTTOM SLAB	7.48	2.17	1	TOP SLAB	6.82	
		S6A	34.500		2.18	75.18	1.40	3.34	1	BOTTOM SLAB	7.48	2.18	1	TOP SLAB	6.82	
		S7B	38.500	3	2.16	83.05	1.40	3.31	1	BOTTOM SLAB	7.48	2.16	1	TOP SLAB	6.82	
		S7A	40.000		2.18	87.16	1.40	3.34	1	BOTTOM SLAB	7.48	2.18	1	TOP SLAB	6.82	
	TRUCK TRACTOR SEMI-TRAILER (TTST)	T4A	28.250		2.43	68.73	1.40	3.88	1	TOP CORNER WALL	7.48	2.43	1	TOP SLAB	6.82	
		T5B	32.000		2.37	75.68	1.40	3.99	1	TOP CORNER WALL	0.66	2.37	1	TOP SLAB	6.82	
		T6A	36.000		2.27	81.68	1.40	3.55	1	BOTTOM SLAB	0.66	2.27	1	TOP SLAB	6.82	
		T7A	40.000		2.37	94.65	1.40	3.89	1	BOTTOM SLAB	7.48	2.37	1	TOP SLAB	6.82	
		T7B	40.000		2.37	94.70	1.40	3.55	1	BOTTOM SLAB	7.48	2.37	1	TOP SLAB	6.82	

LOAD FACTORS:

DESIGN LOAD RATING FACTORS

LOAD TYPE	MAX FACTOR	MIN FACTOR
DC	1.25	0.90
DW	1.50	0.65
EV	1.30	0.90
EH	1.35	0.90
ES	1.35	0.90
LS	1.75	--
WA	1.00	--

NOTE:

RATING FACTORS ARE BASED ON THE STRENGTH I LIMIT STATE.

COMMENTS:

1.
2.
3.
4.

(#) CONTROLLING LOAD RATING

(1) DESIGN LOAD RATING (HL-93)

(2) DESIGN LOAD RATING (HS-20)

(3) LEGAL LOAD RATING **

** SEE CHART FOR VEHICLE TYPE

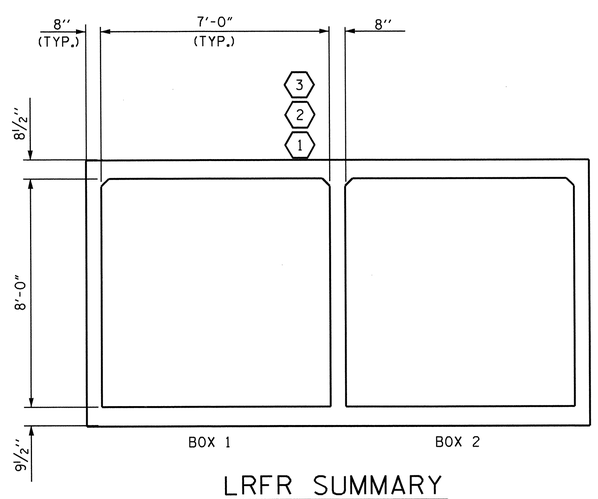

LRFR SUMMARY

(LOOKING DOWNSTREAM)

PROJECT NO. U-2525B

GUILFORD COUNTY

STATION: 218+00.00 -L-

SHEET 5 OF 5

STATE OF NORTH CAROLINA
DEPARTMENT OF TRANSPORTATION
RALEIGH

STANDARD

LRFR SUMMARY FOR REINFORCED CONCRETE BOX CULVERTS
(INTERSTATE TRAFFIC)

NORTH CAROLINA PROFESSIONAL SEAL 20125 ENGINEER MARSHALL G. CREEK, JR.
2-19-14

REVISIONS						SHEET NO.
NO.	BY:	DATE:	NO.	BY:	DATE:	C-15
1			3			TOTAL SHEETS
2			4			20

STR. #17 STD. NO. LRFR6

DRAWN BY : A. SORSENGINH DATE : 10/2011
CHECKED BY : JR MCROY DATE : 9/2011

07-JAN-2014 12:48
R:\Structures\Final Plans\U-2525B_SD_LRFR.dgn
mpoole

BENCHMARK #8: R/R SPIKE SET IN 20" SWEET GUM, STA. 248+16.88 -L-, 515.84' RT., EL. 745.86

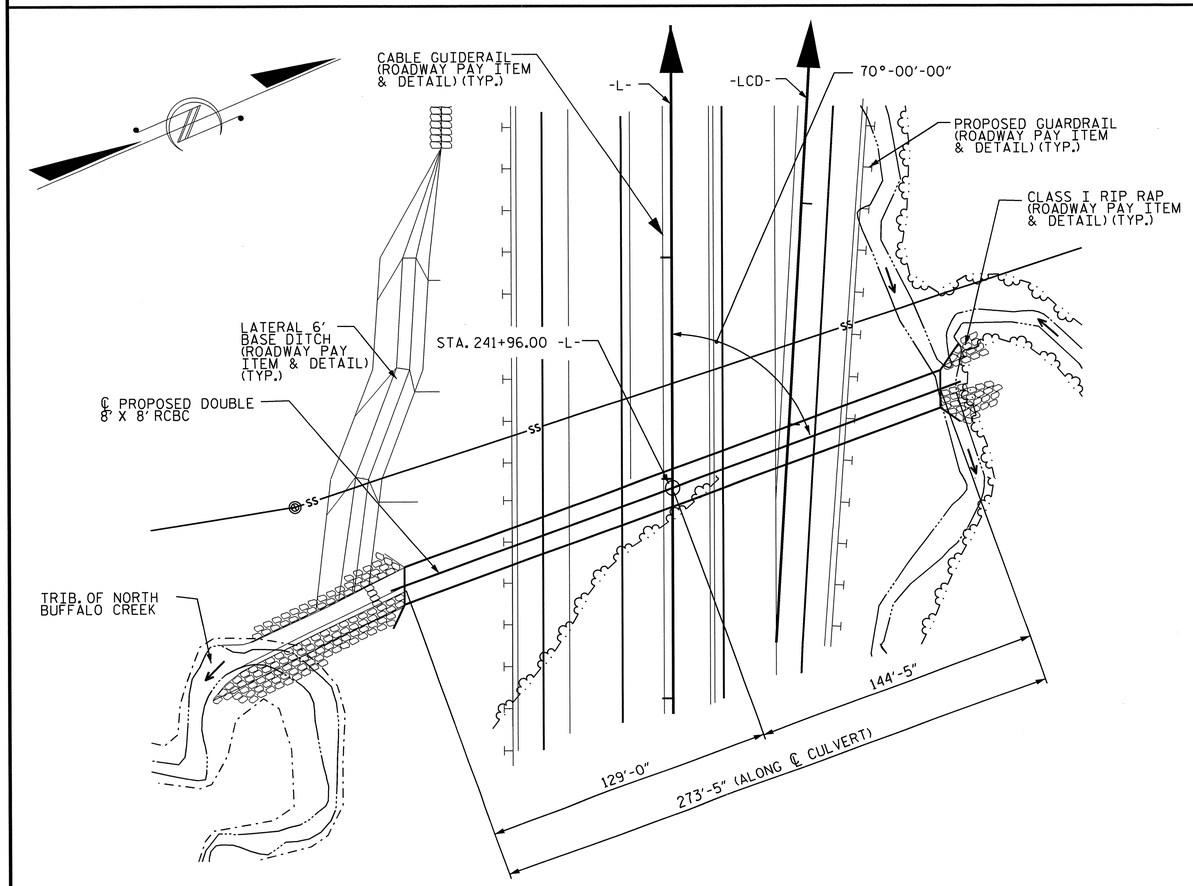

FOR UTILITY INFORMATION, SEE UTILITY PLANS AND SPECIAL PROVISIONS.

LOCATION SKETCH

HYDRAULIC DATA

DESIGN DISCHARGE	= 750 CFS
FREQUENCY OF DESIGN FLOOD	= 50 YRS.
DESIGN HIGH WATER ELEVATION	= 737.6'
DRAINAGE AREA	= 0.78 SQ. MI.
BASE DISCHARGE (Q100)	= 850 CFS
BASE HIGH WATER ELEVATION	= 738.2'

OVERTOPPING FLOOD DATA

OVERTOPPING DISCHARGE	= N/A
FREQUENCY OF OVERTOPPING FLOOD	= > 500 YRS.
OVERTOPPING FLOOD ELEVATION	= 759.4'

GRADE DATA

GRADE POINT ELEVATION @ STA. 241+96.00 -L-	= 760.16'
BED ELEVATION @ STA. 241+96.00 -L-	= 728.30'
ROADWAY FILL SLOPES	= 2:1

TOTAL STRUCTURE QUANTITIES

CLASS A CONCRETE			
BARREL @	2.477 CY/FT	677.3	C.Y.
WINGS, ETC.		26.4	C.Y.
SILL		0.6	C.Y.
TOTAL		704.3	C.Y.
REINFORCING STEEL			
BARREL		63,185	LBS.
WINGS, ETC.		1547	LBS.
TOTAL		64,732	LBS.
FOUNDATION CONDITIONING MATERIAL		352	TONS
CULVERT EXCAVATION		LUMP SUM	

NOTES

ASSUMED LIVE LOAD ----------HL-93 OR ALTERNATE LOADING.

DESIGN FILL----------24.2 FT.

FOR OTHER DESIGN DATA AND NOTES SEE STANDARD NOTE SHEET.

3" Ø WEEP HOLES INDICATED TO BE IN ACCORDANCE WITH THE SPECIFICATIONS.

CONCRETE IN CULVERTS TO BE POURED IN THE FOLLOWING ORDER:

1. WING FOOTINGS AND FLOOR SLAB INCLUDING 4" OF ALL VERTICAL WALLS.
2. THE REMAINING PORTIONS OF THE WALLS AND WINGS FULL HEIGHT FOLLOWED BY ROOF SLAB AND HEADWALLS.

THE RESIDENT ENGINEER SHALL CHECK THE LENGTH OF CULVERT BEFORE STAKING IT OUT TO MAKE CERTAIN THAT IT WILL PROPERLY TAKE CARE OF THE FILL.

DIMENSIONS FOR WING LAYOUT AS WELL AS ADDITIONAL REINFORCING STEEL EMBEDDED IN BARREL ARE SHOWN ON WING SHEET.

TRANSVERSE CONSTRUCTION JOINTS SHALL BE USED IN THE BARREL, SPACED TO LIMIT THE POURS TO A MAXIMUM OF 70 FT. LOCATION OF JOINTS SHALL BE SUBJECT TO APPROVAL OF THE ENGINEER.

STEEL IN THE BOTTOM SLAB MAY BE SPLICED AT THE PERMITTED CONSTRUCTION JOINT AT THE CONTRACTOR'S OPTION. EXTRA WEIGHT OF STEEL DUE TO THE SPLICES SHALL BE PAID FOR BY THE CONTRACTOR.

AT THE CONTRACTOR'S OPTION, HE MAY SPLICE THE VERTICAL REINFORCING STEEL IN THE INTERIOR FACE OF EXTERIOR WALL AND BOTH FACES OF INTERIOR WALLS ABOVE LOWER WALL CONSTRUCTION JOINT. THE SPLICE LENGTH SHALL BE AS PROVIDED IN THE SPLICE LENGTH CHART SHOWN ON THE PLANS. EXTRA WEIGHT OF STEEL DUE TO THE SPLICES SHALL BE PAID FOR BY THE CONTRACTOR.

FOR CULVERT DIVERSION DETAILS AND PAY ITEM, SEE EROSION CONTROL PLANS.
FOR CRANE SAFETY, SEE SPECIAL PROVISIONS.
FOR FALSEWORK AND FORMWORK, SEE SPECIAL PROVISIONS.
FOR SUBMITTAL OF WORKING DRAWINGS, SEE SPECIAL PROVISIONS.
FOR GROUT FOR STRUCTURES, SEE SPECIAL PROVISIONS.
NO PRECAST REINFORCED BOX CULVERT OPTION WILL BE ALLOWED.

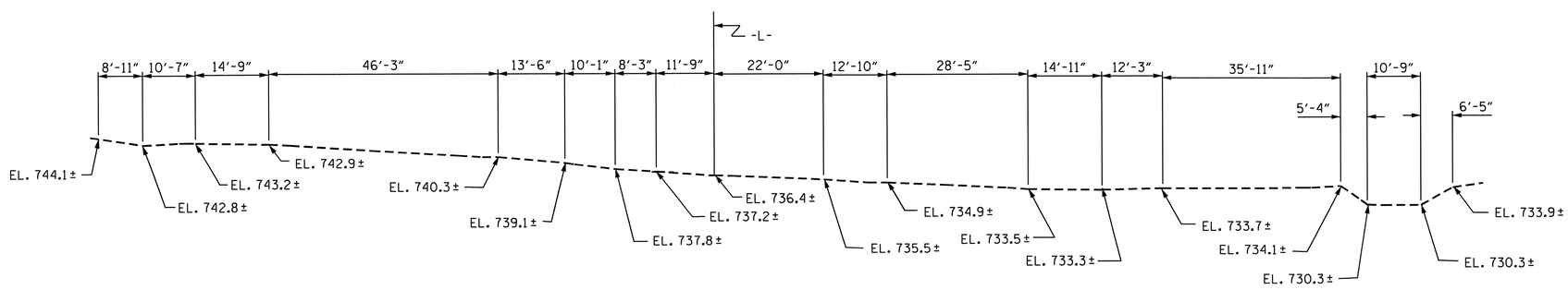

PROFILE ALONG ℄ CULVERT

ASSEMBLED BY : J.R. MCROY DATE : 09/21/11
CHECKED BY : M.A. LEBLANC DATE : 02/13

NORTH CAROLINA PROFESSIONAL SEAL 13014 ENGINEER QUANG H. NGUYEN
Quang H. Nguyen 2-19-14

NORTH CAROLINA PROFESSIONAL SEAL 20125 ENGINEER MARSHALL A. CHECK, JR.
2-19-14

PROJECT NO. U-2525B
GUILFORD COUNTY
STATION: 241+96.00 -L-
SHEET 1 OF 5

STATE OF NORTH CAROLINA
DEPARTMENT OF TRANSPORTATION
RALEIGH

DOUBLE 8 FT X 8 FT CONCRETE BOX CULVERT
70° SKEW

REVISIONS							SHEET NO.
NO.	BY:	DATE:	NO.	BY:	DATE:		C-16
1			3				TOTAL SHEETS
2			4				20

STR. #18

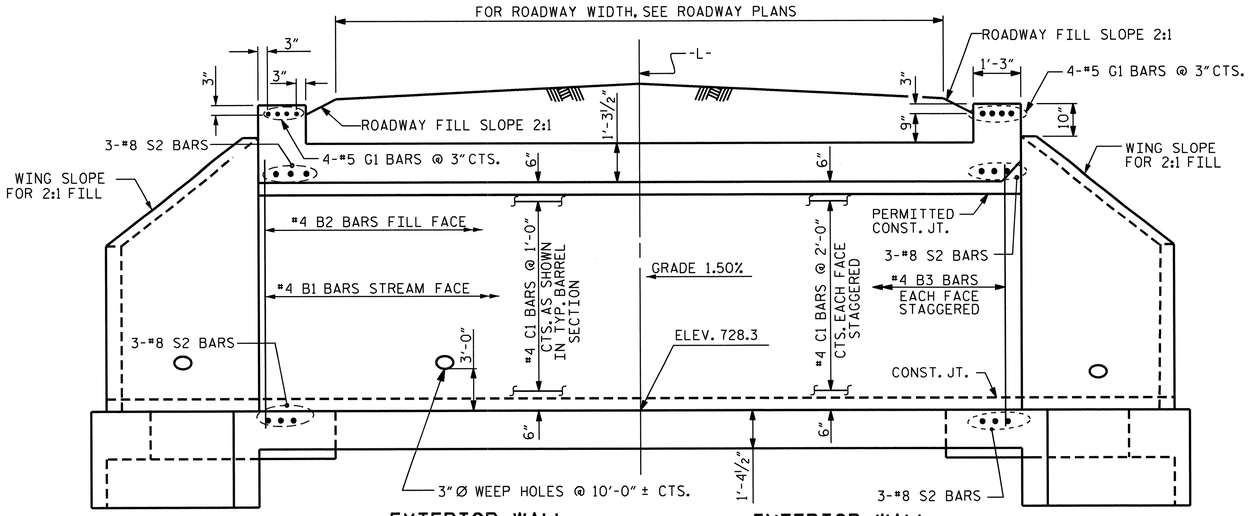

CULVERT SECTION NORMAL TO ROADWAY

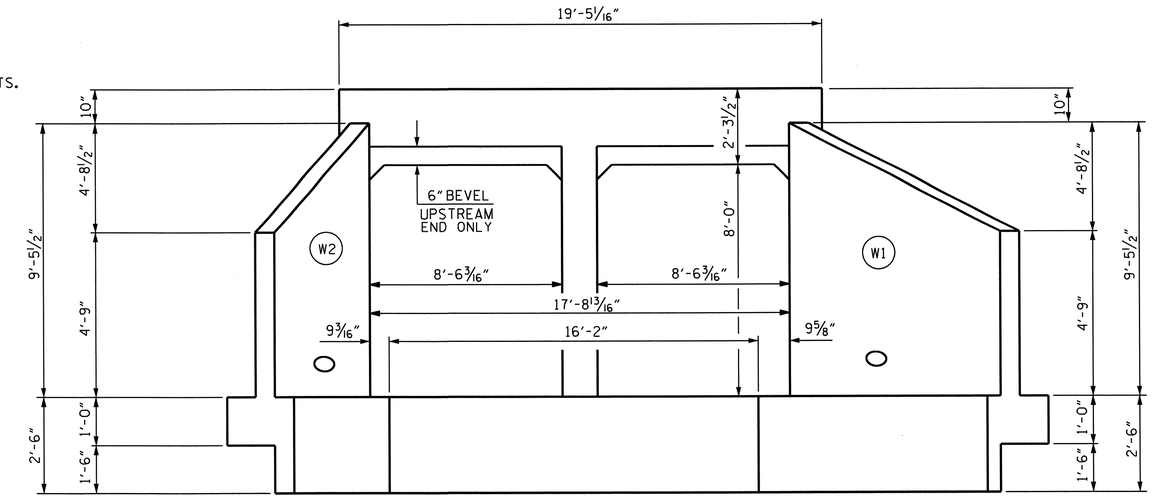

END ELEVATION NORMAL TO SKEW

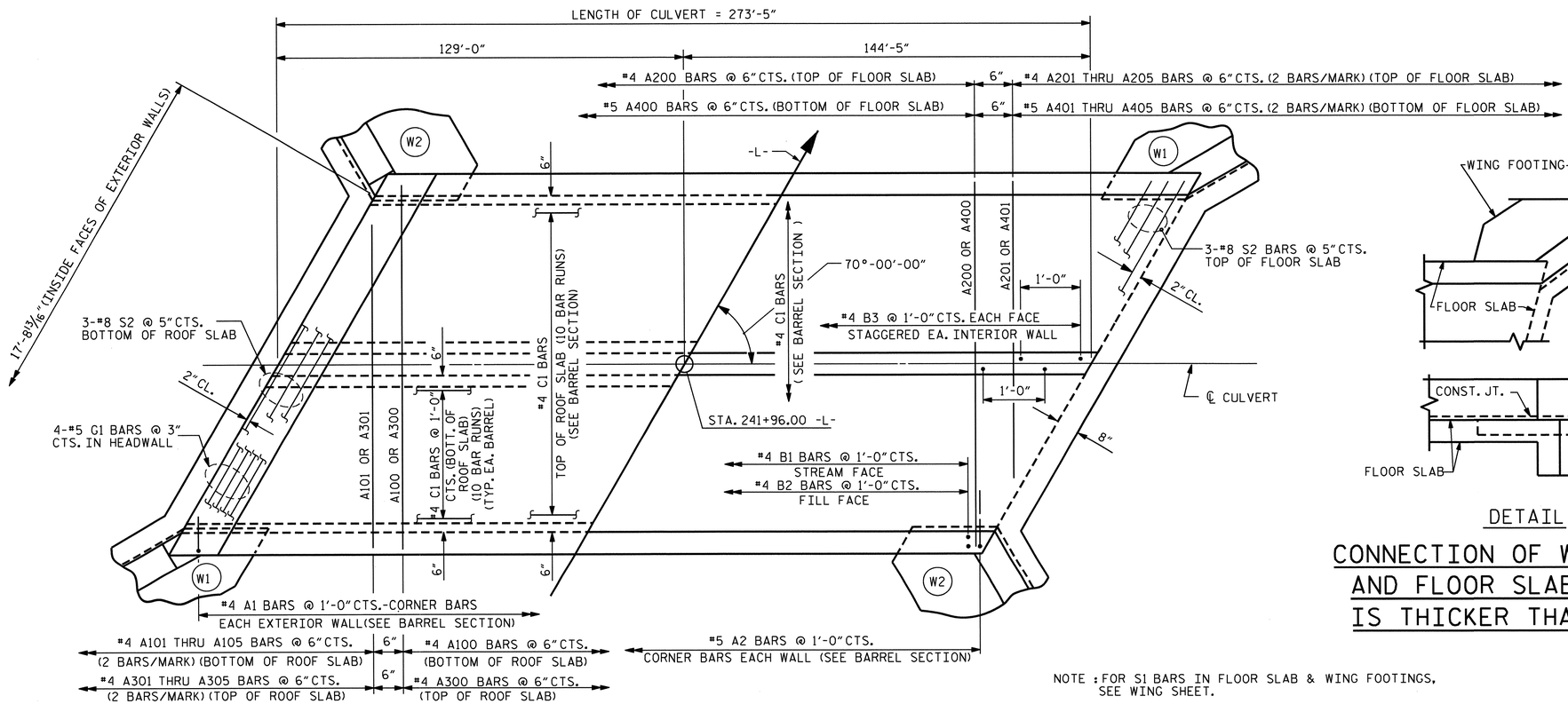

PART PLAN - ROOF SLAB

PART PLAN - FLOOR SLAB

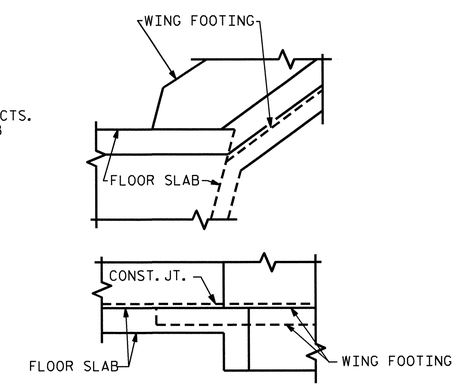

DETAIL

CONNECTION OF WING FOOTING AND FLOOR SLAB WHEN SLAB IS THICKER THAN FOOTING

NOTE : FOR S1 BARS IN FLOOR SLAB & WING FOOTINGS, SEE WING SHEET.

PROJECT NO. U-2525B
GUILFORD COUNTY
STATION: 241+96.00 -L-

SHEET 2 OF 5

STATE OF NORTH CAROLINA
DEPARTMENT OF TRANSPORTATION
RALEIGH

DOUBLE 8 FT X 8 FT CONCRETE BOX CULVERT

70° SKEW

REVISIONS								SHEET NO. C-17
NO.	BY:	DATE:	NO.	BY:	DATE:			
1			3					TOTAL SHEETS 20
2			4					

NORTH CAROLINA PROFESSIONAL SEAL 20125 ENGINEER MARSHALL A. LEBLANC, JR.
2-19-14

ASSEMBLED BY :	J.R. MCROY	DATE :	09/21/11
CHECKED BY :	M.A. LEBLANC	DATE :	02/13
ENG. OF RECORD :	M.A. LEBLANC	DATE :	11/13

STR. #18

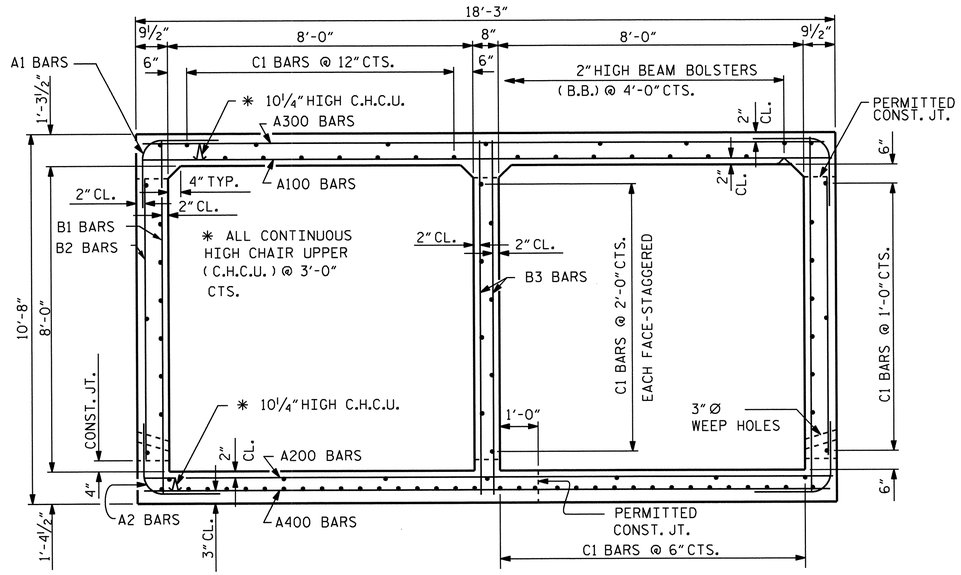

RIGHT ANGLE SECTION OF BARREL

THERE ARE 90 "C" BARS IN SECTION OF BARREL.

BAR TYPE

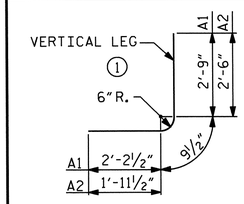

BAR DIMENSIONS ARE OUT TO OUT

SPLICE LENGTH CHART

BAR	SIZE	LENGTH
C1	#4	1'-11"
B1	#4	1'-9"
B3	#4	1'-9"

BAR SCHEDULE

BAR	NO.	SIZE	TYPE	LENGTH	WEIGHT
A100	534	#4	STR	17'-10"	6361
A101	4	#4	STR	14'-10"	40
A102	4	#4	STR	12'-1"	32
A103	4	#4	STR	9'-4"	25
A104	4	#4	STR	6'-7"	18
A105	4	#4	STR	3'-10"	10
A200	534	#4	STR	17'-10"	6361
A201	4	#4	STR	14'-10"	40
A202	4	#4	STR	12'-1"	32
A203	4	#4	STR	9'-4"	25
A204	4	#4	STR	6'-7"	18
A205	4	#4	STR	3'-10"	10
A300	534	#4	STR	17'-10"	6361
A301	4	#4	STR	14'-10"	40
A302	4	#4	STR	12'-1"	32
A303	4	#4	STR	9'-4"	25
A304	4	#4	STR	6'-7"	18
A305	4	#4	STR	3'-10"	10

BAR	NO.	SIZE	TYPE	LENGTH	WEIGHT
A400	534	#5	STR	17'-10"	9933
A401	4	#5	STR	14'-10"	62
A402	4	#5	STR	12'-1"	50
A403	4	#5	STR	9'-4"	39
A404	4	#5	STR	6'-7"	27
A405	4	#5	STR	3'-10"	16
A1	548	#4	1	5'-9"	2105
A2	548	#5	1	5'-3"	3001
B1	548	#4	STR	10'-2"	3722
B2	548	#4	STR	7'-4"	2684
B3	548	#4	STR	10'-2"	3722
C1	900	#4	STR	29'-3"	17585
D1	3	#6	STR	2'-11"	13
G1	8	#5	STR	19'-0"	159
S2	12	#8	STR	19'-0"	609

REINFORCING STEEL = 63,185 LBS.

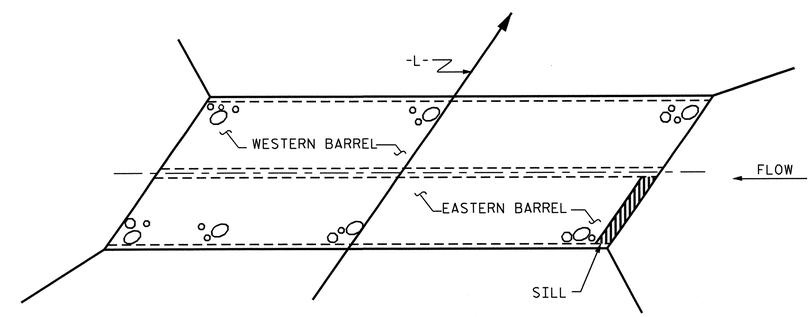

PLAN OF SILL LOCATION

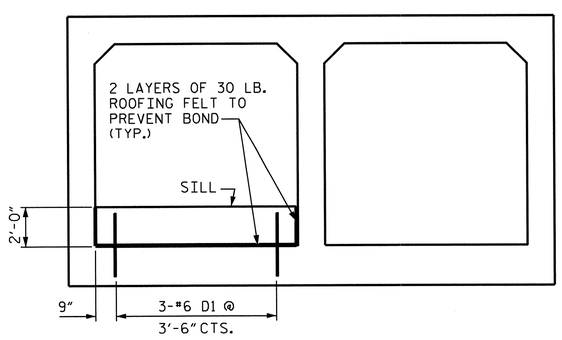

ELEVATION

(LOOKING DOWNSTREAM)

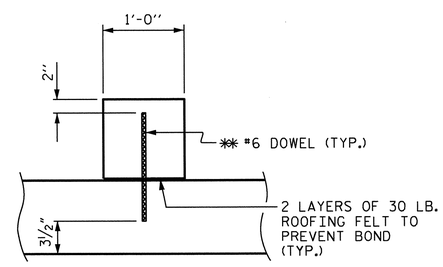

SECTION THROUGH SILL

✱✱ DOWELS MAY BE PUSHED INTO GREEN CONCRETE AFTER SLAB HAS BEEN FLOAT FINISHED.

NOTES

MATERIAL EXCAVATED FROM THE EXISTING BED SHALL BE STOCKPILED FOR USE IN THE PROPOSED CULVERT. THE MATERIAL SHALL BE PLACED IN THE EASTERN BARREL TO A DEPTH OF 2 FEET. AT THE DIRECTION OF THE ENGINEER, EXCESS MATERIAL MAY BE PLACED IN THE WESTERN BARREL TO A DEPTH OF 1 FOOT. BED MATERIAL SHALL BE SUPPLEMENTED WITH CLASS 'B' RIP RAP AS NECESSARY. BED MATERIAL SHALL BE SUBJECT TO APPROVAL BY THE ENGINEER.

THE ENTIRE COST OF WORK REQUIRED TO PLACE THE EXCAVATED MATERIAL OR SUPPLEMENTAL MATERIAL AS SHOWN ON THE PLANS SHALL BE INCLUDED IN THE CONTACT LUMP SUM PRICE BID FOR CULVERT EXCAVATION.

THE ENTIRE COST OF WORK REQUIRED TO CONSTRUCT THE SILL SHALL BE INCLUDED IN THE VARIOUS PAY ITEMS.

CULVERT SILL DETAILS

PROJECT NO. U-2525B
GUILFORD COUNTY
STATION: 241+96.00 -L-

SHEET 3 OF 5

STATE OF NORTH CAROLINA
DEPARTMENT OF TRANSPORTATION
RALEIGH

DOUBLE 8 FT X 8 FT
CONCRETE BOX CULVERT

70° SKEW

NORTH CAROLINA PROFESSIONAL SEAL 20125 ENGINEER MARSHALL W. CHECK, JR.
2-19-14

REVISIONS								SHEET NO.
NO.	BY:	DATE:	NO.	BY:	DATE:			C-18
1			3					TOTAL SHEETS
2			4					20

ASSEMBLED BY :	J.R. MCROY	DATE :	09/21/11
CHECKED BY :	M.A. LEBLANC	DATE :	02/13
ENG. OF RECORD :	M.A. LEBLANC	DATE :	11/13

STR. #18

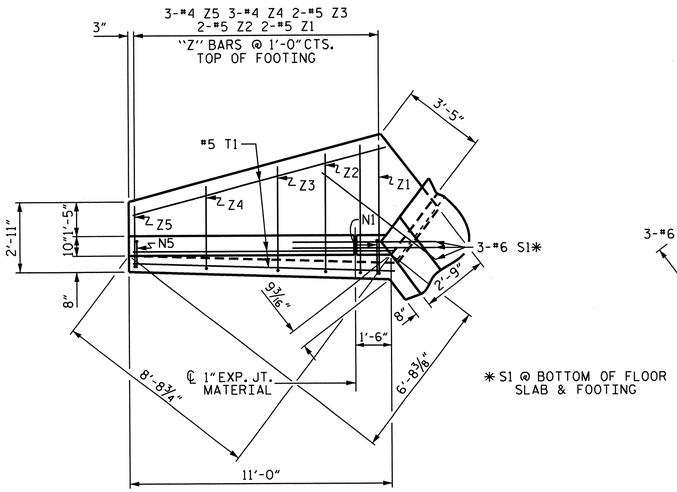

* S1 @ BOTTOM OF FLOOR SLAB & FOOTING

PLAN W2

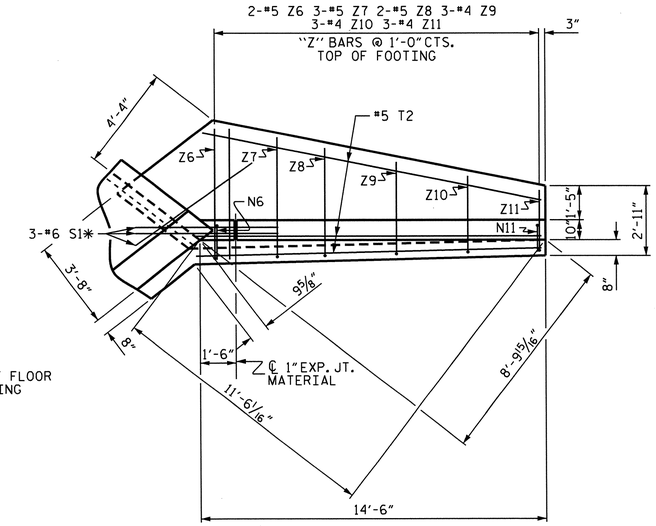

PLAN W1

NOTE:

A THREE FOOT STRIP OF FILTER FABRIC SHALL BE ATTACHED TO THE FILL FACE OF THE WING COVERING THE ENTIRE LENGTH OF THE EXPANSION JOINT.

BAR TYPES

ALL BAR DIMENSIONS ARE OUT TO OUT.

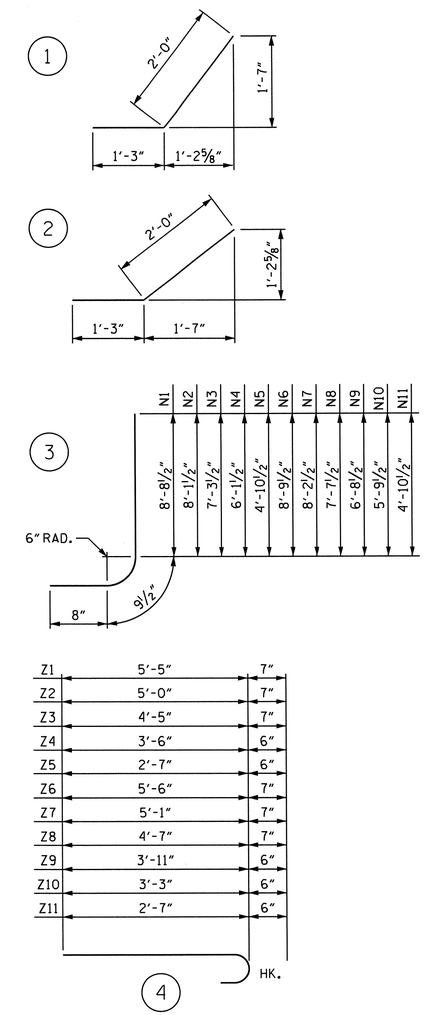

BILL OF MATERIAL

BAR	NO.	SIZE	TYPE	LENGTH	WEIGHT
H1	12	#4	STR	9'-1"	73
H2	4	#4	STR	8'-2"	22
H3	4	#4	STR	4'-5"	12
H4	24	#4	1	3'-3"	52
H5	4	#4	STR	9'-10"	26
H6	12	#4	STR	12'-7"	101
H7	4	#4	STR	11'-4"	30
H8	4	#4	STR	6'-5"	17
H9	24	#4	2	3'-3"	52
H10	4	#4	STR	13'-2"	35
N1	4	#5	3	10'-2"	42
N2	4	#5	3	9'-7"	40
N3	4	#5	3	8'-9"	37
N4	6	#4	3	7'-7"	30
N5	6	#4	3	6'-4"	25
N6	4	#5	3	10'-3"	43
N7	6	#5	3	9'-8"	60
N8	4	#5	3	9'-1"	38
N9	6	#4	3	8'-2"	33
N10	6	#4	3	7'-3"	29
N11	6	#4	3	6'-4"	25
S1	12	#6	STR	6'-0"	108
T1	6	#5	STR	11'-0"	69
T2	6	#5	STR	14'-6"	91
V1	4	#4	STR	8'-2"	22
V2	4	#4	STR	7'-6"	20
V3	4	#4	STR	6'-9"	18
V4	6	#4	STR	5'-6"	22
V5	6	#4	STR	4'-4"	17
V6	4	#4	STR	8'-3"	22
V7	6	#4	STR	7'-8"	31
V8	4	#4	STR	7'-0"	19
V9	6	#4	STR	6'-1"	24
V10	6	#4	STR	5'-2"	21
V11	6	#4	STR	4'-3"	17
Z1	4	#5	4	6'-0"	25
Z2	4	#5	4	5'-7"	23
Z3	4	#5	4	5'-0"	21
Z4	6	#4	4	4'-0"	16
Z5	6	#4	4	3'-1"	12
Z6	4	#5	4	6'-1"	25
Z7	6	#5	4	5'-8"	35
Z8	4	#5	4	5'-2"	22
Z9	6	#4	4	4'-5"	18
Z10	6	#4	4	3'-9"	15
Z11	6	#4	4	3'-1"	12

REINFORCING STEEL FOR 4 WINGS 1547 LBS.

CLASS A CONCRETE
- 4 WINGS 22.6 C.Y.
- 2 HEADWALLS 1.8 C.Y.
- 2 END CURTAIN WALLS 2.0 C.Y.
- TOTAL 26.4 C.Y.

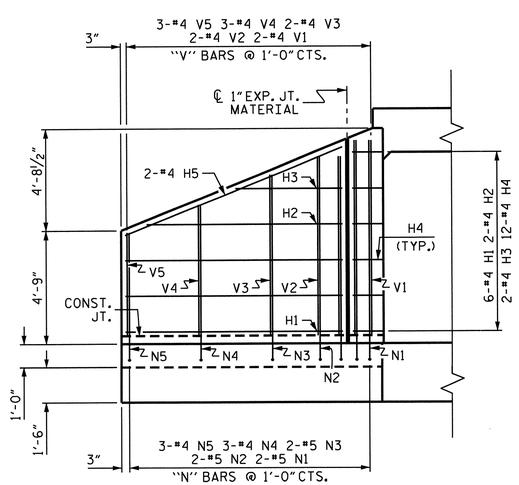

ELEVATION W2

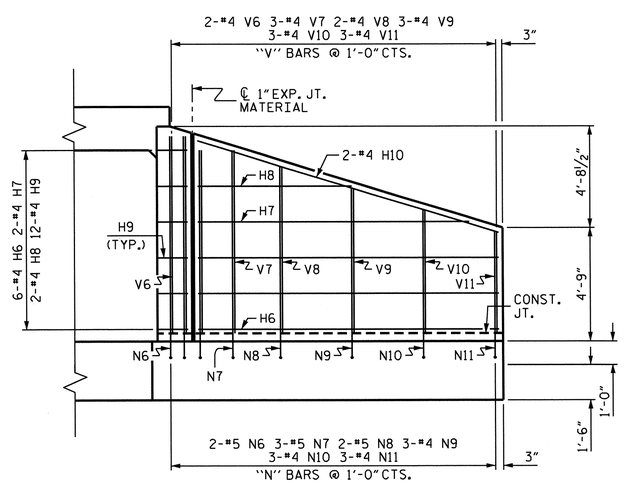

ELEVATION W1

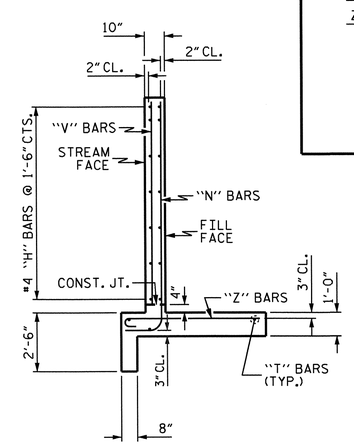

TYPICAL WING SECTION

PROJECT NO. U-2525B

GUILFORD COUNTY

STATION: 241+96.00 -L-

SHEET 4 OF 5

STATE OF NORTH CAROLINA
DEPARTMENT OF TRANSPORTATION
RALEIGH

STANDARD WINGS FOR CONCRETE BOX CULVERT

H = 8'-0" SLOPE = 2:1

NORTH CAROLINA PROFESSIONAL SEAL 20125 ENGINEER MARSHALL C. CHEEK, JR.
2-19-14

REVISIONS						SHEET NO.
NO.	BY:	DATE:	NO.	BY:	DATE:	C-19
1			3			TOTAL SHEETS
2			4			20

ASSEMBLED BY : J.R. MCROY DATE : 01/13
CHECKED BY : M.A. LEBLANC DATE : 02/13

DRAWN BY : CCJ 01/00
CHECKED BY : RWW 03/00

STR. #18 STD. NO. CW7508

LOAD AND RESISTANCE FACTOR RATING (LRFR) SUMMARY FOR REINFORCED CONCRETE BOX CULVERTS

LEVEL		VEHICLE	WEIGHT (W) (TONS)	CONTROLLING LOAD RATING (#)	MINIMUM RATING FACTORS (RF)	TONS = W × RF	STRENGTH I LIMIT STATE									COMMENT NUMBER
							LIVE-LOAD FACTORS (γ_{LL})	MOMENT				SHEAR				
								RATING FACTOR	BOX NO.	ELEMENT TYPE	DISTANCE FROM LEFT END OF ELEMENT (ft)	RATING FACTOR	BOX NO.	ELEMENT TYPE	DISTANCE FROM LEFT END OF ELEMENT (ft)	
DESIGN LOAD RATING		HL-93 (INVENTORY)	N/A	1	2.21	--	1.75	3.33	1	BOTT. COR. WALL	8.87	2.21	1	EXTERIOR WALL	1.22	
		HL-93 (OPERATING)	N/A		2.87	--	1.35	4.32	1	BOTT. COR. WALL	8.87	2.87	1	EXTERIOR WALL	1.22	
		HS-20 (INVENTORY)	36.000	2	2.21	79.68	1.75	3.33	1	BOTT. COR. WALL	8.87	2.21	1	EXTERIOR WALL	1.22	
		HS-20 (OPERATING)	36.000		2.87	103.29	1.35	4.32	1	BOTT. COR. WALL	8.87	2.87	1	EXTERIOR WALL	1.22	
LEGAL LOAD RATING	SINGLE VEHICLE (SV)	SH	12.500	3	2.76	34.48	1.40	4.15	1	BOTT. COR. WALL	8.87	2.76	1	EXTERIOR WALL	1.22	
		S3C	21.500		2.76	59.31	1.40	4.15	1	BOTT. COR. WALL	8.87	2.76	1	EXTERIOR WALL	1.22	
		S3A	22.750		2.76	62.76	1.40	4.15	1	BOTT. COR. WALL	8.87	2.76	1	EXTERIOR WALL	1.22	
		S4A	26.750		2.76	73.79	1.40	4.15	1	BOTT. COR. WALL	8.87	2.76	1	EXTERIOR WALL	1.22	
		S5A	30.500		2.76	84.14	1.40	4.15	1	BOTT. COR. WALL	8.87	2.76	1	EXTERIOR WALL	1.22	
		S6A	34.500		2.76	95.17	1.40	4.15	1	BOTT. COR. WALL	8.87	2.76	1	EXTERIOR WALL	1.22	
		S7B	38.500		2.76	106.20	1.40	4.15	1	BOTT. COR. WALL	8.87	2.76	1	EXTERIOR WALL	1.22	
		S7A	40.000		2.76	110.34	1.40	4.15	1	BOTT. COR. WALL	8.87	2.76	1	EXTERIOR WALL	1.22	
	TRUCK TRACTOR SEMI-TRAILER (TTST)	T4A	28.250		2.76	77.93	1.40	4.15	1	BOTT. COR. WALL	8.87	2.76	1	EXTERIOR WALL	1.22	
		T5B	32.000		2.76	88.27	1.40	4.15	1	BOTT. COR. WALL	8.87	2.76	1	EXTERIOR WALL	1.22	
		T6A	36.000		2.76	99.31	1.40	4.15	1	BOTT. COR. WALL	8.87	2.76	1	EXTERIOR WALL	1.22	
		T7A	40.000		2.76	110.34	1.40	4.15	1	BOTT. COR. WALL	8.87	2.76	1	EXTERIOR WALL	1.22	
		T7B	40.000		2.76	110.34	1.40	4.15	1	BOTT. COR. WALL	8.87	2.76	1	EXTERIOR WALL	1.22	

LOAD FACTORS:

DESIGN LOAD RATING FACTORS

LOAD TYPE	MAX FACTOR	MIN FACTOR
DC	1.25	0.90
DW	1.50	0.65
EV	1.30	0.90
EH	1.35	0.90
ES	1.35	0.90
LS	1.75	--
WA	1.00	--

NOTE:

RATING FACTORS ARE BASED ON THE STRENGTH I LIMIT STATE.

COMMENTS:

1.
2.
3.
4.

(#) CONTROLLING LOAD RATING

(1) DESIGN LOAD RATING (HL-93)

(2) DESIGN LOAD RATING (HS-20)

(3) LEGAL LOAD RATING **

** SEE CHART FOR VEHICLE TYPE

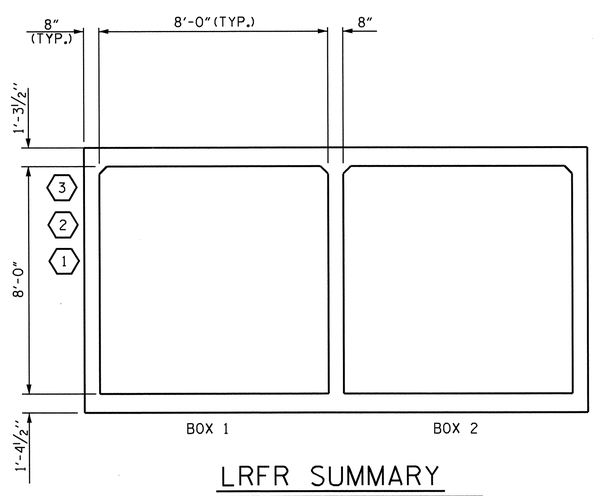

LRFR SUMMARY

(LOOKING DOWNSTREAM)

PROJECT NO. U-2525B

GUILFORD COUNTY

STATION: 241+96.00 -L-

SHEET 5 OF 5

STATE OF NORTH CAROLINA
DEPARTMENT OF TRANSPORTATION
RALEIGH

STANDARD

LRFR SUMMARY FOR REINFORCED CONCRETE BOX CULVERTS
(INTERSTATE TRAFFIC)

NORTH CAROLINA PROFESSIONAL SEAL 20125 ENGINEER MARSHALL A. GREEN, JR.
2-19-14

REVISIONS						SHEET NO.
NO.	BY:	DATE:	NO.	BY:	DATE:	C-20
1			3			TOTAL SHEETS
2			4			20

ASSEMBLED BY : J.R. MCROY DATE : 09/26/11
CHECKED BY : M.A. LEBLANC DATE : 02/13

DRAWN BY : WMC 7/11
CHECKED BY : GM 7/11

REV. 10/1/11 MAA/GM

07-JAN-2014 12:50
R:\Structures\Final Plans\U-2525B_SD_CU_19.dgn
mpoole

STR. #18 STD. NO. LRFR6

GEOTECHNICAL ENGINEER	ENGINEER
NORTH CAROLINA PROFESSIONAL SEAL 028176 ENGINEER SHIHAI ZHANG 1-22-2014	
SIGNATURE DATE	SIGNATURE DATE

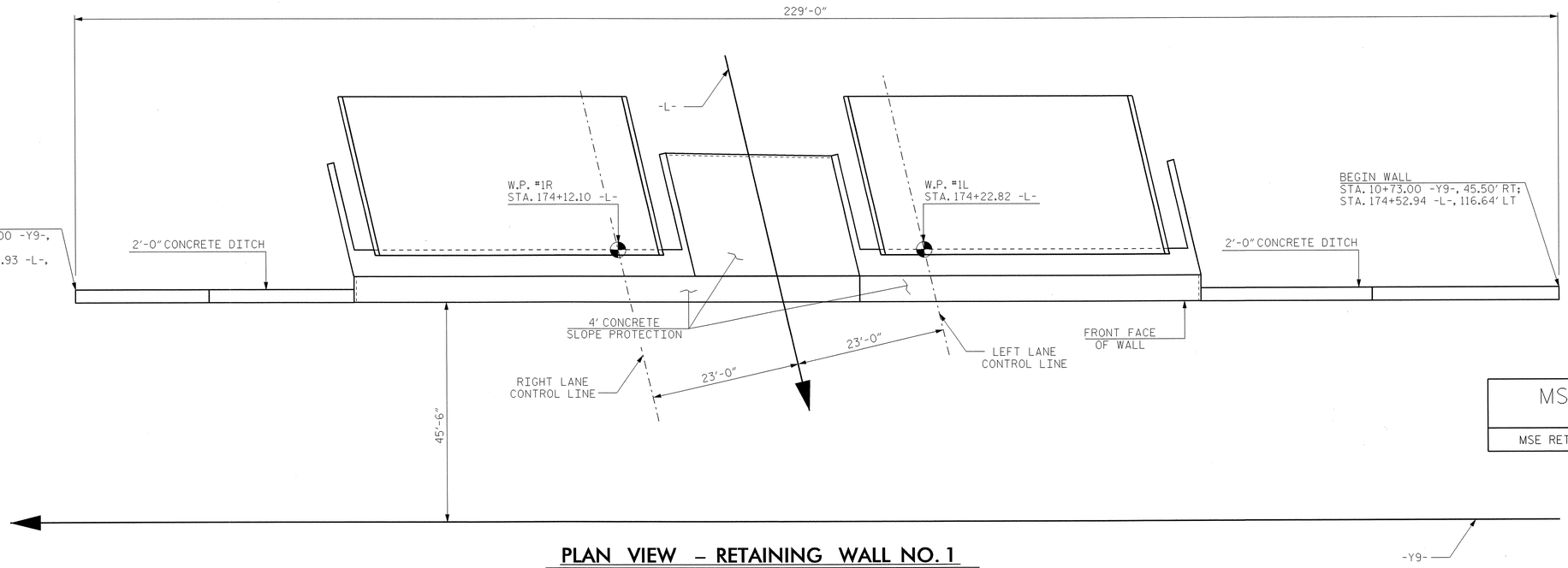

MSE WALL QUANTITY (SQUARE FEET)	
MSE RETAINING WALL NO. 1	3,200 SF

PLAN VIEW – RETAINING WALL NO. 1 @ END BENT 1, NTS

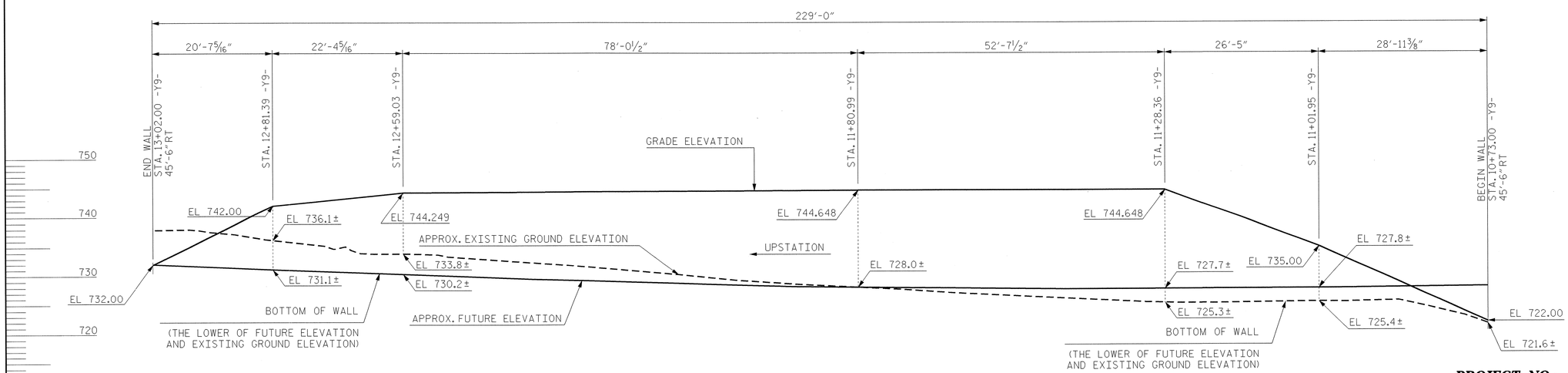

(-Y9-) STA.	WALL OFFSET	GRADE ELEV.	BOTTOM OF WALL ELEV. *	DESIGN HEIGHT
10+73.00	45.50 RT	722.00	721.60	0.40
11+01.95	45.50 RT	735.00	725.40	9.60
11+28.36	45.50 RT	744.65	725.30	19.35
11+80.99	45.50 RT	744.65	728.00	16.65
12+59.03	45.50 RT	744.25	730.20	14.05
12+81.39	45.50 RT	742.00	731.10	10.90
13+02.00	45.50 RT	732.00	732.00	0.00

* BOTTOM OF WALL ELEV. IS THE LOWER OF FUTURE ELEV. AND EXISTING GROUND ELEV.

EXPOSED WALL FACE ENVELOPE – RETAINING WALL NO. 1 @ END BENT 1, NTS

PROJECT NO.: U-2525B
GUILFORD ***COUNTY***
STATION: VARIES

SHEET 1 OF 4

PREPARED BY: S. ZHANG	DATE: 12/2013
REVIEWED BY: J. BATTS	DATE: 12/2013

GEOTECHNICAL ENGINEERING UNIT

- [X] *EASTERN REGIONAL OFFICE*
- [ ] *WESTERN REGIONAL OFFICE*
- [ ] *CONTRACT OFFICE*

STATE OF NORTH CAROLINA DEPARTMENT OF TRANSPORTATION RALEIGH

MSE RETAINING WALL NO. 1
LOCATION AND
WALL ENVELOPE

REVISIONS						SHEET NO.
NO.	BY	DATE	NO.	BY	DATE	W-1
1			3			TOTAL SHEETS
2			4			4

GEOTECHNICAL ENGINEER	ENGINEER
NORTH CAROLINA PROFESSIONAL SEAL 038476 ENGINEER SHIHAI ZHANG 1-22-2014	
SIGNATURE DATE	SIGNATURE DATE

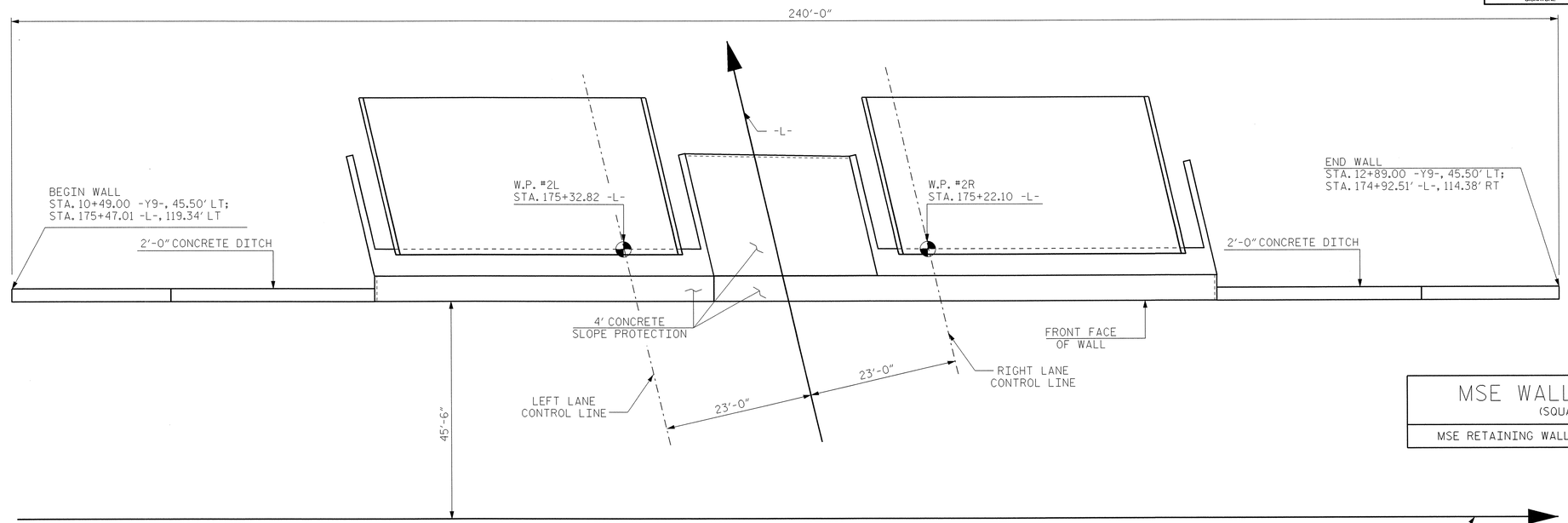

MSE WALL QUANTITY (SQUARE FEET)	
MSE RETAINING WALL NO. 2	3,600 SF

PLAN VIEW – RETAINING WALL NO. 2 @ END BENT 2, NTS

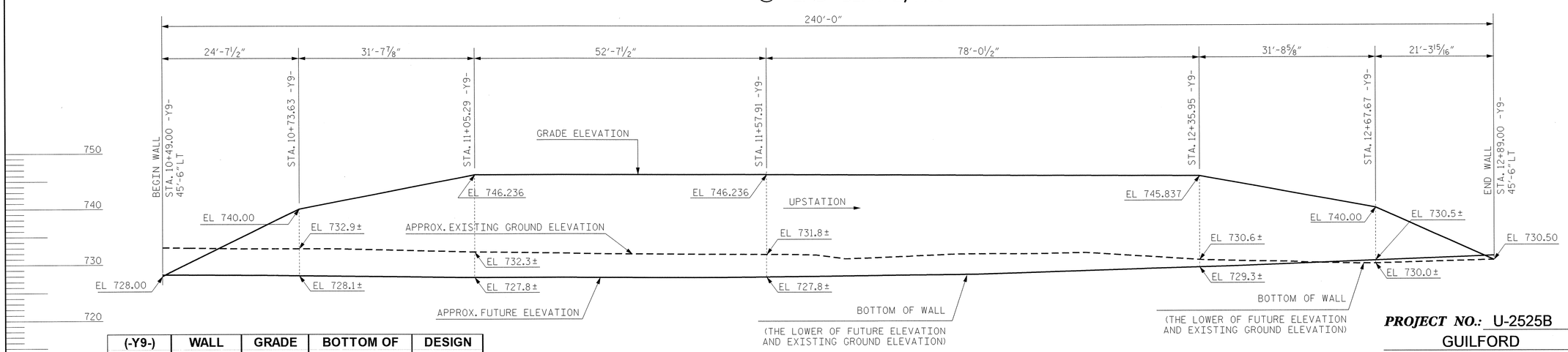

(-Y9-) STA.	WALL OFFSET	GRADE ELEV.	BOTTOM OF WALL ELEV. *	DESIGN HEIGHT
10+49.00	45.50 LT	728.00	728.00	0.00
10+73.63	45.50 LT	740.00	728.10	11.90
11+05.29	45.50 LT	746.24	727.80	18.44
11+57.91	45.50 LT	746.24	727.80	18.44
12+35.95	45.50 LT	745.84	729.30	16.54
12+67.67	45.50 LT	740.00	730.00	10.00
12+89.00	45.50 LT	730.50	730.50	0.00

* BOTTOM OF WALL ELEV. IS THE LOWER OF FUTURE ELEV. AND EXISTING GROUND ELEV.

EXPOSED WALL FACE ENVELOPE – RETAINING WALL NO. 2 @ END BENT 2, NTS

PREPARED BY: S. ZHANG	DATE: 12/2013
REVIEWED BY: J. BATTS	DATE: 12/2013

GEOTECHNICAL ENGINEERING UNIT

STATE OF NORTH CAROLINA DEPARTMENT OF TRANSPORTATION

- [X] EASTERN REGIONAL OFFICE
- [ ] WESTERN REGIONAL OFFICE
- [ ] CONTRACT OFFICE

STATE OF NORTH CAROLINA
DEPARTMENT OF TRANSPORTATION
RALEIGH

MSE RETAINING WALL NO. 2
LOCATION AND
WALL ENVELOPE

–

REVISIONS						SHEET NO.
NO.	BY	DATE	NO.	BY	DATE	W-2
1	–	–	3	–	–	TOTAL SHEETS
2	–	–	4	–	–	4

PROJECT NO.: U-2525B

GUILFORD ***COUNTY***

STATION: VARIES

SHEET 2 OF 4

GEOTECHNICAL ENGINEER	ENGINEER
NORTH CAROLINA PROFESSIONAL SEAL 038176 ENGINEER SHIHAI ZHANG 1-22-2014	
SIGNATURE DATE	SIGNATURE DATE

NOTES:

FOR MECHANICALLY STABILIZED EARTH (MSE) RETAINING WALLS, SEE MECHANICALLY STABILIZED EARTH RETAINING WALLS PROVISION.

USE AN MSE WALL SYSTEM WITH PRECAST CONCRETE PANELS THAT MEET SECTION 1077 OF THE STANDARD SPECIFICATIONS FOR RETAINING WALL NO. 1 AND NO. 2.

CAST-IN-PLACE REINFORCED CONCRETE COPING IS REQUIRED FOR RETAINING WALL NO. 1 AND NO. 2.

A DRAIN IS REQUIRED FOR RETAINING WALL NO. 1 AND NO. 2.

BEFORE BEGINNING MSE WALL DESIGN FOR RETAINING WALL NO. 1 AND NO. 2, SURVEY WALL LOCATION AND SUBMIT A REVISED WALL PROFILE VIEW (WALL ENVELOPE) FOR REVIEW. DO NOT START WALL DESIGN OR CONSTRUCTION UNTIL THE REVISED WALL ENVELOPE IS ACCEPTED.

DESIGN RETAINING WALL NO. 1 AND NO. 2 FOR THE FOLLOWING:
1) H = DESIGN HEIGHT + EMBEDMENT
2) DESIGN LIFE = 100 YEARS
3) MAXIMUM FACTORED VERTICAL STRESS ON FOUNDATION MATERIAL = 7,200 LB/SF
4) MINIMUM REINFORCEMENT LENGTH (L) TO WALL HEIGHT (H) RATIO = 1.0
5) AGGREGATE PARAMETERS:

AGGREGATE TYPE*	UNIT WEIGHT (γ) LB/CF	FRICTION ANGLE (ϕ) DEGREES	COHESION (c) LB/SF
COARSE	110	38	0
FINE	125	34	0
*SEE MSE RETAINING WALLS PROVISION FOR COARSE AND FINE AGGREGATE MATERIAL REQUIREMENTS.			

6) IN-SITU ASSUMED MATERIAL PARAMETERS:

MATERIAL TYPE	UNIT WEIGHT (γ) LB/CF	FRICTION ANGLE (ϕ) DEGREES	COHESION (c) LB/SF
BACKFILL	120	30	0
FOUNDATION	120	30	0

DESIGN RETAINING WALL NO. 1 AND NO. 2 FOR A LIVE LOAD (TRAFFIC) SURCHARGE.

DESIGN REINFORCEMENT CONNECTED TO END BENT CAPS FOR FACTORED LOAD AND LENGTH OF REINFORCEMENT IN ACTIVE ZONE (L_a) SHOWN. CAST REINFORCEMENT CONNECTORS INTO CAP BACKWALL FOR END BENT NO. 1(L) LOCATED AT STATION 174+22.82 -L-, END BENT NO. 1(R) LOCATED AT STATION 174+12.10 -L-, END BENT NO. 2(L) LOCATED AT STATION 175+32.82 -L-, AND END BENT NO. 2(R) LOCATED AT STATION 175+22.10 -L-. MAINTAIN A CLEARANCE OF AT LEAST 3" BETWEEN CONNECTORS AND REINFORCING STEEL IN CAP.

FOUNDATIONS FOR END BENT NO. 1(L) LOCATED AT STATION 174+22.82 -L- AND END BENT NO. 1(R) LOCATED AT STATION 174+12.10 -L- WILL INTERFERE WITH REINFORCEMENT FOR RETAINING WALL NO. 1. SEE "FOUNDATION LAYOUT" SHEET FOR FOUNDATION LOCATIONS.

FOUNDATIONS FOR END BENT NO. 2(L) LOCATED AT STATION 175+32.82 -L- AND END BENT NO. 2(R) LOCATED AT STATION 175+22.10 -L- WILL INTERFERE WITH REINFORCEMENT FOR RETAINING WALL NO. 2. SEE "FOUNDATION LAYOUT" SHEET FOR FOUNDATION LOCATIONS.

DO NOT PLACE LEVELING PAD CONCRETE, AGGREGATE OR REINFORCEMENT FOR RETAINING WALL NO. 1 AND NO. 2 UNTIL EXCAVATION DIMENSIONS AND FOUNDATION MATERIAL ARE APPROVED.

THE EAST END OF RETAINING NO. 2 IS LOCATED WITHIN THE WET LAND BOUNDARY. UNDERCUT BEYOND THE LIMITS OF WALL EXCAVATION MAY BE REQUIRED AT THE DISCRETION OF THE ENGINEER. THE UNDERCUT WILL BE MEASURED BY THE ENGINEER AND BE PAID AS ROADWAY UNDERCUT EXCAVATION. BACKFILL WILL BE PAID AS SELECT GRANULAR MATERIAL.

INSTALL DRAINAGE PIPES IN FRONT OF THE WALLS BEFORE CONSTRUCTING EAST END OF RETAINING WALL NO. 1 AND WEST END OF RETAINING WALL NO. 2. FOR DRAINAGE PIPES, SEE ROADWAY PLANS.

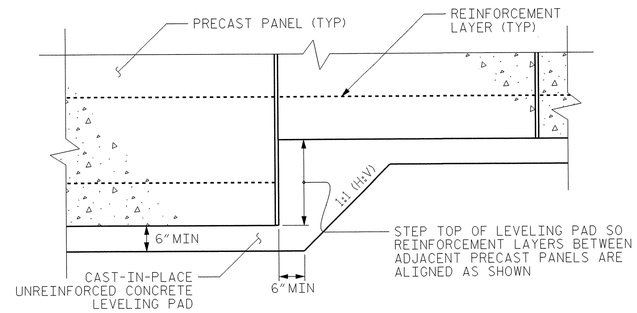

PRECAST CONCRETE PANELS

LEVELING PAD STEP DETAILS

PREPARED BY: S. ZHANG	DATE: 12/2013
REVIEWED BY: J. BATTS	DATE: 12/2013

PROJECT NO.: U-2525B
GUILFORD **COUNTY**
STATION: VARIES
SHEET 3 OF 4

GEOTECHNICAL ENGINEERING UNIT
[X] EASTERN REGIONAL OFFICE
[ ] WESTERN REGIONAL OFFICE
[ ] CONTRACT OFFICE
STATE OF NORTH CAROLINA
DEPARTMENT OF TRANSPORTATION
RALEIGH

MSE RETAINING WALL NO. 1 & 2
NOTES AND DETAILS

REVISIONS						SHEET NO.
NO.	BY	DATE	NO.	BY	DATE	W-3
1	-	-	3	-	-	TOTAL SHEETS
2	-	-	4	-	-	4

GEOTECHNICAL ENGINEER	ENGINEER
NORTH CAROLINA PROFESSIONAL SEAL 038176 ENGINEER SHIHAI ZHANG 1-22-2014	
SIGNATURE DATE	SIGNATURE DATE

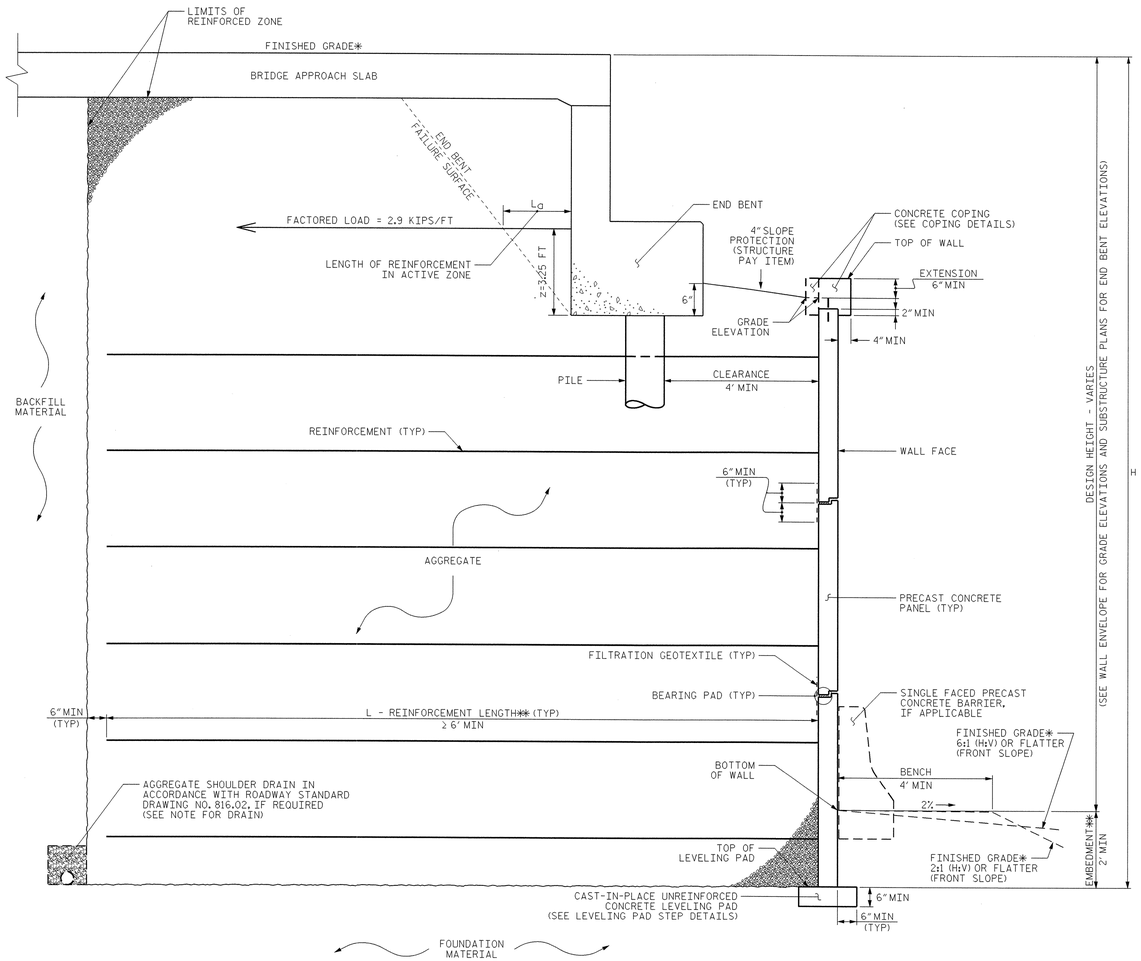

MSE ABUTMENT WALL WITH PRECAST PANELS - TYPICAL SECTION

*SEE ROADWAY PLANS FOR FINISHED GRADE DETAILS.
**SEE MSE RETAINING WALLS PROVISION FOR EMBEDMENT AND REINFORCEMENT LENGTH REQUIREMENTS.

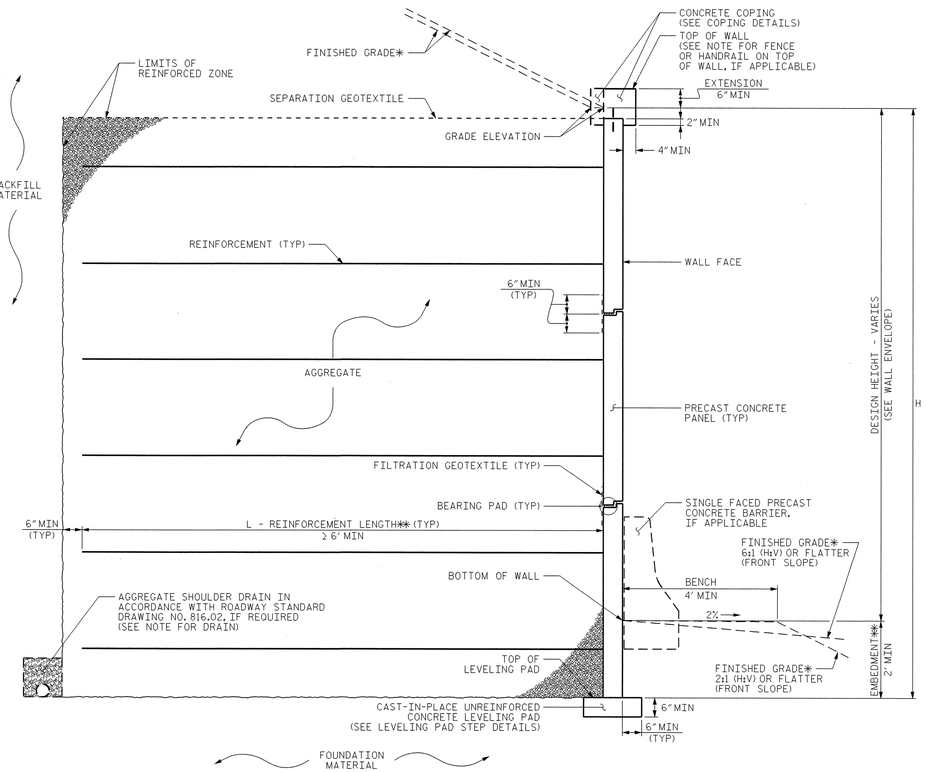

MSE WALL WITH PRECAST PANELS - TYPICAL SECTION

*SEE ROADWAY PLANS FOR FINISHED GRADE DETAILS.
**SEE MSE RETAINING WALLS PROVISION FOR EMBEDMENT AND REINFORCEMENT LENGTH REQUIREMENTS.

COPING DETAILS

AT THE CONTRACTOR'S OPTION, CONNECT COPING TO PANELS WITH DOWELS OR EXTEND COPING DOWN BACK OF PANELS.

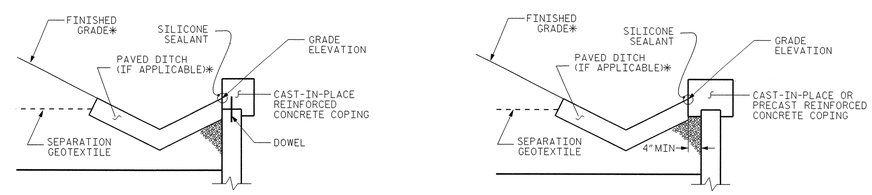

COPING DETAILS

AT THE CONTRACTOR'S OPTION, CONNECT COPING TO PANELS WITH DOWELS OR EXTEND COPING DOWN BACK OF PANELS.
*SEE ROADWAY PLANS FOR FINISHED GRADE AND DITCH DETAILS.

PROJECT NO.: U-2525B
GUILFORD ***COUNTY***
STATION: VARIES

SHEET 4 OF 4

PREPARED BY: S. ZHANG	DATE: 12/2013
REVIEWED BY: J. BATTS	DATE: 12/2013

GEOTECHNICAL ENGINEERING UNIT

[X] ***EASTERN REGIONAL OFFICE***
[ ] ***WESTERN REGIONAL OFFICE***
[ ] ***CONTRACT OFFICE***

STATE OF NORTH CAROLINA
DEPARTMENT OF TRANSPORTATION
RALEIGH

MSE RETAINING WALL NO. 1 & 2
TYPICAL DETAILS

–
–

REVISIONS						SHEET NO.
NO.	BY	DATE	NO.	BY	DATE	W-4
1	–	–	3	–	–	TOTAL SHEETS
2	–	–	4	–	–	4

STANDARD NOTES

DESIGN DATA:

SPECIFICATIONS	A.A.S.H.T.O. (CURRENT)
LIVE LOAD	SEE PLANS
IMPACT ALLOWANCE	SEE A.A.S.H.T.O.
STRESS IN EXTREME FIBER OF	
STRUCTURAL STEEL - AASHTO M270 GRADE 36	20,000 LBS. PER SQ. IN.
- AASHTO M270 GRADE 50W	27,000 LBS. PER SQ. IN.
- AASHTO M270 GRADE 50	27,000 LBS. PER SQ. IN.
REINFORCING STEEL IN TENSION	
GRADE 60	24,000 LBS. PER SQ. IN.
CONCRETE IN COMPRESSION	1,200 LBS. PER SQ. IN.
CONCRETE IN SHEAR	SEE A.A.S.H.T.O.
STRUCTURAL TIMBER - TREATED OR	
UNTREATED - EXTREME FIBER STRESS	1,800 LBS. PER SQ. IN.
COMPRESSION PERPENDICULAR TO GRAIN OF TIMBER	375 LBS. PER SQ. IN.
EQUIVALENT FLUID PRESSURE OF EARTH	30 LBS. PER CU. FT. (MINIMUM)

MATERIAL AND WORKMANSHIP:

EXCEPT AS MAY OTHERWISE BE SPECIFIED ON PLANS OR IN THE SPECIAL PROVISIONS, ALL MATERIAL AND WORKMANSHIP SHALL BE IN ACCORDANCE WITH THE 2012 "STANDARD SPECIFICATIONS FOR ROADS AND STRUCTURES" OF THE N. C. DEPARTMENT OF TRANSPORTATION.

STEEL SHEET PILING FOR PERMANENT OR TEMPORARY APPLICATIONS SHALL BE HOT ROLLED.

CONCRETE:

UNLESS OTHERWISE REQUIRED ON PLANS, CLASS A CONCRETE SHALL BE USED FOR ALL PORTIONS OF ALL STRUCTURES WITH THE EXCEPTION THAT: CLASS AA CONCRETE SHALL BE USED IN BRIDGE SUPERSTRUCTURES, ABUTMENT BACKWALLS, AND APPROACH SLABS; AND CLASS B CONCRETE SHALL BE USED FOR SLOPE PROTECTION AND RIP RAP.

CONCRETE CHAMFERS:

UNLESS OTHERWISE NOTED ON THE PLANS, ALL EXPOSED CORNERS ON STRUCTURES SHALL BE CHAMFERED 3/4" WITH THE FOLLOWING EXCEPTIONS: TOP CORNERS OF CURBS MAY BE ROUNDED TO 1-1/2" RADIUS WHICH IS BUILT INTO CURB FORMS; CORNERS OF TRANSVERSE FLOOR EXPANSION JOINTS SHALL BE ROUNDED WITH A 1/4" FINISHING TOOL UNLESS OTHERWISE REQUIRED ON PLANS; AND CORNERS OF EXPANSION JOINTS IN THE ROADWAY FACES AND TOPS OF CURBS AND SIDEWALKS SHALL BE ROUNDED TO A 1/4" RADIUS WITH A FINISHING STONE OR TOOL UNLESS OTHERWISE REQUIRED ON PLANS.

DOWELS:

DOWELS WHEN INDICATED ON PLANS AS FOR CULVERT EXTENSIONS, SHALL BE EMBEDDED AT LEAST 12" INTO THE OLD CONCRETE AND GROUTED INTO PLACE WITH 1:2 CEMENT MORTAR.

ALLOWANCE FOR DEAD LOAD DEFLECTION, SETTLEMENT, ETC. IN CASTING SUPERSTRUCTURES:

BRIDGES SHALL BE BUILT ON THE GRADE OR VERTICAL CURVE SHOWN ON PLANS. SLABS, CURBS AND PARAPETS SHALL CONFORM TO THE GRADE OR CURVE.

ALL DIMENSIONS WHICH ARE GIVEN IN SECTION AND ARE AFFECTED BY DEAD LOAD DEFLECTIONS ARE DIMENSIONS AT CENTER LINE OF BEARING UNLESS OTHERWISE NOTED ON PLANS. IN SETTING FORMS FOR STEEL BEAM BRIDGES AND PRESTRESSED CONCRETE GIRDER BRIDGES, ADJUSTMENTS SHALL BE MADE DUE TO THE DEAD LOAD DEFLECTIONS FOR THE ELEVATIONS SHOWN. WHERE BLOCKS ARE SHOWN OVER BEAMS FOR BUILDING UP TO THE SLAB, THE VERTICAL DIMENSIONS OF THE BLOCKS SHALL BE ADJUSTED BETWEEN BEARINGS TO COMPENSATE FOR DEAD LOAD DEFLECTIONS, VERTICAL CURVE ORDINATE, AND ACTUAL BEAM CAMBER. WHERE BOTTOM OF SLAB IS IN LINE WITH BOTTOM OF TOP FLANGES, DEPTH OF SLAB BETWEEN BEARINGS SHALL BE ADJUSTED TO COMPENSATE FOR DEAD LOAD DEFLECTION, VERTICAL CURVE ORDINATE, AND ACTUAL BEAM CAMBER.

IN SETTING FALSEWORK AND FORMS FOR REINFORCED CONCRETE SPANS, AN ALLOWANCE SHALL BE MADE FOR DEAD LOAD DEFLECTIONS, SETTLEMENT OF FALSEWORK, AND PERMANENT CAMBER WHICH SHALL BE PROVIDED FOR IN ADDITION TO THE ELEVATIONS SHOWN. AFTER REMOVAL OF THE FALSEWORK, THE FINISHED STRUCTURES SHALL CONFORM TO THE PROFILE AND ELEVATIONS SHOWN ON THE PLANS AND CONSTRUCTION ELEVATIONS FURNISHED BY THE ENGINEER.

DETAILED DRAWINGS FOR FALSEWORK OR FORMS FOR BRIDGE SUPERSTRUCTURE AND ANY STRUCTURE OR PARTS OF A STRUCTURE AS NOTED ON THE PLANS SHALL BE SUBMITTED TO THE ENGINEER FOR APPROVAL BEFORE CONSTRUCTION OF THE FALSEWORK OR FORMS IS STARTED.

REINFORCING STEEL:

ALL REINFORCING STEEL SHALL BE DEFORMED. DIMENSIONS RELATIVE TO PLACEMENT OF REINFORCING ARE TO CENTERS OF BARS UNLESS OTHERWISE INDICATED IN THE PLANS. DIMENSIONS ON BAR DETAILS ARE TO CENTERS OF BARS OR ARE OUT TO OUT AS INDICATED ON PLANS.

WIRE BAR SUPPORTS SHALL BE PROVIDED FOR REINFORCING STEEL WHERE INDICATED ON THE PLANS. WHEN BAR SUPPORT PIECES ARE PLACED IN CONTINUOUS LINES, THEY SHALL BE SO PLACED THAT THE ENDS OF THE SUPPORTING WIRES SHALL BE LAPPED TO LOCK LEGS ON ADJOINING PIECES.

STRUCTURAL STEEL:

AT THE CONTRACTOR'S OPTION, HE MAY SUBSTITUTE 7/8" Ø SHEAR STUDS FOR THE 3/4" Ø STUDS SPECIFIED ON THE PLANS. THIS SUBSTITUTION SHALL BE MADE AT THE RATE OF 3 - 7/8" Ø STUDS FOR 4 - 3/4" Ø STUDS, AND STUD SPACING CHANGES SHALL BE MADE AS NECESSARY TO PROVIDE THE SAME EQUIVALENT NUMBER OF 7/8" Ø STUDS ALONG THE BEAM AS SHOWN FOR 3/4" Ø STUDS BASED ON THE RATIO OF 3 - 7/8" Ø STUDS FOR 4 - 3/4" Ø STUDS. STUDS OF THE LENGTH SPECIFIED ON THE PLANS MUST BE PROVIDED. THE MAXIMUM SPACING SHALL BE 2'-0".

EXCEPT AT THE INTERIOR SUPPORTS OF CONTINUOUS BEAMS WHERE THE COVER PLATE IS IN CONTACT WITH BEARING PLATE, THE CONTRACTOR MAY, AT HIS OPTION, SUBSTITUTE FOR THE COVER PLATES DESIGNATED ON THE PLANS COVER PLATES OF THE EQUIVALENT AREA PROVIDED THESE PLATES ARE AT LEAST 5/16" IN THICKNESS AND DO NOT EXCEED A WIDTH EQUAL TO THE FLANGE WIDTH LESS 2" OR A THICKNESS EQUAL TO 2 TIMES THE FLANGE THICKNESS. THE SIZE OF FILLET WELDS SHALL CONFORM TO THE REQUIREMENTS OF THE CURRENT ANSI/AASHTO/AWS "BRIDGE WELDING CODE". ELECTROSLAG WELDING WILL NOT BE PERMITTED.

WITH THE SOLE EXCEPTION OF EDGES AT SURFACES WHICH BEAR ON OTHER SURFACES, ALL SHARP EDGES AND ENDS OF SHAPES AND PLATES SHALL BE SLIGHTLY ROUNDED BY SUITABLE MEANS TO A RADIUS OF APPROXIMATELY 1/16 INCH OR EQUIVALENT FLAT SURFACE AT A SUITABLE ANGLE PRIOR TO PAINTING, GALVANIZING, OR METALLIZING.

HANDRAILS AND POSTS:

METAL STANDARDS AND FACES OF THE CONCRETE END POSTS FOR THE METAL RAIL SHALL BE SET NORMAL TO THE GRADE OF THE CURB, UNLESS OTHERWISE SHOWN ON PLANS. THE METAL RAIL AND TOPS OF CONCRETE POSTS USED WITH THE ALUMINUM RAIL SHALL BE BUILT PARALLEL TO THE GRADE OF THE CURB.

METAL HANDRAILS SHALL BE IN ACCORDANCE WITH THE PLANS. RAILS SHALL BE AS MANUFACTURED FOR BRIDGE RAILING. CASTINGS SHALL BE OF A UNIFORM APPEARANCE. FINS AND OTHER DEFORMATIONS RESULTING FROM CASTING OR OTHERWISE SHALL BE REMOVED IN A MANNER SO THAT A UNIFORM COLORING OF THE COMPLETED CASTING SHALL BE OBTAINED. CASTINGS WITH DISCOLORATIONS OR OF NON-UNIFORM COLORING WILL NOT BE ACCEPTED. CERTIFIED MILL REPORTS ARE REQUIRED FOR METAL RAILS AND POSTS.

SPECIAL NOTES:

GENERALLY, IN CASE OF DISCREPANCY, THIS STANDARD SHEET OF NOTES SHALL GOVERN OVER THE SPECIFICATIONS, BUT THE REMAINDER OF THE PLANS SHALL GOVERN OVER NOTES HEREON, AND SPECIAL PROVISIONS SHALL GOVERN OVER ALL. SEE SPECIFICATIONS ARTICLE 105-4.

ENGLISH

JANUARY, 1990