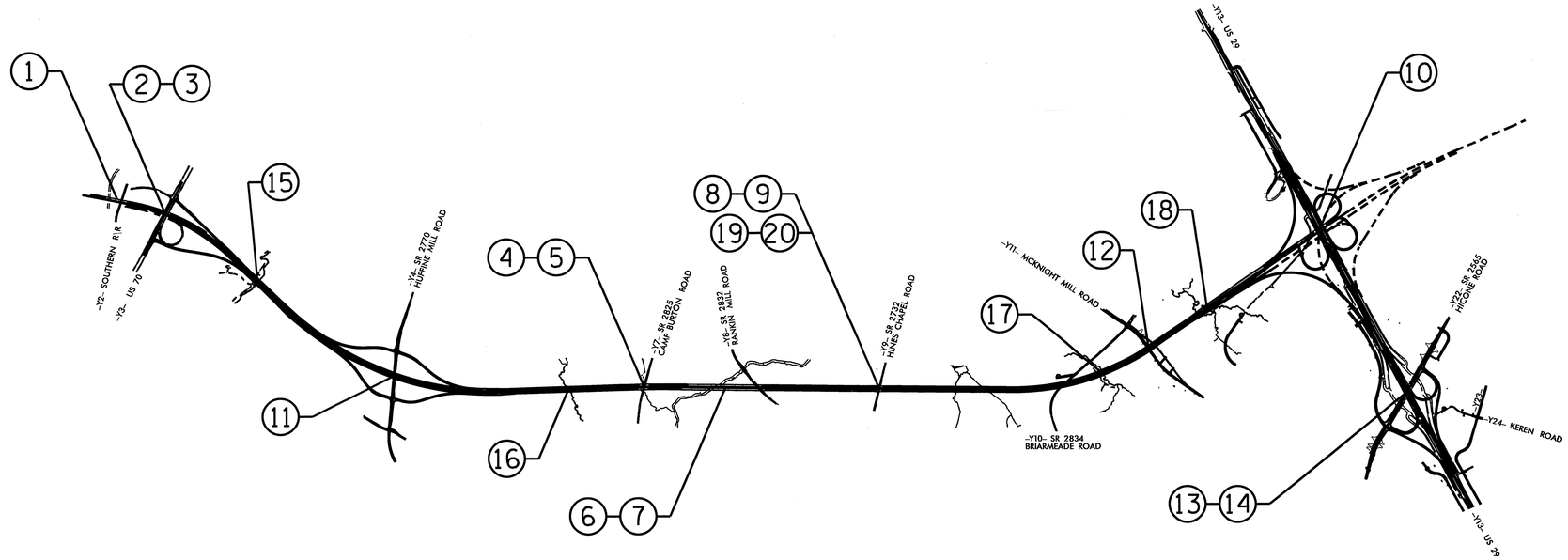

STRUCTURE INDEX

NO.	STATION	DESCRIPTION	SHEETS
1	14+99.25 -L-	BRIDGE ON GREENSBORO EASTERN LOOP OVER OLD BURLINGTON RD. AND NORFOLK SOUTHERN RR	S-1 thru S-44
2	26+21.65 -L-	BRIDGE ON GREENSBORO EASTERN LOOP OVER US 70 (LEFT LANE)	S-45 thru S-74
3	26+21.65 -L-	BRIDGE ON GREENSBORO EASTERN LOOP OVER US 70 (RIGHT LANE)	S-75 thru S-109
4	129+37.56 -L-	BRIDGE ON GREENSBORO EASTERN LOOP OVER CAMP BURTON RD. (LEFT LANE)	S-110 thru S-140
5	129+37.56 -L-	BRIDGE ON GREENSBORO EASTERN LOOP OVER CAMP BURTON RD. (RIGHT LANE)	S-141 thru S-172
6	144+90.00 -L-	BRIDGE ON GREENSBORO EASTERN LOOP OVER NORTH BUFFALO CREEK AND SR 2832 (LEFT LANE)	S-173 thru S-233
7	144+60.63 -L-	BRIDGE ON GREENSBORO EASTERN LOOP OVER NORTH BUFFALO CREEK AND SR 2832 (RIGHT LANE)	S-234 thru S-296
8	174+72.46 -L-	BRIDGE ON GREENSBORO EASTERN LOOP OVER SR 2835 (LEFT LANE)	S-297 thru S-320
9	174+72.46 -L-	BRIDGE ON GREENSBORO EASTERN LOOP OVER SR 2835 (RIGHT LANE)	S-321 thru S-345
10	268+22.89 -L-	BRIDGE ON GREENSBORO EASTERN LOOP OVER US 29	S-346 thru S-388
11	80+74.41 -L-	BRIDGE ON HUFFINE MILL RD. OVER GREENSBORO EASTERN LOOP	S-389 thru S-418
12	228+23.81 -L-	BRIDGE ON McKNIGHT MILL RD. OVER GREENSBORO EASTERN LOOP	S-419 thru S-452
13	26+17.64 -Y22-	BRIDGE ON HICONE RD. OVER US 29 (LEFT LANE)	S-453 thru S-500
14	26+17.64 -Y22-	BRIDGE ON HICONE RD. OVER US 29 (RIGHT LANE)	S-501 thru S-541
15	48+65.00 -L-	DOUBLE 9'X9' RCBC	C-1 thru C-5
16	114+55.00 -L-	DOUBLE 7'X8' RCBC	C-6 thru C-10
17	218+00.00 -L-	DOUBLE 7'X8' RCBC	C-11 thru C-15
18	241+96.00 -L-	DOUBLE 8'X8' RCBC	C-16 thru C-20
19	10+73.00 -Y9-	MSE RETAINING WALL NO. 1	W1 thru W4
20	10+49.00 -Y9-	MSE RETAINING WALL NO. 2	

PART 1

PART 2

PART 3

PART 2 OF 3

PROJECT NO. U-2525B

GUILFORD COUNTY

STATION:

STATE OF NORTH CAROLINA
DEPARTMENT OF TRANSPORTATION
RALEIGH

INDEX

REVISIONS						
NO.	BY:	DATE:	NO.	BY:	DATE:	
1			3			
2			4			

DRAWN BY : W.D. CRUTCHER DATE : 2-14-14
CHECKED BY : E.G. ALLEN DATE : 2-18-14

18-FEB-2014 11:17
S:\PEF\ALL INDIVIDUAL FOLDERS\Darrell\u2525b_title_index.dgn

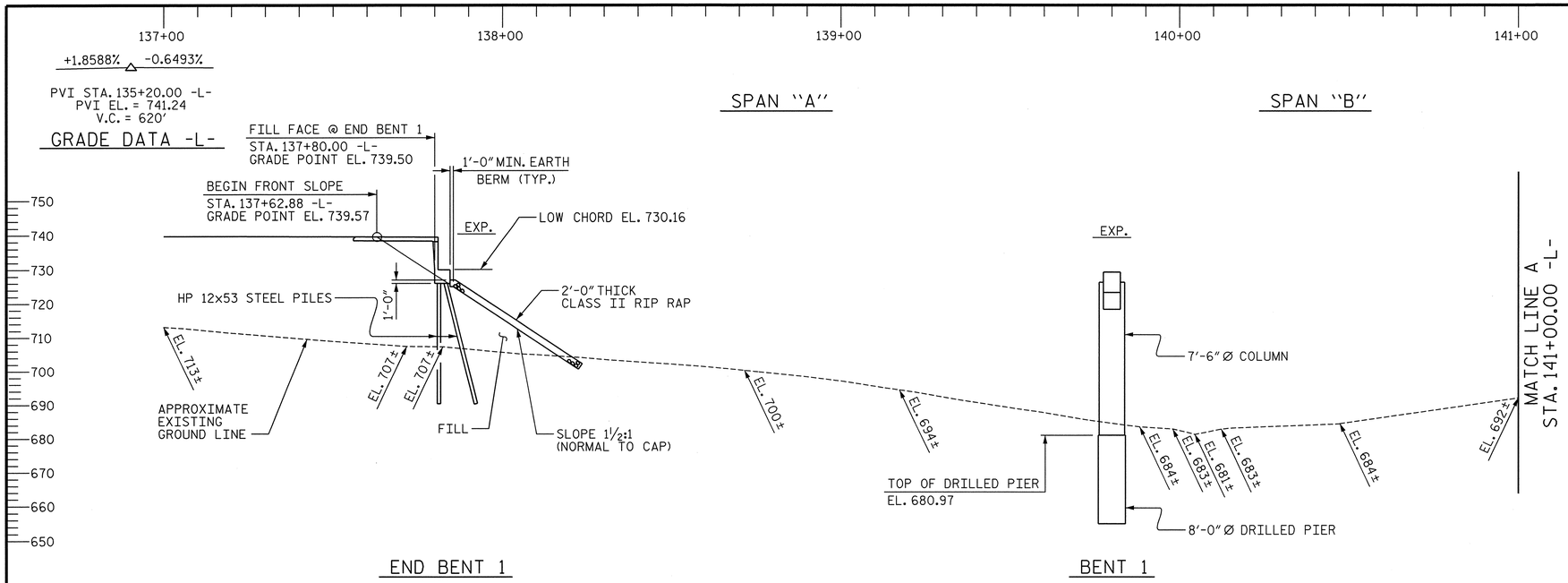

SECTION ALONG PGL LEFT LANE

(SECTION TAKEN AT RIGHT ANGLES TO END BENTS AND BENTS)

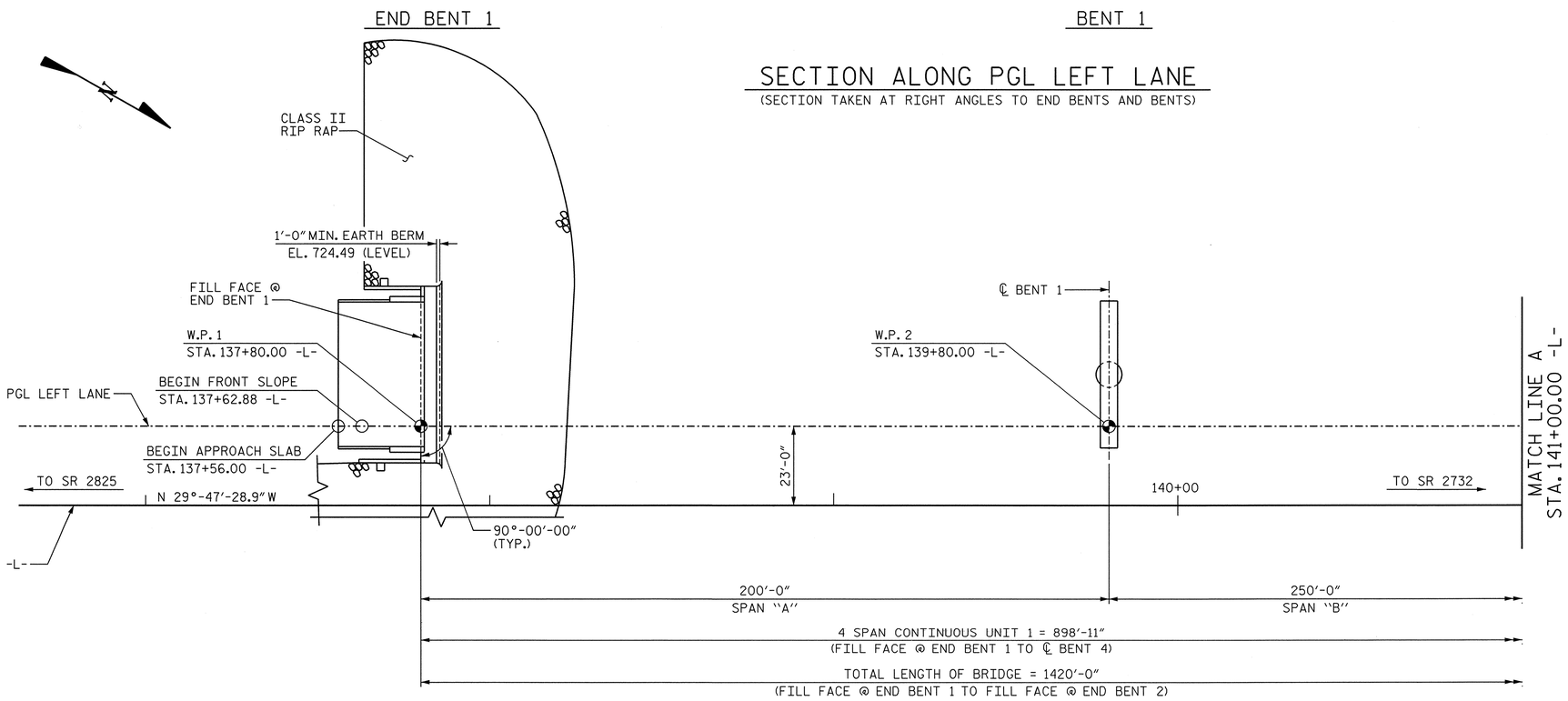

PLAN

(PILES NOT SHOWN FOR CLARITY)

I HEREBY CERTIFY THESE PLANS ARE THE AS-BUILT PLANS

PROJECT NO. U-2525B

GUILFORD COUNTY

STATION: 144+90.00 -L-

SHEET 1 OF 6

BRIDGE NO. 1138

STATE OF NORTH CAROLINA
DEPARTMENT OF TRANSPORTATION
RALEIGH

GENERAL DRAWING
FOR BRIDGE ON GREENSBORO EASTERN LOOP OVER NORTH BUFFALO CREEK AND SR 2832 BETWEEN SR 2825 & SR 2732

LEFT LANE

NORTH CAROLINA PROFESSIONAL SEAL 12323 ENGINEER MORRIS ISRAELNAM 01/10/2014

NORTH CAROLINA PROFESSIONAL SEAL 027799 ENGINEER ALLYSON K. ORR 1/10/14

MI ENGINEERING
1011 SCHAUB DRIVE, SUITE 100
RALEIGH, NC 27606
(919) 851-6606
FIRM PE NUMBER : P-0671

REVISIONS					
NO.	BY:	DATE:	NO.	BY:	DATE:
1			3		
2			4		

SHEET NO. S-173

TOTAL SHEETS 541

DRAWN BY : B.E. LANNING DATE : 11/13
CHECKED BY : A.K. ORR DATE : 11/13
DESIGN ENGINEER OF RECORD : A.K. ORR DATE : 01/14

DWG. NO. 1

STR. #6

1/9/2014
4:54:14 PM
User: bjanning
Filename: P:\NC Bridges\MI1007.03 U-2525B Guilford\U-2525B\Structures\Left Bridge\U2525B_SD_GDA_4_LT.dgn

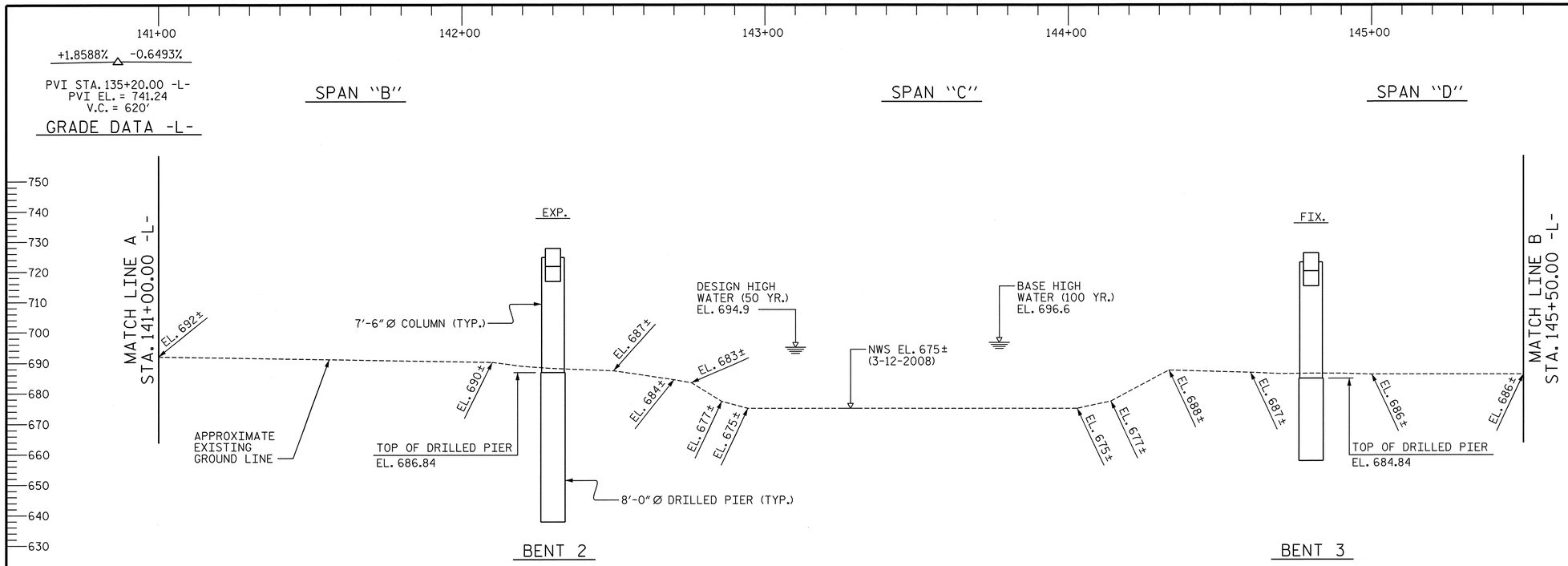

SECTION ALONG PGL LEFT LANE

(SECTION TAKEN AT RIGHT ANGLES TO BENTS)

HYDROGRAPHIC DATA

DESIGN DISCHARGE	= 9804 CFS
FREQUENCY OF DESIGN FLOOD	= 50 YRS.
DESIGN HIGH WATER ELEVATION	= 695.6 FT.
DRAINAGE AREA	= 37.1 SQ. MI.
BASE DISCHARGE (Q100)	= 11,460 CFS
BASE HIGH WATER ELEVATION	= 696.96 FT.
500 YR. DISCHARGE	= 15,398 CFS
500 YR. FLOOD ELEVATION	= 699.8 FT.

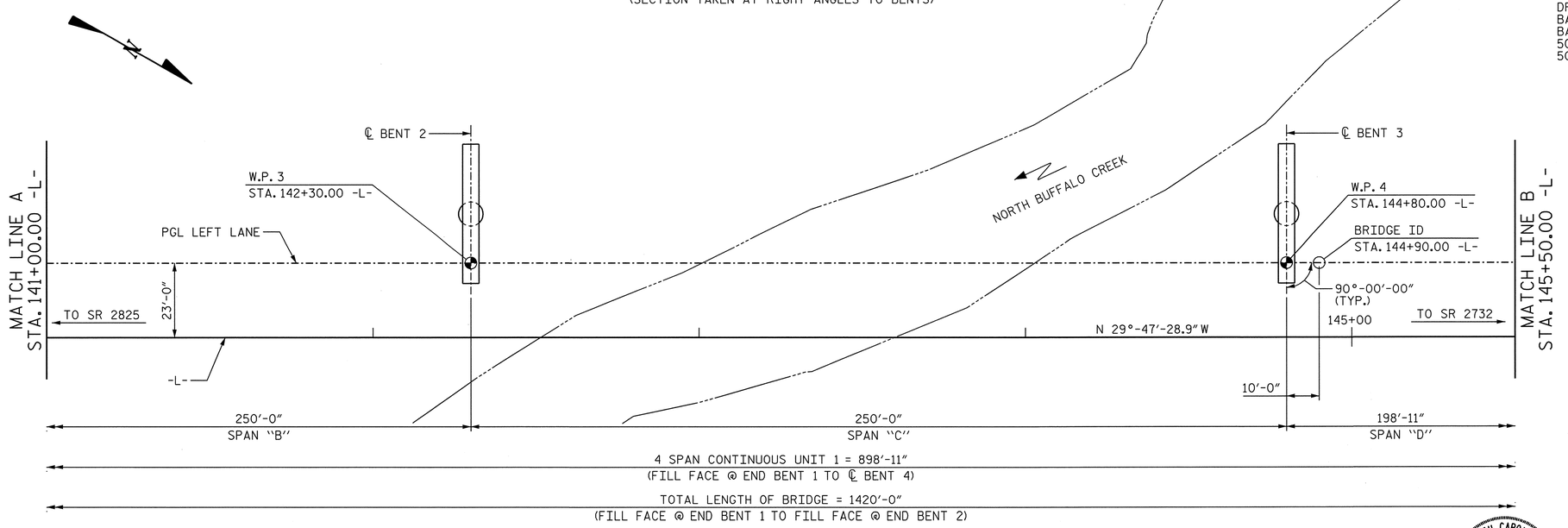

PLAN

PROJECT NO. U-2525B

GUILFORD COUNTY

STATION: 144+90.00 -L-

SHEET 2 OF 6

STATE OF NORTH CAROLINA
DEPARTMENT OF TRANSPORTATION
RALEIGH

GENERAL DRAWING

FOR BRIDGE ON GREENSBORO EASTERN LOOP OVER NORTH BUFFALO CREEK AND SR 2832 BETWEEN SR 2825 & SR 2732

LEFT LANE

NORTH CAROLINA PROFESSIONAL SEAL 027799 ENGINEER ALLYSON K. ORR
1/10/14

DRAWN BY : B.E. LANNING	DATE : 11/13		
CHECKED BY : A.K. ORR	DATE : 11/13		
DESIGN ENGINEER OF RECORD : A.K. ORR	DATE : 01/14		

DWG. NO. 2

MI ENGINEERING
1011 SCHAUB DRIVE, SUITE 100
RALEIGH, NC 27606
(919) 851-6606
FIRM PE NUMBER : P-0671

REVISIONS							
NO.	BY:	DATE:	NO.	BY:	DATE:	SHEET NO.	S-174
1			3			TOTAL SHEETS	541
2			4				

1/9/2014
4:54:17 PM
User: blanning
Filename: P:\NC Bridges\MI1007.03 U-2525B Guilford\U-2525B\Structures\Left Bridge\U2525B_SD_GDB_4_LT.dgn

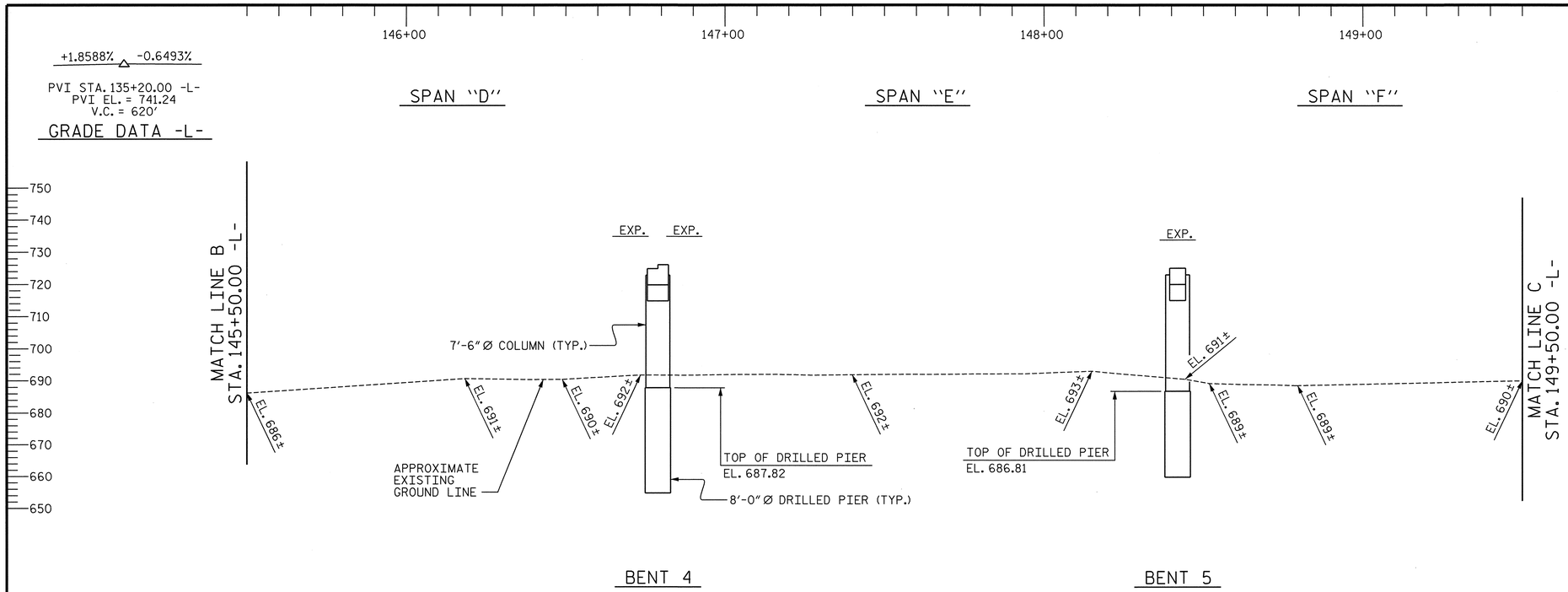

SECTION ALONG PGL LEFT LANE

(SECTION TAKEN AT RIGHT ANGLES TO BENTS)

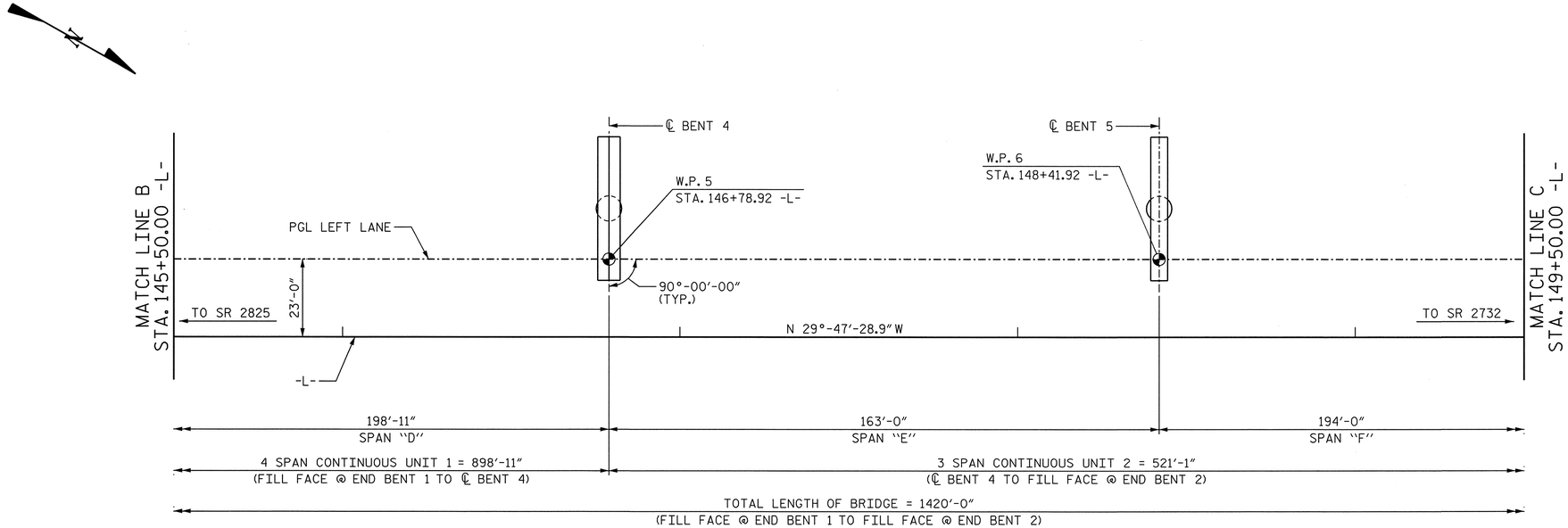

PLAN

PROJECT NO. U-2525B

GUILFORD COUNTY

STATION: 144+90.00 -L-

SHEET 3 OF 6

STATE OF NORTH CAROLINA
DEPARTMENT OF TRANSPORTATION
RALEIGH

GENERAL DRAWING

FOR BRIDGE ON GREENSBORO EASTERN LOOP OVER NORTH BUFFALO CREEK AND SR 2832 BETWEEN SR 2825 & SR 2732

LEFT LANE

NORTH CAROLINA PROFESSIONAL SEAL 027799 ENGINEER ALLYSON K. ORR
1/10/14

DRAWN BY : B.E. LANNING	DATE : 11/13		
CHECKED BY : A.K. ORR	DATE : 11/13		
DESIGN ENGINEER OF RECORD : A.K. ORR	DATE : 01/14		

DWG. NO. 3

MI ENGINEERING
1011 SCHAUB DRIVE, SUITE 100
RALEIGH, NC 27606
(919) 851-6606
FIRM PE NUMBER : P-0671

REVISIONS						
NO.	BY:	DATE:	NO.	BY:	DATE:	
1			3			
2			4			

SHEET NO. 5-175

TOTAL SHEETS 541

1/9/2014
4:54:19 PM
User:blanning
Filename: P:\NC Bridges\MI1007.03 U-2525B Guilford\U-2525B\Structures\Left Bridge\U2525B_SD_GDC_4_LT.dgn

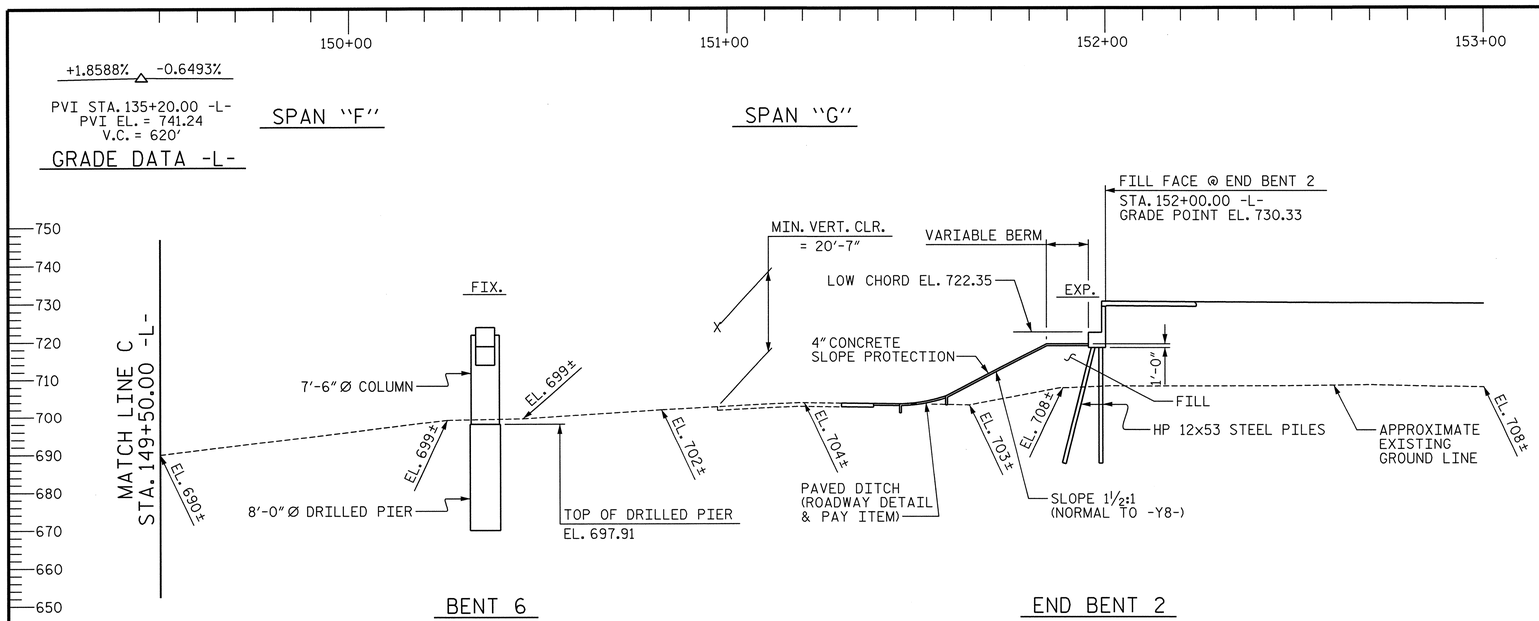

SECTION ALONG PGL LEFT LANE

(SECTION TAKEN AT RIGHT ANGLES TO END BENTS AND BENTS)

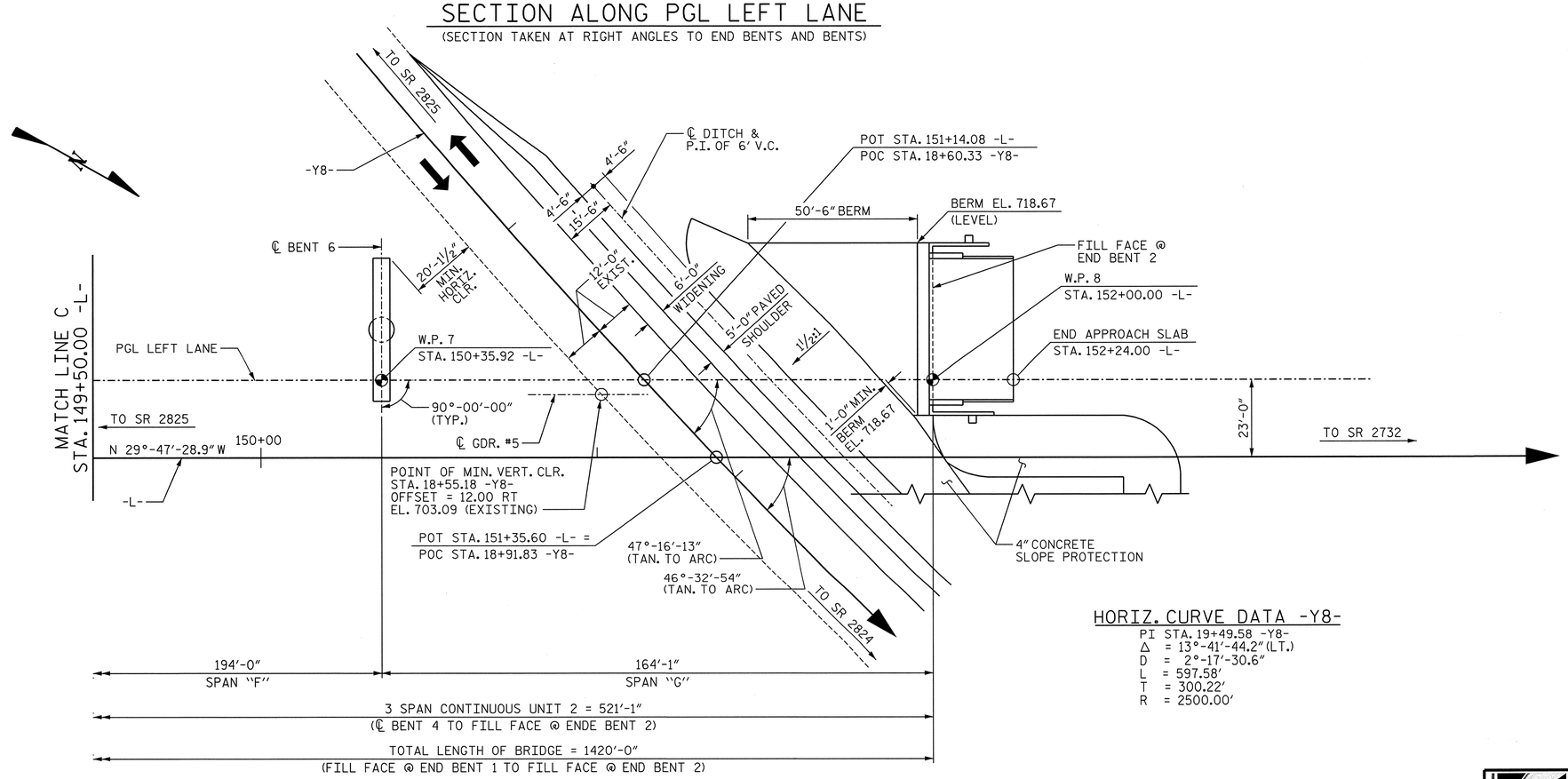

PLAN

(PILES NOT SHOWN FOR CLARITY)

HORIZ. CURVE DATA -Y8-

PI STA. 19+49.58 -Y8-
Δ = 13°-41'-44.2" (LT.)
D = 2°-17'-30.6"
L = 597.58'
T = 300.22'
R = 2500.00'

PROJECT NO. U-2525B
GUILFORD COUNTY
STATION: 144+90.00 -L-

SHEET 4 OF 6

STATE OF NORTH CAROLINA
DEPARTMENT OF TRANSPORTATION
RALEIGH

GENERAL DRAWING

FOR BRIDGE ON GREENSBORO EASTERN LOOP OVER NORTH BUFFALO CREEK AND SR 2832 BETWEEN SR 2825 & SR 2732

LEFT LANE

NORTH CAROLINA PROFESSIONAL SEAL 027799 ENGINEER ALLYSON K. ORR
1/10/14

DRAWN BY : B.E. LANNING	DATE : 11/13		
CHECKED BY : A.K. ORR	DATE : 11/13		
DESIGN ENGINEER OF RECORD : A.K. ORR	DATE : 01/14		

DWG. NO. 4

MI ENGINEERING
1011 SCHAUB DRIVE, SUITE 100
RALEIGH, NC 27606
(919) 851-6606
FIRM PE NUMBER : P-0671

REVISIONS								
NO.	BY:	DATE:	NO.	BY:	DATE:	SHEET NO.	TOTAL SHEETS
1			3			5-176	541
2			4				

1/9/2014
4:54:22 PM
User: blanning
Filename: P:\NC Bridges\MI1007.03 U-2525B Guilford\U-2525B\Structures\Left Bridge\U2525B_SD_GDD_4_LT.dgn

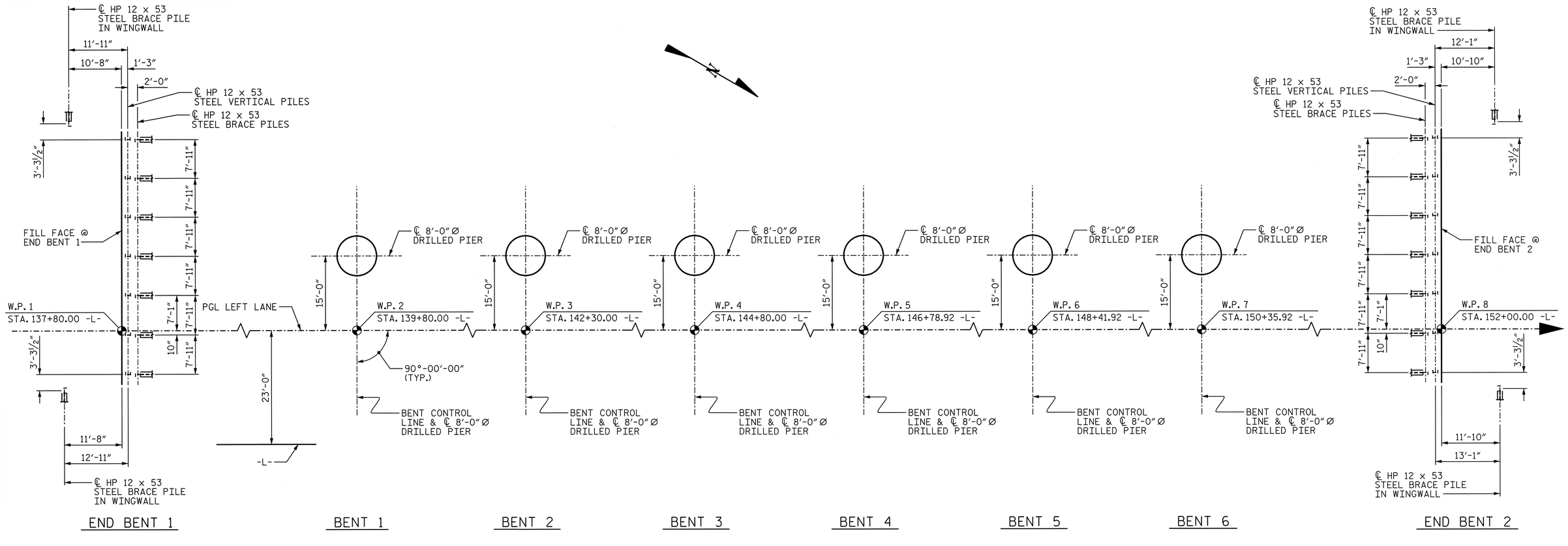

FOUNDATION LAYOUT

DIMENSIONS LOCATING END BENT PILES AND BENT DRILLED PIERS ARE SHOWN TO CENTERLINE PILES AND DRILLED PIERS.

BRACE PILES ARE TO BE BATTERED AT 3:12.

FOUNDATION NOTES

FOR PILES, SEE SECTION 450 OF THE STANDARD SPECIFICATIONS.

PILES AT END BENT 1 AND END BENT 2 ARE DESIGNED FOR A FACTORED RESISTANCE OF 120 TONS PER PILE.

DRIVE PILES AT END BENT 1 AND END BENT 2 TO A REQUIRED DRIVING RESISTANCE OF 200 TONS PER PILE.

FOR DRILLED PIERS, SEE SECTION 411 OF THE STANDARD SPECIFICATIONS.

DRILLED PIERS AT BENT 1, BENT 2 AND BENT 3 ARE DESIGNED FOR A FACTORED RESISTANCE OF 2690 TONS PER PIER. CHECK FIELD CONDITIONS FOR THE REQUIRED TIP RESISTANCE OF 150 TSF.

DRILLED PIER AT BENT 4 IS DESIGNED FOR A FACTORED RESISTANCE OF 1830 TONS PER PIER. CHECK FIELD CONDITIONS FOR THE REQUIRED TIP RESISTANCE OF 125 TSF.

DRILLED PIERS AT BENT 5 AND BENT 6 ARE DESIGNED FOR A FACTORED RESISTANCE OF 2230 TONS PER PIER. CHECK FIELD CONDITIONS FOR THE REQUIRED TIP RESISTANCE OF 125 TSF.

INSTALL DRILLED PIERS AT BENT 1 THROUGH BENT 6 TO A TIP ELEVATION NO HIGHER THAN 655 FT, 638 FT, 658 FT, 655 FT, 660 FT AND 670 FT, RESPECTIVELY, AND WITH THE REQUIRED TIP RESISTANCE AND PENETRATION OF AT LEAST 16 FT INTO ROCK AS DEFINED BY ARTICLE 411-1 OF THE STANDARD SPECIFICATIONS.

THE SCOUR CRITICAL ELEVATIONS FOR BENT 2, BENT 3 AND BENT 4 ARE ELEVATION 658 FT, 671 FT AND 681 FT, RESPECTIVELY. SCOUR CRITICAL ELEVATIONS ARE USED TO MONITOR POSSIBLE SCOUR PROBLEMS DURING THE LIFE OF THE STRUCTURE.

SID INSPECTIONS MAY BE REQUIRED FOR DRILLED PIERS. THE ENGINEER WILL DETERMINE THE NEED FOR SID INSPECTIONS. FOR SID INSPECTIONS, SEE SECTION 411 OF THE STANDARD SPECIFICATIONS.

CSL TUBES ARE REQUIRED FOR ALL DRILLED PIERS. CSL TESTING IS REQUIRED FOR THE FIRST DRILLED PIER ON THE PROJECT. CSL TESTING MAY BE REQUIRED FOR REMAINING DRILLED PIERS. THE ENGINEER WILL DETERMINE THE NEED FOR CSL TESTING. FOR CSL TESTING, SEE SECTION 411 OF THE STANDARD SPECIFICATIONS.

PROJECT NO. U-2525B
GUILFORD COUNTY
STATION: 144+90.00 -L-

SHEET 5 OF 6

STATE OF NORTH CAROLINA
DEPARTMENT OF TRANSPORTATION
RALEIGH

GENERAL DRAWING
FOR BRIDGE ON GREENSBORO EASTERN LOOP OVER NORTH BUFFALO CREEK AND SR 2832 BETWEEN SR 2825 & SR 2732
LEFT LANE

NORTH CAROLINA PROFESSIONAL SEAL 027799 ENGINEER ALLYSON K. ORR
1/10/14

MI ENGINEERING
1011 SCHAUB DRIVE, SUITE 100
RALEIGH, NC 27606
(919) 851-6606
FIRM PE NUMBER : P-0671

REVISIONS						
NO.	BY:	DATE:	NO.	BY:	DATE:	
1			3			
2			4			

SHEET NO. 5-177
TOTAL SHEETS 541

DWG. NO. 5

DRAWN BY :	B.E. LANNING	DATE :	11/13
CHECKED BY :	G.R. COLS	DATE :	11/13
DESIGN ENGINEER OF RECORD :	A.K. ORR	DATE :	01/14

1/9/2014
4:54:24 PM
User: blanning
Filename: P:\NC Bridges\MI1007.03 U-2525B Guilford\U-2525B\Structures\Left Bridge\U2525B_SD_GDE_4_LT.dgn

BENCH MARK #31 - RR SPIKE IN 12"PINE; 198.0' RIGHT OF STA. 144+39.00 -L-, EL. 697.32

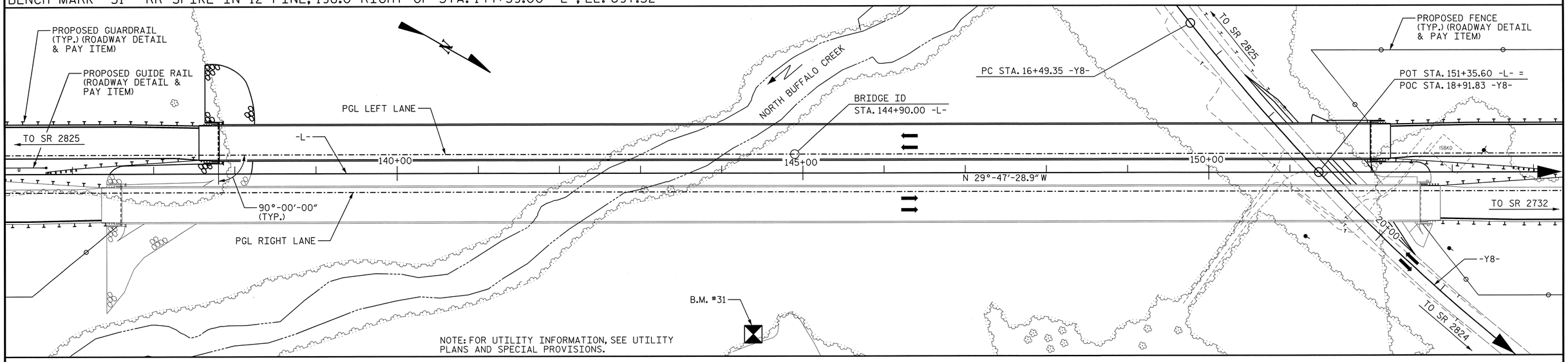

NOTE: FOR UTILITY INFORMATION, SEE UTILITY PLANS AND SPECIAL PROVISIONS.

LOCATION SKETCH

TOTAL BILL OF MATERIAL

	8'-0" Ø DRILLED PIER IN SOIL	8'-0" Ø DRILLED PIER NOT IN SOIL	SID INSPECTIONS	CSL TESTING	REINFORCED CONCRETE DECK SLAB	GROOVING BRIDGE FLOORS	CLASS A CONCRETE	BRIDGE APPROACH SLABS	REINFORCING STEEL	SPIRAL COLUMN REINFORCING STEEL	STRUCTURAL STEEL (APPROX.)	HP 12 X 53 STEEL PILES		CONCRETE BARRIER RAIL	4" SLOPE PROTECTION	RIP RAP CLASS II (2'-0" THICK)	GEOTEXTILE FOR DRAINAGE	POT BEARINGS	EXPANSION JOINT SEALS	MODULAR EXPANSION JOINT SEALS
	LIN. FT.	LIN. FT.	EACH	EACH	SQ. FT.	SQ. FT.	CU. YDS.	LUMP SUM	LBS.	LBS.	LBS.	NO.	LIN. FT.	LIN. FT.	SQ. YDS.	TONS	SQ. YDS.	LUMP SUM	LUMP SUM	LUMP SUM
SUPERSTRUCTURE					64,156	57,020		LUMP SUM			3,133,800			2875.46				LUMP SUM	LUMP SUM	LUMP SUM
END BENT 1							79.2		9,897			16	592.0			899	998			
BENT 1	9.0	17.0					133.8		42,731	3,687										
BENT 2	31.0	18.0					121.5		44,330	4,525										
BENT 3	10.0	17.0					122.3		40,691	3,325										
BENT 4	17.0	16.0					135.4		32,783	3,481										
BENT 5	11.0	16.0					111.1		26,823	3,205										
BENT 6	10.0	18.0					91.1		24,910	2,529										
END BENT 2							71.7		9,214			16	512.0		522					
TOTAL	88.0	102.0	6	6	64,156	57,020	866.1	LUMP SUM	231,379	20,752	3,133,800	32	1104.0	2875.46	522	899	998	LUMP SUM	LUMP SUM	LUMP SUM

NOTES

ASSUMED LIVE LOAD = HL 93 OR ALTERNATE LOADING.

FOR OTHER DESIGN DATA AND GENERAL NOTES, SEE SHEET SN.

FOR EROSION CONTROL MEASURES, SEE EROSION CONTROL PLANS.

THIS BRIDGE HAS BEEN DESIGNED IN ACCORDANCE WITH THE AASHTO LRFD BRIDGE DESIGN SPECIFICATIONS.

THIS BRIDGE IS LOCATED IN SEISMIC ZONE 1.

REMOVABLE FORMS MAY BE USED IN LIEU OF METAL STAY-IN-PLACE FORMS IN ACCORDANCE WITH ARTICLE 420-3 OF THE STANDARD SPECIFICATIONS.

THIS STRUCTURE HAS BEEN DESIGNED IN ACCORDANCE WITH "HEC 18 - EVALUATING SCOUR AT BRIDGES".

ALL STRUCTURAL STEEL SHALL BE AASHTO M270 GRADE 50W AND PAINTED IN ACCORDANCE WITH SYSTEM 4 OF ARTICLE 442-8 OF THE STANDARD SPECIFICATIONS UNLESS OTHERWISE NOTED ON THE PLANS.

THE ELEVATION AND CLEARANCE SHOWN ON THE PLANS AT THE POINT OF MINIMUM VERTICAL CLEARANCE ARE FROM THE BEST INFORMATION AVAILABLE. PRIOR TO BEGINNING CONSTRUCTION, VERIFY THE ELEVATION ON THE EXISTING PAVEMENT AND CHECK THE CLEARANCE. REPORT ANY VARIATIONS TO THE ENGINEER. ANY PLAN REVISIONS NECESSARY TO ACHIEVE THE REQUIRED MINIMUM VERTICAL CLEARANCE WILL BE PROVIDED BY THE DEPARTMENT.

FOR MAINTENANCE AND PROTECTION OF TRAFFIC BENEATH PROPOSED STRUCTURE, SEE SPECIAL PROVISIONS.

THE CLASS AA CONCRETE IN THE BRIDGE DECK SHALL CONTAIN FLY ASH OR GROUND GRANULATED BLAST FURNACE SLAG AT THE SUBSTITUTION RATE SPECIFIED IN ARTICLE 1024-1 AND IN ACCORDANCE WITH ARTICLES 1024-5 AND 1024-6 OF THE STANDARD SPECIFICATIONS. NO PAYMENT WILL BE MADE FOR THIS SUBSTITUTION AS IT IS CONSIDERED INCIDENTAL TO THE COST OF THE REINFORCED CONCRETE DECK SLAB.

NEEDLE BEAMS WILL NOT BE ALLOWED UNLESS OTHERWISE CALLED FOR ON THE PLANS OR APPROVED BY THE ENGINEER.

FOR SUBMITTAL OF WORKING DRAWINGS, SEE SPECIAL PROVISIONS.

FOR FALSEWORK AND FORMWORK, SEE SPECIAL PROVISIONS.

FOR CRANE SAFETY, SEE SPECIAL PROVISIONS.

FOR GROUT FOR STRUCTURES, SEE SPECIAL PROVISIONS.

FOR FOUNDATION NOTES, SEE "FOUNDATION LAYOUT" SHEET.

FOR EXPANSION JOINT SEALS, SEE SPECIAL PROVISIONS.

SPECIAL SNOWPLOW PROTECTION IS REQUIRED. SEE SPECIAL PROVISIONS FOR MODULAR EXPANSION JOINT SEALS.

FOR BRIDGE DECK RIDEABILITY AND GROOVING, SEE SPECIAL PROVISIONS.

FOR PLACING LOAD ON STRUCTURE MEMBERS, SEE SPECIAL PROVISIONS.

FOR MASS CONCRETE, SEE SPECIAL PROVISIONS.

NORTH CAROLINA PROFESSIONAL SEAL 027799 ENGINEER ALLYSON K. ORR
2/19/14

PROJECT NO. U-2525B
GUILFORD COUNTY
STATION: 144+90.00 -L-

SHEET 6 OF 6

STATE OF NORTH CAROLINA
DEPARTMENT OF TRANSPORTATION
RALEIGH

GENERAL DRAWING
FOR BRIDGE ON GREENSBORO EASTERN LOOP OVER NORTH BUFFALO CREEK AND SR 2832 BETWEEN SR 2825 & SR 2732
LEFT LANE

DRAWN BY : B.E. LANNING DATE : 11/13
CHECKED BY : G.R. COLS DATE : 11/13
DESIGN ENGINEER OF RECORD : A.K. ORR DATE : 01/14

DWG. NO. 6

MI ENGINEERING
1011 SCHAUB DRIVE, SUITE 100
RALEIGH, NC 27606
(919) 851-6606
FIRM PE NUMBER : P-0671

REVISIONS						SHEET NO.
NO.	BY:	DATE:	NO.	BY:	DATE:	S-178
1			3			TOTAL SHEETS
2			4			54

2/14/2014
12:32:51 PM
User: blanning
Filename: P:\NC Bridges\MI1007.03 U-2525B Guilford\U-2525B\Structures\Left Bridge\U2525B_SD_GDF_4_LT.dgn

LOAD AND RESISTANCE FACTOR RATING (LRFR) SUMMARY FOR STEEL GIRDERS

LEVEL		VEHICLE	WEIGHT (W) (TONS)	CONTROLLING LOAD RATING (#)	MINIMUM RATING FACTORS (RF)	TONS = W × RF	STRENGTH I LIMIT STATE											SERVICE II LIMIT STATE						COMMENT NUMBER
							LIVE-LOAD FACTORS (γ_{LL})	MOMENT					SHEAR					LIVE-LOAD FACTORS (γ_{LL})	MOMENT					
								DISTRIBUTION FACTORS (DF)	RATING FACTOR	SPAN	GIRDER LOCATION	DISTANCE FROM LEFT END OF SPAN (ft)	DISTRIBUTION FACTORS (DF)	RATING FACTOR	SPAN	GIRDER LOCATION	DISTANCE FROM LEFT END OF SPAN (ft)		DISTRIBUTION FACTORS (DF)	RATING FACTOR	SPAN	GIRDER LOCATION	DISTANCE FROM LEFT END OF SPAN (ft)	
DESIGN LOAD RATING		HL-93 (INVENTORY)	N/A	1	1.15	--	1.75	0.8138	1.15	A	E	175.3	0.9293	1.25	C	I	22.5	1.30	0.8138	1.67	D	E	97.8	
		HL-93 (OPERATING)	N/A		1.49	--	1.35	0.8138	1.49	A	E	175.3	0.9293	1.62	C	I	22.5	1.00	0.8138	2.17	D	E	97.8	
		HS-20 (INVENTORY)	36.000	2	2.56	92.22	1.75	0.8138	3.02	D	E	97.8	0.9293	2.56	D	I	19.8	1.30	0.8138	2.95	D	E	97.8	
		HS-20 (OPERATING)	36.000		3.33	119.88	1.35	0.8138	3.93	D	E	97.8	0.9293	3.33	D	I	19.8	1.00	0.8138	3.84	D	E	97.8	
LEGAL LOAD RATING	SINGLE VEHICLE (SV)	SH	12.500		8.00	100.00	1.40	0.8138	10.25	D	E	97.8	0.9293	8.88	D	I	19.8	1.30	0.8138	8.00	D	E	97.8	
		S3C	21.500		4.67	100.41	1.40	0.8138	5.99	D	E	97.8	0.9293	5.23	D	I	19.8	1.30	0.8138	4.67	D	E	97.8	
		S3A	22.750		4.42	100.56	1.40	0.8138	5.67	D	E	97.8	0.9293	4.95	D	I	19.8	1.30	0.8138	4.42	D	E	97.8	
		S4A	26.750		3.82	102.19	1.40	0.8138	4.90	D	E	97.8	0.9293	4.25	D	I	19.8	1.30	0.8138	3.82	D	E	97.8	
		S5A	30.500		3.39	103.40	1.40	0.8138	4.34	D	E	97.8	0.9293	3.75	D	I	19.8	1.30	0.8138	3.39	D	E	97.8	
		S6A	34.500		3.04	104.88	1.40	0.8138	3.89	D	E	97.8	0.9293	3.33	D	I	19.8	1.30	0.8138	3.04	D	E	97.8	
		S7B	38.500		2.73	105.11	1.40	0.8138	3.49	D	E	97.8	0.9293	2.97	D	I	19.8	1.30	0.8138	2.73	D	E	97.8	
		S7A	40.000	3	2.68	107.20	1.40	0.8138	3.41	A	E	175.3	0.9293	2.92	D	I	19.8	1.30	0.8138	2.68	D	E	97.8	
	TRUCK TRACTOR SEMI-TRAILER (TTST)	T4A	28.250		3.69	104.24	1.40	0.8138	4.72	D	E	97.8	0.9293	4.06	D	I	19.8	1.30	0.8138	3.69	D	E	97.8	
		T5B	32.000		3.28	104.96	1.40	0.8138	4.20	D	E	97.8	0.9293	3.61	D	I	19.8	1.30	0.8138	3.28	D	E	97.8	
		T6A	36.000		2.94	105.84	1.40	0.8138	3.76	D	E	97.8	0.9293	3.27	D	I	19.8	1.30	0.8138	2.94	D	E	97.8	
		T7A	40.000		2.71	108.40	1.40	0.8138	3.42	A	E	175.3	0.9293	2.94	D	I	19.8	1.30	0.8138	2.71	D	E	97.8	
		T7B	40.000		2.75	110.00	1.40	0.8138	3.43	A	E	175.3	0.9293	2.94	D	I	19.8	1.30	0.8138	2.75	D	E	97.8	
FATIGUE		HL-93 (INVENTORY)	γ_{LL}=0.75																					

LOAD FACTORS:

DESIGN LOAD RATING FACTORS	LIMIT STATE	γ_{DC}	γ_{DW}
	STRENGTH I	1.25	1.50
	SERVICE II	1.00	1.00

NOTES:

MINIMUM RATING FACTORS ARE BASED ON THE STRENGTH I AND SERVICE II LIMIT STATES.

ALLOWABLE STRESS FOR SERVICE II LIMIT STATE ARE AS REQUIRED FOR DESIGN.

COMMENTS:

1.
2.
3.
4.

(#) CONTROLLING LOAD RATING
(1) DESIGN LOAD RATING (HL-93)
(2) DESIGN LOAD RATING (HS-20)
(3) LEGAL LOAD RATING **
** SEE CHART FOR VEHICLE TYPE
GIRDER LOCATION
I - INTERIOR GIRDER
E - EXTERIOR GIRDER

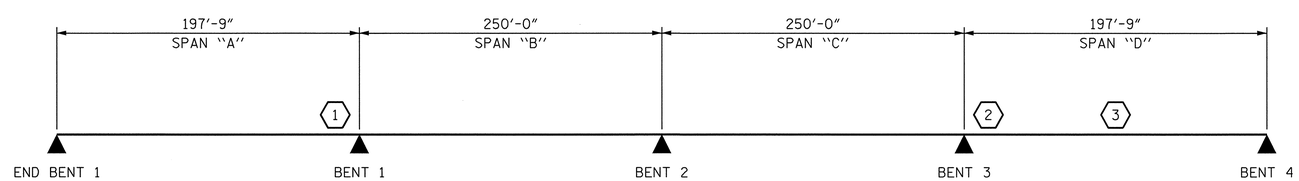

LRFR SUMMARY

(SPAN LENGTHS ARE BEARING TO BEARING)

PROJECT NO. U-2525B
GUILFORD COUNTY
STATION: 144+90.00 -L-

SHEET 1 OF 2

STATE OF NORTH CAROLINA
DEPARTMENT OF TRANSPORTATION
RALEIGH

STANDARD
LRFR SUMMARY FOR STEEL GIRDERS
UNIT 1
(INTERSTATE TRAFFIC)
LEFT LANE

NORTH CAROLINA PROFESSIONAL SEAL 021759 ENGINEER ALYSON K. ORR
1/10/14

MI ENGINEERING
1011 SCHAUB DRIVE, SUITE 100
RALEIGH, NC 27606
(919) 851-6606
FIRM PE NUMBER : P-0671

REVISIONS						
NO.	BY:	DATE:	NO.	BY:	DATE:	
1			3			
2			4			

SHEET NO. S-179
TOTAL SHEETS 54-1

STD. NO. LRFR4

DWG. NO. 7

ASSEMBLED BY:	B.E. LANNING	DATE:	10/13
CHECKED BY :	A.K. ORR	DATE:	11/13
DESIGN ENGINEER OF RECORD:	A.K. ORR	DATE:	01/14
DRAWN BY : MAA 1/08	REV. 11/12/08RR	MAA/GM	
CHECKED BY : GM/DI 2/08	REV. 10/1/11	MAA/GM	

1/9/2014
4:54:29 PM
User: blanning
Filename: P:\NC Bridges\MI1007.03 U-2525B Guilford\U-2525B\Structures\Left Bridge\U2525B_SD_LRFR1_4_LT.dgn

LOAD AND RESISTANCE FACTOR RATING (LRFR) SUMMARY FOR STEEL GIRDERS

LEVEL		VEHICLE	WEIGHT (W) (TONS)	CONTROLLING LOAD RATING (#)	MINIMUM RATING FACTORS (RF)	TONS = W x RF	STRENGTH I LIMIT STATE											SERVICE II LIMIT STATE						COMMENT NUMBER
								MOMENT					SHEAR						MOMENT					
							LIVE-LOAD FACTORS (γ_{LL})	DISTRIBUTION FACTORS (DF)	RATING FACTOR	SPAN	GIRDER LOCATION	DISTANCE FROM LEFT END OF SPAN (ft)	DISTRIBUTION FACTORS (DF)	RATING FACTOR	SPAN	GIRDER LOCATION	DISTANCE FROM LEFT END OF SPAN (ft)	LIVE-LOAD FACTORS (γ_{LL})	DISTRIBUTION FACTORS (DF)	RATING FACTOR	SPAN	GIRDER LOCATION	DISTANCE FROM LEFT END OF SPAN (ft)	
DESIGN LOAD RATING		HL-93 (INVENTORY)	N/A	1	1.14	--	1.75	0.8138	1.14	F	E	14.0	0.9293	1.32	E	I	129.5	1.30	0.8138	1.65	G	E	73.0	
		HL-93 (OPERATING)	N/A		1.47	--	1.35	0.8138	1.47	F	E	14.0	0.9293	1.72	E	I	129.5	1.00	0.8138	2.14	G	E	73.0	
		HS-20 (INVENTORY)	36.000	2	2.14	76.98	1.75	0.8138	2.71	E	E	147.8	0.9293	2.14	G	I	161.8	1.30	0.8138	2.68	G	E	73.0	
		HS-20 (OPERATING)	36.000		2.78	100.08	1.35	0.8138	3.52	E	E	147.8	0.9293	2.78	G	I	161.8	1.00	0.8138	3.49	G	E	73.0	
LEGAL LOAD RATING	SINGLE VEHICLE (SV)	SH	12.500		7.14	89.25	1.40	0.8138	9.13	G	E	73.0	0.9293	7.18	G	I	161.8	1.30	0.8138	7.14	G	E	73.0	
		S3C	21.500		4.19	90.09	1.40	0.8138	5.35	G	E	73.0	0.9293	4.34	G	I	161.8	1.30	0.8138	4.19	G	E	73.0	
		S3A	22.750		3.96	90.09	1.40	0.8138	5.07	G	E	73.0	0.9293	4.11	G	I	161.8	1.30	0.8138	3.96	G	E	73.0	
		S4A	26.750		3.44	92.02	1.40	0.8138	4.39	G	E	73.0	0.9293	3.55	G	I	161.8	1.30	0.8138	3.44	G	E	73.0	
		S5A	30.500		3.05	93.03	1.40	0.8138	3.90	G	E	73.0	0.9293	3.17	G	I	32.4	1.30	0.8138	3.05	G	E	73.0	
		S6A	34.500		2.74	94.53	1.40	0.8138	3.51	G	E	73.0	0.9293	2.82	G	I	32.4	1.30	0.8138	2.74	G	E	73.0	
		S7B	38.500		2.47	95.10	1.40	0.8138	3.15	G	E	73.0	0.9293	2.53	G	I	32.4	1.30	0.8138	2.47	G	E	73.0	
		S7A	40.000	3	2.41	96.40	1.40	0.8138	3.07	G	E	14.0	0.9293	2.54	G	I	32.4	1.30	0.8138	2.41	G	E	73.0	
	TRUCK TRACTOR SEMI-TRAILER (TTST)	T4A	28.250		3.33	94.07	1.40	0.8138	4.25	G	E	73.0	0.9293	3.41	G	I	161.8	1.30	0.8138	3.33	G	E	73.0	
		T5B	32.000		2.96	94.72	1.40	0.8138	3.79	G	E	73.0	0.9293	3.07	G	I	32.4	1.30	0.8138	2.96	G	E	73.0	
		T6A	36.000		2.68	96.48	1.40	0.8138	3.40	E	E	147.8	0.9293	2.81	G	I	32.4	1.30	0.8138	2.68	G	E	73.0	
		T7A	40.000		2.45	98.00	1.40	0.8138	3.08	E	E	147.8	0.9293	2.55	G	I	32.4	1.30	0.8138	2.45	G	E	73.0	
		T7B	40.000		2.51	100.40	1.40	0.8138	3.10	E	E	147.8	0.9293	2.52	G	I	32.4	1.30	0.8138	2.51	G	E	73.0	
FATIGUE		HL-93 (INVENTORY)	γ_{LL}=0.75																					

LOAD FACTORS:

DESIGN LOAD RATING FACTORS	LIMIT STATE	γ_{DC}	γ_{DW}
	STRENGTH I	1.25	1.50
	SERVICE II	1.00	1.00

NOTES:

MINIMUM RATING FACTORS ARE BASED ON THE STRENGTH I AND SERVICE II LIMIT STATES.

ALLOWABLE STRESS FOR SERVICE II LIMIT STATE ARE AS REQUIRED FOR DESIGN.

COMMENTS:

1.
2.
3.
4.

(#) CONTROLLING LOAD RATING

(1) DESIGN LOAD RATING (HL-93)
(2) DESIGN LOAD RATING (HS-20)
(3) LEGAL LOAD RATING **

** SEE CHART FOR VEHICLE TYPE

GIRDER LOCATION

I - INTERIOR GIRDER
E - EXTERIOR GIRDER

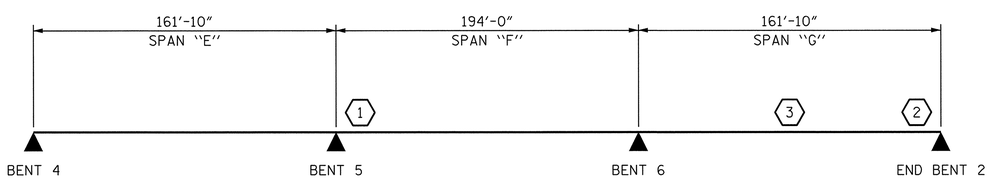

LRFR SUMMARY

(SPAN LENGTHS ARE BEARING TO BEARING)

PROJECT NO. U-2525B
GUILFORD COUNTY
STATION: 144+90.00 -L-

SHEET 2 OF 2

STATE OF NORTH CAROLINA
DEPARTMENT OF TRANSPORTATION
RALEIGH

STANDARD
LRFR SUMMARY FOR STEEL GIRDERS
UNIT 2
(INTERSTATE TRAFFIC)
LEFT LANE

NORTH CAROLINA PROFESSIONAL SEAL 021759 ENGINEER ALLYSON K. ORR
1/10/14

ASSEMBLED BY: B.E. LANNING	DATE: 10/13	
CHECKED BY : A.K. ORR	DATE: 11/13	
DESIGN ENGINEER OF RECORD: A.K. ORR	DATE: 01/14	
DRAWN BY : MAA 1/08	REV. 11/12/08RR	MAA/GM
CHECKED BY : GM/DI 2/08	REV. 10/1/11	MAA/GM

DWG. NO. 8

MI ENGINEERING
1011 SCHAUB DRIVE, SUITE 100
RALEIGH, NC 27606
(919) 851-6606
FIRM PE NUMBER : P-0671

REVISIONS						
NO.	BY:	DATE:	NO.	BY:	DATE:	
1			3			
2			4			

SHEET NO. S-180
TOTAL SHEETS 541

STD. NO. LRFR4

1/9/2014
4:54:32 PM
User: blanning
Filename: P:\NC Bridges\MI1007.03 U-2525B Guilford\U-2525B\Structures\Left Bridge\U2525B_SD_LRFR2_4_LT.dgn

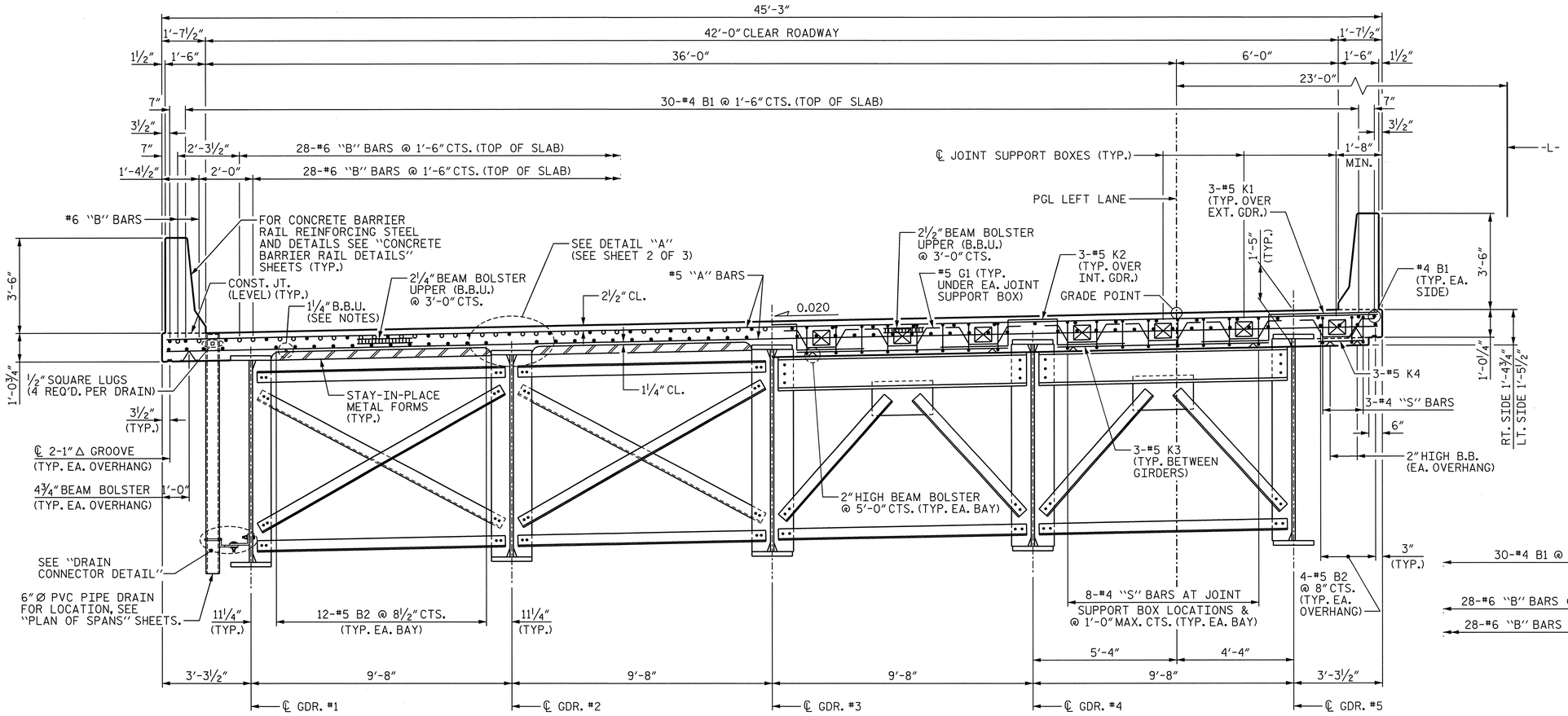

HALF SECTION AT BENT 1, 2 AND 3 CROSSFRAMES

HALF SECTION AT END BENT 1 AND BENT 4 DIAPHRAGMS

TYPICAL SECTION

NOTES

PROVIDE 1¼" HIGH BEAM BOLSTERS UPPER AT 4'-0" CTS. ATOP THE METAL STAY-IN-PLACE FORMS TO SUPPORT THE BOTTOM MAT OF "A" BARS. WHEN USING REMOVABLE FORMS, PROVIDE CONTINUOUS HIGH CHAIRS FOR METAL DECK (C.H.C.M.) @ 4'-0" CTS. WITH A HEIGHT TO SUPPORT THE BOTTOM MAT OF "A" BARS A CLEAR DISTANCE OF 2½" ABOVE THE TOP OF THE REMOVABLE FORM.

METAL STAY-IN-PLACE FORMS SHALL NOT BE WELDED TO BEAM OR GIRDER FLANGES IN THE ZONES REQUIRING CHARPY V-NOTCH TEST. SEE STRUCTURAL STEEL DETAIL SHEETS.

PREVIOUSLY CAST CONCRETE IN A CONTINUOUS UNIT SHALL HAVE ATTAINED A MINIMUM COMPRESSIVE STRENGTH OF 3,000 PSI BEFORE ADDITIONAL CONCRETE IS CAST IN THE UNIT.

BARRIER RAIL IN A CONTINUOUS UNIT SHALL NOT BE CAST UNTIL ALL SLAB CONCRETE IN THE UNIT HAS BEEN CAST AND HAS REACHED A MINIMUM COMPRESSIVE STRENGTH OF 3,000 PSI.

STRUCTURAL STEEL ERECTION IN A CONTINUOUS UNIT SHALL BE COMPLETE BEFORE FALSEWORK OR FORMS ARE PLACED ON THE UNIT.

THE CONTRACTOR MAY, WHEN NECESSARY, PROPOSE A SCHEME FOR AVOIDING INTERFERENCE BETWEEN METAL STAY-IN-PLACE FORM SUPPORTS OR FORMS AND BEAM/GIRDER STIFFENERS OR CONNECTOR PLATES. THE PROPOSAL SHALL BE INDICATED, AS APPROPRIATE, ON EITHER THE STEEL WORKING DRAWINGS OR THE METAL STAY-IN-PLACE FORM WORKING DRAWINGS.

THE "B" BARS IN THE DECK SLAB MAY BE CUT AS DIRECTED BY THE ENGINEER TO CLEAR THE MODULAR JOINT SUPPORT BOXES.

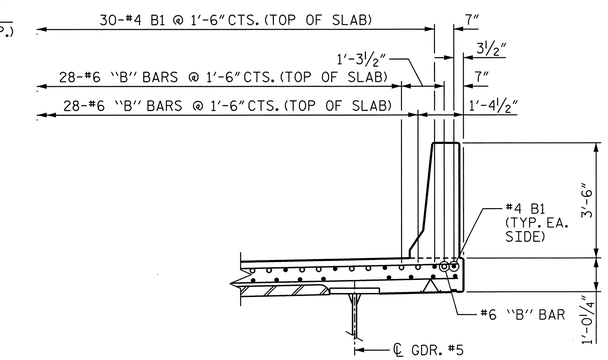

RIGHT OVERHANG DETAIL OVER BENTS

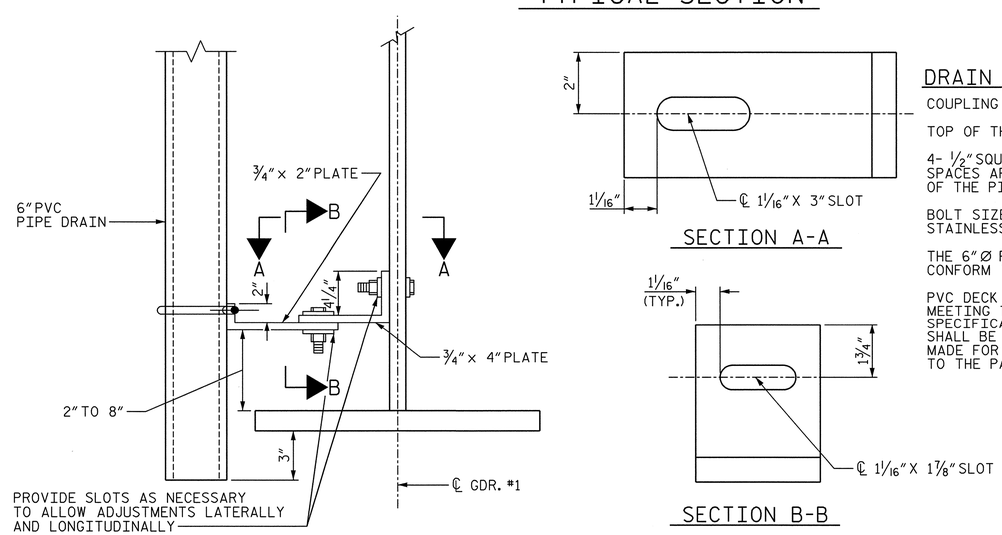

DRAIN CONNECTOR DETAIL

(TOTAL ASSEMBLIES REQUIRED = 96)

DRAIN CONNECTOR NOTES

COUPLING IN DRAIN PIPE WILL BE PERMITTED AS APPROVED BY THE ENGINEER.

TOP OF THE FLOOR DRAIN TO BE SET ⅜" BELOW SURFACE OF SLAB.

4- ½" SQUARE LUGS TO BE GLUED TO THE PVC PLASTIC PIPE AT EQUAL SPACES AROUND THE PIPE DRAIN APPROXIMATELY 4" FROM THE TOP OF THE PIPE.

BOLT SIZE TO BE THE SAME AS DIAPHRAGMS AND CROSS FRAME CONNECTIONS. STAINLESS STEEL WORM DRIVE HOSE CLAMP SHALL BE COMMERCIAL QUALITY.

THE 6" Ø PVC PLASTIC PIPE AND FITTINGS SHALL BE SCHEDULE 40 AND CONFORM TO ASTM D1785.

PVC DECK DRAINS SHALL BE PAINTED WITH TWO COATS OF BROWN PRIMER MEETING THE REQUIREMENTS OF ARTICLE 1080-11 OF THE STANDARD SPECIFICATIONS. EACH COAT SHALL BE 2 DRY MILS THICK. DECK DRAINS SHALL BE ROUGHENED PRIOR TO PAINTING. NO SEPARATE PAYMENT SHALL BE MADE FOR PAINTING PVC DECK DRAINS AS THIS IS CONSIDERED INCIDENTAL TO THE PAY ITEM FOR REINFORCED CONCRETE DECK SLAB.

NORTH CAROLINA PROFESSIONAL SEAL 027799 ENGINEER ALLYSON K. ORR
1/10/14

PROJECT NO. U-2525B
GUILFORD COUNTY
STATION: 144+90.00 -L-

SHEET 1 OF 3

STATE OF NORTH CAROLINA
DEPARTMENT OF TRANSPORTATION
RALEIGH

SUPERSTRUCTURE
TYPICAL SECTION
UNIT 1

LEFT LANE

DRAWN BY : B.E. LANNING	DATE : 06/13		
CHECKED BY : A.K. ORR	DATE : 06/13		
DESIGN ENGINEER OF RECORD : A.K. ORR	DATE : 01/14		

MI ENGINEERING
1011 SCHAUB DRIVE, SUITE 100
RALEIGH, NC 27606
(919) 851-6606
FIRM PE NUMBER : P-0671

DWG. NO. 9

REVISIONS						
NO.	BY:	DATE:	NO.	BY:	DATE:	SHEET NO. 5-181
1			3			TOTAL SHEETS 541
2			4			

1/9/2014
4:54:34 PM
User: blanning
Filename: P:\NC Bridges\MI1007.03 U-2525B Guilford\U-2525B\Structures\Left Bridge\U2525B_SD_TS1_4_LT.dgn

FOR SUPERSTRUCTURE NOTES, SEE SHEET 1 OF 3.

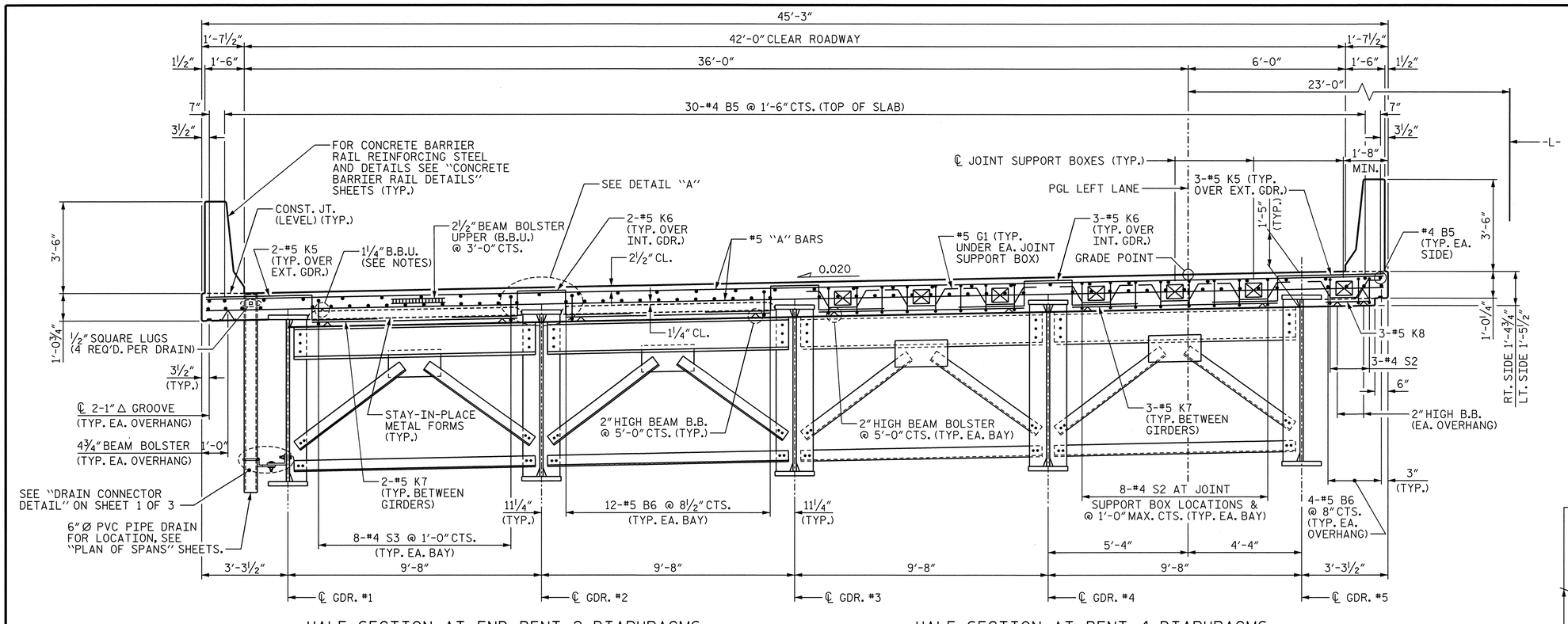

HALF SECTION AT END BENT 2 DIAPHRAGMS

HALF SECTION AT BENT 4 DIAPHRAGMS

TYPICAL SECTION

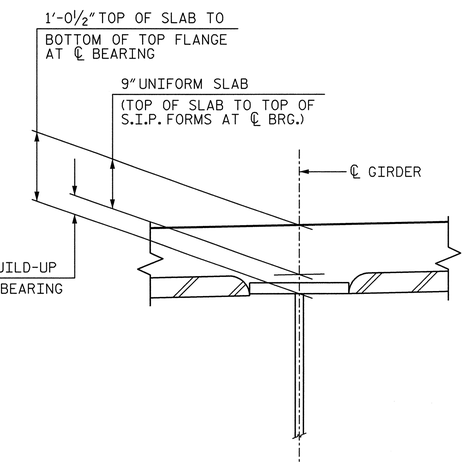

DETAIL "A"

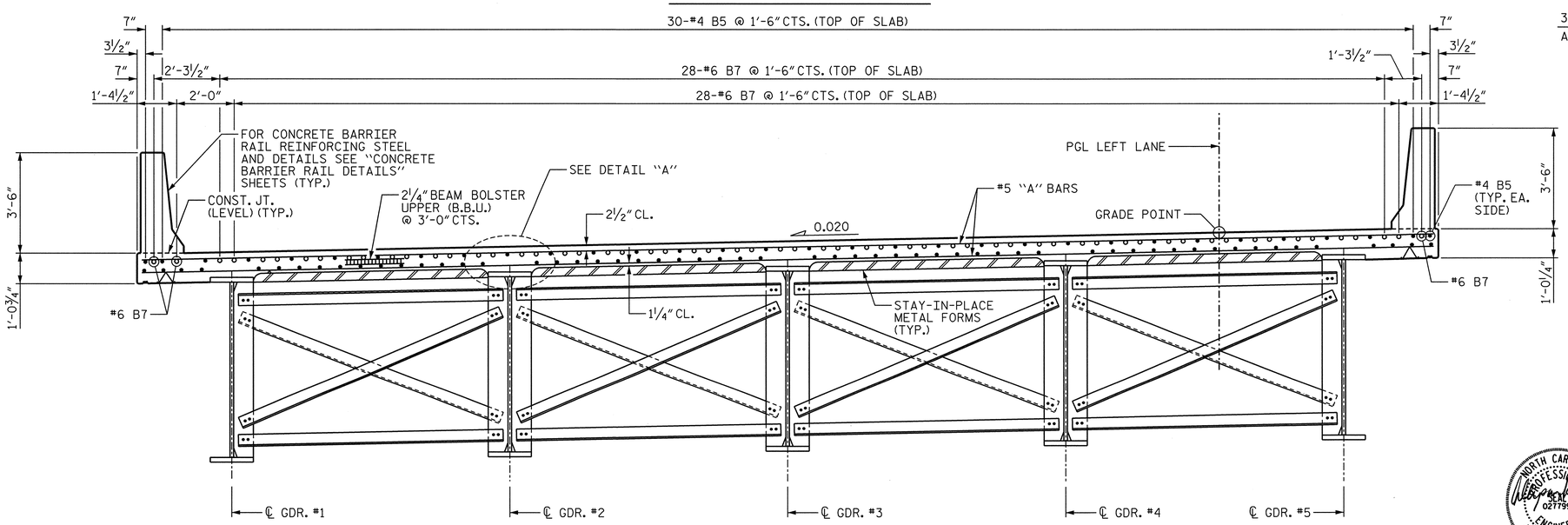

TYPICAL SECTION AT BENT 5 AND 6 CROSSFRAMES

(FOR DIMENSIONS NOT SHOWN, SEE TYPICAL SECTION ABOVE)

PROJECT NO. U-2525B

GUILFORD COUNTY

STATION: 144+90.00 -L-

SHEET 2 OF 3

STATE OF NORTH CAROLINA
DEPARTMENT OF TRANSPORTATION
RALEIGH

SUPERSTRUCTURE

TYPICAL SECTION
UNIT 2

LEFT LANE

NORTH CAROLINA PROFESSIONAL SEAL 027799 ENGINEER ALLYSON K. ORR
1/10/14

DRAWN BY :	B.E. LANNING	DATE :	06/13
CHECKED BY :	A.K. ORR	DATE :	06/13
DESIGN ENGINEER OF RECORD :	A.K. ORR	DATE :	01/14

MI ENGINEERING
1011 SCHAUB DRIVE, SUITE 100
RALEIGH, NC 27606
(919) 851-6606
FIRM PE NUMBER : P-0671

DWG. NO. 10

REVISIONS						
NO.	BY:	DATE:	NO.	BY:	DATE:	
1			3			
2			4			

SHEET NO. 5-182

TOTAL SHEETS 541

1/9/2014
4:54:37 PM
User: blanning
Filename: P:\NC Bridges\MI1007.03 U-2525B Guilford\U-2525B\Structures\Left Bridge\U2525B_SD_TS2_4_LT.dgn

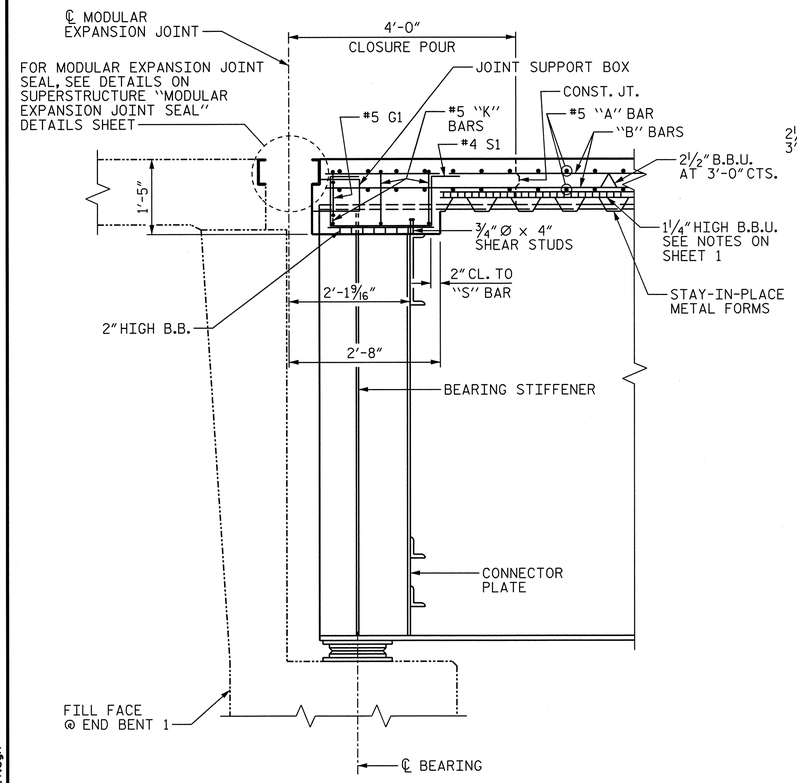

SECTION A-A

AT END BENT 1

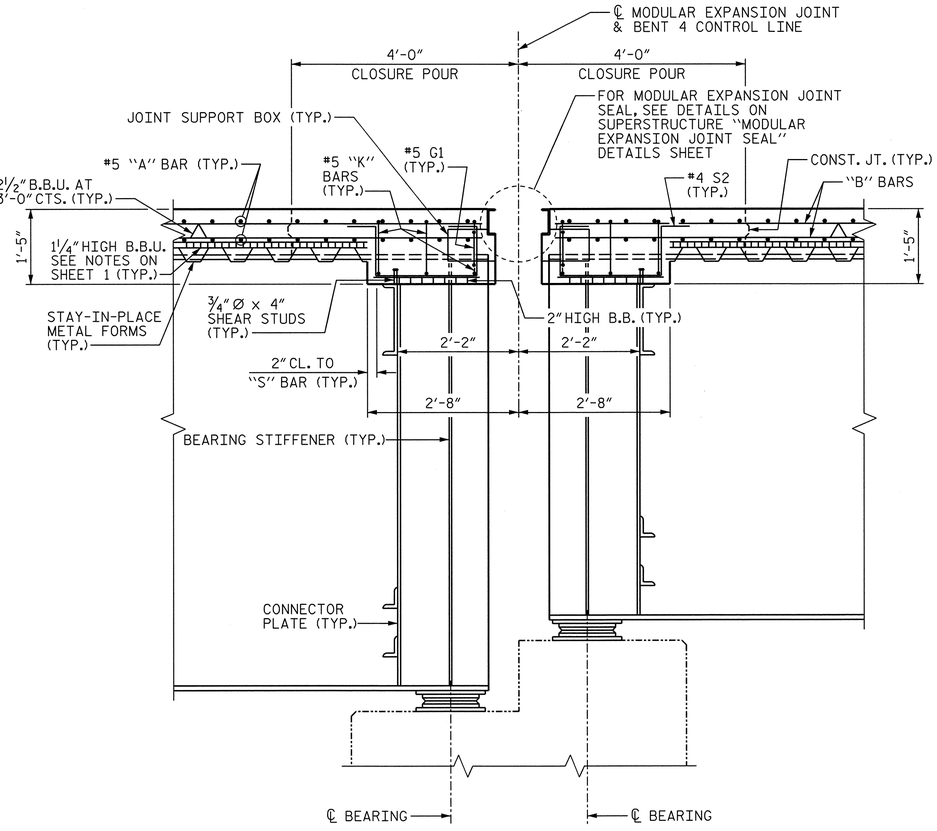

SECTION B-B

AT BENT 4

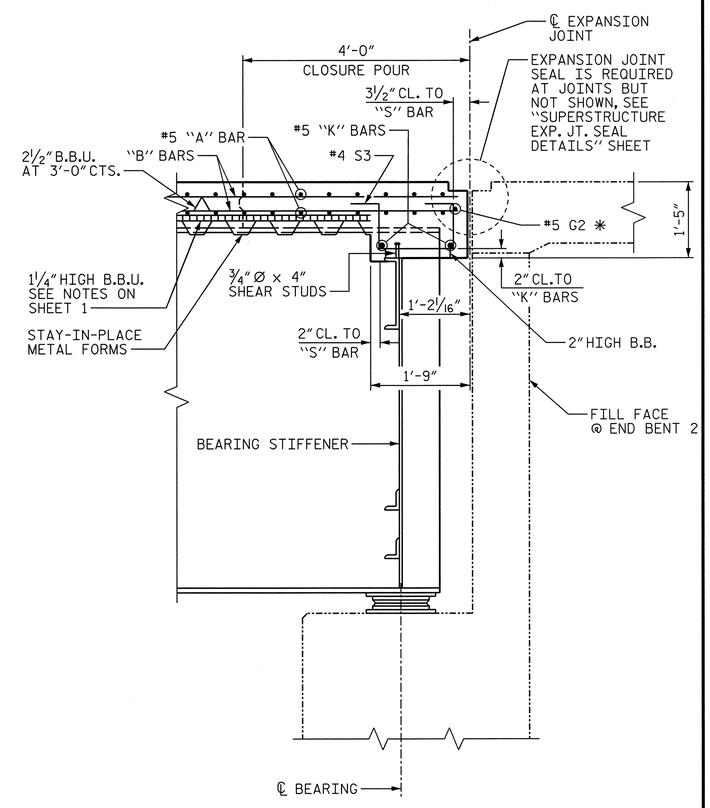

SECTION C-C

AT END BENT 2

✱ #5 G2 BAR MAY BE SHIFTED SLIGHTLY AS NECESSARY, TO CLEAR REINFORCING STEEL.

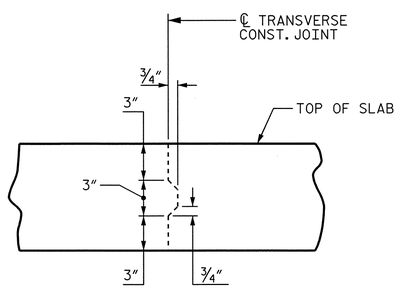

TRANSVERSE CONSTRUCTION JOINT DETAIL

NOTE: REINFORCING STEEL IN SLAB NOT SHOWN. LONGITUDINAL REINFORCING STEEL SHALL BE CONTINUOUS THRU JOINT.

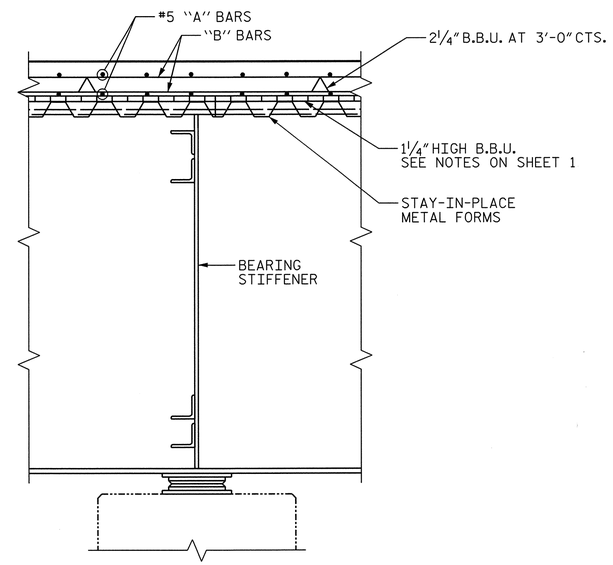

SECTION OF INTERIOR BENT DIAPHRAGM

AT BENTS 1, 2, 3, 5 AND 6

PROJECT NO. U-2525B

GUILFORD COUNTY

STATION: 144+90.00 -L-

SHEET 3 OF 3

STATE OF NORTH CAROLINA
DEPARTMENT OF TRANSPORTATION
RALEIGH

SUPERSTRUCTURE

TYPICAL SECTION DETAILS
UNITS 1 & 2
LEFT LANE

NORTH CAROLINA PROFESSIONAL SEAL 027799 ENGINEER ALLYSON K. ORR
1/10/14

DRAWN BY : B.E. LANNING	DATE : 06/13		
CHECKED BY : A.K. ORR	DATE : 06/13		
DESIGN ENGINEER OF RECORD : A.K. ORR	DATE : 01/14		

MI ENGINEERING
1011 SCHAUB DRIVE, SUITE 100
RALEIGH, NC 27606
(919) 851-6606
FIRM PE NUMBER : P-0671

REVISIONS

NO.	BY:	DATE:	NO.	BY:	DATE:
1			3		
2			4		

SHEET NO. 5-183

TOTAL SHEETS 541

DWG. NO. 11

1/9/2014
4:54:39 PM
User: blanning
Filename: P:\NC Bridges\MI1007.03 U-2525B Guilford\U-2525B\Structures\Left Bridge\U2525B_SD_TS3_4_LT.dgn

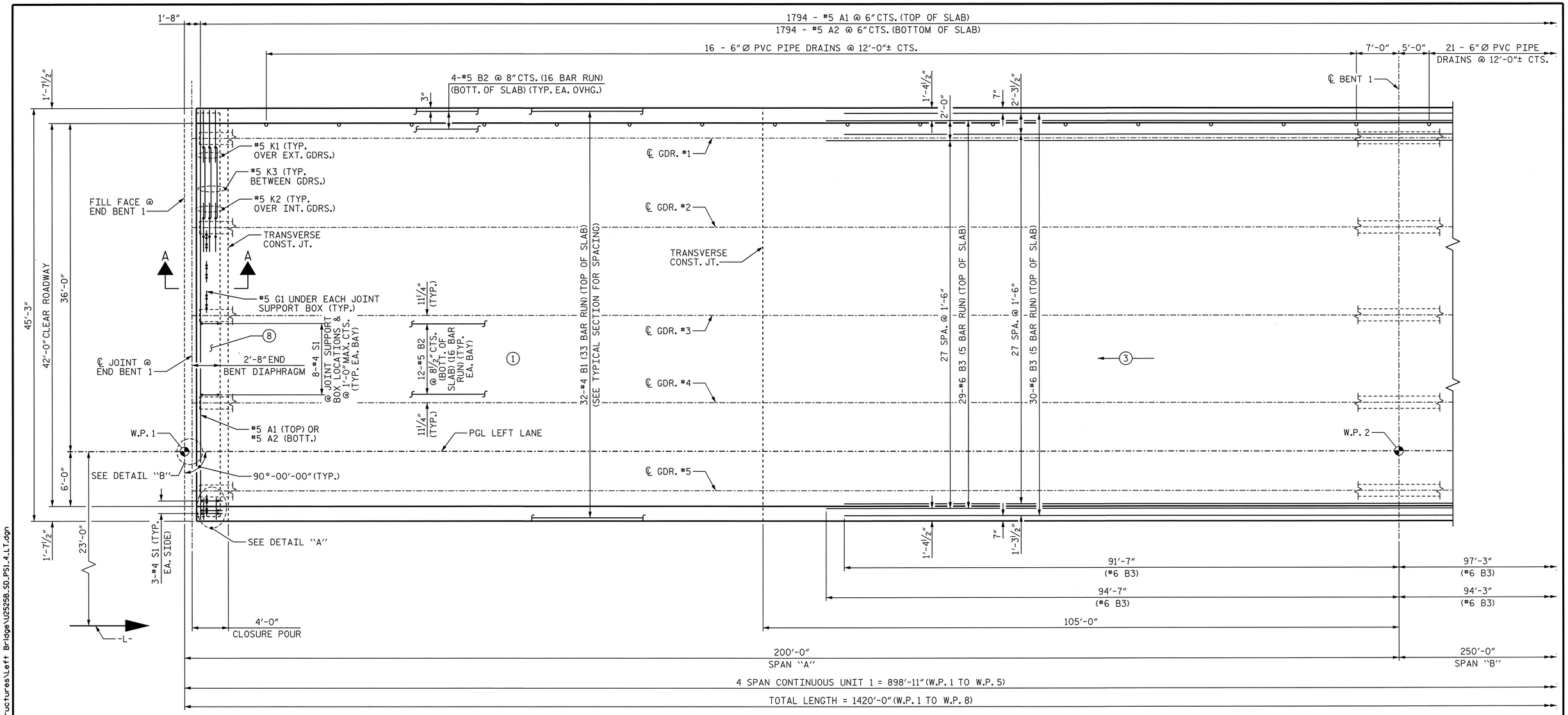

PLAN OF SPAN "A"

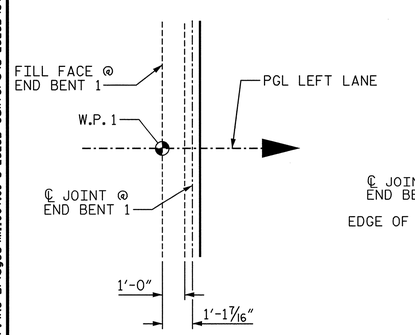

DETAIL "B"

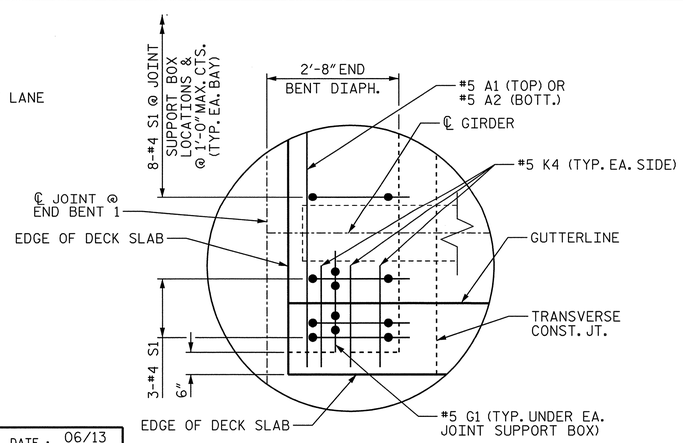

DETAIL "A"

NOTES

FOR REINFORCING STEEL IN BARRIER RAIL NOT SHOWN, SEE "STANDARD CONCRETE BARRIER RAIL" SHEET.

FOR TRANSVERSE CONSTRUCTION JOINT IN DECK SLAB DETAIL, SEE SUPERSTRUCTURE "TYPICAL SECTION DETAILS" SHEET 3 OF 3.

THE "A" BARS IN the DECK MAY BE SHITED SLIGHTLY TO CLEAR THE MODULAR JOINT SUPPORT BOXES.

FOR SECTION A-A, SEE "TYPICAL SECTION DETAILS" SHEET 3 OF 3.

(#) INDICATES POUR NUMBER AND DIRECTION OF POUR.

PROJECT NO. U-2525B
GUILFORD COUNTY
STATION: 144+90.00 -L-

SHEET 1 OF 7

STATE OF NORTH CAROLINA
DEPARTMENT OF TRANSPORTATION
RALEIGH

SUPERSTRUCTURE
PLAN OF SPANS
SPAN "A"
UNIT 1
LEFT LANE

NORTH CAROLINA PROFESSIONAL ENGINEER SEAL 027799 ALLYSON K. ORR 1/10/14

MI ENGINEERING
1011 SCHAUB DRIVE, SUITE 100
RALEIGH, NC 27606
(919) 851-6606
FIRM PE NUMBER : P-0671

REVISIONS						
NO.	BY:	DATE:	NO.	BY:	DATE:	
1			3			
2			4			

SHEET NO. S-184
TOTAL SHEETS 541

DWG. NO. 12

DRAWN BY : B.E. LANNING DATE : 06/13
CHECKED BY : A.K. ORR DATE : 06/13
DESIGN ENGINEER OF RECORD : A.K. ORR DATE : 01/14

1/9/2014
4:54:42 PM
User: blanning
Filename: P:\NC Bridges\MI1007.03 U-2525B Guilford\U-2525B\Structures\Left Bridge\U2525B_SD_PS1_4_LT.dgn

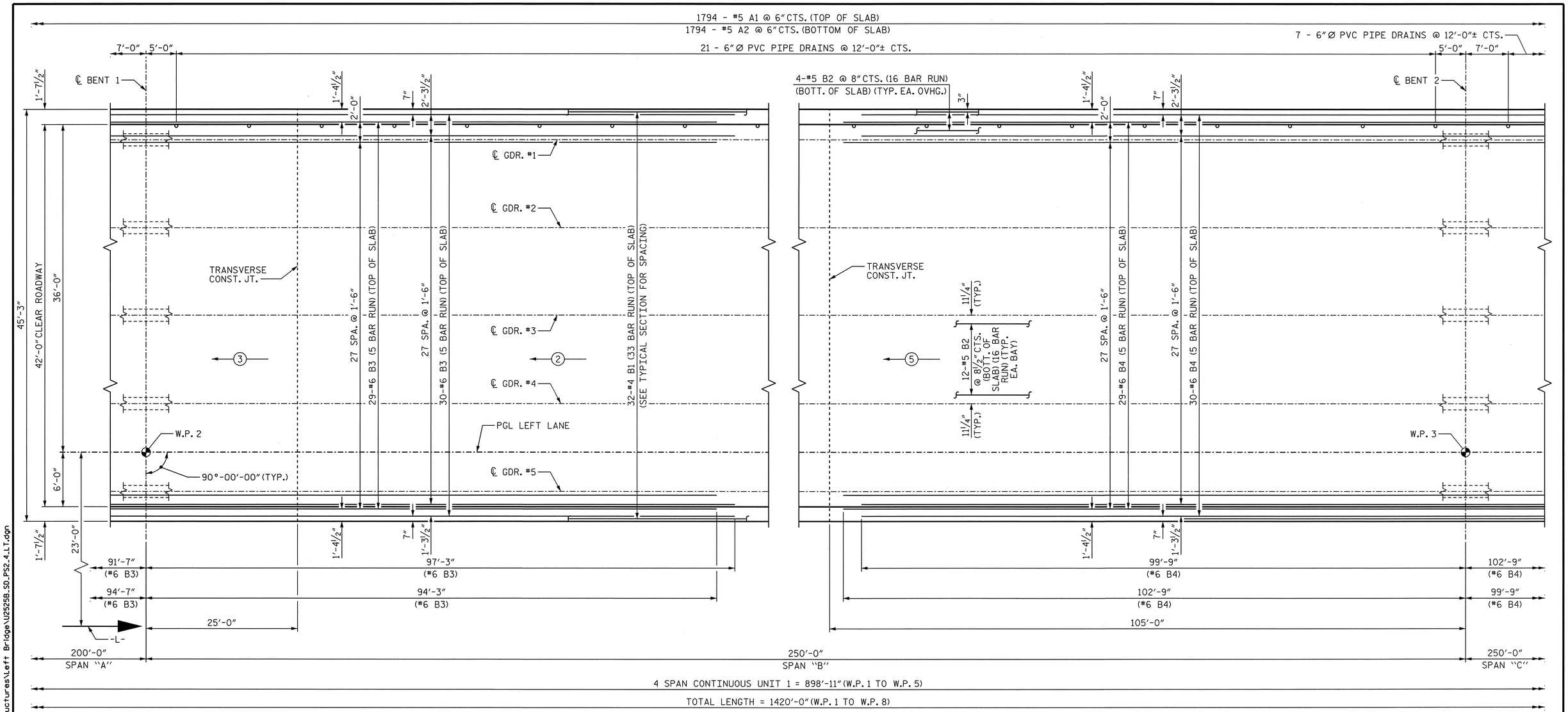

PLAN OF SPAN "B"

NOTES

FOR REINFORCING STEEL IN BARRIER RAIL NOT SHOWN, SEE "STANDARD CONCRETE BARRIER RAIL" SHEET.

FOR TRANSVERSE CONSTRUCTION JOINT IN DECK SLAB DETAIL, SEE SUPERSTRUCTURE "TYPICAL SECTION DETAILS" SHEET 3 OF 3.

(#) INDICATES POUR NUMBER AND DIRECTION OF POUR.

PROJECT NO. U-2525B
GUILFORD COUNTY
STATION: 144+90.00 -L-

SHEET 2 OF 7

STATE OF NORTH CAROLINA
DEPARTMENT OF TRANSPORTATION
RALEIGH

SUPERSTRUCTURE
PLAN OF SPANS
SPAN "B"
UNIT 1
LEFT LANE

NORTH CAROLINA PROFESSIONAL SEAL 027799 ENGINEER ALLYSON K. ORR 1/10/14

MI ENGINEERING
1011 SCHAUB DRIVE, SUITE 100
RALEIGH, NC 27606
(919) 851-6606
FIRM PE NUMBER : P-0671

REVISIONS								SHEET NO.
NO.	BY:	DATE:	NO.	BY:	DATE:			S-185
1			3					TOTAL SHEETS
2			4					541

DRAWN BY : B.E. LANNING DATE : 06/13
CHECKED BY : A.K. ORR DATE : 06/13
DESIGN ENGINEER OF RECORD : A.K. ORR DATE : 01/14

DWG. NO. 13

1/9/2014
4:56:19 PM
User: blanning
Filename: P:\NC Bridges\MI1007.03 U-2525B Guilford\U-2525B\Structures\Left Bridge\U2525B_SD_PS2_4_LT.dgn

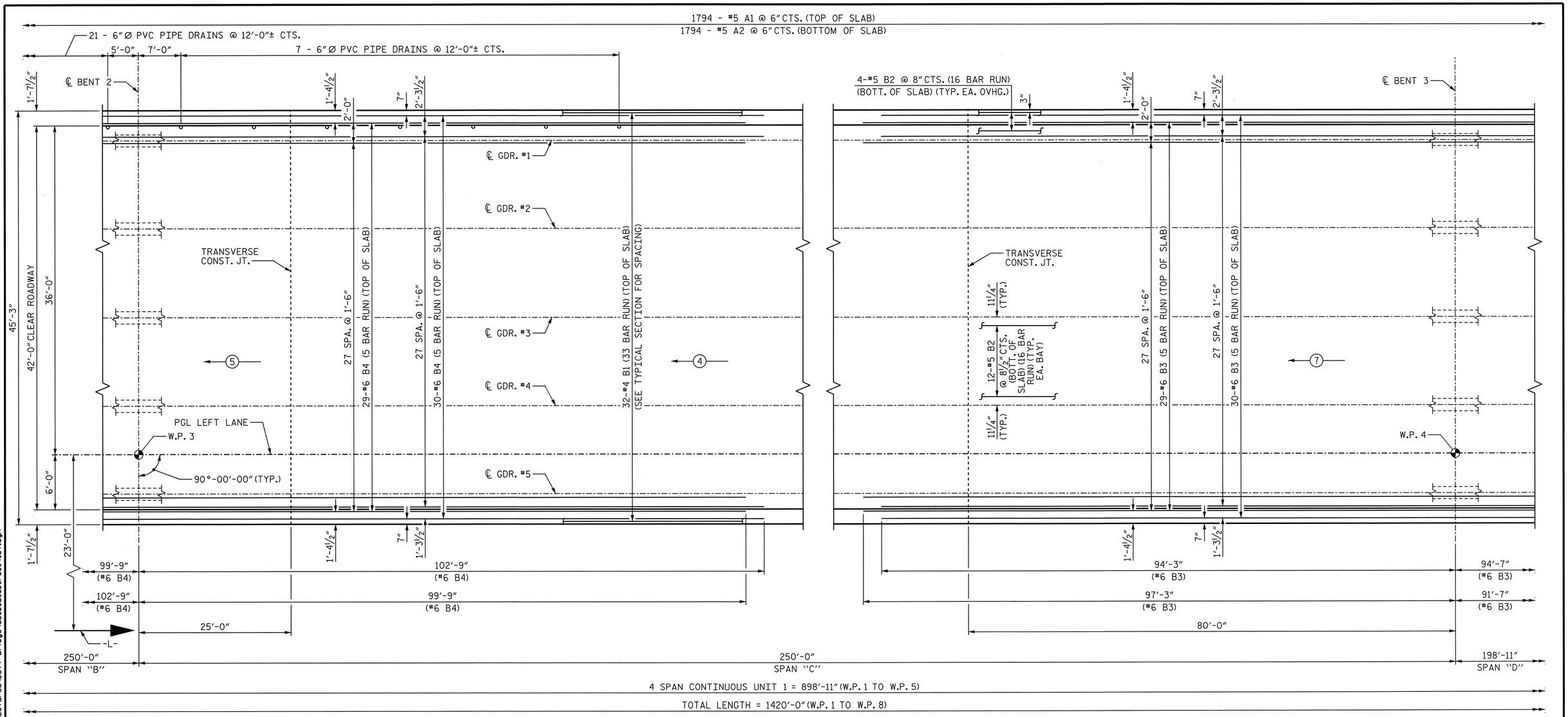

PLAN OF SPAN "C"

NOTES

FOR REINFORCING STEEL IN BARRIER RAIL NOT SHOWN, SEE "STANDARD CONCRETE BARRIER RAIL" SHEET.

FOR TRANSVERSE CONSTRUCTION JOINT IN DECK SLAB DETAIL, SEE SUPERSTRUCTURE "TYPICAL SECTION DETAILS" SHEET 3 OF 3.

←(#)— INDICATES POUR NUMBER AND DIRECTION OF POUR.

PROJECT NO. U-2525B
GUILFORD COUNTY
STATION: 144+90.00 -L-

SHEET 3 OF 7

STATE OF NORTH CAROLINA
DEPARTMENT OF TRANSPORTATION
RALEIGH

SUPERSTRUCTURE

PLAN OF SPANS
SPAN "C"
UNIT 1
LEFT LANE

NORTH CAROLINA PROFESSIONAL SEAL 027799 ENGINEER ALLYSON K. ORR
1/10/14

DRAWN BY : B.E. LANNING	DATE : 06/13		
CHECKED BY : A.K. ORR	DATE : 06/13		
DESIGN ENGINEER OF RECORD : A.K. ORR	DATE : 01/14		

DWG. NO. 14

MI ENGINEERING
1011 SCHAUB DRIVE, SUITE 100
RALEIGH, NC 27606
(919) 851-6606
FIRM PE NUMBER : P-0671

REVISIONS								SHEET NO.
NO.	BY:	DATE:	NO.	BY:	DATE:			5-186
1			3					TOTAL SHEETS
2			4					541

1/9/2014
4:56:22 PM
User: blanning
Filename: P:\NC Bridges\MI1007.03 U-2525B Guilford\U-2525B\Structures\Left Bridge\U2525B_SD_PS3_4_LT.dgn

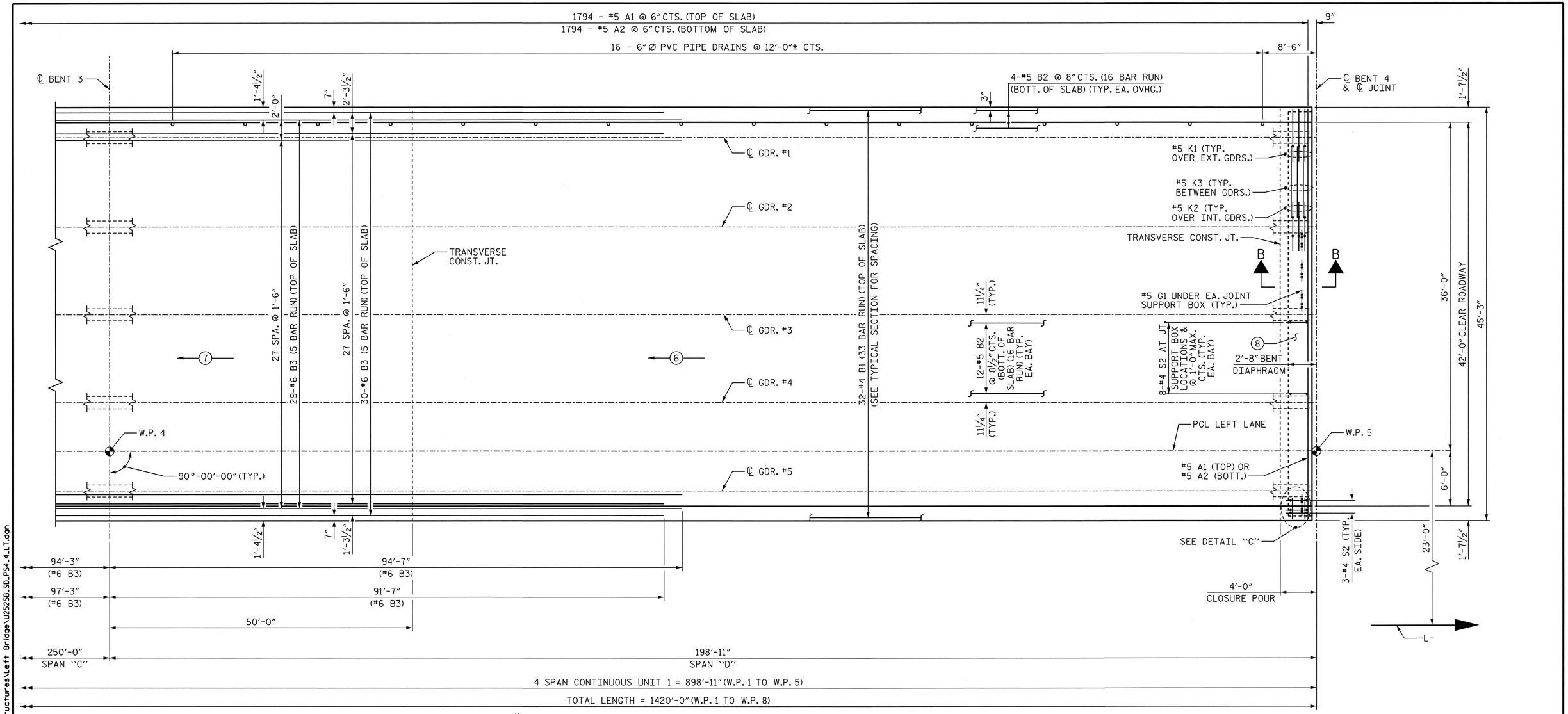

PLAN OF SPAN "D"

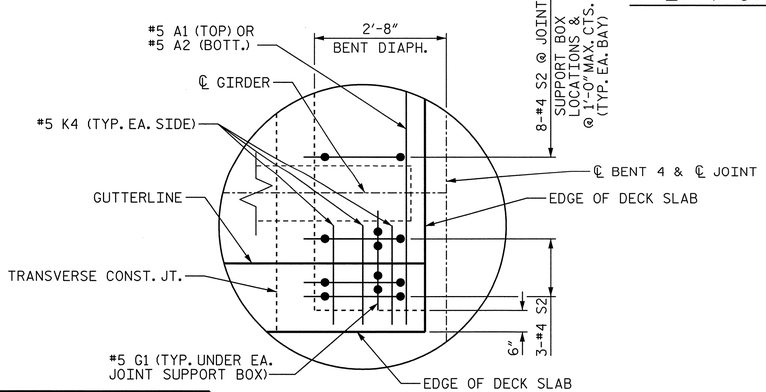

DETAIL "C"

NOTES

FOR REINFORCING STEEL IN BARRIER RAIL NOT SHOWN, SEE "STANDARD CONCRETE BARRIER RAIL" SHEET.

FOR TRANSVERSE CONSTRUCTION JOINT IN DECK SLAB DETAIL, SEE SUPERSTRUCTURE "TYPICAL SECTION DETAILS" SHEET 3 OF 3.

THE "A" BARS IN THE DECK MAY BE SHITED SLIGHTLY TO CLEAR THE MODULAR JOINT SUPPORT BOXES.

FOR SECTION B-B, SEE "TYPICAL SECTION DETAILS" SHEET 3 OF 3.

—(#)— INDICATES POUR NUMBER AND DIRECTION OF POUR.

PROJECT NO. U-2525B
GUILFORD COUNTY
STATION: 144+90.00 -L-

SHEET 4 OF 7

STATE OF NORTH CAROLINA
DEPARTMENT OF TRANSPORTATION
RALEIGH

SUPERSTRUCTURE
PLAN OF SPANS
SPAN "D"
UNIT 1
LEFT LANE

NORTH CAROLINA PROFESSIONAL SEAL 027799 ENGINEER ALLYSON K. ORR
1/10/14

MI ENGINEERING
1011 SCHAUB DRIVE, SUITE 100
RALEIGH, NC 27606
(919) 851-6606
FIRM PE NUMBER : P-0671

REVISIONS							
NO.	BY:	DATE:	NO.	BY:	DATE:		
1			3				
2			4				

SHEET NO. 5-187
TOTAL SHEETS 541

DWG. NO. 15

DRAWN BY : B.E. LANNING DATE : 06/13
CHECKED BY : A.K. ORR DATE : 06/13
DESIGN ENGINEER OF RECORD : A.K. ORR DATE : 01/14

1/9/2014
4:56:24 PM
User: blanning
Filename: P:\NC Bridges\MI1007.03 U-2525B Guilford\U-2525B\Structures\Left Bridge\U2525B_SD_PS4_4_LT.dgn

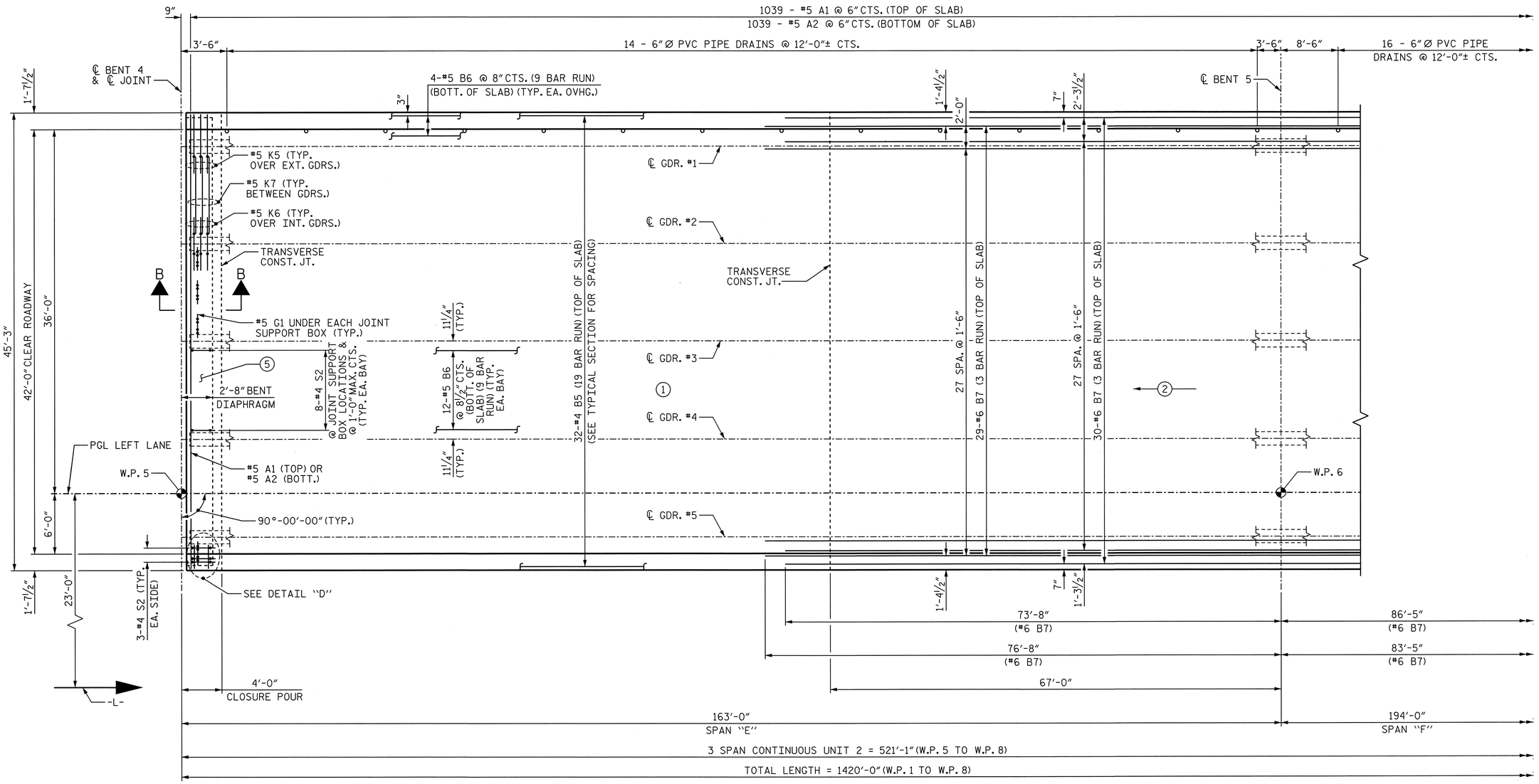

PLAN OF SPAN "E"

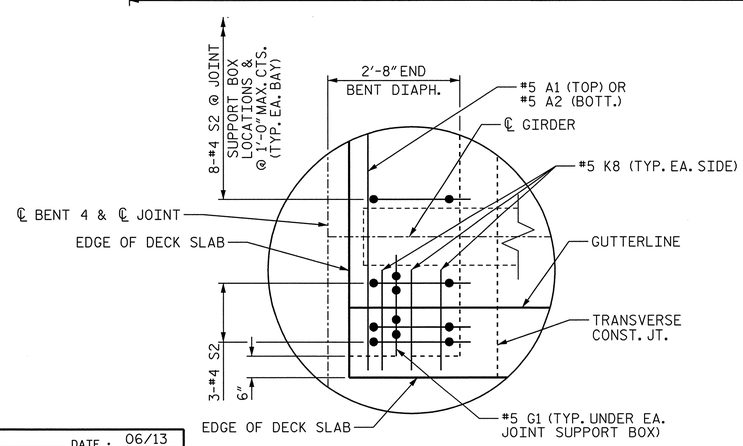

DETAIL "D"

NOTES

FOR REINFORCING STEEL IN BARRIER RAIL NOT SHOWN, SEE "STANDARD CONCRETE BARRIER RAIL" SHEET.

FOR TRANSVERSE CONSTRUCTION JOINT IN DECK SLAB DETAIL, SEE SUPERSTRUCTURE "TYPICAL SECTION DETAILS" SHEET 3 OF 3.

THE "A" BARS IN THE DECK MAY BE SHITED SLIGHTLY TO CLEAR THE MODULAR JOINT SUPPORT BOXES.

FOR SECTION B-B, SEE "TYPICAL SECTION DETAILS" SHEET 3 OF 3.

←(#)— INDICATES POUR NUMBER AND DIRECTION OF POUR.

PROJECT NO. U-2525B
GUILFORD COUNTY
STATION: 144+90.00 -L-

SHEET 5 OF 7

STATE OF NORTH CAROLINA
DEPARTMENT OF TRANSPORTATION
RALEIGH

SUPERSTRUCTURE
PLAN OF SPANS
SPAN "E"
UNIT 2
LEFT LANE

NORTH CAROLINA PROFESSIONAL SEAL 027799 ENGINEER ALLYSON K. ORR
1/10/14

MI ENGINEERING
1011 SCHAUB DRIVE, SUITE 100
RALEIGH, NC 27606
(919) 851-6606
FIRM PE NUMBER : P-0671

REVISIONS							
NO.	BY:	DATE:	NO.	BY:	DATE:		
1			3				
2			4				

SHEET NO. 5-188
TOTAL SHEETS 541

DWG. NO. 16

DRAWN BY :	B.E. LANNING	DATE :	06/13
CHECKED BY :	A.K. ORR	DATE :	06/13
DESIGN ENGINEER OF RECORD :	A.K. ORR	DATE :	01/14

1/9/2014
4:56:27 PM
User:blanning
Filename: P:\NC Bridges\MI1007.03 U-2525B Guilford\U-2525B\Structures\Left Bridge\U2525B_SD_PS5_4_LT.dgn

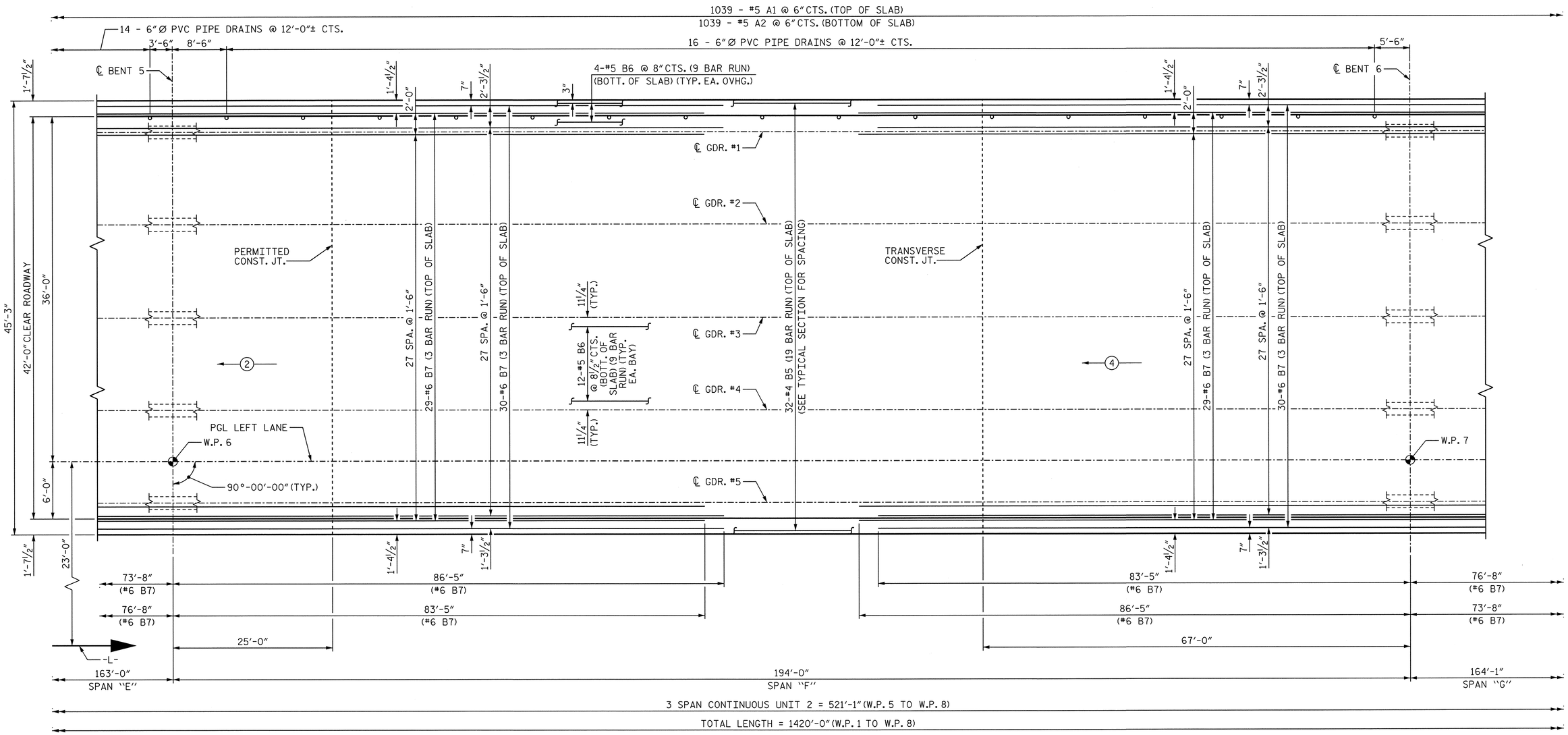

PLAN OF SPAN "F"

NOTES

FOR REINFORCING STEEL IN BARRIER RAIL NOT SHOWN, SEE "STANDARD CONCRETE BARRIER RAIL" SHEET.

FOR TRANSVERSE CONSTRUCTION JOINT IN DECK SLAB DETAIL, SEE SUPERSTRUCTURE "TYPICAL SECTION DETAILS" SHEET 3 OF 3.

(#) INDICATES POUR NUMBER AND DIRECTION OF POUR.

PROJECT NO. U-2525B
GUILFORD COUNTY
STATION: 144+90.00 -L-

SHEET 6 OF 7

STATE OF NORTH CAROLINA
DEPARTMENT OF TRANSPORTATION
RALEIGH

SUPERSTRUCTURE
PLAN OF SPANS
SPAN "F"
UNIT 2
LEFT LANE

NORTH CAROLINA PROFESSIONAL SEAL 027799 ENGINEER ALLYSON K. ORR
1/10/14

DRAWN BY : B.E. LANNING	DATE : 06/13		
CHECKED BY : A.K. ORR	DATE : 06/13		
DESIGN ENGINEER OF RECORD : A.K. ORR	DATE : 01/14		

DWG. NO. 17

MI ENGINEERING
1011 SCHAUB DRIVE, SUITE 100
RALEIGH, NC 27606
(919) 851-6606
FIRM PE NUMBER : P-0671

REVISIONS							
NO.	BY:	DATE:	NO.	BY:	DATE:	SHEET NO.	
1			3			5-189	
2			4			TOTAL SHEETS	
						541	

1/9/2014
4:56:29 PM
User: blanning
Filename: P:\NC Bridges\MI1007.03 U-2525B Guilford\U-2525B\Structures\Left Bridge\U2525B_SD_PS6.4_LT.dgn

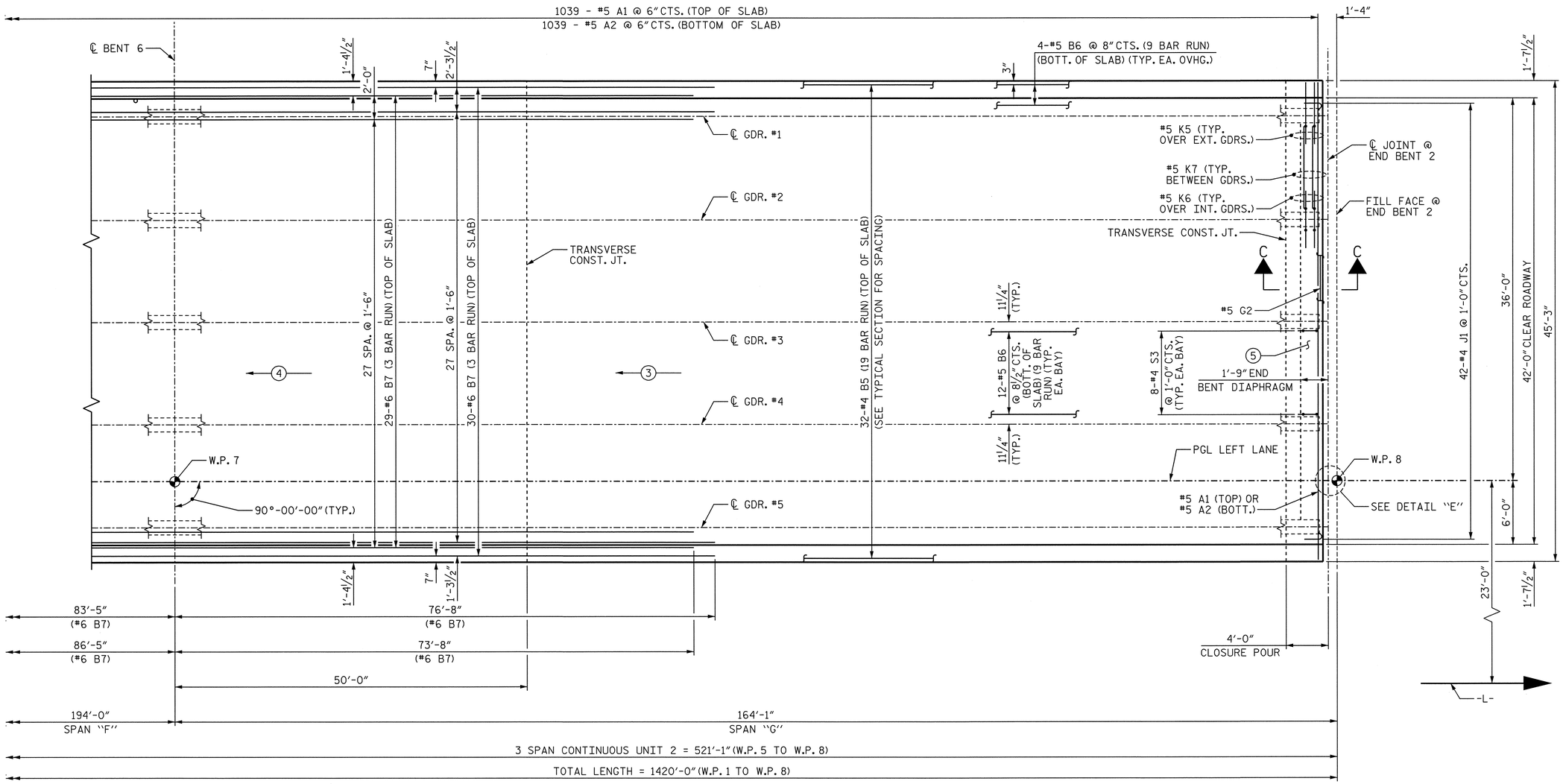

PLAN OF SPAN "G"

NOTES

FOR REINFORCING STEEL IN BARRIER RAIL NOT SHOWN, SEE "STANDARD CONCRETE BARRIER RAIL" SHEET.

FOR TRANSVERSE CONSTRUCTION JOINT IN DECK SLAB DETAIL, SEE SUPERSTRUCTURE "TYPICAL SECTION DETAILS" SHEET 3 OF 3.

FOR SECTION C-C, SEE "TYPICAL SECTION DETAILS" SHEET 3 OF 3.

(#) INDICATES POUR NUMBER AND DIRECTION OF POUR.

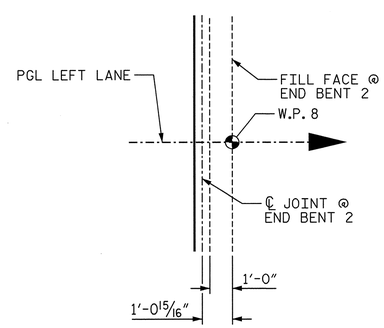

DETAIL "E"

PROJECT NO. U-2525B
GUILFORD COUNTY
STATION: 144+90.00 -L-

SHEET 7 OF 7

STATE OF NORTH CAROLINA
DEPARTMENT OF TRANSPORTATION
RALEIGH

SUPERSTRUCTURE

PLAN OF SPANS
SPAN "G"
UNIT 2
LEFT LANE

NORTH CAROLINA PROFESSIONAL SEAL 021799 ENGINEER ALLYSON K. ORR 1/10/14

DRAWN BY : B.E. LANNING	DATE : 06/13		
CHECKED BY : A.K. ORR	DATE : 06/13		
DESIGN ENGINEER OF RECORD : A.K. ORR	DATE : 01/14		

MI ENGINEERING
1011 SCHAUB DRIVE, SUITE 100
RALEIGH, NC 27606
(919) 851-6606
FIRM PE NUMBER : P-0671

DWG. NO. 18

REVISIONS							
NO.	BY:	DATE:	NO.	BY:	DATE:	SHEET NO.	S-190
1			3			TOTAL SHEETS	541
2			4				

1/9/2014
4:56:32 PM
User: blanning
Filename: P:\NC Bridges\MI1007.03 U-2525B Guilford\U-2525B\Structures\Left Bridge\U2525B_SD_PST_4_LT.dgn

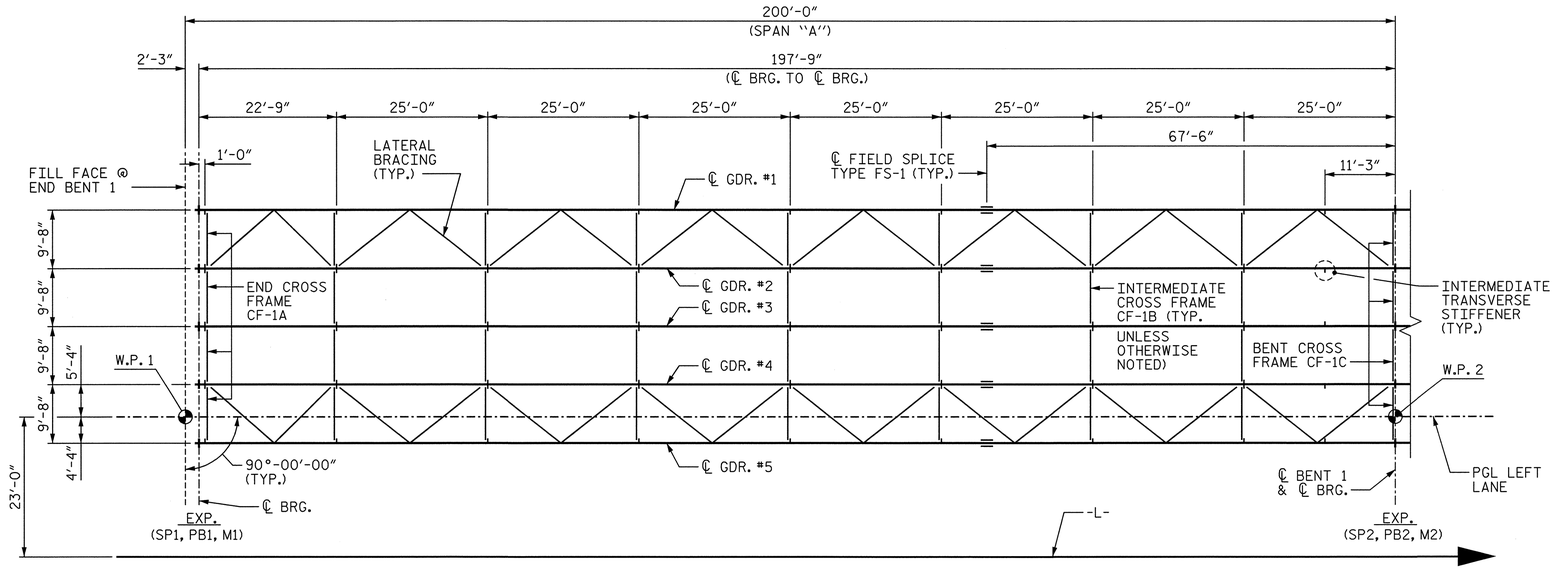

SPAN "A"

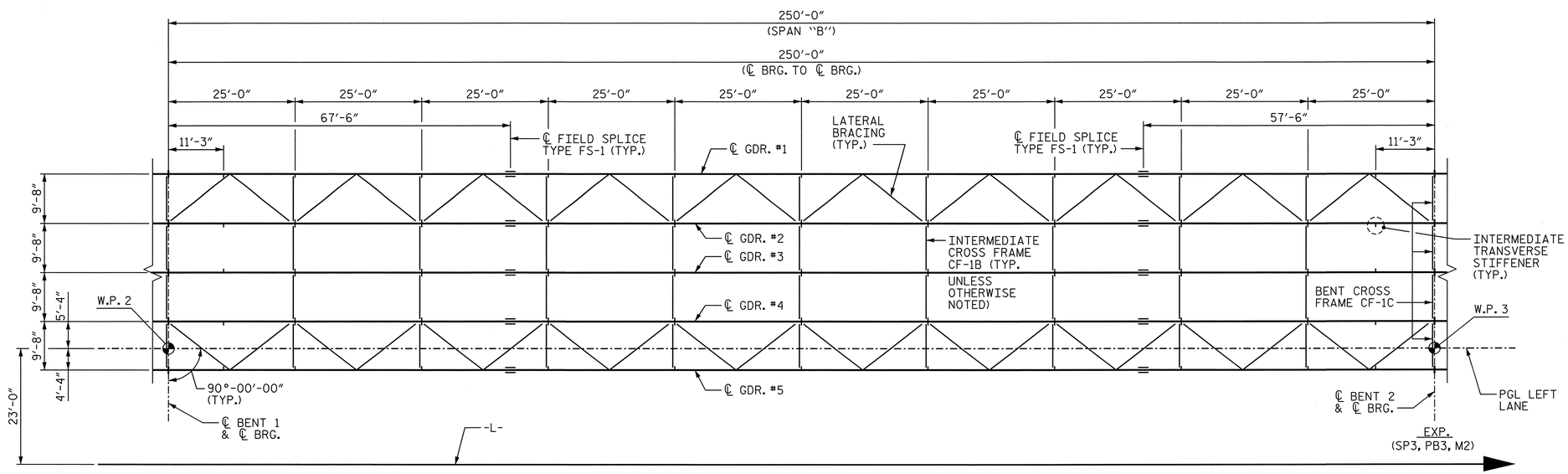

SPAN "B"

FRAMING PLAN

PROJECT NO. U-2525B

GUILFORD COUNTY

STATION: 144+90.00 -L-

SHEET 1 OF 3

STATE OF NORTH CAROLINA
DEPARTMENT OF TRANSPORTATION
RALEIGH

SUPERSTRUCTURE
FRAMING PLAN
UNIT 1
SPANS "A" & "B"
LEFT LANE

NORTH CAROLINA PROFESSIONAL SEAL 027199 ENGINEER ALLYSON K. ORR
1/10/14

DRAWN BY : J.S. ISRAELNAIM	DATE : 05/13		
CHECKED BY : A.K. ORR	DATE : 05/13		
DESIGN ENGINEER OF RECORD : A.K. ORR	DATE : 01/14		

MI ENGINEERING
1011 SCHAUB DRIVE, SUITE 100
RALEIGH, NC 27606
(919) 851-6606
FIRM PE NUMBER : P-0671

DWG. NO. 19

REVISIONS							
NO.	BY:	DATE:	NO.	BY:	DATE:	SHEET NO.	
1			3			5-191	
2			4			TOTAL SHEETS	
						541	

1/9/2014
4:56:34 PM
User: blanning
Filename: P:\NC Bridges\MI1007.03 U-2525B Guilford\U-2525B\Structures\Left Bridge\U2525B_SD_FP1_4_LT.dgn

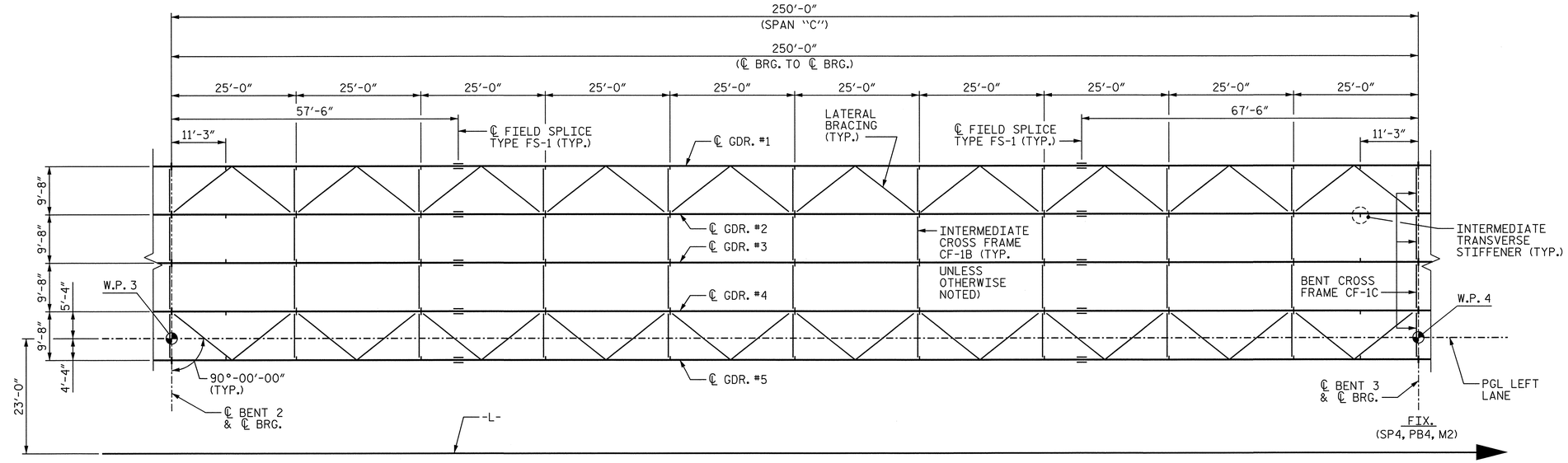

SPAN "C"

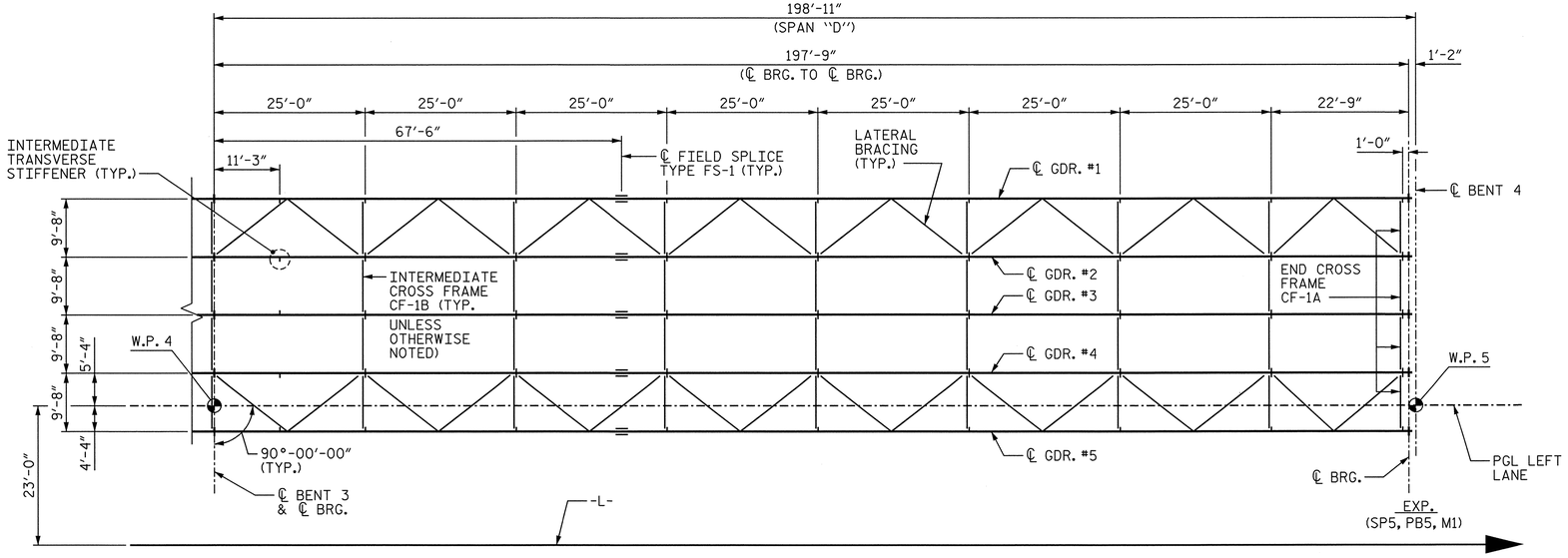

SPAN "D"

FRAMING PLAN

PROJECT NO. U-2525B
GUILFORD COUNTY
STATION: 144+90.00 -L-

SHEET 2 OF 3

STATE OF NORTH CAROLINA
DEPARTMENT OF TRANSPORTATION
RALEIGH

SUPERSTRUCTURE
FRAMING PLAN
UNIT 1
SPANS "C" & "D"
LEFT LANE

NORTH CAROLINA PROFESSIONAL SEAL 027799 ENGINEER ALLYSON K. ORR
1/10/14

DRAWN BY : J.S. ISRAELNAIM	DATE : 05/13		
CHECKED BY : A.K. ORR	DATE : 05/13		
DESIGN ENGINEER OF RECORD : A.K. ORR	DATE : 01/14		

DWG. NO. 20

MI ENGINEERING
1011 SCHAUB DRIVE, SUITE 100
RALEIGH, NC 27606
(919) 851-6606
FIRM PE NUMBER : P-0671

REVISIONS							
NO.	BY:	DATE:	NO.	BY:	DATE:	SHEET NO.	
1			3			5-192	
2			4			TOTAL SHEETS	
						541	

1/9/2014
4:56:36 PM
User: blanning
Filename: P:\NC Bridges\MI1007.03 U-2525B Guilford\U-2525B\Structures\Left Bridge\U2525B_SD_FP2_4_LT.dgn

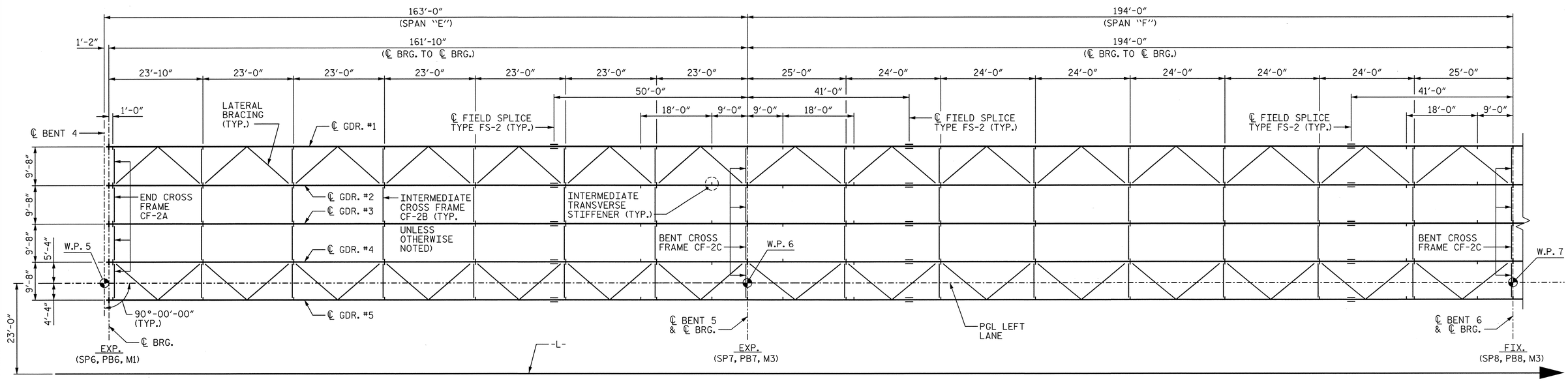

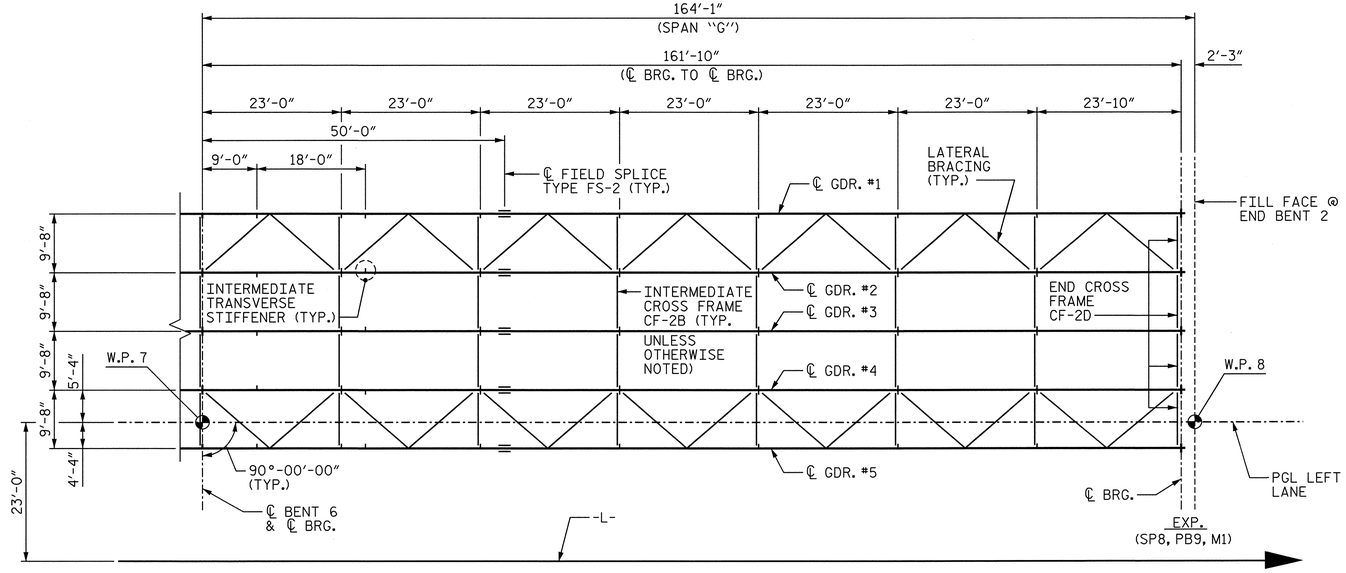

FRAMING PLAN

PROJECT NO. U-2525B
GUILFORD COUNTY
STATION: 144+90.00 -L-

SHEET 3 OF 3

STATE OF NORTH CAROLINA
DEPARTMENT OF TRANSPORTATION
RALEIGH

SUPERSTRUCTURE
FRAMING PLAN
UNIT 2
SPANS "E", "F" & "G"
LEFT LANE

NORTH CAROLINA PROFESSIONAL ENGINEER SEAL 027799 ALLYSON K. ORR
1/10/14

MI ENGINEERING
1011 SCHAUB DRIVE, SUITE 100
RALEIGH, NC 27606
(919) 851-6606
FIRM PE NUMBER : P-0671

REVISIONS						
NO.	BY:	DATE:	NO.	BY:	DATE:	
1			3			
2			4			

SHEET NO. 5-193
TOTAL SHEETS 541

DWG. NO. 21

DRAWN BY : J.S. ISRAELNAIM DATE : 05/13
CHECKED BY : A.K. ORR DATE : 07/13
DESIGN ENGINEER OF RECORD : A.K. ORR DATE : 01/14

1/9/2014
4:56:39 PM
User:blanning
Filename: P:\NC Bridges\MI1007.03 U-2525B Guilford\U-2525B\Structures\Left Bridge\U2525B_SD_FP3_4_LT.dgn

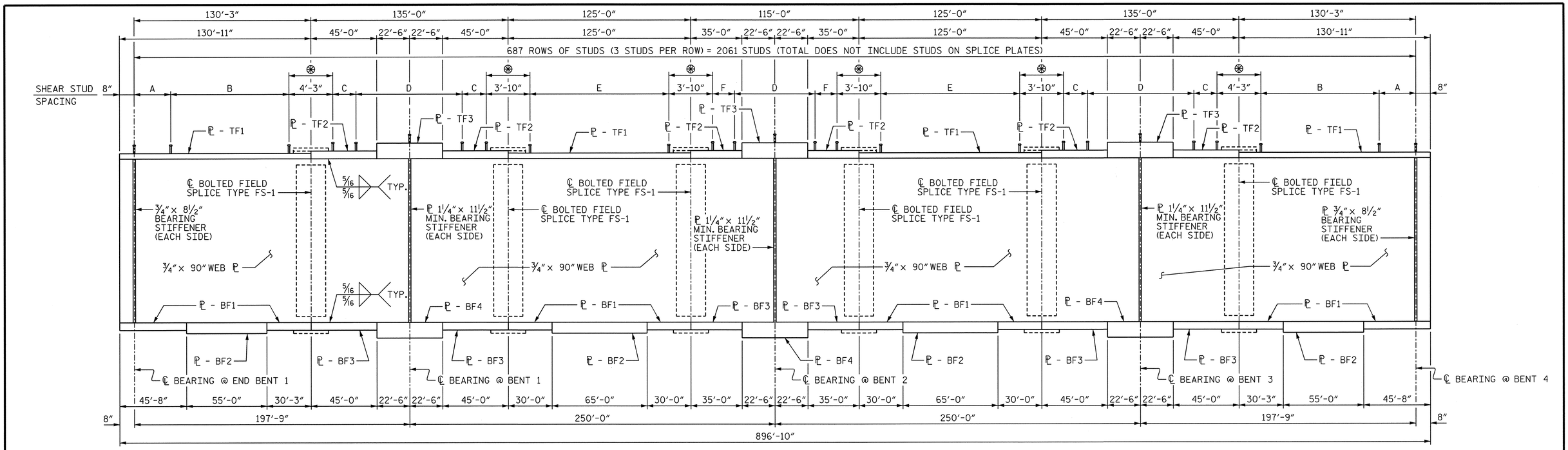

GIRDER ELEVATION

⊛ SEE SHEET 5 OF 5 FOR STUD LOCATIONS ON SPLICE PLATES.

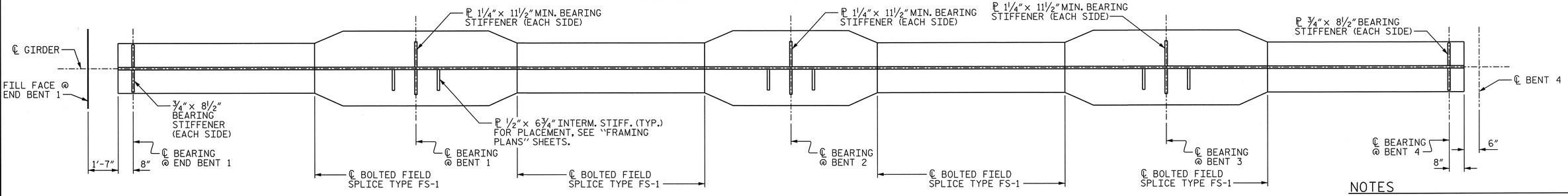

PLAN OF BOTTOM FLANGE

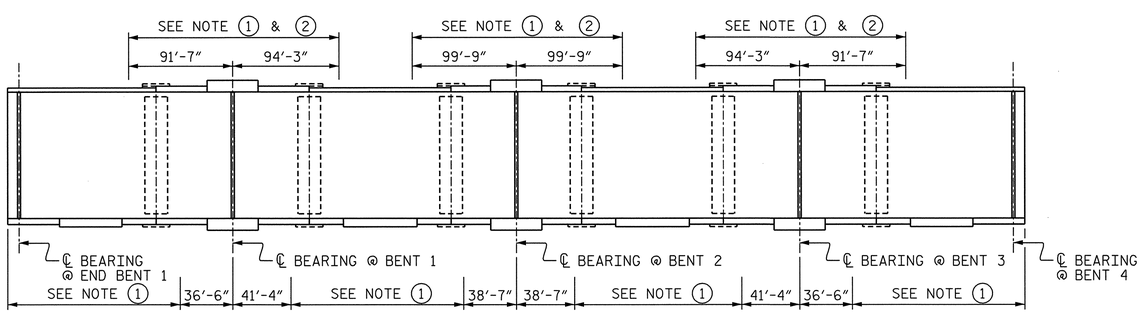

CHARPY V-NOTCH TESTS FOR GIRDERS

NOTE ①: CHARPY V-NOTCH TESTS ARE REQUIRED FOR ALL TOP OR BOTTOM FLANGE PLATES WHICH FALL WITHIN THESE LIMITS, ALL WEB PLATES AND ALL SPLICE PLATES. IF A PERMITTED SHOP FLANGE SPLICE IS NOT USED, CHARPY V-NOTCH TESTS WILL BE REQUIRED FOR THE ENTIRE FLANGE PLATE. FOR CHARPY V-NOTCH TESTS, SEE ARTICLE 1072-9 OF THE STANDARD SPECIFICATIONS.

NOTE ②: NO WELDING OF FORMS OR FALSEWORK TO THE TOP FLANGE WILL BE PERMITTED IN THIS REGION.

TABLE OF SHEAR STUDS

A	B	C	D	E	F
35 SPA. @ 1'-0"	80 SPA. @ 1'-2"	25 SPA. @ 1'-2"	36 SPA. @ 2'-0"	104 SPA. @ 1'-2"	17 SPA. @ 1'-2"

TABLE OF FLANGE PLATES

TOP PLATE	SIZE
TF1	7/8" x 1'-6 1/2"
TF2	1 1/4" x 2'-0"
TF3	2 1/2" x 2'-0"
BOTTOM PLATE	**SIZE**
BF1	1 1/4" x 1'-6"
BF2	1 3/4" x 1'-6"
BF3	1 1/4" x 2'-3"
BF4	2 1/2" x 2'-3"

NOTES

FOR SHEAR STUD DETAILS, SEE SHEET 3 OF 5.

FOR BOLTED FIELD SPLICE DETAILS, SEE SHEET 5 OF 5.

FOR INTERMEDIATE STIFFENER LOCATIONS, SEE FRAMING PLANS.

PROJECT NO. U-2525B

GUILFORD COUNTY

STATION: 144+90.00 -L-

SHEET 1 OF 5

NORTH CAROLINA PROFESSIONAL SEAL 027799 ENGINEER ALLYSON K. ORR
1/10/14

STATE OF NORTH CAROLINA
DEPARTMENT OF TRANSPORTATION
RALEIGH

SUPERSTRUCTURE

STRUCTURAL STEEL DETAILS
UNIT 1
LEFT LANE

DRAWN BY : B.E. LANNING DATE : 06/13
CHECKED BY : A.K. ORR DATE : 07/13
DESIGN ENGINEER OF RECORD : A.K. ORR DATE : 01/14

DWG. NO. 22

MI ENGINEERING
1011 SCHAUB DRIVE, SUITE 100
RALEIGH, NC 27606
(919) 851-6606
FIRM PE NUMBER : P-0671

REVISIONS								SHEET NO.
NO.	BY:	DATE:	NO.	BY:	DATE:			5-194
1			3					TOTAL SHEETS
2			4					541

1/9/2014
4:56:41 PM
User: blanning
Filename: P:\NC Bridges\WI1007.03 U-2525B Guilford\U-2525B\Structures\Left Bridge\U2525B_SD_SS1_4_LT.dgn

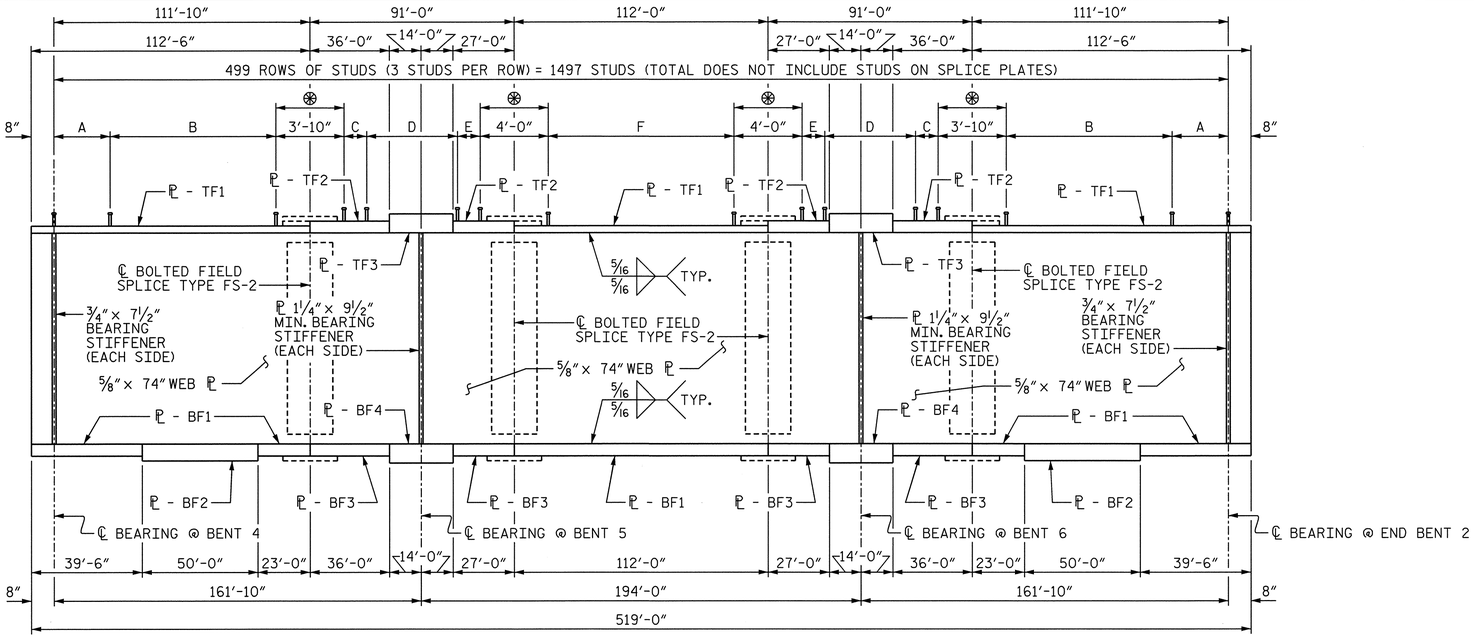

GIRDER ELEVATION

⊛ SEE SHEET 5 OF 5 FOR STUD LOCATIONS ON SPLICE PLATES.

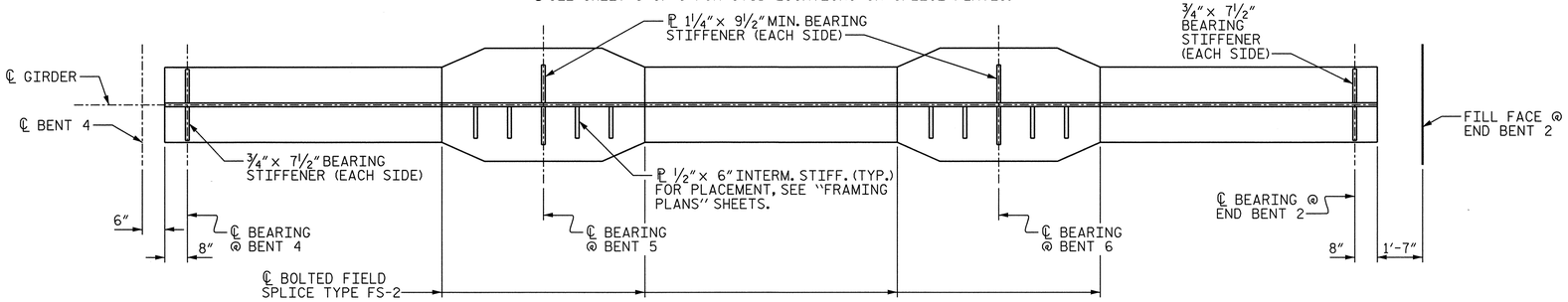

PLAN OF BOTTOM FLANGE

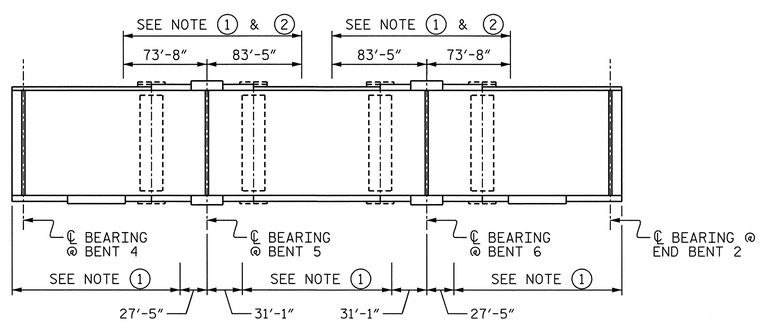

CHARPY V-NOTCH TESTS FOR GIRDERS

NOTE 1: CHARPY V-NOTCH TESTS ARE REQUIRED FOR ALL TOP OR BOTTOM FLANGE PLATES WHICH FALL WITHIN THESE LIMITS, ALL WEB PLATES AND ALL SPLICE PLATES. IF A PERMITTED SHOP FLANGE SPLICE IS NOT USED, CHARPY V-NOTCH TESTS WILL BE REQUIRED FOR THE ENTIRE FLANGE PLATE. FOR CHARPY V-NOTCH TESTS, SEE ARTICLE 1072-9 OF THE STANDARD SPECIFICATIONS.

NOTE 2: NO WELDING OF FORMS OR FALSEWORK TO THE TOP FLANGE WILL BE PERMITTED IN THIS REGION.

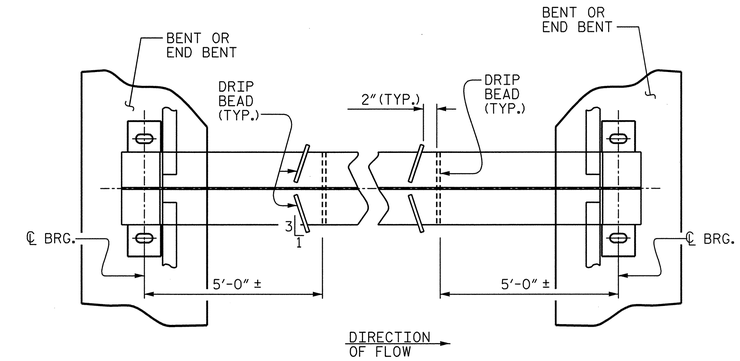

PART PLAN - BOTTOM FLANGE

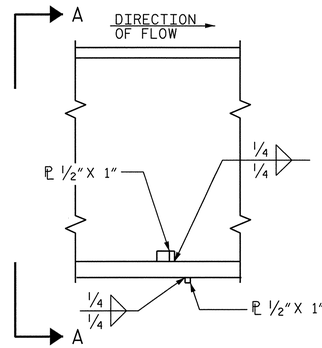

SECTION

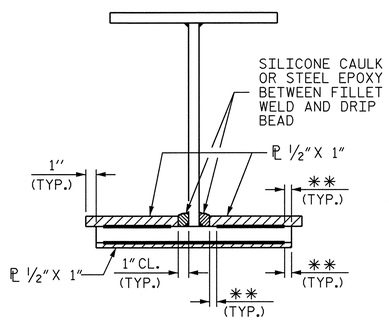

VIEW A-A

** SEE "WELD TERMINATION DETAILS" SHEET 2 OF 3.

DRIP BEAD DETAILS

NOTES

FOR SHEAR STUD DETAILS, SEE SHEET 3 OF 5.

FOR BOLTED FIELD SPLICE DETAILS, SEE SHEET 5 OF 5.

FOR INTERMEDIATE STIFFENER LOCATIONS, SEE FRAMING PLANS.

TABLE OF SHEAR STUDS					
A	B	C	D	E	F
33 SPA. @ 9"	93 SPA. @ 11"	24 SPA. @ 1'-0"	20 SPA. @ 2'-0"	23 SPA. @ 1'-0"	108 SPA. @ 1'-0"

TABLE OF FLANGE PLATES	
TOP PLATE	SIZE
TF1	3/4" x 1'-4"
TF2	1 1/4" x 1'-8"
TF3	2 1/8" x 1'-8"
BOTTOM PLATE	SIZE
BF1	1 1/4" x 1'-4"
BF2	1 3/4" x 1'-4"
BF3	1 1/4" x 2'-0"
BF4	2 1/8" x 2'-0"

PROJECT NO. U-2525B
GUILFORD COUNTY
STATION: 144+90.00 -L-

SHEET 2 OF 5

STATE OF NORTH CAROLINA
DEPARTMENT OF TRANSPORTATION
RALEIGH

SUPERSTRUCTURE

STRUCTURAL STEEL DETAILS
UNIT 2
LEFT LANE

NORTH CAROLINA PROFESSIONAL SEAL 027799 ENGINEER ALLYSON K. ORR
1/10/14

MI ENGINEERING
1011 SCHAUB DRIVE, SUITE 100
RALEIGH, NC 27606
(919) 851-6606
FIRM PE NUMBER : P-0671

DWG. NO. 23

REVISIONS							
NO.	BY:	DATE:	NO.	BY:	DATE:	SHEET NO.	5-195
1			3			TOTAL SHEETS	541
2			4				

DRAWN BY :	B.E. LANNING	DATE :	06/13
CHECKED BY :	A.K. ORR	DATE :	07/13
DESIGN ENGINEER OF RECORD :	A.K. ORR	DATE :	01/14

1/9/2014
4:56:44 PM
User: blanning
Filename: P:\NC Bridges\MI1007.03 U-2525B Guilford\U-2525B\Structures\Left Bridge\U2525B_SD_SS2_4_LT.dgn

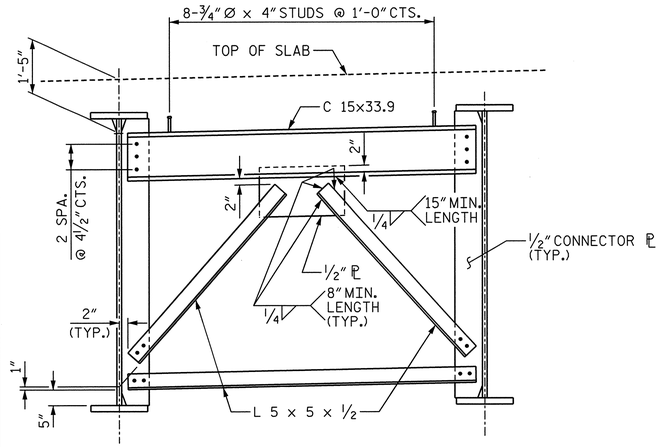

END CROSS FRAME CF-1A

(AT END BENT 1 & BENT 4)

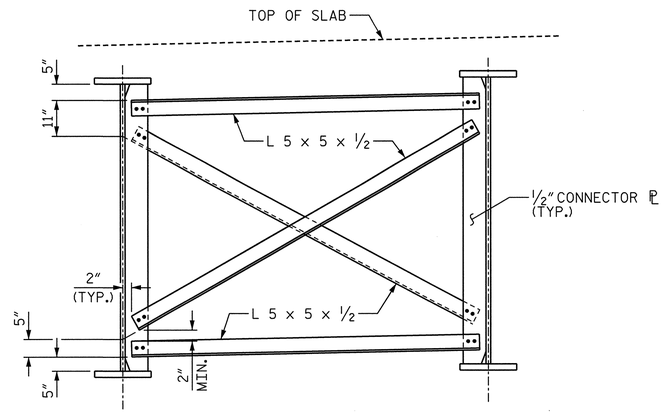

INTERMEDIATE CROSS FRAME CF-1B

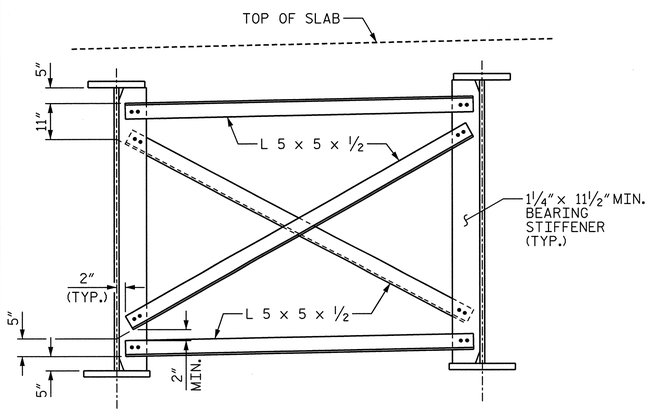

BENT CROSS FRAME CF-1C

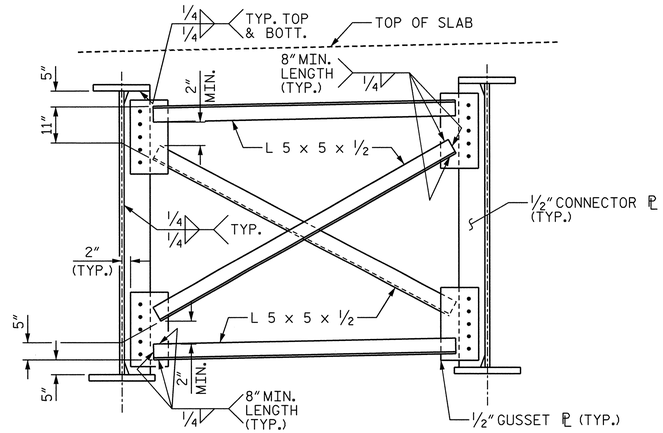

OPTIONAL INTERMEDIATE CROSS FRAME CF-1B

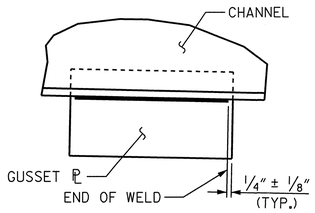

TYPICAL GUSSET PLATE CONNECTION

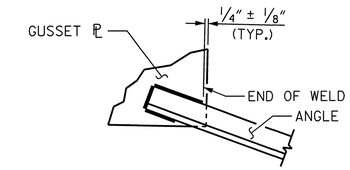

TYPICAL "ANGLE" TO GUSSET PLATE CONNECTION

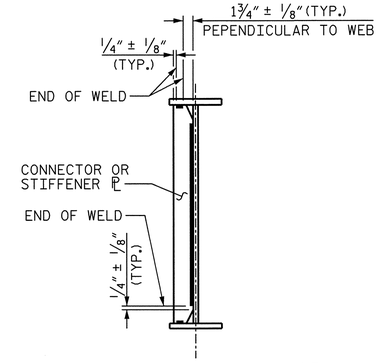

TYPICAL STIFFINER OR CONNECTOR PLATE CONNECTIONS

WELD TERMINATION DETAILS

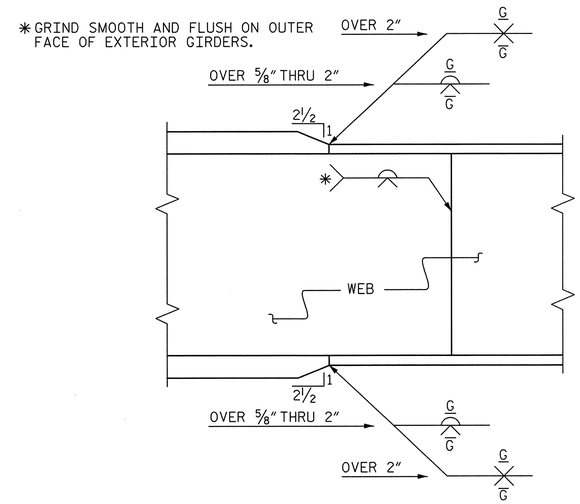

ELEVATION

TYPICAL FLANGE AND WEB BUTT JOINT

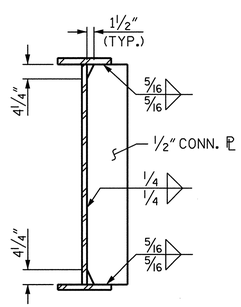

CONNECTOR PLATE WELD DETAIL

UNIT 1

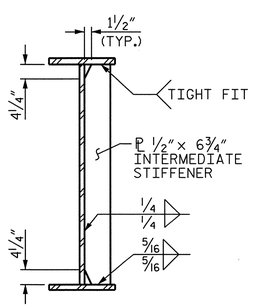

INTERMEDIATE STIFFENER

UNIT 1

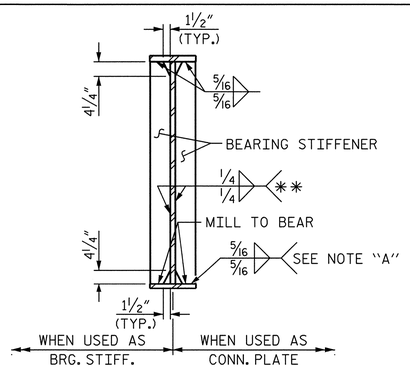

BEARING STIFFENER

UNIT 1

NOTE A:
ONLY WELD BEARING STIFFENER TO BOTTOM FLANGE IF DIAPHRAGM IS ATTACHED TO BEARING STIFFENER.

BEARING STIFFENER MAY REQUIRE COPING IF WIDER THAN BOTTOM FLANGE.

** PER BRIDGE WELDING CODE FIG. 2.3(c) BEVEL IF NECESSARY.

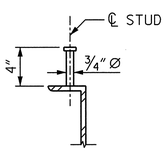

ON DIAPHRAGMS

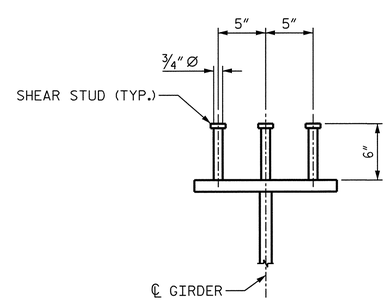

ON GIRDERS

SHEAR STUD DETAILS

STUDS ON GIRDERS MAY BE SHIFTED SLIGHTLY, IF NECESSARY, TO CLEAR FLANGE SPLICE WELD.

DWG. NO. 24

PROJECT NO. U-2525B

GUILFORD COUNTY

STATION: 144+90.00 -L-

SHEET 3 OF 5

STATE OF NORTH CAROLINA
DEPARTMENT OF TRANSPORTATION
RALEIGH

SUPERSTRUCTURE

STRUCTURAL STEEL DETAILS

LEFT LANE

NORTH CAROLINA PROFESSIONAL SEAL 021799 ENGINEER ALLYSON K. ORR 1/10/14

MI ENGINEERING
1011 SCHAUB DRIVE, SUITE 100
RALEIGH, NC 27606
(919) 851-6606
FIRM PE NUMBER : P-0671

REVISIONS							SHEET NO.
NO.	BY:	DATE:	NO.	BY:	DATE:		5-196
1			3				TOTAL SHEETS
2			4				541

DRAWN BY :	B.E. LANNING	DATE :	06/13
CHECKED BY :	A.K. ORR	DATE :	07/13
DESIGN ENGINEER OF RECORD :	A.K. ORR	DATE :	01/14

1/9/2014
4:58:22 PM
User: blanning
Filename: P:\NC Bridges\MI1007.03 U-2525B Guilford\U-2525B\Structures\Left Bridge\U2525B_SD_SS3_4_LT.dgn

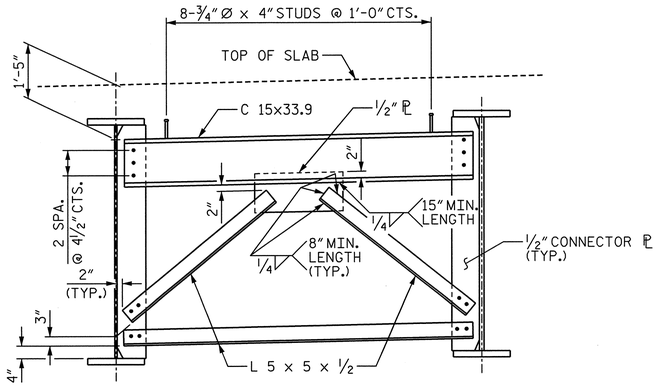

END CROSS FRAME CF-2A

(AT BENT 4)

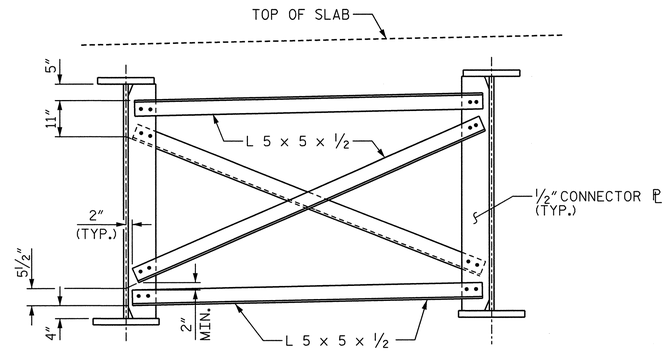

INTERMEDIATE CROSS FRAME CF-2B

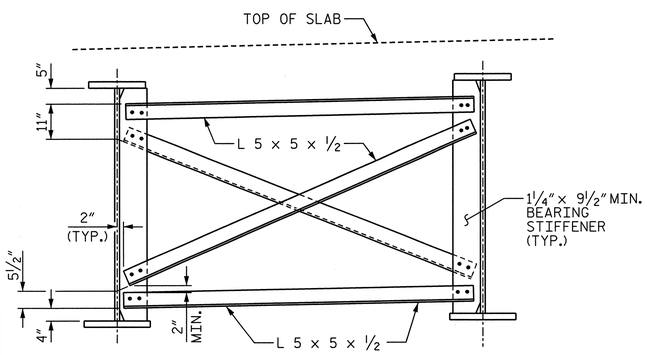

BENT CROSS FRAME CF-2C

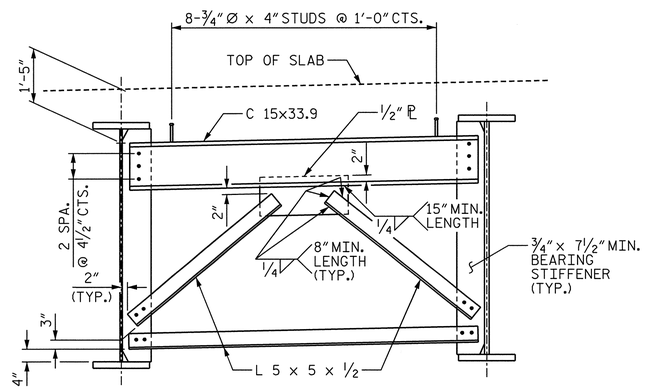

END CROSS FRAME CF-2D

(AT END BENT 2)

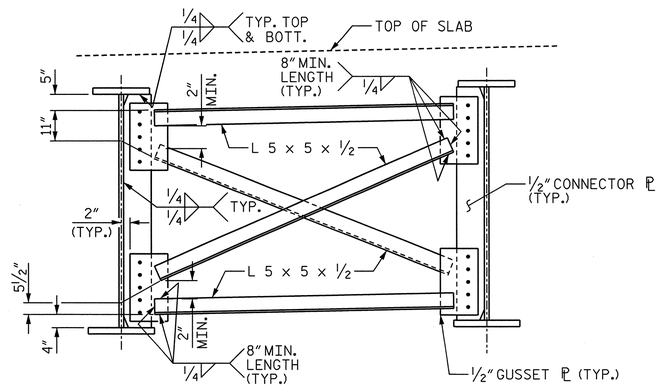

OPTIONAL INTERMEDIATE CROSS FRAME CF-2B

NOTES

ALL STRUCTURAL STEEL SHALL BE AASHTO M270 GRADE 50W AND PAINTED IN ACCORDANCE WITH SYSTEM 4 OF ARTICLE 442-7 OF THE STANDARD SPECIFICATIONS, UNLESS OTHERWISE NOTED ON THE PLANS.

ALL DIMENSIONS SHOWN ARE HORIZONTAL OR VERTICAL, UNLESS OTHERWISE NOTED.

ALL FIELD CONNECTIONS TO BE 7/8" DIA. HIGH STRENGTH BOLTS, UNLESS OTHERWISE NOTED.

BEARING STIFFENERS ARE TO BE PLACED NORMAL TO THE WEB OF THE GIRDER AND SHALL BE PLUMB.

PERMITTED FLANGE AND WEB SHOP SPLICES SHALL NOT BE LOCATED WITHIN 15 FEET OF MAXIMUM DEAD LOAD DEFLECTION (NOR WITHIN 15 FEET OF INTERMEDIATE BEARINGS OF CONTINUOUS UNITS). KEEP 2 FEET MINIMUM BETWEEN WEB AND FLANGE SHOP SPLICES. KEEP 6" MINIMUM BETWEEN CONNECTOR PLATE OR TRANSVERSE STIFFENER WELDS AND WEB OR FLANGE SHOP SPLICES.

STUDS ON GIRDERS MAY BE SHIFTED UP TO 1" IF NECESSARY TO CLEAR FLANGE SPLICE WELD.

TENSION ON THE ASTM A325 BOLTS SHALL BE CALIBRATED USING DIRECT TENSION INDICATOR WASHERS IN ACCORDANCE WITH ARTICLE 440-8 OF THE STANDARD SPECIFICATIONS.

ENDS OF GIRDERS SHALL BE PLUMB.

STRUCTURAL STEEL ERECTION IN A CONTINUOUS UNIT SHALL BE COMPLETE BEFORE FALSEWORK OR FORMS ARE PLACED ON THE UNIT.

AT THE CONTRACTOR'S OPTION, THE CROSS FRAME WITH THE WELDED GUSSET PLATES MAY BE USED IN LIEU OF THE CROSS FRAME WITH BOLTED ANGLES AT NO ADDITIONAL COST TO THE DEPARTMENT.

FABRICATORS SHALL DETAIL DIAPHRAGM MEMBERS AND CONNECTIONS FOR STEEL DEAD LOAD FIT UP.

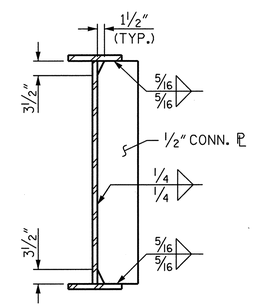

CONNECTOR PLATE WELD DETAIL

UNIT 2

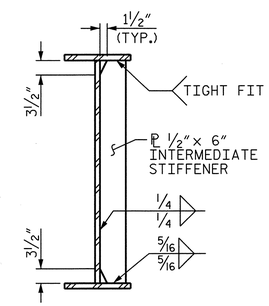

INTERMEDIATE STIFFENER

UNIT 2

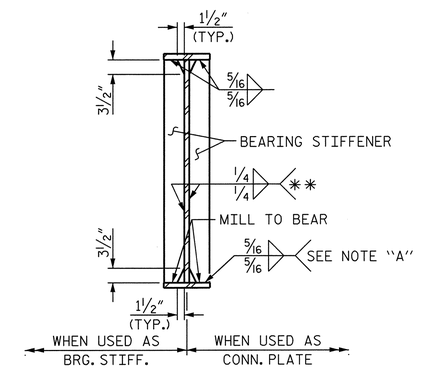

BEARING STIFFENER

UNIT 2

NOTE A:
ONLY WELD BEARING STIFFENER TO BOTTOM FLANGE IF DIAPHRAGM IS ATTACHED TO BEARING STIFFENER.

BEARING STIFFENER MAY REQUIRE COPING IF WIDER THAN BOTTOM FLANGE.

** PER BRIDGE WELDING CODE FIG. 2.3(c) BEVEL IF NECESSARY.

PROJECT NO. U-2525B

GUILFORD COUNTY

STATION: 144+90.00 -L-

SHEET 4 OF 5

STATE OF NORTH CAROLINA
DEPARTMENT OF TRANSPORTATION
RALEIGH

SUPERSTRUCTURE

STRUCTURAL STEEL DETAILS

LEFT LANE

NORTH CAROLINA PROFESSIONAL SEAL 027799 ENGINEER ALLYSON K. ORR 2/27/14

DRAWN BY : B.E. LANNING	DATE : 07/13
CHECKED BY : A.K. ORR	DATE : 07/13
DESIGN ENGINEER OF RECORD : A.K. ORR	DATE : 01/14

MI ENGINEERING
1011 SCHAUB DRIVE, SUITE 100
RALEIGH, NC 27606
(919) 851-6606
FIRM PE NUMBER : P-0671

DWG. NO. 25

REVISIONS						
NO.	BY:	DATE:	NO.	BY:	DATE:	
1			3			
2			4			

SHEET NO. S-1917

TOTAL SHEETS 54

2/27/2014
2:33:14 PM
User: blanning
Filename: P:\NC Bridges\MI1007.03 U-2525B Guilford\U-2525B\Structures\Left Bridge\U2525B_SD_SS4_4_LT.dgn

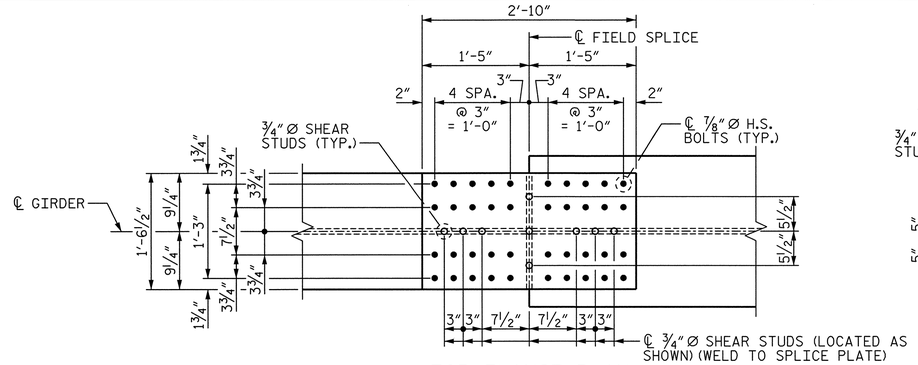

TOP FLANGE PLAN

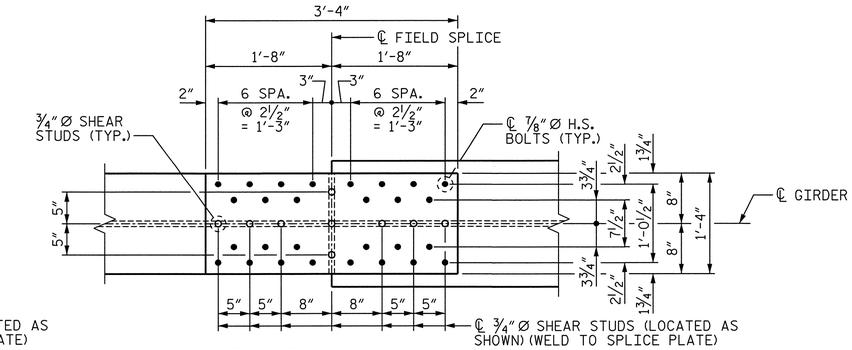

TOP FLANGE PLAN

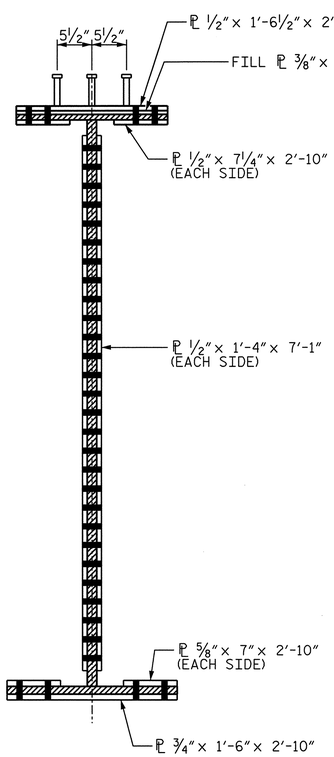

SECTION A-A

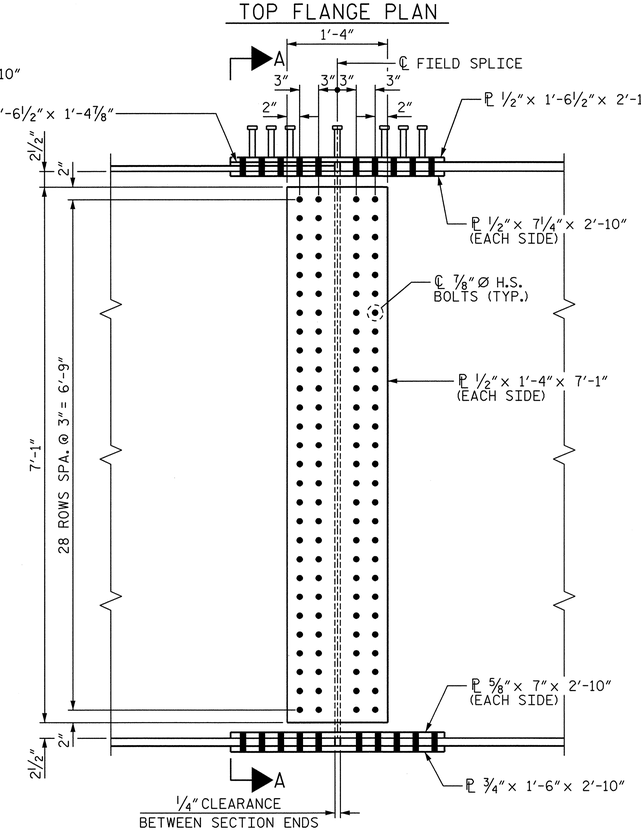

ELEVATION

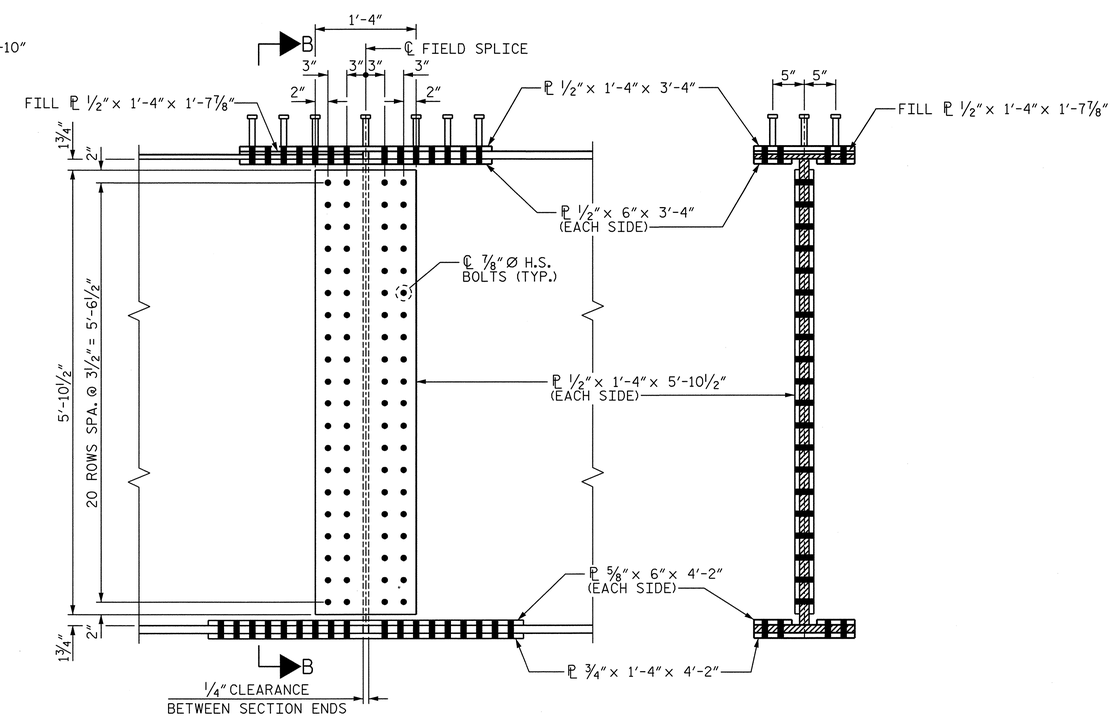

ELEVATION

SECTION B-B

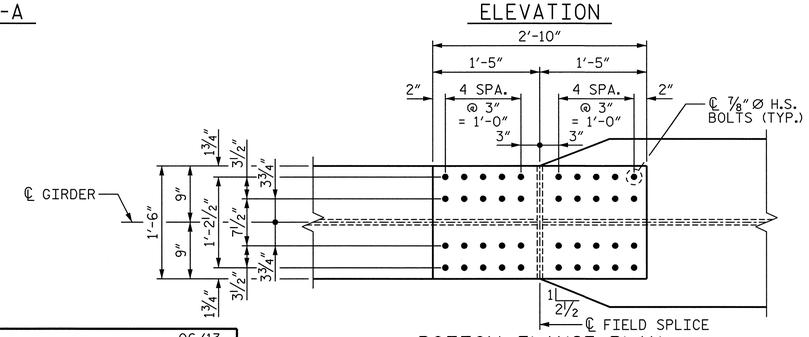

BOTTOM FLANGE PLAN

BOLTED FIELD SPLICE DETAILS FS-1

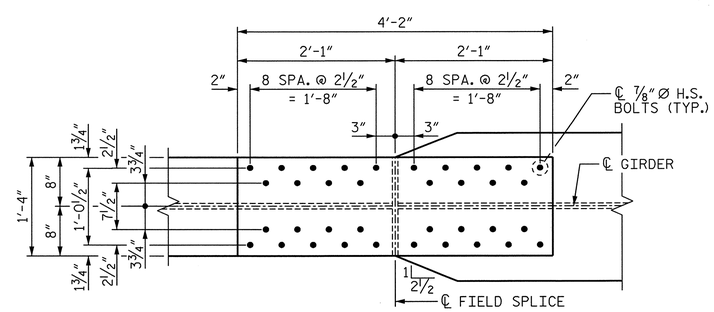

BOTTOM FLANGE PLAN

BOLTED FIELD SPLICE DETAILS FS-2

PROJECT NO. U-2525B

GUILFORD COUNTY

STATION: 144+90.00 -L-

SHEET 5 OF 5

STATE OF NORTH CAROLINA
DEPARTMENT OF TRANSPORTATION
RALEIGH

SUPERSTRUCTURE

STRUCTURAL STEEL DETAILS

LEFT LANE

NORTH CAROLINA PROFESSIONAL SEAL 027799 ENGINEER ALLYSON K. ORR
1/10/14

DRAWN BY : B.E. LANNING	DATE : 06/13		
CHECKED BY : A.K. ORR	DATE : 07/13		
DESIGN ENGINEER OF RECORD : A.K. ORR	DATE : 01/14		

DWG. NO. 26

MI ENGINEERING
1011 SCHAUB DRIVE, SUITE 100
RALEIGH, NC 27606
(919) 851-6606
FIRM PE NUMBER : P-0671

REVISIONS								
NO.	BY:	DATE:	NO.	BY:	DATE:	SHEET NO. 5-198
1			3			TOTAL SHEETS 541
2			4			

1/9/2014
4:58:26 PM
User:blanning
Filename: P:\NC Bridges\MI1007.03 U-2525B Guilford\U-2525B\Structures\Left Bridge\U2525B_SD_SS5_4_LT.dgn

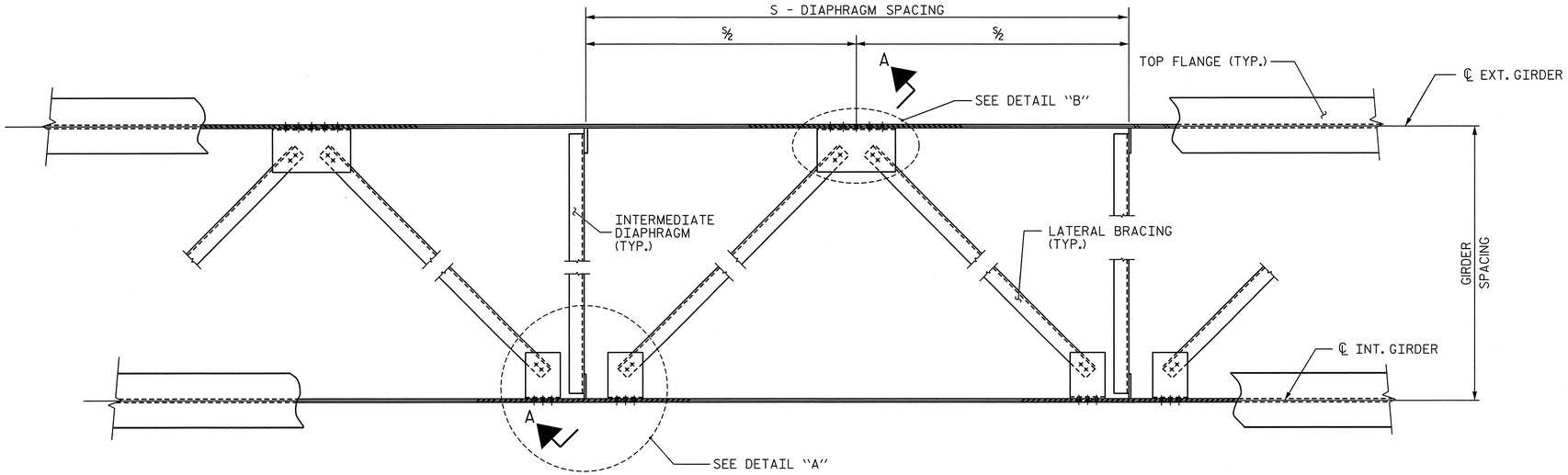

PART PLAN - NEAR TOP FLANGE LATERAL BRACING

(THROUGHOUT EXTERIOR BAYS ONLY)

NOTES

LATERAL BRACING ASSEMBLY SHALL COMPLY WITH SECTION 1072 OF THE STANDARD SPECIFICATIONS.

ALL STRUCTURAL STEEL SHALL BE AASHTO M270 GRADE 50W OR APPROVED EQUAL.

TENSION ON THE ASTM A325 BOLTS SHALL BE CALIBRATED USING DIRECT TENSION INDICATOR WASHERS IN ACCORDANCE WITH THE STANDARD SPECIFICATIONS.

ALL BOLTED CONNECTIONS SHALL BE 7/8" Ø HIGH STRENGTH BOLTS.

THE CONTRACTOR HAS THE OPTION TO CLIP THE PROTRUDING CORNERS OF THE GUSSET PLATES, AT NO ADDITIONAL COST TO THE DEPARTMENT.

BENT GUSSET PLATES OR ROLLED ANGLE SHAPES MAY BE SUBSTITUTED FOR THE WELDED GUSSET PLATES DETAILED IF APPROVED BY THE ENGINEER, AT NO ADDITIONAL COST TO THE DEPARTMENT.

INSTALL THE LATERAL BRACING AFTER ERECTING THE EXTERIOR GIRDER AND THE ADJACENT INTERIOR GIRDER AND INSTALLING THE INTERMEDIATE DIAPHRAGMS.

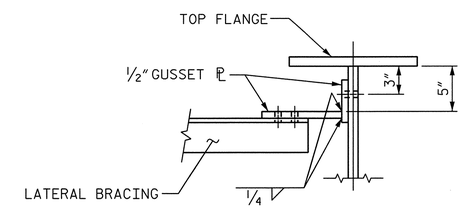

SECTION THRU CONNECTION

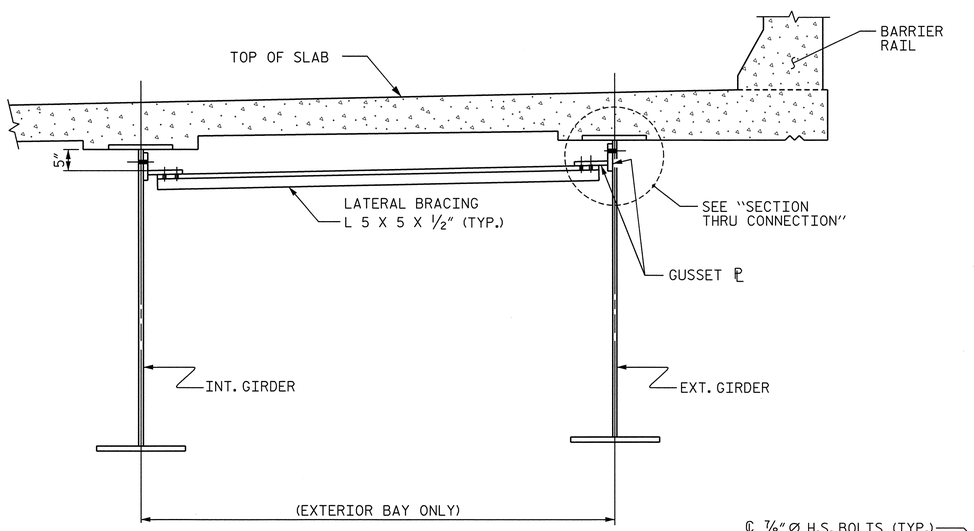

SECTION A-A

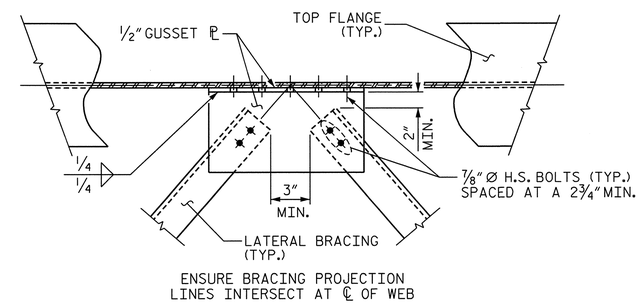

DETAIL "B"

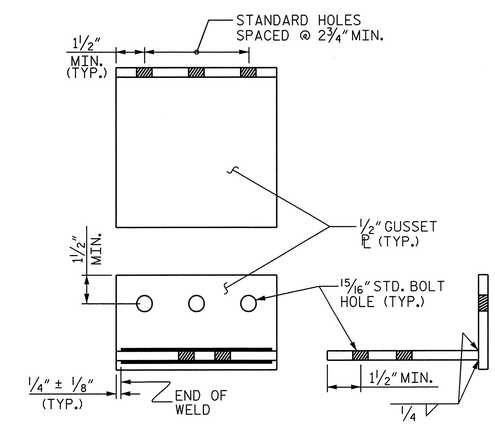

CONNECTION DETAIL

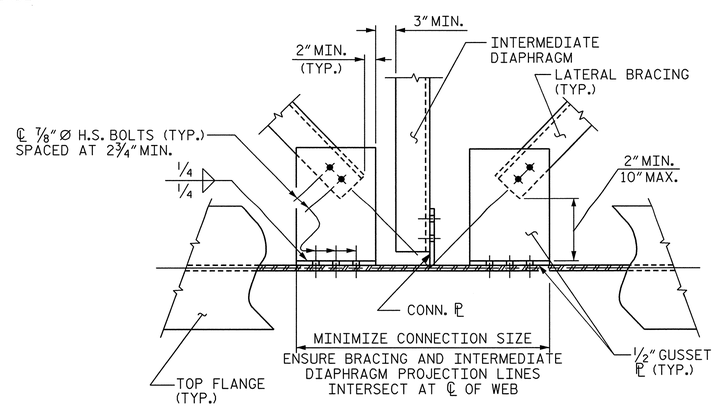

DETAIL "A"

PROJECT NO. U-2525B

GUILFORD COUNTY

STATION: 144+90.00 -L-

STATE OF NORTH CAROLINA
DEPARTMENT OF TRANSPORTATION
RALEIGH

STANDARD

LATERAL BRACING

LEFT LANE

NORTH CAROLINA PROFESSIONAL SEAL 027799 ENGINEER ALLYSON K. ORR 1/10/14

ASSEMBLED BY:	B. E. ATKINSON	DATE: 06/13	
CHECKED BY :	A.K. ORR	DATE: 07/13	
DESIGN ENGINEER OF RECORD:	A.K. ORR	DATE: 01/14	
DRAWN BY :	WMC 6/11	ADDED: 10/31/11	
CHECKED BY :	GM 6/11		

MI ENGINEERING
1011 SCHAUB DRIVE, SUITE 100
RALEIGH, NC 27606
(919) 851-6606
FIRM PE NUMBER : P-0671

DWG. NO. 27

REVISIONS							
NO.	BY:	DATE:	NO.	BY:	DATE:	SHEET NO.	5-199
1			3			TOTAL SHEETS	541
2			4				

STD. NO. LB1

1/9/2014
4:58:29 PM
User: blanning
Filename: P:\NC Bridges\MI1007.03 U-2525B Guilford\U-2525B\Structures\Left Bridge\U2525B_SD_LB1_4_LT.dgn

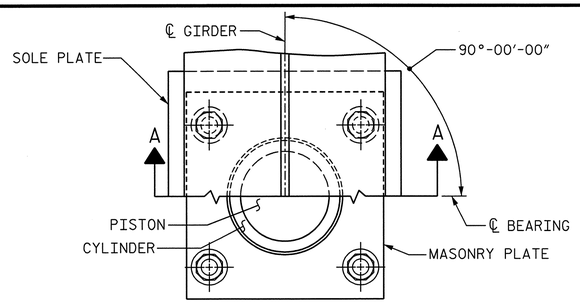

CUT-AWAY PLAN

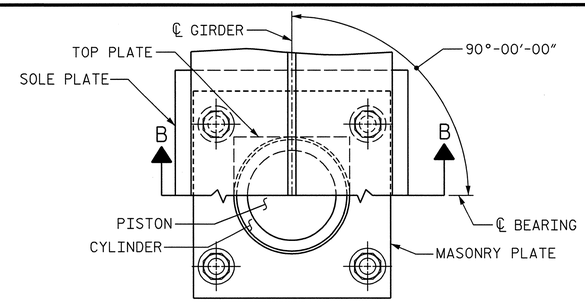

CUT-AWAY PLAN

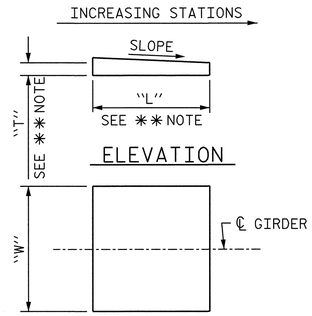

PLAN

**NOTE:
DIMENSIONS "L" AND "T" ARE TO BE DETERMINED BY THE MANUFACTURER.

SOLE PLATE DETAILS

SOLE PLATE	LOCATION	SLOPE	"W"
SP1	END BENT 1	0.4561%	1'-8"
SP2	BENT 1	0.6493%	2'-5"
SP3	BENT 2	0.6493%	2'-5"
SP4	BENT 3	0.6493%	2'-5"
SP5	BENT 4 (BACK)	0.6493%	1'-8"

NOTES

FOR POT BEARINGS, SEE SPECIAL PROVISIONS.

AT ALL POINTS OF SUPPORT IN SPANS A THRU G, NUTS FOR ANCHOR BOLTS SHALL BE TIGHTENED FINGER TIGHT AND GIVEN AN ADDITIONAL 1/4 TURN. THE THREAD OF THE NUT AND BOLT SHALL THEN BE BURRED WITH A SHARP POINTED TOOL.

WHEN WELDING THE SOLE PLATE TO THE GIRDER, USE TEMPERATURE INDICATING WAX PENS, OR OTHER SUITABLE MEANS, TO ENSURE THAT THE TEMPERATURE OF THE BEARING DOES NOT EXCEED 250°F TEMPERATURES ABOVE THIS MAY DAMAGE THE TFE OR ELASTOMER.

AFTER BEARING ASSEMBLY IS IN PLACE AND ANCHOR BOLTS HAVE BEEN FINALLY POSITIONED. THEY SHALL BE GROUTED IN PLACE AS SHOWN.

THE CLOSURE PLATE, GROUT PIPE AND STANDARD PIPE FOR THIS ASSEMBLY NEED NOT BE GALVANIZED.

SOLE PLATES SHOULD BE WELDED TO BEAM FLANGES AND ANCHOR BOLTS SHOULD BE GROUTED BEFORE FALSEWORK IS PLACED.

ALL SURFACES OF BEARING PLATES SHALL BE SMOOTH AND STRAIGHT.

FOR THERMAL SPRAYED COATINGS (METALLIZATION), SEE SPECIAL PROVISIONS.

THE CONTRACTOR MAY SUBSTITUTE DISC BEARINGS FOR THE POT BEARINGS SHOWN. FOR OPTIONAL DISC BEARINGS, SEE SPECIAL PROVISIONS.

THE CONTRACTOR SHALL ADJUST THE GIRDER BUILDUPS AS NECESSARY TO INCORPORATE A MAXIMUM PERMISSIBLE VARIATION IN POT BEARING DEPTH OF 1/2 INCH, SEE SPECIAL PROVISION FOR POT BEARINGS.

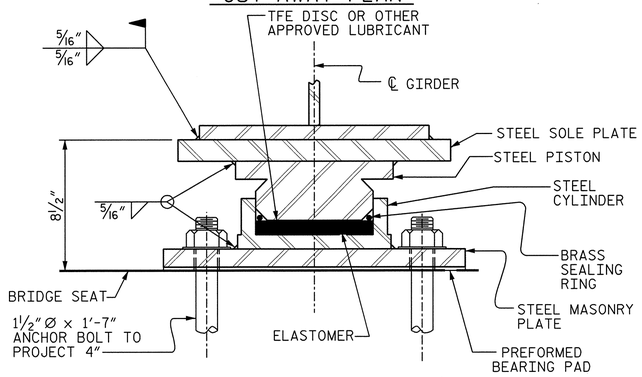

SECTION A-A

PB4 (FIXED)
(5 REQ'D.)

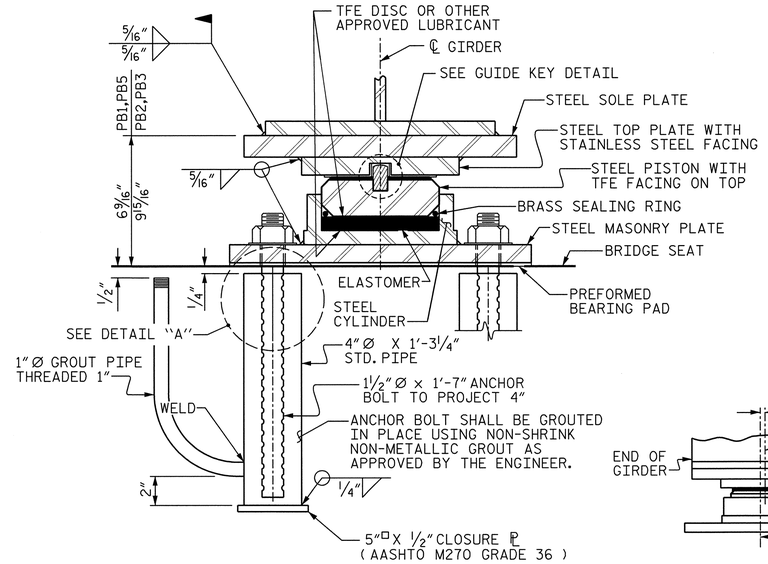

SECTION B-B

PB1, PB2, PB3, PB5 (EXP.)
(5 OF EACH, TOTAL = 20)

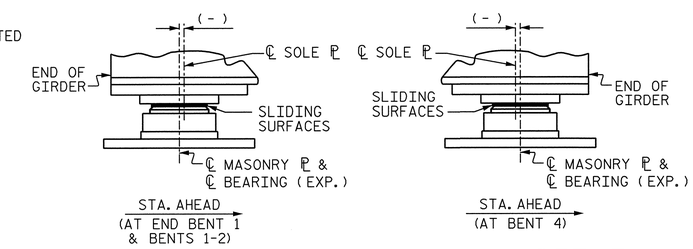

TEMPERATURE SETTING DETAIL

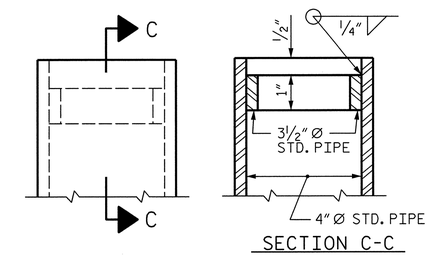

SECTION C-C

DETAIL "A"

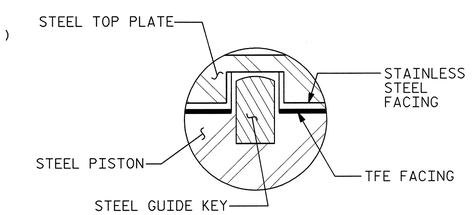

GUIDE KEY DETAIL

POT BEARING DETAILS

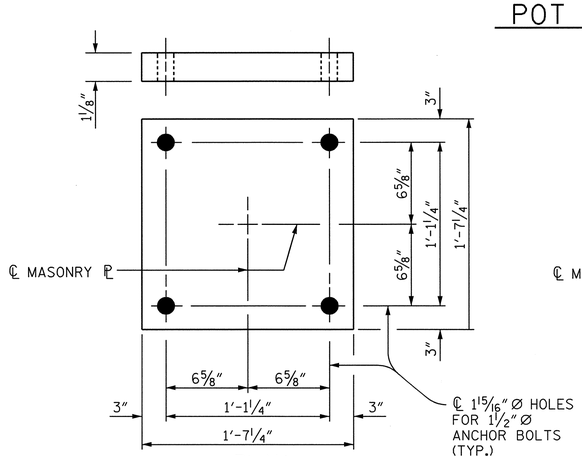

PLAN
M1 (10 REQ'D.)

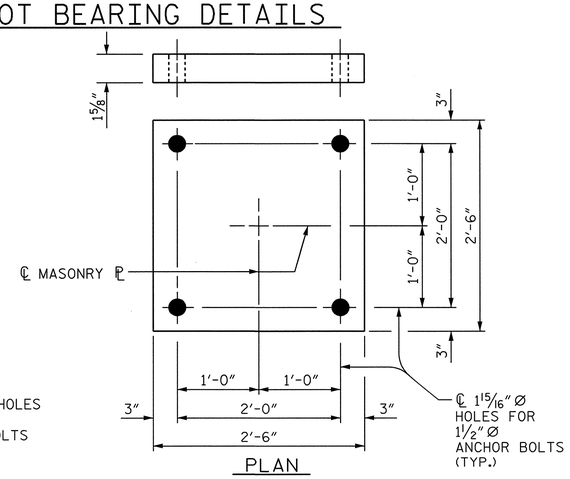

PLAN
M2 (15 REQ'D.)

MASONRY PLATE DETAILS

TABLE FOR LOADS AND MOVEMENT

BEARING	LOCATION	UNFACTORED VERTICAL LOAD (KIPS) DEAD DC	DW	LIVE LL+IM	TOTAL	FACTORED LATERAL LOAD (KIPS)	TOTAL MOVEMENT (INCHES)
PB1 (EXP.)	END BENT 1	137	21	139	297	57	5 7/16"
PB2 (EXP.)	BENT 1	496	74	301	871	180	3 7/8"
PB3 (EXP.)	BENT 2	496	74	301	871	180	1 15/16"
PB4 (FIX)	BENT 3	496	74	300	870	180	0
PB5 (EXP.)	BENT 4 BK	137	21	139	297	57	3 1/4"

TABLE FOR PLATE SETTING DATA

(EXPANSION POT BEARINGS)

TEMPERATURE AT TIME OF SETTING	45° F	60° F	90° F	*
PB1 (EXP.)	-13/16"	0	1 5/8"	-3/8"
PB2 (EXP.)	-9/16"	0	1 3/16"	0
PB3 (EXP.)	-5/16"	0	9/16"	0
PB5 (EXP.)	-1/4"	0	7/16"	-3/8"

* CORRECTION FOR END ROTATION DUE TO WEIGHT OF SLAB AND COMPOSITE DEAD LOAD.

PROJECT NO. U-2525B
GUILFORD COUNTY
STATION: 144+90.00 -L-

SHEET 1 OF 2

STATE OF NORTH CAROLINA
DEPARTMENT OF TRANSPORTATION
RALEIGH

STANDARD
POT BEARING DETAILS
UNIT 1
LEFT LANE

NORTH CAROLINA PROFESSIONAL SEAL ENGINEER 021799 ALLYSON K. ORR
1/10/14

ASSEMBLED BY: B.E. LANNING	DATE: 08/13		
CHECKED BY : A.K. ORR	DATE: 10/13		
DESIGN ENGINEER OF RECORD: A.K. ORR	DATE: 01/14		
DRAWN BY : RWW 8/99	REV. 5/7/03	RWW/JTE	
CHECKED BY : LES 8/99	REV. 5/1/06R	TLA/GM	
	REV. 10/1/11	MAA/GM	

MI ENGINEERING
1011 SCHAUB DRIVE, SUITE 100
RALEIGH, NC 27606
(919) 851-6606
FIRM PE NUMBER : P-0671

DWG. NO. 28

REVISIONS							
NO.	BY:	DATE:	NO.	BY:	DATE:	SHEET NO.	S-200
1			3			TOTAL SHEETS	541
2			4				

STD. NO. PB1

1/9/2014
4:58:31 PM
User: blanning
Filename: P:\NC Bridges\MI1007.03 U-2525B Guilford\U-2525B\Structures\Left Bridge\U2525B_SD_BG1_4_LT.dgn

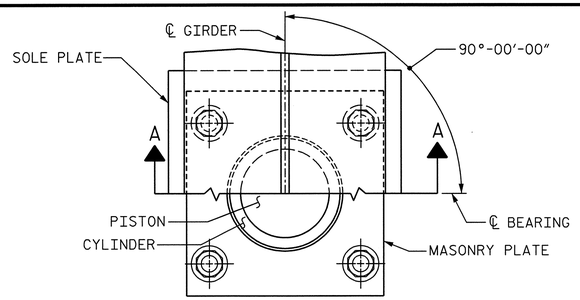

CUT-AWAY PLAN

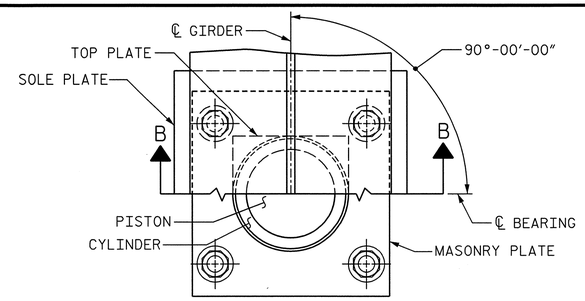

CUT-AWAY PLAN

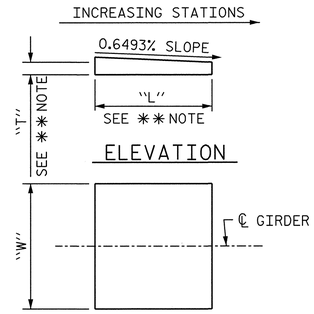

PLAN

** NOTE:
DIMENSIONS "L" AND "T" ARE TO BE DETERMINED BY THE MANUFACTURER.

SOLE PLATE DETAILS

SOLE PLATE	LOCATION	"W"
SP6	BENT 4 (AHEAD)	1'-6"
SP7	BENT 5	2'-2"
SP8	BENT 6	2'-2"
SP9	END BENT 2	1'-6"

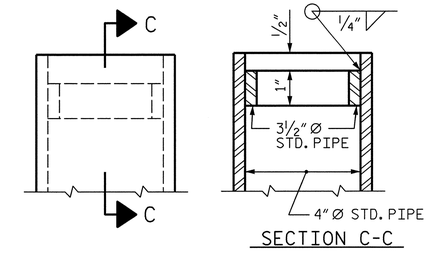

DETAIL "A"

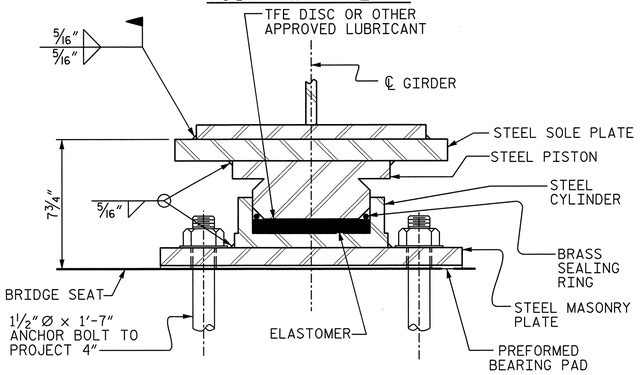

SECTION A-A

PB8 (FIXED)
(5 REQ'D.)

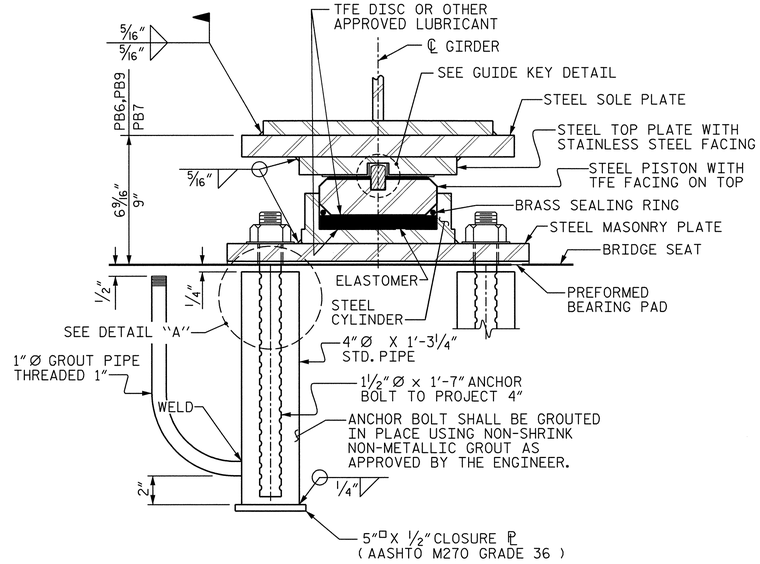

SECTION B-B

PB6, PB7, PB9 (EXP.)
(5 OF EACH, TOTAL = 15)

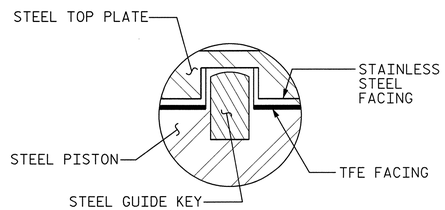

GUIDE KEY DETAIL

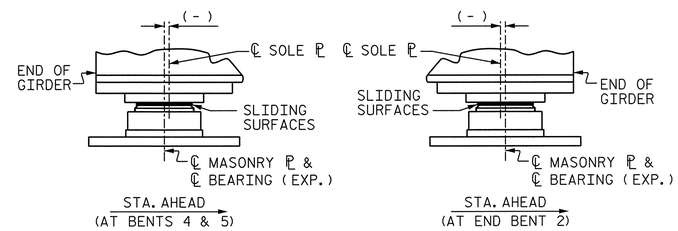

TEMPERATURE SETTING DETAIL

POT BEARING DETAILS

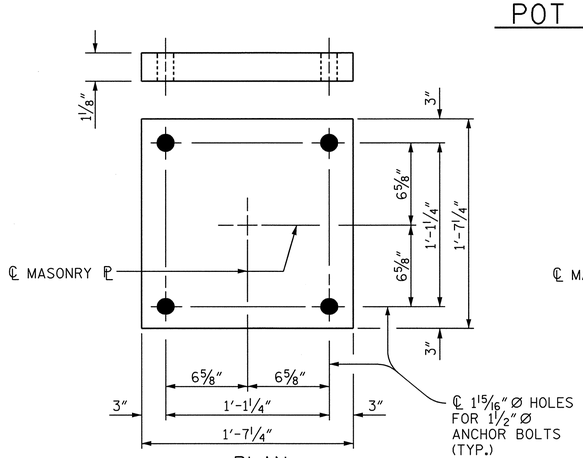

PLAN
M1 (10 REQ'D.)

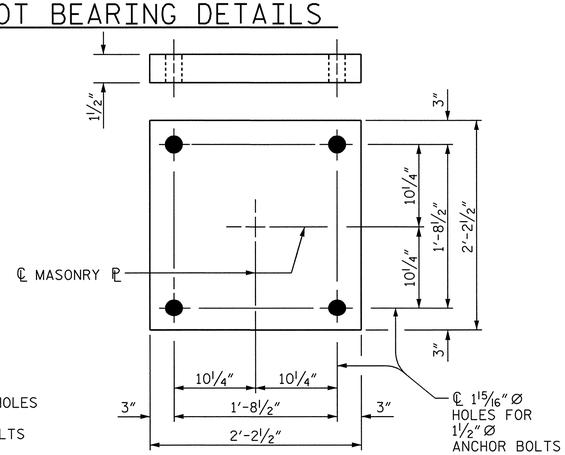

PLAN
M3 (10 REQ'D.)

MASONRY PLATE DETAILS

TABLE FOR LOADS AND MOVEMENT

BEARING	LOCATION	UNFACTORED VERTICAL LOAD (KIPS) DEAD DC	DEAD DW	LIVE LL+IM	TOTAL	FACTORED LATERAL LOAD (KIPS)	TOTAL MOVEMENT (INCHES)
PB6 (EXP.)	BENT 4 AHEAD	110	18	127	255	48	2 13/16"
PB7 (EXP.)	BENT 5	366	58	263	687	139	1 9/16"
PB8 (FIX)	BENT 6	366	58	263	687	139	0
PB9 (EXP.)	END BENT 2	110	18	127	255	48	1 11/16"

TABLE FOR PLATE SETTING DATA

(EXPANSION POT BEARINGS)

TEMPERATURE AT TIME OF SETTING	45° F	60° F	90° F	*
PB6 (EXP.)	-7/16"	0	13/16"	-5/16"
PB7 (EXP.)	-1/4"	0	7/16"	1/16"
PB9 (EXP.)	-3/16"	0	3/8"	-5/16"

* CORRECTION FOR END ROTATION DUE TO WEIGHT OF SLAB AND COMPOSITE DEAD LOAD.

FOR BEARING NOTES, SEE SHEET 1 OF 2.

PROJECT NO. U-2525B
GUILFORD COUNTY
STATION: 144+90.00 -L-

SHEET 2 OF 2

STATE OF NORTH CAROLINA
DEPARTMENT OF TRANSPORTATION
RALEIGH

STANDARD
POT BEARING DETAILS
UNIT 2
LEFT LANE

NORTH CAROLINA PROFESSIONAL SEAL 027199 ENGINEER ALLYSON K. ORR
1/10/14

MI ENGINEERING
1011 SCHAUB DRIVE, SUITE 100
RALEIGH, NC 27606
(919) 851-6606
FIRM PE NUMBER : P-0671

REVISIONS							
NO.	BY:	DATE:	NO.	BY:	DATE:	SHEET NO.	
1			3			S-201	
2			4			TOTAL SHEETS	541

DWG. NO. 29

STD. NO. PB1

ASSEMBLED BY: B.E. LANNING	DATE: 08/13
CHECKED BY : A.K. ORR	DATE: 10/13
DESIGN ENGINEER OF RECORD: A.K. ORR	DATE: 01/14
DRAWN BY : RWW 8/99	REV. 5/7/03 RWW/JTE
CHECKED BY : LES 8/99	REV. 5/1/06R TLA/GM
	REV. 10/1/11 MAA/GM

1/9/2014
4:58:34 PM
User: blanning
Filename: P:\NC Bridges\M11007.03 U-2525B Guilford\U-2525B\Structures\Left Bridge\U2525B_SD_BG2_4_LT.dgn

DEAD LOAD DEFLECTION AND CAMBER

GIRDER		SPAN "A"																													
	THIRTIETH POINTS	0	1	2	3	4	5	6	7	8	9	10	11	12	13	14	15	16	17	18	19	20	21	22	23	24	25	26	27	28	29	30
1 & 5	DEFLECTION DUE TO WT. OF STEEL	0	.014	.028	.041	.053	.065	.074	.083	.090	.096	.100	.103	.104	.103	.101	.098	.093	.087	.080	.072	.063	.054	.046	.036	.028	.020	.013	.008	.004	.001	0
	DEFLECTION DUE TO WT. OF SLAB*	0	.039	.076	.111	.143	.175	.201	.224	.243	.258	.268	.275	.277	.275	.269	.259	.246	.228	.210	.189	.163	.140	.116	.090	.069	.050	.032	.018	.009	.002	0
	DEFLECTION DUE TO WT. OF RAIL	0	.005	.011	.015	.020	.024	.028	.031	.034	.036	.037	.038	.039	.039	.038	.037	.035	.033	.030	.027	.024	.020	.017	.013	.010	.007	.005	.003	.001	.000	0
	TOTAL DEAD LOAD DEFLECTION	0	.058	.115	.167	.216	.264	.303	.338	.367	.390	.405	.416	.420	.417	.408	.394	.374	.348	.320	.288	.250	.214	.179	.139	.107	.077	.050	.029	.014	.003	0
	VERTICAL CURVE ORDINATE	0	.010	.019	.026	.031	.034	.035	.035	.034	.033	.031	.030	.028	.027	.025	.023	.022	.020	.019	.017	.016	.014	.012	.011	.009	.008	.006	.005	.003	.002	0
	SUPERELEVATION ORDINATE	0	.000	.000	.000	.000	.000	.000	.000	.000	.000	.000	.000	.000	.000	.000	.000	.000	.000	.000	.000	.000	.000	.000	.000	.000	.000	.000	.000	.000	.000	0
	REQUIRED CAMBER	0	13/16"	1 5/8"	2 5/16"	2 15/16"	3 9/16"	4 1/16"	4 1/2"	4 13/16"	5 1/16"	5 1/4"	5 3/8"	5 3/8"	5 5/16"	5 3/16"	5"	4 3/4"	4 7/16"	4 1/16"	3 11/16"	3 3/16"	2 3/4"	2 5/16"	1 15/16"	1 3/8"	1"	11/16"	7/16"	3/16"	1/16"	0
2, 3 & 4	DEFLECTION DUE TO WT. OF STEEL	0	.015	.029	.043	.055	.067	.077	.086	.094	.100	.104	.107	.108	.107	.105	.102	.097	.090	.083	.075	.065	.056	.047	.037	.029	.021	.014	.008	.004	.001	0
	DEFLECTION DUE TO WT. OF SLAB*	0	.039	.076	.111	.143	.175	.201	.224	.243	.258	.268	.275	.277	.275	.269	.259	.246	.228	.210	.189	.163	.140	.116	.090	.069	.050	.032	.018	.009	.002	0
	DEFLECTION DUE TO WT. OF RAIL	0	.004	.008	.011	.015	.018	.021	.023	.025	.027	.028	.029	.029	.029	.028	.027	.026	.024	.022	.020	.018	.015	.013	.010	.008	.005	.003	.002	.001	.000	0
	TOTAL DEAD LOAD DEFLECTION	0	.058	.113	.165	.213	.260	.299	.333	.362	.385	.400	.411	.414	.411	.402	.388	.369	.342	.315	.284	.246	.211	.176	.137	.106	.076	.049	.028	.014	.003	0
	VERTICAL CURVE ORDINATE	0	.010	.019	.026	.031	.034	.035	.035	.034	.033	.031	.030	.028	.027	.025	.023	.022	.020	.019	.017	.016	.014	.012	.011	.009	.008	.006	.005	.003	.002	0
	SUPERELEVATION ORDINATE	0	.000	.000	.000	.000	.000	.000	.000	.000	.000	.000	.000	.000	.000	.000	.000	.000	.000	.000	.000	.000	.000	.000	.000	.000	.000	.000	.000	.000	.000	0
	REQUIRED CAMBER	0	13/16"	1 9/16"	2 5/16"	2 15/16"	3 1/2"	4"	4 7/16"	4 3/4"	5"	5 3/16"	5 5/16"	5 5/16"	5 1/4"	5 1/8"	4 15/16"	4 11/16"	4 3/8"	4"	3 5/8"	3 1/8"	2 11/16"	2 1/4"	1 3/4"	1 3/8"	1"	11/16"	3/8"	3/16"	1/16"	0

GIRDER		SPAN "B"																													
	THIRTIETH POINTS	30	31	32	33	34	35	36	37	38	39	40	41	42	43	44	45	46	47	48	49	50	51	52	53	54	55	56	57	58	59	60
1 & 5	DEFLECTION DUE TO WT. OF STEEL	0	.001	.004	.009	.015	.025	.034	.044	.056	.066	.075	.084	.090	.095	.099	.100	.099	.096	.091	.085	.076	.067	.057	.046	.036	.026	.017	.010	.005	.002	0
	DEFLECTION DUE TO WT. OF SLAB*	0	.004	.013	.026	.045	.071	.097	.124	.157	.184	.209	.234	.252	.265	.274	.276	.273	.264	.251	.234	.209	.184	.157	.124	.097	.072	.045	.027	.013	.004	0
	DEFLECTION DUE TO WT. OF RAIL	0	.001	.002	.005	.008	.012	.016	.020	.025	.029	.033	.036	.039	.041	.042	.042	.042	.040	.038	.036	.032	.029	.025	.020	.015	.012	.007	.004	.002	.001	0
	TOTAL DEAD LOAD DEFLECTION	0	.006	.019	.040	.068	.108	.147	.188	.238	.279	.317	.354	.381	.401	.415	.418	.414	.400	.380	.355	.317	.280	.239	.190	.148	.110	.069	.041	.020	.007	0
	VERTICAL CURVE ORDINATE	0	.000	.000	.000	.000	.000	.000	.000	.000	.000	.000	.000	.000	.000	.000	.000	.000	.000	.000	.000	.000	.000	.000	.000	.000	.000	.000	.000	.000	.000	0
	SUPERELEVATION ORDINATE	0	.000	.000	.000	.000	.000	.000	.000	.000	.000	.000	.000	.000	.000	.000	.000	.000	.000	.000	.000	.000	.000	.000	.000	.000	.000	.000	.000	.000	.000	0
	REQUIRED CAMBER	0	1/16"	1/4"	1/2"	13/16"	1 5/16"	1 3/4"	2 1/4"	2 7/8"	3 3/8"	3 13/16"	4 1/4"	4 9/16"	4 13/16"	5"	5"	4 15/16"	4 13/16"	4 9/16"	4 1/4"	3 13/16"	3 3/8"	2 7/8"	2 1/4"	1 3/4"	1 5/16"	13/16"	1/2"	1/4"	1/16"	0
2, 3 & 4	DEFLECTION DUE TO WT. OF STEEL	0	.001	.004	.009	.016	.026	.035	.045	.058	.068	.078	.087	.094	.099	.103	.104	.103	.100	.095	.088	.079	.070	.060	.047	.037	.028	.017	.010	.005	.002	0
	DEFLECTION DUE TO WT. OF SLAB*	0	.004	.013	.026	.045	.071	.097	.124	.157	.184	.209	.234	.252	.265	.274	.276	.273	.264	.251	.234	.209	.184	.157	.124	.097	.072	.045	.027	.013	.004	0
	DEFLECTION DUE TO WT. OF RAIL	0	.001	.002	.004	.006	.009	.012	.015	.019	.022	.025	.027	.029	.031	.031	.032	.031	.030	.029	.027	.024	.021	.018	.015	.012	.009	.006	.003	.002	.001	0
	TOTAL DEAD LOAD DEFLECTION	0	.006	.019	.039	.067	.106	.144	.184	.234	.274	.312	.348	.375	.395	.408	.412	.407	.394	.375	.349	.312	.275	.235	.186	.146	.109	.068	.040	.020	.007	0
	VERTICAL CURVE ORDINATE	0	.000	.000	.000	.000	.000	.000	.000	.000	.000	.000	.000	.000	.000	.000	.000	.000	.000	.000	.000	.000	.000	.000	.000	.000	.000	.000	.000	.000	.000	0
	SUPERELEVATION ORDINATE	0	.000	.000	.000	.000	.000	.000	.000	.000	.000	.000	.000	.000	.000	.000	.000	.000	.000	.000	.000	.000	.000	.000	.000	.000	.000	.000	.000	.000	.000	0
	REQUIRED CAMBER	0	1/16"	1/4"	7/16"	13/16"	1 1/4"	1 3/4"	2 3/16"	2 13/16"	3 5/16"	3 3/4"	4 3/16"	4 1/2"	4 3/4"	4 7/8"	4 15/16"	4 7/8"	4 3/4"	4 1/2"	4 3/16"	3 3/4"	3 5/16"	2 13/16"	2 1/4"	1 3/4"	1 5/16"	13/16"	1/2"	1/4"	1/16"	0

* INCLUDES SLAB, BUILDUPS & STAY-IN-PLACE FORMS.
ALL VALUES ARE SHOWN IN FEET (DECIMAL FORM), EXCEPT "REQUIRED CAMBER", WHICH IS GIVEN IN INCHES (FRACTION FORM).

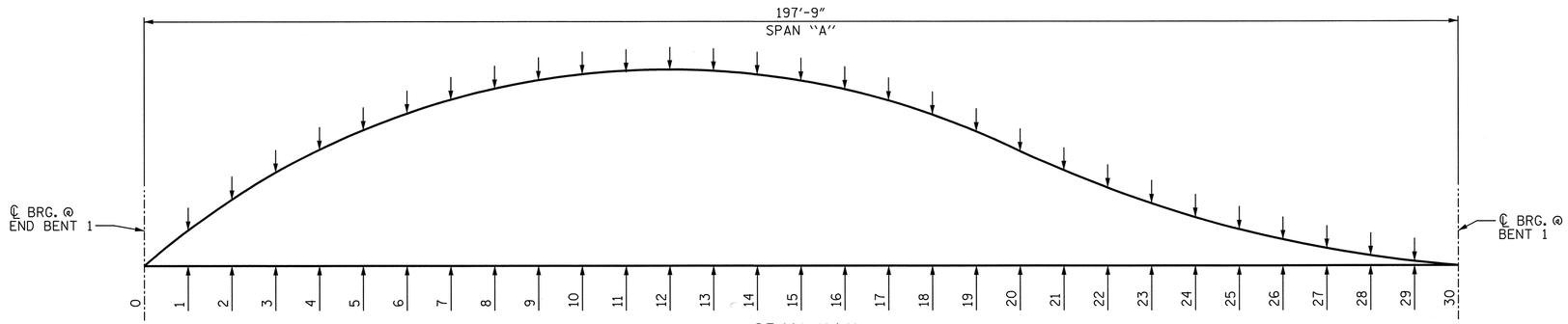

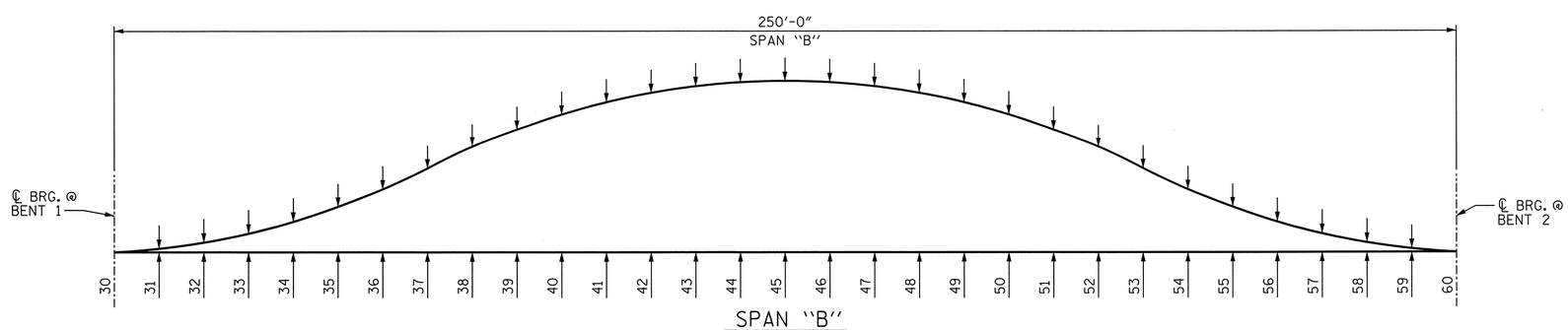

SCHEMATIC OF CAMBER ORDINATES

FOR CAMBER VALUES AT THIRTIETH POINTS, SEE TABLES.

SLOPE FOR ZERO CAMBER LINE VARIES.

PROJECT NO. U-2525B
GUILFORD COUNTY
STATION: 144+90.00 -L-

SHEET 1 OF 4

STATE OF NORTH CAROLINA
DEPARTMENT OF TRANSPORTATION
RALEIGH

SUPERSTRUCTURE
CAMBER AND DEAD LOAD DEFLECTIONS SPAN "A" & SPAN "B"
LEFT LANE

NORTH CAROLINA PROFESSIONAL SEAL 027799 ENGINEER ALLYSON K. ORR
1/10/14

DRAWN BY : B.E. LANNING	DATE : 07/13		
CHECKED BY : A.K. ORR	DATE : 10/13		
DESIGN ENGINEER OF RECORD : A.K. ORR	DATE : 01/14		

MI ENGINEERING
1011 SCHAUB DRIVE, SUITE 100
RALEIGH, NC 27606
(919) 851-6606
FIRM PE NUMBER : P-0671

REVISIONS								SHEET NO.
NO.	BY:	DATE:	NO.	BY:	DATE:			5-202
1			3					TOTAL SHEETS
2			4					541

DWG. NO. 30

1/9/2014
4:58:36 PM
User: blanning
Filename: P:\NC Bridges\WI1007.03 U-2525B Guilford\U-2525B\Structures\Left Bridge\U2525B_SD_DLAB_4_LT.dgn

DEAD LOAD DEFLECTION AND CAMBER

GIRDER	SPAN "C"																														
	THIRTIETH POINTS	60	61	62	63	64	65	66	67	68	69	70	71	72	73	74	75	76	77	78	79	80	81	82	83	84	85	86	87	88	89	90
1 & 5	DEFLECTION DUE TO WT. OF STEEL	0	.002	.005	.010	.017	.026	.036	.046	.057	.067	.076	.085	.091	.096	.099	.100	.099	.095	.090	.084	.075	.066	.056	.044	.034	.025	.015	.009	.004	.001	0
	DEFLECTION DUE TO WT. OF SLAB*	0	.004	.013	.027	.045	.072	.097	.124	.157	.184	.209	.234	.251	.264	.273	.276	.274	.265	.252	.234	.209	.184	.157	.124	.097	.071	.045	.026	.013	.004	0
	DEFLECTION DUE TO WT. OF RAIL	0	.001	.002	.004	.007	.012	.015	.020	.025	.029	.032	.036	.038	.040	.042	.042	.042	.041	.039	.036	.033	.029	.025	.020	.016	.012	.008	.005	.002	.001	0
	TOTAL DEAD LOAD DEFLECTION	0	.007	.020	.041	.069	.110	.148	.190	.239	.280	.317	.355	.380	.400	.414	.418	.415	.401	.381	.354	.317	.279	.238	.188	.147	.108	.068	.040	.019	.006	0
	VERTICAL CURVE ORDINATE	0	.000	.000	.000	.000	.000	.000	.000	.000	.000	.000	.000	.000	.000	.000	.000	.000	.000	.000	.000	.000	.000	.000	.000	.000	.000	.000	.000	.000	.000	0
	SUPERELEVATION ORDINATE	0	.000	.000	.000	.000	.000	.000	.000	.000	.000	.000	.000	.000	.000	.000	.000	.000	.000	.000	.000	.000	.000	.000	.000	.000	.000	.000	.000	.000	.000	0
	REQUIRED CAMBER	0	1/16"	1/4"	1/2"	13/16"	1 5/16"	1 3/4"	2 1/4"	2 7/8"	3 3/8"	3 13/16"	4 1/4"	4 9/16"	4 13/16"	4 15/16"	5"	5"	4 13/16"	4 9/16"	4 1/4"	3 13/16"	3 3/8"	2 7/8"	2 1/4"	1 3/4"	1 5/16"	13/16"	1/2"	1/4"	1/16"	0
2, 3 & 4	DEFLECTION DUE TO WT. OF STEEL	0	.002	.005	.010	.017	.028	.037	.047	.060	.070	.079	.088	.095	.100	.103	.104	.103	.099	.094	.087	.078	.068	.058	.045	.035	.026	.016	.009	.004	.001	0
	DEFLECTION DUE TO WT. OF SLAB*	0	.004	.013	.027	.045	.072	.097	.124	.157	.184	.209	.234	.251	.264	.273	.276	.274	.265	.252	.234	.209	.184	.157	.124	.097	.071	.045	.026	.013	.004	0
	DEFLECTION DUE TO WT. OF RAIL	0	.001	.002	.003	.006	.009	.012	.015	.018	.021	.024	.027	.029	.030	.031	.032	.031	.031	.029	.027	.025	.022	.019	.015	.012	.009	.006	.004	.002	.001	0
	TOTAL DEAD LOAD DEFLECTION	0	.007	.020	.040	.068	.109	.146	.186	.235	.275	.312	.349	.375	.394	.407	.412	.408	.395	.375	.348	.312	.274	.234	.184	.144	.106	.067	.039	.019	.006	0
	VERTICAL CURVE ORDINATE	0	.000	.000	.000	.000	.000	.000	.000	.000	.000	.000	.000	.000	.000	.000	.000	.000	.000	.000	.000	.000	.000	.000	.000	.000	.000	.000	.000	.000	.000	0
	SUPERELEVATION ORDINATE	0	.000	.000	.000	.000	.000	.000	.000	.000	.000	.000	.000	.000	.000	.000	.000	.000	.000	.000	.000	.000	.000	.000	.000	.000	.000	.000	.000	.000	.000	0
	REQUIRED CAMBER	0	1/16"	1/4"	1/2"	13/16"	1 5/16"	1 3/4"	2 1/4"	2 13/16"	3 5/16"	3 3/4"	4 3/16"	4 1/2"	4 3/4"	4 7/8"	4 15/16"	4 7/8"	4 3/4"	4 1/2"	4 3/16"	3 3/4"	3 5/16"	2 13/16"	2 3/16"	1 3/4"	1 1/4"	13/16"	7/16"	1/4"	1/16"	0

GIRDER	SPAN "D"																															
	THIRTIETH POINTS	90	91	92	93	94	95	96	97	98	99	100	101	102	103	104	105	106	107	108	109	110	111	112	113	114	115	116	117	118	119	120
1 & 5	DEFLECTION DUE TO WT. OF STEEL	0	.001	.004	.008	.013	.021	.028	.036	.046	.054	.063	.072	.080	.087	.093	.098	.101	.103	.104	.103	.100	.096	.090	.083	.075	.065	.053	.041	.028	.014	0
	DEFLECTION DUE TO WT. OF SLAB*	0	.002	.009	.018	.032	.050	.069	.090	.116	.140	.163	.189	.210	.229	.246	.259	.269	.275	.277	.275	.268	.258	.243	.224	.201	.175	.143	.111	.076	.039	0
	DEFLECTION DUE TO WT. OF RAIL	0	.000	.001	.003	.005	.007	.010	.013	.017	.020	.024	.027	.030	.033	.035	.037	.038	.039	.039	.038	.037	.036	.034	.031	.028	.024	.020	.015	.011	.005	0
	TOTAL DEAD LOAD DEFLECTION	0	.003	.014	.029	.050	.078	.107	.139	.179	.214	.250	.288	.320	.349	.374	.394	.408	.417	.420	.416	.405	.390	.367	.338	.304	.264	.216	.167	.115	.058	0
	VERTICAL CURVE ORDINATE	0	.000	.000	.000	.000	.000	.000	.000	.000	.000	.000	.000	.000	.000	.000	.000	.000	.000	.000	.000	.000	.000	.000	.000	.000	.000	.000	.000	.000	.000	0
	SUPERELEVATION ORDINATE	0	.000	.000	.000	.000	.000	.000	.000	.000	.000	.000	.000	.000	.000	.000	.000	.000	.000	.000	.000	.000	.000	.000	.000	.000	.000	.000	.000	.000	.000	0
	REQUIRED CAMBER	0	1/16"	3/16"	3/8"	5/8"	15/16"	1 5/16"	1 11/16"	2 1/8"	2 9/16"	3"	3 7/16"	3 13/16"	4 3/16"	4 1/2"	4 3/4"	4 7/8"	5"	5 1/16"	5"	4 7/8"	4 11/16"	4 3/8"	4 1/16"	3 5/8"	3 3/16"	2 9/16"	2"	1 3/8"	11/16"	0
2, 3 & 4	DEFLECTION DUE TO WT. OF STEEL	0	.001	.004	.008	.014	.021	.029	.037	.047	.056	.065	.075	.083	.090	.097	.102	.105	.107	.108	.107	.104	.100	.094	.086	.078	.067	.055	.043	.029	.015	0
	DEFLECTION DUE TO WT. OF SLAB*	0	.002	.009	.018	.032	.050	.069	.090	.116	.140	.163	.189	.210	.229	.246	.259	.269	.275	.277	.275	.268	.258	.243	.224	.201	.175	.143	.111	.076	.039	0
	DEFLECTION DUE TO WT. OF RAIL	0	.000	.001	.002	.003	.005	.008	.010	.013	.015	.018	.020	.022	.024	.026	.027	.028	.029	.029	.029	.028	.027	.025	.023	.021	.018	.015	.011	.008	.004	0
	TOTAL DEAD LOAD DEFLECTION	0	.003	.014	.028	.049	.076	.106	.137	.176	.211	.246	.284	.315	.343	.369	.388	.402	.411	.414	.411	.400	.385	.362	.333	.300	.260	.213	.165	.113	.058	0
	VERTICAL CURVE ORDINATE	0	.000	.000	.000	.000	.000	.000	.000	.000	.000	.000	.000	.000	.000	.000	.000	.000	.000	.000	.000	.000	.000	.000	.000	.000	.000	.000	.000	.000	.000	0
	SUPERELEVATION ORDINATE	0	.000	.000	.000	.000	.000	.000	.000	.000	.000	.000	.000	.000	.000	.000	.000	.000	.000	.000	.000	.000	.000	.000	.000	.000	.000	.000	.000	.000	.000	0
	REQUIRED CAMBER	0	1/16"	3/16"	5/16"	9/16"	15/16"	1 1/4"	1 5/8"	2 1/8"	2 9/16"	2 15/16"	3 7/16"	3 3/4"	4 1/8"	4 7/16"	4 5/8"	4 13/16"	4 15/16"	4 15/16"	4 15/16"	4 13/16"	4 5/8"	4 3/8"	4"	3 5/8"	3 1/8"	2 9/16"	2"	1 3/8"	11/16"	0

* INCLUDES SLAB, BUILDUPS & STAY-IN-PLACE FORMS.
ALL VALUES ARE SHOWN IN FEET (DECIMAL FORM), EXCEPT "REQUIRED CAMBER", WHICH IS GIVEN IN INCHES (FRACTION FORM).

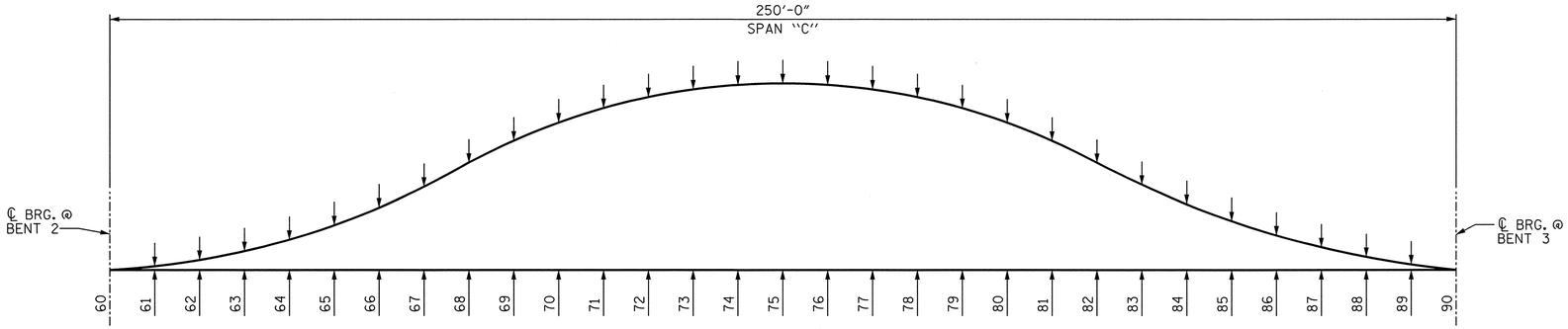

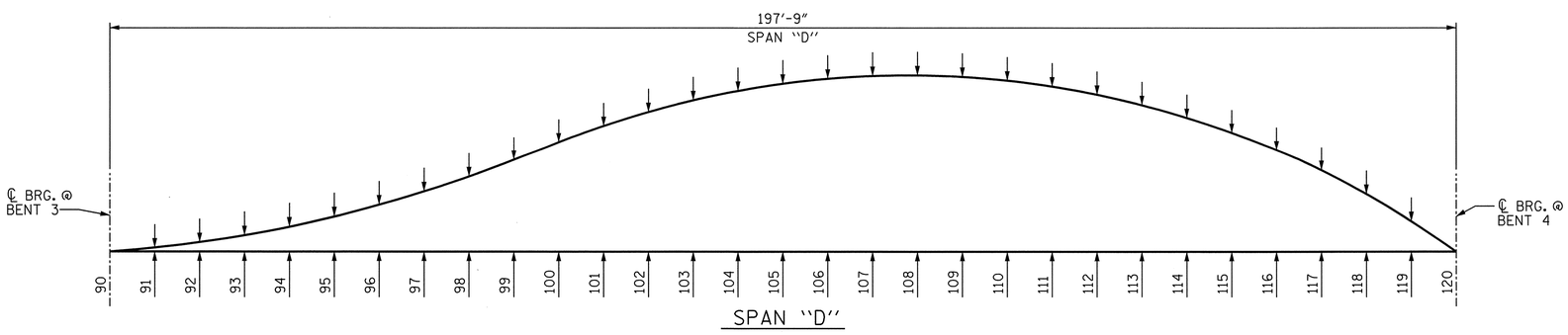

SCHEMATIC OF CAMBER ORDINATES

FOR CAMBER VALUES AT THIRTIETH POINTS, SEE TABLES.

PROJECT NO. U-2525B
GUILFORD COUNTY
STATION: 144+90.00 -L-

SHEET 2 OF 4

NORTH CAROLINA PROFESSIONAL SEAL 021799 ENGINEER ALLYSON K. ORR 1/10/14

STATE OF NORTH CAROLINA
DEPARTMENT OF TRANSPORTATION
RALEIGH

SUPERSTRUCTURE

CAMBER AND DEAD LOAD DEFLECTIONS SPAN "C" & SPAN "D"
LEFT LANE

DRAWN BY : B.E. LANNING DATE : 07/13
CHECKED BY : A.K. ORR DATE : 10/13
DESIGN ENGINEER OF RECORD : A.K. ORR DATE : 01/14

MI ENGINEERING
1011 SCHAUB DRIVE, SUITE 100
RALEIGH, NC 27606
(919) 851-6606
FIRM PE NUMBER : P-0671

DWG. NO. 31

REVISIONS										SHEET NO.
NO.	BY:	DATE:	NO.	BY:	DATE:					5-203
1			3							TOTAL SHEETS
2			4							54-1

1/9/2014
4:58:38 PM
User: blanning
Filename: P:\NC Bridges\MI1007.03 U-2525B Guilford\U-2525B\Structures\Left Bridge\U2525B_SD_DLCD_4_LT.dgn

DEAD LOAD DEFLECTION AND CAMBER

GIRDER	SPAN "E"																				
	THIRTIETH POINTS	0	1	2	3	4	5	6	7	8	9	10	11	12	13	14	15	16	17	18	19	20
1 & 5	DEFLECTION DUE TO WT. OF STEEL	0	.016	.030	.043	.055	.064	.071	.076	.078	.078	.076	.071	.064	.056	.047	.036	.027	.018	.010	.004	0
	DEFLECTION DUE TO WT. OF SLAB*	0	.055	.106	.154	.194	.227	.251	.266	.273	.271	.262	.244	.220	.189	.157	.121	.088	.057	.032	.013	0
	DEFLECTION DUE TO WT. OF RAIL	0	.007	.013	.019	.023	.027	.030	.032	.033	.033	.032	.030	.027	.023	.019	.015	.011	.007	.004	.001	0
	TOTAL DEAD LOAD DEFLECTION	0	.078	.149	.216	.272	.318	.352	.374	.384	.382	.370	.345	.311	.268	.223	.172	.126	.082	.046	.018	0
	VERTICAL CURVE ORDINATE	0	.000	.000	.000	.000	.000	.000	.000	.000	.000	.000	.000	.000	.000	.000	.000	.000	.000	.000	.000	0
	SUPERELEVATION ORDINATE	0	.000	.000	.000	.000	.000	.000	.000	.000	.000	.000	.000	.000	.000	.000	.000	.000	.000	.000	.000	0
	REQUIRED CAMBER	0	15/16"	1 13/16"	2 9/16"	3 1/4"	3 13/16"	4 1/4"	4 1/2"	4 5/8"	4 9/16"	4 7/16"	4 1/8"	3 3/4"	3 3/16"	2 11/16"	2 1/16"	1 1/2"	1"	9/16"	3/16"	0
2, 3 & 4	DEFLECTION DUE TO WT. OF STEEL	0	.016	.031	.046	.058	.068	.075	.080	.082	.082	.079	.074	.068	.058	.049	.038	.028	.018	.011	.004	0
	DEFLECTION DUE TO WT. OF SLAB*	0	.060	.116	.168	.212	.247	.274	.291	.299	.296	.286	.266	.240	.206	.171	.132	.096	.062	.035	.014	0
	DEFLECTION DUE TO WT. OF RAIL	0	.005	.009	.014	.017	.020	.022	.024	.025	.024	.024	.022	.020	.017	.014	.011	.008	.005	.003	.001	0
	TOTAL DEAD LOAD DEFLECTION	0	.081	.156	.228	.287	.335	.371	.395	.406	.402	.389	.362	.328	.281	.234	.181	.132	.085	.049	.019	0
	VERTICAL CURVE ORDINATE	0	.000	.000	.000	.000	.000	.000	.000	.000	.000	.000	.000	.000	.000	.000	.000	.000	.000	.000	.000	0
	SUPERELEVATION ORDINATE	0	.000	.000	.000	.000	.000	.000	.000	.000	.000	.000	.000	.000	.000	.000	.000	.000	.000	.000	.000	0
	REQUIRED CAMBER	0	1"	1 7/8"	2 3/4"	3 7/16"	4"	4 7/16"	4 3/4"	4 7/8"	4 13/16"	4 11/16"	4 3/8"	3 15/16"	3 3/8"	2 13/16"	2 3/16"	1 9/16"	1"	9/16"	1/4"	0

GIRDER	SPAN "F"																					
	THIRTIETH POINTS	20	21	22	23	24	25	26	27	28	29	30	31	32	33	34	35	36	37	38	39	40
1 & 5	DEFLECTION DUE TO WT. OF STEEL	0	-.002	-.001	.004	.009	.017	.024	.030	.035	.039	.040	.039	.035	.030	.024	.017	.009	.004	-.001	-.002	0
	DEFLECTION DUE TO WT. OF SLAB*	0	-.003	.003	.022	.046	.076	.103	.131	.150	.164	.168	.164	.150	.131	.103	.076	.046	.023	.003	-.003	0
	DEFLECTION DUE TO WT. OF RAIL	0	.000	.002	.005	.008	.013	.016	.020	.023	.025	.025	.025	.023	.020	.016	.013	.008	.005	.002	.000	0
	TOTAL DEAD LOAD DEFLECTION	0	-.005	.004	.031	.063	.106	.143	.181	.208	.228	.233	.228	.208	.181	.143	.106	.063	.032	.004	-.005	0
	VERTICAL CURVE ORDINATE	0	.000	.000	.000	.000	.000	.000	.000	.000	.000	.000	.000	.000	.000	.000	.000	.000	.000	.000	.000	0
	SUPERELEVATION ORDINATE	0	.000	.000	.000	.000	.000	.000	.000	.000	.000	.000	.000	.000	.000	.000	.000	.000	.000	.000	.000	0
	REQUIRED CAMBER	0	-1/16"	1/16"	3/8"	3/4"	1 1/4"	1 11/16"	2 3/16"	2 1/2"	2 3/4"	2 13/16"	2 3/4"	2 1/2"	2 3/16"	1 11/16"	1 1/4"	3/4"	3/8"	1/16"	-1/16"	0
2, 3 & 4	DEFLECTION DUE TO WT. OF STEEL	0	-.002	-.001	.004	.010	.018	.025	.032	.037	.041	.042	.041	.037	.032	.025	.018	.010	.004	-.001	-.002	0
	DEFLECTION DUE TO WT. OF SLAB*	0	-.004	.003	.025	.050	.083	.113	.143	.164	.179	.184	.179	.164	.143	.113	.083	.050	.025	.003	-.004	0
	DEFLECTION DUE TO WT. OF RAIL	0	.000	.001	.004	.006	.009	.012	.015	.017	.018	.019	.018	.017	.015	.012	.009	.006	.004	.001	.000	0
	TOTAL DEAD LOAD DEFLECTION	0	-.006	.003	.033	.066	.110	.150	.190	.218	.238	.245	.238	.218	.190	.150	.110	.066	.033	.003	-.006	0
	VERTICAL CURVE ORDINATE	0	.000	.000	.000	.000	.000	.000	.000	.000	.000	.000	.000	.000	.000	.000	.000	.000	.000	.000	.000	0
	SUPERELEVATION ORDINATE	0	.000	.000	.000	.000	.000	.000	.000	.000	.000	.000	.000	.000	.000	.000	.000	.000	.000	.000	.000	0
	REQUIRED CAMBER	0	-1/16"	1/16"	3/8"	13/16"	1 5/16"	1 13/16"	2 1/4"	2 5/8"	2 7/8"	2 15/16"	2 7/8"	2 5/8"	2 1/4"	1 13/16"	1 5/16"	13/16"	3/8"	1/16"	-1/16"	0

* INCLUDES SLAB, BUILDUPS & STAY-IN-PLACE FORMS.
ALL VALUES ARE SHOWN IN FEET (DECIMAL FORM), EXCEPT "REQUIRED CAMBER", WHICH IS GIVEN IN INCHES (FRACTION FORM).

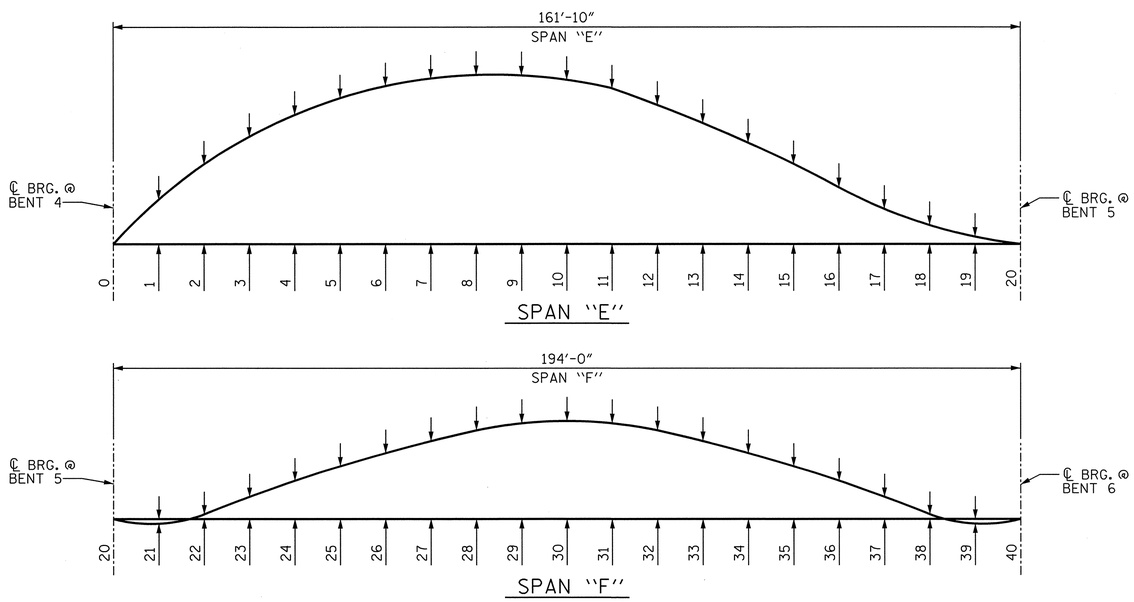

SCHEMATIC OF CAMBER ORDINATES

FOR CAMBER VALUES AT TWENTIETH POINTS, SEE TABLES.

PROJECT NO. U-2525B
GUILFORD COUNTY
STATION: 144+90.00 -L-

SHEET 3 OF 4

STATE OF NORTH CAROLINA
DEPARTMENT OF TRANSPORTATION
RALEIGH

SUPERSTRUCTURE

CAMBER AND DEAD LOAD DEFLECTIONS SPAN "E" & SPAN "F"
LEFT LANE

NORTH CAROLINA PROFESSIONAL SEAL 027799 ENGINEER ALLYSON K. ORR
1/10/14

DRAWN BY : B.E. LANNING DATE : 07/13
CHECKED BY : A.K. ORR DATE : 10/13
DESIGN ENGINEER OF RECORD : A.K. ORR DATE : 01/14

DWG. NO. 32

MI ENGINEERING
1011 SCHAUB DRIVE, SUITE 100
RALEIGH, NC 27606
(919) 851-6606
FIRM PE NUMBER : P-0671

REVISIONS						
NO.	BY:	DATE:	NO.	BY:	DATE:	
1			3			
2			4			

SHEET NO. S-204
TOTAL SHEETS 541

1/9/2014
4:58:41 PM
User:blanning
Filename: P:\NC Bridges\MI1007.03 U-2525B Guilford\U-2525B\Structures\Left Bridge\U2525B_SD_DLEF_4_LT.dgn

DEAD LOAD DEFLECTION AND CAMBER

GIRDER	THIRTIETH POINTS	40	41	42	43	44	45	46	47	48	49	50	51	52	53	54	55	56	57	58	59	60
		SPAN "G"																				
1 & 5	DEFLECTION DUE TO WT. OF STEEL	0	.004	.010	.018	.027	.036	.047	.056	.064	.071	.076	.078	.078	.076	.071	.064	.055	.043	.030	.016	0
	DEFLECTION DUE TO WT. OF SLAB*	0	.013	.032	.057	.088	.121	.157	.189	.220	.244	.262	.271	.273	.266	.251	.226	.194	.154	.106	.055	0
	DEFLECTION DUE TO WT. OF RAIL	0	.001	.004	.007	.011	.015	.019	.023	.027	.030	.032	.033	.033	.032	.030	.027	.023	.019	.013	.007	0
	TOTAL DEAD LOAD DEFLECTION	0	.018	.046	.082	.126	.172	.223	.268	.311	.345	.370	.382	.384	.374	.352	.317	.272	.216	.149	.078	0
	VERTICAL CURVE ORDINATE	0	.000	.000	.000	.000	.000	.000	.000	.000	.000	.000	.000	.000	.000	.000	.000	.000	.000	.000	.000	0
	SUPERELEVATION ORDINATE	0	.000	.000	.000	.000	.000	.000	.000	.000	.000	.000	.000	.000	.000	.000	.000	.000	.000	.000	.000	0
	REQUIRED CAMBER	0	3/16"	9/16"	1"	1 1/2"	2 1/16"	2 11/16"	3 3/16"	3 3/4"	4 1/8"	4 7/16"	4 9/16"	4 5/8"	4 1/2"	4 1/4"	3 13/16"	3 1/4"	2 9/16"	1 13/16"	15/16"	0
2, 3 & 4	DEFLECTION DUE TO WT. OF STEEL	0	.004	.011	.018	.028	.038	.049	.058	.068	.074	.079	.082	.082	.080	.075	.068	.058	.046	.031	.016	0
	DEFLECTION DUE TO WT. OF SLAB*	0	.014	.035	.062	.096	.132	.171	.206	.240	.266	.286	.296	.298	.291	.274	.247	.212	.168	.116	.060	0
	DEFLECTION DUE TO WT. OF RAIL	0	.001	.003	.005	.008	.011	.014	.017	.020	.022	.024	.024	.025	.024	.022	.020	.017	.014	.009	.005	0
	TOTAL DEAD LOAD DEFLECTION	0	.019	.049	.085	.132	.181	.234	.281	.328	.362	.389	.402	.405	.395	.371	.335	.287	.228	.156	.081	0
	VERTICAL CURVE ORDINATE	0	.000	.000	.000	.000	.000	.000	.000	.000	.000	.000	.000	.000	.000	.000	.000	.000	.000	.000	.000	0
	SUPERELEVATION ORDINATE	0	.000	.000	.000	.000	.000	.000	.000	.000	.000	.000	.000	.000	.000	.000	.000	.000	.000	.000	.000	0
	REQUIRED CAMBER	0	1/4"	9/16"	1"	1 9/16"	2 3/16"	2 13/16"	3 3/8"	3 15/16"	4 3/8"	4 11/16"	4 13/16"	4 7/8"	4 3/4"	4 7/16"	4"	3 7/16"	2 3/4"	1 7/8"	1"	0

* INCLUDES SLAB, BUILDUPS & STAY-IN-PLACE FORMS.
ALL VALUES ARE SHOWN IN FEET (DECIMAL FORM), EXCEPT "REQUIRED CAMBER", WHICH IS GIVEN IN INCHES (FRACTION FORM).

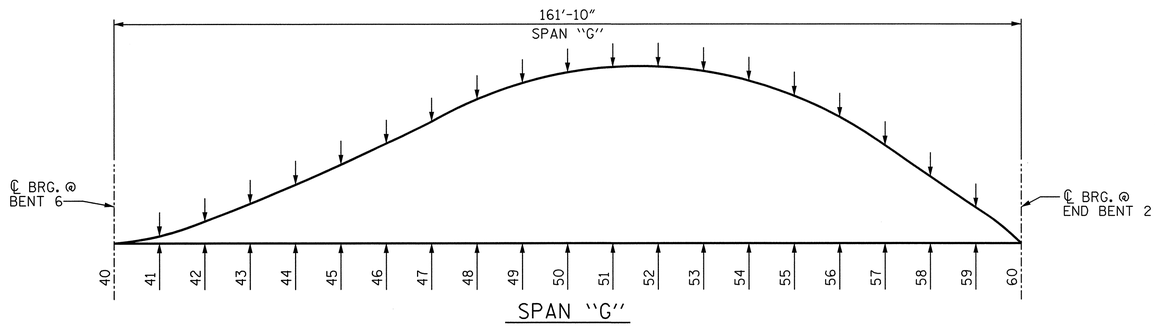

SCHEMATIC OF CAMBER ORDINATES

FOR CAMBER VALUES AT TWENTIETH POINTS, SEE TABLES.

PROJECT NO. U-2525B
GUILFORD COUNTY
STATION: 144+90.00 -L-

SHEET 4 OF 4

STATE OF NORTH CAROLINA
DEPARTMENT OF TRANSPORTATION
RALEIGH

SUPERSTRUCTURE
CAMBER AND DEAD LOAD DEFLECTIONS SPAN "G"
LEFT LANE

NORTH CAROLINA PROFESSIONAL SEAL 027799 ENGINEER ALLYSON K. ORR
1/10/14

MI ENGINEERING
1011 SCHAUB DRIVE, SUITE 100
RALEIGH, NC 27606
(919) 851-6606
FIRM PE NUMBER : P-0671

REVISIONS						SHEET NO.
NO.	BY:	DATE:	NO.	BY:	DATE:	5-205
1			3			TOTAL SHEETS
2			4			541

DRAWN BY : B.E. LANNING DATE : 07/13
CHECKED BY : A.K. ORR DATE : 10/13
DESIGN ENGINEER OF RECORD : A.K. ORR DATE : 01/14

DWG. NO. 33

1/9/2014
4:58:43 PM
User: blanning
Filename: P:\NC Bridges\MI1007.03 U-2525B Guilford\U-2525B\Structures\Left Bridge\U2525B_SD_DLG_4_LT.dgn

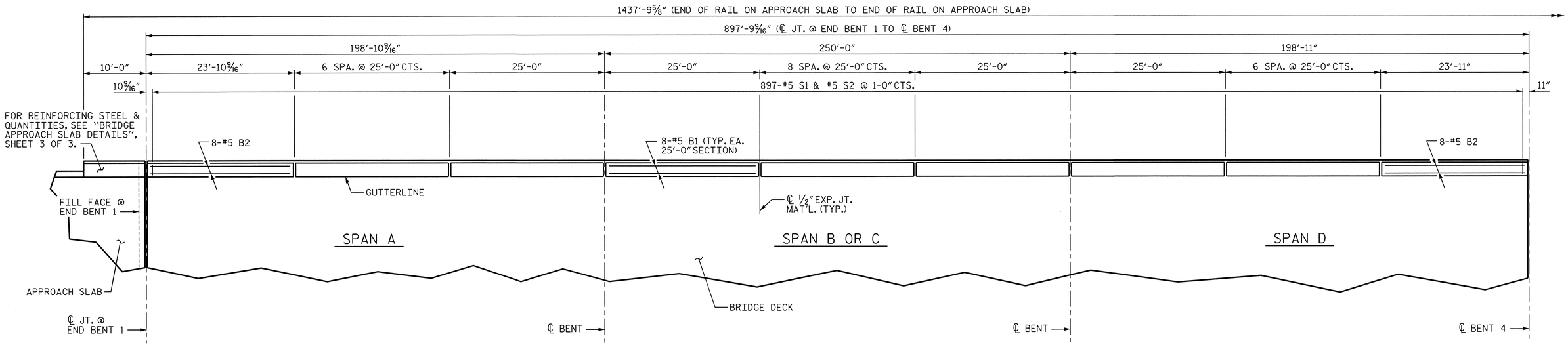

PLAN AT UNIT 1

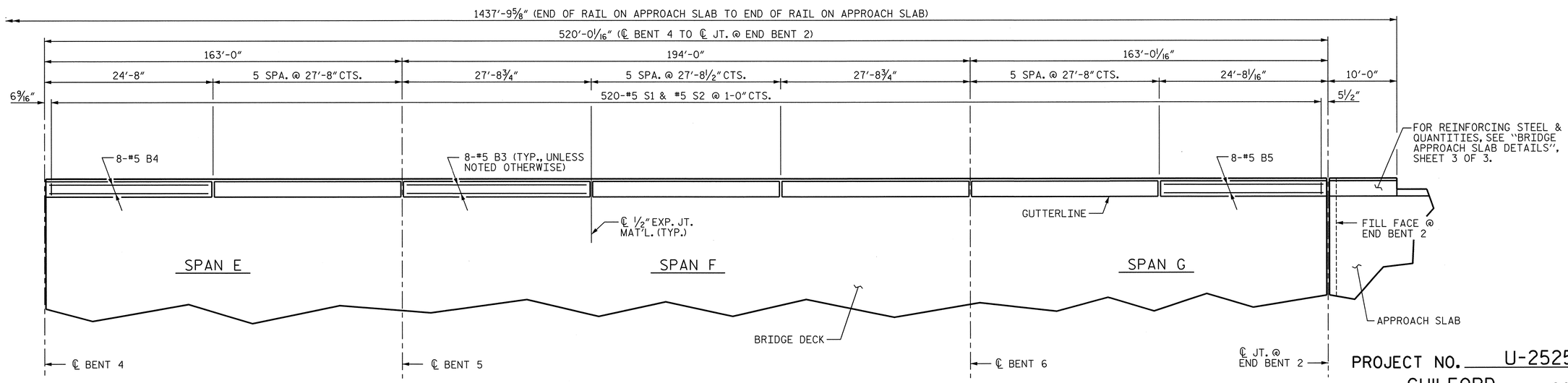

PLAN AT UNIT 2

PROJECT NO. U-2525B

GUILFORD COUNTY

STATION: 144+90.00 -L-

SHEET 1 OF 2

PLAN OF BARRIER RAIL

(LEFT RAIL SHOWN, RIGHT RAIL SIMILAR)

NORTH CAROLINA PROFESSIONAL SEAL 027799 ENGINEER ALLYSON K. ORR

1/10/14

STATE OF NORTH CAROLINA
DEPARTMENT OF TRANSPORTATION
RALEIGH

SUPERSTRUCTURE

CONCRETE BARRIER RAIL

LEFT LANE

DRAWN BY : B.E. ATKINSON	DATE : 06/13		
CHECKED BY : A.K. ORR	DATE : 09/13		
DESIGN ENGINEER OF RECORD : A.K. ORR	DATE : 01/14		

DWG. NO. 34

MI ENGINEERING
1011 SCHAUB DRIVE, SUITE 100
RALEIGH, NC 27606
(919) 851-6606
FIRM PE NUMBER : P-0671

REVISIONS							
NO.	BY:	DATE:	NO.	BY:	DATE:	SHEET NO.	
1			3			5-206	
2			4			TOTAL SHEETS	
						541	

1/9/2014
4:58:46 PM
User: blanning
Filename: P:\NC Bridges\MI1007.03 U-2525B Guilford\U-2525B\Structures\Left Bridge\U2525B_SD_CBR1_4_LT.dgn

NOTES

THE BARRIER RAIL IN A CONTINUOUS UNIT SHALL NOT BE CAST UNTIL ALL SLAB CONCRETE IN THAT UNIT HAS BEEN CAST AND HAS REACHED A MINIMUM COMPRESSIVE STRENGTH OF 3,000 PSI.

ALL REINFORCING STEEL IN BARRIER RAILS SHALL BE EPOXY COATED.

GROOVED CONTRACTION JOINTS, 1/2" IN DEPTH, SHALL BE TOOLED IN ALL EXPOSED FACES OF THE BARRIER RAIL AND IN ACCORDANCE WITH ARTICLE 825-10(B) OF THE STANDARD SPECIFICATIONS. THE CONTRACTION JOINT SHALL BE LOCATED AT EACH THIRD POINT BETWEEN BARRIER RAIL EXPANSION JOINTS. ONLY ONE CONTRACTION JOINT IS REQUIRED AT MIDPOINT OF BARRIER RAIL SEGMENTS LESS THAN 20 FEET IN LENGTH AND NO CONTRACTION JOINTS ARE REQUIRED FOR THOSE SEGMENTS LESS THAN 10 FEET IN LENGTH.

BAR TYPES

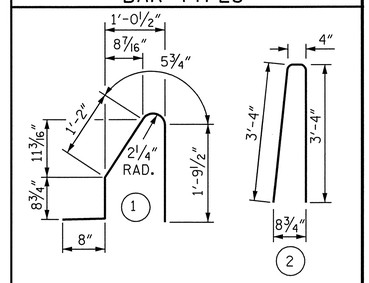

ALL BAR DIMENSIONS ARE OUT TO OUT

BILL OF MATERIAL

FOR CONCRETE BARRIER RAIL ONLY

BAR	NO.	SIZE	TYPE	LENGTH	WEIGHT
✳ B1	544	#5	STR	24'-7"	13948
✳ B2	32	#5	STR	23'-4"	779
✳ B3	272	#5	STR	27'-3"	7731
✳ B4	16	#5	STR	24'-1"	402
✳ B5	16	#5	STR	24'-2"	403
✳ S1	2834	#5	1	4'-10"	14287
✳ S2	2834	#5	2	7'-0"	20691

⊛ ✳ EPOXY COATED REINFORCING STEEL	58,241 LBS.
⊛ CLASS AA CONCRETE	385.8 CU. YDS.
CONCRETE BARRIER RAIL	
SUPERSTRUCTURE	2835.46 LIN. FT.
APPROACH SLABS	40.00 LIN. FT.
TOTAL	2875.46 LIN. FT.

⊛ THE QUANTITIES FOR BARRIER RAIL ON APPROACH SLABS IS NOT INCLUDED. FOR BARRIER RAIL ON APPROACH SLABS, SEE "BRIDGE APPROACH SLAB DETAILS" SHEET 3 OF 3.

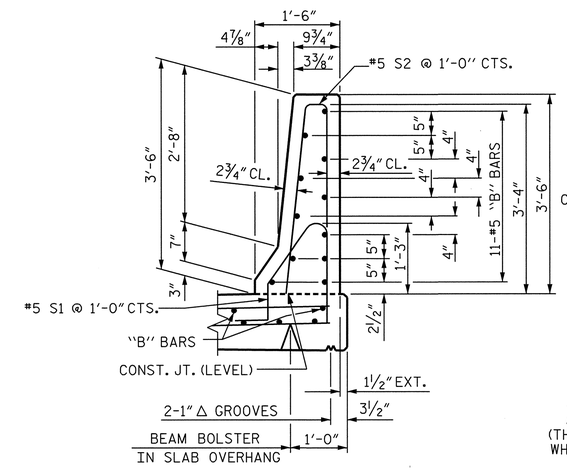

SECTION THRU RAIL

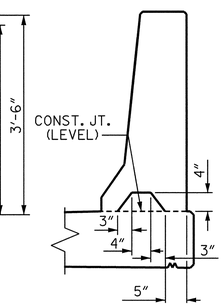

SECTION S-S

AT DAM IN OPEN JOINT
(THIS IS TO BE USED ONLY
WHEN SLIP FORM IS USED)

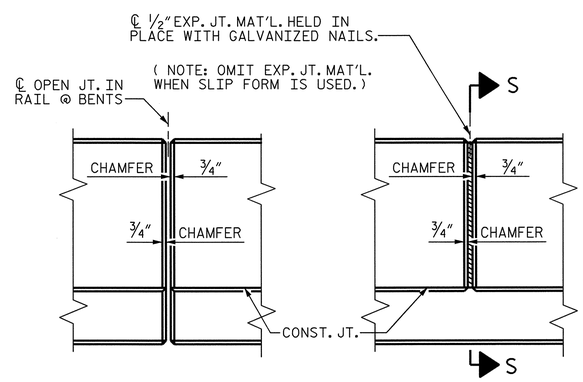

ELEVATION AT EXPANSION JOINTS

BARRIER RAIL DETAILS

PROJECT NO. U-2525B

GUILFORD COUNTY

STATION: 144+90.00 -L-

SHEET 2 OF 2

STATE OF NORTH CAROLINA
DEPARTMENT OF TRANSPORTATION
RALEIGH

STANDARD

CONCRETE
BARRIER RAIL

LEFT LANE

NORTH CAROLINA PROFESSIONAL SEAL 027799 ENGINEER ALLYSON K. ORR
1/10/14

MI ENGINEERING
1011 SCHAUB DRIVE, SUITE 100
RALEIGH, NC 27606
(919) 851-6606
FIRM PE NUMBER : P-0671

REVISIONS						
NO.	BY:	DATE:	NO.	BY:	DATE:	
1			3			
2			4			

SHEET NO. 5-207

TOTAL SHEETS 541

DWG. NO. 35

STD. NO. CBR1

ASSEMBLED BY:	B.E. ATKINSON	DATE:	06/13
CHECKED BY :	A.K. ORR	DATE:	09/13
DESIGN ENGINEER OF RECORD:	A.K. ORR	DATE:	01/14
DRAWN BY : ARB 5/87	REV. 10/1/11		MAA/GM
CHECKED BY : SJD 9/87	REV. 7/12		MAA/GM
	REV. 10/12		MAA/GM

1/9/2014
5:00:23 PM
User: blanning
Filename: P:\NC Bridges\WI1007.03 U-2525B Guilford\U-2525B\Structures\Left Bridge\U2525B_SD_CBR2_4_LT.dgn

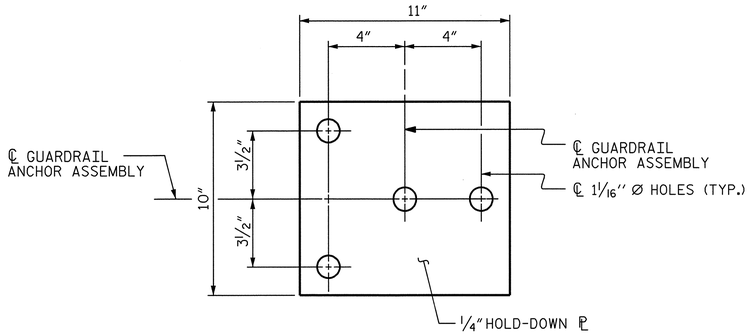

PLAN

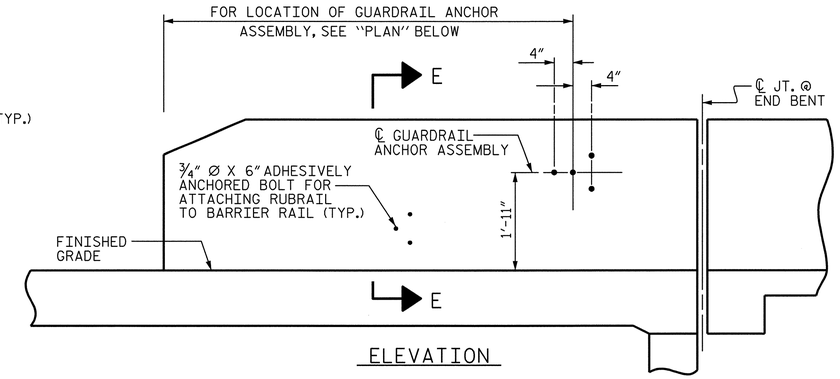

ELEVATION

NOTES

THE GUARDRAIL ANCHOR ASSEMBLY SHALL CONSIST OF A 1/4" HOLD-DOWN PLATE AND 4 - 7/8" Ø BOLTS WITH NUTS AND WASHERS, RUBRAIL, AND ADHESIVELY ANCHORED BOLTS.

THE HOLD-DOWN PLATE SHALL CONFORM TO AASHTO M270 GRADE 36. AFTER FABRICATION, THE HOLD-DOWN PLATE SHALL BE HOT-DIP GALVANIZED IN ACCORDANCE WITH AASHTO M111.

BOLTS SHALL CONFORM TO THE REQUIREMENTS OF ASTM A307 AND NUTS SHALL CONFORM TO THE REQUIREMENTS OF AASHTO M291. BOLTS, NUTS AND WASHERS SHALL BE GALVANIZED. (AT THE CONTRACTOR'S OPTION, STAINLESS STEEL BOLTS, NUTS AND WASHERS MAY BE USED AS AN ALTERNATE FOR THE 7/8" Ø GALVANIZED BOLTS, NUTS AND WASHERS. THEY SHALL CONFORM TO OR EXCEED THE MECHANICAL REQUIREMENTS OF ASTM A307. THE USE OF THIS ALTERNATE SHALL BE APPROVED BY THE ENGINEER.)

THE GUARDRAIL ANCHOR ASSEMBLY IS REQUIRED AT ALL POINTS WHERE APPROACH GUARDRAIL IS TO BE ATTACHED TO THE END OF BARRIER RAIL. FOR POINTS OF ATTACHMENT, SEE SKETCH.

AFTER INSTALLATION, THE EXPOSED THREAD OF THE BOLT SHALL BE BURRED WITH A SHARP POINTED TOOL.

THE COST OF THE GUARDRAIL ANCHOR ASSEMBLY SHALL BE INCLUDED IN THE UNIT CONTRACT PRICE BID FOR CONCRETE BARRIER RAIL.

THE 1 1/4" Ø HOLES SHALL BE FORMED OR DRILLED WITH A CORE BIT. IMPACT TOOLS WILL NOT BE PERMITTED. ANY CONCRETE DAMAGED BY THIS WORK SHALL BE REPAIRED TO THE SATISFACTION OF THE ENGINEER.

THE C6 X 8.2 RUBRAIL IS TO BE ADHESIVELY ANCHORED TO THE RAIL USING THREE 3/4" Ø X 6" BOLTS WITH WASHERS. LEVEL ONE FIELD TESTING IS REQUIRED, AND THE YIELD LOAD OF THE 3/4" Ø BOLT IS 12 KIPS. FOR ADHESIVELY ANCHORED ANCHOR BOLTS OR DOWELS, SEE STANDARD SPECIFICATIONS. SEE ROADWAY STANDARD 862.03 FOR DETAILS AND LOCATION OF THE RUBRAIL.

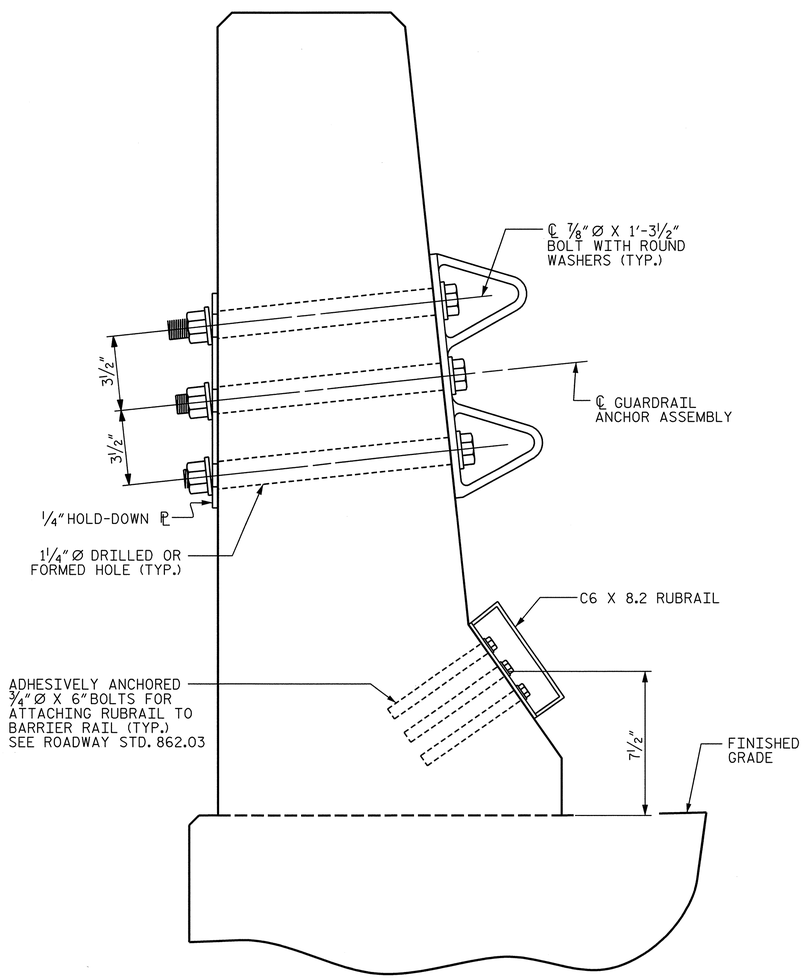

SECTION E-E

GUARDRAIL ANCHOR ASSEMBLY DETAILS

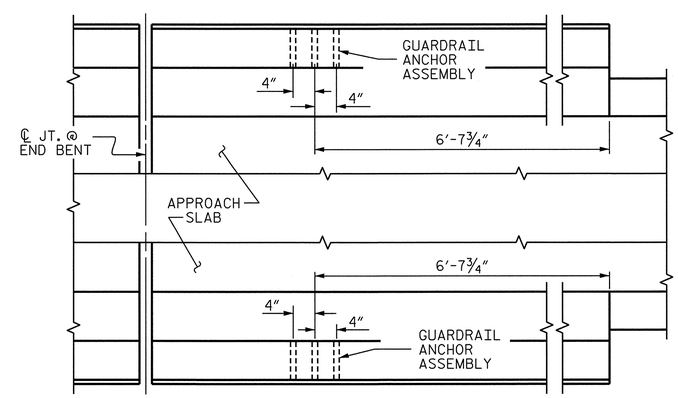

PLAN

LOCATION OF ANCHORS FOR GUARDRAIL

END BENT #2 SHOWN, END BENT #1 SIMILAR.

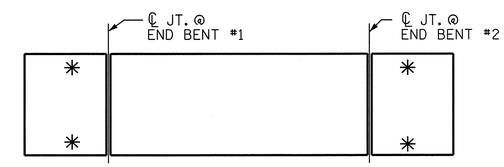

SKETCH SHOWING POINTS OF ATTACHMENTS

✳ DENOTES GUARDRAIL ANCHOR ASSEMBLY

PROJECT NO. U-2525B
GUILFORD COUNTY
STATION: 144+90.00 -L-

STATE OF NORTH CAROLINA
DEPARTMENT OF TRANSPORTATION
RALEIGH

STANDARD

GUARDRAIL ANCHORAGE FOR BARRIER RAIL

LEFT LANE

NORTH CAROLINA PROFESSIONAL SEAL 027799 ENGINEER ALLYSON K. ORR
1/10/14

ASSEMBLED BY:	B.E. ATKINSON	DATE:	06/13
CHECKED BY :	A.K. ORR	DATE:	09/13
DESIGN ENGINEER OF RECORD:	A.K. ORR	DATE:	01/14

DRAWN BY : TLA	5/06	REV. 10/1/11	MAA/GM
CHECKED BY : GM	5/06	REV. 7/12	MAA/GM
		REV. 10/12	MAA/GM

MI ENGINEERING
1011 SCHAUB DRIVE, SUITE 100
RALEIGH, NC 27606
(919) 851-6606
FIRM PE NUMBER : P-0671

DWG. NO. 36

REVISIONS						
NO.	BY:	DATE:	NO.	BY:	DATE:	
1			3			
2			4			

SHEET NO. 5-208
TOTAL SHEETS 541

STD. NO. GRA2

1/9/2014
5:00:26 PM
User: blanning
Filename: P:\NC Bridges\MI1007.03 U-2525B Guilford\U-2525B\Structures\Left Bridge\U2525B_SD_GRA1_4_LT.dgn

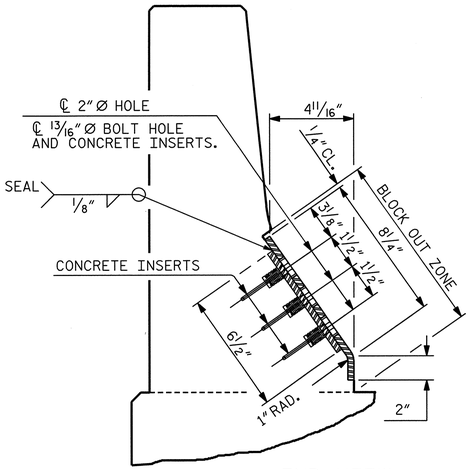

END VIEW

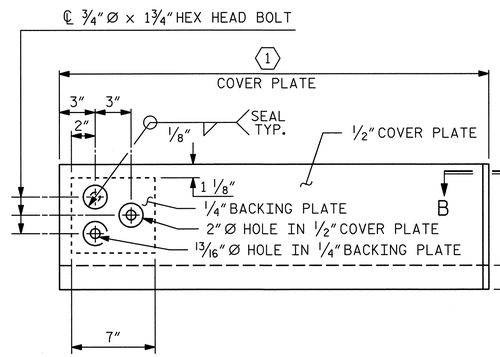

TYPE I - ELEVATION VIEW

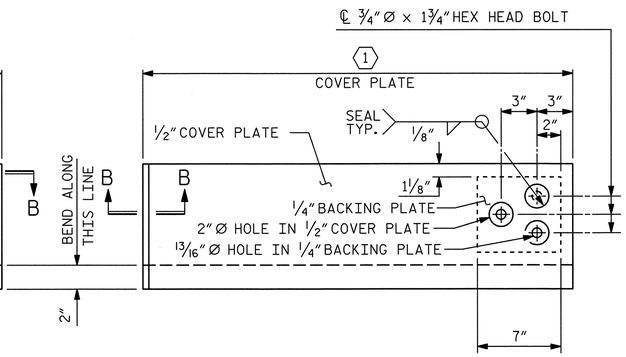

TYPE II - ELEVATION VIEW

COVER PLATE DETAILS

(1) DETAILS OF COVER PLATES ARE SUBJECT TO CHANGE DEPENDING ON THE DETAILS OF THE MODULAR EXPANSION JOINT SEALS FURNISHED.

NOTES

FOR MODULAR EXPANSION JOINT SEALS, SEE SPECIAL PROVISIONS.

THE STEEL PLATES SHALL CONFORM TO AASHTO M270 GRADE 36 OR APPROVED EQUAL AND BE PAINTED IN ACCORDANCE WITH THE STANDARD SPECIFICATIONS. AT THE CONTRACTOR'S OPTION, THE PLATES MAY BE METALLIZED AFTER FABRICATION. SEE SPECIAL PROVISIONS FOR THERMAL SPRAYED COATINGS (METALLIZATION).

THE 3/4" Ø HEX HEAD BOLTS SHALL CONFORM TO ASTM F593 ALLOY 304 STAINLESS STEEL.

THE 3/4" CONCRETE INSERTS SHALL BE CLOSED-END FERRULES WITH LOOPED WIRE STRUTS ATTACHED TO THEM. THE INSERTS SHALL CONFORM TO AASHTO M169, GRADE 12L14 AND SHALL HAVE A TENSILE WORKING LOAD CAPACITY OF 3000 LBS.

NO SEPARATE PAYMENT WILL BE MADE FOR FURNISHING AND INSTALLING THE COVER PLATE. THE ENTIRE COST OF THIS WORK SHALL BE INCLUDED IN THE LUMP SUM PRICE FOR "MODULAR EXPANSION JOINT SEALS".

SPECIAL SNOWPLOW PROTECTION IS REQUIRED. SEE SPECIAL PROVISIONS FOR MODULAR EXPANSION JOINT SEALS.

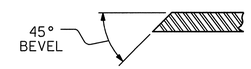

SECTION B-B

	SKEW ANGLE	TOTAL MOVEMENT ALONG ℄ ROADWAY
END BENT #1	90°-00'-00"	3 3/4"
BENT #4	90°-00'-00"	5 11/16"

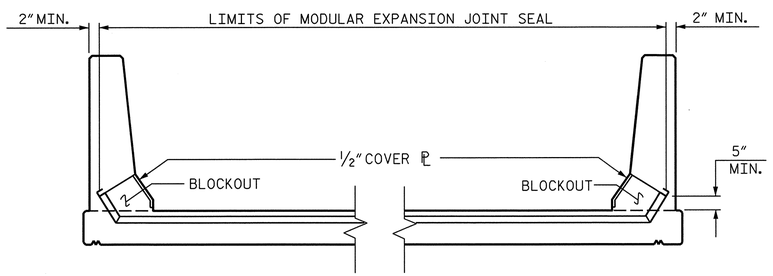

SKETCH SHOWING LIMITS OF MODULAR EXPANSION JOINT SEAL-BARRIER RAIL

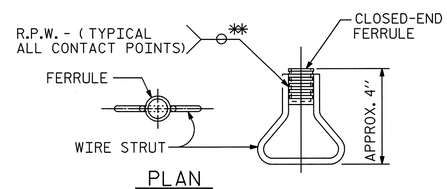

PLAN

ELEVATION

CONCRETE INSERT

** EACH WELDED ATTACHMENT OF WIRE TO FERRULE SHALL DEVELOP THE TENSILE STRENGTH OF THE WIRE.

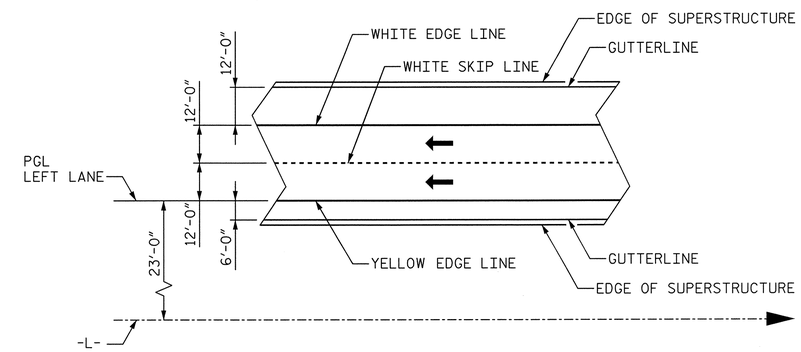

PAVEMENT MARKING ALIGNMENT SKETCH

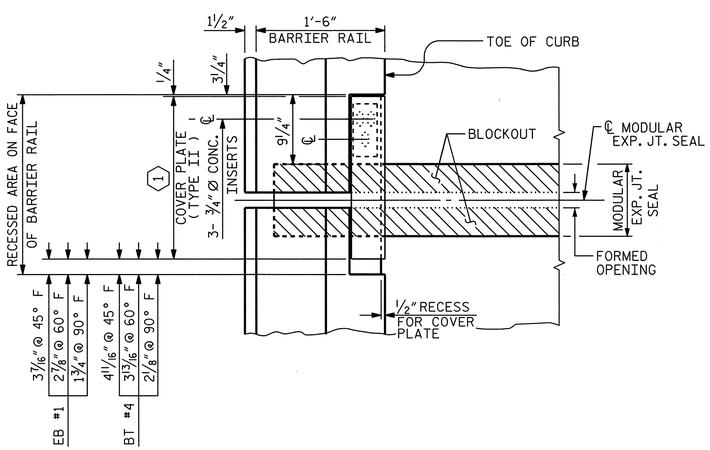

PLAN OF MODULAR EXPANSION JOINT SEAL - LEFT SIDE

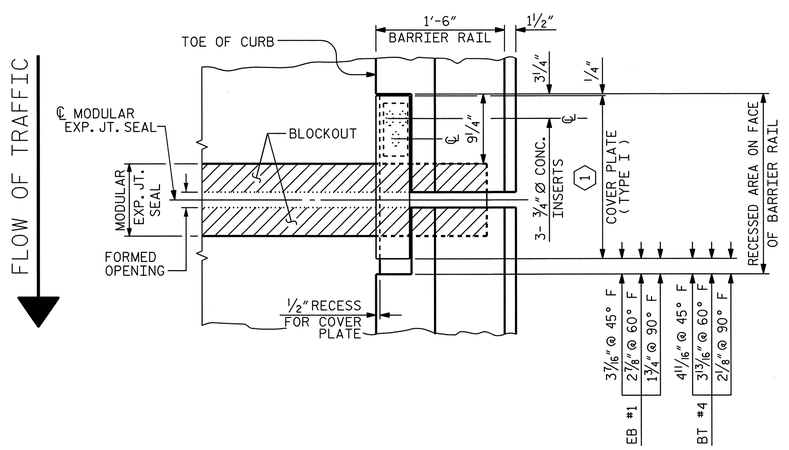

PLAN OF MODULAR EXPANSION JOINT SEAL - RIGHT SIDE

PROJECT NO. U-2525B
GUILFORD COUNTY
STATION: 144+90.00 -L-

STATE OF NORTH CAROLINA
DEPARTMENT OF TRANSPORTATION
RALEIGH

STANDARD

MODULAR EXPANSION JOINT SEAL DETAILS FOR BARRIER RAIL
LEFT LANE

NORTH CAROLINA PROFESSIONAL SEAL 027799 ENGINEER ALLYSON K. ORR
1/10/14

ASSEMBLED BY: B.E. ATKINSON	DATE: 06/13
CHECKED BY : A.K. ORR	DATE: 09/13
DESIGN ENGINEER OF RECORD: A.K. ORR	DATE: 01/14
DRAWN BY : EEM 7/96	REV. 5/1/06 TLA/GM
CHECKED BY : VAP 7/96	REV. 10/1/11 MAA/GM
	REV. 10/12 MAA/GM

DWG. NO. 37

MI ENGINEERING
1011 SCHAUB DRIVE, SUITE 100
RALEIGH, NC 27606
(919) 851-6606
FIRM PE NUMBER : P-0671

REVISIONS						
NO.	BY:	DATE:	NO.	BY:	DATE:	
1			3			
2			4			

SHEET NO. 5-209
TOTAL SHEETS 541

STD. NO. MEJS1

1/9/2014
5:00:28 PM
User: blanning
Filename: P:\NC Bridges\MI1007.03 U-2525B Guilford\U-2525B\Structures\Left Bridge\U2525B_SD_MEJS1_4_LT.dgn

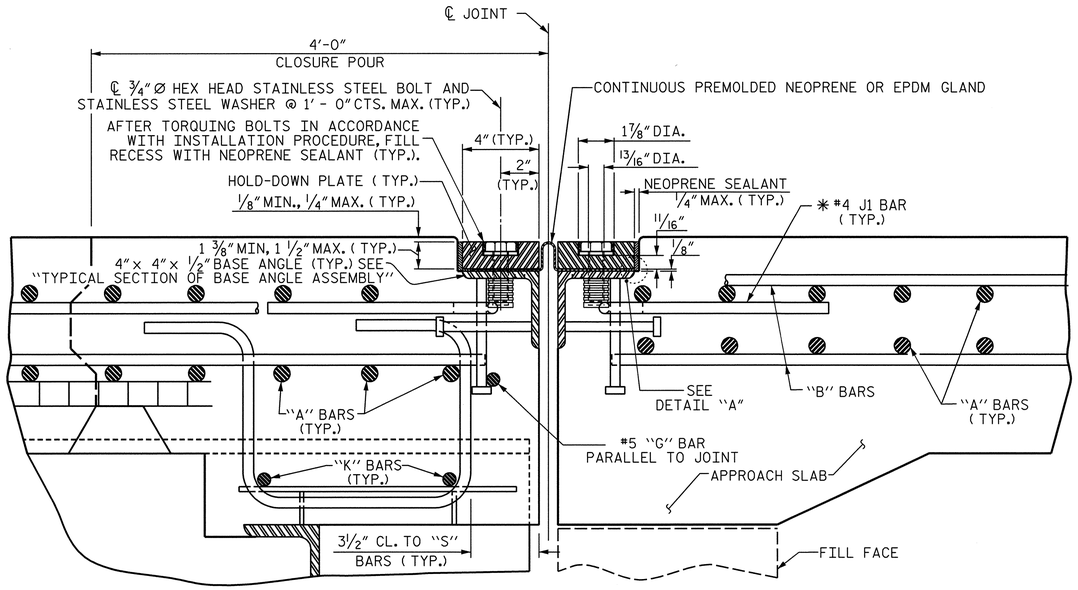

EXPANSION JOINT DETAILS

SECTION NORMAL TO JOINT -- STEEL SUPERSTRUCTURE

✱ THE QUANTITY OF #4 J1 BARS ON THE BILL OF MATERIAL IS BASED ON 1'-0" CENTERS. J1 BARS SHALL BE PLACED AT EACH VERTICAL STUD ANCHOR BOLT. IN THE EVENT THAT THE NUMBER OF VERTICAL STUD ANCHORS EXCEEDS THE NUMBER OF J1 BARS SPECIFIED, ADDITIONAL J1 BARS WILL NOT BE REQUIRED.

INSTALLATION PROCEDURE

1. A TEMPLATE OR OTHER SUITABLE DEVICE SHALL BE USED TO FORM THE TOP OF THE EXPANSION JOINT SEAL BLOCKOUT TO THE PROPER DEPTH AND WIDTH. THE TEMPLATE SHALL BE 4⅛" TO 4¼" WIDE AND OF SUCH THICKNESS AS TO PROVIDE FOR CORRECT FINAL ELEVATION OF TOP OF HOLD-DOWN PLATES. THE TEMPLATE SHALL BE ATTACHED TO THE BASE ANGLE ASSEMBLY WITH THE ¾"Ø HEX HEAD BOLTS PROVIDED FOR THE HOLD-DOWN PLATES. A 1"Ø HOLE SHALL BE PROVIDED IN THE TEMPLATE CENTERED OVER EACH WEEP HOLE IN THE 4" X 4" X ½" BASE ANGLE. OTHER METHODS OF INSURING DRAINAGE THROUGH WEEP HOLES MAY BE EMPLOYED SUBJECT TO ENGINEER'S APPROVAL.
2. AFTER THE CONCRETE HAS BEEN CAST ON BOTH SIDES OF THE JOINT, REMOVE THE TEMPLATE. THOROUGHLY CLEAN THE BOLT HOLES AND THE ANGLE PLATE. REMOVE ANY EXCESS CONCRETE THAT COMES OUT OF THE WEEP HOLES. ANY DAMAGED STEEL SHALL BE COATED WITH A MINIMUM THICKNESS OF 4 DRY MILS OF ZINC-RICH PAINT IN ACCORDANCE WITH THE STANDARD SPECIFICATIONS.
3. LAY THE GLAND ON THE BASE ANGLE AND FIELD MARK THE GLAND FOR THE BOLT HOLES. HOLES IN THE GLAND SHALL BE PUNCHED ⅞" IN DIAMETER WITH A HAND PUNCH.
4. IN ORDER TO CHECK FOR PROPER ALIGNMENT, PLACE THE GLAND AND HOLD-DOWN PLATES ON THE BASE ANGLE. DO NOT APPLY NEOPRENE SEALANT. BOLT THE HOLD-DOWN PLATES TO THE BASE ANGLE BUT DO NOT TIGHTEN. THE ENGINEER SHALL INSPECT THE JOINT SEAL DEVICE FOR PROPER ALIGNMENT.
5. AFTER INSPECTION, REMOVE THE HOLD-DOWN PLATES AND GLAND. APPLY NEOPRENE SEALANT TO THE BASE ANGLE IN ACCORDANCE WITH THE "INSTALLATION SKETCH". PLACE GLAND AND HOLD-DOWN PLATES ON THE BASE ANGLE. BOLT THE HOLD-DOWN PLATES TO THE BASE ANGLE ASSEMBLY AND TORQUE THE BOLTS TO 88 FT-LBS WITH A TORQUE WRENCH. CHECK THE TORQUE AFTER THREE (3) HOURS AND, IF NECESSARY, RETIGHTEN TO 88 FT-LBS. A FINAL CHECK SHALL BE MADE AT SEVEN (7) DAYS. TORQUE SHALL NOT BE LESS THAN 80 FT-LBS AFTER SEVEN (7) DAYS.
6. AFTER PROPER TORQUING, CLEAN THE BOLT HOLE RECESSES AND THE RECESS BETWEEN THE JOINT SEAL DEVICE AND CONCRETE, COMPLETELY FILL THESE RECESSES WITH NEOPRENE SEALANT.

GENERAL NOTES

1. FOR EXPANSION JOINT SEALS, SEE SPECIAL PROVISIONS.
2. ALL PLATES AND ANGLES SHALL CONFORM TO AASHTO M270 GRADE 36 STEEL OR APPROVED EQUAL. ALL HOLD-DOWN BOLTS SHALL CONFORM TO ASTM F593 ALLOY 304 STAINLESS STEEL AND WASHERS SHALL CONFORM TO ASTM F844 EXCEPT THEY SHALL BE MADE FROM ALLOY 304 STAINLESS STEEL. ALL STUD ANCHORS SHALL CONFORM TO AASHTO M169, GRADES 1010 THRU 1020 OR APPROVED EQUAL. ALL CONCRETE INSERTS SHALL BE CLOSED END AND SHALL CONFORM TO AASHTO M169, GRADE 12L14. TENSILE CAPACITY SHALL BE 3000 LBS. MIN.
3. A PREMOLDED CORRUGATED OR NON-CORRUGATED GLAND SHALL BE USED FOR JOINTS SKEWED BETWEEN 50° THRU 130°. FOR JOINTS SKEWED LESS THAN 50° OR MORE THAN 130°, ONLY A CORRUGATED GLAND SHALL BE USED.
4. CLOSED END FERRULES AND STUD ANCHORS SHALL BE SHOP WELDED AND ALL HOLES SHALL BE SHOP DRILLED AS SHOWN ON PLANS. STUD ANCHORS SHALL BE ELECTRIC ARC END WELDED WITH COMPLETE FUSION.
5. SURFACES COMING IN CONTACT WITH NEOPRENE SHALL BE GROUND SMOOTH PRIOR TO METALLIZING.
6. UPON COMPLETION OF SHOP FABRICATION, THE HOLD DOWN PLATE AND BASE ANGLE ASSEMBLY, AS SHOWN IN THE "TYPICAL SECTION OF BASE ANGLE ASSEMBLY", SHALL BE METALLIZED. SEE SPECIAL PROVISION FOR THERMAL SPRAYED COATINGS (METALLIZATION).
7. BASE ANGLE ASSEMBLY SHALL BE CONTINUOUS FOR THE LENGTH OF THE JOINT. AT CROWN BREAKS, THE ENDS OF THE BASE ANGLE ASSEMBLY SHALL BE CUT PARALLEL TO THE BRIDGE CENTERLINE FOR SKEWS LESS THAN 80° AND GREATER THAN 100°. FINISHED WELD SHALL BE GROUND SMOOTH AND COATED WITH A MINIMUM THICKNESS OF 4 DRY MILS OF ZINC-RICH PAINT IN ACCORDANCE WITH THE STANDARD SPECIFICATIONS.
8. FIELD SPLICES OF HOLD-DOWN PLATES SHALL BE KEPT TO A MINIMUM. CONTRACTOR SHALL FURNISH DETAILED PLANS SHOWING PROPOSED SPLICE LOCATIONS FOR APPROVAL. HOLD-DOWN PLATES SHALL NOT EXCEED 20' LENGTHS UNLESS APPROVED BY THE ENGINEER.
9. NO ALTERNATE JOINT DETAILS SHALL BE PERMITTED IN LIEU OF THOSE SHOWN ON THESE PLANS.
10. THE CONTRACTOR MAY, AT HIS OPTION, USE ADHESIVELY ANCHORED ANCHOR BOLTS IN PLACE OF CONCRETE INSERTS FOR COVER PLATES. THE YIELD LOAD OF THE ¾"Ø BOLT IS 10 KIPS. FIELD TESTING OF THE ADHESIVE BONDING SYSTEM IS NOT REQUIRED.

MOVEMENT AND SETTING AT JOINT					
LOCATION	SKEW ANGLE	TOTAL MOVEMENT (ALONG ℄ RDWY)	PERPENDICULAR JOINT OPENING AT 45° F	PERPENDICULAR JOINT OPENING AT 60° F	PERPENDICULAR JOINT OPENING AT 90° F
END BENT 2	90°-00'-00"	1⅝"	2 1/16"	1 13/16"	1 5/16"

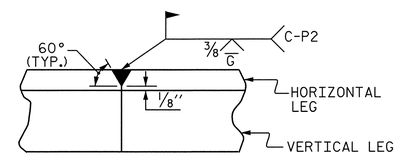

DETAIL- FIELD WELD SPLICE OF BASE ANGLE

NOTE: FOR PAVEMENT MARKING ALIGNMENT SKETCH, SEE "MODULAR EXPANSION JOINT SEAL DETAILS FOR BARRIER RAIL" SHEET.

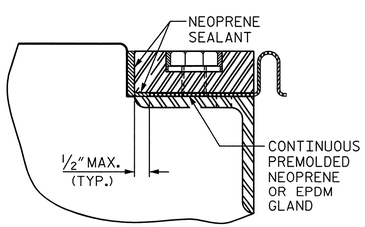

DETAIL "A"

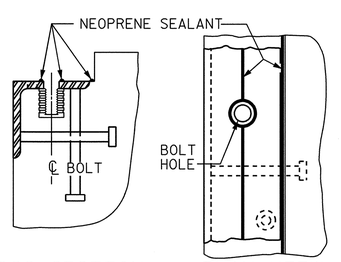

CROSS SECTION PLAN VIEW

INSTALLATION SKETCH

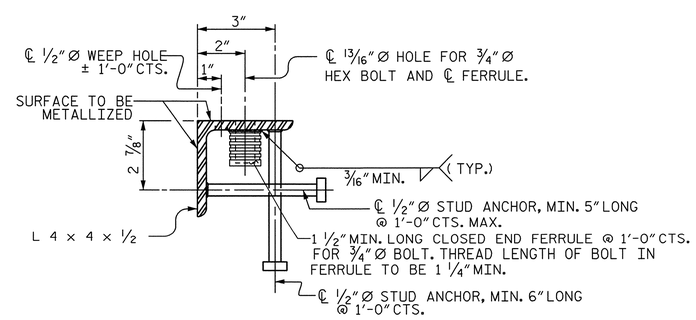

TYPICAL SECTION OF BASE ANGLE ASSEMBLY

PROJECT NO. U-2525B
GUILFORD COUNTY
STATION: 144+90.00 -L-

SHEET 1 OF 2

STATE OF NORTH CAROLINA
DEPARTMENT OF TRANSPORTATION
RALEIGH

STANDARD

EXPANSION JOINT SEAL DETAILS

LEFT LANE

NORTH CAROLINA PROFESSIONAL SEAL 027799 ENGINEER ALLYSON K. ORR
1/10/14

ASSEMBLED BY:	B.E. ATKINSON	DATE:	06/13
CHECKED BY :	A.K. ORR	DATE:	09/13
DESIGN ENGINEER OF RECORD:	A.K. ORR	DATE:	01/14

DRAWN BY :	REK	9/87	REV. 5/7/03R RWW/JTE
CHECKED BY :	CRK	10/87	REV. 5/1/06R TLA/GM
			REV. 10/1/11 MAA/GM

MI ENGINEERING
1011 SCHAUB DRIVE, SUITE 100
RALEIGH, NC 27606
(919) 851-6606
FIRM PE NUMBER : P-0671

REVISIONS								
NO.	BY:	DATE:	NO.	BY:	DATE:	SHEET NO. S-210
1			3			TOTAL SHEETS 54-1
2			4			

DWG. NO. 38

STD. NO. EJS1

1/9/2014
5:00:51 PM
User: blanning
Filename: P:\NC Bridges\MI1007.03 U-2525B Guilford\U-2525B\Structures\Left Bridge\U2525B_SD_EJS1_4_LT.dgn

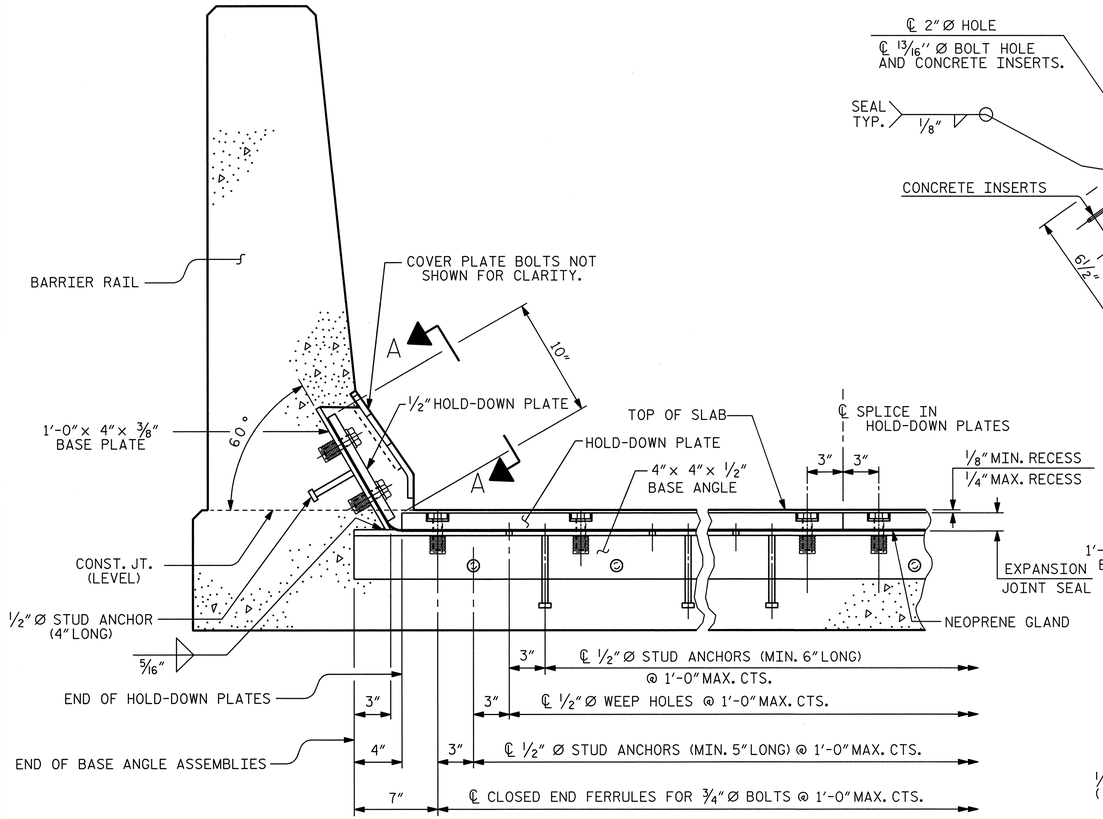

SECTION THRU RAIL NORMAL TO JOINT

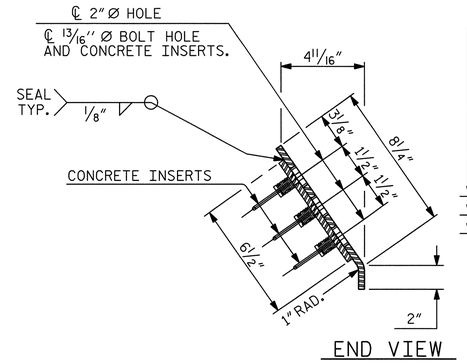

END VIEW

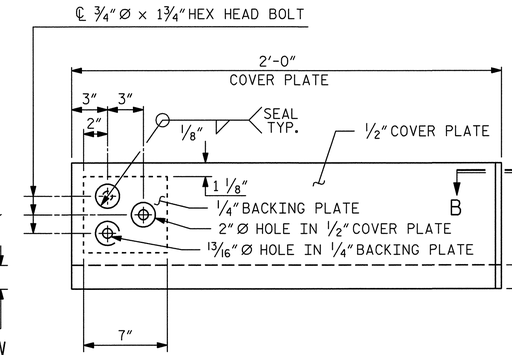

TYPE I - ELEVATION VIEW

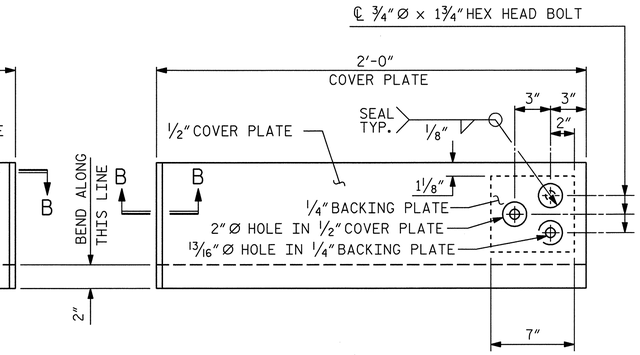

TYPE II - ELEVATION VIEW

BEND ALONG THIS LINE

COVER PLATE DETAILS

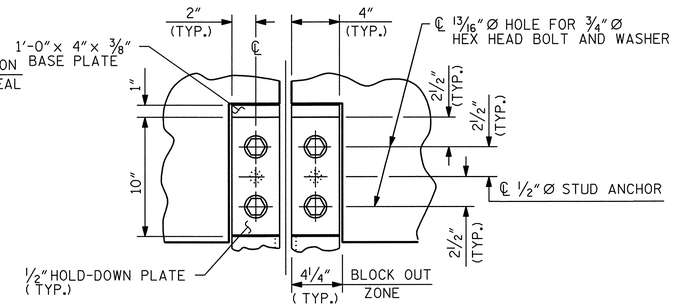

SECTION A - A

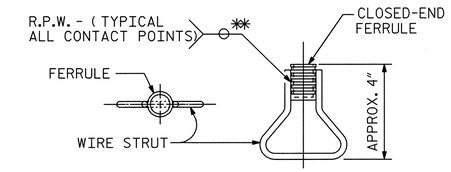

PLAN ELEVATION

CONCRETE INSERT

** EACH WELDED ATTACHMENT OF WIRE TO FERRULE SHALL DEVELOP THE TENSILE STRENGTH OF THE WIRE.

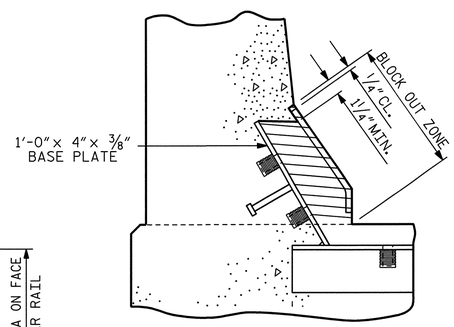

BLOCK OUT DETAIL

SEE " SECTION A - A " FOR OTHER DETAILS.

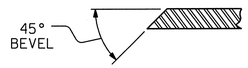

SECTION B - B

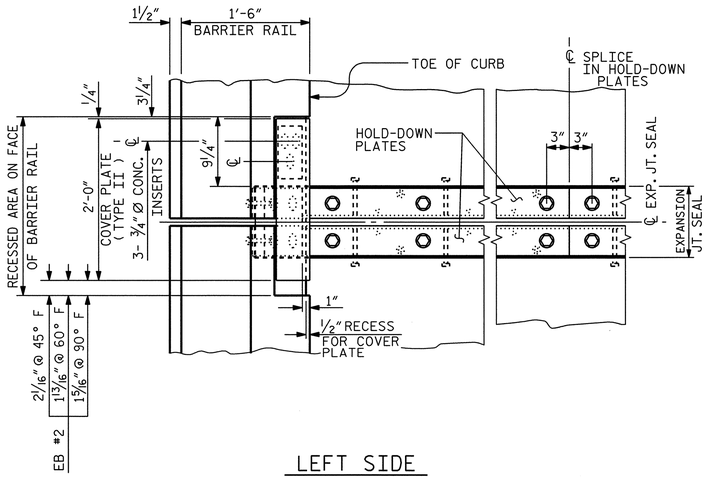

LEFT SIDE

FLOW OF TRAFFIC

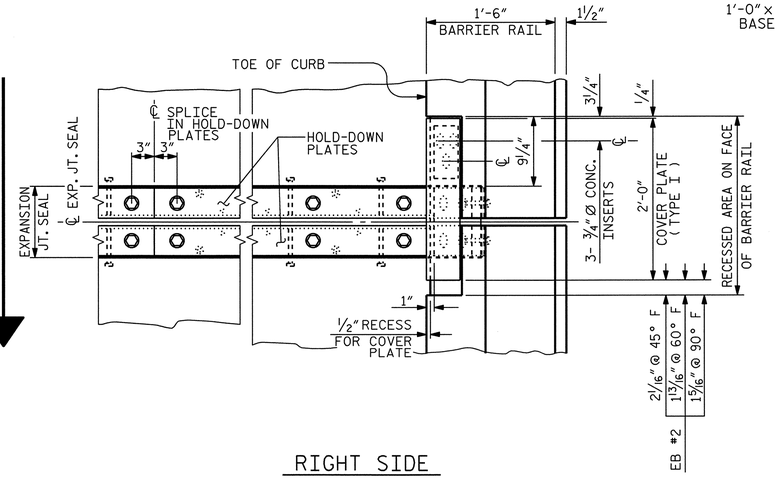

RIGHT SIDE

PLAN OF EXPANSION JOINT SEAL

PROJECT NO. U-2525B

GUILFORD COUNTY

STATION: 144+90.00 -L-

SHEET 2 OF 2

STATE OF NORTH CAROLINA
DEPARTMENT OF TRANSPORTATION
RALEIGH

STANDARD

EXPANSION JOINT SEAL DETAILS FOR BARRIER RAIL

LEFT LANE

NORTH CAROLINA PROFESSIONAL SEAL 027799 ENGINEER ALLYSON K. ORR 1/10/14

ASSEMBLED BY:	B.E. ATKINSON DATE: 06/13
CHECKED BY :	A.K. ORR DATE: 09/13
DESIGN ENGINEER OF RECORD:	A.K. ORR DATE: 01/14
DRAWN BY : REK 9/87	REV. 10/1/11 MAA/GM
CHECKED BY : CRK 10/87	REV. 7/12 MAA/GM
	REV. 10/12 MAA/GM

MI ENGINEERING
1011 SCHAUB DRIVE, SUITE 100
RALEIGH, NC 27606
(919) 851-6606
FIRM PE NUMBER : P-0671

REVISIONS								
NO.	BY:	DATE:	NO.	BY:	DATE:		SHEET NO.	
1			3				S-211	
2			4				TOTAL SHEETS	
							541	

DWG. NO. 39

STD. NO. EJS2 SHT 1a

1/9/2014
5:00:53 PM
User: blanning
Filename: P:\NC Bridges\MI1007.03 U-2525B Guilford\U-2525B\Structures\Left Bridge\U2525B_SD_EJS2_4_LT.dgn

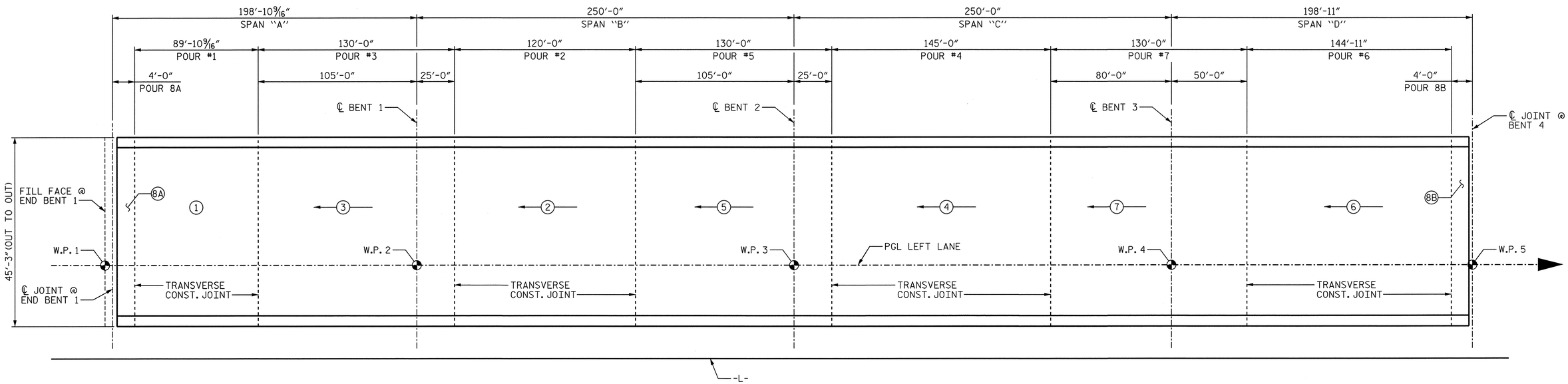

POURING SEQUENCE - UNIT 1

(#) INDICATES POUR NUMBER AND POUR DIRECTION

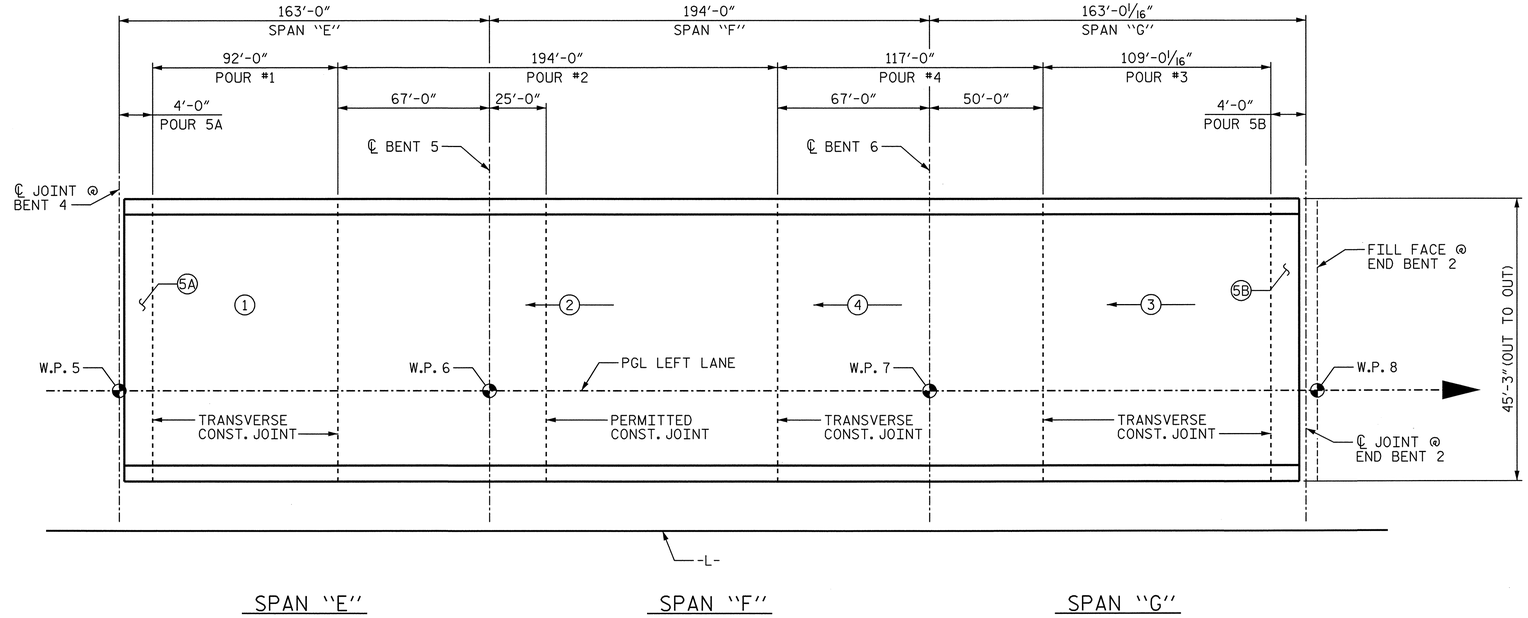

POURING SEQUENCE - UNIT 2

(#) INDICATES POUR NUMBER AND POUR DIRECTION

CONCRETE BREAKDOWN		
POUR	UNIT 1	UNIT 2
1	132.5	135.6
2	176.9	285.8
3	191.7	160.6
4	213.8	172.4
5	191.7	15.6
6	213.7	--
7	191.7	--
8	16.6	--
TOTAL	1328.6	770.0

PROJECT NO. U-2525B
GUILFORD COUNTY
STATION: 144+90.00 -L-

SHEET 1 OF 2

STATE OF NORTH CAROLINA
DEPARTMENT OF TRANSPORTATION
RALEIGH

SUPERSTRUCTURE
BILL OF MATERIAL

LEFT LANE

NORTH CAROLINA PROFESSIONAL SEAL 021799 ENGINEER ALLYSON K. ORR
1/10/14

MI ENGINEERING
1011 SCHAUB DRIVE, SUITE 100
RALEIGH, NC 27606
(919) 851-6606
FIRM PE NUMBER : P-0671

REVISIONS						
NO.	BY:	DATE:	NO.	BY:	DATE:	
1			3			
2			4			

SHEET NO. 5-212
TOTAL SHEETS 541

DWG. NO. 40

DRAWN BY : B.E. LANNING DATE : 01/14
CHECKED BY : A.K. ORR DATE : 01/14
DESIGN ENGINEER OF RECORD : A.K. ORR DATE : 01/14

1/9/2014
5:10:47 PM
User: blanning
Filename: P:\NC Bridges\MI1007.03 U-2525B Guilford\U-2525B\Structures\Left Bridge\U2525B_SD_BMI_4_LT.dgn

REINFORCING BAR SCHEDULE

UNIT 1

BAR	NO.	SIZE	TYPE	LENGTH	WEIGHT
✱ A1	1794	#5	STR	44'-11"	84045
A2	1794	#5	STR	44'-11"	84045
✱ B1	1056	#4	STR	29'-3"	20633
B2	896	#5	STR	58'-3"	54436
✱ B3	590	#6	STR	40'-2"	35595
✱ B4	295	#6	STR	42'-11"	19016
✱ G1	28	#5	4	3'-8"	107
✱ K1	12	#5	1	7'-5"	93
✱ K2	18	#5	2	8'-7"	161
✱ K3	24	#5	STR	7'-9"	194
✱ K4	12	#5	STR	1'-8"	21
✱ S1	38	#4	3	4'-9"	121
✱ S2	38	#4	3	4'-8"	118

✱EPOXY COATED REINFORCING STEEL LBS. 160,104

REINFORCING STEEL LBS. 138,481

UNIT 2

BAR	NO.	SIZE	TYPE	LENGTH	WEIGHT
✱ A1	1039	#5	STR	44'-11"	48675
A2	1039	#5	STR	44'-11"	48675
✱ B5	608	#4	STR	29'-4"	11914
B6	504	#5	STR	59'-9"	31409
✱ B7	354	#6	STR	55'-5"	29465
✱ G1	14	#5	4	3'-8"	54
✱ G2	1	#5	STR	44'-11"	47
✱ J1	42	#4	5	1'-5"	40
✱ K5	10	#5	1	7'-4"	76
✱ K6	15	#5	2	8'-4"	130
✱ K7	20	#5	STR	8'-0"	167
✱ K8	6	#5	STR	1'-9"	11
✱ S2	38	#4	3	4'-8"	118
✱ S3	32	#4	3	3'-10"	82

✱EPOXY COATED REINFORCING STEEL LBS. 90,779

REINFORCING STEEL LBS. 80,084

SUPERSTRUCTURE REINFORCING STEEL LENGTHS ARE BASED ON THE FOLLOWING MINIMUM SPLICE LENGTHS

BAR SIZE	SUPERSTRUCTURE EXCEPT APPROACH SLABS, PARAPET, AND BARRIER RAIL		APPROACH SLABS		PARAPET AND BARRIER RAIL
	EPOXY COATED	UNCOATED	EPOXY COATED	UNCOATED	
#4	2'-0"	1'-9"	2'-0"	1'-9"	2'-9"
#5	2'-6"	2'-2"	2'-6"	2'-2"	3'-5"
#6	3'-0"	2'-7"	3'-10"	2'-7"	4'-4"
#7	5'-3"	3'-6"			
#8	6'-10"	4'-7"			

BAR TYPES

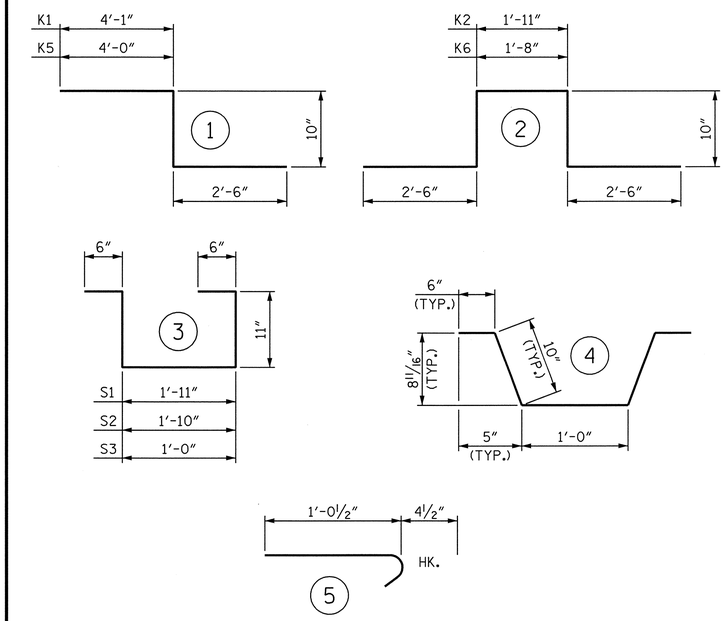

ALL BAR DIMENSIONS ARE OUT TO OUT.

SUPERSTRUCTURE BILL OF MATERIAL

	CLASS AA CONCRETE	REINFORCING STEEL	EPOXY COATED REINFORCING STEEL
	(CU. YDS.)	(LBS.)	(LBS.)
UNIT 1	1328.6	138,481	160,104
UNIT 2	770.0	80,084	90,779
TOTALS✱✱	2098.6	218,565	250,883

✱✱QUANTITIES FOR BARRIER RAIL ARE NOT INCLUDED.

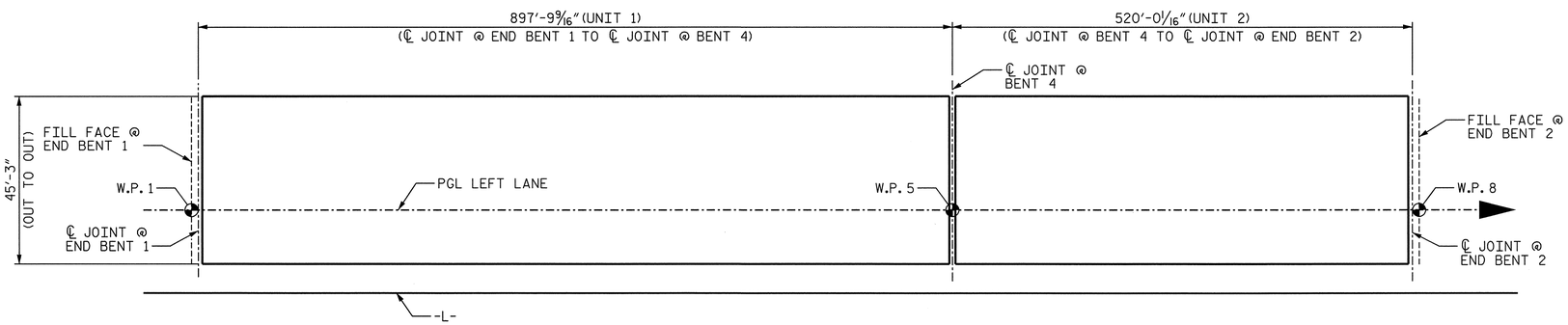

LAYOUT FOR COMPUTING AREA OF REINFORCED CONCRETE DECK SLAB
(SQ. FT. = 64,156)

GROOVING BRIDGE FLOORS

APPROACH SLABS ⊛	1859 SQ.FT.
BRIDGE DECK - UNIT 1	34942 SQ.FT.
BRIDGE DECK - UNIT 2	20219 SQ.FT.
TOTAL	57020 SQ.FT.

⊛QUANTITY IS FOR BOTH APPROACH SLABS.

PROJECT NO. U-2525B

GUILFORD COUNTY

STATION: 144+90.00 -L-

SHEET 2 OF 2

STATE OF NORTH CAROLINA
DEPARTMENT OF TRANSPORTATION
RALEIGH

SUPERSTRUCTURE BILL OF MATERIAL

LEFT LANE

NORTH CAROLINA PROFESSIONAL SEAL 027799 ENGINEER ALLYSON K. ORR
1/10/14

MI ENGINEERING
1011 SCHAUB DRIVE, SUITE 100
RALEIGH, NC 27606
(919) 851-6606
FIRM PE NUMBER : P-0671

REVISIONS						
NO.	BY:	DATE:	NO.	BY:	DATE:	
1			3			
2			4			

SHEET NO. 5-213

TOTAL SHEETS 541

DWG. NO. 41

DRAWN BY : B.E. LANNING DATE : 07/13
CHECKED BY : A.K. ORR DATE : 07/13
DESIGN ENGINEER OF RECORD : A.K. ORR DATE : 01/14

1/9/2014
5:11:08 PM
User: blanning
Filename: P:\NC Bridges\MI1007.03 U-2525B Guilford\U-2525B\Structures\Left Bridge\U2525B_SD_BM2_4_LT.dgn

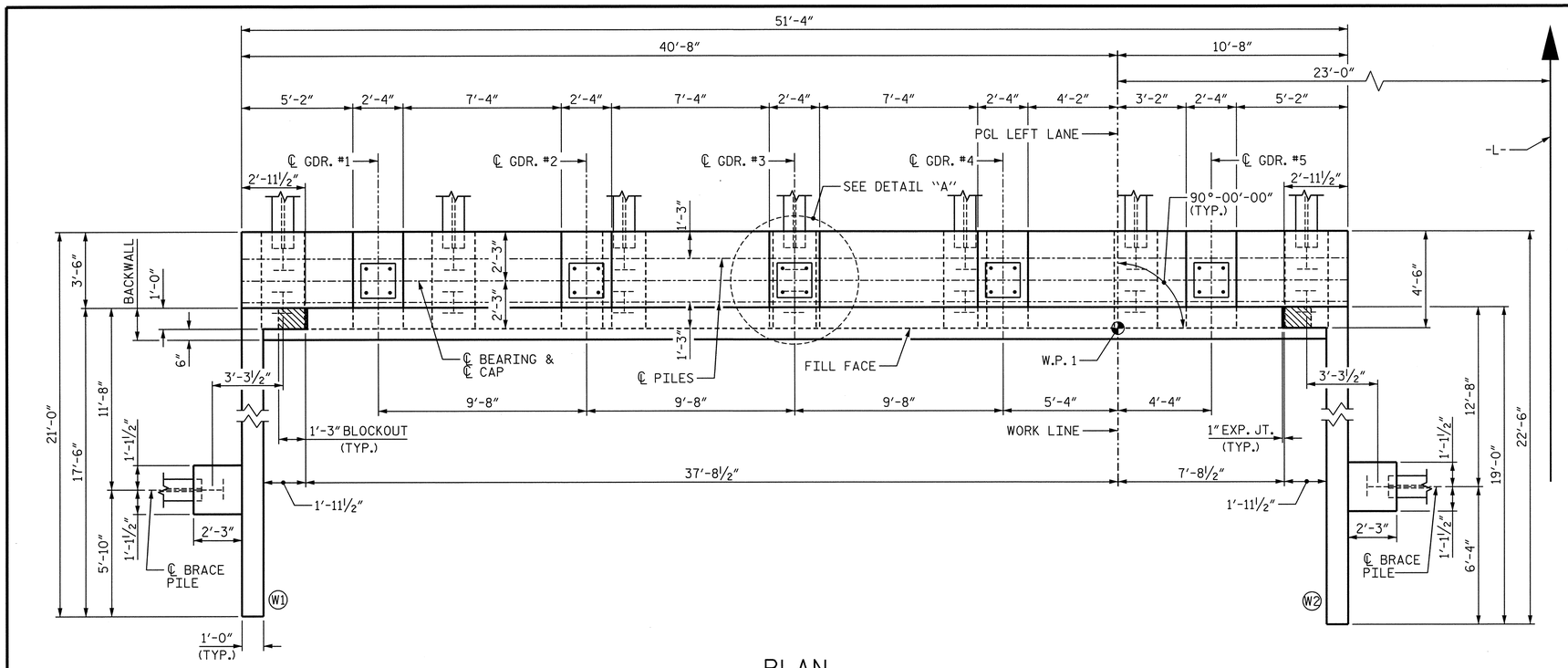

PLAN

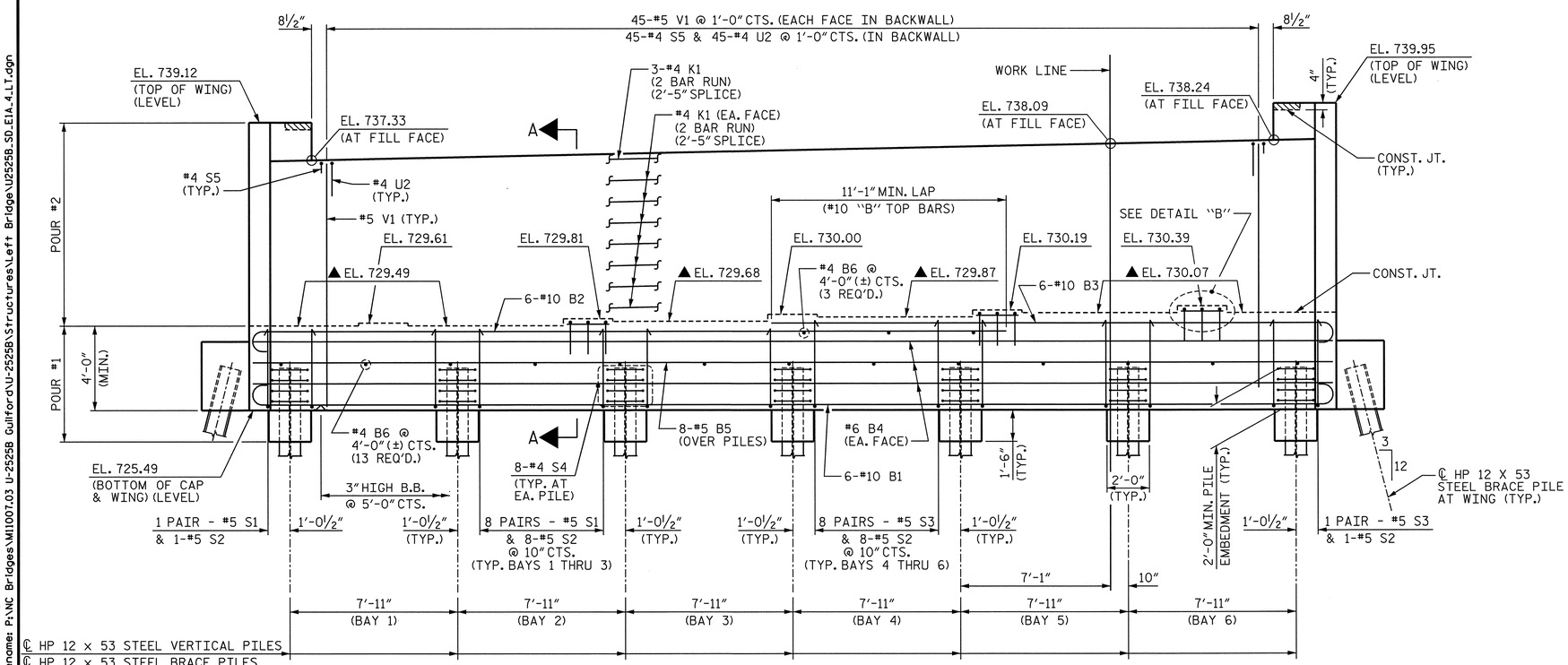

ELEVATION

NOTES

STIRRUPS AND #4 U1 BARS IN CAP MAY BE SHIFTED AS NECESSARY TO CLEAR ANCHOR BOLTS AND PIPE INSERTS.

#5 V1 BARS IN BACKWALL SHALL BE PLACED 2" CLEAR FROM THE TOP OF BACKWALL.

BACKWALL SHALL BE PLACED BEFORE APPLYING THE EPOXY PROTECTIVE COATING.

THE TOP SURFACE AREAS OF THE END BENT CAP SHALL BE CURED IN ACCORDANCE WITH THE STANDARD SPECIFICATIONS, EXCEPT THAT THE MEMBRANE CURING COMPOUND METHOD SHALL NOT BE USED.

THE TOP SURFACE OF THE CAP EXCEPT THE BRIDGE SEAT BUILDUPS SHALL BE SLOPED TRANSVERSELY FROM THE FILL FACE TO THE BACK FACE AT THE RATE OF 2%.

▲ FOR LOCATION OF ELEVATIONS BETWEEN BRIDGE SEAT BUILD-UPS, SEE SECTION A-A ON SHEET 3 OF 3.

FOR SECTION A-A, PILE SPLICE DETAILS AND TEMPORARY DRAINAGE DETAILS, SEE SHEET 3 OF 3.

THE CONCRETE IN THE SHADED AREA OF THE WING SHALL BE POURED AFTER THE BARRIER RAIL IS CAST IF SLIP FORMING IS USED.

INSTALL THE 4" DIA. DRAIN PIPE THROUGH THE WING WALL AS REQUIRED FOR REINFORCED BRIDGE APPROACH FILLS, SEE THE ROADWAY PLANS. REINFORCING STEEL IN THE WING WALL MAY BE SHIFTED AS NECESSARY TO CLEAR THE DRAIN PIPE.

FOR 1½" Ø ANCHOR BOLTS, SEE "POT BEARING DETAILS" SHEETS.

FOR PIPE INSERT DETAILS, SEE "POT BEARING DETAILS" SHEETS.

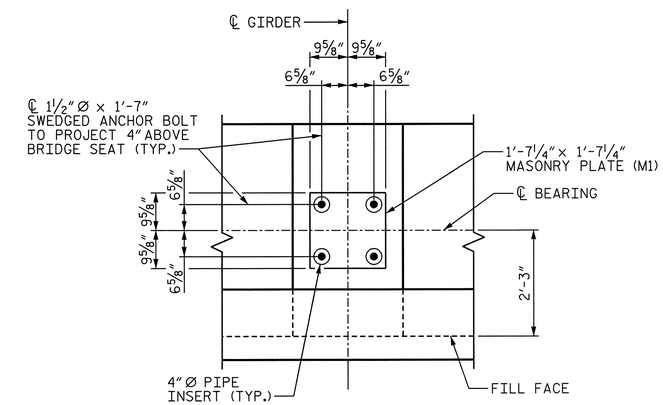

DETAIL "A"

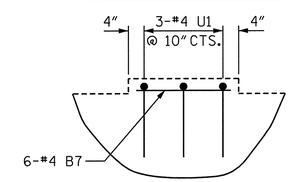

DETAIL "B"

(TYP. AT GDRS. #2, #4 AND #5)

PROJECT NO. U-2525B

GUILFORD COUNTY

STATION: 144+90.00 -L-

SHEET 1 OF 3

STATE OF NORTH CAROLINA
DEPARTMENT OF TRANSPORTATION
RALEIGH

SUBSTRUCTURE
END BENT 1

LEFT LANE

NORTH CAROLINA PROFESSIONAL SEAL 027799 ENGINEER ALLYSON K. ORR
1/10/14

DRAWN BY : B.E. LANNING DATE : 08/13
CHECKED BY : G.R. COLS DATE : 10/13
DESIGN ENGINEER OF RECORD : A.K. ORR DATE : 01/14

MI ENGINEERING
1011 SCHAUB DRIVE, SUITE 100
RALEIGH, NC 27606
(919) 851-6606
FIRM PE NUMBER : P-0671

DWG. NO. 42

REVISIONS								SHEET NO.
NO.	BY:	DATE:		NO.	BY:	DATE:		5-214
1				3				TOTAL SHEETS
2				4				541

1/9/2014
5:00:56 PM
User: blanning
Filename: P:\NC Bridges\MI1007.03 U-2525B Guilford\U-2525B\Structures\Left Bridge\U2525B_SD_EIA_4_LT.dgn

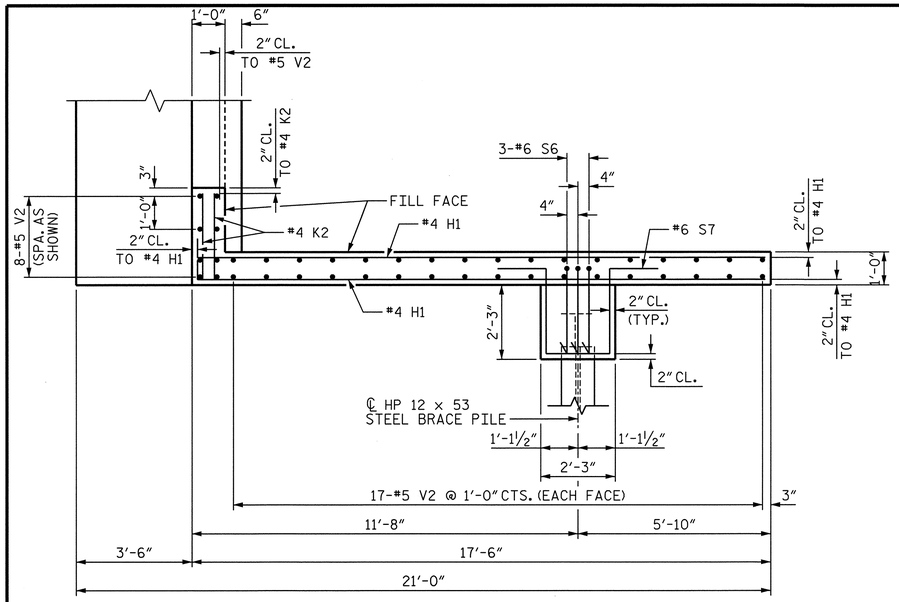

PLAN OF WING (W1)

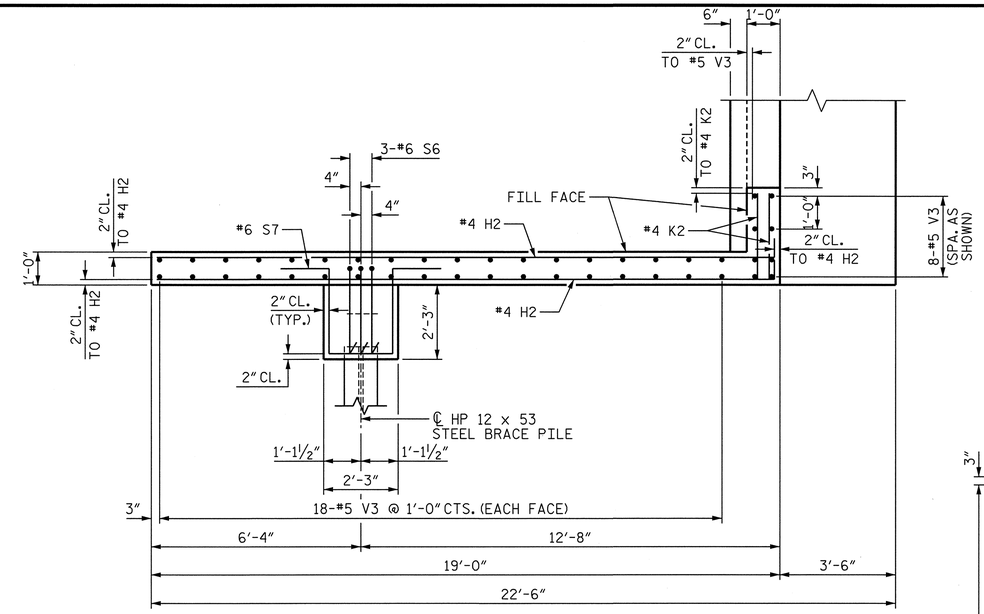

PLAN OF WING (W2)

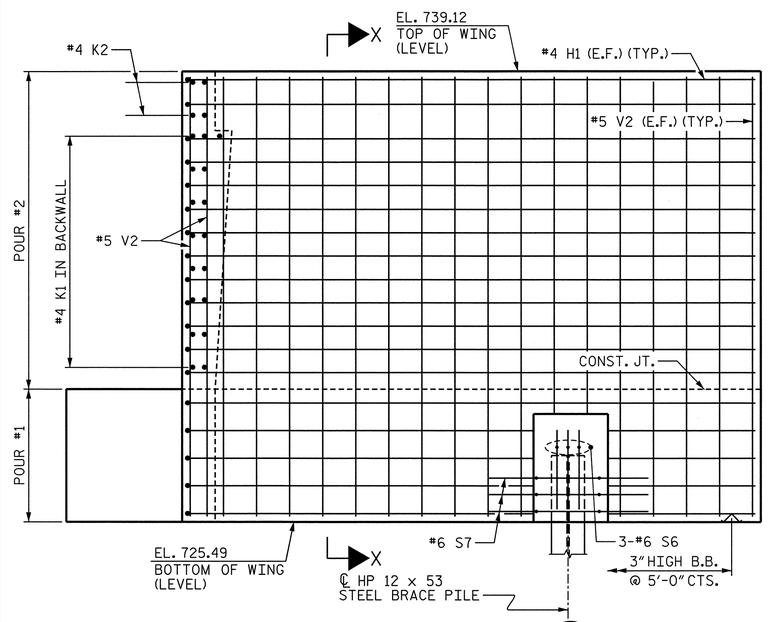

ELEVATION OF WING (W1)

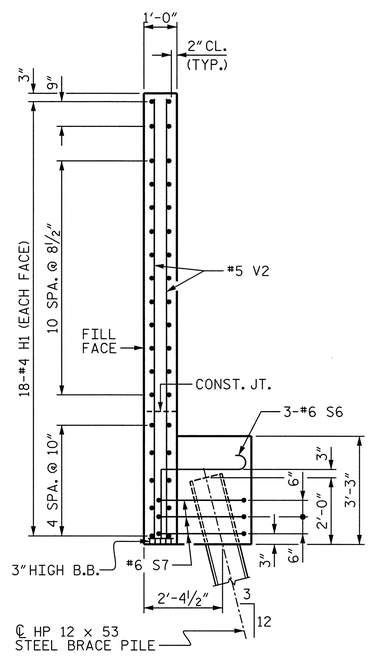

SECTION X-X

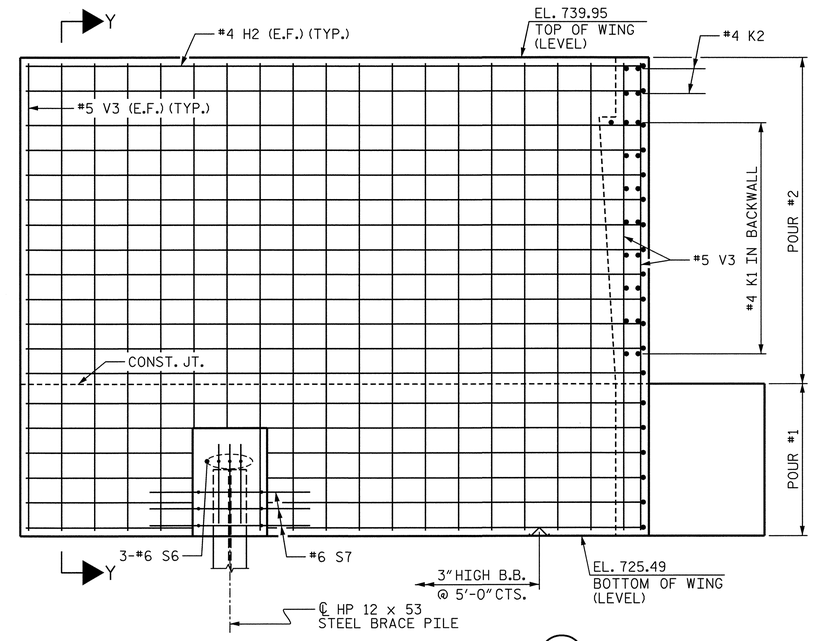

ELEVATION OF WING (W2)

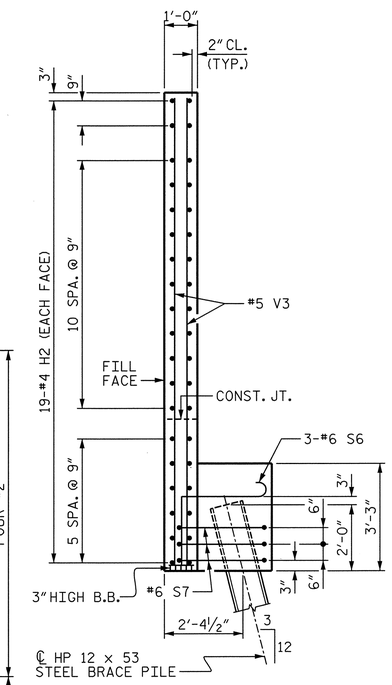

SECTION Y-Y

PROJECT NO. U-2525B

GUILFORD COUNTY

STATION: 144+90.00 -L-

SHEET 2 OF 3

STATE OF NORTH CAROLINA
DEPARTMENT OF TRANSPORTATION
RALEIGH

SUBSTRUCTURE
END BENT 1

LEFT LANE

NORTH CAROLINA PROFESSIONAL ENGINEER SEAL 027799 ALLYSON K. ORR 1/10/14

DRAWN BY : B.E. LANNING	DATE : 08/13		
CHECKED BY : G.R. COLS	DATE : 10/13		
DESIGN ENGINEER OF RECORD : A.K. ORR	DATE : 01/14		

DWG. NO. 43

MI ENGINEERING
1011 SCHAUB DRIVE, SUITE 100
RALEIGH, NC 27606
(919) 851-6606
FIRM PE NUMBER : P-0671

REVISIONS							SHEET NO.
NO.	BY:	DATE:	NO.	BY:	DATE:		5-215
1			3				TOTAL SHEETS
2			4				541

1/9/2014
5:00:58 PM
User: blanning
Filename: P:\NC Bridges\MI1007.03 U-2525B Guilford\U-2525B\Structures\Left Bridge\U2525B_SD_EIB_4_LT.dgn

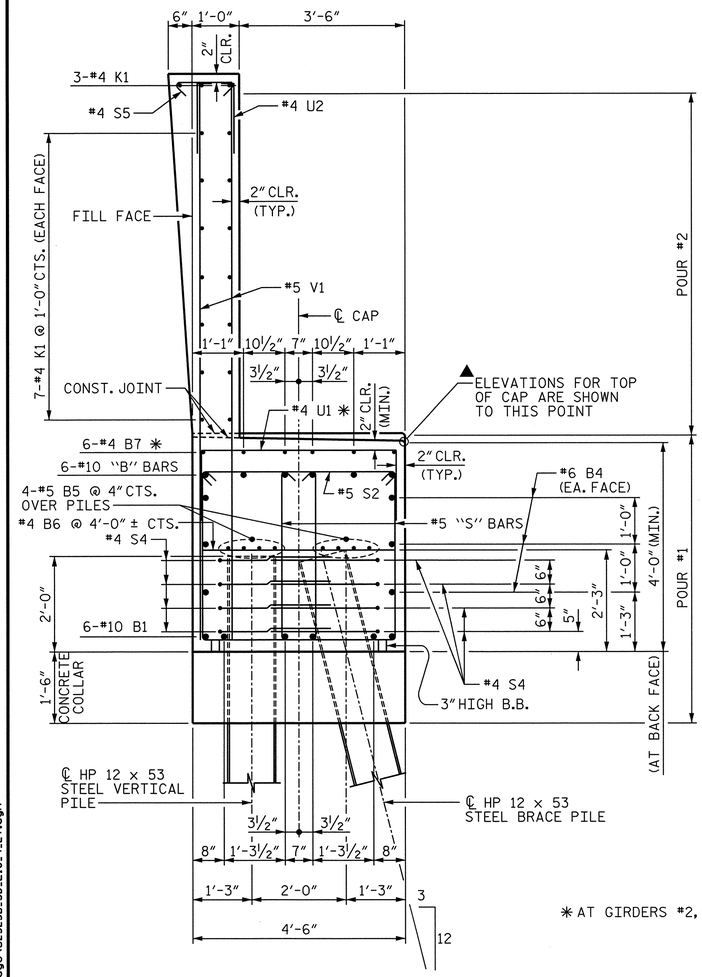

✳ AT GIRDERS #2, #4 AND #5 ONLY.

SECTION A-A

BAR TYPES

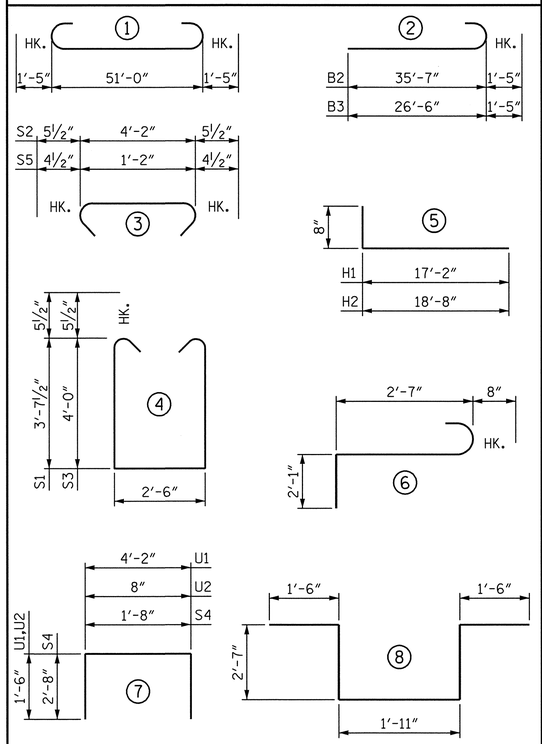

ALL BAR DIMENSIONS ARE OUT TO OUT.

BILL OF MATERIAL

END BENT 1

BAR	NO.	SIZE	TYPE	LENGTH	WEIGHT
B1	6	#10	1	53′-10″	1390
B2	6	#10	2	37′-0″	955
B3	6	#10	2	27′-11″	721
B4	6	#6	STR	51′-0″	460
B5	8	#5	STR	51′-0″	426
B6	16	#4	STR	4′-2″	45
B7	18	#4	STR	2′-0″	24
H1	36	#4	5	17′-10″	429
H2	38	#4	5	19′-4″	491
K1	34	#4	STR	26′-9″	608
K2	8	#4	STR	2′-7″	14
S1	50	#5	4	10′-8″	556
S2	50	#5	3	5′-1″	265
S3	50	#5	4	11′-5″	595
S4	56	#4	7	7′-0″	262
S5	45	#4	3	1′-11″	58
S6	6	#6	6	5′-4″	48
S7	6	#6	8	10′-1″	91
U1	9	#4	7	7′-2″	43
U2	45	#4	7	3′-8″	110
V1	90	#5	STR	11′-6″	1080
V2	42	#5	STR	13′-3″	580
V3	44	#5	STR	14′-1″	646

REINFORCING STEEL	9,897 LBS.
CLASS A CONCRETE BREAKDOWN	
POUR #1 (CAP, COLLARS & LOWER WING)	47.8 C.Y.
POUR #2 (BACKWALL & UPPER WING)	31.4 C.Y.
TOTAL CLASS A CONCRETE	79.2 C.Y.
HP 12 x 53 STEEL PILES NO. 16	592 LIN. FT.

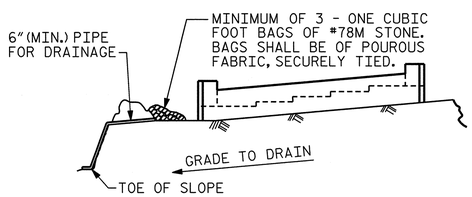

BAGGED STONE AND PIPE SHALL BE PLACED IMMEDIATELY AFTER COMPLETION OF END BENT EXCAVATION. PIPE MAY BE EITHER CONCRETE, CORRUGATED STEEL, CORRUGATED ALUMINUM ALLOY, OR CORRUGATED PLASTIC. PERFORATED PIPE WILL NOT BE ALLOWED.

BAGGED STONE SHALL REMAIN IN PLACE UNTIL THE ENGINEER DIRECTS THAT IT BE REMOVED. THE CONTRACTOR SHALL REMOVE AND DISPOSE OF SILT ACCUMULATIONS AT BAGGED STONE WHEN SO DIRECTED BY THE ENGINEER. BAGS SHALL BE REMOVED AND REPLACED WHENEVER THE ENGINEER DETERMINES THAT THEY HAVE DETERIORATED AND LOST THEIR EFFECTIVENESS.

NO SEPARATE PAYMENT WILL BE MADE FOR THIS WORK AND THE ENTIRE COST OF THIS WORK SHALL BE INCLUDED IN THE UNIT CONTRACT PRICE BID FOR THE SEVERAL PAY ITEMS.

TEMPORARY DRAINAGE AT END BENT

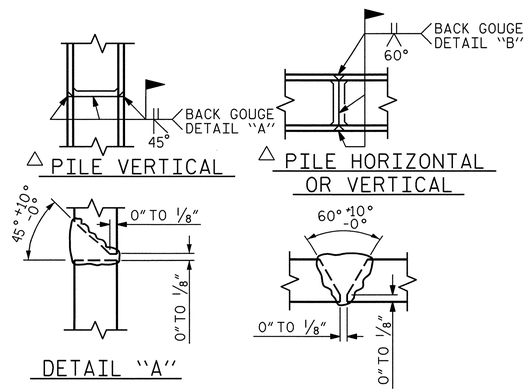

△ POSITION OF PILE DURING WELDING.

PILE SPLICE DETAILS

PROJECT NO. U-2525B

GUILFORD COUNTY

STATION: 144+90.00 -L-

SHEET 3 OF 3

STATE OF NORTH CAROLINA
DEPARTMENT OF TRANSPORTATION
RALEIGH

SUBSTRUCTURE

END BENT 1

LEFT LANE

NORTH CAROLINA PROFESSIONAL SEAL 027799 ENGINEER ALLYSON K. ORR
1/10/14

MI ENGINEERING
1011 SCHAUB DRIVE, SUITE 100
RALEIGH, NC 27606
(919) 851-6606
FIRM PE NUMBER : P-0671

REVISIONS							
NO.	BY:	DATE:	NO.	BY:	DATE:		
1			3				
2			4				

SHEET NO. 5-216

TOTAL SHEETS 541

DWG. NO. 44

DRAWN BY :	B.E. LANNING	DATE :	08/13
CHECKED BY :	G.R. COLS	DATE :	10/13
DESIGN ENGINEER OF RECORD :	A.K. ORR	DATE :	01/14

1/9/2014
5:01:00 PM
User: blanning
Filename: P:\NC Bridges\MI1007.03 U-2525B Guilford\U-2525B\Structures\Left Bridge\U2525B_SD_EIC_4_LT.dgn

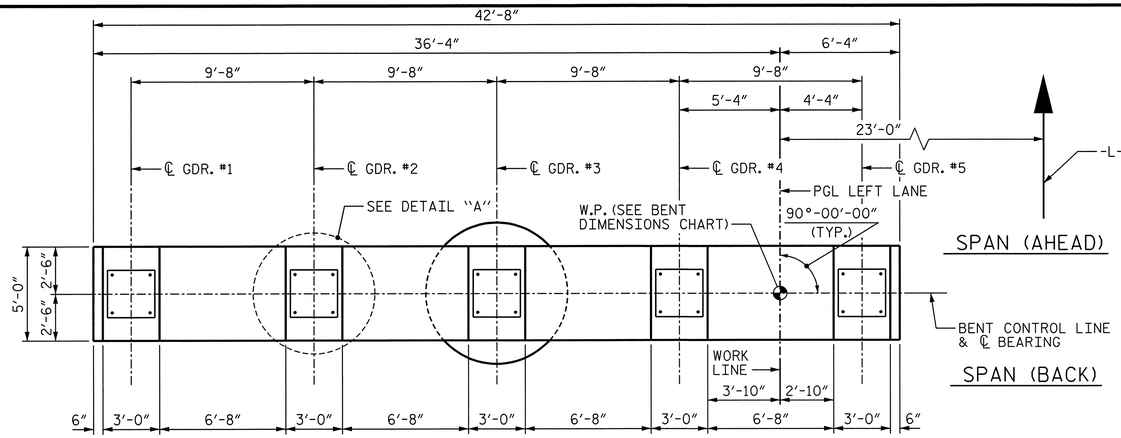

PLAN

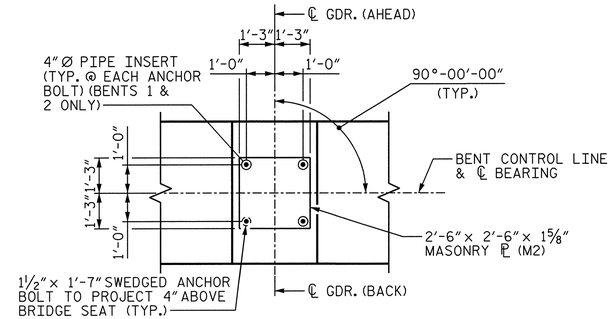

DETAIL "A"

NOTES

STIRRUPS AND "U" BARS IN CAP MAY BE SHIFTED AS NECESSARY TO CLEAR ANCHOR BOLTS AND PIPE INSERTS.

DETAILED DRAWINGS FOR FALSEWORK AND FORMS FOR THIS HAMMERHEAD BENT CAP SHALL BE SUBMITTED. SEE SHEET SN.

ALL STEEL IN THE DRILLED PIER IS INCLUDED IN THE PAY ITEMS FOR "REINFORCING STEEL" AND "SPIRAL COLUMN REINFORCING STEEL".

THE CONTRACTOR'S ATTENTION IS CALLED TO THE FACT THAT THE LONGITUDINAL REINFORCEMENT FOR THE DRILLED PIER IS DETAILED WITH 3 FEET OF EXTRA LENGTH.

THE LOCATION OF THE CONSTRUCTION JOINT IN THE DRILLED PIER IS BASED ON AN APPROXIMATE GROUND LINE ELEVATION. IF THE CONSTRUCTION JOINT IS ABOVE THE ACTUAL GROUND ELEVATION, THE CONTRACTOR SHALL PLACE THE CONSTRUCTION JOINT 1 FOOT BELOW THE GROUND LINE.

FOR DRILLED PIER & PERMANENT STEEL CASING, SEE SECTION 411 OF THE STANDARD SPECIFICATIONS.

FOR SECTIONS A-A AND B-B, SEE SHEET 2 OF 3.

FOR VIEW C-C, SEE SHEET 2 OF 3.

FOR PIPE INSERT DETAILS, SEE "POT BEARING DETAILS" SHEET.

FOR END ELEVATION, SEE SHEET 2 OF 3.

FOR 1½" Ø ANCHOR BOLTS, SEE "POT BEARING DETAILS" SHEET.

THE CAP AND COLUMN SHALL BE CONSIDERED MASS CONCRETE. SEE SPECIAL PROVISIONS.

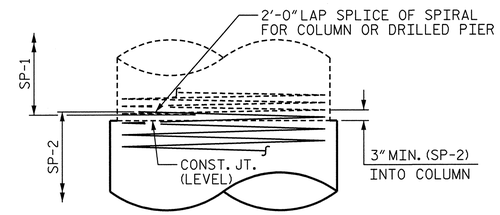

CONSTRUCTION JOINT DETAIL

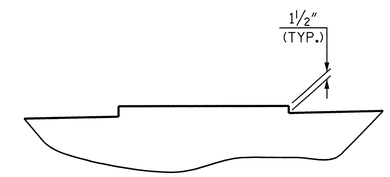

DETAIL "B"
(TYP. EACH GIRDER)

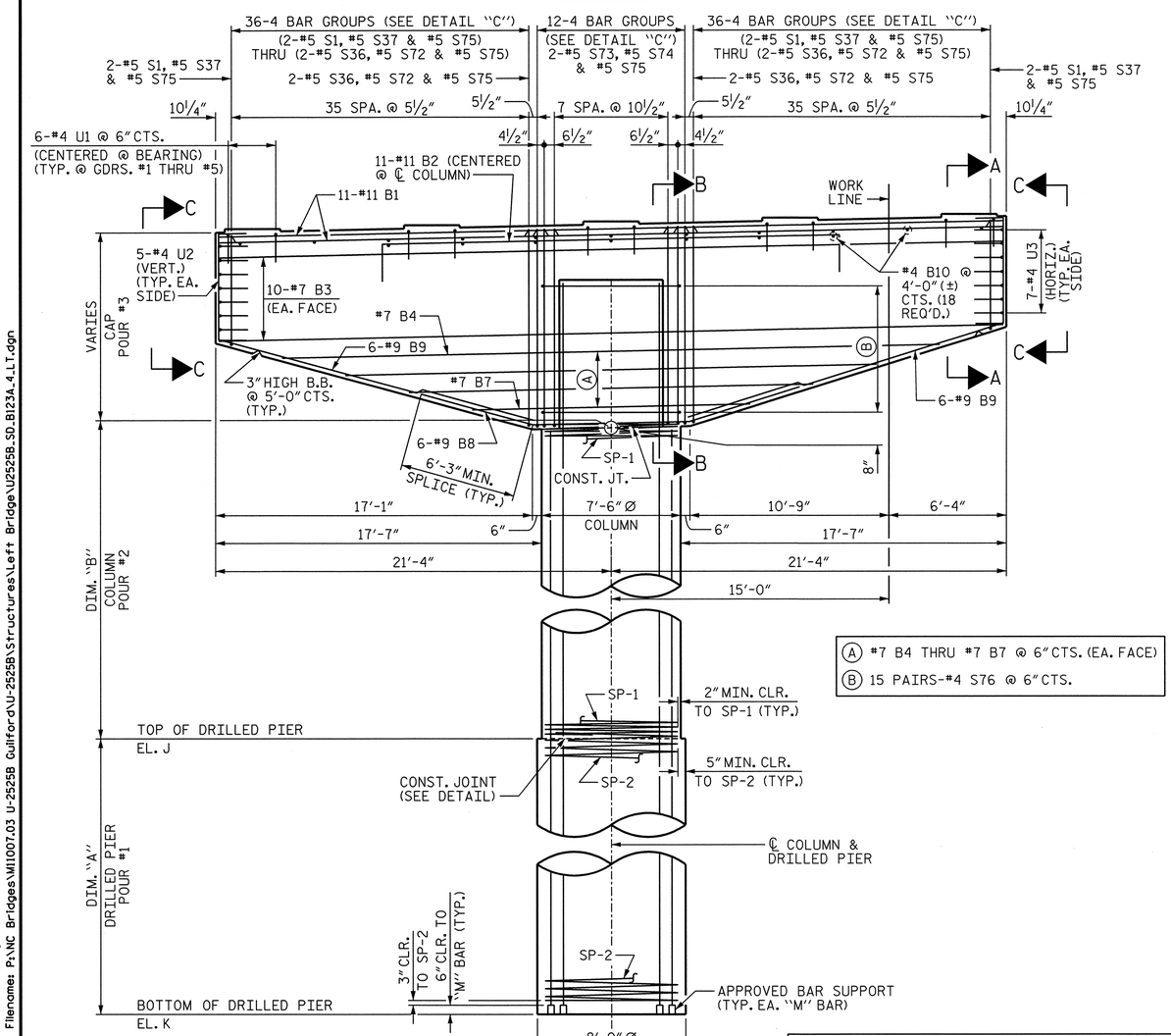

ELEVATION

(A) #7 B4 THRU #7 B7 @ 6" CTS. (EA. FACE)
(B) 15 PAIRS-#4 S76 @ 6" CTS.

NOTE: FOR COLUMN & DRILLED PIER REINFORCING STEEL & DETAILS, SEE END ELEVATION ON SHEET 2 OF 3.

BRIDGE SEAT ELEVATIONS

BENT	EL. A	EL. B	EL. C	EL. D	EL. E
1	727.99	728.18	728.38	728.57	728.76
2	726.37	726.56	726.75	726.95	727.14
3	724.86	725.06	725.25	725.44	725.64

CAP, COLUMN & DRILLED PIER ELEVATIONS

BENT	EL. F	EL. G	EL. H	EL. I	EL. J	EL. K
1	727.79	728.65	717.22	725.22	680.97	654.97
2	726.17	727.02	715.59	723.59	686.84	637.84
3	724.67	725.52	714.09	722.09	684.84	657.84

BENT DIMENSIONS

BENT	W.P.	SPAN (AHEAD)	SPAN (BACK)	DIM. "A"	DIM. "B"
1	2	B	A	26'-0"	36'-3"
2	3	C	B	49'-0"	28'-9"
3	4	D	C	27'-0"	29'-3"

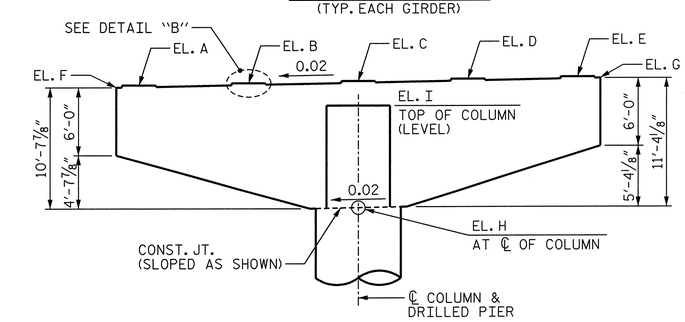

BENT CAP LAYOUT

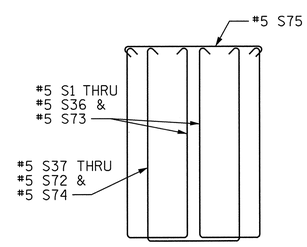

DETAIL "C"
(BARS OFFSET FOR CLARITY)

PROJECT NO. U-2525B
GUILFORD COUNTY
STATION: 144+90.00 -L-

SHEET 1 OF 3

STATE OF NORTH CAROLINA
DEPARTMENT OF TRANSPORTATION
RALEIGH

SUBSTRUCTURE

BENTS 1, 2 AND 3
PLAN AND ELEVATION

LEFT LANE

NORTH CAROLINA PROFESSIONAL SEAL 027799 ENGINEER ALLYSON K. ORR
2/14/14

MI ENGINEERING
1011 SCHAUB DRIVE, SUITE 100
RALEIGH, NC 27606
(919) 851-6606
FIRM PE NUMBER : P-0671

REVISIONS								SHEET NO.
NO.	BY:	DATE:	NO.	BY:	DATE:			S-217
1			3					TOTAL SHEETS
2			4					541

DWG. NO. 45

DRAWN BY :	B.E. LANNING	DATE :	10/13
CHECKED BY :	G.R. COLS	DATE :	10/13
DESIGN ENGINEER OF RECORD :	P.A. de PAOLI	DATE :	01/14

2/14/2014
12:33:32 PM
User: blanning
Filename: P:\NC Bridges\MI1007.03 U-2525B Guilford\U-2525B\Structures\Left Bridge\U2525B_SD_B123A_4_LT.dgn

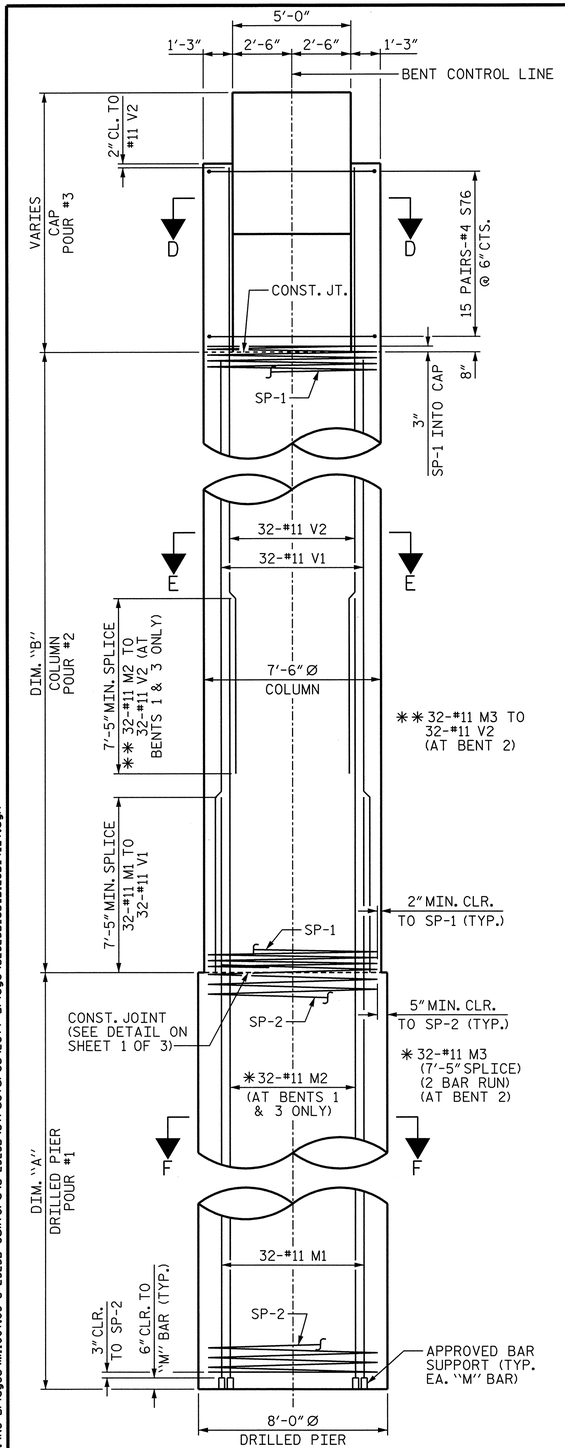

END ELEVATION

(FOR DIM. "A" & DIM. "B", SEE BENT DIMENSIONS TABLE, SHEET 1 OF 3)

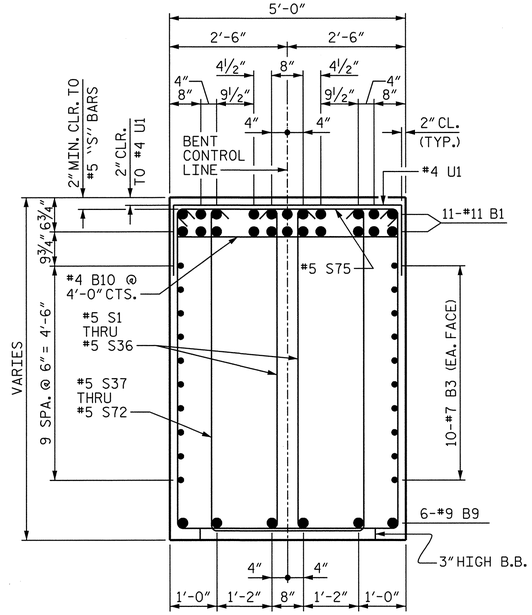

SECTION A-A

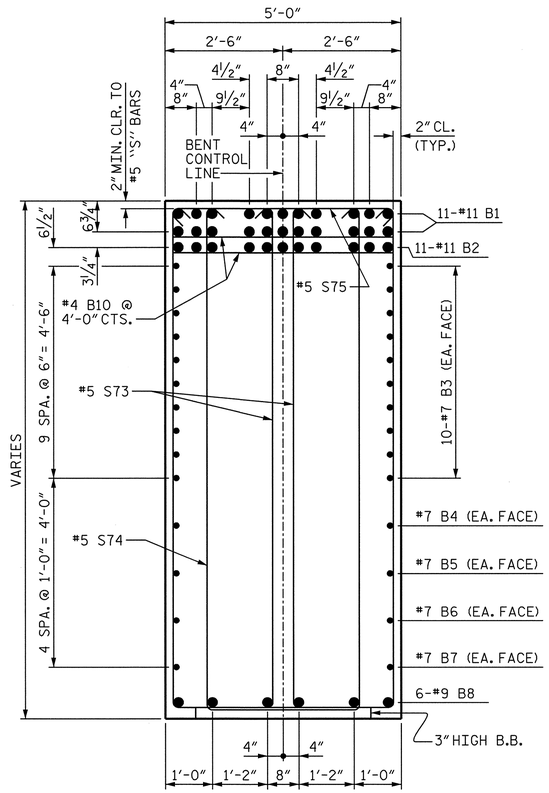

SECTION B-B

NOTE: EXTENSION OF COLUMN ABOVE BOTTOM OF CAP NOT SHOWN FOR CLARITY.

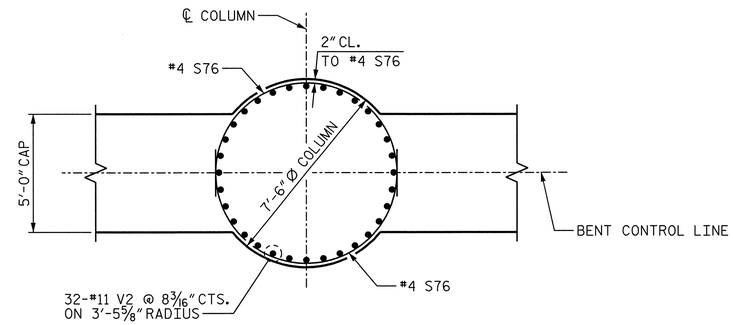

SECTION D-D

(CAP REINFORCING NOT SHOWN FOR CLARITY)

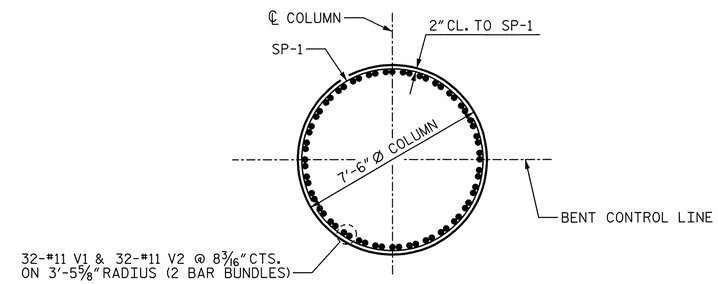

SECTION E-E

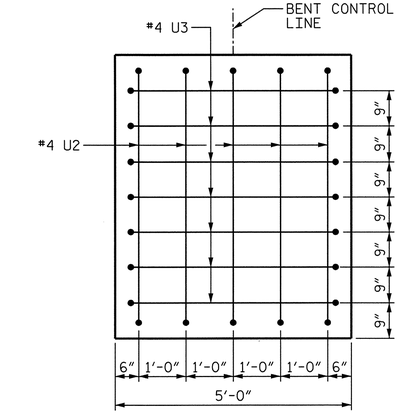

VIEW C-C

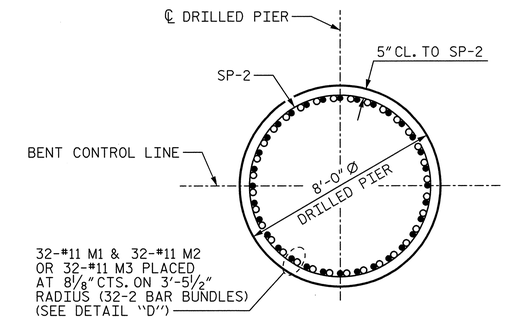

SECTION F-F

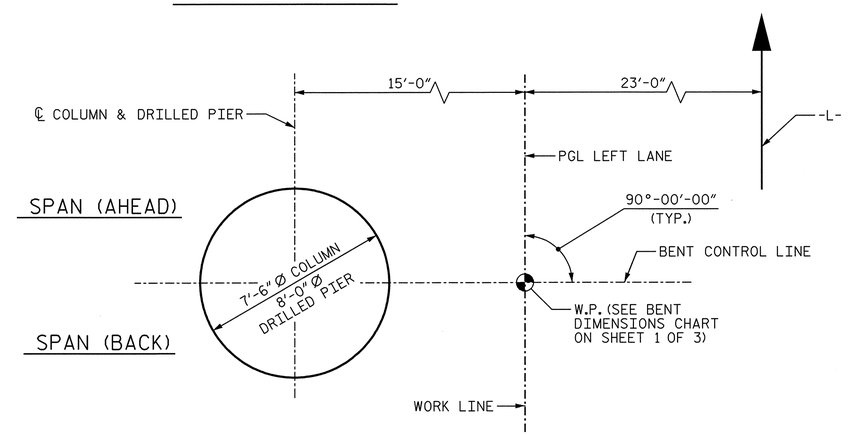

PLAN OF COLUMN & DRILLED PIER

(SEE SECTIONS D-D THRU F-F FOR "SP", "M" AND "V" BAR MARKS)

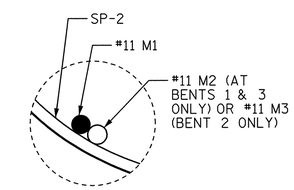

DETAIL "D"

PROJECT NO. U-2525B

GUILFORD COUNTY

STATION: 144+90.00 -L-

SHEET 2 OF 3

STATE OF NORTH CAROLINA
DEPARTMENT OF TRANSPORTATION
RALEIGH

SUBSTRUCTURE

BENTS 1, 2 AND 3 SECTION AND DETAILS

LEFT LANE

NORTH CAROLINA PROFESSIONAL SEAL 021799 ENGINEER ALLYSON K. ORR
1/10/14

MI ENGINEERING
1011 SCHAUB DRIVE, SUITE 100
RALEIGH, NC 27606
(919) 851-6606
FIRM PE NUMBER : P-0671

REVISIONS								SHEET NO.
NO.	BY:	DATE:	NO.	BY:	DATE:			5-218
1			3					TOTAL SHEETS
2			4					541

DWG. NO. 46

DRAWN BY :	B.E. LANNING	DATE :	10/13
CHECKED BY :	G.R. COLS	DATE :	10/13
DESIGN ENGINEER OF RECORD :	P.A. de PAOLI	DATE :	01/14

1/9/2014
5:01:05 PM
User: blanning
Filename: P:\NC Bridges\M11007.03 U-2525B Guilford\U-2525B\Structures\Left Bridge\U2525B_SD_B123B_4_LT.dgn

BILL OF MATERIAL

BENT 1

BAR	NO.	SIZE	TYPE	LENGTH	WEIGHT
B1	22	#11	STR	42'-4"	4,948
B2	11	#11	4	28'-8"	1,675
B3	20	#7	STR	42'-4"	1,731
B4	2	#7	STR	35'-6"	145
B5	2	#7	STR	28'-8"	117
B6	2	#7	STR	21'-10"	89
B7	2	#7	STR	15'-0"	61
B8	6	#9	3	21'-3"	434
B9	12	#9	STR	17'-6"	714
B10	18	#4	STR	4'-8"	56
M1	32	#11	STR	35'-11"	6,106
M2	32	#11	STR	47'-4"	8,047
S1	4	#5	1	14'-10"	62
S2	4	#5	1	15'-1"	63
S3	4	#5	1	15'-4"	64
S4	4	#5	1	15'-7"	65
S5	4	#5	1	15'-11"	66
S6	4	#5	1	16'-2"	67
S7	4	#5	1	16'-5"	68
S8	4	#5	1	16'-8"	70
S9	4	#5	1	16'-11"	71
S10	4	#5	1	17'-3"	72
S11	4	#5	1	17'-6"	73
S12	4	#5	1	17'-9"	74
S13	4	#5	1	18'-0"	75
S14	4	#5	1	18'-3"	76
S15	4	#5	1	18'-7"	78
S16	4	#5	1	18'-10"	79
S17	4	#5	1	19'-1"	80
S18	4	#5	1	19'-4"	81
S19	4	#5	1	19'-8"	82
S20	4	#5	1	19'-11"	83
S21	4	#5	1	20'-2"	84
S22	4	#5	1	20'-5"	85
S23	4	#5	1	20'-8"	86
S24	4	#5	1	21'-0"	88
S25	4	#5	1	21'-3"	89
S26	4	#5	1	21'-6"	90
S27	4	#5	1	21'-9"	91
S28	4	#5	1	22'-1"	92
S29	4	#5	1	22'-4"	93
S30	4	#5	1	22'-7"	94
S31	4	#5	1	22'-10"	95
S32	4	#5	1	23'-1"	96
S33	4	#5	1	23'-5"	98
S34	4	#5	1	23'-8"	99
S35	4	#5	1	23'-11"	100
S36	4	#5	1	24'-2"	101
S37	2	#5	1	15'-11"	33
S38	2	#5	1	16'-2"	34
S39	2	#5	1	16'-5"	34
S40	2	#5	1	16'-8"	35
S41	2	#5	1	17'-0"	35
S42	2	#5	1	17'-3"	36
S43	2	#5	1	17'-6"	37
S44	2	#5	1	17'-9"	37
S45	2	#5	1	18'-0"	38
S46	2	#5	1	18'-4"	38
S47	2	#5	1	18'-7"	39
S48	2	#5	1	18'-10"	39
S49	2	#5	1	19'-1"	40
S50	2	#5	1	19'-4"	40
S51	2	#5	1	19'-8"	41
S52	2	#5	1	19'-11"	42
S53	2	#5	1	20'-2"	42
S54	2	#5	1	20'-5"	43
S55	2	#5	1	20'-9"	43
S56	2	#5	1	21'-0"	44
S57	2	#5	1	21'-3"	44
S58	2	#5	1	21'-6"	45
S59	2	#5	1	21'-9"	45
S60	2	#5	1	22'-1"	46
S61	2	#5	1	22'-4"	47
S62	2	#5	1	22'-7"	47
S63	2	#5	1	22'-10"	48
S64	2	#5	1	23'-2"	48
S65	2	#5	1	23'-5"	49
S66	2	#5	1	23'-8"	49
S67	2	#5	1	23'-11"	50
S68	2	#5	1	24'-2"	50
S69	2	#5	1	24'-6"	51
S70	2	#5	1	24'-9"	52
S71	2	#5	1	25'-0"	52
S72	2	#5	1	25'-3"	53
S73	24	#5	1	24'-4"	609
S74	12	#5	1	25'-5"	318
S75	84	#5	2	5'-7"	489
S76	30	#4	5	13'-2"	264
U1	30	#4	4	7'-8"	154
U2	10	#4	4	8'-7"	57
U3	14	#4	4	7'-7"	71
V1	32	#11	STR	35'-11"	6,106
V2	32	#11	STR	35'-8"	6,064
SP-1	1	**	6	3333'-0"	2,226
SP-2	1	***	7	1400'-8"	1,461

REINFORCING STEEL 42,731 LBS.

SPIRAL COLUMN
REINFORCING STEEL 3,687 LBS.

CLASS A CONCRETE BREAKDOWN

POUR #2 (COLUMN)	59.4	C.Y.
POUR #3 (CAP & PART COLUMN)	74.4	C.Y.
TOTAL	133.8	C.Y.

8'-0" Ø DRILLED PIER

DRILLED PIER CONCRETE POUR 1 (DRILLED PIER)	48.4	C.Y.
8'-0" Ø DRILLED PIER IN SOIL	9.0	LIN. FT.
8'-0" Ø DRILLED PIER NOT IN SOIL	17.0	LIN. FT.
CSL TUBES	220.0	LIN. FT.

BENT 2

BAR	NO.	SIZE	TYPE	LENGTH	WEIGHT
B1	22	#11	STR	42'-4"	4,948
B2	11	#11	4	28'-8"	1,675
B3	20	#7	STR	42'-4"	1,731
B4	2	#7	STR	35'-6"	145
B5	2	#7	STR	28'-8"	117
B6	2	#7	STR	21'-10"	89
B7	2	#7	STR	15'-0"	61
B8	6	#9	3	21'-3"	434
B9	12	#9	STR	17'-6"	714
B10	18	#4	STR	4'-8"	56
M1	32	#11	STR	58'-11"	10,017
M3	64	#11	STR	38'-11"	13,233
S1	4	#5	1	14'-10"	62
S2	4	#5	1	15'-1"	63
S3	4	#5	1	15'-4"	64
S4	4	#5	1	15'-7"	65
S5	4	#5	1	15'-11"	66
S6	4	#5	1	16'-2"	67
S7	4	#5	1	16'-5"	68
S8	4	#5	1	16'-8"	70
S9	4	#5	1	16'-11"	71
S10	4	#5	1	17'-3"	72
S11	4	#5	1	17'-6"	73
S12	4	#5	1	17'-9"	74
S13	4	#5	1	18'-0"	75
S14	4	#5	1	18'-3"	76
S15	4	#5	1	18'-7"	78
S16	4	#5	1	18'-10"	79
S17	4	#5	1	19'-1"	80
S18	4	#5	1	19'-4"	81
S19	4	#5	1	19'-8"	82
S20	4	#5	1	19'-11"	83
S21	4	#5	1	20'-2"	84
S22	4	#5	1	20'-5"	85
S23	4	#5	1	20'-8"	86
S24	4	#5	1	21'-0"	88
S25	4	#5	1	21'-3"	89
S26	4	#5	1	21'-6"	90
S27	4	#5	1	21'-9"	91
S28	4	#5	1	22'-1"	92
S29	4	#5	1	22'-4"	93
S30	4	#5	1	22'-7"	94
S31	4	#5	1	22'-10"	95
S32	4	#5	1	23'-1"	96
S33	4	#5	1	23'-5"	98
S34	4	#5	1	23'-8"	99
S35	4	#5	1	23'-11"	100
S36	4	#5	1	24'-2"	101
S37	2	#5	1	15'-11"	33
S38	2	#5	1	16'-2"	34
S39	2	#5	1	16'-5"	34
S40	2	#5	1	16'-8"	35
S41	2	#5	1	17'-0"	35
S42	2	#5	1	17'-3"	36
S43	2	#5	1	17'-6"	37
S44	2	#5	1	17'-9"	37
S45	2	#5	1	18'-0"	38
S46	2	#5	1	18'-4"	38
S47	2	#5	1	18'-7"	39
S48	2	#5	1	18'-10"	39
S49	2	#5	1	19'-1"	40
S50	2	#5	1	19'-4"	40
S51	2	#5	1	19'-8"	41
S52	2	#5	1	19'-11"	42
S53	2	#5	1	20'-2"	42
S54	2	#5	1	20'-5"	43
S55	2	#5	1	20'-9"	43
S56	2	#5	1	21'-0"	44
S57	2	#5	1	21'-3"	44
S58	2	#5	1	21'-6"	45
S59	2	#5	1	21'-9"	45
S60	2	#5	1	22'-1"	46
S61	2	#5	1	22'-4"	47
S62	2	#5	1	22'-7"	47
S63	2	#5	1	22'-10"	48
S64	2	#5	1	23'-2"	48
S65	2	#5	1	23'-5"	49
S66	2	#5	1	23'-8"	49
S67	2	#5	1	23'-11"	50
S68	2	#5	1	24'-2"	50
S69	2	#5	1	24'-6"	51
S70	2	#5	1	24'-9"	52
S71	2	#5	1	25'-0"	52
S72	2	#5	1	25'-3"	53
S73	24	#5	1	24'-4"	609
S74	12	#5	1	25'-5"	318
S75	84	#5	2	5'-7"	489
S76	30	#4	5	13'-2"	264
U1	30	#4	4	7'-8"	154
U2	10	#4	4	8'-7"	57
U3	14	#4	4	7'-7"	71
V1	32	#11	STR	28'-5"	4,831
V2	32	#11	STR	28'-2"	4,789
SP-1	1	**	6	2661'-11"	1,778
SP-2	1	***	7	2633'-9"	2,747

REINFORCING STEEL 44,330 LBS.

SPIRAL COLUMN
REINFORCING STEEL 4,525 LBS.

CLASS A CONCRETE BREAKDOWN

POUR #2 (COLUMN)	47.1	C.Y.
POUR #3 (CAP & PART COLUMN)	74.4	C.Y.
TOTAL	121.5	C.Y.

8'-0" Ø DRILLED PIER

DRILLED PIER CONCRETE POUR 1 (DRILLED PIER)	91.3	C.Y.
8'-0" Ø DRILLED PIER IN SOIL	31.0	LIN. FT.
8'-0" Ø DRILLED PIER NOT IN SOIL	18.0	LIN. FT.
CSL TUBES	404.0	LIN. FT.

BENT 3

BAR	NO.	SIZE	TYPE	LENGTH	WEIGHT
B1	22	#11	STR	42'-4"	4,948
B2	11	#11	4	28'-8"	1,675
B3	20	#7	STR	42'-4"	1,731
B4	2	#7	STR	35'-6"	145
B5	2	#7	STR	28'-8"	117
B6	2	#7	STR	21'-10"	89
B7	2	#7	STR	15'-0"	61
B8	6	#9	3	21'-3"	434
B9	12	#9	STR	17'-6"	714
B10	18	#4	STR	4'-8"	56
M1	32	#11	STR	36'-11"	6,276
M2	32	#11	STR	48'-4"	8,217
S1	4	#5	1	14'-10"	62
S2	4	#5	1	15'-1"	63
S3	4	#5	1	15'-4"	64
S4	4	#5	1	15'-7"	65
S5	4	#5	1	15'-11"	66
S6	4	#5	1	16'-2"	67
S7	4	#5	1	16'-5"	68
S8	4	#5	1	16'-8"	70
S9	4	#5	1	16'-11"	71
S10	4	#5	1	17'-3"	72
S11	4	#5	1	17'-6"	73
S12	4	#5	1	17'-9"	74
S13	4	#5	1	18'-0"	75
S14	4	#5	1	18'-3"	76
S15	4	#5	1	18'-7"	78
S16	4	#5	1	18'-10"	79
S17	4	#5	1	19'-1"	80
S18	4	#5	1	19'-4"	81
S19	4	#5	1	19'-8"	82
S20	4	#5	1	19'-11"	83
S21	4	#5	1	20'-2"	84
S22	4	#5	1	20'-5"	85
S23	4	#5	1	20'-8"	86
S24	4	#5	1	21'-0"	88
S25	4	#5	1	21'-3"	89
S26	4	#5	1	21'-6"	90
S27	4	#5	1	21'-9"	91
S28	4	#5	1	22'-1"	92
S29	4	#5	1	22'-4"	93
S30	4	#5	1	22'-7"	94
S31	4	#5	1	22'-10"	95
S32	4	#5	1	23'-1"	96
S33	4	#5	1	23'-5"	98
S34	4	#5	1	23'-8"	99
S35	4	#5	1	23'-11"	100
S36	4	#5	1	24'-2"	101
S37	2	#5	1	15'-11"	33
S38	2	#5	1	16'-2"	34
S39	2	#5	1	16'-5"	34
S40	2	#5	1	16'-8"	35
S41	2	#5	1	17'-0"	35
S42	2	#5	1	17'-3"	36
S43	2	#5	1	17'-6"	37
S44	2	#5	1	17'-9"	37
S45	2	#5	1	18'-0"	38
S46	2	#5	1	18'-4"	38
S47	2	#5	1	18'-7"	39
S48	2	#5	1	18'-10"	39
S49	2	#5	1	19'-1"	40
S50	2	#5	1	19'-4"	40
S51	2	#5	1	19'-8"	41
S52	2	#5	1	19'-11"	42
S53	2	#5	1	20'-2"	42
S54	2	#5	1	20'-5"	43
S55	2	#5	1	20'-9"	43
S56	2	#5	1	21'-0"	44
S57	2	#5	1	21'-3"	44
S58	2	#5	1	21'-6"	45
S59	2	#5	1	21'-9"	45
S60	2	#5	1	22'-1"	46
S61	2	#5	1	22'-4"	47
S62	2	#5	1	22'-7"	47
S63	2	#5	1	22'-10"	48
S64	2	#5	1	23'-2"	48
S65	2	#5	1	23'-5"	49
S66	2	#5	1	23'-8"	49
S67	2	#5	1	23'-11"	50
S68	2	#5	1	24'-2"	50
S69	2	#5	1	24'-6"	51
S70	2	#5	1	24'-9"	52
S71	2	#5	1	25'-0"	52
S72	2	#5	1	25'-3"	53
S73	24	#5	1	24'-4"	609
S74	12	#5	1	25'-5"	318
S75	84	#5	2	5'-7"	489
S76	30	#4	5	13'-2"	264
U1	30	#4	4	7'-8"	154
U2	10	#4	4	8'-7"	57
U3	14	#4	4	7'-7"	71
V1	32	#11	STR	28'-11"	6,106
V2	32	#11	STR	28'-8"	6,064
SP-1	1	**	6	2706'-8"	2,226
SP-2	1	***	7	1454'-3"	1,461

REINFORCING STEEL 40,691 LBS.

SPIRAL COLUMN
REINFORCING STEEL 3,325 LBS.

CLASS A CONCRETE BREAKDOWN

POUR #2 (COLUMN)	47.9	C.Y.
POUR #3 (CAP & PART COLUMN)	74.4	C.Y.
TOTAL	122.3	C.Y.

8'-0" Ø DRILLED PIER

DRILLED PIER CONCRETE POUR 1 (DRILLED PIER)	50.3	C.Y.
8'-0" Ø DRILLED PIER IN SOIL	10.0	LIN. FT.
8'-0" Ø DRILLED PIER NOT IN SOIL	17.0	LIN. FT.
CSL TUBES	228.0	LIN. FT.

STIRRUP HEIGHT TABLE

BAR	"L"	BAR	"L"	BAR	"L"
S1	5'-10½"	S26	9'-2½"	S51	7'-9"
S2	6'-0"	S27	9'-4"	S52	7'-10½"
S3	6'-1½"	S28	9'-6"	S53	8'-0"
S4	6'-3"	S29	9'-7½"	S54	8'-1½"
S5	6'-5"	S30	9'-9"	S55	8'-3½"
S6	6'-6½"	S31	9'-10½"	S56	8'-5"
S7	6'-8"	S32	10'-0"	S57	8'-6½"
S8	6'-9½"	S33	10'-2"	S58	8'-8"
S9	6'-11"	S34	10'-3½"	S59	8'-9½"
S10	7'-1"	S35	10'-5"	S60	8'-11½"
S11	7'-2½"	S36	10'-6½"	S61	9'-1"
S12	7'-4"	S37	5'-10½"	S62	9'-2½"
S13	7'-5½"	S38	6'-0"	S63	9'-4"
S14	7'-7"	S39	6'-1½"	S64	9'-6"
S15	7'-9"	S40	6'-3"	S65	9'-7½"
S16	7'-10½"	S41	6'-5"	S66	9'-9"
S17	8'-0"	S42	6'-6½"	S67	9'-10½"
S18	8'-1½"	S43	6'-8"	S68	10'-0"
S19	8'-3½"	S44	6'-9½"	S69	10'-2"
S20	8'-5"	S45	6'-11"	S70	10'-3½"
S21	8'-6½"	S46	7'-1"	S71	10'-5"
S22	8'-8"	S47	7'-2½"	S72	10'-6½"
S23	8'-9½"	S48	7'-4"	S73	10'-7½"
S24	8'-11½"	S49	7'-5½"	S74	10'-7½"
S25	9'-1"	S50	7'-7"		

** THE SP-1 SPIRAL REINFORCING STEEL SHALL BE W20 OR D-20 COLD DRAWN WIRE OR #4 PLAIN OR DEFORMED BAR.

*** THE SP-2 SPIRAL REINFORCING STEEL SHALL BE W31 OR D-31 COLD DRAWN WIRE OR #5 PLAIN OR DEFORMED BAR.

BAR TYPES

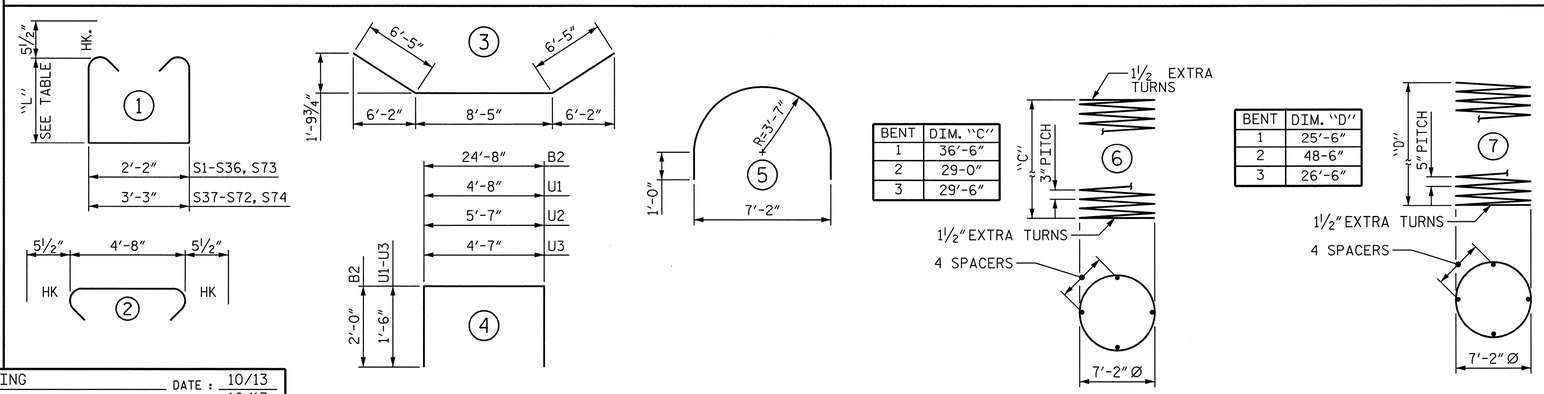

BENT	DIM. "C"
1	36'-6"
2	29-0"
3	29'-6"

BENT	DIM. "D"
1	25'-6"
2	48-6"
3	26'-6"

ALL BAR DIMENSIONS ARE OUT TO OUT.

DWG. NO. 47

PROJECT NO. U-2525B
GUILFORD COUNTY
STATION: 144+90.00 -L-

SHEET 3 OF 3

STATE OF NORTH CAROLINA
DEPARTMENT OF TRANSPORTATION
RALEIGH

SUBSTRUCTURE

BENTS 1, 2 AND 3
BILL OF MATERIAL

LEFT LANE

NORTH CAROLINA PROFESSIONAL SEAL 027799 ENGINEER ALLYSON K. ORR
1/10/14

MI ENGINEERING
1011 SCHAUB DRIVE, SUITE 100
RALEIGH, NC 27606
(919) 851-6606
FIRM PE NUMBER : P-0671

REVISIONS								SHEET NO.
NO.	BY:	DATE:	NO.	BY:	DATE:			5-219
1			3					TOTAL SHEETS
2			4					541

DRAWN BY : B.E. LANNING DATE : 10/13
CHECKED BY : G.R. COLS DATE : 10/13
DESIGN ENGINEER OF RECORD : P.A. de PAOLI DATE : 01/14

1/9/2014
5:01:07 PM
User: blanning
Filename: P:\NC Bridges\MI1007.03 U-2525B Guilford\U-2525B\Structures\Left Bridge\U2525B_SD_B123C_4_LT.dgn

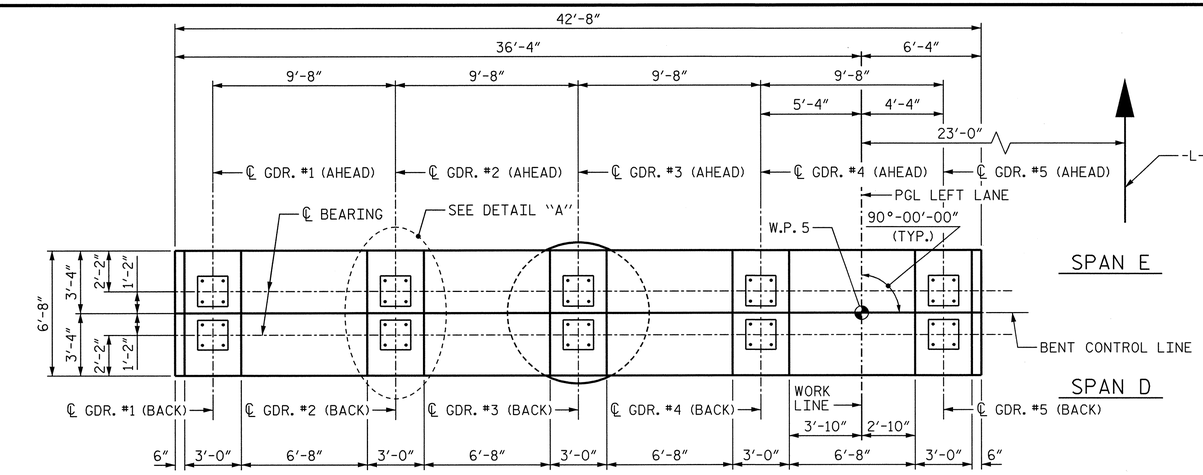

PLAN

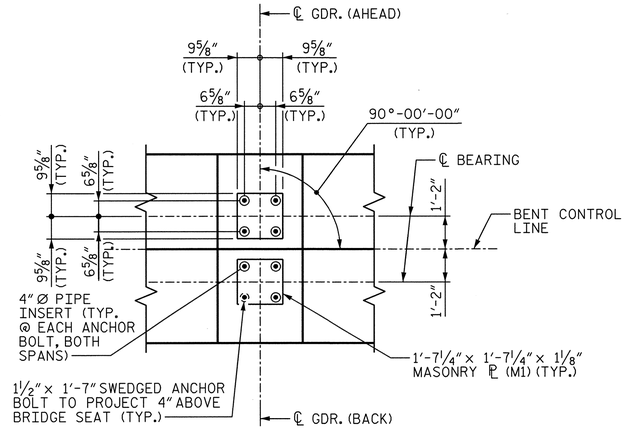

DETAIL "A"

NOTES

STIRRUPS AND "U" BARS IN CAP MAY BE SHIFTED AS NECESSARY TO CLEAR ANCHOR BOLTS AND PIPE INSERTS.

DETAILED DRAWINGS FOR FALSEWORK AND FORMS FOR THIS HAMMERHEAD BENT CAP SHALL BE SUBMITTED. SEE SHEET SN.

ALL STEEL IN THE DRILLED PIER IS INCLUDED IN THE PAY ITEMS FOR "REINFORCING STEEL" AND "SPIRAL COLUMN REINFORCING STEEL".

THE CONTRACTOR'S ATTENTION IS CALLED TO THE FACT THAT THE LONGITUDINAL REINFORCEMENT FOR THE DRILLED PIER IS DETAILED WITH 3 FEET OF EXTRA LENGTH.

THE LOCATION OF THE CONSTRUCTION JOINT IN THE DRILLED PIER IS BASED ON AN APPROXIMATE GROUND LINE ELEVATION. IF THE CONSTRUCTION JOINT IS ABOVE THE ACTUAL GROUND ELEVATION, THE CONTRACTOR SHALL PLACE THE CONSTRUCTION JOINT 1 FOOT BELOW THE GROUND LINE.

FOR DRILLED PIER & PERMANENT STEEL CASING, SEE SECTION 411 OF THE STANDARD SPECIFICATIONS.

FOR SECTIONS A-A AND B-B, SEE SHEET 2 OF 3.

FOR VIEW C-C, SEE SHEET 2 OF 3.

FOR PIPE INSERT DETAILS, SEE "POT BEARING DETAILS" SHEET.

FOR END ELEVATION, SEE SHEET 2 OF 3.

FOR 1½"Ø ANCHOR BOLTS, SEE "POT BEARING DETAILS" SHEET.

THE TOP SURFACE AREAS OF THE BENT CAP SHALL BE CURED IN ACCORDANCE WITH THE STANDARD SPECIFICATIONS EXCEPT THE MEMBRANE CURING COMPOUND METHOD SHALL NOT BE USED.

THE CAP AND COLUMN SHALL BE CONSIDERED MASS CONCRETE. SEE SPECIAL PROVISIONS.

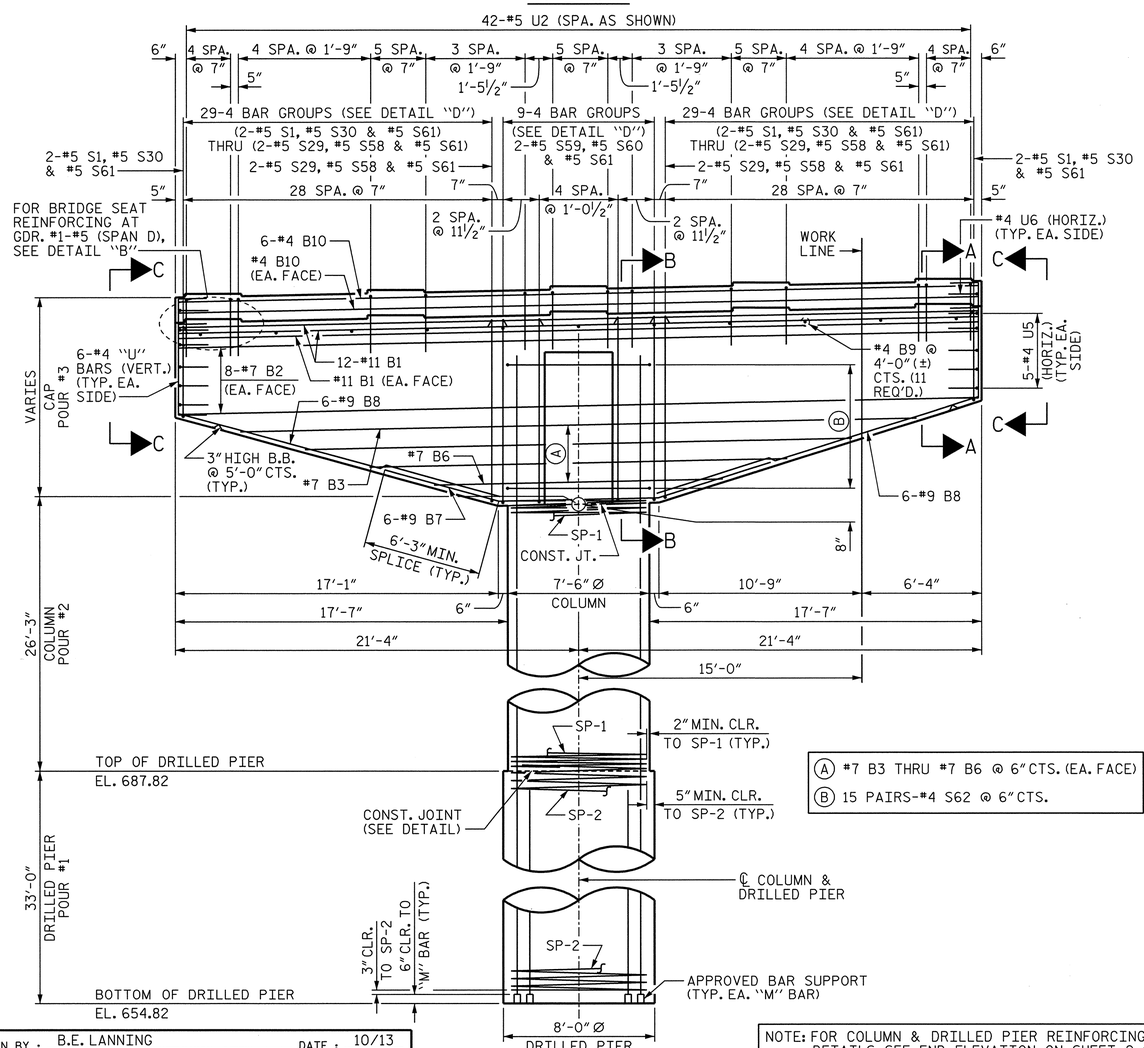

ELEVATION

Ⓐ #7 B3 THRU #7 B6 @ 6"CTS. (EA. FACE)

Ⓑ 15 PAIRS-#4 S62 @ 6"CTS.

NOTE: FOR COLUMN & DRILLED PIER REINFORCING STEEL & DETAILS, SEE END ELEVATION ON SHEET 2 OF 3.

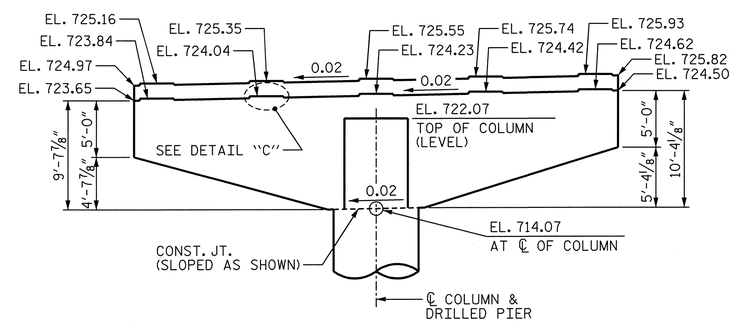

BENT CAP LAYOUT

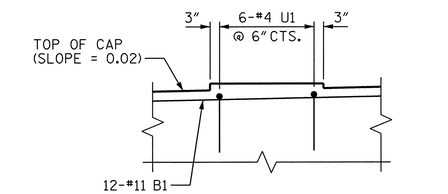

DETAIL "B"
(TYP. EA. GDR.)
(SPAN "D")

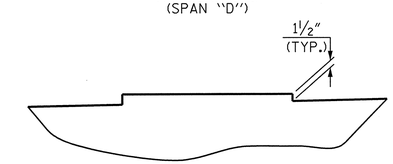

DETAIL "C"
(TYP. EA. GDR., SPANS "D" & "E")

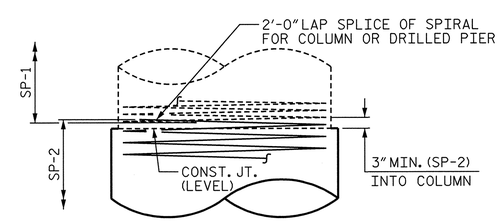

CONSTRUCTION JOINT DETAIL

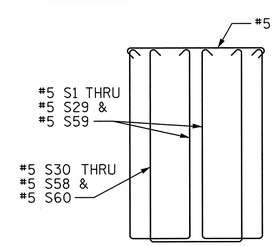

DETAIL "D"
(BARS OFFSET FOR CLARITY)

PROJECT NO. U-2525B

GUILFORD COUNTY

STATION: 144+90.00 -L-

SHEET 1 OF 3

STATE OF NORTH CAROLINA
DEPARTMENT OF TRANSPORTATION
RALEIGH

SUBSTRUCTURE

BENT 4
PLAN AND ELEVATION

LEFT LANE

NORTH CAROLINA PROFESSIONAL SEAL 027799 ENGINEER ALLYSON K. ORR 2/14/14

MI ENGINEERING
1011 SCHAUB DRIVE, SUITE 100
RALEIGH, NC 27606
(919) 851-6606
FIRM PE NUMBER : P-0671

REVISIONS								SHEET NO.
NO.	BY:	DATE:	NO.	BY:	DATE:			S-220
1			3					TOTAL SHEETS
2			4					54

DRAWN BY : B.E. LANNING DATE : 10/13
CHECKED BY : G.R. COLS DATE : 10/13
DESIGN ENGINEER OF RECORD : P.A. de PAOLI DATE : 01/14

DWG. NO. 48

2/14/2014
12:34:25 PM
User: blanning
Filename: P:\NC Bridges\MI1007.03 U-2525B Guilford\U-2525B\Structures\Left Bridge\U2525B_SD_B4A_4_LT.dgn

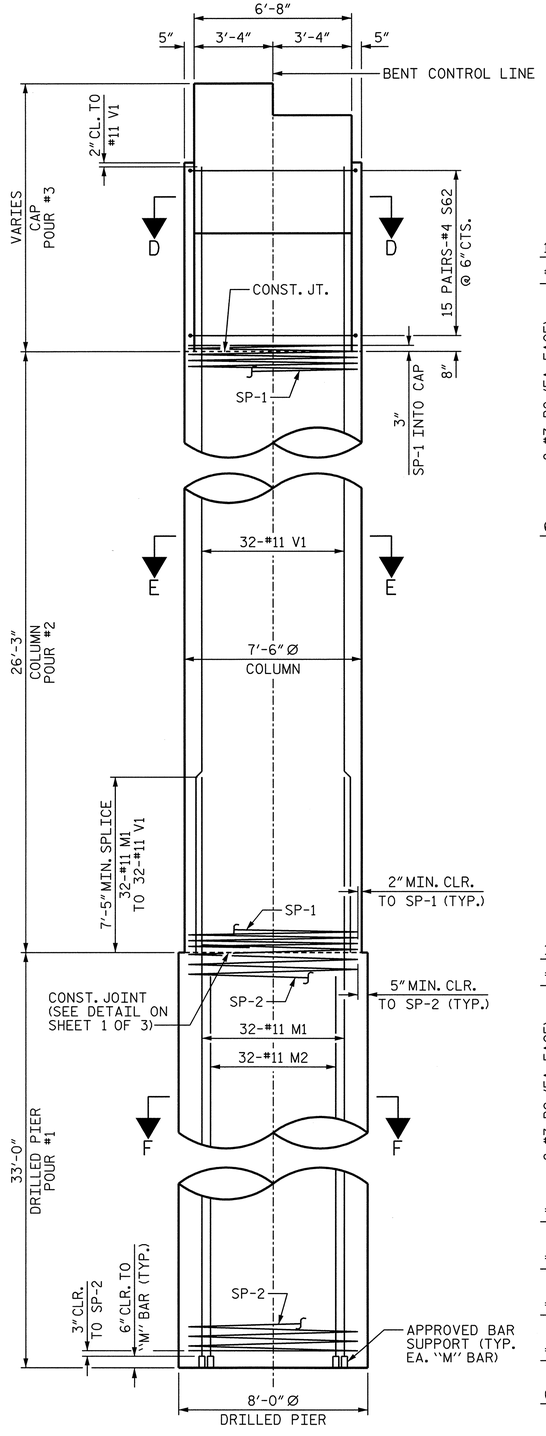

END ELEVATION

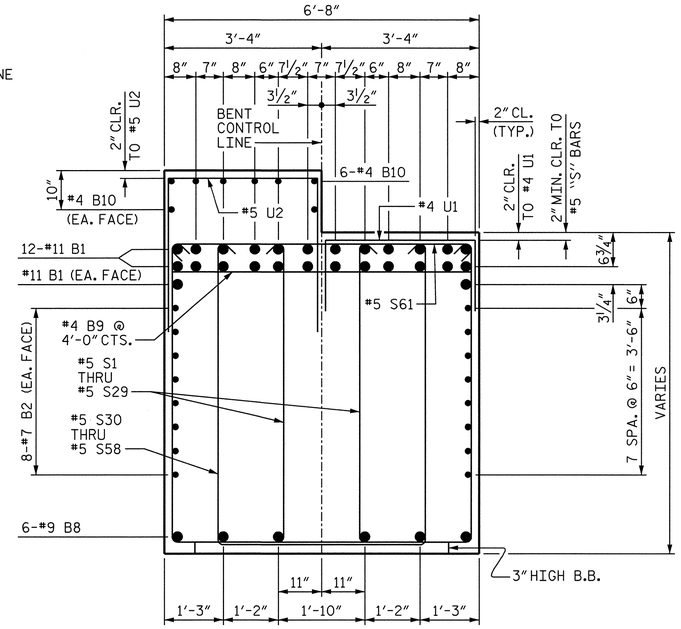

SECTION A-A

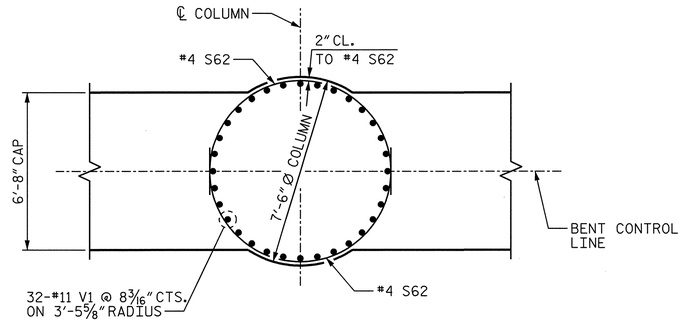

SECTION D-D

(CAP REINFORCING NOT SHOWN FOR CLARITY)

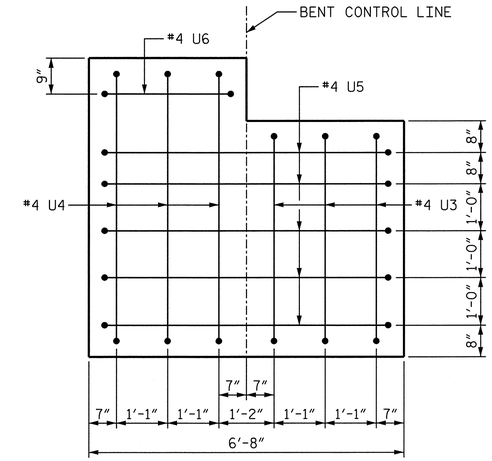

VIEW C-C

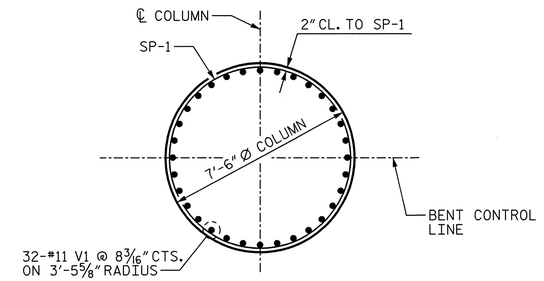

SECTION E-E

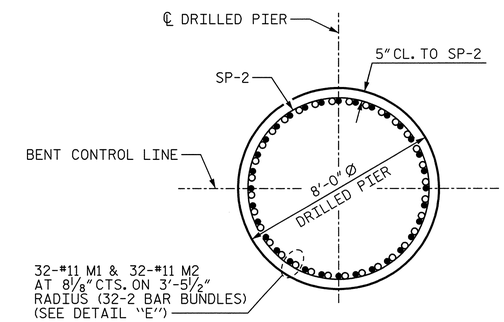

SECTION F-F

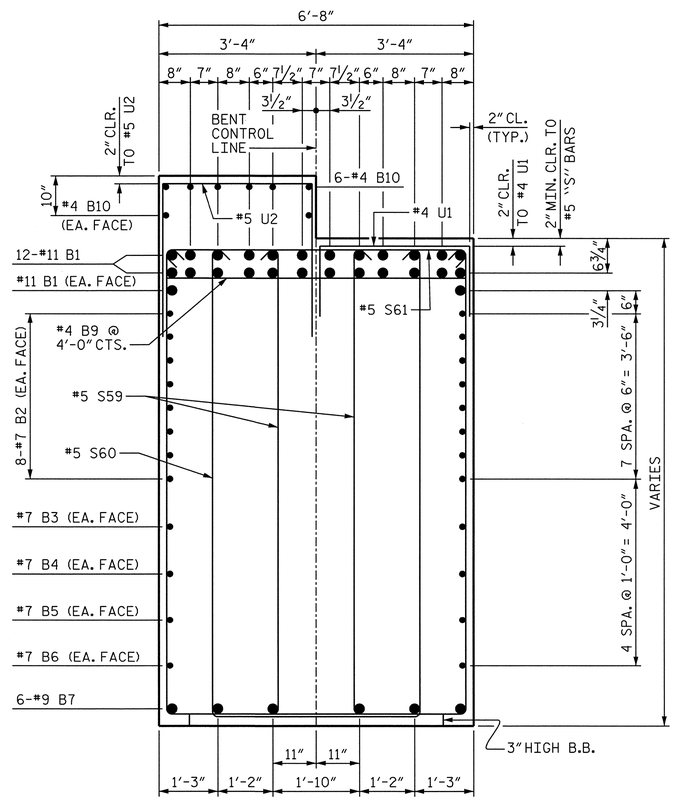

SECTION B-B

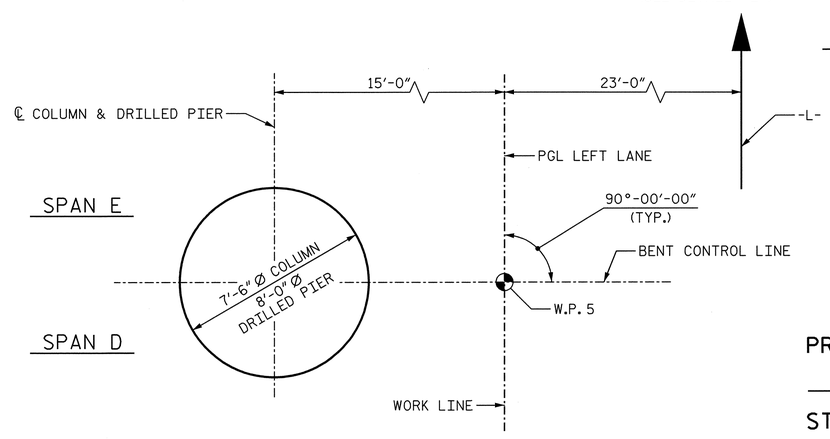

PLAN OF COLUMN & DRILLED PIER

(SEE SECTIONS D-D THRU F-F FOR "SP", "M" AND "V" BAR MARKS)

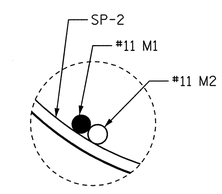

DETAIL "E"

PROJECT NO. U-2525B

GUILFORD COUNTY

STATION: 144+90.00 -L-

SHEET 2 OF 3

NORTH CAROLINA PROFESSIONAL SEAL 027799 ENGINEER ALLYSON K. DRR 1/10/14

STATE OF NORTH CAROLINA
DEPARTMENT OF TRANSPORTATION
RALEIGH

SUBSTRUCTURE

BENT 4
SECTION AND DETAILS

LEFT LANE

DRAWN BY : B.E. LANNING	DATE : 10/13	
CHECKED BY : G.R. COLS	DATE : 10/13	
DESIGN ENGINEER OF RECORD : P.A. de PAOLI	DATE : 01/14	

MI ENGINEERING
1011 SCHAUB DRIVE, SUITE 100
RALEIGH, NC 27606
(919) 851-6606
FIRM PE NUMBER : P-0671

DWG. NO. 49

REVISIONS						
NO.	BY:	DATE:	NO.	BY:	DATE:	
1			3			
2			4			

SHEET NO. S-221

TOTAL SHEETS 541

1/9/2014
5:02:28 PM
User: blanning
Filename: P:\NC Bridges\MI1007.03 U-2525B Guilford\U-2525B\Structures\Left Bridge\U2525B_SD_B4B_4_LT.dgn

BAR TYPES

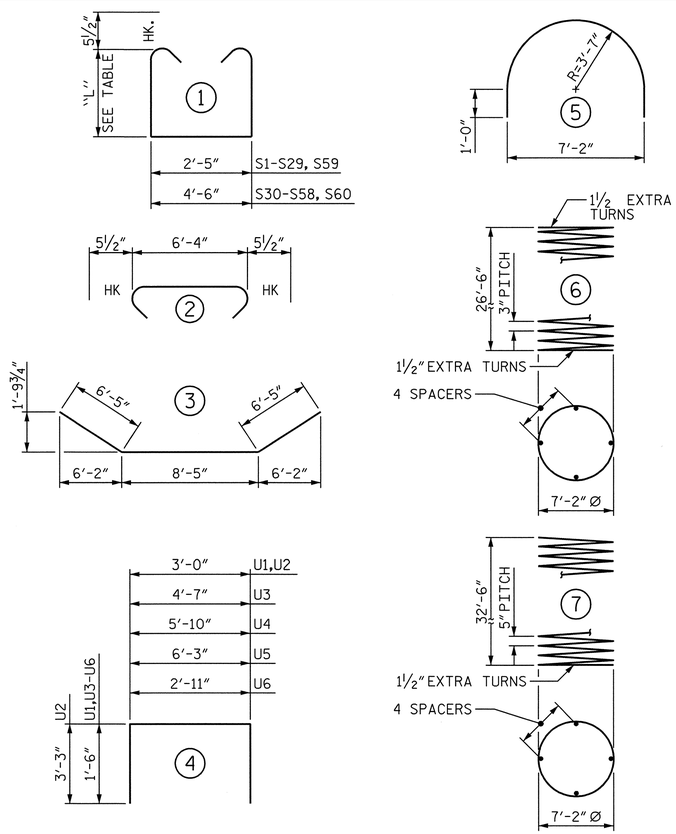

ALL BAR DIMENSIONS ARE OUT TO OUT.

STIRRUP HEIGHT TABLE

BAR	"L"	BAR	"L"	BAR	"L"
S1	4'-9"	S26	9'-0"	S51	8'-4"
S2	4'-11"	S27	9'-2"	S52	8'-6"
S3	5'-1"	S28	9'-4"	S53	8'-8"
S4	5'-3"	S29	9'-6"	S54	8'-10"
S5	5'-5"	S30	4'-9"	S55	9'-0"
S6	5'-7"	S31	4'-11"	S56	9'-2"
S7	5'-9"	S32	5'-1"	S57	9'-4"
S8	5'-11"	S33	5'-3"	S58	9'-6"
S9	6'-1"	S34	5'-5"	S59	9'-7½"
S10	6'-3"	S35	5'-7"	S60	9'-7½"
S11	6'-5½"	S36	5'-9"		
S12	6'-7½"	S37	5'-11"		
S13	6'-9½"	S38	6'-1"		
S14	6'-11½"	S39	6'-3"		
S15	7'-1½"	S40	6'-5½"		
S16	7'-3½"	S41	6'-7½"		
S17	7'-5½"	S42	6'-9½"		
S18	7'-7½"	S43	6'-11½"		
S19	7'-9½"	S44	7'-1½"		
S20	7'-11½"	S45	7'-3½"		
S21	8'-2"	S46	7'-5½"		
S22	8'-4"	S47	7'-7½"		
S23	8'-6"	S48	7'-9½"		
S24	8'-8"	S49	7'-11½"		
S25	8'-10"	S50	8'-2"		

BILL OF MATERIAL

BENT 4

BAR	NO.	SIZE	TYPE	LENGTH	WEIGHT
B1	26	#11	STR	42'-4"	5,848
B2	16	#7	STR	42'-4"	1,384
B3	2	#7	STR	35'-9"	146
B4	2	#7	STR	28'-11"	118
B5	2	#7	STR	22'-1"	90
B6	2	#7	STR	15'-3"	62
B7	6	#9	3	21'-3"	434
B8	12	#9	STR	17'-6"	714
B9	11	#4	STR	6'-4"	47
B10	8	#4	STR	42'-4"	226
M1	32	#11	STR	42'-11"	7,297
M2	32	#11	STR	31'-6"	5,356
S1	4	#5	1	12'-10"	54
S2	4	#5	1	13'-2"	55
S3	4	#5	1	13'-6"	56
S4	4	#5	1	13'-10"	58
S5	4	#5	1	14'-2"	59
S6	4	#5	1	14'-6"	60
S7	4	#5	1	14'-10"	62
S8	4	#5	1	15'-2"	63
S9	4	#5	1	15'-6"	65
S10	4	#5	1	15'-10"	66
S11	4	#5	1	16'-3"	68
S12	4	#5	1	16'-7"	69
S13	4	#5	1	16'-11"	71
S14	4	#5	1	17'-3"	72
S15	4	#5	1	17'-7"	73
S16	4	#5	1	17'-11"	75
S17	4	#5	1	18'-3"	76
S18	4	#5	1	18'-7"	78
S19	4	#5	1	18'-11"	79
S20	4	#5	1	19'-3"	80
S21	4	#5	1	19'-8"	82
S22	4	#5	1	20'-0"	83
S23	4	#5	1	20'-4"	85
S24	4	#5	1	20'-8"	86
S25	4	#5	1	21'-0"	88
S26	4	#5	1	21'-4"	89
S27	4	#5	1	21'-8"	90
S28	4	#5	1	22'-0"	92
S29	4	#5	1	22'-4"	93
S30	2	#5	1	14'-11"	31
S31	2	#5	1	15'-3"	32
S32	2	#5	1	15'-7"	33
S33	2	#5	1	15'-11"	33
S34	2	#5	1	16'-3"	34
S35	2	#5	1	16'-7"	35
S36	2	#5	1	16'-11"	35
S37	2	#5	1	17'-3"	36
S38	2	#5	1	17'-7"	37
S39	2	#5	1	17'-11"	37
S40	2	#5	1	18'-4"	38
S41	2	#5	1	18'-8"	39
S42	2	#5	1	19'-0"	40
S43	2	#5	1	19'-4"	40
S44	2	#5	1	19'-8"	41
S45	2	#5	1	20'-0"	42
S46	2	#5	1	20'-4"	42
S47	2	#5	1	20'-8"	43
S48	2	#5	1	21'-0"	44
S49	2	#5	1	21'-4"	45
S50	2	#5	1	21'-9"	45
S51	2	#5	1	22'-1"	46
S52	2	#5	1	22'-5"	47
S53	2	#5	1	22'-9"	47
S54	2	#5	1	23'-1"	48
S55	2	#5	1	23'-5"	49
S56	2	#5	1	23'-9"	50
S57	2	#5	1	24'-1"	50
S58	2	#5	1	24'-5"	51
S59	18	#5	1	22'-7"	424
S60	9	#5	1	24'-8"	232
S61	67	#5	2	7'-3"	507
S62	30	#4	5	13'-2"	264
U1	30	#4	4	6'-0"	120
U2	42	#4	4	9'-6"	267
U3	6	#4	4	7'-7"	30
U4	6	#4	4	8'-10"	35
U5	10	#4	4	9'-3"	62
U6	2	#4	4	5'-11"	8
V1	32	#11	STR	34'-1"	5,795
SP-1	1	**	6	2438'-3"	1,629
SP-2	1	***	7	1775'-11"	1,852

REINFORCING STEEL	32,783 LBS.
SPIRAL COLUMN REINFORCING STEEL	3,481 LBS.
CLASS A CONCRETE BREAKDOWN	
POUR #2 (COLUMN)	43.0 C.Y.
POUR #3 (CAP & PART COLUMN)	92.4 C.Y.
TOTAL	135.4 C.Y.
8'-0" Ø DRILLED PIER	
DRILLED PIER CONCRETE POUR 1 (DRILLED PIER)	61.5 C.Y.
8'-0" Ø DRILLED PIER IN SOIL	17.0 LIN. FT.
8'-0" Ø DRILLED PIER NOT IN SOIL	16.0 LIN. FT.
CSL TUBES	276.0 LIN. FT.

** THE SP-1 SPIRAL REINFORCING STEEL SHALL BE W20 OR D-20 COLD DRAWN WIRE OR #4 PLAIN OR DEFORMED BAR.

*** THE SP-2 SPIRAL REINFORCING STEEL SHALL BE W31 OR D-31 COLD DRAWN WIRE OR #5 PLAIN OR DEFORMED BAR.

PROJECT NO. U-2525B
GUILFORD COUNTY
STATION: 144+90.00 -L-

SHEET 3 OF 3

NORTH CAROLINA PROFESSIONAL SEAL 027799 ENGINEER ALLYSON K. ORR 1/10/14

STATE OF NORTH CAROLINA
DEPARTMENT OF TRANSPORTATION
RALEIGH

SUBSTRUCTURE

BENT 4
BILL OF MATERIAL

LEFT LANE

MI ENGINEERING
1011 SCHAUB DRIVE, SUITE 100
RALEIGH, NC 27606
(919) 851-6606
FIRM PE NUMBER : P-0671

REVISIONS						SHEET NO.
NO.	BY:	DATE:	NO.	BY:	DATE:	S-222
1			3			TOTAL SHEETS
2			4			541

DWG. NO. 50

DRAWN BY : B.E. LANNING DATE : 10/13
CHECKED BY : G.R. COLS DATE : 10/13
DESIGN ENGINEER OF RECORD : P.A. de PAOLI DATE : 01/14

1/9/2014
5:02:30 PM
User: blanning
Filename: P:\NC Bridges\MI1007.03 U-2525B Guilford\U-2525B\Structures\Left Bridge\U2525B_SD_B4C_4_LT.dgn

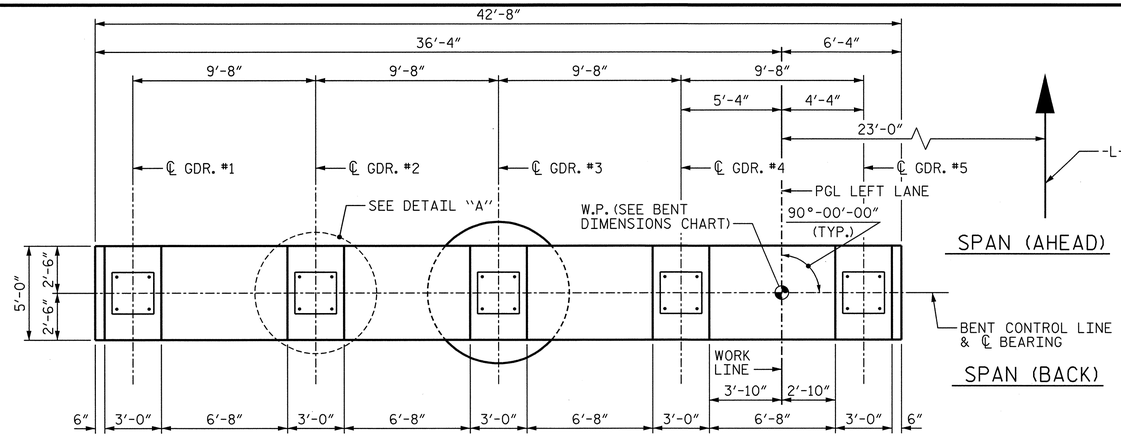

PLAN

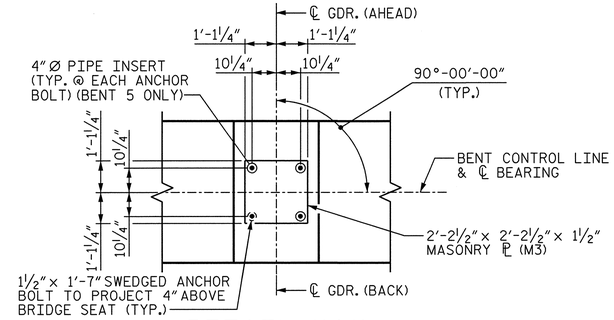

DETAIL "A"

NOTES

STIRRUPS AND "U" BARS IN CAP MAY BE SHIFTED AS NECESSARY TO CLEAR ANCHOR BOLTS AND PIPE INSERTS.

DETAILED DRAWINGS FOR FALSEWORK AND FORMS FOR THIS HAMMERHEAD BENT CAP SHALL BE SUBMITTED. SEE SHEET SN.

ALL STEEL IN THE DRILLED PIER IS INCLUDED IN THE PAY ITEMS FOR "REINFORCING STEEL" AND "SPIRAL COLUMN REINFORCING STEEL".

THE CONTRACTOR'S ATTENTION IS CALLED TO THE FACT THAT THE LONGITUDINAL REINFORCEMENT FOR THE DRILLED PIER IS DETAILED WITH 3 FEET OF EXTRA LENGTH.

THE LOCATION OF THE CONSTRUCTION JOINT IN THE DRILLED PIER IS BASED ON AN APPROXIMATE GROUND LINE ELEVATION. IF THE CONSTRUCTION JOINT IS ABOVE THE ACTUAL GROUND ELEVATION, THE CONTRACTOR SHALL PLACE THE CONSTRUCTION JOINT 1 FOOT BELOW THE GROUND LINE.

FOR DRILLED PIER & PERMANENT STEEL CASING, SEE SECTION 411 OF THE STANDARD SPECIFICATIONS.

FOR SECTIONS A-A AND B-B, SEE SHEET 2 OF 3.

FOR VIEW C-C, SEE SHEET 2 OF 3.

FOR PIPE INSERT DETAILS, SEE "POT BEARING DETAILS" SHEET.

FOR END ELEVATION, SEE SHEET 2 OF 3.

FOR 1½" Ø ANCHOR BOLTS, SEE "POT BEARING DETAILS" SHEET.

THE CAP AND COLUMN SHALL BE CONSIDERED MASS CONCRETE. SEE SPECIAL PROVISIONS.

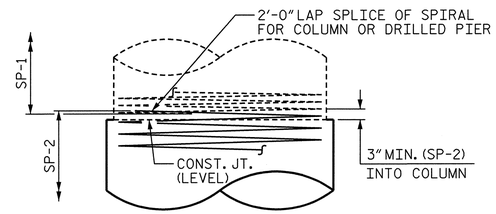

CONSTRUCTION JOINT DETAIL

DETAIL "B"
(TYP. EACH GIRDER)

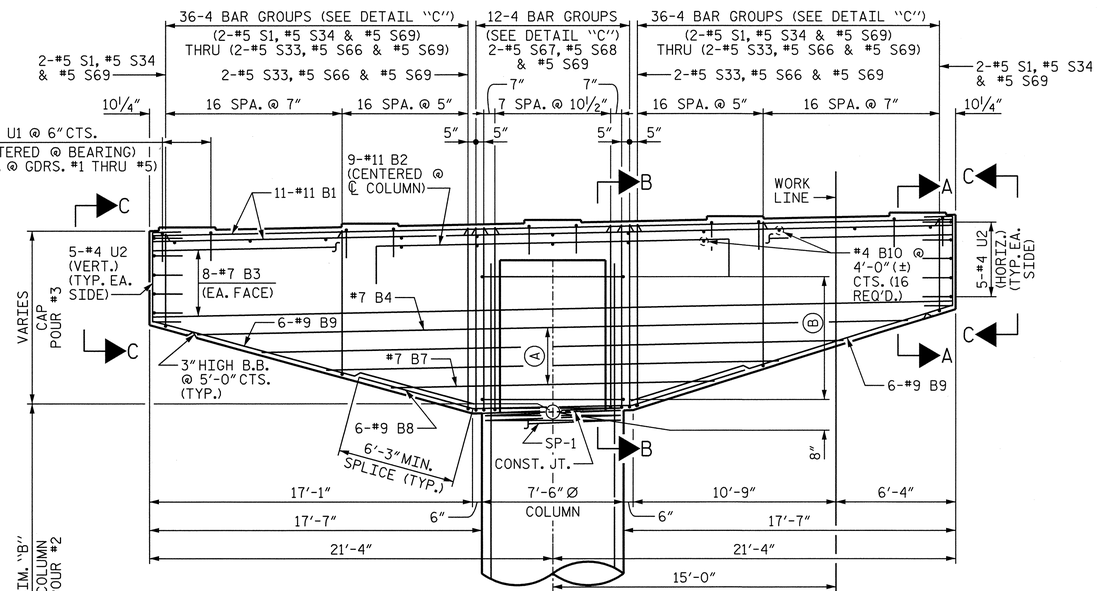

ELEVATION

Ⓐ #7 B4 THRU #7 B7 @ 6" CTS. (EA. FACE)
Ⓑ 15 PAIRS-#4 S70 @ 6" CTS.

NOTE: FOR COLUMN & DRILLED PIER REINFORCING STEEL & DETAILS, SEE END ELEVATION ON SHEET 2 OF 3.

BRIDGE SEAT ELEVATIONS					
BENT	EL. A	EL. B	EL. C	EL. D	EL. E
5	723.83	724.03	724.22	724.41	724.61
6	722.68	722.87	723.07	723.26	723.45

CAP, COLUMN & DRILLED PIER ELEVATIONS						
BENT	EL. F	EL. G	EL. H	EL. I	EL. J	EL. K
5	723.64	724.49	714.06	722.06	686.81	659.81
6	722.48	723.34	712.91	720.91	697.91	669.91

BENT DIMENSIONS					
BENT	W.P.	SPAN (AHEAD)	SPAN (BACK)	DIM. "A"	DIM. "B"
5	6	F	E	27'-0"	27'-3"
6	7	G	F	28'-0"	15'-0"

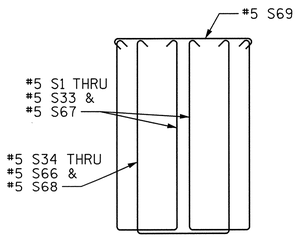

DETAIL "C"
(BARS OFFSET FOR CLARITY)

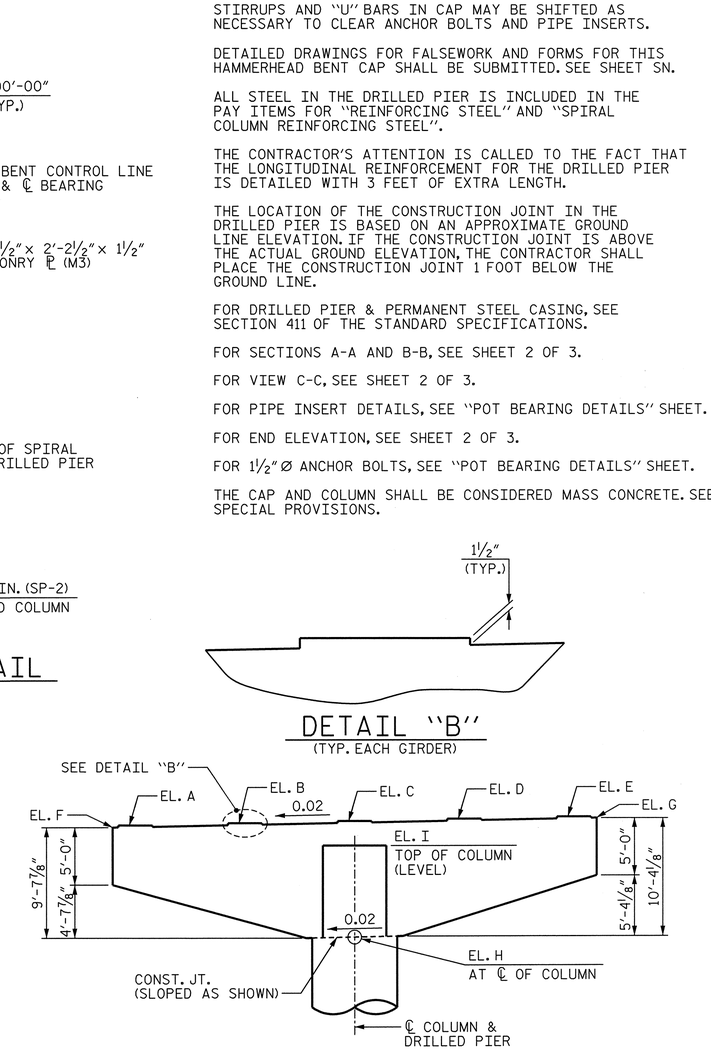

BENT CAP LAYOUT

PROJECT NO. U-2525B
GUILFORD COUNTY
STATION: 144+90.00 -L-

SHEET 1 OF 3

STATE OF NORTH CAROLINA
DEPARTMENT OF TRANSPORTATION
RALEIGH

SUBSTRUCTURE

BENTS 5 AND 6 PLAN AND ELEVATION

LEFT LANE

NORTH CAROLINA PROFESSIONAL SEAL 027799 ENGINEER ALLYSON K. ORR 2/14/14

MI ENGINEERING
1011 SCHAUB DRIVE, SUITE 100
RALEIGH, NC 27606
(919) 851-6606
FIRM PE NUMBER : P-0671

REVISIONS							
NO.	BY:	DATE:	NO.	BY:	DATE:	SHEET NO.	
1			3			S-223	
2			4			TOTAL SHEETS	
						34-1	

DWG. NO. 51

DRAWN BY :	B.E. LANNING	DATE :	10/13
CHECKED BY :	G.R. COLS	DATE :	10/13
DESIGN ENGINEER OF RECORD :	P.A. de PAOLI	DATE :	01/14

2/14/2014
12:35:51 PM
User: blanning
Filename: P:\NC Bridges\MI1007.03 U-2525B Guilford\U-2525B\Structures\Left Bridge\U2525B_SD_B56A_4_LT.dgn

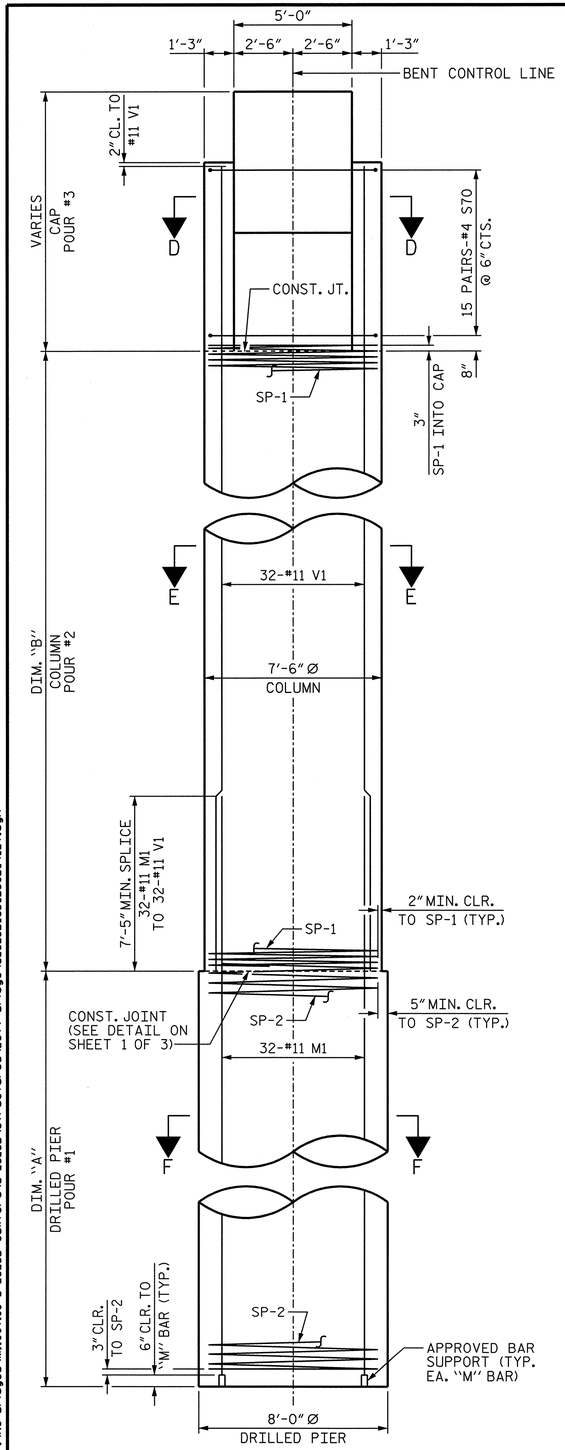

END ELEVATION

(FOR DIM. "A" & DIM. "B", SEE BENT DIMENSIONS TABLE, SHEET 1 OF 3)

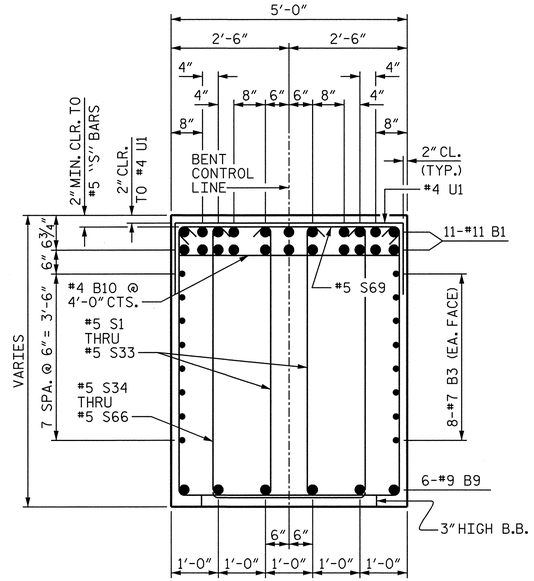

SECTION A-A

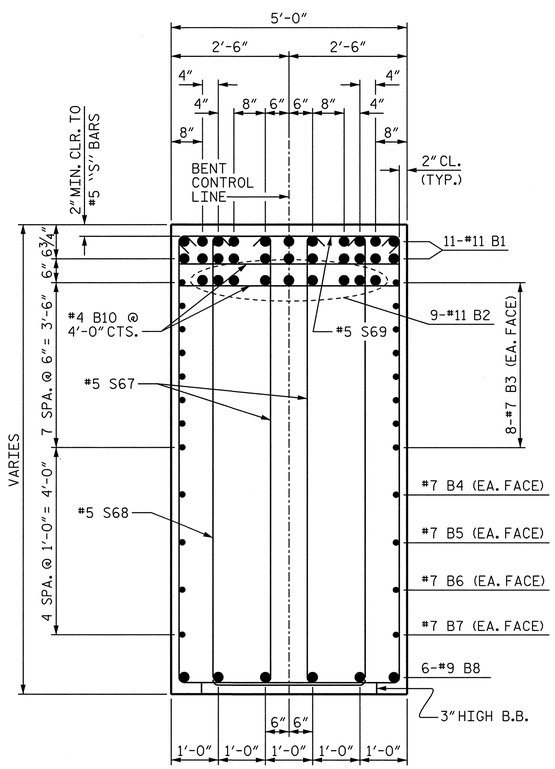

SECTION B-B

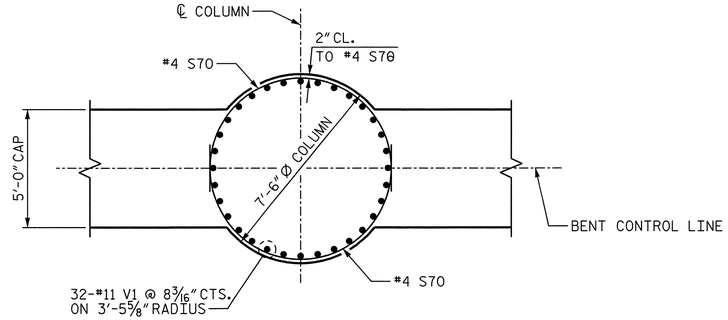

SECTION D-D

(CAP REINFORCING NOT SHOWN FOR CLARITY)

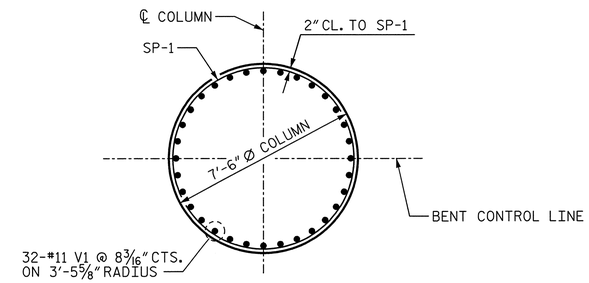

SECTION E-E

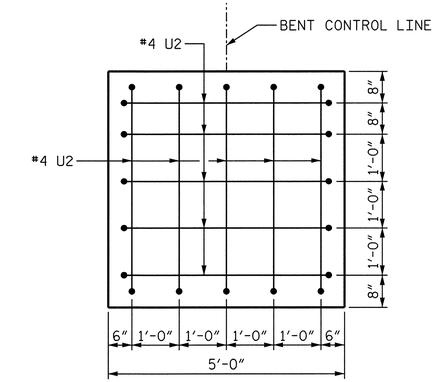

VIEW C-C

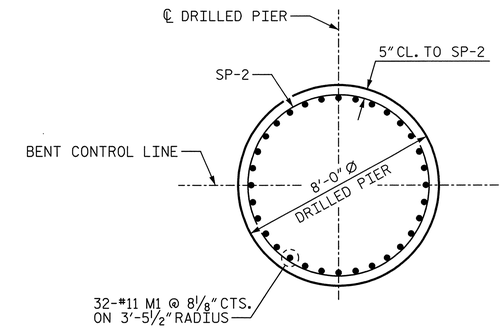

SECTION F-F

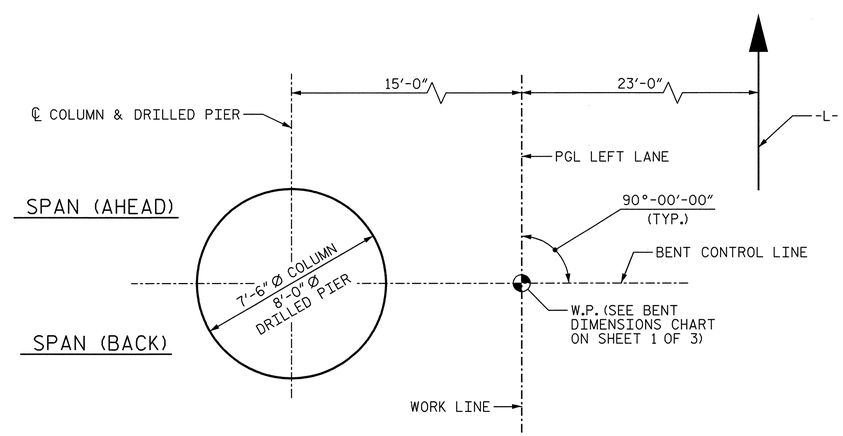

PLAN OF COLUMN & DRILLED PIER

(SEE SECTIONS D-D THRU F-F FOR "SP", "M" AND "V" BAR MARKS)

PROJECT NO. U-2525B

GUILFORD COUNTY

STATION: 144+90.00 -L-

SHEET 2 OF 3

STATE OF NORTH CAROLINA
DEPARTMENT OF TRANSPORTATION
RALEIGH

SUBSTRUCTURE

BENTS 5 AND 6 SECTION AND DETAILS

LEFT LANE

NORTH CAROLINA PROFESSIONAL SEAL 027799 ENGINEER ALLYSON K. DORR 1/10/14

DRAWN BY : B.E. LANNING	DATE : 10/13		
CHECKED BY : G.R. COLS	DATE : 10/13		
DESIGN ENGINEER OF RECORD : P.A. de PAOLI	DATE : 01/14		

DWG. NO. 52

MI ENGINEERING
1011 SCHAUB DRIVE, SUITE 100
RALEIGH, NC 27606
(919) 851-6606
FIRM PE NUMBER : P-0671

REVISIONS								SHEET NO.
NO.	BY:	DATE:	NO.	BY:	DATE:			5-224
1			3					TOTAL SHEETS
2			4					54

1/9/2014
5:02:55 PM
User: blanning
Filename: P:\NC Bridges\MI1007.03 U-2525B Guilford\U-2525B\Structures\Left Bridge\U2525B_SD_B56B_4_LT.dgn

BAR TYPES

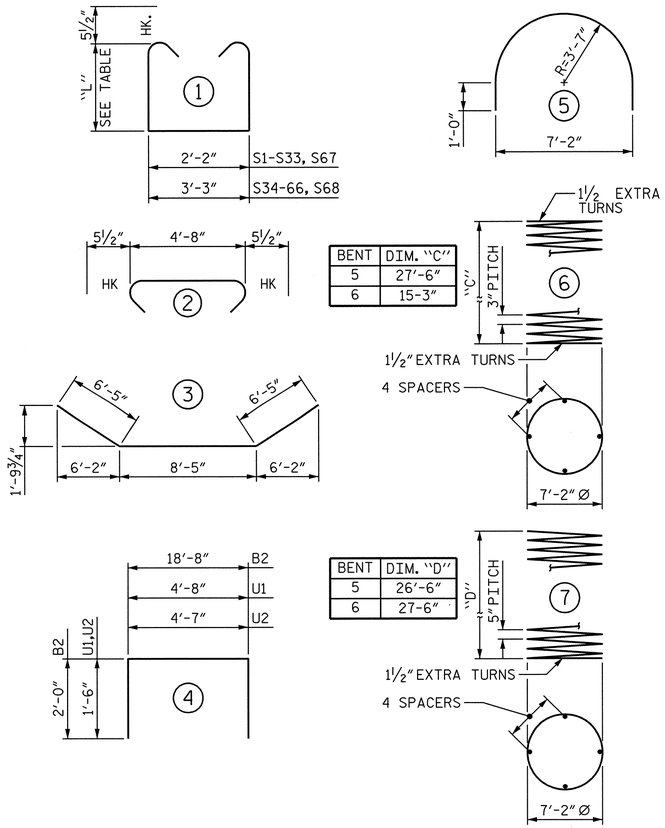

BENT	DIM. "C"
5	27'-6"
6	15-3"

BENT	DIM. "D"
5	26'-6"
6	27-6"

ALL BAR DIMENSIONS ARE OUT TO OUT.

STIRRUP HEIGHT TABLE

BAR	"L"	BAR	"L"	BAR	"L"
S1	4'-10½"	S26	8'-8½"	S51	7'-8½"
S2	5'-0½"	S27	8'-10"	S52	7'-10"
S3	5'-2½"	S28	8'-11½"	S53	7'-11½"
S4	5'-4½"	S29	9'-0½"	S54	8'-1"
S5	5'-6½"	S30	9'-2"	S55	8'-2½"
S6	5'-8½"	S31	9'-3½"	S56	8'-4"
S7	5'-10½"	S32	9'-5"	S57	8'-5½"
S8	6'-0½"	S33	9'-6½"	S58	8'-7"
S9	6'-3"	S34	4'-10½"	S59	8'-8½"
S10	6'-5"	S35	5'-0½"	S60	8'-10"
S11	6'-7"	S36	5'-2½"	S61	8'-11½"
S12	6'-9"	S37	5'-4½"	S62	9'-0½"
S13	6'-11"	S38	5'-6½"	S63	9'-2"
S14	7'-1"	S39	5'-8½"	S64	9'-3½"
S15	7'-3"	S40	5'-10½"	S65	9'-5"
S16	7'-5"	S41	6'-0½"	S66	9'-6½"
S17	7'-7"	S42	6'-3"	S67	9'-7½"
S18	7'-8½"	S43	6'-5"	S68	9'-7½"
S19	7'-10"	S44	6'-7"		
S20	7'-11½"	S45	6'-9"		
S21	8'-1"	S46	6'-11"		
S22	8'-2½"	S47	7'-1"		
S23	8'-4"	S48	7'-3"		
S24	8'-5½"	S49	7'-5"		
S25	8'-7"	S50	7'-7"		

BILL OF MATERIAL

BENT 5

BAR	NO.	SIZE	TYPE	LENGTH	WEIGHT
B1	22	#11	STR	42'-4"	4,948
B2	9	#11	4	22'-8"	1,084
B3	16	#7	STR	42'-4"	1,384
B4	2	#7	STR	37'-7"	154
B5	2	#7	STR	30'-9"	126
B6	2	#7	STR	23'-11"	98
B7	2	#7	STR	17'-1"	70
B8	6	#9	3	21'-3"	434
B9	12	#9	STR	17'-6"	714
B10	16	#4	STR	4'-8"	50
M1	32	#11	STR	36'-11"	6,276
S1	4	#5	1	12'-9"	53
S2	4	#5	1	13'-1"	55
S3	4	#5	1	13'-5"	56
S4	4	#5	1	13'-9"	57
S5	4	#5	1	14'-1"	59
S6	4	#5	1	14'-5"	60
S7	4	#5	1	14'-9"	62
S8	4	#5	1	15'-1"	63
S9	4	#5	1	15'-6"	65
S10	4	#5	1	15'-10"	66
S11	4	#5	1	16'-2"	67
S12	4	#5	1	16'-6"	69
S13	4	#5	1	16'-10"	70
S14	4	#5	1	17'-2"	72
S15	4	#5	1	17'-6"	73
S16	4	#5	1	17'-10"	74
S17	4	#5	1	18'-2"	76
S18	4	#5	1	18'-5"	77
S19	4	#5	1	18'-8"	78
S20	4	#5	1	18'-11"	79
S21	4	#5	1	19'-2"	80
S22	4	#5	1	19'-5"	81
S23	4	#5	1	19'-8"	82
S24	4	#5	1	19'-11"	83
S25	4	#5	1	20'-2"	84
S26	4	#5	1	20'-5"	85
S27	4	#5	1	20'-8"	86
S28	4	#5	1	20'-11"	87
S29	4	#5	1	21'-1"	88
S30	4	#5	1	21'-4"	89
S31	4	#5	1	21'-7"	90
S32	4	#5	1	21'-10"	91
S33	4	#5	1	22'-1"	92
S34	2	#5	1	14'-1"	29
S35	2	#5	1	14'-5"	30
S36	2	#5	1	14'-9"	31
S37	2	#5	1	15'-1"	31
S38	2	#5	1	15'-5"	32
S39	2	#5	1	15'-9"	33
S40	2	#5	1	16'-1"	34
S41	2	#5	1	16'-5"	34
S42	2	#5	1	16'-10"	35
S43	2	#5	1	17'-2"	36
S44	2	#5	1	17'-6"	37
S45	2	#5	1	17'-10"	37
S46	2	#5	1	18'-2"	38
S47	2	#5	1	18'-6"	39
S48	2	#5	1	18'-10"	39
S49	2	#5	1	19'-2"	40

BAR	NO.	SIZE	TYPE	LENGTH	WEIGHT
S50	2	#5	1	19'-6"	41
S51	2	#5	1	19'-9"	41
S52	2	#5	1	20'-0"	42
S53	2	#5	1	20'-3"	42
S54	2	#5	1	20'-6"	43
S55	2	#5	1	20'-9"	43
S56	2	#5	1	21'-0"	44
S57	2	#5	1	21'-3"	44
S58	2	#5	1	21'-6"	45
S59	2	#5	1	21'-9"	45
S60	2	#5	1	22'-0"	46
S61	2	#5	1	22'-3"	46
S62	2	#5	1	22'-5"	47
S63	2	#5	1	22'-8"	47
S64	2	#5	1	22'-11"	48
S65	2	#5	1	23'-2"	48
S66	2	#5	1	23'-5"	49
S67	22	#5	1	22'-3"	511
S68	11	#5	1	23'-7"	271
S69	78	#5	2	5'-7"	454
S70	30	#4	5	13'-2"	264
U1	30	#4	4	7'-8"	154
U2	20	#4	4	7'-7"	101
V1	32	#11	STR	35'-1"	5,965
SP-1	1	**	6	2527'-8"	1,688
SP-2	1	***	7	1454'-3"	1,517

REINFORCING STEEL	26,823 LBS.
SPIRAL COLUMN REINFORCING STEEL	3,205 LBS.
CLASS A CONCRETE BREAKDOWN	
POUR #2 (COLUMN)	44.6 C.Y.
POUR #3 (CAP & PART COLUMN)	66.5 C.Y.
TOTAL	111.1 C.Y.
8'-0" Ø DRILLED PIER	
DRILLED PIER CONCRETE POUR 1 (DRILLED PIER)	50.3 C.Y.
8'-0" Ø DRILLED PIER IN SOIL	11.0 LIN. FT.
8'-0" Ø DRILLED PIER NOT IN SOIL	16.0 LIN. FT.
CSL TUBES	228.0 LIN. FT.

BENT 6

BAR	NO.	SIZE	TYPE	LENGTH	WEIGHT
B1	22	#11	STR	42'-4"	4,948
B2	9	#11	4	22'-8"	1,084
B3	16	#7	STR	42'-4"	1,384
B4	2	#7	STR	37'-7"	154
B5	2	#7	STR	30'-9"	126
B6	2	#7	STR	23'-11"	98
B7	2	#7	STR	17'-1"	70
B8	6	#9	3	21'-3"	434
B9	12	#9	STR	17'-6"	714
B10	16	#4	STR	4'-8"	50
M1	32	#11	STR	37'-11"	6,446
S1	4	#5	1	12'-9"	53
S2	4	#5	1	13'-1"	55
S3	4	#5	1	13'-5"	56
S4	4	#5	1	13'-9"	57
S5	4	#5	1	14'-1"	59
S6	4	#5	1	14'-5"	60
S7	4	#5	1	14'-9"	62
S8	4	#5	1	15'-1"	63
S9	4	#5	1	15'-6"	65
S10	4	#5	1	15'-10"	66
S11	4	#5	1	16'-2"	67
S12	4	#5	1	16'-6"	69
S13	4	#5	1	16'-10"	70
S14	4	#5	1	17'-2"	72
S15	4	#5	1	17'-6"	73
S16	4	#5	1	17'-10"	74
S17	4	#5	1	18'-2"	76
S18	4	#5	1	18'-5"	77
S19	4	#5	1	18'-8"	78
S20	4	#5	1	18'-11"	79
S21	4	#5	1	19'-2"	80
S22	4	#5	1	19'-5"	81
S23	4	#5	1	19'-8"	82
S24	4	#5	1	19'-11"	83
S25	4	#5	1	20'-2"	84
S26	4	#5	1	20'-5"	85
S27	4	#5	1	20'-8"	86
S28	4	#5	1	20'-11"	87
S29	4	#5	1	21'-1"	88
S30	4	#5	1	21'-4"	89
S31	4	#5	1	21'-7"	90
S32	4	#5	1	21'-10"	91
S33	4	#5	1	22'-1"	92
S34	2	#5	1	14'-1"	29
S35	2	#5	1	14'-5"	30
S36	2	#5	1	14'-9"	31
S37	2	#5	1	15'-1"	31
S38	2	#5	1	15'-5"	32
S39	2	#5	1	15'-9"	33
S40	2	#5	1	16'-1"	34
S41	2	#5	1	16'-5"	34
S42	2	#5	1	16'-10"	35
S43	2	#5	1	17'-2"	36
S44	2	#5	1	17'-6"	37
S45	2	#5	1	17'-10"	37
S46	2	#5	1	18'-2"	38
S47	2	#5	1	18'-6"	39
S48	2	#5	1	18'-10"	39
S49	2	#5	1	19'-2"	40

BAR	NO.	SIZE	TYPE	LENGTH	WEIGHT
S50	2	#5	1	19'-6"	41
S51	2	#5	1	19'-9"	41
S52	2	#5	1	20'-0"	42
S53	2	#5	1	20'-3"	42
S54	2	#5	1	20'-6"	43
S55	2	#5	1	20'-9"	43
S56	2	#5	1	21'-0"	44
S57	2	#5	1	21'-3"	44
S58	2	#5	1	21'-6"	45
S59	2	#5	1	21'-9"	45
S60	2	#5	1	22'-0"	46
S61	2	#5	1	22'-3"	46
S62	2	#5	1	22'-5"	47
S63	2	#5	1	22'-8"	47
S64	2	#5	1	22'-11"	48
S65	2	#5	1	23'-2"	48
S66	2	#5	1	23'-5"	49
S67	22	#5	1	22'-3"	511
S68	11	#5	1	23'-7"	271
S69	78	#5	2	5'-7"	454
S70	30	#4	5	13'-2"	264
U1	30	#4	4	7'-8"	154
U2	20	#4	4	7'-7"	101
V1	32	#11	STR	22'-10"	3,882
SP-1	1	**	6	1431'-7"	956
SP-2	1	***	7	1507'-11"	1,573

REINFORCING STEEL	24,910 LBS.
SPIRAL COLUMN REINFORCING STEEL	2,529 LBS.
CLASS A CONCRETE BREAKDOWN	
POUR #2 (COLUMN)	24.6 C.Y.
POUR #3 (CAP & PART COLUMN)	66.5 C.Y.
TOTAL	91.1 C.Y.
8'-0" Ø DRILLED PIER	
DRILLED PIER CONCRETE POUR 1 (DRILLED PIER)	52.2 C.Y.
8'-0" Ø DRILLED PIER IN SOIL	10.0 LIN. FT.
8'-0" Ø DRILLED PIER NOT IN SOIL	18.0 LIN. FT.
CSL TUBES	236.0 LIN. FT.

** THE SP-1 SPIRAL REINFORCING STEEL SHALL BE W20 OR D-20 COLD DRAWN WIRE OR #4 PLAIN OR DEFORMED BAR.

*** THE SP-2 SPIRAL REINFORCING STEEL SHALL BE W31 OR D-31 COLD DRAWN WIRE OR #5 PLAIN OR DEFORMED BAR.

PROJECT NO. U-2525B
GUILFORD COUNTY
STATION: 144+90.00 -L-

SHEET 3 OF 3

STATE OF NORTH CAROLINA
DEPARTMENT OF TRANSPORTATION
RALEIGH

SUBSTRUCTURE

BENTS 5 AND 6 BILL OF MATERIAL

LEFT LANE

NORTH CAROLINA PROFESSIONAL SEAL 021799 ENGINEER ALLYSON K. DIRR
1/10/14

MI ENGINEERING
1011 SCHAUB DRIVE, SUITE 100
RALEIGH, NC 27606
(919) 851-6606
FIRM PE NUMBER : P-0671

REVISIONS							
NO.	BY:	DATE:	NO.	BY:	DATE:	SHEET NO.	
1			3			5-225	
2			4			TOTAL SHEETS	
						541	

DRAWN BY : B.E. LANNING DATE : 10/13
CHECKED BY : G.R. COLS DATE : 10/13
DESIGN ENGINEER OF RECORD : P.A. de PAOLI DATE : 01/14

DWG. NO. 53

1/9/2014
5:02:57 PM
User: blanning
Filename: P:\NC Bridges\MI1007.03 U-2525B Guilford\U-2525B\Structures\Left Bridge\U2525B_SD_B56C_4_LT.dgn

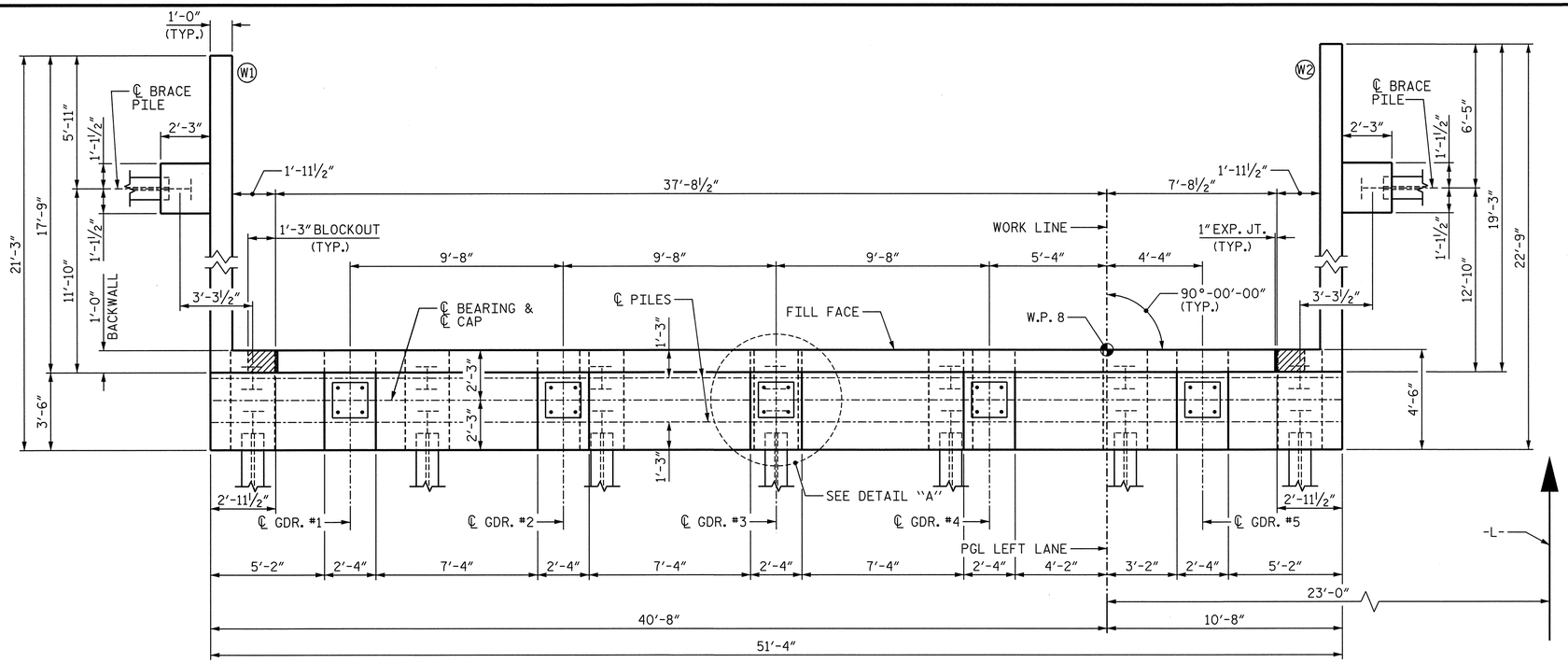

PLAN

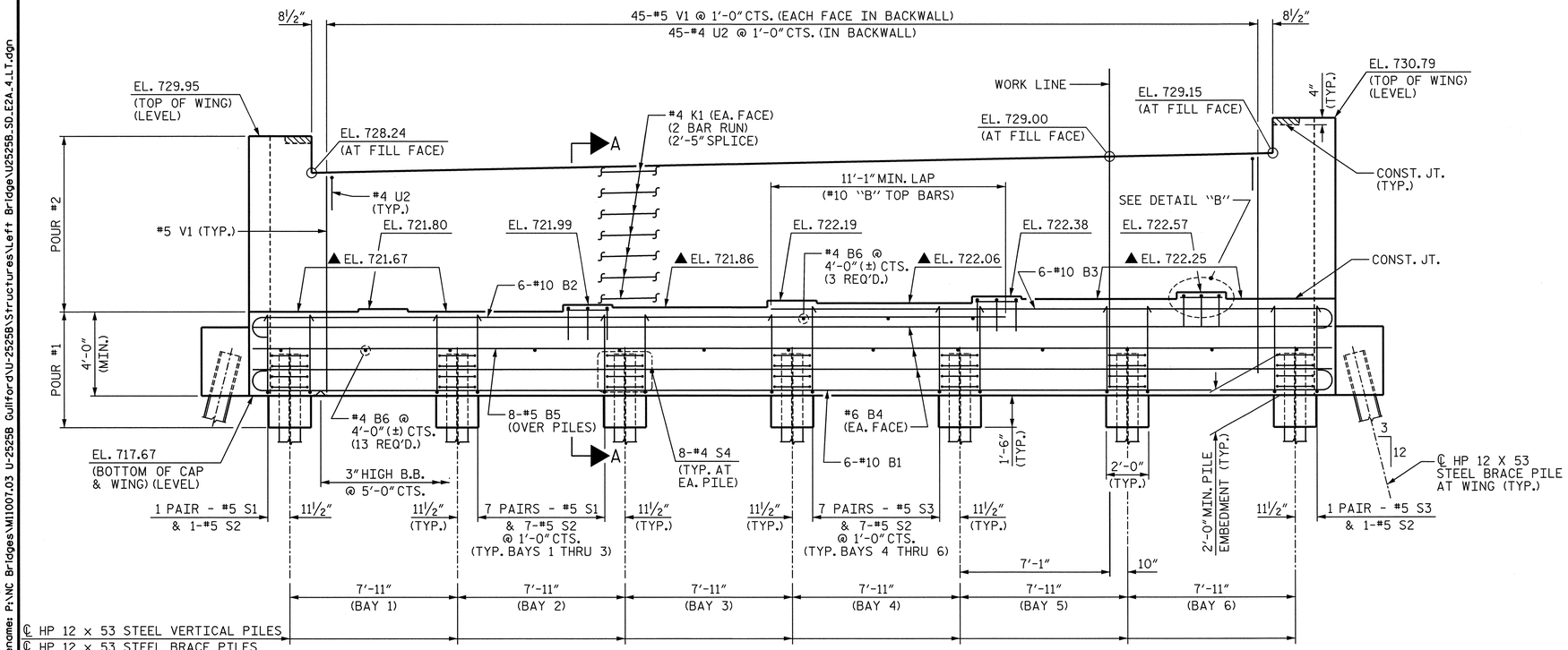

ELEVATION

NOTES

STIRRUPS AND #4 U1 BARS IN CAP MAY BE SHIFTED AS NECESSARY TO CLEAR ANCHOR BOLTS AND PIPE INSERTS.

#5 V1 BARS IN BACKWALL SHALL BE PLACED 2" CLEAR FROM THE TOP OF BACKWALL.

BACKWALL SHALL BE PLACED BEFORE APPLYING THE EPOXY PROTECTIVE COATING.

THE TOP SURFACE AREAS OF THE END BENT CAP SHALL BE CURED IN ACCORDANCE WITH THE STANDARD SPECIFICATIONS, EXCEPT THAT THE MEMBRANE CURING COMPOUND METHOD SHALL NOT BE USED.

THE TOP SURFACE OF THE CAP EXCEPT THE BRIDGE SEAT BUILDUPS SHALL BE SLOPED TRANSVERSELY FROM THE FILL FACE TO THE BACK FACE AT THE RATE OF 2%.

▲ FOR LOCATION OF ELEVATIONS BETWEEN BRIDGE SEAT BUILD-UPS, SEE SECTION A-A ON SHEET 3 OF 3.

FOR SECTION A-A, PILE SPLICE DETAILS AND TEMPORARY DRAINAGE DETAILS, SEE SHEET 3 OF 3.

THE CONCRETE IN THE SHADED AREA OF THE WING SHALL BE POURED AFTER THE BARRIER RAIL IS CAST IF SLIP FORMING IS USED.

INSTALL THE 4" DIA. DRAIN PIPE THROUGH THE WING WALL AS REQUIRED FOR REINFORCED BRIDGE APPROACH FILLS, SEE THE ROADWAY PLANS. REINFORCING STEEL IN THE WING WALL MAY BE SHIFTED AS NECESSARY TO CLEAR THE DRAIN PIPE.

FOR 1½" Ø ANCHOR BOLTS, SEE "POT BEARING DETAILS" SHEETS.

FOR PIPE INSERT DETAILS, SEE "POT BEARING DETAILS" SHEETS.

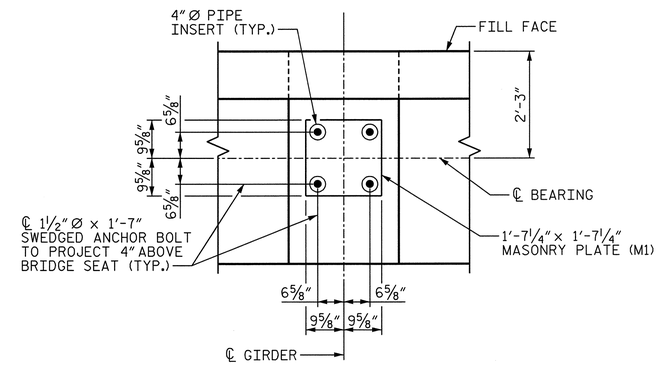

DETAIL "A"

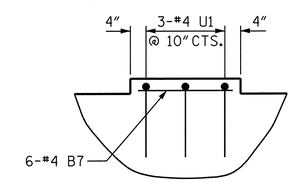

DETAIL "B"

(TYP. AT GDRS. #2, #4 AND #5)

PROJECT NO. U-2525B

GUILFORD COUNTY

STATION: 144+90.00 -L-

SHEET 1 OF 3

STATE OF NORTH CAROLINA
DEPARTMENT OF TRANSPORTATION
RALEIGH

SUBSTRUCTURE

END BENT 2

LEFT LANE

NORTH CAROLINA PROFESSIONAL SEAL 027799 ENGINEER ALLYSON K. ORR 1/10/14

DRAWN BY : B.E. LANNING	DATE : 08/13
CHECKED BY : G.R. COLS	DATE : 10/13
DESIGN ENGINEER OF RECORD : A.K. ORR	DATE : 01/14

DWG. NO. 54

MI ENGINEERING
1011 SCHAUB DRIVE, SUITE 100
RALEIGH, NC 27606
(919) 851-6606
FIRM PE NUMBER : P-0671

REVISIONS								SHEET NO.
NO.	BY:	DATE:	NO.	BY:	DATE:			5-226
1			3					TOTAL SHEETS
2			4					541

1/9/2014
5:03:00 PM
User:blanning
Filename: P:\NC Bridges\MI1007.03 U-2525B Guilford\U-2525B\Structures\Left Bridge\U2525B_SD_E2A_4_LT.dgn

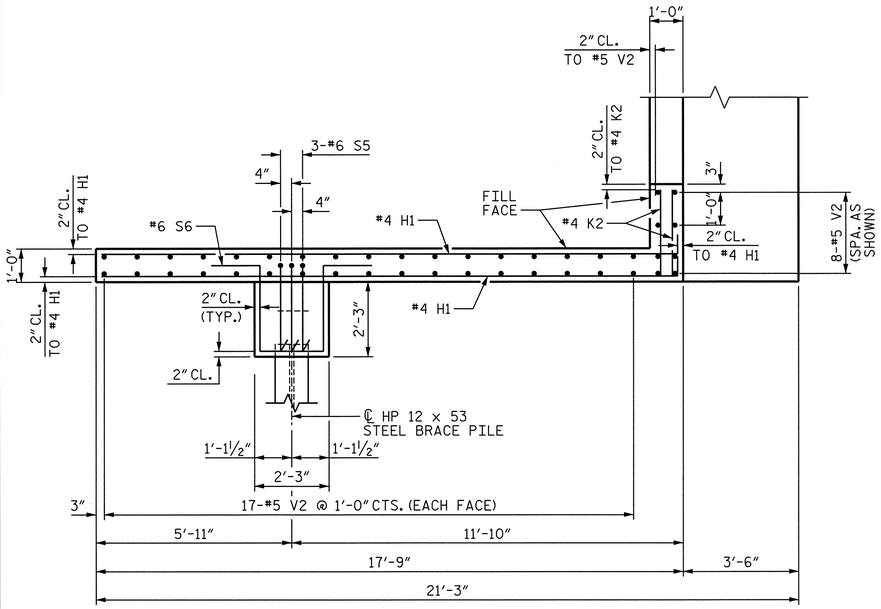

PLAN OF WING (W1)

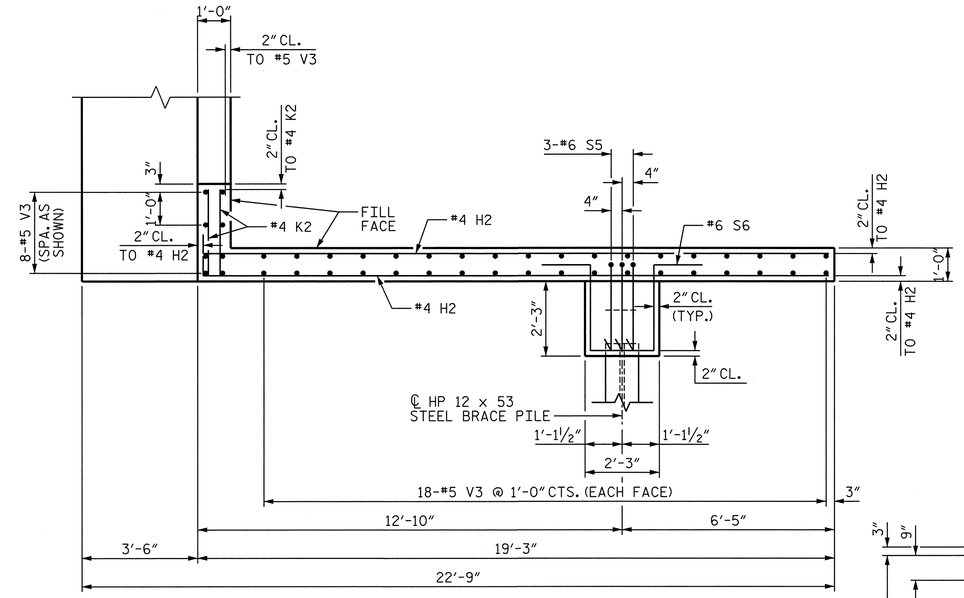

PLAN OF WING (W2)

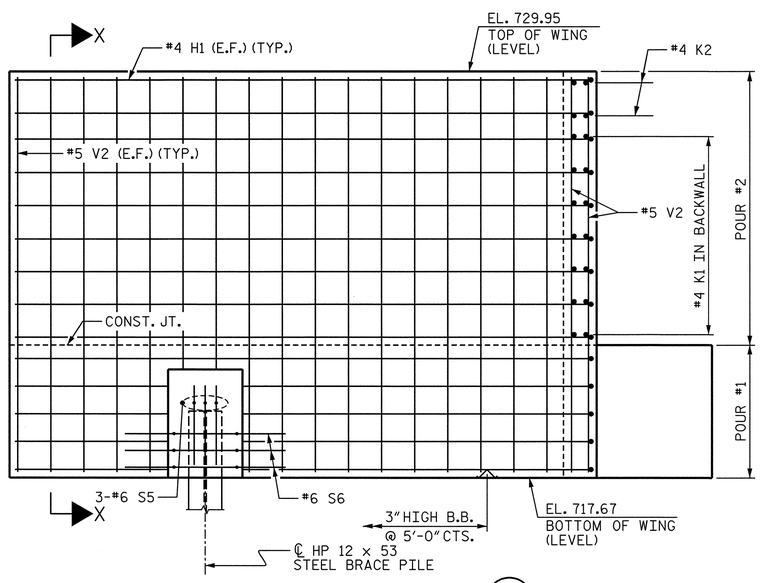

ELEVATION OF WING (W1)

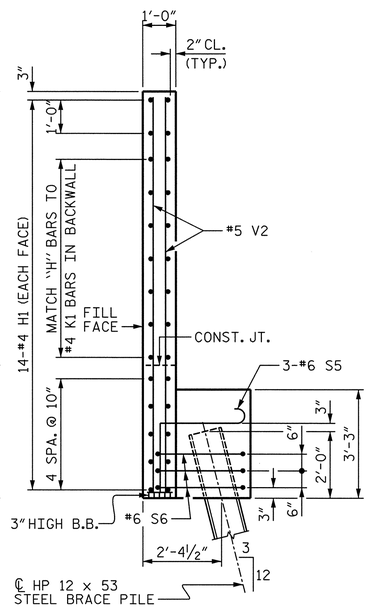

SECTION X-X

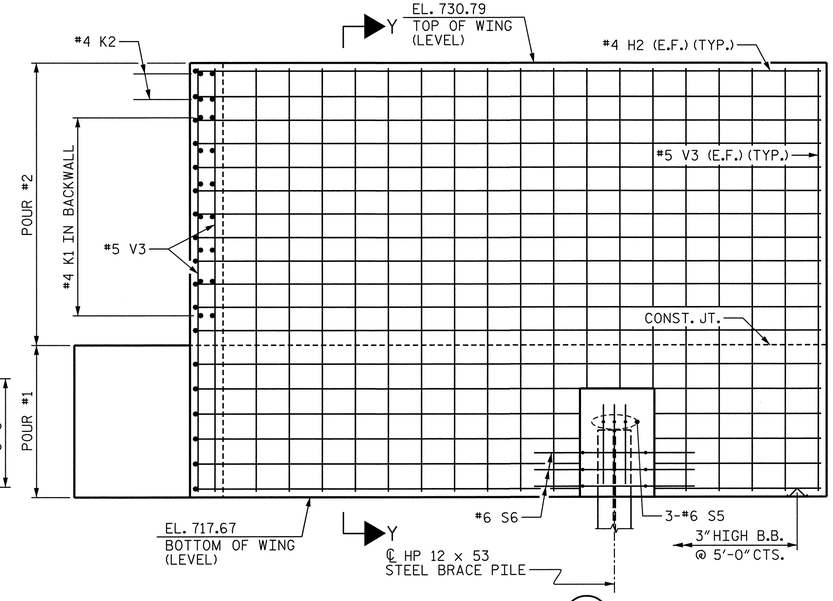

ELEVATION OF WING (W2)

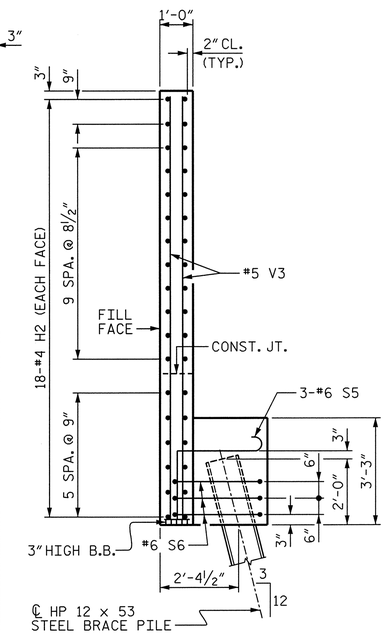

SECTION Y-Y

PROJECT NO. U-2525B

GUILFORD COUNTY

STATION: 144+90.00 -L-

SHEET 2 OF 3

STATE OF NORTH CAROLINA
DEPARTMENT OF TRANSPORTATION
RALEIGH

SUBSTRUCTURE

END BENT 2

LEFT LANE

NORTH CAROLINA PROFESSIONAL ENGINEER SEAL 027799 ALLYSON K. ORR
1/10/14

DRAWN BY : B.E. LANNING	DATE : 08/13		
CHECKED BY : G.R. COLS	DATE : 10/13		
DESIGN ENGINEER OF RECORD : A.K. ORR	DATE : 01/14		

DWG. NO. 55

MI ENGINEERING
1011 SCHAUB DRIVE, SUITE 100
RALEIGH, NC 27606
(919) 851-6606
FIRM PE NUMBER : P-0671

REVISIONS						SHEET NO.
NO.	BY:	DATE:	NO.	BY:	DATE:	5-227
1			3			TOTAL SHEETS
2			4			541

1/9/2014
5:03:02 PM
User:blanning
Filename: P:\NC Bridges\MI1007.03 U-2525B Guilford\U-2525B\Structures\Left Bridge\U2525B_SD_E2B_4_LT.dgn

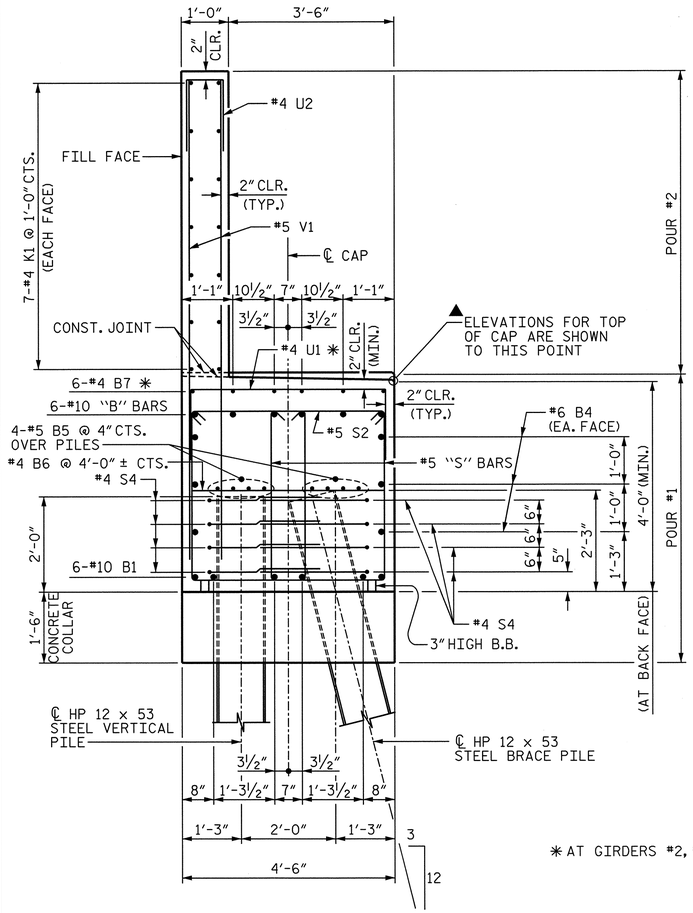

✳ AT GIRDERS #2, #4 AND #5 ONLY.

SECTION A-A

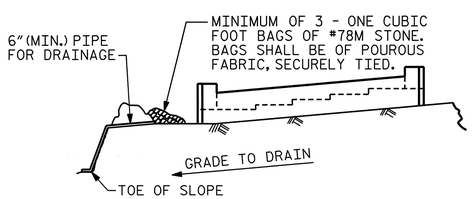

BAGGED STONE AND PIPE SHALL BE PLACED IMMEDIATELY AFTER COMPLETION OF END BENT EXCAVATION. PIPE MAY BE EITHER CONCRETE, CORRUGATED STEEL, CORRUGATED ALUMINUM ALLOY, OR CORRUGATED PLASTIC. PERFORATED PIPE WILL NOT BE ALLOWED.

BAGGED STONE SHALL REMAIN IN PLACE UNTIL THE ENGINEER DIRECTS THAT IT BE REMOVED. THE CONTRACTOR SHALL REMOVE AND DISPOSE OF SILT ACCUMULATIONS AT BAGGED STONE WHEN SO DIRECTED BY THE ENGINEER. BAGS SHALL BE REMOVED AND REPLACED WHENEVER THE ENGINEER DETERMINES THAT THEY HAVE DETERIORATED AND LOST THEIR EFFECTIVENESS.

NO SEPARATE PAYMENT WILL BE MADE FOR THIS WORK AND THE ENTIRE COST OF THIS WORK SHALL BE INCLUDED IN THE UNIT CONTRACT PRICE BID FOR THE SEVERAL PAY ITEMS.

TEMPORARY DRAINAGE AT END BENT

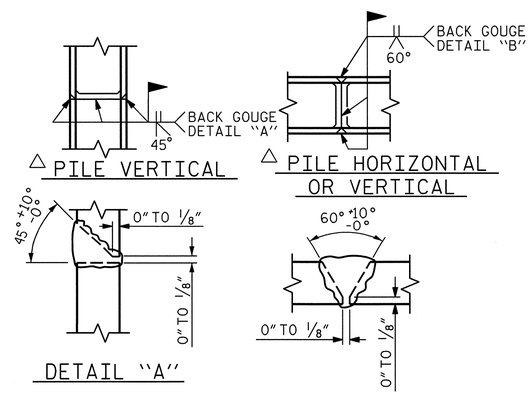

△ POSITION OF PILE DURING WELDING.

PILE SPLICE DETAILS

BAR TYPES

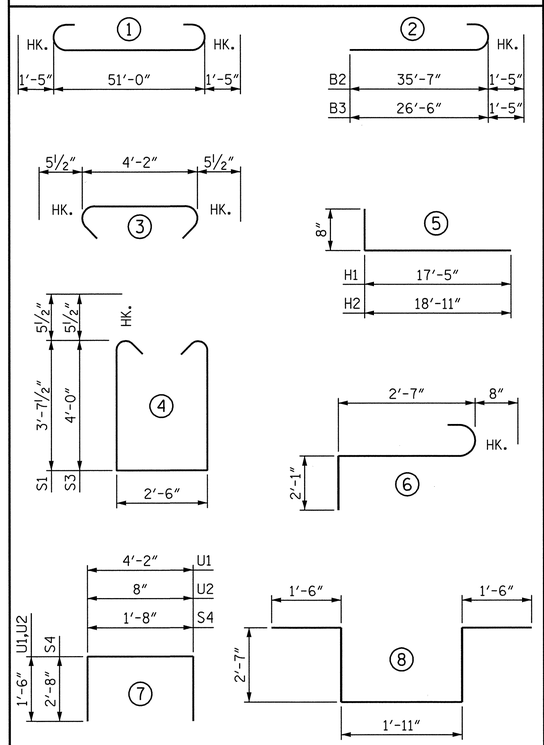

ALL BAR DIMENSIONS ARE OUT TO OUT.

BILL OF MATERIAL

END BENT 2

BAR	NO.	SIZE	TYPE	LENGTH	WEIGHT
B1	6	#10	1	53'-10"	1390
B2	6	#10	2	37'-0"	955
B3	6	#10	2	27'-11"	721
B4	6	#6	STR	51'-0"	460
B5	8	#5	STR	51'-0"	426
B6	16	#4	STR	4'-2"	45
B7	18	#4	STR	2'-0"	24
H1	28	#4	5	18'-1"	338
H2	36	#4	5	19'-7"	471
K1	28	#4	STR	26'-9"	500
K2	8	#4	STR	2'-7"	14
S1	44	#5	4	10'-8"	490
S2	44	#5	3	5'-1"	233
S3	44	#5	4	11'-5"	524
S4	56	#4	7	7'-0"	262
S5	6	#6	6	5'-4"	48
S6	6	#6	8	10'-1"	91
U1	9	#4	4	7'-2"	43
U2	45	#4	4	3'-8"	110
V1	90	#5	STR	10'-3"	962
V2	42	#5	STR	11'-11"	522
V3	44	#5	STR	12'-9"	585

REINFORCING STEEL 9,214 LBS.

CLASS A CONCRETE BREAKDOWN
POUR #1 (CAP, COLLARS & LOWER WING) 47.9 C.Y.
POUR #2 (BACKWALL & UPPER WING) 23.8 C.Y.
TOTAL CLASS A CONCRETE 71.7 C.Y.

HP 12 x 53 STEEL PILES
NO. 16 512 LIN. FT.

PROJECT NO. U-2525B
GUILFORD COUNTY
STATION: 144+90.00 -L-

SHEET 3 OF 3

STATE OF NORTH CAROLINA
DEPARTMENT OF TRANSPORTATION
RALEIGH

SUBSTRUCTURE

END BENT 2

LEFT LANE

NORTH CAROLINA PROFESSIONAL SEAL 027799 ENGINEER ALLYSON K. ORR 1/10/14

DRAWN BY : B.E. LANNING DATE : 08/13
CHECKED BY : G.R. COLS DATE : 10/13
DESIGN ENGINEER OF RECORD : A.K. ORR DATE : 01/14

MI ENGINEERING
1011 SCHAUB DRIVE, SUITE 100
RALEIGH, NC 27606
(919) 851-6606
FIRM PE NUMBER : P-0671

REVISIONS								SHEET NO.
NO.	BY:	DATE:	NO.	BY:	DATE:			5-228
1			3					TOTAL SHEETS
2			4					541

DWG. NO. 56

1/9/2014
5:03:04 PM
User: blanning
Filename: P:\NC Bridges\MI1007.03 U-2525B Guilford\U-2525B\Structures\Left Bridge\U2525B_SD_E2C_4_LT.dgn

℄ SECTION
BERM RIP RAPPED

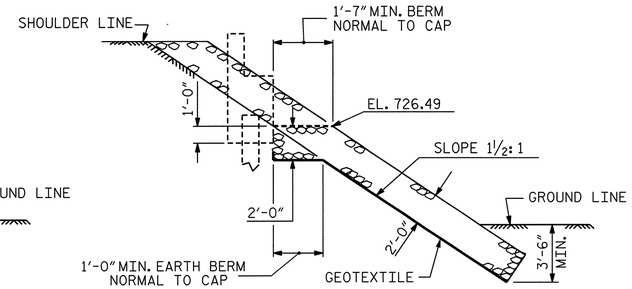

SECTION H-H

SECTION A-A

NOTES :

FOR BERM WIDTH DIMENSIONS, SEE GENERAL DRAWING.

✳ ESTIMATED QUANTITIES		
BRIDGE @ STA. 144+90.00 -L-	RIP RAP CLASS II (2'-0" THICK)	GEOTEXTILE FOR DRAINAGE
	TONS	SQUARE YARDS
END BENT 1	899	998

✳ QUANTITY SHOWN IS FOR LEFT LANE BRIDGE AND HAS BEEN ESTIMATED FROM THE -L- LINE.

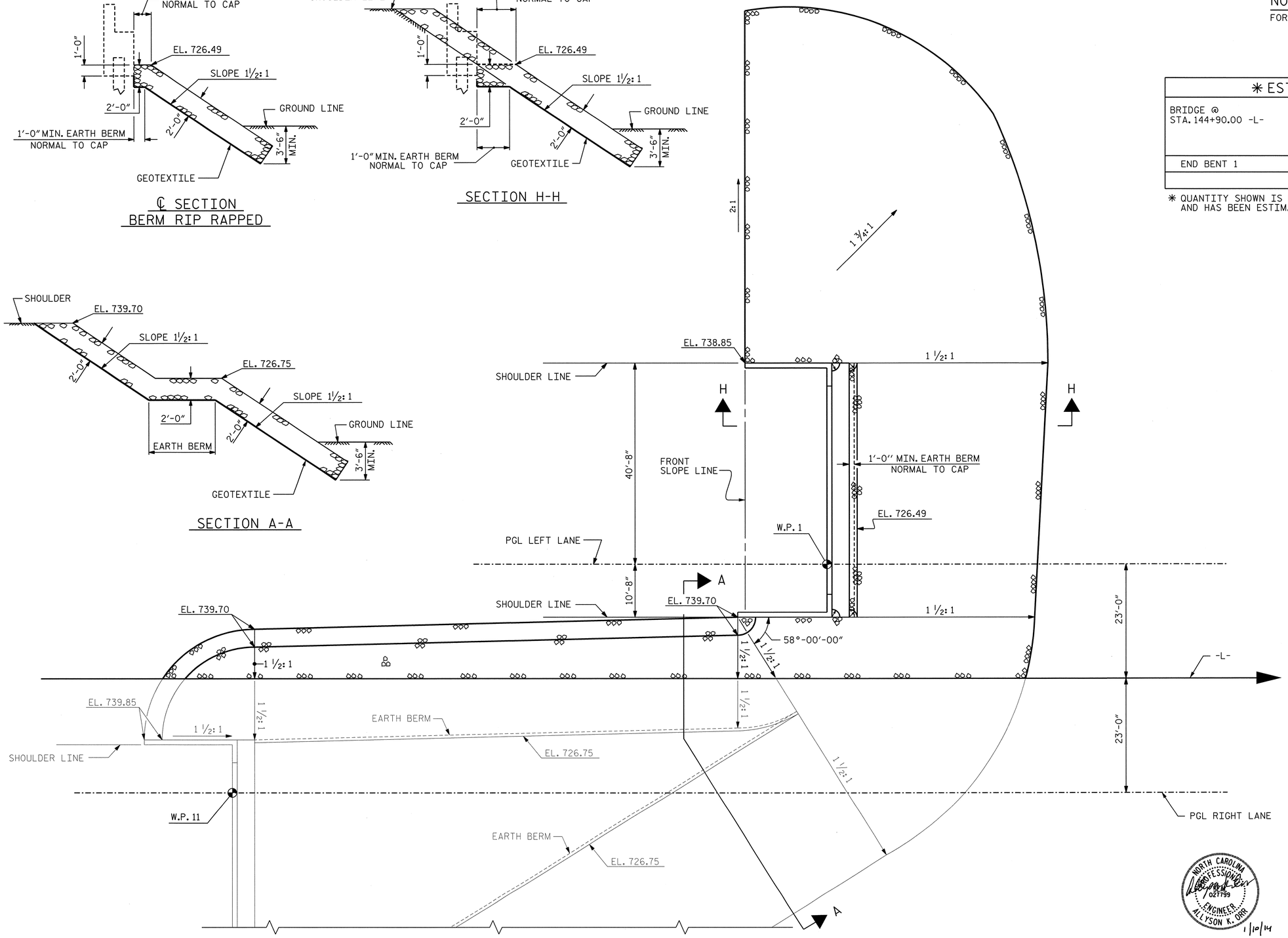

PLAN OF END BENT 1

PROJECT NO. U-2525B
GUILFORD COUNTY
STATION: 144+90.00 -L-

STATE OF NORTH CAROLINA
DEPARTMENT OF TRANSPORTATION
RALEIGH

RIP RAP DETAIL
AT END BENT 1

LEFT LANE

NORTH CAROLINA PROFESSIONAL ENGINEER SEAL 021799 ALLYSON K. ORR
1/10/14

DRAWN BY : B.E. ATKINSON	DATE : 08/13		
CHECKED BY : G.R. COLS	DATE : 11/13		
DESIGN ENGINEER OF RECORD : A.K. ORR	DATE : 01/14		

DWG. NO. 57

MI ENGINEERING
1011 SCHAUB DRIVE, SUITE 100
RALEIGH, NC 27606
(919) 851-6606
FIRM PE NUMBER : P-0671

REVISIONS						
NO.	BY:	DATE:	NO.	BY:	DATE:	
1			3			
2			4			

SHEET NO. 5-229
TOTAL SHEETS 541

1/9/2014
5:03:07 PM
User: blanning
Filename: P:\NC Bridges\MI1007.03 U-2525B Guilford\U-2525B\Structures\Left Bridge\U2525B_SD_RR1_4_LT.dgn

GENERAL NOTES

SLOPE PROTECTION SHALL BE PLACED UNDER THE ENDS OF THE BRIDGE AS SHOWN IN THE DETAILS. STRAIGHT EDGING WILL NOT BE REQUIRED UNLESS, IN THE OPINION OF THE ENGINEER, VISUAL INSPECTION INDICATES A NEED FOR IT. MEASUREMENT AND PAYMENT SHALL BE AS PRESCRIBED IN SECTION 462 OF THE STANDARD SPECIFICATIONS. FOR BERM WIDTH, SEE GENERAL DRAWING.

SLOPE PROTECTION SHALL CONSIST OF 4" POURED-IN-PLACE CONCRETE PAVING AS SHOWN IN THE DETAILS ON THIS SHEET. CONCRETE SHALL BE CLASS "B". THE CONCRETE SURFACE SHALL BE FLOATED WITH A WOODEN FLOAT AND FINISHED. WELDED WIRE FABRIC REINFORCING SHALL BE 6 X 6 - W1.4 X W1.4, 60" WIDE. SLOPE PROTECTION SHALL BE POURED IN 5' STRIPS AS SHOWN IN THE "POURING DETAIL" WITH 2'-0" LONG #4 BARS PLACED ALONG THE SLOPE BETWEEN STRIPS AT 1'-6" MAXIMUM SPACING. SLOPE PROTECTION MAY BE POURED IN ALTERNATE 4' AND 5' STRIPS AS SHOWN IN THE "OPTIONAL POURING DETAIL" WITH ADJACENT RUNS OF WELDED WIRE FABRIC LAPPING AT LEAST 6". THE COST OF THE WELDED WIRE FABRIC AND #4 BARS, IF USED, SHALL BE INCLUDED IN THE CONTRACT UNIT PRICE BID PER SQUARE YARD FOR SLOPE PROTECTION.

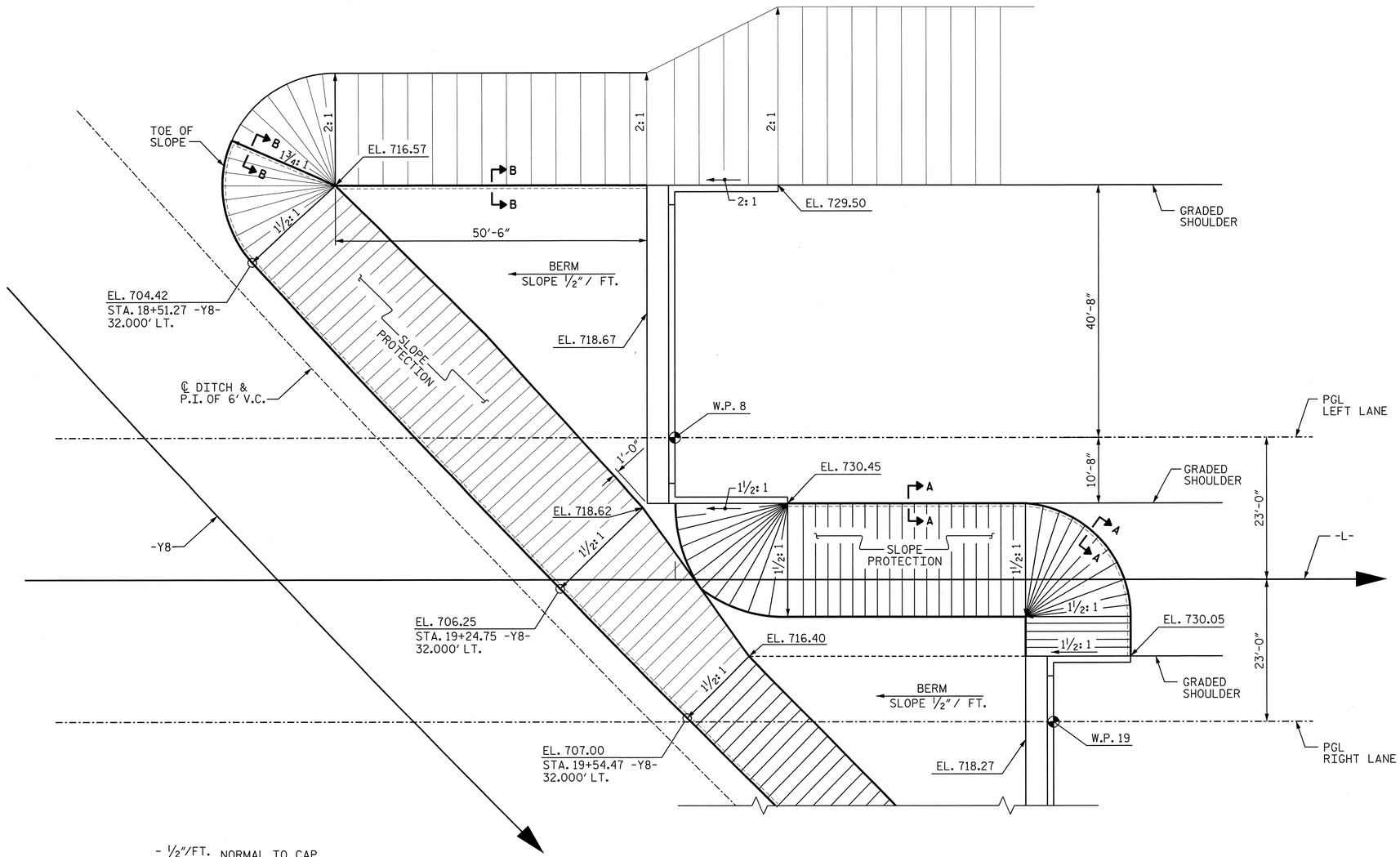

PLAN OF SLOPE PROTECTION

BRIDGE @ STA. 144+90.00 -L-	4 INCH SLOPE PROTECTION	✳ WELDED WIRE FABRIC 60 INCHES WIDE
	SQUARE YARDS	APPROX. L.F.
END BENT 2	522	940

✳ QUANTITY SHOWN IS BASED ON 5' POURS.

NOTE: QUANTITY SHOWN IS FOR LEFT LANE BRIDGE AND HAS BEEN ESTIMATED FROM THE -L- LINE.

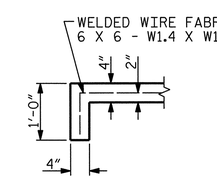

SECTION A-A

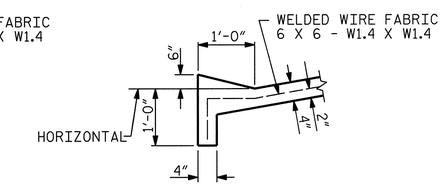

SECTION B-B

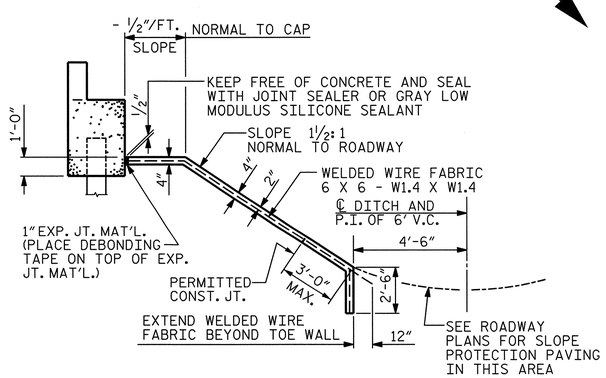

SECTION ALONG ℄ ROADWAY WHEN FILL CATCHES IN DITCH

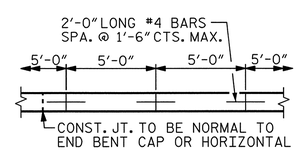

STRIP WIDTHS MAY VARY IN CURVED PORTION.

POURING DETAIL

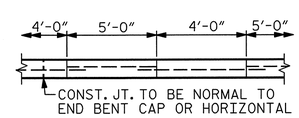

POUR A 4'-0" STRIP FIRST. STRIP WIDTHS MAY VARY IN CURVED PORTION.

OPTIONAL POURING DETAIL

PROJECT NO. U-2525B
GUILFORD COUNTY
STATION: 144+90.00 -L-

STATE OF NORTH CAROLINA
DEPARTMENT OF TRANSPORTATION
RALEIGH

SLOPE PROTECTION DETAILS

LEFT LANE

NORTH CAROLINA PROFESSIONAL SEAL 027199 ENGINEER ALLYSON K. ORR
1/10/14

MI ENGINEERING
1011 SCHAUB DRIVE, SUITE 100
RALEIGH, NC 27606
(919) 851-6606
FIRM PE NUMBER : P-0671

REVISIONS							
NO.	BY:	DATE:	NO.	BY:	DATE:		
1			3				
2			4				

SHEET NO. S-230
TOTAL SHEETS 541

DWG. NO. 58

DRAWN BY :	B.E. ATKINSON	DATE :	08/13
CHECKED BY :	G.R. COLS	DATE :	11/13
DESIGN ENGINEER OF RECORD :	A.K. ORR	DATE :	01/14

1/9/2014
5:03:09 PM
User: blanning
Filename: P:\NC Bridges\MI1007.03 U-2525B Guilford\U-2525B\Structures\Left Bridge\U2525B_SD_SP1_4_LT.dgn

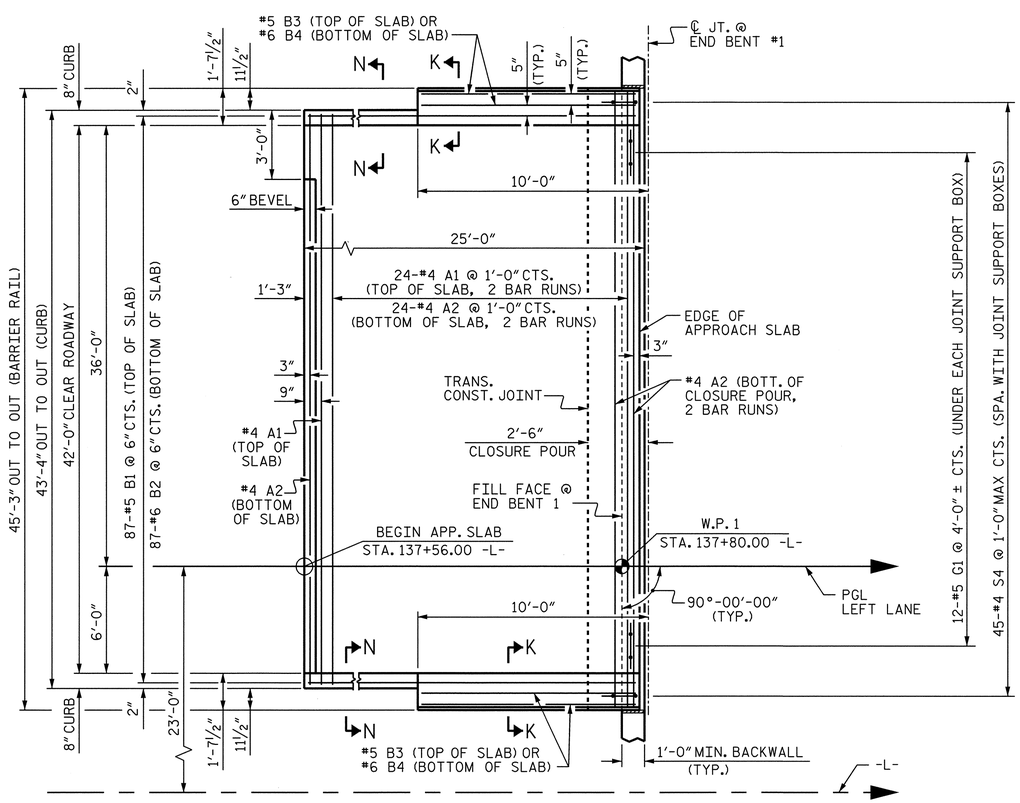

PLAN @ END BENT 1

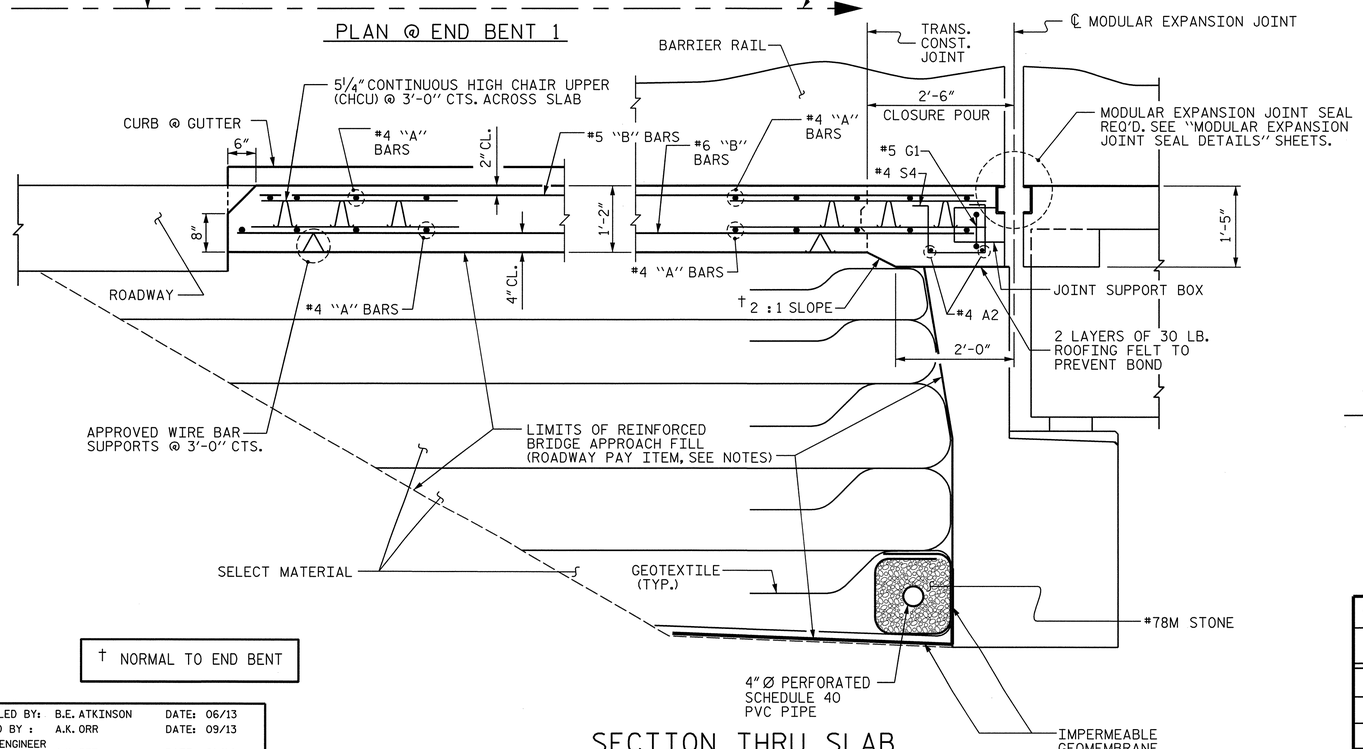

† NORMAL TO END BENT

SECTION THRU SLAB

NOTES

APPROACH SLAB SHALL NOT BE CONSTRUCTED PRIOR TO COMPLETION OF THE BRIDGE DECK.

FOR REINFORCED BRIDGE APPROACH FILL INCLUDING GEOTEXTILE, IMPERMEABLE GEOMEMBRANE, 4" Ø DRAINAGE PIPE, #78M STONE, AND SELECT MATERIAL, SEE ROADWAY PLANS.

AREA BETWEEN THE WINGWALL AND APPROACH SLAB SHALL BE GRADED TO DRAIN THE WATER AWAY FROM THE FILL FACE OF THE BRIDGE AND SHALL BE PAVED. SEE ROADWAY PLANS.

THE #5 & #6 "B" BARS IN THE APPROACH SLAB MAY BE CUT AS DIRECTED BY THE ENGINEER TO CLEAR THE MODULAR JOINT SUPPORT BOX.

FOR MODULAR EXPANSION JOINT SEALS, SEE SPECIAL PROVISIONS.

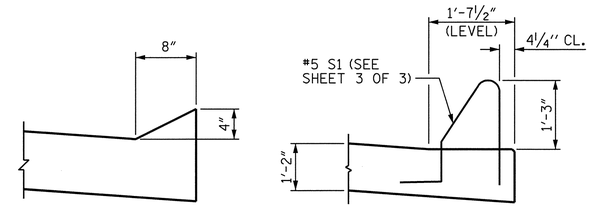

SECTION N-N

SECTION K-K

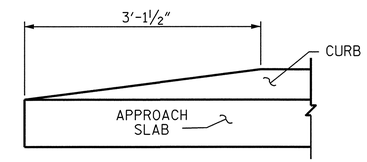

END OF CURB WITHOUT
SHOULDER BERM GUTTER

CURB DETAILS

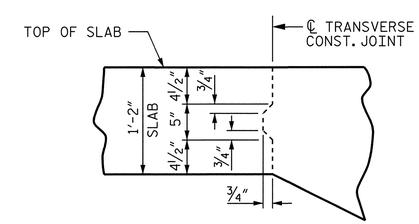

TRANSVERSE CONSTRUCTION JOINT
IN APPROACH SLAB

NOTE: REINFORCING STEEL IN SLAB NOT SHOWN. LONGITUDINAL REINFORCING STEEL SHALL BE CONTINUOUS THRU JOINT.

SPLICE LENGTHS		
BAR SIZE	EPOXY COATED	UNCOATED
#4	2'-0"	1'-9"
#5	2'-6"	2'-2"
#6	3'-10"	2'-7"

BILL OF MATERIAL
APPROACH SLAB AT END BENT 1

BAR	NO.	SIZE	TYPE	LENGTH	WEIGHT
✱ A1	50	#4	STR	23'-6"	785
A2	54	#4	STR	23'-4"	842
✱ B1	87	#5	STR	23'-11"	2170
B2	87	#6	STR	24'-5"	3191
✱ B3	4	#5	STR	9'-3"	39
B4	4	#6	STR	9'-3"	56
✱ G1	12	#5	2	3'-8"	46
✱ S4	45	#4	1	3'-10"	115

REINFORCING STEEL ✱✱ 4089 LBS.
✱ EPOXY COATED REINFORCING STEEL ✱✱ 3155 LBS.
CLASS AA CONCRETE ✱✱ 48.2 C.Y.

BAR TYPE

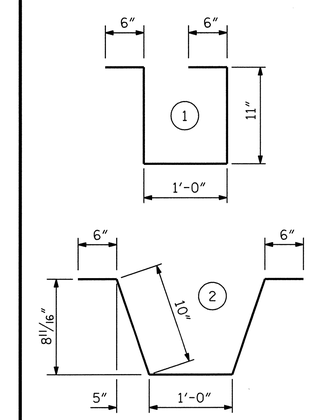

ALL BAR DIMENSIONS ARE OUT TO OUT

✱✱ QUANTITIES FOR BARRIER RAIL ARE NOT INCLUDED. SEE SHEET 3 OF 3.

PROJECT NO. U-2525B
GUILFORD COUNTY
STATION: 144+90.00 -L-

SHEET 1 OF 3

STATE OF NORTH CAROLINA
DEPARTMENT OF TRANSPORTATION
RALEIGH

STANDARD
BRIDGE APPROACH SLAB
FOR FLEXIBLE PAVEMENT
AT END BENT 1
LEFT LANE

NORTH CAROLINA PROFESSIONAL SEAL 021799 ENGINEER ALLYSON K. ORR 1/10/14

MI ENGINEERING
1011 SCHAUB DRIVE, SUITE 100
RALEIGH, NC 27606
(919) 851-6606
FIRM PE NUMBER : P-0671

REVISIONS							
NO.	BY:	DATE:	NO.	BY:	DATE:	SHEET NO.	
1			3			5-231	
2			4			TOTAL SHEETS	
						54	

DWG. NO. 59

STD. NO. BAS2 (SHT 4)

ASSEMBLED BY:	B.E. ATKINSON	DATE:	06/13
CHECKED BY :	A.K. ORR	DATE:	09/13
DESIGN ENGINEER OF RECORD:	A.K. ORR	DATE:	01/14
DRAWN BY : EEM 3/95	REV. 5/7/03R RWW/JTE		
CHECKED BY : VAP 3/95	REV. 5/1/06RR KMM/GM		
	REV. 10/1/11 MAA/GM		

1/9/2014
5:04:27 PM
User: blanning
Filename: P:\NC Bridges\MI1007.03 U-2525B Guilford\U-2525B\Structures\Left Bridge\U2525B_SD_AS1_4_LT.dgn

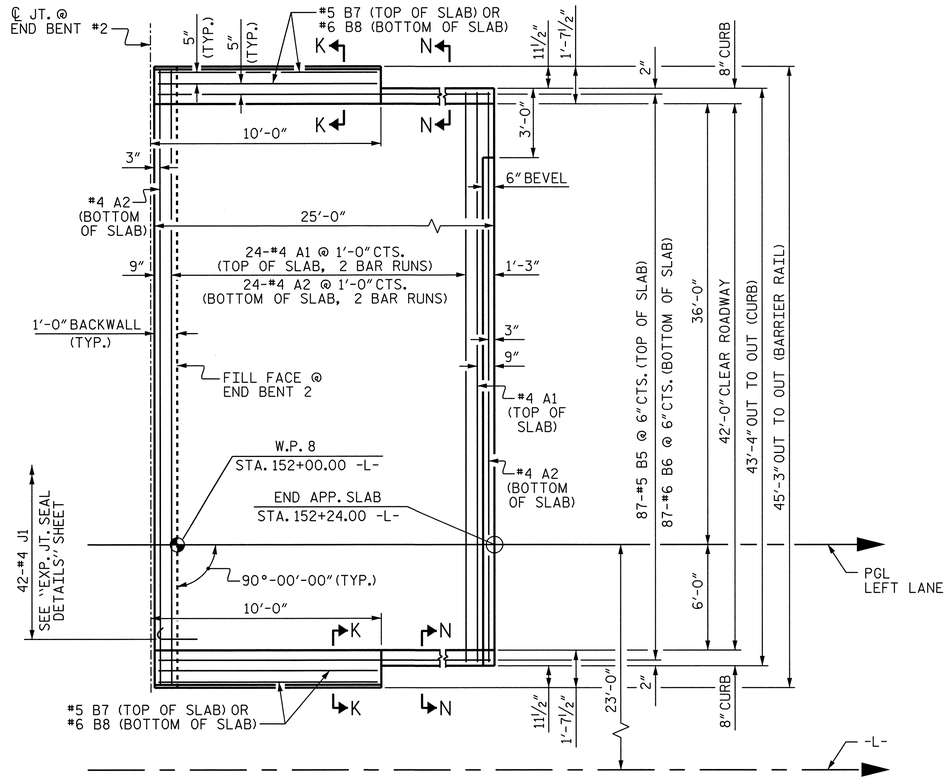

PLAN @ END BENT 2

NOTES

APPROACH SLAB SHALL NOT BE CONSTRUCTED PRIOR TO COMPLETION OF THE BRIDGE DECK.

FOR REINFORCED BRIDGE APPROACH FILL INCLUDING GEOTEXTILE, IMPERMEABLE GEOMEMBRANE, 4" Ø DRAINAGE PIPE, #78M STONE, AND SELECT MATERIAL, SEE ROADWAY PLANS.

AREA BETWEEN THE WINGWALL AND APPROACH SLAB SHALL BE GRADED TO DRAIN THE WATER AWAY FROM THE FILL FACE OF THE BRIDGE AND SHALL BE PAVED. SEE ROADWAY PLANS.

FOR EXPANSION JOINT SEALS, SEE SPECIAL PROVISIONS.

BILL OF MATERIAL

APPROACH SLAB AT END BENT 2

BAR	NO.	SIZE	TYPE	LENGTH	WEIGHT
✳ A1	50	#4	STR	23'-6"	785
A2	52	#4	STR	23'-4"	811
✳ B5	87	#5	STR	23'-9"	2155
B6	87	#6	STR	24'-8"	3223
✳ B7	4	#5	STR	9'-3"	39
B8	4	#6	STR	9'-8"	58
✳ J1	42	#4	3	1'-5"	40
REINFORCING STEEL ✳✳					4092 LBS.
✳ EPOXY COATED REINFORCING STEEL ✳✳					3019 LBS.
CLASS AA CONCRETE ✳✳					47.9 C. Y.

BAR TYPE

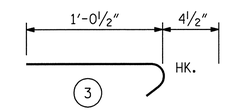

ALL BAR DIMENSIONS ARE OUT TO OUT

✳✳ QUANTITIES FOR BARRIER RAIL ARE NOT INCLUDED. SEE SHEET 3 OF 3.

THE QUANTITY OF #4 J1 BARS ON THE BILL OF MATERIAL IS BASED ON 1'-0" CENTERS. J1 BARS SHALL BE PLACED AT EACH VERTICAL STUD ANCHOR BOLT. IN THE EVENT THAT THE NUMBER OF VERTICAL STUD ANCHORS EXCEEDS THE NUMBER OF J1 BARS SPECIFIED, ADDITIONAL J1 BARS WILL NOT BE REQUIRED.

SPLICE LENGTHS

BAR SIZE	EPOXY COATED	UNCOATED
#4	2'-0"	1'-9"
#5	2'-6"	2'-2"
#6	3'-10"	2'-7"

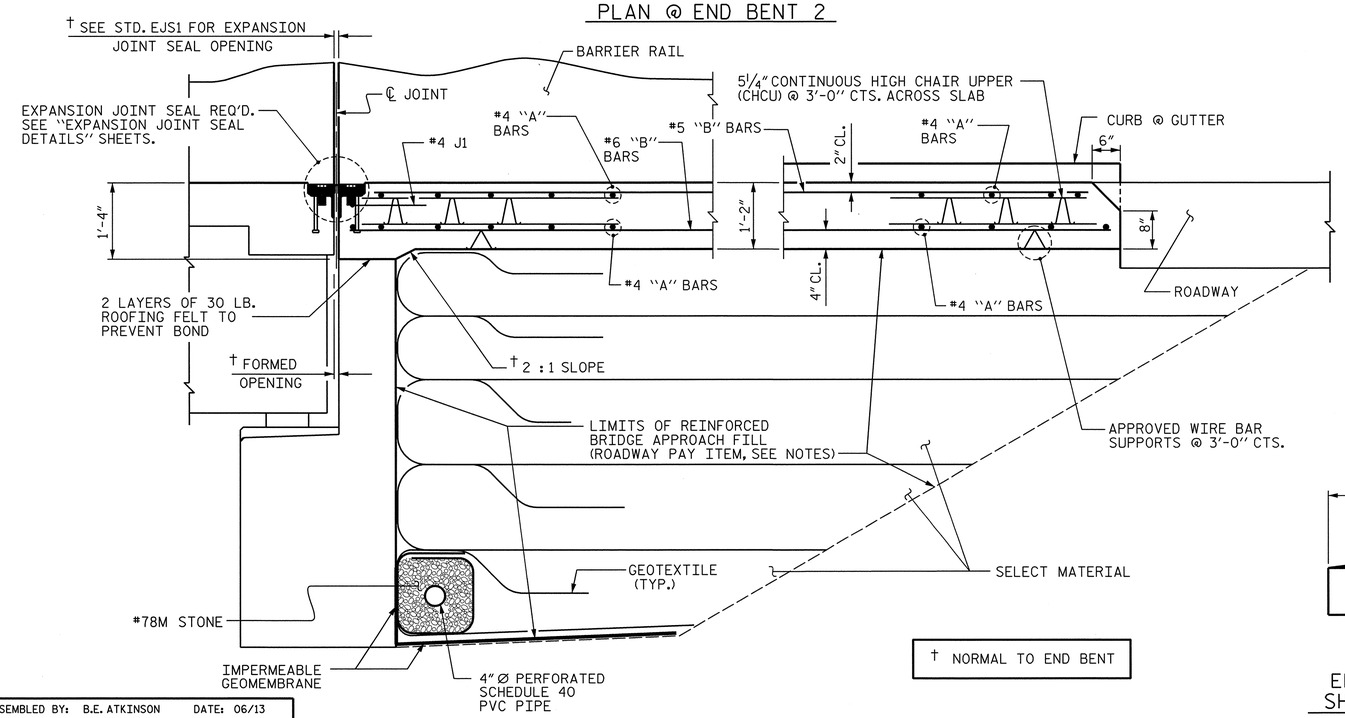

† NORMAL TO END BENT

SECTION THRU SLAB

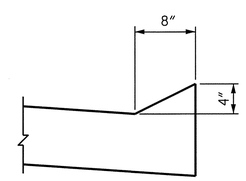

SECTION N-N

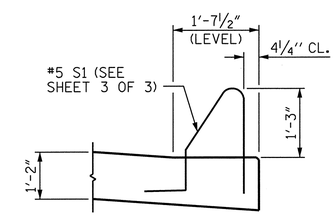

SECTION K-K

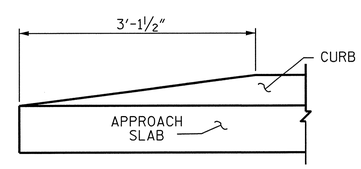

END OF CURB WITHOUT SHOULDER BERM GUTTER

CURB DETAILS

PROJECT NO. U-2525B

GUILFORD COUNTY

STATION: 144+90.00 -L-

SHEET 2 OF 3

STATE OF NORTH CAROLINA
DEPARTMENT OF TRANSPORTATION
RALEIGH

STANDARD

BRIDGE APPROACH SLAB FOR FLEXIBLE PAVEMENT AT END BENT 2

LEFT LANE

NORTH CAROLINA PROFESSIONAL SEAL 027799 ENGINEER ALLYSON K. ORR 1/10/14

MI ENGINEERING
1011 SCHAUB DRIVE, SUITE 100
RALEIGH, NC 27606
(919) 851-6606
FIRM PE NUMBER : P-0671

REVISIONS								
NO.	BY:	DATE:	NO.	BY:	DATE:		SHEET NO.	
1			3				5-232	
2			4				TOTAL SHEETS	
							541	

ASSEMBLED BY:	B.E. ATKINSON	DATE:	06/13
CHECKED BY :	A.K. ORR	DATE:	09/13
DESIGN ENGINEER OF RECORD:	A.K. ORR	DATE:	01/14

DRAWN BY :	EEM	3/95	REV. 5/7/03R	RWW/JTE
CHECKED BY :	VAP	3/95	REV. 5/1/06RR	KMM/GM
			REV. 10/1/11	MAA/GM

DWG. NO. 60

STD. NO. BAS2 (SHT 4)

1/9/2014 5:04:30 PM
User: blanning
Filename: P:\NC Bridges\MI1007.03 U-2525B Guilford\U-2525B\Structures\Left Bridge\U2525B_SD_AS2_4_LT.dgn

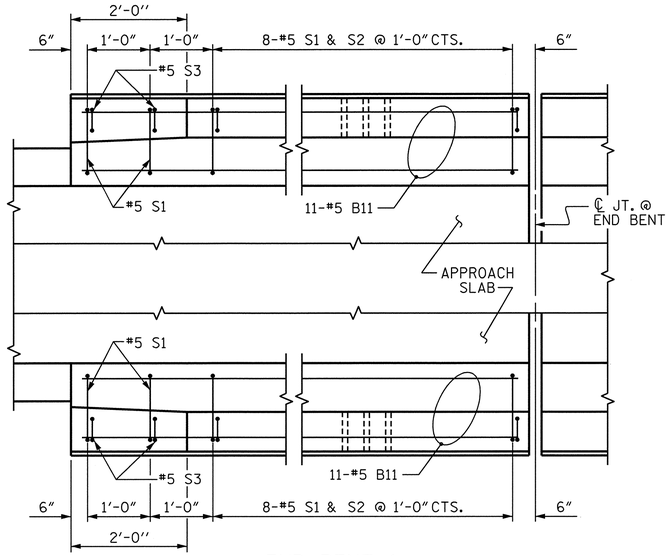

END BENT 1

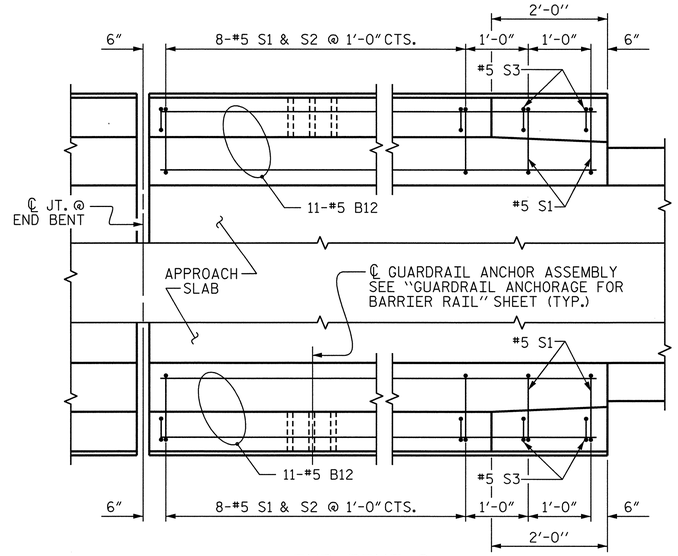

END BENT 2

PLAN OF BARRIER RAIL

NOTES

THE COST OF THE BARRIER RAIL ON THE APPROACH SLAB SHALL BE INCLUDED IN THE LINEAR FOOT CONTRACT PRICE BID FOR "CONCRETE BARRIER RAIL".

THE BARRIER RAIL ON EACH APPROACH SLAB SHALL NOT BE CAST UNTIL ALL APPROACH SLAB CONCRETE HAS BEEN CAST AND HAS REACHED A MINIMUM COMPRESSIVE STRENGTH OF 3,000 PSI.

ALL REINFORCING STEEL IN BARRIER RAILS SHALL BE EPOXY COATED.

BAR TYPES

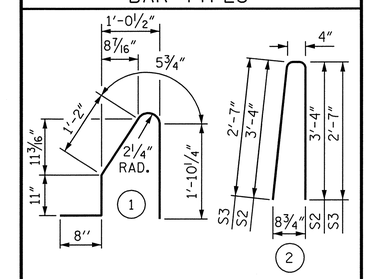

ALL BAR DIMENSIONS ARE OUT TO OUT

BILL OF MATERIAL

BARRIER RAIL ONLY

BAR	NO.	SIZE	TYPE	LENGTH	WEIGHT
✳B11	22	#5	STR	9'-3"	212
✳B12	22	#5	STR	9'-6"	218
✳S1	40	#5	1	5'-1"	212
✳S2	32	#5	2	7'-0"	234
✳S3	8	#5	2	5'-6"	46
✳EPOXY COATED REINFORCING STEEL					922 LBS.
CLASS AA CONCRETE					5.4 C.Y.
CONCRETE BARRIER RAIL					40.00 LIN. FT.

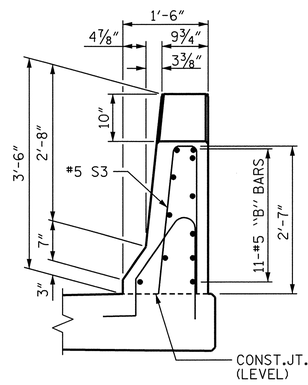

END VIEW

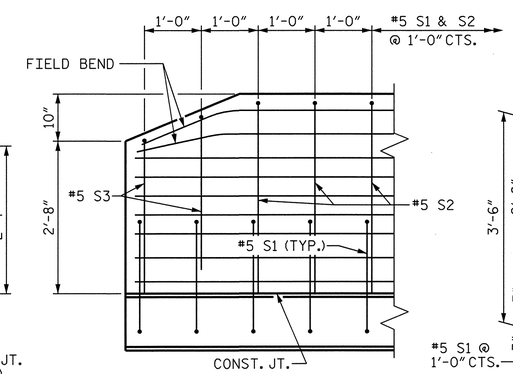

SIDE VIEW

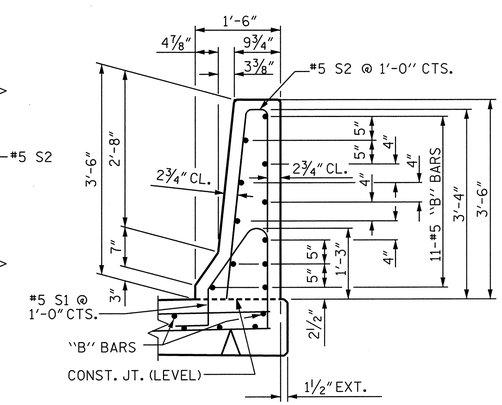

SECTION THRU RAIL

END OF RAIL DETAILS

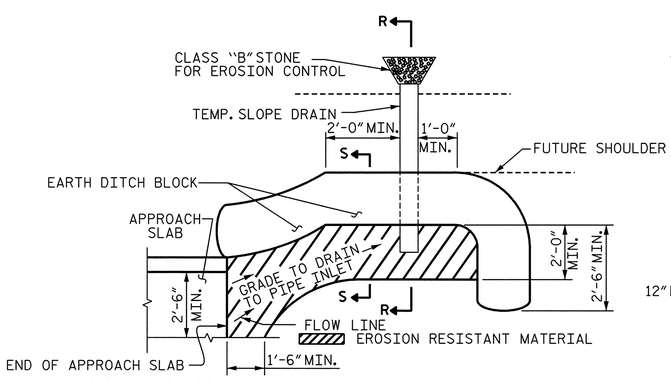

NOTE: IMMEDIATELY AFTER THE CONSTRUCTION OF THE APPROACH SLAB, THE CONTRACTOR SHALL PROVIDE TEMPORARY BERM AND SLOPE DRAIN. CONTRACTOR SHALL GRADE TO PIPE INLET AND PROVIDE EROSION RESISTANT MATERIAL AS SHOWN. THE EROSION RESISTANT MATERIAL SHALL BE EITHER 1) ASPHALT PLANT MIX, TYPE 1 OR TYPE 2, MIN. 2" DEPTH, 2) EROSION CONTROL MAT, OR 3) CONCRETE, AS DIRECTED BY THE ENGINEER. THE SLOPE DRAIN SHALL CONSIST OF A NON-PERFORATED TEMPORARY DRAINAGE PIPE, 12 INCHES IN DIAMETER.

PLAN VIEW

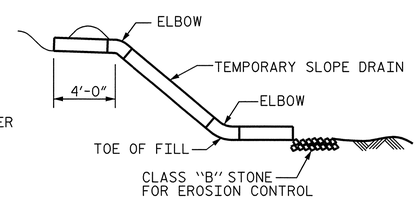

SECTION R-R

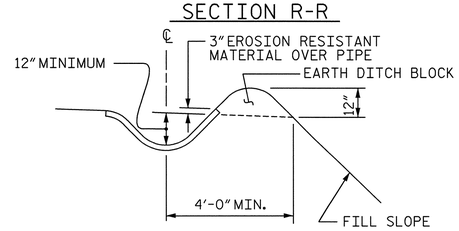

SECTION S-S

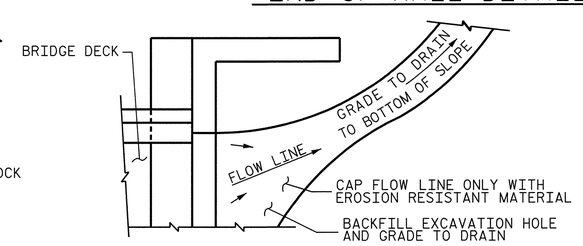

NOTE: IF THE APPROACH SLAB IS NOT CONSTRUCTED IMMEDIATELY AFTER THE BACKFILLING OF THE END BENT EXCAVATION, GRADE TO DRAIN TO THE BOTTOM OF THE SLOPE AND PROVIDE EROSION RESISTANT MATERIAL, SUCH AS FIBERGLASS ROVING OR AS DIRECTED BY THE ENGINEER TO PREVENT SOIL EROSION AND TO PROTECT THE AREA ADJACENT TO THE STRUCTURE. THE CONTRACTOR WILL BE REQUIRED TO REMOVE THESE MATERIALS PRIOR TO CONSTRUCTION OF THE APPROACH SLAB.

TEMPORARY DRAINAGE DETAIL

TEMPORARY BERM AND SLOPE DRAIN DETAILS

(TO BE USED WHEN SHOULDER BERM GUTTER IS REQUIRED)

PROJECT NO. U-2525B
GUILFORD COUNTY
STATION: 144+90.00 -L-

SHEET 3 OF 3

STATE OF NORTH CAROLINA
DEPARTMENT OF TRANSPORTATION
RALEIGH

STANDARD

BRIDGE APPROACH SLAB DETAILS

LEFT LANE

NORTH CAROLINA PROFESSIONAL SEAL 027799 ENGINEER ALLYSON K. ORR
1/10/14

ASSEMBLED BY:	B.E. ATKINSON	DATE:	06/13
CHECKED BY :	A.K. ORR	DATE:	09/13
DESIGN ENGINEER OF RECORD:	A.K. ORR	DATE:	01/14

DRAWN BY : FCJ	11/88	REV. 10/1/11	MAA/GM
CHECKED BY : ARB	11/88	REV. 7/12	MAA/GM
		REV. 10/12	MAA/GM

MI ENGINEERING
1011 SCHAUB DRIVE, SUITE 100
RALEIGH, NC 27606
(919) 851-6606
FIRM PE NUMBER : P-0671

REVISIONS						
NO.	BY:	DATE:	NO.	BY:	DATE:	
1			3			
2			4			

SHEET NO. S-233
TOTAL SHEETS 541

DWG. NO. 61

STD. NO. BAS4 (SHT 3)

1/9/2014
5:04:32 PM
User: blanning
Filename: P:\NC Bridges\WI1007.03 U-2525B Guilford\U-2525B\Structures\Left Bridge\U2525B_SD_AS3_4_LT.dgn

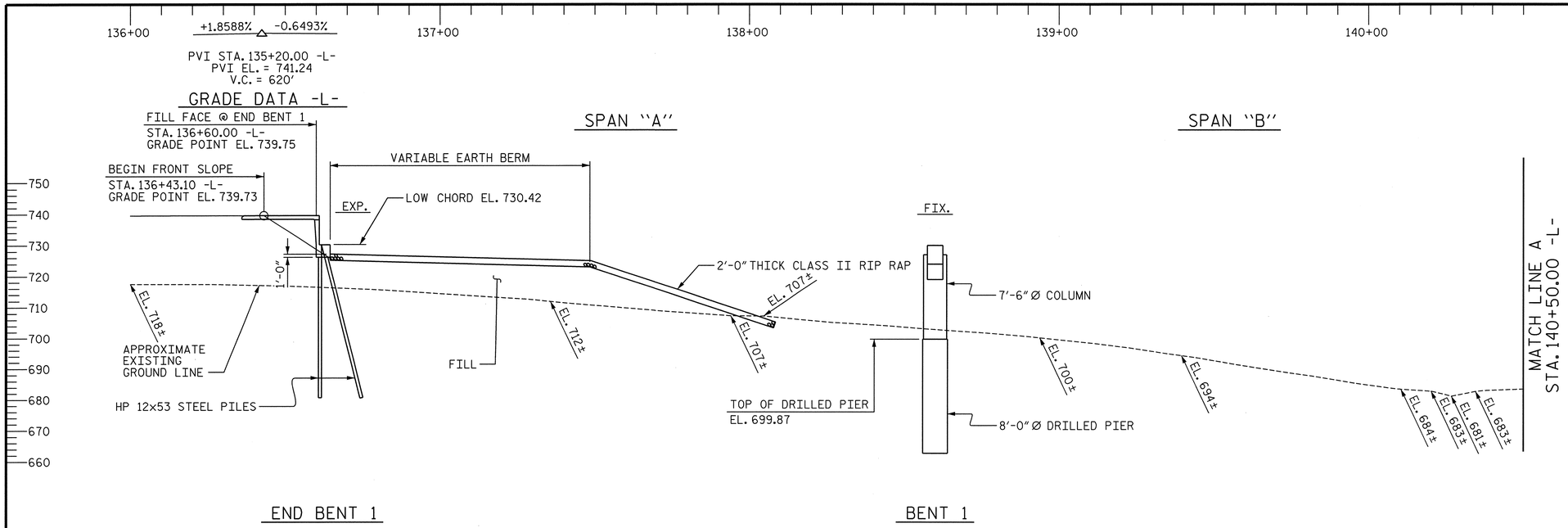

SECTION ALONG PGL RIGHT LANE

(SECTION TAKEN AT RIGHT ANGLES TO END BENTS AND BENTS)

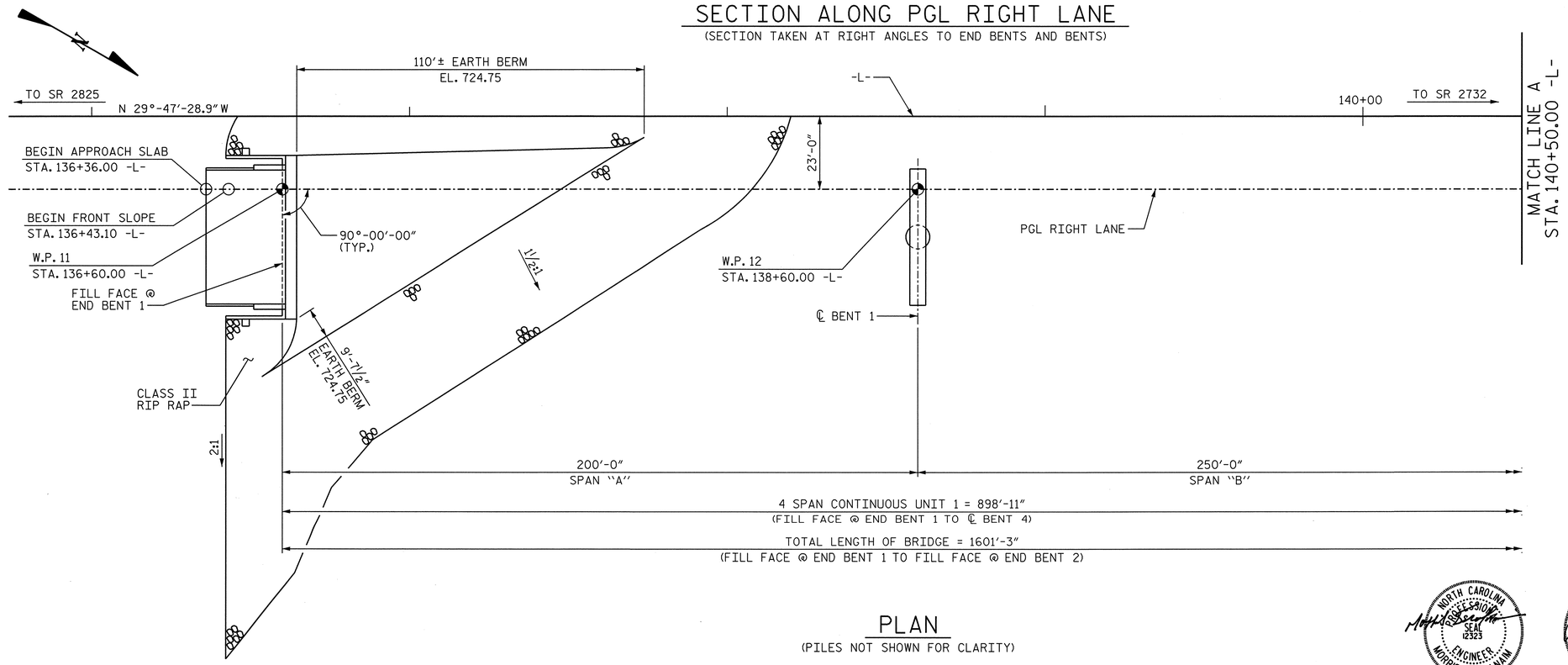

PLAN

(PILES NOT SHOWN FOR CLARITY)

I HEREBY CERTIFY THESE PLANS ARE THE AS-BUILT PLANS

PROJECT NO. U-2525B

GUILFORD COUNTY

STATION: 144+60.63 -L-

SHEET 1 OF 6

BRIDGE NO. 1139

STATE OF NORTH CAROLINA
DEPARTMENT OF TRANSPORTATION
RALEIGH

GENERAL DRAWING

FOR BRIDGE ON GREENSBORO EASTERN LOOP OVER NORTH BUFFALO CREEK AND SR 2832 BETWEEN SR 2825 & SR 2732

RIGHT LANE

NORTH CAROLINA PROFESSIONAL SEAL 12323 ENGINEER MORRIS ISRAELNAIM 01/10/2014

NORTH CAROLINA PROFESSIONAL SEAL 027799 ENGINEER ALLYSON K. ORR 1/10/14

MI ENGINEERING
1011 SCHAUB DRIVE, SUITE 100
RALEIGH, NC 27606
(919) 851-6606
FIRM PE NUMBER : P-0671

REVISIONS						
NO.	BY:	DATE:	NO.	BY:	DATE:	
1			3			
2			4			

SHEET NO. S-234

TOTAL SHEETS 541

DRAWN BY : B.E. LANNING DATE : 11/13
CHECKED BY : A.K. ORR DATE : 11/13
DESIGN ENGINEER OF RECORD : A.K. ORR DATE : 01/14

DWG. NO. 1

STR. #7

1/10/2014
9:35:08 AM
User: blanning
Filename: P:\NC Bridges\MI1007.03 U-2525B Guilford\U-2525B\Structures\Right Bridge\U2525B_SD_GDA_4_RT.dgn

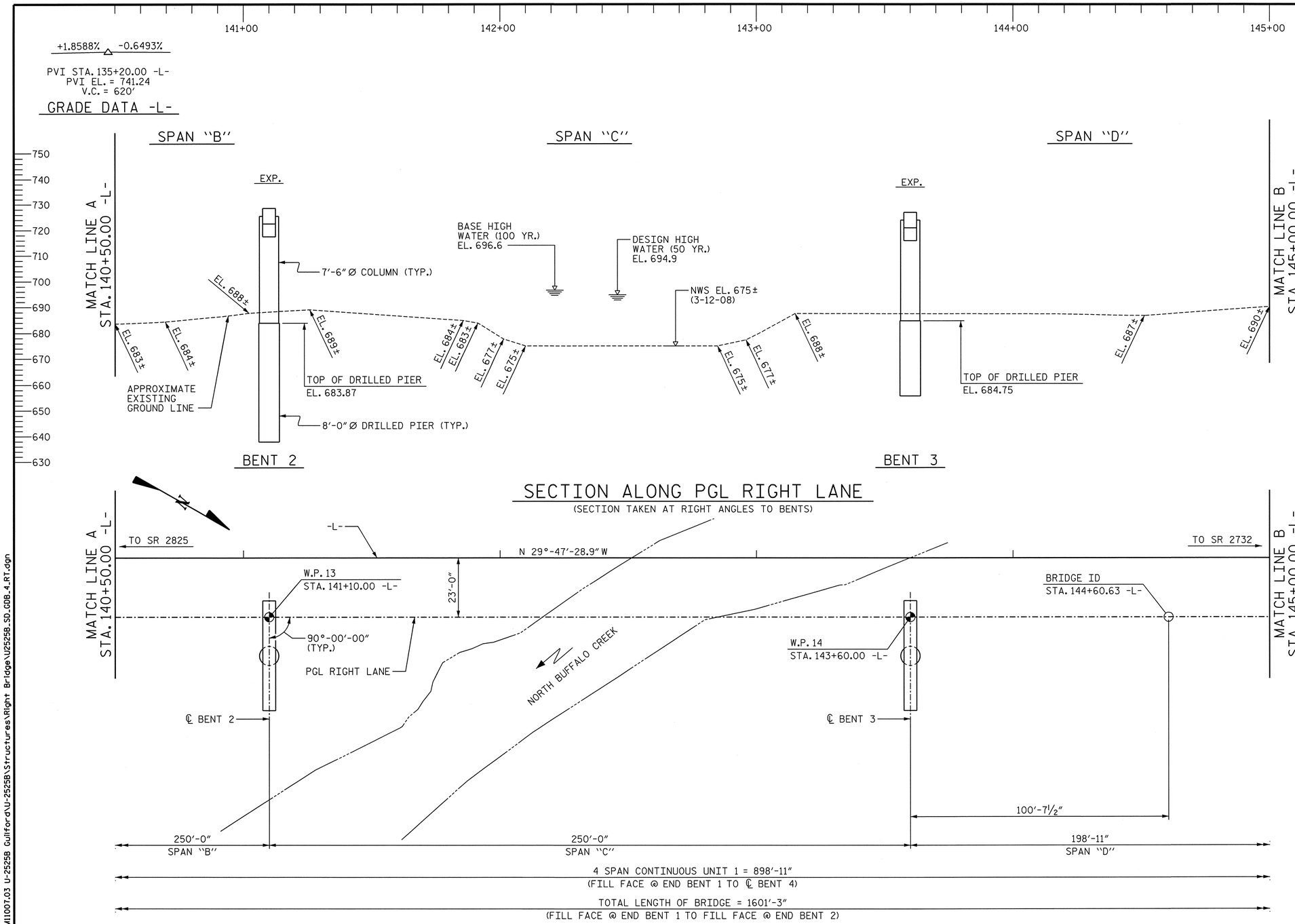

HYDROGRAPHIC DATA

DESIGN DISCHARGE	= 9804 CFS
FREQUENCY OF DESIGN FLOOD	= 50 YRS.
DESIGN HIGH WATER ELEVATION	= 695.6 FT.
DRAINAGE AREA	= 37.1 SQ. MI.
BASE DISCHARGE (Q100)	= 11,460 CFS
BASE HIGH WATER ELEVATION	= 696.96 FT.
500 YR. DISCHARGE	= 15,398 CFS
500 YR. FLOOD ELEVATION	= 699.8 FT.

PROJECT NO. U-2525B

GUILFORD COUNTY

STATION: 144+60.63 -L-

SHEET 2 OF 6

STATE OF NORTH CAROLINA
DEPARTMENT OF TRANSPORTATION
RALEIGH

GENERAL DRAWING

FOR BRIDGE ON GREENSBORO EASTERN LOOP OVER NORTH BUFFALO CREEK AND SR 2832 BETWEEN SR 2825 & SR 2732

RIGHT LANE

NORTH CAROLINA PROFESSIONAL ENGINEER SEAL 027799 ALLYSON K. ORR 1/10/14

DRAWN BY : B.E. LANNING DATE : 11/13
CHECKED BY : A.K. ORR DATE : 11/13
DESIGN ENGINEER OF RECORD : A.K. ORR DATE : 01/14

MI ENGINEERING
1011 SCHAUB DRIVE, SUITE 100
RALEIGH, NC 27606
(919) 851-6606
FIRM PE NUMBER : P-0671

DWG. NO. 2

REVISIONS						
NO.	BY:	DATE:	NO.	BY:	DATE:	
1			3			
2			4			

SHEET NO. S-235

TOTAL SHEETS 451

1/10/2014
9:35:11 AM
User: blanning
Filename: P:\NC Bridges\MI1007.03 U-2525B Guilford\U-2525B\Structures\Right Bridge\U2525B_SD_GDB_4_RT.dgn

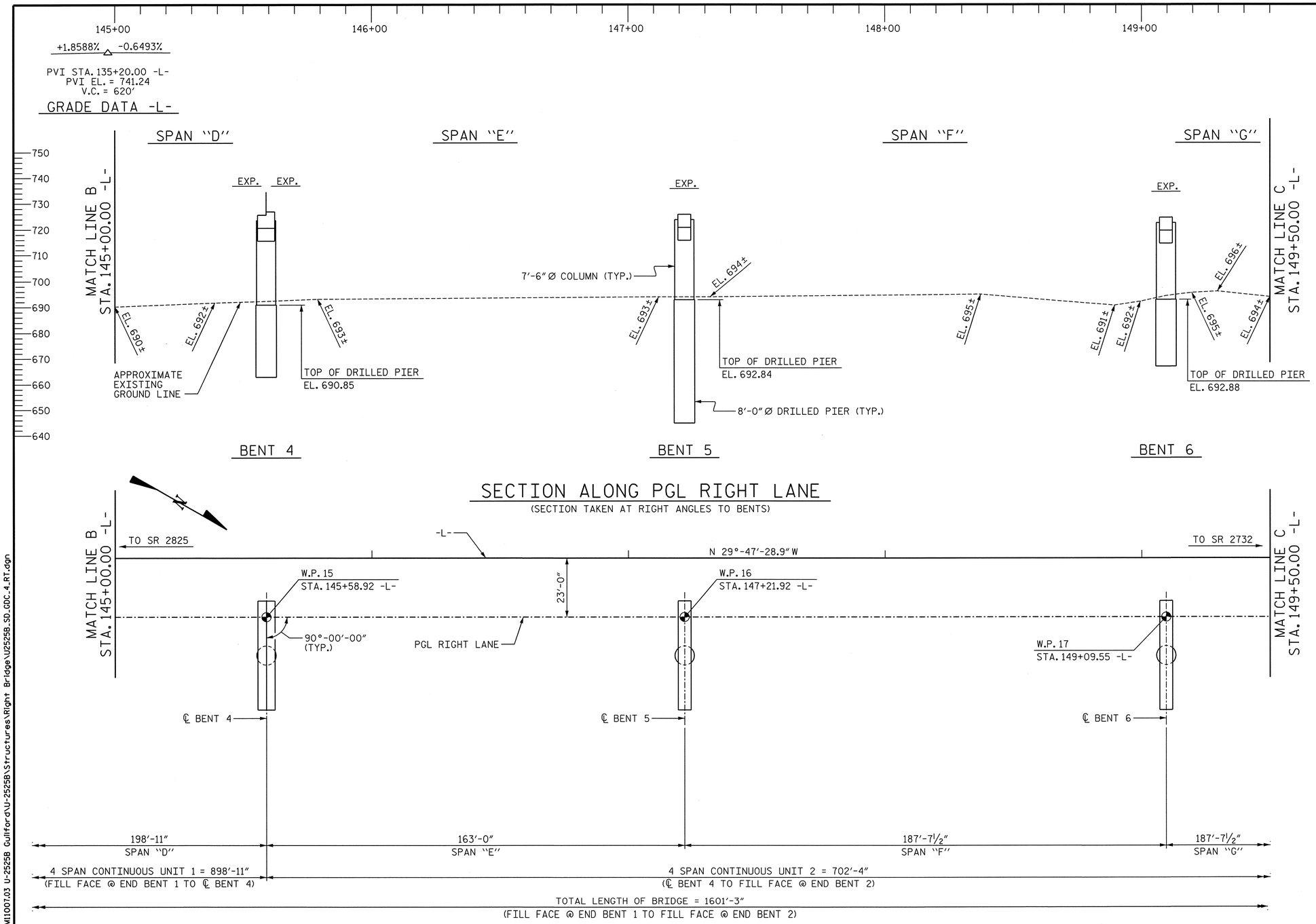

PLAN

PROJECT NO. U-2525B

GUILFORD COUNTY

STATION: 144+60.63 -L-

SHEET 3 OF 6

STATE OF NORTH CAROLINA
DEPARTMENT OF TRANSPORTATION
RALEIGH

GENERAL DRAWING
FOR BRIDGE ON GREENSBORO EASTERN LOOP OVER NORTH BUFFALO CREEK AND SR 2832 BETWEEN SR 2825 & SR 2732

RIGHT LANE

NORTH CAROLINA PROFESSIONAL SEAL 027799 ENGINEER ALLYSON K. ORR
1/10/14

DRAWN BY : B.E. LANNING DATE : 11/13
CHECKED BY : A.K. ORR DATE : 11/13
DESIGN ENGINEER OF RECORD : A.K. ORR DATE : 01/14

DWG. NO. 3

MI ENGINEERING
1011 SCHAUB DRIVE, SUITE 100
RALEIGH, NC 27606
(919) 851-6606
FIRM PE NUMBER : P-0671

REVISIONS								
NO.	BY:	DATE:	NO.	BY:	DATE:		SHEET NO. S-236
1			3				TOTAL SHEETS 541
2			4				

1/10/2014
9:35:13 AM
User: blanning
Filename: P:\NC Bridges\MI1007.03 U-2525B Guilford\U-2525B\Structures\Right Bridge\U2525B_SD_GDC_4_RT.dgn

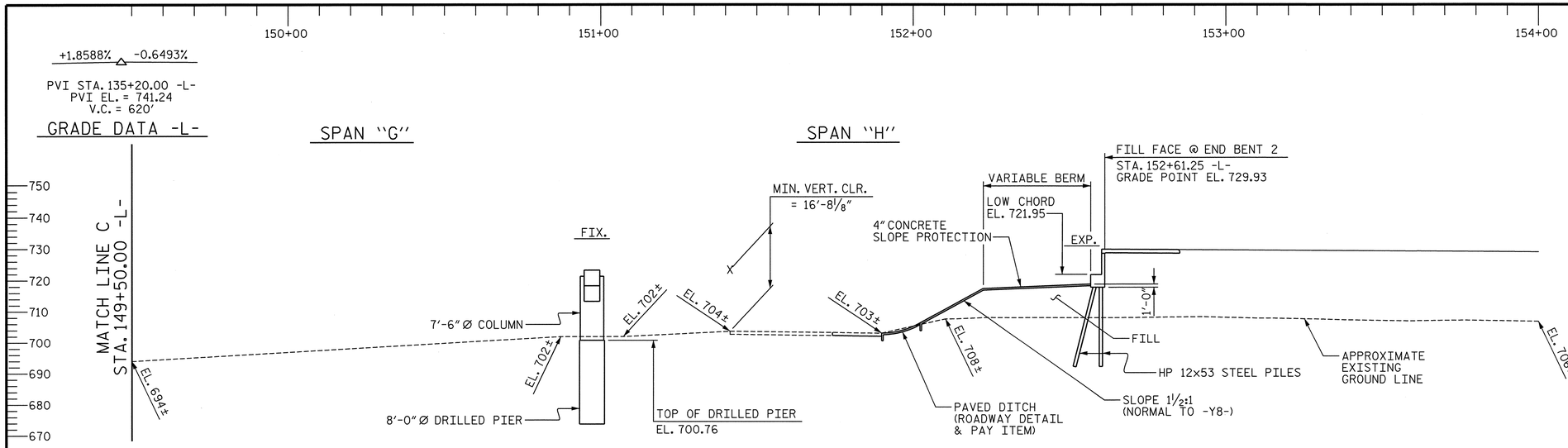

SECTION ALONG PGL RIGHT LANE

(SECTION TAKEN AT RIGHT ANGLES TO END BENTS AND BENTS)

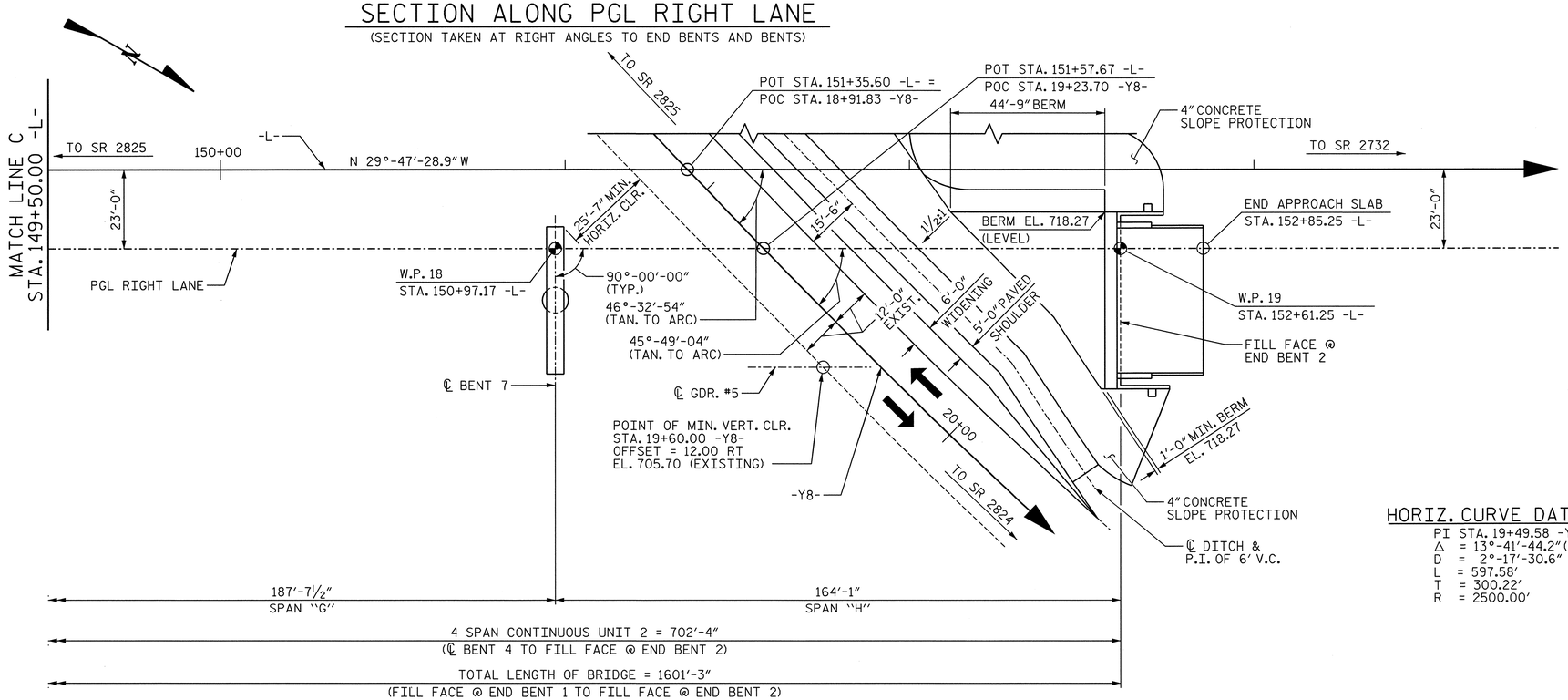

PLAN

(PILES NOT SHOWN FOR CLARITY)

HORIZ. CURVE DATA -Y8-

PI STA. 19+49.58 -Y8-
Δ = 13°-41'-44.2" (LT.)
D = 2°-17'-30.6"
L = 597.58'
T = 300.22'
R = 2500.00'

PROJECT NO. U-2525B
GUILFORD COUNTY
STATION: 144+60.63 -L-

SHEET 4 OF 6

STATE OF NORTH CAROLINA
DEPARTMENT OF TRANSPORTATION
RALEIGH

GENERAL DRAWING

FOR BRIDGE ON GREENSBORO EASTERN LOOP OVER NORTH BUFFALO CREEK AND SR 2832 BETWEEN SR 2825 & SR 2732

RIGHT LANE

NORTH CAROLINA PROFESSIONAL SEAL 027799 ENGINEER ALLYSON K. ORR 1/10/14

DRAWN BY : B.E. LANNING	DATE : 11/13		
CHECKED BY : A.K. ORR	DATE : 11/13		
DESIGN ENGINEER OF RECORD : A.K. ORR	DATE : 01/14		

DWG. NO. 4

MI ENGINEERING
1011 SCHAUB DRIVE, SUITE 100
RALEIGH, NC 27606
(919) 851-6606
FIRM PE NUMBER : P-0671

REVISIONS									
NO.	BY:	DATE:	NO.	BY:	DATE:	SHEET NO.	TOTAL SHEETS
1			3			S-237	541
2			4				

1/10/2014
9:35:16 AM
User: blanning
Filename: P:\NC Bridges\MI1007.03 U-2525B Guilford\U-2525B\Structures\Right Bridge\U2525B_SD_GDD_4_RT.dgn

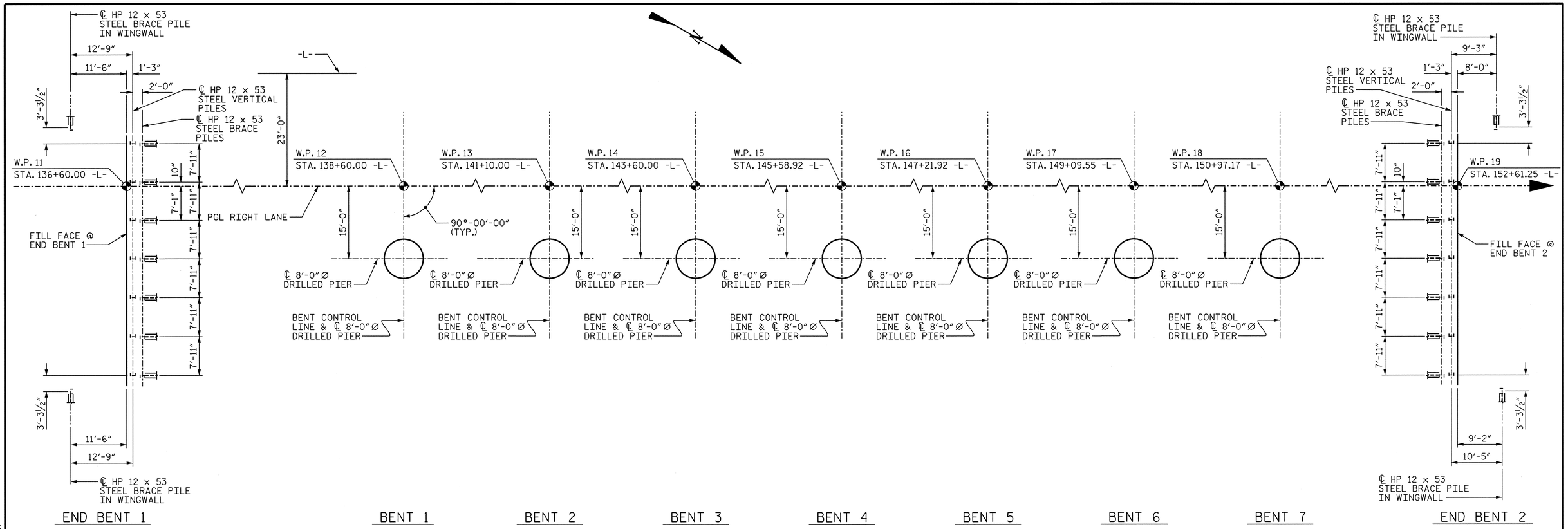

FOUNDATION LAYOUT

DIMENSIONS LOCATING END BENT PILES AND BENT DRILLED PIERS ARE SHOWN TO CENTERLINE PILES AND DRILLED PIERS.

BRACE PILES ARE TO BE BATTERED AT 3:12.

FOUNDATION NOTES

FOR PILES, SEE SECTION 450 OF THE STANDARD SPECIFICATIONS.

PILES AT END BENT 1 AND END BENT 2 ARE DESIGNED FOR A FACTORED RESISTANCE OF 120 TONS PER PILE.

DRIVE PILES AT END BENT 1 AND END BENT 2 TO A REQUIRED DRIVING RESISTANCE OF 200 TONS PER PILE.

FOR DRILLED PIERS, SEE SECTION 411 OF THE STANDARD SPECIFICATIONS.

DRILLED PIERS AT BENT 1, BENT 2 AND BENT 3 ARE DESIGNED FOR A FACTORED RESISTANCE OF 2690 TONS PER PIER. CHECK FIELD CONDITIONS FOR THE REQUIRED TIP RESISTANCE OF 150 TSF.

DRILLED PIER AT BENT 4 IS DESIGNED FOR A FACTORED RESISTANCE OF 1830 TONS PER PIER. CHECK FIELD CONDITIONS FOR THE REQUIRED TIP RESISTANCE OF 125 TSF.

DRILLED PIERS AT BENT 5, BENT 6 AND BENT 7 ARE DESIGNED FOR A FACTORED RESISTANCE OF 2230 TONS PER PIER. CHECK FIELD CONDITIONS FOR THE REQUIRED TIP RESISTANCE OF 125 TSF.

INSTALL DRILLED PIERS AT BENT 1 THROUGH BENT 7 TO A TIP ELEVATION NO HIGHER THAN 663 FT, 638 FT, 656 FT, 663 FT, 645 FT, 667 FT AND 674 FT, RESPECTIVELY, AND WITH THE REQUIRED TIP RESISTANCE AND PENETRATION OF AT LEAST 16 FT INTO ROCK AS DEFINED BY ARTICLE 411-1 OF THE STANDARD SPECIFICATIONS.

THE SCOUR CRITICAL ELEVATIONS FOR BENT 2, BENT 3 AND BENT 4 ARE ELEVATION 665 FT, 669 FT AND 684 FT, RESPECTIVELY. SCOUR CRITICAL ELEVATIONS ARE USED TO MONITOR POSSIBLE SCOUR PROBLEMS DURING THE LIFE OF THE STRUCTURE.

SPT MAY BE REQUIRED FOR DRILLED PIERS. THE ENGINEER WILL DETERMINE THE NEED FOR SPT. FOR SPT TESTING, SEE SECTION 411 OF THE STANDARD SPECIFICATIONS.

SID INSPECTIONS MAY BE REQUIRED FOR DRILLED PIERS. THE ENGINEER WILL DETERMINE THE NEED FOR SID INSPECTIONS. FOR SID INSPECTIONS, SEE SECTION 411 OF THE STANDARD SPECIFICATIONS.

CSL TUBES ARE REQUIRED FOR ALL DRILLED PIERS. CSL TESTING IS REQUIRED FOR THE FIRST DRILLED PIER ON THE PROJECT. CSL TESTING MAY BE REQUIRED FOR REMAINING DRILLED PIERS. THE ENGINEER WILL DETERMINE THE NEED FOR CSL TESTING. FOR CSL TESTING, SEE SECTION 411 OF THE STANDARD SPECIFICATIONS.

PROJECT NO. U-2525B
GUILFORD COUNTY
STATION: 144+60.63 -L-

SHEET 5 OF 6

STATE OF NORTH CAROLINA
DEPARTMENT OF TRANSPORTATION
RALEIGH

GENERAL DRAWING
FOR BRIDGE ON GREENSBORO EASTERN LOOP OVER NORTH BUFFALO CREEK AND SR 2832 BETWEEN SR 2825 & SR 2732
RIGHT LANE

NORTH CAROLINA PROFESSIONAL SEAL 027759 ENGINEER ALLYSON K. ORR 1/10/14

MI ENGINEERING
1011 SCHAUB DRIVE, SUITE 100
RALEIGH, NC 27606
(919) 851-6606
FIRM PE NUMBER : P-0671

REVISIONS						
NO.	BY:	DATE:	NO.	BY:	DATE:	
1			3			
2			4			

SHEET NO. S-238
TOTAL SHEETS 541

DWG. NO. 5

DRAWN BY : B.E. LANNING DATE : 11/13
CHECKED BY : G.R. COLS DATE : 11/13
DESIGN ENGINEER OF RECORD : A.K. ORR DATE : 01/14

1/10/2014
9:35:18 AM
User:blanning
Filename: P:\NC Bridges\MI1007.03 U-2525B Guilford\U-2525B\Structures\Right Bridge\U2525B_SD_GDE_4_RT.dgn

BENCH MARK #31 - RR SPIKE IN 12"PINE; 198.0' RIGHT OF STA. 144+39.00 -L-, EL. 697.32

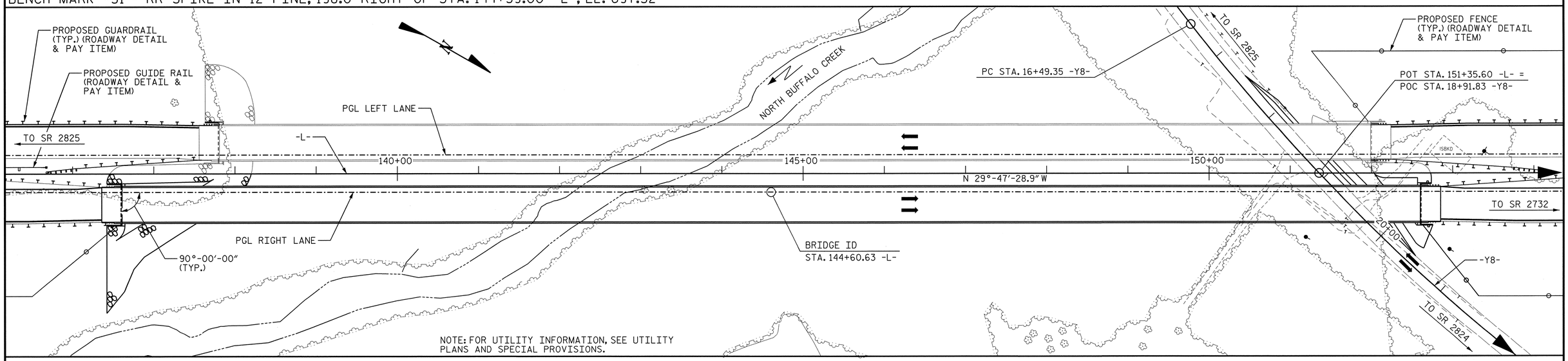

LOCATION SKETCH

TOTAL BILL OF MATERIAL

	8'-0" Ø DRILLED PIER IN SOIL	8'-0" Ø DRILLED PIER NOT IN SOIL	SID INSPECTIONS	SPT TESTING	CSL TESTING	REINFORCED CONCRETE DECK SLAB	GROOVING BRIDGE FLOORS	CLASS A CONCRETE	BRIDGE APPROACH SLABS	REINFORCING STEEL	SPIRAL COLUMN REINFORCING STEEL	STRUCTURAL STEEL (APPROX.)	HP 12 X 53 STEEL PILES		CONCRETE BARRIER RAIL	4" SLOPE PROTECTION	RIP RAP CLASS II (2'-0" THICK)	GEOTEXTILE FOR DRAINAGE	POT BEARINGS	EXPANSION JOINT SEALS	MODULAR EXPANSION JOINT SEALS	ELECTRICAL CONDUIT SYSTEM AT STA. 144+60.63 -L-
	LIN. FT.	LIN. FT.	EACH	EACH	EACH	SQ. FT.	SQ. FT.	CU. YDS.	LUMP SUM	LBS.	LBS.	LBS.	NO.	LIN. FT.	LIN. FT.	SQ. YDS.	TONS	SQ. YDS.	LUMP SUM	LUMP SUM	LUMP SUM	LUMP SUM
SUPERSTRUCTURE						72,358	64,089		LUMP SUM			3,474,600			3238.11				LUMP SUM	LUMP SUM	LUMP SUM	LUMP SUM
END BENT 1								79.6		9,948			16	752.0			1480	1644				
BENT 1	19.0	18.0						104.3		40,353	3,227											
BENT 2	19.0	27.0						127.6		44,585	4,581											
BENT 3	11.0	18.0						123.5		41,626	3,482											
BENT 4	12.0	16.0						131.7		30,698	3,067											
BENT 5	31.0	17.0						102.5		29,501	4,066											
BENT 6	9.0	17.0						100.5		25,548	2,761											
BENT 7	10.0	17.0						85.8		24,187	2,279											
END BENT 2								67.8		8,747			16	432.0		499						
TOTAL	111.0	130.0	7	2	7	72,358	64,089	923.3	LUMP SUM	255,193	23,463	3,474,600	32	1184.0	3238.11	499	1480	1644	LUMP SUM	LUMP SUM	LUMP SUM	LUMP SUM

NOTES

ASSUMED LIVE LOAD = HL 93 OR ALTERNATE LOADING.

FOR OTHER DESIGN DATA AND GENERAL NOTES, SEE SHEET SN.

FOR EROSION CONTROL MEASURES, SEE EROSION CONTROL PLANS.

THIS BRIDGE HAS BEEN DESIGNED IN ACCORDANCE WITH THE AASHTO LRFD BRIDGE DESIGN SPECIFICATIONS.

THIS BRIDGE IS LOCATED IN SEISMIC ZONE 1.

REMOVABLE FORMS MAY BE USED IN LIEU OF METAL STAY-IN-PLACE FORMS IN ACCORDANCE WITH ARTICLE 420-3 OF THE STANDARD SPECIFICATIONS.

THIS STRUCTURE HAS BEEN DESIGNED IN ACCORDANCE WITH "HEC 18 - EVALUATING SCOUR AT BRIDGES".

ALL STRUCTURAL STEEL SHALL BE AASHTO M270 GRADE 50W AND PAINTED IN ACCORDANCE WITH SYSTEM 4 OF ARTICLE 442-8 OF THE STANDARD SPECIFICATIONS UNLESS OTHERWISE NOTED ON THE PLANS.

THE ELEVATION AND CLEARANCE SHOWN ON THE PLANS AT THE POINT OF MINIMUM VERTICAL CLEARANCE ARE FROM THE BEST INFORMATION AVAILABLE. PRIOR TO BEGINNING CONSTRUCTION, VERIFY THE ELEVATION ON THE EXISTING PAVEMENT AND CHECK THE CLEARANCE. REPORT ANY VARIATIONS TO THE ENGINEER. ANY PLAN REVISIONS NECESSARY TO ACHIEVE THE REQUIRED MINIMUM VERTICAL CLEARANCE WILL BE PROVIDED BY THE DEPARTMENT.

FOR MAINTENANCE AND PROTECTION OF TRAFFIC BENEATH PROPOSED STRUCTURE, SEE SPECIAL PROVISIONS.

THE CLASS AA CONCRETE IN THE BRIDGE DECK SHALL CONTAIN FLY ASH OR GROUND GRANULATED BLAST FURNACE SLAG AT THE SUBSTITUTION RATE SPECIFIED IN ARTICLE 1024-1 AND IN ACCORDANCE WITH ARTICLES 1024-5 AND 1024-6 OF THE STANDARD SPECIFICATIONS. NO PAYMENT WILL BE MADE FOR THIS SUBSTITUTION AS IT IS CONSIDERED INCIDENTAL TO THE COST OF THE REINFORCED CONCRETE DECK SLAB.

NEEDLE BEAMS WILL NOT BE ALLOWED UNLESS OTHERWISE CALLED FOR ON THE PLANS OR APPROVED BY THE ENGINEER.

FOR SUBMITTAL OF WORKING DRAWINGS, SEE SPECIAL PROVISIONS.

FOR FALSEWORK AND FORMWORK, SEE SPECIAL PROVISIONS.

FOR CRANE SAFETY, SEE SPECIAL PROVISIONS.

FOR GROUT FOR STRUCTURES, SEE SPECIAL PROVISIONS.

FOR FOUNDATION NOTES, SEE "FOUNDATION LAYOUT" SHEET.

FOR EXPANSION JOINT SEALS, SEE SPECIAL PROVISIONS.

SPECIAL SNOWPLOW PROTECTION IS REQUIRED. SEE SPECIAL PROVISIONS FOR MODULAR EXPANSION JOINT SEALS.

FOR BRIDGE DECK RIDEABILITY AND GROOVING, SEE SPECIAL PROVISIONS.

FOR PLACING LOAD ON STRUCTURE MEMBERS, SEE SPECIAL PROVISIONS.

FOR ELECTRICAL CONDUIT SYSTEM, SEE "ELECTRICAL CONDUIT SYSTEM FOR SIGNALS" SHEET.

FOR MASS CONCRETE, SEE SPECIAL PROVISIONS.

NORTH CAROLINA PROFESSIONAL SEAL ENGINEER 027799 ALLYSON K. ORR 2/14/14

PROJECT NO. U-2525B
GUILFORD COUNTY
STATION: 144+60.63 -L-

SHEET 6 OF 6

STATE OF NORTH CAROLINA
DEPARTMENT OF TRANSPORTATION
RALEIGH

GENERAL DRAWING
FOR BRIDGE ON GREENSBORO EASTERN LOOP OVER NORTH BUFFALO CREEK AND SR 2832 BETWEEN SR 2825 & SR 2732
RIGHT LANE

DRAWN BY : B.E. LANNING DATE : 11/13
CHECKED BY : G.R. COLS DATE : 11/13
DESIGN ENGINEER OF RECORD : A.K. ORR DATE : 01/14

MI ENGINEERING
1011 SCHAUB DRIVE, SUITE 100
RALEIGH, NC 27606
(919) 851-6606
FIRM PE NUMBER : P-0671

DWG. NO. 6

REVISIONS								
NO.	BY:	DATE:	NO.	BY:	DATE:			
1			3					
2			4					

SHEET NO. S-237
TOTAL SHEETS 541

2/14/2014 12:36:23 PM
User: blanning
Filename: P:\NC Bridges\M1007.03 U-2525B Guilford\U-2525B\Structures\Right Bridge\U2525B_SD_GDF_A_RT.dgn

LOAD AND RESISTANCE FACTOR RATING (LRFR) SUMMARY FOR STEEL GIRDERS

LEVEL		VEHICLE	WEIGHT (W) (TONS)	CONTROLLING LOAD RATING (#)	MINIMUM RATING FACTORS (RF)	TONS = W × RF	STRENGTH I LIMIT STATE											SERVICE II LIMIT STATE						COMMENT NUMBER
								MOMENT					SHEAR						MOMENT					
							LIVE-LOAD FACTORS (γ_{LL})	DISTRIBUTION FACTORS (DF)	RATING FACTOR	SPAN	GIRDER LOCATION	DISTANCE FROM LEFT END OF SPAN (ft)	DISTRIBUTION FACTORS (DF)	RATING FACTOR	SPAN	GIRDER LOCATION	DISTANCE FROM LEFT END OF SPAN (ft)	LIVE-LOAD FACTORS (γ_{LL})	DISTRIBUTION FACTORS (DF)	RATING FACTOR	SPAN	GIRDER LOCATION	DISTANCE FROM LEFT END OF SPAN (ft)	
DESIGN LOAD RATING		HL-93 (INVENTORY)	N/A	1	1.15	--	1.75	0.8138	1.15	A	E	175.3	0.9293	1.25	C	I	22.5	1.30	0.8138	1.67	D	E	97.8	
		HL-93 (OPERATING)	N/A		1.49	--	1.35	0.8138	1.49	A	E	175.3	0.9293	1.62	C	I	22.5	1.00	0.8138	2.17	D	E	97.8	
		HS-20 (INVENTORY)	36.000	2	2.56	92.22	1.75	0.8138	3.02	D	E	97.8	0.9293	2.56	D	I	19.8	1.30	0.8138	2.95	D	E	97.8	
		HS-20 (OPERATING)	36.000		3.33	119.88	1.35	0.8138	3.93	D	E	97.8	0.9293	3.33	D	I	19.8	1.00	0.8138	3.84	D	E	97.8	
LEGAL LOAD RATING	SINGLE VEHICLE (SV)	SH	12.500		8.00	100.00	1.40	0.8138	10.25	D	E	97.8	0.9293	8.88	D	I	19.8	1.30	0.8138	8.00	D	E	97.8	
		S3C	21.500		4.67	100.41	1.40	0.8138	5.99	D	E	97.8	0.9293	5.23	D	I	19.8	1.30	0.8138	4.67	D	E	97.8	
		S3A	22.750		4.42	100.56	1.40	0.8138	5.67	D	E	97.8	0.9293	4.95	D	I	19.8	1.30	0.8138	4.42	D	E	97.8	
		S4A	26.750		3.82	102.19	1.40	0.8138	4.90	D	E	97.8	0.9293	4.25	D	I	19.8	1.30	0.8138	3.82	D	E	97.8	
		S5A	30.500		3.39	103.40	1.40	0.8138	4.34	D	E	97.8	0.9293	3.75	D	I	19.8	1.30	0.8138	3.39	D	E	97.8	
		S6A	34.500		3.04	104.88	1.40	0.8138	3.89	D	E	97.8	0.9293	3.33	D	I	19.8	1.30	0.8138	3.04	D	E	97.8	
		S7B	38.500		2.73	105.11	1.40	0.8138	3.49	D	E	97.8	0.9293	2.97	D	I	19.8	1.30	0.8138	2.73	D	E	97.8	
		S7A	40.000	3	2.68	107.20	1.40	0.8138	3.41	A	E	175.3	0.9293	2.92	D	I	19.8	1.30	0.8138	2.68	D	E	97.8	
	TRUCK TRACTOR SEMI-TRAILER (TTST)	T4A	28.250		3.69	104.24	1.40	0.8138	4.72	D	E	97.8	0.9293	4.06	D	I	19.8	1.30	0.8138	3.69	D	E	97.8	
		T5B	32.000		3.28	104.96	1.40	0.8138	4.20	D	E	97.8	0.9293	3.61	D	I	19.8	1.30	0.8138	3.28	D	E	97.8	
		T6A	36.000		2.94	105.84	1.40	0.8138	3.76	D	E	97.8	0.9293	3.27	D	I	19.8	1.30	0.8138	2.94	D	E	97.8	
		T7A	40.000		2.71	108.40	1.40	0.8138	3.42	A	E	175.3	0.9293	2.94	D	I	19.8	1.30	0.8138	2.71	D	E	97.8	
		T7B	40.000		2.75	110.00	1.40	0.8138	3.43	A	E	175.3	0.9293	2.94	D	I	19.8	1.30	0.8138	2.75	D	E	97.8	
FATIGUE		HL-93 (INVENTORY)	γ_{LL}=0.75																					

LOAD FACTORS:

DESIGN LOAD RATING FACTORS	LIMIT STATE	γ_{DC}	γ_{DW}
	STRENGTH I	1.25	1.50
	SERVICE II	1.00	1.00

NOTES:

MINIMUM RATING FACTORS ARE BASED ON THE STRENGTH I AND SERVICE II LIMIT STATES.

ALLOWABLE STRESS FOR SERVICE II LIMIT STATE ARE AS REQUIRED FOR DESIGN.

COMMENTS:

1.
2.
3.
4.

(#) CONTROLLING LOAD RATING

(1) DESIGN LOAD RATING (HL-93)
(2) DESIGN LOAD RATING (HS-20)
(3) LEGAL LOAD RATING **
** SEE CHART FOR VEHICLE TYPE

GIRDER LOCATION

I - INTERIOR GIRDER
E - EXTERIOR GIRDER

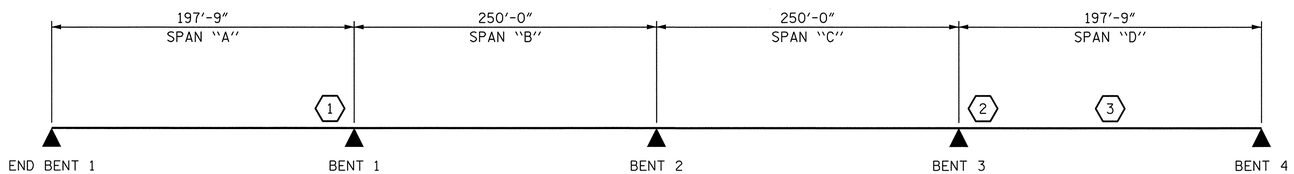

LRFR SUMMARY

(SPAN LENGTHS ARE BEARING TO BEARING)

PROJECT NO. U-2525B
GUILFORD COUNTY
STATION: 144+60.63 -L-

SHEET 1 OF 2

STATE OF NORTH CAROLINA
DEPARTMENT OF TRANSPORTATION
RALEIGH

STANDARD
LRFR SUMMARY FOR STEEL GIRDERS
UNIT 1
(INTERSTATE TRAFFIC)
RIGHT LANE

NORTH CAROLINA PROFESSIONAL SEAL 027799 ENGINEER ALLYSON K. ORR
1/10/14

MI ENGINEERING
1011 SCHAUB DRIVE, SUITE 100
RALEIGH, NC 27606
(919) 851-6606
FIRM PE NUMBER : P-0671

REVISIONS						
NO.	BY:	DATE:	NO.	BY:	DATE:	
1			3			
2			4			

SHEET NO. S-240
TOTAL SHEETS 541

STD. NO. LRFR4

DWG. NO. 7

ASSEMBLED BY:	B.E. LANNING	DATE: 10/13
CHECKED BY :	A.K. ORR	DATE: 11/13
DESIGN ENGINEER OF RECORD:	A.K. ORR	DATE: 01/14
DRAWN BY : MAA 1/08	REV. 11/12/08RR	MAA/GM
CHECKED BY : GM/DI 2/08	REV. 10/1/11	MAA/GM

1/10/2014
9:35:23 AM
User: blanning
Filename: P:\NC Bridges\M11007.03 U-2525B Guilford\U-2525B\Structures\Right Bridge\U2525B_SD_LRFR1_4_RT.dgn

LOAD AND RESISTANCE FACTOR RATING (LRFR) SUMMARY FOR STEEL GIRDERS

LEVEL		VEHICLE	WEIGHT (W) (TONS)	CONTROLLING LOAD RATING (#)	MINIMUM RATING FACTORS (RF)	TONS = W × RF	STRENGTH I LIMIT STATE											SERVICE II LIMIT STATE						COMMENT NUMBER
							LIVE-LOAD FACTORS (γ_{LL})	MOMENT					SHEAR					LIVE-LOAD FACTORS (γ_{LL})	MOMENT					
								DISTRIBUTION FACTORS (DF)	RATING FACTOR	SPAN	GIRDER LOCATION	DISTANCE FROM LEFT END OF SPAN (ft)	DISTRIBUTION FACTORS (DF)	RATING FACTOR	SPAN	GIRDER LOCATION	DISTANCE FROM LEFT END OF SPAN (ft)		DISTRIBUTION FACTORS (DF)	RATING FACTOR	SPAN	GIRDER LOCATION	DISTANCE FROM LEFT END OF SPAN (ft)	
DESIGN LOAD RATING		HL-93 (INVENTORY)	N/A	1	1.19	--	1.75	0.8138	1.19	F	E	161.8	0.9293	1.32	E	I	129.5	1.30	0.8138	1.64	E	E	88.8	
		HL-93 (OPERATING)	N/A		1.55	--	1.35	0.8138	1.55	F	E	161.8	0.9293	1.72	E	I	129.5	1.00	0.8138	2.13	E	E	88.8	
		HS-20 (INVENTORY)	36.000	2	2.14	76.98	1.75	0.8138	2.73	H	E	73.0	0.9293	2.14	E	I	0.0	1.30	0.8138	2.68	E	E	88.8	
		HS-20 (OPERATING)	36.000		2.78	100.08	1.35	0.8138	3.55	H	E	73.0	0.9293	2.78	E	I	0.0	1.00	0.8138	3.49	E	E	88.8	
LEGAL LOAD RATING	SINGLE VEHICLE (SV)	SH	12.500		7.13	89.13	1.40	0.8138	9.12	E	E	88.8	0.9293	7.17	E	I	0.0	1.30	0.8138	7.13	H	E	73.0	
		S3C	21.500		4.18	89.87	1.40	0.8138	5.34	E	E	88.8	0.9293	4.34	H	I	161.8	1.30	0.8138	4.18	H	E	73.0	
		S3A	22.750		3.96	90.09	1.40	0.8138	5.06	E	E	88.8	0.9293	4.11	H	I	161.8	1.30	0.8138	3.96	H	E	73.0	
		S4A	26.750		3.43	91.75	1.40	0.8138	4.39	E	E	88.8	0.9293	3.55	H	I	161.8	1.30	0.8138	3.43	H	E	73.0	
		S5A	30.500		3.04	92.72	1.40	0.8138	3.89	E	E	88.8	0.9293	3.17	H	I	32.4	1.30	0.8138	3.04	H	E	73.0	
		S6A	34.500		2.74	94.53	1.40	0.8138	3.50	E	E	88.8	0.9293	2.82	H	I	32.4	1.30	0.8138	2.74	H	E	73.0	
		S7B	38.500		2.46	94.71	1.40	0.8138	3.15	E	E	88.8	0.9293	2.54	H	I	32.4	1.30	0.8138	2.46	H	E	73.0	
		S7A	40.000	3	2.41	96.40	1.40	0.8138	3.08	E	E	88.8	0.9293	2.53	H	I	32.4	1.30	0.8138	2.41	H	E	73.0	
	TRUCK TRACTOR SEMI-TRAILER (TTST)	T4A	28.250		3.32	93.79	1.40	0.8138	4.25	E	E	88.8	0.9293	3.41	H	I	161.8	1.30	0.8138	3.32	H	E	73.0	
		T5B	32.000		2.96	94.72	1.40	0.8138	3.78	E	E	88.8	0.9293	3.07	H	I	32.4	1.30	0.8138	2.96	H	E	73.0	
		T6A	36.000		2.68	96.48	1.40	0.8138	3.42	E	E	88.8	0.9293	2.81	H	I	32.4	1.30	0.8138	2.68	H	E	73.0	
		T7A	40.000		2.45	98.00	1.40	0.8138	3.13	E	E	88.8	0.9293	2.55	H	I	32.4	1.30	0.8138	2.45	H	E	73.0	
		T7B	40.000		2.50	100.00	1.40	0.8138	3.20	E	E	88.8	0.9293	2.51	H	I	32.4	1.30	0.8138	2.50	H	E	73.0	
FATIGUE		HL-93 (INVENTORY)	γ_{LL}=0.75																					

LOAD FACTORS:

DESIGN LOAD RATING FACTORS	LIMIT STATE	γ_{DC}	γ_{DW}
	STRENGTH I	1.25	1.50
	SERVICE II	1.00	1.00

NOTES:

MINIMUM RATING FACTORS ARE BASED ON THE STRENGTH I AND SERVICE II LIMIT STATES.

ALLOWABLE STRESS FOR SERVICE II LIMIT STATE ARE AS REQUIRED FOR DESIGN.

COMMENTS:

1.
2.
3.
4.

CONTROLLING LOAD RATING
1 DESIGN LOAD RATING (HL-93)
2 DESIGN LOAD RATING (HS-20)
3 LEGAL LOAD RATING **
** SEE CHART FOR VEHICLE TYPE

GIRDER LOCATION
I - INTERIOR GIRDER
E - EXTERIOR GIRDER

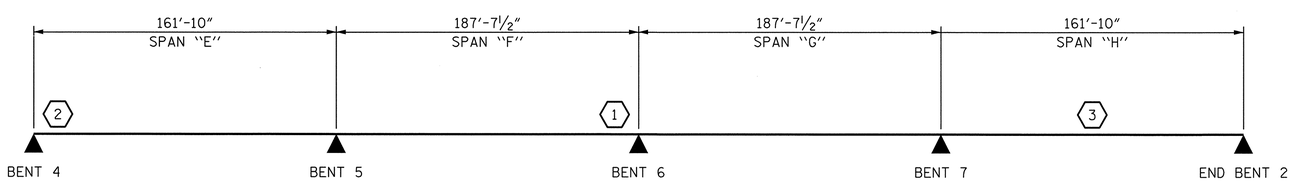

LRFR SUMMARY

(SPAN LENGTHS ARE BEARING TO BEARING)

PROJECT NO. U-2525B
GUILFORD COUNTY
STATION: 144+60.63 -L-

SHEET 2 OF 2

STATE OF NORTH CAROLINA
DEPARTMENT OF TRANSPORTATION
RALEIGH

STANDARD
LRFR SUMMARY FOR STEEL GIRDERS
UNIT 2
(INTERSTATE TRAFFIC)
RIGHT LANE

NORTH CAROLINA PROFESSIONAL SEAL 027799 ENGINEER ALLYSON K. ORR 7/10/14

ASSEMBLED BY: B.E. LANNING	DATE: 10/13		
CHECKED BY : A.K. ORR	DATE: 11/13		
DESIGN ENGINEER OF RECORD: A.K. ORR	DATE: 01/14		
DRAWN BY : MAA 1/08	REV. 11/12/08RR	MAA/GM	
CHECKED BY : GM/DI 2/08	REV. 10/1/11	MAA/GM	

DWG. NO. 8

MI ENGINEERING
1011 SCHAUB DRIVE, SUITE 100
RALEIGH, NC 27606
(919) 851-6606
FIRM PE NUMBER : P-0671

REVISIONS						
NO.	BY:	DATE:	NO.	BY:	DATE:	
1			3			
2			4			

SHEET NO. S-241
TOTAL SHEETS 541

STD. NO. LRFR4

1/10/2014
9:35:25 AM
User: blanning
Filename: P:\NC Bridges\MI1007.03 U-2525B Guilford\U-2525B\Structures\Right Bridge\U2525B_SD_LRFR2_4_RT.dgn

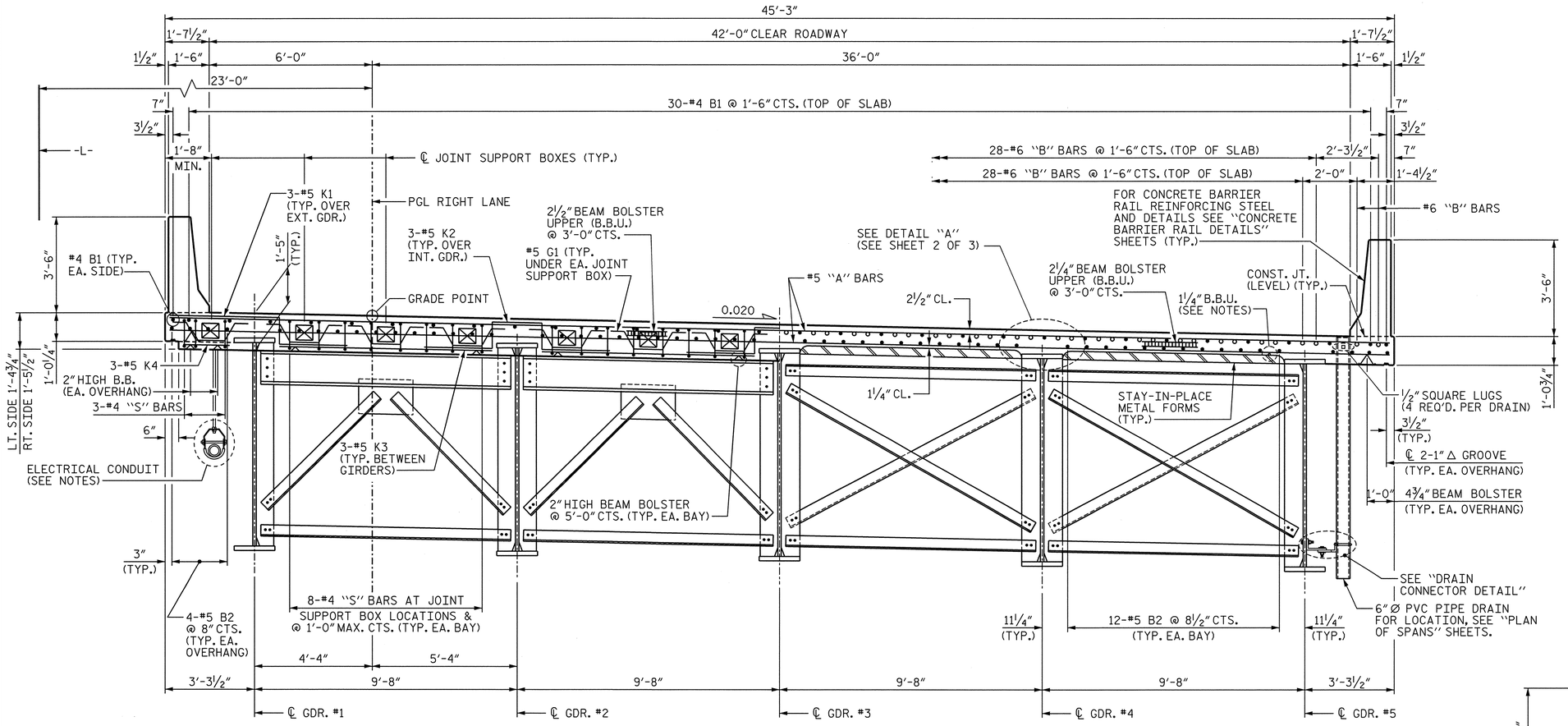

HALF SECTION AT END BENT 1 AND BENT 4 DIAPHRAGMS

HALF SECTION AT BENT 1, 2 AND 3 CROSSFRAMES

TYPICAL SECTION

NOTES

PROVIDE 1¼" HIGH BEAM BOLSTERS UPPER AT 4'-0" CTS. ATOP THE METAL STAY-IN-PLACE FORMS TO SUPPORT THE BOTTOM MAT OF "A" BARS. WHEN USING REMOVABLE FORMS, PROVIDE CONTINUOUS HIGH CHAIRS FOR METAL DECK (C.H.C.M.) @ 4'-0" CTS. WITH A HEIGHT TO SUPPORT THE BOTTOM MAT OF "A" BARS A CLEAR DISTANCE OF 2½" ABOVE THE TOP OF THE REMOVABLE FORM.

METAL STAY-IN-PLACE FORMS SHALL NOT BE WELDED TO BEAM OR GIRDER FLANGES IN THE ZONES REQUIRING CHARPY V-NOTCH TEST. SEE STRUCTURAL STEEL DETAIL SHEETS.

PREVIOUSLY CAST CONCRETE IN A CONTINUOUS UNIT SHALL HAVE ATTAINED A MINIMUM COMPRESSIVE STRENGTH OF 3,000 PSI BEFORE ADDITIONAL CONCRETE IS CAST IN THE UNIT.

BARRIER RAIL IN A CONTINUOUS UNIT SHALL NOT BE CAST UNTIL ALL SLAB CONCRETE IN THE UNIT HAS BEEN CAST AND HAS REACHED A MINIMUM COMPRESSIVE STRENGTH OF 3,000 PSI.

STRUCTURAL STEEL ERECTION IN A CONTINUOUS UNIT SHALL BE COMPLETE BEFORE FALSEWORK OR FORMS ARE PLACED ON THE UNIT.

THE CONTRACTOR MAY, WHEN NECESSARY, PROPOSE A SCHEME FOR AVOIDING INTERFERENCE BETWEEN METAL STAY-IN-PLACE FORM SUPPORTS OR FORMS AND BEAM/GIRDER STIFFENERS OR CONNECTOR PLATES. THE PROPOSAL SHALL BE INDICATED, AS APPROPRIATE, ON EITHER THE STEEL WORKING DRAWINGS OR THE METAL STAY-IN-PLACE FORM WORKING DRAWINGS.

THE "B" BARS IN THE DECK SLAB MAY BE CUT AS DIRECTED BY THE ENGINEER TO CLEAR THE MODULAR JOINT SUPPORT BOXES.

FOR ELECTRICAL CONDUIT, SEE STANDARD "ELECTRICAL CONDUIT SYSTEM FOR SIGNALS" SHEET.

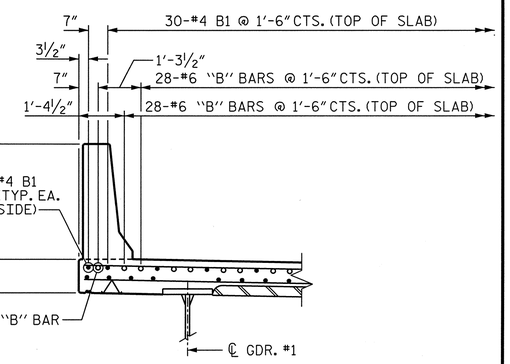

LEFT OVERHANG DETAIL OVER BENTS

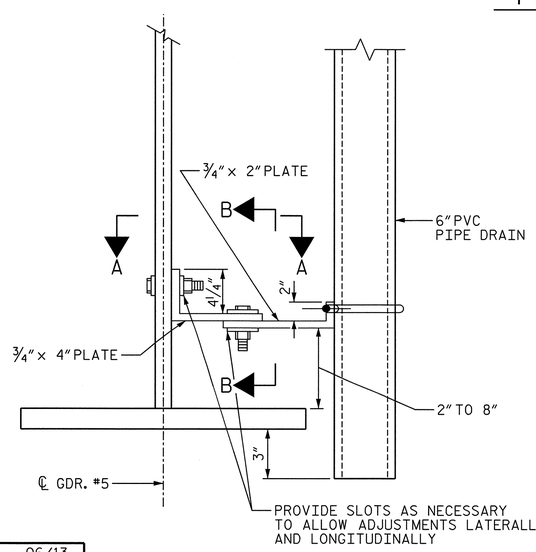

DRAIN CONNECTOR DETAIL

(TOTAL ASSEMBLIES REQUIRED = 111)

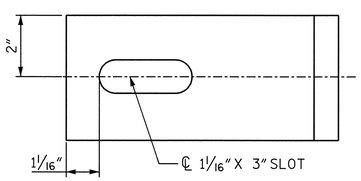

SECTION A-A

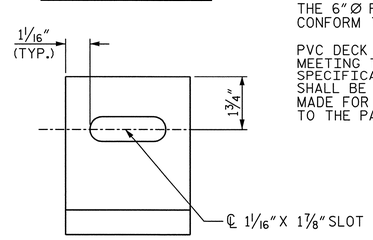

SECTION B-B

DRAIN CONNECTOR NOTES

COUPLING IN DRAIN PIPE WILL BE PERMITTED AS APPROVED BY THE ENGINEER.

TOP OF THE FLOOR DRAIN TO BE SET ⅜" BELOW SURFACE OF SLAB.

4- ½" SQUARE LUGS TO BE GLUED TO THE PVC PLASTIC PIPE AT EQUAL SPACES AROUND THE PIPE DRAIN APPROXIMATELY 4" FROM THE TOP OF THE PIPE.

BOLT SIZE TO BE THE SAME AS DIAPHRAGMS AND CROSS FRAME CONNECTIONS. STAINLESS STEEL WORM DRIVE HOSE CLAMP SHALL BE COMMERCIAL QUALITY.

THE 6" Ø PVC PLASTIC PIPE AND FITTINGS SHALL BE SCHEDULE 40 AND CONFORM TO ASTM D1785.

PVC DECK DRAINS SHALL BE PAINTED WITH TWO COATS OF BROWN PRIMER MEETING THE REQUIREMENTS OF ARTICLE 1080-11 OF THE STANDARD SPECIFICATIONS. EACH COAT SHALL BE 2 DRY MILS THICK. DECK DRAINS SHALL BE ROUGHENED PRIOR TO PAINTING. NO SEPARATE PAYMENT SHALL BE MADE FOR PAINTING PVC DECK DRAINS AS THIS IS CONSIDERED INCIDENTAL TO THE PAY ITEM FOR REINFORCED CONCRETE DECK SLAB.

NORTH CAROLINA PROFESSIONAL SEAL 027799 ENGINEER ALLYSON K. ORR 1/21/14

PROJECT NO. U-2525B
GUILFORD COUNTY
STATION: 144+60.63 -L-

SHEET 1 OF 3

STATE OF NORTH CAROLINA
DEPARTMENT OF TRANSPORTATION
RALEIGH

SUPERSTRUCTURE
TYPICAL SECTION
UNIT 1

RIGHT LANE

DRAWN BY : M. NGUYEN	DATE : 06/13		
CHECKED BY : A.K. ORR	DATE : 07/13		
DESIGN ENGINEER OF RECORD : A.K. ORR	DATE : 01/14		

DWG. NO. 9

MI ENGINEERING
1011 SCHAUB DRIVE, SUITE 100
RALEIGH, NC 27606
(919) 851-6606
FIRM PE NUMBER : P-0671

REVISIONS								SHEET NO.
NO.	BY:	DATE:	NO.	BY:	DATE:			S-242
1			3					TOTAL SHEETS
2			4					541

1/21/2014
1:33:33 PM
User: blanning
Filename: P:\NC Bridges\MI1007.03 U-2525B Guilford\U-2525B\Structures\Right Bridge\U2525B_SD_TS1_4_RT.dgn

FOR SUPERSTRUCTURE NOTES, SEE SHEET 1 OF 3.

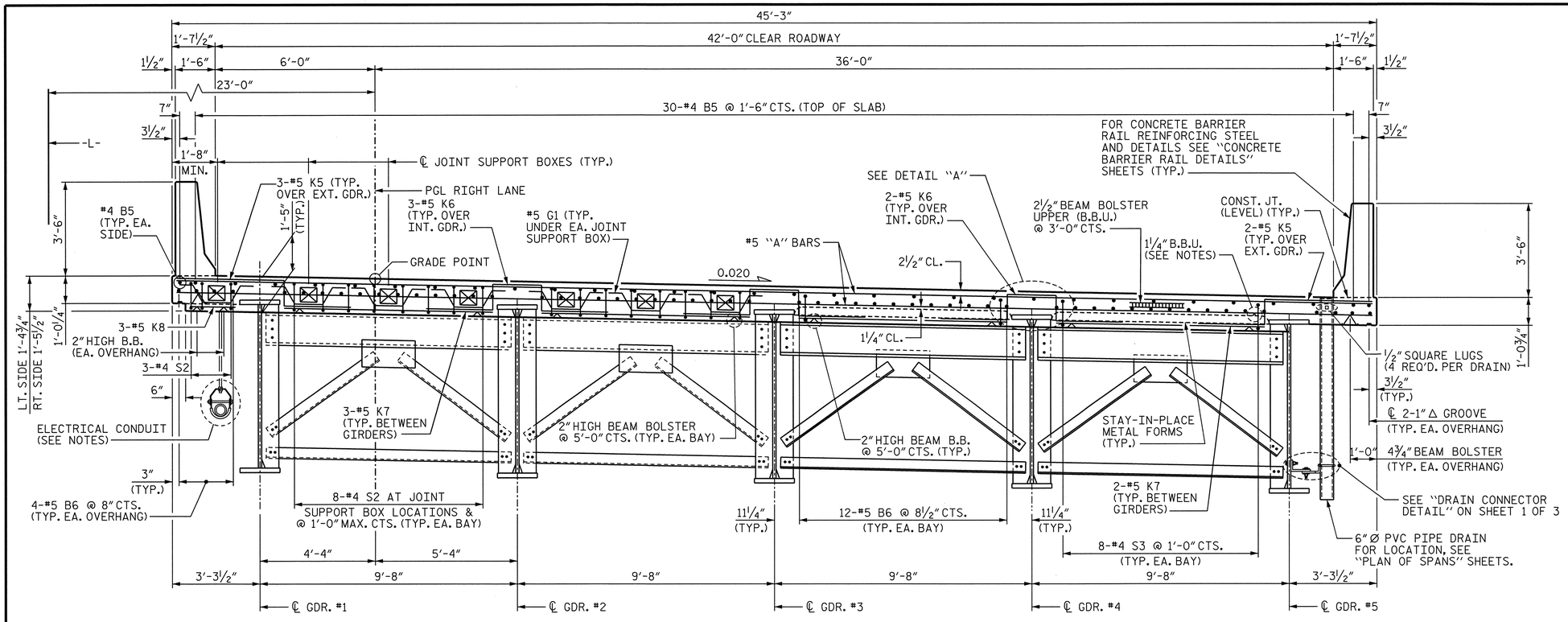

HALF SECTION AT BENT 4 DIAPHRAGMS

HALF SECTION AT END BENT 2 DIAPHRAGMS

TYPICAL SECTION

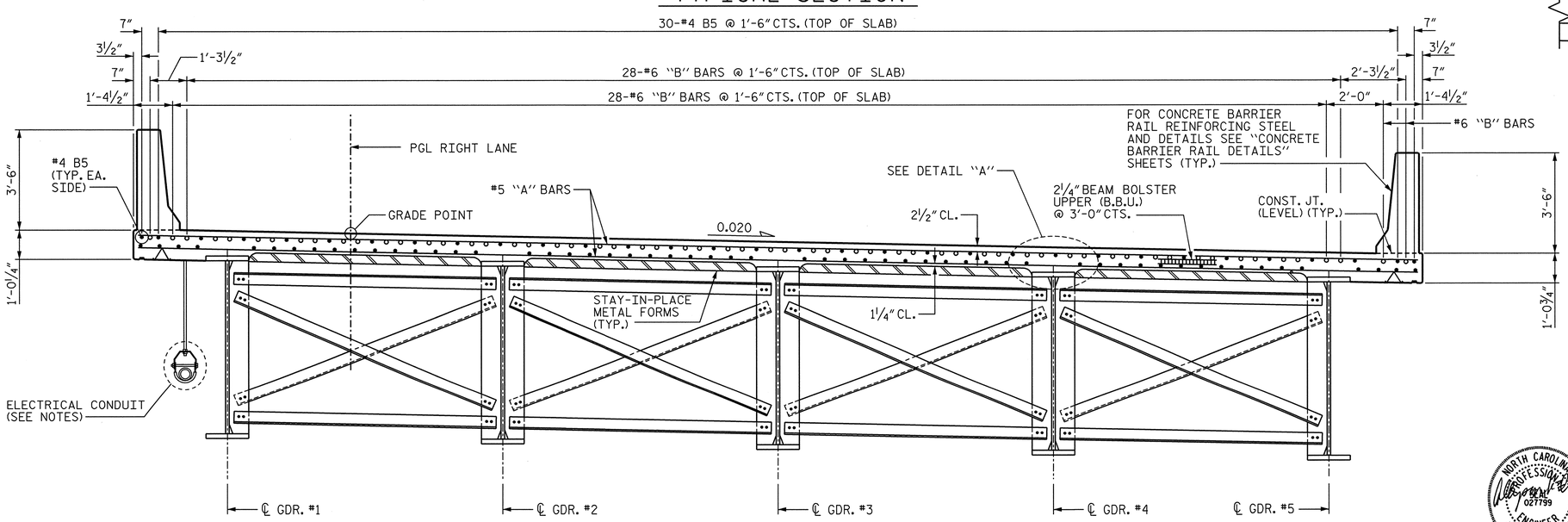

TYPICAL SECTION AT BENT 5, 6 AND 7 CROSSFRAMES

(FOR DIMENSIONS NOT SHOWN, SEE TYPICAL SECTION ABOVE)

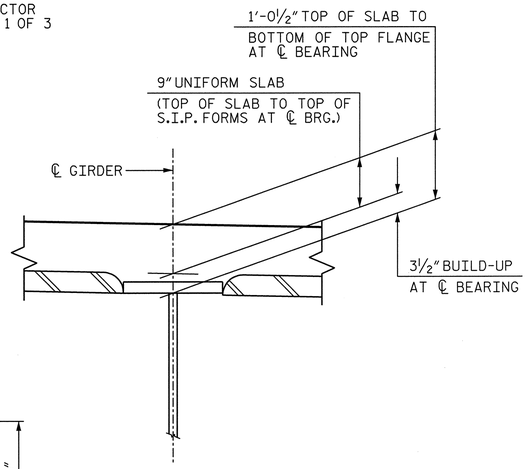

DETAIL "A"

PROJECT NO. U-2525B

GUILFORD COUNTY

STATION: 144+60.63 -L-

SHEET 2 OF 3

STATE OF NORTH CAROLINA
DEPARTMENT OF TRANSPORTATION
RALEIGH

SUPERSTRUCTURE

TYPICAL SECTION
UNIT 2

RIGHT LANE

NORTH CAROLINA PROFESSIONAL ENGINEER SEAL 027799 ALLYSON K. ORR 1/21/14

DRAWN BY : M. NGUYEN	DATE : 06/13
CHECKED BY : A.K. ORR	DATE : 07/13
DESIGN ENGINEER OF RECORD : A.K. ORR	DATE : 01/14

DWG. NO. 10

MI ENGINEERING
1011 SCHAUB DRIVE, SUITE 100
RALEIGH, NC 27606
(919) 851-6606
FIRM PE NUMBER : P-0671

REVISIONS					
NO.	BY:	DATE:	NO.	BY:	DATE:
1			3		
2			4		

SHEET NO. S-243

TOTAL SHEETS 541

1/21/2014
1:50:16 PM
User: blanning
Filename: P:\NC Bridges\MI1007.03 U-2525B Guilford\U-2525B\Structures\Right Bridge\U2525B_SD_TS2_4_RT.dgn

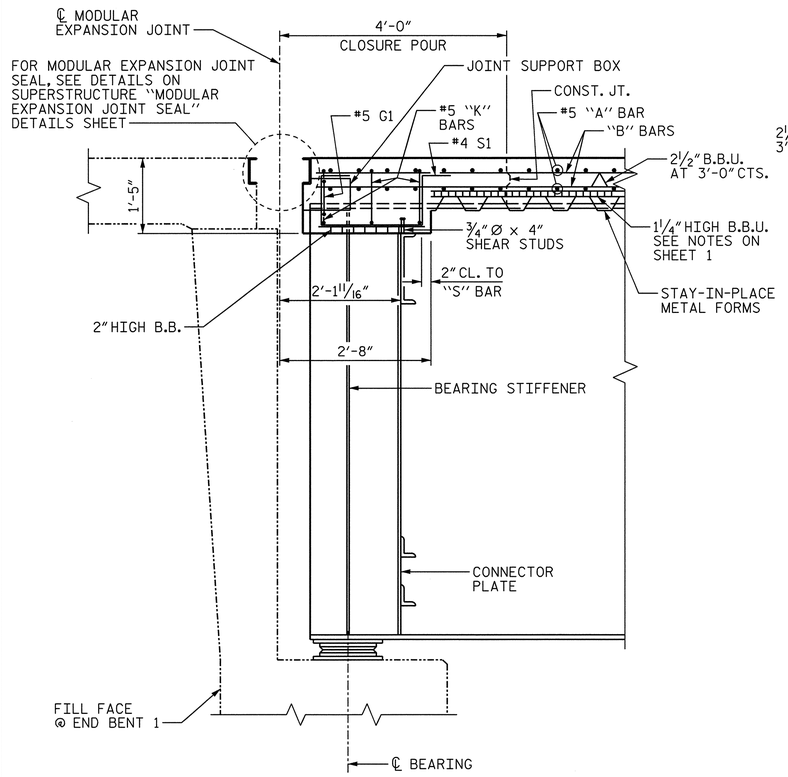

SECTION A-A

AT END BENT 1

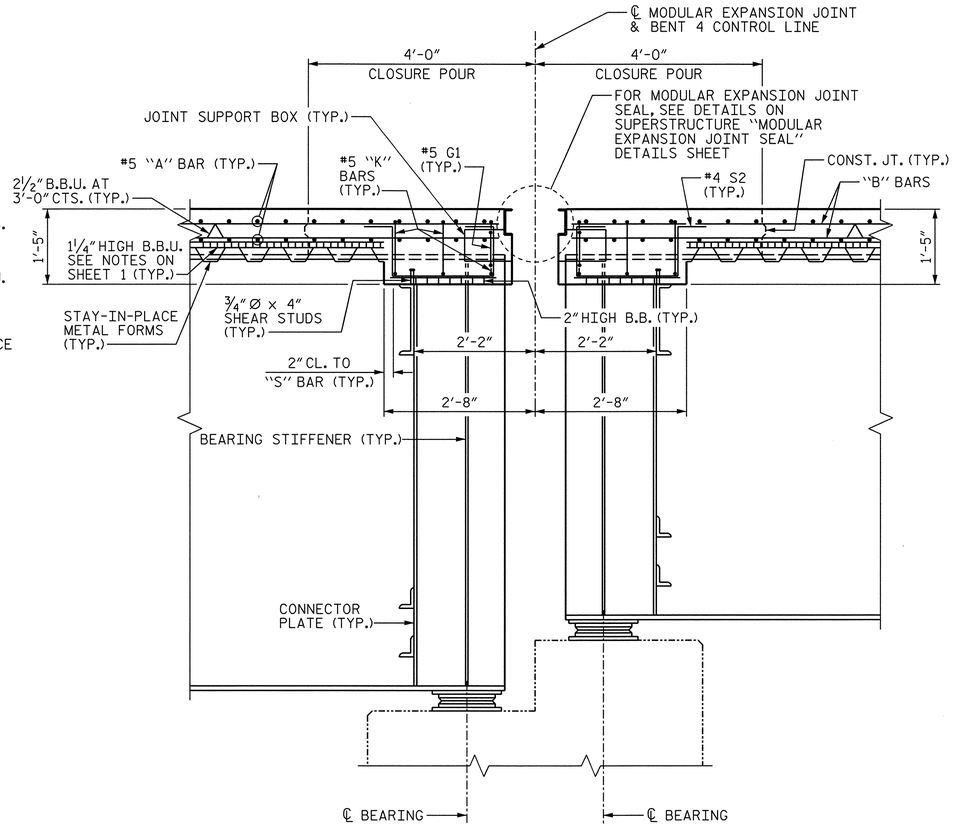

SECTION B-B

AT BENT 4

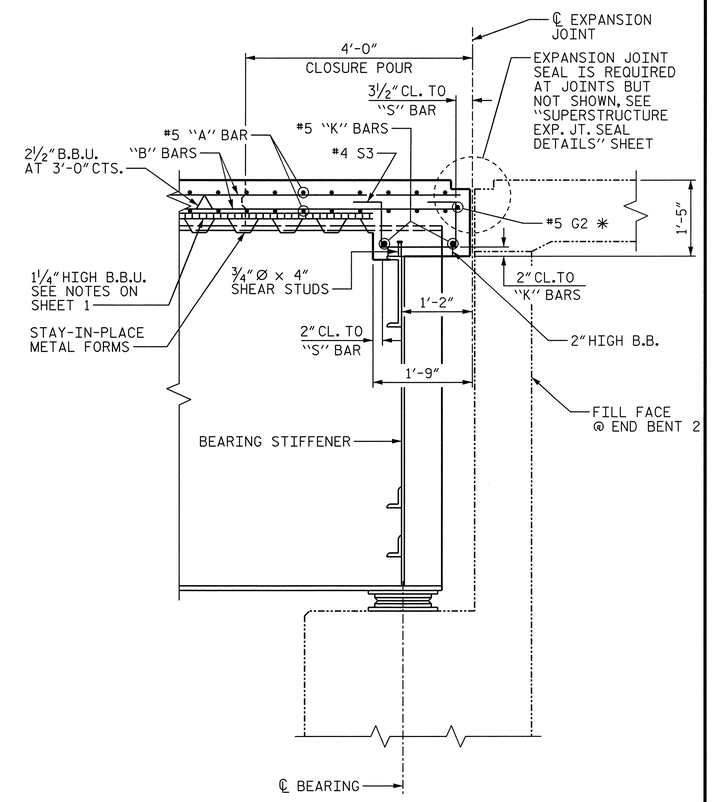

SECTION C-C

AT END BENT 2

✱ #5 G2 BAR MAY BE SHIFTED SLIGHTLY AS NECESSARY, TO CLEAR REINFORCING STEEL.

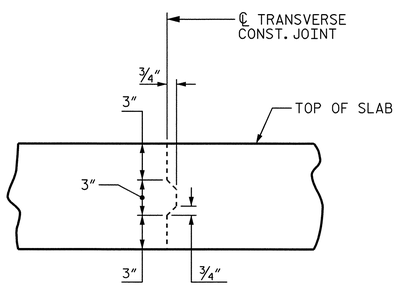

TRANSVERSE CONSTRUCTION JOINT DETAIL

NOTE: REINFORCING STEEL IN SLAB NOT SHOWN. LONGITUDINAL REINFORCING STEEL SHALL BE CONTINUOUS THRU JOINT.

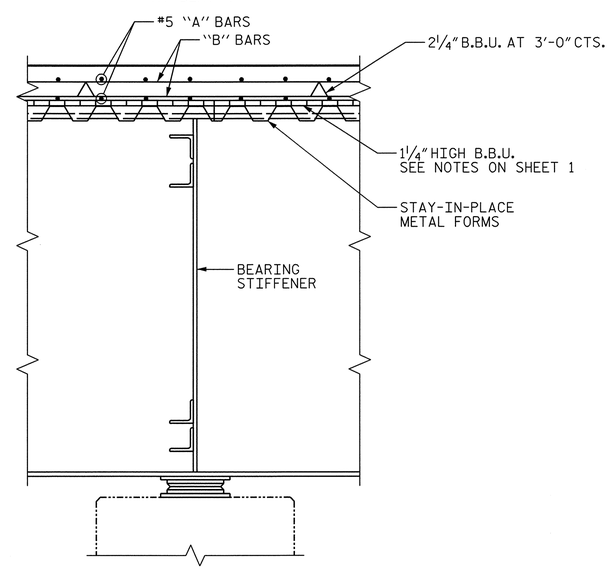

SECTION OF INTERIOR BENT DIAPHRAGM

AT BENTS 1, 2, 3, 5, 6 AND 7

PROJECT NO. U-2525B

GUILFORD COUNTY

STATION: 144+60.63 -L-

SHEET 3 OF 3

STATE OF NORTH CAROLINA
DEPARTMENT OF TRANSPORTATION
RALEIGH

SUPERSTRUCTURE

TYPICAL SECTION DETAILS
UNITS 1 & 2
RIGHT LANE

NORTH CAROLINA PROFESSIONAL SEAL 027799 ENGINEER ALLYSON K. ORR 1/10/14

DRAWN BY : B.E. LANNING	DATE : 06/13		
CHECKED BY : A.K. ORR	DATE : 07/13		
DESIGN ENGINEER OF RECORD : A.K. ORR	DATE : 01/14		

MI ENGINEERING
1011 SCHAUB DRIVE, SUITE 100
RALEIGH, NC 27606
(919) 851-6606
FIRM PE NUMBER : P-0671

REVISIONS						
NO.	BY:	DATE:	NO.	BY:	DATE:	
1			3			
2			4			

SHEET NO. S-244

TOTAL SHEETS 541

DWG. NO. 11

1/10/2014
9:35:33 AM
User: blanning
Filename: P:\NC Bridges\MI1007.03 U-2525B Guilford\U-2525B\Structures\Right Bridge\U2525B_SD_TS3_4_RT.dgn

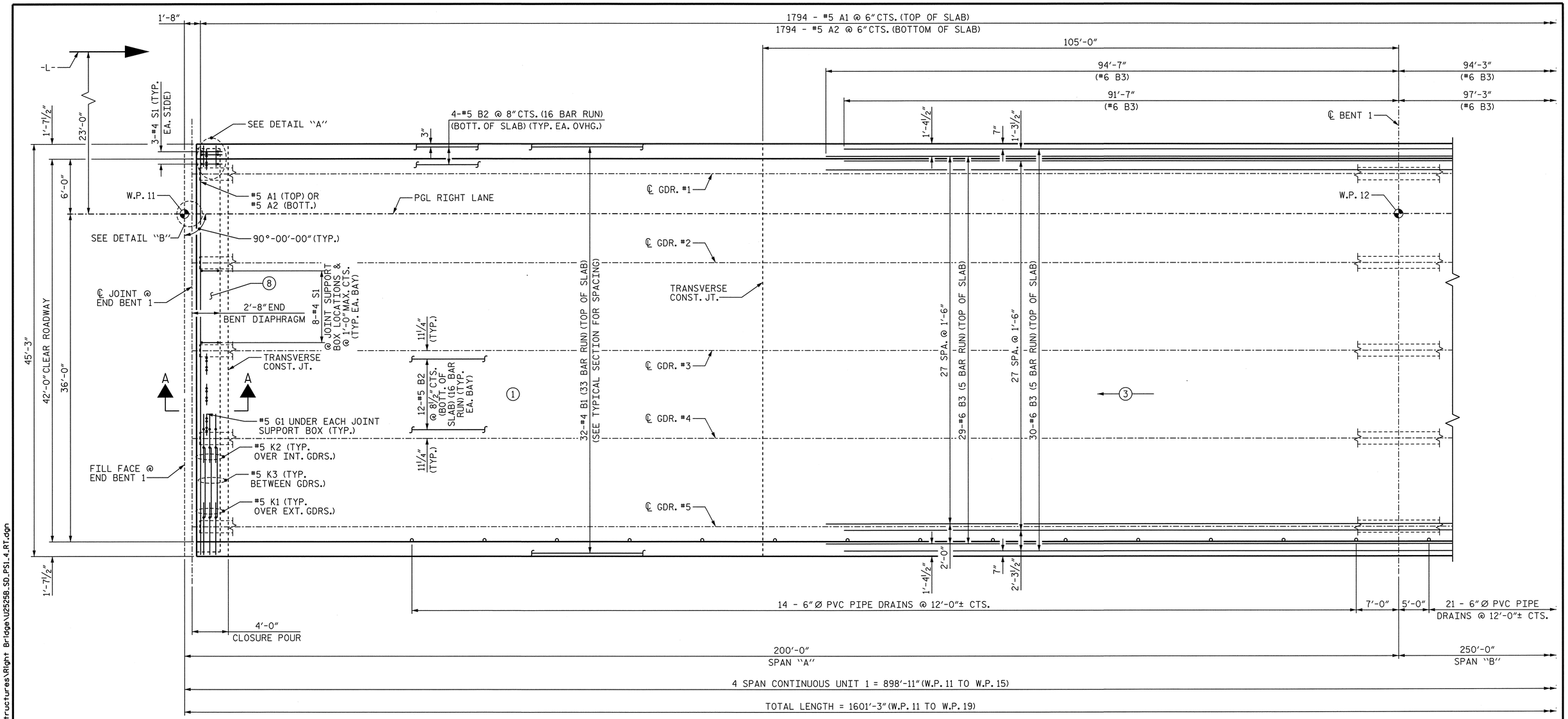

PLAN OF SPAN "A"

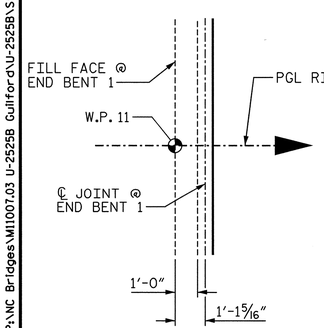

DETAIL "B"

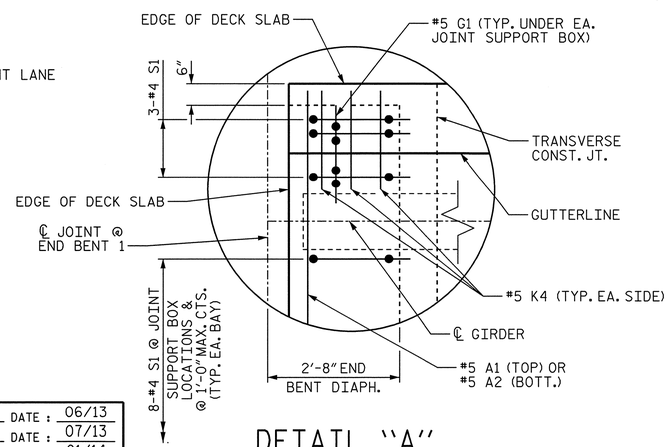

DETAIL "A"

NOTES

FOR REINFORCING STEEL IN BARRIER RAIL NOT SHOWN, SEE "STANDARD CONCRETE BARRIER RAIL" SHEET.

FOR TRANSVERSE CONSTRUCTION JOINT IN DECK SLAB DETAIL, SEE SUPERSTRUCTURE "TYPICAL SECTION DETAILS" SHEET 3 OF 3.

THE "A" BARS IN THE DECK MAY BE SHITED SLIGHTLY TO CLEAR THE MODULAR JOINT SUPPORT BOXES.

FOR SECTION A-A, SEE "TYPICAL SECTION DETAILS" SHEET 3 OF 3.

—(#)— INDICATES POUR NUMBER AND DIRECTION OF POUR.

PROJECT NO. U-2525B
GUILFORD COUNTY
STATION: 144+60.63 -L-

SHEET 1 OF 8

STATE OF NORTH CAROLINA
DEPARTMENT OF TRANSPORTATION
RALEIGH

SUPERSTRUCTURE
PLAN OF SPANS
SPAN "A"
UNIT 1
RIGHT LANE

NORTH CAROLINA PROFESSIONAL SEAL 027759 ENGINEER ALLYSON K. ORR
1/10/14

MI ENGINEERING
1011 SCHAUB DRIVE, SUITE 100
RALEIGH, NC 27606
(919) 851-6606
FIRM PE NUMBER : P-0671

REVISIONS						
NO.	BY:	DATE:	NO.	BY:	DATE:	
1			3			
2			4			

SHEET NO. S-245
TOTAL SHEETS 541

DWG. NO. 12

DRAWN BY :	B.E. LANNING	DATE :	06/13
CHECKED BY :	A.K. ORR	DATE :	07/13
DESIGN ENGINEER OF RECORD :	A.K. ORR	DATE :	01/14

1/10/2014
9:35:35 AM
User: blanning
Filename: P:\NC Bridges\MII007.03 U-2525B Guilford\U-2525B\Structures\Right Bridge\U2525B_SD_PS1_4_RT.dgn

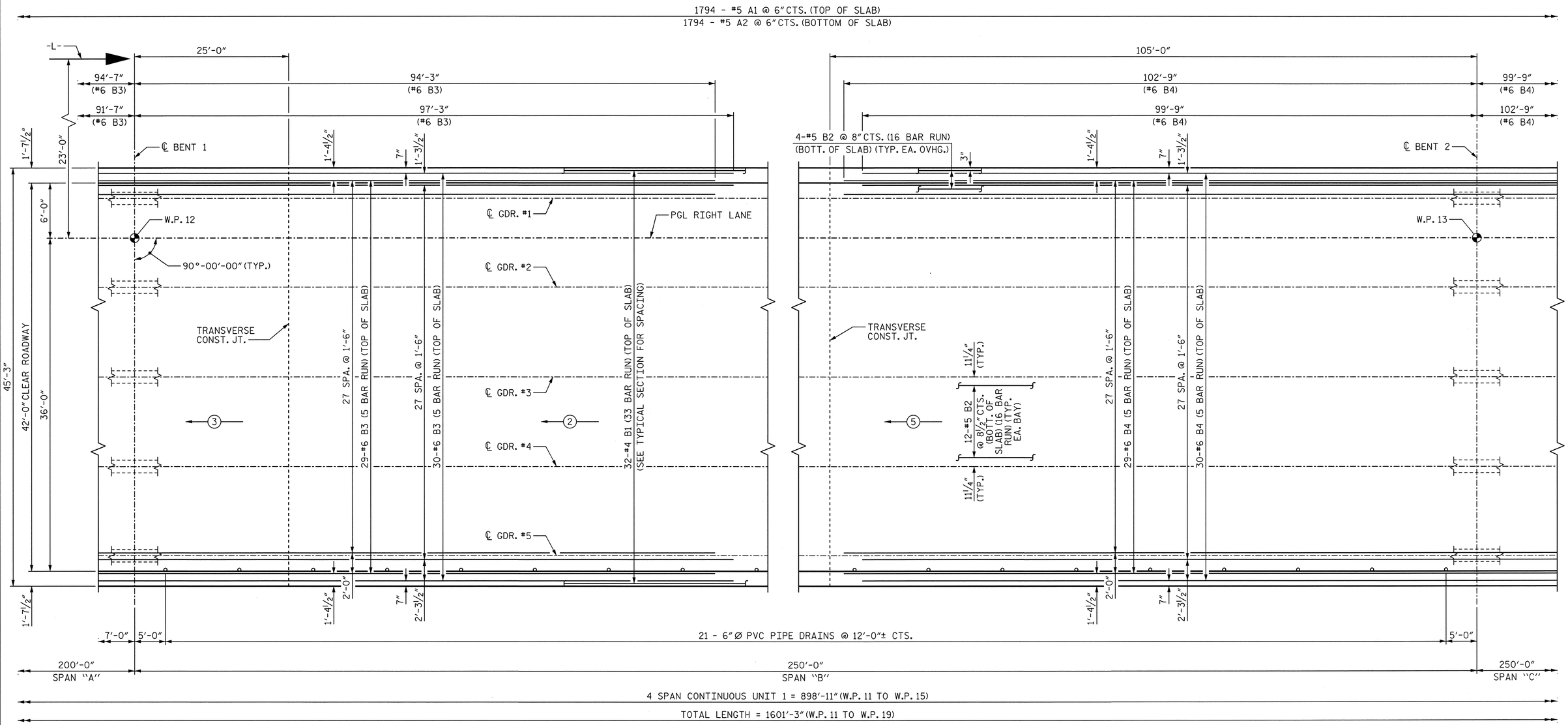

PROJECT NO. U-2525B
GUILFORD COUNTY
STATION: 144+60.63 -L-

SHEET 2 OF 8

PLAN OF SPAN "B"

NOTES

FOR REINFORCING STEEL IN BARRIER RAIL NOT SHOWN, SEE "STANDARD CONCRETE BARRIER RAIL" SHEET.

FOR TRANSVERSE CONSTRUCTION JOINT IN DECK SLAB DETAIL, SEE SUPERSTRUCTURE "TYPICAL SECTION DETAILS" SHEET 3 OF 3.

←(#)— INDICATES POUR NUMBER AND DIRECTION OF POUR.

NORTH CAROLINA PROFESSIONAL SEAL 027799 ENGINEER ALLYSON K. ORR
1/10/14

STATE OF NORTH CAROLINA
DEPARTMENT OF TRANSPORTATION
RALEIGH

SUPERSTRUCTURE

PLAN OF SPANS
SPAN "B"
UNIT 1
RIGHT LANE

DRAWN BY : B.E. LANNING	DATE : 06/13		
CHECKED BY : A.K. ORR	DATE : 07/13		
DESIGN ENGINEER OF RECORD : A.K. ORR	DATE : 01/14		

MI ENGINEERING
1011 SCHAUB DRIVE, SUITE 100
RALEIGH, NC 27606
(919) 851-6606
FIRM PE NUMBER : P-0671

DWG. NO. 13

REVISIONS						
NO.	BY:	DATE:	NO.	BY:	DATE:	SHEET NO. S-246
1			3			TOTAL SHEETS 54-1
2			4			

1/10/2014
9:37:13 AM
User: blanning
Filename: P:\NC Bridges\M1007.03 U-2525B Guilford\U-2525B\Structures\Right Bridge\U2525B_SD_PS2_4_RT.dgn

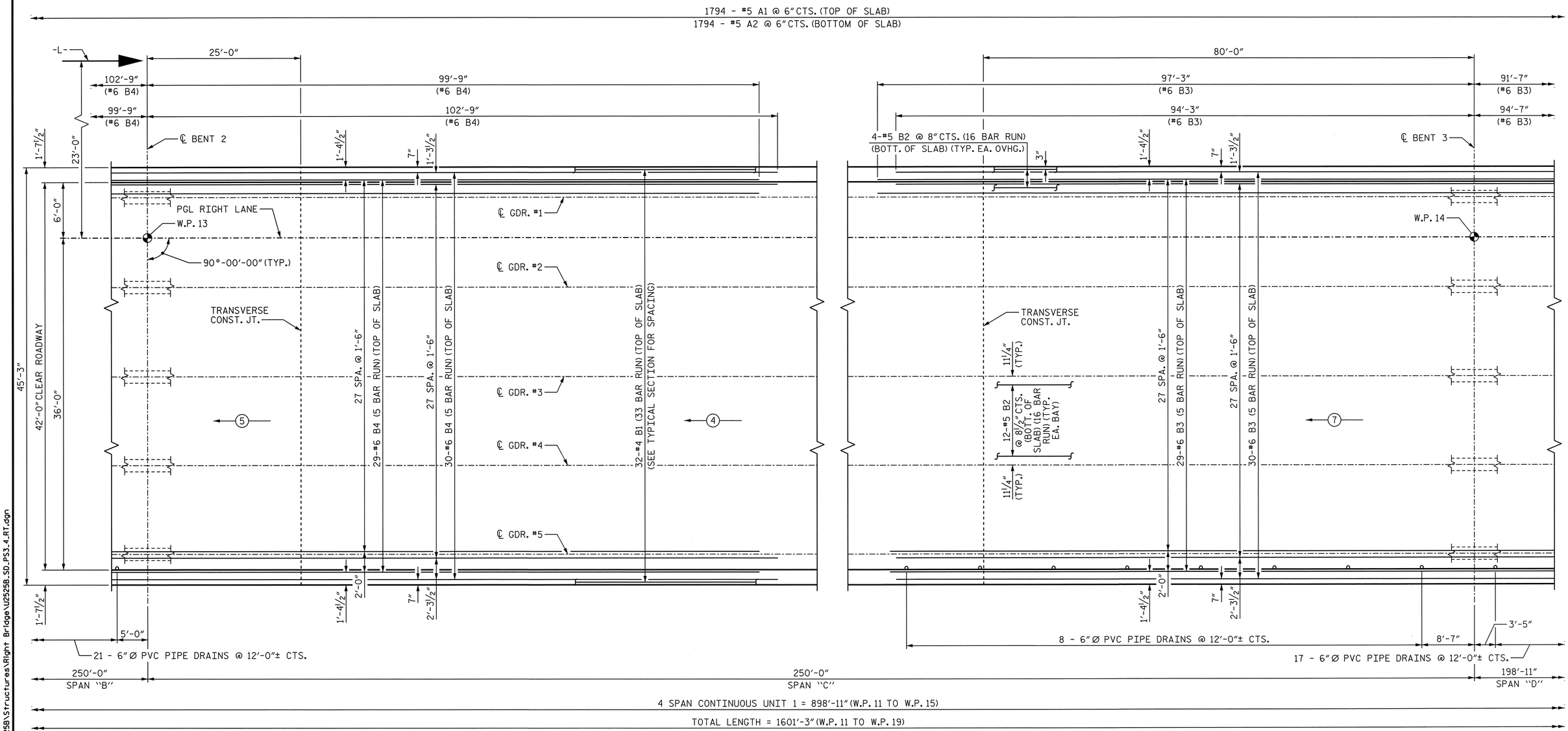

PROJECT NO. U-2525B
GUILFORD COUNTY
STATION: 144+60.63 -L-

SHEET 3 OF 8

PLAN OF SPAN "C"

NOTES

FOR REINFORCING STEEL IN BARRIER RAIL NOT SHOWN, SEE "STANDARD CONCRETE BARRIER RAIL" SHEET.

FOR TRANSVERSE CONSTRUCTION JOINT IN DECK SLAB DETAIL, SEE SUPERSTRUCTURE "TYPICAL SECTION DETAILS" SHEET 3 OF 3.

(#) INDICATES POUR NUMBER AND DIRECTION OF POUR.

NORTH CAROLINA PROFESSIONAL SEAL 027799 ENGINEER ALLYSON K. ORR 1/10/14

STATE OF NORTH CAROLINA
DEPARTMENT OF TRANSPORTATION
RALEIGH

SUPERSTRUCTURE

PLAN OF SPANS
SPAN "C"
UNIT 1
RIGHT LANE

DRAWN BY : B.E. LANNING	DATE : 06/13		
CHECKED BY : A.K. ORR	DATE : 07/13		
DESIGN ENGINEER OF RECORD : A.K. ORR	DATE : 01/14		

MI ENGINEERING
1011 SCHAUB DRIVE, SUITE 100
RALEIGH, NC 27606
(919) 851-6606
FIRM PE NUMBER : P-0671

DWG. NO. 14

REVISIONS

NO.	BY:	DATE:	NO.	BY:	DATE:
1			3		
2			4		

SHEET NO. S-247
TOTAL SHEETS 541

1/10/2014
9:37:15 AM
User: blanning
Filename: P:\NC Bridges\MI1007.03 U-2525B Guilford\U-2525B\Structures\Right Bridge\U2525B_SD_PS3_4_RT.dgn

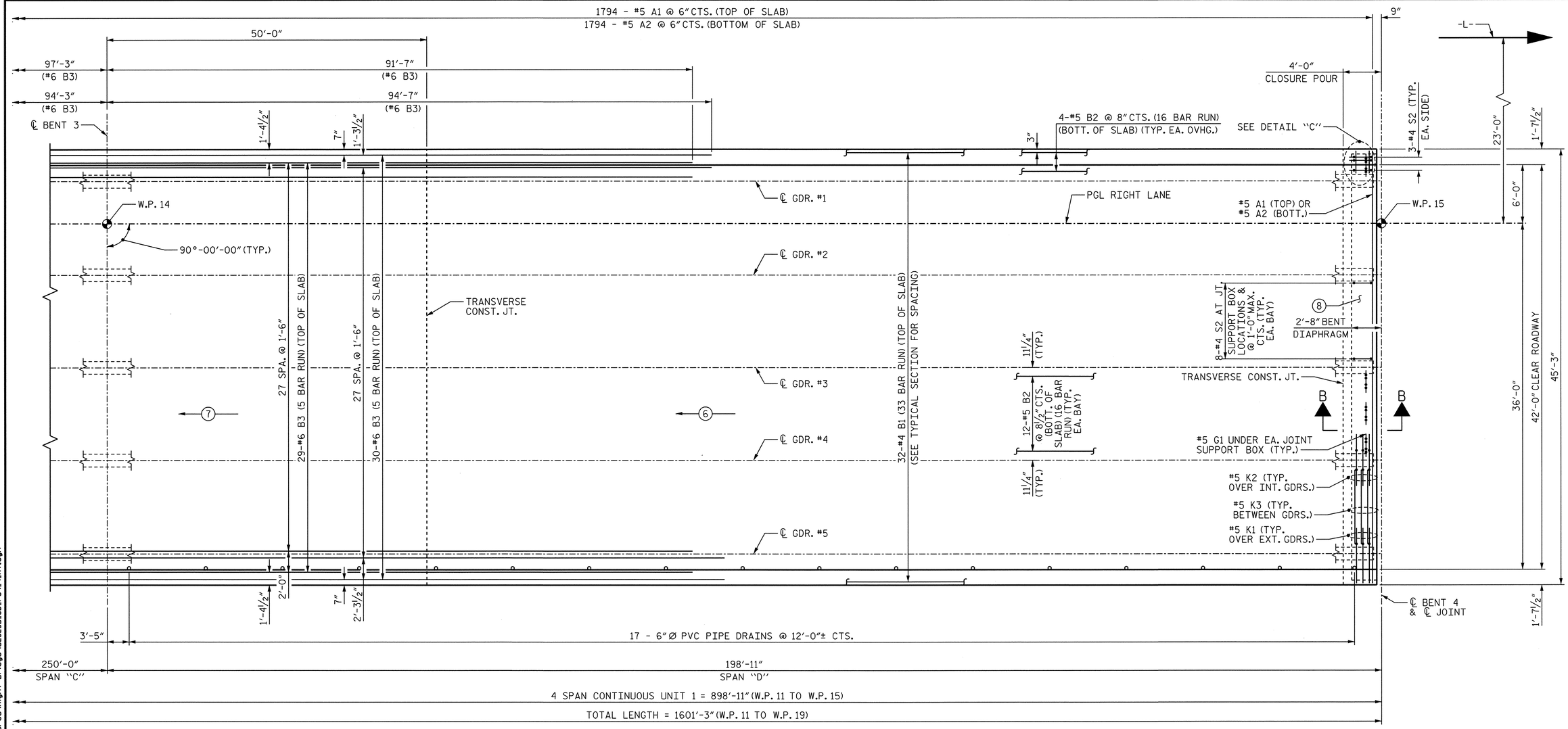

PLAN OF SPAN "D"

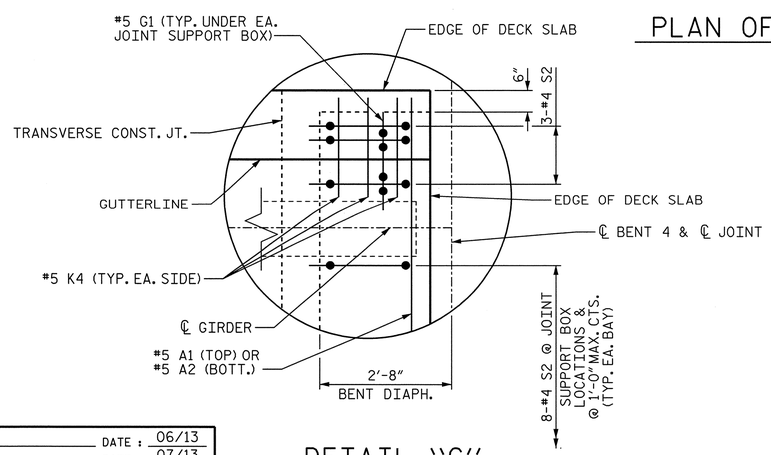

DETAIL "C"

NOTES

FOR REINFORCING STEEL IN BARRIER RAIL NOT SHOWN, SEE "STANDARD CONCRETE BARRIER RAIL" SHEET.

FOR TRANSVERSE CONSTRUCTION JOINT IN DECK SLAB DETAIL, SEE SUPERSTRUCTURE "TYPICAL SECTION DETAILS" SHEET 3 OF 3.

THE "A" BARS IN THE DECK MAY BE SHITED SLIGHTLY TO CLEAR THE MODULAR JOINT SUPPORT BOXES.

FOR SECTION B-B, SEE "TYPICAL SECTION DETAILS" SHEET 3 OF 3.

—(#)— INDICATES POUR NUMBER AND DIRECTION OF POUR.

PROJECT NO. U-2525B
GUILFORD COUNTY
STATION: 144+60.63 -L-

SHEET 4 OF 8

STATE OF NORTH CAROLINA
DEPARTMENT OF TRANSPORTATION
RALEIGH

SUPERSTRUCTURE
PLAN OF SPANS
SPAN "D"
UNIT 1
RIGHT LANE

NORTH CAROLINA PROFESSIONAL SEAL 027799 ENGINEER ALLYSON K. ORR
1/10/14

DRAWN BY : B.E. LANNING	DATE : 06/13
CHECKED BY : A.K. ORR	DATE : 07/13
DESIGN ENGINEER OF RECORD : A.K. ORR	DATE : 01/14

MI ENGINEERING
1011 SCHAUB DRIVE, SUITE 100
RALEIGH, NC 27606
(919) 851-6606
FIRM PE NUMBER : P-0671

DWG. NO. 15

REVISIONS						
NO.	BY:	DATE:	NO.	BY:	DATE:	
1			3			
2			4			

SHEET NO. S-248
TOTAL SHEETS 54

1/10/2014
9:37:18 AM
User: blanning
Filename: P:\NC Bridges\MI1007.03 U-2525B Guilford\U-2525B\Structures\Right Bridge\U2525B_SD_PS4_4_RT.dgn

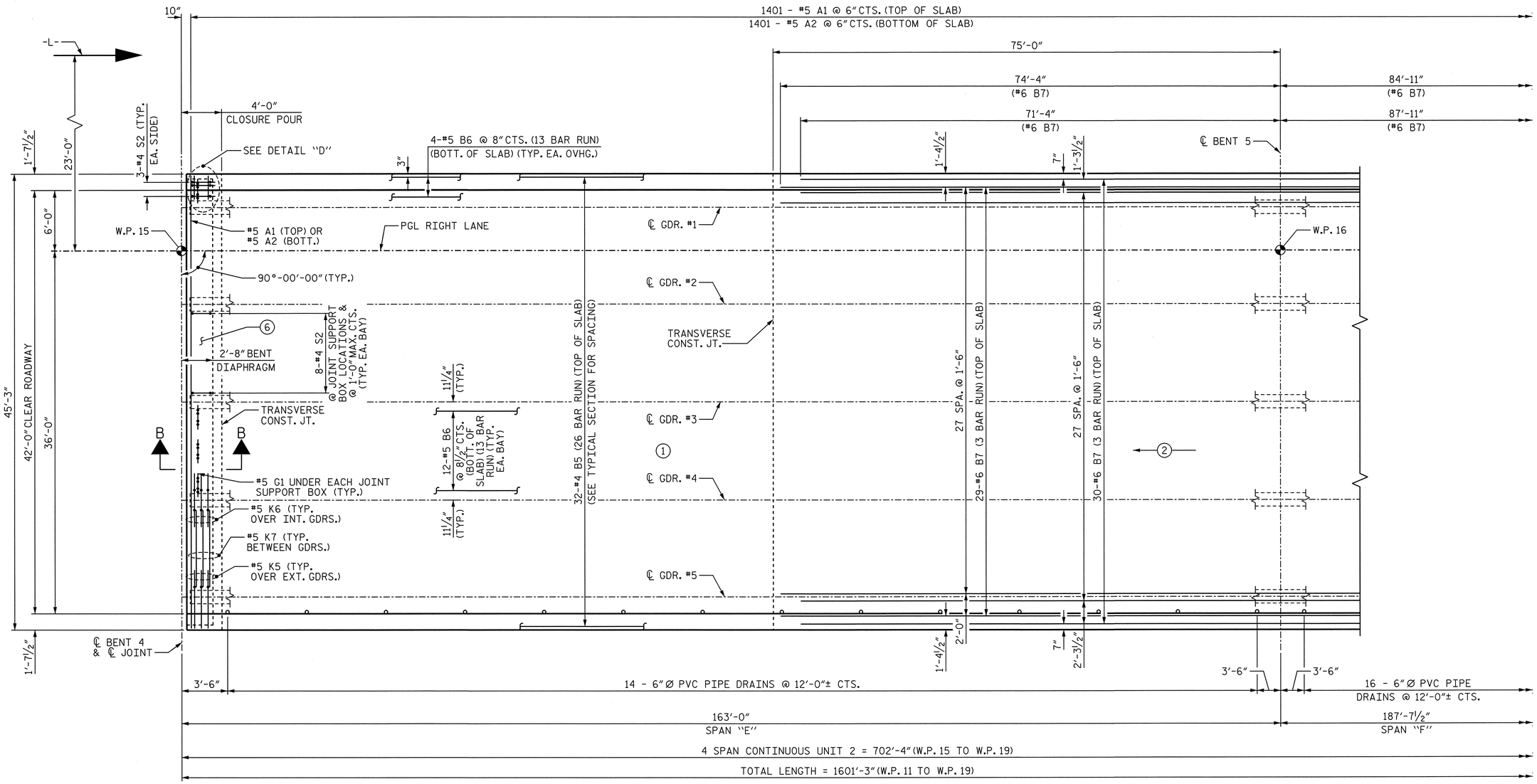

PLAN OF SPAN "E"

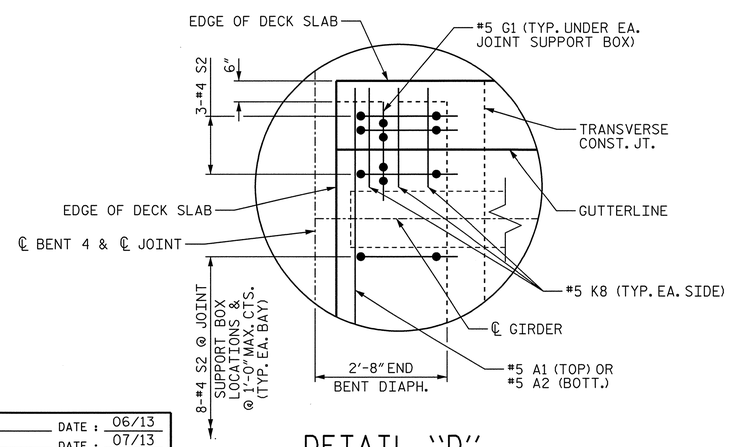

DETAIL "D"

NOTES

FOR REINFORCING STEEL IN BARRIER RAIL NOT SHOWN, SEE "STANDARD CONCRETE BARRIER RAIL" SHEET.

FOR TRANSVERSE CONSTRUCTION JOINT IN DECK SLAB DETAIL, SEE SUPERSTRUCTURE "TYPICAL SECTION DETAILS" SHEET 3 OF 3.

THE "A" BARS IN THE DECK MAY BE SHITED SLIGHTLY TO CLEAR THE MODULAR JOINT SUPPORT BOXES.

FOR SECTION B-B, SEE "TYPICAL SECTION DETAILS" SHEET 3 OF 3.

←(#)— INDICATES POUR NUMBER AND DIRECTION OF POUR.

PROJECT NO. U-2525B

GUILFORD COUNTY

STATION: 144+60.63 -L-

SHEET 5 OF 8

STATE OF NORTH CAROLINA
DEPARTMENT OF TRANSPORTATION
RALEIGH

SUPERSTRUCTURE

PLAN OF SPANS
SPAN "E"
UNIT 2
RIGHT LANE

NORTH CAROLINA PROFESSIONAL SEAL 027799 ENGINEER ALLYSON K. ORR
1/10/14

DRAWN BY : B.E. LANNING	DATE : 06/13
CHECKED BY : A.K. ORR	DATE : 07/13
DESIGN ENGINEER OF RECORD : A.K. ORR	DATE : 01/14

MI ENGINEERING
1011 SCHAUB DRIVE, SUITE 100
RALEIGH, NC 27606
(919) 851-6606
FIRM PE NUMBER : P-0671

DWG. NO. 16

REVISIONS						
NO.	BY:	DATE:	NO.	BY:	DATE:	
1			3			
2			4			

SHEET NO. S-249
TOTAL SHEETS 541

1/10/2014
9:37:20 AM
User: blanning
Filename: P:\NC Bridges\M11007.03 U-2525B Guilford\U-2525B\Structures\Right Bridge\U2525B_SD_PS5_4_RT.dgn

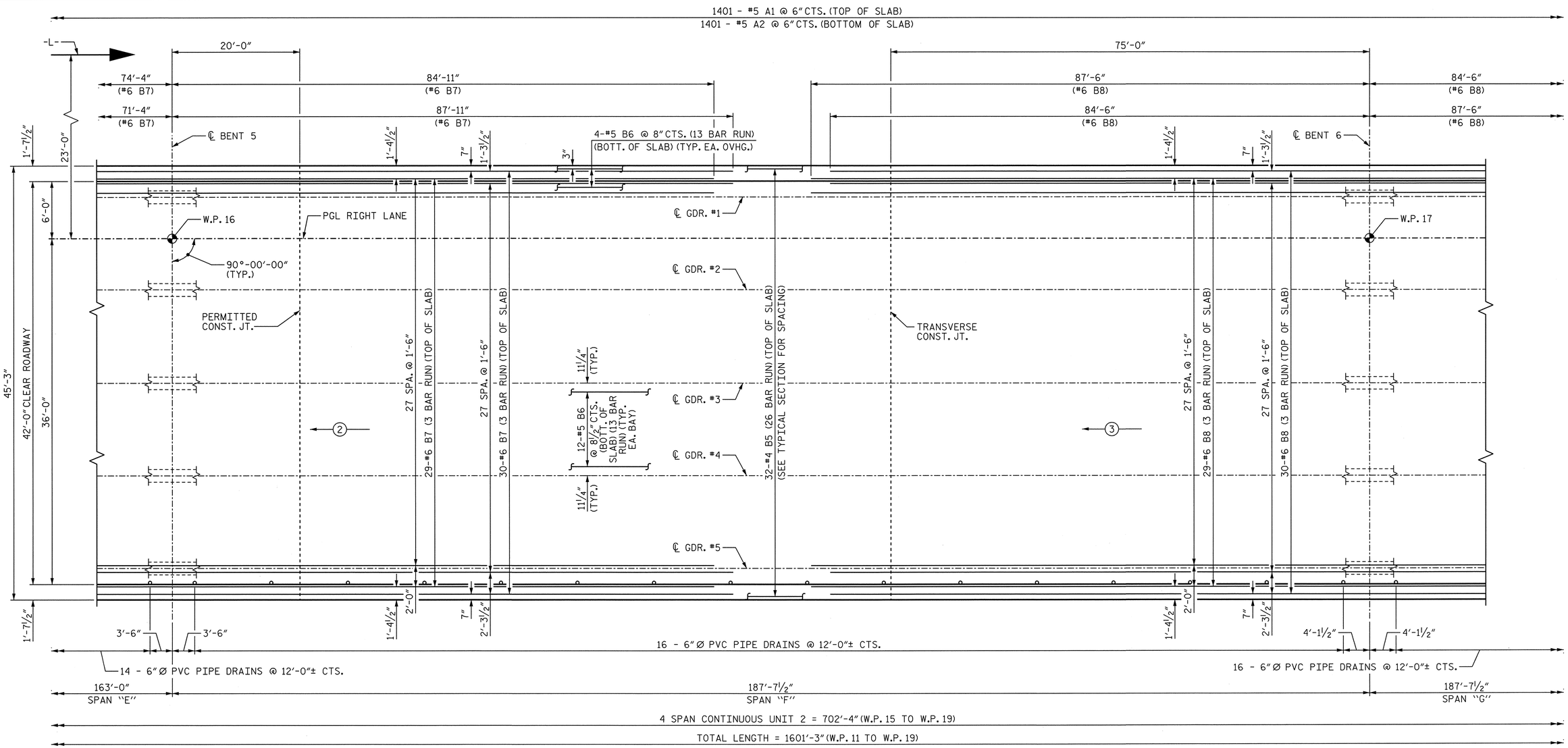

PLAN OF SPAN "F"

NOTES

FOR REINFORCING STEEL IN BARRIER RAIL NOT SHOWN, SEE "STANDARD CONCRETE BARRIER RAIL" SHEET.

FOR TRANSVERSE CONSTRUCTION JOINT IN DECK SLAB DETAIL, SEE SUPERSTRUCTURE "TYPICAL SECTION DETAILS" SHEET 3 OF 3.

(#) INDICATES POUR NUMBER AND DIRECTION OF POUR.

PROJECT NO. U-2525B
GUILFORD COUNTY
STATION: 144+60.63 -L-

SHEET 6 OF 8

STATE OF NORTH CAROLINA
DEPARTMENT OF TRANSPORTATION
RALEIGH

SUPERSTRUCTURE

PLAN OF SPANS
SPAN "F"
UNIT 2
RIGHT LANE

NORTH CAROLINA PROFESSIONAL SEAL 027799 ENGINEER ALLYSON K. ORR 1/10/14

DRAWN BY : B.E. LANNING	DATE : 06/13		
CHECKED BY : A.K. ORR	DATE : 07/13		
DESIGN ENGINEER OF RECORD : A.K. ORR	DATE : 01/14		

DWG. NO. 17

MI ENGINEERING
1011 SCHAUB DRIVE, SUITE 100
RALEIGH, NC 27606
(919) 851-6606
FIRM PE NUMBER : P-0671

REVISIONS						
NO.	BY:	DATE:	NO.	BY:	DATE:	SHEET NO. S-250
1			3			TOTAL SHEETS 54
2			4			

1/10/2014
9:37:23 AM
User: blanning
Filename: P:\NC Bridges\MI1007.03 U-2525B Guilford\U-2525B\Structures\Right Bridge\U2525B_SD_PS6.4_RT.dgn

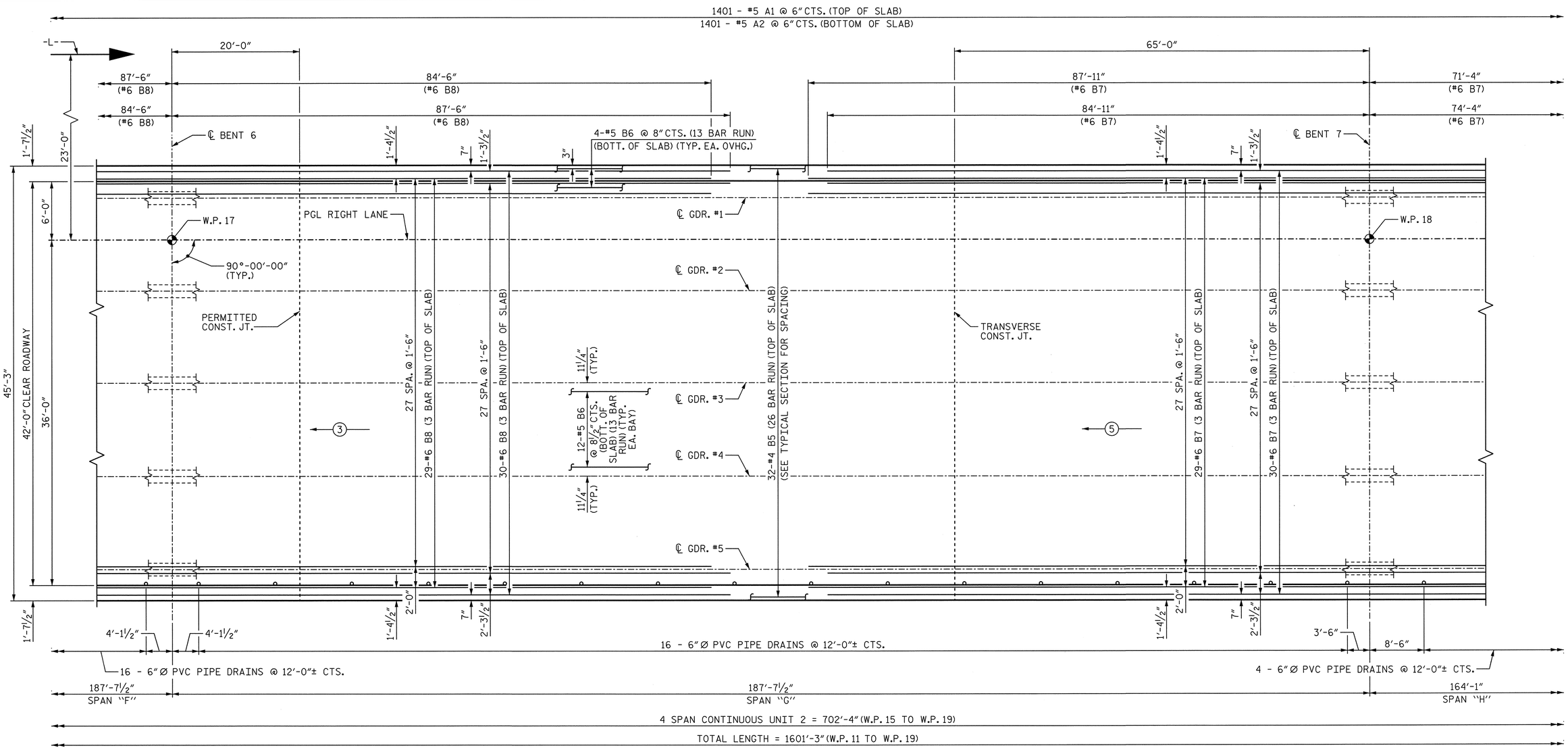

PLAN OF SPAN "G"

NOTES

FOR REINFORCING STEEL IN BARRIER RAIL NOT SHOWN, SEE "STANDARD CONCRETE BARRIER RAIL" SHEET.

FOR TRANSVERSE CONSTRUCTION JOINT IN DECK SLAB DETAIL, SEE SUPERSTRUCTURE "TYPICAL SECTION DETAILS" SHEET 3 OF 3.

(#) INDICATES POUR NUMBER AND DIRECTION OF POUR.

PROJECT NO. U-2525B
GUILFORD COUNTY
STATION: 144+60.63 -L-

SHEET 7 OF 8

STATE OF NORTH CAROLINA
DEPARTMENT OF TRANSPORTATION
RALEIGH

SUPERSTRUCTURE

PLAN OF SPANS
SPAN "G"
UNIT 2
RIGHT LANE

NORTH CAROLINA PROFESSIONAL SEAL 027799 ENGINEER ALLYSON K. ORR
1/10/14

MI ENGINEERING
1011 SCHAUB DRIVE, SUITE 100
RALEIGH, NC 27606
(919) 851-6606
FIRM PE NUMBER : P-0671

REVISIONS						
NO.	BY:	DATE:	NO.	BY:	DATE:	
1			3			
2			4			

SHEET NO. S-251
TOTAL SHEETS 541

DRAWN BY : B.E. LANNING DATE : 06/13
CHECKED BY : A.K. ORR DATE : 07/13
DESIGN ENGINEER OF RECORD : A.K. ORR DATE : 01/14

DWG. NO. 18

1/10/2014
9:37:25 AM
User: blanning
Filename: P:\NC Bridges\MI1007.03 U-2525B Guilford\U-2525B\Structures\Right Bridge\U2525B_SD_PST_4_RT.dgn

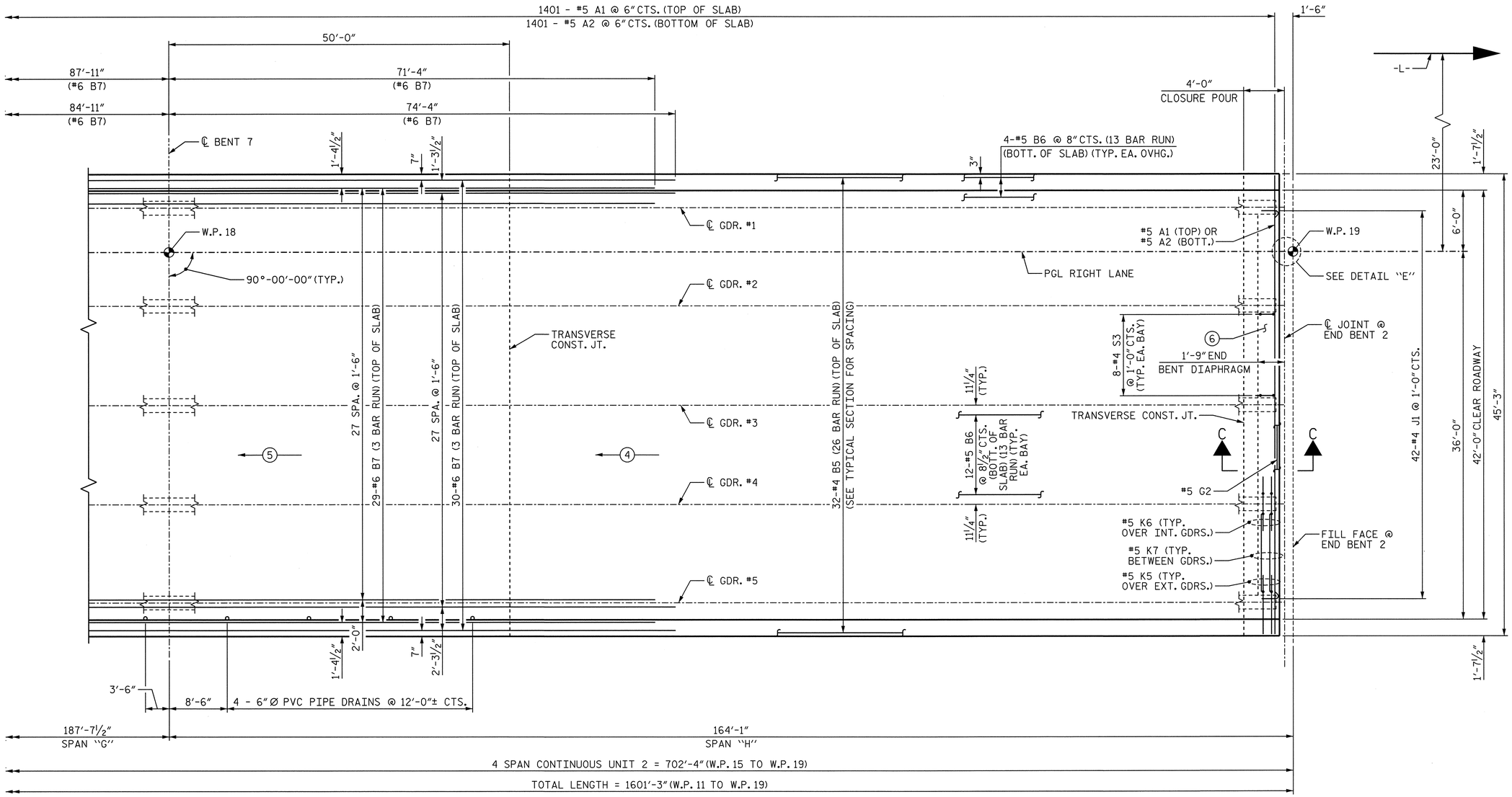

PLAN OF SPAN "H"

NOTES

FOR REINFORCING STEEL IN BARRIER RAIL NOT SHOWN, SEE "STANDARD CONCRETE BARRIER RAIL" SHEET.

FOR TRANSVERSE CONSTRUCTION JOINT IN DECK SLAB DETAIL, SEE SUPERSTRUCTURE "TYPICAL SECTION DETAILS" SHEET 3 OF 3.

FOR SECTION C-C, SEE "TYPICAL SECTION DETAILS" SHEET 3 OF 3.

(#) INDICATES POUR NUMBER AND DIRECTION OF POUR.

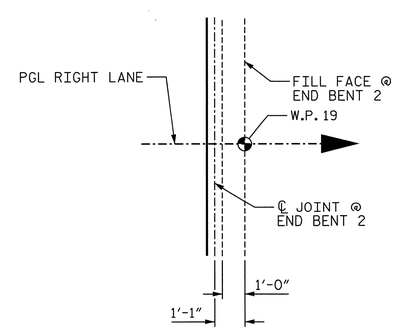

DETAIL "E"

DWG. NO. 19

PROJECT NO. U-2525B

GUILFORD COUNTY

STATION: 144+60.63 -L-

SHEET 8 OF 8

STATE OF NORTH CAROLINA
DEPARTMENT OF TRANSPORTATION
RALEIGH

SUPERSTRUCTURE

PLAN OF SPANS
SPAN "H"
UNIT 2
RIGHT LANE

NORTH CAROLINA PROFESSIONAL SEAL 027799 ENGINEER ALLYSON K. ORR 1/10/14

MI ENGINEERING
1011 SCHAUB DRIVE, SUITE 100
RALEIGH, NC 27606
(919) 851-6606
FIRM PE NUMBER : P-0671

REVISIONS						SHEET NO.
NO.	BY:	DATE:	NO.	BY:	DATE:	S-252
1			3			TOTAL SHEETS
2			4			541

DRAWN BY : B.E. LANNING DATE : 06/13
CHECKED BY : A.K. ORR DATE : 07/13
DESIGN ENGINEER OF RECORD : A.K. ORR DATE : 01/14

1/10/2014
9:37:27 AM
User: blanning
Filename: P:\NC Bridges\MI1007.03 U-2525B Guilford\U-2525B\Structures\Right Bridge\U2525B_SD_PS8_4_RT.dgn

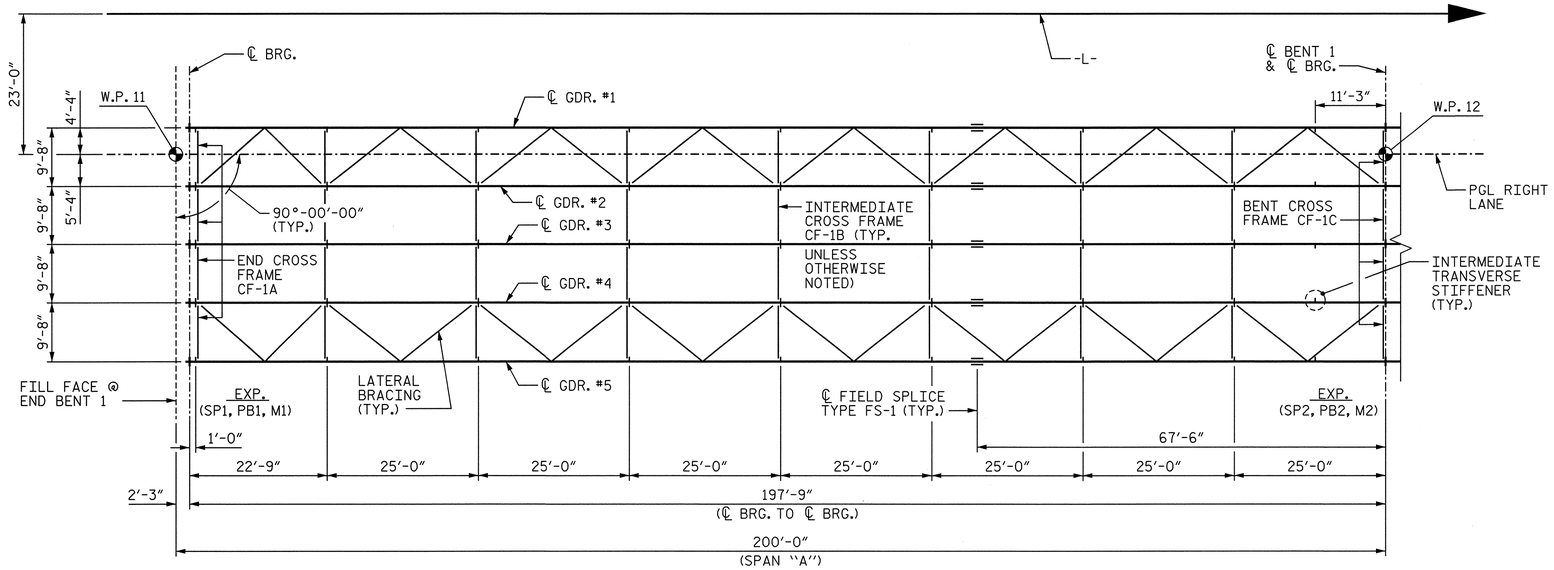

SPAN "A"

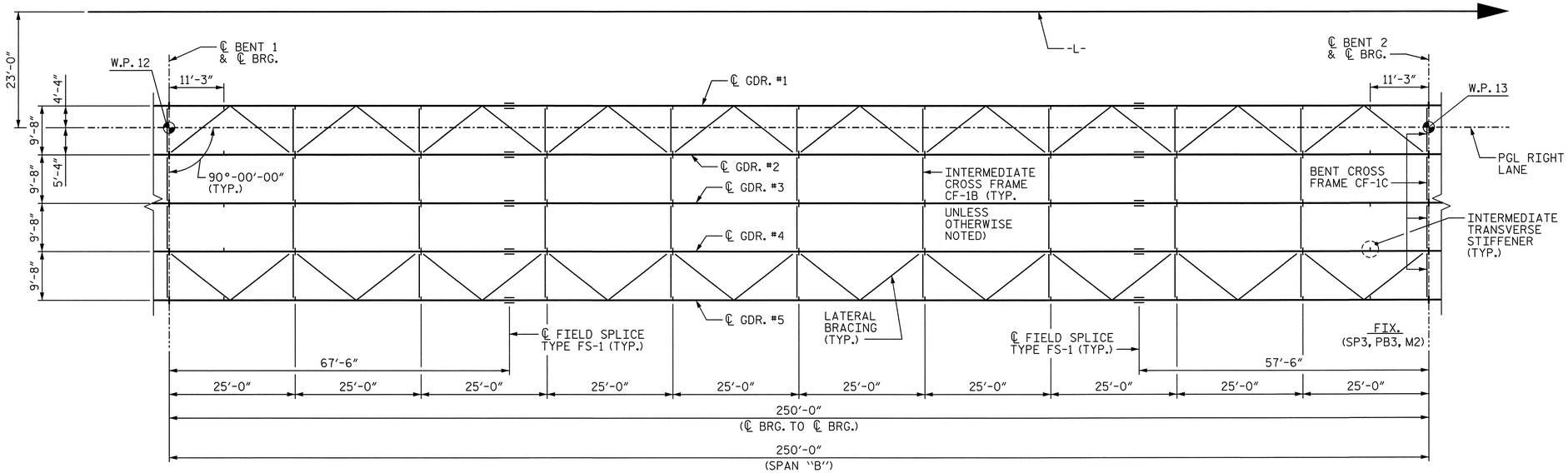

SPAN "B"

FRAMING PLAN

PROJECT NO. U-2525B

GUILFORD COUNTY

STATION: 144+60.63 -L-

SHEET 1 OF 3

STATE OF NORTH CAROLINA
DEPARTMENT OF TRANSPORTATION
RALEIGH

SUPERSTRUCTURE
FRAMING PLAN
UNIT I
SPANS "A" & "B"
RIGHT LANE

NORTH CAROLINA PROFESSIONAL SEAL 027799 ENGINEER ALLYSON K. ORR
1/10/14

DRAWN BY : J.S. ISRAELNAIM	DATE : 05/13		
CHECKED BY : A.K. ORR	DATE : 05/13		
DESIGN ENGINEER OF RECORD : A.K. ORR	DATE : 01/14		

DWG. NO. 20

MI ENGINEERING
1011 SCHAUB DRIVE, SUITE 100
RALEIGH, NC 27606
(919) 851-6606
FIRM PE NUMBER : P-0671

REVISIONS							
NO.	BY:	DATE:	NO.	BY:	DATE:	SHEET NO.	
1			3			S-253	
2			4			TOTAL SHEETS	
						541	

1/10/2014
9:37:50 AM
User: blanning
Filename: P:\NC Bridges\MI1007.03 U-2525B Guilford\U-2525B\Structures\Right Bridge\U2525B_SD_FP1_4_RT.dgn

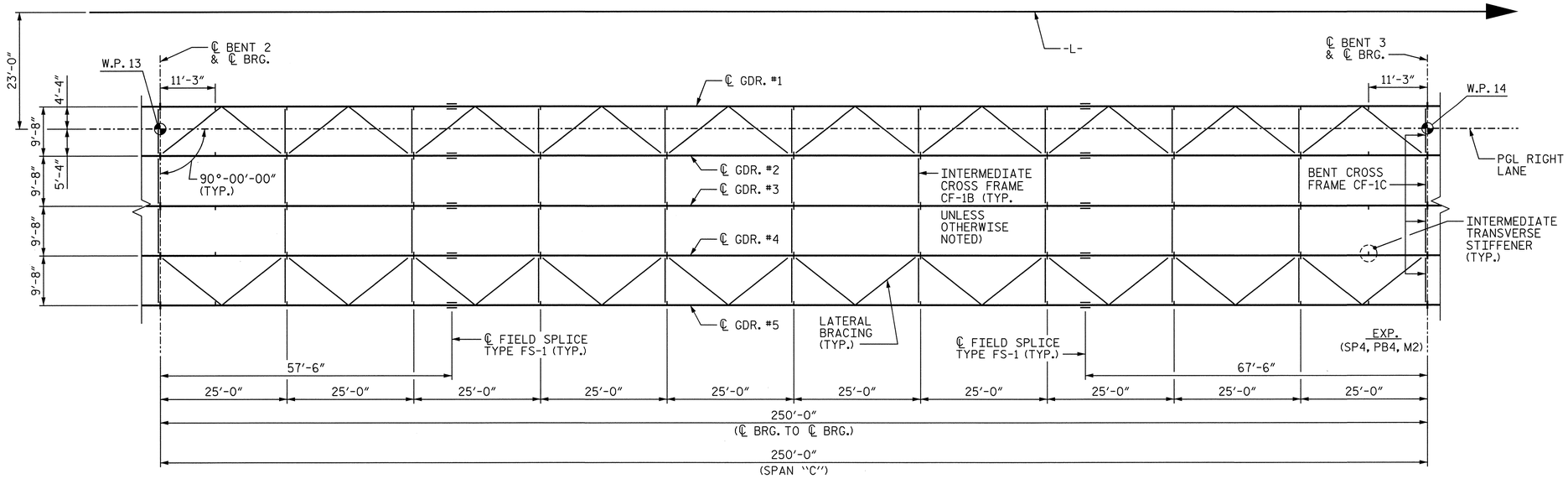

SPAN "C"

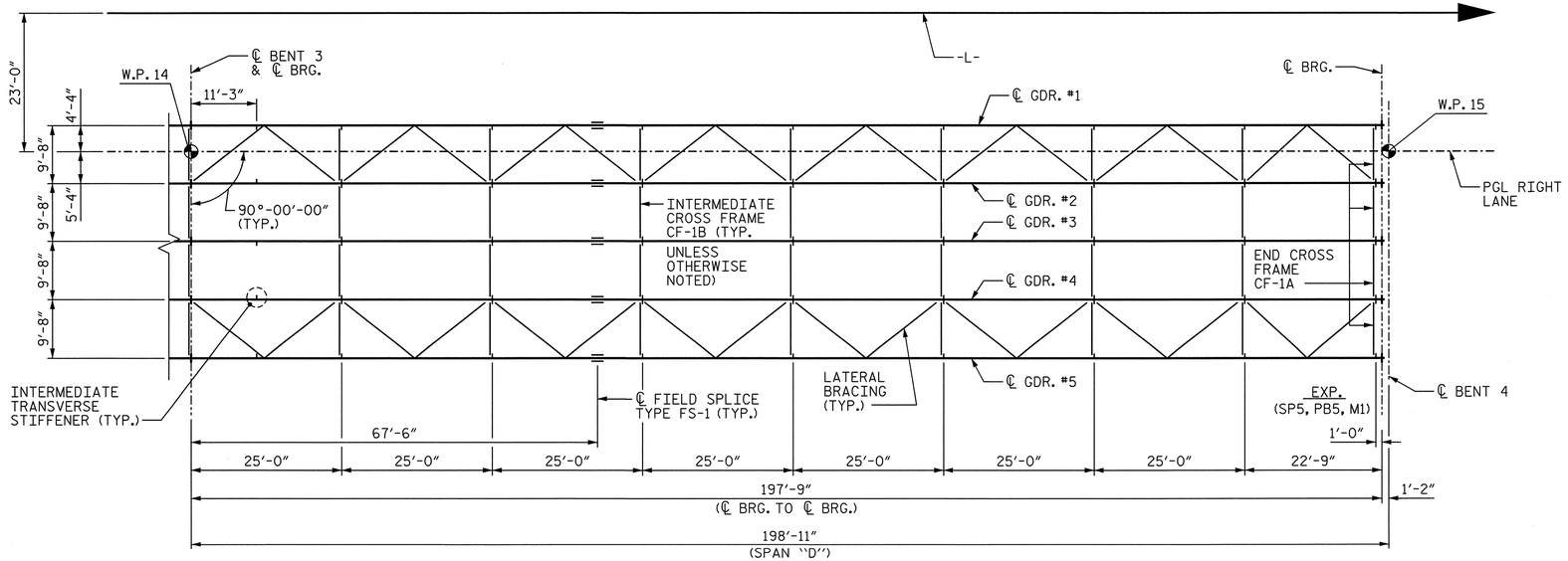

SPAN "D"

FRAMING PLAN

PROJECT NO. U-2525B

GUILFORD COUNTY

STATION: 144+60.63 -L-

SHEET 2 OF 3

STATE OF NORTH CAROLINA
DEPARTMENT OF TRANSPORTATION
RALEIGH

SUPERSTRUCTURE
FRAMING PLAN
UNIT 1
SPANS "C" & "D"
RIGHT LANE

NORTH CAROLINA PROFESSIONAL SEAL 027799 ENGINEER ALLYSON K. ORR
1/10/14

DRAWN BY : J.S. ISRAELNAIM	DATE : 05/13		
CHECKED BY : A.K. ORR	DATE : 05/13		
DESIGN ENGINEER OF RECORD : A.K. ORR	DATE : 01/14		

DWG. NO. 21

MI ENGINEERING
1011 SCHAUB DRIVE, SUITE 100
RALEIGH, NC 27606
(919) 851-6606
FIRM PE NUMBER : P-0671

REVISIONS						
NO.	BY:	DATE:	NO.	BY:	DATE:	
1			3			
2			4			

SHEET NO. S-254
TOTAL SHEETS 541

1/10/2014
9:37:32 AM
User: blanning
Filename: P:\NC Bridges\MI1007.03 U-2525B Guilford\U-2525B\Structures\Right Bridge\U2525B_SD_FP2_4_RT.dgn

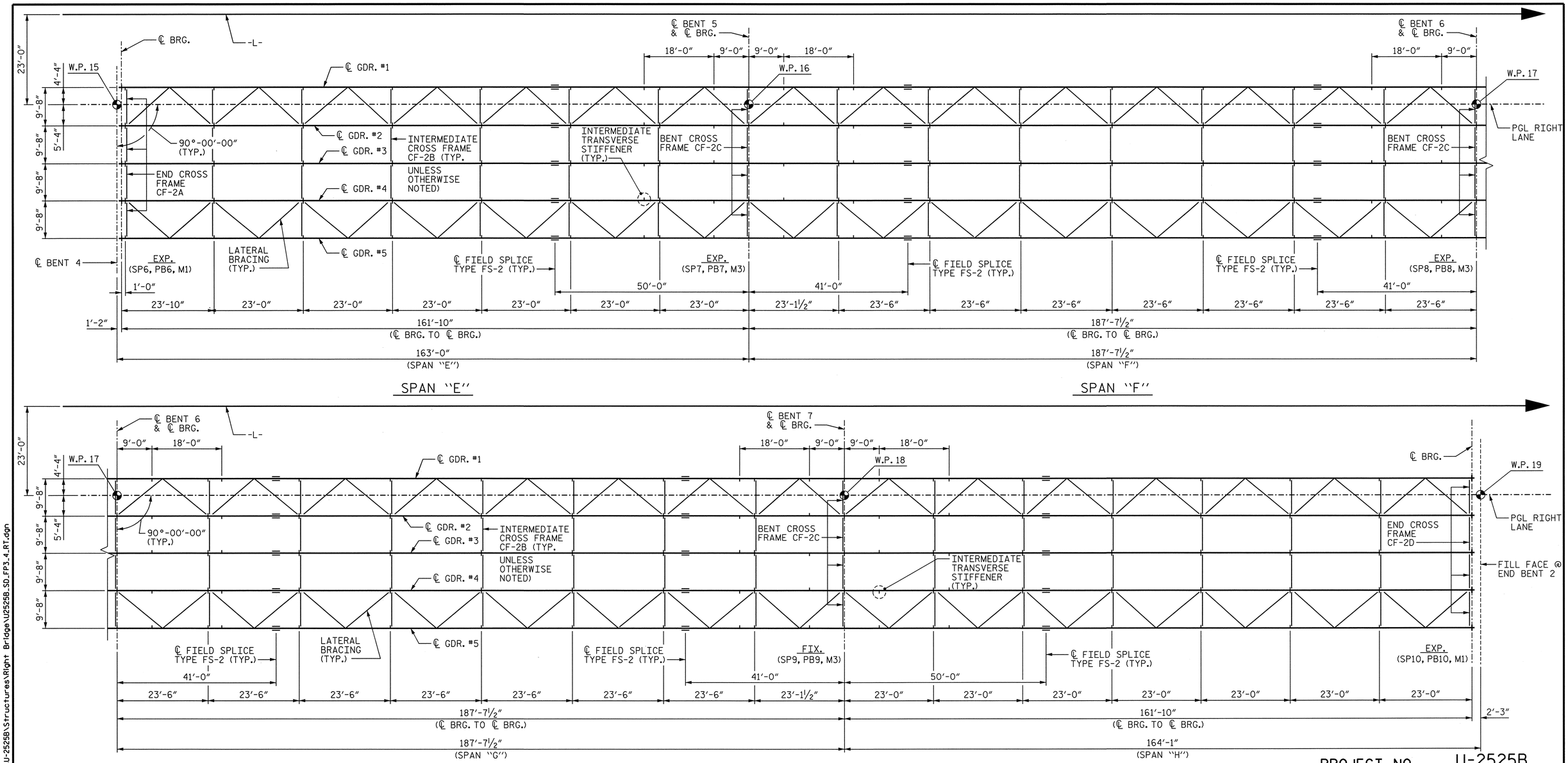

FRAMING PLAN

PROJECT NO. U-2525B

GUILFORD COUNTY

STATION: 144+60.63 -L-

SHEET 3 OF 3

STATE OF NORTH CAROLINA
DEPARTMENT OF TRANSPORTATION
RALEIGH

SUPERSTRUCTURE
FRAMING PLAN
UNIT 2
SPANS "E" THRU "H"
RIGHT LANE

NORTH CAROLINA PROFESSIONAL SEAL 027799 ENGINEER ALLYSON K. ORR
1/10/14

MI ENGINEERING
1011 SCHAUB DRIVE, SUITE 100
RALEIGH, NC 27606
(919) 851-6606
FIRM PE NUMBER : P-0671

DWG. NO. 22

REVISIONS						
NO.	BY:	DATE:	NO.	BY:	DATE:	
1			3			
2			4			

SHEET NO. S-255
TOTAL SHEETS 541

DRAWN BY : B.E. LANNING DATE : 07/13
CHECKED BY : A.K. ORR DATE : 07/13
DESIGN ENGINEER OF RECORD : A.K. ORR DATE : 01/14

1/10/2014
9:37:35 AM
User: blanning
Filename: P:\NC Bridges\MI1007.03 U-2525B Guilford\U-2525B\Structures\Right Bridge\U2525B_SD_FP3_4_RT.dgn

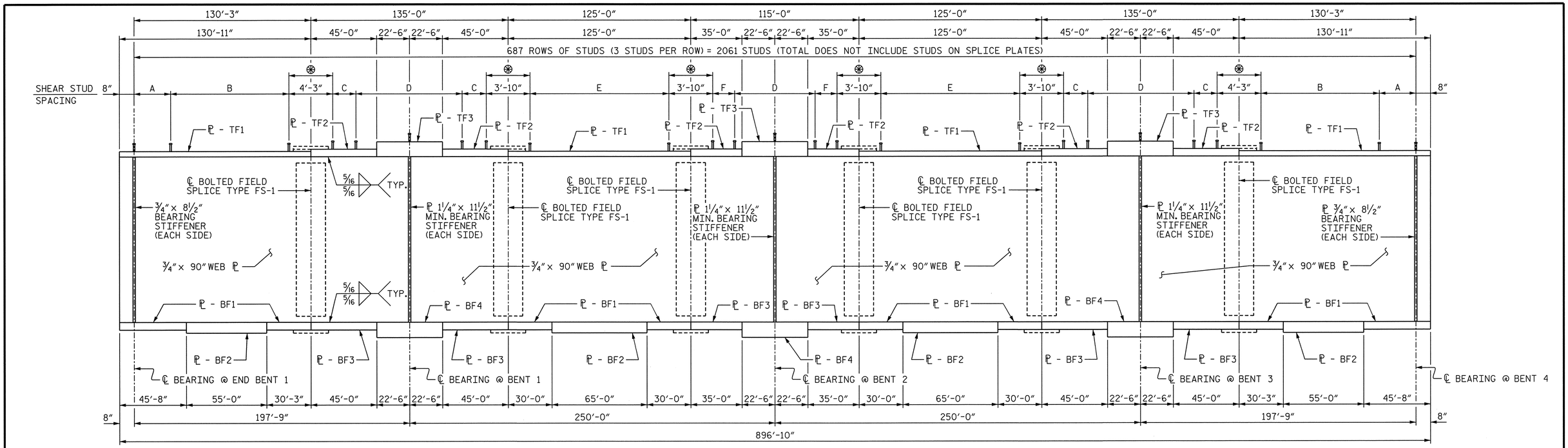

GIRDER ELEVATION

⊛ SEE SHEET 5 OF 5 FOR STUD LOCATIONS ON SPLICE PLATES.

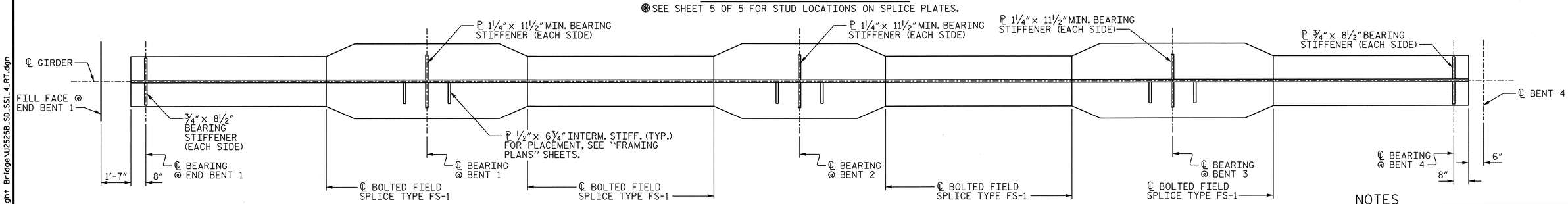

PLAN OF BOTTOM FLANGE

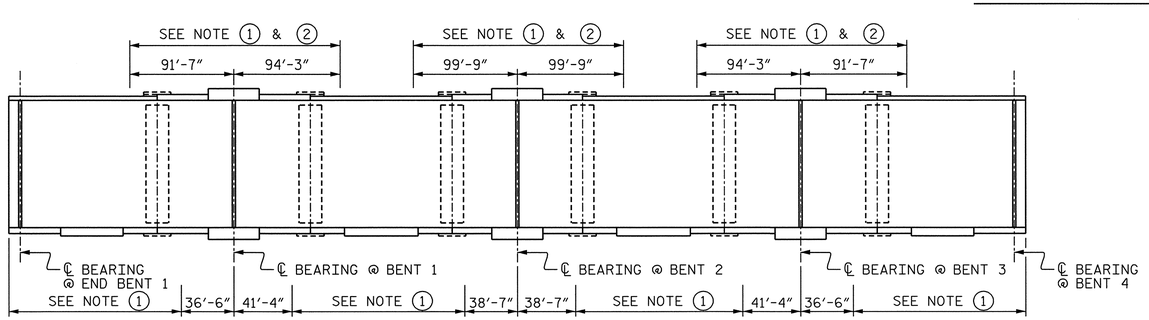

CHARPY V-NOTCH TESTS FOR GIRDERS

NOTE ①: CHARPY V-NOTCH TESTS ARE REQUIRED FOR ALL TOP OR BOTTOM FLANGE PLATES WHICH FALL WITHIN THESE LIMITS, ALL WEB PLATES AND ALL SPLICE PLATES. IF A PERMITTED SHOP FLANGE SPLICE IS NOT USED, CHARPY V-NOTCH TESTS WILL BE REQUIRED FOR THE ENTIRE FLANGE PLATE. FOR CHARPY V-NOTCH TESTS, SEE ARTICLE 1072-9 OF THE STANDARD SPECIFICATIONS.

NOTE ②: NO WELDING OF FORMS OR FALSEWORK TO THE TOP FLANGE WILL BE PERMITTED IN THIS REGION.

TABLE OF SHEAR STUDS

A	B	C	D	E	F
35 SPA. @ 1'-0"	80 SPA. @ 1'-2"	25 SPA. @ 1'-2"	36 SPA. @ 2'-0"	104 SPA. @ 1'-2"	17 SPA. @ 1'-2"

TABLE OF FLANGE PLATES

TOP PLATE	SIZE
TF1	7/8" × 1'-6 1/2"
TF2	1 1/4" × 2'-0"
TF3	2 1/2" × 2'-0"
BOTTOM PLATE	**SIZE**
BF1	1 1/4" × 1'-6"
BF2	1 3/4" × 1'-6"
BF3	1 1/4" × 2'-3"
BF4	2 1/2" × 2'-3"

NOTES

FOR SHEAR STUD DETAILS, SEE SHEET 3 OF 5.

FOR BOLTED FIELD SPLICE DETAILS, SEE SHEET 5 OF 5.

FOR INTERMEDIATE STIFFENER LOCATIONS, SEE FRAMING PLANS.

PROJECT NO. U-2525B

GUILFORD COUNTY

STATION: 144+60.63 -L-

SHEET 1 OF 5

NORTH CAROLINA PROFESSIONAL SEAL 027799 ENGINEER ALLYSON K. ORR 1/10/14

STATE OF NORTH CAROLINA
DEPARTMENT OF TRANSPORTATION
RALEIGH

SUPERSTRUCTURE

STRUCTURAL STEEL DETAILS
UNIT 1
RIGHT LANE

DRAWN BY : B.E. LANNING DATE : 07/13
CHECKED BY : A.K. ORR DATE : 07/13
DESIGN ENGINEER OF RECORD : A.K. ORR DATE : 01/14

DWG. NO. 23

MI ENGINEERING
1011 SCHAUB DRIVE, SUITE 100
RALEIGH, NC 27606
(919) 851-6606
FIRM PE NUMBER : P-0671

REVISIONS						
NO.	BY:	DATE:	NO.	BY:	DATE:	
1			3			
2			4			

SHEET NO. S-256

TOTAL SHEETS 541

1/10/2014
9:37:37 AM
User: blanning
Filename: P:\NC Bridges\MI1007.03 U-2525B Guilford\U-2525B\Structures\Right Bridge\U2525B_SD_SS1_4_RT.dgn

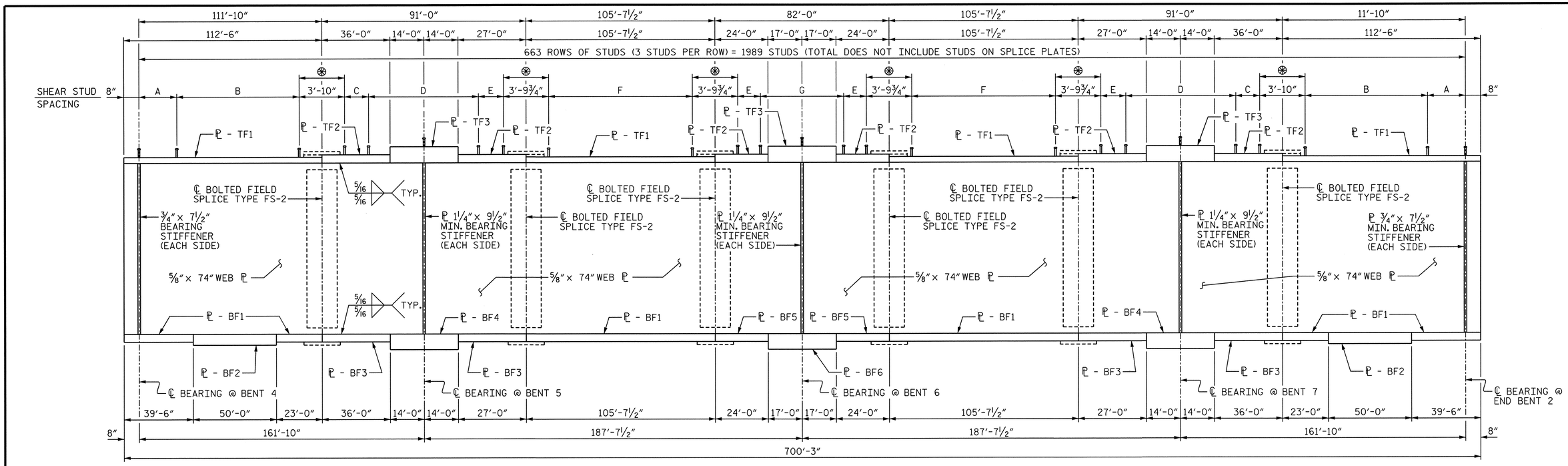

GIRDER ELEVATION

⊛SEE SHEET 5 OF 5 FOR STUD LOCATIONS ON SPLICE PLATES.

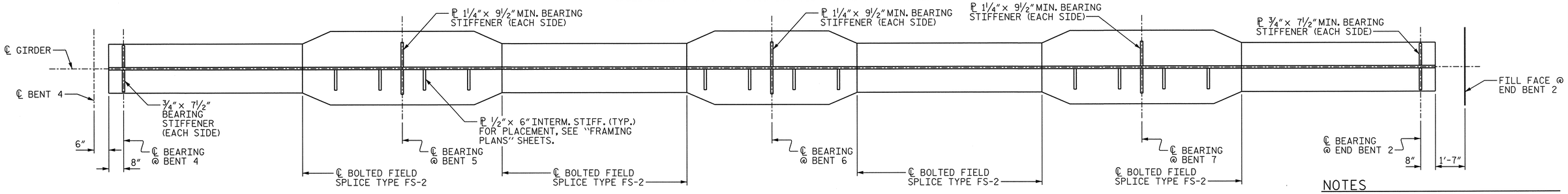

PLAN OF BOTTOM FLANGE

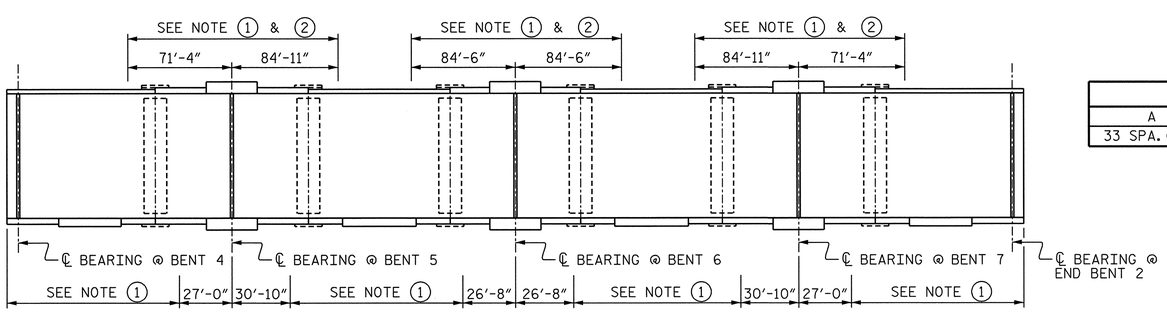

CHARPY V-NOTCH TESTS FOR GIRDERS

NOTE ①: CHARPY V-NOTCH TESTS ARE REQUIRED FOR ALL TOP OR BOTTOM FLANGE PLATES WHICH FALL WITHIN THESE LIMITS, ALL WEB PLATES AND ALL SPLICE PLATES. IF A PERMITTED SHOP FLANGE SPLICE IS NOT USED, CHARPY V-NOTCH TESTS WILL BE REQUIRED FOR THE ENTIRE FLANGE PLATE. FOR CHARPY V-NOTCH TESTS, SEE ARTICLE 1072-9 OF THE STANDARD SPECIFICATIONS.

NOTE ②: NO WELDING OF FORMS OR FALSEWORK TO THE TOP FLANGE WILL BE PERMITTED IN THIS REGION.

TABLE OF SHEAR STUDS

A	B	C	D	E	F	G
33 SPA. @ 9"	93 SPA. @ 11"	22 SPA. @ 1'-0"	19 SPA. @ 2'-0"	25 SPA. @ 1'-0"	102 SPA. @ 1'-0"	14 SPA. @ 2'-0"

TABLE OF FLANGE PLATES

TOP PLATE	SIZE
TF1	¾"× 1'-4"
TF2	1¼"× 1'-8"
TF3	2⅛"× 1'-8"
BOTTOM PLATE	**SIZE**
BF1	1¼"× 1'-4"
BF2	1¾"× 1'-4"
BF3	1¼"× 2'-0"
BF4	2⅛"× 2'-0"
BF5	1¼"× 1'-10"
BF6	2⅛"× 1'-10"

NOTES

FOR SHEAR STUD DETAILS, SEE SHEET 3 OF 5.

FOR BOLTED FIELD SPLICE DETAILS, SEE SHEET 5 OF 5.

FOR INTERMEDIATE STIFFENER LOCATIONS, SEE FRAMING PLANS.

PROJECT NO. U-2525B
GUILFORD COUNTY
STATION: 144+60.63 -L-

SHEET 2 OF 5

NORTH CAROLINA PROFESSIONAL SEAL 027799 ENGINEER ALLYSON K. ORR
1/10/14

STATE OF NORTH CAROLINA
DEPARTMENT OF TRANSPORTATION
RALEIGH

SUPERSTRUCTURE
STRUCTURAL STEEL DETAILS
UNIT 2
RIGHT LANE

MI ENGINEERING
1011 SCHAUB DRIVE, SUITE 100
RALEIGH, NC 27606
(919) 851-6606
FIRM PE NUMBER : P-0671

REVISIONS							
NO.	BY:	DATE:	NO.	BY:	DATE:		
1			3				
2			4				

SHEET NO. S-257
TOTAL SHEETS 541

DWG. NO. 24

DRAWN BY :	B.E. LANNING	DATE :	07/13
CHECKED BY :	A.K. ORR	DATE :	07/13
DESIGN ENGINEER OF RECORD :	A.K. ORR	DATE :	01/14

1/10/2014
9:39:15 AM
User: blanning
Filename: P:\NC Bridges\MI1007.03 U-2525B Guilford\U-2525B\Structures\Right Bridge\U2525B_SD_SS2_4_RT.dgn

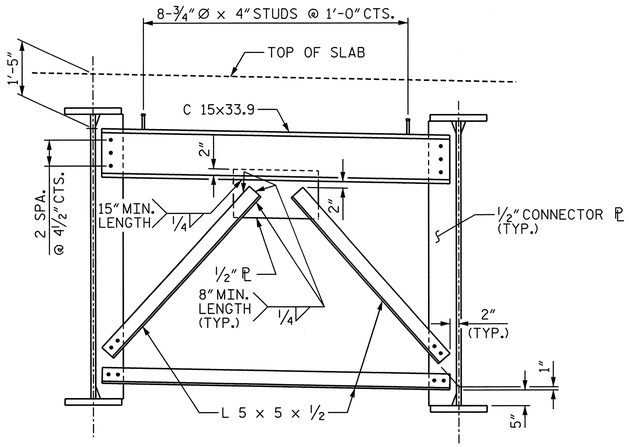

END CROSS FRAME CF-1A

(AT END BENT 1 & BENT 4)

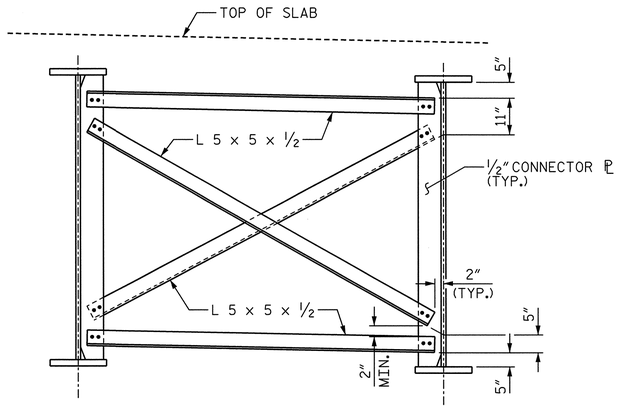

INTERMEDIATE CROSS FRAME CF-1B

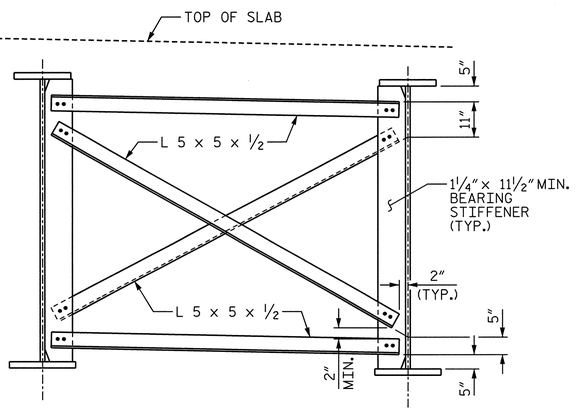

BENT CROSS FRAME CF-1C

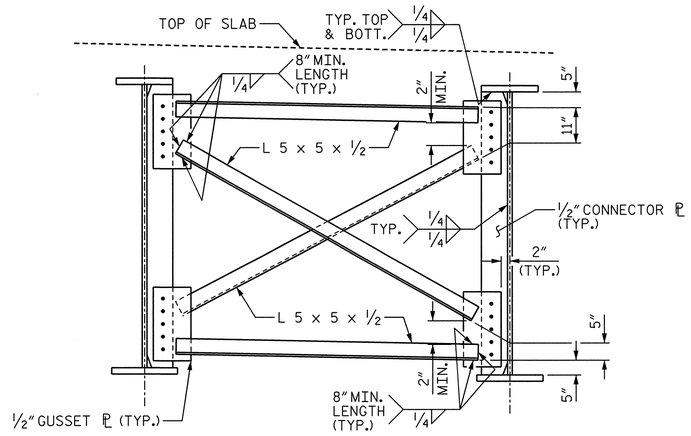

OPTIONAL INTERMEDIATE CROSS FRAME CF-1B

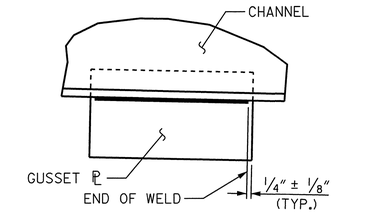

TYPICAL GUSSET PLATE CONNECTION

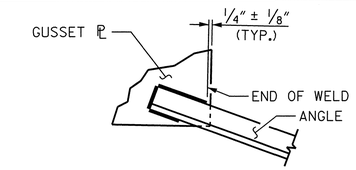

TYPICAL "ANGLE" TO GUSSET PLATE CONNECTION

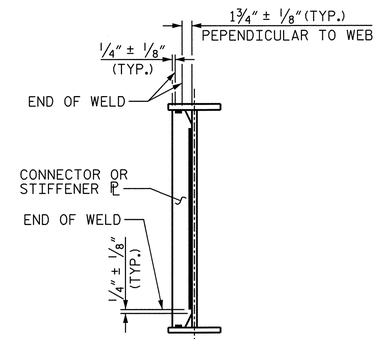

TYPICAL STIFFINER OR CONNECTOR PLATE CONNECTIONS

WELD TERMINATION DETAILS

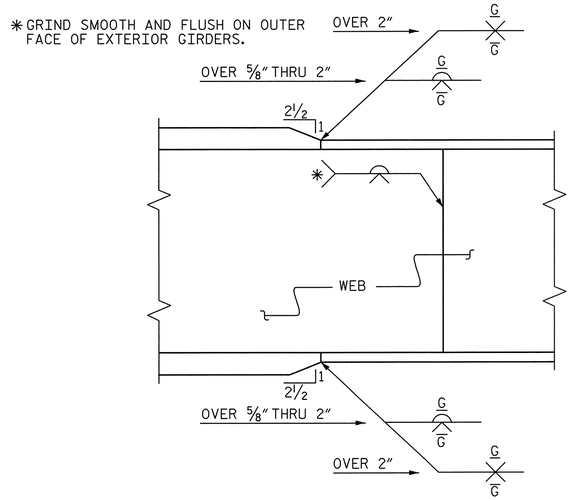

ELEVATION

TYPICAL FLANGE AND WEB BUTT JOINT

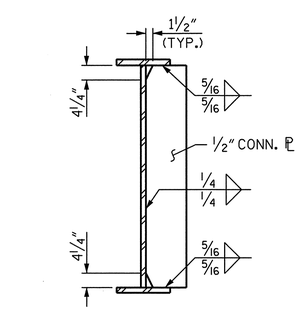

CONNECTOR PLATE WELD DETAIL

UNIT 1

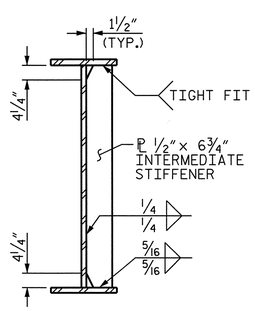

INTERMEDIATE STIFFENER

UNIT 1

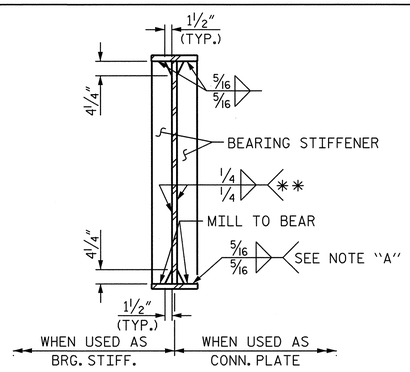

BEARING STIFFENER

UNIT 1

NOTE A:
ONLY WELD BEARING STIFFENER TO BOTTOM FLANGE IF DIAPHRAGM IS ATTACHED TO BEARING STIFFENER.

BEARING STIFFENER MAY REQUIRE COPING IF WIDER THAN BOTTOM FLANGE.

** PER BRIDGE WELDING CODE FIG. 2.3(c) BEVEL IF NECESSARY.

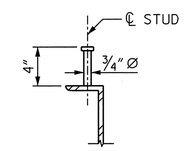

ON DIAPHRAGMS

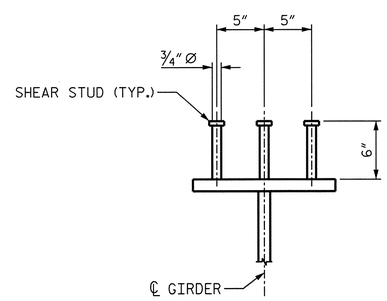

ON GIRDERS

SHEAR STUD DETAILS

STUDS ON GIRDERS MAY BE SHIFTED SLIGHTLY, IF NECESSARY, TO CLEAR FLANGE SPLICE WELD.

DWG. NO. 25

PROJECT NO. U-2525B
GUILFORD COUNTY
STATION: 144+60.63 -L-

SHEET 3 OF 5

STATE OF NORTH CAROLINA
DEPARTMENT OF TRANSPORTATION
RALEIGH

SUPERSTRUCTURE
STRUCTURAL STEEL DETAILS

RIGHT LANE

NORTH CAROLINA PROFESSIONAL SEAL 027799 ENGINEER ALLYSON K. ORR
1/10/14

MI ENGINEERING
1011 SCHAUB DRIVE, SUITE 100
RALEIGH, NC 27606
(919) 851-6606
FIRM PE NUMBER : P-0671

REVISIONS							
NO.	BY:	DATE:	NO.	BY:	DATE:	SHEET NO.	S-258
1			3			TOTAL SHEETS	54
2			4				

DRAWN BY :	B.E. LANNING	DATE :	07/13
CHECKED BY :	A.K. ORR	DATE :	07/13
DESIGN ENGINEER OF RECORD :	A.K. ORR	DATE :	01/14

1/10/2014
9:39:18 AM
User: blanning
Filename: P:\NC Bridges\WI1007.03 U-2525B Guilford\U-2525B\Structures\Right Bridge\U2525B_SD_SS3_4_RT.dgn

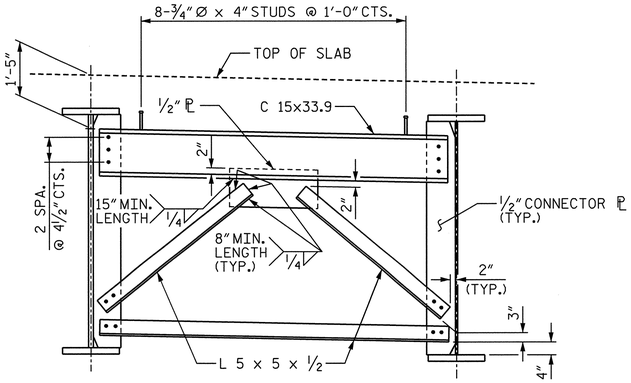

END CROSS FRAME CF-2A

(AT BENT 4)

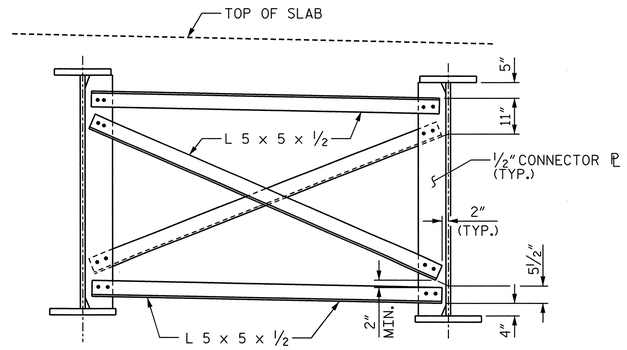

INTERMEDIATE CROSS FRAME CF-2B

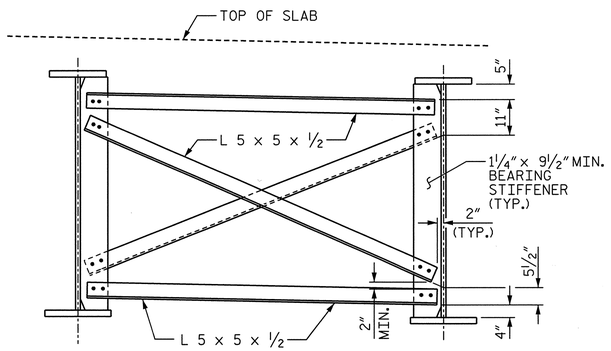

BENT CROSS FRAME CF-2C

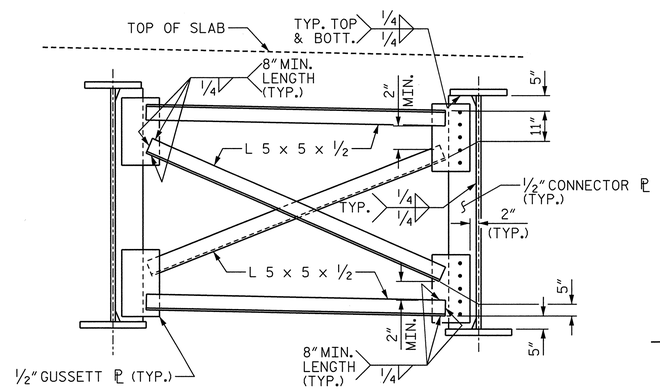

OPTIONAL INTERMEDIATE CROSS FRAME CF-2B

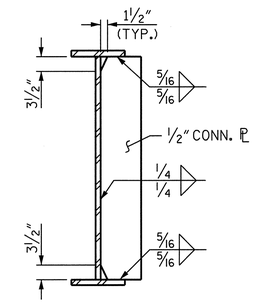

CONNECTOR PLATE WELD DETAIL

UNIT 2

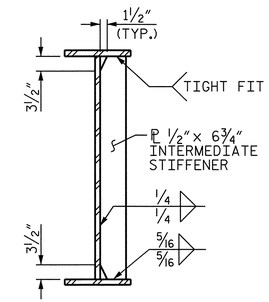

INTERMEDIATE STIFFENER

UNIT 2

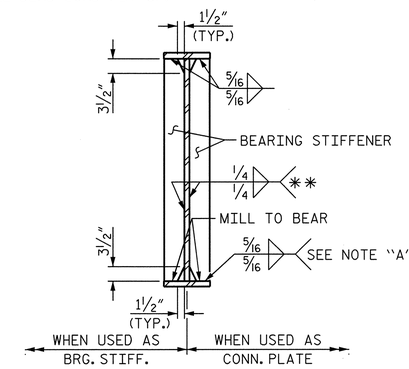

BEARING STIFFENER

UNIT 2

NOTE A:
ONLY WELD BEARING STIFFENER TO BOTTOM FLANGE IF DIAPHRAGM IS ATTACHED TO BEARING STIFFENER.

BEARING STIFFENER MAY REQUIRE COPING IF WIDER THAN BOTTOM FLANGE.

** PER BRIDGE WELDING CODE FIG. 2.3(c) BEVEL IF NECESSARY.

NOTES

ALL STRUCTURAL STEEL SHALL BE AASHTO M270 GRADE 50W AND PAINTED IN ACCORDANCE WITH SYSTEM 4 OF ARTICLE 442-7 OF THE STANDARD SPECIFICATIONS, UNLESS OTHERWISE NOTED ON THE PLANS.

ALL DIMENSIONS SHOWN ARE HORIZONTAL OR VERTICAL, UNLESS OTHERWISE NOTED.

ALL FIELD CONNECTIONS TO BE ⅞" DIA. HIGH STRENGTH BOLTS, UNLESS OTHERWISE NOTED.

BEARING STIFFENERS ARE TO BE PLACED NORMAL TO THE WEB OF THE GIRDER AND SHALL BE PLUMB.

PERMITTED FLANGE AND WEB SHOP SPLICES SHALL NOT BE LOCATED WITHIN 15 FEET OF MAXIMUM DEAD LOAD DEFLECTION (NOR WITHIN 15 FEET OF INTERMEDIATE BEARINGS OF CONTINUOUS UNITS). KEEP 2 FEET MINIMUM BETWEEN WEB AND FLANGE SHOP SPLICES. KEEP 6" MINIMUM BETWEEN CONNECTOR PLATE OR TRANSVERSE STIFFENER WELDS AND WEB OR FLANGE SHOP SPLICES.

STUDS ON GIRDERS MAY BE SHIFTED UP TO 1" IF NECESSARY TO CLEAR FLANGE SPLICE WELD.

TENSION ON THE ASTM A325 BOLTS SHALL BE CALIBRATED USING DIRECT TENSION INDICATOR WASHERS IN ACCORDANCE WITH ARTICLE 440-8 OF THE STANDARD SPECIFICATIONS.

ENDS OF GIRDERS SHALL BE PLUMB.

STRUCTURAL STEEL ERECTION IN A CONTINUOUS UNIT SHALL BE COMPLETE BEFORE FALSEWORK OR FORMS ARE PLACED ON THE UNIT.

FABRICATORS SHALL DETAIL DIAPHRAGM MEMBERS AND CONNECTIONS FOR FULL DEAD LOAD FIT UP. GIRDERS SHALL BE PLUMB AFTER THE FULL AMOUNT OF DEAD LOAD IS APPLIED.

AT THE CONTRACTOR'S OPTION, THE CROSS FRAME WITH THE WELDED GUSSET PLATES MAY BE USED IN LIEU OF THE CROSS FRAME WITH BOLTED ANGLES AT NO ADDITIONAL COST TO THE DEPARTMENT.

FABRICATORS SHALL DETAIL DIAPHRAGM MEMBERS AND CONNECTIONS FOR STEEL DEAD LOAD FIT UP.

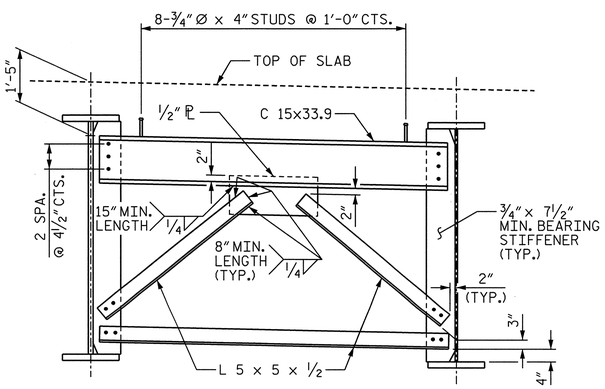

END CROSS FRAME CF-2D

(AT END BENT 2)

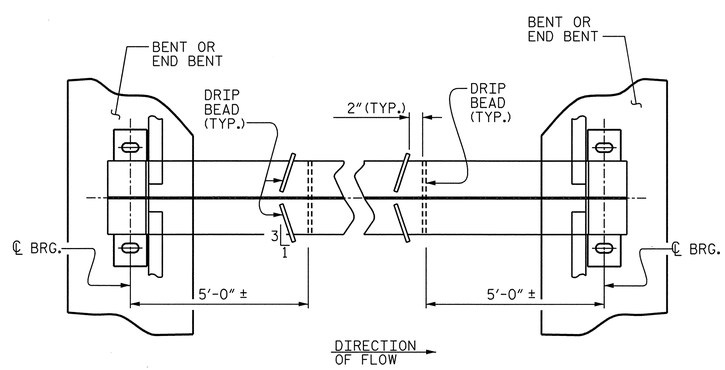

PART PLAN - BOTTOM FLANGE

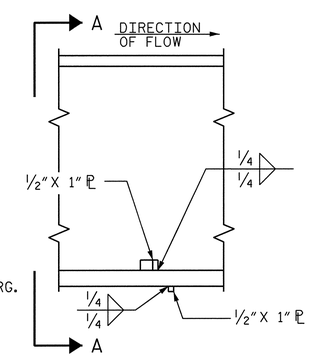

SECTION

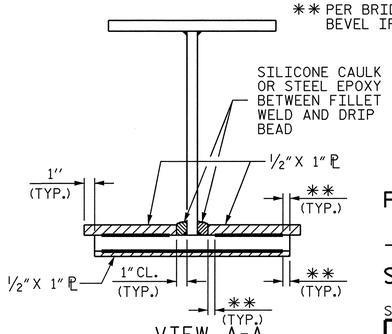

VIEW A-A

** SEE "WELD TERMINATION DETAILS" SHEET 3 OF 5.

DRIP BEAD DETAILS

PROJECT NO. U-2525B
GUILFORD COUNTY
STATION: 144+60.63 -L-

SHEET 4 OF 5

STATE OF NORTH CAROLINA
DEPARTMENT OF TRANSPORTATION
RALEIGH

SUPERSTRUCTURE

STRUCTURAL STEEL DETAILS

RIGHT LANE

NORTH CAROLINA PROFESSIONAL SEAL 027799 ENGINEER ALLYSON K. ORR 2/27/14

MI ENGINEERING
1011 SCHAUB DRIVE, SUITE 100
RALEIGH, NC 27606
(919) 851-6606
FIRM PE NUMBER : P-0671

DWG. NO. 26

REVISIONS						
NO.	BY:	DATE:	NO.	BY:	DATE:	
1			3			
2			4			

SHEET NO. S-259
TOTAL SHEETS 541

DRAWN BY : B.E. LANNING DATE : 07/13
CHECKED BY : A.K. ORR DATE : 07/13
DESIGN ENGINEER OF RECORD : A.K. ORR DATE : 01/14

2/27/2014
2:35:16 PM
User: blanning
Filename: P:\NC Bridges\MI1007.03 U-2525B Guilford\U-2525B\Structures\Right Bridge\U2525B_SD_SS4_4_RT.dgn

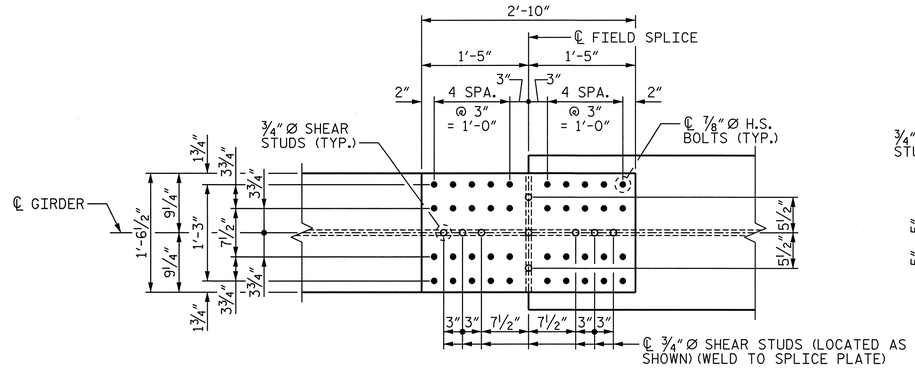

TOP FLANGE PLAN

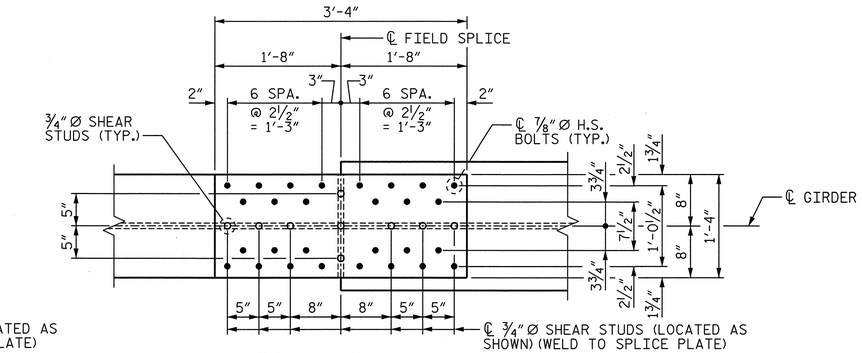

TOP FLANGE PLAN

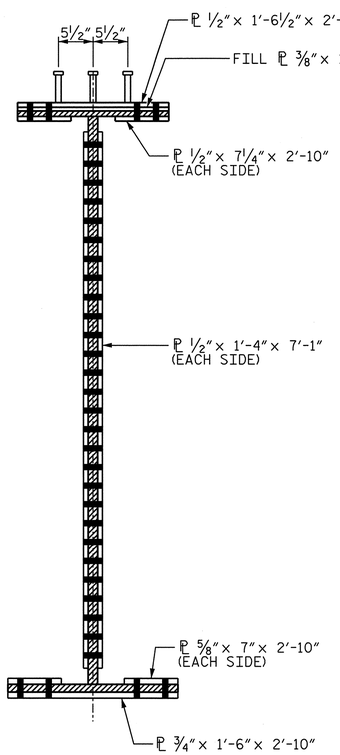

SECTION A-A

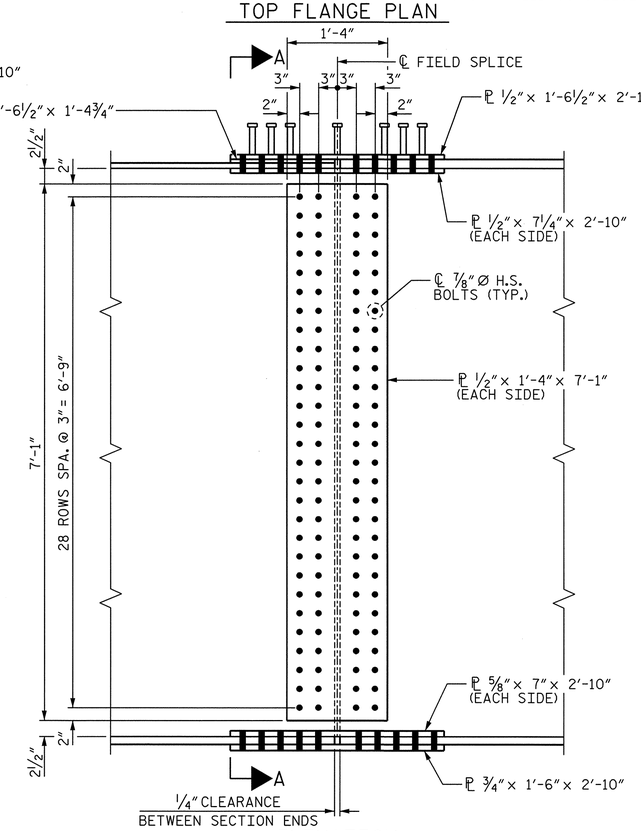

ELEVATION

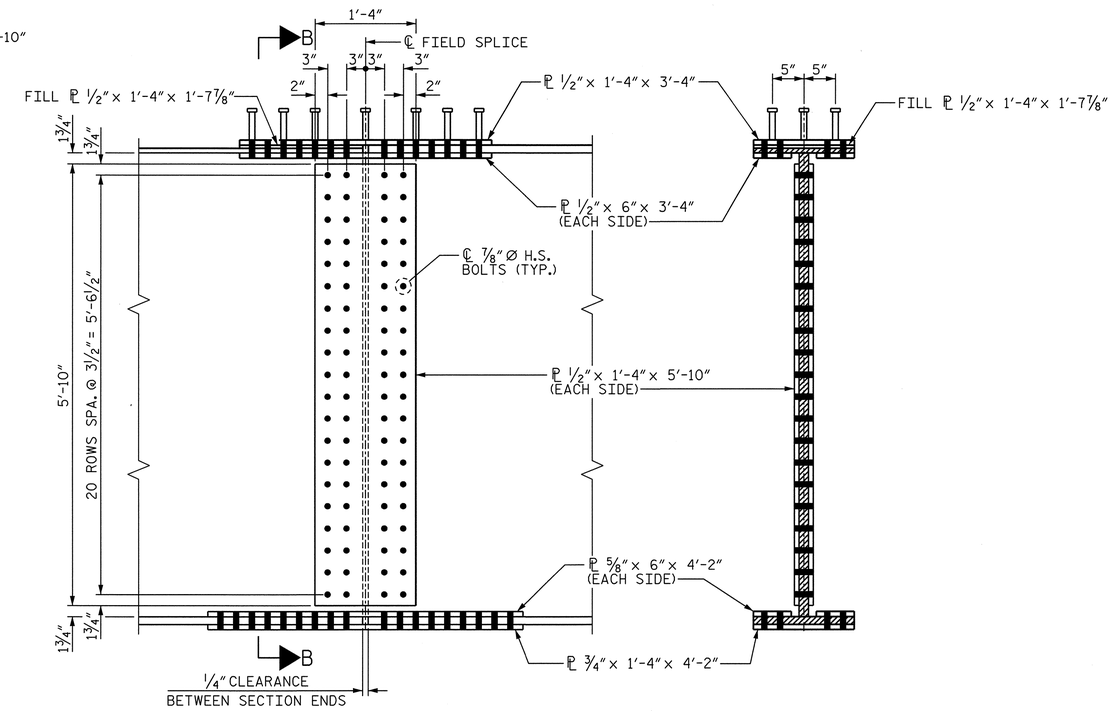

ELEVATION

SECTION B-B

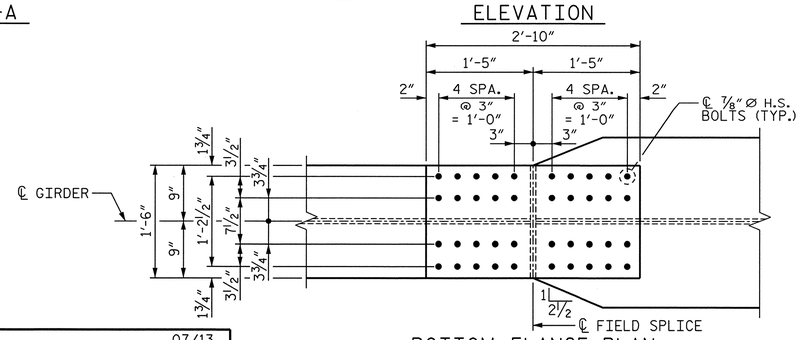

BOTTOM FLANGE PLAN

BOLTED FIELD SPLICE DETAILS FS-1

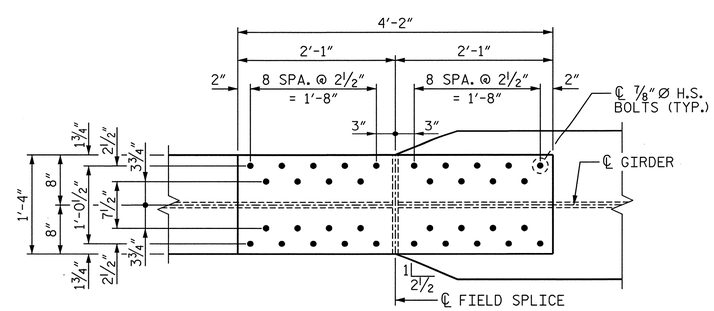

BOTTOM FLANGE PLAN

BOLTED FIELD SPLICE DETAILS FS-2

PROJECT NO. U-2525B

GUILFORD COUNTY

STATION: 144+60.63 -L-

SHEET 5 OF 5

STATE OF NORTH CAROLINA
DEPARTMENT OF TRANSPORTATION
RALEIGH

SUPERSTRUCTURE

STRUCTURAL STEEL DETAILS

RIGHT LANE

NORTH CAROLINA PROFESSIONAL SEAL 027799 ENGINEER ALLYSON K. ORR
1/10/14

MI ENGINEERING
1011 SCHAUB DRIVE, SUITE 100
RALEIGH, NC 27606
(919) 851-6606
FIRM PE NUMBER : P-0671

REVISIONS						SHEET NO.
NO.	BY:	DATE:	NO.	BY:	DATE:	S-260
1			3			TOTAL SHEETS
2			4			54-1

DRAWN BY : B.E. LANNING DATE : 07/13
CHECKED BY : A.K. ORR DATE : 07/13
DESIGN ENGINEER OF RECORD : A.K. ORR DATE : 01/14

DWG. NO. 27

1/10/2014
9:39:22 AM
User: blanning
Filename: P:\NC Bridges\MI1007.03 U-2525B Guilford\U-2525B\Structures\Right Bridge\U2525B_SD_SS5_4_RT.dgn

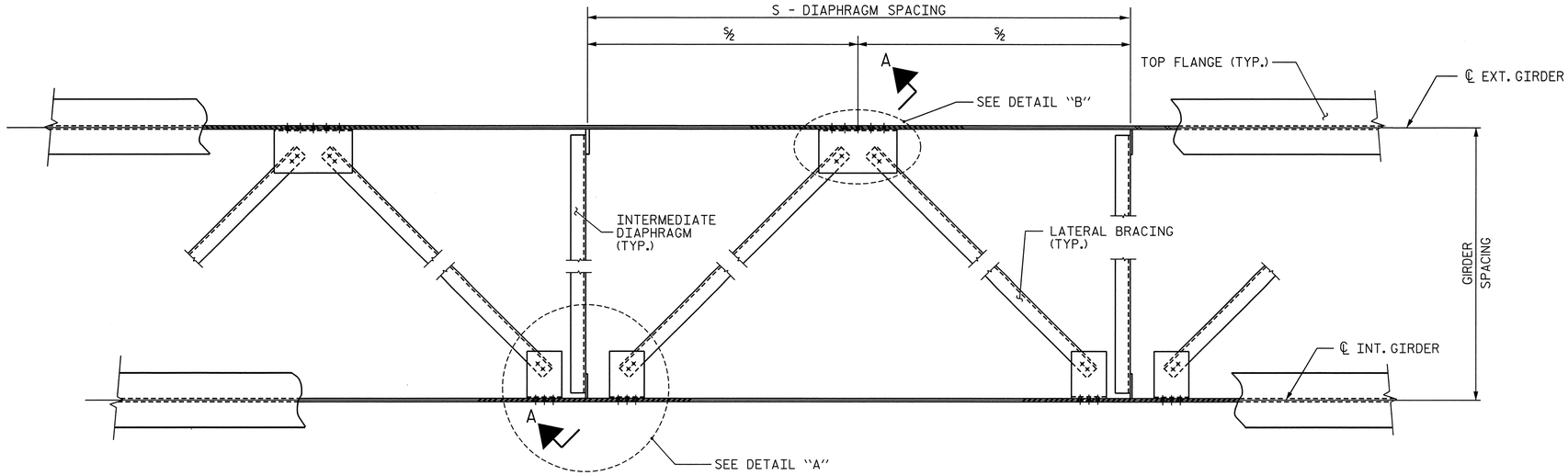

PART PLAN - NEAR TOP FLANGE LATERAL BRACING

(THROUGHOUT EXTERIOR BAYS ONLY)

NOTES

LATERAL BRACING ASSEMBLY SHALL COMPLY WITH SECTION 1072 OF THE STANDARD SPECIFICATIONS.

ALL STRUCTURAL STEEL SHALL BE AASHTO M270 GRADE 50W OR APPROVED EQUAL.

TENSION ON THE ASTM A325 BOLTS SHALL BE CALIBRATED USING DIRECT TENSION INDICATOR WASHERS IN ACCORDANCE WITH THE STANDARD SPECIFICATIONS.

ALL BOLTED CONNECTIONS SHALL BE 7/8" Ø HIGH STRENGTH BOLTS.

THE CONTRACTOR HAS THE OPTION TO CLIP THE PROTRUDING CORNERS OF THE GUSSET PLATES, AT NO ADDITIONAL COST TO THE DEPARTMENT.

BENT GUSSET PLATES OR ROLLED ANGLE SHAPES MAY BE SUBSTITUTED FOR THE WELDED GUSSET PLATES DETAILED IF APPROVED BY THE ENGINEER, AT NO ADDITIONAL COST TO THE DEPARTMENT.

INSTALL THE LATERAL BRACING AFTER ERECTING THE EXTERIOR GIRDER AND THE ADJACENT INTERIOR GIRDER AND INSTALLING THE INTERMEDIATE DIAPHRAGMS.

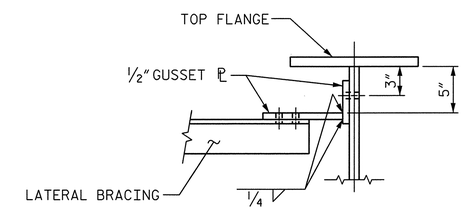

SECTION THRU CONNECTION

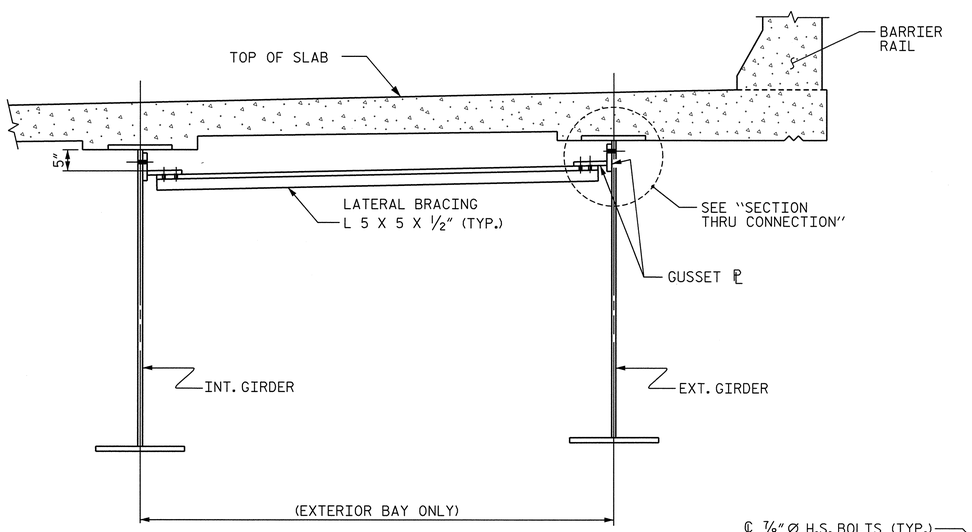

SECTION A-A

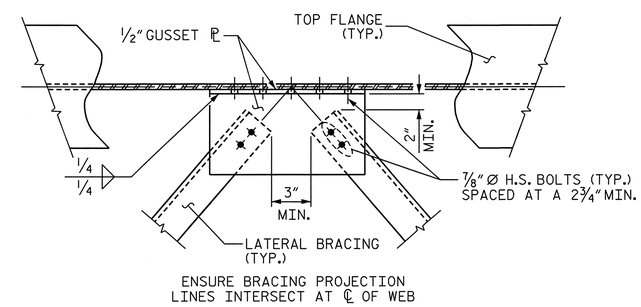

DETAIL "B"

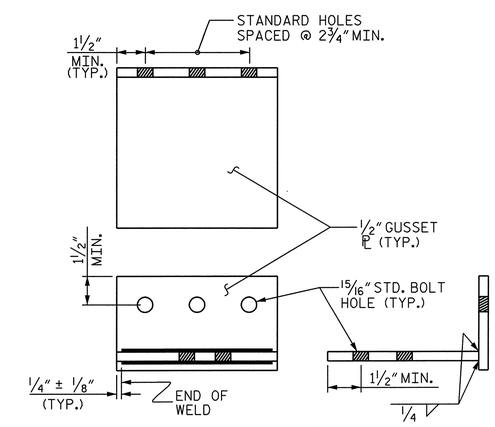

CONNECTION DETAIL

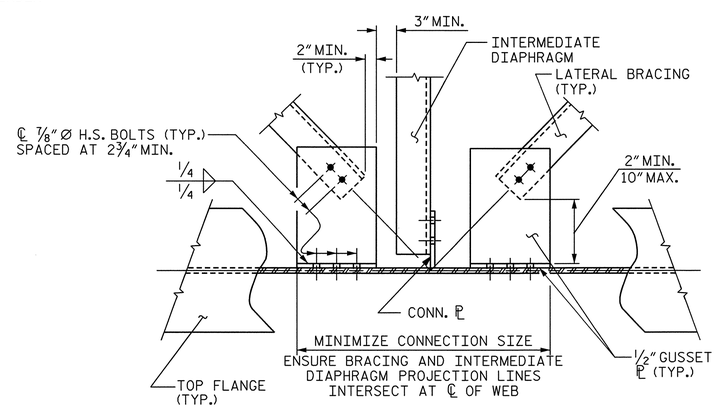

DETAIL "A"

PROJECT NO. U-2525B

GUILFORD COUNTY

STATION: 144+60.63 -L-

STATE OF NORTH CAROLINA
DEPARTMENT OF TRANSPORTATION
RALEIGH

STANDARD

LATERAL BRACING

RIGHT LANE

NORTH CAROLINA PROFESSIONAL SEAL 027799 ENGINEER ALLYSON K. ORR
1/10/14

ASSEMBLED BY:	B. E. ATKINSON	DATE:	06/13
CHECKED BY :	A.K. ORR	DATE:	07/13
DESIGN ENGINEER OF RECORD:	A.K. ORR	DATE:	01/14
DRAWN BY :	WMC 6/11	ADDED: 10/31/11	
CHECKED BY :	GM 6/11		

MI ENGINEERING
1011 SCHAUB DRIVE, SUITE 100
RALEIGH, NC 27606
(919) 851-6606
FIRM PE NUMBER : P-0671

DWG. NO. 28

REVISIONS							
NO.	BY:	DATE:	NO.	BY:	DATE:	SHEET NO.	S-26
1			3			TOTAL SHEETS	54
2			4				

STD. NO. LB1

1/10/2014
9:57:09 AM
User: blanning
Filename: P:\NC Bridges\M11007.03 U-2525B Guilford\U-2525B\Structures\Right Bridge\U2525B_SD_LB1_4_RT.dgn

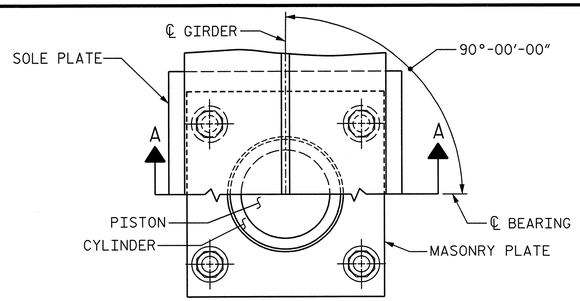

CUT-AWAY PLAN

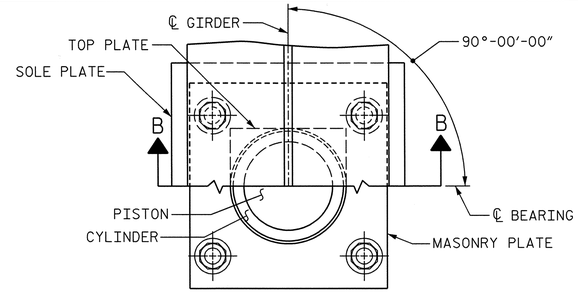

CUT-AWAY PLAN

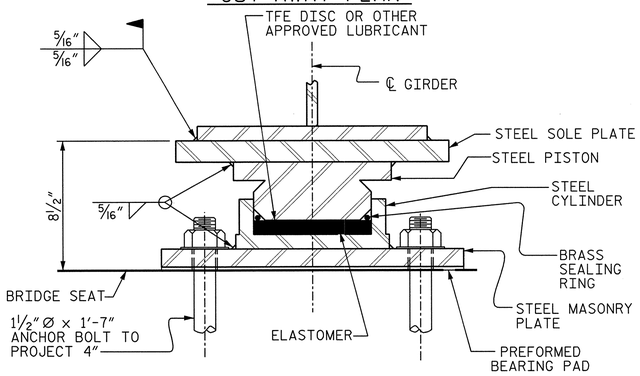

SECTION A-A

PB2 (FIXED)
(5 REQ'D.)

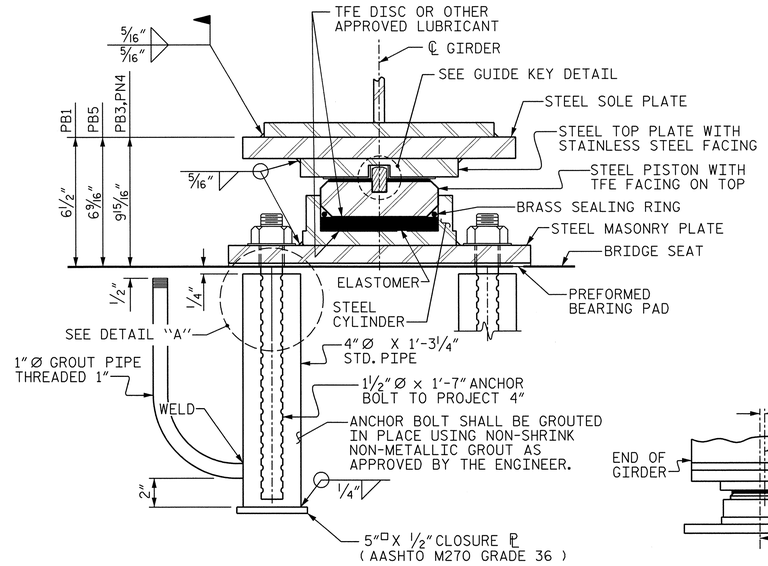

SECTION B-B

PB1, PB3, PB4, PB5 (EXP.)
(5 OF EACH, TOTAL = 20)

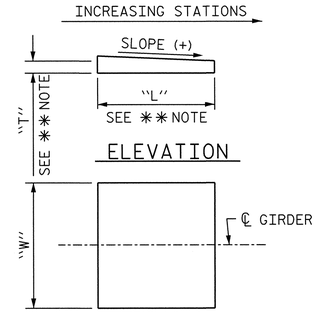

PLAN

** NOTE:
DIMENSIONS "L" AND "T" ARE TO BE DETERMINED BY THE MANUFACTURER.

SOLE PLATE DETAILS

SOLE PLATE	LOCATION	SLOPE	"W"
SP1	END BENT 1	-0.0293%	1'-8"
SP2	BENT 1	0.6493%	2'-5"
SP3	BENT 2	0.6493%	2'-5"
SP4	BENT 3	0.6493%	2'-5"
SP5	BENT 4 (BACK)	0.6493%	1'-8"

NOTES

FOR POT BEARINGS, SEE SPECIAL PROVISIONS.

AT ALL POINTS OF SUPPORT IN SPANS A THRU G, NUTS FOR ANCHOR BOLTS SHALL BE TIGHTENED FINGER TIGHT AND GIVEN AN ADDITIONAL 1/4 TURN. THE THREAD OF THE NUT AND BOLT SHALL THEN BE BURRED WITH A SHARP POINTED TOOL.

WHEN WELDING THE SOLE PLATE TO THE GIRDER, USE TEMPERATURE INDICATING WAX PENS, OR OTHER SUITABLE MEANS, TO ENSURE THAT THE TEMPERATURE OF THE BEARING DOES NOT EXCEED 250°F TEMPERATURES ABOVE THIS MAY DAMAGE THE TFE OR ELASTOMER.

AFTER BEARING ASSEMBLY IS IN PLACE AND ANCHOR BOLTS HAVE BEEN FINALLY POSITIONED. THEY SHALL BE GROUTED IN PLACE AS SHOWN.

THE CLOSURE PLATE, GROUT PIPE AND STANDARD PIPE FOR THIS ASSEMBLY NEED NOT BE GALVANIZED.

SOLE PLATES SHOULD BE WELDED TO BEAM FLANGES AND ANCHOR BOLTS SHOULD BE GROUTED BEFORE FALSEWORK IS PLACED.

ALL SURFACES OF BEARING PLATES SHALL BE SMOOTH AND STRAIGHT.

FOR THERMAL SPRAYED COATINGS (METALLIZATION), SEE SPECIAL PROVISIONS.

THE CONTRACTOR MAY SUBSTITUTE DISC BEARINGS FOR THE POT BEARINGS SHOWN. FOR OPTIONAL DISC BEARINGS, SEE SPECIAL PROVISIONS.

THE CONTRACTOR SHALL ADJUST THE GIRDER BUILDUPS AS NECESSARY TO INCORPORATE A MAXIMUM PERMISSIBLE VARIATION IN POT BEARING DEPTH OF 1/2 INCH, SEE SPECIAL PROVISION FOR POT BEARINGS.

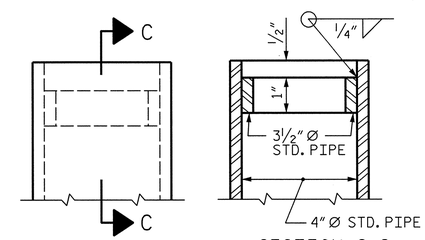

SECTION C-C

DETAIL "A"

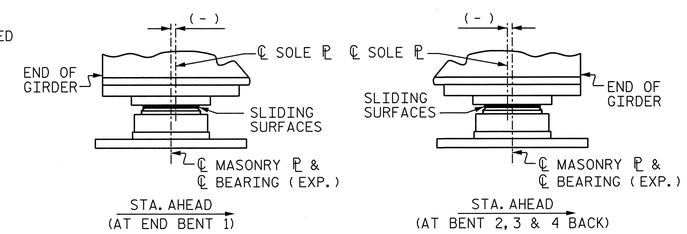

TEMPERATURE SETTING DETAIL

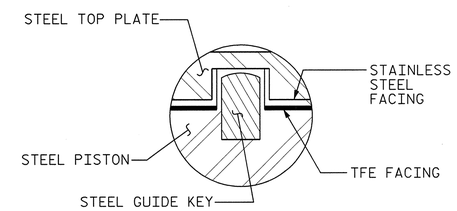

GUIDE KEY DETAIL

POT BEARING DETAILS

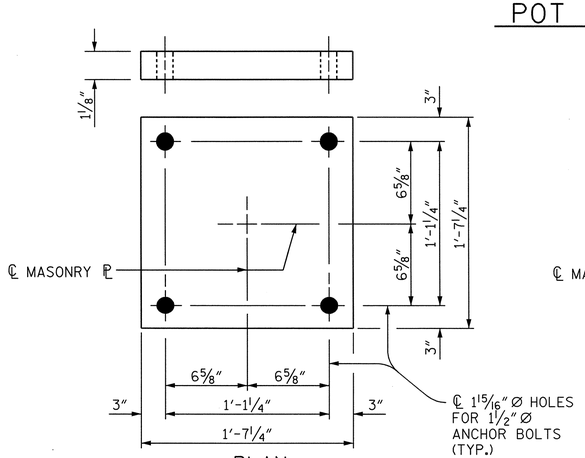

PLAN
M1 (10 REQ'D.)

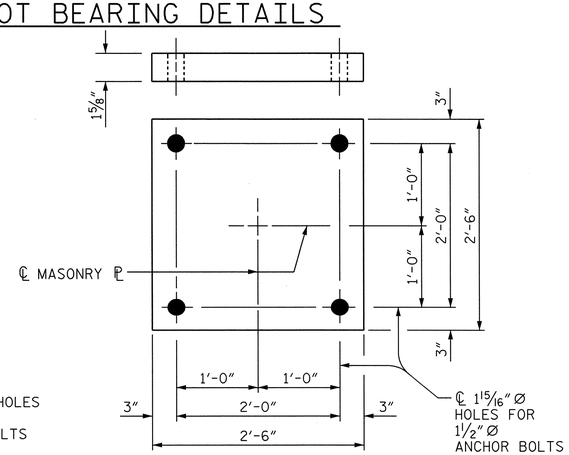

PLAN
M2 (15 REQ'D.)

MASONRY PLATE DETAILS

TABLE FOR LOADS AND MOVEMENT

BEARING	LOCATION	UNFACTORED VERTICAL LOAD (KIPS) DEAD DC	DEAD DW	LIVE LL+IM	TOTAL	FACTORED LATERAL LOAD (KIPS)	TOTAL MOVEMENT (INCHES)
PB1 (EXP.)	END BENT 1	137	21	139	297	57	3 1/4"
PB2 (FIX)	BENT 1	496	74	301	871	180	0
PB3 (EXP.)	BENT 2	496	74	300	870	180	1 15/16"
PB4 (EXP.)	BENT 3	496	74	300	870	180	3 7/8"
PB5 (EXP.)	BENT 4 BK	137	21	139	297	57	5 7/16"

TABLE FOR PLATE SETTING DATA

(EXPANSION POT BEARINGS)

TEMPERATURE AT TIME OF SETTING	45° F	60° F	90° F	*
PB1 (EXP.)	-1/4"	0	7/16"	-3/8"
PB3 (EXP.)	-5/16"	0	9/16"	0
PB4 (EXP.)	-9/16"	0	1 3/16"	0
PB5 (EXP.)	-13/16"	0	1 5/8"	-3/8"

* CORRECTION FOR END ROTATION DUE TO WEIGHT OF SLAB AND COMPOSITE DEAD LOAD.

PROJECT NO. U-2525B
GUILFORD COUNTY
STATION: 144+60.63 -L-

SHEET 1 OF 2

STATE OF NORTH CAROLINA
DEPARTMENT OF TRANSPORTATION
RALEIGH

STANDARD
POT BEARING DETAILS
UNIT 1
RIGHT LANE

NORTH CAROLINA PROFESSIONAL SEAL 027799 ENGINEER ALYSON K. ORR 5/5/14

ASSEMBLED BY:	B.E. LANNING	DATE:	08/13
CHECKED BY :	A.K. ORR	DATE:	10/13
DESIGN ENGINEER OF RECORD:	A.K. ORR	DATE:	01/14
DRAWN BY :	RWW 8/99	REV. 5/7/03	RWW/JTE
CHECKED BY :	LES 8/99	REV. 5/1/06R	TLA/GM
		REV. 10/1/11	MAA/GM

MI ENGINEERING
1011 SCHAUB DRIVE, SUITE 100
RALEIGH, NC 27606
(919) 851-6606
FIRM PE NUMBER : P-0671

REVISIONS						SHEET NO.
NO.	BY:	DATE:	NO.	BY:	DATE:	S-262
1			3			TOTAL SHEETS
2			4			541

DWG. NO. 29

STD. NO. PB1

5/5/2014
2:47:55 PM
User: blanning
Filename: P:\NC Bridges\MI1007.03 U-2525B Guilford\U-2525B\Structures\Right Bridge\U2525B_SD_BG1_4_RT.dgn

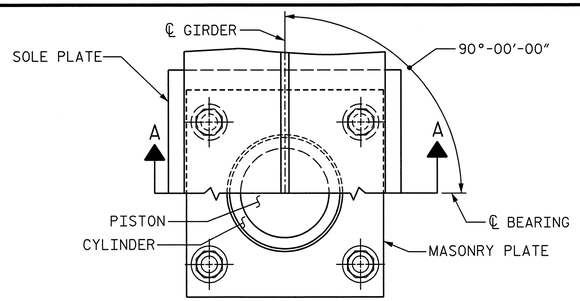

CUT-AWAY PLAN

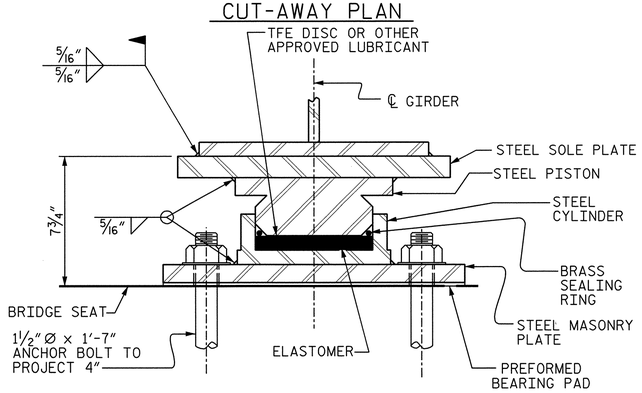

SECTION A-A

PB9 (FIXED)
(5 REQ'D.)

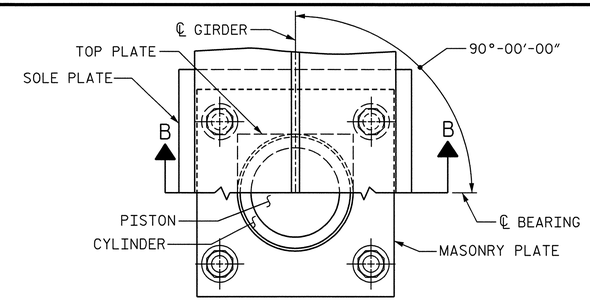

CUT-AWAY PLAN

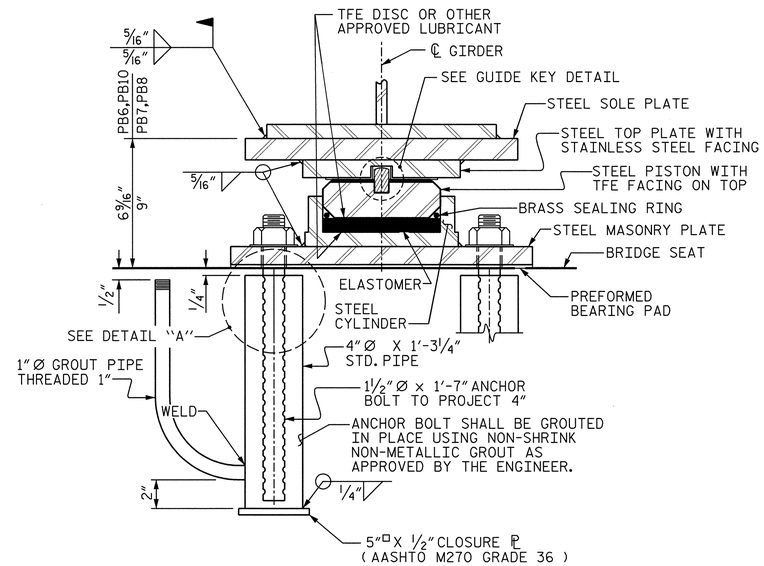

SECTION B-B

PB6, PB7, PB8, PB10 (EXP.)
(5 OF EACH, TOTAL = 20)

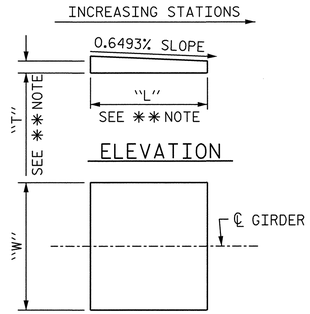

PLAN

** NOTE:
DIMENSIONS "L" AND "T" ARE TO BE DETERMINED BY THE MANUFACTURER.

SOLE PLATE DETAILS

SOLE PLATE	LOCATION	"W"
SP6	BENT 4 (AHEAD)	1'-6"
SP7	BENT 5	2'-2"
SP8	BENT 6	2'-2"
SP9	BENT 7	2'-2"
SP10	END BENT 2	1'-6"

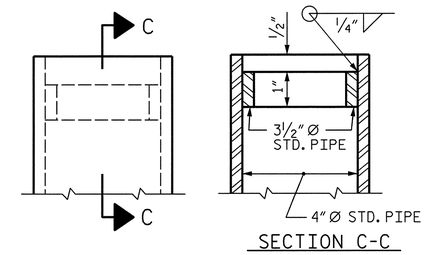

DETAIL "A"

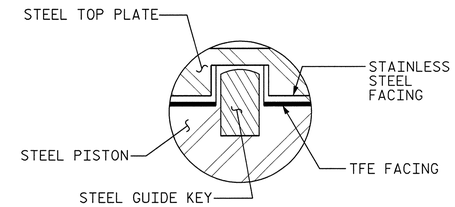

GUIDE KEY DETAIL

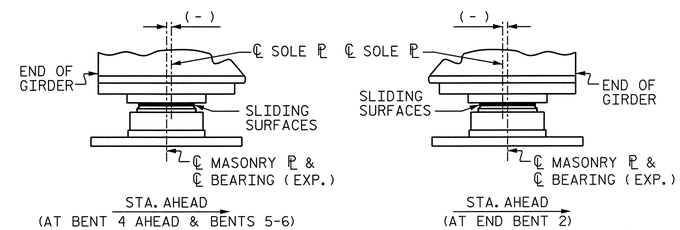

TEMPERATURE SETTING DETAIL

POT BEARING DETAILS

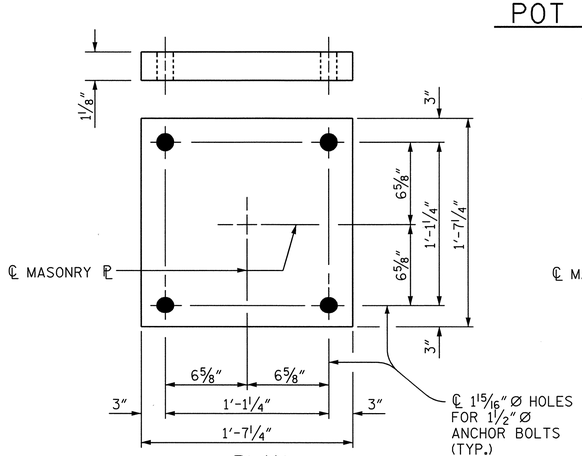

PLAN
M1 (10 REQ'D.)

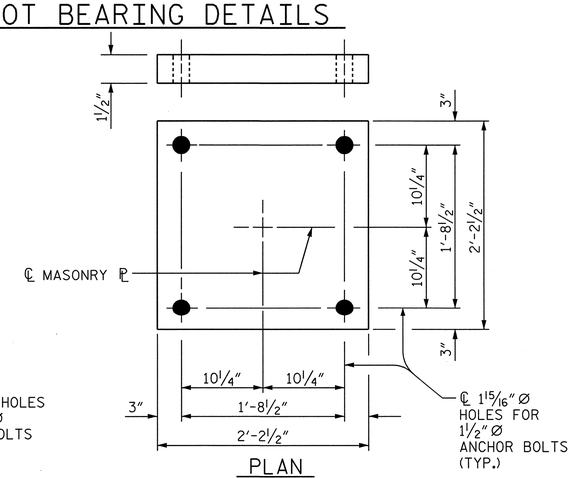

PLAN
M3 (15 REQ'D.)

MASONRY PLATE DETAILS

TABLE FOR LOADS AND MOVEMENT

BEARING	LOCATION	UNFACTORED VERTICAL LOAD (KIPS) DEAD DC	DEAD DW	LIVE LL+IM	TOTAL	FACTORED LATERAL LOAD (KIPS)	TOTAL MOVEMENT (INCHES)
PB6 (EXP.)	BENT 4 AHEAD	111	18	127	256	48	4¼"
PB7 (EXP.)	BENT 5	365	58	263	686	139	2 15/16"
PB8 (EXP.)	BENT 6	334	54	261	649	130	1½"
PB9 (FIX)	BENT 7	365	58	263	686	139	0
PB10 (EXP.)	END BENT 2	111	18	127	256	48	2 1/16"

TABLE FOR PLATE SETTING DATA
(EXPANSION POT BEARINGS)

TEMPERATURE AT TIME OF SETTING	45° F	60° F	90° F	*
PB6 (EXP.)	-⅝"	0	1¼"	-¼"
PB7 (EXP.)	-7/16"	0	⅞"	1/16"
PB8 (EXP.)	-¼"	0	7/16"	0
PB10 (EXP.)	-3/16"	0	⅜"	-5/16"

* CORRECTION FOR END ROTATION DUE TO WEIGHT OF SLAB AND COMPOSITE DEAD LOAD.

FOR BEARING NOTES, SEE SHEET 1 OF 2.

PROJECT NO. U-2525B
GUILFORD COUNTY
STATION: 144+60.63 -L-

SHEET 2 OF 2

STATE OF NORTH CAROLINA
DEPARTMENT OF TRANSPORTATION
RALEIGH

STANDARD
POT BEARING DETAILS
UNIT 2
RIGHT LANE

NORTH CAROLINA PROFESSIONAL SEAL 027799 ENGINEER ALLYSON K. ORR
1/10/14

MI ENGINEERING
1011 SCHAUB DRIVE, SUITE 100
RALEIGH, NC 27606
(919) 851-6606
FIRM PE NUMBER : P-0671

REVISIONS						
NO.	BY:	DATE:	NO.	BY:	DATE:	
1			3			
2			4			

SHEET NO. S-263
TOTAL SHEETS 541

DWG. NO. 30

STD. NO. PB1

ASSEMBLED BY: B.E. LANNING	DATE: 08/13
CHECKED BY : A.K. ORR	DATE: 10/13
DESIGN ENGINEER OF RECORD: A.K. ORR	DATE: 01/14
DRAWN BY : RWW 8/99	REV. 5/7/03 RWW/JTE
CHECKED BY : LES 8/99	REV. 5/1/06R TLA/GM
	REV. 10/1/11 MAA/GM

1/10/2014
9:39:27 AM
User:blanning
Filename: P:\NC Bridges\MI1007.03 U-2525B Guilford\U-2525B\Structures\Right Bridge\U2525B_SD_BG2_4_RT.dgn

DEAD LOAD DEFLECTION AND CAMBER

GIRDER		SPAN "A"																													
	THIRTIETH POINTS	0	1	2	3	4	5	6	7	8	9	10	11	12	13	14	15	16	17	18	19	20	21	22	23	24	25	26	27	28	29	30
1 & 5	DEFLECTION DUE TO WT. OF STEEL	0	.014	.028	.041	.053	.065	.074	.083	.090	.096	.100	.103	.104	.103	.101	.098	.093	.087	.080	.072	.063	.054	.046	.036	.028	.020	.013	.008	.004	.001	0
	DEFLECTION DUE TO WT. OF SLAB*	0	.039	.076	.111	.143	.175	.201	.224	.243	.258	.268	.275	.277	.275	.269	.259	.246	.228	.210	.189	.163	.140	.116	.090	.069	.050	.032	.018	.009	.002	0
	DEFLECTION DUE TO WT. OF RAIL	0	.005	.011	.015	.020	.024	.028	.031	.034	.036	.037	.038	.039	.039	.038	.037	.035	.033	.030	.027	.024	.020	.017	.013	.010	.007	.005	.003	.001	.000	0
	TOTAL DEAD LOAD DEFLECTION	0	.058	.115	.167	.216	.264	.303	.338	.367	.390	.405	.416	.420	.417	.408	.394	.374	.348	.320	.288	.250	.214	.179	.139	.107	.077	.050	.029	.014	.003	0
	VERTICAL CURVE ORDINATE	0	.025	.048	.069	.089	.107	.123	.137	.150	.160	.169	.177	.182	.186	.188	.188	.187	.184	.178	.172	.163	.153	.141	.127	.111	.094	.076	.057	.038	.019	0
	SUPERELEVATION ORDINATE	0	.000	.000	.000	.000	.000	.000	.000	.000	.000	.000	.000	.000	.000	.000	.000	.000	.000	.000	.000	.000	.000	.000	.000	.000	.000	.000	.000	.000	.000	0
	REQUIRED CAMBER	0	1"	1 15/16"	2 13/16"	3 11/16"	4 7/16"	5 1/8"	5 11/16"	6 3/16"	6 5/8"	6 7/8"	7 1/8"	7 1/4"	7 1/4"	7 1/8"	7"	6 3/4"	6 3/8"	6"	5 1/2"	4 15/16"	4 3/8"	3 13/16"	3 3/16"	2 5/8"	2 1/16"	1 1/2"	1 1/16"	5/8"	1/4"	0
2, 3 & 4	DEFLECTION DUE TO WT. OF STEEL	0	.015	.029	.043	.055	.067	.077	.086	.094	.100	.104	.107	.108	.107	.105	.102	.097	.090	.083	.075	.065	.056	.047	.037	.029	.021	.014	.008	.004	.001	0
	DEFLECTION DUE TO WT. OF SLAB*	0	.039	.076	.111	.143	.175	.201	.224	.243	.258	.268	.275	.277	.275	.269	.259	.246	.228	.210	.189	.163	.140	.116	.090	.069	.050	.032	.018	.009	.002	0
	DEFLECTION DUE TO WT. OF RAIL	0	.004	.008	.011	.015	.018	.021	.023	.025	.027	.028	.029	.029	.029	.028	.027	.026	.024	.022	.020	.018	.015	.013	.010	.008	.005	.003	.002	.001	.000	0
	TOTAL DEAD LOAD DEFLECTION	0	.058	.113	.165	.213	.260	.299	.333	.362	.385	.400	.411	.414	.411	.402	.388	.369	.342	.315	.284	.246	.211	.176	.137	.106	.076	.049	.028	.014	.003	0
	VERTICAL CURVE ORDINATE	0	.025	.048	.069	.089	.107	.123	.137	.150	.160	.169	.177	.182	.186	.188	.188	.187	.184	.178	.172	.163	.153	.141	.127	.111	.094	.076	.057	.038	.019	0
	SUPERELEVATION ORDINATE	0	.000	.000	.000	.000	.000	.000	.000	.000	.000	.000	.000	.000	.000	.000	.000	.000	.000	.000	.000	.000	.000	.000	.000	.000	.000	.000	.000	.000	.000	0
	REQUIRED CAMBER	0	1"	1 15/16"	2 13/16"	3 5/8"	4 3/8"	5 1/16"	5 5/8"	6 1/8"	6 9/16"	6 13/16"	7 1/16"	7 1/8"	7 3/16"	7 1/16"	6 15/16"	6 11/16"	6 5/16"	5 15/16"	5 1/2"	4 15/16"	4 3/8"	3 13/16"	3 3/16"	2 5/8"	2 1/16"	1 1/2"	1"	5/8"	1/4"	0

GIRDER		SPAN "B"																														
	THIRTIETH POINTS	30	31	32	33	34	35	36	37	38	39	40	41	42	43	44	45	46	47	48	49	50	51	52	53	54	55	56	57	58	59	60
1 & 5	DEFLECTION DUE TO WT. OF STEEL	0	.001	.004	.009	.015	.025	.034	.044	.056	.066	.075	.084	.090	.095	.099	.100	.099	.096	.091	.085	.076	.067	.057	.046	.036	.026	.017	.010	.005	.002	0
	DEFLECTION DUE TO WT. OF SLAB*	0	.004	.013	.026	.045	.071	.097	.124	.157	.184	.209	.234	.252	.265	.274	.276	.273	.264	.251	.234	.209	.184	.157	.124	.097	.072	.045	.027	.013	.004	0
	DEFLECTION DUE TO WT. OF RAIL	0	.001	.002	.005	.008	.012	.016	.020	.025	.029	.033	.036	.039	.041	.042	.042	.042	.040	.038	.036	.032	.029	.025	.020	.015	.012	.007	.004	.002	.001	0
	TOTAL DEAD LOAD DEFLECTION	0	.006	.019	.040	.068	.108	.147	.188	.238	.279	.317	.354	.381	.401	.415	.418	.414	.400	.380	.355	.317	.280	.239	.190	.148	.110	.069	.041	.020	.007	0
	VERTICAL CURVE ORDINATE	0	.000	.000	.000	.000	.000	.000	.000	.000	.000	.000	.000	.000	.000	.000	.000	.000	.000	.000	.000	.000	.000	.000	.000	.000	.000	.000	.000	.000	.000	0
	SUPERELEVATION ORDINATE	0	.000	.000	.000	.000	.000	.000	.000	.000	.000	.000	.000	.000	.000	.000	.000	.000	.000	.000	.000	.000	.000	.000	.000	.000	.000	.000	.000	.000	.000	0
	REQUIRED CAMBER	0	1/16"	1/4"	1/2"	13/16"	1 5/16"	1 3/4"	2 1/4"	2 7/8"	3 3/8"	3 13/16"	4 1/4"	4 9/16"	4 13/16"	5"	5"	4 15/16"	4 13/16"	4 9/16"	4 1/4"	3 13/16"	3 3/8"	2 7/8"	2 1/4"	1 3/4"	1 5/16"	13/16"	1/2"	1/4"	1/16"	0
2, 3 & 4	DEFLECTION DUE TO WT. OF STEEL	0	.001	.004	.009	.016	.026	.035	.045	.058	.068	.078	.087	.094	.099	.103	.104	.103	.100	.095	.088	.079	.070	.060	.047	.037	.028	.017	.010	.005	.002	0
	DEFLECTION DUE TO WT. OF SLAB*	0	.004	.013	.026	.045	.071	.097	.124	.157	.184	.209	.234	.252	.265	.274	.276	.273	.264	.251	.234	.209	.184	.157	.124	.097	.072	.045	.027	.013	.004	0
	DEFLECTION DUE TO WT. OF RAIL	0	.001	.002	.004	.006	.009	.012	.015	.019	.022	.025	.027	.029	.031	.031	.032	.031	.030	.029	.027	.024	.021	.018	.015	.012	.009	.006	.003	.002	.001	0
	TOTAL DEAD LOAD DEFLECTION	0	.006	.019	.039	.067	.106	.144	.184	.234	.274	.312	.348	.375	.395	.408	.412	.407	.394	.375	.349	.312	.275	.235	.186	.146	.109	.068	.040	.020	.007	0
	VERTICAL CURVE ORDINATE	0	.000	.000	.000	.000	.000	.000	.000	.000	.000	.000	.000	.000	.000	.000	.000	.000	.000	.000	.000	.000	.000	.000	.000	.000	.000	.000	.000	.000	.000	0
	SUPERELEVATION ORDINATE	0	.000	.000	.000	.000	.000	.000	.000	.000	.000	.000	.000	.000	.000	.000	.000	.000	.000	.000	.000	.000	.000	.000	.000	.000	.000	.000	.000	.000	.000	0
	REQUIRED CAMBER	0	1/16"	1/4"	7/16"	13/16"	1 1/4"	1 3/4"	2 3/16"	2 13/16"	3 5/16"	3 3/4"	4 3/16"	4 1/2"	4 3/4"	4 7/8"	4 15/16"	4 7/8"	4 3/4"	4 1/2"	4 3/16"	3 3/4"	3 5/16"	2 13/16"	2 1/4"	1 3/4"	1 5/16"	13/16"	1/2"	1/4"	1/16"	0

* INCLUDES SLAB, BUILDUPS & STAY-IN-PLACE FORMS.
ALL VALUES ARE SHOWN IN FEET (DECIMAL FORM), EXCEPT "REQUIRED CAMBER", WHICH IS GIVEN IN INCHES (FRACTION FORM).

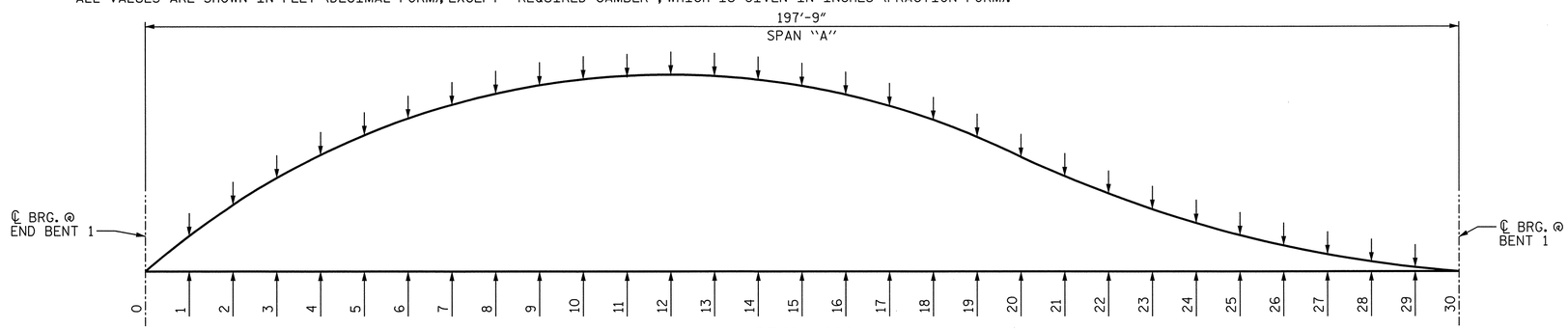

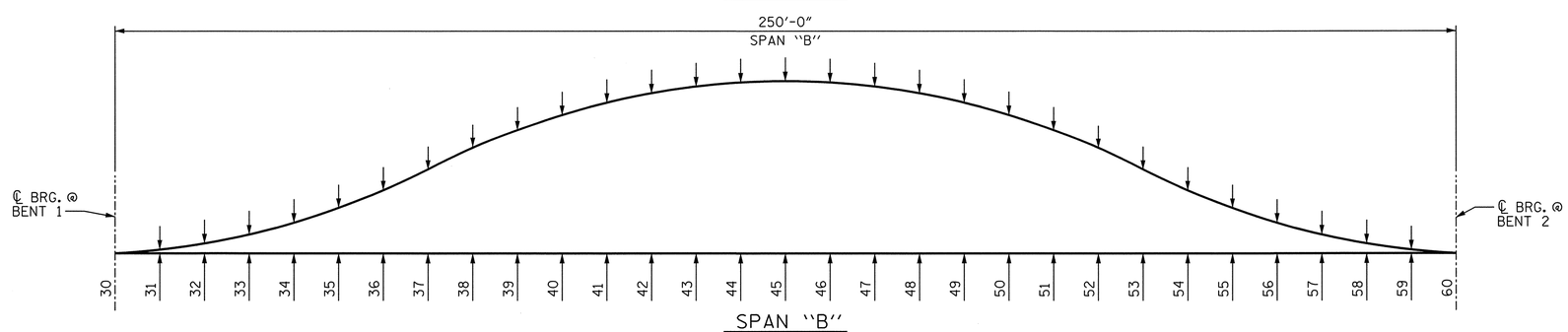

SCHEMATIC OF CAMBER ORDINATES

FOR CAMBER VALUES AT THIRTIETH POINTS, SEE TABLES.

SLOPE FOR ZERO CAMBER LINE VARIES.

PROJECT NO. U-2525B
GUILFORD COUNTY
STATION: 144+60.63 -L-

SHEET 1 OF 4

STATE OF NORTH CAROLINA
DEPARTMENT OF TRANSPORTATION
RALEIGH

SUPERSTRUCTURE

CAMBER AND DEAD LOAD DEFLECTIONS SPAN "A" & SPAN "B"

RIGHT LANE

NORTH CAROLINA PROFESSIONAL SEAL 027799 ENGINEER ALLYSON K. ORR 1/10/14

DRAWN BY : B.E. LANNING	DATE : 07/13		
CHECKED BY : A.K. ORR	DATE : 10/13		
DESIGN ENGINEER OF RECORD : A.K. ORR	DATE : 01/14		

MI ENGINEERING
1011 SCHAUB DRIVE, SUITE 100
RALEIGH, NC 27606
(919) 851-6606
FIRM PE NUMBER : P-0671

REVISIONS						SHEET NO.
NO.	BY:	DATE:	NO.	BY:	DATE:	S-2A
1			3			TOTAL SHEETS
2			4			541

DWG. NO. 31

1/10/2014
9:39:30 AM
User: blanning
Filename: P:\NC Bridges\MI1007.03 U-2525B Guilford\U-2525B\Structures\Right Bridge\U2525B_SD_DLAB_4_RT.dgn

DEAD LOAD DEFLECTION AND CAMBER

GIRDER	SPAN "C"																														
	THIRTIETH POINTS	60	61	62	63	64	65	66	67	68	69	70	71	72	73	74	75	76	77	78	79	80	81	82	83	84	85	86	87	88	89	90
1 & 5	DEFLECTION DUE TO WT. OF STEEL	0	.002	.005	.010	.017	.026	.036	.046	.057	.067	.076	.085	.091	.096	.099	.100	.099	.095	.090	.084	.075	.066	.056	.044	.034	.025	.015	.009	.004	.001	0
	DEFLECTION DUE TO WT. OF SLAB*	0	.004	.013	.027	.045	.072	.097	.124	.157	.184	.209	.234	.251	.264	.273	.276	.274	.265	.252	.234	.209	.184	.157	.124	.097	.071	.045	.026	.013	.004	0
	DEFLECTION DUE TO WT. OF RAIL	0	.001	.002	.004	.007	.012	.015	.020	.025	.029	.032	.036	.038	.040	.042	.042	.042	.041	.039	.036	.033	.029	.025	.020	.016	.012	.008	.005	.002	.001	0
	TOTAL DEAD LOAD DEFLECTION	0	.007	.020	.041	.069	.110	.148	.190	.239	.280	.317	.355	.380	.400	.414	.418	.415	.401	.381	.354	.317	.279	.238	.188	.147	.108	.068	.040	.019	.006	0
	VERTICAL CURVE ORDINATE	0	.000	.000	.000	.000	.000	.000	.000	.000	.000	.000	.000	.000	.000	.000	.000	.000	.000	.000	.000	.000	.000	.000	.000	.000	.000	.000	.000	.000	.000	0
	SUPERELEVATION ORDINATE	0	.000	.000	.000	.000	.000	.000	.000	.000	.000	.000	.000	.000	.000	.000	.000	.000	.000	.000	.000	.000	.000	.000	.000	.000	.000	.000	.000	.000	.000	0
	REQUIRED CAMBER	0	1/16"	1/4"	1/2"	13/16"	1 5/16"	1 3/4"	2 1/4"	2 7/8"	3 3/8"	3 13/16"	4 1/4"	4 9/16"	4 13/16"	4 15/16"	5"	5"	4 13/16"	4 9/16"	4 1/4"	3 13/16"	3 3/8"	2 7/8"	2 1/4"	1 3/4"	1 5/16"	13/16"	1/2"	1/4"	1/16"	0
2, 3 & 4	DEFLECTION DUE TO WT. OF STEEL	0	.002	.005	.010	.017	.028	.037	.047	.060	.070	.079	.088	.095	.100	.103	.104	.103	.099	.094	.087	.078	.068	.058	.045	.035	.026	.016	.009	.004	.001	0
	DEFLECTION DUE TO WT. OF SLAB*	0	.004	.013	.027	.045	.072	.097	.124	.157	.184	.209	.234	.251	.264	.273	.276	.274	.265	.252	.234	.209	.184	.157	.124	.097	.071	.045	.026	.013	.004	0
	DEFLECTION DUE TO WT. OF RAIL	0	.001	.002	.003	.006	.009	.012	.015	.018	.021	.024	.027	.029	.030	.031	.032	.031	.031	.029	.027	.025	.022	.019	.015	.012	.009	.006	.004	.002	.001	0
	TOTAL DEAD LOAD DEFLECTION	0	.007	.020	.040	.068	.109	.146	.186	.235	.275	.312	.349	.375	.394	.407	.412	.408	.395	.375	.348	.312	.274	.234	.184	.144	.106	.067	.039	.019	.006	0
	VERTICAL CURVE ORDINATE	0	.000	.000	.000	.000	.000	.000	.000	.000	.000	.000	.000	.000	.000	.000	.000	.000	.000	.000	.000	.000	.000	.000	.000	.000	.000	.000	.000	.000	.000	0
	SUPERELEVATION ORDINATE	0	.000	.000	.000	.000	.000	.000	.000	.000	.000	.000	.000	.000	.000	.000	.000	.000	.000	.000	.000	.000	.000	.000	.000	.000	.000	.000	.000	.000	.000	0
	REQUIRED CAMBER	0	1/16"	1/4"	1/2"	13/16"	1 5/16"	1 3/4"	2 1/4"	2 13/16"	3 5/16"	3 3/4"	4 3/16"	4 1/2"	4 3/4"	4 7/8"	4 15/16"	4 7/8"	4 3/4"	4 1/2"	4 3/16"	3 3/4"	3 5/16"	2 13/16"	2 3/16"	1 3/4"	1 1/4"	13/16"	7/16"	1/4"	1/16"	0

GIRDER	SPAN "D"																														
	THIRTIETH POINTS	90	91	92	93	94	95	96	97	98	99	100	101	102	103	104	105	106	107	108	109	110	111	112	113	114	115	116	117	118	119	120
1 & 5	DEFLECTION DUE TO WT. OF STEEL	0	.001	.004	.008	.013	.021	.028	.036	.046	.054	.063	.072	.080	.087	.093	.098	.101	.103	.104	.103	.100	.096	.090	.083	.075	.065	.053	.041	.028	.014	0
	DEFLECTION DUE TO WT. OF SLAB*	0	.002	.009	.018	.032	.050	.069	.090	.116	.140	.163	.189	.210	.229	.246	.259	.269	.275	.277	.275	.268	.258	.243	.224	.201	.175	.143	.111	.076	.039	0
	DEFLECTION DUE TO WT. OF RAIL	0	.000	.001	.003	.005	.007	.010	.013	.017	.020	.024	.027	.030	.033	.035	.037	.038	.039	.039	.038	.037	.036	.034	.031	.028	.024	.020	.015	.011	.005	0
	TOTAL DEAD LOAD DEFLECTION	0	.003	.014	.029	.050	.078	.107	.139	.179	.214	.250	.288	.320	.349	.374	.394	.408	.417	.420	.416	.405	.390	.367	.338	.304	.264	.216	.167	.115	.058	0
	VERTICAL CURVE ORDINATE	0	.000	.000	.000	.000	.000	.000	.000	.000	.000	.000	.000	.000	.000	.000	.000	.000	.000	.000	.000	.000	.000	.000	.000	.000	.000	.000	.000	.000	.000	0
	SUPERELEVATION ORDINATE	0	.000	.000	.000	.000	.000	.000	.000	.000	.000	.000	.000	.000	.000	.000	.000	.000	.000	.000	.000	.000	.000	.000	.000	.000	.000	.000	.000	.000	.000	0
	REQUIRED CAMBER	0	1/16"	3/16"	3/8"	5/8"	15/16"	1 5/16"	1 11/16"	2 1/8"	2 9/16"	3"	3 7/16"	3 13/16"	4 3/16"	4 1/2"	4 3/4"	4 7/8"	5"	5 1/16"	5"	4 7/8"	4 11/16"	4 3/8"	4 1/16"	3 5/8"	3 3/16"	2 9/16"	2"	1 3/8"	11/16"	0
2, 3 & 4	DEFLECTION DUE TO WT. OF STEEL	0	.001	.004	.008	.014	.021	.029	.037	.047	.056	.065	.075	.083	.090	.097	.102	.105	.107	.108	.107	.104	.100	.094	.086	.078	.067	.055	.043	.029	.015	0
	DEFLECTION DUE TO WT. OF SLAB*	0	.002	.009	.018	.032	.050	.069	.090	.116	.140	.163	.189	.210	.229	.246	.259	.269	.275	.277	.275	.268	.258	.243	.224	.201	.175	.143	.111	.076	.039	0
	DEFLECTION DUE TO WT. OF RAIL	0	.000	.001	.002	.003	.005	.008	.010	.013	.015	.018	.020	.022	.024	.026	.027	.028	.029	.029	.029	.028	.027	.025	.023	.021	.018	.015	.011	.008	.004	0
	TOTAL DEAD LOAD DEFLECTION	0	.003	.014	.028	.049	.076	.106	.137	.176	.211	.246	.284	.315	.343	.369	.388	.402	.411	.414	.411	.400	.385	.362	.333	.300	.260	.213	.165	.113	.058	0
	VERTICAL CURVE ORDINATE	0	.000	.000	.000	.000	.000	.000	.000	.000	.000	.000	.000	.000	.000	.000	.000	.000	.000	.000	.000	.000	.000	.000	.000	.000	.000	.000	.000	.000	.000	0
	SUPERELEVATION ORDINATE	0	.000	.000	.000	.000	.000	.000	.000	.000	.000	.000	.000	.000	.000	.000	.000	.000	.000	.000	.000	.000	.000	.000	.000	.000	.000	.000	.000	.000	.000	0
	REQUIRED CAMBER	0	1/16"	3/16"	5/16"	9/16"	15/16"	1 1/4"	1 5/8"	2 1/8"	2 9/16"	2 15/16"	3 7/16"	3 3/4"	4 1/8"	4 7/16"	4 5/8"	4 13/16"	4 15/16"	4 15/16"	4 15/16"	4 13/16"	4 5/8"	4 3/8"	4"	3 5/8"	3 1/8"	2 9/16"	2"	1 3/8"	11/16"	0

* INCLUDES SLAB, BUILDUPS & STAY-IN-PLACE FORMS.
ALL VALUES ARE SHOWN IN FEET (DECIMAL FORM), EXCEPT "REQUIRED CAMBER", WHICH IS GIVEN IN INCHES (FRACTION FORM).

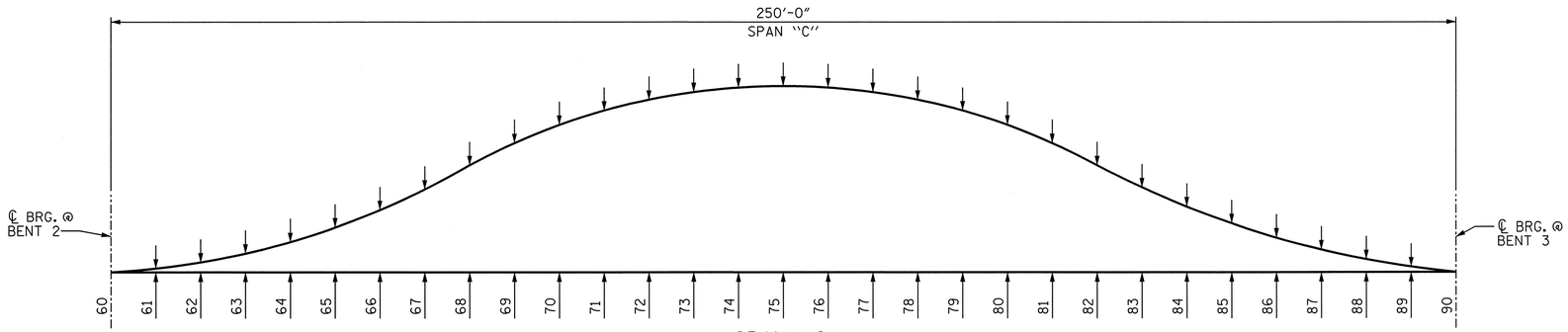

SPAN "C"

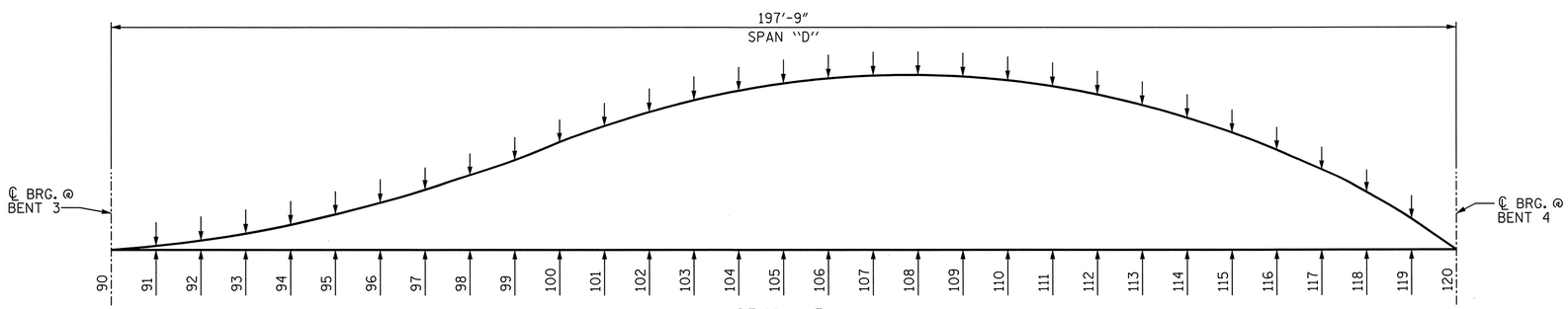

SPAN "D"

SCHEMATIC OF CAMBER ORDINATES

FOR CAMBER VALUES AT THIRTIETH POINTS, SEE TABLES.

PROJECT NO. U-2525B
GUILFORD COUNTY
STATION: 144+60.63 -L-

SHEET 2 OF 4

STATE OF NORTH CAROLINA
DEPARTMENT OF TRANSPORTATION
RALEIGH

SUPERSTRUCTURE

CAMBER AND DEAD LOAD DEFLECTIONS SPAN "C" & SPAN "D"
RIGHT LANE

NORTH CAROLINA PROFESSIONAL SEAL 027799 ENGINEER ALLYSON K. ORR
1/10/14

DRAWN BY : B.E. LANNING	DATE : 07/13		
CHECKED BY : A.K. ORR	DATE : 10/13		
DESIGN ENGINEER OF RECORD : A.K. ORR	DATE : 01/14		

DWG. NO. 32

MI ENGINEERING
1011 SCHAUB DRIVE, SUITE 100
RALEIGH, NC 27606
(919) 851-6606
FIRM PE NUMBER : P-0671

REVISIONS					
NO.	BY:	DATE:	NO.	BY:	DATE:
1			3		
2			4		

SHEET NO. S-265
TOTAL SHEETS 541

1/10/2014
9:39:32 AM
User: blanning
Filename: P:\NC Bridges\MI1007.03 U-2525B Guilford\U-2525B\Structures\Right Bridge\U2525B_SD_DLCD_4_RT.dgn

DEAD LOAD DEFLECTION AND CAMBER

GIRDER		SPAN "E"																				
	THIRTIETH POINTS	0	1	2	3	4	5	6	7	8	9	10	11	12	13	14	15	16	17	18	19	20
1 & 5	DEFLECTION DUE TO WT. OF STEEL	0	.016	.030	.044	.055	.064	.071	.076	.078	.078	.076	.071	.064	.056	.047	.036	.027	.018	.010	.004	0
	DEFLECTION DUE TO WT. OF SLAB*	0	.056	.107	.155	.196	.229	.253	.269	.276	.274	.265	.247	.223	.192	.160	.123	.090	.059	.033	.013	0
	DEFLECTION DUE TO WT. OF RAIL	0	.007	.013	.019	.024	.028	.031	.033	.034	.034	.033	.030	.028	.024	.020	.015	.011	.007	.004	.002	0
	TOTAL DEAD LOAD DEFLECTION	0	.079	.150	.218	.275	.321	.355	.378	.388	.386	.374	.348	.315	.272	.227	.174	.128	.084	.047	.019	0
	VERTICAL CURVE ORDINATE	0	.000	.000	.000	.000	.000	.000	.000	.000	.000	.000	.000	.000	.000	.000	.000	.000	.000	.000	.000	0
	SUPERELEVATION ORDINATE	0	.000	.000	.000	.000	.000	.000	.000	.000	.000	.000	.000	.000	.000	.000	.000	.000	.000	.000	.000	0
	REQUIRED CAMBER	0	15/16"	1 13/16"	2 5/8"	3 5/16"	3 7/8"	4 1/4"	4 3/16"	4 5/8"	4 5/8"	4 1/2"	4 3/16"	3 3/4"	3 1/4"	2 3/4"	2 1/16"	1 9/16"	1"	9/16"	1/4"	0
2, 3 & 4	DEFLECTION DUE TO WT. OF STEEL	0	.016	.032	.046	.058	.068	.075	.080	.083	.082	.080	.075	.068	.059	.049	.038	.028	.019	.011	.004	0
	DEFLECTION DUE TO WT. OF SLAB*	0	.061	.117	.169	.214	.250	.276	.294	.302	.300	.289	.270	.244	.210	.174	.135	.099	.064	.036	.015	0
	DEFLECTION DUE TO WT. OF RAIL	0	.005	.010	.014	.018	.021	.023	.024	.025	.025	.024	.023	.021	.018	.015	.011	.008	.005	.003	.001	0
	TOTAL DEAD LOAD DEFLECTION	0	.082	.159	.229	.290	.339	.374	.398	.410	.407	.393	.368	.333	.287	.238	.184	.135	.088	.050	.020	0
	VERTICAL CURVE ORDINATE	0	.000	.000	.000	.000	.000	.000	.000	.000	.000	.000	.000	.000	.000	.000	.000	.000	.000	.000	.000	0
	SUPERELEVATION ORDINATE	0	.000	.000	.000	.000	.000	.000	.000	.000	.000	.000	.000	.000	.000	.000	.000	.000	.000	.000	.000	0
	REQUIRED CAMBER	0	1"	1 15/16"	2 3/4"	3 1/2"	4 1/16"	4 1/2"	4 3/4"	4 15/16"	4 7/8"	4 11/16"	4 7/16"	4"	3 7/16"	2 7/8"	2 3/16"	1 5/8"	1 1/16"	5/8"	1/4"	0

GIRDER		SPAN "F"																				
	THIRTIETH POINTS	20	21	22	23	24	25	26	27	28	29	30	31	32	33	34	35	36	37	38	39	40
1 & 5	DEFLECTION DUE TO WT. OF STEEL	0	-.002	-.001	.003	.009	.016	.023	.030	.035	.039	.041	.041	.039	.035	.029	.022	.016	.009	.005	.001	0
	DEFLECTION DUE TO WT. OF SLAB*	0	-.004	.001	.018	.039	.067	.093	.119	.140	.155	.161	.160	.151	.133	.112	.085	.060	.035	.017	.005	0
	DEFLECTION DUE TO WT. OF RAIL	0	.000	.001	.004	.007	.011	.014	.018	.020	.022	.023	.022	.021	.019	.016	.012	.009	.005	.003	.001	0
	TOTAL DEAD LOAD DEFLECTION	0	-.006	.001	.025	.055	.094	.130	.167	.195	.216	.225	.223	.211	.187	.157	.119	.085	.049	.025	.007	0
	VERTICAL CURVE ORDINATE	0	.000	.000	.000	.000	.000	.000	.000	.000	.000	.000	.000	.000	.000	.000	.000	.000	.000	.000	.000	0
	SUPERELEVATION ORDINATE	0	.000	.000	.000	.000	.000	.000	.000	.000	.000	.000	.000	.000	.000	.000	.000	.000	.000	.000	.000	0
	REQUIRED CAMBER	0	-1/16"	0"	5/16"	11/16"	1 1/8"	1 9/16"	2"	2 5/16"	2 9/16"	2 11/16"	2 11/16"	2 9/16"	2 1/4"	1 7/8"	1 7/16"	1"	9/16"	5/16"	1/16"	0
2, 3 & 4	DEFLECTION DUE TO WT. OF STEEL	0	-.002	-.001	.004	.009	.017	.024	.032	.037	.042	.044	.043	.041	.037	.031	.024	.017	.010	.005	.002	0
	DEFLECTION DUE TO WT. OF SLAB*	0	-.005	.001	.019	.042	.073	.101	.130	.153	.169	.176	.174	.165	.145	.122	.093	.066	.039	.019	.006	0
	DEFLECTION DUE TO WT. OF RAIL	0	.000	.001	.003	.005	.008	.011	.013	.015	.016	.017	.017	.016	.014	.012	.009	.007	.004	.002	.001	0
	TOTAL DEAD LOAD DEFLECTION	0	-.007	.001	.026	.056	.098	.136	.175	.205	.227	.237	.234	.222	.196	.165	.126	.090	.053	.026	.009	0
	VERTICAL CURVE ORDINATE	0	.000	.000	.000	.000	.000	.000	.000	.000	.000	.000	.000	.000	.000	.000	.000	.000	.000	.000	.000	0
	SUPERELEVATION ORDINATE	0	.000	.000	.000	.000	.000	.000	.000	.000	.000	.000	.000	.000	.000	.000	.000	.000	.000	.000	.000	0
	REQUIRED CAMBER	0	-1/16"	0"	5/16"	11/16"	1 3/16"	1 5/8"	2 1/8"	2 7/16"	2 3/4"	2 7/8"	2 13/16"	2 11/16"	2 3/8"	2"	1 1/2"	1 1/16"	5/8"	5/16"	1/8"	0

* INCLUDES SLAB, BUILDUPS & STAY-IN-PLACE FORMS.
ALL VALUES ARE SHOWN IN FEET (DECIMAL FORM), EXCEPT "REQUIRED CAMBER", WHICH IS GIVEN IN INCHES (FRACTION FORM).

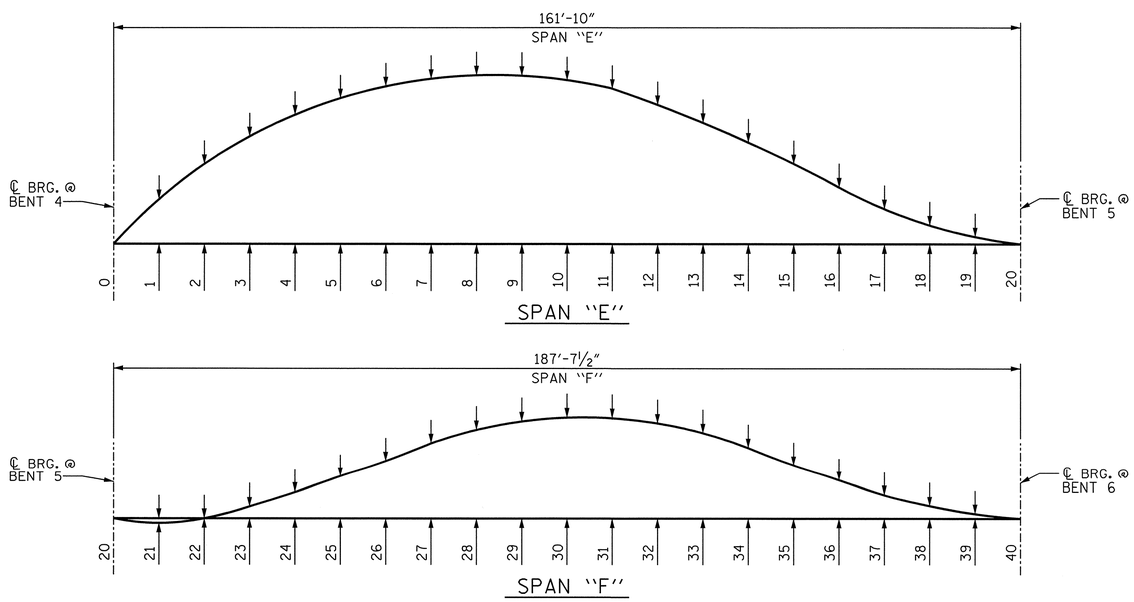

SCHEMATIC OF CAMBER ORDINATES

FOR CAMBER VALUES AT TWENTIETH POINTS, SEE TABLES.

PROJECT NO. U-2525B
GUILFORD COUNTY
STATION: 144+60.63 -L-

SHEET 3 OF 4

STATE OF NORTH CAROLINA
DEPARTMENT OF TRANSPORTATION
RALEIGH

SUPERSTRUCTURE

CAMBER AND DEAD LOAD DEFLECTIONS SPAN "E" & SPAN "F"
RIGHT LANE

NORTH CAROLINA PROFESSIONAL SEAL 027799 ENGINEER ALLYSON K. ORR
1/10/14

MI ENGINEERING
1011 SCHAUB DRIVE, SUITE 100
RALEIGH, NC 27606
(919) 851-6606
FIRM PE NUMBER : P-0671

REVISIONS						
NO.	BY:	DATE:	NO.	BY:	DATE:	
1			3			
2			4			

SHEET NO. S-266
TOTAL SHEETS 541

DRAWN BY : B.E. LANNING DATE : 07/13
CHECKED BY : A.K. ORR DATE : 10/13
DESIGN ENGINEER OF RECORD : A.K. ORR DATE : 01/14

DWG. NO. 33

1/10/2014
9:39:35 AM
User: blanning
Filename: P:\NC Bridges\MI100T.03 U-2525B Guilford\U-2525B\Structures\Right Bridge\U2525B_SD_DLEF_4_RT.dgn

DEAD LOAD DEFLECTION AND CAMBER

GIRDER		SPAN "G"																				
	THIRTIETH POINTS	40	41	42	43	44	45	46	47	48	49	50	51	52	53	54	55	56	57	58	59	60
1 & 5	DEFLECTION DUE TO WT. OF STEEL	0	.001	.005	.009	.016	.022	.029	.035	.039	.041	.041	.039	.035	.030	.023	.016	.009	.003	-.001	-.002	0
	DEFLECTION DUE TO WT. OF SLAB*	0	.005	.017	.035	.060	.085	.112	.133	.151	.160	.161	.155	.140	.119	.093	.067	.039	.018	.001	-.004	0
	DEFLECTION DUE TO WT. OF RAIL	0	.001	.003	.005	.009	.012	.016	.019	.021	.022	.023	.022	.020	.018	.014	.011	.007	.004	.001	.000	0
	TOTAL DEAD LOAD DEFLECTION	0	.007	.025	.049	.085	.119	.157	.187	.211	.223	.225	.216	.195	.167	.130	.094	.055	.025	.001	-.006	0
	VERTICAL CURVE ORDINATE	0	.000	.000	.000	.000	.000	.000	.000	.000	.000	.000	.000	.000	.000	.000	.000	.000	.000	.000	.000	0
	SUPERELEVATION ORDINATE	0	.000	.000	.000	.000	.000	.000	.000	.000	.000	.000	.000	.000	.000	.000	.000	.000	.000	.000	.000	0
	REQUIRED CAMBER	0	1/16"	5/16"	9/16"	1"	1 7/16"	1 7/8"	2 1/4"	2 9/16"	2 11/16"	2 11/16"	2 9/16"	2 5/16"	2"	1 9/16"	1 1/8"	11/16"	5/16"	0"	-1/16"	0
2, 3 & 4	DEFLECTION DUE TO WT. OF STEEL	0	.002	.005	.010	.017	.024	.031	.037	.041	.043	.044	.042	.037	.032	.024	.017	.009	.004	-.001	-.002	0
	DEFLECTION DUE TO WT. OF SLAB*	0	.006	.019	.039	.066	.093	.122	.145	.165	.174	.176	.169	.153	.130	.101	.073	.042	.019	.001	-.005	0
	DEFLECTION DUE TO WT. OF RAIL	0	.001	.002	.004	.007	.009	.012	.014	.016	.017	.017	.016	.015	.013	.011	.008	.005	.003	.001	.000	0
	TOTAL DEAD LOAD DEFLECTION	0	.009	.026	.053	.090	.126	.165	.196	.222	.234	.237	.227	.205	.175	.136	.098	.056	.026	.001	-.007	0
	VERTICAL CURVE ORDINATE	0	.000	.000	.000	.000	.000	.000	.000	.000	.000	.000	.000	.000	.000	.000	.000	.000	.000	.000	.000	0
	SUPERELEVATION ORDINATE	0	.000	.000	.000	.000	.000	.000	.000	.000	.000	.000	.000	.000	.000	.000	.000	.000	.000	.000	.000	0
	REQUIRED CAMBER	0	1/8"	5/16"	5/8"	1 1/16"	1 1/2"	2"	2 3/8"	2 11/16"	2 13/16"	2 7/8"	2 3/4"	2 7/16"	2 1/8"	1 5/8"	1 3/16"	11/16"	5/16"	0"	-1/16"	0

GIRDER		SPAN "H"																				
	THIRTIETH POINTS	60	61	62	63	64	65	66	67	68	69	70	71	72	73	74	75	76	77	78	79	80
1 & 5	DEFLECTION DUE TO WT. OF STEEL	0	.004	.010	.018	.027	.036	.047	.056	.064	.071	.076	.078	.078	.076	.071	.064	.055	.044	.030	.016	0
	DEFLECTION DUE TO WT. OF SLAB*	0	.013	.033	.059	.090	.123	.160	.192	.223	.247	.265	.274	.276	.269	.253	.229	.196	.155	.107	.056	0
	DEFLECTION DUE TO WT. OF RAIL	0	.002	.004	.007	.011	.015	.020	.024	.028	.030	.033	.034	.034	.033	.031	.028	.024	.019	.013	.007	0
	TOTAL DEAD LOAD DEFLECTION	0	.019	.047	.084	.128	.174	.227	.272	.315	.348	.374	.386	.388	.378	.355	.321	.275	.218	.150	.079	0
	VERTICAL CURVE ORDINATE	0	.000	.000	.000	.000	.000	.000	.000	.000	.000	.000	.000	.000	.000	.000	.000	.000	.000	.000	.000	0
	SUPERELEVATION ORDINATE	0	.000	.000	.000	.000	.000	.000	.000	.000	.000	.000	.000	.000	.000	.000	.000	.000	.000	.000	.000	0
	REQUIRED CAMBER	0	1/4"	9/16"	1"	1 9/16"	2 1/16"	2 3/4"	3 1/4"	3 3/4"	4 3/16"	4 1/2"	4 5/8"	4 5/8"	4 9/16"	4 1/4"	3 7/8"	3 5/16"	2 5/8"	1 13/16"	15/16"	0
2, 3 & 4	DEFLECTION DUE TO WT. OF STEEL	0	.004	.011	.019	.028	.038	.049	.059	.068	.075	.080	.082	.083	.080	.075	.068	.058	.046	.032	.016	0
	DEFLECTION DUE TO WT. OF SLAB*	0	.015	.036	.064	.099	.135	.174	.210	.244	.270	.289	.300	.302	.294	.276	.250	.214	.169	.117	.061	0
	DEFLECTION DUE TO WT. OF RAIL	0	.001	.003	.005	.008	.011	.015	.018	.021	.023	.024	.025	.025	.024	.023	.021	.018	.014	.010	.005	0
	TOTAL DEAD LOAD DEFLECTION	0	.020	.050	.088	.135	.184	.238	.287	.333	.368	.393	.407	.410	.398	.374	.339	.290	.229	.159	.082	0
	VERTICAL CURVE ORDINATE	0	.000	.000	.000	.000	.000	.000	.000	.000	.000	.000	.000	.000	.000	.000	.000	.000	.000	.000	.000	0
	SUPERELEVATION ORDINATE	0	.000	.000	.000	.000	.000	.000	.000	.000	.000	.000	.000	.000	.000	.000	.000	.000	.000	.000	.000	0
	REQUIRED CAMBER	0	1/4"	5/8"	1 1/16"	1 5/8"	2 3/16"	2 7/8"	3 7/16"	4"	4 7/16"	4 11/16"	4 7/8"	4 15/16"	4 3/4"	4 1/2"	4 1/16"	3 1/2"	2 3/4"	1 15/16"	1"	0

* INCLUDES SLAB, BUILDUPS & STAY-IN-PLACE FORMS.
ALL VALUES ARE SHOWN IN FEET (DECIMAL FORM), EXCEPT "REQUIRED CAMBER", WHICH IS GIVEN IN INCHES (FRACTION FORM).

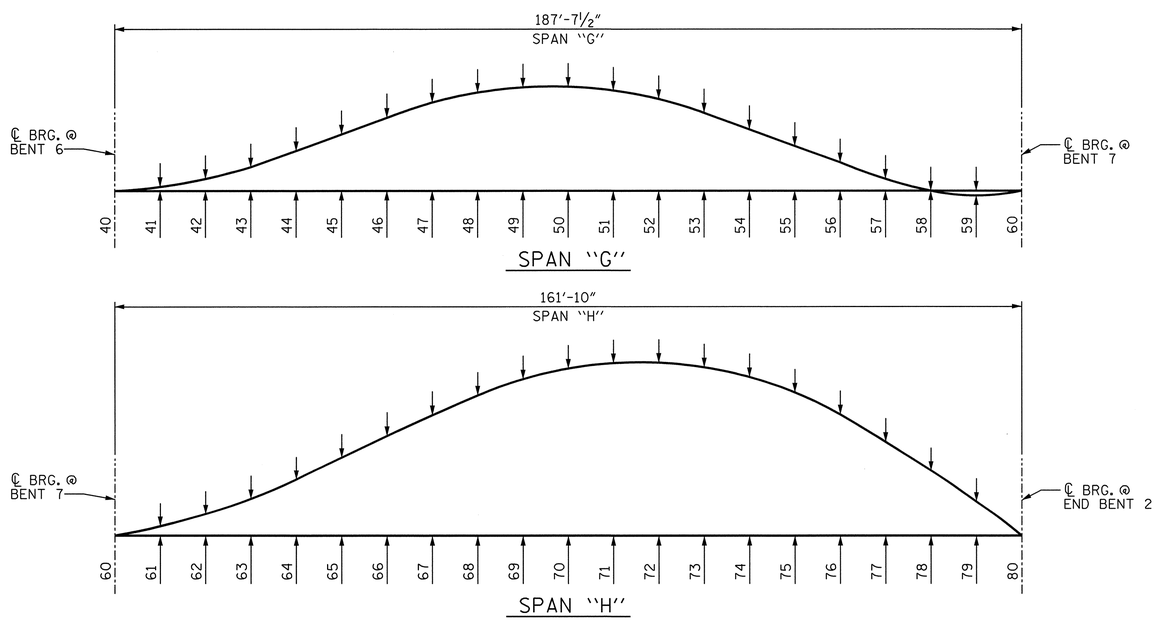

SCHEMATIC OF CAMBER ORDINATES

FOR CAMBER VALUES AT TWENTIETH POINTS, SEE TABLES.

PROJECT NO. U-2525B
GUILFORD COUNTY
STATION: 144+60.63 -L-

SHEET 4 OF 4

STATE OF NORTH CAROLINA
DEPARTMENT OF TRANSPORTATION
RALEIGH

SUPERSTRUCTURE

CAMBER AND DEAD LOAD DEFLECTIONS SPAN "G" & SPAN "H"

RIGHT LANE

NORTH CAROLINA PROFESSIONAL SEAL 027799 ENGINEER ALLYSON K. ORR 1/10/14

DRAWN BY : B.E. LANNING	DATE : 07/13		
CHECKED BY : A.K. ORR	DATE : 10/13		
DESIGN ENGINEER OF RECORD : A.K. ORR	DATE : 01/14		

MI ENGINEERING
1011 SCHAUB DRIVE, SUITE 100
RALEIGH, NC 27606
(919) 851-6606
FIRM PE NUMBER : P-0671

DWG. NO. 34

REVISIONS						SHEET NO.
NO.	BY:	DATE:	NO.	BY:	DATE:	S-267
1			3			TOTAL SHEETS
2			4			541

1/10/2014
9:39:37 AM
User: blanning
Filename: P:\NC Bridges\MI1007.03 U-2525B Guilford\U-2525B\Structures\Right Bridge\U2525B_SD_DLGH_4_RT.dgn

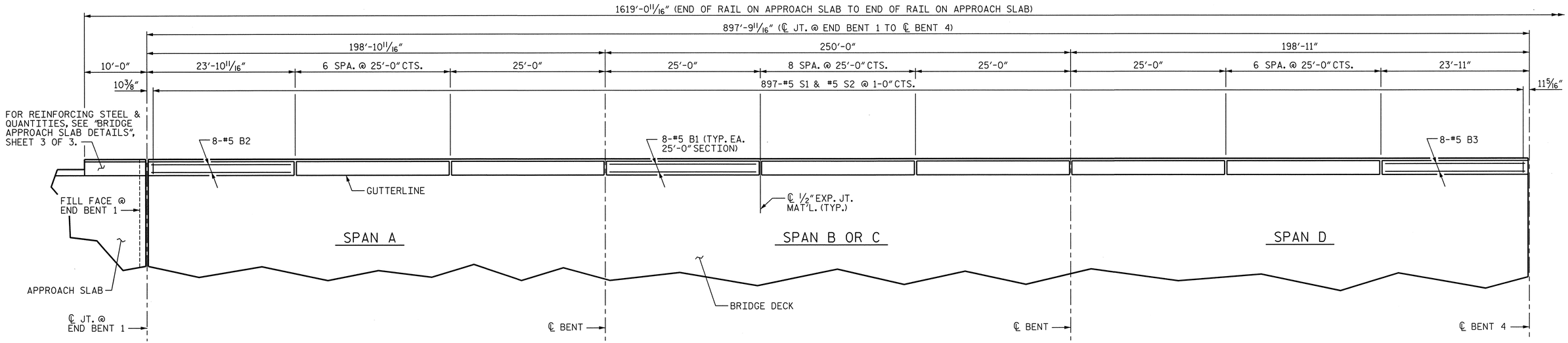

PLAN AT UNIT 1

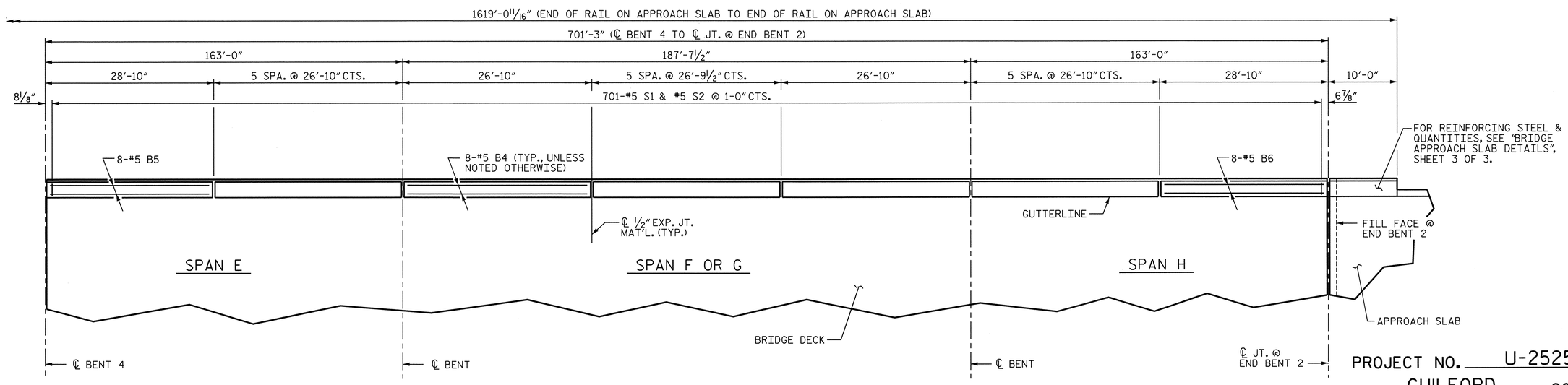

PLAN AT UNIT 2

PROJECT NO. U-2525B

GUILFORD COUNTY

STATION: 144+60.63 -L-

SHEET 1 OF 2

PLAN OF BARRIER RAIL

(LEFT RAIL SHOWN, RIGHT RAIL SIMILAR)

NORTH CAROLINA PROFESSIONAL SEAL 027799 ENGINEER ALLYSON K. ORR 1/10/14

STATE OF NORTH CAROLINA
DEPARTMENT OF TRANSPORTATION
RALEIGH

SUPERSTRUCTURE

CONCRETE BARRIER RAIL

RIGHT LANE

MI ENGINEERING
1011 SCHAUB DRIVE, SUITE 100
RALEIGH, NC 27606
(919) 851-6606
FIRM PE NUMBER : P-0671

REVISIONS						
NO.	BY:	DATE:	NO.	BY:	DATE:	
1			3			
2			4			

SHEET NO. S-28

TOTAL SHEETS 54

DWG. NO. 35

DRAWN BY :	B.E. ATKINSON	DATE :	06/13
CHECKED BY :	A.K. ORR	DATE :	09/13
DESIGN ENGINEER OF RECORD :	A.K. ORR	DATE :	01/14

1/10/2014
9:50:17 AM
User: blanning
Filename: P:\NC Bridges\MI1007.03 U-2525B Guilford\U-2525B\Structures\Right Bridge\U2525B_SD_CBR1_4_RT.dgn

NOTES

THE BARRIER RAIL IN A CONTINUOUS UNIT SHALL NOT BE CAST UNTIL ALL SLAB CONCRETE IN THAT UNIT HAS BEEN CAST AND HAS REACHED A MINIMUM COMPRESSIVE STRENGTH OF 3,000 PSI.

ALL REINFORCING STEEL IN BARRIER RAILS SHALL BE EPOXY COATED.

GROOVED CONTRACTION JOINTS, 1/2" IN DEPTH, SHALL BE TOOLED IN ALL EXPOSED FACES OF THE BARRIER RAIL AND IN ACCORDANCE WITH ARTICLE 825-10(B) OF THE STANDARD SPECIFICATIONS. THE CONTRACTION JOINT SHALL BE LOCATED AT EACH THIRD POINT BETWEEN BARRIER RAIL EXPANSION JOINTS. ONLY ONE CONTRACTION JOINT IS REQUIRED AT MIDPOINT OF BARRIER RAIL SEGMENTS LESS THAN 20 FEET IN LENGTH AND NO CONTRACTION JOINTS ARE REQUIRED FOR THOSE SEGMENTS LESS THAN 10 FEET IN LENGTH.

BAR TYPES

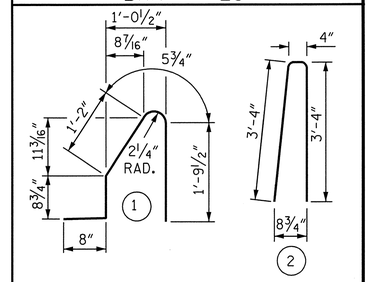

ALL BAR DIMENSIONS ARE OUT TO OUT

BILL OF MATERIAL

FOR CONCRETE BARRIER RAIL ONLY

BAR	NO.	SIZE	TYPE	LENGTH	WEIGHT
* B1	544	#5	STR	24'-7"	13948
* B2	16	#5	STR	23'-5"	391
* B3	16	#5	STR	23'-4"	389
* B4	384	#5	STR	26'-5"	10580
* B5	16	#5	STR	28'-3"	471
* B6	16	#5	STR	28'-4"	473
* S1	3196	#5	1	4'-10"	16112
* S2	3196	#5	2	7'-0"	23334

⊛ * EPOXY COATED REINFORCING STEEL	65,698 LBS.
⊛ CLASS AA CONCRETE	435.1 CU. YDS.
CONCRETE BARRIER RAIL	
SUPERSTRUCTURE	3198.11 LIN. FT.
APPROACH SLABS	40.00 LIN. FT.
TOTAL	3238.11 LIN. FT.

⊛ THE QUANTITIES FOR BARRIER RAIL ON APPROACH SLABS IS NOT INCLUDED. FOR BARRIER RAIL ON APPROACH SLABS, SEE "BRIDGE APPROACH SLAB DETAILS" SHEET 3 OF 3.

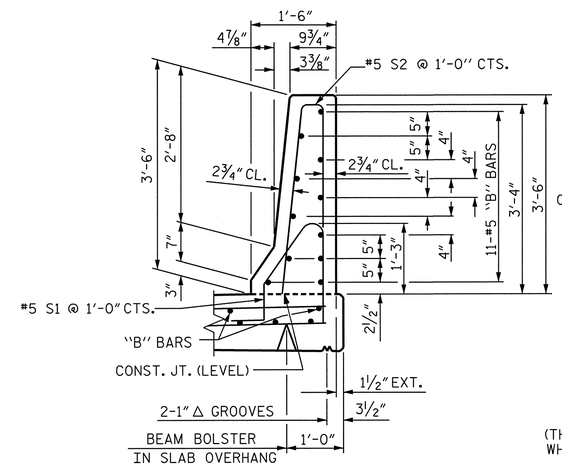

SECTION THRU RAIL

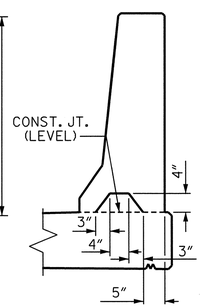

SECTION S-S

AT DAM IN OPEN JOINT (THIS IS TO BE USED ONLY WHEN SLIP FORM IS USED)

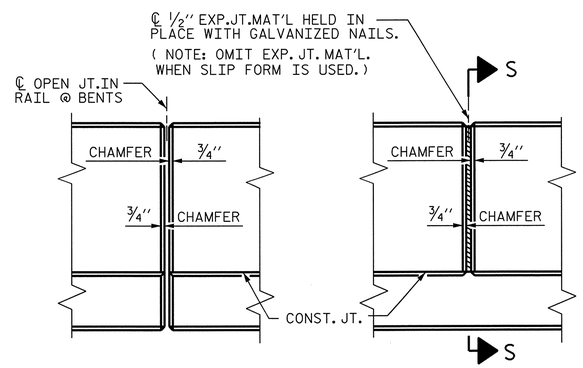

ELEVATION AT EXPANSION JOINTS

BARRIER RAIL DETAILS

PROJECT NO. U-2525B

GUILFORD COUNTY

STATION: 144+60.63 -L-

SHEET 2 OF 2

STATE OF NORTH CAROLINA
DEPARTMENT OF TRANSPORTATION
RALEIGH

STANDARD

CONCRETE BARRIER RAIL

RIGHT LANE

NORTH CAROLINA PROFESSIONAL SEAL 021799 ENGINEER ALLYSON K. ORR
1/10/14

MI ENGINEERING
1011 SCHAUB DRIVE, SUITE 100
RALEIGH, NC 27606
(919) 851-6606
FIRM PE NUMBER : P-0671

REVISIONS							
NO.	BY:	DATE:	NO.	BY:	DATE:	SHEET NO.	S-269
1			3			TOTAL SHEETS	541
2			4				

DWG. NO. 36

STD. NO. CBR1

ASSEMBLED BY:	B.E. ATKINSON	DATE:	06/13
CHECKED BY :	A.K. ORR	DATE:	09/13
DESIGN ENGINEER OF RECORD:	A.K. ORR	DATE:	01/14

DRAWN BY :	ARB	5/87	REV. 10/1/11 MAA/GM
CHECKED BY :	SJD	9/87	REV. 7/12 MAA/GM
			REV. 10/12 MAA/GM

1/10/2014
9:39:39 AM
User: blanning
Filename: P:\NC Bridges\MI1007.03 U-2525B Guilford\U-2525B\Structures\Right Bridge\U2525B_SD_CBR2_4_RT.dgn

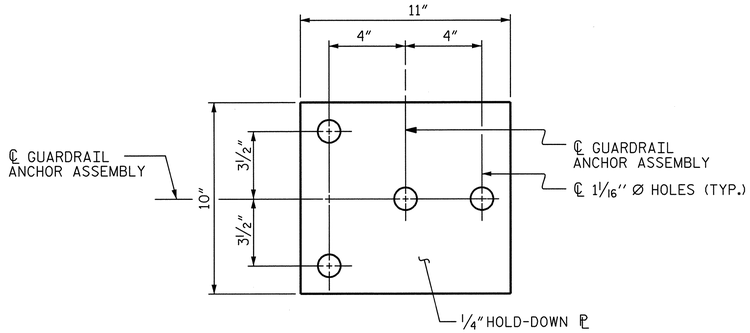

PLAN

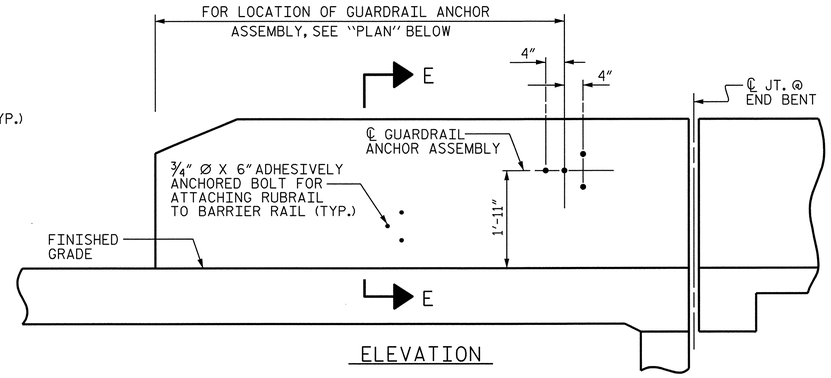

ELEVATION

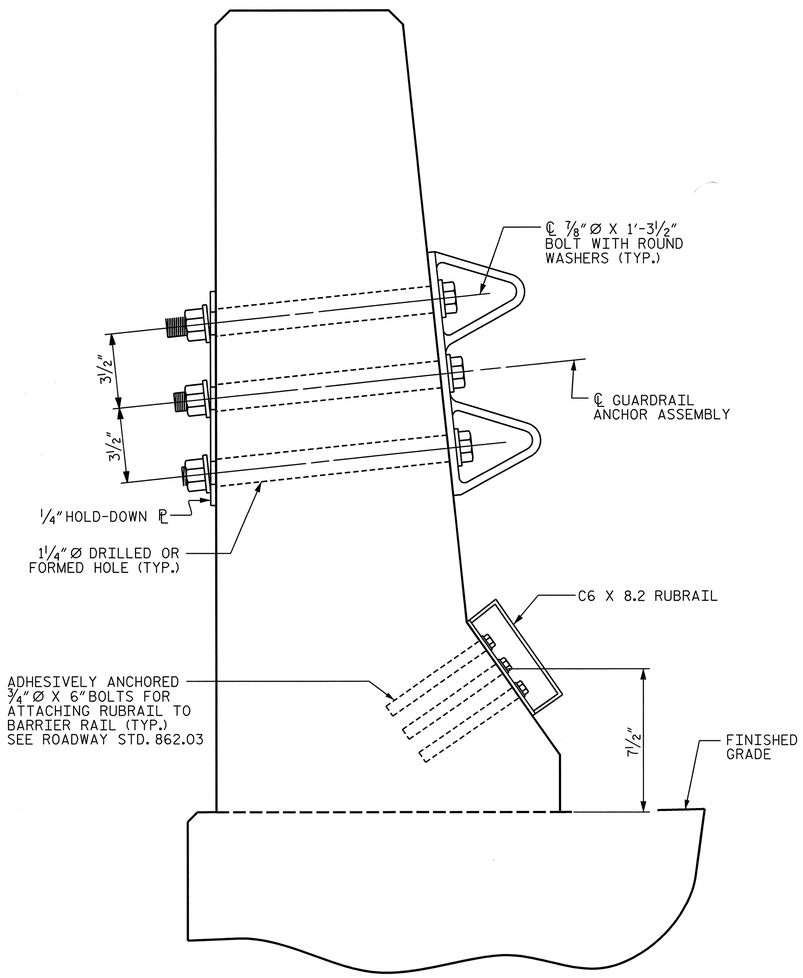

SECTION E-E

GUARDRAIL ANCHOR ASSEMBLY DETAILS

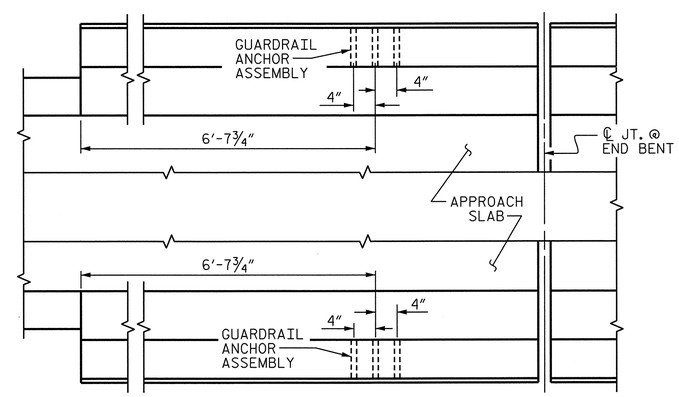

PLAN

LOCATION OF ANCHORS FOR GUARDRAIL

END BENT #2 SHOWN, END BENT #1 SIMILAR.

NOTES

THE GUARDRAIL ANCHOR ASSEMBLY SHALL CONSIST OF A 1/4" HOLD-DOWN PLATE AND 4 - 7/8" Ø BOLTS WITH NUTS AND WASHERS, RUBRAIL, AND ADHESIVELY ANCHORED BOLTS.

THE HOLD-DOWN PLATE SHALL CONFORM TO AASHTO M270 GRADE 36. AFTER FABRICATION, THE HOLD-DOWN PLATE SHALL BE HOT-DIP GALVANIZED IN ACCORDANCE WITH AASHTO M111.

BOLTS SHALL CONFORM TO THE REQUIREMENTS OF ASTM A307 AND NUTS SHALL CONFORM TO THE REQUIREMENTS OF AASHTO M291. BOLTS, NUTS AND WASHERS SHALL BE GALVANIZED. (AT THE CONTRACTOR'S OPTION, STAINLESS STEEL BOLTS, NUTS AND WASHERS MAY BE USED AS AN ALTERNATE FOR THE 7/8" Ø GALVANIZED BOLTS, NUTS AND WASHERS. THEY SHALL CONFORM TO OR EXCEED THE MECHANICAL REQUIREMENTS OF ASTM A307. THE USE OF THIS ALTERNATE SHALL BE APPROVED BY THE ENGINEER.)

THE GUARDRAIL ANCHOR ASSEMBLY IS REQUIRED AT ALL POINTS WHERE APPROACH GUARDRAIL IS TO BE ATTACHED TO THE END OF BARRIER RAIL. FOR POINTS OF ATTACHMENT, SEE SKETCH.

AFTER INSTALLATION, THE EXPOSED THREAD OF THE BOLT SHALL BE BURRED WITH A SHARP POINTED TOOL.

THE COST OF THE GUARDRAIL ANCHOR ASSEMBLY SHALL BE INCLUDED IN THE UNIT CONTRACT PRICE BID FOR CONCRETE BARRIER RAIL.

THE 1 1/4" Ø HOLES SHALL BE FORMED OR DRILLED WITH A CORE BIT. IMPACT TOOLS WILL NOT BE PERMITTED. ANY CONCRETE DAMAGED BY THIS WORK SHALL BE REPAIRED TO THE SATISFACTION OF THE ENGINEER.

THE C6 X 8.2 RUBRAIL IS TO BE ADHESIVELY ANCHORED TO THE RAIL USING THREE 3/4" Ø X 6" BOLTS WITH WASHERS. LEVEL ONE FIELD TESTING IS REQUIRED, AND THE YIELD LOAD OF THE 3/4" Ø BOLT IS 12 KIPS. FOR ADHESIVELY ANCHORED ANCHOR BOLTS OR DOWELS, SEE STANDARD SPECIFICATIONS. SEE ROADWAY STANDARD 862.03 FOR DETAILS AND LOCATION OF THE RUBRAIL.

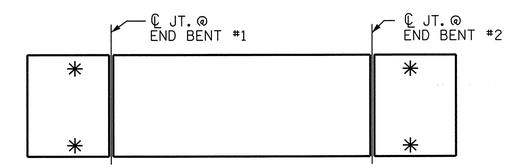

SKETCH SHOWING POINTS OF ATTACHMENTS

✳ DENOTES GUARDRAIL ANCHOR ASSEMBLY

PROJECT NO. U-2525B
GUILFORD COUNTY
STATION: 144+60.63 -L-

ASSEMBLED BY:	B.E. ATKINSON	DATE:	06/13
CHECKED BY :	A.K. ORR	DATE:	09/13
DESIGN ENGINEER OF RECORD:	A.K. ORR	DATE:	01/14

DRAWN BY : TLA	5/06	REV. 10/1/11	MAA/GM
CHECKED BY : GM	5/06	REV. 7/12	MAA/GM
		REV. 10/12	MAA/GM

NORTH CAROLINA PROFESSIONAL SEAL 027799 ENGINEER ALLYSON K. ORR
1/10/14

DWG. NO. 37

MI ENGINEERING
1011 SCHAUB DRIVE, SUITE 100
RALEIGH, NC 27606
(919) 851-6606
FIRM PE NUMBER : P-0671

STATE OF NORTH CAROLINA
DEPARTMENT OF TRANSPORTATION
RALEIGH

STANDARD
GUARDRAIL ANCHORAGE FOR BARRIER RAIL

RIGHT LANE

REVISIONS							
NO.	BY:	DATE:	NO.	BY:	DATE:	SHEET NO.	S-270
1			3			TOTAL SHEETS	541
2			4				

STD. NO. GRA2

1/10/2014
9:41:17 AM
User: blanning
Filename: P:\NC Bridges\MI1007.03 U-2525B Guilford\U-2525B\Structures\Right Bridge\U2525B_SD_GRA1_4_RT.dgn

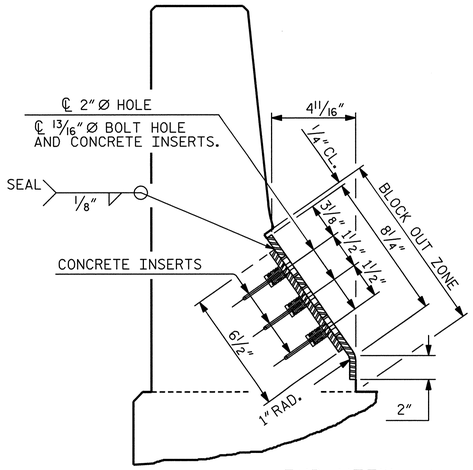

END VIEW

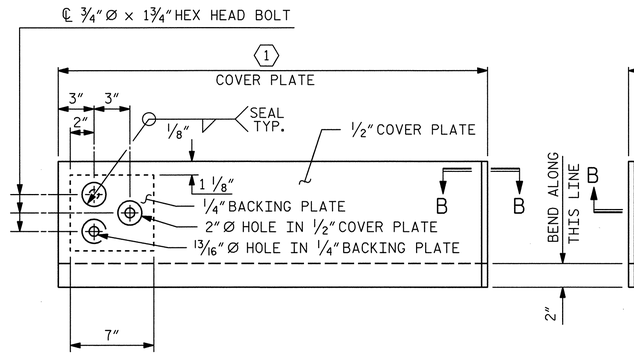

TYPE I - ELEVATION VIEW

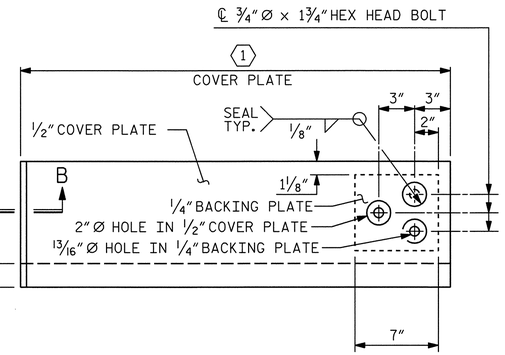

TYPE II - ELEVATION VIEW

COVER PLATE DETAILS

(1) DETAILS OF COVER PLATES ARE SUBJECT TO CHANGE DEPENDING ON THE DETAILS OF THE MODULAR EXPANSION JOINT SEALS FURNISHED.

NOTES

FOR MODULAR EXPANSION JOINT SEALS, SEE SPECIAL PROVISIONS.

THE STEEL PLATES SHALL CONFORM TO AASHTO M270 GRADE 36 OR APPROVED EQUAL AND BE PAINTED IN ACCORDANCE WITH THE STANDARD SPECIFICATIONS. AT THE CONTRACTOR'S OPTION, THE PLATES MAY BE METALLIZED AFTER FABRICATION. SEE SPECIAL PROVISIONS FOR THERMAL SPRAYED COATINGS (METALLIZATION).

THE 3/4'' Ø HEX HEAD BOLTS SHALL CONFORM TO ASTM F593 ALLOY 304 STAINLESS STEEL.

THE 3/4'' CONCRETE INSERTS SHALL BE CLOSED-END FERRULES WITH LOOPED WIRE STRUTS ATTACHED TO THEM. THE INSERTS SHALL CONFORM TO AASHTO M169, GRADE 12L14 AND SHALL HAVE A TENSILE WORKING LOAD CAPACITY OF 3000 LBS.

NO SEPARATE PAYMENT WILL BE MADE FOR FURNISHING AND INSTALLING THE COVER PLATE. THE ENTIRE COST OF THIS WORK SHALL BE INCLUDED IN THE LUMP SUM PRICE FOR "MODULAR EXPANSION JOINT SEALS".

SPECIAL SNOWPLOW PROTECTION IS REQUIRED. SEE SPECIAL PROVISIONS FOR MODULAR EXPANSION JOINT SEALS.

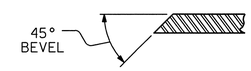

SECTION B-B

	SKEW ANGLE	TOTAL MOVEMENT ALONG ℄ ROADWAY
END BENT #1	90°-00'-00"	3 1/4"
BENT #4	90°-00'-00"	7 13/16"

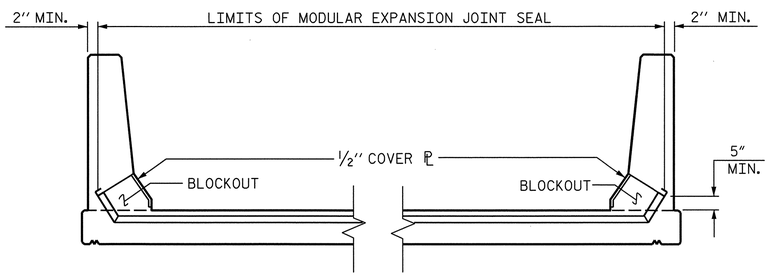

SKETCH SHOWING LIMITS OF MODULAR EXPANSION JOINT SEAL-BARRIER RAIL

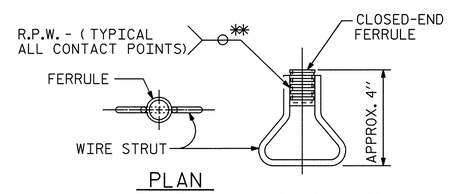

CONCRETE INSERT

** EACH WELDED ATTACHMENT OF WIRE TO FERRULE SHALL DEVELOP THE TENSILE STRENGTH OF THE WIRE.

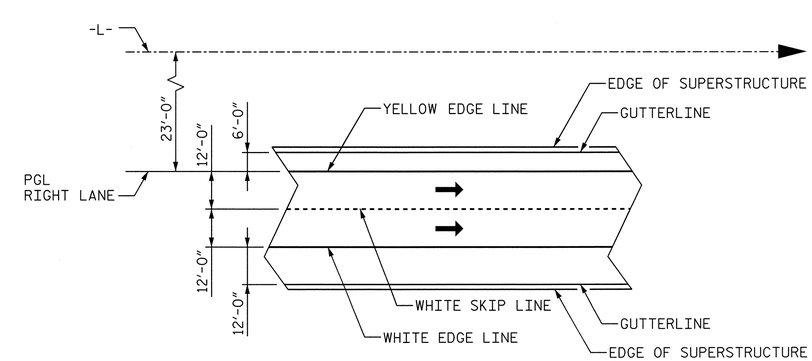

PAVEMENT MARKING ALIGNMENT SKETCH

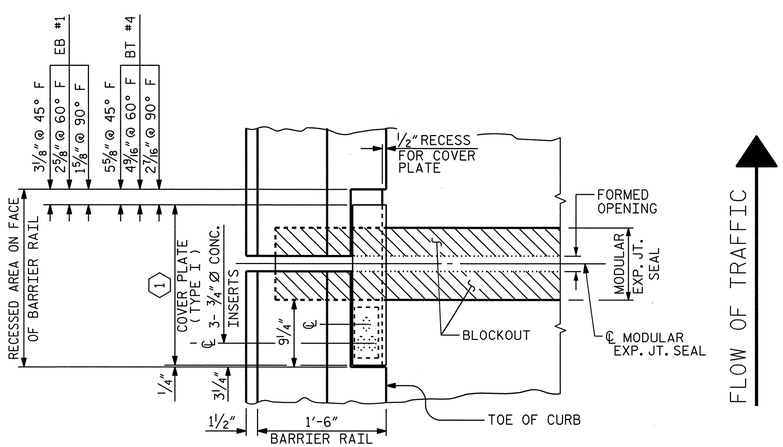

PLAN OF MODULAR EXPANSION JOINT SEAL - LEFT SIDE

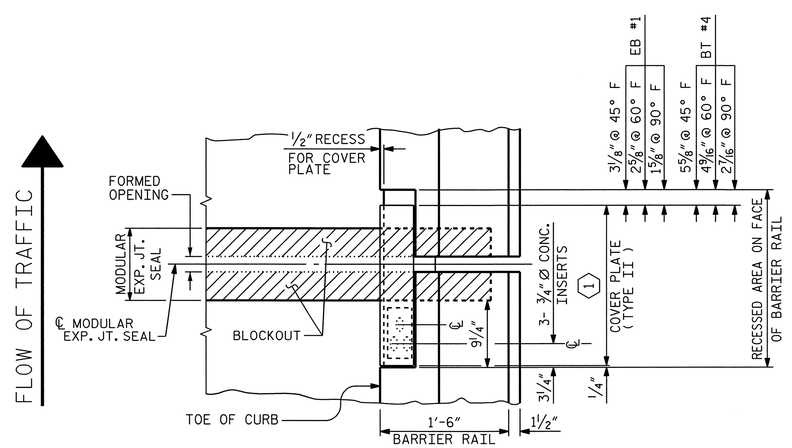

PLAN OF MODULAR EXPANSION JOINT SEAL - RIGHT SIDE

PROJECT NO. U-2525B
GUILFORD COUNTY
STATION: 144+60.63 -L-

STATE OF NORTH CAROLINA
DEPARTMENT OF TRANSPORTATION
RALEIGH

STANDARD

MODULAR EXPANSION JOINT SEAL DETAILS FOR BARRIER RAIL
RIGHT LANE

NORTH CAROLINA PROFESSIONAL SEAL 021799 ENGINEER ALLYSON K. ORR
1/10/14

MI ENGINEERING
1011 SCHAUB DRIVE, SUITE 100
RALEIGH, NC 27606
(919) 851-6606
FIRM PE NUMBER : P-0671

REVISIONS							SHEET NO.
NO.	BY:	DATE:	NO.	BY:	DATE:		S-271
1			3				TOTAL SHEETS
2			4				541

DWG. NO. 38

STD. NO. MEJS1

ASSEMBLED BY:	B.E. ATKINSON	DATE:	06/13
CHECKED BY :	A.K. ORR	DATE:	09/13
DESIGN ENGINEER OF RECORD:	A.K. ORR	DATE:	01/14
DRAWN BY : EEM 7/96	REV. 5/1/06	TLA/GM	
CHECKED BY : VAP 7/96	REV. 10/1/11	MAA/GM	
	REV. 10/12	MAA/GM	

1/10/2014
9:41:20 AM
User: blanning
Filename: P:\NC Bridges\MI1007.03 U-2525B Guilford\U-2525B\Structures\Right Bridge\U2525B_SD_MEJS1_4_RT.dgn

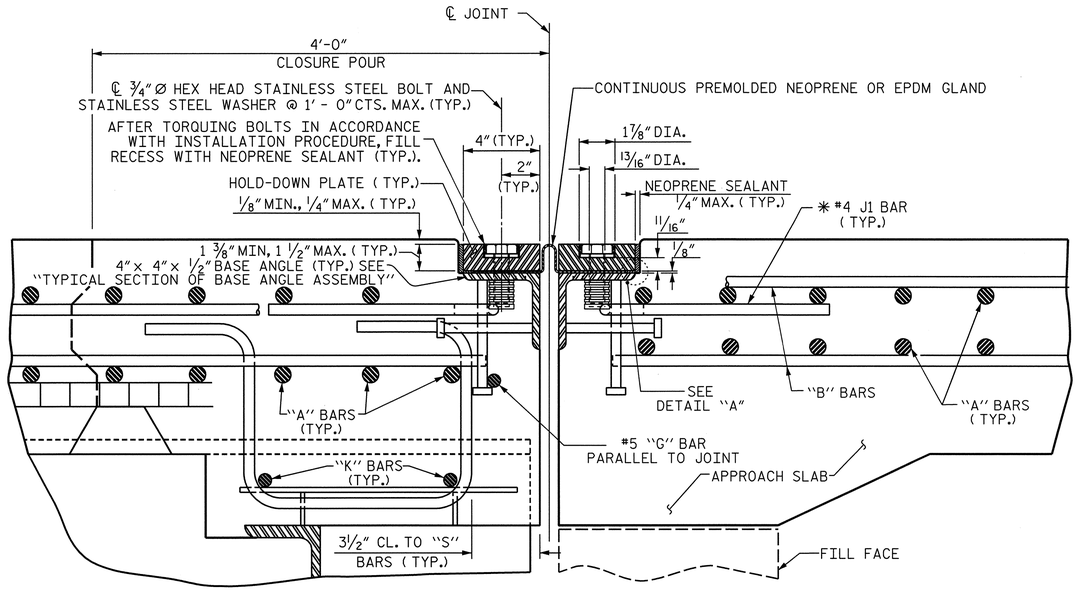

EXPANSION JOINT DETAILS

SECTION NORMAL TO JOINT -- STEEL SUPERSTRUCTURE

* THE QUANTITY OF #4 J1 BARS ON THE BILL OF MATERIAL IS BASED ON 1'-0" CENTERS. J1 BARS SHALL BE PLACED AT EACH VERTICAL STUD ANCHOR BOLT. IN THE EVENT THAT THE NUMBER OF VERTICAL STUD ANCHORS EXCEEDS THE NUMBER OF J1 BARS SPECIFIED, ADDITIONAL J1 BARS WILL NOT BE REQUIRED.

INSTALLATION PROCEDURE

1. A TEMPLATE OR OTHER SUITABLE DEVICE SHALL BE USED TO FORM THE TOP OF THE EXPANSION JOINT SEAL BLOCKOUT TO THE PROPER DEPTH AND WIDTH. THE TEMPLATE SHALL BE 4⅛" TO 4¼" WIDE AND OF SUCH THICKNESS AS TO PROVIDE FOR CORRECT FINAL ELEVATION OF TOP OF HOLD-DOWN PLATES. THE TEMPLATE SHALL BE ATTACHED TO THE BASE ANGLE ASSEMBLY WITH THE ¾"Ø HEX HEAD BOLTS PROVIDED FOR THE HOLD-DOWN PLATES. A 1"Ø HOLE SHALL BE PROVIDED IN THE TEMPLATE CENTERED OVER EACH WEEP HOLE IN THE 4" X 4" X ½" BASE ANGLE. OTHER METHODS OF INSURING DRAINAGE THROUGH WEEP HOLES MAY BE EMPLOYED SUBJECT TO ENGINEER'S APPROVAL.
2. AFTER THE CONCRETE HAS BEEN CAST ON BOTH SIDES OF THE JOINT, REMOVE THE TEMPLATE. THOROUGHLY CLEAN THE BOLT HOLES AND THE ANGLE PLATE. REMOVE ANY EXCESS CONCRETE THAT COMES OUT OF THE WEEP HOLES. ANY DAMAGED STEEL SHALL BE COATED WITH A MINIMUM THICKNESS OF 4 DRY MILS OF ZINC-RICH PAINT IN ACCORDANCE WITH THE STANDARD SPECIFICATIONS.
3. LAY THE GLAND ON THE BASE ANGLE AND FIELD MARK THE GLAND FOR THE BOLT HOLES. HOLES IN THE GLAND SHALL BE PUNCHED ⅞" IN DIAMETER WITH A HAND PUNCH.
4. IN ORDER TO CHECK FOR PROPER ALIGNMENT, PLACE THE GLAND AND HOLD-DOWN PLATES ON THE BASE ANGLE. DO NOT APPLY NEOPRENE SEALANT. BOLT THE HOLD-DOWN PLATES TO THE BASE ANGLE BUT DO NOT TIGHTEN. THE ENGINEER SHALL INSPECT THE JOINT SEAL DEVICE FOR PROPER ALIGNMENT.
5. AFTER INSPECTION, REMOVE THE HOLD-DOWN PLATES AND GLAND. APPLY NEOPRENE SEALANT TO THE BASE ANGLE IN ACCORDANCE WITH THE "INSTALLATION SKETCH". PLACE GLAND AND HOLD-DOWN PLATES ON THE BASE ANGLE. BOLT THE HOLD-DOWN PLATES TO THE BASE ANGLE ASSEMBLY AND TORQUE THE BOLTS TO 88 FT-LBS WITH A TORQUE WRENCH. CHECK THE TORQUE AFTER THREE (3) HOURS AND, IF NECESSARY, RETIGHTEN TO 88 FT-LBS. A FINAL CHECK SHALL BE MADE AT SEVEN (7) DAYS. TORQUE SHALL NOT BE LESS THAN 80 FT-LBS AFTER SEVEN (7) DAYS.
6. AFTER PROPER TORQUING, CLEAN THE BOLT HOLE RECESSES AND THE RECESS BETWEEN THE JOINT SEAL DEVICE AND CONCRETE, COMPLETELY FILL THESE RECESSES WITH NEOPRENE SEALANT.

GENERAL NOTES

1. FOR EXPANSION JOINT SEALS, SEE SPECIAL PROVISIONS.
2. ALL PLATES AND ANGLES SHALL CONFORM TO AASHTO M270 GRADE 36 STEEL OR APPROVED EQUAL. ALL HOLD-DOWN BOLTS SHALL CONFORM TO ASTM F593 ALLOY 304 STAINLESS STEEL AND WASHERS SHALL CONFORM TO ASTM F844 EXCEPT THEY SHALL BE MADE FROM ALLOY 304 STAINLESS STEEL. ALL STUD ANCHORS SHALL CONFORM TO AASHTO M169, GRADES 1010 THRU 1020 OR APPROVED EQUAL. ALL CONCRETE INSERTS SHALL BE CLOSED END AND SHALL CONFORM TO AASHTO M169, GRADE 12L14. TENSILE CAPACITY SHALL BE 3000 LBS. MIN.
3. A PREMOLDED CORRUGATED OR NON-CORRUGATED GLAND SHALL BE USED FOR JOINTS SKEWED BETWEEN 50° THRU 130°. FOR JOINTS SKEWED LESS THAN 50° OR MORE THAN 130°, ONLY A CORRUGATED GLAND SHALL BE USED.
4. CLOSED END FERRULES AND STUD ANCHORS SHALL BE SHOP WELDED AND ALL HOLES SHALL BE SHOP DRILLED AS SHOWN ON PLANS. STUD ANCHORS SHALL BE ELECTRIC ARC END WELDED WITH COMPLETE FUSION.
5. SURFACES COMING IN CONTACT WITH NEOPRENE SHALL BE GROUND SMOOTH PRIOR TO METALLIZING.
6. UPON COMPLETION OF SHOP FABRICATION, THE HOLD DOWN PLATE AND BASE ANGLE ASSEMBLY, AS SHOWN IN THE "TYPICAL SECTION OF BASE ANGLE ASSEMBLY", SHALL BE METALLIZED. SEE SPECIAL PROVISION FOR THERMAL SPRAYED COATINGS (METALLIZATION).
7. BASE ANGLE ASSEMBLY SHALL BE CONTINUOUS FOR THE LENGTH OF THE JOINT. AT CROWN BREAKS, THE ENDS OF THE BASE ANGLE ASSEMBLY SHALL BE CUT PARALLEL TO THE BRIDGE CENTERLINE FOR SKEWS LESS THAN 80° AND GREATER THAN 100°. FINISHED WELD SHALL BE GROUND SMOOTH AND COATED WITH A MINIMUM THICKNESS OF 4 DRY MILS OF ZINC-RICH PAINT IN ACCORDANCE WITH THE STANDARD SPECIFICATIONS.
8. FIELD SPLICES OF HOLD-DOWN PLATES SHALL BE KEPT TO A MINIMUM. CONTRACTOR SHALL FURNISH DETAILED PLANS SHOWING PROPOSED SPLICE LOCATIONS FOR APPROVAL. HOLD-DOWN PLATES SHALL NOT EXCEED 20' LENGTHS UNLESS APPROVED BY THE ENGINEER.
9. NO ALTERNATE JOINT DETAILS SHALL BE PERMITTED IN LIEU OF THOSE SHOWN ON THESE PLANS.
10. THE CONTRACTOR MAY, AT HIS OPTION, USE ADHESIVELY ANCHORED ANCHOR BOLTS IN PLACE OF CONCRETE INSERTS FOR COVER PLATES. THE YIELD LOAD OF THE ¾"Ø BOLT IS 10 KIPS. FIELD TESTING OF THE ADHESIVE BONDING SYSTEM IS NOT REQUIRED.

MOVEMENT AND SETTING AT JOINT					
LOCATION	SKEW ANGLE	TOTAL MOVEMENT (ALONG ℄ RDWY)	PERPENDICULAR JOINT OPENING AT 45° F	PERPENDICULAR JOINT OPENING AT 60° F	PERPENDICULAR JOINT OPENING AT 90° F
END BENT 2	90°-00'-00"	2 1/16"	2 5/16"	2"	1 7/16"

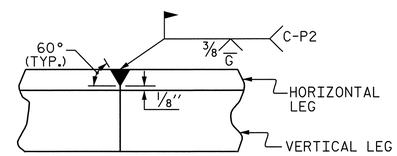

DETAIL- FIELD WELD SPLICE OF BASE ANGLE

NOTE: FOR PAVEMENT MARKING ALIGNMENT SKETCH, SEE "MODULAR EXPANSION JOINT SEAL DETAILS FOR BARRIER RAIL" SHEET.

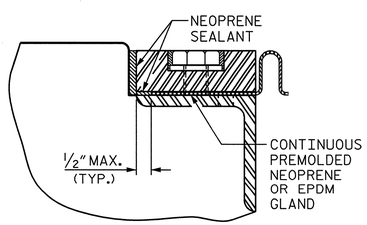

DETAIL "A"

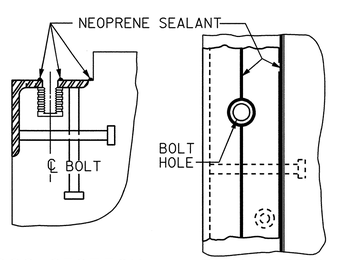

CROSS SECTION PLAN VIEW

INSTALLATION SKETCH

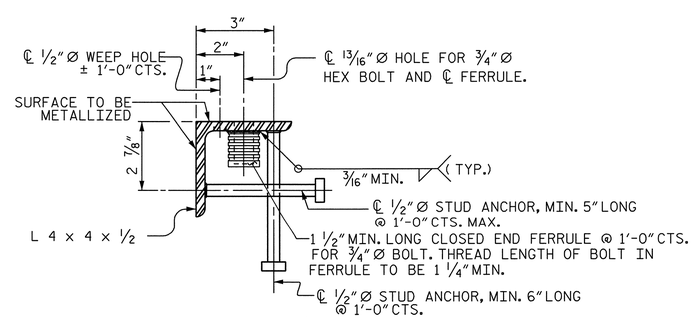

TYPICAL SECTION OF BASE ANGLE ASSEMBLY

PROJECT NO. U-2525B
GUILFORD COUNTY
STATION: 144+60.63 -L-

SHEET 1 OF 2

STATE OF NORTH CAROLINA
DEPARTMENT OF TRANSPORTATION
RALEIGH

STANDARD

EXPANSION JOINT SEAL DETAILS

RIGHT LANE

NORTH CAROLINA PROFESSIONAL SEAL 027799 ENGINEER ALLYSON K. ORR
1/10/14

MI ENGINEERING
1011 SCHAUB DRIVE, SUITE 100
RALEIGH, NC 27606
(919) 851-6606
FIRM PE NUMBER : P-0671

REVISIONS						
NO.	BY:	DATE:	NO.	BY:	DATE:	
1			3			
2			4			

SHEET NO. S-272
TOTAL SHEETS 541

DWG. NO. 39

STD. NO. EJS1

ASSEMBLED BY:	B.E. ATKINSON	DATE:	06/13
CHECKED BY :	A.K. ORR	DATE:	09/13
DESIGN ENGINEER OF RECORD:	A.K. ORR	DATE:	01/14
DRAWN BY : REK 9/87	REV. 5/7/03R	RWW/JTE	
CHECKED BY : CRK 10/87	REV. 5/1/06R	TLA/GM	
	REV. 10/1/11	MAA/GM	

1/10/2014
9:41:22 AM
User: blanning
Filename: P:\NC Bridges\MI1007.03 U-2525B Guilford\U-2525B\Structures\Right Bridge\U2525B_SD_EJSL_4_RT.dgn

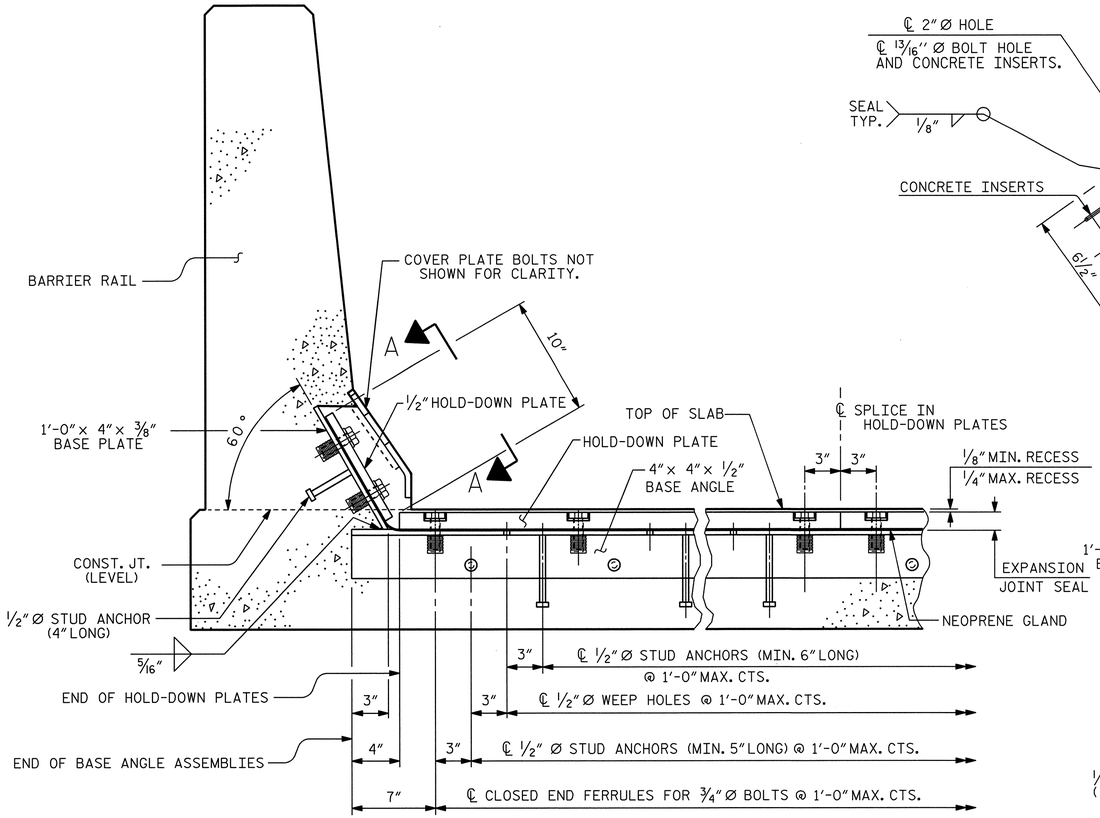

SECTION THRU RAIL NORMAL TO JOINT

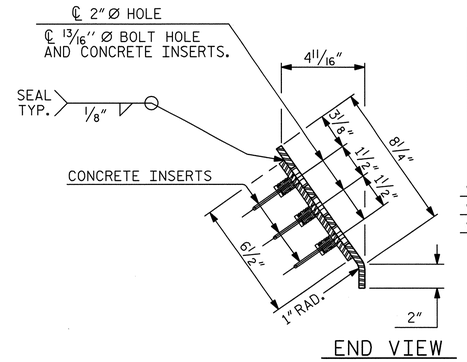

END VIEW

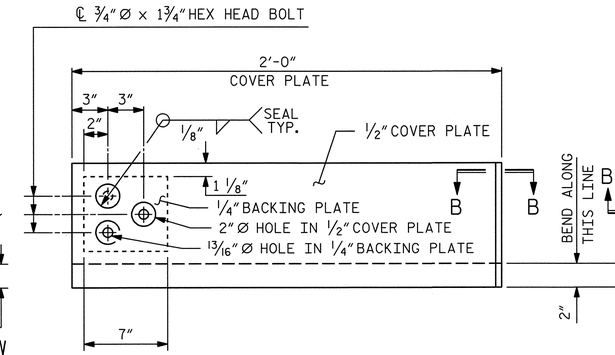

TYPE I - ELEVATION VIEW

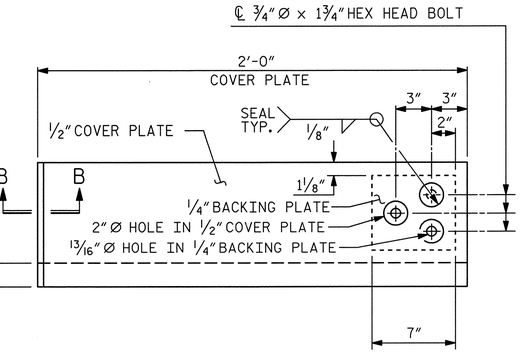

TYPE II - ELEVATION VIEW

BEND ALONG THIS LINE

2"

COVER PLATE DETAILS

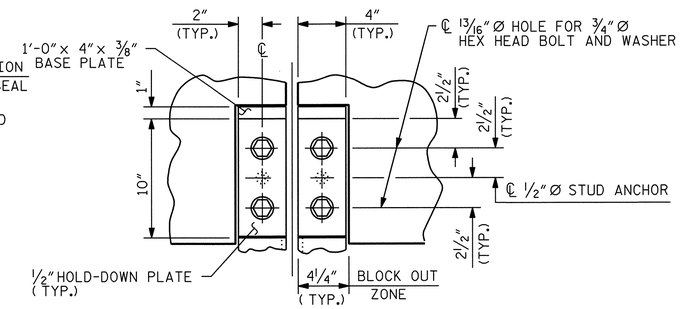

SECTION A - A

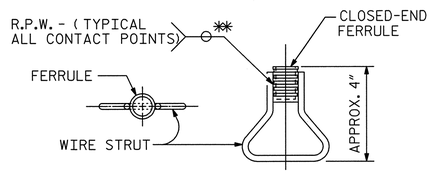

PLAN ELEVATION

CONCRETE INSERT

** EACH WELDED ATTACHMENT OF WIRE TO FERRULE SHALL DEVELOP THE TENSILE STRENGTH OF THE WIRE.

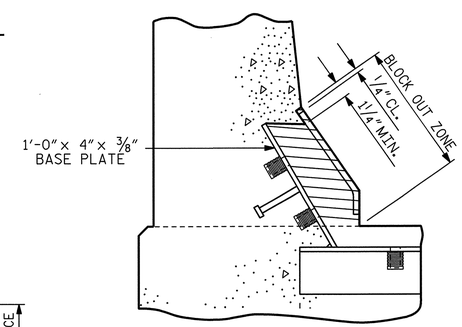

BLOCK OUT DETAIL

SEE " SECTION A - A " FOR OTHER DETAILS.

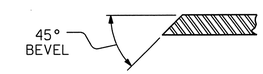

SECTION B - B

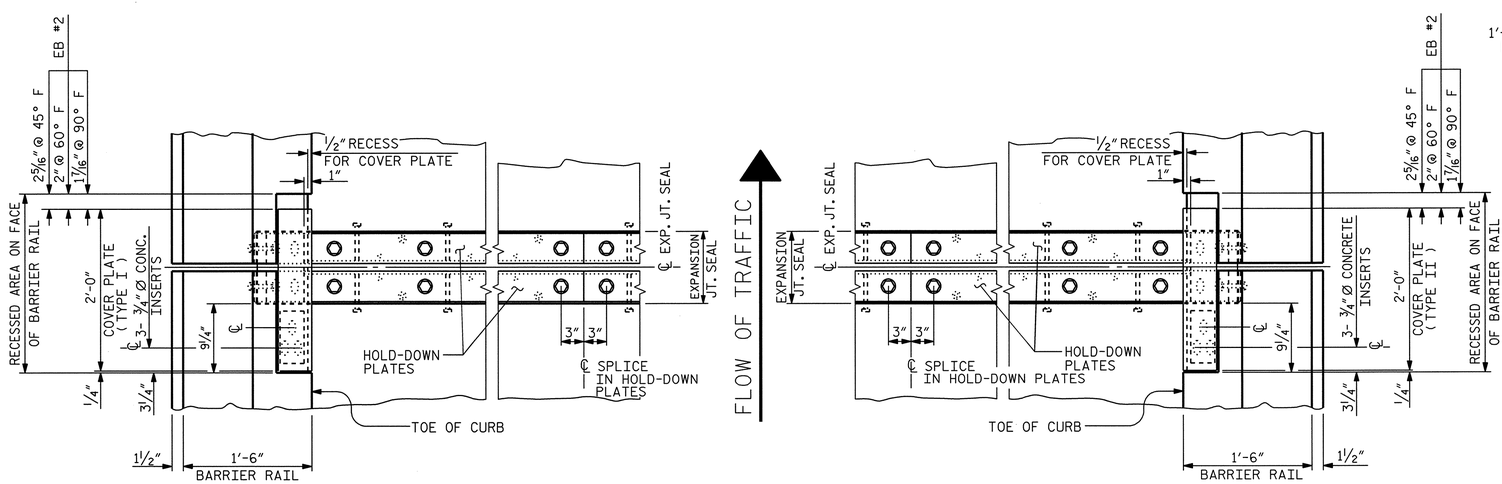

LEFT SIDE

RIGHT SIDE

PLAN OF EXPANSION JOINT SEAL

PROJECT NO. U-2525B

GUILFORD COUNTY

STATION: 144+60.63 -L-

SHEET 2 OF 2

STATE OF NORTH CAROLINA
DEPARTMENT OF TRANSPORTATION
RALEIGH

STANDARD

EXPANSION JOINT SEAL DETAILS FOR BARRIER RAIL

RIGHT LANE

NORTH CAROLINA PROFESSIONAL SEAL 027799 ENGINEER ALLYSON K. ORR
1/10/14

ASSEMBLED BY: B.E. ATKINSON	DATE: 06/13
CHECKED BY : A.K. ORR	DATE: 09/13
DESIGN ENGINEER OF RECORD: A.K. ORR	DATE: 01/14

DRAWN BY : REK 9/87	REV. 10/1/11	MAA/GM
CHECKED BY : CRK 10/87	REV. 7/12	MAA/GM
	REV. 10/12	MAA/GM

MI ENGINEERING
1011 SCHAUB DRIVE, SUITE 100
RALEIGH, NC 27606
(919) 851-6606
FIRM PE NUMBER : P-0671

REVISIONS								SHEET NO.
NO.	BY:	DATE:	NO.	BY:	DATE:			S-213
1			3					TOTAL SHEETS
2			4					541

DWG. NO. 40

STD. NO. EJS2 SHT 1a

1/10/2014
9:41:24 AM
User: blanning
Filename: P:\NC Bridges\MI1007.03 U-2525B Guilford\U-2525B\Structures\Right Bridge\U2525B_SD_EJS2_4_RT.dgn

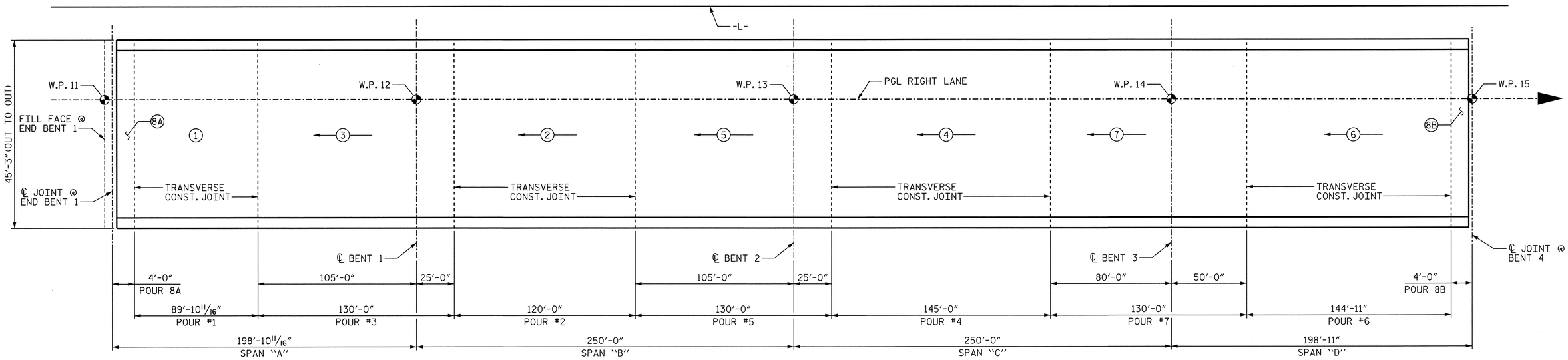

POURING SEQUENCE - UNIT 1

(#) INDICATES POUR NUMBER AND POUR DIRECTION

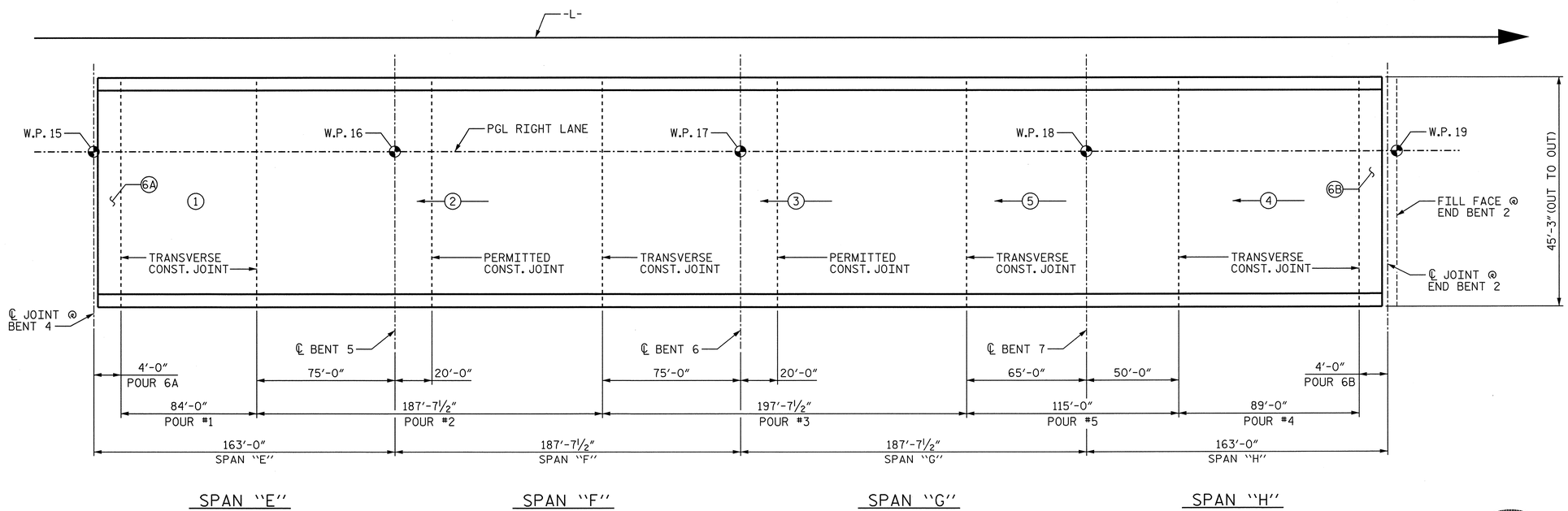

POURING SEQUENCE - UNIT 2

(#) INDICATES POUR NUMBER AND POUR DIRECTION

CONCRETE BREAKDOWN

POUR	UNIT 1	UNIT 2
1	132.5	123.8
2	176.9	276.4
3	191.7	291.2
4	213.8	160.6
5	191.7	169.5
6	213.7	15.4
7	191.7	--
8	16.6	--
TOTAL	1328.6	1036.9

PROJECT NO. U-2525B
GUILFORD COUNTY
STATION: 144+60.63 -L-

SHEET 1 OF 2

STATE OF NORTH CAROLINA
DEPARTMENT OF TRANSPORTATION
RALEIGH

SUPERSTRUCTURE
BILL OF MATERIAL

RIGHT LANE

NORTH CAROLINA PROFESSIONAL SEAL 027799 ENGINEER ALLYSON K. ORR
1/10/14

DRAWN BY : B.E. LANNING DATE : 01/14
CHECKED BY : A.K. ORR DATE : 01/14
DESIGN ENGINEER OF RECORD : A.K. ORR DATE : 01/14

DWG. NO. 41

MI ENGINEERING
1011 SCHAUB DRIVE, SUITE 100
RALEIGH, NC 27606
(919) 851-6606
FIRM PE NUMBER : P-0671

REVISIONS						SHEET NO.
NO.	BY:	DATE:	NO.	BY:	DATE:	S-274
1			3			TOTAL SHEETS
2			4			341

1/10/2014
9:50:42 AM
User: blanning
Filename: P:\NC Bridges\MI1007.03 U-2525B Guilford\U-2525B\Structures\Right Bridge\U2525B_SD_BMI_4_RT.dgn

REINFORCING BAR SCHEDULE

UNIT 1

BAR	NO.	SIZE	TYPE	LENGTH	WEIGHT
✱ A1	1794	#5	STR	44'-11"	84045
A2	1794	#5	STR	44'-11"	84045
✱ B1	1056	#4	STR	29'-3"	20633
B2	896	#5	STR	58'-3"	54436
✱ B3	590	#6	STR	40'-2"	35595
✱ B4	295	#6	STR	42'-11"	19016
✱ G1	28	#5	4	3'-8"	107
✱ K1	12	#5	1	7'-5"	93
✱ K2	18	#5	2	8'-7"	161
✱ K3	24	#5	STR	7'-9"	194
✱ K4	12	#5	STR	1'-8"	21
✱ S1	38	#4	3	4'-9"	121
✱ S2	38	#4	3	4'-7"	116

✱ EPOXY COATED REINFORCING STEEL LBS. 160,102

REINFORCING STEEL LBS. 138,481

UNIT 2

BAR	NO.	SIZE	TYPE	LENGTH	WEIGHT
✱ A1	1401	#5	STR	44'-11"	65634
A2	1401	#5	STR	44'-11"	65634
✱ B5	832	#4	STR	29'-0"	16118
B6	728	#5	STR	56'-0"	42521
✱ B7	354	#6	STR	55'-1"	29288
✱ B8	177	#6	STR	59'-4"	15774
✱ G1	14	#5	4	3'-8"	54
✱ G2	1	#5	STR	44'-11"	47
✱ J1	42	#4	5	1'-5"	40
✱ K5	10	#5	1	7'-4"	76
✱ K6	15	#5	2	8'-4"	130
✱ K7	20	#5	STR	8'-0"	167
✱ K8	6	#5	STR	1'-9"	11
✱ S2	38	#4	3	4'-7"	116
✱ S3	32	#4	3	3'-10"	82

✱ EPOXY COATED REINFORCING STEEL LBS. 127,537

REINFORCING STEEL LBS. 108,155

SUPERSTRUCTURE REINFORCING STEEL LENGTHS ARE BASED ON THE FOLLOWING MINIMUM SPLICE LENGTHS

BAR SIZE	SUPERSTRUCTURE EXCEPT APPROACH SLABS, PARAPET, AND BARRIER RAIL		APPROACH SLABS		PARAPET AND BARRIER RAIL
	EPOXY COATED	UNCOATED	EPOXY COATED	UNCOATED	
#4	2'-0"	1'-9"	2'-0"	1'-9"	2'-9"
#5	2'-6"	2'-2"	2'-6"	2'-2"	3'-5"
#6	3'-0"	2'-7"	3'-10"	2'-7"	4'-4"
#7	5'-3"	3'-6"			
#8	6'-10"	4'-7"			

BAR TYPES

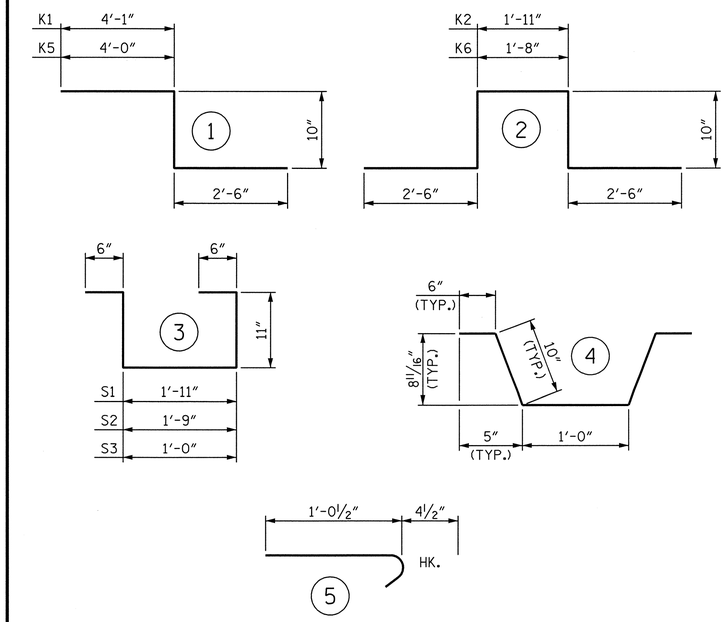

ALL BAR DIMENSIONS ARE OUT TO OUT.

SUPERSTRUCTURE BILL OF MATERIAL

	CLASS AA CONCRETE	REINFORCING STEEL	EPOXY COATED REINFORCING STEEL
	(CU. YDS.)	(LBS.)	(LBS.)
UNIT 1	1328.6	138,481	160,102
UNIT 2	1036.9	108,155	127,537
TOTALS✱✱	2365.5	246,636	287,639

✱✱QUANTITIES FOR BARRIER RAIL ARE NOT INCLUDED.

GROOVING BRIDGE FLOORS

APPROACH SLABS ⊛	1859 SQ.FT.
BRIDGE DECK - UNIT 1	34943 SQ.FT.
BRIDGE DECK - UNIT 2	27287 SQ.FT.
TOTAL	64089 SQ.FT.

⊛QUANTITY IS FOR BOTH APPROACH SLABS.

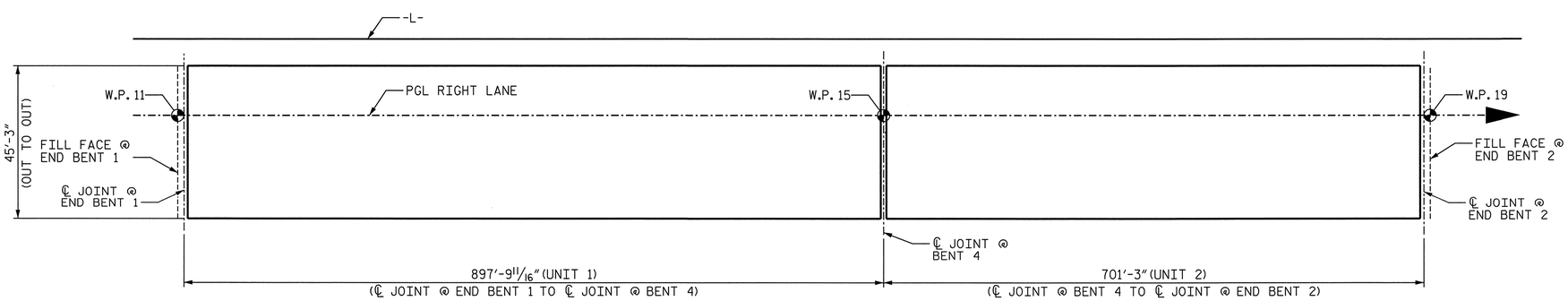

LAYOUT FOR COMPUTING AREA OF REINFORCED CONCRETE DECK SLAB
(SQ. FT. = 72,358)

PROJECT NO. U-2525B
GUILFORD COUNTY
STATION: 144+60.63 -L-

STATE OF NORTH CAROLINA
DEPARTMENT OF TRANSPORTATION
RALEIGH

SUPERSTRUCTURE BILL OF MATERIAL

RIGHT LANE

NORTH CAROLINA PROFESSIONAL SEAL 027799 ENGINEER ALLYSON K. ORR
1/10/14

DRAWN BY : B.E. LANNING	DATE : 07/13
CHECKED BY : A.K. ORR	DATE : 09/13
DESIGN ENGINEER OF RECORD : A.K. ORR	DATE : 01/14

DWG. NO. 42

MI ENGINEERING
1011 SCHAUB DRIVE, SUITE 100
RALEIGH, NC 27606
(919) 851-6606
FIRM PE NUMBER : P-0671

REVISIONS						SHEET NO.
NO.	BY:	DATE:	NO.	BY:	DATE:	S-275
1			3			TOTAL SHEETS
2			4			541

1/10/2014
9:51:02 AM
User: blanning
Filename: P:\NC Bridges\MI1007.03 U-2525B Guilford\U-2525B\Structures\Right Bridge\U2525B_SD_BM2_4_RT.dgn

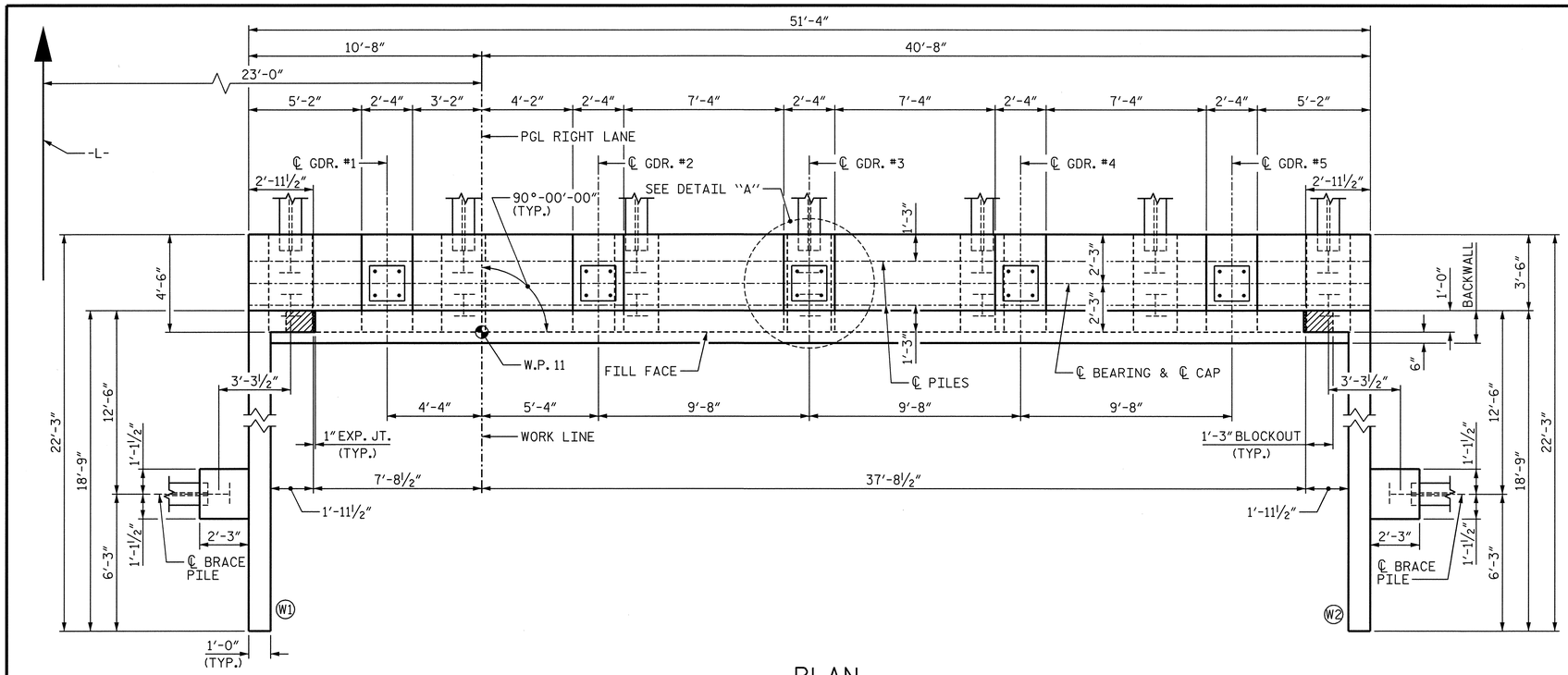

PLAN

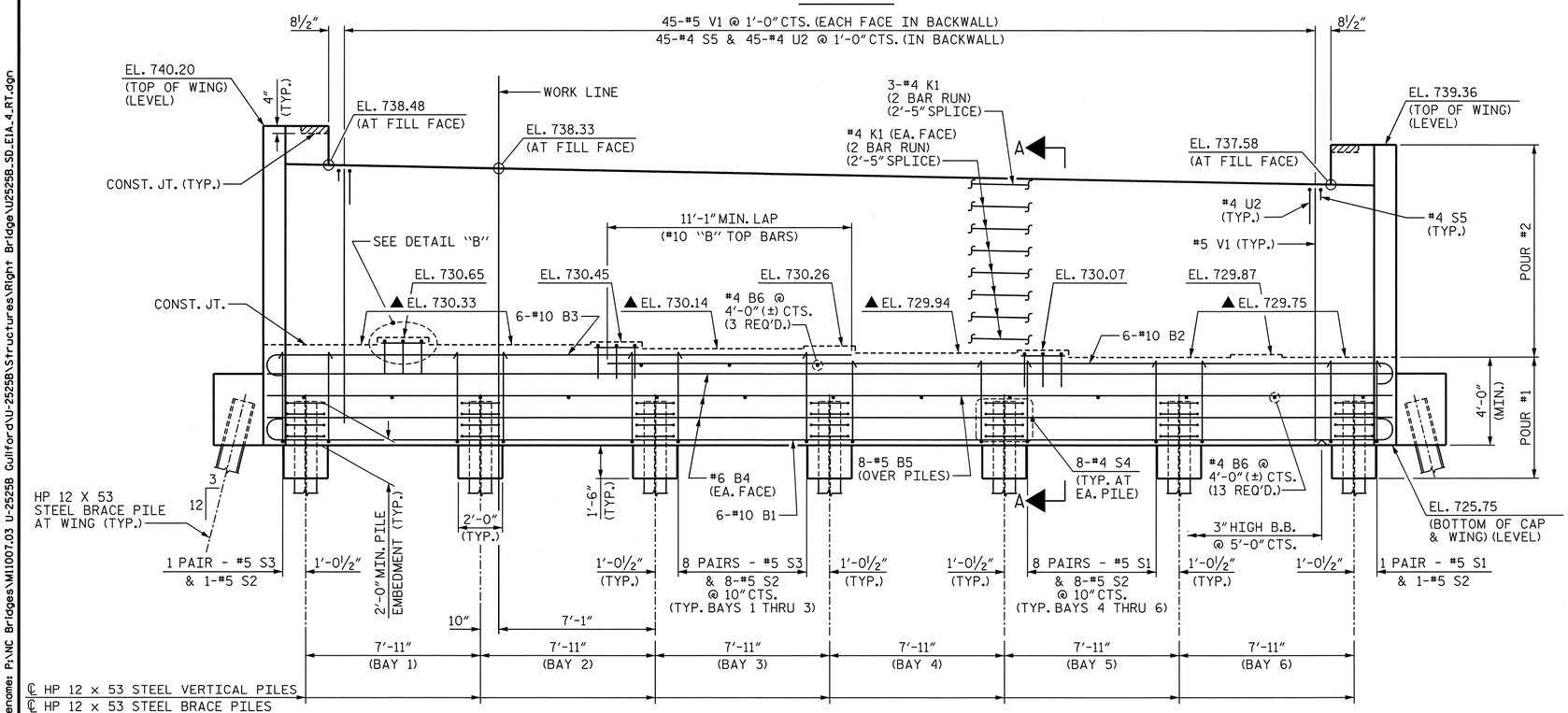

ELEVATION

NOTES

STIRRUPS AND #4 U1 BARS IN CAP MAY BE SHIFTED AS NECESSARY TO CLEAR ANCHOR BOLTS AND PIPE INSERTS.

#5 V1 BARS IN BACKWALL SHALL BE PLACED 2" CLEAR FROM THE TOP OF BACKWALL.

BACKWALL SHALL BE PLACED BEFORE APPLYING THE EPOXY PROTECTIVE COATING.

THE TOP SURFACE AREAS OF THE END BENT CAP SHALL BE CURED IN ACCORDANCE WITH THE STANDARD SPECIFICATIONS, EXCEPT THAT THE MEMBRANE CURING COMPOUND METHOD SHALL NOT BE USED.

THE TOP SURFACE OF THE CAP EXCEPT THE BRIDGE SEAT BUILDUPS SHALL BE SLOPED TRANSVERSELY FROM THE FILL FACE TO THE BACK FACE AT THE RATE OF 2%.

▲ FOR LOCATION OF ELEVATIONS BETWEEN BRIDGE SEAT BUILD-UPS, SEE SECTION A-A ON SHEET 3 OF 3.

FOR SECTION A-A, PILE SPLICE DETAILS AND TEMPORARY DRAINAGE DETAILS, SEE SHEET 3 OF 3.

THE CONCRETE IN THE SHADED AREA OF THE WING SHALL BE POURED AFTER THE BARRIER RAIL IS CAST IF SLIP FORMING IS USED.

INSTALL THE 4" DIA. DRAIN PIPE THROUGH THE WING WALL AS REQUIRED FOR REINFORCED BRIDGE APPROACH FILLS, SEE THE ROADWAY PLANS. REINFORCING STEEL IN THE WING WALL MAY BE SHIFTED AS NECESSARY TO CLEAR THE DRAIN PIPE.

FOR 1½" Ø ANCHOR BOLTS, SEE "POT BEARING DETAILS" SHEETS.

FOR PIPE INSERT DETAILS, SEE "POT BEARING DETAILS" SHEETS.

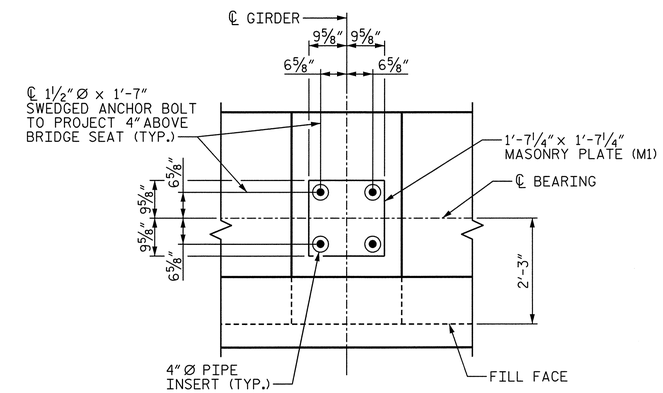

DETAIL "A"

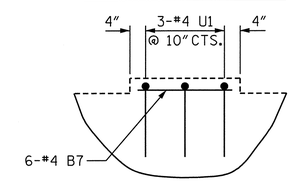

DETAIL "B"

(TYP. AT GDRS. #1, #2 AND #4)

PROJECT NO. U-2525B

GUILFORD COUNTY

STATION: 144+60.63 -L-

SHEET 1 OF 3

STATE OF NORTH CAROLINA
DEPARTMENT OF TRANSPORTATION
RALEIGH

SUBSTRUCTURE
END BENT 1

RIGHT LANE

NORTH CAROLINA PROFESSIONAL SEAL 027799 ENGINEER ALLYSON K. ORR
1/10/14

DRAWN BY : B.E. LANNING	DATE : 08/13
CHECKED BY : C.R. COLS	DATE : 10/13
DESIGN ENGINEER OF RECORD : A.K. ORR	DATE : 01/14

MI ENGINEERING
1011 SCHAUB DRIVE, SUITE 100
RALEIGH, NC 27606
(919) 851-6606
FIRM PE NUMBER : P-0671

DWG. NO. 43

REVISIONS						
NO.	BY:	DATE:	NO.	BY:	DATE:	
1			3			
2			4			

SHEET NO. S-276

TOTAL SHEETS 54

1/10/2014
9:41:27 AM
User: blanning
Filename: P:\NC Bridges\MI1007.03 U-2525B Guilford\U-2525B\Structures\Right Bridge\U2525B_SD_EIA_4_RT.dgn

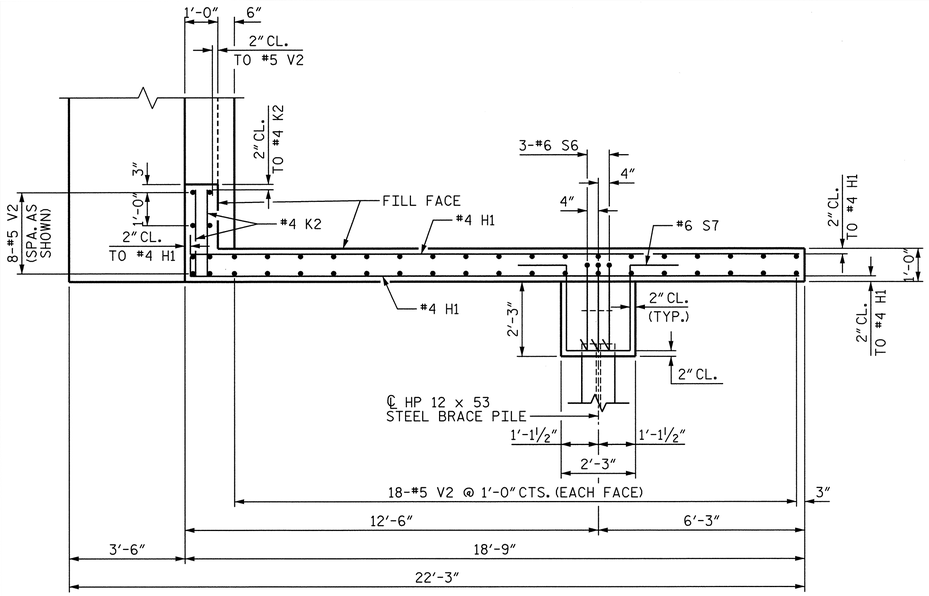

PLAN OF WING (W1)

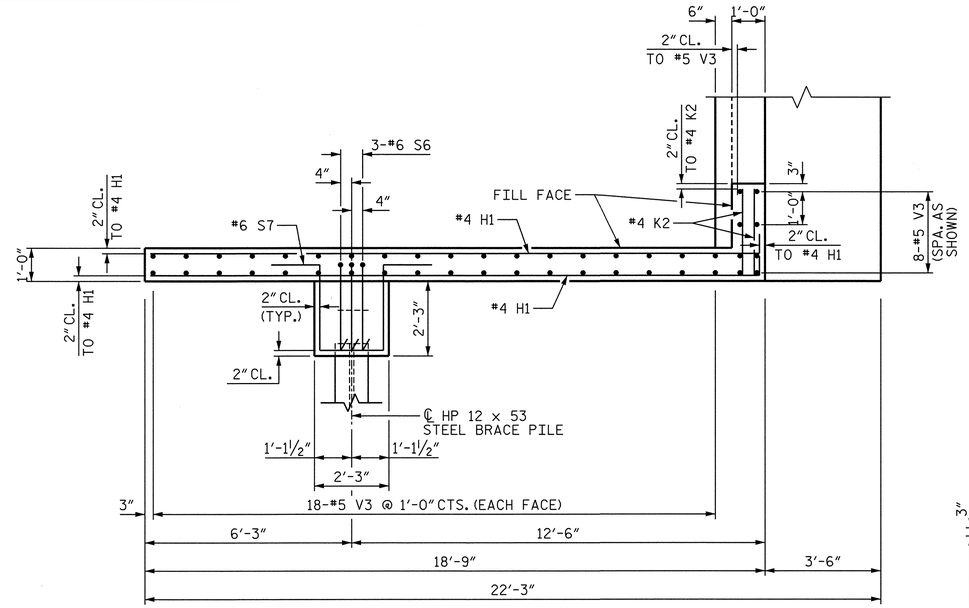

PLAN OF WING (W2)

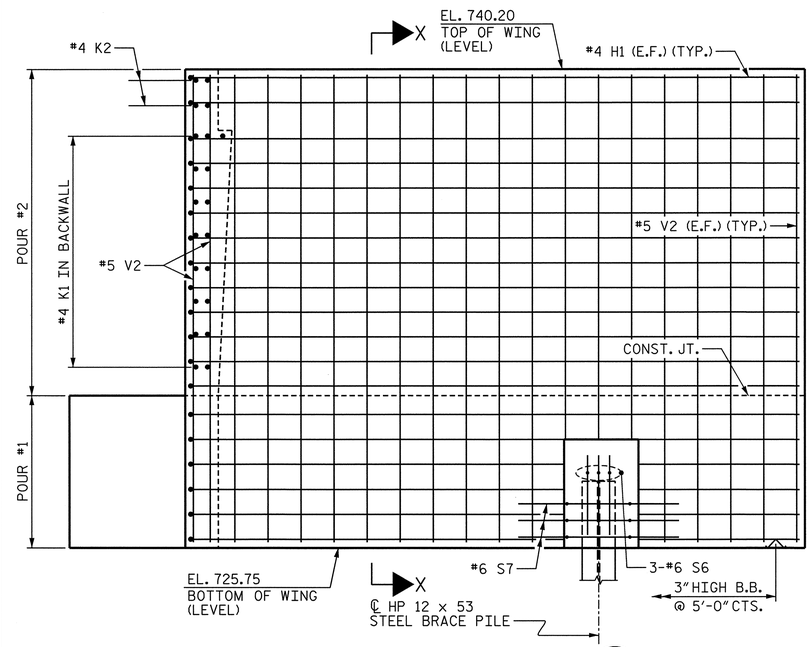

ELEVATION OF WING (W1)

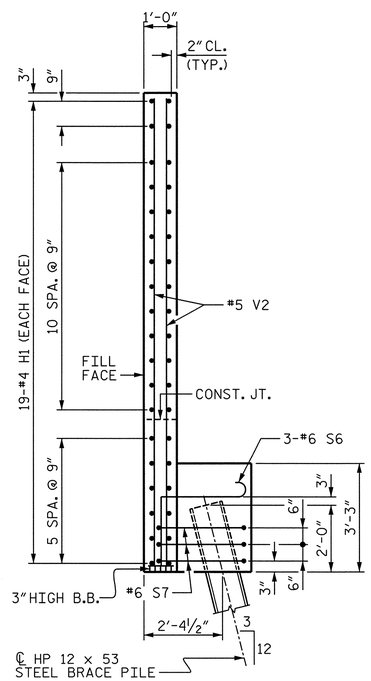

SECTION X-X

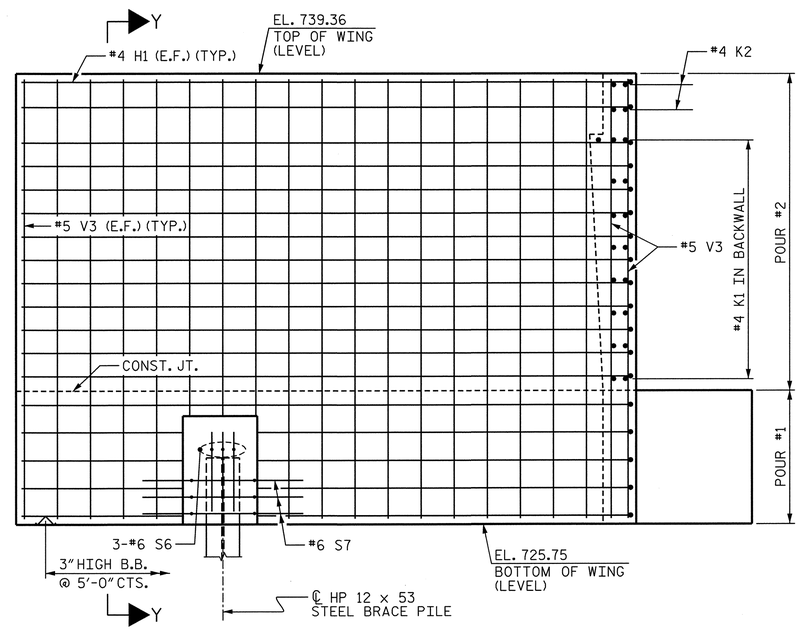

ELEVATION OF WING (W2)

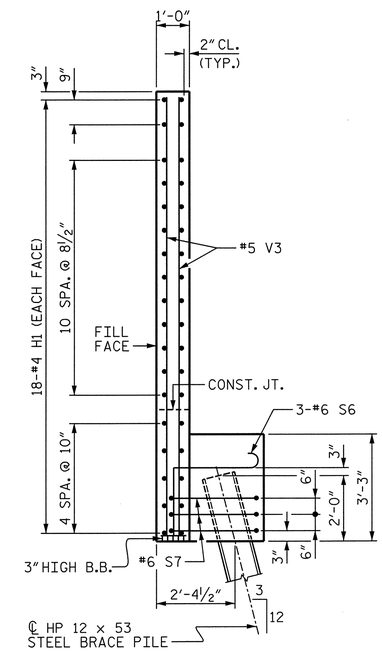

SECTION Y-Y

PROJECT NO. U-2525B

GUILFORD COUNTY

STATION: 144+60.63 -L-

SHEET 2 OF 3

STATE OF NORTH CAROLINA
DEPARTMENT OF TRANSPORTATION
RALEIGH

SUBSTRUCTURE

END BENT 1

RIGHT LANE

NORTH CAROLINA PROFESSIONAL SEAL 021799 ENGINEER ALLYSON K. ORR 1/10/14

DRAWN BY : B.E. LANNING	DATE : 08/13		
CHECKED BY : G.R. COLS	DATE : 10/13		
DESIGN ENGINEER OF RECORD : A.K. ORR	DATE : 01/14		

MI ENGINEERING
1011 SCHAUB DRIVE, SUITE 100
RALEIGH, NC 27606
(919) 851-6606
FIRM PE NUMBER : P-0671

DWG. NO. 44

REVISIONS								SHEET NO.
NO.	BY:	DATE:	NO.	BY:	DATE:			S-277
1			3					TOTAL SHEETS
2			4					541

1/10/2014
9:41:29 AM
User: blanning
Filename: P:\NC Bridges\MI1007.03 U-2525B Guilford\U-2525B\Structures\Right Bridge\U2525B_SD_EB_4_RT.dgn

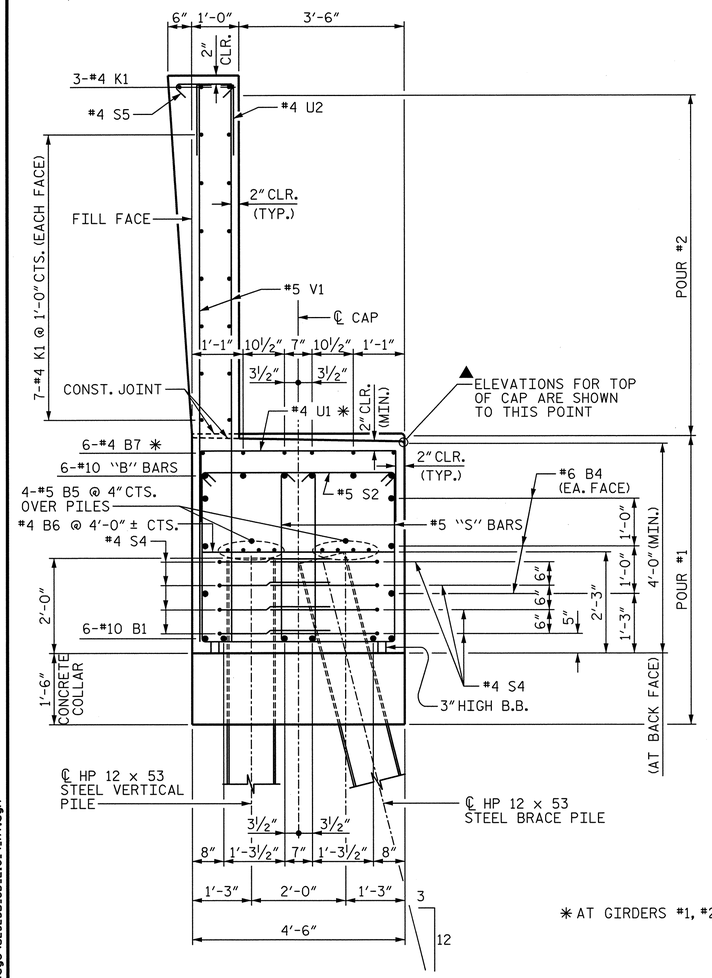

✳ AT GIRDERS #1, #2 AND #4 ONLY.

SECTION A-A

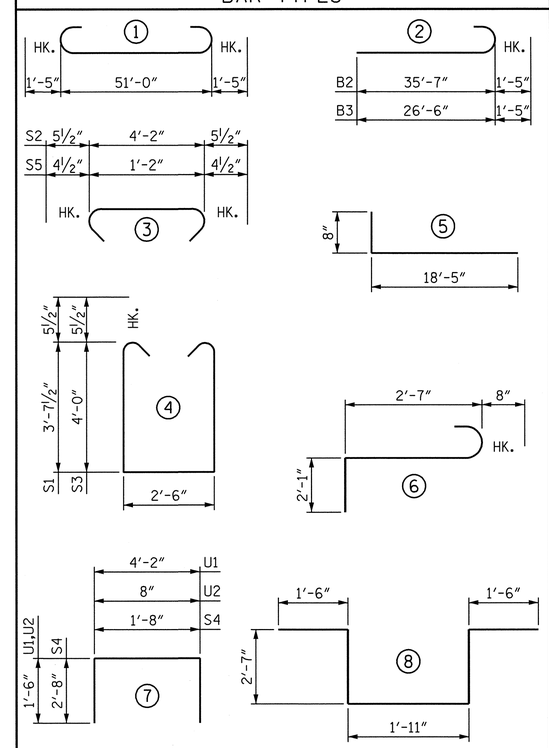

BILL OF MATERIAL

END BENT 1

BAR	NO.	SIZE	TYPE	LENGTH	WEIGHT
B1	6	#10	1	53'-10"	1390
B2	6	#10	2	37'-0"	955
B3	6	#10	2	27'-11"	721
B4	6	#6	STR	51'-0"	460
B5	8	#5	STR	51'-0"	426
B6	16	#4	STR	4'-2"	45
B7	18	#4	STR	2'-0"	24
H1	74	#4	5	19'-1"	943
K1	34	#4	STR	26'-9"	608
K2	8	#4	STR	2'-7"	14
S1	50	#5	4	10'-8"	556
S2	50	#5	3	5'-1"	265
S3	50	#5	4	11'-5"	595
S4	56	#4	7	7'-0"	262
S5	45	#4	3	1'-11"	58
S6	6	#6	6	5'-4"	48
S7	6	#6	8	10'-1"	91
U1	9	#4	7	7'-2"	43
U2	45	#4	7	3'-8"	110
V1	90	#5	STR	11'-6"	1080
V2	44	#5	STR	14'-1"	646
V3	44	#5	STR	13'-3"	608

REINFORCING STEEL 9,948 LBS.

CLASS A CONCRETE BREAKDOWN
POUR #1 (CAP, COLLARS & LOWER WING) 47.9 C.Y.
POUR #2 (BACKWALL & UPPER WING) 31.7 C.Y.
TOTAL CLASS A CONCRETE 79.6 C.Y.

HP 12 x 53 STEEL PILES
NO. 16 752 LIN. FT.

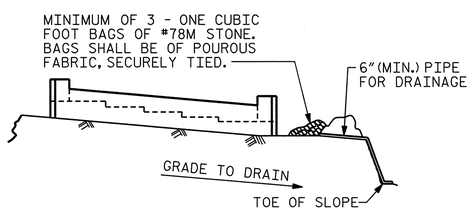

BAGGED STONE AND PIPE SHALL BE PLACED IMMEDIATELY AFTER COMPLETION OF END BENT EXCAVATION. PIPE MAY BE EITHER CONCRETE, CORRUGATED STEEL, CORRUGATED ALUMINUM ALLOY, OR CORRUGATED PLASTIC. PERFORATED PIPE WILL NOT BE ALLOWED.

BAGGED STONE SHALL REMAIN IN PLACE UNTIL THE ENGINEER DIRECTS THAT IT BE REMOVED. THE CONTRACTOR SHALL REMOVE AND DISPOSE OF SILT ACCUMULATIONS AT BAGGED STONE WHEN SO DIRECTED BY THE ENGINEER. BAGS SHALL BE REMOVED AND REPLACED WHENEVER THE ENGINEER DETERMINES THAT THEY HAVE DETERIORATED AND LOST THEIR EFFECTIVENESS.

NO SEPARATE PAYMENT WILL BE MADE FOR THIS WORK AND THE ENTIRE COST OF THIS WORK SHALL BE INCLUDED IN THE UNIT CONTRACT PRICE BID FOR THE SEVERAL PAY ITEMS.

TEMPORARY DRAINAGE AT END BENT

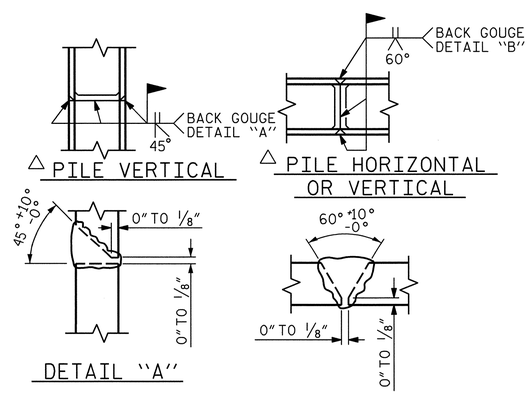

△ POSITION OF PILE DURING WELDING.

PILE SPLICE DETAILS

PROJECT NO. U-2525B
GUILFORD COUNTY
STATION: 144+60.63 -L-

SHEET 3 OF 3

STATE OF NORTH CAROLINA
DEPARTMENT OF TRANSPORTATION
RALEIGH

SUBSTRUCTURE

END BENT 1

RIGHT LANE

NORTH CAROLINA PROFESSIONAL SEAL 027799 ENGINEER ALLYSON K. ORR 1/10/14

MI ENGINEERING
1011 SCHAUB DRIVE, SUITE 100
RALEIGH, NC 27606
(919) 851-6606
FIRM PE NUMBER : P-0671

REVISIONS							SHEET NO.
NO.	BY:	DATE:	NO.	BY:	DATE:		S-278
1			3				TOTAL SHEETS
2			4				541

DWG. NO. 45

DRAWN BY : B.E. LANNING DATE : 08/13
CHECKED BY : G.R. COLS DATE : 10/13
DESIGN ENGINEER OF RECORD : A.K. ORR DATE : 01/14

1/10/2014
9:41:32 AM
User: blanning
Filename: P:\NC Bridges\MI1007.03 U-2525B Guilford\U-2525B\Structures\Right Bridge\U2525B_SD_EIC_4_RT.dgn

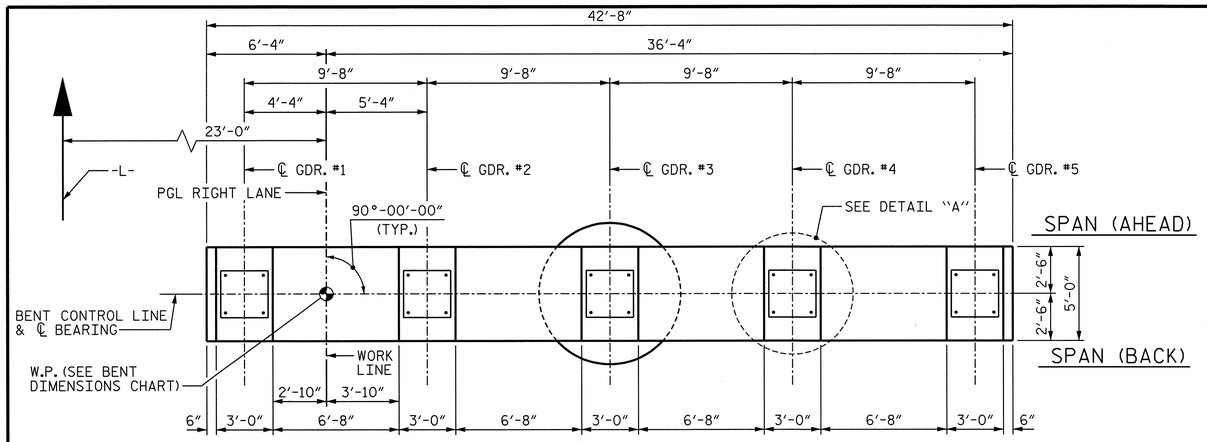

PLAN

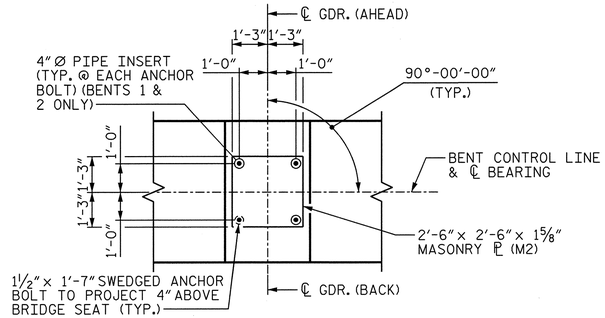

DETAIL "A"

NOTES

STIRRUPS AND "U" BARS IN CAP MAY BE SHIFTED AS NECESSARY TO CLEAR ANCHOR BOLTS AND PIPE INSERTS.

DETAILED DRAWINGS FOR FALSEWORK AND FORMS FOR THIS HAMMERHEAD BENT CAP SHALL BE SUBMITTED. SEE SHEET SN.

ALL STEEL IN THE DRILLED PIER IS INCLUDED IN THE PAY ITEMS FOR "REINFORCING STEEL" AND "SPIRAL COLUMN REINFORCING STEEL".

THE CONTRACTOR'S ATTENTION IS CALLED TO THE FACT THAT THE LONGITUDINAL REINFORCEMENT FOR THE DRILLED PIER IS DETAILED WITH 3 FEET OF EXTRA LENGTH.

THE LOCATION OF THE CONSTRUCTION JOINT IN THE DRILLED PIER IS BASED ON AN APPROXIMATE GROUND LINE ELEVATION. IF THE CONSTRUCTION JOINT IS ABOVE THE ACTUAL GROUND ELEVATION, THE CONTRACTOR SHALL PLACE THE CONSTRUCTION JOINT 1 FOOT BELOW THE GROUND LINE.

FOR DRILLED PIER & PERMANENT STEEL CASING, SEE SECTION 411 OF THE STANDARD SPECIFICATIONS.

FOR SECTIONS A-A AND B-B, SEE SHEET 2 OF 3.

FOR VIEW C-C, SEE SHEET 2 OF 3.

FOR PIPE INSERT DETAILS, SEE "POT BEARING DETAILS" SHEET.

FOR END ELEVATION, SEE SHEET 2 OF 3.

FOR 1½" Ø ANCHOR BOLTS, SEE "POT BEARING DETAILS" SHEET.

THE CAP AND COLUMN SHALL BE CONSIDERED MASS CONCRETE. SEE SPECIAL PROVISIONS.

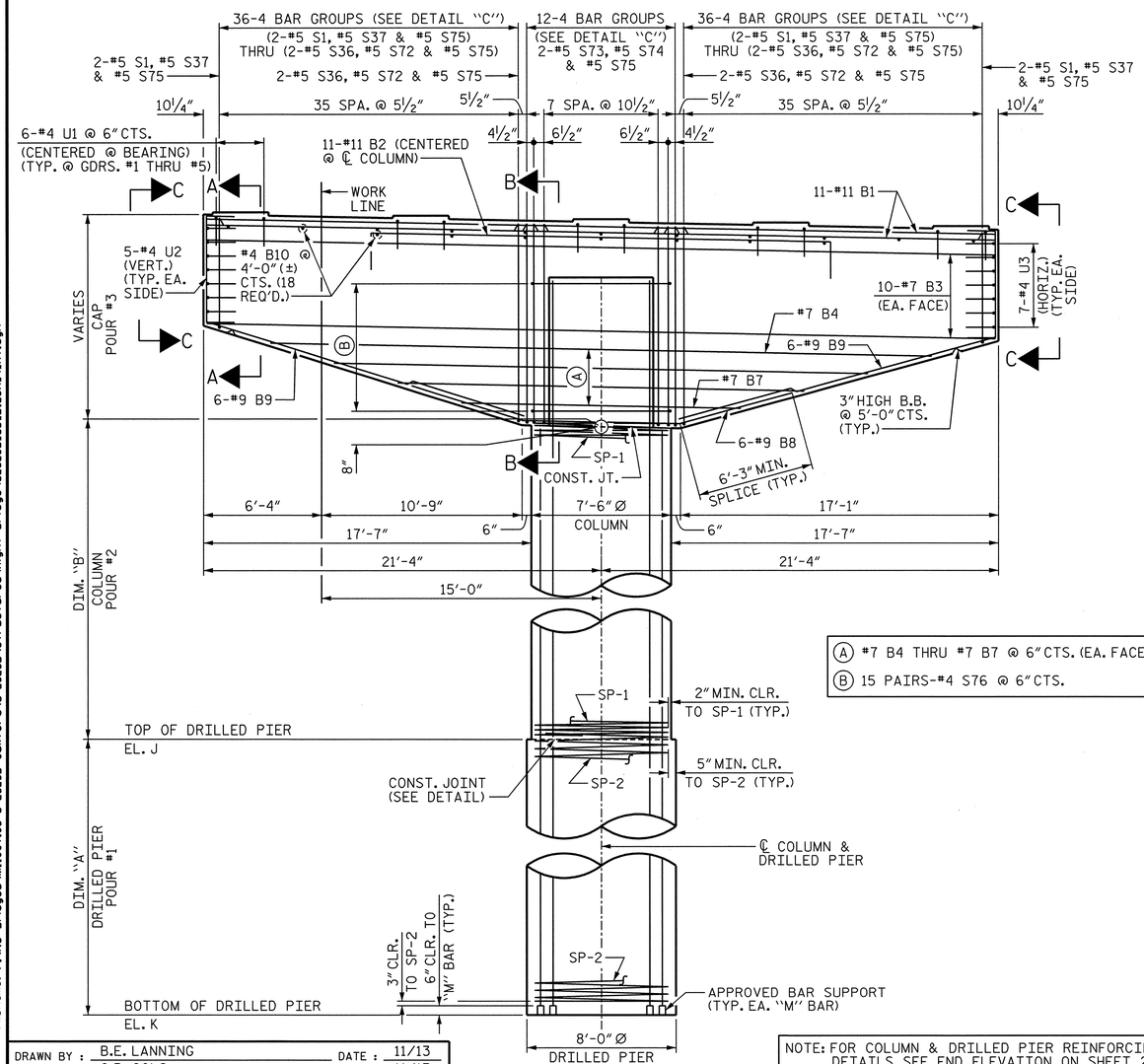

ELEVATION

Ⓐ #7 B4 THRU #7 B7 @ 6" CTS. (EA. FACE)

Ⓑ 15 PAIRS-#4 S76 @ 6" CTS.

NOTE: FOR COLUMN & DRILLED PIER REINFORCING STEEL & DETAILS, SEE END ELEVATION ON SHEET 2 OF 3.

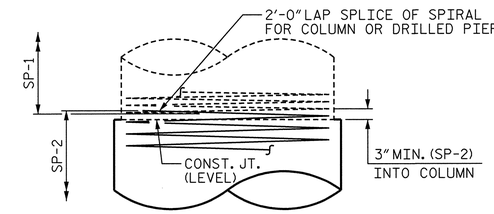

CONSTRUCTION JOINT DETAIL

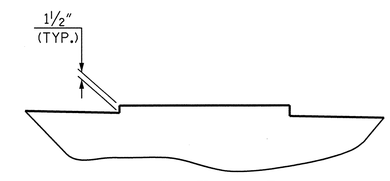

DETAIL "B"
(TYP. EACH GIRDER)

BRIDGE SEAT ELEVATIONS					
BENT	EL. A	EL. B	EL. C	EL. D	EL. E
1	729.66	729.47	729.27	729.08	728.89
2	727.92	727.72	727.53	727.34	727.14
3	726.29	726.10	725.91	725.71	725.52

CAP, COLUMN & DRILLED PIER ELEVATIONS						
BENT	EL. F	EL. G	EL. H	EL. I	EL. J	EL. K
1	729.55	728.69	718.12	726.12	699.87	662.87
2	727.80	726.95	716.37	724.37	683.87	637.87
3	726.18	725.33	714.75	722.75	684.75	655.75

BENT DIMENSIONS					
BENT	W.P.	SPAN (AHEAD)	SPAN (BACK)	DIM. "A"	DIM. "B"
1	12	B	A	37'-0"	18'-3"
2	13	C	B	46'-0"	32'-6"
3	14	D	C	29'-0"	30'-0"

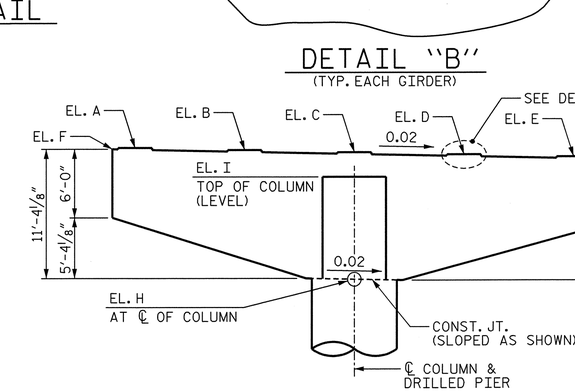

BENT CAP LAYOUT

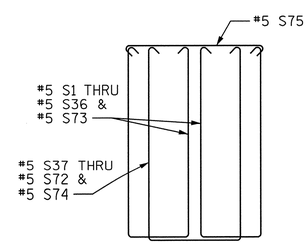

DETAIL "C"
(BARS OFFSET FOR CLARITY)

PROJECT NO. U-2525B
GUILFORD COUNTY
STATION: 144+60.63 -L-

SHEET 1 OF 3

STATE OF NORTH CAROLINA
DEPARTMENT OF TRANSPORTATION
RALEIGH

SUBSTRUCTURE

BENTS 1, 2 AND 3 PLAN AND ELEVATION

RIGHT LANE

NORTH CAROLINA PROFESSIONAL SEAL 027799 ENGINEER ALLYSON K. ORR 2/14/14

DRAWN BY : B.E. LANNING DATE : 11/13
CHECKED BY : G.R. COLS DATE : 11/13
DESIGN ENGINEER OF RECORD : P.A. de PAOLI DATE : 01/14

MI ENGINEERING
1011 SCHAUB DRIVE, SUITE 100
RALEIGH, NC 27606
(919) 851-6606
FIRM PE NUMBER : P-0671

DWG. NO. 46

REVISIONS							
NO.	BY:	DATE:	NO.	BY:	DATE:	SHEET NO.	
1			3			S-279	
2			4			TOTAL SHEETS	
						54	

2/14/2014
12:37:23 PM
User: blanning
Filename: P:\NC Bridges\MI1007.03 U-2525B Guilford\U-2525B\Structures\Right Bridge\U2525B_SD_B123A_4_RT.dgn

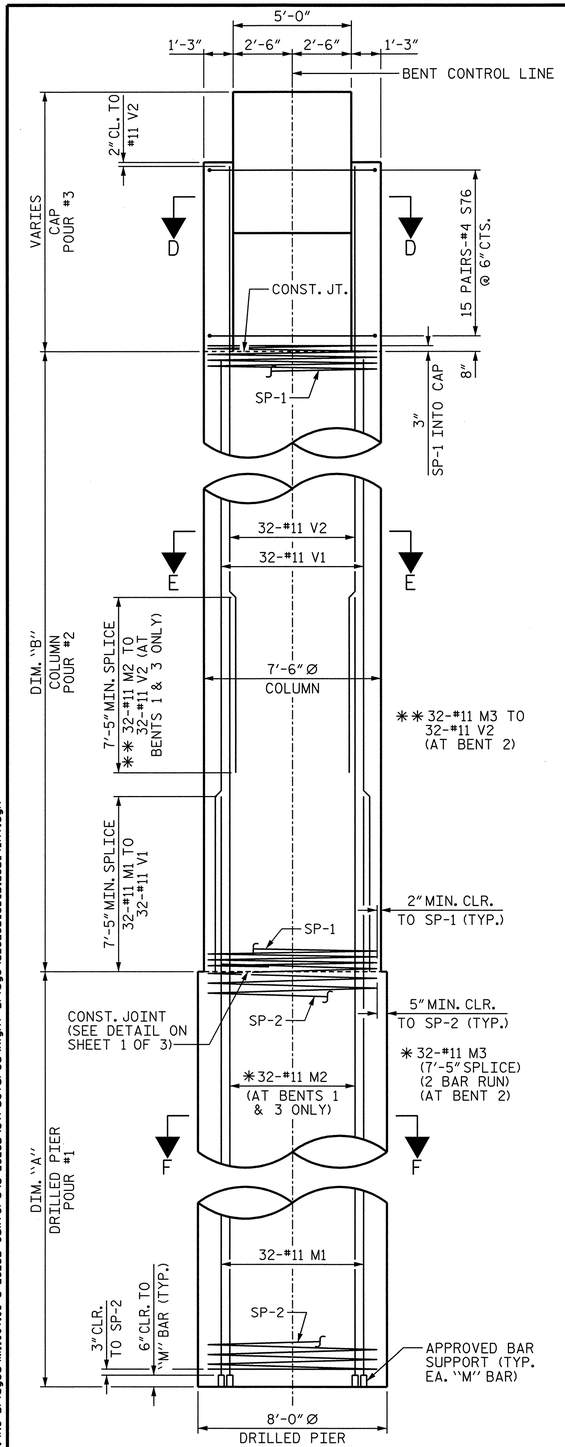

END ELEVATION

(FOR DIM. "A" & DIM. "B", SEE BENT DIMENSIONS TABLE, SHEET 1 OF 3)

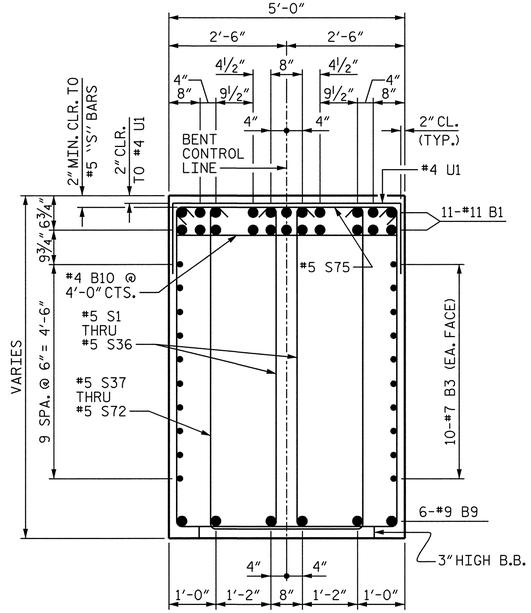

SECTION A-A

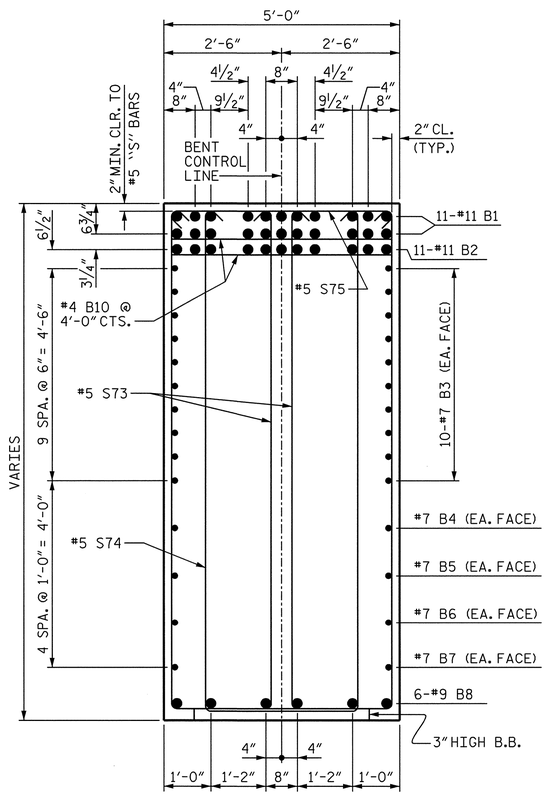

SECTION B-B

NOTE: EXTENSION OF COLUMN ABOVE BOTTOM OF CAP NOT SHOWN FOR CLARITY.

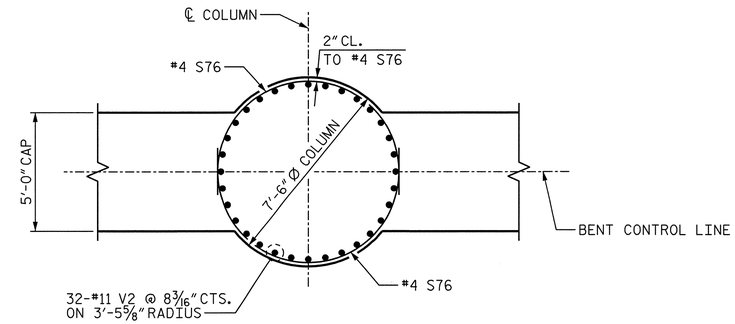

SECTION D-D

(CAP REINFORCING NOT SHOWN FOR CLARITY)

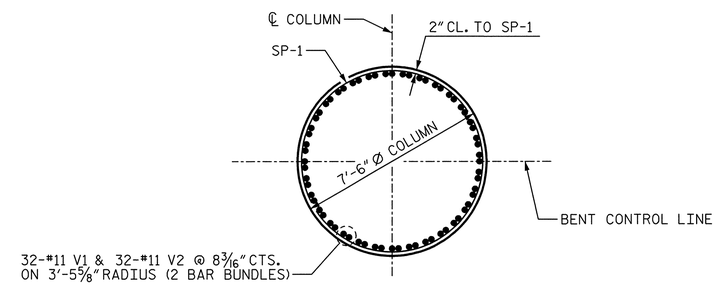

SECTION E-E

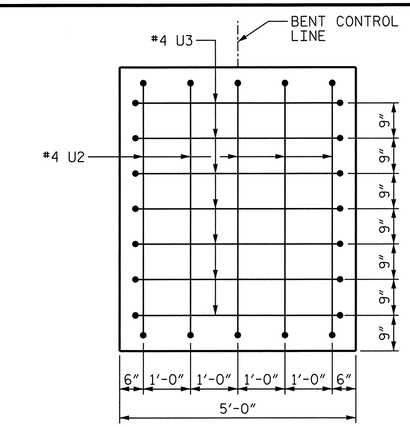

VIEW C-C

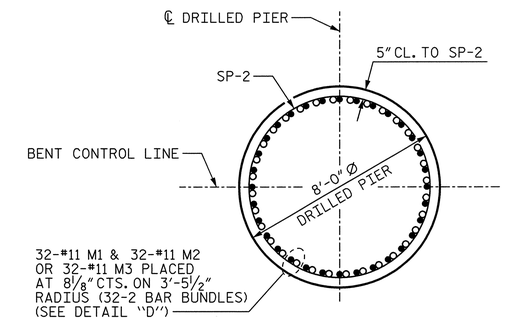

SECTION F-F

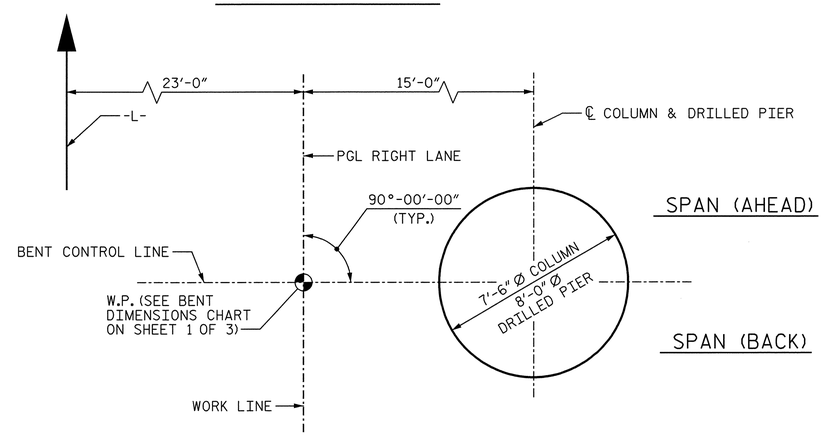

PLAN OF COLUMN & DRILLED PIER

(SEE SECTIONS D-D THRU F-F FOR "SP", "M" AND "V" BAR MARKS)

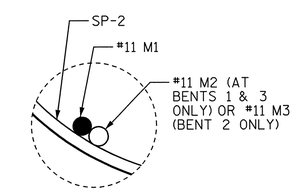

DETAIL "D"

PROJECT NO. U-2525B

GUILFORD COUNTY

STATION: 144+60.63 -L-

SHEET 2 OF 3

STATE OF NORTH CAROLINA
DEPARTMENT OF TRANSPORTATION
RALEIGH

SUBSTRUCTURE

BENTS 1, 2 AND 3
SECTION AND DETAILS

RIGHT LANE

NORTH CAROLINA PROFESSIONAL SEAL ENGINEER ALLYSON K. ORR 027799
1/10/14

MI ENGINEERING
1011 SCHAUB DRIVE, SUITE 100
RALEIGH, NC 27606
(919) 851-6606
FIRM PE NUMBER : P-0671

DWG. NO. 47

REVISIONS								
NO.	BY:	DATE:	NO.	BY:	DATE:		SHEET NO.	
1			3				S-280	
2			4				TOTAL SHEETS	
							541	

DRAWN BY :	B.E. LANNING	DATE :	11/13
CHECKED BY :	G.R. COLS	DATE :	11/13
DESIGN ENGINEER OF RECORD :	P.A. de PAOLI	DATE :	01/14

1/10/2014
9:41:57 AM
User: blanning
Filename: P:\NC Bridges\MI1007.03 U-2525B Guilford\U-2525B\Structures\Right Bridge\U2525B_SD_B123B_4_RT.dgn

BILL OF MATERIAL

BENT 1

BAR	NO.	SIZE	TYPE	LENGTH	WEIGHT
B1	22	#11	STR	42'-4"	4,948
B2	11	#11	4	28'-8"	1,675
B3	20	#7	STR	42'-4"	1,731
B4	2	#7	STR	35'-6"	145
B5	2	#7	STR	28'-8"	117
B6	2	#7	STR	21'-10"	89
B7	2	#7	STR	15'-0"	61
B8	6	#9	3	21'-3"	434
B9	12	#9	STR	17'-6"	714
B10	18	#4	STR	4'-8"	56
M1	32	#11	STR	46'-11"	7,977
M2	32	#11	STR	58'-4"	9,918
S1	4	#5	1	14'-10"	62
S2	4	#5	1	15'-1"	63
S3	4	#5	1	15'-4"	64
S4	4	#5	1	15'-7"	65
S5	4	#5	1	15'-11"	66
S6	4	#5	1	16'-2"	67
S7	4	#5	1	16'-5"	68
S8	4	#5	1	16'-8"	70
S9	4	#5	1	16'-11"	71
S10	4	#5	1	17'-3"	72
S11	4	#5	1	17'-6"	73
S12	4	#5	1	17'-9"	74
S13	4	#5	1	18'-0"	75
S14	4	#5	1	18'-3"	76
S15	4	#5	1	18'-7"	78
S16	4	#5	1	18'-10"	79
S17	4	#5	1	19'-1"	80
S18	4	#5	1	19'-4"	81
S19	4	#5	1	19'-8"	82
S20	4	#5	1	19'-11"	83
S21	4	#5	1	20'-2"	84
S22	4	#5	1	20'-5"	85
S23	4	#5	1	20'-8"	86
S24	4	#5	1	21'-0"	88
S25	4	#5	1	21'-3"	89
S26	4	#5	1	21'-6"	90
S27	4	#5	1	21'-9"	91
S28	4	#5	1	22'-1"	92
S29	4	#5	1	22'-4"	93
S30	4	#5	1	22'-7"	94
S31	4	#5	1	22'-10"	95
S32	4	#5	1	23'-1"	96
S33	4	#5	1	23'-5"	98
S34	4	#5	1	23'-8"	99
S35	4	#5	1	23'-11"	100
S36	4	#5	1	24'-2"	101
S37	2	#5	1	15'-11"	33
S38	2	#5	1	16'-2"	34
S39	2	#5	1	16'-5"	34
S40	2	#5	1	16'-8"	35
S41	2	#5	1	17'-0"	35
S42	2	#5	1	17'-3"	36
S43	2	#5	1	17'-6"	37
S44	2	#5	1	17'-9"	37
S45	2	#5	1	18'-0"	38
S46	2	#5	1	18'-4"	38
S47	2	#5	1	18'-7"	39
S48	2	#5	1	18'-10"	39
S49	2	#5	1	19'-1"	40
S50	2	#5	1	19'-4"	40
S51	2	#5	1	19'-8"	41
S52	2	#5	1	19'-11"	42
S53	2	#5	1	20'-2"	42
S54	2	#5	1	20'-5"	43
S55	2	#5	1	20'-9"	43
S56	2	#5	1	21'-0"	44
S57	2	#5	1	21'-3"	44
S58	2	#5	1	21'-6"	45
S59	2	#5	1	21'-9"	45
S60	2	#5	1	22'-1"	46
S61	2	#5	1	22'-4"	47
S62	2	#5	1	22'-7"	47
S63	2	#5	1	22'-10"	48
S64	2	#5	1	23'-2"	48
S65	2	#5	1	23'-5"	49
S66	2	#5	1	23'-8"	49
S67	2	#5	1	23'-11"	50
S68	2	#5	1	24'-2"	50
S69	2	#5	1	24'-6"	51
S70	2	#5	1	24'-9"	52
S71	2	#5	1	25'-0"	52
S72	2	#5	1	25'-3"	53
S73	24	#5	1	24'-4"	609
S74	12	#5	1	25'-5"	318
S75	84	#5	2	5'-7"	489
S76	30	#4	5	13'-2"	264
U1	30	#4	4	7'-8"	154
U2	10	#4	4	8'-7"	57
U3	14	#4	4	7'-7"	71
V1	32	#11	STR	17'-11"	3,046
V2	32	#11	STR	17'-8"	3,004
SP-1	1	**	6	1722'-5"	1,151
SP-2	1	***	7	1990'-5"	2,076

REINFORCING STEEL 40,353 LBS.

SPIRAL COLUMN
REINFORCING STEEL 3,227 LBS.

CLASS A CONCRETE BREAKDOWN

POUR #2 (COLUMN)	29.9	C.Y.
POUR #3 (CAP & PART COLUMN)	74.4	C.Y.
TOTAL	104.3	C.Y.

8'-0" Ø DRILLED PIER

DRILLED PIER CONCRETE POUR 1 (DRILLED PIER)	68.9	C.Y.
8'-0" Ø DRILLED PIER IN SOIL	19.0	LIN. FT.
8'-0" Ø DRILLED PIER NOT IN SOIL	18.0	LIN. FT.
CSL TUBES	308.0	LIN. FT.

BENT 2

BAR	NO.	SIZE	TYPE	LENGTH	WEIGHT
B1	22	#11	STR	42'-4"	4,948
B2	11	#11	4	28'-8"	1,675
B3	20	#7	STR	42'-4"	1,731
B4	2	#7	STR	35'-6"	145
B5	2	#7	STR	28'-8"	117
B6	2	#7	STR	21'-10"	89
B7	2	#7	STR	15'-0"	61
B8	6	#9	3	21'-3"	434
B9	12	#9	STR	17'-6"	714
B10	18	#4	STR	4'-8"	56
M1	32	#11	STR	55'-11"	9,507
M3	64	#11	STR	37'-5"	12,723
S1	4	#5	1	14'-10"	62
S2	4	#5	1	15'-1"	63
S3	4	#5	1	15'-4"	64
S4	4	#5	1	15'-7"	65
S5	4	#5	1	15'-11"	66
S6	4	#5	1	16'-2"	67
S7	4	#5	1	16'-5"	68
S8	4	#5	1	16'-8"	70
S9	4	#5	1	16'-11"	71
S10	4	#5	1	17'-3"	72
S11	4	#5	1	17'-6"	73
S12	4	#5	1	17'-9"	74
S13	4	#5	1	18'-0"	75
S14	4	#5	1	18'-3"	76
S15	4	#5	1	18'-7"	78
S16	4	#5	1	18'-10"	79
S17	4	#5	1	19'-1"	80
S18	4	#5	1	19'-4"	81
S19	4	#5	1	19'-8"	82
S20	4	#5	1	19'-11"	83
S21	4	#5	1	20'-2"	84
S22	4	#5	1	20'-5"	85
S23	4	#5	1	20'-8"	86
S24	4	#5	1	21'-0"	88
S25	4	#5	1	21'-3"	89
S26	4	#5	1	21'-6"	90
S27	4	#5	1	21'-9"	91
S28	4	#5	1	22'-1"	92
S29	4	#5	1	22'-4"	93
S30	4	#5	1	22'-7"	94
S31	4	#5	1	22'-10"	95
S32	4	#5	1	23'-1"	96
S33	4	#5	1	23'-5"	98
S34	4	#5	1	23'-8"	99
S35	4	#5	1	23'-11"	100
S36	4	#5	1	24'-2"	101
S37	2	#5	1	15'-11"	33
S38	2	#5	1	16'-2"	34
S39	2	#5	1	16'-5"	34
S40	2	#5	1	16'-8"	35
S41	2	#5	1	17'-0"	35
S42	2	#5	1	17'-3"	36
S43	2	#5	1	17'-6"	37
S44	2	#5	1	17'-9"	37
S45	2	#5	1	18'-0"	38
S46	2	#5	1	18'-4"	38
S47	2	#5	1	18'-7"	39
S48	2	#5	1	18'-10"	39
S49	2	#5	1	19'-1"	40
S50	2	#5	1	19'-4"	40
S51	2	#5	1	19'-8"	41
S52	2	#5	1	19'-11"	42
S53	2	#5	1	20'-2"	42
S54	2	#5	1	20'-5"	43
S55	2	#5	1	20'-9"	43
S56	2	#5	1	21'-0"	44
S57	2	#5	1	21'-3"	44
S58	2	#5	1	21'-6"	45
S59	2	#5	1	21'-9"	45
S60	2	#5	1	22'-1"	46
S61	2	#5	1	22'-4"	47
S62	2	#5	1	22'-7"	47
S63	2	#5	1	22'-10"	48
S64	2	#5	1	23'-2"	48
S65	2	#5	1	23'-5"	49
S66	2	#5	1	23'-8"	49
S67	2	#5	1	23'-11"	50
S68	2	#5	1	24'-2"	50
S69	2	#5	1	24'-6"	51
S70	2	#5	1	24'-9"	52
S71	2	#5	1	25'-0"	52
S72	2	#5	1	25'-3"	53
S73	24	#5	1	24'-4"	609
S74	12	#5	1	25'-5"	318
S75	84	#5	2	5'-7"	489
S76	30	#4	5	13'-2"	264
U1	30	#4	4	7'-8"	154
U2	10	#4	4	8'-7"	57
U3	14	#4	4	7'-7"	71
V1	32	#11	STR	32'-2"	5,469
V2	32	#11	STR	31'-11"	5,426
SP-1	1	**	6	2997'-5"	2,002
SP-2	1	***	7	2472'-11"	2,579

REINFORCING STEEL 44,585 LBS.

SPIRAL COLUMN
REINFORCING STEEL 4,581 LBS.

CLASS A CONCRETE BREAKDOWN

POUR #2 (COLUMN)	53.2	C.Y.
POUR #3 (CAP & PART COLUMN)	74.4	C.Y.
TOTAL	127.6	C.Y.

8'-0" Ø DRILLED PIER

DRILLED PIER CONCRETE POUR 1 (DRILLED PIER)	85.7	C.Y.
8'-0" Ø DRILLED PIER IN SOIL	19.0	LIN. FT.
8'-0" Ø DRILLED PIER NOT IN SOIL	27.0	LIN. FT.
CSL TUBES	380.0	LIN. FT.

BENT 3

BAR	NO.	SIZE	TYPE	LENGTH	WEIGHT
B1	22	#11	STR	42'-4"	4,948
B2	11	#11	4	28'-8"	1,675
B3	20	#7	STR	42'-4"	1,731
B4	2	#7	STR	35'-6"	145
B5	2	#7	STR	28'-8"	117
B6	2	#7	STR	21'-10"	89
B7	2	#7	STR	15'-0"	61
B8	6	#9	3	21'-3"	434
B9	12	#9	STR	17'-6"	714
B10	18	#4	STR	4'-8"	56
M1	32	#11	STR	38'-11"	6,616
M2	32	#11	STR	50'-4"	8,557
S1	4	#5	1	14'-10"	62
S2	4	#5	1	15'-1"	63
S3	4	#5	1	15'-4"	64
S4	4	#5	1	15'-7"	65
S5	4	#5	1	15'-11"	66
S6	4	#5	1	16'-2"	67
S7	4	#5	1	16'-5"	68
S8	4	#5	1	16'-8"	70
S9	4	#5	1	16'-11"	71
S10	4	#5	1	17'-3"	72
S11	4	#5	1	17'-6"	73
S12	4	#5	1	17'-9"	74
S13	4	#5	1	18'-0"	75
S14	4	#5	1	18'-3"	76
S15	4	#5	1	18'-7"	78
S16	4	#5	1	18'-10"	79
S17	4	#5	1	19'-1"	80
S18	4	#5	1	19'-4"	81
S19	4	#5	1	19'-8"	82
S20	4	#5	1	19'-11"	83
S21	4	#5	1	20'-2"	84
S22	4	#5	1	20'-5"	85
S23	4	#5	1	20'-8"	86
S24	4	#5	1	21'-0"	88
S25	4	#5	1	21'-3"	89
S26	4	#5	1	21'-6"	90
S27	4	#5	1	21'-9"	91
S28	4	#5	1	22'-1"	92
S29	4	#5	1	22'-4"	93
S30	4	#5	1	22'-7"	94
S31	4	#5	1	22'-10"	95
S32	4	#5	1	23'-1"	96
S33	4	#5	1	23'-5"	98
S34	4	#5	1	23'-8"	99
S35	4	#5	1	23'-11"	100
S36	4	#5	1	24'-2"	101
S37	2	#5	1	15'-11"	33
S38	2	#5	1	16'-2"	34
S39	2	#5	1	16'-5"	34
S40	2	#5	1	16'-8"	35
S41	2	#5	1	17'-0"	35
S42	2	#5	1	17'-3"	36
S43	2	#5	1	17'-6"	37
S44	2	#5	1	17'-9"	37
S45	2	#5	1	18'-0"	38
S46	2	#5	1	18'-4"	38
S47	2	#5	1	18'-7"	39
S48	2	#5	1	18'-10"	39
S49	2	#5	1	19'-1"	40
S50	2	#5	1	19'-4"	40
S51	2	#5	1	19'-8"	41
S52	2	#5	1	19'-11"	42
S53	2	#5	1	20'-2"	42
S54	2	#5	1	20'-5"	43
S55	2	#5	1	20'-9"	43
S56	2	#5	1	21'-0"	44
S57	2	#5	1	21'-3"	44
S58	2	#5	1	21'-6"	45
S59	2	#5	1	21'-9"	45
S60	2	#5	1	22'-1"	46
S61	2	#5	1	22'-4"	47
S62	2	#5	1	22'-7"	47
S63	2	#5	1	22'-10"	48
S64	2	#5	1	23'-2"	48
S65	2	#5	1	23'-5"	49
S66	2	#5	1	23'-8"	49
S67	2	#5	1	23'-11"	50
S68	2	#5	1	24'-2"	50
S69	2	#5	1	24'-6"	51
S70	2	#5	1	24'-9"	52
S71	2	#5	1	25'-0"	52
S72	2	#5	1	25'-3"	53
S73	24	#5	1	24'-4"	609
S74	12	#5	1	25'-5"	318
S75	84	#5	2	5'-7"	489
S76	30	#4	5	13'-2"	264
U1	30	#4	4	7'-8"	154
U2	10	#4	4	8'-7"	57
U3	14	#4	4	7'-7"	71
V1	32	#11	STR	29'-8"	5,044
V2	32	#11	STR	29'-5"	5,001
SP-1	1	**	6	2773'-9"	1,853
SP-2	1	***	7	1561'-6"	1,629

REINFORCING STEEL 41,626 LBS.

SPIRAL COLUMN
REINFORCING STEEL 3,482 LBS.

CLASS A CONCRETE BREAKDOWN

POUR #2 (COLUMN)	49.1	C.Y.
POUR #3 (CAP & PART COLUMN)	74.4	C.Y.
TOTAL	123.5	C.Y.

8'-0" Ø DRILLED PIER

DRILLED PIER CONCRETE POUR 1 (DRILLED PIER)	54.0	C.Y.
8'-0" Ø DRILLED PIER IN SOIL	11.0	LIN. FT.
8'-0" Ø DRILLED PIER NOT IN SOIL	18.0	LIN. FT.
CSL TUBES	244.0	LIN. FT.

STIRRUP HEIGHT TABLE

BAR	"L"	BAR	"L"	BAR	"L"
S1	5'-10½"	S26	9'-2½"	S51	7'-9"
S2	6'-0"	S27	9'-4"	S52	7'-10½"
S3	6'-1½"	S28	9'-6"	S53	8'-0"
S4	6'-3"	S29	9'-7½"	S54	8'-1½"
S5	6'-5"	S30	9'-9"	S55	8'-3½"
S6	6'-6½"	S31	9'-10½"	S56	8'-5"
S7	6'-8"	S32	10'-0"	S57	8'-6½"
S8	6'-9½"	S33	10'-2"	S58	8'-8"
S9	6'-11"	S34	10'-3½"	S59	8'-9½"
S10	7'-1"	S35	10'-5"	S60	8'-11½"
S11	7'-2½"	S36	10'-6½"	S61	9'-1"
S12	7'-4"	S37	5'-10½"	S62	9'-2½"
S13	7'-5½"	S38	6'-0"	S63	9'-4"
S14	7'-7"	S39	6'-1½"	S64	9'-6"
S15	7'-9"	S40	6'-3"	S65	9'-7½"
S16	7'-10½"	S41	6'-5"	S66	9'-9"
S17	8'-0"	S42	6'-6½"	S67	9'-10½"
S18	8'-1½"	S43	6'-8"	S68	10'-0"
S19	8'-3½"	S44	6'-9½"	S69	10'-2"
S20	8'-5"	S45	6'-11"	S70	10'-3½"
S21	8'-6½"	S46	7'-1"	S71	10'-5"
S22	8'-8"	S47	7'-2½"	S72	10'-6½"
S23	8'-9½"	S48	7'-4"	S73	10'-7½"
S24	8'-11½"	S49	7'-5½"	S74	10'-7½"
S25	9'-1"	S50	7'-7"		

** THE SP-1 SPIRAL REINFORCING STEEL SHALL BE W20 OR D-20 COLD DRAWN WIRE OR #4 PLAIN OR DEFORMED BAR.

*** THE SP-2 SPIRAL REINFORCING STEEL SHALL BE W31 OR D-31 COLD DRAWN WIRE OR #5 PLAIN OR DEFORMED BAR.

BAR TYPES

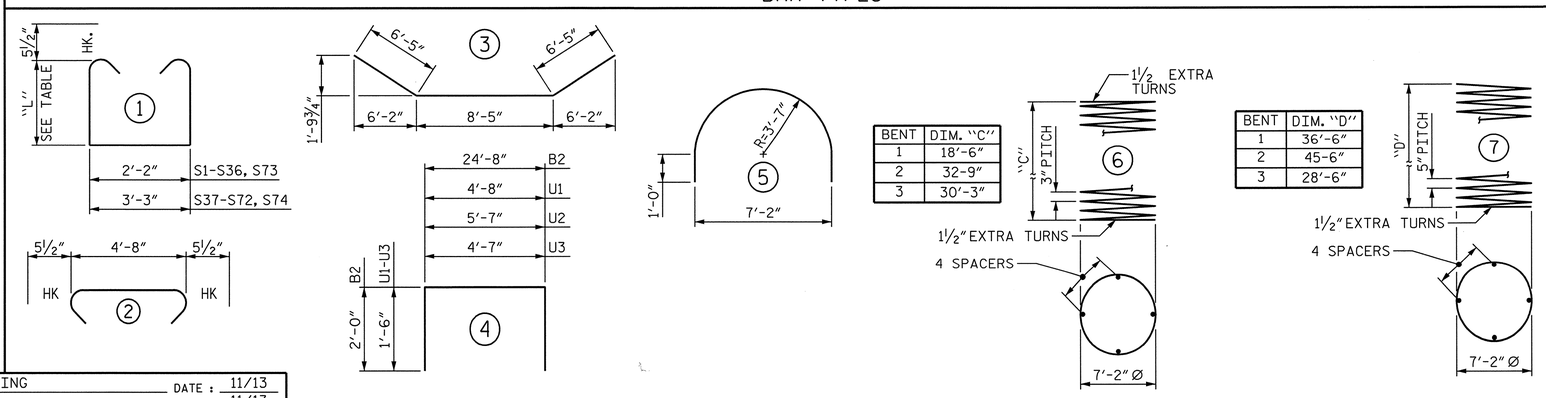

BENT	DIM. "C"
1	18'-6"
2	32-9"
3	30'-3"

BENT	DIM. "D"
1	36'-6"
2	45-6"
3	28'-6"

ALL BAR DIMENSIONS ARE OUT TO OUT.

DWG. NO. 48

DRAWN BY : B.E. LANNING DATE : 11/13
CHECKED BY : G.R. COLS DATE : 11/13
DESIGN ENGINEER OF RECORD : P.A. de PAOLI DATE : 01/14

NORTH CAROLINA PROFESSIONAL SEAL 027799 ENGINEER ALLYSON K. ORR
1/10/14

MI ENGINEERING
1011 SCHAUB DRIVE, SUITE 100
RALEIGH, NC 27606
(919) 851-6606
FIRM PE NUMBER : P-0671

REVISIONS						
NO.	BY:	DATE:	NO.	BY:	DATE:	
1			3			
2			4			

SHEET NO. S-281
TOTAL SHEETS 541

PROJECT NO. U-2525B
GUILFORD COUNTY
STATION: 144+60.63 -L-

SHEET 3 OF 3

STATE OF NORTH CAROLINA
DEPARTMENT OF TRANSPORTATION
RALEIGH

SUBSTRUCTURE

BENTS 1, 2 AND 3 BILL OF MATERIAL

RIGHT LANE

1/10/2014
9:41:59 AM
User: blanning
Filename: P:\NC Bridges\MI1007.03 U-2525B Guilford\U-2525B\Structures\Right Bridge\U2525B_SD_BI23C_4_RT.dgn

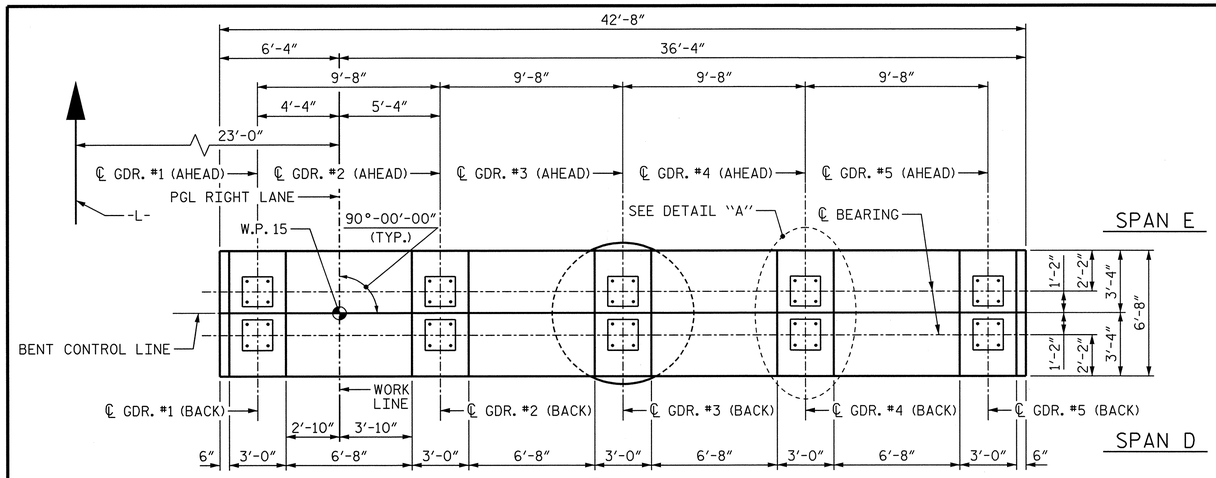

PLAN

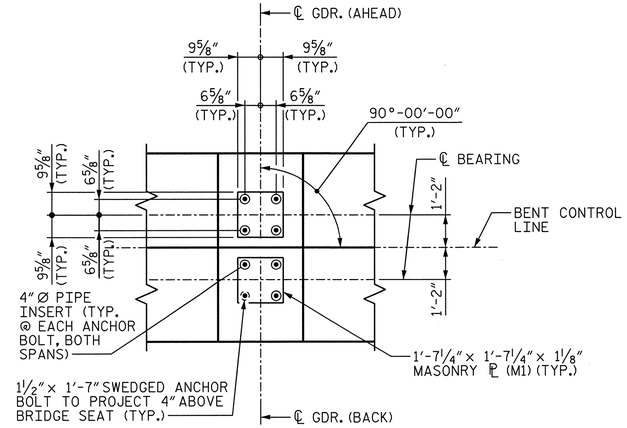

DETAIL "A"

NOTES

STIRRUPS AND "U" BARS IN CAP MAY BE SHIFTED AS NECESSARY TO CLEAR ANCHOR BOLTS AND PIPE INSERTS.

DETAILED DRAWINGS FOR FALSEWORK AND FORMS FOR THIS HAMMERHEAD BENT CAP SHALL BE SUBMITTED. SEE SHEET SN.

ALL STEEL IN THE DRILLED PIER IS INCLUDED IN THE PAY ITEMS FOR "REINFORCING STEEL" AND "SPIRAL COLUMN REINFORCING STEEL".

THE CONTRACTOR'S ATTENTION IS CALLED TO THE FACT THAT THE LONGITUDINAL REINFORCEMENT FOR THE DRILLED PIER IS DETAILED WITH 3 FEET OF EXTRA LENGTH.

THE LOCATION OF THE CONSTRUCTION JOINT IN THE DRILLED PIER IS BASED ON AN APPROXIMATE GROUND LINE ELEVATION. IF THE CONSTRUCTION JOINT IS ABOVE THE ACTUAL GROUND ELEVATION, THE CONTRACTOR SHALL PLACE THE CONSTRUCTION JOINT 1 FOOT BELOW THE GROUND LINE.

FOR DRILLED PIER & PERMANENT STEEL CASING, SEE SECTION 411 OF THE STANDARD SPECIFICATIONS.

FOR SECTIONS A-A AND B-B, SEE SHEET 2 OF 3.

FOR VIEW C-C, SEE SHEET 2 OF 3.

FOR PIPE INSERT DETAILS, SEE "POT BEARING DETAILS" SHEET.

FOR END ELEVATION, SEE SHEET 2 OF 3.

FOR 1½" Ø ANCHOR BOLTS, SEE "POT BEARING DETAILS" SHEET.

THE TOP SURFACE AREAS OF THE BENT CAP SHALL BE CURED IN ACCORDANCE WITH THE STANDARD SPECIFICATIONS EXCEPT THE MEMBRANE CURING COMPOUND METHOD SHALL NOT BE USED.

THE CAP AND COLUMN SHALL BE CONSIDERED MASS CONCRETE. SEE SPECIAL PROVISIONS.

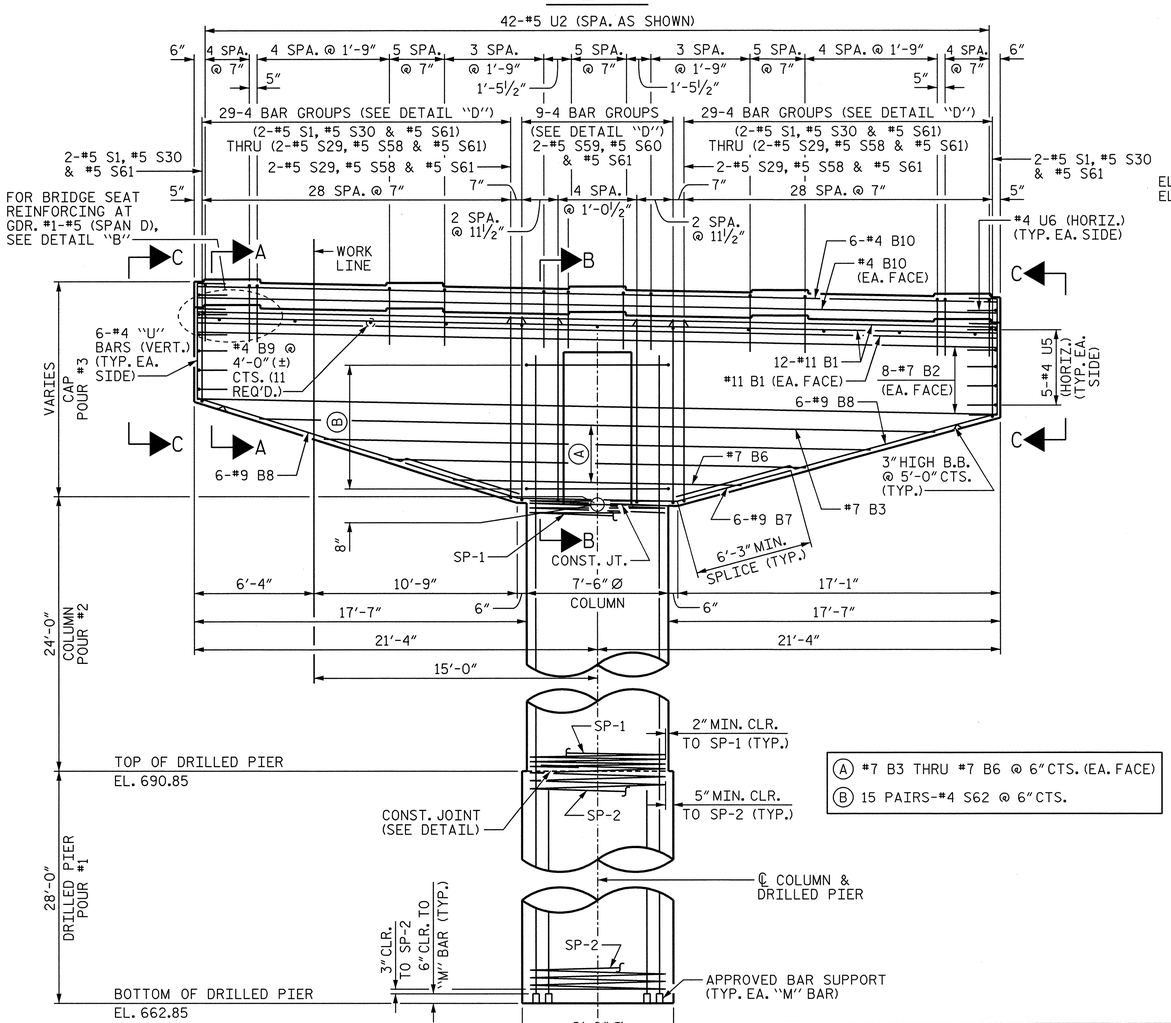

ELEVATION

(A) #7 B3 THRU #7 B6 @ 6" CTS. (EA. FACE)

(B) 15 PAIRS-#4 S62 @ 6" CTS.

NOTE: FOR COLUMN & DRILLED PIER REINFORCING STEEL & DETAILS, SEE END ELEVATION ON SHEET 2 OF 3.

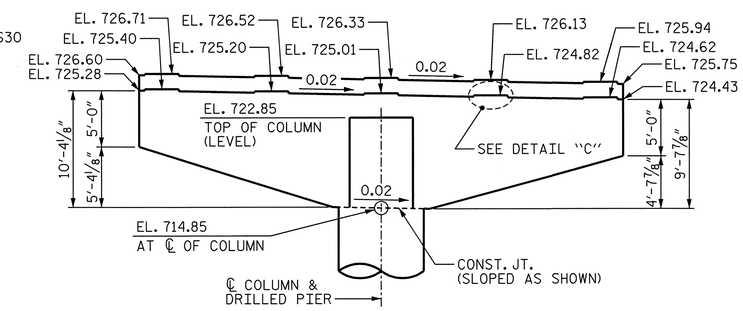

BENT CAP LAYOUT

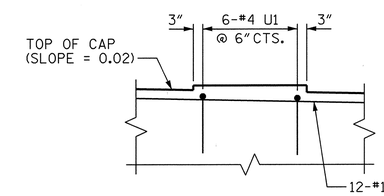

DETAIL "B"

(TYP. EA. GDR.)
(SPAN "D")

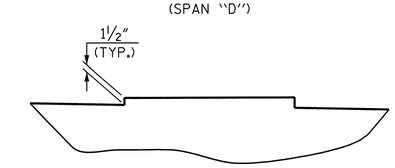

DETAIL "C"

(TYP. EA. GDR., SPANS "D" & "E")

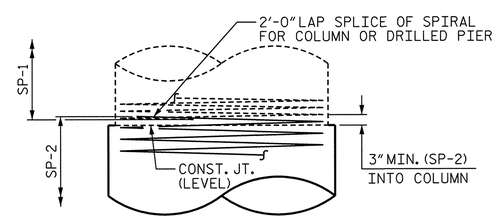

CONSTRUCTION JOINT DETAIL

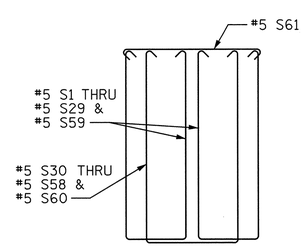

DETAIL "D"

(BARS OFFSET FOR CLARITY)

PROJECT NO. U-2525B

GUILFORD COUNTY

STATION: 144+60.63 -L-

SHEET 1 OF 3

STATE OF NORTH CAROLINA
DEPARTMENT OF TRANSPORTATION
RALEIGH

SUBSTRUCTURE

BENT 4
PLAN AND ELEVATION

RIGHT LANE

NORTH CAROLINA PROFESSIONAL SEAL 027799 ENGINEER ALLYSON K. ORR 2/14/14

MI ENGINEERING
1011 SCHAUB DRIVE, SUITE 100
RALEIGH, NC 27606
(919) 851-6606
FIRM PE NUMBER : P-0671

REVISIONS							SHEET NO.
NO.	BY:	DATE:	NO.	BY:	DATE:		S-282
1			3				TOTAL SHEETS
2			4				54

DRAWN BY : B.E. LANNING DATE : 11/13
CHECKED BY : G.R. COLS DATE : 11/13
DESIGN ENGINEER OF RECORD : P.A. de PAOLI DATE : 01/14

DWG. NO. 49

2/14/2014
12:38:09 PM
User: blanning
Filename: P:\NC Bridges\MI1007.03 U-2525B Guilford\U-2525B\Structures\Right Bridge\U2525B_SD_B4A_4_RT.dgn

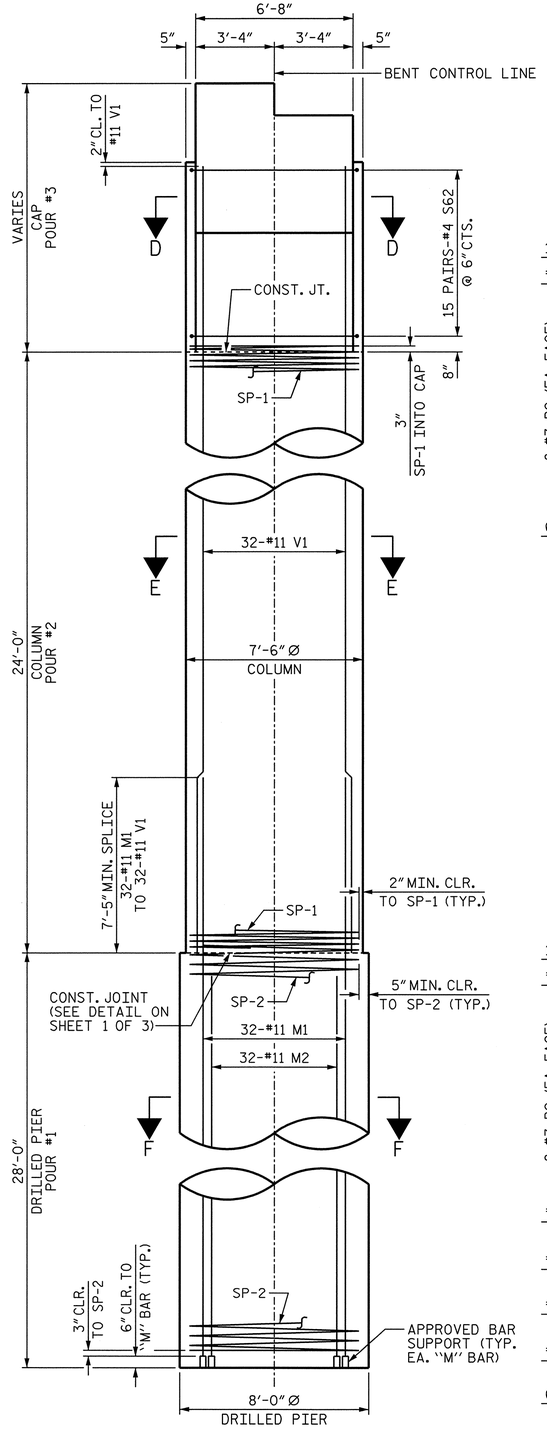

END ELEVATION

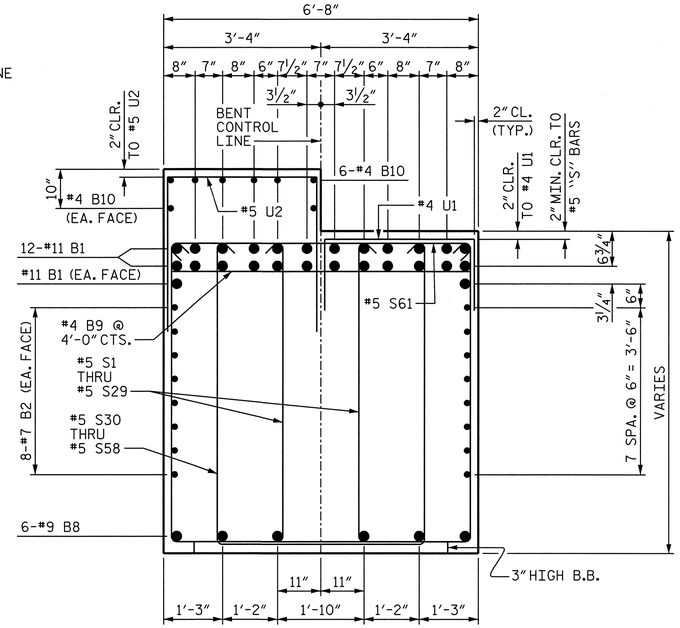

SECTION A-A

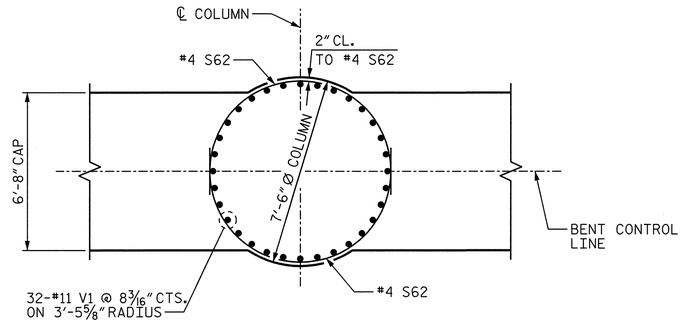

SECTION D-D

(CAP REINFORCING NOT SHOWN FOR CLARITY)

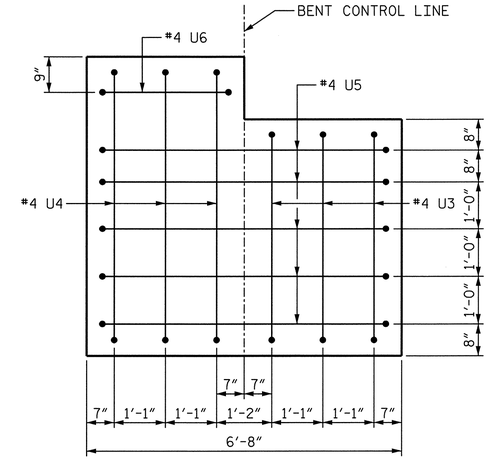

VIEW C-C

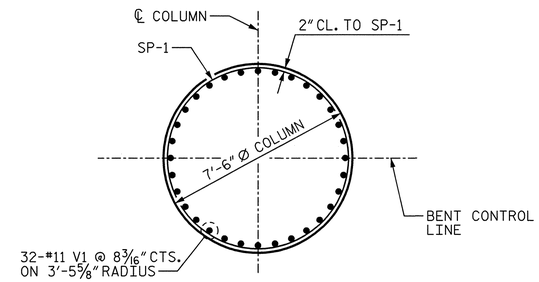

SECTION E-E

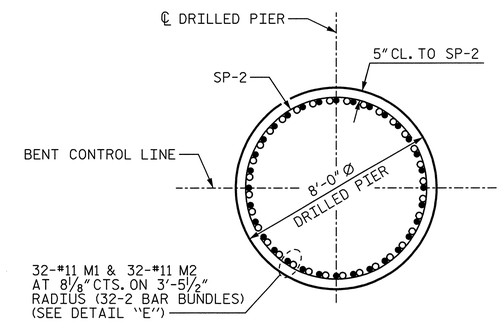

SECTION F-F

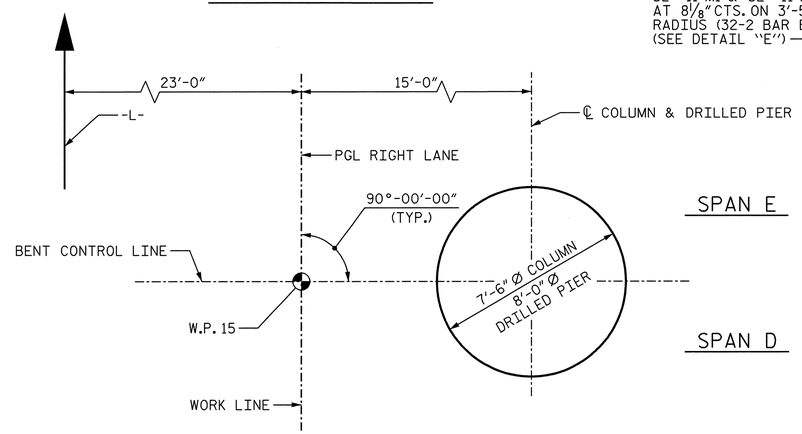

PLAN OF COLUMN & DRILLED PIER

(SEE SECTIONS D-D THRU F-F FOR "SP", "M" AND "V" BAR MARKS)

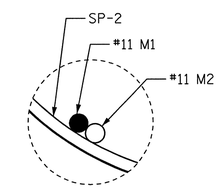

DETAIL "E"

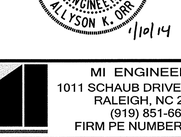

PROJECT NO. U-2525B

GUILFORD COUNTY

STATION: 144+60.63 -L-

SHEET 2 OF 3

STATE OF NORTH CAROLINA
DEPARTMENT OF TRANSPORTATION
RALEIGH

SUBSTRUCTURE

BENT 4
SECTION AND DETAILS

RIGHT LANE

DRAWN BY : B.E. LANNING DATE : 11/13
CHECKED BY : G.R. COLS DATE : 11/13
DESIGN ENGINEER OF RECORD : P.A. de PAOLI DATE : 01/14

DWG. NO. 50

MI ENGINEERING
1011 SCHAUB DRIVE, SUITE 100
RALEIGH, NC 27606
(919) 851-6606
FIRM PE NUMBER : P-0671

REVISIONS						SHEET NO.
NO.	BY:	DATE:	NO.	BY:	DATE:	S-283
1			3			TOTAL SHEETS
2			4			541

1/10/2014
9:43:19 AM
User: blanning
Filename: P:\NC Bridges\MI1007.03 U-2525B Guilford\U-2525B\Structures\Right Bridge\U2525B_SD_B4B_4_RT.dgn

BAR TYPES

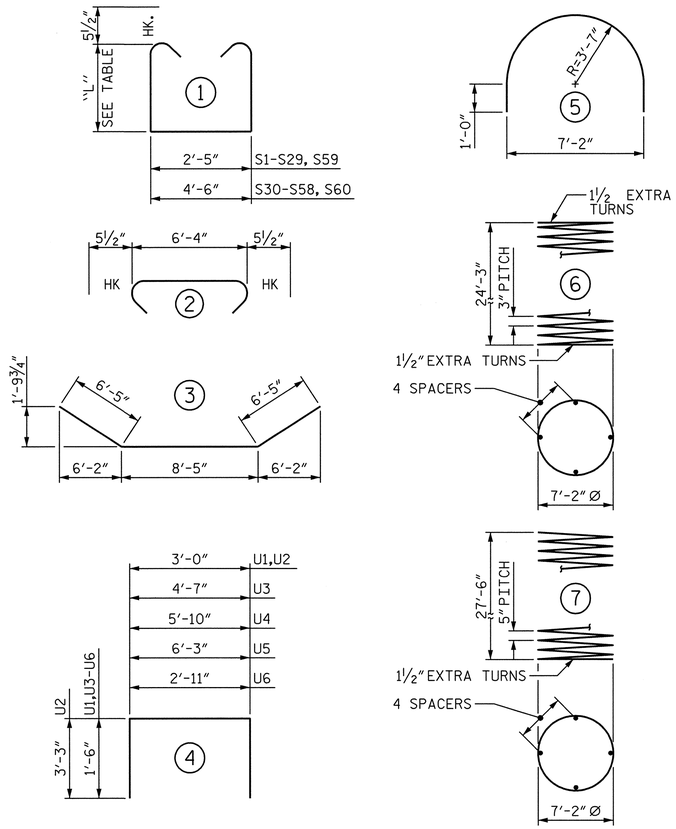

ALL BAR DIMENSIONS ARE OUT TO OUT.

STIRRUP HEIGHT TABLE

BAR	"L"	BAR	"L"	BAR	"L"
S1	4'-9"	S26	9'-0"	S51	8'-4"
S2	4'-11"	S27	9'-2"	S52	8'-6"
S3	5'-1"	S28	9'-4"	S53	8'-8"
S4	5'-3"	S29	9'-6"	S54	8'-10"
S5	5'-5"	S30	4'-9"	S55	9'-0"
S6	5'-7"	S31	4'-11"	S56	9'-2"
S7	5'-9"	S32	5'-1"	S57	9'-4"
S8	5'-11"	S33	5'-3"	S58	9'-6"
S9	6'-1"	S34	5'-5"	S59	9'-7½"
S10	6'-3"	S35	5'-7"	S60	9'-7½"
S11	6'-5½"	S36	5'-9"		
S12	6'-7½"	S37	5'-11"		
S13	6'-9½"	S38	6'-1"		
S14	6'-11½"	S39	6'-3"		
S15	7'-1½"	S40	6'-5½"		
S16	7'-3½"	S41	6'-7½"		
S17	7'-5½"	S42	6'-9½"		
S18	7'-7½"	S43	6'-11½"		
S19	7'-9½"	S44	7'-1½"		
S20	7'-11½"	S45	7'-3½"		
S21	8'-2"	S46	7'-5½"		
S22	8'-4"	S47	7'-7½"		
S23	8'-6"	S48	7'-9½"		
S24	8'-8"	S49	7'-11½"		
S25	8'-10"	S50	8'-2"		

BILL OF MATERIAL

BENT 4

BAR	NO.	SIZE	TYPE	LENGTH	WEIGHT
B1	26	#11	STR	42'-4"	5,848
B2	16	#7	STR	42'-4"	1,384
B3	2	#7	STR	35'-9"	146
B4	2	#7	STR	28'-11"	118
B5	2	#7	STR	22'-1"	90
B6	2	#7	STR	15'-3"	62
B7	6	#9	3	21'-3"	434
B8	12	#9	STR	17'-6"	714
B9	11	#4	STR	6'-4"	47
B10	8	#4	STR	42'-4"	226
M1	32	#11	STR	37'-11"	6,446
M2	32	#11	STR	26'-6"	4,505
S1	4	#5	1	12'-10"	54
S2	4	#5	1	13'-2"	55
S3	4	#5	1	13'-6"	56
S4	4	#5	1	13'-10"	58
S5	4	#5	1	14'-2"	59
S6	4	#5	1	14'-6"	60
S7	4	#5	1	14'-10"	62
S8	4	#5	1	15'-2"	63
S9	4	#5	1	15'-6"	65
S10	4	#5	1	15'-10"	66
S11	4	#5	1	16'-3"	68
S12	4	#5	1	16'-7"	69
S13	4	#5	1	16'-11"	71
S14	4	#5	1	17'-3"	72
S15	4	#5	1	17'-7"	73
S16	4	#5	1	17'-11"	75
S17	4	#5	1	18'-3"	76
S18	4	#5	1	18'-7"	78
S19	4	#5	1	18'-11"	79
S20	4	#5	1	19'-3"	80
S21	4	#5	1	19'-8"	82
S22	4	#5	1	20'-0"	83
S23	4	#5	1	20'-4"	85
S24	4	#5	1	20'-8"	86
S25	4	#5	1	21'-0"	88
S26	4	#5	1	21'-4"	89
S27	4	#5	1	21'-8"	90
S28	4	#5	1	22'-0"	92
S29	4	#5	1	22'-4"	93
S30	2	#5	1	14'-11"	31
S31	2	#5	1	15'-3"	32
S32	2	#5	1	15'-7"	33
S33	2	#5	1	15'-11"	33
S34	2	#5	1	16'-3"	34
S35	2	#5	1	16'-7"	35
S36	2	#5	1	16'-11"	35
S37	2	#5	1	17'-3"	36
S38	2	#5	1	17'-7"	37
S39	2	#5	1	17'-11"	37
S40	2	#5	1	18'-4"	38
S41	2	#5	1	18'-8"	39
S42	2	#5	1	19'-0"	40
S43	2	#5	1	19'-4"	40
S44	2	#5	1	19'-8"	41
S45	2	#5	1	20'-0"	42
S46	2	#5	1	20'-4"	42
S47	2	#5	1	20'-8"	43
S48	2	#5	1	21'-0"	44
S49	2	#5	1	21'-4"	45
S50	2	#5	1	21'-9"	45
S51	2	#5	1	22'-1"	46
S52	2	#5	1	22'-5"	47
S53	2	#5	1	22'-9"	47
S54	2	#5	1	23'-1"	48
S55	2	#5	1	23'-5"	49
S56	2	#5	1	23'-9"	50
S57	2	#5	1	24'-1"	50
S58	2	#5	1	24'-5"	51
S59	18	#5	1	22'-7"	424
S60	9	#5	1	24'-8"	232
S61	67	#5	2	7'-3"	507
S62	30	#4	5	13'-2"	264
U1	30	#4	4	6'-0"	120
U2	42	#4	4	9'-6"	267
U3	6	#4	4	7'-7"	30
U4	6	#4	4	8'-10"	35
U5	10	#4	4	9'-3"	62
U6	2	#4	4	5'-11"	8
V1	32	#11	STR	31'-10"	5,412
SP-1	1	**	6	2236'-11"	1,494
SP-2	1	***	7	1507'-11"	1,573

REINFORCING STEEL	30,698 LBS.
SPIRAL COLUMN REINFORCING STEEL	3,067 LBS.
CLASS A CONCRETE BREAKDOWN	
POUR #2 (COLUMN)	39.3 C.Y.
POUR #3 (CAP & PART COLUMN)	92.4 C.Y.
TOTAL	131.7 C.Y.
8'-0" Ø DRILLED PIER	
DRILLED PIER CONCRETE POUR 1 (DRILLED PIER)	52.2 C.Y.
8'-0" Ø DRILLED PIER IN SOIL	12.0 LIN. FT.
8'-0" Ø DRILLED PIER NOT IN SOIL	16.0 LIN. FT.
CSL TUBES	236.0 LIN. FT.

** THE SP-1 SPIRAL REINFORCING STEEL SHALL BE W20 OR D-20 COLD DRAWN WIRE OR #4 PLAIN OR DEFORMED BAR.

*** THE SP-2 SPIRAL REINFORCING STEEL SHALL BE W31 OR D-31 COLD DRAWN WIRE OR #5 PLAIN OR DEFORMED BAR.

PROJECT NO. U-2525B

GUILFORD COUNTY

STATION: 144+60.63 -L-

SHEET 3 OF 3

NORTH CAROLINA PROFESSIONAL SEAL 027799 ENGINEER ALLYSON K. ORR

1/10/14

STATE OF NORTH CAROLINA
DEPARTMENT OF TRANSPORTATION
RALEIGH

SUBSTRUCTURE

BENT 4
BILL OF MATERIAL

RIGHT LANE

MI ENGINEERING
1011 SCHAUB DRIVE, SUITE 100
RALEIGH, NC 27606
(919) 851-6606
FIRM PE NUMBER : P-0671

REVISIONS						
NO.	BY:	DATE:	NO.	BY:	DATE:	SHEET NO. S-284
1			3			TOTAL SHEETS 541
2			4			

DWG. NO. 51

DRAWN BY : B.E. LANNING DATE : 11/13
CHECKED BY : G.R. COLS DATE : 11/13
DESIGN ENGINEER OF RECORD : P.A. de PAOLI DATE : 01/14

1/10/2014
9:43:21 AM
User: blanning
Filename: P:\NC Bridges\MI1007.03 U-2525B Guilford\U-2525B\Structures\Right Bridge\U2525B_SD_B4C_4_RT.dgn

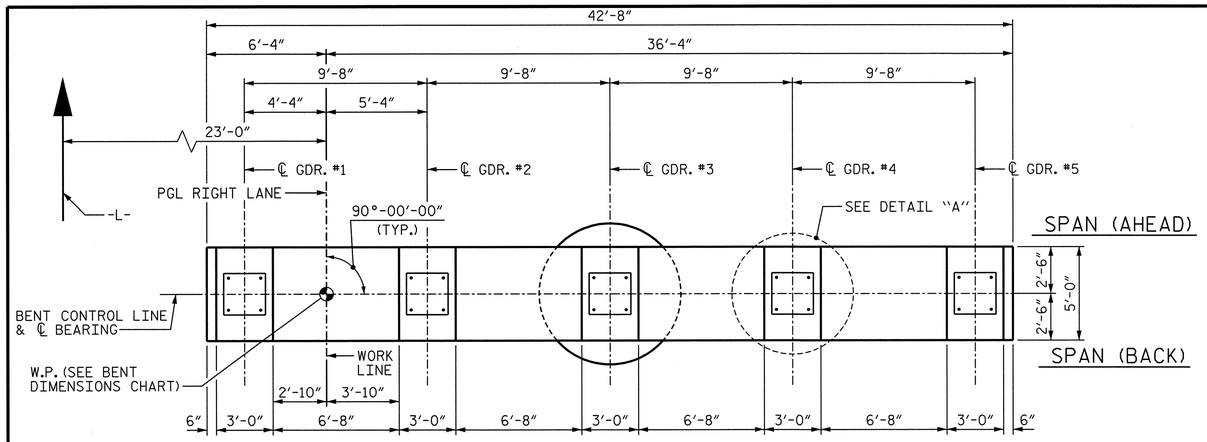

PLAN

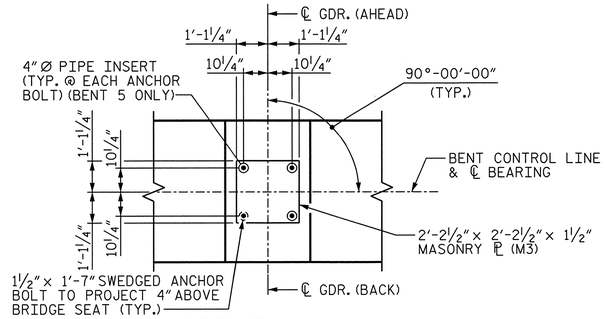

DETAIL "A"

NOTES

STIRRUPS AND "U" BARS IN CAP MAY BE SHIFTED AS NECESSARY TO CLEAR ANCHOR BOLTS AND PIPE INSERTS.

DETAILED DRAWINGS FOR FALSEWORK AND FORMS FOR THIS HAMMERHEAD BENT CAP SHALL BE SUBMITTED. SEE SHEET SN.

ALL STEEL IN THE DRILLED PIER IS INCLUDED IN THE PAY ITEMS FOR "REINFORCING STEEL" AND "SPIRAL COLUMN REINFORCING STEEL".

THE CONTRACTOR'S ATTENTION IS CALLED TO THE FACT THAT THE LONGITUDINAL REINFORCEMENT FOR THE DRILLED PIER IS DETAILED WITH 3 FEET OF EXTRA LENGTH.

THE LOCATION OF THE CONSTRUCTION JOINT IN THE DRILLED PIER IS BASED ON AN APPROXIMATE GROUND LINE ELEVATION. IF THE CONSTRUCTION JOINT IS ABOVE THE ACTUAL GROUND ELEVATION, THE CONTRACTOR SHALL PLACE THE CONSTRUCTION JOINT 1 FOOT BELOW THE GROUND LINE.

FOR DRILLED PIER & PERMANENT STEEL CASING, SEE SECTION 411 OF THE STANDARD SPECIFICATIONS.

FOR SECTIONS A-A AND B-B, SEE SHEET 2 OF 3.

FOR VIEW C-C, SEE SHEET 2 OF 3.

FOR PIPE INSERT DETAILS, SEE "POT BEARING DETAILS" SHEET.

FOR END ELEVATION, SEE SHEET 2 OF 3.

FOR 1½" Ø ANCHOR BOLTS, SEE "POT BEARING DETAILS" SHEET.

THE CAP AND COLUMN SHALL BE CONSIDERED MASS CONCRETE. SEE SPECIAL PROVISIONS.

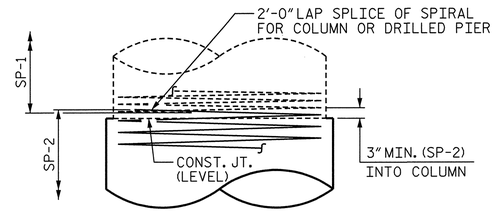

CONSTRUCTION JOINT DETAIL

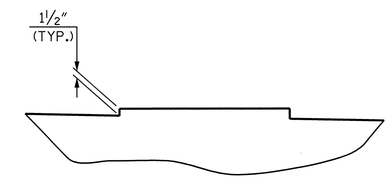

DETAIL "B"
(TYP. EACH GIRDER)

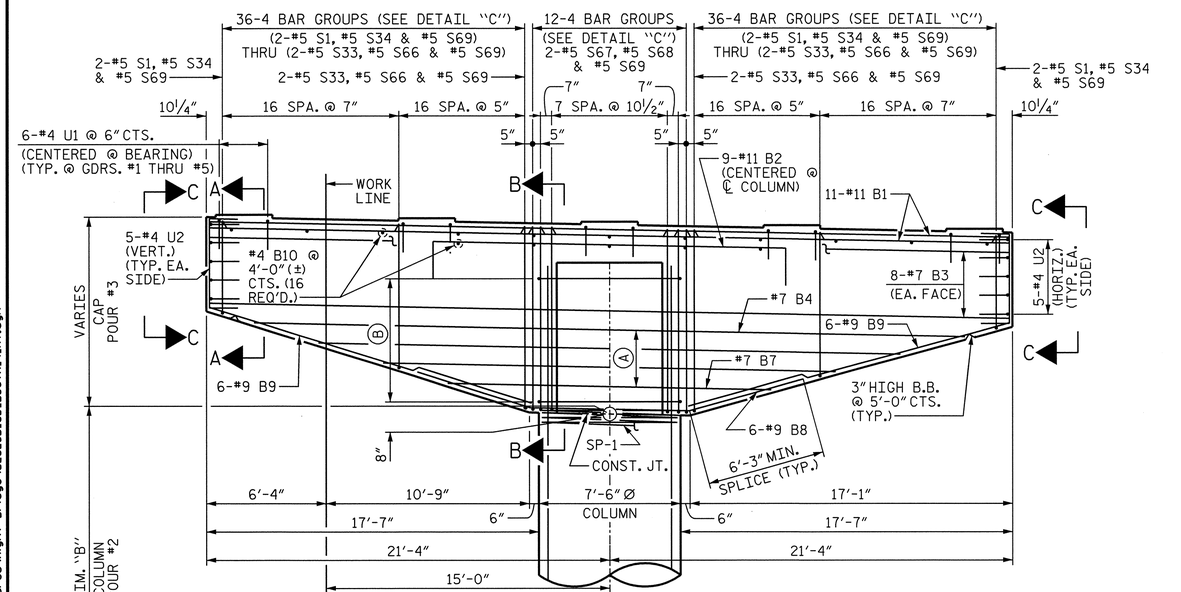

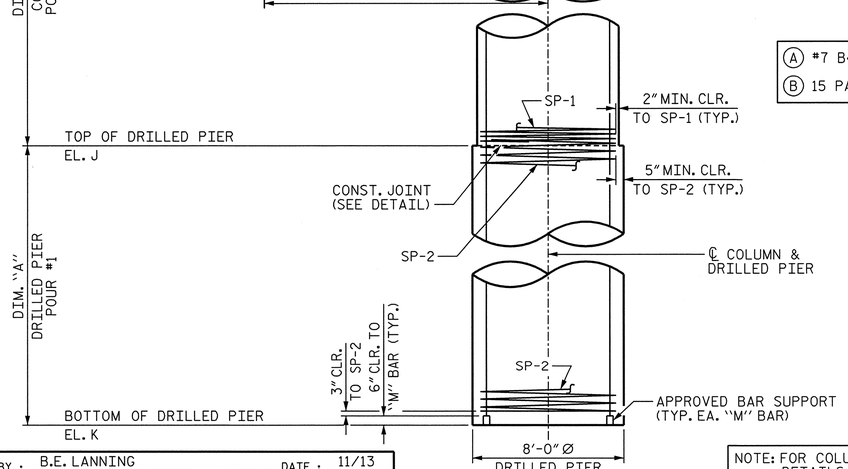

ELEVATION

Ⓐ #7 B4 THRU #7 B7 @ 6" CTS. (EA. FACE)
Ⓑ 15 PAIRS-#4 S70 @ 6" CTS.

NOTE: FOR COLUMN & DRILLED PIER REINFORCING STEEL & DETAILS, SEE END ELEVATION ON SHEET 2 OF 3.

BRIDGE SEAT ELEVATIONS

BENT	EL. A	EL. B	EL. C	EL. D	EL. E
5	725.39	725.19	725.00	724.81	724.61
6	724.17	723.98	723.78	723.59	723.40
7	723.05	722.86	722.67	722.47	722.28

CAP, COLUMN & DRILLED PIER ELEVATIONS

BENT	EL. F	EL. G	EL. H	EL. I	EL. J	EL. K
5	725.27	724.42	714.84	722.84	692.84	644.84
6	724.05	723.20	713.63	721.63	692.88	666.88
7	722.94	722.09	712.51	720.51	700.76	673.76

BENT DIMENSIONS

BENT	W.P.	SPAN (AHEAD)	SPAN (BACK)	DIM. "A"	DIM. "B"
5	16	F	E	48'-0"	22'-0"
6	17	G	F	26'-0"	20'-9"
7	18	H	G	27'-0"	11'-9"

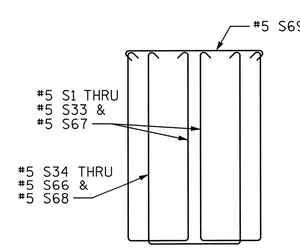

DETAIL "C"
(BARS OFFSET FOR CLARITY)

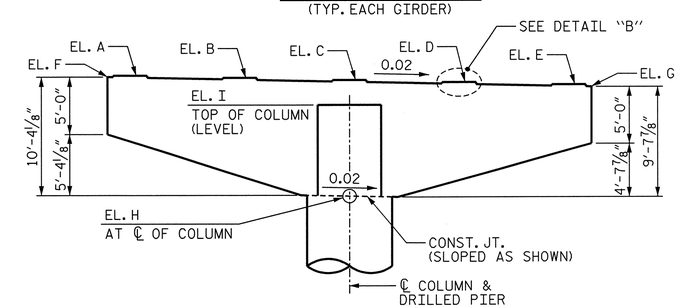

BENT CAP LAYOUT

PROJECT NO. U-2525B
GUILFORD COUNTY
STATION: 144+60.63 -L-

SHEET 1 OF 3

STATE OF NORTH CAROLINA
DEPARTMENT OF TRANSPORTATION
RALEIGH

SUBSTRUCTURE

BENTS 5, 6 AND 7 PLAN AND ELEVATION

RIGHT LANE

NORTH CAROLINA PROFESSIONAL SEAL 027799 ENGINEER ALLYSON K. DIRR
2/14/14

MI ENGINEERING
1011 SCHAUB DRIVE, SUITE 100
RALEIGH, NC 27606
(919) 851-6606
FIRM PE NUMBER : P-0671

REVISIONS								
NO.	BY:	DATE:	NO.	BY:	DATE:	SHEET NO.
1			3			S-285
2			4			TOTAL SHEETS 54-1

DRAWN BY : B.E. LANNING DATE : 11/13
CHECKED BY : G.R. COLS DATE : 11/13
DESIGN ENGINEER OF RECORD : P.A. de PAOLI DATE : 01/14

DWG. NO. 52

2/14/2014
12:39:12 PM
User: blanning
Filename: P:\NC Bridges\MI1007.03 U-2525B Guilford\U-2525B\Structures\Right Bridge\U2525B_SD_B567A_4_RT.dgn

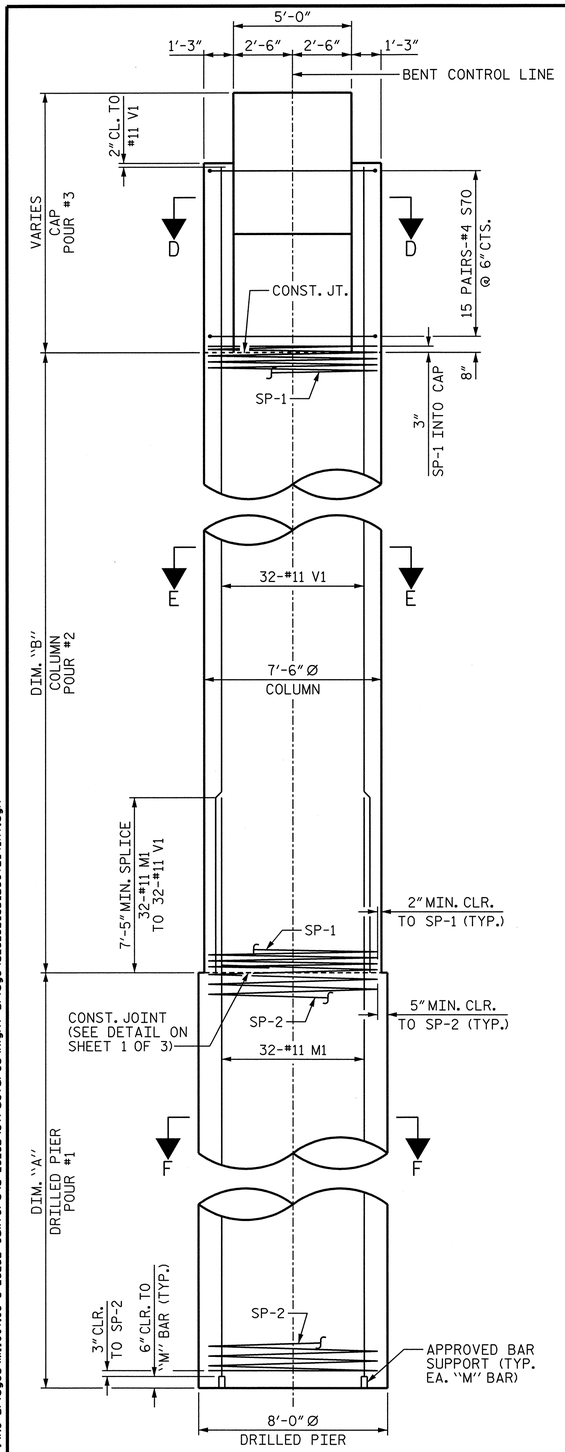

END ELEVATION

(FOR DIM. "A" & DIM. "B", SEE BENT DIMENSIONS TABLE, SHEET 1 OF 3)

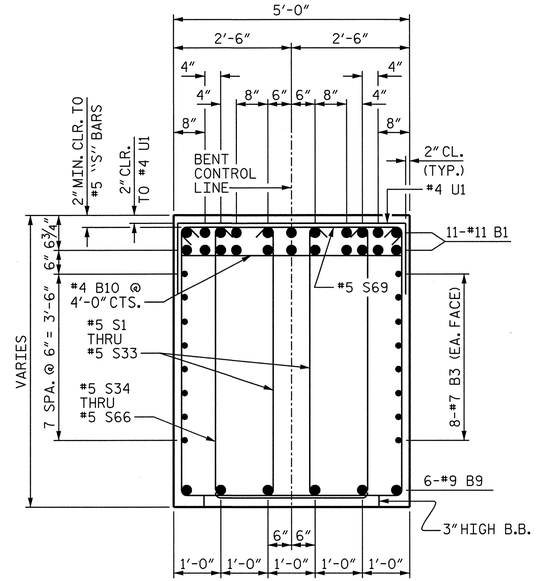

SECTION A-A

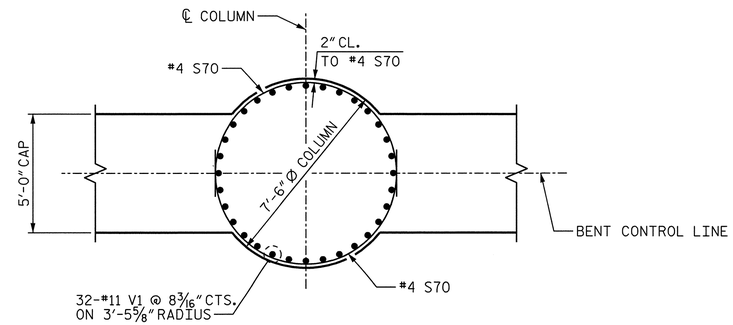

SECTION D-D

(CAP REINFORCING NOT SHOWN FOR CLARITY)

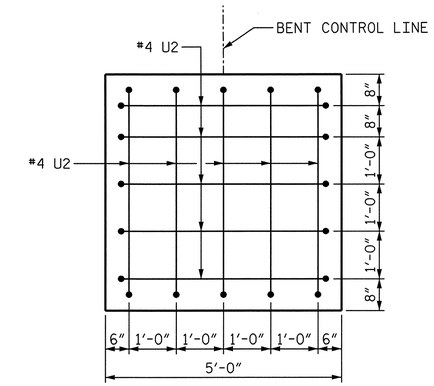

VIEW C-C

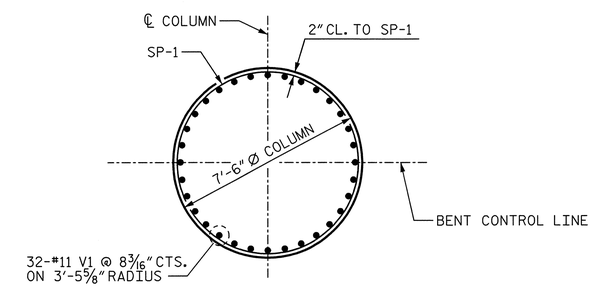

SECTION E-E

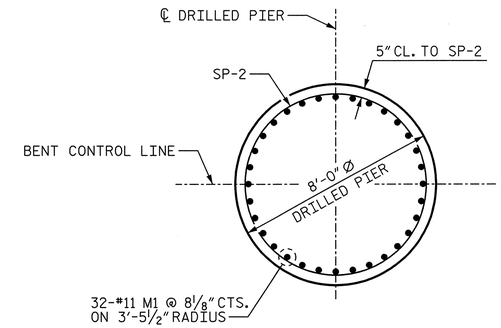

SECTION F-F

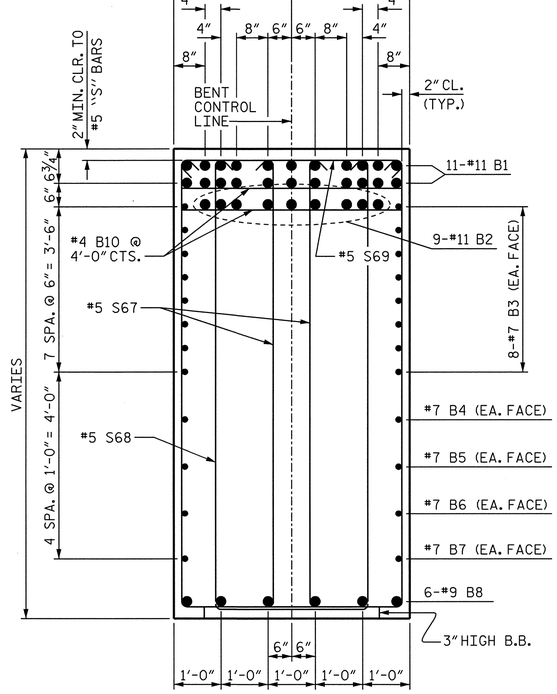

SECTION B-B

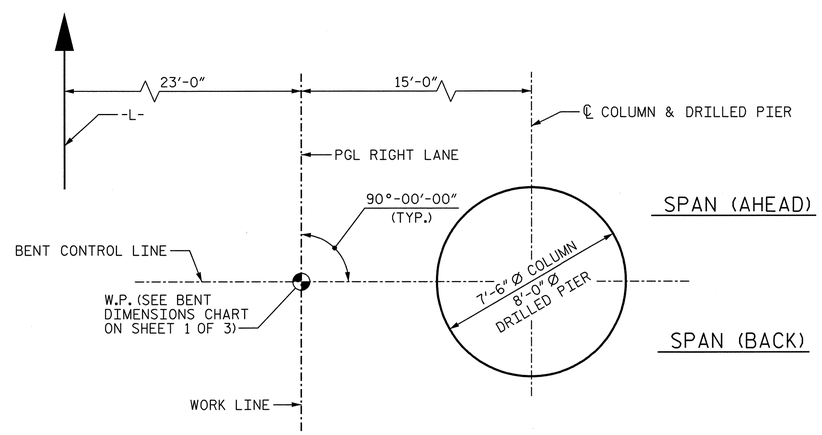

PLAN OF COLUMN & DRILLED PIER

(SEE SECTIONS D-D THRU F-F FOR "SP", "M" AND "V" BAR MARKS)

PROJECT NO. U-2525B

GUILFORD COUNTY

STATION: 144+60.63 -L-

SHEET 2 OF 3

STATE OF NORTH CAROLINA
DEPARTMENT OF TRANSPORTATION
RALEIGH

SUBSTRUCTURE

BENTS 5, 6 AND 7
SECTION AND DETAILS

RIGHT LANE

NORTH CAROLINA PROFESSIONAL SEAL 027799 ENGINEER ALLYSON K. DIRR
1/10/14

DRAWN BY : B.E. LANNING DATE : 11/13
CHECKED BY : G.R. COLS DATE : 11/13
DESIGN ENGINEER OF RECORD : P.A. de PAOLI DATE : 01/14

DWG. NO. 53

MI ENGINEERING
1011 SCHAUB DRIVE, SUITE 100
RALEIGH, NC 27606
(919) 851-6606
FIRM PE NUMBER : P-0671

REVISIONS						
NO.	BY:	DATE:	NO.	BY:	DATE:	
1			3			
2			4			

SHEET NO. S-28C

TOTAL SHEETS 541

1/10/2014
9:43:26 AM
User: blanning
Filename: P:\NC Bridges\MI1007.03 U-2525B Guilford\U-2525B\Structures\Right Bridge\U2525B_SD_B567B_4_RT.dgn

BILL OF MATERIAL

BENT 5

BAR	NO.	SIZE	TYPE	LENGTH	WEIGHT
B1	22	#11	STR	42'-4"	4,948
B2	9	#11	4	22'-8"	1,084
B3	16	#7	STR	42'-4"	1,384
B4	2	#7	STR	37'-7"	154
B5	2	#7	STR	30'-9"	126
B6	2	#7	STR	23'-11"	98
B7	2	#7	STR	17'-1"	70
B8	6	#9	3	21'-3"	434
B9	12	#9	STR	17'-6"	714
B10	16	#4	STR	4'-8"	50
M1	32	#11	STR	57'-11"	9,847
S1	4	#5	1	12'-9"	53
S2	4	#5	1	13'-1"	55
S3	4	#5	1	13'-5"	56
S4	4	#5	1	13'-9"	57
S5	4	#5	1	14'-1"	59
S6	4	#5	1	14'-5"	60
S7	4	#5	1	14'-9"	62
S8	4	#5	1	15'-1"	63
S9	4	#5	1	15'-6"	65
S10	4	#5	1	15'-10"	66
S11	4	#5	1	16'-2"	67
S12	4	#5	1	16'-6"	69
S13	4	#5	1	16'-10"	70
S14	4	#5	1	17'-2"	72
S15	4	#5	1	17'-6"	73
S16	4	#5	1	17'-10"	74
S17	4	#5	1	18'-2"	76
S18	4	#5	1	18'-5"	77
S19	4	#5	1	18'-8"	78
S20	4	#5	1	18'-11"	79
S21	4	#5	1	19'-2"	80
S22	4	#5	1	19'-5"	81
S23	4	#5	1	19'-8"	82
S24	4	#5	1	19'-11"	83
S25	4	#5	1	20'-2"	84
S26	4	#5	1	20'-5"	85
S27	4	#5	1	20'-8"	86
S28	4	#5	1	20'-11"	87
S29	4	#5	1	21'-1"	88
S30	4	#5	1	21'-4"	89
S31	4	#5	1	21'-7"	90
S32	4	#5	1	21'-10"	91
S33	4	#5	1	22'-1"	92
S34	2	#5	1	14'-1"	29
S35	2	#5	1	14'-5"	30
S36	2	#5	1	14'-9"	31
S37	2	#5	1	15'-5"	31
S38	2	#5	1	15'-9"	32
S39	2	#5	1	16'-1"	33
S40	2	#5	1	16'-5"	34
S41	2	#5	1	16'-10"	34
S42	2	#5	1	17'-2"	35
S43	2	#5	1	17'-6"	36
S44	2	#5	1	17'-10"	37
S45	2	#5	1	18'-2"	37
S46	2	#5	1	18'-6"	38
S47	2	#5	1	18'-10"	39
S48	2	#5	119'-2"15'-1"		39
S49	2	#5	1		40

BAR	NO.	SIZE	TYPE	LENGTH	WEIGHT
S50	2	#5	1	19'-6"	41
S51	2	#5	1	19'-9"	41
S52	2	#5	1	20'-0"	42
S53	2	#5	1	20'-3"	42
S54	2	#5	1	20'-6"	43
S55	2	#5	1	20'-9"	43
S56	2	#5	1	21'-0"	44
S57	2	#5	1	21'-3"	44
S58	2	#5	1	21'-6"	45
S59	2	#5	1	21'-9"	45
S60	2	#5	1	22'-0"	46
S61	2	#5	1	22'-3"	46
S62	2	#5	1	22'-5"	47
S63	2	#5	1	22'-8"	47
S64	2	#5	1	22'-11"	48
S65	2	#5	1	23'-2"	48
S66	2	#5	1	23'-5"	49
S67	22	#5	1	22'-3"	511
S68	11	#5	1	23'-7"	271
S69	78	#5	2	5'-7"	454
S70	30	#4	5	13'-2"	264
U1	30	#4	4	7'-8"	154
U2	20	#4	4	7'-7"	101
V1	32	#11	STR	29'-10"	5,072
SP-1	1	**	6	2057'-7"	1,375
SP-2	1	***	7	2580'-2"	2,691

REINFORCING STEEL 29,501 LBS.

SPIRAL COLUMN
REINFORCING STEEL 4,066 LBS.

CLASS A CONCRETE BREAKDOWN

POUR #2 (COLUMN)	36.0	C.Y.
POUR #3 (CAP & PART COLUMN)	66.5	C.Y.
TOTAL	102.5	C.Y.

8'-0" Ø DRILLED PIER

DRILLED PIER CONCRETE POUR 1 (DRILLED PIER)	89.4	C.Y.
8'-0" Ø DRILLED PIER IN SOIL	31.0	LIN. FT.
8'-0" Ø DRILLED PIER NOT IN SOIL	17.0	LIN. FT.
CSL TUBES	396.0	LIN. FT.

BENT 6

BAR	NO.	SIZE	TYPE	LENGTH	WEIGHT
B1	22	#11	STR	42'-4"	4,948
B2	9	#11	4	22'-8"	1,084
B3	16	#7	STR	42'-4"	1,384
B4	2	#7	STR	37'-7"	154
B5	2	#7	STR	30'-9"	126
B6	2	#7	STR	23'-11"	98
B7	2	#7	STR	17'-1"	70
B8	6	#9	3	21'-3"	434
B9	12	#9	STR	17'-6"	714
B10	16	#4	STR	4'-8"	50
M1	32	#11	STR	35'-11"	6,106
S1	4	#5	1	12'-9"	53
S2	4	#5	1	13'-1"	55
S3	4	#5	1	13'-5"	56
S4	4	#5	1	13'-9"	57
S5	4	#5	1	14'-1"	59
S6	4	#5	1	14'-5"	60
S7	4	#5	1	14'-9"	62
S8	4	#5	1	15'-1"	63
S9	4	#5	1	15'-6"	65
S10	4	#5	1	15'-10"	66
S11	4	#5	1	16'-2"	67
S12	4	#5	1	16'-6"	69
S13	4	#5	1	16'-10"	70
S14	4	#5	1	17'-2"	72
S15	4	#5	1	17'-6"	73
S16	4	#5	1	17'-10"	74
S17	4	#5	1	18'-2"	76
S18	4	#5	1	18'-5"	77
S19	4	#5	1	18'-8"	78
S20	4	#5	1	18'-11"	79
S21	4	#5	1	19'-2"	80
S22	4	#5	1	19'-5"	81
S23	4	#5	1	19'-8"	82
S24	4	#5	1	19'-11"	83
S25	4	#5	1	20'-2"	84
S26	4	#5	1	20'-5"	85
S27	4	#5	1	20'-8"	86
S28	4	#5	1	20'-11"	87
S29	4	#5	1	21'-1"	88
S30	4	#5	1	21'-4"	89
S31	4	#5	1	21'-7"	90
S32	4	#5	1	21'-10"	91
S33	4	#5	1	22'-1"	92
S34	2	#5	1	14'-1"	29
S35	2	#5	1	14'-5"	30
S36	2	#5	1	14'-9"	31
S37	2	#5	1	15'-1"	31
S38	2	#5	1	15'-5"	32
S39	2	#5	1	15'-9"	33
S40	2	#5	1	16'-1"	34
S41	2	#5	1	16'-5"	34
S42	2	#5	1	16'-10"	35
S43	2	#5	1	17'-2"	36
S44	2	#5	1	17'-6"	37
S45	2	#5	1	17'-10"	37
S46	2	#5	1	18'-2"	38
S47	2	#5	1	18'-6"	39
S48	2	#5	1	18'-10"	39
S49	2	#5	1	19'-2"	40

BAR	NO.	SIZE	TYPE	LENGTH	WEIGHT
S50	2	#5	1	19'-6"	41
S51	2	#5	1	19'-9"	41
S52	2	#5	1	20'-0"	42
S53	2	#5	1	20'-3"	42
S54	2	#5	1	20'-6"	43
S55	2	#5	1	20'-9"	43
S56	2	#5	1	21'-0"	44
S57	2	#5	1	21'-3"	44
S58	2	#5	1	21'-6"	45
S59	2	#5	1	21'-9"	45
S60	2	#5	1	22'-0"	46
S61	2	#5	1	22'-3"	46
S62	2	#5	1	22'-5"	47
S63	2	#5	1	22'-8"	47
S64	2	#5	1	22'-11"	48
S65	2	#5	1	23'-2"	48
S66	2	#5	1	23'-5"	49
S67	22	#5	1	22'-3"	511
S68	11	#5	1	23'-7"	271
S69	78	#5	2	5'-7"	454
S70	30	#4	5	13'-2"	264
U1	30	#4	4	7'-8"	154
U2	20	#4	4	7'-7"	101
V1	32	#11	STR	28'-7"	4,860
SP-1	1	**	6	1946'-1"	1,300
SP-2	1	***	7	1400'-8"	1,461

REINFORCING STEEL 25,548 LBS.

SPIRAL COLUMN
REINFORCING STEEL 2,761 LBS.

CLASS A CONCRETE BREAKDOWN

POUR #2 (COLUMN)	34.0	C.Y.
POUR #3 (CAP & PART COLUMN)	66.5	C.Y.
TOTAL	100.5	C.Y.

8'-0" Ø DRILLED PIER

DRILLED PIER CONCRETE POUR 1 (DRILLED PIER)	48.4	C.Y.
8'-0" Ø DRILLED PIER IN SOIL	9.0	LIN. FT.
8'-0" Ø DRILLED PIER NOT IN SOIL	17.0	LIN. FT.
CSL TUBES	220.0	LIN. FT.

BENT 7

BAR	NO.	SIZE	TYPE	LENGTH	WEIGHT
B1	22	#11	STR	42'-4"	4,948
B2	9	#11	4	22'-8"	1,084
B3	16	#7	STR	42'-4"	1,384
B4	2	#7	STR	37'-7"	154
B5	2	#7	STR	30'-9"	126
B6	2	#7	STR	23'-11"	98
B7	2	#7	STR	17'-1"	70
B8	6	#9	3	21'-3"	434
B9	12	#9	STR	17'-6"	714
B10	16	#4	STR	4'-8"	50
M1	32	#11	STR	36'-11"	6,276
S1	4	#5	1	12'-9"	53
S2	4	#5	1	13'-1"	55
S3	4	#5	1	13'-5"	56
S4	4	#5	1	13'-9"	57
S5	4	#5	1	14'-1"	59
S6	4	#5	1	14'-5"	60
S7	4	#5	1	14'-9"	62
S8	4	#5	1	15'-1"	63
S9	4	#5	1	15'-6"	65
S10	4	#5	1	15'-10"	66
S11	4	#5	1	16'-2"	67
S12	4	#5	1	16'-6"	69
S13	4	#5	1	16'-10"	70
S14	4	#5	1	17'-2"	72
S15	4	#5	1	17'-6"	73
S16	4	#5	1	17'-10"	74
S17	4	#5	1	18'-2"	76
S18	4	#5	1	18'-5"	77
S19	4	#5	1	18'-8"	78
S20	4	#5	1	18'-11"	79
S21	4	#5	1	19'-2"	80
S22	4	#5	1	19'-5"	81
S23	4	#5	1	19'-8"	82
S24	4	#5	1	19'-11"	83
S25	4	#5	1	20'-2"	84
S26	4	#5	1	20'-5"	85
S27	4	#5	1	20'-8"	86
S28	4	#5	1	20'-11"	87
S29	4	#5	1	21'-1"	88
S30	4	#5	1	21'-4"	89
S31	4	#5	1	21'-7"	90
S32	4	#5	1	21'-10"	91
S33	4	#5	1	22'-1"	92
S34	2	#5	1	14'-1"	29
S35	2	#5	1	14'-5"	30
S36	2	#5	1	14'-9"	31
S37	2	#5	1	15'-1"	31
S38	2	#5	1	15'-5"	32
S39	2	#5	1	15'-9"	33
S40	2	#5	1	16'-1"	34
S41	2	#5	1	16'-5"	34
S42	2	#5	1	16'-10"	35
S43	2	#5	1	17'-2"	36
S44	2	#5	1	17'-6"	37
S45	2	#5	1	17'-10"	37
S46	2	#5	1	18'-2"	38
S47	2	#5	1	18'-6"	39
S48	2	#5	1	18'-10"	39
S49	2	#5	1	19'-2"	40

BAR	NO.	SIZE	TYPE	LENGTH	WEIGHT
S50	2	#5	1	19'-6"	41
S51	2	#5	1	19'-9"	41
S52	2	#5	1	20'-0"	42
S53	2	#5	1	20'-3"	42
S54	2	#5	1	20'-6"	43
S55	2	#5	1	20'-9"	43
S56	2	#5	1	21'-0"	44
S57	2	#5	1	21'-3"	44
S58	2	#5	1	21'-6"	45
S59	2	#5	1	21'-9"	45
S60	2	#5	1	22'-0"	46
S61	2	#5	1	22'-3"	46
S62	2	#5	1	22'-5"	47
S63	2	#5	1	22'-8"	47
S64	2	#5	1	22'-11"	48
S65	2	#5	1	23'-2"	48
S66	2	#5	1	23'-5"	49
S67	22	#5	1	22'-3"	511
S68	11	#5	1	23'-7"	271
S69	78	#5	2	5'-7"	454
S70	30	#4	5	13'-2"	264
U1	30	#4	4	7'-8"	154
U2	20	#4	4	7'-7"	101
V1	32	#11	STR	19'-7"	3,329
SP-1	1	**	6	1140'-10"	762
SP-2	1	***	7	1454'-3"	1,517

REINFORCING STEEL 24,187 LBS.

SPIRAL COLUMN
REINFORCING STEEL 2,279 LBS.

CLASS A CONCRETE BREAKDOWN

POUR #2 (COLUMN)	19.3	C.Y.
POUR #3 (CAP & PART COLUMN)	66.5	C.Y.
TOTAL	85.8	C.Y.

8'-0" Ø DRILLED PIER

DRILLED PIER CONCRETE POUR 1 (DRILLED PIER)	50.3	C.Y.
8'-0" Ø DRILLED PIER IN SOIL	10.0	LIN. FT.
8'-0" Ø DRILLED PIER NOT IN SOIL	17.0	LIN. FT.
CSL TUBES	228.0	LIN. FT.

STIRRUP HEIGHT TABLE

BAR	"L"	BAR	"L"	BAR	"L"
S1	4'-10½"	S26	8'-8½"	S51	7'-8½"
S2	5'-0½"	S27	8'-10"	S52	7'-10"
S3	5'-2½"	S28	8'-11½"	S53	7'-11½"
S4	5'-4½"	S29	9'-0½"	S54	8'-1"
S5	5'-6½"	S30	9'-2"	S55	8'-2½"
S6	5'-8½"	S31	9'-3½"	S56	8'-4"
S7	5'-10½"	S32	9'-5"	S57	8'-5½"
S8	6'-0½"	S33	9'-6½"	S58	8'-7"
S9	6'-3"	S34	4'-10½"	S59	8'-8½"
S10	6'-5"	S35	5'-0½"	S60	8'-10"
S11	6'-7"	S36	5'-2½"	S61	8'-11½"
S12	6'-9"	S37	5'-4½"	S62	9'-0½"
S13	6'-11"	S38	5'-6½"	S63	9'-2"
S14	7'-1"	S39	5'-8½"	S64	9'-3½"
S15	7'-3"	S40	5'-10½"	S65	9'-5"
S16	7'-5"	S41	6'-0½"	S66	9'-6½"
S17	7'-7"	S42	6'-3"	S67	9'-7½"
S18	7'-8½"	S43	6'-5"	S68	9'-7½"
S19	7'-10"	S44	6'-7"		
S20	7'-11½"	S45	6'-9"		
S21	8'-1"	S46	6'-11"		
S22	8'-2½"	S47	7'-1"		
S23	8'-4"	S48	7'-3"		
S24	8'-5½"	S49	7'-5"		
S25	8'-7"	S50	7'-7"		

** THE SP-1 SPIRAL REINFORCING STEEL SHALL BE W20 OR D-20 COLD DRAWN WIRE OR #4 PLAIN OR DEFORMED BAR.

*** THE SP-2 SPIRAL REINFORCING STEEL SHALL BE W31 OR D-31 COLD DRAWN WIRE OR #5 PLAIN OR DEFORMED BAR.

BAR TYPES

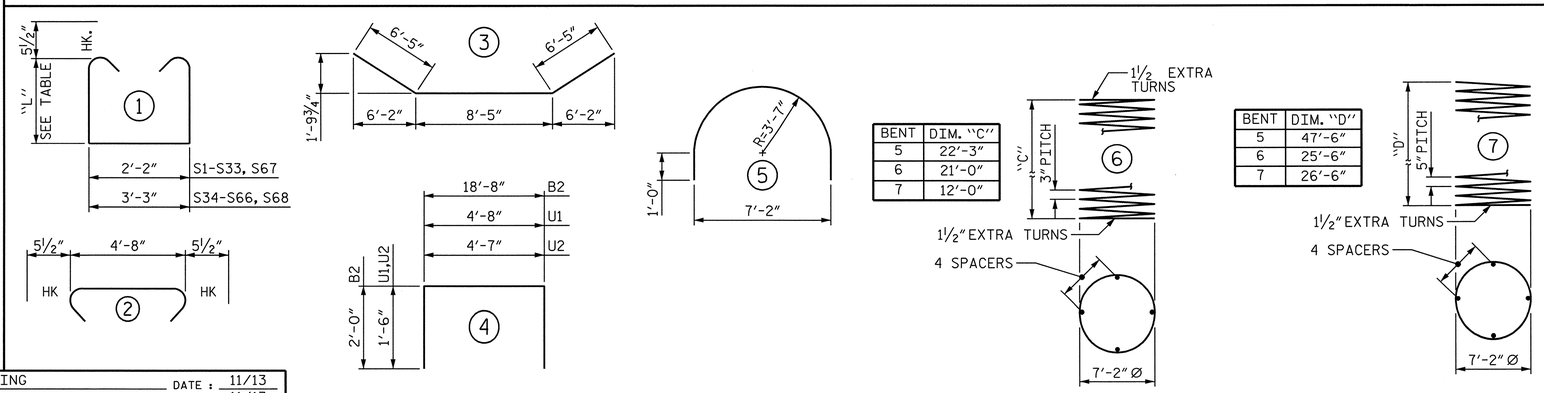

BENT	DIM. "C"
5	22'-3"
6	21'-0"
7	12'-0"

BENT	DIM. "D"
5	47'-6"
6	25'-6"
7	26'-6"

ALL BAR DIMENSIONS ARE OUT TO OUT.

DWG. NO. 54

DRAWN BY : B.E. LANNING DATE : 11/13
CHECKED BY : G.R. COLS DATE : 11/13
DESIGN ENGINEER OF RECORD : P.A. de PAOLI DATE : 01/14

PROJECT NO. U-2525B
GUILFORD COUNTY
STATION: 144+60.63 -L-

SHEET 3 OF 3

STATE OF NORTH CAROLINA
DEPARTMENT OF TRANSPORTATION
RALEIGH

SUBSTRUCTURE

BENTS 5, 6 AND 7
BILL OF MATERIAL

RIGHT LANE

NORTH CAROLINA PROFESSIONAL ENGINEER SEAL 027799 ALLYSON K. ORR
1/10/14

MI ENGINEERING
1011 SCHAUB DRIVE, SUITE 100
RALEIGH, NC 27606
(919) 851-6606
FIRM PE NUMBER : P-0671

REVISIONS								SHEET NO.
NO.	BY:	DATE:	NO.	BY:	DATE:			S-287
1			3					TOTAL SHEETS
2			4					54-1

1/10/2014
9:43:28 AM
User: blanning
Filename: P:\NC Bridges\MI1007.03 U-2525B Guilford\U-2525B\Structures\Right Bridge\U2525B_SD_B567C_4_RT.dgn

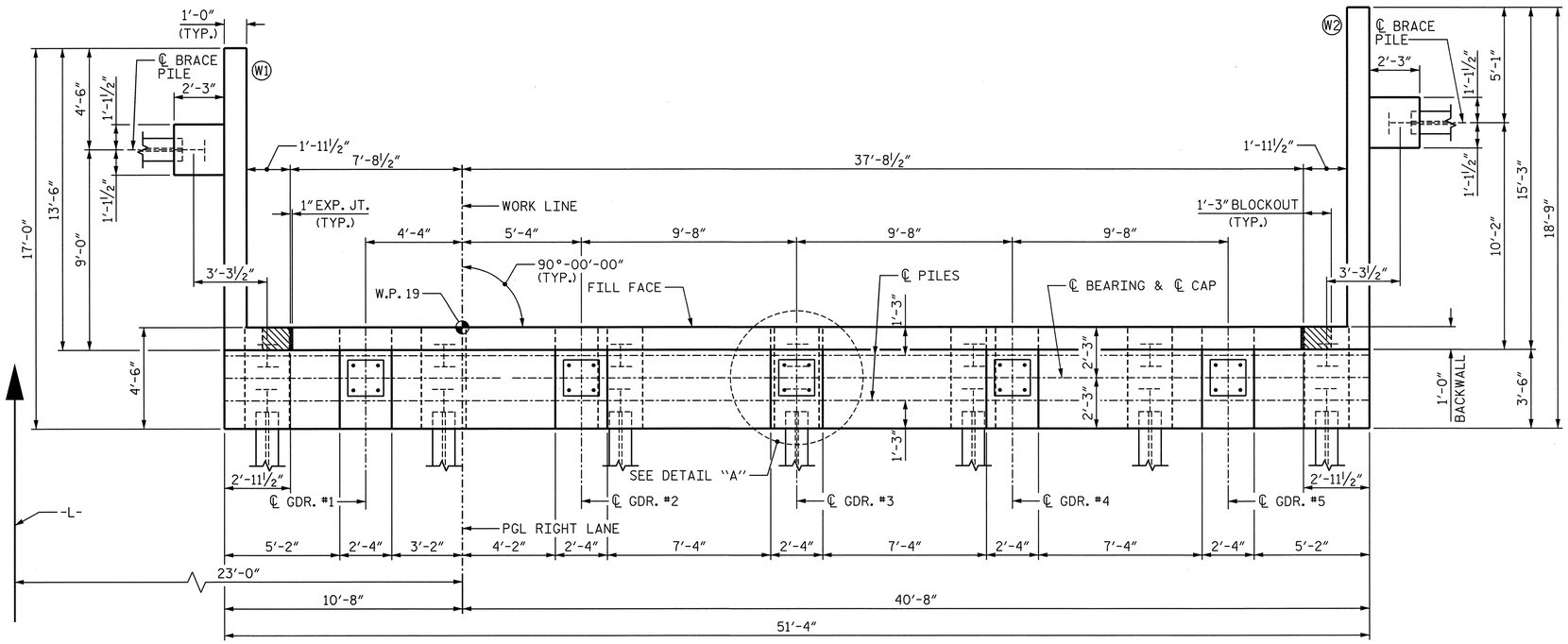

PLAN

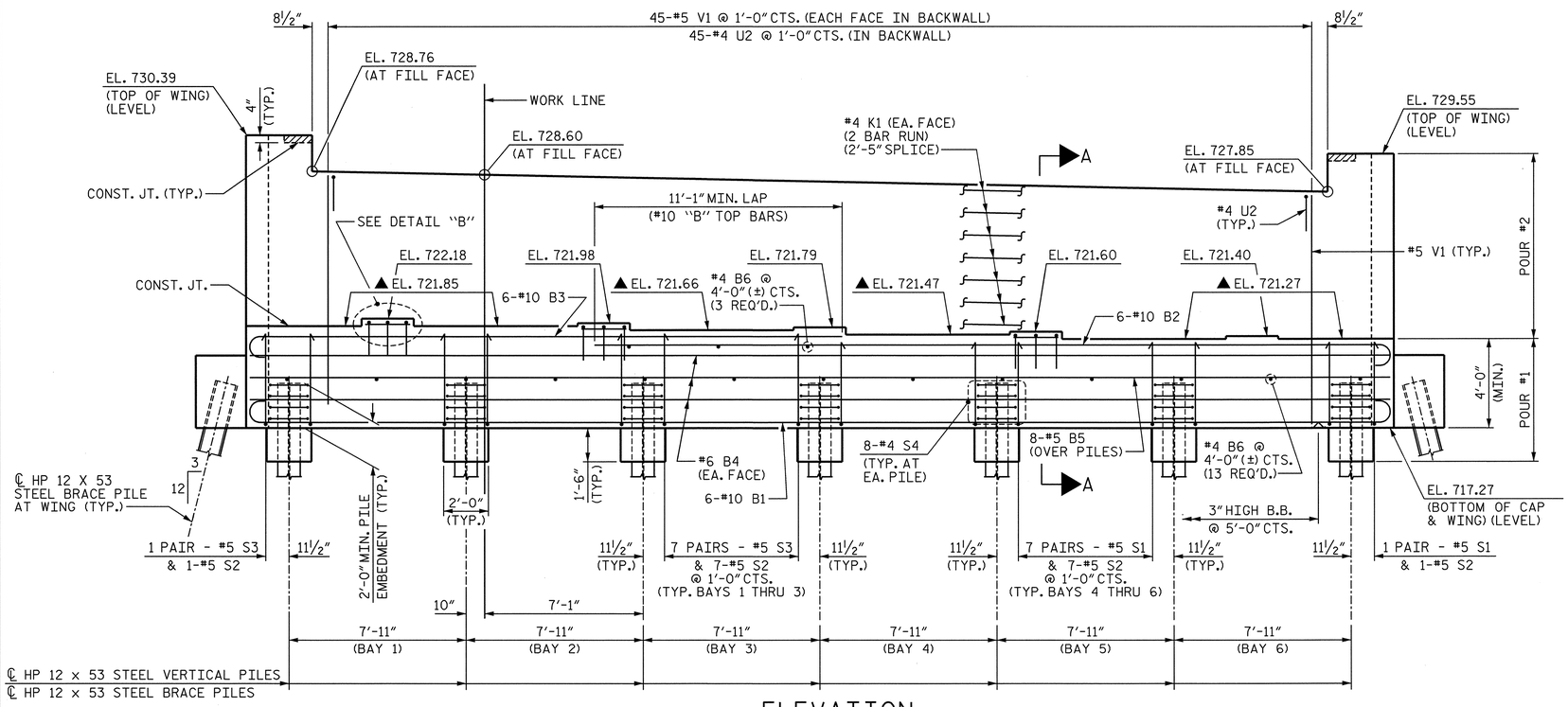

ELEVATION

NOTES

STIRRUPS AND #4 U1 BARS IN CAP MAY BE SHIFTED AS NECESSARY TO CLEAR ANCHOR BOLTS AND PIPE INSERTS.

#5 V1 BARS IN BACKWALL SHALL BE PLACED 2" CLEAR FROM THE TOP OF BACKWALL.

BACKWALL SHALL BE PLACED BEFORE APPLYING THE EPOXY PROTECTIVE COATING.

THE TOP SURFACE AREAS OF THE END BENT CAP SHALL BE CURED IN ACCORDANCE WITH THE STANDARD SPECIFICATIONS, EXCEPT THAT THE MEMBRANE CURING COMPOUND METHOD SHALL NOT BE USED.

THE TOP SURFACE OF THE CAP EXCEPT THE BRIDGE SEAT BUILDUPS SHALL BE SLOPED TRANSVERSELY FROM THE FILL FACE TO THE BACK FACE AT THE RATE OF 2%.

▲ FOR LOCATION OF ELEVATIONS BETWEEN BRIDGE SEAT BUILD-UPS, SEE SECTION A-A ON SHEET 3 OF 3.

FOR SECTION A-A, PILE SPLICE DETAILS AND TEMPORARY DRAINAGE DETAILS, SEE SHEET 3 OF 3.

THE CONCRETE IN THE SHADED AREA OF THE WING SHALL BE POURED AFTER THE BARRIER RAIL IS CAST IF SLIP FORMING IS USED.

INSTALL THE 4" DIA. DRAIN PIPE THROUGH THE WING WALL AS REQUIRED FOR REINFORCED BRIDGE APPROACH FILLS, SEE THE ROADWAY PLANS. REINFORCING STEEL IN THE WING WALL MAY BE SHIFTED AS NECESSARY TO CLEAR THE DRAIN PIPE.

FOR 1½" Ø ANCHOR BOLTS, SEE "POT BEARING DETAILS" SHEETS.

FOR PIPE INSERT DETAILS, SEE "POT BEARING DETAILS" SHEETS.

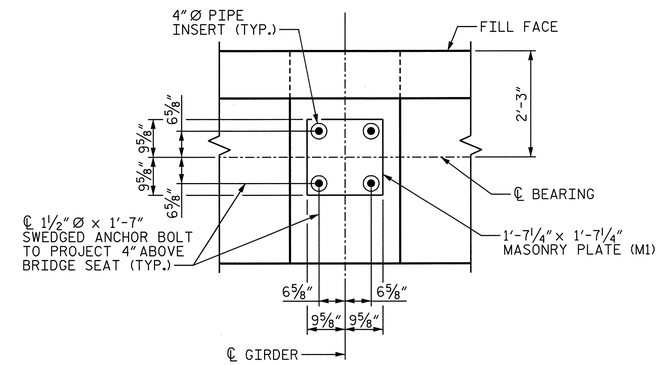

DETAIL "A"

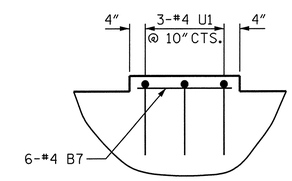

DETAIL "B"

(TYP. AT GDRS. #1, #2 AND #4)

PROJECT NO. U-2525B

GUILFORD COUNTY

STATION: 144+60.63 -L-

SHEET 1 OF 3

STATE OF NORTH CAROLINA
DEPARTMENT OF TRANSPORTATION
RALEIGH

SUBSTRUCTURE

END BENT 2

RIGHT LANE

NORTH CAROLINA PROFESSIONAL SEAL 027799 ENGINEER ALLYSON K. ORR 1/10/14

DRAWN BY : B.E. LANNING	DATE : 08/13		
CHECKED BY : G.R. COLS	DATE : 10/13		
DESIGN ENGINEER OF RECORD : A.K. ORR	DATE : 01/14		

MI ENGINEERING
1011 SCHAUB DRIVE, SUITE 100
RALEIGH, NC 27606
(919) 851-6606
FIRM PE NUMBER : P-0671

DWG. NO. 55

REVISIONS						SHEET NO.
NO.	BY:	DATE:	NO.	BY:	DATE:	S-288
1			3			TOTAL SHEETS
2			4			541

1/10/2014
9:43:31 AM
User: blanning
Filename: P:\NC Bridges\MI1007.03 U-2525B Guilford\U-2525B\Structures\Right Bridge\U2525B_SD_E2A_4_RT.dgn

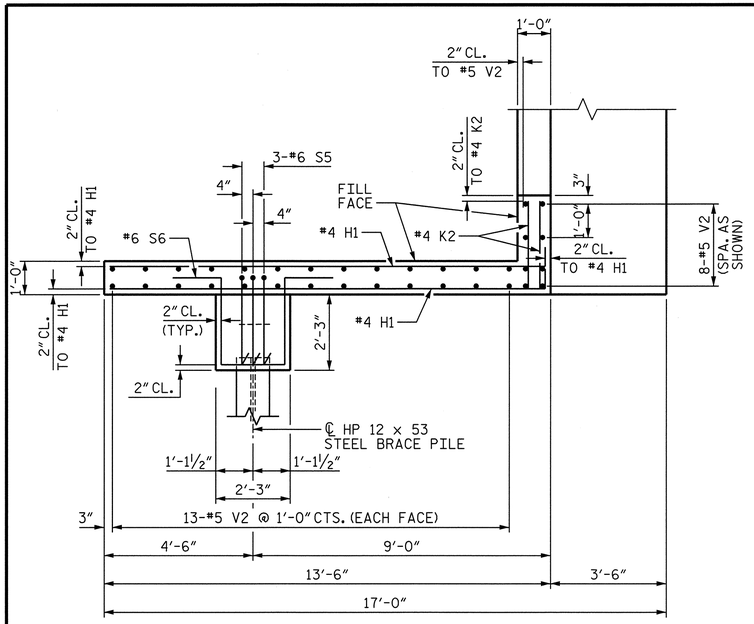

PLAN OF WING (W1)

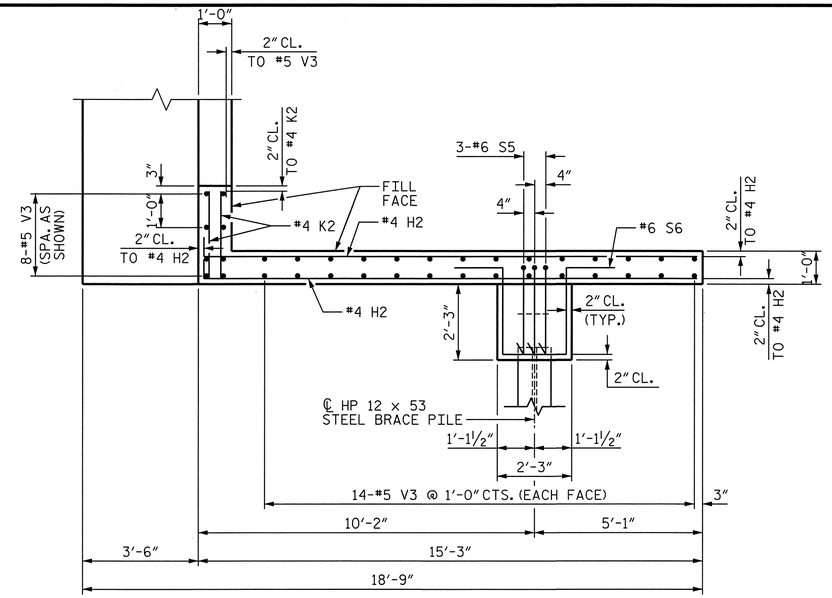

PLAN OF WING (W2)

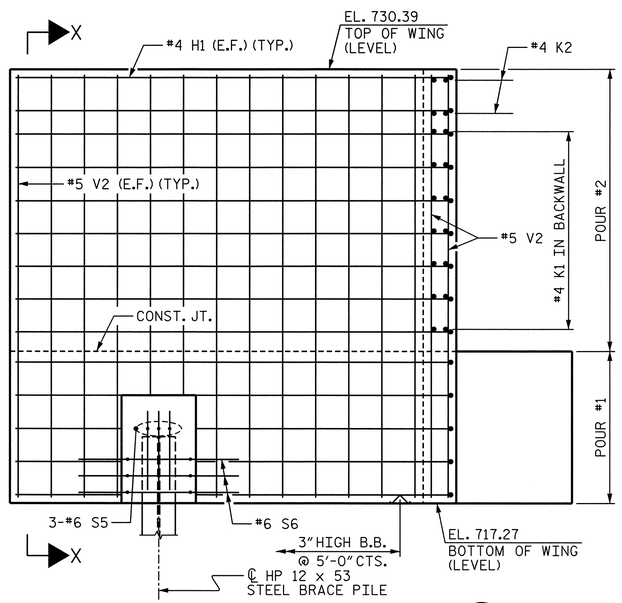

ELEVATION OF WING (W1)

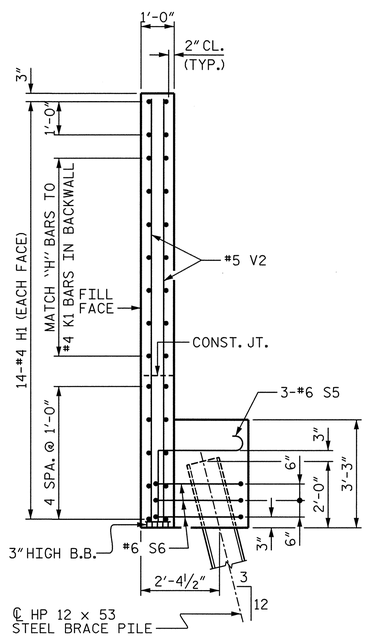

SECTION X-X

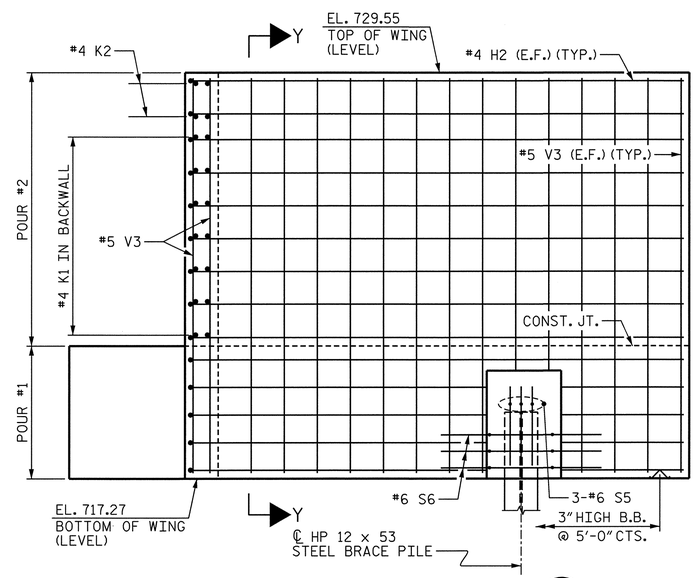

ELEVATION OF WING (W2)

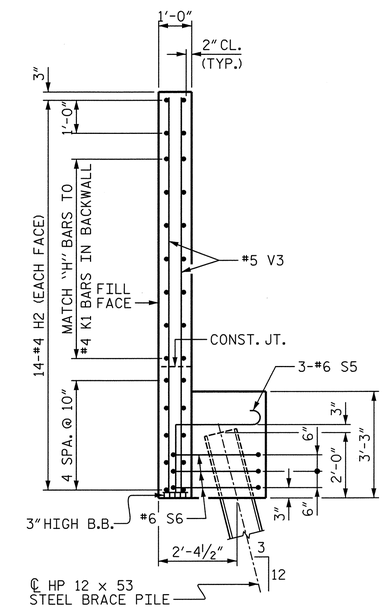

SECTION Y-Y

PROJECT NO. U-2525B

GUILFORD COUNTY

STATION: 144+60.63 -L-

SHEET 2 OF 3

STATE OF NORTH CAROLINA
DEPARTMENT OF TRANSPORTATION
RALEIGH

SUBSTRUCTURE

END BENT 2

RIGHT LANE

NORTH CAROLINA PROFESSIONAL SEAL 027799 ENGINEER ALLYSON K. ORR
1/10/14

MI ENGINEERING
1011 SCHAUB DRIVE, SUITE 100
RALEIGH, NC 27606
(919) 851-6606
FIRM PE NUMBER : P-0671

REVISIONS						
NO.	BY:	DATE:	NO.	BY:	DATE:	
1			3			
2			4			

SHEET NO. S-289

TOTAL SHEETS 541

DWG. NO. 56

DRAWN BY :	B.E. LANNING	DATE :	08/13
CHECKED BY :	G.R. COLS	DATE :	10/13
DESIGN ENGINEER OF RECORD :	A.K. ORR	DATE :	01/14

1/10/2014
9:43:33 AM
User: blanning
Filename: P:\NC Bridges\MI1007.03 U-2525B Guilford\U-2525B\Structures\Right Bridge\U2525B_SD_E2B_4_RT.dgn

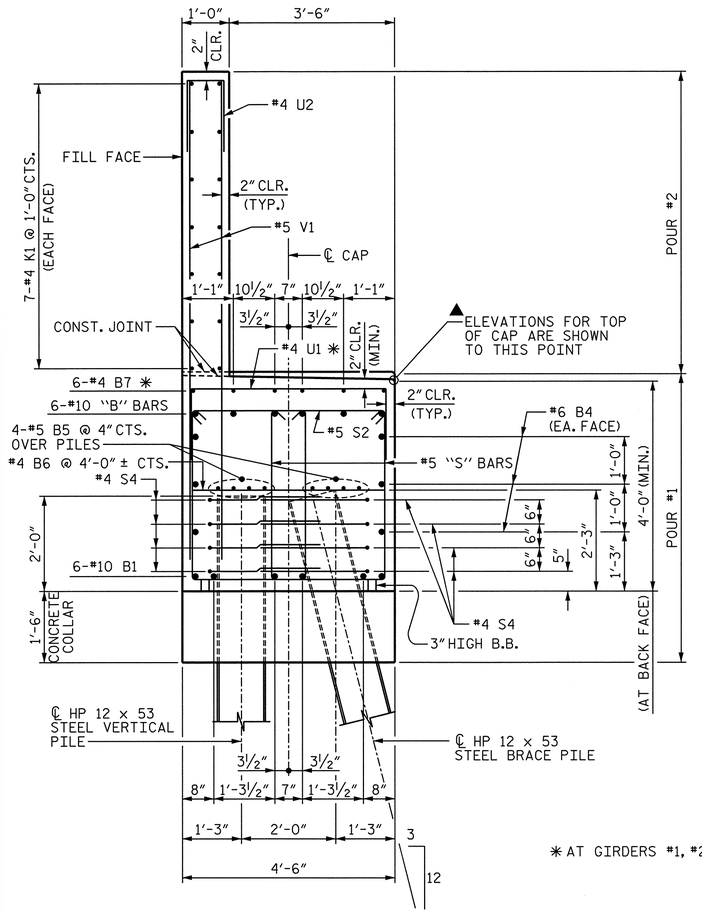

✳ AT GIRDERS #1, #2 AND #4 ONLY.

SECTION A-A

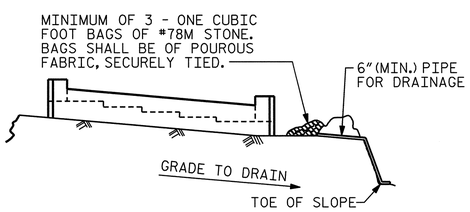

BAGGED STONE AND PIPE SHALL BE PLACED IMMEDIATELY AFTER COMPLETION OF END BENT EXCAVATION. PIPE MAY BE EITHER CONCRETE, CORRUGATED STEEL, CORRUGATED ALUMINUM ALLOY, OR CORRUGATED PLASTIC. PERFORATED PIPE WILL NOT BE ALLOWED.

BAGGED STONE SHALL REMAIN IN PLACE UNTIL THE ENGINEER DIRECTS THAT IT BE REMOVED. THE CONTRACTOR SHALL REMOVE AND DISPOSE OF SILT ACCUMULATIONS AT BAGGED STONE WHEN SO DIRECTED BY THE ENGINEER. BAGS SHALL BE REMOVED AND REPLACED WHENEVER THE ENGINEER DETERMINES THAT THEY HAVE DETERIORATED AND LOST THEIR EFFECTIVENESS.

NO SEPARATE PAYMENT WILL BE MADE FOR THIS WORK AND THE ENTIRE COST OF THIS WORK SHALL BE INCLUDED IN THE UNIT CONTRACT PRICE BID FOR THE SEVERAL PAY ITEMS.

TEMPORARY DRAINAGE AT END BENT

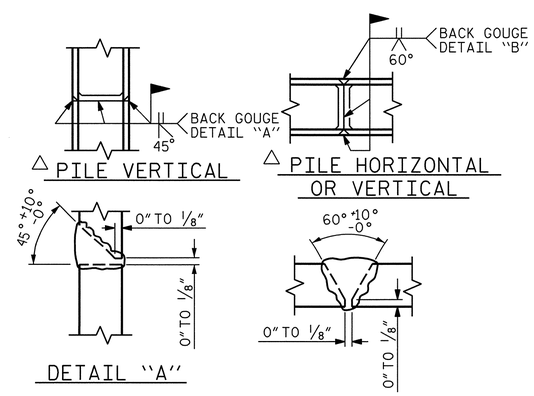

△ POSITION OF PILE DURING WELDING.

PILE SPLICE DETAILS

BAR TYPES

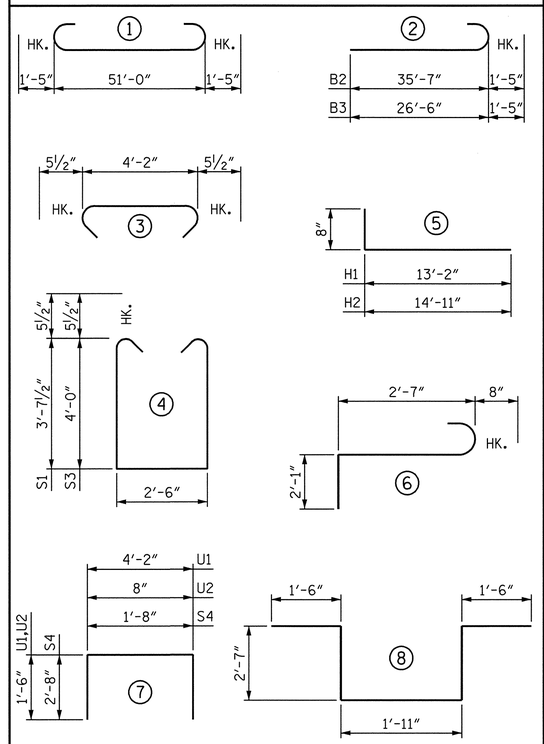

ALL BAR DIMENSIONS ARE OUT TO OUT.

BILL OF MATERIAL

END BENT 2

BAR	NO.	SIZE	TYPE	LENGTH	WEIGHT
B1	6	#10	1	53'-10"	1390
B2	6	#10	2	37'-0"	955
B3	6	#10	2	27'-11"	721
B4	6	#6	STR	51'-0"	460
B5	8	#5	STR	51'-0"	426
B6	16	#4	STR	4'-2"	45
B7	18	#4	STR	2'-0"	24
H1	28	#4	5	13'-10"	259
H2	28	#4	5	15'-7"	291
K1	28	#4	STR	26'-9"	500
K2	8	#4	STR	2'-7"	14
S1	44	#5	4	10'-8"	490
S2	44	#5	3	5'-1"	233
S3	44	#5	4	11'-5"	524
S4	56	#4	7	7'-0"	262
S5	6	#6	6	5'-4"	48
S6	6	#6	8	10'-1"	91
U1	9	#4	4	7'-2"	43
U2	45	#4	4	3'-8"	110
V1	90	#5	STR	10'-3"	962
V2	34	#5	STR	12'-9"	452
V3	36	#5	STR	11'-11"	447

REINFORCING STEEL 8,747 LBS.

CLASS A CONCRETE BREAKDOWN
POUR #1 (CAP, COLLARS & LOWER WING) 46.5 C.Y.
POUR #2 (BACKWALL & UPPER WING) 21.3 C.Y.
TOTAL CLASS A CONCRETE 67.8 C.Y.

HP 12 x 53 STEEL PILES
NO. 16 432 LIN. FT.

PROJECT NO. U-2525B
GUILFORD COUNTY
STATION: 144+60.63 -L-

SHEET 3 OF 3

STATE OF NORTH CAROLINA
DEPARTMENT OF TRANSPORTATION
RALEIGH

SUBSTRUCTURE

END BENT 2

RIGHT LANE

NORTH CAROLINA PROFESSIONAL SEAL 027799 ENGINEER ALLYSON K. ORR
1/10/14

MI ENGINEERING
1011 SCHAUB DRIVE, SUITE 100
RALEIGH, NC 27606
(919) 851-6606
FIRM PE NUMBER : P-0671

REVISIONS								SHEET NO.
NO.	BY:	DATE:	NO.	BY:	DATE:			S-290
1			3					TOTAL SHEETS
2			4					541

DWG. NO. 57

DRAWN BY : B.E. LANNING DATE : 08/13
CHECKED BY : G.R. COLS DATE : 10/13
DESIGN ENGINEER OF RECORD : A.K. ORR DATE : 01/14

1/10/2014
9:43:35 AM
User: blanning
Filename: P:\NC Bridges\MI1007.03 U-2525B Guilford\U-2525B\Structures\Right Bridge\U2525B_SD_E2C_4_RT.dgn

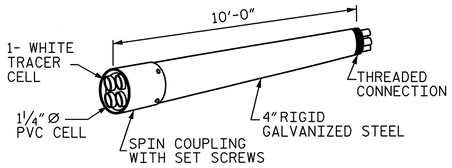

RIGID GALVANIZED (RGC) MULTI-CELL RACEWAY

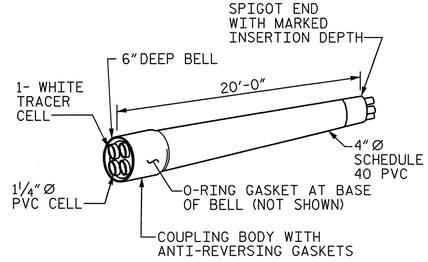

SCHEDULE 40 PVC MULTI-CELL RACEWAY

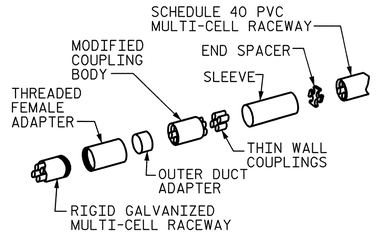

TRANSITION ADAPTER

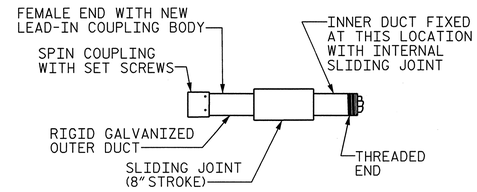

EXPANSION JOINT FITTING

DETAIL "D"
4" MULTI-CELL COMPONENTS

NOTES

THE CONTRACTOR SHALL BE RESPONSIBLE FOR DETERMINING THE TOTAL QUANTITY OF CONDUIT NEEDED TO COMPLETE THE WORK AND THAT THE CONDUIT(S) ARE PLACED AT THE NOTED DIMENSION AND ABOVE THE BOTTOM OF THE GIRDER.

THE INSTALLATION OF THE CONDUIT SYSTEM SHALL BE PAID FOR AS LUMP SUM. THE PRICE SHALL INCLUDE ALL CONDUIT, HANGERS, STABILIZERS, EXPANSION JOINTS, CONCRETE INSERTS, PVC SLEEVES AND ALL NECESSARY HARDWARE TO COMPLETE THE WORK.

THE CONTRACTOR SHALL FIELD VERIFY THAT THE CONDUIT SYSTEM IS NOT IN CONFLICT WITH THE GUARDRAIL POSTS.

SEE DETAIL "C" FOR HANGER ASSEMBLY INSTALLATION.

INSTALL SLEEVES PARALLEL TO GIRDERS. SEE DETAIL "B" FOR SLEEVE INSTALLATION.

PROVIDE TRANSITION ADAPTOR AND EXPANSION JOINT FOR CONDUIT AT END BENT 1 AND END BENT 2.

INSTALL STABILIZERS MIDWAY BETWEEN DECK EXPANSION JOINTS. STABILIZER CAN NOT BE USED INSTEAD OF A HANGER ASSEMBLY.

INSTALL EXPANSION JOINT AT BENT 4.

THE CONCRETE SCREW INSERT SHALL HAVE A ROD SIZE OF ⅝" AND A PULL FORCE OF 1260 lbs.

FOR ELECTRICAL CONDUIT SYSTEM FOR SIGNALS, SEE SPECIAL PROVISIONS.

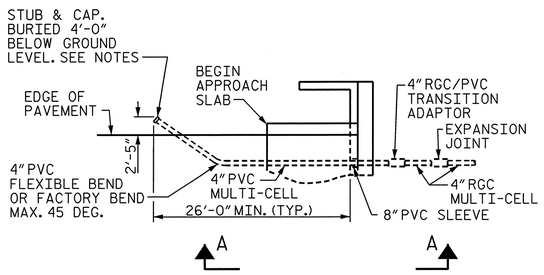

DETAIL "A"
TERMINATION OF CONDUIT AT WING WALL

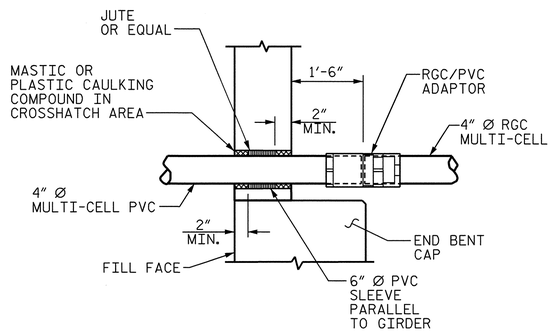

DETAIL "B"
PVC SLEEVE INSTALLATION & RGC/PVC ADAPTOR AT BACKWALL.

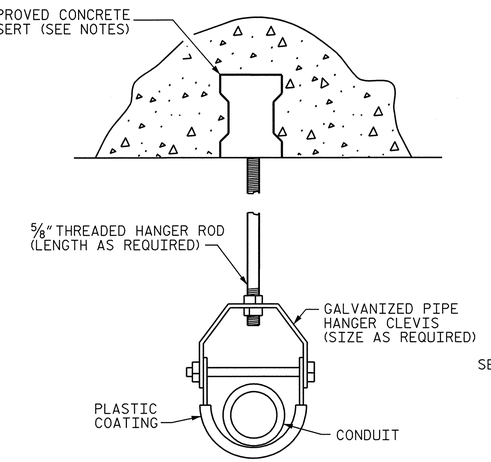

DETAIL "C"
HANGER ASSEMBLY

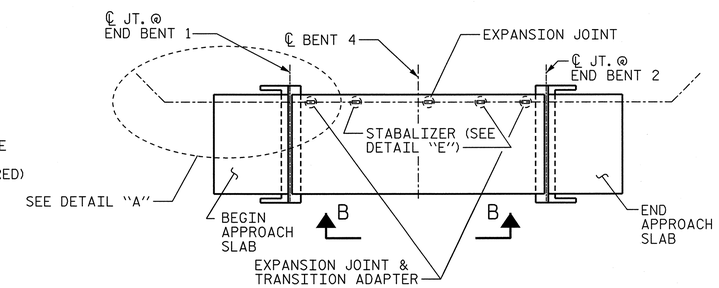

CONDUIT LAYOUT

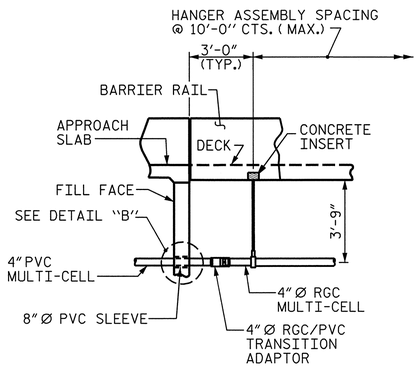

VIEW A-A

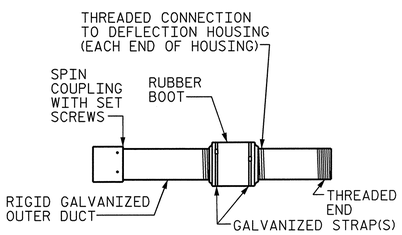

DETAIL "F"
DEFLECTION COUPLING

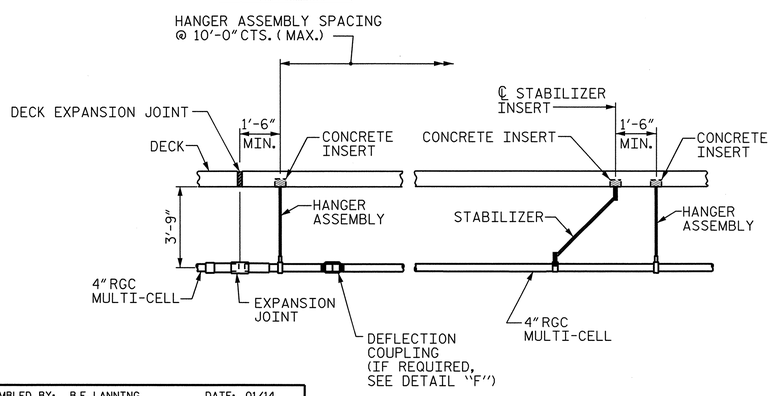

VIEW B-B
STEEL GIRDERS

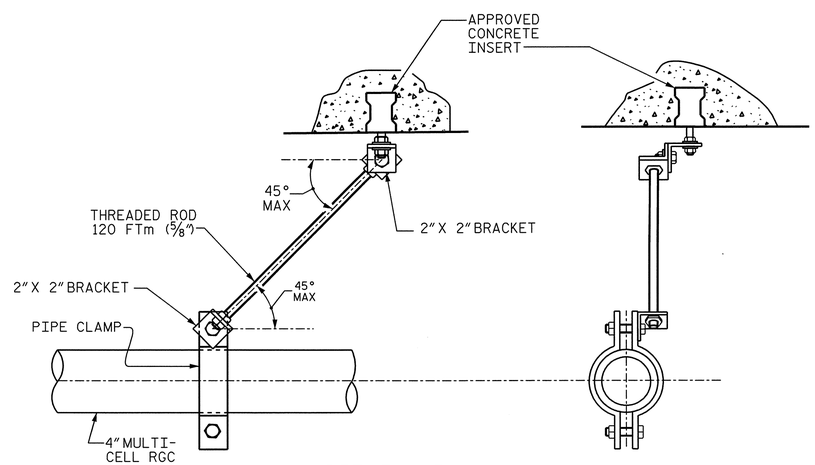

DETAIL "E"
STABILIZER

PROJECT NO. U-2525B
GUILFORD COUNTY
STATION: 144+60.63 -L-

STATE OF NORTH CAROLINA
DEPARTMENT OF TRANSPORTATION
RALEIGH
STANDARD

ELECTRICAL CONDUIT SYSTEM FOR SIGNALS

RIGHT LANE

NORTH CAROLINA PROFESSIONAL SEAL ENGINEER ALLYSON K. ORR 021759 1/21/14

ASSEMBLED BY:	B.E. LANNING	DATE:	01/14
CHECKED BY :	A.K. ORR	DATE:	01/14
DESIGN ENGINEER OF RECORD:	A.K. ORR	DATE:	01/14
DRAWN BY : RWW	2-4-03	REV. 5/1/06	TLA/GM
CHECKED BY : DBM	2-4-03	REV. 10/1/11	MAA/GM

MI ENGINEERING
1011 SCHAUB DRIVE, SUITE 100
RALEIGH, NC 27606
(919) 851-6606
FIRM PE NUMBER : P-0671

REVISIONS								SHEET NO.
NO.	BY:	DATE:	NO.	BY:	DATE:			S-291
1			3					TOTAL SHEETS
2			4					541

DWG. NO. 57A

ELECTRIC CONDUIT DETAILS

(SHT 1) STD. NO. ECS1

1/21/2014
1:30:39 PM
User: blanning
Filename: P:\NC Bridges\MI1007.03 U-2525B Guilford\U-2525B\Structures\Right Bridge\U2525B_SD_ECS1_4_RT.dgn

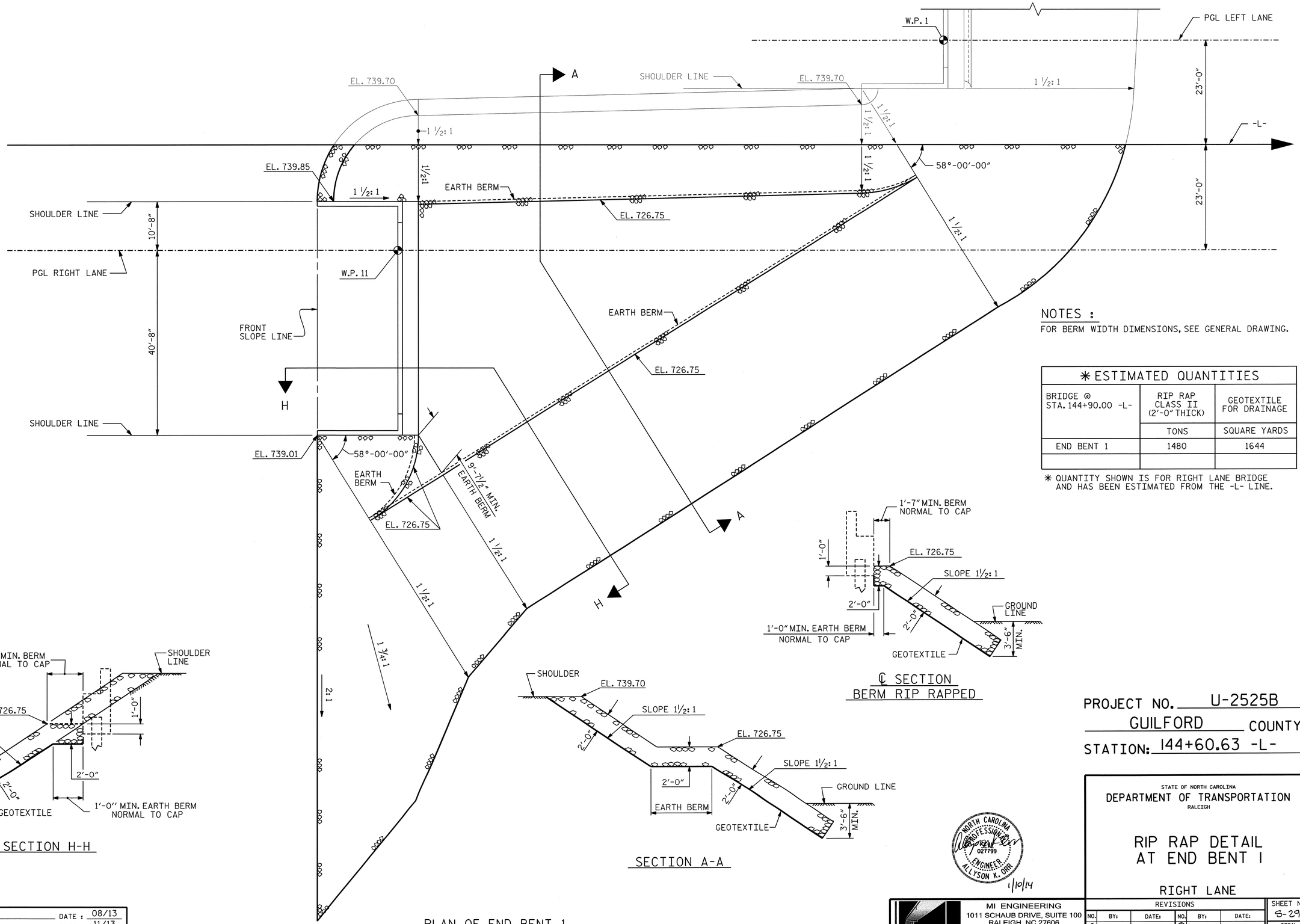

NOTES :

FOR BERM WIDTH DIMENSIONS, SEE GENERAL DRAWING.

✳ ESTIMATED QUANTITIES		
BRIDGE @ STA. 144+90.00 -L-	RIP RAP CLASS II (2'-0" THICK)	GEOTEXTILE FOR DRAINAGE
	TONS	SQUARE YARDS
END BENT 1	1480	1644

✳ QUANTITY SHOWN IS FOR RIGHT LANE BRIDGE AND HAS BEEN ESTIMATED FROM THE -L- LINE.

PROJECT NO. U-2525B
GUILFORD COUNTY
STATION: 144+60.63 -L-

STATE OF NORTH CAROLINA
DEPARTMENT OF TRANSPORTATION
RALEIGH

RIP RAP DETAIL AT END BENT 1

RIGHT LANE

NORTH CAROLINA PROFESSIONAL SEAL 021799 ENGINEER ALLYSON K. ORR
1/10/14

MI ENGINEERING
1011 SCHAUB DRIVE, SUITE 100
RALEIGH, NC 27606
(919) 851-6606
FIRM PE NUMBER : P-0671

REVISIONS						
NO.	BY:	DATE:	NO.	BY:	DATE:	
1			3			
2			4			

SHEET NO. S-292
TOTAL SHEETS 541

DWG. NO. 58

DRAWN BY : B.E. ATKINSON DATE : 08/13
CHECKED BY : G.R. COLS DATE : 11/13
DESIGN ENGINEER OF RECORD : A.K. ORR DATE : 01/14

1/10/2014
9:51:28 AM
User: blanning
Filename: P:\NC Bridges\MI1007.03 U-2525B Guilford\U-2525B\Structures\Right Bridge\U2525B_SD_RR1_4_RT.dgn

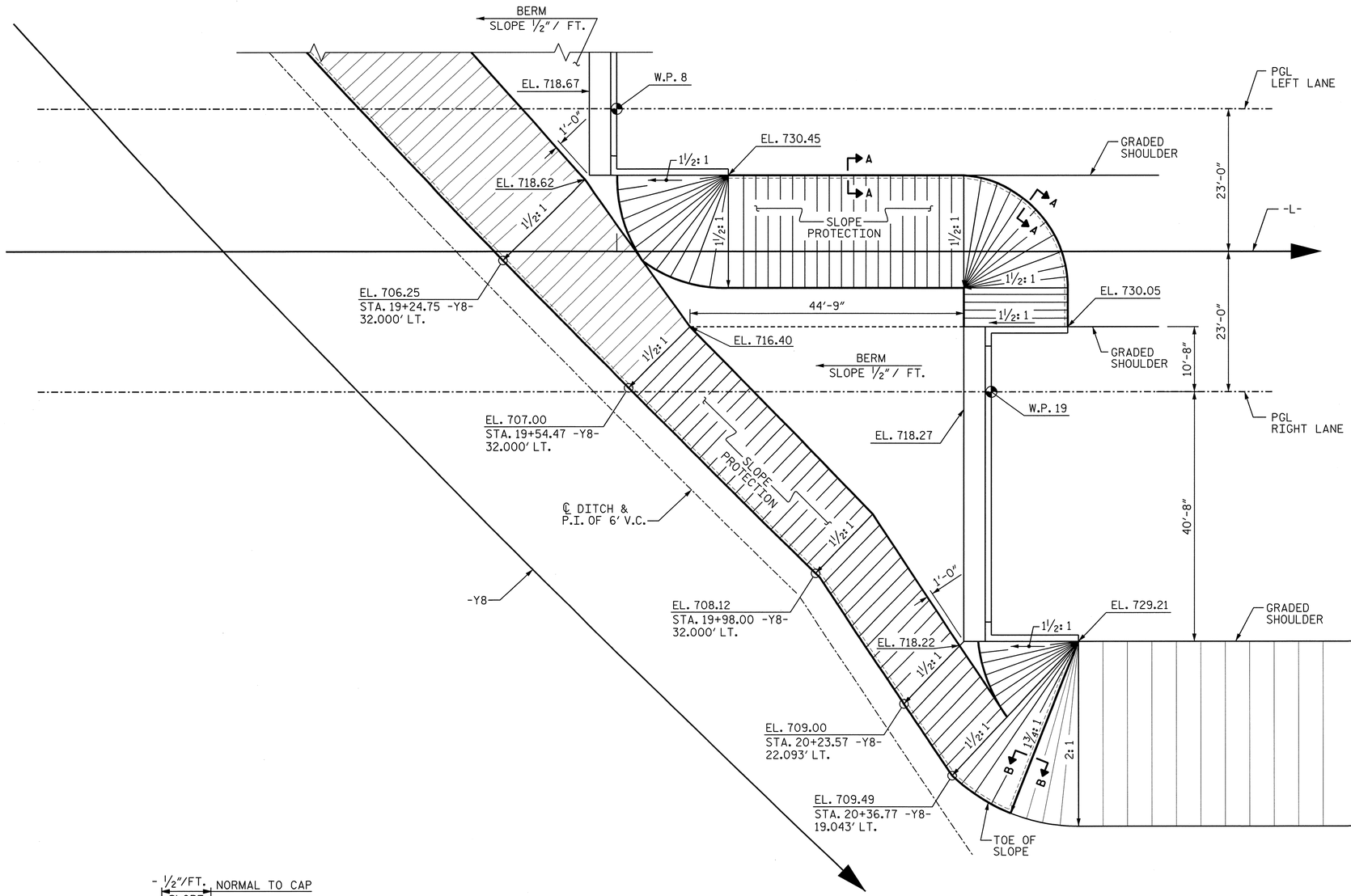

PLAN OF SLOPE PROTECTION

GENERAL NOTES

SLOPE PROTECTION SHALL BE PLACED UNDER THE ENDS OF THE BRIDGE AS SHOWN IN THE DETAILS. STRAIGHT EDGING WILL NOT BE REQUIRED UNLESS, IN THE OPINION OF THE ENGINEER, VISUAL INSPECTION INDICATES A NEED FOR IT. MEASUREMENT AND PAYMENT SHALL BE AS PRESCRIBED IN SECTION 462 OF THE STANDARD SPECIFICATIONS. FOR BERM WIDTH, SEE GENERAL DRAWING.

SLOPE PROTECTION SHALL CONSIST OF 4" POURED-IN-PLACE CONCRETE PAVING AS SHOWN IN THE DETAILS ON THIS SHEET. CONCRETE SHALL BE CLASS "B". THE CONCRETE SURFACE SHALL BE FLOATED WITH A WOODEN FLOAT AND FINISHED. WELDED WIRE FABRIC REINFORCING SHALL BE 6 X 6 - W1.4 X W1.4, 60" WIDE. SLOPE PROTECTION SHALL BE POURED IN 5' STRIPS AS SHOWN IN THE "POURING DETAIL" WITH 2'-0" LONG #4 BARS PLACED ALONG THE SLOPE BETWEEN STRIPS AT 1'-6" MAXIMUM SPACING. SLOPE PROTECTION MAY BE POURED IN ALTERNATE 4' AND 5' STRIPS AS SHOWN IN THE "OPTIONAL POURING DETAIL" WITH ADJACENT RUNS OF WELDED WIRE FABRIC LAPPING AT LEAST 6". THE COST OF THE WELDED WIRE FABRIC AND #4 BARS, IF USED, SHALL BE INCLUDED IN THE CONTRACT UNIT PRICE BID PER SQUARE YARD FOR SLOPE PROTECTION.

BRIDGE @ STA. 144+60.63 -L-	4 INCH SLOPE PROTECTION	* WELDED WIRE FABRIC 60 INCHES WIDE
	SQUARE YARDS	APPROX. L.F.
END BENT 2	499	898

* QUANTITY SHOWN IS BASED ON 5' POURS.

NOTE: QUANTITY SHOWN IS FOR RIGHT LANE BRIDGE AND HAS BEEN ESTIMATED FROM THE -L- LINE.

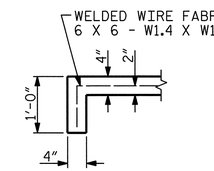

SECTION A-A

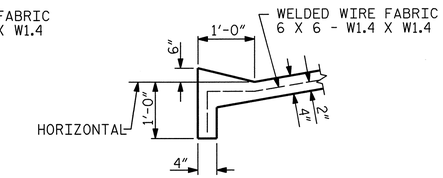

SECTION B-B

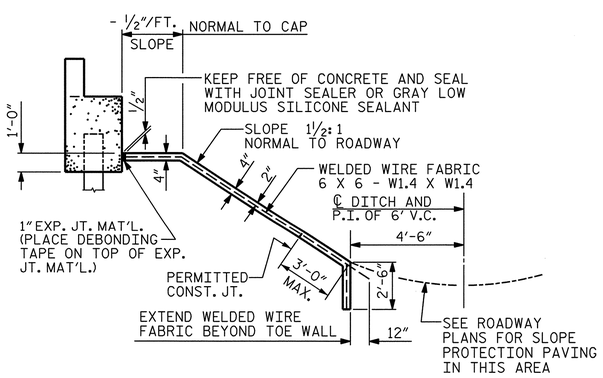

SECTION ALONG ℄ ROADWAY WHEN FILL CATCHES IN DITCH

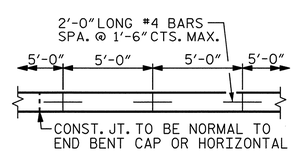

STRIP WIDTHS MAY VARY IN CURVED PORTION.

POURING DETAIL

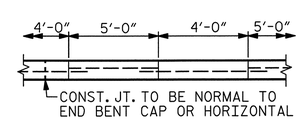

POUR A 4'-0" STRIP FIRST. STRIP WIDTHS MAY VARY IN CURVED PORTION.

OPTIONAL POURING DETAIL

PROJECT NO. U-2525B
GUILFORD COUNTY
STATION: 144+60.63 -L-

STATE OF NORTH CAROLINA
DEPARTMENT OF TRANSPORTATION
RALEIGH

SLOPE PROTECTION DETAILS

RIGHT LANE

NORTH CAROLINA PROFESSIONAL SEAL 027799 ENGINEER ALLYSON K. ORR
1/10/14

MI ENGINEERING
1011 SCHAUB DRIVE, SUITE 100
RALEIGH, NC 27606
(919) 851-6606
FIRM PE NUMBER : P-0671

REVISIONS								SHEET NO.
NO.	BY:	DATE:	NO.	BY:	DATE:			S-293
1			3					TOTAL SHEETS
2			4					541

DWG. NO. 59

DRAWN BY :	B.E. ATKINSON	DATE :	08/13
CHECKED BY :	G.R. COLS	DATE :	11/13
DESIGN ENGINEER OF RECORD :	A.K. ORR	DATE :	01/14

1/10/2014
9:51:50 AM
User: blanning
Filename: P:\NC Bridges\MI1007.03 U-2525B Guilford\U-2525B\Structures\Right Bridge\U2525B_SD_SP1_4_RT.dgn

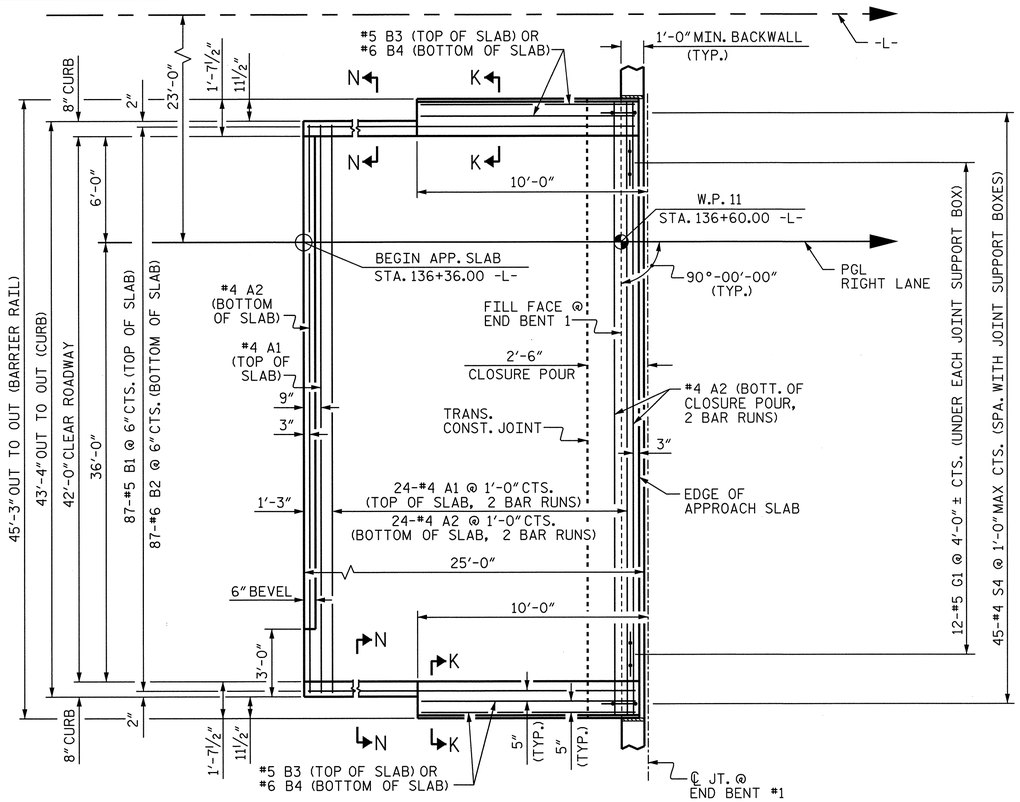

PLAN @ END BENT 1

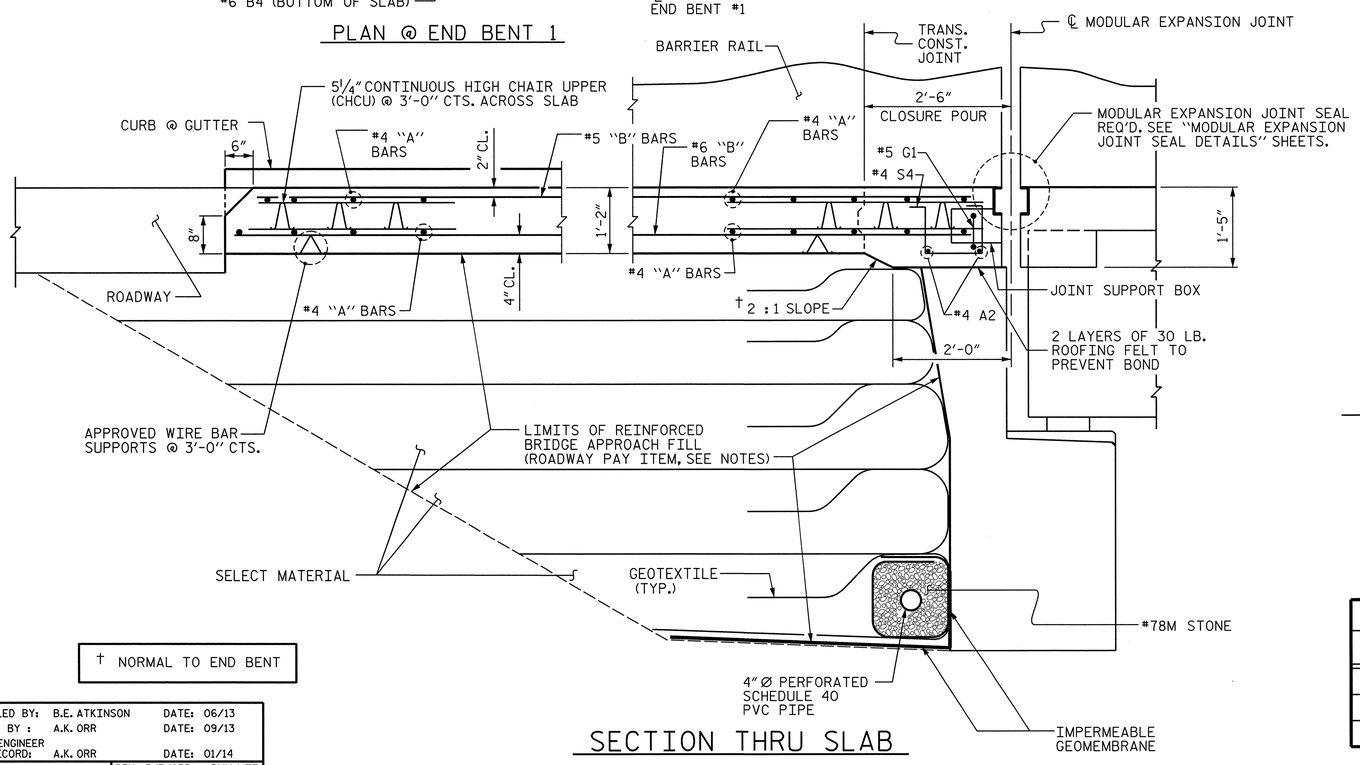

† NORMAL TO END BENT

SECTION THRU SLAB

NOTES

APPROACH SLAB SHALL NOT BE CONSTRUCTED PRIOR TO COMPLETION OF THE BRIDGE DECK.

FOR REINFORCED BRIDGE APPROACH FILL INCLUDING GEOTEXTILE, IMPERMEABLE GEOMEMBRANE, 4" Ø DRAINAGE PIPE, #78M STONE, AND SELECT MATERIAL, SEE ROADWAY PLANS.

AREA BETWEEN THE WINGWALL AND APPROACH SLAB SHALL BE GRADED TO DRAIN THE WATER AWAY FROM THE FILL FACE OF THE BRIDGE AND SHALL BE PAVED. SEE ROADWAY PLANS.

THE #5 & #6 "B" BARS IN THE APPROACH SLAB MAY BE CUT AS DIRECTED BY THE ENGINEER TO CLEAR THE MODULAR JOINT SUPPORT BOX.

FOR MODULAR EXPANSION JOINT SEALS, SEE SPECIAL PROVISIONS.

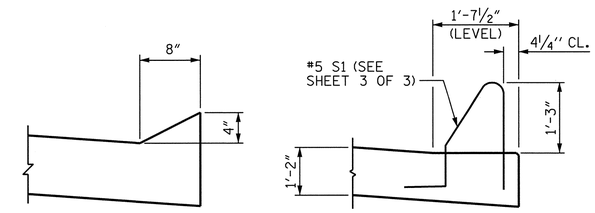

SECTION N-N

SECTION K-K

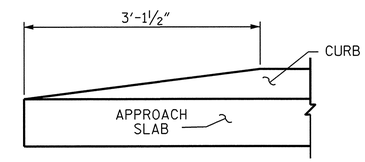

END OF CURB WITHOUT SHOULDER BERM GUTTER

CURB DETAILS

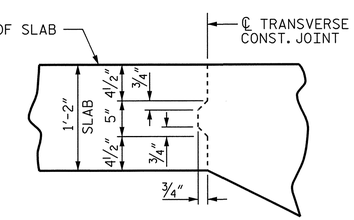

TRANSVERSE CONSTRUCTION JOINT IN APPROACH SLAB

NOTE: REINFORCING STEEL IN SLAB NOT SHOWN. LONGITUDINAL REINFORCING STEEL SHALL BE CONTINUOUS THRU JOINT.

BILL OF MATERIAL

APPROACH SLAB AT END BENT 1

BAR	NO.	SIZE	TYPE	LENGTH	WEIGHT
✱ A1	50	#4	STR	23'-6"	785
A2	54	#4	STR	23'-4"	842
✱ B1	87	#5	STR	23'-11"	2170
B2	87	#6	STR	24'-5"	3191
✱ B3	4	#5	STR	9'-3"	39
B4	4	#6	STR	9'-3"	56
✱ G1	12	#5	2	3'-8"	46
✱ S4	45	#4	1	3'-10"	115
REINFORCING STEEL ✱✱					4089 LBS.
✱ EPOXY COATED REINFORCING STEEL ✱✱					3155 LBS.
CLASS AA CONCRETE ✱✱					48.2 C. Y.

BAR TYPE

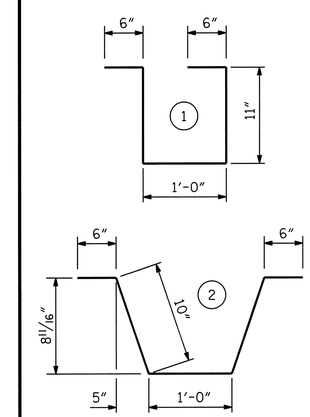

ALL BAR DIMENSIONS ARE OUT TO OUT

✱✱ QUANTITIES FOR BARRIER RAIL ARE NOT INCLUDED. SEE SHEET 3 OF 3.

SPLICE LENGTHS		
BAR SIZE	EPOXY COATED	UNCOATED
#4	2'-0"	1'-9"
#5	2'-6"	2'-2"
#6	3'-10"	2'-7"

PROJECT NO. U-2525B

GUILFORD COUNTY

STATION: 144+60.63 -L-

SHEET 1 OF 3

STATE OF NORTH CAROLINA
DEPARTMENT OF TRANSPORTATION
RALEIGH

STANDARD

BRIDGE APPROACH SLAB FOR FLEXIBLE PAVEMENT AT END BENT 1

RIGHT LANE

NORTH CAROLINA PROFESSIONAL SEAL 027799 ENGINEER ALLYSON K. ORR
1/10/14

MI ENGINEERING
1011 SCHAUB DRIVE, SUITE 100
RALEIGH, NC 27606
(919) 851-6606
FIRM PE NUMBER : P-0671

REVISIONS						SHEET NO.
NO.	BY:	DATE:	NO.	BY:	DATE:	S-29A
1			3			TOTAL SHEETS
2			4			54

DWG. NO. 60

ASSEMBLED BY:	B.E. ATKINSON	DATE:	06/13
CHECKED BY :	A.K. ORR	DATE:	09/13
DESIGN ENGINEER OF RECORD:	A.K. ORR	DATE:	01/14

DRAWN BY :	EEM	3/95	REV. 5/7/03R	RWW/JTE
CHECKED BY :	VAP	3/95	REV. 5/1/06RR	KMM/GM
			REV. 10/1/11	MAA/GM

STD. NO. BAS2 (SHT 4)

1/10/2014
9:43:38 AM
User: blanning
Filename: P:\NC Bridges\MI1007.03 U-2525B Guilford\U-2525B\Structures\Right Bridge\U2525B_SD_AS1.4_RT.dgn

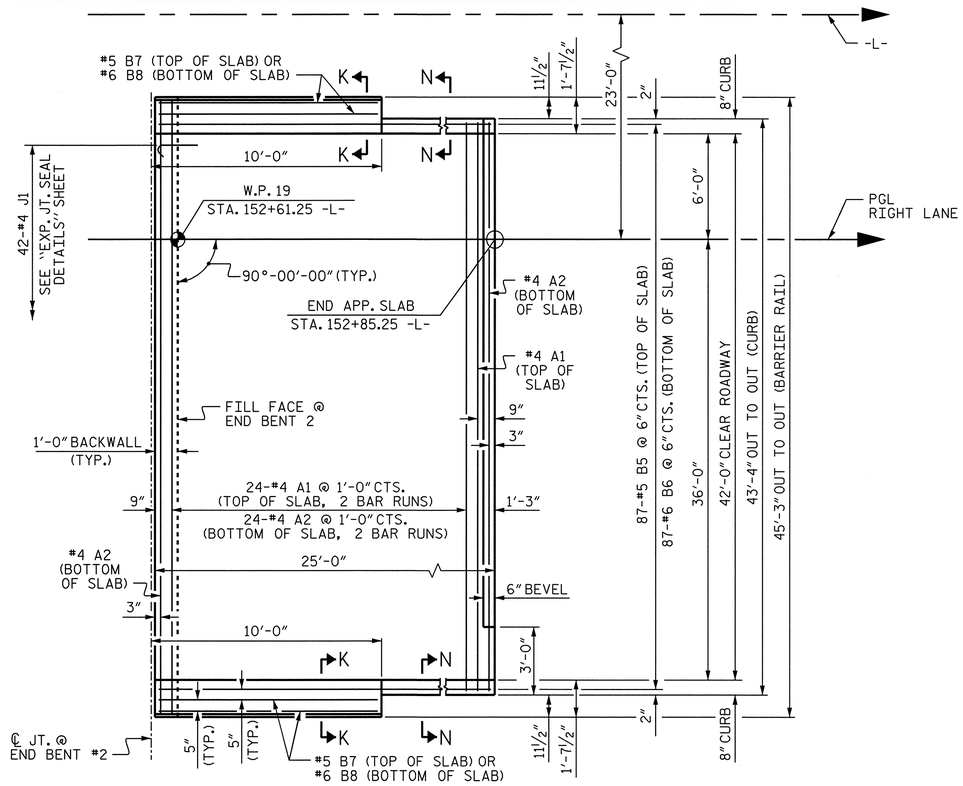

PLAN @ END BENT 2

NOTES

APPROACH SLAB SHALL NOT BE CONSTRUCTED PRIOR TO COMPLETION OF THE BRIDGE DECK.

FOR REINFORCED BRIDGE APPROACH FILL INCLUDING GEOTEXTILE, IMPERMEABLE GEOMEMBRANE, 4" Ø DRAINAGE PIPE, #78M STONE, AND SELECT MATERIAL, SEE ROADWAY PLANS.

AREA BETWEEN THE WINGWALL AND APPROACH SLAB SHALL BE GRADED TO DRAIN THE WATER AWAY FROM THE FILL FACE OF THE BRIDGE AND SHALL BE PAVED. SEE ROADWAY PLANS.

FOR EXPANSION JOINT SEALS, SEE SPECIAL PROVISIONS.

BILL OF MATERIAL
APPROACH SLAB AT END BENT 2

BAR	NO.	SIZE	TYPE	LENGTH	WEIGHT
✱ A1	50	#4	STR	23'-6"	785
A2	52	#4	STR	23'-4"	811
✱ B5	87	#5	STR	23'-9"	2155
B6	87	#6	STR	24'-8"	3223
✱ B7	4	#5	STR	9'-3"	39
B8	4	#6	STR	9'-8"	58
✱ J1	42	#4	3	1'-5"	40

REINFORCING STEEL ✱✱ 4092 LBS.
✱ EPOXY COATED REINFORCING STEEL ✱✱ 3019 LBS.

CLASS AA CONCRETE ✱✱ 47.9 C. Y.

BAR TYPE

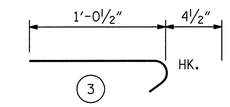

ALL BAR DIMENSIONS ARE OUT TO OUT

✱✱ QUANTITIES FOR BARRIER RAIL ARE NOT INCLUDED. SEE SHEET 3 OF 3.

THE QUANTITY OF #4 J1 BARS ON THE BILL OF MATERIAL IS BASED ON 1'-0" CENTERS. J1 BARS SHALL BE PLACED AT EACH VERTICAL STUD ANCHOR BOLT. IN THE EVENT THAT THE NUMBER OF VERTICAL STUD ANCHORS EXCEEDS THE NUMBER OF J1 BARS SPECIFIED, ADDITIONAL J1 BARS WILL NOT BE REQUIRED.

SPLICE LENGTHS

BAR SIZE	EPOXY COATED	UNCOATED
#4	2'-0"	1'-9"
#5	2'-6"	2'-2"
#6	3'-10"	2'-7"

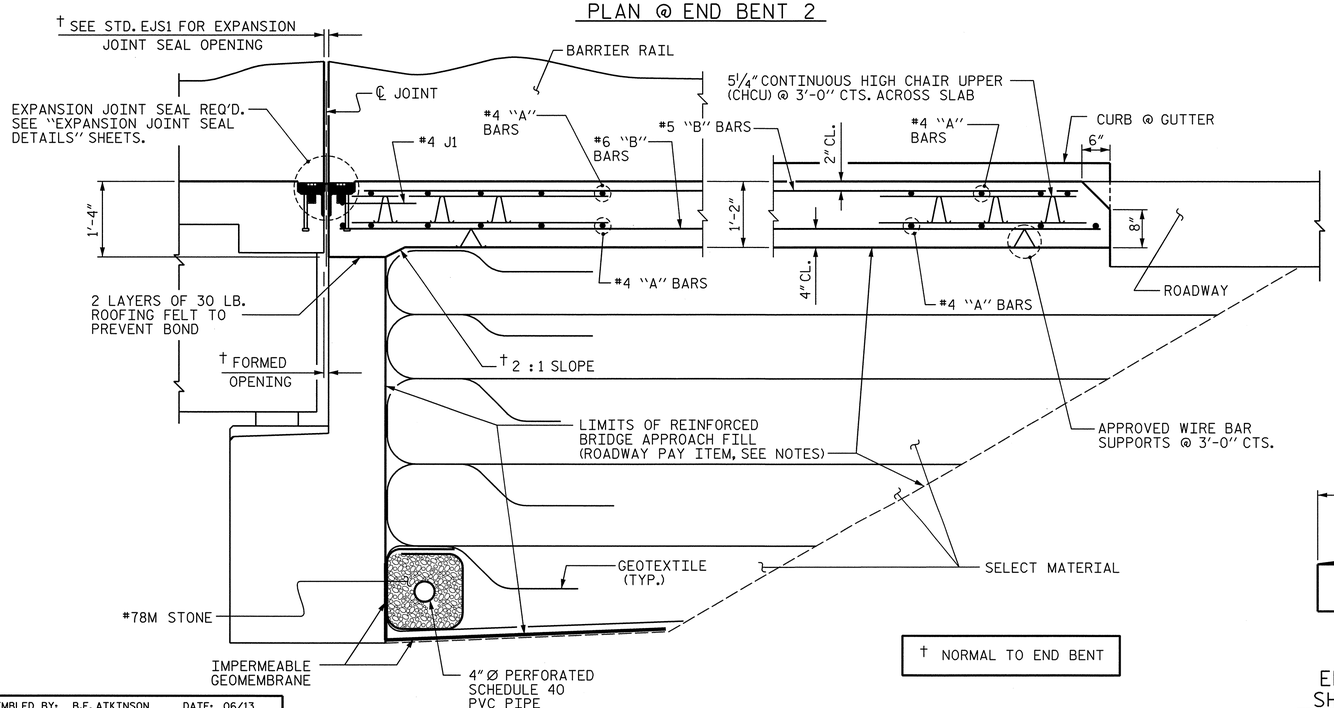

† NORMAL TO END BENT

SECTION THRU SLAB

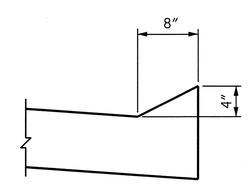

SECTION N-N

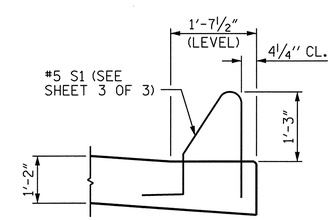

SECTION K-K

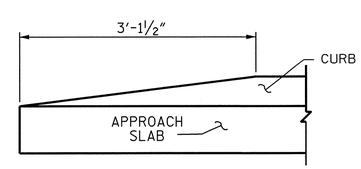

END OF CURB WITHOUT SHOULDER BERM GUTTER

CURB DETAILS

PROJECT NO. U-2525B
GUILFORD COUNTY
STATION: 144+60.63 -L-

SHEET 2 OF 3

STATE OF NORTH CAROLINA
DEPARTMENT OF TRANSPORTATION
RALEIGH

STANDARD

BRIDGE APPROACH SLAB FOR FLEXIBLE PAVEMENT AT END BENT 2
RIGHT LANE

NORTH CAROLINA PROFESSIONAL SEAL 027799 ENGINEER ALLYSON K. ORR
1/10/14

MI ENGINEERING
1011 SCHAUB DRIVE, SUITE 100
RALEIGH, NC 27606
(919) 851-6606
FIRM PE NUMBER : P-0671

REVISIONS						
NO.	BY:	DATE:	NO.	BY:	DATE:	
1			3			
2			4			

SHEET NO. S-295
TOTAL SHEETS 541

ASSEMBLED BY:	B.E. ATKINSON	DATE: 06/13
CHECKED BY :	A.K. ORR	DATE: 09/13
DESIGN ENGINEER OF RECORD:	A.K. ORR	DATE: 01/14

DRAWN BY :	EEM	3/95	REV. 5/7/03R	RWW/JTE
CHECKED BY :	VAP	3/95	REV. 5/1/06RR	KMM/GM
			REV. 10/1/11	MAA/GM

DWG. NO. 61

STD. NO. BAS2 (SHT 4)

1/10/2014
9:44:01 AM
User: blanning
Filename: P:\NC Bridges\MI1007.03 U-2525B Guilford\U-2525B\Structures\Right Bridge\U2525B_SD_AS2_4_RT.dgn

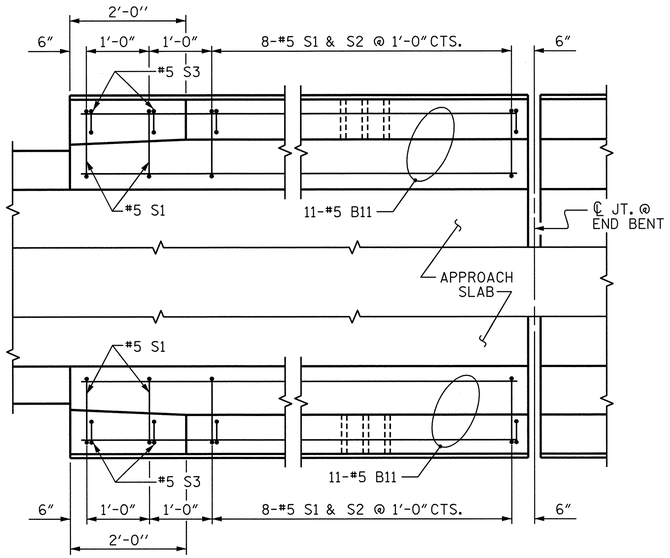

END BENT 1

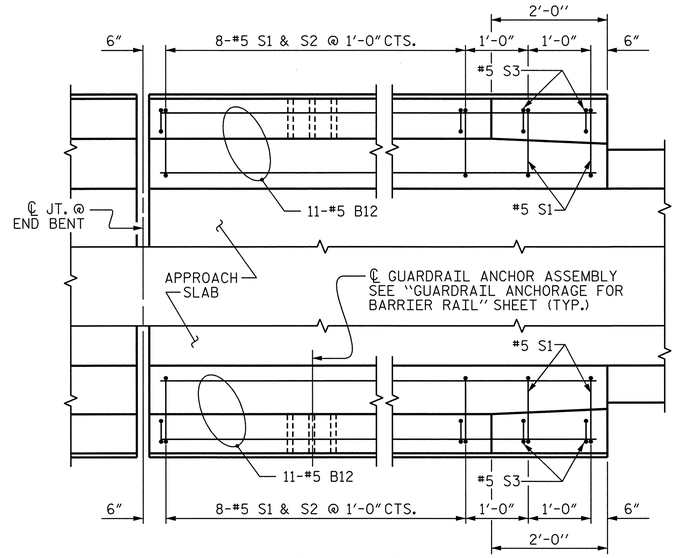

END BENT 2

PLAN OF BARRIER RAIL

NOTES

THE COST OF THE BARRIER RAIL ON THE APPROACH SLAB SHALL BE INCLUDED IN THE LINEAR FOOT CONTRACT PRICE BID FOR "CONCRETE BARRIER RAIL".

THE BARRIER RAIL ON EACH APPROACH SLAB SHALL NOT BE CAST UNTIL ALL APPROACH SLAB CONCRETE HAS BEEN CAST AND HAS REACHED A MINIMUM COMPRESSIVE STRENGTH OF 3,000 PSI.

ALL REINFORCING STEEL IN BARRIER RAILS SHALL BE EPOXY COATED.

BAR TYPES

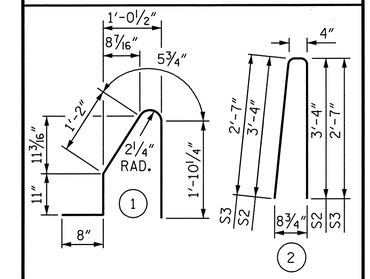

ALL BAR DIMENSIONS ARE OUT TO OUT

BILL OF MATERIAL

BARRIER RAIL ONLY

BAR	NO.	SIZE	TYPE	LENGTH	WEIGHT
✳B11	22	#5	STR	9'-3"	212
✳B12	22	#5	STR	9'-6"	218
✳S1	40	#5	1	5'-1"	212
✳S2	32	#5	2	7'-0"	234
✳S3	8	#5	2	5'-6"	46

✳EPOXY COATED REINFORCING STEEL	922 LBS.
CLASS AA CONCRETE	5.4 C. Y.
CONCRETE BARRIER RAIL	40.00 LIN. FT.

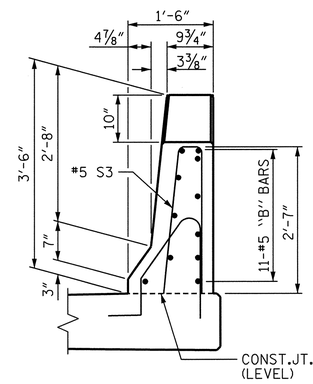

END VIEW

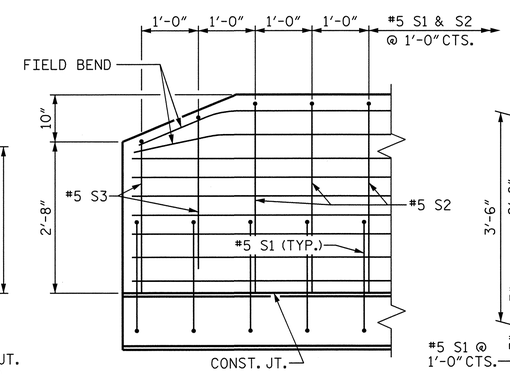

SIDE VIEW

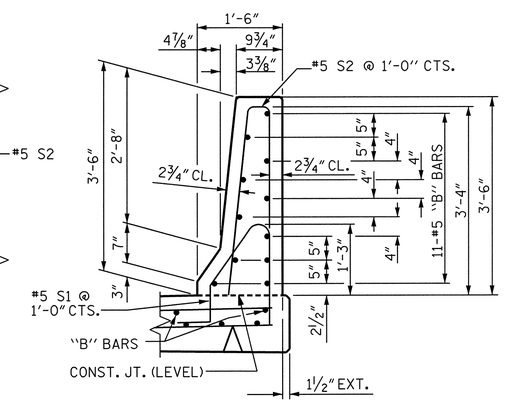

SECTION THRU RAIL

END OF RAIL DETAILS

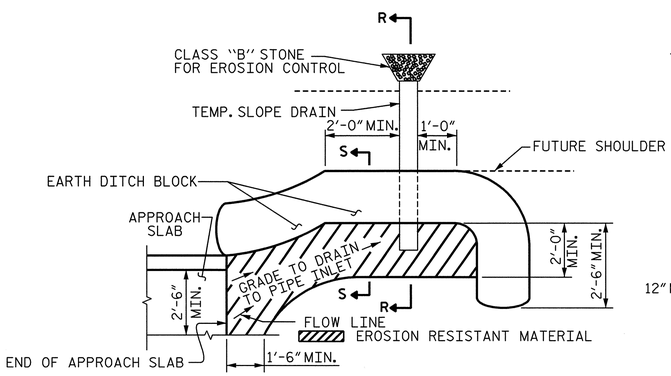

NOTE: IMMEDIATELY AFTER THE CONSTRUCTION OF THE APPROACH SLAB, THE CONTRACTOR SHALL PROVIDE TEMPORARY BERM AND SLOPE DRAIN. CONTRACTOR SHALL GRADE TO PIPE INLET AND PROVIDE EROSION RESISTANT MATERIAL AS SHOWN. THE EROSION RESISTANT MATERIAL SHALL BE EITHER 1) ASPHALT PLANT MIX, TYPE 1 OR TYPE 2, MIN. 2" DEPTH, 2) EROSION CONTROL MAT, OR 3) CONCRETE, AS DIRECTED BY THE ENGINEER. THE SLOPE DRAIN SHALL CONSIST OF A NON-PERFORATED TEMPORARY DRAINAGE PIPE, 12 INCHES IN DIAMETER.

PLAN VIEW

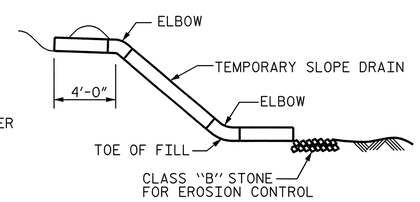

SECTION R-R

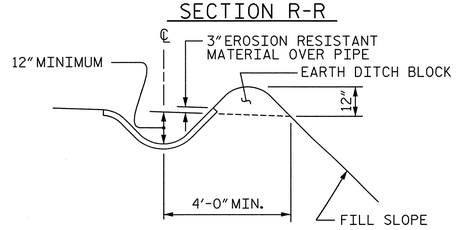

SECTION S-S

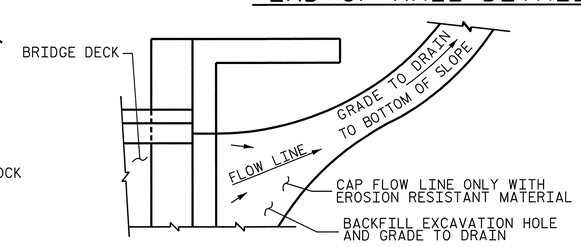

NOTE: IF THE APPROACH SLAB IS NOT CONSTRUCTED IMMEDIATELY AFTER THE BACKFILLING OF THE END BENT EXCAVATION, GRADE TO DRAIN TO THE BOTTOM OF THE SLOPE AND PROVIDE EROSION RESISTANT MATERIAL, SUCH AS FIBERGLASS ROVING OR AS DIRECTED BY THE ENGINEER TO PREVENT SOIL EROSION AND TO PROTECT THE AREA ADJACENT TO THE STRUCTURE. THE CONTRACTOR WILL BE REQUIRED TO REMOVE THESE MATERIALS PRIOR TO CONSTRUCTION OF THE APPROACH SLAB.

TEMPORARY DRAINAGE DETAIL

TEMPORARY BERM AND SLOPE DRAIN DETAILS

(TO BE USED WHEN SHOULDER BERM GUTTER IS REQUIRED)

PROJECT NO. U-2525B
GUILFORD COUNTY
STATION: 144+60.63 -L-

SHEET 3 OF 3

STATE OF NORTH CAROLINA
DEPARTMENT OF TRANSPORTATION
RALEIGH

STANDARD

BRIDGE APPROACH SLAB DETAILS

RIGHT LANE

NORTH CAROLINA PROFESSIONAL SEAL 027799 ENGINEER ALLYSON K. ORR
1/10/14

ASSEMBLED BY:	B.E. ATKINSON	DATE:	06/13
CHECKED BY :	A.K. ORR	DATE:	09/13
DESIGN ENGINEER OF RECORD:	A.K. ORR	DATE:	01/14

DRAWN BY : FCJ	11/88	REV. 10/1/11	MAA/GM
CHECKED BY : ARB	11/88	REV. 7/12	MAA/GM
		REV. 10/12	MAA/GM

MI ENGINEERING
1011 SCHAUB DRIVE, SUITE 100
RALEIGH, NC 27606
(919) 851-6606
FIRM PE NUMBER : P-0671

REVISIONS						
NO.	BY:	DATE:	NO.	BY:	DATE:	
1			3			
2			4			

SHEET NO. 8-296
TOTAL SHEETS 541

DWG. NO. 62

STD. NO. BAS4 (SHT 3)

1/10/2014
9:44:03 AM
User: blanning
Filename: P:\NC Bridges\MI1007.03 U-2525B Guilford\U-2525B\Structures\Right Bridge\U2525B_SD_AS3_4_RT.dgn

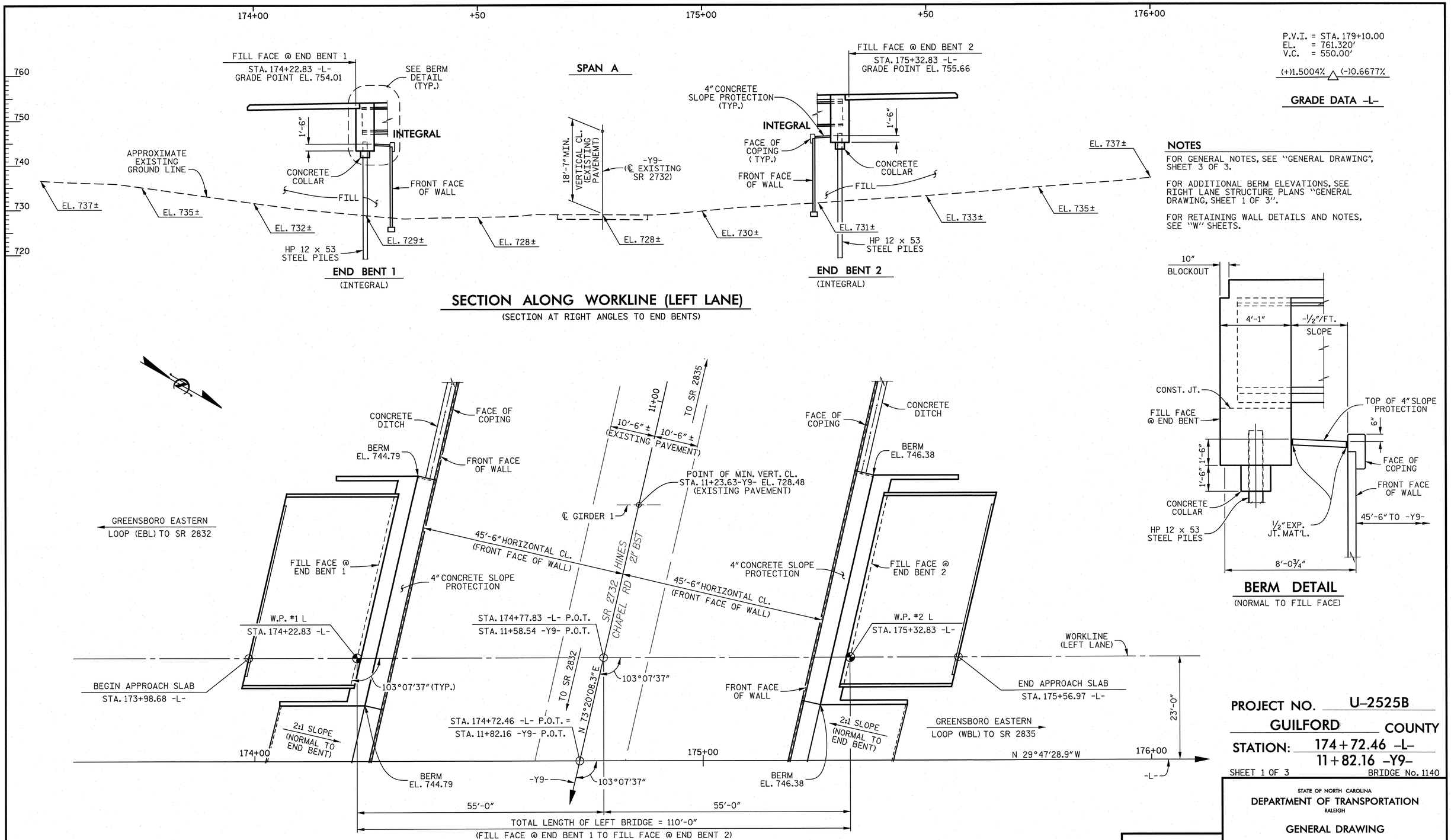

P.V.I. = STA. 179+10.00
EL. = 761.320'
V.C. = 550.00'

(+)1.5004% △ (-)0.6677%

GRADE DATA -L-

NOTES

FOR GENERAL NOTES, SEE "GENERAL DRAWING", SHEET 3 OF 3.

FOR ADDITIONAL BERM ELEVATIONS, SEE RIGHT LANE STRUCTURE PLANS "GENERAL DRAWING, SHEET 1 OF 3".

FOR RETAINING WALL DETAILS AND NOTES, SEE "W" SHEETS.

PROJECT NO. U-2525B

GUILFORD COUNTY

STATION: 174+72.46 -L-
11+82.16 -Y9-

SHEET 1 OF 3

BRIDGE No. 1140

STATE OF NORTH CAROLINA
DEPARTMENT OF TRANSPORTATION
RALEIGH

GENERAL DRAWING

BRIDGE OVER SR 2732 (-Y9-) ON GREENSBORO EASTERN LOOP (-L-) BETWEEN SR 2832 AND SR 2835

(LEFT LANE)

DRAWN BY :	K. E. LOFTON	DATE :	8-13
CHECKED BY :	T. M. HARRIS	DATE :	10-13
DESIGN ENGINEER :	T. M. HARRIS	DATE :	10-13

PLANS PREPARED BY :
PARSONS
5540 Centerview Drive, Suite 217
Raleigh, NC 27606-3386
NC LICENSE No. F-0246
FOR NORTH CAROLINA DEPARTMENT OF TRANSPORTATION

NORTH CAROLINA PROFESSIONAL SEAL 19299 ENGINEER THOMAS M. HARRIS
12/9/13

DWG. No. S08-001

REVISIONS

No.	BY:	DATE:	No.	BY:	DATE:
1			3		
2			4		

SHEET No. S-297

TOTAL SHEETS 541

STR. #8

FILE: i:\u-2525b\structures\plans\final\U2525B_SD_Str8_gdt1.dgn
DATE: 12/2/2013 11:45:21 AM

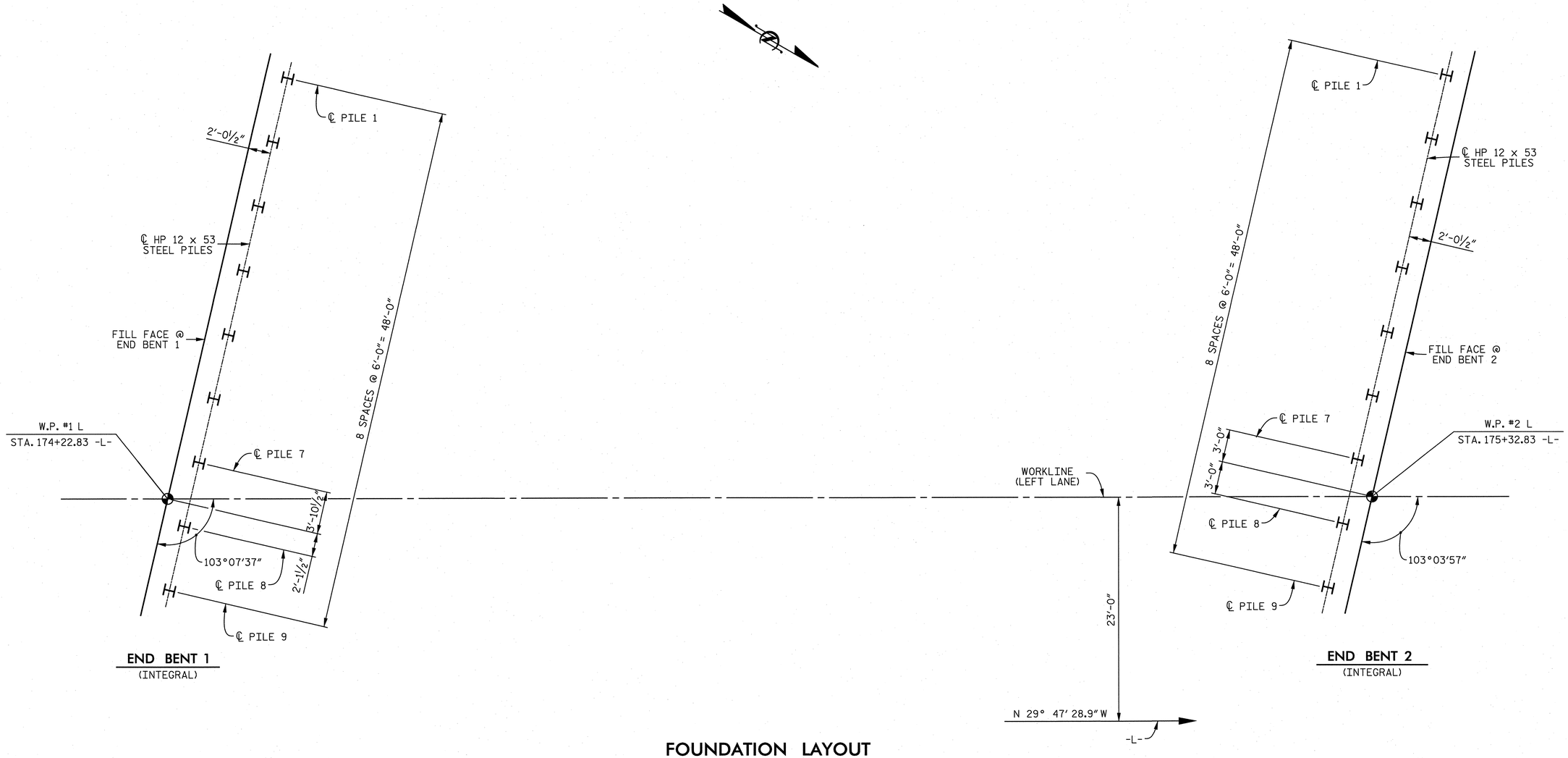

FOUNDATION LAYOUT

NOTES

ALL END BENT PILES ARE VERTICAL HP 12 x 53 STEEL PILES.

DIMENSIONS LOCATING PILES ARE SHOWN TO PILE CENTERLINES AT THE BOTTOM OF THE END BENT CAPS.

FOR PILES, SEE SECTION 450 OF THE STANDARD SPECIFICATIONS.

PILES AT END BENT 1 AND END BENT 2 ARE DESIGNED FOR A FACTORED RESISTANCE OF 110 TONS PER PILE.

DRIVE PILES AT END BENT 1 AND END BENT 2 TO A REQUIRED DRIVING RESISTANCE OF 185 TONS PER PILE.

STEEL PILE POINTS ARE REQUIRED FOR STEEL "H" PILE 1 THRU PILE 5 AT END BENT 2. FOR STEEL PILE POINTS, SEE SECTION 450 OF THE STANDARD SPECIFICATIONS.

PILE EXCAVATION IS REQUIRED TO INSTALL PILE 1 THRU PILE 5 AT END BENT 2. EXCAVATE HOLES AT PILE LOCATIONS TO ELEVATION 722 FEET. FOR PILE EXCAVATION, SEE SECTION 450 OF THE STANDARD SPECIFICATIONS.

CONCRETE OR GROUT IS REQUIRED TO FILL HOLES FOR PILE EXCAVATION AT END BENT 2.

PILES AT END BENT 1 AND END BENT 2 SHALL BE INSTALLED PRIOR TO CONSTRUCTING THE MSE RETAINING WALLS.

PROJECT NO. U-2525B
GUILFORD COUNTY
STATION: 174+72.46 -L-

SHEET 2 OF 3

STATE OF NORTH CAROLINA
DEPARTMENT OF TRANSPORTATION
RALEIGH

GENERAL DRAWING

BRIDGE OVER SR 2732 (-Y9-) ON GREENSBORO EASTERN LOOP (-L-) BETWEEN SR 2832 AND SR 2835 (LEFT LANE)

DRAWN BY : K. E. LOFTON	DATE : 8-13	
CHECKED BY : T. M. HARRIS	DATE : 9-13	
DESIGN ENGINEER : T. M. HARRIS	DATE : 10-13	

PLANS PREPARED BY :
PARSONS
5540 Centerview Drive, Suite 217
Raleigh, NC 27606-3386
NC LICENSE No. F-0246
FOR NORTH CAROLINA DEPARTMENT OF TRANSPORTATION

NORTH CAROLINA PROFESSIONAL SEAL 19299 ENGINEER THOMAS M. HARRIS
12/9/13

DWG. No. S08-002

REVISIONS						
No.	BY:	DATE:	No.	BY:	DATE:	
1			3			
2			4			

SHEET No. 5-298
TOTAL SHEETS 541

STR. #8

FILE: j:\u-2525b\structures\plans\final\U2525B_SD_Sn8_fill.dgn
DATE: 12/3/2013 11:45:22 AM

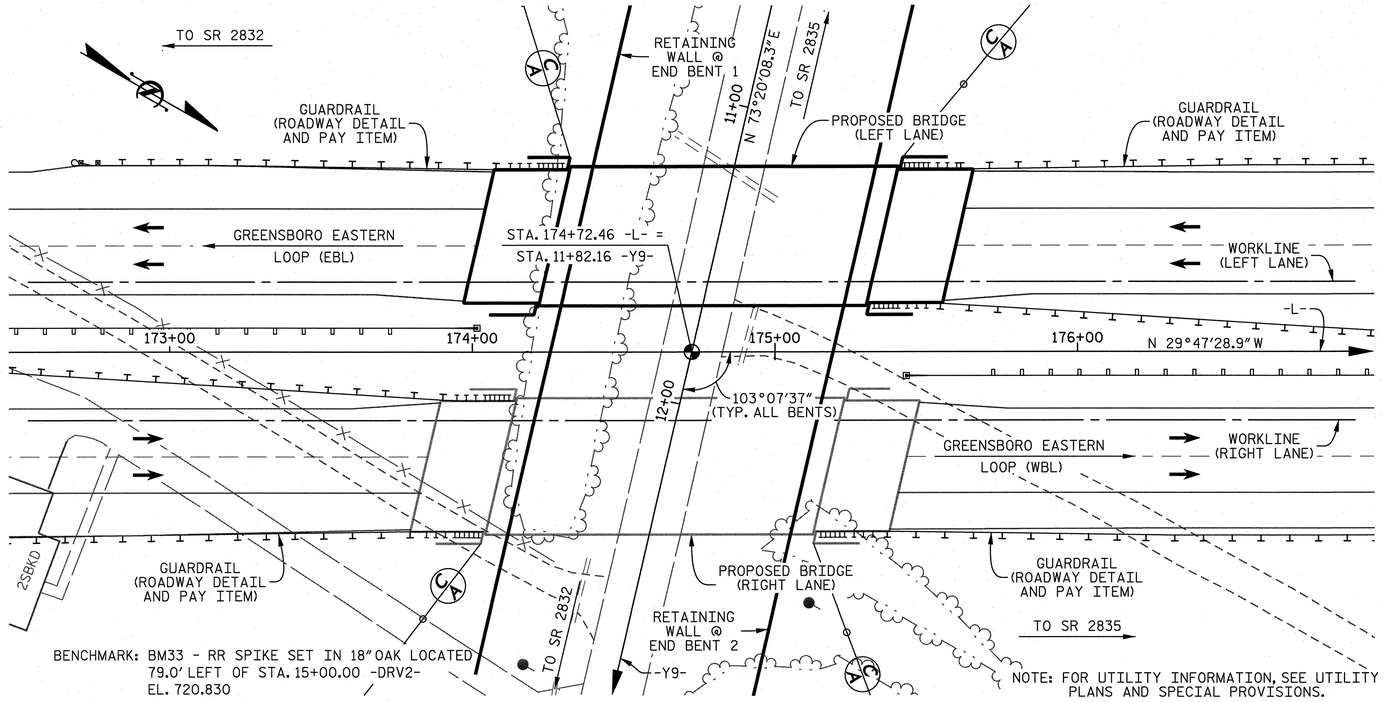

LOCATION SKETCH

NOTES

ASSUMED LIVE LOAD = HL 93 OR ALTERNATE LOADING.

THIS BRIDGE HAS BEEN DESIGNED IN ACCORDANCE WITH THE AASHTO LRFD BRIDGE DESIGN SPECIFICATIONS.

THIS BRIDGE IS LOCATED IN SEISMIC ZONE 1.

FOR OTHER DESIGN DATA AND GENERAL NOTES, SEE SHEET SN.

THE CLASS AA CONCRETE IN THE BRIDGE DECK SHALL CONTAIN FLY ASH OR GROUND GRANULATED BLAST FURNACE SLAG AT THE SUBSTITUTION RATE SPECIFIED IN ARTICLE 1024-1 AND IN ACCORDANCE WITH ARTICLES 1024-5 AND 1024-6 OF THE STANDARD SPECIFICATIONS. NO PAYMENT WILL BE MADE FOR THIS SUBSTITUTION AS IT IS CONSIDERED INCIDENTAL TO THE COST OF THE REINFORCED CONCRETE DECK SLAB.

REMOVABLE FORMS MAY BE USED IN LIEU OF METAL STAY-IN-PLACE FORMS IN ACCORDANCE WITH ARTICLE 420-3 OF THE STANDARD SPECIFICATIONS.

NEEDLE BEAMS WILL NOT BE ALLOWED UNLESS OTHERWISE CALLED FOR ON THE PLANS OR APPROVED BY THE ENGINEER.

FOR SUBMITTAL OF WORKING DRAWINGS, SEE SPECIAL PROVISIONS.

FOR GROUT FOR STRUCTURES, SEE SPECIAL PROVISIONS.

FOR EROSION CONTROL MEASURES, SEE EROSION CONTROL PLANS.

FOR FALSEWORK AND FORMWORK, SEE SPECIAL PROVISIONS.

FOR CRANE SAFETY, SEE SPECIAL PROVISIONS.

FOR PLACING LOAD ON STRUCTURE MEMBERS, SEE SPECIAL PROVISIONS.

FOR MAINTENANCE AND PROTECTION OF TRAFFIC BENEATH PROPOSED STRUCTURE, SEE SPECIAL PROVISIONS.

THE ELEVATION AND CLEARANCE SHOWN ON THE PLANS AT THE POINT OF MINIMUM VERTICAL CLEARANCE ARE FROM THE BEST INFORMATION AVAILABLE. PRIOR TO BEGINNING BRIDGE CONSTRUCTION, VERIFY THE ELEVATION ON THE EXISTING PAVEMENT AND CHECK THE CLEARANCE. REPORT ANY VARIATIONS TO THE ENGINEER. ANY PLAN REVISIONS NECESSARY TO ACHIEVE THE REQUIRED MINIMUM VERTICAL CLEARANCE WILL BE PROVIDED BY THE DEPARTMENT.

TOTAL BILL OF MATERIAL

	PILE EXCAVATION IN SOIL	PILE EXCAVATION NOT IN SOIL	REINFORCED CONCRETE DECK SLAB	GROOVING BRIDGE FLOORS	CLASS A CONCRETE	BRIDGE APPROACH SLABS	REINFORCING STEEL	MODIFIED 72" PRESTRESSED CONCRETE GIRDER		HP 12 x 53 STEEL PILES		STEEL PILE POINTS	CONCRETE BARRIER RAIL	4" SLOPE PROTECTION	ELASTOMERIC BEARINGS
	LIN. FT.	LIN. FT.	SQ. FT.	SQ. FT.	CU. YDS.	LUMP SUM	LBS.	No.	LIN. FT.	No.	LIN. FT.	EACH	LIN. FT.	SQ. YD.	LUMP SUM
SUPERSTRUCTURE			4,900	6,094		LUMP SUM		5	536.09				216.58		LUMP SUM
END BENT 1					31.5		6,828			9	270			54	
END BENT 2	25	25			31.5		6,828			9	265	5		55	
TOTAL	25	25	4,900	6,094	63.0	LUMP SUM	13,656	5	536.09	18	535	5	216.58	109	LUMP SUM

PROJECT NO. U-2525B

GUILFORD COUNTY

STATION: 174+72.46 -L-

SHEET 3 OF 3

STATE OF NORTH CAROLINA
DEPARTMENT OF TRANSPORTATION
RALEIGH

GENERAL DRAWING

BRIDGE OVER SR 2732 (-Y9-) ON GREENSBORO EASTERN LOOP (-L-) BETWEEN SR 2832 AND SR 2835 (LEFT LANE)

NORTH CAROLINA PROFESSIONAL SEAL 19299 ENGINEER THOMAS M. HARRIS 12/9/13

REVISIONS						SHEET No.
No.	BY:	DATE:	No.	BY:	DATE:	5-299
1			3			TOTAL SHEETS
2			4			541

DWG. No. S08-003

STR. #8

DRAWN BY : K. E. LOFTON DATE : 10-13
CHECKED BY : T. M. HARRIS DATE : 10-13
DESIGN ENGINEER : T. M. HARRIS DATE : 10-13

PLANS PREPARED BY :
PARSONS
5540 Centerview Drive, Suite 217
Raleigh, NC 27606-3386
NC LICENSE No. F-0246
FOR NORTH CAROLINA DEPARTMENT OF TRANSPORTATION

FILE: p:\u-2525b\structures\plans\final\U2525B_SD_Sh8_lst.dgn
DATE: 12/2/2013 11:45:25 AM

LOAD AND RESISTANCE FACTOR RATING (LRFR) SUMMARY FOR PRESTRESSED CONCRETE GIRDERS

LEVEL		VEHICLE	WEIGHT (W) (TONS)	CONTROLLING LOAD RATING (#)	MINIMUM RATING FACTORS (RF)	TONS = W × RF	STRENGTH I LIMIT STATE											SERVICE III LIMIT STATE						COMMENT NUMBER
							LIVE-LOAD FACTORS (γ_{LL})	MOMENT					SHEAR					LIVE-LOAD FACTORS (γ_{LL})	MOMENT					
								DISTRIBUTION FACTORS (DF)	RATING FACTOR	SPANS	GIRDER LOCATION	DISTANCE FROM LEFT END OF SPAN (ft)	DISTRIBUTION FACTORS (DF)	RATING FACTOR	SPAN	GIRDER LOCATION	DISTANCE FROM LEFT END OF SPAN (ft)		DISTRIBUTION FACTORS (DF)	RATING FACTOR	SPANS	GIRDER LOCATION	DISTANCE FROM LEFT END OF SPAN (ft)	
DESIGN LOAD RATING		HL-93 (INVENTORY)	N/A	1	1.12	--	1.75	0.821	1.31	A	ER	52.90	0.961	1.25	A	I	10.00	0.80	0.821	1.12	A	ER	52.90	--
		HL-93 (OPERATING)	N/A		1.65	--	1.35	0.821	1.70	A	ER	52.90	0.961	1.65	A	I	10.00	N/A	--	--	--	--	--	--
		HS-20 (INVENTORY)	36.000	2	1.58	57.00	1.75	0.821	1.86	A	ER	52.90	0.961	1.73	A	I	10.00	0.80	0.821	1.58	A	ER	52.90	--
		HS-20 (OPERATING)	36.000		2.28	82.00	1.35	0.821	2.41	A	ER	52.90	0.961	2.28	A	I	10.00	N/A	--	--	--	--	--	--
LEGAL LOAD RATING	SINGLE VEHICLE (SV)	SH	12.500		4.09	51.13	1.40	0.821	6.02	A	ER	52.90	0.961	6.07	A	I	10.00	0.80	0.821	4.09	A	ER	52.90	--
		S3C	21.500		2.39	51.39	1.40	0.821	3.51	A	ER	52.90	0.961	3.50	A	I	10.00	0.80	0.821	2.39	A	ER	52.90	--
		S3A	22.750		2.26	51.42	1.40	0.821	3.33	A	ER	52.90	0.961	3.32	A	I	10.00	0.80	0.821	2.26	A	ER	52.90	--
		S4A	26.750		1.98	52.97	1.40	0.821	2.91	A	ER	52.90	0.961	2.86	A	I	10.00	0.80	0.821	1.98	A	ER	52.90	--
		S5A	30.500		1.75	53.38	1.40	0.821	2.57	A	ER	52.90	0.961	2.59	A	I	10.00	0.80	0.821	1.75	A	ER	52.90	--
		S6A	34.500		1.58	54.51	1.40	0.821	2.32	A	ER	52.90	0.961	2.31	A	I	10.00	0.80	0.821	1.58	A	ER	52.90	--
		S7B	38.500		1.43	55.06	1.40	0.821	2.10	A	ER	52.90	0.961	2.13	A	I	10.00	0.80	0.821	1.43	A	ER	52.90	--
		S7A	40.000	3	1.40	56.00	1.40	0.821	2.07	A	ER	52.90	0.961	2.15	A	I	10.00	0.80	0.821	1.40	A	ER	52.90	--
	TRUCK TRACTOR SEMI-TRAILER (TTST)	T4A	28.250		1.94	54.81	1.40	0.821	2.85	A	ER	52.90	0.961	2.76	A	I	10.00	0.80	0.821	1.94	A	ER	52.90	--
		T5B	32.000		1.70	54.40	1.40	0.821	2.50	A	ER	52.90	0.961	2.57	A	I	10.00	0.80	0.821	1.70	A	ER	52.90	--
		T6A	36.000		1.55	55.80	1.40	0.821	2.28	A	ER	52.90	0.961	2.33	A	I	10.00	0.80	0.821	1.55	A	ER	52.90	--
		T7A	40.000		1.43	57.20	1.40	0.821	2.10	A	ER	52.90	0.961	2.15	A	I	10.00	0.80	0.821	1.43	A	ER	52.90	--
		T7B	40.000		1.50	60.00	1.40	0.821	2.21	A	ER	52.90	0.961	2.04	A	I	10.00	0.80	0.821	1.50	A	ER	52.90	--

LOAD FACTORS

DESIGN LOAD RATING FACTORS	LIMIT STATE	γ_{DC}	γ_{DW}
	STRENGTH I	1.25	1.50
	SERVICE III	1.00	1.00

NOTES

MINIMUM RATING FACTORS ARE BASED ON THE STRENGTH I AND SERVICE III LIMIT STATES.

ALLOWABLE STRESSES FOR SERVICE III LIMIT STATE ARE AS REQUIRED FOR DESIGN.

COMMENTS

CONCRETE BARRIER RAIL LOADS:

GIRDER A1 AND GIRDER A5 242 LBS./FT.
GIRDER A2 AND GIRDER A4 182 LBS./FT.
GIRDER A3 253 LBS./FT.

(#) CONTROLLING LOAD RATING

(1) DESIGN LOAD RATING (HL-93)

(2) DESIGN LOAD RATING (HS-20)

(3) LEGAL LOAD RATING **

** SEE CHART FOR VEHICLE TYPE

GIRDER LOCATION

I - INTERIOR GIRDER (GIRDER A3)
EL - EXTERIOR LEFT GIRDER
ER - EXTERIOR RIGHT GIRDER

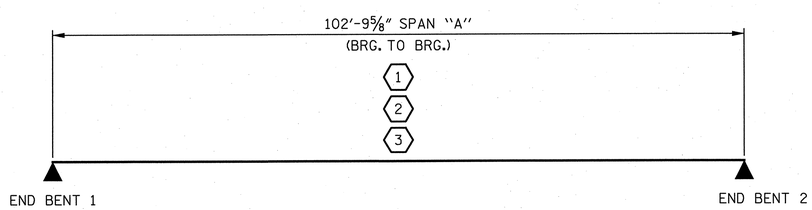

LRFR SUMMARY

PROJECT NO. U-2525B
GUILFORD COUNTY
STATION: 174+72.46 -L-

STATE OF NORTH CAROLINA
DEPARTMENT OF TRANSPORTATION
RALEIGH

STANDARD

LRFR SUMMARY FOR PRESTRESSED CONCRETE GIRDERS (INTERSTATE TRAFFIC) (LEFT LANE)

REVISIONS						SHEET No.
No.	BY:	DATE:	No.	BY:	DATE:	S-300
1			3			TOTAL SHEETS
2			4			541

DWG. No. S08-004

STD. No. LRFR2 STR. #8

NORTH CAROLINA PROFESSIONAL SEAL 19299 ENGINEER THOMAS M. HARRIS 12/9/13

PLANS PREPARED BY :
PARSONS
5540 Centerview Drive, Suite 217
Raleigh, NC 27606-3386
NC LICENSE No. F-0246
FOR NORTH CAROLINA DEPARTMENT OF TRANSPORTATION

DRAWN BY : K. E. LOFTON DATE : 7-13
CHECKED BY : T. M. HARRIS DATE : 7-13
DESIGN ENGINEER : T. M. HARRIS DATE : 10-13

ASSEMBLED BY : K. E. LOFTON DATE : 7-13
CHECKED BY : T. M. HARRIS DATE : 7-13
DRAWN BY : MAA 1/08
CHECKED BY : GM/DI 2/08
REV. 11/12/08RR MAA/GM
REV. 10/1/11 MAA/GM

FILE: j:\u-2525b\structures\plans\final\U2525B_SD_SV8_F1.dgn
DATE: 11/22/2013 2:15:09 PM

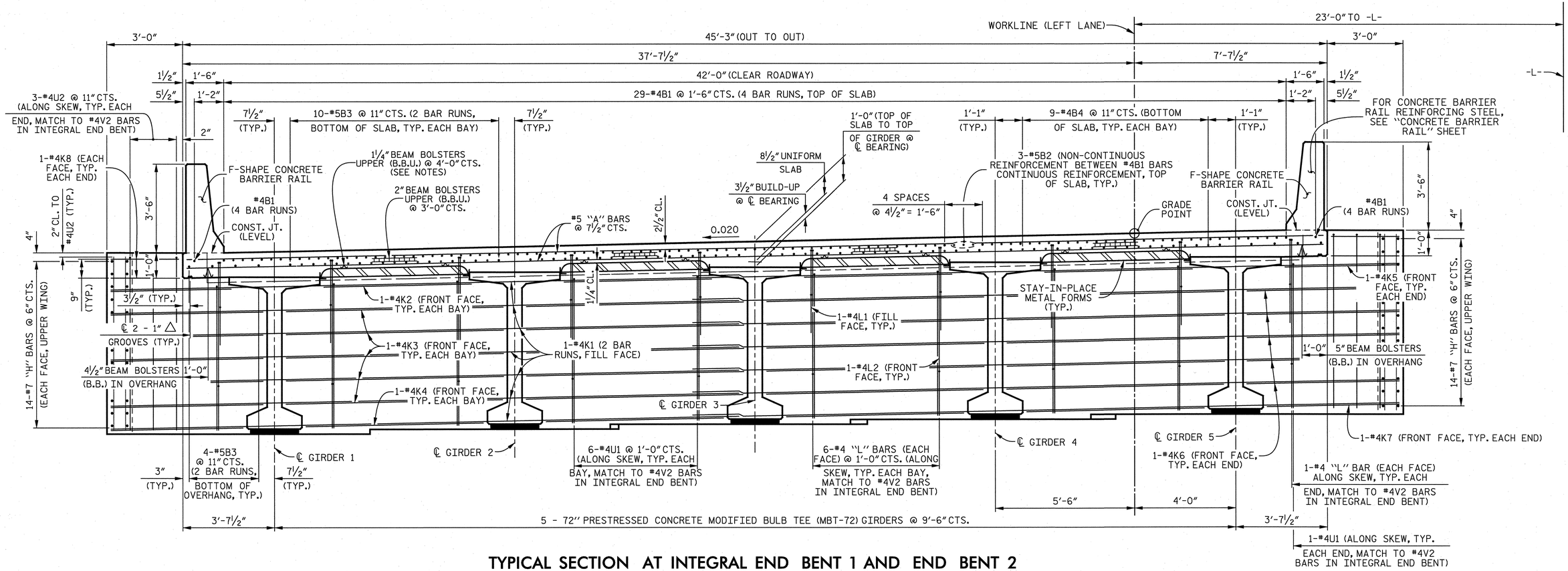

TYPICAL SECTION AT INTEGRAL END BENT 1 AND END BENT 2

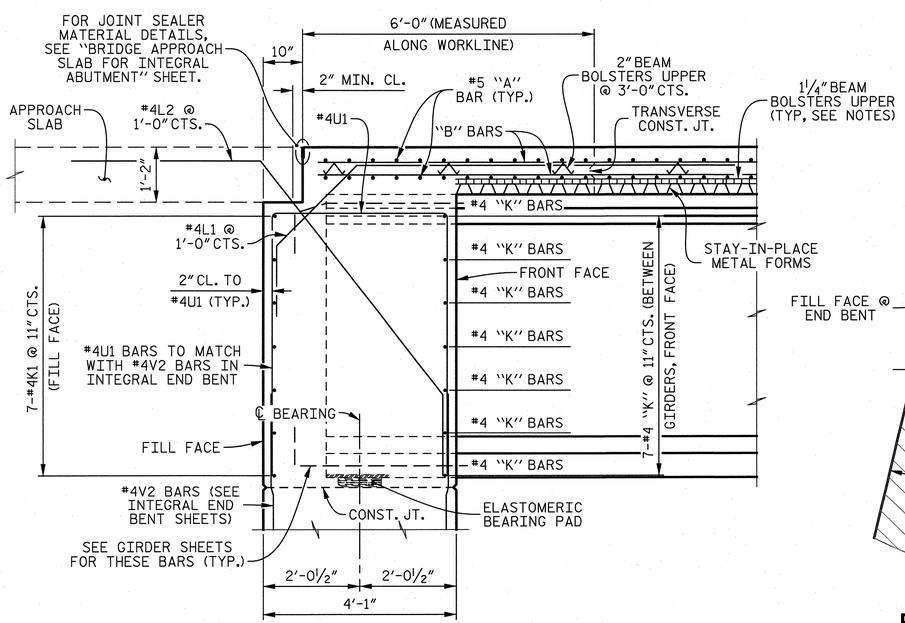

SECTION THRU INTEGRAL END BENT

(END BENT 1 SHOWN, END BENT 2 SIMILAR)

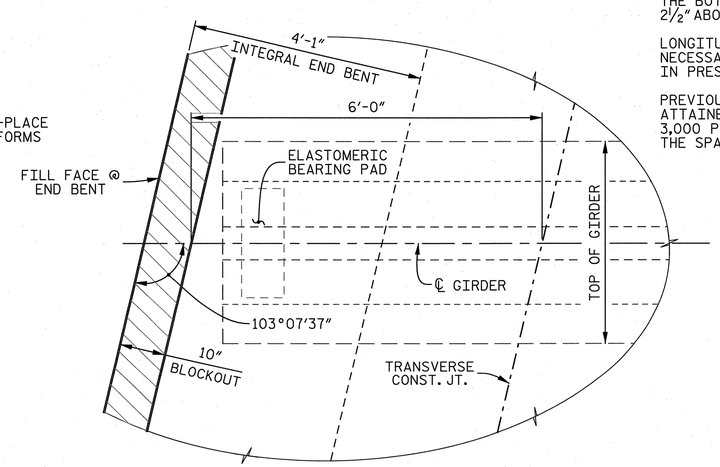

PLAN OF GIRDER – INTEGRAL END BENT

NOTES

PROVIDE 1¼" HIGH BEAM BOLSTERS UPPER AT 4'-0" CTS. ATOP THE METAL STAY-IN-PLACE FORMS TO SUPPORT THE BOTTOM MAT OF "A" BARS. WHEN USING REMOVABLE FORMS, PROVIDE CONTINUOUS HIGH CHAIRS FOR METAL DECK (C.H.C.M.) @ 4'-0" CTS. WITH A HEIGHT TO SUPPORT THE BOTTOM MAT OF "A" BARS A CLEAR DISTANCE OF 2½" ABOVE THE TOP OF THE REMOVABLE FORM.

LONGITUDINAL STEEL MAY BE SHIFTED SLIGHTLY, AS NECESSARY, TO AVOID INTERFERENCE WITH STIRRUPS IN PRESTRESSED CONCRETE GIRDERS.

PREVIOUSLY CAST CONCRETE IN SPAN "A" SHALL HAVE ATTAINED A MINIMUM COMPRESSIVE STRENGTH OF 3,000 PSI BEFORE ADDITIONAL CONCRETE IS CAST IN THE SPAN.

BARRIER RAIL IN SPAN "A" SHALL NOT BE CAST UNTIL ALL SLAB CONCRETE IN THE SPAN HAS BEEN CAST AND HAS REACHED A MINIMUM COMPRESSIVE STRENGTH OF 3,000 PSI.

FOR F-SHAPE CONCRETE BARRIER RAIL DETAILS, SEE "CONCRETE BARRIER RAIL" SHEET.

FOR POURING SEQUENCE, SEE "SUPERSTRUCTURE BILL OF MATERIAL" SHEET.

PROJECT NO. U-2525B
GUILFORD COUNTY
STATION: 174+72.46 -L-

SHEET 1 OF 2

STATE OF NORTH CAROLINA
DEPARTMENT OF TRANSPORTATION
RALEIGH

SUPERSTRUCTURE

TYPICAL SECTION
(LEFT LANE)

DRAWN BY : K. E. LOFTON	DATE : 7-13		
CHECKED BY : T. M. HARRIS	DATE : 7-13		
DESIGN ENGINEER : T. M. HARRIS	DATE : 10-13		

PLANS PREPARED BY :
PARSONS
5540 Centerview Drive, Suite 217
Raleigh, NC 27606-3386
NC LICENSE No. F-0246
FOR NORTH CAROLINA DEPARTMENT OF TRANSPORTATION

NORTH CAROLINA PROFESSIONAL ENGINEER SEAL 19299 THOMAS M. HARRIS
12/9/13

DWG. No. S08-005

REVISIONS						
No.	BY:	DATE:	No.	BY:	DATE:	
1			3			
2			4			

SHEET No. 5-301
TOTAL SHEETS 541

STR. #8

FILE: f:\u-2525b\structures\plans\final\U2525B_SD_Sn8_tsl.dgn
DATE: 12/3/2013 11:45:27 AM

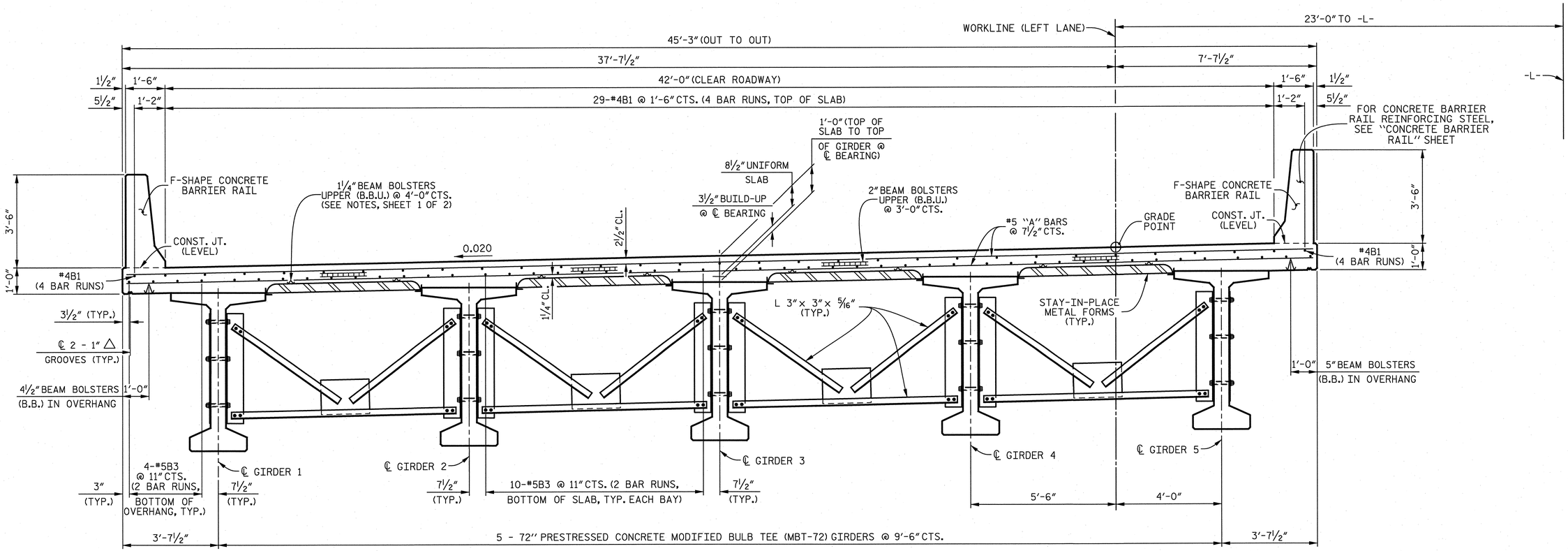

TYPICAL SECTION AT INTERMEDIATE STEEL DIAPHRAGMS

FOR INTERMEDIATE STEEL DIAPHRAGMS DETAILS, SEE SHEET 4 OF 4 OF 72" MODIFIED BULB TEE PRESTRESSED CONCRETE GIRDERS.

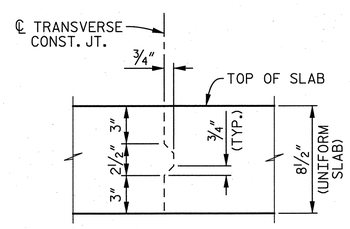

TRANSVERSE CONSTRUCTION JOINT DETAIL

REINFORCING STEEL IN SLAB NOT SHOWN. LONGITUDINAL REINFORCING STEEL SHALL BE CONTINUOUS THROUGH JOINT.

PROJECT NO. U-2525B
GUILFORD COUNTY
STATION: 174+72.46 -L-

SHEET 2 OF 2

STATE OF NORTH CAROLINA
DEPARTMENT OF TRANSPORTATION
RALEIGH

SUPERSTRUCTURE

TYPICAL SECTION (LEFT LANE)

REVISIONS						SHEET No.
No.	BY:	DATE:	No.	BY:	DATE:	S-302
1			3			TOTAL SHEETS
2			4			541

STR. #8

DRAWN BY : K. E. LOFTON DATE : 7-13
CHECKED BY : T. M. HARRIS DATE : 7-13
DESIGN ENGINEER : T. M. HARRIS DATE : 10-13

PLANS PREPARED BY :
PARSONS
5540 Centerview Drive, Suite 217
Raleigh, NC 27606-3386
NC LICENSE No. F-0246
FOR NORTH CAROLINA DEPARTMENT OF TRANSPORTATION

NORTH CAROLINA PROFESSIONAL SEAL 19299 ENGINEER THOMAS M. HARRIS
12/9/13

DWG. No. S08-006

FILE: (:\u-2525b\structures\plans\final\U2525B_SD_Sh08_b2.dgn
DATE: 12/2/2013 11:45:31 AM

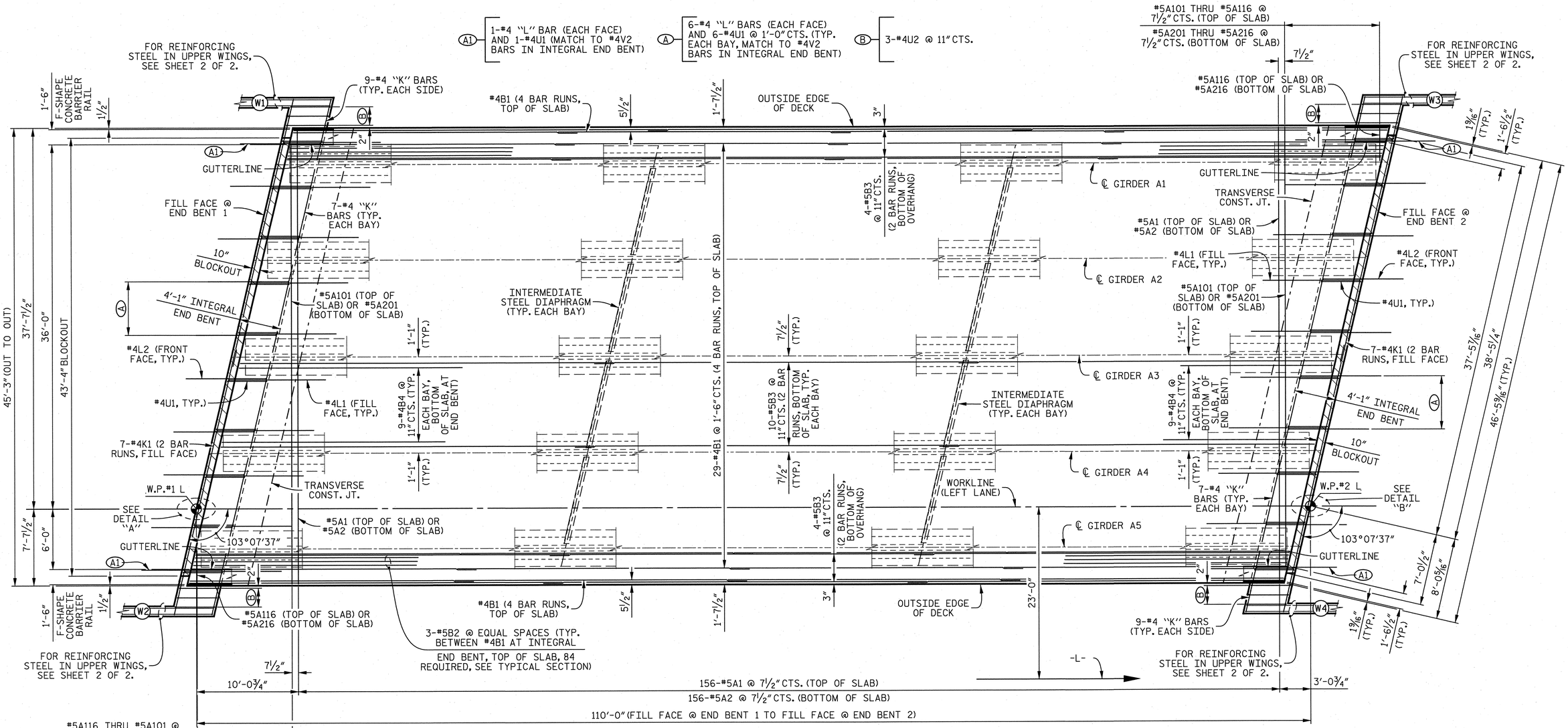

PLAN OF SPAN

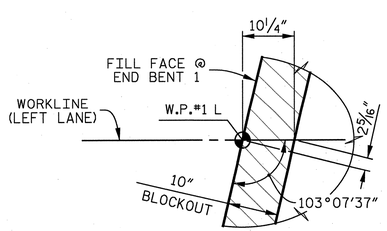

DETAIL "A"

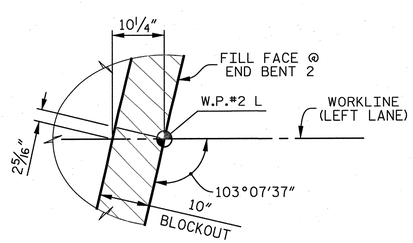

DETAIL "B"

NOTES

#5 "A" BARS SHALL BE PLACED PERPENDICULAR TO WORKLINE WITH A 2" MINIMUM CLEARANCE ON EACH END.

FOR REINFORCING STEEL IN CONCRETE BARRIER RAIL, SEE "CONCRETE BARRIER RAIL" SHEET.

FOR SLAB POURING SEQUENCE AND SPLICE CHART, SEE "SUPERSTRUCTURE BILL OF MATERIAL" SHEET.

PROJECT NO. U-2525B
GUILFORD COUNTY
STATION: 174+72.46 -L-

SHEET 1 OF 2

STATE OF NORTH CAROLINA
DEPARTMENT OF TRANSPORTATION
RALEIGH

SUPERSTRUCTURE
PLAN OF SPAN
(LEFT LANE)

DRAWN BY :	K. E. LOFTON	DATE :	7-13
CHECKED BY :	T. M. HARRIS	DATE :	8-13
DESIGN ENGINEER :	T. M. HARRIS	DATE :	10-13

PLANS PREPARED BY :
PARSONS
5540 Centerview Drive, Suite 217
Raleigh, NC 27606-3386
NC LICENSE No. F-0246
FOR NORTH CAROLINA DEPARTMENT OF TRANSPORTATION

NORTH CAROLINA PROFESSIONAL SEAL 19299 ENGINEER THOMAS M. HARRIS 12/9/13

DWG. No. S08-007

REVISIONS						
No.	BY:	DATE:	No.	BY:	DATE:	
1			3			
2			4			

SHEET No. 5-303
TOTAL SHEETS 541

STR. #8

FILE: J:\u-2525b\structures\plans\final\U2525B_SD_Sv8_pst.dgn
DATE: 12/9/2013 11:45:37 AM

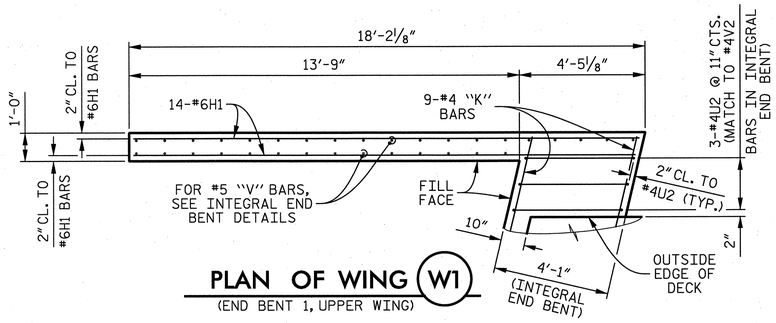

PLAN OF WING (W1)

(END BENT 1, UPPER WING)

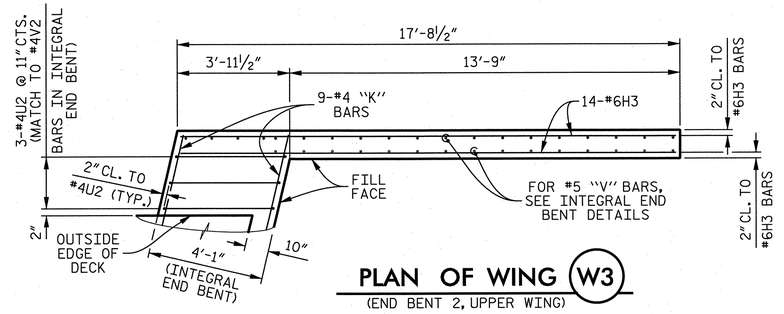

PLAN OF WING (W3)

(END BENT 2, UPPER WING)

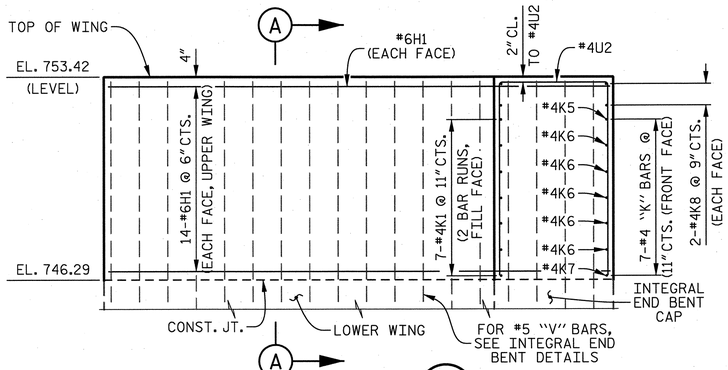

ELEVATION OF WING (W1)

(END BENT 1, UPPER WING)

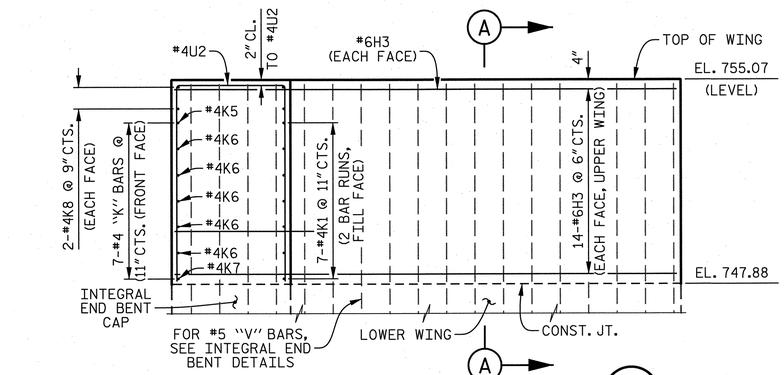

ELEVATION OF WING (W3)

(END BENT 2, UPPER WING)

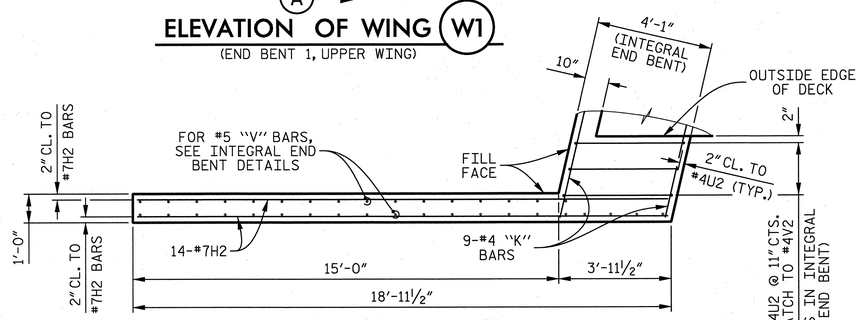

PLAN OF WING (W2)

(END BENT 1, UPPER WING)

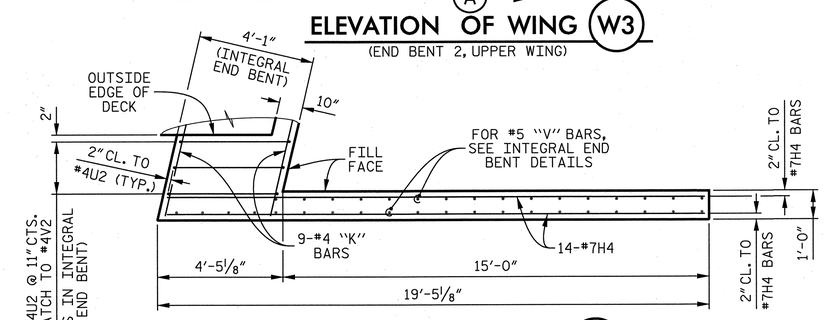

PLAN OF WING (W4)

(END BENT 2, UPPER WING)

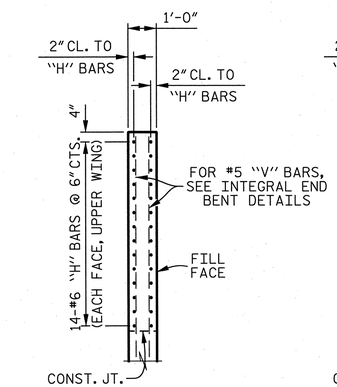

SECTION A–A

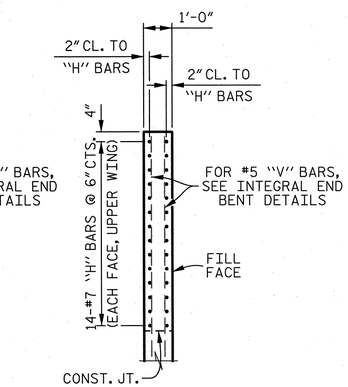

SECTION B–B

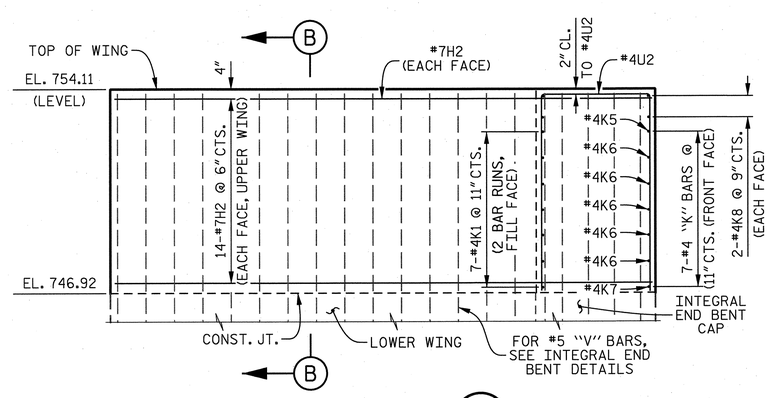

ELEVATION OF WING (W2)

(END BENT 1, UPPER WING)

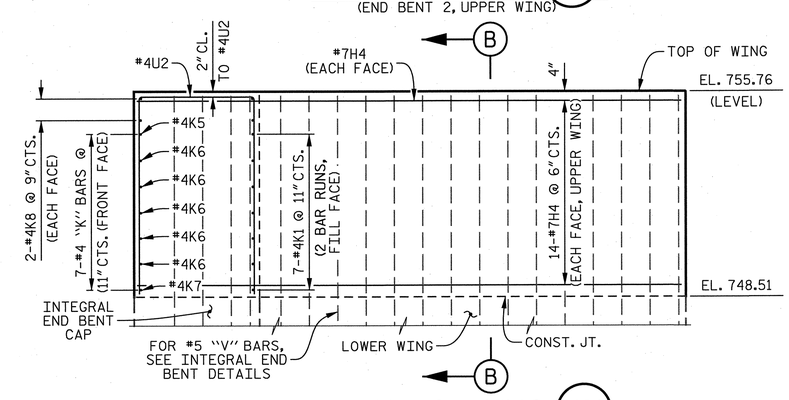

ELEVATION OF WING (W4)

(END BENT 2, UPPER WING)

PROJECT NO. U-2525B

GUILFORD COUNTY

STATION: 174+72.46 -L-

SHEET 2 OF 2

STATE OF NORTH CAROLINA
DEPARTMENT OF TRANSPORTATION
RALEIGH

SUPERSTRUCTURE

PLAN OF SPAN DETAILS

(LEFT LANE)

DRAWN BY : K. E. LOFTON	DATE : 7-13	
CHECKED BY : T. M. HARRIS	DATE : 7-13	
DESIGN ENGINEER : T. M. HARRIS	DATE : 10-13	

PLANS PREPARED BY :
PARSONS
5540 Centerview Drive, Suite 217
Raleigh, NC 27606-3386
NC LICENSE No. F-0246
FOR NORTH CAROLINA DEPARTMENT OF TRANSPORTATION

NORTH CAROLINA PROFESSIONAL SEAL 19299 ENGINEER THOMAS M. HARRIS
12/9/13

DWG. No. S08-008

REVISIONS								
No.	BY:	DATE:	No.	BY:	DATE:		SHEET No.	5-304
1			3				TOTAL SHEETS	541
2			4					

STR. #8

FILE: I:\U-2525b\structures\plans\final\U2525B_SD_Sh8_pn2.dgn
DATE: 11/22/2013 2:15:18 PM

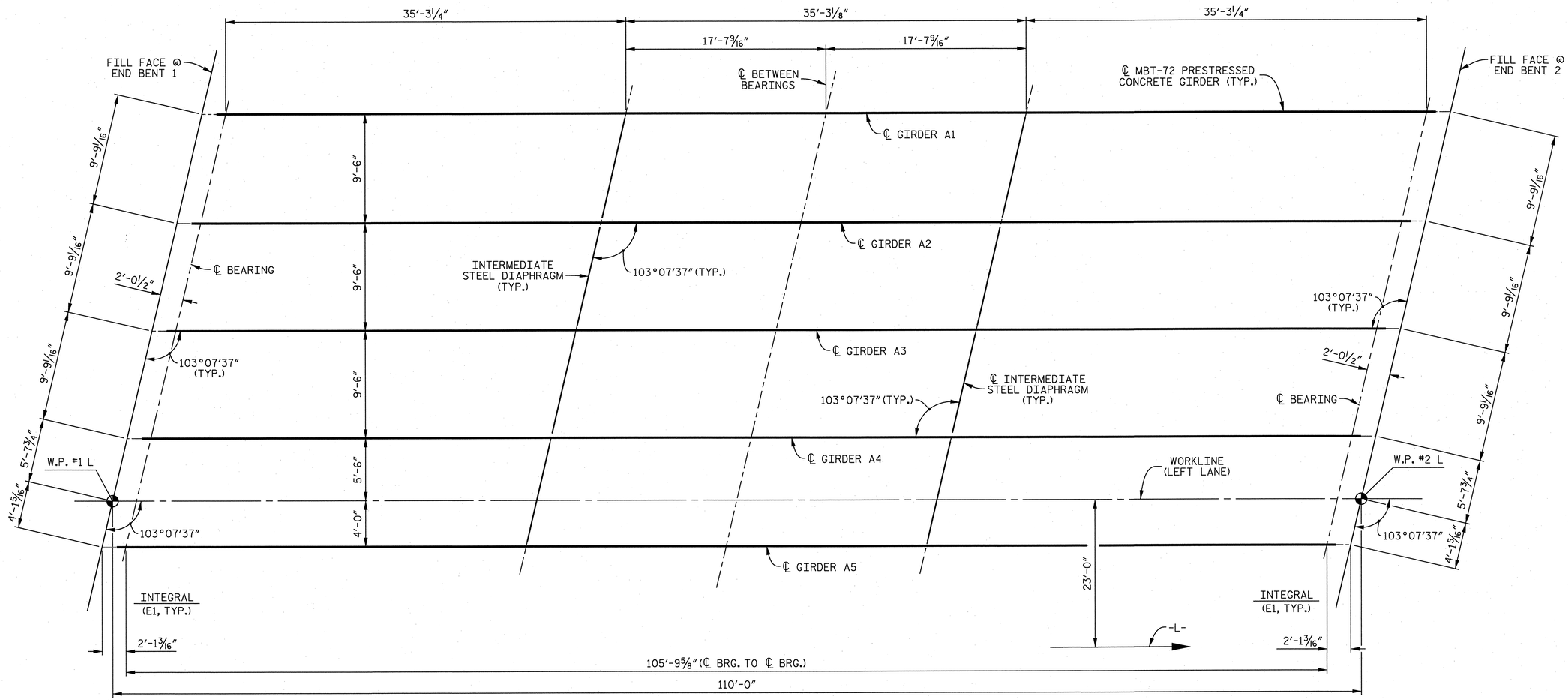

SPAN A

FRAMING PLAN

NOTES

FOR INTERMEDIATE STEEL DIAPHRAGMS, SEE "INTERMEDIATE STEEL DIAPHRAGMS FOR 72" MODIFIED BULB TEE PRESTRESSED CONCRETE GIRDERS" SHEET.

FOR ELASTOMERIC BEARING DETAILS, SEE "ELASTOMERIC BEARING DETAILS PRESTRESSED CONCRETE GIRDER SUPERSTRUCTURE" SHEET.

PROJECT NO. U-2525B
GUILFORD COUNTY
STATION: 174+72.46 -L-

STATE OF NORTH CAROLINA
DEPARTMENT OF TRANSPORTATION
RALEIGH

SUPERSTRUCTURE

FRAMING PLAN

(LEFT LANE)

DRAWN BY : K. E. LOFTON	DATE : 7-13		
CHECKED BY : T. M. HARRIS	DATE : 7-13		
DESIGN ENGINEER : T. M. HARRIS	DATE : 10-13		

PLANS PREPARED BY :
PARSONS
5540 Centerview Drive, Suite 217
Raleigh, NC 27606-3386
NC LICENSE No. F-0246
FOR NORTH CAROLINA DEPARTMENT OF TRANSPORTATION

NORTH CAROLINA PROFESSIONAL SEAL 19299 ENGINEER THOMAS M. HARRIS
12/9/13

DWG. No. S08-009

REVISIONS						SHEET No.
No.	BY:	DATE:	No.	BY:	DATE:	S-305
1			3			TOTAL SHEETS
2			4			541

STR. #8

FILE: i:\u-2525b\structures\plans\final\U2525B_SD_Sn8_fp1.dgn
DATE: 12/2/2013 11:45:34 AM

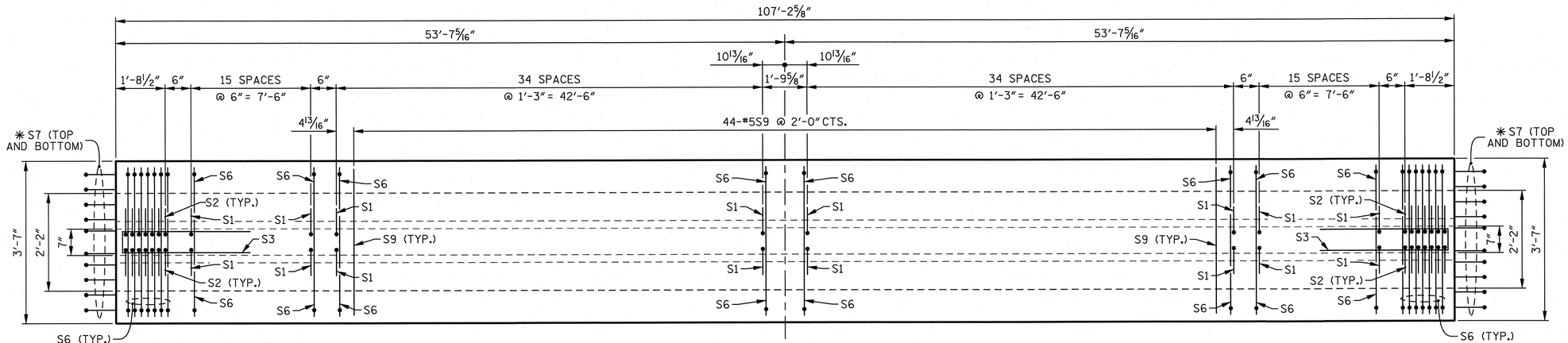

PLAN OF GIRDER

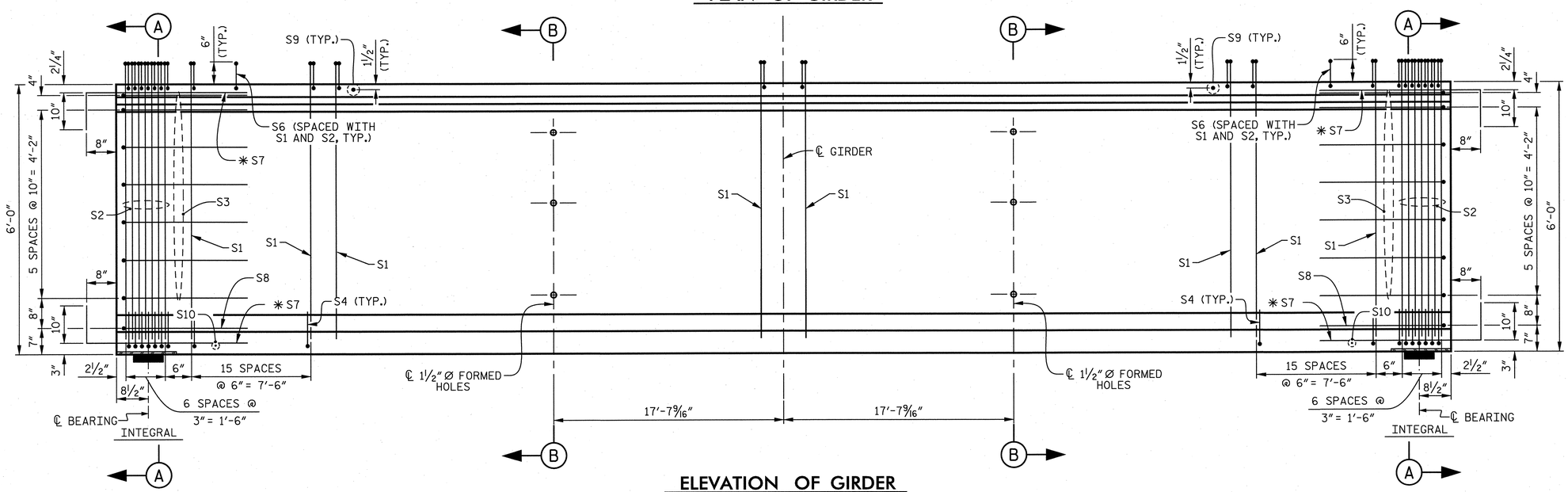

ELEVATION OF GIRDER

NOTES

FOR SECTION A-A AND SECTION B-B, SEE SHEET 2 OF 3.

FOR STRAND PATTERN, SEE SHEET 2 OF 3.

FOR ADDITIONAL NOTES, SEE SHEET 3 OF 3.

0.6" Ø L.R. GRADE 270 STRANDS

AREA (SQUARE INCHES)	ULTIMATE STRENGTH (LBS. PER STRAND)	APPLIED PRESTRESS (LBS. PER STRAND)
0.217	58,600	43,950

REINFORCING STEEL FOR ONE GIRDER

BAR	NUMBER	SIZE	TYPE	LENGTH	WEIGHT
S1	204	#4	1	6'-10"	931
S2	28	#5	1	6'-10"	200
S3	14	#4	2	8'- 5"	79
S4	92	#4	3	3'- 0"	184
S6	232	#5	4	4'- 4"	1,049
✳ S7	40	#5	STR	3'- 8"	153
S8	2	#5	2	9'- 0"	19
S9	44	#5	STR	3'- 3"	149
S10	2	#3	STR	1'-10"	1
S11	8	#5	5	11'- 6"	96
S12	16	#4	STR	8'- 0"	86

✳ NOTE: S7 BARS SHALL BE BENT BEFORE SHIPMENT. HEAT BENDING SHALL NOT BE ALLOWED.

BAR TYPES

ALL BAR DIMENSIONS ARE OUT-TO-OUT.

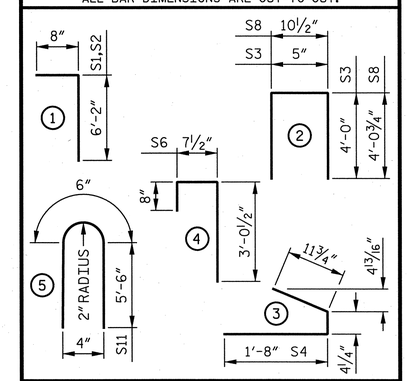

QUANTITIES FOR ONE GIRDER

	REINFORCING STEEL	7,500 PSI CONCRETE	0.6" Ø L.R. STRANDS
GIRDERS	LB.	C.Y.	No.
A1 THRU A5	2,947	23.0	34

GIRDERS REQUIRED

LOCATION	NUMBER	LENGTH	TOTAL LENGTH
SPAN A	5	107'-2 5/8"	536.09'

PROJECT NO. U-2525B

GUILFORD COUNTY

STATION: 174+72.46 -L-

SHEET 1 OF 4

STATE OF NORTH CAROLINA
DEPARTMENT OF TRANSPORTATION
RALEIGH

STANDARD

72" PRESTRESSED CONCRETE MODIFIED BULB TEE GIRDER

(LEFT LANE)

REVISIONS								SHEET No.
No.	BY:	DATE:	No.	BY:	DATE:			5-306
1			3					TOTAL SHEETS
2			4					541

STD. No. PCG8 STR. #8

DWG. No. S08-010

NORTH CAROLINA PROFESSIONAL SEAL 18299 ENGINEER THOMAS M. HARRIS
12/9/13

PLANS PREPARED BY :
PARSONS
5540 Centerview Drive, Suite 217
Raleigh, NC 27606-3386
NC LICENSE No. F-0246
FOR NORTH CAROLINA DEPARTMENT OF TRANSPORTATION

DRAWN BY :	K. E. LOFTON	DATE : 7-13
CHECKED BY :	T. M. HARRIS	DATE : 7-13
DESIGN ENGINEER :	T. M. HARRIS	DATE : 10-13

ASSEMBLED BY : K. E. LOFTON	DATE : 7-13	
CHECKED BY : T. M. HARRIS	DATE : 7-13	
DRAWN BY : EEM 2/6/97	REV. 5/1/06R	TLA/GM
CHECKED BY : VAP 2/6/97	REV. 10/1/11	MAA/GM
	REV. 6/13	MAA/GM

FILE: j:\u-2525b\structures\plans\final\U2525B_SD_Sn8_pg1.dgn
DATE: 12/20/13 11:45:36 AM

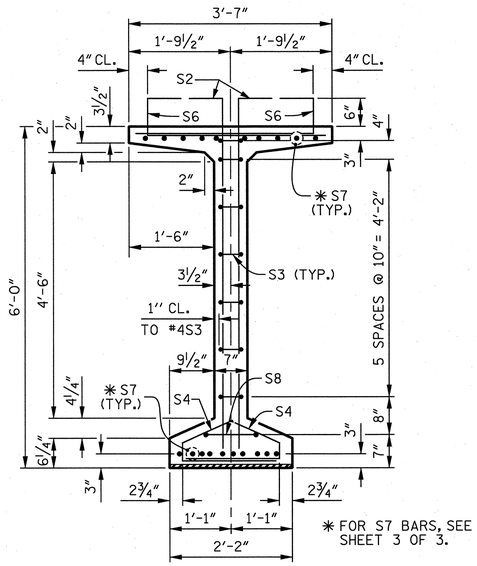

SECTION A–A

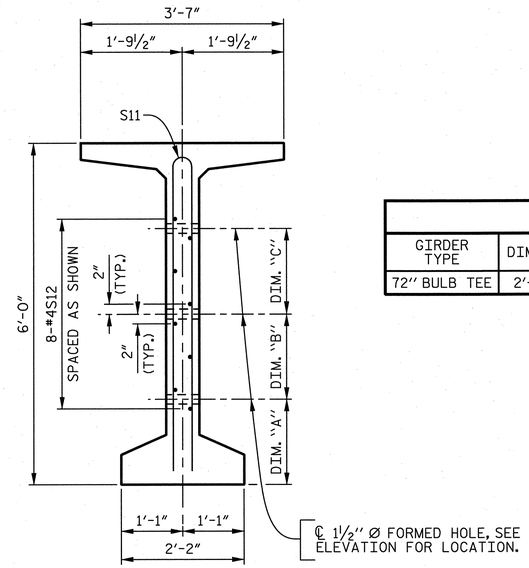

SECTION B–B

(S1, S6 AND S9 BARS NOT SHOWN)

TABLE				
GIRDER TYPE	DIM "A"	DIM "B"	DIM "C"	DIM "L"
72" BULB TEE	2'-0½"	1'-5½"	1'-4¾"	4'-2"

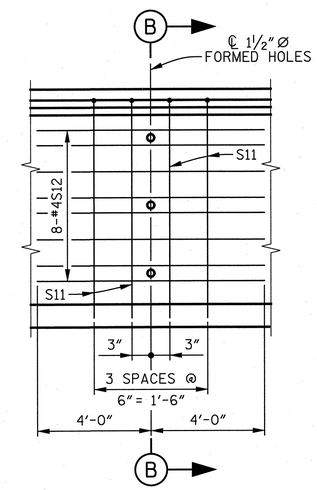

PARTIAL ELEVATION

SHOWING INTERMEDIATE DIAPHRAGM REINFORCING STEEL FOR ALL GIRDERS

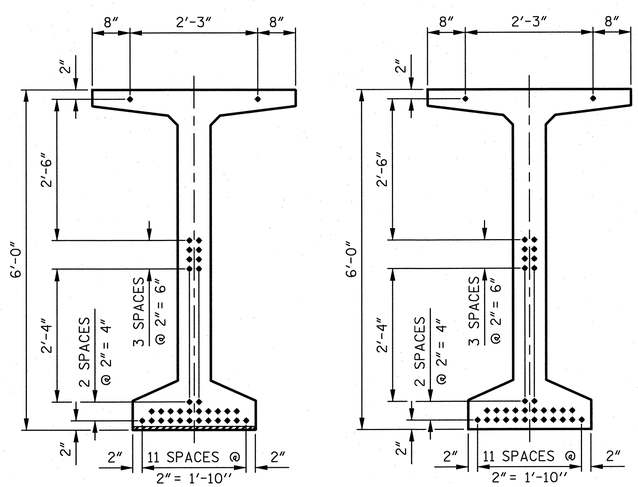

AT END OF GIRDER

AT ℄ OF GIRDER

34 – 0.6" Ø LOW RELAXATION STRAND LAYOUT

PROJECT NO. U–2525B

GUILFORD COUNTY

STATION: 174+72.46 –L–

SHEET 2 OF 4

STATE OF NORTH CAROLINA
DEPARTMENT OF TRANSPORTATION
RALEIGH

STANDARD

72" PRESTRESSED CONCRETE MODIFIED BULB TEE GIRDER

(LEFT LANE)

REVISIONS								SHEET No.
No.	BY:	DATE:	No.	BY:	DATE:			5-307
1			3					TOTAL SHEETS
2			4					541

NORTH CAROLINA PROFESSIONAL SEAL 18299 ENGINEER THOMAS M. HARRIS
12/9/13

DWG. No. S08–011

STD. No. PCG8

STR. #8

PLANS PREPARED BY :
PARSONS
5540 Centerview Drive, Suite 217
Raleigh, NC 27606-3386
NC LICENSE No. F-0246
FOR NORTH CAROLINA DEPARTMENT OF TRANSPORTATION

DRAWN BY :	K. E. LOFTON	DATE :	7-13
CHECKED BY :	T. M. HARRIS	DATE :	7-13
DESIGN ENGINEER :	T. M. HARRIS	DATE :	10-13

ASSEMBLED BY :	K. E. LOFTON	DATE :	7-13
CHECKED BY :	T. M. HARRIS	DATE :	7-13
DRAWN BY :	EEM 2/6/97	REV. 5/1/06R	TLA/GM
CHECKED BY :	VAP 2/6/97	REV. 10/1/11	MAA/GM
		REV. 6/13	MAA/GM

FILE: I:\u-2525b\structures\plans\final\U2525B_SD_Sh8_pg2.dgn
DATE: 12/3/2013 11:45:37 AM

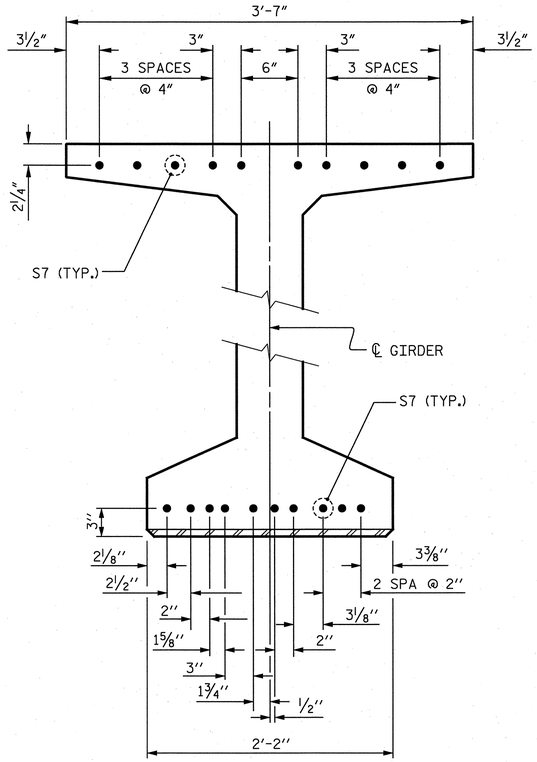

DETAIL "C"

(FOR 72" MODIFIED BULB TEES)

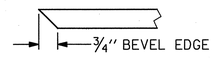

SECTION "F"

(SEE NOTES)

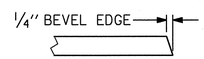

SECTION "G"

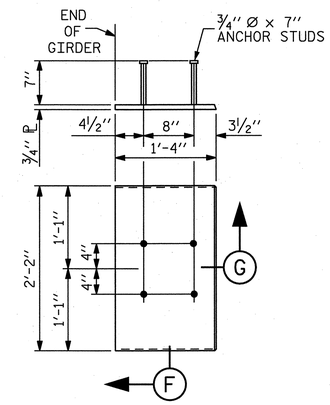

EMBEDDED PLATE "B-1" DETAILS FOR 72" MODIFIED BULB TEES

(2 REQUIRED PER GIRDER)

NOTES

ALL PRESTRESSING STRANDS SHALL BE 7-WIRE LOW-RELAXATION GRADE 270 STRANDS AND SHALL CONFORM TO AASHTO M203 EXCEPT FOR SAMPLING REQUIREMENTS WHICH SHALL BE IN ACCORDANCE WITH THE STANDARD SPECIFICATIONS.

ALL REINFORCING STEEL SHALL BE GRADE 60.

EMBEDDED PLATE "B-1" SHALL BE GALVANIZED IN ACCORDANCE WITH THE STANDARD SPECIFICATIONS. BEVEL EDGES OF PLATE "B-1" TO GIVE CLOSE FIT BUT NOT TIGHT FIT TO STEEL CASTING FORM.

ANCHOR STUDS SHALL CONFORM TO AASHTO M169 GRADES 1010 THROUGH 1020 OR APPROVED EQUAL, AND SHALL MEET THE TYPE "B" REQUIREMENTS OF SUBSECTION 7.3 OF THE ANSI/AASHTO/AWS D1.5 BRIDGE WELDING CODE.

AT ENDS OF GIRDERS TO BE EMBEDDED IN CONCRETE DIAPHRAGMS OR END WALLS, PRESTRESSING STRANDS MAY EXTEND A MAXIMUM OF 2" BEYOND THE GIRDER ENDS. OTHERWISE, PRESTRESSING STRANDS SHALL BE CUT FLUSH WITH THE GIRDER ENDS.

THE TRANSFER OF LOAD FROM THE ANCHORAGES TO THE GIRDER SHALL BE DONE WHEN CONCRETE HAS REACHED A COMPRESSIVE STRENGTH OF NOT LESS THAN 7,000 PSI.

DEPENDING ON THE TYPE OF SYSTEM USED TO SUPPORT THE DECK SLAB FORMS, PRESET ANCHORS MAY BE NECESSARY IN THE PRESTRESSED CONCRETE GIRDER.

THE TOP SURFACE OF THE GIRDER, EXCLUDING THE OUTSIDE 4", SHALL BE RAKED TO A DEPTH OF ¼".

A 2" × 2" CHAMFER IS ALLOWED AT THE INTERSECTION OF THE WEB AND THE BOTTOM FLANGE OF THE 72" MODIFIED BULB TEES.

THE CONTRACTOR HAS THE OPTION TO PROVIDE, AT NO ADDITIONAL COST TO THE DEPARTMENT, 2 ADDITIONAL STRANDS AT THE TOP OF THE GIRDER TO FACILITATE TYING OF THE REINFORCING STEEL. THESE STRANDS SHALL BE PULLED TO A LOAD OF 4,500 LBS.

CAMBER AND DEAD LOAD DEFLECTIONS

	SPAN A																				
GIRDERS 1 THRU 5	℄ BRG.	0.05	0.10	0.15	0.20	0.25	0.30	0.35	0.40	0.45	0.50	0.55	0.60	0.65	0.70	0.75	0.80	0.85	0.90	0.95	℄ BRG.
CAMBER (GIRDER ALONE IN PLACE) ↑	0.000	0.046	0.093	0.126	0.159	0.181	0.202	0.215	0.227	0.231	0.235	0.231	0.227	0.215	0.202	0.181	0.159	0.126	0.093	0.046	0.000
DEFLECTION DUE TO SUPERIMPOSED D.L. ✱ ↑	0.000	0.017	0.033	0.049	0.065	0.077	0.090	0.098	0.106	0.109	0.111	0.109	0.106	0.098	0.090	0.077	0.065	0.049	0.033	0.017	0.000
FINAL CAMBER ↑	0	⅜"	11/16"	15/16"	1⅛"	1¼"	1⅜"	1⅜"	1 7/16"	1 7/16"	1½"	1 7/16"	1 7/16"	1⅜"	1⅜"	1¼"	1⅛"	15/16"	11/16"	⅜"	0

✱ INCLUDES FUTURE WEARING SURFACE

ALL VALUES ARE SHOWN IN FEET (DECIMAL FORM), EXCEPT "FINAL CAMBER", WHICH IS GIVEN IN INCHES (FRACTION FORM).

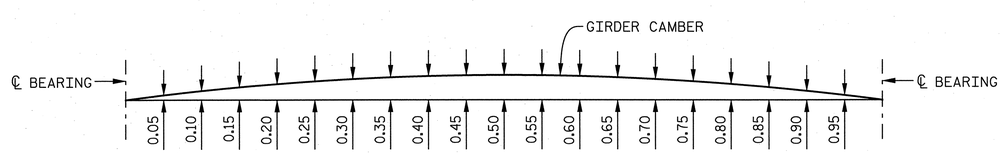

GIRDER CAMBER AND DEFLECTIONS

PROJECT NO. U-2525B
GUILFORD COUNTY
STATION: 174+72.46 -L-

SHEET 3 OF 4

STATE OF NORTH CAROLINA
DEPARTMENT OF TRANSPORTATION
RALEIGH

STANDARD

72" PRESTRESSED CONCRETE MODIFIED BULB TEE GIRDER

(LEFT LANE)

ASSEMBLED BY : K. E. LOFTON	DATE : 7-13		
CHECKED BY : T. M. HARRIS	DATE : 7-13		
DRAWN BY : EEM 2/6/97	REV. 5/1/06R	TLA/GM	
CHECKED BY : VAP 2/6/97	REV. 10/1/11	MAA/GM	
	REV. 6/13	MAA/GM	

DRAWN BY : K. E. LOFTON DATE : 7-13
CHECKED BY : T. M. HARRIS DATE : 7-13
DESIGN ENGINEER : T. M. HARRIS DATE : 10-13

PLANS PREPARED BY :
PARSONS
5540 Centerview Drive, Suite 217
Raleigh, NC 27606-3386
NC LICENSE No. F-0246
FOR NORTH CAROLINA DEPARTMENT OF TRANSPORTATION

NORTH CAROLINA PROFESSIONAL SEAL 19299 ENGINEER THOMAS M. HARRIS
12/9/13

DWG. No. S08-012

REVISIONS						
No.	BY:	DATE:	No.	BY:	DATE:	
1			3			
2			4			

SHEET No. S-308
TOTAL SHEETS 541

STD. No. PCG8 STR. #8

FILE: i:\u-2525b\structures\plans\final\U2525B_SD_Sr8_pg3.dgn
DATE: 12/3/2013 11:45:38 AM

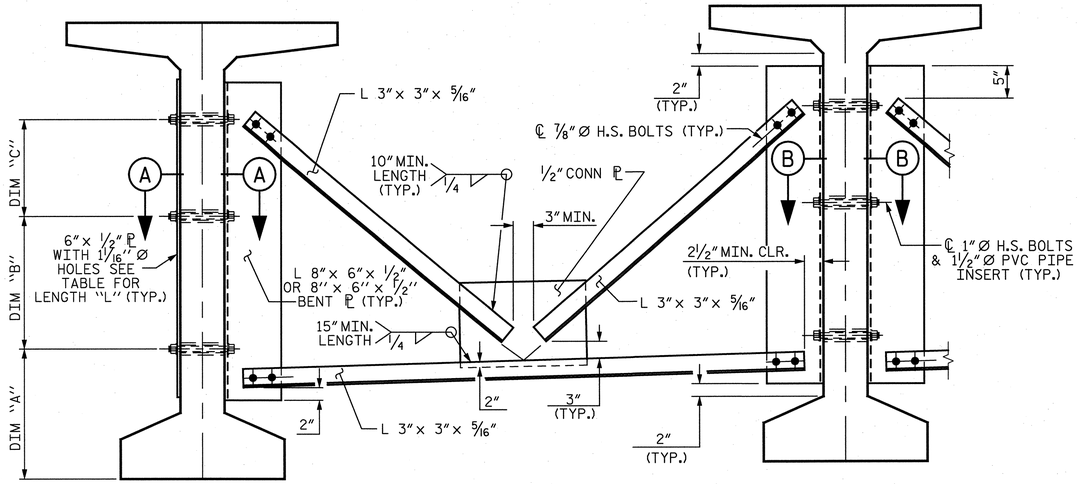

PART SECTION AT INTERMEDIATE DIAPHRAGM

(72″ BULB TEE)

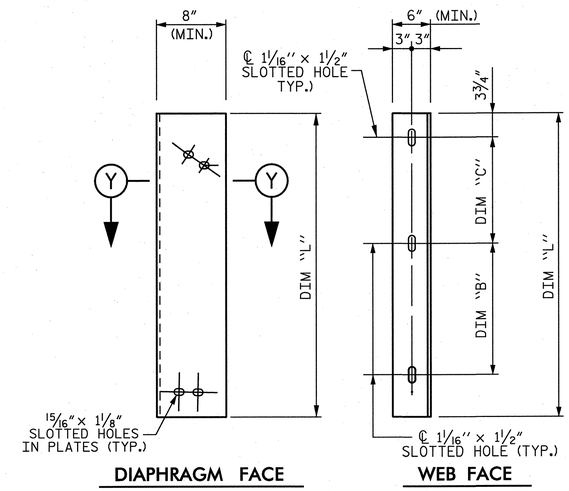

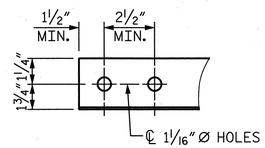

ANGLE END

(L 3″× 3″× 5/16″)

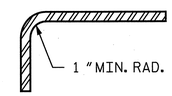

SECTION Y–Y

CONNECTOR PLATE DETAILS

STRUCTURAL STEEL NOTES

ALL INTERMEDIATE DIAPHRAGM STEEL AND CONNECTOR PLATES SHALL BE AASHTO M270 GRADE 50 OR APPROVED EQUAL.

TENSION ON THE ASTM A325 BOLTS THROUGH THE ANGLE MEMBER SHALL BE CALIBRATED USING DIRECT TENSION INDICATOR WASHERS IN ACCORDANCE WITH THE STANDARD SPECIFICATIONS.

TENSION ON THE ASTM A449 BOLTS THROUGH THE GIRDER WEB SHALL BE SNUG TIGHTENED FOLLOWED BY AN ADDITIONAL 1/4 TURN.

THE PLATES, BENT PLATES, AND ANGLES SHALL BE GALVANIZED OR METALLIZED IN ACCORDANCE WITH THE STANDARD SPECIFICATIONS. FOR THERMAL SPRAYED COATINGS (METALLIZATION), SEE SPECIAL PROVISIONS.

FOR METALLIZATION, APPLY AN 8 MIL THICK 99.99 PERCENT ZINC (W-Zn-1) THERMAL SPRAYED COATING WITH A 0.5 MIL THICK SEAL COAT TO ALL STEEL DIAPHRAGM SURFACES IN ACCORDANCE WITH THE THERMAL SPRAYED COATINGS SPECIAL PROVISION AND SECTION 442 OF THE STANDARD SPECIFICATIONS.

GALVANIZE THE HIGH STRENGTH BOLTS, NUTS, WASHERS AND DIRECT TENSION INDICATORS IN ACCORDANCE WITH THE STANDARD SPECIFICATIONS.

USE AN ASTM F436 HARDENED WASHER WITH STANDARD AND SLOTTED HOLES UNDER EACH BOLT HEAD AND NUT.

FOR BOLTS THROUGH THE GIRDER WEB, PROVIDE SUFFICIENT LENGTH OF THREADS ON ALL BOLTS TO ACCOMMODATE WASHERS AND THE THICKNESS OF CONNECTING MEMBER PLUS AT LEAST 1/4″ PROJECTION BEYOND THE NUT.

INTERMEDIATE DIAPHRAGM ASSEMBLY SHALL COMPLY WITH SECTION 1072 OF THE STANDARD SPECIFICATIONS.

SUBMIT TWO SETS OF WORKING DRAWINGS FOR THE INTERMEDIATE DIAPHRAGM ASSEMBLY FOR REVIEW, COMMENTS AND ACCEPTANCE. AFTER REVIEW, COMMENTS, AND ACCEPTANCE, SUBMIT SEVEN SETS FOR DISTRIBUTION.

IN THE EXTERIOR BAYS, PLACE TEMPORARY STRUTS BETWEEN PRESTRESSED GIRDERS ADJACENT TO THE STEEL DIAPHRAGMS. STRUTS SHALL REMAIN IN PLACE 3 DAYS AFTER CONCRETE IS PLACED.

THE COST OF THE STEEL DIAPHRAGMS AND ASSEMBLIES SHALL BE INCLUDED IN THE UNIT PRICE BID FOR PRESTRESSED CONCRETE GIRDERS.

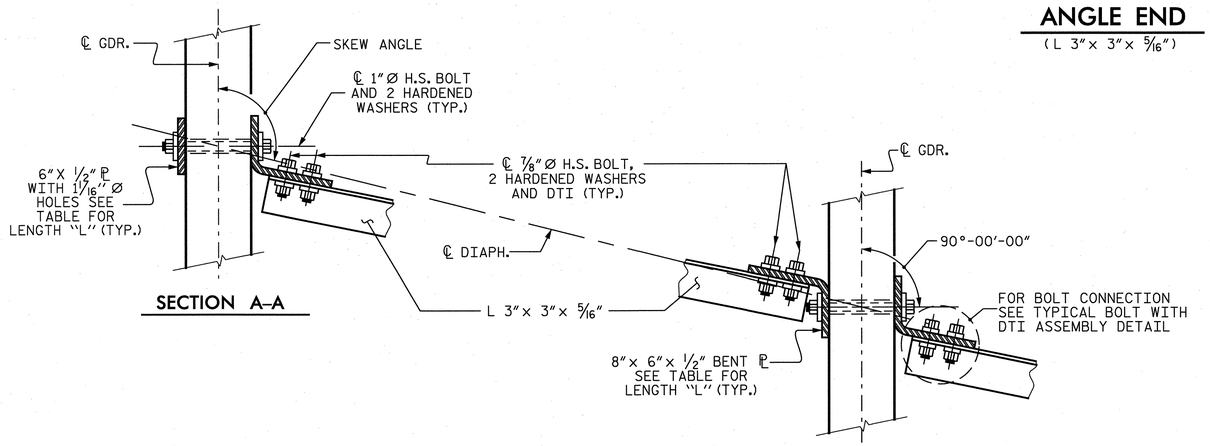

CONNECTION DETAILS

(90°< SKEW < 110°)

TABLE				
GIRDER TYPE	DIM "A"	DIM "B"	DIM "C"	DIM "L"
72″ BULB TEE	2′-0 1/2″	1′-5 1/2″	1′-4 3/4″	4′-2″

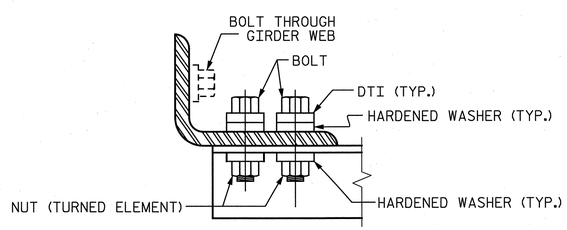

BOLT WITH DTI ASSEMBLY DETAIL

PROJECT NO. U–2525B

GUILFORD COUNTY

STATION: 174+72.46 –L–

SHEET 4 OF 4

STATE OF NORTH CAROLINA
DEPARTMENT OF TRANSPORTATION
RALEIGH

STANDARD

INTERMEDIATE STEEL DIAPHRAGMS FOR 72″ MODIFIED BULB TEE PRESTRESSED CONCRETE GIRDERS

(LEFT LANE)

REVISIONS						
No.	BY:	DATE:	No.	BY:	DATE:	
1			3			
2			4			

SHEET No. 5-309

TOTAL SHEETS 541

STD. No. PCG11 STR. #8

NORTH CAROLINA PROFESSIONAL SEAL 18299 ENGINEER THOMAS M. HARRIS 12/4/13

DWG. No. S08-013

PLANS PREPARED BY :
PARSONS
5540 Centerview Drive, Suite 217
Raleigh, NC 27606-3386
NC LICENSE No. F-0246
FOR NORTH CAROLINA DEPARTMENT OF TRANSPORTATION

DRAWN BY :	K. E. LOFTON	DATE :	7-13
CHECKED BY :	T. M. HARRIS	DATE :	7-13
DESIGN ENGINEER :	T. M. HARRIS	DATE :	10-13

ASSEMBLED BY :	K. E. LOFTON	DATE :	7-13
CHECKED BY :	T. M. HARRIS	DATE :	7-13
DRAWN BY : RWW 11/09	ADDED 11/23/09		
CHECKED BY : GM 11/09	REV. 10/1/11	MAA/GM	

FILE: j:\u-2525b\structures\plans\final\U2525B_SD_SnB_dt1.dgn
DATE: 12/3/2013 11:45:39 AM

NOTES

THE ELASTOMER IN THE STEEL REINFORCED BEARINGS SHALL HAVE A SHEAR MODULUS OF 0.160 KSI, IN ACCORDANCE WITH AASHTO M251.

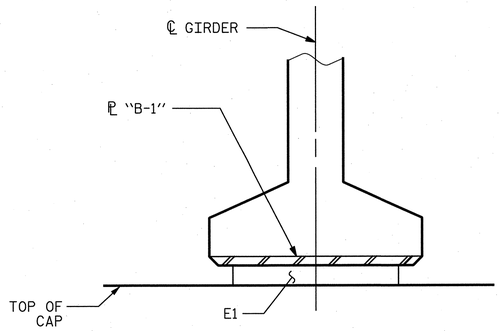

INTEGRAL

SECTION E–E

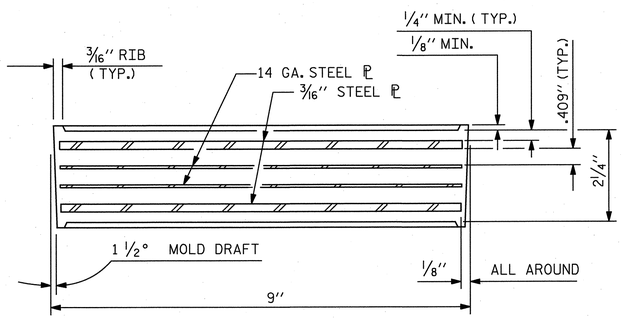

TYPICAL SECTION OF ELASTOMERIC BEARINGS

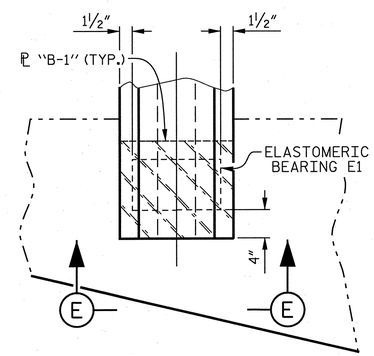

PARTIAL PLAN – INTEGRAL END BENT

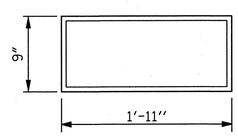

E1 (10 REQUIRED)

PLAN VIEW OF ELASTOMERIC BEARING

TYPE V

MAXIMUM ALLOWABLE SERVICE LOAD	
	D.L.+ L.L. (NO IMPACT)
TYPE V	365 K

PROJECT NO. U–2525B

GUILFORD COUNTY

STATION: 174+72.46 –L–

STATE OF NORTH CAROLINA
DEPARTMENT OF TRANSPORTATION
RALEIGH

STANDARD

ELASTOMERIC BEARING DETAILS PRESTRESSED CONCRETE GIRDER SUPERSTRUCTURE (LEFT LANE)

REVISIONS						
No.	BY:	DATE:	No.	BY:	DATE:	
1			3			
2			4			

SHEET No. S-310

TOTAL SHEETS 541

STD. No. EB4 STR. #8

NORTH CAROLINA PROFESSIONAL SEAL 19299 ENGINEER THOMAS M. HARRIS 12/9/13

DWG. No. S08-014

PLANS PREPARED BY :
PARSONS
5540 Centerview Drive, Suite 217
Raleigh, NC 27606-3386
NC LICENSE No. F-0246
FOR NORTH CAROLINA DEPARTMENT OF TRANSPORTATION

DRAWN BY :	K. E. LOFTON	DATE :	7-13
CHECKED BY :	T. M. HARRIS	DATE :	7-13
DESIGN ENGINEER :	T. M. HARRIS	DATE :	10-13

ASSEMBLED BY :	K. E. LOFTON	DATE :	7-13
CHECKED BY :	T. M. HARRIS	DATE :	7-13
DRAWN BY : EEM	2/97	REV. 5/1/06	TLA/GM
CHECKED BY : VAP	2/97	REV. 10/1/11	MAA/GM
		REV. 6/13	AAC/MAA

FILE: j:\u-2525b\structural\plans\final\U2525B_SD_Sn8_eb1.dgn
DATE: 12/2/2013 2:15:24 PM

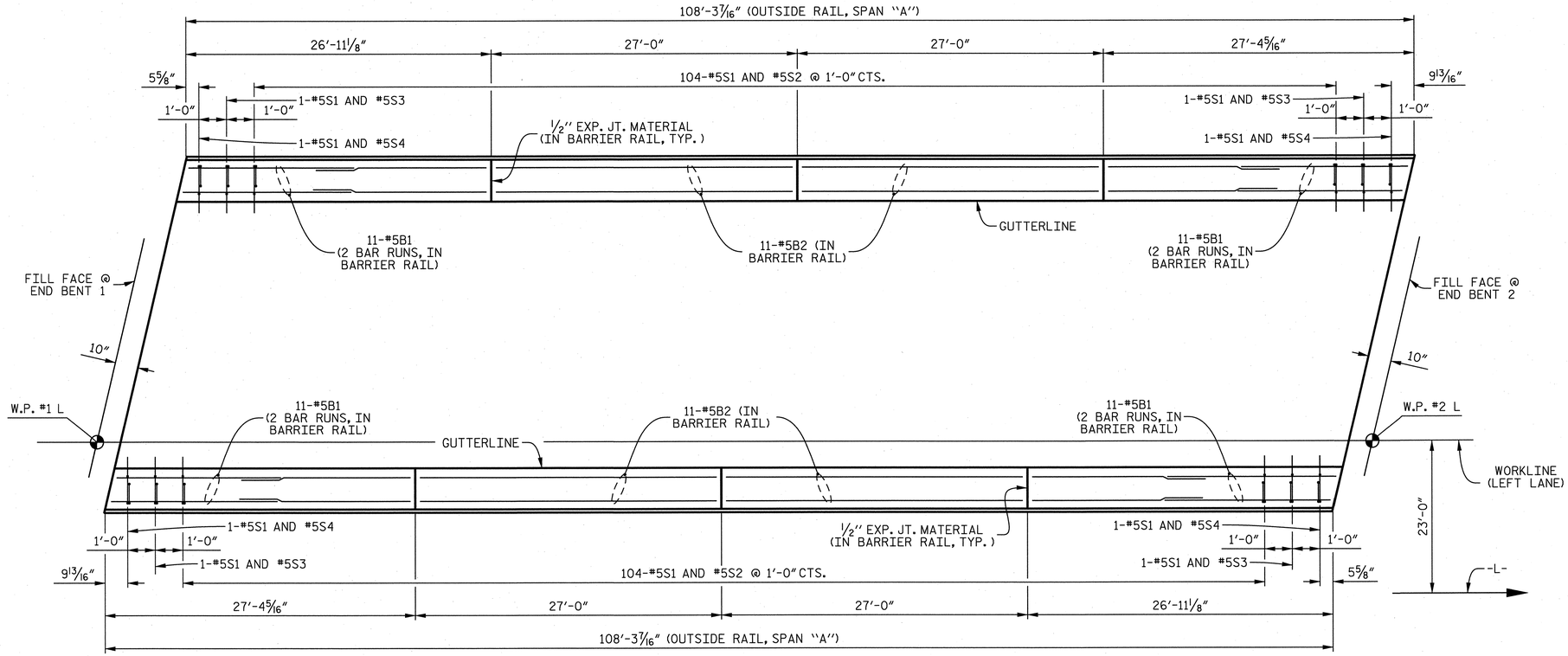

PLAN OF BARRIER RAIL

SPLICE LENGTH		
BAR	SIZE	LENGTH
B1	#5	3'-5"

BAR TYPES

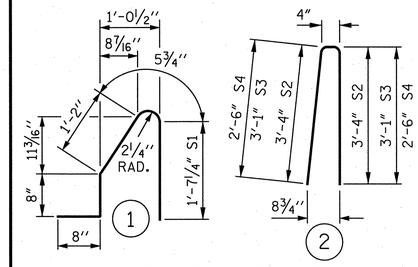

ALL BAR DIMENSIONS ARE OUT TO OUT.

BILL OF MATERIAL

FOR CONCRETE BARRIER RAIL ONLY

BAR	No.	SIZE	TYPE	LENGTH	WEIGHT
✱B1	88	#5	STR	15'- 3"	1,400
✱B2	44	#5	STR	26'- 7"	1,220
✱S1	216	#5	1	4'- 7"	1,033
✱S2	208	#5	2	7'- 0"	1,519
✱S3	4	#5	2	6'- 6"	27
✱S4	4	#5	2	5'- 4"	22
✱EPOXY COATED REINFORCING STEEL					5,221 LBS.
CLASS "AA" CONCRETE					29.4 CU. YDS.
CONCRETE BARRIER RAIL					216.58 LIN. FT.

NOTES

THE BARRIER RAIL IN SPAN "A" SHALL NOT BE CAST UNTIL ALL SLAB CONCRETE IN THE SPAN HAS BEEN CAST AND HAS REACHED A MINIMUM COMPRESSIVE STRENGTH OF 3,000 PSI.

ALL REINFORCING STEEL IN BARRIER RAILS SHALL BE EPOXY COATED.

GROOVED CONTRACTION JOINTS, 1/2" IN DEPTH, SHALL BE TOOLED IN ALL EXPOSED FACES OF THE BARRIER RAIL AND IN ACCORDANCE WITH ARTICLE 825-10(B) OF THE STANDARD SPECIFICATIONS. THE CONTRACTION JOINT SHALL BE LOCATED AT EACH THIRD POINT BETWEEN BARRIER RAIL EXPANSION JOINTS. ONLY ONE CONTRACTION JOINT IS REQUIRED AT MIDPOINT OF BARRIER RAIL SEGMENTS LESS THAN 20 FEET IN LENGTH AND NO CONTRACTION JOINTS ARE REQUIRED FOR THOSE SEGMENTS LESS THAN 10 FEET IN LENGTH.

THE #5S1 AND #5S2 BARS MAY BE SHIFTED AS NECESSARY TO CLEAR EXPANSION JOINTS IN RAIL.

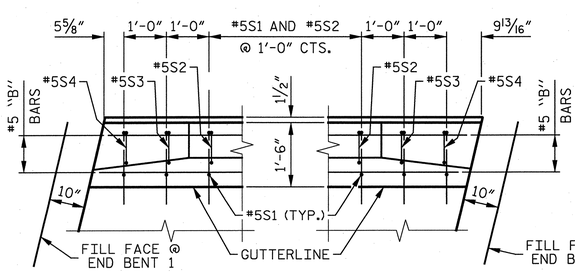

PLAN @ END BENT 1

LEFT SIDE SHOWN, RIGHT SIDE SIMILAR

PLAN @ END BENT 2

LEFT SIDE SHOWN, RIGHT SIDE SIMILAR

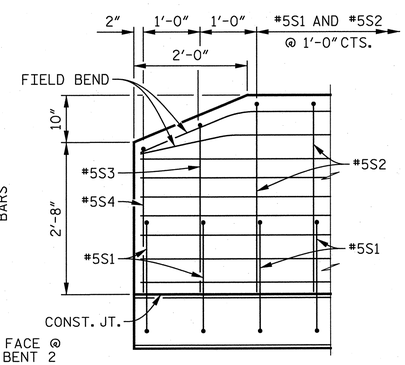

ELEVATION VIEW

END OF RAIL DETAILS

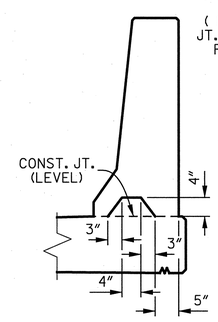

SECTION S–S

AT DAM IN OPEN JOINT (THIS IS TO BE USED ONLY WHEN SLIP FORM IS USED)

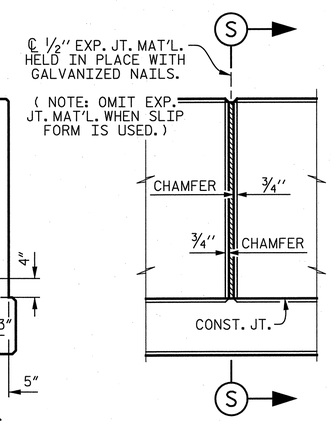

ELEVATION AT EXPANSION JOINTS

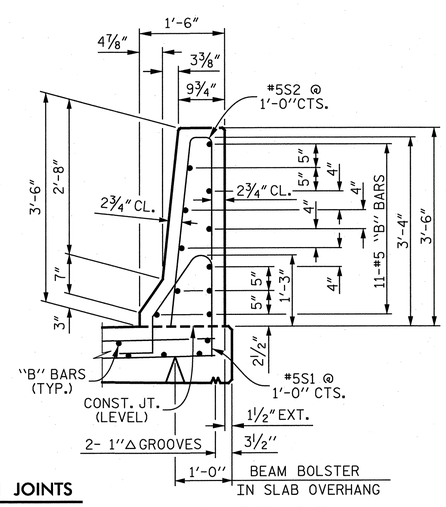

SECTION THRU RAIL

BARRIER RAIL DETAILS

PROJECT NO. U-2525B

GUILFORD COUNTY

STATION: 174+72.46 -L-

STATE OF NORTH CAROLINA
DEPARTMENT OF TRANSPORTATION
RALEIGH

STANDARD

CONCRETE BARRIER RAIL (LEFT LANE)

ASSEMBLED BY :	K. E. LOFTON	DATE :	7-13
CHECKED BY :	T. M. HARRIS	DATE :	7-13

DRAWN BY : ARB 5/87	REV. 10/1/11	MAA/GM
CHECKED BY : SJD 9/87	REV. 7/12	MAA/GM
	REV. 6/13	MAA/GM

DRAWN BY :	K. E. LOFTON	DATE :	7-13
CHECKED BY :	T. M. HARRIS	DATE :	7-13
DESIGN ENGINEER :	T. M. HARRIS	DATE :	10-13

PLANS PREPARED BY :
PARSONS
5540 Centerview Drive, Suite 217
Raleigh, NC 27606-3386
NC LICENSE No. F-0246
FOR NORTH CAROLINA DEPARTMENT OF TRANSPORTATION

NORTH CAROLINA PROFESSIONAL SEAL 19299 ENGINEER THOMAS M. HARRIS
12/9/13

DWG. No. S08-015

REVISIONS						
No.	BY:	DATE:	No.	BY:	DATE:	
1			3			
2			4			

SHEET No. S-311

TOTAL SHEETS 541

STD. No. CBR1

STR. #8

FILE: i:\u-2525b\structures\plans\final\U2525B_SD_SH8_brl.dgn
DATE: 12/2/2013 2:15:25 PM

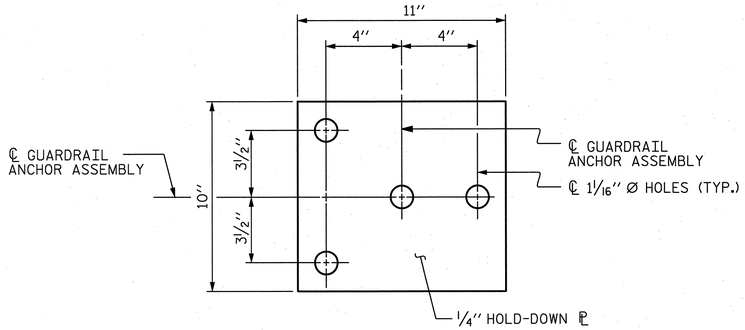

PLAN

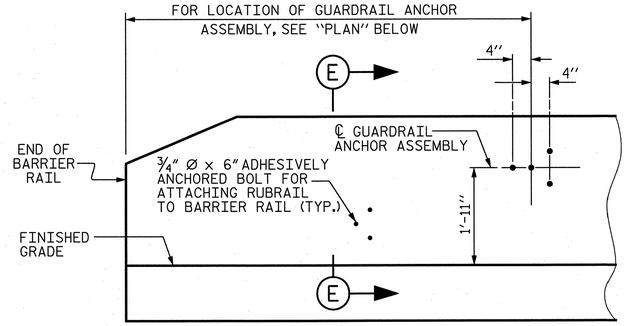

ELEVATION

(END BENT 1 SHOWN, END BENT 2 SIMILAR)

NOTES

THE GUARDRAIL ANCHOR ASSEMBLY SHALL CONSIST OF A 1/4'' HOLD DOWN PLATE AND 4 - 7/8'' Ø BOLTS WITH NUTS AND WASHERS, RUBRAIL, AND ADHESIVELY ANCHORED BOLTS.

THE HOLD-DOWN PLATE SHALL CONFORM TO AASHTO M270 GRADE 36. AFTER FABRICATION, THE HOLD-DOWN PLATE SHALL BE HOT-DIP GALVANIZED IN ACCORDANCE WITH AASHTO M111.

BOLTS SHALL CONFORM TO THE REQUIREMENTS OF ASTM A307 AND NUTS SHALL CONFORM TO THE REQUIREMENTS OF AASHTO M291. BOLTS, NUTS AND WASHERS SHALL BE GALVANIZED. (AT THE CONTRACTOR'S OPTION, STAINLESS STEEL BOLTS, NUTS AND WASHERS MAY BE USED AS AN ALTERNATE FOR THE 7/8'' Ø GALVANIZED BOLTS, NUTS AND WASHERS. THEY SHALL CONFORM TO OR EXCEED THE MECHANICAL REQUIREMENTS OF ASTM A307. THE USE OF THIS ALTERNATE SHALL BE APPROVED BY THE ENGINEER.)

THE GUARDRAIL ANCHOR ASSEMBLY IS REQUIRED AT ALL POINTS WHERE APPROACH GUARDRAIL IS TO BE ATTACHED TO THE END OF BARRIER RAIL. FOR POINTS OF ATTACHMENT, SEE SKETCH.

AFTER INSTALLATION, THE EXPOSED THREAD OF THE BOLT SHALL BE BURRED WITH A SHARP POINTED TOOL.

THE COST OF THE GUARDRAIL ANCHOR ASSEMBLY SHALL BE INCLUDED IN THE UNIT CONTRACT PRICE BID FOR CONCRETE BARRIER RAIL.

THE 1 1/4'' Ø HOLES SHALL BE FORMED OR DRILLED WITH A CORE BIT. IMPACT TOOLS WILL NOT BE PERMITTED. ANY CONCRETE DAMAGED BY THIS WORK SHALL BE REPAIRED TO THE SATISFACTION OF THE ENGINEER.

THE C6 x 8.2 RUBRAIL IS TO BE ADHESIVELY ANCHORED TO THE RAIL USING THREE 3/4''Ø x 6'' BOLTS WITH WASHERS. LEVEL ONE FIELD TESTING IS REQUIRED, AND THE YIELD LOAD OF THE 3/4''Ø BOLT IS 12 KIPS. FOR ADHESIVELY ANCHORED ANCHOR BOLTS OR DOWELS, SEE STANDARD SPECIFICATIONS. SEE ROADWAY STANDARD 862.03 FOR DETAILS AND LOCATION OF THE RUBRAIL.

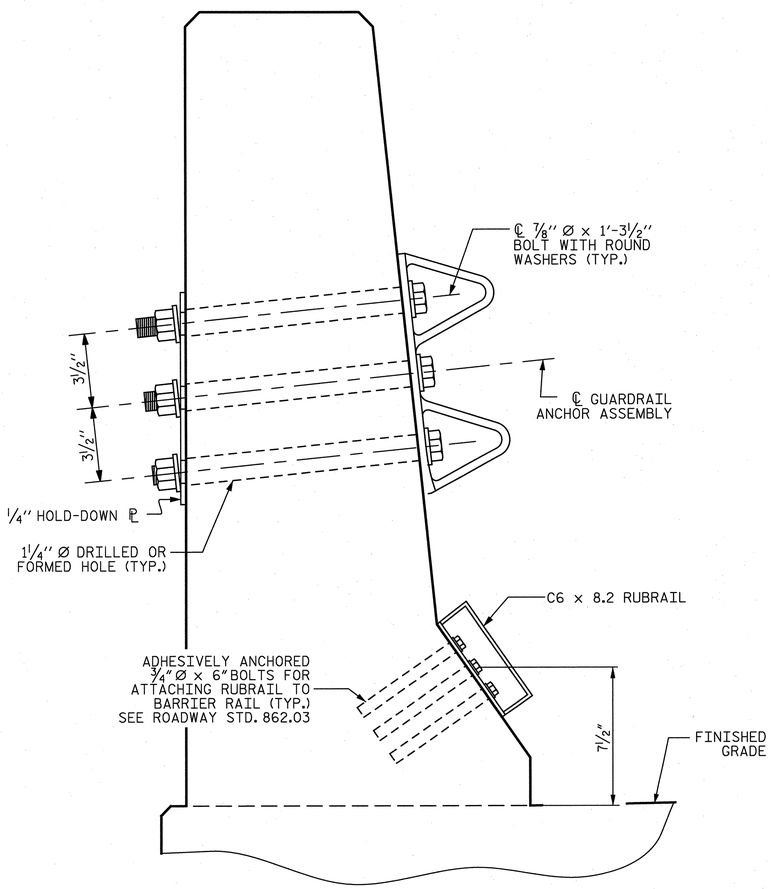

SECTION E–E

GUARDRAIL ANCHOR ASSEMBLY DETAILS

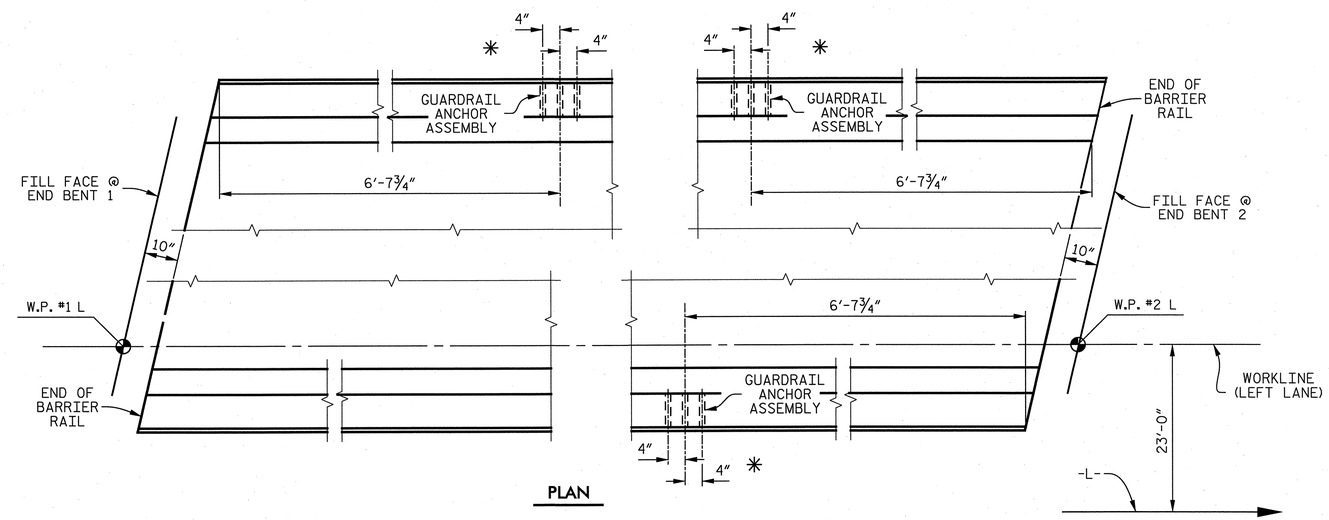

PLAN

LOCATION OF ANCHORS FOR GUARDRAIL

* DENOTES GUARDRAIL ANCHOR ASSEMBLY

PROJECT NO. U–2525B

GUILFORD COUNTY

STATION: 174+72.46 –L–

STATE OF NORTH CAROLINA
DEPARTMENT OF TRANSPORTATION
RALEIGH

STANDARD

GUARDRAIL ANCHORAGE FOR BARRIER RAIL (LEFT LANE)

ASSEMBLED BY :	K. E. LOFTON	DATE :	7-13
CHECKED BY :	T. M. HARRIS	DATE :	7-13

DRAWN BY :	TLA	5/06	REV. 10/1/11	MAA/GM
CHECKED BY :	GM	5/06	REV. 7/12	MAA/GM
			REV. 6/13	MAA/GM

DRAWN BY :	K. E. LOFTON	DATE :	7-13
CHECKED BY :	T. M. HARRIS	DATE :	8-13
DESIGN ENGINEER :	T. M. HARRIS	DATE :	10-13

PLANS PREPARED BY :
PARSONS
5540 Centerview Drive, Suite 217
Raleigh, NC 27606-3386
NC LICENSE No. F-0246
FOR NORTH CAROLINA DEPARTMENT OF TRANSPORTATION

NORTH CAROLINA PROFESSIONAL SEAL 19299 ENGINEER THOMAS M. HARRIS
12/9/13

DWG. No. S08-016

REVISIONS						
No.	BY:	DATE:	No.	BY:	DATE:	
1			3			
2			4			

SHEET No. 5-312

TOTAL SHEETS 541

STD. No. GRA2

STR. #8

FILE: f:\u-2525b\structure\plans\final\U2525B_SD_Sr8_gr1.dgn
DATE: 12/3/2013 11:45:40 AM

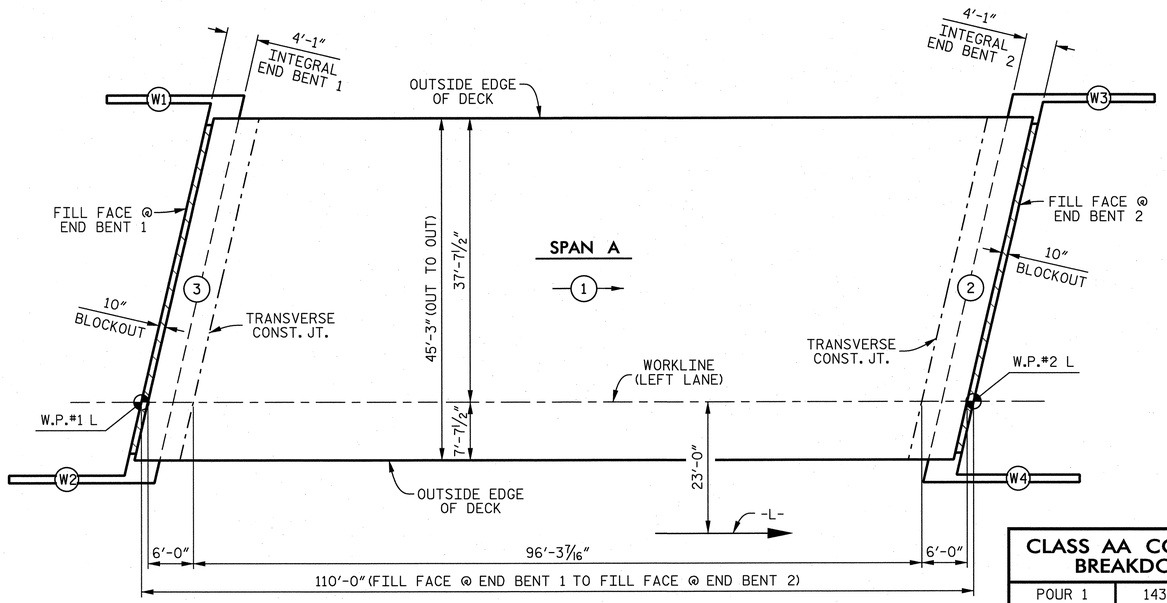

(#) INDICATES POUR NUMBER AND DIRECTION OF POUR.

POURING SEQUENCE

NOTES

REINFORCING STEEL AND CONCRETE FOR THE UPPER WINGS IS INCLUDED IN THE PAY ITEM "REINFORCED CONCRETE DECK SLAB".

POUR 2 AND POUR 3 MAY BE COMBINED.

BAR TYPES

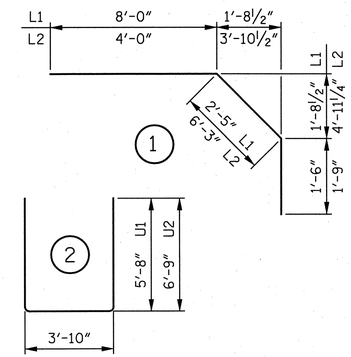

ALL BAR DIMENSIONS ARE OUT TO OUT.

BILL OF MATERIAL SPAN A

BAR	No.	SIZE	TYPE	LENGTH	WEIGHT
✳A1	156	#5	STR	44'-11"	7,308
✳A101	2	#5	STR	43'-6"	91
✳A102	2	#5	STR	40'-10"	85
✳A103	2	#5	STR	38'-2"	80
✳A104	2	#5	STR	35'-6"	74
✳A105	2	#5	STR	32'-10"	68
✳A106	2	#5	STR	30'-1"	63
✳A107	2	#5	STR	27'-5"	57
✳A108	2	#5	STR	24'-9"	52
✳A109	2	#5	STR	22'-1"	46
✳A110	2	#5	STR	19'-5"	41
✳A111	2	#5	STR	16'-9"	35
✳A112	2	#5	STR	14'-0"	29
✳A113	2	#5	STR	11'-4"	24
✳A114	2	#5	STR	8'-8"	18
✳A115	2	#5	STR	6'-0"	13
✳A116	2	#5	STR	3'-4"	7
A2	156	#5	STR	44'-11"	7,308
A201	2	#5	STR	43'-6"	91
A202	2	#5	STR	40'-10"	85
A203	2	#5	STR	38'-2"	80
A204	2	#5	STR	35'-6"	74
A205	2	#5	STR	32'-10"	68
A206	2	#5	STR	30'-1"	63
A207	2	#5	STR	27'-5"	57
A208	2	#5	STR	24'-9"	52
A209	2	#5	STR	22'-1"	46
A210	2	#5	STR	19'-5"	41
A211	2	#5	STR	16'-9"	35
A212	2	#5	STR	14'-0"	29
A213	2	#5	STR	11'-4"	24
A214	2	#5	STR	8'-8"	18
A215	2	#5	STR	6'-0"	13
A216	2	#5	STR	3'-4"	7
✳B1	124	#4	STR	28'-6"	2,361
✳B2	168	#5	STR	22'-0"	3,855
B3	96	#5	STR	55'-1"	5,515
B4	72	#4	STR	22'-0"	1,058
H1	28	#6	STR	17'-8"	743
H2	28	#7	STR	18'-6"	1,059
H3	28	#6	STR	17'-2"	722
H4	28	#7	STR	18'-11"	1,083
K1	28	#4	STR	27'-0"	505
K2	8	#4	STR	5'-9"	31
K3	40	#4	STR	8'-10"	236
K4	8	#4	STR	7'-2"	38
K5	4	#4	STR	4'-10"	13
K6	20	#4	STR	6'-2"	82
K7	4	#4	STR	5'-4"	14
K8	16	#4	STR	2'-9"	29
✳L1	52	#4	1	11'-11"	414
✳L2	52	#4	1	12'-0"	417
✳U1	52	#4	2	15'-2"	527
U2	12	#4	2	17'-4"	139
REINFORCING STEEL					19,358 LBS.
✳EPOXY COATED REINFORCING STEEL					15,665 LBS.

CLASS AA CONCRETE BREAKDOWN

POUR 1	143.8 CU. YDS.
POUR 2	64.9 CU. YDS.
POUR 3	64.9 CU. YDS.
TOTAL	273.6 CU. YDS.

TOTAL SUPERSTRUCTURE QUANTITIES

	REINFORCING STEEL	EPOXY COATED REINFORCING STEEL	CLASS "AA" CONCRETE
	LBS.	LBS.	CU. YDS.
SPAN A	19,358	15,665	273.6
✳✳ TOTAL	19,358	15,665	273.6

✳✳QUANTITIES FOR CONCRETE BARRIER RAIL ARE NOT INCLUDED. SEE "CONCRETE BARRIER RAIL" SHEET FOR DETAILS.

GROOVING BRIDGE FLOORS

APPROACH SLAB AT END BENT 1	942 SQ. FT.
BRIDGE DECK	4,210 SQ. FT.
APPROACH SLAB AT END BENT 2	942 SQ. FT.
TOTAL	6,094 SQ. FT.

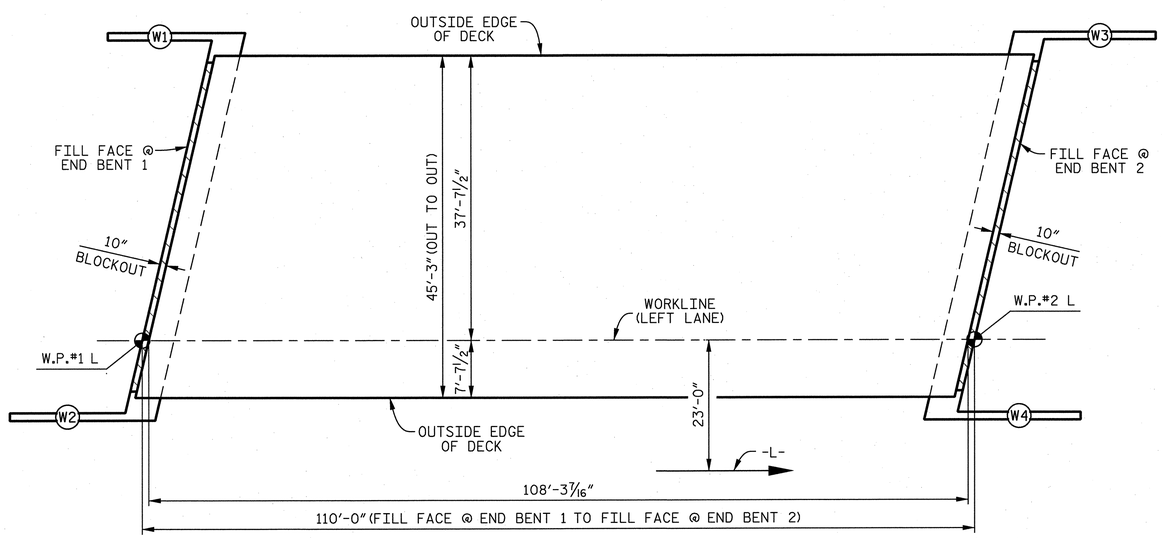

LAYOUT FOR COMPUTING AREA OF REINFORCED CONCRETE DECK SLAB

(4,900 SQ. FT.)

SUPERSTRUCTURE REINFORCING STEEL LENGTHS ARE BASED ON THE FOLLOWING MINIMUM SPLICE LENGTHS

BAR SIZE	SUPERSTRUCTURE EXCEPT APPROACH SLABS, PARAPET AND BARRIER RAIL		APPROACH SLABS		PARAPET AND BARRIER RAIL
	EPOXY COATED	UNCOATED	EPOXY COATED	UNCOATED	
#4	2'-0"	1'-9"	2'-0"	1'-9"	2'-9"
#5	2'-6"	2'-2"	2'-6"	2'-2"	3'-5"
#6	3'-0"	2'-7"	3'-10"	2'-7"	4'-4"
#7	5'-3"	3'-6"			
#8	6'-10"	4'-7"			

PROJECT NO. U-2525B

GUILFORD COUNTY

STATION: 174+72.46 -L-

STATE OF NORTH CAROLINA
DEPARTMENT OF TRANSPORTATION
RALEIGH

SUPERSTRUCTURE

BILL OF MATERIAL

(LEFT LANE)

NORTH CAROLINA PROFESSIONAL SEAL 19299 ENGINEER THOMAS M. HARRIS
12/9/13

DRAWN BY : K. E. LOFTON DATE : 7-13
CHECKED BY : T. M. HARRIS DATE : 7-13
DESIGN ENGINEER : T. M. HARRIS DATE : 10-13

PLANS PREPARED BY :
PARSONS
5540 Centerview Drive, Suite 217
Raleigh, NC 27606-3386
NC LICENSE No. F-0246
FOR NORTH CAROLINA DEPARTMENT OF TRANSPORTATION

DWG. No. S08-017

REVISIONS						
No.	BY:	DATE:	No.	BY:	DATE:	
1			3			
2			4			

SHEET No. 5-313

TOTAL SHEETS 541

STR. #8

FILE: j:\u-2525b\structure\dwgs\final\U2525B_SD_S08_bm1.dgn
DATE: 12/9/2013 11:45:41 AM

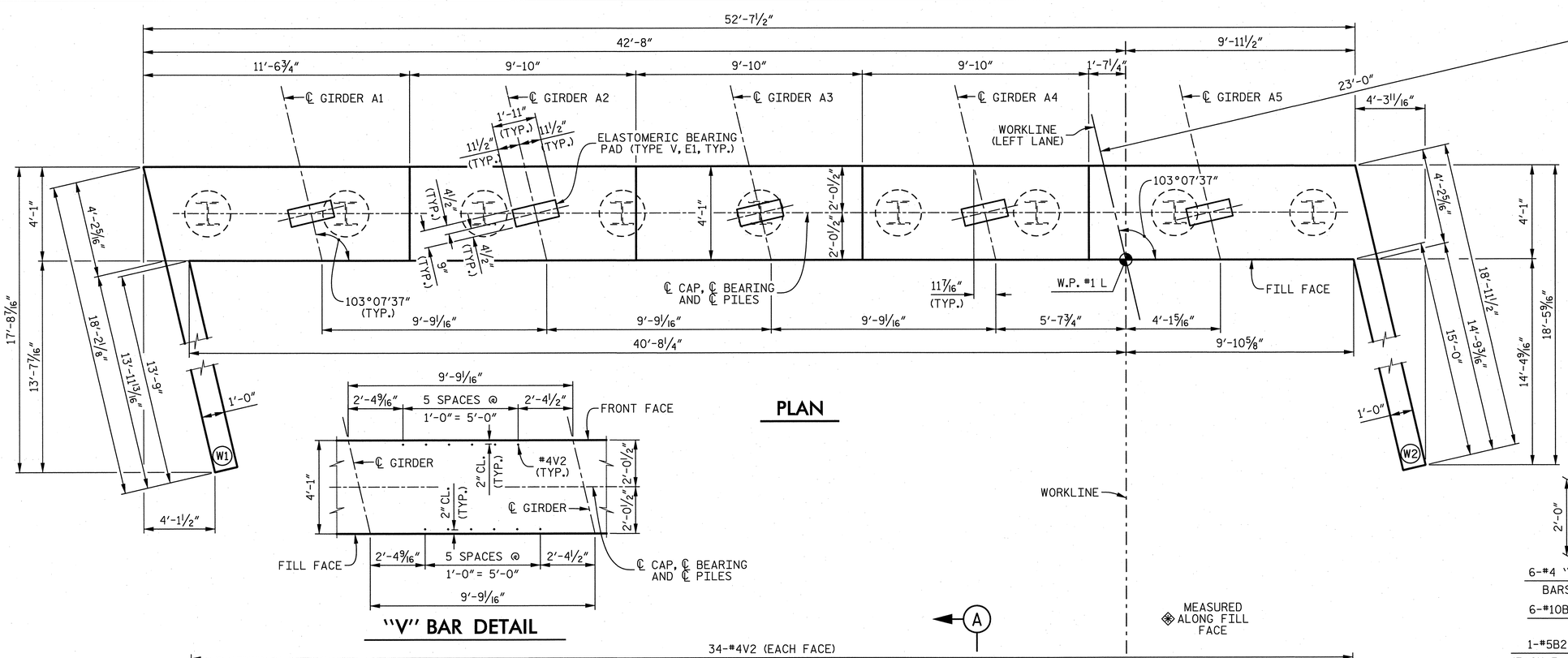

PLAN

"V" BAR DETAIL

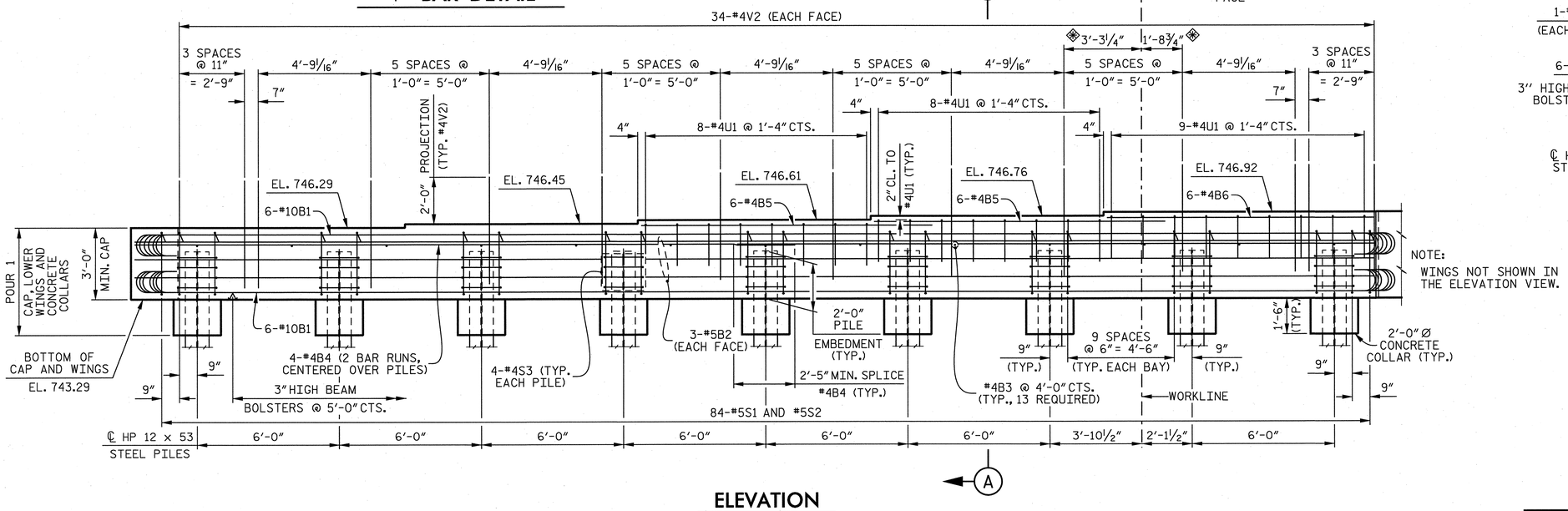

ELEVATION

NOTE:
WINGS NOT SHOWN IN THE ELEVATION VIEW.

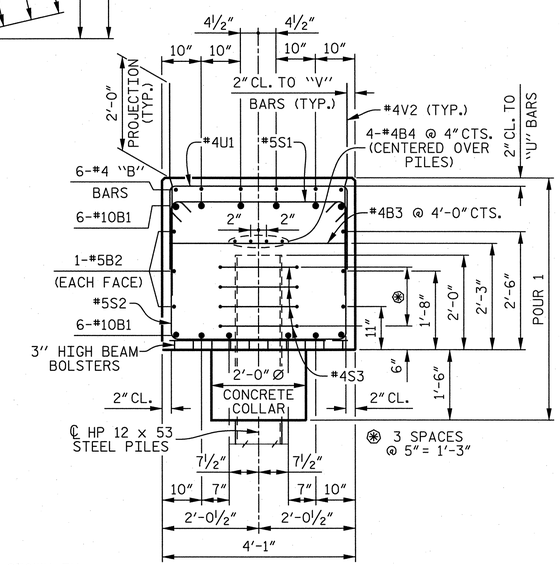

SECTION A–A

NOTES

THE UPPER PORTION OF THE INTEGRAL END BENT CAP AND THE UPPER PORTION OF THE WINGS SHALL BE POURED WITH THE SUPERSTRUCTURE. SEE SUPERSTRUCTURE PLANS.

STIRRUPS AND "U" BARS IN CAP MAY BE SHIFTED AS NECESSARY TO CLEAR #4V2 BARS.

THE TOP SURFACE OF THE END BENT CAP AND WINGS, EXCEPT THE BEARING AREA, SHALL BE RAKED TO A DEPTH OF ¼".

FOR PILE SPLICE DETAILS, SEE SHEET 2 OF 2.

FOR TEMPORARY DRAINAGE AT END BENT DETAIL, SEE SHEET 2 OF 2.

PROJECT NO. U-2525B
GUILFORD COUNTY
STATION: 174+72.46 -L-

SHEET 1 OF 2

STATE OF NORTH CAROLINA
DEPARTMENT OF TRANSPORTATION
RALEIGH

SUBSTRUCTURE

END BENT 1

(LEFT LANE)

REVISIONS									SHEET No.
No.	BY:	DATE:	No.	BY:	DATE:				S-314
1			3						TOTAL SHEETS
2			4						541

DWG. No. S08-018

NORTH CAROLINA PROFESSIONAL SEAL 19299 ENGINEER THOMAS M. HARRIS
12/9/13

PLANS PREPARED BY :
PARSONS
5540 Centerview Drive, Suite 217
Raleigh, NC 27606-3386
NC LICENSE No. F-0246
FOR NORTH CAROLINA DEPARTMENT OF TRANSPORTATION

DRAWN BY :	K. E. LOFTON	DATE :	8-13
CHECKED BY :	T. M. HARRIS	DATE :	8-13
DESIGN ENGINEER :	T. M. HARRIS	DATE :	10-13

STR. #8

FILE: I:\u-2525b\structure\plans\final\U2525B_SD_Sn8_ab11.dgn
DATE: 12/3/2013 11:45:44 AM

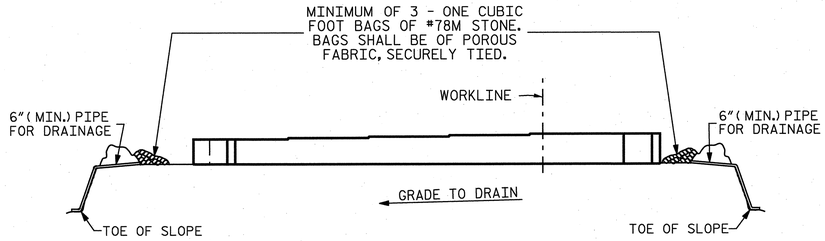

BAGGED STONE AND PIPE SHALL BE PLACED IMMEDIATELY AFTER COMPLETION OF END BENT EXCAVATION. PIPE MAY BE EITHER CONCRETE, CORRUGATED STEEL, CORRUGATED ALUMINUM ALLOY, OR CORRUGATED PLASTIC. PERFORATED PIPE WILL NOT BE ALLOWED.

BAGGED STONE SHALL REMAIN IN PLACE UNTIL THE ENGINEER DIRECTS THAT IT BE REMOVED. THE CONTRACTOR SHALL REMOVE AND DISPOSE OF SILT ACCUMULATIONS AT BAGGED STONE WHEN SO DIRECTED BY THE ENGINEER. BAGS SHALL BE REMOVED AND REPLACED WHENEVER THE ENGINEER DETERMINES THAT THEY HAVE DETERIORATED AND LOST THEIR EFFECTIVENESS.

NO SEPARATE PAYMENT WILL BE MADE FOR THIS WORK AND THE ENTIRE COST OF THIS WORK SHALL BE INCLUDED IN THE UNIT CONTRACT PRICE FOR THE SEVERAL PAY ITEMS.

TEMPORARY DRAINAGE AT END BENT

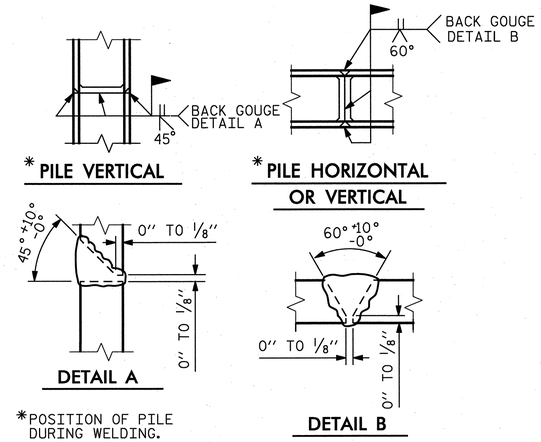

PILE SPLICE DETAILS

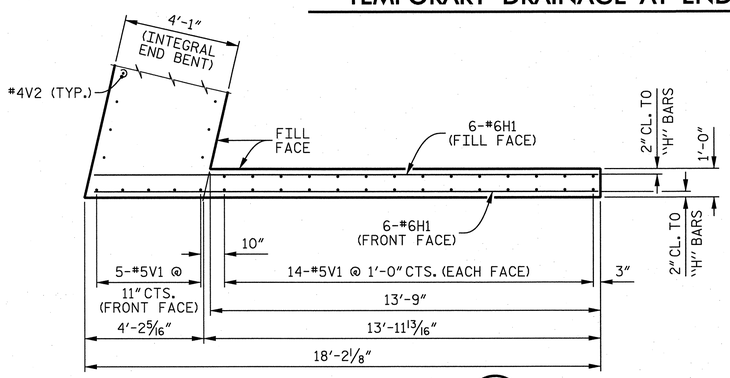

PLAN OF WING (W1)

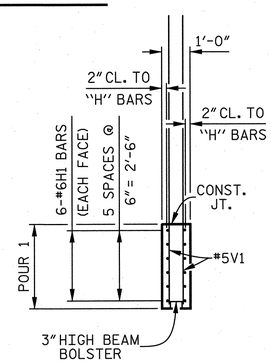

SECTION B–B

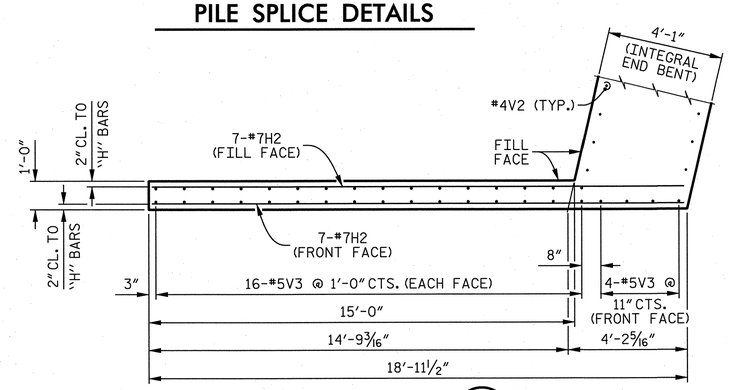

PLAN OF WING (W2)

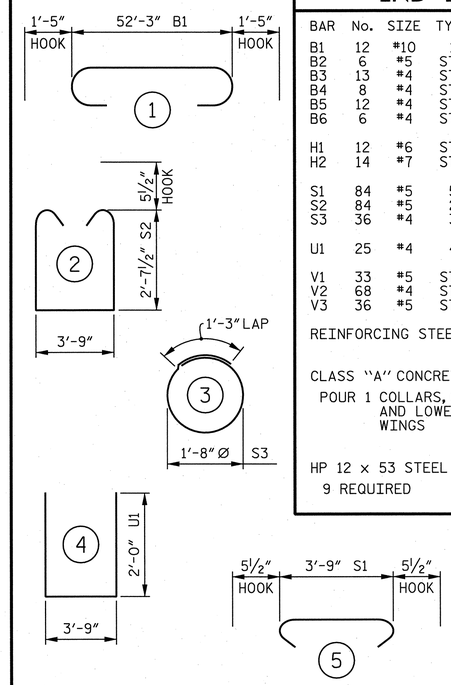

ALL BAR DIMENSIONS ARE OUT TO OUT.

BAR TYPES

BILL OF MATERIAL

END BENT 1

BAR	No.	SIZE	TYPE	LENGTH	WEIGHT
B1	12	#10	1	55'- 1"	2,844
B2	6	#5	STR	52'- 3"	327
B3	13	#4	STR	3'- 9"	33
B4	8	#4	STR	27'- 4"	146
B5	12	#4	STR	12'- 3"	98
B6	6	#4	STR	11'- 2"	45
H1	12	#6	STR	17'- 8"	318
H2	14	#7	STR	18'- 6"	529
S1	84	#5	5	4'- 8"	409
S2	84	#5	2	9'-11"	869
S3	36	#4	3	6'- 6"	156
U1	25	#4	4	7'- 9"	129
V1	33	#5	STR	9'- 8"	333
V2	68	#4	STR	4'- 6"	204
V3	36	#5	STR	10'- 4"	388

REINFORCING STEEL 6,828 LBS.

CLASS "A" CONCRETE
POUR 1 COLLARS, CAP AND LOWER WINGS 31.5 CU. YDS.

HP 12 x 53 STEEL PILES
9 REQUIRED 270 LIN. FT.

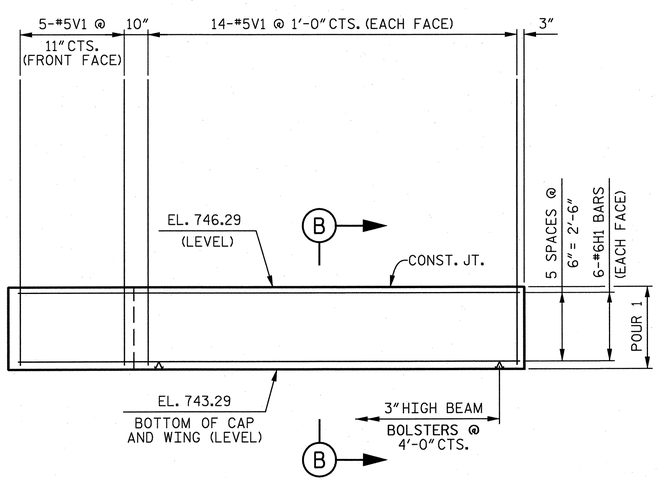

ELEVATION OF WING (W1)

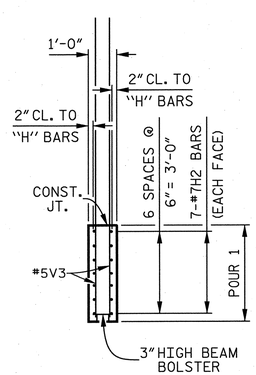

SECTION C–C

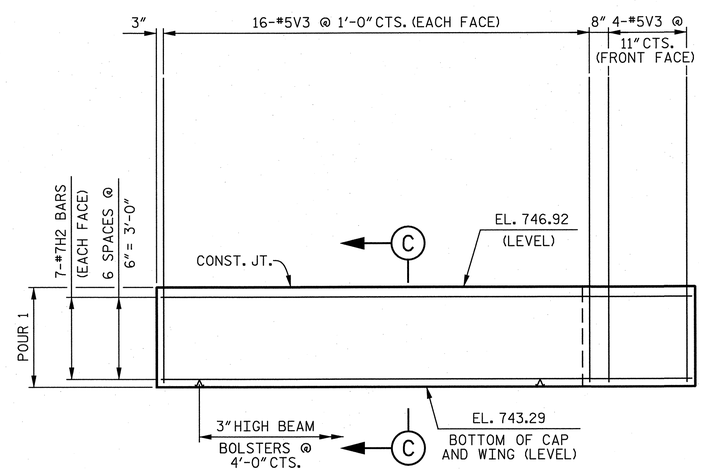

ELEVATION OF WING (W2)

PROJECT NO. U-2525B
GUILFORD COUNTY
STATION: 174+72.46 -L-

SHEET 2 OF 2

STATE OF NORTH CAROLINA
DEPARTMENT OF TRANSPORTATION
RALEIGH

SUBSTRUCTURE
END BENT 1
(LEFT LANE)

DRAWN BY : K. E. LOFTON	DATE : 7-13	
CHECKED BY : T. M. HARRIS	DATE : 7-13	
DESIGN ENGINEER : T. M. HARRIS	DATE : 10-13	

PLANS PREPARED BY :
PARSONS
5540 Centerview Drive, Suite 217
Raleigh, NC 27606-3386
NC LICENSE No. F-0246
FOR NORTH CAROLINA DEPARTMENT OF TRANSPORTATION

NORTH CAROLINA PROFESSIONAL ENGINEER SEAL 19299 THOMAS M. HARRIS
12/9/13

DWG. No. S08-019

REVISIONS						
No.	BY:	DATE:	No.	BY:	DATE:	
1			3			
2			4			

SHEET No. S-315
TOTAL SHEETS 541

STR. #8

FILE: j:\u-2525b\structures\plans\final\U2525B_SD_SN8_eb12.dgn
DATE: 11/27/2013 2:15:30 PM

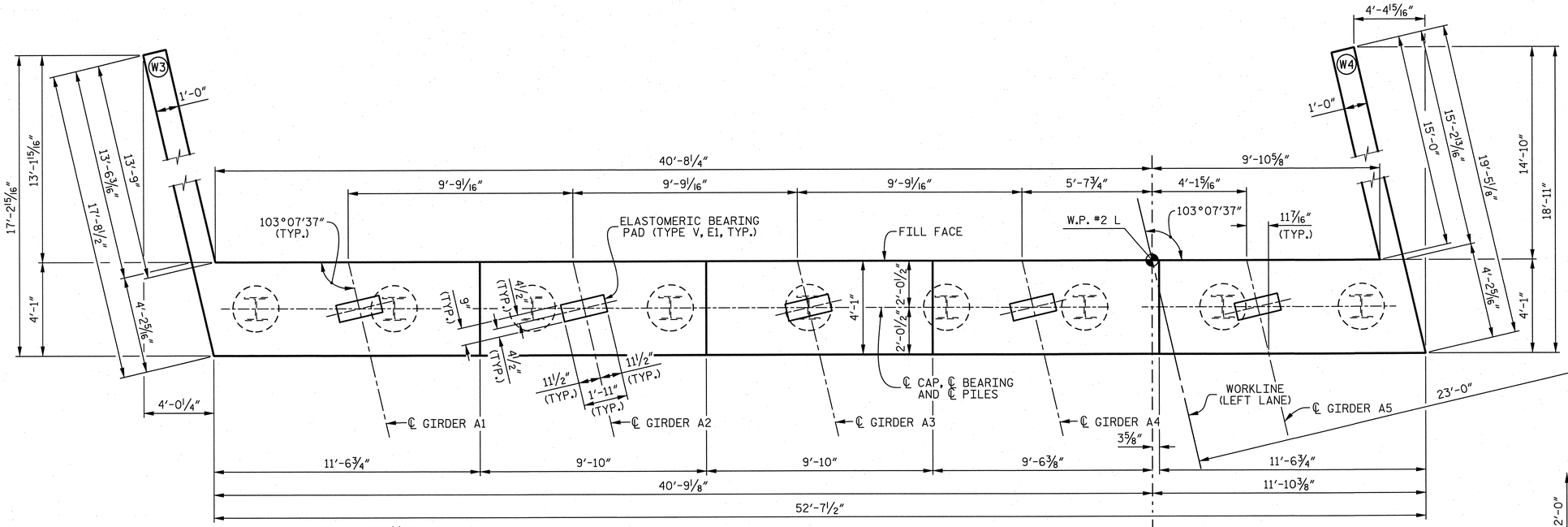

PLAN

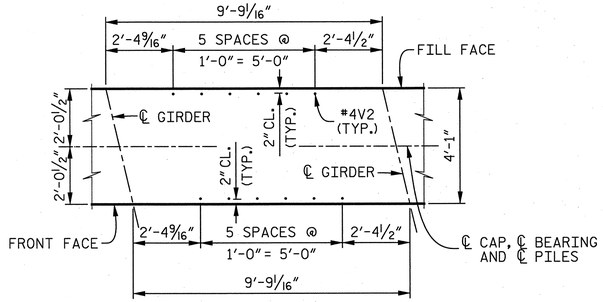

"V" BAR DETAIL

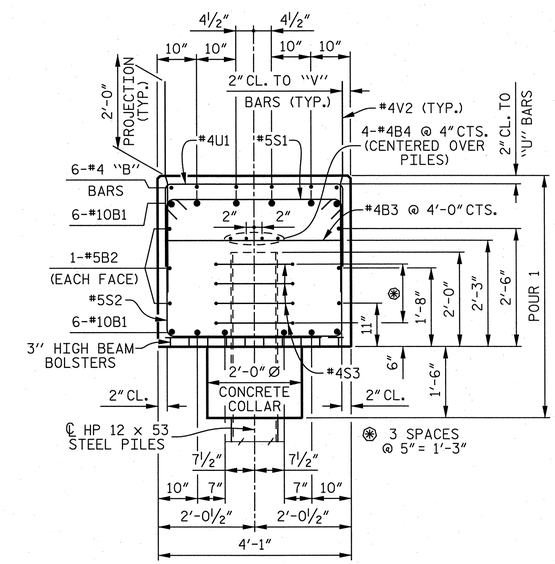

SECTION A–A

NOTE:
WINGS NOT SHOWN IN THE ELEVATION VIEW.

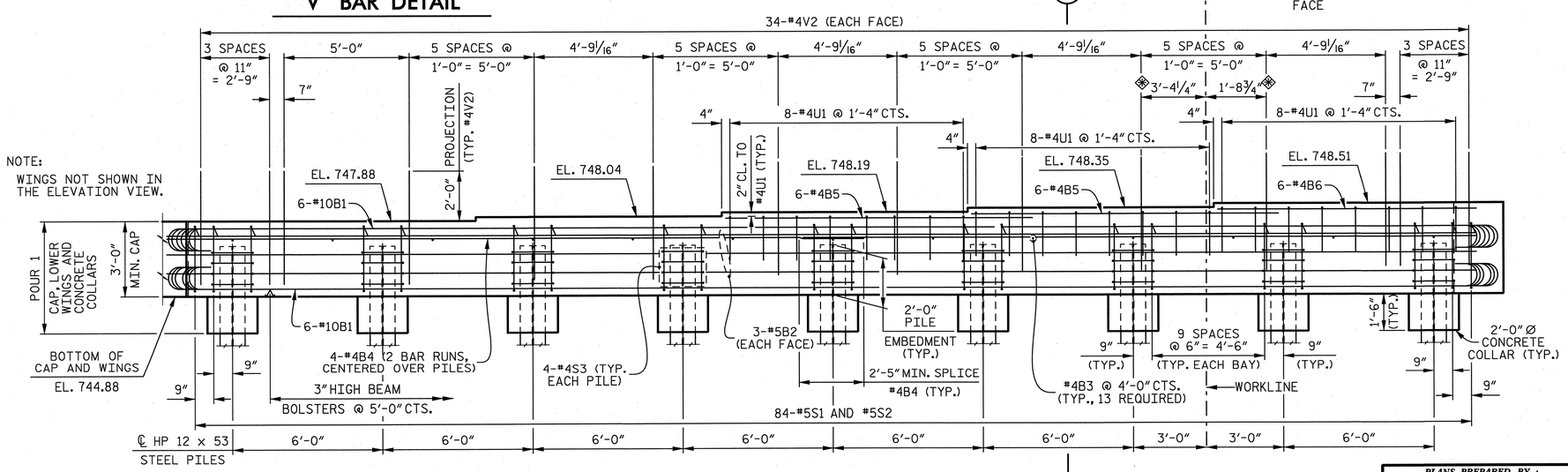

ELEVATION

NOTES

THE UPPER PORTION OF THE INTEGRAL END BENT CAP AND THE UPPER PORTION OF THE WINGS SHALL BE POURED WITH THE SUPERSTRUCTURE. SEE SUPERSTRUCTURE PLANS.

STIRRUPS AND "U" BARS IN CAP MAY BE SHIFTED AS NECESSARY TO CLEAR #4V2 BARS.

THE TOP SURFACE OF THE END BENT CAP AND WINGS, EXCEPT THE BEARING AREA, SHALL BE RAKED TO A DEPTH OF 1/4".

FOR PILE SPLICE DETAILS, SEE SHEET 2 OF 2.

FOR TEMPORARY DRAINAGE AT END BENT DETAIL, SEE SHEET 2 OF 2.

PROJECT NO. U-2525B
GUILFORD COUNTY
STATION: 174+72.46 -L-

SHEET 1 OF 2

STATE OF NORTH CAROLINA
DEPARTMENT OF TRANSPORTATION
RALEIGH

SUBSTRUCTURE

END BENT 2

(LEFT LANE)

DRAWN BY : K. E. LOFTON	DATE : 8-13				
CHECKED BY : T. M. HARRIS	DATE : 8-13				
DESIGN ENGINEER : T. M. HARRIS	DATE : 10-13				

PLANS PREPARED BY :
PARSONS
5540 Centerview Drive, Suite 217
Raleigh, NC 27606-3386
NC LICENSE No. F-0246
FOR NORTH CAROLINA DEPARTMENT OF TRANSPORTATION

NORTH CAROLINA PROFESSIONAL SEAL 19299 ENGINEER THOMAS M. HARRIS
12/9/13

DWG. No. S08-020

REVISIONS

No.	BY:	DATE:	No.	BY:	DATE:
1			3		
2			4		

SHEET No. 5-316
TOTAL SHEETS 541

STR. #8

FILE: I:\u-2525b\structure\plans\final\U2525B_SD_Str8_eb21.dgn
DATE: 12/3/2013 11:45:47 AM

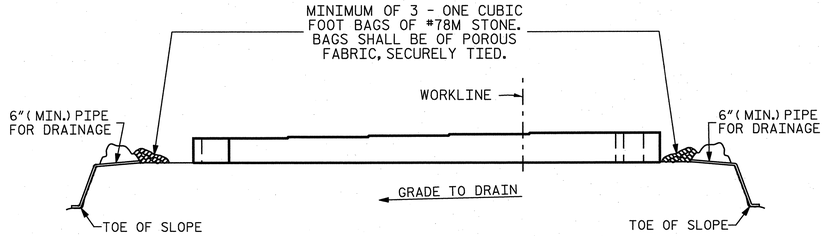

BAGGED STONE AND PIPE SHALL BE PLACED IMMEDIATELY AFTER COMPLETION OF END BENT EXCAVATION. PIPE MAY BE EITHER CONCRETE, CORRUGATED STEEL, CORRUGATED ALUMINUM ALLOY, OR CORRUGATED PLASTIC. PERFORATED PIPE WILL NOT BE ALLOWED.

BAGGED STONE SHALL REMAIN IN PLACE UNTIL THE ENGINEER DIRECTS THAT IT BE REMOVED. THE CONTRACTOR SHALL REMOVE AND DISPOSE OF SILT ACCUMULATIONS AT BAGGED STONE WHEN SO DIRECTED BY THE ENGINEER. BAGS SHALL BE REMOVED AND REPLACED WHENEVER THE ENGINEER DETERMINES THAT THEY HAVE DETERIORATED AND LOST THEIR EFFECTIVENESS.

NO SEPARATE PAYMENT WILL BE MADE FOR THIS WORK AND THE ENTIRE COST OF THIS WORK SHALL BE INCLUDED IN THE UNIT CONTRACT PRICE FOR THE SEVERAL PAY ITEMS.

TEMPORARY DRAINAGE AT END BENT

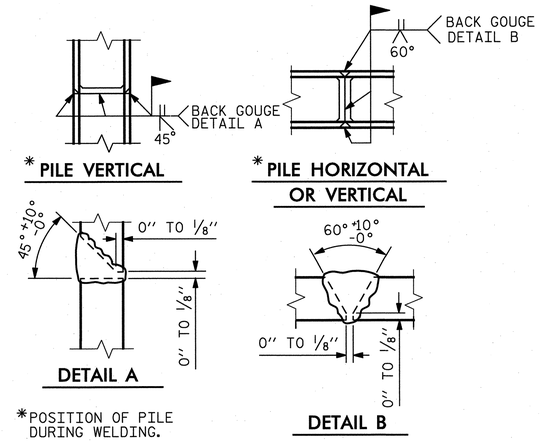

PILE SPLICE DETAILS

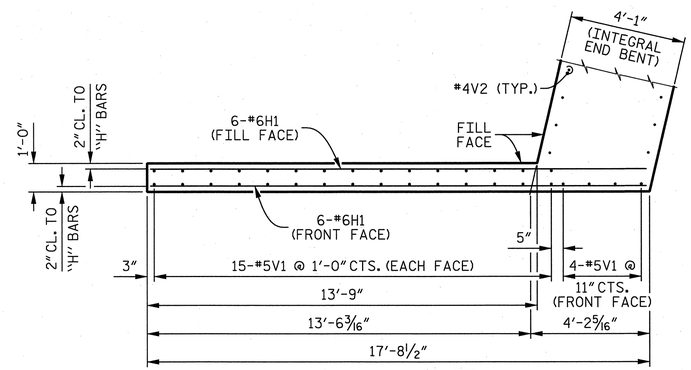

PLAN OF WING (W3)

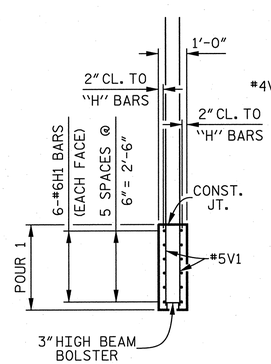

SECTION B–B

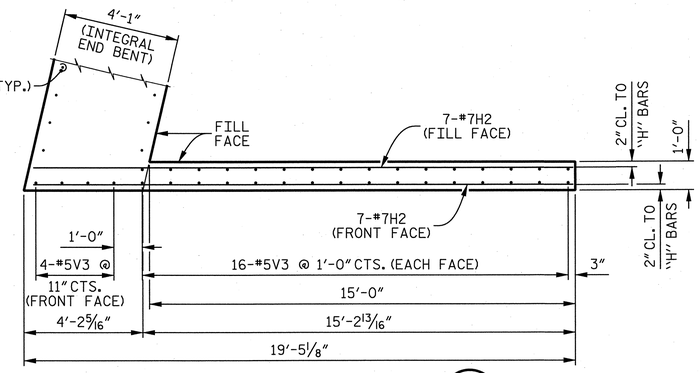

PLAN OF WING (W4)

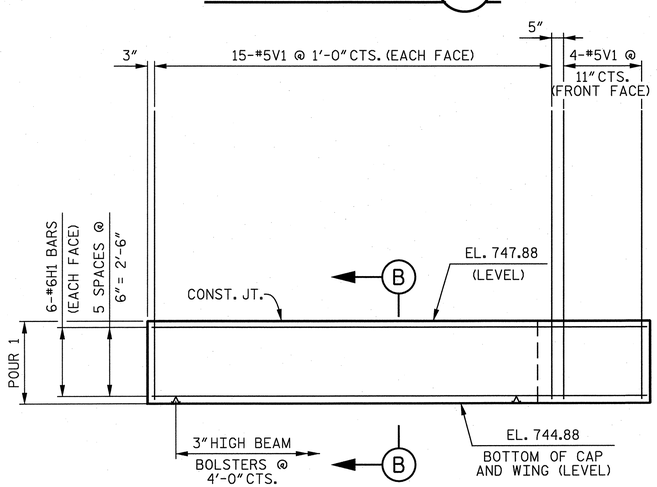

ELEVATION OF WING (W3)

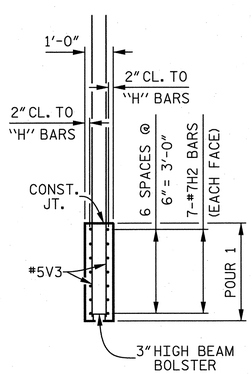

SECTION C–C

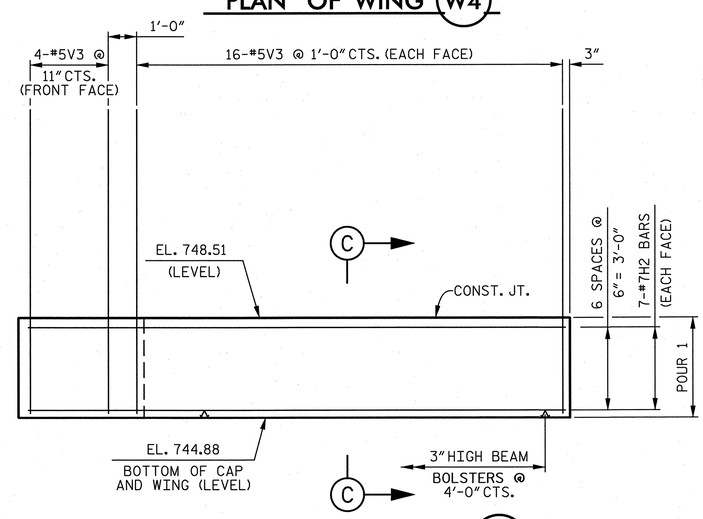

ELEVATION OF WING (W4)

BAR TYPES

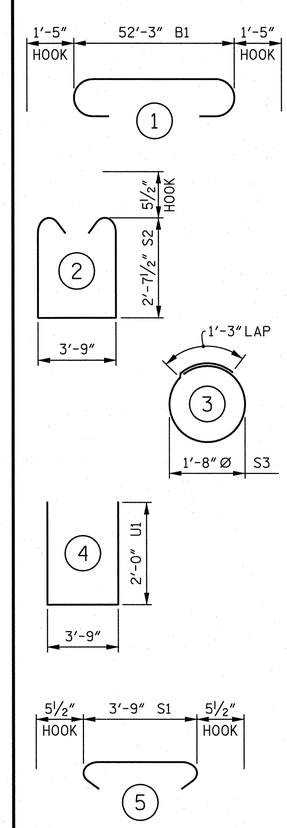

ALL BAR DIMENSIONS ARE OUT TO OUT.

BILL OF MATERIAL

END BENT 2

BAR	No.	SIZE	TYPE	LENGTH	WEIGHT
B1	12	#10	1	55'- 1"	2,844
B2	6	#5	STR	52'- 3"	327
B3	13	#4	STR	3'- 9"	33
B4		#4	STR	27'- 4"	146
B5	12	#4	STR	12'- 3"	98
B6	6	#4	STR	10'- 3"	41
H1	12	#6	STR	17'- 2"	309
H2	14	#7	STR	18'- 9"	537
S1	84	#5	5	4'- 8"	409
S2	84	#5	2	9'-11"	869
S3	36	#4	3	6'- 6"	156
U1	24	#4	4	7'- 9"	124
V1	34	#5	STR	9'- 8"	343
V2	68	#4	STR	4'- 6"	204
V3	36	#5	STR	10'- 4"	388

REINFORCING STEEL 6,828 LBS.

CLASS "A" CONCRETE
POUR 1 COLLARS, CAP AND LOWER WINGS 31.5 CU. YDS.

HP 12 x 53 STEEL PILES
9 REQUIRED 265 LIN. FT.

PILE EXCAVATION
IN SOIL 25 LIN. FT.

PILE EXCAVATION
NOT IN SOIL 25 LIN. FT.

STEEL PILES POINTS 5 REQUIRED

PROJECT NO. U-2525B
GUILFORD COUNTY
STATION: 174+72.46 -L-

SHEET 2 OF 2

STATE OF NORTH CAROLINA
DEPARTMENT OF TRANSPORTATION
RALEIGH

SUBSTRUCTURE
END BENT 2
(LEFT LANE)

DRAWN BY : K. E. LOFTON DATE : 8-13
CHECKED BY : T. M. HARRIS DATE : 8-13
DESIGN ENGINEER : T. M. HARRIS DATE : 10-13

PLANS PREPARED BY :
PARSONS
5540 Centerview Drive, Suite 217
Raleigh, NC 27606-3386
NC LICENSE No. F-0246
FOR NORTH CAROLINA DEPARTMENT OF TRANSPORTATION

NORTH CAROLINA PROFESSIONAL SEAL 19299 ENGINEER THOMAS M. HARRIS
12/9/13

DWG. No. S08-021

REVISIONS						
No.	BY:	DATE:	No.	BY:	DATE:	
1			3			
2			4			

SHEET No. 5-317
TOTAL SHEETS 541

STR. #8

FILE: j:\u-2525b\structures\plans\final\U2525B_SD_Sh8_eb22.dgn
DATE: 12/3/2013 11:45:48 AM

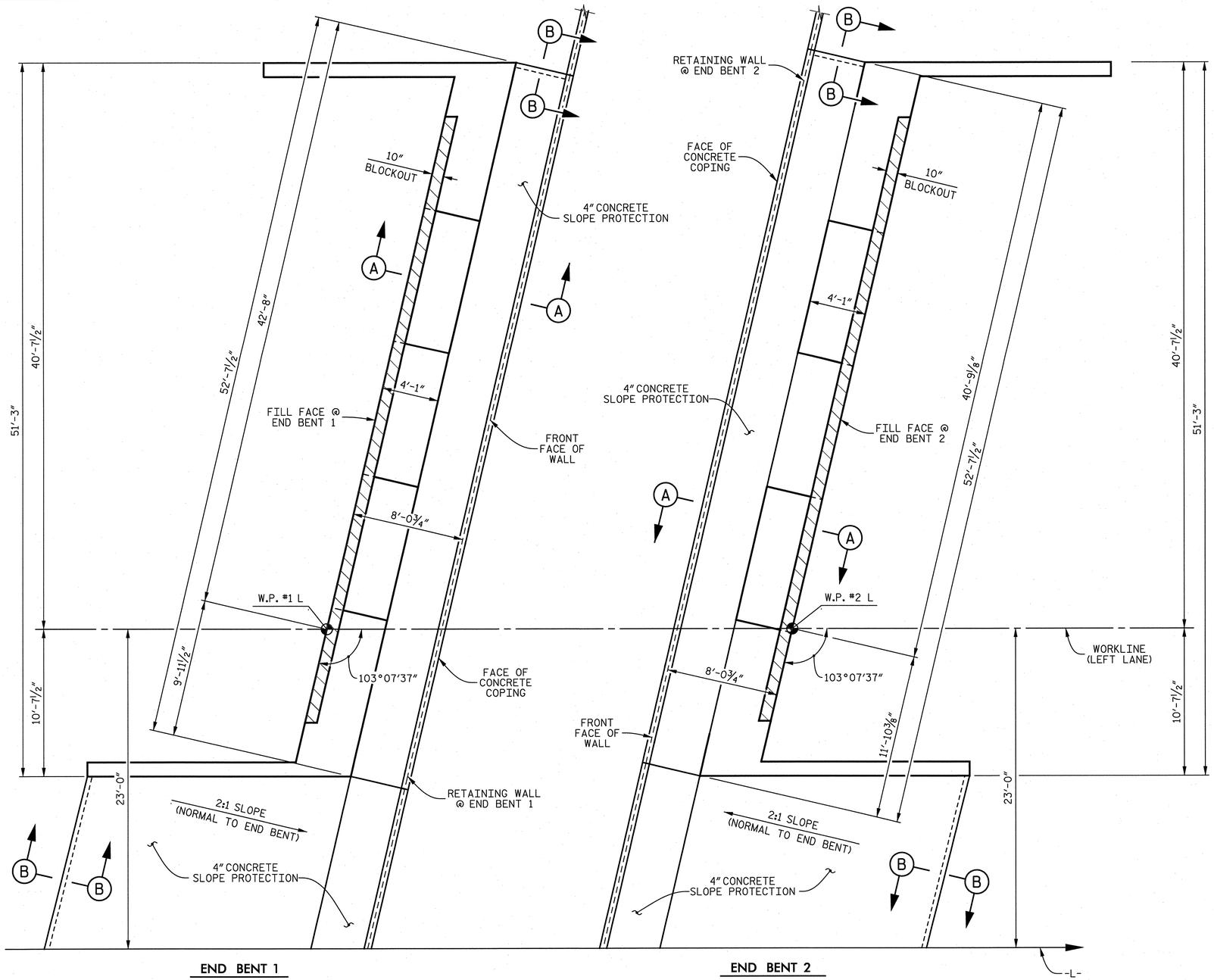

PLAN

CONCRETE DITCHES NOT SHOWN

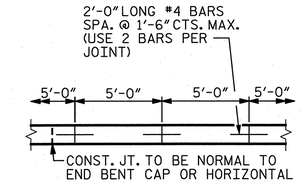

POURING DETAIL

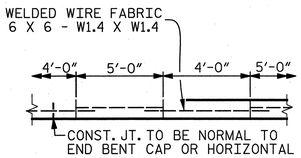

POUR A 4′-0″ STRIP FIRST.

OPTIONAL POURING DETAIL

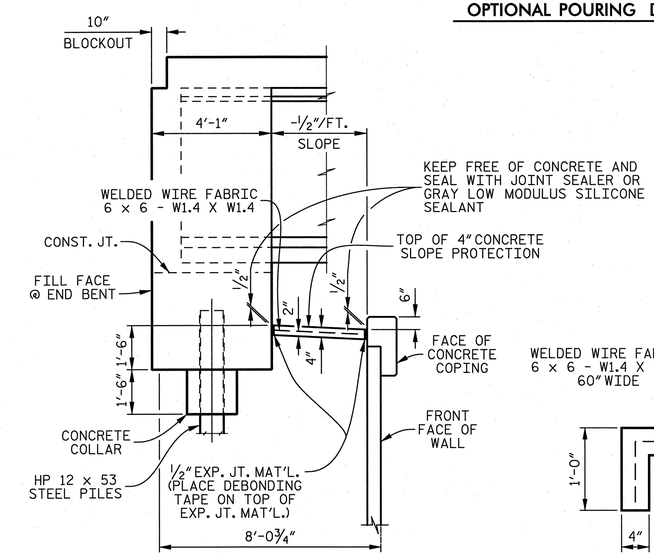

SECTION A–A

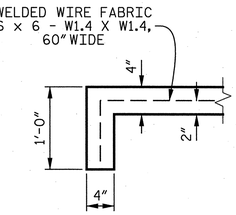

SECTION B–B

DETAILS FOR ALTERNATE "A"

BRIDGE AT STA. 174+72.46 –L– (LEFT LANE)	4″ SLOPE PROTECTION	WELDED WIRE FABRIC
	SQUARE YARDS	APPROX. LINEAR FEET
END BENT 1	54	98
END BENT 2	55	100

PROJECT NO. U–2525B

GUILFORD COUNTY

STATION: 174+72.46 –L–

GENERAL NOTES

SLOPE PROTECTION SHALL BE PLACED UNDER THE ENDS OF THE BRIDGE AS SHOWN IN THE DETAILS. STRAIGHT EDGING WILL NOT BE REQUIRED UNLESS, IN THE OPINION OF THE ENGINEER, VISUAL INSPECTION INDICATES A NEED FOR IT.

FOR BERM WIDTH, SEE GENERAL DRAWING.

ALTERNATE "A"

ALTERNATE "A" SHALL CONSIST OF 4″ POURED-IN-PLACE CONCRETE PAVING AS SHOWN IN THE DETAILS ON THIS SHEET. CONCRETE SHALL BE CLASS "B". THE CONCRETE SURFACE SHALL BE FLOATED WITH A WOODEN FLOAT AND FINISHED. WELDED WIRE FABRIC REINFORCING SHALL BE 6 X 6 - W1.4 X W1.4, 60″ WIDE. SLOPE PROTECTION SHALL BE POURED IN 5′ STRIPS AS SHOWN IN THE "POURING DETAIL" WITH 2′-0″ LONG #4 BARS PLACED ALONG THE SLOPE BETWEEN STRIPS AT 1′-6″ MAXIMUM SPACING. SLOPE PROTECTION MAY BE POURED IN ALTERNATE 4′ AND 5′ STRIPS AS SHOWN IN THE "OPTIONAL POURING DETAIL" WITH ADJACENT RUNS OF WELDED WIRE FABRIC LAPPING AT LEAST 6″. THE COST OF THE WELDED WIRE FABRIC AND #4 BARS, IF USED, SHALL BE INCLUDED IN THE CONTRACT UNIT PRICE BID PER SQUARE YARD FOR SLOPE PROTECTION.

ASSEMBLED BY : K. E. LOFTON		DATE : 7-13	
CHECKED BY : T. M. HARRIS		DATE : 7-13	
DRAWN BY : ELR	5/92	REV. 5/1/06	TLA/GM
CHECKED BY : GRP	6/92	REV. 10/1/11	MAA/GM
		REV. 12/21/11	MAA/GM

DRAWN BY :	K. E. LOFTON	DATE :	7-13
CHECKED BY :	T. M. HARRIS	DATE :	7-13
DESIGN ENGINEER :	T. M. HARRIS	DATE :	10-13

PLANS PREPARED BY :
PARSONS
5540 Centerview Drive, Suite 217
Raleigh, NC 27606-3386
NC LICENSE No. F-0246
FOR NORTH CAROLINA DEPARTMENT OF TRANSPORTATION

NORTH CAROLINA PROFESSIONAL SEAL 19299 ENGINEER THOMAS W. HARRIS
12/9/13

DWG. No. S08-022

STATE OF NORTH CAROLINA
DEPARTMENT OF TRANSPORTATION
RALEIGH

STANDARD

SLOPE PROTECTION DETAILS (LEFT LANE)

REVISIONS						SHEET No.
No.	BY:	DATE:	No.	BY:	DATE:	5-318
1			3			TOTAL SHEETS
2			4			541

STD. No. SP1

STR. #8

FILE: i:\u-2525b\structures\plans\final\U2525B_SD_Sh8_sp1.dgn
DATE: 12/3/2013 11:45:49 AM

SPLICE LENGTHS		
BAR	SIZE	LENGTH
A1	#4	2'-0"
A2	#4	1'-9"

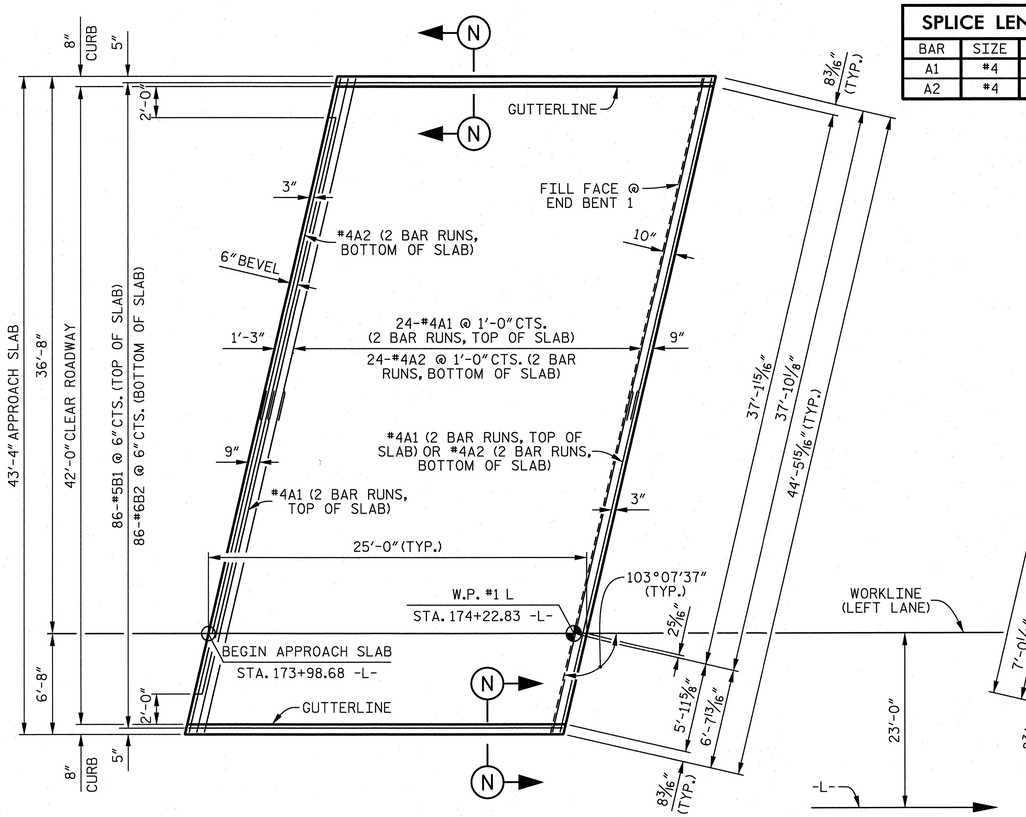

PLAN OF APPROACH SLAB AT END BENT 1

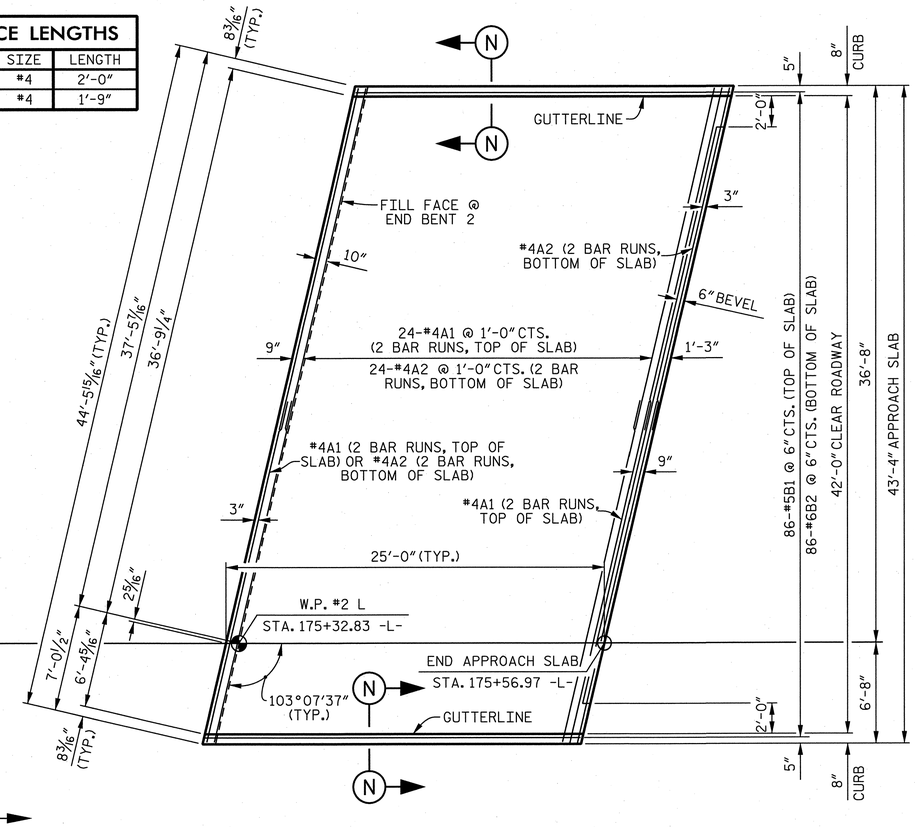

PLAN OF APPROACH SLAB AT END BENT 2

BILL OF MATERIAL

APPROACH SLAB AT END BENT 1 OR END BENT 2

BAR	No.	SIZE	TYPE	LENGTH	WEIGHT
✱A1	52	#4	STR	23'- 1"	802
A2	52	#4	STR	22'-11"	796
✱B1	86	#5	STR	24'- 2"	2,168
B2	86	#6	STR	24'- 8"	3,186
REINFORCING STEEL					3,982 LBS.
✱EPOXY COATED REINFORCING STEEL					2,970 LBS.
CLASS "AA" CONCRETE					46.8 CU. YDS.

NOTES

APPROACH SLAB SHALL NOT BE CONSTRUCTED PRIOR TO COMPLETION OF THE BRIDGE DECK.

AREA BETWEEN THE WINGWALL AND APPROACH SLAB SHALL BE GRADED TO DRAIN THE WATER AWAY FROM THE FILL FACE OF THE BRIDGE AND SHALL BE PAVED. SEE ROADWAY PLANS.

THE JOINT OPENING AT THE APPROACH SLAB/DECK INTERFACE SHALL BE SAWED NO MORE THAN 12 HOURS AFTER THE APPROACH SLAB IS CAST. THE JOINT SHALL BE CLEANED OF ALL DEBRIS BEFORE THE SEALANT IS APPLIED. THE JOINT SEALER MATERIAL SHALL CONFORM TO THE REQUIREMENTS OF SECTION 1028-3 OF THE STANDARD SPECIFICATIONS.

SELECT BACKFILL MATERIAL SHALL BE THE AGGREGATE USED IN THE REINFORCED ZONE FOR THE MSE RETAINING WALL.

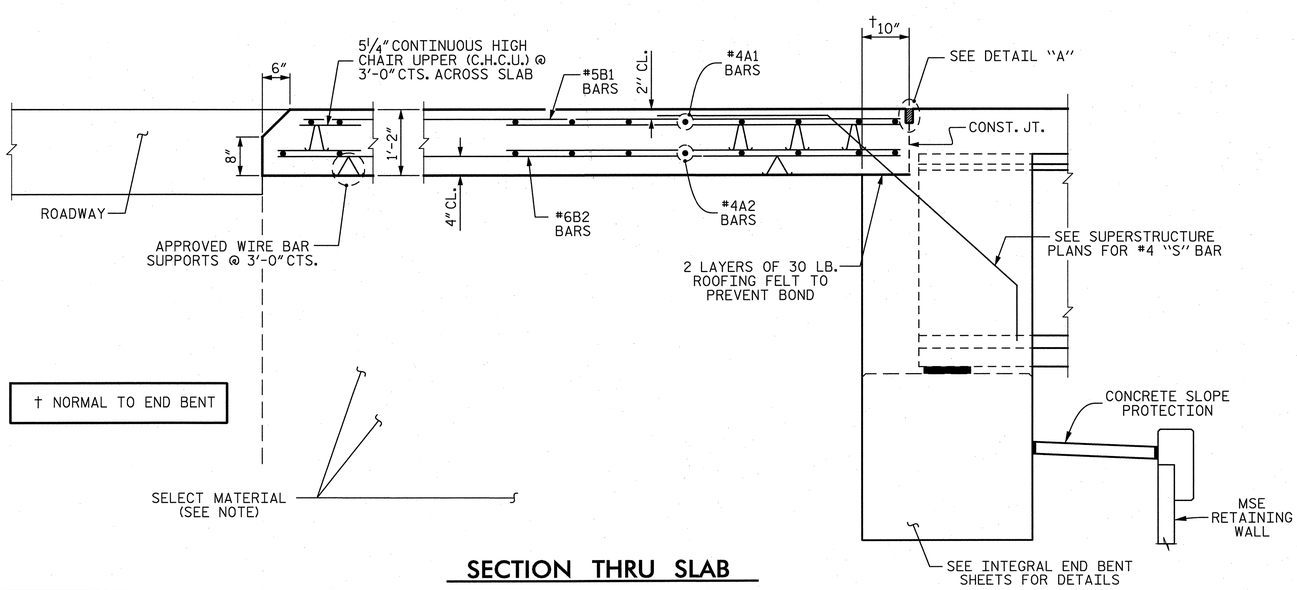

† NORMAL TO END BENT

SECTION THRU SLAB

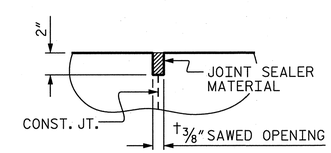

DETAIL "A"

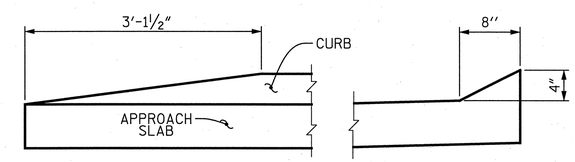

END OF CURB WITHOUT SHOULDER BERM GUTTER

SECTION N-N

CURB DETAILS

PROJECT NO. U-2525B

GUILFORD COUNTY

STATION: 174+72.46 -L-

SHEET 1 OF 2

STATE OF NORTH CAROLINA
DEPARTMENT OF TRANSPORTATION
RALEIGH

STANDARD

BRIDGE APPROACH SLAB FOR INTEGRAL ABUTMENT (LEFT LANE)

NORTH CAROLINA PROFESSIONAL SEAL 19299 ENGINEER THOMAS M. HARRIS 12/9/13

REVISIONS								SHEET No.
No.	BY:	DATE:	No.	BY:	DATE:			5-319
1			3					TOTAL SHEETS
2			4					541

DWG. No. S08-023

STD. No. BAS5 STR. #8

ASSEMBLED BY : K. E. LOFTON	DATE : 7-13		
CHECKED BY : T. M. HARRIS	DATE : 7-13		
DRAWN BY : TLA 10/05	ADDED 5/1/06	RR	KMM/GM
CHECKED BY : GM 5/06	REV. 10/1/11		MAA/GM
	REV. 6/13		MAA/GM

DRAWN BY : K. E. LOFTON	DATE : 7-13		
CHECKED BY : T. M. HARRIS	DATE : 7-13		
DESIGN ENGINEER : T. M. HARRIS	DATE : 10-13		

PLANS PREPARED BY :
PARSONS
5540 Centerview Drive, Suite 217
Raleigh, NC 27606-3386
NC LICENSE No. F-0246
FOR NORTH CAROLINA DEPARTMENT OF TRANSPORTATION

FILE: I:\U-2525B\structures\plans\final\U2525B_SD_Sn8_ast.dgn
DATE: 10/7/2013 2:15:37 PM

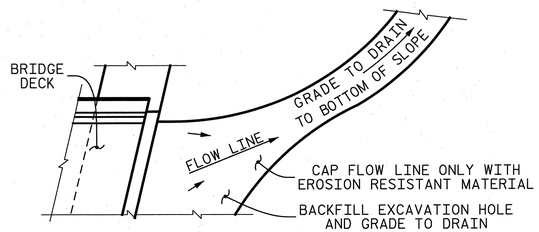

IF THE APPROACH SLAB IS NOT CONSTRUCTED IMMEDIATELY AFTER THE BACKFILLING OF THE END BENT EXCAVATION, GRADE TO DRAIN TO THE BOTTOM OF THE SLOPE AND PROVIDE EROSION RESISTANT MATERIAL, SUCH AS FIBERGLASS ROVING OR AS DIRECTED BY THE ENGINEER TO PREVENT SOIL EROSION AND TO PROTECT THE AREA ADJACENT TO THE STRUCTURE. THE CONTRACTOR WILL BE REQUIRED TO REMOVE THESE MATERIALS PRIOR TO CONSTRUCTION OF THE APPROACH SLAB.

TEMPORARY DRAINAGE DETAIL

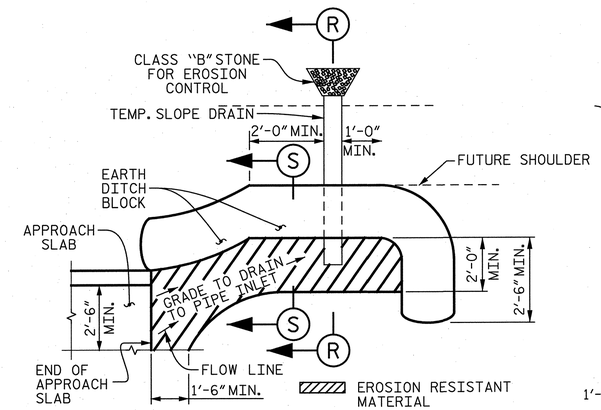

NOTE: IMMEDIATELY AFTER THE CONSTRUCTION OF THE APPROACH SLAB, THE CONTRACTOR SHALL PROVIDE TEMPORARY BERM AND SLOPE DRAIN. CONTRACTOR SHALL GRADE TO PIPE INLET AND PROVIDE EROSION RESISTANT MATERIAL AS SHOWN. THE EROSION RESISTANT MATERIAL SHALL BE EITHER 1) ASPHALT PLANT MIX, TYPE 1 OR TYPE 2, MIN. 2" DEPTH, 2) EROSION CONTROL MAT, OR 3) CONCRETE, AS DIRECTED BY THE ENGINEER. THE SLOPE DRAIN SHALL CONSIST OF A NON-PERFORATED TEMPORARY DRAINAGE PIPE, 12 INCHES IN DIAMETER.

PLAN VIEW

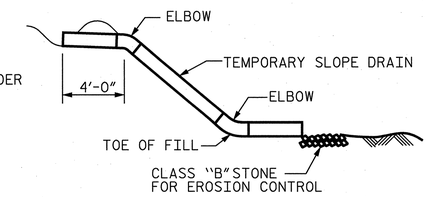

SECTION R–R

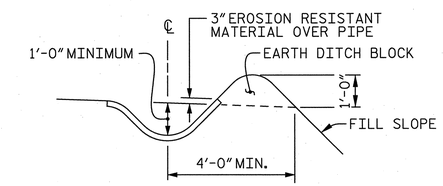

SECTION S–S

TEMPORARY BERM AND SLOPE DRAIN DETAILS

(TO BE USED WHEN SHOULDER BERM GUTTER IS REQUIRED)

PROJECT NO. U–2525B

GUILFORD COUNTY

STATION: 174+72.46 –L–

SHEET 2 OF 2

STATE OF NORTH CAROLINA
DEPARTMENT OF TRANSPORTATION
RALEIGH

STANDARD

BRIDGE APPROACH SLAB DETAILS (LEFT LANE)

ASSEMBLED BY : K. E. LOFTON	DATE : 7-13		
CHECKED BY : T. M. HARRIS	DATE : 7-13		
DRAWN BY : FCJ 11/88	REV. 10/1/11	MAA/GM	
CHECKED BY : ABR 11/88	REV. 7/12	MAA/GM	
	REV. 6/13	MAA/GM	

DRAWN BY : K. E. LOFTON	DATE : 7-13	
CHECKED BY : T. M. HARRIS	DATE : 7-13	
DESIGN ENGINEER : T. M. HARRIS	DATE : 10-13	

PLANS PREPARED BY :
PARSONS
5540 Centerview Drive, Suite 217
Raleigh, NC 27606-3386
NC LICENSE No. F-0246
FOR NORTH CAROLINA DEPARTMENT OF TRANSPORTATION

NORTH CAROLINA PROFESSIONAL SEAL 19299 ENGINEER THOMAS M. HARRIS
12/9/13

DWG. No. S08-024

REVISIONS

No.	BY:	DATE:	No.	BY:	DATE:
1			3		
2			4		

SHEET No. S-320

TOTAL SHEETS 541

STD. No. BAS4 STR. #8

FILE: j:\u-2525b\structures\plans\final\U2525B_SD_Sh8_as2.dgn
DATE: 11/2/2013 2:15:38 PM

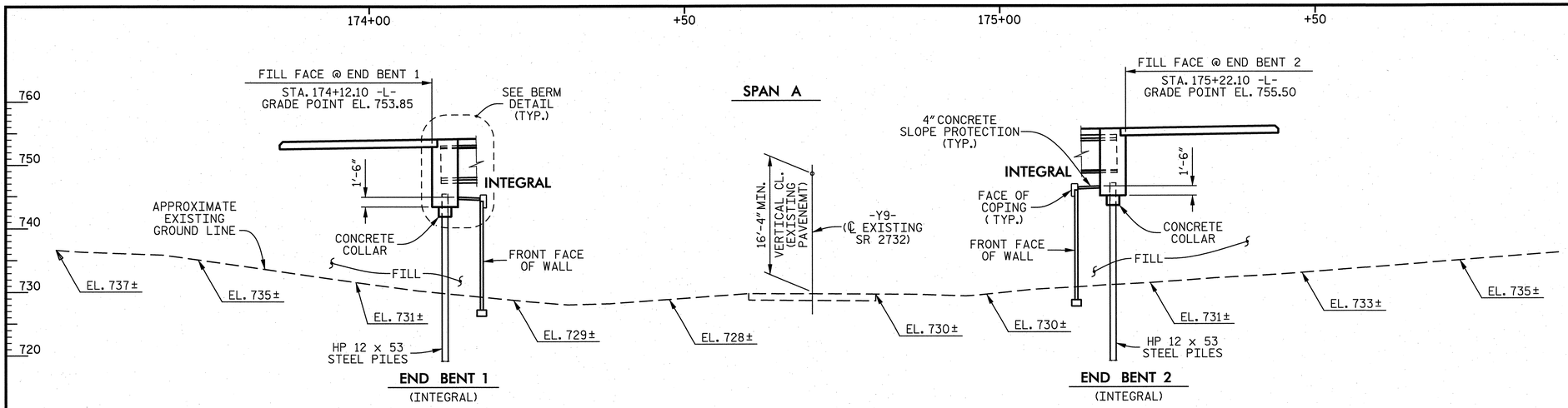

SECTION ALONG WORKLINE (RIGHT LANE)

(SECTION AT RIGHT ANGLES TO END BENTS)

P.V.I. = STA. 179+10.00
EL. = 761.320'
V.C. = 550.00'

(+)1.5004% △ (-)0.6677%

GRADE DATA -L-

NOTES

FOR GENERAL NOTES, SEE "GENERAL DRAWING", SHEET 3 OF 3.

FOR RETAINING WALL DETAILS AND NOTES, SEE "W" SHEETS.

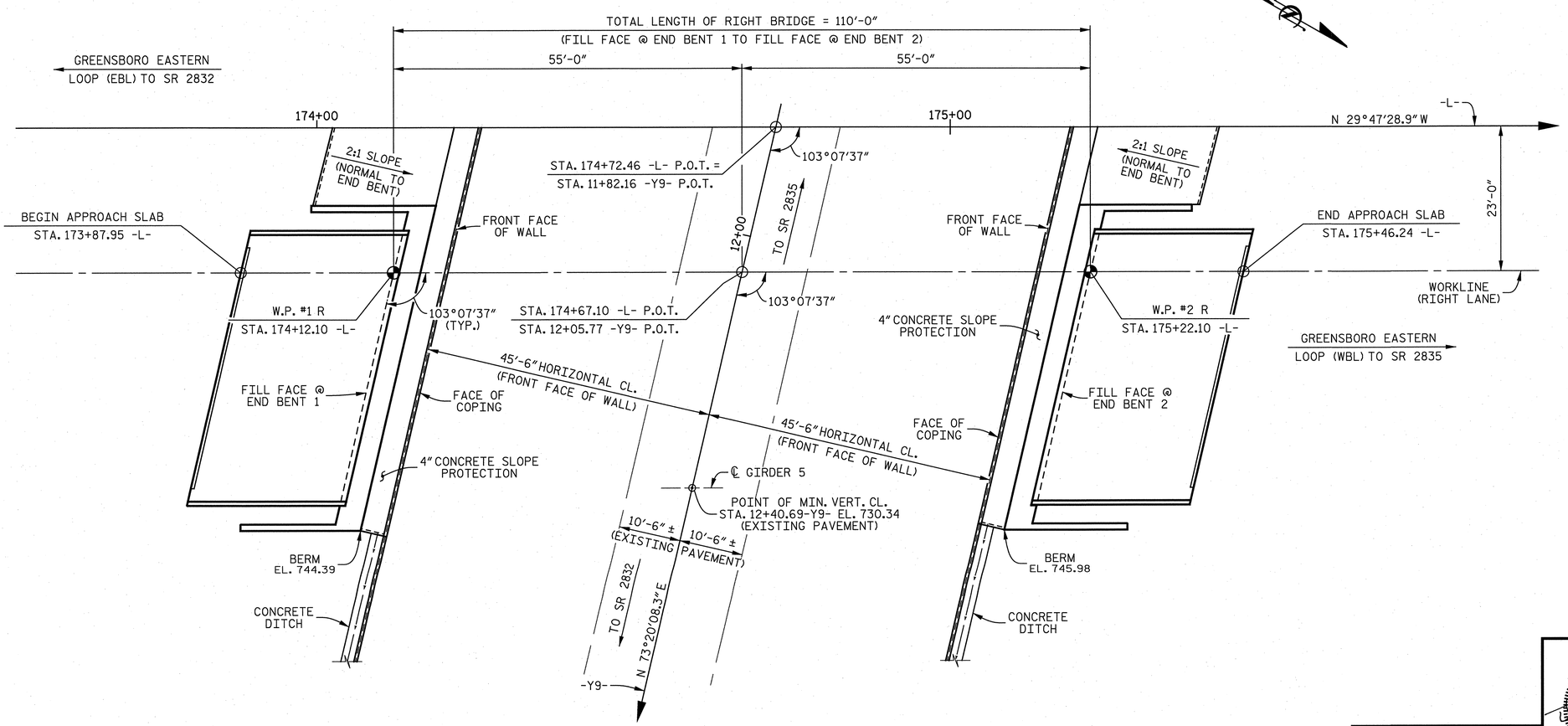

PLAN

PILES NOT SHOWN IN PLAN VIEW.

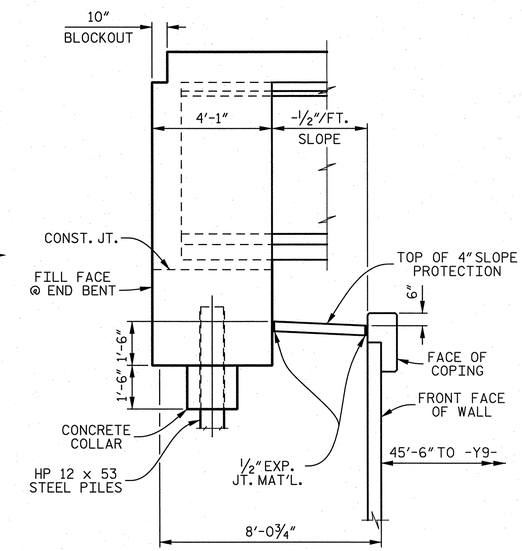

BERM DETAIL

(NORMAL TO FILL FACE)

PROJECT NO. U-2525B

GUILFORD COUNTY

STATION: 174+72.46 -L-
11+82.16 -Y9-

SHEET 1 OF 3 BRIDGE No. 1141

STATE OF NORTH CAROLINA
DEPARTMENT OF TRANSPORTATION
RALEIGH

GENERAL DRAWING

BRIDGE OVER SR 2732 (-Y9-) ON GREENSBORO EASTERN LOOP (-L-) BETWEEN SR 2832 AND SR 2835

(RIGHT LANE)

DRAWN BY : K. E. LOFTON	DATE : 8-13	
CHECKED BY : T. M. HARRIS	DATE : 10-13	
DESIGN ENGINEER : T. M. HARRIS	DATE : 10-13	

PLANS PREPARED BY :
PARSONS
5540 Centerview Drive, Suite 217
Raleigh, NC 27606-3386
NC LICENSE No. F-0246
FOR NORTH CAROLINA DEPARTMENT OF TRANSPORTATION

NORTH CAROLINA PROFESSIONAL SEAL 19299 ENGINEER THOMAS M. HARRIS
12/9/13

DWG. No. S09-001

REVISIONS						
No.	BY:	DATE:	No.	BY:	DATE:	
1			3			
2			4			

SHEET No. S-321
TOTAL SHEETS 541

STR. #9

FILE: j:\u-2525b\structures\plans\final\U2525B_SD_Str9_gdf.dgn
DATE: 12/9/2013 1:27:22 PM

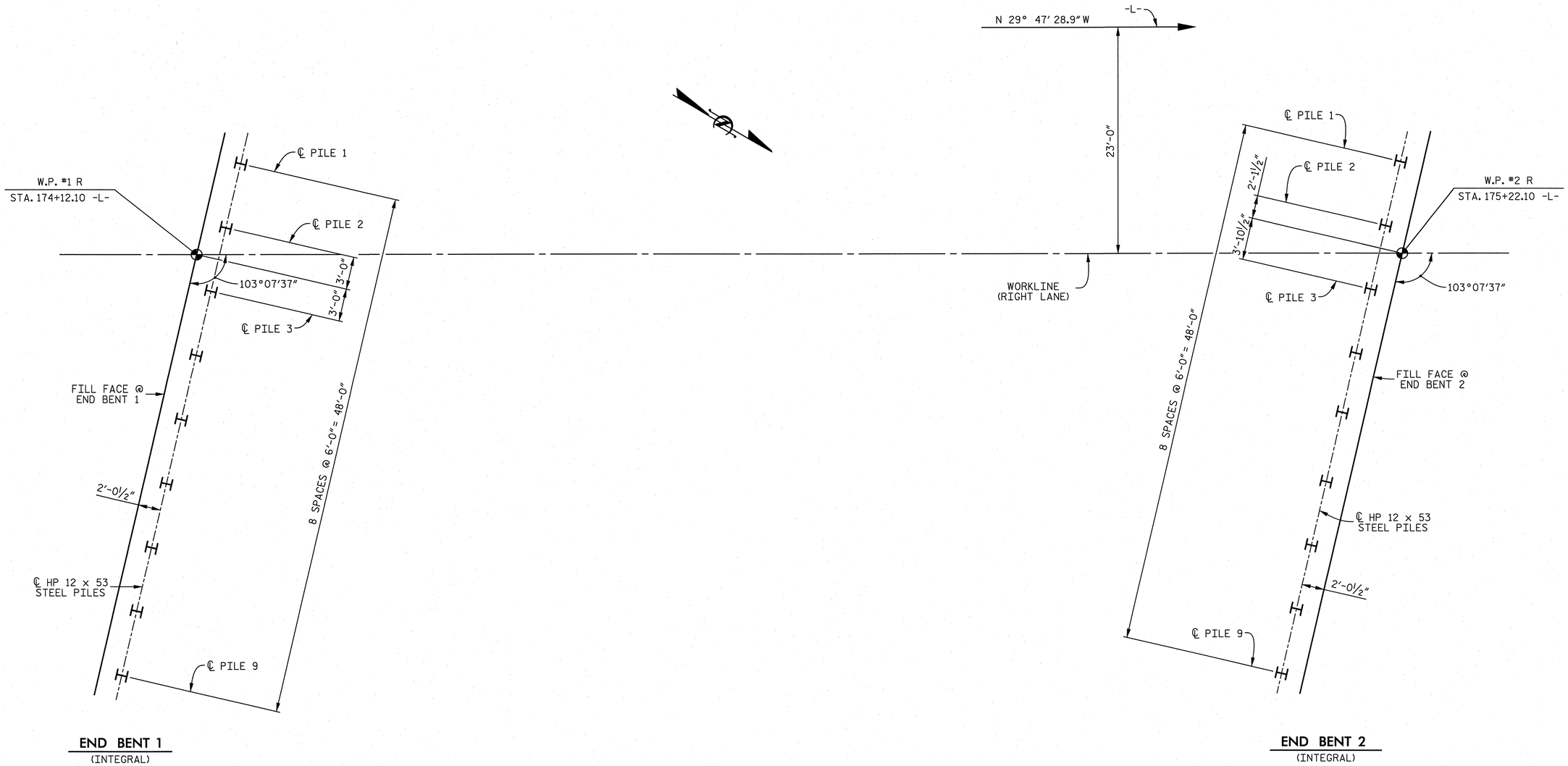

FOUNDATION LAYOUT

NOTES

ALL END BENT PILES ARE VERTICAL HP 12 x 53 STEEL PILES.

DIMENSIONS LOCATING PILES ARE SHOWN TO PILE CENTERLINES AT THE BOTTOM OF THE END BENT CAPS.

FOR PILES, SEE SECTION 450 OF THE STANDARD SPECIFICATIONS.

PILES AT END BENT 1 AND END BENT 2 ARE DESIGNED FOR A FACTORED RESISTANCE OF 110 TONS PER PILE.

DRIVE PILES AT END BENT 1 AND END BENT 2 TO A REQUIRED DRIVING RESISTANCE OF 185 TONS PER PILE.

DRIVE PILES AT END BENT 1 AND END BENT 2 BEFORE CONSTRUCTING THE MSE RETAINING WALLS.

PROJECT NO. U-2525B
GUILFORD COUNTY
STATION: 174+72.46 -L-

SHEET 2 OF 3

STATE OF NORTH CAROLINA
DEPARTMENT OF TRANSPORTATION
RALEIGH

GENERAL DRAWING

BRIDGE OVER SR 2732 (-Y9-) ON GREENSBORO EASTERN LOOP (-L-) BETWEEN SR 2832 AND SR 2835 (RIGHT LANE)

DRAWN BY :	K. E. LOFTON	DATE : 8-13
CHECKED BY :	T. M. HARRIS	DATE : 9-13
DESIGN ENGINEER :	T. M. HARRIS	DATE : 10-13

PLANS PREPARED BY :
PARSONS
5540 Centerview Drive, Suite 217
Raleigh, NC 27606-3386
NC LICENSE No. F-0246
FOR NORTH CAROLINA DEPARTMENT OF TRANSPORTATION

NORTH CAROLINA PROFESSIONAL ENGINEER SEAL 19299 THOMAS M. HARRIS
12/9/13

DWG. No. S09-002

REVISIONS

No.	BY:	DATE:	No.	BY:	DATE:
1			3		
2			4		

SHEET No. 5322
TOTAL SHEETS 541

STR. #9

FILE: j:\u-2525b\structures\final\U2525B_SD_Sr9_fl1.dgn
DATE: 12/3/2013 1:27:24 PM

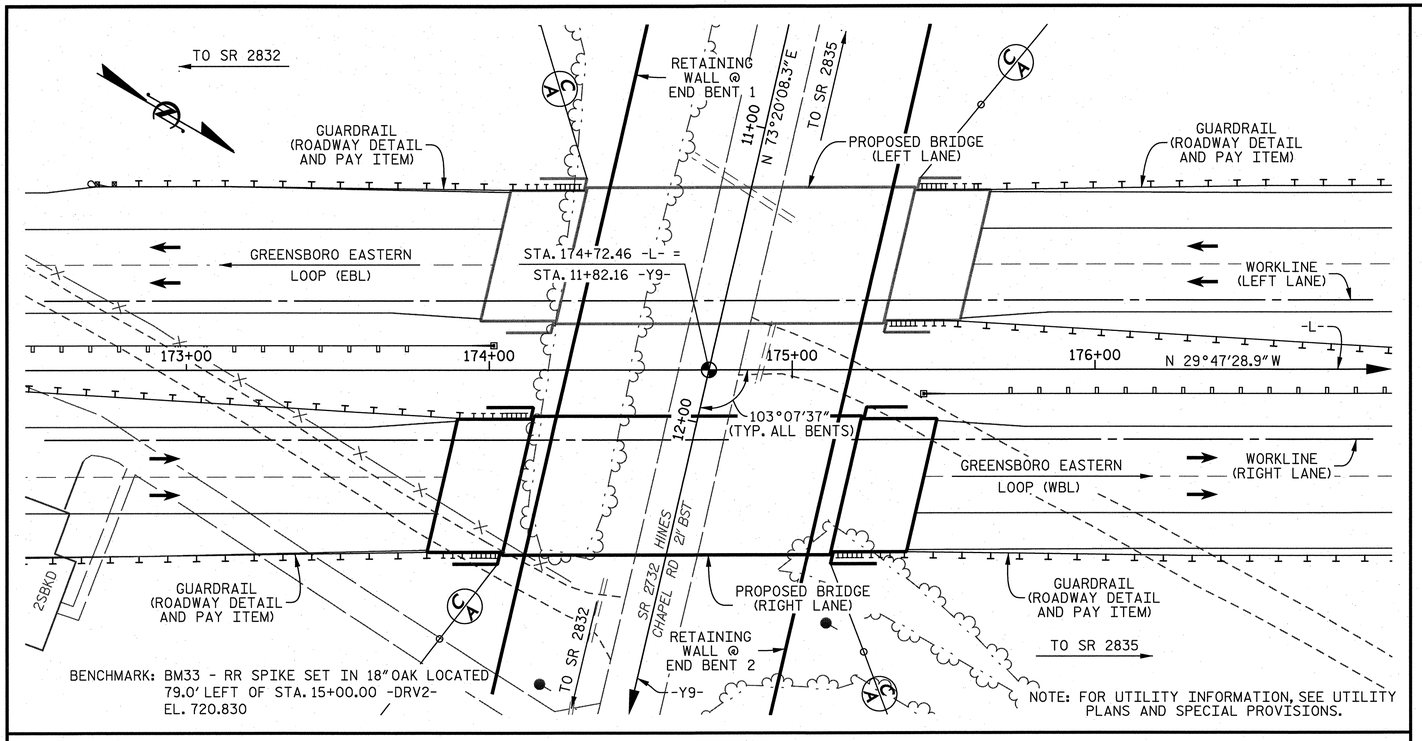

LOCATION SKETCH

NOTES

ASSUMED LIVE LOAD = HL 93 OR ALTERNATE LOADING.

THIS BRIDGE HAS BEEN DESIGNED IN ACCORDANCE WITH THE AASHTO LRFD BRIDGE DESIGN SPECIFICATIONS.

THIS BRIDGE IS LOCATED IN SEISMIC ZONE 1.

FOR OTHER DESIGN DATA AND GENERAL NOTES, SEE SHEET SN.

THE CLASS AA CONCRETE IN THE BRIDGE DECK SHALL CONTAIN FLY ASH OR GROUND GRANULATED BLAST FURNACE SLAG AT THE SUBSTITUTION RATE SPECIFIED IN ARTICLE 1024-1 AND IN ACCORDANCE WITH ARTICLES 1024-5 AND 1024-6 OF THE STANDARD SPECIFICATIONS. NO PAYMENT WILL BE MADE FOR THIS SUBSTITUTION AS IT IS CONSIDERED INCIDENTAL TO THE COST OF THE REINFORCED CONCRETE DECK SLAB.

REMOVABLE FORMS MAY BE USED IN LIEU OF METAL STAY-IN-PLACE FORMS IN ACCORDANCE WITH ARTICLE 420-3 OF THE STANDARD SPECIFICATIONS.

NEEDLE BEAMS WILL NOT BE ALLOWED UNLESS OTHERWISE CALLED FOR ON THE PLANS OR APPROVED BY THE ENGINEER.

FOR SUBMITTAL OF WORKING DRAWINGS, SEE SPECIAL PROVISIONS.

FOR GROUT FOR STRUCTURES, SEE SPECIAL PROVISIONS.

FOR EROSION CONTROL MEASURES, SEE EROSION CONTROL PLANS.

FOR FALSEWORK AND FORMWORK, SEE SPECIAL PROVISIONS.

FOR CRANE SAFETY, SEE SPECIAL PROVISIONS.

FOR PLACING LOAD ON STRUCTURE MEMBERS, SEE SPECIAL PROVISIONS.

FOR MAINTENANCE AND PROTECTION OF TRAFFIC BENEATH PROPOSED STRUCTURE, SEE SPECIAL PROVISIONS.

THE ELEVATION AND CLEARANCE SHOWN ON THE PLANS AT THE POINT OF MINIMUM VERTICAL CLEARANCE ARE FROM THE BEST INFORMATION AVAILABLE. PRIOR TO BEGINNING BRIDGE CONSTRUCTION, VERIFY THE ELEVATION ON THE EXISTING PAVEMENT AND CHECK THE CLEARANCE. REPORT ANY VARIATIONS TO THE ENGINEER. ANY PLAN REVISIONS NECESSARY TO ACHIEVE THE REQUIRED MINIMUM VERTICAL CLEARANCE WILL BE PROVIDED BY THE DEPARTMENT.

FOR ELECTRICAL CONDUIT SYSTEM FOR SIGNALS, SEE SPECIAL PROVISIONS.

TOTAL BILL OF MATERIAL

	REINFORCED CONCRETE DECK SLAB	GROOVING BRIDGE FLOORS	CLASS A CONCRETE	BRIDGE APPROACH SLABS	REINFORCING STEEL	MODIFIED 72" PRESTRESSED CONCRETE GIRDER		HP 12 x 53 STEEL PILES		CONCRETE BARRIER RAIL	4" SLOPE PROTECTION	ELASTOMERIC BEARINGS	ELECTRICAL CONDUIT SYSTEM FOR SIGNALS
	SQ. FT.	SQ. FT.	CU. YDS.	LUMP SUM	LBS.	No.	LIN. FT.	No.	LIN. FT.	LIN. FT.	SQ. YD.	LUMP SUM	LUMP SUM
SUPERSTRUCTURE	4,900	6,094		LUMP SUM		5	536.09			216.58		LUMP SUM	LUMP SUM
END BENT 1			32.6		7,242			9	270		54		
END BENT 2			32.7		7,251			9	315		55		
TOTAL	4,900	6,094	65.3	LUMP SUM	14,493	5	536.09	18	585	216.58	109	LUMP SUM	LUMP SUM

PROJECT NO. U-2525B

GUILFORD COUNTY

STATION: 174+72.46 -L-

SHEET 3 OF 3

STATE OF NORTH CAROLINA
DEPARTMENT OF TRANSPORTATION
RALEIGH

GENERAL DRAWING

BRIDGE OVER SR 2732 (-Y9-) ON GREENSBORO EASTERN LOOP (-L-) BETWEEN SR 2832 AND SR 2835 (RIGHT LANE)

NORTH CAROLINA PROFESSIONAL SEAL 19299 ENGINEER THOMAS M. HARRIS 12-20-13

DRAWN BY : K. E. LOFTON DATE : 10-13
CHECKED BY : T. M. HARRIS DATE : 12-13
DESIGN ENGINEER : T. M. HARRIS DATE : 12-13

PLANS PREPARED BY :
PARSONS
5540 Centerview Drive, Suite 217
Raleigh, NC 27606-3386
NC LICENSE No. F-0246
FOR NORTH CAROLINA DEPARTMENT OF TRANSPORTATION

DWG. No. S09-003

REVISIONS						SHEET No.
No.	BY:	DATE:	No.	BY:	DATE:	5-323
1			3			TOTAL SHEETS
2			4			541

STR. #9

FILE: J:\U-2525B\Structures\Plans\Final\U2525B_SD_Sn2_b1.dgn
DATE: 12/19/2013 1:59:48 PM

LOAD AND RESISTANCE FACTOR RATING (LRFR) SUMMARY FOR PRESTRESSED CONCRETE GIRDERS

LEVEL		VEHICLE	WEIGHT (W) (TONS)	CONTROLLING LOAD RATING (#)	MINIMUM RATING FACTORS (RF)	TONS = W × RF	STRENGTH I LIMIT STATE											SERVICE III LIMIT STATE						COMMENT NUMBER
								MOMENT					SHEAR						MOMENT					
							LIVE-LOAD FACTORS (γ_{LL})	DISTRIBUTION FACTORS (DF)	RATING FACTOR	SPANS	GIRDER LOCATION	DISTANCE FROM LEFT END OF SPAN (FT)	DISTRIBUTION FACTORS (DF)	RATING FACTOR	SPAN	GIRDER LOCATION	DISTANCE FROM LEFT END OF SPAN (FT)	LIVE-LOAD FACTORS (γ_{LL})	DISTRIBUTION FACTORS (DF)	RATING FACTOR	SPANS	GIRDER LOCATION	DISTANCE FROM LEFT END OF SPAN (FT)	
DESIGN LOAD RATING		HL-93 (INVENTORY)	N/A	1	1.12	--	1.75	0.821	1.31	A	EL	52.90	0.961	1.25	A	I	10.00	0.80	0.821	1.12	A	EL	52.90	--
		HL-93 (OPERATING)	N/A		1.65	--	1.35	0.821	1.70	A	EL	52.90	0.961	1.65	A	I	10.00	N/A	--	--	--	--	--	--
		HS-20 (INVENTORY)	36.000	2	1.58	57.00	1.75	0.821	1.86	A	EL	52.90	0.961	1.73	A	I	10.00	0.80	0.821	1.58	A	EL	52.90	--
		HS-20 (OPERATING)	36.000		2.28	82.00	1.35	0.821	2.41	A	EL	52.90	0.961	2.28	A	I	10.00	N/A	--	--	--	--	--	--
LEGAL LOAD RATING	SINGLE VEHICLE (SV)	SH	12.500		4.09	51.13	1.40	0.821	6.02	A	EL	52.90	0.961	6.07	A	I	10.00	0.80	0.821	4.09	A	EL	52.90	--
		S3C	21.500		2.39	51.39	1.40	0.821	3.51	A	EL	52.90	0.961	3.50	A	I	10.00	0.80	0.821	2.39	A	EL	52.90	--
		S3A	22.750		2.26	51.42	1.40	0.821	3.33	A	EL	52.90	0.961	3.32	A	I	10.00	0.80	0.821	2.26	A	EL	52.90	--
		S4A	26.750		1.98	52.97	1.40	0.821	2.91	A	EL	52.90	0.961	2.86	A	I	10.00	0.80	0.821	1.98	A	EL	52.90	--
		S5A	30.500		1.75	53.38	1.40	0.821	2.57	A	EL	52.90	0.961	2.59	A	I	10.00	0.80	0.821	1.75	A	EL	52.90	--
		S6A	34.500		1.58	54.51	1.40	0.821	2.32	A	EL	52.90	0.961	2.31	A	I	10.00	0.80	0.821	1.58	A	EL	52.90	--
		S7B	38.500		1.43	55.06	1.40	0.821	2.10	A	EL	52.90	0.961	2.13	A	I	10.00	0.80	0.821	1.43	A	EL	52.90	--
		S7A	40.000	3	1.40	56.00	1.40	0.821	2.07	A	EL	52.90	0.961	2.15	A	I	10.00	0.80	0.821	1.40	A	EL	52.90	--
	TRUCK TRACTOR SEMI-TRAILER (TTST)	T4A	28.250		1.94	54.81	1.40	0.821	2.85	A	EL	52.90	0.961	2.76	A	I	10.00	0.80	0.821	1.94	A	EL	52.90	--
		T5B	32.000		1.70	54.40	1.40	0.821	2.50	A	EL	52.90	0.961	2.57	A	I	10.00	0.80	0.821	1.70	A	EL	52.90	--
		T6A	36.000		1.55	55.80	1.40	0.821	2.28	A	EL	52.90	0.961	2.33	A	I	10.00	0.80	0.821	1.55	A	EL	52.90	--
		T7A	40.000		1.43	57.20	1.40	0.821	2.10	A	EL	52.90	0.961	2.15	A	I	10.00	0.80	0.821	1.43	A	EL	52.90	--
		T7B	40.000		1.50	60.00	1.40	0.821	2.21	A	EL	52.90	0.961	2.04	A	I	10.00	0.80	0.821	1.50	A	EL	52.90	--

LOAD FACTORS

DESIGN LOAD RATING FACTORS	LIMIT STATE	γ_{DC}	γ_{DW}
	STRENGTH I	1.25	1.50
	SERVICE III	1.00	1.00

NOTES

MINIMUM RATING FACTORS ARE BASED ON THE STRENGTH I AND SERVICE III LIMIT STATES.

ALLOWABLE STRESSES FOR SERVICE III LIMIT STATE ARE AS REQUIRED FOR DESIGN.

COMMENTS

CONCRETE BARRIER RAIL LOADS:

GIRDER A1 AND GIRDER A5 242 LBS./FT.
GIRDER A2 AND GIRDER A4 182 LBS./FT.
GIRDER A3 253 LBS./FT.

(#) CONTROLLING LOAD RATING

(1) DESIGN LOAD RATING (HL-93)

(2) DESIGN LOAD RATING (HS-20)

(3) LEGAL LOAD RATING **

** SEE CHART FOR VEHICLE TYPE

GIRDER LOCATION

I - INTERIOR GIRDER (GIRDER A3)
EL - EXTERIOR LEFT GIRDER
ER - EXTERIOR RIGHT GIRDER

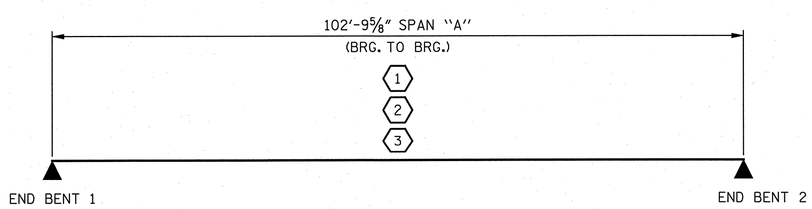

LRFR SUMMARY

PROJECT NO. U-2525B
GUILFORD COUNTY
STATION: 174+72.46 -L-

STATE OF NORTH CAROLINA
DEPARTMENT OF TRANSPORTATION
RALEIGH

STANDARD
LRFR SUMMARY FOR PRESTRESSED CONCRETE GIRDERS (INTERSTATE TRAFFIC) (RIGHT LANE)

REVISIONS						
No.	BY:	DATE:	No.	BY:	DATE:	
1			3			
2			4			

SHEET No. 5-324
TOTAL SHEETS 541

STD. No. LRFR2 STR. #9

NORTH CAROLINA PROFESSIONAL SEAL 19299 ENGINEER THOMAS M. HARRIS
12/9/13

DWG. No. S09-004

PLANS PREPARED BY :
PARSONS
5540 Centerview Drive, Suite 217
Raleigh, NC 27606-3386
NC LICENSE No. F-0246
FOR NORTH CAROLINA DEPARTMENT OF TRANSPORTATION

DRAWN BY : K. E. LOFTON DATE : 7-13
CHECKED BY : T. M. HARRIS DATE : 9-13
DESIGN ENGINEER : T. M. HARRIS DATE : 10-13

ASSEMBLED BY : K. E. LOFTON DATE : 7-13
CHECKED BY : T. M. HARRIS DATE : 9-13

DRAWN BY : MAA 1/08
CHECKED BY : GM/DI 2/08

REV. 11/12/08RR MAA/GM
REV. 10/1/11 MAA/GM

FILE: f:\u-2525b\structures\plans\final\U2525B_SD_Sh#2_M1.dgn
DATE: 12/3/2013 1:27:28 PM

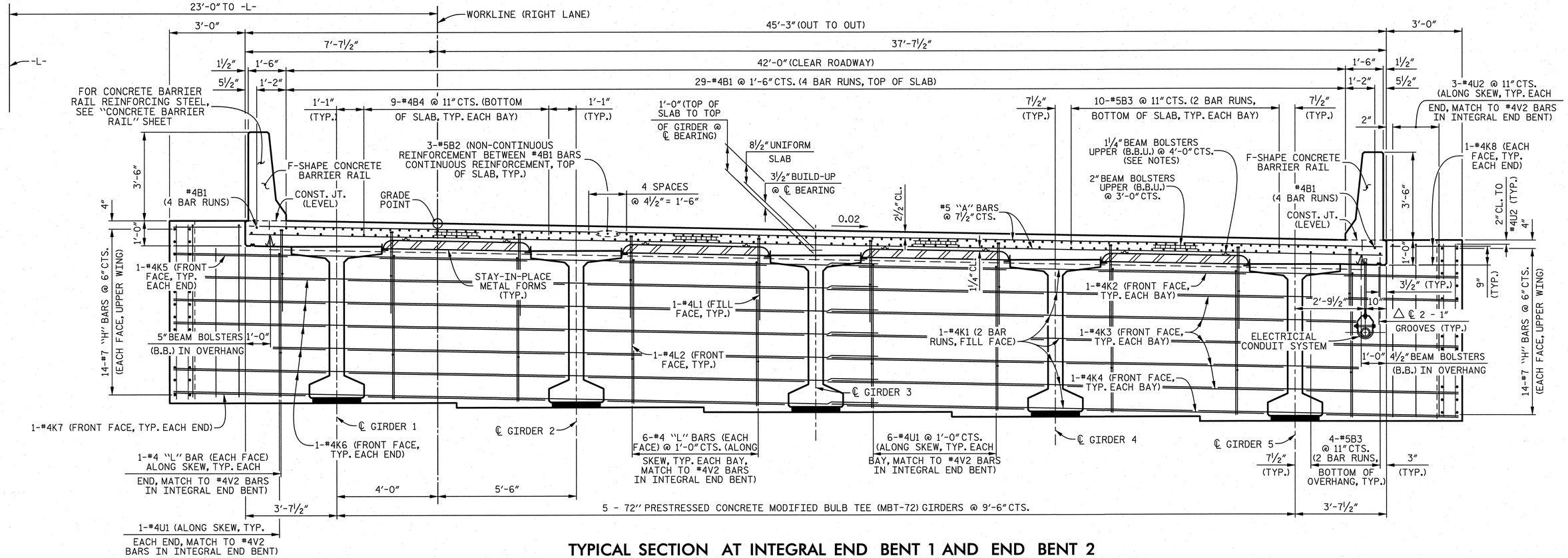

TYPICAL SECTION AT INTEGRAL END BENT 1 AND END BENT 2

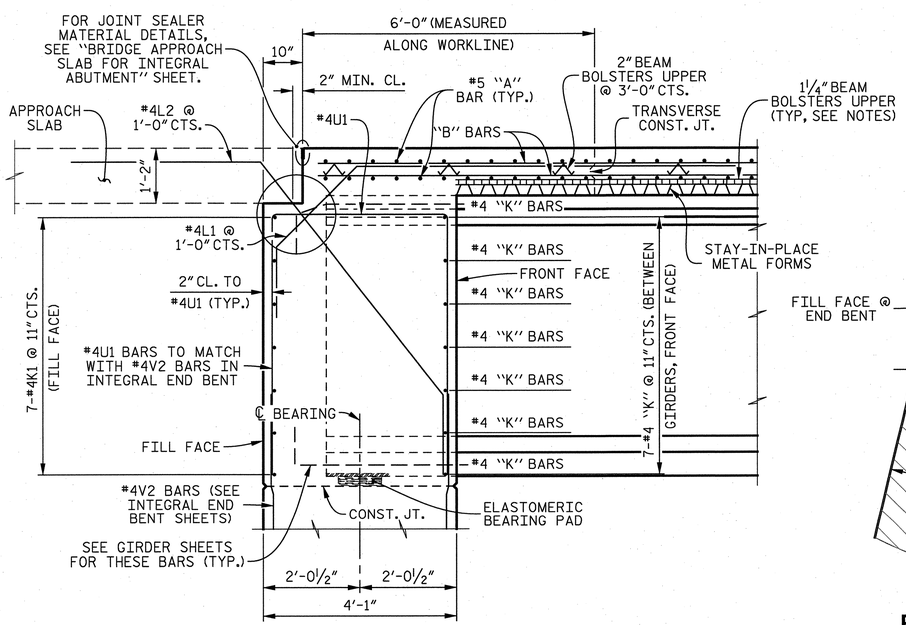

SECTION THRU INTEGRAL END BENT

(END BENT 1 SHOWN, END BENT 2 SIMILAR)

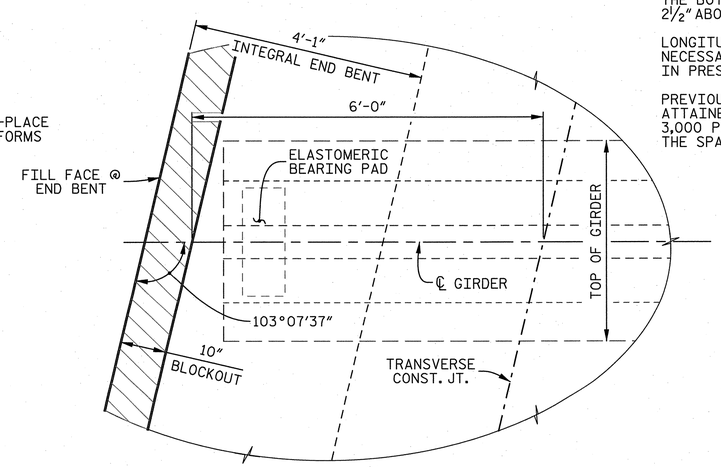

PLAN OF GIRDER – INTEGRAL END BENT

NOTES

PROVIDE 1¼" HIGH BEAM BOLSTERS UPPER AT 4'-0" CTS. ATOP THE METAL STAY-IN-PLACE FORMS TO SUPPORT THE BOTTOM MAT OF "A" BARS. WHEN USING REMOVABLE FORMS, PROVIDE CONTINUOUS HIGH CHAIRS FOR METAL DECK (C.H.C.M.) @ 4'-0" CTS. WITH A HEIGHT TO SUPPORT THE BOTTOM MAT OF "A" BARS A CLEAR DISTANCE OF 2½" ABOVE THE TOP OF THE REMOVABLE FORM.

LONGITUDINAL STEEL MAY BE SHIFTED SLIGHTLY, AS NECESSARY, TO AVOID INTERFERENCE WITH STIRRUPS IN PRESTRESSED CONCRETE GIRDERS.

PREVIOUSLY CAST CONCRETE IN SPAN "A" SHALL HAVE ATTAINED A MINIMUM COMPRESSIVE STRENGTH OF 3,000 PSI BEFORE ADDITIONAL CONCRETE IS CAST IN THE SPAN.

BARRIER RAIL IN SPAN "A" SHALL NOT BE CAST UNTIL ALL SLAB CONCRETE IN THE SPAN HAS BEEN CAST AND HAS REACHED A MINIMUM COMPRESSIVE STRENGTH OF 3,000 PSI.

FOR F-SHAPE CONCRETE BARRIER RAIL DETAILS, SEE "CONCRETE BARRIER RAIL" SHEET.

FOR POURING SEQUENCE, SEE "SUPERSTRUCTURE BILL OF MATERIAL" SHEET.

FOR ELECTRICAL CONDUIT SYSTEM DETAILS, SEE "ELECTRICAL CONDUIT SYSTEM DETAILS" SHEET.

PROJECT NO. U-2525B

GUILFORD COUNTY

STATION: 174+72.46 -L-

SHEET 1 OF 2

STATE OF NORTH CAROLINA
DEPARTMENT OF TRANSPORTATION
RALEIGH

SUPERSTRUCTURE

TYPICAL SECTION
(RIGHT LANE)

DRAWN BY : K. E. LOFTON	DATE : 7-13		
CHECKED BY : T. M. HARRIS	DATE : 12-13		
DESIGN ENGINEER : T. M. HARRIS	DATE : 12-13		

PLANS PREPARED BY :
PARSONS
5540 Centerview Drive, Suite 217
Raleigh, NC 27606-3386
NC LICENSE No. F-0246
FOR NORTH CAROLINA DEPARTMENT OF TRANSPORTATION

NORTH CAROLINA PROFESSIONAL SEAL 19299 ENGINEER THOMAS M. HARRIS
12-20-13

DWG. No. S09-005

REVISIONS						
No.	BY:	DATE:	No.	BY:	DATE:	
1			3			
2			4			

SHEET No. S-325

TOTAL SHEETS 541

STR. #9

FILE: J:\U-2525B\Structures\Plans\Final\U2525B_SD_Str9_st1.dgn
DATE: 12/19/2013 6:19:59 PM

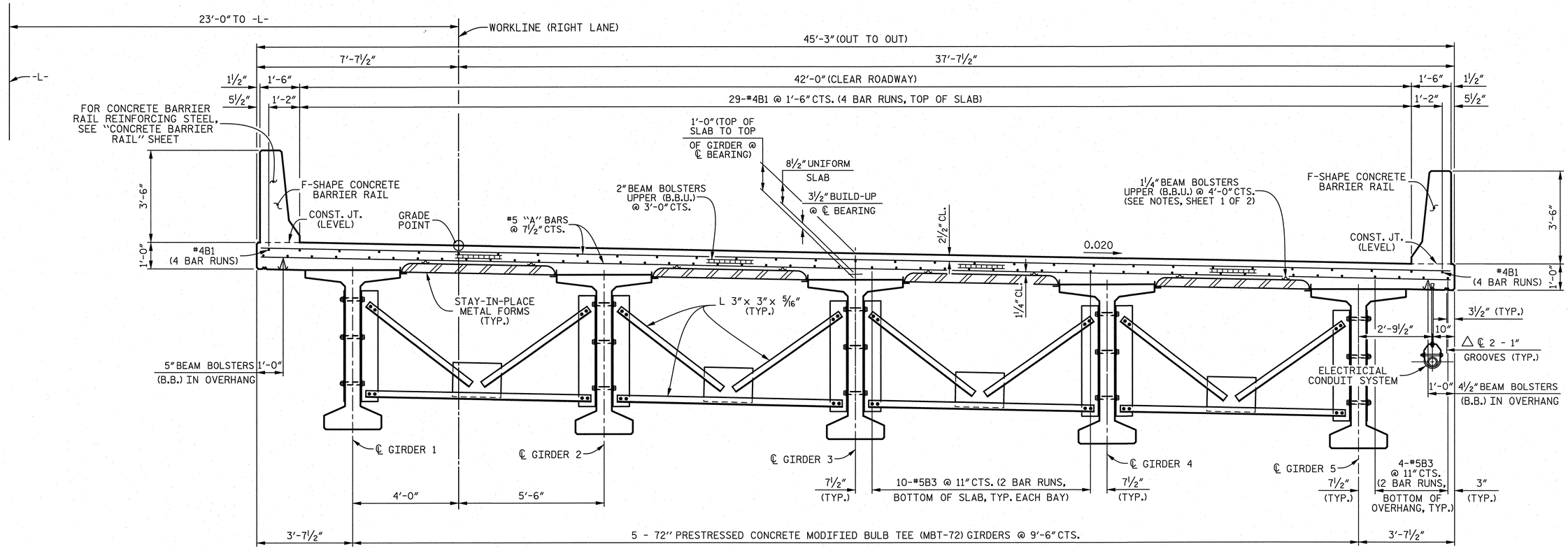

TYPICAL SECTION AT INTERMEDIATE STEEL DIAPHRAGMS

FOR INTERMEDIATE STEEL DIAPHRAGMS DETAILS, SEE SHEET 4 OF 4 OF 72" MODIFIED BULB TEE PRESTRESSED CONCRETE GIRDERS.

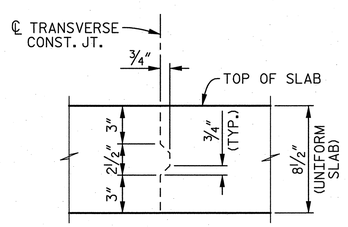

TRANSVERSE CONSTRUCTION JOINT DETAIL

REINFORCING STEEL IN SLAB NOT SHOWN. LONGITUDINAL REINFORCING STEEL SHALL BE CONTINUOUS THROUGH JOINT.

PROJECT NO. U-2525B
GUILFORD COUNTY
STATION: 174+72.46 -L-

SHEET 2 OF 2

STATE OF NORTH CAROLINA
DEPARTMENT OF TRANSPORTATION
RALEIGH

SUPERSTRUCTURE

TYPICAL SECTION (RIGHT LANE)

REVISIONS						
No.	BY:	DATE:	No.	BY:	DATE:	
1			3			
2			4			

SHEET No. 5-326
TOTAL SHEETS 541

DRAWN BY : K. E. LOFTON DATE : 7-13
CHECKED BY : T. M. HARRIS DATE : 12-13
DESIGN ENGINEER : T. M. HARRIS DATE : 12-13

PLANS PREPARED BY :
PARSONS
5540 Centerview Drive, Suite 217
Raleigh, NC 27606-3386
NC LICENSE No. F-0246
FOR NORTH CAROLINA DEPARTMENT OF TRANSPORTATION

NORTH CAROLINA PROFESSIONAL SEAL 19299 ENGINEER THOMAS M. HARRIS
12-20-13

DWG. No. S09-006

STR. #9

FILE: J:\U-2525B\Structures\Plans\Final\U2525B_SD_SrP_ts2.dgn
DATE: 12/20/2013 11:41:55 AM

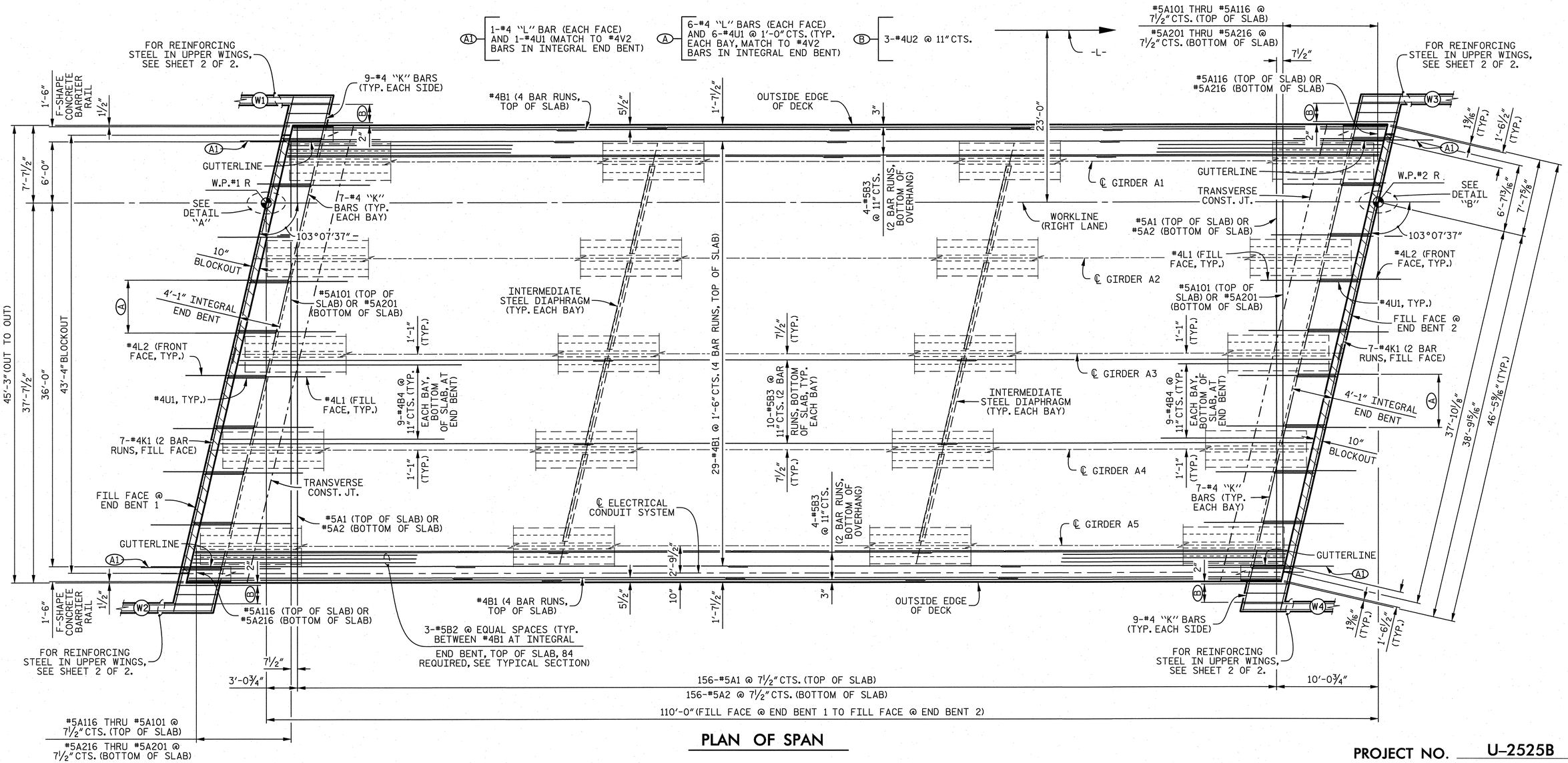

PLAN OF SPAN

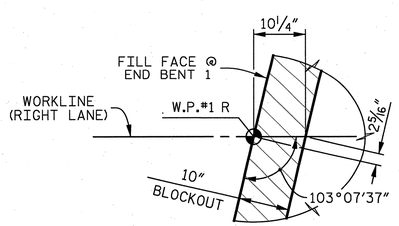

DETAIL "A"

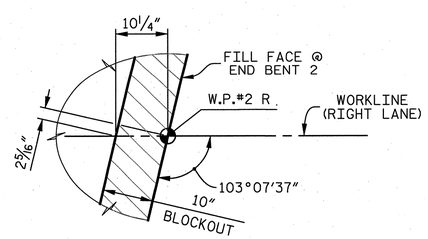

DETAIL "B"

NOTES

#5 "A" BARS SHALL BE PLACED PERPENDICULAR TO WORKLINE WITH A 2" MINIMUM CLEARANCE ON EACH END.

FOR REINFORCING STEEL IN CONCRETE BARRIER RAIL, SEE "CONCRETE BARRIER RAIL" SHEET.

FOR SLAB POURING SEQUENCE AND SPLICE CHART, SEE "SUPERSTRUCTURE BILL OF MATERIAL" SHEET.

PROJECT NO. U-2525B

GUILFORD COUNTY

STATION: 174+72.46 -L-

SHEET 1 OF 2

STATE OF NORTH CAROLINA
DEPARTMENT OF TRANSPORTATION
RALEIGH

SUPERSTRUCTURE

PLAN OF SPAN

(RIGHT LANE)

DRAWN BY :	K. E. LOFTON	DATE :	7-13
CHECKED BY :	T. M. HARRIS	DATE :	12-13
DESIGN ENGINEER :	T. M. HARRIS	DATE :	12-13

PLANS PREPARED BY :
PARSONS
5540 Centerview Drive, Suite 217
Raleigh, NC 27606-3386
NC LICENSE No. F-0246
FOR NORTH CAROLINA DEPARTMENT OF TRANSPORTATION

NORTH CAROLINA PROFESSIONAL SEAL 19299 ENGINEER THOMAS M. HARRIS
12-20-13

DWG. No. S09-007

REVISIONS						
No.	BY:	DATE:	No.	BY:	DATE:	
1			3			
2			4			

SHEET No. 5-327

TOTAL SHEETS 541

STR. #9

FILE: J:\U-2525B\Structures\Plans\Final\U2525B_SD_Sht2_pt1.dgn
DATE: 12/19/2013 1:29:43 PM

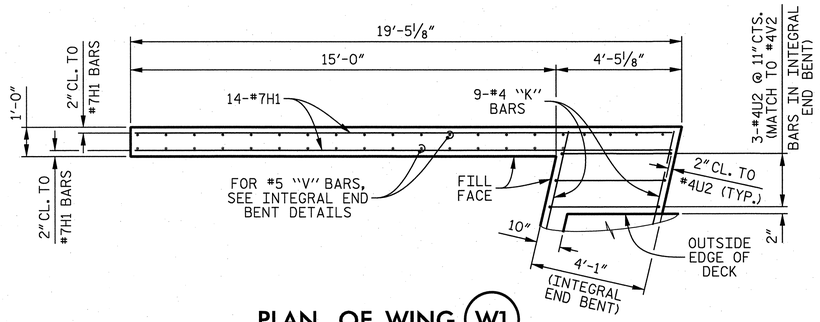

PLAN OF WING (W1)

(END BENT 1, UPPER WING)

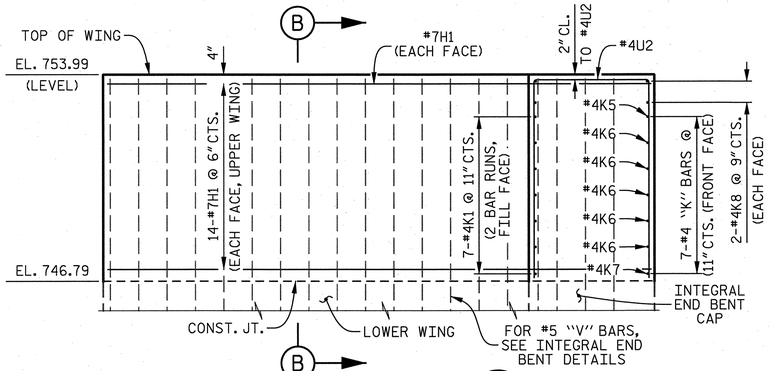

ELEVATION OF WING (W1)

(END BENT 1, UPPER WING)

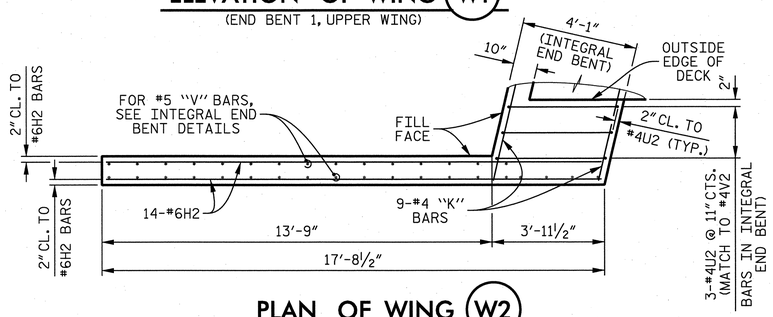

PLAN OF WING (W2)

(END BENT 1, UPPER WING)

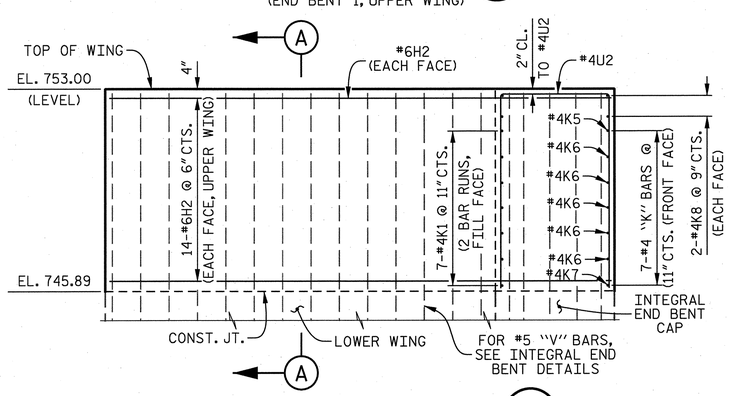

ELEVATION OF WING (W2)

(END BENT 1, UPPER WING)

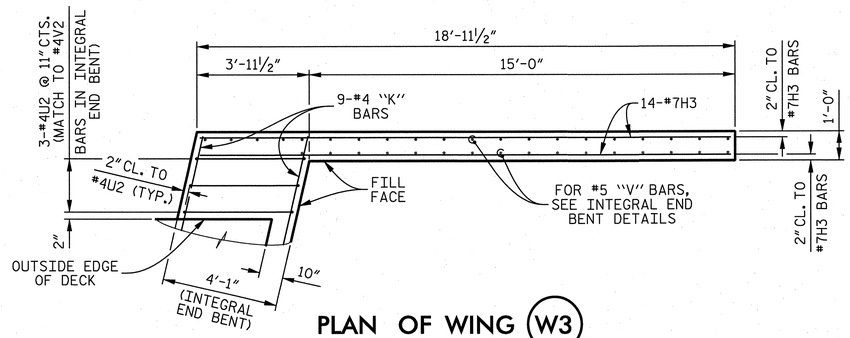

PLAN OF WING (W3)

(END BENT 2, UPPER WING)

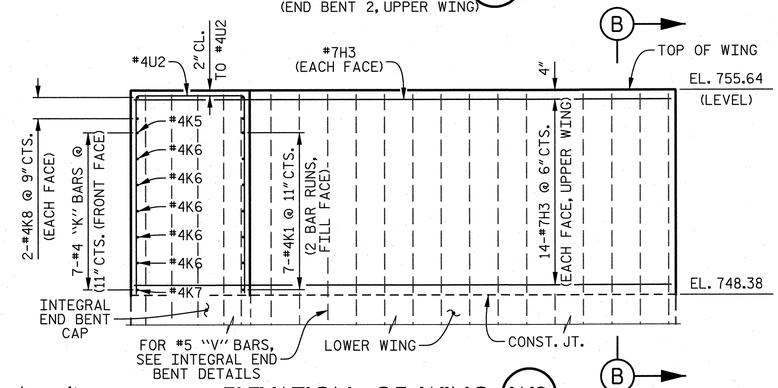

ELEVATION OF WING (W3)

(END BENT 2, UPPER WING)

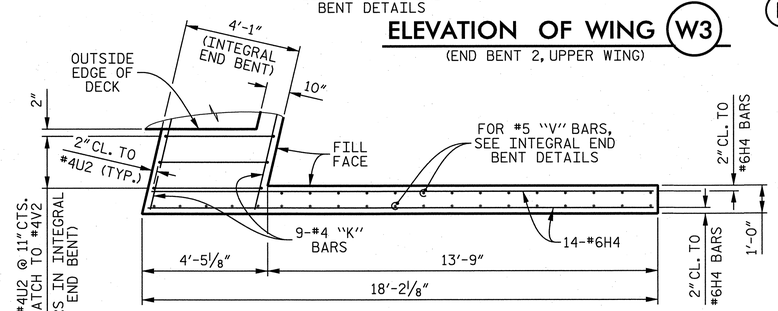

PLAN OF WING (W4)

(END BENT 2, UPPER WING)

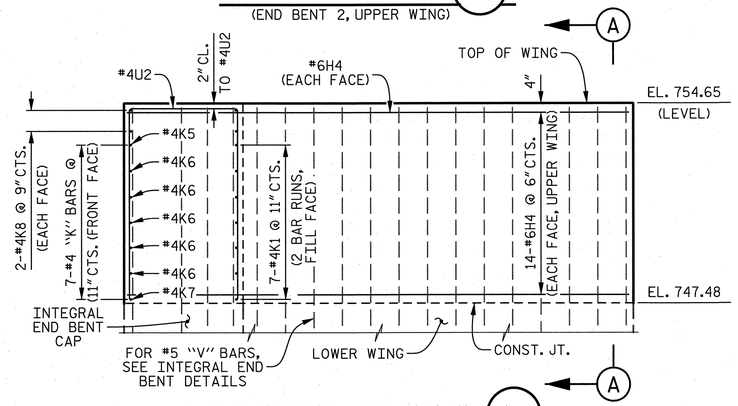

ELEVATION OF WING (W4)

(END BENT 2, UPPER WING)

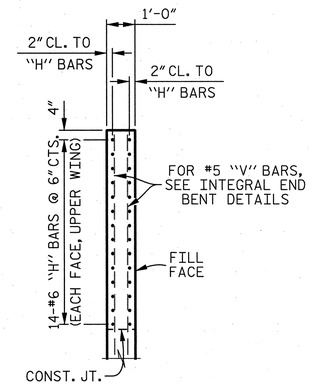

SECTION A–A

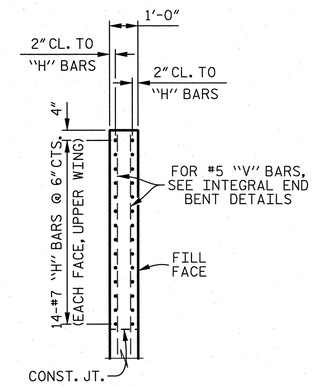

SECTION B–B

PROJECT NO. U-2525B

GUILFORD COUNTY

STATION: 174+72.46 -L-

SHEET 2 OF 2

STATE OF NORTH CAROLINA
DEPARTMENT OF TRANSPORTATION
RALEIGH

SUPERSTRUCTURE

PLAN OF SPAN DETAILS

(RIGHT LANE)

NORTH CAROLINA PROFESSIONAL SEAL 19299 ENGINEER THOMAS M. HARRIS
12/9/13

REVISIONS						
No.	BY:	DATE:	No.	BY:	DATE:	
1			3			
2			4			

SHEET No. 5-328

TOTAL SHEETS 541

STR. #9

DWG. No. S09-008

PLANS PREPARED BY :
PARSONS
5540 Centerview Drive, Suite 217
Raleigh, NC 27606-3386
NC LICENSE No. F-0246
FOR NORTH CAROLINA DEPARTMENT OF TRANSPORTATION

DRAWN BY :	K. E. LOFTON	DATE :	7-13
CHECKED BY :	T. M. HARRIS	DATE :	9-13
DESIGN ENGINEER :	T. M. HARRIS	DATE :	10-13

FILE: j:\u-2525b\structures\plans\final\U2525B_SD_Sr2_pa2.dgn
DATE: 12/3/013 1:27:32 PM

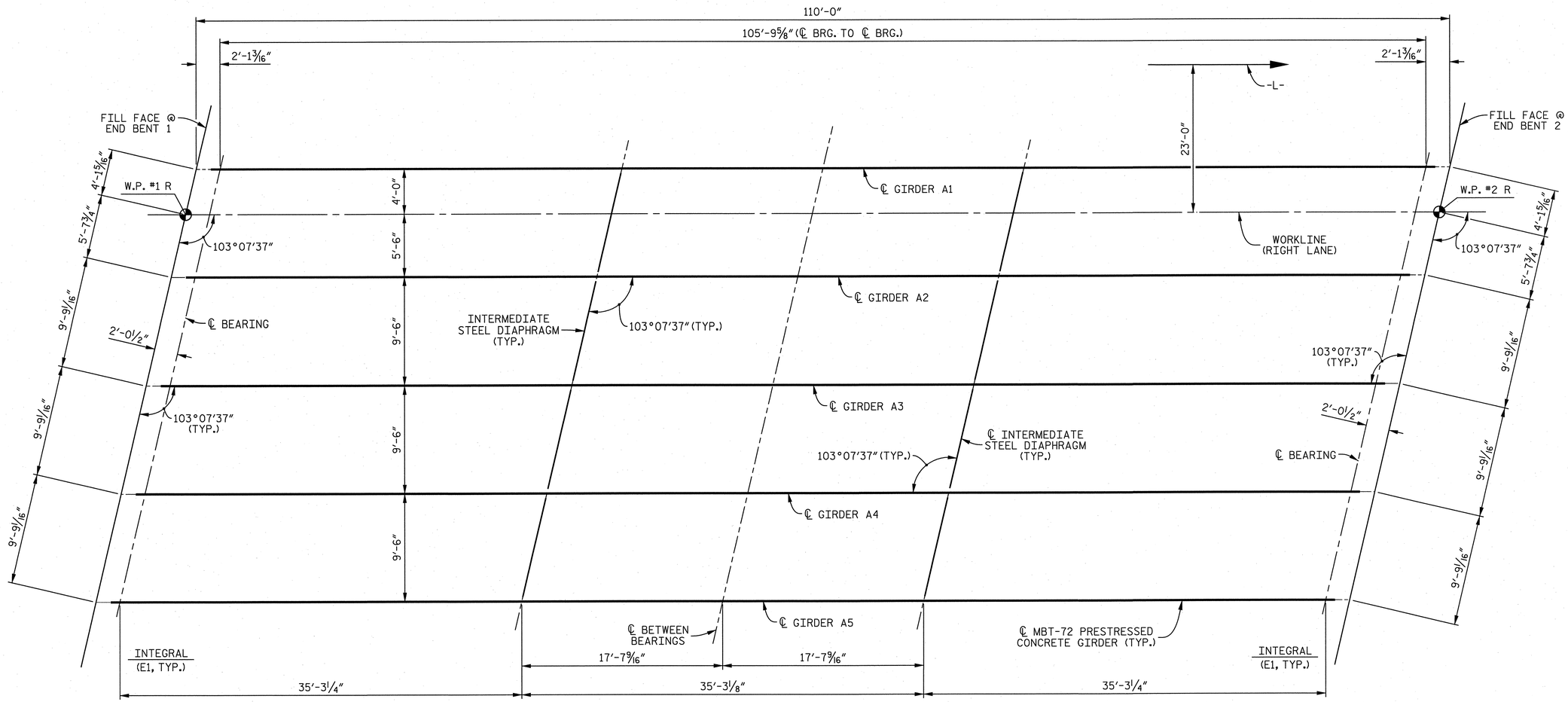

SPAN A

FRAMING PLAN

PROJECT NO. U-2525B

GUILFORD COUNTY

STATION: 174+72.46 -L-

NOTES

FOR INTERMEDIATE STEEL DIAPHRAGMS, SEE "INTERMEDIATE STEEL DIAPHRAGMS FOR 72" MODIFIED BULB TEE PRESTRESSED CONCRETE GIRDERS" SHEET.

FOR ELASTOMERIC BEARING DETAILS, SEE "ELASTOMERIC BEARING DETAILS PRESTRESSED CONCRETE GIRDER SUPERSTRUCTURE" SHEET.

STATE OF NORTH CAROLINA
DEPARTMENT OF TRANSPORTATION
RALEIGH

SUPERSTRUCTURE

FRAMING PLAN

(RIGHT LANE)

NORTH CAROLINA PROFESSIONAL SEAL 19299 ENGINEER THOMAS M. HARRIS 12/9/13

REVISIONS						
No.	BY:	DATE:	No.	BY:	DATE:	
1			3			
2			4			

SHEET No. 5-329

TOTAL SHEETS 541

STR. #9

PLANS PREPARED BY :
PARSONS
5540 Centerview Drive, Suite 217
Raleigh, NC 27606-3386
NC LICENSE No. F-0246
FOR NORTH CAROLINA DEPARTMENT OF TRANSPORTATION

DWG. No. S09-009

DRAWN BY :	K. E. LOFTON	DATE :	7-13
CHECKED BY :	T. M. HARRIS	DATE :	9-13
DESIGN ENGINEER :	T. M. HARRIS	DATE :	10-13

FILE: I:\u-2525b\structure\plans\final\U2525B_SD_Sr9_fp1.dgn
DATE: 12/2/013 1:27:33 PM

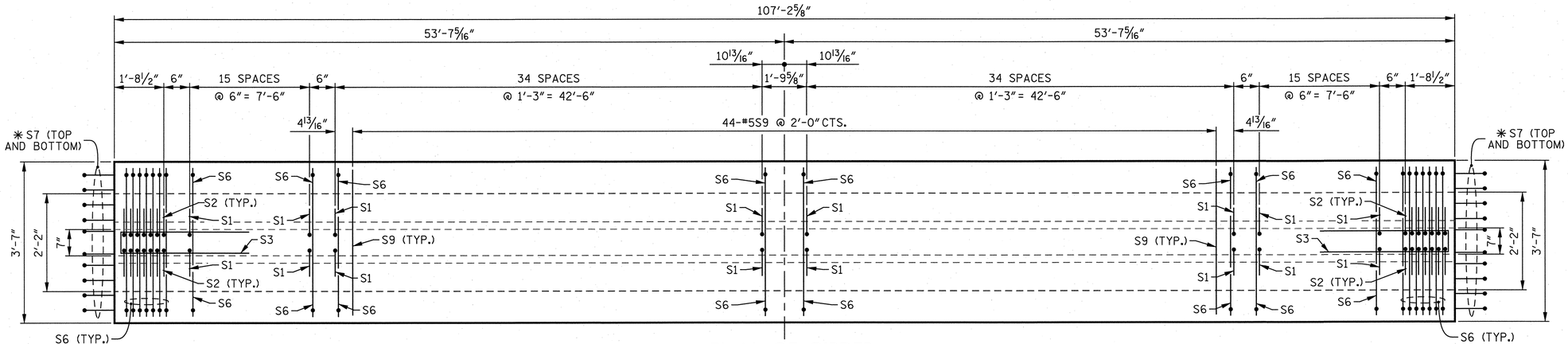

PLAN OF GIRDER

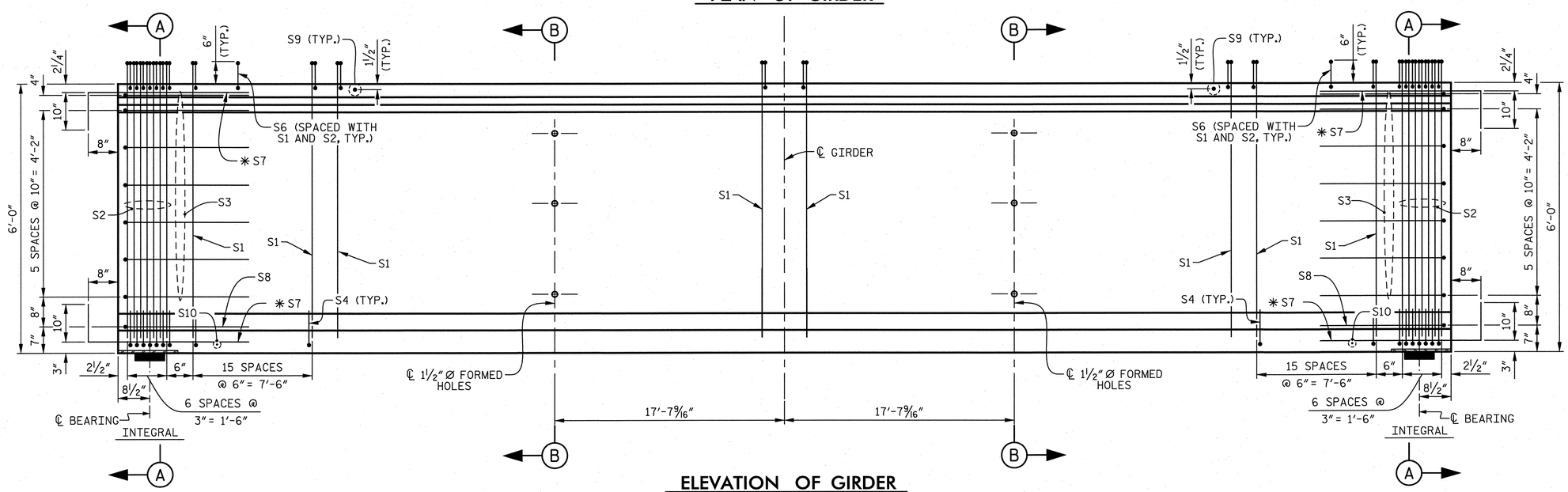

ELEVATION OF GIRDER

NOTES

FOR SECTION A-A AND SECTION B-B, SEE SHEET 2 OF 3.

FOR STRAND PATTERN, SEE SHEET 2 OF 3.

FOR ADDITIONAL NOTES, SEE SHEET 3 OF 3.

0.6" Ø L.R. GRADE 270 STRANDS

AREA (SQUARE INCHES)	ULTIMATE STRENGTH (LBS. PER STRAND)	APPLIED PRESTRESS (LBS. PER STRAND)
0.217	58,600	43,950

REINFORCING STEEL FOR ONE GIRDER

BAR	NUMBER	SIZE	TYPE	LENGTH	WEIGHT
S1	204	#4	1	6'-10"	931
S2	28	#5	1	6'-10"	200
S3	14	#4	2	8'- 5"	79
S4	92	#4	3	3'- 0"	184
S6	232	#5	4	4'- 4"	1,049
✳S7	40	#5	STR	3'- 8"	153
S8	2	#5	2	9'- 0"	19
S9	44	#5	STR	3'- 3"	149
S10	2	#3	STR	1'-10"	1
S11	8	#5	5	11'- 6"	96
S12	16	#4	STR	8'- 0"	86

✳NOTE: S7 BARS SHALL BE BENT BEFORE SHIPMENT. HEAT BENDING SHALL NOT BE ALLOWED.

BAR TYPES

ALL BAR DIMENSIONS ARE OUT-TO-OUT.

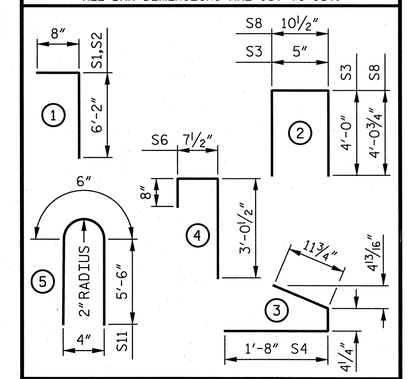

QUANTITIES FOR ONE GIRDER

	REINFORCING STEEL	7,500 PSI CONCRETE	0.6" Ø L.R. STRANDS
GIRDERS	LB.	C.Y.	No.
A1 THRU A5	2,947	23.0	34

GIRDERS REQUIRED

LOCATION	NUMBER	LENGTH	TOTAL LENGTH
SPAN A	5	107'-2 5/8"	536.09'

PROJECT NO. U-2525B

GUILFORD COUNTY

STATION: 174+72.46 -L-

SHEET 1 OF 4

STATE OF NORTH CAROLINA
DEPARTMENT OF TRANSPORTATION
RALEIGH

STANDARD

72" PRESTRESSED CONCRETE MODIFIED BULB TEE GIRDER

(RIGHT LANE)

ASSEMBLED BY : K. E. LOFTON	DATE : 7-13		
CHECKED BY : T. M. HARRIS	DATE : 9-13		
DRAWN BY : EEM 2/6/97	REV. 5/1/06R	TLA/GM	
CHECKED BY : VAP 2/6/97	REV. 10/1/11	MAA/GM	
	REV. 6/13	MAA/GM	

DRAWN BY : K. E. LOFTON	DATE : 7-13	
CHECKED BY : T. M. HARRIS	DATE : 9-13	
DESIGN ENGINEER : T. M. HARRIS	DATE : 10-13	

PLANS PREPARED BY :
PARSONS
5540 Centerview Drive, Suite 217
Raleigh, NC 27606-3386
NC LICENSE No. F-0246
FOR NORTH CAROLINA DEPARTMENT OF TRANSPORTATION

NORTH CAROLINA PROFESSIONAL SEAL 19299 ENGINEER THOMAS M. HARRIS
12/9/13

DWG. No. S09-010

REVISIONS

No.	BY:	DATE:	No.	BY:	DATE:
1			3		
2			4		

SHEET No. S-330

TOTAL SHEETS 541

STD. No. PCG8 STR. #9

FILE: i:\u-2525b\structures\plans\final\U2525B_SD_Sn9_pg1.dgn
DATE: 12/9/2013 1:27:35 PM

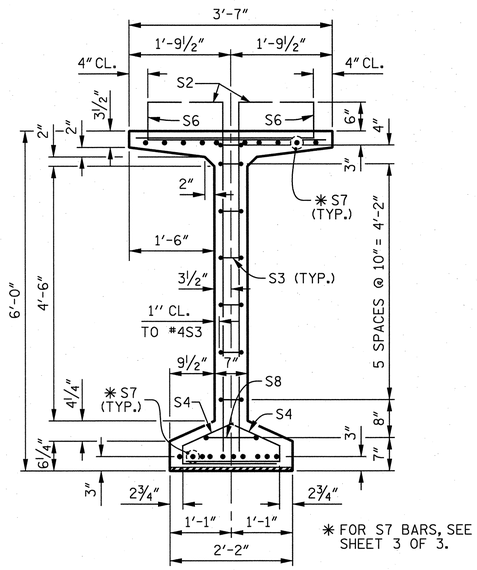

SECTION A–A

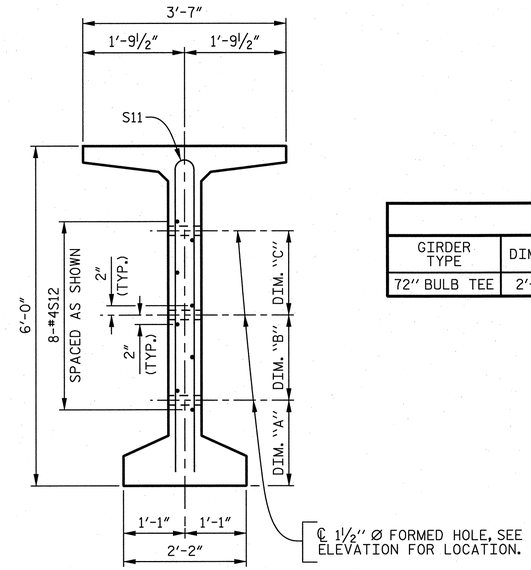

SECTION B–B

(S1, S6 AND S9 BARS NOT SHOWN)

TABLE				
GIRDER TYPE	DIM "A"	DIM "B"	DIM "C"	DIM "L"
72" BULB TEE	2'-0½"	1'-5½"	1'-4¾"	4'-2"

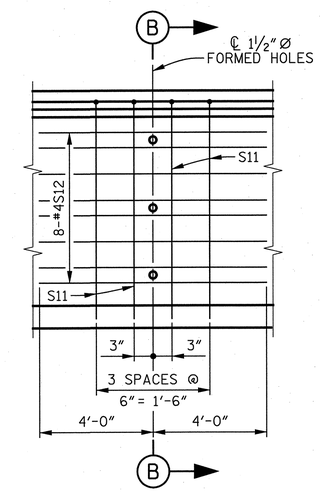

PARTIAL ELEVATION

SHOWING INTERMEDIATE DIAPHRAGM REINFORCING STEEL FOR ALL GIRDERS

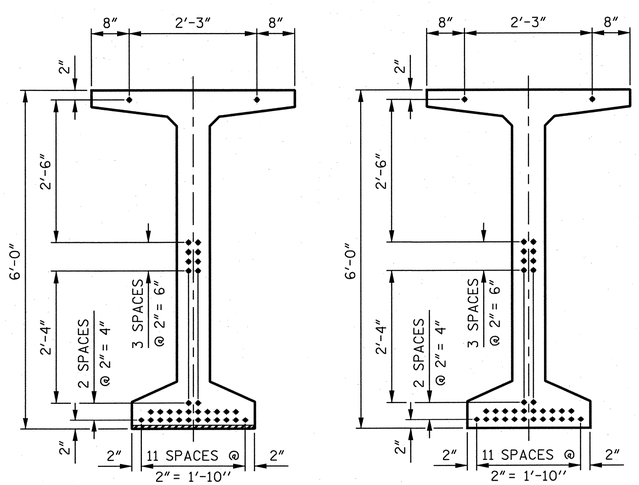

AT END OF GIRDER

AT ℄ OF GIRDER

34 – 0.6" Ø LOW RELAXATION STRAND LAYOUT

PROJECT NO. U-2525B

GUILFORD COUNTY

STATION: 174+72.46 –L–

SHEET 2 OF 4

STATE OF NORTH CAROLINA
DEPARTMENT OF TRANSPORTATION
RALEIGH

STANDARD

72" PRESTRESSED CONCRETE MODIFIED BULB TEE GIRDER

(RIGHT LANE)

ASSEMBLED BY : K. E. LOFTON	DATE : 7-13		
CHECKED BY : T. M. HARRIS	DATE : 9-13		
DRAWN BY : EEM 2/6/97	REV. 5/1/06R	TLA/GM	
CHECKED BY : VAP 2/6/97	REV. 10/1/11	MAA/GM	
	REV. 6/13	MAA/GM	

DRAWN BY : K. E. LOFTON	DATE : 7-13		
CHECKED BY : T. M. HARRIS	DATE : 9-13		
DESIGN ENGINEER : T. M. HARRIS	DATE : 10-13		

PLANS PREPARED BY :
PARSONS
5540 Centerview Drive, Suite 217
Raleigh, NC 27606-3386
NC LICENSE No. F-0246
FOR NORTH CAROLINA DEPARTMENT OF TRANSPORTATION

NORTH CAROLINA PROFESSIONAL SEAL 19299 ENGINEER THOMAS M. HARRIS
12/9/13

DWG. No. S09-011

REVISIONS

No.	BY:	DATE:	No.	BY:	DATE:
1			3		
2			4		

SHEET No. 5-331

TOTAL SHEETS 541

STD. No. PCG8

STR. #9

FILE: f:\u-2525b\structures\plans\final\U2525B_SD_Str2_pg2.dgn
DATE: 12/9/2013 1:27:36 PM

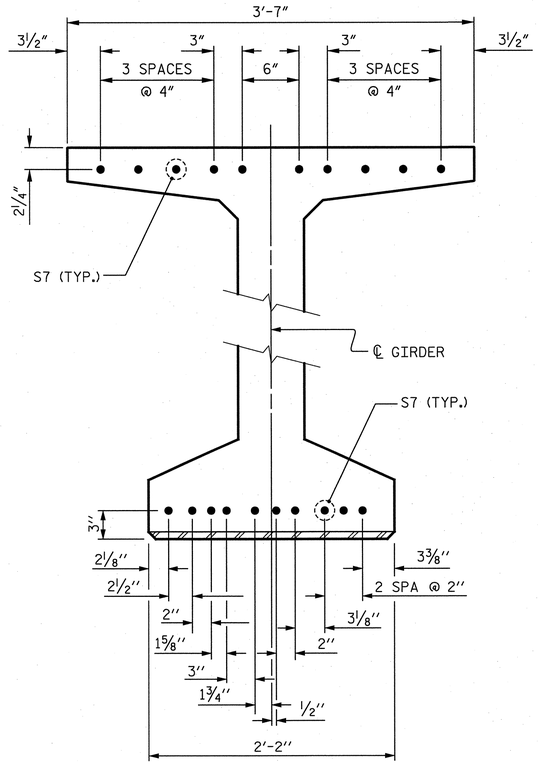

DETAIL "C"

(FOR 72" MODIFIED BULB TEES)

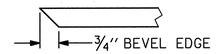

SECTION "F"

(SEE NOTES)

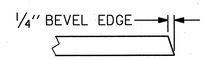

SECTION "G"

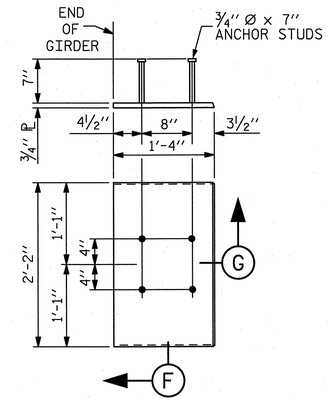

EMBEDDED PLATE "B-1" DETAILS FOR 72" MODIFIED BULB TEES

(2 REQUIRED PER GIRDER)

NOTES

ALL PRESTRESSING STRANDS SHALL BE 7-WIRE LOW-RELAXATION GRADE 270 STRANDS AND SHALL CONFORM TO AASHTO M203 EXCEPT FOR SAMPLING REQUIREMENTS WHICH SHALL BE IN ACCORDANCE WITH THE STANDARD SPECIFICATIONS.

ALL REINFORCING STEEL SHALL BE GRADE 60.

EMBEDDED PLATE "B-1" SHALL BE GALVANIZED IN ACCORDANCE WITH THE STANDARD SPECIFICATIONS. BEVEL EDGES OF PLATE "B-1" TO GIVE CLOSE FIT BUT NOT TIGHT FIT TO STEEL CASTING FORM.

ANCHOR STUDS SHALL CONFORM TO AASHTO M169 GRADES 1010 THROUGH 1020 OR APPROVED EQUAL, AND SHALL MEET THE TYPE "B" REQUIREMENTS OF SUBSECTION 7.3 OF THE ANSI/AASHTO/AWS D1.5 BRIDGE WELDING CODE.

AT ENDS OF GIRDERS TO BE EMBEDDED IN CONCRETE DIAPHRAGMS OR END WALLS, PRESTRESSING STRANDS MAY EXTEND A MAXIMUM OF 2" BEYOND THE GIRDER ENDS. OTHERWISE, PRESTRESSING STRANDS SHALL BE CUT FLUSH WITH THE GIRDER ENDS.

THE TRANSFER OF LOAD FROM THE ANCHORAGES TO THE GIRDER SHALL BE DONE WHEN CONCRETE HAS REACHED A COMPRESSIVE STRENGTH OF NOT LESS THAN 7,000 PSI.

DEPENDING ON THE TYPE OF SYSTEM USED TO SUPPORT THE DECK SLAB FORMS, PRESET ANCHORS MAY BE NECESSARY IN THE PRESTRESSED CONCRETE GIRDER.

THE TOP SURFACE OF THE GIRDER, EXCLUDING THE OUTSIDE 4", SHALL BE RAKED TO A DEPTH OF ¼".

A 2" x 2" CHAMFER IS ALLOWED AT THE INTERSECTION OF THE WEB AND THE BOTTOM FLANGE OF THE 72" MODIFIED BULB TEES.

THE CONTRACTOR HAS THE OPTION TO PROVIDE, AT NO ADDITIONAL COST TO THE DEPARTMENT, 2 ADDITIONAL STRANDS AT THE TOP OF THE GIRDER TO FACILITATE TYING OF THE REINFORCING STEEL. THESE STRANDS SHALL BE PULLED TO A LOAD OF 4,500 LBS.

CAMBER AND DEAD LOAD DEFLECTIONS

	SPAN A																				
GIRDERS 1 THRU 5	℄ BRG.	0.05	0.10	0.15	0.20	0.25	0.30	0.35	0.40	0.45	0.50	0.55	0.60	0.65	0.70	0.75	0.80	0.85	0.90	0.95	℄ BRG.
CAMBER (GIRDER ALONE IN PLACE) ↑	0.000	0.046	0.093	0.126	0.159	0.181	0.202	0.215	0.227	0.231	0.235	0.231	0.227	0.215	0.202	0.181	0.159	0.126	0.093	0.046	0.000
DEFLECTION DUE TO SUPERIMPOSED D.L. ✳ ↑	0.000	0.017	0.033	0.049	0.065	0.077	0.090	0.098	0.106	0.109	0.111	0.109	0.106	0.098	0.090	0.077	0.065	0.049	0.033	0.017	0.000
FINAL CAMBER ↑	0	⅜"	11/16"	15/16"	1⅛"	1¼"	1⅜"	1⅜"	1 7/16"	1 7/16"	1½"	1 7/16"	1 7/16"	1⅜"	1⅜"	1¼"	1⅛"	15/16"	11/16"	⅜"	0

✳ INCLUDES FUTURE WEARING SURFACE

ALL VALUES ARE SHOWN IN FEET (DECIMAL FORM), EXCEPT "FINAL CAMBER", WHICH IS GIVEN IN INCHES (FRACTION FORM).

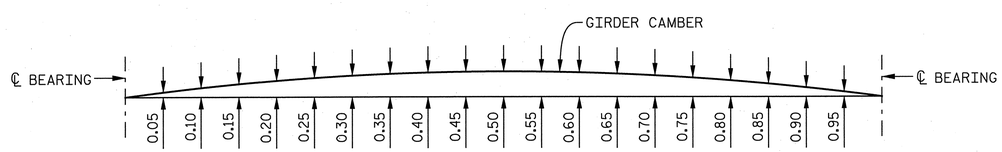

GIRDER CAMBER AND DEFLECTIONS

PROJECT NO. U-2525B

GUILFORD COUNTY

STATION: 174+72.46 -L-

SHEET 3 OF 4

STATE OF NORTH CAROLINA
DEPARTMENT OF TRANSPORTATION
RALEIGH

STANDARD

72" PRESTRESSED CONCRETE MODIFIED BULB TEE GIRDER

(RIGHT LANE)

ASSEMBLED BY : K. E. LOFTON	DATE : 7-13				
CHECKED BY : T. M. HARRIS	DATE : 9-13				
DRAWN BY : EEM 2/6/97	REV. 5/1/06R	TLA/GM			
CHECKED BY : VAP 2/6/97	REV. 10/1/11	MAA/GM			
	REV. 6/13	MAA/GM			

DRAWN BY : K. E. LOFTON DATE : 7-13
CHECKED BY : T. M. HARRIS DATE : 9-13
DESIGN ENGINEER : T. M. HARRIS DATE : 10-13

PLANS PREPARED BY :
PARSONS
5540 Centerview Drive, Suite 217
Raleigh, NC 27606-3386
NC LICENSE No. F-0246
FOR NORTH CAROLINA DEPARTMENT OF TRANSPORTATION

NORTH CAROLINA PROFESSIONAL SEAL 19299 ENGINEER THOMAS M. HARRIS
12/9/13

DWG. No. S09-012

REVISIONS						
No.	BY:	DATE:	No.	BY:	DATE:	
1			3			
2			4			

SHEET No. S-332

TOTAL SHEETS 541

STD. No. PCG8

STR. #9

FILE: f:\u-2525b\structures\plans\final\U2525B_SD_Sn9_pg3.dgn
DATE: 12/3/2013 1:27:36 PM

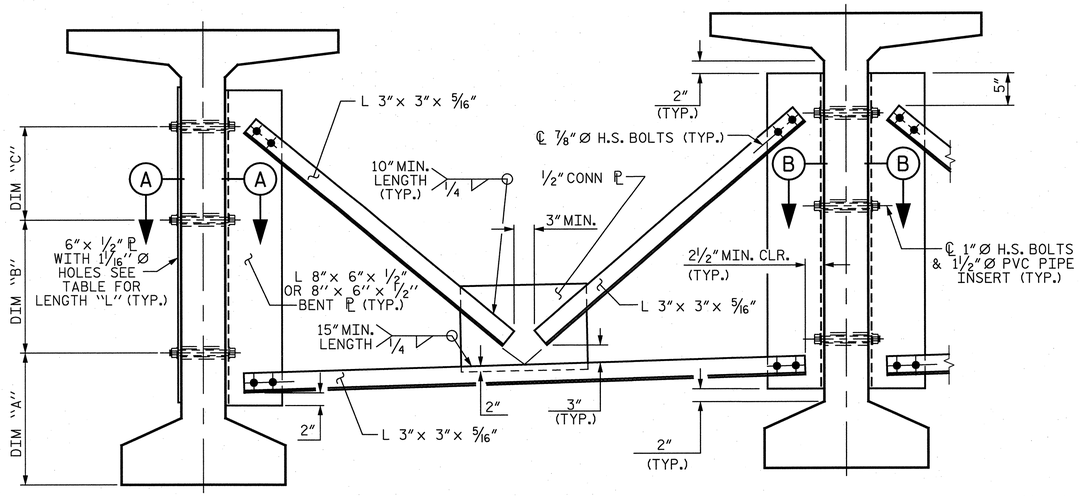

PART SECTION AT INTERMEDIATE DIAPHRAGM

(72" BULB TEE)

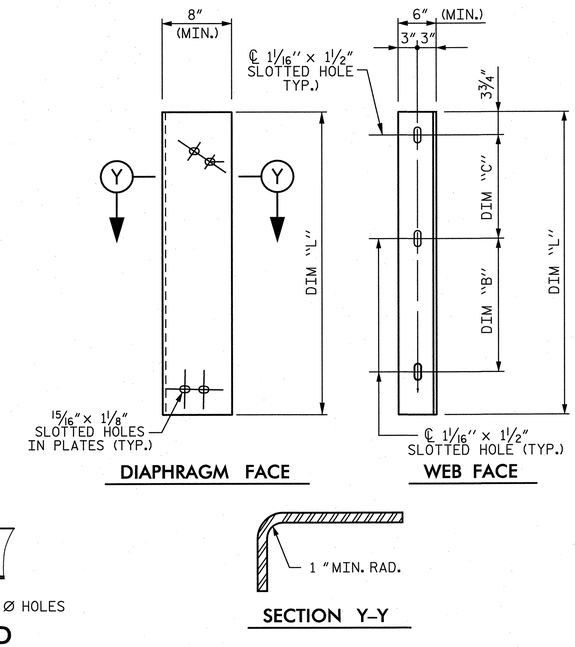

CONNECTOR PLATE DETAILS

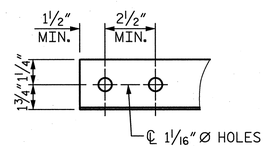

ANGLE END

(L 3"× 3"× 5/16")

STRUCTURAL STEEL NOTES

ALL INTERMEDIATE DIAPHRAGM STEEL AND CONNECTOR PLATES SHALL BE AASHTO M270 GRADE 50 OR APPROVED EQUAL.

TENSION ON THE ASTM A325 BOLTS THROUGH THE ANGLE MEMBER SHALL BE CALIBRATED USING DIRECT TENSION INDICATOR WASHERS IN ACCORDANCE WITH THE STANDARD SPECIFICATIONS.

TENSION ON THE ASTM A449 BOLTS THROUGH THE GIRDER WEB SHALL BE SNUG TIGHTENED FOLLOWED BY AN ADDITIONAL 1/4 TURN.

THE PLATES, BENT PLATES, AND ANGLES SHALL BE GALVANIZED OR METALLIZED IN ACCORDANCE WITH THE STANDARD SPECIFICATIONS. FOR THERMAL SPRAYED COATINGS (METALLIZATION), SEE SPECIAL PROVISIONS.

FOR METALLIZATION, APPLY AN 8 MIL THICK 99.99 PERCENT ZINC (W-Zn-1) THERMAL SPRAYED COATING WITH A 0.5 MIL THICK SEAL COAT TO ALL STEEL DIAPHRAGM SURFACES IN ACCORDANCE WITH THE THERMAL SPRAYED COATINGS SPECIAL PROVISION AND SECTION 442 OF THE STANDARD SPECIFICATIONS.

GALVANIZE THE HIGH STRENGTH BOLTS, NUTS, WASHERS AND DIRECT TENSION INDICATORS IN ACCORDANCE WITH THE STANDARD SPECIFICATIONS.

USE AN ASTM F436 HARDENED WASHER WITH STANDARD AND SLOTTED HOLES UNDER EACH BOLT HEAD AND NUT.

FOR BOLTS THROUGH THE GIRDER WEB, PROVIDE SUFFICIENT LENGTH OF THREADS ON ALL BOLTS TO ACCOMMODATE WASHERS AND THE THICKNESS OF CONNECTING MEMBER PLUS AT LEAST 1/4" PROJECTION BEYOND THE NUT.

INTERMEDIATE DIAPHRAGM ASSEMBLY SHALL COMPLY WITH SECTION 1072 OF THE STANDARD SPECIFICATIONS.

SUBMIT TWO SETS OF WORKING DRAWINGS FOR THE INTERMEDIATE DIAPHRAGM ASSEMBLY FOR REVIEW, COMMENTS AND ACCEPTANCE. AFTER REVIEW, COMMENTS, AND ACCEPTANCE, SUBMIT SEVEN SETS FOR DISTRIBUTION.

IN THE EXTERIOR BAYS, PLACE TEMPORARY STRUTS BETWEEN PRESTRESSED GIRDERS ADJACENT TO THE STEEL DIAPHRAGMS. STRUTS SHALL REMAIN IN PLACE 3 DAYS AFTER CONCRETE IS PLACED.

THE COST OF THE STEEL DIAPHRAGMS AND ASSEMBLIES SHALL BE INCLUDED IN THE UNIT PRICE BID FOR PRESTRESSED CONCRETE GIRDERS.

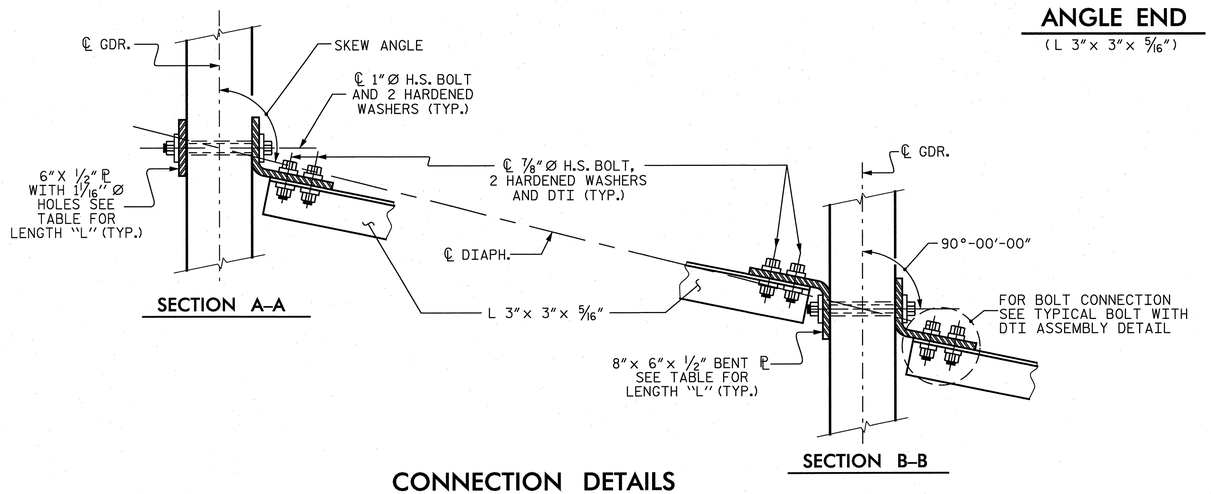

CONNECTION DETAILS

(90°< SKEW < 110°)

TABLE				
GIRDER TYPE	DIM "A"	DIM "B"	DIM "C"	DIM "L"
72" BULB TEE	2'-0 1/2"	1'-5 1/2"	1'-4 3/4"	4'-2"

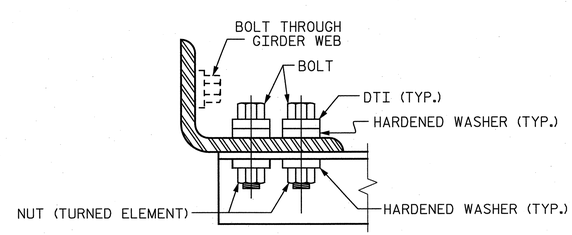

BOLT WITH DTI ASSEMBLY DETAIL

PROJECT NO. U-2525B

GUILFORD COUNTY

STATION: 174+72.46 -L-

SHEET 4 OF 4

STATE OF NORTH CAROLINA
DEPARTMENT OF TRANSPORTATION
RALEIGH

STANDARD

INTERMEDIATE STEEL DIAPHRAGMS FOR 72" MODIFIED BULB TEE PRESTRESSED CONCRETE GIRDERS

(RIGHT LANE)

REVISIONS								SHEET No.
No.	BY:	DATE:	No.	BY:	DATE:			5-333
1			3					TOTAL SHEETS
2			4					541

ASSEMBLED BY : K. E. LOFTON	DATE : 7-13		
CHECKED BY : T. M. HARRIS	DATE : 9-13		
DRAWN BY : RWW 11/09	ADDED 11/23/09		
CHECKED BY : GM 11/09	REV. 10/1/11	MAA/GM	

DRAWN BY : K. E. LOFTON	DATE : 7-13	
CHECKED BY : T. M. HARRIS	DATE : 9-13	
DESIGN ENGINEER : T. M. HARRIS	DATE : 10-13	

PLANS PREPARED BY :
PARSONS
5540 Centerview Drive, Suite 217
Raleigh, NC 27606-3386
NC LICENSE No. F-0246
FOR NORTH CAROLINA DEPARTMENT OF TRANSPORTATION

NORTH CAROLINA PROFESSIONAL SEAL 19299 ENGINEER THOMAS M. HARRIS
12/9/13

DWG. No. S09-013

STD. No. PCG11

STR. #9

FILE: J:\u-2525b\structures\plans\final\U2525B_SD_Str9_s01.dgn
DATE: 12/3/2013 1:27:37 PM

NOTES

THE ELASTOMER IN THE STEEL REINFORCED BEARINGS SHALL HAVE A SHEAR MODULUS OF 0.160 KSI, IN ACCORDANCE WITH AASHTO M251.

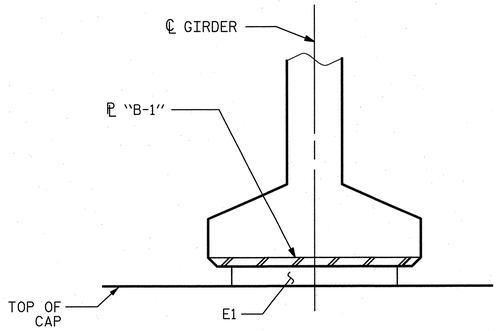

INTEGRAL

SECTION E–E

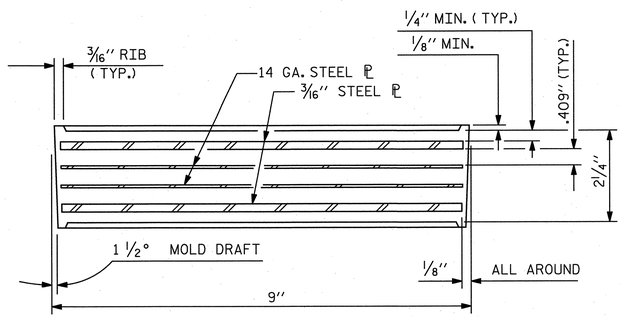

TYPICAL SECTION OF ELASTOMERIC BEARINGS

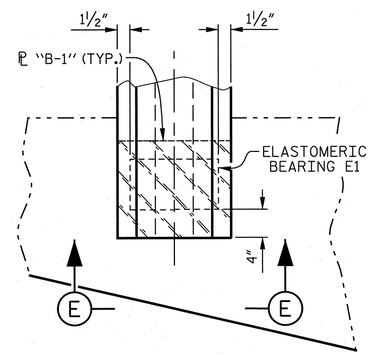

PARTIAL PLAN – INTEGRAL END BENT

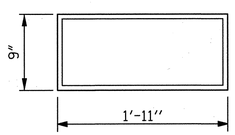

E1 (10 REQUIRED)

PLAN VIEW OF ELASTOMERIC BEARING

TYPE V

MAXIMUM ALLOWABLE SERVICE LOAD	
	D.L.+ L.L. (NO IMPACT)
TYPE V	365 K

PROJECT NO. U–2525B

GUILFORD COUNTY

STATION: 174+72.46 –L–

STATE OF NORTH CAROLINA
DEPARTMENT OF TRANSPORTATION
RALEIGH

STANDARD

ELASTOMERIC BEARING DETAILS PRESTRESSED CONCRETE GIRDER SUPERSTRUCTURE (RIGHT LANE)

ASSEMBLED BY :	K. E. LOFTON	DATE :	7-13
CHECKED BY :	T. M. HARRIS	DATE :	9-13

DRAWN BY : EEM	2/97	REV. 5/1/06	TLA/GM
CHECKED BY : VAP	2/97	REV. 10/1/11	MAA/GM
		REV. 6/13	AAC/MAA

DRAWN BY :	K. E. LOFTON	DATE : 7-13
CHECKED BY :	T. M. HARRIS	DATE : 9-13
DESIGN ENGINEER :	T. M. HARRIS	DATE : 10-13

PLANS PREPARED BY :
PARSONS
5540 Centerview Drive, Suite 217
Raleigh, NC 27606-3386
NC LICENSE No. F-0246
FOR NORTH CAROLINA DEPARTMENT OF TRANSPORTATION

NORTH CAROLINA PROFESSIONAL SEAL 19299 ENGINEER THOMAS M. HARRIS
12/9/13

DWG. No. S09-014

REVISIONS						
No.	BY:	DATE:	No.	BY:	DATE:	
1			3			
2			4			

SHEET No. 5-334

TOTAL SHEETS 541

STD. No. EB4

STR. #9

FILE: f:\u-2525b\structures\plans\final\U2525B_SD_Str2_ab1.dgn
DATE: 12/3/2013 1:27:38 PM

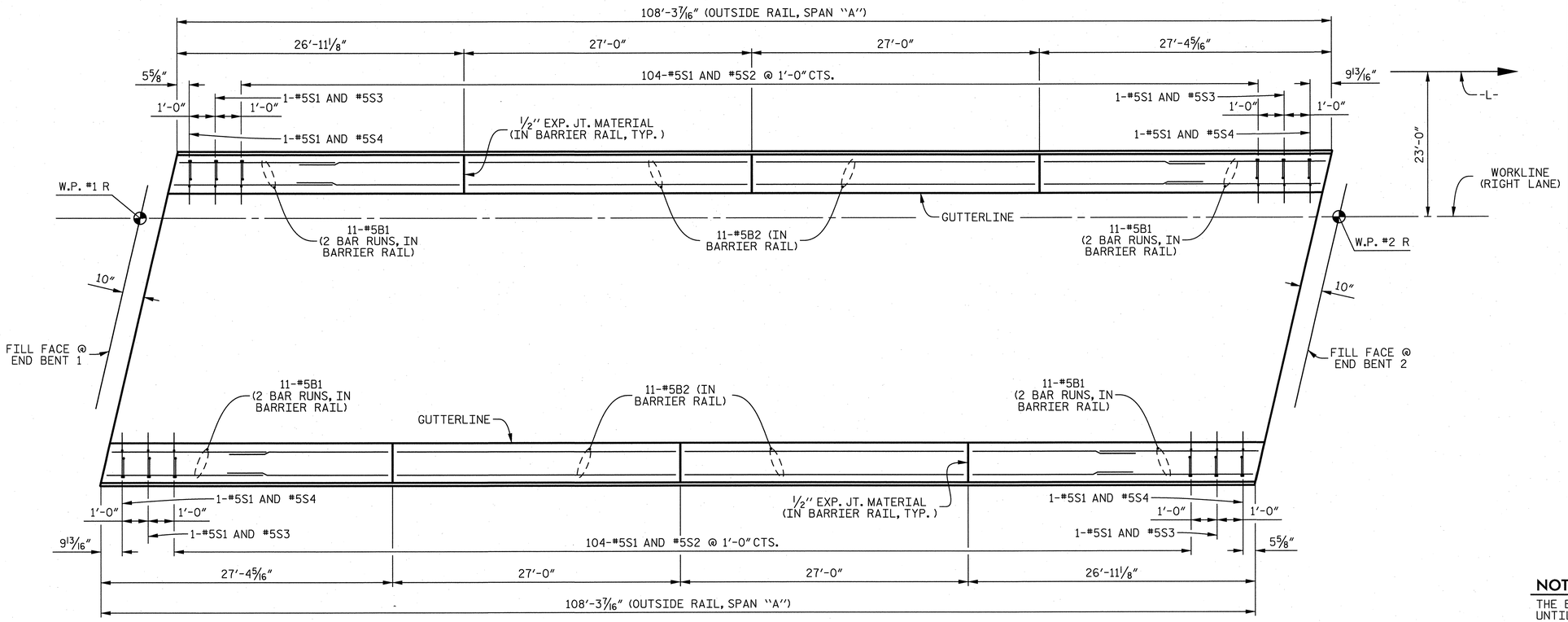

PLAN OF BARRIER RAIL

SPLICE LENGTH		
BAR	SIZE	LENGTH
B1	#5	3'-5"

BAR TYPES

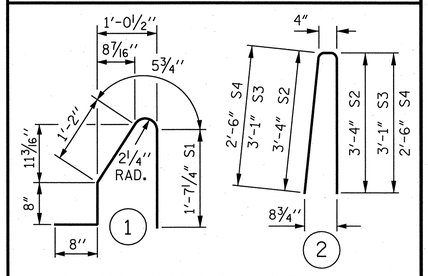

ALL BAR DIMENSIONS ARE OUT TO OUT.

BILL OF MATERIAL

FOR CONCRETE BARRIER RAIL ONLY

BAR	No.	SIZE	TYPE	LENGTH	WEIGHT
✱B1	88	#5	STR	15'- 3"	1,400
✱B2	44	#5	STR	26'- 7"	1,220
✱S1	216	#5	1	4'- 7"	1,033
✱S2	208	#5	2	7'- 0"	1,519
✱S3	4	#5	2	6'- 6"	27
✱S4	4	#5	2	5'- 4"	22

✱EPOXY COATED REINFORCING STEEL	5,221 LBS.
CLASS "AA" CONCRETE	29.4 CU. YDS.
CONCRETE BARRIER RAIL	216.58 LIN. FT.

NOTES

THE BARRIER RAIL IN SPAN "A" SHALL NOT BE CAST UNTIL ALL SLAB CONCRETE IN THE SPAN HAS BEEN CAST AND HAS REACHED A MINIMUM COMPRESSIVE STRENGTH OF 3,000 PSI.

ALL REINFORCING STEEL IN BARRIER RAILS SHALL BE EPOXY COATED.

GROOVED CONTRACTION JOINTS, 1/2" IN DEPTH, SHALL BE TOOLED IN ALL EXPOSED FACES OF THE BARRIER RAIL AND IN ACCORDANCE WITH ARTICLE 825-10(B) OF THE STANDARD SPECIFICATIONS. THE CONTRACTION JOINT SHALL BE LOCATED AT EACH THIRD POINT BETWEEN BARRIER RAIL EXPANSION JOINTS. ONLY ONE CONTRACTION JOINT IS REQUIRED AT MIDPOINT OF BARRIER RAIL SEGMENTS LESS THAN 20 FEET IN LENGTH AND NO CONTRACTION JOINTS ARE REQUIRED FOR THOSE SEGMENTS LESS THAN 10 FEET IN LENGTH.

THE #5S1 AND #5S2 BARS MAY BE SHIFTED AS NECESSARY TO CLEAR EXPANSION JOINTS IN RAIL.

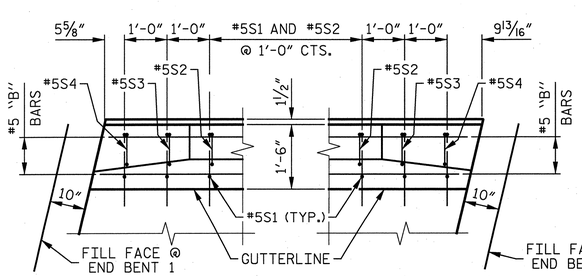

PLAN @ END BENT 1

LEFT SIDE SHOWN, RIGHT SIDE SIMILAR

PLAN @ END BENT 2

LEFT SIDE SHOWN, RIGHT SIDE SIMILAR

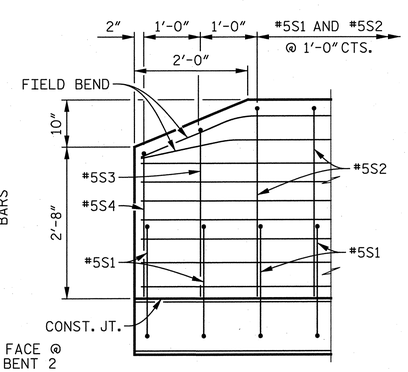

ELEVATION VIEW

END OF RAIL DETAILS

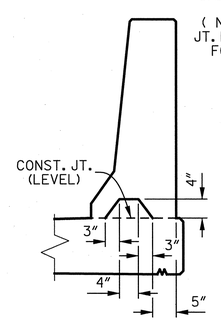

SECTION S-S

AT DAM IN OPEN JOINT (THIS IS TO BE USED ONLY WHEN SLIP FORM IS USED)

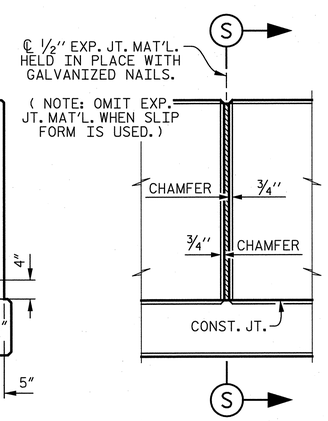

ELEVATION AT EXPANSION JOINTS

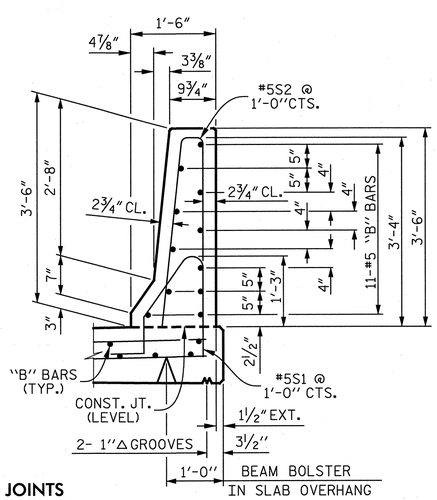

SECTION THRU RAIL

BARRIER RAIL DETAILS

PROJECT NO. U-2525B

GUILFORD COUNTY

STATION: 174+72.46 -L-

STATE OF NORTH CAROLINA
DEPARTMENT OF TRANSPORTATION
RALEIGH

STANDARD

CONCRETE BARRIER RAIL (RIGHT LANE)

ASSEMBLED BY :	K. E. LOFTON	DATE :	7-13
CHECKED BY :	T. M. HARRIS	DATE :	9-13

DRAWN BY :	ARB	5/87	REV. 10/1/11	MAA/GM
CHECKED BY :	SJD	9/87	REV. 7/12	MAA/GM
			REV. 6/13	MAA/GM

DRAWN BY :	K. E. LOFTON	DATE :	7-13
CHECKED BY :	T. M. HARRIS	DATE :	9-13
DESIGN ENGINEER :	T. M. HARRIS	DATE :	10-13

PLANS PREPARED BY:
PARSONS
5540 Centerview Drive, Suite 217
Raleigh, NC 27606-3386
NC LICENSE No. F-0246
FOR NORTH CAROLINA DEPARTMENT OF TRANSPORTATION

NORTH CAROLINA PROFESSIONAL SEAL 19299 ENGINEER THOMAS M. HARRIS
12/9/13

DWG. No. S09-015

REVISIONS							
No.	BY:	DATE:	No.	BY:	DATE:	SHEET No.	5-335
1			3			TOTAL SHEETS	541
2			4				

STD. No. CBR1

STR. #9

FILE: {U-2525B\structures\plans\final\U2525B_SD_Str9_bri1.dgn
DATE: 12/3/2013 1:27:39 PM

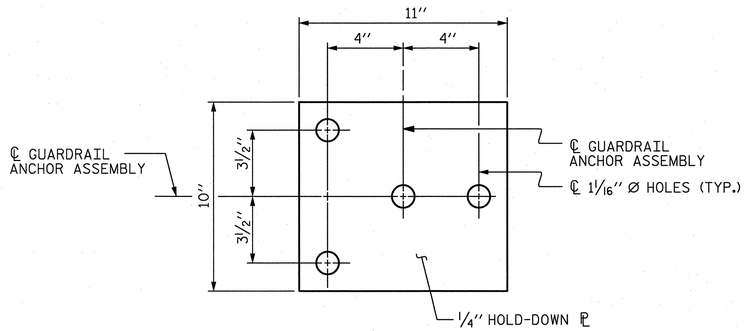

PLAN

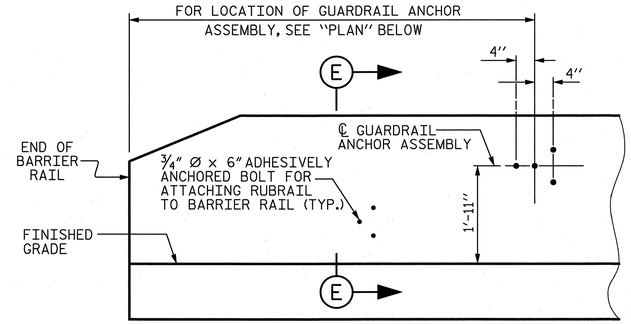

ELEVATION

(END BENT 1 SHOWN, END BENT 2 SIMILAR)

NOTES

THE GUARDRAIL ANCHOR ASSEMBLY SHALL CONSIST OF A 1/4'' HOLD DOWN PLATE AND 4 - 7/8'' Ø BOLTS WITH NUTS AND WASHERS, RUBRAIL, AND ADHESIVELY ANCHORED BOLTS.

THE HOLD-DOWN PLATE SHALL CONFORM TO AASHTO M270 GRADE 36. AFTER FABRICATION, THE HOLD-DOWN PLATE SHALL BE HOT-DIP GALVANIZED IN ACCORDANCE WITH AASHTO M111.

BOLTS SHALL CONFORM TO THE REQUIREMENTS OF ASTM A307 AND NUTS SHALL CONFORM TO THE REQUIREMENTS OF AASHTO M291. BOLTS, NUTS AND WASHERS SHALL BE GALVANIZED. (AT THE CONTRACTOR'S OPTION, STAINLESS STEEL BOLTS, NUTS AND WASHERS MAY BE USED AS AN ALTERNATE FOR THE 7/8'' Ø GALVANIZED BOLTS, NUTS AND WASHERS. THEY SHALL CONFORM TO OR EXCEED THE MECHANICAL REQUIREMENTS OF ASTM A307. THE USE OF THIS ALTERNATE SHALL BE APPROVED BY THE ENGINEER.)

THE GUARDRAIL ANCHOR ASSEMBLY IS REQUIRED AT ALL POINTS WHERE APPROACH GUARDRAIL IS TO BE ATTACHED TO THE END OF BARRIER RAIL. FOR POINTS OF ATTACHMENT, SEE SKETCH.

AFTER INSTALLATION, THE EXPOSED THREAD OF THE BOLT SHALL BE BURRED WITH A SHARP POINTED TOOL.

THE COST OF THE GUARDRAIL ANCHOR ASSEMBLY SHALL BE INCLUDED IN THE UNIT CONTRACT PRICE BID FOR CONCRETE BARRIER RAIL.

THE 1 1/4'' Ø HOLES SHALL BE FORMED OR DRILLED WITH A CORE BIT. IMPACT TOOLS WILL NOT BE PERMITTED. ANY CONCRETE DAMAGED BY THIS WORK SHALL BE REPAIRED TO THE SATISFACTION OF THE ENGINEER.

THE C6 x 8.2 RUBRAIL IS TO BE ADHESIVELY ANCHORED TO THE RAIL USING THREE 3/4''Ø x 6'' BOLTS WITH WASHERS. LEVEL ONE FIELD TESTING IS REQUIRED, AND THE YIELD LOAD OF THE 3/4''Ø BOLT IS 12 KIPS. FOR ADHESIVELY ANCHORED ANCHOR BOLTS OR DOWELS, SEE STANDARD SPECIFICATIONS. SEE ROADWAY STANDARD 862.03 FOR DETAILS AND LOCATION OF THE RUBRAIL.

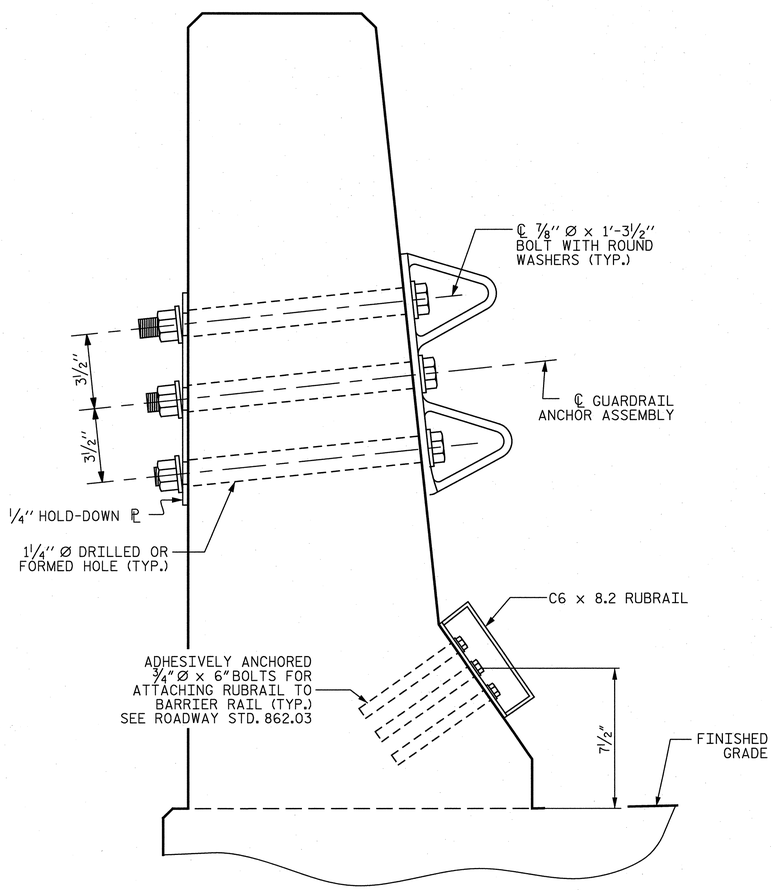

SECTION E–E

GUARDRAIL ANCHOR ASSEMBLY DETAILS

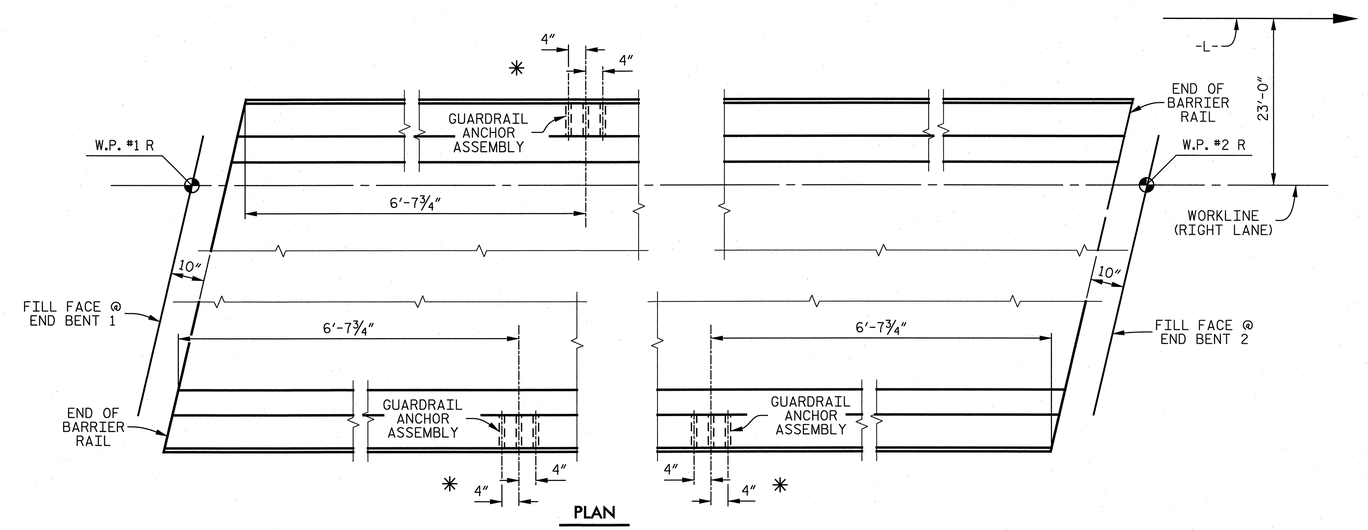

PLAN

LOCATION OF ANCHORS FOR GUARDRAIL

* DENOTES GUARDRAIL ANCHOR ASSEMBLY

PROJECT NO. U–2525B

GUILFORD COUNTY

STATION: 174+72.46 –L–

STATE OF NORTH CAROLINA
DEPARTMENT OF TRANSPORTATION
RALEIGH

STANDARD

GUARDRAIL ANCHORAGE FOR BARRIER RAIL (RIGHT LANE)

ASSEMBLED BY : K. E. LOFTON	DATE : 7–13				
CHECKED BY : T. M. HARRIS	DATE : 9–13				
DRAWN BY : TLA 5/06	REV. 10/1/11	MAA/GM			
CHECKED BY : GM 5/06	REV. 7/12	MAA/GM			
	REV. 6/13	MAA/GM			

DRAWN BY :	K. E. LOFTON	DATE : 7–13
CHECKED BY :	T. M. HARRIS	DATE : 9–13
DESIGN ENGINEER :	T. M. HARRIS	DATE : 10–13

PLANS PREPARED BY :
PARSONS
5540 Centerview Drive, Suite 217
Raleigh, NC 27606-3386
NC LICENSE No. F-0246
FOR NORTH CAROLINA DEPARTMENT OF TRANSPORTATION

NORTH CAROLINA PROFESSIONAL SEAL 19299 ENGINEER THOMAS M. HARRIS
12/9/13

DWG. No. S09-016

REVISIONS						
No.	BY:	DATE:	No.	BY:	DATE:	
1			3			
2			4			

SHEET No. 5-336

TOTAL SHEETS 54-1

STD. No. GRA2

STR. #9

FILE: j:\u-2525b\structures\plans\final\U2525B_SD_Str9_gr1.dgn
DATE: 12/2/2013 1:27:40 PM

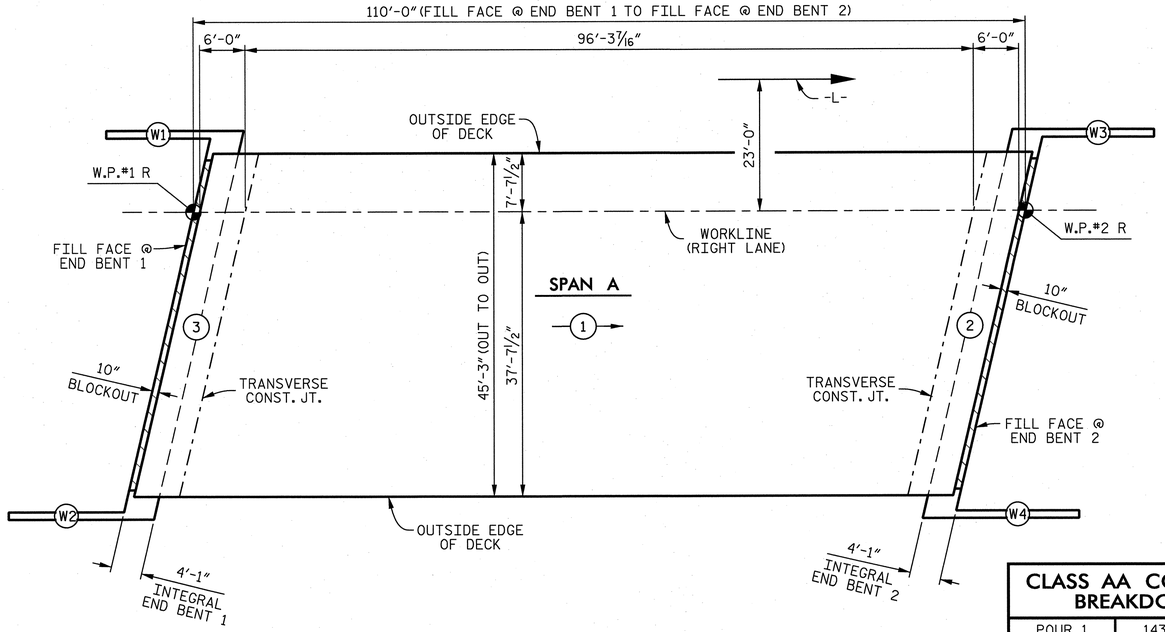

POURING SEQUENCE

NOTES

REINFORCING STEEL AND CONCRETE FOR THE UPPER WINGS IS INCLUDED IN THE PAY ITEM "REINFORCED CONCRETE DECK SLAB".

POUR 2 AND POUR 3 MAY BE COMBINED.

BAR TYPES

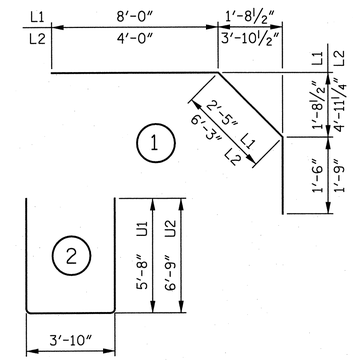

ALL BAR DIMENSIONS ARE OUT TO OUT.

BILL OF MATERIAL SPAN A

BAR	No.	SIZE	TYPE	LENGTH	WEIGHT
✱A1	156	#5	STR	44'-11"	7,308
✱A101	2	#5	STR	43'- 6"	91
✱A102	2	#5	STR	40'-10"	85
✱A103	2	#5	STR	38'- 2"	80
✱A104	2	#5	STR	35'- 6"	74
✱A105	2	#5	STR	32'-10"	68
✱A106	2	#5	STR	30'- 1"	63
✱A107	2	#5	STR	27'- 5"	57
✱A108	2	#5	STR	24'- 9"	52
✱A109	2	#5	STR	22'- 1"	46
✱A110	2	#5	STR	19'- 5"	41
✱A111	2	#5	STR	16'- 9"	35
✱A112	2	#5	STR	14'- 0"	29
✱A113	2	#5	STR	11'- 4"	24
✱A114	2	#5	STR	8'- 8"	18
✱A115	2	#5	STR	6'- 0"	13
✱A116	2	#5	STR	3'- 4"	7
A2	156	#5	STR	44'-11"	7,308
A201	2	#5	STR	43'- 6"	91
A202	2	#5	STR	40'-10"	85
A203	2	#5	STR	38'- 2"	80
A204	2	#5	STR	35'- 6"	74
A205	2	#5	STR	32'-10"	68
A206	2	#5	STR	30'- 1"	63
A207	2	#5	STR	27'- 5"	57
A208	2	#5	STR	24'- 9"	52
A209	2	#5	STR	22'- 1"	46
A210	2	#5	STR	19'- 5"	41
A211	2	#5	STR	16'- 9"	35
A212	2	#5	STR	14'- 0"	29
A213	2	#5	STR	11'- 4"	24
A214	2	#5	STR	8'- 8"	18
A215	2	#5	STR	6'- 0"	13
A216	2	#5	STR	3'- 4"	7
✱B1	124	#4	STR	28'- 6"	2,361
✱B2	168	#5	STR	22'- 0"	3,855
B3	96	#5	STR	55'- 1"	5,515
B4	72	#4	STR	22'- 0"	1,058
H1	28	#7	STR	18'-11"	1,083
H2	28	#6	STR	17'- 2"	722
H3	28	#7	STR	18'- 6"	1,059
H4	28	#6	STR	17'- 8"	743
K1	28	#4	STR	27'- 0"	505
K2	8	#4	STR	5'- 9"	31
K3	40	#4	STR	8'-10"	236
K4	8	#4	STR	7'- 2"	38
K5	4	#4	STR	4'-10"	13
K6	20	#4	STR	6'- 2"	82
K7	4	#4	STR	5'- 4"	14
K8	16	#4	STR	2'- 9"	29
✱L1	52	#4	1	11'-11"	414
✱L2	52	#4	1	12'- 0"	417
✱U1	52	#4	2	15'- 2"	527
U2	12	#4	2	17'- 4"	139
REINFORCING STEEL					19,358 LBS.
✱EPOXY COATED REINFORCING STEEL					15,665 LBS.

CLASS AA CONCRETE BREAKDOWN

POUR 1	143.8 CU. YDS.
POUR 2	64.9 CU. YDS.
POUR 3	64.9 CU. YDS.
TOTAL	273.6 CU. YDS.

TOTAL SUPERSTRUCTURE QUANTITIES

	REINFORCING STEEL	EPOXY COATED REINFORCING STEEL	CLASS "AA" CONCRETE
	LBS.	LBS.	CU. YDS.
SPAN A	19,358	15,665	273.6
✱✱ TOTAL	19,358	15,665	273.6

✱✱QUANTITIES FOR CONCRETE BARRIER RAIL ARE NOT INCLUDED. SEE "CONCRETE BARRIER RAIL" SHEET FOR DETAILS.

GROOVING BRIDGE FLOORS

APPROACH SLAB AT END BENT 1	942 SQ. FT.
BRIDGE DECK	4,210 SQ. FT.
APPROACH SLAB AT END BENT 2	942 SQ. FT.
TOTAL	6,094 SQ. FT.

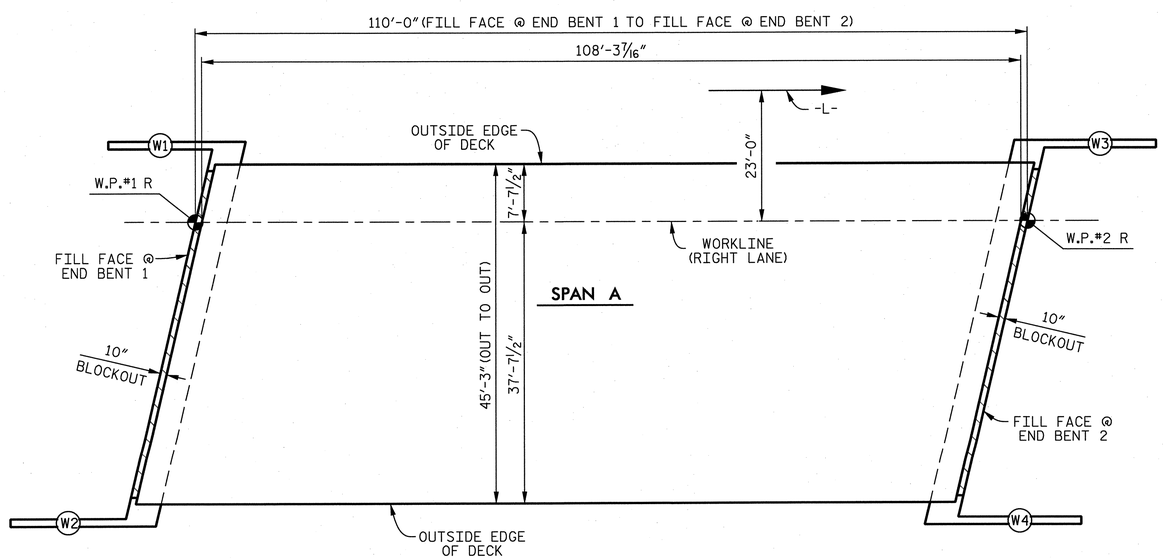

LAYOUT FOR COMPUTING AREA OF REINFORCED CONCRETE DECK SLAB

(4,900 SQ. FT.)

SUPERSTRUCTURE REINFORCING STEEL LENGTHS ARE BASED ON THE FOLLOWING MINIMUM SPLICE LENGTHS

BAR SIZE	SUPERSTRUCTURE EXCEPT APPROACH SLABS, PARAPET AND BARRIER RAIL		APPROACH SLABS		PARAPET AND BARRIER RAIL
	EPOXY COATED	UNCOATED	EPOXY COATED	UNCOATED	
#4	2'-0"	1'-9"	2'-0"	1'-9"	2'-9"
#5	2'-6"	2'-2"	2'-6"	2'-2"	3'-5"
#6	3'-0"	2'-7"	3'-10"	2'-7"	4'-4"
#7	5'-3"	3'-6"			
#8	6'-10"	4'-7"			

PROJECT NO. U-2525B

GUILFORD COUNTY

STATION: 174+72.46 -L-

STATE OF NORTH CAROLINA
DEPARTMENT OF TRANSPORTATION
RALEIGH

SUPERSTRUCTURE

BILL OF MATERIAL

(RIGHT LANE)

NORTH CAROLINA PROFESSIONAL SEAL 19299 ENGINEER THOMAS M. HARRIS 12/9/13

PLANS PREPARED BY :
PARSONS
5540 Centerview Drive, Suite 217
Raleigh, NC 27606-3386
NC LICENSE No. F-0246
FOR NORTH CAROLINA DEPARTMENT OF TRANSPORTATION

DRAWN BY : K. E. LOFTON DATE : 7-13
CHECKED BY : T. M. HARRIS DATE : 9-13
DESIGN ENGINEER : T. M. HARRIS DATE : 10-13

DWG. No. S09-017

REVISIONS								
No.	BY:	DATE:	No.	BY:	DATE:		SHEET No.	
1			3				5-337	
2			4				TOTAL SHEETS	
							541	

STR. #9

FILE: i:\u-2525b\structures\plans\final\U2525B_SD_Str2_bm1.dgn
DATE: 12/3/2013 1:27:41 PM

NOTES

THE UPPER PORTION OF THE INTEGRAL END BENT CAP AND THE UPPER PORTION OF THE WINGS SHALL BE POURED WITH THE SUPERSTRUCTURE. SEE SUPERSTRUCTURE PLANS.

STIRRUPS AND "U" BARS IN CAP MAY BE SHIFTED AS NECESSARY TO CLEAR #4V2 BARS.

THE TOP SURFACE OF THE END BENT CAP AND WINGS, EXCEPT THE BEARING AREA, SHALL BE RAKED TO A DEPTH OF 1/4".

FOR PILE SPLICE DETAILS, SEE "END BENT 2, SHEET 2 OF 2".

FOR TEMPORARY DRAINAGE AT END BENT DETAIL, SEE "END BENT 2, SHEET 2 OF 2".

FOR SECTION A-A AND SECTION B-B, SEE SHEET 2 OF 2.

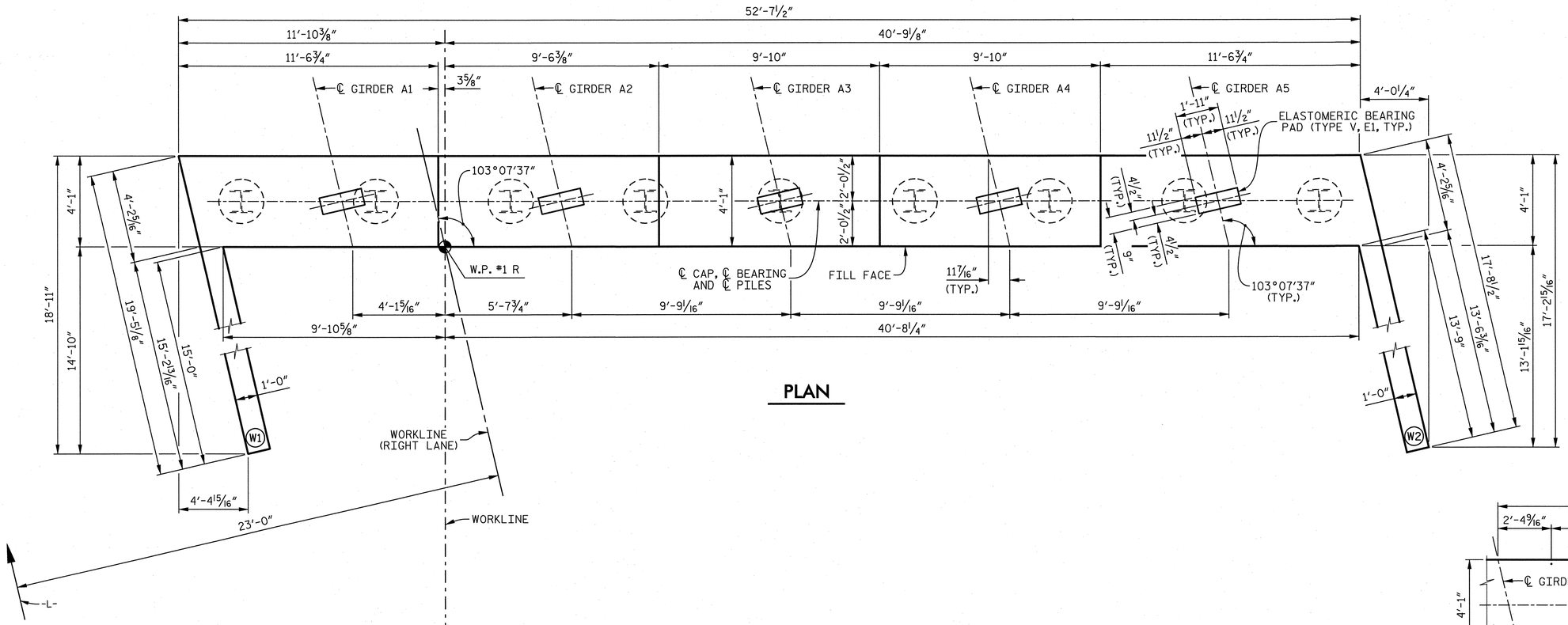

PLAN

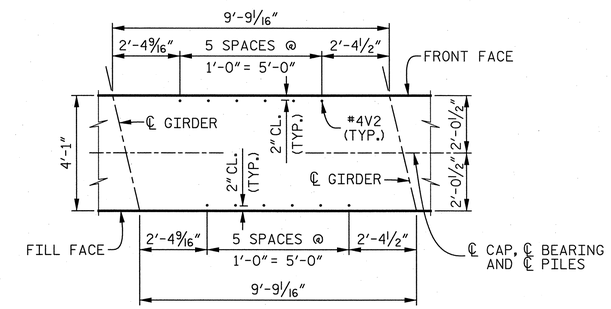

"V" BAR DETAIL

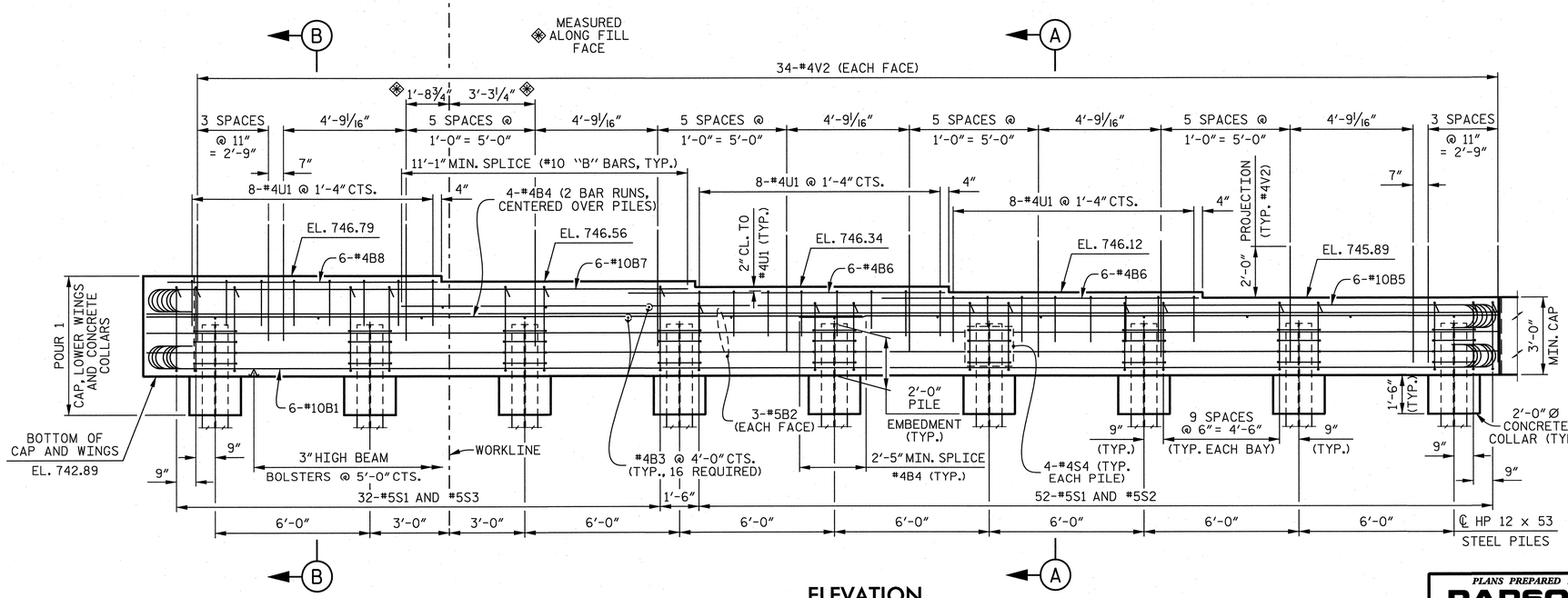

ELEVATION

NOTE:
WINGS NOT SHOWN IN THE ELEVATION VIEW.

PROJECT NO. U-2525B
GUILFORD COUNTY
STATION: 174+72.46 -L-

SHEET 1 OF 2

STATE OF NORTH CAROLINA
DEPARTMENT OF TRANSPORTATION
RALEIGH

SUBSTRUCTURE

END BENT 1

(RIGHT LANE)

DRAWN BY : K. E. LOFTON	DATE : 8-13
CHECKED BY : T. M. HARRIS	DATE : 9-13
DESIGN ENGINEER : T. M. HARRIS	DATE : 10-13

PLANS PREPARED BY :
PARSONS
5540 Centerview Drive, Suite 217
Raleigh, NC 27606-3386
NC LICENSE No. F-0246
FOR NORTH CAROLINA DEPARTMENT OF TRANSPORTATION

NORTH CAROLINA PROFESSIONAL SEAL 18299 ENGINEER THOMAS M. HARRIS
12/9/13

DWG. No. S09-018

REVISIONS						
No.	BY:	DATE:	No.	BY:	DATE:	
1			3			
2			4			

SHEET No. 5-338
TOTAL SHEETS 541

STR. #9

FILE: i:\u-2525b\structures\plans\final\U2525B_SD_Sr9_eb11.dgn
DATE: 12/3/2013 1:27:44 PM

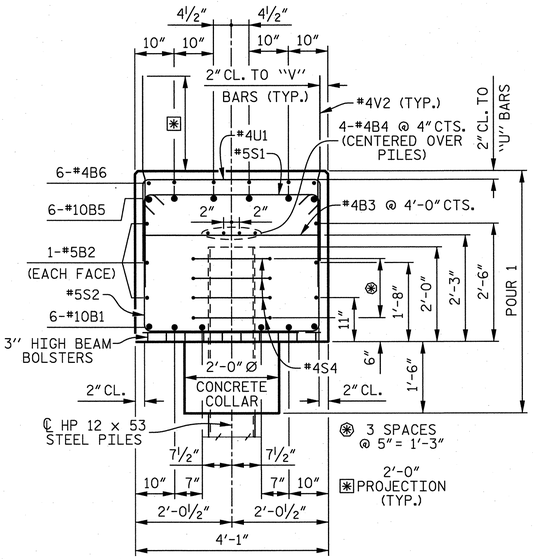

SECTION A–A

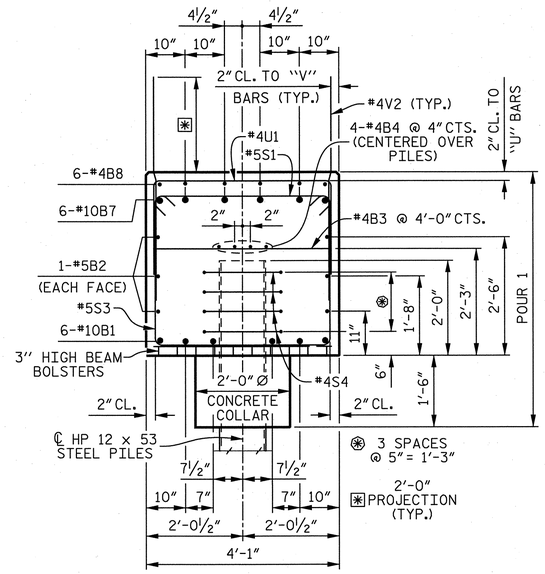

SECTION B–B

BAR TYPES

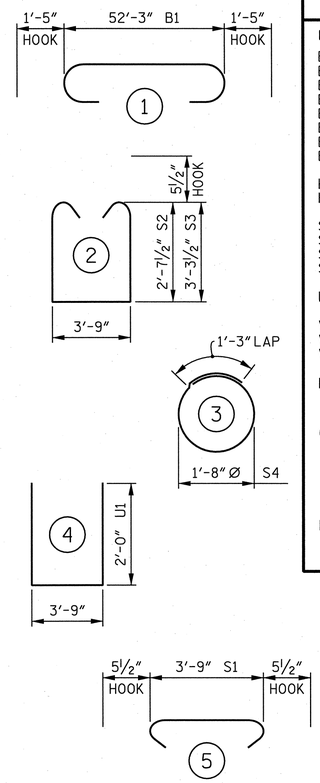

ALL BAR DIMENSIONS ARE OUT TO OUT.

BILL OF MATERIAL

END BENT 1

BAR	No.	SIZE	TYPE	LENGTH	WEIGHT
B1	6	#10	1	55'- 1"	1,422
B2	6	#5	STR	52'- 3"	327
B3	16	#4	STR	3'- 9"	40
B4	8	#4	STR	27'- 4"	146
B5	6	#10	6	44'- 8"	1,153
B6	12	#4	STR	12'- 3"	98
B7	6	#10	6	21'- 5"	553
B8	6	#4	STR	10'- 2"	41
H1	16	#7	STR	18'- 8"	610
H2	12	#6	STR	17'- 2"	309
S1	84	#5	5	4'- 8"	409
S2	52	#5	2	9'-11"	538
S3	32	#5	2	11'- 3"	375
S4	36	#4	3	6'- 6"	156
U1	24	#4	4	7'- 9"	124
V1	36	#5	STR	10'- 7"	397
V2	68	#4	STR	4'- 6"	204
V3	34	#5	STR	9'- 7"	340

REINFORCING STEEL 7,242 LBS.

CLASS "A" CONCRETE
POUR 1 COLLARS, CAP AND LOWER WINGS 32.6 CU. YDS.

HP 12 x 53 STEEL PILES
9 REQUIRED 270 LIN. FT.

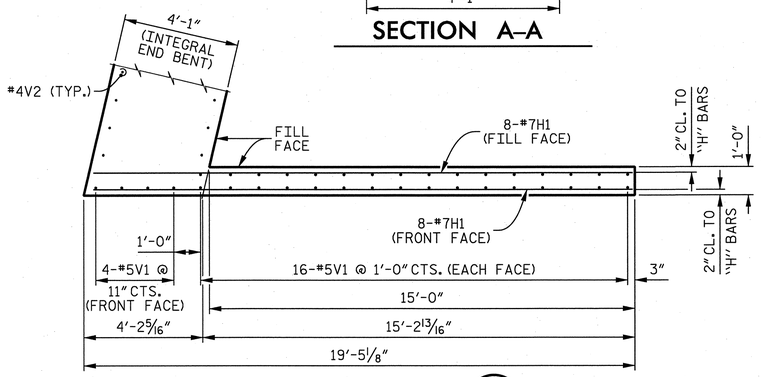

PLAN OF WING (W1)

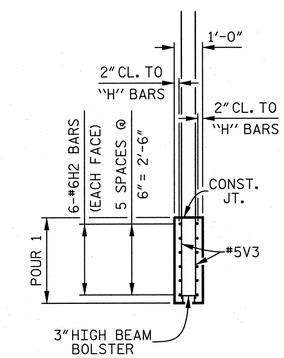

SECTION D–D

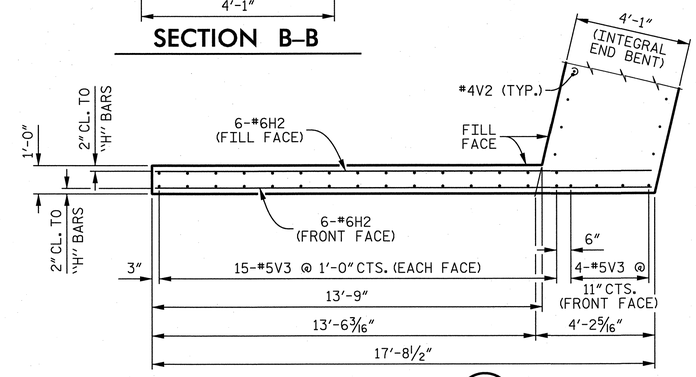

PLAN OF WING (W2)

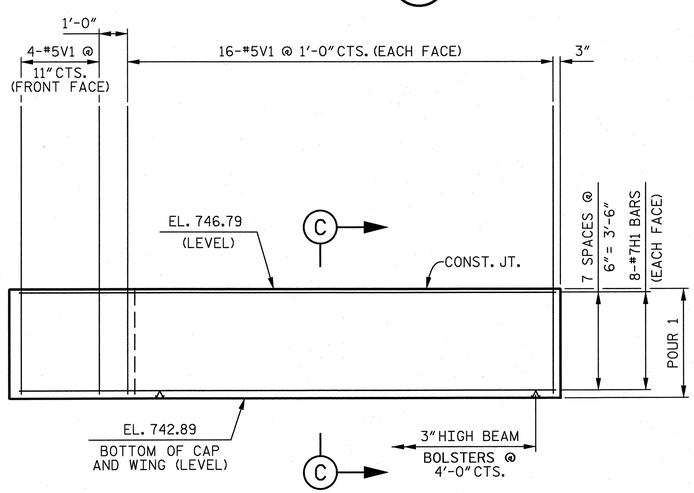

ELEVATION OF WING (W1)

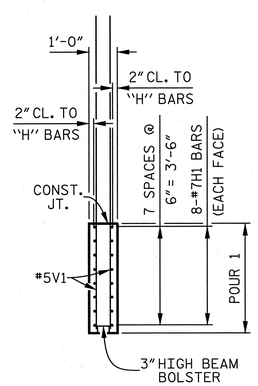

SECTION C–C

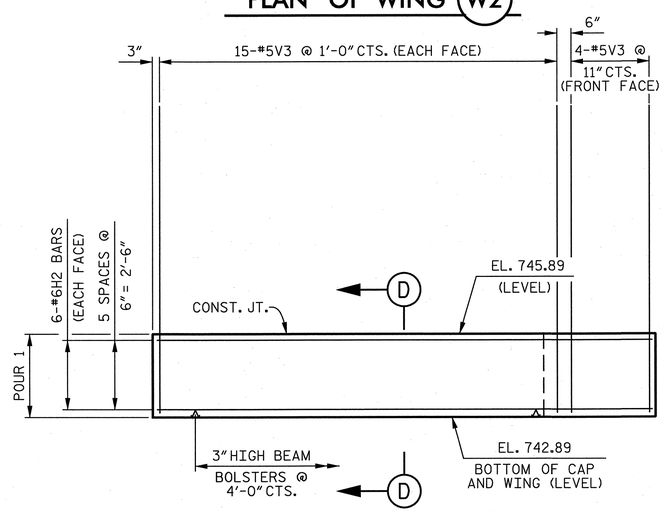

ELEVATION OF WING (W2)

PROJECT NO. U-2525B
GUILFORD COUNTY
STATION: 174+72.46 -L-

SHEET 2 OF 2

STATE OF NORTH CAROLINA
DEPARTMENT OF TRANSPORTATION
RALEIGH

SUBSTRUCTURE
END BENT 1
(RIGHT LANE)

DRAWN BY : K. E. LOFTON	DATE : 9-13
CHECKED BY : T. M. HARRIS	DATE : 9-13
DESIGN ENGINEER : T. M. HARRIS	DATE : 10-13

PLANS PREPARED BY :
PARSONS
5540 Centerview Drive, Suite 217
Raleigh, NC 27606-3386
NC LICENSE No. F-0246
FOR NORTH CAROLINA DEPARTMENT OF TRANSPORTATION

NORTH CAROLINA PROFESSIONAL SEAL 19299 ENGINEER THOMAS M. HARRIS
12/9/13

DWG. No. S09-019

REVISIONS						
No.	BY:	DATE:	No.	BY:	DATE:	
1			3			
2			4			

SHEET No. 5-339
TOTAL SHEETS 541

STR. #9

FILE: {j:\u-2525b\structures\plans\final\U2525B_SD_Sn9_eb12.dgn
DATE: 12/3/2013 1:27:46 PM

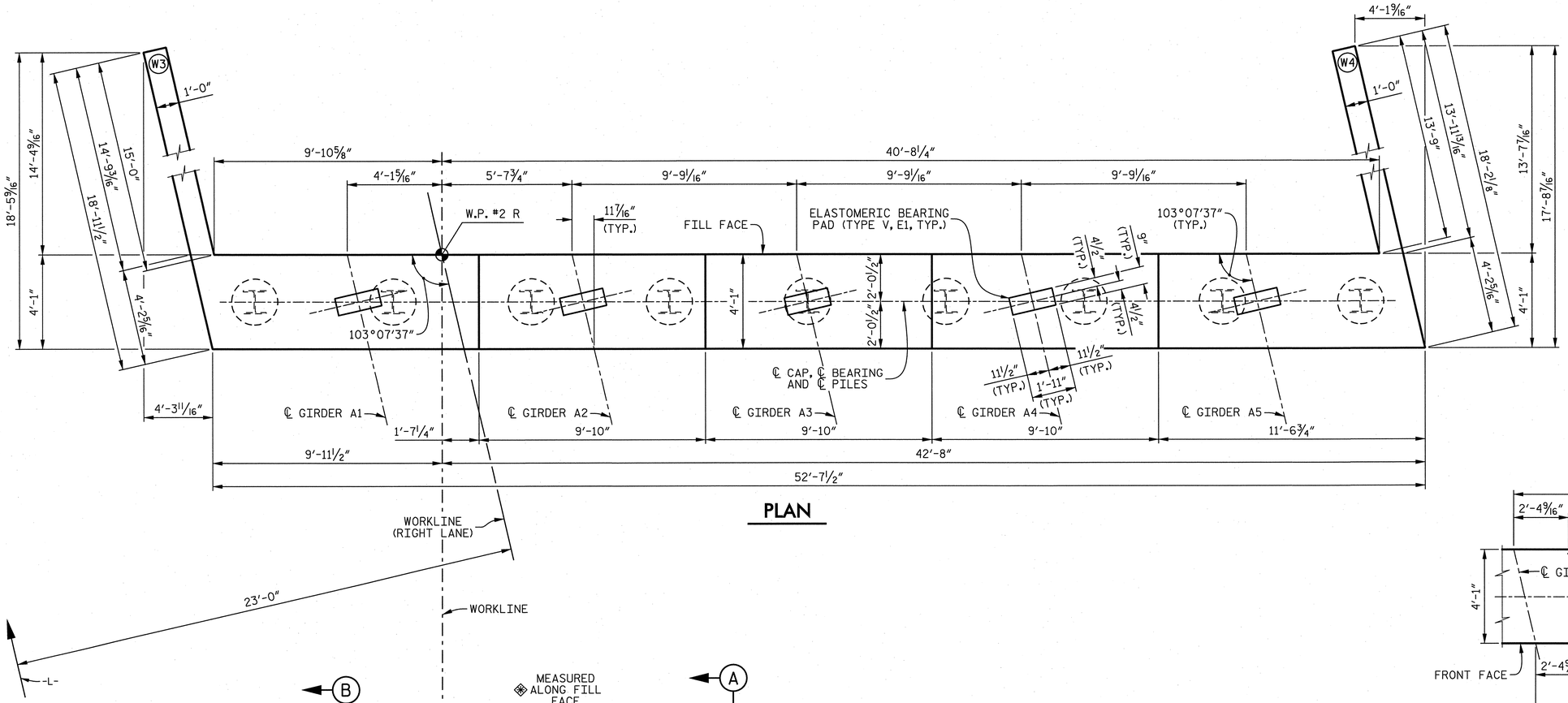

PLAN

NOTES

THE UPPER PORTION OF THE INTEGRAL END BENT CAP AND THE UPPER PORTION OF THE WINGS SHALL BE POURED WITH THE SUPERSTRUCTURE. SEE SUPERSTRUCTURE PLANS.

STIRRUPS AND "U" BARS IN CAP MAY BE SHIFTED AS NECESSARY TO CLEAR #4V2 BARS.

THE TOP SURFACE OF THE END BENT CAP AND WINGS, EXCEPT THE BEARING AREA, SHALL BE RAKED TO A DEPTH OF 1/4".

FOR PILE SPLICE DETAILS, SEE SHEET 2 OF 2".

FOR TEMPORARY DRAINAGE AT END BENT DETAIL, SEE SHEET 2 OF 2".

FOR SECTION A-A AND SECTION B-B, SEE "END BENT 1, SHEET 2 OF 2".

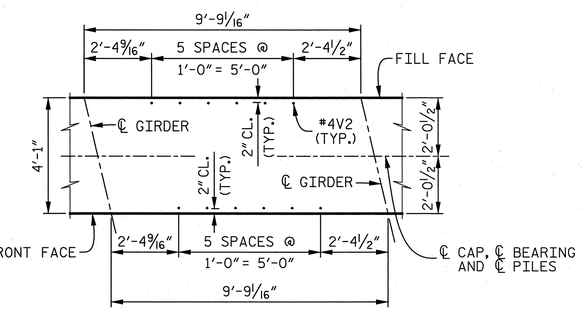

"V" BAR DETAIL

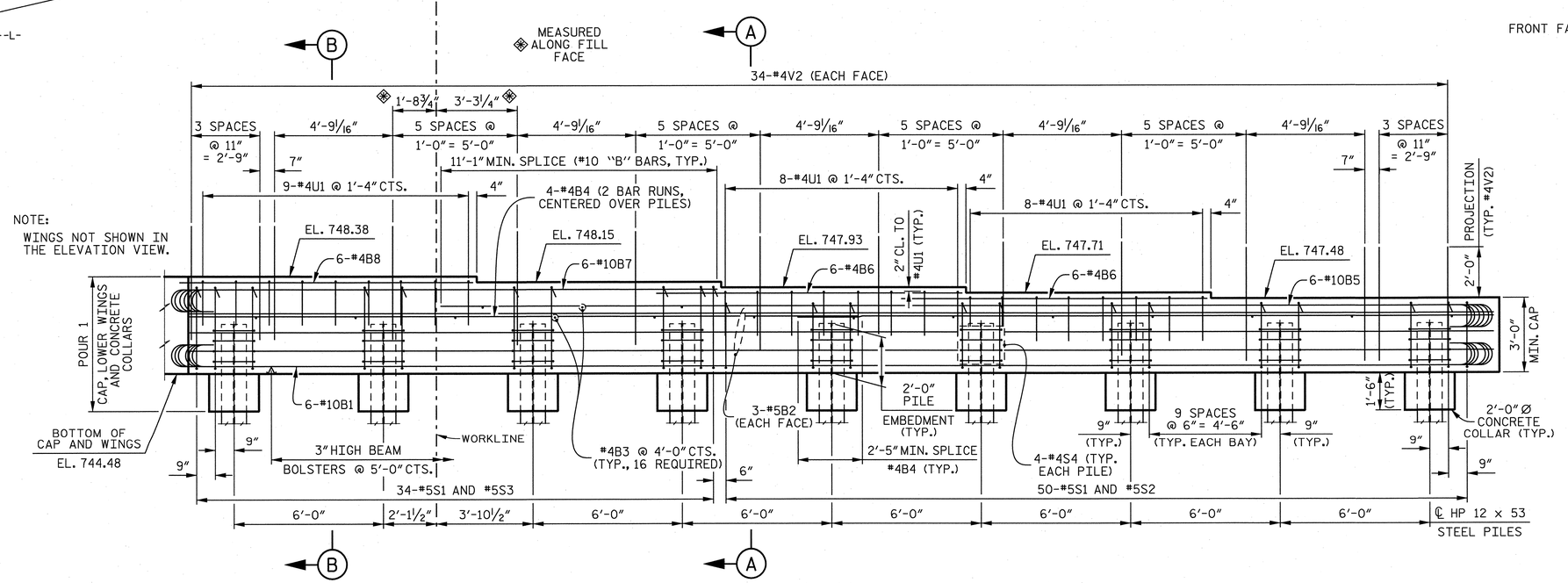

ELEVATION

PROJECT NO. U-2525B

GUILFORD COUNTY

STATION: 174+72.46 -L-

SHEET 1 OF 2

STATE OF NORTH CAROLINA
DEPARTMENT OF TRANSPORTATION
RALEIGH

SUBSTRUCTURE

END BENT 2

(RIGHT LANE)

DRAWN BY :	K. E. LOFTON	DATE :	9-13
CHECKED BY :	T. M. HARRIS	DATE :	9-13
DESIGN ENGINEER :	T. M. HARRIS	DATE :	10-13

PLANS PREPARED BY :
PARSONS
5540 Centerview Drive, Suite 217
Raleigh, NC 27606-3386
NC LICENSE No. F-0246
FOR NORTH CAROLINA DEPARTMENT OF TRANSPORTATION

NORTH CAROLINA PROFESSIONAL SEAL 19299 ENGINEER THOMAS M. HARRIS
12/9/13

DWG. No. S09-020

REVISIONS						
No.	BY:	DATE:	No.	BY:	DATE:	
1			3			
2			4			

SHEET No. S-340

TOTAL SHEETS 541

STR. #9

FILE: j:\u-2525b\structures\plans\final\U2525B_SD_Str0_ab21.dgn
DATE: 12/3/2013 1:27:48 PM

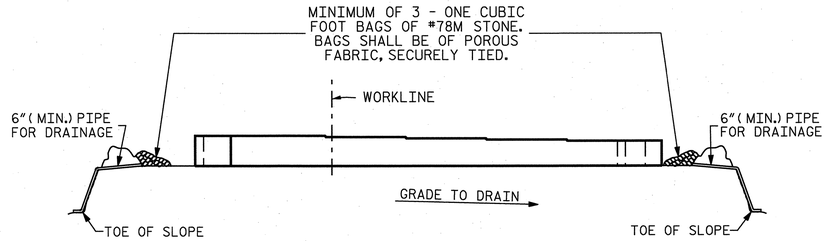

BAGGED STONE AND PIPE SHALL BE PLACED IMMEDIATELY AFTER COMPLETION OF END BENT EXCAVATION. PIPE MAY BE EITHER CONCRETE, CORRUGATED STEEL, CORRUGATED ALUMINUM ALLOY, OR CORRUGATED PLASTIC. PERFORATED PIPE WILL NOT BE ALLOWED.

BAGGED STONE SHALL REMAIN IN PLACE UNTIL THE ENGINEER DIRECTS THAT IT BE REMOVED. THE CONTRACTOR SHALL REMOVE AND DISPOSE OF SILT ACCUMULATIONS AT BAGGED STONE WHEN SO DIRECTED BY THE ENGINEER. BAGS SHALL BE REMOVED AND REPLACED WHENEVER THE ENGINEER DETERMINES THAT THEY HAVE DETERIORATED AND LOST THEIR EFFECTIVENESS.

NO SEPARATE PAYMENT WILL BE MADE FOR THIS WORK AND THE ENTIRE COST OF THIS WORK SHALL BE INCLUDED IN THE UNIT CONTRACT PRICE FOR THE SEVERAL PAY ITEMS.

TEMPORARY DRAINAGE AT END BENT

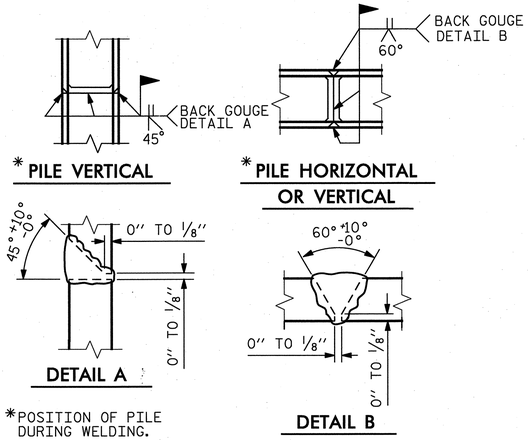

PILE SPLICE DETAILS

BAR TYPES

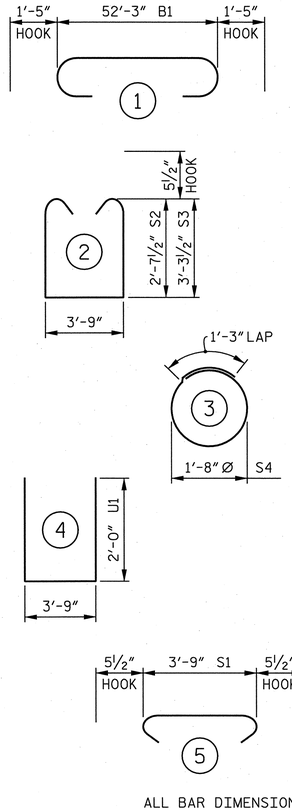

ALL BAR DIMENSIONS ARE OUT TO OUT.

BILL OF MATERIAL

END BENT 2

BAR	No.	SIZE	TYPE	LENGTH	WEIGHT
B1	6	#10	1	55'- 1"	1,422
B2	6	#5	STR	52'- 3"	327
B3	16	#4	STR	3'- 9"	40
B4	8	#4	STR	27'- 4"	146
B5	6	#10	6	43'- 8"	1,127
B6	12	#4	STR	12'- 3"	98
B7	6	#10	6	22'- 8"	585
B8	6	#4	STR	11'- 3"	45
H1	16	#7	STR	18'- 6"	605
H2	12	#6	STR	17'- 6"	315
S1	84	#5	5	4'- 8"	409
S2	50	#5	2	9'-11"	517
S3	34	#5	2	11'- 3"	399
S4	36	#4	3	6'- 6"	156
U1	25	#4	4	7'- 9"	129
V1	36	#5	STR	10'- 7"	397
V2	68	#4	STR	4'- 6"	204
V3	33	#5	STR	9'- 7"	330

REINFORCING STEEL 7,251 LBS.

CLASS "A" CONCRETE
POUR 1 COLLARS, CAP AND LOWER WINGS 32.7 CU. YDS.

HP 12 x 53 STEEL PILES
9 REQUIRED 315 LIN. FT.

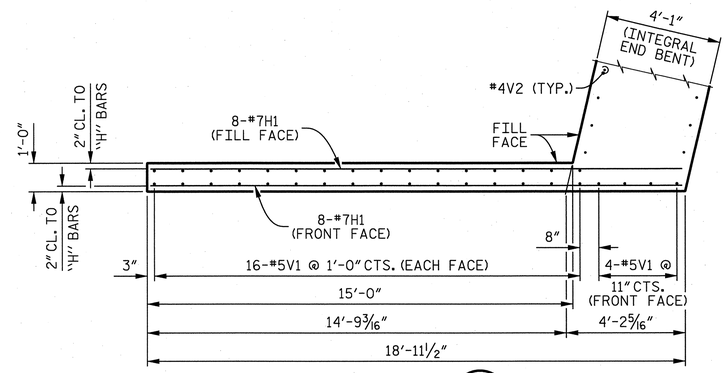

PLAN OF WING (W3)

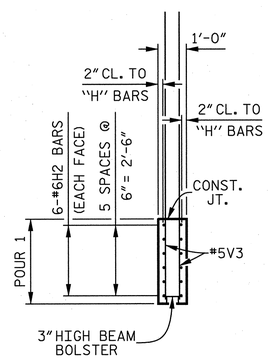

SECTION D–D

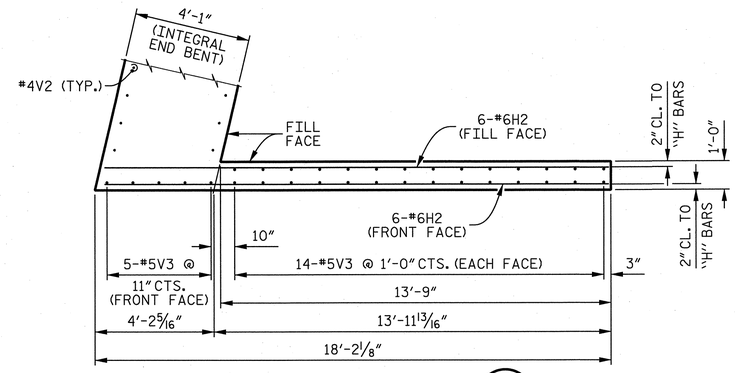

PLAN OF WING (W4)

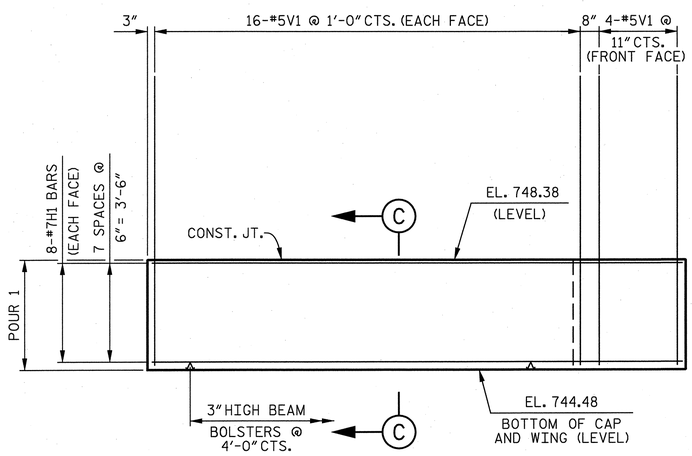

ELEVATION OF WING (W3)

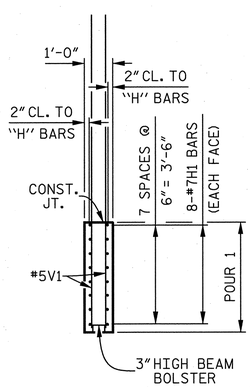

SECTION C–C

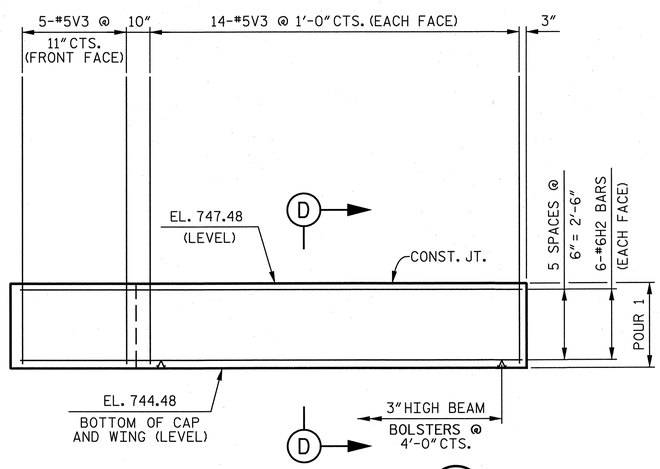

ELEVATION OF WING (W4)

PROJECT NO. U-2525B
GUILFORD COUNTY
STATION: 174+72.46 -L-

SHEET 2 OF 2

STATE OF NORTH CAROLINA
DEPARTMENT OF TRANSPORTATION
RALEIGH

SUBSTRUCTURE
END BENT 2
(RIGHT LANE)

DRAWN BY : K. E. LOFTON	DATE : 9-13	
CHECKED BY : T. M. HARRIS	DATE : 9-13	
DESIGN ENGINEER : T. M. HARRIS	DATE : 10-13	

PLANS PREPARED BY :
PARSONS
5540 Centerview Drive, Suite 217
Raleigh, NC 27606-3386
NC LICENSE No. F-0246
FOR NORTH CAROLINA DEPARTMENT OF TRANSPORTATION

NORTH CAROLINA PROFESSIONAL SEAL 19299 ENGINEER THOMAS M. HARRIS
12/9/13

DWG. No. S09-021

REVISIONS						
No.	BY:	DATE:	No.	BY:	DATE:	
1			3			
2			4			

SHEET No. 5-341
TOTAL SHEETS 541

STR. #9

FILE: f:\u-2525b\structures\dgns\final\U2525B_SD_Sn9_eb22.dgn
DATE: 12/3/2013 1:27:49 PM

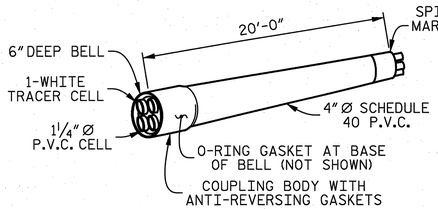

SCHEDULE 40 P.V.C.
MULTI – CELL RACEWAY

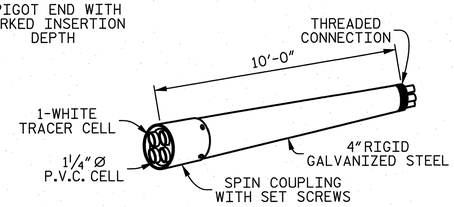

RIGID GALVANIZED (R.G.C.)
MULTI – CELL RACEWAY

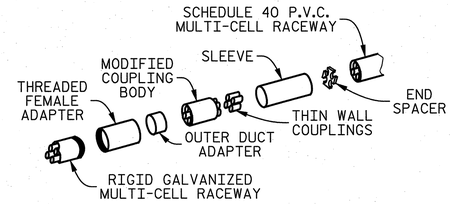

TRANSITION ADAPTER

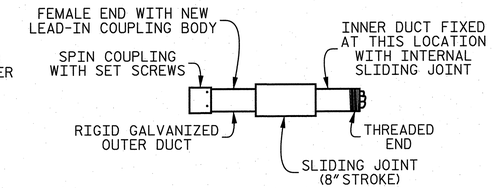

EXPANSION JOINT FITTING

DETAIL "D"

4" MULTI-CELL COMPONENTS

NOTES

THE CONTRACTOR SHALL BE RESPONSIBLE FOR DETERMINING THE TOTAL QUANTITY OF CONDUIT NEEDED TO COMPLETE THE WORK AND THAT THE CONDUIT IS PLACED AT THE NOTED DIMENSION AND ABOVE THE BOTTOM OF THE GIRDER.

THE INSTALLATION OF THE CONDUIT SYSTEM SHALL BE PAID FOR AS LUMP SUM. THE PRICE SHALL INCLUDE ALL CONDUIT, HANGERS, STABILIZERS, EXPANSION JOINTS, CONCRETE INSERTS, P.V.C. SLEEVES AND ALL NECESSARY HARDWARE TO COMPLETE THE WORK.

THE CONTRACTOR SHALL FIELD VERIFY THAT THE CONDUIT SYSTEM IS NOT IN CONFLICT WITH THE GUARDRAIL POSTS.

SEE DETAIL "C" FOR HANGER ASSEMBLY INSTALLATION.

INSTALL PIPE SLEEVES PARALLEL TO GIRDER. SEE DETAIL "B" FOR PIPE SLEEVE INSTALLATION.

PROVIDE TRANSITION ADAPTOR FOR CONDUIT AT END BENT 1 AND END BENT 2.

INSTALL STABILIZER MIDWAY OF SPAN. STABILIZER CAN NOT BE USED INSTEAD OF A HANGER ASSEMBLY.

THE CONCRETE SCREW INSERT SHALL HAVE A ROD SIZE OF ⅝" Ø AND A PULL FORCE OF 1,260 LBS.

FOR ELECTRICAL CONDUIT SYSTEM FOR SIGNALS, SEE SPECIAL PROVISIONS.

FOR END BENT DIAPHRAGM DETAILS, SEE "TYPICAL SECTION DETAILS" SHEET.

8" Ø P.V.C. PIPE SLEEVE TO BE FLUSH WITH BOTH FACES OF INTEGRAL END BENT. FIELD BEND REINFORCING STEEL AS NECESSARY TO PROVIDE MINIMUM CLEARANCES FOR PIPE SLEEVES.

INSTALL EXPANSION JOINT AT END BENT 1.

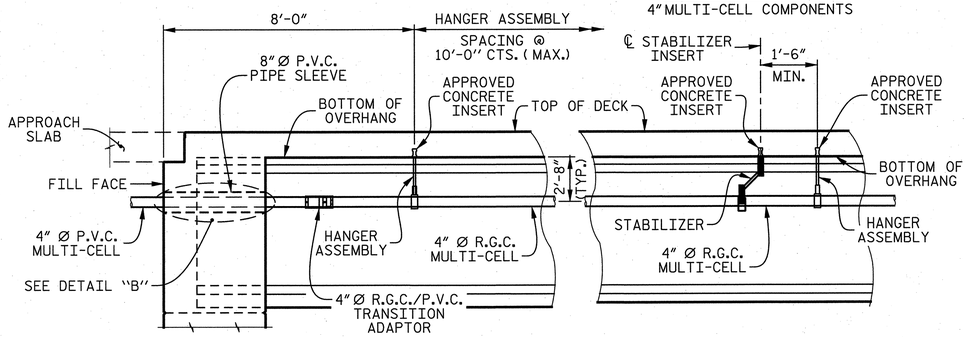

SECTION A–A

SECTION B–B

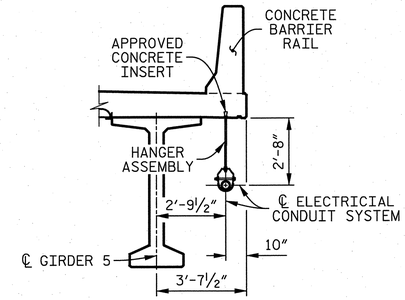

CONDUIT LOCATION

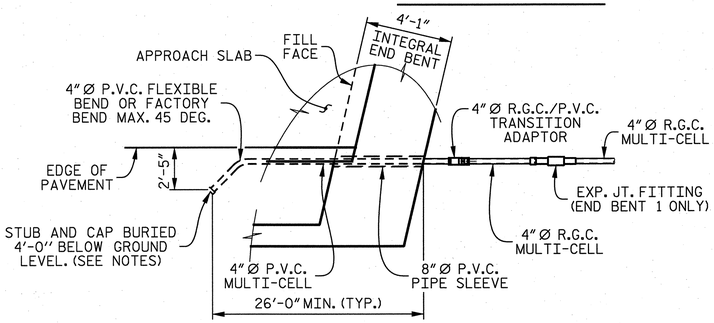

DETAIL "A"

TERMINATION OF CONDUIT AT WING WALL, END BENT 1 SHOWN, END BENT 2 SIMILAR EXCEPT FOR EXPANSION JOINT (END BENT 1 ONLY).

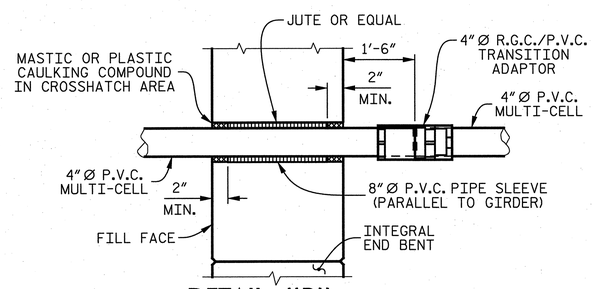

DETAIL "B"

P.V.C. PIPE SLEEVE INSTALLATION AND R.G.C./P.V.C. ADAPTOR AT INTEGRAL END BENT.

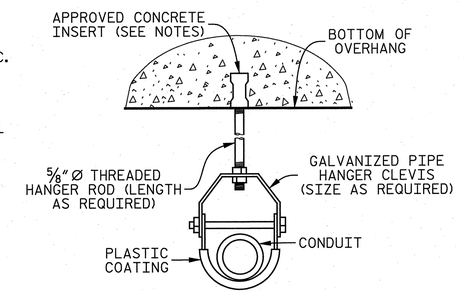

DETAIL "C"

HANGER ASSEMBLY

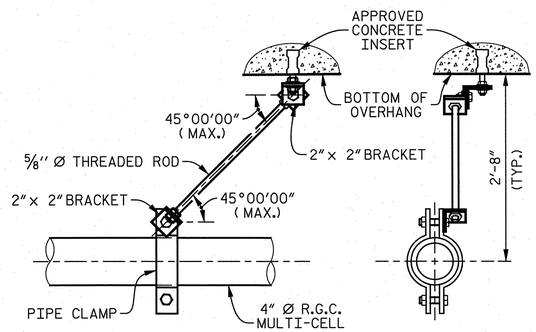

DETAIL "E"

STABILIZER

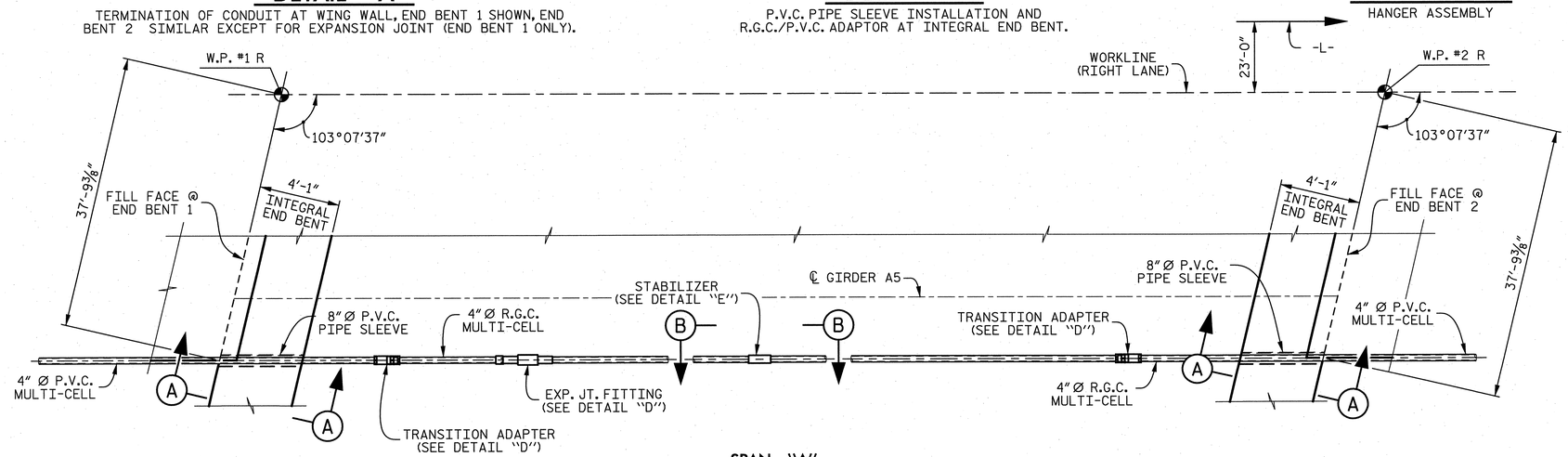

SPAN "A"

ELECTRICAL CONDUIT LAYOUT

PROJECT NO. U-2525B
GUILFORD COUNTY
STATION: 174+72.46 -L-

STATE OF NORTH CAROLINA
DEPARTMENT OF TRANSPORTATION
RALEIGH

STANDARD

ELECTRICAL CONDUIT SYSTEM DETAILS

(RIGHT LANE)

DRAWN BY : K. E. LOFTON	DATE : 12-13	
CHECKED BY : T. M. HARRIS	DATE : 12-13	
DESIGN ENGINEER : T. M. HARRIS	DATE : 12-13	

PLANS PREPARED BY :
PARSONS
5540 Centerview Drive, Suite 217
Raleigh, NC 27606-3386
NC LICENSE No. F-0246
FOR NORTH CAROLINA DEPARTMENT OF TRANSPORTATION

NORTH CAROLINA PROFESSIONAL SEAL 19299 ENGINEER THOMAS M. HARRIS
2-14-14

DWG. No. S09-022

REVISIONS								
No.	BY:	DATE:	No.	BY:	DATE:			
1			3					
2			4					

SHEET No. S-342
TOTAL SHEETS 541

STD. No. ECS1 STR. #9

FILE: I:\U-2525B\Structures\Plans\Final\U2525B_SD_S09_ec1.dgn
DATE: 2/14/2014 12:57:45 PM

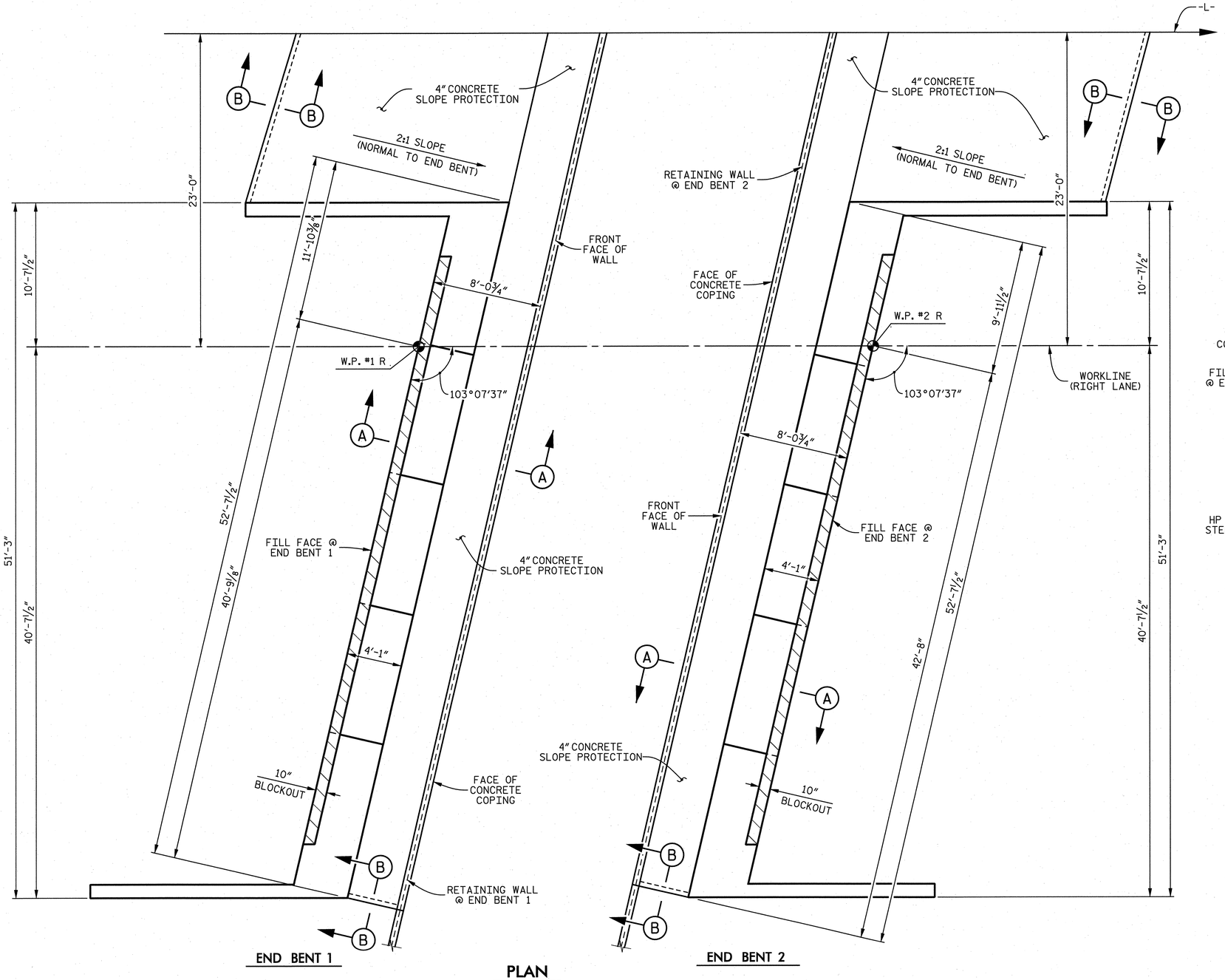

PLAN

CONCRETE DITCHES NOT SHOWN

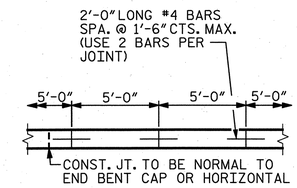

POURING DETAIL

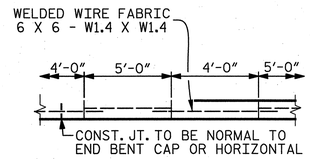

POUR A 4'-0" STRIP FIRST.

OPTIONAL POURING DETAIL

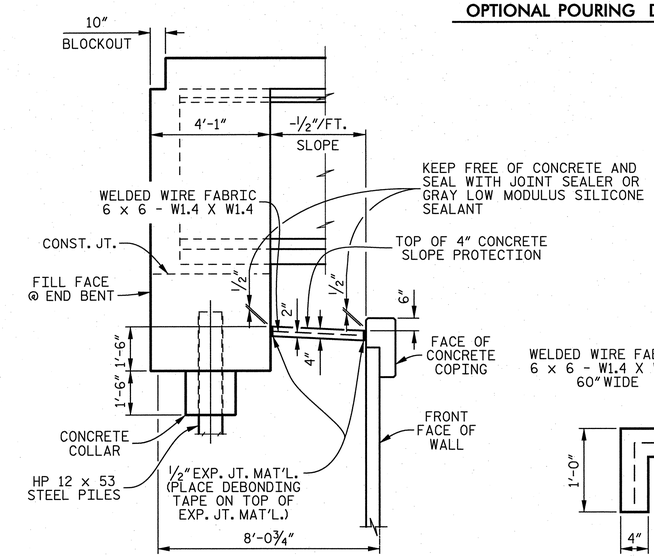

SECTION A–A

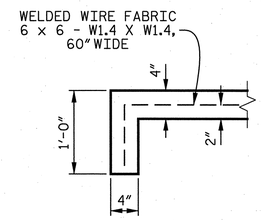

SECTION B–B

DETAILS FOR ALTERNATE "A"

BRIDGE AT STA. 174+72.46 –L– (RIGHT LANE)	4" SLOPE PROTECTION	WELDED WIRE FABRIC
	SQUARE YARDS	APPROX. LINEAR FEET
END BENT 1	54	98
END BENT 2	55	100

PROJECT NO. U–2525B

GUILFORD COUNTY

STATION: 174+72.46 –L–

GENERAL NOTES

SLOPE PROTECTION SHALL BE PLACED UNDER THE ENDS OF THE BRIDGE AS SHOWN IN THE DETAILS. STRAIGHT EDGING WILL NOT BE REQUIRED UNLESS, IN THE OPINION OF THE ENGINEER, VISUAL INSPECTION INDICATES A NEED FOR IT.

FOR BERM WIDTH, SEE GENERAL DRAWING.

ALTERNATE "A"

ALTERNATE "A" SHALL CONSIST OF 4" POURED-IN-PLACE CONCRETE PAVING AS SHOWN IN THE DETAILS ON THIS SHEET. CONCRETE SHALL BE CLASS "B". THE CONCRETE SURFACE SHALL BE FLOATED WITH A WOODEN FLOAT AND FINISHED. WELDED WIRE FABRIC REINFORCING SHALL BE 6 X 6 – W1.4 X W1.4, 60" WIDE. SLOPE PROTECTION SHALL BE POURED IN 5' STRIPS AS SHOWN IN THE "POURING DETAIL" WITH 2'-0" LONG #4 BARS PLACED ALONG THE SLOPE BETWEEN STRIPS AT 1'-6" MAXIMUM SPACING. SLOPE PROTECTION MAY BE POURED IN ALTERNATE 4' AND 5' STRIPS AS SHOWN IN THE "OPTIONAL POURING DETAIL" WITH ADJACENT RUNS OF WELDED WIRE FABRIC LAPPING AT LEAST 6". THE COST OF THE WELDED WIRE FABRIC AND #4 BARS, IF USED, SHALL BE INCLUDED IN THE CONTRACT UNIT PRICE BID PER SQUARE YARD FOR SLOPE PROTECTION.

ASSEMBLED BY : K. E. LOFTON DATE : 7-13
CHECKED BY : T. M. HARRIS DATE : 9-13

DRAWN BY : ELR 5/92 REV. 5/1/06 TLA/GM
CHECKED BY : GRP 6/92 REV. 10/1/11 MAA/GM
REV. 12/21/11 MAA/GM

DRAWN BY : K. E. LOFTON DATE : 7-13
CHECKED BY : T. M. HARRIS DATE : 9-13
DESIGN ENGINEER : T. M. HARRIS DATE : 10-13

PLANS PREPARED BY :
PARSONS
5540 Centerview Drive, Suite 217
Raleigh, NC 27606-3386
NC LICENSE No. F-0246
FOR NORTH CAROLINA DEPARTMENT OF TRANSPORTATION

NORTH CAROLINA PROFESSIONAL SEAL 19299 ENGINEER THOMAS M. HARRIS
12-20-13

DWG. No. S09-023

STATE OF NORTH CAROLINA
DEPARTMENT OF TRANSPORTATION
RALEIGH

STANDARD

SLOPE PROTECTION DETAILS (RIGHT LANE)

REVISIONS								SHEET No.
No.	BY:	DATE:	No.	BY:	DATE:			5-343
1			3					TOTAL SHEETS
2			4					541

STD. No. SP1 STR. #9

FILE: J:\U-2525B\Structures\Plans\Final\U2525B_SD_Sr9_sp1.dgn
DATE: 12/19/2013 2:00:43 PM

BILL OF MATERIAL

APPROACH SLAB AT END BENT 1 OR END BENT 2

BAR	No.	SIZE	TYPE	LENGTH	WEIGHT
✱ A1	52	#4	STR	23'- 1"	802
A2	52	#4	STR	22'-11"	796
✱ B1	86	#5	STR	24'- 2"	2,168
B2	86	#6	STR	24'- 8"	3,186
REINFORCING STEEL					3,982 LBS.
✱ EPOXY COATED REINFORCING STEEL					2,970 LBS.
CLASS "AA" CONCRETE					46.8 CU. YDS.

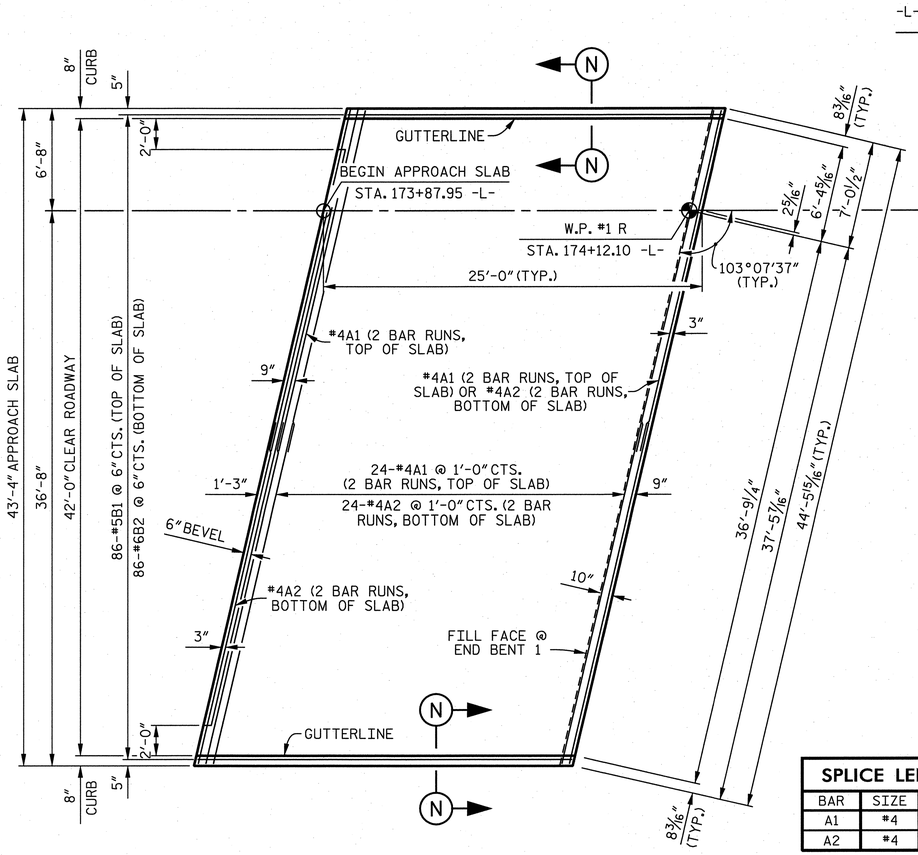

PLAN OF APPROACH SLAB AT END BENT 1

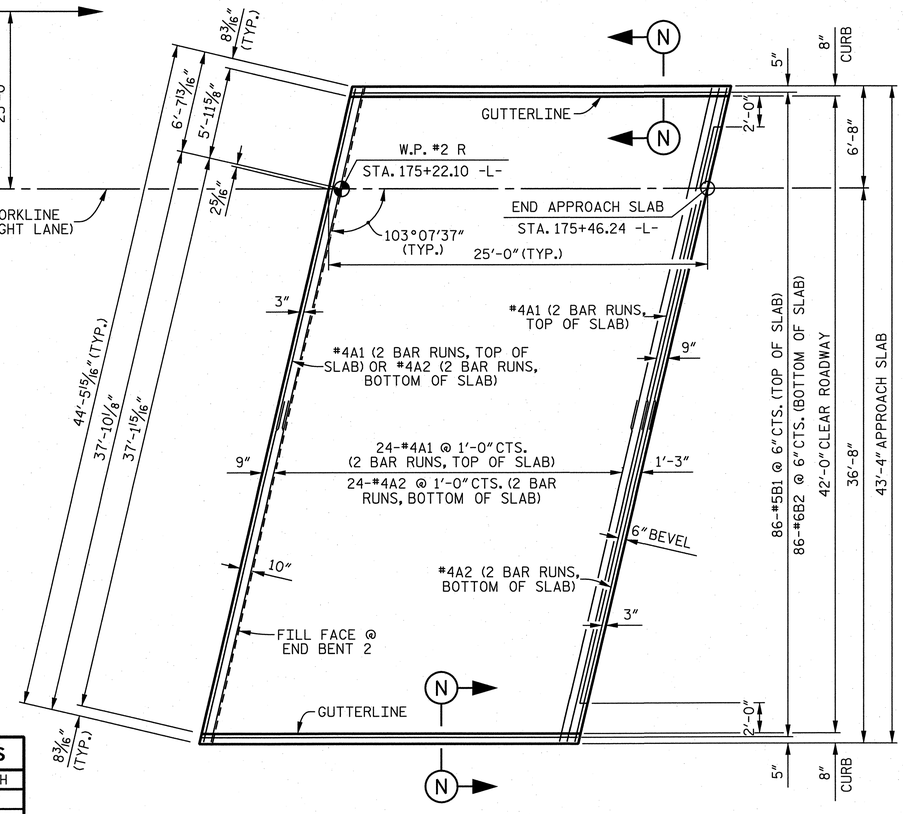

PLAN OF APPROACH SLAB AT END BENT 2

SPLICE LENGTHS		
BAR	SIZE	LENGTH
A1	#4	2'-0"
A2	#4	1'-9"

NOTES

APPROACH SLAB SHALL NOT BE CONSTRUCTED PRIOR TO COMPLETION OF THE BRIDGE DECK.

AREA BETWEEN THE WINGWALL AND APPROACH SLAB SHALL BE GRADED TO DRAIN THE WATER AWAY FROM THE FILL FACE OF THE BRIDGE AND SHALL BE PAVED. SEE ROADWAY PLANS.

THE JOINT OPENING AT THE APPROACH SLAB/DECK INTERFACE SHALL BE SAWED NO MORE THAN 12 HOURS AFTER THE APPROACH SLAB IS CAST. THE JOINT SHALL BE CLEANED OF ALL DEBRIS BEFORE THE SEALANT IS APPLIED. THE JOINT SEALER MATERIAL SHALL CONFORM TO THE REQUIREMENTS OF SECTION 1028-3 OF THE STANDARD SPECIFICATIONS.

SELECT BACKFILL MATERIAL SHALL BE THE AGGREGATE USED IN THE REINFORCED ZONE FOR THE MSE RETAINING WALL.

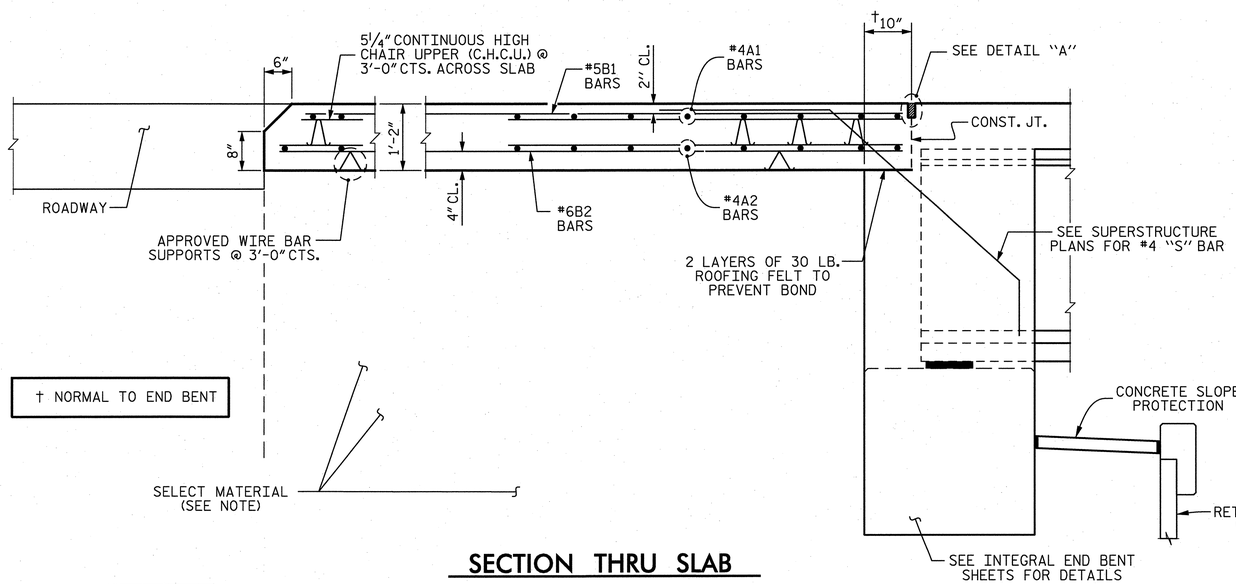

† NORMAL TO END BENT

SECTION THRU SLAB

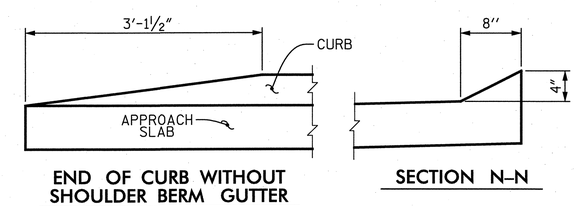

END OF CURB WITHOUT SHOULDER BERM GUTTER

SECTION N-N

CURB DETAILS

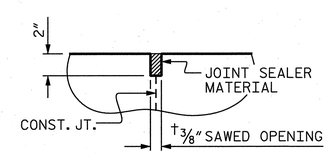

DETAIL "A"

PROJECT NO. U-2525B

GUILFORD COUNTY

STATION: 174+72.46 -L-

SHEET 1 OF 2

STATE OF NORTH CAROLINA
DEPARTMENT OF TRANSPORTATION
RALEIGH

STANDARD

BRIDGE APPROACH SLAB FOR INTEGRAL ABUTMENT (RIGHT LANE)

NORTH CAROLINA PROFESSIONAL SEAL 19299 ENGINEER THOMAS M. HARRIS
12-20-13

REVISIONS					
No.	BY:	DATE:	No.	BY:	DATE:
1			3		
2			4		

SHEET No. 5-344

TOTAL SHEETS 541

DWG. No. S09-024

STD. No. BAS5

STR. #9

PLANS PREPARED BY :
PARSONS
5540 Centerview Drive, Suite 217
Raleigh, NC 27606-3386
NC LICENSE No. F-0246
FOR NORTH CAROLINA DEPARTMENT OF TRANSPORTATION

DRAWN BY : K. E. LOFTON DATE : 7-13
CHECKED BY : T. M. HARRIS DATE : 9-13
DESIGN ENGINEER : T. M. HARRIS DATE : 10-13

ASSEMBLED BY : K. E. LOFTON DATE : 7-13
CHECKED BY : T. M. HARRIS DATE : 9-13

DRAWN BY : TLA 10/05
CHECKED BY : GM 5/06

ADDED 5/1/06RR KMM/GM
REV. 10/1/11 MAA/GM
REV. 6/13 MAA/GM

FILE: J:\U-2525B\Structures\Plans\Final\U2525B_SD_Srf2_ad1.dgn
DATE: 12/19/2013 2:01:29 PM

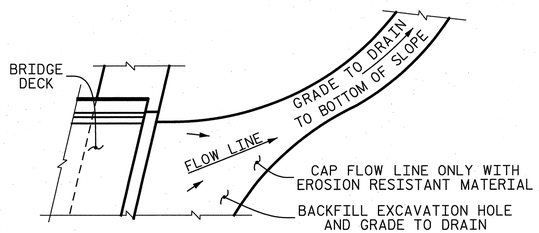

IF THE APPROACH SLAB IS NOT CONSTRUCTED IMMEDIATELY AFTER THE BACKFILLING OF THE END BENT EXCAVATION, GRADE TO DRAIN TO THE BOTTOM OF THE SLOPE AND PROVIDE EROSION RESISTANT MATERIAL, SUCH AS FIBERGLASS ROVING OR AS DIRECTED BY THE ENGINEER TO PREVENT SOIL EROSION AND TO PROTECT THE AREA ADJACENT TO THE STRUCTURE. THE CONTRACTOR WILL BE REQUIRED TO REMOVE THESE MATERIALS PRIOR TO CONSTRUCTION OF THE APPROACH SLAB.

TEMPORARY DRAINAGE DETAIL

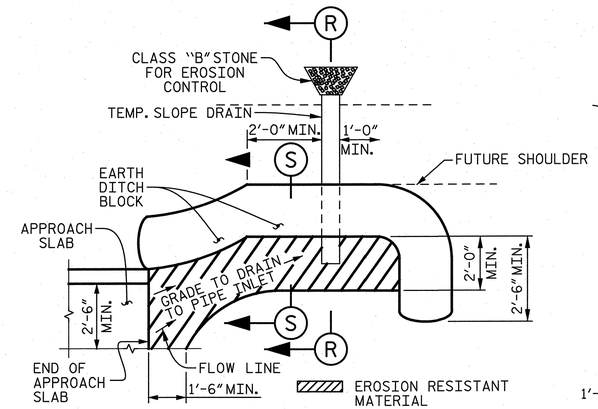

NOTE: IMMEDIATELY AFTER THE CONSTRUCTION OF THE APPROACH SLAB, THE CONTRACTOR SHALL PROVIDE TEMPORARY BERM AND SLOPE DRAIN. CONTRACTOR SHALL GRADE TO PIPE INLET AND PROVIDE EROSION RESISTANT MATERIAL AS SHOWN. THE EROSION RESISTANT MATERIAL SHALL BE EITHER 1) ASPHALT PLANT MIX, TYPE 1 OR TYPE 2, MIN. 2" DEPTH, 2) EROSION CONTROL MAT, OR 3) CONCRETE, AS DIRECTED BY THE ENGINEER. THE SLOPE DRAIN SHALL CONSIST OF A NON-PERFORATED TEMPORARY DRAINAGE PIPE, 12 INCHES IN DIAMETER.

PLAN VIEW

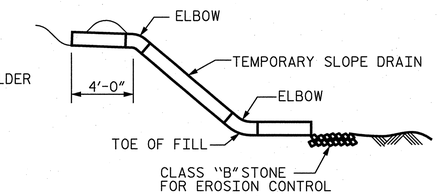

SECTION R–R

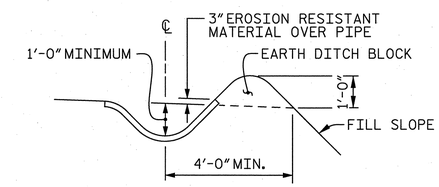

SECTION S–S

TEMPORARY BERM AND SLOPE DRAIN DETAILS

(TO BE USED WHEN SHOULDER BERM GUTTER IS REQUIRED)

PROJECT NO. U–2525B

GUILFORD COUNTY

STATION: 174+72.46 –L–

SHEET 2 OF 2

STATE OF NORTH CAROLINA
DEPARTMENT OF TRANSPORTATION
RALEIGH

STANDARD

BRIDGE APPROACH SLAB DETAILS (RIGHT LANE)

ASSEMBLED BY : K. E. LOFTON		DATE : 7-13	
CHECKED BY : T. M. HARRIS		DATE : 9-13	
DRAWN BY : FCJ 11/88	REV. 10/1/11	MAA/GM	
CHECKED BY : ABR 11/88	REV. 7/12	MAA/GM	
	REV. 6/13	MAA/GM	

DRAWN BY : K. E. LOFTON	DATE : 7–13	
CHECKED BY : T. M. HARRIS	DATE : 9–13	
DESIGN ENGINEER : T. M. HARRIS	DATE : 10–13	

PLANS PREPARED BY :
PARSONS
5540 Centerview Drive, Suite 217
Raleigh, NC 27606-3386
NC LICENSE No. F-0246
FOR NORTH CAROLINA DEPARTMENT OF TRANSPORTATION

NORTH CAROLINA PROFESSIONAL SEAL 19299 ENGINEER THOMAS M. HARRIS
12-20-13

DWG. No. S09–025

REVISIONS						
No.	BY:	DATE:	No.	BY:	DATE:	
1			3			
2			4			

SHEET No. S-345

TOTAL SHEETS 541

STD. No. BAS4 STR. #9

FILE: J:\U-2525B\Structures\Plans\Final\U2525B_SD_Sh9_sa2.dgn
DATE: 12/19/2013 2:01:58 PM

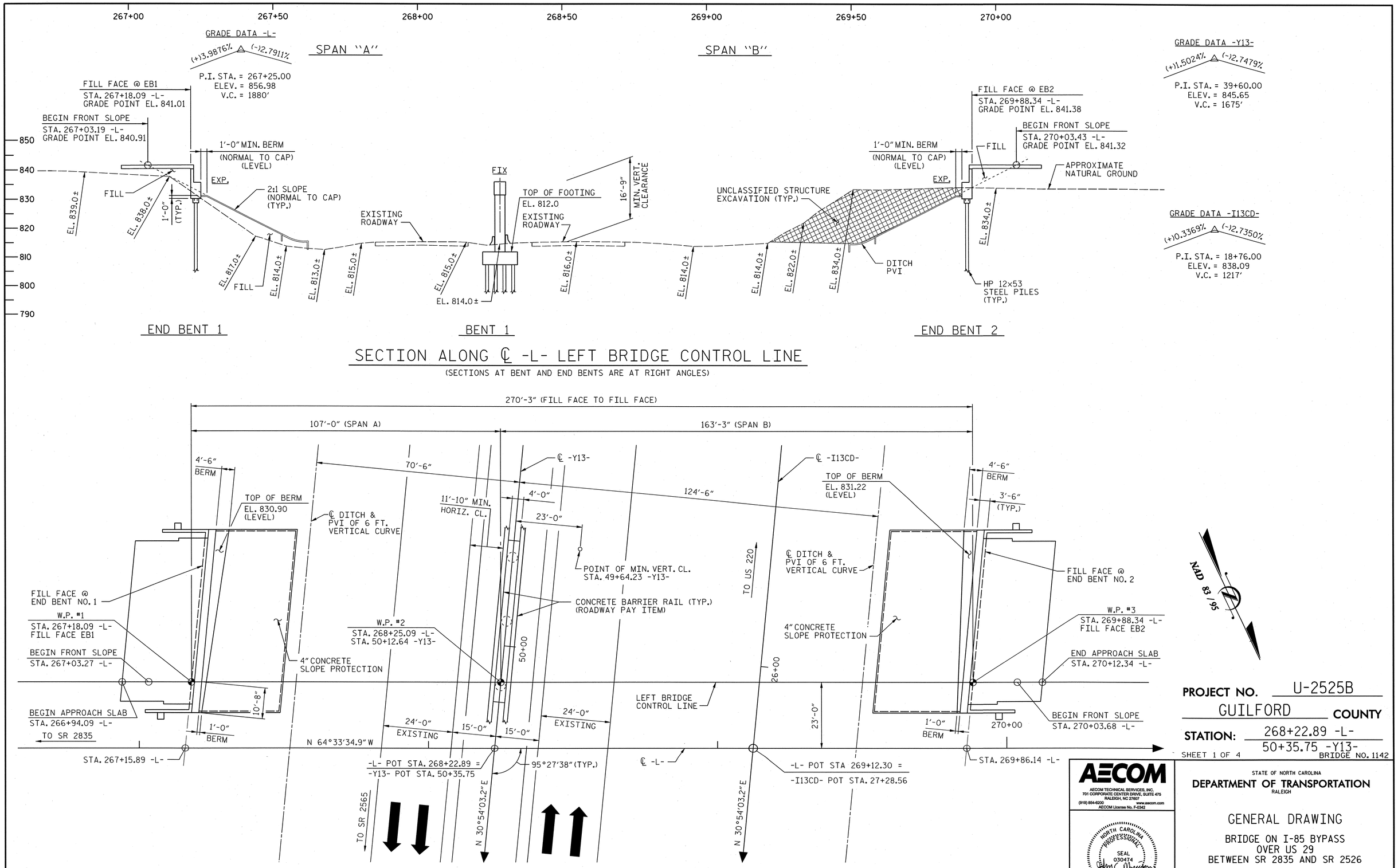
267+00
267+50
268+00
268+50
269+00
269+50
270+00
GRADE DATA -L-
(+)3.9876% (-)2.7911%
P.I. STA. = 267+25.00
ELEV. = 856.98
V.C. = 1880'
SPAN "A"
SPAN "B"
GRADE DATA -Y13-
(+)1.5024% (-)2.7479%
P.I. STA. = 39+60.00
ELEV. = 845.65
V.C. = 1675'
FILL FACE @ EB1
STA. 267+18.09 -L-
GRADE POINT EL. 841.01
BEGIN FRONT SLOPE
STA. 267+03.19 -L-
GRADE POINT EL. 840.91
FILL FACE @ EB2
STA. 269+88.34 -L-
GRADE POINT EL. 841.38
BEGIN FRONT SLOPE
STA. 270+03.43 -L-
GRADE POINT EL. 841.32
850
840
830
820
810
800
790
1'-0" MIN. BERM
(NORMAL TO CAP)
(LEVEL)
EXP.
FILL
2:1 SLOPE
(NORMAL TO CAP)
(TYP.)
EL. 839.0±
EL. 838.0±
1'-0"
(TYP.)
EL. 817.0±
EL. 814.0±
EL. 813.0±
EL. 815.0±
EL. 815.0±
EL. 814.0±
FIX
TOP OF FOOTING
EL. 812.0
EXISTING
ROADWAY
16'-9"
MIN. VERT.
CLEARANCE
EL. 816.0±
EL. 814.0±
UNCLASSIFIED STRUCTURE
EXCAVATION (TYP.)
EL. 814.0±
EL. 822.0±
EL. 834.0±
DITCH
PVI
EL. 834.0±
APPROXIMATE
NATURAL GROUND
HP 12x53
STEEL PILES
(TYP.)
GRADE DATA -I13CD-
(+)0.3369% (-)2.7350%
P.I. STA. = 18+76.00
ELEV. = 838.09
V.C. = 1217'
END BENT 1
BENT 1
END BENT 2
270'-3" (FILL FACE TO FILL FACE)
107'-0" (SPAN A)
163'-3" (SPAN B)
4'-6"
BERM
TOP OF BERM
EL. 830.90
(LEVEL)
70'-6"
℄ DITCH &
PVI OF 6 FT.
VERTICAL CURVE
℄ -Y13-
11'-10" MIN.
HORIZ. CL.
4'-0"
23'-0"
124'-6"
POINT OF MIN. VERT. CL.
STA. 49+64.23 -Y13-
CONCRETE BARRIER RAIL (TYP.)
(ROADWAY PAY ITEM)
TO US 220
℄ -I13CD-
TOP OF BERM
EL. 831.22
(LEVEL)
℄ DITCH &
PVI OF 6 FT.
VERTICAL CURVE
4'-6"
BERM
3'-6"
(TYP.)
FILL FACE @
END BENT NO. 1
W.P. #1
STA. 267+18.09 -L-
FILL FACE EB1
BEGIN FRONT SLOPE
STA. 267+03.27 -L-
4" CONCRETE
SLOPE PROTECTION
W.P. #2
STA. 268+25.09 -L-
STA. 50+12.64 -Y13-
50+00
4" CONCRETE
SLOPE PROTECTION
26+00
FILL FACE @
END BENT NO. 2
W.P. #3
STA. 269+88.34 -L-
FILL FACE EB2
END APPROACH SLAB
STA. 270+12.34 -L-
BEGIN APPROACH SLAB
STA. 266+94.09 -L-
TO SR 2835
10'-8"
1'-0"
BERM
24'-0"
EXISTING
15'-0"
15'-0"
24'-0"
EXISTING
LEFT BRIDGE
CONTROL LINE
23'-0"
1'-0"
BERM
270+00
BEGIN FRONT SLOPE
STA. 270+03.68 -L-
N 64°33'34.9" W
STA. 267+15.89 -L-
-L- POT STA. 268+22.89 =
-Y13- POT STA. 50+35.75
95°27'38" (TYP.)
℄ -L-
-L- POT STA 269+12.30 =
-I13CD- POT STA. 27+28.56
STA. 269+86.14 -L-
TO SR 2565
N 30°54'03.2" E
N 30°54'03.2" E
NAD 83/95
PROJECT NO. U-2525B
GUILFORD COUNTY
STATION: 268+22.89 -L-
50+35.75 -Y13-
SHEET 1 OF 4
BRIDGE NO. 1142
AECOM
AECOM TECHNICAL SERVICES, INC.
701 CORPORATE CENTER DRIVE, SUITE 475
RALEIGH, NC 27607
(919) 854-6200
www.aecom.com
AECOM License No. F-0342
NORTH CAROLINA PROFESSIONAL SEAL 030474 ENGINEER JOHN C. MORRISON
3/17/14
R.N. 10-01
STATE OF NORTH CAROLINA
DEPARTMENT OF TRANSPORTATION
RALEIGH
GENERAL DRAWING
BRIDGE ON I-85 BYPASS
OVER US 29
BETWEEN SR 2835 AND SR 2526
REVISIONS
NO. BY: DATE: NO. BY: DATE:
1 3
2 4
SHEET NO. S-3A6
TOTAL SHEETS 541
DRAWN BY : MTB DATE : 10/13
CHECKED BY : JCM DATE : 10/13
PLAN
(PILES NOT SHOWN IN PLAN VIEW FOR CLARITY)
DATE: 3/14/2014
TIME: 11:35:53 AM
USER: tweaver
DGN: G:\60129336\400_Technical_Information_Disc_Files\450_IK\DOT Stuff\Deliver\Files\Structures\Bridge 10\Cadd\U2525B_SD_DSN_IN42_GPE.dgn
STR #10

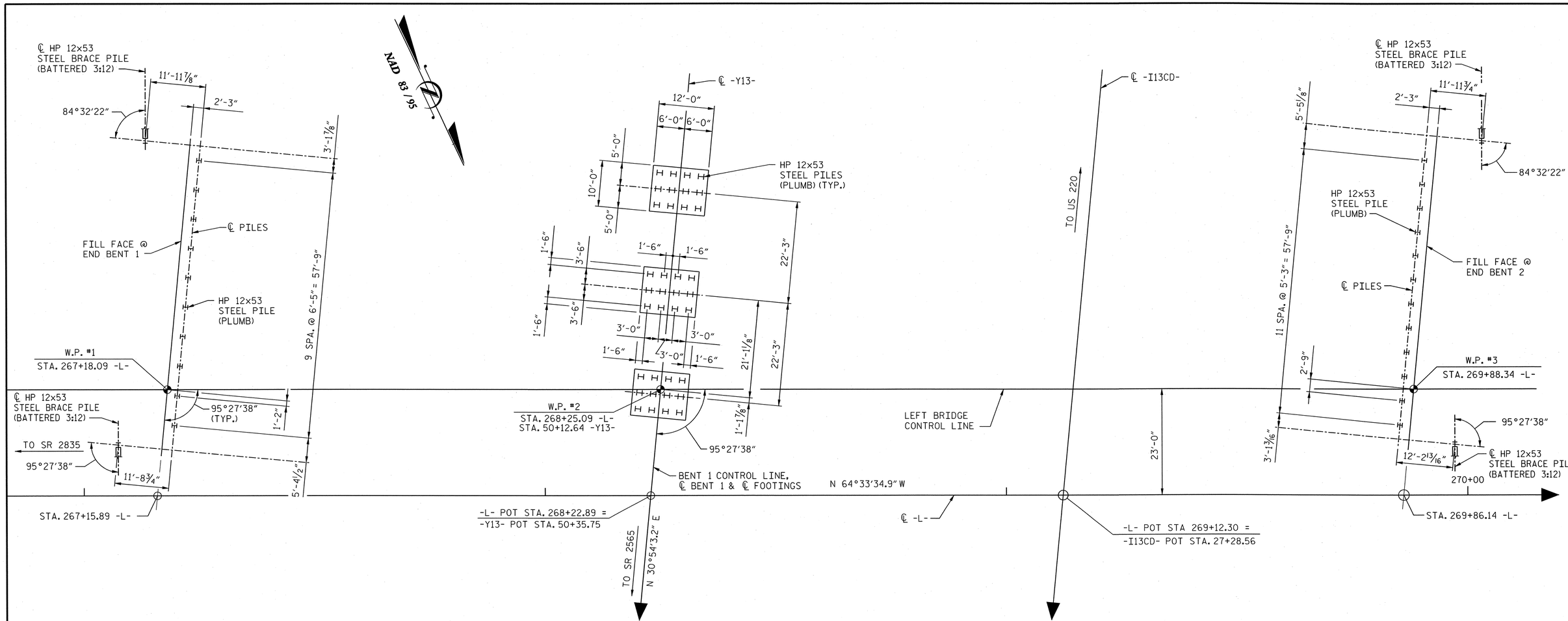

FOUNDATION LAYOUT

(DIMENSIONS LOCATING PILES ARE SHOWN TO THE PILE CENTERLINE)

NOTES:

1. FOR PILES, SEE SECTION 450 OF THE STANDARD SPECIFICATIONS.
2. PILES AT END BENT NO. 1 ARE DESIGNED FOR A FACTORED RESISTANCE OF 85 TONS PER PILE.
3. PILES AT BENT NO. 1 ARE DESIGNED FOR A FACTORED RESISTANCE OF 110 TONS PER PILE.
4. PILES AT END BENT NO. 2 ARE DESIGNED FOR A FACTORED RESISTANCE OF 115 TONS PER PILE.
5. DRIVE PILES AT END BENT NO. 1 TO A REQUIRED DRIVING RESISTANCE OF 145 TONS PER PILE.
6. DRIVE PILES AT BENT NO. 1 TO A REQUIRED DRIVING RESISTANCE OF 185 TONS PER PILE.
7. DRIVE PILES AT END BENT NO. 2 TO A REQUIRED DRIVING RESISTANCE OF 195 TONS PER PILE.
8. STEEL PILE POINTS ARE REQUIRED FOR STEEL H-PILES AT END BENT NO. 2 (LEFT & CENTER). FOR STEEL PILE POINTS, SEE SECTION 450 OF THE STANDARD SPECIFICATIONS.

DRAWN BY : MTB DATE : 10/13
CHECKED BY : JCM DATE : 10/13

PROJECT NO. U-2525B
GUILFORD COUNTY
STATION: 268+22.89 -L-
50+35.75 -Y13-
SHEET 2 OF 4

AECOM
AECOM TECHNICAL SERVICES, INC.
701 CORPORATE CENTER DRIVE, SUITE 475
RALEIGH, NC 27607
(919) 854-6200 www.aecom.com
AECOM License No. F-0342

NORTH CAROLINA PROFESSIONAL SEAL 030474 ENGINEER JOHN C. MORRISON
3/7/14
R.N. 10-02

STATE OF NORTH CAROLINA
DEPARTMENT OF TRANSPORTATION
RALEIGH

GENERAL DRAWING
BRIDGE ON I-85 BYPASS
OVER US 29
BETWEEN SR 2835 AND SR 2526

REVISIONS						SHEET NO.
NO.	BY:	DATE:	NO.	BY:	DATE:	S-347
1			3			TOTAL SHEETS
2			4			541

DATE: 3/14/2014
TIME: 10:26:22 AM
USER: lowery
DGN: q:\60259356\400_Technical_Information_Disc_Files\450_NCDOT Staff Use\Design Files\Structures\Bridge 10\Cold\U2525B_SD_DSN_U42_FOUNDLAY.dgn

BENCH MARK: BM#36 - R/R SPIKE SET IN 28"OAK TREE, -Y13LPC- STATION 10+55, 85' RIGHT
N 871980 E 1783179, ELEV. = 821.46', NAVD 1988

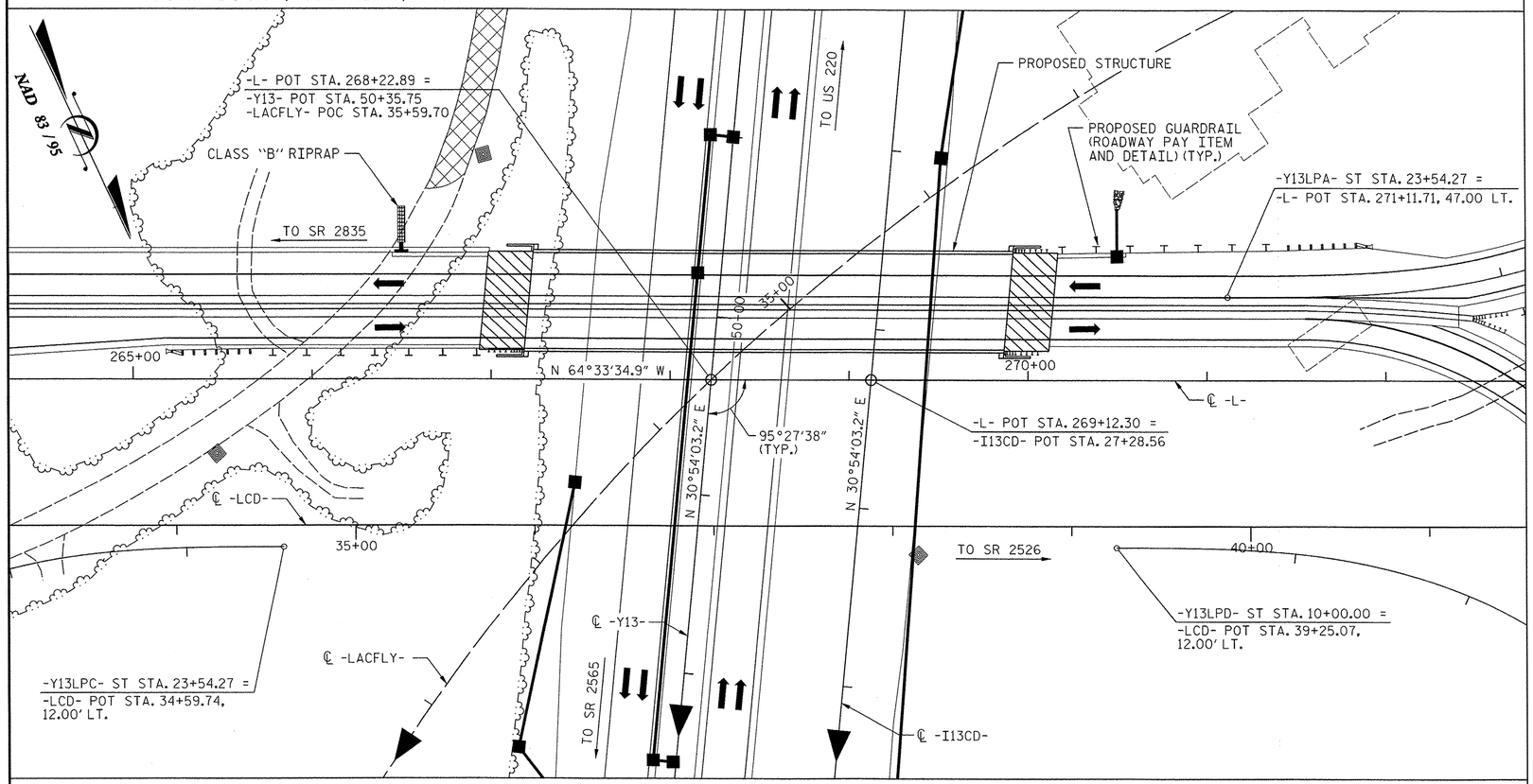

LOCATION SKETCH

FOR UTILITY INFORMATION, SEE UTILITY PLANS AND SPECIAL PROVISIONS

GENERAL NOTES:

ASSUMED LIVE LOAD = HL-93 OR ALTERNATE LOADING.

THIS BRIDGE HAS BEEN DESIGNED IN ACCORDANCE WITH THE REQUIREMENTS OF THE AASHTO LRFD BRIDGE DESIGN SPECIFICATIONS.

THIS BRIDGE IS LOCATED IN SEISMIC ZONE 1.

FOR EROSION CONTROL MEASURES, SEE EROSION CONTROL PLANS.

REMOVABLE FORMS MAY BE USED IN LIEU OF METAL STAY-IN-PLACE FORMS IN ACCORDANCE WITH ARTICLE 420-3 OF THE STANDARD SPECIFICATIONS.

NEEDLE BEAMS WILL NOT BE ALLOWED UNLESS OTHERWISE CALLED FOR ON THE PLANS OR APPROVED BY THE ENGINEER.

THE CLASS AA CONCRETE IN THE BRIDGE DECK SHALL CONTAIN FLY ASH OR GROUND GRANULATED BLAST FURNACE SLAG AT THE SUBSTITUTION RATE SPECIFIED IN ARTICLE 1024-1 AND IN ACCORDANCE WITH ARTICLES 1024-5 AND 1024-6 OF THE STANDARD SPECIFICATIONS. NO PAYMENT WILL BE MADE FOR THIS SUBSTITUTION AS IT IS CONSIDERED INCIDENTAL TO THE COST OF THE REINFORCED CONCRETE DECK SLAB.

FOR CRANE SAFETY, SEE SPECIAL PROVISIONS.

FOR SUBMITTAL OF WORKING DRAWINGS, SEE SPECIAL PROVISIONS.

FOR FALSEWORK AND FORMWORK, SEE SPECIAL PROVISIONS.

FOR GROUT FOR STRUCTURES, SEE SPECIAL PROVISIONS.

FOR MAINTENANCE AND PROTECTION OF TRAFFIC BENEATH PROPOSED STRUCTURE, SEE SPECIAL PROVISIONS.

THE ELEVATION AND CLEARANCE SHOWN ON THE PLANS AT THE POINT OF MINIMUM VERTICAL CLEARANCE ARE FROM THE BEST INFORMATION AVAILABLE. PRIOR TO BEGINNING BRIDGE CONSTRUCTION, VERIFY THE ELEVATION ON THE EXISTING PAVEMENT AND CHECK THE CLEARANCE. REPORT ANY VARIATIONS TO THE ENGINEER. ANY PLAN REVISIONS NECESSARY TO ACHIEVE THE REQUIRED MINIMUM VERTICAL CLEARANCE WILL BE PROVIDED BY THE DEPARTMENT.

ALL STRUCTURAL STEEL SHALL BE AASHTO M270 GRADE 50W AND PAINTED IN ACCORDANCE WITH SYSTEM 4 OF ARTICLE 442-8 OF THE STANDARD SPECIFICATIONS UNLESS OTHERWISE NOTED ON THE PLANS.

THE MATERIAL SHOWN IN THE CROSS-HATCHED AREA SHALL BE EXCAVATED FOR A DISTANCE OF 32FT EACH SIDE OF CENTERLINE ROADWAY AS DIRECTED BY THE ENGINEER. THIS WORK WILL BE PAID FOR AT THE CONTRACT LUMP SUM PRICE FOR UNCLASSIFIED STRUCTURE EXCAVATION. SEE SECTION 412 OF THE STANDARD SPECIFICATIONS.

FOR GIRDER ERECTION SEQUENCE, SEE "FRAMING PLAN".

FOR PLACING LOAD ON STRUCTURE MEMBERS, SEE SPECIAL PROVISIONS.

FOR OTHER DESIGN DATA AND GENERAL NOTES, SEE SHEET SN.

TOTAL BILL OF MATERIAL

	MODIFIED BRIDGE APPROACH FILL	FOUNDATION EXCAVATION	UNCLASSIFIED STRUCTURE EXCAVATION	REINFORCED CONCRETE DECK SLAB	GROOVING BRIDGE FLOORS	CLASS A CONCRETE	BRIDGE APPROACH SLABS	REINFORCING STEEL	SPIRAL COLUMN REINFORCING STEEL	APPROX. LBS. STRUCTURAL STEEL	HP 12x53 STEEL PILES		STEEL PILE POINTS	CONCRETE BARRIER RAIL	4" SLOPE PROTECTION	POT BEARINGS	ELASTOMERIC BEARINGS	EXPANSION JOINT SEALS	ELECTRICAL CONDUIT SYSTEM FOR SIGNALS
	LUMP SUM	LUMP SUM	LUMP SUM	SQ. FT.	SQ. FT.	CU. YD.	LUMP SUM	LBS.	LBS.	LBS.	NO.	LIN. FT.	EA.	LIN. FT.	SQ. YD.	LUMP SUM	LUMP SUM	LUMP SUM	LUMP SUM
SUPERSTRUCTURE	—	—	—	15,352	16,099	—	LUMP SUM	—	—	693,200	—	—	—	576.3	—	LUMP SUM	LUMP SUM	LUMP SUM	LUMP SUM
END BENT #1	LUMP SUM	—	—	—	—	63.8	—	8064	—	—	12	540	—	—	269	—	—	—	—
BENT #1	—	LUMP SUM	—	—	—	127.1	—	27223	1437	—	36	840	—	—	—	—	—	—	—
END BENT #2	LUMP SUM	—	LUMP SUM	—	—	64.4	—	8690	—	—	14	350	9	—	286	—	—	—	—
TOTAL	LUMP SUM	LUMP SUM	LUMP SUM	15,352	16,099	255.3	LUMP SUM	43977	1437	693,200	62	1730	9	576.3	555	LUMP SUM	LUMP SUM	LUMP SUM	LUMP SUM

DRAWING INDEX:

10-01 GENERAL DRAWING - PLAN AND ELEVATION
10-02 GENERAL DRAWING - FOUNDATION LAYOUT
10-03 GENERAL DRAWING - LOCATION SKETCH AND TOTAL BILL OF MATERIAL
10-04 GENERAL DRAWING - LRFR SUMMARY FOR STEEL GIRDERS (INTERSTATE TRAFFIC)
10-05 SUPERSTRUCTURE - TYPICAL SECTION AND DETAILS
10-06 SUPERSTRUCTURE - TYPICAL DETAILS
10-07 SUPERSTRUCTURE - PARTIAL PLAN OF SPAN "A" (1 OF 3)
10-08 SUPERSTRUCTURE - PARTIAL PLAN OF SPANS "A" & "B" (2 OF 3)
10-09 SUPERSTRUCTURE - PARTIAL PLAN OF SPAN "B" (3 OF 3)
10-10 SUPERSTRUCTURE - FRAMING PLAN
10-11 SUPERSTRUCTURE - STRUCTURAL STEEL DETAILS (1 OF 3)
10-12 SUPERSTRUCTURE - STRUCTURAL STEEL DETAILS (2 OF 3)
10-13 SUPERSTRUCTURE - STRUCTURAL STEEL DETAILS (3 OF 3)
10-14 SUPERSTRUCTURE - ELASTOMERIC BEARING DETAILS
10-15 SUPERSTRUCTURE - POT BEARING DETAILS
10-16 SUPERSTRUCTURE - GIRDER DEFLECTION AND CAMBER SCHEDULES (1 OF 4)
10-17 SUPERSTRUCTURE - GIRDER DEFLECTION AND CAMBER SCHEDULES (2 OF 4)
10-18 SUPERSTRUCTURE - GIRDER DEFLECTION AND CAMBER SCHEDULES (3 OF 4)
10-19 SUPERSTRUCTURE - GIRDER DEFLECTION AND CAMBER SCHEDULES (4 OF 4)
10-20 SUPERSTRUCTURE - CONCRETE BARRIER RAIL LAYOUT (1 OF 2)
10-21 STANDARD - CONCRETE BARRIER RAIL (2 OF 2)
10-22 STANDARD - GUARDRAIL ANCHORAGE FOR BARRIER RAIL
10-23 STANDARD - EXPANSION JOINT SEAL DETAILS (1 OF 2)
10-24 STANDARD - EXPANSION JOINT SEAL DETAILS FOR BARRIER RAIL (2 OF 2)
10-25 SUPERSTRUCTURE - BILL OF MATERIAL
10-26 SUBSTRUCTURE - END BENT 1 PLAN AND ELEVATION (1 OF 5)
10-27 SUBSTRUCTURE - END BENT 1 PLAN AND ELEVATION (2 OF 5)
10-28 SUBSTRUCTURE - END BENT 1 SECTIONS AND DETAILS (3 OF 5)
10-29 SUBSTRUCTURE - END BENT 1 SECTIONS AND DETAILS (4 OF 5)
10-30 SUBSTRUCTURE - END BENT 1 SECTIONS AND DETAILS (5 OF 5)
10-31 SUBSTRUCTURE - BENT 1 PLAN AND ELEVATION (1 OF 2)
10-32 SUBSTRUCTURE - BENT 1 SECTIONS AND DETAILS (2 OF 2)
10-33 SUBSTRUCTURE - END BENT 2 PLAN AND ELEVATION (1 OF 5)
10-34 SUBSTRUCTURE - END BENT 2 PLAN AND ELEVATION (2 OF 5)
10-35 SUBSTRUCTURE - END BENT 2 SECTIONS AND DETAILS (3 OF 5)
10-36 SUBSTRUCTURE - END BENT 2 SECTIONS AND DETAILS (4 OF 5)
10-37 SUBSTRUCTURE - END BENT 2 SECTIONS AND DETAILS (5 OF 5)
10-38 STANDARD - ELECTRICAL CONDUIT SYSTEM FOR SIGNALS
10-39 STANDARD - SLOPE PROTECTION DETAILS (1 OF 2)
10-40 STANDARD - SLOPE PROTECTION DETAILS (2 OF 2)
10-41 STANDARD - BRIDGE APPROACH SLAB FOR FLEXIBLE PAVEMENT
10-42 STANDARD - BRIDGE APPROACH SLAB DETAILS
SN - STANDARD NOTES

DRAWN BY : MTB DATE : 03/14
CHECKED BY : JCM DATE : 03/14

PROJECT NO. U-2525B
GUILFORD COUNTY
STATION: 268+22.89 -L-
50+35.75 -Y13-
SHEET 3 OF 4

AECOM
AECOM TECHNICAL SERVICES, INC.
701 CORPORATE CENTER DRIVE, SUITE 475
RALEIGH, NC 27607
(919) 854-6200 www.aecom.com
AECOM License No. F-0342

NORTH CAROLINA PROFESSIONAL SEAL 030474 ENGINEER JOHN C. MORRISON
5/30/14

R.N. 10-03

STATE OF NORTH CAROLINA
DEPARTMENT OF TRANSPORTATION
RALEIGH

GENERAL DRAWING
BRIDGE ON I-85 BYPASS
OVER US 29
BETWEEN SR 2835 AND SR 2526

REVISIONS						SHEET NO.
NO.	BY:	DATE:	NO.	BY:	DATE:	S-348
1			3			TOTAL SHEETS
2			4			541

DATE: 5/30/2014
TIME: 1:54:28 PM

USER: swright
DGN: 50502933SW400_Technical_Information_Disc_Files\450_BJWCDT3\dfTechDesignFiles\Structures\Bridge 1\Cad\U2525B_SD_DSN_H02_L10.dgn

LOAD AND RESISTANCE FACTOR RATING (LRFR) SUMMARY FOR STEEL GIRDERS

LEVEL		VEHICLE	WEIGHT (W) (TONS)	CONTROLLING LOAD RATING (#)	MINIMUM RATING FACTORS (RF)	TONS = W × RF	STRENGTH I LIMIT STATE											SERVICE II LIMIT STATE						COMMENT NUMBER
								MOMENT					SHEAR						MOMENT					
							LIVE-LOAD FACTORS (γ_{LL})	DISTRIBUTION FACTORS (DF)	RATING FACTOR	SPAN	GIRDER LOCATION	DISTANCE FROM LEFT END OF SPAN (ft)	DISTRIBUTION FACTORS (DF)	RATING FACTOR	SPAN	GIRDER LOCATION	DISTANCE FROM LEFT END OF SPAN (ft)	LIVE-LOAD FACTORS (γ_{LL})	DISTRIBUTION FACTORS (DF)	RATING FACTOR	SPAN	GIRDER LOCATION	DISTANCE FROM LEFT END OF SPAN (ft)	
DESIGN LOAD RATING		HL-93 (INVENTORY)	N/A	1	1.45	--	1.75	NOTE 1	1.45	A	EL	89.750	NOTE 1	1.94	B	I	0.000	1.30	NOTE 1	1.54	B	ER	121.000	
		HL-93 (OPERATING)	N/A		1.88	--	1.35	NOTE 1	1.88	A	EL	89.750	NOTE 1	2.51	B	I	0.000	1.00	NOTE 1	2.00	B	ER	121.000	
		HS-20 (INVENTORY)	36.000	2	2.55	91.80	1.75	NOTE 1	2.60	B	ER	121.000	NOTE 1	3.46	B	I	0.000	1.30	NOTE 1	2.55	A	ER	121.000	
		HS-20 (OPERATING)	36.000		3.36	120.96	1.35	NOTE 1	3.36	B	ER	121.000	NOTE 1	4.49	B	I	0.000	1.00	NOTE 1	3.31	A	ER	121.000	
LEGAL LOAD RATING	SINGLE VEHICLE (SV)	SH	12.500		4.85	60.63	1.40	NOTE 1	7.02	A	ER	52.380	NOTE 1	10.75	B	I	0.000	1.30	NOTE 1	4.85	A	I	52.380	
		S3C	21.500		3.63	78.05	1.40	NOTE 1	5.23	B	EL	121.000	NOTE 1	6.45	B	I	0.000	1.30	NOTE 1	3.63	B	ER	121.000	
		S3A	22.750		3.73	84.86	1.40	NOTE 1	4.75	B	ER	121.000	NOTE 1	6.68	B	I	0.000	1.30	NOTE 1	3.73	B	ER	121.000	
		S4A	26.750		2.99	79.98	1.40	NOTE 1	3.77	B	ER	121.000	NOTE 1	5.26	B	I	0.000	1.30	NOTE 1	2.99	B	ER	121.000	
		S5A	30.500		2.64	80.52	1.40	NOTE 1	3.68	B	EL	121.000	NOTE 1	4.64	B	I	0.000	1.30	NOTE 1	2.64	B	ER	121.000	
		S6A	34.500		2.38	82.11	1.40	NOTE 1	3.00	B	ER	121.000	NOTE 1	4.14	B	I	0.000	1.30	NOTE 1	2.38	B	ER	121.000	
		S7B	38.500		2.17	83.55	1.40	NOTE 1	2.74	B	ER	121.000	NOTE 1	3.77	B	I	0.000	1.30	NOTE 1	2.17	B	ER	121.000	
		S7A	40.000	3	2.14	85.60	1.40	NOTE 1	2.69	B	ER	121.000	NOTE 1	3.72	B	I	0.000	1.30	NOTE 1	2.14	B	ER	121.000	
	TRUCK TRACTOR SEMI-TRAILER (TTST)	T4A	28.250		2.90	81.93	1.40	NOTE 1	3.65	B	ER	121.000	NOTE 1	5.05	B	I	0.000	1.30	NOTE 1	2.90	B	ER	121.000	
		T5B	32.000		2.58	82.56	1.40	NOTE 1	3.57	B	EL	121.000	NOTE 1	4.50	B	I	0.000	1.30	NOTE 1	2.58	B	ER	121.000	
		T6A	36.000		2.36	84.96	1.40	NOTE 1	2.98	B	ER	121.000	NOTE 1	4.15	B	I	0.000	1.30	NOTE 1	2.36	B	ER	121.000	
		T7A	40.000		2.16	86.40	1.40	NOTE 1	2.72	B	ER	121.000	NOTE 1	3.76	B	I	0.000	1.30	NOTE 1	2.16	B	ER	121.000	
		T7B	40.000		2.17	86.80	1.40	NOTE 1	2.73	B	ER	121.000	NOTE 1	3.72	B	I	0.000	1.30	NOTE 1	2.17	B	ER	121.000	
FATIGUE		HL-93 (INVENTORY)	γ_{LL}=0.75		3.38																			

LOAD FACTORS:

DESIGN LOAD RATING FACTORS	LIMIT STATE	γ_{DC}	γ_{DW}
	STRENGTH I	1.25	1.50
	SERVICE II	1.00	1.00

NOTES:

MINIMUM RATING FACTORS ARE BASED ON THE STRENGTH I AND SERVICE II LIMIT STATES.

ALLOWABLE STRESS FOR SERVICE II LIMIT STATE ARE AS REQUIRED FOR DESIGN.

COMMENTS:

1. ANALYSIS METHOD: FINITE ELEMENT MODEL ON GRILLAGE.
2. SPAN LENGTHS SHOWN ARE BEARING TO BEARING DIMENSIONS.

(#) CONTROLLING LOAD RATING

(1) DESIGN LOAD RATING (HL-93)
(2) DESIGN LOAD RATING (HS-20)
(3) LEGAL LOAD RATING **
** SEE CHART FOR VEHICLE TYPE

GIRDER LOCATION

I - INTERIOR GIRDER
EL - EXTERIOR LEFT GIRDER
ER - EXTERIOR RIGHT GIRDER

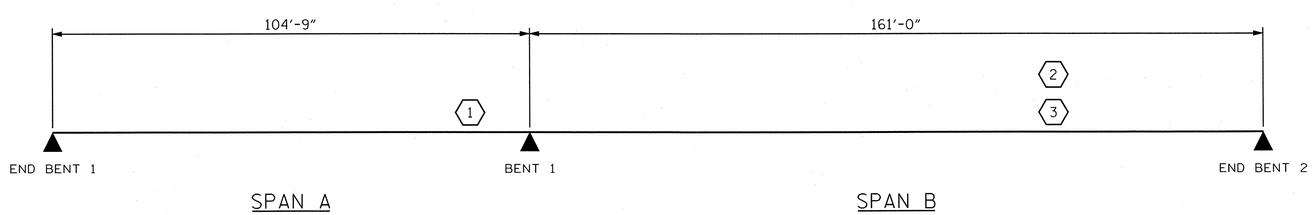

LRFR SUMMARY

PROJECT NO. U-2525B
GUILFORD COUNTY
STATION: 268+22.89 -L-
50+35.75 -Y13-

SHEET 4 OF 4

AECOM
AECOM TECHNICAL SERVICES, INC.
701 CORPORATE CENTER DRIVE, SUITE 475
RALEIGH, NC 27607
(919) 854-6200 www.aecom.com
AECOM License No. F-0342

NORTH CAROLINA PROFESSIONAL SEAL 030474 ENGINEER JOHN C. MORRICON
3/17/14
R.N. 10-04

STATE OF NORTH CAROLINA
DEPARTMENT OF TRANSPORTATION
RALEIGH

STANDARD

LRFR SUMMARY FOR STEEL GIRDERS
(INTERSTATE TRAFFIC)

REVISIONS						SHEET NO.
NO.	BY:	DATE:	NO.	BY:	DATE:	S-349
1			3			TOTAL SHEETS
2			4			541

STD. NO. LRFR4

ASSEMBLED BY : DDL	DATE : 10/13		
CHECKED BY : JCM	DATE : 10/13		
DRAWN BY : MAA 1/08	REV. 11/12/08 RR	MAA/GM	
CHECKED BY : GM/DI 2/08	REV. 10/1/11	MAA/GM	

DATE: 3/14/2014
TIME: 11:06:08 AM
USER: lowery
DGN: q:\60029335\0-WO3_Technical_Information_Disc_Files\450_NCDOT Std Tech Design Files\Structures\Bridge ID\Cadd\U2525B_SD_DSN_U42_LRFR4.dgn

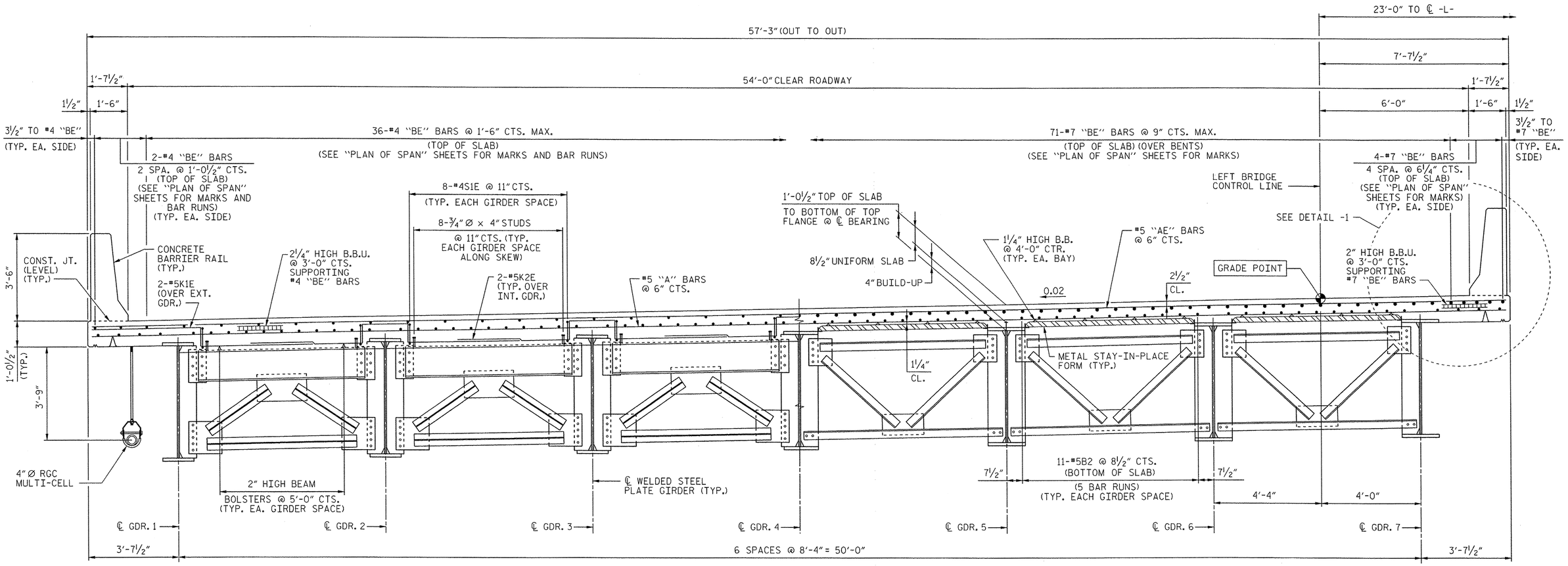

TYPICAL HALF SECTION AT END BENT CROSS FRAME

TYPICAL SECTION

TYPICAL HALF SECTION AT BENT 1

NOTES:

PROVIDE 1¼" HIGH BEAM BOLSTERS UPPER AT 4'-0" CTS. ATOP THE METAL STAY-IN-PLACE FORMS TO SUPPORT THE BOTTOM MAT OF "A" BARS. WHEN USING REMOVABLE FORMS, PROVIDE CONTINUOUS HIGH CHAIRS FOR METAL DECK (C.H.C.M.) AT 4'-0" CTS. WITH A HEIGHT TO SUPPORT THE BOTTOM MAT OF "A" BARS A CLEAR DISTANCE OF 2½" ABOVE THE TOP OF THE REMOVABLE FORM.

STRUCTURAL STEEL ERECTION IN A CONTINUOUS UNIT SHALL BE COMPLETE BEFORE FALSEWORK OR FORMS ARE PLACED ON THE UNIT.

PREVIOUSLY CAST CONCRETE IN CONTINUOUS UNIT SHALL HAVE ATTAINED A MINIMUM COMPRESSIVE STRENGTH OF 3000 PSI BEFORE ADDITIONAL CONCRETE IS CAST IN THE UNIT.

BARRIER RAIL IN A CONTINUOUS UNIT SHALL NOT BE CAST UNTIL ALL SLAB CONCRETE IN THE UNIT HAS BEEN CAST AND HAS REACHED A MINIMUM COMPRESSIVE STRENGTH OF 3000 PSI.

THE CONTRACTOR MAY, WHEN NECESSARY, PROPOSE A SCHEME FOR AVOIDING INTERFERENCE BETWEEN METAL STAY-IN-PLACE FORM SUPPORTS OR FORMS AND GIRDER STIFFENER OR CONNECTOR PLATES. THE PROPOSAL SHALL BE INDICATED, AS APPROPRIATE, ON EITHER STEEL WORKING DRAWINGS OR THE METAL STAY-IN-PLACE FORM WORKING DRAWINGS.

METAL STAY-IN-PLACE FORMS AND FALSEWORK SHALL NOT BE WELDED TO GIRDER FLANGES IN THE ZONES REQUIRING CHARPY V-NOTCH TEST. SEE "STRUCTURAL STEEL DETAILS" SHEET.

FOR DETAILS OF THE ELECTRICAL CONDUIT SYSTEM, SEE "ELECTRICAL CONDUIT SYSTEM FOR SIGNALS" SHEET.

FOR EXPANSION JOINT SEALS, SEE SPECIAL PROVISIONS.

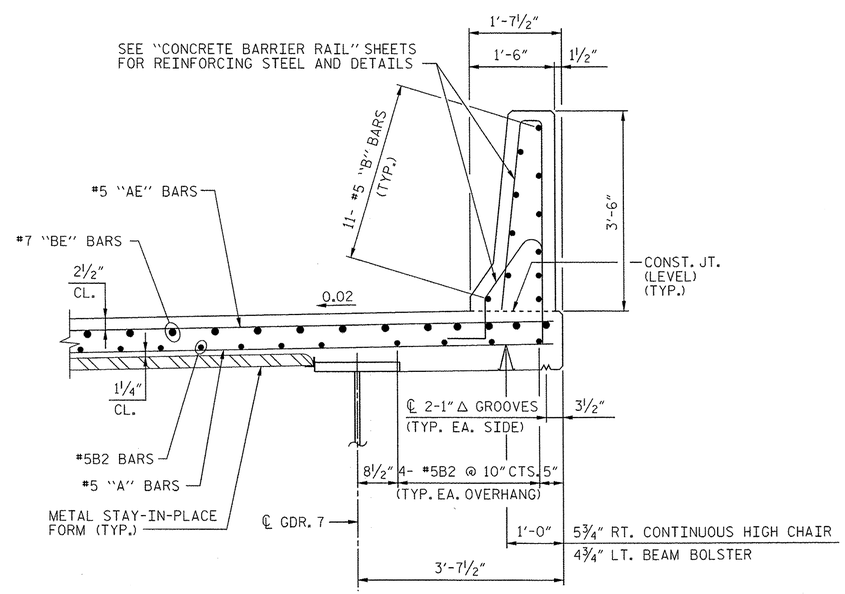

DETAIL-1

PROJECT NO. U-2525B
GUILFORD COUNTY
STATION: 268+22.89 -L-
50+35.75 -Y13-

AECOM
AECOM TECHNICAL SERVICES, INC.
701 CORPORATE CENTER DRIVE, SUITE 475
RALEIGH, NC 27607
(919) 854-6200 www.aecom.com
AECOM License No. F-0342

NORTH CAROLINA PROFESSIONAL SEAL 030474 ENGINEER JOHN C. MORRISON
5/30/14
R.N. 10-05

STATE OF NORTH CAROLINA
DEPARTMENT OF TRANSPORTATION
RALEIGH

SUPERSTRUCTURE

TYPICAL SECTION AND DETAILS

REVISIONS								SHEET NO.
NO.	BY:	DATE:	NO.	BY:	DATE:			S-350
1			3					TOTAL SHEETS
2			4					541

DRAWN BY : MTB DATE : 10/13
CHECKED BY : JCM DATE : 10/13

DATE: 6/12/2014
TIME: 3:48:42 PM

USER: lwang
DGN: ...\U2525B_NCDOT3dTechDesignFiles\Structures\Bridge 100\Cold\U2525B_SD_DSN_1H2_SEC.dgn

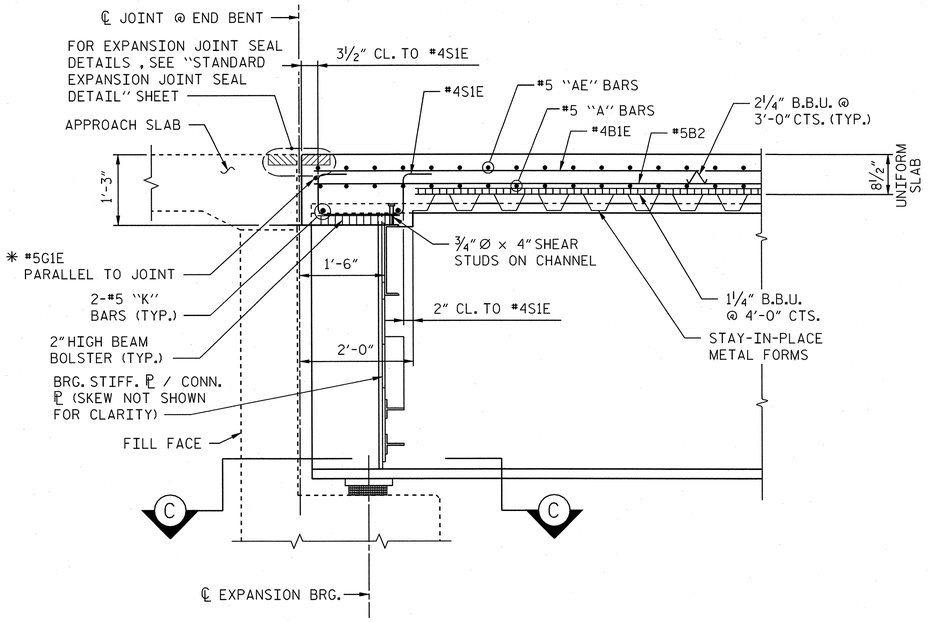

SECTION "A-A"

NOTE: SHEAR STUDS ON GIRDER NOT SHOWN FOR CLARITY.

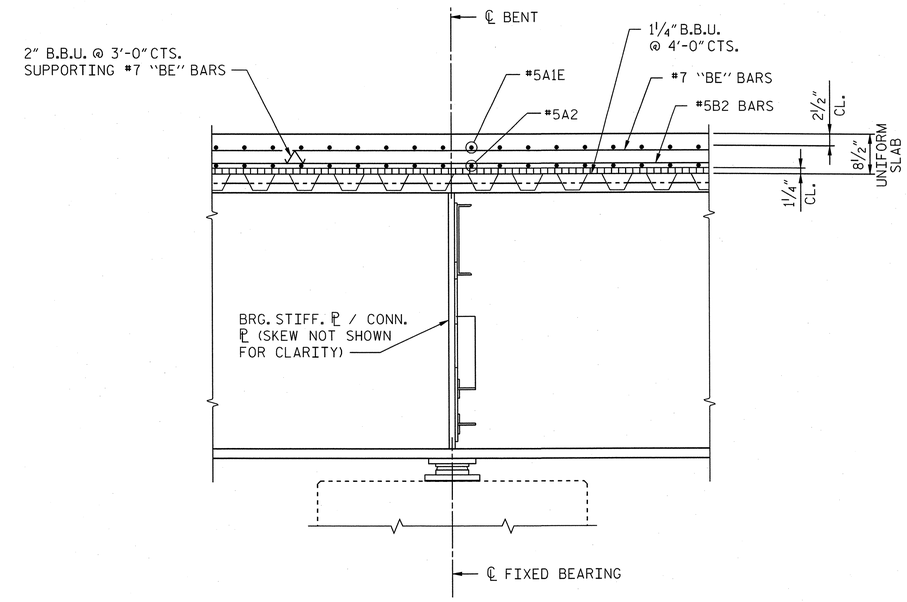

SECTION "B-B"

NOTE: SHEAR STUDS ON GIRDER NOT SHOWN FOR CLARITY.

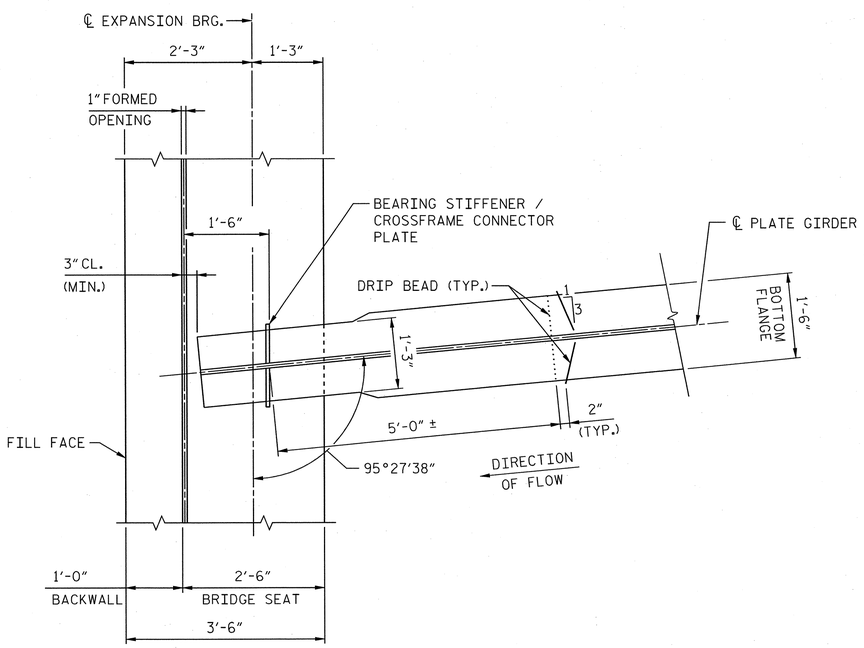

SECTION "C-C"

END BENT 1 SHOWN, END BENT 2 SIMILAR

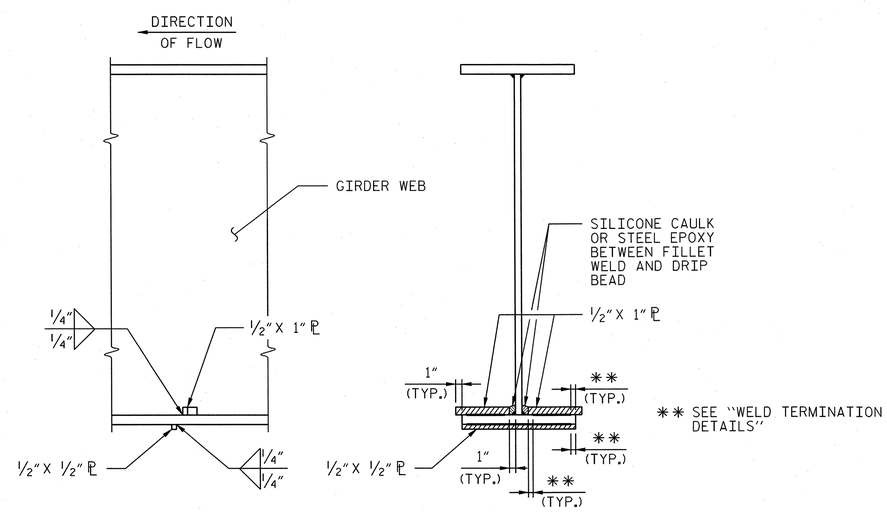

ELEVATION

SECTION

DRIP BEAD DETAILS

(SEE SECTION "C-C" FOR DRIP BEAD DETAILS)

PROJECT NO. U-2525B

GUILFORD COUNTY

STATION: 268+22.89 -L-

50+35.75 -Y13-

AECOM

AECOM TECHNICAL SERVICES, INC.
701 CORPORATE CENTER DRIVE, SUITE 475
RALEIGH, NC 27607
(919) 854-6200 www.aecom.com
AECOM License No. F-0342

NORTH CAROLINA PROFESSIONAL SEAL 030474 ENGINEER JOHN C. MORRISON

3/17/14

R.N. 10-06

STATE OF NORTH CAROLINA
DEPARTMENT OF TRANSPORTATION
RALEIGH

SUPERSTRUCTURE

TYPICAL DETAILS

REVISIONS						SHEET NO.
NO.	BY:	DATE:	NO.	BY:	DATE:	S-351
1			3			TOTAL SHEETS
2			4			541

DRAWN BY : MTB DATE : 10/13
CHECKED BY : JCM DATE : 10/13

DATE: 3/14/2014
TIME: 10:06 AM

USER: lawson
DGN: U:\2025\3350\400_Technical_Information_Disc_Files\450_NCDOT\Sdf\techdesign\Files\Structures\Bridge 00\Cad\U2525B_SD_DSN_U42_DETLS.dgn

NOTES:

FOR CONCRETE BARRIER RAIL REINFORCING STEEL THAT MUST BE CAST IN DECK SLAB, SEE "CONCRETE BARRIER RAIL" SHEET.

#5G1E BAR IS PARALLEL TO JOINT AND MAY BE SHIFTED SLIGHTLY, AS NECESSARY TO CLEAR REINFORCING STEEL AND STIRRUPS.

TRANSVERSE CONSTRUCTION JOINT SHALL BE PLACED ALONG THE SKEW. FOR TRANSVERSE CONSTRUCTION JOINT DETAIL, SEE "SUPERSTRUCTURE BILL OF MATERIAL" SHEET.

FOR SECTION "A-A", SEE "TYPICAL DETAILS" SHEET.

LONGITUDINAL REINFORCING STEEL SHALL BE CONTINUOUS THROUGH TRANSVERSE CONSTRUCTION JOINT.

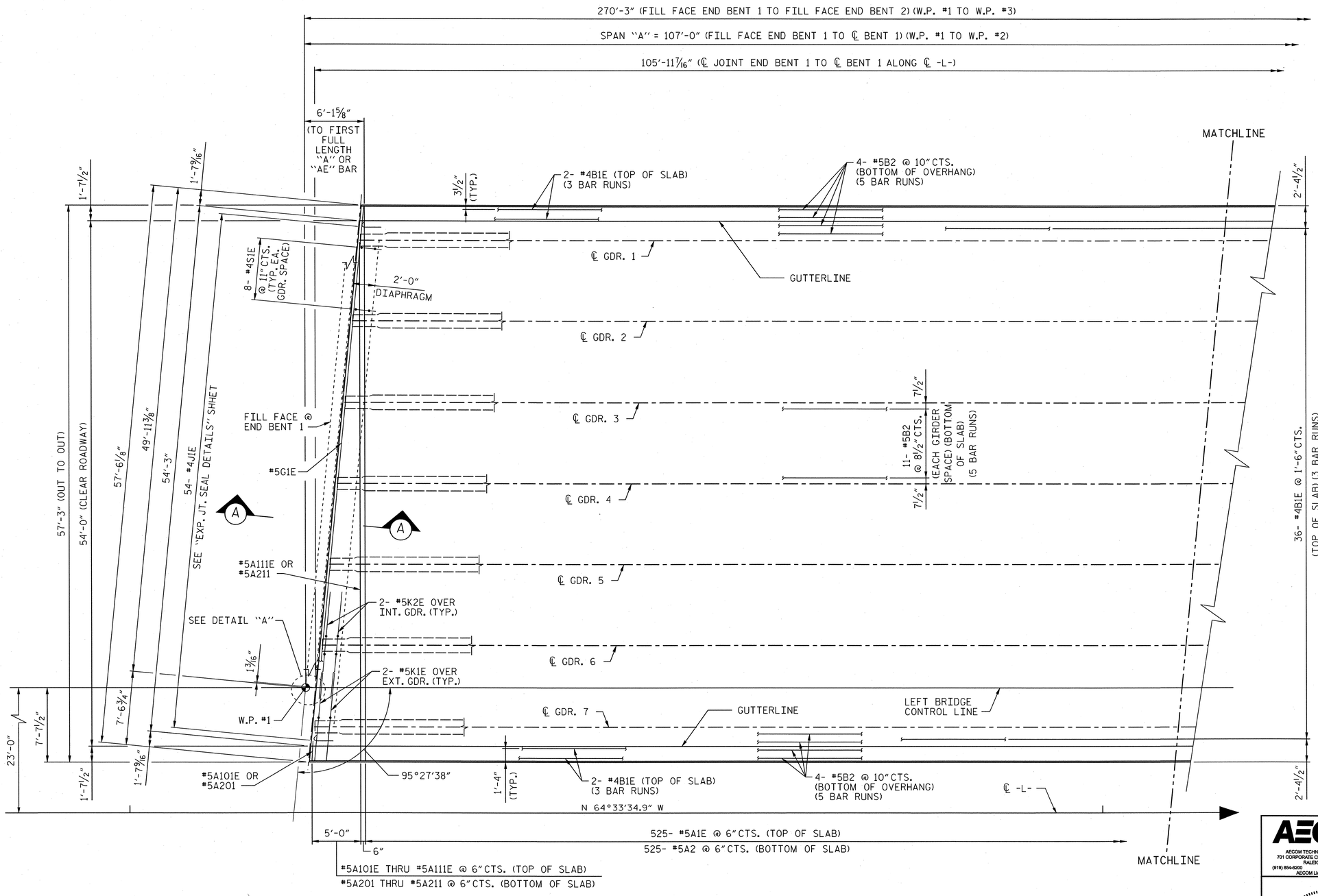

PARTIAL PLAN OF SPAN "A"

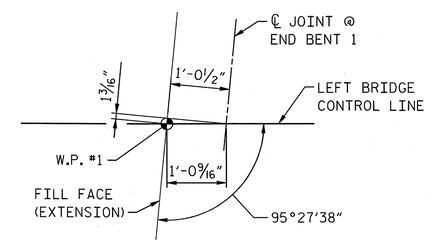

DETAIL "A"

NOTE: SKEWED DIMENSIONS AT END BENT 1 ARE BASED ON A JOINT OPENING OF 1" AT 60° F.

PROJECT NO. U-2525B

GUILFORD COUNTY

STATION: 268+22.89 -L-
50+35.75 -Y13-

SHEET 1 OF 3

AECOM
AECOM TECHNICAL SERVICES, INC.
701 CORPORATE CENTER DRIVE, SUITE 475
RALEIGH, NC 27607
(919) 854-6200 www.aecom.com
AECOM License No. F-0342

NORTH CAROLINA PROFESSIONAL SEAL 030474 ENGINEER JOHN C. MORRISON
3/17/14
R.N. 10-07

STATE OF NORTH CAROLINA
DEPARTMENT OF TRANSPORTATION
RALEIGH

SUPERSTRUCTURE

PARTIAL PLAN OF SPAN "A"

REVISIONS						SHEET NO.
NO.	BY:	DATE:	NO.	BY:	DATE:	S-352
1			3			TOTAL SHEETS
2			4			541

DRAWN BY : MTB DATE : 10/13
CHECKED BY : JCM DATE : 10/13

DATE: 3/14/2014
TIME: 11:22:08 AM

USER: swang
DGN: U2525B3350W20_Technical_Information_Disc_Files\450_NCDOTSidTechDesignFiles\Structures\Bridge IDs\Cat0\U2525B_SD_DSN_U42_SPAN4.dgn

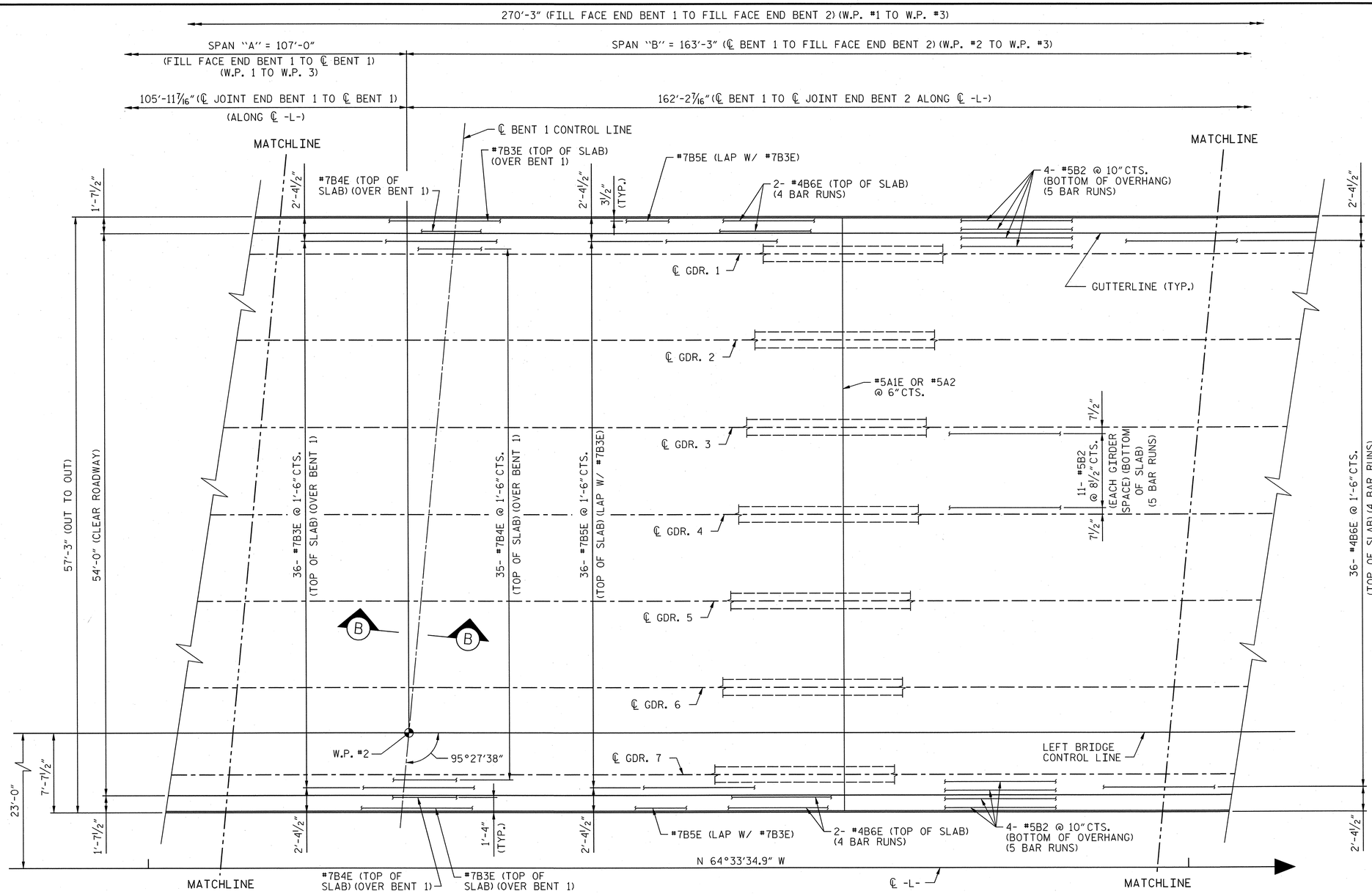

PARTIAL PLAN OF SPANS "A" & "B"

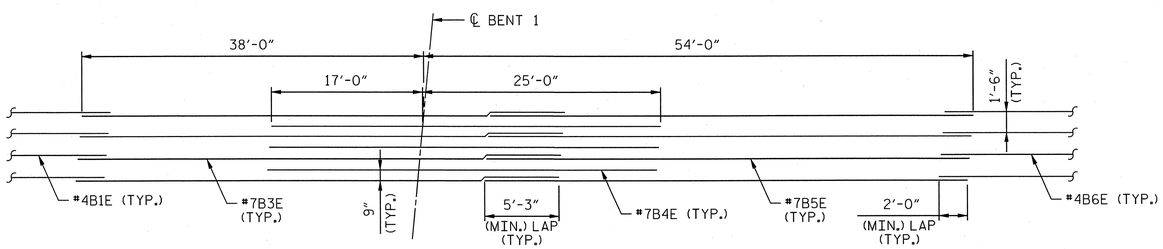

BENT 1

TOP OF SLAB REINFORCEMENT LAYOUT

NOTES:

FOR CONCRETE BARRIER RAIL REINFORCING STEEL THAT MUST BE CAST IN DECK SLAB, SEE "CONCRETE BARRIER RAIL" SHEET.

FOR SECTION "B-B", SEE "TYPICAL DETAILS" SHEET.

PROJECT NO. U-2525B

GUILFORD COUNTY

STATION: 268+22.89 -L-
50+35.75 -Y13-

SHEET 2 OF 3

AECOM
AECOM TECHNICAL SERVICES, INC.
701 CORPORATE CENTER DRIVE, SUITE 475
RALEIGH, NC 27607
(919) 854-6200 www.aecom.com
AECOM License No. F-0342

NORTH CAROLINA PROFESSIONAL SEAL 030474 ENGINEER JOHN C. MORRISON
3/17/14
R.N. 10-08

STATE OF NORTH CAROLINA
DEPARTMENT OF TRANSPORTATION
RALEIGH

SUPERSTRUCTURE

PARTIAL PLAN OF
SPANS "A" & "B"

REVISIONS						SHEET NO.
NO.	BY:	DATE:	NO.	BY:	DATE:	S-353
1			3			TOTAL SHEETS
2			4			541

DRAWN BY : MTB DATE : 10/13
CHECKED BY : JCM DATE : 10/13

USER: lawong
DGN: U:\U2525\350-400_Technical_Information_Disc_Files\450_NCDOT Staff etc\Design Files\Structures\Bridge 100\Cad\U2525B_SD_DSN_W2_SPAN A.dgn
DATE: 3/14/2014
TIME: 11:28:25 AM

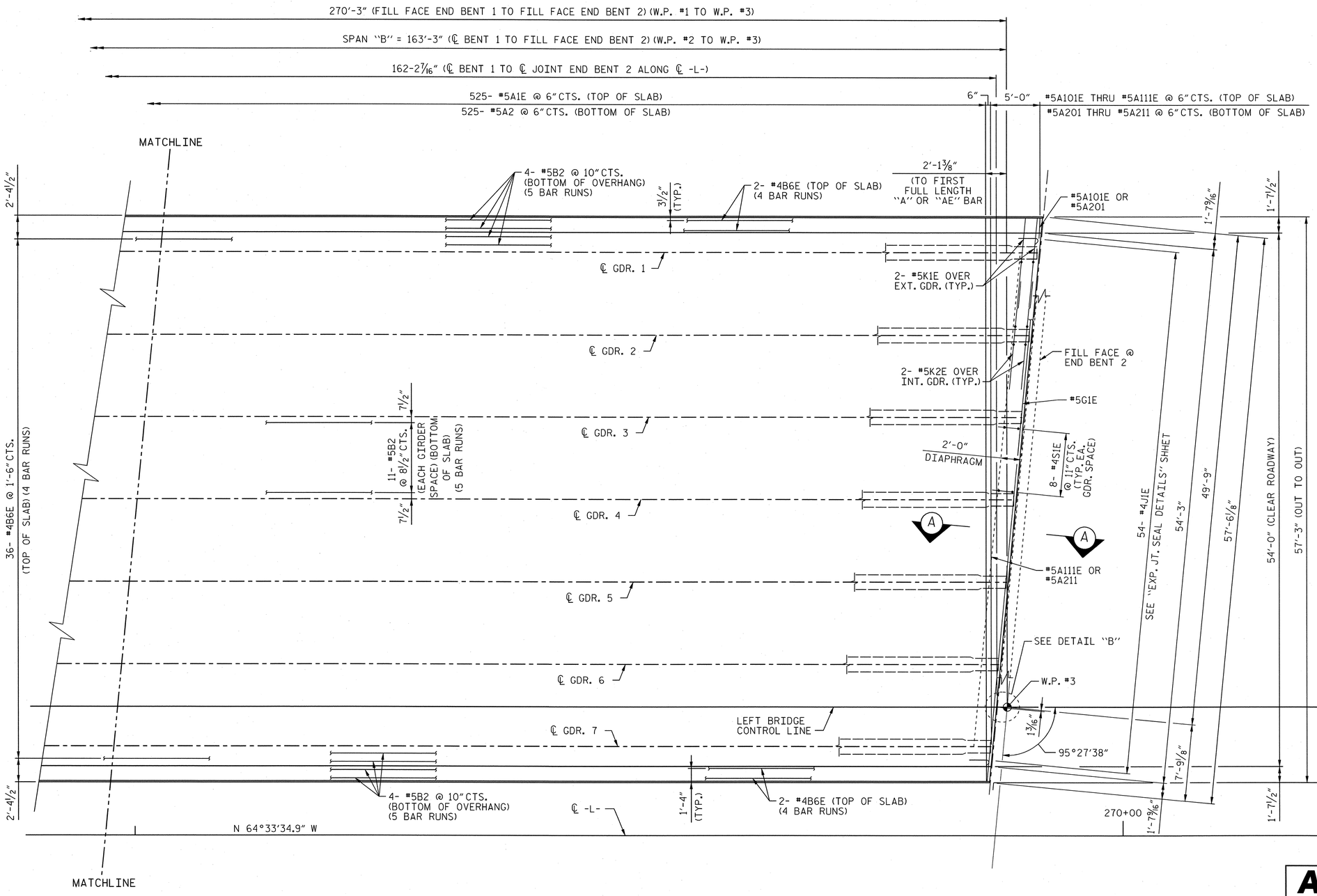

PARTIAL PLAN OF SPAN "B"

NOTES:

FOR CONCRETE BARRIER RAIL REINFORCING STEEL THAT MUST BE CAST IN DECK SLAB, SEE "CONCRETE BARRIER RAIL" SHEET.

#5G1E BAR IS PARALLEL TO JOINT AND MAY BE SHIFTED SLIGHTLY, AS NECESSARY TO CLEAR REINFORCING STEEL AND STIRRUPS.

TRANSVERSE CONSTRUCTION JOINT SHALL BE PLACED ALONG THE SKEW. FOR TRANSVERSE CONSTRUCTION JOINT DETAIL, SEE "SUPERSTRUCTURE BILL OF MATERIAL" SHEET.

FOR SECTION "A-A", SEE "TYPICAL DETAILS" SHEET.

LONGITUDINAL REINFORCING STEEL SHALL BE CONTINUOUS THROUGH TRANSVERSE CONSTRUCTION JOINT.

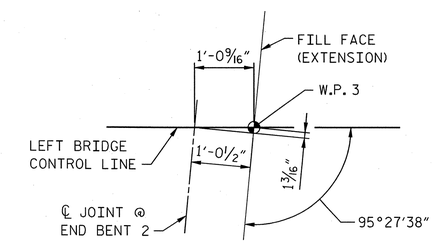

DETAIL "B"

NOTE: SKEWED DIMENSIONS AT END BENT 2 ARE BASED ON A JOINT OPENING OF 1" AT 60° F.

PROJECT NO. U-2525B

GUILFORD **COUNTY**

STATION: 268+22.89 -L-
50+35.75 -Y13-

SHEET 3 OF 3

AECOM
AECOM TECHNICAL SERVICES, INC.
701 CORPORATE CENTER DRIVE, SUITE 475
RALEIGH, NC 27607
(919) 854-6200
www.aecom.com
AECOM License No. F-0342

NORTH CAROLINA PROFESSIONAL SEAL 030474 ENGINEER JOHN C. MORRISON
3/17/14
R.N. 10-09

STATE OF NORTH CAROLINA
DEPARTMENT OF TRANSPORTATION
RALEIGH

SUPERSTRUCTURE

PARTIAL PLAN OF SPAN "B"

REVISIONS						SHEET NO.
NO.	BY:	DATE:	NO.	BY:	DATE:	S-354
1			3			TOTAL SHEETS
2			4			541

DRAWN BY : MTB DATE : 10/13
CHECKED BY : JCM DATE : 10/13

DATE: 3/14/2014
TIME: 11:51:38 AM

USER: lawang
DGN: G:\2625\3356\400_Technical_Information_Disc_Files\450_NCDOT Staff tech\Design\Files\Structures\Bridge 10\Cadd\U2525B_SD_DSN_1H42_SPAN B.dgn

NOTES:

D1, D2 AND D3 DENOTE DIAPHRAGMS. SEE "SUPERSTRUCTURE STRUCTURAL STEEL DETAILS".

CONNECTOR PLATES FOR END BENT AND BENT CROSSFRAMES SHALL BE PLACED ALONG SKEW.

PB1, M1, E1 AND P1 OR P2 DENOTE POT BEARINGS, MASONRY PLATES, ELASTOMERIC BEARINGS AND SOLE PLATES. SEE "SUPERSTRUCTURE ELASTOMERIC BEARING DETAILS" AND "SUPERSTRUCTURE POT BEARING DETAILS".

FOR FIELD SPLICE LOCATION AND DETAILS, SEE "SUPERSTRUCTURE STRUCTURAL STEEL DETAILS - GIRDER ELEVATION".

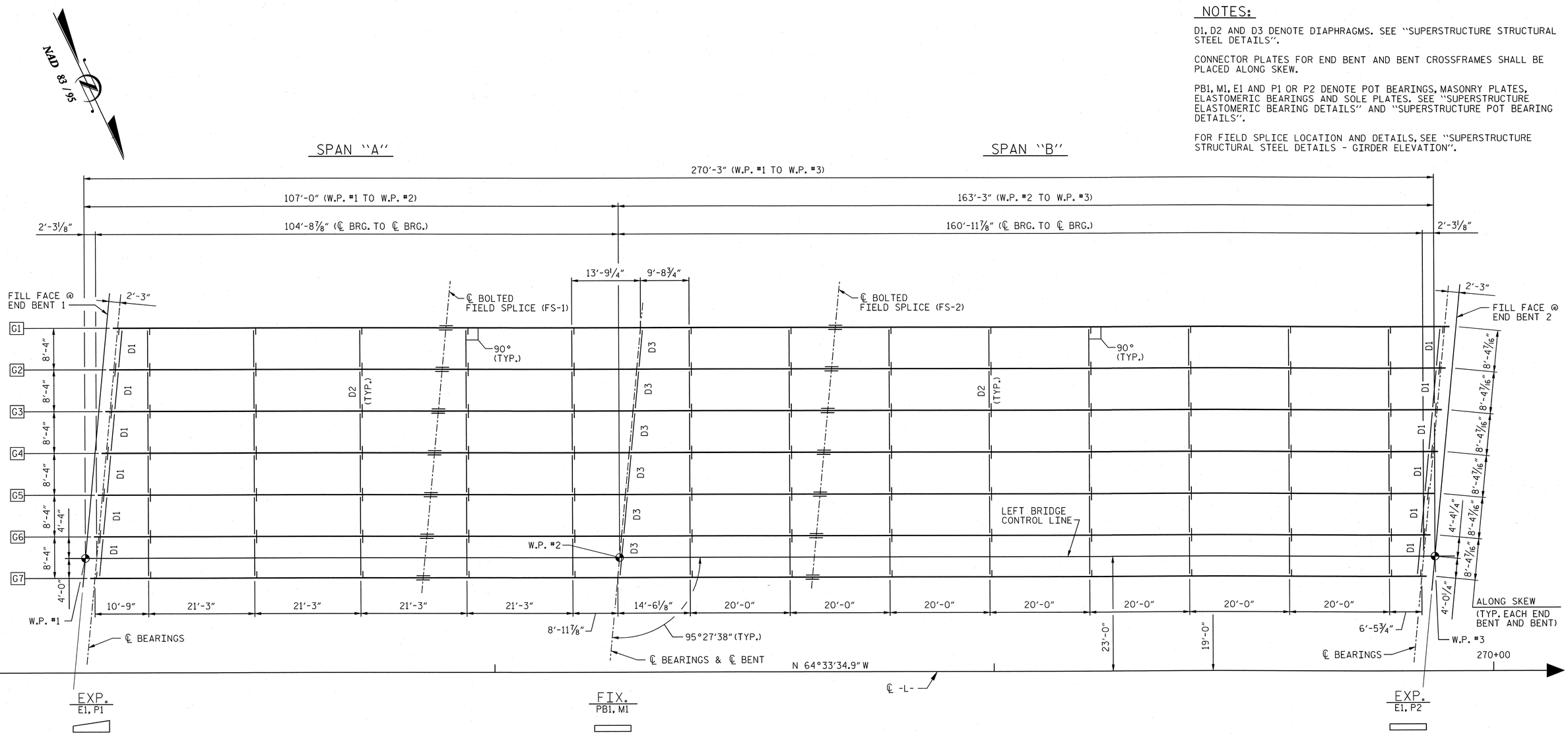

CONTINUOUS GIRDER FRAMING PLAN

GIRDER ERECTION SEQUENCE

THE STRUCTURAL STEEL SHALL BE SUPPORTED DURING ERECTION IN ITS CAMBERED POSITION. ONE EXTERIOR GIRDER AND ITS ADJACENT INTERIOR GIRDER SHALL BE ERECTED WITH ALL DIAPHRAGMS AND LATERAL BRACING BETWEEN THE GIRDERS IN PLACE AND ALL BOLTS TIGHTENED PRIOR TO RELEASE OF THE GIRDERS. THE REMAINING GIRDERS SHALL THEN BE ERECTED WITH DIAPHRAGMS CONNECTING THE GIRDER TO THE ADJACENT ERECTED GIRDER AND ALL BOLTS TIGHTENED BEFORE RELEASING THE GIRDER.

ONE TEMPORARY BENT SHALL BE USED IN SPAN "B".

THE LOCATION OF THE TEMPORARY BENT SHALL BE ADJUSTED BY THE CONTRACTOR AS NECESSARY.

THE TEMPORARY BENT SHALL REMAIN IN PLACE UNTIL ALL CROSS FRAMES AND LATERAL BRACING ARE IN PLACE AND HIGH STRENGTH BOLTS TIGHTENED.

PLANS FOR THE TEMPORARY BENT, ERECTION SEQUENCE AND TEMPORARY BENT REMOVAL SHALL BE SUBMITTED TO THE ENGINEER FOR REVIEW.

THE TEMPORARY BENT SHALL BE DESIGNED BY A PROFESSIONAL ENGINEER REGISTERED IN THE STATE OF NORTH CAROLINA.

DURING THE GIRDER ERECTION PROCEDURE, THE CONTRACTOR IS RESPONSIBLE FOR PROVIDING TEMPORARY LATERAL BRACING AND OTHER MEANS OF SUPPORT, AS REQUIRED, TO ENSURE STABILITY OF THE GIRDERS, AVOID UPLIFT OF THE GIRDERS AT THE TEMPORARY ERECTION BENTS AND MAINTAIN PLUMBNESS OF THE GIRDER WEBS.

THE CONTRACTOR'S ERECTION PLAN SHALL INCLUDE A METHOD OF TEMPORARY BENT REMOVAL THAT WILL UNIFORMLY APPLY THE STRUCTURAL STEEL WEIGHT TO THE BRIDGE CROSS FRAMES.

THE CONTRACTOR MAY SUBMIT ALTERNATE ERECTION METHODS. PLANS FOR SUCH ERECTION METHODS SHALL BE APPROVED BY THE ENGINEER.

FOR TEMPORARY BENTS, SEE SPECIAL PROVISIONS.

PROJECT NO. U-2525B
GUILFORD COUNTY
STATION: 268+22.89 -L-
50+35.75 -Y13-

AECOM
AECOM TECHNICAL SERVICES, INC.
701 CORPORATE CENTER DRIVE, SUITE 475
RALEIGH, NC 27607
(919) 854-6200 www.aecom.com
AECOM License No. F-0342

NORTH CAROLINA PROFESSIONAL SEAL 030474 ENGINEER JOHN C. MORRISON
3/17/14
R.N. 10-10

STATE OF NORTH CAROLINA
DEPARTMENT OF TRANSPORTATION
RALEIGH

SUPERSTRUCTURE
FRAMING PLAN

REVISIONS						SHEET NO.
NO.	BY:	DATE:	NO.	BY:	DATE:	S-355
1			3			TOTAL SHEETS
2			4			541

DRAWN BY : MTB DATE : 10/13
CHECKED BY : JCM DATE : 10/13

USER: bwood
DGN: d:\60129356\400_Technical_Information_Disc_Files\450_NCDOT Std Tech Design Files\Structures\Bridge 10\Cadd\U2525B_SD_DSN_U42_FRAMING.dgn
DATE: 3/14/2014
TIME: 10:25 AM

NOTES:

ALL DIMENSIONS ON THIS SHEET ARE HORIZONTAL.

SHEAR STUDS MAY BE SHIFTED UP TO 1", AS NECESSARY, TO AVOID INTERFERENCE WITH GIRDER SECTION CHANGES AND HOLES FOR THE BOLTED FIELD SPLICES.

FOR ADDITIONAL STRUCTURAL STEEL NOTES, SEE SHEET 2 OF 3.

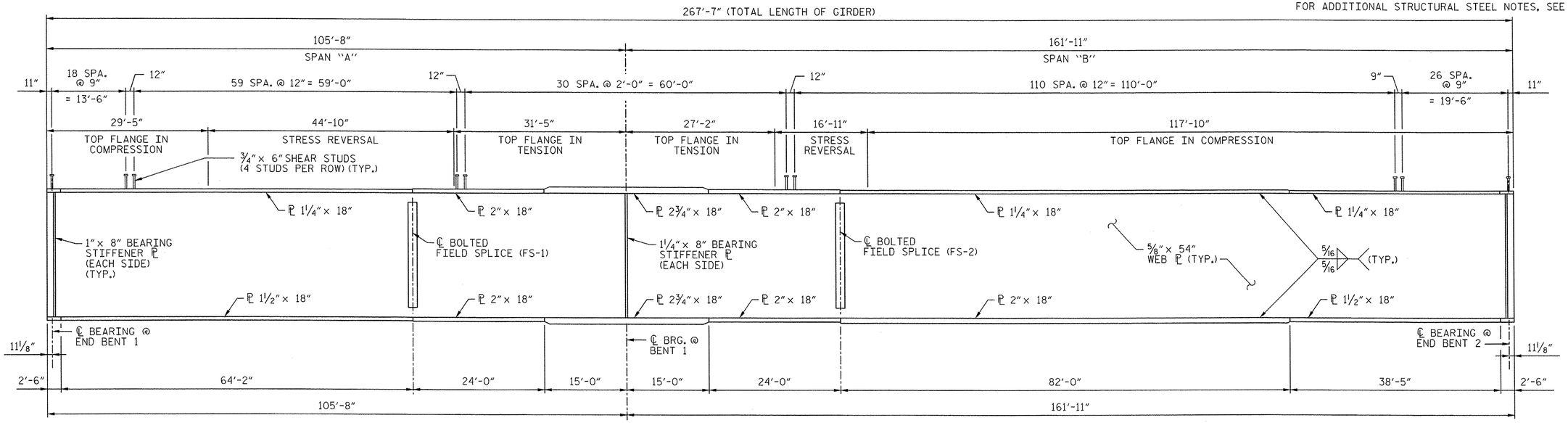

GIRDER ELEVATION

(INTERMEDIATE CROSSFRAME CONNECTOR PLATES NOT SHOWN FOR CLARITY)

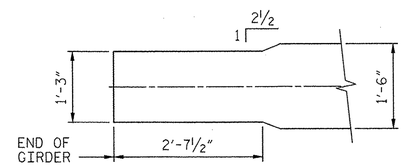

PLAN

TAPER FLANGE AT END OF GIRDER

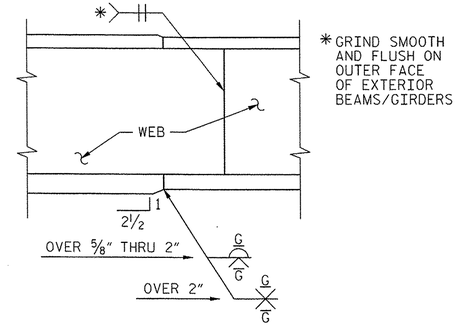

ELEVATION

TYPICAL FLANGE AND WEB BUTT JOINT

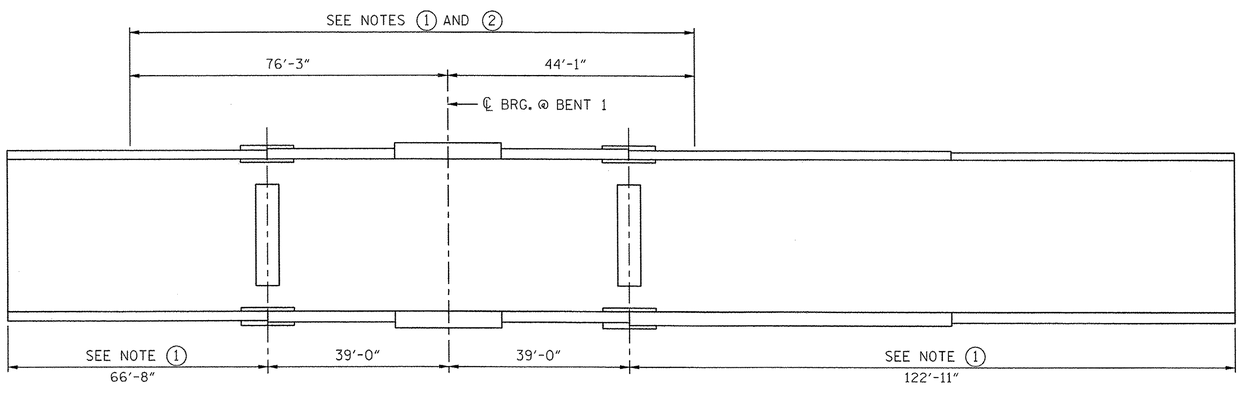

SPAN "A" SPAN "B"

GIRDER MAKE-UP

CHARPY V - NOTCH TESTS FOR CONTINUOUS PLATE GIRDERS

CHARPY V-NOTCH NOTES:

1. CHARPY V-NOTCH TESTS ARE REQUIRED FOR ALL TOP OR BOTTOM FLANGE PLATES WHICH FALL WITHIN THESE LIMITS, ALL WEB PLATES, AND ALL SPLICE PLATES. IF A PERMITTED SHOP FLANGE SPLICE IS NOT USED, CHARPY V-NOTCH TESTS WILL BE REQUIRED FOR THE ENTIRE FLANGE PLATE. FOR CHARPY V-NOTCH TESTS, SEE ARTICLE 1072-7 OF THE STANDARD SPECIFICATIONS.
2. NO WELDING OF FORMS OR FALSEWORK TO THE TOP FLANGE WILL BE PERMIITED IN THIS REGION.

PROJECT NO. U-2525B
GUILFORD COUNTY
STATION: 268+22.89 -L-
50+35.75 -Y13-

SHEET 1 OF 3

AECOM
AECOM TECHNICAL SERVICES, INC.
701 CORPORATE CENTER DRIVE, SUITE 475
RALEIGH, NC 27607
(919) 854-6200 www.aecom.com
AECOM License No. F-0342

NORTH CAROLINA PROFESSIONAL SEAL 030474 ENGINEER JOHN C. MORRISON
5/30/14
R.N. 10-11

STATE OF NORTH CAROLINA
DEPARTMENT OF TRANSPORTATION
RALEIGH

SUPERSTRUCTURE

STRUCTURAL STEEL DETAILS

REVISIONS						SHEET NO.
NO.	BY:	DATE:	NO.	BY:	DATE:	S-356
1			3			TOTAL SHEETS
2			4			541

DRAWN BY : MTB DATE : 10/13
CHECKED BY : JCM DATE : 10/13

DATE: 6/2/2014
TIME: 4:06:54 PM
USER: dwang
DGN: G:\60129356\400_Technical_Information_Disc_Files\450_NCDOT\Shd\ecbDesignFiles\Structures\Bridge_IDX\ed\U2525B_S3_DSN_JHE_STLDETLS.dgn

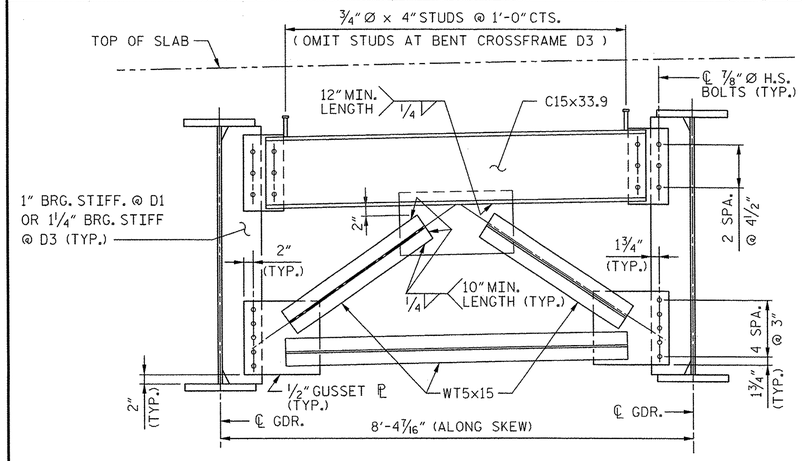

TYPICAL END BENT CROSSFRAME (D1) AND BENT CROSSFRAME (D3)

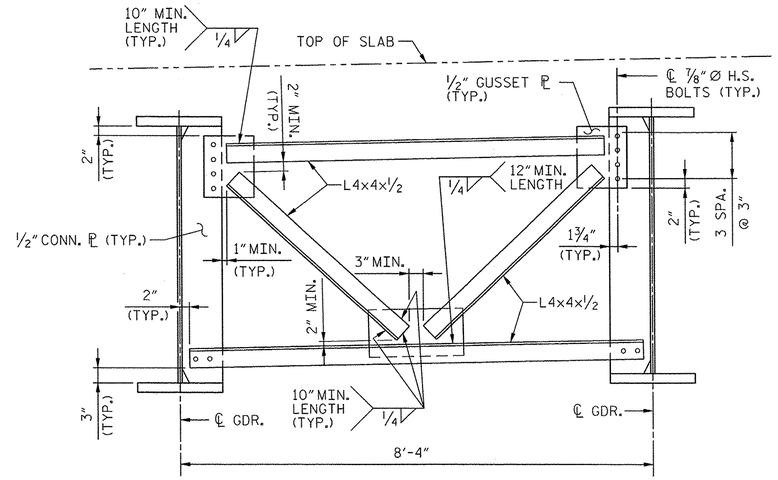

TYPICAL INTERMEDIATE CROSSFRAME (D2)

NOTES:

ALL STRUCTURAL STEEL SHALL BE AASHTO M270 GRADE 50W AND PAINTED IN ACCORDANCE WITH SYSTEM 4 OF ARTICLE 442-8 OF THE STANDARD SPECIFICATIONS UNLESS OTHERWISE NOTED ON THE PLANS.

ALL DIMENSIONS SHOWN ARE HORIZONTAL OR VERTICAL, UNLESS OTHERWISE NOTED.

ALL FIELD CONNECTIONS TO BE 7/8" DIA. HIGH STRENGTH BOLTS, UNLESS OTHERWISE NOTED.

BEARING STIFFENERS MAY REQUIRE COPING IF WIDER THAN BOTTOM FLANGE.

ENDS OF GIRDERS SHALL BE PLUMB.

STUDS ON GIRDERS MAY BE SHIFTED UP TO 1 INCH IF NECESSARY TO CLEAR FLANGE SPLICE WELD.

TENSION ON THE ASTM A325 BOLTS SHALL BE CALIBRATED USING DIRECT TENSION INDICATOR WASHERS IN ACCORDANCE WITH ARTICLE 440-8 OF THE STANDARD SPECIFICATIONS.

STRUCTURAL STEEL ERECTION IN A CONTINUOUS UNIT SHALL BE COMPLETE BEFORE FALSEWORK OR FORMS ARE PLACED ON THE UNIT.

PERMITTED FLANGE AND WEB SHOP SPLICES SHALL NOT BE LOCATED WITHIN 15 FEET OF MAXIMUM DEAD LOAD DEFLECTION (NOR WITHIN 15 FEET OF INTERMEDIATE BEARINGS OF CONTINUOUS UNITS). KEEP 2 FEET MINIMUM BETWEEN WEB AND FLANGE SHOP SPLICES. KEEP 6" MINIMUM BETWEEN CONNECTOR PLATE OR TRANSVERSE STIFFENER WELDS AND WEB OR FLANGE SHOP SPLICES.

THE CONTRACTOR MAY, WHEN NECESSARY, PROPOSE A SCHEME FOR AVOIDING INTERFERENCE BETWEEN METAL STAY-IN-PLACE FORM SUPPORTS OR FORMS AND BEAM/GIRDER STIFFENERS OR CONNECTOR PLATES. THE PROPOSAL SHALL BE INDICATED, AS APPRORIATE, ON EITHER THE STEEL WORKING DRAWINGS OR THE METAL STAY-IN-PLACE FORM WORKING DRAWINGS.

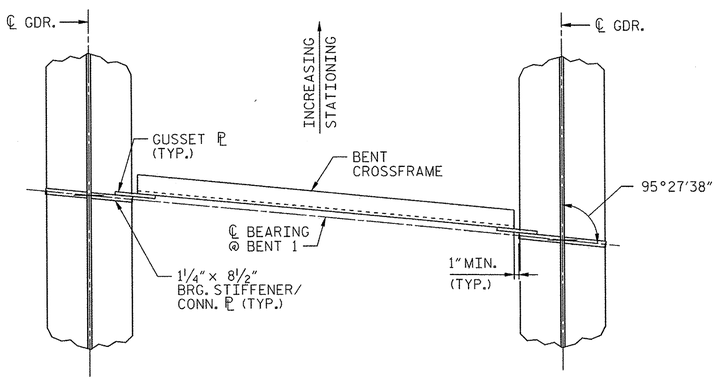

PLAN OF BENT CROSSFRAME (D3)

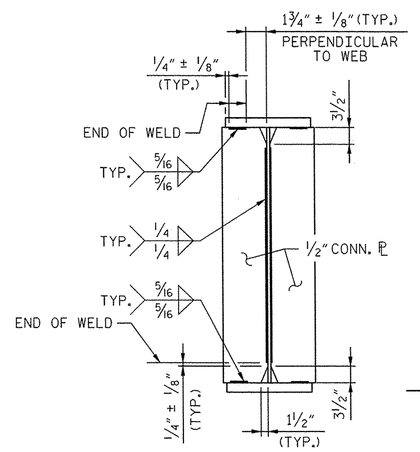

TYPICAL CONNECTOR PLATE DETAIL

(INTERIOR GIRDER SHOWN, HOLES NOT SHOWN)

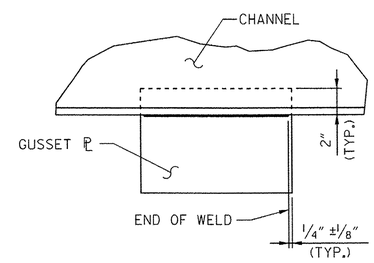

TYPICAL GUSSET PLATE CONNECTION

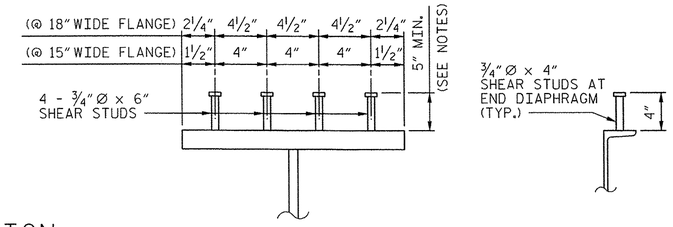

SHEAR STUD DETAILS

NOTE: TOP OF SHEAR STUD SHALL HAVE AT LEAST 2 1/2" COVER AND PENETRATE AT LEAST 3" ABOVE BOTTOM OF SLAB.

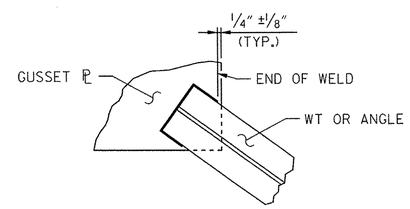

TYPICAL "TEE"/"ANGLE" TO GUSSET PLATE CONNECTION

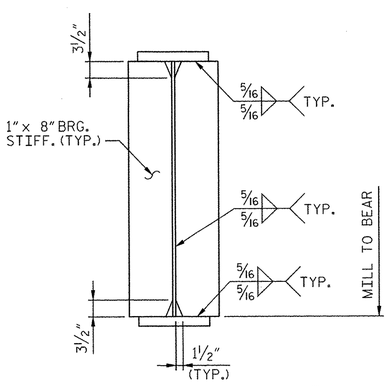

BEARING STIFFENER DETAIL @ END BENT

(HOLES NOT SHOWN)

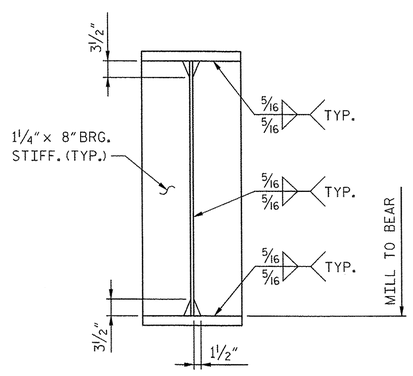

BEARING STIFFENER DETAIL @ BENT

(HOLES NOT SHOWN)

BEARING STIFFENER MAY REQUIRE COPING IF WIDER THAN BOTTOM FLANGE.

WELD TERMINATION DETAILS

DRAWN BY :	MTB	DATE :	03/14
CHECKED BY :	JCM	DATE :	03/14

PROJECT NO. U-2525B

GUILFORD **COUNTY**

STATION: 268+22.89 -L-
50+35.75 -Y13-

SHEET 2 OF 3

AECOM
AECOM TECHNICAL SERVICES, INC.
701 CORPORATE CENTER DRIVE, SUITE 475
RALEIGH, NC 27607
(919) 854-6200 www.aecom.com
AECOM License No. F-0342

NORTH CAROLINA PROFESSIONAL SEAL 030474 ENGINEER JOHN C. MORRISON
5/30/14

R.N. 10-12

STATE OF NORTH CAROLINA
DEPARTMENT OF TRANSPORTATION
RALEIGH

SUPERSTRUCTURE

STRUCTURAL STEEL DETAILS

REVISIONS								
NO.	BY:	DATE:	NO.	BY:	DATE:			
1			3					
2			4					

SHEET NO. S-357

TOTAL SHEETS 541

DATE: 5/30/2014
TIME: 2:38:53 PM
USER: lowery
DGN: G:\60193356\400_Technical_Information_Disc_Files\450_NCDOT Staff edit\Design Files\Structures\Bridge 10\Cad\U2525B_S3_DSN_IHR_STLDET1S2.dgn

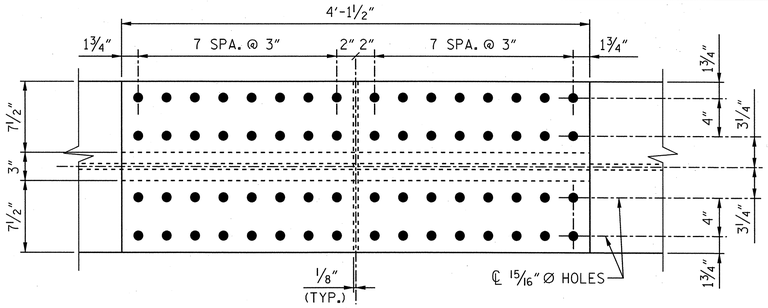

PLAN (TOP OF TOP FLANGE) (FS-1)

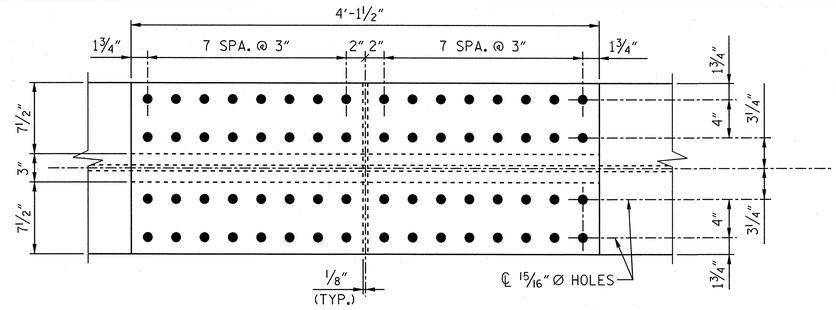

PLAN (TOP OF TOP FLANGE) (FS-2)

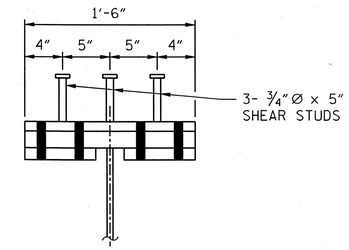

SHEAR STUD DETAIL FOR TOP FLANGE SPLICE PLATE

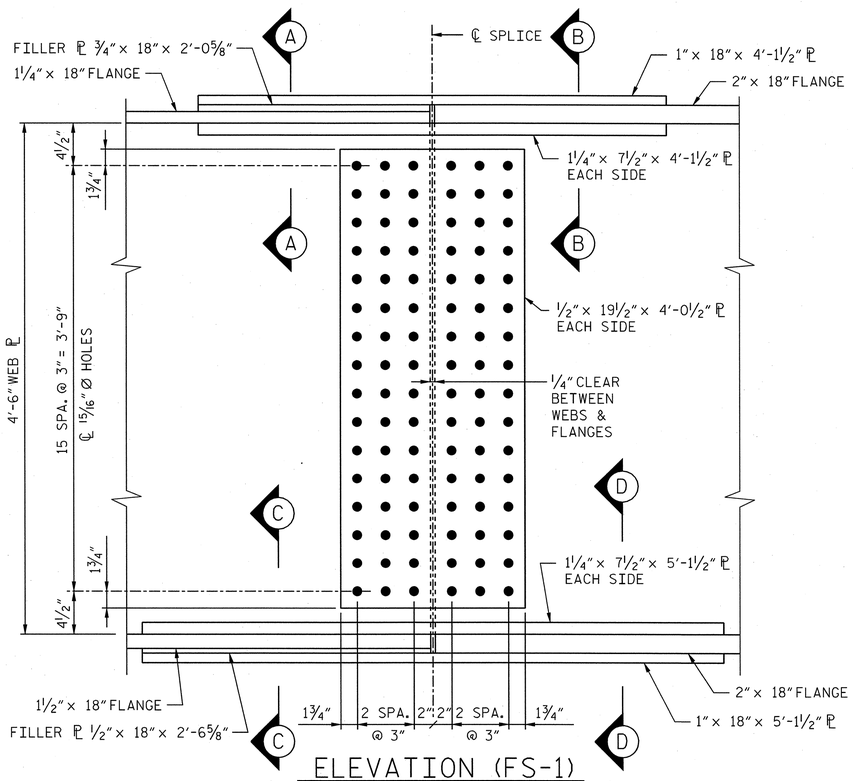

ELEVATION (FS-1)

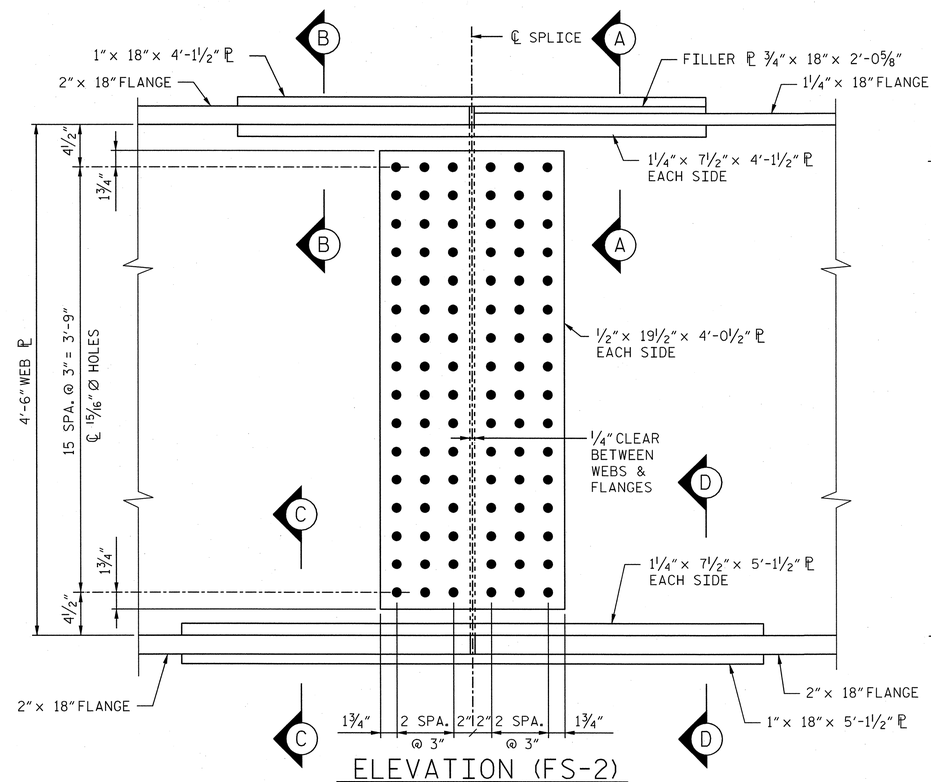

ELEVATION (FS-2)

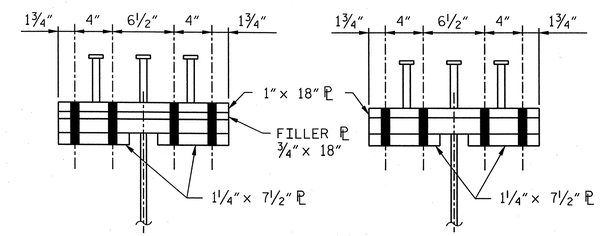

SECTION A-A

SECTION B-B

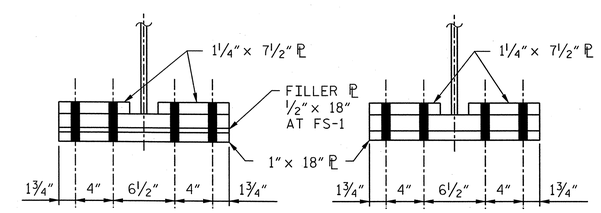

SECTION C-C

SECTION D-D

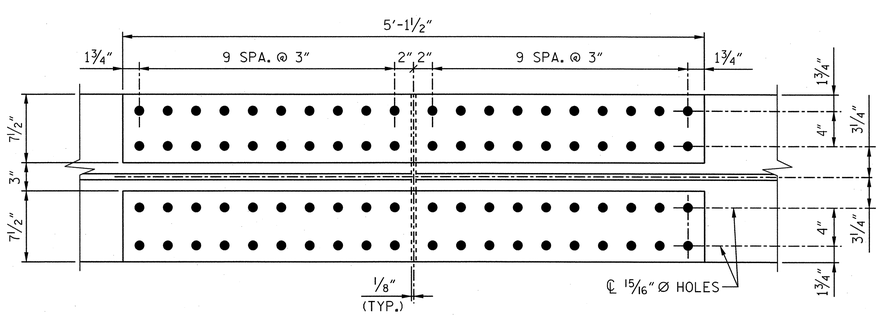

PLAN (TOP OF BOTTOM FLANGE) (FS-1)

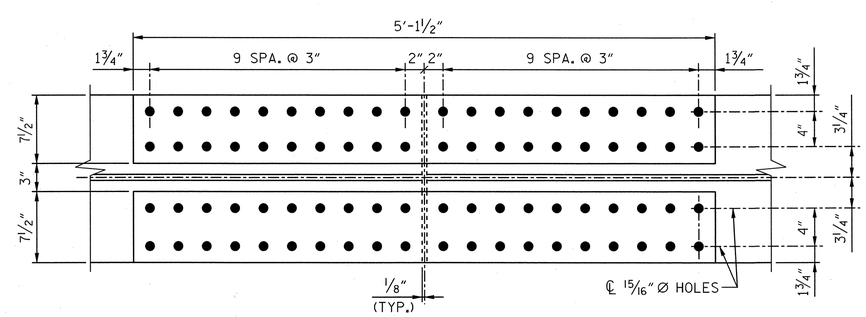

PLAN (TOP OF BOTTOM FLANGE) (FS-2)

BOLTED FIELD SPLICES

DRAWN BY : MTB DATE : 10/13
CHECKED BY : JCM DATE : 10/13

PROJECT NO. U-2525B
GUILFORD COUNTY
STATION: 268+22.89 -L-
50+35.75 -Y13-
SHEET 3 OF 3

AECOM
AECOM TECHNICAL SERVICES, INC.
701 CORPORATE CENTER DRIVE, SUITE 475
RALEIGH, NC 27607
(919) 854-6200 www.aecom.com
AECOM License No. F-0342

NORTH CAROLINA PROFESSIONAL SEAL 030474 ENGINEER JOHN C. MORRISON
3/17/14
R.N. 10-13

STATE OF NORTH CAROLINA
DEPARTMENT OF TRANSPORTATION
RALEIGH

SUPERSTRUCTURE

STRUCTURAL STEEL DETAILS

REVISIONS						SHEET NO.
NO.	BY:	DATE:	NO.	BY:	DATE:	S-358
1			3			TOTAL SHEETS
2			4			541

USER: dwenzel
DGN: U2525B_9356400_Technical_Information_Disc_Files\450_NCDOT SHP Checklists\prj\Files\Structures\Bridge 10\Cadd\U2525B_SD_DSN_M42_STL DETLS3.dgn
DATE: 3/14/2014
TIME: 11:35:56 AM

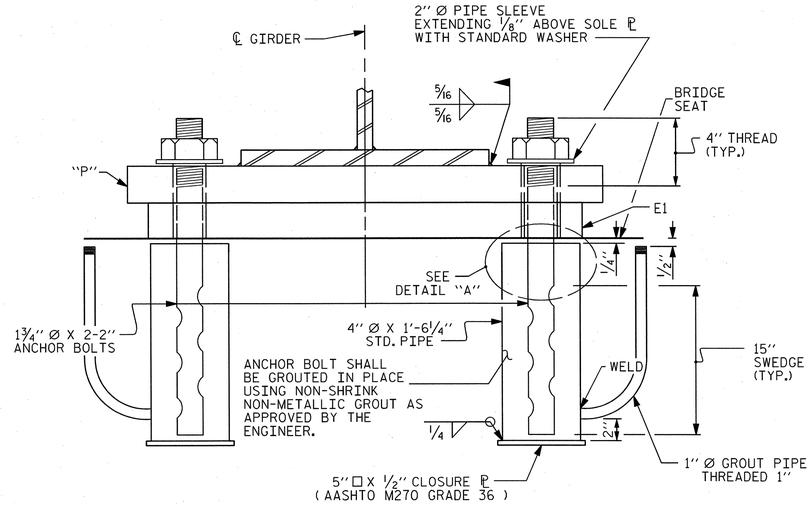

EXPANSION END VIEW

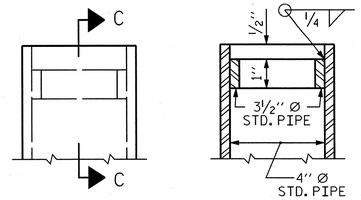

SECTION C-C

DETAIL "A"

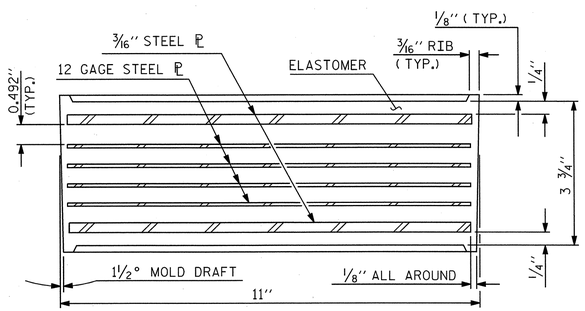

TYPICAL SECTION OF ELASTOMERIC BEARING

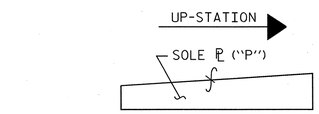

SOLE PL PLACEMENT DETAIL

(SOLE PLATE P1)

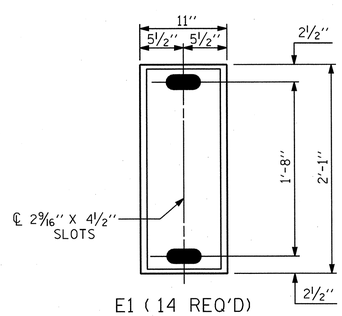

PLAN VIEW OF ELASTOMERIC BEARING

MODIFIED TYPE IV

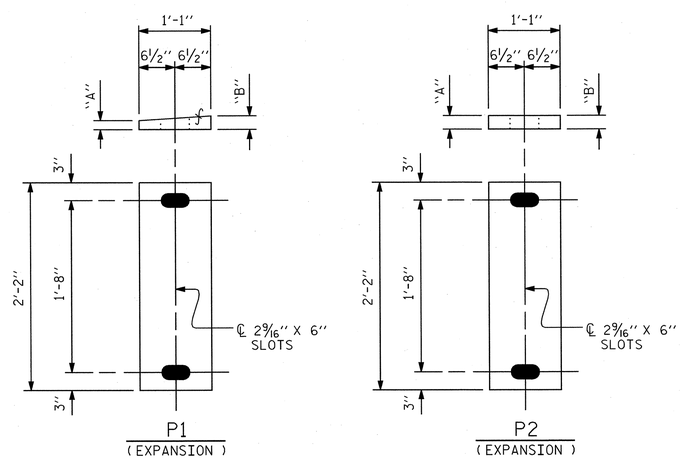

SOLE PLATE DETAILS ("P")

MAXIMUM ALLOWABLE SERVICE LOADS	
D.L.+L.L. (NO IMPACT)	
TYPE IV	310 k

TYPE	"A" (IN.)	"B" (IN.)	NO.
P1	1½''	1 9/16''	7
P2	1½''	1½''	7

NOTES

AT ALL FIXED POINTS OF SUPPORT, NUTS FOR ANCHOR BOLTS ARE TO BE TIGHTENED FINGER TIGHT AND THEN BACKED OFF ½ TURN. THE THREAD OF THE NUT AND BOLT SHALL THEN BE BURRED WITH A SHARP POINTED TOOL.

THE 2'' Ø PIPE SLEEVE SHALL BE CUT FROM SCHEDULE 40 PVC PLASTIC PIPE. THE PVC PLASTIC PIPE SHALL MEET THE REQUIREMENTS OF ASTM D1785.

THE PAYMENT FOR THE PIPE SLEEVES SHALL BE INCLUDED IN THE SEVERAL PAY ITEMS.

FOR PAINTED STRUCTURAL STEEL (EXCLUDING AASHTO M270 GRADE 50W), SOLE PLATES, ANCHOR BOLTS, NUTS AND WASHERS SHALL BE GALVANIZED IN ACCORDANCE WITH THE STANDARD SPECIFICATIONS.

FOR AASHTO M270 GRADE 50W STRUCTURAL STEEL, SOLE PLATE SHALL BE AASHTO M270 GRADE 50W AND SHALL NOT BE GALVANIZED. ANCHOR BOLTS, NUTS AND WASHERS SHALL BE GALVANIZED IN ACCORDANCE WITH THE STANDARD SPECIFICATIONS.

ANCHOR BOLTS SHALL MEET THE REQUIREMENTS OF ASTM A449. NUTS SHALL MEET THE REQUIREMENTS OF AASHTO M291-DH OR AASHTO M292-2H. WASHERS SHALL MEET THE REQUIREMENTS OF AASHTO M293. SHOP DRAWINGS ARE NOT REQUIRED FOR ANCHOR BOLTS, NUTS AND WASHERS. SHOP INSPECTION IS REQUIRED.

WHEN FIELD WELDING THE SOLE PLATE TO THE GIRDER FLANGE, USE TEMPERATURE INDICATING WAX PENS, OR OTHER SUITABLE MEANS, TO ENSURE THAT THE TEMPERATURE OF THE SOLE PLATE DOES NOT EXCEED 300°F. TEMPERATURES ABOVE THIS MAY DAMAGE THE ELASTOMER.

ALL SURFACES OF BEARING PLATES SHALL BE SMOOTH AND STRAIGHT.

THE CLOSURE PLATE, GROUT PIPE AND STANDARD PIPE FOR THE EXPANSION ASSEMBLY NEED NOT BE GALVANIZED.

THE ELASTOMER IN THE STEEL REINFORCED BEARINGS SHALL HAVE A SHEAR MODULUS OF 0.160 KSI, IN ACCORDANCE WITH AASHTO M251.

FOR STEEL REINFORCED ELASTOMERIC BEARINGS, SEE SPECIAL PROVISIONS.

ʃ - SURFACE FINISH

FOR LOCATION OF SOLE PLATES AND BEARINGS, SEE "FRAMING PLAN".

THE CONTRACTOR'S ATTENTION IS CALLED TO THE FOLLOWING PROCEDURE, WHICH MAY BE REQUIRED BY THE ENGINEER, TO RESET ELASTOMERIC BEARINGS DUE TO GIRDER TRANSLATION AND END ROTATION:

1. ONCE THE DECK HAS CURED, THE GIRDERS SHALL BE JACKED THEN THE ANCHOR BOLTS AND ELASTOMERIC BEARING SLOTS CENTERED AS NEARLY AS PRACTICAL ABOUT THE ℄ BEARING LOCATION AS DETAILED IN THE PLANS. THIS OPERATION SHALL BE PERFORMED AT APPROXIMATELY 60°F.
2. AFTER CENTERING THE ELASTOMERIC BEARING SLOTS AND ANCHOR BOLTS, THE ANCHOR BOLTS SHALL BE GROUTED.

THE CONTRACTOR MAY PROPOSE ALTERNATE METHODS, PROVIDED DETAILS ARE SUBMITTED TO THE ENGINEER FOR REVIEW AND APPROVAL.

PROJECT NO. U-2525B
GUILFORD COUNTY
STATION: 268+22.89 -L-
50+35.75 -Y13-

AECOM
AECOM TECHNICAL SERVICES, INC.
701 CORPORATE CENTER DRIVE, SUITE 475
RALEIGH, NC 27607
(919) 854-6200
www.aecom.com
AECOM License No. F-0342

NORTH CAROLINA PROFESSIONAL SEAL 030474 ENGINEER JOHN C. MORRISON
3/7/14
R.N. 10-14

STATE OF NORTH CAROLINA
DEPARTMENT OF TRANSPORTATION
RALEIGH

SUPERSTRUCTURE

ELASTOMERIC BEARING DETAILS

REVISIONS						SHEET NO.
NO.	BY:	DATE:	NO.	BY:	DATE:	S-359
1			3			TOTAL SHEETS
2			4			541

DRAWN BY : MTB DATE : 10/13
CHECKED BY : JCM DATE : 10/13

DATE: 3/14/2014
TIME: 10:26:01 AM
USER: lawend
DGN: Q:\pb2@rg356\400_Technical_Information_Disc_Files\450_NCDOT\Staff and Design Files\Structures\Bridge_IDVCad\U2525B_S3_DSN_HNS_EBRD.dgn

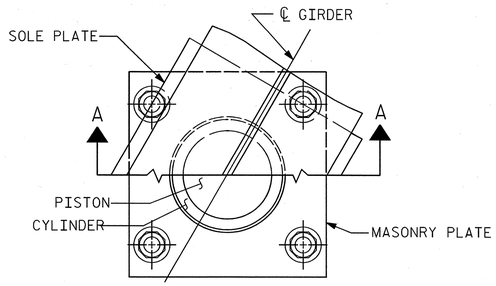

CUT-AWAY PLAN

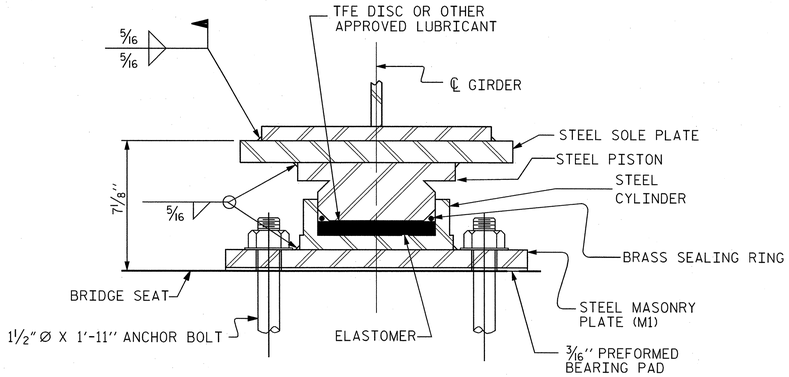

SECTION A-A

PB1, FIXED
(7 REQ'D.)

POT BEARING DETAILS

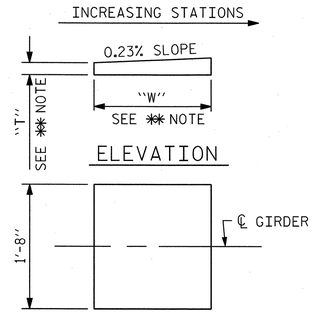

PLAN

✱✱ NOTE:
DIMENSIONS ''W'' AND ''T'' ARE TO BE DETERMINED BY THE MANUFACTURER.

SOLE PLATE DETAILS

NOTES

FOR POT BEARINGS, SEE SPECIAL PROVISIONS.

AT ALL POINTS OF SUPPORT, NUTS FOR ANCHOR BOLTS SHALL BE TIGHTENED FINGER TIGHT AND GIVEN AN ADDITIONAL 1/4 TURN. THE THREAD OF THE NUT AND BOLT SHALL THEN BE BURRED WITH A SHARP POINTED TOOL.

WHEN WELDING THE SOLE PLATE TO THE GIRDER, USE TEMPERATURE INDICATING WAX PENS, OR OTHER SUITABLE MEANS, TO ENSURE THAT THE TEMPERATURE OF THE BEARING DOES NOT EXCEED 250°F TEMPERATURES ABOVE THIS MAY DAMAGE THE TFE OR ELASTOMER.

AFTER BEARING ASSEMBLY IS IN PLACE AND ANCHOR BOLTS HAVE BEEN FINALLY POSITIONED. THEY SHALL BE GROUTED IN PLACE AS SHOWN.

THE CLOSURE PLATE, GROUT PIPE AND STANDARD PIPE FOR THIS ASSEMBLY NEED NOT BE GALVANIZED.

SOLE PLATES SHOULD BE WELDED TO BEAM FLANGES AND ANCHOR BOLTS SHOULD BE GROUTED BEFORE FALSEWORK IS PLACED.

ALL SURFACES OF BEARING PLATES SHALL BE SMOOTH AND STRAIGHT.

FOR THERMAL SPRAYED COATINGS (METALLIZATION), SEE SPECIAL PROVISIONS.

THE CONTRACTOR MAY SUBSTITUTE DISC BEARINGS FOR THE POT BEARINGS SHOWN. FOR OPTIONAL DISC BEARINGS, SEE SPECIAL PROVISIONS.

THE CONTRACTOR SHALL ADJUST THE GIRDER BUILD-UPS AS NECESSARY TO INCORPORATE A MAXIMUM PERMISSIBLE VARIATION IN POT BEARING DEPTH OF 1/2'', SEE SPECIAL PROVISIONS FOR POT BEARING.

FOR PROJECTION OF ANCHOR BOLTS, SEE BENT SHEETS.

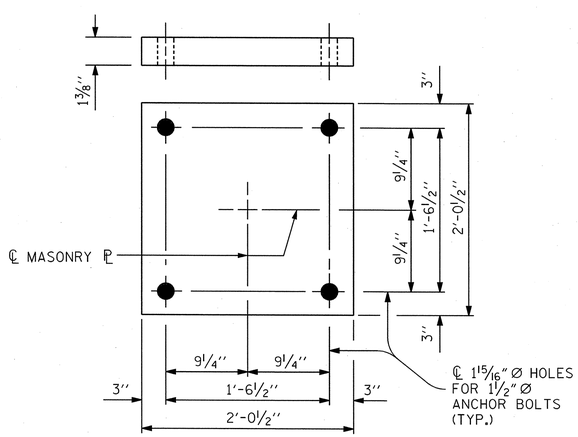

PLAN
M1 (7 REQ'D.)

MASONRY PLATE DETAILS

TABLE FOR LOADS AND MOVEMENT							
BEARING	LOCATION	UNFACTORED VERTICAL LOAD (KIPS)				FACTORED LATERAL LOAD (KIPS)	TOTAL MOVEMENT (INCHES)
		DEAD		LIVE	TOTAL		
		DC	DW	LL+IM			
PB1 (FIXED)	BENT 1	282	42	174	498	103	—

PROJECT NO. U-2525B
GUILFORD COUNTY
STATION: 268+22.89 -L-
50+35.75 -Y13-

AECOM
AECOM TECHNICAL SERVICES, INC.
701 CORPORATE CENTER DRIVE, SUITE 475
RALEIGH, NC 27607
(919) 854-6200 www.aecom.com
AECOM License No. F-0342

NORTH CAROLINA PROFESSIONAL SEAL 030474 ENGINEER JOHN C. MORRICON
3/17/14

R.N. 10-15

STATE OF NORTH CAROLINA
DEPARTMENT OF TRANSPORTATION
RALEIGH

STANDARD

POT BEARING DETAILS

REVISIONS						SHEET NO.
NO.	BY:	DATE:	NO.	BY:	DATE:	S-360
1			3			TOTAL SHEETS
2			4			541

STD. NO. PB1

ASSEMBLED BY : MTB		DATE : 10/13	
CHECKED BY : JCM		DATE : 10/13	
DRAWN BY : RWW 8/99	REV. 5/7/03	RWW/JTE	
CHECKED BY : LES 8/99	REV. 5/1/06R	TLA/GM	
	REV. 10/1/11	MAA/GM	

DATE: 3/14/2014
TIME: 10:08:24 AM
USER: lawong
DGN: d:\projects\356\400_Technical_Information_Disc_Files\450_NCDOT Standards\Structures\Bridge 90Code\U2525B_SD_DSN_V42_POTBRG.dgn

DEAD LOAD DEFLECTION TABLE FOR GIRDERS

ORDINATES	SPAN "A" GIRDER 1																				
TWENTIETH POINTS	BRG.	0.05	0.10	0.15	0.20	0.25	0.30	0.35	0.40	0.45	0.50	0.55	0.60	0.65	0.70	0.75	0.80	0.85	0.90	0.95	BRG.
DEFLECTION DUE TO WEIGHT OF STEEL	0.000	0.000	-0.001	-0.002	-0.003	-0.004	-0.005	-0.007	-0.009	-0.011	-0.013	-0.015	-0.016	-0.017	-0.017	-0.017	-0.016	-0.014	-0.010	-0.006	0.000
✳ DEFLECTION DUE TO WEIGHT OF SLAB	0.000	0.007	0.014	0.019	0.024	0.027	0.028	0.027	0.025	0.021	0.015	0.008	0.000	-0.008	-0.015	-0.022	-0.025	-0.024	-0.020	-0.012	0.000
DEFLECTION DUE TO WEIGHT OF RAIL	0.000	0.000	0.000	0.000	0.000	0.000	0.000	-0.001	-0.001	-0.001	-0.002	-0.003	-0.003	-0.003	-0.004	-0.004	-0.004	-0.003	-0.003	-0.002	0.000
TOTAL DL DEFLECTION	0.000	0.007	0.013	0.017	0.021	0.023	0.023	0.019	0.015	0.009	0.000	-0.010	-0.019	-0.028	-0.036	-0.043	-0.045	-0.041	-0.033	-0.020	0.000
VERTICAL CURVE ORDINATE	0.000	0.009	0.018	0.025	0.032	0.037	0.042	0.045	0.047	0.049	0.049	0.049	0.047	0.045	0.042	0.037	0.032	0.025	0.018	0.009	0.000
REQUIRED CAMBER	0.000	3/16"	3/8"	1/2"	5/8"	3/4"	3/4"	3/4"	3/4"	11/16"	9/16"	7/16"	5/16"	3/16"	1/16"	-1/16"	-1/8"	-3/16"	-3/16"	-1/8"	0.000

DEAD LOAD DEFLECTION TABLE FOR GIRDERS

ORDINATES	SPAN "A" GIRDER 2																				
TWENTIETH POINTS	BRG.	0.05	0.10	0.15	0.20	0.25	0.30	0.35	0.40	0.45	0.50	0.55	0.60	0.65	0.70	0.75	0.80	0.85	0.90	0.95	BRG.
DEFLECTION DUE TO WEIGHT OF STEEL	0.000	0.000	-0.001	-0.001	-0.002	-0.003	-0.005	-0.007	-0.008	-0.010	-0.012	-0.014	-0.016	-0.017	-0.017	-0.017	-0.016	-0.014	-0.011	-0.006	0.000
✳ DEFLECTION DUE TO WEIGHT OF SLAB	0.000	0.007	0.013	0.019	0.024	0.026	0.028	0.027	0.025	0.021	0.015	0.008	0.001	-0.008	-0.015	-0.021	-0.024	-0.024	-0.020	-0.012	0.000
DEFLECTION DUE TO WEIGHT OF RAIL	0.000	0.000	0.000	0.000	0.000	0.000	0.000	-0.001	-0.001	-0.001	-0.002	-0.003	-0.003	-0.003	-0.004	-0.004	-0.004	-0.003	-0.003	-0.002	0.000
TOTAL DL DEFLECTION	0.000	0.007	0.012	0.018	0.022	0.023	0.023	0.019	0.016	0.010	0.001	-0.009	-0.018	-0.028	-0.036	-0.042	-0.044	-0.041	-0.034	-0.020	0.000
VERTICAL CURVE ORDINATE	0.000	0.009	0.018	0.025	0.032	0.037	0.042	0.045	0.047	0.049	0.049	0.049	0.047	0.045	0.042	0.037	0.032	0.025	0.018	0.009	0.000
REQUIRED CAMBER	0.000	3/16"	3/8"	1/2"	5/8"	3/4"	3/4"	3/4"	3/4"	11/16"	5/8"	1/2"	3/8"	3/16"	1/16"	-1/16"	-1/8"	-3/16"	-3/16"	-1/8"	0.000

DEAD LOAD DEFLECTION TABLE FOR GIRDERS

ORDINATES	SPAN "A" GIRDER 3																				
TWENTIETH POINTS	BRG.	0.05	0.10	0.15	0.20	0.25	0.30	0.35	0.40	0.45	0.50	0.55	0.60	0.65	0.70	0.75	0.80	0.85	0.90	0.95	BRG.
DEFLECTION DUE TO WEIGHT OF STEEL	0.000	0.000	-0.001	-0.001	-0.002	-0.003	-0.005	-0.006	-0.008	-0.010	-0.012	-0.014	-0.016	-0.017	-0.017	-0.017	-0.016	-0.014	-0.011	-0.006	0.000
✳ DEFLECTION DUE TO WEIGHT OF SLAB	0.000	0.007	0.014	0.019	0.024	0.026	0.028	0.027	0.025	0.021	0.015	0.008	0.001	-0.007	-0.014	-0.021	-0.024	-0.024	-0.020	-0.012	0.000
DEFLECTION DUE TO WEIGHT OF RAIL	0.000	0.000	0.000	0.000	0.000	0.000	0.000	-0.001	-0.001	-0.001	-0.002	-0.003	-0.003	-0.003	-0.004	-0.004	-0.004	-0.003	-0.003	-0.002	0.000
TOTAL DL DEFLECTION	0.000	0.007	0.013	0.018	0.022	0.023	0.023	0.020	0.016	0.010	0.001	-0.009	-0.018	-0.027	-0.035	-0.042	-0.044	-0.041	-0.034	-0.020	0.000
VERTICAL CURVE ORDINATE	0.000	0.009	0.018	0.025	0.032	0.037	0.042	0.045	0.047	0.049	0.049	0.049	0.047	0.045	0.042	0.037	0.032	0.025	-0.018	0.009	0.000
REQUIRED CAMBER	0.000	3/16"	3/8"	1/2"	5/8"	3/4"	3/4"	3/4"	3/4"	11/16"	5/8"	1/2"	3/8"	3/16"	1/16"	-1/16"	-1/8"	-3/16"	-3/16"	-1/8"	0.000

DEAD LOAD DEFLECTION TABLE FOR GIRDERS

ORDINATES	SPAN "A" GIRDER 4																				
TWENTIETH POINTS	BRG.	0.05	0.10	0.15	0.20	0.25	0.30	0.35	0.40	0.45	0.50	0.55	0.60	0.65	0.70	0.75	0.80	0.85	0.90	0.95	BRG.
DEFLECTION DUE TO WEIGHT OF STEEL	0.000	0.000	-0.001	-0.001	-0.002	-0.003	-0.004	-0.006	-0.008	-0.010	-0.012	-0.014	-0.016	-0.017	-0.017	-0.017	-0.016	-0.014	-0.011	-0.006	0.000
✳ DEFLECTION DUE TO WEIGHT OF SLAB	0.000	0.007	0.014	0.019	0.024	0.026	0.028	0.027	0.025	0.021	0.016	0.009	0.001	-0.007	-0.014	-0.021	-0.024	-0.024	-0.020	-0.012	0.000
DEFLECTION DUE TO WEIGHT OF RAIL	0.000	0.000	0.000	0.000	0.000	0.000	0.000	-0.001	-0.001	-0.001	-0.002	-0.003	-0.003	-0.003	-0.004	-0.004	-0.004	-0.003	-0.003	-0.002	0.000
TOTAL DL DEFLECTION	0.000	0.007	0.013	0.018	0.022	0.023	0.024	0.020	0.016	0.010	0.002	-0.008	-0.018	-0.027	-0.035	-0.042	-0.044	-0.041	-0.034	-0.020	0.000
VERTICAL CURVE ORDINATE	0.000	0.009	0.018	0.025	0.032	0.037	0.042	0.045	0.047	0.049	0.049	0.049	0.047	0.045	0.042	0.037	0.032	0.025	0.018	0.009	0.000
REQUIRED CAMBER	0.000	3/16"	3/8"	1/2"	5/8"	3/4"	13/16"	3/4"	3/4"	11/16"	5/8"	1/2"	3/8"	3/16"	1/16"	-1/16"	-1/8"	-3/16"	-3/16"	-1/8"	0.000

✳ INCLUDES SLAB, BUILD-UP AND STAY-IN-PLACE METAL FORMS.

CAMBER NOTES:

1. ALL DEFLECTIONS AND CAMBER VALUES SHOWN ARE IN FEET (DECIMAL FORM), EXCEPT FOR "REQUIRED CAMBER" GIVEN IN INCHES (FRACTIONAL FORM).
2. DEFLECTIONS IN THE DOWNWARD DIRECTION ARE POSITIVE. A REQUIRED CAMBER IN THE UPWARD DIRECTION IS POSITIVE.

NOTE:

FABRICATORS SHALL DETAIL DIAPHRAGM MEMBERS AND CONNECTIONS FOR STEEL DEAD LOAD FIT UP. GIRDERS SHALL BE PLUMB AFTER THE FULL AMOUNT OF DEAD LOAD IS APPLIED.

PROJECT NO. U-2525B

GUILFORD COUNTY

STATION: 268+22.89 -L-
50+35.75 -Y13-

SHEET 1 OF 4

AECOM
AECOM TECHNICAL SERVICES, INC.
701 CORPORATE CENTER DRIVE, SUITE 475
RALEIGH, NC 27607
(919) 854-6200 www.aecom.com
AECOM License No. F-0342

NORTH CAROLINA PROFESSIONAL SEAL 030474 ENGINEER JOHN C. MORRISON
John C. Morrison
5/30/14

R.N. 10-16

STATE OF NORTH CAROLINA
DEPARTMENT OF TRANSPORTATION
RALEIGH

SUPERSTRUCTURE

GIRDER DEFLECTION AND CAMBER SCHEDULES

REVISIONS												SHEET NO.
NO.	BY:	DATE:	NO.	BY:	DATE:	NO.	BY:	DATE:	NO.	BY:	DATE:	S-361
1			3									TOTAL SHEETS
2			4									541

DRAWN BY : MTB DATE : 10/13
CHECKED BY : JCM DATE : 10/13

DATE: 5/30/2014
TIME: 2:42:17 PM

USER: lewand
DGN: 0:\36027\335\v400_Technical_Information_Disc_Files\450_NCDOT\Std\tech\Design\Files\Structures\Bridge 1\Dcadd\U2525B_SD_DSN_H2_DL_DEFLECT.Jdgn

DEAD LOAD DEFLECTION TABLE FOR GIRDERS

ORDINATES	SPAN "A" GIRDER 5																				
TWENTIETH POINTS	BRG.	0.05	0.10	0.15	0.20	0.25	0.30	0.35	0.40	0.45	0.50	0.55	0.60	0.65	0.70	0.75	0.80	0.85	0.90	0.95	BRG.
DEFLECTION DUE TO WEIGHT OF STEEL	0.000	0.000	-0.001	-0.001	-0.002	-0.003	-0.004	-0.006	-0.008	-0.010	-0.012	-0.014	-0.015	-0.017	-0.017	-0.017	-0.016	-0.014	-0.011	-0.006	0.000
✳ DEFLECTION DUE TO WEIGHT OF SLAB	0.000	0.007	0.014	0.019	0.024	0.026	0.028	0.027	0.025	0.021	0.015	0.009	0.002	-0.007	-0.014	-0.021	-0.024	-0.024	-0.020	-0.012	0.000
DEFLECTION DUE TO WEIGHT OF RAIL	0.000	0.000	0.000	0.000	0.000	0.000	0.000	-0.001	-0.001	-0.001	-0.002	-0.002	-0.003	-0.003	-0.004	-0.004	-0.004	-0.003	-0.003	-0.002	0.000
TOTAL DL DEFLECTION	0.000	0.007	0.013	0.018	0.022	0.023	0.024	0.020	0.016	0.010	0.001	-0.007	-0.016	-0.027	-0.035	-0.042	-0.044	-0.041	-0.034	-0.020	0.000
VERTICAL CURVE ORDINATE	0.000	0.009	0.018	0.025	0.032	0.037	0.042	0.045	0.047	0.049	0.049	0.049	0.047	0.045	0.042	0.037	0.032	0.025	0.018	0.009	0.000
REQUIRED CAMBER	0.000	3/16"	3/8"	1/2"	5/8"	3/4"	13/16"	3/4"	3/4"	11/16"	5/8"	1/2"	3/8"	3/16"	1/16"	-1/16"	-1/8"	-3/16"	-3/16"	-1/8"	0.000

DEAD LOAD DEFLECTION TABLE FOR GIRDERS

ORDINATES	SPAN "A" GIRDER 6																				
TWENTIETH POINTS	BRG.	0.05	0.10	0.15	0.20	0.25	0.30	0.35	0.40	0.45	0.50	0.55	0.60	0.65	0.70	0.75	0.80	0.85	0.90	0.95	BRG.
DEFLECTION DUE TO WEIGHT OF STEEL	0.000	0.000	-0.001	-0.001	-0.002	-0.003	-0.004	-0.006	-0.008	-0.010	-0.012	-0.014	-0.015	-0.016	-0.017	-0.017	-0.016	-0.014	-0.010	-0.006	0.000
✳ DEFLECTION DUE TO WEIGHT OF SLAB	0.000	0.007	0.014	0.020	0.024	0.027	0.028	0.027	0.025	0.021	0.015	0.008	0.001	-0.008	-0.014	-0.020	-0.023	-0.023	-0.019	-0.012	0.000
DEFLECTION DUE TO WEIGHT OF RAIL	0.000	0.000	0.000	0.000	0.000	0.000	0.000	-0.001	-0.001	-0.001	-0.002	-0.002	-0.003	-0.003	-0.004	-0.004	-0.004	-0.003	-0.003	-0.001	0.000
TOTAL DL DEFLECTION	0.000	0.007	0.013	0.019	0.022	0.024	0.024	0.020	0.016	0.010	0.001	-0.008	-0.017	-0.027	-0.035	-0.041	-0.043	-0.040	-0.032	-0.019	0.000
VERTICAL CURVE ORDINATE	0.000	0.009	0.018	0.025	0.032	0.037	0.042	0.045	0.047	0.049	0.049	0.049	0.047	0.045	0.042	0.037	0.032	0.025	0.018	0.009	0.000
REQUIRED CAMBER	0.000	3/16"	3/8"	1/2"	5/8"	3/4"	13/16"	3/4"	3/4"	11/16"	5/8"	1/2"	3/8"	3/16"	1/16"	-1/16"	-1/8"	-3/16"	-3/16"	-1/8"	0.000

DEAD LOAD DEFLECTION TABLE FOR GIRDERS

ORDINATES	SPAN "A" GIRDER 7																				
TWENTIETH POINTS	BRG.	0.05	0.10	0.15	0.20	0.25	0.30	0.35	0.40	0.45	0.50	0.55	0.60	0.65	0.70	0.75	0.80	0.85	0.90	0.95	BRG.
DEFLECTION DUE TO WEIGHT OF STEEL	0.000	0.000	-0.001	-0.001	-0.002	-0.003	-0.005	-0.006	-0.008	-0.010	-0.012	-0.014	-0.015	-0.016	-0.017	-0.017	-0.015	-0.013	-0.010	-0.006	0.000
✳ DEFLECTION DUE TO WEIGHT OF SLAB	0.000	0.008	0.014	0.020	0.025	0.028	0.029	0.028	0.026	0.021	0.016	0.008	0.001	-0.007	-0.014	-0.020	-0.023	-0.023	-0.019	-0.012	0.000
DEFLECTION DUE TO WEIGHT OF RAIL	0.000	0.000	0.000	0.000	0.000	0.000	0.000	0.000	-0.001	-0.001	-0.002	-0.002	-0.003	-0.003	-0.004	-0.004	-0.004	-0.003	-0.003	-0.001	0.000
TOTAL DL DEFLECTION	0.000	0.008	0.013	0.019	0.023	0.025	0.024	0.022	0.017	0.010	0.002	-0.008	-0.017	-0.026	-0.035	-0.041	-0.042	-0.039	-0.032	-0.019	0.000
VERTICAL CURVE ORDINATE	0.000	0.009	0.018	0.025	0.032	0.037	0.042	0.045	0.047	0.049	0.049	0.049	0.047	0.045	0.042	0.037	0.032	0.025	0.018	0.009	0.000
REQUIRED CAMBER	0.000	3/16"	3/8"	1/2"	5/8"	3/4"	13/16"	13/16"	3/4"	11/16"	5/8"	1/2"	3/8"	1/4"	1/16"	-1/16"	-1/8"	-3/16"	-3/16"	-1/8"	0.000

✳ INCLUDES SLAB, BUILD-UP AND STAY-IN-PLACE METAL FORMS.

CAMBER NOTES:

1. ALL DEFLECTIONS AND CAMBER VALUES SHOWN ARE IN FEET (DECIMAL FORM), EXCEPT FOR "REQUIRED CAMBER" GIVEN IN INCHES (FRACTIONAL FORM).
2. DEFLECTIONS IN THE DOWNWARD DIRECTION ARE POSITIVE. A REQUIRED CAMBER IN THE UPWARD DIRECTION IS POSITIVE.

NOTE:

FABRICATORS SHALL DETAIL DIAPHRAGM MEMBERS AND CONNECTIONS FOR STEEL DEAD LOAD FIT UP. GIRDERS SHALL BE PLUMB AFTER THE FULL AMOUNT OF DEAD LOAD IS APPLIED.

PROJECT NO. U-2525B

GUILFORD COUNTY

STATION: 268+22.89 -L-
50+35.75 -Y13-

SHEET 2 OF 4

AECOM
AECOM TECHNICAL SERVICES, INC.
701 CORPORATE CENTER DRIVE, SUITE 475
RALEIGH, NC 27607
(919) 854-6200 www.aecom.com
AECOM License No. F-0342

NORTH CAROLINA PROFESSIONAL SEAL 030474 ENGINEER JOHN C. MORRISON
5/30/14

R.N. 10-17

STATE OF NORTH CAROLINA
DEPARTMENT OF TRANSPORTATION
RALEIGH

SUPERSTRUCTURE

GIRDER DEFLECTION AND CAMBER SCHEDULES

REVISIONS						
NO.	BY:	DATE:	NO.	BY:	DATE:	
1			3			
2			4			

SHEET NO. S-362

TOTAL SHEETS 541

DRAWN BY : MTB DATE : 10/13
CHECKED BY : JCM DATE : 10/13

DATE: 5/30/2014
TIME: 2:43:20 PM

USER: lawsyd
DGN: 0:\60029355\400_Technical_Information_Disc_Files\450_NCDOT Staff to Design Files\Structures\Bridge 10\bcd\U2525B_SD_DSN_JH2_DL_DEFLECT_2.dgn

DEAD LOAD DEFLECTION TABLE FOR GIRDERS

ORDINATES	SPAN "B" GIRDER 1																				
TWENTIETH POINTS	BRG.	0.05	0.10	0.15	0.20	0.25	0.30	0.35	0.40	0.45	0.50	0.55	0.60	0.65	0.70	0.75	0.80	0.85	0.90	0.95	BRG.
DEFLECTION DUE TO WEIGHT OF STEEL	0.000	0.012	0.027	0.044	0.062	0.081	0.099	0.115	0.130	0.140	0.148	0.151	0.150	0.144	0.134	0.120	0.102	0.081	0.056	0.029	0.000
✳ DEFLECTION DUE TO WEIGHT OF SLAB	0.000	0.028	0.064	0.110	0.159	0.209	0.262	0.307	0.348	0.380	0.405	0.415	0.414	0.400	0.374	0.336	0.286	0.226	0.157	0.082	0.000
DEFLECTION DUE TO WEIGHT OF RAIL	0.000	0.003	0.007	0.012	0.017	0.022	0.027	0.031	0.035	0.037	0.039	0.040	0.040	0.038	0.036	0.032	0.027	0.021	0.015	0.008	0.000
TOTAL DL DEFLECTION	0.000	0.043	0.098	0.166	0.238	0.312	0.388	0.453	0.513	0.557	0.592	0.606	0.604	0.582	0.544	0.488	0.415	0.328	0.228	0.119	0.000
VERTICAL CURVE ORDINATE	0.000	0.022	0.042	0.060	0.075	0.088	0.098	0.106	0.112	0.116	0.117	0.116	0.112	0.106	0.098	0.088	0.075	0.060	0.042	0.022	0.000
REQUIRED CAMBER	0.000	13/16"	1 11/16"	2 11/16"	3 3/4"	4 13/16"	5 13/16"	6 11/16"	7 1/2"	8 1/16"	8 1/2"	8 11/16"	8 9/16"	8 1/4"	7 11/16"	6 15/16"	5 7/8"	4 5/8"	3 1/4"	1 11/16"	0.000

DEAD LOAD DEFLECTION TABLE FOR GIRDERS

ORDINATES	SPAN "B" GIRDER 2																				
TWENTIETH POINTS	BRG.	0.05	0.10	0.15	0.20	0.25	0.30	0.35	0.40	0.45	0.50	0.55	0.60	0.65	0.70	0.75	0.80	0.85	0.90	0.95	BRG.
DEFLECTION DUE TO WEIGHT OF STEEL	0.000	0.012	0.027	0.045	0.063	0.081	0.100	0.116	0.130	0.141	0.149	0.152	0.151	0.145	0.135	0.121	0.102	0.081	0.056	0.029	0.000
✳ DEFLECTION DUE TO WEIGHT OF SLAB	0.000	0.028	0.063	0.110	0.158	0.207	0.259	0.304	0.345	0.377	0.401	0.412	0.410	0.397	0.371	0.333	0.283	0.224	0.156	0.081	0.000
DEFLECTION DUE TO WEIGHT OF RAIL	0.000	0.003	0.007	0.012	0.017	0.022	0.027	0.031	0.035	0.037	0.039	0.040	0.040	0.038	0.035	0.032	0.027	0.021	0.015	0.008	0.000
TOTAL DL DEFLECTION	0.000	0.043	0.097	0.167	0.238	0.310	0.386	0.451	0.510	0.555	0.589	0.604	0.601	0.580	0.541	0.486	0.412	0.326	0.227	0.118	0.000
VERTICAL CURVE ORDINATE	0.000	0.022	0.042	0.060	0.075	0.088	0.098	0.106	0.112	0.116	0.117	0.116	0.112	0.106	0.098	0.088	0.075	0.060	0.042	0.022	0.000
REQUIRED CAMBER	0.000	13/16"	1 11/16"	2 3/4"	3 3/4"	4 3/4"	5 13/16"	6 11/16"	7 7/16"	8 1/16"	8 1/2"	8 5/8"	8 9/16"	8 1/4"	7 11/16"	6 7/8"	5 13/16"	4 5/8"	3 1/4"	1 11/16"	0.000

DEAD LOAD DEFLECTION TABLE FOR GIRDERS

ORDINATES	SPAN "B" GIRDER 3																				
TWENTIETH POINTS	BRG.	0.05	0.10	0.15	0.20	0.25	0.30	0.35	0.40	0.45	0.50	0.55	0.60	0.65	0.70	0.75	0.80	0.85	0.90	0.95	BRG.
DEFLECTION DUE TO WEIGHT OF STEEL	0.000	0.012	0.027	0.045	0.063	0.082	0.100	0.116	0.131	0.142	0.150	0.153	0.151	0.146	0.136	0.121	0.103	0.081	0.056	0.029	0.000
✳ DEFLECTION DUE TO WEIGHT OF SLAB	0.000	0.028	0.063	0.109	0.157	0.206	0.256	0.301	0.342	0.374	0.398	0.409	0.408	0.394	0.368	0.331	0.281	0.223	0.155	0.081	0.000
DEFLECTION DUE TO WEIGHT OF RAIL	0.000	0.003	0.007	0.012	0.017	0.022	0.027	0.031	0.034	0.037	0.039	0.040	0.040	0.038	0.035	0.032	0.027	0.021	0.015	0.008	0.000
TOTAL DL DEFLECTION	0.000	0.043	0.097	0.166	0.237	0.310	0.383	0.448	0.507	0.553	0.587	0.602	0.599	0.578	0.539	0.484	0.411	0.325	0.226	0.118	0.000
VERTICAL CURVE ORDINATE	0.000	0.022	0.042	0.060	0.075	0.088	0.098	0.106	0.112	0.116	0.117	0.116	0.112	0.106	0.098	0.088	0.075	0.060	0.042	0.022	0.000
REQUIRED CAMBER	0.000	13/16"	1 11/16"	2 11/16"	3 3/4"	4 3/4"	5 3/4"	6 5/8"	7 7/16"	8"	8 7/16"	8 5/8"	8 9/16"	8 3/16"	7 5/8"	6 7/8"	5 13/16"	4 5/8"	3 3/16"	1 11/16"	0.000

DEAD LOAD DEFLECTION TABLE FOR GIRDERS

ORDINATES	SPAN "B" GIRDER 4																				
TWENTIETH POINTS	BRG.	0.05	0.10	0.15	0.20	0.25	0.30	0.35	0.40	0.45	0.50	0.55	0.60	0.65	0.70	0.75	0.80	0.85	0.90	0.95	BRG.
DEFLECTION DUE TO WEIGHT OF STEEL	0.000	0.012	0.027	0.045	0.063	0.082	0.100	0.116	0.130	0.141	0.149	0.152	0.151	0.145	0.135	0.121	0.103	0.081	0.056	0.029	0.000
✳ DEFLECTION DUE TO WEIGHT OF SLAB	0.000	0.028	0.063	0.109	0.156	0.205	0.254	0.299	0.340	0.372	0.396	0.406	0.405	0.392	0.367	0.329	0.280	0.222	0.154	0.081	0.000
DEFLECTION DUE TO WEIGHT OF RAIL	0.000	0.003	0.007	0.012	0.017	0.022	0.027	0.031	0.034	0.037	0.039	0.040	0.039	0.038	0.035	0.032	0.027	0.021	0.015	0.008	0.000
TOTAL DL DEFLECTION	0.000	0.043	0.097	0.166	0.236	0.309	0.381	0.446	0.504	0.550	0.584	0.598	0.595	0.575	0.537	0.482	0.410	0.324	0.225	0.118	0.000
VERTICAL CURVE ORDINATE	0.000	0.022	0.042	0.060	0.075	0.088	0.098	0.106	0.112	0.116	0.117	0.116	0.112	0.106	0.098	0.088	0.075	0.060	0.042	0.122	0.000
REQUIRED CAMBER	0.000	13/16"	1 11/16"	2 11/16"	3 3/4"	4 3/4"	5 3/4"	6 5/8"	7 3/8"	8"	8 7/16"	8 9/16"	8 1/2"	8 3/16"	7 5/8"	6 13/16"	5 13/16"	4 5/8"	3 3/16"	1 11/16"	0.000

✳ INCLUDES SLAB, BUILD-UP AND STAY-IN-PLACE METAL FORMS.

CAMBER NOTES:

1. ALL DEFLECTIONS AND CAMBER VALUES SHOWN ARE IN FEET (DECIMAL FORM), EXCEPT FOR "REQUIRED CAMBER" GIVEN IN INCHES (FRACTIONAL FORM).
2. DEFLECTIONS IN THE DOWNWARD DIRECTION ARE POSITIVE. A REQUIRED CAMBER IN THE UPWARD DIRECTION IS POSITIVE.

NOTE:

FABRICATORS SHALL DETAIL DIAPHRAGM MEMBERS AND CONNECTIONS FOR STEEL DEAD LOAD FIT UP. GIRDERS SHALL BE PLUMB AFTER THE FULL AMOUNT OF DEAD LOAD IS APPLIED.

PROJECT NO. U-2525B
GUILFORD COUNTY
STATION: 268+22.89 -L-
50+35.75 -Y13-

SHEET 3 OF 4

AECOM
AECOM TECHNICAL SERVICES, INC.
701 CORPORATE CENTER DRIVE, SUITE 475
RALEIGH, NC 27607
(919) 854-6200 www.aecom.com
AECOM License No. F-0342

NORTH CAROLINA PROFESSIONAL SEAL 030474 - ENGINEER JOHN C. MORRISON
5/30/14
R.N. 10-18

STATE OF NORTH CAROLINA
DEPARTMENT OF TRANSPORTATION
RALEIGH

SUPERSTRUCTURE

GIRDER DEFLECTION AND CAMBER SCHEDULES

REVISIONS						SHEET NO.
NO.	BY:	DATE:	NO.	BY:	DATE:	S-363
1			3			TOTAL SHEETS
2			4			541

DRAWN BY : MTB DATE : 10/13
CHECKED BY : JCM DATE : 10/13

DATE: 5/30/2014
TIME: 5:44:15 PM
USER: lwarryd
DGN: 0:\2025\9335\400_Technical_Information_Disc_Files\450_NCDOT\Sdf\sdt\Design\Files\Structures\Bridge 10\cdd\U2525B_SD_DSN_H42_DL_DEFLECT_3.dgn

DEAD LOAD DEFLECTION TABLE FOR GIRDERS

ORDINATES	SPAN "B" GIRDER 5																				
TWENTIETH POINTS	BRG.	0.05	0.10	0.15	0.20	0.25	0.30	0.35	0.40	0.45	0.50	0.55	0.60	0.65	0.70	0.75	0.80	0.85	0.90	0.95	BRG.
DEFLECTION DUE TO WEIGHT OF STEEL	0.000	0.012	0.027	0.045	0.063	0.081	0.099	0.115	0.130	0.141	0.148	0.151	0.150	0.145	0.135	0.121	0.102	0.081	0.056	0.029	0.000
✳ DEFLECTION DUE TO WEIGHT OF SLAB	0.000	0.028	0.063	0.108	0.155	0.203	0.252	0.298	0.340	0.371	0.393	0.403	0.403	0.390	0.365	0.329	0.280	0.222	0.154	0.080	0.000
DEFLECTION DUE TO WEIGHT OF RAIL	0.000	0.003	0.007	0.012	0.017	0.022	0.026	0.031	0.034	0.037	0.039	0.040	0.039	0.038	0.035	0.032	0.027	0.021	0.015	0.008	0.000
TOTAL DL DEFLECTION	0.000	0.043	0.097	0.165	0.235	0.306	0.377	0.444	0.504	0.549	0.580	0.594	0.592	0.573	0.535	0.482	0.409	0.324	0.225	0.117	0.000
VERTICAL CURVE ORDINATE	0.000	0.022	0.042	0.060	0.075	0.088	0.098	0.106	0.112	0.116	0.117	0.116	0.112	0.106	0.098	0.088	0.075	0.060	0.042	0.022	0.000
REQUIRED CAMBER	0.000	13/16"	1 11/16"	2 11/16"	3 11/16"	4 3/4"	5 11/16"	6 5/8"	7 3/8"	8"	8 3/8"	8 1/2"	8 7/16"	8 1/8"	7 5/8"	6 13/16"	5 13/16"	4 5/8"	3 3/16"	1 11/16"	0.000

DEAD LOAD DEFLECTION TABLE FOR GIRDERS

ORDINATES	SPAN "B" GIRDER 6																				
TWENTIETH POINTS	BRG.	0.05	0.10	0.15	0.20	0.25	0.30	0.35	0.40	0.45	0.50	0.55	0.60	0.65	0.70	0.75	0.80	0.85	0.90	0.95	BRG.
DEFLECTION DUE TO WEIGHT OF STEEL	0.000	0.012	0.027	0.044	0.062	0.080	0.098	0.114	0.129	0.139	0.146	0.149	0.148	0.143	0.133	0.120	0.102	0.080	0.055	0.029	0.000
✳ DEFLECTION DUE TO WEIGHT OF SLAB	0.000	0.028	0.062	0.107	0.153	0.201	0.251	0.296	0.338	0.369	0.391	0.401	0.401	0.389	0.364	0.328	0.279	0.221	0.152	0.079	0.000
DEFLECTION DUE TO WEIGHT OF RAIL	0.000	0.003	0.007	0.012	0.017	0.022	0.026	0.030	0.034	0.037	0.039	0.039	0.039	0.038	0.035	0.032	0.027	0.021	0.014	0.008	0.000
TOTAL DL DEFLECTION	0.000	0.043	0.096	0.163	0.232	0.303	0.375	0.440	0.501	0.545	0.576	0.589	0.588	0.570	0.532	0.480	0.408	0.322	0.221	0.116	0.000
VERTICAL CURVE ORDINATE	0.000	0.022	0.042	0.060	0.075	0.088	0.098	0.106	0.112	0.116	0.117	0.116	0.112	0.106	0.098	0.088	0.075	0.060	0.042	0.022	0.000
REQUIRED CAMBER	0.000	13/16"	1 11/16"	2 11/16"	3 11/16"	4 11/16"	5 11/16"	6 9/16"	7 3/8"	7 15/16"	8 5/16"	8 7/16"	8 3/8"	8 1/8"	7 9/16"	6 13/16"	5 13/16"	4 9/16"	3 3/16"	1 11/16"	0.000

DEAD LOAD DEFLECTION TABLE FOR GIRDERS

ORDINATES	SPAN "B" GIRDER 7																				
TWENTIETH POINTS	BRG.	0.05	0.10	0.15	0.20	0.25	0.30	0.35	0.40	0.45	0.50	0.55	0.60	0.65	0.70	0.75	0.80	0.85	0.90	0.95	BRG.
DEFLECTION DUE TO WEIGHT OF STEEL	0.000	0.012	0.026	0.043	0.061	0.078	0.096	0.112	0.127	0.137	0.144	0.147	0.146	0.141	0.132	0.118	0.101	0.079	0.055	0.028	0.000
✳ DEFLECTION DUE TO WEIGHT OF SLAB	0.000	0.028	0.063	0.107	0.153	0.200	0.249	0.294	0.336	0.366	0.388	0.398	0.398	0.386	0.363	0.327	0.280	0.221	0.152	0.079	0.000
DEFLECTION DUE TO WEIGHT OF RAIL	0.000	0.003	0.007	0.012	0.017	0.021	0.026	0.030	0.034	0.037	0.039	0.039	0.039	0.038	0.035	0.032	0.027	0.021	0.014	0.008	0.000
TOTAL DL DEFLECTION	0.000	0.043	0.096	0.162	0.231	0.299	0.371	0.436	0.497	0.540	0.571	0.584	0.583	0.565	0.530	0.477	0.408	0.321	0.221	0.115	0.000
VERTICAL CURVE ORDINATE	0.000	0.022	0.042	0.060	0.075	0.088	0.098	0.106	0.112	0.116	0.117	0.116	0.112	0.106	0.098	0.088	0.075	0.060	0.042	0.022	0.000
REQUIRED CAMBER	0.000	13/16"	1 11/16"	2 11/16"	3 11/16"	4 5/8"	5 5/8"	6 1/2"	7 5/16"	7 7/8"	8 1/4"	8 3/8"	8 5/16"	8 1/16"	7 9/16"	6 3/4"	5 13/16"	4 9/16"	3 3/16"	1 5/8"	0.000

✳ INCLUDES SLAB, BUILD-UP AND STAY-IN-PLACE METAL FORMS.

NOTE:

FABRICATORS SHALL DETAIL DIAPHRAGM MEMBERS AND CONNECTIONS FOR STEEL DEAD LOAD FIT UP. GIRDERS SHALL BE PLUMB AFTER THE FULL AMOUNT OF DEAD LOAD IS APPLIED.

CAMBER NOTES:

1. ALL DEFLECTIONS AND CAMBER VALUES SHOWN ARE IN FEET (DECIMAL FORM), EXCEPT FOR "REQUIRED CAMBER" GIVEN IN INCHES (FRACTIONAL FORM).
2. DEFLECTIONS IN THE DOWNWARD DIRECTION ARE POSITIVE. A REQUIRED CAMBER IN THE UPWARD DIRECTION IS POSITIVE.

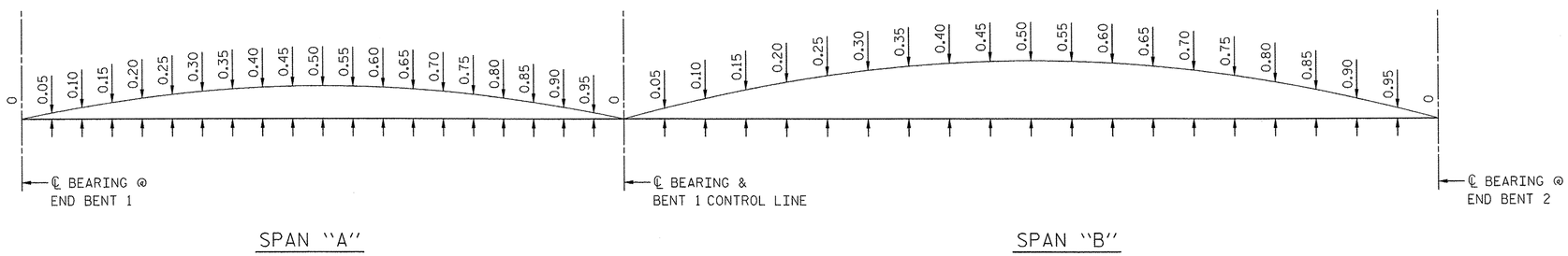

SCHEMATIC CAMBER ORDINATES FOR ALL GIRDERS

SLOPE FOR THE ZERO CAMBER BASE LINE VARIES

DRAWN BY : MTB DATE : 10/13
CHECKED BY : JCM DATE : 10/13

PROJECT NO. U-2525B
GUILFORD COUNTY
STATION: 268+22.89 -L-
50+35.75 -Y13-
SHEET 4 OF 4

AECOM
AECOM TECHNICAL SERVICES, INC.
701 CORPORATE CENTER DRIVE, SUITE 475
RALEIGH, NC 27607
(919) 854-6200 www.aecom.com
AECOM License No. F-0342

NORTH CAROLINA PROFESSIONAL SEAL 030474 ENGINEER JOHN C. MORRISON
5/30/14

R.N. 10-19

STATE OF NORTH CAROLINA
DEPARTMENT OF TRANSPORTATION
RALEIGH

SUPERSTRUCTURE

GIRDER DEFLECTION AND CAMBER SCHEDULES

REVISIONS						
NO.	BY:	DATE:	NO.	BY:	DATE:	
1			3			
2			4			

SHEET NO. S-364
TOTAL SHEETS 541

DATE: 5/30/2014
TIME: 4:34:40 PM

USER: tweaver
DGN: G:\60107335\V00_Technical_Information_Disc_Files\450_NCDOT Std Tech Design Files\Structures\Bridge 10\Cad\U2525B_SD_DSN_1\42_DL_DEFLECT_4.dgn

NOTES:

PAYMENT FOR THE BARRIER RAIL ON THE APPROACH SLAB IS INCLUDED IN THE PAY ITEM FOR BRIDGE APPROACH SLAB. SEE BRIDGE APPROACH SLAB SHEET FOR REINFORCING AND DETAILS.

FOR REINFORCING STEEL IN BARRIER RAIL, SEE "STANDARD CONCRETE BARRIER RAIL" SHEET.

SEE "STANDARD GUARDRAIL ANCHORAGE FOR BARRIER RAIL" SHEET FOR ANCHOR ASSEMBLY PLACEMENT.

DIMENSIONS ARE GIVEN ALONG OUTSIDE FACE OF RAIL UNLESS OTHERWISE NOTED.

#5 "S" BARS MAY BE SHIFTED AS NECESSARY TO CLEAR EXPANSION JOINTS IN RAIL.

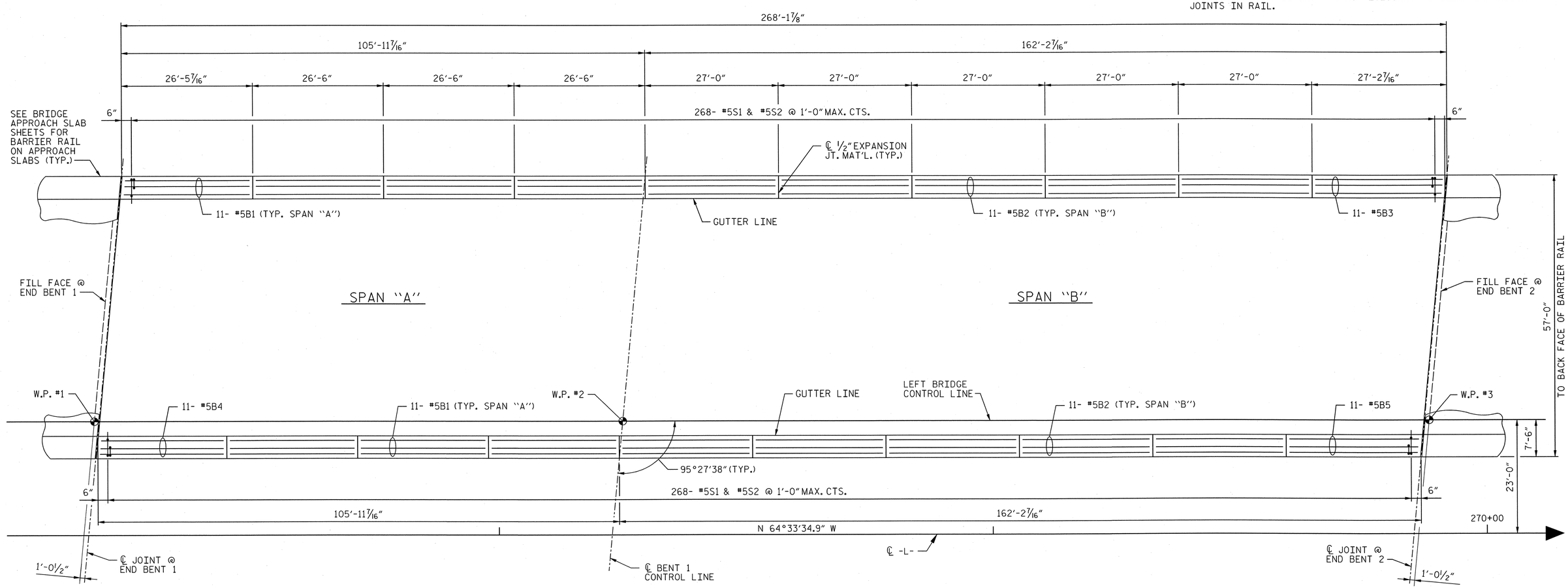

PLAN OF BARRIER RAIL

PROJECT NO. U-2525B

GUILFORD **COUNTY**

STATION: 268+22.89 -L-
50+35.75 -Y13-

SHEET 1 OF 2

AECOM
AECOM TECHNICAL SERVICES, INC.
701 CORPORATE CENTER DRIVE, SUITE 475
RALEIGH, NC 27607
(919) 854-6200
www.aecom.com
AECOM License No. F-0342

NORTH CAROLINA PROFESSIONAL SEAL 030474 ENGINEER JOHN C. MORRISON
3/17/14
R.N. 10-20

STATE OF NORTH CAROLINA
DEPARTMENT OF TRANSPORTATION
RALEIGH

SUPERSTRUCTURE

CONCRETE BARRIER RAIL LAYOUT

REVISIONS							SHEET NO.
NO.	BY:	DATE:	NO.	BY:	DATE:		S-365
1			3				TOTAL SHEETS
2			4				541

DRAWN BY : MTB DATE : 10/13
CHECKED BY : JCM DATE : 10/13

DATE: 3/14/2014
TIME: 10:53 AM
USER: lwesley
DGN: Q:\60129335\V400_Technical_Information_Dist_Files\450_NCDOT Std Text\Design Files\Structures\Bridge 10\Cadd\U2525B_SD_DSN_LN42_CONCBAR.dgn

NOTES

THE BARRIER RAIL IN A CONTINUOUS UNIT SHALL NOT BE CAST UNTIL ALL SLAB CONCRETE IN THAT UNIT HAS BEEN CAST AND HAS REACHED A MINIMUM COMPRESSIVE STRENGTH OF 3,000 PSI.

ALL REINFORCING STEEL IN BARRIER RAILS SHALL BE EPOXY COATED.

GROOVED CONTRACTION JOINTS, 1/2" IN DEPTH, SHALL BE TOOLED IN ALL EXPOSED FACES OF THE BARRIER RAIL AND IN ACCORDANCE WITH ARTICLE 825-10(B) OF THE STANDARD SPECIFICATIONS. THE CONTRACTION JOINT SHALL BE LOCATED AT EACH THIRD POINT BETWEEN BARRIER RAIL EXPANSION JOINTS. ONLY ONE CONTRACTION JOINT IS REQUIRED AT MIDPOINT OF BARRIER RAIL SEGMENTS LESS THAN 20 FEET IN LENGTH AND NO CONTRACTION JOINTS ARE REQUIRED FOR THOSE SEGMENTS LESS THAN 10 FEET IN LENGTH.

BAR TYPES

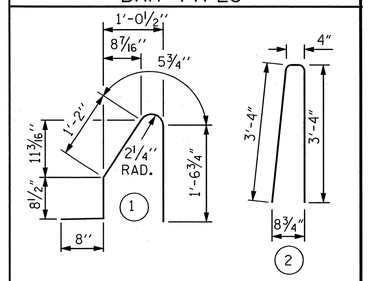

ALL BAR DIMENSIONS ARE OUT TO OUT

BILL OF MATERIAL

FOR CONCRETE BARRIER RAIL ONLY

BAR	NO.	SIZE	TYPE	LENGTH	WEIGHT
* B1	77	#5	STR	26'-2"	2101
* B2	110	#5	STR	26'-8"	3059
* B3	11	#5	STR	26'-9"	307
* B4	11	#5	STR	26'-0"	298
* B5	11	#5	STR	26'-11"	309
* S1	268	#5	1	4'-7"	1282
* S2	268	#5	2	7'-0"	1958

* EPOXY COATED REINFORCING STEEL	9314 LBS.
CLASS AA CONCRETE	72.9 CU. YDS.
CONCRETE BARRIER RAIL **	576.3 LIN. FT.

** QUANTITY INCLUDES LIN. FT. SHOWN ON APPROACH SLABS.

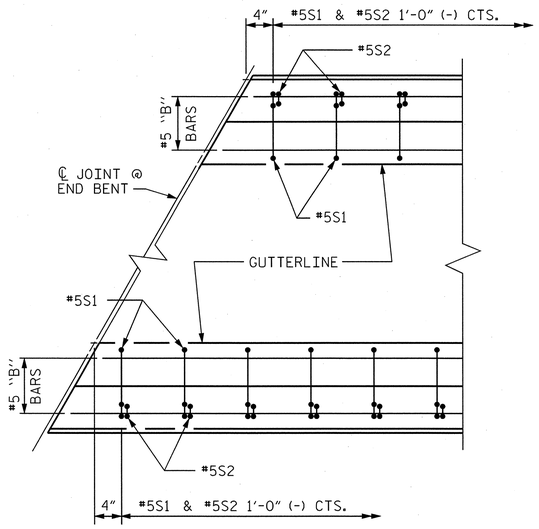

PLAN AT END OF RAIL

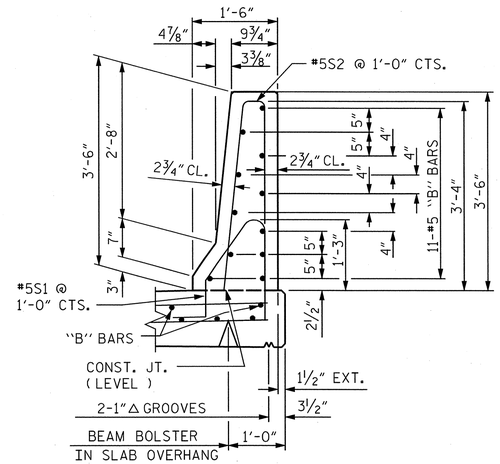

SECTION THRU RAIL

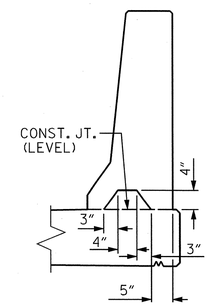

SECTION S-S

AT DAM IN OPEN JOINT (THIS IS TO BE USED ONLY WHEN SLIP FORM IS USED)

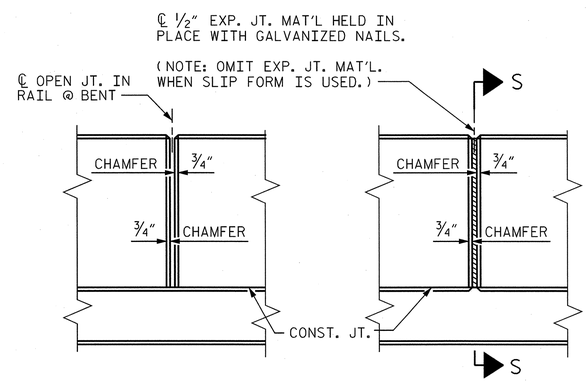

ELEVATION AT EXPANSION JOINTS

BARRIER RAIL DETAILS

PROJECT NO. U-2525B

GUILFORD COUNTY

STATION: 268+22.89 -L-

50+35.75 -Y13-

SHEET 2 OF 2

AECOM

AECOM TECHNICAL SERVICES, INC.
701 CORPORATE CENTER DRIVE, SUITE 475
RALEIGH, NC 27607
(919) 854-6200 www.aecom.com
AECOM License No. F-0342

NORTH CAROLINA PROFESSIONAL SEAL 030474 ENGINEER JOHN C. MORRISON

3/17/14

R.N. 10-21

STATE OF NORTH CAROLINA
DEPARTMENT OF TRANSPORTATION
RALEIGH

STANDARD

CONCRETE BARRIER RAIL

REVISIONS							
NO.	BY:	DATE:	NO.	BY:	DATE:	SHEET NO.	
1			3			S-366	
2			4			TOTAL SHEETS	
						541	

STD. NO. CBR1

ASSEMBLED BY : MTB		DATE : 10/13	
CHECKED BY : JCM		DATE : 10/13	
DRAWN BY : ARB 5/87	REV. 10/1/11	MAA/GM	
CHECKED BY : SJD 9/87	REV. 7/12	MAA/GM	
	REV. 6/13	MAA/GM	

USER: lowerjd DGN: Q:\60029355\400_Technical_Information_Drop_File\450_NCDOT Std Tech Delgn Files\Structures\Bridge 10\Cbd\U2525B_SD_DSN_1\R2_CBR1.dgn DATE: 3/14/2014 TIME: 10:50:43 AM

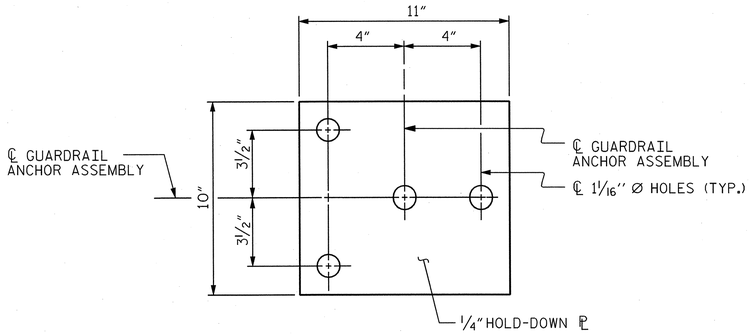

PLAN

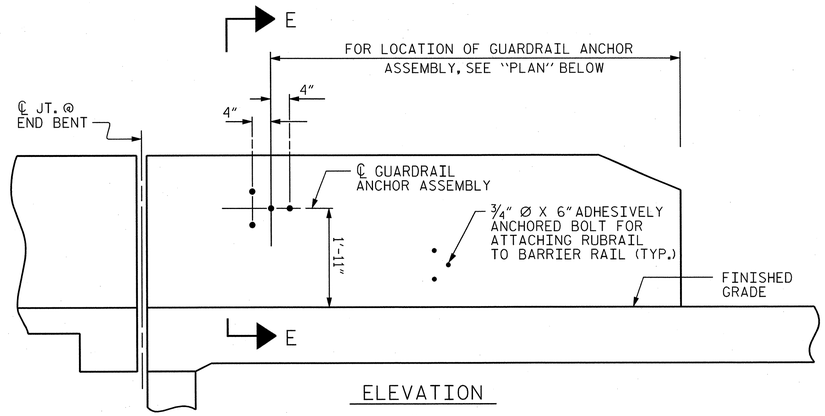

ELEVATION

NOTES

THE GUARDRAIL ANCHOR ASSEMBLY SHALL CONSIST OF A 1/4" HOLD-DOWN PLATE AND 4 - 7/8" Ø BOLTS WITH NUTS AND WASHERS, RUBRAIL, AND ADHESIVELY ANCHORED BOLTS.

THE HOLD-DOWN PLATE SHALL CONFORM TO AASHTO M270 GRADE 36. AFTER FABRICATION, THE HOLD-DOWN PLATE SHALL BE HOT-DIP GALVANIZED IN ACCORDANCE WITH AASHTO M111.

BOLTS SHALL CONFORM TO THE REQUIREMENTS OF ASTM A307 AND NUTS SHALL CONFORM TO THE REQUIREMENTS OF AASHTO M291. BOLTS, NUTS AND WASHERS SHALL BE GALVANIZED. (AT THE CONTRACTOR'S OPTION, STAINLESS STEEL BOLTS, NUTS AND WASHERS MAY BE USED AS AN ALTERNATE FOR THE 7/8" Ø GALVANIZED BOLTS, NUTS AND WASHERS. THEY SHALL CONFORM TO OR EXCEED THE MECHANICAL REQUIREMENTS OF ASTM A307. THE USE OF THIS ALTERNATE SHALL BE APPROVED BY THE ENGINEER.)

THE GUARDRAIL ANCHOR ASSEMBLY IS REQUIRED AT ALL POINTS WHERE APPROACH GUARDRAIL IS TO BE ATTACHED TO THE END OF BARRIER RAIL. FOR POINTS OF ATTACHMENT, SEE SKETCH.

AFTER INSTALLATION, THE EXPOSED THREAD OF THE BOLT SHALL BE BURRED WITH A SHARP POINTED TOOL.

THE COST OF THE GUARDRAIL ANCHOR ASSEMBLY SHALL BE INCLUDED IN THE UNIT CONTRACT PRICE BID FOR CONCRETE BARRIER RAIL.

THE 1 1/4" Ø HOLES SHALL BE FORMED OR DRILLED WITH A CORE BIT. IMPACT TOOLS WILL NOT BE PERMITTED. ANY CONCRETE DAMAGED BY THIS WORK SHALL BE REPAIRED TO THE SATISFACTION OF THE ENGINEER.

THE C6 X 8.2 RUBRAIL IS TO BE ADHESIVELY ANCHORED TO THE RAIL USING THREE 3/4" Ø X 6" BOLTS WITH WASHERS. LEVEL ONE FIELD TESTING IS REQUIRED, AND THE YIELD LOAD OF THE 3/4" Ø BOLT IS 12 KIPS. FOR ADHESIVELY ANCHORED ANCHOR BOLTS OR DOWELS, SEE STANDARD SPECIFICATIONS. SEE ROADWAY STANDARD 862.03 FOR DETAILS AND LOCATION OF THE RUBRAIL.

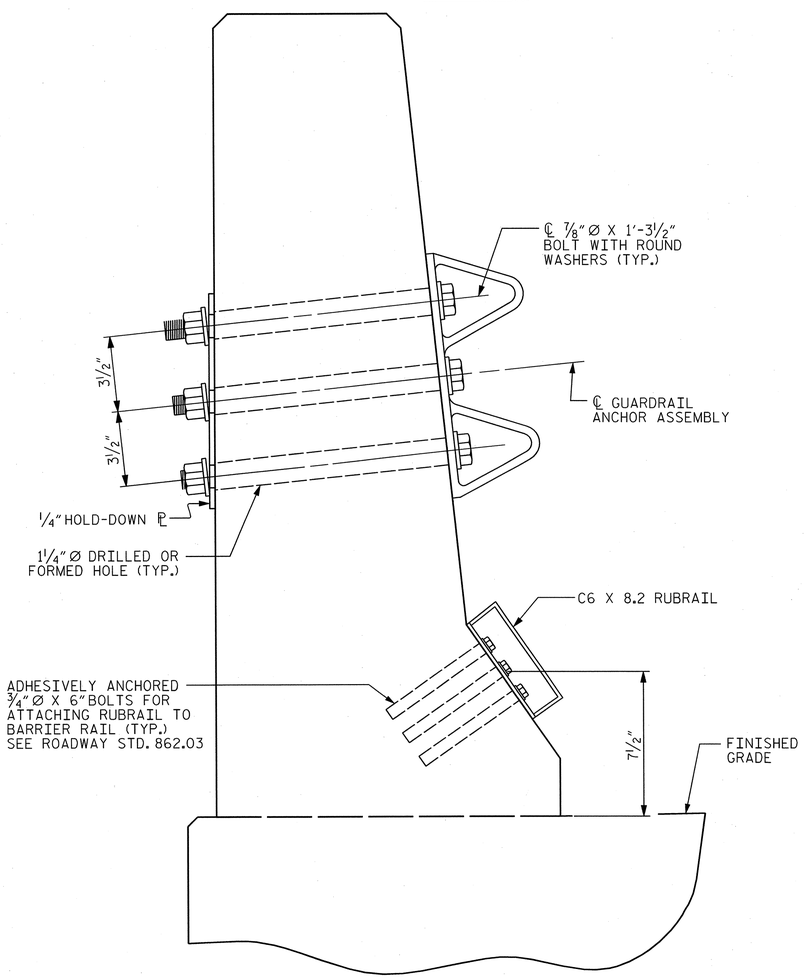

SECTION E-E

GUARDRAIL ANCHOR ASSEMBLY DETAILS

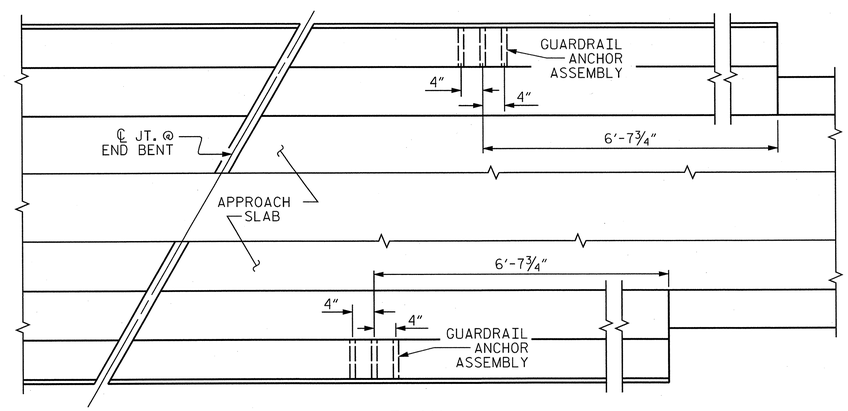

PLAN

LOCATION OF ANCHORS FOR GUARDRAIL

END BENT #2 SHOWN, END BENT #1 SIMILAR

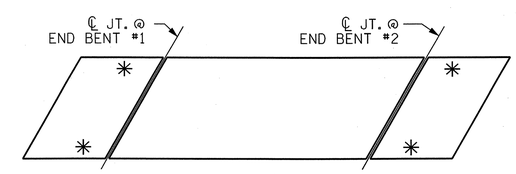

SKETCH SHOWING POINTS OF ATTACHMENTS

✳ DENOTES GUARDRAIL ANCHOR ASSEMBLY

PROJECT NO. U-2525B

GUILFORD COUNTY

STATION: 268+22.89 -L-
50+35.75 -Y13-

AECOM
AECOM TECHNICAL SERVICES, INC.
701 CORPORATE CENTER DRIVE, SUITE 475
RALEIGH, NC 27607
(919) 854-6200 www.aecom.com
AECOM License No. F-0342

NORTH CAROLINA PROFESSIONAL SEAL 030474 ENGINEER JOHN C. MORRISON
3/17/14

R.N. 10-22

STATE OF NORTH CAROLINA
DEPARTMENT OF TRANSPORTATION
RALEIGH

STANDARD

GUARDRAIL ANCHORAGE FOR BARRIER RAIL

REVISIONS						SHEET NO.
NO.	BY:	DATE:	NO.	BY:	DATE:	S-367
1			3			TOTAL SHEETS
2			4			54-1

STD. NO. GRA2

ASSEMBLED BY : MTB		DATE : 10/13	
CHECKED BY : JCM		DATE : 10/13	
DRAWN BY : TLA 5/06	REV. 10/1/11		MAA/GM
CHECKED BY : GM 5/06	REV. 7/12		MAA/GM
	REV. 6/13		MAA/GM

USER: lowerjd
DGN: Q:\60227935\60_Technical_Information_Disc_Files\450_NC007S\dTechDesignFiles\StructuresBridge\0Code0\U2525B_SD_DSN_U42_GRA2.dgn
DATE: 3/14/2014
TIME: 11:53:43 AM

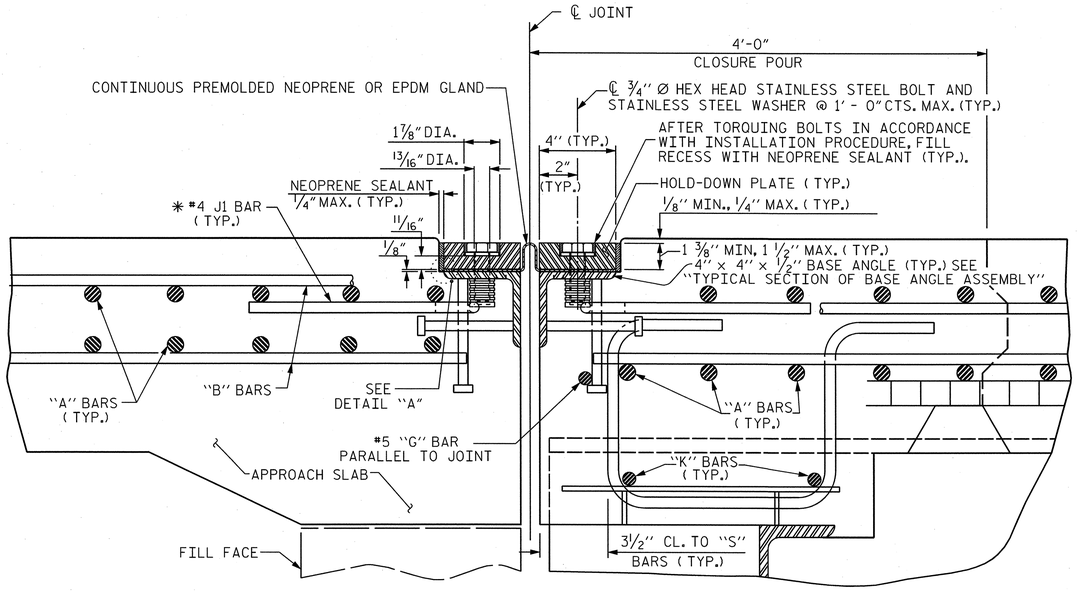

EXPANSION JOINT DETAILS

SECTION NORMAL TO JOINT -- STEEL SUPERSTRUCTURE

✳ THE QUANTITY OF #4 J1 BARS ON THE BILL OF MATERIAL IS BASED ON 1'-0" CENTERS. J1 BARS SHALL BE PLACED AT EACH VERTICAL STUD ANCHOR BOLT. IN THE EVENT THAT THE NUMBER OF VERTICAL STUD ANCHORS EXCEEDS THE NUMBER OF J1 BARS SPECIFIED, ADDITIONAL J1 BARS WILL NOT BE REQUIRED.

INSTALLATION PROCEDURE

1. A TEMPLATE OR OTHER SUITABLE DEVICE SHALL BE USED TO FORM THE TOP OF THE EXPANSION JOINT SEAL BLOCKOUT TO THE PROPER DEPTH AND WIDTH. THE TEMPLATE SHALL BE 4⅛" TO 4¼" WIDE AND OF SUCH THICKNESS AS TO PROVIDE FOR CORRECT FINAL ELEVATION OF TOP OF HOLD-DOWN PLATES. THE TEMPLATE SHALL BE ATTACHED TO THE BASE ANGLE ASSEMBLY WITH THE ¾" Ø HEX HEAD BOLTS PROVIDED FOR THE HOLD-DOWN PLATES. A 1" Ø HOLE SHALL BE PROVIDED IN THE TEMPLATE CENTERED OVER EACH WEEP HOLE IN THE 4" X 4" X ½" BASE ANGLE. OTHER METHODS OF INSURING DRAINAGE THROUGH WEEP HOLES MAY BE EMPLOYED SUBJECT TO ENGINEER'S APPROVAL.
2. AFTER THE CONCRETE HAS BEEN CAST ON BOTH SIDES OF THE JOINT, REMOVE THE TEMPLATE. THOROUGHLY CLEAN THE BOLT HOLES AND THE ANGLE PLATE. REMOVE ANY EXCESS CONCRETE THAT COMES OUT OF THE WEEP HOLES. ANY DAMAGED STEEL SHALL BE COATED WITH A MINIMUM THICKNESS OF 4 DRY MILS OF ZINC-RICH PAINT IN ACCORDANCE WITH THE STANDARD SPECIFICATIONS.
3. LAY THE GLAND ON THE BASE ANGLE AND FIELD MARK THE GLAND FOR THE BOLT HOLES. HOLES IN THE GLAND SHALL BE PUNCHED ⅞" IN DIAMETER WITH A HAND PUNCH.
4. IN ORDER TO CHECK FOR PROPER ALIGNMENT, PLACE THE GLAND AND HOLD-DOWN PLATES ON THE BASE ANGLE. DO NOT APPLY NEOPRENE SEALANT. BOLT THE HOLD-DOWN PLATES TO THE BASE ANGLE BUT DO NOT TIGHTEN. THE ENGINEER SHALL INSPECT THE JOINT SEAL DEVICE FOR PROPER ALIGNMENT.
5. AFTER INSPECTION, REMOVE THE HOLD-DOWN PLATES AND GLAND. APPLY NEOPRENE SEALANT TO THE BASE ANGLE IN ACCORDANCE WITH THE "INSTALLATION SKETCH". PLACE GLAND AND HOLD-DOWN PLATES ON THE BASE ANGLE. BOLT THE HOLD-DOWN PLATES TO THE BASE ANGLE ASSEMBLY AND TORQUE THE BOLTS TO 88 FT-LBS WITH A TORQUE WRENCH. CHECK THE TORQUE AFTER THREE (3) HOURS AND, IF NECESSARY, RETIGHTEN TO 88 FT-LBS. A FINAL CHECK SHALL BE MADE AT SEVEN (7) DAYS. TORQUE SHALL NOT BE LESS THAN 80 FT-LBS AFTER SEVEN (7) DAYS.
6. AFTER PROPER TORQUING, CLEAN THE BOLT HOLE RECESSES AND THE RECESS BETWEEN THE JOINT SEAL DEVICE AND CONCRETE, COMPLETELY FILL THESE RECESSES WITH NEOPRENE SEALANT.

GENERAL NOTES

1. FOR EXPANSION JOINT SEALS, SEE SPECIAL PROVISIONS.
2. ALL PLATES AND ANGLES SHALL CONFORM TO AASHTO M270 GRADE 36 STEEL OR APPROVED EQUAL. ALL HOLD-DOWN BOLTS SHALL CONFORM TO ASTM F593 ALLOY 304 STAINLESS STEEL AND WASHERS SHALL CONFORM TO ASTM F844 EXCEPT THEY SHALL BE MADE FROM ALLOY 304 STAINLESS STEEL. ALL STUD ANCHORS SHALL CONFORM TO AASHTO M169, GRADES 1010 THRU 1020 OR APPROVED EQUAL. ALL CONCRETE INSERTS SHALL BE CLOSED END AND SHALL CONFORM TO AASHTO M169, GRADE 12L14. TENSILE CAPACITY SHALL BE 3000 LBS. MIN.
3. A PREMOLDED CORRUGATED OR NON-CORRUGATED GLAND SHALL BE USED FOR JOINTS SKEWED BETWEEN 50° THRU 130°. FOR JOINTS SKEWED LESS THAN 50° OR MORE THAN 130°, ONLY A CORRUGATED GLAND SHALL BE USED.
4. CLOSED END FERRULES AND STUD ANCHORS SHALL BE SHOP WELDED AND ALL HOLES SHALL BE SHOP DRILLED AS SHOWN ON PLANS. STUD ANCHORS SHALL BE ELECTRIC ARC END WELDED WITH COMPLETE FUSION.
5. SURFACES COMING IN CONTACT WITH NEOPRENE SHALL BE GROUND SMOOTH PRIOR TO METALLIZING.
6. UPON COMPLETION OF SHOP FABRICATION, THE HOLD DOWN PLATE AND BASE ANGLE ASSEMBLY, AS SHOWN IN THE "TYPICAL SECTION OF BASE ANGLE ASSEMBLY", SHALL BE METALLIZED. SEE SPECIAL PROVISION FOR THERMAL SPRAYED COATINGS (METALLIZATION).
7. BASE ANGLE ASSEMBLY SHALL BE CONTINUOUS FOR THE LENGTH OF THE JOINT. AT CROWN BREAKS, THE ENDS OF THE BASE ANGLE ASSEMBLY SHALL BE CUT PARALLEL TO THE BRIDGE CENTERLINE FOR SKEWS LESS THAN 80° AND GREATER THAN 100°. FINISHED WELD SHALL BE GROUND SMOOTH AND COATED WITH A MINIMUM THICKNESS OF 4 DRY MILS OF ZINC-RICH PAINT IN ACCORDANCE WITH THE STANDARD SPECIFICATIONS.
8. FIELD SPLICES OF HOLD-DOWN PLATES SHALL BE KEPT TO A MINIMUM. CONTRACTOR SHALL FURNISH DETAILED PLANS SHOWING PROPOSED SPLICE LOCATIONS FOR APPROVAL. HOLD-DOWN PLATES SHALL NOT EXCEED 20' LENGTHS UNLESS APPROVED BY THE ENGINEER.
9. NO ALTERNATE JOINT DETAILS SHALL BE PERMITTED IN LIEU OF THOSE SHOWN ON THESE PLANS.
10. THE CONTRACTOR MAY, AT HIS OPTION, USE ADHESIVELY ANCHORED ANCHOR BOLTS IN PLACE OF CONCRETE INSERTS FOR COVER PLATES. THE YIELD LOAD OF THE ¾" Ø BOLT IS 10 KIPS. FIELD TESTING OF THE ADHESIVE BONDING SYSTEM IS NOT REQUIRED.

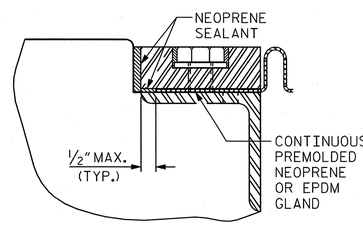

DETAIL "A"

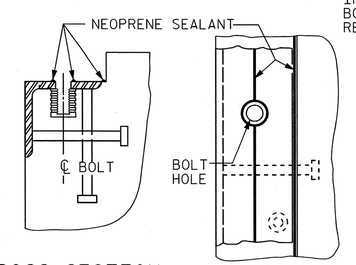

CROSS SECTION PLAN VIEW

INSTALLATION SKETCH

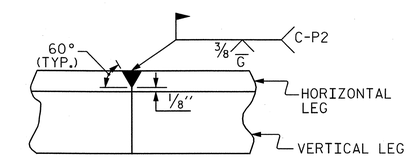

DETAIL- FIELD WELD SPLICE OF BASE ANGLE

MOVEMENT AND SETTING AT JOINT					
BENT NO.	SKEW ANGLE	TOTAL MOVEMENT (ALONG ℄ RDWY)	PERPENDICULAR JOINT OPENING AT 45° F	PERPENDICULAR JOINT OPENING AT 60° F	PERPENDICULAR JOINT OPENING AT 90° F
EB1	95°27'38"	¹³⁄₁₆"	1⁹⁄₁₆"	1⁷⁄₁₆"	1⁷⁄₁₆"
EB2	95°27'38"	1¼"	1¹³⁄₁₆"	1⅝"	1⅝"

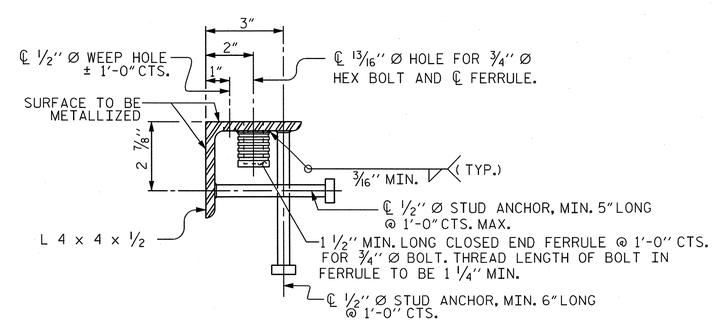

TYPICAL SECTION OF BASE ANGLE ASSEMBLY

PROJECT NO. U-2525B
GUILFORD COUNTY
STATION: 268+22.89 -L-
50+35.75 -Y13-

SHEET 1 OF 2

AECOM
AECOM TECHNICAL SERVICES, INC.
701 CORPORATE CENTER DRIVE, SUITE 475
RALEIGH, NC 27607
(919) 854-6200 www.aecom.com
AECOM License No. F-0342

NORTH CAROLINA PROFESSIONAL SEAL 030474 ENGINEER JOHN C. MORRISON
3/17/14

R.N. 10-23

STATE OF NORTH CAROLINA
DEPARTMENT OF TRANSPORTATION
RALEIGH

STANDARD

EXPANSION JOINT SEAL DETAILS

REVISIONS						SHEET NO.
NO.	BY:	DATE:	NO.	BY:	DATE:	S-36B
1			3			TOTAL SHEETS
2			4			541

STD. NO. EJS1 (SHT 2a)

ASSEMBLED BY : MTB		DATE : 10/13	
CHECKED BY : JCM		DATE : 10/13	
DRAWN BY : REK 9/87	REV. 5/7/03R	RWW/JTE	
CHECKED BY : CRK 10/87	REV. 5/1/06R	TLA/GM	
	REV. 10/1/11	MAA/GM	

DATE: 3/14/2014
TIME: 10:53:00 AM

USER: lowery
DGN: q:\6025\5350\400_Technical_Information_Disc_Files\450_NCDOT Std Tech Design Files\Structures\Bridge 10\Cat6\U2525B_SD_DSN_U42_EJS1.dgn

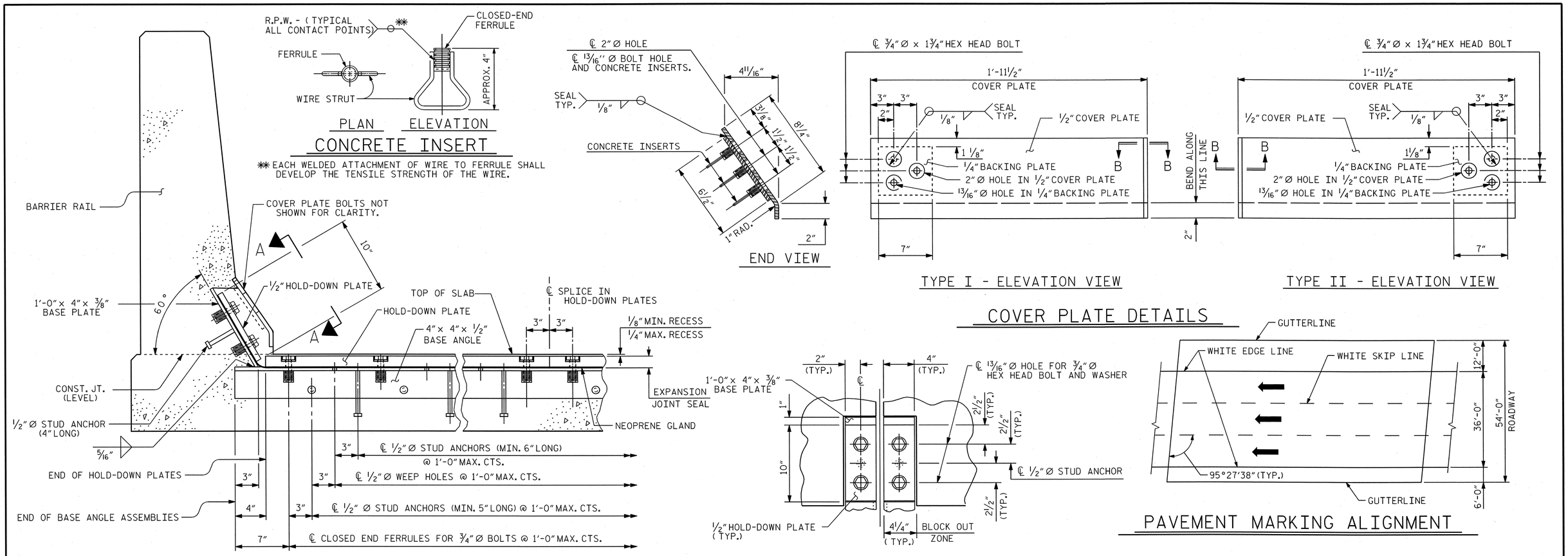

PROJECT NO. U-2525B

GUILFORD COUNTY

STATION: 268+22.89 -L-

50+35.75 -Y13-

SHEET 2 OF 2

ASSEMBLED BY : MTB		DATE : 10/13	
CHECKED BY : JCM		DATE : 10/13	
DRAWN BY : REK 9/87	REV. 10/1/11		MAA/GM
CHECKED BY : CRK 10/87	REV. 7/12		MAA/GM
	REV. 6/13		MAA/GM

AECOM

AECOM TECHNICAL SERVICES, INC.
701 CORPORATE CENTER DRIVE, SUITE 475
RALEIGH, NC 27607
(919) 854-6200
www.aecom.com
AECOM License No. F-0342

NORTH CAROLINA PROFESSIONAL SEAL 030474 ENGINEER JOHN C. MORRISON

3/17/14

R.N. 10-24

STATE OF NORTH CAROLINA
DEPARTMENT OF TRANSPORTATION
RALEIGH

STANDARD

EXPANSION JOINT SEAL DETAILS FOR BARRIER RAIL

REVISIONS						SHEET NO.
NO.	BY:	DATE:	NO.	BY:	DATE:	S-329
1			3			TOTAL SHEETS
2			4			541

STD. NO. EJS2 (SHT 2a)

DATE: 3/14/2014
TIME: 10:55:00 AM

USER: lowery
DGN: Q:\60029335\400_Technical_Information_Disc_Files\450_NCDOT Std Details\Highway Files\Structures\Bridge 10\Cadd\U2525B_SD_DSN_1\42_EJS2.dgn

REINFORCING BAR SCHEDULE

SPANS "A" AND "B"

BAR	NO.	SIZE	TYPE	LENGTH	WEIGHT
A1E	525	#5	STR	56'-11"	31,166
A2	525	#5	STR	56'-11"	31,166
A3E	1068	#5	4	9'-7"	10,675
A101E	2	#5	STR	2'-0"	4
A102E	2	#5	STR	6'-2"	13
A103E	2	#5	STR	11'-5"	24
A104E	2	#5	STR	16'-8"	35
A105E	2	#5	STR	21'-10"	46
A106E	2	#5	STR	27'-1"	56
A107E	2	#5	STR	32'-4"	67
A108E	2	#5	STR	37'-7"	78
A109E	2	#5	STR	42'-9"	89
A110E	2	#5	STR	48'-0"	100
A111E	2	#5	STR	53'-3"	111
A201	2	#5	STR	2'-0"	4
A202	2	#5	STR	7'-3"	13
A203	2	#5	STR	12'-6"	24
A204	2	#5	STR	17'-8"	35
A205	2	#5	STR	22'-11"	46
A206	2	#5	STR	28'-2"	56
A207	2	#5	STR	32'-4"	67
A208	2	#5	STR	37'-7"	78
A209	2	#5	STR	42'-9"	89
A210	2	#5	STR	48'-0"	100
A211	2	#5	STR	53'-3"	111
B1E	120	#4	STR	24'-9"	1,984
B2	370	#5	STR	55'-6"	21,418
B3E	38	#7	STR	60'-0"	4,660
B4E	37	#7	STR	42'-0"	3,176
B5E	38	#7	STR	38'-0"	2,952
B6E	160	#4	STR	29'-2"	3,117
J1E	108	#4	5	1'-5"	102
G1E	2	#5	STR	57'-2"	119
K1E	8	#5	1	9'-9"	81
K2E	20	#5	2	12'-6"	261
S1E	96	#4	3	3'-8"	235
REINFORCING STEEL					53,207
EPOXY COATED REINFORCING STEEL					48,476

"E" DENOTES EPOXY COATED REINFORCING STEEL.

SUPERSTRUCTURE BILL OF MATERIAL

SPANS	CLASS AA CONCRETE	REINFORCING STEEL	EPOXY COATED REINFORCING STEEL
	(CU. YDS.)	(LBS.)	(LBS.)
"A" AND "B"		53,207	59,151
POUR 1	101.4		
POUR 2	129.4		
POUR 3	212.9		
POUR 4	12.5		
**TOTALS	456.2	53,207	59,151

**QUANTITIES FOR BARRIER RAIL ARE NOT INCLUDED.

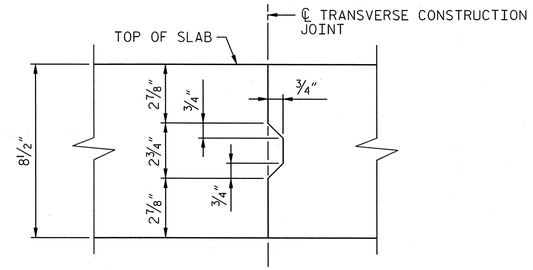

NOTE: REINFORCING STEEL IN SLAB NOT SHOWN FOR CLARITY LONGITUDINAL REINFORCING STEEL SHALL BE CONTINUOUS THRU JOINT.

TRANSVERSE CONSTRUCTION JOINT IN DECK SLAB

BAR TYPES

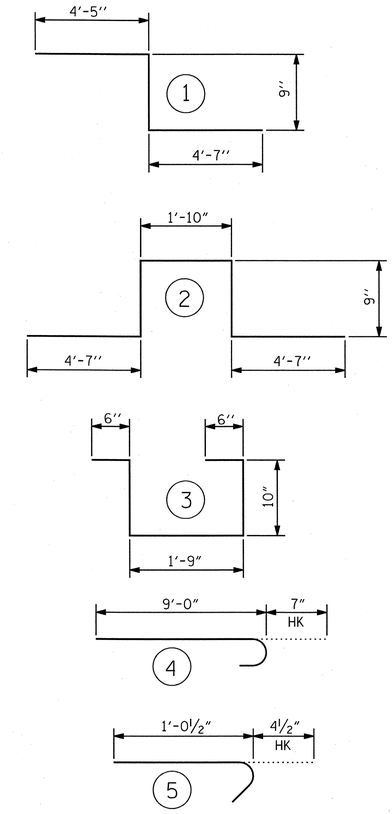

ALL BAR DIMENSIONS ARE OUT TO OUT

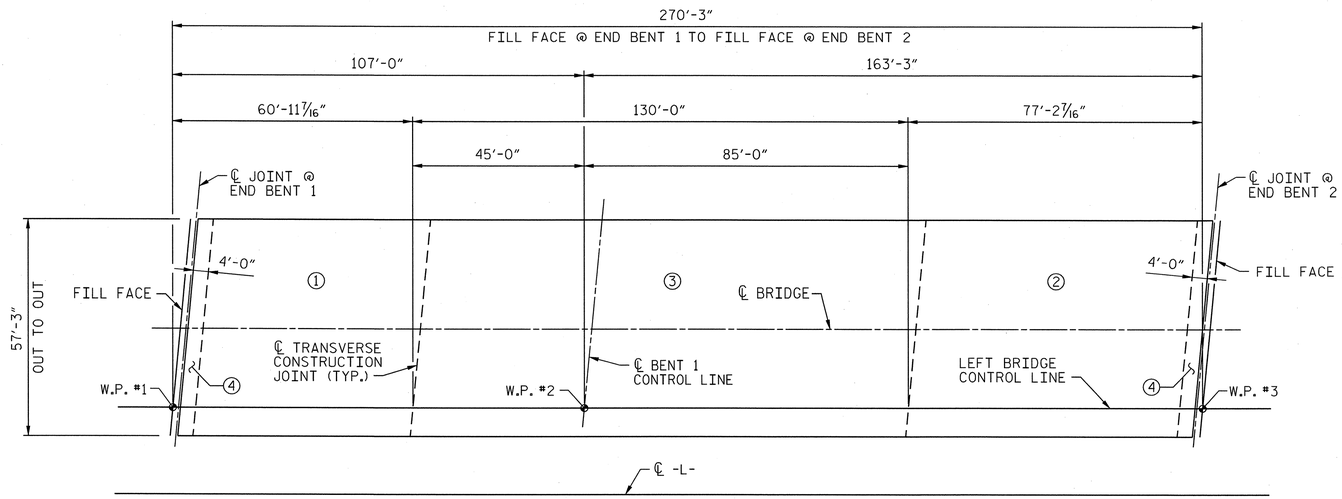

NOTE:
NO DECK POUR SHALL BE PLACED WHERE A POUR IN AN ADJACENT SPAN IS NOT A MINIMUM OF 72 HOURS OLD OR HAS NOT OBTAINED A MINIMUM COMPRESSIVE STRENGTH OF 3000 PSI.

SKETCH SHOWING LOCATION OF TRANSVERSE CONSTRUCTION JOINTS AND ORDER OF POURS

○ INDICATES POUR NUMBER

GROOVING BRIDGE FLOORS

APPROACH SLABS	2,461	SQ.FT.
BRIDGE DECK	13,638	SQ.FT.
TOTAL	16,099	SQ.FT.

SUPERSTRUCTURE REINFORCING STEEL LENGTHS ARE BASED ON THE FOLLOWING MINIMUM SPLICE LENGTHS

BAR SIZE	SUPERSTRUCTURE EXCEPT APPROACH SLABS, PARAPET, AND BARRIER RAIL		APPROACH SLABS		PARAPET AND BARRIER RAIL
	EPOXY COATED	UNCOATED	EPOXY COATED	UNCOATED	
#4	2'-0"	1'-9"	2'-0"	1'-9"	2'-9"
#5	2'-6"	2'-2"	2'-6"	2'-2"	3'-5"
#6	3'-0"	2'-7"	3'-10"	2'-7"	4'-4"
#7	5'-3"	3'-6"			
#8	6'-10"	4'-7"			

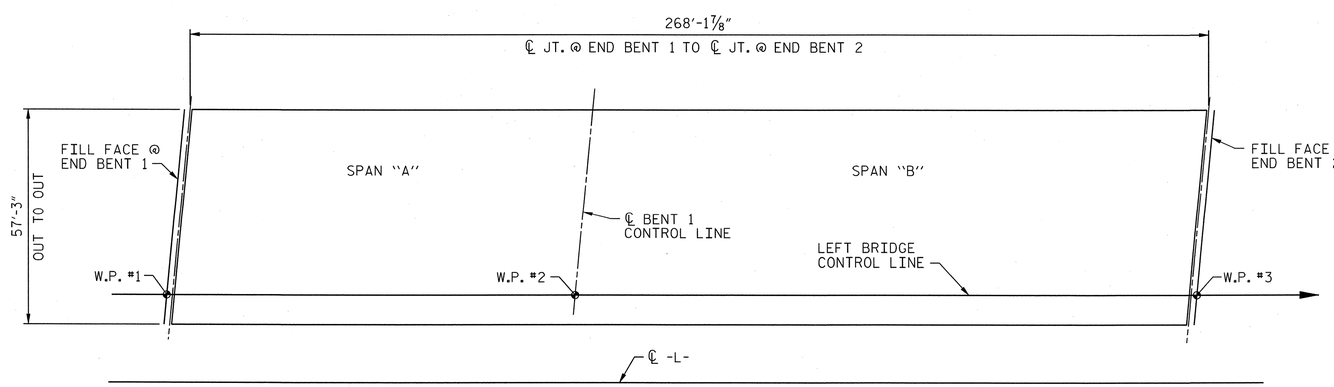

LAYOUT FOR COMPUTING AREA OF REINFORCED CONCRETE DECK SLAB
(SQ. FT. = 15,352)

PROJECT NO. U-2525B
GUILFORD COUNTY
STATION: 268+22.89 -L-
50+35.75 -Y13-

AECOM
AECOM TECHNICAL SERVICES, INC.
701 CORPORATE CENTER DRIVE, SUITE 475
RALEIGH, NC 27607
(919) 854-6200 www.aecom.com
AECOM License No. F-0342

NORTH CAROLINA PROFESSIONAL SEAL 030474 ENGINEER JOHN C. MORRISON
3/17/14
R.N. 10-25

STATE OF NORTH CAROLINA
DEPARTMENT OF TRANSPORTATION
RALEIGH

SUPERSTRUCTURE
BILL OF MATERIAL

REVISIONS						SHEET NO.
NO.	BY:	DATE:	NO.	BY:	DATE:	S-370
1			3			TOTAL SHEETS
2			4			541

DRAWN BY : MTB DATE : 03/14
CHECKED BY : JCM DATE : 03/14

DATE: 3/24/2014
TIME: 10:04:46 AM

USER: lowerod
DGN: d:\8d28f9356h400_Technical_Information_Disc_File\450_NCDOT Std Tech Design Files\Structures\Bridge IO\Cadd\U2525B_SD_DSN_U42_BOM.dgn

NOTES:

SEE SHEET 2 OF 5 FOR NOTES.

SEE SHEET 2 OF 5 FOR BEARING DETAIL.

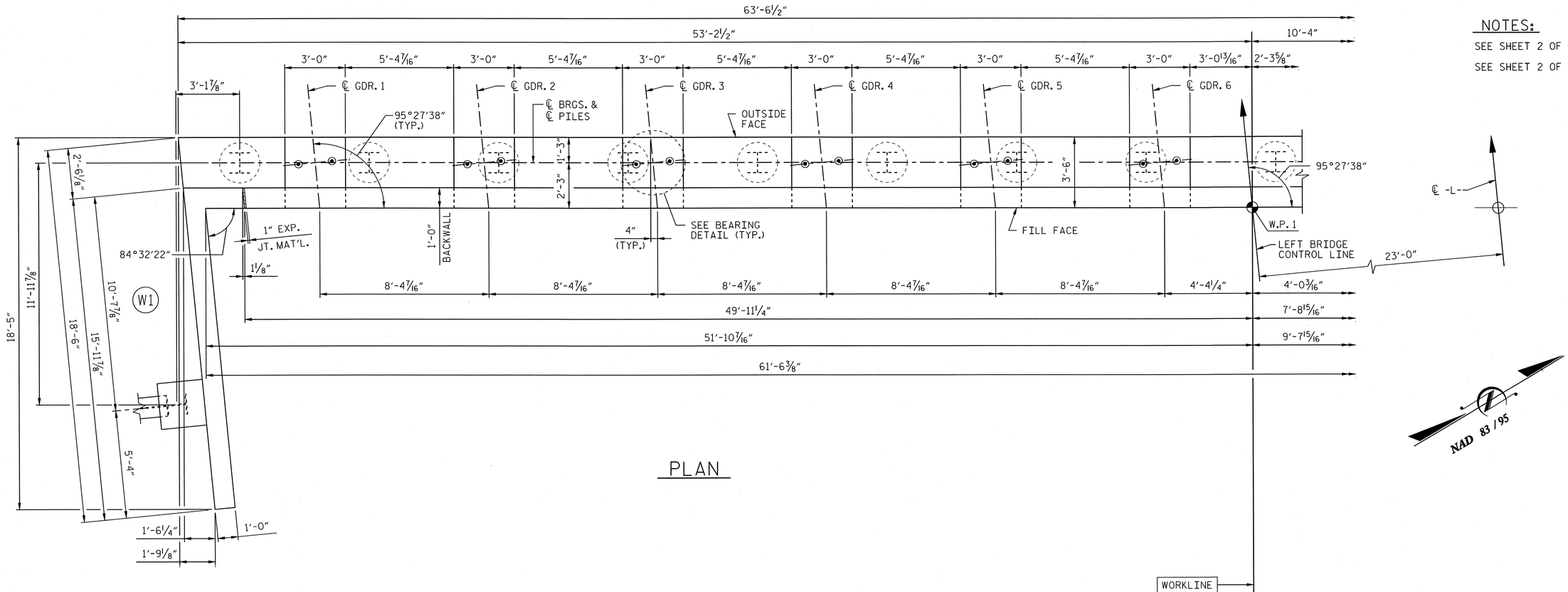

PLAN

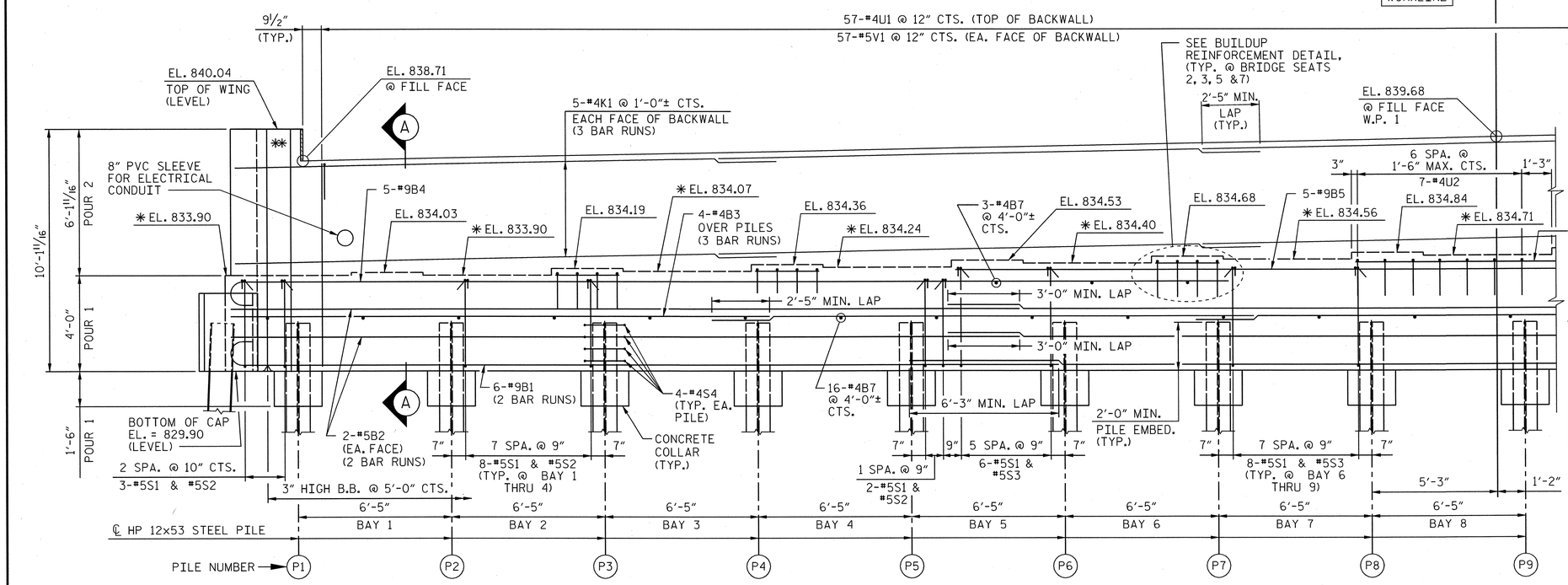

✱SEE SECTION "A-A" SHEET 5 OF 5.

✱✱REINFORCING IN WING NOT SHOWN FOR CLARITY. FOR DETAILS, SEE SHEET 3 & 4.

ELEVATION

DRAWN BY : MTB DATE : 10/13
CHECKED BY : JCM DATE : 10/13

PROJECT NO. U-2525B

GUILFORD **COUNTY**

STATION: 268+22.89 -L-
50+35.75 -Y13-

SHEET 1 OF 5

AECOM
AECOM TECHNICAL SERVICES, INC.
701 CORPORATE CENTER DRIVE, SUITE 475
RALEIGH, NC 27607
(919) 854-6200 www.aecom.com
AECOM License No. F-0342

NORTH CAROLINA PROFESSIONAL SEAL 030474 ENGINEER JOHN C. MORRISON
3/17/14
R.N. 10-26

STATE OF NORTH CAROLINA
DEPARTMENT OF TRANSPORTATION
RALEIGH

SUBSTRUCTURE
END BENT 1
PLAN AND ELEVATION

REVISIONS						SHEET NO.
NO.	BY:	DATE:	NO.	BY:	DATE:	S-371
1			3			TOTAL SHEETS
2			4			541

DATE: 3/14/2014
TIME: 10:28:57 AM

USER: lawarren
DGN: D:\SDP\3256\400_Technical_Information_Disc_Files\450_MCDOT\Sdf\eng\Design\Structures\Bridge 0\Coded\U2525B_SD_DSN_U42_EBT1_L4.dgn

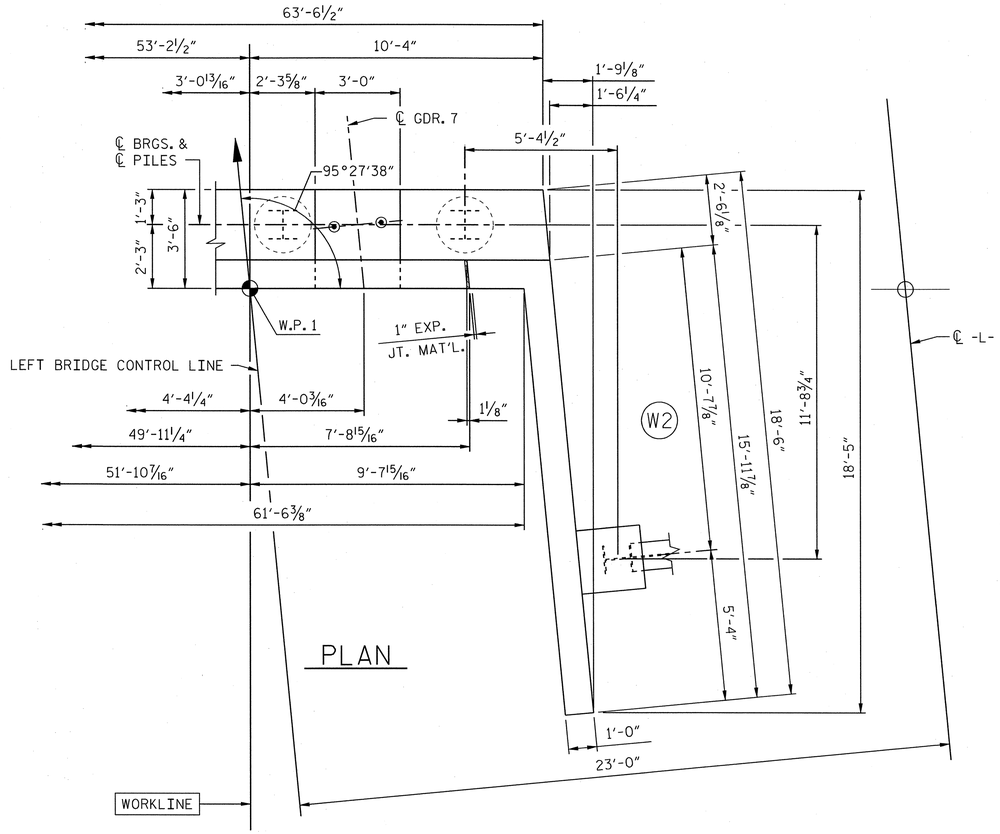

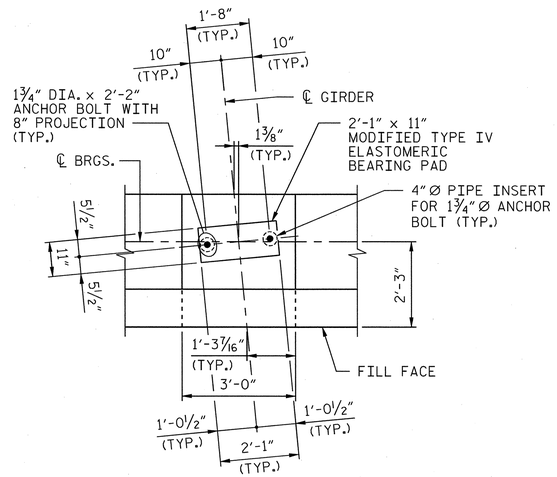

BEARING DETAIL

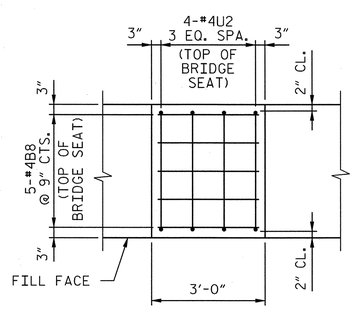

BUILDUP REINFORCEMENT

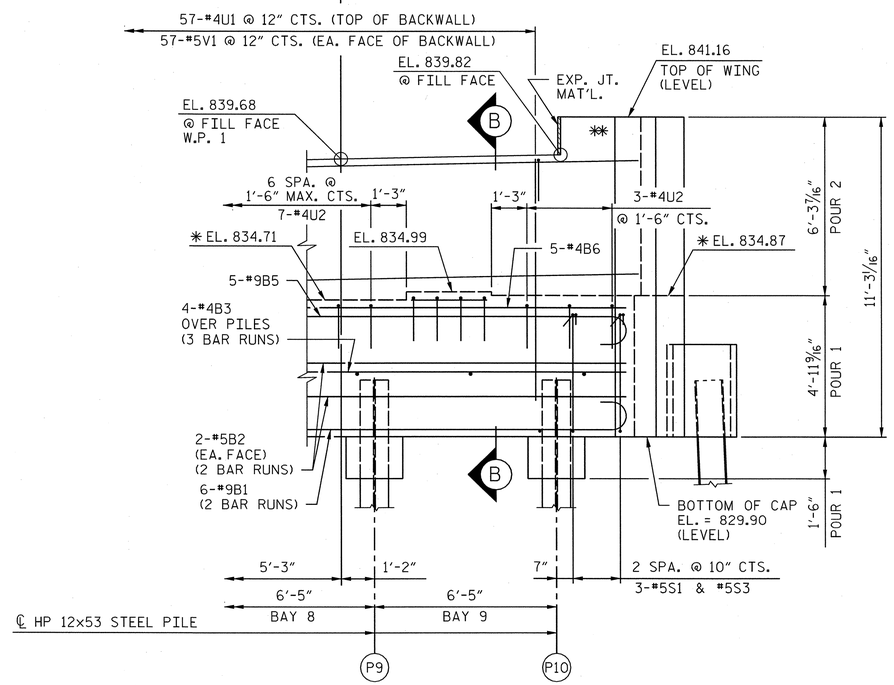

ELEVATION

NOTES:

STIRRUPS IN CAP MAY BE SHIFTED AS NECESSARY TO CLEAR PIPE INSERT.

FOR PIPE INSERT DETAILS, SEE "ELASTOMERIC BEARINGS" SHEET.

BACKWALL SHALL BE PLACED BEFORE APPLYING THE EPOXY PROTECTIVE COATING.

EPOXY COAT THE END BENT CAP AFTER ADJUSTMENTS ARE MADE TO BEARINGS AND ANCHOR BOLTS ARE GROUTED.

THE TOP SURFACE AREAS OF THE END BENT CAP SHALL BE CURED IN ACCORDANCE WITH THE STANDARD SPECIFICATIONS EXCEPT THAT THE MEMBRANE CURING COMPOUND METHOD SHALL NOT BE USED.

THE TOP SURFACE OF THE CAP EXCEPT THE BRIDGE SEAT BUILDUPS SHALL BE SLOPED TRANSVERSELY FROM THE FILL FACE TO THE FRONT FACE AT THE RATE OF 2%.

INSTALL THE 4" DIA. DRAIN PIPE THROUGH THE WING WALL AS REQUIRED FOR REINFORCED BRIDGE APPROACH FILLS, SEE ROADWAY PLANS. REINFORCING STEEL IN THE WING WALL MAY BE SHIFTED AS NECESSARY TO CLEAR THE DRAIN PIPE.

FOR GALVANIZED REINFORCING STRAPS, REFER TO MSE WALL SHEETS AT STR. #8 AND STR. #9.

FOR DETAILS OF THE ELECTRICAL CONDUIT SYSTEM THROUGH BACKWALL, SEE "ELCTRICAL CONDUIT SYSTEM FOR SIGNALS" SHEET.

FOR MSE RETAINING WALLS, SEE SPECIAL PROVISIONS.

FOR OTHER NOTES, SEE FOUNDATION LAYOUT.

PROJECT NO. U-2525B

GUILFORD COUNTY

STATION: 268+22.89 -L-
50+35.75 -Y13-

SHEET 2 OF 5

AECOM
AECOM TECHNICAL SERVICES, INC.
701 CORPORATE CENTER DRIVE, SUITE 475
RALEIGH, NC 27607
(919) 854-6200 www.aecom.com
AECOM License No. F-0342

NORTH CAROLINA PROFESSIONAL SEAL 030474 ENGINEER JOHN C. MORRISON
3/17/14

R.N. 10-27

STATE OF NORTH CAROLINA
DEPARTMENT OF TRANSPORTATION
RALEIGH

SUBSTRUCTURE
END BENT 1
PLAN AND ELEVATION

REVISIONS						SHEET NO.
NO.	BY:	DATE:	NO.	BY:	DATE:	S-372
1			3			TOTAL SHEETS
2			4			541

DRAWN BY : MTB DATE : 10/13
CHECKED BY : JCM DATE : 10/13

DATE: 3/14/2014
TIME: 10:28:07 AM
USER: lowerjd
DGN: 0:\2525B\3356\400_Technical_Information_Disc_Files\450_NCDOT Std Tech Design Files\Structures\Bridge 10\Cat0\U2525B_SD_DSN_1\42_EBT1_2.dgn

NOTES:

SEE SHEET 2 OF 5 FOR NOTES.

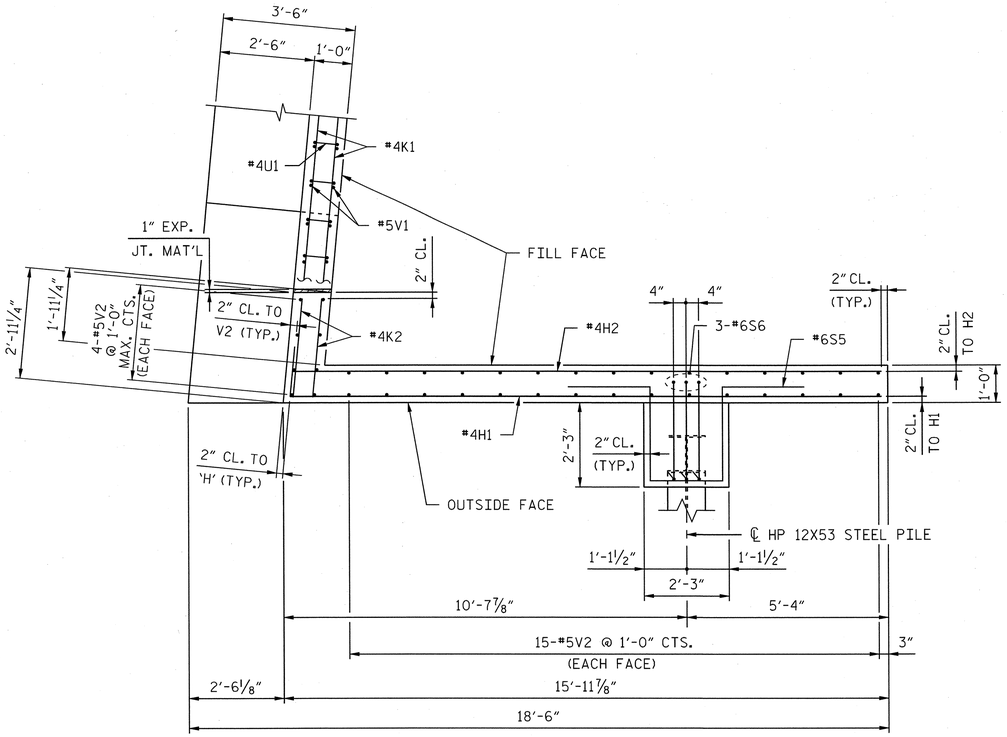

PLAN W1

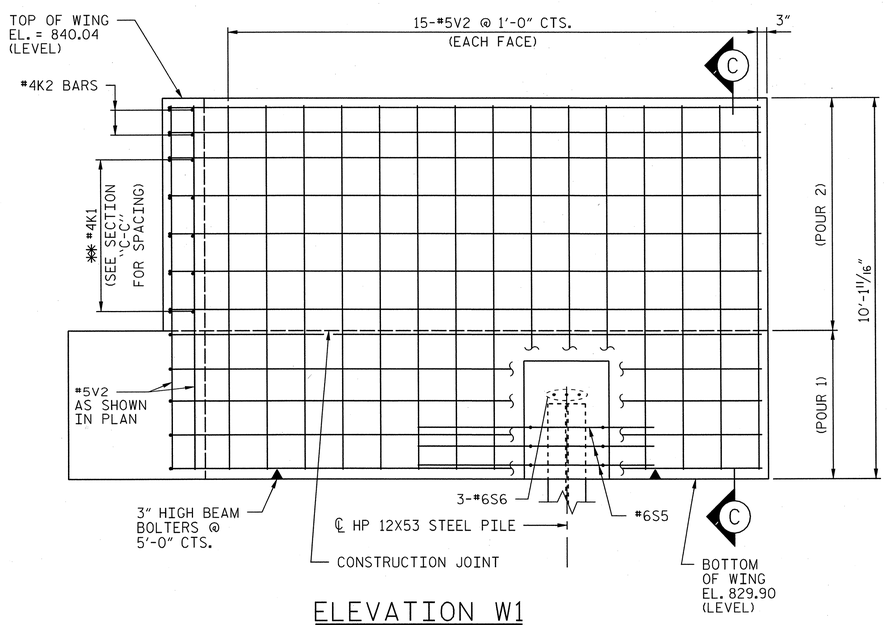

ELEVATION W1

✱✱ PLACE #4 'H' BARS TO MATCH #4K1 BARS IN BACKWALL

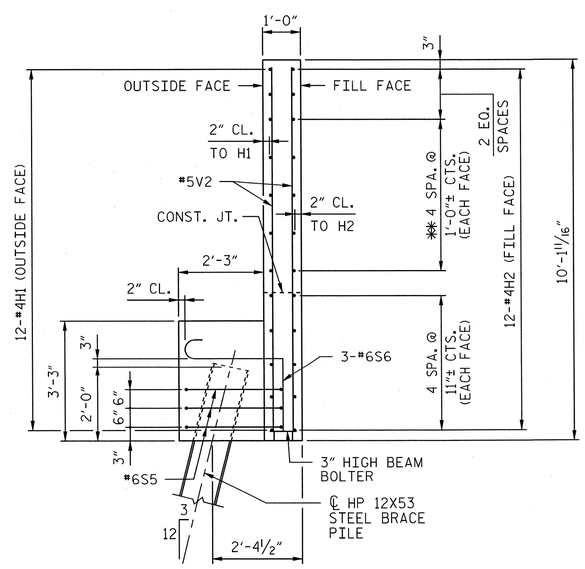

SECTION C-C

PROJECT NO. U-2525B

GUILFORD COUNTY

STATION: 268+22.89 -L-
50+35.75 -Y13-

SHEET 3 OF 5

AECOM
AECOM TECHNICAL SERVICES, INC.
701 CORPORATE CENTER DRIVE, SUITE 475
RALEIGH, NC 27607
(919) 854-6200 www.aecom.com
AECOM License No. F-0342

NORTH CAROLINA PROFESSIONAL SEAL 030474 ENGINEER JOHN C. MORRISON
3/17/14

R.N. 10-28

STATE OF NORTH CAROLINA
DEPARTMENT OF TRANSPORTATION
RALEIGH

SUBSTRUCTURE
END BENT 1
SECTIONS AND DETAILS

REVISIONS						SHEET NO.
NO.	BY:	DATE:	NO.	BY:	DATE:	S-373
						TOTAL SHEETS 541

DRAWN BY : DDL DATE : 10/13
CHECKED BY : JCM DATE : 10/13

DATE: 3/14/2014
TIME: 10:30:33 AM

USER: lawayne
DGN: G:\52\2\9356\400_Technical_Information_Disc_Files\450_MOD\Stuffed\Design\Files\Structures\Bridge 10\Cadd\U2525B_SD_DSN_W2_EB1_3.dgn

NOTES:

SEE SHEET 2 OF 5 FOR NOTES.

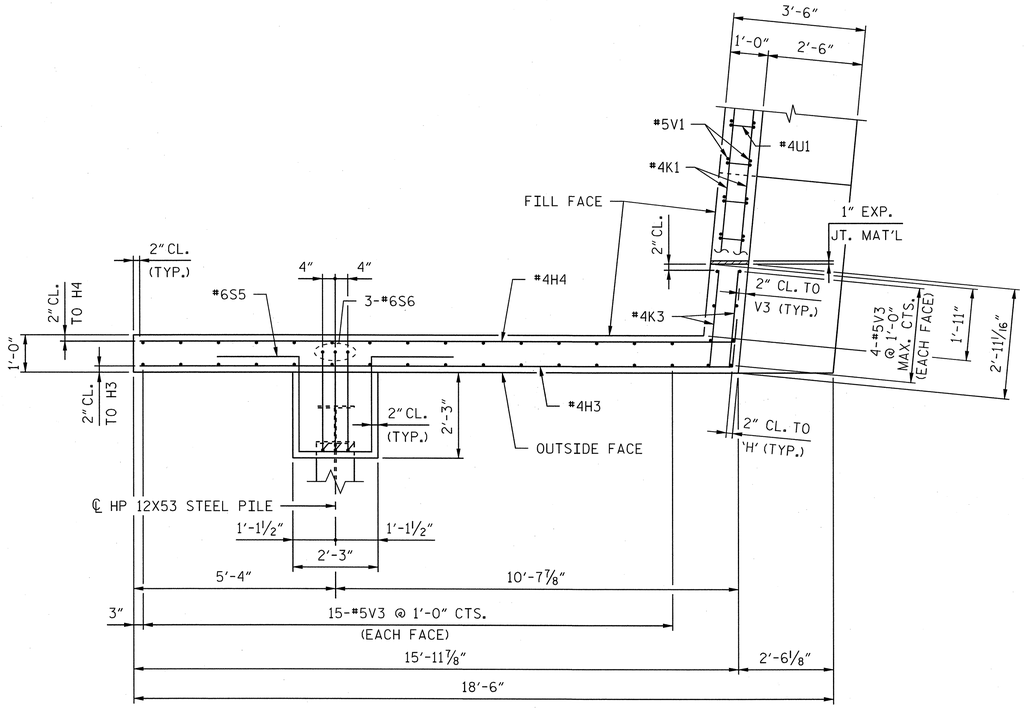

PLAN W2

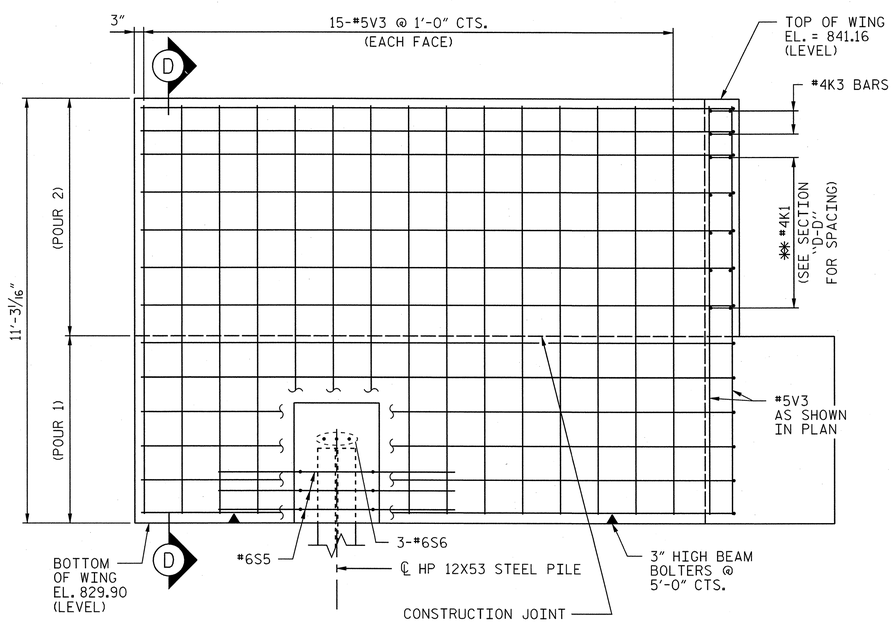

ELEVATION W2

✱✱ PLACE #4 'H' BARS TO MATCH #4K1 BARS IN BACKWALL

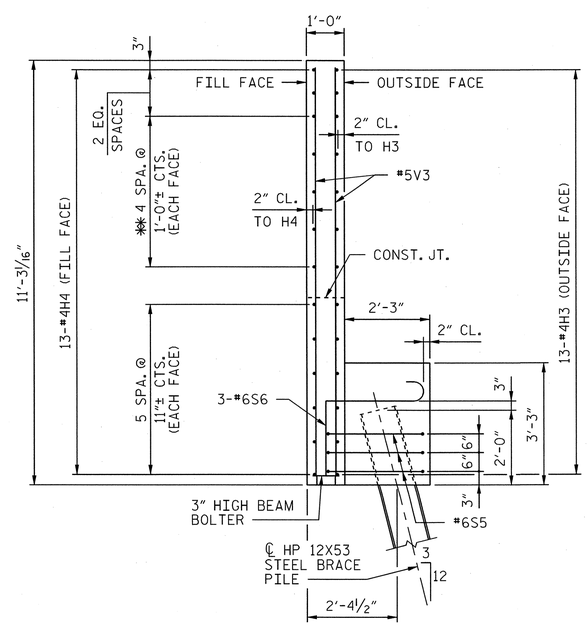

SECTION D-D

PROJECT NO. U-2525B

GUILFORD COUNTY

STATION: 268+22.89 -L-
50+35.75 -Y13-

SHEET 4 OF 5

AECOM
AECOM TECHNICAL SERVICES, INC.
701 CORPORATE CENTER DRIVE, SUITE 475
RALEIGH, NC 27607
(919) 854-6200
www.aecom.com
AECOM License No. F-0342

NORTH CAROLINA PROFESSIONAL SEAL 030474 ENGINEER JOHN C. MORRISON
3/17/14

R.N. 10-29

STATE OF NORTH CAROLINA
DEPARTMENT OF TRANSPORTATION
RALEIGH

SUBSTRUCTURE
END BENT 1
SECTIONS AND DETAILS

REVISIONS						SHEET NO.
NO.	BY:	DATE:	NO.	BY:	DATE:	S-374
						TOTAL SHEETS
						541

DRAWN BY : DDL DATE : 10/13
CHECKED BY : JCM DATE : 10/13

DATE: 3/14/2014
TIME: 10:32:50 AM

USER: lawayne
DGN: U:\U2525\556400_Technical_Information_Disc_Files\450_NCDOT Stuff extra\Design Files\Structures\Bridge 1\Cadd\U2525B_SD_DSN_W2_EBT1_A.dgn

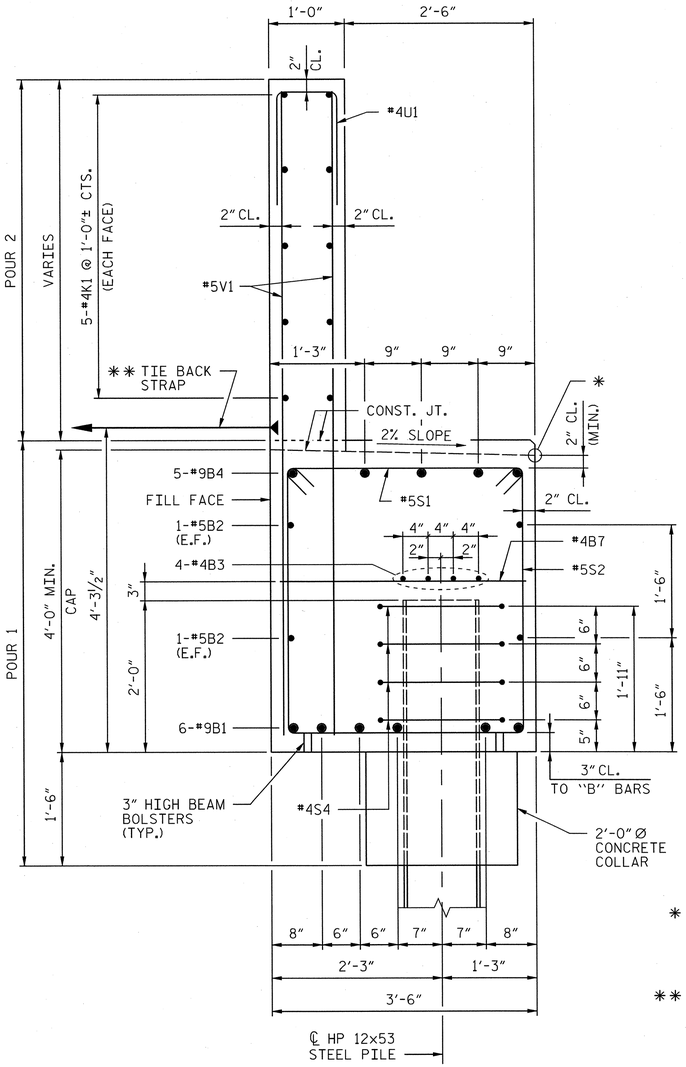

SECTION "A-A"

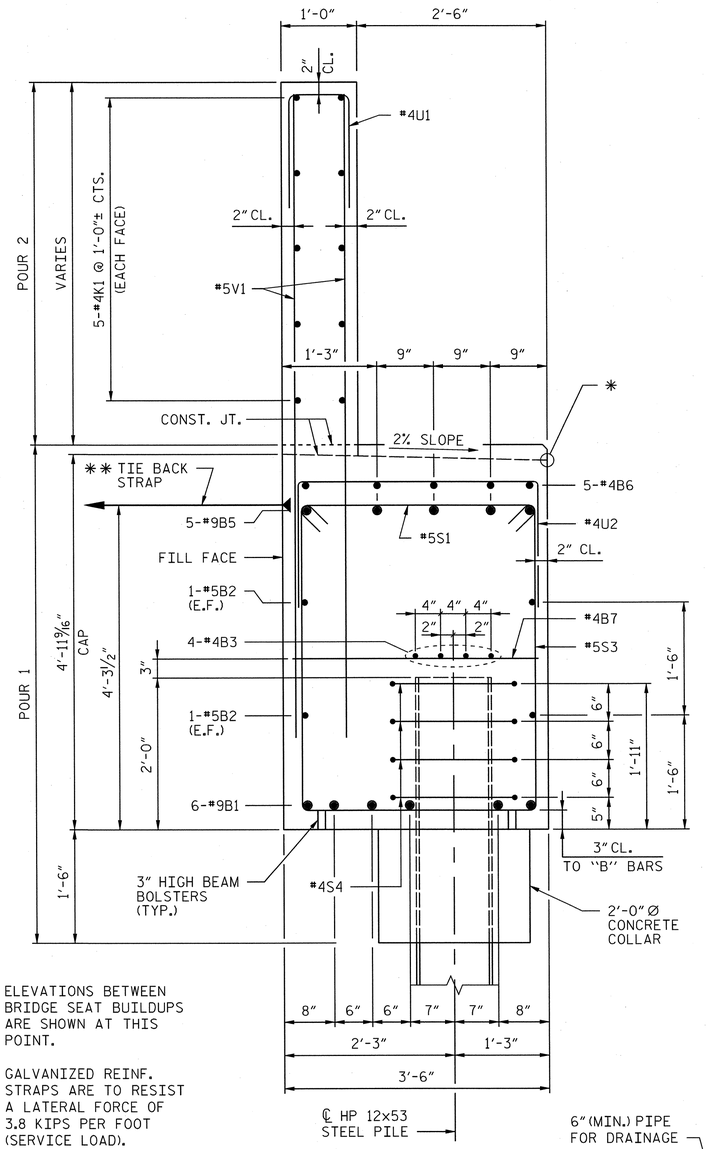

SECTION "B-B"

* ELEVATIONS BETWEEN BRIDGE SEAT BUILDUPS ARE SHOWN AT THIS POINT.

** GALVANIZED REINF. STRAPS ARE TO RESIST A LATERAL FORCE OF 3.8 KIPS PER FOOT (SERVICE LOAD). REFER TO NOTES ON SHEET 2 OF 5.

BAR TYPES

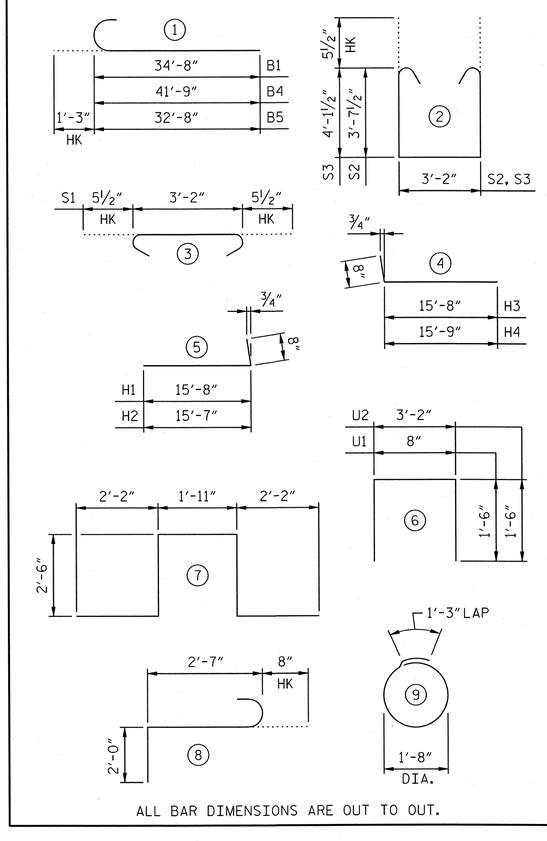

ALL BAR DIMENSIONS ARE OUT TO OUT.

BILL OF MATERIAL

END BENT 1

BAR	NO.	SIZE	TYPE	LENGTH	WEIGHT
B1	12	#9	1	35'-11"	1465
B2	8	#5	STR	33'-1"	276
B3	12	#4	STR	22'-9"	182
B4	5	#9	1	43'-0"	731
B5	5	#9	1	33'-11"	577
B6	5	#4	STR	16'-0"	53
B7	19	#4	STR	3'-2"	40
B8	20	#4	STR	2'-8"	36
H1	12	#4	5	16'-4"	131
H2	12	#4	5	16'-3"	130
H3	13	#4	4	16'-4"	142
H4	13	#4	4	16'-5"	143
K1	30	#4	STR	22'-9"	456
K2	4	#4	STR	2'-8"	7
K3	4	#4	STR	2'-8"	7
S1	78	#5	3	4'-1"	332
S2	37	#5	2	11'-4"	437
S3	41	#5	2	12'-4"	527
S4	40	#4	9	6'-6"	174
S5	6	#6	7	11'-3"	101
S6	6	#6	8	5'-3"	47
U1	57	#4	6	3'-8"	140
U2	26	#4	6	6'-2"	107
V1	114	#5	STR	8'-6"	1011
V2	38	#5	STR	9'-8"	383
V3	38	#5	STR	10'-10"	429

TOTAL REINFORCING STEEL LBS. 8064

END BENT 1 TOTAL QUANTITIES

CLASS A CONCRETE		
POUR 1 (COLLARS, CAP & LOWER WING)	C.Y.	45.1
POUR 2 (BACKWALL & UPPER WING)	C.Y.	18.7
TOTAL	C.Y.	63.8
HP 12x53 STEEL PILES	NO.	12
	LIN. FT.	540

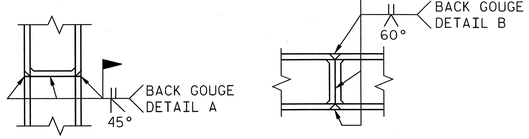

*** PILE VERTICAL

*** PILE HORIZONTAL OR VERTICAL

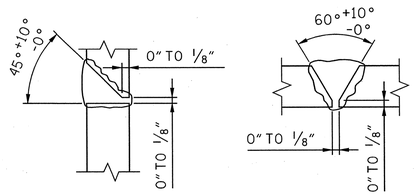

DETAIL A

DETAIL B

*** POSITION OF PILE DURING WELDING.

PILE SPLICE DETAILS

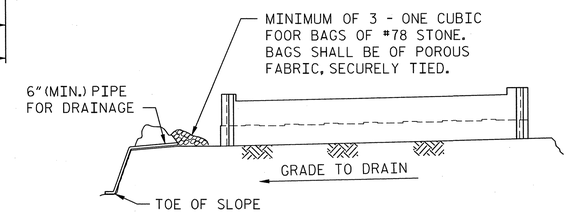

BAGGED STONE AND PIPE SHALL BE PLACED IMMEDIATELY AFTER COMPLETION OF END BENT EXCAVATION. PIPE MAY BE EITHER CONCRETE, CORRUGATED STEEL, CORRUGATED ALUMINUM ALLOY, OR CORRUGATED PLASTIC. PERFORATED PIPE WILL NOT BE ALLOWED.

BAGGED STONE SHALL REMAIN IN PLACE UNTIL THE ENGINEER DIRECTS THAT IT BE REMOVED. THE CONTRACTOR SHALL REMOVE AND DISPOSE OF SILT ACCUMULATIONS AT BAGGED STONE WHEN SO DIRECTED BY THE ENGINEER. BAGS SHALL BE REMOVED AND REPLACED WHENEVER THE ENGINEER DETERMINES THAT THEY HAVE DETERIORATED AND LOST THEIR EFFECTIVENESS.

NO SEPARATE PAYMENT WILL BE MADE FOR THIS WORK AND THE ENTIRE COST OF THIS WORK SHALL BE INCLUDED IN THE UNIT CONTRACT PRICE FOR THE SEVERAL PAY ITEMS.

TEMPORARY DRAINAGE END BENT

PROJECT NO. U-2525B

GUILFORD COUNTY

STATION: 268+22.89 -L-
50+35.75 -Y13-

SHEET 5 OF 5

AECOM
AECOM TECHNICAL SERVICES, INC.
701 CORPORATE CENTER DRIVE, SUITE 475
RALEIGH, NC 27607
(919) 854-6200 www.aecom.com
AECOM License No. F-0342

NORTH CAROLINA PROFESSIONAL SEAL 030474 ENGINEER JOHN C. MORRISON
3/17/14

R.N. 10-30

STATE OF NORTH CAROLINA
DEPARTMENT OF TRANSPORTATION
RALEIGH

SUBSTRUCTURE
END BENT 1
SECTIONS AND DETAILS

REVISIONS						SHEET NO.
NO.	BY:	DATE:	NO.	BY:	DATE:	S-375
						TOTAL SHEETS 541

DRAWN BY : DDL DATE : 10/13
CHECKED BY : JCM DATE : 10/13

DATE: 3/14/2014
TIME: 10:34:47 AM

USER: lowery
DGN: G:\U2525\9356\400_Technical_Information_Disc_File\450_NCDOT Shd Tech Des\proFiles\Structures\Bridge 10\Cadd\U2525B_S0_DSN_1142_EBT1_5.dgn

NOTES:

STIRRUPS IN CAP MAY BE SHIFTED AS NECESSARY TO CLEAR ANCHOR BOLTS.

HOOKS ON "V" BARS MAY BE TURNED AS NECESSARY FOR PLACING REINFORCING STEEL.

FOR OTHER NOTES, SEE "GENERAL DRAWINGS".

FOR PILE SPLICE DETAILS, SEE "END BENT" SHEETS.

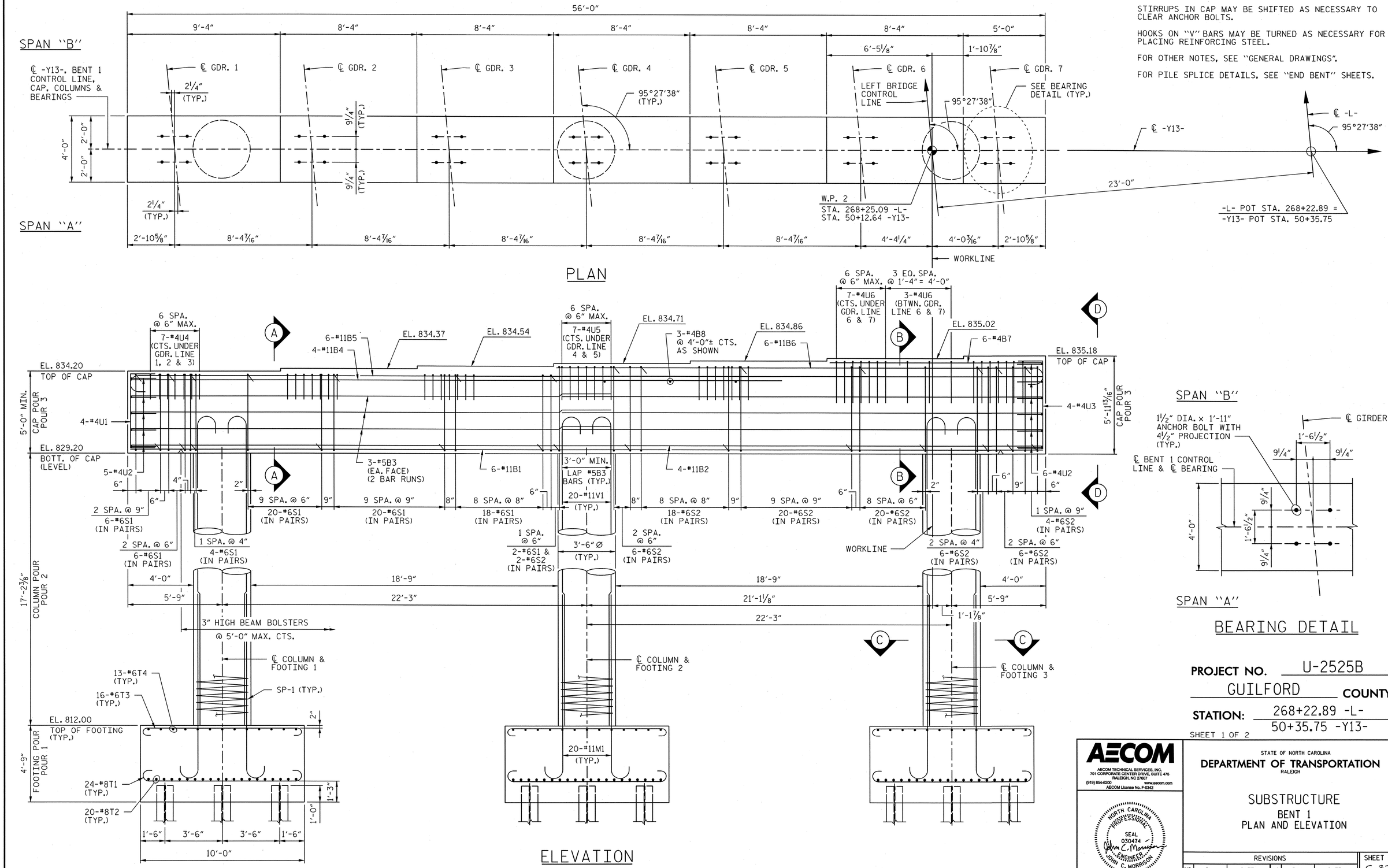

PROJECT NO. U-2525B

GUILFORD COUNTY

STATION: 268+22.89 -L-
50+35.75 -Y13-

SHEET 1 OF 2

AECOM
AECOM TECHNICAL SERVICES, INC.
701 CORPORATE CENTER DRIVE, SUITE 475
RALEIGH, NC 27607
(919) 854-6200 www.aecom.com
AECOM License No. F-0342

NORTH CAROLINA PROFESSIONAL SEAL 030474 ENGINEER JOHN C. MORRISON
3/17/14
R.N. 10-31

STATE OF NORTH CAROLINA
DEPARTMENT OF TRANSPORTATION
RALEIGH

SUBSTRUCTURE
BENT 1
PLAN AND ELEVATION

REVISIONS						SHEET NO.
NO.	BY:	DATE:	NO.	BY:	DATE:	S-376
1			3			TOTAL SHEETS
2			4			541

DRAWN BY : DDL DATE : 03/14
CHECKED BY : JCM DATE : 03/14

DATE: 3/14/2014
TIME: 10:08:13 AM

USER: lowerjd
DGN: q:\60029335\400_Technical_Information_Disc_Files\450_NC0013\StdTechDesignFiles\Structures\Bridge 10\Cadd\U2525B_SD_DSN_IH2_BENT1.dgn

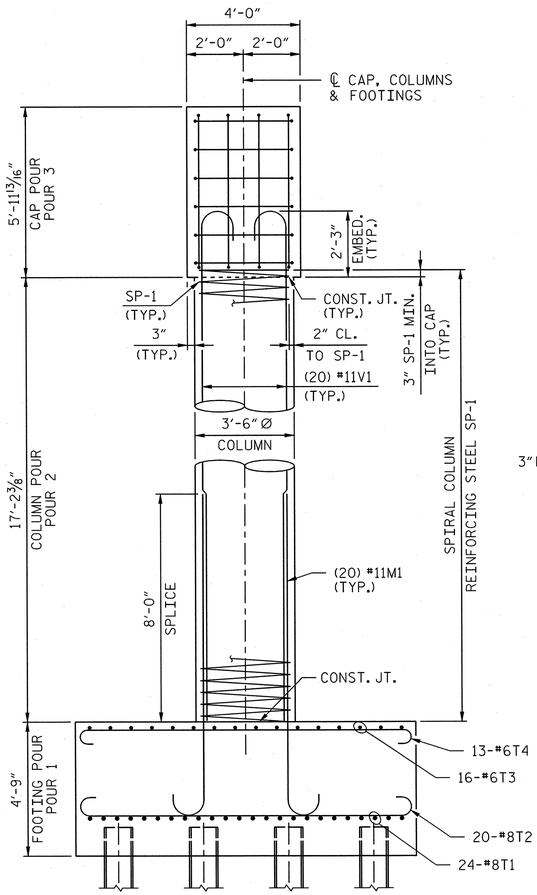

END VIEW

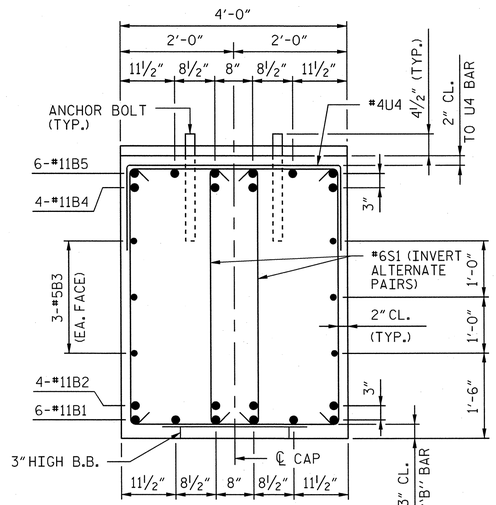

SECTION "A-A"

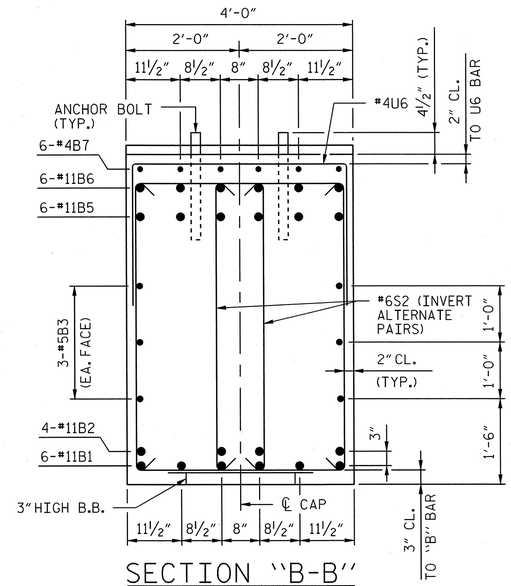

SECTION "B-B"

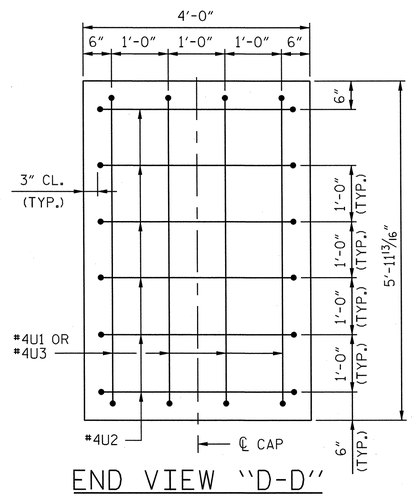

END VIEW "D-D"

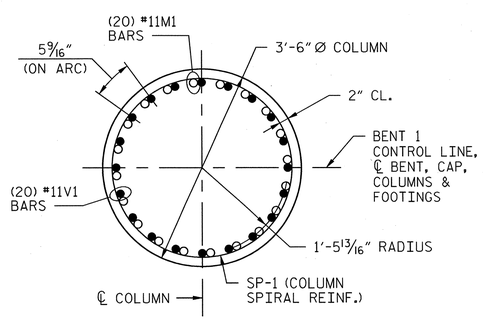

SECTION "C-C"

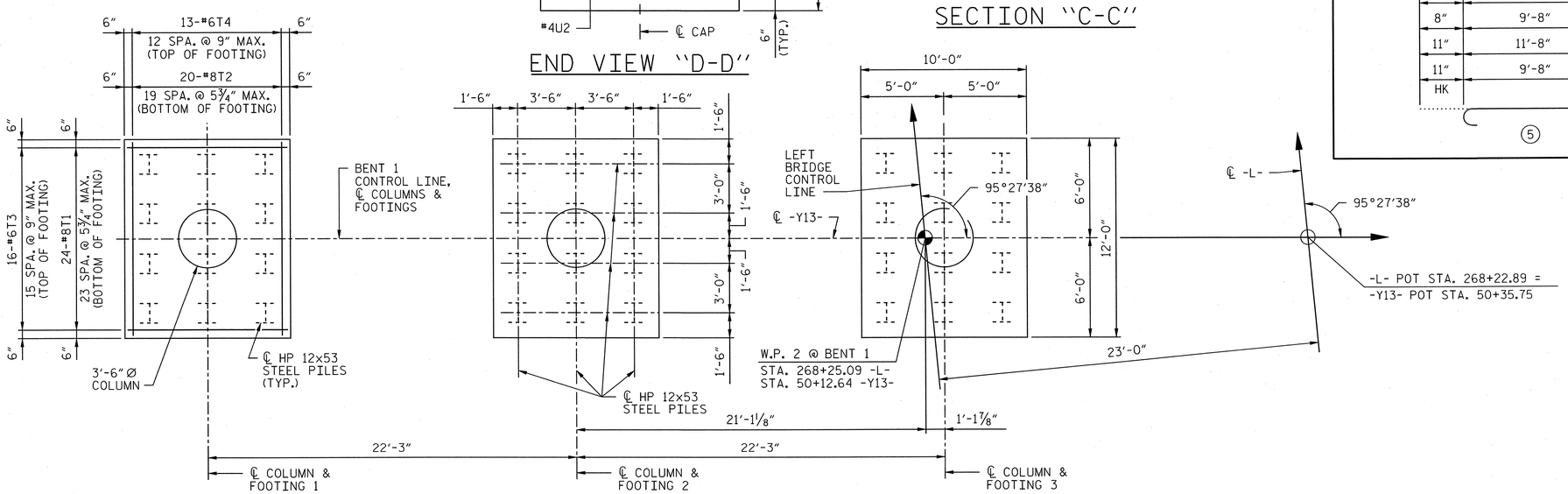

PLAN OF FOOTINGS

BAR TYPES

ALL BAR DIMENSIONS ARE OUT TO OUT.

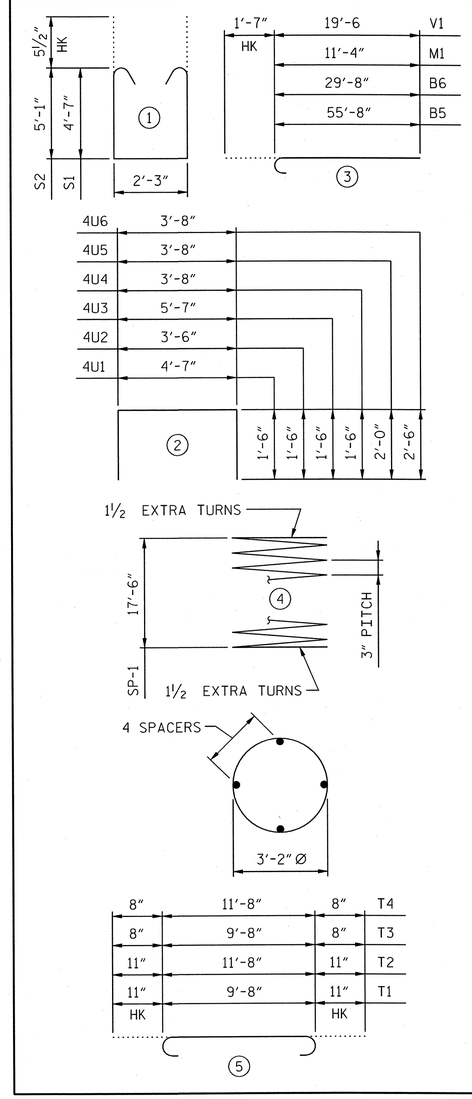

BILL OF MATERIAL

BENT 1

BAR	NO.	SIZE	TYPE	LENGTH	WEIGHT
B1	6	#11	STR	55'-8"	1775
B2	4	#11	STR	55'-8"	1183
B3	12	#5	STR	29'-4"	367
B4	4	#11	STR	39'-9"	845
B5	6	#11	3	57'-3"	1825
B6	6	#11	3	31'-3"	996
B7	6	#4	STR	13'-0"	52
B8	3	#4	STR	3'-8"	7
M1	60	#11	3	12'-11"	4118
S1	76	#6	1	12'-4"	1408
S2	82	#6	1	13'-4"	1642
T1	72	#8	5	11'-6"	2211
T2	60	#8	5	13'-6"	2163
T3	48	#6	5	11'-0"	793
T4	39	#6	5	13'-0"	762
U1	4	#4	2	7'-7"	20
U2	11	#4	2	6'-6"	48
U3	4	#4	2	8'-7"	23
U4	21	#4	2	6'-8"	94
U5	14	#4	2	7'-8"	72
U6	17	#4	2	8'-8"	98
V1	60	#11	3	21'-1"	6721
REINFORCING STEEL				LBS.	27223
SP-1	3	***	4	717'-0"	1437
SPIRAL COLUMN REINFORCING STEEL				LBS.	1437

*** THE "SP" SPIRAL REINFORCING STEEL SHALL BE W20 OR D-20 COLD DRAWN WIRE OR #4 PLAIN OR DEFORMED BAR.

BENT 1 TOTAL QUANTITIES

CLASS A CONCRETE		
POUR 1 (FOOTINGS)	C.Y.	63.3
POUR 2 (COLUMNS)	C.Y.	18.5
POUR 3 (CAP)	C.Y.	45.3
TOTAL CLASS A CONCRETE	C.Y.	127.1
HP 12x53 STEEL PILES	NO.	36
	LIN. FT.	840

PROJECT NO. U-2525B

GUILFORD COUNTY

STATION: 268+22.89 -L-
50+35.75 -Y13-

SHEET 2 OF 2

AECOM
AECOM TECHNICAL SERVICES, INC.
701 CORPORATE CENTER DRIVE, SUITE 475
RALEIGH, NC 27607
(919) 854-6200
www.aecom.com
AECOM License No. F-0342

NORTH CAROLINA PROFESSIONAL SEAL 030474 ENGINEER JOHN C. MORRISON
3/17/14

R.N. 10-32

STATE OF NORTH CAROLINA
DEPARTMENT OF TRANSPORTATION
RALEIGH

SUBSTRUCTURE
BENT 1
SECTIONS AND DETAILS

REVISIONS						SHEET NO.
NO.	BY:	DATE:	NO.	BY:	DATE:	S-377
						TOTAL SHEETS 541

DRAWN BY : DDL DATE : 03/14
CHECKED BY : JCM DATE : 03/14

USER: swaynick
DGN: U2525B2933S-W03_Technical_Information_Disc_Files\450_NCDOT SHT\TechDesignFiles\Structures\Bridge 10\Cadd\U2525B_SD_DSN_U42_BENT1_2.dgn
DATE: 3/14/2014
TIME: 1:00:26 AM

NOTES:

SEE SHEET 2 OF 5 FOR NOTES.

SEE SHEET 2 OF 5 FOR BEARING DETAIL.

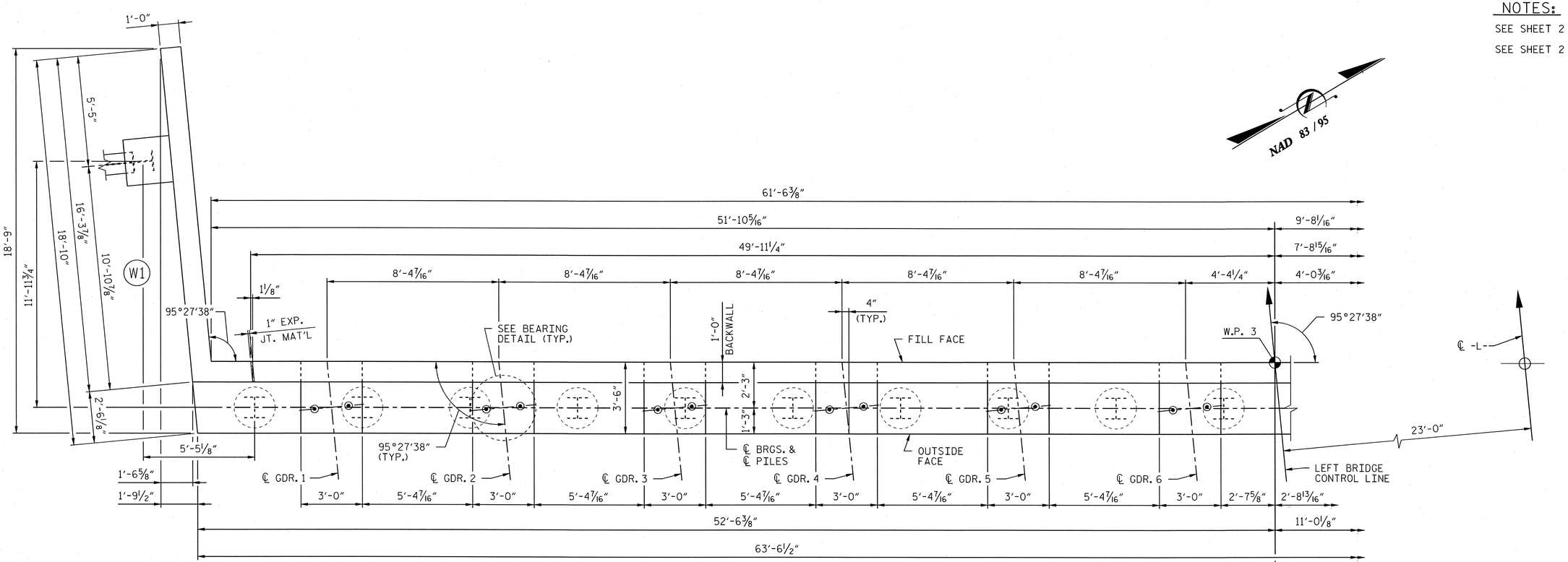

PLAN

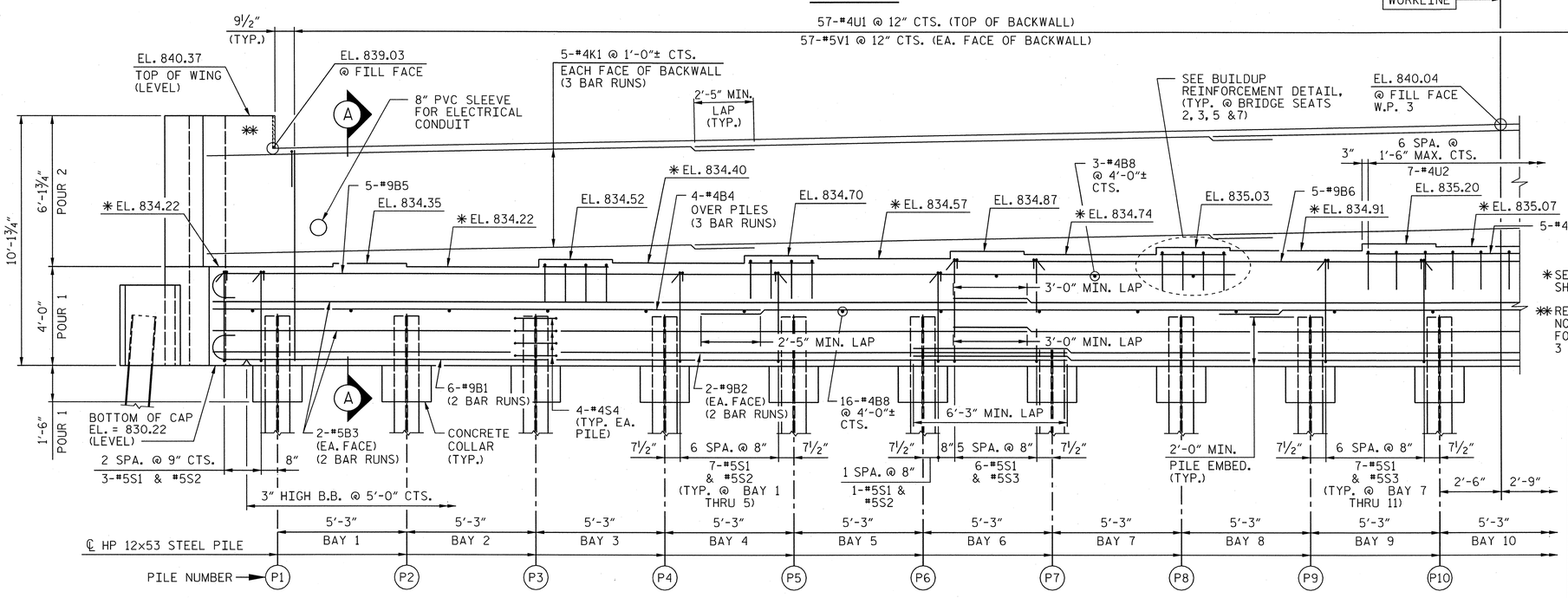

✱ SEE SECTIONS "A-A" & "B-B", SHEET 5 OF 5.

✱✱ REINFORCING IN WING NOT SHOWN FOR CLARITY. FOR DETAILS, SEE SHEET 3 & 4.

ELEVATION

PROJECT NO. U-2525B

GUILFORD COUNTY

STATION: 268+22.89 -L-
50+35.75 -Y13-

SHEET 1 OF 5

AECOM
AECOM TECHNICAL SERVICES, INC.
701 CORPORATE CENTER DRIVE, SUITE 475
RALEIGH, NC 27607
(919) 854-6200 www.aecom.com
AECOM License No. F-0342

NORTH CAROLINA PROFESSIONAL SEAL 030474 ENGINEER JOHN C. MORRISON
3/17/14

R.N. 10-33

STATE OF NORTH CAROLINA
DEPARTMENT OF TRANSPORTATION
RALEIGH

SUBSTRUCTURE
END BENT 2
PLAN AND ELEVATION

REVISIONS						SHEET NO.
NO.	BY:	DATE:	NO.	BY:	DATE:	S-378
1			3			TOTAL SHEETS
2			4			541

DRAWN BY : DDL DATE : 10/13
CHECKED BY : JCM DATE : 10/13

DATE: 3/14/2014
TIME: 10:30:44 AM

USER: lowerjd
DGN: q:\60025355\400_Technical_Information_Disc_Files\450_WCDOT\Staff extDesign\Files\Structures\Bridge 10\Cadd\U2525B_SD_DSN_I42_EBT2.dgn

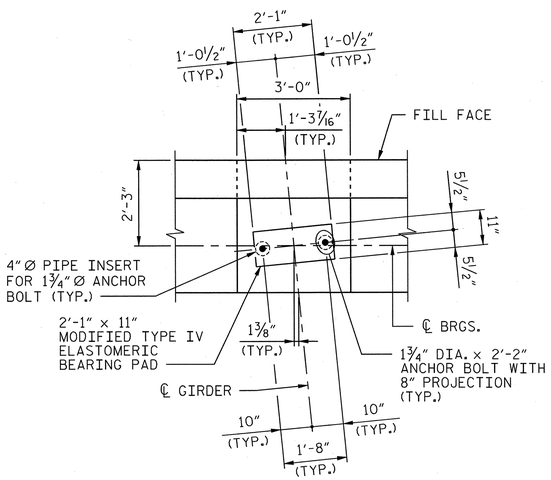

BEARING DETAIL

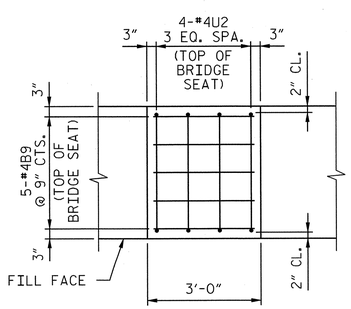

BUILDUP REINFORCEMENT

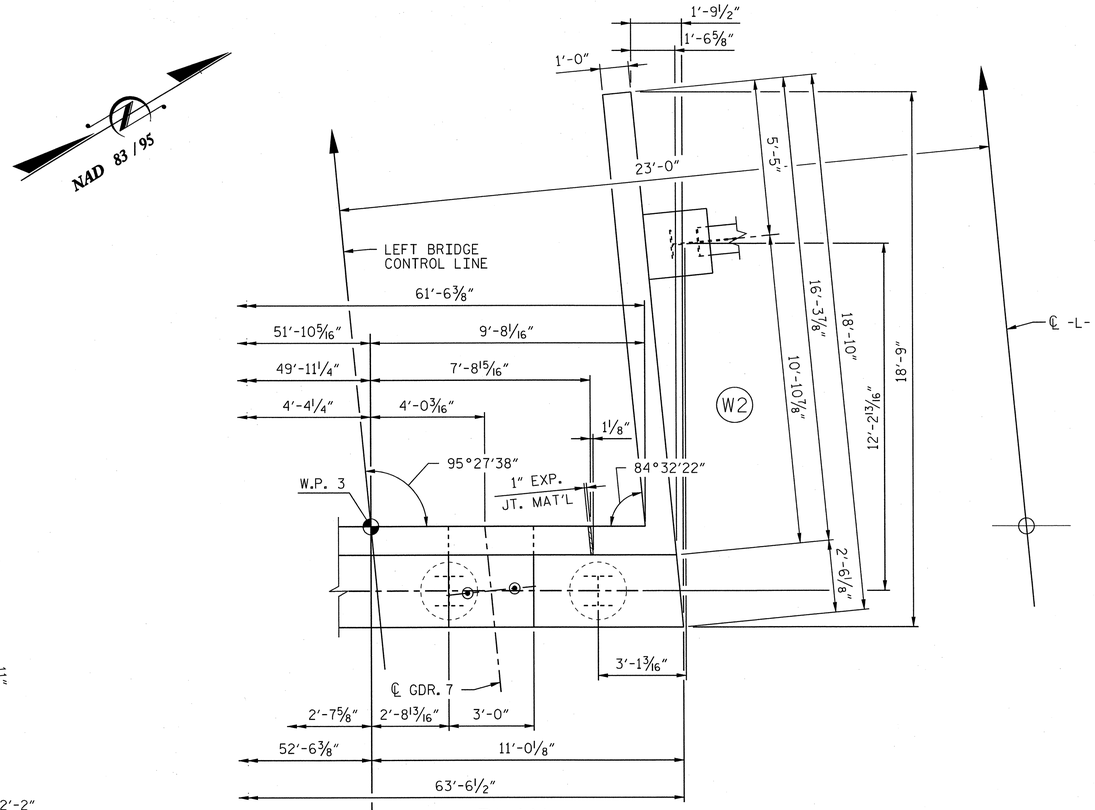

PLAN

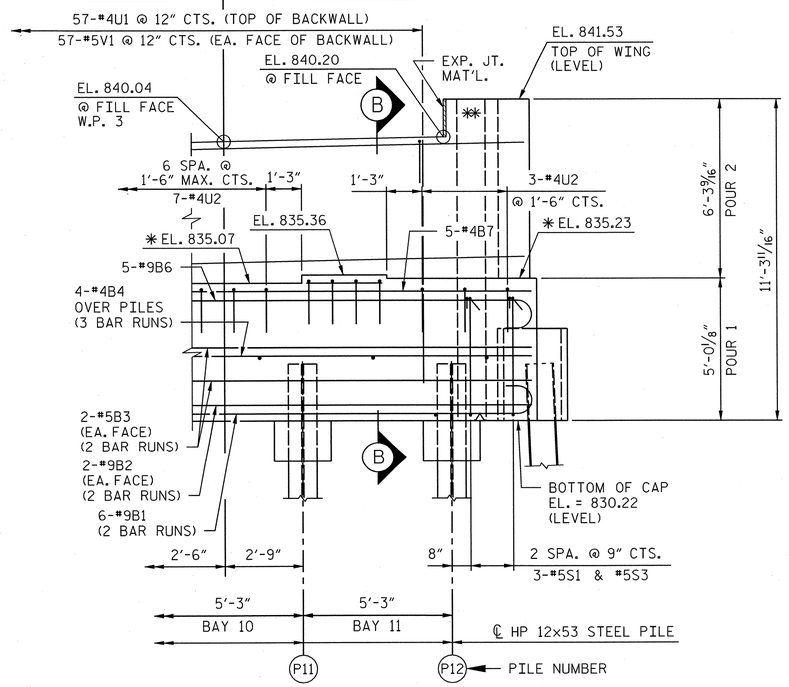

ELEVATION

NOTES:

STIRRUPS IN CAP MAY BE SHIFTED AS NECESSARY TO CLEAR PIPE INSERT.

FOR PIPE INSERT DETAILS, SEE "ELASTOMERIC BEARINGS" SHEET.

BACKWALL SHALL BE PLACED BEFORE APPLYING THE EPOXY PROTECTIVE COATING.

EPOXY COAT THE END BENT CAP AFTER ADJUSTMENTS ARE MADE TO BEARINGS AND ANCHOR BOLTS ARE GROUTED.

THE TOP SURFACE AREAS OF THE END BENT CAP SHALL BE CURED IN ACCORDANCE WITH THE STANDARD SPECIFICATIONS EXCEPT THAT THE MEMBRANE CURING COMPOUND METHOD SHALL NOT BE USED.

THE TOP SURFACE OF THE CAP EXCEPT THE BRIDGE SEAT BUILDUPS SHALL BE SLOPED TRANSVERSELY FROM THE FILL FACE TO THE FRONT FACE AT THE RATE OF 2%.

INSTALL THE 4" DIA. DRAIN PIPE THROUGH THE WING WALL AS REQUIRED FOR REINFORCED BRIDGE APPROACH FILLS, SEE ROADWAY PLANS. REINFORCING STEEL IN THE WING WALL MAY BE SHIFTED AS NECESSARY TO CLEAR THE DRAIN PIPE.

FOR GALVANIZED REINFORCING STRAPS, REFER TO MSE WALL SHEETS AT STR. #8 AND STR. #9.

FOR DETAILS OF THE ELECTRICAL CONDUIT SYSTEM THROUGH BACKWALL, SEE "ELCTRICAL CONDUIT SYSTEM FOR SIGNALS" SHEET.

FOR MSE RETAINING WALLS, SEE SPECIAL PROVISIONS.

FOR OTHER NOTES, SEE FOUNDATION LAYOUT.

PROJECT NO. U-2525B
GUILFORD COUNTY
STATION: 268+22.89 -L-
50+35.75 -Y13-
SHEET 2 OF 5

AECOM
AECOM TECHNICAL SERVICES, INC.
701 CORPORATE CENTER DRIVE, SUITE 475
RALEIGH, NC 27607
(919) 854-6200
www.aecom.com
AECOM License No. F-0342

NORTH CAROLINA PROFESSIONAL SEAL 030474 ENGINEER JOHN C. MORRISON
3/17/14
R.N. 10-34

STATE OF NORTH CAROLINA
DEPARTMENT OF TRANSPORTATION
RALEIGH

SUBSTRUCTURE
END BENT 2
PLAN AND ELEVATION

REVISIONS						SHEET NO.
NO.	BY:	DATE:	NO.	BY:	DATE:	S-379
1			3			TOTAL SHEETS
2			4			541

DRAWN BY : DDL DATE : 10/13
CHECKED BY : JCM DATE : 10/13

USER: bward
DGN: Q:\60129356\400_Technical_Information_Disc_Files\450_NC\0013\Ref\BeltlineFiles\Structures\Bridge 10\Cadd\U2525B_SD_DSN_IH2_EBT2_2.dgn
DATE: 3/14/2014
TIME: 10:31:08 AM

NOTES:

SEE SHEET 2 OF 5 FOR NOTES.

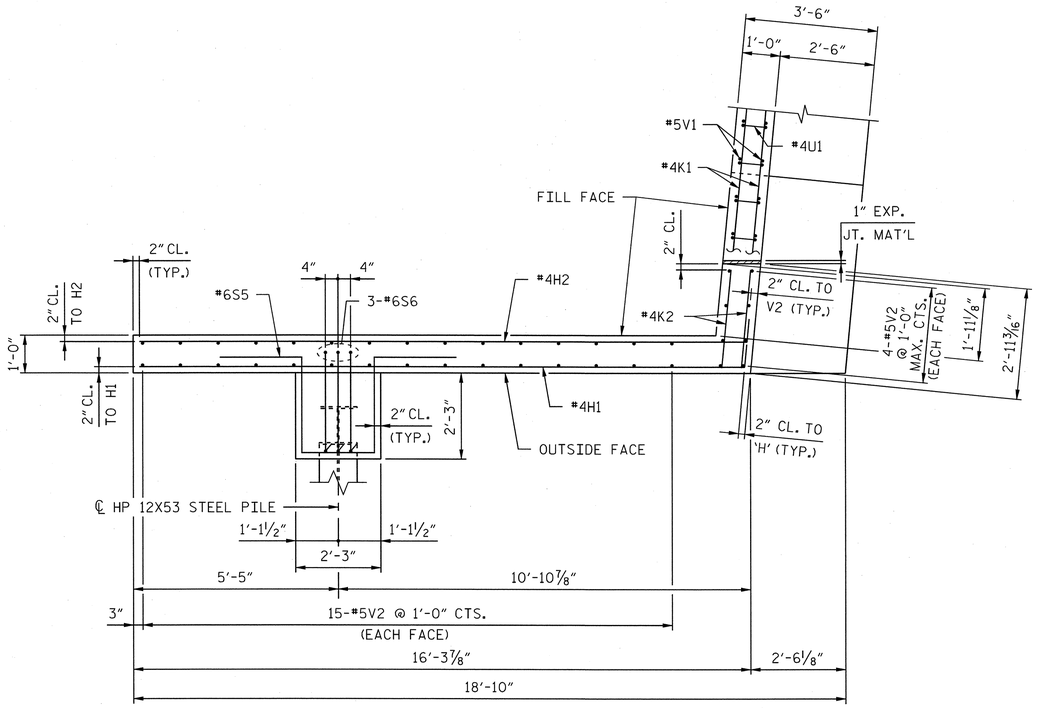

PLAN W1

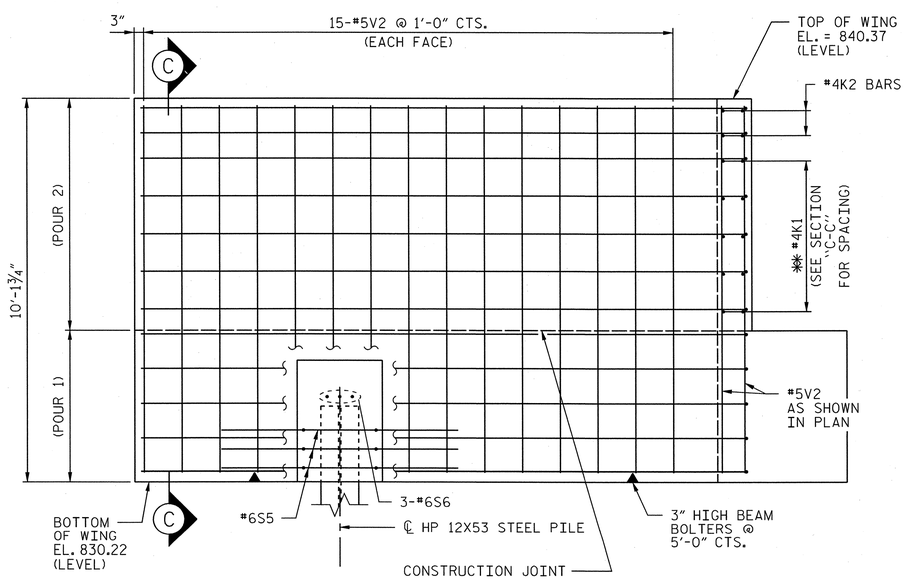

ELEVATION W1

✱✱ PLACE #4 'H' BARS TO MATCH #4K1 BARS IN BACKWALL

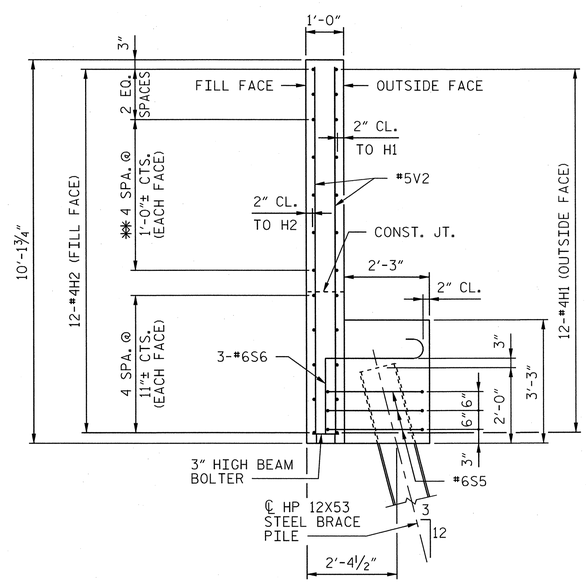

SECTION C-C

PROJECT NO. U-2525B

GUILFORD COUNTY

STATION: 268+22.89 -L-
50+35.75 -Y13-

SHEET 3 OF 5

AECOM
AECOM TECHNICAL SERVICES, INC.
701 CORPORATE CENTER DRIVE, SUITE 475
RALEIGH, NC 27607
(919) 854-6200
www.aecom.com
AECOM License No. F-0342

NORTH CAROLINA PROFESSIONAL SEAL 030474 ENGINEER JOHN C. MORRISON
3/17/14
R.N. 10-35

STATE OF NORTH CAROLINA
DEPARTMENT OF TRANSPORTATION
RALEIGH

SUBSTRUCTURE
END BENT 2
SECTIONS AND DETAILS

REVISIONS						SHEET NO.
NO.	BY:	DATE:	NO.	BY:	DATE:	S-380
						TOTAL SHEETS
						541

DRAWN BY : DDL DATE : 10/13
CHECKED BY : JCM DATE : 10/13

USER: lawson
DGN: 0:\6029\3556\400_Technical_Information_Disc_Files\450_NCDOT\Shd\ebd\plan\Files\Structures\Bridge 0\Ode\U2525B_S0_DSN_H42_EBT2_3.dgn
DATE: 3/14/2014
TIME: 10:46:37 AM

NOTES:

SEE SHEET 2 OF 5 FOR NOTES.

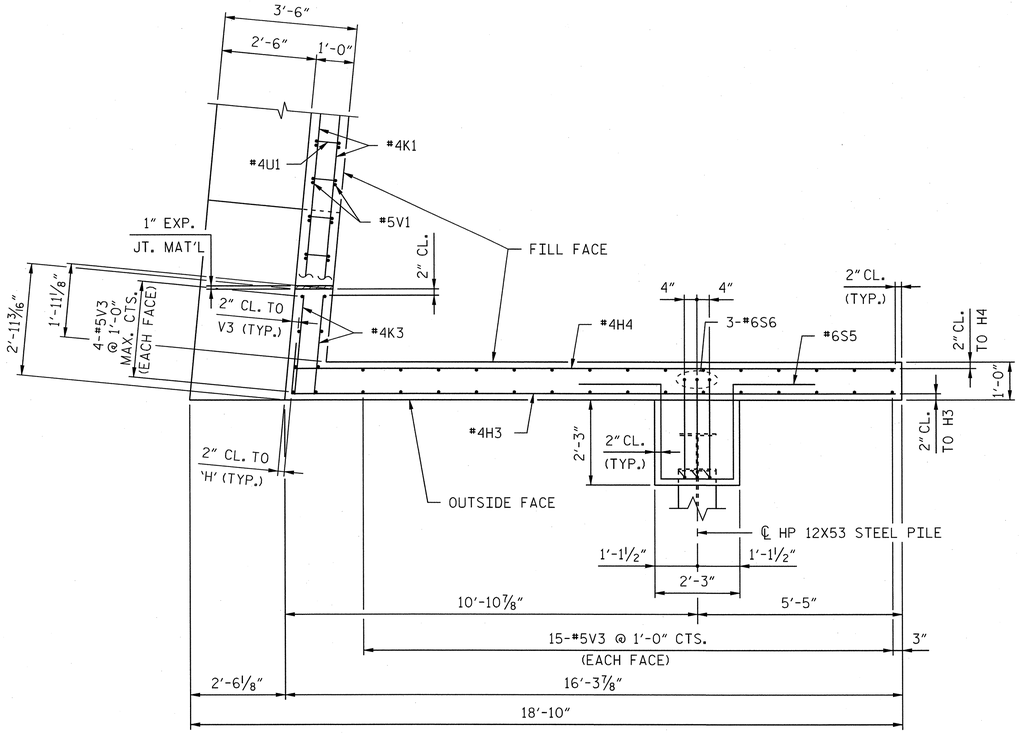

PLAN W2

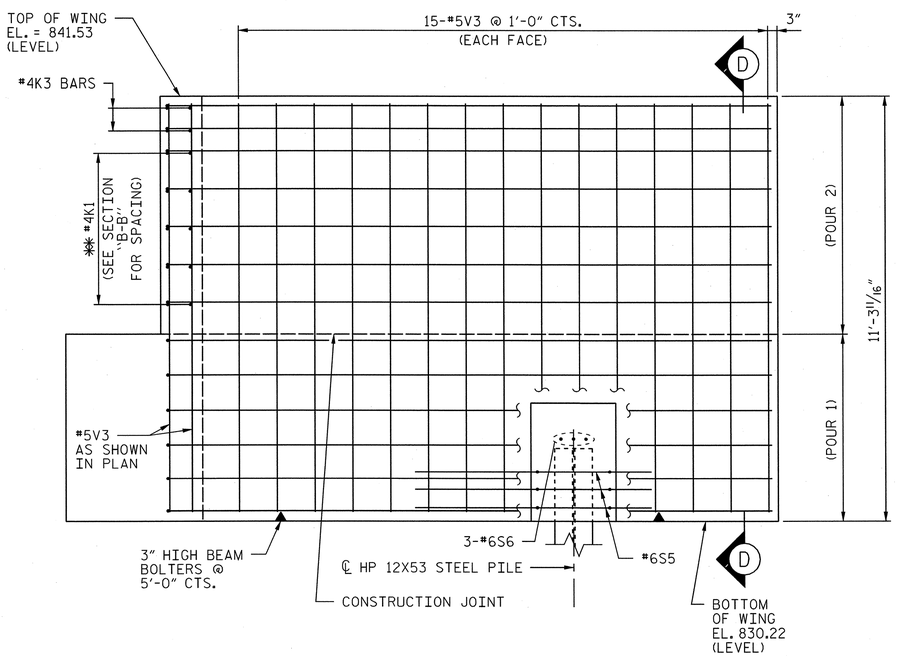

ELEVATION W2

✱✱ PLACE #4 'H' BARS TO MATCH #4K1 BARS IN BACKWALL

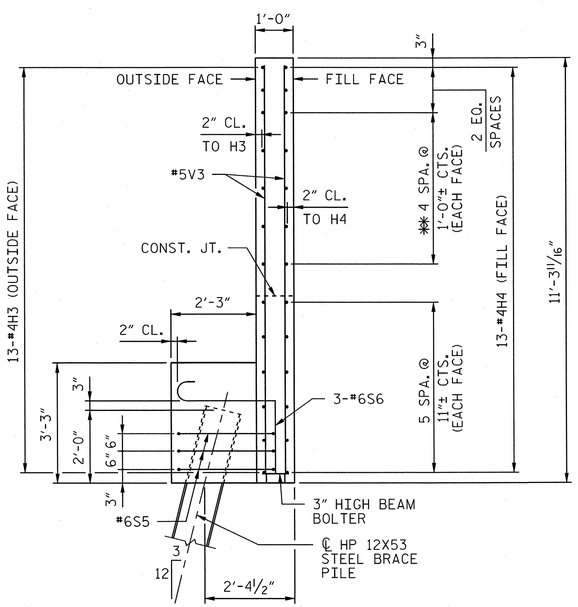

SECTION D-D

DRAWN BY :	DDL	DATE :	10/13
CHECKED BY :	JCM	DATE :	10/13

PROJECT NO. U-2525B

GUILFORD COUNTY

STATION: 268+22.89 -L-
50+35.75 -Y13-

SHEET 4 OF 5

AECOM

AECOM TECHNICAL SERVICES, INC.
701 CORPORATE CENTER DRIVE, SUITE 475
RALEIGH, NC 27607
(919) 854-6200 www.aecom.com
AECOM License No. F-0342

NORTH CAROLINA PROFESSIONAL SEAL 030474 ENGINEER JOHN C. MORRISON

3/17/14

R.N. 10-36

STATE OF NORTH CAROLINA
DEPARTMENT OF TRANSPORTATION
RALEIGH

SUBSTRUCTURE
END BENT 2
SECTIONS AND DETAILS

REVISIONS						SHEET NO.
NO.	BY:	DATE:	NO.	BY:	DATE:	S-381
						TOTAL SHEETS
						541

USER: lawang
DGN: ...
DATE: 3/14/2014
TIME: 10:42:35 AM

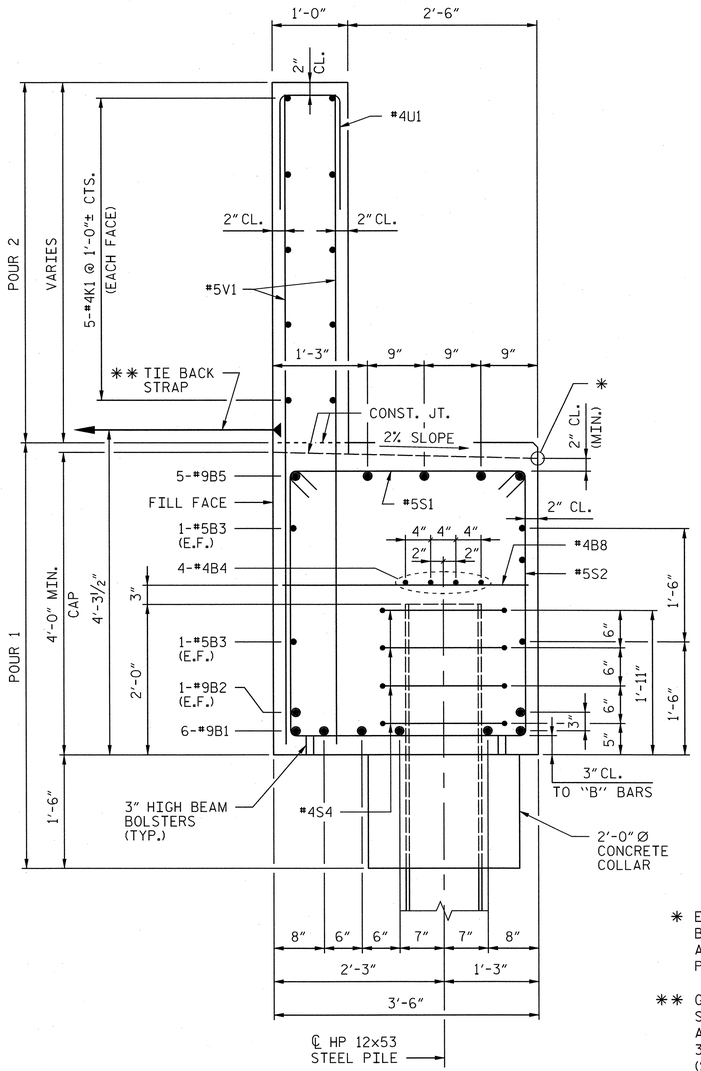

SECTION "A-A"

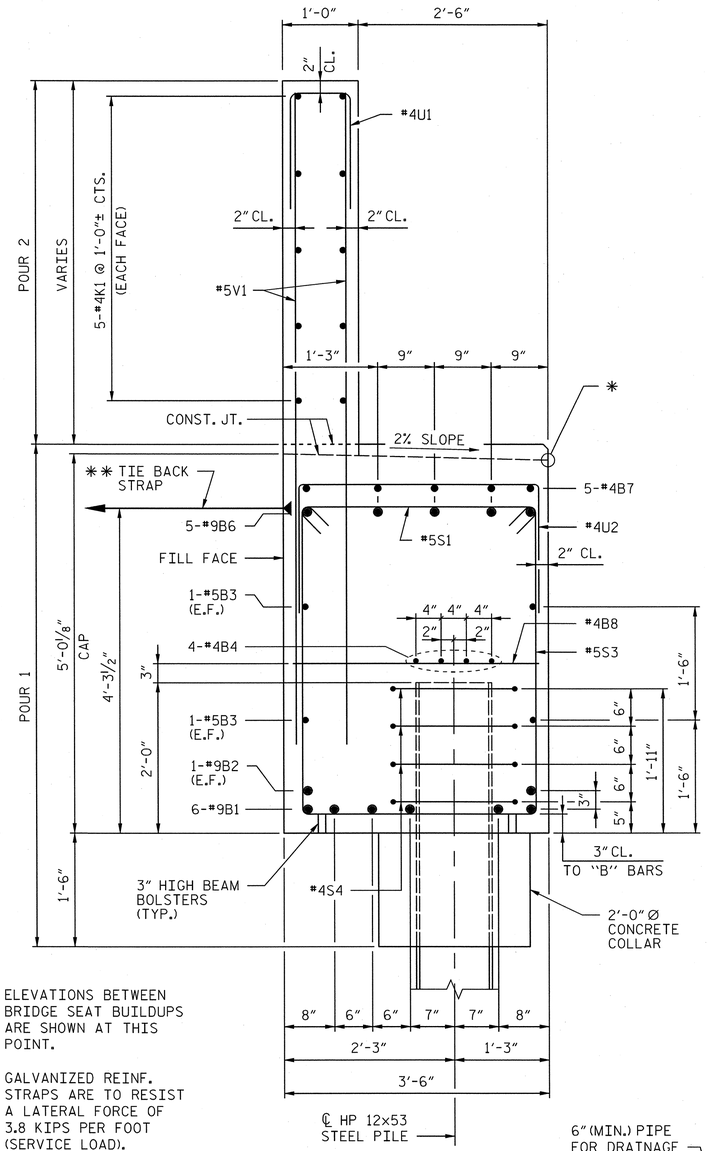

SECTION "B-B"

* ELEVATIONS BETWEEN BRIDGE SEAT BUILDUPS ARE SHOWN AT THIS POINT.

** GALVANIZED REINF. STRAPS ARE TO RESIST A LATERAL FORCE OF 3.8 KIPS PER FOOT (SERVICE LOAD). REFER TO NOTES ON SHEET 2 OF 5.

BAR TYPES

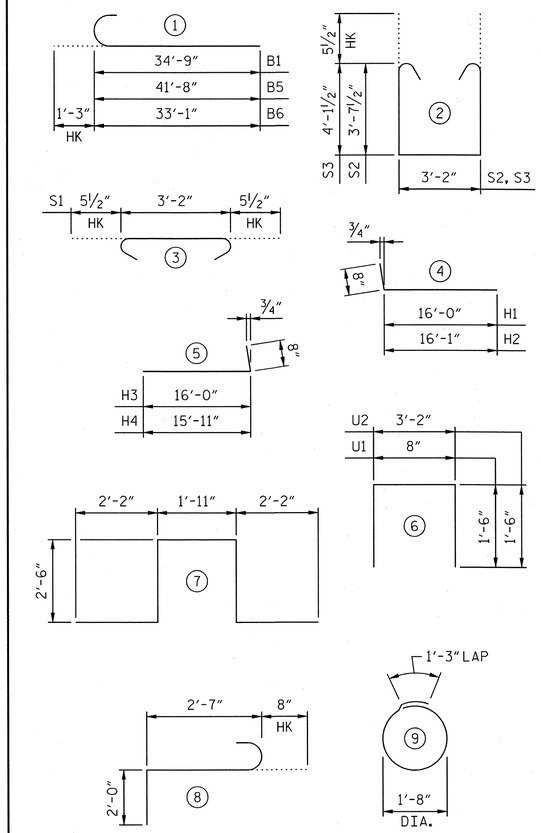

ALL BAR DIMENSIONS ARE OUT TO OUT.

BILL OF MATERIAL

END BENT 2

BAR	NO.	SIZE	TYPE	LENGTH	WEIGHT
B1	12	#9	1	36'-0"	1469
B2	4	#9	STR	34'-9"	473
B3	8	#5	STR	33'-2"	277
B4	12	#4	STR	22'-9"	182
B5	5	#9	1	42'-11"	730
B6	5	#9	1	34'-4"	584
B7	5	#4	STR	16'-4"	55
B8	19	#4	STR	3'-2"	40
B9	20	#4	STR	2'-8"	36
H1	12	#4	4	16'-8"	134
H2	12	#4	4	16'-9"	134
H3	13	#4	5	16'-8"	145
H4	13	#4	5	16'-7"	144
K1	30	#4	STR	22'-9"	456
K2	4	#4	STR	2'-8"	7
K3	4	#4	STR	2'-8"	7
S1	83	#5	3	4'-1"	353
S2	39	#5	2	11'-4"	461
S3	44	#5	2	12'-4"	566
S4	48	#4	9	6'-6"	208
S5	6	#6	7	11'-3"	101
S6	6	#6	8	5'-3"	47
U1	57	#4	6	3'-8"	140
U2	26	#4	6	6'-2"	107
V1	114	#5	STR	8'-7"	1021
V2	38	#5	STR	9'-9"	386
V3	38	#5	STR	10'-11"	433

TOTAL REINFORCING STEEL LBS. 8690

END BENT 2 TOTAL QUANTITIES

CLASS A CONCRETE		
POUR 1 (COLLARS, CAP & LOWER WING)	C.Y.	45.6
POUR 2 (BACKWALL & UPPER WING)	C.Y.	18.8
TOTAL	C.Y.	64.4
HP 12x53 STEEL PILES	NO.	14
	LIN. FT.	350
STEEL PILE POINTS	NO.	9

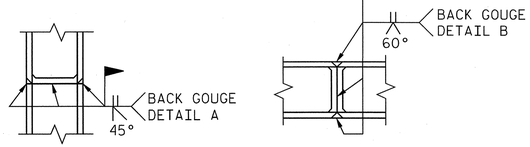

*** PILE VERTICAL

*** PILE HORIZONTAL OR VERTICAL

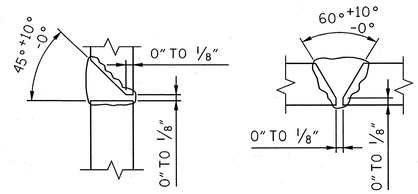

DETAIL A

DETAIL B

*** POSITION OF PILE DURING WELDING.

PILE SPLICE DETAILS

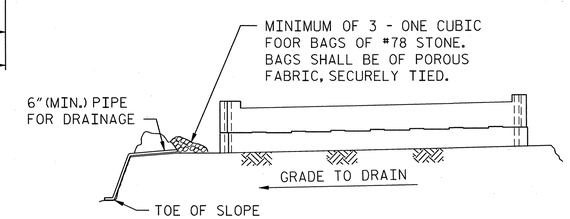

BAGGED STONE AND PIPE SHALL BE PLACED IMMEDIATELY AFTER COMPLETION OF END BENT EXCAVATION. PIPE MAY BE EITHER CONCRETE, CORRUGATED STEEL, CORRUGATED ALUMINUM ALLOY, OR CORRUGATED PLASTIC. PERFORATED PIPE WILL NOT BE ALLOWED.

BAGGED STONE SHALL REMAIN IN PLACE UNTIL THE ENGINEER DIRECTS THAT IT BE REMOVED. THE CONTRACTOR SHALL REMOVE AND DISPOSE OF SILT ACCUMULATIONS AT BAGGED STONE WHEN SO DIRECTED BY THE ENGINEER. BAGS SHALL BE REMOVED AND REPLACED WHENEVER THE ENGINEER DETERMINES THAT THEY HAVE DETERIORATED AND LOST THEIR EFFECTIVENESS.

NO SEPARATE PAYMENT WILL BE MADE FOR THIS WORK AND THE ENTIRE COST OF THIS WORK SHALL BE INCLUDED IN THE UNIT CONTRACT PRICE FOR THE SEVERAL PAY ITEMS.

TEMPORARY DRAINAGE END BENT

PROJECT NO. U-2525B

GUILFORD COUNTY

STATION: 268+22.89 -L-
50+35.75 -Y13-

SHEET 5 OF 5

AECOM
AECOM TECHNICAL SERVICES, INC.
701 CORPORATE CENTER DRIVE, SUITE 475
RALEIGH, NC 27607
(919) 854-6200 www.aecom.com
AECOM License No. F-0342

NORTH CAROLINA PROFESSIONAL SEAL 030474 ENGINEER JOHN C. MORRISON
3/17/14
R.N. 10-37

STATE OF NORTH CAROLINA
DEPARTMENT OF TRANSPORTATION
RALEIGH

SUBSTRUCTURE
END BENT 2
SECTIONS AND DETAILS

REVISIONS						SHEET NO.
NO.	BY:	DATE:	NO.	BY:	DATE:	S-382
						TOTAL SHEETS 541

DRAWN BY : DDL DATE : 10/13
CHECKED BY : JCM DATE : 10/13

DATE: 3/14/2014
TIME: 10:44:26 AM

USER: dwenger
DGN: G:\6029\93356\400_Technical_Information_Disc_Files\450_WORTS\Stuff text\Design Files\Structures\Bridge 100\bdd\U2525B_SD_DSN_U42_EBT2_5.dgn

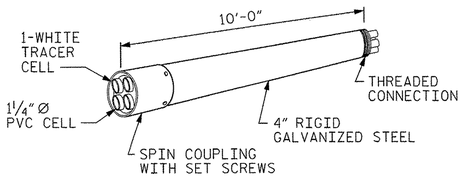

RIGID GALVANIZED (RGC)
MULTI-CELL RACEWAY

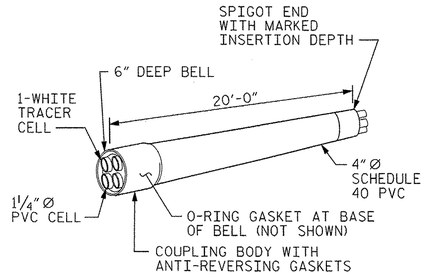

SCHEDULE 40 PVC
MULTI-CELL RACEWAY

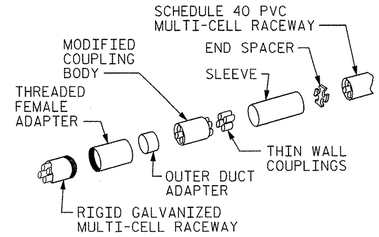

TRANSITION ADAPTER

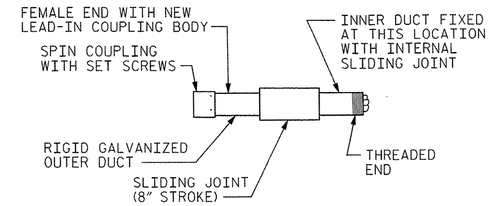

EXPANSION JOINT FITTING

DETAIL "D"
4" MULTI-CELL COMPONENTS

NOTES

THE CONTRACTOR SHALL BE RESPONSIBLE FOR DETERMINING THE TOTAL QUANTITY OF CONDUIT NEEDED TO COMPLETE THE WORK AND THAT THE CONDUIT(S) ARE PLACED AT THE NOTED DIMENSION AND ABOVE THE BOTTOM OF THE GIRDER.

THE INSTALLATION OF THE CONDUIT SYSTEM SHALL BE PAID FOR AS LUMP SUM. THE PRICE SHALL INCLUDE ALL CONDUIT, HANGERS, STABILIZERS, EXPANSION JOINTS, CONCRETE INSERTS, PVC SLEEVES AND ALL NECESSARY HARDWARE TO COMPLETE THE WORK.

THE CONTRACTOR SHALL FIELD VERIFY THAT THE CONDUIT SYSTEM IS NOT IN CONFLICT WITH THE GUARDRAIL POSTS.

SEE DETAIL "C" FOR HANGER ASSEMBLY INSTALLATION.

INSTALL SLEEVES PARALLEL TO GIRDERS. SEE DETAIL "B" FOR SLEEVE INSTALLATION.

PROVIDE TRANSITION ADAPTOR (AND EXPANSION JOINT) FOR CONDUIT AT END BENT 1 (AND END BENT 2).

INSTALL STABILIZER'S MIDWAY BETWEEN DECK EXPANSION JOINTS. STABILIZER CAN NOT BE USED INSTEAD OF A HANGER ASSEMBLY.

INSTALL EXPANSION JOINTS AT BENT.

THE CONCRETE SCREW INSERT SHALL HAVE A ROD SIZE OF 5/8" AND A PULL FORCE OF 1260 lbs.

FOR ELECTRICAL CONDUIT SYSTEM FOR SIGNALS, SEE SPECIAL PROVISIONS.

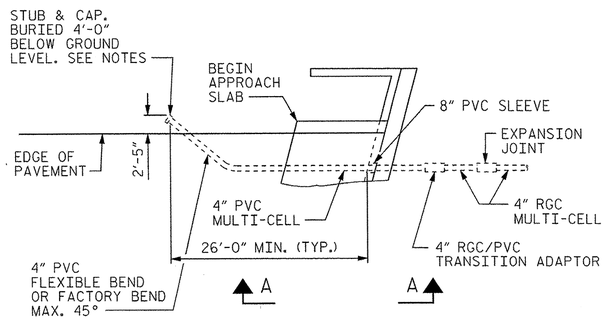

DETAIL "A"
TERMINATION OF CONDUIT AT WING WALL.
END BENT 1 SHOWN, END BENT 2 SIMILAR.

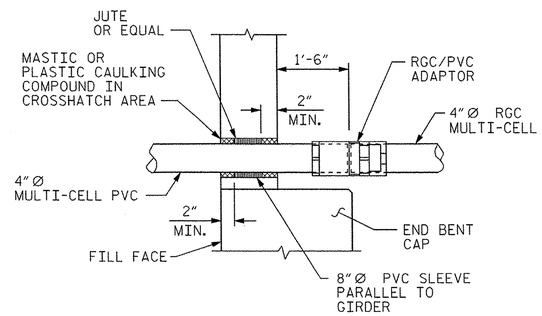

DETAIL "B"
PVC SLEEVE INSTALLATION & RGC/PVC ADAPTOR AT BACKWALL.

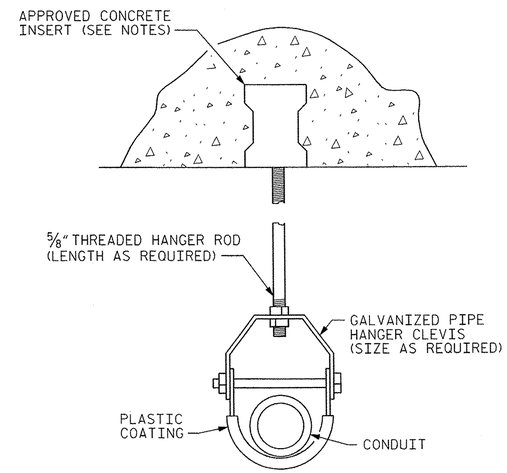

DETAIL "C"
HANGER ASSEMBLY

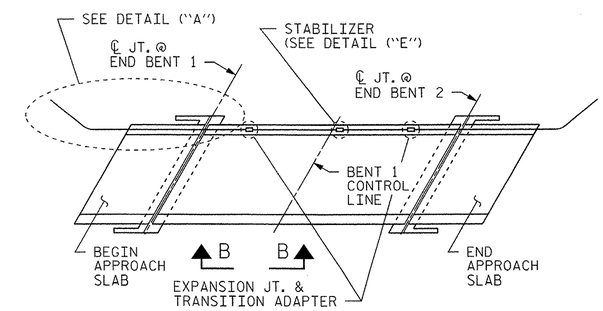

CONDUIT LAYOUT

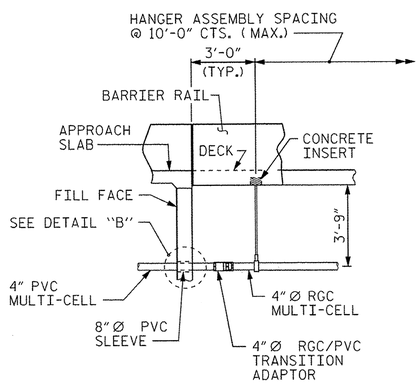

VIEW "A-A"

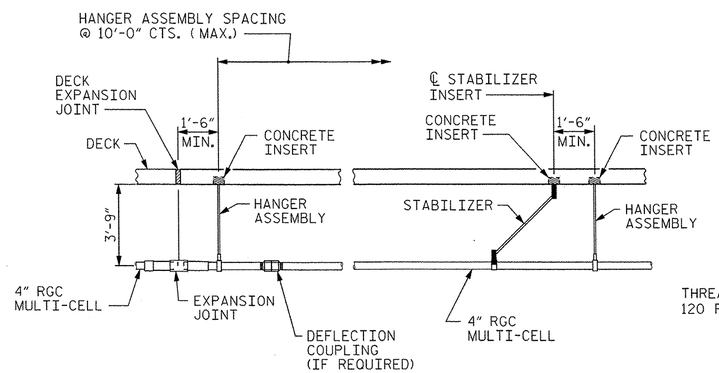

VIEW "B-B"
STEEL GIRDERS

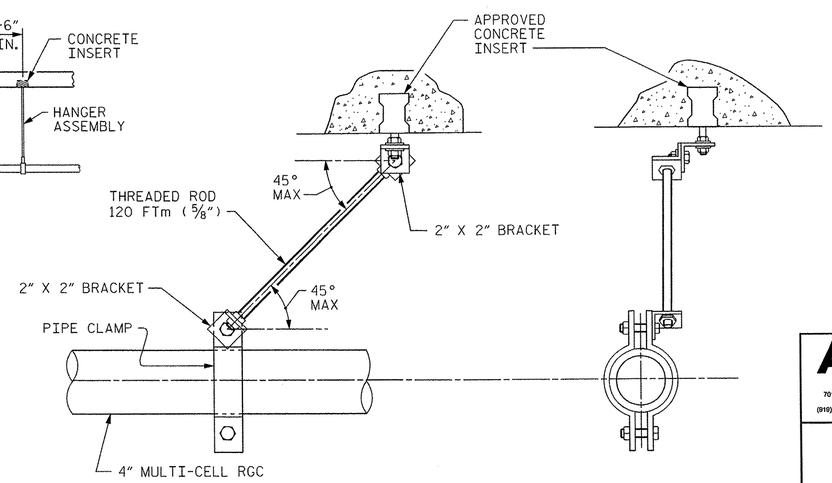

DETAIL "E"
STABILIZER

ELECTRIC CONDUIT DETAILS

PROJECT NO. U-2525B
GUILFORD COUNTY
STATION: 268+22.89 -L-
50+35.75 -Y13-

AECOM
AECOM TECHNICAL SERVICES, INC.
701 CORPORATE CENTER DRIVE, SUITE 475
RALEIGH, NC 27607
(919) 854-6200 www.aecom.com
AECOM License No. F-0342

NORTH CAROLINA PROFESSIONAL SEAL 030474 ENGINEER JOHN C. MORRISON
5/30/14

STATE OF NORTH CAROLINA
DEPARTMENT OF TRANSPORTATION
RALEIGH
STANDARD

ELECTRICAL CONDUIT SYSTEM FOR SIGNALS

REVISIONS						
NO.	BY:	DATE:	NO.	BY:	DATE:	
1			3			
2			4			

R.N. 10-38

SHEET NO. S-383
TOTAL SHEETS 541

STD. NO. ECS1

ASSEMBLED BY : DDL		DATE : 12/13	
CHECKED BY : JCM		DATE : 12/13	
DRAWN BY : RWW 2-4-03	REV. 5/1/06	TLA/GM	
CHECKED BY : DBM 2-4-03	REV. 10/1/11	MAA/GM	

DATE: 5/30/2014
TIME: 2:00:05 PM

USER: lpwynd
DGN: U:\2525B\9356\400_Technical_Information_Disc_Files\450_NCDOT Std Tech Design Files\Structure\Bridge 10\Odd\U2525B_SD_DSN_LW2_ECS1.dgn

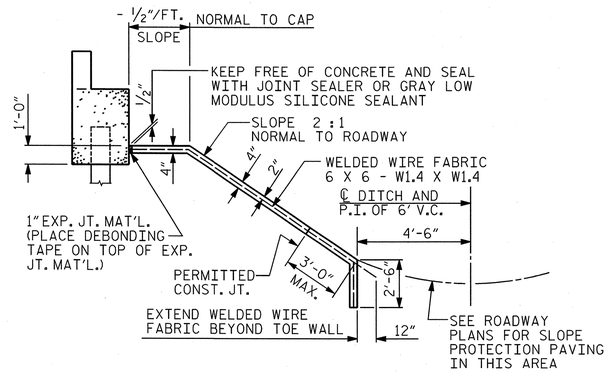

SECTION ALONG ℄ ROADWAY WHEN FILL CATCHES IN DITCH

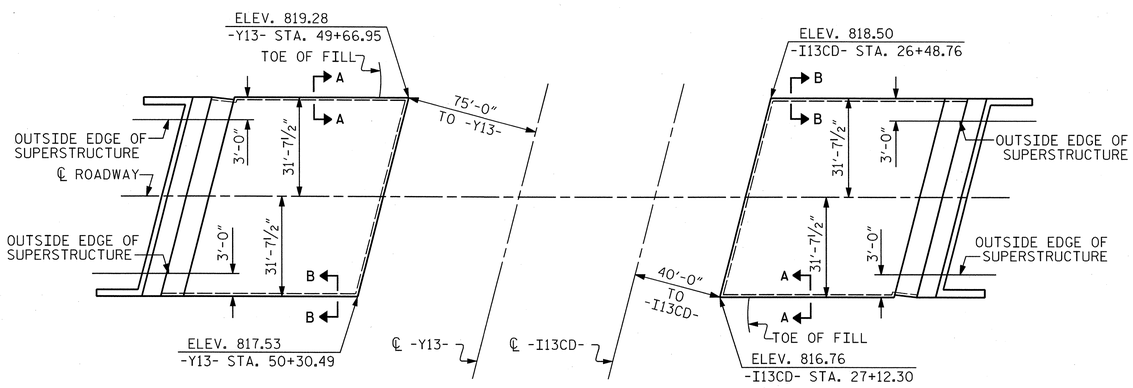

PLAN

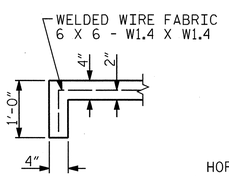

SECTION A-A

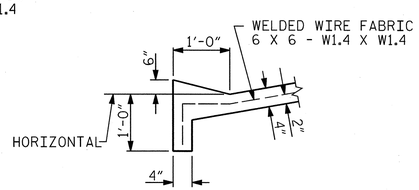

SECTION B-B

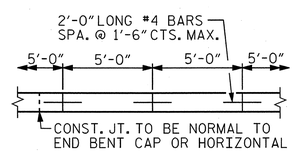

STRIP WIDTHS MAY VARY IN CURVED PORTION.

POURING DETAIL

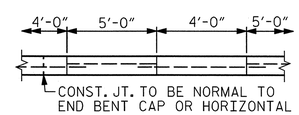

POUR A 4'-0" STRIP FIRST. STRIP WIDTHS MAY VARY IN CURVED PORTION.

OPTIONAL POURING DETAIL

GENERAL NOTES

SLOPE PROTECTION SHALL BE PLACED UNDER THE ENDS OF THE BRIDGE AS SHOWN IN THE DETAILS. MEASUREMENT AND PAYMENT SHALL BE AS PRESCRIBED IN SECTION 462 OF THE STANDARD SPECIFICATIONS. FOR BERM WIDTH, SEE GENERAL DRAWING.

SLOPE PROTECTION SHALL CONSIST OF 4" POURED-IN-PLACE CONCRETE PAVING AS SHOWN IN THE DETAILS ON THIS SHEET. CONCRETE SHALL BE CLASS "B". THE CONCRETE SURFACE SHALL BE FLOATED WITH A WOODEN FLOAT AND FINISHED. WELDED WIRE FABRIC REINFORCING SHALL BE 6 X 6 - W1.4 X W1.4, 60" WIDE. SLOPE PROTECTION SHALL BE POURED IN 5' STRIPS AS SHOWN IN THE "POURING DETAIL" WITH 2'-0" LONG #4 BARS PLACED ALONG THE SLOPE BETWEEN STRIPS AT 1'-6" MAXIMUM SPACING. SLOPE PROTECTION MAY BE POURED IN ALTERNATE 4' AND 5' STRIPS AS SHOWN IN THE "OPTIONAL POURING DETAIL" WITH ADJACENT RUNS OF WELDED WIRE FABRIC LAPPING AT LEAST 6". THE COST OF THE WELDED WIRE FABRIC AND #4 BARS, IF USED, SHALL BE INCLUDED IN THE CONTRACT UNIT PRICE BID PER SQUARE YARD FOR SLOPE PROTECTION.

BRIDGE @ STA. 268+22.89 -L-	4" INCH SLOPE PROTECTION	* WELDED WIRE FABRIC 60 INCHES WIDE
	SQUARE YARDS	APPROX. L.F.
END BENT 1	269	484
END BENT 2	286	515

* QUANTITY SHOWN IS BASED ON 5' POURS.

PROJECT NO. U-2525B

GUILFORD COUNTY

STATION: 268+22.89 -L-
50+35.75 -Y13-

SHEET 1 OF 2

AECOM
AECOM TECHNICAL SERVICES, INC.
701 CORPORATE CENTER DRIVE, SUITE 475
RALEIGH, NC 27607
(919) 854-6200 www.aecom.com
AECOM License No. F-0342

NORTH CAROLINA PROFESSIONAL SEAL 030474 ENGINEER JOHN C. MORRISON
3/17/14
R.N. 10-39

STATE OF NORTH CAROLINA
DEPARTMENT OF TRANSPORTATION
RALEIGH

STANDARD

SLOPE PROTECTION DETAILS

REVISIONS						
NO.	BY:	DATE:	NO.	BY:	DATE:	
1			3			
2			4			

SHEET NO. S-384

TOTAL SHEETS 541

ASSEMBLED BY :	MTB	DATE :	10/13
CHECKED BY :	JCM	DATE :	10/13
DRAWN BY : ELR 5/92	REV. 5/1/06		TLA/GM
CHECKED BY : GRP 6/92	REV. 10/1/11		MAA/GM
	REV. 12/21/11		MAA/GM

STD. NO. SP1

DATE: 3/14/2014
TIME: 11:52:58 AM
USER: dwenyon
DGN: U:\52\93356\400_Technical_Information_Disc_Files\450_NCDOT Std Details\Bridge\10\Cadd\U2525B_SD_DSN_1442_SLOPE_PROTECTION.dgn

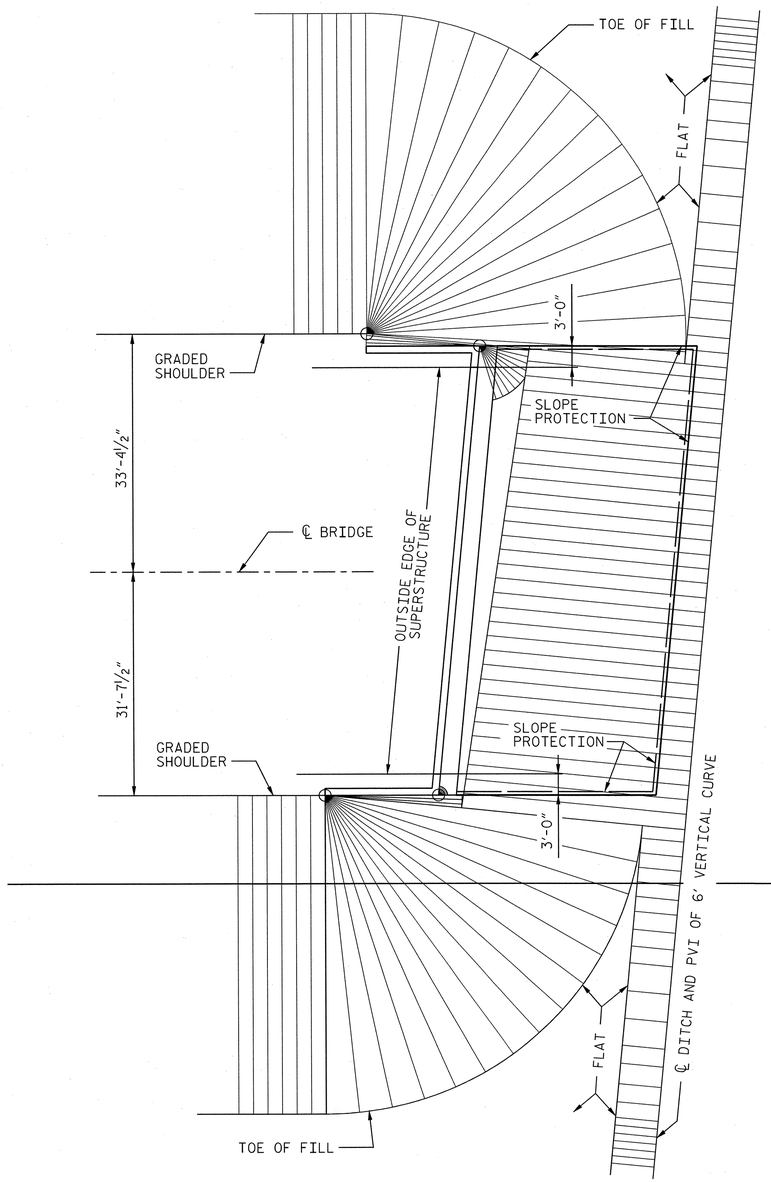

END BENT 1

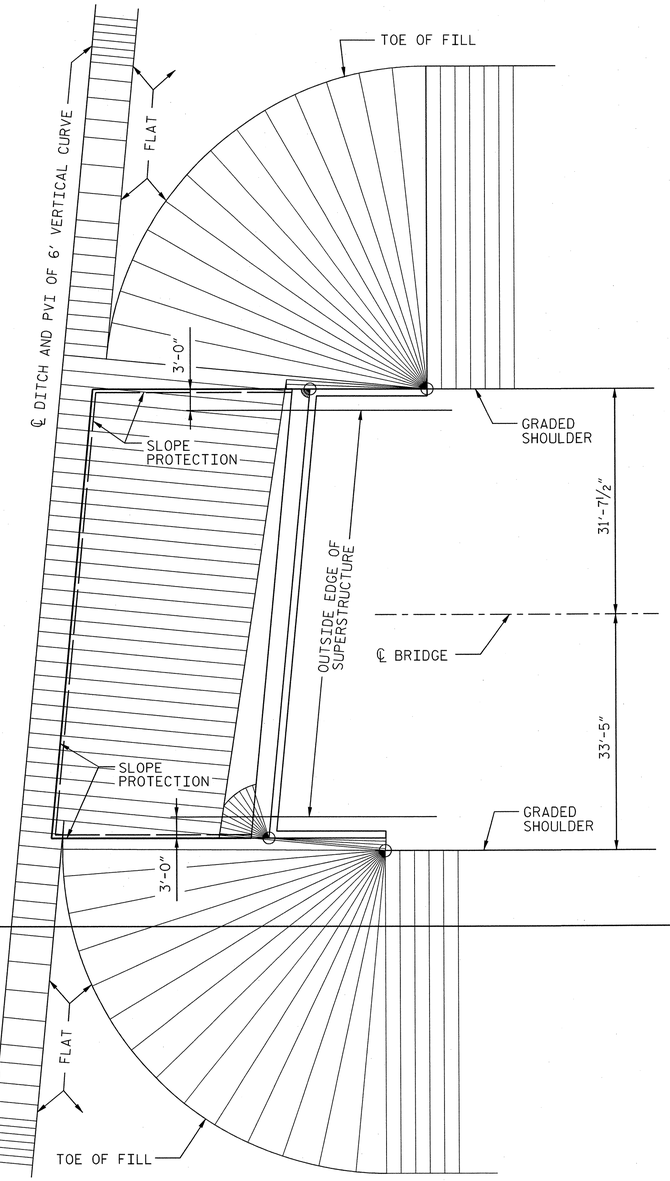

END BENT 2

PLAN - END BENT WITH SWEPT BACK WINGS - SKEWED

(2:1 SLOPE)

PROJECT NO. U-2525B

GUILFORD COUNTY

STATION: 268+22.89 -L-
50+35.75 -Y13-

SHEET 2 OF 2

AECOM
AECOM TECHNICAL SERVICES, INC.
701 CORPORATE CENTER DRIVE, SUITE 475
RALEIGH, NC 27607
(919) 854-6200 www.aecom.com
AECOM License No. F-0342

NORTH CAROLINA PROFESSIONAL SEAL 030474 ENGINEER JOHN C. MORRISON
3/17/14

R.N. 10-40

STATE OF NORTH CAROLINA
DEPARTMENT OF TRANSPORTATION
RALEIGH

STANDARD

SLOPE PROTECTION DETAILS

REVISIONS						SHEET NO.
NO.	BY:	DATE:	NO.	BY:	DATE:	S-385
						TOTAL SHEETS 541

ASSEMBLED BY : MTB		DATE : 10/13	
CHECKED BY : JCM		DATE : 10/13	
DRAWN BY : WJH 10/88	REV. 7/17/98	REK/RWW	
CHECKED BY : FCJ 10/88	REV. 5/1/06	TLA/GM	
	REV. 10/1/11	MAA/GM	

STD. NO. SP2

DATE: 3/14/2014
TIME: 11:24:40 AM
USER: lowengrd
DGN: G:\U2525\355\400_Technical_Information_Disc_Files\450_NCDOT Stuff and Designs Files\Structures\Bridge 10\Cadd\U2525B_SD_DSN_1\42_SLOPE_PROTECTION_2.dgn

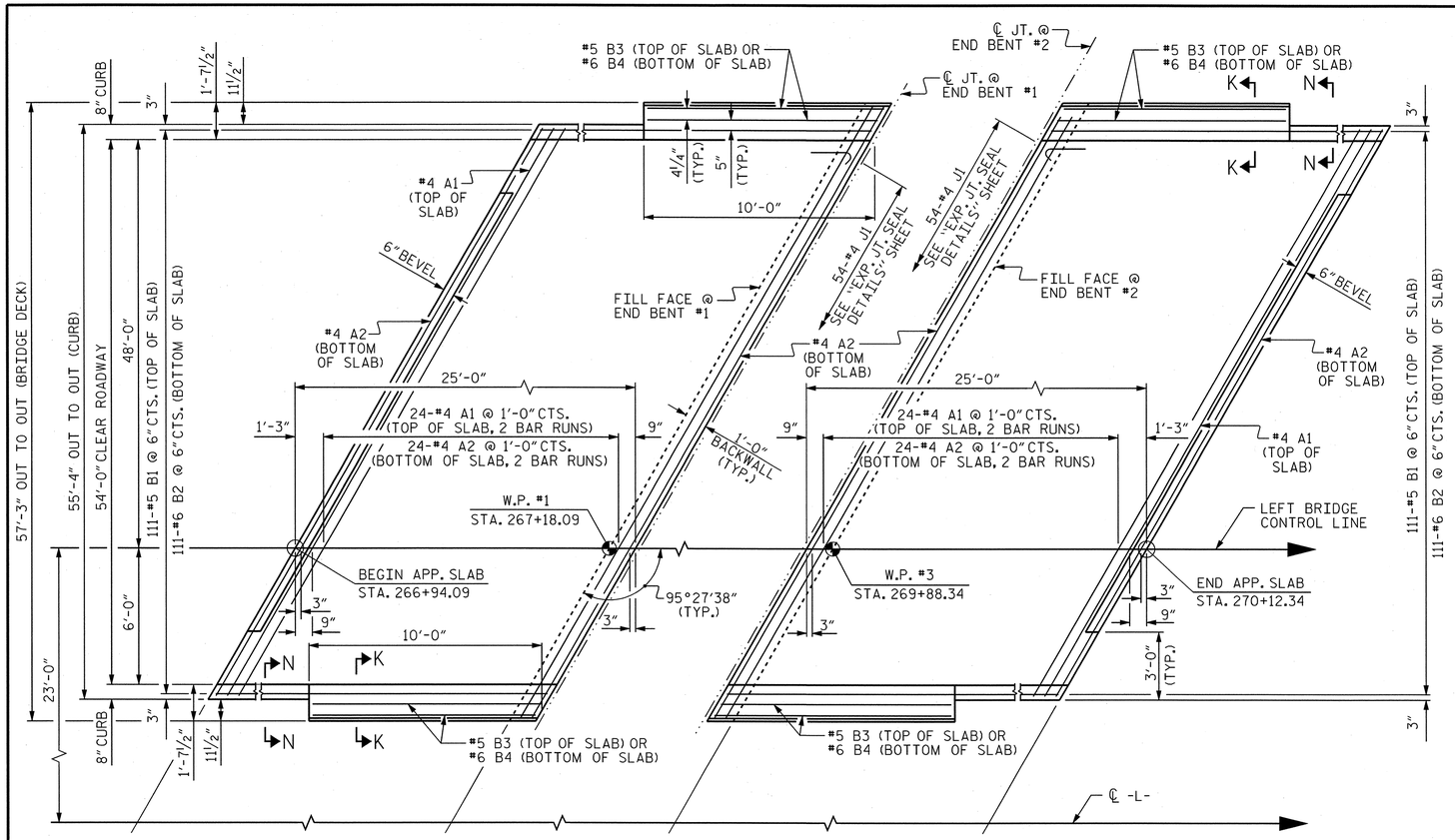

PLAN @ END BENT #1 PLAN @ END BENT #2

DIMENSIONS SHOWN ARE TYPICAL FOR BOTH APPROACH SLABS

NOTES

APPROACH SLAB SHALL NOT BE CONSTRUCTED PRIOR TO COMPLETION OF THE BRIDGE DECK.

AREA BETWEEN THE WINGWALL AND APPROACH SLAB SHALL BE GRADED TO DRAIN THE WATER AWAY FROM THE FILL FACE OF THE BRIDGE AND SHALL BE PAVED. SEE ROADWAY PLANS.

FOR EXPANSION JOINT SEALS, SEE SPECIAL PROVISIONS.

FOR MODIFIED BRIDGE APPROACH FILLS INCLUDING IMPERMEABLE GEOMEMBRANE, 4" DIA. DRAINAGE PIPE, AND #78 STONE, SEE "MODIFIED BRIDGE APPROACH FILL DETAIL" SHEET.

BILL OF MATERIAL

APPROACH SLAB AT EB #1

BAR	NO.	SIZE	TYPE	LENGTH	WEIGHT
✱A1	50	#4	STR	28'-8"	957
A2	52	#4	STR	28'-6"	990
✱B1	111	#5	STR	24'-2"	2798
B2	111	#6	STR	24'-8"	4112
✱B3	4	#5	STR	9'-8"	40
B4	4	#6	STR	9'-8"	58
✱J1	54	#4	1	1'-5"	51
REINFORCING STEEL ✱✱				LBS.	5160
✱EPOXY COATED REINFORCING STEEL ✱✱				LBS.	3846
CLASS AA CONCRETE ✱✱				C.Y.	60.8

APPROACH SLAB AT EB #2

BAR	NO.	SIZE	TYPE	LENGTH	WEIGHT
✱A1	50	#4	STR	28'-8"	957
A2	52	#4	STR	28'-6"	990
✱B1	111	#5	STR	24'-2"	2798
B2	111	#6	STR	24'-8"	4112
✱B3	4	#5	STR	9'-8"	40
B4	4	#6	STR	9'-8"	58
✱J1	54	#4	1	1'-5"	51
REINFORCING STEEL ✱✱				LBS.	5160
✱EPOXY COATED REINFORCING STEEL ✱✱				LBS.	3846
CLASS AA CONCRETE ✱✱				C.Y.	60.8

BAR TYPE

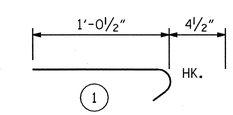

ALL BAR DIMENSIONS ARE OUT TO OUT

✱✱ QUANTITIES FOR BARRIER RAIL ARE NOT INCLUDED. SEE SHEET 2 OF 2.

THE QUANTITY OF #4 J1 BARS ON THE BILL OF MATERIAL IS BASED ON 1'-0" CENTERS. J1 BARS SHALL BE PLACED AT EACH VERTICAL STUD ANCHOR BOLT. IN THE EVENT THAT THE NUMBER OF VERTICAL STUD ANCHORS EXCEEDS THE NUMBER OF J1 BARS SPECIFIED, ADDITIONAL J1 BARS WILL NOT BE REQUIRED.

SPLICE LENGTHS

BAR SIZE	EPOXY COATED	UNCOATED
#4	2'-0"	1'-9"
#5	2'-6"	2'-2"
#6	3'-10"	2'-7"

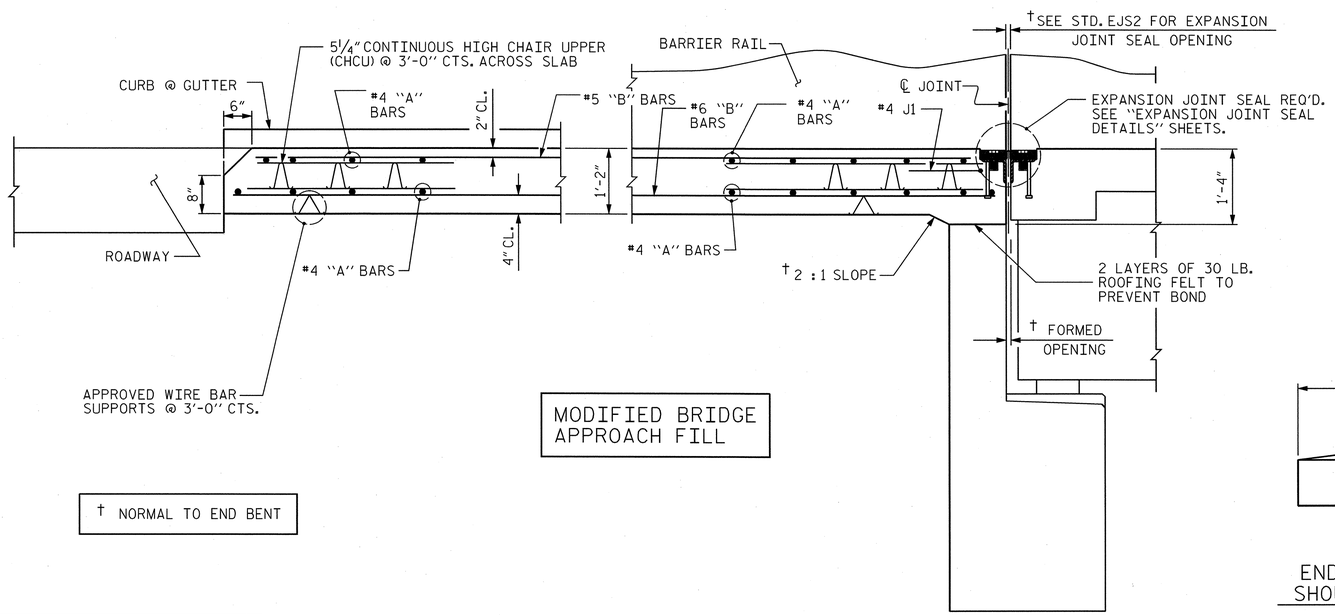

MODIFIED BRIDGE APPROACH FILL

† NORMAL TO END BENT

SECTION THRU SLAB

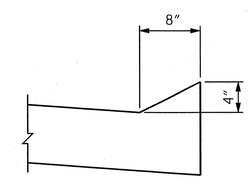

SECTION N-N

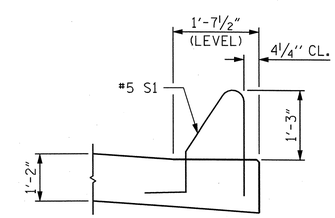

SECTION K-K

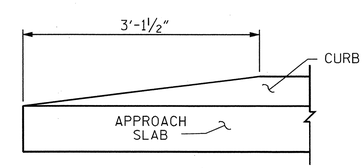

END OF CURB WITHOUT SHOULDER BERM GUTTER

CURB DETAILS

PROJECT NO. U-2525B

GUILFORD COUNTY

STATION: 268+22.89 -L-
50+35.75 -Y13-

SHEET 1 OF 2

AECOM
AECOM TECHNICAL SERVICES, INC.
701 CORPORATE CENTER DRIVE, SUITE 475
RALEIGH, NC 27607
(919) 854-6200
www.aecom.com
AECOM License No. F-0342

NORTH CAROLINA PROFESSIONAL SEAL 030474 ENGINEER JOHN C. MORRISON
3/17/14

R.N. 10-41

STATE OF NORTH CAROLINA
DEPARTMENT OF TRANSPORTATION
RALEIGH

STANDARD

BRIDGE APPROACH SLAB FOR FLEXIBLE PAVEMENT

REVISIONS						SHEET NO.
NO.	BY:	DATE:	NO.	BY:	DATE:	S-386
1			3			TOTAL SHEETS
2			4			541

STD. NO. BAS2 (SHT 4b)

ASSEMBLED BY : MTB		DATE : 10/13	
CHECKED BY : JCM		DATE : 10/13	
DRAWN BY : EEM 3/95	REV. 10/1/11	MAA/GM	
CHECKED BY : VAP 3/95	REV. 12/21/11	MAA/GM	
	REV. 6/13	MAA/GM	

DATE: 3/14/2014
TIME: 10:49:02 AM
USER: lowerod
DGN: d:\BDE2535\400_Technical_Information_Disc_Files\450_NCDOT Std Text&Data\prFiles\Structures\Bridge 10\Cadd\U2525B_SD_DSN_1\42_BAS2.dgn

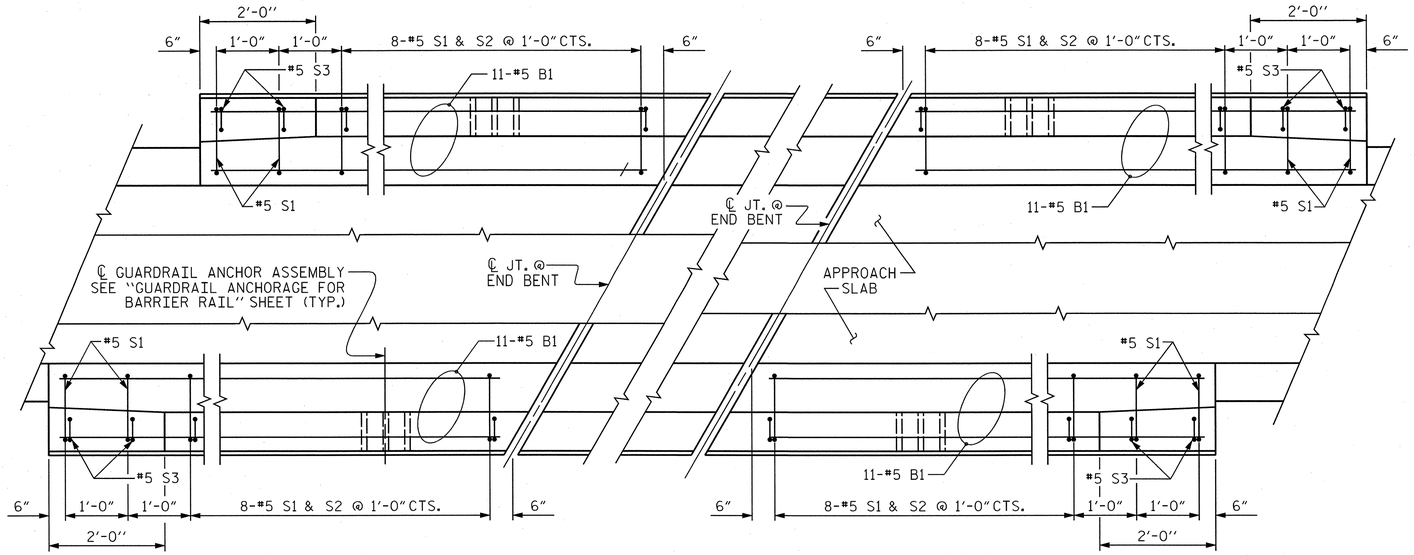

END BENT #1

END BENT #2

PLAN OF BARRIER RAIL

NOTES

THE COST OF THE BARRIER RAIL ON THE APPROACH SLAB SHALL BE INCLUDED IN THE LINEAR FOOT CONTRACT PRICE BID FOR "CONCRETE BARRIER RAIL".

THE BARRIER RAIL ON EACH APPROACH SLAB SHALL NOT BE CAST UNTIL ALL APPROACH SLAB CONCRETE HAS BEEN CAST AND HAS REACHED A MINIMUM COMPRESSIVE STRENGTH OF 3,000 PSI.

ALL REINFORCING STEEL IN BARRIER RAILS SHALL BE EPOXY COATED.

BAR TYPES

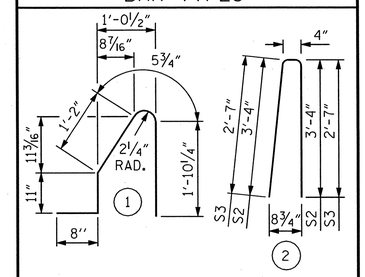

ALL BAR DIMENSIONS ARE OUT TO OUT

BILL OF MATERIAL

BARRIER RAIL ONLY

BAR	NO.	SIZE	TYPE	LENGTH	WEIGHT
✳B1	44	#5	STR	9'-8"	444
✳S1	40	#5	1	5'-1"	212
✳S2	32	#5	2	7'-0"	234
✳S3	8	#5	2	5'-6"	46
✳EPOXY COATED REINFORCING STEEL				LBS.	936
CLASS AA CONCRETE				C. Y.	5.3
CONCRETE BARRIER RAIL				40.0	LIN. FT.

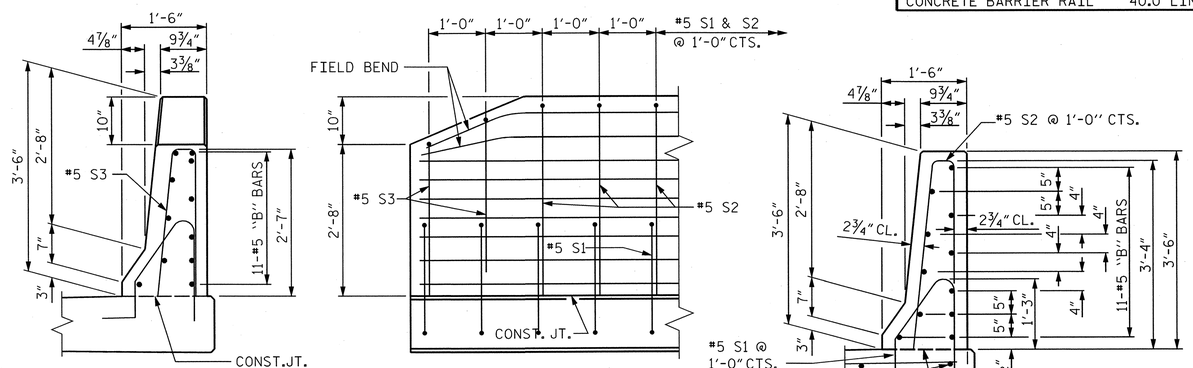

END VIEW

SIDE VIEW

END OF RAIL DETAILS

SECTION THRU RAIL

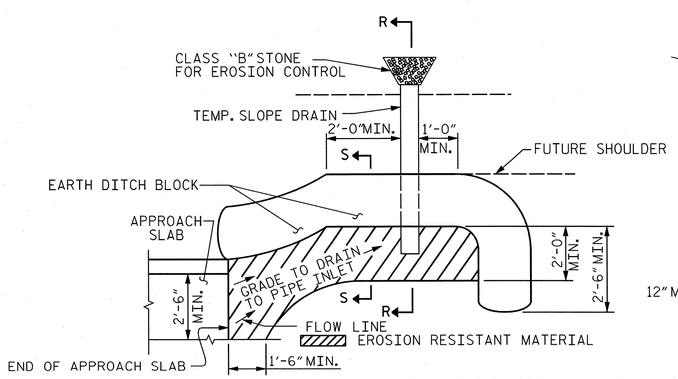

NOTE: IMMEDIATELY AFTER THE CONSTRUCTION OF THE APPROACH SLAB, THE CONTRACTOR SHALL PROVIDE TEMPORARY BERM AND SLOPE DRAIN. CONTRACTOR SHALL GRADE TO PIPE INLET AND PROVIDE EROSION RESISTANT MATERIAL AS SHOWN. THE EROSION RESISTANT MATERIAL SHALL BE EITHER 1) ASPHALT PLANT MIX, TYPE 1 OR TYPE 2, MIN. 2" DEPTH, 2) EROSION CONTROL MAT, OR 3) CONCRETE, AS DIRECTED BY THE ENGINEER. THE SLOPE DRAIN SHALL CONSIST OF A NON-PERFORATED TEMPORARY DRAINAGE PIPE, 12 INCHES IN DIAMETER.

PLAN VIEW

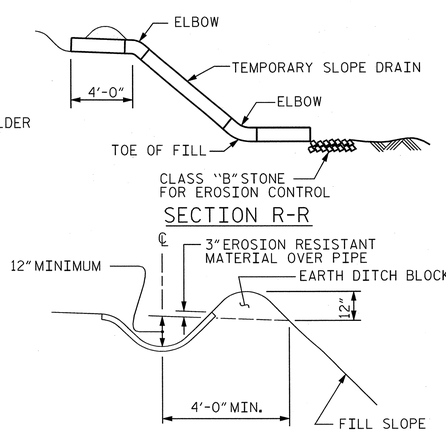

SECTION R-R

SECTION S-S

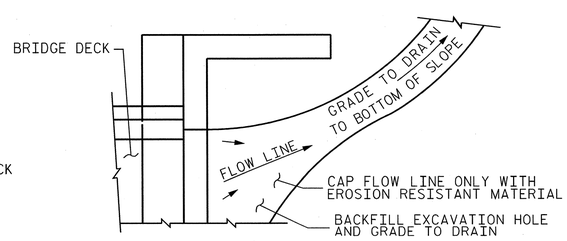

NOTE: IF THE APPROACH SLAB IS NOT CONSTRUCTED IMMEDIATELY AFTER THE BACKFILLING OF THE END BENT EXCAVATION, GRADE TO DRAIN TO THE BOTTOM OF THE SLOPE AND PROVIDE EROSION RESISTANT MATERIAL, SUCH AS FIBERGLASS ROVING OR AS DIRECTED BY THE ENGINEER TO PREVENT SOIL EROSION AND TO PROTECT THE AREA ADJACENT TO THE STRUCTURE. THE CONTRACTOR WILL BE REQUIRED TO REMOVE THESE MATERIALS PRIOR TO CONSTRUCTION OF THE APPROACH SLAB.

TEMPORARY DRAINAGE DETAIL

TEMPORARY BERM AND SLOPE DRAIN DETAILS

(TO BE USED WHEN SHOULDER BERM GUTTER IS REQUIRED)

PROJECT NO. U-2525B

GUILFORD COUNTY

STATION: 268+22.89 -L-
50+35.75 -Y13-

SHEET 2 OF 2

AECOM
AECOM TECHNICAL SERVICES, INC.
701 CORPORATE CENTER DRIVE, SUITE 475
RALEIGH, NC 27607
(919) 854-6200 www.aecom.com
AECOM License No. F-0342

NORTH CAROLINA PROFESSIONAL SEAL 030474 ENGINEER JOHN C. MORRISON
3/17/14

R.N. 10-42

STATE OF NORTH CAROLINA
DEPARTMENT OF TRANSPORTATION
RALEIGH

STANDARD

BRIDGE APPROACH SLAB DETAILS

REVISIONS							SHEET NO.
NO.	BY:	DATE:	NO.	BY:	DATE:		S-387
1			3				TOTAL SHEETS
2			4				541

STD. NO. BAS4 (SHT 3b)

ASSEMBLED BY : MTB		DATE : 10/13	
CHECKED BY : JCM		DATE : 10/13	
DRAWN BY : FCJ	11/88	REV. 10/1/11	MAA/GM
CHECKED BY : ARB	11/88	REV. 7/12	MAA/GM
		REV. 6/13	MAA/GM

DATE: 3/14/2014
TIME: 10:49:27 AM
USER: lawang
DGN: G:\2025\3525\400_Technical_Information_Disc_Files\450_NCDOT\Shiftedsbeligrf\Files\Structures\Bridge 10\Cadd\U2525B_SD_DSN_W42_BAS4dgn

GEOTECHNICAL ENGINEER	ENGINEER
NORTH CAROLINA PROFESSIONAL SEAL 038176 ENGINEER SHIVAJI K. BANERJEE 1-22-2014	
SIGNATURE DATE	SIGNATURE DATE

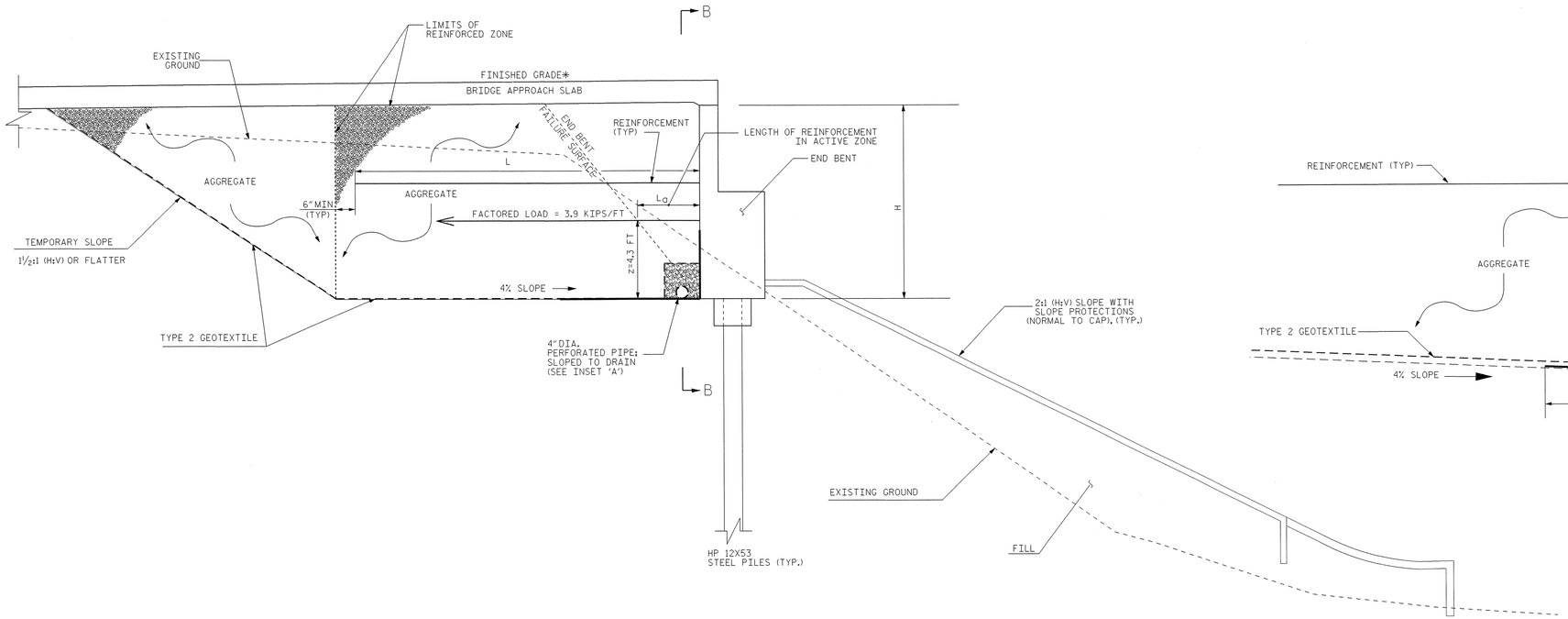

MODIFIED BRIDGE APPROACH FILLS DETAIL (NTS)
END BENT 1 (STA. 267+18.09)
END BENT 2 (STA. 269+88.34)

*SEE ROADWAY PLANS FOR FINISHED GRADE DETAILS.

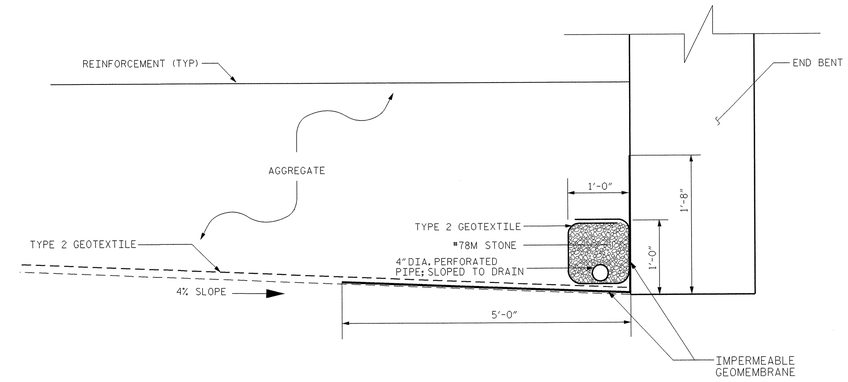

INSET 'A'

NTS

NOTES:

DESIGN REINFORCEMENT CONNECTED TO END BENT CAPS FOR FACTORED LOAD AND LENGTH OF REINFORCEMENT IN ACTIVE ZONE (La) SHOWN. CAST REINFORCEMENT CONNECTORS INTO CAP BACKWALL FOR END BENT NO. 1 LOCATED AT STATION 267+18.09 -L- AND END BENT NO. 2 LOCATED AT STATION 269+88.34 -L-. MAINTAIN A CLEARANCE OF AT LEAST 3 INCHES BETWEEN CONNECTORS AND REINFORCING STEEL IN CAP.

FOR MODIFIED BRIDGE APPROACH FILLS, SEE MODIFIED BRIDGE APPROACH FILLS PROVISION.

REINFORCEMENT LENGTH (L) SHALL BE AT A MINIMUM OF 0.7 TIMES THE BACKWALL HEIGHT (H) AND DESIGNED IN ACCORDANCE WITH MECHANICALLY STABILIZED EARTH RETAINING WALLS PROVISION.

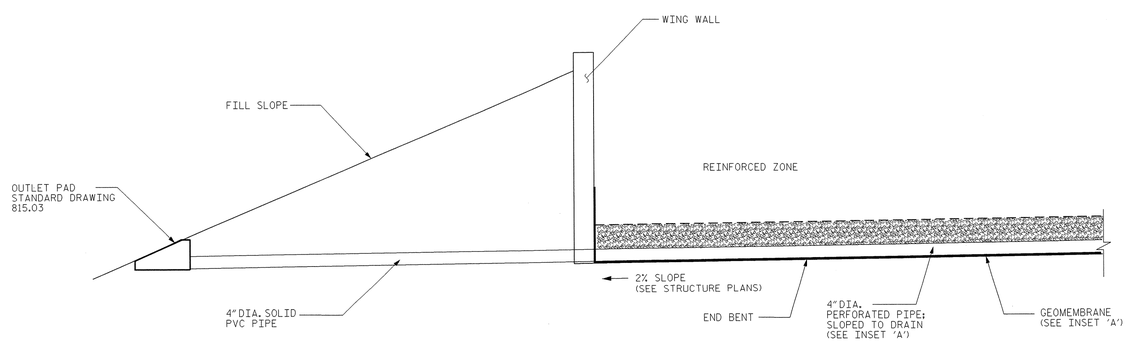

SECTION B-B

NTS

ESTIMATED QUANTITY	
MODIFIED BRIDGE APPROACH FILL, STATION 268+22.89 -L-	LUMP SUM

PROJECT NO.: U-2525B

GUILFORD ***COUNTY***

STATION: 268+22.89 -L-

SHEET 1 OF 1

PREPARED BY: S. ZHANG	DATE: 12/2013
REVIEWED BY: J. BATTS	DATE: 12/2013

GEOTECHNICAL ENGINEERING UNIT

[X] ***EASTERN REGIONAL OFFICE***

[ ] ***WESTERN REGIONAL OFFICE***

[ ] ***CONTRACT OFFICE***

STATE OF NORTH CAROLINA
DEPARTMENT OF TRANSPORTATION
RALEIGH

MODIFIED BRIDGE APPROACH FILLS DETAIL FOR BRIDGE ON I-85 BYPASS OVER US 29 (STRUCTURE NO. 10)

REVISIONS

NO.	BY	DATE	NO.	BY	DATE
1	–	–	3	–	–
2	–	–	4	–	–

SHEET NO. S-388

TOTAL SHEETS 541