TIP PROJECT: U-2525B

CONTRACT: C203399

17-FEB-2014 13:22
$$$$$$$$$$$$$$$$$$$$DGN$$$$$$$$$$$$$$$$$$$$
scruticher

STATE OF NORTH CAROLINA
DIVISION OF HIGHWAYS

GUILFORD COUNTY

STATE	STATE PROJECT REFERENCE NO.	SHEET NO.	TOTAL SHEETS
N.C.	U-2525B		

STATE PROJ. NO.	F. A. PROJ. NO.	DESCRIPTION
34821.1.3		PE
34821.2.3		R/W & UTILITIES
34821.3.S6		CONST.

LOCATION: ***GREENSBORO EASTERN LOOP FROM NORTH OF US 70 RELOCATION TO US 29 NORTH OF GREENSBORO***

TYPE OF WORK: ***GRADING, DRAINAGE, PAVING, SIGNALS, CULVERTS, ITS, RETAINING WALLS, AND STRUCTURES***

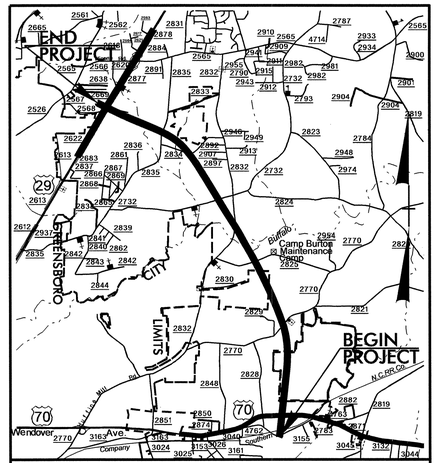

VICINITY MAP

NAD 83/95

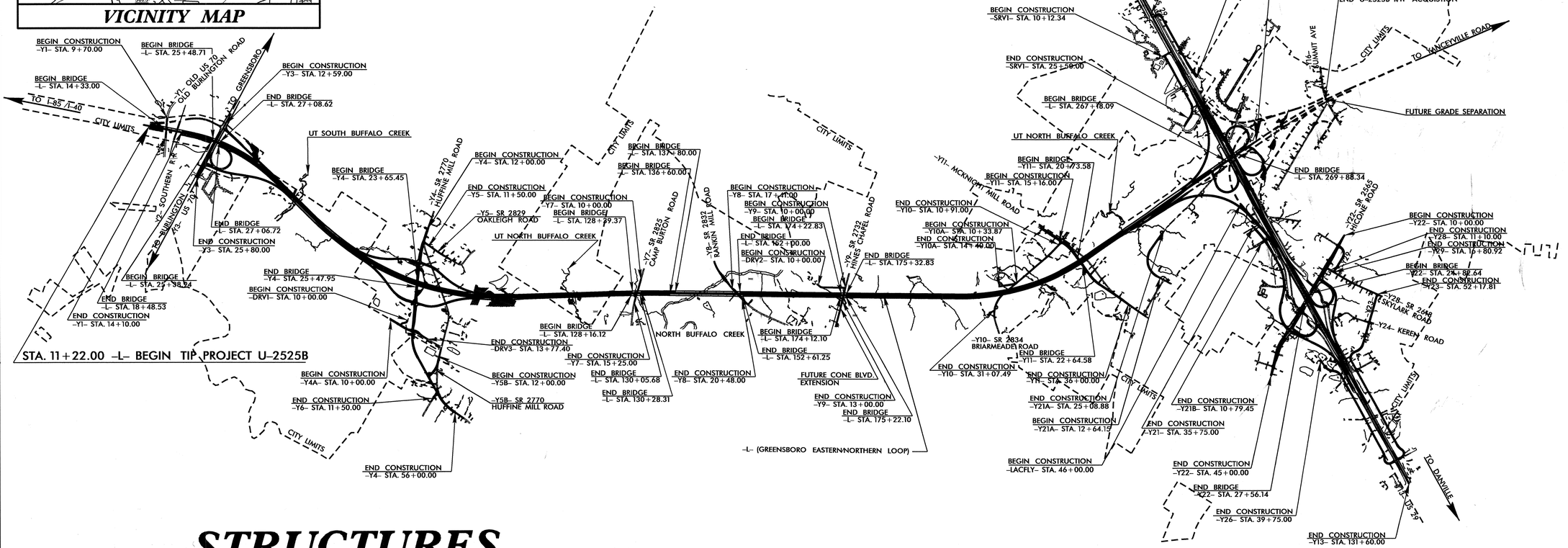

STRUCTURES

DESIGN DATA

ADT 2014 = N/A
ADT 2040 = 58000
DHV = 10 %
D = 60 %
T = 14 % *
V = 70 MPH

* TTST 8% DUAL 6%
FUNC CLASS = INTERSTATE
"STATEWIDE TIER"

PROJECT LENGTH

LENGTH ROADWAY TIP PROJECT U-2525B = 4.474 Miles
LENGTH STRUCTURE TIP PROJECT U-2525B = 0.522 Miles
TOTAL LENGTH OF TIP PROJECT U-2525B = 4.996 Miles

Prepared for the Office of:
DIVISION OF HIGHWAYS
1000 Birch Ridge Dr., Raleigh NC, 27610

2012 STANDARD SPECIFICATIONS

LETTING DATE:
– JUNE 17, 2014 –

STATE OF NORTH CAROLINA • DEPARTMENT OF TRANSPORTATION •

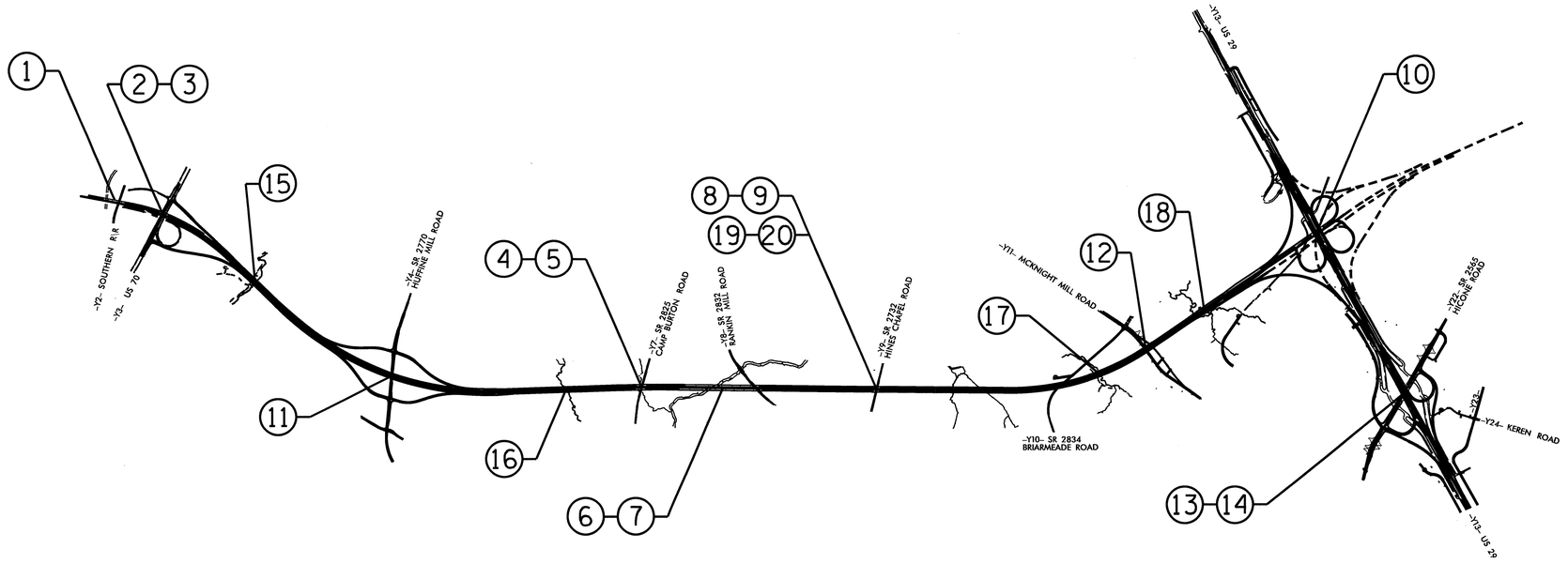

STRUCTURE INDEX			
NO.	**STATION**	**DESCRIPTION**	**SHEETS**
1	14+99.25 -L-	BRIDGE ON GREENSBORO EASTERN LOOP OVER OLD BURLINGTON RD. AND NORFOLK SOUTHERN RR	S-1 thru S-44
2	26+21.65 -L-	BRIDGE ON GREENSBORO EASTERN LOOP OVER US 70 (LEFT LANE)	S-45 thru S-74
3	26+21.65 -L-	BRIDGE ON GREENSBORO EASTERN LOOP OVER US 70 (RIGHT LANE)	S-75 thru S-109
4	129+37.56 -L-	BRIDGE ON GREENSBORO EASTERN LOOP OVER CAMP BURTON RD. (LEFT LANE)	S-110 thru S-140
5	129+37.56 -L-	BRIDGE ON GREENSBORO EASTERN LOOP OVER CAMP BURTON RD. (RIGHT LANE)	S-141 thru S-172
6	144+90.00 -L-	BRIDGE ON GREENSBORO EASTERN LOOP OVER NORTH BUFFALO CREEK AND SR 2832 (LEFT LANE)	S-173 thru S-233
7	144+60.63 -L-	BRIDGE ON GREENSBORO EASTERN LOOP OVER NORTH BUFFALO CREEK AND SR 2832 (RIGHT LANE)	S-234 thru S-296
8	174+72.46 -L-	BRIDGE ON GREENSBORO EASTERN LOOP OVER SR 2835 (LEFT LANE)	S-297 thru S-320
9	174+72.46 -L-	BRIDGE ON GREENSBORO EASTERN LOOP OVER SR 2835 (RIGHT LANE)	S-321 thru S-345
10	268+22.89 -L-	BRIDGE ON GREENSBORO EASTERN LOOP OVER US 29	S-346 thru S-388
11	80+74.41 -L-	BRIDGE ON HUFFINE MILL RD. OVER GREENSBORO EASTERN LOOP	S-389 thru S-418
12	228+23.81 -L-	BRIDGE ON McKNIGHT MILL RD. OVER GREENSBORO EASTERN LOOP	S-419 thru S-452
13	26+17.64 -Y22-	BRIDGE ON HICONE RD. OVER US 29 (LEFT LANE)	S-453 thru S-500
14	26+17.64 -Y22-	BRIDGE ON HICONE RD. OVER US 29 (RIGHT LANE)	S-501 thru S-541
15	48+65.00 -L-	DOUBLE 9'X9' RCBC	C-1 thru C-5
16	114+55.00 -L-	DOUBLE 7'X8' RCBC	C-6 thru C-10
17	218+00.00 -L-	DOUBLE 7'X8' RCBC	C-11 thru C-15
18	241+96.00 -L-	DOUBLE 8'X8' RCBC	C-16 thru C-20
19	10+73.00 -Y9-	MSE RETAINING WALL NO. 1	W1 thru W4
20	10+49.00 -Y9-	MSE RETAINING WALL NO. 2	

PART 1
PART 2
PART 3

PART 1 OF 3

PROJECT NO. U-2525B

GUILFORD COUNTY

STATION:

STATE OF NORTH CAROLINA
DEPARTMENT OF TRANSPORTATION
RALEIGH

INDEX

REVISIONS					
NO.	BY:	DATE:	NO.	BY:	DATE:
1			3		
2			4		

DRAWN BY : W.D. CRUTCHER DATE : 2-14-14
CHECKED BY : E.G. ALLEN DATE : 2-18-14

18-FEB-2014 11:16
S:\PEF\ALL INDIVIDUAL FOLDERS\Darrell\u2525b_title_index.dgn

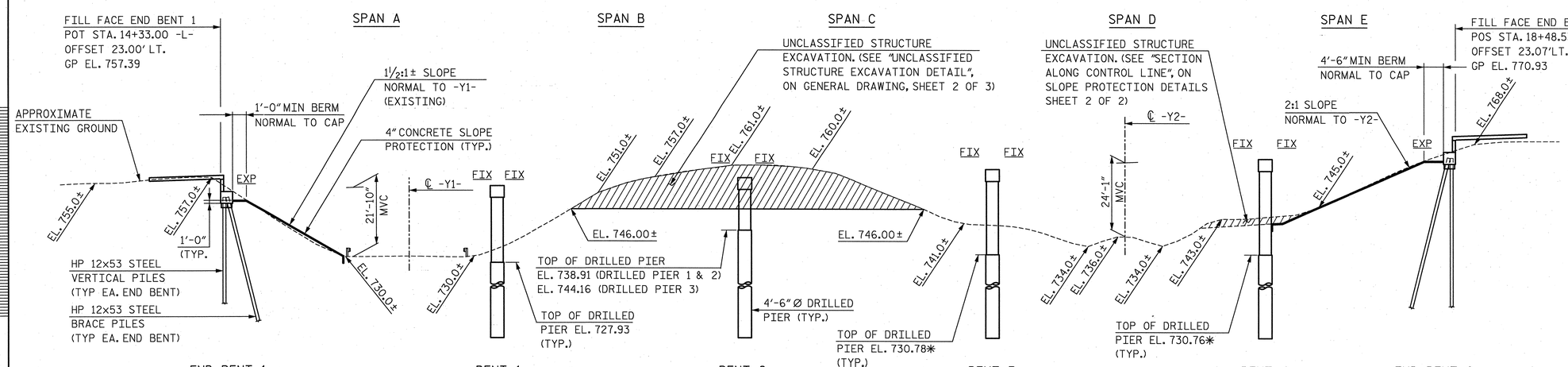

* TOP OF DRILLED PIERS AT BENTS 3 & 4 ARE BASED UPON THE THEORETICAL DITCH SECTION FOR THE FUTURE TRACKS.

SECTION ALONG CONTROL LINE

(END BENTS AND BENTS ON SECTION AT RIGHT ANGLES TO END BENTS AND BENTS)

NOTES:

FOR NOTES, SEE GENERAL DRAWING SHEET 3 OF 3.

MVC = MINIMUM VERTICAL CLEARANCE
MHC = MINIMUM HORIZONTAL CLEARANCE

TOP OF RAIL ELEVATIONS

STATION -Y2-	ELEV.
11+00	737.76
11+50	737.41
12+00	737.06
12+50	736.71
13+00	736.36

NOTE: TOP OF RAIL ELEVATIONS WERE APPROXIMATED FROM AVAILABLE SURVEY INFORMATION.

CURVE DATA -L-

PIs STA 20+56.13
Θs = 2° 57' 03.1"(RT)
Ls = 393.70'
LT = 262.50'
ST = 131.27'

PI STA 31+07.94
Δ = 27°-05'-05.5"(RT)
D = 1°-29'-56.5"
L = 1,806.82'
T = 920.62'
R = 3,822.17'

NOTE: FOR SUPERELEVATION INFORMATION, SEE "SUPERSTRUCTURE TYPICAL SECTIONS" SHEET 1 OF 2.

PI STA. = 26+89.63
EL = 798.52
L = 1,804.46'

(+)3.2730% (-)3.0653%

GRADE DATA -L-

GRADE POINT
STA. 11+50.00
EL = 731.81

(-)3.1680%

GRADE POINT
STA. 14+00.00
EL = 723.89

GRADE DATA -Y1-

NOTE: GRADE DATA FOR -Y1- WAS APPROXIMATED USING AVAILABLE SURVEY INFORMATION. ROADWAY IS APPROXIMATELY NORMAL CROWN.

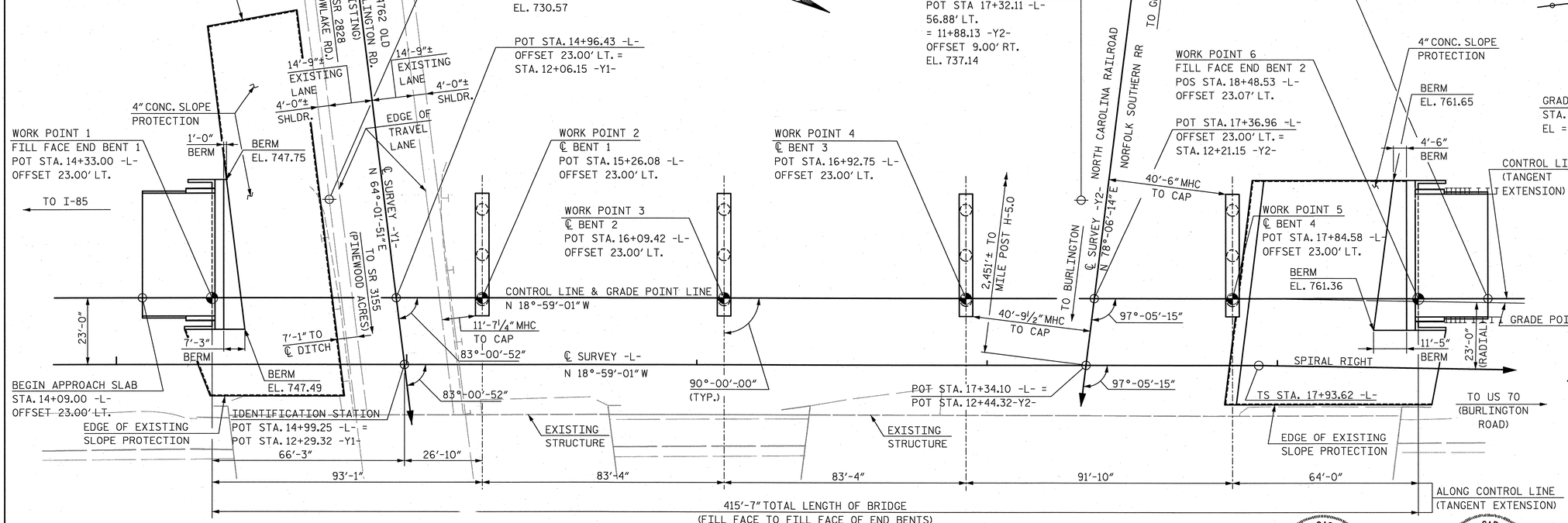

PLAN

NOTE: PILES NOT SHOWN FOR CLARITY.

CONTROL LINE FOR BRIDGE SHALL BE A 23'-0" OFFSET OF THE -L- LINE TANGENT PRIOR TO THE SPIRAL. END BENT 2 WORK POINT AND END APPROACH SLAB WORK POINTS WERE PLACED ON THE EXTENDED TANGENT.

PROJECT NO. U-2525B

GUILFORD COUNTY

STATION: POT 14+99.25 -L-
POT 12+29.32 -Y1-

BRIDGE NO. 1133
SHEET 1 OF 3 NCRR/NS MILEPOST H-5.5

STATE OF NORTH CAROLINA
DEPARTMENT OF TRANSPORTATION
RALEIGH

GENERAL DRAWING

BRIDGE OVER OLD BURLINGTON RD. AND NORFOLK SOUTHERN RR ON GREENSBORO EASTERN LOOP BETWEEN I-85 AND US 70

NORTH CAROLINA PROFESSIONAL SEAL 27812 ENGINEER DAVID W. HAWKINS 12/20/13

NORTH CAROLINA PROFESSIONAL SEAL 12916 ENGINEER PAUL J. BARBER 12/20/13

HNTB HNTB NORTH CAROLINA, P.C.
NC License No. C-1554
343 E. Six Forks Rd., Suite 200, Raleigh, N.C. 27609

DRAWN BY J. BAYNE DATE 7/13
CHECKED BY D. HAWKINS DATE 10/13
DWG. NO. 1

REVISIONS						SHEET NO.
NO.	BY	DATE	NO.	BY	DATE	S-1
1			3			TOTAL SHEETS
2			4			541

STR. #1

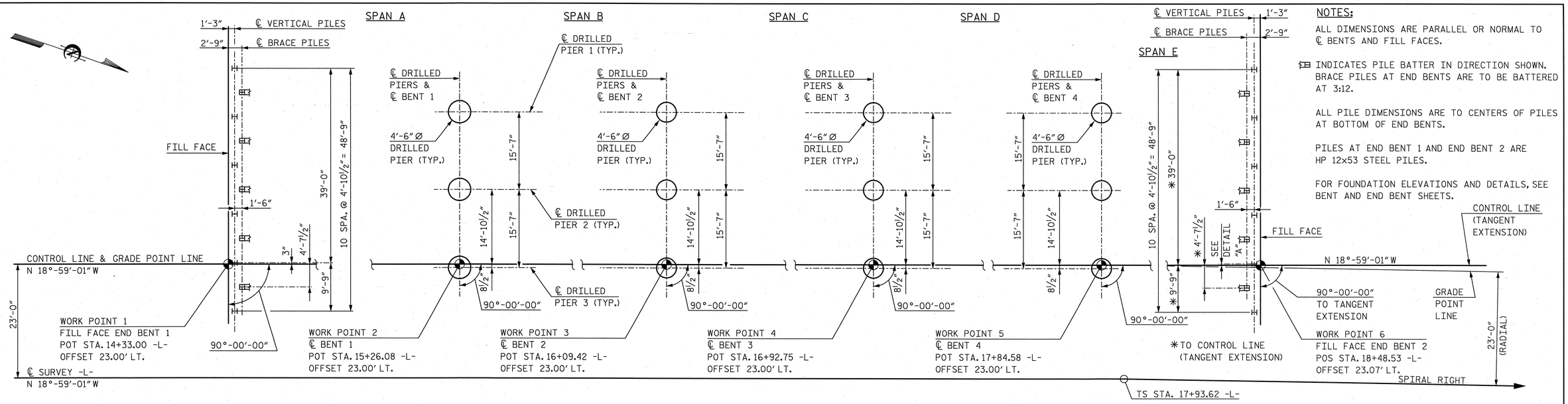

NOTES:

ALL DIMENSIONS ARE PARALLEL OR NORMAL TO ℄ BENTS AND FILL FACES.

⊞ INDICATES PILE BATTER IN DIRECTION SHOWN. BRACE PILES AT END BENTS ARE TO BE BATTERED AT 3:12.

ALL PILE DIMENSIONS ARE TO CENTERS OF PILES AT BOTTOM OF END BENTS.

PILES AT END BENT 1 AND END BENT 2 ARE HP 12x53 STEEL PILES.

FOR FOUNDATION ELEVATIONS AND DETAILS, SEE BENT AND END BENT SHEETS.

FOUNDATION NOTES

FOR PILES, SEE SECTION 450 OF THE STANDARD SPECIFICATIONS.

PILES AT END BENT NO. 1 ARE DESIGNED FOR A FACTORED RESISTANCE OF 100 TONS PER PILE.

DRIVE PILES AT END BENT NO. 1 TO A REQUIRED DRIVING RESISTANCE OF 170 TONS PER PILE.

PILES AT END BENT NO. 2 ARE DESIGNED FOR A FACTORED RESISTANCE OF 80 TONS PER PILE.

DRIVE PILES AT END BENT NO. 2 TO A REQUIRED DRIVING RESISTANCE OF 135 TONS PER PILE.

FOR DRILLED PIERS, SEE SECTION 411 OF THE STANDARD SPECIFICATIONS.

DRILLED PIERS AT BENT NO. 1 ARE DESIGNED FOR A FACTORED RESISTANCE OF 505 TONS PER PIER. CHECK FIELD CONDITIONS FOR THE REQUIRED TIP RESISTANCE OF 75 TSF.

DRILLED PIERS AT BENT NO. 2 THRU BENT NO. 4 ARE DESIGNED FOR A FACTORED RESISTANCE OF 480 TONS PER PIER. CHECK FIELD CONDITIONS FOR THE REQUIRED TIP RESISTANCE OF 75 TSF.

INSTALL DRILLED PIERS AT BENT NO. 1 TO A TIP ELEVATION NO HIGHER THAN 697 FT. (DRILLED PIER 1), 699 FT. (DRILLED PIER 2.), 701 FT. (DRILLED PIER 3) RESPECTIVELY, AND WITH THE REQUIRED TIP RESISTANCE AND PENETRATION OF AT LEAST 5 FT. INTO ROCK AS DEFINED BY ARTICLE 411-1 OF THE STANDARD SPECIFICATIONS.

INSTALL DRILLED PIERS AT BENT NO. 2 TO A TIP ELEVATION NO HIGHER THAN 703 FT. (DRILLED PIER 1), 706 FT. (DRILLED PIER 2), 709 FT. (DRILLED PIER 3) RESPECTIVELY, AND W1 THE REQUIRED TIP RESISTANCE AND PENETRATION OF AT LEAST 5 FT. INTO ROCK AS DEFINED BY ARTICLE 411-1 OF THE STANDARD SPECIFICATIONS.

INSTALL DRILLED PIERS AT BENT NO. 3 TO A TIP ELEVATION NO HIGHER THAN 708 FT. (DRILLED PIER 1), 706 FT. (DRILLED PIER 2), 703 FT. (DRILLED PIER 3) RESPECTIVELY, AND WITH THE REQUIRED TIP RESISTANCE AND PENETRATION OF AT LEAST 3 FT. INTO ROCK AS DEFINED BY ARTICLE 411-1 OF THE STANDARD SPECIFICATIONS.

INSTALL DRILLED PIERS AT BENT NO. 4 TO A TIP ELEVATION NO HIGHER THAN 709 FT. (DRILLED PIER 1), 707.5 FT. (DRILLED PIER 2), 705 FT. (DRILLED PIER 3) RESPECTIVELY, AND WITH THE REQUIRED TIP RESISTANCE AND PENETRATION OF AT LEAST 3 FT. INTO ROCK AS DEFINED BY ARTICLE 411-1 OF THE STANDARD SPECIFICATIONS.

SID INSPECTIONS MAY BE REQUIRED FOR DRILLED PIERS. THE ENGINEER WILL DETERMINE THE NEED FOR SID INSPECTIONS. FOR SID INSPECTIONS, SEE SECTION 411 OF THE STANDARD SPECIFICATIONS.

CSL TUBES ARE REQUIRED AND CSL TESTING MAY BE REQUIRED FOR DRILLED PIERS. THE ENGINEER WILL DETERMINE THE NEED FOR CSL TESTING. FOR CSL TESTING, SEE SECTION 411 OF THE STANDARD SPECIFICATIONS.

OBSERVE A ONE MONTH WAITING PERIOD AFTER CONSTRUCTING THE EMBANKMENT TO WITHIN 2 FT. OF FINISHED GRADE BEFORE BEGINNING END BENT CONSTRUCTION AT END BENT NO. 2.

FOUNDATION LAYOUT

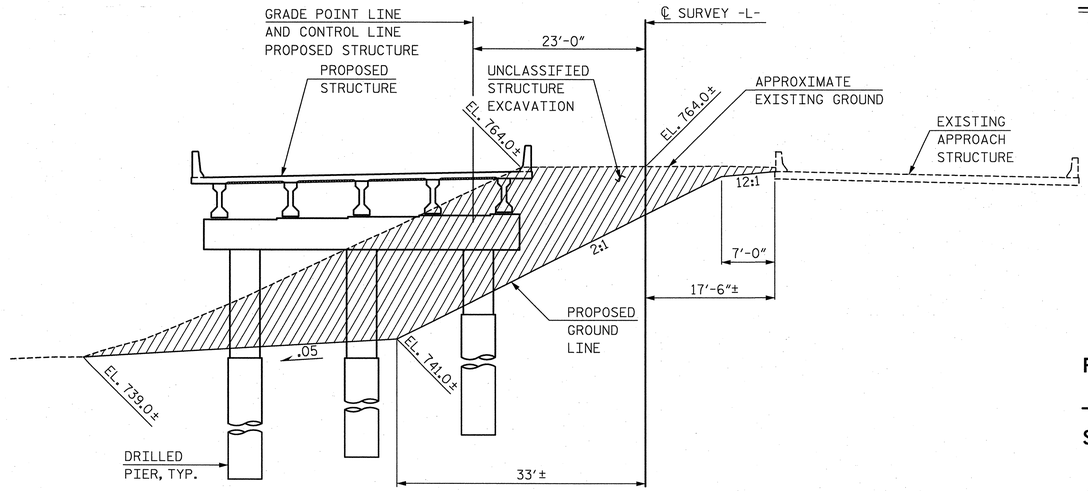

UNCLASSIFIED STRUCTURE EXCAVATION DETAIL

(NORMAL TO ℄ SURVEY STA. 16+09.42 -L-, ℄ BENT 2)

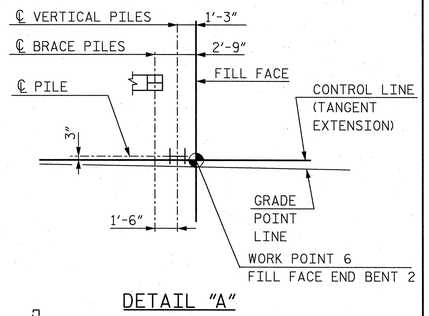

DETAIL "A"

PROJECT NO. U-2525B

GUILFORD COUNTY

STATION: POT 14+99.25 -L-

SHEET 2 OF 3

STATE OF NORTH CAROLINA
DEPARTMENT OF TRANSPORTATION
RALEIGH

GENERAL DRAWING

FOUNDATION LAYOUT

NORTH CAROLINA PROFESSIONAL SEAL 27812 ENGINEER DAVID W. HAWKINS 12/20/13

NORTH CAROLINA PROFESSIONAL SEAL 12916 ENGINEER PAUL J. BARBER 12/20/13

HNTB NORTH CAROLINA, P.C.
NC License No. C-1554
343 E. Six Forks Rd., Suite 200, Raleigh, N.C. 27609

DRAWN BY J. BAYNE DATE 8/13
CHECKED BY P. BARBER DATE 10/13
DWG. NO. 2

REVISIONS						SHEET NO.
NO.	BY	DATE	NO.	BY	DATE	S-2
1			3			TOTAL SHEETS
2			4			54

BENCH MARK #23: "X" ON SOUTH CONCRETE BRIDGE WING, -L- STA. 14+25.33 151.20' LT., EL. 757.45'.

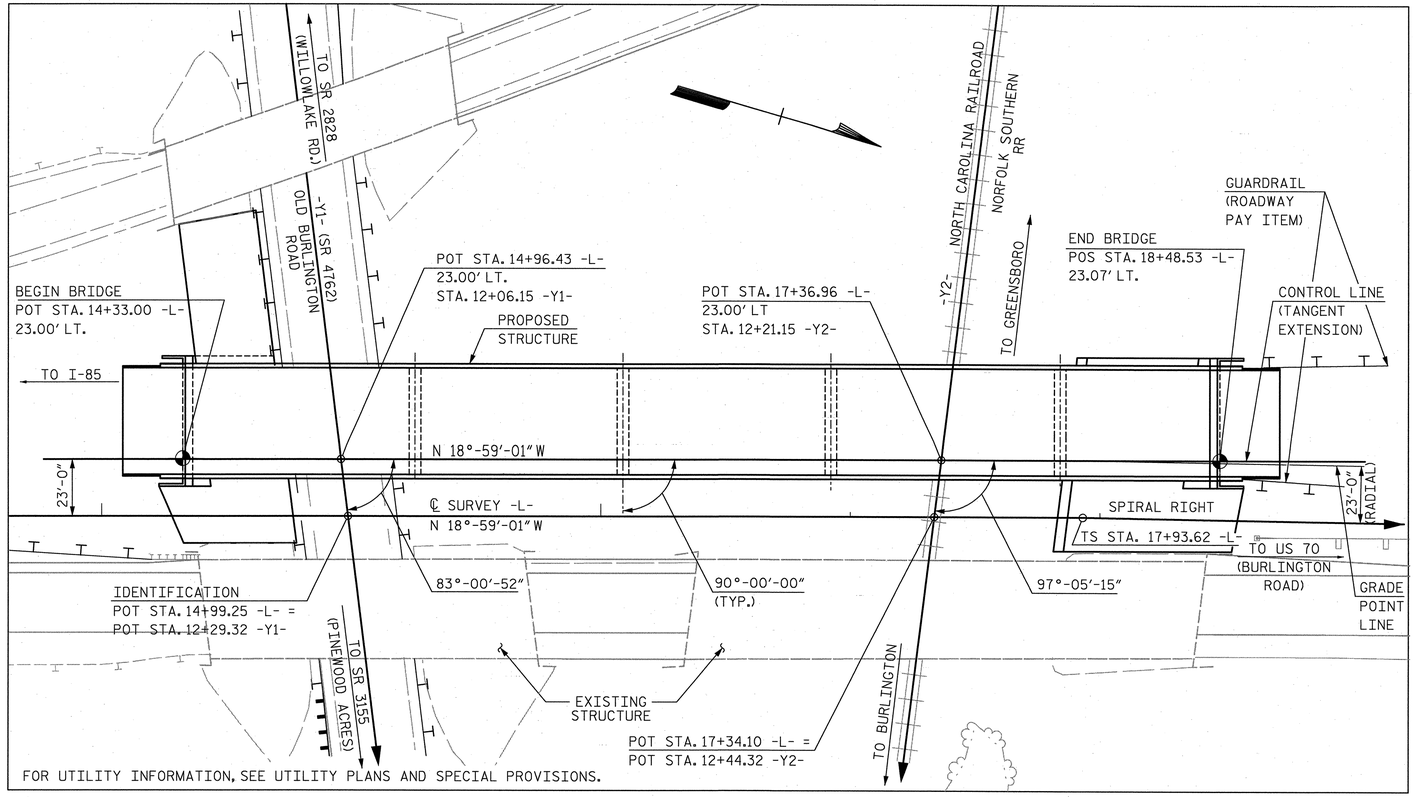

FOR UTILITY INFORMATION, SEE UTILITY PLANS AND SPECIAL PROVISIONS.

LOCATION SKETCH

GENERAL NOTES

ASSUMED LIVE LOAD = HL-93 OR ALTERNATE LOADING.

THIS BRIDGE HAS BEEN DESIGNED IN ACCORDANCE WITH THE AASHTO LRFD BRIDGE DESIGN SPECIFICATIONS.

THIS BRIDGE IS LOCATED IN SEISMIC ZONE 1.

FOR OTHER DESIGN DATA AND GENERAL NOTES, SEE SHEET SN.

FOR SUBMITTAL OF WORKING DRAWINGS, SEE SPECIAL PROVISIONS.

FOR FALSEWORK AND FORMWORK, SEE SPECIAL PROVISIONS.

FOR CRANE SAFETY, SEE SPECIAL PROVISIONS.

FOR GROUT FOR STRUCTURES, SEE SPECIAL PROVISIONS.

THE ELEVATIONS AND CLEARANCES SHOWN ON THE PLANS AT THE POINTS OF MINIMUM VERTICAL CLEARANCE ARE FROM THE BEST INFORMATION AVAILABLE. PRIOR TO BEGINNING BRIDGE CONSTRUCTION, VERIFY THE ELEVATIONS ON THE EXISTING PAVEMENT AND CHECK THE CLEARANCE. REPORT ANY VARIATIONS TO THE ENGINEER. ANY PLAN REVISIONS NECESSARY TO ACHIEVE THE REQUIRED MINIMUM VERTICAL CLEARANCE WILL BE PROVIDED BY THE DEPARTMENT.

FOR MAINTENANCE AND PROTECTION OF TRAFFIC BENEATH PROPOSED STRUCTURE, SEE SPECIAL PROVISIONS.

PRESTRESSED CONCRETE DECK PANELS MAY BE USED IN LIEU OF METAL STAY-IN-PLACE FORMS IN ACCORDANCE WITH ARTICLE 420-3 OF THE STANDARD SPECIFICATIONS.

REMOVABLE FORMS MAY BE USED IN LIEU OF METAL STAY-IN-PLACE FORMS IN ACCORDANCE WITH ARTICLE 420-3 OF THE STANDARD SPECIFICATIONS.

THE RAILROAD TRACK TOP OF RAIL ELEVATIONS ON THE PLANS ARE FROM THE BEST INFORMATION AVAILABLE. PRIOR TO BEGINNING BRIDGE CONSTRUCTION, VERIFY THE TOP OF RAIL ELEVATIONS AND REPORT ANY VARIATIONS TO THE ENGINEER. ANY PLAN REVISIONS NECESSARY TO ACHIEVE THE REQUIRED MINIMUM CLEARANCE WILL BE PROVIDED BY THE DEPARTMENT.

NEEDLE BEAMS WILL NOT BE ALLOWED UNLESS OTHERWISE CALLED FOR ON THE PLANS OR APPROVED BY THE ENGINEER.

THE CLASS AA CONCRETE IN THE BRIDGE DECK SHALL CONTAIN FLY ASH OR GROUND GRANULATED BLAST FURNACE SLAG AT THE SUBSTITUTION RATE SPECIFIED IN ARTICLE 1024-1 AND IN ACCORDANCE WITH ARTICLES 1024-5 AND 1024-6 OF THE STANDARD SPECIFICATIONS. NO PAYMENT WILL BE MADE FOR THIS SUBSTITUTION AS IT IS CONSIDERED INCIDENTAL TO THE COST OF THE REINFORCED CONCRETE DECK SLAB.

THE MATERIAL SHOWN IN THE CROSS-HATCHED AREA SHALL BE EXCAVATED FOR A MINIMUM DISTANCE OF 52'-0"(±) LEFT AND 10'-10½"(±) RIGHT OF THE CONTROL LINE AS DIRECTED BY THE ENGINEER. SEE "FOUNDATION PLAN" FOR DETAIL AT BENT 2 AND "SLOPE PROTECTION DETAILS" SHEET 2 OF 2 FOR DETAILS AT BENT 4. THIS WORK WILL BE PAID FOR AT THE CONTRACT LUMP SUM PRICE FOR UNCLASSIFIED STRUCTURE EXCAVATION. SEE SECTION 412 OF THE STANDARD SPECIFICATIONS.

FOR EROSION CONTROL MEASURES, SEE EROSION CONTROL PLANS.

FOR PLACING LOAD ON STRUCTURE MEMBERS, SEE SPECIAL PROVISIONS.

TOTAL BILL OF MATERIAL

	FOUNDATION EXCAVATION FOR BENT 3 AT STATION 14+99.25	FOUNDATION EXCAVATION FOR BENT 4 AT STATION 14+99.25	4'-6" DIA. DRILLED PIERS IN SOIL	4'-6" DIA. DRILLED PIERS NOT IN SOIL	SID INSPECTIONS	CSL TESTING	UNCLASSIFIED STRUCTURE EXCAVATION AT STATION 14+99.25	REINFORCED CONCRETE DECK SLAB	GROOVING BRIDGE FLOORS	CLASS A CONCRETE
	LUMP SUM	LUMP SUM	L.F.	L.F.	EACH	EACH	LUMP SUM	SQ. FT.	SQ. FT.	CU. YDS.
SUPERSTRUCTURE	——	——	——	——	——	——	——	18,811	18,052	——
END BENT 1	——	——	——	——	——	——	——	——	——	50.3
BENT 1	——	——	61.0	26.0	——	——	——	——	——	62.2
BENT 2	——	——	88.25	16.0	——	——	LUMP SUM	——	——	48.3
BENT 3	LUMP SUM	——	54.0	22.0	——	——	——	——	——	65.6
BENT 4	——	LUMP SUM	46.5	25.0	——	——	LUMP SUM	——	——	68.6
END BENT 2	——	——	——	——	——	——	——	——	——	50.2
TOTAL	LUMP SUM	LUMP SUM	249.75	89.0	4	4	LUMP SUM	18,811	18,052	345.2

TOTAL BILL OF MATERIAL

	BRIDGE APPROACH SLABS, STATION 14+99.25 -L-	REINFORCING STEEL	SPIRAL COLUMN REINFORCING STEEL	54" PRESTRESSED CONCRETE GIRDERS		HP 12x53 STEEL PILES		CONCRETE BARRIER RAIL	4" SLOPE PROTECTION	ELASTOMERIC BEARINGS	EXPANSION JOINT SEALS	ELECTRICAL CONDUIT SYSTEM FOR SIGNALS AT STATION 14+99.25 -L-
	LUMP SUM	LBS.	LBS.	NO.	L.F.	NO.	L.F.	L.F.	SQ. YDS.	LUMP SUM	LUMP SUM	LUMP SUM
SUPERSTRUCTURE	LUMP SUM	——	——	25	2,046.67	——	——	866.52	——	LUMP SUM	LUMP SUM	LUMP SUM
END BENT 1	——	7,377	——	——	——	11	412.5	——	675	——	——	——
BENT 1	——	24,560	4,536	——	——	——	——	——	——	——	——	——
BENT 2	——	23,284	3,969	——	——	——	——	——	——	——	——	——
BENT 3	——	24,351	4,479	——	——	——	——	——	——	——	——	——
BENT 4	——	24,771	4,670	——	——	——	——	——	——	——	——	——
END BENT 2	——	6,801	——	——	——	11	495.0	——	625	——	——	——
TOTAL	LUMP SUM	111,144	17,654	25	2,046.67	22	907.5	866.52	1,300	LUMP SUM	LUMP SUM	LUMP SUM

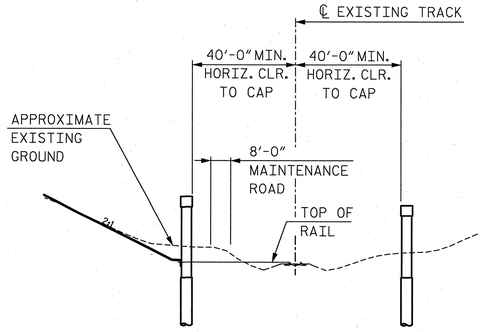

SECTION THRU RAILROAD

(LOOKING IN DIRECTION OF INCREASING STATIONS ON RAILROAD)
(SPAN LENGTHS BASED ON THIS SECTION)

NORTH CAROLINA PROFESSIONAL SEAL 27812 ENGINEER DAVID W. HAWKINS 12/20/13

NORTH CAROLINA PROFESSIONAL SEAL 12916 ENGINEER PAUL J. BARBER 12/20/13

PROJECT NO. U-2525B
GUILFORD **COUNTY**
STATION: POT 14+99.25 -L-

SHEET 3 OF 3

STATE OF NORTH CAROLINA
DEPARTMENT OF TRANSPORTATION
RALEIGH

GENERAL DRAWING LOCATION SKETCH, GENERAL NOTES & TOTAL BILL OF MATERIAL

HNTB NORTH CAROLINA, P.C.
NC License No. C-1554
343 E. Six Forks Rd., Suite 200, Raleigh, N.C. 27609

DRAWN BY J. BAYNE DATE 10/13
CHECKED BY P. BARBER DATE 10/13
DWG. NO. 3

REVISIONS						SHEET NO.
NO.	BY	DATE	NO.	BY	DATE	S-3
1			3			TOTAL SHEETS
2			4			54

STR. #1

LOAD AND RESISTANCE FACTOR RATING (LRFR) SUMMARY FOR PRESTRESSED CONCRETE GIRDERS

LEVEL		VEHICLE	WEIGHT (W) (TONS)	⟨#⟩ CONTROLLING LOAD RATING	MINIMUM RATING FACTORS (RF)	TONS = W x RF	STRENGTH I LIMIT STATE											SERVICE III LIMIT STATE						COMMENT NUMBER
								MOMENT					SHEAR						MOMENT						
							LIVE-LOAD FACTORS (γ_{LL})	DISTRIBUTION FACTORS (DF)	RATING FACTOR	SPAN	GIRDER LOCATION	DISTANCE FROM LEFT END OF SPAN (ft)	DISTRIBUTION FACTORS (DF)	RATING FACTOR	SPAN	GIRDER LOCATION	DISTANCE FROM LEFT END OF SPAN (ft)	LIVE-LOAD FACTORS (γ_{LL})	DISTRIBUTION FACTORS (DF)	RATING FACTOR	SPAN	GIRDER LOCATION	DISTANCE FROM LEFT END OF SPAN (ft)	
DESIGN LOAD RATING		HL-93 (INVENTORY)	N/A	⟨1⟩	1.01	--	1.75	0.84	1.01	E	I	30.4	0.93	1.21	E	I	11.7	0.80	0.83	1.01	A/D	EL/ER	44.9	
		HL-93 (OPERATING)	N/A	--	1.30	--	1.35	0.84	1.30	E	I	30.4	0.93	1.81	A/D	I	17.5	N/A	--	--	--	--	--	
		HS-20 (INVENTORY)	36.000	⟨2⟩	1.28	46.1	1.75	0.84	1.28	E	I	30.4	0.93	1.78	A/D	I	17.5	0.80	0.84	1.31	E	I	30.4	
		HS-20 (OPERATING)	36.000	--	1.66	59.8	1.35	0.84	1.66	E	I	30.4	0.93	2.34	B/C	I	15.8	N/A	--	--	--	--	--	
LEGAL LOAD RATING	SINGLE VEHICLE (SV)	SH	12.500	--	3.10	38.8	1.40	0.84	3.77	E	I	30.4	0.93	6.04	B/C	I	15.8	0.80	0.84	3.10	E	I	30.4	
		S3C	21.500	--	1.82	39.1	1.40	0.84	2.21	E	I	30.4	0.93	3.49	B/C	I	15.8	0.80	0.84	1.82	E	I	30.4	
		S3A	22.750	--	1.72	39.1	1.40	0.84	2.10	E	I	30.4	0.93	3.31	B/C	I	15.8	0.80	0.84	1.72	E	I	30.4	
		S4A	26.750	--	1.54	41.2	1.40	0.84	1.88	E	I	30.4	0.93	2.88	B/C	I	15.8	0.80	0.84	1.54	E	I	30.4	
		S5A	30.500	--	1.37	41.8	1.40	0.84	1.67	E	I	30.4	0.93	2.66	B/C	I	15.8	0.80	0.84	1.37	E	I	30.4	
		S6A	34.500	--	1.26	43.5	1.40	0.84	1.53	E	I	30.4	0.93	2.39	A/D	I	17.5	0.80	0.84	1.26	E	I	30.4	
		S7B	38.500	⟨3⟩	1.15	44.3	1.40	0.84	1.40	E	I	30.4	0.93	2.23	A/D	I	17.5	0.80	0.84	1.15	E	I	30.4	
		S7A	40.000	--	1.16	46.4	1.40	0.84	1.41	E	I	30.4	0.93	2.30	A/D	I	17.5	0.80	0.84	1.16	E	I	30.4	
	TRUCK TRACTOR SEMI-TRAILER (TTST)	T4A	28.250	--	1.55	43.8	1.40	0.84	1.89	E	I	30.4	0.93	2.81	B/C	I	15.8	0.80	0.84	1.55	E	I	30.4	
		T5B	32.000	--	1.36	43.5	1.40	0.84	1.66	E	I	30.4	0.93	2.69	A/D	I	17.5	0.80	0.84	1.36	E	I	30.4	
		T6A	36.000	--	1.27	45.7	1.40	0.84	1.55	E	I	30.4	0.93	2.47	A/D	I	17.5	0.80	0.84	1.27	E	I	30.4	
		T7A	40.000	--	1.20	48.0	1.40	0.84	1.46	E	I	30.4	0.93	2.29	A/D	I	17.5	0.80	0.84	1.20	E	I	30.4	
		T7B	40.000	--	1.33	53.2	1.40	0.84	1.62	E	I	30.4	0.93	2.14	A/D	I	17.5	0.80	0.84	1.33	E	I	30.4	

LOAD FACTORS:

DESIGN LOAD RATING FACTORS	LIMIT STATE	γ_{DC}	γ_{DW}
	STRENGTH I	1.25	1.50
	SERVICE III	1.00	1.00

NOTES:

MINIMUM RATING FACTORS ARE BASED ON THE STRENGTH I AND SERVICE III LIMIT STATES.

ALLOWABLE STRESSES FOR SERVICE III LIMIT STATE ARE AS REQUIRED FOR DESIGN.

COMMENTS:

1.
2.
3.
4.

⟨#⟩ CONTROLLING LOAD RATING

⟨1⟩ DESIGN LOAD RATING (HL-93)

⟨2⟩ DESIGN LOAD RATING (HS-20)

⟨3⟩ LEGAL LOAD RATING **

** SEE CHART FOR VEHICLE TYPE

GIRDER LOCATION

I - INTERIOR GIRDER
EL - EXTERIOR LEFT GIRDER
ER - EXTERIOR RIGHT GIRDER

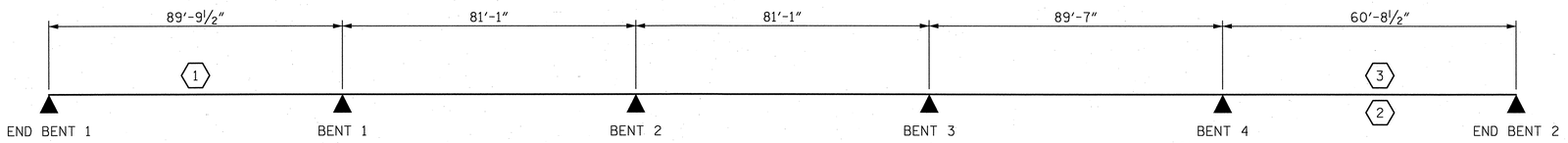

LRFR SUMMARY

NOTE: SPAN LENGTHS PROVIDED ARE BEARING TO BEARING LENGTHS

PROJECT NO. U-2525B

GUILFORD COUNTY

STATION: POT 14+99.25 -L-

NORTH CAROLINA PROFESSIONAL SEAL 27812 ENGINEER DAVID W. HAWKINS 12/20/13

NORTH CAROLINA PROFESSIONAL SEAL 12916 ENGINEER PAUL J. BARBER 12/20/13

STATE OF NORTH CAROLINA
DEPARTMENT OF TRANSPORTATION
RALEIGH

STANDARD

LRFR SUMMARY FOR PRESTRESSED CONCRETE GIRDERS (INTERSTATE TRAFFIC)

ASSEMBLED BY : J. BAYNE	DATE : 8/13
CHECKED BY : S. FISHER	DATE : 10/13
DRAWN BY : MAA 1/08	REV. 11/12/08RR MAA/GM
CHECKED BY : GM/DI 2/08	REV. 10/1/11 MAA/GM

HNTB NORTH CAROLINA, P.C.
NC License No. C-554
343 E. Six Forks Rd., Suite 200, Raleigh, N.C. 27609

DRAWN BY J. BAYNE DATE 8/13
CHECKED BY S. FISHER DATE 10/13

DWG. NO. 4

REVISIONS						SHEET NO.
NO.	BY:	DATE:	NO.	BY:	DATE:	S-4
1			3			TOTAL SHEETS
2			4			541

STD. NO. LRFR2

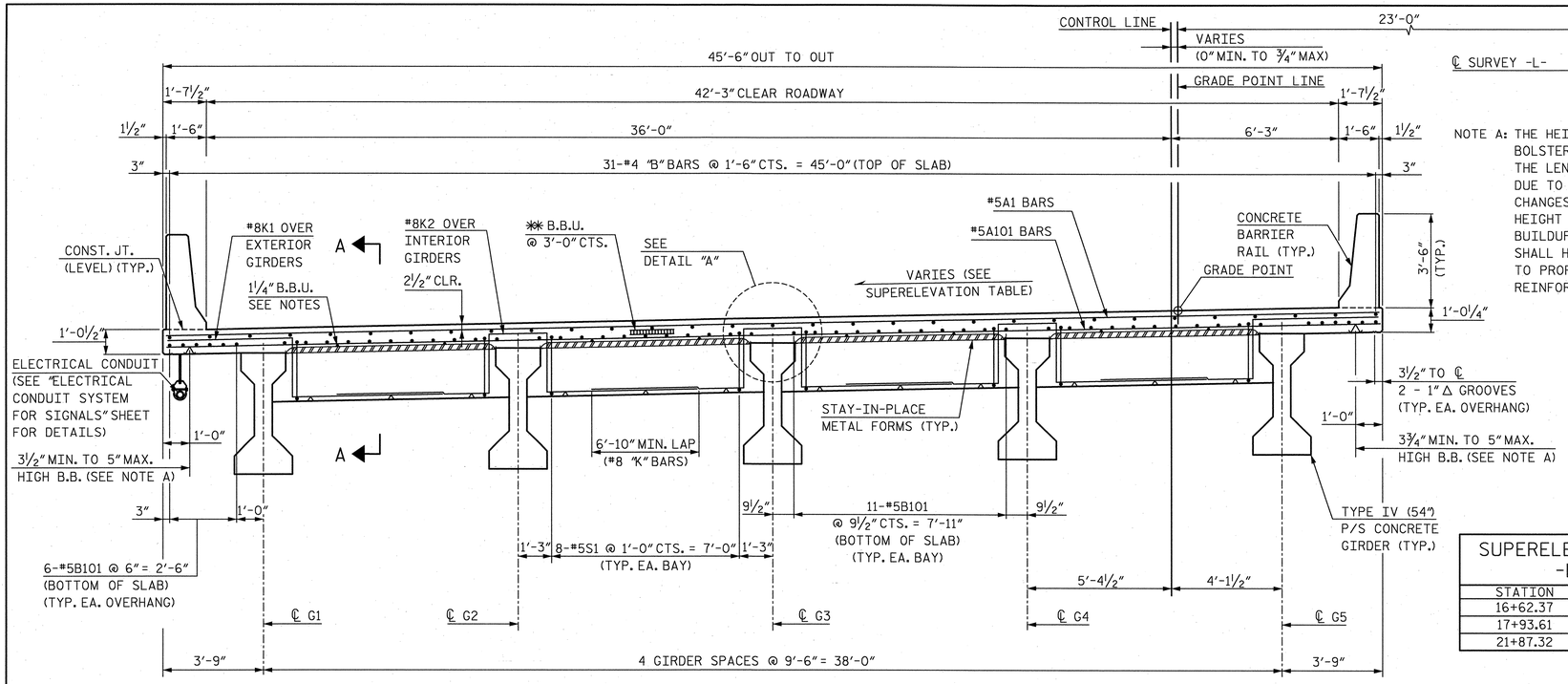

TYPICAL SECTION AT END BENT

FOR SECTION THRU END BENT, SEE SECTION A-A, SHEET 2 OF 2.

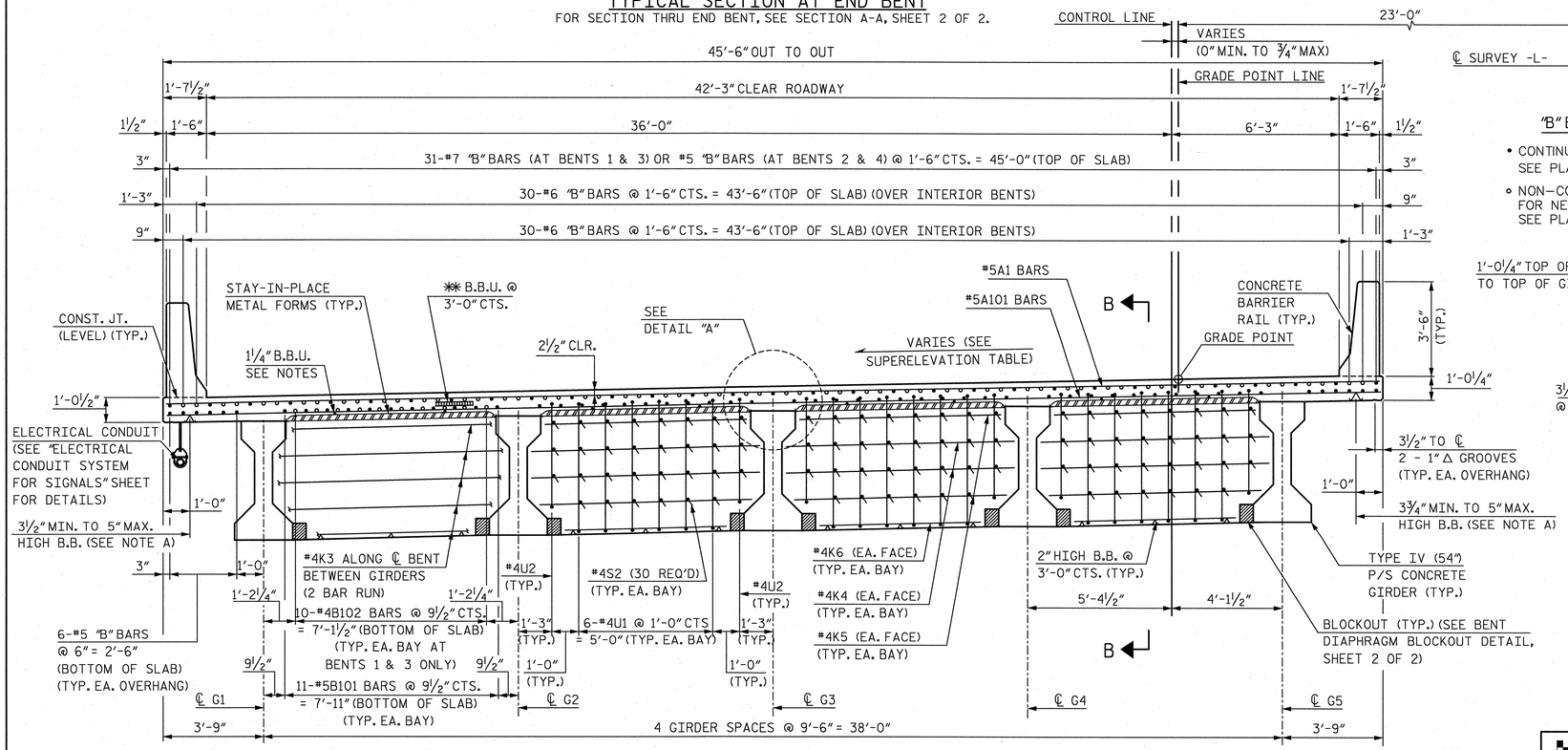

TYPICAL SECTION AT BENT

FOR SECTION THRU BENT, SEE SECTION B-B, SHEET 2 OF 2.

SUPERSTRUCTURE NOTES

PROVIDE 1¼" HIGH BEAM BOLSTERS UPPER AT 4'-0" CTS. ATOP THE METAL STAY-IN-PLACE FORMS TO SUPPORT THE BOTTOM MAT OF 'A' BARS. WHEN USING REMOVABLE FORMS, PROVIDE CONTINUOUS HIGH CHAIRS FOR METAL DECK (CHCM) AT 4'-0" CTS. WITH A HEIGHT TO SUPPORT THE BOTTOM MAT OF 'A' BARS A CLEAR DISTANCE OF 2½" ABOVE THE TOP OF THE REMOVABLE FORM.

LONGITUDINAL STEEL MAY BE SHIFTED SLIGHTLY, AS NECESSARY, TO AVOID INTERFERENCE WITH STIRRUPS IN PRESTRESSED CONCRETE GIRDERS.

NO CHAMFER IS REQUIRED ON CORNERS OF GIRDER BUILDUPS.

PREVIOUSLY CAST CONCRETE IN A CONTINUOUS UNIT SHALL HAVE ATTAINED A MINIMUM COMPRESSIVE STRENGTH OF 3,000 PSI BEFORE ADDITIONAL CONCRETE IS CAST IN THE UNIT.

BARRIER RAIL IN A CONTINUOUS UNIT SHALL NOT BE CAST UNTIL ALL SLAB CONCRETE IN THAT UNIT HAS BEEN CAST AND HAS REACHED A MINIMUM COMPRESSIVE STRENGTH OF 3,000 PSI.

NOTE A: THE HEIGHT OF THE BEAM BOLSTER VARIES ALONG THE LENGTH OF THE SPAN DUE TO SUPERELEVATION CHANGES AND VARYING HEIGHT REQUIRED FOR THE BUILDUP. THE CONTRACTOR SHALL HAVE SUFFICIENT SIZES TO PROPERLY SUPPORT THE REINFORCING STEEL.

** TO MAINTAIN PROPER LOCATION OF "A" BARS IN THE TOP OF SLAB, BBU DEPTH MUST VARY IN UNIT AS THE MAXIMUM SIZE OF THE "B" BARS IN THE TOP OF THE SLAB VARIES. A 2¼" BBU SHALL BE USED WHERE #4 AND #5 "B" BARS ARE PRESENT, WHERE #6 "B" BARS ARE PRESENT, A 2" BBU SHALL BE USED, AND WHERE #7 "B" BARS ARE PRESENT, A 1¾" BBU SHALL BE USED.

SUPERELEVATION TABLE -L- LINE

STATION	SE
16+62.37	-0.02
17+93.61	0.00
21+87.32	+0.06

"B" BAR KEY

- CONTINUOUS BAR RUN SEE PLAN OF SPAN SHEETS.
- NON-CONTINUOUS BAR RUN FOR NEGATIVE MOMENT REGIONS SEE PLAN OF SPAN SHEETS.

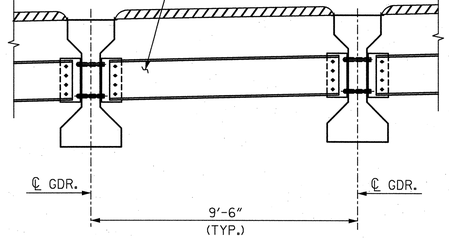

PARTIAL TYPICAL SECTION

(SHOWING INTERMEDIATE DIAPHRAGM)

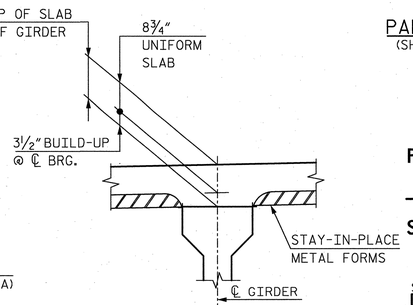

DETAIL "A"

NOTE: BUILDUP VARIES BETWEEN ℄ BEARINGS.

PROJECT NO. U-2525B

GUILFORD **COUNTY**

STATION: POT 14+99.25 -L-

SHEET 1 OF 2

STATE OF NORTH CAROLINA
DEPARTMENT OF TRANSPORTATION
RALEIGH

SUPERSTRUCTURE

TYPICAL SECTIONS

NORTH CAROLINA PROFESSIONAL SEAL 27812 ENGINEER DAVID W. HAWKINS 12/20/13

NORTH CAROLINA PROFESSIONAL SEAL 12916 ENGINEER PAUL J. BARBER 12/20/13

HNTB NORTH CAROLINA, P.C.
NC License No. C-1554
343 E. Six Forks Rd., Suite 200, Raleigh, N.C. 27609

DRAWN BY J. BAYNE DATE 6/13
CHECKED BY P. BARBER DATE 9/13
DWG. NO. 5

REVISIONS						SHEET NO.
NO.	BY	DATE	NO.	BY	DATE	S-5
1			3			TOTAL SHEETS
2			4			54-1

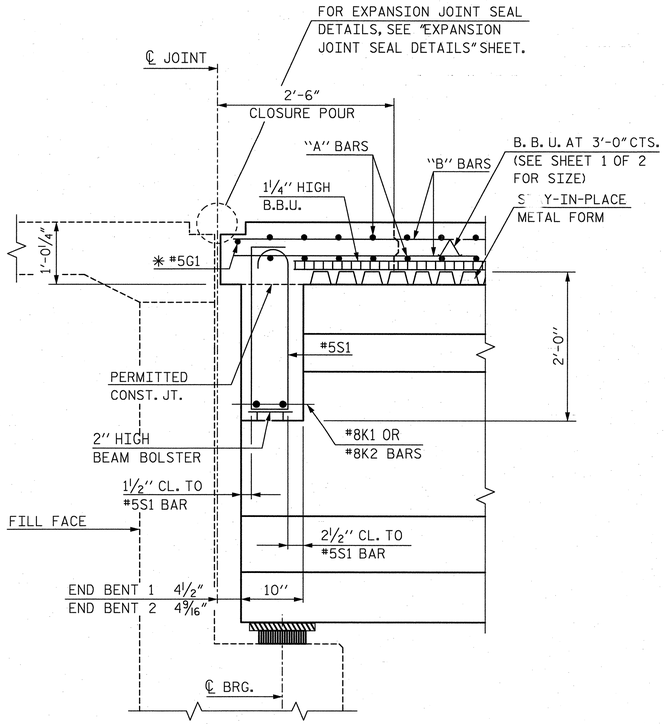

SECTION A-A

(END BENT 1 SHOWN, END BENT 2 SIMILAR)

* #5G1 BAR MAY BE SHIFTED SLIGHTLY AS NECESSARY TO CLEAR REINFORCING STEEL AND STIRRUPS.

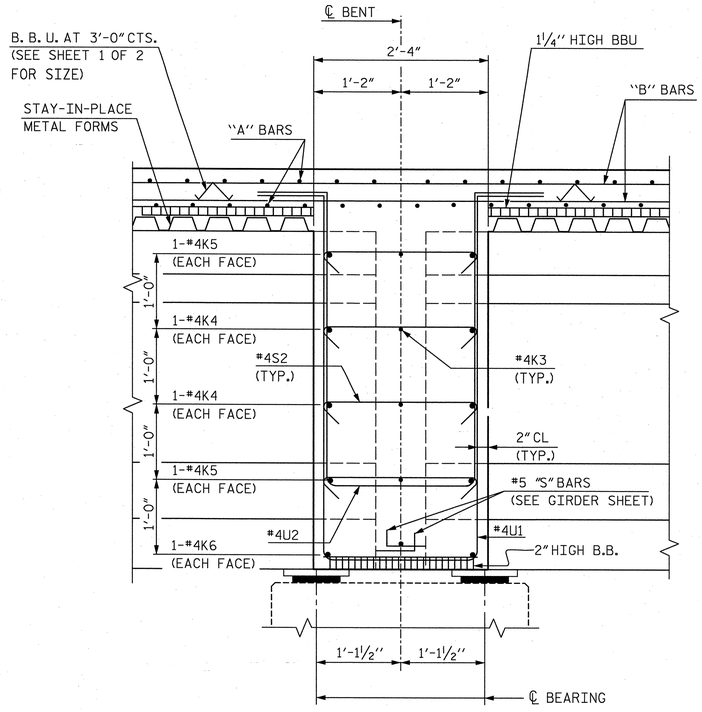

SECTION B-B

(THRU BENT DIAPHRAGM)

NOTE: BENT DIAPHRAGM SHALL BE CAST MONOLITHICALLY WITH SLAB. SEE POUR SEQUENCE ON "PLAN OF SPAN A" SHEET.

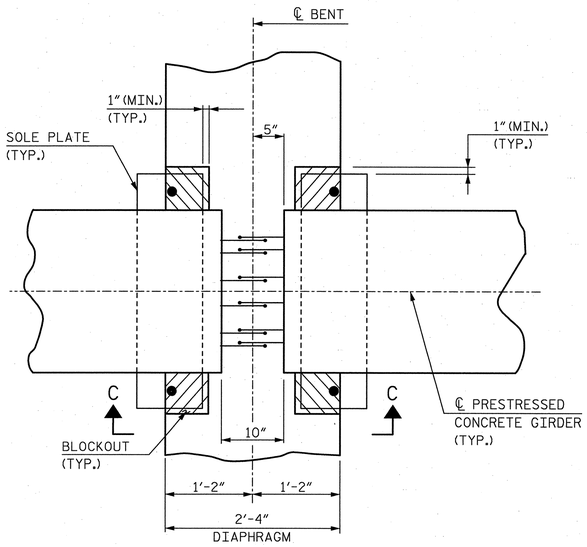

PLAN

(AT INTERIOR BENT)

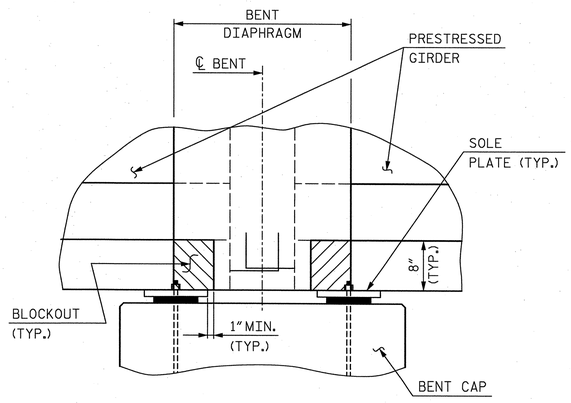

SECTION C-C

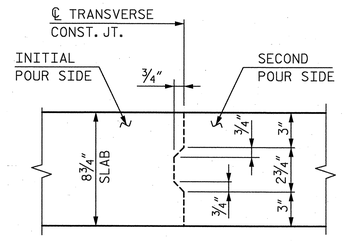

SLAB TRANSVERSE CONSTRUCTION JOINT DETAIL

REINFORCING STEEL IN SLAB NOT SHOWN. LONGITUDINAL REINFORCING STEEL SHALL BE CONTINUOUS THROUGH JOINT.

BENT DIAPHRAGM BLOCKOUT DETAILS

NORTH CAROLINA PROFESSIONAL SEAL 27812 ENGINEER DAVID W. HAWKINS 12/20/13

NORTH CAROLINA PROFESSIONAL SEAL 12916 ENGINEER PAUL J. BARBER 12/20/13

HNTB NORTH CAROLINA, P.C.
NC License No. C-1554
343 E. Six Forks Rd., Suite 200, Raleigh, N.C. 27609

DRAWN BY J. BAYNE DATE 6/13
CHECKED BY P. BARBER DATE 9/13
DWG. NO. 6

PROJECT NO. U-2525B
GUILFORD COUNTY
STATION: POT 14+99.25 -L-

SHEET 2 OF 2

STATE OF NORTH CAROLINA
DEPARTMENT OF TRANSPORTATION
RALEIGH

SUPERSTRUCTURE

TYPICAL SECTION DETAILS

REVISIONS						SHEET NO.
NO.	BY	DATE	NO.	BY	DATE	S-6
1			3			TOTAL SHEETS
2			4			54

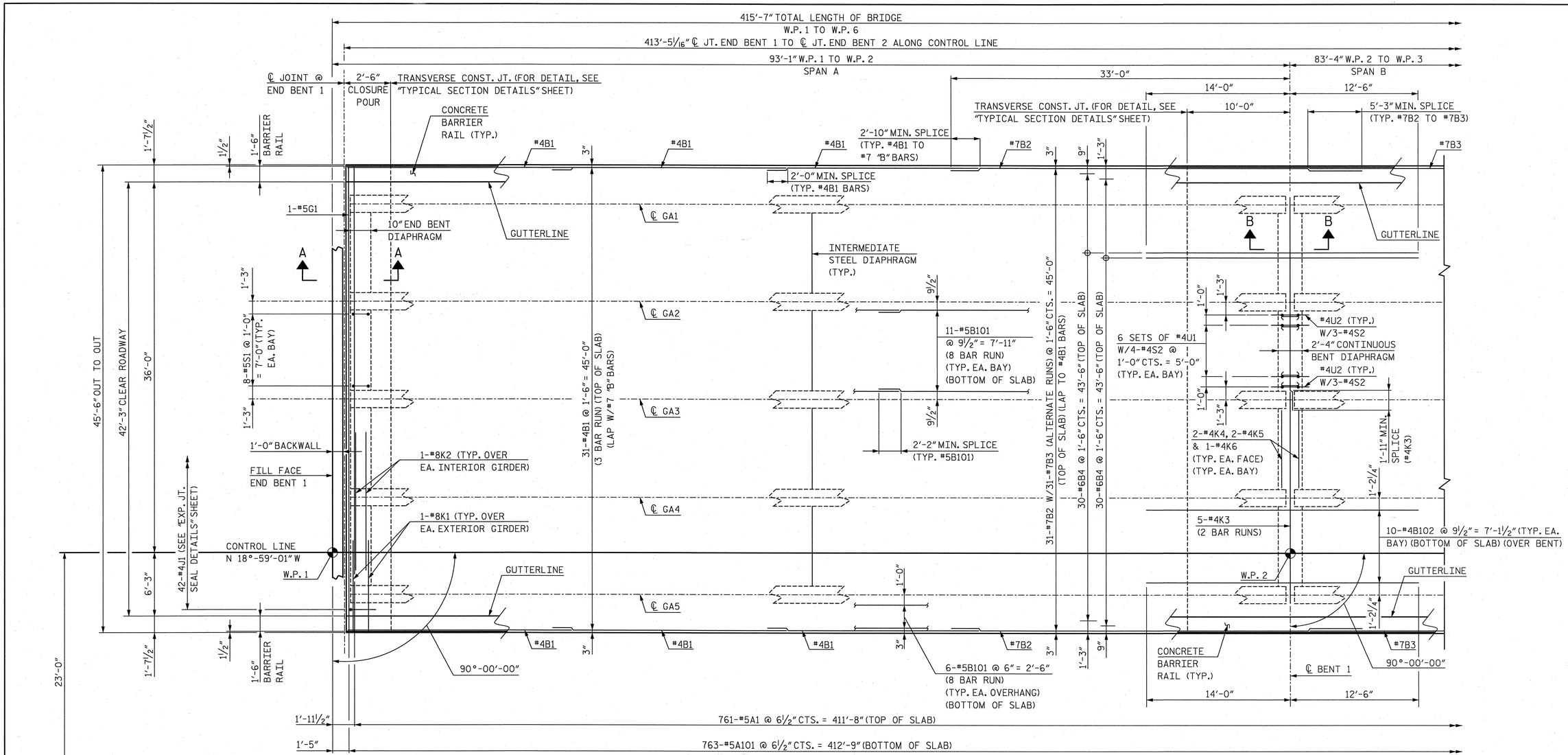

PLAN OF SPAN A

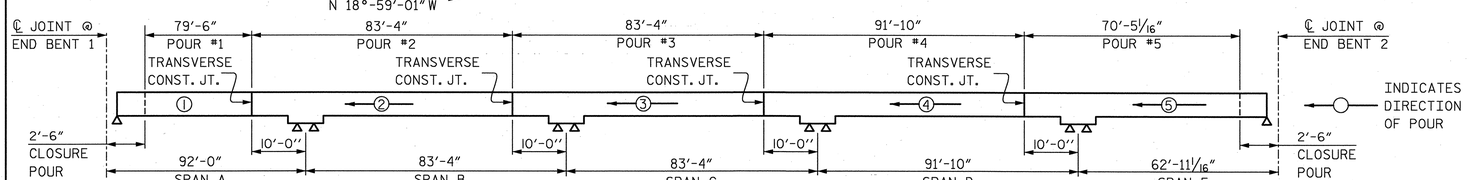

POURING SEQUENCE

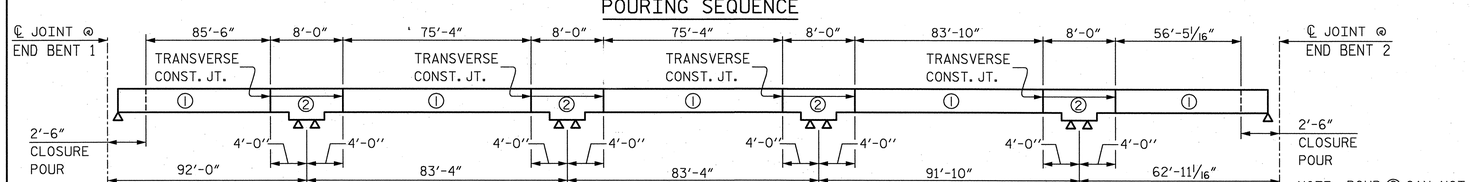

OPTIONAL POURING SEQUENCE

NOTE: POUR ② CAN NOT BE STARTED UNTIL BOTH ADJACENT ① POURS REACH A MINIMUM OF 3000 PSI

NOTES:

FOR SECTION VIEWS, SEE "SUPERSTRUCTURE TYPICAL SECTION DETAILS" SHEET.

FOR INTERMEDIATE STEEL DIAPHRAGMS, SEE "INTERMEDIATE STEEL DIAPHRAGMS FOR TYPE IV PRESTRESSED CONCRETE GIRDERS" SHEET FOR DETAILS. FOR LOCATION, SEE "SUPERSTRUCTURE FRAMING PLAN" SHEET.

FOR CONCRETE BARRIER RAIL DIMENSIONS, REINFORCING AND JOINT SPACING, SEE "CONCRETE BARRIER RAIL" SHEET.

NORTH CAROLINA PROFESSIONAL SEAL 27812 ENGINEER DAVID W. HAWKINS 12/20/13

NORTH CAROLINA PROFESSIONAL SEAL 12916 ENGINEER PAUL J. BARBER 12/20/13

PROJECT NO. U-2525B

GUILFORD **COUNTY**

STATION: POT 14+99.25 -L-

SHEET 1 OF 5

STATE OF NORTH CAROLINA
DEPARTMENT OF TRANSPORTATION
RALEIGH

SUPERSTRUCTURE

PLAN OF SPAN A

HNTB NORTH CAROLINA, P.C.
NC License No. C-1554
343 E. Six Forks Rd., Suite 200, Raleigh, N.C. 27609

DRAWN BY J. BAYNE DATE 6/13
CHECKED BY P. BARBER DATE 8/13
DWG. NO. 7

REVISIONS						SHEET NO.
NO.	BY	DATE	NO.	BY	DATE	S-7
1			3			TOTAL SHEETS
2			4			54

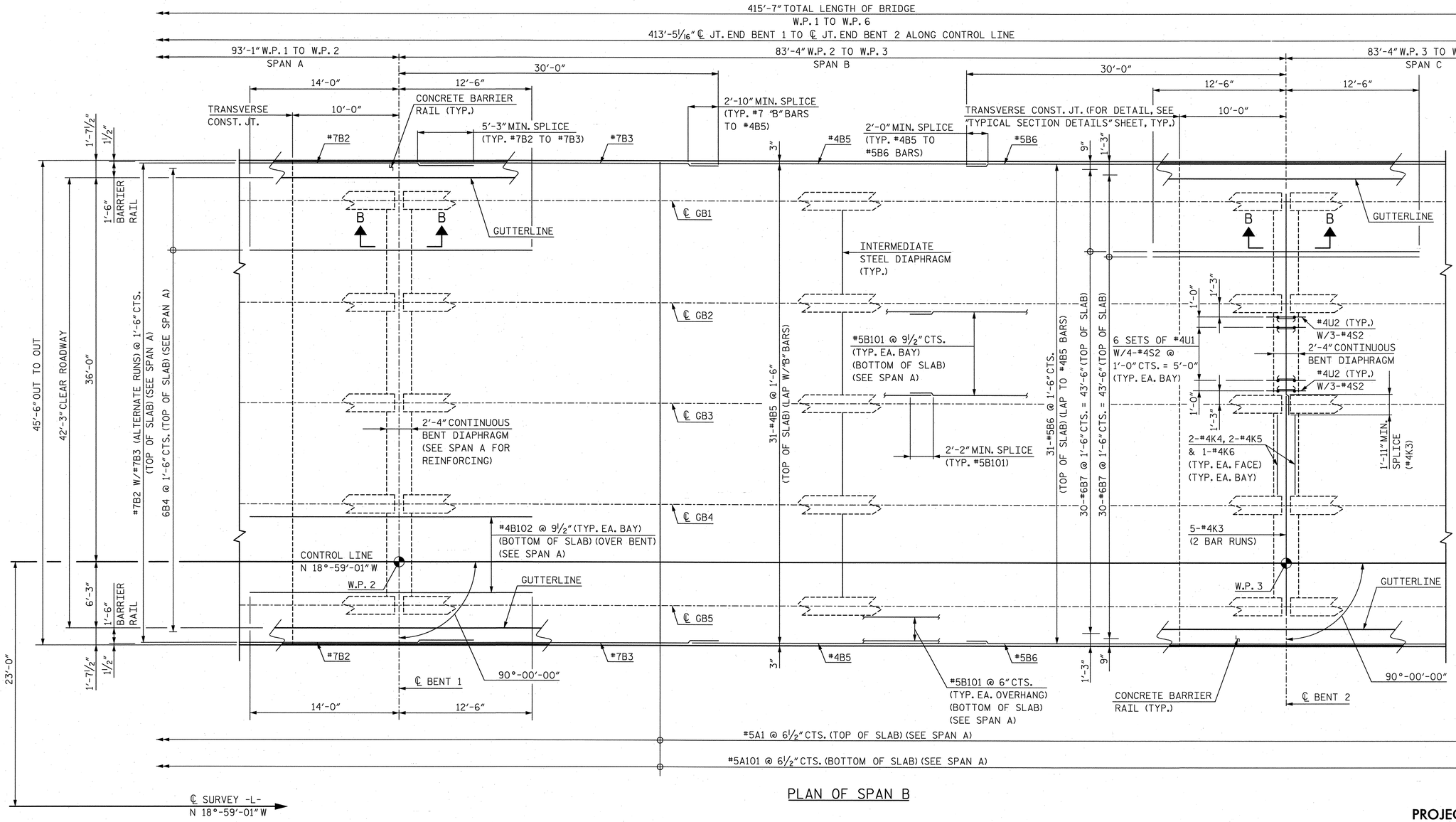

PLAN OF SPAN B

NOTES:

FOR SECTION VIEWS, SEE "SUPERSTRUCTURE TYPICAL SECTION DETAILS" SHEET.

FOR INTERMEDIATE STEEL DIAPHRAGMS, SEE "INTERMEDIATE STEEL DIAPHRAGMS FOR TYPE IV PRESTRESSED CONCRETE GIRDERS" SHEET FOR DETAILS. FOR LOCATION, SEE "SUPERSTRUCTURE FRAMING PLAN" SHEET.

FOR CONCRETE BARRIER RAIL DIMENSIONS, REINFORCING AND JOINT SPACING, SEE "CONCRETE BARRIER RAIL" SHEET.

PROJECT NO. U-2525B

GUILFORD COUNTY

STATION: POT 14+99.25 -L-

SHEET 2 OF 5

STATE OF NORTH CAROLINA
DEPARTMENT OF TRANSPORTATION
RALEIGH

SUPERSTRUCTURE

PLAN OF SPAN B

NORTH CAROLINA PROFESSIONAL SEAL 27812 ENGINEER DAVID W. HAWKINS 12/20/13

NORTH CAROLINA PROFESSIONAL SEAL 12916 ENGINEER PAUL J. BARBER 12/20/13

HNTB NORTH CAROLINA, P.C.
NC License No. C-1554
343 E. Six Forks Rd., Suite 200, Raleigh, N.C. 27609

DRAWN BY J. BAYNE DATE 6/13
CHECKED BY DATE
DWG. NO. 8

REVISIONS						SHEET NO.
NO.	BY	DATE	NO.	BY	DATE	S-8
1			3			TOTAL SHEETS
2			4			541

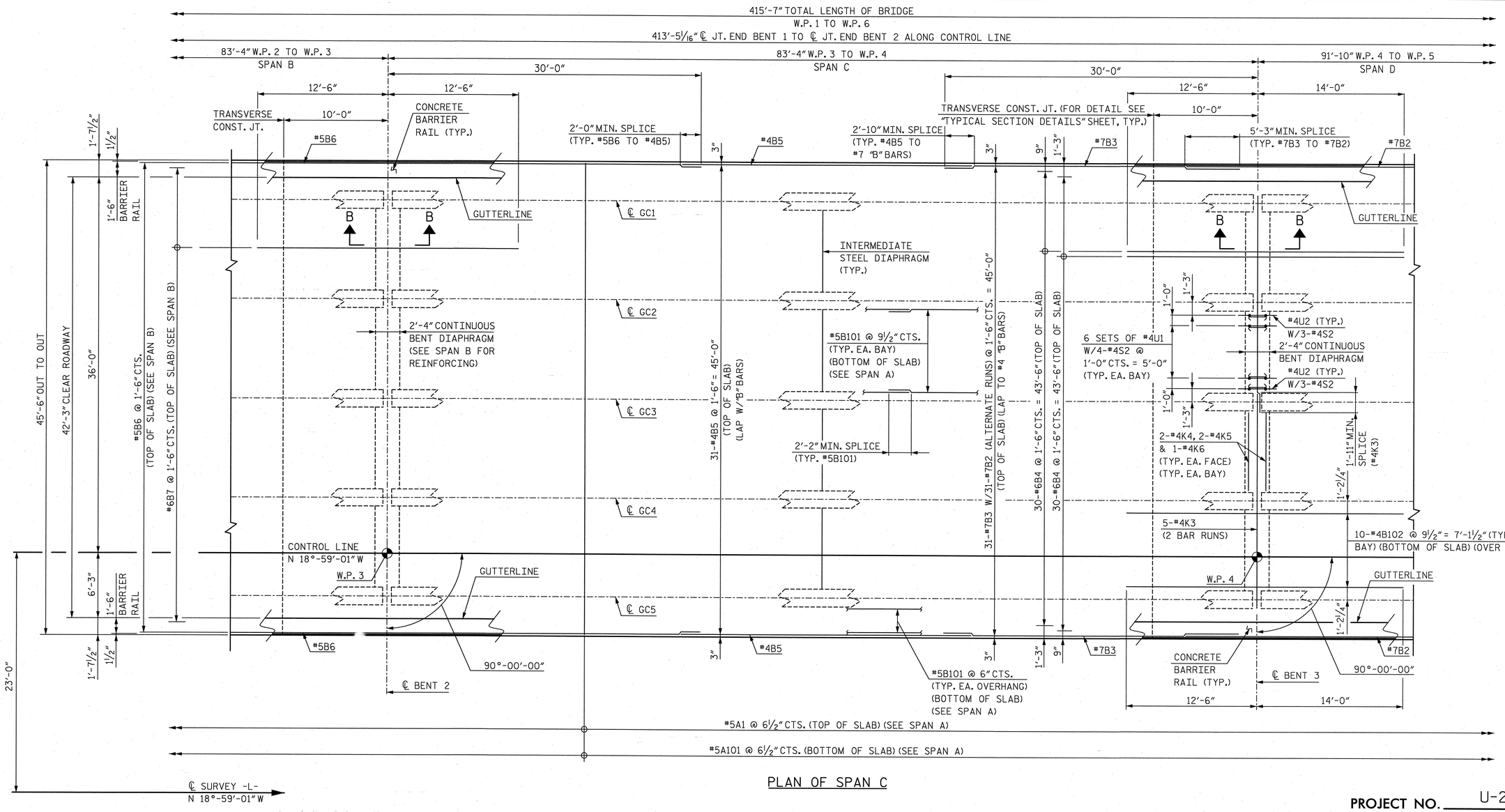

PLAN OF SPAN C

NOTES:

FOR SECTION VIEWS, SEE "SUPERSTRUCTURE TYPICAL SECTION DETAILS" SHEET.

FOR INTERMEDIATE STEEL DIAPHRAGMS, SEE "INTERMEDIATE STEEL DIAPHRAGMS FOR TYPE IV PRESTRESSED CONCRETE GIRDERS" SHEET FOR DETAILS. FOR LOCATION, SEE "SUPERSTRUCTURE FRAMING PLAN" SHEET.

FOR CONCRETE BARRIER RAIL DIMENSIONS, REINFORCING AND JOINT SPACING, SEE "CONCRETE BARRIER RAIL" SHEET.

PROJECT NO. U-2525B

GUILFORD COUNTY

STATION: POT 14+99.25 -L-

SHEET 3 OF 5

STATE OF NORTH CAROLINA
DEPARTMENT OF TRANSPORTATION
RALEIGH

SUPERSTRUCTURE

PLAN OF SPAN C

NORTH CAROLINA PROFESSIONAL SEAL 27812 ENGINEER DAVID W. HAWKINS 12/20/13

NORTH CAROLINA PROFESSIONAL SEAL 12916 ENGINEER PAUL J. BARBER 9/13/13

HNTB NORTH CAROLINA, P.C.
NC License No. C-1554
343 E. Six Forks Rd., Suite 200, Raleigh, N.C. 27609

DRAWN BY J. BAYNE DATE 6/13
CHECKED BY P. BARBER DATE 9/13
DWG. NO. 9

REVISIONS						SHEET NO.
NO.	BY	DATE	NO.	BY	DATE	S-9
1			3			TOTAL SHEETS
2			4			54

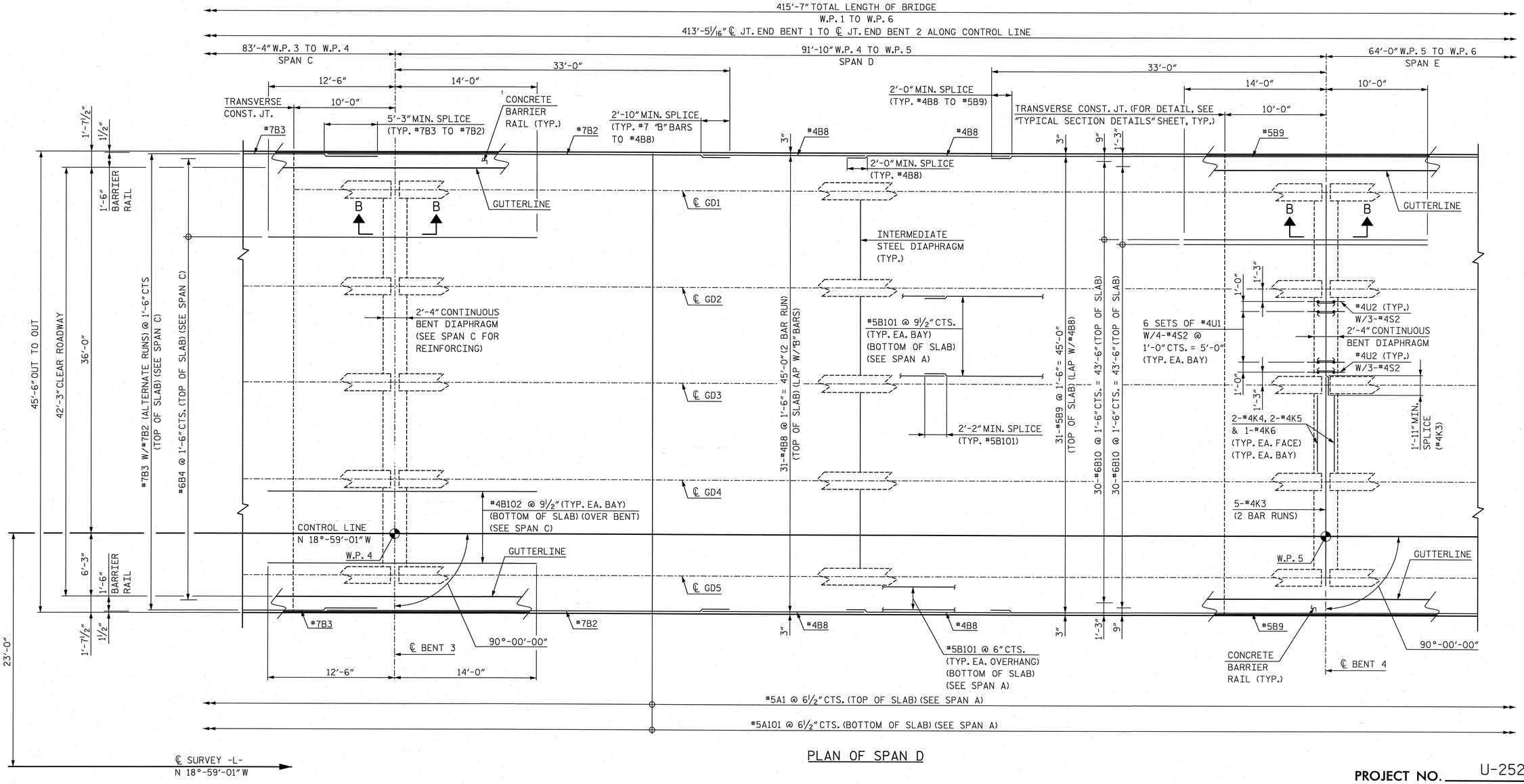

PLAN OF SPAN D

NOTES:

FOR SECTION VIEWS, SEE "SUPERSTRUCTURE TYPICAL SECTION DETAILS" SHEET.

FOR INTERMEDIATE STEEL DIAPHRAGMS, SEE "INTERMEDIATE STEEL DIAPHRAGMS FOR TYPE IV PRESTRESSED CONCRETE GIRDERS" SHEET FOR DETAILS. FOR LOCATION, SEE "SUPERSTRUCTURE FRAMING PLAN" SHEET.

FOR CONCRETE BARRIER RAIL DIMENSIONS, REINFORCING AND JOINT SPACING, SEE "CONCRETE BARRIER RAIL" SHEET.

PROJECT NO. U-2525B

GUILFORD COUNTY

STATION: POT 14+99.25 -L-

SHEET 4 OF 5

STATE OF NORTH CAROLINA
DEPARTMENT OF TRANSPORTATION
RALEIGH

SUPERSTRUCTRUE

PLAN OF SPAN D

NORTH CAROLINA PROFESSIONAL SEAL 27812 ENGINEER DAVID W. HAWKINS 12/20/13

NORTH CAROLINA PROFESSIONAL SEAL 12916 ENGINEER PAUL J. BARBER 12/20/13

HNTB NORTH CAROLINA, P.C.
NC License No. C-1554
343 E. Six Forks Rd., Suite 200, Raleigh, N.C. 27609

DRAWN BY J. BAYNE DATE 6/13
CHECKED BY P. BARBER DATE 9/13
DWG. NO. 10

REVISIONS						SHEET NO.
NO.	BY	DATE	NO.	BY	DATE	S-10
1			3			TOTAL SHEETS
2			4			541

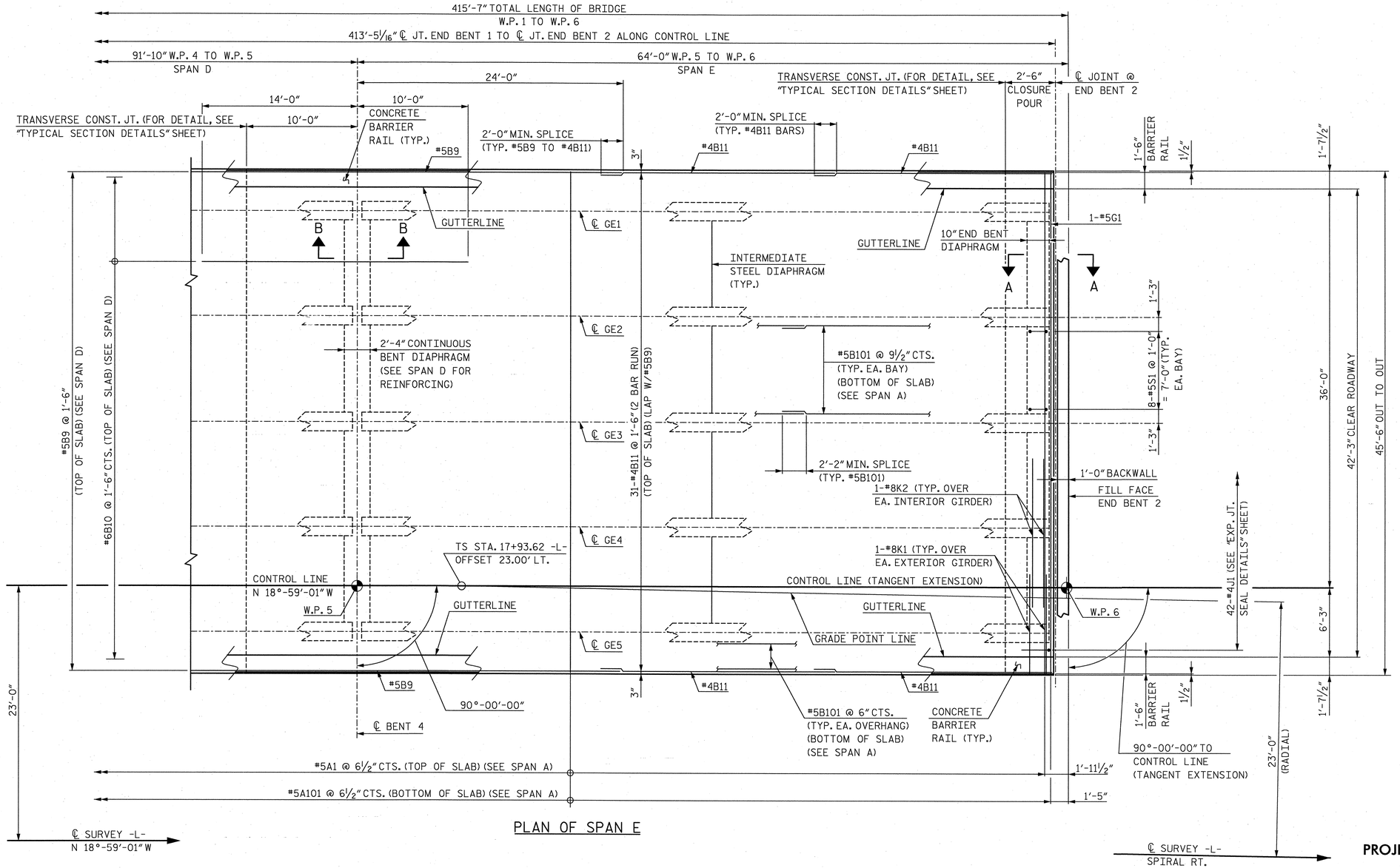

PLAN OF SPAN E

NOTES:

FOR SECTION VIEWS, SEE "SUPERSTRUCTURE TYPICAL SECTION DETAILS" SHEET.

FOR INTERMEDIATE STEEL DIAPHRAGMS, SEE "INTERMEDIATE STEEL DIAPHRAGMS FOR TYPE IV PRESTRESSED CONCRETE GIRDERS" SHEET FOR DETAILS. FOR LOCATION, SEE "SUPERSTRUCTURE FRAMING PLAN" SHEET.

FOR CONCRETE BARRIER RAIL DIMENSIONS, REINFORCING AND JOINT SPACING, SEE "CONCRETE BARRIER RAIL" SHEET.

PROJECT NO. U-2525B

GUILFORD COUNTY

STATION: POT 14+99.25 -L-

SHEET 5 OF 5

STATE OF NORTH CAROLINA
DEPARTMENT OF TRANSPORTATION
RALEIGH

SUPERSTRUCTURE

PLAN OF SPAN E

NORTH CAROLINA PROFESSIONAL SEAL 27812 ENGINEER DAVID W. HAWKINS 12/20/13

NORTH CAROLINA PROFESSIONAL SEAL 12916 ENGINEER PAUL J. BARBER 12/20/13

HNTB NORTH CAROLINA, P.C.
NC License No. C-1554
343 E. Six Forks Rd., Suite 200, Raleigh, N.C. 27609

DRAWN BY J. BAYNE DATE 6/13
CHECKED BY P. BARBER DATE 9/13
DWG. NO. 11

REVISIONS						SHEET NO.
NO.	BY	DATE	NO.	BY	DATE	S-11
1			3			TOTAL SHEETS
2			4			541

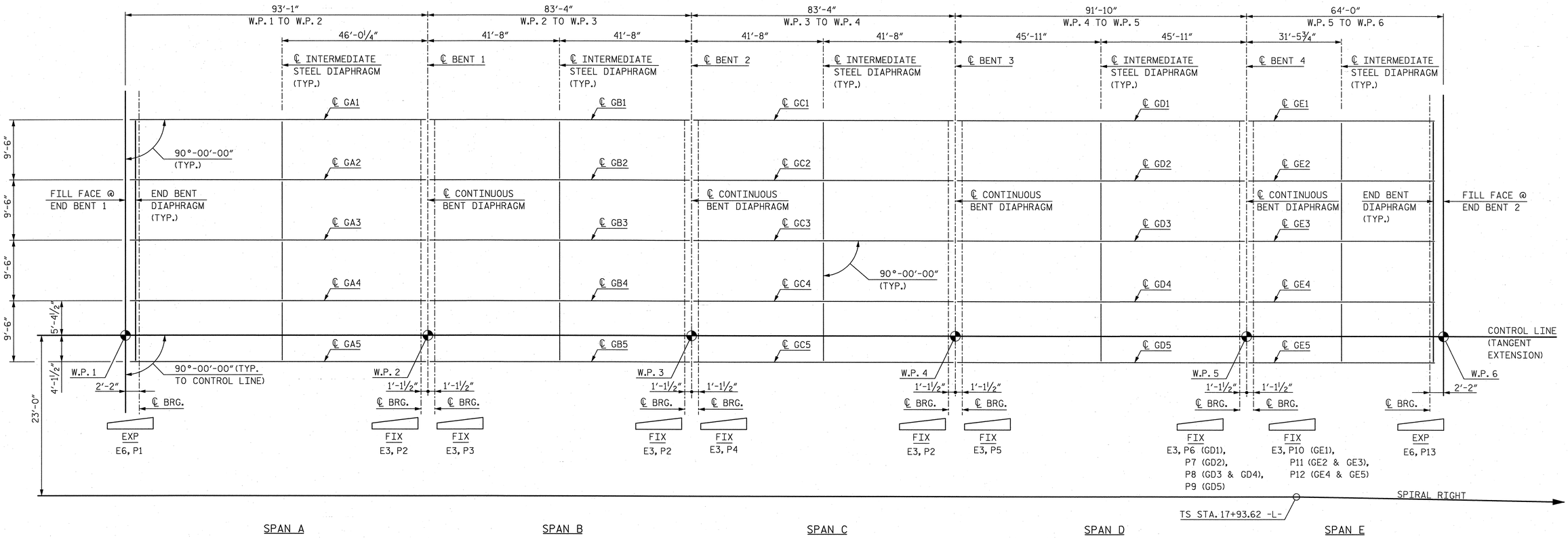

FRAMING PLAN

NOTES:

"EXP" DENOTES EXPANSION BEARING ASSEMBLY.

"FIX" DENOTES FIXED BEARING ASSEMBLY.

"E" DENOTES ELASTOMERIC BEARING PAD MARK.

"P" DENOTES STEEL SOLE PLATE MARK.

PROJECT NO. U-2525B

GUILFORD COUNTY

STATION: POT 14+99.25 -L-

NORTH CAROLINA PROFESSIONAL SEAL 27812 ENGINEER DAVID W. HAWKINS 12/20/13

NORTH CAROLINA PROFESSIONAL SEAL 12916 ENGINEER PAUL J. BARBER 12/20/13

HNTB NORTH CAROLINA, P.C.
NC License No. C-1554
343 E. Six Forks Rd., Suite 200, Raleigh, N.C. 27609

DRAWN BY J. BAYNE DATE 6/13
CHECKED BY D. RAGAN DATE 8/13
DWG. NO. 12

STATE OF NORTH CAROLINA
DEPARTMENT OF TRANSPORTATION
RALEIGH

SUPERSTRUCTURE

FRAMING PLAN

REVISIONS						SHEET NO.
NO.	BY	DATE	NO.	BY	DATE	S-12
1			3			TOTAL SHEETS
2			4			541

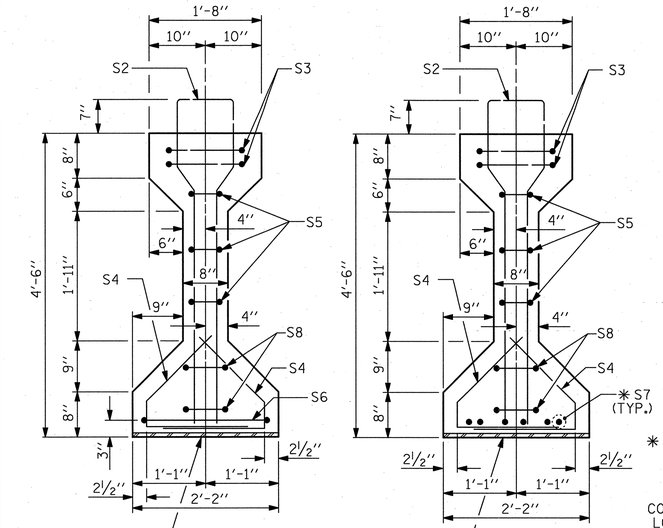

SECTION A-A

SECTION B-B

✳ FOR S7 BARS, SEE DETAIL "A" OF "PRESTRESSED CONCRETE GIRDER CONTINUOUS FOR LIVE LOAD DETAILS" SHEET

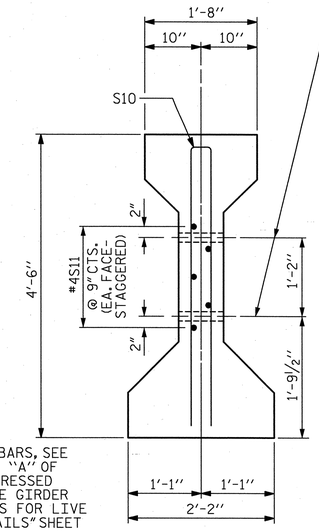

SECTION C-C

(S12 BARS NOT SHOWN)

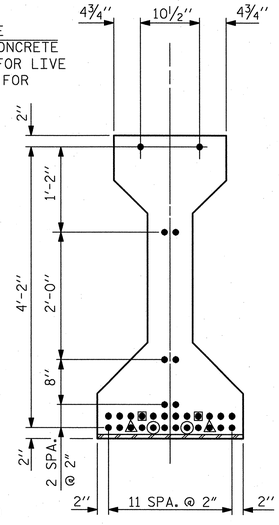

AT END OF GIRDER

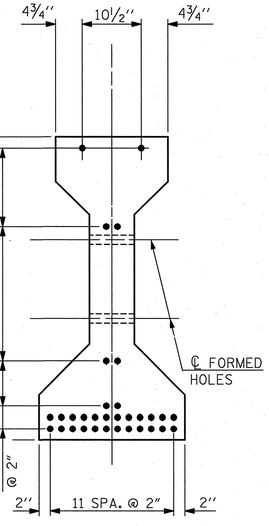

AT ℄ OF GIRDER

0.6" Ø LOW RELAXATION STRAND LAYOUT

DEBONDING LEGEND

- • FULLY BONDED STRANDS
- ▣ STRANDS DEBONDED FOR 4'-0" FROM END OF GIRDER
- ◬ STRANDS DEBONDED FOR 10'-0" FROM END OF GIRDER
- ⊙ STRANDS DEBONDED FOR 20'-0" FROM END OF GIRDER

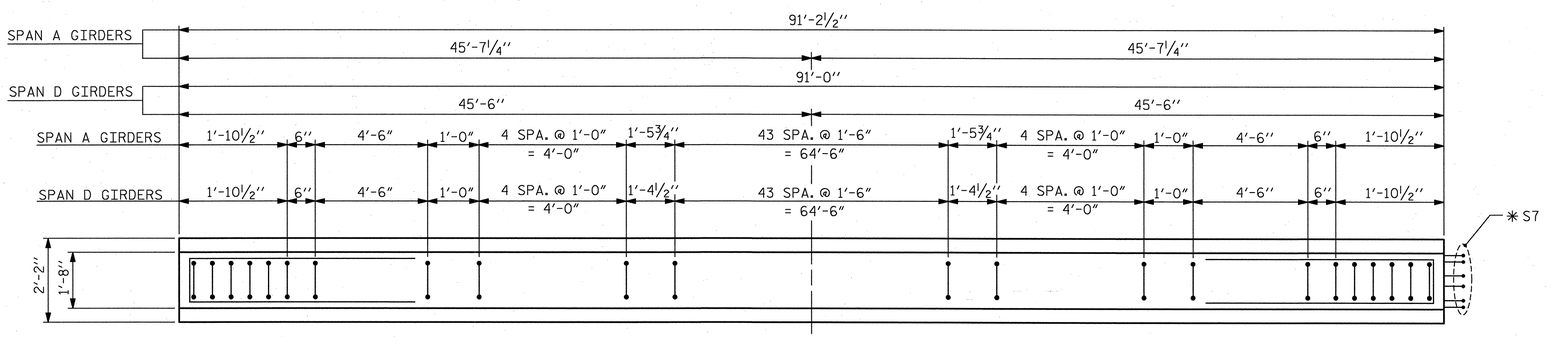

PLAN OF GIRDER

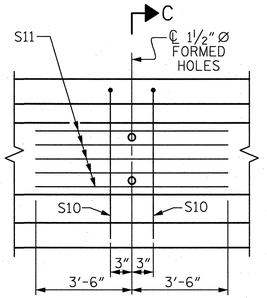

PARTIAL ELEVATION

SHOWING INTERMEDIATE DIAPHRAGM REINFORCING STEEL FOR GIRDERS GA1 - GA5 AND GIRDERS GD1 - GD5

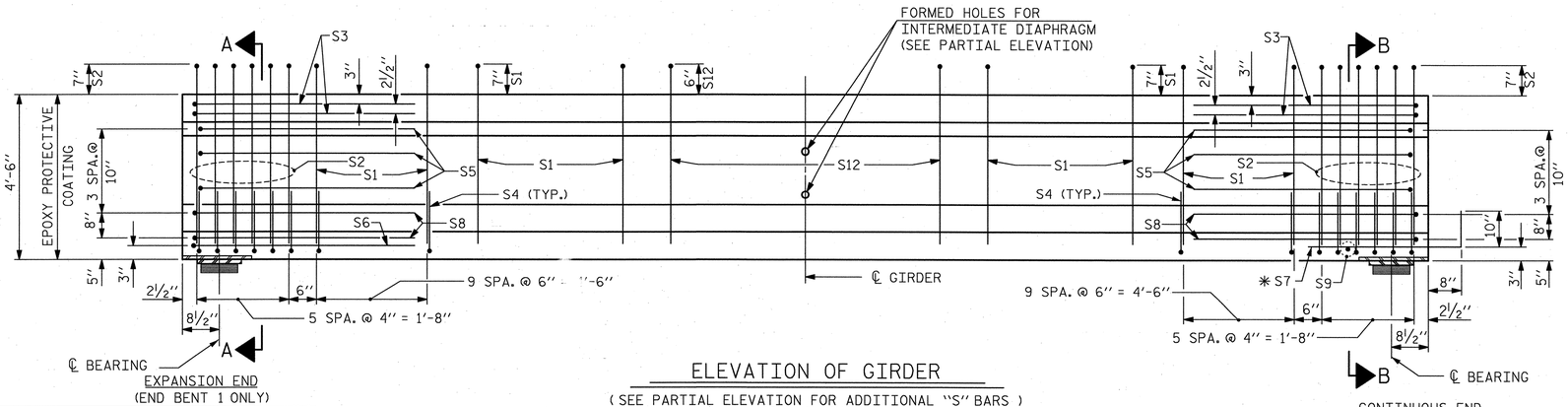

FORMED HOLES FOR INTERMEDIATE DIAPHRAGM (SEE PARTIAL ELEVATION)

EXPANSION END
(END BENT 1 ONLY)

ELEVATION OF GIRDER

(SEE PARTIAL ELEVATION FOR ADDITIONAL "S" BARS)
(SPAN "A" SHOWN)

CONTINUOUS END
(BENT 1 END @ SPAN "A")
(TYP. EA. END @ SPAN "D")

NOTES:

THE TRANSFER OF LOAD FROM THE ANCHORAGES TO THE GIRDER SHALL BE DONE WHEN CONCRETE HAS REACHED A COMPRESSIVE STRENGTH OF NOT LESS THAN 4,800 PSI FOR SPAN A AND D GIRDERS.

GIRDER CONCRETE SHALL HAVE A MINIMUM COMPRESSIVE STRENGTH OF 6,500 PSI AT THE AGE OF 28 DAYS.

0.6" Ø L. R. GRADE 270 STRANDS

AREA (SQUARE INCHES)	ULTIMATE STRENGTH (LBS. PER STRAND)	APPLIED PRESTRESS (LBS. PER STRAND)
0.217	58,600	43,950

REINFORCING STEEL FOR ONE GIRDER

	BAR	NUMBER	SIZE	TYPE	LENGTH	WEIGHT
	S1	30	#4	1	10'-10"	217
	S2	12	#6	1	10'-10"	195
	S3	4	#4	2	9'-1"	24
	S4	64	#4	3	3'-5"	146
	S5	6	#4	2	8'-5"	34
SPAN A GDR.	S6	1	#4	2	9'-11"	7
SPAN A GDR.	✳S7	6	#5	STR	3'-8"	23
SPAN D GDR.	✳S7	12	#5	STR	3'-8"	46
	S8	4	#4	2	8'-7"	23
SPAN A GDR.	S9	1	#3	STR	1'-10"	1
SPAN D GDR.	S9	2	#3	STR	1'-10"	1
	S10	2	#5	2	8'-8"	18
	S11	5	#4	STR	7'-0"	23
	S12	44	#4	1	10'-8"	314

✳NOTE: S7 BARS SHALL BE BENT BEFORE SHIPMENT. HEAT BENDING SHALL NOT BE ALLOWED.

BAR TYPES

ALL BAR DIMENSIONS ARE OUT-TO-OUT

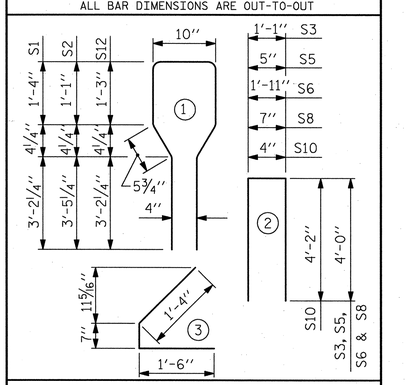

QUANTITIES FOR ONE GIRDER

	REINFORCING STEEL (LB.)	6,500 PSI CONCRETE (C.Y.)	0.6" Ø L.R. STRANDS (No.)
SPAN A GDR.	1,025	18.5	32
SPAN D GDR.	1,041	18.5	32

GIRDERS REQUIRED

	NUMBER	LENGTH	TOTAL LENGTH
SPAN A GDR.	5	91'-2½"	456.04'
SPAN D GDR.	5	91'-0"	455.00'

PROJECT NO. U-2525B

GUILFORD COUNTY

STATION: POT 14+99.25 -L-

SHEET 1 OF 5

STATE OF NORTH CAROLINA
DEPARTMENT OF TRANSPORTATION
RALEIGH

STANDARD

AASHTO TYPE IV PRESTRESSED CONCRETE GIRDER CONTINUOUS FOR LIVE LOAD SPANS A & D

NORTH CAROLINA PROFESSIONAL ENGINEER SEAL 27812 DAVID W. HAWKINS 12/20/13

NORTH CAROLINA PROFESSIONAL ENGINEER SEAL 12916 PAUL J. BARBER 12/20/13

ASSEMBLED BY : J. BAYNE	DATE : 6/13	REV. 10/17/00R	RWW/LES
CHECKED BY : D. RAGAN	DATE : 8/13	REV. 5/1/06R	TLA/GM
DRAWN BY : ELR 8/91		REV. 10/1/11	MAA/GM
CHECKED BY : GRP 8/91			

HNTB NORTH CAROLINA, P.C.
NC License No. C-1554
343 E. Six Forks Rd., Suite 200, Raleigh, N.C. 27609

DRAWN BY J. BAYNE DATE 6/13
CHECKED BY D. RAGAN DATE 8/13
DWG. NO. 13

REVISIONS						SHEET NO.
NO.	BY:	DATE:	NO.	BY:	DATE:	S-13
1			3			TOTAL SHEETS
2			4			541

STD. NO. PCG6

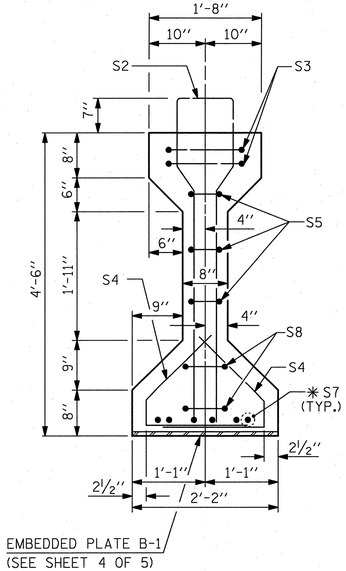

SECTION A-A

✱ FOR S7 BARS, SEE DETAIL "A" OF "PRESTRESSED CONCRETE GIRDER CONTINUOUS FOR LIVE LOAD DETAILS" SHEET

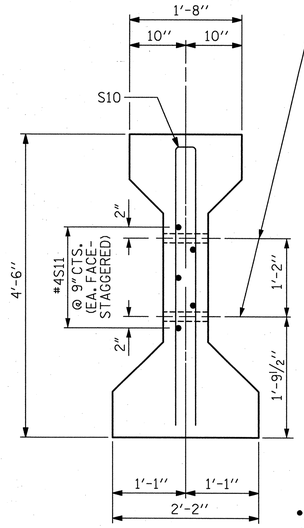

SECTION C-C

(S1 BARS NOT SHOWN)

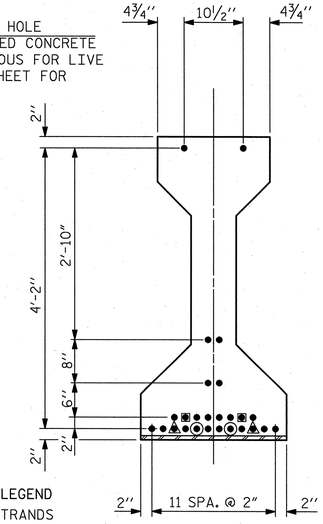

AT END OF GIRDER

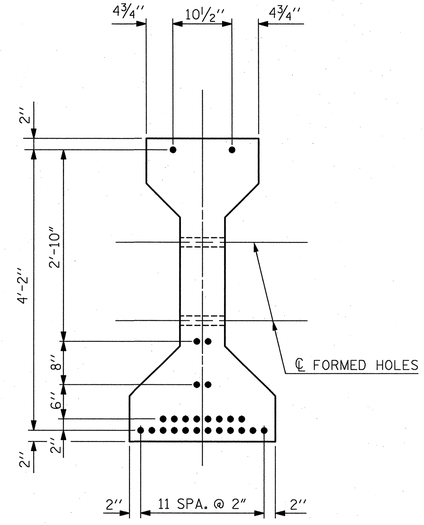

AT ℄ OF GIRDER

DEBONDING LEGEND

- • FULLY BONDED STRANDS
- ▣ STRANDS DEBONDED FOR 4'-0" FROM END OF GIRDER
- ◬ STRANDS DEBONDED FOR 8'-0" FROM END OF GIRDER
- ⊙ STRANDS DEBONDED FOR 16'-0" FROM END OF GIRDER

0.6" Ø LOW RELAXATION STRAND LAYOUT

PLAN OF GIRDER

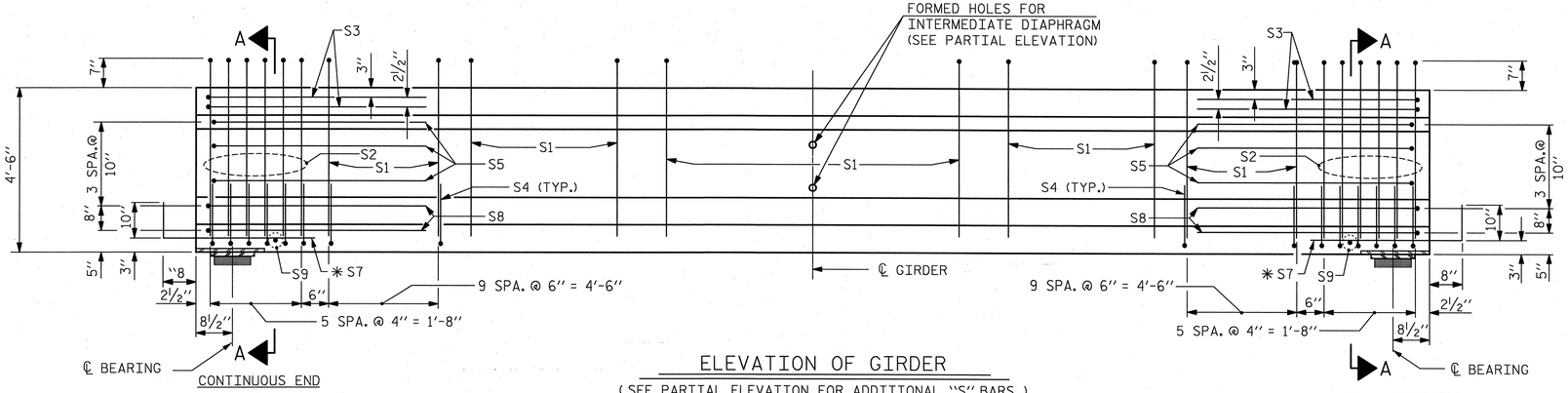

ELEVATION OF GIRDER

(SEE PARTIAL ELEVATION FOR ADDITIONAL "S" BARS)

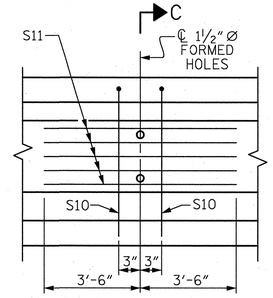

PARTIAL ELEVATION

SHOWING INTERMEDIATE DIAPHRAGM REINFORCING STEEL FOR GIRDERS GB1 - GB5 AND GIRDERS GC1 - GC5

NOTES:

THE TRANSFER OF LOAD FROM THE ANCHORAGES TO THE GIRDER SHALL BE DONE WHEN CONCRETE HAS REACHED A COMPRESSIVE STRENGTH OF NOT LESS THAN 4,200 PSI FOR SPAN B AND C GIRDERS.

GIRDER CONCRETE SHALL HAVE A MINIMUM COMPRESSIVE STRENGTH OF 5,500 PSI AT THE AGE OF 28 DAYS.

0.6" Ø L. R. GRADE 270 STRANDS

AREA (SQUARE INCHES)	ULTIMATE STRENGTH (LBS. PER STRAND)	APPLIED PRESTRESS (LBS. PER STRAND)
0.217	58,600	43,950

REINFORCING STEEL FOR ONE GIRDER

BAR	NUMBER	SIZE	TYPE	LENGTH	WEIGHT
S1	68	#4	1	10'-10"	492
S2	12	#6	1	10'-10"	195
S3	4	#4	2	9'-1"	24
S4	64	#4	3	3'-5"	146
S5	6	#4	2	8'-5"	34
✱S7	12	#5	STR	3'-8"	46
S8	4	#4	2	8'-7"	23
S9	2	#3	STR	1'-10"	1
S10	2	#5	2	8'-8"	18
S11	5	#4	STR	7'-0"	23

✱NOTE: S7 BARS SHALL BE BENT BEFORE SHIPMENT. HEAT BENDING SHALL NOT BE ALLOWED.

BAR TYPES

ALL BAR DIMENSIONS ARE OUT-TO-OUT

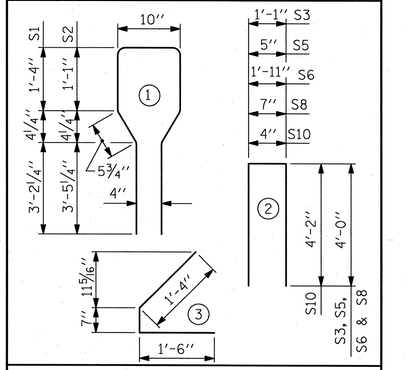

QUANTITIES FOR ONE GIRDER

	REINFORCING STEEL LB.	5,500 PSI CONCRETE C.Y.	0.6" Ø L.R. STRANDS No.
SPAN B GDR.	1,002	16.7	26
SPAN C GDR.	1,002	16.7	26

GIRDERS REQUIRED

	NUMBER	LENGTH	TOTAL LENGTH
SPAN B GDR.	5	82'-6"	412.50'
SPAN C GDR.	5	82'-6"	412.50'

PROJECT NO. U-2525B

GUILFORD COUNTY

STATION: POT 14+99.25 -L-

SHEET 2 OF 5

STATE OF NORTH CAROLINA
DEPARTMENT OF TRANSPORTATION
RALEIGH

STANDARD

AASHTO TYPE IV
PRESTRESSED CONCRETE GIRDER
CONTINUOUS FOR LIVE LOAD
SPANS B & C

NORTH CAROLINA PROFESSIONAL SEAL 27812 ENGINEER DAVID W. HAWKINS 12/20/13

NORTH CAROLINA PROFESSIONAL SEAL 12916 ENGINEER PAUL J. BARBER 12/20/13

ASSEMBLED BY : J. BAYNE	DATE : 6/13
CHECKED BY : D. RAGAN	DATE : 8/13
DRAWN BY : ELR 8/91	REV. 10/17/00R RWW/LES
CHECKED BY : GRP 8/91	REV. 5/1/06R TLA/GM
	REV. 10/1/11 MAA/GM

HNTB NORTH CAROLINA, P.C.
NC License No. C-1554
343 E. Six Forks Rd., Suite 200, Raleigh, N.C. 27609

DRAWN BY J. BAYNE DATE 6/13
CHECKED BY D. RAGAN DATE 8/13

DWG. NO. 14

REVISIONS						SHEET NO.
NO.	BY:	DATE:	NO.	BY:	DATE:	S-14
1			3			TOTAL SHEETS
2			4			54

STD. NO. PCG6

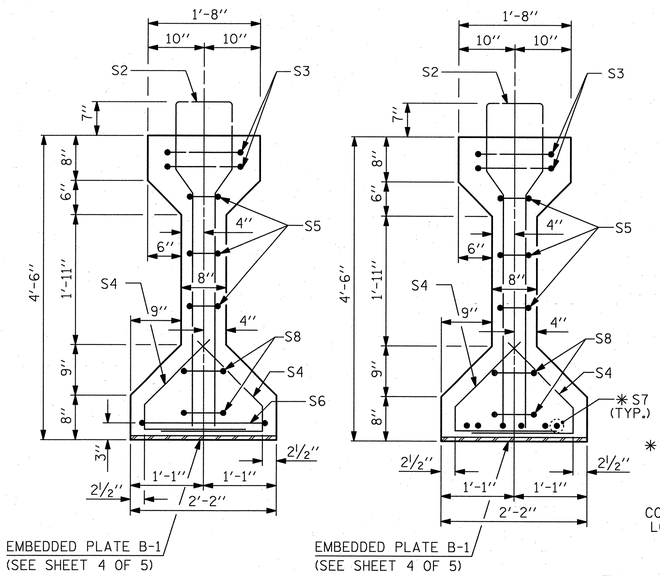

SECTION A-A

SECTION B-B

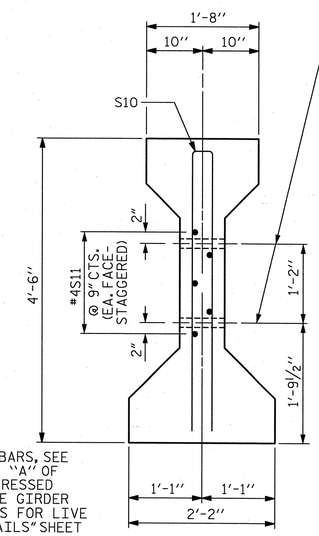

SECTION C-C
(S1 BARS NOT SHOWN)

✱ FOR S7 BARS, SEE DETAIL "A" OF "PRESTRESSED CONCRETE GIRDER CONTINUOUS FOR LIVE LOAD DETAILS" SHEET

DEBONDING LEGEND
- FULLY BONDED STRANDS

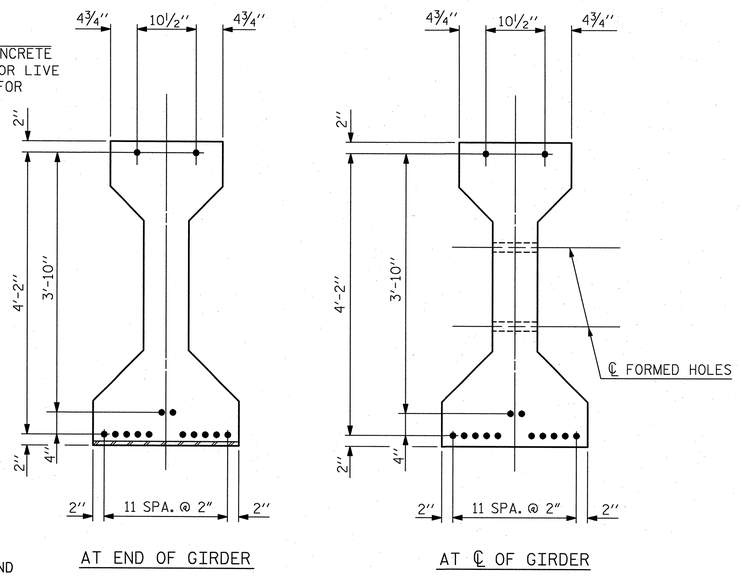

0.6" Ø LOW RELAXATION STRAND LAYOUT

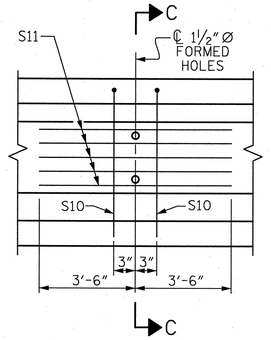

PARTIAL ELEVATION

SHOWING INTERMEDIATE DIAPHRAGM REINFORCING STEEL FOR GIRDERS GE1 - GE5

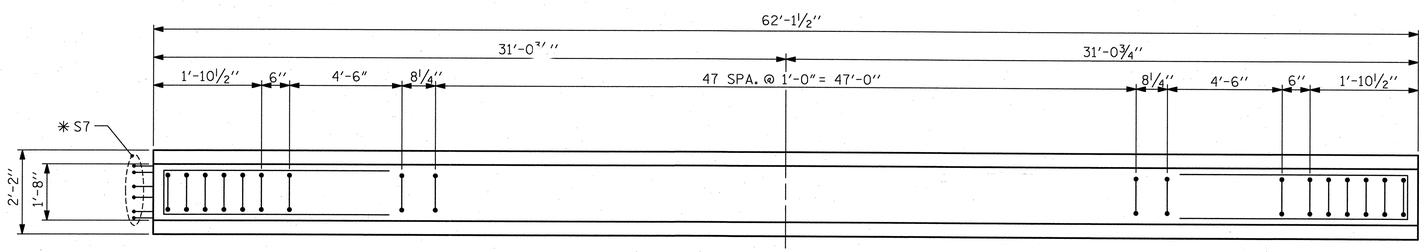

PLAN OF GIRDER

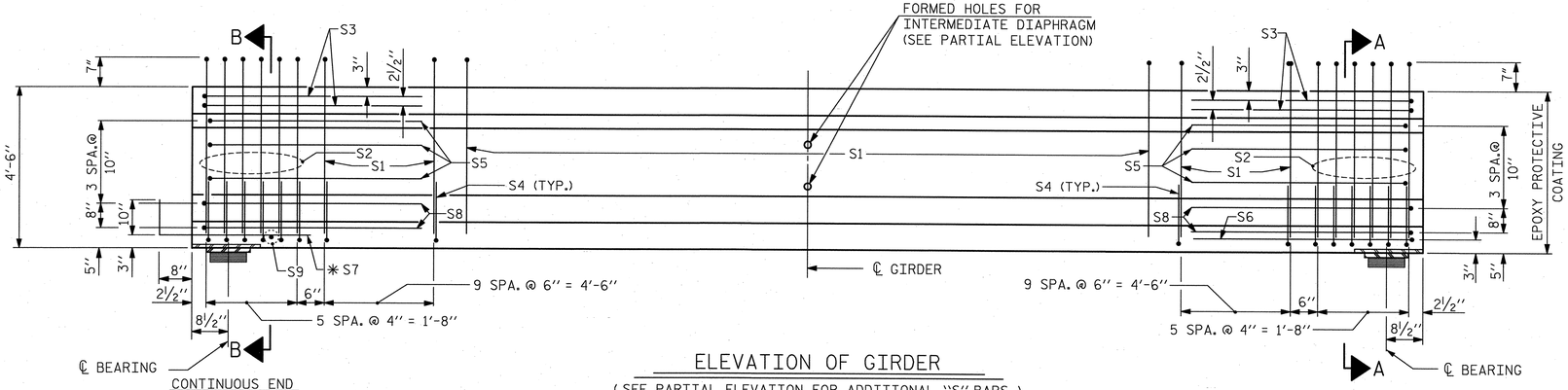

ELEVATION OF GIRDER
(SEE PARTIAL ELEVATION FOR ADDITIONAL "S" BARS)

NOTES:

THE TRANSFER OF LOAD FROM THE ANCHORAGES TO THE GIRDER SHALL BE DONE WHEN CONCRETE HAS REACHED A COMPRESSIVE STRENGTH OF NOT LESS THAN 4,000 PSI FOR SPAN E GIRDERS.

GIRDER CONCRETE SHALL HAVE A MINIMUM COMPRESSIVE STRENGTH OF 5,000 PSI AT THE AGE OF 28 DAYS.

0.6" Ø L. R. GRADE 270 STRANDS

AREA (SQUARE INCHES)	ULTIMATE STRENGTH (LBS. PER STRAND)	APPLIED PRESTRESS (LBS. PER STRAND)
0.217	58,600	43,950

REINFORCING STEEL FOR ONE GIRDER

BAR	NUMBER	SIZE	TYPE	LENGTH	WEIGHT
S1	68	#4	1	10'-10"	492
S2	12	#6	1	10'-10"	195
S3	4	#4	2	9'-1"	24
S4	64	#4	3	3'-5"	146
S5	6	#4	2	8'-5"	34
S6	1	#4	2	9'-11"	7
✱S7	6	#5	STR	3'-8"	23
S8	4	#4	2	8'-7"	23
S9	1	#3	STR	1'-10"	1
S10	2	#5	2	8'-8"	18
S11	5	#4	STR	7'-0"	23

✱ NOTE: S7 BARS SHALL BE BENT BEFORE SHIPMENT. HEAT BENDING SHALL NOT BE ALLOWED.

BAR TYPES

ALL BAR DIMENSIONS ARE OUT-TO-OUT

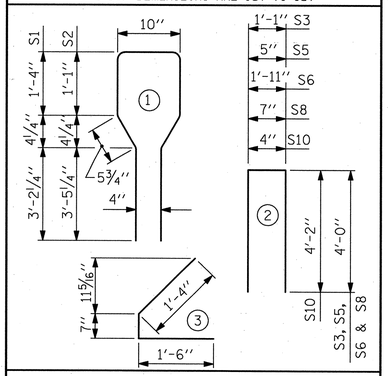

QUANTITIES FOR ONE GIRDER

	REINFORCING STEEL LB.	5,000 PSI CONCRETE C.Y.	0.6" Ø L.R. STRANDS No.
SPAN E GDR.	986	12.6	14

GIRDERS REQUIRED

NUMBER	LENGTH	TOTAL LENGTH
5	62'-1½"	310.63'

PROJECT NO. U-2525B

GUILFORD COUNTY

STATION: POT 14+99.25 -L-

SHEET 3 OF 5

STATE OF NORTH CAROLINA
DEPARTMENT OF TRANSPORTATION
RALEIGH

STANDARD

AASHTO TYPE IV
PRESTRESSED CONCRETE GIRDER
CONTINUOUS FOR LIVE LOAD
SPAN E

ASSEMBLED BY : J. BAYNE	DATE : 6/13
CHECKED BY : D. RAGAN	DATE : 8/13
DRAWN BY : ELR 8/91	REV. 10/17/00R RWW/LES
CHECKED BY : GRP 8/91	REV. 5/1/06R TLA/GM
	REV. 10/1/11 MAA/GM

NORTH CAROLINA PROFESSIONAL ENGINEER SEAL 27812 DAVID W. HAWKINS 12/20/13

NORTH CAROLINA PROFESSIONAL ENGINEER SEAL 12916 PAUL J. BARBER 12/20/13

HNTB NORTH CAROLINA, P.C.
NC License No. C-1554
343 E. Six Forks Rd., Suite 200, Raleigh, N.C. 27609

DRAWN BY J. BAYNE DATE 6/13
CHECKED BY D. RAGAN DATE 8/13
DWG. NO. 15

REVISIONS						SHEET NO.
NO.	BY:	DATE:	NO.	BY:	DATE:	S-15
1			3			TOTAL SHEETS
2			4			541

STD. NO. PCG6

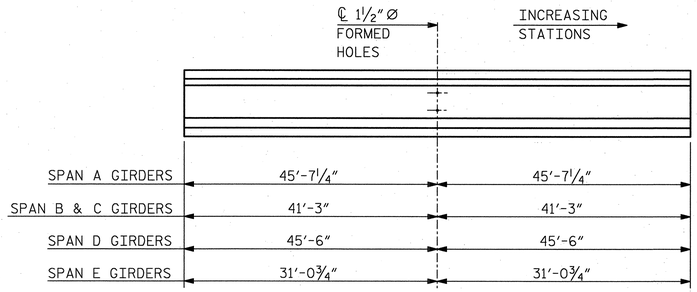

GIRDER ELEVATION

1½" Ø FORMED HOLE LOCATIONS

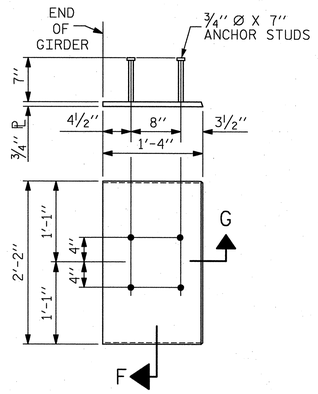

EMBEDDED PLATE "B-1" DETAILS FOR AASHTO TYPE IV GIRDER

(2 REQ'D PER GIRDER)

NOTES

ALL PRESTRESSING STRANDS SHALL BE 7-WIRE LOW-RELAXATION GRADE 270 STRANDS AND SHALL CONFORM TO AASHTO M203 EXCEPT FOR SAMPLING REQUIREMENTS WHICH SHALL BE IN ACCORDANCE WITH THE STANDARD SPECIFICATIONS.

ALL REINFORCING STEEL SHALL BE GRADE 60.

APPLY EPOXY PROTECTIVE COATING TO END OF GIRDER SURFACES INDICATED IN ELEVATION VIEW.

EMBEDDED PLATE "B-1" SHALL BE GALVANIZED IN ACCORDANCE WITH THE STANDARD SPECIFICATIONS. BEVEL EDGES OF PLATE "B-1" TO GIVE CLOSE FIT BUT NOT TIGHT FIT TO STEEL CASTING FORM.

ANCHOR STUDS SHALL CONFORM TO AASHTO M169 GRADES 1010 THROUGH 1020 OR APPROVED EQUAL, AND SHALL MEET THE TYPE "B" REQUIREMENTS OF SUBSECTION 7.3 OF THE ANSI/AASHTO/AWS D1.5 BRIDGE WELDING CODE.

AT ENDS OF GIRDERS TO BE EMBEDDED IN CONCRETE DIAPHRAGMS OR END WALLS, PRESTRESSING STRANDS MAY EXTEND A MAXIMUM OF 2" BEYOND THE GIRDER ENDS. OTHERWISE, PRESTRESSING STRANDS SHALL BE CUT FLUSH WITH THE GIRDER ENDS.

DEPENDING ON THE TYPE OF SYSTEM USED TO SUPPORT THE DECK SLAB FORMS, PRESET ANCHORS MAY BE NECESSARY IN THE PRESTRESSED CONCRETE GIRDER.

THE TOP SURFACE OF THE GIRDER, EXCLUDING THE OUTSIDE 4", SHALL BE RAKED TO A DEPTH OF ¼".

THE CONTRACTOR HAS THE OPTION TO PROVIDE, AT NO ADDITIONAL COST TO THE DEPARTMENT, 2 ADDITIONAL STRANDS AT THE TOP OF THE GIRDER TO FACILITATE TYING OF THE REINFORCING STEEL. THESE STRANDS SHALL BE PULLED TO A LOAD OF 4500 lbs.

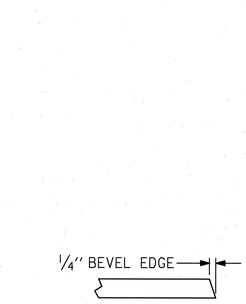

SECTION "G"

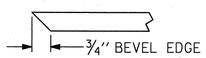

SECTION "F"

(SEE NOTES)

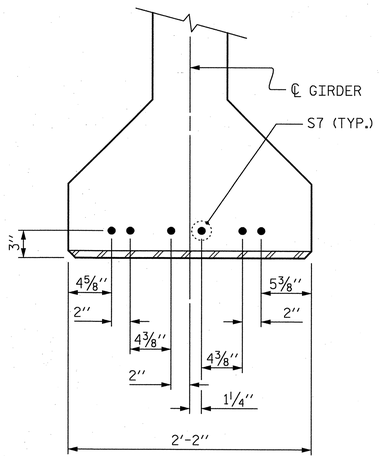

DETAIL "A"

(FOR AASHTO TYPE IV GIRDERS)

PROJECT NO. U-2525B

GUILFORD COUNTY

STATION: POT 14+99.25 -L-

SHEET 4 OF 5

STATE OF NORTH CAROLINA
DEPARTMENT OF TRANSPORTATION
RALEIGH

STANDARD

PRESTRESSED CONCRETE GIRDER CONTINUOUS FOR LIVE LOAD DETAILS

NORTH CAROLINA PROFESSIONAL SEAL 27812 ENGINEER DAVID W. HAWKINS 12/20/13

NORTH CAROLINA PROFESSIONAL SEAL 12916 ENGINEER PAUL J. BARBER 12/20/13

HNTB NORTH CAROLINA, P.C.
NC License No. C-1554
343 E. Six Forks Rd., Suite 200, Raleigh, N.C. 27609

DRAWN BY J. BAYNE DATE 6/13
CHECKED BY D. RAGAN DATE 8/13

DWG. NO. 16

REVISIONS						SHEET NO.
NO.	BY:	DATE:	NO.	BY:	DATE:	S-16
1			3			TOTAL SHEETS
2			4			541

ASSEMBLED BY : J. BAYNE	DATE : 6/13
CHECKED BY : D. RAGAN	DATE : 8/13
DRAWN BY : ELR 11/91	REV. 7/10/01RR LES/RDR
CHECKED BY : GRP 11/91	REV. 5/1/06 TLA/GM
	REV. 10/1/11 MAA/GM

STD. NO. PCG9

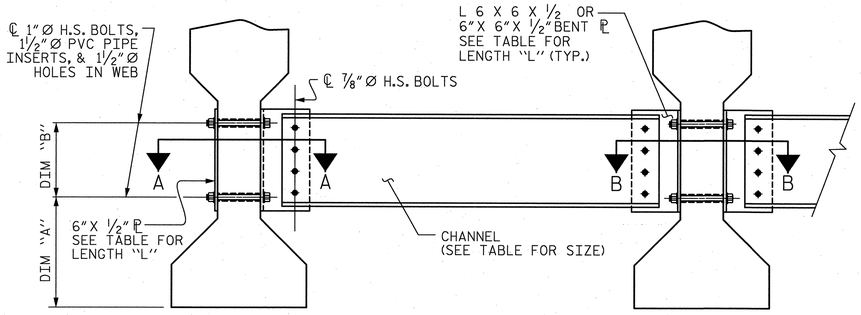

PART SECTION AT INTERMEDIATE DIAPHRAGM

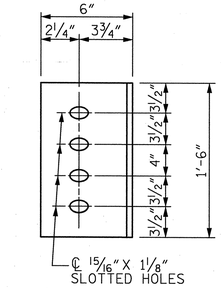

DIAPHRAGM FACE

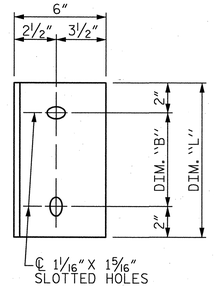

WEB FACE

CONNECTOR PLATE DETAILS

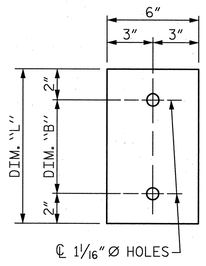

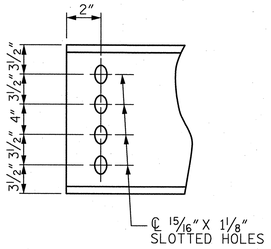

PLATE DETAILS CHANNEL END

STRUCTURAL STEEL NOTES

ALL INTERMEDIATE DIAPHRAGM STEEL AND CONNECTOR PLATES SHALL BE AASHTO M270 GRADE 50 OR APPROVED EQUAL.

TENSION ON THE ASTM A325 BOLTS THROUGH THE CHANNEL MEMBER SHALL BE CALIBRATED USING DIRECT TENSION INDICATOR WASHERS IN ACCORDANCE WITH THE STANDARD SPECIFICATIONS.

TENSION ON THE ASTM A449 BOLTS THROUGH THE GIRDER WEB SHALL BE SNUG TIGHTENED FOLLOWED BY AN ADDITIONAL ¼ TURN.

THE PLATES, BENT PLATES, CHANNELS, AND ANGLES SHALL BE GALVANIZED OR METALLIZED IN ACCORDANCE WITH THE STANDARD SPECIFICATIONS. FOR THERMAL SPRAYED COATINGS (METALLIZATION), SEE SPECIAL PROVISIONS.

FOR METALLIZATION, APPLY AN 8 MIL THICK 99.99 PERCENT ZINC (W-Zn-1) THERMAL SPRAYED COATING WITH A 0.5 MIL THICK SEAL COAT TO ALL STEEL DIAPHRAGM SURFACES IN ACCORDANCE WITH THE THERMAL SPRAYED COATINGS SPECIAL PROVISION AND SECTION 442 OF THE STANDARD SPECIFICATIONS.

GALVANIZE THE HIGH STRENGTH BOLTS, NUTS, WASHERS AND DIRECT TENSION INDICATORS IN ACCORDANCE WITH THE STANDARD SPECIFICATIONS.

USE AN ASTM F436 HARDENED WASHER WITH STANDARD AND SLOTTED HOLES UNDER EACH BOLT HEAD AND NUT.

FOR BOLTS THROUGH THE GIRDER WEB, PROVIDE SUFFICIENT LENGTH OF THREADS ON ALL BOLTS TO ACCOMMODATE WASHERS AND THE THICKNESS OF CONNECTING MEMBER PLUS AT LEAST ¼"PROJECTION BEYOND THE NUT.

INTERMEDIATE DIAPHRAGM ASSEMBLY SHALL COMPLY WITH SECTION 1072 OF THE STANDARD SPECIFICATIONS.

SUBMIT TWO SETS OF WORKING DRAWINGS FOR THE INTERMEDIATE DIAPHRAGM ASSEMBLY FOR REVIEW, COMMENTS AND ACCEPTANCE. AFTER REVIEW, COMMENTS, AND ACCEPTANCE, SUBMIT SEVEN SETS FOR DISTRIBUTION.

IN THE EXTERIOR BAYS, PLACE TEMPORARY STRUTS BETWEEN PRESTRESSED GIRDERS ADJACENT TO THE STEEL DIAPHRAGMS. STRUTS SHALL REMAIN IN PLACE 3 DAYS AFTER CONCRETE IS PLACED.

THE COST OF THE STEEL DIAPHRAGMS AND ASSEMBLIES SHALL BE INCLUDED IN THE UNIT PRICE BID FOR PRESTRESSED CONCRETE GIRDERS.

TABLE

GIRDER TYPE	CHANNEL SIZE	DIM "A"	DIM "B"	DIM "L"
IV	MC 18 x 42.7	1'-9½"	1'-2"	1'-6"

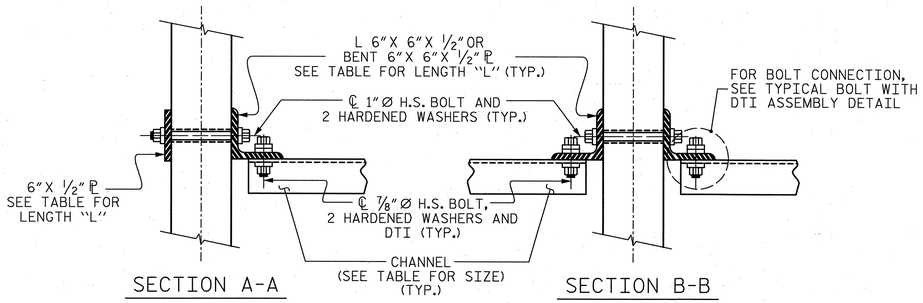

CONNECTION DETAILS

(FOR SKEW = 90°)

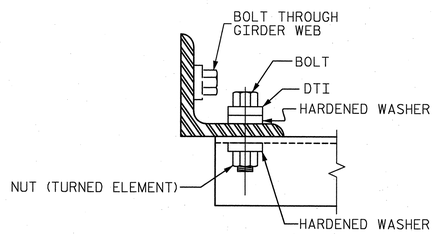

BOLT WITH DTI ASSEMBLY DETAIL

PROJECT NO. U-2525B

GUILFORD COUNTY

STATION: POT 14+99.25 -L-

SHEET 5 OF 5

STATE OF NORTH CAROLINA
DEPARTMENT OF TRANSPORTATION
RALEIGH

STANDARD

INTERMEDIATE STEEL DIAPHRAGMS FOR TYPE IV PRESTRESSED CONCRETE GIRDERS

REVISIONS						SHEET NO.
NO.	BY:	DATE:	NO.	BY:	DATE:	S-17
1			3			TOTAL SHEETS
2			4			541

STD. NO. PCG10

NORTH CAROLINA PROFESSIONAL SEAL 27812 ENGINEER DAVID W. HAWKINS 4/20/13

NORTH CAROLINA PROFESSIONAL SEAL 12916 ENGINEER PAUL J. BARBER 4/20/13

HNTB NORTH CAROLINA, P.C.
NC License No. C-1554
343 E. Six Forks Rd., Suite 200, Raleigh, N.C. 27609

DRAWN BY J. BAYNE DATE 4/13
CHECKED BY D. RAGAN DATE 8/13
DWG. NO. 17

ASSEMBLED BY : J. BAYNE	DATE : 4/13	ADDED 10/21/05	
CHECKED BY : D. RAGAN	DATE : 8/13	REV. 5/1/06RRR	KMM/GM
DRAWN BY : TLA 6/05		REV. 10/1/11	MAA/GM
CHECKED BY : VC 6/05			

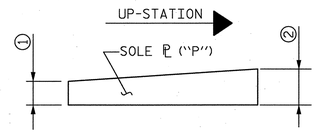

SOLE ℄ PLACEMENT DETAIL

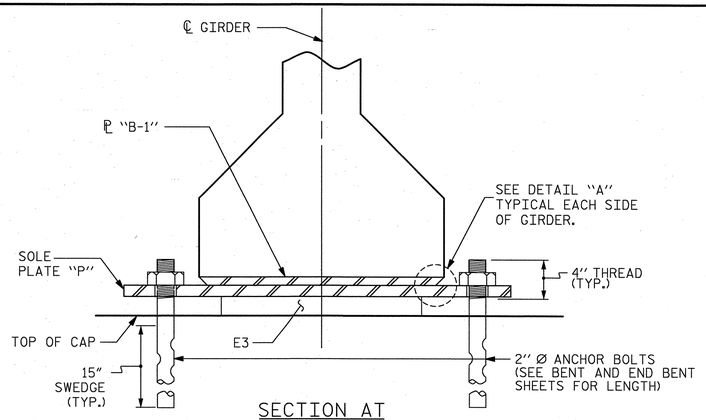

SECTION AT FIXED BEARING

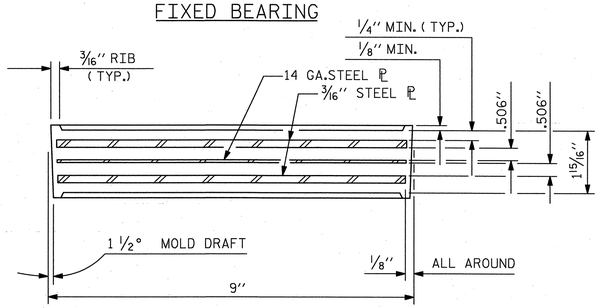

TYPICAL SECTION OF ELASTOMERIC BEARINGS

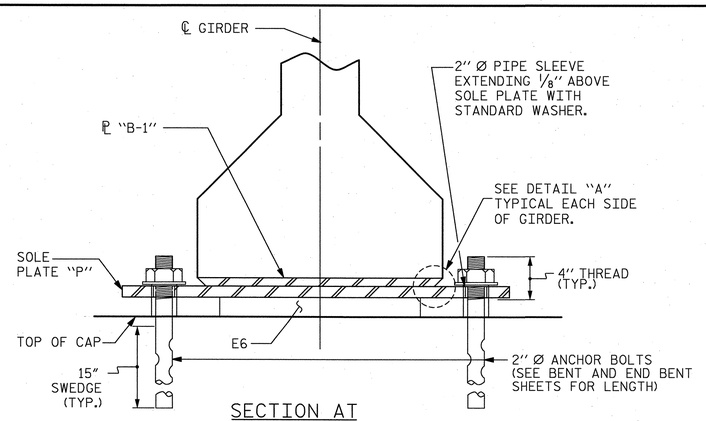

SECTION AT EXPANSION BEARING

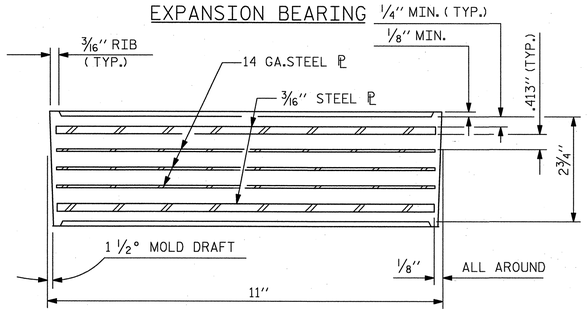

TYPICAL SECTION OF ELASTOMERIC BEARINGS

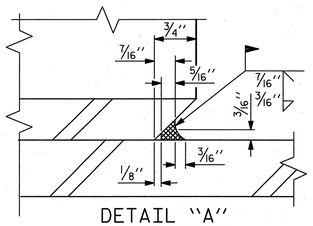

DETAIL "A"

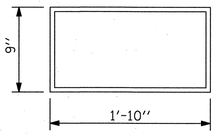

E3 (40 REQ'D)

PLAN VIEW OF ELASTOMERIC BEARING

TYPE IV

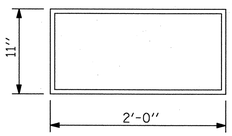

E6 (10 REQ'D)

PLAN VIEW OF ELASTOMERIC BEARING

TYPE VII

LOCATION	DIMENSIONS		
	"A"	"B"	"C"
EB1, EB2	1"	2"	1"
B1,B2,B3,B4 (BACK, AHEAD)	2"	3"	1"

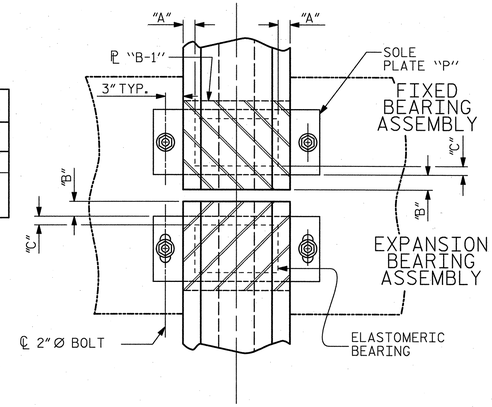

BEARING PLAN

TABLE OF SOLE PLATE VARIABLES								
BENT	SPAN BACK	SPAN AHEAD	GIRDERS	F/E	①	②	MARK	REQ'D
EB1		A	GA1-GA5	E	1 1/4"	1 3/4"	P1	5
B1	A		GA1-GA5	F	1 1/4"	1 1/2"	P2	5
		B	GB1-GB5	F	2"	2 3/8"	P3	5
B2	B		GB1-GB5	F	1 1/4"	1 1/2"	P2	5
		C	GC1-GC5	F	2"	2 1/2"	P4	5
B3	C		GC1-GC5	F	1 1/4"	1 1/2"	P2	5
		D	GD1-GD5	F	2 1/8"	2 5/8"	P5	5
B4	D		GD1	F	1 1/4"	1 5/8"	P6	1
	D		GD2	F	1 1/2"	1 7/8"	P7	1
	D		GD3,GD4	F	1 3/4"	2"	P8	2
	D		GD5	F	2"	2 1/4"	P9	1
		E	GE1	F	2 1/4"	2 5/8"	P10	1
		E	GE2,GE3	F	2 1/2"	2 7/8"	P11	2
		E	GE4,GE5	F	2 3/4"	3 1/8"	P12	2
EB2	E		GE1-GE5	E	1 1/4"	1 5/8"	P13	5

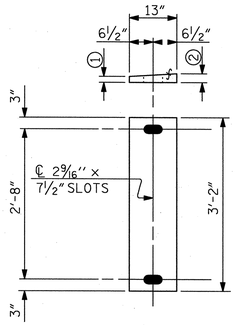

EXPANSION BRG. SOLE PLATE
(10 REQ'D.)
(SEE TABLE FOR MARK)

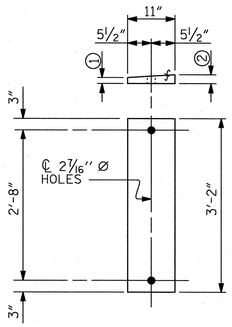

FIXED BRG. SOLE PLATE
(40 REQ'D.)
(SEE TABLE FOR MARK)

SOLE PLATE DETAILS ("P")

MAXIMUM ALLOWABLE SERVICE LOADS	
D.L.+L.L. (NO IMPACT)	
TYPE IV	225 k
TYPE VII	470 k

NOTES

AT ALL FIXED POINTS OF SUPPORT, NUTS FOR ANCHOR BOLTS ARE TO BE TIGHTENED FINGER TIGHT AND THEN BACKED OFF 1/2 TURN. THE THREAD OF THE NUT AND BOLT SHALL THEN BE BURRED WITH A SHARP POINTED TOOL.

THE 2" Ø PIPE SLEEVE SHALL BE CUT FROM SCHEDULE 40 PVC PLASTIC PIPE. THE PVC PLASTIC PIPE SHALL MEET THE REQUIREMENTS OF ASTM D1785.

STEEL SOLE PLATES, ANCHOR BOLTS, NUTS, AND WASHERS SHALL BE GALVANIZED IN ACCORDANCE WITH THE STANDARD SPECIFICATIONS.

PRIOR TO WELDING, GRIND THE GALVANIZED SURFACE OF THE PORTION OF THE EMBEDDED PLATE AND SOLE PLATE THAT ARE TO BE WELDED. AFTER WELDING, DAMAGED GALVANIZED SURFACES SHALL BE REPAIRED IN ACCORDANCE WITH THE STANDARD SPECIFICATIONS.

WHEN WELDING THE SOLE PLATE TO THE EMBEDDED PLATE IN THE GIRDER, USE TEMPERATURE INDICATING WAX PENS, OR OTHER SUITABLE MEANS, TO ENSURE THAT THE TEMPERATURE OF THE SOLE PLATE DOES NOT EXCEED 300°F. TEMPERATURES ABOVE THIS MAY DAMAGE THE ELASTOMER.

SOLE PLATE "P", BOLTS, NUTS, WASHERS, AND PIPE SLEEVE SHALL BE INCLUDED IN THE PAY ITEM FOR PRESTRESSED CONCRETE GIRDERS.

ANCHOR BOLTS SHALL MEET THE REQUIREMENTS OF ASTM A449. NUTS SHALL MEET THE REQUIREMENTS OF AASHTO M291-DH OR AASHTO M292-2H. WASHERS SHALL MEET THE REQUIREMENTS OF AASHTO M293. NO SHOP DRAWINGS ARE REQUIRED FOR ANCHOR BOLTS, NUTS AND WASHERS. SHOP INSPECTION IS REQUIRED.

ALL SURFACES OF BEARING PLATES SHALL BE SMOOTH AND STRAIGHT.

THE ELASTOMER IN THE STEEL REINFORCED BEARINGS SHALL HAVE A SHEAR MODULUS OF 0.160 KSI, IN ACCORDANCE WITH AASHTO M251, AND SHALL BE 60 DUROMETER HARDNESS.

FOR STEEL REINFORCED ELASTOMERIC BEARINGS, SEE SPECIAL PROVISIONS.

ALL BEARING PLATES SHALL BE AASHTO M270 GRADE 36.

FOR BEARING AND SOLE PLATE LOCATIONS, SEE "FRAMING PLAN" SHEET.

PROJECT NO. U-2525B

GUILFORD COUNTY

STATION: POT 14+99.25 -L-

STATE OF NORTH CAROLINA
DEPARTMENT OF TRANSPORTATION
RALEIGH

STANDARD

ELASTOMERIC BEARING DETAILS

PRESTRESSED CONCRETE GIRDER SUPERSTRUCTURE

NORTH CAROLINA PROFESSIONAL SEAL 27812 ENGINEER DAVID W. HAWKINS 12/20/13

NORTH CAROLINA PROFESSIONAL SEAL 12916 ENGINEER PAUL J. BARBER 12/20/13

ASSEMBLED BY : M. WRIGHT	DATE : 6/13
CHECKED BY : D. RAGAN	DATE : 8/13
DRAWN BY : EEM 2/97	REV. 5/1/06 TLA/GM
CHECKED BY : VAP 2/97	REV. 10/1/11 MAA/GM
	REV. 6/13 AAC/MAA

HNTB NORTH CAROLINA, P.C.
NC License No. C-1554
343 E. Six Forks Rd., Suite 200, Raleigh, N.C. 27609

DRAWN BY M. WRIGHT DATE 6/13
CHECKED BY D. RAGAN DATE 8/13

DWG. NO. 18

REVISIONS						SHEET NO.
NO.	BY:	DATE:	NO.	BY:	DATE:	S-18
1			3			TOTAL SHEETS
2			4			541

STD. NO. EB3 AND EB4

DEAD LOAD DEFLECTION TABLE FOR SPANS A & D											
0.6"Ø LOW RELAXATION STRANDS	GIRDER 1 & 5										
TENTH POINTS	0.00	0.10	0.20	0.30	0.40	0.50	0.60	0.70	0.80	0.90	1.00
CAMBER (GIRDER ALONE IN PLACE) ↑	0.000	0.116	0.203	0.263	0.298	0.309	0.298	0.263	0.203	0.116	0.000
DEFLECTION DUE TO SUPERIMPOSED D.L. * ↓	0.000	0.040	0.080	0.110	0.130	0.137	0.130	0.110	0.080	0.040	0.000
FINAL CAMBER ↑	0	15/16	1 1/2	1 13/16	2	2 1/16	2	1 13/16	1 1/2	15/16	0

DEAD LOAD DEFLECTION TABLE FOR SPANS A & D											
0.6"Ø LOW RELAXATION STRANDS	GIRDER 2, 3 & 4										
TENTH POINTS	0.00	0.10	0.20	0.30	0.40	0.50	0.60	0.70	0.80	0.90	1.00
CAMBER (GIRDER ALONE IN PLACE) ↑	0.000	0.116	0.203	0.263	0.298	0.309	0.298	0.263	0.203	0.116	0.000
DEFLECTION DUE TO SUPERIMPOSED D.L. * ↓	0.000	0.043	0.084	0.117	0.137	0.145	0.137	0.117	0.084	0.043	0.000
FINAL CAMBER ↑	0	7/8	1 7/16	1 3/4	1 15/16	1 15/16	1 15/16	1 3/4	1 7/16	7/8	0

DEAD LOAD DEFLECTION TABLE FOR SPANS B & C											
0.6"Ø LOW RELAXATION STRANDS	GIRDER 1 & 5										
TENTH POINTS	0.00	0.10	0.20	0.30	0.40	0.50	0.60	0.70	0.80	0.90	1.00
CAMBER (GIRDER ALONE IN PLACE) ↑	0.000	0.094	0.162	0.207	0.234	0.243	0.234	0.207	0.162	0.094	0.000
DEFLECTION DUE TO SUPERIMPOSED D.L. * ↓	0.000	0.029	0.057	0.080	0.094	0.099	0.094	0.080	0.057	0.029	0.000
FINAL CAMBER ↑	0	3/4	1 1/4	1 1/2	1 11/16	1 3/4	1 11/16	1 1/2	1 1/4	3/4	0

DEAD LOAD DEFLECTION TABLE FOR SPANS B & C											
0.6"Ø LOW RELAXATION STRANDS	GIRDER 2, 3 & 4										
TENTH POINTS	0.00	0.10	0.20	0.30	0.40	0.50	0.60	0.70	0.80	0.90	1.00
CAMBER (GIRDER ALONE IN PLACE) ↑	0.000	0.094	0.162	0.207	0.234	0.243	0.234	0.207	0.162	0.094	0.000
DEFLECTION DUE TO SUPERIMPOSED D.L. * ↓	0.000	0.031	0.061	0.084	0.099	0.105	0.099	0.084	0.061	0.031	0.000
FINAL CAMBER ↑	0	3/4	1 3/16	1 1/2	1 5/8	1 5/8	1 5/8	1 1/2	1 3/16	3/4	0

DEAD LOAD DEFLECTION TABLE FOR SPAN E											
0.6"Ø LOW RELAXATION STRANDS	GIRDER 1 & 5										
TENTH POINTS	0.00	0.10	0.20	0.30	0.40	0.50	0.60	0.70	0.80	0.90	1.00
CAMBER (GIRDER ALONE IN PLACE) ↑	0.000	0.028	0.048	0.061	0.069	0.071	0.069	0.061	0.048	0.028	0.000
DEFLECTION DUE TO SUPERIMPOSED D.L. * ↓	0.000	0.010	0.019	0.027	0.031	0.033	0.031	0.027	0.019	0.010	0.000
FINAL CAMBER ↑	0	3/16	3/8	7/16	7/16	7/16	7/16	7/16	3/8	3/16	0

DEAD LOAD DEFLECTION TABLE FOR SPAN E											
0.6"Ø LOW RELAXATION STRANDS	GIRDER 2, 3 & 4										
TENTH POINTS	0.00	0.10	0.20	0.30	0.40	0.50	0.60	0.70	0.80	0.90	1.00
CAMBER (GIRDER ALONE IN PLACE) ↑	0.000	0.028	0.048	0.061	0.069	0.071	0.069	0.061	0.048	0.028	0.000
DEFLECTION DUE TO SUPERIMPOSED D.L. * ↓	0.000	0.010	0.020	0.028	0.033	0.035	0.033	0.028	0.020	0.010	0.000
FINAL CAMBER ↑	0	3/16	5/16	3/8	7/16	7/16	7/16	3/8	5/16	3/16	0

* INCLUDES FUTURE WEARING SURFACE IN SUPERIMPOSED DEAD LOAD
ALL VALUES ARE SHOWN IN FEET (DECIMAL FORM), EXCEPT " FINAL CAMBER ", WHICH IS GIVEN IN INCHES (FRACTION FORM).

PROJECT NO. U-2525B

GUILFORD COUNTY

STATION: POT 14+99.25 -L-

NORTH CAROLINA PROFESSIONAL SEAL 27812 ENGINEER DAVID W. HAWKINS 12/20/13

NORTH CAROLINA PROFESSIONAL SEAL 12916 ENGINEER PAUL J. BARBER 12/20/13

HNTB NORTH CAROLINA, P.C.
NC License No. C-1554
343 E. Six Forks Rd., Suite 200, Raleigh, N.C. 27609

DRAWN BY J. BAYNE DATE 6/13
CHECKED BY S. FISHER DATE 10/13

DWG. NO. 19

REVISIONS						SHEET NO.
NO.	BY	DATE	NO.	BY	DATE	S-19
1			3			TOTAL SHEETS
2			4			541

STATE OF NORTH CAROLINA
DEPARTMENT OF TRANSPORTATION
RALEIGH

SUPERSTRUCTURE

DEAD LOAD DEFLECTIONS

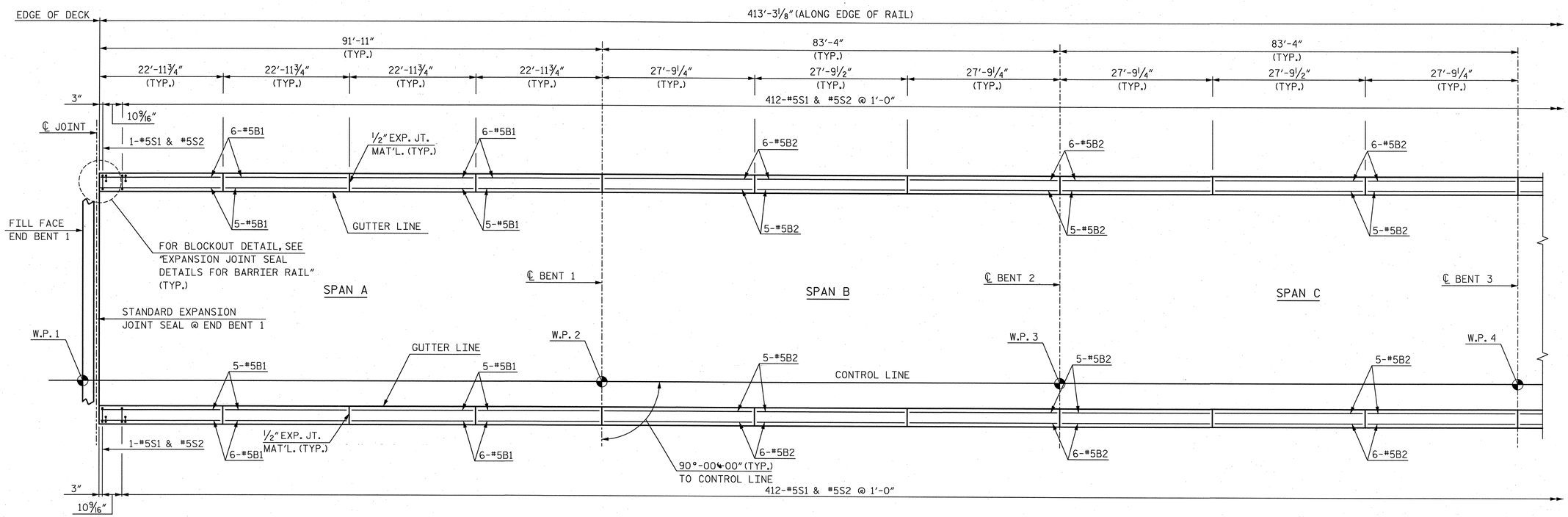

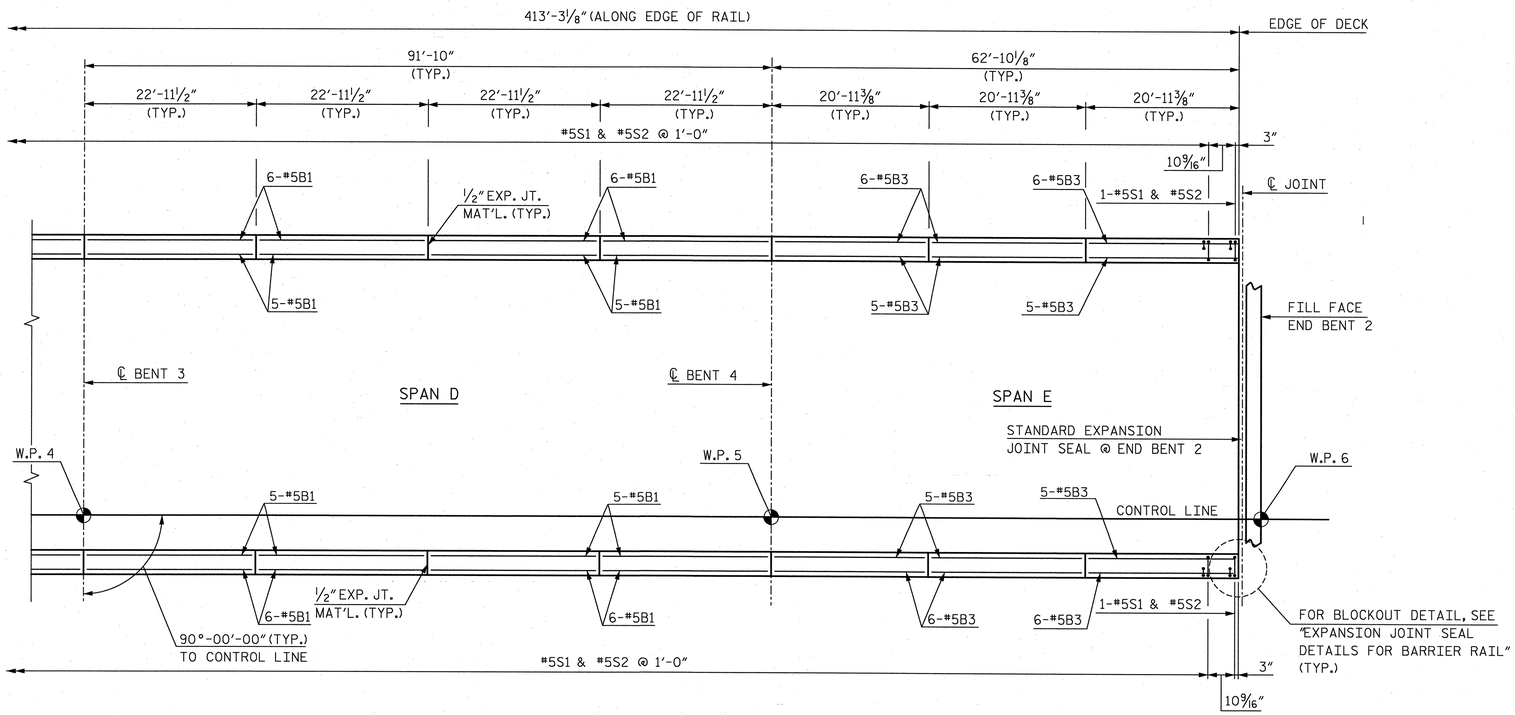

PLAN OF BARRIER RAIL

NOTE: EDGE OF SLAB NOT SHOWN FOR CLARITY

NOTES:

FOR END OF BARRIER RAIL DETAILS, SEE APPROACH SLAB SHEETS 1 OF 2 AND 2 OF 2.

PROJECT NO. U-2525B

GUILFORD COUNTY

STATION: POT 14+99.25 -L-

SHEET 1 OF 2

STATE OF NORTH CAROLINA
DEPARTMENT OF TRANSPORTATION
RALEIGH

SUPERSTRUCTURE

CONCRETE BARRIER RAIL

NORTH CAROLINA PROFESSIONAL SEAL 27812 ENGINEER DAVID W. HAWKINS 12/20/13

NORTH CAROLINA PROFESSIONAL SEAL 12916 ENGINEER PAUL J. BARBER 12/20/13

HNTB NORTH CAROLINA, P.C.
NC License No. C-1554
343 E. Six Forks Rd., Suite 200, Raleigh, N.C. 27609

DRAWN BY J. BAYNE DATE 4/13
CHECKED BY S. FISHER DATE 8/13
DWG. NO. 20

REVISIONS						SHEET NO.
NO.	BY	DATE	NO.	BY	DATE	S-20
1			3			TOTAL SHEETS
2			4			54-1

NOTES

THE BARRIER RAIL IN EACH UNIT SHALL NOT BE CAST UNTIL ALL SLAB CONCRETE IN THAT UNIT HAS BEEN CAST AND HAS REACHED A MINIMUM COMPRESSIVE STRENGTH OF 3,000 PSI.

~~WHEN FOAM JOINT SEAL IS REQUIRED, THE JOINT IN THE DECK SHALL BE SAWED PRIOR TO THE CASTING OF BARRIER RAIL.~~

ALL REINFORCING STEEL IN BARRIER RAILS SHALL BE EPOXY COATED.

~~THE #5 S3, S4, S5 AND S6 BARS SHALL BE INSTALLED, USING AN ADHESIVE ANCHORING SYSTEM, AFTER SAWING THE JOINT. THE YIELD LOAD FOR THE #5 S3, S4, S5 AND S6 BARS IS 18.6 KIPS. FIELD TESTING FOR THE ADHESIVE BONDING SYSTEM IS NOT REQUIRED.~~

GROOVED CONTRACTION JOINTS, ½" IN DEPTH, SHALL BE TOOLED IN ALL EXPOSED FACES OF THE BARRIER RAIL AND IN ACCORDANCE WITH ARTICLE 825-10(B) OF THE STANDARD SPECIFICATIONS. THE CONTRACTION JOINT SHALL BE LOCATED AT EACH THIRD POINT BETWEEN BARRIER RAIL EXPANSION JOINTS. ONLY ONE CONTRACTION JOINT IS REQUIRED AT MIDPOINT OF BARRIER RAIL SEGMENTS LESS THAN 20 FEET IN LENGTH AND NO CONTRACTION JOINTS ARE REQUIRED FOR THOSE SEGMENTS LESS THAN 10 FEET IN LENGTH.

THE #5S1 & #5S2 MAY BE SHIFTED SLIGHTLY AS REQUIRED TO PROVIDE 2" MINIMUM CONCRETE COVER AT THE ½" EXPANSION JOINTS IN THE BARRIER RAIL.

BAR TYPES

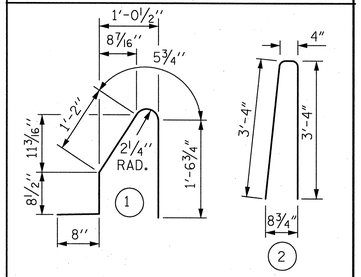

ALL BAR DIMENSIONS ARE OUT TO OUT

BILL OF MATERIAL

FOR CONCRETE BARRIER RAIL ONLY

BAR	NO.	SIZE	TYPE	LENGTH	WEIGHT
✳ B1	176	#5	STR.	22'-7"	4,146
✳ B2	132	#5	STR.	27'-4"	3,763
✳ B3	66	#5	STR.	20'-7"	1,417
✳ S1	828	#5	1	4'-7"	3,958
✳ S2	828	#5	2	7'-0"	6,045

✳ EPOXY COATED REINFORCING STEEL	19,329	LBS.
CLASS AA CONCRETE	112.4	CU. YDS.
CONCRETE BARRIER RAIL	826.52	LIN. FT.

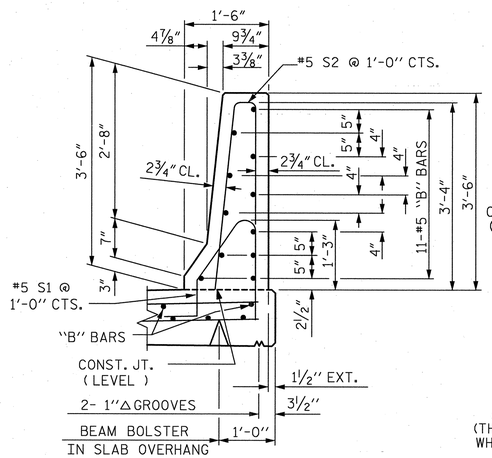

SECTION THRU RAIL

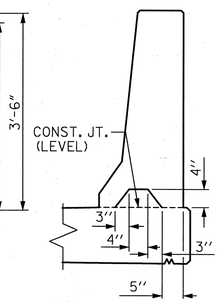

SECTION S-S

AT DAM IN OPEN JOINT
(THIS IS TO BE USED ONLY WHEN SLIP FORM IS USED)

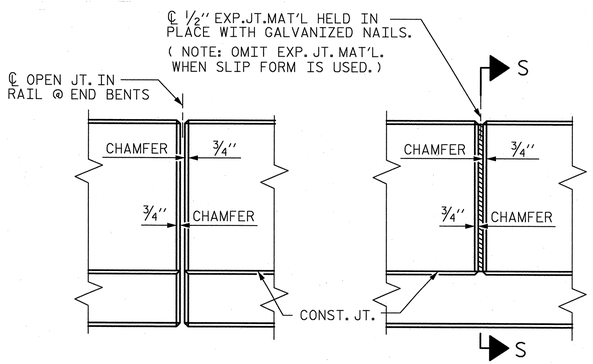

ELEVATION AT EXPANSION JOINTS

BARRIER RAIL DETAILS

PROJECT NO. U-2525B

GUILFORD COUNTY

STATION: POT 14+99.25 -L-

SHEET 2 OF 2

STATE OF NORTH CAROLINA
DEPARTMENT OF TRANSPORTATION
RALEIGH

STANDARD

CONCRETE BARRIER RAIL

NORTH CAROLINA PROFESSIONAL SEAL 27812 ENGINEER DAVID W. HAWKINS 12/20/13

NORTH CAROLINA PROFESSIONAL SEAL 12916 ENGINEER PAUL J. BARBER 12/20/13

ASSEMBLED BY : J. BAYNE	DATE : 4/13
CHECKED BY : S. FISHER	DATE : 8/13

DRAWN BY : ARB	5/87	
CHECKED BY : SJD	9/87	
REV. 10/1/11		MAA/GM
REV. 7/12		MAA/GM
REV. 6/13		MAA/GM

HNTB NORTH CAROLINA, P.C.
NC License No. C-1554
343 E. Six Forks Rd., Suite 200, Raleigh, N.C. 27609

DRAWN BY J. BAYNE DATE 4/13
CHECKED BY S. FISHER DATE 8/13
DWG. NO. 21

REVISIONS						SHEET NO.
NO.	BY:	DATE:	NO.	BY:	DATE:	S-21
1			3			TOTAL SHEETS
2			4			541

STD. NO. CBR1

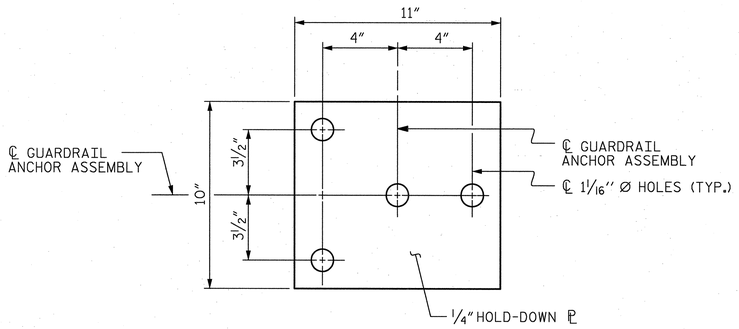

PLAN

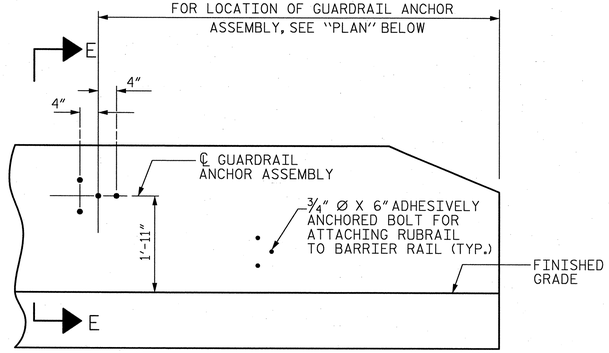

ELEVATION

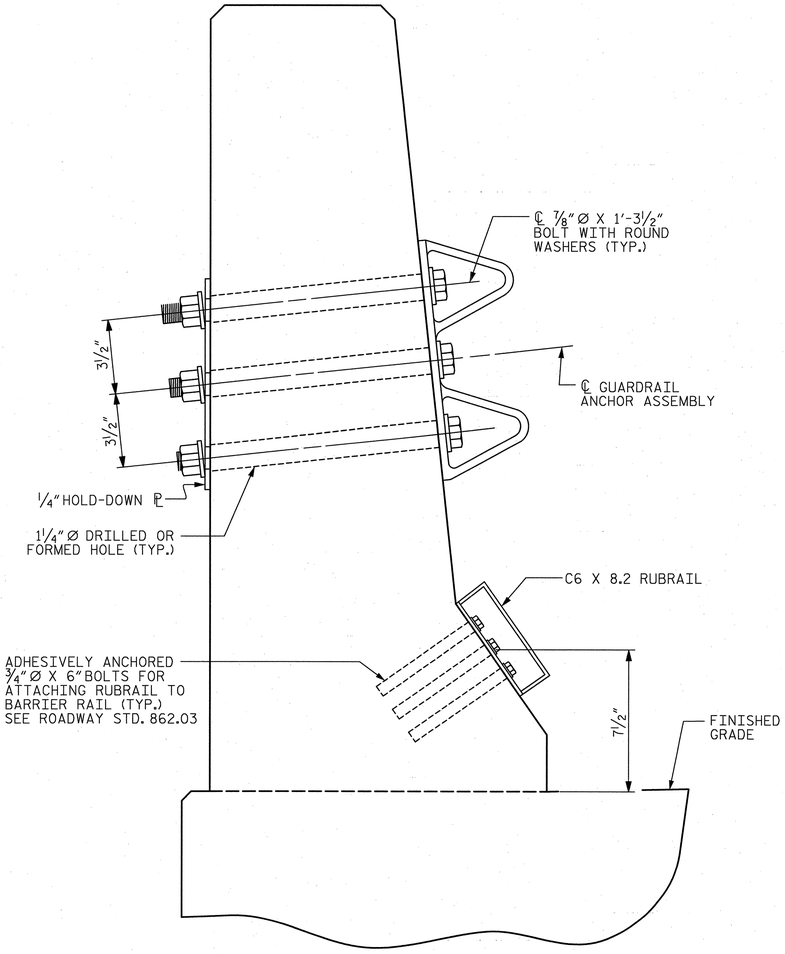

SECTION E-E

GUARDRAIL ANCHOR ASSEMBLY DETAILS

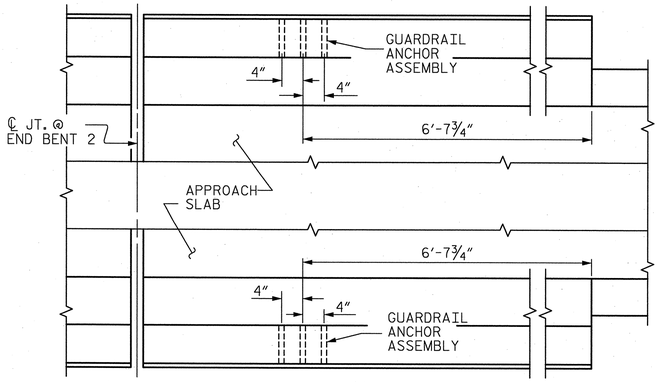

PLAN AT END BENT 2

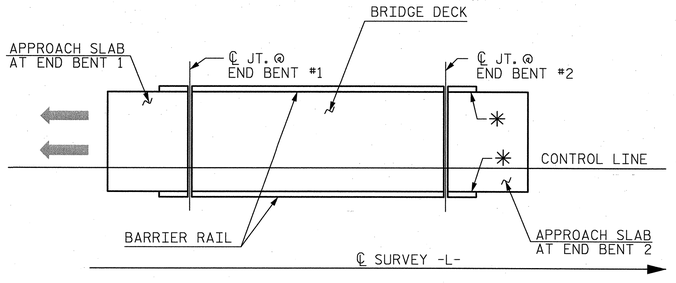

SKETCH SHOWING POINTS OF ATTACHMENT

✳ DENOTES GUARDRAIL ANCHOR ASSEMBLY (2 REQ'D.)

LOCATION OF ANCHORS FOR GUARDRAIL

NOTES

THE GUARDRAIL ANCHOR ASSEMBLY SHALL CONSIST OF A 1/4" HOLD-DOWN PLATE AND 4 - 7/8" Ø BOLTS WITH NUTS AND WASHERS, RUBRAIL, AND ADHESIVELY ANCHORED BOLTS.

THE HOLD-DOWN PLATE SHALL CONFORM TO AASHTO M270 GRADE 36. AFTER FABRICATION, THE HOLD-DOWN PLATE SHALL BE HOT-DIP GALVANIZED IN ACCORDANCE WITH AASHTO M111.

BOLTS SHALL CONFORM TO THE REQUIREMENTS OF ASTM A307 AND NUTS SHALL CONFORM TO THE REQUIREMENTS OF AASHTO M291. BOLTS, NUTS AND WASHERS SHALL BE GALVANIZED. (AT THE CONTRACTOR'S OPTION, STAINLESS STEEL BOLTS, NUTS AND WASHERS MAY BE USED AS AN ALTERNATE FOR THE 7/8" Ø GALVANIZED BOLTS, NUTS AND WASHERS. THEY SHALL CONFORM TO OR EXCEED THE MECHANICAL REQUIREMENTS OF ASTM A307. THE USE OF THIS ALTERNATE SHALL BE APPROVED BY THE ENGINEER.)

THE GUARDRAIL ANCHOR ASSEMBLY IS REQUIRED AT ALL POINTS WHERE APPROACH GUARDRAIL IS TO BE ATTACHED TO THE END OF BARRIER RAIL. FOR POINTS OF ATTACHMENT, SEE SKETCH.

AFTER INSTALLATION, THE EXPOSED THREAD OF THE BOLT SHALL BE BURRED WITH A SHARP POINTED TOOL.

THE COST OF THE GUARDRAIL ANCHOR ASSEMBLY SHALL BE INCLUDED IN THE UNIT CONTRACT PRICE BID FOR CONCRETE BARRIER RAIL.

THE 1 1/4" Ø HOLES SHALL BE FORMED OR DRILLED WITH A CORE BIT. IMPACT TOOLS WILL NOT BE PERMITTED. ANY CONCRETE DAMAGED BY THIS WORK SHALL BE REPAIRED TO THE SATISFACTION OF THE ENGINEER.

THE C6 X 8.2 RUBRAIL IS TO BE ADHESIVELY ANCHORED TO THE RAIL USING THREE 3/4" Ø X 6" BOLTS WITH WASHERS. LEVEL ONE FIELD TESTING IS REQUIRED, AND THE YIELD LOAD OF THE 3/4" Ø BOLT IS 12 KIPS. FOR ADHESIVELY ANCHORED ANCHOR BOLTS OR DOWELS, SEE STANDARD SPECIFICATIONS. SEE ROADWAY STANDARD 862.03 FOR DETAILS AND LOCATION OF THE RUBRAIL.

PROJECT NO. U-2525B

GUILFORD COUNTY

STATION: PDT 14+99.25 -L-

ASSEMBLED BY : J. BAYNE	DATE : 4/13		
CHECKED BY : S. FISHER	DATE : 8/13		
DRAWN BY : TLA 5/06	REV. 10/1/11	MAA/GM	
CHECKED BY : GM 5/06	REV. 7/12	MAA/GM	
	REV. 6/13	MAA/GM	

NORTH CAROLINA PROFESSIONAL SEAL 27812 ENGINEER DAVID W. HAWKINS 12/20/13

NORTH CAROLINA PROFESSIONAL SEAL 12916 ENGINEER PAUL J. BARBER 12/20/13

HNTB NORTH CAROLINA, P.C.
NC License No. C-1554
343 E. Six Forks Rd., Suite 200, Raleigh, N.C. 27609

DRAWN BY J. BAYNE DATE 4/13
CHECKED BY S. FISHER DATE 8/13

DWG. NO. 22

STATE OF NORTH CAROLINA
DEPARTMENT OF TRANSPORTATION
RALEIGH

STANDARD

GUARDRAIL ANCHORAGE FOR BARRIER RAIL

REVISIONS						SHEET NO.
NO.	BY:	DATE:	NO.	BY:	DATE:	S-22
1			3			TOTAL SHEETS
2			4			54

STD. NO. GRA2

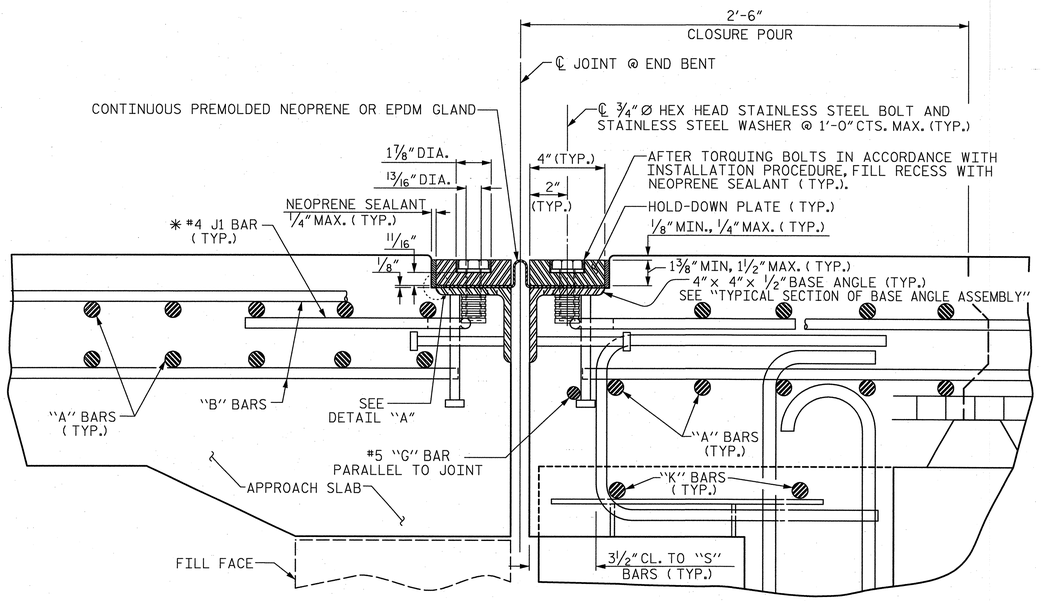

EXPANSION JOINT DETAILS

SECTION NORMAL TO JOINT -- PRESTRESSED GIRDER SUPERSTRUCTURE

* THE QUANTITY OF #4 J1 BARS ON THE BILL OF MATERIAL IS BASED ON 1'-0" CENTERS. J1 BARS SHALL BE PLACED AT EACH VERTICAL STUD ANCHOR BOLT. IN THE EVENT THAT THE NUMBER OF VERTICAL STUD ANCHORS EXCEEDS THE NUMBER OF J1 BARS SPECIFIED, ADDITIONAL J1 BARS WILL NOT BE REQUIRED.

INSTALLATION PROCEDURE

1. A TEMPLATE OR OTHER SUITABLE DEVICE SHALL BE USED TO FORM THE TOP OF THE EXPANSION JOINT SEAL BLOCKOUT TO THE PROPER DEPTH AND WIDTH. THE TEMPLATE SHALL BE 4⅛" TO 4¼" WIDE AND OF SUCH THICKNESS AS TO PROVIDE FOR CORRECT FINAL ELEVATION OF TOP OF HOLD-DOWN PLATES. THE TEMPLATE SHALL BE ATTACHED TO THE BASE ANGLE ASSEMBLY WITH THE ¾"Ø HEX HEAD BOLTS PROVIDED FOR THE HOLD-DOWN PLATES. A 1"Ø HOLE SHALL BE PROVIDED IN THE TEMPLATE CENTERED OVER EACH WEEP HOLE IN THE 4" X 4" X ½" BASE ANGLE. OTHER METHODS OF INSURING DRAINAGE THROUGH WEEP HOLES MAY BE EMPLOYED SUBJECT TO ENGINEER'S APPROVAL.
2. AFTER THE CONCRETE HAS BEEN CAST ON BOTH SIDES OF THE JOINT, REMOVE THE TEMPLATE. THOROUGHLY CLEAN THE BOLT HOLES AND THE ANGLE PLATE. REMOVE ANY EXCESS CONCRETE THAT COMES OUT OF THE WEEP HOLES. ANY DAMAGED STEEL SHALL BE COATED WITH A MINIMUM THICKNESS OF 4 DRY MILS OF ZINC-RICH PAINT IN ACCORDANCE WITH THE STANDARD SPECIFICATIONS.
3. LAY THE GLAND ON THE BASE ANGLE AND FIELD MARK THE GLAND FOR THE BOLT HOLES. HOLES IN THE GLAND SHALL BE PUNCHED ⅞" IN DIAMETER WITH A HAND PUNCH.
4. IN ORDER TO CHECK FOR PROPER ALIGNMENT, PLACE THE GLAND AND HOLD-DOWN PLATES ON THE BASE ANGLE. DO NOT APPLY NEOPRENE SEALANT. BOLT THE HOLD-DOWN PLATES TO THE BASE ANGLE BUT DO NOT TIGHTEN. THE ENGINEER SHALL INSPECT THE JOINT SEAL DEVICE FOR PROPER ALIGNMENT.
5. AFTER INSPECTION, REMOVE THE HOLD-DOWN PLATES AND GLAND. APPLY NEOPRENE SEALANT TO THE BASE ANGLE IN ACCORDANCE WITH THE "INSTALLATION SKETCH". PLACE GLAND AND HOLD-DOWN PLATES ON THE BASE ANGLE. BOLT THE HOLD-DOWN PLATES TO THE BASE ANGLE ASSEMBLY AND TORQUE THE BOLTS TO 88 FT-LBS WITH A TORQUE WRENCH. CHECK THE TORQUE AFTER THREE (3) HOURS AND, IF NECESSARY, RETIGHTEN TO 88 FT-LBS. A FINAL CHECK SHALL BE MADE AT SEVEN (7) DAYS. TORQUE SHALL NOT BE LESS THAN 80 FT-LBS AFTER SEVEN (7) DAYS.
6. AFTER PROPER TORQUING, CLEAN THE BOLT HOLE RECESSES AND THE RECESS BETWEEN THE JOINT SEAL DEVICE AND CONCRETE, COMPLETELY FILL THESE RECESSES WITH NEOPRENE SEALANT.

GENERAL NOTES

1. FOR EXPANSION JOINT SEALS, SEE SPECIAL PROVISIONS.
2. ALL PLATES AND ANGLES SHALL CONFORM TO AASHTO M270 GRADE 36 STEEL OR APPROVED EQUAL. ALL HOLD-DOWN BOLTS SHALL CONFORM TO ASTM F593 ALLOY 304 STAINLESS STEEL AND WASHERS SHALL CONFORM TO ASTM F844 EXCEPT THEY SHALL BE MADE FROM ALLOY 304 STAINLESS STEEL. ALL STUD ANCHORS SHALL CONFORM TO AASHTO M169, GRADES 1010 THRU 1020 OR APPROVED EQUAL. ALL CONCRETE INSERTS SHALL BE CLOSED END AND SHALL CONFORM TO AASHTO M169, GRADE 12L14. TENSILE CAPACITY SHALL BE 3000 LBS. MIN.
3. A PREMOLDED CORRUGATED OR NON-CORRUGATED GLAND SHALL BE USED FOR JOINTS SKEWED BETWEEN 50° THRU 130°. FOR JOINTS SKEWED LESS THAN 50° OR MORE THAN 130°, ONLY A CORRUGATED GLAND SHALL BE USED.
4. CLOSED END FERRULES AND STUD ANCHORS SHALL BE SHOP WELDED AND ALL HOLES SHALL BE SHOP DRILLED AS SHOWN ON PLANS. STUD ANCHORS SHALL BE ELECTRIC ARC END WELDED WITH COMPLETE FUSION.
5. SURFACES COMING IN CONTACT WITH NEOPRENE SHALL BE GROUND SMOOTH PRIOR TO METALLIZING.
6. UPON COMPLETION OF SHOP FABRICATION, THE HOLD DOWN PLATE AND BASE ANGLE ASSEMBLY, AS SHOWN IN THE " TYPICAL SECTION OF BASE ANGLE ASSEMBLY", SHALL BE METALLIZED. SEE SPECIAL PROVISION FOR THERMAL SPRAYED COATINGS (METALLIZATION).
7. BASE ANGLE ASSEMBLY SHALL BE CONTINUOUS FOR THE LENGTH OF THE JOINT. AT CROWN BREAKS, THE ENDS OF THE BASE ANGLE ASSEMBLY SHALL BE CUT PARALLEL TO THE BRIDGE CENTERLINE FOR SKEWS LESS THAN 80° AND GREATER THAN 100°. FINISHED WELD SHALL BE GROUND SMOOTH AND COATED WITH A MINIMUM THICKNESS OF 4 DRY MILS OF ZINC-RICH PAINT IN ACCORDANCE WITH THE STANDARD SPECIFICATIONS.
8. FIELD SPLICES OF HOLD-DOWN PLATES SHALL BE KEPT TO A MINIMUM. CONTRACTOR SHALL FURNISH DETAILED PLANS SHOWING PROPOSED SPLICE LOCATIONS FOR APPROVAL. HOLD-DOWN PLATES SHALL NOT EXCEED 20' LENGTHS UNLESS APPROVED BY THE ENGINEER.
9. NO ALTERNATE JOINT DETAILS SHALL BE PERMITTED IN LIEU OF THOSE SHOWN ON THESE PLANS.
10. THE CONTRACTOR MAY, AT HIS OPTION, USE ADHESIVELY ANCHORED ANCHOR BOLTS IN PLACE OF CONCRETE INSERTS FOR COVER PLATES. THE YIELD LOAD OF THE ¾"Ø BOLT IS 10 KIPS. FIELD TESTING OF THE ADHESIVE BONDING SYSTEM IS NOT REQUIRED.

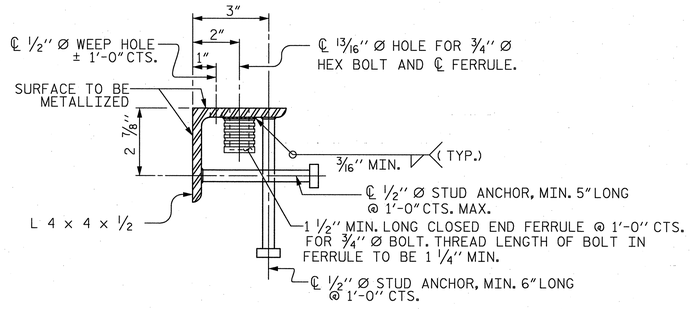

TYPICAL SECTION OF BASE ANGLE ASSEMBLY

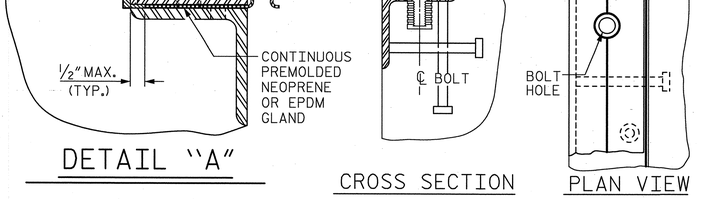

DETAIL "A"

CROSS SECTION PLAN VIEW

INSTALLATION SKETCH

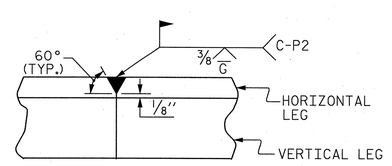

DETAIL- FIELD WELD SPLICE OF BASE ANGLE

MOVEMENT AND SETTING AT JOINT					
BENT NO.	SKEW ANGLE	TOTAL MOVEMENT (ALONG ℄ RDWY)	PERPENDICULAR JOINT OPENING AT 45° F	PERPENDICULAR JOINT OPENING AT 60° F	PERPENDICULAR JOINT OPENING AT 90° F
END BENT 1	90°-00'-00"	1 13/16"	2 5/16"	2"	1 3/8"
END BENT 2	90°-00'-00"	1 5/8"	2 3/16"	1 1/8"	1 5/16"

PROJECT NO. U-2525B

GUILFORD COUNTY

STATION: POT 14+99.25 -L-

SHEET 1 OF 2

STATE OF NORTH CAROLINA
DEPARTMENT OF TRANSPORTATION
RALEIGH

STANDARD

EXPANSION JOINT SEAL DETAILS

NORTH CAROLINA PROFESSIONAL SEAL 27812 ENGINEER DAVID W. HAWKINS 12/20/13

NORTH CAROLINA PROFESSIONAL SEAL 12916 ENGINEER PAUL J. BARBER 12/20/13

ASSEMBLED BY : J. BAYNE	DATE : 4/13		
CHECKED BY : D. RAGAN	DATE : 8/13		
DRAWN BY : REK 9/87	REV. 5/7/03R	RWW/JTE	
CHECKED BY : CRK 10/87	REV. 5/1/06R	TLA/GM	
	REV. 10/1/11	MAA/GM	

HNTB NORTH CAROLINA, P.C.
NC License No. C-1554
343 E. Six Forks Rd., Suite 200, Raleigh, N.C. 27609

DRAWN BY J. BAYNE DATE 4/13
CHECKED BY D. RAGAN DATE 8/13
DWG. NO. 23

REVISIONS						SHEET NO.
NO.	BY:	DATE:	NO.	BY:	DATE:	S-23
1			3			TOTAL SHEETS
2			4			541

STD. NO. EJS1

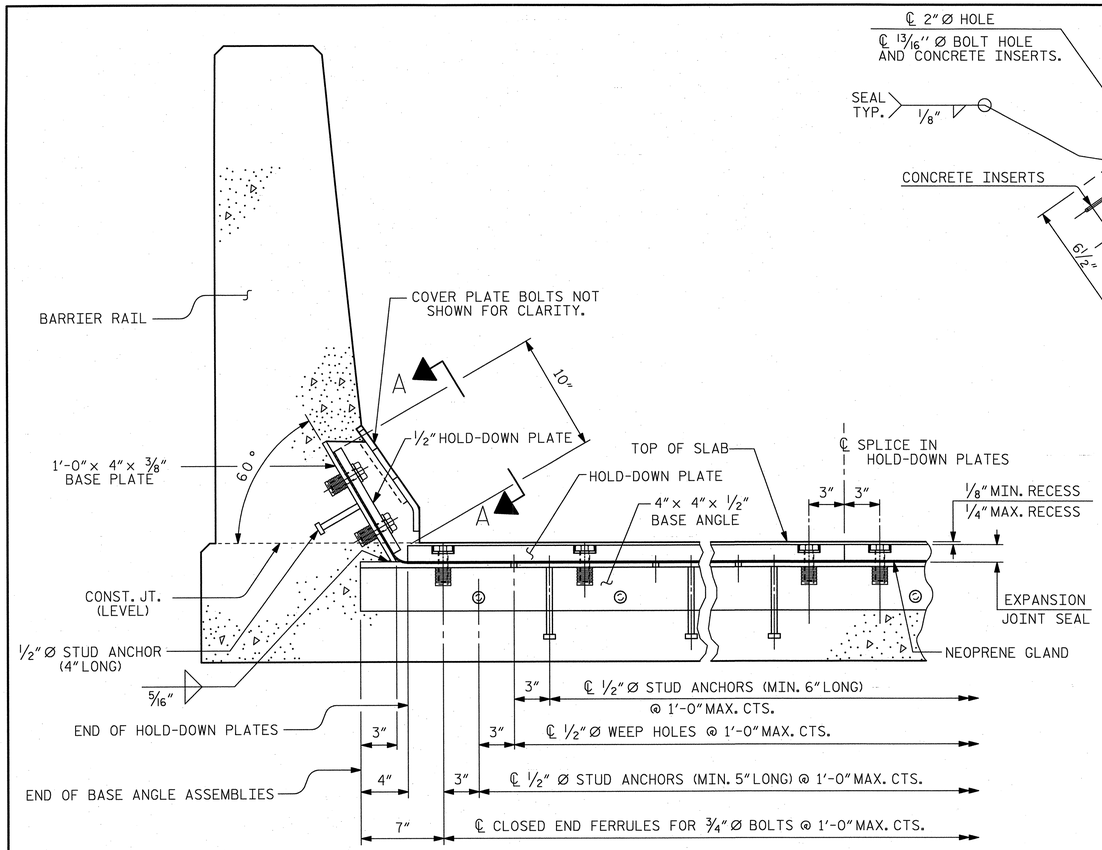

SECTION THRU RAIL NORMAL TO JOINT

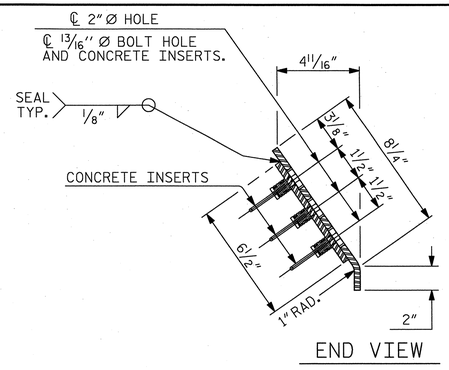

END VIEW

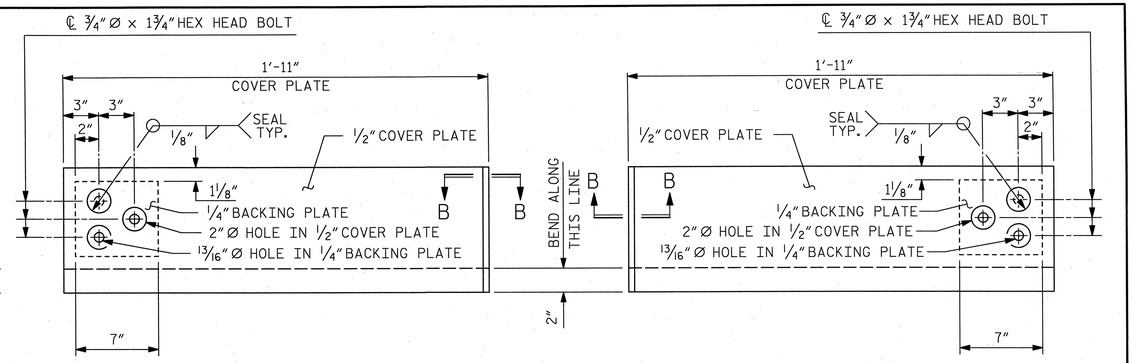

TYPE I - ELEVATION VIEW

TYPE II - ELEVATION VIEW

COVER PLATE DETAILS

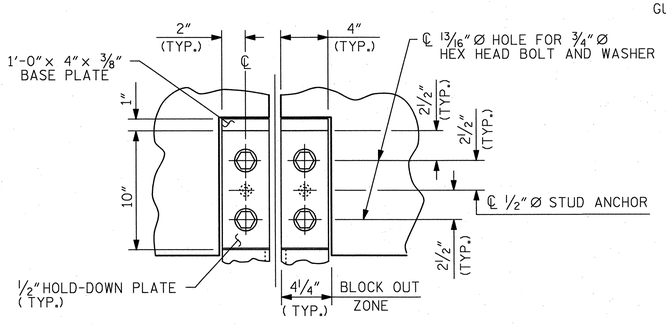

SECTION A - A

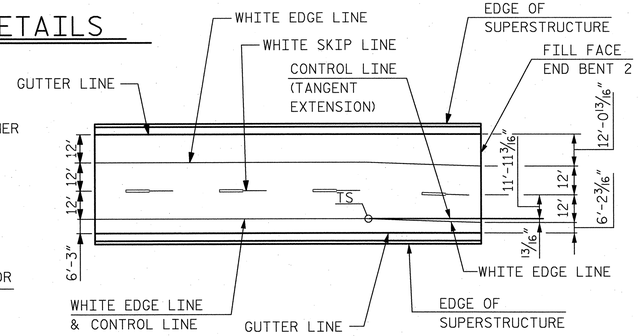

PAVEMENT MARKING ALIGNMENT

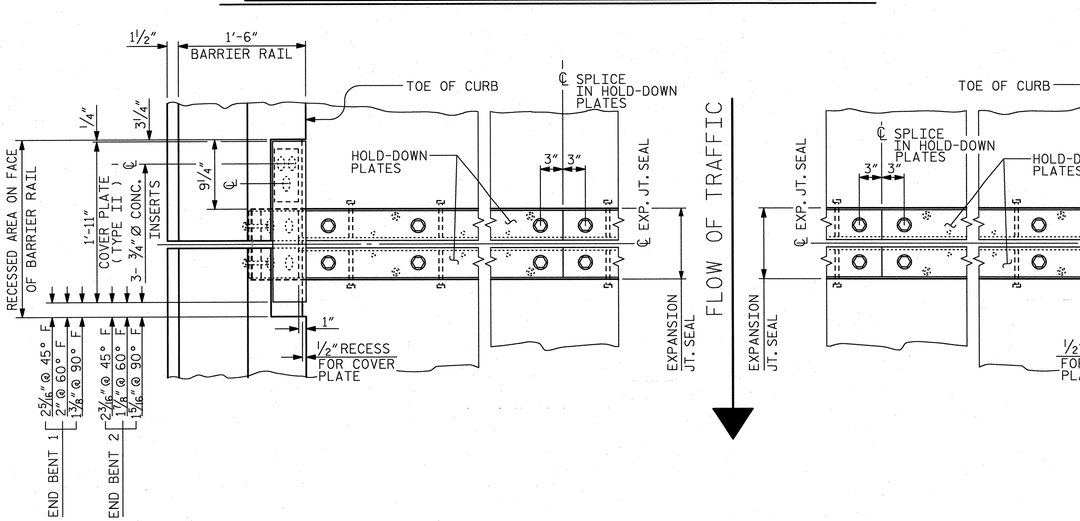

PLAN OF EXPANSION JOINT SEAL

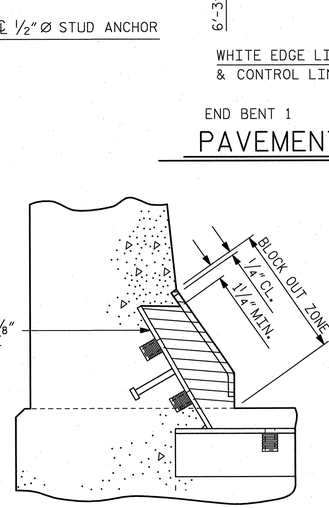

BLOCK OUT DETAIL

SEE " SECTION A - A " FOR OTHER DETAILS.

45° BEVEL

SECTION B - B

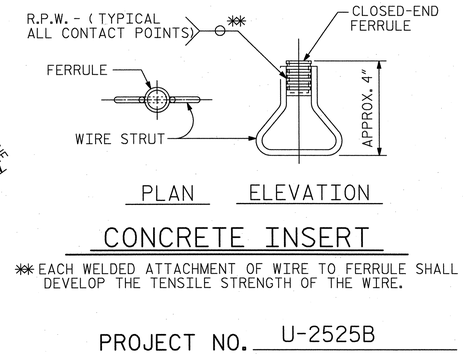

PLAN ELEVATION

CONCRETE INSERT

** EACH WELDED ATTACHMENT OF WIRE TO FERRULE SHALL DEVELOP THE TENSILE STRENGTH OF THE WIRE.

PROJECT NO. U-2525B

GUILFORD COUNTY

STATION: POT 14+99.25 -L-

SHEET 2 OF 2

STATE OF NORTH CAROLINA
DEPARTMENT OF TRANSPORTATION
RALEIGH

STANDARD

EXPANSION JOINT SEAL DETAILS FOR BARRIER RAIL

NORTH CAROLINA PROFESSIONAL SEAL 27812 ENGINEER DAVID W. HAWKINS 12/20/13

NORTH CAROLINA PROFESSIONAL SEAL 12916 ENGINEER PAUL J. BARBER 12/20/13

ASSEMBLED BY :	J. BAYNE
CHECKED BY :	D. RAGAN
DATE :	4/13
DATE :	8/13
DRAWN BY : REK	9/87
CHECKED BY : CRK	10/87
REV. 10/1/11	MAA/GM
REV. 7/12	MAA/GM
REV. 6/13	MAA/GM

HNTB NORTH CAROLINA, P.C.
NC License No. C-1554
343 E. Six Forks Rd., Suite 200, Raleigh, N.C. 27609

DRAWN BY J. BAYNE DATE 4/13
CHECKED BY D. RAGAN DATE 8/13

DWG. NO. 24

REVISIONS						SHEET NO.
NO.	BY:	DATE:	NO.	BY:	DATE:	S-24
1			3			TOTAL SHEETS
2			4			54-1

STD. NO. EJS2

BILL OF MATERIAL

EPOXY COATED

BAR	NO.	SIZE	TYPE	LENGTH	WEIGHT
A1	761	5	STR.	45′-2″	35,850
B1	93	4	STR.	21′-11″	1,362
B2	62	7	STR.	40′-0″	5,069
B3	62	7	STR.	28′-3″	3,580
B4	120	6	STR.	26′-6″	4,776
B5	62	4	STR.	28′-2″	1,167
B6	31	5	STR.	60′-0″	1,940
B7	60	6	STR.	25′-0″	2,253
B8	62	4	STR.	16′-4″	676
B9	31	5	STR.	57′-0″	1,843
B10	60	6	STR.	24′-0″	2,163
B11	62	4	STR.	21′-5″	887
G1	2	5	STR.	45′-2″	94
J1	84	4	4	1′-5″	79
K1	8	8	1	13′-11″	297
K2	12	8	2	20′-11″	670
S1	64	5	3	6′-0″	401
				TOTAL	63,107

BILL OF MATERIAL

UNCOATED

BAR	NO.	SIZE	TYPE	LENGTH	WEIGHT
A101	763	5	STR.	45′-2″	35,944
B101	448	5	STR.	53′-7″	25,038
B102	80	4	STR.	26′-6″	1,416
K3	40	4	STR.	20′-2″	539
K4	64	4	STR.	8′-6″	363
K5	64	4	STR.	7′-6″	321
K6	32	4	STR.	5′-10″	125
S2	480	4	5	2′-9″	882
U1	96	4	6	13′-4″	855
U2	32	4	6	11′-4″	242
				TOTAL	65,725

SUPERSTRUCTURE REINFORCING STEEL LENGTHS ARE BASED ON THE FOLLOWING MINIMUM SPLICE LENGTHS

BAR SIZE	SUPERSTRUCTURE EXCEPT APPROACH SLABS, PARAPET, AND BARRIER RAIL		APPROACH SLABS		PARAPET AND BARRIER RAIL
	EPOXY COATED	UNCOATED	EPOXY COATED	UNCOATED	
#4	2′-0″	1′-9″	2′-0″	1′-9″	2′-9″
#5	2′-6″	2′-2″	2′-6″	2′-2″	3′-5″
#6	3′-0″	2′-7″	3′-10″	2′-7″	4′-4″
#7	5′-3″	3′-6″			
#8	6′-10″	4′-7″			

GROOVING BRIDGE FLOORS

APPROACH SLABS	1,871	SQ.FT.
BRIDGE DECK	16,181	SQ.FT.
TOTAL	18,052	SQ.FT.

BAR TYPES

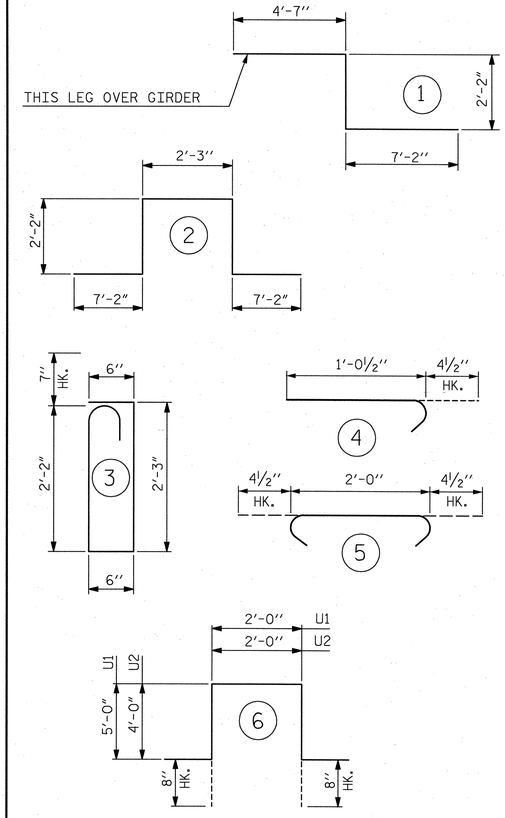

ALL BAR DIMENSIONS ARE OUT TO OUT

SUPERSTRUCTURE BILL OF MATERIAL

	CLASS AA CONCRETE	REINFORCING STEEL	EPOXY COATED REINFORCING STEEL
	(CU. YDS.)	(LBS.)	(LBS.)
POUR 1	123.0		
POUR 2	137.7		
POUR 3	137.7		
POUR 4	150.4		
POUR 5	123.9		
TOTALS**	672.7	65,725	63,107

**QUANTITIES FOR BARRIER RAIL ARE NOT INCLUDED

PROJECT NO. U-2525B

GUILFORD COUNTY

STATION: POT 14+99.25 -L-

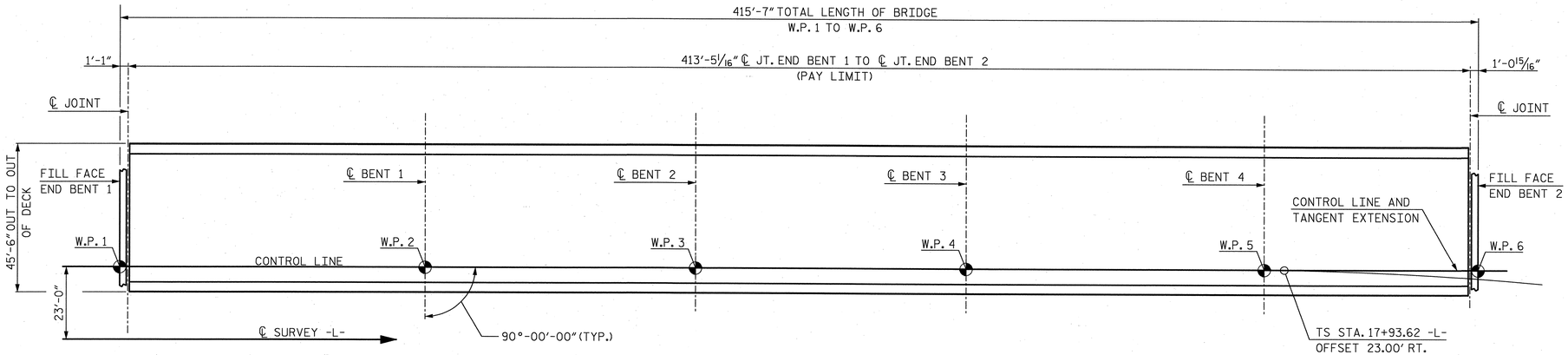

LAYOUT FOR COMPUTING AREA REINFORCED CONCRETE DECK SLAB (SQ. FT. = 18,811)

NORTH CAROLINA PROFESSIONAL SEAL 27812 ENGINEER DAVID W. HAWKINS 12/20/13

NORTH CAROLINA PROFESSIONAL SEAL 12916 ENGINEER PAUL J. BARBER 12/20/13

ASSEMBLED BY : J. BAYNE	DATE : 6/13		
CHECKED BY : P. BARBER	DATE : 9/13		
DRAWN BY : JMB 5/87	REV. 8/16/99	RWW/LES	
CHECKED BY : SJD 9/87	REV. 5/1/06	TLA/GM	
	REV. 10/1/11	MAA/GM	

HNTB NORTH CAROLINA, P.C.
NC License No. C-1554
343 E. Six Forks Rd., Suite 200, Raleigh, N.C. 27609

DRAWN BY J. BAYNE DATE 6/13
CHECKED BY P. BARBER DATE 9/13

DWG. NO. 25

REVISIONS					
NO.	BY:	DATE:	NO.	BY:	DATE:
1			3		
2			4		

SHEET NO. S-25

TOTAL SHEETS 54

STATE OF NORTH CAROLINA
DEPARTMENT OF TRANSPORTATION
RALEIGH

STANDARD
SUPERSTRUCTURE BILL OF MATERIAL

STD. NO. BOM2

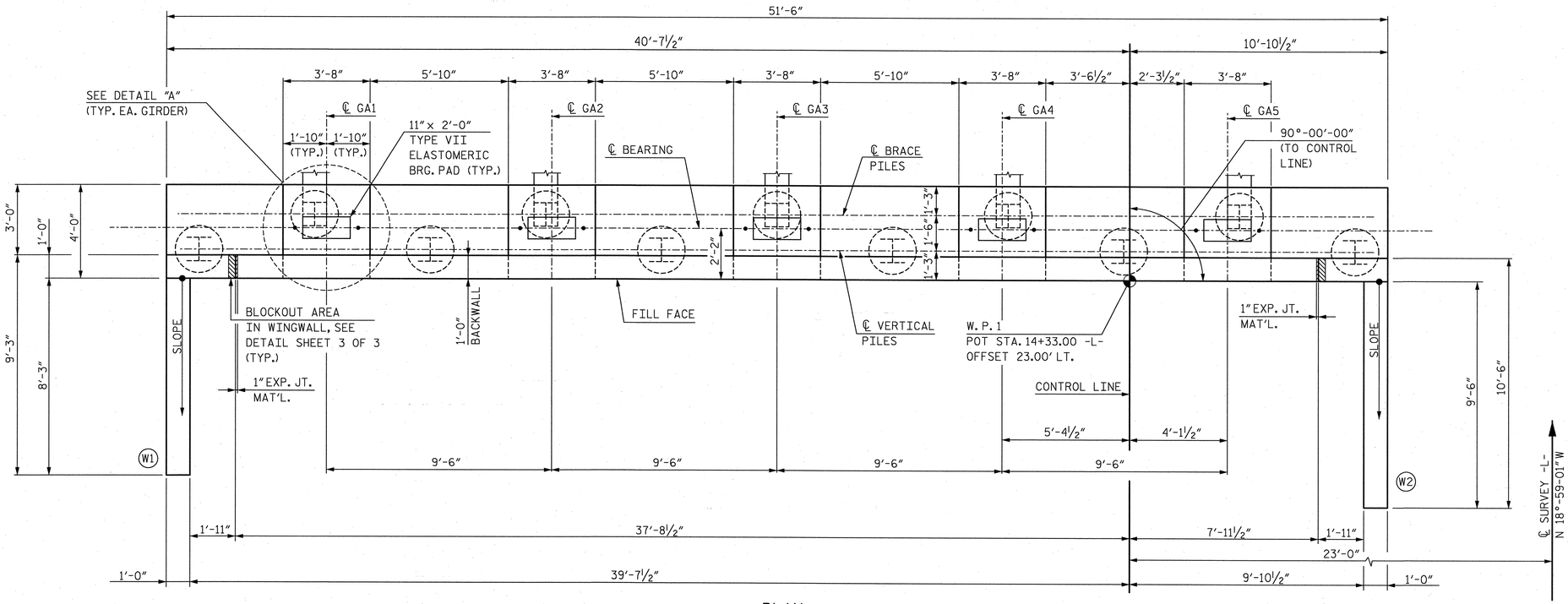

PLAN

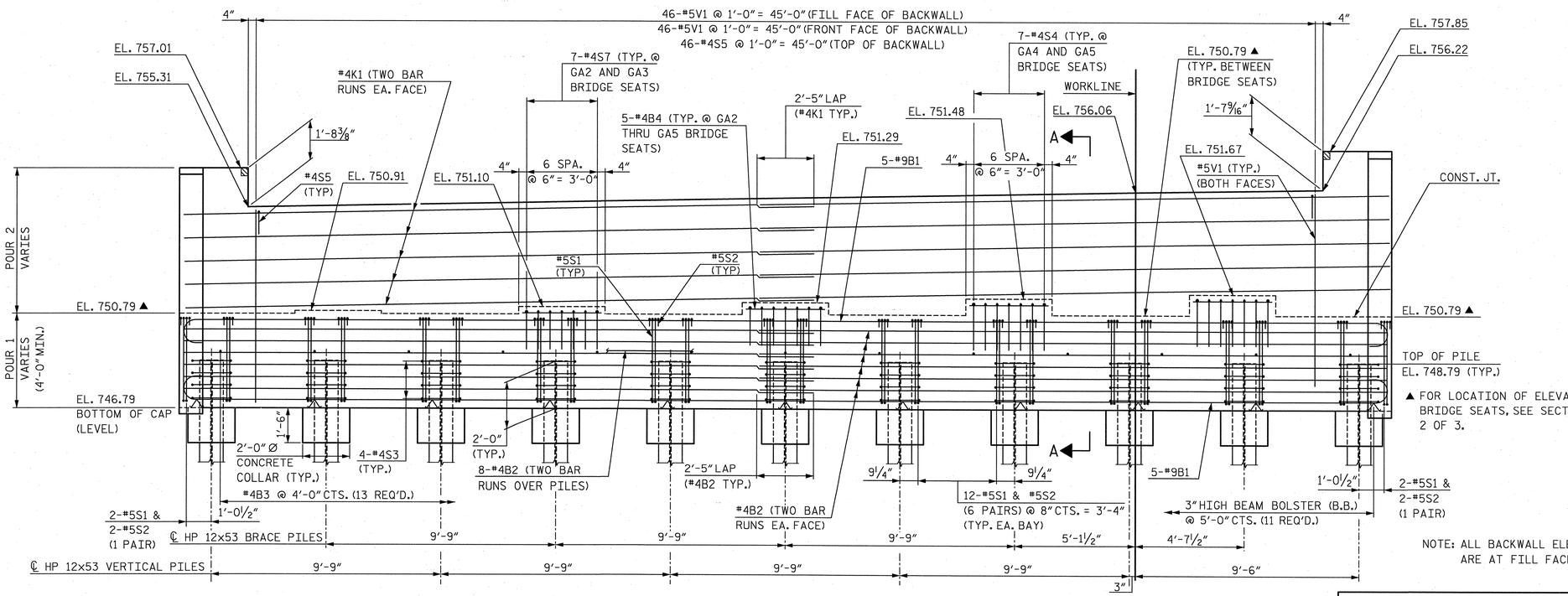

ELEVATION

▲ FOR LOCATION OF ELEVATIONS BETWEEN BRIDGE SEATS, SEE SECTION A-A, SHEET 2 OF 3.

NOTE: ALL BACKWALL ELEVATIONS ARE AT FILL FACE.

NOTES:

STIRRUPS IN CAP MAY BE SHIFTED AS NECESSARY TO CLEAR ANCHOR BOLTS.

BACKWALL SHALL BE PLACED BEFORE APPLYING THE EPOXY PROTECTIVE COATING.

THE TOP SURFACE AREAS OF THE END BENT CAPS SHALL BE CURED IN ACCORDANCE WITH THE STANDARD SPECIFICATIONS EXCEPT THE MEMBRANE CURING COMPOUND METHOD SHALL NOT BE USED.

THE TOP SURFACE OF THE END BENT CAP EXCEPT THE BRIDGE SEAT BUILDUPS SHALL BE SLOPED TRANSVERSELY FROM THE FILL FACE TO THE BACK FACE AT THE RATE OF 2%.

THE CONTRACTOR SHALL PROVIDE FOR INSTALLATION OF THE 4"Ø DRAIN PIPE THROUGH THE WINGWALL AS REQUIRED FOR THE REINFORCED BRIDGE APPROACH FILLS, SEE ROADWAY PLANS. REINFORCING STEEL IN THE WINGWALL MAY BE SHIFTED AS NECESSARY TO CLEAR DRAIN PIPE.

FOR WINGWALL DETAILS, SEE SHEET 2 OF 3.

FOR SECTION A-A, SEE SHEET 2 OF 3.

FOR PILE SPLICE DETAILS, SEE SHEET 3 OF 3.

INDICATES 3:12 PILE BATTER IN DIRECTION SHOWN.

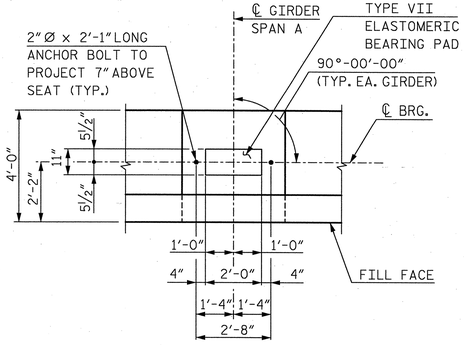

DETAIL "A"

NORTH CAROLINA PROFESSIONAL ENGINEER SEAL 27812 DAVID W. HAWKINS 12/20/13

NORTH CAROLINA PROFESSIONAL ENGINEER SEAL 12916 PAUL J. BARBER 12/20/13

PROJECT NO. U-2525B

GUILFORD COUNTY

STATION: POT 14+99.25 -L-

SHEET 1 OF 3

STATE OF NORTH CAROLINA
DEPARTMENT OF TRANSPORTATION
RALEIGH

SUBSTRUCTURE

END BENT 1

HNTB NORTH CAROLINA, P.C.
NC License No. C-1554
343 E. Six Forks Rd., Suite 200, Raleigh, N.C. 27609

DRAWN BY J. BAYNE DATE 8/13
CHECKED BY D. RAGAN DATE 10/13
DWG. NO. 26

REVISIONS						SHEET NO.
NO.	BY	DATE	NO.	BY	DATE	S-26
1			3			TOTAL SHEETS
2			4			54

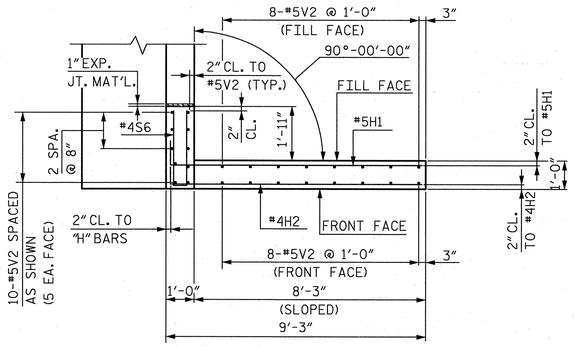

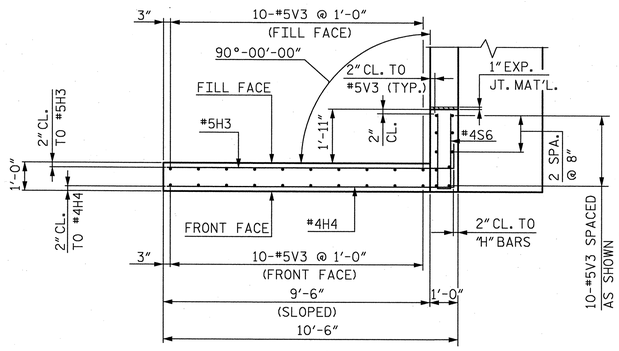

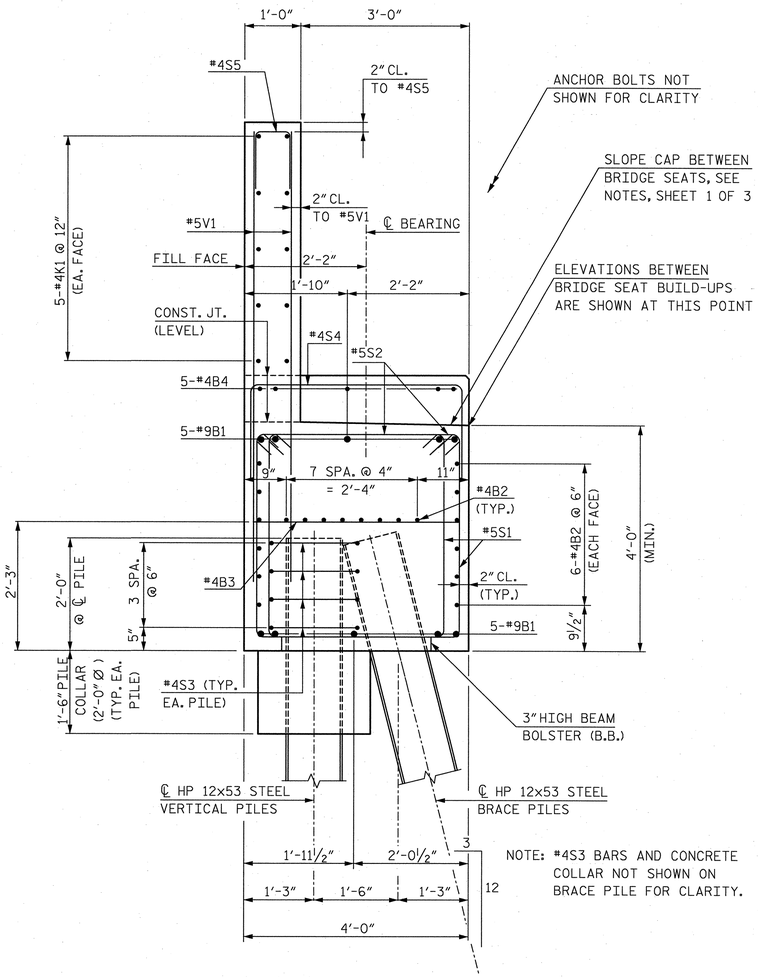

SECTION A-A

PLAN OF WING (W1)

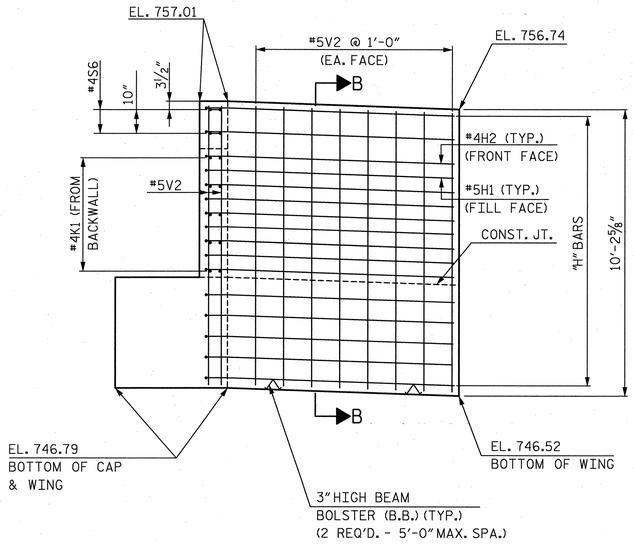

ELEVATION OF WING (W1)

PLAN OF WING (W2)

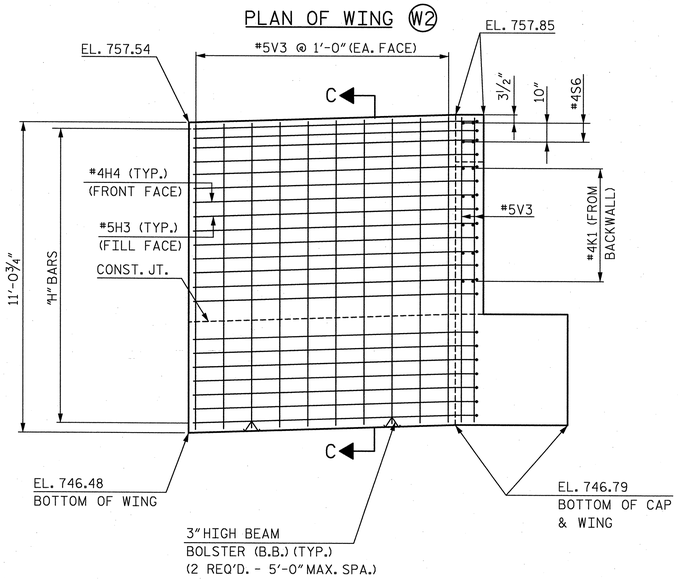

ELEVATION OF WING (W2)

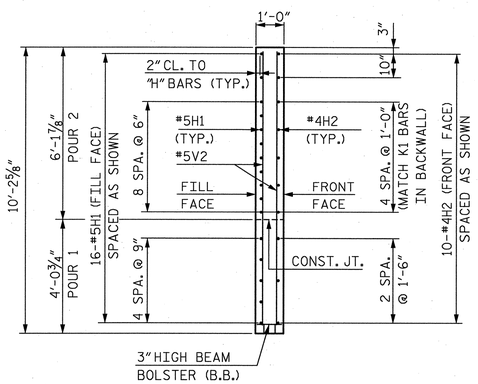

SECTION B-B

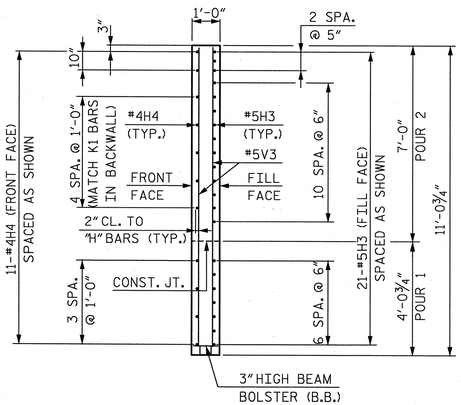

SECTION C-C

PROJECT NO. U-2525B

GUILFORD **COUNTY**

STATION: POT 14+99.25 -L-

SHEET 2 OF 3

STATE OF NORTH CAROLINA
DEPARTMENT OF TRANSPORTATION
RALEIGH

SUBSTRUCTURE

END BENT 1

NORTH CAROLINA PROFESSIONAL SEAL 27812 ENGINEER DAVID W. HAWKINS 12/20/13

NORTH CAROLINA PROFESSIONAL SEAL 12916 ENGINEER PAUL J. BARBER 12/20/13

HNTB NORTH CAROLINA, P.C.
NC License No. C-1554
343 E. Six Forks Rd., Suite 200, Raleigh, N.C. 27609

DRAWN BY J. BAYNE DATE 8/13
CHECKED BY D. RAGAN DATE 10/13
DWG. NO. 27

REVISIONS						SHEET NO.
NO.	BY	DATE	NO.	BY	DATE	S-27
1			3			TOTAL SHEETS
2			4			54-1

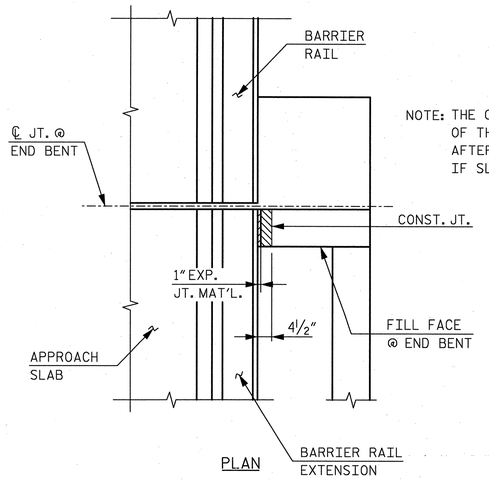

PLAN

NOTE: THE CONCRETE IN THE SHADED AREA OF THE WING SHALL BE POURED AFTER THE BARRIER RAIL IS CAST IF SLIP FORMING IS USED.

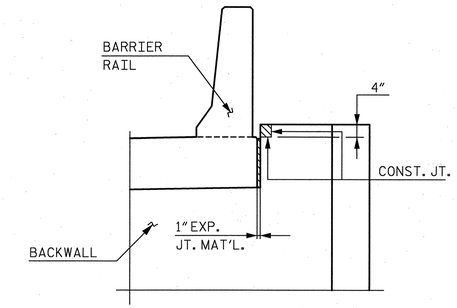

ELEVATION

BLOCKOUT IN WINGWALL

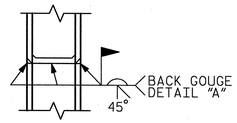

✳ PILE VERTICAL

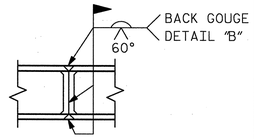

✳ PILE HORIZONTAL OR VERTICAL

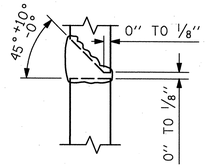

DETAIL "A"

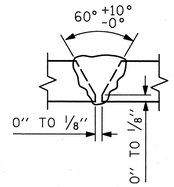

DETAIL "B"

✳ POSITION OF PILE DURING WELDING.

PILE SPLICE DETAILS

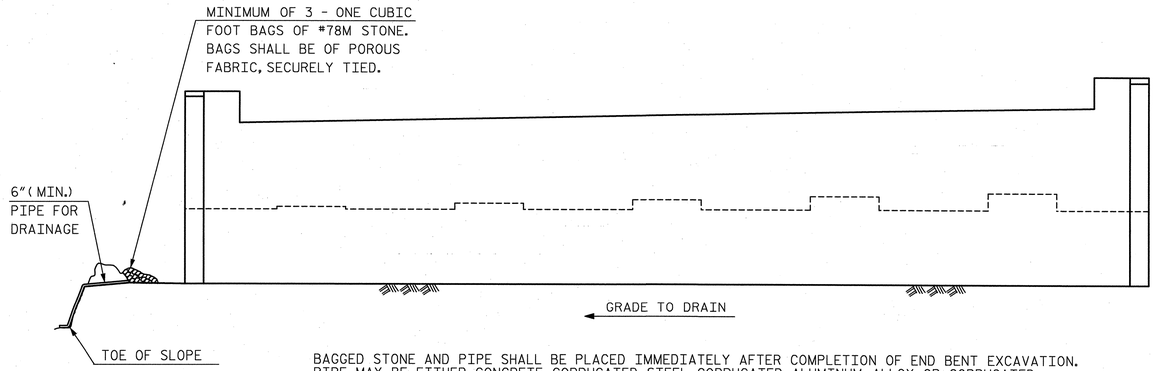

BAGGED STONE AND PIPE SHALL BE PLACED IMMEDIATELY AFTER COMPLETION OF END BENT EXCAVATION. PIPE MAY BE EITHER CONCRETE, CORRUGATED STEEL, CORRUGATED ALUMINUM ALLOY OR CORRUGATED PLASTIC. PERFORATED PIPE WILL NOT BE ALLOWED.

BAGGED STONE SHALL REMAIN IN PLACE UNTIL THE ENGINEER DIRECTS THAT IT BE REMOVED. THE CONTRACTOR SHALL REMOVE AND DISPOSE OF SILT ACCUMULATIONS AT BAGGED STONE WHEN SO DIRECTED BY THE ENGINEER. BAGS SHALL BE REMOVED AND REPLACED WHENEVER THE ENGINEER DETERMINES THAT THEY HAVE DETERIORATED AND LOST THEIR EFFECTIVENESS.

NO SEPARATE PAYMENT WILL BE MADE FOR THIS WORK AND THE ENTIRE COST OF THIS WORK SHALL BE INCLUDED IN THE UNIT CONTRACT PRICE FOR THE SEVERAL PAY ITEMS.

TEMPORARY DRAINAGE AT END BENT 1

BAR TYPES

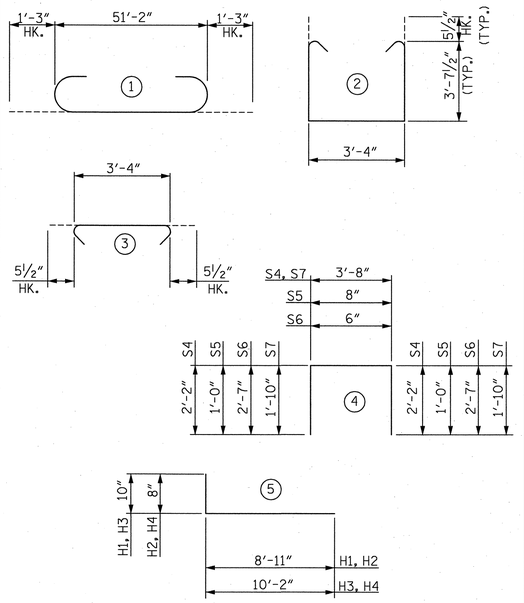

ALL BAR DIMENSIONS ARE OUT TO OUT

BILL OF REINFORCING

END BENT 1

BAR	NO.	SIZE	TYPE	LENGTH	WEIGHT
B1	10	9	1	53'-8"	1,825
B2	40	4	STR.	26'-10"	717
B3	13	4	STR.	3'-8"	32
B4	20	4	STR.	3'-4"	45
H1	16	5	5	9'-9"	163
H2	10	4	5	9'-7"	64
H3	21	5	5	11'-0"	241
H4	11	4	5	10'-10"	80
K1	20	4	STR.	26'-10"	358
V1	92	5	STR.	8'-2"	784
V2	26	5	STR.	9'-10"	267
V3	30	5	STR.	10'-8"	334
S1	124	5	2	11'-6"	1,487
S2	124	5	3	4'-3"	550
S3	44	4	6	6'-5"	189
S4	14	4	4	8'-0"	75
S5	46	4	4	2'-8"	82
S6	4	4	4	5'-8"	15
S7	14	4	4	7'-4"	69

QUANTITIES

REINFORCING STEEL	LBS.	7,377
CLASS "A" CONCRETE BREAKDOWN		
POUR 1 - CAP & BOT. OF WINGS	CU. YDS.	36.2
POUR 2 - TOP OF WINGS & BACKWALL	CU. YDS.	14.1
TOTAL	CU. YDS.	50.3
HP 12x53 STEEL PILES	NO.	11
	LIN. FT.	412.5

PROJECT NO. U-2525B

GUILFORD COUNTY

STATION: POT 14+99.25 -L-

SHEET 3 OF 3

STATE OF NORTH CAROLINA
DEPARTMENT OF TRANSPORTATION
RALEIGH

SUBSTRUCTURE

END BENT 1

NORTH CAROLINA PROFESSIONAL SEAL 27812 ENGINEER DAVID W. HAWKINS 12/20/13

NORTH CAROLINA PROFESSIONAL SEAL 12916 ENGINEER PAUL J. BARBER 12/20/13

HNTB NORTH CAROLINA, P.C.
NC License No. C-1554
343 E. Six Forks Rd., Suite 200, Raleigh, N.C. 27609

DRAWN BY J. BAYNE DATE 8/13
CHECKED BY D. RAGAN DATE 10/13

DWG. NO. 28

REVISIONS						SHEET NO.
NO.	BY	DATE	NO.	BY	DATE	S-88
1			3			TOTAL SHEETS
2			4			54

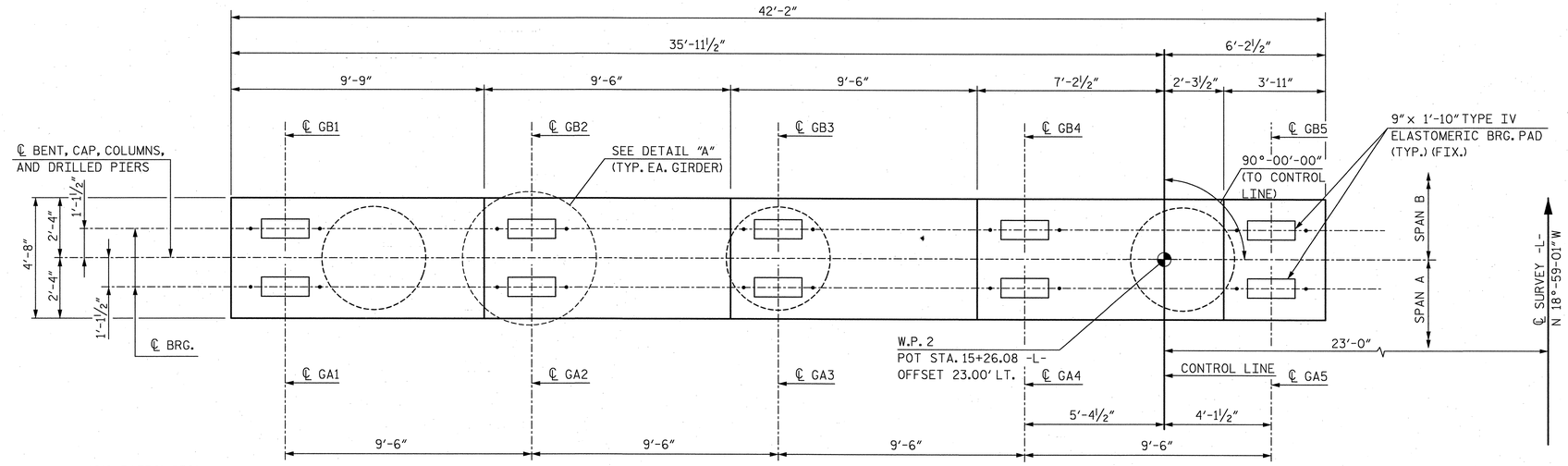

PLAN

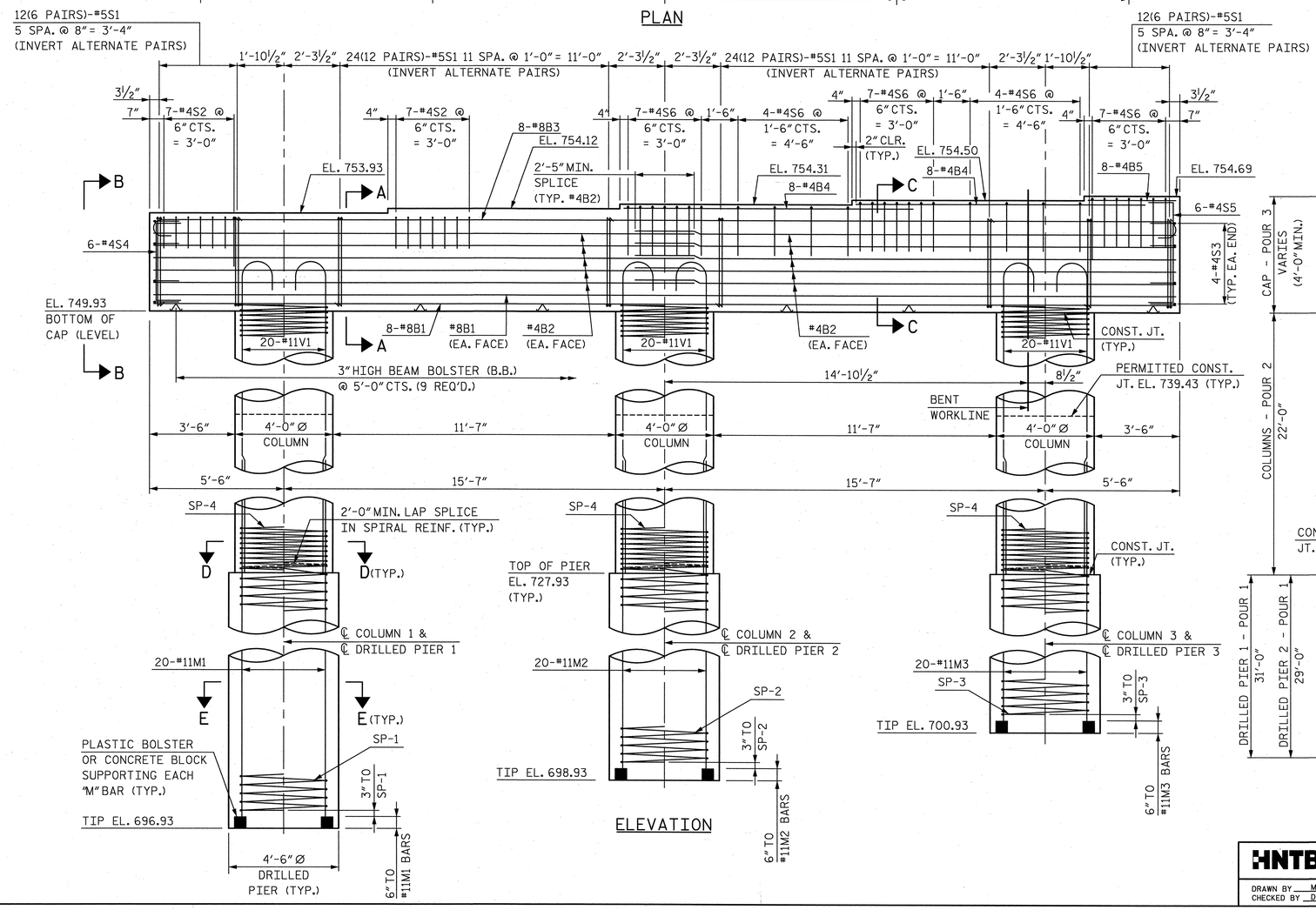

ELEVATION

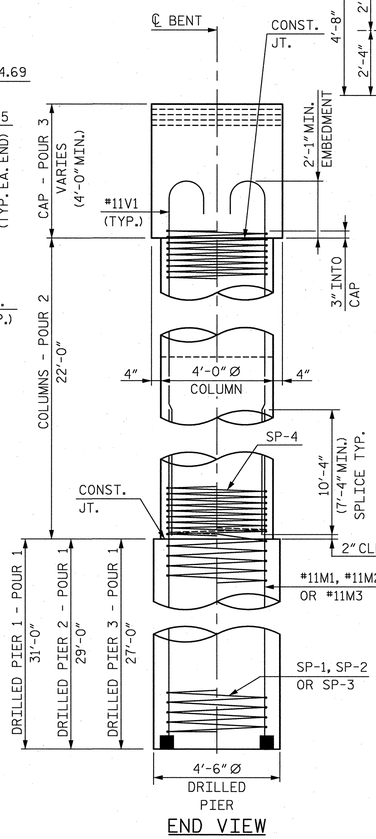

END VIEW

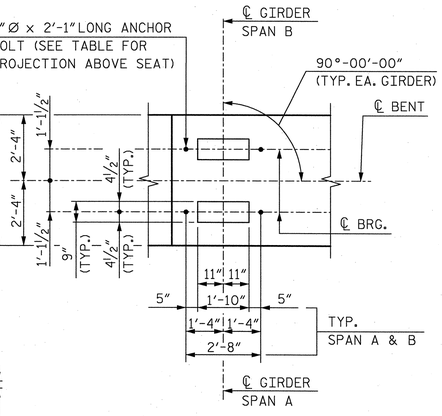

DETAIL A

NOTES:

STIRRUPS IN CAP MAY BE SHIFTED AS NECESSARY TO CLEAR ANCHOR BOLTS.

HOOKS ON "V" BARS MAY BE TURNED AS NECESSARY FOR PLACING REINFORCING STEEL.

ALL STEEL IN THE DRILLED PIERS IS INCLUDED IN THE PAY ITEMS FOR "REINFORCING STEEL" AND "SPIRAL COLUMN REINFORCING STEEL".

THE LOCATION OF THE CONSTRUCTION JOINT IN THE DRILLED PIER IS BASED ON AN APPROXIMATE GROUND LINE ELEVATION. IF THE CONSTRUCTION JOINT IS ABOVE THE ACTUAL GROUND LINE ELEVATION, THE CONTRACTOR SHALL PLACE THE CONSTRUCTION JOINT 1'-0" BELOW THE GROUND LINE.

ANCHOR BOLT PROJECTION TABLE			
SPAN A GIRDERS		SPAN B GIRDERS	
GIRDER	PROJECTION	GIRDER	PROJECTION
GA1-GA5	6"	GB1-GB5	7"

NORTH CAROLINA PROFESSIONAL SEAL 27812 ENGINEER DAVID W. HAWKINS 12/20/13

NORTH CAROLINA PROFESSIONAL SEAL 12916 ENGINEER PAUL J. BARBER 12/20/13

PROJECT NO. U-2525B

GUILFORD COUNTY

STATION: POT 14+99.25 -L-

SHEET 1 OF 2

STATE OF NORTH CAROLINA
DEPARTMENT OF TRANSPORTATION
RALEIGH

SUBSTRUCTURE

BENT 1

HNTB NORTH CAROLINA, P.C.
NC License No. C-554
343 E. Six Forks Rd., Suite 200, Raleigh, N.C. 27609

DRAWN BY M. WRIGHT DATE 7/13
CHECKED BY D. RAGAN DATE 8/13
DWG. NO. 29

REVISIONS						SHEET NO.
NO.	BY	DATE	NO.	BY	DATE	S-29
1			3			TOTAL SHEETS
2			4			54

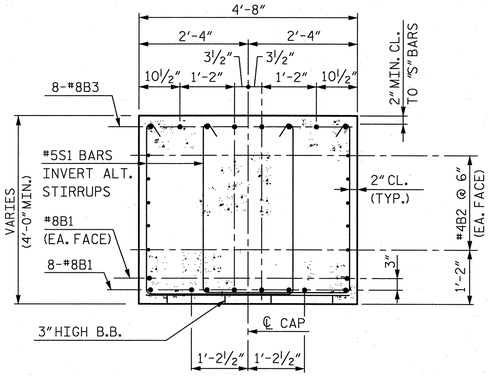

SECTION A-A

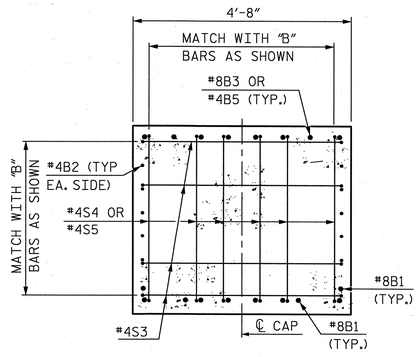

VIEW B-B

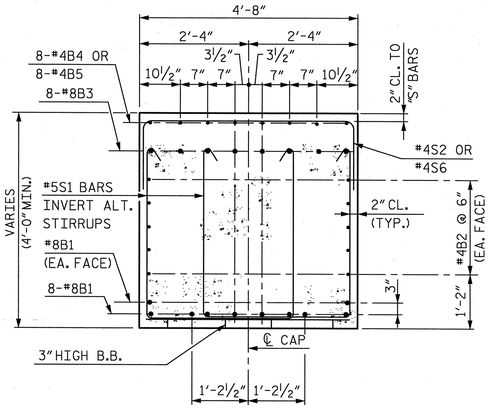

SECTION C-C

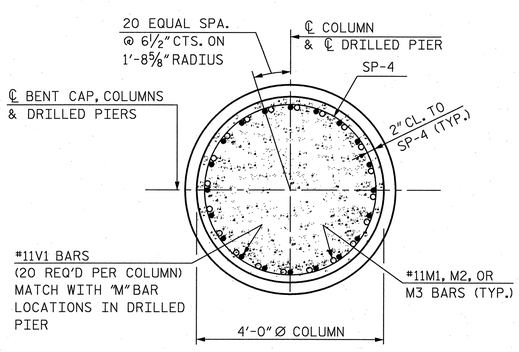

SECTION D-D

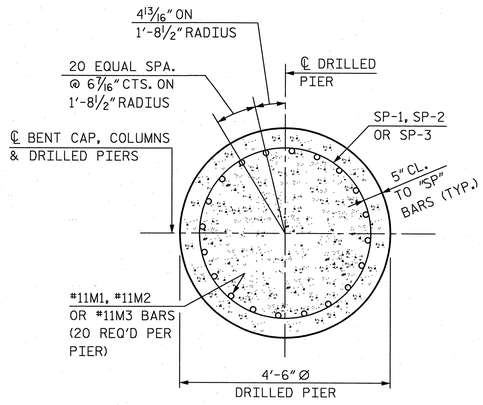

SECTION E-E

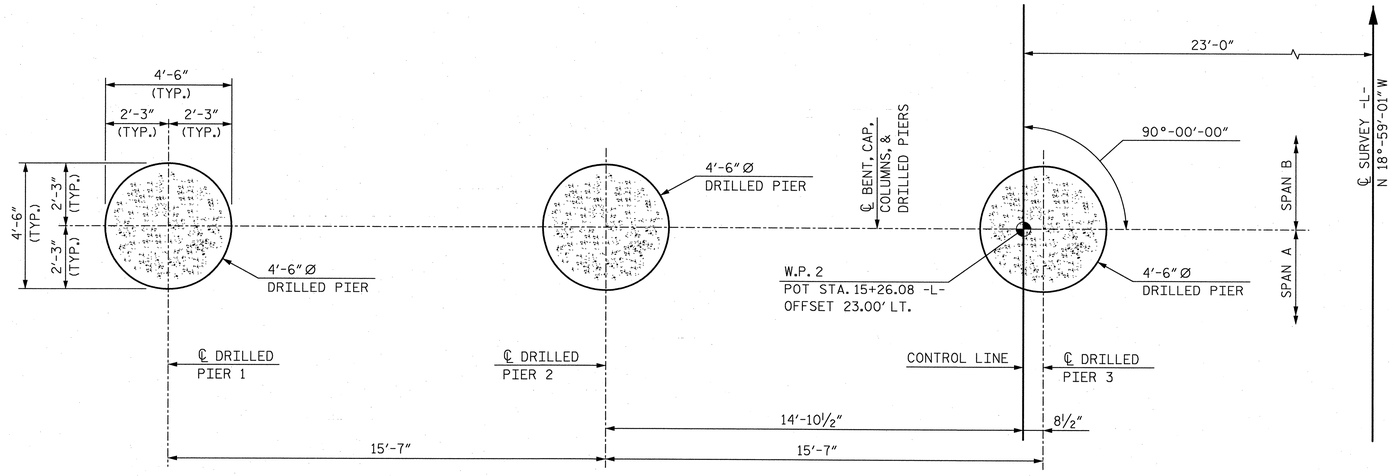

DRILLED PIER PLAN

NOTE: SEE SECTION E-E FOR TYPICAL DRILLED PIER REINFORCING.

BAR TYPES

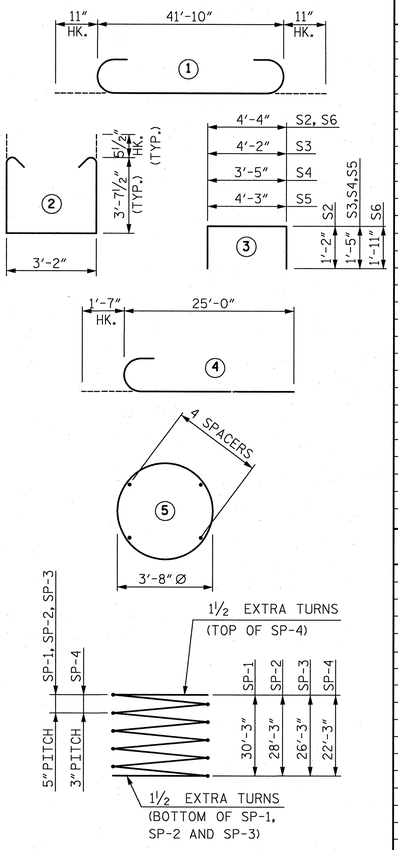

ALL BAR DIMENSIONS ARE OUT TO OUT

BILL OF REINFORCING

BENT 1

BAR	NO.	SIZE	TYPE	LENGTH	WEIGHT
B1	10	8	STR.	41'-10"	1,117
B2	20	4	STR.	22'-2"	296
B3	8	8	1	43'-8"	933
B4	16	4	STR.	11'-11"	127
B5	8	4	STR.	3'-7"	19
M1	20	11	STR.	41'-0"	4,357
M2	20	11	STR.	39'-0"	4,144
M3	20	11	STR.	37'-0"	3,932
S1	72	5	2	11'-4"	851
S2	14	4	3	6'-8"	62
S3	8	4	3	7'-0"	37
S4	6	4	3	6'-3"	25
S5	6	4	3	7'-1"	28
S6	29	4	3	8'-2"	158
V1	60	11	4	26'-7"	8,474
SP-1	1	*	5	844'-1"	880
SP-2	1	*	5	789'-6"	823
SP-3	1	*	5	725'-0"	767
SP-4	3	**	5	1,030'-11"	2,066

QUANTITIES

REINFORCING STEEL	LBS.	24,560
SPIRAL COLUMN REINFORCING STEEL	LBS.	4,536
CLASS A CONCRETE		
COLUMN POUR 2	CU. YDS.	30.7
CAP POUR 3	CU. YDS.	31.5
TOTAL	CU. YDS.	62.2
4'-6" Ø DRILLED PIERS	NO.	3
DRILLED PIERS, NOT IN SOIL	FEET	26.0
DRILLED PIERS, IN SOIL	FEET	61.0
DRILLED PIER CONCRETE POUR 1	CU. YDS.	51.2

NOTE: THE CONTRACTOR'S ATTENTION IS CALLED TO THE FACT THAT THE LONGITUDINAL REINFORCEMENT FOR THE DRILLED PIERS IS DETAILED WITH 3 FEET OF EXTRA LENGTH.

* THE SP-1, SP-2, SP-3 SPIRAL REINFORCING STEEL SHALL BE W31 OR D31 COLD DRAWN WIRE OR #5 PLAIN OR DEFORMED BAR.

** THE SP-4 SPIRAL REINFORCING STEEL SHALL BE W20 OR D20 COLD DRAWN WIRE OR #4 PLAIN OR DEFORMED BAR.

PROJECT NO. U-2525B

GUILFORD COUNTY

STATION: POT 14+99.25 -L-

SHEET 2 OF 2

STATE OF NORTH CAROLINA
DEPARTMENT OF TRANSPORTATION
RALEIGH

SUBSTRUCTURE

BENT 1

NORTH CAROLINA PROFESSIONAL SEAL 27812 ENGINEER DAVID W. HAWKINS 12/20/13

NORTH CAROLINA PROFESSIONAL SEAL 12916 ENGINEER PAUL J. BARBER 12/18/13

HNTB NORTH CAROLINA, P.C.
NC License No. C-1554
343 E. Six Forks Rd., Suite 200, Raleigh, N.C. 27609

DRAWN BY M. WRIGHT DATE 7/13
CHECKED BY D. RAGAN DATE 8/13

DWG. NO. 30

REVISIONS						SHEET NO.
NO.	BY	DATE	NO.	BY	DATE	S-30
1			3			TOTAL SHEETS
2			4			54

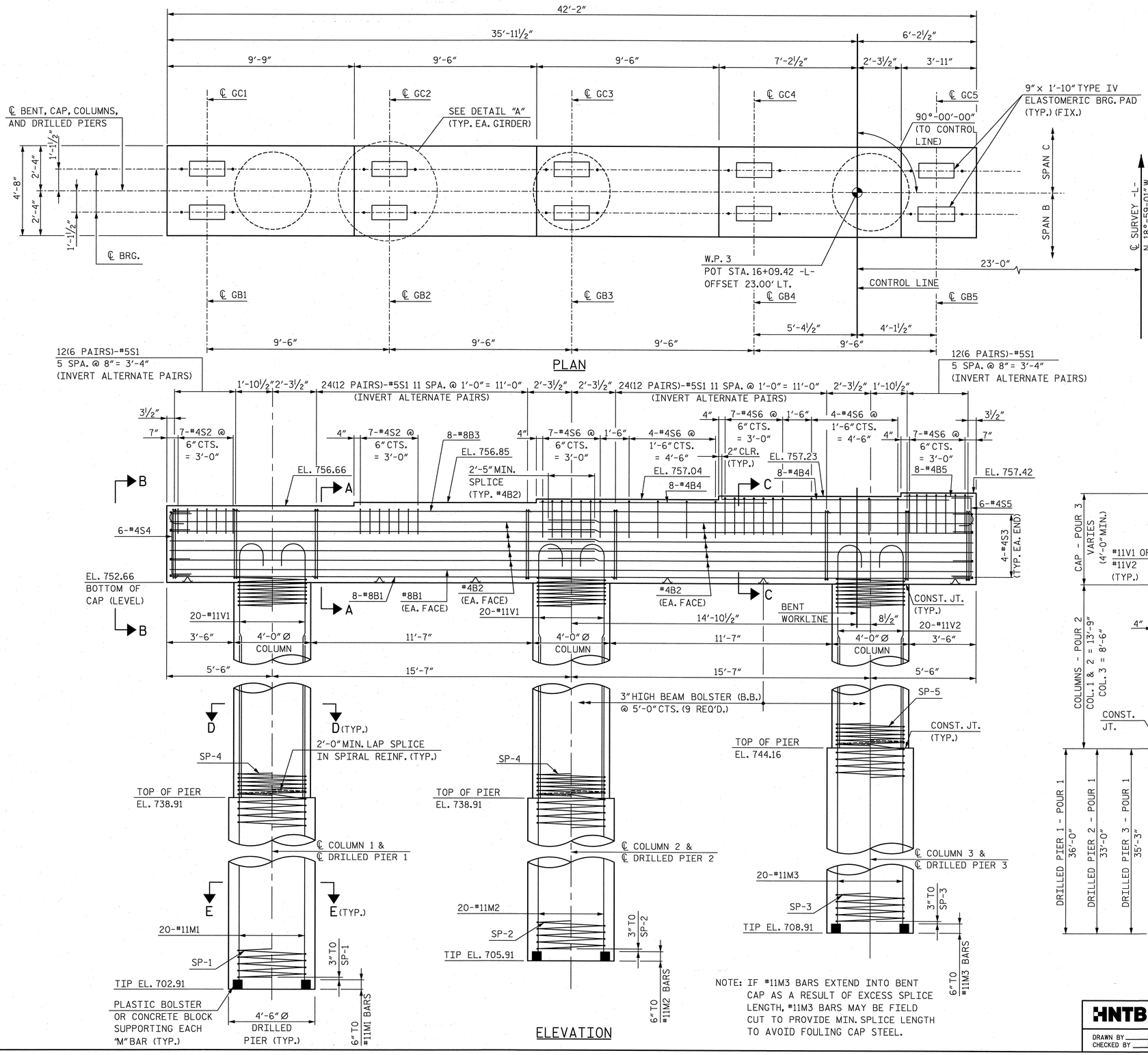

NOTES:

STIRRUPS IN CAP MAY BE SHIFTED AS NECESSARY TO CLEAR ANCHOR BOLTS.

HOOKS ON "V" BARS MAY BE TURNED AS NECESSARY FOR PLACING REINFORCING STEEL.

ALL STEEL IN THE DRILLED PIERS IS INCLUDED IN THE PAY ITEMS FOR "REINFORCING STEEL" AND "SPIRAL COLUMN REINFORCING STEEL".

THE LOCATION OF THE CONSTRUCTION JOINT IN THE DRILLED PIER IS BASED UPON THE UNCLASSIFIED STRUCTURE EXCAVATION DETAIL PROVIDED ON "FOUNDATION LAYOUT" SHEET. IF THE CONSTRUCTION JOINT IS ABOVE THE GRADED GROUND LINE ELEVATION, THE CONTRACTOR SHALL PLACE THE CONSTRUCTION JOINT 1'-0" BELOW THE GROUND LINE.

ANCHOR BOLT PROJECTION TABLE			
SPAN B GIRDERS		SPAN C GIRDERS	
GIRDER	PROJECTION	GIRDER	PROJECTION
GB1-GB5	6"	GC1-GC5	7"

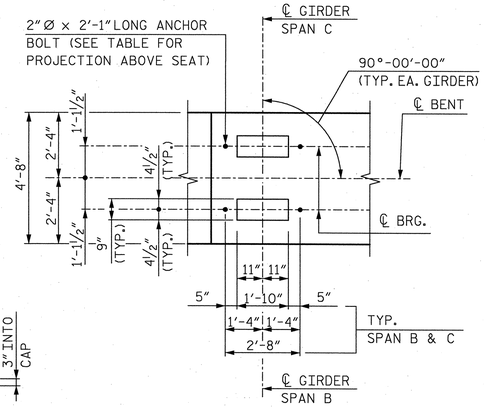

DETAIL A

NORTH CAROLINA PROFESSIONAL SEAL 27812 ENGINEER DAVID W. HAWKINS 12/20/13

NORTH CAROLINA PROFESSIONAL SEAL 12916 ENGINEER PAUL J. BARBER 12/20/13

PROJECT NO. U-2525B

GUILFORD COUNTY

STATION: POT 14+99.25 -L-

SHEET 1 OF 2

STATE OF NORTH CAROLINA
DEPARTMENT OF TRANSPORTATION
RALEIGH

SUBSTRUCTURE

BENT 2

HNTB NORTH CAROLINA, P.C.
NC License No. C-1554
343 E. Six Forks Rd., Suite 200, Raleigh, N.C. 27609

DRAWN BY M. WRIGHT DATE 7/13
CHECKED BY P. BARBER DATE 10/13

DWG. NO. 31

REVISIONS						SHEET NO.
NO.	BY	DATE	NO.	BY	DATE	S-31
1			3			TOTAL SHEETS
2			4			541

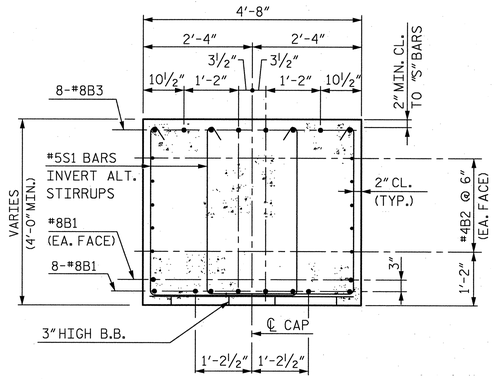

SECTION A-A

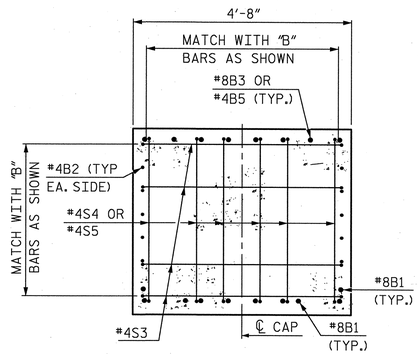

VIEW B-B

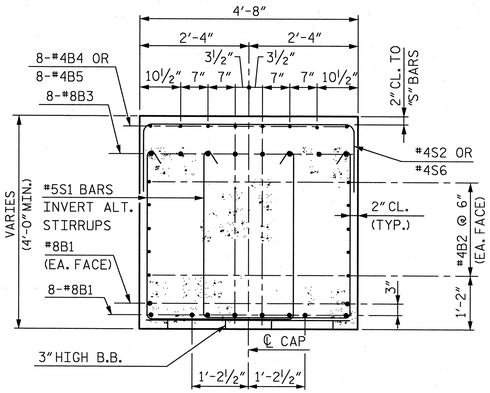

SECTION C-C

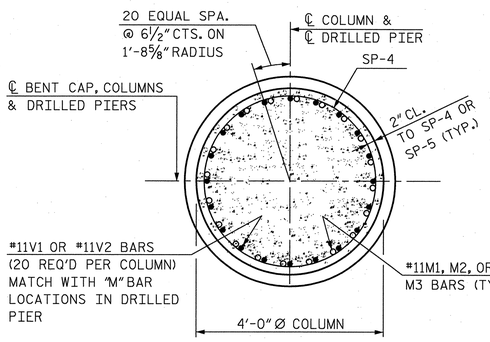

SECTION D-D

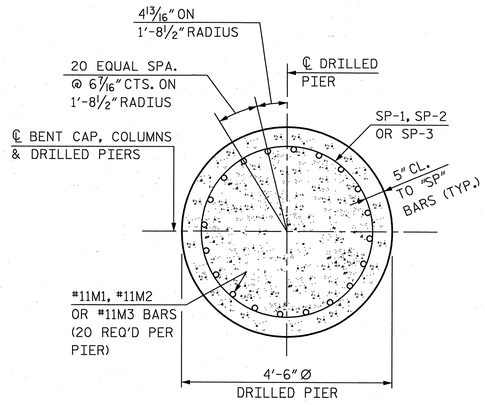

SECTION E-E

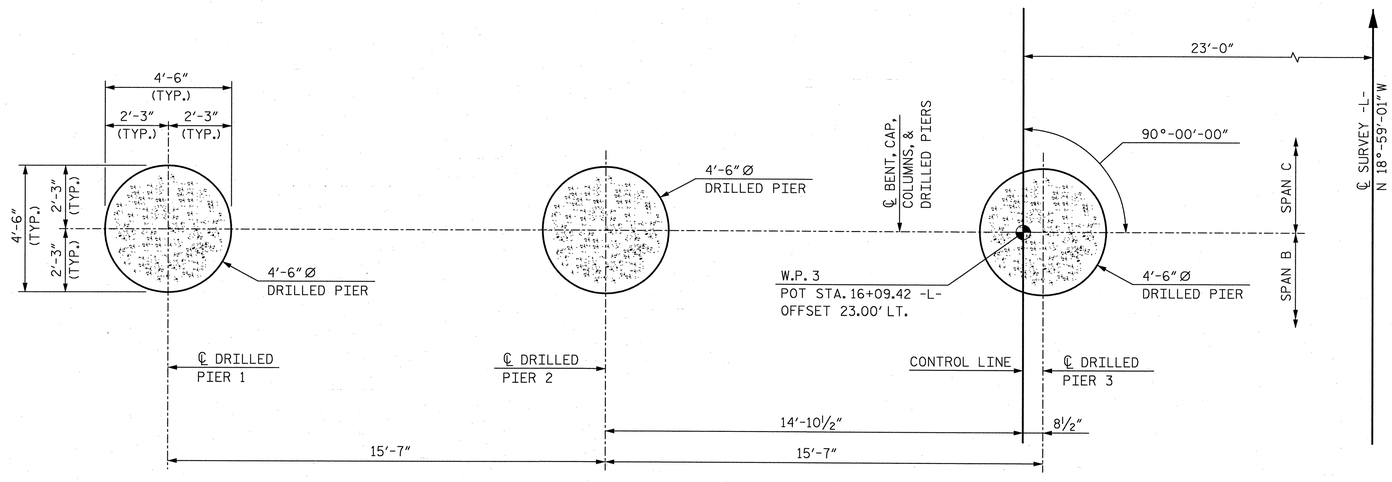

DRILLED PIER PLAN

NOTE: SEE SECTION E-E FOR TYPICAL DRILLED PIER REINFORCING.

BAR TYPES

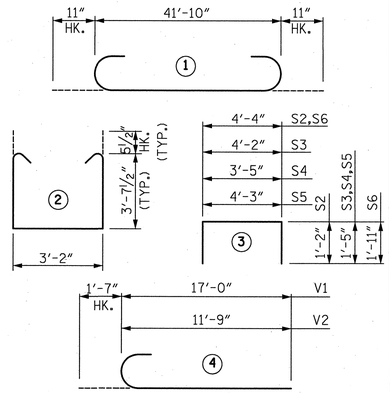

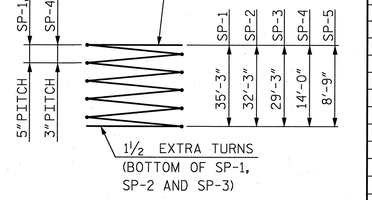

ALL BAR DIMENSIONS ARE OUT TO OUT

BILL OF REINFORCING

BENT 2

BAR	NO.	SIZE	TYPE	LENGTH	WEIGHT
B1	10	8	STR.	41'-10"	1,117
B2	20	4	STR.	22'-2"	296
B3	8	8	1	43'-8"	933
B4	16	4	STR.	11'-11"	127
B5	8	4	STR.	3'-7"	19
M1	20	11	STR.	46'-0"	4,888
M2	20	11	STR.	43'-0"	4,569
M3	20	11	STR.	45'-3"	4,808
S1	72	5	2	11'-4"	851
S2	14	4	3	6'-8"	62
S3	8	4	3	7'-0"	37
S4	6	4	3	6'-3"	25
S5	6	4	3	7'-1"	28
S6	29	4	3	8'-2"	158
V1	40	11	4	18'-7"	3,949
V2	20	11	4	13'-4"	1,417
SP-1	1	*	5	980'-5"	1,023
SP-2	1	*	5	898'-7"	937
SP-3	1	*	5	816'-9"	852
SP-4	2	**	5	657'-0"	878
SP-5	1	**	5	417'-10"	279

QUANTITIES

REINFORCING STEEL	LBS.	23,284
SPIRAL COLUMN REINFORCING STEEL	LBS.	3,969
CLASS A CONCRETE		
COLUMN POUR 2	CU. YDS.	16.8
CAP POUR 3	CU. YDS.	31.5
TOTAL	CU. YDS.	48.3
4'-6" Ø DRILLED PIERS	NO.	3
DRILLED PIERS, NOT IN SOIL	FEET	16.0
DRILLED PIERS, IN SOIL	FEET	88.25
DRILLED PIER CONCRETE POUR 1	CU. YDS.	61.4

NOTE: THE CONTRACTOR'S ATTENTION IS CALLED TO THE FACT THAT THE LONGITUDINAL REINFORCEMENT FOR THE DRILLED PIERS IS DETAILED WITH 3 FEET OF EXTRA LENGTH.

* THE SP-1, SP-2, SP-3 SPIRAL REINFORCING STEEL SHALL BE W31 OR D31 COLD DRAWN WIRE OR #5 PLAIN OR DEFORMED BAR.

** THE SP-4 & SP-5 SPIRAL REINFORCING STEEL SHALL BE W20 OR D20 COLD DRAWN WIRE OR #4 PLAIN OR DEFORMED BAR.

PROJECT NO. U-2525B

GUILFORD COUNTY

STATION: POT 14+99.25 -L-

SHEET 2 OF 2

STATE OF NORTH CAROLINA
DEPARTMENT OF TRANSPORTATION
RALEIGH

SUBSTRUCTURE

BENT 2

NORTH CAROLINA PROFESSIONAL SEAL 27812 ENGINEER DAVID W. HAWKINS 12/20/13

NORTH CAROLINA PROFESSIONAL SEAL 12916 ENGINEER PAUL J. BARBER 12/20/13

HNTB NORTH CAROLINA, P.C.
NC License No. C-1554
343 E. Six Forks Rd., Suite 200, Raleigh, N.C. 27609

DRAWN BY M. WRIGHT DATE 7/13
CHECKED BY P. BARBER DATE 10/13

DWG. NO. 32

REVISIONS						SHEET NO.
NO.	BY	DATE	NO.	BY	DATE	S-32
1			3			TOTAL SHEETS
2			4			541

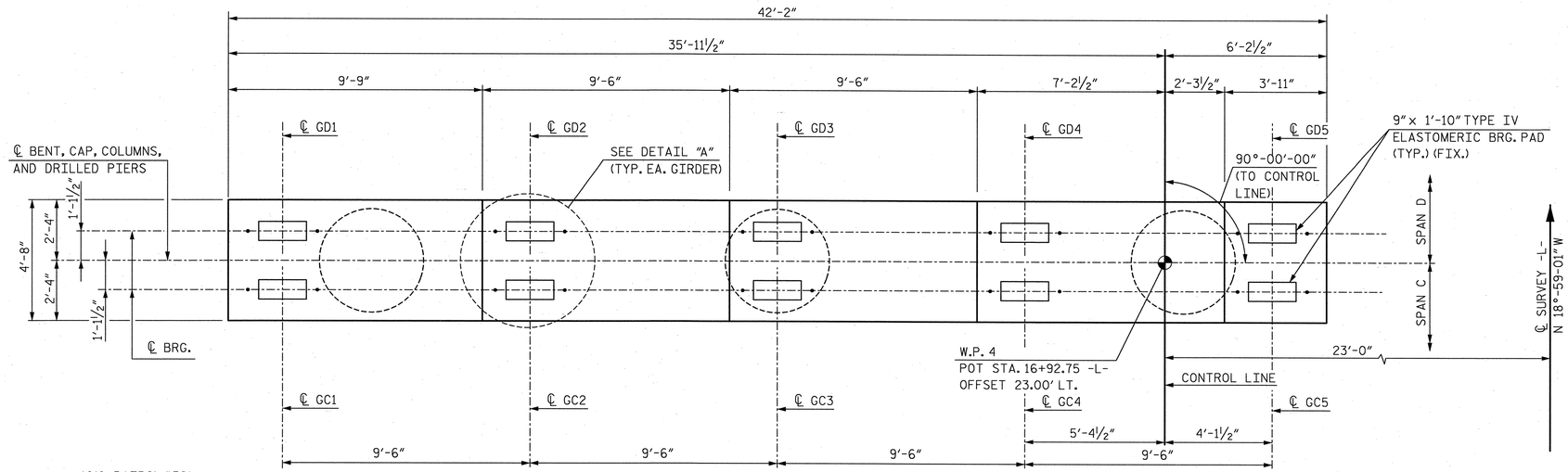

PLAN

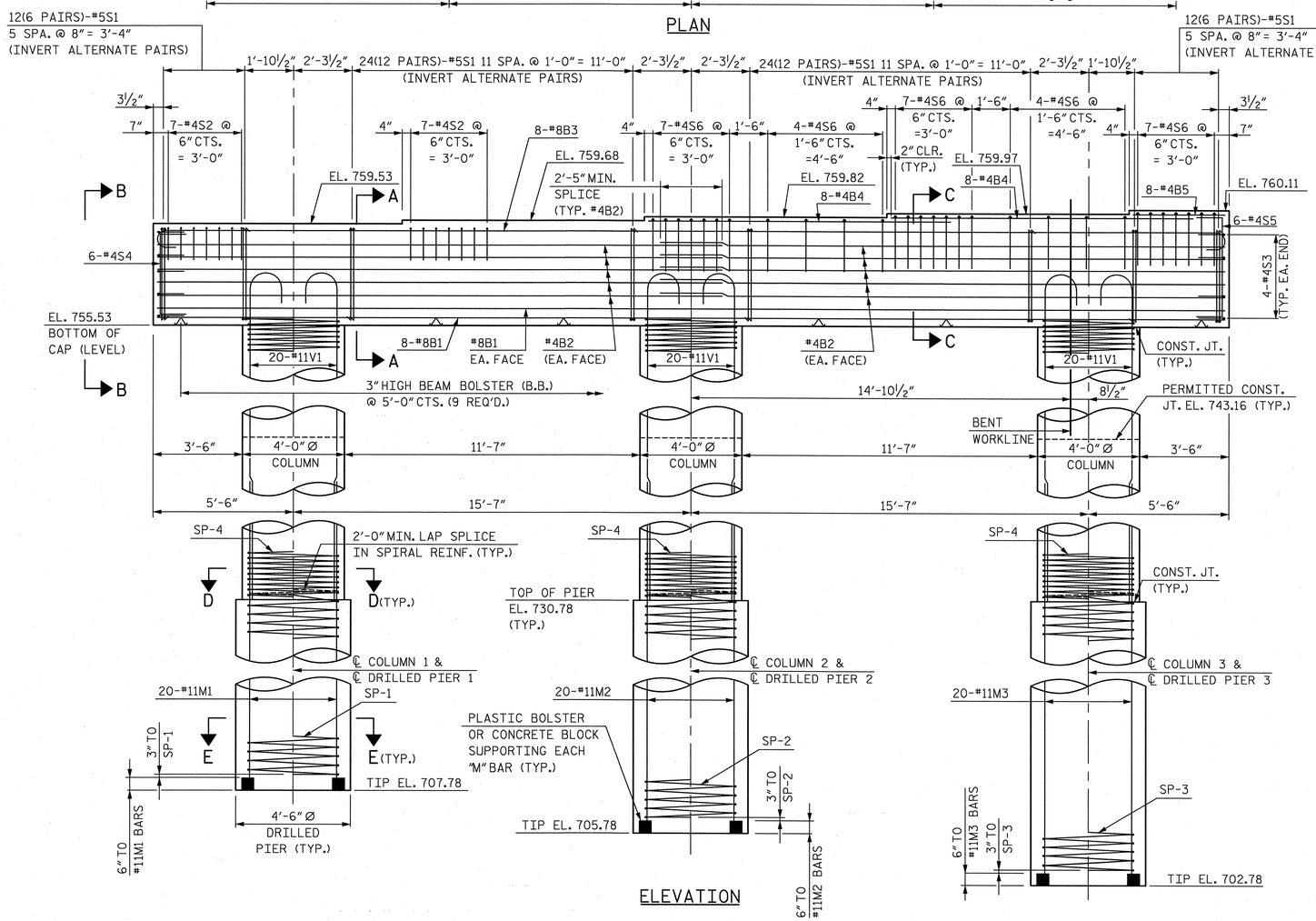

ELEVATION

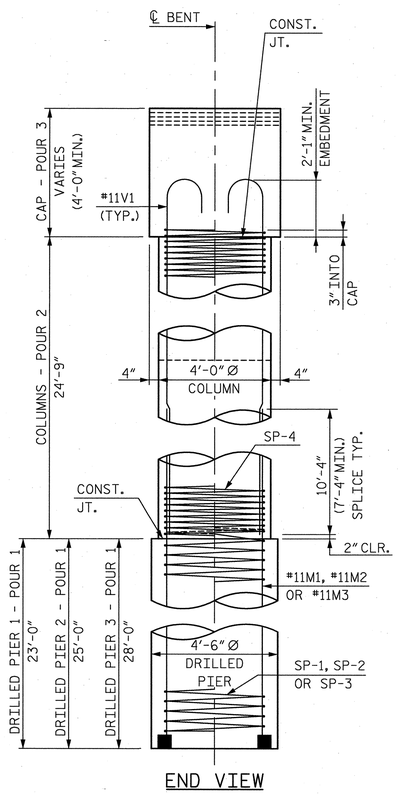

END VIEW

NOTES:

STIRRUPS IN CAP MAY BE SHIFTED AS NECESSARY TO CLEAR ANCHOR BOLTS.

HOOKS ON "V" BARS MAY BE TURNED AS NECESSARY FOR PLACING REINFORCING STEEL.

ALL STEEL IN THE DRILLED PIERS IS INCLUDED IN THE PAY ITEMS FOR "REINFORCING STEEL" AND "SPIRAL COLUMN REINFORCING STEEL".

THE LOCATION OF THE CONSTRUCTION JOINT IN THE DRILLED PIER IS BASED UPON A FUTURE RAILROAD DITCH CONDITION. EXCAVATION/BACKFILL REQUIRED TO LOCATE THE PIER/COLUMN CONSTRUCTION JOINT SHALL BE PAID FOR UNDER THE PAY ITEM "FOUNDATION EXCAVATION" ON A LUMP SUM BASIS.

ANCHOR BOLT PROJECTION TABLE			
SPAN C GIRDERS		SPAN D GIRDERS	
GIRDER	PROJECTION	GIRDER	PROJECTION
GC1-GC5	6"	GD1-GD5	7"

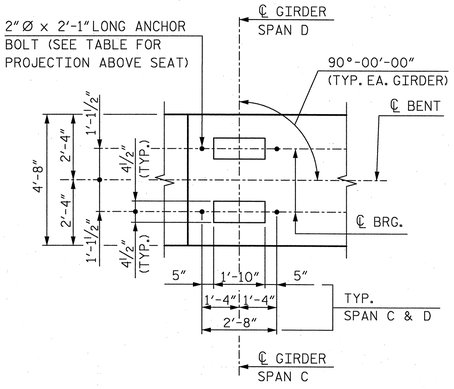

DETAIL A

NORTH CAROLINA PROFESSIONAL SEAL 27812 ENGINEER DAVID W. HAWKINS 12/20/13

NORTH CAROLINA PROFESSIONAL SEAL 12916 ENGINEER PAUL J. BARBER 12/20/13

PROJECT NO. U-2525B

GUILFORD **COUNTY**

STATION: POT 14+99.25 -L-

SHEET 1 OF 2

STATE OF NORTH CAROLINA
DEPARTMENT OF TRANSPORTATION
RALEIGH

SUBSTRUCTURE

BENT 3

HNTB NORTH CAROLINA, P.C.
NC License No. C-1554
343 E. Six Forks Rd., Suite 200, Raleigh, N.C. 27609

DRAWN BY M. WRIGHT DATE 7/13
CHECKED BY P. BARBER DATE 10/13
DWG. NO. 33

REVISIONS						SHEET NO.
NO.	BY	DATE	NO.	BY	DATE	S-33
1			3			TOTAL SHEETS
2			4			34-1

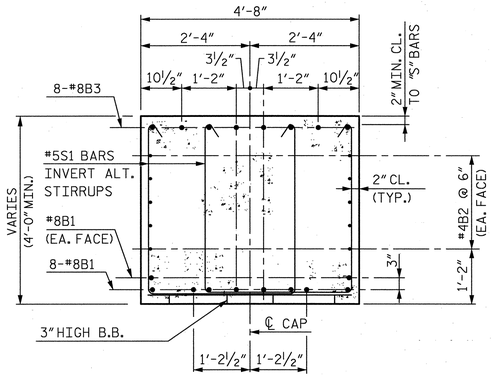

SECTION A-A

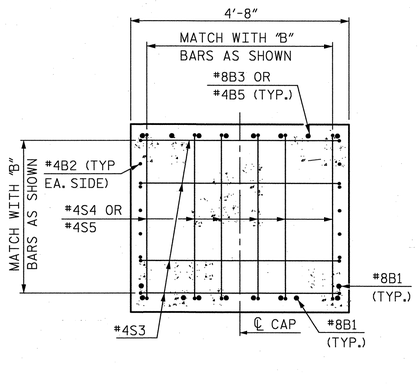

VIEW B-B

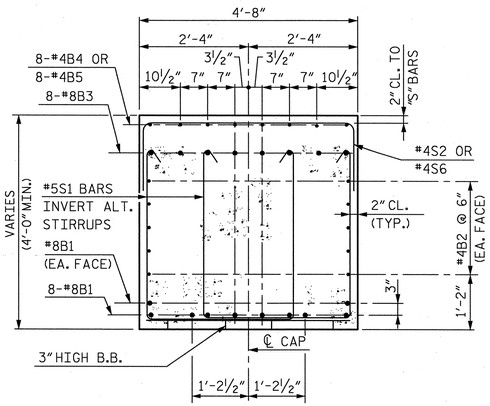

SECTION C-C

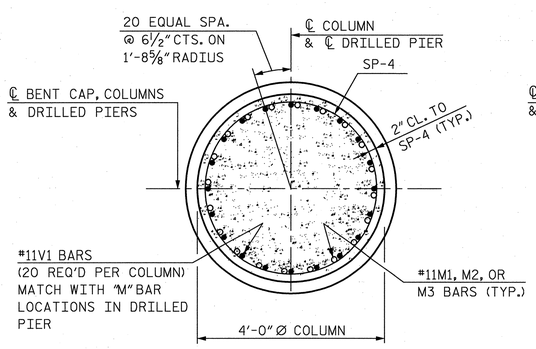

SECTION D-D

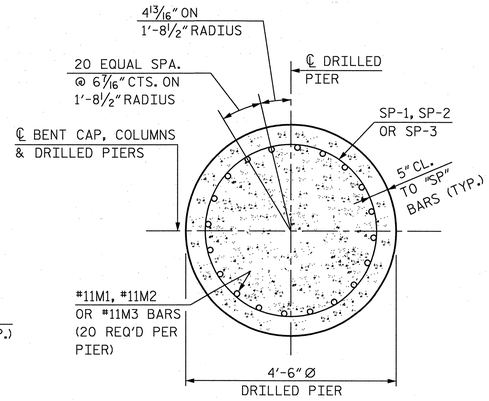

SECTION E-E

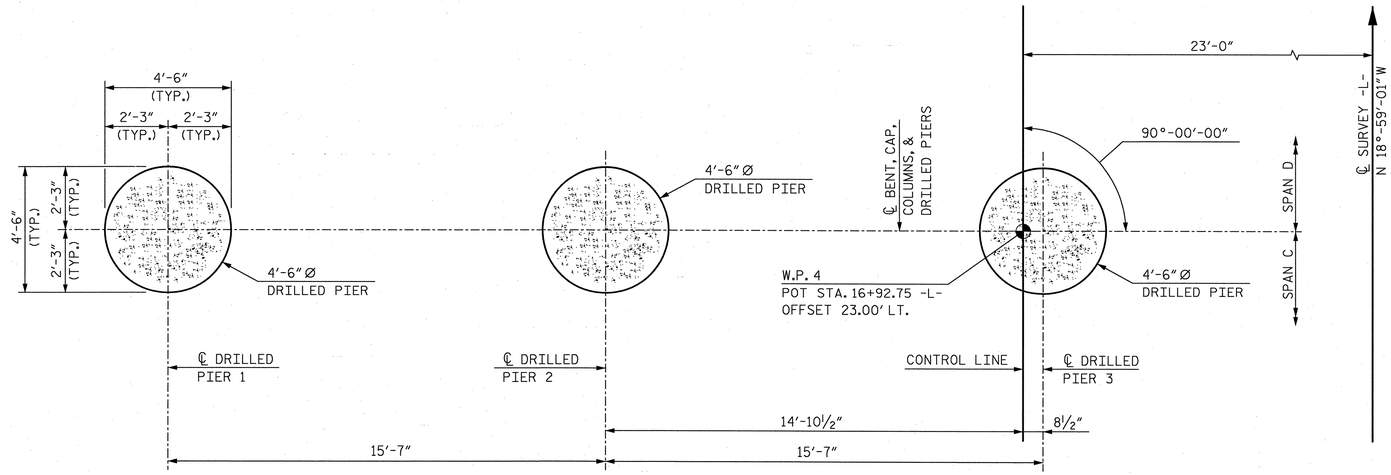

DRILLED PIER PLAN

NOTE: SEE SECTION E-E FOR TYPICAL DRILLED PIER REINFORCING.

BAR TYPES

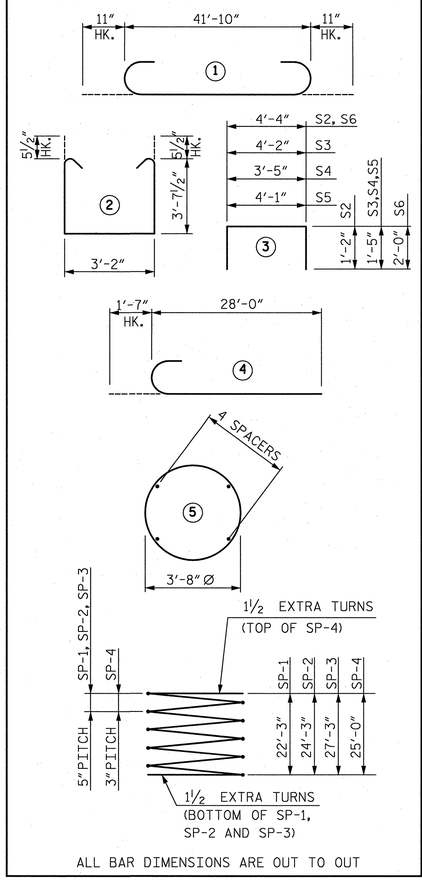

ALL BAR DIMENSIONS ARE OUT TO OUT

NOTE: THE CONTRACTOR'S ATTENTION IS CALLED TO THE FACT THAT THE LONGITUDINAL REINFORCEMENT FOR THE DRILLED PIERS IS DETAILED WITH 3 FEET OF EXTRA LENGTH.

BILL OF REINFORCING

BENT 3

BAR	NO.	SIZE	TYPE	LENGTH	WEIGHT
B1	10	8	STR.	41'-10"	1,117
B2	20	4	STR.	22'-2"	296
B3	8	8	1	43'-8"	933
B4	16	4	STR.	11'-11"	127
B5	8	4	STR.	3'-7"	19
M1	20	11	STR.	33'-0"	3,507
M2	20	11	STR.	35'-0"	3,719
M3	20	11	STR.	38'-0"	4,038
S1	72	5	2	11'-4"	851
S2	14	4	3	6'-8"	62
S3	8	4	3	7'-0"	37
S4	6	4	3	6'-3"	25
S5	6	4	3	6'-11"	28
S6	29	4	3	8'-4"	161
V1	60	11	4	29'-7"	9,431
SP-1	1	*	5	625'-11"	653
SP-2	1	*	5	680'-5"	710
SP-3	1	*	5	762'-3"	795
SP-4	3	**	5	1,158'-3"	2,321

QUANTITIES

REINFORCING STEEL	LBS.	24,351
SPIRAL COLUMN REINFORCING STEEL	LBS.	4,479
CLASS A CONCRETE		
COLUMN POUR 2	CU. YDS.	34.6
CAP POUR 3	CU. YDS.	31.0
TOTAL	CU. YDS.	65.6
FOUNDATION EXCAVATION FOR BENT 3 AT STA. 14+99.25	LUMP SUM	LUMP SUM
4'-6" Ø DRILLED PIERS	NO.	3
DRILLED PIERS, NOT IN SOIL	FEET	22.0
DRILLED PIERS, IN SOIL	FEET	54.0
DRILLED PIER CONCRETE POUR 1	CU. YDS.	44.8

* THE SP-1, SP-2, SP-3 SPIRAL REINFORCING STEEL SHALL BE W31 OR D31 COLD DRAWN WIRE OR #5 PLAIN OR DEFORMED BAR.

** THE SP-4 SPIRAL REINFORCING STEEL SHALL BE W20 OR D20 COLD DRAWN WIRE OR #4 PLAIN OR DEFORMED BAR.

PROJECT NO. U-2525B

GUILFORD COUNTY

STATION: POT 14+99.25 -L-

SHEET 2 OF 2

STATE OF NORTH CAROLINA
DEPARTMENT OF TRANSPORTATION
RALEIGH

SUBSTRUCTURE

BENT 3

NORTH CAROLINA PROFESSIONAL SEAL 27812 ENGINEER DAVID W. HAWKINS 12/20/13

NORTH CAROLINA PROFESSIONAL SEAL 12916 ENGINEER PAUL J. BARBER 12/20/13

HNTB NORTH CAROLINA, P.C.
NC License No. C-554
343 E. Six Forks Rd., Suite 200, Raleigh, N.C. 27609

DRAWN BY M. WRIGHT DATE 7/13
CHECKED BY P. BARBER DATE 10/13

DWG. NO. 34

REVISIONS						SHEET NO.
NO.	BY	DATE	NO.	BY	DATE	S-3A
1			3			TOTAL SHEETS
2			4			54

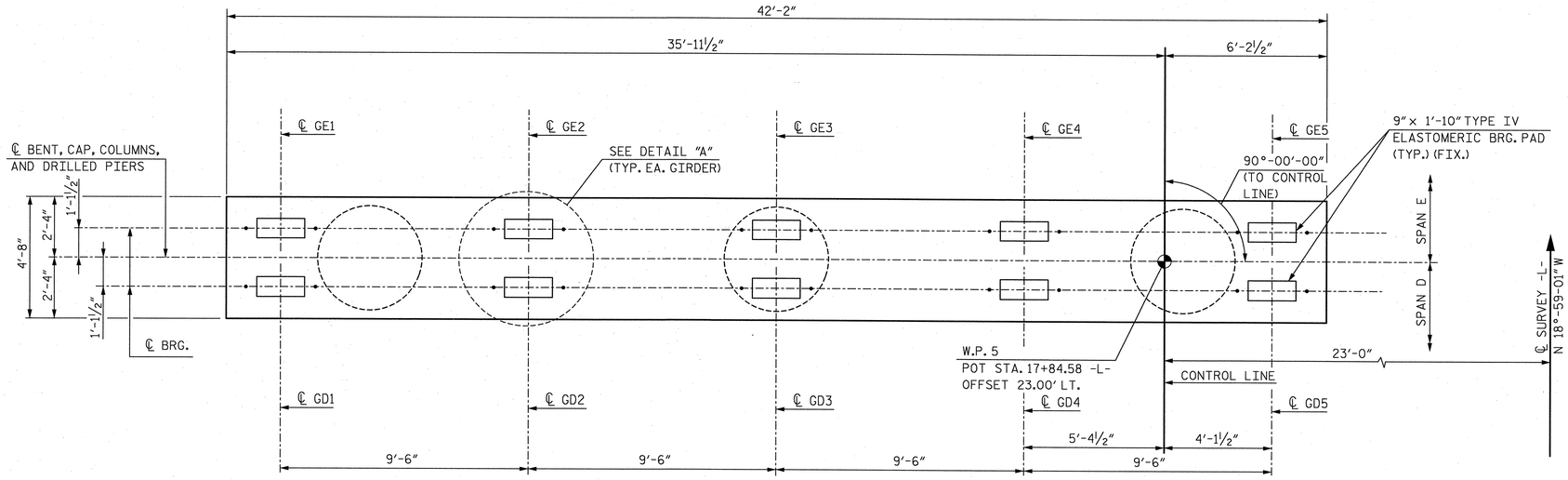

PLAN

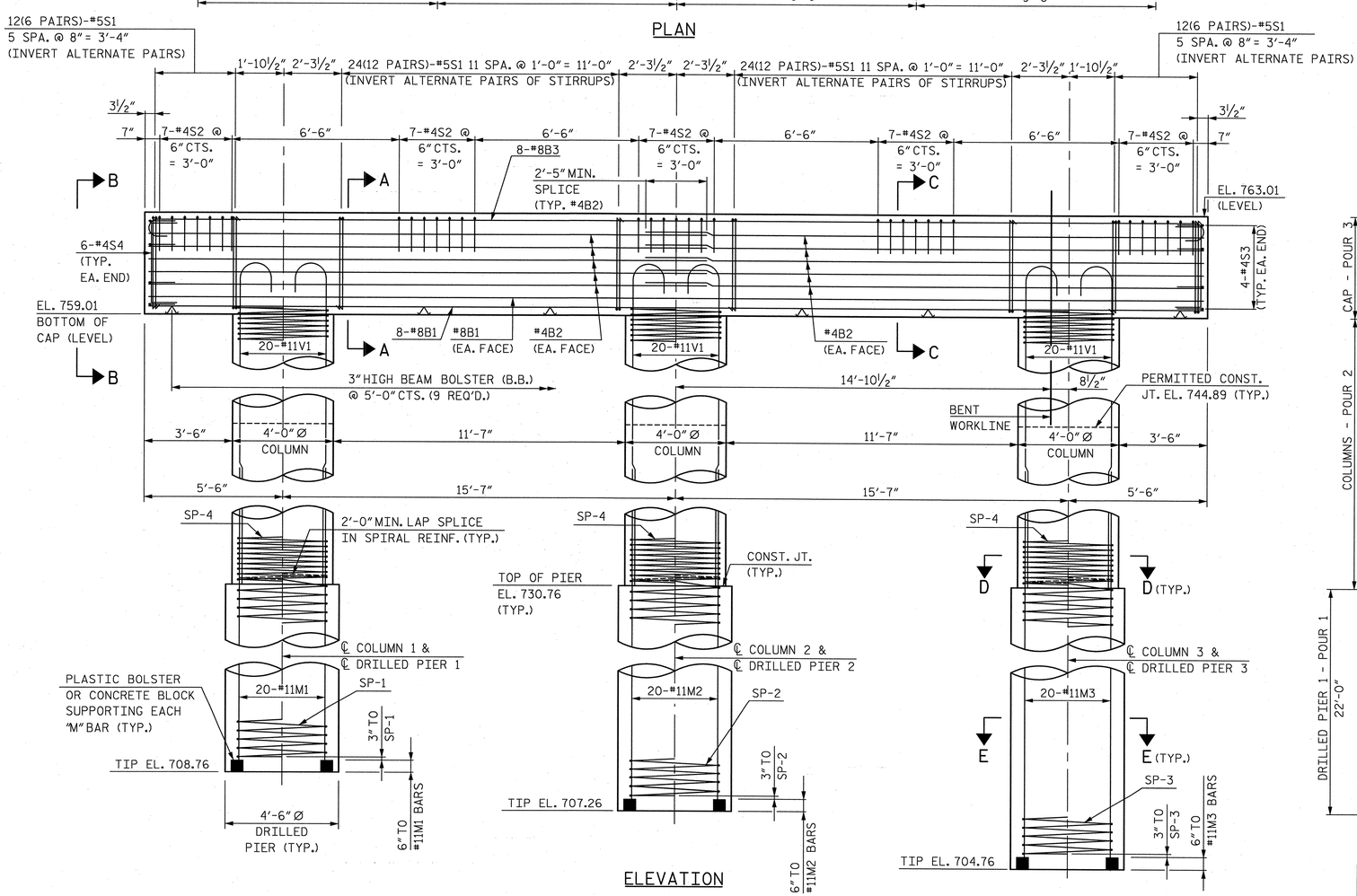

ELEVATION

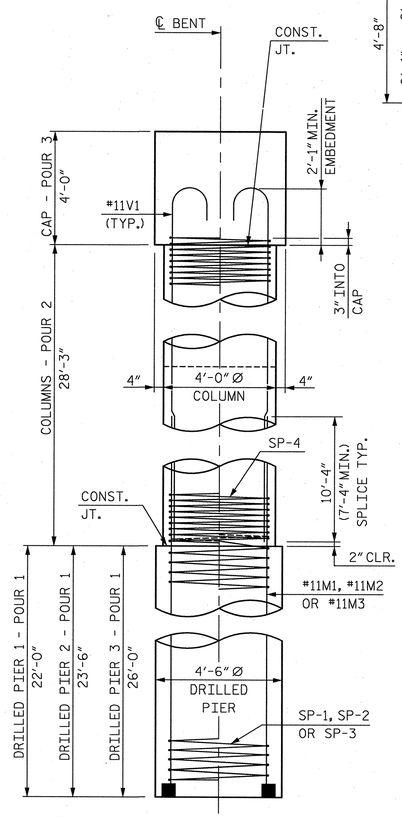

END VIEW

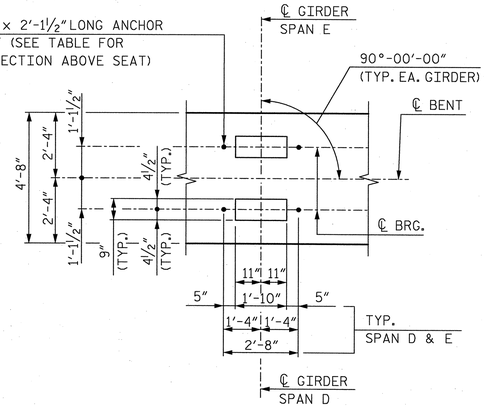

DETAIL A

NOTES:

STIRRUPS IN CAP MAY BE SHIFTED AS NECESSARY TO CLEAR ANCHOR BOLTS.

HOOKS ON "V" BARS MAY BE TURNED AS NECESSARY FOR PLACING REINFORCING STEEL.

ALL STEEL IN THE DRILLED PIERS IS INCLUDED IN THE PAY ITEMS FOR "REINFORCING STEEL" AND "SPIRAL COLUMN REINFORCING STEEL".

THE LOCATION OF THE CONSTRUCTION JOINT IN THE DRILLED PIER IS BASED UPON A FUTURE RAILROAD DITCH CONDITION. EXCAVATION/BACKFILL REQUIRED TO LOCATE THE PIER/COLUMN CONSTRUCTION JOINT SHALL BE PAID FOR UNDER THE PAY ITEM "FOUNDATION EXCAVATION" ON A LUMP SUM BASIS.

ANCHOR BOLT PROJECTION TABLE			
SPAN D GIRDERS		SPAN E GIRDERS	
GIRDER	PROJECTION	GIRDER	PROJECTION
GD1	6"	GE1	7"
GD2-GD4	6½"	GE2-GE5	7½"
GD5	7"	——	——

NORTH CAROLINA PROFESSIONAL SEAL 27812 ENGINEER DAVID W. HAWKINS 12/20/13

NORTH CAROLINA PROFESSIONAL SEAL 12916 ENGINEER PAUL J. BARBER 12/20/13

PROJECT NO. U-2525B

GUILFORD COUNTY

STATION: POT 14+99.25 -L-

SHEET 1 OF 2

STATE OF NORTH CAROLINA
DEPARTMENT OF TRANSPORTATION
RALEIGH

SUBSTRUCTURE

BENT 4

HNTB NORTH CAROLINA, P.C.
NC License No. C-1554
343 E. Six Forks Rd., Suite 200, Raleigh, N.C. 27609

DRAWN BY M. WRIGHT DATE 7/13
CHECKED BY P. BARBER DATE 10/13

DWG. NO. 35

REVISIONS						SHEET NO.
NO.	BY	DATE	NO.	BY	DATE	S-35
1			3			TOTAL SHEETS
2			4			54

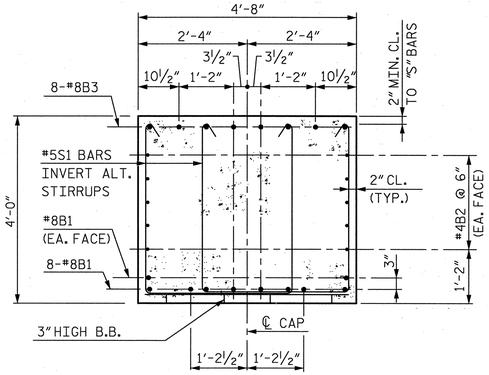

SECTION A-A

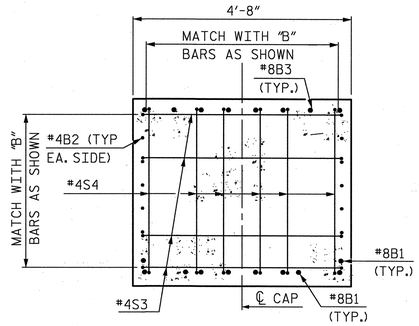

VIEW B-B

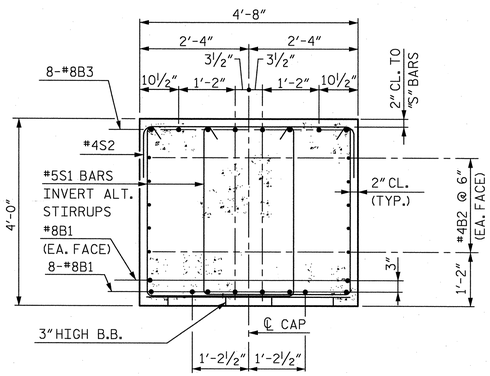

SECTION C-C

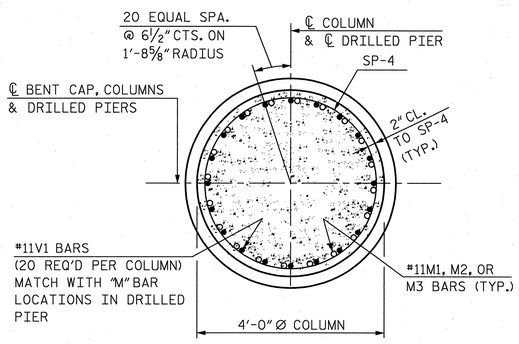

SECTION D-D

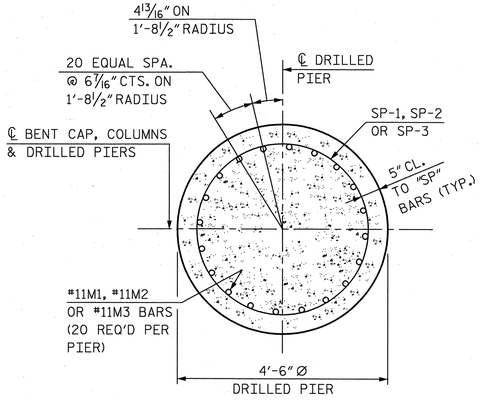

SECTION E-E

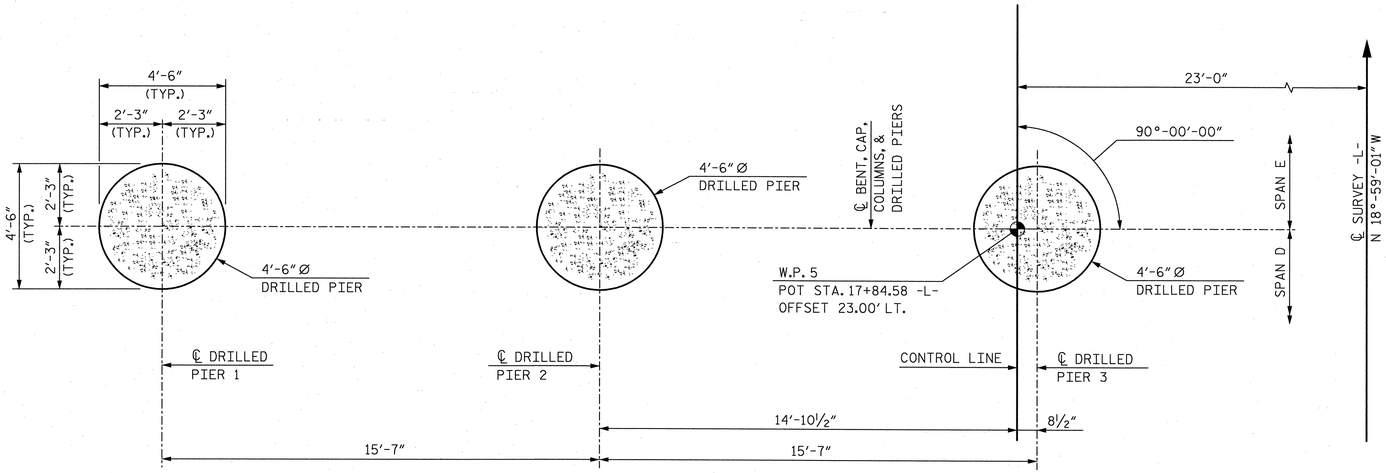

DRILLED PIER PLAN

NOTE: SEE SECTION E-E FOR TYPICAL DRILLED PIER REINFORCING

BAR TYPES

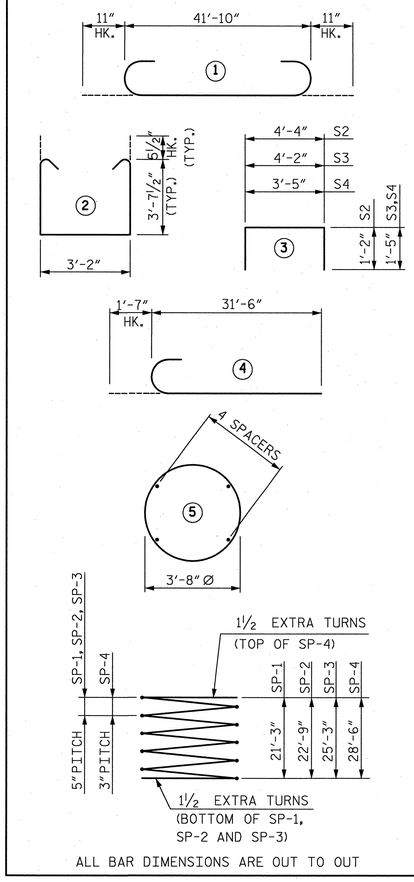

ALL BAR DIMENSIONS ARE OUT TO OUT

NOTE: THE CONTRACTOR'S ATTENTION IS CALLED TO THE FACT THAT THE LONGITUDINAL REINFORCEMENT FOR THE DRILLED PIERS IS DETAILED WITH 3 FEET OF EXTRA LENGTH.

BILL OF REINFORCING

BENT 4

BAR	NO.	SIZE	TYPE	LENGTH	WEIGHT
B1	10	8	STR.	41'-10"	1,117
B2	20	4	STR.	22'-2"	296
B3	8	8	1	43'-8"	933
M1	20	11	STR.	32'-0"	3,400
M2	20	11	STR.	33'-6"	3,560
M3	20	11	STR.	36'-0"	3,825
S1	72	5	2	11'-4"	851
S2	35	4	3	6'-8"	156
S3	8	4	3	7'-0"	37
S4	12	4	3	6'-3"	50
V1	60	11	4	33'-1"	10,546
SP-1	1	*	5	598'-7"	624
SP-2	1	*	5	639'-6"	667
SP-3	1	*	5	707'-8"	738
SP-4	3	**	5	1,317'-8"	2,641

QUANTITIES

REINFORCING STEEL	LBS.	24,771
SPIRAL COLUMN REINFORCING STEEL	LBS.	4,670
CLASS A CONCRETE		
COLUMN POUR 2	CU. YDS.	39.4
CAP POUR 3	CU. YDS.	29.2
TOTAL	CU. YDS.	68.6
FOUNDATION EXCAVATION FOR BENT 4 AT STA. 14+99.25	LUMP SUM	LUMP SUM
4'-6" Ø DRILLED PIERS	NO.	3
DRILLED PIERS, NOT IN SOIL	FEET	25.0
DRILLED PIERS, IN SOIL	FEET	46.5
DRILLED PIER CONCRETE POUR 1	CU. YDS.	42.1

* THE SP-1, SP-2, SP-3 SPIRAL REINFORCING STEEL SHALL BE W31 OR D31 COLD DRAWN WIRE OR #5 PLAIN OR DEFORMED BAR.

** THE SP-4 SPIRAL REINFORCING STEEL SHALL BE W20 OR D20 COLD DRAWN WIRE OR #4 PLAIN OR DEFORMED BAR.

PROJECT NO. U-2525B

GUILFORD COUNTY

STATION: POT 14+99.25 -L-

SHEET 2 OF 2

STATE OF NORTH CAROLINA
DEPARTMENT OF TRANSPORTATION
RALEIGH

SUBSTRUCTURE

BENT 4

NORTH CAROLINA PROFESSIONAL SEAL 27812 ENGINEER DAVID W. HAWKINS 12/20/13

NORTH CAROLINA PROFESSIONAL SEAL 12916 ENGINEER PAUL J. BARBER 12/20/13

HNTB NORTH CAROLINA, P.C.
NC License No. C-1554
343 E. Six Forks Rd., Suite 200, Raleigh, N.C. 27609

DRAWN BY M. WRIGHT DATE 7/13
CHECKED BY P. BARBER DATE 10/13

DWG. NO. 36

REVISIONS						SHEET NO.
NO.	BY	DATE	NO.	BY	DATE	S-3C
1			3			TOTAL SHEETS
2			4			54

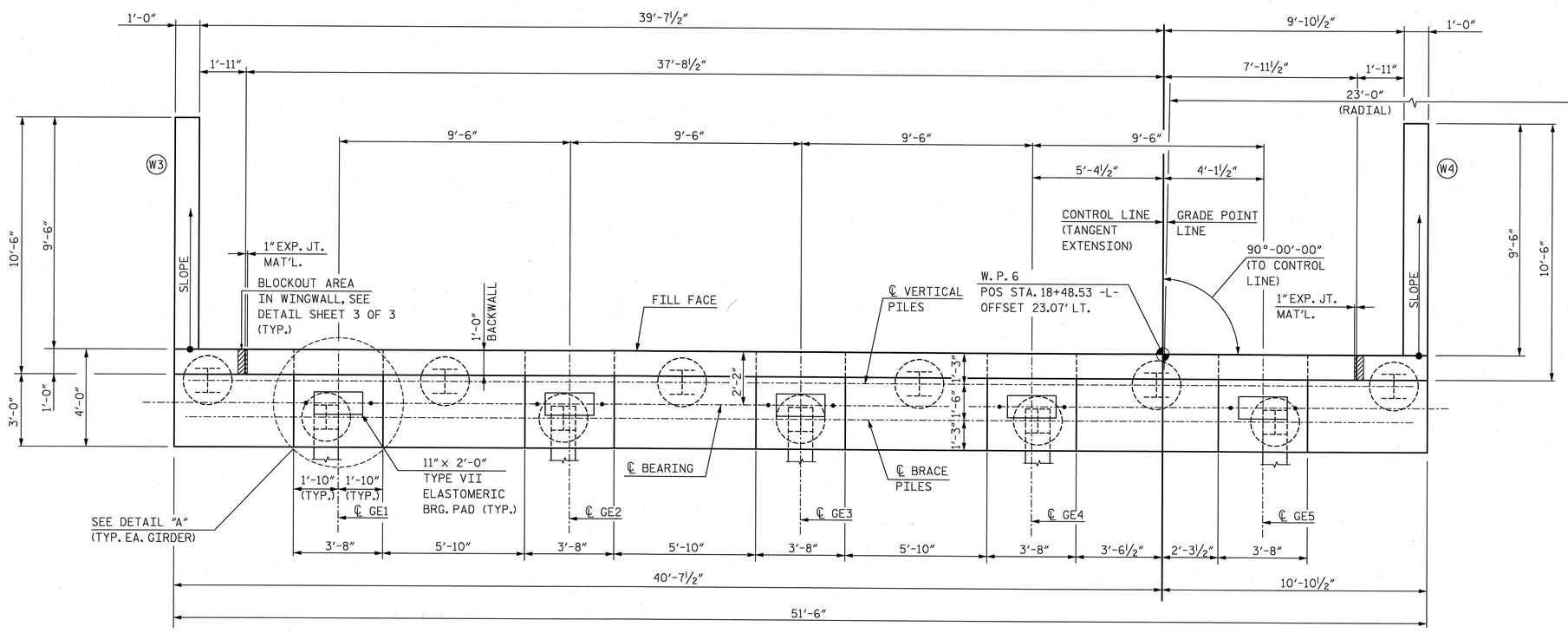

PLAN

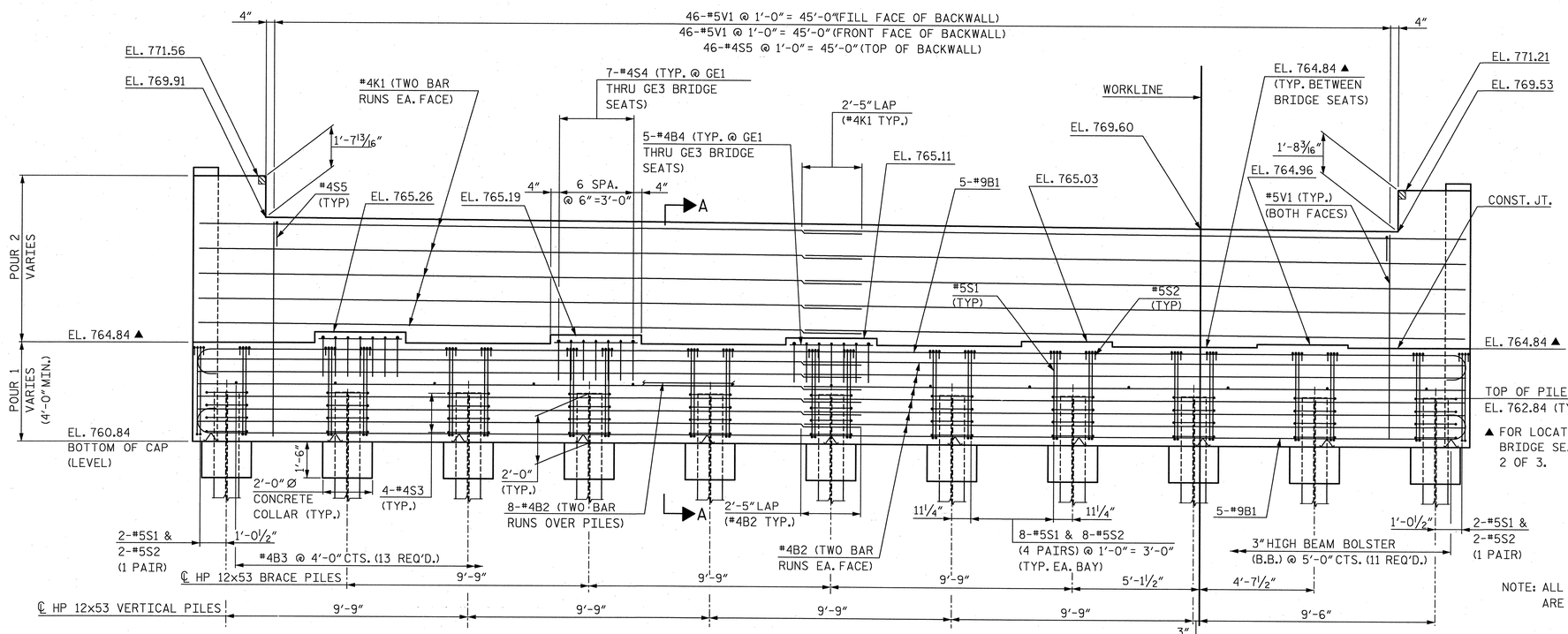

ELEVATION

▲ FOR LOCATION OF ELEVATIONS BETWEEN BRIDGE SEATS, SEE SECTION A-A, SHEET 2 OF 3.

NOTE: ALL BACKWALL ELEVATIONS ARE AT FILL FACE.

NOTES:

STIRRUPS IN CAP MAY BE SHIFTED AS NECESSARY TO CLEAR ANCHOR BOLTS.

BACKWALL SHALL BE PLACED BEFORE APPLYING THE EPOXY PROTECTIVE COATING.

THE TOP SURFACE AREAS OF THE END BENT CAPS SHALL BE CURED IN ACCORDANCE WITH THE STANDARD SPECIFICATIONS EXCEPT THE MEMBRANE CURING COMPOUND METHOD SHALL NOT BE USED.

THE TOP SURFACE OF THE END BENT CAP EXCEPT THE BRIDGE SEAT BUILDUPS SHALL BE SLOPED TRANSVERSELY FROM THE FILL FACE TO THE BACK FACE AT THE RATE OF 2%.

THE CONTRACTOR SHALL PROVIDE FOR INSTALLATION OF THE 4" Ø DRAIN PIPE THROUGH THE WINGWALL AS REQUIRED FOR REINFORCED BRIDGE APPROACH FILLS, SEE ROADWAY PLANS. REINFORCING STEEL IN THE WINGWALL MAY BE SHIFTED AS NECESSARY TO CLEAR DRAIN PIPE.

FOR WINGWALL DETAILS, SEE SHEET 2 OF 3.

FOR SECTION A-A, SEE SHEET 2 OF 3.

FOR PILE SPLICE DETAILS, SEE SHEET 3 OF 3.

INDICATES 3:12 PILE BATTER IN DIRECTION SHOWN.

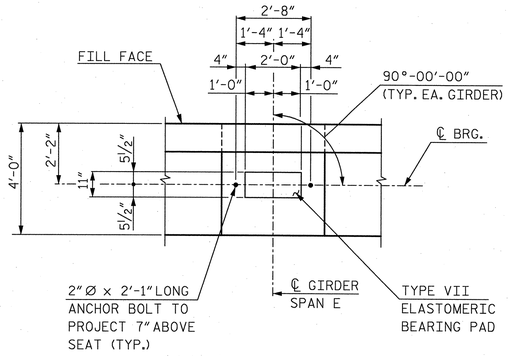

DETAIL "A"

NORTH CAROLINA PROFESSIONAL SEAL 27812 ENGINEER DAVID W. HAWKINS 12/20/13

NORTH CAROLINA PROFESSIONAL SEAL 12916 ENGINEER PAUL J. BARBER 12/20/13

PROJECT NO. U-2525B

GUILFORD COUNTY

STATION: POT 14+99.25 -L-

SHEET 1 OF 3

STATE OF NORTH CAROLINA
DEPARTMENT OF TRANSPORTATION
RALEIGH

SUBSTRUCTURE

END BENT 2

HNTB NORTH CAROLINA, P.C.
NC License No. C-1554
343 E. Six Forks Rd., Suite 200, Raleigh, N.C. 27609

DRAWN BY J. BAYNE DATE 10/13
CHECKED BY P. BARBER DATE 10/13
DWG. NO. 37

REVISIONS						SHEET NO.
NO.	BY	DATE	NO.	BY	DATE	S-37
1			3			TOTAL SHEETS
2			4			541

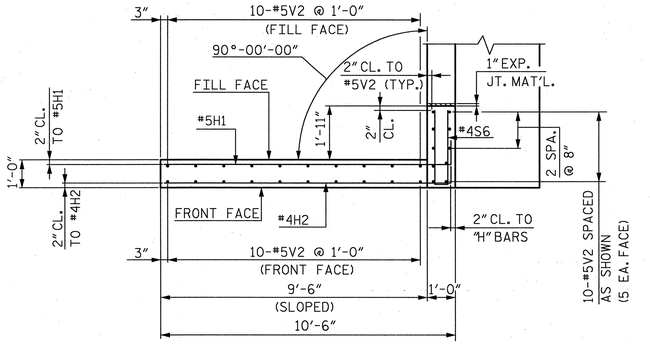

PLAN OF WING (W3)

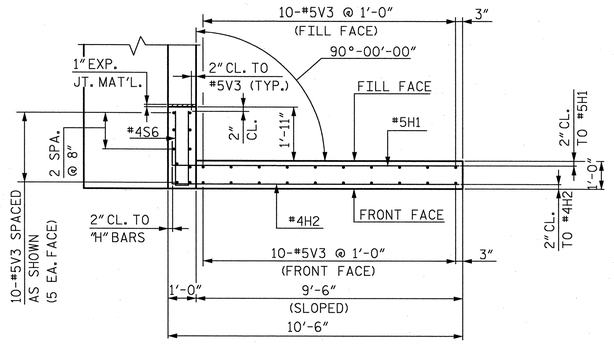

PLAN OF WING (W4)

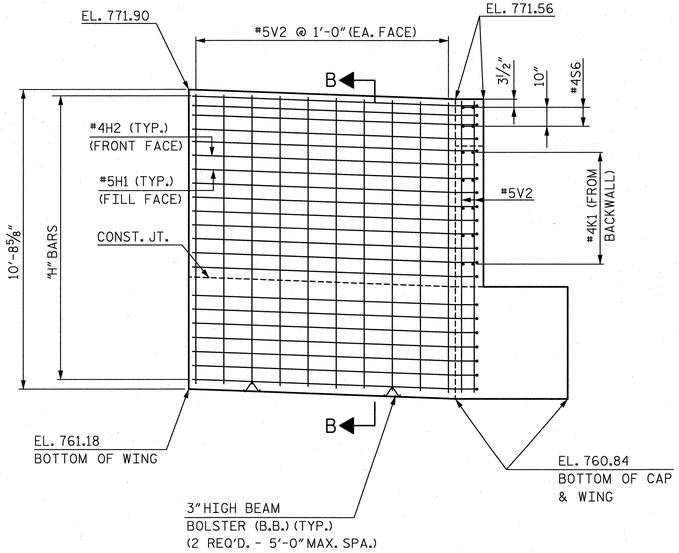

ELEVATIOM OF WING (W3)

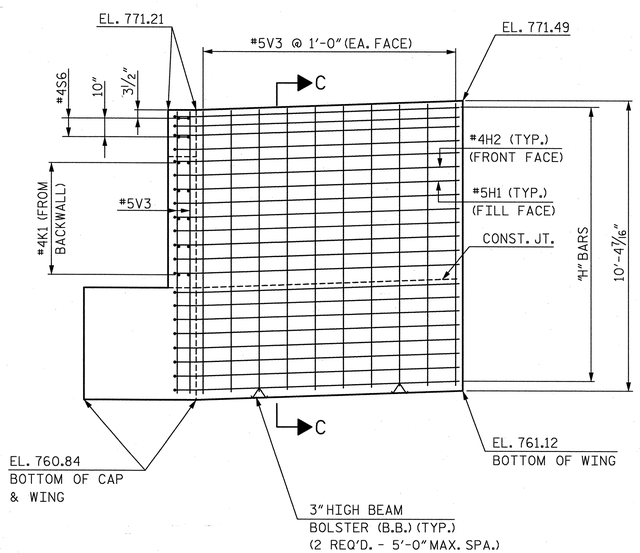

ELEVATION OF WING (W4)

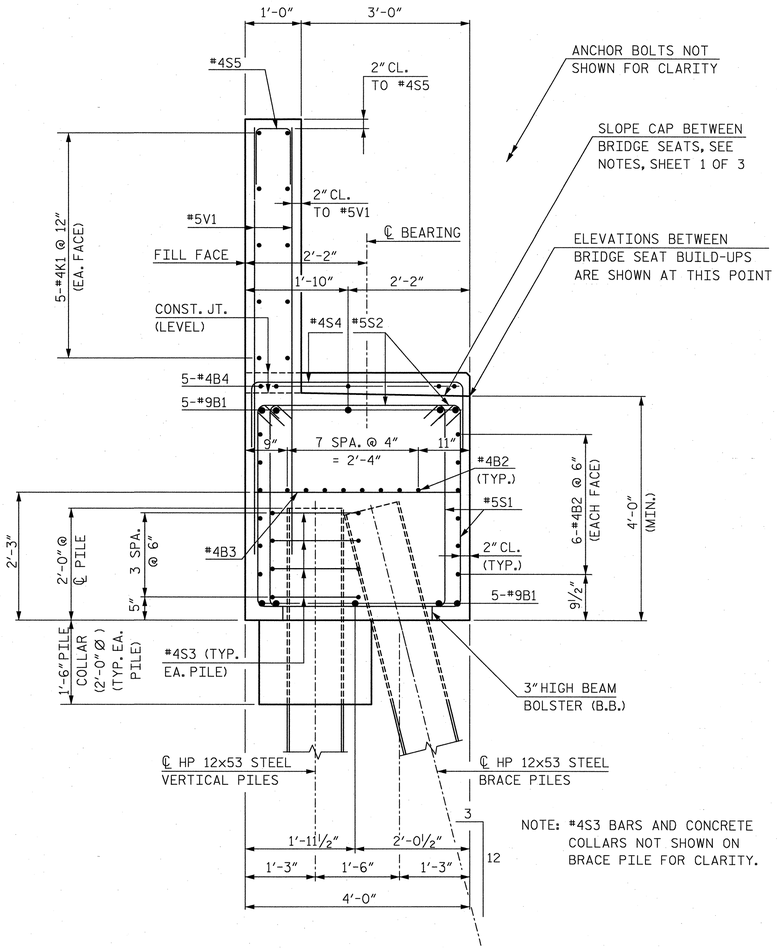

SECTION A-A

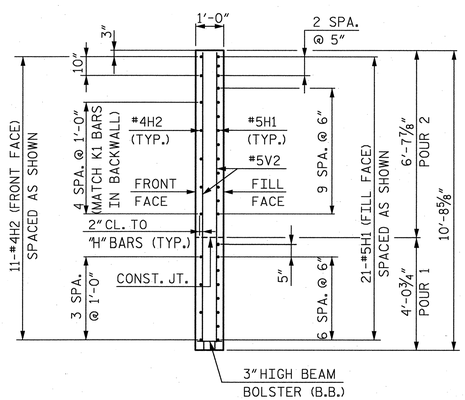

SECTION B-B

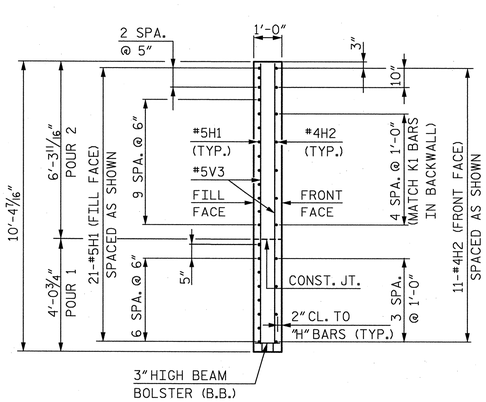

SECTION C-C

PROJECT NO. U-2525B

GUILFORD COUNTY

STATION: POT 14+99.25 -L-

SHEET 2 OF 3

STATE OF NORTH CAROLINA
DEPARTMENT OF TRANSPORTATION
RALEIGH

SUBSTRUCTURE

END BENT 2

NORTH CAROLINA PROFESSIONAL SEAL 27812 ENGINEER DAVID W. HAWKINS 12/20/13

NORTH CAROLINA PROFESSIONAL SEAL 12916 ENGINEER PAUL J. BARBER 12/20/13

HNTB NORTH CAROLINA, P.C.
NC License No. C-1554
343 E. Six Forks Rd., Suite 200, Raleigh, N.C. 27609

DRAWN BY J. BAYNE DATE 10/13
CHECKED BY P. BARBER DATE 10/13

DWG. NO. 38

REVISIONS						SHEET NO.
NO.	BY	DATE	NO.	BY	DATE	S-38
1			3			TOTAL SHEETS
2			4			541

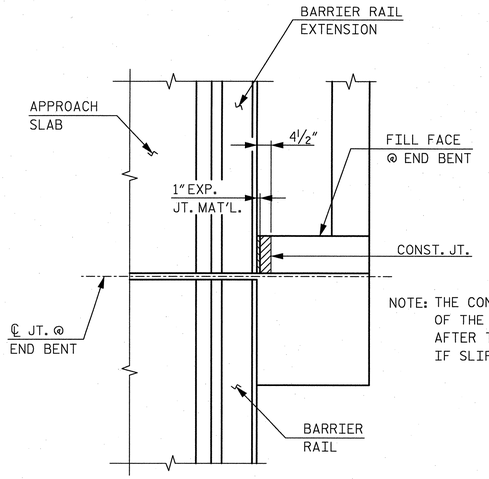

PLAN

NOTE: THE CONCRETE IN THE SHADED AREA OF THE WING SHALL BE POURED AFTER THE BARRIER RAIL IS CAST IF SLIP FORMING IS USED.

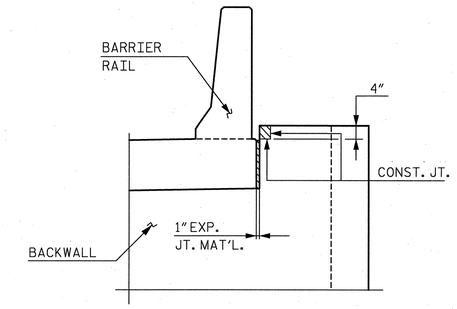

ELEVATION

BLOCKOUT IN WINGWALL

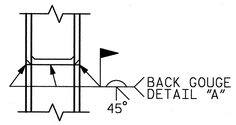

✳ PILE VERTICAL

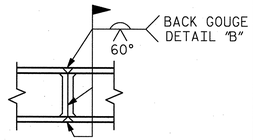

✳ PILE HORIZONTAL OR VERTICAL

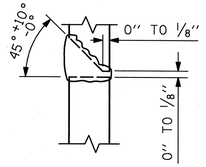

DETAIL "A"

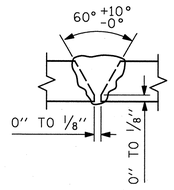

DETAIL "B"

✳ POSITION OF PILE DURING WELDING.

PILE SPLICE DETAILS

BAR TYPES

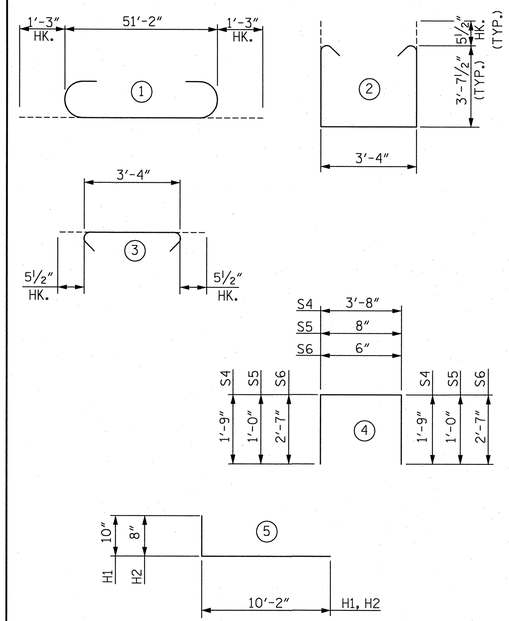

ALL BAR DIMENSIONS ARE OUT TO OUT

BILL OF REINFORCING

END BENT 2

BAR	NO.	SIZE	TYPE	LENGTH	WEIGHT
B1	10	9	1	53'-8"	1,825
B2	40	4	STR.	26'-10"	717
B3	13	4	STR.	3'-8"	32
B4	15	4	STR.	3'-4"	33
H1	42	5	5	11'-0"	482
H2	22	4	5	10'-10"	159
K1	20	4	STR.	26'-10"	358
V1	92	5	STR.	8'-3"	792
V2	30	5	STR.	10'-4"	323
V3	30	5	STR.	10'-0"	313
S1	84	5	2	11'-6"	1,008
S2	84	5	3	4'-3"	372
S3	44	4	6	6'-5"	189
S4	21	4	4	7'-2"	101
S5	46	4	4	2'-8"	82
S6	4	4	4	5'-8"	15

QUANTITIES

REINFORCING STEEL	LBS.	6,801
CLASS "A" CONCRETE BREAKDOWN		
POUR 1 - CAP & BOTT. OF WINGS	CU. YDS.	35.9
POUR 2 - TOP OF WINGS & BACKWALL	CU. YDS.	14.3
TOTAL	CU. YDS.	50.2
HP 12x53 STEEL PILES	NO.	11
	FEET	495

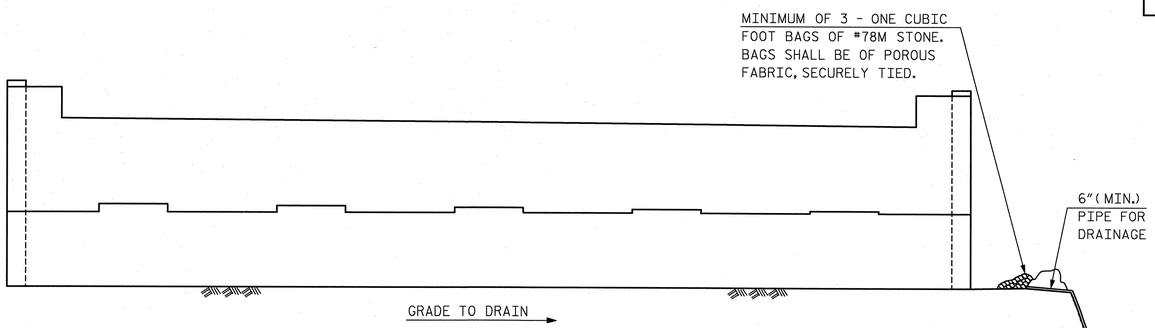

BAGGED STONE AND PIPE SHALL BE PLACED IMMEDIATELY AFTER COMPLETION OF END BENT EXCAVATION. PIPE MAY BE EITHER CONCRETE, CORRUGATED STEEL, CORRUGATED ALUMINUM ALLOY OR CORRUGATED PLASTIC. PERFORATED PIPE WILL NOT BE ALLOWED.

BAGGED STONE SHALL REMAIN IN PLACE UNTIL THE ENGINEER DIRECTS THAT IT BE REMOVED. THE CONTRACTOR SHALL REMOVE AND DISPOSE OF SILT ACCUMULATIONS AT BAGGED STONE WHEN SO DIRECTED BY THE ENGINEER. BAGS SHALL BE REMOVED AND REPLACED WHENEVER THE ENGINEER DETERMINES THAT THEY HAVE DETERIORATED AND LOST THEIR EFFECTIVENESS.

NO SEPARATE PAYMENT WILL BE MADE FOR THIS WORK AND THE ENTIRE COST OF THIS WORK SHALL BE INCLUDED IN THE UNIT CONTRACT PRICE FOR THE SEVERAL PAY ITEMS.

TEMPORARY DRAINAGE AT END BENT 2

PROJECT NO. U-2525B

GUILFORD COUNTY

STATION: POT 14+99.25 -L-

SHEET 3 OF 3

STATE OF NORTH CAROLINA
DEPARTMENT OF TRANSPORTATION
RALEIGH

SUBSTRUCTURE

END BENT 2

NORTH CAROLINA PROFESSIONAL SEAL 27812 ENGINEER DAVID W. HAWKINS 12/20/13

NORTH CAROLINA PROFESSIONAL SEAL 12916 ENGINEER PAUL J. BARBER 12/20/13

HNTB HNTB NORTH CAROLINA, P.C.
NC License No. C-1554
343 E. Six Forks Rd., Suite 200, Raleigh, N.C. 27609

DRAWN BY J. BAYNE DATE 10/13
CHECKED BY P. BARBER DATE 10/13

DWG. NO. 39

REVISIONS						SHEET NO.
NO.	BY	DATE	NO.	BY	DATE	S-39
1			3			TOTAL SHEETS
2			4			541

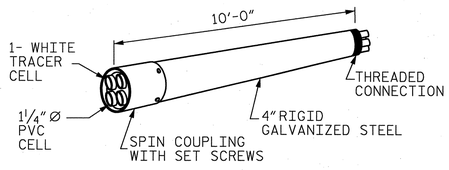

RIGID GALVANIZED (RGC)
MULTI-CELL RACEWAY

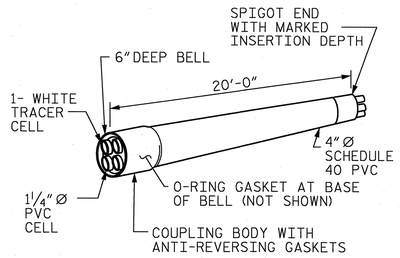

SCHEDULE 40 PVC
MULTI-CELL RACEWAY

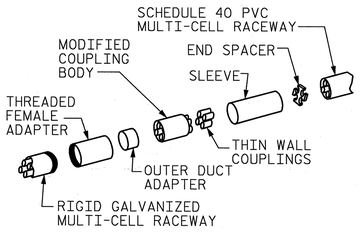

TRANSITION ADAPTER

DETAIL "D"
4" MULTI-CELL COMPONENTS

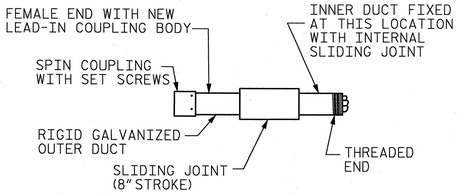

EXPANSION JOINT FITTING

NOTES

THE CONTRACTOR SHALL BE RESPONSIBLE FOR DETERMINING THE TOTAL QUANTITY OF CONDUIT NEEDED TO COMPLETE THE WORK AND THAT THE CONDUIT(S) ARE PLACED AT THE NOTED DIMENSION AND ABOVE THE BOTTOM OF THE GIRDER.

THE INSTALLATION OF THE CONDUIT SYSTEM SHALL BE PAID FOR AS LUMP SUM. THE PRICE SHALL INCLUDE ALL CONDUIT, HANGERS, STABILIZERS, EXPANSION JOINTS, CONCRETE INSERTS, PVC SLEEVES AND ALL NECESSARY HARDWARE TO COMPLETE THE WORK.

THE CONTRACTOR SHALL FIELD VERIFY THAT THE CONDUIT SYSTEM IS NOT IN CONFLICT WITH THE GUARDRAIL POSTS.

SEE DETAIL "C" FOR HANGER ASSEMBLY INSTALLATION.

INSTALL SLEEVES PARALLEL TO GIRDERS. SEE DETAIL "B" FOR SLEEVE INSTALLATION.

PROVIDE TRANSITION ADAPTOR AND EXPANSION JOINT FOR CONDUIT AT END BENT 1 AND END BENT 2.

INSTALL STABILIZER'S MIDWAY BETWEEN DECK EXPANSION JOINTS. STABILIZER CAN NOT BE USED INSTEAD OF A HANGER ASSEMBLY.

THE CONCRETE SCREW INSERT SHALL HAVE A ROD SIZE OF ⅝" AND A PULL FORCE OF 1260 lbs.

FOR ELECTRICAL CONDUIT SYSTEM FOR SIGNALS, SEE SPECIAL PROVISIONS.

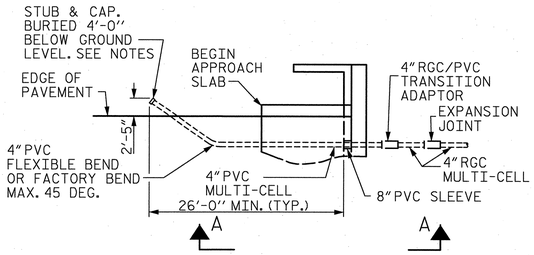

DETAIL "A"
TERMINATION OF CONDUIT AT WING WALL
END BENT 1 SHOWN, END BENT 2 SIMILAR

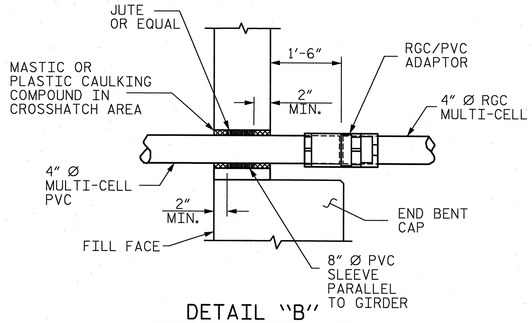

DETAIL "B"
PVC SLEEVE INSTALLATION & RGC/PVC ADAPTOR AT BACKWALL.

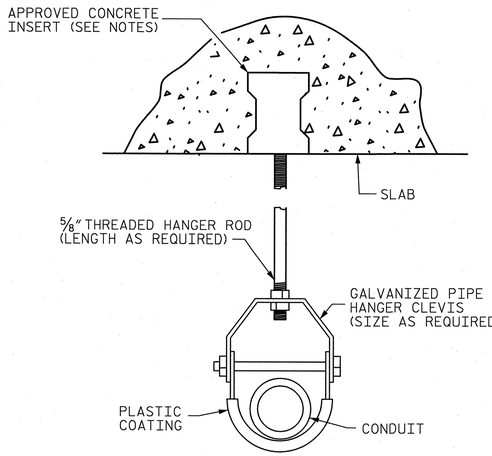

DETAIL "C"
HANGER ASSEMBLY

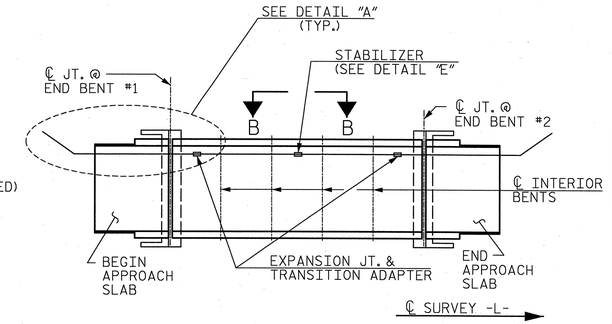

CONDUIT LAYOUT

NOTE: SUPERSTRUCTURE IS CONTINUOUS FOR LIVE LOAD OVER INTERIOR BENTS.

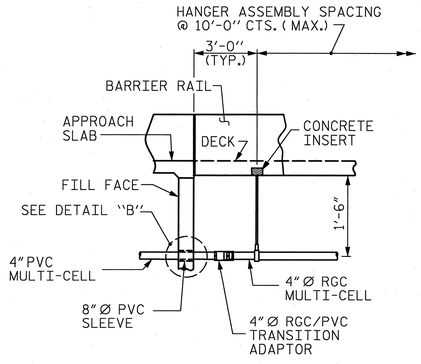

VIEW A-A

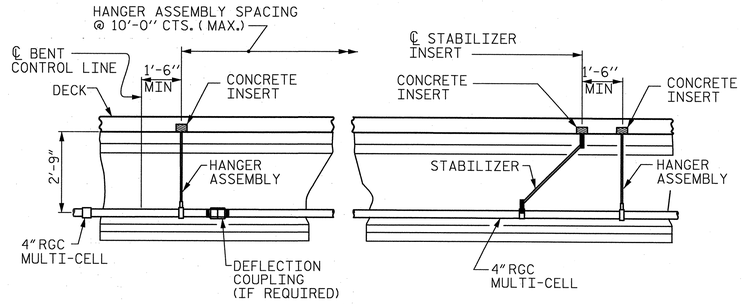

VIEW B-B
PRESTRESSED GIRDERS
CONTINUOUS FOR LIVE LOAD

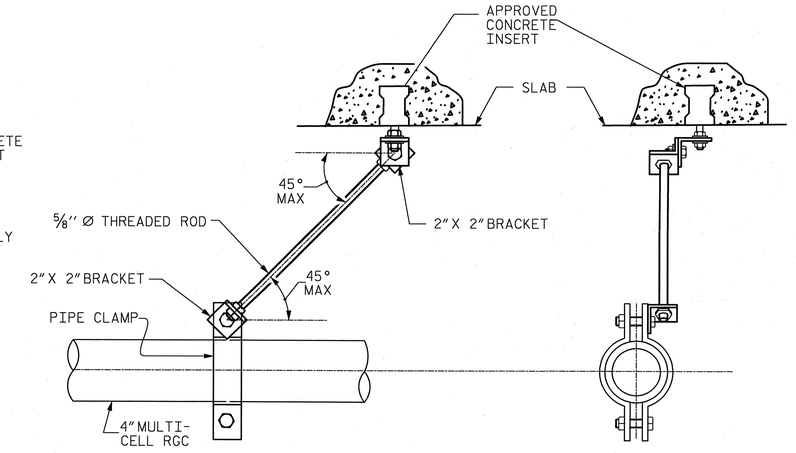

DETAIL "E"
STABILIZER

PROJECT NO. U-2525B

GUILFORD COUNTY

STATION: POT 14+99.25 -L-

STATE OF NORTH CAROLINA
DEPARTMENT OF TRANSPORTATION
RALEIGH

STANDARD

ELECTRICAL CONDUIT SYSTEM FOR SIGNALS

ASSEMBLED BY : J. BAYNE	DATE : 12/13		
CHECKED BY : P. BARBER	DATE : 12/13		
DRAWN BY : RWW 2-4-03	REV. 5/1/06	TLA/GM	
CHECKED BY : DBM 2-4-03	REV. 10/1/11	MAA/GM	

ELECTRIC CONDUIT DETAILS

HNTB NORTH CAROLINA, P.C.
NC License No. C-1554
343 E. Six Forks Rd., Suite 200, Raleigh, N.C. 27609

DRAWN BY J. BAYNE DATE 12/13
CHECKED BY P. BARBER DATE 12/13

DWG. NO. 40

REVISIONS						SHEET NO.
NO.	BY:	DATE:	NO.	BY:	DATE:	S-40
1			3			TOTAL SHEETS
2			4			54

STD. NO. ECS1

SLOPE PROTECTION SHALL CONSIST OF 4'' POURED-IN-PLACE CONCRETE PAVING AS SHOWN IN THE DETAILS ON THIS SHEET. CONCRETE SHALL BE CLASS ''B''. THE CONCRETE SURFACE SHALL BE FLOATED WITH A WOODEN FLOAT AND FINISHED. WELDED WIRE FABRIC REINFORCING SHALL BE 6 X 6 - W1.4 X W1.4, 60'' WIDE. SLOPE PROTECTION SHALL BE POURED IN 5' STRIPS AS SHOWN IN THE ''POURING DETAIL'' WITH 2'-0'' LONG #4 BARS PLACED ALONG THE SLOPE BETWEEN STRIPS AT 1'-6'' MAXIMUM SPACING. SLOPE PROTECTION MAY BE POURED IN ALTERNATE 4' AND 5' STRIPS AS SHOWN IN THE ''OPTIONAL POURING DETAIL'' WITH ADJACENT RUNS OF WELDED WIRE FABRIC LAPPING AT LEAST 6''. THE COST OF THE WELDED WIRE FABRIC AND #4 BARS, IF USED, SHALL BE INCLUDED IN THE CONTRACT UNIT PRICE BID PER SQUARE YARD FOR SLOPE PROTECTION.

BRIDGE @ STA. 14+99.25 -L-	4 INCH SLOPE PROTECTION	✳ WELDED WIRE FABRIC 60 INCHES WIDE
	SQUARE YARDS	APPROX. L.F.
END BENT 1	675	1,215
END BENT 2	625	1,125

✳ QUANTITY SHOWN IS BASED ON 5' POURS.

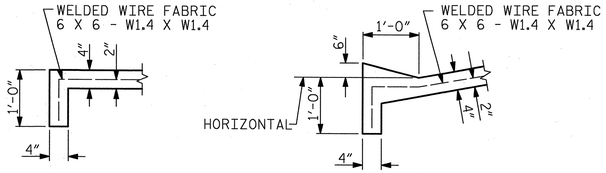

SECTION A-A

SECTION B-B

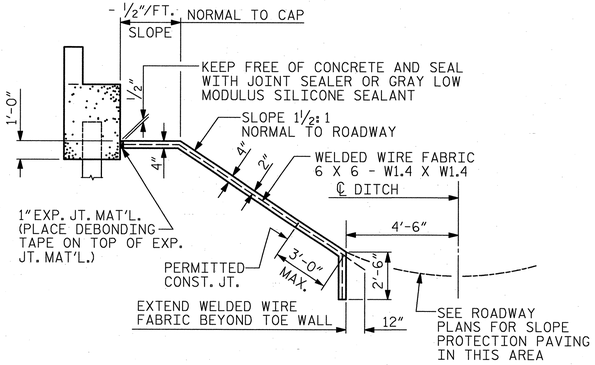

SECTION C-C

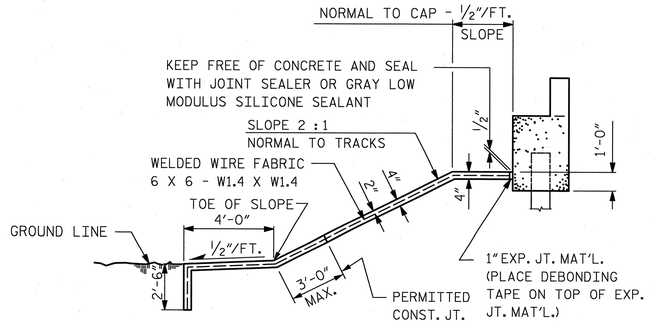

SECTION D-D

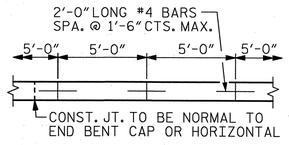

STRIP WIDTHS MAY VARY IN CURVED PORTION.

POURING DETAIL

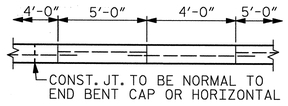

POUR A 4'-0'' STRIP FIRST. STRIP WIDTHS MAY VARY IN CURVED PORTION.

OPTIONAL POURING DETAIL

PROJECT NO. U-2525B

GUILFORD COUNTY

STATION: POT 14+99.25 -L-

SHEET 1 OF 2

STATE OF NORTH CAROLINA
DEPARTMENT OF TRANSPORTATION
RALEIGH

STANDARD

SLOPE PROTECTION DETAILS

NORTH CAROLINA PROFESSIONAL SEAL 27812 ENGINEER DAVID W. HAWKINS 12/20/13

NORTH CAROLINA PROFESSIONAL SEAL 12916 ENGINEER PAUL J. BARBER 12/20/13

HNTB NORTH CAROLINA, P.C.
NC License No. C-1554
343 E. Six Forks Rd., Suite 200, Raleigh, N.C. 27609

DRAWN BY J. BAYNE DATE 10/13
CHECKED BY P. BARBER DATE 10/13
DWG. NO. 41

REVISIONS						SHEET NO.
NO.	BY:	DATE:	NO.	BY:	DATE:	S-41
1			3			TOTAL SHEETS
2			4			541

ASSEMBLED BY : J. BAYNE	DATE : 10/13		
CHECKED BY : P. BARBER	DATE : 10/13		
DRAWN BY : ELR 5/92	REV. 5/1/06	TLA/GM	
CHECKED BY : GRP 6/92	REV. 10/1/11	MAA/GM	
	REV. 12/21/11	MAA/GM	

STD. NO. SP1

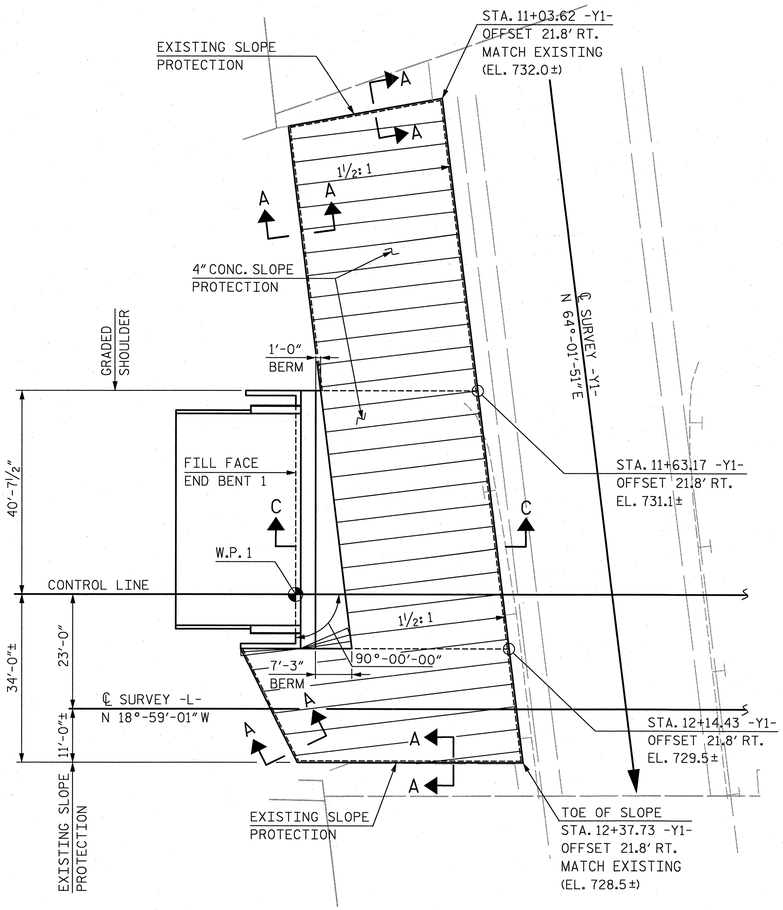

END BENT 1

PLAN

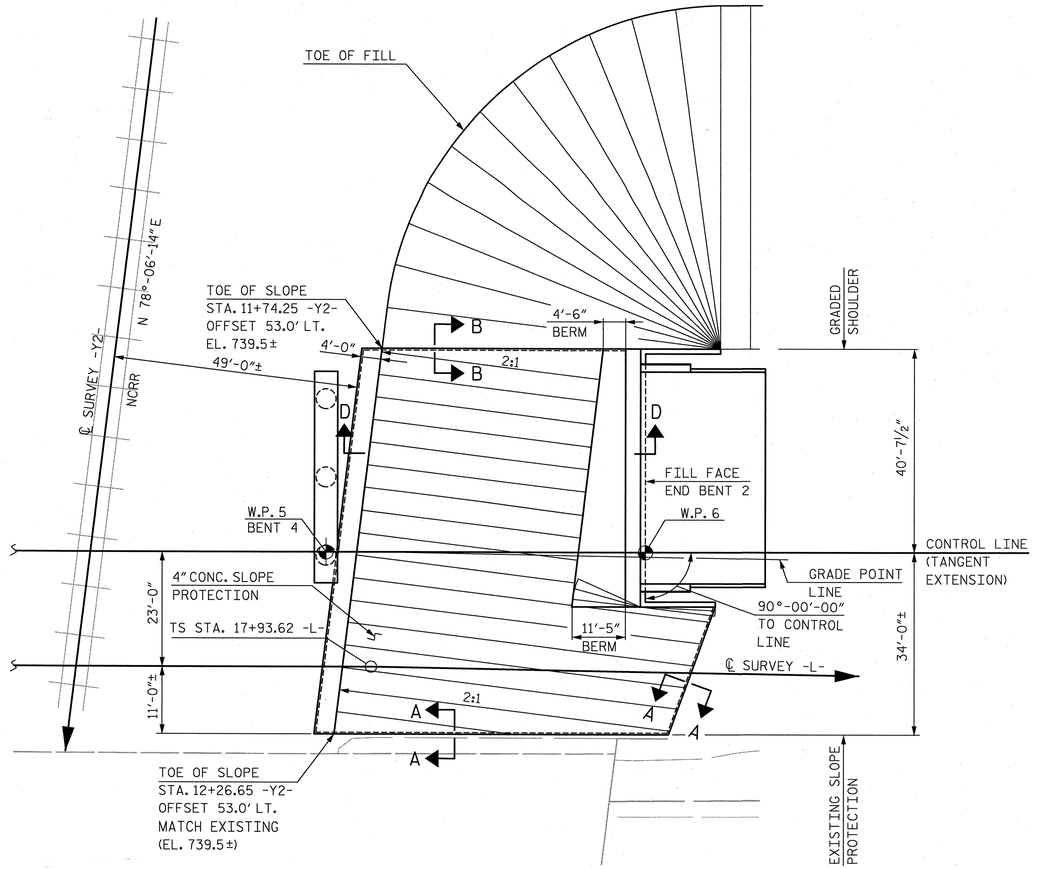

NOTE: FOR BERM ELEVATIONS, SEE "GENERAL DRAWING", SHEET 1.

END BENT 2

PLAN

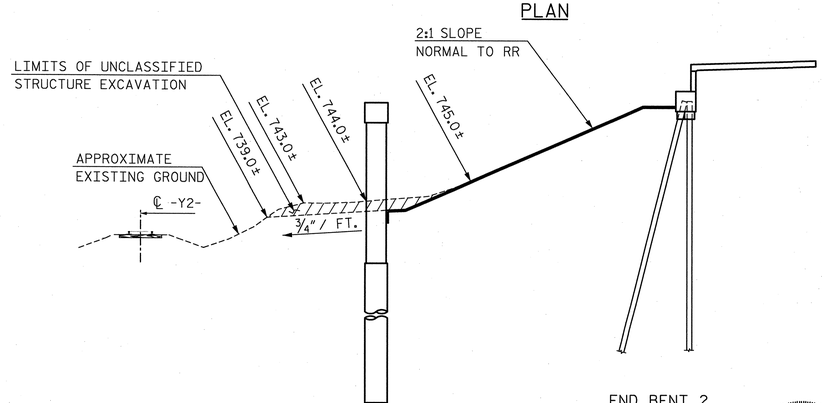

SECTION ALONG CONTROL LINE

PROJECT NO. U-2525B

GUILFORD COUNTY

STATION: POT 14+99.25 -L-

SHEET 2 OF 2

STATE OF NORTH CAROLINA
DEPARTMENT OF TRANSPORTATION
RALEIGH

SLOPE PROTECTION DETAILS

NORTH CAROLINA PROFESSIONAL SEAL 27812 ENGINEER DAVID W. HAWKINS 12/20/13

NORTH CAROLINA PROFESSIONAL SEAL 12916 ENGINEER PAUL J. BARBER 12/20/13

HNTB NORTH CAROLINA, P.C.
NC License No. C-1554
343 E. Six Forks Rd., Suite 200, Raleigh, N.C. 27609

DRAWN BY J. BAYNE DATE 10/13
CHECKED BY P. BARBER DATE 10/13
DWG. NO. 42

REVISIONS						SHEET NO.
NO.	BY	DATE	NO.	BY	DATE	S-42
1			3			TOTAL SHEETS
2			4			541

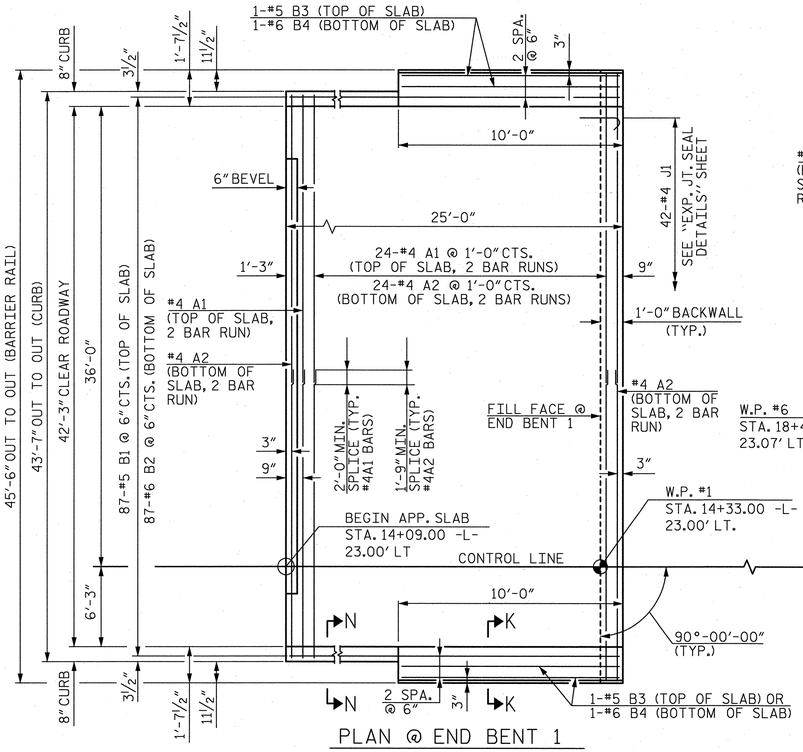

PLAN @ END BENT 1

OUT TO OUT AND ROADWAY DIMENSIONS SHOWN ARE TYPICAL FOR BOTH APPROACH SLABS

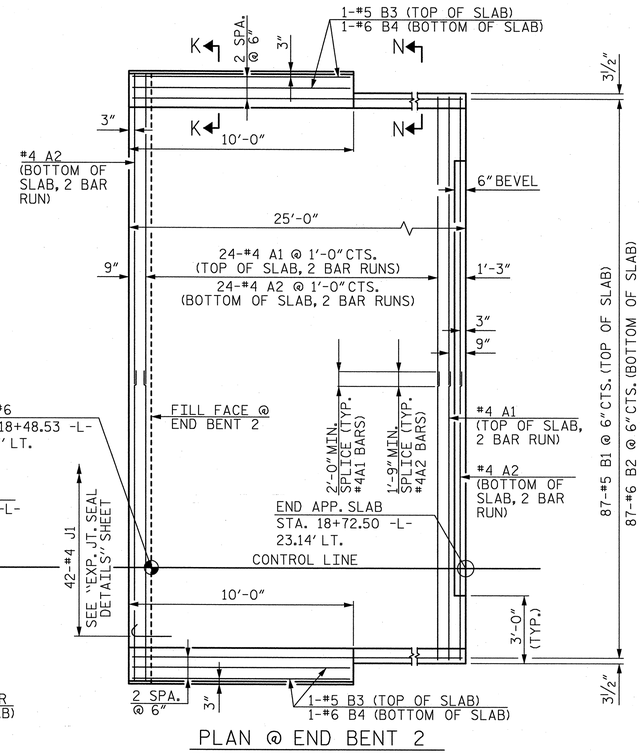

PLAN @ END BENT 2

NOTES

APPROACH SLAB SHALL NOT BE CONSTRUCTED PRIOR TO COMPLETION OF THE BRIDGE DECK.

FOR REINFORCED BRIDGE APPROACH FILL INCLUDING GEOTEXTILE, IMPERMEABLE GEOMEMBRANE, 4" Ø DRAINAGE PIPE, #78M STONE, AND SELECT MATERIAL, SEE ROADWAY PLANS.

AREA BETWEEN THE WINGWALL AND APPROACH SLAB SHALL BE GRADED TO DRAIN THE WATER AWAY FROM THE FILL FACE OF THE BRIDGE AND SHALL BE PAVED. SEE ROADWAY PLANS.

FOR EXPANSION JOINT SEALS, SEE SPECIAL PROVISIONS.

BILL OF MATERIAL

APPROACH SLAB AT EB #1

BAR	NO.	SIZE	TYPE	LENGTH	WEIGHT
✱A1	50	#4	STR	23'-7"	788
A2	52	#4	STR	23'-6"	816
✱B1	87	#5	STR	24'-0"	2,178
B2	87	#6	STR	24'-8"	3,223
✱B3	4	#5	STR	9'-8"	40
B4	4	#6	STR	9'-8"	58
✱J1	42	#4	1	1'-5"	40
REINFORCING STEEL ✱✱ LBS.					4,097
✱EPOXY COATED REINFORCING STEEL ✱✱ LBS.					3,046
CLASS AA CONCRETE ✱✱ C.Y.					

APPROACH SLAB AT EB #2

BAR	NO.	SIZE	TYPE	LENGTH	WEIGHT
✱A1	50	#4	STR	23'-7"	788
A2	52	#4	STR	23'-6"	816
✱B1	87	#5	STR	24'-0"	2,178
B2	87	#6	STR	24'-8"	3,223
✱B3	4	#5	STR	9'-8"	40
B4	4	#6	STR	9'-8"	58
✱J1	42	#4	1	1'-5"	40
REINFORCING STEEL ✱✱ LBS.					4,097
✱EPOXY COATED REINFORCING STEEL ✱✱ LBS.					3,046
CLASS AA CONCRETE ✱✱ C.Y.					

BAR TYPE

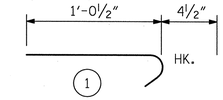

ALL BAR DIMENSIONS ARE OUT TO OUT

✱✱ QUANTITIES FOR BARRIER RAIL ARE NOT INCLUDED. SEE SHEET 2 OF 2.

SPLICE LENGTHS

BAR SIZE	EPOXY COATED	UNCOATED
#4	2'-0"	1'-9"
#5	2'-6"	2'-2"
#6	3'-10"	2'-7"

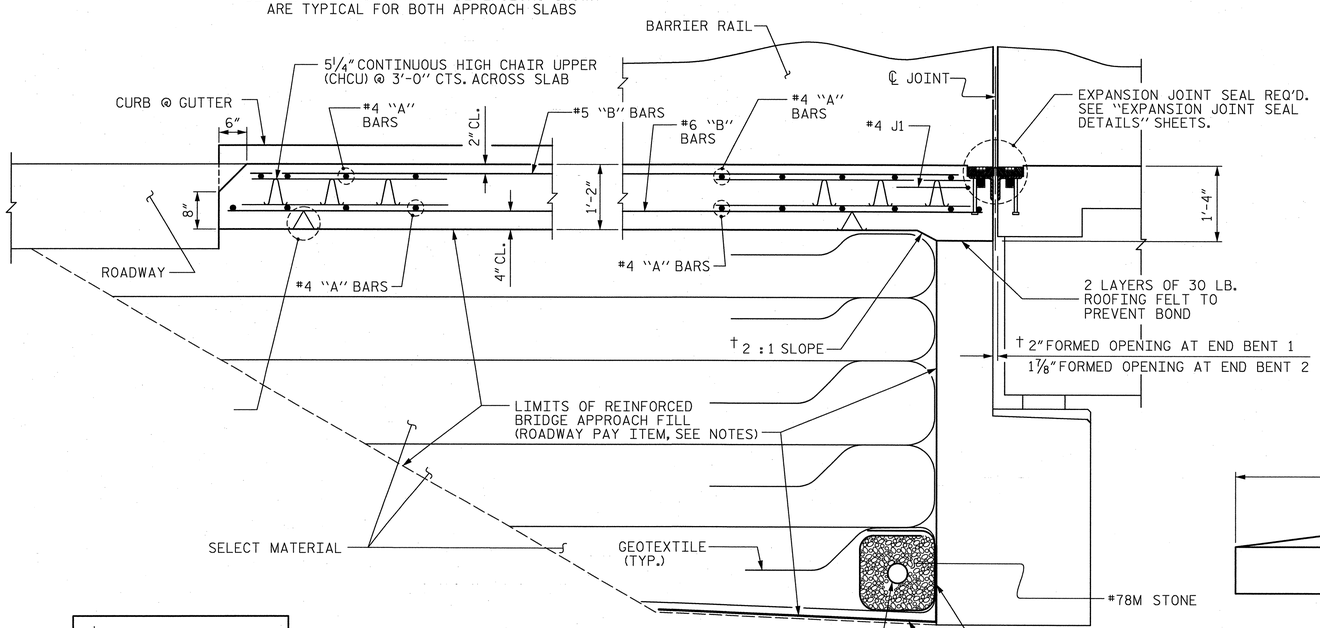

† NORMAL TO END BENT

SECTION THRU SLAB

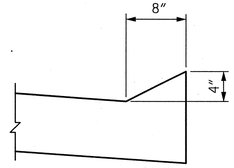

SECTION N-N

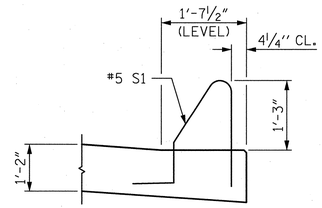

SECTION K-K

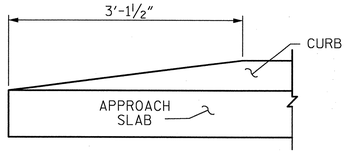

END OF CURB WITHOUT SHOULDER BERM GUTTER

CURB DETAILS

THE QUANTITY OF #4 J1 BARS ON THE BILL OF MATERIAL IS BASED ON 1'-0" CENTERS. J1 BARS SHALL BE PLACED AT EACH VERTICAL STUD ANCHOR BOLT. IN THE EVENT THAT THE NUMBER OF VERTICAL STUD ANCHORS EXCEEDS THE NUMBER OF J1 BARS SPECIFIED, ADDITIONAL J1 BARS WILL NOT BE REQUIRED.

PROJECT NO. U-2525B

GUILFORD COUNTY

STATION: POT 14+99.25 -L-

SHEET 1 OF 2

STATE OF NORTH CAROLINA
DEPARTMENT OF TRANSPORTATION
RALEIGH

STANDARD

BRIDGE APPROACH SLAB FOR FLEXIBLE PAVEMENT

NORTH CAROLINA PROFESSIONAL ENGINEER SEAL 27812 DAVID W. HAWKINS 12/20/13

NORTH CAROLINA PROFESSIONAL ENGINEER SEAL 12916 PAUL J. BARBER 12/20/13

HNTB NORTH CAROLINA, P.C.
NC License No. C-1554
343 E. Six Forks Rd., Suite 200, Raleigh, N.C. 27609

DRAWN BY J. BAYNE DATE 6/13
CHECKED BY S. FISHER DATE 8/13
DWG. NO. 43

REVISIONS						SHEET NO.
NO.	BY:	DATE:	NO.	BY:	DATE:	S-43
1			3			TOTAL SHEETS
2			4			S41

ASSEMBLED BY : J. BAYNE		DATE : 6/13
CHECKED BY : S. FISHER		DATE : 8/13
DRAWN BY : EEM 3/95	REV. 10/1/11	MAA/GM
CHECKED BY : VAP 3/95	REV. 12/21/11	MAA/GM
	REV. 6/13	MAA/GM

STD. NO. BAS2

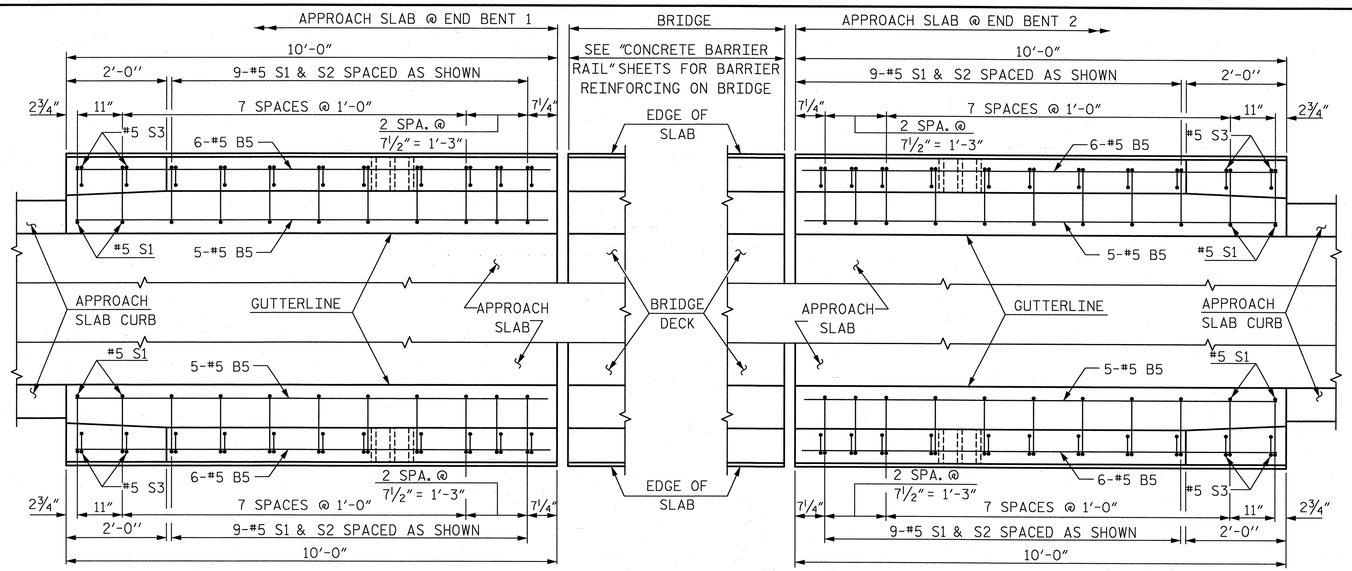

NOTES

THE COST OF THE BARRIER RAIL ON THE APPROACH SLAB SHALL BE INCLUDED IN THE LINEAR FOOT CONTRACT PRICE BID FOR "CONCRETE BARRIER RAIL".

THE BARRIER RAIL ON EACH APPROACH SLAB SHALL NOT BE CAST UNTIL ALL APPROACH SLAB CONCRETE HAS BEEN CAST AND HAS REACHED A MINIMUM COMPRESSIVE STRENGTH OF 3,000 PSI.

ALL REINFORCING STEEL IN BARRIER RAILS SHALL BE EPOXY COATED.

BAR TYPES

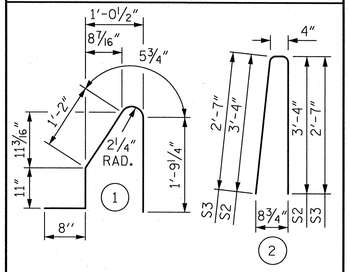

ALL BAR DIMENSIONS ARE OUT TO OUT

BILL OF MATERIAL

BARRIER RAIL ONLY

BAR	NO.	SIZE	TYPE	LENGTH	WEIGHT
✳B5	44	#5	STR	9'-8"	444
✳S1	44	#5	1	5'-0"	229
✳S2	36	#5	2	7'-0"	263
✳S3	8	#5	2	5'-6"	46

✳EPOXY COATED REINFORCING STEEL	LBS.	982
CLASS AA CONCRETE	C.Y.	5.4
CONCRETE BARRIER RAIL	40.00	LIN.FT.

PLAN OF BARRIER RAIL

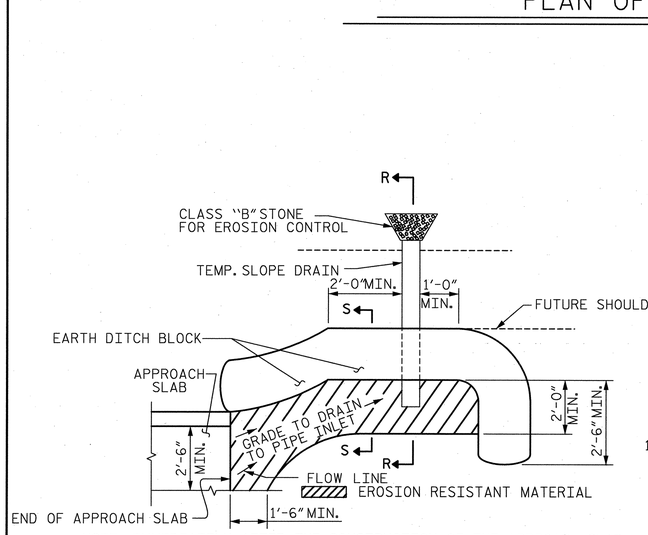

NOTE: IMMEDIATELY AFTER THE CONSTRUCTION OF THE APPROACH SLAB, THE CONTRACTOR SHALL PROVIDE TEMPORARY BERM AND SLOPE DRAIN. CONTRACTOR SHALL GRADE TO PIPE INLET AND PROVIDE EROSION RESISTANT MATERIAL AS SHOWN. THE EROSION RESISTANT MATERIAL SHALL BE EITHER 1) ASPHALT PLANT MIX, TYPE 1 OR TYPE 2, MIN. 2" DEPTH, 2) EROSION CONTROL MAT, OR 3) CONCRETE, AS DIRECTED BY THE ENGINEER. THE SLOPE DRAIN SHALL CONSIST OF A NON-PERFORATED TEMPORARY DRAINAGE PIPE, 12 INCHES IN DIAMETER.

PLAN VIEW

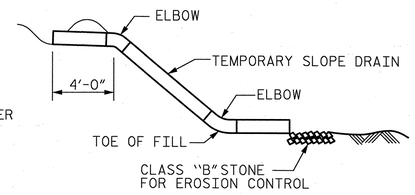

SECTION R-R

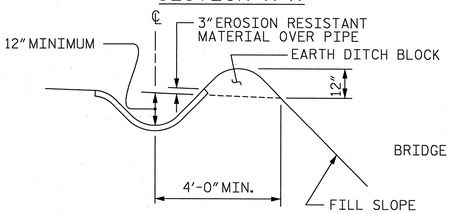

SECTION S-S

TEMPORARY BERM AND SLOPE DRAIN DETAILS

(TO BE USED WHEN SHOULDER BERM GUTTER IS REQUIRED)

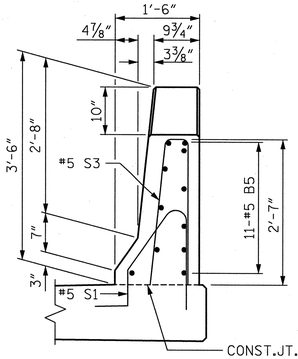

END VIEW

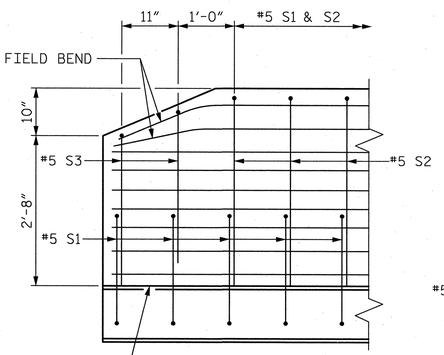

SIDE VIEW

END OF RAIL DETAILS

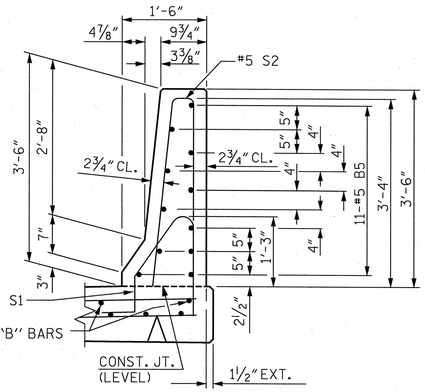

SECTION THRU RAIL

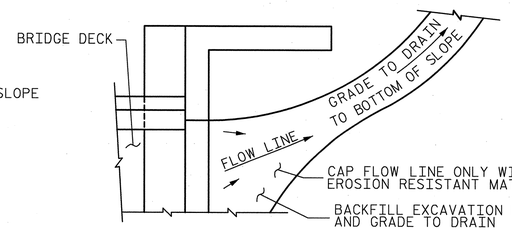

NOTE: IF THE APPROACH SLAB IS NOT CONSTRUCTED IMMEDIATELY AFTER THE BACKFILLING OF THE END BENT EXCAVATION, GRADE TO DRAIN TO THE BOTTOM OF THE SLOPE AND PROVIDE EROSION RESISTANT MATERIAL, SUCH AS FIBERGLASS ROVING OR AS DIRECTED BY THE ENGINEER TO PREVENT SOIL EROSION AND TO PROTECT THE AREA ADJACENT TO THE STRUCTURE. THE CONTRACTOR WILL BE REQUIRED TO REMOVE THESE MATERIALS PRIOR TO CONSTRUCTION OF THE APPROACH SLAB.

TEMPORARY DRAINAGE DETAIL

PROJECT NO. U-2525B

GUILFORD COUNTY

STATION: POT 14+99.25 -L-

SHEET 2 OF 2

STATE OF NORTH CAROLINA
DEPARTMENT OF TRANSPORTATION
RALEIGH

STANDARD

BRIDGE APPROACH SLAB DETAILS

NORTH CAROLINA PROFESSIONAL SEAL 27812 ENGINEER DAVID W. HAWKINS 12/3/13

NORTH CAROLINA PROFESSIONAL SEAL 12916 ENGINEER PAUL J. BARBER 12/3/13

ASSEMBLED BY : J. BAYNE	DATE : 8/13		
CHECKED BY : S. FISHER	DATE : 8/13		
DRAWN BY : FCJ 11/88	REV. 10/1/11	MAA/GM	
CHECKED BY : ARB 11/88	REV. 7/12	MAA/GM	
	REV. 6/13	MAA/GM	

HNTB NORTH CAROLINA, P.C.
NC License No. C-1554
343 E. Six Forks Rd., Suite 200, Raleigh, N.C. 27609

DRAWN BY J. BAYNE DATE 8/13
CHECKED BY S. FISHER DATE 8/13

DWG. NO. 44

REVISIONS						SHEET NO.
NO.	BY:	DATE:	NO.	BY:	DATE:	S-44
1			3			TOTAL SHEETS
2			4			541

STD. NO. BAS4

25+00 25+50 26+00 26+50 27+00 27+50

790 780 770 760 750

SPAN A

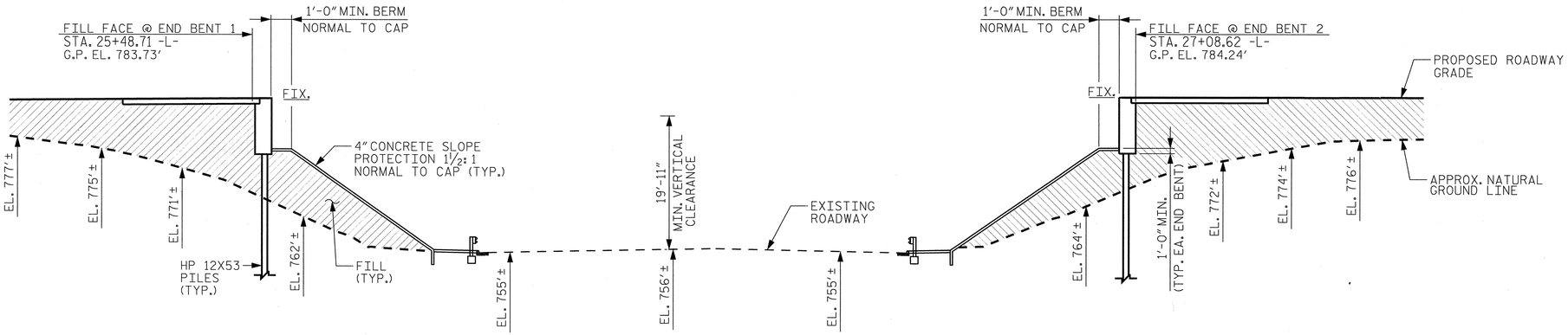

END BENT 1
(INTEGRAL)

END BENT 2
(INTEGRAL)

(+)3.2730% (-)3.0653%

-L- VERTICAL CURVE DATA

PVI STA. = 26+89.63 -L-
EL. = 798.52'
VC = 1,804.46'

SECTION ALONG LEFT LANE CONTROL LINE

(SECTIONS @ END BENTS ARE @ RIGHT ANGLES)

PLAN

(PILES NOT SHOWN IN PLAN VIEW.)

-L- HORIZONTAL CURVE DATA

PI STA. 31+07.94 -L-
△ = 27°-05'-05.5"
D = 1°-29'-56.5"
L = 1,806.82'
T = 920.62'
R = 3,822.17'

PROJECT NO. U-2525B
GUILFORD COUNTY
STATION: 26+21.65 -L-
17+06.65 -Y3-

SHEET 1 OF 4 BRIDGE NO. 401134

NORTH CAROLINA PROFESSIONAL SEAL 12186 ENGINEER CECIL L. NARRON 2/17/14

Kimley-Horn and Associates, Inc.
333 Fayetteville Street, Suite 600
Raleigh, NC 27601-1772
Phone (919) 835-1494
NC LICENSE # F-0102

This document, together with the concepts and designs presented herein, as an instrument of services, is intended only for the specific purpose and client for which it was prepared. Reuse of and improper reliance on this document without written authorization and adaptation by Kimley-Horn and Associates, Inc. shall be without liability to Kimley-Horn and Associates, Inc.

Copyright Kimley-Horn and Associates, Inc., 2014

STATE OF NORTH CAROLINA
DEPARTMENT OF TRANSPORTATION
RALEIGH

GENERAL DRAWING

BRIDGE OVER US 70 ON GREENSBORO EASTERN LOOP BETWEEN WILLOWLAKE RD. AND BURLINGTON RD., LEFT LANE

REVISIONS						SHEET NO.
NO.	BY:	DATE:	NO.	BY:	DATE:	S-45
1			3			TOTAL SHEETS
2			4			541

DRAWN BY: RTO DATE: 1/14
CHECKED BY: JCW DATE: 1/14

2/17/2014 K:\RDT_Structures_Bridge\NC\011036224_U-2525B_Greensboro East Loop over US 70\Cad\dgn\u-2525_sd_str_2_psh45.dgn

STR. #2

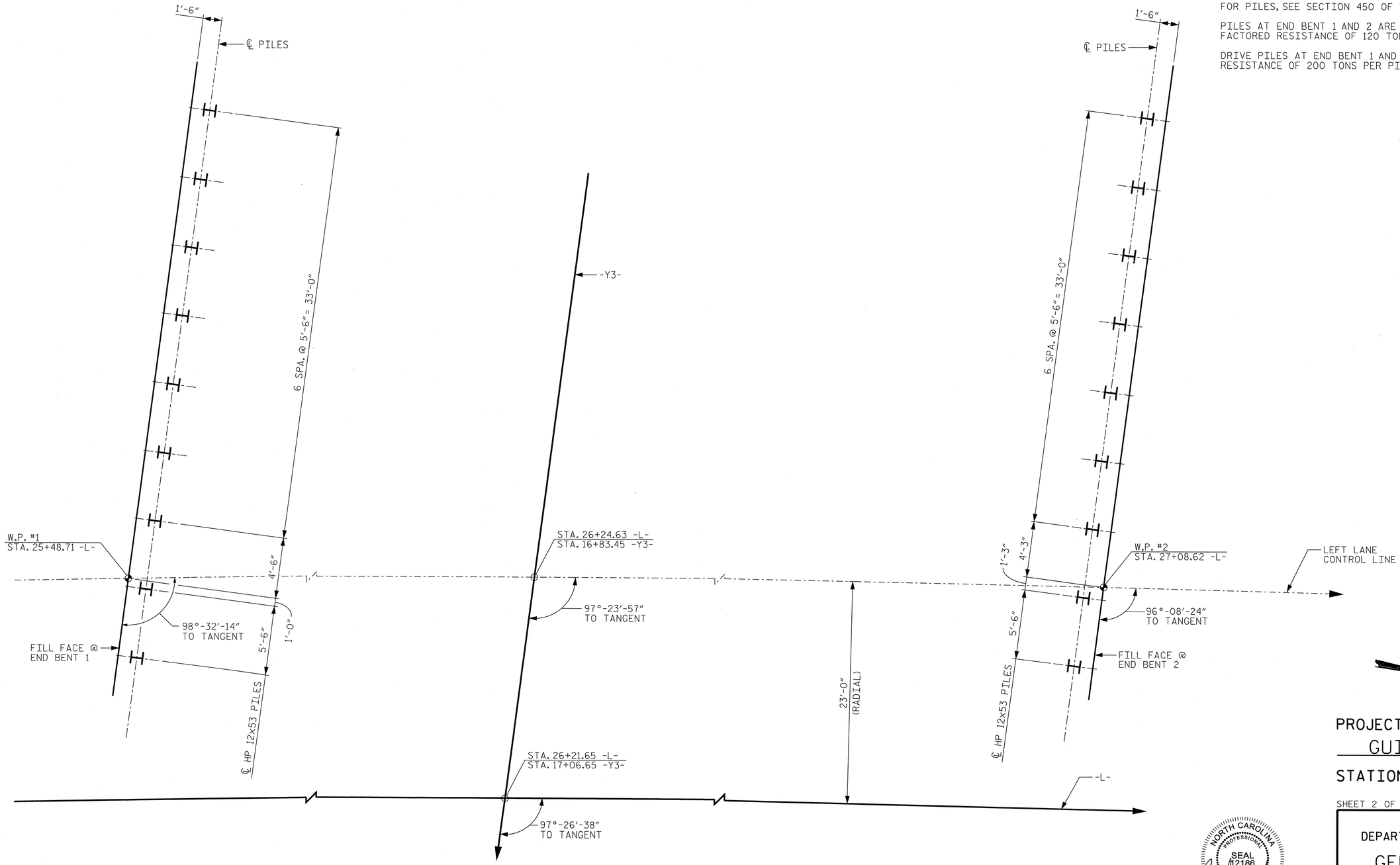

END BENT 1
(INTEGRAL)

END BENT 2
(INTEGRAL)

FOUNDATION LAYOUT

(DIMENSIONS LOCATING PILES ARE SHOWN TO THE PILE CENTERLINE AT BOTTOM OF CAP)

NOTES

FOR PILES, SEE SECTION 450 OF THE STANDARD SPECIFICATIONS.

PILES AT END BENT 1 AND 2 ARE DESIGNED FOR A FACTORED RESISTANCE OF 120 TONS PER PILE.

DRIVE PILES AT END BENT 1 AND 2 TO A REQUIRED DRIVING RESISTANCE OF 200 TONS PER PILE.

PROJECT NO. U-2525B

GUILFORD COUNTY

STATION: 26+21.65 -L-
17+06.65 -Y3-

SHEET 2 OF 4

STATE OF NORTH CAROLINA
DEPARTMENT OF TRANSPORTATION
RALEIGH

GENERAL DRAWING
BRIDGE OVER US 70 ON GREENSBORO EASTERN LOOP BETWEEN WILLOWLAKE RD. AND BURLINGTON RD., LEFT LANE

NORTH CAROLINA PROFESSIONAL SEAL 12186 ENGINEER NEIL L. NARRON 2/17/14

Kimley-Horn and Associates, Inc.
333 Fayetteville Street, Suite 600
Raleigh, NC 27601-1772
Phone (919) 835-1494
NC LICENSE # F-0102

This document, together with the concepts and designs presented herein, as an instrument of services, is intended only for the specific purpose and client for which it was prepared. Reuse of and improper reliance on this document without written authorization and adaptation by Kimley-Horn and Associates, Inc. shall be without liability to Kimley-Horn and Associates, Inc.

Copyright Kimley-Horn and Associates, Inc., 2014

REVISIONS						SHEET NO.
NO.	BY:	DATE:	NO.	BY:	DATE:	S-46
1			3			TOTAL SHEETS
2			4			541

STR. #2

DRAWN BY: RTO DATE: 1/14
CHECKED BY: JCW DATE: 1/14

2/17/2014 K:\RDT_Structures_Bridge\NC\011036224_U-2525B_Gboro East Loop over US 70\Cad\dgn\u-2525_sd_str_2_psh46.dgn

ANGLES
1 - 97°-20'-19.18"
2 - 8°-32'-13.91"
✳3 - 97°-23'-56.91"

✳ TANGENT TO CURVE

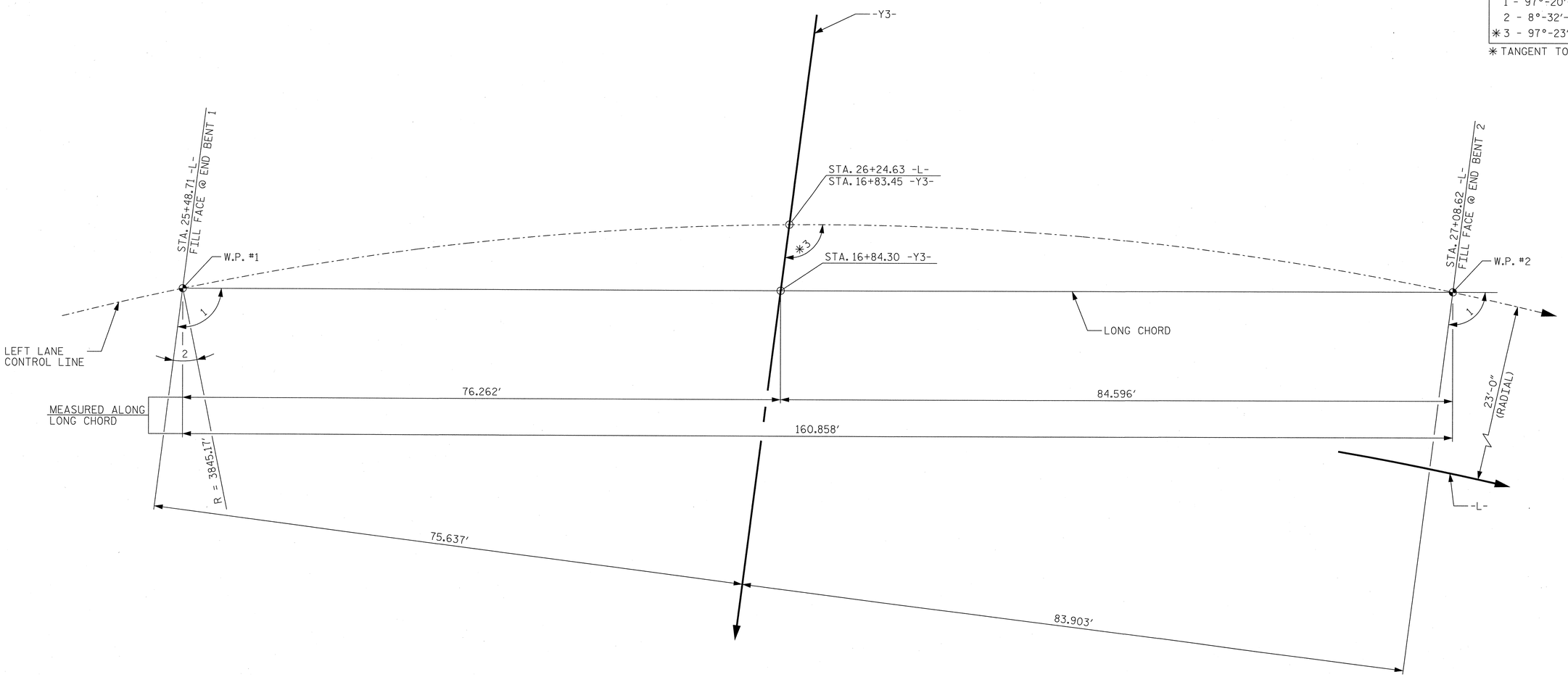

LONG CHORD LAYOUT

(ALL BENTS ARE PARALLEL)

PROJECT NO. U-2525B

GUILFORD COUNTY

STATION: 26+21.65 -L-
17+06.65 -Y3-

SHEET 3 OF 4

NORTH CAROLINA PROFESSIONAL SEAL 12186 ENGINEER CECIL L. NARRON
2/17/14

Kimley-Horn and Associates, Inc.
333 Fayetteville Street, Suite 600
Raleigh, NC 27601-1772
Phone (919) 835-1494
NC LICENSE # F-0102

This document, together with the concepts and designs presented herein, as an instrument of services, is intended only for the specific purpose and client for which it was prepared. Reuse of and improper reliance of this document without written authorization and adaption by Kimley-Horn and Associates, Inc. shall be without liability to Kimley-Horn and Associates, Inc.

Copyright Kimley-Horn and Associates, Inc., 2014

STATE OF NORTH CAROLINA
DEPARTMENT OF TRANSPORTATION
RALEIGH

GENERAL DRAWING

BRIDGE OVER US 70 ON GREENSBORO EASTERN LOOP BETWEEN WILLOWLAKE RD. AND BURLINGTON RD., LEFT LANE

REVISIONS						SHEET NO.
NO.	BY:	DATE:	NO.	BY:	DATE:	S-47
1			3			TOTAL SHEETS
2			4			541

DRAWN BY: RTO DATE: 1/14
CHECKED BY: JCW DATE: 1/14

STR. #2

2/17/2014 K:\RDT_Structures_Bridge\NC\01103224_U-2525B_Gboro East Loop over US 70\Cad\dgn\u-2525_sd_str_2_psh47.dgn

BENCHMARK: BM #24 -Y3- STA. 14+32.46, OFFSET 101' LT, EL. 755.59', R/R SPIKE SET IN 30" OAK

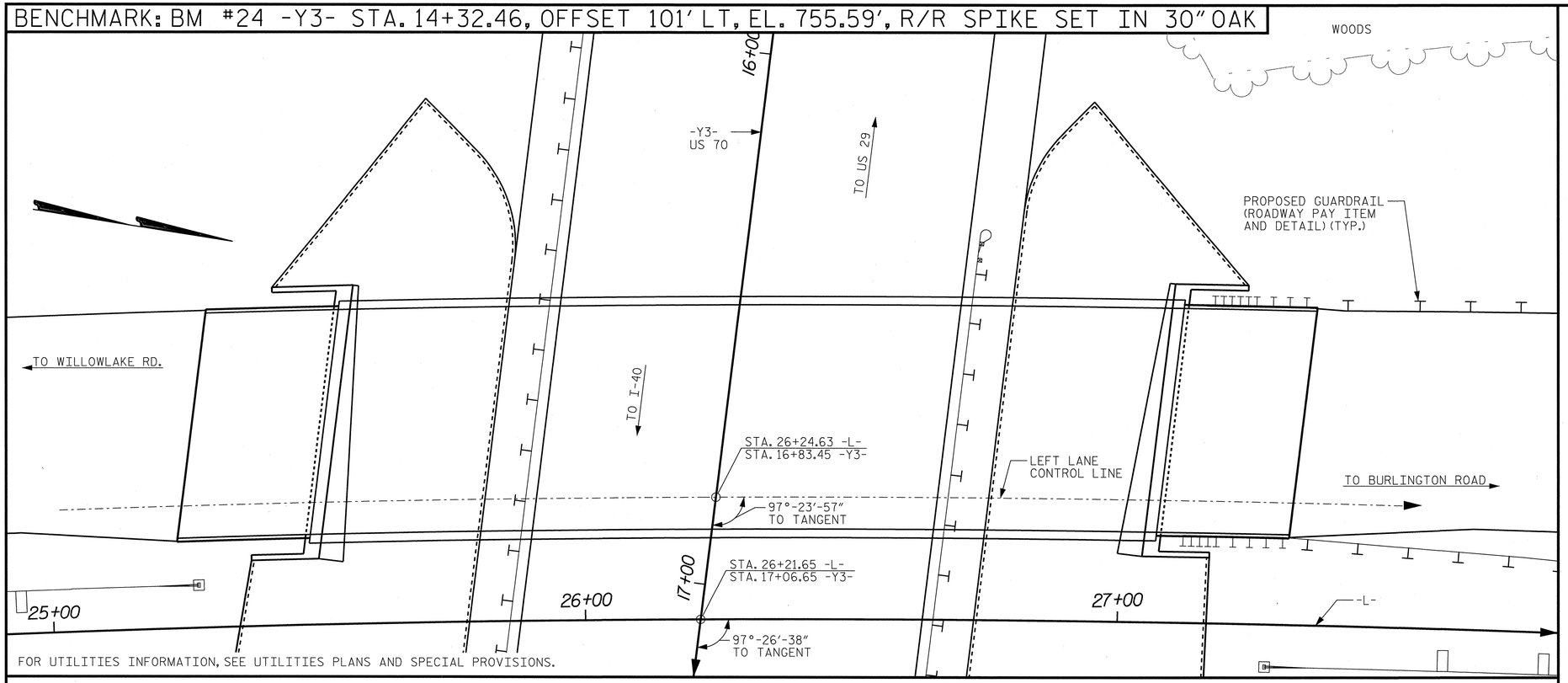

LOCATION SKETCH

NOTES

ASSUMED LIVE LOAD = HL-93 OR ALTERNATE LOADING.

THIS BRIDGE HAS BEEN DESIGNED IN ACCORDANCE WITH THE AASHTO LRFD BRIDGE DESIGN SPECIFICATIONS.

THIS BRIDGE IS LOCATED IN SEISMIC ZONE 1.

FOR OTHER DESIGN DATA AND GENERAL NOTES, SEE SHEET SN.

FOR SUBMITTAL OF WORKING DRAWINGS, SEE SPECIAL PROVISIONS.

FOR FALSEWORK AND FORMWORK, SEE SPECIAL PROVISIONS.

FOR CRANE SAFETY, SEE SPECIAL PROVISIONS.

FOR GROUT FOR STRUCTURES, SEE SPECIAL PROVISIONS.

THE ELEVATION AND CLEARANCE SHOWN ON THE PLANS AT THE POINT OF MINIMUM VERTICAL CLEARANCE ARE FROM THE BEST INFORMATION AVAILABLE. PRIOR TO BEGINNING BRIDGE CONSTRUCTION, VERIFY THE ELEVATION ON THE EXISTING PAVEMENT AND CHECK THE CLEARANCE. REPORT ANY VARIATIONS TO THE ENGINEER. ANY PLAN REVISIONS NECESSARY TO ACHIEVE THE REQUIRED MINIMUM VERTICAL CLEARANCE WILL BE PROVIDED BY THE DEPARTMENT.

FOR MAINTENANCE AND PROTECTION OF TRAFFIC BENEATH PROPOSED STRUCTURE, SEE SPECIAL PROVISIONS.

REMOVABLE FORMS MAY BE USED IN LIEU OF METAL STAY-IN-PLACE FORMS IN ACCORDANCE WITH ARTICLE 420-3 OF THE STANDARD SPECIFICATIONS.

NEEDLE BEAMS WILL NOT BE ALLOWED UNLESS OTHERWISE CALLED FOR ON THE PLANS OR APPROVED BY THE ENGINEER.

ALL STRUCTURAL STEEL SHALL BE AASHTO M270 GRADE 50W AND PAINTED IN ACCORDANCE WITH SYSTEM 4 OF ARTICLE 442-8 OF THE STANDARD SPECIFICATIONS UNLESS OTHERWISE NOTED ON THE PLANS.

THE CLASS AA CONCRETE IN THE BRIDGE DECK SHALL CONTAIN FLY ASH OR GROUND GRANULATED BLAST FURNACE SLAG AT THE SUBSTITUTION RATE SPECIFIED IN ARTICLE 1024-1 AND IN ACCORDANCE WITH ARTICLES 1024-5 AND 1024-6 OF THE STANDARD SPECIFICATIONS. NO PAYMENT WILL BE MADE FOR THIS SUBSTITUTION AS IT IS CONSIDERED INCIDENTAL TO THE COST OF THE REINFORCED CONCRETE DECK SLAB.

FOR EROSION CONTROL MEASURES, SEE EROSION CONTROL PLANS.

TOTAL BILL OF MATERIAL

	REINFORCED CONCRETE DECK SLAB	GROOVING BRIDGE FLOORS	CLASS A CONCRETE	BRIDGE APPROACH SLABS	REINFORCING STEEL	STRUCTURAL STEEL (APPROX.)	HP 12x53 STEEL PILES		CONCRETE BARRIER RAIL	4" SLOPE PROTECTION	ELASTOMERIC BEARINGS	ELECTRICAL CONDUIT SYSTEM
	SQ. FT.	SQ. FT.	C.Y.	LUMP SUM	LBS.	LBS.	NO.	LIN. FT.	LIN. FT.	SQ. YDS.	LUMP SUM	LUMP SUM
SUPERSTRUCTURE	7,203	8,158		LUMP SUM		313,600			318.4		LUMP SUM	LUMP SUM
END BENT 1			30.8		5,008		9	405		425		
END BENT 2			30.2		4,956		9	365		420		
TOTAL	7,203	8,158	61.0	LUMP SUM	9,964	313,600	18	770	318.4	845	LUMP SUM	LUMP SUM

PROJECT NO. U-2525B

GUILFORD COUNTY

STATION: 26+21.65 -L-
17+06.65 -Y3-

SHEET 4 OF 4

NORTH CAROLINA PROFESSIONAL SEAL 12186 ENGINEER CECIL L. NARRON 2/17/14

Kimley-Horn and Associates, Inc.
333 Fayetteville Street, Suite 600
Raleigh, NC 27601-1772
Phone (919) 835-1494
NC LICENSE # F-0102

This document, together with the concepts and designs presented herein, as an instrument of services, is intended only for the specific purpose and client for which it was prepared. Reuse of and improper reliance of this document without written authorization and adaptation by Kimley-Horn and Associates, Inc. shall be without liability to Kimley-Horn and Associates, Inc.

Copyright Kimley-Horn and Associates, Inc., 2014

STATE OF NORTH CAROLINA
DEPARTMENT OF TRANSPORTATION
RALEIGH

GENERAL DRAWING

BRIDGE OVER US 70 ON GREENSBORO EASTERN LOOP BETWEEN WILLOWLAKE RD. AND BURLINGTON RD., LEFT LANE

REVISIONS						SHEET NO.
NO.	BY:	DATE:	NO.	BY:	DATE:	S-48
1			3			TOTAL SHEETS
2			4			541

DRAWN BY: RTO DATE: 1/14
CHECKED BY: JCW DATE: 1/14

STR. #2

2/17/2014 K:\RDT_Structures_Bridge\NC\011036224_U-2525B_Greensboro East Loop over US 70\Cad\dgn\u-2525_sd_str_2_psh48.dgn

LOAD AND RESISTANCE FACTOR RATING (LRFR) SUMMARY FOR STEEL GIRDERS

LEVEL		VEHICLE	WEIGHT (W) (TONS)	CONTROLLING LOAD RATING (#)	MINIMUM RATING FACTORS (RF)	TONS = W × RF	STRENGTH I LIMIT STATE											SERVICE II LIMIT STATE						COMMENT NUMBER
								MOMENT					SHEAR						MOMENT						
							LIVE-LOAD FACTORS (γ_{LL})	DISTRIBUTION FACTORS (DF)	RATING FACTOR	SPAN	GIRDER LOCATION	DISTANCE FROM LEFT END OF SPAN (ft)	DISTRIBUTION FACTORS (DF)	RATING FACTOR	SPAN	GIRDER LOCATION	DISTANCE FROM LEFT END OF SPAN (ft)	LIVE-LOAD FACTORS (γ_{LL})	DISTRIBUTION FACTORS (DF)	RATING FACTOR	SPAN	GIRDER LOCATION	DISTANCE FROM LEFT END OF SPAN (ft)	
DESIGN LOAD RATING		HL-93 (INVENTORY)	N/A	1	1.59	--	1.75	0.802	1.59	A	E	78.92	0.946	1.60	A	I	0.00	1.30	0.802	1.67	A	E	78.92	
		HL-93 (OPERATING)	N/A	--	2.07	--	1.35	0.802	2.07	A	E	78.92	0.946	2.08	A	I	0.00	1.00	0.802	2.17	A	E	78.92	
		HS-20 (INVENTORY)	36.000	2	3.04	109.44	1.75	0.802	3.04	A	E	78.92	0.802	3.74	A	E	0.00	1.30	0.802	3.18	A	E	78.92	
		HS-20 (OPERATING)	36.000	--	3.93	141.48	1.35	0.802	3.93	A	E	78.92	0.802	4.85	A	E	0.00	1.00	0.802	4.13	A	E	78.92	
LEGAL LOAD RATING	SINGLE VEHICLE (SV)	SH	12.500	--	8.57	107.13	1.40	0.802	10.21	A	E	78.92	0.802	12.90	A	E	0.00	1.30	0.802	8.57	A	E	78.92	
		S3C	21.500	--	4.99	107.29	1.40	0.802	5.96	A	E	78.92	0.802	7.54	A	E	0.00	1.30	0.802	4.99	A	E	78.92	
		S3A	22.750	--	4.73	107.61	1.40	0.802	5.64	A	E	78.92	0.802	7.14	A	E	0.00	1.30	0.802	4.73	A	E	78.92	
		S4A	26.750	--	4.09	109.41	1.40	0.802	4.88	A	E	78.92	0.802	6.14	A	E	0.00	1.30	0.802	4.09	A	E	78.92	
		S5A	30.500	--	3.60	109.80	1.40	0.802	4.30	A	E	78.92	0.802	5.49	A	E	0.00	1.30	0.802	3.60	A	E	78.92	
		S6A	34.500	--	3.22	111.09	1.40	0.802	3.85	A	E	78.92	0.802	4.90	A	E	0.00	1.30	0.802	3.22	A	E	78.92	
		S7B	38.500	--	2.92	112.42	1.40	0.802	3.48	A	E	78.92	0.802	4.47	A	E	0.00	1.30	0.802	2.92	A	E	78.92	
		S7A	40.000	3	2.84	113.60	1.40	0.802	3.39	A	E	78.92	0.802	4.41	A	E	0.00	1.30	0.802	2.84	A	E	78.92	
	TRUCK TRACTOR SEMI-TRAILER (TTST)	T4A	28.250	--	3.96	111.87	1.40	0.802	4.72	A	E	78.92	0.802	5.88	A	E	0.00	1.30	0.802	3.96	A	E	78.92	
		T5B	32.000	--	3.49	111.68	1.40	0.802	4.16	A	E	78.92	0.802	5.35	A	E	0.00	1.30	0.802	3.49	A	E	78.92	
		T6A	36.000	--	3.14	113.04	1.40	0.802	3.75	A	E	78.92	0.802	4.83	A	E	0.00	1.30	0.802	3.14	A	E	78.92	
		T7A	40.000	--	2.87	114.80	1.40	0.802	3.43	A	E	78.92	0.802	4.41	A	E	0.00	1.30	0.802	2.87	A	E	78.92	
		T7B	40.000	--	2.97	118.80	1.40	0.802	3.54	A	E	78.92	0.802	4.30	A	E	0.00	1.30	0.802	2.97	A	E	78.92	
FATIGUE		HL-93 (INVENTORY)	γ_{LL}=0.75	--	--																			

LOAD FACTORS:

DESIGN LOAD RATING FACTORS	LIMIT STATE	γ_{DC}	γ_{DW}
	STRENGTH I	1.25	1.50
	SERVICE II	1.00	1.00

NOTES:

MINIMUM RATING FACTORS ARE BASED ON THE STRENGTH I AND SERVICE II LIMIT STATES.

ALLOWABLE STRESS FOR SERVICE II LIMIT STATE ARE AS REQUIRED FOR DESIGN.

COMMENTS:

1.

2.

3.

4.

(#) CONTROLLING LOAD RATING

(1) DESIGN LOAD RATING (HL-93)

(2) DESIGN LOAD RATING (HS-20)

(3) LEGAL LOAD RATING **

** SEE CHART FOR VEHICLE TYPE

GIRDER LOCATION

I - INTERIOR GIRDER
EL - EXTERIOR LEFT GIRDER
ER - EXTERIOR RIGHT GIRDER

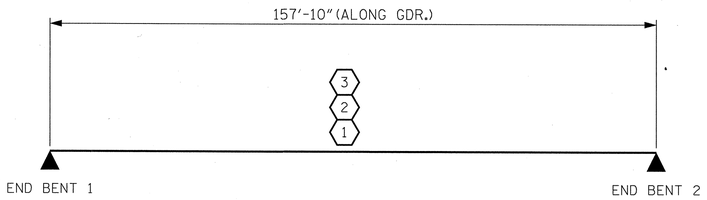

LRFR SUMMARY

PROJECT NO. U-2525B

GUILFORD COUNTY

STATION: 26+21.65 -L-
17+06.65 -Y3-

NORTH CAROLINA PROFESSIONAL SEAL 12186 ENGINEER CECIL L. NARRON
CECIL L. NARRON 2/17/14

Kimley-Horn and Associates, Inc.
333 Fayetteville Street, Suite 600
Raleigh, NC 27601-1772
Phone (919) 835-1494
NC LICENSE # F-0102

This document, together with the concepts and designs presented herein, as an instruments of services, is intended only for the specific purpose and client for which it was prepared. Reuse of and improper reliance of this document without written authorization and adaption by Kimley-Horn and Associates, Inc. shall be without liability to Kimley-Horn and Associates, Inc.

Copyright Kimley-Horn and Associates, Inc., 2014

STATE OF NORTH CAROLINA
DEPARTMENT OF TRANSPORTATION
RALEIGH

STANDARD

LRFR SUMMARY FOR STEEL GIRDERS
(INTERSTATE TRAFFIC)

REVISIONS						SHEET NO.
NO.	BY:	DATE:	NO.	BY:	DATE:	S-49
1			3			TOTAL SHEETS
2			4			541

ASSEMBLED BY : RTO	DATE :	1/14
CHECKED BY : JCW	DATE :	1/14
DRAWN BY : MAA 1/08	REV. 11/12/08RR	MAA/GM
CHECKED BY : GM/DI 2/08	REV. 10/1/11	MAA/GM

2/17/2014 K:\ROT_Structures_Bridge\NC\011036224.U-2525B.Oboro East Loop over US 70\Cad\dgn\u-2525_sd_str_2_pshm49.dgn

STD. NO. LRFR4 STR. #2

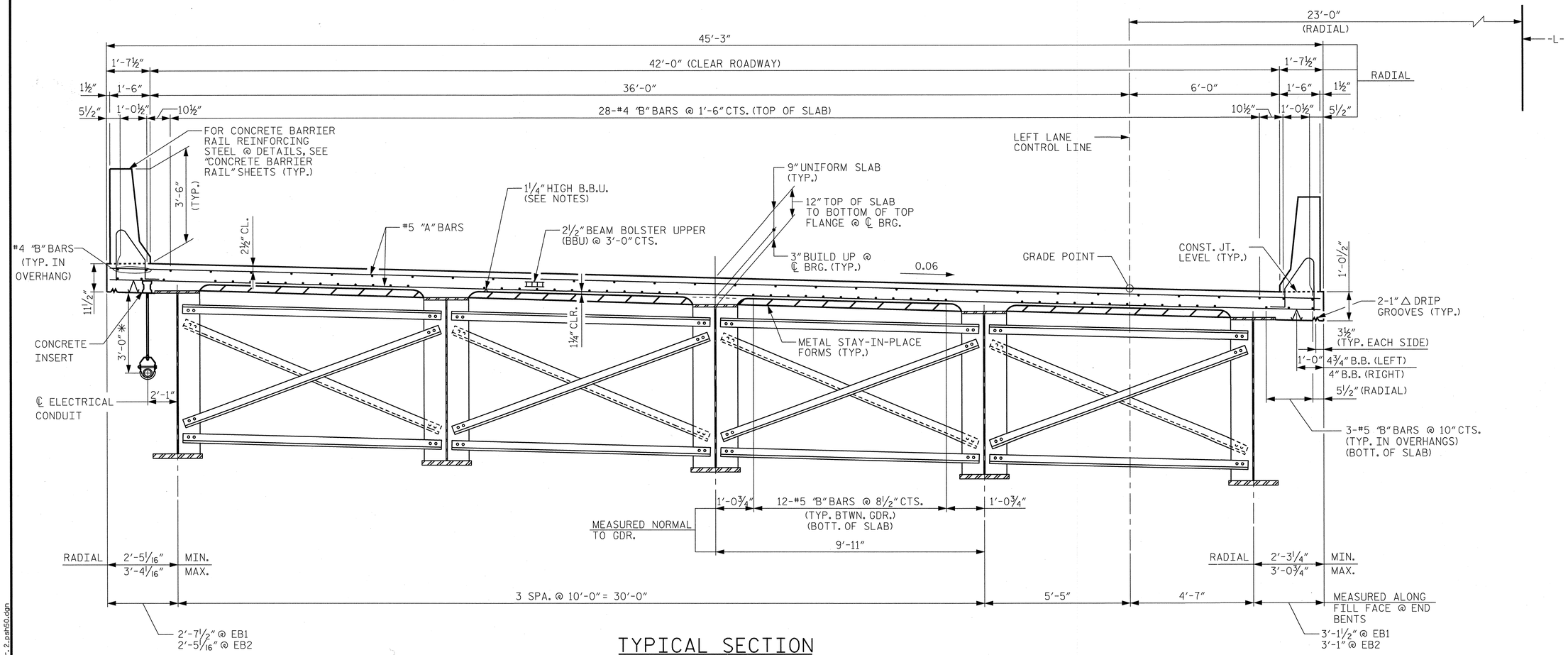

TYPICAL SECTION

(SHOWING INTERMEDIATE DIAPHRAGM)

* MEASURED FROM BOTTOM OF SLAB TO ℄ CONDUIT

NOTES

PROVIDE 1¼" HIGH BEAM BOLSTER UPPER AT 4'-0" CTS. ATOP THE METAL STAY-IN-PLACE FORMS TO SUPPORT THE BOTTOM MAT OF "A" BARS. WHEN USING REMOVEABLE FORMS, PROVIDE CONTINUOUS HIGH CHAIRS FOR METAL DECK (C.H.C.M.) @ 4'-0" CTS. WITH A HEIGHT TO SUPPORT THE BOTTOM MAT OF "A" BARS A CLEAR DISTANCE OF 2½" ABOVE THE TOP OF THE REMOVEABLE FORM.

METAL STAY-IN-PLACE FORMS SHALL NOT BE WELDED TO GIRDER FLANGES IN THE ZONES REQUIRING CHARPY V-NOTCH TEST. SEE STRUCUTRAL STEEL DETAIL SHEETS.

PREVIOUSLY CAST CONCRETE IN THE SPAN SHALL HAVE ATTAINED A MINIMUM COMPRESSIVE STRENGTH OF 3,000 PSI BEFORE ADDITIONAL CONCRETE IS CAST IN THE SPAN.

THE CONTRACTOR MAY, WHEN NECESSARY, PROPOSE A SCHEME FOR AVOIDING INTERFERENCE BETWEEN METAL STAY-IN-PLACE FORM SUPPORTS OR FORMS AND GIRDER STIFFENERS OR CONNECTOR PLATES. THE PROPOSAL SHALL BE INDICATED, AS APPROPRIATE, ON EITHER THE STEEL WORKING DRAWINGS OR THE METAL STAY-IN-PLACE FORM WORKING DRAWINGS.

NORTH CAROLINA PROFESSIONAL SEAL 12186 ENGINEER CECIL L. NARRON
2/17/14

Kimley-Horn and Associates, Inc.
333 Fayetteville Street, Suite 600
Raleigh, NC 27601-1772
Phone (919) 835-1494
NC LICENSE # F-0102

This document, together with the concepts and designs presented herein, as an instrument of service, is intended only for the specific purpose and client for which it was prepared. Reuse of and improper reliance on this document without written authorization and adaptation by Kimley-Horn and Associates, Inc. shall be without liability to Kimley-Horn and Associates, Inc.
Copyright Kimley-Horn and Associates, Inc., 2014

PROJECT NO. U-2525B
GUILFORD COUNTY
STATION: 26+21.65 -L-
17+06.65 -Y3-

SHEET 1 OF 2

STATE OF NORTH CAROLINA
DEPARTMENT OF TRANSPORTATION
RALEIGH
SUPERSTRUCTURE
TYPICAL SECTION

REVISIONS						SHEET NO.
NO.	BY:	DATE:	NO.	BY:	DATE:	S-50
1			3			TOTAL SHEETS
2			4			541

STR. #2

DRAWN BY: RTO DATE: 1/14
CHECKED BY: JCW DATE: 1/14

2/17/2014 K:\RDT_Structures_Bridges\NC\01103624_U-2525B_Gboro East Loop over US 70\Cad\dgn\u-2525_sd_str_2_psh50.dgn

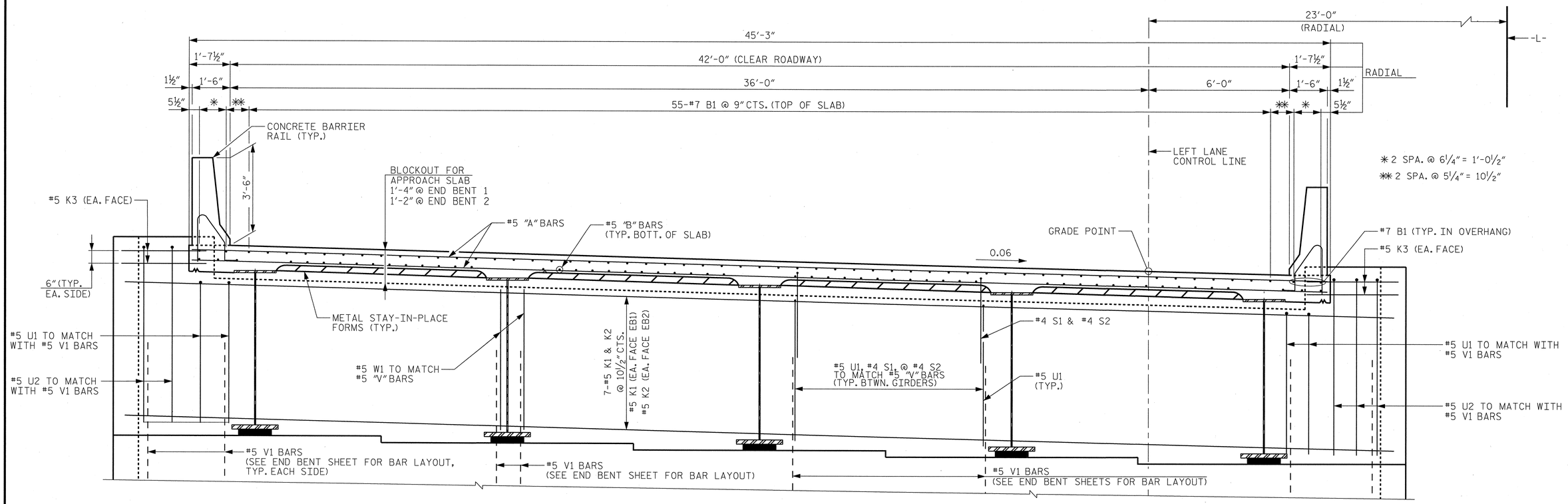

TYPICAL SECTION

(SHOWING INTEGRAL END BENT DIAPHRAGM)

NOTES

SEE SHEET S-50 FOR NOTES.

FOR VIEW C-C CUT SEE SHEET S-53.

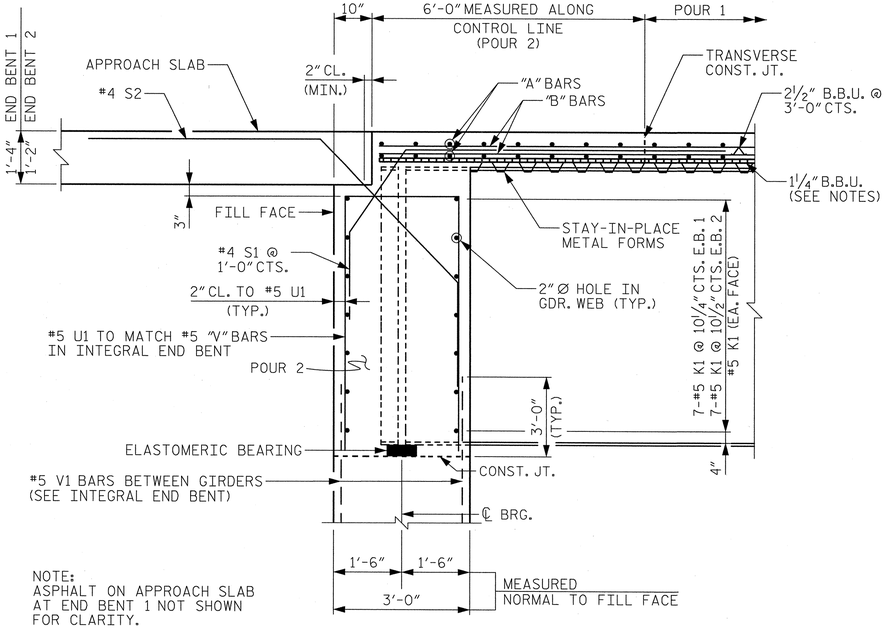

NOTE:
ASPHALT ON APPROACH SLAB AT END BENT 1 NOT SHOWN FOR CLARITY.

SECTION THRU INTEGRAL END BENT

(END BENT 2 SHOWN, END BENT 1 SIMILAR)

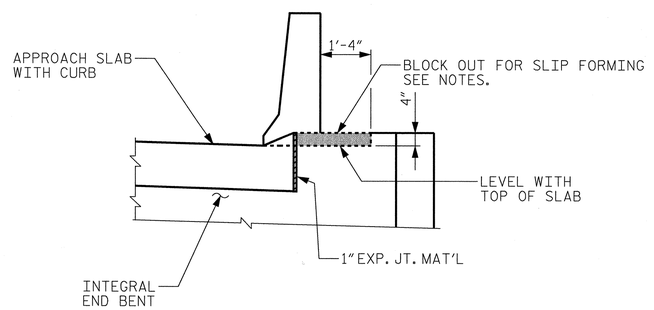

VIEW C-C

(END BENT 2 SHOWN, END BENT 1 SIMILAR)

PROJECT NO. U-2525B

GUILFORD COUNTY

STATION: 26+21.65 -L-
17+06.65 -Y3-

SHEET 2 OF 2

NORTH CAROLINA PROFESSIONAL SEAL 12186 ENGINEER CECIL L. NARRON 2/17/14

STATE OF NORTH CAROLINA
DEPARTMENT OF TRANSPORTATION
RALEIGH

SUPERSTRUCTURE
TYPICAL SECTION

Kimley-Horn and Associates, Inc.
333 Fayetteville Street, Suite 600
Raleigh, NC 27601-1772
Phone (919) 835-1494
NC LICENSE # F-0102

This document, together with the concepts and designs presented herein, as an instrument of services, is intended only for the specific purpose and client for which it was prepared. Reuse of and improper reliance on this document without written authorization and adoption by Kimley-Horn and Associates, Inc. shall be without liability to Kimley-Horn and Associates, Inc.
Copyright Kimley-Horn and Associates, Inc., 2014

REVISIONS						SHEET NO.
NO.	BY:	DATE:	NO.	BY:	DATE:	S-51
1			3			TOTAL SHEETS
2			4			541

DRAWN BY: RTO DATE: 1/14
CHECKED BY: JCW DATE: 1/14

STR. #2

2/17/2014 K:\RDT_Structures_Bridge\NC\011036224_U-2525B_Gboro East Loop over US 70\Cad\dgn\u-2525_sd_str_2_psh51.dgn

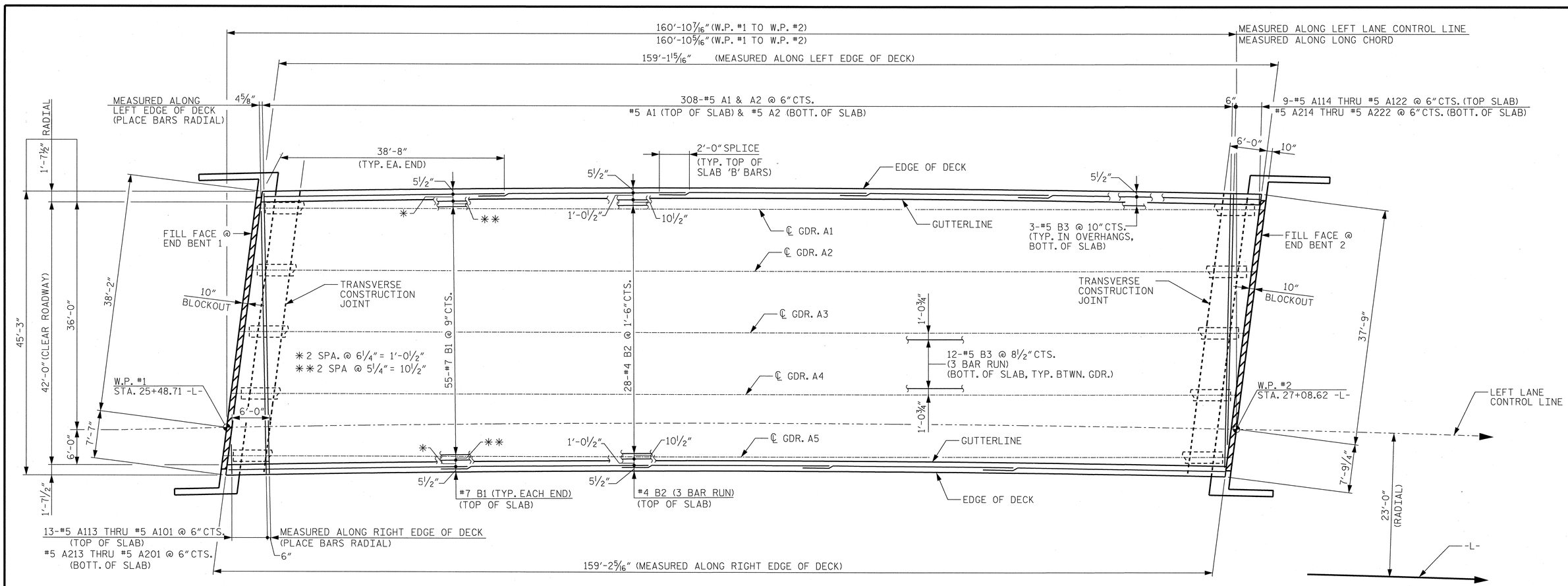

PLAN OF SPAN A

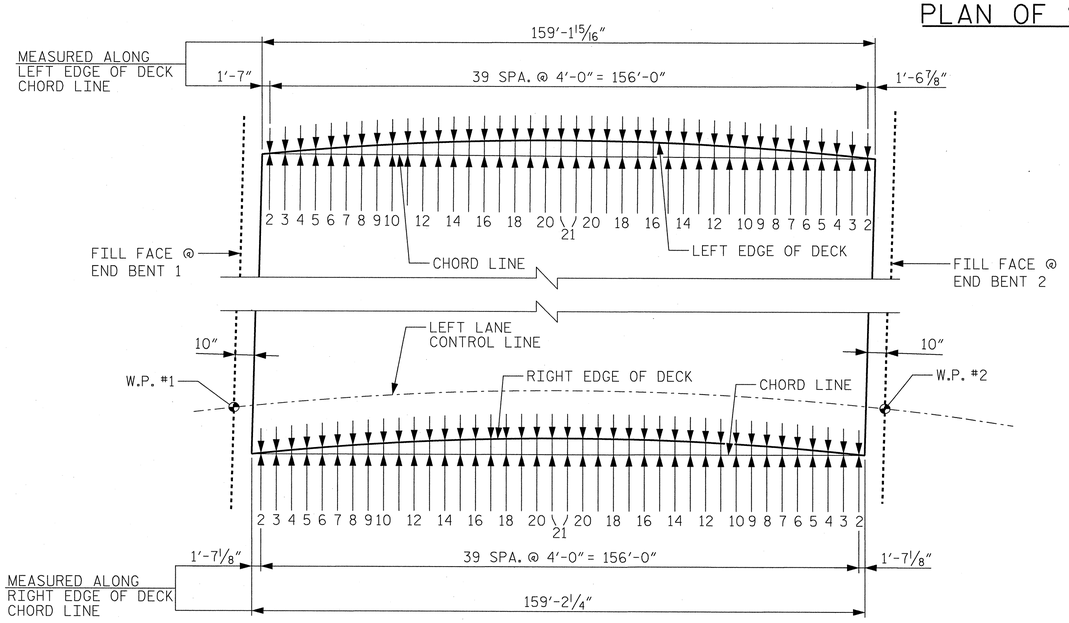

CURVE OFFSET

(SPAN A)

CURVE OFFSET (IN.) CHORD TO EDGE OF DECK		
LOC.	LEFT	RIGHT
1	0	0
2	3/8	3/8
3	1 5/16	1 5/16
4	2 3/16	2 1/4
5	3 1/16	3 1/8
6	3 7/8	3 7/8
7	4 9/16	4 9/16
8	5 1/4	5 1/4
9	5 15/16	5 15/16
10	6 1/2	6 1/2
11	7 1/16	7 1/16
12	7 9/16	7 9/16
13	8	8
14	8 3/8	8 3/8
15	8 3/4	8 3/4
16	9 1/16	9 1/16
17	9 5/16	9 5/16
18	9 7/16	9 7/16
19	9 5/8	9 5/8
20	9 3/4	9 3/4
21	9 3/4	9 3/4

PROJECT NO. U-2525B

GUILFORD COUNTY

STATION: 26+21.65 -L-
17+06.65 -Y3-

SHEET 1 OF 3

STATE OF NORTH CAROLINA
DEPARTMENT OF TRANSPORTATION
RALEIGH

SUPERSTRUCTURE
PLAN OF SPAN

NORTH CAROLINA PROFESSIONAL SEAL 12186 ENGINEER CECIL L. NARRON
2/17/14

Kimley-Horn and Associates, Inc.
333 Fayetteville Street, Suite 600
Raleigh, NC 27601-1772
Phone (919) 835-1494
NC LICENSE # F-0102

This document, together with the concepts and designs presented herein, as an instrument of services, is intended only for the specific purpose and client for which it was prepared. Reuse of and improper reliance of this document without written authorization and adoption by Kimley-Horn and Associates, Inc. shall be without liability to Kimley-Horn and Associates, Inc.
Copyright Kimley-Horn and Associates, Inc., 2014

REVISIONS						SHEET NO.
NO.	BY:	DATE:	NO.	BY:	DATE:	S-52
1			3			TOTAL SHEETS
2			4			541

DRAWN BY: RTO DATE: 1/14
CHECKED BY: JCW DATE: 1/14

STR. #2

K:\RDT_Structures_Bridge\NC\01036224_U-2525B_Goro East Loop over US 70\Cad\dgn\u-2525_sd_str_2_psh52.dgn
2/17/2014

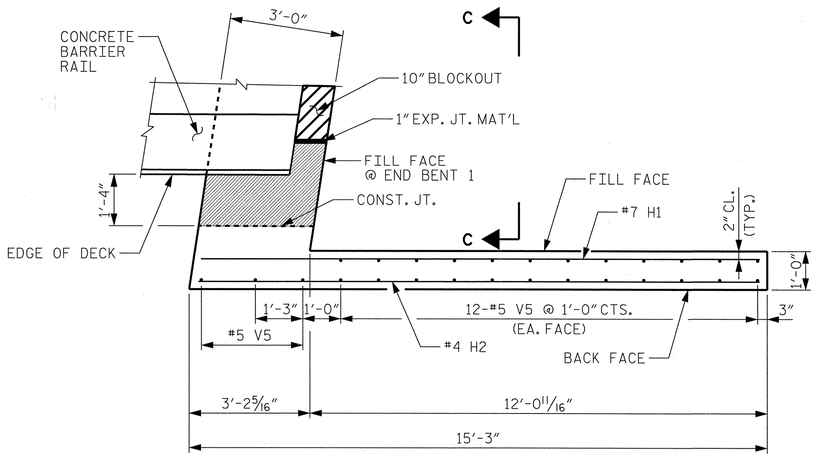

PLAN OF WING (W1)

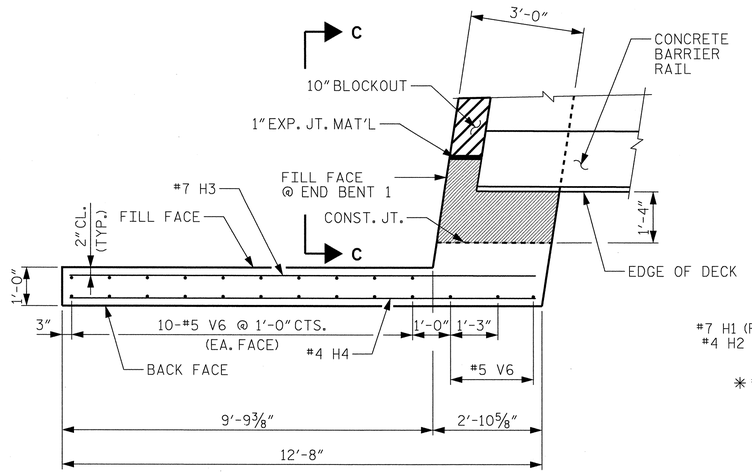

PLAN OF WING (W2)

NOTES

FOR VIEW C-C SEE SHEET S-51.

THE CONCRETE IN THE SHADED AREA OF THE INTEGRAL END BENT SHALL BE POURED AFTER THE BARRIER RAIL IS CAST IF SLIP FORMING IS USED.

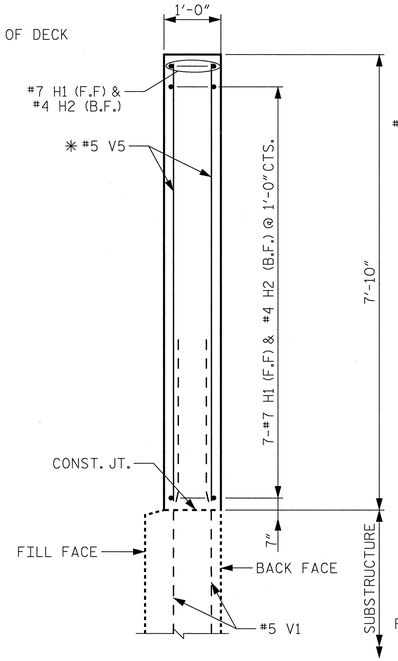

SECTION A-A

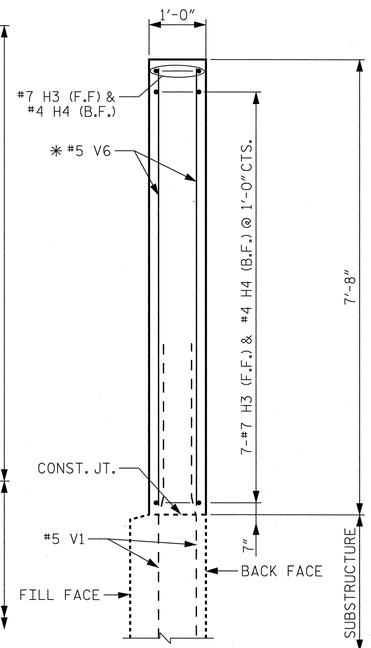

SECTION B-B

* - SPACE WITH V1 BARS IN END BENT 1 WINGS.

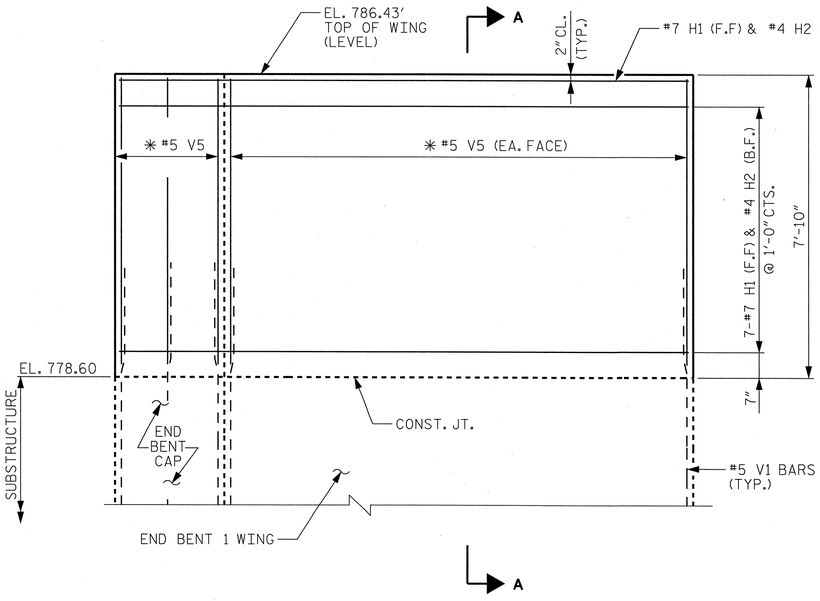

ELEVATION OF WING (W1)

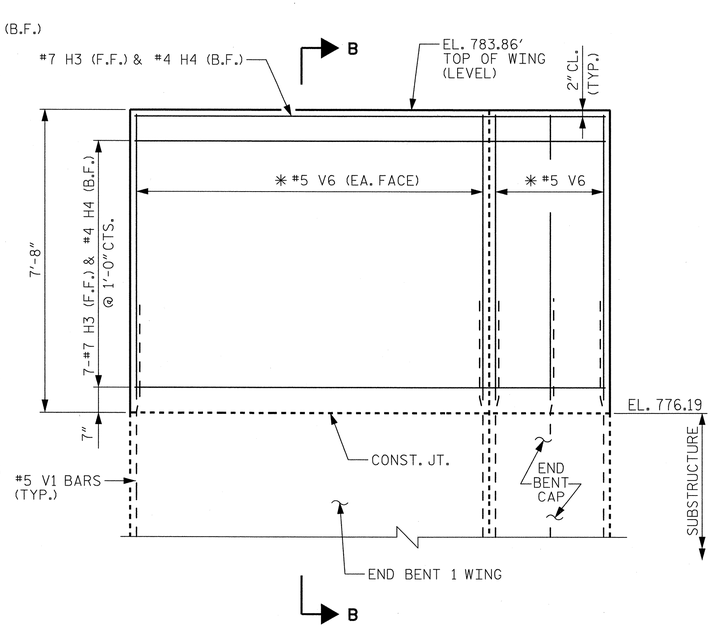

ELEVATION OF WING (W2)

END DIAPHRAGM WINGS AT END BENT 1

(FOR END BENT REINFORCING STEEL AND DETAILS, SEE "SUBSTRUCTURE END BENTS 1 & 2" SHEETS.)

DRAWN BY:	RTO	DATE:	1/14
CHECKED BY:	JCW	DATE:	1/14

PROJECT NO. U-2525B

GUILFORD COUNTY

STATION: 26+21.65 -L-
17+06.65 -Y3-

SHEET 2 OF 3

STATE OF NORTH CAROLINA
DEPARTMENT OF TRANSPORTATION
RALEIGH

SUPERSTRUCTURE

PLAN OF SPAN DETAILS

NORTH CAROLINA PROFESSIONAL SEAL 12186 ENGINEER CECIL L. NARRON 2/17/14

Kimley-Horn and Associates, Inc.
333 Fayetteville Street, Suite 600
Raleigh, NC 27601-1772
Phone (919) 835-1494
NC LICENSE # F-0102

This document, together with the concepts and designs presented herein, as an instrument of services, is intended only for the specific purpose and client for which it was prepared. Reuse of and improper reliance on this document without written authorization and adaptation by Kimley-Horn and Associates, Inc. shall be without liability to Kimley-Horn and Associates, Inc.

Copyright Kimley-Horn and Associates, Inc., 2014

REVISIONS						SHEET NO.
NO.	BY:	DATE:	NO.	BY:	DATE:	S-53
1			3			TOTAL SHEETS
2			4			541

STR. #2

K:\RDT_Structures_Bridge\NC\01\036224.U-2525B.Gboro East Loop over US 70\Cad\dgn\u-2525_sd_str_2.psh53.dgn
2/17/2014

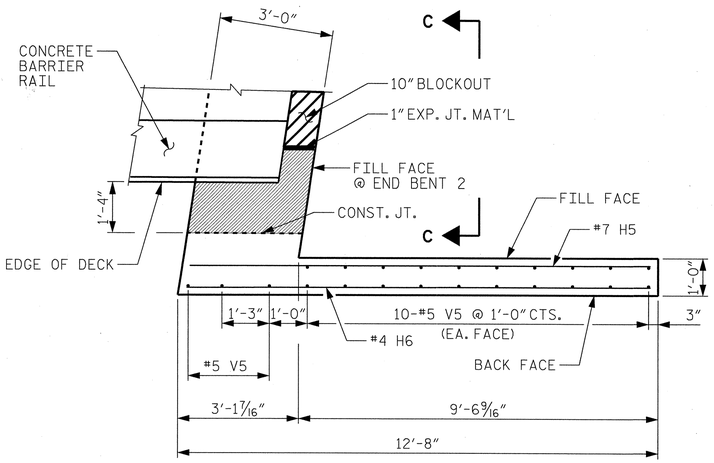

PLAN OF WING (W3)

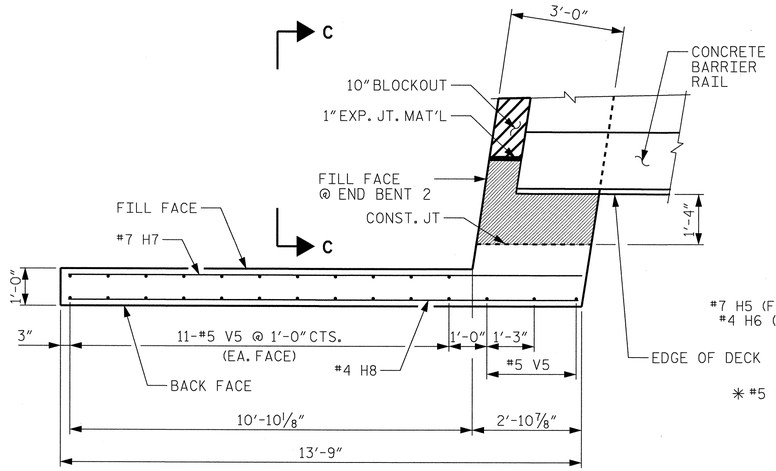

PLAN OF WING (W4)

NOTES

FOR VIEW C-C SEE SHEET S-51.

THE CONCRETE IN THE SHADED AREA OF THE INTEGRAL END BENT SHALL BE POURED AFTER THE BARRIER RAIL IS CAST IF SLIP FORMING IS USED.

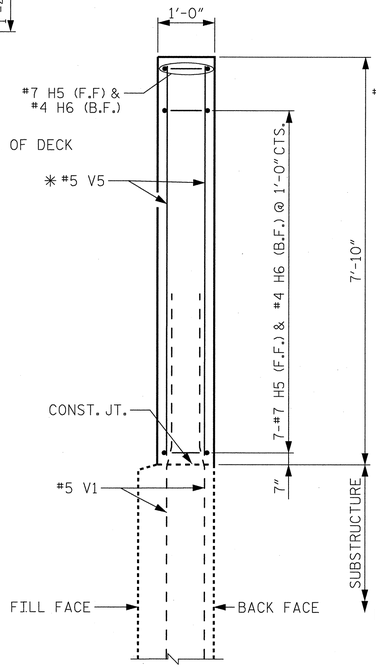

SECTION A-A

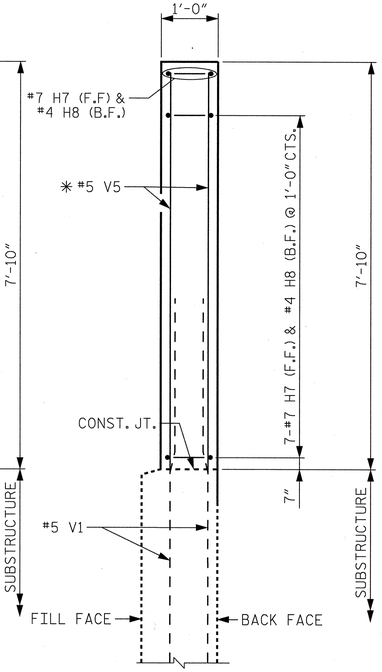

SECTION B-B

* - SPACE WITH V1 OR V3 BARS IN END BENT 2 WINGS.

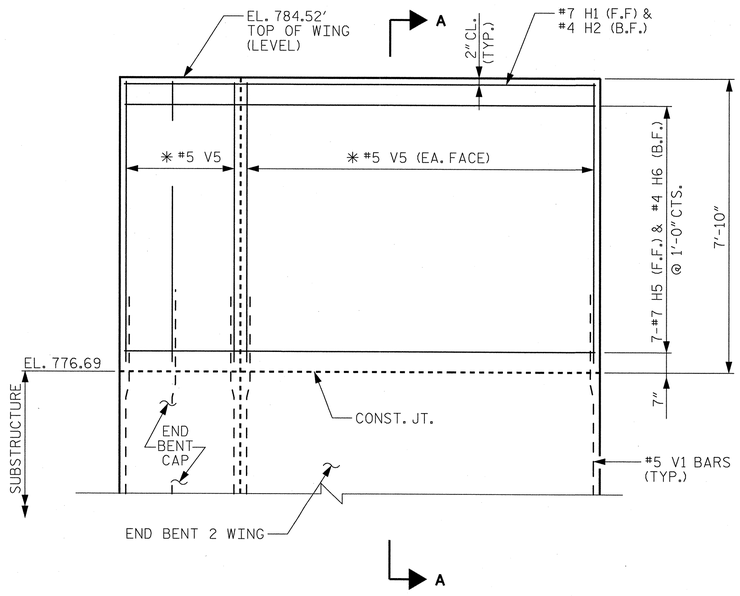

ELEVATION OF WING (W3)

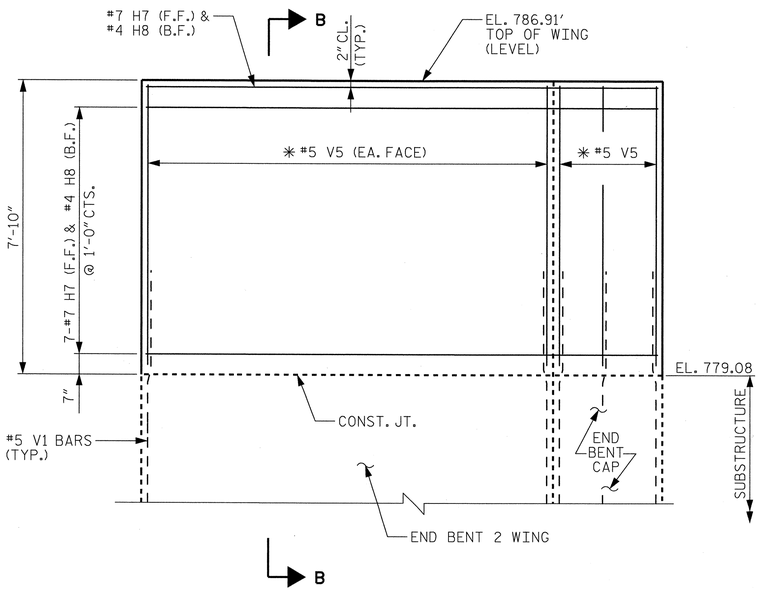

ELEVATION OF WING (W4)

END DIAPHRAGM WINGS AT END BENT 2

(FOR END BENT REINFORCING STEEL AND DETAILS, SEE "SUBSTRUCTURE END BENTS 1 & 2" SHEETS.)

DRAWN BY: RTO DATE: 1/14
CHECKED BY: JCW DATE: 1/14

PROJECT NO. U-2525B
GUILFORD COUNTY
STATION: 26+21.65 -L-
17+06.65 -Y3-

SHEET 2 OF 3

STATE OF NORTH CAROLINA
DEPARTMENT OF TRANSPORTATION
RALEIGH

SUPERSTRUCTURE

PLAN OF SPAN DETAILS

NORTH CAROLINA PROFESSIONAL SEAL 12186 ENGINEER JACOB L. NARRONE 2/17/14

Kimley-Horn and Associates, Inc.
333 Fayetteville Street, Suite 600
Raleigh, NC 27601-1772
Phone (919) 835-1494
NC LICENSE # F-0102

This document, together with the concepts and designs presented herein, as an instrument of services, is intended only for the specific purpose and client for which it was prepared. Reuse of and improper reliance of this document without written authorization and adaptation by Kimley-Horn and Associates, Inc. shall be without liability to Kimley-Horn and Associates, Inc.
Copyright Kimley-Horn and Associates, Inc., 2014

REVISIONS						SHEET NO.
NO.	BY:	DATE:	NO.	BY:	DATE:	S-54
1			3			TOTAL SHEETS
2			4			541

STR. #2

2/17/2014 K:\RDT_Structures_Bridges\NC\011036224_U-2525B_Cboro East Loop over US 70\Cad\dgn\u-2525_sd_str_2.pw54.dgn

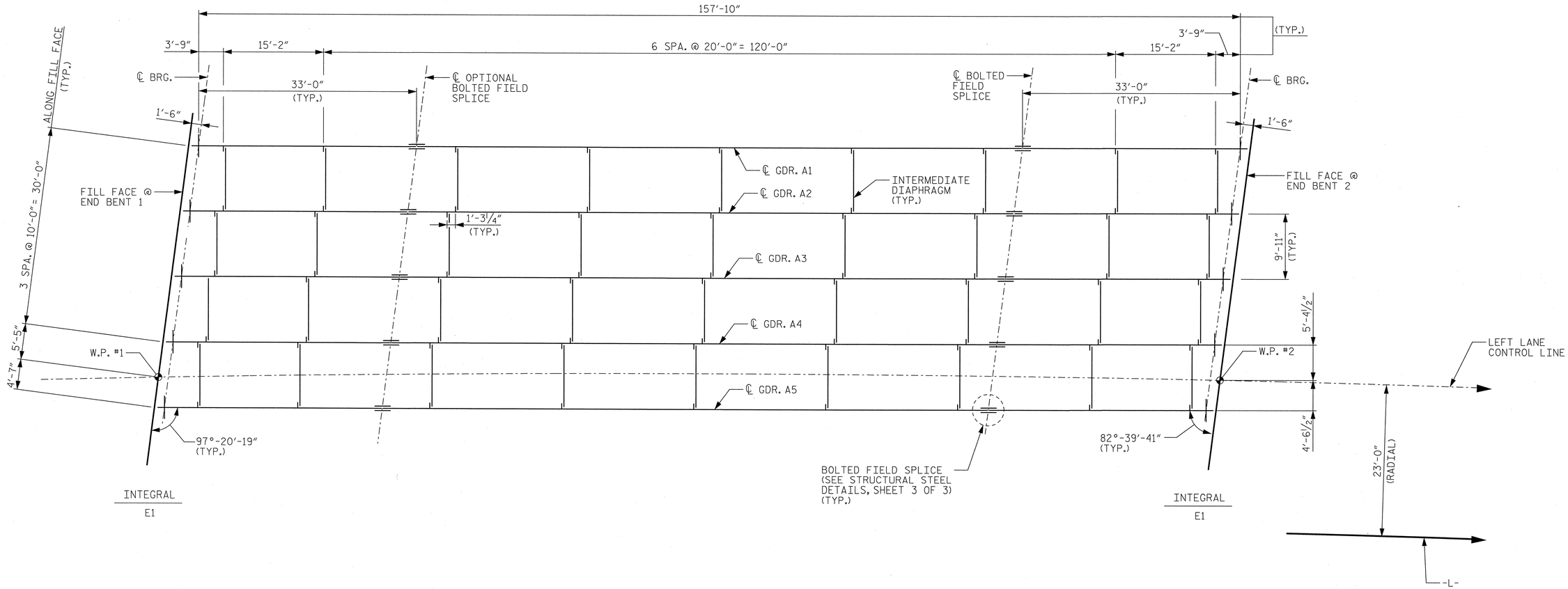

FRAMING PLAN

PROJECT NO. U-2525B

GUILFORD COUNTY

STATION: 26+21.65 -L-
17+06.65 -Y3-

STATE OF NORTH CAROLINA
DEPARTMENT OF TRANSPORTATION
RALEIGH

SUPERSTRUCTURE

FRAMING PLAN

NORTH CAROLINA PROFESSIONAL SEAL 2186 ENGINEER DECIL L. NARRON 2/17/14

Kimley-Horn and Associates, Inc.
333 Fayetteville Street, Suite 600
Raleigh, NC 27601-1772
Phone (919) 835-1494
NC LICENSE # F-0102

This document, together with the concepts and designs presented herein, as an instrument of services, is intended only for the specific purpose and client for which it was prepared. Reuse of and improper reliance on this document without written authorization and adaptation by Kimley-Horn and Associates, Inc. shall be without liability to Kimley-Horn and Associates, Inc.

Copyright Kimley-Horn and Associates, Inc., 2014

REVISIONS						SHEET NO.
NO.	BY:	DATE:	NO.	BY:	DATE:	S-55
1			3			TOTAL SHEETS
2			4			541

DRAWN BY: RTO DATE: 1/14
CHECKED BY: JCW DATE: 1/14

STR. #2

2/17/2014 K:\RDT_Structures_Bridges\NC\011036224_U-2525B_Oboro East Loop over US 70\Cad\dgn\u-2525_sd_str_2_pgn55.dgn

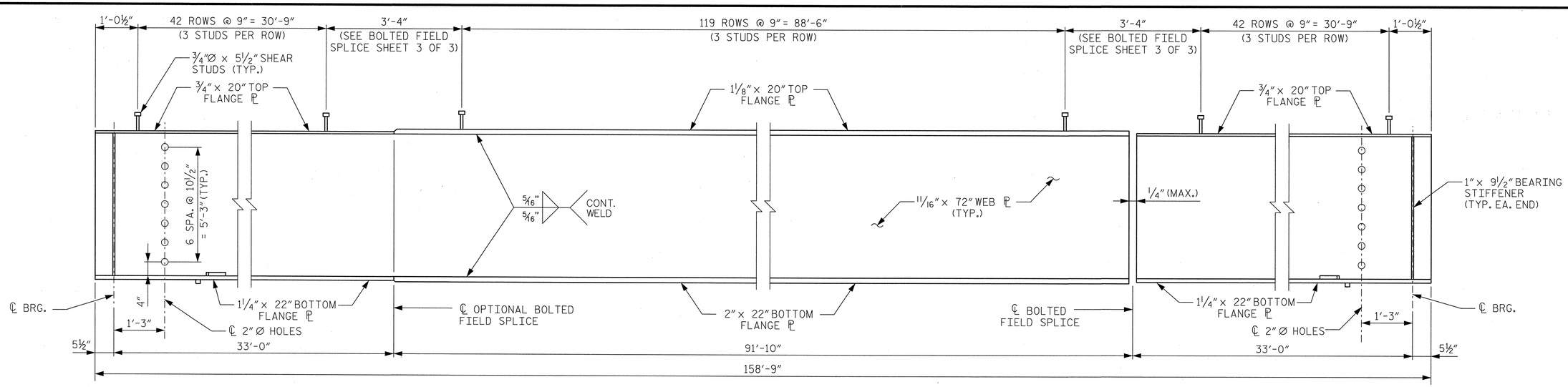

PLATE GIRDER ELEVATION

(CONNECTOR PLATES NOT SHOWN FOR CLARITY)

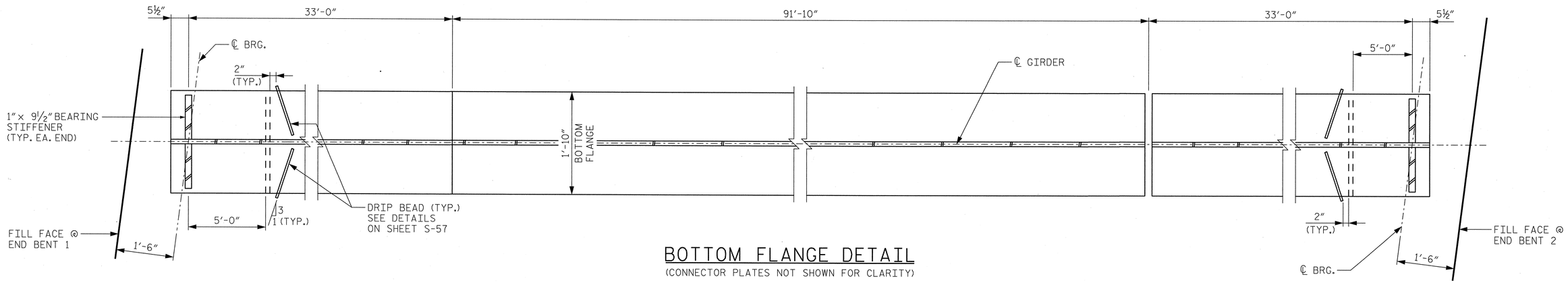

BOTTOM FLANGE DETAIL

(CONNECTOR PLATES NOT SHOWN FOR CLARITY)

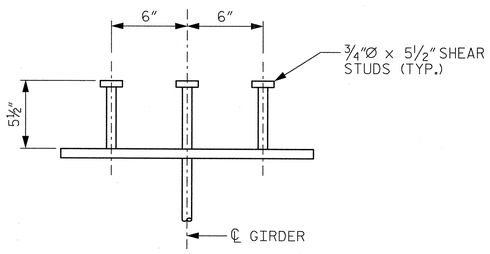

SHEAR STUD DETAIL

(TYP. EA. GIRDER)

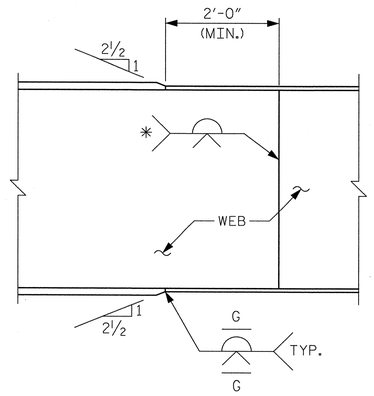

* GRIND SMOOTH AND FLUSH ON OUTER FACE OF EXTERIOR GIRDERS.

TYPICAL FLANGE AND WEB BUTT JOINT

PROJECT NO. U-2525B

GUILFORD COUNTY

STATION: 26+21.65 -L-
17+06.65 -Y3-

SHEET 1 OF 3

STATE OF NORTH CAROLINA
DEPARTMENT OF TRANSPORTATION
RALEIGH

SUPERSTRUCTURE

STRUCTURAL STEEL DETAILS

NORTH CAROLINA PROFESSIONAL SEAL 12186 ENGINEER CECIL L. NARRON 2/17/14

Kimley-Horn and Associates, Inc.
333 Fayetteville Street, Suite 600
Raleigh, NC 27601-1772
Phone (919) 835-1494
NC LICENSE # F-0102

This document, together with the concepts and designs presented herein, as an instrument of service, is intended only for the specific purpose and client for which it was prepared. Reuse of and improper reliance on this document without written authorization and adaptation by Kimley-Horn and Associates, Inc. shall be without liability to Kimley-Horn and Associates, Inc.

Copyright Kimley-Horn and Associates, Inc., 2014

REVISIONS						SHEET NO.
NO.	BY:	DATE:	NO.	BY:	DATE:	S-56
1			3			TOTAL SHEETS
2			4			541

DRAWN BY: RTO DATE: 1/14
CHECKED BY: JCW DATE: 1/14

STR. #2

2/17/2014 K:\RDT_Structures_Bridges\NC\011036224_U-2525B_Gboro East Loop_over_US_70\Cad\dgn\u-2525_sd_str_2.pet56.dgn

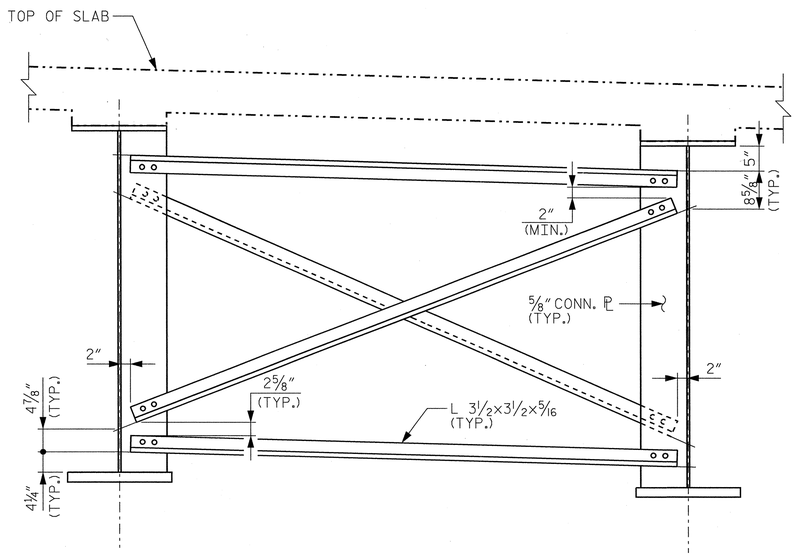

INTERMEDIATE DIAPHRAGM

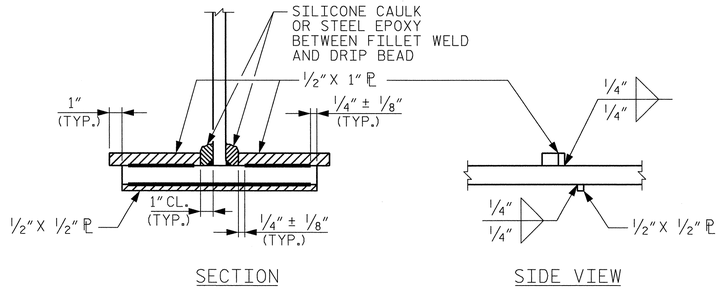

DRIP BEAD DETAILS

STRUCTURAL STEEL NOTES

ALL STRUCTURAL STEEL SHALL BE AASHTO M270 GRADE 50W AND PAINTED IN ACCORDANCE WITH SYSTEM 4 OF ARTICLE 442-8 OF THE STANDARD SPECIFICATIONS UNLESS OTHERWISE NOTED ON PLANS.

ALL DIMENSIONS SHOWN ARE HORIZONTAL OR VERTICAL, UNLESS OTHERWISE NOTED.

ALL FIELD CONNECTIONS TO BE 7/8" DIA. HIGH STRENGTH BOLTS UNLESS OTHERWISE NOTED.

BEARING STIFFENERS ARE TO BE PLACED NORMAL TO THE WEB OF THE GIRDERS AND SHALL BE PLUMB.

A CHARPY V-NOTCH TEST IS REQUIRED FOR WEB PLATES, WEB SPLICE PLATES, BOTTOM FLANGE PLATES, BOTTOM FLANGE SPLICE PLATES, AND TOP FLANGE PLATES WITHIN 32 FEET OF THE ENDS OF THE GIRDERS AND IN ACCORDANCE WITH ARTICLE 1072-7 OF THE STANDARD SPECIFICATIONS.

PERMITTED FLANGE AND WEB SHOP SPLICES SHALL NOT BE LOCATED WITHIN 15 FEET OF MAXIMUM DEAD LOAD DEFLECTION. KEEP 2 FEET MINIMUM BETWEEN WEB AND FLANGE SHOP SPLICES. KEEP 6" MINIMUM BETWEEN CONNECTOR PLATE OR TRANSVERSE STIFFENER WELDS AND WEB OR FLANGE SHOP SPLICES.

STUDS ON GIRDERS MAY BE SHIFTED UP TO 1" IF NECESSARY TO CLEAR FLANGE SPLICE WELD.

TENSION ON THE ASTM A325 BOLTS SHALL BE CALIBRATED USING DIRECT TENSION INDICATOR WASHERS IN ACCORDANCE WITH ARTICLE 440-8 OF THE STANDARD SPECIFICATIONS.

END OF GIRDERS SHALL BE PLUMB.

FABRICATORS SHALL DETAIL DIAPHRAGM MEMBERS AND CONNECTIONS FOR STEEL DEAD LOAD FIT UP.

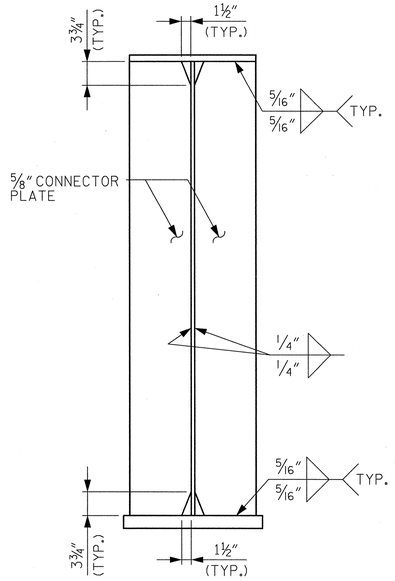

CONNECTOR PLATE

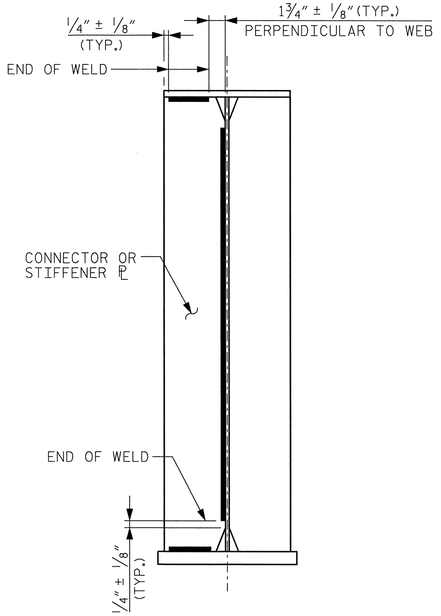

WELD TERMINATION DETAIL

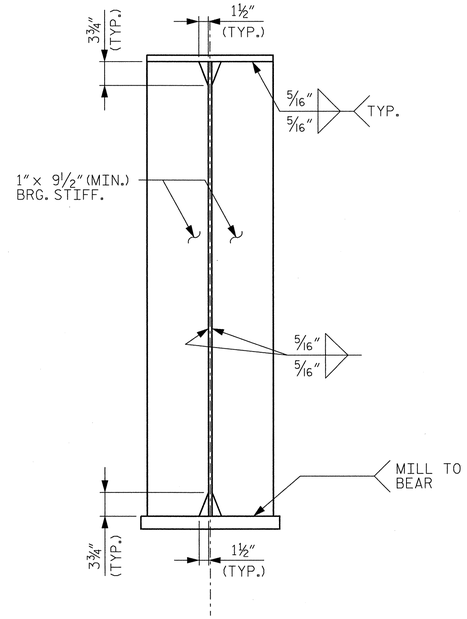

BEARING STIFFENER

PROJECT NO. U-2525B

GUILFORD COUNTY

STATION: 26+21.65 -L-
17+06.65 -Y3-

SHEET 2 OF 3

NORTH CAROLINA PROFESSIONAL SEAL 12186 ENGINEER NEIL L. NARRONE
5/12/14

Kimley-Horn and Associates, Inc.
333 Fayetteville Street, Suite 600
Raleigh, NC 27601-1772
Phone (919) 835-1494
NC LICENSE # F-0102

This document, together with the concepts and designs presented herein, as an instrument of services, is intended only for the specific purpose and client for which it was prepared. Reuse of and improper reliance on this document without written authorization and adaptation by Kimley-Horn and Associates, Inc. shall be without liability to Kimley-Horn and Associates, Inc.

Copyright Kimley-Horn and Associates, Inc., 2014

STATE OF NORTH CAROLINA
DEPARTMENT OF TRANSPORTATION
RALEIGH

SUPERSTRUCTURE

STRUCTURAL STEEL DETAILS

REVISIONS						SHEET NO.
NO.	BY:	DATE:	NO.	BY:	DATE:	S-57
1			3			TOTAL SHEETS
2			4			541

DRAWN BY: RTO DATE: 1/14
CHECKED BY: JCW DATE: 1/14

3/11/2014 K:\RDT-Structures_Bridges\NC\01036224-U-2525B-Guilford-Greensboro East Loop over US 70\Cad\dgn\u-2525_sd_str_2.pen57.dgn

STR. #2

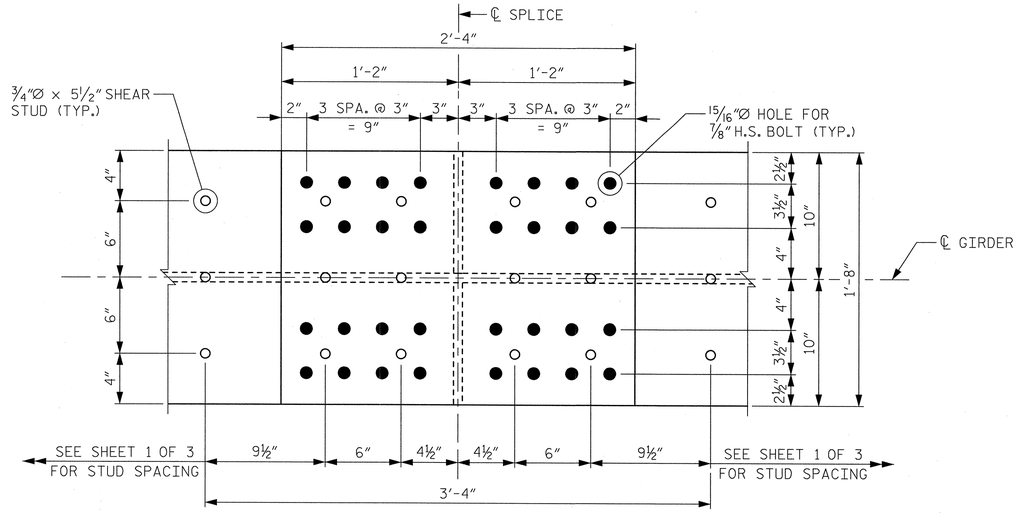

PLAN (TOP OF TOP FLANGE)

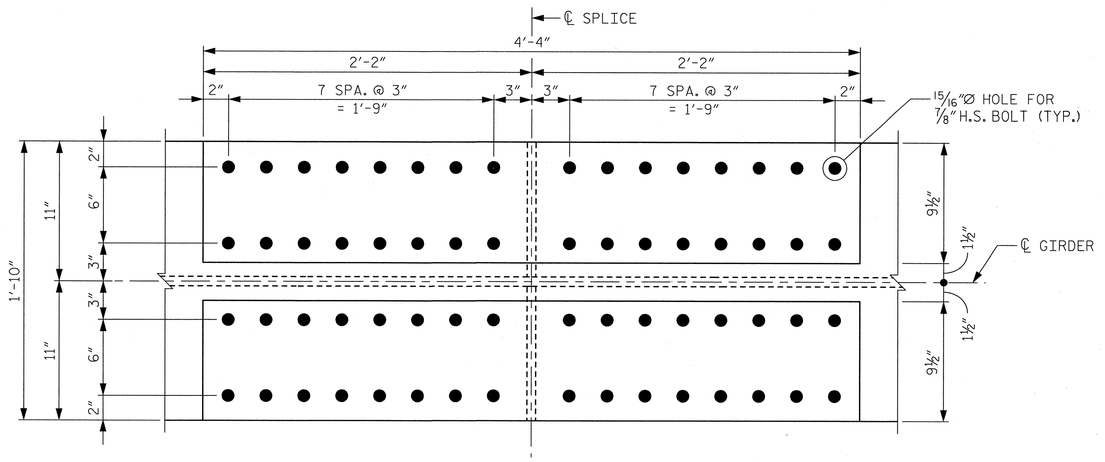

PLAN (TOP OF BOTTOM FLANGE)

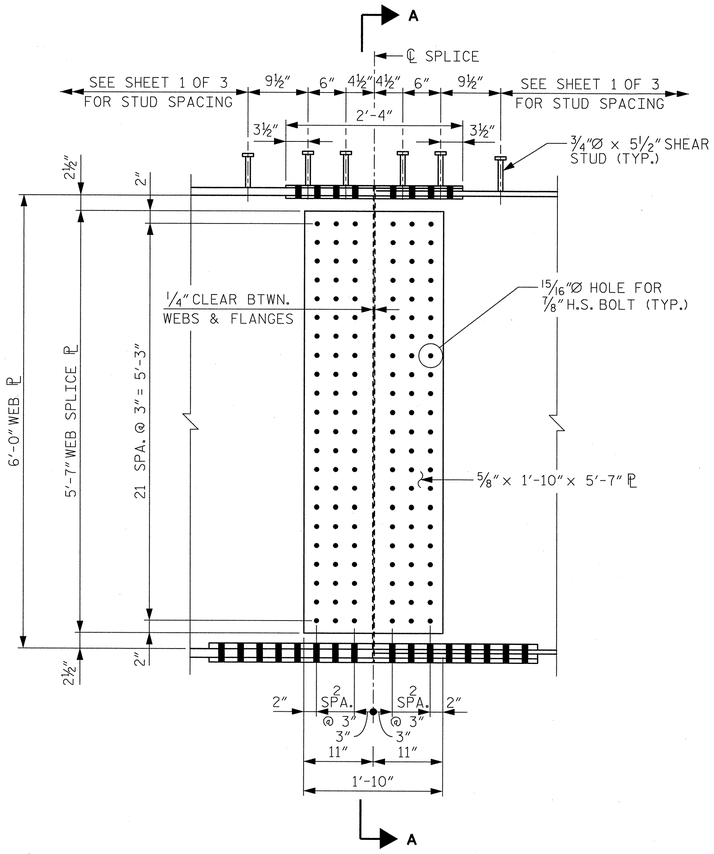

ELEVATION

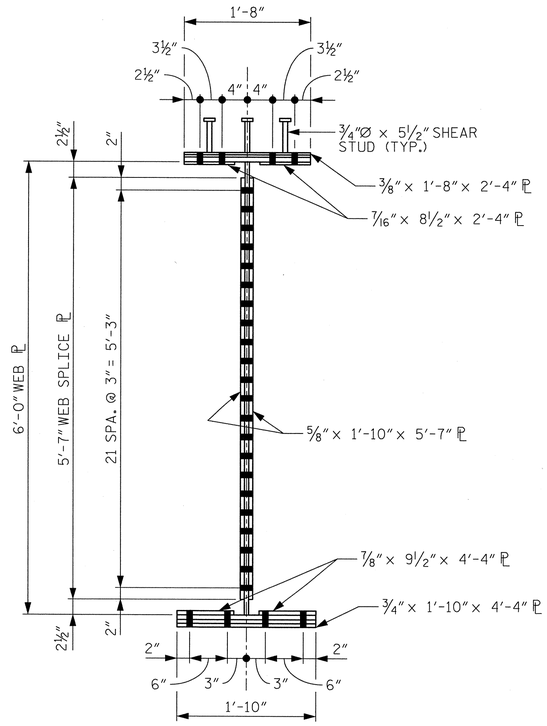

SECTION A-A

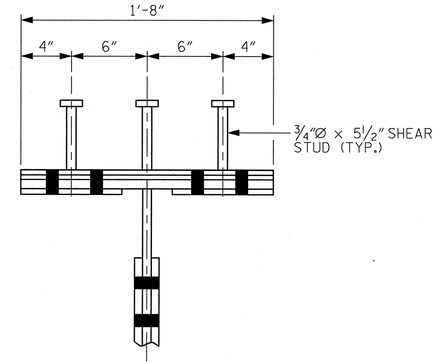

SHEAR STUD DETAIL FOR TOP FLANGE SPLICE PLATE

PROJECT NO. U-2525B

GUILFORD COUNTY

STATION: 26+21.65 -L-
17+06.65 -Y3-

SHEET 3 OF 3

NORTH CAROLINA PROFESSIONAL SEAL 032186 ENGINEER CECIL L. HARRON 2/17/14

Kimley-Horn and Associates, Inc.
333 Fayetteville Street, Suite 600
Raleigh, NC 27601-1772
Phone (919) 835-1494
NC LICENSE # F-0102

This document, together with the concepts and designs presented herein, as an instrument of services, is intended only for the specific purpose and client for which it was prepared. Reuse of and improper reliance on this document without written authorization and adaptation by Kimley-Horn and Associates, Inc. shall be without liability to Kimley-Horn and Associates, Inc.

Copyright Kimley-Horn and Associates, Inc., 2014

STATE OF NORTH CAROLINA
DEPARTMENT OF TRANSPORTATION
RALEIGH

SUPERSTRUCTURE

STRUCTURAL STEEL DETAILS BOLTED FIELD SPLICE

REVISIONS						SHEET NO.
NO.	BY:	DATE:	NO.	BY:	DATE:	S-58
1			3			TOTAL SHEETS
2			4			541

DRAWN BY: RTO DATE: 1/14
CHECKED BY: JCW DATE: 1/14

2/17/2014 K:\RDT_Structures_Bridges\NC\011036224_U-2525B_Gboro East Loop over US 70\Cad\dgn\u-2525_sd_str_2.pdf58.dgn

STR. #2

DEAD LOAD DEFLECTION TABLE

SPAN A

GIRDER 1 & 5																					
TWENTIETH POINTS		0	0.05	0.10	0.15	0.20	0.25	0.30	0.35	0.40	0.45	0.50	0.55	0.60	0.65	0.70	0.75	0.80	0.85	0.90	0.95	0
DEFLECTION DUE TO WEIGHT OF GIRDER	↓	0	0.027	0.053	0.078	0.099	0.118	0.134	0.146	0.156	0.161	0.163	0.161	0.156	0.146	0.134	0.118	0.099	0.078	0.053	0.027	0
DEFLECTION DUE TO WEIGHT OF SLAB *	↓	0	0.066	0.148	0.223	0.290	0.348	0.397	0.436	0.464	0.482	0.487	0.482	0.464	0.436	0.397	0.348	0.290	0.223	0.148	0.066	0
DEFLECTION DUE TO WEIGHT OF RAIL	↓	0	0.010	0.019	0.028	0.036	0.043	0.049	0.054	0.057	0.059	0.060	0.059	0.057	0.054	0.049	0.043	0.036	0.028	0.019	0.010	0
TOTAL DEAD LOAD DEFLECTION	↓	0	0.103	0.220	0.329	0.425	0.509	0.579	0.636	0.677	0.702	0.710	0.702	0.677	0.636	0.579	0.509	0.425	0.329	0.220	0.103	0
VERTICAL CURVE ORDINATE	↑	0	0.011	0.021	0.030	0.037	0.043	0.049	0.053	0.056	0.057	0.058	0.057	0.056	0.053	0.049	0.043	0.037	0.030	0.021	0.011	0
ORDINATE DUE TO SUPERELEVATION	↓	0	0.009	0.017	0.025	0.031	0.036	0.040	0.044	0.046	0.048	0.048	0.048	0.046	0.044	0.040	0.036	0.031	0.025	0.017	0.009	0
REQUIRED CAMBER	↑	0	1 1/4	2 11/16	4	5 3/16	6 3/16	7 1/16	7 3/4	8 1/4	8 9/16	8 5/8	8 9/16	8 1/4	7 3/4	7 1/16	6 3/16	5 3/16	4	2 11/16	1 1/4	0
GIRDER 2 & 4																					
TWENTIETH POINTS		0	0.05	0.10	0.15	0.20	0.25	0.30	0.35	0.40	0.45	0.50	0.55	0.60	0.65	0.70	0.75	0.80	0.85	0.90	0.95	0
DEFLECTION DUE TO WEIGHT OF GIRDER	↓	0	0.027	0.053	0.078	0.099	0.118	0.134	0.146	0.156	0.161	0.163	0.161	0.156	0.146	0.134	0.118	0.099	0.078	0.053	0.027	0
DEFLECTION DUE TO WEIGHT OF SLAB *	↓	0	0.067	0.149	0.225	0.293	0.351	0.400	0.440	0.468	0.486	0.492	0.486	0.468	0.440	0.400	0.351	0.293	0.225	0.149	0.067	0
DEFLECTION DUE TO WEIGHT OF RAIL	↓	0	0.007	0.014	0.020	0.026	0.031	0.035	0.038	0.040	0.042	0.042	0.042	0.040	0.038	0.035	0.031	0.026	0.020	0.014	0.007	0
TOTAL DEAD LOAD DEFLECTION	↓	0	0.101	0.216	0.323	0.418	0.499	0.569	0.624	0.664	0.689	0.697	0.689	0.664	0.624	0.569	0.499	0.418	0.323	0.216	0.101	0
VERTICAL CURVE ORDINATE	↑	0	0.011	0.021	0.030	0.037	0.044	0.049	0.053	0.056	0.058	0.058	0.058	0.056	0.053	0.049	0.044	0.037	0.030	0.021	0.011	0
ORDINATE DUE TO SUPERELEVATION	↓	0	0.009	0.017	0.025	0.031	0.036	0.041	0.044	0.046	0.048	0.048	0.048	0.046	0.044	0.041	0.036	0.031	0.025	0.017	0.009	0
REQUIRED CAMBER	↑	0	1 1/4	2 5/8	3 15/16	5 1/16	6 1/16	6 15/16	7 5/8	8 1/16	8 3/8	8 1/2	8 3/8	8 1/16	7 5/8	6 15/16	6 1/16	5 1/16	3 15/16	2 5/8	1 1/4	0
GIRDER 3																					
TWENTIETH POINTS		0	0.05	0.10	0.15	0.20	0.25	0.30	0.35	0.40	0.45	0.50	0.55	0.60	0.65	0.70	0.75	0.80	0.85	0.90	0.95	0
DEFLECTION DUE TO WEIGHT OF GIRDER	↓	0	0.027	0.053	0.078	0.099	0.118	0.134	0.146	0.156	0.161	0.163	0.161	0.156	0.146	0.134	0.118	0.099	0.078	0.053	0.027	0
DEFLECTION DUE TO WEIGHT OF SLAB *	↓	0	0.068	0.150	0.227	0.295	0.354	0.404	0.444	0.473	0.490	0.496	0.490	0.473	0.444	0.404	0.354	0.295	0.227	0.150	0.068	0
DEFLECTION DUE TO WEIGHT OF RAIL	↓	0	0.007	0.014	0.020	0.026	0.031	0.035	0.038	0.040	0.042	0.042	0.042	0.040	0.038	0.035	0.031	0.026	0.020	0.014	0.007	0
TOTAL DEAD LOAD DEFLECTION	↓	0	0.102	0.217	0.325	0.420	0.503	0.572	0.628	0.668	0.693	0.701	0.693	0.668	0.628	0.572	0.503	0.420	0.325	0.217	0.102	0
VERTICAL CURVE ORDINATE	↑	0	0.011	0.021	0.030	0.038	0.044	0.049	0.054	0.056	0.058	0.059	0.058	0.057	0.054	0.049	0.044	0.038	0.030	0.021	0.011	0
ORDINATE DUE TO SUPERELEVATION	↓	0	0.009	0.017	0.025	0.031	0.036	0.041	0.044	0.046	0.048	0.048	0.048	0.046	0.044	0.041	0.036	0.031	0.025	0.017	0.009	0
REQUIRED CAMBER	↑	0	1 1/4	2 5/8	3 15/16	5 1/8	6 1/8	7	7 5/8	8 1/8	8 7/16	8 9/16	8 7/16	8 1/8	7 5/8	7	6 1/8	5 1/8	3 15/16	2 5/8	1 1/4	0

* INCLUDES SLAB, BUILDUPS, AND STAY-IN-PLACE FORMS.
ALL VALUES ARE SHOWN IN FEET, EXCEPT "FINAL CAMBER," WHICH IS SHOWN IN INCHES

SIGN CONVENTION FOR DEAD LOAD DEFLECTION TABLE ↑ + ○ ↓ −

PROJECT NO. U-2525B
GUILFORD COUNTY
STATION: 26+21.65 -L-
17+06.65 -Y3-

NORTH CAROLINA PROFESSIONAL SEAL 2186 ENGINEER CECIL L. NARRON 2/17/14

Kimley-Horn and Associates, Inc.
333 Fayetteville Street, Suite 600
Raleigh, NC 27601-1772
Phone (919) 835-1494
NC LICENSE # F-0102

This document, together with the concepts and designs presented herein, as an instrument of services, is intended only for the specific purpose and client for which it was prepared. Reuse of and improper reliance on this document without written authorization and adaption by Kimley-Horn and Associates, Inc. shall be without liability to Kimley-Horn and Associates, Inc.
Copyright Kimley-Horn and Associates, Inc., 2014

STATE OF NORTH CAROLINA
DEPARTMENT OF TRANSPORTATION
RALEIGH

SUPERSTRUCTURE

DEAD LOAD DEFLECTIONS

REVISIONS						SHEET NO.
NO.	BY:	DATE:	NO.	BY:	DATE:	S-59
1			3			TOTAL SHEETS
2			4			541

DRAWN BY: RTO DATE: 1/14
CHECKED BY: JCW DATE: 1/14

STR. #2

2/17/2014 K:\RDT_Structures_Bridges\NC\01103624_U-2525B_Gboro East Loop over US 70\Cad\dgn\u-2525_sd_str_2_pet59.dgn

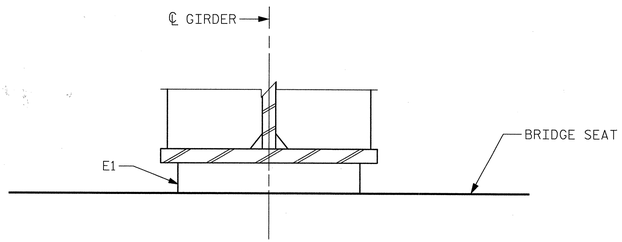

END VIEW
(AT INTEGRAL END BENT)

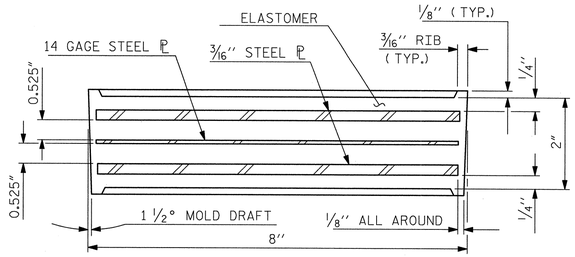

TYPICAL SECTION OF ELASTOMERIC BEARINGS (E1)

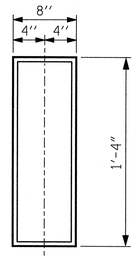

E1 (10 REQ'D)

PLAN VIEW OF ELASTOMERIC BEARING

INTEGRAL END BENT

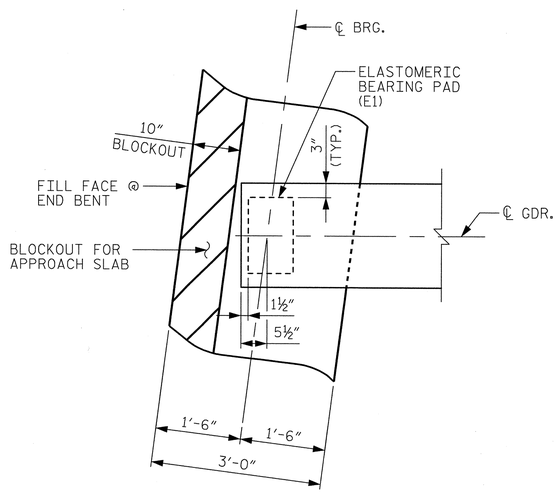

PLAN VIEW AT INTEGRAL END BENT
(END BENT 1 SHOWN, END BENT 2 SIMILAR.)

NOTES

THE ELASTOMER IN THE STEEL REINFORCED BEARINGS SHALL HAVE A SHEAR MODULUS OF 0.160 KSI, IN ACCORDANCE WITH AASHTO M251.

FOR STEEL REINFORCED ELASTOMERIC BEARINGS, SEE SPECIAL PROVISIONS.

PROJECT NO. U-2525B
GUILFORD COUNTY
STATION: 26+21.65 -L-
17+06.65 -Y3-

NORTH CAROLINA PROFESSIONAL SEAL 12186 ENGINEER CECIL L. NARRON
2/17/14

Kimley-Horn and Associates, Inc.
333 Fayetteville Street, Suite 600
Raleigh, NC 27601-1772
Phone (919) 835-1494
NC LICENSE # F-0102

This document, together with the concepts and designs presented herein, as an instrument of services, is intended only for the specific purpose and client for which it was prepared. Reuse of and improper reliance of this document without written authorization and adaptation by Kimley-Horn and Associates, Inc. shall be without liability to Kimley-Horn and Associates, Inc.
Copyright Kimley-Horn and Associates, Inc., 2014

STATE OF NORTH CAROLINA
DEPARTMENT OF TRANSPORTATION
RALEIGH

STANDARD
ELASTOMERIC BEARING DETAILS
(STEEL SUPERSTRUCTURE)

REVISIONS						SHEET NO.
NO.	BY:	DATE:	NO.	BY:	DATE:	S-60
1			3			TOTAL SHEETS
2			4			541

STR. #2

DRAWN BY: RTO DATE: 1/14
CHECKED BY: JCW DATE: 1/14

2/17/2014 K:\RDT_Structures_Bridges\NC\01036224_U-2525B_Greensboro East Loop over US 70\Cad\dgn\u-2525_sd_str_2.pstb60.dgn

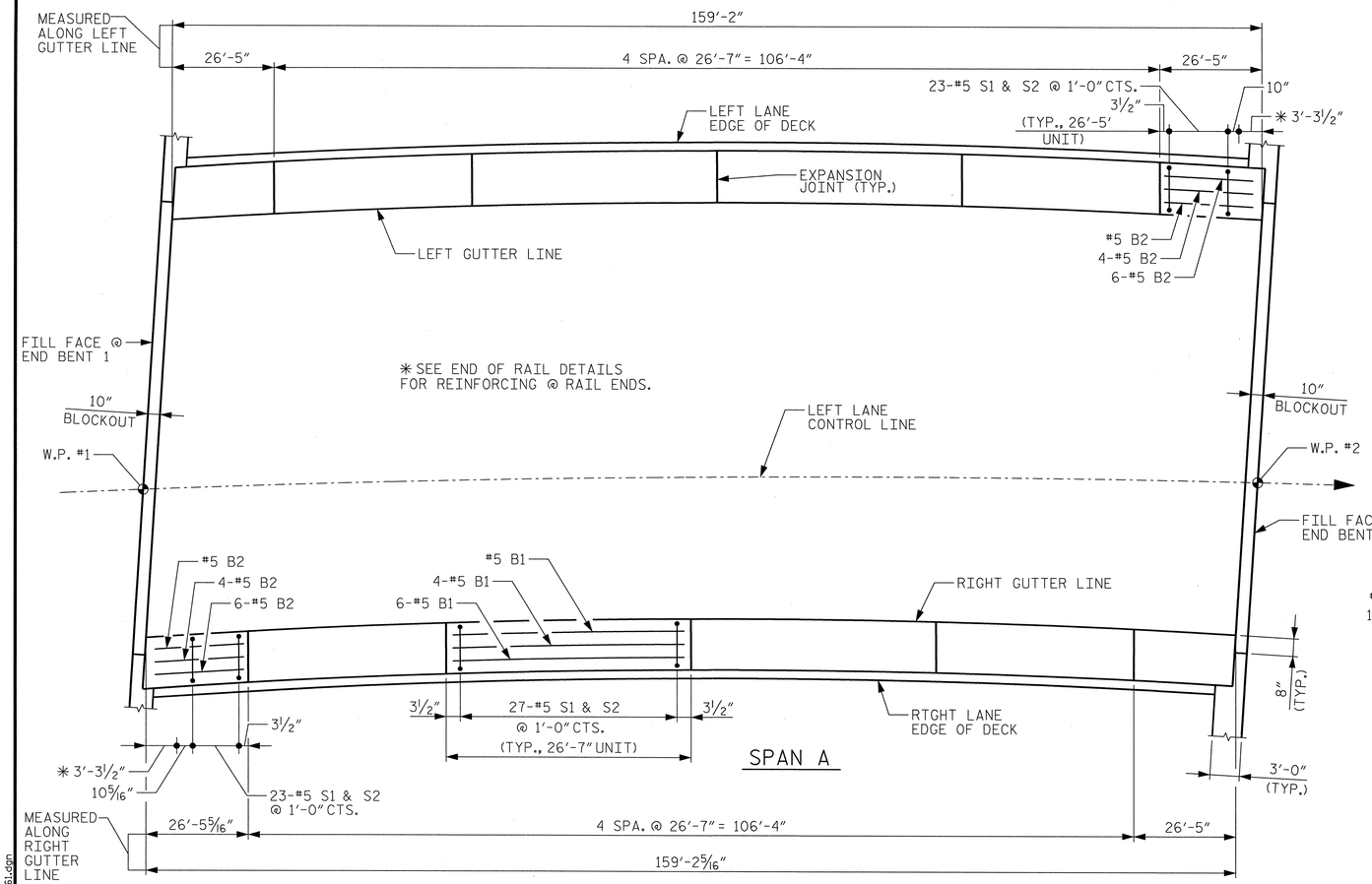

SPAN A

PLAN OF BARRIER RAIL

NOTES

THE BARRIER RAIL SHALL NOT BE CAST UNTIL ALL SLAB CONCRETE IN THAT SPAN HAS BEEN CAST AND HAS REACHED A MINIMUM COMPRESSIVE STRENGTH OF 3,000 PSI.

ALL REINFORCING STEEL IN BARRIER RAILS SHALL BE EPOXY COATED.

THE #5 S3, S4, S5, AND S6 BARS SHALL BE INSTALLED USING AN ADHESIVE ANCHOR SYSTEM. THE YIELD LOAD FOR #5 S3, S4, S5, AND S6 BARS IS 18.6 KIPS. FIELD TESTING FOR THE ADHESIVE BONDING SYSTEM IS NOT REQUIRED.

GROOVED CONTRACTION JOINTS, ½" IN DEPTH, SHALL BE TOOLED IN ALL EXPOSED FACES OF THE BARRIER RAIL AND IN ACCORDANCE WITH ARTICLE 825-10(B) OF THE STANDARD SPECIFICATIONS. THE CONTRACTION JOINT SHALL BE LOCATED AT EACH THIRD POINT BETWEEN BARRIER RAIL EXPANSION JOINTS. ONLY ONE CONTRACTION JOINT IS REQUIRED AT MIDPOINT OF BARRIER RAIL SEGMENTS LESS THAN 20 FEET IN LENGTH AND NO CONTRACTION JOINTS ARE REQUIRED FOR THOSE SEGMENTS LESS THAN 10 FEET IN LENGTH.

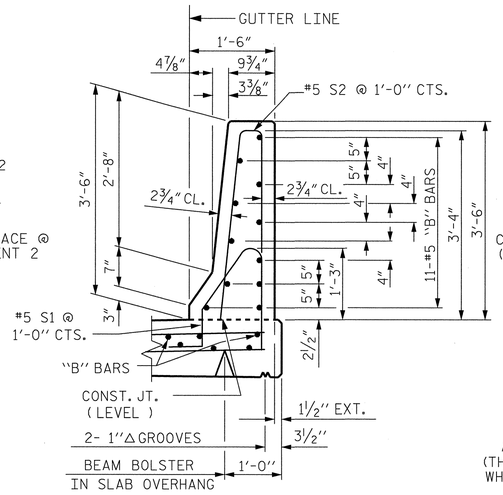

SECTION THRU RAIL

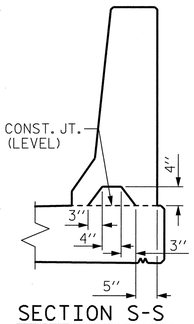

SECTION S-S

AT DAM IN OPEN JOINT
(THIS IS TO BE USED ONLY WHEN SLIP FORM IS USED)

BAR TYPES

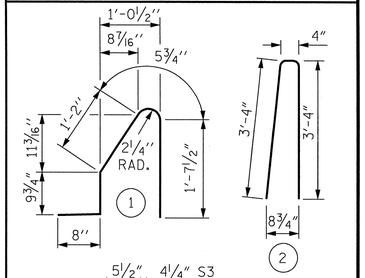

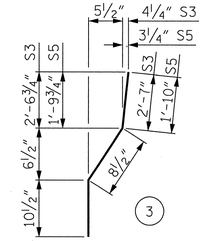

ALL BAR DIMENSIONS ARE OUT TO OUT

BILL OF MATERIAL

FOR CONCRETE BARRIER RAIL ONLY

BAR	NO.	SIZE	TYPE	LENGTH	WEIGHT
* S1	308	#5	1	4'-9"	1,526
* S2	308	#5	2	7'-0"	2,249
* S3	8	#5	3	4'-2"	35
* S4	8	#5	STR	4'-0"	33
* S5	8	#5	3	3'-5"	29
* S6	8	#5	STR	3'-3"	27
* B1	88	#5	STR	26'-2"	2,402
* B2	44	#5	STR	26'-0"	1,193

* EPOXY COATED REINFORCING STEEL	7,494 LBS.
CLASS AA CONCRETE	43.2 CU. YDS.
CONCRETE BARRIER RAIL	318.4 LIN. FT.

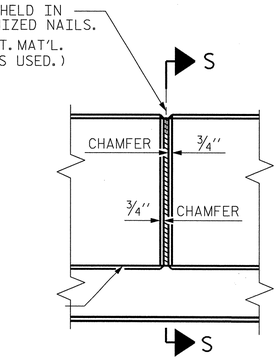

ELEVATION AT EXPANSION JOINTS

BARRIER RAIL DETAILS

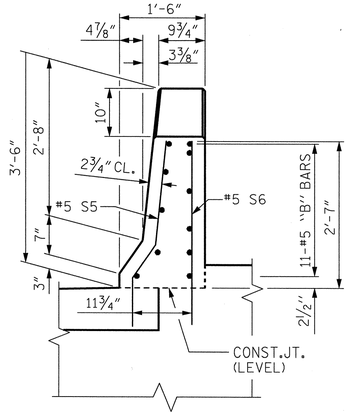

END VIEW

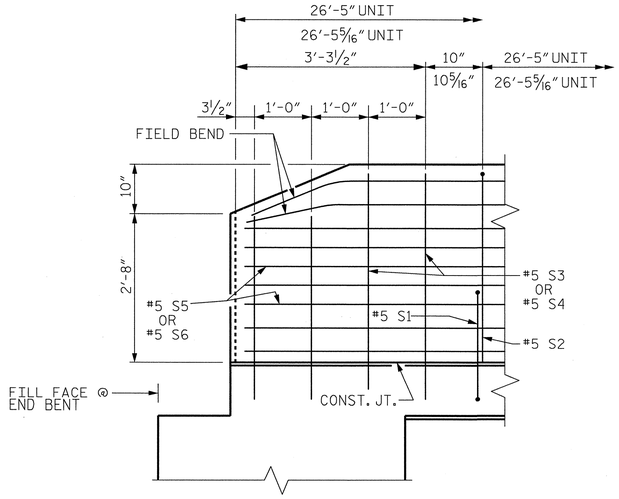

SIDE VIEW

END OF RAIL DETAILS

FOR ADHESIVE ANCHORING AT SAWED JOINTS

NORTH CAROLINA PROFESSIONAL SEAL 12186 ENGINEER CECIL L. NARRON 2/17/14

Kimley-Horn and Associates, Inc.
333 Fayetteville Street, Suite 600
Raleigh, NC 27601-1772
Phone (919) 835-1494
NC LICENSE # F-0102

This document, together with the concepts and designs presented herein, as an instrument of service, is intended only for the specific purpose and client for which it was prepared. Reuse of and improper reliance on this document without written authorization and adaption by Kimley-Horn and Associates, Inc. shall be without liability to Kimley-Horn and Associates, Inc.
Copyright Kimley-Horn and Associates, Inc., 2014

ASSEMBLED BY : RTO	DATE : 1/14		
CHECKED BY : JCW	DATE : 1/14		
DRAWN BY : ARB 5/87	REV. 10/1/11	MAA/GM	
CHECKED BY : SJD 9/87	REV. 7/12	MAA/GM	
	REV. 10/12	MAA/GM	

REVISIONS						SHEET NO.
NO.	BY:	DATE:	NO.	BY:	DATE:	S-61
1			3			TOTAL SHEETS
2			4			541

PROJECT NO. U-2525B

GUILFORD COUNTY

STATION: 26+21.65 -L-
17+06.65 -Y3-

SHEET 1 OF 2

STATE OF NORTH CAROLINA
DEPARTMENT OF TRANSPORTATION
RALEIGH

STANDARD
CONCRETE
BARRIER RAIL

STD. NO. CBR1 STR. #2

2/17/2014 K:\RDT_Structures_Bridge\NC\U1036224_U-2525B_Oboro East Loop over US 70\Cad\dgn\u-2525_sd_str_2_pa161.dgn

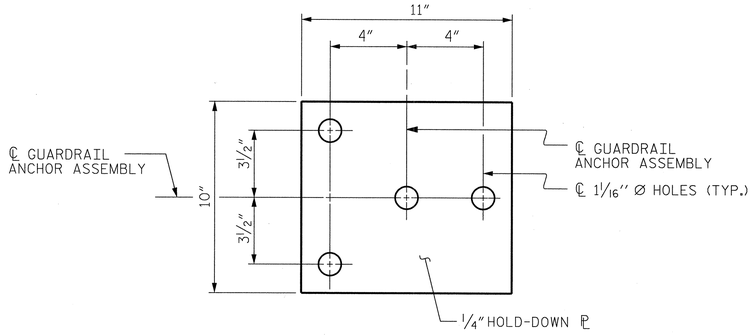

PLAN

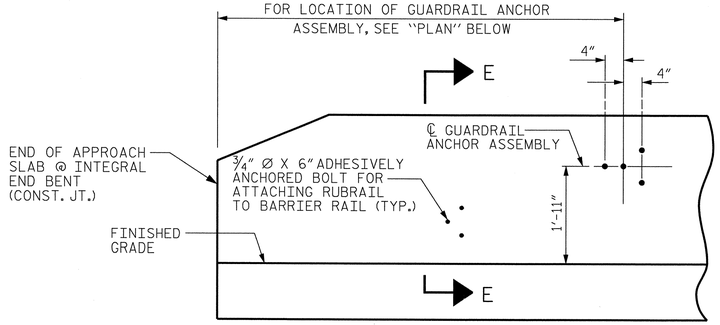

ELEVATION

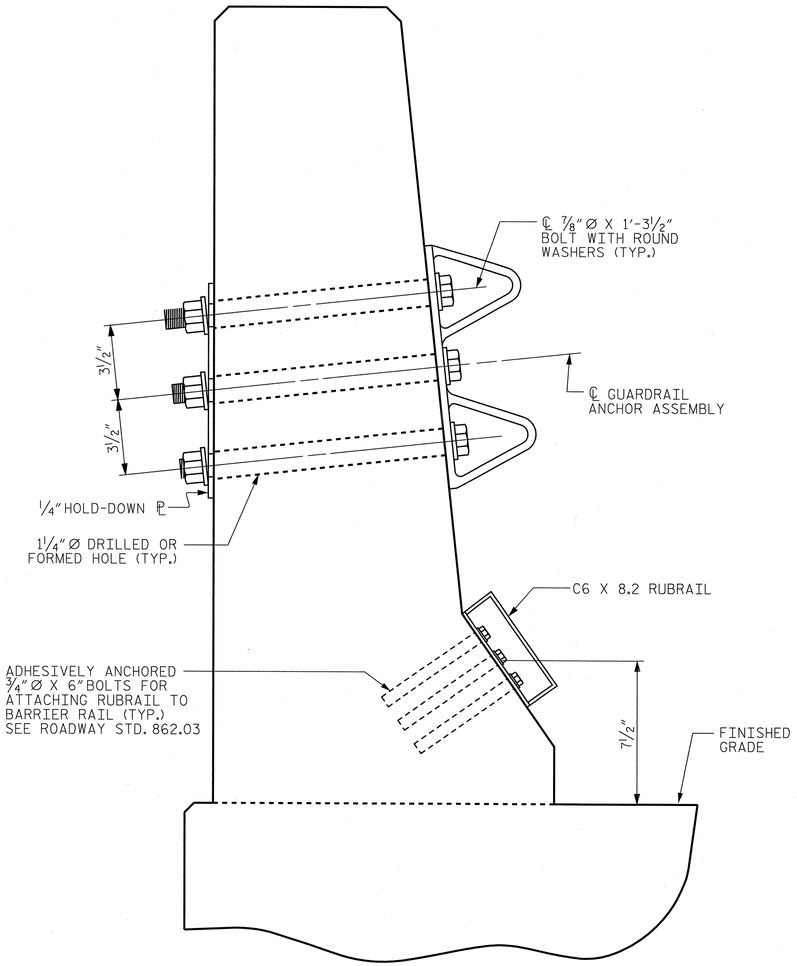

SECTION E-E

GUARDRAIL ANCHOR ASSEMBLY DETAILS

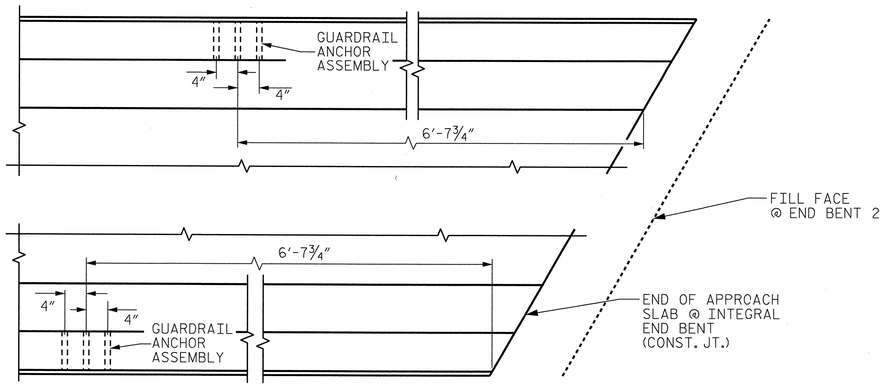

PLAN

LOCATION OF ANCHORS FOR GUARDRAIL

END BENT 2

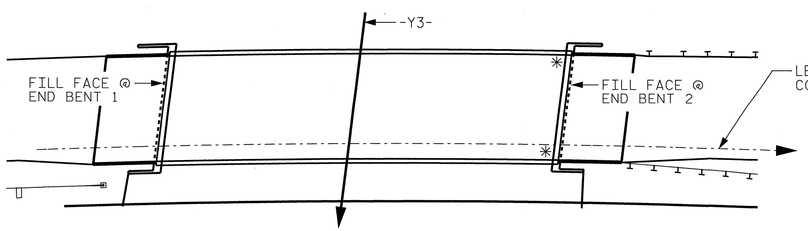

SKETCH SHOWING POINTS OF ATTACHMENTS

✳ DENOTES GUARDRAIL ANCHOR ASSEMBLY

NOTES

THE GUARDRAIL ANCHOR ASSEMBLY SHALL CONSIST OF A 1/4" HOLD-DOWN PLATE AND 4 - 7/8" Ø BOLTS WITH NUTS AND WASHERS, RUBRAIL, AND ADHESIVELY ANCHORED BOLTS.

THE HOLD-DOWN PLATE SHALL CONFORM TO AASHTO M270 GRADE 36. AFTER FABRICATION, THE HOLD-DOWN PLATE SHALL BE HOT-DIP GALVANIZED IN ACCORDANCE WITH AASHTO M111.

BOLTS SHALL CONFORM TO THE REQUIREMENTS OF ASTM A307 AND NUTS SHALL CONFORM TO THE REQUIREMENTS OF AASHTO M291. BOLTS, NUTS AND WASHERS SHALL BE GALVANIZED. (AT THE CONTRACTOR'S OPTION, STAINLESS STEEL BOLTS, NUTS AND WASHERS MAY BE USED AS AN ALTERNATE FOR THE 7/8" Ø GALVANIZED BOLTS, NUTS AND WASHERS. THEY SHALL CONFORM TO OR EXCEED THE MECHANICAL REQUIREMENTS OF ASTM A307. THE USE OF THIS ALTERNATE SHALL BE APPROVED BY THE ENGINEER.)

THE GUARDRAIL ANCHOR ASSEMBLY IS REQUIRED AT ALL POINTS WHERE APPROACH GUARDRAIL IS TO BE ATTACHED TO THE END OF BARRIER RAIL. FOR POINTS OF ATTACHMENT, SEE SKETCH.

AFTER INSTALLATION, THE EXPOSED THREAD OF THE BOLT SHALL BE BURRED WITH A SHARP POINTED TOOL.

THE COST OF THE GUARDRAIL ANCHOR ASSEMBLY SHALL BE INCLUDED IN THE UNIT CONTRACT PRICE BID FOR CONCRETE BARRIER RAIL.

THE 1 1/4" Ø HOLES SHALL BE FORMED OR DRILLED WITH A CORE BIT. IMPACT TOOLS WILL NOT BE PERMITTED. ANY CONCRETE DAMAGED BY THIS WORK SHALL BE REPAIRED TO THE SATISFACTION OF THE ENGINEER.

THE C6 X 8.2 RUBRAIL IS TO BE ADHESIVELY ANCHORED TO THE RAIL USING THREE 3/4" Ø X 6" BOLTS WITH WASHERS. LEVEL ONE FIELD TESTING IS REQUIRED, AND THE YIELD LOAD OF THE 3/4" Ø BOLT IS 12 KIPS. FOR ADHESIVELY ANCHORED ANCHOR BOLTS OR DOWELS, SEE STANDARD SPECIFICATIONS. SEE ROADWAY STANDARD 862.03 FOR DETAILS AND LOCATION OF THE RUBRAIL.

ASSEMBLED BY : RTO		DATE :	1/14
CHECKED BY : JCW		DATE :	1/14
DRAWN BY : TLA	5/06	REV. 10/1/11	MAA/GM
CHECKED BY : GM	5/06	REV. 7/12	MAA/GM
		REV. 10/12	MAA/GM

2/17/2014 K:\RDT_Structures_Bridges\NC\01103624_U-2525B_Oboro_East_Loop_over_US_70\Cad\dgn\u-2525_sd_str-2_psh62.dgn

Kimley-Horn and Associates, Inc.
333 Fayetteville Street, Suite 600
Raleigh, NC 27601-1772
Phone (919) 835-1494
NC LICENSE # F-0102

This document, together with the concepts and designs presented herein, as an instrument of services, is intended only for the specific purpose and client for which it was prepared. Reuse of and improper reliance on this document without written authorization and adaption by Kimley-Horn and Associates, Inc. shall be without liability to Kimley-Horn and Associates, Inc.
Copyright Kimley-Horn and Associates, Inc., 2014

NORTH CAROLINA PROFESSIONAL SEAL 12186 ENGINEER JACCIL L. NARRON 2/17/14

PROJECT NO. U-2525B
GUILFORD COUNTY
STATION: 26+21.65 -L-
17+06.65 -Y3-
SHEET 2 OF 2

STATE OF NORTH CAROLINA
DEPARTMENT OF TRANSPORTATION
RALEIGH
STANDARD

GUARDRAIL ANCHORAGE FOR BARRIER RAIL

REVISIONS						SHEET NO.
NO.	BY:	DATE:	NO.	BY:	DATE:	S-62
1			3			TOTAL SHEETS
2			4			541

STD. NO. GRA2 STR. #2

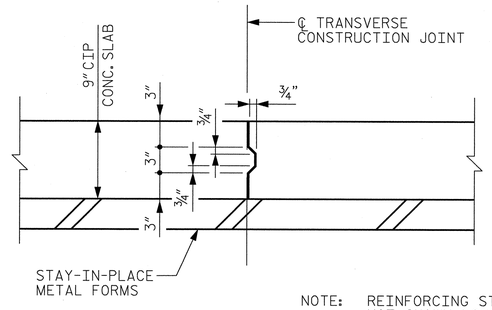

NOTE: REINFORCING STEEL IN SLAB NOT SHOWN. LONGITUDINAL STEEL SHALL BE CONTINUOUS THROUGH JOINT.

TRANSVERSE CONSTRUCTION JOINT

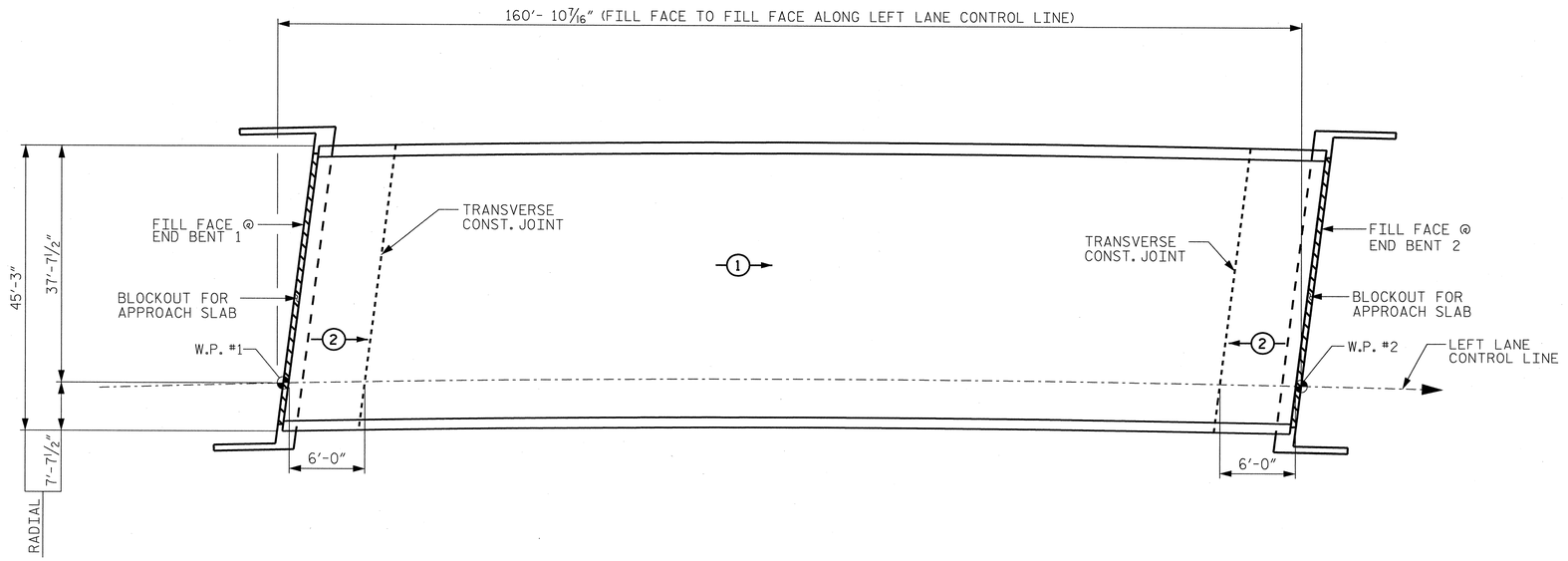

POURING SEQUENCE

(SEE TRANSVERSE CONSTRUCTION JOINT DETAIL.)

(#) INDICATES POUR NUMBER AND DIRECTION

NOTE: THE UPPER PORTION OF THE END BENT CAP AND WINGS SHALL BE POURED WITH THE SUPERSTRUCTURE.

PROJECT NO. U-2525B

GUILFORD COUNTY

STATION: 26+21.65 -L-
17+06.65 -Y3-

NORTH CAROLINA PROFESSIONAL SEAL 12186 ENGINEER CECIL L. NARRON 2/17/14

STATE OF NORTH CAROLINA
DEPARTMENT OF TRANSPORTATION
RALEIGH

SUPERSTRUCTURE
POUR SEQUENCE

Kimley-Horn and Associates, Inc.
333 Fayetteville Street, Suite 600
Raleigh, NC 27601-1772
Phone (919) 835-1494
NC LICENSE # F-0102

This document, together with the concepts and designs presented herein, as an instrument of services, is intended only for the specific purpose and client for which it was prepared. Reuse of and improper reliance of this document without written authorization and adaptation by Kimley-Horn and Associates, Inc. shall be without liability to Kimley-Horn and Associates, Inc.
Copyright Kimley-Horn and Associates, Inc., 2014

REVISIONS						SHEET NO.
NO.	BY:	DATE:	NO.	BY:	DATE:	S-63
1			3			TOTAL SHEETS
2			4			541

STD. NO. BOM2 STR. #2

ASSEMBLED BY : RTO		DATE :	1/14
CHECKED BY : JCW		DATE :	1/14
DRAWN BY : JMB	5/87	REV. 8/16/99	RWW/LES
CHECKED BY : SJD	9/87	REV. 5/1/06	TLA/GM
		REV. 10/1/11	MAA/GM

2/17/2014 K:\RDT_Structures_Bridge\NC\011036224_U-2525B_Gboro East Loop over US 70\Cad\dgn\u-2525_sd_str_2_psh63.dgn

SUPERSTRUCTURE REINFORCING STEEL LENGTHS ARE BASED ON THE FOLLOWING MINIMUM SPLICE LENGTHS

BAR SIZE	SUPERSTRUCTURE EXCEPT APPROACH SLABS, PARAPET, AND BARRIER RAIL		APPROACH SLABS		PARAPET AND BARRIER RAIL
	EPOXY COATED	UNCOATED	EPOXY COATED	UNCOATED	
#4	2'-0"	1'-9"	2'-0"	1'-9"	2'-9"
#5	2'-6"	2'-2"	2'-6"	2'-2"	3'-5"
#6	3'-0"	2'-7"	3'-10"	2'-7"	4'-4"
#7	5'-3"	3'-6"			
#8	6'-10"	4'-7"			

BILL OF MATERIAL
SUPERSTRUCTURE

BAR	NO.	SIZE	TYPE	LENGTH	WEIGHT
✳A1	308	5	STR	44'-11"	14,429
A2	308	5	STR	44'-11"	14,429
✳A101	1	5	STR	43'-1"	45
✳A102	1	5	STR	39'-9"	41
✳A103	1	5	STR	36'-4"	38
✳A104	1	5	STR	32'-11"	34
✳A105	1	5	STR	29'-6"	31
✳A106	1	5	STR	26'-2"	27
✳A107	1	5	STR	22'-10"	24
✳A108	1	5	STR	19'-6"	20
✳A109	1	5	STR	16'-1"	17
✳A110	1	5	STR	12'-8"	13
✳A111	1	5	STR	9'-4"	10
✳A112	1	5	STR	6'-0"	6
✳A113	1	5	STR	2'-8"	3
✳A114	1	5	STR	42'-6"	44
✳A115	1	5	STR	37'-11"	40
✳A116	1	5	STR	33'-3"	35
✳A117	1	5	STR	28'-8"	30
✳A118	1	5	STR	24'-1"	25
✳A119	1	5	STR	19'-5"	20
✳A120	1	5	STR	14'-9"	15
✳A121	1	5	STR	10'-2"	11
✳A122	1	5	STR	5'-6"	6
A201	1	5	STR	43'-1"	45
A202	1	5	STR	39'-9"	41
A203	1	5	STR	36'-4"	38
A204	1	5	STR	32'-11"	34
A205	1	5	STR	29'-6"	31
A206	1	5	STR	26'-2"	27
A207	1	5	STR	22'-10"	24
A208	1	5	STR	19'-6"	20
A209	1	5	STR	16'-1"	17
A210	1	5	STR	12'-8"	13
A211	1	5	STR	9'-4"	10
A212	1	5	STR	6'-0"	6

BILL OF MATERIAL
SUPERSTRUCTURE

BAR	NO.	SIZE	TYPE	LENGTH	WEIGHT
A213	1	5	STR	2'-8"	3
A214	1	5	STR	42'-6"	44
A215	1	5	STR	37'-11"	40
A216	1	5	STR	33'-3"	35
A217	1	5	STR	28'-8"	30
A218	1	5	STR	24'-1"	25
A219	1	5	STR	19'-5"	20
A220	1	5	STR	14'-9"	15
A221	1	5	STR	10'-2"	11
A222	1	5	STR	5'-6"	6
✳B1	126	7	STR	38'-8"	9,958
✳B2	96	4	STR	30'-0"	1,924
B3	162	5	STR	54'-5"	9,195
H1	8	7	STR	14'-8"	240
H2	8	4	STR	14'-8"	78
H3	8	7	STR	12'-4"	202
H4	8	4	STR	12'-4"	66
H5	8	7	STR	12'-2"	199
H6	8	4	STR	12'-2"	65
H7	8	7	STR	13'-5"	219
H8	8	4	STR	13'-5"	72
K1	14	5	STR	51'-6"	752
K2	14	5	STR	51'-3"	748
K3	16	5	STR	3'-8"	61
✳S1	72	4	2	11'-11"	573
✳S2	72	4	2	9'-10"	473
U1	80	5	1	13'-2"	1,099
U2	10	5	1	17'-4"	181
V5	75	5	STR	7'-6"	587
V6	23	5	STR	7'-4"	176
W1	10	5	STR	5'-5"	56

✳ = EPOXY COATED REINFORCING STEEL

BAR TYPES

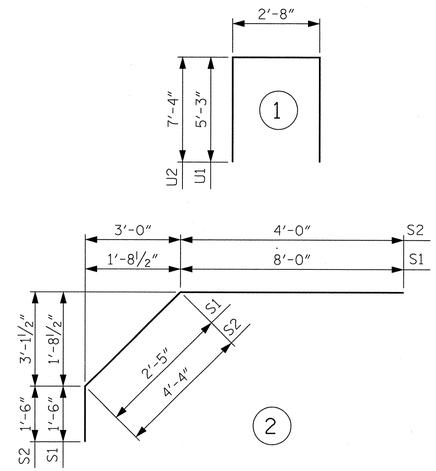

ALL BAR DIMENSIONS ARE OUT TO OUT

SUPERSTRUCTURE BILL OF MATERIAL

	CLASS AA CONCRETE	REINFORCING STEEL	✳EPOXY COATED REINFORCING STEEL
	(CU. YDS.)	(LBS.)	(LBS.)
SPAN A	-	28,960	27,892
POUR #1	198.4	-	-
POUR #2	103.8	-	-
TOTALS✳✳	302.2	28,960	27,892

✳✳QUANTITIES FOR BARRIER RAIL ARE NOT INCLUDED

GROOVING BRIDGE FLOORS

APPROACH SLABS	1,950 SQ.FT.
BRIDGE DECK	6,208 SQ.FT.
TOTAL	8,158 SQ.FT.

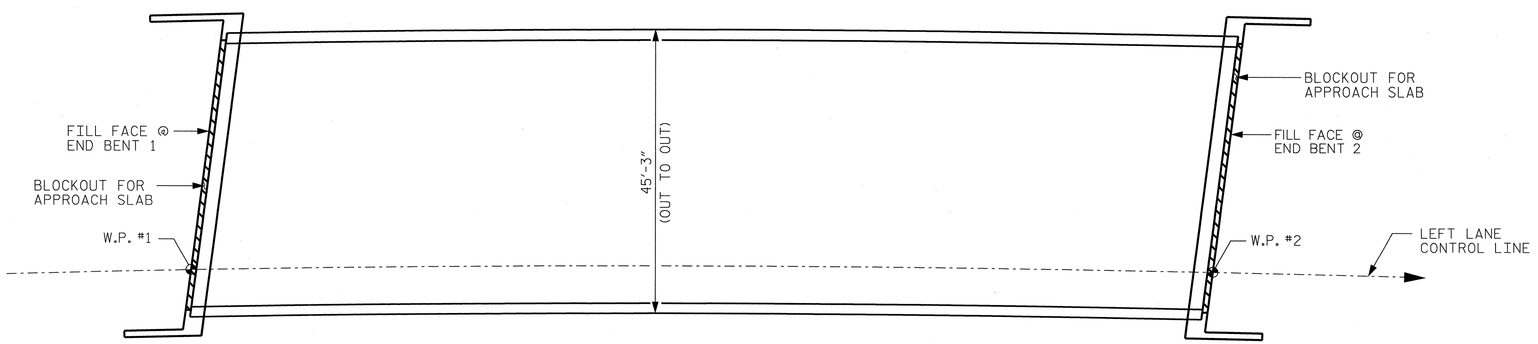

LAYOUT FOR COMPUTING AREA REIFORCED CONCRETE DECK SLAB (SQ. FT. = 7,203)

NOTE: THE COST OF THE UPPER PORTION OF THE WINGS AND INTEGRAL ENDS ABOVE THE CONSTRUCTION JOINT SHALL BE INCLUDED IN THE UNIT PRICE FOR REINFORCED CONCRETE DECK SLAB.

PROJECT NO. U-2525B
GUILFORD COUNTY
STATION: 26+21.65 -L-
17+06.65 -Y3-

STATE OF NORTH CAROLINA
DEPARTMENT OF TRANSPORTATION
RALEIGH
STANDARD
SUPERSTRUCTURE BILL OF MATERIALS

NORTH CAROLINA PROFESSIONAL SEAL 12186 ENGINEER CECIL L. NARRON 2/7/14

Kimley-Horn and Associates, Inc.
333 Fayetteville Street, Suite 600
Raleigh, NC 27601-1772
Phone (919) 835-1494
NC LICENSE # F-0102

This document, together with the concepts and designs presented herein, as an instrument of services, is intended only for the specific purpose and client for which it was prepared. Reuse of and improper reliance on this document without written authorization, and adaption by Kimley-Horn and Associates, Inc. shall be without liability to Kimley-Horn and Associates, Inc.
Copyright Kimley-Horn and Associates, Inc., 2014

REVISIONS						SHEET NO.
NO.	BY:	DATE:	NO.	BY:	DATE:	S-64
1			3			TOTAL SHEETS
2			4			541

STD. NO. BOM2 STR. #2

ASSEMBLED BY : RTO		DATE :	1/14
CHECKED BY : JCW		DATE :	1/14
DRAWN BY : JMB	5/87	REV. 8/16/99	RWW/LES
CHECKED BY : SJD	9/87	REV. 5/1/06	TLA/GM
		REV. 10/1/11	MAA/GM

2/17/2014 K:\R0T_Structures_Bridges\NC\011036224.11-2525B_Oboro East Loop over US 70\Cad\dgn\u-2525_sd_str_2_pshb64.dgn

NOTES

FOR PILE SPLICE DETAILS, SEE SHEET S-70.

INSTALL THE 4"DIAMETER DRAIN PIPE THROUGH THE WING WALL AS REQUIRED FOR REINFORCED BRIDGE APPROACH FILLS. SEE ROADWAY PLANS. REINFORCING STEEL IN THE WING WALL MAY BE SHIFTED AS NECESSARY TO CLEAR THE DRAIN PIPE.

SEE SUPERSTRUCTURE SHEETS FOR UPPER PORTION OF INTEGRAL END BENT DETAILS.

THE TOP SURFACE OF THE END BENT CAP AND WINGS, EXCEPT THE BEARING AREA, SHALL BE RAKED TO A DEPTH OF 1/4".

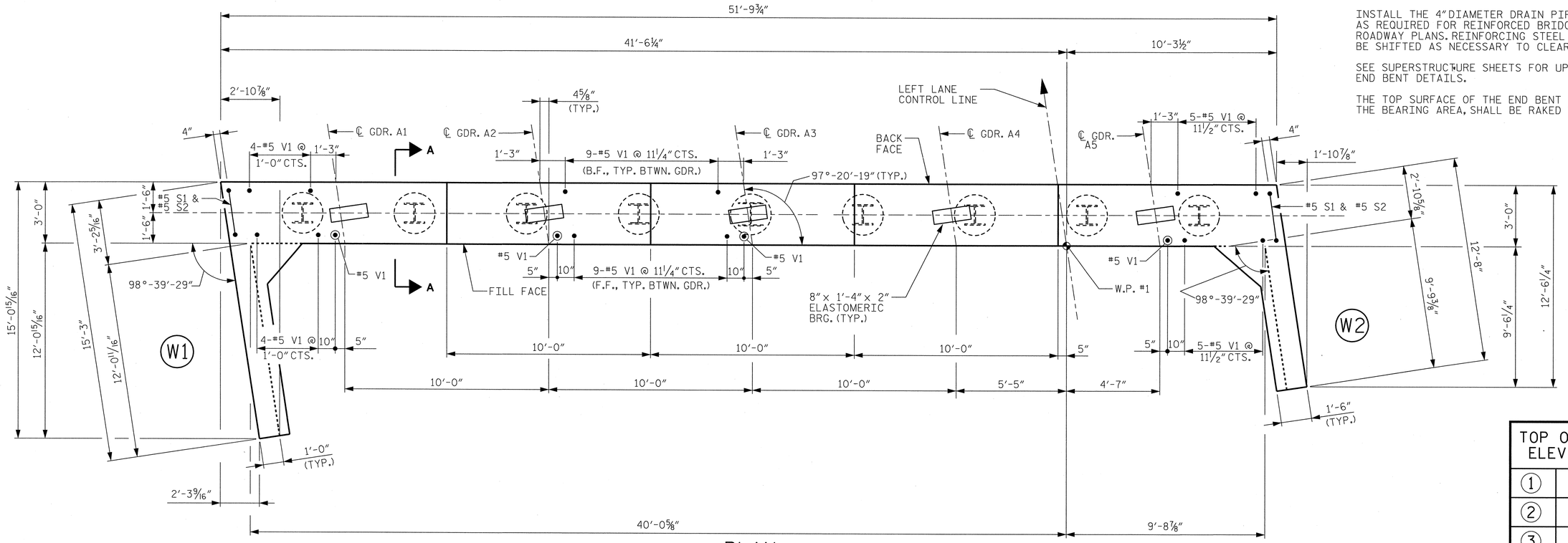

PLAN

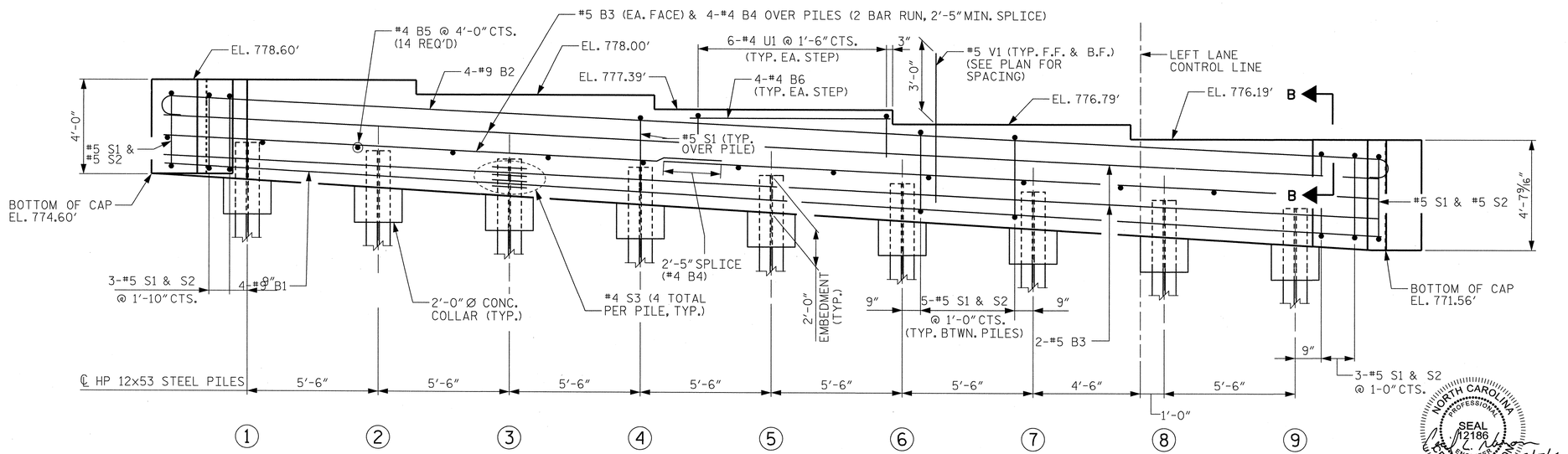

ELEVATION

TOP OF PILE ELEVATION	
①	776.36'
②	776.04'
③	775.72'
④	775.40'
⑤	775.07'
⑥	774.75'
⑦	774.43'
⑧	774.11'
⑨	773.78'

PROJECT NO. U-2525B

GUILFORD COUNTY

STATION: 26+21.65 -L-
17+06.65 -Y3-

SHEET 1 OF 3

STATE OF NORTH CAROLINA
DEPARTMENT OF TRANSPORTATION
RALEIGH

SUBSTRUCTURE
END BENT 1
(INTEGRAL)

NORTH CAROLINA PROFESSIONAL SEAL 12186 ENGINEER CECIL L. NARRONE 2/17/14

Kimley-Horn and Associates, Inc.
333 Fayetteville Street, Suite 600
Raleigh, NC 27601-1772
Phone (919) 835-1494
NC LICENSE # F-0102

This document, together with the concepts and designs presented herein, as an instrument of services, is intended only for the specific purpose and client for which it was prepared. Reuse of and improper reliance of this document without written authorization and adoption by Kimley-Horn and Associates, Inc. shall be without liability to Kimley-Horn and Associates, Inc.

Copyright Kimley-Horn and Associates, Inc., 2014

REVISIONS						SHEET NO.
NO.	BY:	DATE:	NO.	BY:	DATE:	S-65
1			3			TOTAL SHEETS
2			4			541

DRAWN BY: RTO DATE: 1/14
CHECKED BY: JCW DATE: 1/14

STR. #2

2/17/2014 K:\RDT_Structures_Bridge\NC\01103624_U-2525B_Oboro East Loop over US 70\Cadd\dgn\u-2525_sd_str_2_psh65.dgn

NOTE: CAP REINFORCING NOT SHOWN IN PLAN VIEW.

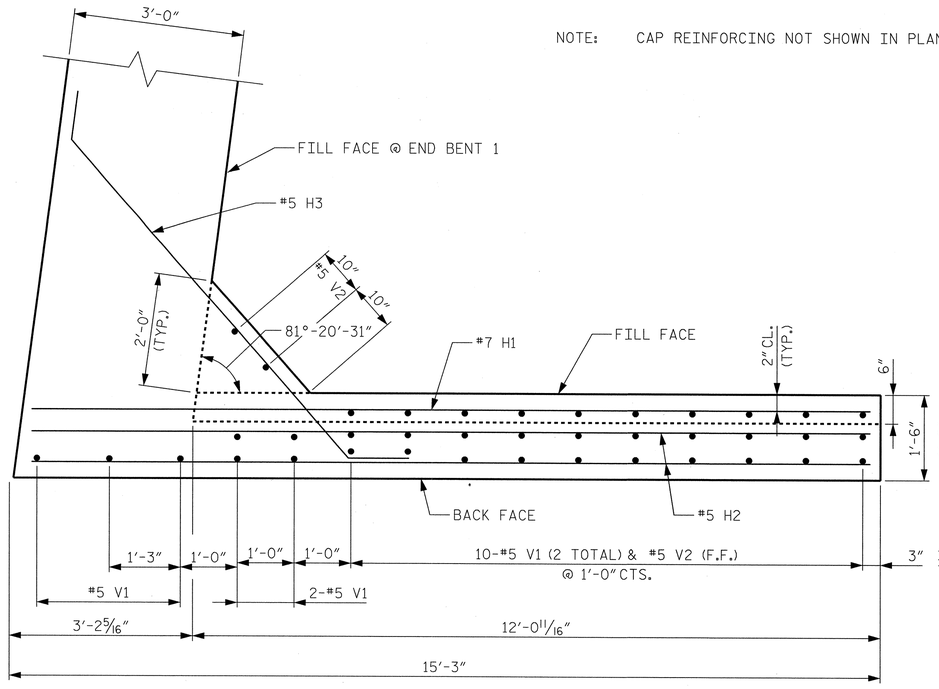

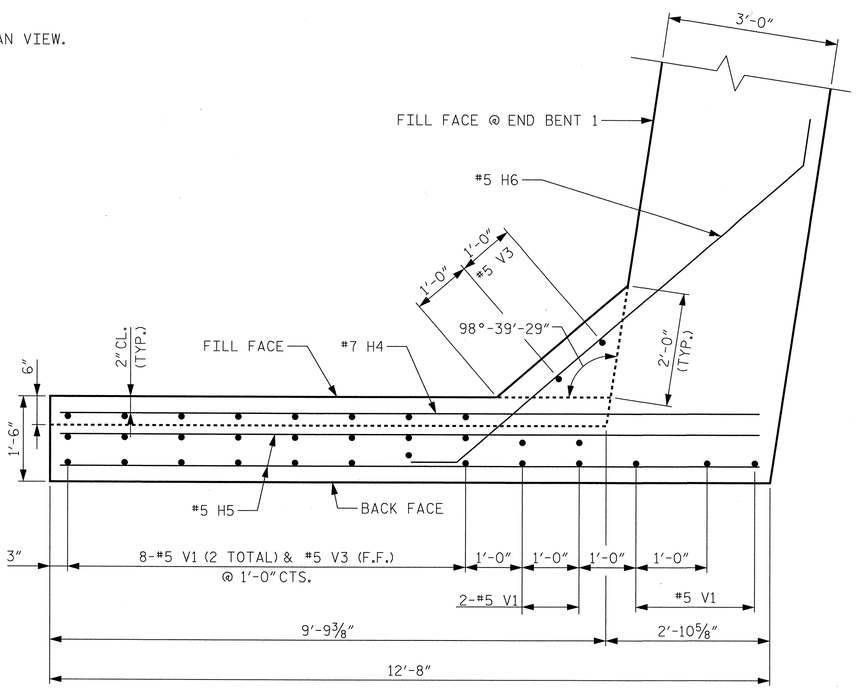

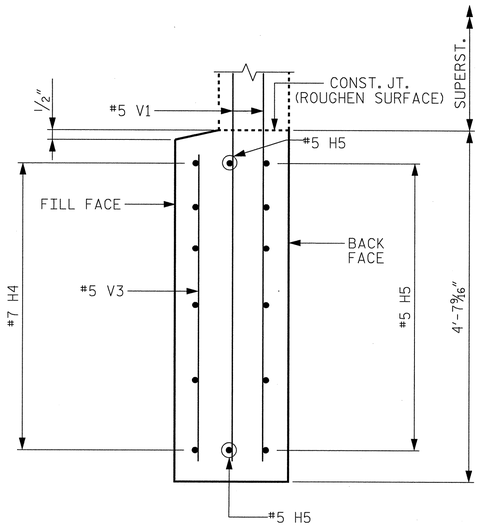

SECTION Y-Y

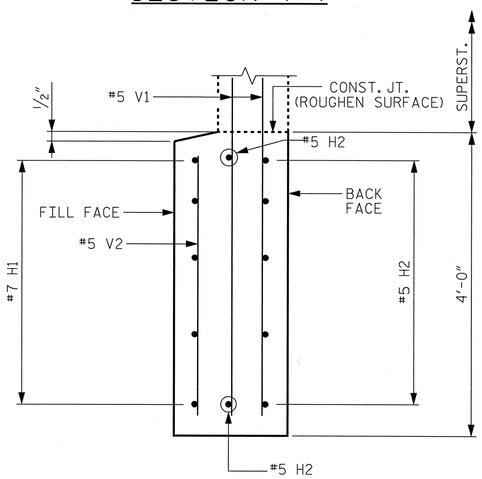

SECTION X-X

PLAN OF WING (W1)

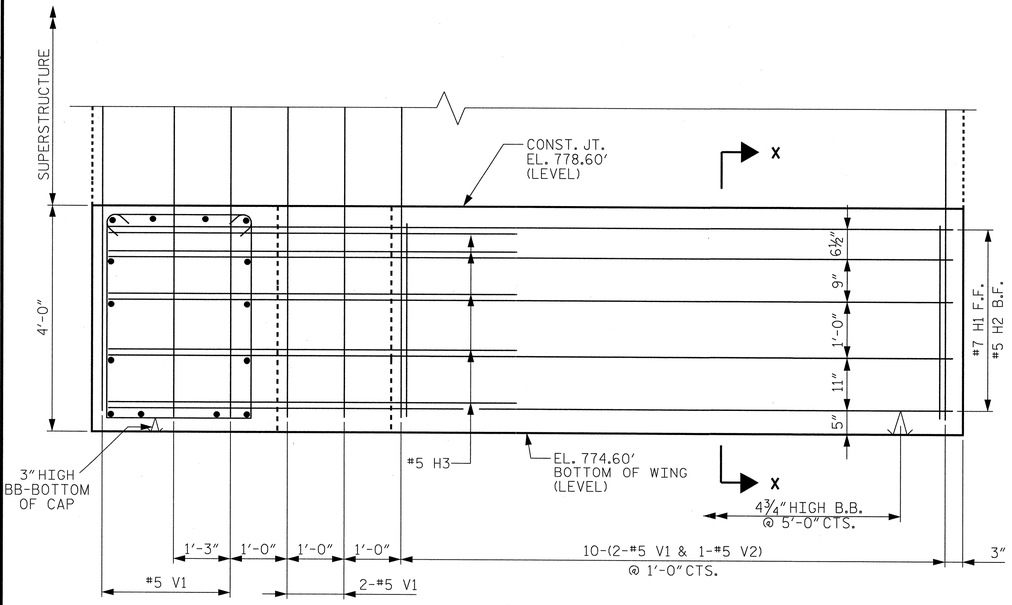

ELEVATION OF WING (W1)

PLAN OF WING (W2)

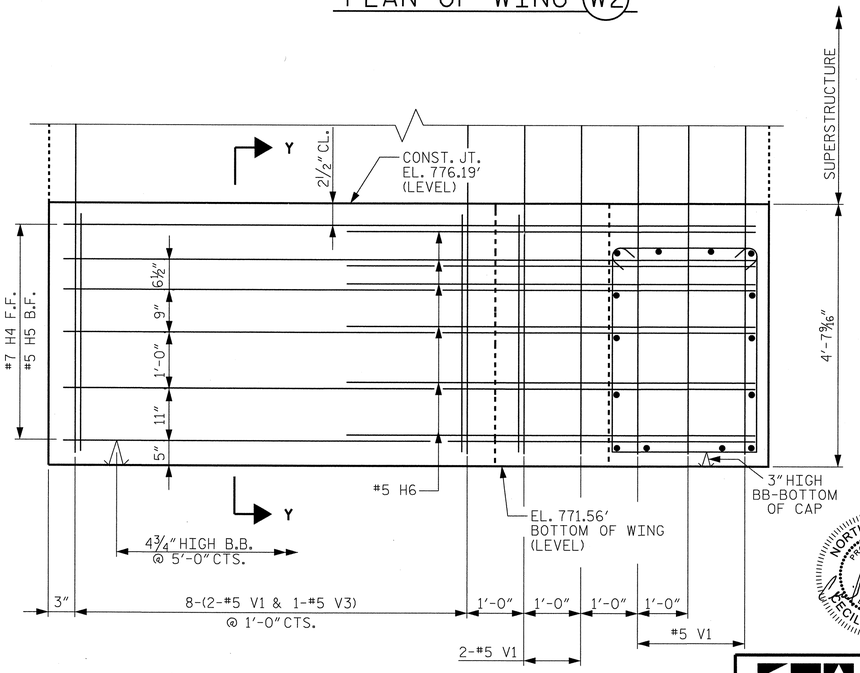

ELEVATION OF WING (W2)

NORTH CAROLINA PROFESSIONAL SEAL 12186 ENGINEER CECIL L. NARRON 2/17/14

Kimley-Horn and Associates, Inc.
333 Fayetteville Street, Suite 600
Raleigh, NC 27601-1772
Phone (919) 835-1494
NC LICENSE # F-0102

This document, together with the concepts and designs presented herein, as an instrument of services, is intended only for the specific purpose and client for which it was prepared. Reuse of and improper reliance on this document without written authorization and adaptation by Kimley-Horn and Associates, Inc. shall be without liability to Kimley-Horn and Associates, Inc.
Copyright Kimley-Horn and Associates, Inc., 2014

PROJECT NO. U-2525B
GUILFORD COUNTY
STATION: 26+21.65 -L-
17+06.65 -Y3-

SHEET 2 OF 3

STATE OF NORTH CAROLINA
DEPARTMENT OF TRANSPORTATION
RALEIGH

SUBSTRUCTURE
END BENT 1
(INTEGRAL)

REVISIONS						SHEET NO.
NO.	BY:	DATE:	NO.	BY:	DATE:	S-66
1			3			TOTAL SHEETS
2			4			541

STR. #2

DRAWN BY: RTO DATE: 1/14
CHECKED BY: JCW DATE: 1/14

2/17/2014 K:\ROT_Structures_Bridge\NC\01036224_U-2525B_Cboro East Loop over US 70\Cad\dgn\u-2525_sd_str_2.pshf66.dgn

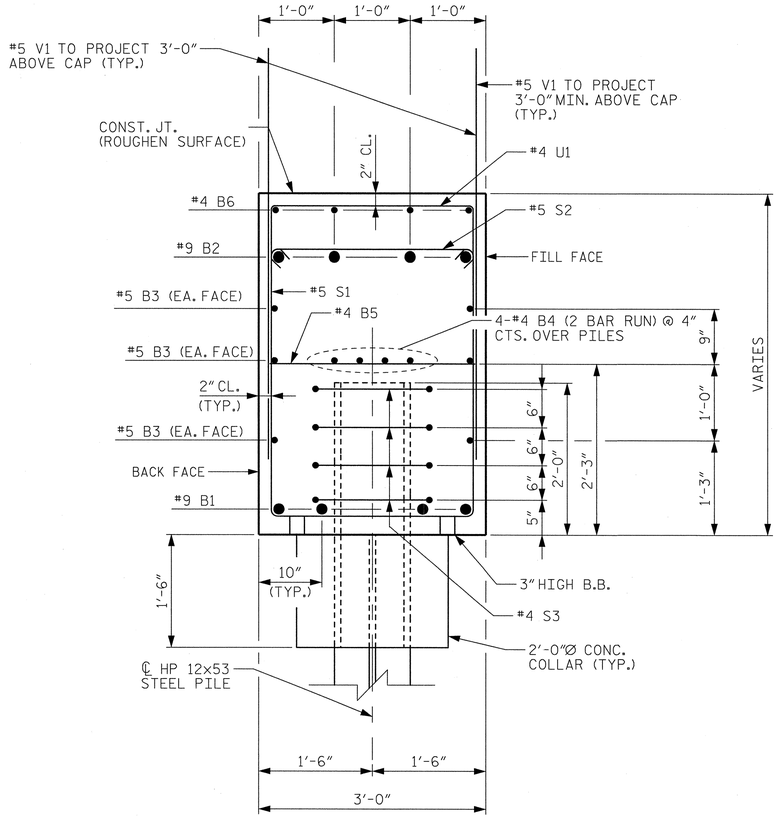

SECTION A-A

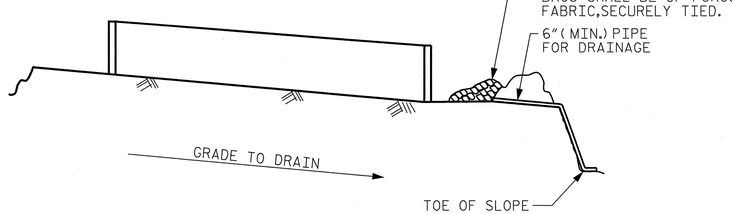

BAGGED STONE AND PIPE SHALL BE PLACED IMMEDIATELY AFTER COMPLETION OF END BENT EXCAVATION. PIPE MAY BE WITHER CONCRETE, CORRUGATED STEEL, CORRUGATED ALUMINUM ALLOY, OR CORRUGATED PLASTIC. PERFORATED PIPE WILL NOT BE ALLOWED.

BAGGED STONE SHALL REMAIN IN PLACE UNTIL THE ENGINEER DIRECTS THAT IT BE REMOVED. THE CONTRACTOR SHALL REMOVED AND DISPOSE OF SILT ACCUMULATIONS AT BAGGED STONE WHEN SO DIRECTED BY THE ENGINEER. BAGS SHALL BE REMOVED AND REPLACED WHENEVER THE ENGINEER DETERMINES THAT THEY HAVE DETERIORATED AND LOST THEIR EFFECTIVENESS.

NO SEPARATE PAYMENT WILL BE MADE FOR THIS WORK AND THE ENTIRE COST OF THIS WORK SHALL BE INCLUDED IN THE UNIT CONTRACT PRICE FOR THE SEVERAL PAY ITEMS.

TEMPORARY DRAINAGE AT END BENT

BAR TYPES

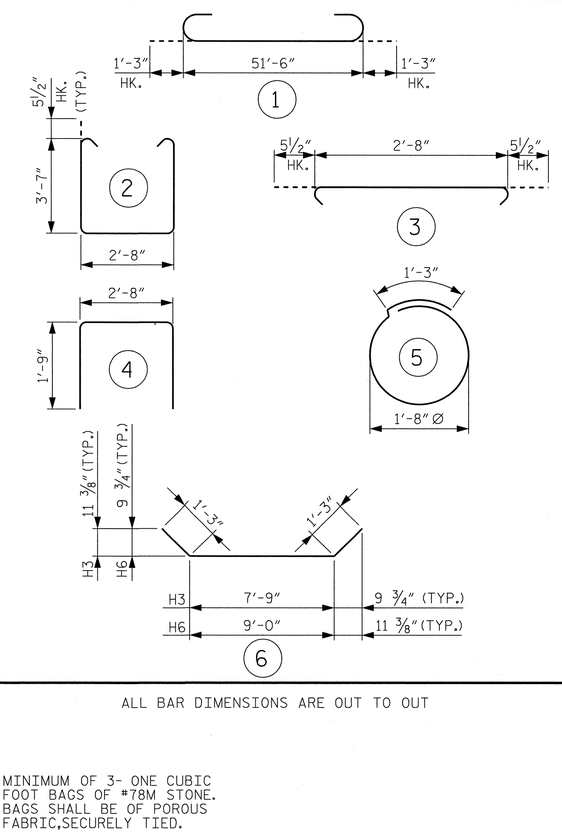

ALL BAR DIMENSIONS ARE OUT TO OUT

BILL OF MATERIAL

END BENT 1

BAR	NO.	SIZE	TYPE	LENGTH	WEIGHT
B1	4	9	STR	51'-6"	700
B2	4	9	1	54'-6"	731
B3	6	5	STR	51'-6"	322
B4	8	4	STR	27'-0"	144
B5	14	4	STR	2'-8"	25
B6	20	4	STR	7'-8"	102
H1	5	7	STR	14'-8"	150
H2	7	5	STR	14'-8"	107
H3	5	5	6	10'-3"	53
H4	6	7	STR	12'-4"	151
H5	8	5	STR	12'-4"	103
H6	6	5	6	11'-6"	72
S1	57	5	2	10'-9"	639
S2	48	5	3	3'-7"	179
S3	36	4	5	6'-6"	156
U1	30	4	4	6'-2"	124
V1	150	5	STR	7'-5"	1,160
V2	12	5	STR	3'-6"	44
V3	10	5	STR	4'-2"	43

REINFORCING STEEL LBS. 5,008

CLASS A CONCRETE C. Y. 30.8

HP 12x53 STEEL PILES:
NO. 9 LIN. FT. 405

PROJECT NO. U-2525B

GUILFORD COUNTY

STATION: 26+21.65 -L-
17+06.65 -Y3-

SHEET 3 OF 3

STATE OF NORTH CAROLINA
DEPARTMENT OF TRANSPORTATION
RALEIGH

SUBSTRUCTURE

END BENT 1
(INTEGRAL)

NORTH CAROLINA PROFESSIONAL SEAL 12186 ENGINEER CECIL L. NARRON
2/17/14

Kimley-Horn and Associates, Inc.
333 Fayetteville Street, Suite 600
Raleigh, NC 27601-1772
Phone (919) 835-1494
NC LICENSE # F-0102

This document, together with the concepts and designs presented herein, as an instrument of service, is intended only for the specific purpose and client for which it was prepared. Reuse of and improper reliance on this document without written authorization and adaptation by Kimley-Horn and Associates, Inc. shall be without liability to Kimley-Horn and Associates, Inc.
Copyright Kimley-Horn and Associates, Inc., 2014

REVISIONS						SHEET NO.
NO.	BY:	DATE:	NO.	BY:	DATE:	S-67
1			3			TOTAL SHEETS
2			4			541

STR. #2

DRAWN BY: RTO DATE: 1/14
CHECKED BY: JCW DATE: 1/14

2/17/2014 K:\RDT_Structures_Bridge\NC\01103622A_U-2525B_Oboro East Loop over US 70\Cadd\dgn\u-2525_sd_str_2_nsh67.dgn

NOTES

SEE NOTES ON SHEET S-65.

FOR TEMPORARY DRAINAGE AT END BENT SEE SHEET S-67.

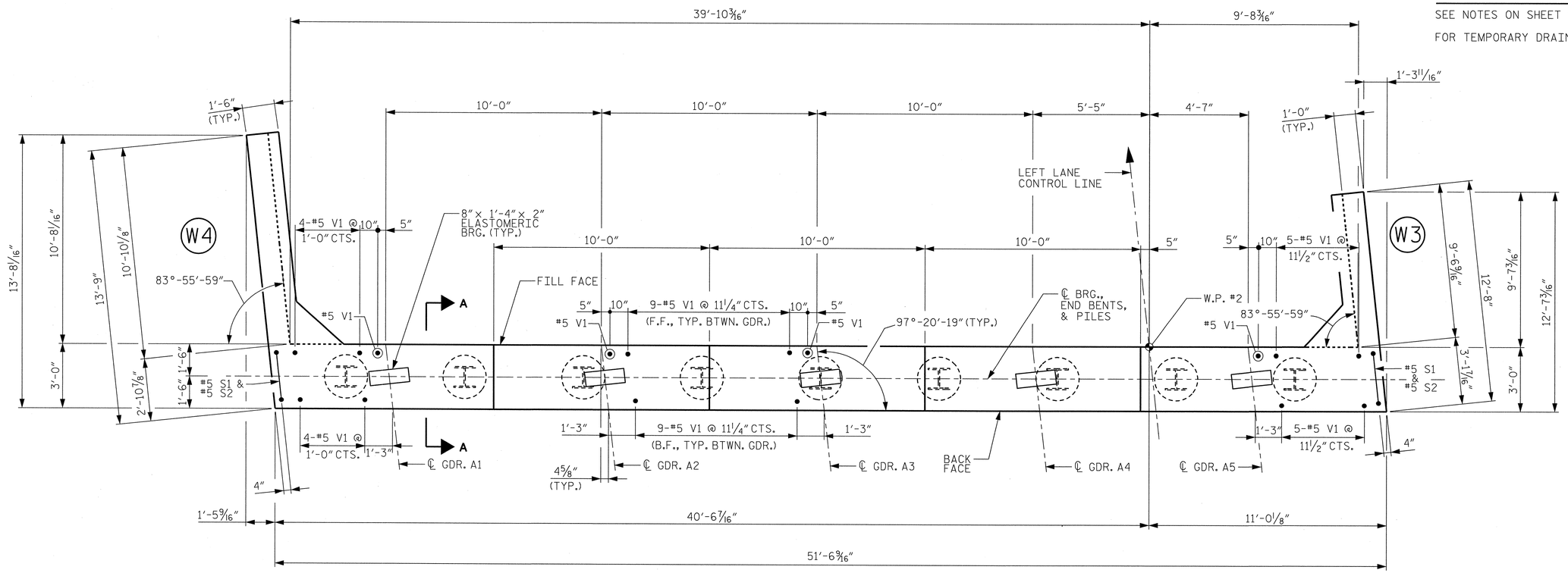

PLAN

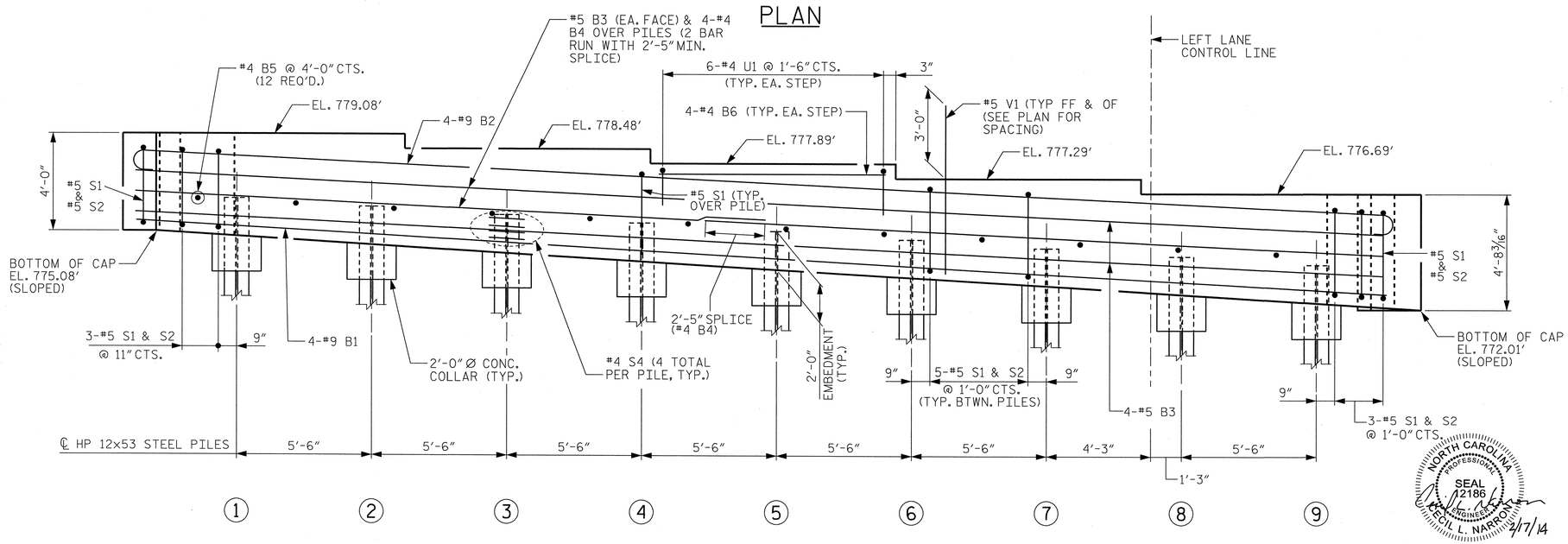

ELEVATION

TOP OF PILE ELEVATION	
1	776.88'
2	776.56'
3	776.23'
4	775.90'
5	775.57'
6	775.25'
7	774.92'
8	774.59'
9	774.26'

PROJECT NO. U-2525B

GUILFORD COUNTY

STATION: 26+21.65 -L-
17+06.65 -Y3-

SHEET 1 OF 3

STATE OF NORTH CAROLINA
DEPARTMENT OF TRANSPORTATION
RALEIGH

SUBSTRUCTURE

END BENT 2
(INTEGRAL)

NORTH CAROLINA PROFESSIONAL SEAL 2186 ENGINEER CECIL L. NARRON 2/7/14

Kimley-Horn and Associates, Inc.
333 Fayetteville Street, Suite 600
Raleigh, NC 27601-1772
Phone (919) 835-1494
NC LICENSE # F-0102

This document, together with the concepts and designs presented herein, as an instrument of services, is intended only for the specific purpose and client for which it was prepared. Reuse of and improper reliance on this document without written authorization and adaptation by Kimley-Horn and Associates, Inc. shall be without liability to Kimley-Horn and Associates, Inc.

Copyright Kimley-Horn and Associates, Inc., 2014

REVISIONS						SHEET NO.
NO.	BY:	DATE:	NO.	BY:	DATE:	S-68
1			3			TOTAL SHEETS
2			4			541

STR. #2

DRAWN BY: RTO DATE: 1/14
CHECKED BY: JCW DATE: 1/14

2/17/2014 K:\RDT_Structures_Bridges\NC\01036224_U-2525B_Oboro East Loop over US 70\Cad\dgn\u-2525_sd_str_2.part68.dgn

NOTE: CAP REINFORCING NOT SHOWN IN PLAN VIEW.

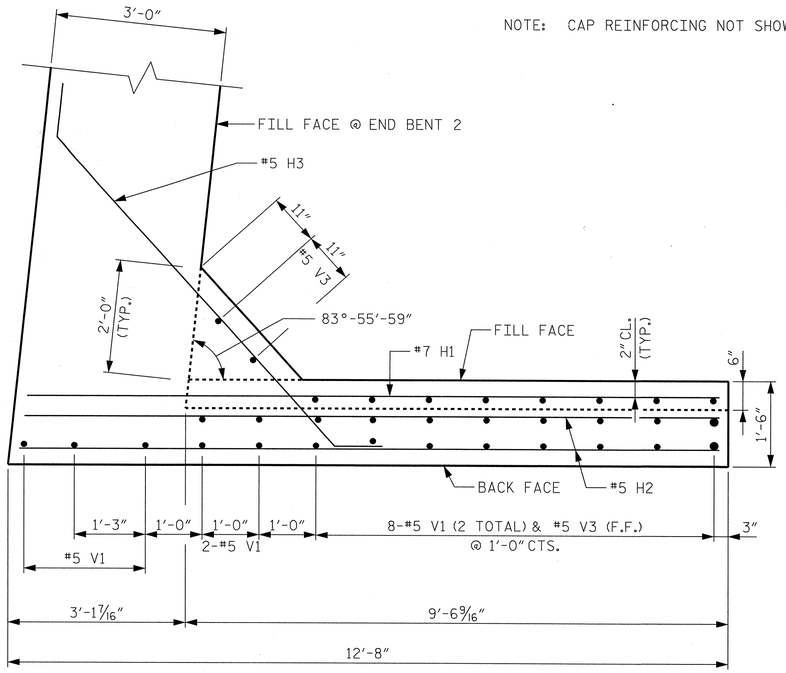

PLAN OF WING (W3)

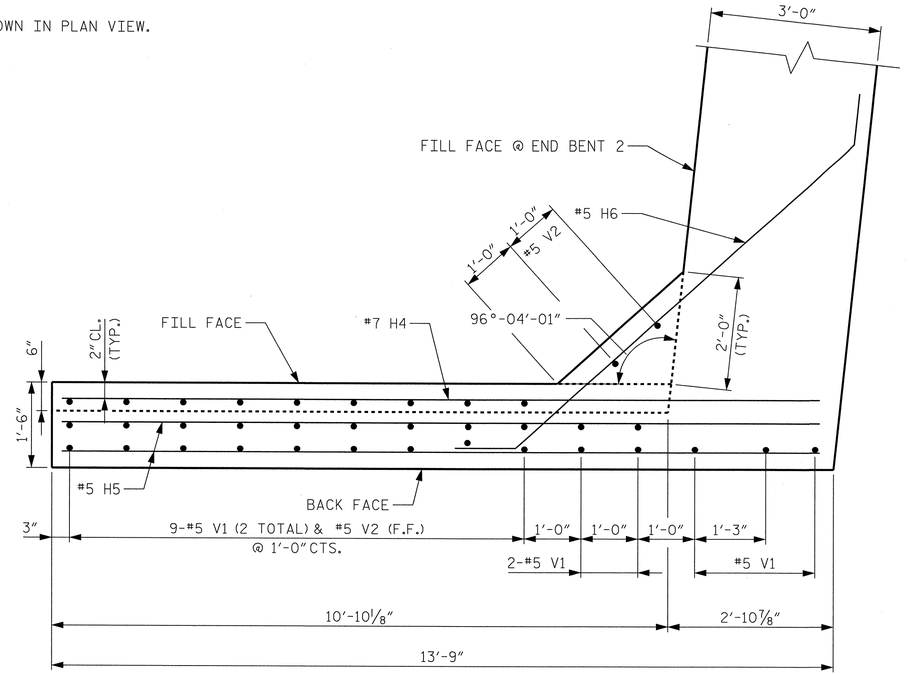

PLAN OF WING (W4)

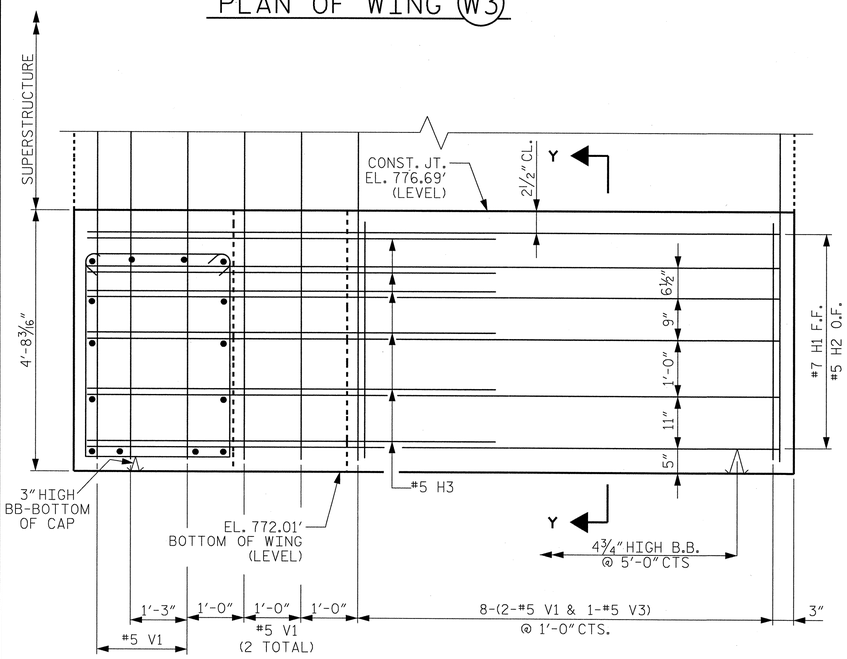

ELEVATION OF WING (W3)

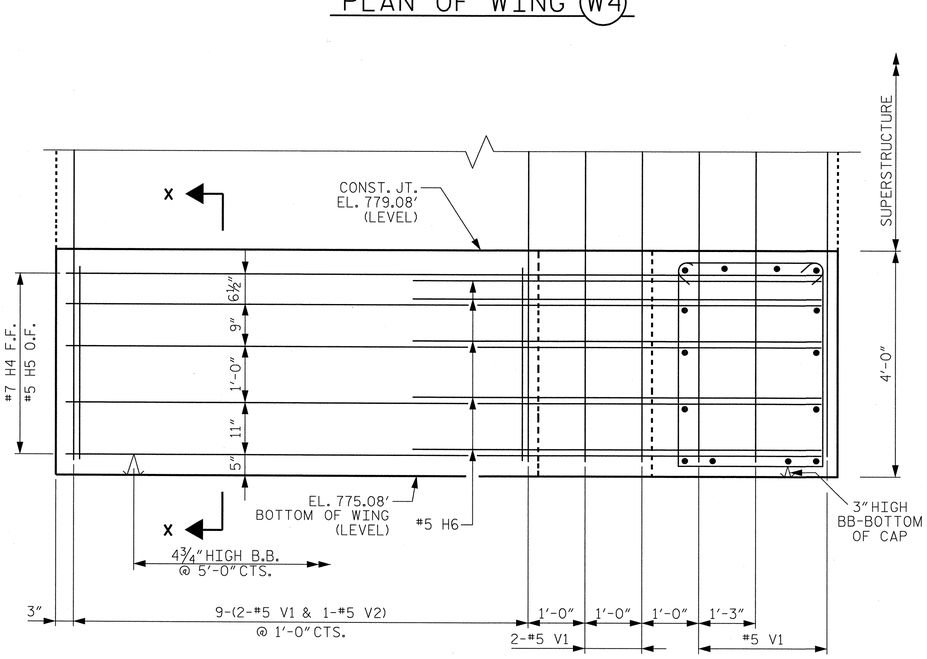

ELEVATION OF WING (W4)

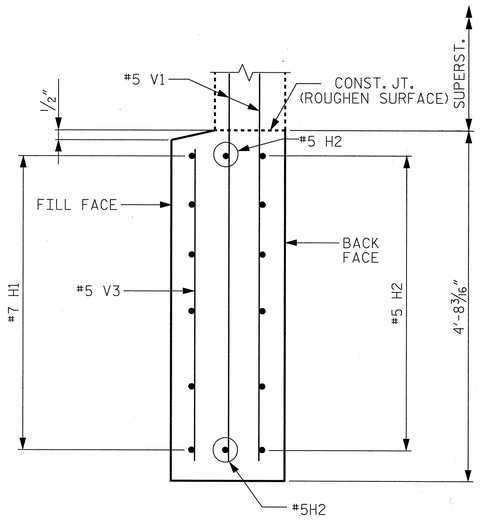

SECTION Y-Y

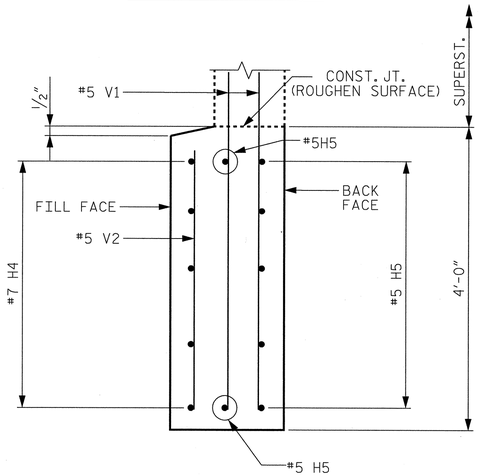

SECTION X-X

PROJECT NO. U-2525B

GUILFORD COUNTY

STATION: 26+21.65 -L-
17+06.65 -Y3-

SHEET 2 OF 3

STATE OF NORTH CAROLINA
DEPARTMENT OF TRANSPORTATION
RALEIGH

SUBSTRUCTURE

END BENT 2
(INTEGRAL)

NORTH CAROLINA PROFESSIONAL SEAL 12186 ENGINEER CECIL L. NARRON 2/17/14

Kimley-Horn and Associates, Inc.
333 Fayetteville Street, Suite 600
Raleigh, NC 27601-1772
Phone (919) 835-1494
NC LICENSE # F-0102

This document, together with the concepts and designs presented herein, as an instrument of service, is intended only for the specific purpose and client for which it was prepared. Reuse of and improper reliance on this document without written authorization and adaptation by Kimley-Horn and Associates, Inc. shall be without liability to Kimley-Horn and Associates, Inc.

Copyright Kimley-Horn and Associates, Inc., 2014

REVISIONS						SHEET NO.
NO.	BY:	DATE:	NO.	BY:	DATE:	S-69
1			3			TOTAL SHEETS
2			4			541

DRAWN BY: RTO DATE: 1/14
CHECKED BY: JCW DATE: 1/14

2/17/2014 K:\NDT_Structures_Bridge\NCV01103224_U-2525B_Oboro East Loop over US 70\Cad\dgn\u-2525_sd_str_2_pst69.dgn

STR. #2

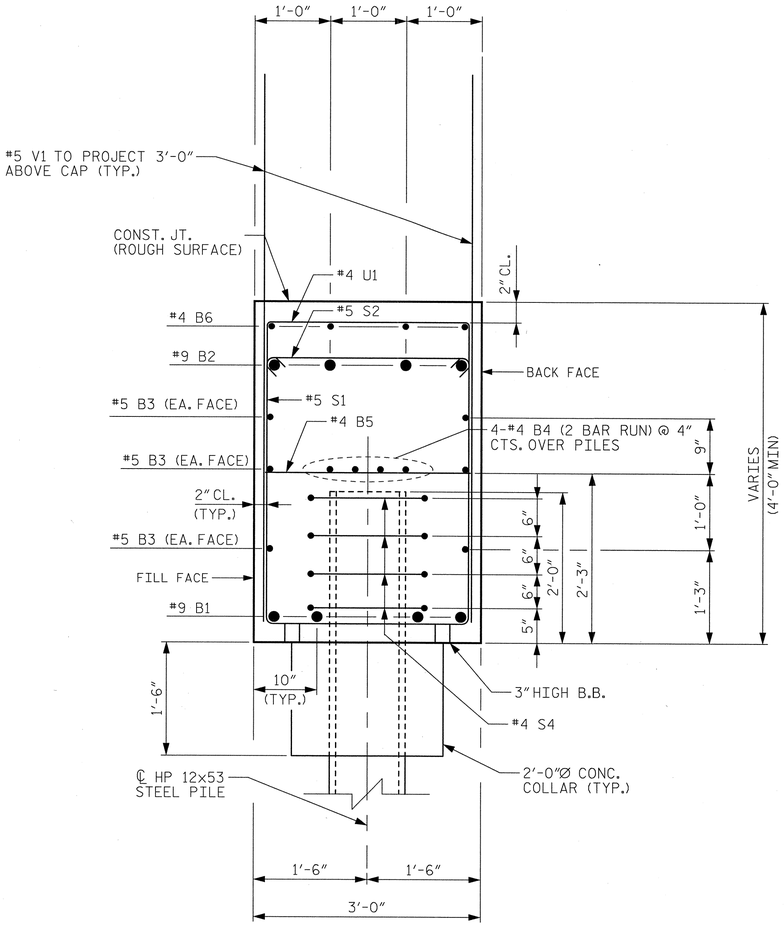

SECTION A-A

BAR TYPES

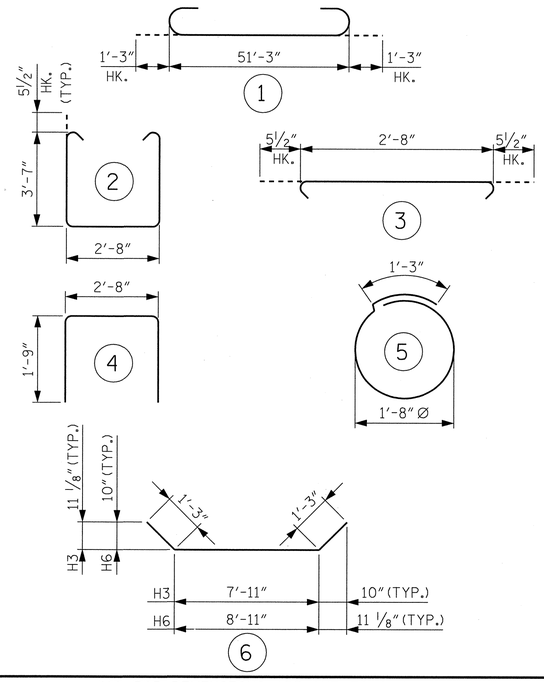

ALL BAR DIMENSIONS ARE OUT TO OUT

BILL OF MATERIAL

END BENT 2

BAR	NO.	SIZE	TYPE	LENGTH	WEIGHT
B1	4	9	STR	51'-3"	697
B2	4	9	1	53'-9"	731
B3	6	5	STR	51'-3"	321
B4	8	4	STR	26'-10"	143
B5	14	4	STR	2'-8"	25
B6	20	4	STR	7'-8"	102
H1	6	7	STR	12'-2"	149
H2	8	5	STR	12'-2"	102
H3	6	5	6	10'-5"	65
H4	5	7	STR	13'-5"	137
H5	7	5	STR	13'-5"	98
H6	5	5	6	11'-5"	60
S1	57	5	2	10'-9"	639
S2	48	5	3	3'-7"	179
S3	36	4	5	6'-6"	156
U1	30	4	4	6'-2"	124
V1	148	5	STR	7'-5"	1,145
V2	11	5	STR	3'-6"	40
V3	10	5	STR	4'-2"	43

REINFORCING STEEL LBS. 4,956

CLASS A CONCRETE C. Y. 30.2

HP 12x53 STEEL PILES:
NO. 9 LIN. FT. 365

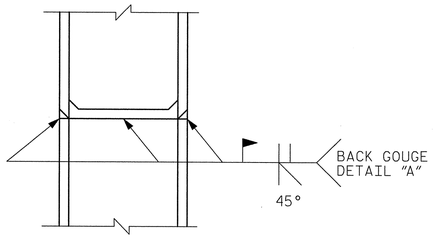

✱ PILE VERTICAL

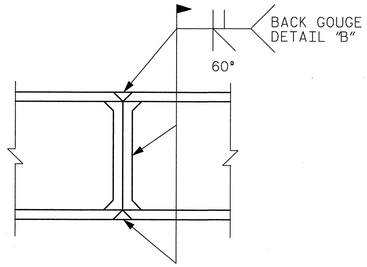

✱ PILE HORIZONTAL OR VERTICAL

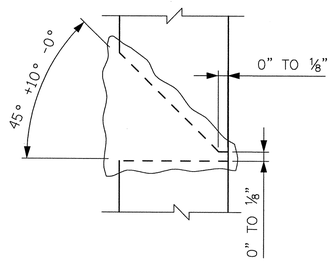

DETAIL "A"

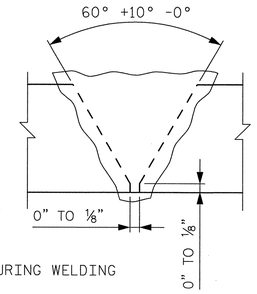

DETAIL "B"

✱ POSITION OF PILE DURING WELDING

HP PILE SPLICE DETAILS

PROJECT NO. U-2525B

GUILFORD COUNTY

STATION: 26+21.65 -L-
17+06.65 -Y3-

SHEET 3 OF 3

STATE OF NORTH CAROLINA
DEPARTMENT OF TRANSPORTATION
RALEIGH

SUBSTRUCTURE

END BENT 2
(INTEGRAL)

NORTH CAROLINA PROFESSIONAL SEAL 12186 ENGINEER CECIL L. NARRON 2/7/14

Kimley-Horn and Associates, Inc.
333 Fayetteville Street, Suite 600
Raleigh, NC 27601-1772
Phone (919) 835-1494
NC LICENSE # F-0102

This document, together with the concepts and designs presented herein, as an instrument of services, is intended only for the specific purpose and client for which it was prepared. Reuse of and improper reliance on this document without written authorization and adaptation by Kimley-Horn and Associates, Inc. shall be without liability to Kimley-Horn and Associates, Inc.
Copyright Kimley-Horn and Associates, Inc., 2014

REVISIONS						SHEET NO.
NO.	BY:	DATE:	NO.	BY:	DATE:	S-70
1			3			TOTAL SHEETS
2			4			541

DRAWN BY: RTO DATE: 1/14
CHECKED BY: JCW DATE: 1/14

2/17/2014 K:\RDT_Structures_Bridge\NC\01036224_U-2525B_Oboro East Loop over US 70\Cad\dgn\u-2525_sd_str-2.psh70.dgn

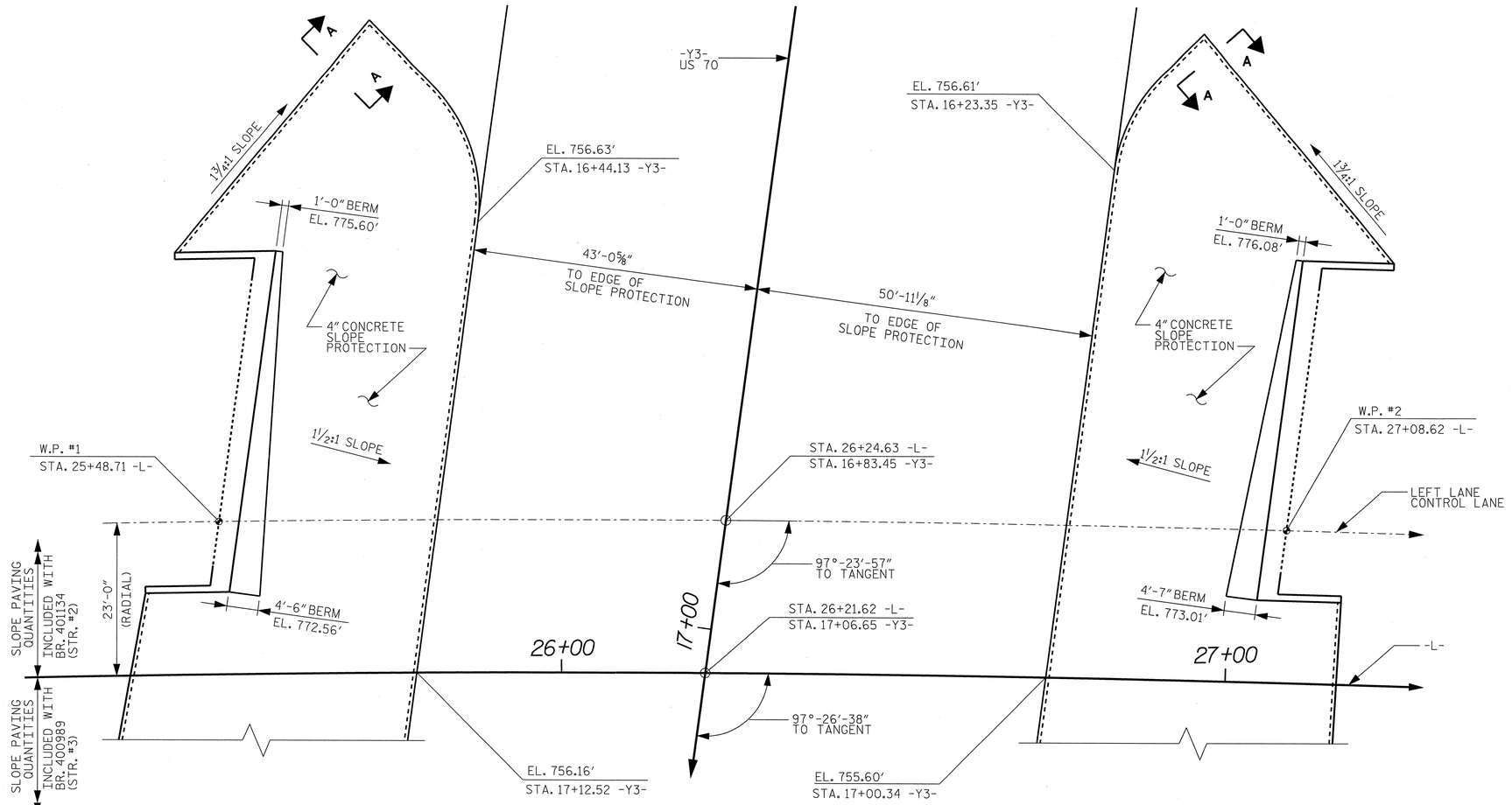

PLAN

NOTES

SLOPE PROTECTION SHALL CONSIST OF 4" POURED-IN-PLACE CONCRETE PAVING AS SHOWN IN THE DETAILS ON THIS SHEET. CONCRETE SHALL BE CLASS "B". THE CONCRETE SURFACE SHALL BE FLOATED WITH A WOODEN FLOAT AND FINISHED. WELDED WIRE FABRIC REINFORCING SHALL BE 6 X 6 - W1.4 X W1.4, 60" WIDE. SLOPE PROTECTION SHALL BE POURED IN 5' STRIPS AS SHOWN IN THE "POURING DETAIL" WITH 2'-0' LONG #4 BARS PLACED ALONG THE SLOPE BETWEEN STRIPS AT 1'-6" MAXIMUM SPACING. SLOPE PROTECTION MAY BE POURED IN ALTERNATE 4' AND 5' STIPS AS SHOWN IN THE "OPTIONAL POURING DETAIL" WITH ADJACENET RUNS OF WELDED WIRE FABRIC LAPPING AT LEAST 6". THE COST OF THE WELDED WIRE FABRIC AND #4 BARS, IF USED, SHALL BE INCLUDED IN THE CONTRACT UNIT PRICE BID PER SQUARE YARD FOR SLOPE PROTECTION.

BRIDGE @ STA. 26+24.63 -L-	4" SLOPE PROTECTION	* WELDED WIRE FABRIC 60 INCHES WIDE
	SQUARE YARDS	APPROX. L.F.
END BENT 1	425	725
END BENT 2	420	720
TOTAL	845	1445

* QUANTITY SHOWN IS BASED ON 5' POURS.

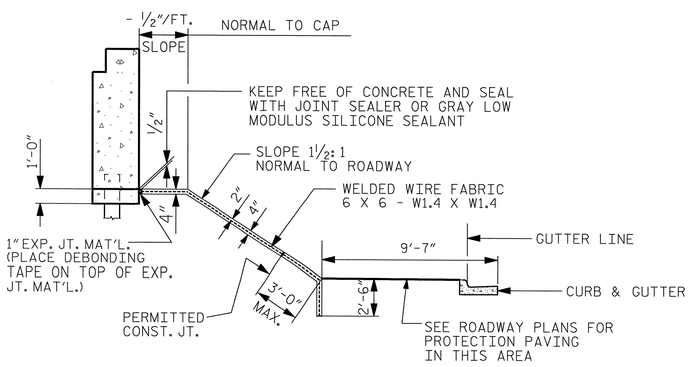

SECTION ALONG ℄ ROADWAY WHEN FILL CATCHES CURB AND GUTTER

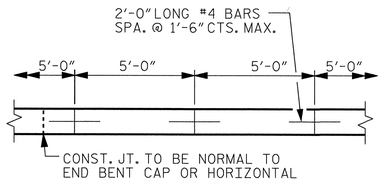

STRIP WIDTHS MAY VARY IN CURVED PORTION.

POURING DETAIL

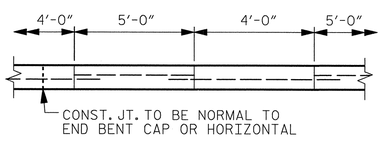

POUR A 4'-0" STRIP FIRST. STRIP WIDTHS MAY VARY IN CURVED PORTION.

OPTIONAL POURING DETAIL

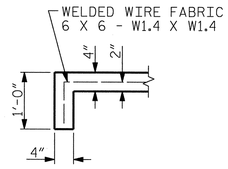

SECTION A-A

PROJECT NO. U-2525B

GUILFORD COUNTY

STATION: 26+21.65 -L-
17+06.65 -Y3-

STATE OF NORTH CAROLINA
DEPARTMENT OF TRANSPORTATION
RALEIGH

STANDARD

SLOPE PROTECTION DETAILS

NORTH CAROLINA PROFESSIONAL SEAL 12186 ENGINEER KECIL L. NARRON 2/7/14

Kimley-Horn and Associates, Inc.
333 Fayetteville Street, Suite 600
Raleigh, NC 27601-1772
Phone (919) 835-1494
NC LICENSE # F-0102

This document, together with the concepts and designs presented herein, as an instrument of services, is intended only for the specific purpose and client for which it was prepared. Reuse of and improper reliance of this document without written authorization and adoption by Kimley-Horn and Associates, Inc. shall be without liability to Kimley-Horn and Associates, Inc.
Copyright Kimley-Horn and Associates, Inc., 2014

REVISIONS					
NO.	BY:	DATE:	NO.	BY:	DATE:
1			3		
2			4		

SHEET NO. S-71
TOTAL SHEETS 541

STD. NO. SP1 STR. #2

ASSEMBLED BY : RTO	DATE : 1/14
CHECKED BY : JCW	DATE : 1/14

2/17/2014 K:\RDT\Structures_Bridges\NCX01103624_U-2525B_Cboro East Loop over US 70\Cadd\dgn\u-2525_sd_str_2.pshl7i.dgn

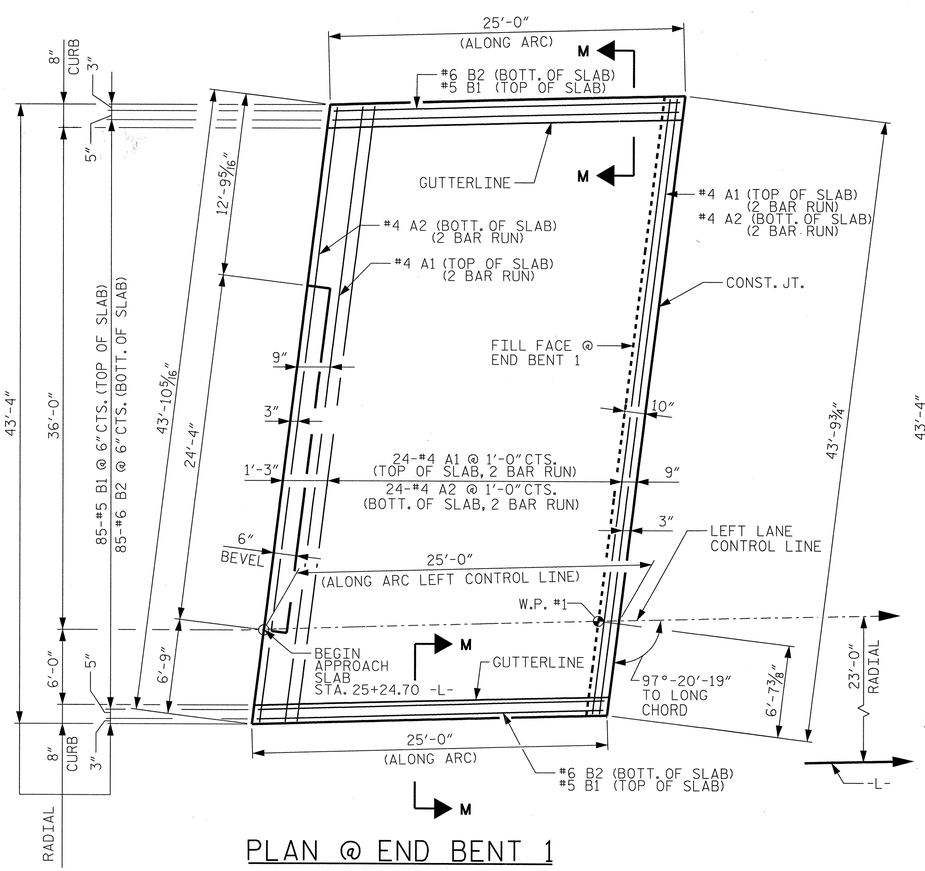

PLAN @ END BENT 1

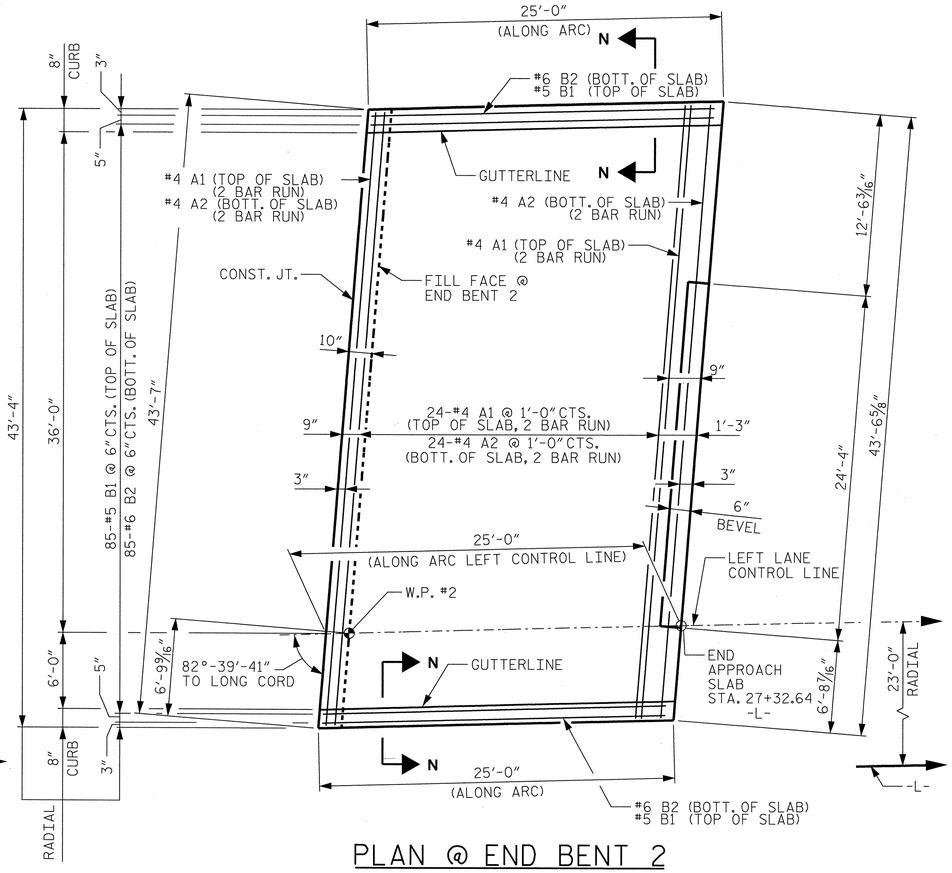

PLAN @ END BENT 2

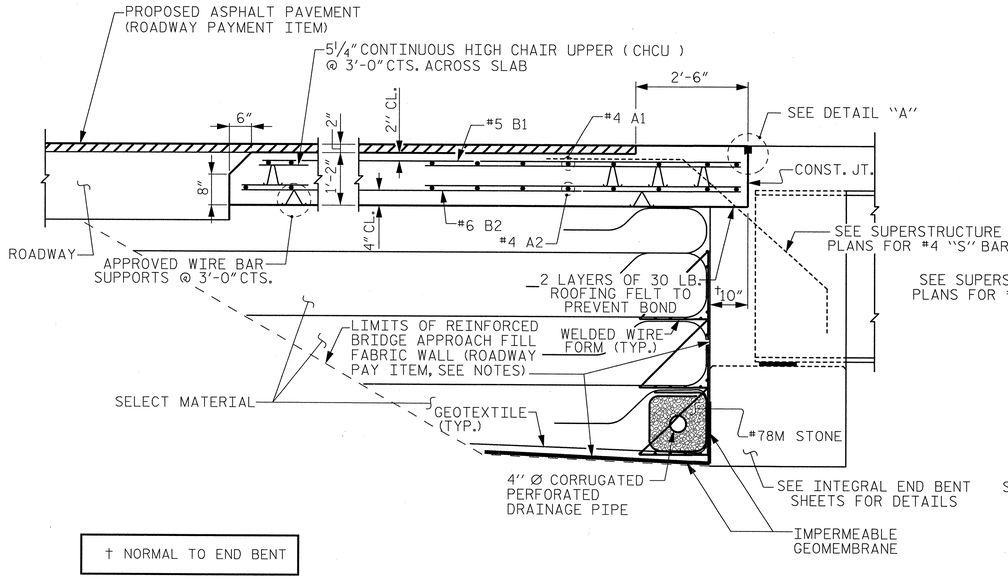

† NORMAL TO END BENT

SECTION THRU SLAB
@ END BENT 1

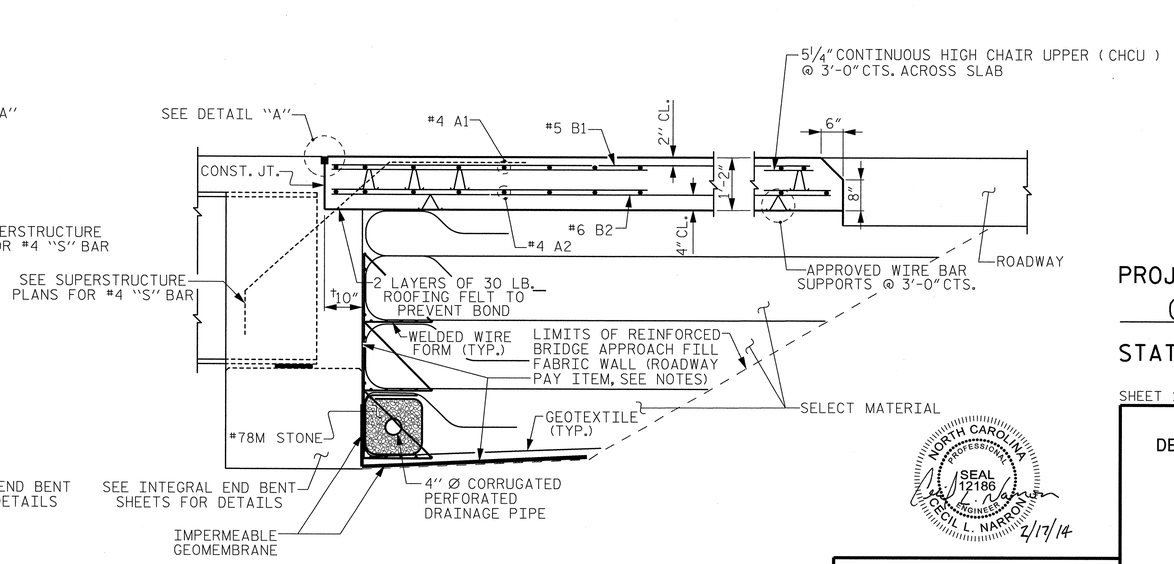

SECTION THRU SLAB
@ END BENT 2

ASSEMBLED BY : RTO	DATE : 1/14		
CHECKED BY : JCW	DATE : 1/14		
DRAWN BY : TLA 10/05	ADDED 5/1/06RR KMM/GM		
CHECKED BY : GM 5/06	REV. 10/1/11 MAA/GM		

Kimley-Horn and Associates, Inc.
333 Fayetteville Street, Suite 600
Raleigh, NC 27601-1772
Phone (919) 835-1494
NC LICENSE # F-0102

This document, together with the concepts and designs presented herein, as an instrument of services, is intended only for the specific purpose and client for which it was prepared. Reuse of and improper reliance of this document without written authorization and adaptation by Kimley-Horn and Associates, Inc. shall be without liability to Kimley-Horn and Associates, Inc.

Copyright Kimley-Horn and Associates, Inc., 2014

NORTH CAROLINA PROFESSIONAL SEAL 12186 ENGINEER CECIL L. NARRON 2/17/14

PROJECT NO. U-2525B

GUILFORD COUNTY

STATION: 26+21.65 -L-
17+06.65 -Y3-

SHEET 1 OF 2

STATE OF NORTH CAROLINA
DEPARTMENT OF TRANSPORTATION
RALEIGH

STANDARD

BRIDGE APPROACH SLAB FOR INTEGRAL ABUTMENT

REVISIONS						SHEET NO.
NO.	BY:	DATE:	NO.	BY:	DATE:	S-72
1			3			TOTAL SHEETS
2			4			541

STD. NO. BAS5 STR. #2

K:\ROT_Structures_Bridges\NC\01036224_U-2525B_Cboro East Loop over US 70\Cad\dgn\u-2525_sd_str_2.pdf72.dgn
2/17/2014

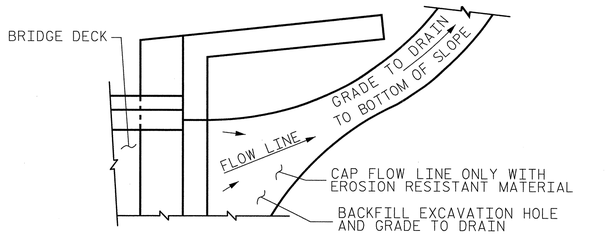

NOTE: IF THE APPROACH SLAB IS NOT CONSTRUCTED IMMEDIATELY AFTER THE BACKFILLING OF THE END BENT EXCAVATION, GRADE TO DRAIN TO THE BOTTOM OF THE SLOPE AND PROVIDE EROSION RESISTANT MATERIAL, SUCH AS FIBERGLASS ROVING OR AS DIRECTED BY THE ENGINEER TO PREVENT SOIL EROSION AND TO PROTECT THE AREA ADJACENT TO THE STRUCTURE. THE CONTRACTOR WILL BE REQUIRED TO REMOVE THESE MATERIALS PRIOR TO CONSTRUCTION OF THE APPROACH SLAB.

TEMPORARY DRAINAGE DETAIL

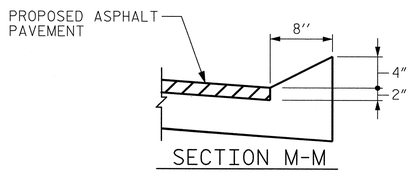

SECTION M-M

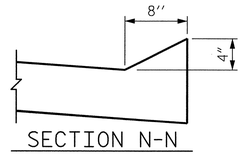

SECTION N-N

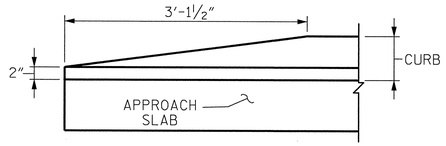

END OF CURB WITHOUT SHOULDER BERM GUTTER @ END BENT 1

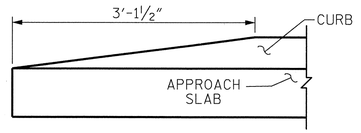

END OF CURB WITHOUT SHOULDER BERM GUTTER @ END BENT 2

BILL OF MATERIAL

FOR ONE APPROACH SLAB (2 REQ'D)

BAR	NO.	SIZE	TYPE	LENGTH	WEIGHT
✳ A1	52	4	STR	22'-9"	790
A2	52	4	STR	22'-7"	784
✳ B1	87	5	STR	24'-2"	2,193
B2	87	6	STR	24'-8"	3,223

REINFORCING STEEL	4,007 LBS.
✳ EPOXY COATED REINFORCING STEEL	2,983 LBS.
CLASS AA CONCRETE	
END BENT 1	48.4 C. Y.
END BENT 2	47.5 C. Y.

NOTES

APPROACH SLAB SHALL NOT BE CONSTRUCTED PRIOR TO COMPLETION OF THE BRIDGE DECK.

FOR REINFORCED BRIDGE APPROACH FILL INCLUDING GEOTEXTILE, IMPERMEABLE GEOMEMBRANE, 4'' Ø DRAINAGE PIPE, #78M STONE, AND SELECT MATERIAL, SEE ROADWAY PLANS.

AREA BETWEEN THE WINGWALL AND APPROACH SLAB SHALL BE GRADED TO DRAIN THE WATER AWAY FROM THE FILL FACE OF THE BRIDGE AND SHALL BE PAVED. SEE ROADWAY PLANS.

THE JOINT OPENING AT THE APPROACH SLAB/DECK INTERFACE SHALL BE SAWED NO MORE THAN 12 HOURS AFTER THE APPROACH SLAB IS CAST. THE JOINT SHALL BE CLEANED OF ALL DEBRIS BEFORE THE SEALANT IS APPLIED. THE JOINT SEALER MATERIAL SHALL CONFORM TO THE REQUIREMENTS OF SECTION 1028-3 OF THE STANDARD SPECIFICATIONS.

SPLICE LENGTHS		
BAR SIZE	EPOXY COATED	UNCOATED
#4	2'-0"	1'-9"
#5	2'-6"	2'-2"
#6	3'-10"	2'-7"

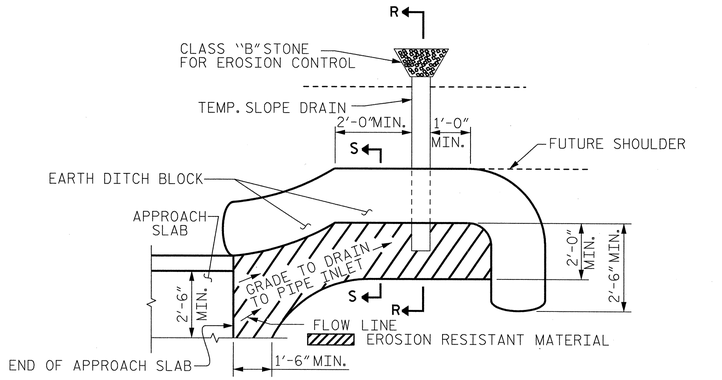

NOTE: IMMEDIATELY AFTER THE CONSTRUCTION OF THE APPROACH SLAB, THE CONTRACTOR SHALL PROVIDE TEMPORARY BERM AND SLOPE DRAIN. CONTRACTOR SHALL GRADE TO PIPE INLET AND PROVIDE EROSION RESISTANT MATERIAL AS SHOWN. THE EROSION RESISTANT MATERIAL SHALL BE EITHER 1) ASPHALT PLANT MIX, TYPE 1 OR TYPE 2, MIN. 2" DEPTH, 2) EROSION CONTROL MAT, OR 3) CONCRETE, AS DIRECTED BY THE ENGINEER. THE SLOPE DRAIN SHALL CONSIST OF A NON-PERFORATED TEMPORARY DRAINAGE PIPE, 12 INCHES IN DIAMETER.

PLAN VIEW

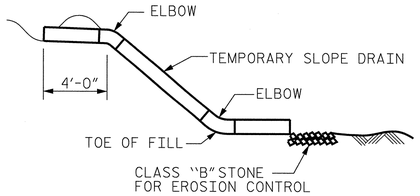

SECTION R-R

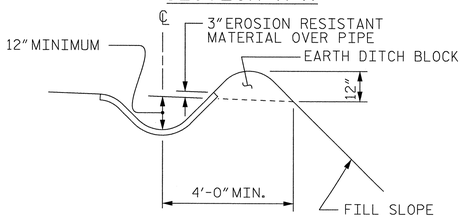

SECTION S-S

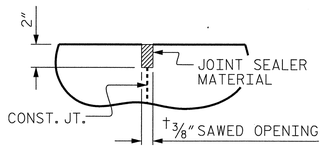

DETAIL "A"

TEMPORARY BERM AND SLOPE DRAIN DETAILS

(TO BE USED WHEN SHOULDER BERM GUTTER IS REQUIRED)

PROJECT NO. U-2525B

GUILFORD COUNTY

STATION: 26+21.65 -L-
17+06.65 -Y3-

SHEET 2 OF 2

Kimley-Horn and Associates, Inc.
333 Fayetteville Street, Suite 600
Raleigh, NC 27601-1772
Phone (919) 835-1494
NC LICENSE # F-0102

This document, together with the concepts and designs presented herein, as an instrument of services, is intended only for the specific purpose and client for which it was prepared. Reuse of and improper reliance on this document without written authorization and adaption by Kimley-Horn and Associates, Inc. shall be without liability to Kimley-Horn and Associates, Inc.

Copyright Kimley-Horn and Associates, Inc., 2014

STATE OF NORTH CAROLINA
DEPARTMENT OF TRANSPORTATION
RALEIGH

STANDARD

BRIDGE APPROACH SLAB DETAILS

REVISIONS						SHEET NO.
NO.	BY:	DATE:	NO.	BY:	DATE:	S-73
1			3			TOTAL SHEETS
2			4			541

STD. NO. BAS4 STR. #2

ASSEMBLED BY : RTO		DATE :	1/14
CHECKED BY : JCW		DATE :	1/14
DRAWN BY : FCJ	11/88	REV. 10/11	MAA/GM
CHECKED BY : ARB	11/88	REV. 7/12	MAA/GM
		REV. 10/12	MAA/GM

2/17/2014 K:\NDOT_Structures_Bridge\NC\01103624_U-2525B_Cboro East Loop over US 70\Cadd\dgn\u-2525_ed_str_2_pshf3.dgn

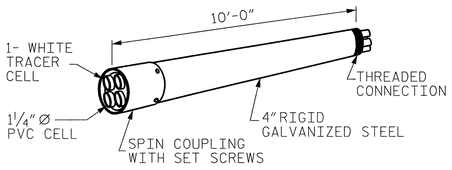

RIGID GALVANIZED (RGC)
MULTI-CELL RACEWAY

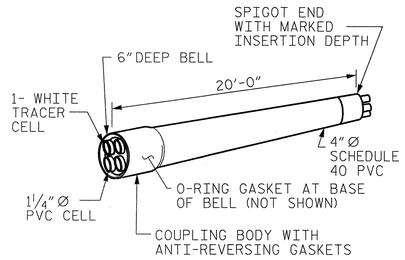

SCHEDULE 40 PVC
MULTI-CELL RACEWAY

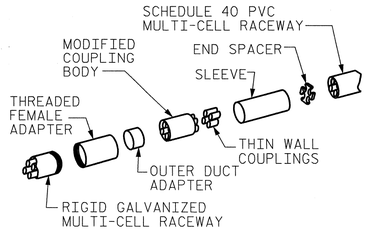

TRANSITION ADAPTER

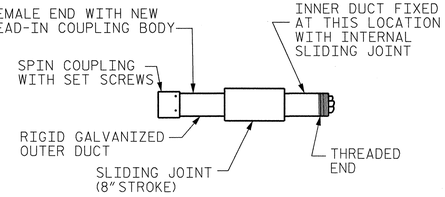

EXPANSION JOINT FITTING

DETAIL "D"

4" MULTI-CELL COMPONENTS

NOTES

THE CONTRACTOR SHALL BE RESPONSIBLE FOR DETERMINING THE TOTAL QUANTITY OF CONDUIT NEEDED TO COMPLETE THE WORK AND THAT THE CONDUIT(S) ARE PLACED AT THE NOTED DIMENSION AND ABOVE THE BOTTOM OF THE GIRDER.

THE INSTALLATION OF THE CONDUIT SYSTEM SHALL BE PAID FOR AS LUMP SUM. THE PRICE SHALL INCLUDE ALL CONDUIT, HANGERS, STABILIZERS, EXPANSION JOINTS, CONCRETE INSERTS, PVC SLEEVES AND ALL NECESSARY HARDWARE TO COMPLETE THE WORK.

THE CONTRACTOR SHALL FIELD VERIFY THAT THE CONDUIT SYSTEM IS NOT IN CONFLICT WITH THE GUARDRAIL POSTS.

SEE DETAIL "C" FOR HANGER ASSEMBLY INSTALLATION.

INSTALL SLEEVES PARALLEL TO GIRDERS. SEE DETAIL "B" FOR SLEEVE INSTALLATION.

PROVIDE TRANSITION ADAPTOR (AND EXPANSION JOINT) FOR CONDUIT AT END BENT 1 (AND END BENT 2).

INSTALL STABILIZER AT MIDSPAN. STABILIZER CAN NOT BE USED INSTEAD OF A HANGER ASSEMBLY.

INSTALL EXPANSION JOINTS AT END BENT #1 & END BENT #2.

THE CONCRETE SCREW INSERT SHALL HAVE A ROD SIZE OF 5/8" AND A PULL FORCE OF 1260 lbs.

FOR ELECTRICAL CONDUIT SYSTEM FOR SIGNALS, SEE SPECIAL PROVISIONS.

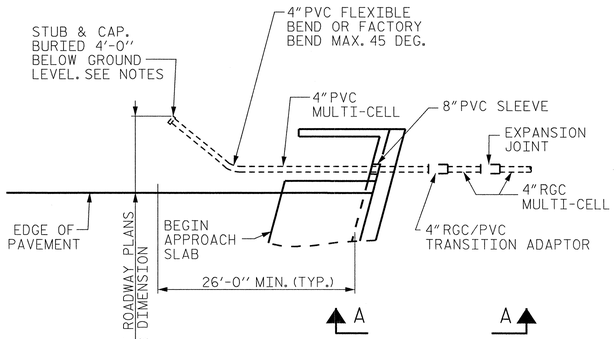

DETAIL "A"

TERMINATION OF CONDUIT AT WING WALL
END BENT #1 SHOWN, END BENT #2 SIMILAR.

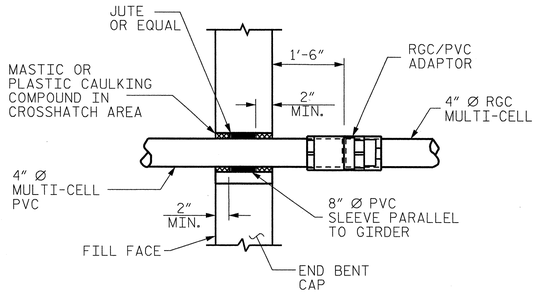

DETAIL "B"

PVC SLEEVE INSTALLATION &
RGC/PVC ADAPTOR AT BACKWALL.

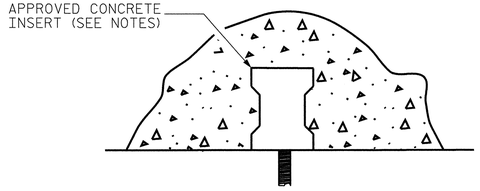

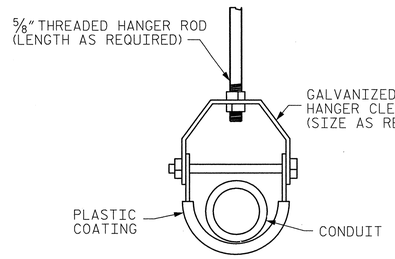

DETAIL "C"

HANGER ASSEMBLY

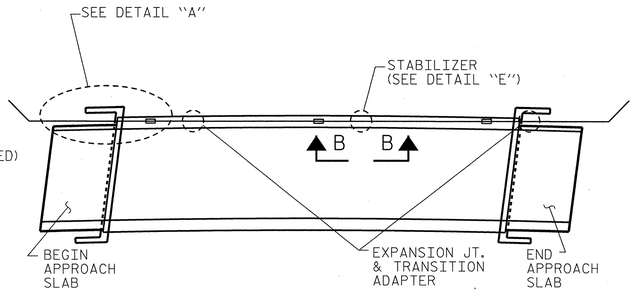

CONDUIT LAYOUT

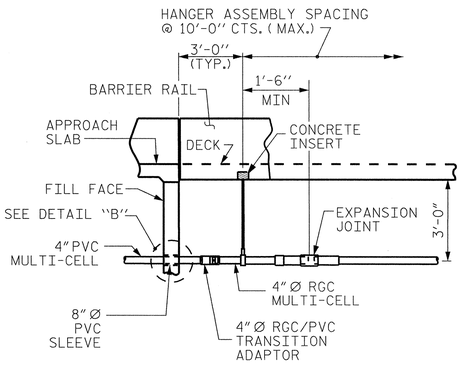

VIEW A-A

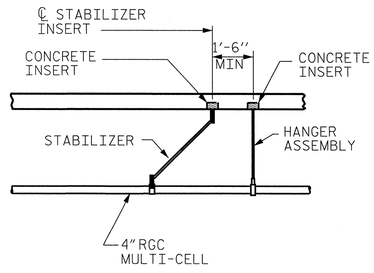

VIEW B-B

STEEL GIRDERS

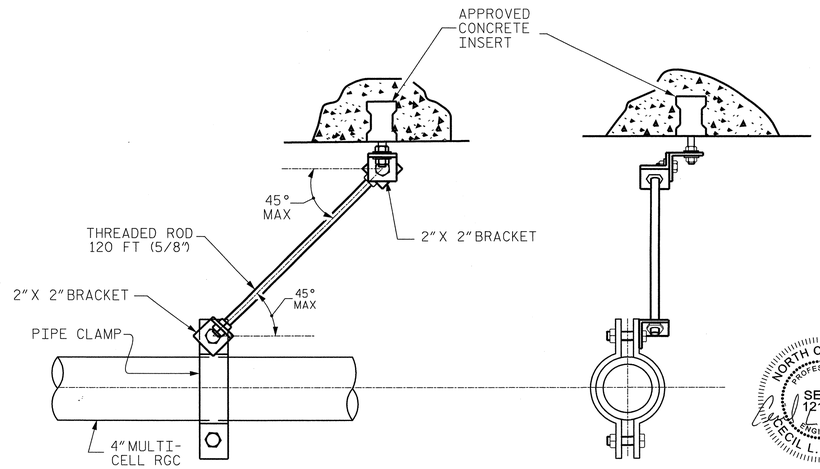

DETAIL "E"

STABILIZER

ELECTRIC CONDUIT DETAILS

PROJECT NO. U-2525B
GUILFORD COUNTY
STATION: 26+21.65 -L-
17+06.65 -Y3-

STATE OF NORTH CAROLINA
DEPARTMENT OF TRANSPORTATION
RALEIGH
STANDARD
ELECTRICAL CONDUIT SYSTEM FOR SIGNALS

ASSEMBLED BY : RTO		DATE : 1/14	
CHECKED BY : JCW		DATE : 1/14	
DRAWN BY : RWW 2/03	REV. 5/1/06	TLA/GM	
CHECKED BY : DBM 2/03	REV. 10/1/11	MAA/GM	

Kimley-Horn and Associates, Inc.
333 Fayetteville Street, Suite 600
Raleigh, NC 27601-1772
Phone (919) 835-1494
NC LICENSE # F-0102

This document, together with the concepts and designs presented herein, as an instrument of service, is intended only for the specific purpose and client for which it was prepared. Reuse of and improper reliance on this document without written authorization and adaptation by Kimley-Horn and Associates, Inc. shall be without liability to Kimley-Horn and Associates, Inc.
Copyright Kimley-Horn and Associates, Inc., 2014

NORTH CAROLINA PROFESSIONAL SEAL 12186 ENGINEER CECIL L. NARRON
5/30/14

REVISIONS						SHEET NO.
NO.	BY:	DATE:	NO.	BY:	DATE:	S-74
1			3			TOTAL SHEETS
2			4			541

STD. NO. ECS1 STR. #2

5/30/2014 K:\RDT_Structures_Bridge\NC\011036224_U-2525B_Gboro East Loop over US 70\Cad\dgn\u-2525_sd_str_2.psh74.dgn

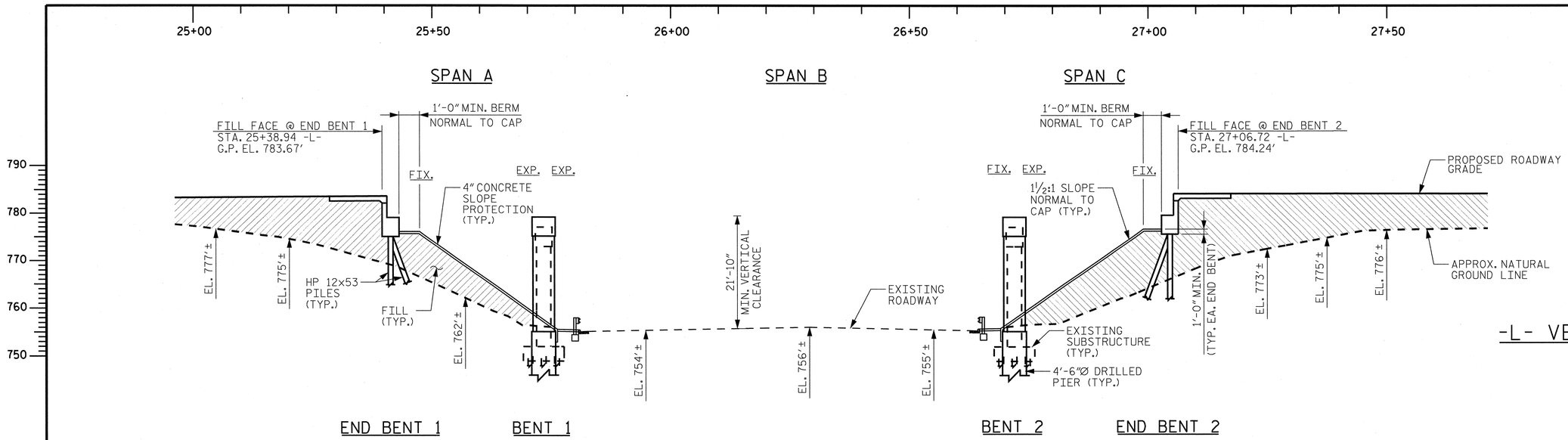

(+)3.2730% (-)3.0653%

-L- VERTICAL CURVE DATA

PVI STA. = 26+89.63 -L-
EL. = 798.52'
VC = 1,804.46'

SECTION ALONG RIGHT LANE CONTROL LINE

(SECTIONS @ BENTS ARE @ RIGHT ANGLES)

-L- HORIZONTAL CURVE DATA

PI STA. 31+07.94 -L-
△ = 27°-05'-05.5"
D = 1°-29'-56.5"
L = 1,806.82'
T = 920.62'
R = 3,822.17'

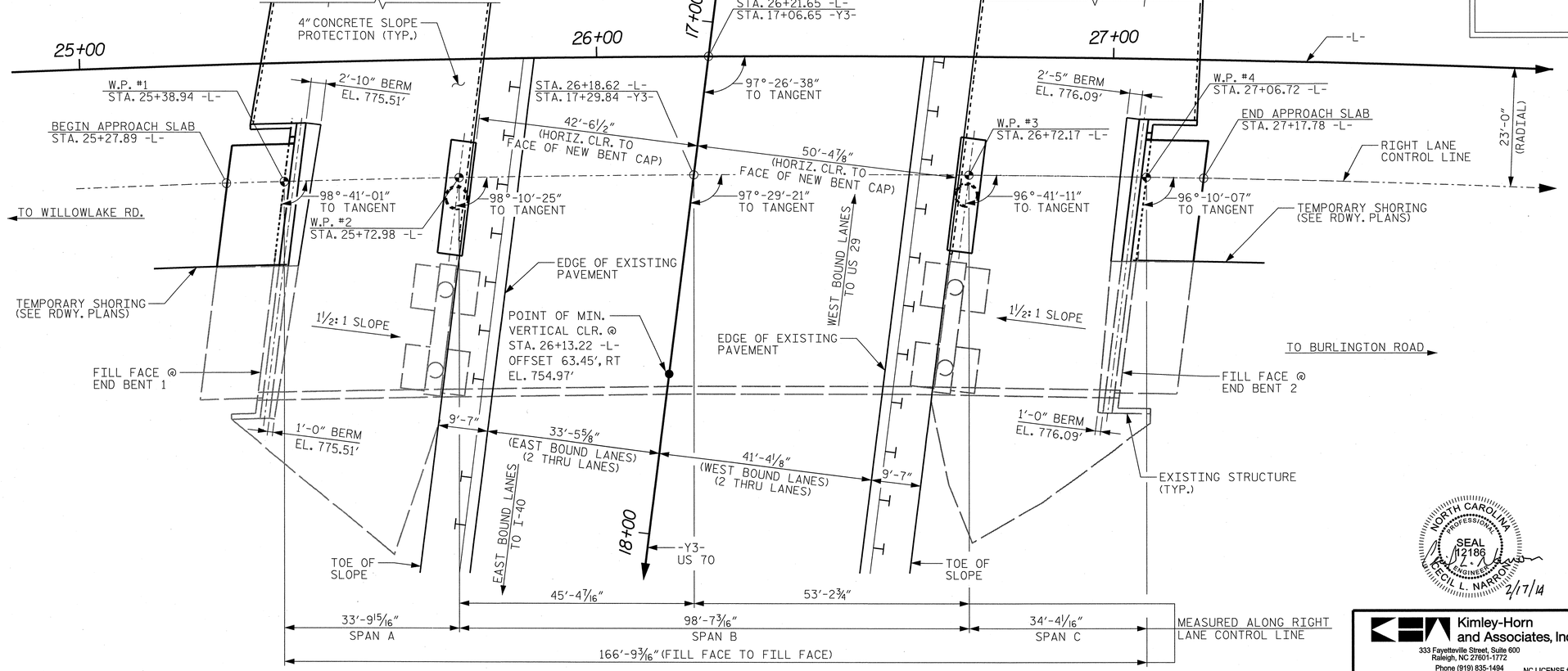

PLAN

(PILES NOT SHOWN IN PLAN VIEW.)

PROJECT NO. U-2525B
GUILFORD COUNTY
STATION: 26+21.65 -L-
17+06.65 -Y3-
SHEET 1 OF 4 WIDENING OF BRIDGE NO. 400989

STATE OF NORTH CAROLINA
DEPARTMENT OF TRANSPORTATION
RALEIGH

GENERAL DRAWING

BRIDGE OVER US 70 ON GREENSBORO EASTERN LOOP BETWEEN WILLOWLAKE RD. AND BURLINGTON RD., RIGHT LANE

NORTH CAROLINA PROFESSIONAL SEAL 12186 ENGINEER CECIL L. HARRON 2/7/14

Kimley-Horn and Associates, Inc.
333 Fayetteville Street, Suite 600
Raleigh, NC 27601-1772
Phone (919) 835-1494
NC LICENSE # F-0102

This document, together with the concepts and designs presented herein, as an instrument of service, is intended only for the specific purpose for which it was prepared. Reuse of and improper reliance on this document without written authorization and adaptation by Kimley-Horn and Associates, Inc. shall be without liability to Kimley-Horn and Associates, Inc.
Copyright Kimley-Horn and Associates, Inc., 2014

REVISIONS						SHEET NO.
NO.	BY:	DATE:	NO.	BY:	DATE:	S-75
1			3			TOTAL SHEETS
2			4			541

DRAWN BY: RTO DATE: 1/14
CHECKED BY: JCW DATE: 1/14

STR. #3

K:\RDT_Structures_Bridge\NC\011036224.U-2525B_Gboro East Loop over US 70\Cad\dgn\u-2525_sd_str_3.pshl75.dgn
2/17/2014

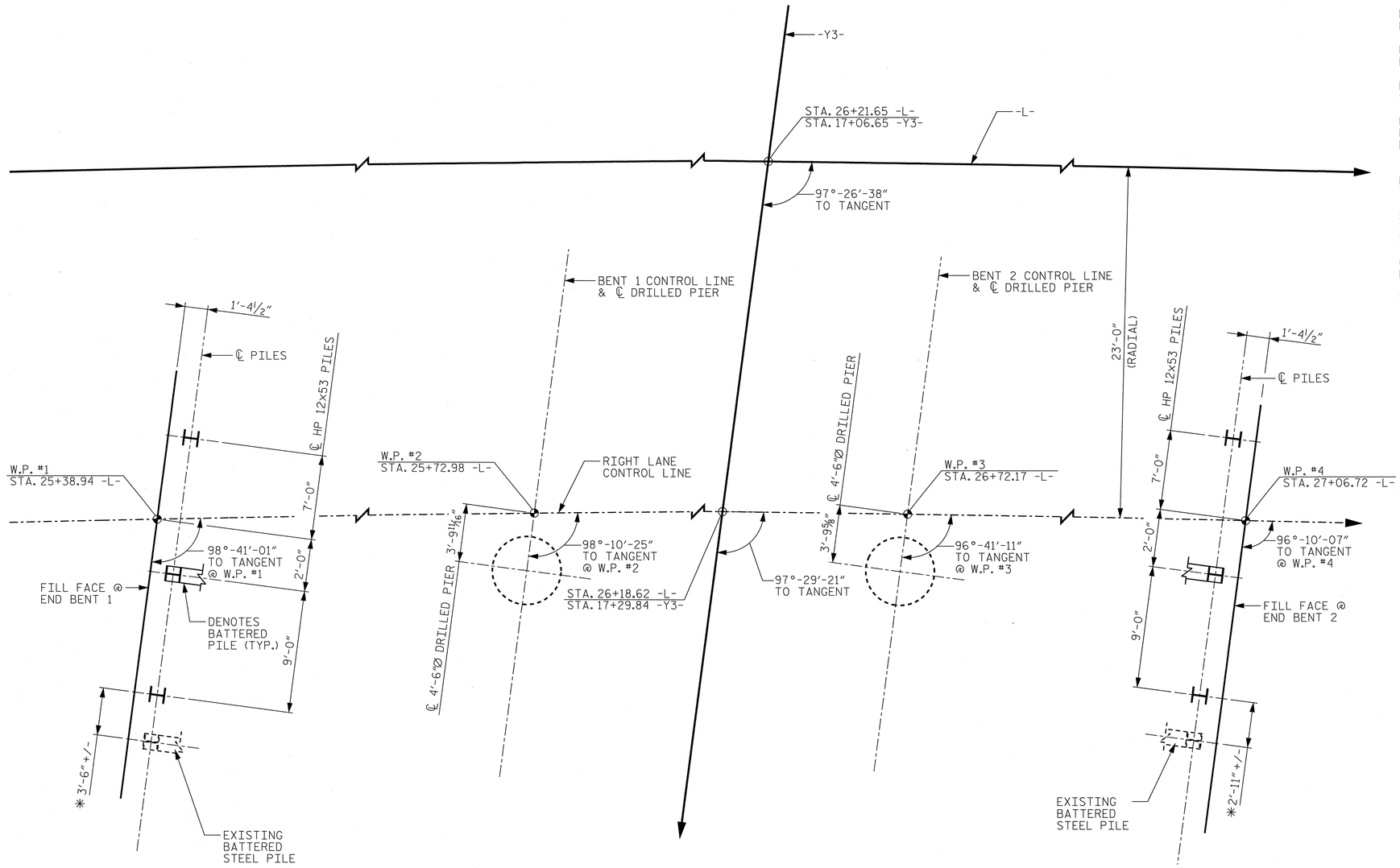

END BENT 1 BENT 1 BENT 2 END BENT 2

FOUNDATION LAYOUT

(DIMENSIONS LOCATING PILES ARE SHOWN TO THE PILE CENTERLINE AT BOTTOM OF CAP)

NOTES

FOR PILES, SEE SECTION 450 OF THE STANDARD SPECIFICATIONS.

PILES AT END BENT 1 AND 2 ARE DESIGNED FOR A FACTORED RESISTANCE OF 90 TONS PER PILE.

DRIVE PILES AT END BENT 1 AND 2 TO A REQUIRED DRIVING RESISTANCE OF 150 TONS PER PILE.

FOR DRILLED PIERS, SEE SECTION 411 OF THE STANDARD SPECIFICATIONS.

DRILLED PIERS AT BENT 1 AND 2 ARE DESIGNED FOR A FACTORED RESISTANCE OF 470 TONS PER PIER. CHECK FIELD CONDITIONS FOR THE REQUIRED TIP RESISTANCE OF 60 TSF.

INSTALL DRILLED PIERS AT BENT 1 AND 2 TO A TIP ELEVATION NO HIGHER THAN 718 FT AND 723 FT, RESPECTIVELY, AND WITH THE REQUIRED TIP RESISTANCE.

SID INSPECTION MAY BE REQUIRED FOR DRILLED PIERS. THE ENGINEER WILL DETERMINE THE NEED FOR SID INSPECTIONS. FOR SID INSPECTIONS, SEE SECTION 411 OF THE STANDARD SPECIFICATIONS.

CSL TUBES ARE REQUIRED AND CSL TESTING MAY BE REQUIRED FOR DRILLED PIERS. THE ENGINEER WILL DETERMINE THE NEED FOR CSL TESTING. FOR CSL TESTING, SEE SECTION 411 OF THE STANDARD SPECIFICATIONS.

PROJECT NO. U-2525B

GUILFORD COUNTY

STATION: 26+21.65 -L-
17+06.65 -Y3-

SHEET 2 OF 4

NORTH CAROLINA PROFESSIONAL SEAL 12186 ENGINEER CECIL L. NARROW 3/17/14

Kimley-Horn and Associates, Inc.
333 Fayetteville Street, Suite 600
Raleigh, NC 27601-1772
Phone (919) 835-1494
NC LICENSE # F-0102

This document, together with the concepts and designs presented herein, as an instrument of services, is intended only for the specific purpose and client for which it was prepared. Reuse of and improper reliance of this document without written authorization and adaptation by Kimley-Horn and Associates, Inc. shall be without liability to Kimley-Horn and Associates, Inc.
Copyright Kimley-Horn and Associates, Inc., 2014

STATE OF NORTH CAROLINA
DEPARTMENT OF TRANSPORTATION
RALEIGH

GENERAL DRAWING

BRIDGE OVER US 70 ON GREENSBORO EASTERN LOOP BETWEEN WILLOWLAKE RD. AND BURLINGTON RD., RIGHT LANE

REVISIONS						SHEET NO.
NO.	BY:	DATE:	NO.	BY:	DATE:	S-76
1			3			TOTAL SHEETS
2			4			541

STR. #3

DRAWN BY: RTO DATE: 1/14
CHECKED BY: JCW DATE: 1/14

2/17/2014 K:\RDI-Structures_Bridge\NC\D11036224_U-2525B_Guilford_Greensboro East Loop over US 70\Cad\dgn\u-2525_sd_str_3_path76.dgn

ANGLES
1 - 98°-25′-42.90″
2 - 97°-25′-34.20″
3 - 8°-41′-01.25″
4 - 97°-25′-47.95″
5 - 96°-25′-39.26″
✳6 - 97°-29′-21.26″

✳ TANGENT TO CURVE

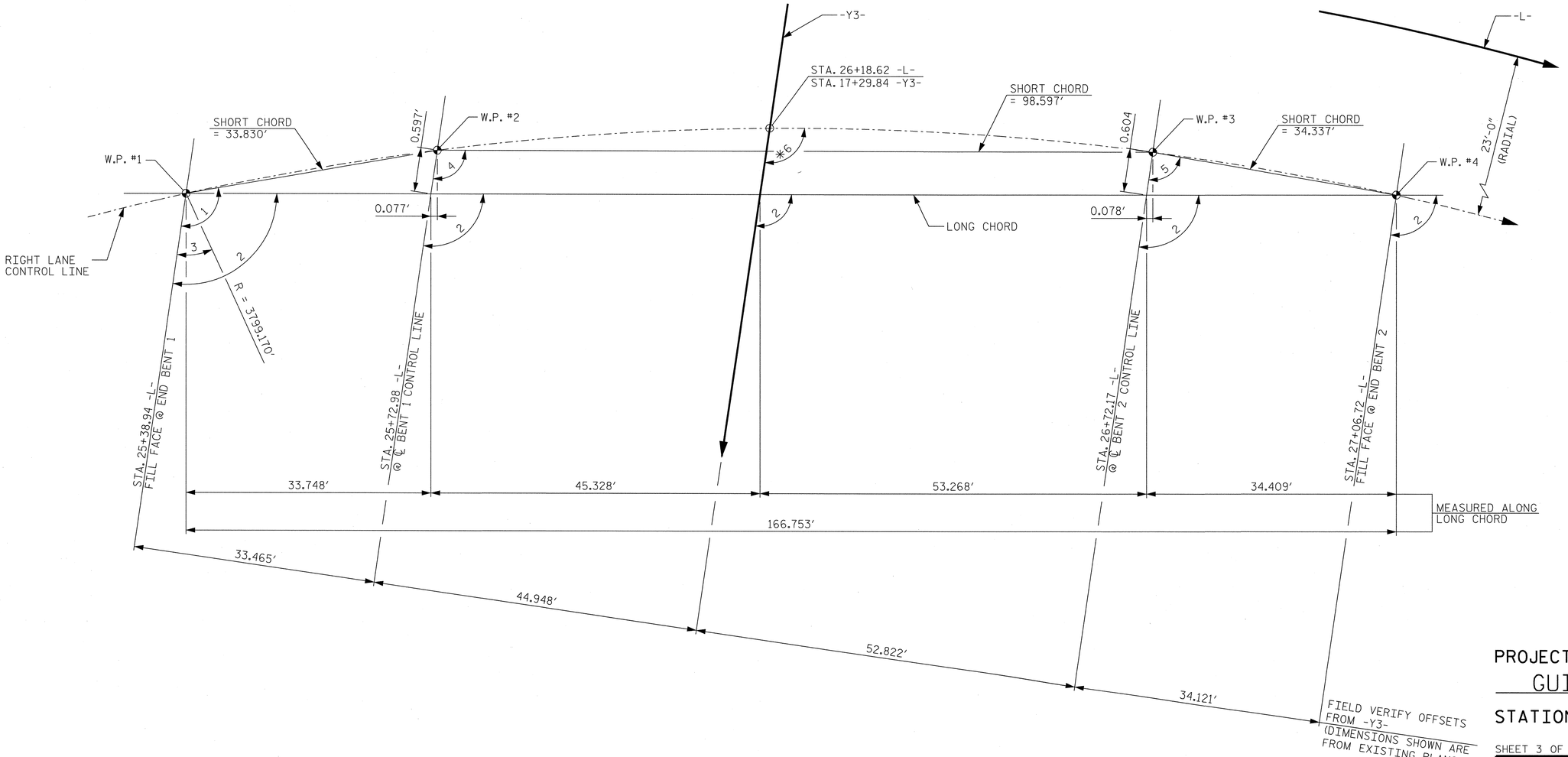

LONG CHORD LAYOUT

(ALL BENTS ARE PARALLEL)

PROJECT NO. U-2525B

GUILFORD COUNTY

STATION: 26+21.65 -L-
17+06.65 -Y3-

SHEET 3 OF 4 WIDENING OF BRIDGE NO. 400989

STATE OF NORTH CAROLINA
DEPARTMENT OF TRANSPORTATION
RALEIGH

GENERAL DRAWING

BRIDGE OVER US 70 ON
GREENSBORO EASTERN LOOP
BETWEEN WILLOWLAKE RD. AND
BURLINGTON RD., RIGHT LANE

NORTH CAROLINA PROFESSIONAL SEAL 12186 ENGINEER CECIL L. NARRON
2/17/14

Kimley-Horn and Associates, Inc.
333 Fayetteville Street, Suite 600
Raleigh, NC 27601-1772
Phone (919) 835-1494
NC LICENSE # F-0102

This document, together with the concepts and designs presented herein, as an instrument of services, is intended only for the specific purpose and client for which it was prepared. Reuse of and improper reliance on this document without written authorization and adoption by Kimley-Horn and Associates, Inc. shall be without liability to Kimley-Horn and Associates, Inc.

Copyright Kimley-Horn and Associates, Inc., 2014

REVISIONS						SHEET NO.
NO.	BY:	DATE:	NO.	BY:	DATE:	S-77
1			3			TOTAL SHEETS
2			4			541

DRAWN BY: RTO DATE: 1/14
CHECKED BY: JCW DATE: 1/14

STR. #3

2/17/2014 K:\RDT_Structures_Bridge\NC_011036224_U-2525B_Greensboro East Loop over US 70\Cad\dgn\u-2525_sd_str_3.pah77.dgn

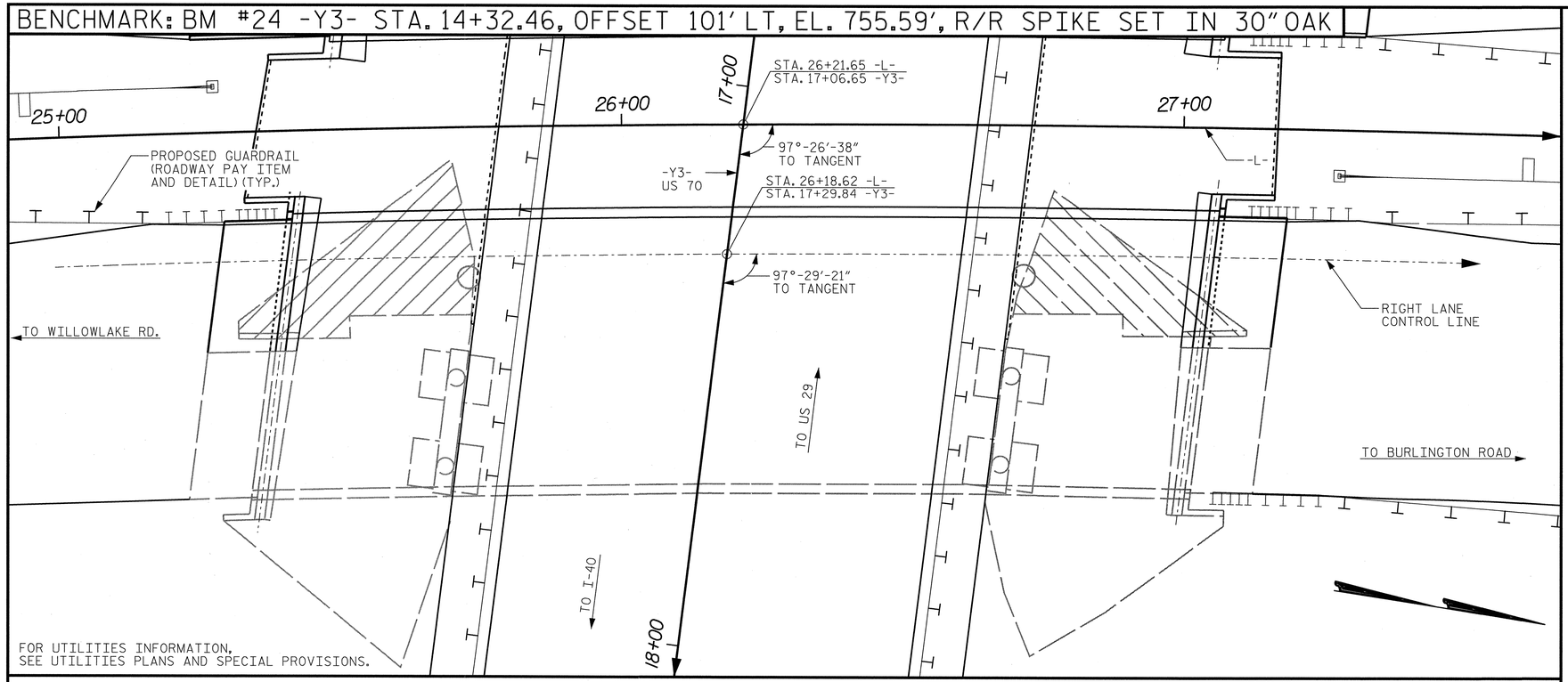

LOCATION SKETCH

NOTES

ASSUMED LIVE LOAD = HL-93 OR ALTERNATE LOADING.

THIS BRIDGE HAS BEEN DESIGNED IN ACCORDANCE WITH THE AASHTO LRFD BRIDGE DESIGN SPECIFICATIONS.

THIS BRIDGE IS LOCATED IN SEISMIC ZONE 1.

FOR OTHER DESIGN DATA AND GENERAL NOTES, SEE SHEET SN.

FOR SUBMITTAL OF WORKING DRAWINGS, SEE SPECIAL PROVISIONS.

FOR FALSEWORK AND FORMWORK, SEE SPECIAL PROVISIONS.

FOR CRANE SAFETY, SEE SPECIAL PROVISIONS.

FOR GROUT FOR STRUCTURES, SEE SPECIAL PROVISIONS.

THE ELEVATION AND CLEARANCE SHOWN ON THE PLANS AT THE POINT OF MINIMUM VERTICAL CLEARANCE ARE FROM THE BEST INFORMATION AVAILABLE. PRIOR TO BEGINNING BRIDGE CONSTRUCTION, VERIFY THE ELEVATION(S) ON THE EXISTING PAVEMENT AND CHECK THE CLEARANCE. REPORT ANY VARIATIONS TO THE ENGINEER. ANY PLAN REVISIONS NECESSARY TO ACHIEVE THE REQUIRED MINIMUM VERTICAL CLEARANCE WILL BE PROVIDED BY THE DEPARTMENT.

FOR MAINTENANCE AND PROTECTION OF TRAFFIC BENEATH PROPOSED STRUCTURE, SEE SPECIAL PROVISIONS.

REMOVEABLE FORMS MAY BE USED IN LIEU OF METAL STAY-IN-PLACE FORMS IN ACCORDANCE WITH ARTICLE 420-3 OF THE STANDARD SPECIFICATIONS.

NEEDLE BEAMS WILL NOT BE ALLOWED UNLESS OTHERWISE CALLED FOR ON THE PLANS OR APPROVED BY THE ENGINEER.

THE SUBSTRUCTURE OF THE EXISTING BRIDGE INDICATED ON THE PLANS IS FROM THE BEST INFORMATON AVAILABLE. SINCE THIS INFORMATION IS SHOWN FOR THE CONVENIENCE OF THE CONTRACTOR, THE CONTRACTOR SHALL HAVE NO CLAIM WHATSOEVER AGAINST THE DEPARTMENT OF TRANSPORTATION FOR ANY DELAYS OR ADDITIONAL COST INCURRED BASED ON DIFFERENCES BETWEEN THE EXISTING BRIDGE SUPSSTRUCUTRE SHOWN ON THE PLANS AND THE ACTUAL CONDITIONS AT THE PROJECT SITE.

ALL STRUCTURAL STEEL SHALL BE AASHTO M270 GRADE 50W AND PAINTED IN ACCORDANCE WITH SYSTEM 4 OF ARTICLE 442-8 OF THE STANDARD SPECIFICATIONS UNLESS OTHERWISE NOTED ON THE PLANS.

THE CLASS AA CONCRETE IN THE BRIDGE DECK SHALL CONTAIN FLY ASH OR GROUND GRANULATED BLAST FURNACE SLAG AT THE SUBSTITUTION RATE SPECIFIED IN ARTICLE 1024-1 AND IN ACCORDANCE WITH ARTICLES 1024-5 AND 1024-6 OF THE STANDARD SPECIFICATIONS. NO PAYMENT WILL BE MADE FOR THIS SUBSTITUTION AS IT IS CONSIDERED INCIDENTAL TO THE COST OF THE REINFORCED CONCRETE DECK SLAB.

FOR EROSION CONTROL MEASURES, SEE EROSION CONTROL PLANS.

ASPHALT WEARING SURFACE IS INCLUDED IN ROADWAY QUANTITY ON ROADWAY PLANS.

TOTAL BILL OF MATERIAL

	REMOVAL OF EXISTING STRUCTURE @ STA. 26+21.65 -L-	4'-6" DIA. DRILLED PIERS IN SOIL	4'-6" DIA. DRILLED PIERS NOT IN SOIL	SID INSPECTIONS	CSL TESTING	REINFORCED CONCRETE DECK SLAB	GROOVING BRIDGE FLOORS	CLASS A CONCRETE	BRIDGE APPROACH SLABS	REINFORCING STEEL	SPIRAL COLUMN REINFORCING STEEL	STRUCTURAL STEEL (APPROX.)	HP 12x53 STEEL PILES		CONCRETE BARRIER RAIL	4" SLOPE PROTECTION
	LUMP SUM	LIN. FT.	LIN. FT.	EACH	EACH	SQ. FT.	SQ. FT.	C.Y.	LUMP SUM	LBS.	LBS.	LBS.	NO.	LIN. FT.	LIN. FT.	SQ. YDS.
SUPERSTRUCTURE						4,340	4,305		LUMP SUM			113,000			164.6	
END BENT 1								19.0		2,456			3	150		180
BENT 1		31	6					23.8		11,551	1,653					
BENT 2		24	8					24.0		11,025	1,524					
END BENT 2								19.0		2,481			3	135		185
TOTAL	LUMP SUM	55	14	1	1	4,340	4,305	85.8	LUMP SUM	27,513	3,177	113,000	6	285	164.6	365

	ELASTOMERIC BEARINGS	FOAM JOINT SEALS
	LUMP SUM	LUMP SUM
SUPERSTRUCTURE	LUMP SUM	LUMP SUM
END BENT 1		
BENT 1		
BENT 2		
END BENT 2		
TOTAL	LUMP SUM	LUMP SUM

DRAWN BY: RTO DATE: 1/14
CHECKED BY: JCW DATE: 1/14

PROJECT NO. U-2525B
GUILFORD COUNTY
STATION: 26+21.65 -L-
17+06.65 -Y3-

SHEET 4 OF 4

NORTH CAROLINA PROFESSIONAL SEAL 12186 ENGINEER CECIL L. NARRON 2/17/14

Kimley-Horn and Associates, Inc.
333 Fayetteville Street, Suite 600
Raleigh, NC 27601-1772
Phone (919) 835-1494
NC LICENSE # F-0102

This document, together with the concepts and designs presented herein, as an instrument of services, is intended only for the specific purpose and client for which it was prepared. Reuse of and improper reliance of this document without written authorization and adoption by Kimley-Horn and Associates, Inc. shall be without liability to Kimley-Horn and Associates, Inc.
Copyright Kimley-Horn and Associates, Inc., 2014

STATE OF NORTH CAROLINA
DEPARTMENT OF TRANSPORTATION
RALEIGH

GENERAL DRAWING

BRIDGE OVER US 70 ON GREENSBORO EASTERN LOOP BETWEEN WILLOWLAKE RD. AND BURLINGTON RD., RIGHT LANE

REVISIONS						SHEET NO.
NO.	BY:	DATE:	NO.	BY:	DATE:	S-78
1			3			TOTAL SHEETS
2			4			541

STR. #3

K:\RDT_Structures_Bridge\NCV01036224.U-2525B_Gboro East Loop over US 70\Cad\dgn\u-2525_sd_str_3_pst78.dgn
2/17/2014

LOAD AND RESISTANCE FACTOR RATING (LRFR) SUMMARY FOR STEEL GIRDERS (NEW GIRDERS)

LEVEL		VEHICLE	WEIGHT (W) (TONS)	⟨#⟩ CONTROLLING LOAD RATING	MINIMUM RATING FACTORS (RF)	TONS = W × RF	STRENGTH I LIMIT STATE											SERVICE II LIMIT STATE						COMMENT NUMBER
								MOMENT					SHEAR						MOMENT					
							LIVE-LOAD FACTORS (γ_{LL})	DISTRIBUTION FACTORS (DF)	RATING FACTOR	SPAN	GIRDER LOCATION	DISTANCE FROM LEFT END OF SPAN (ft)	DISTRIBUTION FACTORS (DF)	RATING FACTOR	SPAN	GIRDER LOCATION	DISTANCE FROM LEFT END OF SPAN (ft)	LIVE-LOAD FACTORS (γ_{LL})	DISTRIBUTION FACTORS (DF)	RATING FACTOR	SPAN	GIRDER LOCATION	DISTANCE FROM LEFT END OF SPAN (ft)	
DESIGN LOAD RATING		HL-93 (INVENTORY)	N/A	⟨1⟩	1.54	--	1.75	0.716	1.87	B	E	48.55	0.879	1.54	B	I	0.00	1.30	0.716	2.04	B	E	48.55	
		HL-93 (OPERATING)	N/A	--	1.99	--	1.35	0.716	2.43	B	E	48.55	0.879	1.99	B	I	0.00	1.00	0.716	2.65	B	E	48.55	
		HS-20 (INVENTORY)	36.000	⟨2⟩	3.07	110.52	1.75	0.716	3.13	B	E	48.55	0.879	3.07	B	I	0.00	1.30	0.716	3.41	B	E	48.55	
		HS-20 (OPERATING)	36.000	--	3.98	143.28	1.35	0.716	4.06	B	E	48.55	0.879	3.98	B	I	0.00	1.00	0.716	4.44	B	E	48.55	
LEGAL LOAD RATING	SINGLE VEHICLE (SV)	SH	12.500	--	8.77	109.63	1.40	0.716	10.05	B	E	48.55	0.879	10.28	B	I	0.00	1.30	0.716	8.77	B	E	48.55	
		S3C	21.500	--	5.12	110.08	1.40	0.716	5.87	B	E	48.55	0.879	6.03	B	I	0.00	1.30	0.716	5.12	B	E	48.55	
		S3A	22.750	--	4.85	110.34	1.40	0.716	5.56	B	E	48.55	0.879	5.72	B	I	0.00	1.30	0.716	4.85	B	E	48.55	
		S4A	26.750	--	4.26	113.96	1.40	0.716	4.88	B	E	48.55	0.879	4.96	B	I	0.00	1.30	0.716	4.26	B	E	48.55	
		S5A	30.500	--	3.75	114.38	1.40	0.716	4.30	B	E	48.55	0.879	4.50	B	I	0.00	1.30	0.716	3.75	B	E	48.55	
		S6A	34.500	--	3.39	116.96	1.40	0.716	3.89	B	E	48.55	0.879	4.03	B	I	0.00	1.30	0.716	3.39	B	E	48.55	
		S7B	38.500	--	3.08	118.58	1.40	0.716	3.54	B	E	48.55	0.879	3.73	B	I	0.00	1.30	0.716	3.08	B	E	48.55	
		S7A	40.000	⟨3⟩	3.04	121.60	1.40	0.716	3.48	B	E	48.55	0.879	3.76	B	I	0.00	1.30	0.716	3.04	B	E	48.55	
	TRUCK TRACTOR SEMI-TRAILER (TTST)	T4A	28.250	--	4.18	118.09	1.40	0.716	4.79	B	E	48.55	0.879	4.78	B	I	0.00	1.30	0.716	4.18	B	E	48.55	
		T5B	32.000	--	3.67	117.44	1.40	0.716	4.21	B	E	48.55	0.879	4.46	B	I	0.00	1.30	0.716	3.67	B	E	48.55	
		T6A	36.000	--	3.35	120.60	1.40	0.716	3.84	B	E	48.55	0.879	4.07	B	I	0.00	1.30	0.716	3.35	B	E	48.55	
		T7A	40.000	--	3.09	123.60	1.40	0.716	3.55	B	E	48.55	0.879	3.75	B	I	0.00	1.30	0.716	3.09	B	E	48.55	
		T7B	40.000	--	3.27	130.80	1.40	0.716	3.76	B	E	48.55	0.879	3.59	B	I	0.00	1.30	0.716	3.27	B	E	48.55	
FATIGUE		HL-93 (INVENTORY)	γ_{LL}=0.75	--	--																			

LOAD FACTORS:

DESIGN LOAD RATING FACTORS	LIMIT STATE	γ_{DC}	γ_{DW}
	STRENGTH I	1.25	1.50
	SERVICE II	1.00	1.00

NOTES:

MINIMUM RATING FACTORS ARE BASED ON THE STRENGTH I AND SERVICE II LIMIT STATES.

ALLOWABLE STRESS FOR SERVICE II LIMIT STATE ARE AS REQUIRED FOR DESIGN.

COMMENTS:

1.

2.

3.

4.

⟨#⟩ CONTROLLING LOAD RATING

⟨1⟩ DESIGN LOAD RATING (HL-93)

⟨2⟩ DESIGN LOAD RATING (HS-20)

⟨3⟩ LEGAL LOAD RATING **

** SEE CHART FOR VEHICLE TYPE

GIRDER LOCATION

I - INTERIOR GIRDER
EL - EXTERIOR LEFT GIRDER
ER - EXTERIOR RIGHT GIRDER

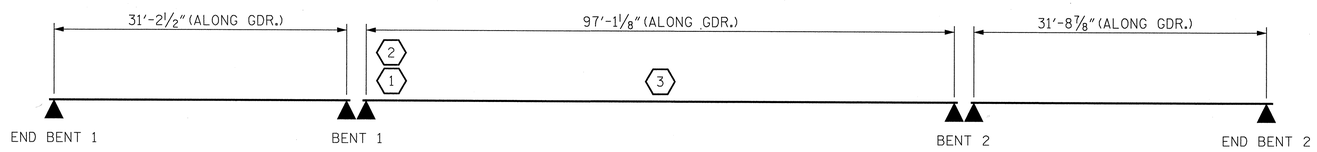

LRFR SUMMARY

PROJECT NO. U-2525B

GUILFORD COUNTY

STATION: 26+21.65 -L-
17+06.65 -Y3-

NORTH CAROLINA PROFESSIONAL SEAL 12186 ENGINEER CECIL L. NARRON 2/7/14

Kimley-Horn and Associates, Inc.
333 Fayetteville Street, Suite 600
Raleigh, NC 27601-1772
Phone (919) 835-1494
NC LICENSE # F-0102

This document, together with the concepts and designs presented herein, as an instrument of services, is intended only for the specific purpose and client for which it was prepared. Reuse of and improper reliance on this document without written authorization and adaptation by Kimley-Horn and Associates, Inc. shall be without liability to Kimley-Horn and Associates, Inc.

Copyright Kimley-Horn and Associates, Inc., 2014

STATE OF NORTH CAROLINA
DEPARTMENT OF TRANSPORTATION
RALEIGH

STANDARD

LRFR SUMMARY FOR STEEL GIRDERS
(INTERSTATE TRAFFIC)
NEW GIRDERS

REVISIONS						SHEET NO.
NO.	BY:	DATE:	NO.	BY:	DATE:	S-79
1			3			TOTAL SHEETS
2			4			541

STD. NO. LRFR4 STR. #3

ASSEMBLED BY : RTO	DATE : 1/14	REV. 11/12/08RR	MAA/GM
CHECKED BY : JCW	DATE : 1/14	REV. 10/1/11	MAA/GM
DRAWN BY : MAA 1/08			
CHECKED BY : GM/DI 2/08			

2/17/2014 K:\RDT_Structures_Bridge\NC\011036224_U-2525B_Cboro East Loop over US 70\Cadd\dgn\u-2525_sd_str_3_psh79.dgn

LOAD AND RESISTANCE FACTOR RATING (LRFR) SUMMARY FOR STEEL GIRDERS (EXISTING GIRDERS)

LEVEL		VEHICLE	WEIGHT (W) (TONS)	CONTROLLING LOAD RATING (#)	MINIMUM RATING FACTORS (RF)	TONS = W x RF	STRENGTH I LIMIT STATE											SERVICE II LIMIT STATE							COMMENT NUMBER
								MOMENT					SHEAR						MOMENT						
							LIVE-LOAD FACTORS (γ_{LL})	DISTRIBUTION FACTORS (DF)	RATING FACTOR	SPAN	GIRDER LOCATION	DISTANCE FROM LEFT END OF SPAN (ft)	DISTRIBUTION FACTORS (DF)	RATING FACTOR	SPAN	GIRDER LOCATION	DISTANCE FROM LEFT END OF SPAN (ft)	LIVE-LOAD FACTORS (γ_{LL})	DISTRIBUTION FACTORS (DF)	RATING FACTOR	SPAN	GIRDER LOCATION	DISTANCE FROM LEFT END OF SPAN (ft)	
DESIGN LOAD RATING		HL-93 (INVENTORY)	N/A	1	0.89	--	1.75	0.553	1.08	B	I	48.63	0.755	2.86	B	I	0.00	1.30	0.553	0.89	B	I	48.63	
		HL-93 (OPERATING)	N/A	--	1.15	--	1.35	0.553	1.40	B	I	48.63	0.755	3.70	B	I	0.00	1.00	0.553	1.15	B	I	48.63	
		HS-20 (INVENTORY)	36.000	2	1.56	56.16	1.75	0.542	1.84	B	E	48.63	0.755	5.45	B	I	0.00	1.30	0.542	1.56	B	E	48.63	
		HS-20 (OPERATING)	36.000	--	2.02	72.72	1.35	0.542	2.38	B	E	48.63	0.755	7.06	B	I	0.00	1.00	0.542	2.02	B	E	48.63	
LEGAL LOAD RATING	SINGLE VEHICLE (SV)	SH	12.500	--	3.99	49.88	1.40	0.542	5.90	B	E	48.63	0.755	18.24	B	I	0.00	1.30	0.542	3.99	B	E	48.63	
		S3C	21.500	--	2.34	50.31	1.40	0.542	3.45	B	E	48.63	0.755	10.68	B	I	0.00	1.30	0.542	2.34	B	E	48.63	
		S3A	22.750	--	2.21	50.28	1.40	0.542	3.27	B	E	48.63	0.755	10.14	B	I	0.00	1.30	0.542	2.21	B	E	48.63	
		S4A	26.750	--	1.94	51.90	1.40	0.542	2.86	B	E	48.63	0.755	8.79	B	I	0.00	1.30	0.542	1.94	B	E	48.63	
		S5A	30.500	--	1.71	52.16	1.40	0.542	2.53	B	E	48.63	0.755	7.97	B	I	0.00	1.30	0.542	1.71	B	E	48.63	
		S6A	34.500	--	1.55	53.48	1.40	0.542	2.28	B	E	48.63	0.755	7.16	B	I	0.00	1.30	0.542	1.55	B	E	48.63	
		S7B	38.500	--	1.41	54.29	1.40	0.542	2.07	B	E	48.63	0.755	6.63	B	I	0.00	1.30	0.542	1.41	B	E	48.63	
		S7A	40.000	3	1.38	55.20	1.40	0.542	2.04	B	E	48.63	0.755	6.67	B	I	0.00	1.30	0.542	1.38	B	E	48.63	
	TRUCK TRACTOR SEMI-TRAILER (TTST)	T4A	28.250	--	1.90	53.68	1.40	0.542	2.81	B	E	48.63	0.755	8.49	B	I	0.00	1.30	0.542	1.90	B	E	48.63	
		T5B	32.000	--	1.67	53.44	1.40	0.542	2.47	B	E	48.63	0.755	7.91	B	I	0.00	1.30	0.542	1.67	B	E	48.63	
		T6A	36.000	--	1.53	55.08	1.40	0.542	2.25	B	E	48.63	0.755	7.21	B	I	0.00	1.30	0.542	1.53	B	E	48.63	
		T7A	40.000	--	1.41	56.40	1.40	0.542	2.08	B	E	48.63	0.755	6.65	B	I	0.00	1.30	0.542	1.41	B	E	48.63	
		T7B	40.000	--	1.49	59.60	1.40	0.542	2.20	B	E	48.63	0.755	6.36	B	I	0.00	1.30	0.542	1.49	B	E	48.63	
FATIGUE		HL-93 (INVENTORY)	γ_{LL}=0.75	--	--																			

LOAD FACTORS:

	LIMIT STATE	γ_{DC}	γ_{DW}
DESIGN LOAD RATING FACTORS	STRENGTH I	1.25	1.50
	SERVICE II	1.00	1.00

NOTES:

MINIMUM RATING FACTORS ARE BASED ON THE STRENGTH I AND SERVICE II LIMIT STATES.

ALLOWABLE STRESS FOR SERVICE II LIMIT STATE ARE AS REQUIRED FOR DESIGN.

GIRDER INFORMATION FOR THE LOAD RATING OF THE EXISTING GIRDERS WAS PROVIDED BY ORIGINAL PLANS

COMMENTS:

1.

2.

3.

4.

(#) CONTROLLING LOAD RATING

(1) DESIGN LOAD RATING (HL-93)

(2) DESIGN LOAD RATING (HS-20)

(3) LEGAL LOAD RATING **

** SEE CHART FOR VEHICLE TYPE

GIRDER LOCATION

I - INTERIOR GIRDER
EL - EXTERIOR LEFT GIRDER
ER - EXTERIOR RIGHT GIRDER

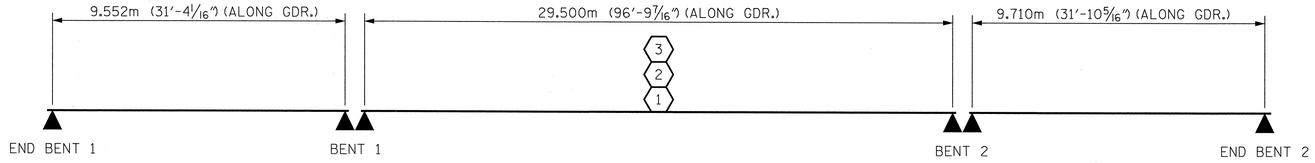

LRFR SUMMARY

PROJECT NO. U-2525B

GUILFORD COUNTY

STATION: 26+21.65 -L-
17+06.65 -Y3-

NORTH CAROLINA PROFESSIONAL SEAL 12186 ENGINEER CECIL L. NARRON 4/17/14

Kimley-Horn and Associates, Inc.
333 Fayetteville Street, Suite 600
Raleigh, NC 27601-1772
Phone (919) 835-1494
NC LICENSE # F-0102

This document, together with the concepts and designs presented herein, as an instrument of services, is intended only for the specific purpose and client for which it was prepared. Reuse of and improper reliance on this document without written authorization by Kimley-Horn and Associates, Inc. shall be without liability to Kimley-Horn and Associates, Inc.

Copyright Kimley-Horn and Associates, Inc., 2014

STATE OF NORTH CAROLINA
DEPARTMENT OF TRANSPORTATION
RALEIGH

STANDARD

LRFR SUMMARY FOR STEEL GIRDERS
(INTERSTATE TRAFFIC)
EXISTING GIRDERS

REVISIONS						SHEET NO.
NO.	BY:	DATE:	NO.	BY:	DATE:	S-80
1			3			TOTAL SHEETS
2			4			541

STD. NO. LRFR4 STR. #3

ASSEMBLED BY : RTO	DATE : 1/14	REV. 11/12/08RR	MAA/GM
CHECKED BY : JCW	DATE : 1/14	REV. 10/1/11	MAA/GM
DRAWN BY : MAA 1/08			
CHECKED BY : GM/DI 2/08			

2/17/2014 K:\RDT_Structures_Bridge\NC\011036224_U-2525B_Gboro East Loop over US 70\Cadd\dgn\u-2525_sd_str_3_pshb0.dgn

NOTE: DIMENSIONS ARE RADIAL UNLESS NOTED OTHERWISE

[ ] = DENOTES DIMENSINS FROM EXISTING PLANS.

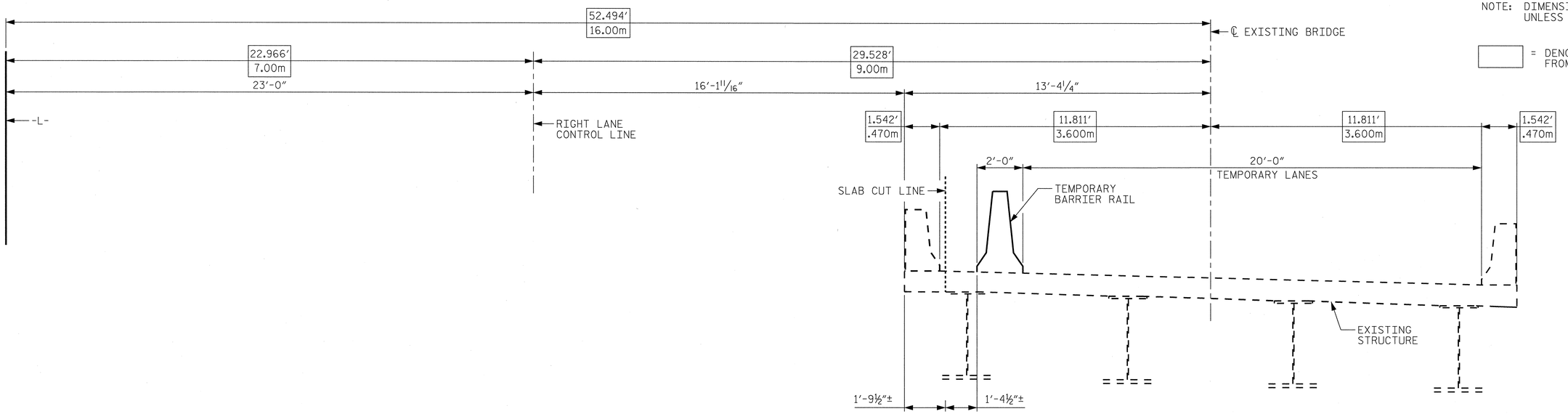

PHASE I

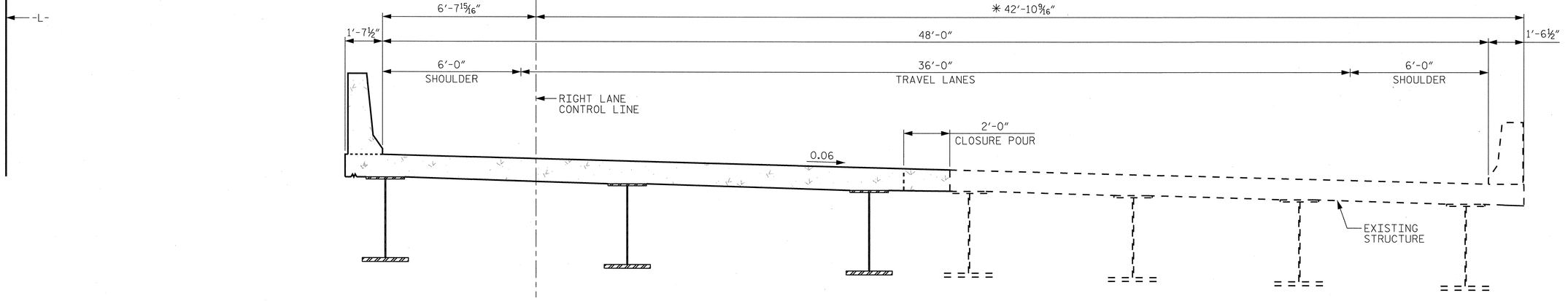

* - FIELD VERIFY LOCATION OF EXISTING BRIDGE BEFORE BEGINNING CONSTRUCTION.

PHASE II

PROJECT NO. U-2525B

GUILFORD COUNTY

STATION: 26+21.65 -L-
17+06.65 -Y3-

NORTH CAROLINA PROFESSIONAL SEAL 12186 ENGINEER JACK L. NARRON 2/7/14

Kimley-Horn and Associates, Inc.
333 Fayetteville Street, Suite 600
Raleigh, NC 27601-1772
Phone (919) 835-1494
NC LICENSE # F-0102

This document, together with the concepts and designs presented herein, as an instrument of services, is intended only for the specific purpose and client for which it was prepared. Reuse of and improper reliance of this document without written authorization and adaption by Kimley-Horn and Associates, Inc. shall be without liability to Kimley-Horn and Associates, Inc.

Copyright Kimley-Horn and Associates, Inc., 2014

STATE OF NORTH CAROLINA
DEPARTMENT OF TRANSPORTATION
RALEIGH

SUPERSTRUCTURE

CONSTRUCTION SEQUENCE

REVISIONS						SHEET NO.
NO.	BY:	DATE:	NO.	BY:	DATE:	S-81
1			3			TOTAL SHEETS
2			4			541

STR. #3

DRAWN BY: RTO DATE: 1/14
CHECKED BY: JCW DATE: 1/14

2/7/2014 K:\RDT_Structures_Bridge\NC\01036224_U-2525B_Gboro_East_Loop_over_US_70\Cad\dgn\U-2525_sd_str_3_psht81.dgn

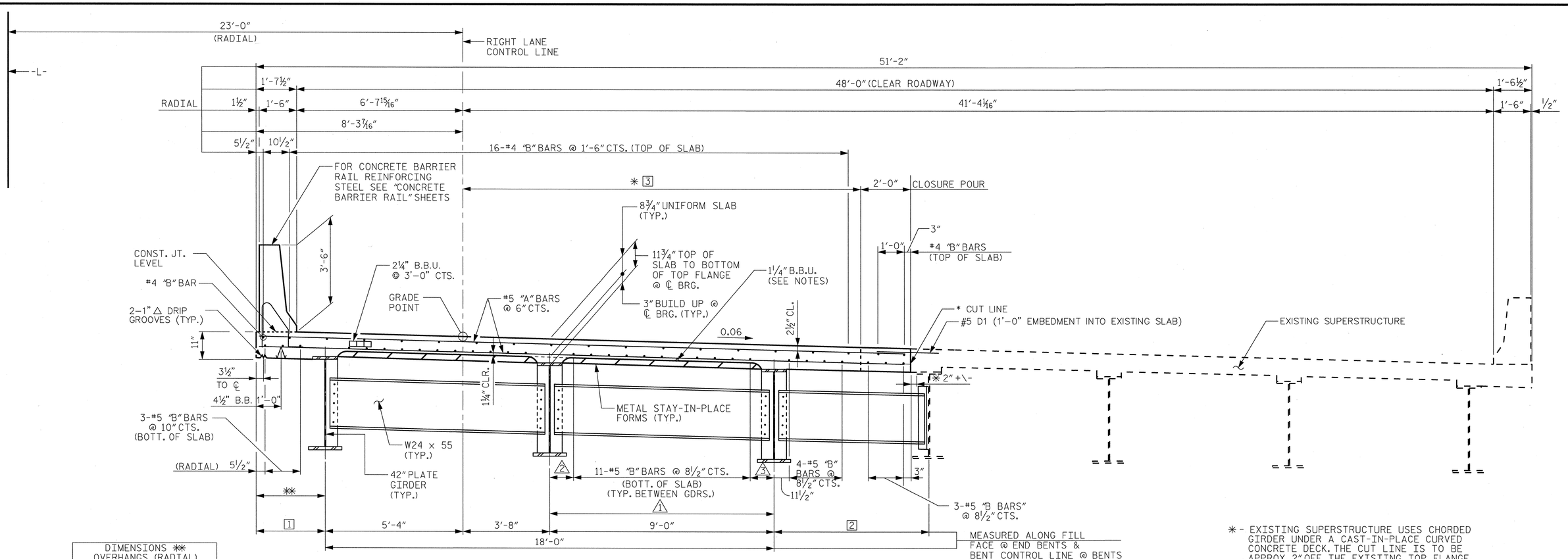

TYPICAL SECTION

(SHOWING INTERMEDIATE DIAPHRAGM)

DIMENSIONS ** OVERHANGS (RADIAL)		
	MAX.	MIN.
SPAN A	3'-0 9/16"	3'-0 1/8"
SPAN B	3'-3 13/16"	3'-0"
SPAN C	3'-0 5/16"	2'-11 15/16"

DIMENSIONS MEASURED NORMAL TO ℄ GDR.			
	1	2	3
SPAN A	8'-10 13/16"	10 15/16"	10 7/8"
SPAN B	8'-11 1/16"	11 1/16"	11"
SPAN C	8'-11 5/16"	11 3/16"	11 1/8"

DIMENSIONS ALONG FILL FACE OR CONTROL LINE			
	1	2†	3†
FILL FACE E.B. 1	3'-0 9/16"	6'-2 9/16" +/-	16'-1 13/16"
B.1 CONTROL LINE	3'-0 7/16"	6'-2 5/16" +/-	16'-1 9/16"
B.2 CONTROL LINE	3'-0 1/8"	6'-1 1/2" +/-	16'-0 15/16"
FILL FACE E.B. 2	3'-0"	6'-1 3/16" +/-	16'-0 11/16"

† - BASED ON EXISTING BRIDGE PLANS FIELD VERIFY.

* - EXISTING SUPERSTRUCTURE USES CHORDED GIRDER UNDER A CAST-IN-PLACE CURVED CONCRETE DECK. THE CUT LINE IS TO BE APPROX. 2" OFF THE EXISTING TOP FLANGE. THE DISTANCE FROM THE CUT LINE TO EDGE OF THE NEW DECK WILL VARY.

NOTES

PROVIDE 1¼" HIGH BEAM BOLSTER UPPER AT 4'-0" CTS. ATOP THE METAL STAY-IN-PLACE FORMS TO SUPPORT THE BOTTOM MAT OF "A" BARS. WHEN USING REMOVEABLE FORMS, PROVIDE CONTINUOUS HIGH CHAIRS FOR METAL DECK (C.H.C.M.) @ 4'-0" CTS. WITH A HEIGHT TO SUPPORT THE BOTTOM MAT OF "A" BARS A CLEAR DISTANCE OF 2½" ABOVE THE TOP OF THE REMOVEABLE FORM.

METAL STAY-IN-PLACE FORMS SHALL NOT BE WELDED TO GIRDER FLANGES IN THE ZONES REQUIRING CHARPY V-NOTCH TEST. SEE STRUCUTRAL STEEL DETAIL SHEETS.

PREVIOUSLY CAST CONCRETE IN THE SPAN SHALL HAVE ATTAINED A MINIMUM COMPRESSIVE STRENGTH OF 3,000 PSI BEFORE ADDITIONAL CONCRETE IS CAST IN THE SPAN.

THE CONTRACTOR MAY, WHEN NECESSARY, PROPOSE A SCHEME FOR AVOIDING INTERFERENCE BETWEEN METAL STAY-IN-PLACE FORM SUPPORTS OR FORMS AND GIRDER STIFFENERS OR CONNECTOR PLATES. THE PROPOSAL SHALL BE INDICATED, AS APPROPRIATE, ON EITHER THE STEEL WORKING DRAWINGS OR THE METAL STAY-IN-PLACE FORM WORKING DRAWINGS.

NORTH CAROLINA PROFESSIONAL SEAL 12186 ENGINEER CECIL L. NARRON 2/17/14

Kimley-Horn and Associates, Inc.
333 Fayetteville Street, Suite 600
Raleigh, NC 27601-1772
Phone (919) 835-1494
NC LICENSE # F-0102

This document, together with the concepts and designs presented herein, as an instrument of service, is intended only for the specified purpose and client for which it was prepared. Reuse of and improper reliance on this document without written authorization and adaptation by Kimley-Horn and Associates, Inc. shall be without liability to Kimley-Horn and Associates, Inc.
Copyright Kimley-Horn and Associates, Inc., 2014

PROJECT NO. U-2525B
GUILFORD COUNTY
STATION: 26+21.65 -L-
17+06.65 -Y3-

SHEET 1 OF 2

STATE OF NORTH CAROLINA
DEPARTMENT OF TRANSPORTATION
RALEIGH

SUPERSTRUCTURE
TYPICAL SECTION

REVISIONS						SHEET NO.
NO.	BY:	DATE:	NO.	BY:	DATE:	S-82
1			3			TOTAL SHEETS
2			4			541

STR. #3

DRAWN BY: RTO DATE: 1/14
CHECKED BY: JCW DATE: 1/14

2/17/2014 K:\RDT_Structures_Bridges\NC\01036224_U-2525B_Oboro East Loop over US 70\Cad\dgn\U-2525_sd_str_3_pshb2.dgn

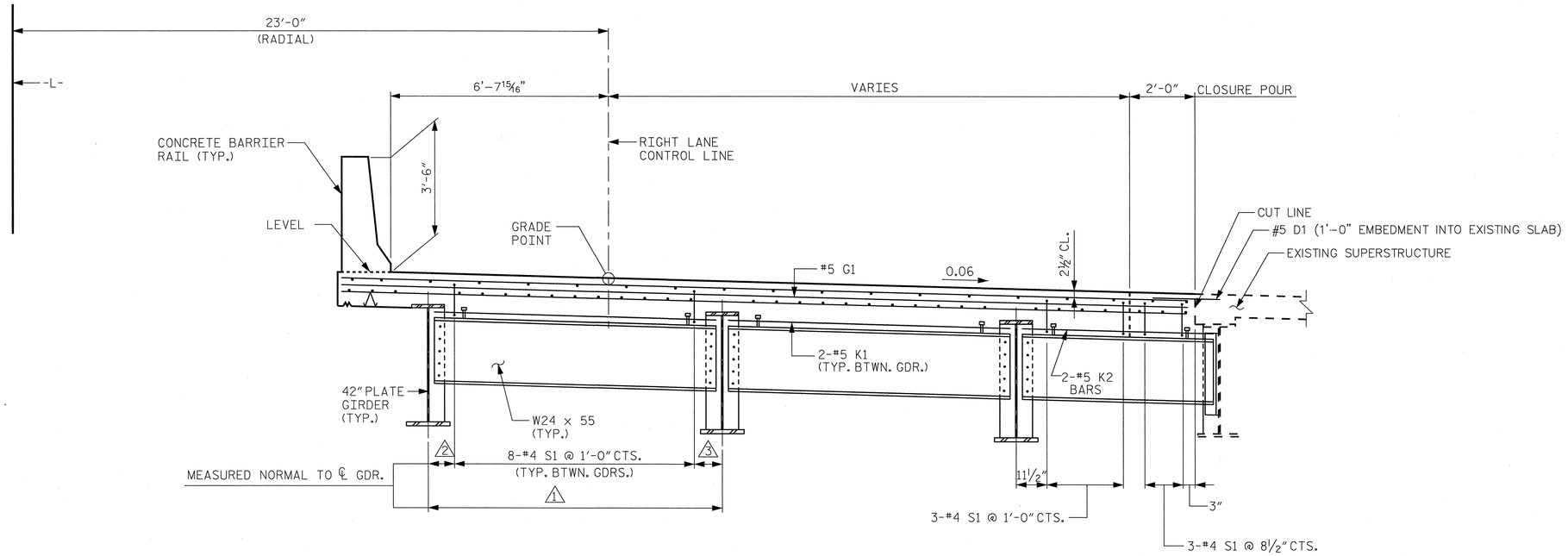

TYPICAL SECTION

(SHOWING BENT DIAPHRAGM)

DIMENSION MEASURED NORMAL TO ℄ GDR.

	1	2	3
SPAN A	8'-10 13/16"	11 7/16"	11 3/8"
SPAN B	8'-11 1/16"	11 1/2"	11 9/16"
SPAN C	8'-11 5/16"	11 11/16"	11 5/8"

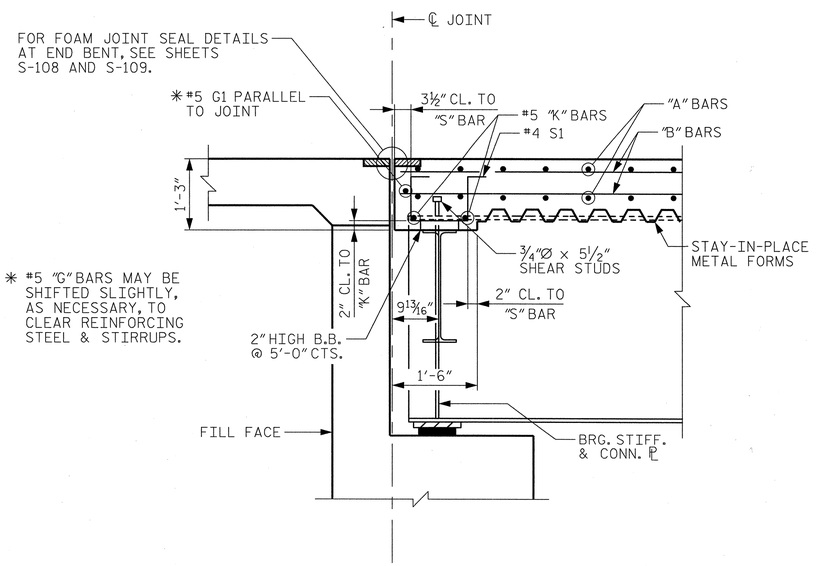

SECTION THRU END BENT DIAPHRAGM

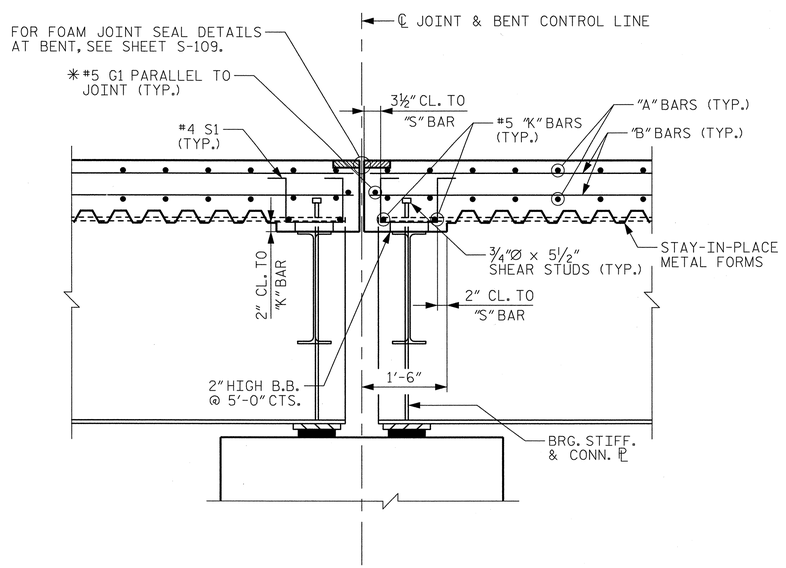

SECTION THRU BENT DIAPHRAGM

PROJECT NO. U-2525B

GUILFORD COUNTY

STATION: 26+21.65 -L-
17+06.65 -Y3-

SHEET 2 OF 2

STATE OF NORTH CAROLINA
DEPARTMENT OF TRANSPORTATION
RALEIGH

SUPERSTRUCTURE
TYPICAL SECTION

NORTH CAROLINA PROFESSIONAL SEAL 12186 ENGINEER NEIL L. NARRON
2/17/14

Kimley-Horn and Associates, Inc.
333 Fayetteville Street, Suite 600
Raleigh, NC 27601-1772
Phone (919) 835-1494
NC LICENSE # F-0102

This document, together with the concepts and designs presented herein, as an instrument of services, is intended only for the specific purpose and client for which it was prepared. Reuse of and improper reliance of this document without written authorization and adoption by Kimley-Horn and Associates, Inc. shall be without liability to Kimley-Horn and Associates, Inc.
Copyright Kimley-Horn and Associates, Inc., 2014

REVISIONS						SHEET NO.
NO.	BY:	DATE:	NO.	BY:	DATE:	S-83
1			3			TOTAL SHEETS
2			4			541

DRAWN BY: RTO DATE: 1/14
CHECKED BY: JCW DATE: 1/14

STR. #3

2/17/2014 K:\RDT_Structures_Bridge\NC\011036224_U-2525B_Oberlo East Loop over US 70\Cad\dgn\U-2525_sd_str_3_psh83.dgn

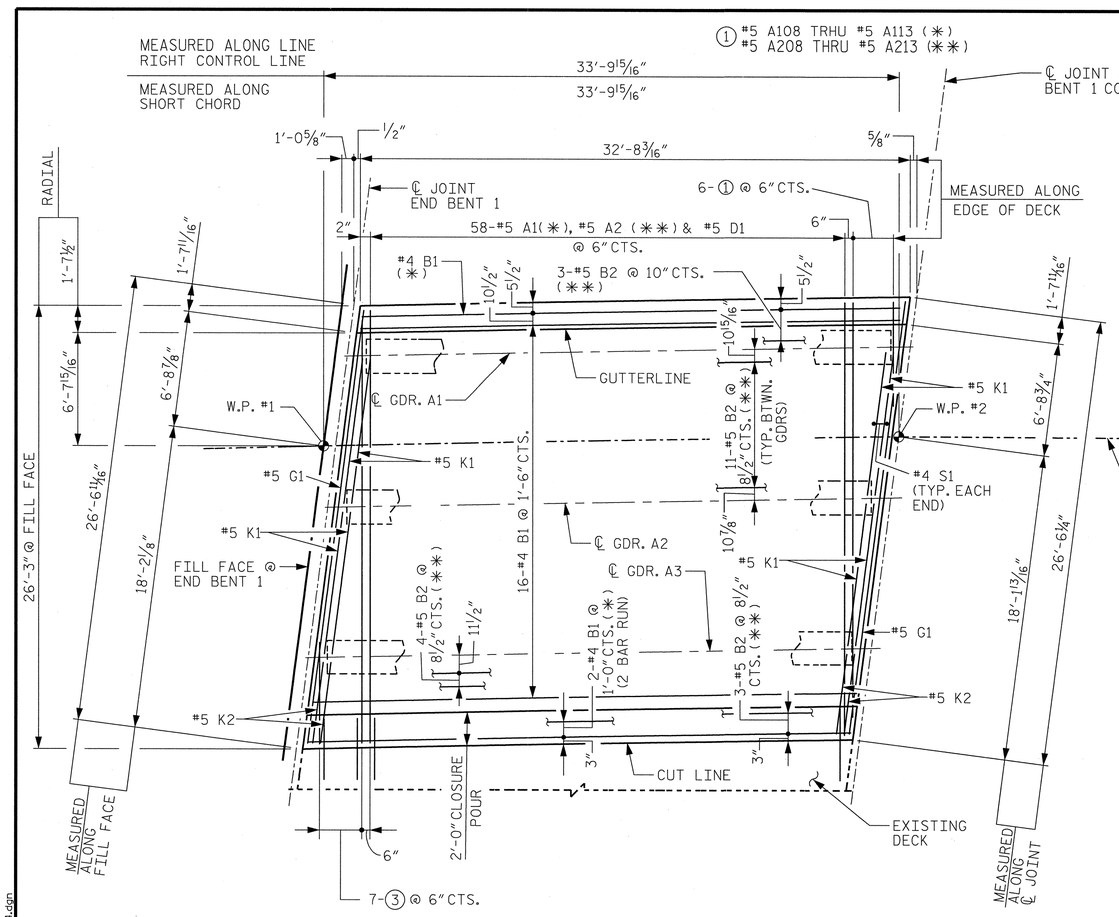

SPAN A

SPAN C

PLAN OF SPAN A & C

* - (TOP OF SLAB)
** - (BOTT. OF SLAB)

③ #5 A107 THRU #5 A101 (*)
#5 A207 THRU #5 A201 (**)
& #5 D1

④ #5 A129 THRU #5 A125 (*)
#5 A229 THRU #5 A225 (**)
& #5 D1

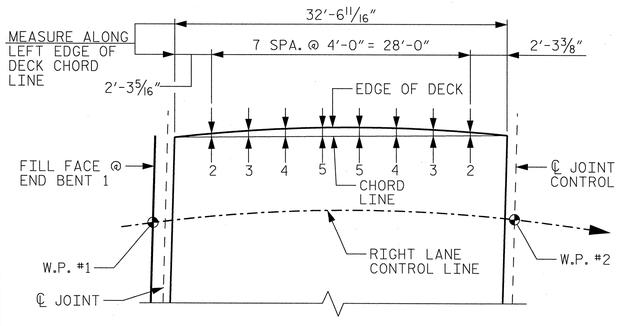

CURVE OFFSET
(SPAN A)

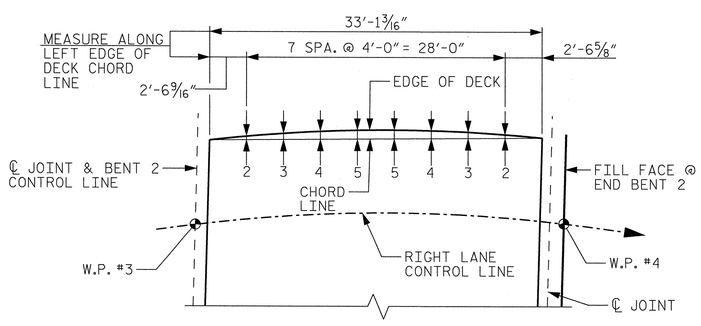

CURVE OFFSET
(SPAN C)

CURVE OFFSET (IN) CHORD TO EDGE OF DECK		
LOC.	SPAN A	SPAN B
1	0	0
2	1/8	1/8
3	1/4	1/4
4	3/8	3/8
5	7/16	7/16

NOTES

DOWELS SHALL BE PLACED IN THE SAME HORIZONTAL PLANE AS THE TOP SLAB REINFORCING STEEL.

A FULL DEPTH SAW CUT SHALL BE MADE AND EXISTING CONCRETE REMOVED IN ACCORDANCE WITH PLAN DETAILS.

SEE TRAFFIC CONTROL PLANS FOR LOCATION AND PAY LIMITS OF THE ANCHORED PORTABLE CONCRETE BARRIER.

DURING THE JOINT INSTALLATION PROCEDURE, THE JOINT AND SURROUNDING AREA SHALL BE KEPT CLEAN AND FREE OF DEBRIS.

FOR "S" BAR SPACING SEE SHEET S-83.

PROJECT NO. U-2525B
GUILFORD COUNTY
STATION: 26+21.65 -L-
17+06.65 -Y3-

SHEET 1 OF 2

NORTH CAROLINA PROFESSIONAL SEAL 12186 ENGINEER CECIL L. NARRON
2/17/14

Kimley-Horn and Associates, Inc.
333 Fayetteville Street, Suite 600
Raleigh, NC 27601-1772
Phone (919) 835-1494
NC LICENSE # F-0102

This document, together with the concepts and designs presented herein, as an instrument of services, is intended only for the specific purpose and client for which it was prepared. Reuse of and improper reliance of this document without written authorization, and adaption by Kimley-Horn and Associates, Inc. shall be without liability to Kimley-Horn and Associates, Inc.
Copyright Kimley-Horn and Associates, Inc., 2014

STATE OF NORTH CAROLINA
DEPARTMENT OF TRANSPORTATION
RALEIGH
SUPERSTRUCTURE
PLAN OF SPAN A & C

REVISIONS						SHEET NO.
NO.	BY:	DATE:	NO.	BY:	DATE:	S-84
1			3			TOTAL SHEETS
2			4			541

DRAWN BY: RTO DATE: 1/14
CHECKED BY: JCW DATE: 1/14

STR. #3

2/17/2014 K:\RDT_Structures_Bridge\NCDOT11036224_U-2525B_Oboro East Loop over US 70\Cad\dgn\u-2525_sd_str_3.pshl84.dgn

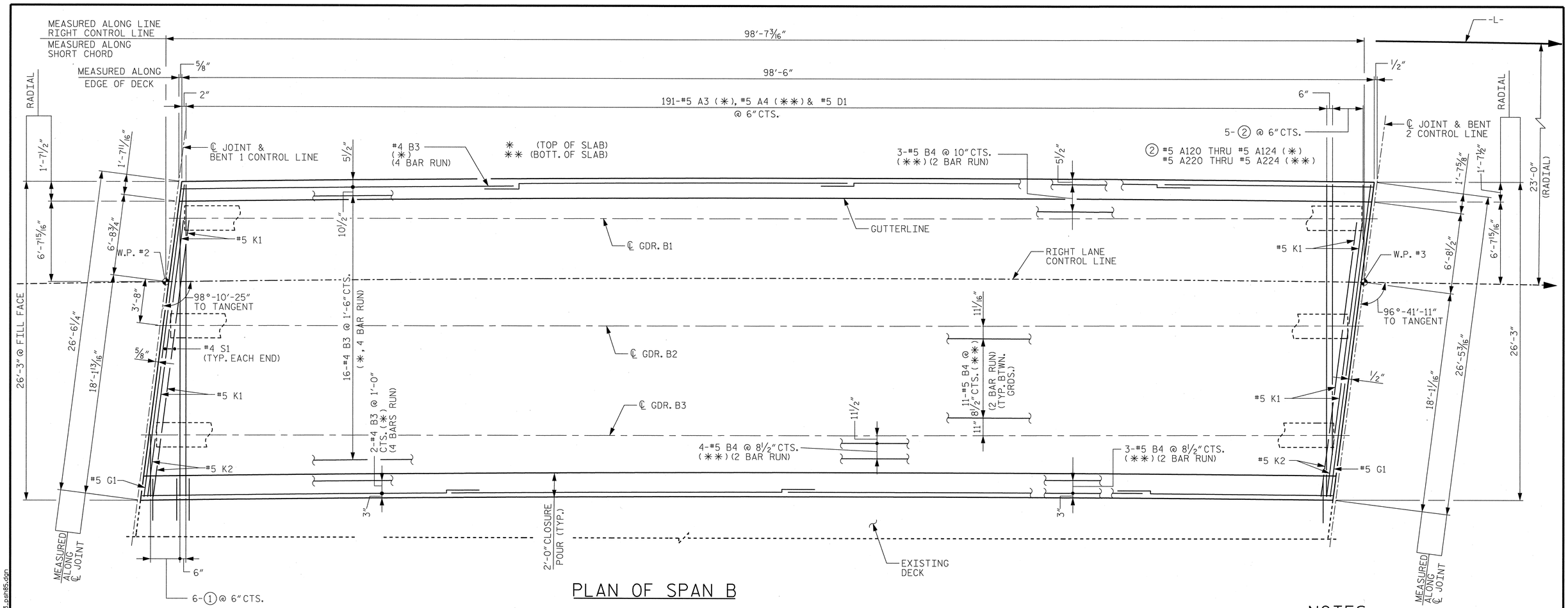

PLAN OF SPAN B

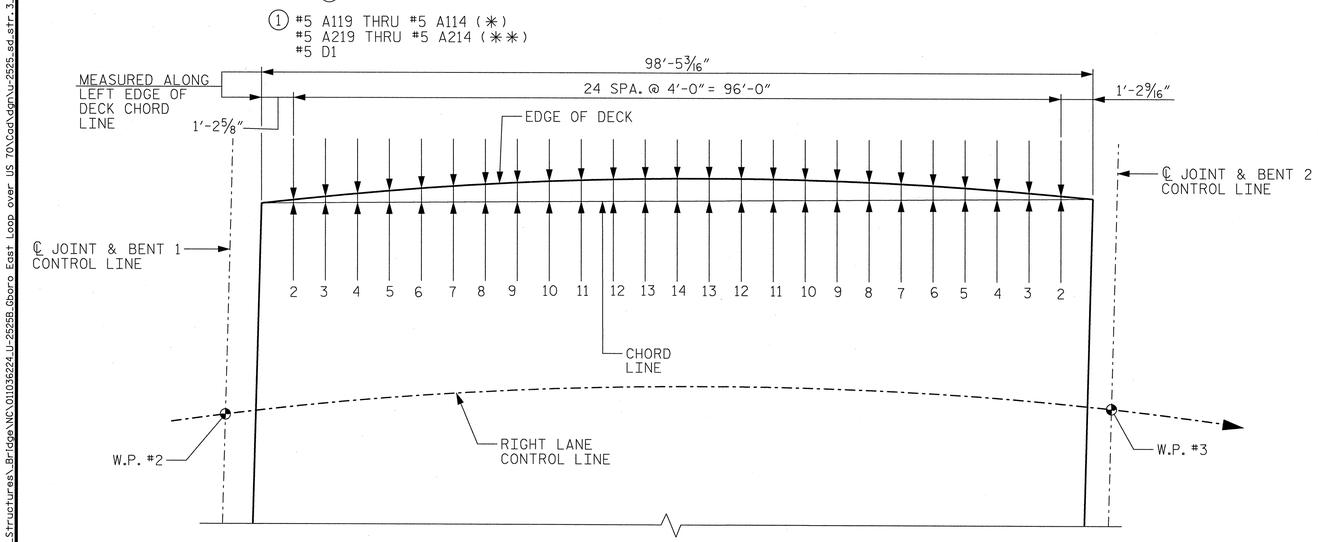

CURVE OFFSET

(SPAN B)

CURVE OFFSET (IN) CHORD TO EDGE OF DECK	
LOCATION	LEFT
1	0
2	3/16
3	3/4
4	1 5/16
5	1 3/4
6	2 3/16
7	2 9/16
8	2 15/16
9	3 3/16
10	3 7/16
11	3 9/16
12	3 11/16
13	3 13/16
14	3 13/16

NOTES

SEE SHEET S-84 FOR NOTES.

FOR "S" BAR SPACING SEE SHEET S-83.

STAGGER PLACEMENT OF #5 A3 AND #5 A4 BARS TRANSVERSELY (EDGE OF DECK TO CUT LINE)

PROJECT NO. U-2525B

GUILFORD COUNTY

STATION: 26+21.65 -L-
17+06.65 -Y3-

SHEET 2 OF 2

NORTH CAROLINA PROFESSIONAL SEAL 12186 ENGINEER CECIL L. NARRON 2/17/14

Kimley-Horn and Associates, Inc.
333 Fayetteville Street, Suite 600
Raleigh, NC 27601-1772
Phone (919) 835-1494
NC LICENSE # F-0102

This document, together with the concepts and designs presented herein, as an instrument of services, is intended only for the specific purpose and client for which it was prepared. Reuse of and improper reliance on this document without written authorization and adaptation by Kimley-Horn and Associates, Inc. shall be without liability to Kimley-Horn and Associates, Inc.
Copyright Kimley-Horn and Associates, Inc., 2014

STATE OF NORTH CAROLINA
DEPARTMENT OF TRANSPORTATION
RALEIGH

SUPERSTRUCTURE

PLAN OF SPAN B

REVISIONS						SHEET NO.
NO.	BY:	DATE:	NO.	BY:	DATE:	S-85
1			3			TOTAL SHEETS
2			4			541

DRAWN BY: RTO DATE: 1/14
CHECKED BY: JCW DATE: 1/14

2/17/2014 K:\RDT_Structures_Bridges\NC\U1036224_U-2525B_Cboro East Loop over US 70\Cad\dgn\U-2525_sd_str_3_psh85.dgn

STR. #3

NOTES

EXISTING DIAPHRAGMS NOT SHOWN FOR CLARITY.

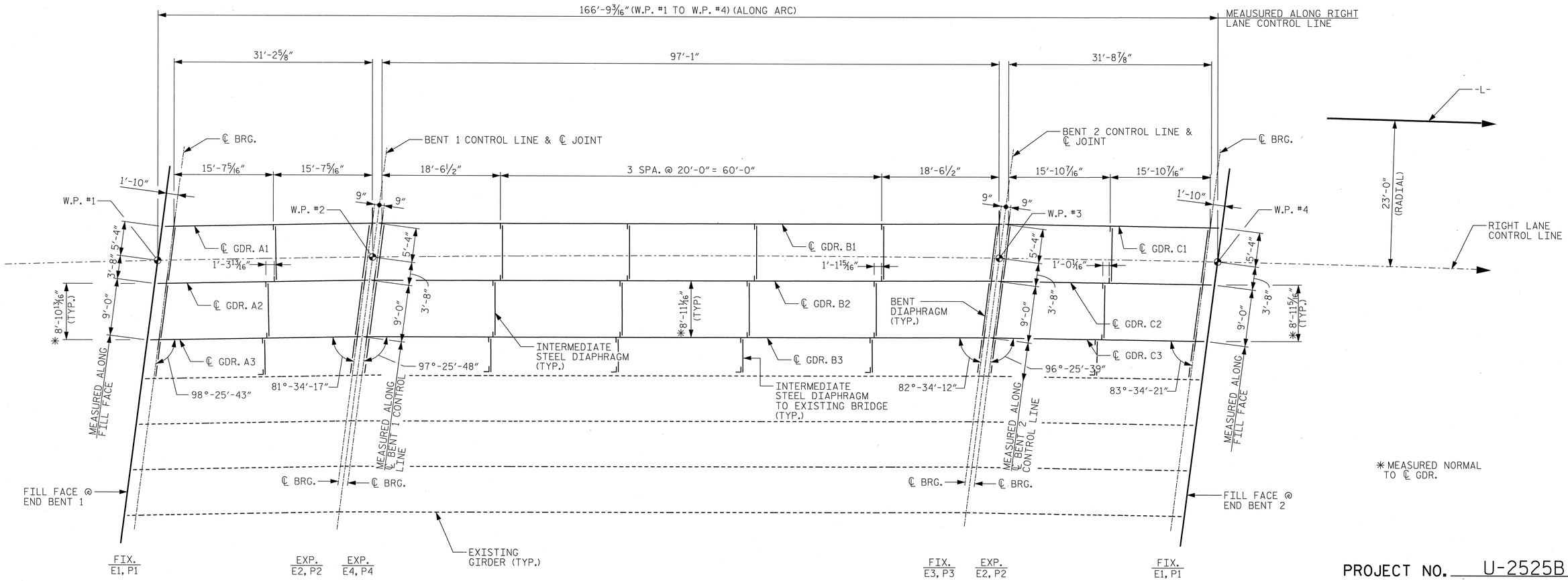

FRAMING PLAN

PROJECT NO. U-2525B

GUILFORD COUNTY

STATION: 26+21.65 -L-
17+06.65 -Y3-

STATE OF NORTH CAROLINA
DEPARTMENT OF TRANSPORTATION
RALEIGH
SUPERSTRUCTURE
FRAMING PLAN

NORTH CAROLINA PROFESSIONAL SEAL 12186 ENGINEER CECIL L. NARRON
2/7/14

Kimley-Horn and Associates, Inc.
333 Fayetteville Street, Suite 600
Raleigh, NC 27601-1772
Phone (919) 835-1494
NC LICENSE # F-0102

This document, together with the concepts and designs presented herein, as an instrument of services, is intended only for the specific purpose and client for which it was prepared. Reuse of and improper reliance of this document without written authorization, and adaption by Kimley-Horn and Associates, Inc. shall be without liability to Kimley-Horn and Associates, Inc.
Copyright Kimley-Horn and Associates, Inc., 2014

REVISIONS					
NO.	BY:	DATE:	NO.	BY:	DATE:
1			3		
2			4		

SHEET NO. S-86

TOTAL SHEETS 541

STR. #3

DRAWN BY: RTO DATE: 1/14
CHECKED BY: JCW DATE: 1/14

2/7/2014 K:\NDOT_Structures_Bridges\NC_011036224_U-2525B_Oboro East Loop over US 70\Cadd\dgn\U-2525_sd_str_3.pan86.dgn

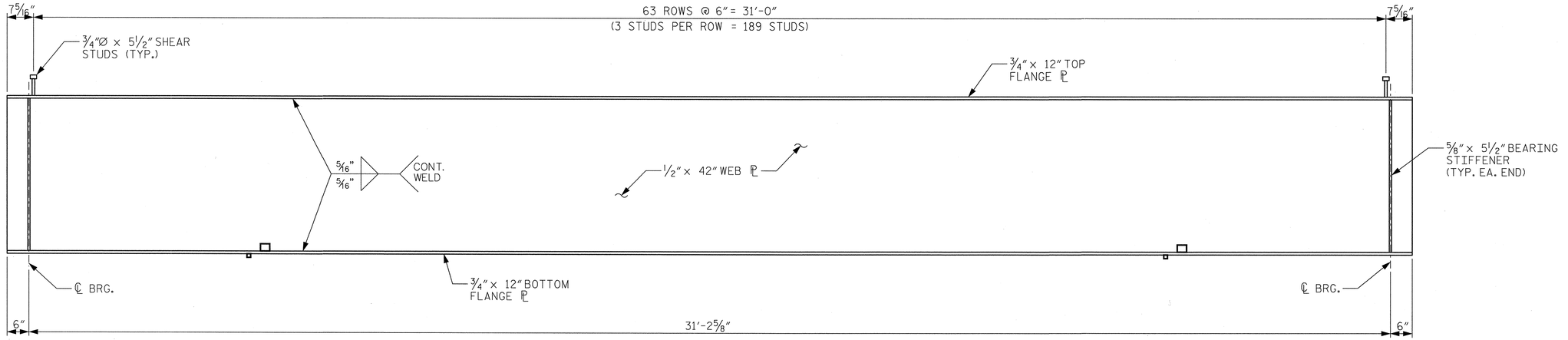

PLATE GIRDER ELEVATION - SPAN A

(CONNECTOR PLATES NOT SHOWN FOR CLARITY)

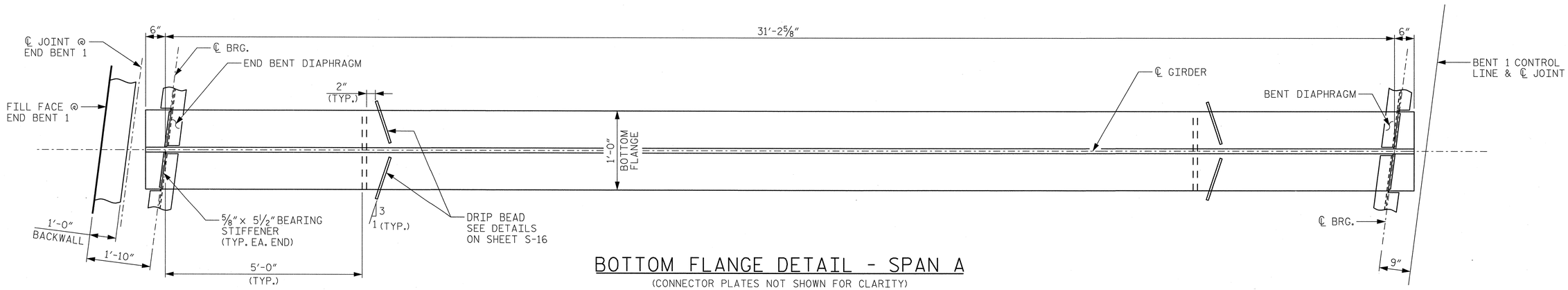

BOTTOM FLANGE DETAIL - SPAN A

(CONNECTOR PLATES NOT SHOWN FOR CLARITY)

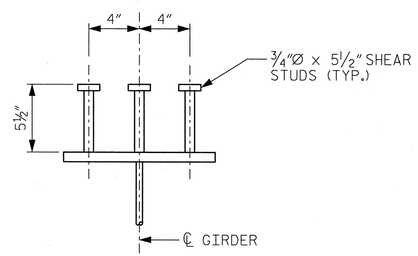

SHEAR STUD DETAIL

(TYP. EA. GIRDER)

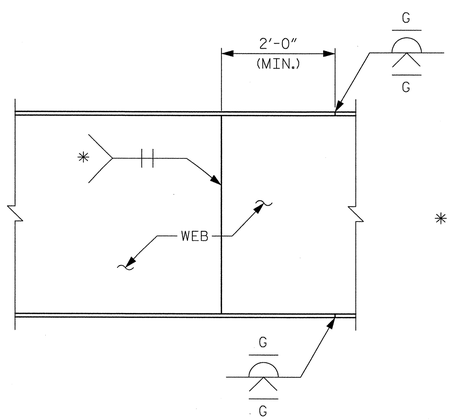

* GRIND SMOOTH AND FLUSH ON OUTER FACE OF EXTERIOR GIRDERS.

TYPICAL FLANGE AND WEB BUTT JOINT

PROJECT NO. U-2525B

GUILFORD COUNTY

STATION: 26+21.65 -L-
17+06.65 -Y3-

SHEET 1 OF 4

NORTH CAROLINA PROFESSIONAL SEAL 12186 ENGINEER CECIL L. NARRON 2/17/14

STATE OF NORTH CAROLINA
DEPARTMENT OF TRANSPORTATION
RALEIGH

SUPERSTRUCTURE
STRUCTURAL
STEEL DETAILS

Kimley-Horn and Associates, Inc.
333 Fayetteville Street, Suite 600
Raleigh, NC 27601-1772
Phone (919) 835-1494
NC LICENSE # F-0102

This document, together with the concepts and designs presented herein, as an instrument of services, is intended only for the specific purpose and client for which it was prepared. Reuse of and improper reliance of this document without written authorization and adaptation by Kimley-Horn and Associates, Inc. shall be without liability to Kimley-Horn and Associates, Inc.

Copyright Kimley-Horn and Associates, Inc., 2014

REVISIONS						SHEET NO.
NO.	BY:	DATE:	NO.	BY:	DATE:	S-87
1			3			TOTAL SHEETS
2			4			541

DRAWN BY: RTO DATE: 1/14
CHECKED BY: JCW DATE: 1/14

STR. #3

2/17/2014 K:\RDT_Structures_Bridge\NC\011036224_U-2525B_Gboro East Loop over US 70\Cad\dgn\u-2525_sd_str_3_psh87.dgn

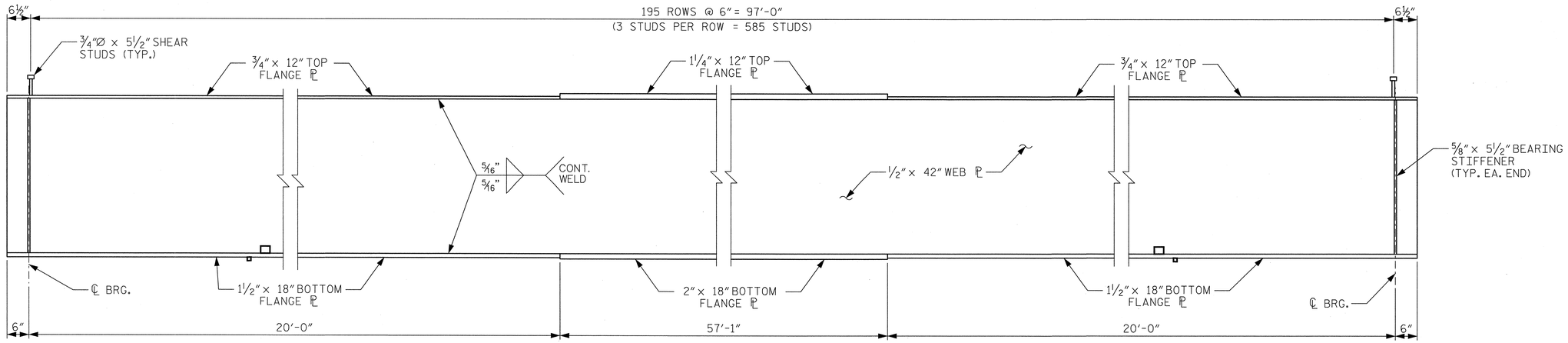

PLATE GIRDER ELEVATION - SPAN B

(CONNECTOR PLATES NOT SHOWN FOR CLARITY)

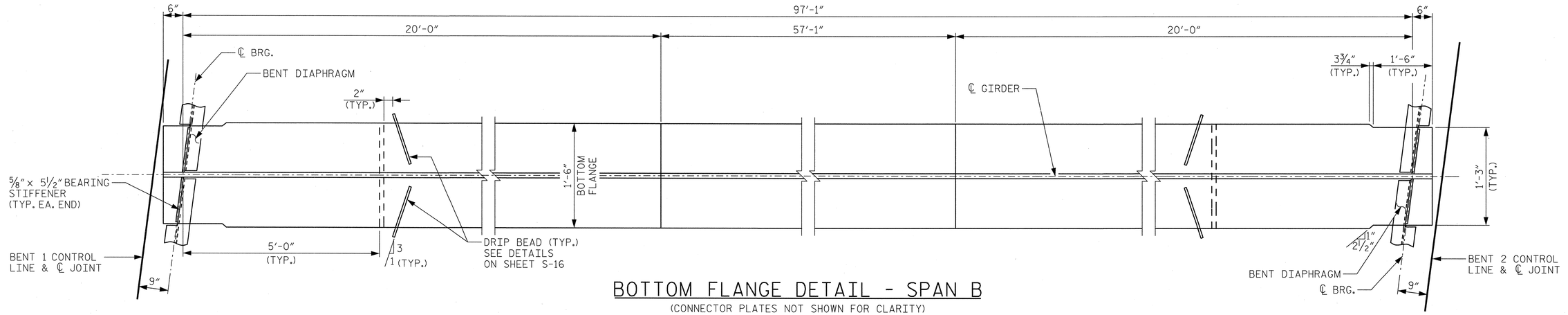

BOTTOM FLANGE DETAIL - SPAN B

(CONNECTOR PLATES NOT SHOWN FOR CLARITY)

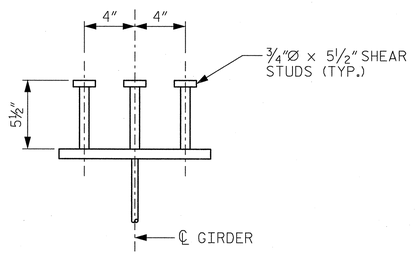

SHEAR STUD DETAIL

(TYP. EA. GIRDER)

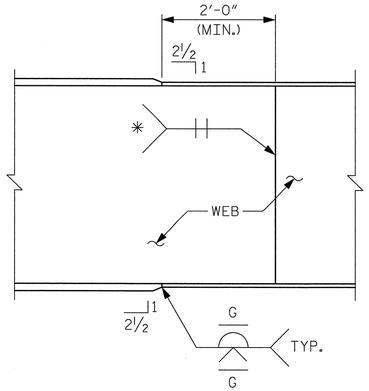

TYPICAL FLANGE AND WEB BUTT JOINT

* GRIND SMOOTH AND FLUSH ON OUTER FACE OF EXTERIOR GIRDERS.

PROJECT NO. U-2525B

GUILFORD COUNTY

STATION: 26+21.65 -L-
17+06.65 -Y3-

SHEET 2 OF 4

STATE OF NORTH CAROLINA
DEPARTMENT OF TRANSPORTATION
RALEIGH

SUPERSTRUCTURE

STRUCTURAL STEEL DETAILS

NORTH CAROLINA PROFESSIONAL SEAL 12186 ENGINEER CECIL L. NARRON
2/17/14

Kimley-Horn and Associates, Inc.
333 Fayetteville Street, Suite 600
Raleigh, NC 27601-1772
Phone (919) 835-1494
NC LICENSE # F-0102

This document, together with the concepts and designs presented herein, as an instrument of services, is intended only for the specific purpose and client for which it was prepared. Reuse of and improper reliance on this document without written authorization and adaptation by Kimley-Horn and Associates, Inc. shall be without liability to Kimley-Horn and Associates, Inc.

Copyright Kimley-Horn and Associates, Inc., 2014

REVISIONS						SHEET NO.
NO.	BY:	DATE:	NO.	BY:	DATE:	S-88
1			3			TOTAL SHEETS
2			4			541

DRAWN BY: RTO DATE: 1/14
CHECKED BY: JCW DATE: 1/14

STR. #3

2/17/2014 K:\RDT_Structures_Bridges\NC\011036224_U-2525B_Guilford_Co_Bridges\Guilford Co Bridges East Loop over US 70\Cad\dgn\u-2525_sd_str_3.pshpb8.dgn

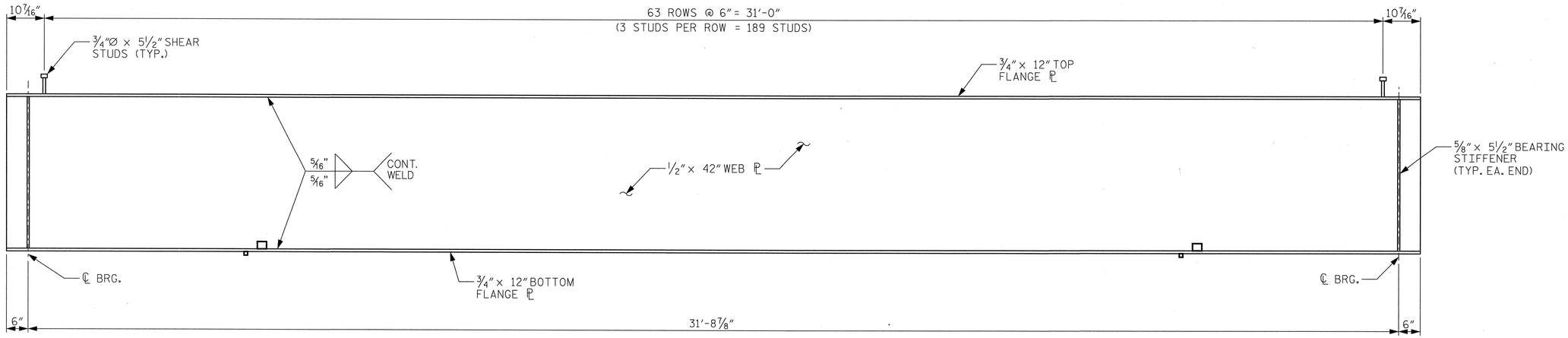

PLATE GIRDER ELEVATION - SPAN C

(CONNECTOR PLATES NOT SHOWN FOR CLARITY)

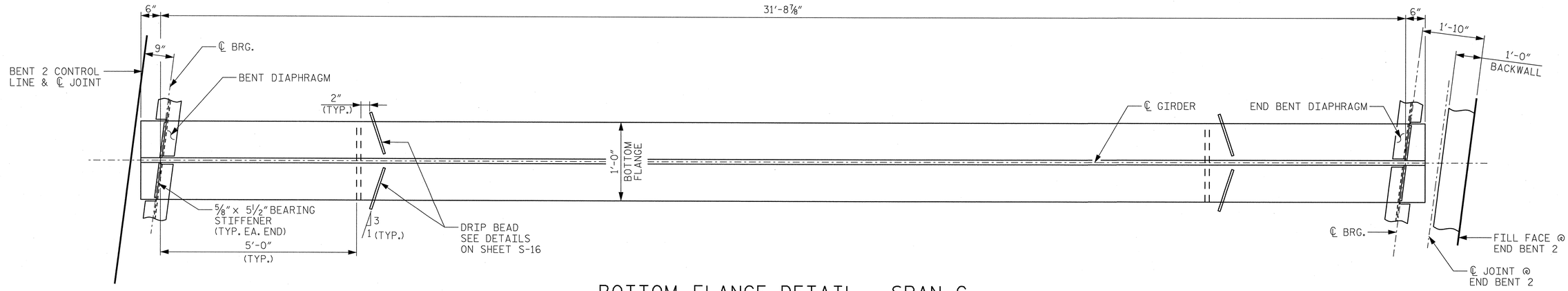

BOTTOM FLANGE DETAIL - SPAN C

(CONNECTOR PLATES NOT SHOWN FOR CLARITY)

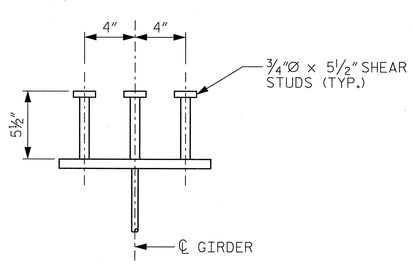

SHEAR STUD DETAIL

(TYP. EA. GIRDER)

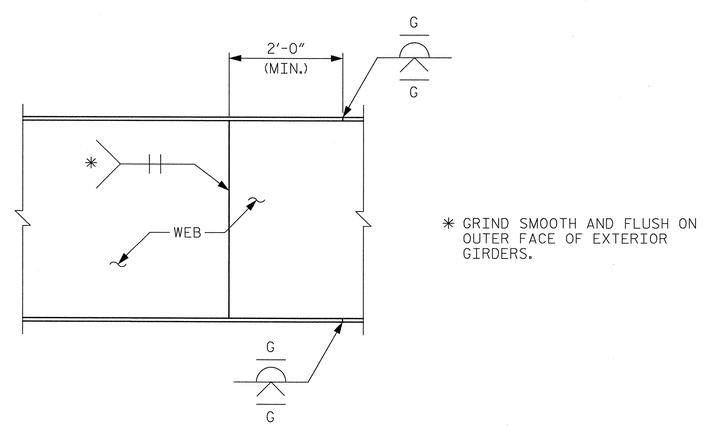

* GRIND SMOOTH AND FLUSH ON OUTER FACE OF EXTERIOR GIRDERS.

TYPICAL FLANGE AND WEB BUTT JOINT

PROJECT NO. U-2525B

GUILFORD COUNTY

STATION: 26+21.65 -L-
17+06.65 -Y3-

SHEET 3 OF 4

NORTH CAROLINA PROFESSIONAL SEAL 12186 ENGINEER CECIL L. NARRONA
2/17/14

STATE OF NORTH CAROLINA
DEPARTMENT OF TRANSPORTATION
RALEIGH

SUPERSTRUCTURE
STRUCTURAL
STEEL DETAILS

Kimley-Horn and Associates, Inc.
333 Fayetteville Street, Suite 600
Raleigh, NC 27601-1772
Phone (919) 835-1494
NC LICENSE # F-0102

This document, together with the concepts and designs presented herein, as an instrument of services, is intended only for the specific purpose and client for which it was prepared. Reuse of and improper reliance of this document without written authorization and adoption by Kimley-Horn and Associates, Inc. shall be without liability to Kimley-Horn and Associates, Inc.
Copyright Kimley-Horn and Associates, Inc., 2014

REVISIONS						SHEET NO.
NO.	BY:	DATE:	NO.	BY:	DATE:	S-89
1			3			TOTAL SHEETS
2			4			541

DRAWN BY: RTO DATE: 1/14
CHECKED BY: JCW DATE: 1/14

2/17/2014 K:\RDT_Structures_Bridge\NC\011036224_U-2525B_Gboro East Loop over US 70\Cad\dgn\u-2525_sd_str_3_psh89.dgn

STR. #3

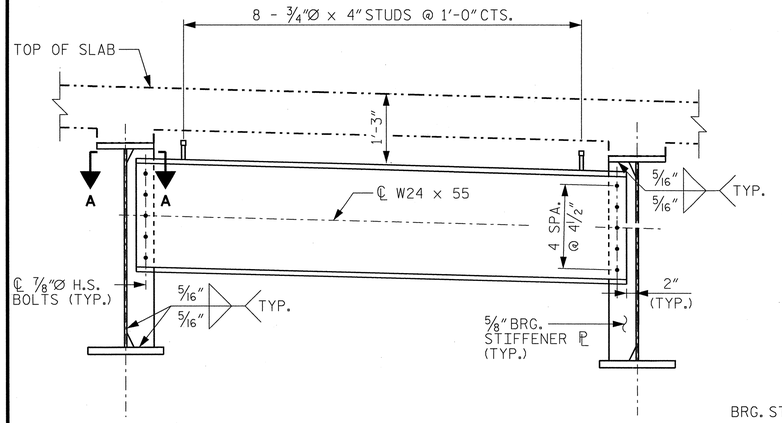

END BENT & BENT DIAPHRAGM

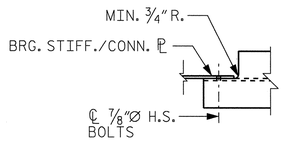

SECTION A-A

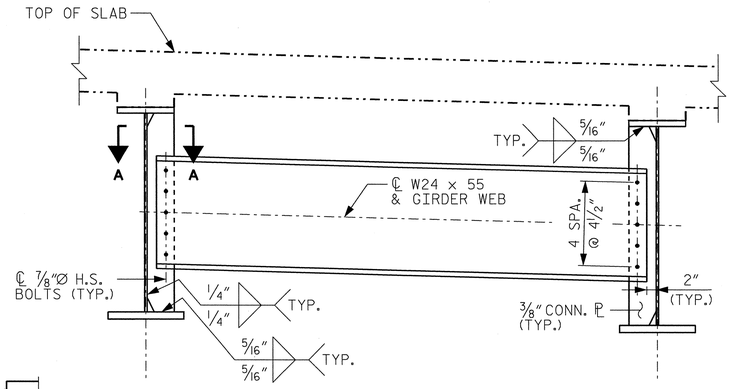

INTERMEDIATE DIAPHRAGM

STRUCTURAL STEEL NOTES

ALL STRUCTURAL STEEL SHALL BE AASHTO M270 GRADE 50W AND PAINTED IN ACCORDANCE WITH SYSTEM 4 OF ARTICLE 442-8 OF THE STANDARD SPECIFICATIONS UNLESS OTHERWISE NOTED ON PLANS.

ALL DIMENSIONS SHOWN ARE HORIZONTAL OR VERTICAL, UNLESS OTHERWISE NOTED.

ALL FIELD CONNECTIONS TO BE ⅞" DIA. HIGH STRENGTH BOLTS UNLESS OTHERWISE NOTED.

BEARING STIFFENERS ARE TO BE PLACED AT THE ANGLE SHOWN AND SHALL BE PLUMB.

A CHARPY V-NOTCH TEST IS REQUIRED FOR WEB PLATES AND BOTTOM FLANGE PLATES. FOR ALL GIRDERS AND IN ACCORDANCE WITH ARTICLE 1072-7 OF THE STANDARD SPECIFICATIONS.

PERMITTED FLANGE AND WEB SHOP SPLICES SHALL NOT BE LOCATED WITHIN 15 FEET OF MAXIMUM DEAD LOAD DEFLECTION. KEEP 2 FEET MINIMUM BETWEEN WEB AND FLANGE SHOP SPLICES. KEEP 6" MINIMUM BETWEEN CONNECTOR PLATE OR TRANSVERSE STIFFENER WELDS AND WEB OR FLANGE SHOP SPLICES.

STUDS ON GIRDERS MAY BE SHIFTED UP TO 1" IF NECESSARY TO CLEAR FLANGE SPLICE WELD.

TENSION ON THE AASHTO M164 BOLTS SHALL BE CALIBRATED USING DIRECT TENSION INDICATOR WASHERS IN ACCORDANCE WITH ARTICLE 440-8 OF THE STANDARD SPECIFICATIONS.

END OF GIRDERS SHALL BE PLUMB.

BEARING STIFFENER MAY REQUIRE COPING IF WIDER THAN BOTTOM FLANGE.

FABRICATORS SHALL DETAIL DIAPHRAGM MEMBERS AND CONNECTIONS FOR STEEL DEAD LOAD FIT UP.

WHERE DIAPHRAGMS ARE TO BE BOLTED TO EXISTING STEEL BEAMS, DO NOT REMOVE PAINT FROM THE CONTACT SURFACE.

CONNECTION BOLTS ARE TO BE LOCATED AT THE BOTTOM OF THE CONNECTION SLOT FOR BRG. STIFFENER AND TOP OF SLOT FOR ℄ W24 x 55 TIGHTENED TO SNUG FIT PRIOR TO FIELD WELDING OPPOSITE END OF DIAPHRAGM. AFTER WELDING DIAPHRAGM TO CONNECTION ANGLE AND PRIOR TO THE POURING OF THE SLAB, BACK OFF BOLTS ½ TURN TO ALLOW FOR VERTICAL DEFLECTION OF NEW BEAM. AFTER DEFLECTIONS HAVE OCCURRED, TIGHTEN BOLTS AS REQUIRED BY THE STANDARD SPECIFICATIONS.

FOR END BENT & BENT DIAPHRAGM TO EXISTING GIRDER SEE SHEET S-91.

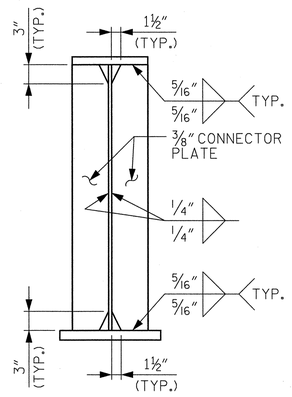

CONNECTOR PLATE

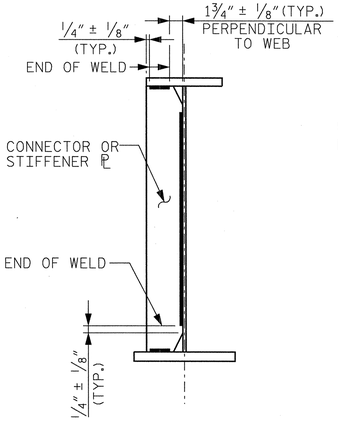

WELD TERMINATION DETAIL

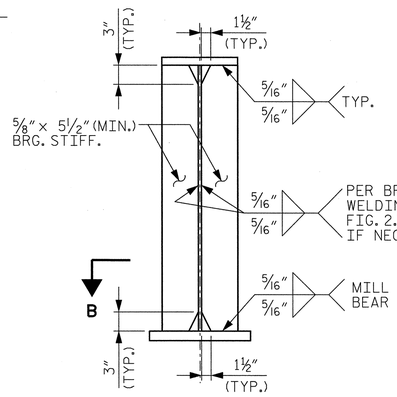

BEARING STIFFENER

(SPAN B SHOWN, SPAN A & C SIMILAR)

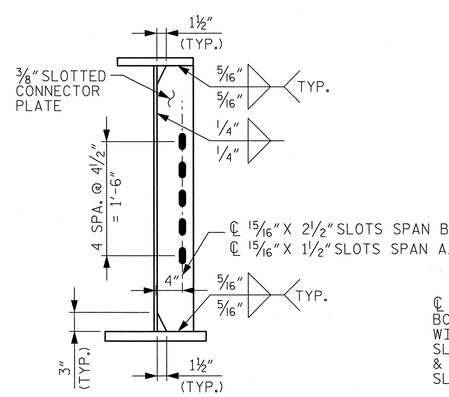

SLOTTED CONNECTOR PLATE

(FOR CONNECTION OF GIRDER 3 TO EXISTING GIRDER)

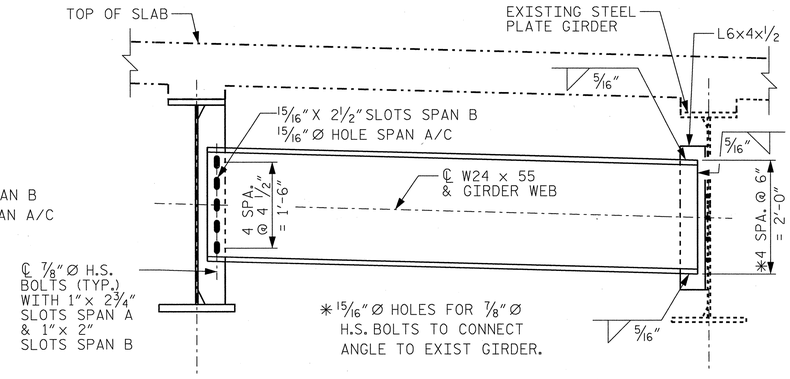

INTERMEDIATE CONNECTION DIAPHRAGM

(FOR CONNECTION OF GIRDER 3 TO EXISTING GIRDER)

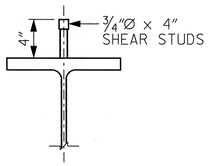

SHEAR STUD DETAIL

(TYP. EA. END BENT & BENT DIAPHRAGM)

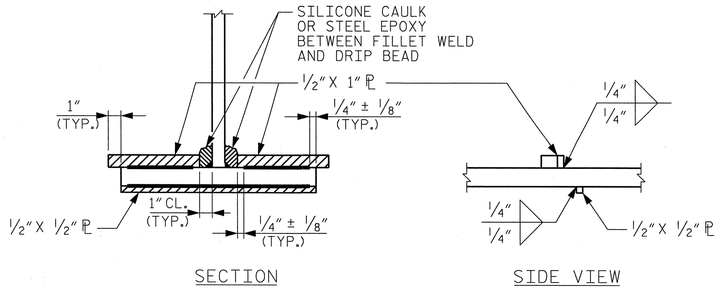

SECTION SIDE VIEW

DRIP BEAD DETAILS

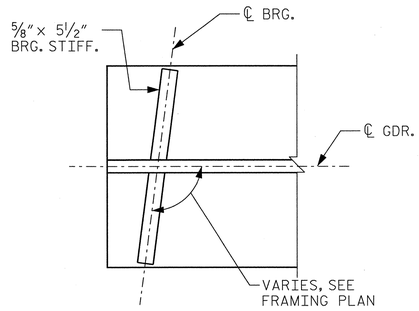

SECTION B-B

PROJECT NO. U-2525B

GUILFORD COUNTY

STATION: 26+21.65 -L-
17+06.65 -Y3-

SHEET 4 OF 4

STATE OF NORTH CAROLINA
DEPARTMENT OF TRANSPORTATION
RALEIGH

SUPERSTRUCTURE
STRUCTURAL STEEL DETAILS

NORTH CAROLINA PROFESSIONAL SEAL 12186 ENGINEER CECIL L. NARRON 3/12/14

Kimley-Horn and Associates, Inc.
333 Fayetteville Street, Suite 600
Raleigh, NC 27601-1772
Phone (919) 835-1494
NC LICENSE # F-0102

This document, together with the concepts and designs presented herein, as an instrument of services, is intended only for the specific purpose and client for which it was prepared. Reuse of and improper reliance of this document without written authorization and adaptation by Kimley-Horn and Associates, Inc. shall be without liability to Kimley-Horn and Associates, Inc.
Copyright Kimley-Horn and Associates, Inc., 2014

REVISIONS						SHEET NO.
NO.	BY:	DATE:	NO.	BY:	DATE:	S-90
1			3			TOTAL SHEETS
2			4			541

DRAWN BY: RTO DATE: 1/14
CHECKED BY: JCW DATE: 1/14

STR. #3

3/11/2014 K:\RDT_Structures_Bridges\NC\011036224_U-2525B_Goboro East Loop over US 70\Cadd\dgn\u-2525_sd_str_3_psh90.dgn

DEAD LOAD DEFLECTION TABLE

SPAN A & C

GIRDER 1												
TENTH POINTS	0	0.10	0.20	0.30	0.40	0.50	0.60	0.70	0.80	0.90	0
DEFLECTION DUE TO WEIGHT OF GIRDER ↓	0	0.000	0.001	0.001	0.001	0.001	0.001	0.001	0.001	0.000	0
DEFLECTION DUE TO WEIGHT OF SLAB * ↓	0	0.002	0.003	0.005	0.006	0.006	0.006	0.005	0.003	0.002	0
DEFLECTION DUE TO WEIGHT OF RAIL ↓	0	0.000	0.000	0.001	0.001	0.001	0.001	0.001	0.000	0.000	0
TOTAL DEAD LOAD DEFLECTION ↓	0	0.002	0.004	0.006	0.007	0.007	0.007	0.006	0.004	0.002	0
VERTICAL CURVE ORDINATE ↑	0	0.001	0.002	0.002	0.002	0.002	0.002	0.002	0.002	0.001	0
ORDINATE DUE TO SUPERELEVATION ↓	0	0.001	0.001	0.002	0.002	0.002	0.002	0.002	0.001	0.001	0
REQUIRED CAMBER ↑	0	0	1/16	1/16	1/16	1/8	1/16	1/16	1/16	1/16	0
GIRDER 2												
TENTH POINTS	0	0.10	0.20	0.30	0.40	0.50	0.60	0.70	0.80	0.90	0
DEFLECTION DUE TO WEIGHT OF GIRDER ↓	0	0.000	0.001	0.001	0.001	0.001	0.001	0.001	0.001	0.000	0
DEFLECTION DUE TO WEIGHT OF SLAB * ↓	0	0.002	0.004	0.005	0.006	0.007	0.006	0.005	0.004	0.002	0
DEFLECTION DUE TO WEIGHT OF RAIL ↓	0	0.000	0.000	0.000	0.000	0.001	0.000	0.000	0.000	0.000	0
TOTAL DEAD LOAD DEFLECTION ↓	0	0.003	0.005	0.006	0.008	0.008	0.008	0.006	0.005	0.003	0
VERTICAL CURVE ORDINATE ↑	0	0.001	0.002	0.002	0.002	0.003	0.002	0.002	0.002	0.001	0
ORDINATE DUE TO SUPERELEVATION ↓	0	0.001	0.001	0.002	0.002	0.002	0.002	0.002	0.001	0.001	0
REQUIRED CAMBER ↑	0	1/16	1/16	1/16	1/8	1/8	1/8	1/16	1/16	1/16	0
GIRDER 3												
TENTH POINTS	0	0.10	0.20	0.30	0.40	0.50	0.60	0.70	0.80	0.90	0
DEFLECTION DUE TO WEIGHT OF GIRDER ↓	0	0.000	0.001	0.001	0.001	0.001	0.001	0.001	0.001	0.000	0
DEFLECTION DUE TO WEIGHT OF SLAB * ↓	0	0.002	0.003	0.005	0.005	0.006	0.005	0.005	0.003	0.002	0
DEFLECTION DUE TO WEIGHT OF RAIL ↓	0	0.000	0.000	0.000	0.000	0.000	0.000	0.000	0.000	0.000	0
TOTAL DEAD LOAD DEFLECTION ↓	0	0.002	0.004	0.006	0.006	0.007	0.006	0.006	0.004	0.002	0
VERTICAL CURVE ORDINATE ↑	0	0.001	0.002	0.002	0.002	0.002	0.002	0.002	0.002	0.001	0
ORDINATE DUE TO SUPERELEVATION ↓	0	0.001	0.001	0.002	0.002	0.002	0.002	0.002	0.001	0.001	0
REQUIRED CAMBER ↑	0	0	1/16	1/16	1/16	1/16	1/16	1/16	1/16	0	0

SPAN B

GIRDER 1											
TENTH POINTS	0	0.10	0.20	0.30	0.40	0.50	0.60	0.70	0.80	0.90	0
DEFLECTION DUE TO WEIGHT OF GIRDER ↓	0	0.021	0.038	0.052	0.060	0.063	0.060	0.052	0.038	0.021	0
DEFLECTION DUE TO WEIGHT OF SLAB * ↓	0	0.064	0.141	0.198	0.235	0.247	0.235	0.198	0.141	0.064	0
DEFLECTION DUE TO WEIGHT OF RAIL ↓	0	0.010	0.018	0.025	0.029	0.030	0.029	0.025	0.018	0.010	0
TOTAL DEAD LOAD DEFLECTION ↓	0	0.094	0.197	0.275	0.324	0.340	0.324	0.275	0.197	0.094	0
VERTICAL CURVE ORDINATE ↑	0	0.008	0.015	0.019	0.022	0.023	0.022	0.020	0.015	0.008	0
ORDINATE DUE TO SUPERELEVATION ↓	0	0.007	0.012	0.016	0.018	0.019	0.018	0.016	0.012	0.007	0
REQUIRED CAMBER ↑	0	1 1/8	2 3/8	3 5/16	3 15/16	4 1/8	3 15/16	3 5/16	2 3/8	1 1/8	0
GIRDER 2											
TENTH POINTS	0	0.10	0.20	0.30	0.40	0.50	0.60	0.70	0.80	0.90	0
DEFLECTION DUE TO WEIGHT OF GIRDER ↓	0	0.021	0.038	0.052	0.060	0.063	0.060	0.052	0.038	0.021	0
DEFLECTION DUE TO WEIGHT OF SLAB * ↓	0	0.066	0.144	0.203	0.240	0.253	0.240	0.203	0.144	0.066	0
DEFLECTION DUE TO WEIGHT OF RAIL ↓	0	0.007	0.013	0.018	0.020	0.021	0.020	0.018	0.013	0.007	0
TOTAL DEAD LOAD DEFLECTION ↓	0	0.093	0.195	0.272	0.320	0.337	0.320	0.272	0.195	0.093	0
VERTICAL CURVE ORDINATE ↑	0	0.008	0.015	0.020	0.022	0.023	0.022	0.020	0.015	0.008	0
ORDINATE DUE TO SUPERELEVATION ↓	0	0.007	0.012	0.016	0.018	0.019	0.018	0.016	0.012	0.007	0
REQUIRED CAMBER ↑	0	1 1/8	2 3/8	3 5/16	3 7/8	4 1/8	3 7/8	3 5/16	2 3/8	1 1/8	0
GIRDER 3											
TENTH POINTS	0	0.10	0.20	0.30	0.40	0.50	0.60	0.70	0.80	0.90	0
DEFLECTION DUE TO WEIGHT OF GIRDER ↓	0	0.021	0.038	0.052	0.060	0.063	0.060	0.052	0.038	0.021	0
DEFLECTION DUE TO WEIGHT OF SLAB * ↓	0	0.067	0.147	0.207	0.245	0.258	0.245	0.207	0.147	0.067	0
DEFLECTION DUE TO WEIGHT OF RAIL ↓	0	0.005	0.009	0.012	0.014	0.014	0.014	0.012	0.009	0.005	0
TOTAL DEAD LOAD DEFLECTION ↓	0	0.093	0.194	0.270	0.318	0.335	0.318	0.270	0.194	0.093	0
VERTICAL CURVE ORDINATE ↑	0	0.009	0.015	0.020	0.023	0.024	0.023	0.020	0.015	0.008	0
ORDINATE DUE TO SUPERELEVATION ↓	0	0.007	0.012	0.016	0.018	0.019	0.018	0.016	0.012	0.007	0
REQUIRED CAMBER ↑	0	1 1/8	2 3/8	3 5/16	3 7/8	4 1/16	3 7/8	3 5/16	2 3/8	1 1/8	0

* INCLUDES SLAB, BUILDUPS, AND STAY-IN-PLACE FORMS.
ALL VALUES ARE SHOWN IN FEET, EXCEPT "FINAL CAMBER," WHICH IS SHOWN IN INCHES

SIGN CONVENTION FOR DEAD LOAD DEFLECTION TABLE ↑ + ○ ↓ −

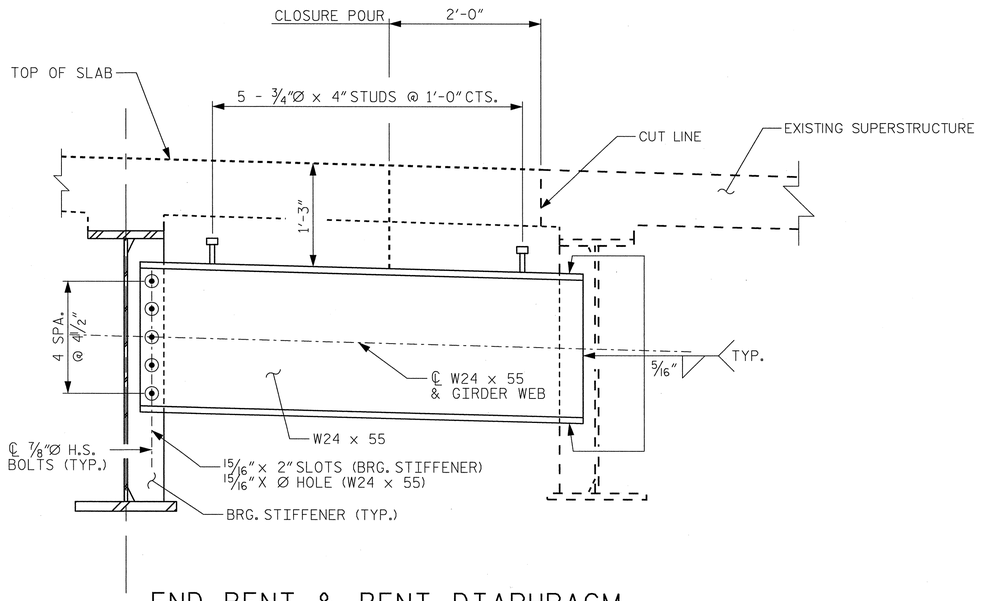

END BENT & BENT DIAPHRAGM

FOR CONNECTION OF GIRDER 3 TO EXISTING GIRDER

PROJECT NO. U-2525B
GUILFORD COUNTY
STATION: 26+21.65 -L-
17+06.65 -Y3-

NORTH CAROLINA PROFESSIONAL SEAL 32186 ENGINEER CECIL L. NARRON 2/17/14

Kimley-Horn and Associates, Inc.
333 Fayetteville Street, Suite 600
Raleigh, NC 27601-1772
Phone (919) 835-1494
NC LICENSE # F-0102

This document, together with the concepts and designs presented herein, as an instrument of service, is intended only for the specific purpose and client for which it was prepared. Reuse of and improper reliance on this document without written authorization and adaption by Kimley-Horn and Associates, Inc. shall be without liability to Kimley-Horn and Associates, Inc.
Copyright Kimley-Horn and Associates, Inc., 2014

STATE OF NORTH CAROLINA
DEPARTMENT OF TRANSPORTATION
RALEIGH
SUPERSTRUCTURE
DEAD LOAD DEFLECTIONS

REVISIONS						SHEET NO.
NO.	BY:	DATE:	NO.	BY:	DATE:	S-91
1			3			TOTAL SHEETS
2			4			541

DRAWN BY: RTO DATE: 1/14
CHECKED BY: JCW DATE: 1/14

STR. #3

2/17/2014 K:\ROT_Structures_Bridge\NC01103624_U-2525B_Gboro East Loop over US 70\Cad\dgn\u-2525_sd_str_3.psm91.dgn

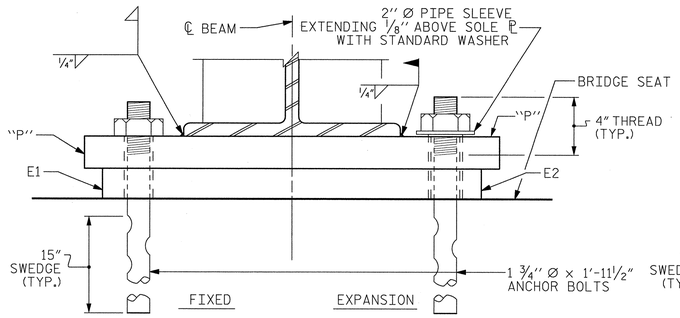

END VIEW

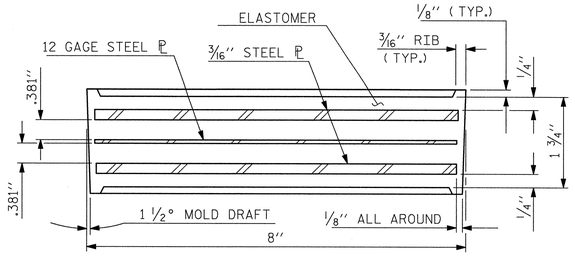

TYPICAL SECTION OF ELASTOMERIC BEARINGS

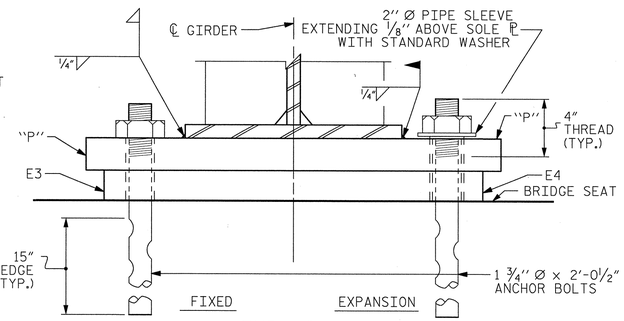

END VIEW

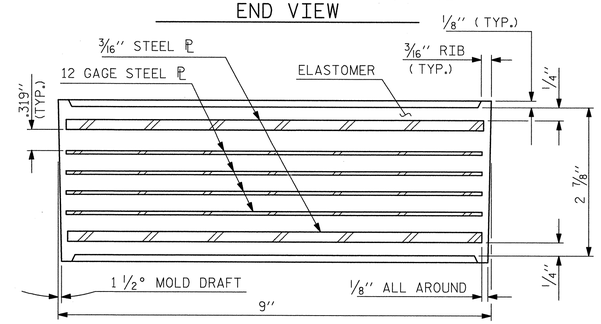

TYPICAL SECTION OF ELASTOMERIC BEARINGS

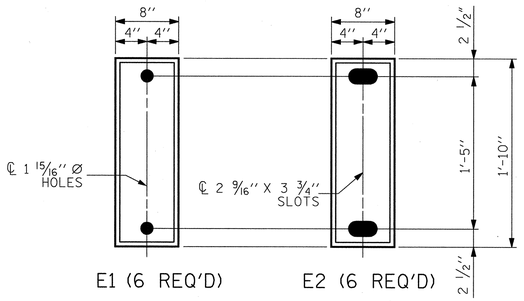

PLAN VIEW OF ELASTOMERIC BEARING

TYPE I

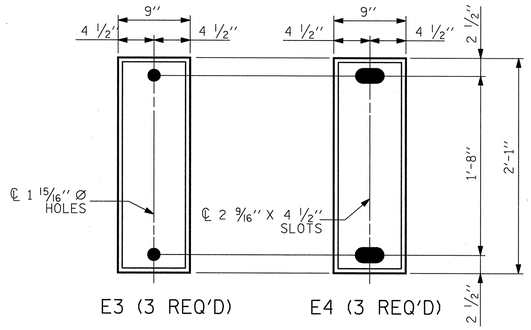

PLAN VIEW OF ELASTOMERIC BEARING

TYPE III

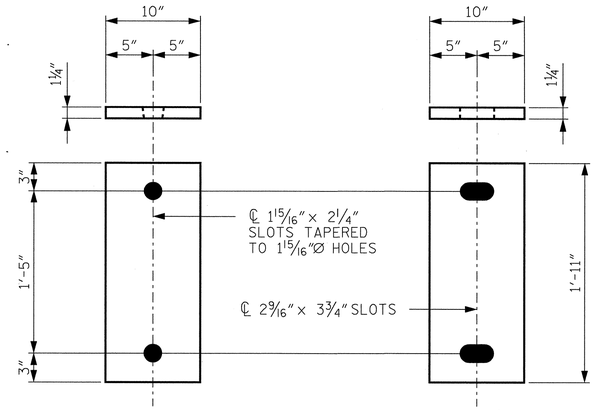

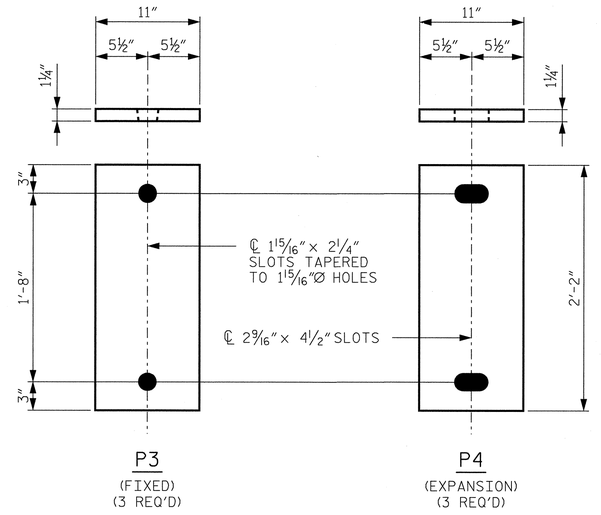

SOLE PLATE DETAILS ("P")

NOTES

AT ALL FIXED POINTS OF SUPPORT, NUTS FOR ANCHOR BOLTS ARE TO BE TIGHTENED FINGER TIGHT AND THEN BACKED OFF 1/2 TURN. THE THREAD OF THE NUT AND BOLT SHALL THEN BE BURRED WITH A SHARP POINTED TOOL.

THE 2" Ø PIPE SLEEVE SHALL BE CUT FROM SCHEDULE 40 PVC PLASTIC PIPE. THE PVC PLASTIC PIPE SHALL MEET THE REQUIREMENTS OF ASTM D1785.

THE PAYMENT FOR THE PIPE SLEEVES SHALL BE INCLUDED IN THE SEVERAL PAY ITEMS.

FOR AASHTO M270 GRADE 50W STRUCTURAL STEEL, SOLE PLATE SHALL BE AASHTO M270 GRADE 50W AND SHALL NOT BE GALVANIZED. ANCHOR BOLTS, NUTS AND WASHERS SHALL BE GALVANIZED IN ACCORDANCE WITH THE STANDARD SPECIFICATIONS.

ANCHOR BOLTS SHALL MEET THE REQUIREMENTS OF ASTM A449. NUTS SHALL MEET THE REQUIREMENTS OF AASHTO M291-DH OR AASHTO M292-2H. WASHERS SHALL MEET THE REQUIREMENTS OF AASHTO M293. SHOP DRAWINGS ARE NOT REQUIRED FOR ANCHOR BOLTS, NUTS AND WASHERS. SHOP INSPECTION IS REQUIRED.

WHEN FIELD WELDING THE SOLE PLATE TO THE GIRDER FLANGE, USE TEMPERATURE INDICATING WAX PENS, OR OTHER SUITABLE MEANS, TO ENSURE THAT THE TEMPERATURE OF THE SOLE PLATE DOES NOT EXCEED 300°F. TEMPERATURES ABOVE THIS MAY DAMAGE THE ELASTOMER.

ALL SURFACES OF BEARING PLATES SHALL BE SMOOTH AND STRAIGHT.

THE ELASTOMER IN THE STEEL REINFORCED BEARINGS SHALL HAVE A SHEAR MODULUS OF 0.160 KSI, IN ACCORDANCE WITH AASHTO M251.

FOR STEEL REINFORCED ELASTOMERIC BEARINGS, SEE SPECIAL PROVISIONS.

THE CONTRACTOR'S ATTENTION IS CALLED TO THE FOLLOWING PROCEDURE. WHICH MAY BE REQUIRED BY THE ENGINEER, TO RESET ELASTOMERIC BEARING DUE TO GIRDER TRANSLATION AND END ROTATIONS:

1. ONCE THE DECK HAS CURED, THE GIRDERS SHALL BE JACKED AND THE ELASTOMERIC BEARING SLOTS CENTERED AS NEARLY AS PRACTICAL ABOUT THE BEARING STIFFENER. THIS OPERATION SHALL BE PERFORMED AT APPROXIMATELY 60° F.

THE CONTRACTOR MAY PROPOSE ALTERNATE METHODS, PROVIDED DETAILS ARE SUBMITTED TO THE ENGINEER FOR REVIEW AND APPROVAL.

MAXIMUM ALLOWABLE SERVICE LOADS	
D.L.+L.L. (NO IMPACT)	
TYPE I	140 k
TYPE III	255 k

PROJECT NO. U-2525B

GUILFORD COUNTY

STATION: 26+21.65 -L-
17+06.65 -Y3-

Kimley-Horn and Associates, Inc.
333 Fayetteville Street, Suite 600
Raleigh, NC 27601-1772
Phone (919) 835-1494
NC LICENSE # F-0102

This document, together with the concepts and designs presented herein, as an instrument of services, is intended only for the specific purpose and client for which it was prepared. Reuse of and improper reliance on this document without written authorization and adaptation by Kimley-Horn and Associates, Inc. shall be without liability to Kimley-Horn and Associates, Inc.
Copyright Kimley-Horn and Associates, Inc., 2014

STATE OF NORTH CAROLINA
DEPARTMENT OF TRANSPORTATION
RALEIGH

STANDARD

ELASTOMERIC BEARING DETAILS

(STEEL SUPERSTRUCTURE)

REVISIONS						SHEET NO.
NO.	BY:	DATE:	NO.	BY:	DATE:	S-92
1			3			TOTAL SHEETS
2			4			541

STD. NO. EB1 STR. #3

ASSEMBLED BY : RTO		DATE :	1/14
CHECKED BY : JCW		DATE :	1/14
DRAWN BY : JMB 11/87	REV. 5/1/06		TLA/GM
CHECKED BY : ARB 11/87	REV. 10/1/11		MAA/GM
	REV. 6/13		AAC/MAA

2/17/2014 K:\RDT_Structures_Bridge\NC\011036224_U-2525B_Qboro East Loop over US 70\Cadd\dgn\u-2525_sd_str_3_pshr92.dgn

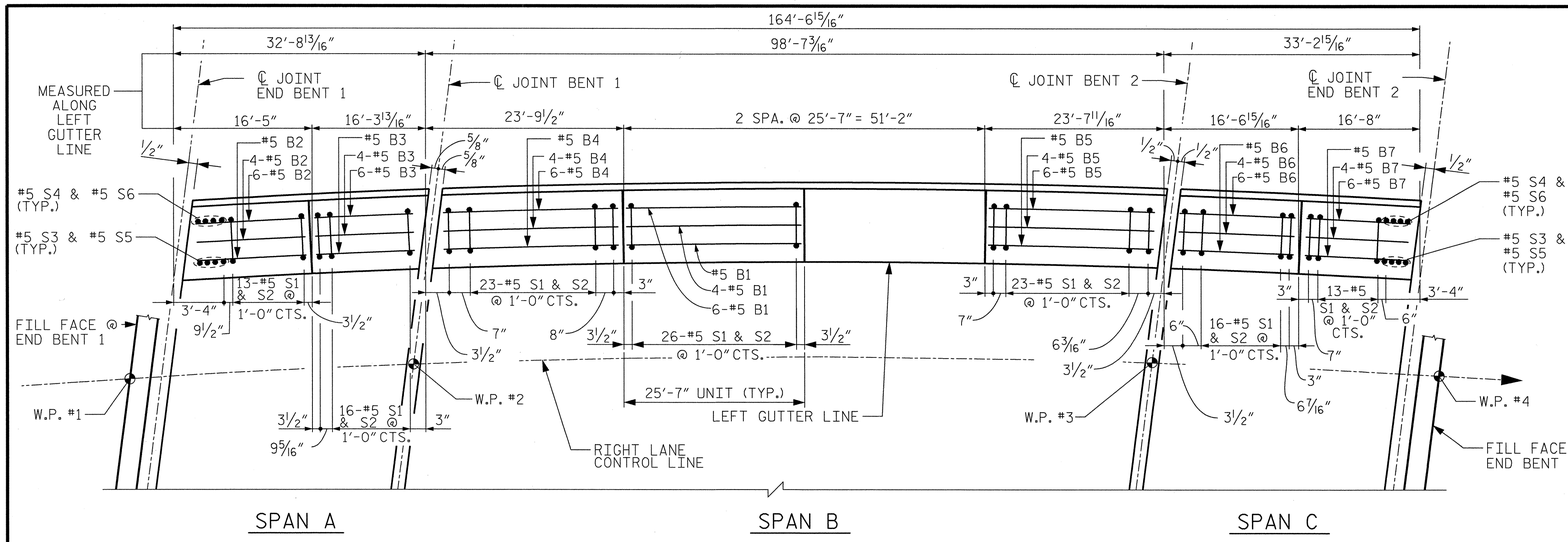

PLAN OF BARRIER RAIL

NOTES

THE BARRIER RAIL IN EACH SPAN SHALL NOT BE CAST UNTIL ALL SLAB CONCRETE IN THAT SPAN HAS BEEN CAST AND HAS REACHED A MINIMUM COMPRESSIVE STRENGTH OF 3,000 PSI.

WHEN FOAM JOINT SEAL IS REQUIRED, THE JOINT IN THE DECK SHALL BE SAWED PRIOR TO THE CASTING OF BARRIER RAIL.

ALL REINFORCING STEEL IN BARRIER RAILS SHALL BE EPOXY COATED.

THE #5 S3, S4, S5 AND S6 BARS SHALL BE INSTALLED, USING AN ADHESIVE ANCHORING SYSTEM, AFTER SAWING THE JOINT. THE YIELD LOAD FOR THE #5 S3, S4, S5 AND S6 BARS IS 18.6 KIPS. FIELD TESTING FOR THE ADHESIVE BONDING SYSTEM IS NOT REQUIRED.

GROOVED CONTRACTION JOINTS, 1/2″ IN DEPTH, SHALL BE TOOLED IN ALL EXPOSED FACES OF THE BARRIER RAIL AND IN ACCORDANCE WITH ARTICLE 825-10(B) OF THE STANDARD SPECIFICATIONS. THE CONTRACTION JOINT SHALL BE LOCATED AT EACHTHIRD POINT BETWEEN BARRIER RAIL EXPANSION JOINTS. ONLY ONE CONTRACTION JOINT IS REQUIRED AT MIDPOINT OF BARRIER RAIL SEGMENTS LESS THAN 20 FEET IN LENGTH AND NO CONTRACTION JOINTS ARE REQUIRED FOR THOSE SEGMENTS LESS THAN 10 FEET IN LENGTH.

BAR TYPES

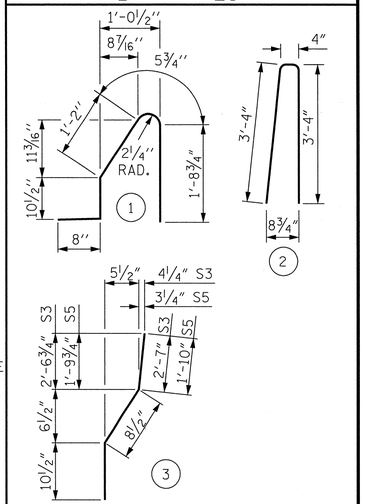

ALL BAR DIMENSIONS ARE OUT TO OUT

BILL OF MATERIAL

FOR CONCRETE BARRIER RAIL ONLY

BAR	NO.	SIZE	TYPE	LENGTH	WEIGHT
✳ S1	164	5	1	4′-11″	841
✳ S2	164	5	2	7′-0″	1,197
✳ S3	4	5	3	4′-2″	17
✳ S4	4	5	STR	4′-0″	17
✳ S5	4	5	3	3′-5″	14
✳ S6	4	5	STR	3′-3″	14
✳ B1	22	5	STR	25′-2″	577
✳ B2	11	5	STR	15′-9″	181
✳ B3	11	5	STR	15′-10″	182
✳ B4	11	5	STR	23′-1″	265
✳ B5	11	5	STR	23′-2″	266
✳ B6	11	5	STR	15′-11″	183
✳ B7	11	5	STR	16′-3″	186

✳ EPOXY COATED REINFORCING STEEL	3,940	LBS.
CLASS AA CONCRETE	21.7	CU. YDS.
CONCRETE BARRIER RAIL	164.6	LIN. FT.

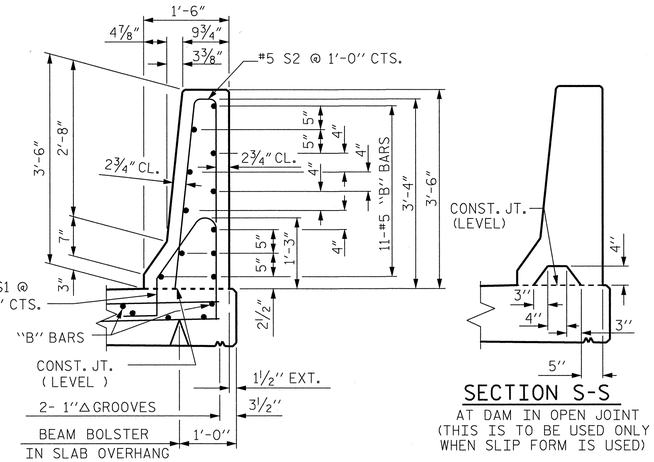

SECTION THRU RAIL

SECTION S-S
AT DAM IN OPEN JOINT
(THIS IS TO BE USED ONLY WHEN SLIP FORM IS USED)

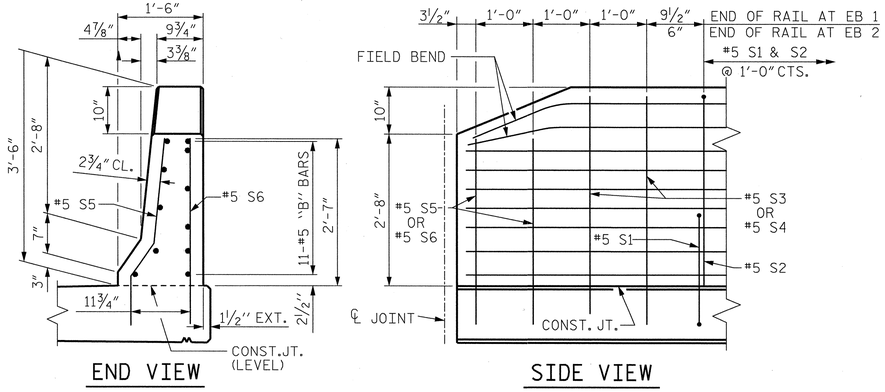

END OF RAIL DETAILS

FOR ADHESIVE ANCHORING AT SAWED JOINTS

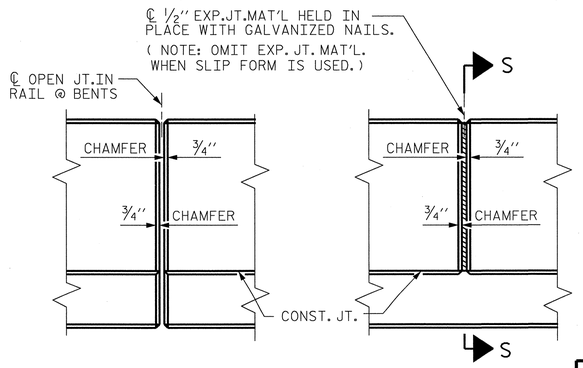

ELEVATION AT EXPANSION JOINTS

BARRIER RAIL DETAILS

NORTH CAROLINA PROFESSIONAL SEAL 12186 ENGINEER CECIL L. NARRON 2/17/14

Kimley-Horn and Associates, Inc.
333 Fayetteville Street, Suite 600
Raleigh, NC 27601-1772
Phone (919) 835-1494
NC LICENSE # F-0102

This document, together with the concepts and designs presented herein, as an instrument of services, is intended only for the specific purpose and client for which it was prepared. Reuse of and improper reliance of this document without written authorization and adaptation by Kimley-Horn and Associates, Inc. shall be without liability to Kimley-Horn and Associates, Inc.
Copyright Kimley-Horn and Associates, Inc., 2014

PROJECT NO. U-2525B
GUILFORD COUNTY
STATION: 26+21.65 -L-
17+06.65 -Y3-

SHEET 1 OF 2

STATE OF NORTH CAROLINA
DEPARTMENT OF TRANSPORTATION
RALEIGH

STANDARD
CONCRETE
BARRIER RAIL

REVISIONS						SHEET NO.
NO.	BY:	DATE:	NO.	BY:	DATE:	S-93
1			3			TOTAL SHEETS
2			4			541

STD. NO. CBR1 STR. #3

ASSEMBLED BY : RTO	DATE : 1/14		
CHECKED BY : JCW	DATE : 1/14		
DRAWN BY : ARB 5/87	REV. 10/1/11	MAA/GM	
CHECKED BY : SJD 9/87	REV. 7/12	MAA/GM	
	REV. 10/12	MAA/GM	

2/17/2014 K:\RDT_Structures_Bridges\NCDOT1036224_U-2525B_Gboro East Loop over US 70\Cad\dgn\u-2525_sd_str_3_pstr93.dgn

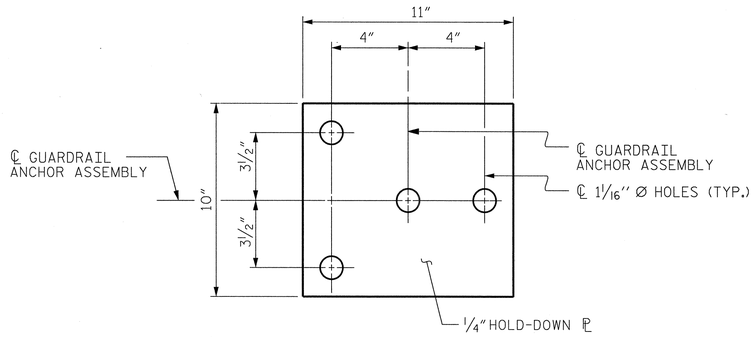

PLAN

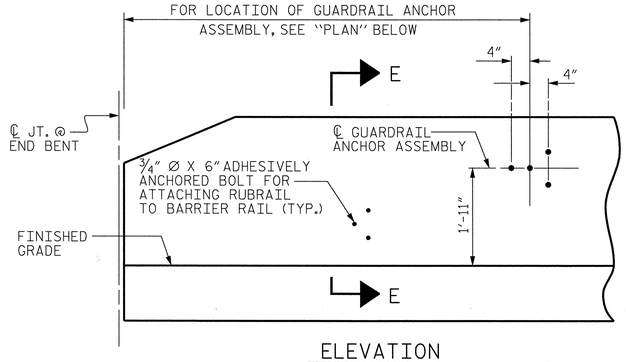

ELEVATION

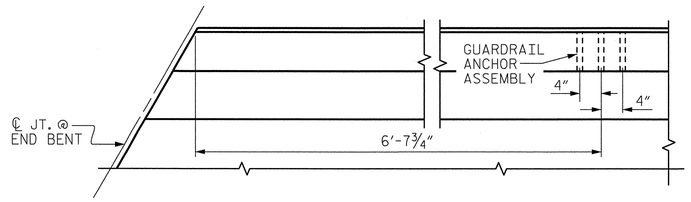

LOCATION OF ANCHORS FOR GUARDRAIL

END BENT 1 SHOWN

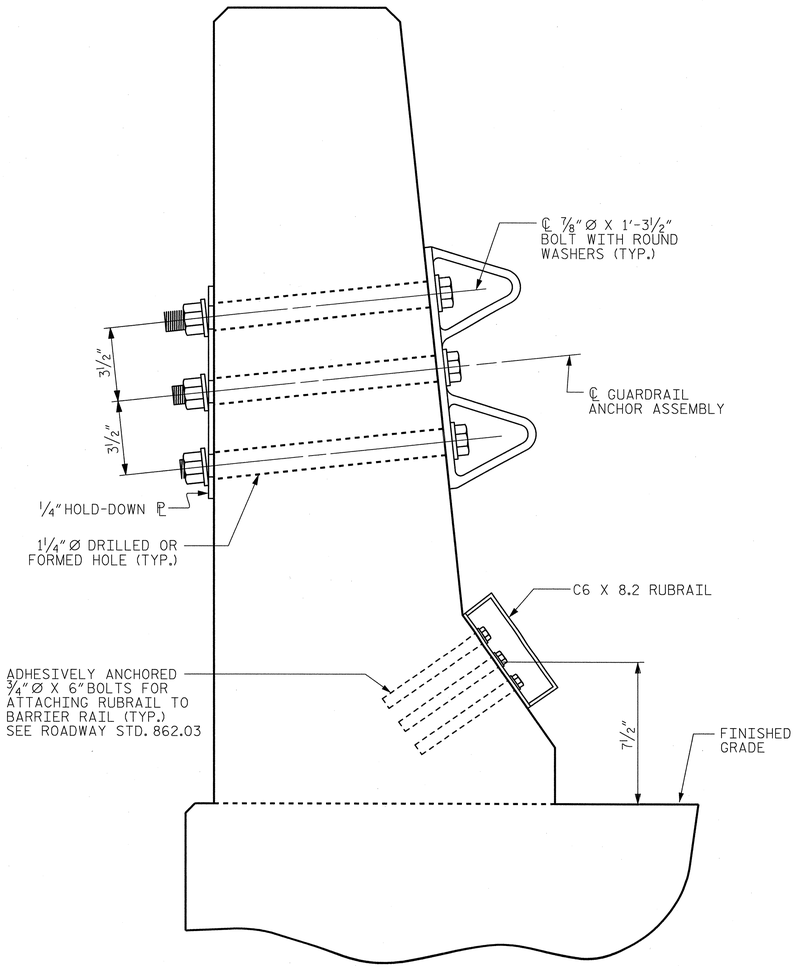

SECTION E-E

GUARDRAIL ANCHOR ASSEMBLY DETAILS

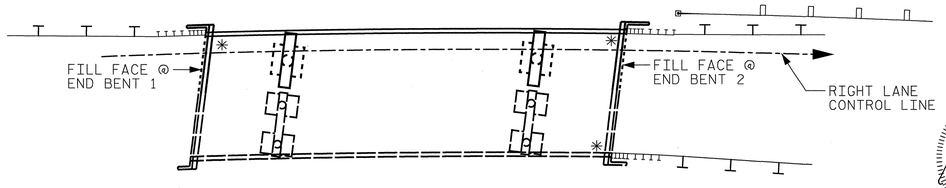

SKETCH SHOWING POINT OF ATTACHMENT

✳ DENOTES GUARDRAIL ANCHOR ASSEMBLY

NOTES

THE GUARDRAIL ANCHOR ASSEMBLY SHALL CONSIST OF A ¼" HOLD-DOWN PLATE AND 4 - ⅞" Ø BOLTS WITH NUTS AND WASHERS, RUBRAIL, AND ADHESIVELY ANCHORED BOLTS.

THE HOLD-DOWN PLATE SHALL CONFORM TO AASHTO M270 GRADE 36. AFTER FABRICATION, THE HOLD-DOWN PLATE SHALL BE HOT-DIP GALVANIZED IN ACCORDANCE WITH AASHTO M111.

BOLTS SHALL CONFORM TO THE REQUIREMENTS OF ASTM A307 AND NUTS SHALL CONFORM TO THE REQUIREMENTS OF AASHTO M291. BOLTS, NUTS AND WASHERS SHALL BE GALVANIZED. (AT THE CONTRACTOR'S OPTION, STAINLESS STEEL BOLTS, NUTS AND WASHERS MAY BE USED AS AN ALTERNATE FOR THE ⅞" Ø GALVANIZED BOLTS, NUTS AND WASHERS. THEY SHALL CONFORM TO OR EXCEED THE MECHANICAL REQUIREMENTS OF ASTM A307. THE USE OF THIS ALTERNATE SHALL BE APPROVED BY THE ENGINEER.)

THE GUARDRAIL ANCHOR ASSEMBLY IS REQUIRED AT ALL POINTS WHERE APPROACH GUARDRAIL IS TO BE ATTACHED TO THE END OF BARRIER RAIL. FOR POINTS OF ATTACHMENT, SEE SKETCH.

AFTER INSTALLATION, THE EXPOSED THREAD OF THE BOLT SHALL BE BURRED WITH A SHARP POINTED TOOL.

THE COST OF THE GUARDRAIL ANCHOR ASSEMBLY SHALL BE INCLUDED IN THE UNIT CONTRACT PRICE BID FOR CONCRETE BARRIER RAIL.

THE 1 ¼" Ø HOLES SHALL BE FORMED OR DRILLED WITH A CORE BIT. IMPACT TOOLS WILL NOT BE PERMITTED. ANY CONCRETE DAMAGED BY THIS WORK SHALL BE REPAIRED TO THE SATISFACTION OF THE ENGINEER.

THE C6 X 8.2 RUBRAIL IS TO BE ADHESIVELY ANCHORED TO THE RAIL USING THREE ¾" Ø X 6" BOLTS WITH WASHERS. LEVEL ONE FIELD TESTING IS REQUIRED, AND THE YIELD LOAD OF THE ¾" Ø BOLT IS 12 KIPS. FOR ADHESIVELY ANCHORED ANCHOR BOLTS OR DOWELS, SEE STANDARD SPECIFICATIONS. SEE ROADWAY STANDARD 862.03 FOR DETAILS AND LOCATION OF THE RUBRAIL.

ASSEMBLED BY : RTO		DATE :	1/14
CHECKED BY : JCW		DATE :	1/14
DRAWN BY : TLA	5/06	REV. 10/1/11	MAA/GM
CHECKED BY : GM	5/06	REV. 7/12	MAA/GM
		REV. 10/12	MAA/GM

Kimley-Horn and Associates, Inc.
333 Fayetteville Street, Suite 600
Raleigh, NC 27601-1772
Phone (919) 835-1494
NC LICENSE # F-0102

This document, together with the concepts and designs presented herein, as an instrument of services, is intended only for the specific purpose and client for which it was prepared. Reuse of and improper reliance of this document without written authorization and adaptation by Kimley-Horn and Associates, Inc. shall be without liability to Kimley-Horn and Associates, Inc.
Copyright Kimley-Horn and Associates, Inc., 2014

NORTH CAROLINA PROFESSIONAL SEAL 12186 ENGINEER CECIL L. NARRON
2/17/14

PROJECT NO. U-2525B
GUILFORD COUNTY
STATION: 26+21.65 -L-
17+06.65 -Y3-
SHEET 2 OF 2

STATE OF NORTH CAROLINA
DEPARTMENT OF TRANSPORTATION
RALEIGH
STANDARD
GUARDRAIL ANCHORAGE FOR BARRIER RAIL

REVISIONS						SHEET NO.
NO.	BY:	DATE:	NO.	BY:	DATE:	S-94
1			3			TOTAL SHEETS
2			4			541

STD. NO. GRA2 STR. #3

2/17/2014 K:\RDT_Structures_Bridge\NC\011036224.U-2525B_Greensboro East Loop over US 70\Cad\dgn\u-2525_sd_str_3.pspl94.dgn

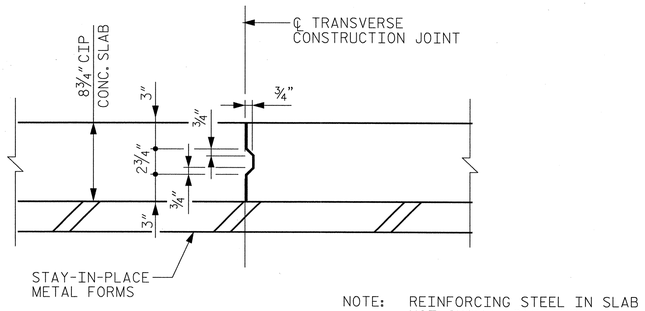

NOTE: REINFORCING STEEL IN SLAB NOT SHOWN. LONGITUDINAL STEEL SHALL BE CONTINUOUS THROUGH JOINT.

TRANSVERSE CONSTRUCTION JOINT

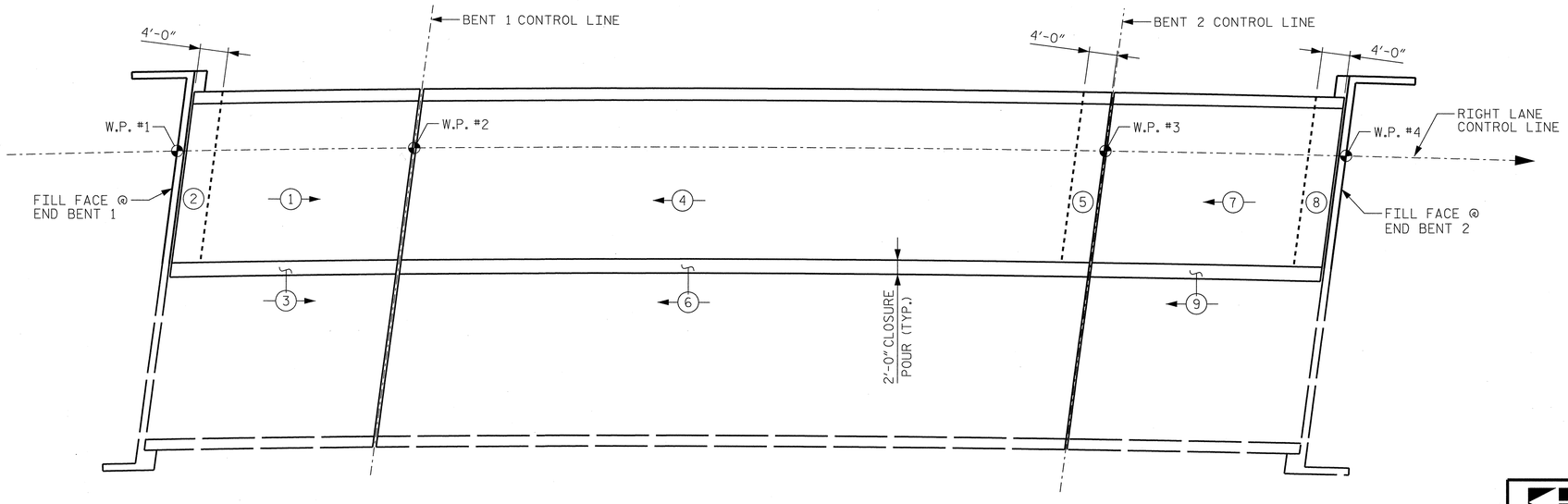

POURING SEQUENCE

(SEE TRANSVERSE CONSTRUCTION JOINT DETAIL.)

(#) INDICATES POUR NUMBER AND DIRECTION

PROJECT NO. U-2525B

GUILFORD COUNTY

STATION: 26+21.65 -L-
17+06.65 -Y3-

STATE OF NORTH CAROLINA
DEPARTMENT OF TRANSPORTATION
RALEIGH

SUPERSTRUCTURE

POUR SEQUENCE

NORTH CAROLINA PROFESSIONAL SEAL 12186 ENGINEER CECIL L. NARRON 2/17/14

Kimley-Horn and Associates, Inc.
333 Fayetteville Street, Suite 600
Raleigh, NC 27601-1772
Phone (919) 835-1494
NC LICENSE # F-0102

This document, together with the concepts and designs presented herein, as an instrument of services, is intended only for the specific purpose and client for which it was prepared. Reuse of and improper reliance on this document without written authorization and adoption by Kimley-Horn and Associates, Inc. shall be without liability to Kimley-Horn and Associates, Inc.
Copyright Kimley-Horn and Associates, Inc., 2014

REVISIONS						SHEET NO.
NO.	BY:	DATE:	NO.	BY:	DATE:	S-95
1			3			TOTAL SHEETS
2			4			541

DRAWN BY: RTO DATE: 1/14
CHECKED BY: JCW DATE: 1/14

STD. NO. BOM2 STR. #3

2/17/2014 K:\RDT_Structures_Bridge\NC\01036224_U-2525B_Oboro East Loop over US 70\Cad\dgn\U-2525_sd_str_3_psh95.dgn

SUPERSTRUCTURE REINFORCING STEEL LENGTHS ARE BASED ON THE FOLLOWING MINIMUM SPLICE LENGTHS

BAR SIZE	SUPERSTRUCTURE EXCEPT APPROACH SLABS, PARAPET, AND BARRIER RAIL		APPROACH SLABS		PARAPET AND BARRIER RAIL
	EPOXY COATED	UNCOATED	EPOXY COATED	UNCOATED	
#4	2'-0"	1'-9"	2'-0"	1'-9"	2'-9"
#5	2'-6"	2'-2"	2'-6"	2'-2"	3'-5"
#6	3'-0"	2'-7"	3'-10"	2'-7"	4'-4"
#7	5'-3"	3'-6"			
#8	6'-10"	4'-7"			

GROOVING BRIDGE FLOORS

APPROACH SLABS	525 SQ.FT.
BRIDGE DECK	3,780 SQ.FT.
TOTAL	4,305 SQ.FT.

BILL OF MATERIAL
SUPERSTRUCTURE

BAR	NO.	SIZE	TYPE	LENGTH	WEIGHT
✳ A1	119	5	STR	25'-11"	3,217
A2	119	5	STR	25'-11"	3,217
✳ A3	191	5	STR	26'-1"	5,196
A4	191	5	STR	26'-1"	5,196
✳A101	1	5	STR	22'-9"	24
✳A102	1	5	STR	19'-6"	20
✳A103	1	5	STR	16'-2"	17
✳A104	1	5	STR	12'-11"	13
✳A105	1	5	STR	9'-8"	10
✳A106	1	5	STR	6'-5"	7
✳A107	1	5	STR	3'-2"	3
✳A108	1	5	STR	22'-11"	24
✳A109	1	5	STR	19'-6"	20
✳A110	1	5	STR	16'-0"	17
✳A111	1	5	STR	12'-7"	13
✳A112	1	5	STR	9'-1"	9
✳A113	1	5	STR	5'-7"	6
✳A114	1	5	STR	22'-7"	24
✳A115	1	5	STR	19'-1"	20
✳A116	1	5	STR	15'-7"	16
✳A117	1	5	STR	12'-1"	13
✳A118	1	5	STR	8'-8"	9
✳A119	1	5	STR	5'-2"	5
✳A120	1	5	STR	22'-6"	23
✳A121	1	5	STR	18'-4"	19
✳A122	1	5	STR	14'-1"	15
✳A123	1	5	STR	9'-10"	10
✳A124	1	5	STR	5'-7"	6
✳A125	1	5	STR	21'-9"	23
✳A126	1	5	STR	17'-6"	18
✳A127	1	5	STR	13'-3"	14
✳A128	1	5	STR	9'-0"	9
✳A129	1	5	STR	4'-9"	5
✳A130	1	5	STR	21'-7"	23
✳A131	1	5	STR	17'-0"	18
✳A132	1	5	STR	12'-5"	13
✳A133	1	5	STR	7'-10"	8
✳A134	1	5	STR	3'-2"	3
A201	1	5	STR	22'-9"	24
A202	1	5	STR	19'-6"	20
A203	1	5	STR	16'-2"	17
A204	1	5	STR	12'-11"	13
A205	1	5	STR	9'-8"	10
A206	1	5	STR	6'-5"	7
A207	1	5	STR	3'-2"	3
A208	1	5	STR	22'-11"	24
A209	1	5	STR	19'-6"	20
A210	1	5	STR	16'-0"	17

BILL OF MATERIAL
SUPERSTRUCTURE

BAR	NO.	SIZE	TYPE	LENGTH	WEIGHT
A211	1	5	STR	12'-7"	13
A212	1	5	STR	9'-1"	9
A213	1	5	STR	5'-7"	6
A214	1	5	STR	22'-7"	24
A215	1	5	STR	19'-1"	20
A216	1	5	STR	15'-7"	16
A217	1	5	STR	12'-1"	13
A218	1	5	STR	8'-8"	9
A219	1	5	STR	5'-2"	5
A220	1	5	STR	22'-6"	23
A221	1	5	STR	18'-4"	19
A222	1	5	STR	14'-1"	15
A223	1	5	STR	9'-10"	10
A224	1	5	STR	5'-7"	6
A225	1	5	STR	21'-9"	23
A226	1	5	STR	17'-6"	18
A227	1	5	STR	13'-3"	14
A228	1	5	STR	9'-0"	9
A229	1	5	STR	4'-9"	5
A230	1	5	STR	21'-7"	23
A231	1	5	STR	17'-0"	18
A232	1	5	STR	12'-5"	13
A233	1	5	STR	7'-10"	8
A234	1	5	STR	3'-2"	3
✳ B1	38	4	STR	17'-2"	436
B2	32	5	STR	32'-4"	1,079
✳ B3	76	4	STR	26'-1"	1,324
B4	64	5	STR	50'-3"	3,354
✳ B5	38	4	STR	17'-6"	444
B6	32	5	STR	32'-10"	1,096
✳ D1	328	5	STR	3'-9"	1,283
S1	132	5	1	3'-8"	505
G1	6	5	STR	26'-1"	163
K1	24	5	STR	8'-7"	215
K2	12	5	STR	5'-9"	72

BAR TYPES

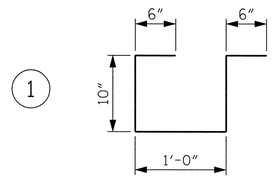

ALL BAR DIMENSIONS ARE OUT TO OUT

SUPERSTRUCTURE BILL OF MATERIAL

	CLASS AA CONCRETE	REINFORCING STEEL	✳EPOXY COATED REINFORCING STEEL
	(CU. YDS.)	(LBS.)	(LBS.)
SPAN A, B.&C	-	15,374	12,377
POUR #1	20.9	-	-
POUR #2	3.0	-	-
POUR #3	2.2	-	-
POUR #4	69.4	-	-
POUR #5	2.9	-	-
POUR #6	6.7	-	-
POUR #7	21.3	-	-
POUR #8	2.9	-	-
POUR #9	2.3	-	-
TOTALS✳✳	131.6	15,374	12,377

✳✳QUANTITIES FOR BARRIER RAIL ARE NOT INCLUDED

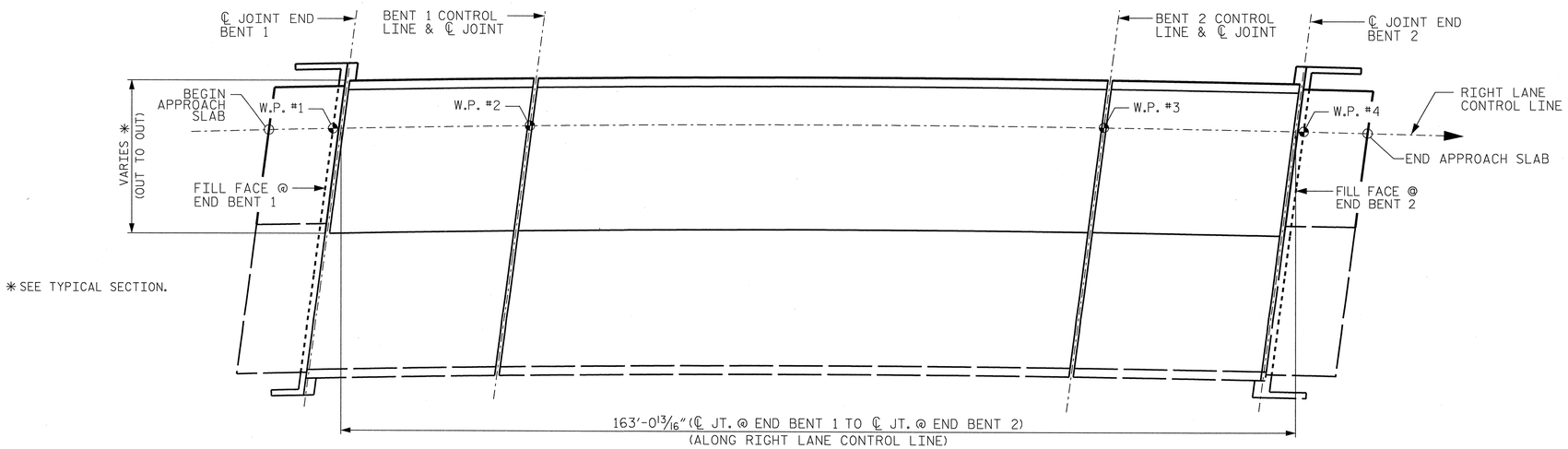

✳SEE TYPICAL SECTION.

LAYOUT FOR COMPUTING AREA REINFORCED CONCRETE DECK SLAB (SQ. FT. = 4,340)

PROJECT NO. U-2525B

GUILFORD COUNTY

STATION: 26+21.65 -L-
17+06.65 -Y3-

NORTH CAROLINA PROFESSIONAL SEAL 12186 ENGINEER CECIL L. NARRON 2/17/14

Kimley-Horn and Associates, Inc.
333 Fayetteville Street, Suite 600
Raleigh, NC 27601-1772
Phone (919) 835-1494
NC LICENSE # F-0102

This document, together with the concepts and designs presented herein, as an instrument of services, is intended only for the specific purpose and client for which it was prepared. Reuse of and improper reliance of this document without written authorization and adoption by Kimley-Horn and Associates, Inc. shall be without liability to Kimley-Horn and Associates, Inc.

Copyright Kimley-Horn and Associates, Inc., 2014

STATE OF NORTH CAROLINA
DEPARTMENT OF TRANSPORTATION
RALEIGH

STANDARD
SUPERSTRUCTURE BILL OF MATERIALS

REVISIONS						SHEET NO.
NO.	BY:	DATE:	NO.	BY:	DATE:	S-96
1			3			TOTAL SHEETS
2			4			541

ASSEMBLED BY : RTO		DATE : 1/14	
CHECKED BY : JCW		DATE : 1/14	
DRAWN BY : JMB 5/87	REV. 8/16/99	RWW/LES	
CHECKED BY : SJD 9/87	REV. 5/1/06	TLA/GM	
	REV. 10/1/11	MAA/GM	

K:\RDT_Structures_Bridge\NCDOT036224_U-2525B_Oberco East Loop over US 70\Cad\dgn\u-2525_sd_str_3.pat96.dgn
2/17/2014

STD. NO. BOM2 STR. #3

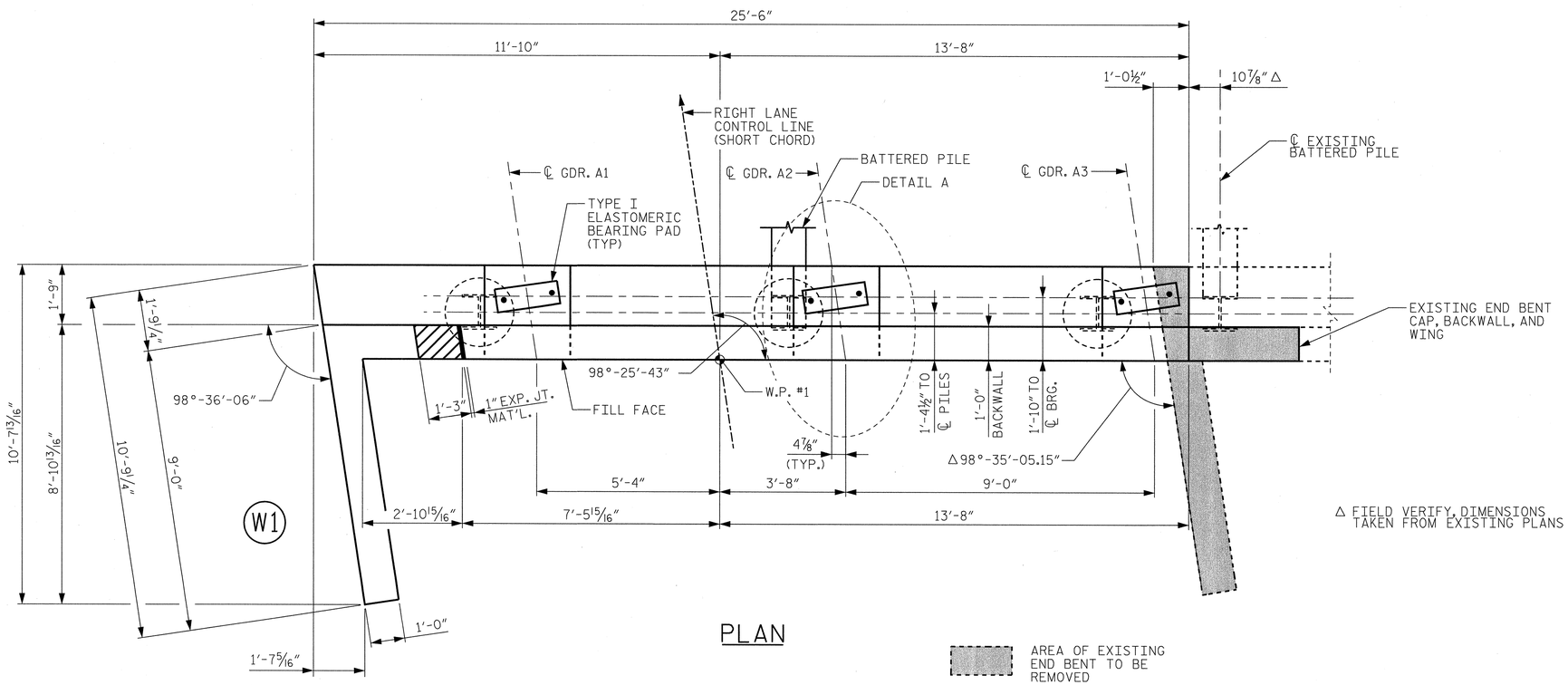

PLAN

△ FIELD VERIFY, DIMENSIONS TAKEN FROM EXISTING PLANS

AREA OF EXISTING END BENT TO BE REMOVED

NOTES

FOR PILE SPLICE DETAILS, SEE END BENT 1 SHEET 3 OF 3.

THE CONTRACTOR SHALL PROVIDE FOR INSTALLATION OF THE 3" DIAMETER DRAIN PIPE THROUGH THE END BENT AS REQUIRED FOR SUBDRAIN FINE AGGREGATE. SEE ROADWAY PLANS. REINFORCING STEEL IN THE END BENT MAY BE SHIFTED AS NECESSARY TO CLEAR THE DRAIN PIPE.

FOR PIPE DRAIN DETAILS, SEE SHEET S-32.

STIRRUPS IN CAP MAY BE SHIFTED AS NECESSARY TO CLEAR ANCHOR BOLTS.

BACKWALL SHALL BE PLACED BEFORE APPLYING THE EPOXY PROTECTIVE COATING.

THE TOP SURFACE AREAS OF THE END BENT CAP SHALL BE CURED IN ACCORDANCE WITH THE STANDARD SPECIFICATIONS EXCEPT THE MEMBRANE CURING COMPOUND METHOD SHALL NOT BE USED.

THE TOP SURFACE OF THE CAP EXPECT THE BRIDGE SEAT BUILDUPS SHALL BE SLOPED TRANSVERSELY FROM THE FILL FACE TO THE BACK FACE AT THE RATE OF 2%.

THE CONCRETE IN THE HATCHED AREA ON THE WING SHALL BE POURED AFTER THE JOINT BETWEEN THE DECK AND THE APPROACH SLAB HAS BEEN SAWED AND THE BARRIER RAIL IS CAST IF SLIP FORMING IS USED.

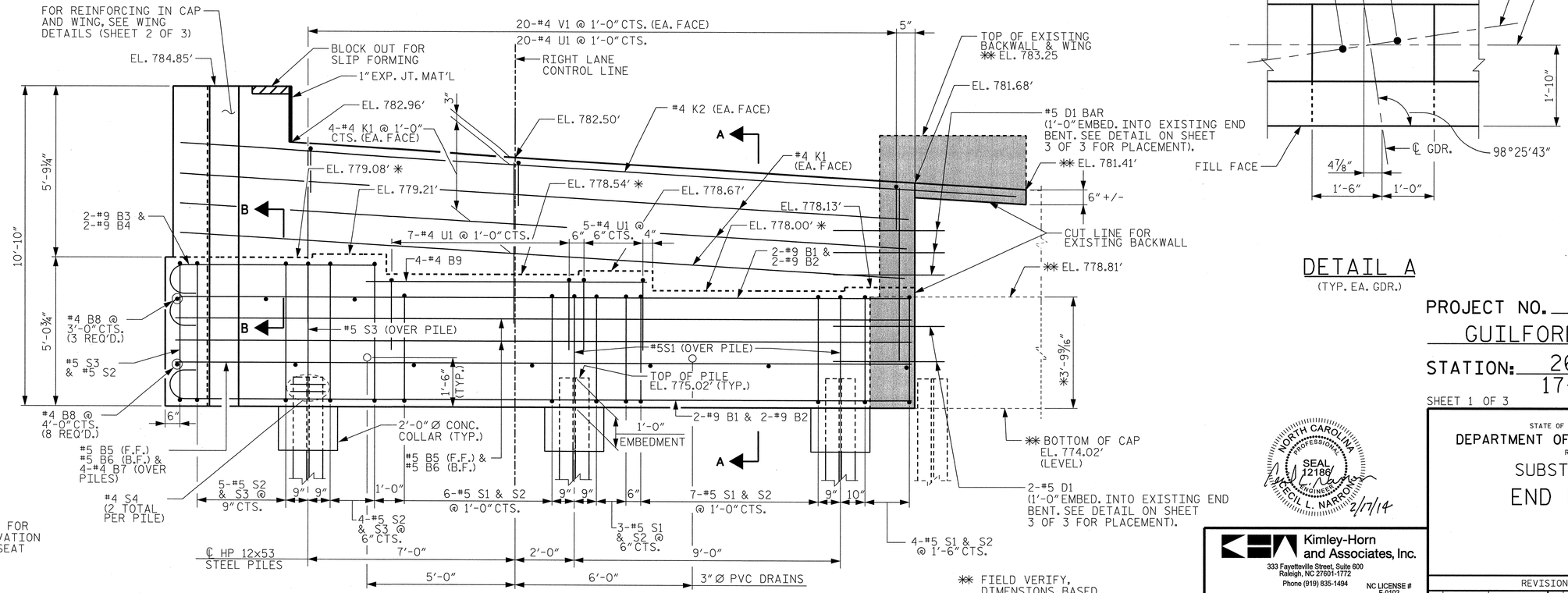

ELEVATION

✻ SEE SHEET 3 OF 3 FOR LOCATION OF ELEVATION BETWEEN BRIDGE SEAT BUILDUPS.

✻✻ FIELD VERIFY, DIMENSIONS BASED ON EXISTING PLANS ELEVATION USING A CORRECTION FACTOR OF -0.89'

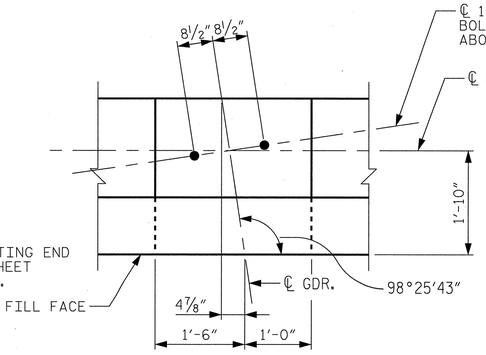

DETAIL A

(TYP. EA. GDR.)

PROJECT NO. U-2525B

GUILFORD COUNTY

STATION: 26+21.65 -L-
17+06.65 -Y3-

SHEET 1 OF 3

STATE OF NORTH CAROLINA
DEPARTMENT OF TRANSPORTATION
RALEIGH

SUBSTRUCTURE

END BENT 1

NORTH CAROLINA PROFESSIONAL SEAL 12186 ENGINEER CECIL L. NARRON 2/17/14

Kimley-Horn and Associates, Inc.
333 Fayetteville Street, Suite 600
Raleigh, NC 27601-1772
Phone (919) 835-1494
NC LICENSE # F-0102

This document, together with the concepts and designs presented herein, as an instrument of services, is intended only for the specific purpose and client for which it was prepared. Reuse of and improper reliance of this document without written authorization and adaption by Kimley-Horn and Associates, Inc. shall be without liability to Kimley-Horn and Associates, Inc.

Copyright Kimley-Horn and Associates, Inc., 2014

REVISIONS						SHEET NO.
NO.	BY:	DATE:	NO.	BY:	DATE:	S-97
1			3			TOTAL SHEETS
2			4			541

DRAWN BY: RTO DATE: 1/14
CHECKED BY: JCW DATE: 1/14

2/17/2014 K:\RDT_Structures_Bridge\NC\U1036224_U-2525B_Goboro East Loop over US 70\Cad\dgn\u-2525_sd_str_3_pah97.dgn

STR. #3

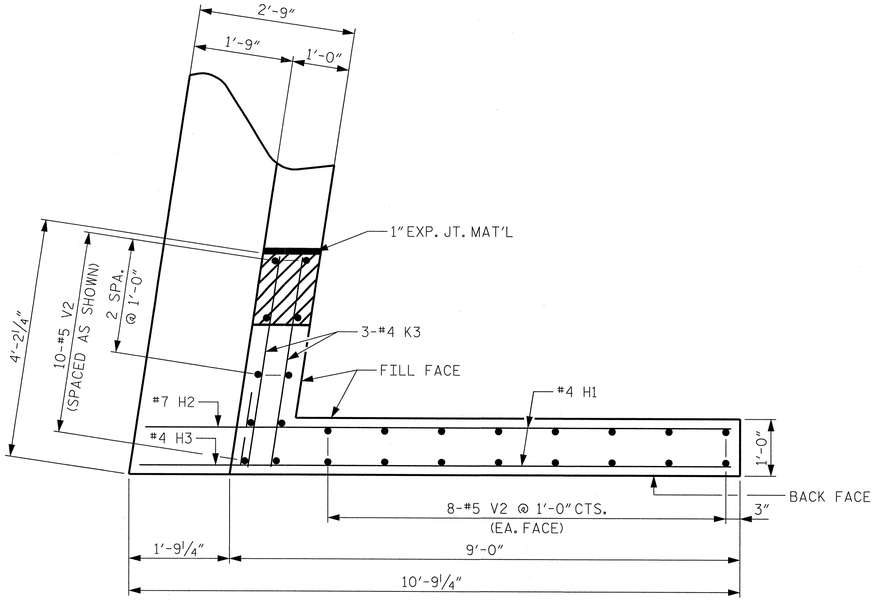

PLAN OF WING (W1)

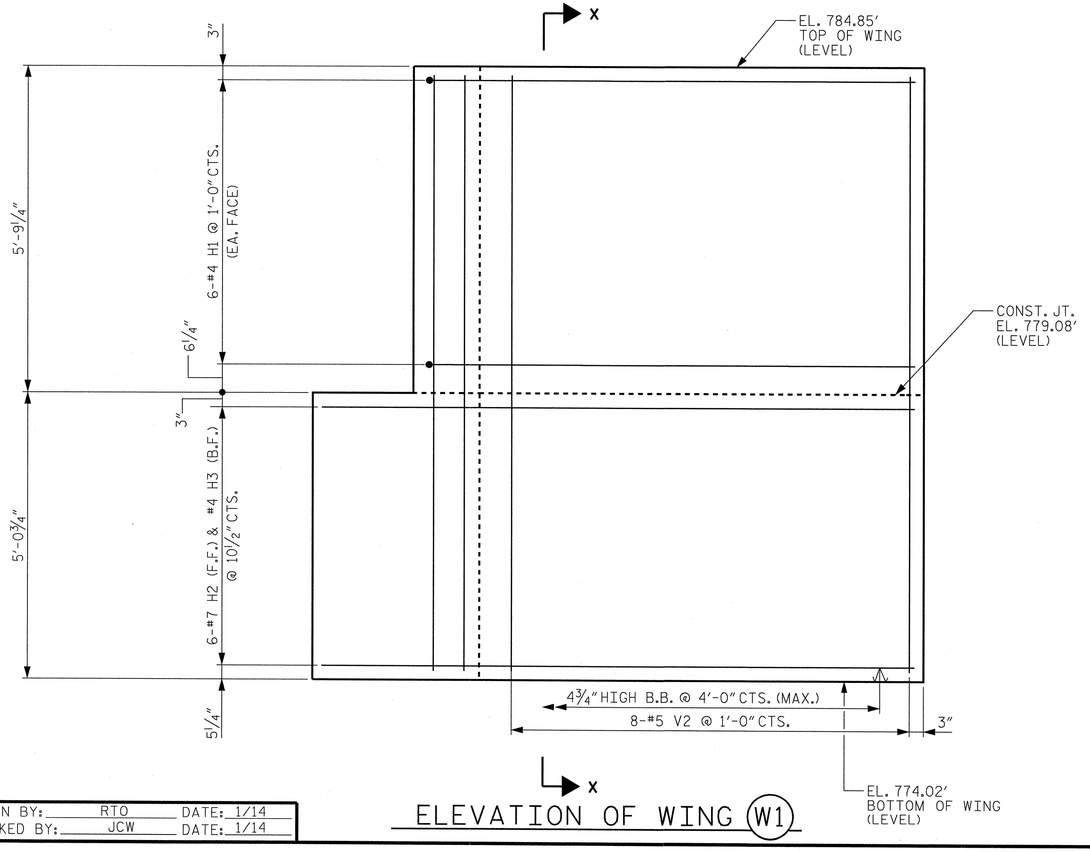

ELEVATION OF WING (W1)

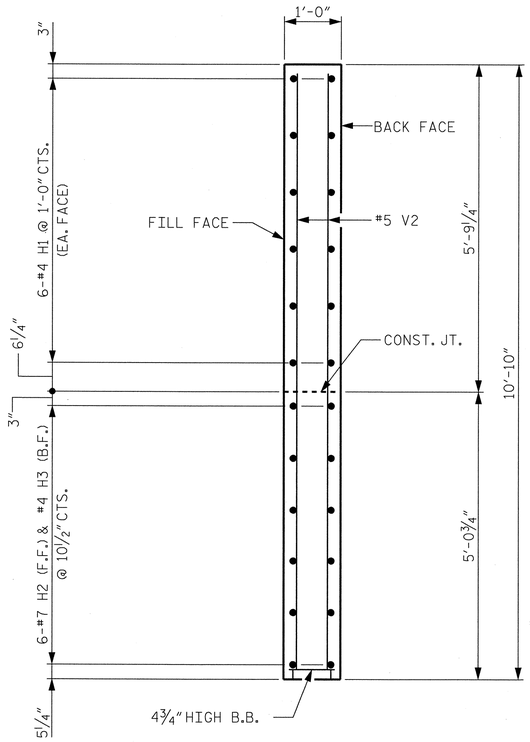

SECTION X-X

DRAWN BY: RTO DATE: 1/14
CHECKED BY: JCW DATE: 1/14

2/17/2014 K:\RDT Structures\Bridge\NC\01103624_U-2525B_Cboro East Loop over US 70\Cad\dgn\u-2525_ed_str_3_psh98.dgn

PROJECT NO. U-2525B
GUILFORD COUNTY
STATION: 26+21.65 -L-
17+06.65 -Y3-

SHEET 2 OF 3

STATE OF NORTH CAROLINA
DEPARTMENT OF TRANSPORTATION
RALEIGH
SUBSTRUCTURE
END BENT 1

NORTH CAROLINA PROFESSIONAL SEAL 12186 ENGINEER CECIL L. NARRON 2/17/14

Kimley-Horn and Associates, Inc.
333 Fayetteville Street, Suite 600
Raleigh, NC 27601-1772
Phone (919) 835-1494
NC LICENSE # F-0102

This document, together with the concepts and designs presented herein, as an instrument of services, is intended only for the specific purpose and client for which it was prepared. Reuse of and improper reliance on this document without written authorization and adaptation by Kimley-Horn and Associates, Inc. shall be without liability to Kimley-Horn and Associates, Inc.
Copyright Kimley-Horn and Associates, Inc., 2014

REVISIONS						SHEET NO.
NO.	BY:	DATE:	NO.	BY:	DATE:	S-98
1			3			TOTAL SHEETS
2			4			541

STR. #3

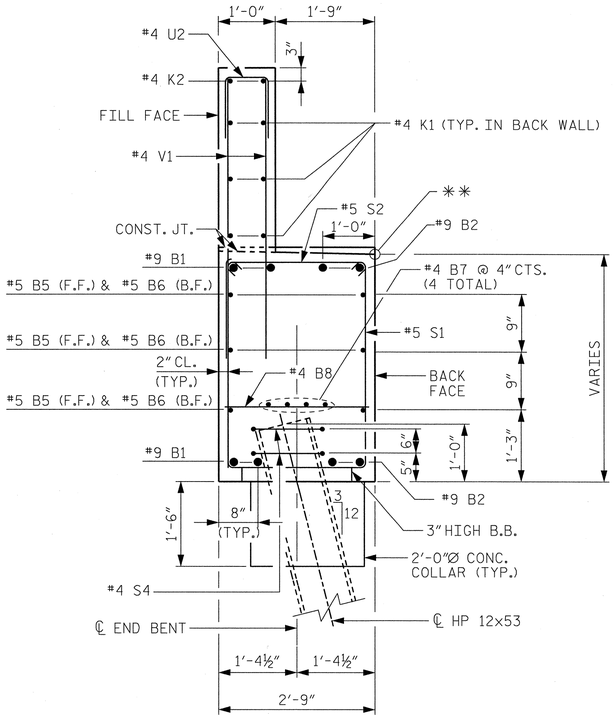

SECTION A-A

** ELEVATIONS BETWEEN BRIDGE SEAT BUILDUPS ARE SHOWN AT THIS POINT

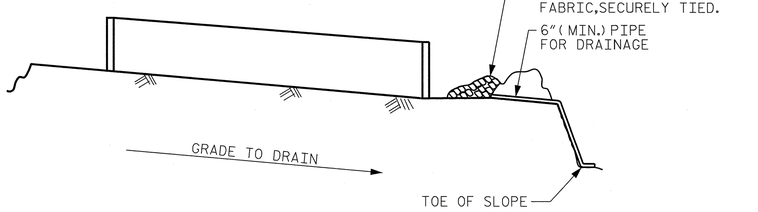

BAGGED STONE AND PIPE SHALL BE PLACED IMMEDIATELY AFTER COMPLETION OF END BENT EXCAVATION. PIPE MAY BE WITHER CONCRETE, CORRUGATED STEEL, CORRUGATED ALUMINUM ALLOY, OR CORRUGATED PLASTIC. PERFORATED PIPE WILL NOT BE ALLOWED.

BAGGED STONE SHALL REMAIN IN PLACE UNTIL THE ENGINEER DIRECTS THAT IT BE REMOVED. THE CONTRACTOR SHALL REMOVED AND DISPOSE OF SILT ACCUMULATIONS AT BAGGED STONE WHEN SO DIRECTED BY THE ENGINEER. BAGS SHALL BE REMOVED AND REPLACED WHENEVER THE ENGINEER DETERMINES THAT THEY HAVE DETERIORATED AND LOST THEIR EFFECTIVENESS.

NO SEPARATE PAYMENT WILL BE MADE FOR THIS WORK AND THE ENTIRE COST OF THIS WORK SHALL BE INCLUDED IN THE UNIT CONTRACT PRICE FOR THE SEVERAL PAY ITEMS.

TEMPORARY DRAINAGE AT END BENT

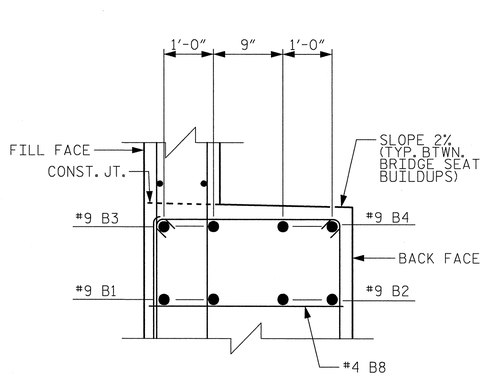

SECTION B-B

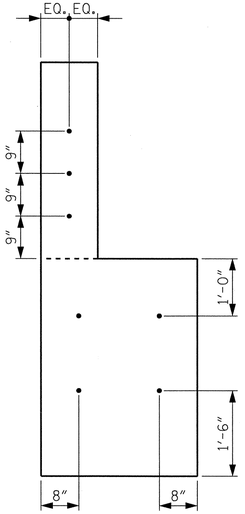

SECTION AT CONST. JT.

BAR TYPES

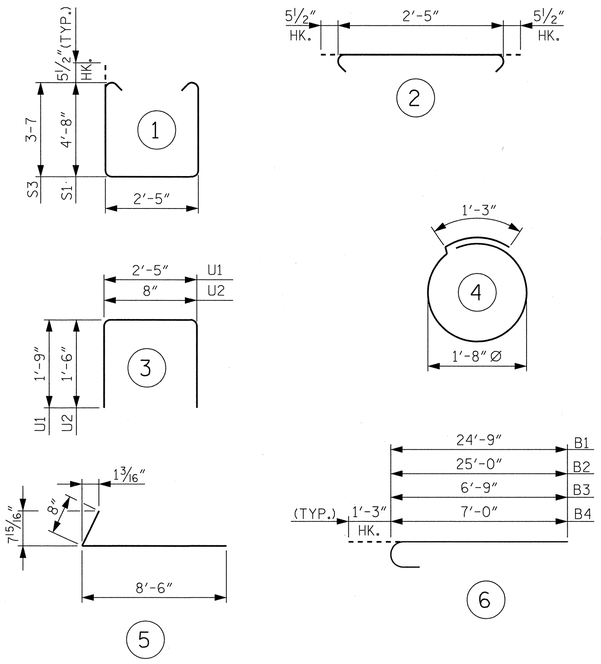

ALL BAR DIMENSIONS ARE OUT TO OUT

BILL OF MATERIAL

END BENT 1

BAR	NO.	SIZE	TYPE	LENGTH	WEIGHT
B1	4	9	6	26'-0"	354
B2	4	9	6	26'-3"	357
B3	2	9	6	8'-0"	54
B4	2	9	6	8'-3"	56
B5	3	5	STR	24'-9"	77
B6	3	5	STR	25'-1"	78
B7	4	4	STR	24'-10"	66
B8	11	4	STR	2'-5"	18
B9	4	4	STR	9'-10"	26
D1	7	5	STR	3'-9"	27
H1	12	4	5	9'-2"	73
H2	6	7	STR	10'-3"	126
H3	6	4	STR	10'-3"	41
K1	6	4	STR	24'-9"	99
K2	2	4	STR	29'-3"	39
K3	6	4	STR	3'-6"	14
S1	22	5	1	10'-6"	241
S2	30	5	2	3'-4"	104
S3	11	5	1	12'-8"	145
S4	6	4	4	6'-6"	26
U1	12	4	3	5'-11"	47
U2	24	4	3	3'-8"	59
V1	42	4	STR	5'-3"	147
V2	26	5	STR	10'-6"	285

REINFORCING STEEL LBS. 2,559

CLASS A CONCRETE C.Y. 19.0

HP 12x53 STEEL PILES: LIN. FT. 150
NO. 3

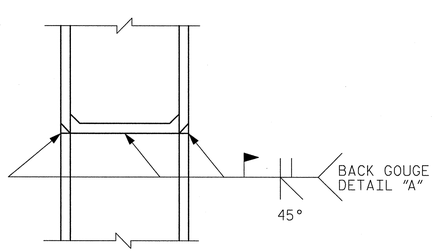

✱PILE VERTICAL

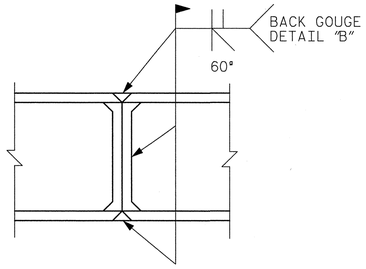

✱PILE HORIZONTAL OR VERTICAL

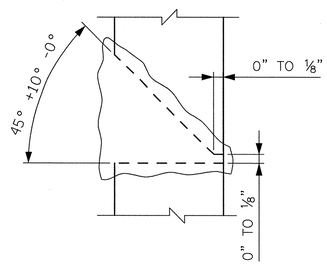

DETAIL "A"

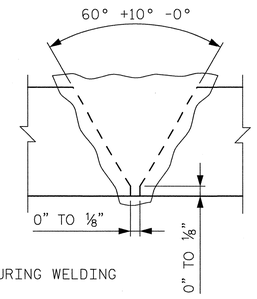

✱POSITION OF PILE DURING WELDING

DETAIL "B"

HP PILE SPLICE DETAILS

PROJECT NO. U-2525B

GUILFORD COUNTY

STATION: 26+21.65 -L-
17+06.65 -Y3-

SHEET 3 OF 3

STATE OF NORTH CAROLINA
DEPARTMENT OF TRANSPORTATION
RALEIGH

SUBSTRUCTURE

END BENT 1

NORTH CAROLINA PROFESSIONAL SEAL 12186 ENGINEER CECIL L. NARRON 2/17/14

Kimley-Horn and Associates, Inc.
333 Fayetteville Street, Suite 600
Raleigh, NC 27601-1772
Phone (919) 835-1494
NC LICENSE # F-0102

This document, together with the concepts and designs presented herein, as an instrument of services, is intended only for the specific purpose and client for which it was prepared. Reuse of and improper reliance of this document without written authorization and adaptation by Kimley-Horn and Associates, Inc. shall be without liability to Kimley-Horn and Associates, Inc.

Copyright Kimley-Horn and Associates, Inc., 2014

REVISIONS						SHEET NO.
NO.	BY:	DATE:	NO.	BY:	DATE:	S-99
1			3			TOTAL SHEETS
2			4			541

DRAWN BY: RTO DATE: 1/14
CHECKED BY: JCW DATE: 1/14

STR. #3

2/17/2014 K:\RDT_Structures_Bridge\NC\U036224_U-2525B_Gboro East Loop over US 70\Cad\dgn\u-2525_sd_str_3.pstn99.dgn

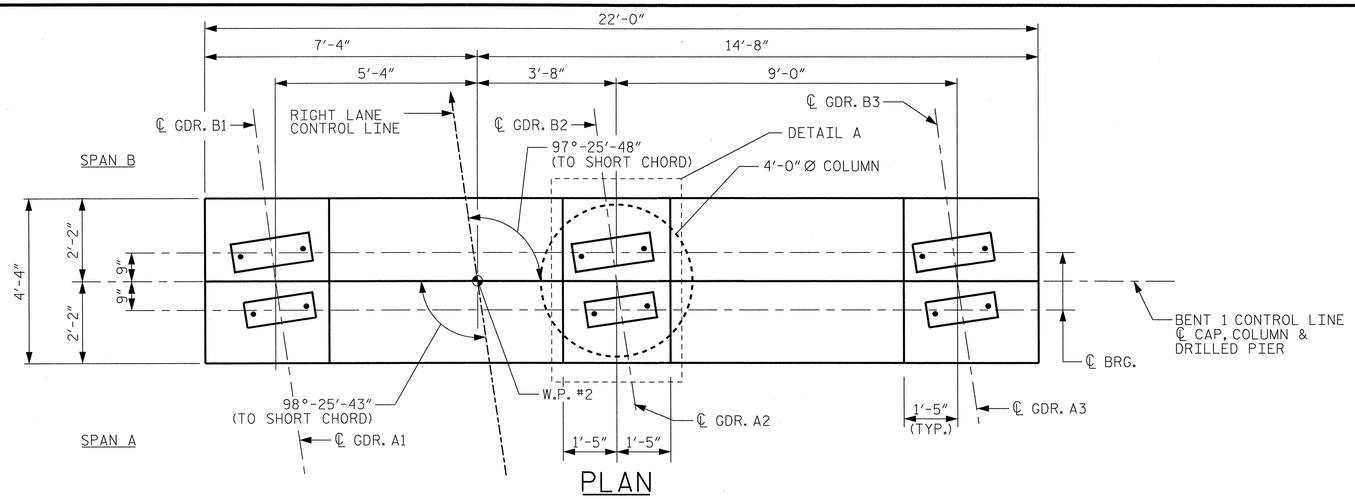

PLAN

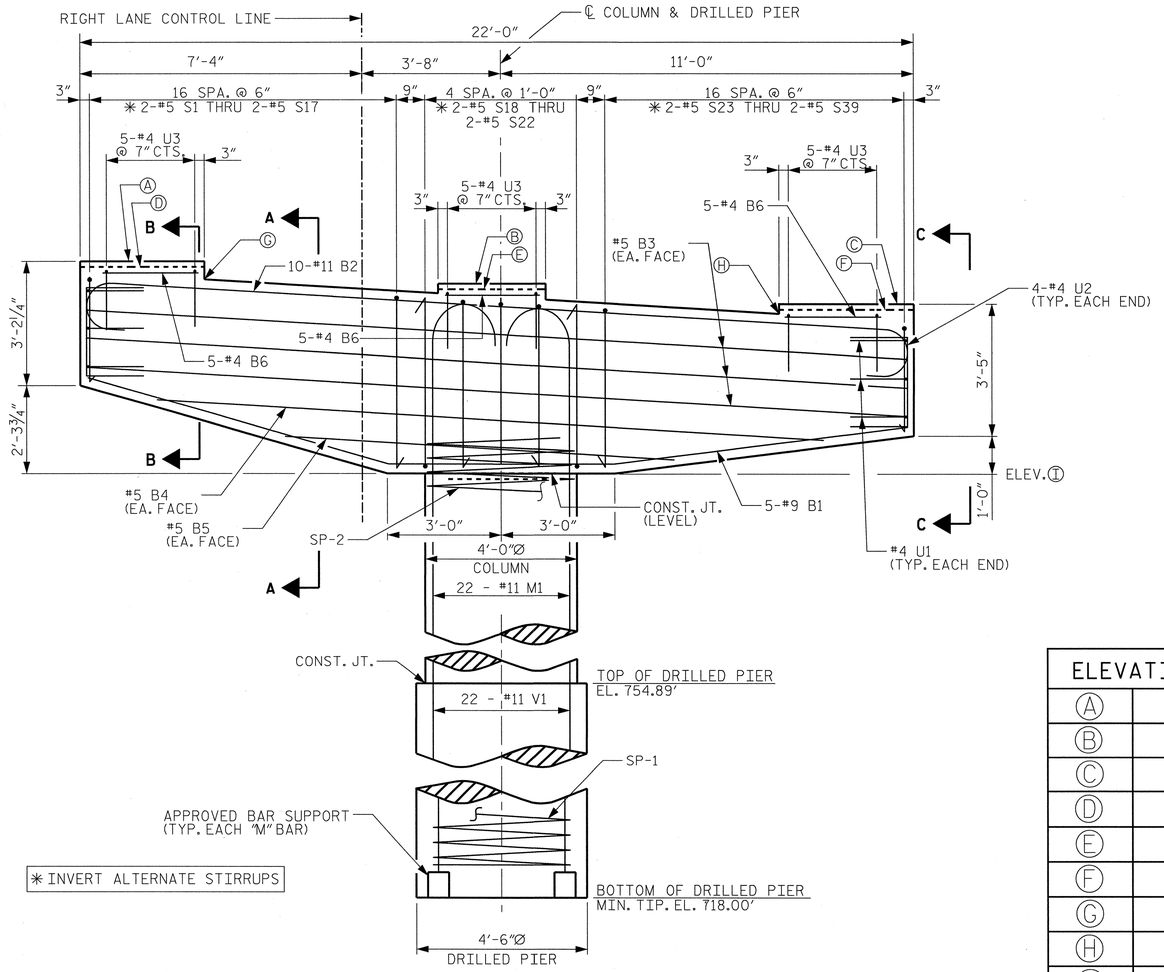

ELEVATION

ELEVATION TABLE	
Ⓐ	779.39'
Ⓑ	778.85'
Ⓒ	778.31'
Ⓓ	779.24'
Ⓔ	778.70'
Ⓕ	778.16'
Ⓖ	778.91'
Ⓗ	778.00'
Ⓘ	773.89'

NOTES

DETAILED DRAWINGS FOR FALSEWORK AND FORMS FOR THIS HAMMERHEAD BENT SHALL BE SUBMITTED. SEE SHEET SN.

THE LOCATION OF THE CONSTRUCTION JOINT IN THE DRILLED PIER IS BASED ON APPROXIMATE GROUND LINE ELEVATION. IF THE CONSTRUCTION JOINT IS ABOVE THE ACTUAL GROUND LINE ELEVATION, THE CONTRACTOR SHALL PLACE THE CONSTRUCTION JOINT 1'-0" BELOW THE GROUND LINE.

ALL STEEL IN DRILLED PIERS IS INCLUDED IN THE PAY ITEMS FOR "REINFORCING STEEL" AND "SPIRAL COLUMN REINFORCING STEEL"

SPLICING OF LONGITUDINAL BARS IN THE DRILLED PIER WILL NOT BE PERMITTED.

STIRRUPS AND U3 BARS MAY BE SHIFTED AS NECESSARY TO CLEAR ANCHOR BOLTS.

THE CONTRACTORS ATTENTION IS CALLED TO THE FACT THAT THE LONGITUDINAL REINFORCEMENT FOR DRILLED PIERS IS DETAILED WITH 3'-0" OF EXTRA LENGTH.

THE TOP SURFACE AREAS OF THE BENT CAPS SHALL BE CURED IN ACCORDANCE WITH THE STANDARD SPECIFICATIONS EXCEPT THE MEMBRANE CURING COMPOUND METHOD SHALL NOT BE USED.

EPOXY COAT THE BENT CAP AFTER ADJUSTMENTS ARE MADE TO BEARING PADS.

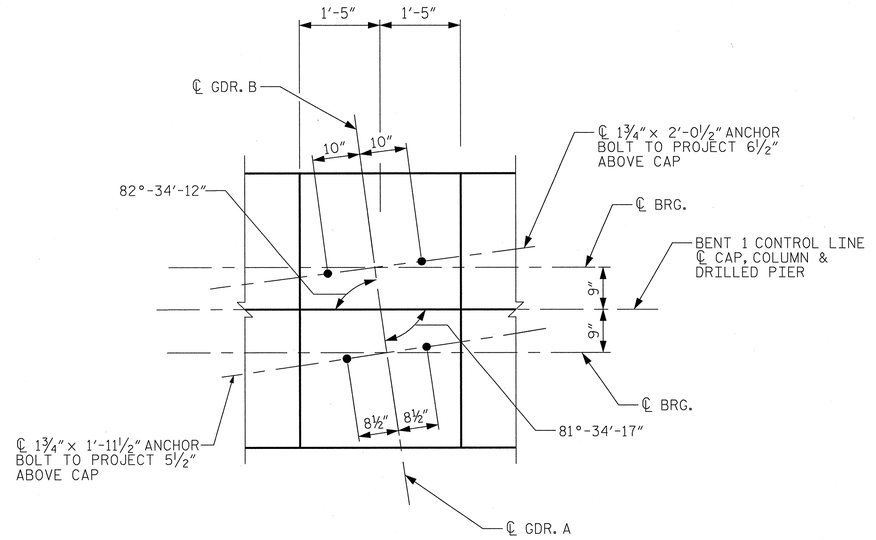

DETAIL A
(TYP. EA. GDR.)

PROJECT NO. U-2525B
GUILFORD COUNTY
STATION: 26+21.65 -L-
17+06.65 -Y3-

SHEET 1 OF 2

STATE OF NORTH CAROLINA
DEPARTMENT OF TRANSPORTATION
RALEIGH
SUBSTRUCTURE
BENT 1

NORTH CAROLINA PROFESSIONAL SEAL 12186 ENGINEER CECIL L. NARRON 2/17/14

Kimley-Horn and Associates, Inc.
333 Fayetteville Street, Suite 600
Raleigh, NC 27601-1772
Phone (919) 835-1494
NC LICENSE # F-0102

This document, together with the concepts and designs presented herein, as an instrument of services, is intended only for the specific purpose and client for which it was prepared. Reuse of and improper reliance on this document without written authorization and adaptation by Kimley-Horn and Associates, Inc. shall be without liability to Kimley-Horn and Associates, Inc.
Copyright Kimley-Horn and Associates, Inc., 2014

REVISIONS						SHEET NO.
NO.	BY:	DATE:	NO.	BY:	DATE:	S-100
1			3			TOTAL SHEETS
2			4			541

DRAWN BY: RTO DATE: 1/14
CHECKED BY: JCW DATE: 1/14

K:\RDT Structures_Bridge\NCV01103622 4\U-2525B Qboro East Loop over US 70\Cadd\dgn\u-2525_sd_str_3.dsn100.dgn
2/17/2014

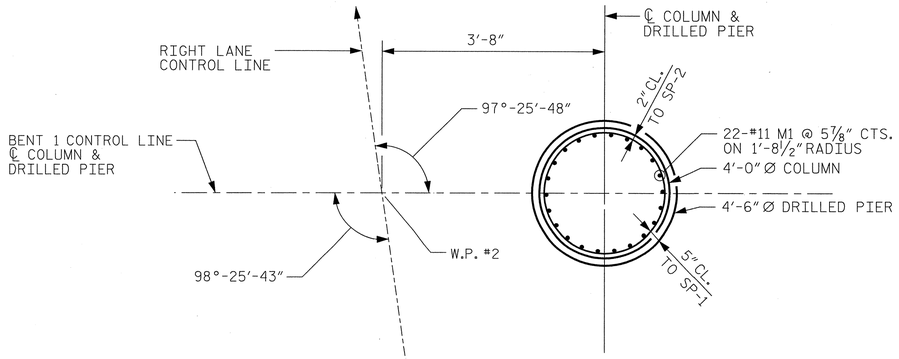

PLAN OF DRILLED PIERS & COLUMNS

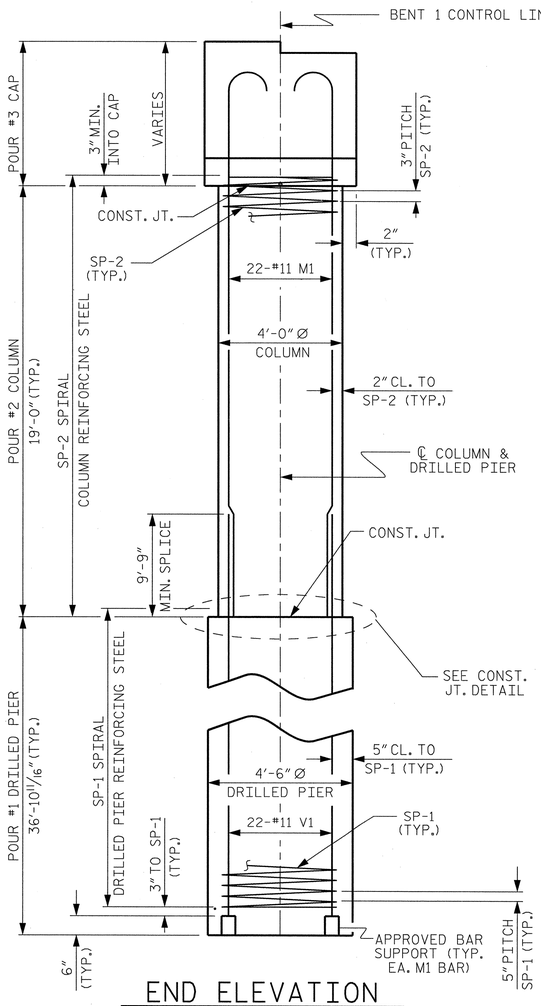

END ELEVATION

CONSTRUCTION JOINT DETAIL

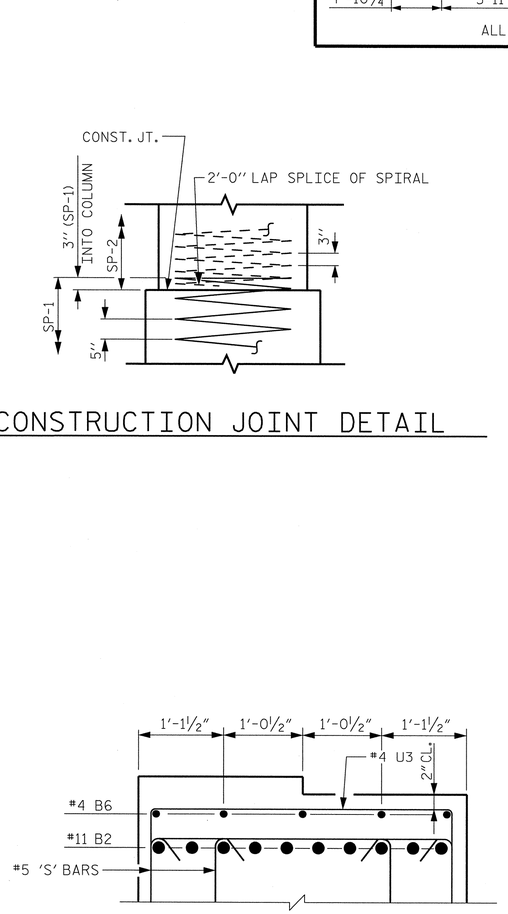

PARTIAL SECTION B-B

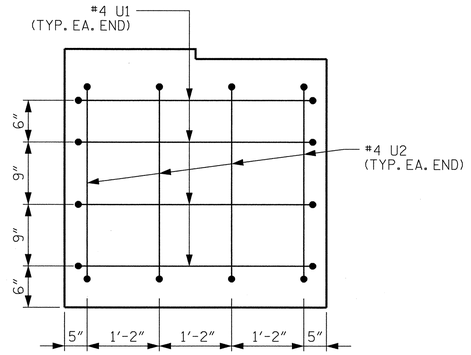

VIEW C-C

(TYPICAL BOTH ENDS)

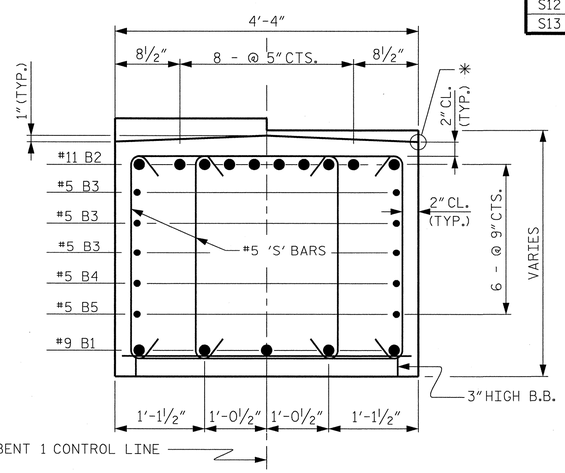

SECTION A-A

* ELEVATIONS BETWEEN BRIDGE SEAT BUILDUPS ARE SHOWN AT THIS POINT

BAR TYPES

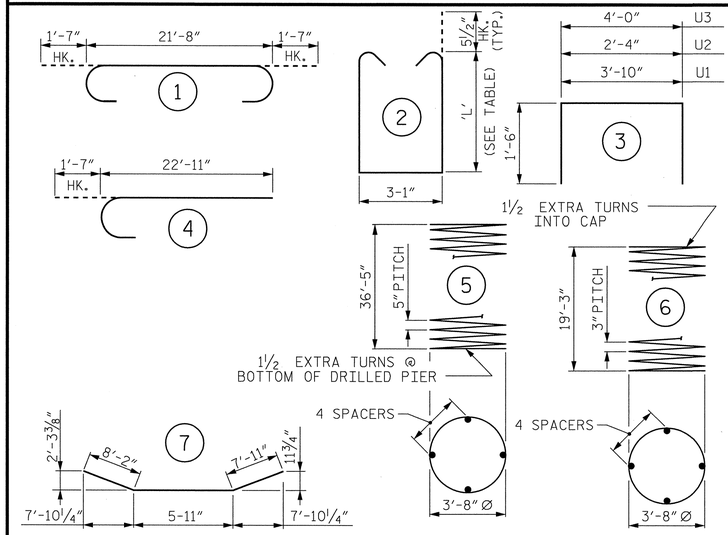

ALL BAR DIMENSIONS ARE OUT TO OUT

BILL OF MATERIAL

BENT 1

BAR	NO.	SIZE	TYPE	LENGTH	WEIGHT
B1	5	#9	7	22'-0"	374
B2	10	#11	1	24'-10"	1,319
B3	6	#5	STR	21'-8"	136
B4	2	#5	STR	16'-5"	34
B5	2	#5	STR	9'-2"	19
B6	15	#5	STR	2'-6"	39
M1	22	#11	4	24'-6"	2,864
S1	2	#5	2	9'-2"	19
S2	2	#5	2	9'-4"	19
S3	2	#5	2	9'-7"	20
S4	2	#5	2	9'-10"	21
S5	2	#5	2	10'-1"	21
S6	2	#5	2	10'-3"	21
S7	2	#5	2	10'-6"	22
S8	2	#5	2	10'-9"	22
S9	2	#5	2	11'-0"	23
S10	2	#5	2	11'-2"	23
S11	2	#5	2	11'-5"	24
S12	2	#5	2	11'-8"	24
S13	2	#5	2	11'-11"	25
S14	2	#5	2	12'-2"	25
S15	2	#5	2	12'-4"	26
S16	2	#5	2	12'-7"	26
S17	2	#5	2	12'-8"	26
S18	2	#5	2	12'-7"	26
S19	2	#5	2	12'-6"	26
S20	2	#5	2	12'-5"	26
S21	2	#5	2	12'-3"	26
S22	2	#5	2	12'-1"	25
S23	2	#5	2	12'-0"	25
S24	2	#5	2	11'-11"	25
S25	2	#5	2	11'-9"	25
S26	2	#5	2	11'-6"	24
S27	2	#5	2	11'-4"	24
S28	2	#5	2	11'-2"	23
S29	2	#5	2	11'-0"	23
S30	2	#5	2	10'-10"	23
S31	2	#5	2	10'-7"	22
S32	2	#5	2	10'-5"	22
S33	2	#5	2	10'-3"	21
S34	2	#5	2	10'-1"	21
S35	2	#5	2	9'-10"	21
S36	2	#5	2	9'-8"	20
S37	2	#5	2	9'-6"	20
S38	2	#5	2	9'-4"	19
S39	2	#5	2	9'-2"	19
U1	8	#4	3	6'-10"	37
U2	8	#4	3	5'-4"	29
U3	15	#4	3	7'-0"	70
V1	22	#11	STR	49'-1"	5,737

REINFORCING STEEL	11,551 LBS.

SP-1	1	*	5	1,011'-4"	1,055
SP-2	1	**	6	894'-3"	598

SPIRAL COLUMN REINFORCING STEEL (FOR BENT 1)	1,653 LBS.

* THE SP-1 SPIRAL REINFORCING STEEL SHALL BE W31 OR D-31 COLD DRAWN WIRE OR #5 PLAIN OR DEFORMED BAR

** THE SP-2 SPIRAL REINFORCING STEEL SHALL BE W20 OR D-20 COLD DRAWN WIRE OR #4 PLAIN OR DEFORMED BAR

CLASS A CONCRETE BREAKDOWN (FOR BENT 1)

POUR #2 (COLUMNS)	8.8 C.Y.
POUR #3 (CAP)	15.0 C.Y.
TOTAL CLASS A CONCRETE	23.8 C.Y.

DRILLED PIERS: (FOR BENT 1)

DRILLED PIER CONCRETE POUR #1 (DRILLED PIERS)	21.7 C.Y.
4'-6" Ø DRILLED PIER NOT IN SOIL	6 LIN. FT.
4'-6" Ø DRILLED PIER IN SOIL	31 LIN. FT.
CSL TUBES	154 LIN. FT.

STIRRUP HEIGHT TABLE

BAR	'L'	BAR	'L'	BAR	'L'
S1	2'-7"	S14	4'-1"	S27	3'-8"
S2	2'-8"	S15	4'-2"	S28	3'-7"
S3	2'-9½"	S16	4'-3½"	S29	3'-6"
S4	2'-11"	S17	4'-4"	S30	3'-5"
S5	3'-0½"	S18	4'-3½"	S31	3'-3½"
S6	3'-1½"	S19	4'-3"	S32	3'-2½"
S7	3'-3"	S20	4'-2½"	S33	3'-1½"
S8	3'-4½	S21	4'-1½"	S34	3'-0½"
S9	3'-6"	S22	4'-0½"	S35	2'-11"
S10	3'-7"	S23	4'-0"	S36	2'-10"
S11	3'-8½"	S24	3'-11½"	S37	2'-9"
S12	3'-10"	S25	3'-10½"	S38	2'-8"
S13	3'-11½"	S26	3'-9"	S39	2'-7"

PROJECT NO. U-2525B

GUILFORD COUNTY

STATION: 26+21.65 -L-
17+06.65 -Y3-

SHEET 2 OF 2

STATE OF NORTH CAROLINA
DEPARTMENT OF TRANSPORTATION
RALEIGH

SUBSTRUCTURE

BENT 1

NORTH CAROLINA PROFESSIONAL SEAL 12186 ENGINEER CECIL L. NARRON 2/17/14

Kimley-Horn and Associates, Inc.
333 Fayetteville Street, Suite 600
Raleigh, NC 27601-1772
Phone (919) 835-1494
NC LICENSE # F-0102

This document, together with the concepts and designs presented herein, as an instrument of services, is intended only for the specific purpose and client for which it was prepared. Reuse of and improper reliance of this document without written authorization and adaptation by Kimley-Horn and Associates, Inc. shall be without liability to Kimley-Horn and Associates, Inc.

Copyright Kimley-Horn and Associates, Inc., 2014

REVISIONS						SHEET NO.
NO.	BY:	DATE:	NO.	BY:	DATE:	S-101
1			3			TOTAL SHEETS
2			4			541

DRAWN BY: RTO DATE: 1/14
CHECKED BY: JCW DATE: 1/14

2/17/2014 K:\ROT_Structures_Bridges\MCV\011036224.ii-2525B Oboro East Loop over US 70\Cad\dgn\u-2525_sd_str_3_psh101.dgn

STR. #3

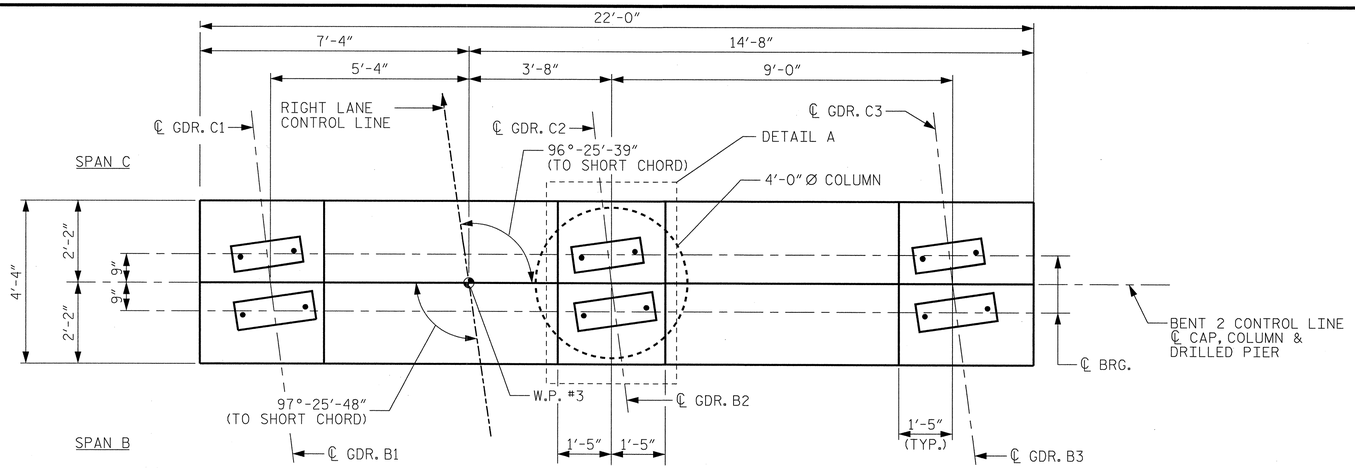

PLAN

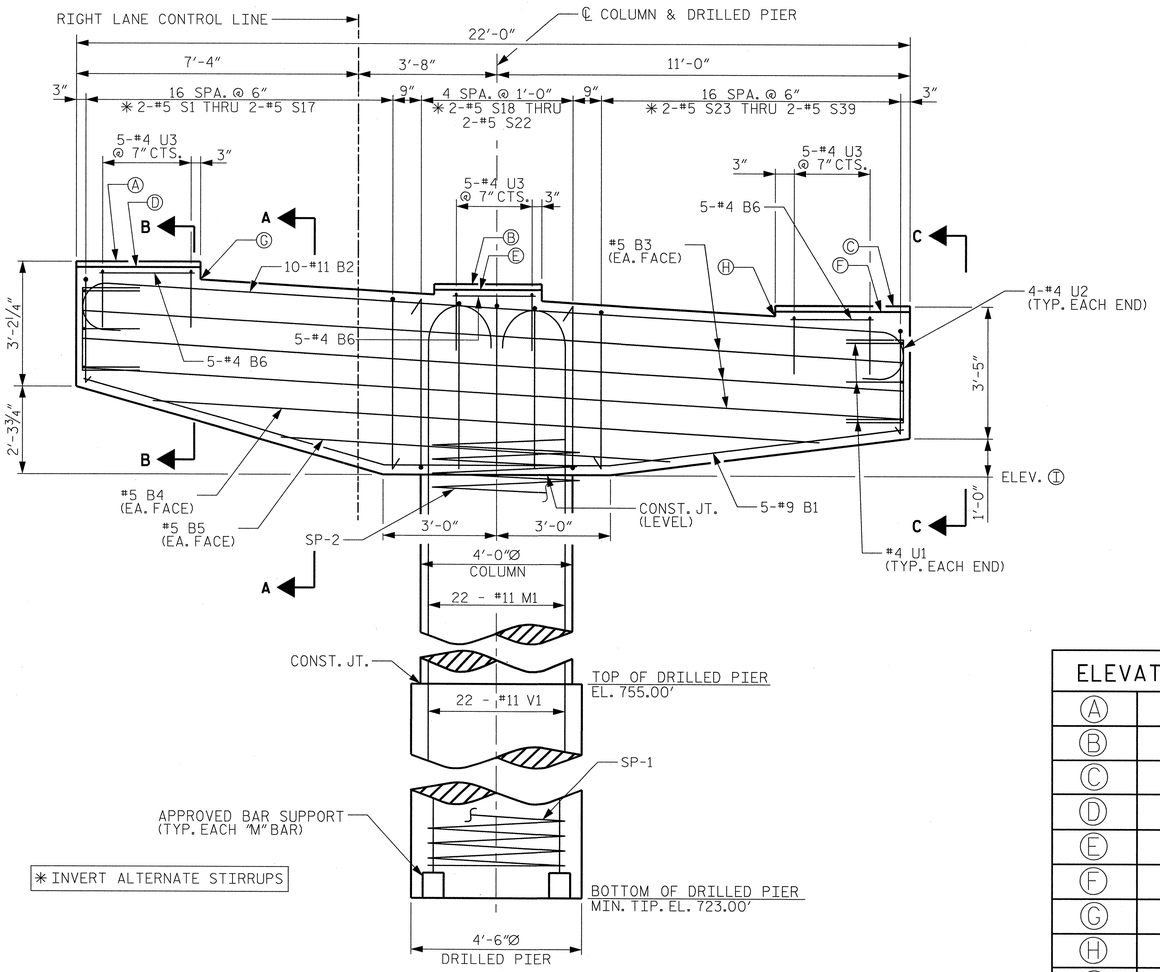

ELEVATION

ELEVATION TABLE	
Ⓐ	779.73'
Ⓑ	779.19'
Ⓒ	778.65'
Ⓓ	779.57'
Ⓔ	779.03'
Ⓕ	778.49'
Ⓖ	779.24'
Ⓗ	778.33'
Ⓘ	774.23'

NOTES

DETAILED DRAWINGS FOR FALSEWORK AND FORMS FOR THIS HAMMERHEAD BENT SHALL BE SUBMITTED. SEE SHEET SN.

THE LOCATION OF THE CONSTRUCTION JOINT IN THE DRILLED PIER IS BASED ON APPROXIMATE GROUND LINE ELEVATION. IF THE CONSTRUCTION JOINT IS ABOVE THE ACTUAL GROUND LINE ELEVATION, THE CONTRACTOR SHALL PLACE THE CONSTRUCTION JOINT 1'-0" BELOW THE GROUND LINE.

ALL STEEL IN DRILLED PIERS IS INCLUDED IN THE PAY ITEMS FOR "REINFORCING STEEL" AND "SPIRAL COLUMN REINFORCING STEEL"

SPLICING OF LONGITUDINAL BARS IN THE DRILLED PIER WILL NOT BE PERMITTED.

STIRRUPS AND U3 BARS MAY BE SHIFTED AS NECESSARY TO CLEAR ANCHOR BOLTS.

THE CONTRACTORS ATTENTION IS CALLED TO THE FACT THAT THE LONGITUDINAL REINFORCEMENT FOR DRILLED PIERS IS DETAILED WITH 3'-0" OF EXTRA LENGTH.

THE TOP SURFACE AREAS OF THE BENT CAPS SHALL BE CURED IN ACCORDANCE WITH THE STANDARD SPECIFICATIONS EXCEPT THE MEMBRANE CURING COMPOUND METHOD SHALL NOT BE USED.

EPOXY COAT THE BENT CAP AFTER ADJUSTMENTS ARE MADE TO BEARING PADS.

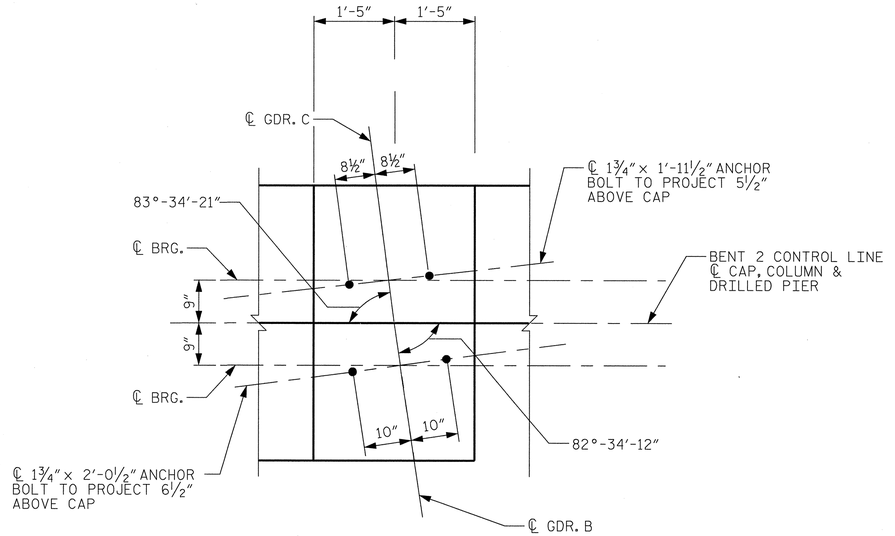

DETAIL A

(TYP. EA. GDR.)

PROJECT NO. U-2525B

GUILFORD COUNTY

STATION: 26+21.65 -L-
17+06.65 -Y3-

SHEET 1 OF 2

STATE OF NORTH CAROLINA
DEPARTMENT OF TRANSPORTATION
RALEIGH

SUBSTRUCTURE

BENT 2

NORTH CAROLINA PROFESSIONAL SEAL 12186 ENGINEER JACQUELYN C. WARREN 2/17/14

Kimley-Horn and Associates, Inc.
333 Fayetteville Street, Suite 600
Raleigh, NC 27601-1772
Phone (919) 835-1494
NC LICENSE # F-0102

This document, together with the concepts and designs presented herein, as an instrument of service, is intended only for the specific purpose and client for which it was prepared. Reuse of or improper reliance on this document without written authorization and adaption by Kimley-Horn and Associates, Inc. shall be without liability to Kimley-Horn and Associates, Inc.

Copyright Kimley-Horn and Associates, Inc., 2014

REVISIONS						SHEET NO.
NO.	BY:	DATE:	NO.	BY:	DATE:	S-102
1			3			TOTAL SHEETS
2			4			541

DRAWN BY: RTO DATE: 1/14
CHECKED BY: JCW DATE: 1/14

2/17/2014 K:\RDT_Structures_Bridges\NC\01036224_U-2525B_Guilford_Co_East_Loop_over_US_70\Cad\dgn\u-2525_sd_str_3.path102.dgn

STR. #3

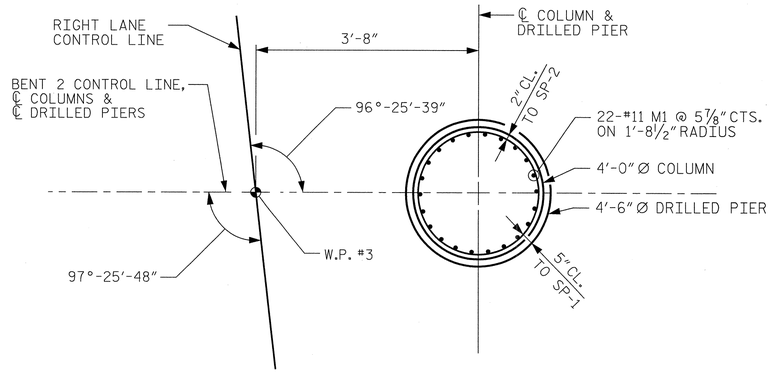

PLAN OF DRILLED PIERS & COLUMNS

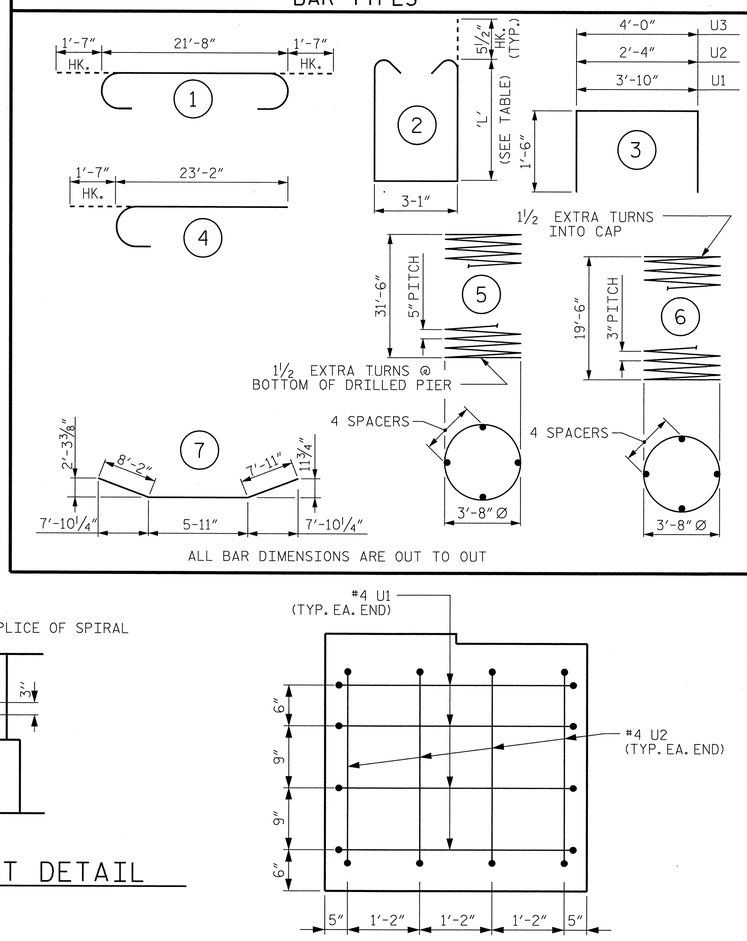

ALL BAR DIMENSIONS ARE OUT TO OUT

BAR TYPES

BILL OF MATERIAL

BENT 2

BAR	NO.	SIZE	TYPE	LENGTH	WEIGHT
B1	5	#9	7	22'-0"	374
B2	10	#11	1	24'-10"	1,319
B3	6	#5	STR	21'-8"	136
B4	2	#5	STR	16'-5"	34
B5	2	#5	STR	9'-2"	19
B6	15	#5	STR	2'-6"	39
M1	22	#11	4	24'-9"	2,893
S1	2	#5	2	9'-2"	19
S2	2	#5	2	9'-4"	19
S3	2	#5	2	9'-7"	20
S4	2	#5	2	9'-10"	21
S5	2	#5	2	10'-1"	21
S6	2	#5	2	10'-3"	21
S7	2	#5	2	10'-6"	22
S8	2	#5	2	10'-9"	22
S9	2	#5	2	11'-0"	23
S10	2	#5	2	11'-2"	23
S11	2	#5	2	11'-5"	24
S12	2	#5	2	11'-8"	24
S13	2	#5	2	11'-11"	25
S14	2	#5	2	12'-2"	25
S15	2	#5	2	12'-4"	26
S16	2	#5	2	12'-7"	26
S17	2	#5	2	12'-8"	26
S18	2	#5	2	12'-7"	26
S19	2	#5	2	12'-6"	26
S20	2	#5	2	12'-5"	26
S21	2	#5	2	12'-3"	26
S22	2	#5	2	12'-1"	25
S23	2	#5	2	12'-0"	25
S24	2	#5	2	11'-11"	25
S25	2	#5	2	11'-9"	25
S26	2	#5	2	11'-6"	24
S27	2	#5	2	11'-4"	24
S28	2	#5	2	11'-2"	23

BAR	NO.	SIZE	TYPE	LENGTH	WEIGHT
S29	2	#5	2	11'-0"	23
S30	2	#5	2	10'-10"	23
S31	2	#5	2	10'-7"	22
S32	2	#5	2	10'-5"	22
S33	2	#5	2	10'-3"	21
S34	2	#5	2	10'-1"	21
S35	2	#5	2	9'-10"	21
S36	2	#5	2	9'-8"	20
S37	2	#5	2	9'-6"	20
S38	2	#5	2	9'-4"	19
S39	2	#5	2	9'-2"	19
U1	8	#4	3	6'-10"	37
U2	8	#4	3	5'-4"	29
U3	15	#4	3	7'-0"	70
V1	22	#11	STR	44'-4"	5,182

SP-1	1	*	5	880'-8"	919
SP-2	1	**	6	905'-8"	605

REINFORCING STEEL 11,025 LBS.

SPIRAL COLUMN REINFORCING STEEL (FOR BENT 2) 1,524 LBS.

* THE SP-1 SPIRAL REINFORCING STEEL SHALL BE W31 OR D-31 COLD DRAWN WIRE OR #5 PLAIN OR DEFORMED BAR

** THE SP-2 SPIRAL REINFORCING STEEL SHALL BE W20 OR D-20 COLD DRAWN WIRE OR #4 PLAIN OR DEFORMED BAR

STIRRUP HEIGHT TABLE

BAR	'L'	BAR	'L'	BAR	'L'
S1	2'-7"	S14	4'-1"	S27	3'-8"
S2	2'-8"	S15	4'-2"	S28	3'-7"
S3	2'-9½"	S16	4'-3½"	S29	3'-6"
S4	2'-11"	S17	4'-4"	S30	3'-5"
S5	3'-0½"	S18	4'-3½"	S31	3'-3½"
S6	3'-1½"	S19	4'-3"	S32	3'-2½"
S7	3'-3"	S20	4'-2½"	S33	3'-1½"
S8	3'-4½	S21	4'-1½"	S34	3'-0½"
S9	3'-6"	S22	4'-0½"	S35	2'-11"
S10	3'-7"	S23	4'-0"	S36	2'-10"
S11	3'-8½"	S24	3'-11½"	S37	2'-9"
S12	3'-10"	S25	3'-10½"	S38	2'-8"
S13	3'-11½"	S26	3'-9"	S39	2'-7"

CLASS A CONCRETE BREAKDOWN (FOR BENT 2)

POUR #2 (COLUMNS)	9.0 C.Y.
POUR #3 (CAP)	15.0 C.Y.
TOTAL CLASS A CONCRETE	24.0 C.Y.

DRILLED PIERS: (FOR BENT 2)

DRILLED PIER CONCRETE	
POUR #1 (DRILLED PIERS)	18.9 C.Y.
4'-6" Ø DRILLED PIER NOT IN SOIL	8 LIN. FT.
4'-6" Ø DRILLED PIER IN SOIL	24 LIN. FT.
CSL TUBES	134 LIN. FT.

END ELEVATION

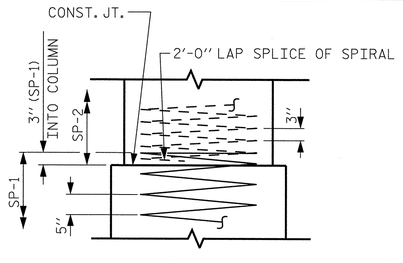

CONSTRUCTION JOINT DETAIL

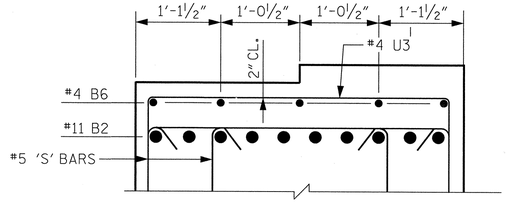

PARTIAL SECTION B-B

VIEW C-C

(TYPICAL BOTH ENDS)

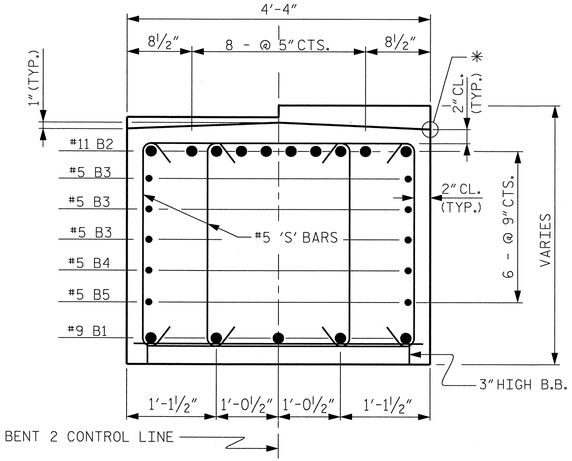

SECTION A-A

* ELEVATIONS BETWEEN BRIDGE SEAT BUILDUPS ARE SHOWN AT THIS POINT

PROJECT NO. U-2525B

GUILFORD COUNTY

STATION: 26+21.65 -L-
17+06.65 -Y3-

SHEET 2 OF 2

STATE OF NORTH CAROLINA
DEPARTMENT OF TRANSPORTATION
RALEIGH

SUBSTRUCTURE

BENT 2

NORTH CAROLINA PROFESSIONAL SEAL 12186 ENGINEER CECIL L. NARRON 2/17/14

Kimley-Horn and Associates, Inc.
333 Fayetteville Street, Suite 600
Raleigh, NC 27601-1772
Phone (919) 835-1494
NC LICENSE # F-0102

This document, together with the concepts and designs presented herein, as an instrument of services, is intended only for the specific purpose and client for which it was prepared. Reuse of and improper reliance on this document without written authorization and adaptation by Kimley-Horn and Associates, Inc. shall be without liability to Kimley-Horn and Associates, Inc.

Copyright Kimley-Horn and Associates, Inc., 2014

REVISIONS						SHEET NO.
NO.	BY:	DATE:	NO.	BY:	DATE:	S-103
1			3			TOTAL SHEETS
2			4			541

DRAWN BY: RTO DATE: 1/14
CHECKED BY: JCW DATE: 1/14

2/17/2014 K:\RDT_Structures_Bridge\NC\01103624_U-2525B_Cboro East Loop over US 70\Cad\dgn\u-2525_sd_str_3_psh103.dgn

STR. #3

NOTES

SEE NOTES ON SHEET S-97.

FOR PILE SPLICE DETAILS AND TEMPORARY DRAINAGE AT END BENT SEE SHEET S-99.

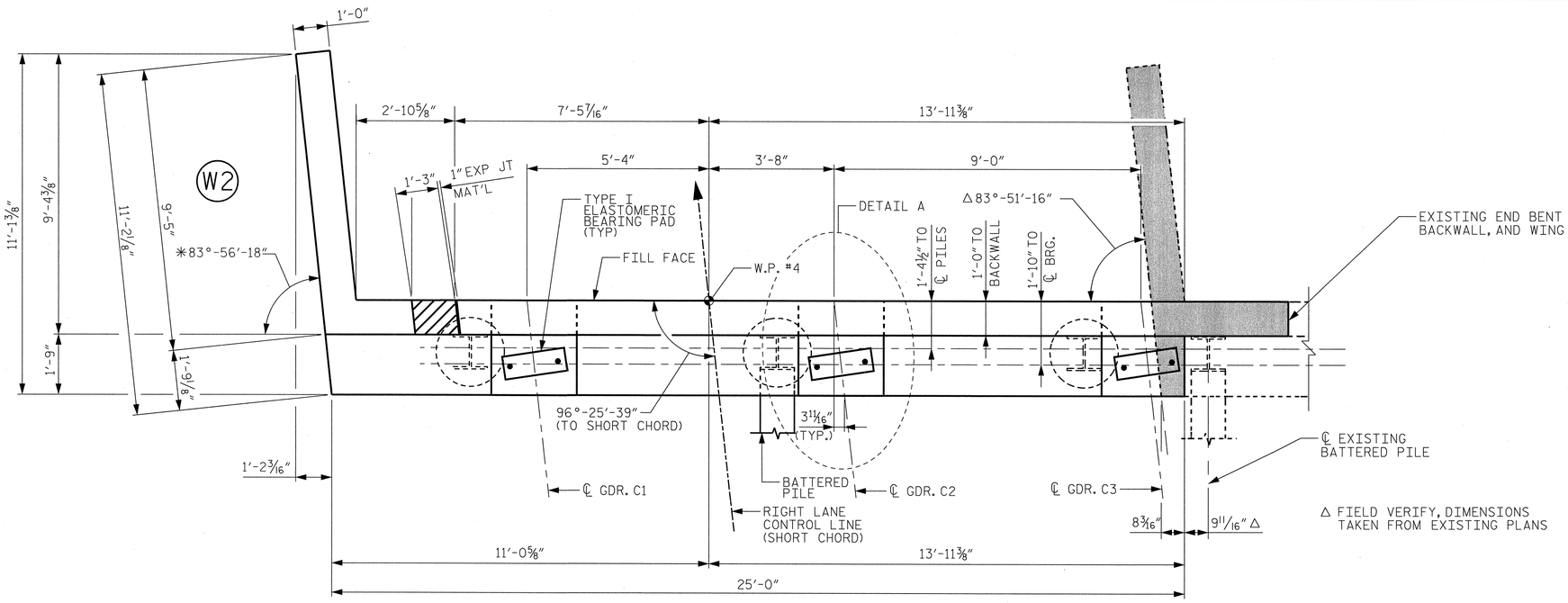

PLAN

Δ FIELD VERIFY, DIMENSIONS TAKEN FROM EXISTING PLANS

AREA OF EXISTING END BENT TO BE REMOVED

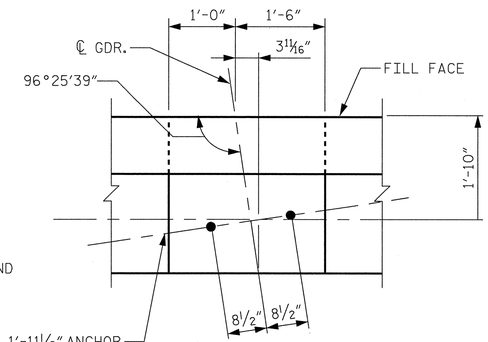

DETAIL A
(TYP. EA. GDR.)

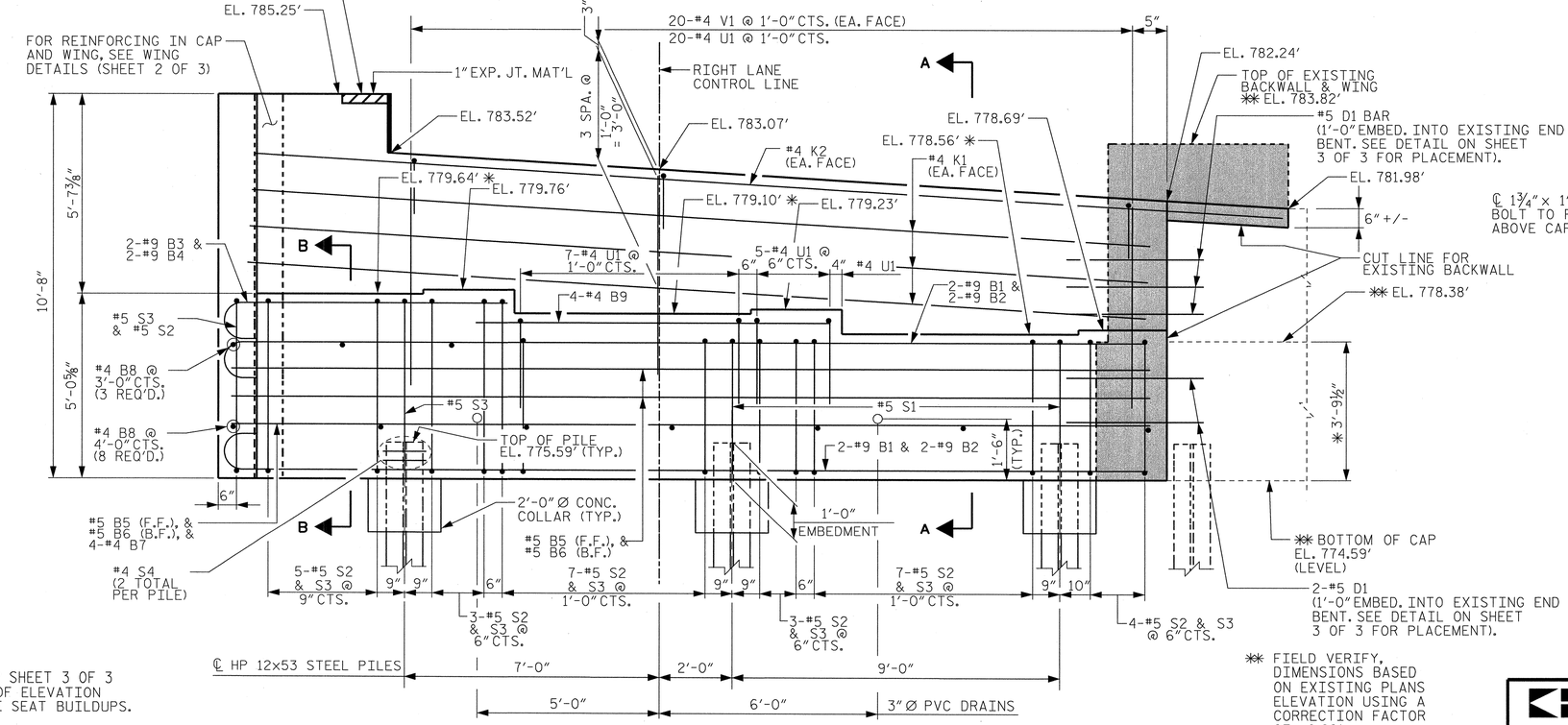

* SEE END BENT 2 SHEET 3 OF 3 FOR LOCATION OF ELEVATION BETWEEN BRIDGE SEAT BUILDUPS.

** FIELD VERIFY, DIMENSIONS BASED ON EXISTING PLANS ELEVATION USING A CORRECTION FACTOR OF -0.89'

ELEVATION

PROJECT NO. U-2525B

GUILFORD COUNTY

STATION: 26+21.65 -L-
17+06.65 -Y3-

SHEET 1 OF 3

STATE OF NORTH CAROLINA
DEPARTMENT OF TRANSPORTATION
RALEIGH

SUBSTRUCTURE
END BENT 2

NORTH CAROLINA PROFESSIONAL SEAL 12186 ENGINEER CECIL L. NARROW 2/17/14

Kimley-Horn and Associates, Inc.
333 Fayetteville Street, Suite 600
Raleigh, NC 27601-1772
Phone (919) 835-1494
NC LICENSE # F-0102

This document, together with the concepts and designs presented herein, as an instrument of service, is intended only for the specific purpose and client for which it was prepared. Reuse of and improper reliance on this document without written authorization and adaptation by Kimley-Horn and Associates, Inc. shall be without liability to Kimley-Horn and Associates, Inc.

Copyright Kimley-Horn and Associates, Inc., 2014

REVISIONS						SHEET NO.
NO.	BY:	DATE:	NO.	BY:	DATE:	S-104
1			3			TOTAL SHEETS
2			4			541

DRAWN BY: RTO DATE: 1/14
CHECKED BY: JCW DATE: 1/14

2/17/2014 K:\RDT_Structures_Bridge\NC\01036224_U-2525B_Guilford\Cadd\dgn\u-2525_ed_str_3_psh104.dgn

STR. #3

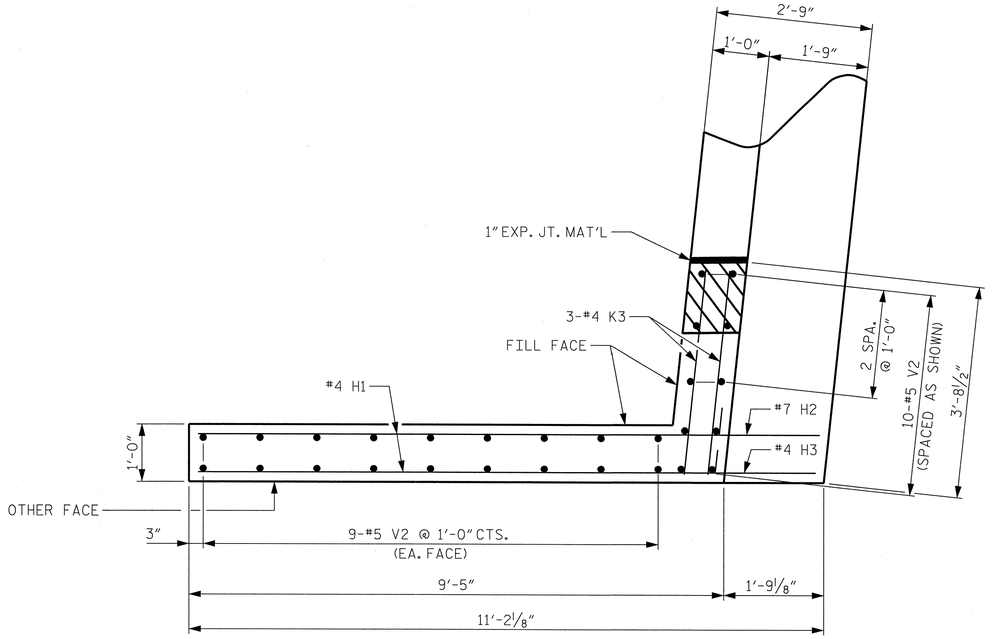

PLAN OF WING (W2)

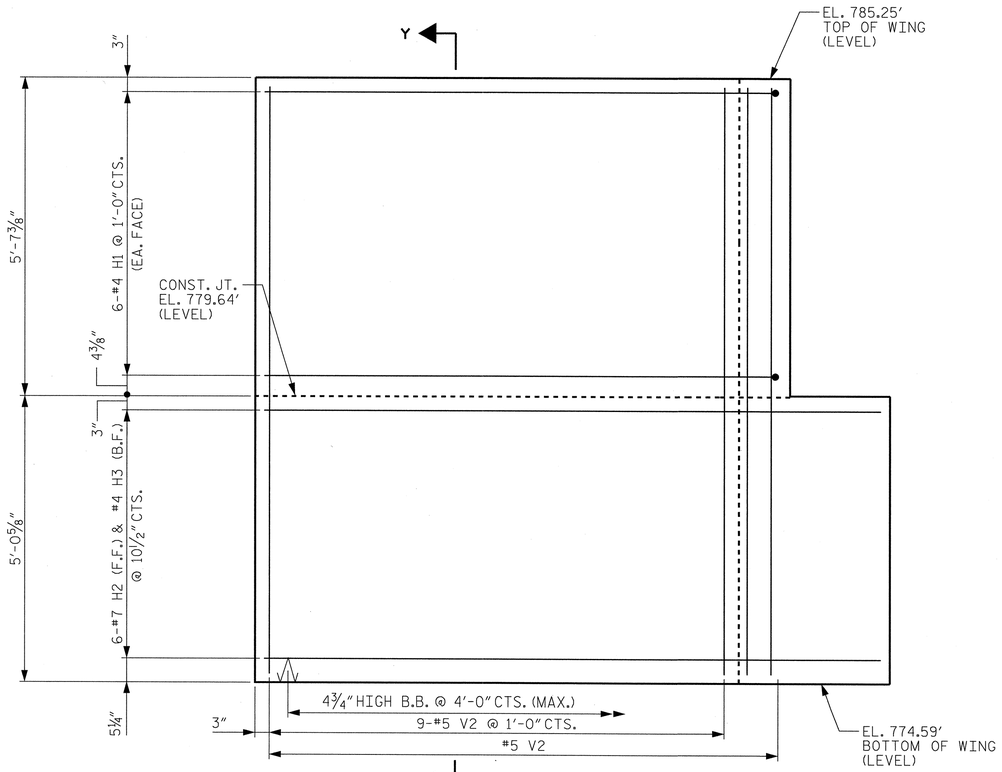

ELEVATION OF WING (W2)

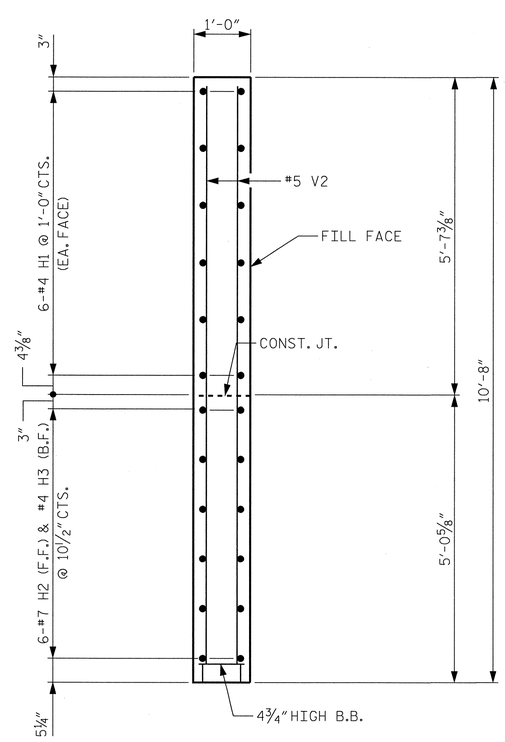

SECTION Y-Y

Kimley-Horn and Associates, Inc.
333 Fayetteville Street, Suite 600
Raleigh, NC 27601-1772
Phone (919) 835-1494
NC LICENSE # F-0102

This document, together with the concepts and designs presented herein, as an instrument of services, is intended only for the specific purpose and client for which it was prepared. Reuse of and improper reliance on this document, without written authorization and adaptation by Kimley-Horn and Associates, Inc. shall be without liability to Kimley-Horn and Associates, Inc.

Copyright Kimley-Horn and Associates, Inc., 2014

NORTH CAROLINA PROFESSIONAL SEAL 12186 ENGINEER CECIL L. NARRON 2/17/14

PROJECT NO. U-2525B

GUILFORD COUNTY

STATION: 26+21.65 -L-
17+06.65 -Y3-

SHEET 2 OF 3

STATE OF NORTH CAROLINA
DEPARTMENT OF TRANSPORTATION
RALEIGH

SUBSTRUCTURE

END BENT 2

REVISIONS						SHEET NO.
NO.	BY:	DATE:	NO.	BY:	DATE:	S-105
1			3			TOTAL SHEETS
2			4			541

DRAWN BY: RTO DATE: 1/14
CHECKED BY: JCW DATE: 1/14

STR. #3

2/17/2014 K:\RDT Structures\Bridge\NC\011036224_U-2525B_Oboro East Loop over US 70\Cad\dgn\u-2525_ed_str_3_psh105.dgn

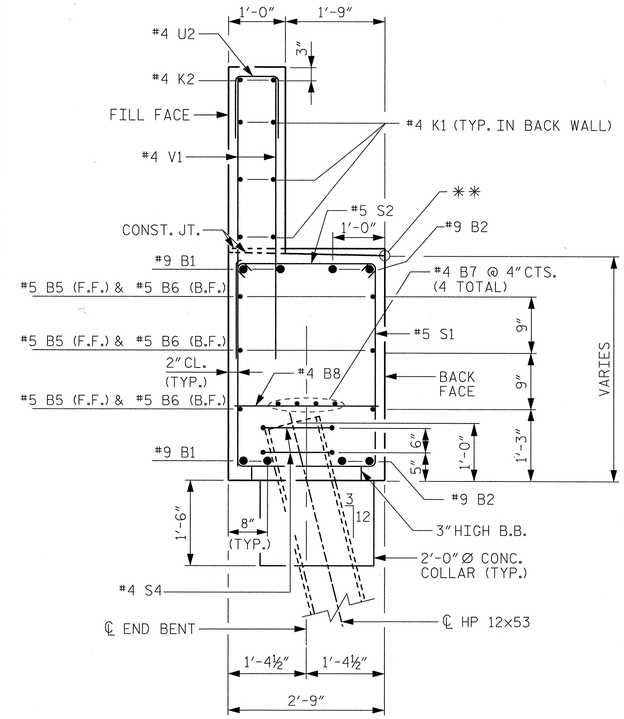

** ELEVATIONS BETWEEN BRIDGE SEAT BUILDUPS ARE SHOWN AT THIS POINT

SECTION B-B

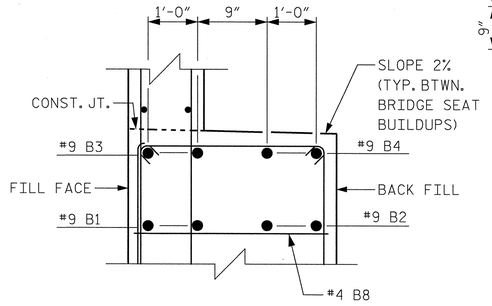

SECTION AT CONST. JT.

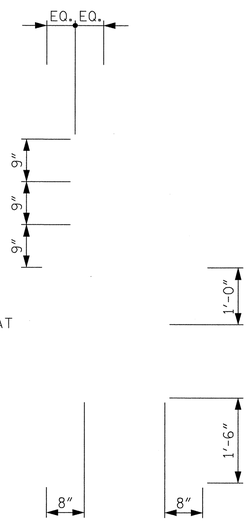

BAR TYPES

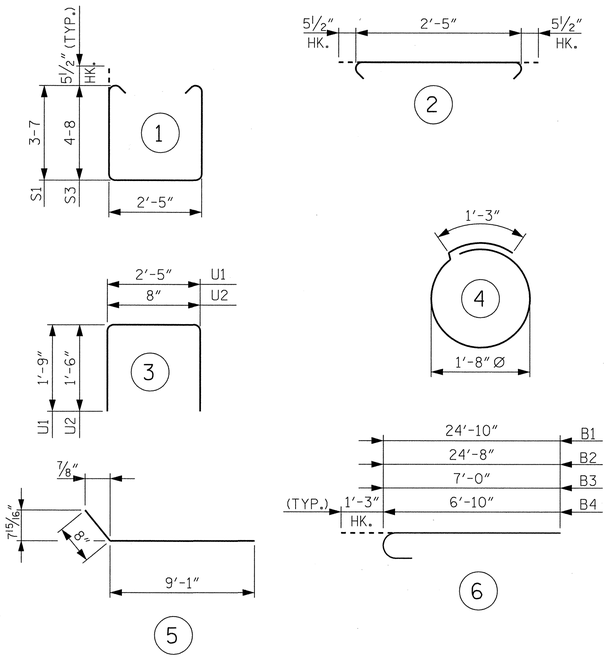

BILL OF MATERIAL

END BENT 2

BAR	NO.	SIZE	TYPE	LENGTH	WEIGHT
B1	4	9	6	26'-1"	355
B2	4	9	6	25'-11"	352
B3	2	9	6	8'-3"	56
B4	2	9	6	8'-1"	55
B5	3	5	STR	24'-11"	78
B6	3	5	STR	24'-8"	77
B7	4	4	STR	24'-9"	66
B8	11	4	STR	2'-5"	18
B9	4	4	STR	9'-10"	26
D1	7	5	STR	3'-9"	27
H1	12	4	5	9'-9"	78
H2	6	7	STR	10'-11"	134
H3	6	4	STR	10'-11"	44
K1	6	4	STR	24'-10"	100
K2	2	4	STR	29'-4"	39
K3	6	4	STR	3'-6"	14
S1	22	5	1	10'-6"	241
S2	30	5	2	3'-4"	104
S3	11	5	2	12'-8"	145
S4	6	4	4	6'-6"	26
U1	12	4	3	5'-11"	47
U2	24	4	3	3'-8"	59
V1	42	4	STR	5'-3"	147
V2	28	5	STR	10'-4"	302

REINFORCING STEEL LBS. 2,590

CLASS A CONCRETE C.Y. 19.0

HP 12x53 STEEL PILES: LIN. FT. 135
NO. 3

ALL BAR DIMENSIONS ARE OUT TO OUT

SECTION A-A

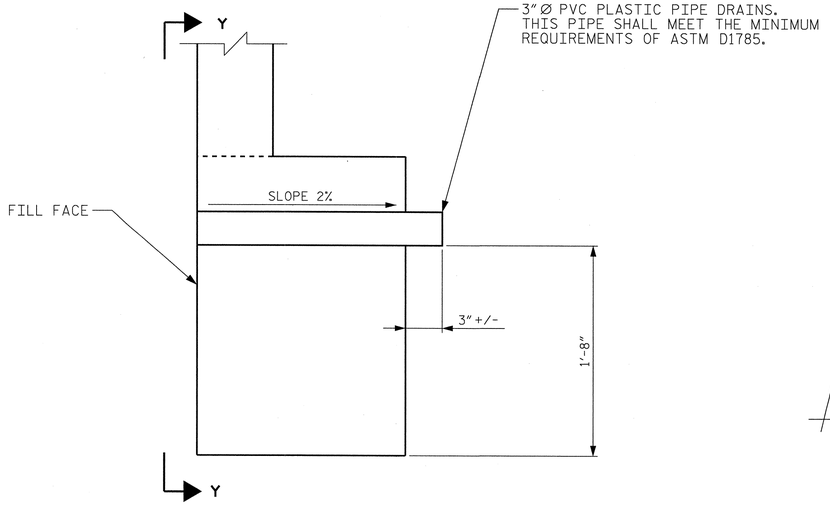

SECTION THRU CAP

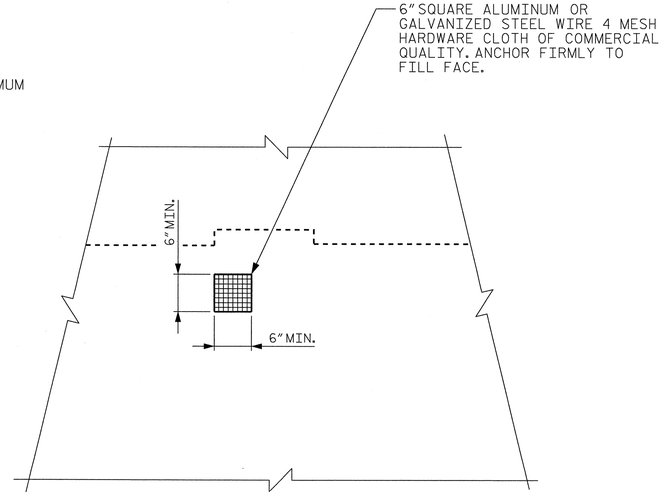

VIEW Y-Y

NOTE:
NO SEPARATE PAYMENT WILL BE MADE FOR FURNISHING AND INSTALLING THE PVC PLASTIC PIPE DRAINS, HARDWARE CLOTH AND FASTENERS. THE ENTIRE COST OF THIS WORK SHALL BE INCLUDED IN THE UNIT CONTRACT PRICE FOR THE SEVERAL PAY ITEMS.

DRAWN BY: RTO DATE: 1/14
CHECKED BY: JCW DATE: 1/14

PROJECT NO. U-2525B
GUILFORD COUNTY
STATION: 26+21.65 -L-
17+06.65 -Y3-

SHEET 3 OF 3

NORTH CAROLINA PROFESSIONAL SEAL 12186 ENGINEER VINCIL L. NARRON 2/17/14

Kimley-Horn and Associates, Inc.
333 Fayetteville Street, Suite 600
Raleigh, NC 27601-1772
Phone (919) 835-1494
NC LICENSE # F-0102

This document, together with the concepts and designs presented herein, as an instrument of service, is intended only for the specific purpose and client for which it was prepared. Reuse of and improper reliance on this document without written authorization and adaption by Kimley-Horn and Associates, Inc. shall be without liability to Kimley-Horn and Associates, Inc.
Copyright Kimley-Horn and Associates, Inc., 2014

STATE OF NORTH CAROLINA
DEPARTMENT OF TRANSPORTATION
RALEIGH

SUBSTRUCTURE

END BENT 2

REVISIONS						SHEET NO.
NO.	BY:	DATE:	NO.	BY:	DATE:	S-106
1			3			TOTAL SHEETS
2			4			541

STR. #3

K:\RDT_Structures_Bridge\NCO11036224_U-2525B_Greensboro East Loop over US 70\Cadd\dgn\u-2525_sd_str_3.pshl06.dgn
2/17/2014

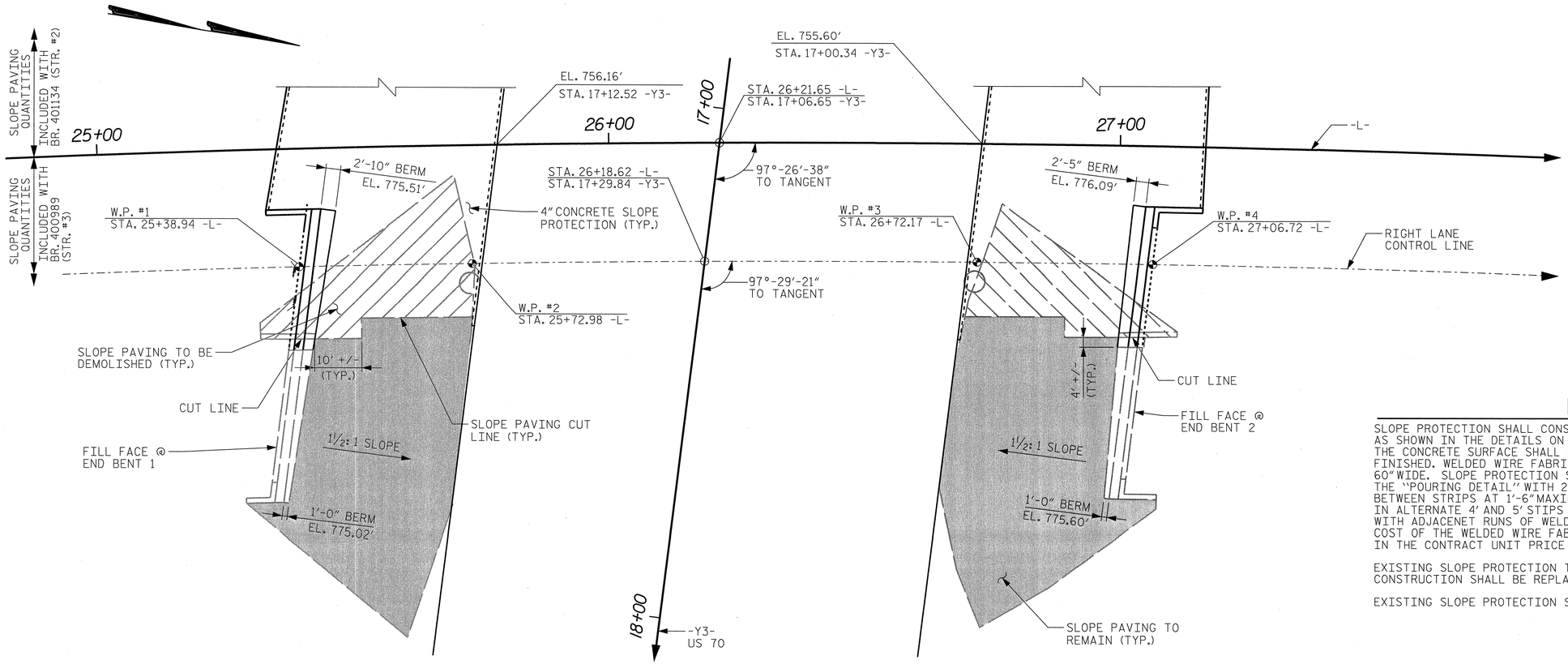

PLAN

NOTES

SLOPE PROTECTION SHALL CONSIST OF 4" POURED-IN-PLACE CONCRETE PAVING AS SHOWN IN THE DETAILS ON THIS SHEET. CONCRETE SHALL BE CLASS "B". THE CONCRETE SURFACE SHALL BE FLOATED WITH A WOODEN FLOAT AND FINISHED. WELDED WIRE FABRIC REINFORCING SHALL BE 6 X 6 - W1.4 X W1.4, 60" WIDE. SLOPE PROTECTION SHALL BE POURED IN 5' STRIPS AS SHOWN IN THE "POURING DETAIL" WITH 2'-0' LONG #4 BARS PLACED ALONG THE SLOPE BETWEEN STRIPS AT 1'-6" MAXIMUM SPACING. SLOPE PROTECTION MAY BE POURED IN ALTERNATE 4' AND 5' STIPS AS SHOWN IN THE "OPTIONAL POURING DETAIL" WITH ADJACENET RUNS OF WELDED WIRE FABRIC LAPPING AT LEAST 6". THE COST OF THE WELDED WIRE FABRIC AND #4 BARS, IF USED, SHALL BE INCLUDED IN THE CONTRACT UNIT PRICE BID PER SQUARE YARD FOR SLOPE PROTECTION.

EXISTING SLOPE PROTECTION TO REMAIN AND ANY THAT WAS DAMAGED DURING CONSTRUCTION SHALL BE REPLACED.

EXISTING SLOPE PROTECTION SHALL BE CUT ALONG EXISTING JOINT LINES.

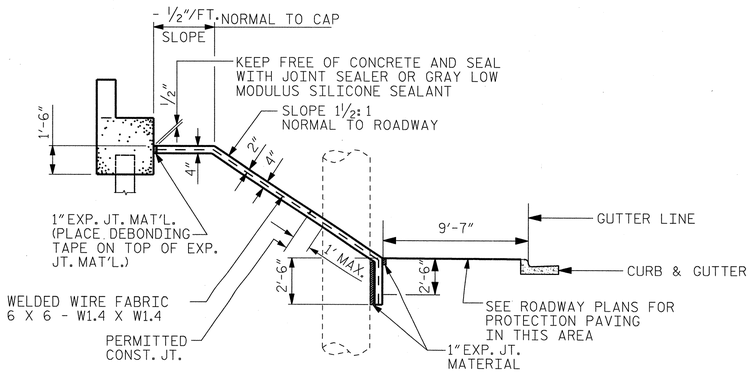

SECTION ALONG ℄ ROADWAY WITH SHOULDER PIER

DETAILS FOR ALTERNATE "A"

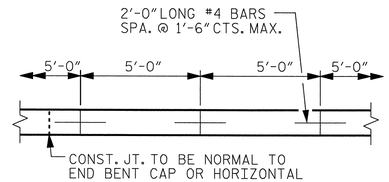

STRIP WIDTHS MAY VARY IN CURVED PORTION.

POURING DETAIL

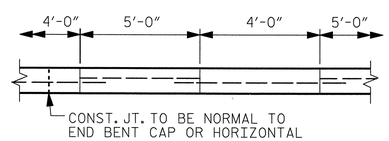

POUR A 4'-0" STRIP FIRST. STRIP WIDTHS MAY VARY IN CURVED PORTION.

OPTIONAL POURING DETAIL

BRIDGE @ STA. 26+18.62 -L-	4" SLOPE PROTECTION	* WELDED WIRE FABRIC 60 INCHES WIDE
	SQUARE YARDS	APPROX. L.F.
END BENT 1	180	305
END BENT 2	185	290
TOTAL	365	595

* QUANTITY SHOWN IS BASED ON 5' POURS.

PROJECT NO. U-2525B

GUILFORD COUNTY

STATION: 26+21.65 -L-
17+06.65 -Y3-

NORTH CAROLINA PROFESSIONAL SEAL 12186 ENGINEER CECIL L. NARRON 2/17/14

Kimley-Horn and Associates, Inc.
333 Fayetteville Street, Suite 600
Raleigh, NC 27601-1772
Phone (919) 835-1494
NC LICENSE # F-0102

This document, together with the concepts and designs presented herein, as an instrument of services, is intended only for the specific purpose and client for which it was prepared. Reuse of and improper reliance on this document without written authorization and adaptation by Kimley-Horn and Associates, Inc. shall be without liability to Kimley-Horn and Associates, Inc.

Copyright Kimley-Horn and Associates, Inc., 2014

STATE OF NORTH CAROLINA
DEPARTMENT OF TRANSPORTATION
RALEIGH

STANDARD

SLOPE PROTECTION DETAILS

REVISIONS						SHEET NO.
NO.	BY:	DATE:	NO.	BY:	DATE:	S-107
1			3			TOTAL SHEETS
2			4			541

DRAWN BY: RTO DATE: 1/14
CHECKED BY: JCW DATE: 1/14

STR. #3

2/17/2014 K:\RDT_Structures_Bridge\NC\01036224_U-2525B_Cboro_East_Loop_over_US_70\Cadd\dgn\u-2525_sd_str_3_psh107.dgn

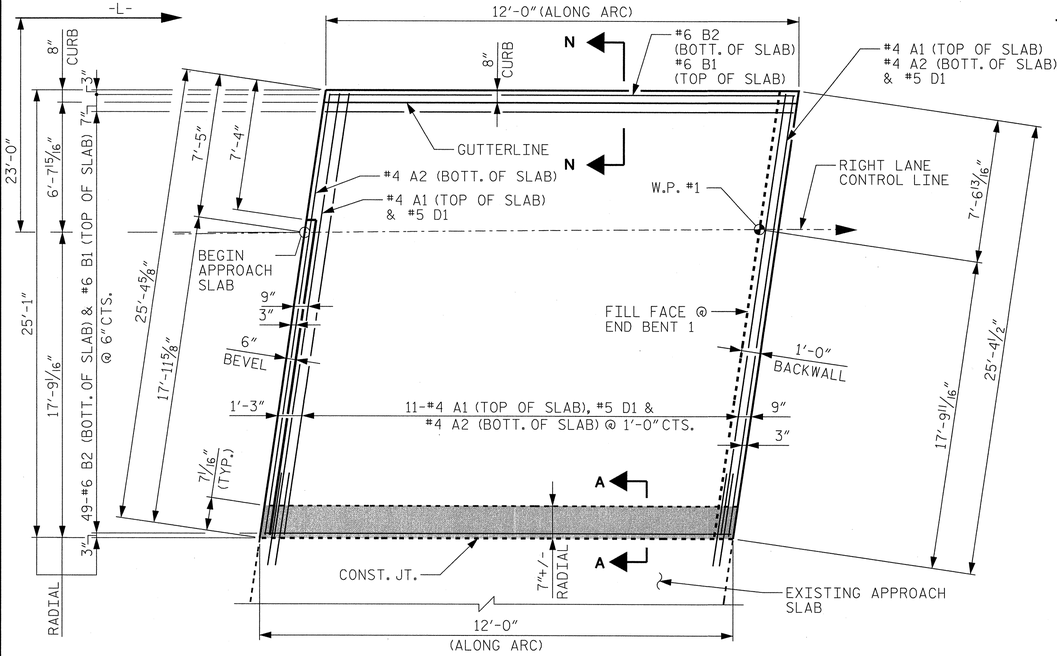

PLAN @ END BENT 1

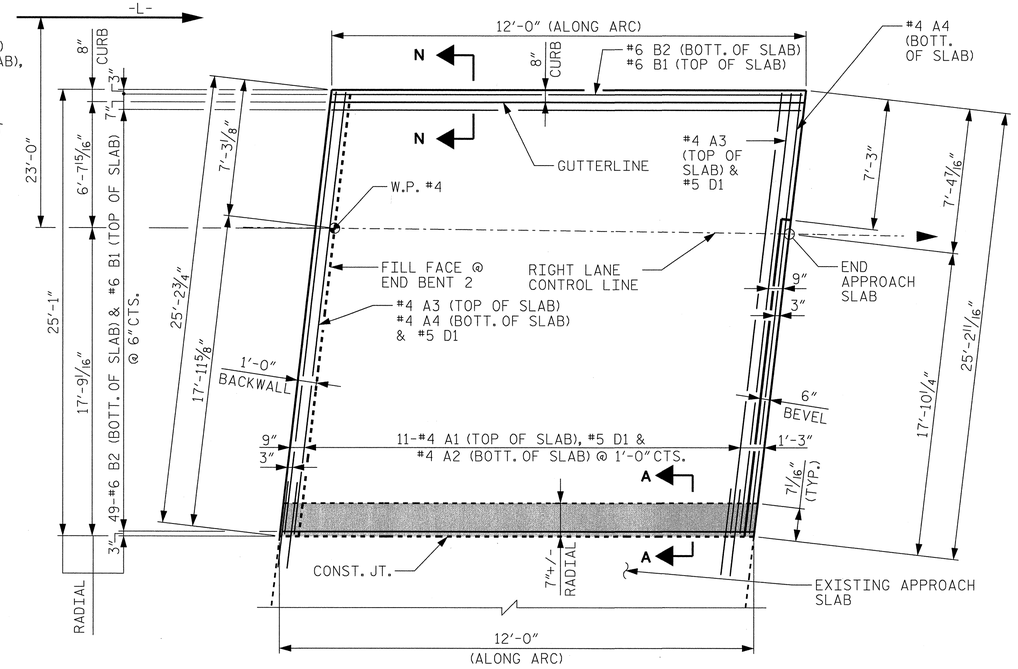

PLAN @ END BENT 2

BILL OF MATERIAL

END BENT 1 APPROACH SLAB

BAR	NO.	SIZE	TYPE	LENGTH	WEIGHT
✳ A1	13	4	STR	25'-0"	217
A2	13	4	STR	25'-0"	217
✳ B1	50	6	STR	11'-2"	839
B2	50	6	STR	11'-8"	876
✳ D1	13	5	STR	3'-8"	50

REINFORCING STEEL	1,093 LBS.
✳ EPOXY COATED REINFORCING STEEL	1,106 LBS.
CLASS AA CONCRETE	10.0 C. Y.

END BENT 2 APPROACH SLAB

BAR	NO.	SIZE	TYPE	LENGTH	WEIGHT
✳ A3	13	4	STR	24'-10"	216
A4	13	4	STR	24'-10"	216
✳ B1	50	6	STR	11'-2"	839
B2	50	6	STR	11'-8"	876
✳ D1	13	5	STR	3'-8"	50

REINFORCING STEEL	1,092 LBS.
✳ EPOXY COATED REINFORCING STEEL	1,105 LBS.
CLASS AA CONCRETE	10.0 C. Y.

NOTES

APPROACH SLAB SHALL NOT BE CONSTRUCTED PRIOR TO COMPLETION OF THE BRIDGE DECK.

AREA BETWEEN THE WINGWALL AND APPROACH SLAB SHALL BE GRADED TO DRAIN THE WATER AWAY FROM THE FILL FACE OF THE BRIDGE AND SHALL BE PAVED. SEE ROADWAY PLANS.

THE JOINT SHALL BE SAWED PRIOR TO THE CASTING OF THE BARRIER RAIL OR PARAPET AND END POST.

FOR FOAM JOINT SEALS, SEE SPECIAL PROVISIONS.

FOR ELASTOMERIC CONCRETE, SEE SPECIAL PROVISIONS.

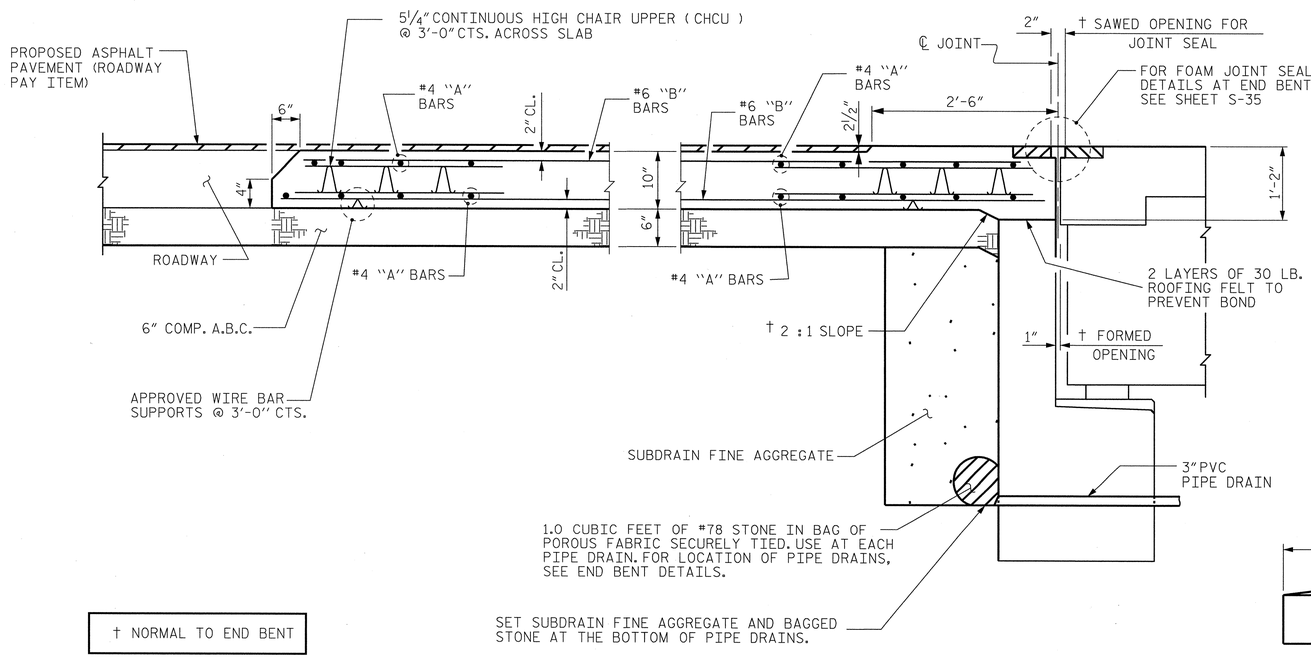

† NORMAL TO END BENT

SECTION THRU SLAB

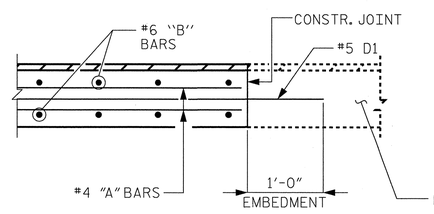

SECTION A-A

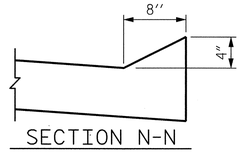

SECTION N-N

SPLICE LENGTHS		
BAR SIZE	EPOXY COATED	UNCOATED
#4	2'-0"	1'-9"
#5	2'-6"	2'-2"
#6	3'-10"	2'-7"

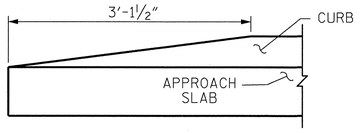

END OF CURB WITHOUT SHOULDER BERM GUTTER

NORTH CAROLINA PROFESSIONAL SEAL 12186 ENGINEER CECIL L. NARRON 2/17/14

Kimley-Horn and Associates, Inc.
333 Fayetteville Street, Suite 600
Raleigh, NC 27601-1772
Phone (919) 835-1494
NC LICENSE # F-0102

This document, together with the concepts and designs presented herein, as an instrument of services, is intended only for the specific purpose and client for which it was prepared. Reuse of and improper reliance of this document without written authorization by Kimley-Horn and Associates, Inc. shall be without liability to Kimley-Horn and Associates, Inc.
Copyright Kimley-Horn and Associates, Inc., 2014

PROJECT NO. U-2525B
GUILFORD COUNTY
STATION: 26+21.65 -L-
17+06.65 -Y3-

SHEET 1 OF 2

STATE OF NORTH CAROLINA
DEPARTMENT OF TRANSPORTATION
RALEIGH

BRIDGE APPROACH SLAB FOR FLEXIBLE PAVEMENT

REVISIONS						SHEET NO.
NO.	BY:	DATE:	NO.	BY:	DATE:	S-108
1			3			TOTAL SHEETS
2			4			541

DRAWN BY: RTO DATE: 1/14
CHECKED BY: JCW DATE: 1/14

STR. #3

2/17/2014 K:\ROT_Structures_Bridge\NC\01\036224.U-2525B_Oboro East Loop over US 70\Cad\dgn\u-2525_sd_str_3_pshn108.dgn

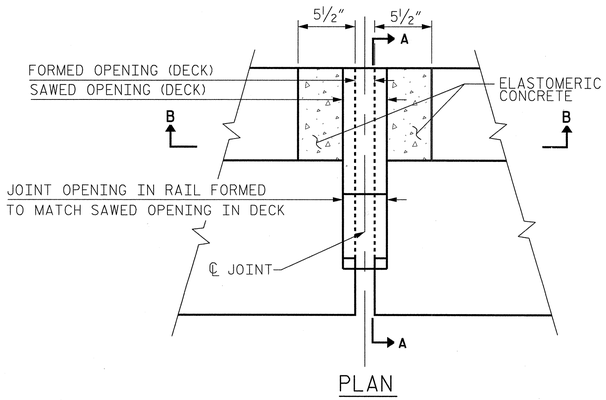

PLAN

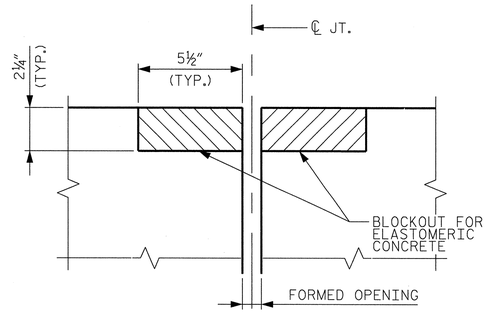

SECTION B-B

FOAM JOINT SEAL
(PRE-SAWED ELASTOMERIC CONCRETE DIMENSIONS)

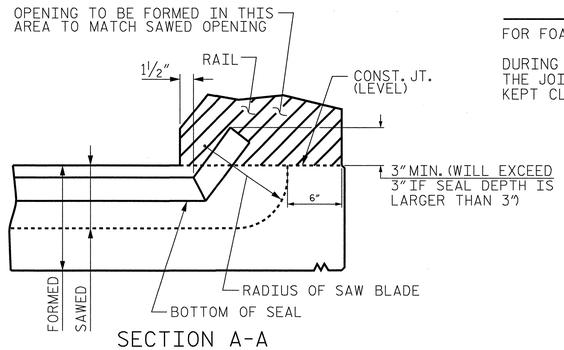

SECTION A-A

FOAM JOINT SEALS TO BE CUT, HEAT WELDED AND TURNED UP PARALLEL TO SLOPED FACE OF THE BARRIER RAIL.

NOTES

FOR FOAM JOINT SEALS, SEE SPECIAL PROVISIONS

DURING THE JOINT INSTALLATION PROCEDURE, THE JOINT AND SURROUNDING AREA SHALL BE KEPT CLEAN AND FREE OF DEBRIS.

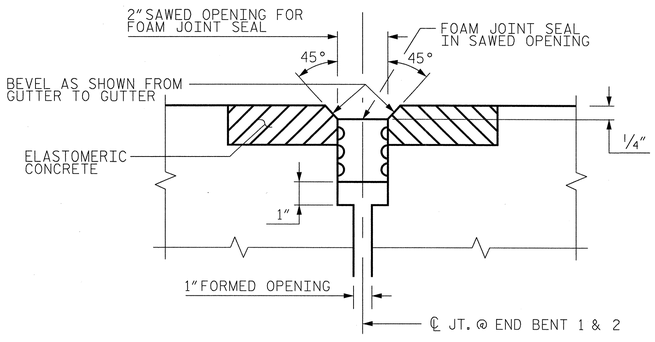

SECTION B-B (END BENT 1 & 2)

FOAM JOINT SEAL
THE NOMINAL UNCOMPRESSED SEAL WIDTH OF THE FOAM JOINT SEAL SHALL BE 2½" IN. AT END BENT 1 & 2.

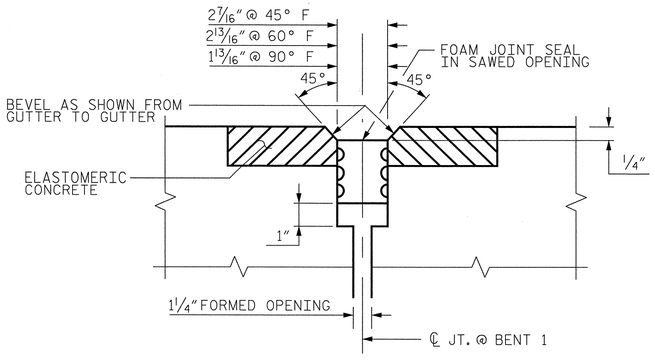

SECTION B-B (BENT 1)

FOAM JOINT SEAL
THE NOMINAL UNCOMPRESSED SEAL WIDTH OF THE FOAM JOINT SEAL SHALL BE 3⅞" IN. AT BENT 1.

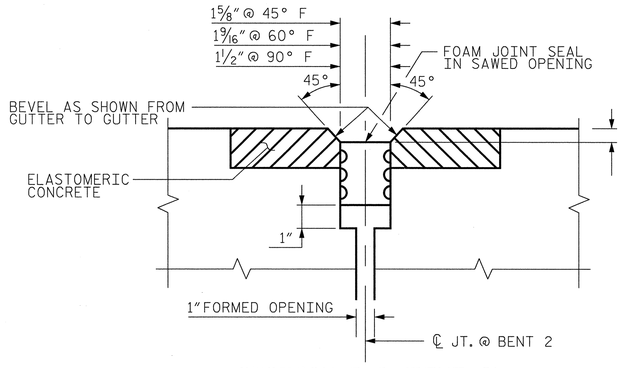

SECTION B-B (BENT 2)

FOAM JOINT SEAL
THE NOMINAL UNCOMPRESSED SEAL WIDTH OF THE FOAM JOINT SEAL SHALL BE 2½" IN. AT BENT 2.

FOAM JOINT SEAL DETAILS

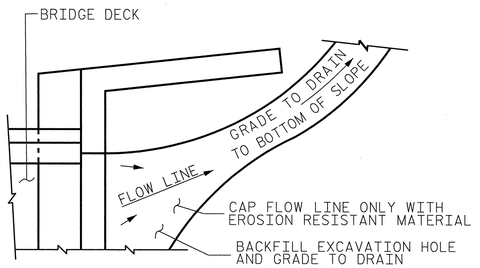

NOTE: IF THE APPROACH SLAB IS NOT CONSTRUCTED IMMEDIATELY AFTER THE BACKFILLING OF THE END BENT EXCAVATION, GRADE TO DRAIN TO THE BOTTOM OF THE SLOPE AND PROVIDE EROSION RESISTANT MATERIAL, SUCH AS FIBERGLASS ROVING OR AS DIRECTED BY THE ENGINEER TO PREVENT SOIL EROSION AND TO PROTECT THE AREA ADJACENT TO THE STRUCTURE. MATERIALS PRIOR TO CONSTRUCTION OF THE APPROACH SLAB.

TEMPORARY DRAINAGE DETAIL

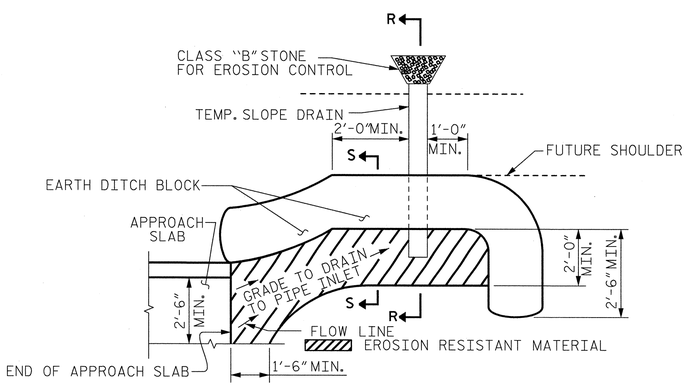

NOTE: IMMEDIATELY AFTER THE CONSTRUCTION OF THE APPROACH SLAB, THE CONTRACTOR SHALL PROVIDE TEMPORARY BERM AND SLOPE DRAIN. CONTRACTOR SHALL GRADE TO PIPE INLET AND PROVIDE EROSION RESISTANT MATERIAL AS SHOWN. THE EROSION RESISTANT MATERIAL SHALL BE EITHER 1) ASPHALT PLANT MIX, TYPE 1 OR TYPE 2, MIN. 2" DEPTH, 2) EROSION CONTROL MAT, OR 3) CONCRETE, AS DIRECTED BY THE ENGINEER. THE SLOPE DRAIN SHALL CONSIST OF A NON-PERFORATED TEMPORARY DRAINAGE PIPE, 12 INCHES IN DIAMETER.

PLAN VIEW

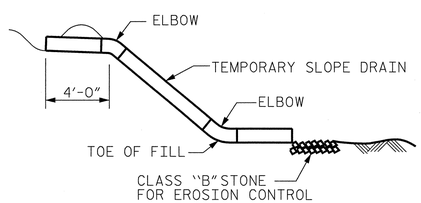

SECTION R-R

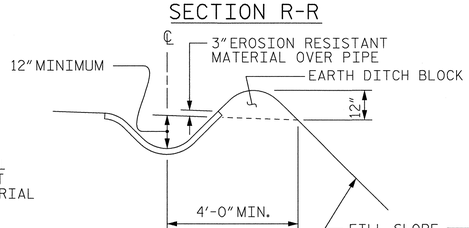

SECTION S-S

TEMPORARY BERM AND SLOPE DRAIN DETAILS

(TO BE USED WHEN SHOULDER BERM GUTTER IS REQUIRED)

ASSEMBLED BY : RTO		DATE :	1/14
CHECKED BY : JCW		DATE :	1/14
DRAWN BY : FCJ	11/88	REV. 10/1/11	MAA/GM
CHECKED BY : ARB	11/88	REV. 7/12	MAA/GM
		REV. 10/12	MAA/GM

NORTH CAROLINA PROFESSIONAL SEAL 12186 ENGINEER JACOB L. NARRON 2/17/14

Kimley-Horn and Associates, Inc.
333 Fayetteville Street, Suite 600
Raleigh, NC 27601-1772
Phone (919) 835-1494
NC LICENSE # F-0102

This document, together with the concepts and designs presented herein, as an instrument of services, is intended only for the specific purpose and client for which it was prepared. Reuse of and improper reliance of this document without written authorization and adaption by Kimley-Horn and Associates, Inc. shall be without liability to Kimley-Horn and Associates, Inc.

Copyright Kimley-Horn and Associates, Inc., 2014

PROJECT NO. U-2525B

GUILFORD COUNTY

STATION: 26+21.65 -L-
17+06.65 -Y3-

SHEET 2 OF 2

STATE OF NORTH CAROLINA
DEPARTMENT OF TRANSPORTATION
RALEIGH

STANDARD

BRIDGE APPROACH SLAB DETAILS

REVISIONS						SHEET NO.
NO.	BY:	DATE:	NO.	BY:	DATE:	S-109
1			3			TOTAL SHEETS
2			4			541

STD. NO. BAS4 STR. #3

2/17/2014 K:\RDT_Structures_Bridge\NCV01\036224_U-2525B_Guilford_Co_Bridge_Approach_Slab_Details\Cad\dgn\u-2525_sd_str_3_osh109.dgn

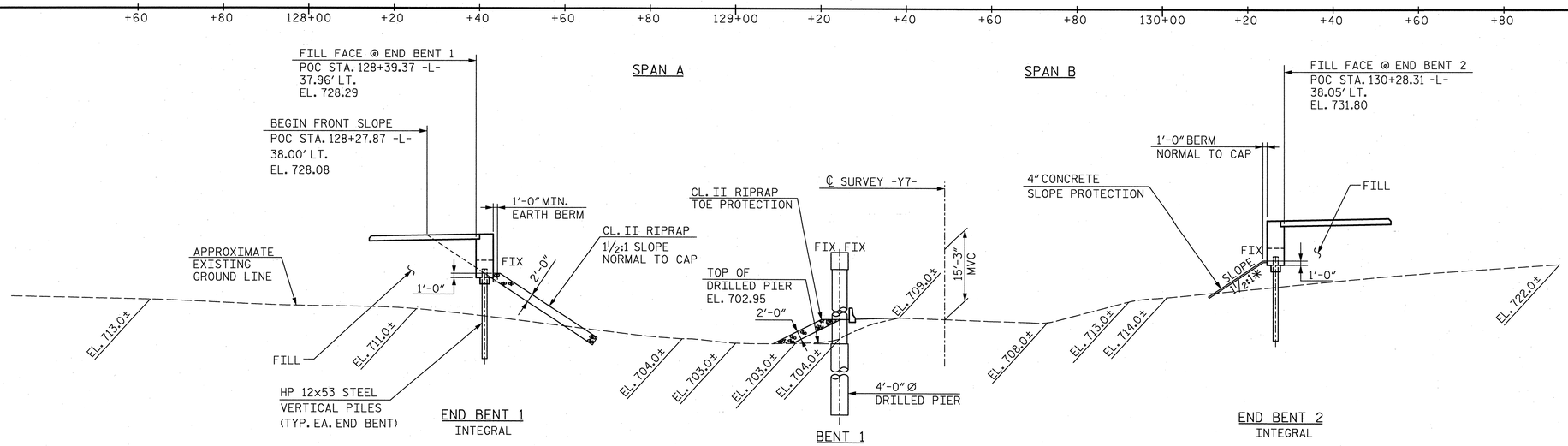

SECTION ALONG CONTROL LINE LEFT & ℄ BRIDGE

NOTES: (END BENTS AND BENT ON SECTION AT RIGHT ANGLES TO END BENTS AND BENT)

THE APPROXIMATE NATURAL GROUND ELEVATIONS ARE ALONG THE EDGE OF BRIDGE ON THE UPSTREAM SIDE.

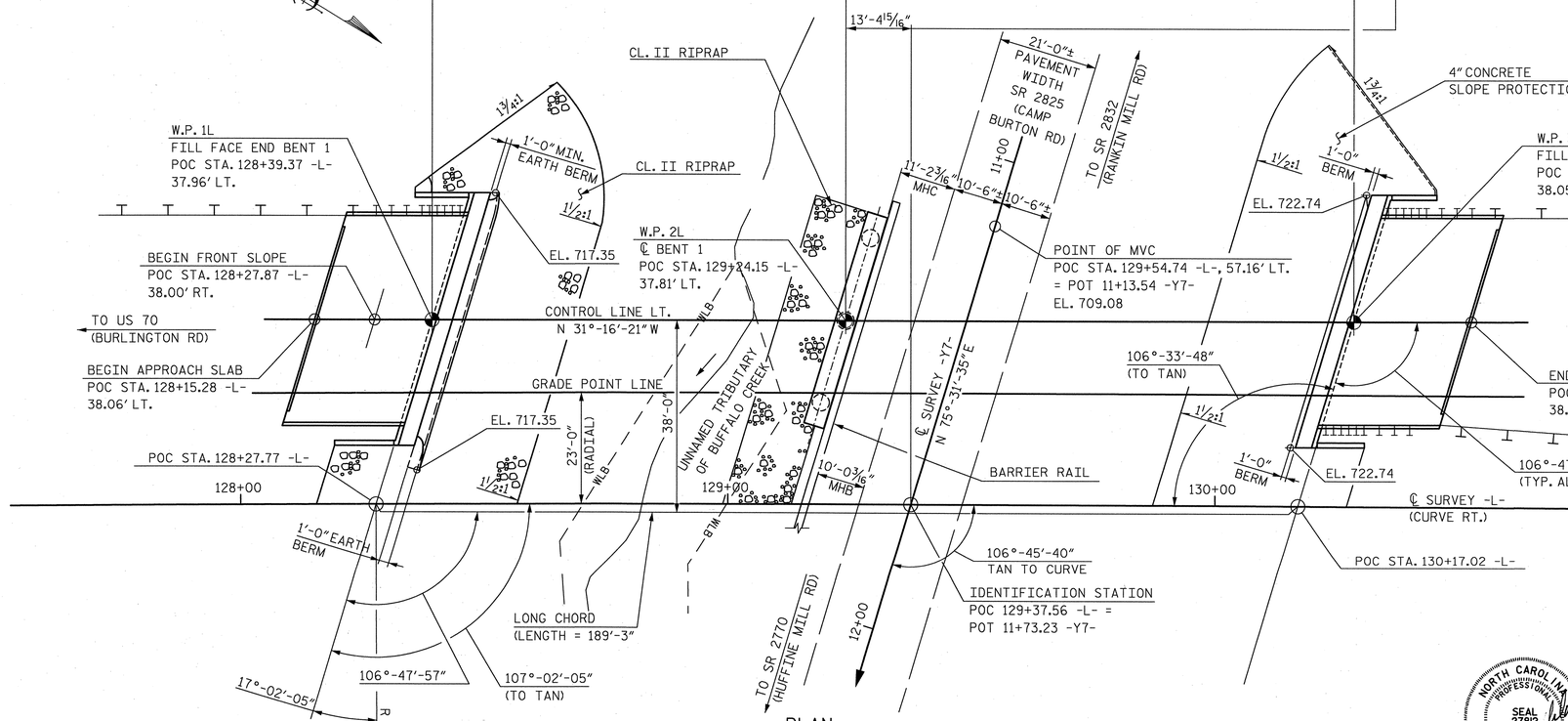

PLAN

NOTES: PILES NOT SHOWN FOR CLARITY.
CONTROL LINE FOR BRIDGE SHALL BE A 38'-0" OFFSET OF THE -L- ℄ SURVEY LONG CHORD.

NOTES:
MVC = MINIMUM VERTICAL CLEARANCE
MHC = MINIMUM HORIZONTAL CLEARANCE TO CAP
MHB = MINIMUM HORIZONTAL CLEARANCE TO BARRIER

NOTE: NO HYDRAULIC INFORMATION IS AVAILABLE.

CURVE DATA FOR -L-

PI STA 130+34.85
△ = 2°-24'-09.0"(RT)
L = 964.43 FT.
T = 482.29 FT.
R = 23,000.00 FT.
SE = NC

PI STA. = 135+20.00
ELEV. = 741.24
V.C. = 620'

(+)1.8588% (-)0.6493%

GRADE DATA FOR -L-

-2.690% (+)0.940%

PI STA. = 12+40.00
ELEV. = 705.60
V.C. = 330'

GRADE DATA FOR -Y7-

NOTE: GRADE DATA FOR -Y7- WAS APPROXIMATED USING AVAILABLE SURVEY INFORMATION. ROADWAY IS APPROXIMATELY NORMAL CROWN.

PROJECT NO. U-2525B
GUILFORD COUNTY
STATION: POC 129+37.56 -L-=
POT 11+73.23 -Y7-

SHEET 1 OF 3 BRIDGE NO. 1136

STATE OF NORTH CAROLINA
DEPARTMENT OF TRANSPORTATION
RALEIGH

GENERAL DRAWING
BRIDGE OVER CAMP BURTON RD. ON GREENSBORO EASTERN LOOP BETWEEN US 70 AND US 29

LEFT LANE

NORTH CAROLINA PROFESSIONAL SEAL 27812 ENGINEER DAVID W. HAWKINS 12/23/13

NORTH CAROLINA PROFESSIONAL SEAL 12916 ENGINEER PAUL J. BARBER 12/23/13

HNTB HNTB NORTH CAROLINA, P.C.
License No. C-1554
343 E. Six Forks Rd., Suite 200, Raleigh, N.C. 27609

DRAWN BY M. WRIGHT DATE 12/13
CHECKED BY D. HAWKINS DATE 12/13
DWG. NO. 1

REVISIONS						SHEET NO.
NO.	BY:	DATE:	NO.	BY:	DATE:	S-110
1			3			TOTAL SHEETS
2			4			541

STR. #4

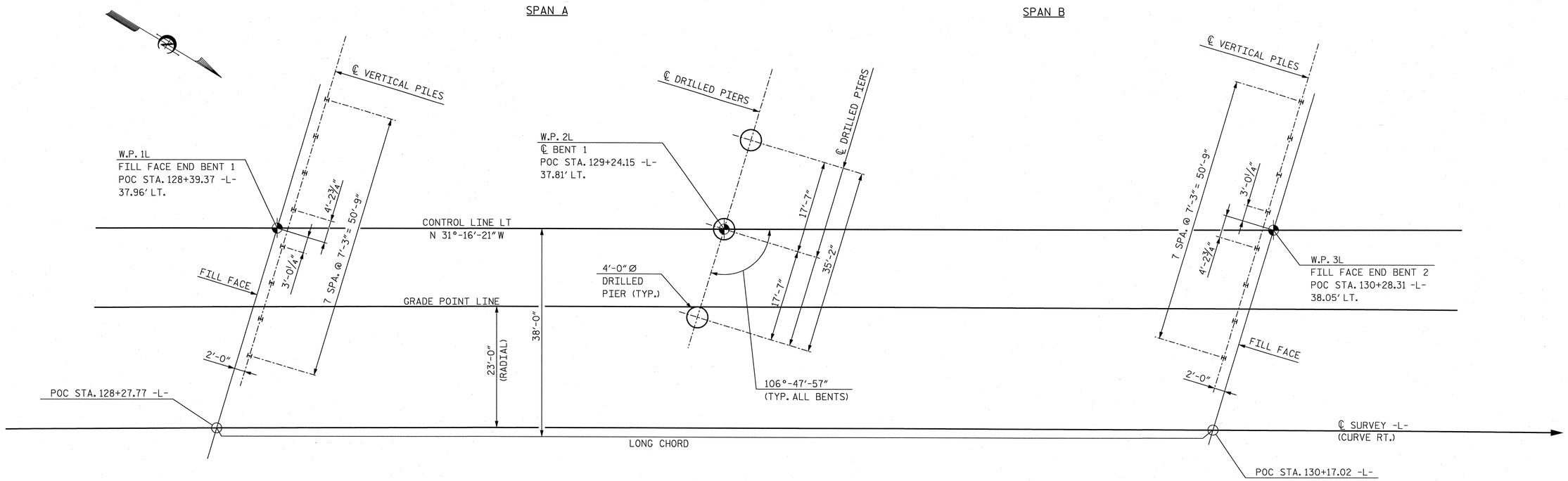

FOUNDATION LAYOUT PLAN

ALL DIMENSIONS ARE PARALLEL OR NORMAL TO FILL FACES AT END BENTS AND ℄ BENT AT BENT NO. 1.

ALL PILE DIMENSIONS ARE TO CENTERS OF PILES.

PILES AT END BENT 1 AND END BENT 2 ARE HP 12x53 STEEL PILES.

FOR FOUNDATION ELEVATIONS AND DETAILS, SEE BENT AND END BENT SHEETS.

FOUNDATION NOTES:

FOR PILES, SEE SECTION 450 OF THE STANDARD SPECIFICATIONS.

PILES AT END BENT NO. 1 AND END BENT NO. 2 ARE DESIGNED FOR A FACTORED RESISTANCE OF 95 TONS AND 110 TONS PER PILE, RESPECTIVELY.

DRIVE PILES AT END BENT NO. 1 AND END BENT NO. 2 TO A REQUIRED DRIVING RESISTANCE OF 165 TONS AND 185 TONS PER PILE, RESPECTIVELY.

FOR DRILLED PIERS, SEE SECTION 411 OF THE STANDARD SPECIFICATIONS.

DRILLED PIERS AT BENT NO. 1 ARE DESIGNED FOR A FACTORED RESISTANCE OF 595 TONS PER PIER. CHECK FIELD CONDITIONS FOR THE REQUIRED TIP RESISTANCE OF 40 TSF.

INSTALL DRILLED PIERS AT BENT NO. 1 TO A TIP ELEVATION NO HIGHER THAN 691 FT. WITH THE REQUIRED TIP RESISTANCE.

DO NOT USE SLURRY CONSTRUCTION FOR DRILLED PIERS AT BENT NO. 1.

SID INSPECTIONS MAY BE REQUIRED FOR DRILLED PIERS. THE ENGINEER WILL DETERMINE THE NEED FOR SID INSPECTIONS. FOR SID INSPECTIONS, SEE SECTION 411 OF THE STANDARD SPECIFICATIONS.

PIT MAY BE REQUIRED FOR DRILLED PIERS. THE ENGINEER WILL DETERMINE THE NEED FOR PIT. FOR PILE INTEGRITY TESTING, SEE SECTION 411 OF THE STANDARD SPECIFICATIONS.

NORTH CAROLINA PROFESSIONAL SEAL 27812 ENGINEER DAVID W. HAWKINS 12/23/13

NORTH CAROLINA PROFESSIONAL SEAL 12916 ENGINEER PAUL J. BARGER 12/23/13

HNTB HNTB NORTH CAROLINA, P.C.
License No. C-1554
343 E. Six Forks Rd., Suite 200, Raleigh, N.C. 27609

DRAWN BY M. WRIGHT DATE 4/13
CHECKED BY D. RAGAN DATE 7/13
DWG. NO. 2

PROJECT NO. U-2525B
GUILFORD COUNTY
STATION: POC 129+37.56 -L-

SHEET 2 OF 3

STATE OF NORTH CAROLINA
DEPARTMENT OF TRANSPORTATION
RALEIGH

GENERAL DRAWING
FOUNDATION
LAYOUT
LEFT LANE

REVISIONS						SHEET NO.
NO.	BY:	DATE:	NO.	BY:	DATE:	S-111
1			3			TOTAL SHEETS
2			4			541

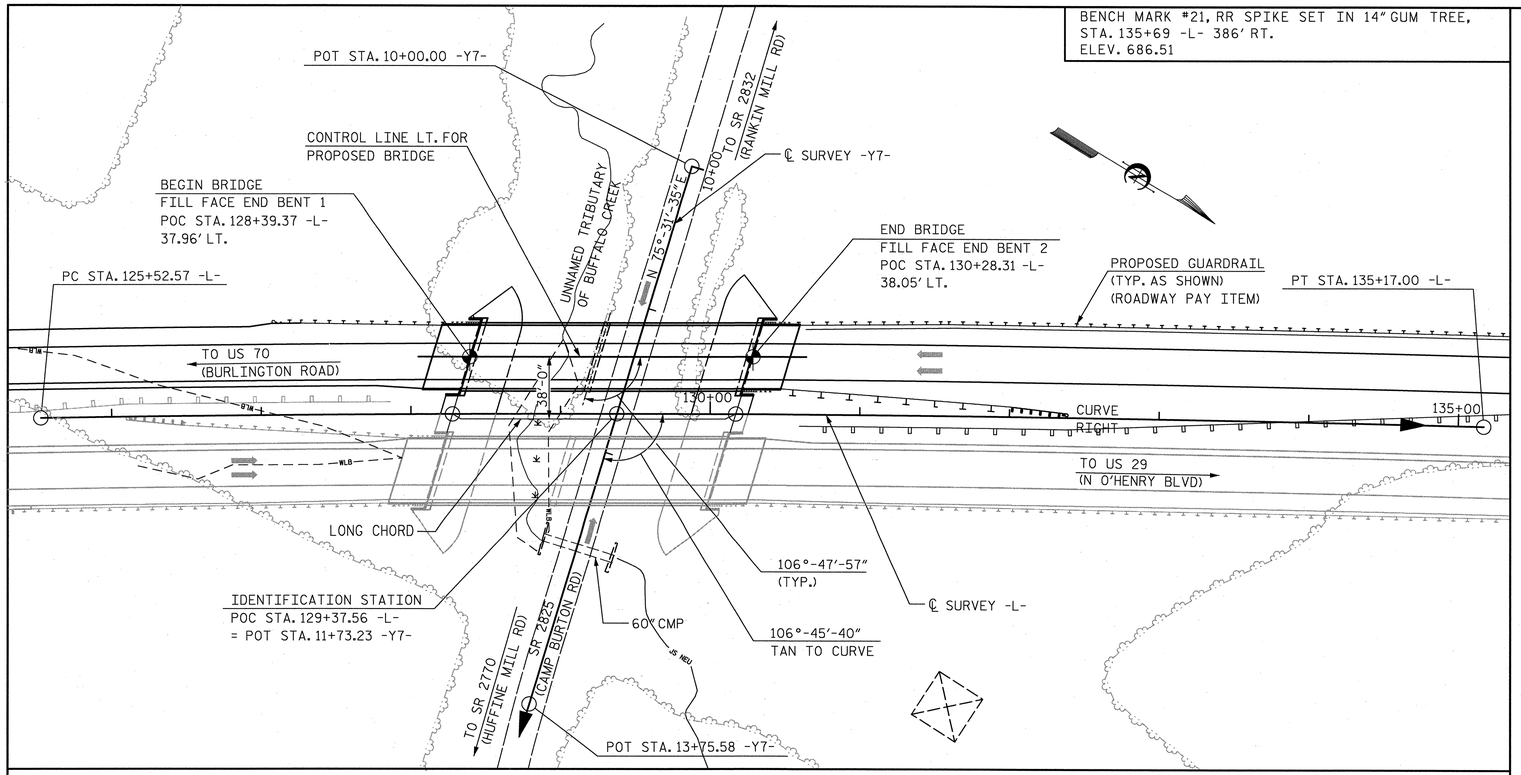

LOCATION SKETCH

FOR UTILITY INFORMATION, SEE UTILITY PLANS AND SPECIAL PROVISIONS

GENERAL NOTES

ASSUMED LIVE LOAD = HL-93 OR ALTERNATE LOADING.

THIS BRIDGE HAS BEEN DESIGNED IN ACCORDANCE WITH THE AASHTO LRFD BRIDGE DESIGN SPECIFICATIONS.

THIS BRIDGE IS LOCATED IN SEISMIC ZONE 1.

FOR OTHER DESIGN DATA AND GENERAL NOTES, SEE SHEET SN.

FOR SUBMITTAL OF WORKING DRAWINGS, SEE SPECIAL PROVISIONS.

FOR FALSEWORK AND FORMWORK, SEE SPECIAL PROVISIONS.

FOR CRANE SAFETY, SEE SPECIAL PROVISIONS.

FOR GROUT FOR STRUCTURES, SEE SPECIAL PROVISIONS.

THE ELEVATION(S) AND CLEARANCE(S) SHOWN ON THE PLANS AT THE POINT(S) OF MINIMUM VERTICAL CLEARANCE ARE FROM THE BEST INFORMATION AVAILABLE. PRIOR TO BEGINNING BRIDGE CONSTRUCTION, VERIFY THE ELEVATION(S) ON THE EXISTING PAVEMENT AND CHECK THE CLEARANCE. REPORT ANY VARIATIONS TO THE ENGINEER. ANY PLAN REVISIONS NECESSARY TO ACHIEVE THE REQUIRED MINIMUM VERTICAL CLEARANCE WILL BE PROVIDED BY THE DEPARTMENT.

FOR MAINTENANCE AND PROTECTION OF TRAFFIC BENEATH PROPOSED STRUCTURE, SEE SPECIAL PROVISIONS.

PRESTRESSED CONCRETE DECK PANELS MAY BE USED IN LIEU OF METAL STAY-IN-PLACE FORMS IN ACCORDANCE WITH ARTICLE 420-3 OF THE STANDARD SPECIFICATIONS.

REMOVABLE FORMS MAY BE USED IN LIEU OF METAL STAY-IN-PLACE FORMS IN ACCORDANCE WITH ARTICLE 420-3 OF THE STANDARD SPECIFICATIONS.

NEEDLE BEAMS WILL NOT BE ALLOWED UNLESS OTHERWISE CALLED FOR ON THE PLANS OR APPROVED BY THE ENGINEER.

THE CLASS AA CONCRETE IN THE BRIDGE DECK SHALL CONTAIN FLY ASH OR GROUND GRANULATED BLAST FURNACE SLAG AT THE SUBSTITUTION RATE SPECIFIED IN ARTICLE 1024-1 AND IN ACCORDANCE WITH ARTICLES 1024-5 AND 1024-6 OF THE STANDARD SPECIFICATIONS. NO PAYMENT WILL BE MADE FOR THIS SUBSTITUTION AS IT IS CONSIDERED INCIDENTAL TO THE COST OF THE REINFORCED CONCRETE DECK SLAB.

FOR EROSION CONTROL MEASURES SEE EROSION CONTROL PLANS.

THE LOCATION OF THE CONSTRUCTION JOINT IN THE DRILLED PIERS IS BASED ON AN APPROXIMATE GROUND LINE ELEVATION. IF THE CONSTRUCTION JOINT IS ABOVE THE ACTUAL GROUND LINE ELEVATION, THE CONTRACTOR SHALL PLACE THE CONSTRUCTION JOINT 1'-0" BELOW THE GROUND LINE.

FOR PLACING LOAD ON STRUCTURE MEMBERS, SEE SPECIAL PROVISIONS.

TOTAL BILL OF MATERIAL

	4'-0" Ø DRILLED PIERS IN SOIL	4'-0" Ø DRILLED PIERS NOT IN SOIL	SID INSPECTIONS	REINFORCED CONCRETE DECK SLAB	GROOVING BRIDGE FLOORS	CLASS A CONCRETE	BRIDGE APPROACH SLABS, STATION 129+37.56 -L- (LEFT LANE)	REINFORCING STEEL	SPIRAL COLUMN REINFORCING STEEL	54" PRESTRESSED CONCRETE GIRDERS		HP 12x53 STEEL PILES		CONCRETE BARRIER RAIL	4" SLOPE PROTECTION	RIP RAP CLASS II (2'-0" THICK)	GEOTEXTILE FOR DRAINAGE	ELASTOMERIC BEARINGS
	L.F.	L.F.	EACH	SQ. FT.	SQ. FT.	CU. YDS.	LUMP SUM	LBS.	LBS.	NO.	L.F.	NO.	L.F.	L.F.	SQ. YD.	TONS	SQ. YD.	LUMP SUM
SUPERSTRUCTURE	—	—	—	8,563	9,279	—	LUMP SUM	—	—	10	928.23	—	—	375.00	—	—	—	LUMP SUM
END BENT 1	—	—	—	—	—	39.0	—	5,642	—	—	—	8	120	—	—	305	335	—
BENT 1	10.0	26.0	1	—	—	47.5	—	11,615	2,270	—	—	—	—	—	—	52	86	—
END BENT 2	—	—	—	—	—	38.3	—	6,079	—	—	—	8	160	—	185	—	—	—
TOTAL	10.0	26.0	1	8,563	9,279	124.8	LUMP SUM	23,336	2,270	10	928.23	16	280	375.00	185	357	421	LUMP SUM

PROJECT NO. U-2525B

GUILFORD COUNTY

STATION: POC 129+37.56 -L-

SHEET 3 OF 3

NORTH CAROLINA PROFESSIONAL SEAL 27812 ENGINEER DAVID W. HAWKINS 12/13/13

NORTH CAROLINA PROFESSIONAL SEAL 12916 ENGINEER PAUL J. BARBER 12/13/13

HNTB

HNTB NORTH CAROLINA, P.C.
License No. C-1554
343 E. Six Forks Rd., Suite 200, Raleigh, N.C. 27609

DRAWN BY M. WRIGHT DATE 12/13
CHECKED BY D. HAWKINS DATE 12/13

DWG. NO. 3

STATE OF NORTH CAROLINA
DEPARTMENT OF TRANSPORTATION
RALEIGH

GENERAL DRAWING
LOCATION SKETCH,
GENERAL NOTES AND
TOTAL BILL OF MATERIAL
LEFT LANE

REVISIONS						SHEET NO.
NO.	BY:	DATE:	NO.	BY:	DATE:	S-112
1			3			TOTAL SHEETS
2			4			541

LOAD AND RESISTANCE FACTOR RATING (LRFR) SUMMARY FOR PRESTRESSED CONCRETE GIRDERS

LEVEL		VEHICLE	WEIGHT (W) (TONS)	⟨#⟩ CONTROLLING LOAD RATING	MINIMUM RATING FACTORS (RF)	TONS = W × RF	STRENGTH I LIMIT STATE											SERVICE III LIMIT STATE						COMMENT NUMBER
								MOMENT					SHEAR						MOMENT						
							LIVE-LOAD FACTORS (γ_{LL})	DISTRIBUTION FACTORS (DF)	RATING FACTOR	SPAN	GIRDER LOCATION	DISTANCE FROM LEFT END OF SPAN (ft)	DISTRIBUTION FACTORS (DF)	RATING FACTOR	SPAN	GIRDER LOCATION	DISTANCE FROM LEFT END OF SPAN (ft)	LIVE-LOAD FACTORS (γ_{LL})	DISTRIBUTION FACTORS (DF)	RATING FACTOR	SPAN	GIRDER LOCATION	DISTANCE FROM LEFT END OF SPAN (ft)	
DESIGN LOAD RATING		HL-93 (INVENTORY)	N/A	⟨1⟩	1.01	--	1.75	0.82	1.30	A	EL/ER	40.8	0.99	1.06	A	I	24.2	0.80	0.76	1.01	B	I	50.6	
		HL-93 (OPERATING)	N/A	--	1.67	--	1.35	0.82	1.69	A	EL/ER	40.8	0.99	1.67	B	I	19.8	N/A	--	--	--	--	--	
		HS-20 (INVENTORY)	36.000	⟨2⟩	1.35	48.6	1.75	0.82	1.74	A	EL/ER	40.8	0.99	1.65	A	I	15.9	0.80	0.79	1.35	A	I	40.8	
		HS-20 (OPERATING)	36.000	--	2.18	78.5	1.35	0.82	2.26	A	EL/ER	40.8	0.99	2.18	A	I	15.9	N/A	--	--	--	--	--	
LEGAL LOAD RATING	SINGLE VEHICLE (SV)	SH	12.500	--	3.38	42.3	1.40	0.82	5.45	A	EL/ER	40.8	0.99	5.63	A	I	15.9	0.80	0.79	3.38	A	I	40.8	
		S3C	21.500	--	1.98	42.6	1.40	0.82	3.19	A	EL/ER	40.8	0.99	3.25	A	I	15.9	0.80	0.79	1.98	A	I	40.8	
		S3A	22.750	--	1.87	42.5	1.40	0.82	3.02	A	EL/ER	40.8	0.99	3.08	A	I	15.9	0.80	0.79	1.87	A	I	40.8	
		S4A	26.750	--	1.65	44.1	1.40	0.82	2.67	A	EL/ER	40.8	0.99	2.69	A	I	15.9	0.80	0.79	1.65	A	I	40.8	
		S5A	30.500	--	1.46	44.5	1.40	0.82	2.35	A	EL/ER	40.8	0.99	2.47	A	I	15.9	0.80	0.79	1.46	A	I	40.8	
		S6A	34.500	--	1.33	45.9	1.40	0.82	2.14	A	EL/ER	40.8	0.99	2.22	A	I	15.9	0.80	0.79	1.33	A	I	40.8	
		S7B	38.500	--	1.21	46.6	1.40	0.82	1.95	A	EL/ER	40.8	0.99	2.09	A	I	15.9	0.80	0.79	1.21	A	I	40.8	
		S7A	40.000	⟨3⟩	1.20	48.0	1.40	0.82	1.93	A	EL/ER	40.8	0.99	2.14	B	I	19.8	0.80	0.79	1.20	A	I	40.8	
	TRUCK TRACTOR SEMI-TRAILER (TTST)	T4A	28.250	--	1.63	46.0	1.40	0.82	2.64	A	EL/ER	40.8	0.99	2.62	A	I	15.9	0.80	0.79	1.63	A	I	40.8	
		T5B	32.000	--	1.43	45.8	1.40	0.82	2.31	A	EL/ER	40.8	0.99	2.51	A	I	15.9	0.80	0.79	1.43	A	I	40.8	
		T6A	36.000	--	1.32	47.5	1.40	0.82	2.13	A	EL/ER	40.8	0.99	2.31	B	I	19.8	0.80	0.79	1.32	A	I	40.8	
		T7A	40.000	--	1.22	48.8	1.40	0.82	1.98	A	EL/ER	40.8	0.99	2.13	B	I	19.8	0.80	0.79	1.22	A	I	40.8	
		T7B	40.000	--	1.31	52.4	1.40	0.82	2.12	A	EL/ER	40.8	0.99	2.00	A	I	15.9	0.80	0.79	1.31	A	I	40.8	

LOAD FACTORS:

DESIGN LOAD RATING FACTORS	LIMIT STATE	γ_{DC}	γ_{DW}
	STRENGTH I	1.25	1.50
	SERVICE III	1.00	1.00

NOTES:

MINIMUM RATING FACTORS ARE BASED ON THE STRENGTH I AND SERVICE III LIMIT STATES.

ALLOWABLE STRESSES FOR SERVICE III LIMIT STATE ARE AS REQUIRED FOR DESIGN.

COMMENTS:

1.

2.

3.

4.

⟨#⟩ CONTROLLING LOAD RATING

⟨1⟩ DESIGN LOAD RATING (HL-93)

⟨2⟩ DESIGN LOAD RATING (HS-20)

⟨3⟩ LEGAL LOAD RATING **

** SEE CHART FOR VEHICLE TYPE

GIRDER LOCATION

I - INTERIOR GIRDER
EL - EXTERIOR LEFT GIRDER
ER - EXTERIOR RIGHTGIRDER

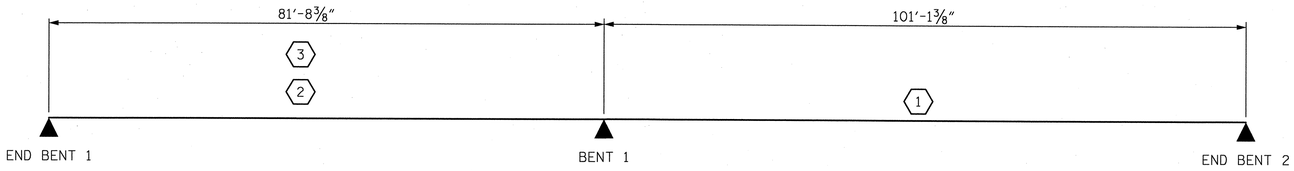

LRFR SUMMARY

NOTE: SPAN LENGTHS PROVIDED ARE BEARING TO BEARING LENGTHS

PROJECT NO. U-2525B

GUILFORD COUNTY

STATION: POC 129+37.56 -L-

STATE OF NORTH CAROLINA
DEPARTMENT OF TRANSPORTATION
RALEIGH

STANDARD
LRFR SUMMARY FOR PRESTRESSED CONCRETE GIRDERS
(INTERSTATE TRAFFIC)
LEFT LANE

NORTH CAROLINA PROFESSIONAL SEAL 27812 ENGINEER DAVID W. HAWKINS 12/23/13

NORTH CAROLINA PROFESSIONAL SEAL 12916 ENGINEER PAUL J. BARBER 12/23/13

HNTB NORTH CAROLINA, P.C.
License No. C-1554
343 E. Six Forks Rd., Suite 200, Raleigh, N.C. 27609

DRAWN BY M. WRIGHT DATE 4/13
CHECKED BY S. FISHER DATE 7/13
DWG. NO. 4

REVISIONS					
NO.	BY:	DATE:	NO.	BY:	DATE:
1			3		
2			4		

SHEET NO. S-113
TOTAL SHEETS 541

ASSEMBLED BY : MEW DATE : 4/13
CHECKED BY : STF DATE : 7/13
DRAWN BY : MAA 1/08 REV. 11/12/08RR MAA/GM
CHECKED BY : GM/DI 2/08 REV. 10/1/11 MAA/GM

STD. NO. LRFR2

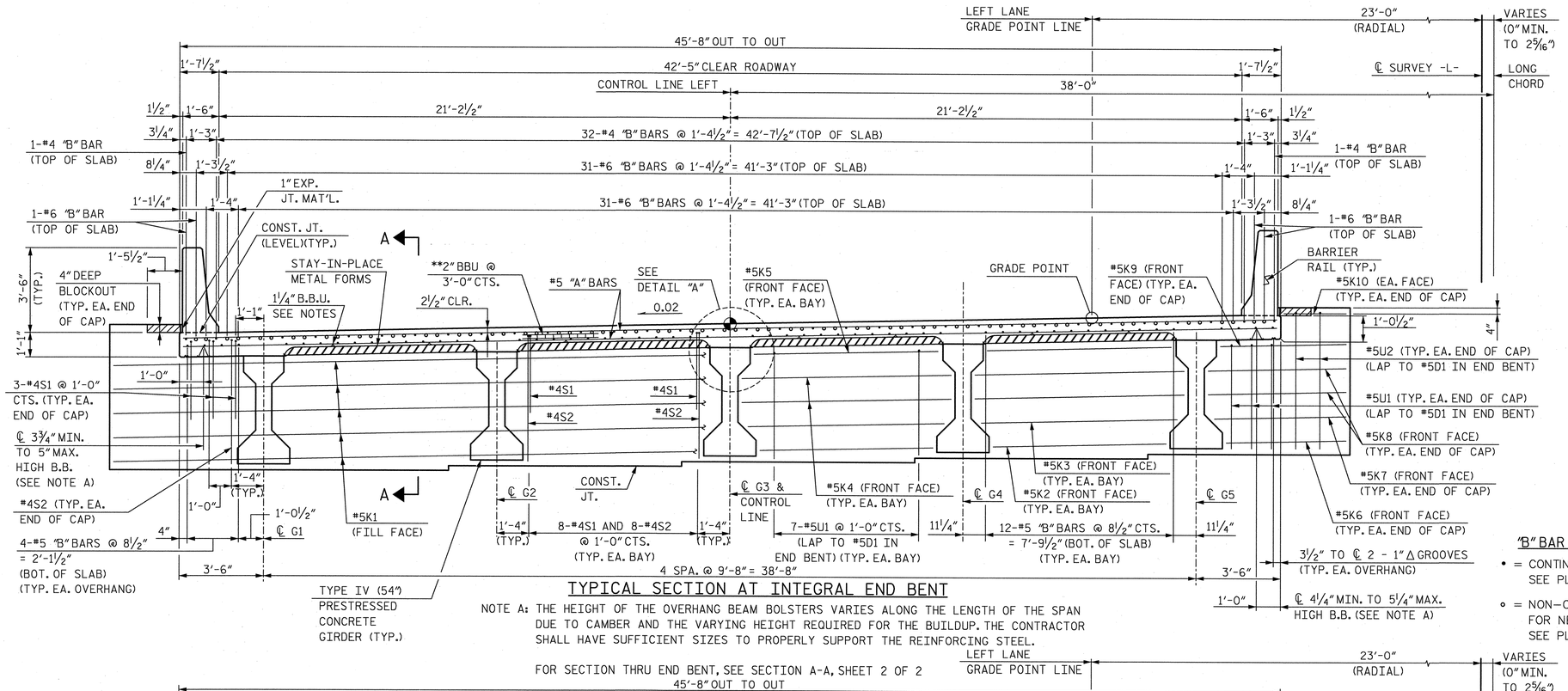

TYPICAL SECTION AT INTEGRAL END BENT

NOTE A: THE HEIGHT OF THE OVERHANG BEAM BOLSTERS VARIES ALONG THE LENGTH OF THE SPAN DUE TO CAMBER AND THE VARYING HEIGHT REQUIRED FOR THE BUILDUP. THE CONTRACTOR SHALL HAVE SUFFICIENT SIZES TO PROPERLY SUPPORT THE REINFORCING STEEL.

FOR SECTION THRU END BENT, SEE SECTION A-A, SHEET 2 OF 2

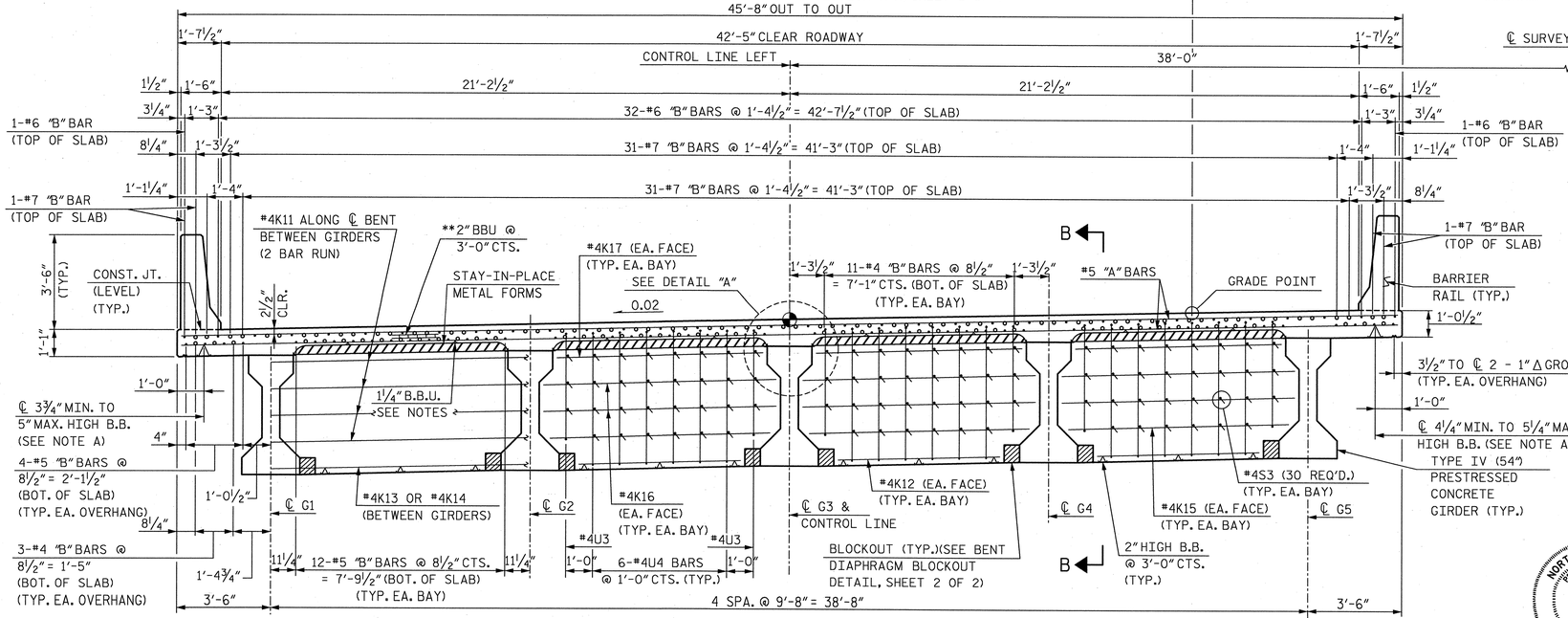

TYPICAL SECTION AT CONTINUOUS BENT DIAPHRAGM

FOR SECTION THRU BENT, SEE SECTION B-B, SHEET 2 OF 2

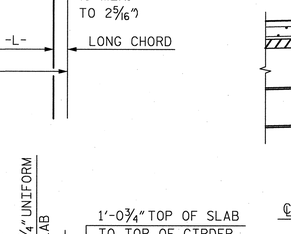

DETAIL "A"

NOTE: BUILD-UP VARIES BETWEEN ℄ BEARINGS

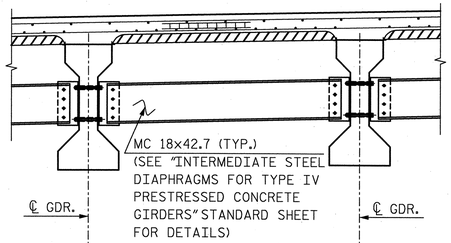

PARTIAL TYPICAL SECTION (SHOWING INTERMEDIATE DIAPHRAGMS)

NOTES

PROVIDE 1 1/4" HIGH BEAM BOLSTERS UPPER AT 4'-0" CTS. ATOP THE METAL STAY-IN-PLACE FORMS TO SUPPORT THE BOTTOM MAT OF 'A' BARS. WHEN USING REMOVABLE FORMS, PROVIDE CONTINUOUS HIGH CHAIRS FOR METAL DECK (CHCM) AT 4'-0" CTS. WITH A HEIGHT TO SUPPORT THE BOTTOM MAT OF 'A' BARS A CLEAR DISTANCE OF 2 1/2" ABOVE THE TOP OF THE REMOVABLE FORM.

LONGITUDINAL STEEL MAY BE SHIFTED SLIGHTLY, AS NECESSARY, TO AVOID INTERFERENCE WITH STIRRUPS IN PRESTRESSED CONCRETE GIRDERS.

PREVIOUSLY CAST CONCRETE IN A CONTINUOUS UNIT SHALL HAVE ATTAINED A MINIMUM COMPRESSIVE STRENGTH OF 3,000 PSI BEFORE ADDITIONAL CONCRETE IS CAST IN THE UNIT.

BARRIER RAIL IN A CONTINUOUS UNIT SHALL NOT BE CAST UNTIL ALL SLAB CONCRETE IN THAT UNIT HAS BEEN CAST AND HAS REACHED A MINIMUM COMPRESSIVE STRENGTH OF 3,000 PSI.

** TO MAINTAIN PROPER LOCATION OF "A" BARS IN THE TOP OF SLAB, BBU DEPTH MUST VARY IN UNIT AS THE MAXIMUM SIZE OF THE "B" BARS IN THE TOP OF THE SLAB VARIES. A 2 1/4" BBU SHALL BE USED WHERE ONLY #4 "B" BARS ARE PRESENT. WHERE #6 OR #7 "B" BARS ARE PRESENT, A 2" BBU SHALL BE USED.

NO CHAMFER IS REQUIRED ON CORNERS OF GIRDER BUILD-UPS.

THE SKEWED END CONDITIONS OF END BENTS AND BENT NO. 1 ARE SUCH THAT THE USE OF 4' WIDE PRESTRESSED CONCRETE DECK PANELS IS NOT POSSIBLE; USE OF 8' WIDE PRESTRESSED CONCRETE DECK PANELS IS NECESSARY.

FOR WINGWALLS OF INTEGRAL END BENT DETAILS, SEE "PLAN OF SPAN, WING DETAILS".

"B" BAR KEY

- • = CONTINUOUS BAR RUN, SEE PLAN OF SPAN SHEETS.
- ∘ = NON-CONTINUOUS BAR RUN FOR NEGATIVE MOMENT REGIONS, SEE PLAN OF SPAN SHEETS.

PROJECT NO. U-2525B

GUILFORD COUNTY

STATION: POC 129+37.56 -L-

SHEET 1 OF 2

STATE OF NORTH CAROLINA
DEPARTMENT OF TRANSPORTATION
RALEIGH

SUPERSTRUCTURE

TYPICAL SECTIONS

LEFT LANE

NORTH CAROLINA PROFESSIONAL SEAL 27812 ENGINEER DAVID W. HAWKINS 12/23/13

NORTH CAROLINA PROFESSIONAL SEAL 12916 ENGINEER PAUL J. BARKER 12/23/13

HNTB NORTH CAROLINA, P.C.
License No. C-1554
343 E. Six Forks Rd., Suite 200, Raleigh, N.C. 27609

DRAWN BY M. WRIGHT DATE 3/13
CHECKED BY D. RAGAN DATE 5/13
DWG. NO. 5

REVISIONS						SHEET NO.
NO.	BY:	DATE:	NO.	BY:	DATE:	S-14
1			3			TOTAL SHEETS
2			4			54

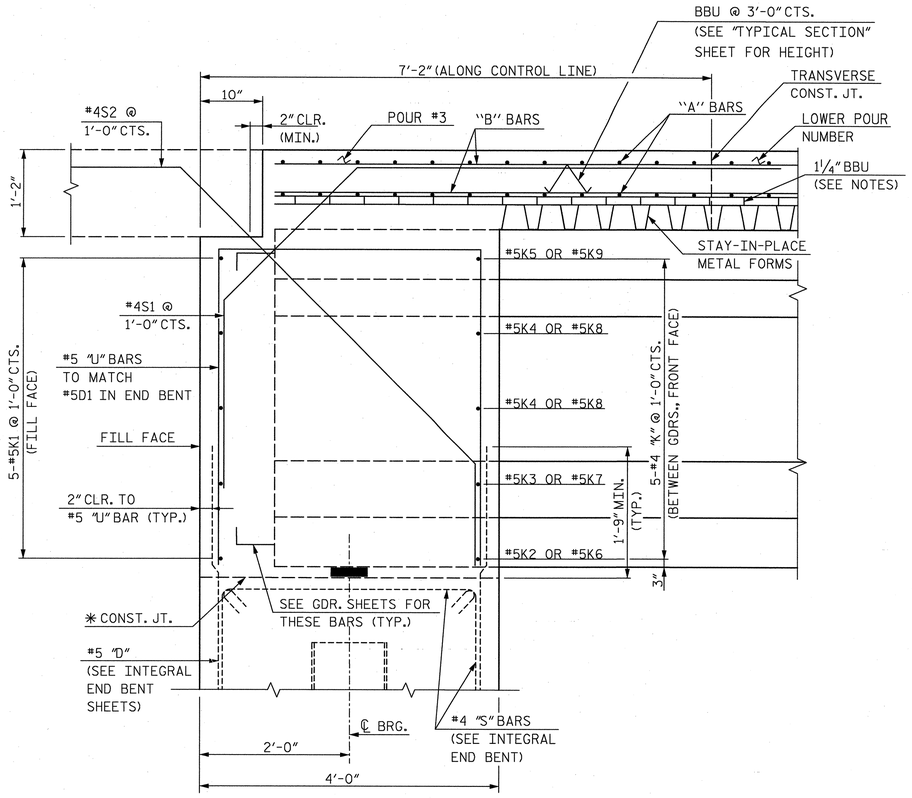

SECTION A-A
(END BENT 1 SHOWN, END BENT 2 SIMILAR)

* THE TOP SURFACE OF THE END BENT CAP AND WINGS EXCLUDING THE BEARING AREA SHALL BE RAKED TO A DEPTH OF ¼".

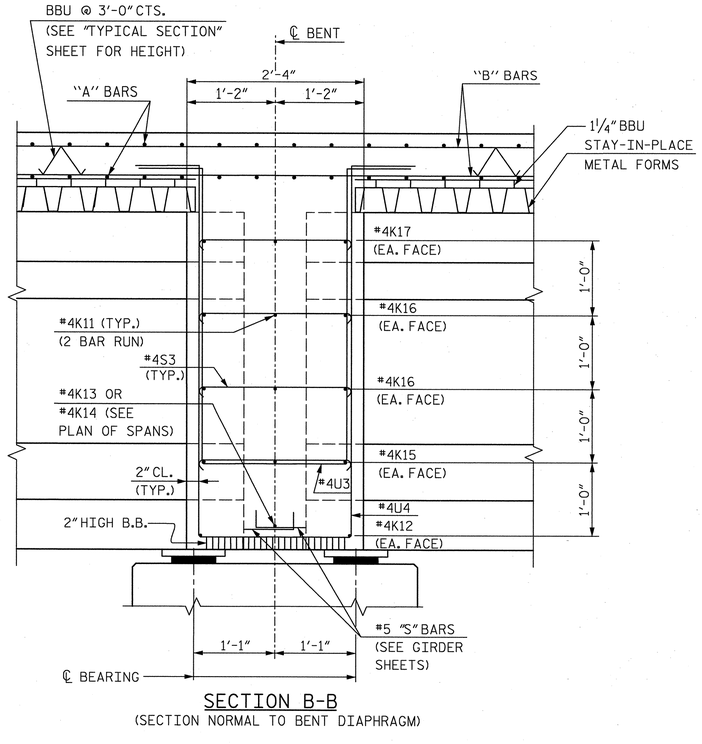

SECTION B-B
(SECTION NORMAL TO BENT DIAPHRAGM)

NOTE: BENT DIAPHRAGM SHALL BE CAST MONOLITHICALLY WITH DECK SLAB

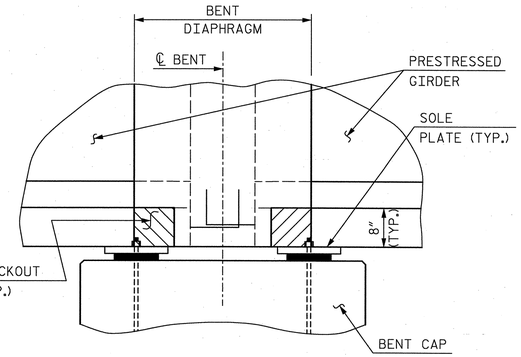

SECTION C-C

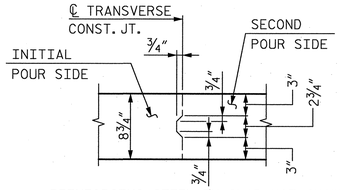

REINFORCING STEEL IN SLAB NOT SHOWN. REINFORCING STEEL SHALL BE CONTINUOUS THROUGH JOINT.

TRANSVERSE CONSTRUCTION JOINT DETAIL

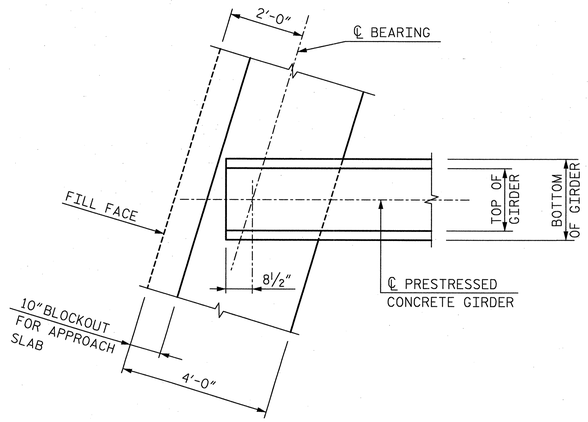

PLAN OF GIRDER AT INTEGRAL END BENT 1
(END BENT 2 SIMILAR)

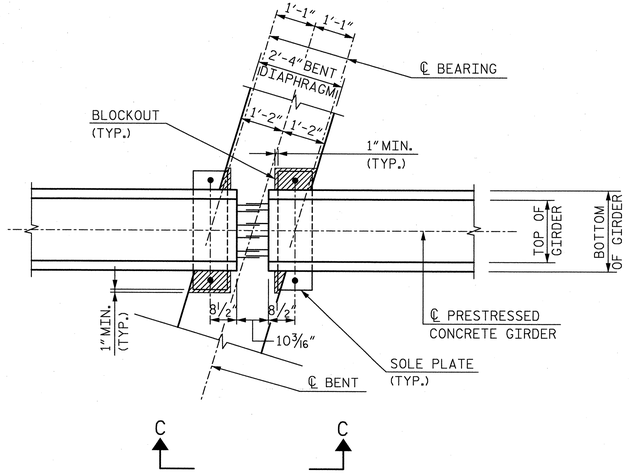

BENT DIAPHRAGM BLOCKOUT DETAI

PROJECT NO. U-2525B
GUILFORD COUNTY
STATION: POC 129+37.56 -L-

SHEET 2 OF 2

STATE OF NORTH CAROLINA
DEPARTMENT OF TRANSPORTATION
RALEIGH

SUPERSTRUCTURE
TYPICAL SECTION
DETAILS
LEFT LANE

NORTH CAROLINA PROFESSIONAL SEAL 27812 ENGINEER DAVID W. HAWKINS 4/13/13

NORTH CAROLINA PROFESSIONAL SEAL 12916 ENGINEER PAUL J. BARBER 12/3/13

HNTB
HNTB NORTH CAROLINA, P.C.
License No. C-1554
343 E. Six Forks Rd., Suite 200, Raleigh, N.C. 27609

DRAWN BY M. WRIGHT DATE 4/13
CHECKED BY D. RAGAN DATE 5/13
DWG. NO. 6

REVISIONS						SHEET NO.
NO.	BY:	DATE:	NO.	BY:	DATE:	S-115
1			3			TOTAL SHEETS
2			4			541

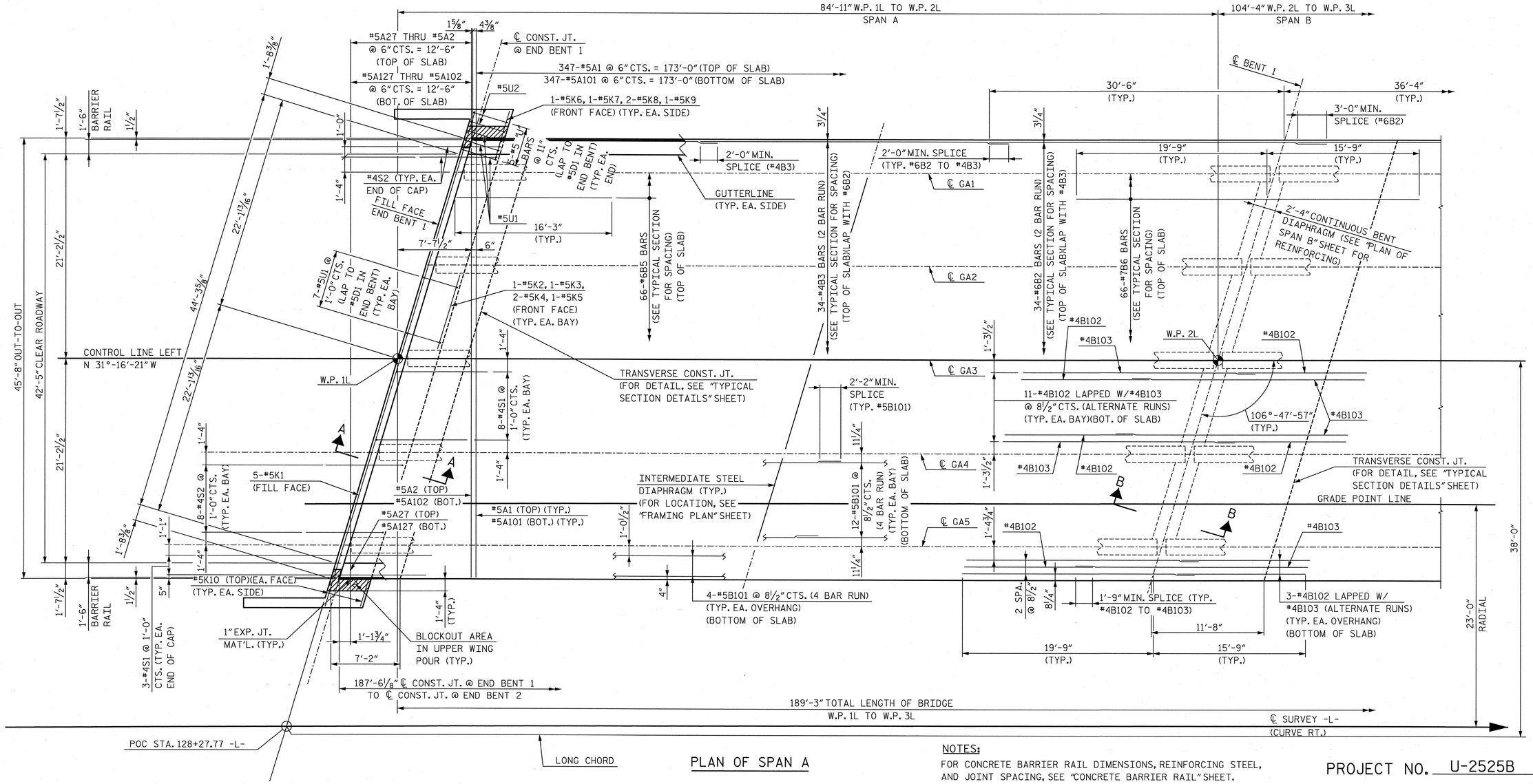

PLAN OF SPAN A

NOTES:

FOR CONCRETE BARRIER RAIL DIMENSIONS, REINFORCING STEEL, AND JOINT SPACING, SEE "CONCRETE BARRIER RAIL" SHEET.

FOR SECTION VIEWS, SEE "SUPERSTRUCTURE TYPICAL SECTION DETAILS" SHEET 2 OF 2.

SEE "PLAN OF SPAN WING DETAILS" SHEETS FOR ADDITIONAL REINFORCING STEEL IN WINGS.

FOR INTERMEDIATE STEEL DIAPHRAGMS, SEE "INTERMEDIATE STEEL DIAPHRAGMS FOR TYPE IV PRESTRESSED CONCRETE GIRDERS" SHEET FOR DETAILS. FOR LOCATION, SEE "SUPERSTRUCTURE FRAMING PLANS" SHEET.

NORTH CAROLINA PROFESSIONAL SEAL 27812 ENGINEER DAVID W. HAWKINS 12/23/13

NORTH CAROLINA PROFESSIONAL SEAL 12916 ENGINEER PAUL J. BARBER 12/23/13

PROJECT NO. U-2525B

GUILFORD COUNTY

STATION: POC 129+37.56 -L-

STATE OF NORTH CAROLINA
DEPARTMENT OF TRANSPORTATION
RALEIGH

SUPERSTRUCTURE

PLAN OF SPAN A

LEFT LANE

HNTB NORTH CAROLINA, P.C.
License No. C-1554
343 E. Six Forks Rd., Suite 200, Raleigh, N.C. 27609

DRAWN BY M. WRIGHT DATE 4/13
CHECKED BY D. RAGAN DATE 5/13
DWG. NO. 7

REVISIONS						SHEET NO.
NO.	BY:	DATE:	NO.	BY:	DATE:	S-116
1			3			TOTAL SHEETS
2			4			541

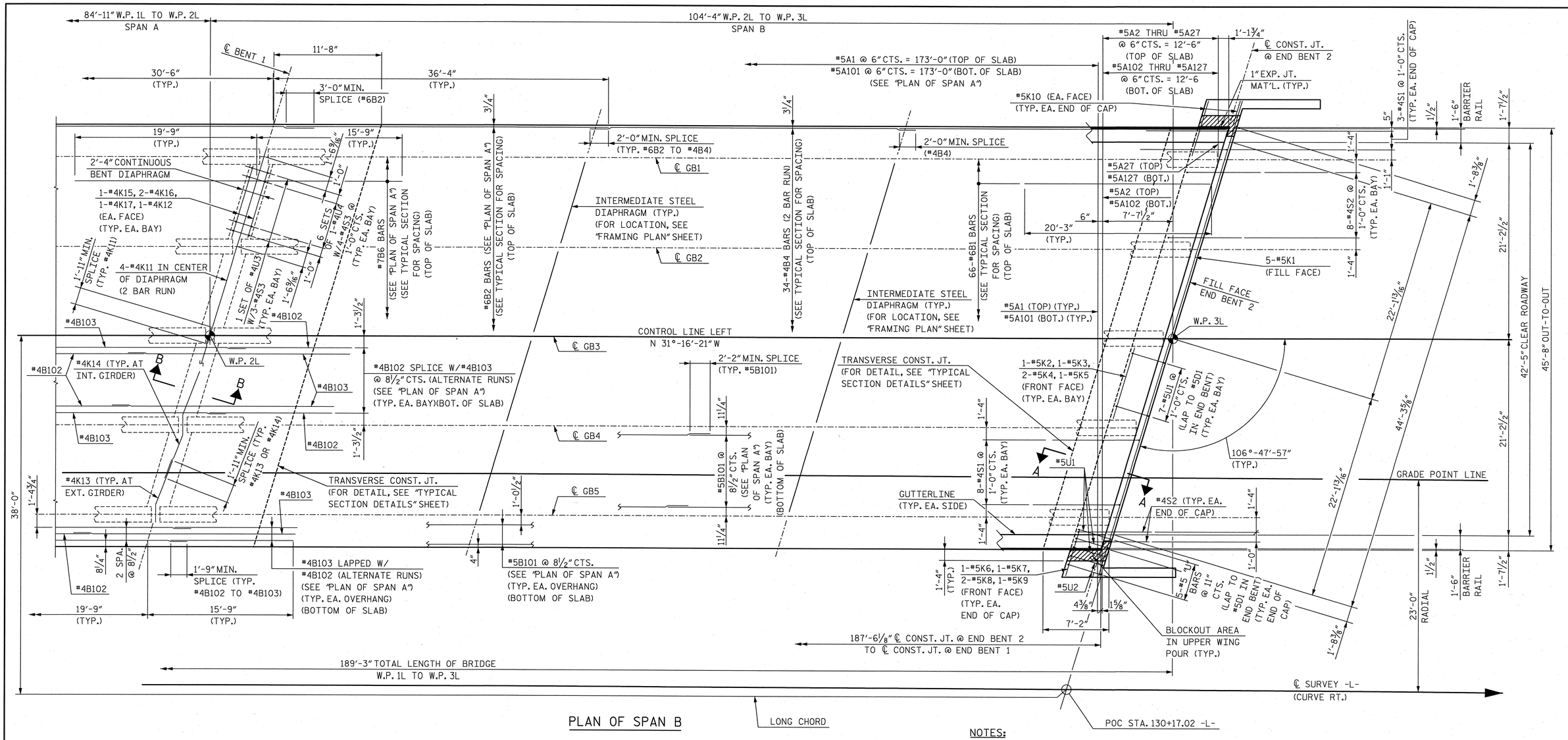

PLAN OF SPAN B

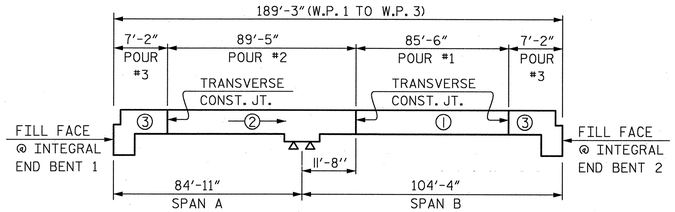

POURING SEQUENCE

DIMENSIONS GIVEN ALONG CONTROL LINE LEFT

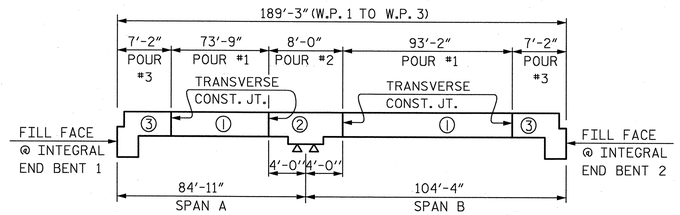

OPTIONAL POURING SEQUENCE

DIMENSIONS GIVEN ALONG CONTROL LINE LEFT

NOTE: POUR ② CAN NOT BE STARTED UNTIL BOTH ADJACENT ① POURS REACH A MINIMUM OF 3000 PSI.

NOTES:

FOR CONCRETE BARRIER RAIL DIMENSIONS, REINFORCING STEEL, AND JOINT SPACING, SEE "CONCRETE BARRIER RAIL" SHEET.

FOR SECTION VIEWS, SEE "SUPERSTRUCTURE TYPICAL SECTION DETAILS" SHEET 2 OF 2.

SEE "PLAN OF SPAN WING DETAILS" SHEETS FOR ADDITIONAL REINFORCING STEEL IN WINGS.

FOR INTERMEDIATE STEEL DIAPHRAGMS, SEE "INTERMEDIATE STEEL DIAPHRAGMS FOR TYPE IV PRESTRESSED CONCRETE GIRDERS" SHEET FOR DETAILS. FOR LOCATION, SEE "SUPERSTRUCTURE FRAMING PLANS" SHEET.

NORTH CAROLINA PROFESSIONAL SEAL 27812 ENGINEER DAVID W. HAWKINS 12/23/13

NORTH CAROLINA PROFESSIONAL SEAL 12916 ENGINEER PAUL J. BARBER 12/23/13

PROJECT NO. U-2525B

GUILFORD COUNTY

STATION: POC 129+37.56 -L-

STATE OF NORTH CAROLINA
DEPARTMENT OF TRANSPORTATION
RALEIGH

SUPERSTRUCTURE

PLAN OF SPAN B

LEFT LANE

HNTB NORTH CAROLINA, P.C.
License No. C-1554
343 E. Six Forks Rd., Suite 200, Raleigh, N.C. 27609

DRAWN BY M. WRIGHT DATE 4/13
CHECKED BY D. RAGAN DATE 5/13
DWG. NO. 8

REVISIONS						SHEET NO.
NO.	BY:	DATE:	NO.	BY:	DATE:	S-117
1			3			TOTAL SHEETS
2			4			541

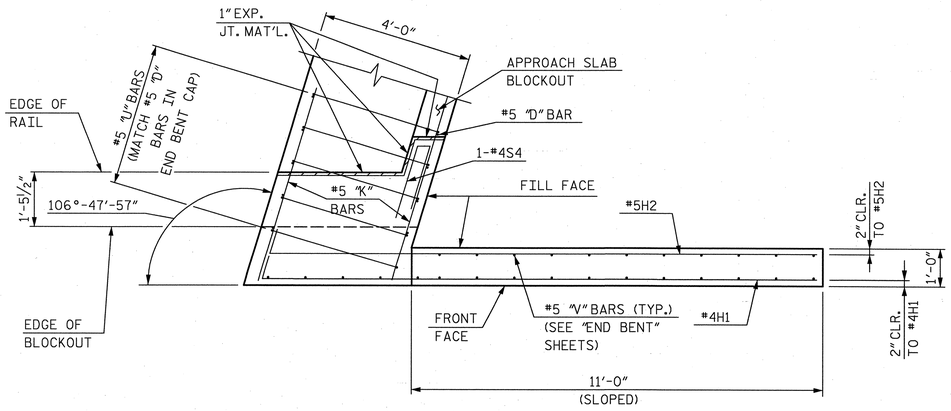

PLAN OF LEFT WING (W1)

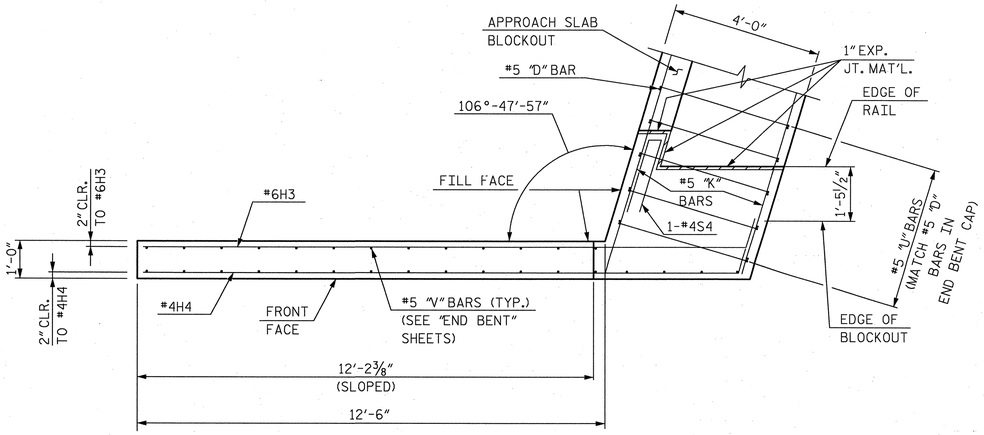

PLAN OF RIGHT WING (W2)

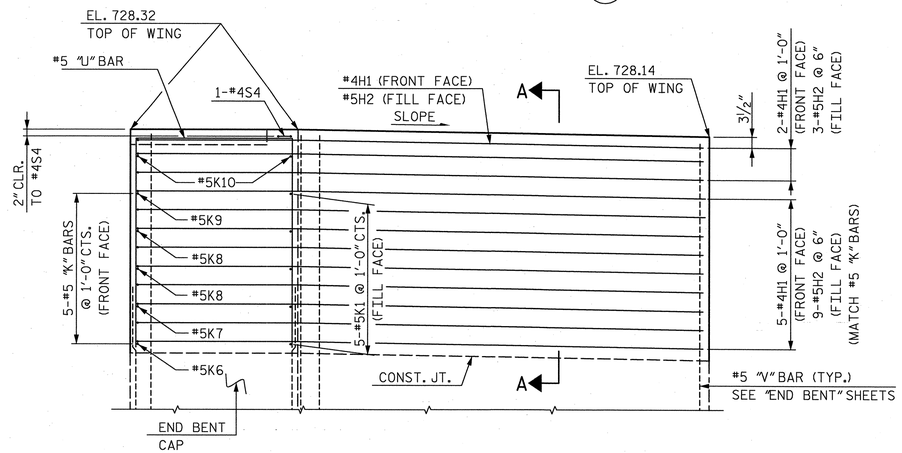

ELEVATION OF LEFT WING (W1)

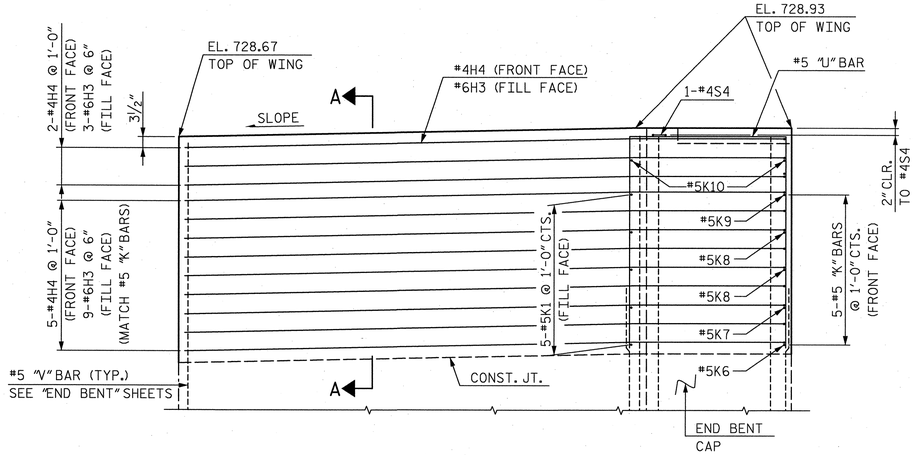

ELEVATION OF RIGHT WING (W2)

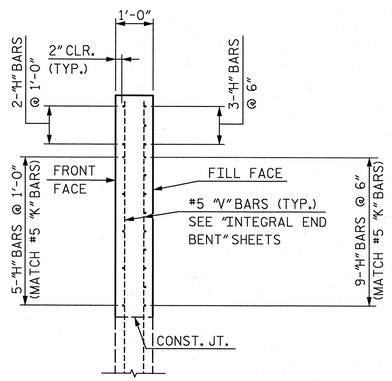

SECTION A-A

PROJECT NO. U-2525B

GUILFORD COUNTY

STATION: POC 129+37.56 -L-

STATE OF NORTH CAROLINA
DEPARTMENT OF TRANSPORTATION
RALEIGH

SUPERSTRUCTURE
PLAN OF SPAN
WING DETAILS - END BENT 1
LEFT LANE

NORTH CAROLINA PROFESSIONAL ENGINEER SEAL 27812 DAVID W. HAWKINS 12/23/13

NORTH CAROLINA PROFESSIONAL ENGINEER SEAL 12916 PAUL J. BARBER 12/23/13

HNTB

HNTB NORTH CAROLINA, P.C.
License No. C-1554
343 E. Six Forks Rd., Suite 200, Raleigh, N.C. 27609

DRAWN BY M. WRIGHT DATE 4/13
CHECKED BY D. RAGAN DATE 7/13
DWG. NO. 9

REVISIONS					
NO.	BY:	DATE:	NO.	BY:	DATE:
1			3		
2			4		

SHEET NO. S-118
TOTAL SHEETS 54-1

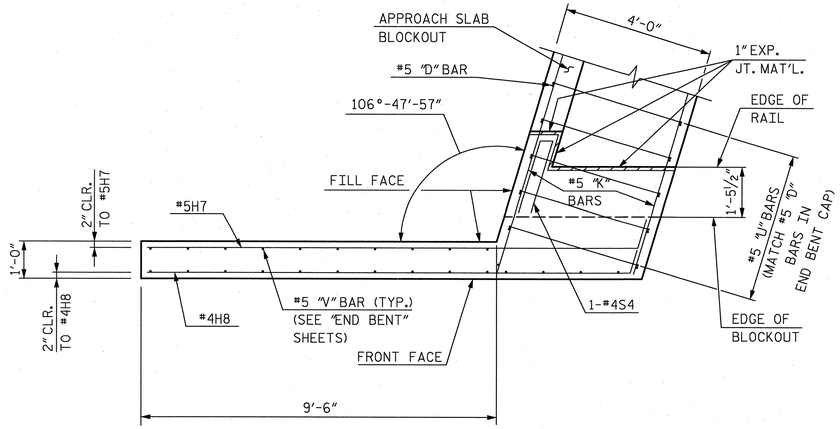

PLAN OF LEFT WING (W3)

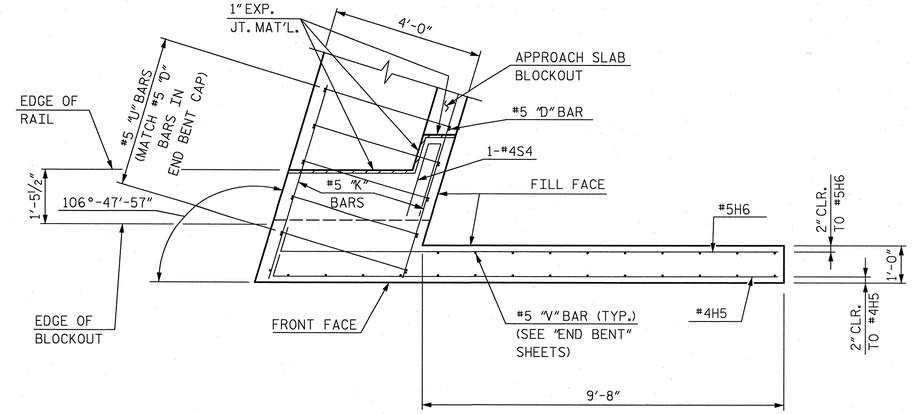

PLAN OF RIGHT WING (W4)

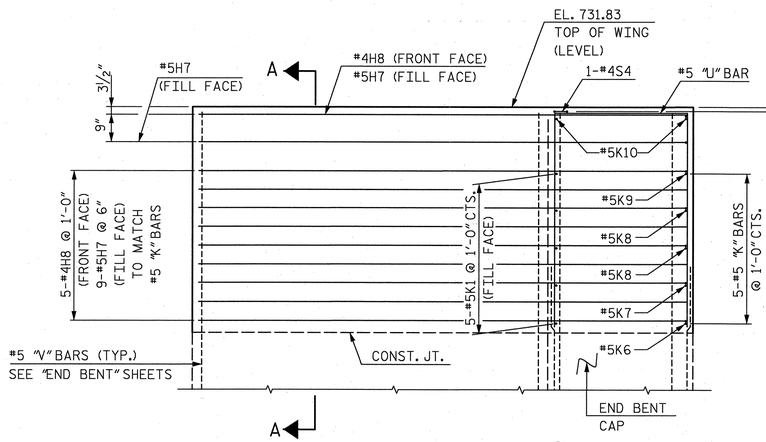

ELEVATION OF LEFT WING (W3)

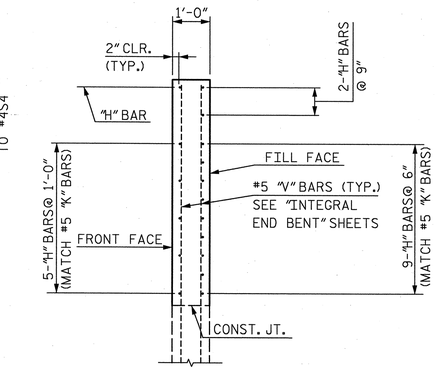

SECTION A-A

LEFT WING (W3) SHOWN, RIGHT WING (W4) SIMILAR

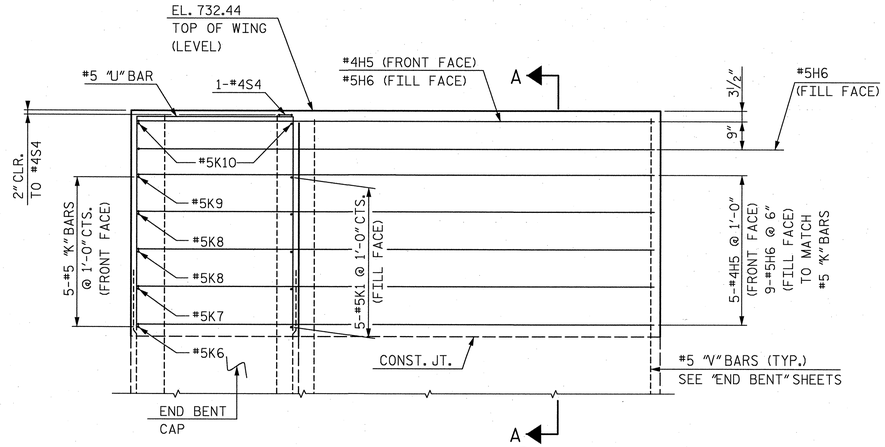

ELEVATION OF RIGHT WING (W4)

PROJECT NO. U-2525B

GUILFORD COUNTY

STATION: POC 129+37.56 -L-

STATE OF NORTH CAROLINA
DEPARTMENT OF TRANSPORTATION
RALEIGH

SUPERSTRUCTURE
PLAN OF SPAN
WING DETAILS - END BENT 2
LEFT LANE

NORTH CAROLINA PROFESSIONAL SEAL 27812 ENGINEER DAVID W. HAWKINS 12/23/13

NORTH CAROLINA PROFESSIONAL SEAL 12916 ENGINEER PAUL J. BARBER 12/23/13

HNTB HNTB NORTH CAROLINA, P.C.
License No. C-1554
343 E. Six Forks Rd., Suite 200, Raleigh, N.C. 27609

DRAWN BY M. WRIGHT DATE 4/13
CHECKED BY D. RAGAN DATE 7/13

DWG. NO. 10

REVISIONS						SHEET NO.
NO.	BY:	DATE:	NO.	BY:	DATE:	S-119
1			3			TOTAL SHEETS
2			4			541

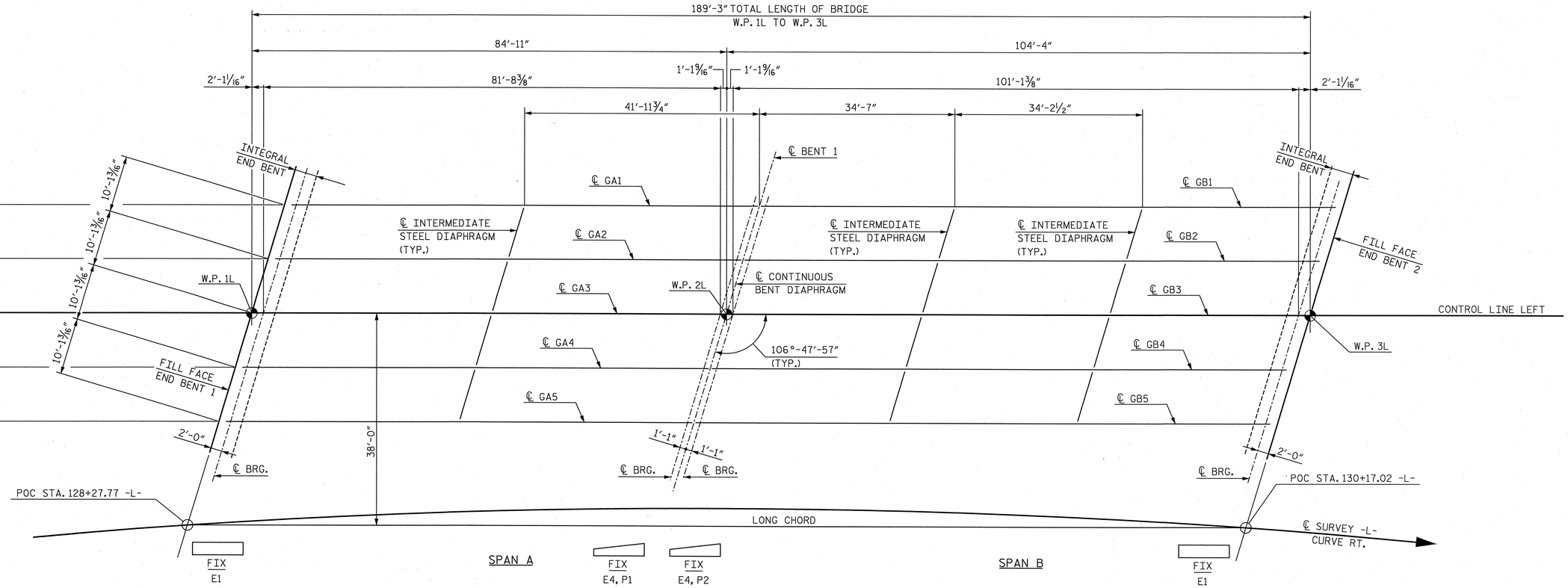

FRAMING PLAN

NOTES:

"FIX" DENOTES FIXED BEARING ASSEMBLY.
"E" DENOTES ELASTOMERIC BEARING PAD MARK.
"P" DENOTES STEEL SOLE PLATE MARK.

NO SOLE PLATES ARE REQUIRED AT INTEGRAL END BENTS.

PROJECT NO. U-2525B

GUILFORD COUNTY

STATION: POC 129+37.56 -L-

NORTH CAROLINA PROFESSIONAL SEAL 27812 ENGINEER DAVID W. HAWKINS 12/23/13

NORTH CAROLINA PROFESSIONAL SEAL 12916 ENGINEER PAUL J. BARBER 12/23/13

HNTB

HNTB NORTH CAROLINA, P.C.
License No. C-1554
343 E. Six Forks Rd., Suite 200, Raleigh, N.C. 27609

DRAWN BY J. BAYNE DATE 4/13
CHECKED BY D. RAGAN DATE 6/13
DWG. NO. 11

STATE OF NORTH CAROLINA
DEPARTMENT OF TRANSPORTATION
RALEIGH

SUPERSTRUCTURE

FRAMING PLAN

LEFT LANE

REVISIONS						SHEET NO.
NO.	BY:	DATE:	NO.	BY:	DATE:	S-120
1			3			TOTAL SHEETS
2			4			54-1

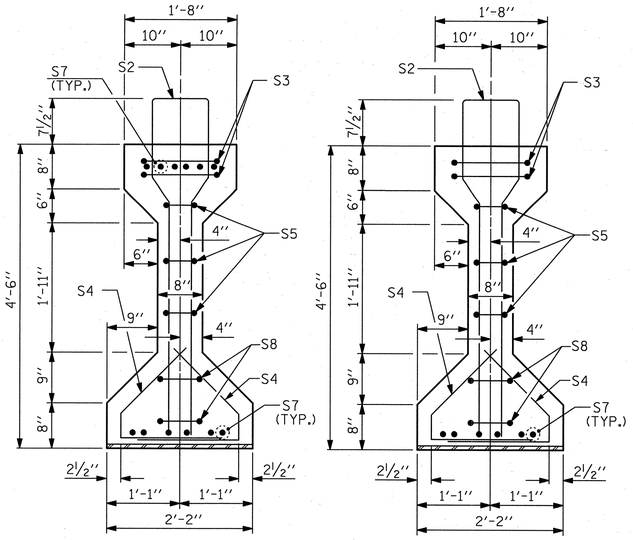

SECTION A-A

NOTE: FOR S7 BARS @ INTEGRAL END BENTS, SEE DETAIL A ON SHEET 3 OF 4.

SECTION B-B

NOTE: FOR S7 BARS @ CONTINUOUS BENT, SEE DETAIL B ON SHEET 3 OF 4.

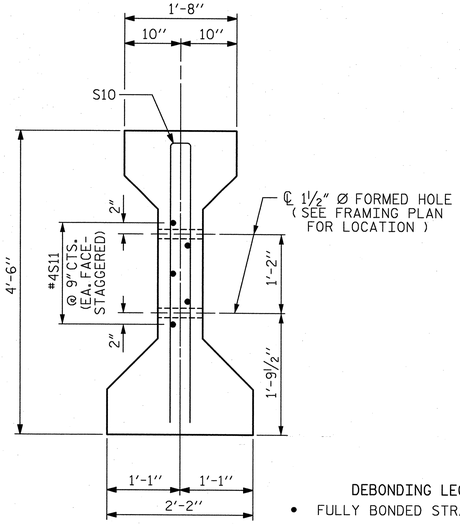

SECTION C-C

(S1 BARS NOT SHOWN)

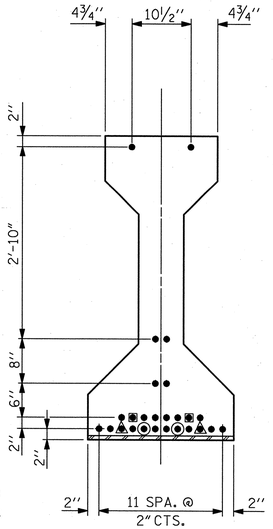

AT END OF GIRDER

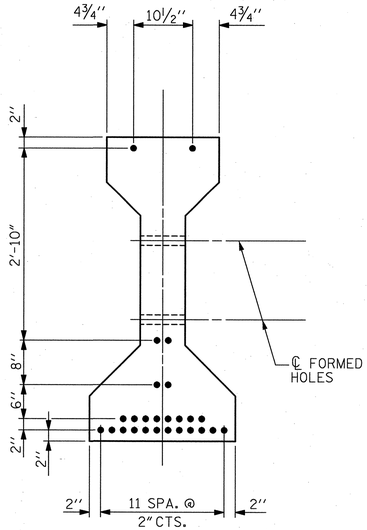

AT ℄ OF GIRDER

DEBONDING LEGEND

- • FULLY BONDED STRANDS
- ▣ STRANDS DEBONDED FOR 4'-0" FROM END OF GIRDER
- ◬ STRANDS DEBONDED FOR 8'-0" FROM END OF GIRDER
- ⊙ STRANDS DEBONDED FOR 16'-0" FROM END OF GIRDER

0.6" Ø LOW RELAXATION STRAND LAYOUT

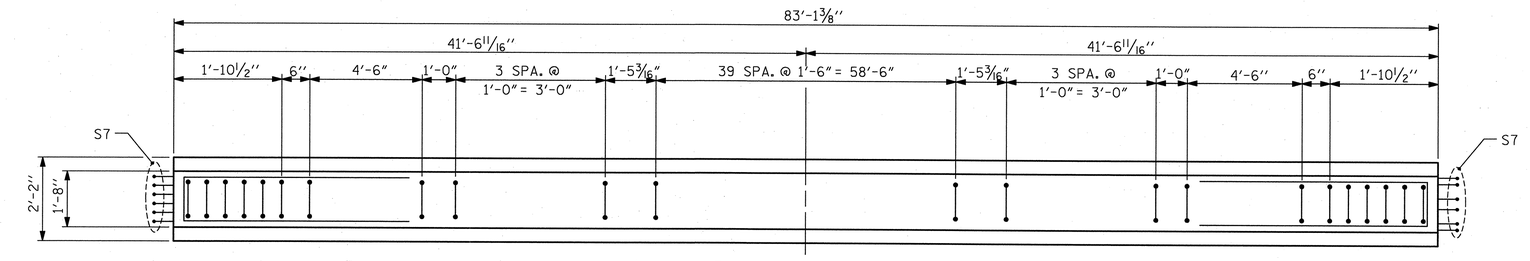

PLAN OF GIRDER

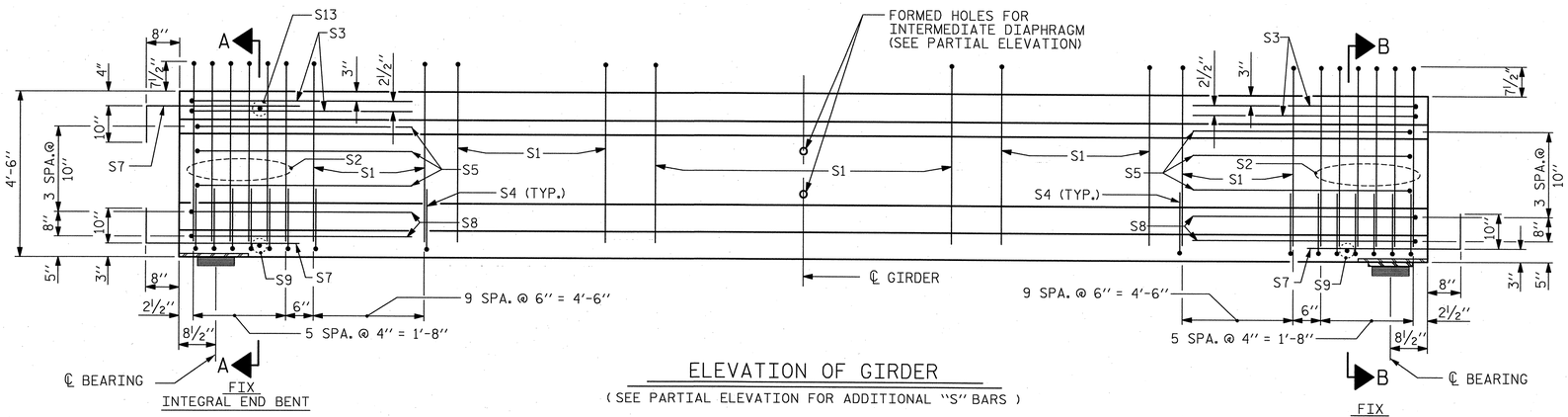

FORMED HOLES FOR INTERMEDIATE DIAPHRAGM (SEE PARTIAL ELEVATION)

FIX INTEGRAL END BENT

FIX CONTINUOUS BENT

ELEVATION OF GIRDER

(SEE PARTIAL ELEVATION FOR ADDITIONAL "S" BARS)

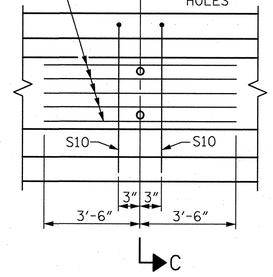

PARTIAL ELEVATION

SHOWING INTERMEDIATE DIAPHRAGM REINFORCING STEEL FOR GIRDERS A1 - A5

NOTES:

THE TRANSFER OF LOAD FROM THE ANCHORAGES TO THE GIRDER SHALL BE DONE WHEN CONCRETE HAS REACHED A COMPRESSIVE STRENGTH OF NOT LESS THAN 4,200 PSI FOR SPAN A GIRDERS.

GIRDER CONCRETE SHALL HAVE A MINIMUM COMPRESSIVE STRENGTH OF 5500 PSI AT THE AGE OF 28 DAYS.

ASSEMBLED BY : MEW	DATE : 4/13		
CHECKED BY : DMR	DATE : 5/13		
DRAWN BY : ELR 8/91	REV. 10/17/00R	RWW/LES	
CHECKED BY : GRP 8/91	REV. 5/1/06R	TLA/GM	
	REV. 10/1/11	MAA/GM	

0.6" Ø L. R. GRADE 270 STRANDS

AREA (SQUARE INCHES)	ULTIMATE STRENGTH (LBS. PER STRAND)	APPLIED PRESTRESS (LBS. PER STRAND)
0.217	58,600	43,950

REINFORCING STEEL FOR ONE GIRDER

BAR	NUMBER	SIZE	TYPE	LENGTH	WEIGHT
S1	68	#4	1	10'-11"	496
S2	12	#6	1	10'-11"	197
S3	4	#4	2	9'-1"	24
S4	64	#4	3	3'-5"	146
S5	6	#4	2	8'-5"	34
✳S7	18	#5	STR	3'-8"	69
S8	4	#4	2	8'-7"	23
S9	2	#3	STR	1'-10"	1
S10	2	#5	2	8'-8"	18
S11	5	#4	STR	7'-0"	23
S13	1	#3	STR	1'-4"	1

✳NOTE: S7 BARS SHALL BE BENT BEFORE SHIPMENT. HEAT BENDING SHALL NOT BE ALLOWED.

BAR TYPES

ALL BAR DIMENSIONS ARE OUT-TO-OUT

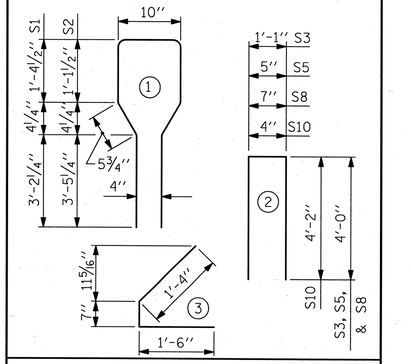

QUANTITIES FOR ONE GIRDER

	REINFORCING STEEL LB.	5,500 PSI CONCRETE C.Y.	0.6" Ø L. R. STRANDS No.
SPAN A GIRDER	1,032	16.9	26

GIRDERS REQUIRED

NUMBER	LENGTH	TOTAL LENGTH
5	83'-1⅜"	415.57'

PROJECT NO. U-2525B

GUILFORD COUNTY

STATION: POC 129+37.56 -L-

SHEET 1 OF 4

STATE OF NORTH CAROLINA
DEPARTMENT OF TRANSPORTATION
RALEIGH

STANDARD AASHTO TYPE IV PRESTRESSED CONCRETE GIRDER CONTINUOUS FOR LIVE LOAD SPAN A LEFT LANE

NORTH CAROLINA PROFESSIONAL SEAL 27812 ENGINEER DAVID W. HAWKINS 12/23/13

NORTH CAROLINA PROFESSIONAL SEAL 12916 ENGINEER PAUL J. BARBER 12/23/13

HNTB NORTH CAROLINA, P.C.
License No. C-1554
343 E. Six Forks Rd., Suite 200, Raleigh, N.C. 27609

DRAWN BY M. WRIGHT DATE 4/13
CHECKED BY D. RAGAN DATE 5/13
DWG. NO. 12

REVISIONS						SHEET NO.
NO.	BY:	DATE:	NO.	BY:	DATE:	S-121
1			3			TOTAL SHEETS
2			4			541

STD. NO. PCG6

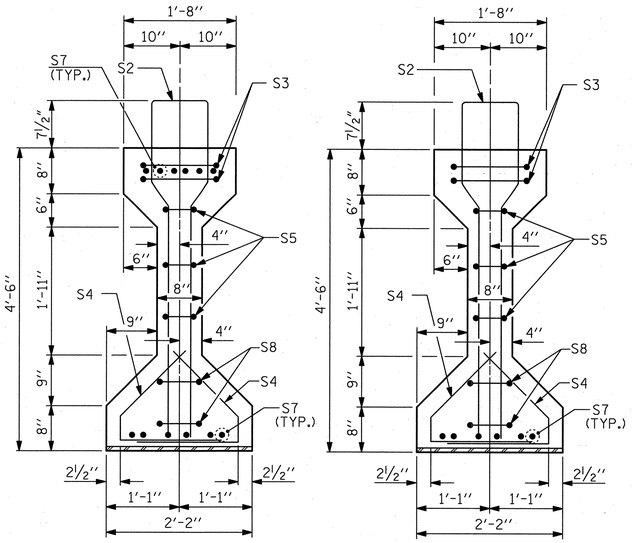

SECTION A-A

NOTE: FOR S7 BARS @ INTEGRAL END BENTS, SEE DETAIL A ON SHEET 3 OF 4.

SECTION B-B

NOTE: FOR S7 BARS @ CONTINUOUS BENT, SEE DETAIL B ON SHEET 3 OF 4.

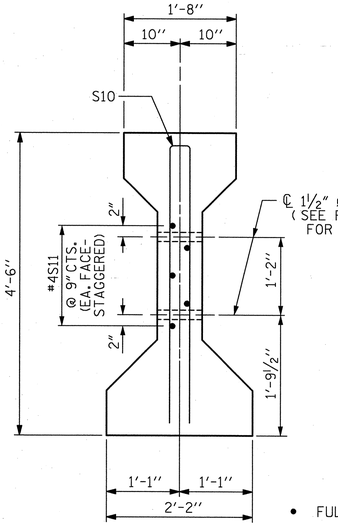

SECTION C-C

(S14 BARS NOT SHOWN)

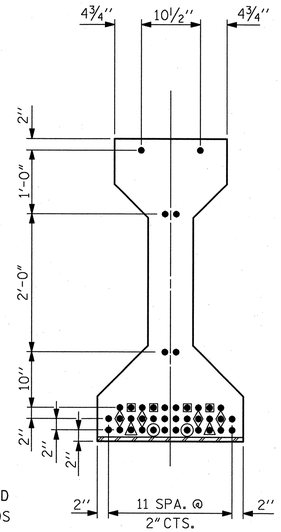

AT END OF GIRDER

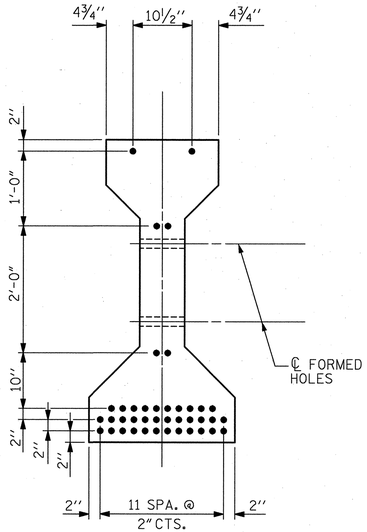

AT ℄ OF GIRDER

0.6" Ø LOW RELAXATION STRAND LAYOUT

DEBONDING LEGEND

- • FULLY BONDED STRANDS
- ▣ STRANDS DEBONDED FOR 4'-0" FROM END OF GIRDER
- ◈ STRANDS DEBONDED FOR 8'-0" FROM END OF GIRDER
- ◬ STRANDS DEBONDED FOR 12'-0" FROM END OF GIRDER
- ⊙ STRANDS DEBONDED FOR 22'-0" FROM END OF GIRDER

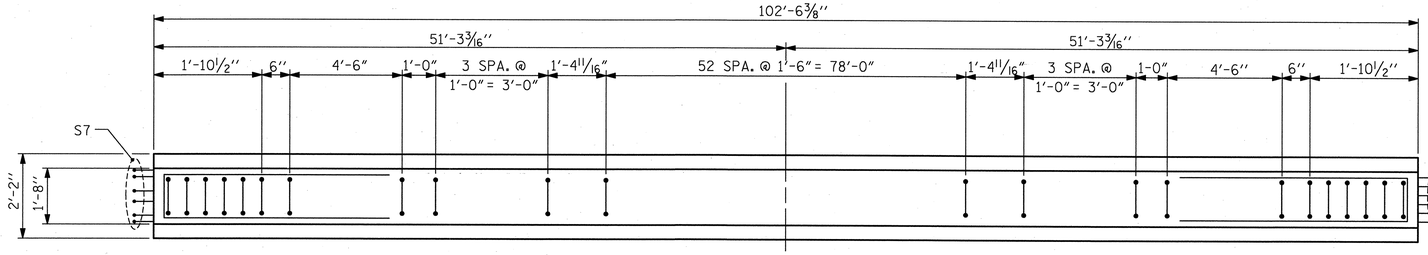

PLAN OF GIRDER

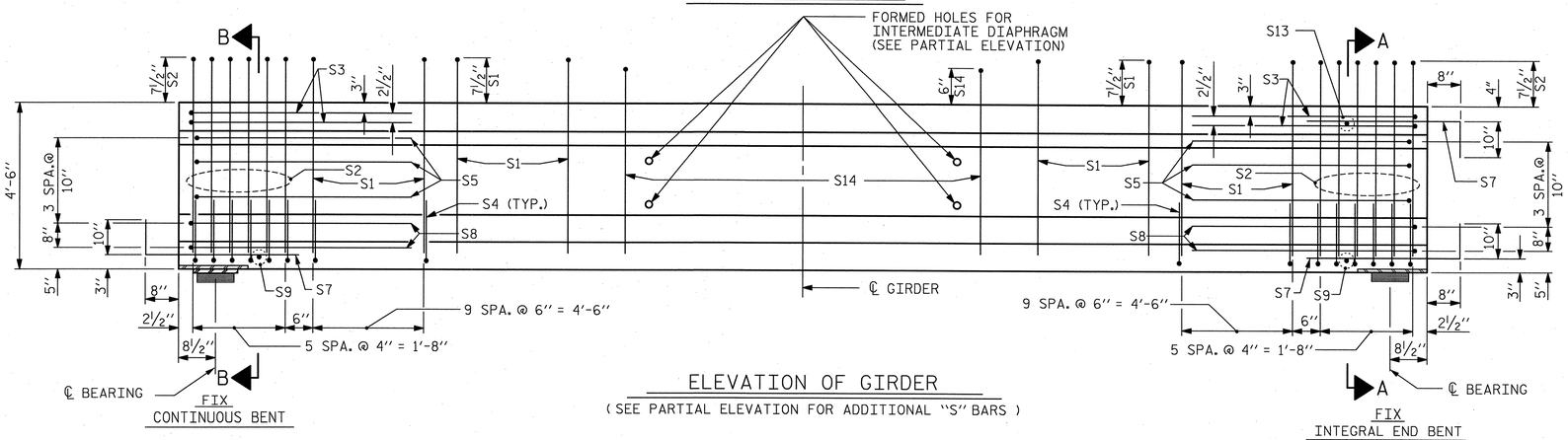

ELEVATION OF GIRDER

(SEE PARTIAL ELEVATION FOR ADDITIONAL "S" BARS)

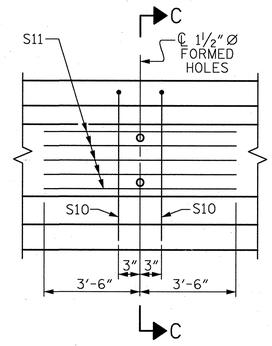

PARTIAL ELEVATION

SHOWING INTERMEDIATE DIAPHRAGM REINFORCING STEEL FOR GIRDERS B1 - B5

NOTES:

THE TRANSFER OF LOAD FROM THE ANCHORAGES TO THE GIRDER SHALL BE DONE WHEN CONCRETE HAS REACHED A COMPRESSIVE STRENGTH OF NOT LESS THAN 6,000 PSI FOR SPAN B GIRDERS.

GIRDER CONCRETE SHALL HAVE A MINIMUM COMPRESSIVE STRENGTH OF 8000 PSI AT THE AGE OF 28 DAYS.

0.6" Ø L. R. GRADE 270 STRANDS		
AREA (SQUARE INCHES)	ULTIMATE STRENGTH (LBS. PER STRAND)	APPLIED PRESTRESS (LBS. PER STRAND)
0.217	58,600	43,950

REINFORCING STEEL FOR ONE GIRDER

BAR	NUMBER	SIZE	TYPE	LENGTH	WEIGHT
S1	28	#4	1	10'-11"	204
S2	12	#6	1	10'-11"	197
S3	4	#4	2	9'-1"	24
S4	64	#4	3	3'-5"	146
S5	6	#4	2	8'-5"	34
✳S7	18	#5	STR	3'-8"	69
S8	4	#4	2	8'-7"	23
S9	2	#3	STR	1'-10"	1
S10	4	#5	2	8'-8"	36
S11	10	#4	STR	7'-0"	47
S13	1	#3	STR	1'-4"	1
S14	53	#4	1	10'-8"	378

✳NOTE: S7 BARS SHALL BE BENT BEFORE SHIPMENT. HEAT BENDING SHALL NOT BE ALLOWED.

BAR TYPES

ALL BAR DIMENSIONS ARE OUT-TO-OUT

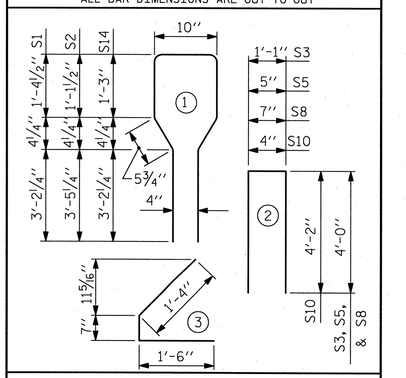

QUANTITIES FOR ONE GIRDER

	REINFORCING STEEL	8,000 PSI CONCRETE	0.6" Ø L. R. STRANDS
	LB.	C.Y.	No.
SPAN B GIRDER	1,160	20.8	40

GIRDERS REQUIRED

NUMBER	LENGTH	TOTAL LENGTH
5	102'-6⅜"	512.66'

PROJECT NO. U-2525B

GUILFORD COUNTY

STATION: POC 129+37.56 -L-

SHEET 2 OF 4

STATE OF NORTH CAROLINA
DEPARTMENT OF TRANSPORTATION
RALEIGH

STANDARD
AASHTO TYPE IV
PRESTRESSED CONCRETE GIRDER
CONTINUOUS FOR LIVE LOAD
SPAN B
LEFT LANE

ASSEMBLED BY : MEW	DATE : 4/13
CHECKED BY : DMR	DATE : 5/13
DRAWN BY : ELR 8/91	REV. 10/17/00R RWW/LES
CHECKED BY : GRP 8/91	REV. 5/1/06R TLA/GM
	REV. 10/1/11 MAA/GM

HNTB NORTH CAROLINA, P.C.
License No. C-1554
343 E. Six Forks Rd., Suite 200, Raleigh, N.C. 27609

DRAWN BY M. WRIGHT DATE 4/13
CHECKED BY D. RAGAN DATE 5/13
DWG. NO. 13

REVISIONS						SHEET NO.
NO.	BY:	DATE:	NO.	BY:	DATE:	S-122
1			3			TOTAL SHEETS
2			4			341

STD. NO. PCG6

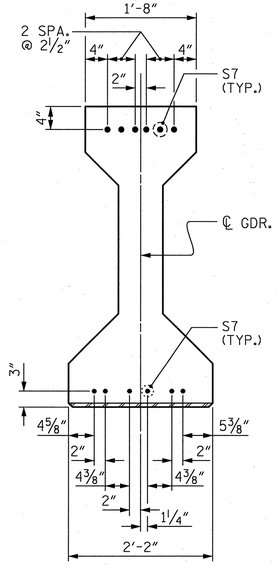

DETAIL "A"

(FOR AASHTO TYPE IV GIRDERS AT INTEGRAL END BENT)

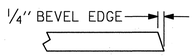

SECTION "G"

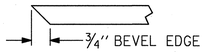

SECTION "F"

(SEE NOTES)

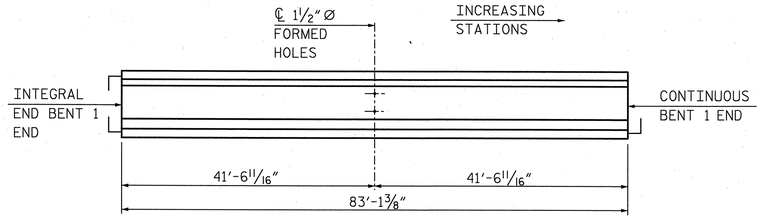

GIRDER ELEVATION

(SPAN A GIRDERS)

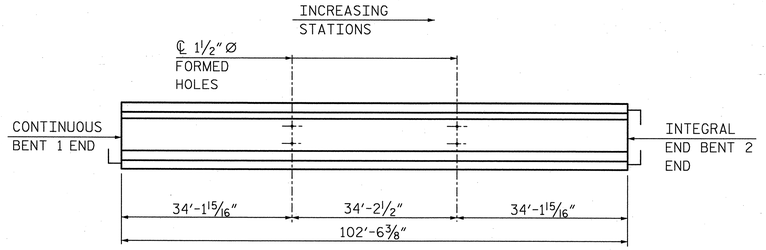

GIRDER ELEVATION

(SPAN B GIRDERS)

1½" Ø FORMED HOLE LOCATIONS

NOTES

ALL PRESTRESSING STRANDS SHALL BE 7-WIRE LOW-RELAXATION GRADE 270 STRANDS AND SHALL CONFORM TO AASHTO M203 EXCEPT FOR SAMPLING REQUIREMENTS WHICH SHALL BE IN ACCORDANCE WITH THE STANDARD SPECIFICATIONS.

ALL REINFORCING STEEL SHALL BE GRADE 60.

EMBEDDED PLATE "B-1" SHALL BE GALVANIZED IN ACCORDANCE WITH THE STANDARD SPECIFICATIONS. BEVEL EDGES OF PLATE "B-1" TO GIVE CLOSE FIT BUT NOT TIGHT FIT TO STEEL CASTING FORM.

ANCHOR STUDS SHALL CONFORM TO AASHTO M169 GRADES 1010 THROUGH 1020 OR APPROVED EQUAL, AND SHALL MEET THE TYPE "B" REQUIREMENTS OF SUBSECTION 7.3 OF THE ANSI/AASHTO/AWS D1.5 BRIDGE WELDING CODE.

AT ENDS OF GIRDERS TO BE EMBEDDED IN CONCRETE DIAPHRAGMS OR END WALLS, PRESTRESSING STRANDS MAY EXTEND A MAXIMUM OF 2" BEYOND THE GIRDER ENDS. OTHERWISE, PRESTRESSING STRANDS SHALL BE CUT FLUSH WITH THE GIRDER ENDS.

DEPENDING ON THE TYPE OF SYSTEM USED TO SUPPORT THE DECK SLAB FORMS, PRESET ANCHORS MAY BE NECESSARY IN THE PRESTRESSED CONCRETE GIRDER.

THE TOP SURFACE OF THE GIRDER, EXCLUDING THE OUTSIDE 4", SHALL BE RAKED TO A DEPTH OF ¼".

THE CONTRACTOR HAS THE OPTION TO PROVIDE, AT NO ADDITIONAL COST TO THE DEPARTMENT, 2 ADDITIONAL STRANDS AT THE TOP OF THE GIRDER TO FACILITATE TYING OF THE REINFORCING STEEL. THESE STRANDS SHALL BE PULLED TO A LOAD OF 4500 lbs.

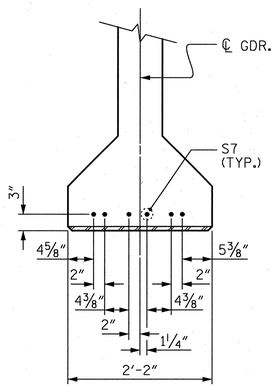

DETAIL "B"

(FOR AASHTO TYPE IV GIRDERS AT CONTINUOUS BENT)

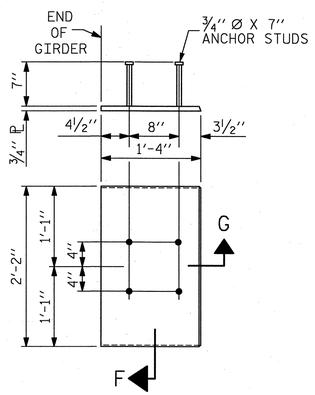

EMBEDDED PLATE "B-1" DETAILS FOR AASHTO TYPE IV GIRDER AND 63" & 72" MODIFIED BULB TEES

(2 REQ'D PER GIRDER)

ASSEMBLED BY : MEW	DATE : 4/13	REV. 7/10/01RR	LES/RDR
CHECKED BY : DMR	DATE : 5/13	REV. 5/1/06	TLA/GM
DRAWN BY : ELR 11/91		REV. 10/1/11	MAA/GM
CHECKED BY : GRP 11/91			

NORTH CAROLINA PROFESSIONAL SEAL 27812 ENGINEER DAVID W. HAWKINS 12/23/13

NORTH CAROLINA PROFESSIONAL SEAL 12916 ENGINEER PAUL J. BARBER 12/23/13

HNTB NORTH CAROLINA, P.C.
License No. C-1554
343 E. Six Forks Rd., Suite 200, Raleigh, N.C. 27609

DRAWN BY M. WRIGHT DATE 4/13
CHECKED BY D. RAGAN DATE 5/13
DWG. NO. 14

PROJECT NO. U-2525B
GUILFORD COUNTY
STATION: POC 129+37.56 -L-

SHEET 3 OF 4

STATE OF NORTH CAROLINA
DEPARTMENT OF TRANSPORTATION
RALEIGH

STANDARD
PRESTRESSED CONCRETE GIRDER CONTINUOUS FOR LIVE LOAD DETAILS
LEFT LANE

REVISIONS						SHEET NO.
NO.	BY:	DATE:	NO.	BY:	DATE:	S-123
1			3			TOTAL SHEETS
2			4			541

STD. NO. PCG9

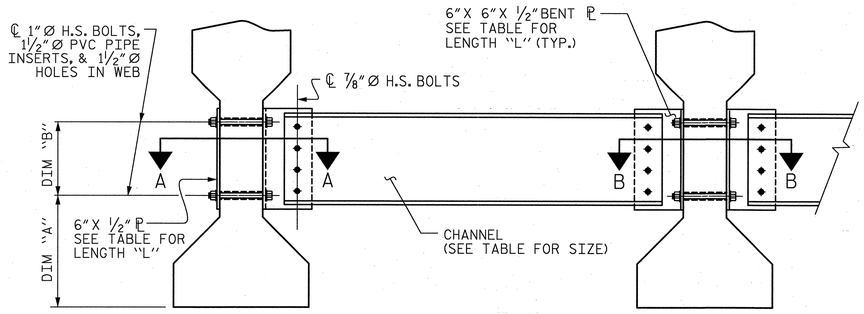

EXTERIOR GIRDER INTERIOR GIRDER

PART SECTION AT INTERMEDIATE DIAPHRAGM

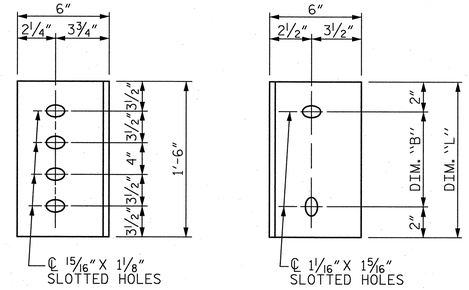

DIAPHRAGM FACE WEB FACE

CONNECTOR PLATE DETAILS

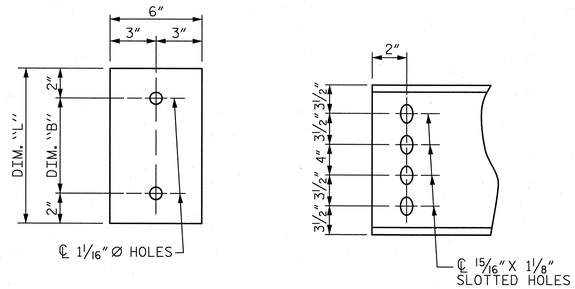

PLATE DETAILS CHANNEL END

STRUCTURAL STEEL NOTES

ALL INTERMEDIATE DIAPHRAGM STEEL AND CONNECTOR PLATES SHALL BE AASHTO M270 GRADE 50 OR APPROVED EQUAL.

TENSION ON THE ASTM A325 BOLTS THROUGH THE CHANNEL MEMBER SHALL BE CALIBRATED USING DIRECT TENSION INDICATOR WASHERS IN ACCORDANCE WITH THE STANDARD SPECIFICATIONS.

TENSION ON THE ASTM A449 BOLTS THROUGH THE GIRDER WEB SHALL BE SNUG TIGHTENED FOLLOWED BY AN ADDITIONAL ¼ TURN.

THE PLATES, BENT PLATES, CHANNELS, AND ANGLES SHALL BE GALVANIZED OR METALLIZED IN ACCORDANCE WITH THE STANDARD SPECIFICATIONS. FOR THERMAL SPRAYED COATINGS (METALLIZATION), SEE SPECIAL PROVISIONS.

FOR METALLIZATION, APPLY AN 8 MIL THICK 99.99 PERCENT ZINC (W-Zn-1) THERMAL SPRAYED COATING WITH A 0.5 MIL THICK SEAL COAT TO ALL STEEL DIAPHRAGM SURFACES IN ACCORDANCE WITH THE THERMAL SPRAYED COATINGS SPECIAL PROVISION AND SECTION 442 OF THE STANDARD SPECIFICATIONS.

GALVANIZE THE HIGH STRENGTH BOLTS, NUTS, WASHERS AND DIRECT TENSION INDICATORS IN ACCORDANCE WITH THE STANDARD SPECIFICATIONS.

USE AN ASTM F436 HARDENED WASHER WITH STANDARD AND SLOTTED HOLES UNDER EACH BOLT HEAD AND NUT.

FOR BOLTS THROUGH THE GIRDER WEB, PROVIDE SUFFICIENT LENGTH OF THREADS ON ALL BOLTS TO ACCOMMODATE WASHERS AND THE THICKNESS OF CONNECTING MEMBER PLUS AT LEAST ¼" PROJECTION BEYOND THE NUT.

INTERMEDIATE DIAPHRAGM ASSEMBLY SHALL COMPLY WITH SECTION 1072 OF THE STANDARD SPECIFICATIONS.

SUBMIT TWO SETS OF WORKING DRAWINGS FOR THE INTERMEDIATE DIAPHRAGM ASSEMBLY FOR REVIEW, COMMENTS AND ACCEPTANCE. AFTER REVIEW, COMMENTS, AND ACCEPTANCE, SUBMIT SEVEN SETS FOR DISTRIBUTION.

IN THE EXTERIOR BAYS, PLACE TEMPORARY STRUTS BETWEEN PRESTRESSED GIRDERS ADJACENT TO THE STEEL DIAPHRAGMS. STRUTS SHALL REMAIN IN PLACE 3 DAYS AFTER CONCRETE IS PLACED.

THE COST OF THE STEEL DIAPHRAGMS AND ASSEMBLIES SHALL BE INCLUDED IN THE UNIT PRICE BID FOR PRESTRESSED CONCRETE GIRDERS.

TABLE

GIRDER TYPE	CHANNEL SIZE	DIM "A"	DIM "B"	DIM "L"
IV	MC 18 x 42.7	1'-9½"	1'-2"	1'-6"

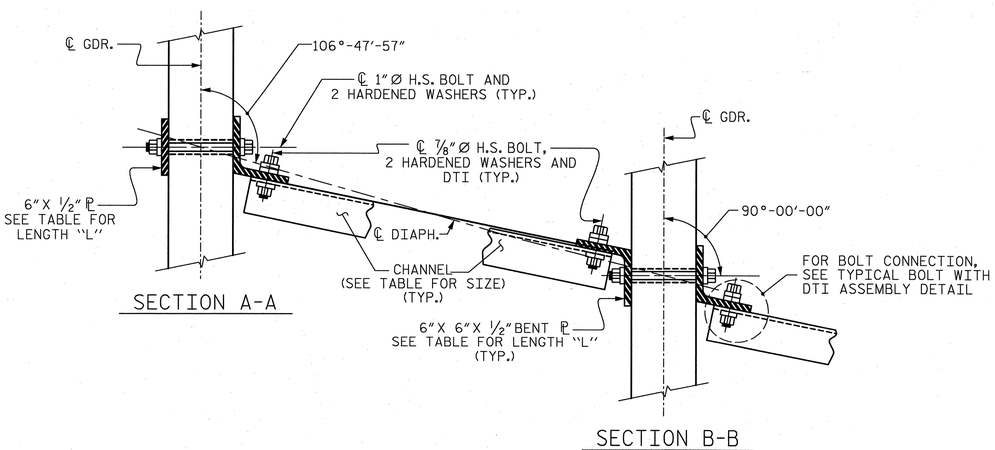

SECTION A-A SECTION B-B

CONNECTION DETAILS

(FOR 70°≤ SKEW < 90° OR 90°< SKEW ≤ 110°)

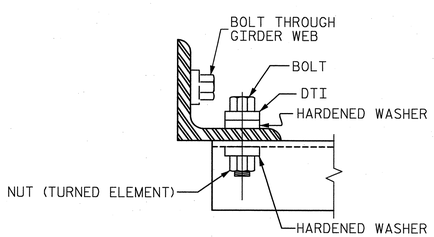

BOLT WITH DTI ASSEMBLY DETAIL

PROJECT NO. U-2525B

GUILFORD COUNTY

STATION: POC 129+37.56 -L-

SHEET 4 OF 4

STATE OF NORTH CAROLINA
DEPARTMENT OF TRANSPORTATION
RALEIGH

STANDARD
INTERMEDIATE
STEEL DIAPHRAGMS
FOR TYPE IV
PRESTRESSED CONCRETE
GIRDERS
LEFT LANE

ASSEMBLED BY : M. WRIGHT	DATE : 3/13
CHECKED BY : D. RAGAN	DATE : 5/13
DRAWN BY : TLA 6/05	ADDED 10/21/05
CHECKED BY : VC 6/05	REV. 5/1/06RRR KMM/GM
	REV. 10/1/11 MAA/GM

NORTH CAROLINA PROFESSIONAL SEAL 27812 ENGINEER DAVID W. HAWKINS 12/23/13

NORTH CAROLINA PROFESSIONAL SEAL 12916 ENGINEER PAUL J. BARBER 12/23/13

HNTB HNTB NORTH CAROLINA, P.C.
License No. C-1554
343 E. Six Forks Rd., Suite 200, Raleigh, N.C. 27609

DRAWN BY M. WRIGHT DATE 3/13
CHECKED BY D. RAGAN DATE 5/13
DWG. NO. 15

REVISIONS						SHEET NO.
NO.	BY:	DATE:	NO.	BY:	DATE:	S-124
1			3			TOTAL SHEETS
2			4			541

STD. NO. PCG10

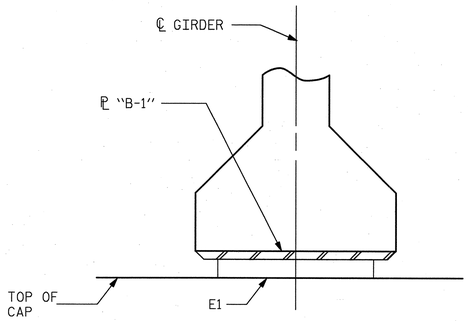

FIXED

SECTION D-D

TYPICAL SECTION OF ELASTOMERIC BEARINGS

E1 (10 REQ'D)

PLAN VIEW OF ELASTOMERIC BEARING

TYPE II

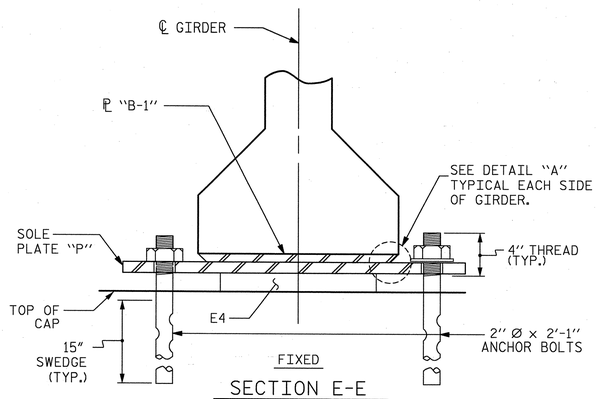

FIXED

SECTION E-E

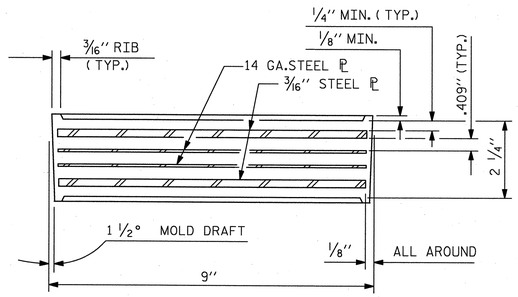

TYPICAL SECTION OF ELASTOMERIC BEARINGS

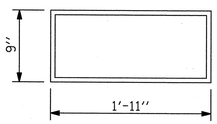

E4 (10 REQ'D)

PLAN VIEW OF ELASTOMERIC BEARING

TYPE V

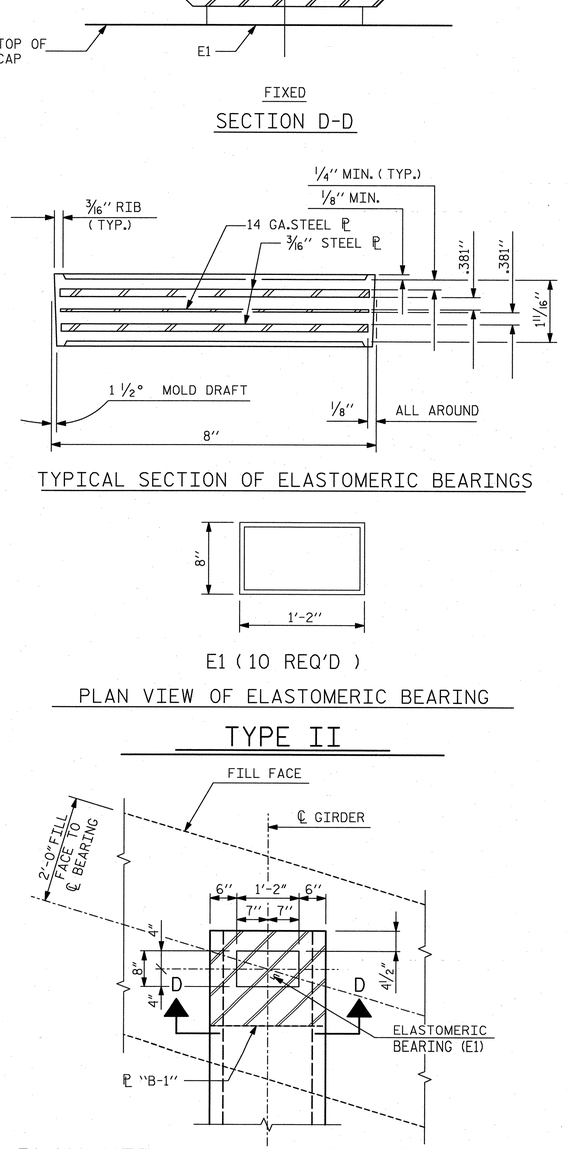

PLAN VIEW AT INTEGRAL END BENTS

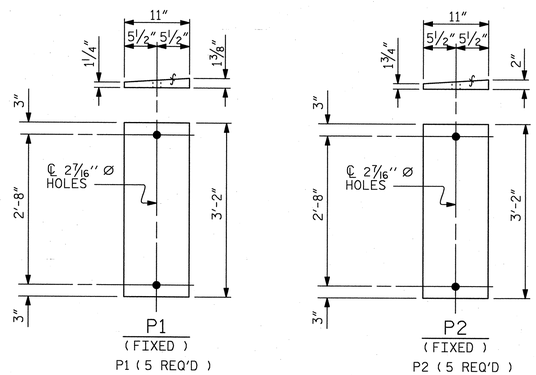

SOLE PLATE DETAILS ("P")

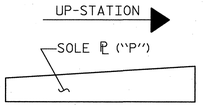

SOLE ℄ PLACEMENT DETAIL

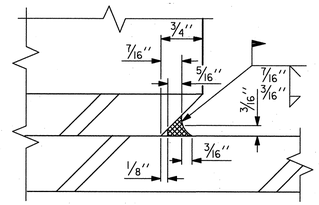

DETAIL "A"

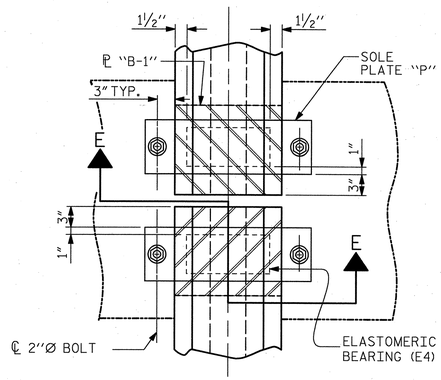

PLAN VIEW @ BENT

(SHOWING CONTINUOUS BENT)

NOTES

AT ALL FIXED POINTS OF SUPPORT, NUTS FOR ANCHOR BOLTS ARE TO BE TIGHTENED FINGER TIGHT AND THEN BACKED OFF 1/2 TURN. THE THREAD OF THE NUT AND BOLT SHALL THEN BE BURRED WITH A SHARP POINTED TOOL.

STEEL SOLE PLATES, ANCHOR BOLTS, NUTS, AND WASHERS SHALL BE GALVANIZED IN ACCORDANCE WITH THE STANDARD SPECIFICATIONS.

PRIOR TO WELDING, GRIND THE GALVANIZED SURFACE OF THE PORTION OF THE EMBEDDED PLATE AND SOLE PLATE THAT ARE TO BE WELDED. AFTER WELDING, DAMAGED GALVANIZED SURFACES SHALL BE REPAIRED IN ACCORDANCE WITH THE STANDARD SPECIFICATIONS.

WHEN WELDING THE SOLE PLATE TO THE EMBEDDED PLATE IN THE GIRDER, USE TEMPERATURE INDICATING WAX PENS, OR OTHER SUITABLE MEANS, TO ENSURE THAT THE TEMPERATURE OF THE SOLE PLATE DOES NOT EXCEED 300°F. TEMPERATURES ABOVE THIS MAY DAMAGE THE ELASTOMER.

SOLE PLATE "P", BOLTS, NUTS, WASHERS, AND PIPE SLEEVE SHALL BE INCLUDED IN THE PAY ITEM FOR PRESTRESSED CONCRETE GIRDERS.

ANCHOR BOLTS SHALL MEET THE REQUIREMENTS OF ASTM A449. NUTS SHALL MEET THE REQUIREMENTS OF AASHTO M291-DH OR AASHTO M292-2H. WASHERS SHALL MEET THE REQUIREMENTS OF AASHTO M293. NO SHOP DRAWINGS ARE REQUIRED FOR ANCHOR BOLTS, NUTS AND WASHERS. SHOP INSPECTION IS REQUIRED.

ALL SURFACES OF BEARING PLATES SHALL BE SMOOTH AND STRAIGHT.

THE ELASTOMER IN THE STEEL REINFORCED BEARINGS SHALL HAVE A SHEAR MODULUS OF 0.160 KSI, IN ACCORDANCE WITH AASHTO M251, AND SHALL BE 60 DUROMETER HARDNESS.

FOR STEEL REINFORCED ELASTOMERIC BEARINGS, SEE SPECIAL PROVISIONS.

ALL BEARING PLATES SHALL BE AASHTO M270 GRADE 36.

FOR BEARING AND SOLE PLATE LOCATIONS, SEE "FRAMING PLAN" SHEET.

MAXIMUM ALLOWABLE SERVICE LOADS	
D.L.+L.L. (NO IMPACT)	
TYPE II	145 k
TYPE V	365 k

PROJECT NO. U-2525B

GUILFORD COUNTY

STATION: POC 129+37.56 -L-

ASSEMBLED BY : MEW	DATE : 6/13		
CHECKED BY : DMR	DATE : 6/13		
DRAWN BY : EEM 2/97	REV. 5/1/06	TLA/GM	
CHECKED BY : VAP 2/97	REV. 10/1/11	MAA/GM	
	REV. 6/13	AAC/MAA	

NORTH CAROLINA PROFESSIONAL SEAL 27812 ENGINEER DAVID W. HAWKINS 12/23/13

NORTH CAROLINA PROFESSIONAL SEAL 12916 ENGINEER PAUL J. BARBER 12/23/13

HNTB HNTB NORTH CAROLINA, P.C.
License No. C-1554
343 E. Six Forks Rd., Suite 200, Raleigh, N.C. 27609

DRAWN BY M. WRIGHT DATE 6/13
CHECKED BY D. RAGAN DATE 6/13
DWG. NO. 16

STATE OF NORTH CAROLINA
DEPARTMENT OF TRANSPORTATION
RALEIGH

STANDARD

ELASTOMERIC BEARING DETAILS

PRESTRESSED CONCRETE GIRDER
SUPERSTRUCTURE
LEFT LANE

REVISIONS						SHEET NO.
NO.	BY:	DATE:	NO.	BY:	DATE:	S-125
1			3			TOTAL SHEETS
2			4			541

STD. NO. EB3 AND EB4

DEAD LOAD DEFLECTION TABLE FOR SPAN A

0.6" Ø LOW RELAXATION STRANDS	GIRDER 1 & 5										
TENTH POINTS	0.00	0.10	0.20	0.30	0.40	0.50	0.60	0.70	0.80	0.90	1.00
CAMBER (GIRDER ALONE IN PLACE) ↑	0.000	0.095	0.163	0.208	0.236	0.245	0.236	0.208	0.163	0.095	0.000
DEFLECTION DUE TO SUPERIMPOSED D.L. * ↓	0.000	0.030	0.059	0.082	0.097	0.102	0.097	0.082	0.059	0.030	0.000
FINAL CAMBER ↑	0	3/4"	1 1/4	1 1/2"	1 11/16	1 11/16	1 11/16	1 1/2	1 1/4	3/4	0

DEAD LOAD DEFLECTION TABLE FOR SPAN A

0.6" Ø LOW RELAXATION STRANDS	GIRDER 2, 3, & 4										
TENTH POINTS	0.00	0.10	0.20	0.30	0.40	0.50	0.60	0.70	0.80	0.90	1.00
CAMBER (GIRDER ALONE IN PLACE) ↑	0.000	0.095	0.163	0.208	0.236	0.245	0.236	0.208	0.163	0.095	0.000
DEFLECTION DUE TO SUPERIMPOSED D.L. * ↓	0.000	0.032	0.064	0.089	0.105	0.110	0.105	0.089	0.064	0.032	0.000
FINAL CAMBER ↑	0	3/4	1 3/16	1 7/16	1 9/16	1 5/8	1 9/16	1 7/16	1 3/16	3/4	0

DEAD LOAD DEFLECTION TABLE FOR SPAN B

0.6" Ø LOW RELAXATION STRANDS	GIRDER 1 & 5																				
TWENTIETH POINTS	0.00	0.05	0.10	0.15	0.20	0.25	0.30	0.35	0.40	0.45	0.50	0.55	0.60	0.65	0.70	0.75	0.80	0.85	0.90	0.95	1.00
CAMBER (GIRDER ALONE IN PLACE) ↑	0.000	0.090	0.169	0.237	0.295	0.343	0.382	0.411	0.432	0.445	0.449	0.445	0.432	0.411	0.382	0.343	0.295	0.237	0.169	0.090	0.000
DEFLECTION DUE TO SUPERIMPOSED D.L. * ↓	0.000	0.030	0.059	0.088	0.115	0.139	0.160	0.176	0.188	0.195	0.197	0.195	0.188	0.176	0.160	0.139	0.115	0.088	0.059	0.030	0.000
FINAL CAMBER ↑	0	3/4	1 5/16	1 13/16	2 1/8	2 7/16	2 11/16	2 13/16	2 15/16	3	3	3	2 15/16	2 13/16	2 11/16	2 7/16	2 1/8	1 13/16	1 5/16	3/4	0

DEAD LOAD DEFLECTION TABLE FOR SPAN B

0.6" Ø LOW RELAXATION STRANDS	GIRDER 2, 3, & 4																				
TWENTIETH POINTS	0.00	0.05	0.10	0.15	0.20	0.25	0.30	0.35	0.40	0.45	0.50	0.55	0.60	0.65	0.70	0.75	0.80	0.85	0.90	0.95	1.00
CAMBER (GIRDER ALONE IN PLACE) ↑	0.000	0.090	0.169	0.237	0.295	0.343	0.382	0.411	0.432	0.445	0.449	0.445	0.432	0.411	0.382	0.343	0.295	0.237	0.169	0.090	0.000
DEFLECTION DUE TO SUPERIMPOSED D.L. * ↓	0.000	0.032	0.064	0.095	0.125	0.150	0.173	0.190	0.202	0.211	0.214	0.211	0.202	0.190	0.173	0.150	0.125	0.095	0.064	0.032	0.000
FINAL CAMBER ↑	0	11/16	1 1/4	1 11/16	2 1/16	2 5/16	2 1/2	2 5/8	2 3/4	2 13/16	2 13/16	2 13/16	2 3/4	2 5/8	2 1/2	2 5/16	2 1/16	1 11/16	1 1/4	11/16	0

* INCLUDES FUTURE WEARING SURFACE IN SUPERIMPOSED DEAD LOAD
ALL VALUES ARE SHOWN IN FEET (DECIMAL FORM), EXCEPT " FINAL CAMBER ", WHICH IS GIVEN IN INCHES (FRACTION FORM).

PROJECT NO. U-2525B

GUILFORD COUNTY

STATION: POC 129+37.56 -L-

NORTH CAROLINA PROFESSIONAL SEAL 27812 ENGINEER DAVID W. HAWKINS 12/23/13

NORTH CAROLINA PROFESSIONAL SEAL 12916 ENGINEER PAUL J. BARBER 12/23/13

HNTB HNTB NORTH CAROLINA, P.C.
License No. C-1554
343 E. Six Forks Rd., Suite 200, Raleigh, N.C. 27609

DRAWN BY M. WRIGHT DATE 6/13
CHECKED BY S. FISHER DATE 7/13

DWG. NO. 17

STATE OF NORTH CAROLINA
DEPARTMENT OF TRANSPORTATION
RALEIGH

SUPERSTRUCTURE
GIRDER
DEAD LOAD DEFLECTIONS
AND CAMBER
LEFT LANE

REVISIONS						SHEET NO.
NO.	BY:	DATE:	NO.	BY:	DATE:	S-126
1			3			TOTAL SHEETS
2			4			541

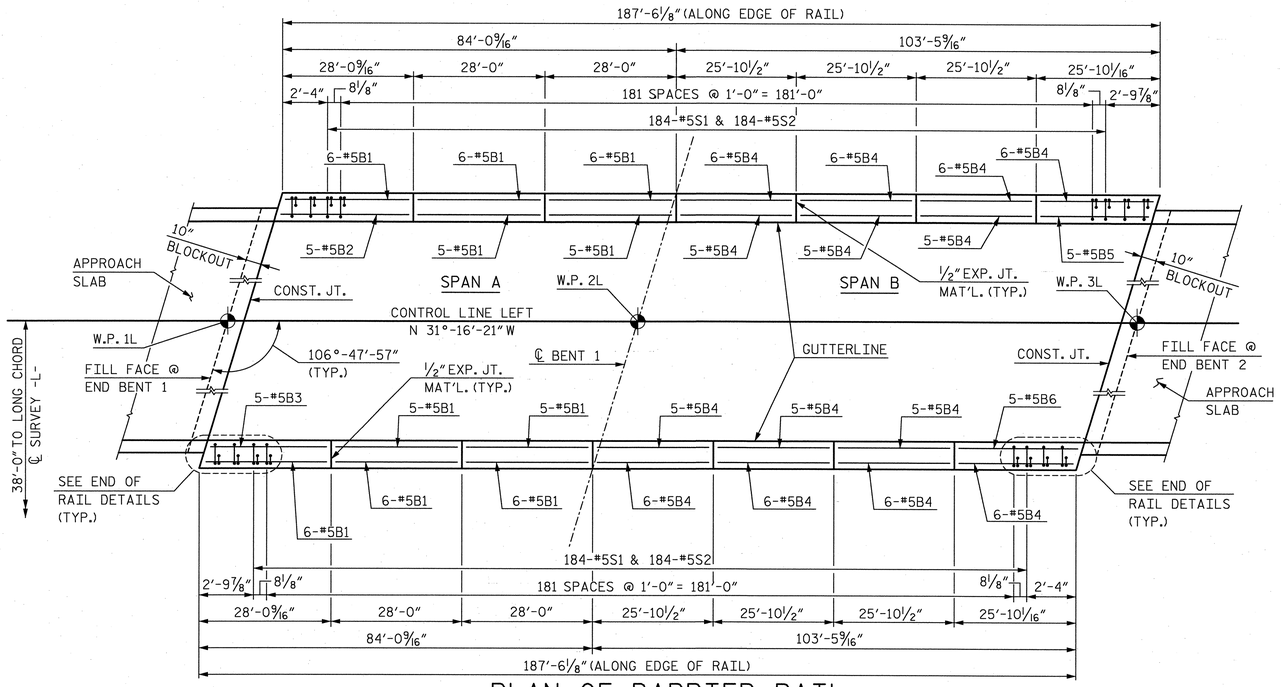

PLAN OF BARRIER RAIL

NOTE: EDGE OF SLAB NOT SHOWN FOR CLARITY.

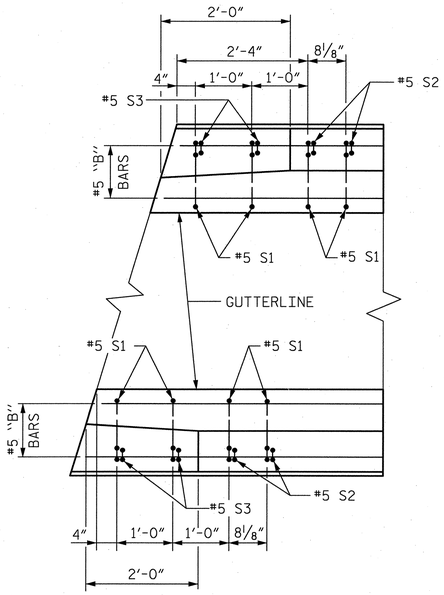

PLAN

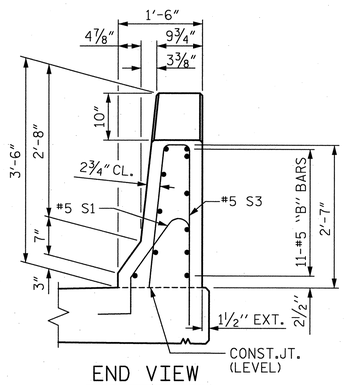

END VIEW

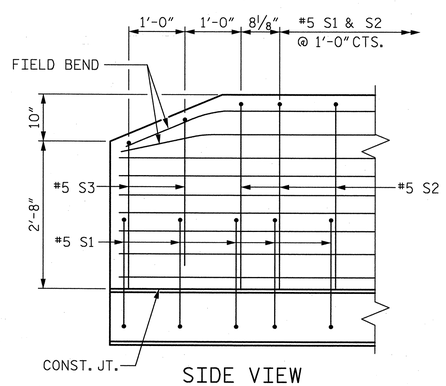

SIDE VIEW

END OF RAIL DETAILS

NOTES

THE BARRIER RAIL IN EACH SPAN SHALL NOT BE CAST UNTIL ALL SLAB CONCRETE IN THAT SPAN HAS BEEN CAST AND HAS REACHED A MINIMUM COMPRESSIVE STRENGTH OF 3,000 PSI.

WHEN FOAM JOINT SEAL IS REQUIRED, THE JOINT IN THE DECK SHALL BE SAWED PRIOR TO THE CASTING OF BARRIER RAIL.

ALL REINFORCING STEEL IN BARRIER RAILS SHALL BE EPOXY COATED.

THE #5 S1 & #5 S2 MAY BE SHIFTED SLIGHTLY AS REQUIRED TO PROVIDE 2″ MINIMUM CONCRETE COVER AT THE ½ INCH EXPANSION JOINTS IN THE BARRIER RAIL.

GROOVED CONTRACTION JOINTS, ½″ IN DEPTH, SHALL BE TOOLED IN ALL EXPOSED FACES OF THE BARRIER RAIL AND IN ACCORDANCE WITH ARTICLE 825-10(B) OF THE STANDARD SPECIFICATIONS. THE CONTRACTION JOINT SHALL BE LOCATED AT EACH THIRD POINT BETWEEN BARRIER RAIL EXPANSION JOINTS. ONLY ONE CONTRACTION JOINT IS REQUIRED AT MIDPOINT OF BARRIER RAIL SEGMENTS LESS THAN 20 FEET IN LENGTH AND NO CONTRACTION JOINTS ARE REQUIRED FOR THOSE SEGMENTS LESS THAN 10 FEET IN LENGTH.

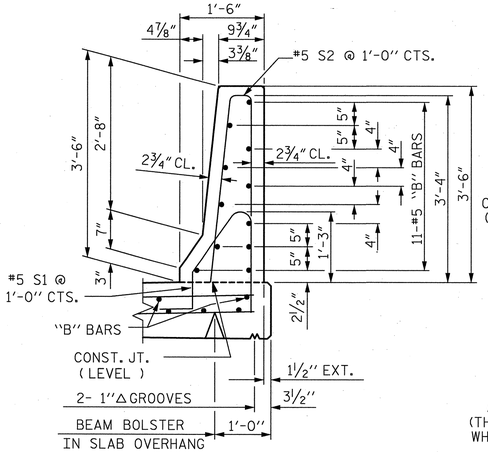

SECTION THRU RAIL

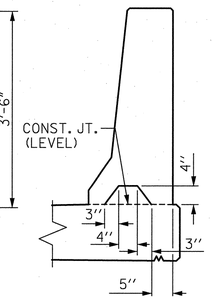

SECTION S-S

AT DAM IN OPEN JOINT (THIS IS TO BE USED ONLY WHEN SLIP FORM IS USED)

℄ ½″ EXP.JT.MAT'L HELD IN PLACE WITH GALVANIZED NAILS.
(NOTE: OMIT EXP. JT. MAT'L. WHEN SLIP FORM IS USED.)

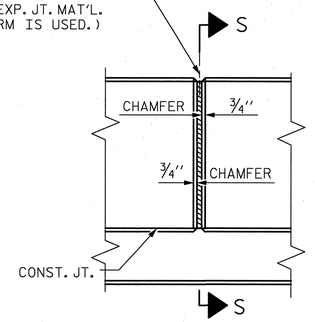

ELEVATION AT EXPANSION JOINTS

BARRIER RAIL DETAILS

BAR TYPES

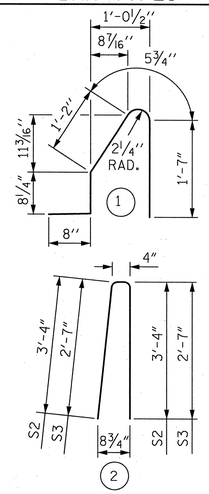

ALL BAR DIMENSIONS ARE OUT TO OUT

BILL OF MATERIAL

FOR CONCRETE BARRIER RAIL ONLY

BAR	NO.	SIZE	TYPE	LENGTH	WEIGHT
✳B1	56	5	STR.	27′-6″	1,606
✳B2	5	5	STR.	27′-10″	145
✳B3	5	5	STR.	27′-3″	142
✳B4	78	5	STR.	25′-3″	2,054
✳B5	5	5	STR.	25′-0″	130
✳B6	5	5	STR.	25′-7″	133
✳S1	376	5	1	4′-7″	1,797
✳S2	368	5	2	7′-0″	2,687
✳S3	8	5	2	5′-6″	46

✳ EPOXY COATED REINFORCING STEEL	8,740 LBS.
CLASS AA CONCRETE	51.0 CU. YDS.
CONCRETE BARRIER RAIL	375.00 LIN. FT.

PROJECT NO. U-2525B

GUILFORD COUNTY

STATION: POC 129+37.56 -L-

STATE OF NORTH CAROLINA
DEPARTMENT OF TRANSPORTATION
RALEIGH

STANDARD

CONCRETE BARRIER RAIL

LEFT LANE

ASSEMBLED BY : MEW	DATE : 3/13
CHECKED BY : DMR	DATE : 5/13
DRAWN BY : ARB 5/87	REV. 10/1/11 MAA/GM
CHECKED BY : SJD 9/87	REV. 7/12 MAA/GM
	REV. 10/12 MAA/GM

NORTH CAROLINA PROFESSIONAL SEAL 27812 ENGINEER DAVID W. HAWKINS 12/23/13

NORTH CAROLINA PROFESSIONAL SEAL 12916 ENGINEER PAUL J. BARBER 12/23/13

HNTB NORTH CAROLINA, P.C.
License No. C-1554
343 E. Six Forks Rd., Suite 200, Raleigh, N.C. 27609

DRAWN BY M. WRIGHT DATE 3/13
CHECKED BY D. RAGAN DATE 5/13
DWG. NO. 18

REVISIONS						SHEET NO.
NO.	BY:	DATE:	NO.	BY:	DATE:	S-127
1			3			TOTAL SHEETS
2			4			541

STD. NO. CBR1

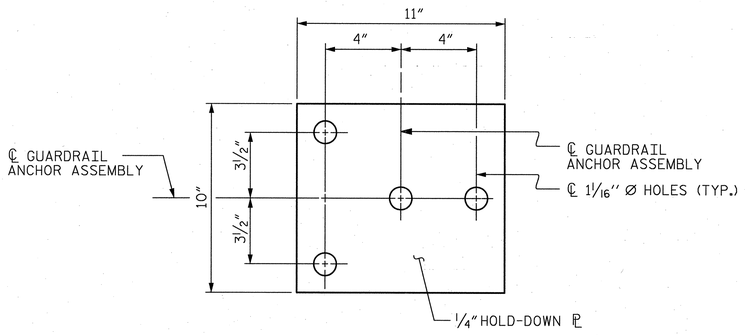

PLAN

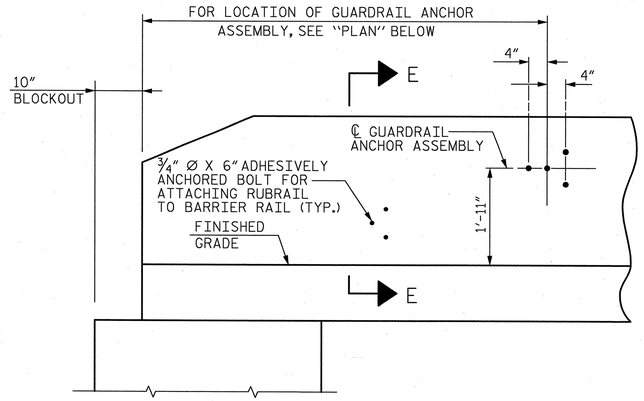

ELEVATION

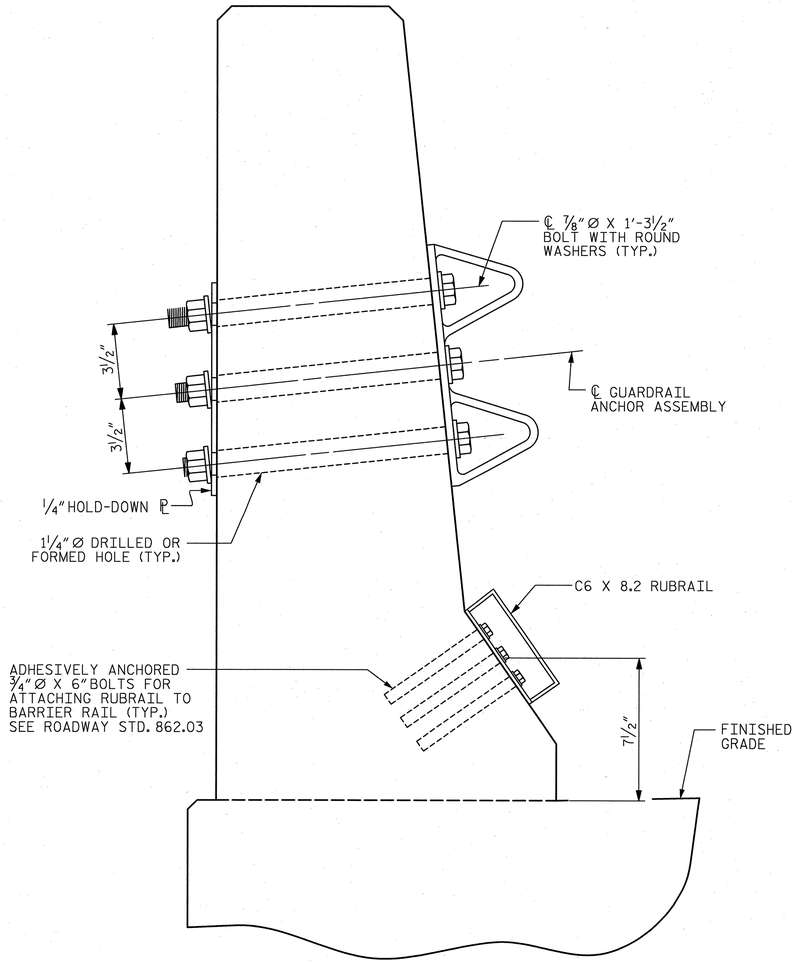

SECTION E-E

GUARDRAIL ANCHOR ASSEMBLY DETAILS

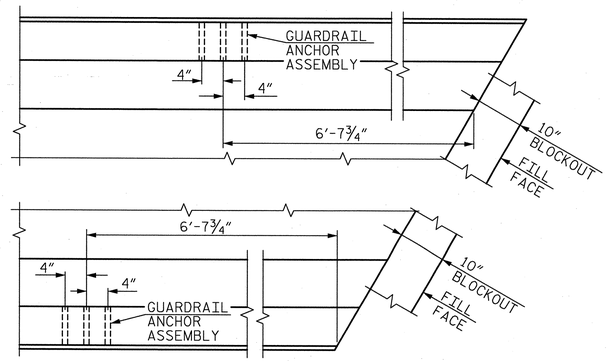

PLAN AT END BENT 2

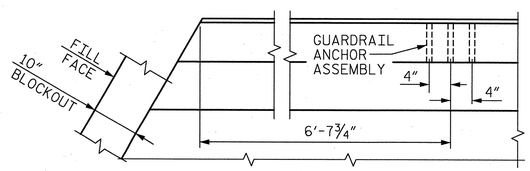

PLAN AT END BENT 1

LOCATION OF ANCHORS FOR GUARDRAIL

NOTES

THE GUARDRAIL ANCHOR ASSEMBLY SHALL CONSIST OF A 1/4″ HOLD-DOWN PLATE AND 4 - 7/8″ Ø BOLTS WITH NUTS AND WASHERS, RUBRAIL, AND ADHESIVELY ANCHORED BOLTS.

THE HOLD-DOWN PLATE SHALL CONFORM TO AASHTO M270 GRADE 36. AFTER FABRICATION, THE HOLD-DOWN PLATE SHALL BE HOT-DIP GALVANIZED IN ACCORDANCE WITH AASHTO M111.

BOLTS SHALL CONFORM TO THE REQUIREMENTS OF ASTM A307 AND NUTS SHALL CONFORM TO THE REQUIREMENTS OF AASHTO M291. BOLTS, NUTS AND WASHERS SHALL BE GALVANIZED. (AT THE CONTRACTOR'S OPTION, STAINLESS STEEL BOLTS, NUTS AND WASHERS MAY BE USED AS AN ALTERNATE FOR THE 7/8″ Ø GALVANIZED BOLTS, NUTS AND WASHERS. THEY SHALL CONFORM TO OR EXCEED THE MECHANICAL REQUIREMENTS OF ASTM A307. THE USE OF THIS ALTERNATE SHALL BE APPROVED BY THE ENGINEER.)

THE GUARDRAIL ANCHOR ASSEMBLY IS REQUIRED AT ALL POINTS WHERE APPROACH GUARDRAIL IS TO BE ATTACHED TO THE END OF BARRIER RAIL. FOR POINTS OF ATTACHMENT, SEE SKETCH.

AFTER INSTALLATION, THE EXPOSED THREAD OF THE BOLT SHALL BE BURRED WITH A SHARP POINTED TOOL.

THE COST OF THE GUARDRAIL ANCHOR ASSEMBLY SHALL BE INCLUDED IN THE UNIT CONTRACT PRICE BID FOR CONCRETE BARRIER RAIL.

THE 1 1/4″ Ø HOLES SHALL BE FORMED OR DRILLED WITH A CORE BIT. IMPACT TOOLS WILL NOT BE PERMITTED. ANY CONCRETE DAMAGED BY THIS WORK SHALL BE REPAIRED TO THE SATISFACTION OF THE ENGINEER.

THE C6 X 8.2 RUBRAIL IS TO BE ADHESIVELY ANCHORED TO THE RAIL USING THREE 3/4″Ø X 6″BOLTS WITH WASHERS. LEVEL ONE FIELD TESTING IS REQUIRED, AND THE YIELD LOAD OF THE 3/4″Ø BOLT IS 12 KIPS. FOR ADHESIVELY ANCHORED ANCHOR BOLTS OR DOWELS, SEE STANDARD SPECIFICATIONS. SEE ROADWAY STANDARD 862.03 FOR DETAILS AND LOCATION OF THE RUBRAIL.

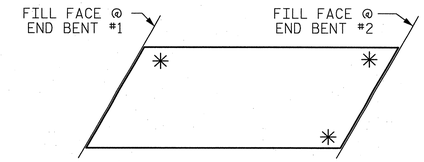

SKETCH SHOWING POINTS OF ATTACHMENTS

✳ DENOTES GUARDRAIL ANCHOR ASSEMBLY

PROJECT NO. U-2525B

GUILFORD COUNTY

STATION: POC 129+37.56 -L-

STATE OF NORTH CAROLINA
DEPARTMENT OF TRANSPORTATION
RALEIGH

STANDARD

GUARDRAIL ANCHORAGE FOR BARRIER RAIL

LEFT LANE

ASSEMBLED BY : MEW	DATE : 4/10/13
CHECKED BY : DMR	DATE : 5/29/13

DRAWN BY : TLA 5/06	REV. 10/1/11 MAA/GM
CHECKED BY : GM 5/06	REV. 7/12 MAA/GM
	REV. 10/12 MAA/GM

NORTH CAROLINA PROFESSIONAL ENGINEER SEAL 27812 DAVID W. HAWKINS 12/23/13

NORTH CAROLINA PROFESSIONAL ENGINEER SEAL 12916 PAUL J. BARBER 12/23/13

HNTB HNTB NORTH CAROLINA, P.C.
License No. C-1554
343 E. Six Forks Rd., Suite 200, Raleigh, N.C. 27609

DRAWN BY M. WRIGHT	DATE 4/13
CHECKED BY D. RAGAN	DATE 5/13

DWG. NO. 19

REVISIONS						SHEET NO.
NO.	BY:	DATE:	NO.	BY:	DATE:	S-128
1			3			TOTAL SHEETS
2			4			541

STD. NO. GRA2

BILL OF MATERIAL

EPOXY COATED

BAR	NO.	SIZE	TYPE	LENGTH	WEIGHT
A1	347	5	STR.	45′-4″	16,407
A2	2	5	STR.	44′-4″	92
A3	2	5	STR.	42′-8″	89
A4	2	5	STR.	41′-0″	86
A5	2	5	STR.	39′-4″	82
A6	2	5	STR.	37′-8″	79
A7	2	5	STR.	36′-0″	75
A8	2	5	STR.	34′-4″	72
A9	2	5	STR.	32′-8″	68
A10	2	5	STR.	31′-1″	65
A11	2	5	STR.	29′-5″	61
A12	2	5	STR.	27′-9″	58
A13	2	5	STR.	26′-1″	54
A14	2	5	STR.	24′-5″	51
A15	2	5	STR.	22′-9″	47
A16	2	5	STR.	21′-1″	44
A17	2	5	STR.	19′-5″	41
A18	2	5	STR.	17′-10″	37
A19	2	5	STR.	16′-2″	34
A20	2	5	STR.	14′-6″	30
A21	2	5	STR.	12′-10″	27
A22	2	5	STR.	11′-2″	23
A23	2	5	STR.	9′-6″	20
A24	2	5	STR.	7′-10″	16
A25	2	5	STR.	6′-2″	13
A26	2	5	STR.	4′-7″	10
A27	2	5	STR.	2′-11″	6

BILL OF MATERIAL

EPOXY COATED

BAR	NO.	SIZE	TYPE	LENGTH	WEIGHT
B1	66	6	STR.	20′-0″	1,983
B2	68	6	STR.	34′-11″	3,566
B3	68	4	STR.	28′-9″	1,306
B4	68	4	STR.	35′-6″	1,613
B5	66	6	STR.	16′-0″	1,586
B6	66	7	STR.	35′-6″	4,789
S1	76	4	3	11′-11″	605
S2	72	4	3	11′-4″	545
U3	8	4	6	11′-4″	61
U4	24	4	6	13′-4″	214
				TOTAL	33,955

BILL OF MATERIAL

UNCOATED

BAR	NO.	SIZE	TYPE	LENGTH	WEIGHT
A101	347	5	STR.	45′-4″	16,407
A102	2	5	STR.	44′-4″	92
A103	2	5	STR.	42′-8″	89
A104	2	5	STR.	41′-0″	86
A105	2	5	STR.	39′-4″	82
A106	2	5	STR.	37′-8″	79
A107	2	5	STR.	36′-0″	75
A108	2	5	STR.	34′-4″	72
A109	2	5	STR.	32′-8″	68
A110	2	5	STR.	31′-1″	65
A111	2	5	STR.	29′-5″	61
A112	2	5	STR.	27′-9″	58
A113	2	5	STR.	26′-1″	54
A114	2	5	STR.	24′-5″	51
A115	2	5	STR.	22′-9″	47
A116	2	5	STR.	21′-1″	44
A117	2	5	STR.	19′-5″	41
A118	2	5	STR.	17′-10″	37
A119	2	5	STR.	16′-2″	34
A120	2	5	STR.	14′-6″	30
A121	2	5	STR.	12′-10″	27
A122	2	5	STR.	11′-2″	23
A123	2	5	STR.	9′-6″	20
A124	2	5	STR.	7′-10″	16
A125	2	5	STR.	6′-2″	13
A126	2	5	STR.	4′-7″	10
A127	2	5	STR.	2′-11″	6
B101	224	5	STR.	48′-5″	11,312
B102	50	4	STR.	13′-3″	443
B103	50	4	STR.	24′-0″	802

BILL OF MATERIAL

UNCOATED

BAR	NO.	SIZE	TYPE	LENGTH	WEIGHT
H1	7	4	1	15′-7″	73
H2	12	5	1	15′-7″	195
H3	12	6	2	17′-1″	308
H4	7	4	2	16′-7″	78
H5	6	4	1	14′-3″	57
H6	11	5	1	14′-3″	163
H7	11	5	2	13′-11″	160
H8	6	4	2	13′-7″	54
K1	10	5	STR.	53′-7″	559
K2	8	5	STR.	7′-5″	62
K3	8	5	STR.	8′-5″	70
K4	16	5	STR.	9′-0″	150
K5	8	5	STR.	8′-0″	67
K6	4	5	STR.	5′-3″	22
K7	4	5	STR.	5′-9″	24
K8	8	5	STR.	6′-1″	51
K9	4	5	STR.	5′-6″	23
K10	8	5	STR.	2′-9″	23
K11	8	4	STR.	22′-2″	118
K12	8	4	STR.	6′-3″	33
K13	2	4	7	6′-11″	9
K14	3	4	8	12′-2″	24
K15	8	4	STR.	8′-5″	45
K16	16	4	STR.	9′-0″	96
K17	8	4	STR.	8′-0″	43
S3	120	4	4	2′-9″	220
S4	4	4	9	4′-5″	12
U1	68	5	5	12′-0″	851
U2	8	5	5	15′-0″	125
				TOTAL	33,959

BAR TABLE

BAR	Ⓐ	Ⓑ
H1	2 5/16″	14′-11″
H2	2 7/8″	14′-9″
H3	3 1/16″	16′-1″
H4	2 5/16″	15′-11″
H5	2 5/16″	13′-7″
H6	2 7/8″	13′-5″
H7	2 7/8″	13′-1″
H8	2 5/16″	12′-11″

BAR TYPES

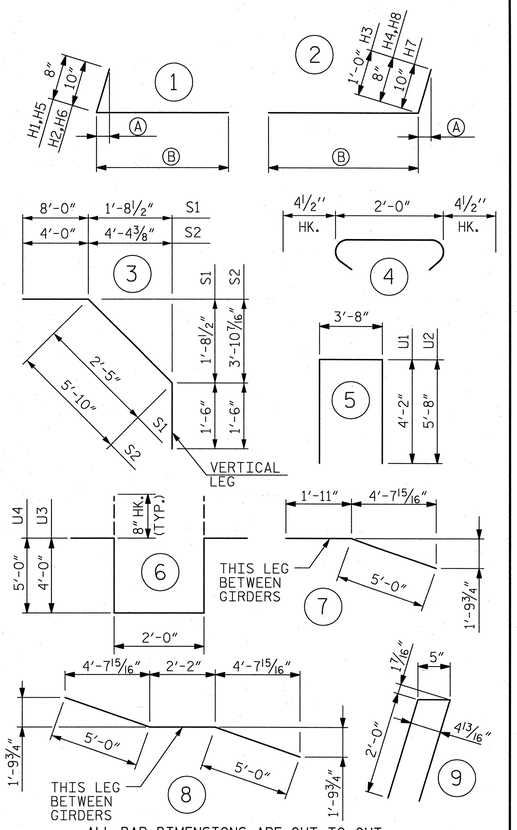

ALL BAR DIMENSIONS ARE OUT TO OUT

SUPERSTRUCTURE BILL OF MATERIAL

	CLASS AA CONCRETE	REINFORCING STEEL	EPOXY COATED REINFORCING STEEL
	(CU. YDS.)	(LBS.)	(LBS.)
POUR 1	128.3		
POUR 2	149.5		
POUR 3	102.1		
TOTALS**	379.9	33,959	33,955

**QUANTITIES FOR BARRIER RAIL ARE NOT INCLUDED

NOTE: QUANTITIES INCLUDE THE CONCRETE AND REINFORCING STEEL FOR THE UPPER PORTION OF THE WINGS AND INTEGRAL END BENTS.

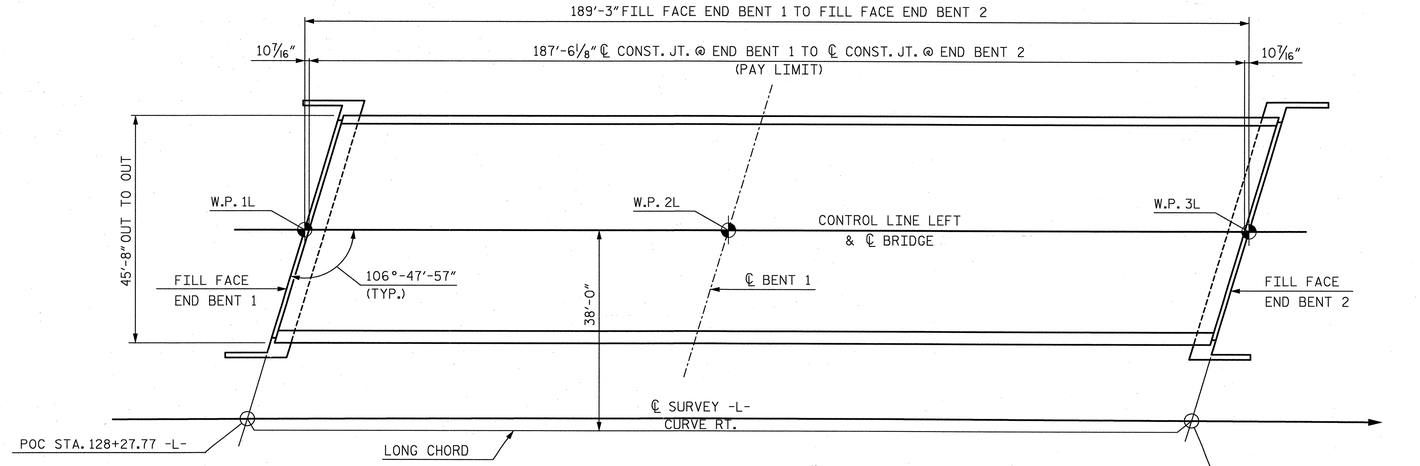

LAYOUT FOR COMPUTING AREA REINFORCED CONCRETE DECK SLAB (SQ. FT. = 8,563)

GROOVING BRIDGE FLOORS

APPROACH SLABS	1,902 SQ.FT.
BRIDGE DECK	7,377 SQ.FT.
TOTAL	9,279 SQ.FT.

SUPERSTRUCTURE REINFORCING STEEL LENGTHS ARE BASED ON THE FOLLOWING MINIMUM SPLICE LENGTHS

BAR SIZE	SUPERSTRUCTURE EXCEPT APPROACH SLABS, PARAPET, AND BARRIER RAIL		APPROACH SLABS		PARAPET AND BARRIER RAIL
	EPOXY COATED	UNCOATED	EPOXY COATED	UNCOATED	
#4	2′-0″	1′-9″	2′-0″	1′-9″	2′-9″
#5	2′-6″	2′-2″	2′-6″	2′-2″	3′-5″
#6	3′-0″	2′-7″	3′-10″	2′-7″	4′-4″
#7	5′-3″	3′-6″			
#8	6′-10″	4′-7″			

NOTE: QUANTITIES INCLUDE THE CONCRETE AND REINFORCING STEEL FOR THE UPPER PORTION OF THE WINGS AND INTEGRAL END BENTS.

PROJECT NO. U-2525B

GUILFORD COUNTY

STATION: POC 129+37.56 -L-

STATE OF NORTH CAROLINA
DEPARTMENT OF TRANSPORTATION
RALEIGH

STANDARD

SUPERSTRUCTURE BILL OF MATERIAL

LEFT LANE

NORTH CAROLINA PROFESSIONAL SEAL 27812 ENGINEER DAVID W. HAWKINS 12/23/13

NORTH CAROLINA PROFESSIONAL SEAL 12916 ENGINEER PAUL J. BARBER 12/23/13

ASSEMBLED BY : MEW	DATE : 4/18/13		
CHECKED BY : DMR	DATE : 7/30/13		
DRAWN BY : JMB 5/87	REV. 8/16/99	RWW/LES	
CHECKED BY : SJD 9/87	REV. 5/1/06	TLA/GM	
	REV. 10/1/11	MAA/GM	

HNTB NORTH CAROLINA, P.C.
License No. C-1554
343 E. Six Forks Rd., Suite 200, Raleigh, N.C. 27609

DRAWN BY M. WRIGHT DATE 4/13
CHECKED BY D. RAGAN DATE 7/13

DWG. NO. 20

REVISIONS						SHEET NO.
NO.	BY:	DATE:	NO.	BY:	DATE:	S-129
1			3			TOTAL SHEETS
2			4			54

STD. NO. BOM2

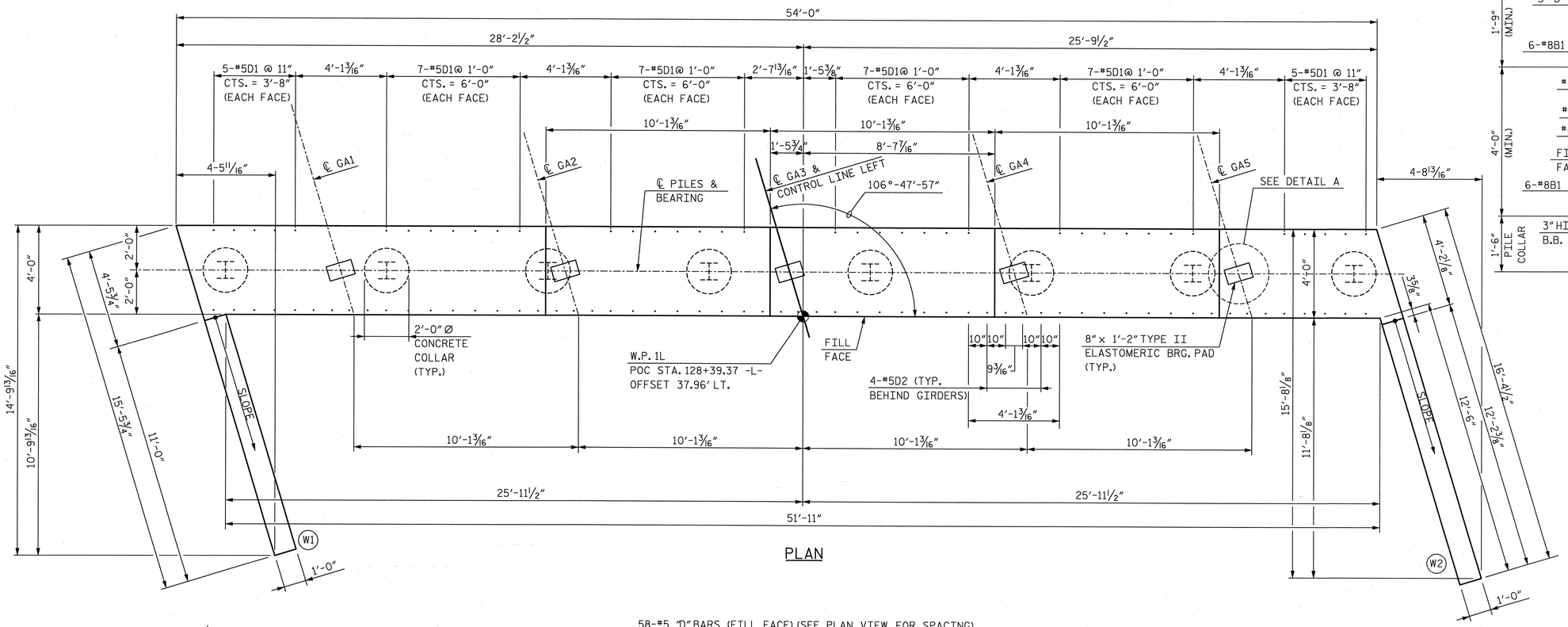

PLAN

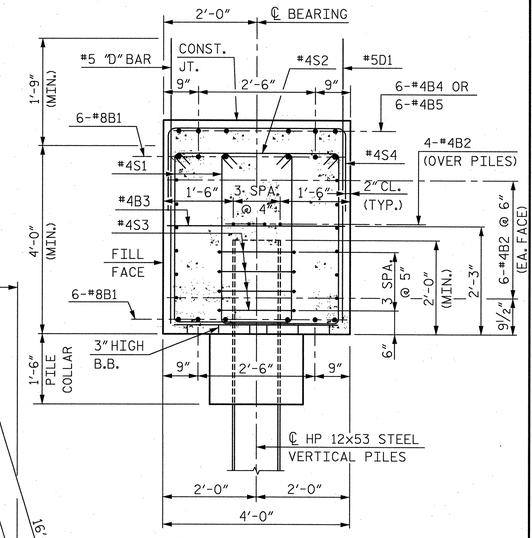

SECTION A-A

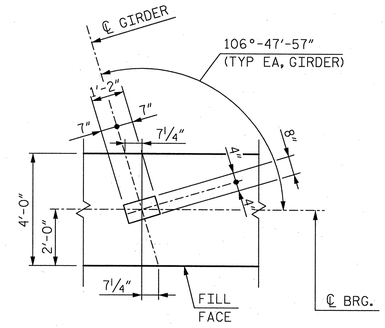

DETAIL A

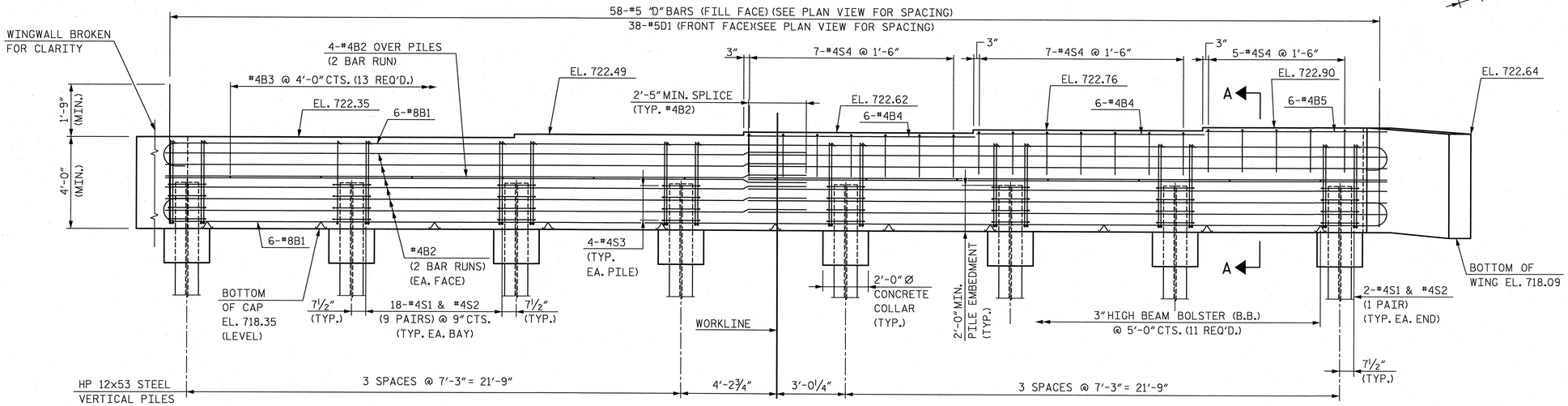

ELEVATION

NOTES:
FOR NOTES, SEE SHEET 2 OF 2.

PROJECT NO. U-2525B

GUILFORD COUNTY

STATION: POC 129+37.56 -L-

SHEET 1 OF 2

STATE OF NORTH CAROLINA
DEPARTMENT OF TRANSPORTATION
RALEIGH

SUBSTRUCTURE

END BENT 1

LEFT LANE

NORTH CAROLINA PROFESSIONAL SEAL 27812 ENGINEER DAVID W. HAWKINS 12/23/13

NORTH CAROLINA PROFESSIONAL SEAL 12916 ENGINEER PAUL J. BARBER 12/23/13

HNTB NORTH CAROLINA, P.C.
License No. C-1554
343 E. Six Forks Rd., Suite 200, Raleigh, N.C. 27609

DRAWN BY M. WRIGHT DATE 4/13
CHECKED BY D. RAGAN DATE 7/13

DWG. NO. 21

REVISIONS						SHEET NO.
NO.	BY:	DATE:	NO.	BY:	DATE:	S-130
1			3			TOTAL SHEETS
2			4			54-1

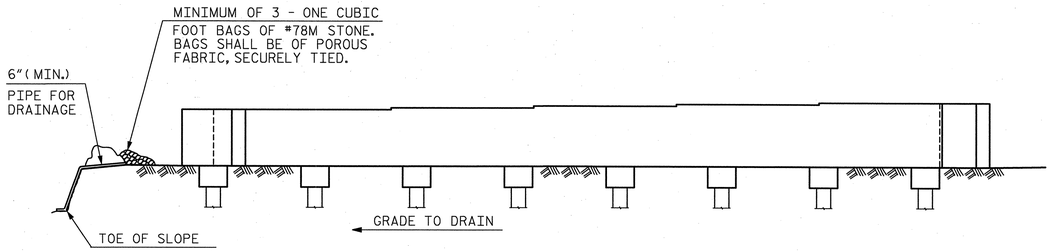

BAGGED STONE AND PIPE SHALL BE PLACED IMMEDIATELY AFTER COMPLETION OF END BENT EXCAVATION. PIPE MAY BE EITHER CONCRETE, CORRUGATED STEEL, CORRUGATED ALUMINUM ALLOY OR CORRUGATED PLASTIC. PERFORATED PIPE WILL NOT BE ALLOWED.

BAGGED STONE SHALL REMAIN IN PLACE UNTIL THE ENGINEER DIRECTS THAT IT BE REMOVED. THE CONTRACTOR SHALL REMOVE AND DISPOSE OF SILT ACCUMULATIONS AT BAGGED STONE WHEN SO DIRECTED BY THE ENGINEER. BAGS SHALL BE REMOVED AND REPLACED WHENEVER THE ENGINEER DETERMINES THAT THEY HAVE DETERIORATED AND LOST THEIR EFFECTIVENESS.

NO SEPARATE PAYMENT WILL BE MADE FOR THIS WORK AND THE ENTIRE COST OF THIS WORK SHALL BE INCLUDED IN THE UNIT CONTRACT PRICE FOR THE SEVERAL PAY ITEMS.

TEMPORARY DRAINAGE AT END BENT 1

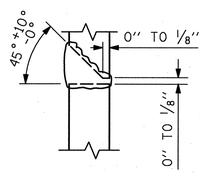

DETAIL "A"

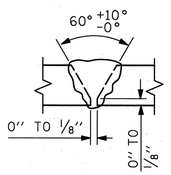

DETAIL "B"

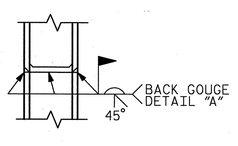

*PILE VERTICAL

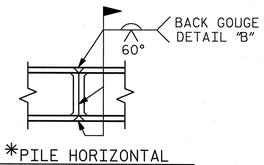

*PILE HORIZONTAL OR VERTICAL

* POSITION OF PILE DURING WELDING.

PILE SPLICE DETAILS

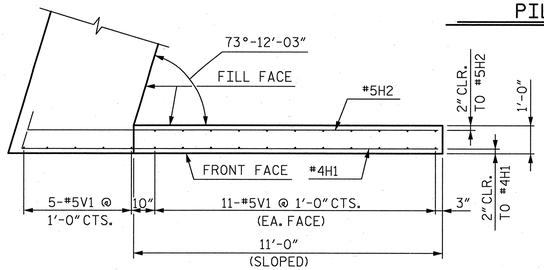

PLAN OF WING (W1)

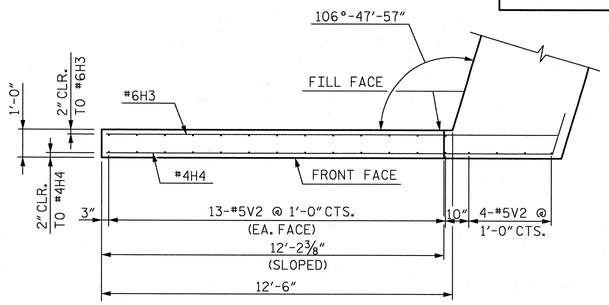

PLAN OF WING (W2)

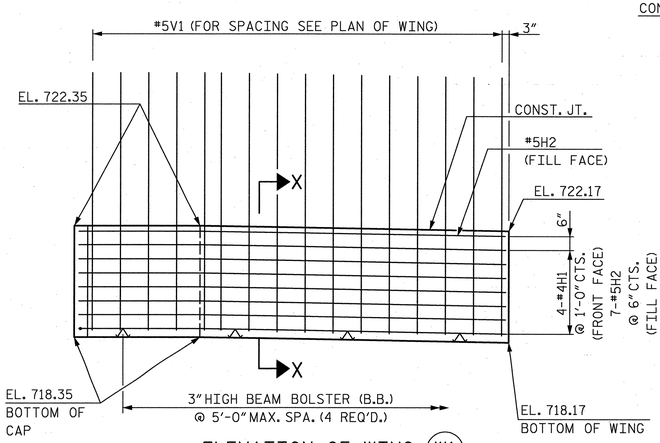

ELEVATION OF WING (W1)

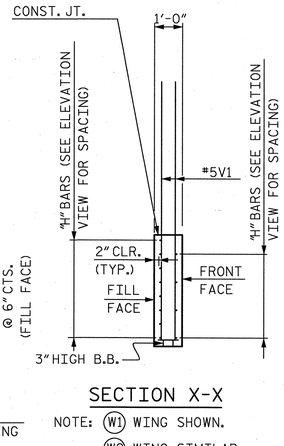

SECTION X-X

NOTE: (W1) WING SHOWN.
(W2) WING SIMILAR.

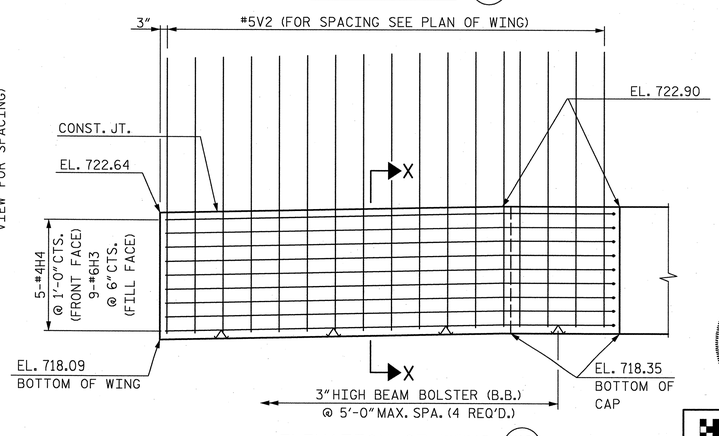

ELEVATION OF WING (W2)

BAR TYPES

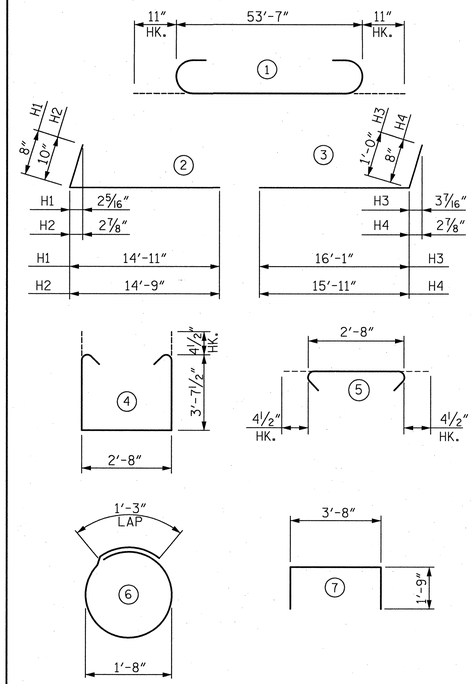

ALL BAR DIMENSIONS ARE OUT TO OUT

BILL OF REINFORCING

END BENT 1

BAR	NO.	SIZE	TYPE	LENGTH	WEIGHT
B1	12	8	1	55'-5"	1,776
B2	32	4	STR.	28'-0"	599
B3	13	4	STR.	3'-8"	32
B4	12	4	STR.	10'-0"	80
B5	6	4	STR.	6'-9"	27
D1	76	5	STR.	6'-2"	489
D2	20	5	STR.	8'-0"	167
H1	4	4	2	15'-7"	42
H2	7	5	2	15'-7"	114
H3	9	6	3	17'-1"	231
H4	5	4	3	16'-7"	55
S1	130	4	4	10'-7"	919
S2	130	4	5	3'-5"	297
S3	32	4	6	6'-6"	139
S4	19	4	7	7'-2"	91
V1	27	5	STR.	9'-6"	268
V2	30	5	STR.	10'-1"	316

QUANTITIES

REINFORCING STEEL	LBS.	5,642
CLASS A CONCRETE BREAKDOWN		
(CAP AND BOTTOM OF WINGS)	CU. YDS.	39.0
HP 12x53 STEEL PILES	NO.	8
	LIN. FT.	120

NOTES:

THE TOP SURFACE OF THE END BENT CAP AND WINGS, EXCEPT THE BEARING AREA, SHALL BE RAKED TO A DEPTH OF 1/4".

THE TOP OF THE WINGS AND BACKWALL SHALL BE POURED WITH THE SUPERSTRUCTURE. CONCRETE AND REINFORCING STEEL QUANTITIES ARE INCLUDED IN THE SUPERSTRUCTURE BILL OF MATERIALS. FOR DETAILS, SEE SUPERSTRUCTURE PLANS.

THE CONTRACTOR SHALL PROVIDE FOR THE INSTALLATION OF THE 4"DIA. DRAIN PIPE THROUGH THE WING WALL AS REQUIRED FOR REINFORCED BRIDGE APPROACH FILLS. SEE ROADWAY PLANS. REINFORCING STEEL IN THE WING WALL MAY BE SHIFTED AS NECESSARY TO CLEAR THE DRAIN PIPE.

PROJECT NO. U-2525B

GUILFORD COUNTY

STATION: POC 129+37.56 -L-

SHEET 2 OF 2

STATE OF NORTH CAROLINA
DEPARTMENT OF TRANSPORTATION
RALEIGH

SUBSTRUCTURE

END BENT 1

LEFT LANE

NORTH CAROLINA PROFESSIONAL SEAL 27812 ENGINEER DAVID W. HAWKINS 12/23/13

NORTH CAROLINA PROFESSIONAL SEAL 12916 ENGINEER PAUL J. BARBER 12/23/13

HNTB NORTH CAROLINA, P.C.
License No. C-1554
343 E. Six Forks Rd., Suite 200, Raleigh, N.C. 27609

DRAWN BY M. WRIGHT DATE 4/13
CHECKED BY D. RAGAN DATE 7/13
DWG. NO. 22

REVISIONS						SHEET NO.
NO.	BY:	DATE:	NO.	BY:	DATE:	S-131
1			3			TOTAL SHEETS
2			4			541

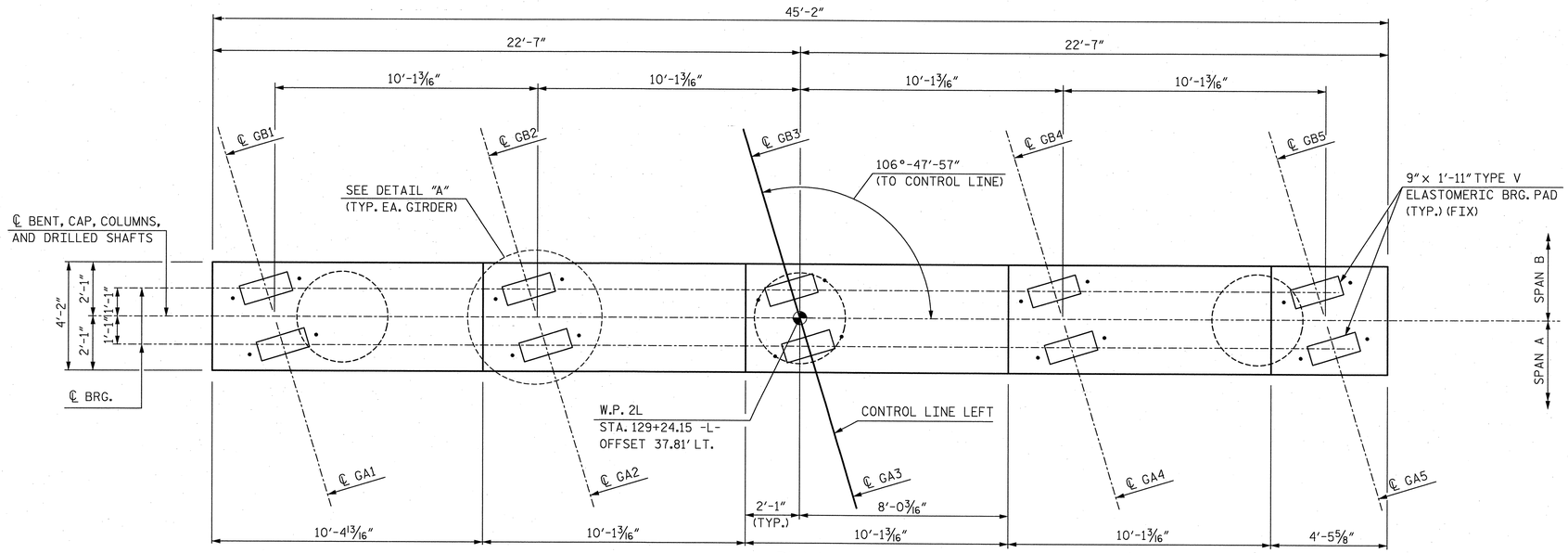

PLAN

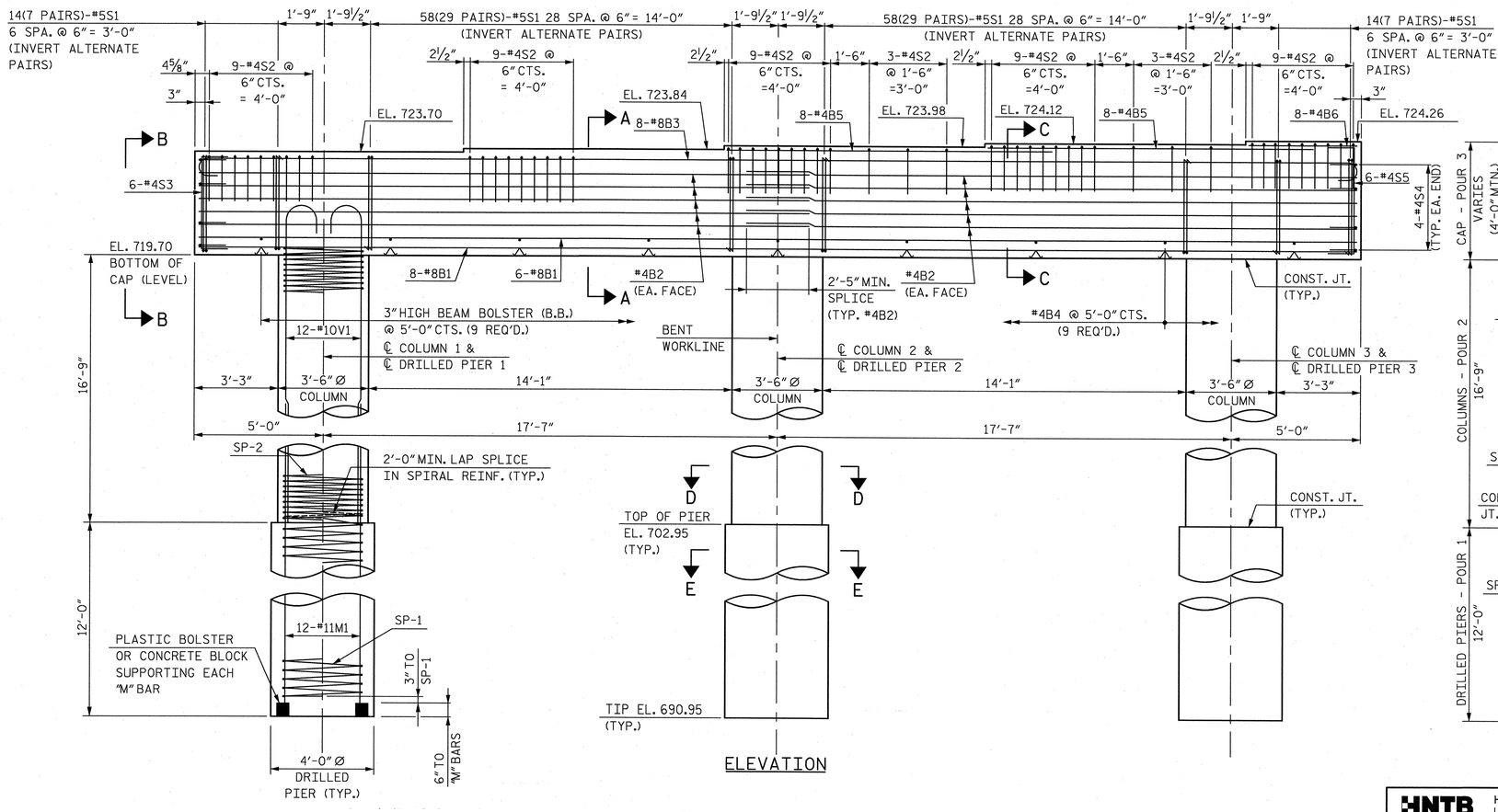

ELEVATION

NOTES:

STIRRUPS IN CAP MAY BE SHIFTED AS NECESSARY TO CLEAR ANCHOR BOLTS.

HOOKS ON "V" BARS MAY BE TURNED AS NECESSARY FOR PLACING REINFORCING STEEL.

ALL STEEL IN THE DRILLED PIERS IS INCLUDED IN THE PAY ITEMS FOR "REINFORCING STEEL" AND "SPIRAL COLUMN REINFORCING STEEL".

THE LOCATION OF THE CONSTRUCTION JOINT IN THE DRILLED PIER IS BASED ON AN APPROXIMATE GROUND LINE ELEVATION. IF THE CONSTRUCTION JOINT IS ABOVE THE ACTUAL GROUND LINE ELEVATION, THE CONTRACTOR SHALL PLACE THE CONSTRUCTION JOINT 1'-0" BELOW THE GROUND LINE.

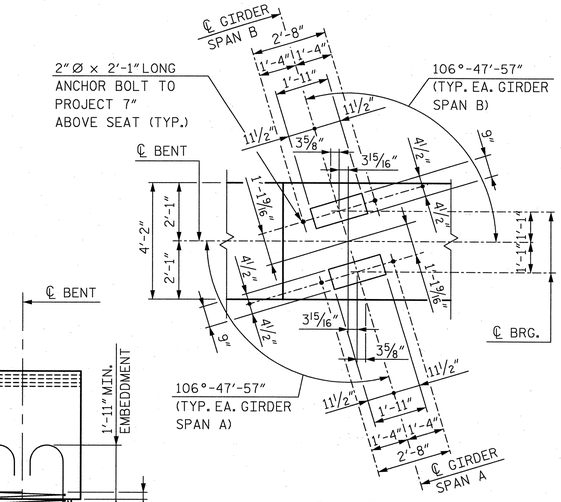

DETAIL A

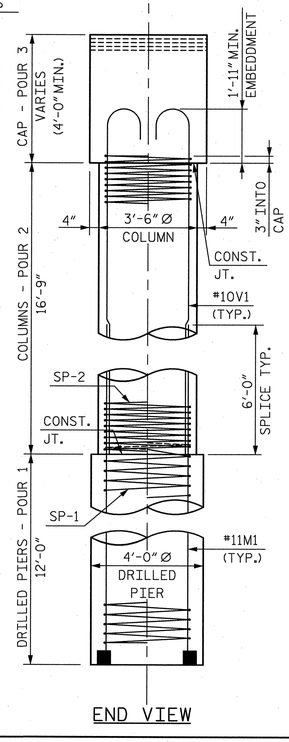

END VIEW

NORTH CAROLINA PROFESSIONAL SEAL 27812 ENGINEER DAVID W. HAWKINS 12/23/13

NORTH CAROLINA PROFESSIONAL SEAL 12916 ENGINEER PAUL J. BARBER 12/23/13

PROJECT NO. U-2525B

GUILFORD COUNTY

STATION: POC 129+37.56 -L-

SHEET 1 OF 2

STATE OF NORTH CAROLINA
DEPARTMENT OF TRANSPORTATION
RALEIGH

SUBSTRUCTURE

BENT 1

LEFT LANE

HNTB NORTH CAROLINA, P.C.
License No. C-1554
343 E. Six Forks Rd., Suite 200, Raleigh, N.C. 27609

DRAWN BY M. WRIGHT DATE 4/13
CHECKED BY D. RAGAN DATE 7/13

DWG. NO. 23

REVISIONS						SHEET NO.
NO.	BY:	DATE:	NO.	BY:	DATE:	S-132
1			3			TOTAL SHEETS
2			4			541

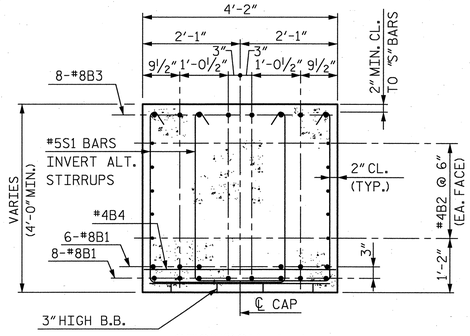

SECTION A-A

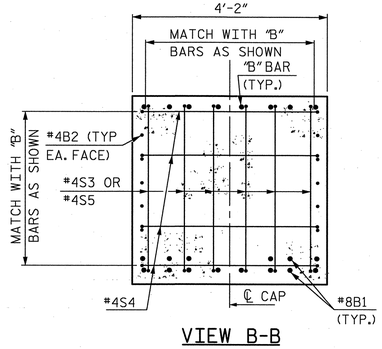

VIEW B-B

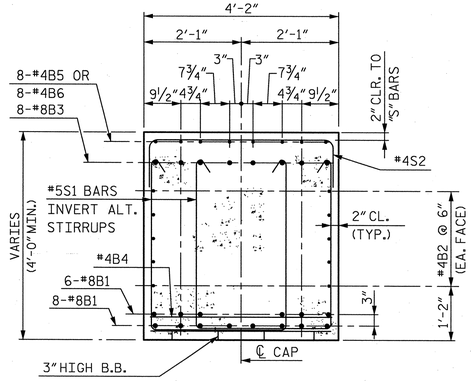

SECTION C-C

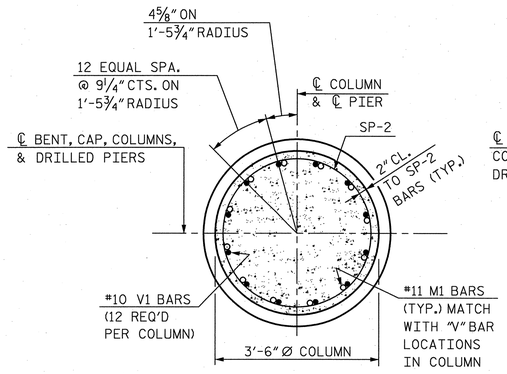

SECTION D-D

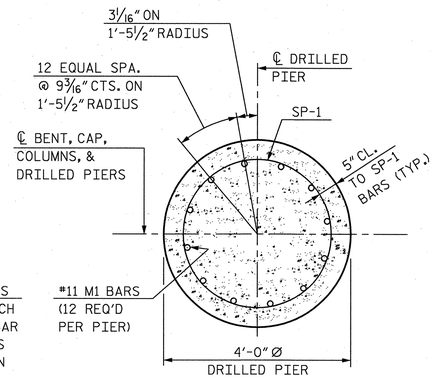

SECTION E-E

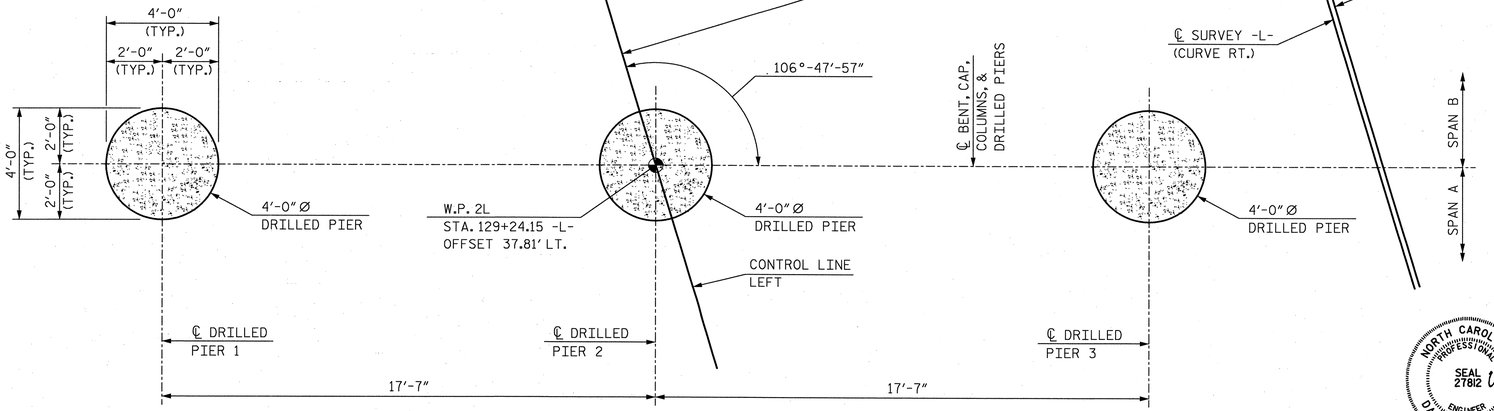

DRILLED PIER PLAN

NOTE: SEE SECTION E-E FOR DRILLED PIER REINFORCING.

BAR TYPES

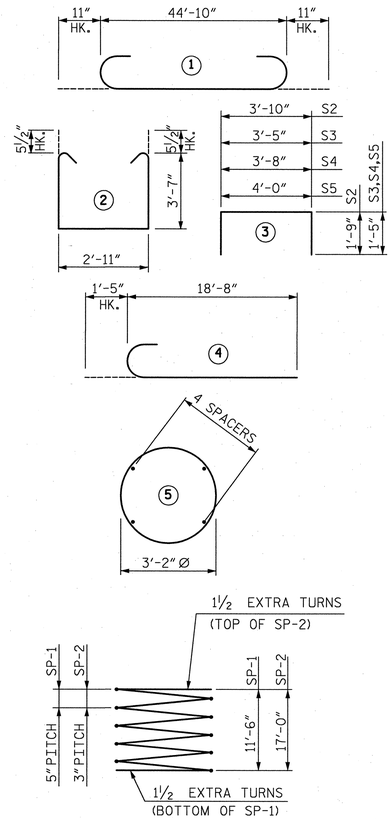

ALL BAR DIMENSIONS ARE OUT TO OUT

BILL OF REINFORCING

BENT 1

BAR	NO.	SIZE	TYPE	LENGTH	WEIGHT
B1	14	8	STR.	44'-10"	1,676
B2	20	4	STR.	23'-8"	316
B3	8	8	1	46'-8"	997
B4	9	4	STR.	3'-10"	23
B5	16	4	STR.	12'-7"	134
B6	8	4	STR.	4'-1"	22
M1	36	11	STR.	17'-6"	3,347
S1	144	5	2	11'-0"	1,652
S2	51	4	3	7'-4"	250
S3	6	4	3	6'-3"	25
S4	8	4	3	6'-6"	35
S5	6	4	3	6'-10"	27
V1	36	10	4	20'-1"	3,111
SP-1	3	*	5	287'-0"	898
SP-2	3	**	5	684'-7"	1,372

QUANTITIES

REINFORCING STEEL	LBS.	11,615
SPIRAL COLUMN REINFORCING STEEL	LBS.	2,270
CLASS A CONCRETE		
COLUMN POUR 2	CU. YDS.	17.9
CAP POUR 3	CU. YDS.	29.6
TOTAL	CU. YDS.	47.5
4'-0" Ø DRILLED PIERS	NO.	3
DRILLED PIERS, NOT IN SOIL	FEET	26.0
DRILLED PIERS, IN SOIL	FEET	10.0
DRILLED PIER CONCRETE POUR 1	CU. YDS.	16.8
SID INSPECTIONS	EA.	1

* THE SP-1 SPIRAL REINFORCING STEEL SHALL BE W31 OR D31 COLD DRAWN WIRE OR #5 PLAIN OR DEFORMED BAR.

** THE SP-2 SPIRAL REINFORCING STEEL SHALL BE W20 OR D20 COLD DRAWN WIRE OR #4 PLAIN OR DEFORMED BAR.

PROJECT NO. U-2525B

GUILFORD COUNTY

STATION: POC 129+37.56 -L-

SHEET 2 OF 2

STATE OF NORTH CAROLINA
DEPARTMENT OF TRANSPORTATION
RALEIGH

SUBSTRUCTURE

BENT 1

LEFT LANE

NORTH CAROLINA PROFESSIONAL SEAL 27812 ENGINEER DAVID W. HAWKINS 12/23/13

NORTH CAROLINA PROFESSIONAL SEAL 12916 ENGINEER PAUL J. BARBER 12/23/13

HNTB NORTH CAROLINA, P.C.
License No. C-1554
343 E. Six Forks Rd., Suite 200, Raleigh, N.C. 27609

DRAWN BY M. WRIGHT DATE 4/13
CHECKED BY D. RAGAN DATE 7/13

DWG. NO. 24

REVISIONS						SHEET NO.
NO.	BY:	DATE:	NO.	BY:	DATE:	S-133
1			3			TOTAL SHEETS
2			4			54-1

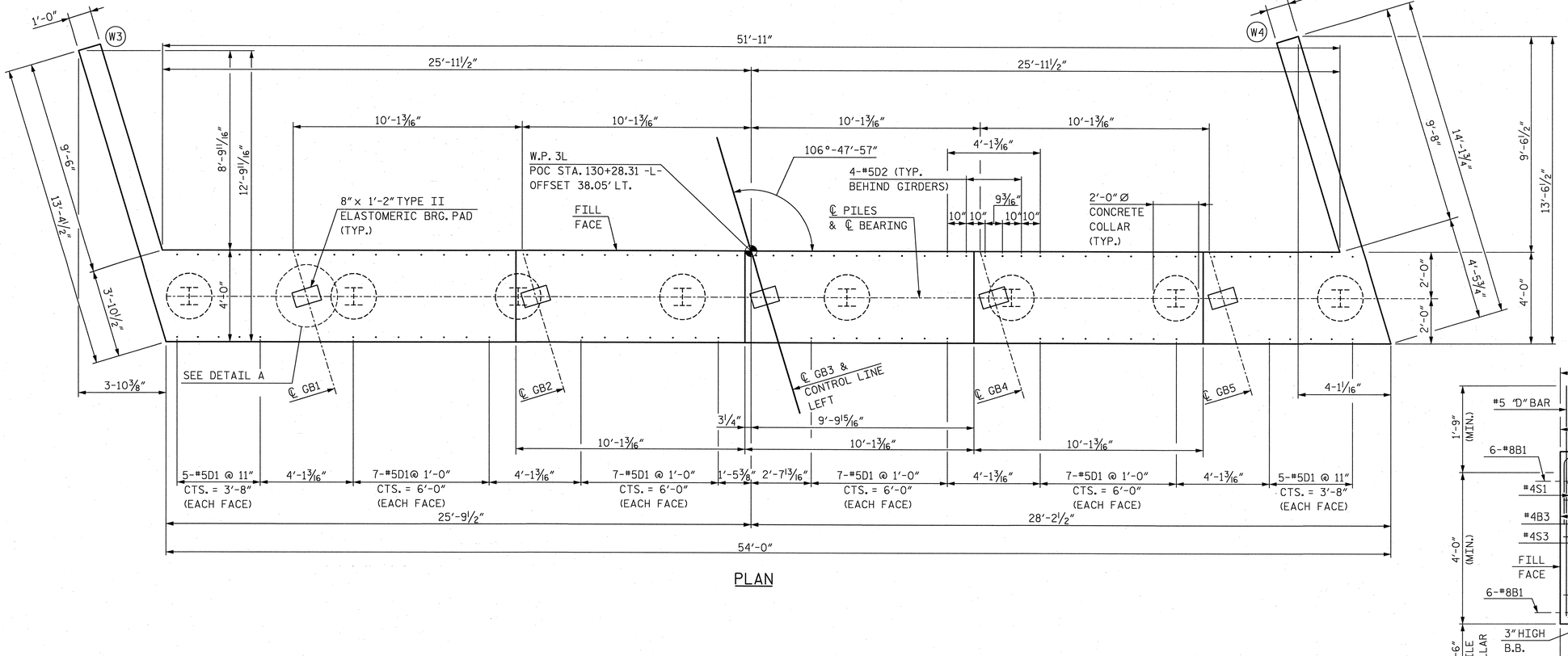

PLAN

NOTES:
FOR NOTES, SEE SHEET 2 OF 2.

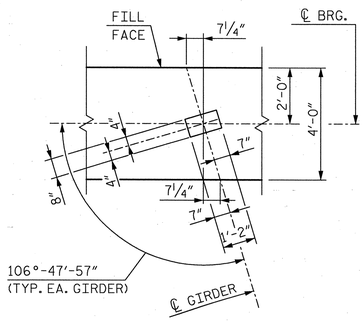

DETAIL A

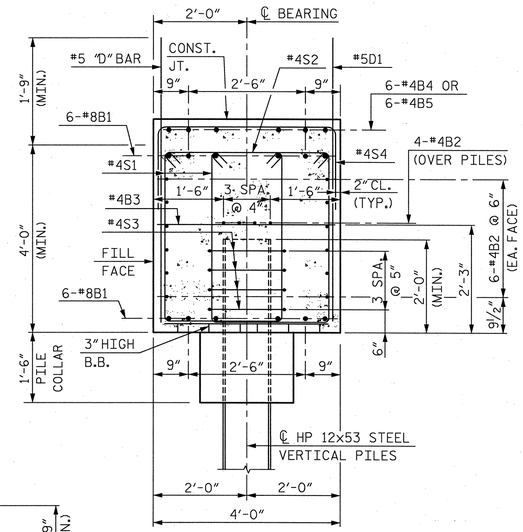

SECTION A-A

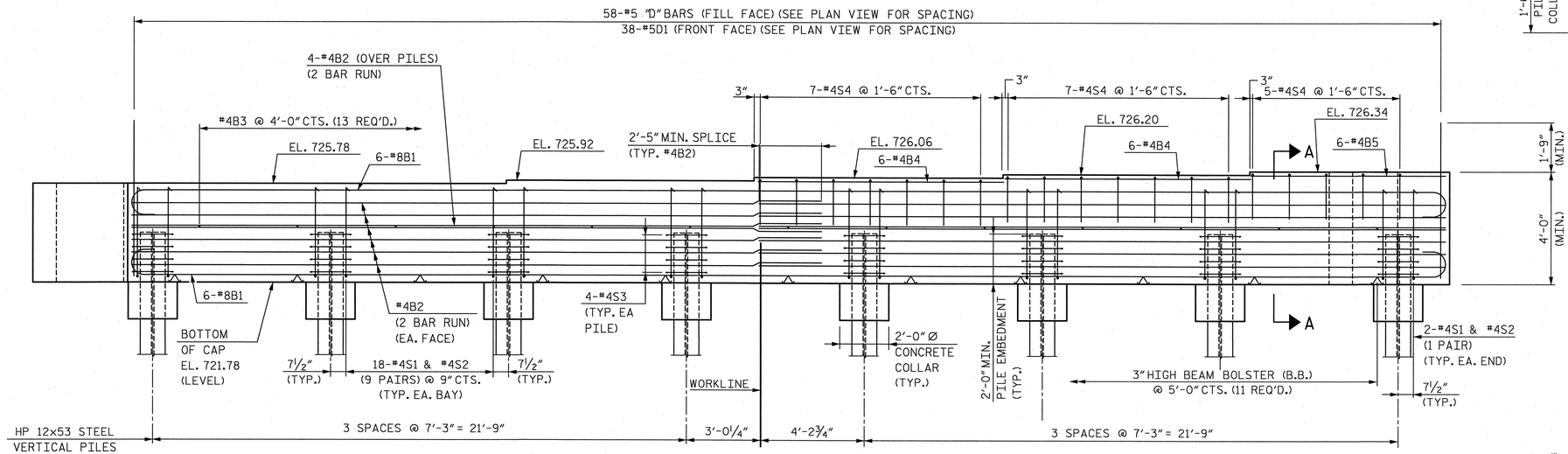

ELEVATION

PROJECT NO. U-2525B
GUILFORD COUNTY
STATION: POC 129+37.56 -L-

SHEET 1 OF 2

STATE OF NORTH CAROLINA
DEPARTMENT OF TRANSPORTATION
RALEIGH

SUBSTRUCTURE
END BENT 2
LEFT LANE

NORTH CAROLINA PROFESSIONAL SEAL 27812 ENGINEER DAVID W. HAWKINS 12/23/13

NORTH CAROLINA PROFESSIONAL SEAL 12916 ENGINEER PAUL J. BARBER 12/23/13

HNTB NORTH CAROLINA, P.C.
License No. C-1554
343 E. Six Forks Rd., Suite 200, Raleigh, N.C. 27609

DRAWN BY M. WRIGHT DATE 7/13
CHECKED BY D. RAGAN DATE 7/13
DWG. NO. 25

REVISIONS						SHEET NO.
NO.	BY:	DATE:	NO.	BY:	DATE:	S-134
1			3			TOTAL SHEETS
2			4			54-1

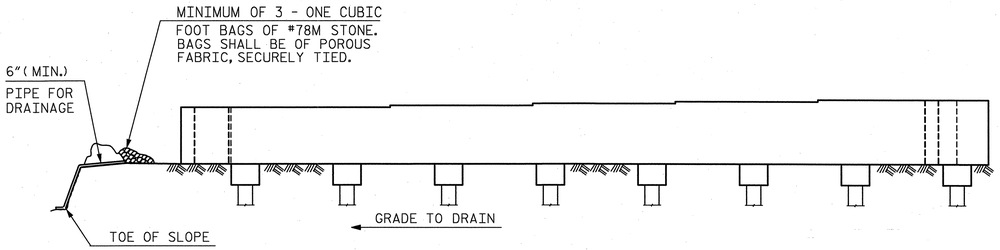

BAGGED STONE AND PIPE SHALL BE PLACED IMMEDIATELY AFTER COMPLETION OF END BENT EXCAVATION. PIPE MAY BE EITHER CONCRETE, CORRUGATED STEEL, CORRUGATED ALUMINUM ALLOY OR CORRUGATED PLASTIC. PERFORATED PIPE WILL NOT BE ALLOWED.

BAGGED STONE SHALL REMAIN IN PLACE UNTIL THE ENGINEER DIRECTS THAT IT BE REMOVED. THE CONTRACTOR SHALL REMOVE AND DISPOSE OF SILT ACCUMULATIONS AT BAGGED STONE WHEN SO DIRECTED BY THE ENGINEER. BAGS SHALL BE REMOVED AND REPLACED WHENEVER THE ENGINEER DETERMINES THAT THEY HAVE DETERIORATED AND LOST THEIR EFFECTIVENESS.

NO SEPARATE PAYMENT WILL BE MADE FOR THIS WORK AND THE ENTIRE COST OF THIS WORK SHALL BE INCLUDED IN THE UNIT CONTRACT PRICE FOR THE SEVERAL PAY ITEMS.

TEMPORARY DRAINAGE AT END BENT 2

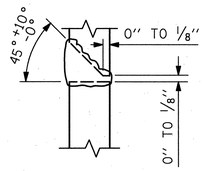

DETAIL "A"

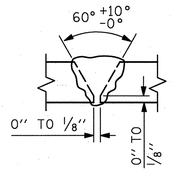

DETAIL "B"

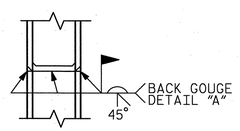

*PILE VERTICAL

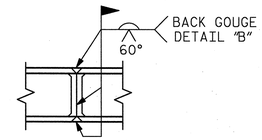

*PILE HORIZONTAL OR VERTICAL

* POSITION OF PILE DURING WELDING.

PILE SPLICE DETAILS

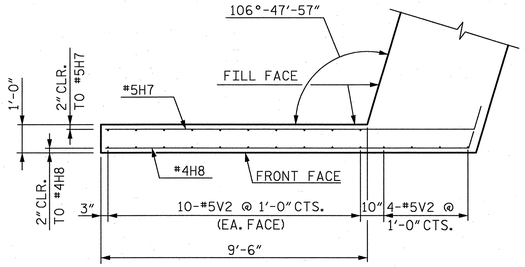

PLAN OF WING (W3)

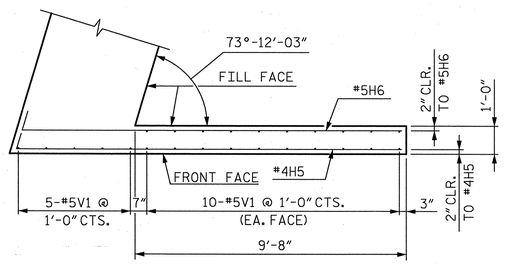

PLAN OF WING (W4)

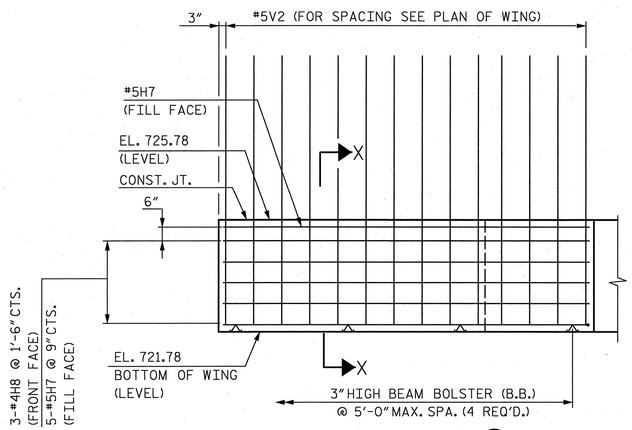

ELEVATION OF WING (W3)

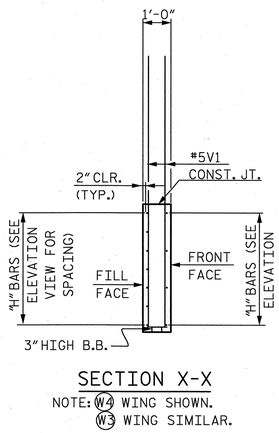

SECTION X-X

NOTE: (W4) WING SHOWN.
(W3) WING SIMILAR.

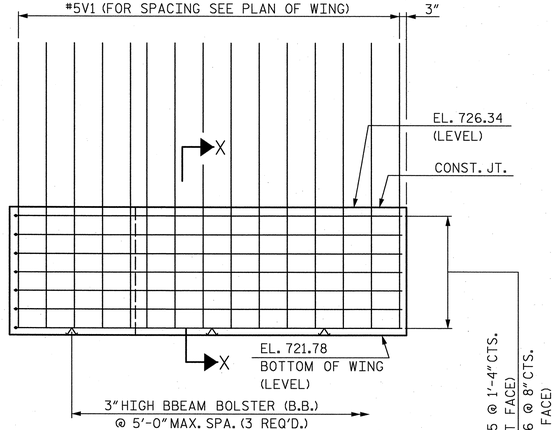

ELEVATION OF WING (W4)

BAR TYPES

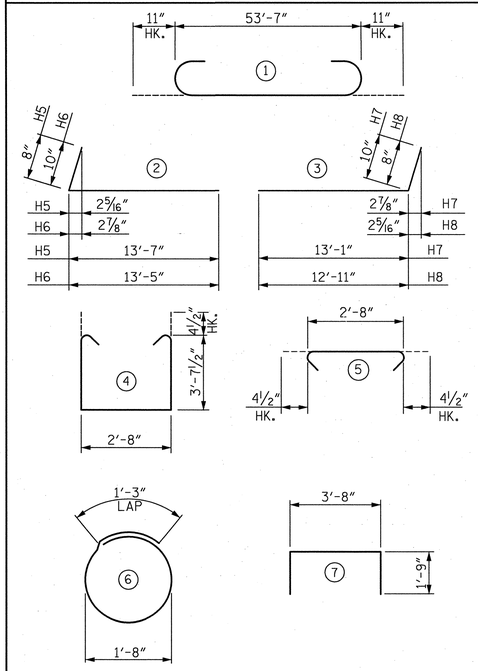

ALL BAR DIMENSIONS ARE OUT TO OUT

BILL OF REINFORCING

END BENT 2

BAR	NO.	SIZE	TYPE	LENGTH	WEIGHT
B1	12	8	1	55'-5"	1,776
B2	32	4	STR.	28'-0"	599
B3	13	4	STR.	3'-8"	32
B4	12	4	STR.	10'-0"	80
B5	6	4	STR.	6'-8"	27
D1	76	5	STR.	6'-2"	489
D2	20	5	STR.	8'-0"	167
H5	4	4	2	14'-3"	38
H6	7	5	2	14'-3"	104
H7	5	5	3	13'-11"	73
H8	3	4	3	13'-7"	27
S1	130	5	4	10'-8"	1,446
S2	130	5	5	3'-5"	463
S3	32	4	6	6'-6"	139
S4	19	4	7	7'-2"	91
V1	25	5	STR.	10'-8"	278
V2	24	5	STR.	10'-0"	250

QUANTITIES

REINFORCING STEEL	LBS.	6,079
CLASS A CONCRETE BREAKDOWN (CAP AND BOTTOM OF WINGS)	CU. YDS.	38.3
HP 12x53 STEEL PILES	NO.	8
	LIN. FT.	160

NOTES:

THE TOP SURFACE OF THE END BENT CAP AND WINGS, EXCEPT THE BEARING AREA, SHALL BE RAKED TO A DEPTH OF 1/4".

THE TOP OF THE WINGS AND BACKWALL SHALL BE POURED WITH THE SUPERSTRUCTURE. CONCRETE AND REINFORCING STEEL QUANTITIES ARE INCLUDED IN THE SUPERSTRUCTURE BILL OF MATERIALS. FOR DETAILS, SEE SUPERSTRUCTURE PLANS.

THE CONTRACTOR SHALL PROVIDE FOR THE INSTALLATION OF THE 4" DIA. DRAIN PIPE THROUGH THE WING WALL AS REQUIRED FOR REINFORCED BRIDGE APPROACH FILLS. SEE ROADWAY PLANS. REINFORCING STEEL IN THE WING WALL MAY BE SHIFTED AS NECESSARY TO CLEAR THE DRAIN PIPE.

PROJECT NO. U-2525B

GUILFORD COUNTY

STATION: POC 129+37.56 -L-

SHEET 2 OF 2

STATE OF NORTH CAROLINA
DEPARTMENT OF TRANSPORTATION
RALEIGH

SUBSTRUCTURE

END BENT 2

LEFT LANE

NORTH CAROLINA PROFESSIONAL ENGINEER SEAL 27812 DAVID W. HAWKINS 12/23/13

NORTH CAROLINA PROFESSIONAL ENGINEER SEAL 12916 PAUL J. BARBER 12/23/13

HNTB NORTH CAROLINA, P.C.
License No. C-1554
343 E. Six Forks Rd., Suite 200, Raleigh, N.C. 27609

DRAWN BY M. WRIGHT DATE 7/13
CHECKED BY D. RAGAN DATE 7/13
DWG. NO. 26

REVISIONS						SHEET NO.
NO.	BY:	DATE:	NO.	BY:	DATE:	S-135
1			3			TOTAL SHEETS
2			4			541

NOTES :

FOR BERM WIDTH DIMENSIONS, SEE GENERAL DRAWING.

ESTIMATED QUANTITIES		
BRIDGE @ POC STA. 129+37.56 -L-	RIP RAP CLASS II (2'-0" THICK)	GEOTEXTILE FOR DRAINAGE
	TONS	SQUARE YARDS
END BENT 1	305	335
BENT 1	52	86

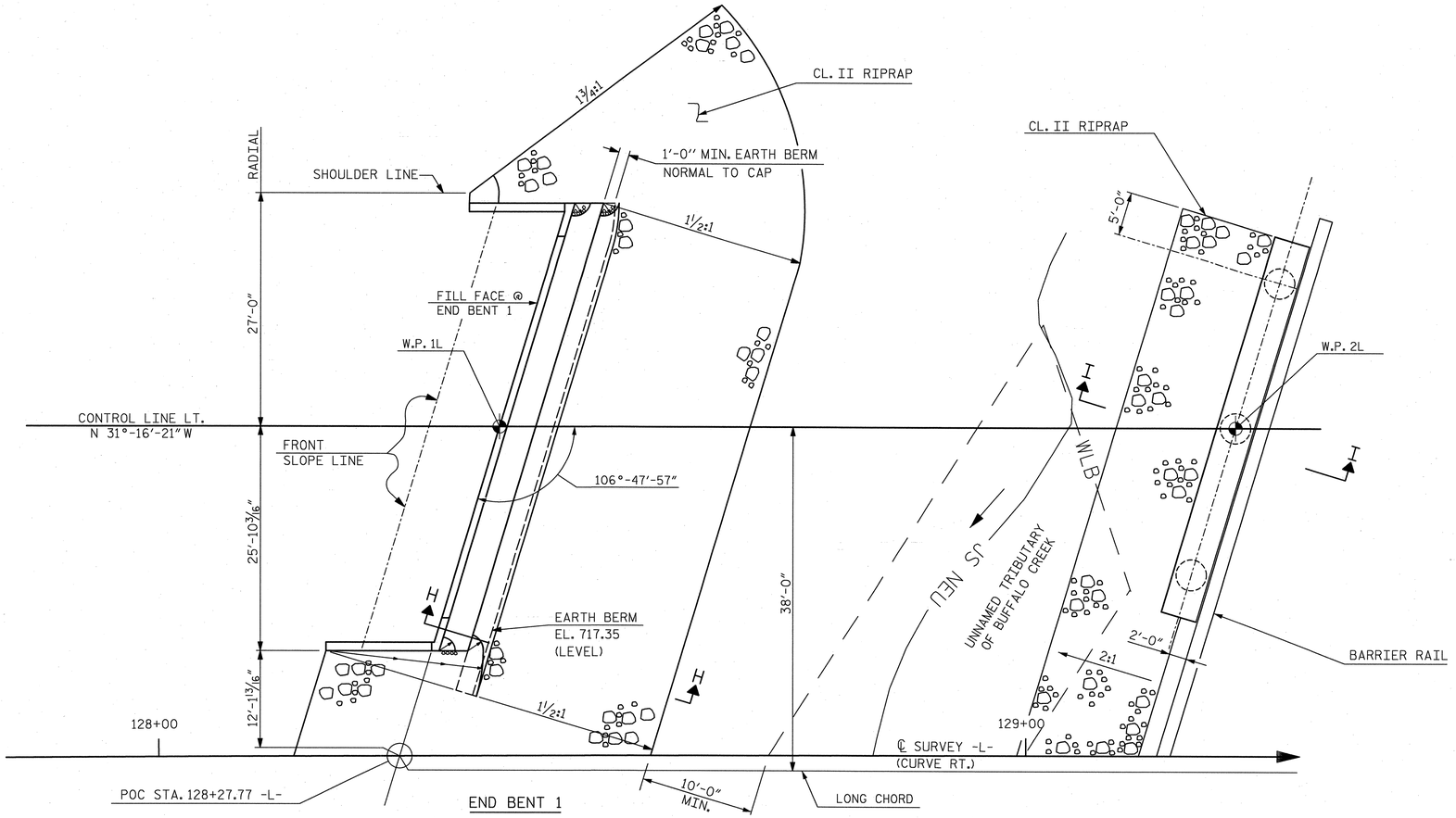

PLAN

SEE RIGHT BRIDGE FOR SLOPE PROTECTION RIGHT OF ℄ SURVEY -L-

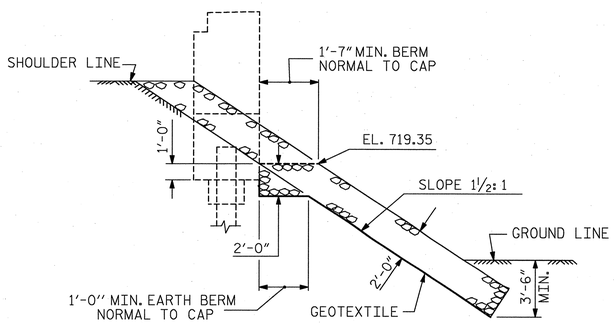

SECTION H-H

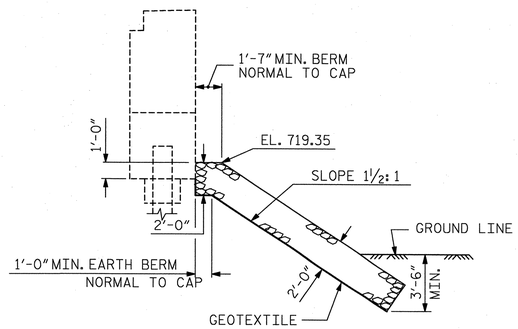

℄ SECTION BERM RIP RAPPED

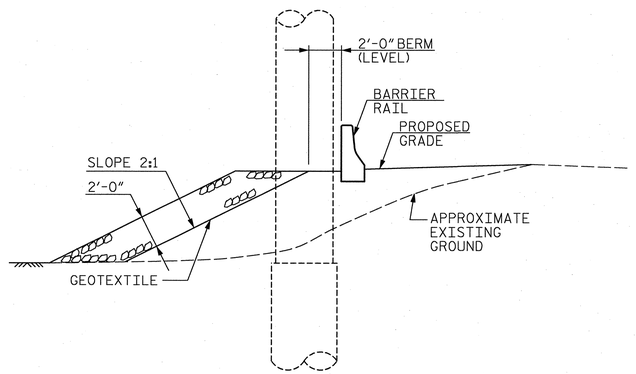

SECTION I-I

PROJECT NO. U-2525B

GUILFORD COUNTY

STATION: POC 129+37.56 -L-

STATE OF NORTH CAROLINA
DEPARTMENT OF TRANSPORTATION
RALEIGH

STANDARD

RIP RAP DETAILS

LEFT LANE

ASSEMBLED BY : MEW	DATE : 3/13
CHECKED BY : PJB	DATE : 6/13
DRAWN BY : REK 1/84	REV. 5/1/06R TLA/GM
CHECKED BY : RDU 1/84	REV. 10/1/11 MAA/GM
	REV. 12/21/11 MAA/GM

HNTB NORTH CAROLINA, P.C.
License No. C-1554
343 E. Six Forks Rd., Suite 200, Raleigh, N.C. 27609

DRAWN BY M. WRIGHT DATE 12/13
CHECKED BY P. BARBER DATE 12/13
DWG. NO. 27

REVISIONS						SHEET NO.
NO.	BY:	DATE:	NO.	BY:	DATE:	S-136
1			3			TOTAL SHEETS
2			4			54

STD. NO. RR1

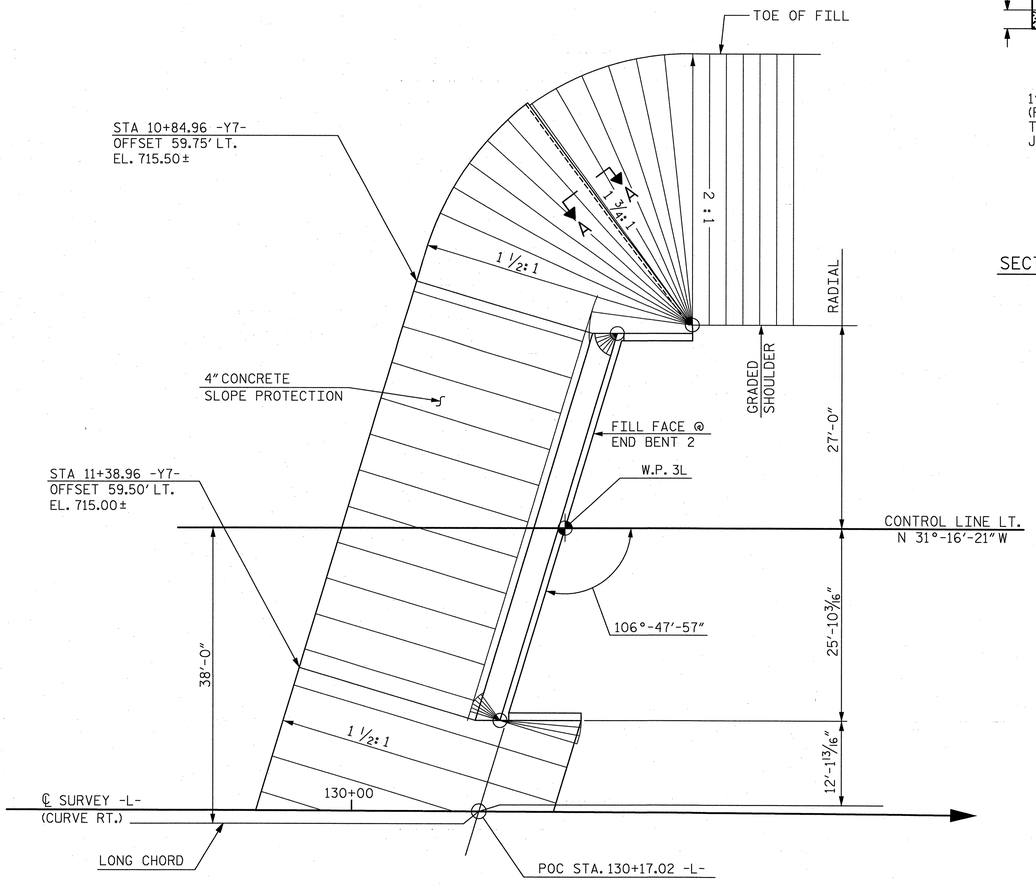

END BENT 2

PLAN

SEE RIGHT BRIDGE FOR SLOPE PROTECTION RIGHT OF ℄ SURVEY -L-

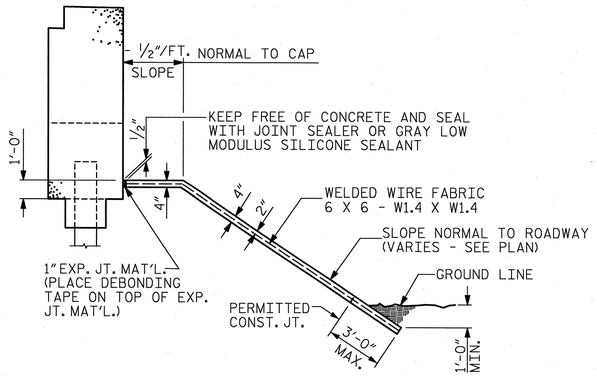

SECTION ALONG ℄ ROADWAY WHEN DITCH IS NOT PROVIDED

NOTES:

FOR BERM WIDTHS AND ELEVATIONS, SEE GENERAL DRAWING.

SLOPE PROTECTION SHALL CONSIST OF 4" POURED-IN-PLACE CONCRETE PAVING AS SHOWN IN THE DETAILS ON THIS SHEET. CONCRETE SHALL BE CLASS "B". THE CONCRETE SURFACE SHALL BE FLOATED WITH A WOODEN FLOAT AND FINISHED. WELDED WIRE FABRIC REINFORCING SHALL BE 6 X 6 - W1.4 X W1.4, 60" WIDE. SLOPE PROTECTION SHALL BE POURED IN 5' STRIPS AS SHOWN IN THE "POURING DETAIL" WITH 2'-0" LONG #4 BARS PLACED ALONG THE SLOPE BETWEEN STRIPS AT 1'-6" MAXIMUM SPACING. SLOPE PROTECTION MAY BE POURED IN ALTERNATE 4' AND 5' STRIPS AS SHOWN IN THE "OPTIONAL POURING DETAIL" WITH ADJACENT RUNS OF WELDED WIRE FABRIC LAPPING AT LEAST 6". THE COST OF THE WELDED WIRE FABRIC AND #4 BARS, IF USED, SHALL BE INCLUDED IN THE CONTRACT UNIT PRICE BID PER SQUARE YARD FOR SLOPE PROTECTION.

BRIDGE @ STA. POC 129+37.56 -L-	4" INCH SLOPE PROTECTION	✳ WELDED WIRE FABRIC 60 INCHES WIDE
	SQUARE YARDS	APPROX. L.F.
END BENT 2	185	370

✳ QUANTITY SHOWN IS BASED ON 5' POURS.

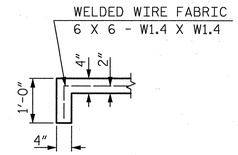

SECTION A-A

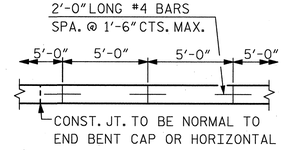

STRIP WIDTHS MAY VARY IN CURVED PORTION.

POURING DETAIL

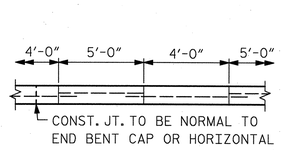

POUR A 4'-0" STRIP FIRST. STRIP WIDTHS MAY VARY IN CURVED PORTION.

OPTIONAL POURING DETAIL

PROJECT NO. U-2525B

GUILFORD COUNTY

STATION: POC 129+37.56 -L-

NORTH CAROLINA PROFESSIONAL SEAL 27812 ENGINEER DAVID W. HAWKINS 12/23/13

NORTH CAROLINA PROFESSIONAL SEAL 12916 ENGINEER PAUL J. BARBER 12/23/13

STATE OF NORTH CAROLINA
DEPARTMENT OF TRANSPORTATION
RALEIGH

SLOPE PROTECTION DETAILS

LEFT LANE

HNTB NORTH CAROLINA, P.C.
License No. C-1554
343 E. Six Forks Rd., Suite 200, Raleigh, N.C. 27609

DRAWN BY M. WRIGHT DATE 3/13
CHECKED BY P. BARBER DATE 6/13
DWG. NO. 28

REVISIONS						SHEET NO.
NO.	BY:	DATE:	NO.	BY:	DATE:	S-137
1			3			TOTAL SHEETS
2			4			54

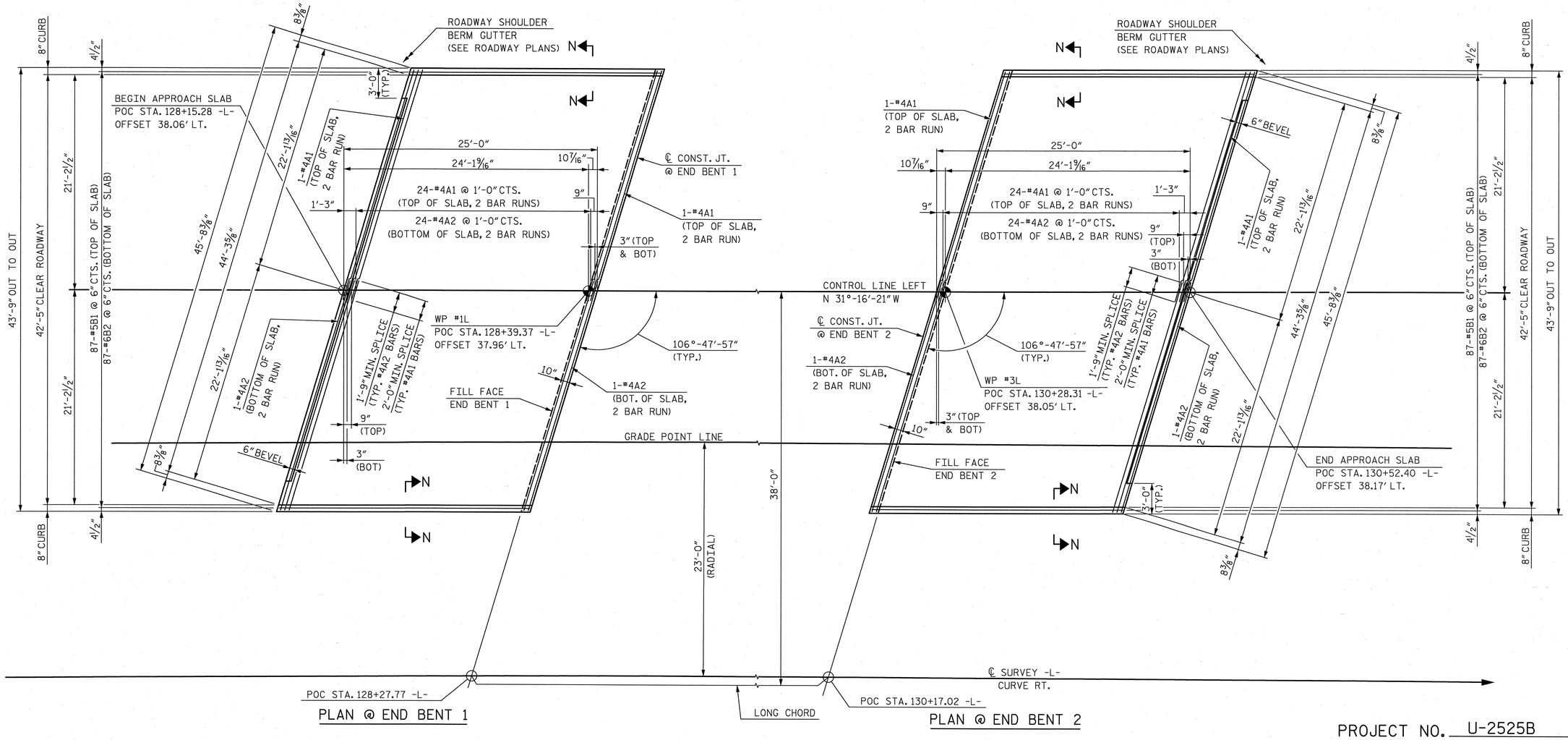

NOTES:

FOR SECTION N-N, SEE "BRIDGE APPROACH SLAB FOR INTEGRAL ABUTMENT" SHEET 2 OF 3.

FOR APPROACH SLAB BILL OF MATERIAL, SEE "BRIDGE APPROACH SLAB FOR INTEGRAL ABUTMENT" SHEET 2 OF 3.

PROJECT NO. U-2525B

GUILFORD COUNTY

STATION: POC 129+37.56 -L-

SHEET 1 OF 3

STATE OF NORTH CAROLINA
DEPARTMENT OF TRANSPORTATION
RALEIGH

BRIDGE APPROACH SLAB PLAN

LEFT LANE

NORTH CAROLINA PROFESSIONAL SEAL 27812 ENGINEER DAVID W. HAWKINS 12/23/13

NORTH CAROLINA PROFESSIONAL SEAL 12916 ENGINEER PAUL J. BARBER 12/23/13

HNTB NORTH CAROLINA, P.C.
License No. C-1554
343 E. Six Forks Rd., Suite 200, Raleigh, N.C. 27609

DRAWN BY M. WRIGHT DATE 3/13
CHECKED BY P. BARBER DATE 6/13

DWG. NO. 29

REVISIONS						SHEET NO.
NO.	BY:	DATE:	NO.	BY:	DATE:	S-138
1			3			TOTAL SHEETS
2			4			54

FOR PLAN VIEW OF APPROACH SLABS AT
END BENT 1 AND END BENT 2, SEE SHEET 1 OF 3.

NOTES

APPROACH SLAB SHALL NOT BE CONSTRUCTED PRIOR TO COMPLETION OF THE BRIDGE DECK.

FOR REINFORCED BRIDGE APPROACH FILL FABRIC WALL INCLUDING GEOTEXTILE, IMPERMEABLE GEOMEMBRANE, 4'' Ø DRAINAGE PIPE, #78M STONE, WELDED WIRE FORM, AND SELECT MATERIAL, SEE ROADWAY PLANS.

AREA BETWEEN THE WINGWALL AND APPROACH SLAB SHALL BE GRADED TO DRAIN THE WATER AWAY FROM THE FILL FACE OF THE BRIDGE AND SHALL BE PAVED. SEE ROADWAY PLANS.

THE JOINT OPENING AT THE APPROACH SLAB/DECK INTERFACE SHALL BE SAWED NO MORE THAN 12 HOURS AFTER THE APPROACH SLAB IS CAST. THE JOINT SHALL BE CLEANED OF ALL DEBRIS BEFORE THE SEALANT IS APPLIED. THE JOINT SEALER MATERIAL SHALL CONFORM TO THE REQUIREMENTS OF SECTION 1028-3 OF THE STANDARD SPECIFICATIONS.

BILL OF MATERIAL

FOR ONE APPROACH SLAB
(2 REQ'D)

BAR	NO.	SIZE	TYPE	LENGTH	WEIGHT
✳ A1	52	#4	STR	23'-8"	822
A2	52	#4	STR	23'-7"	819
✳ B1	87	#5	STR	24'-1"	2,185
B2	87	#6	STR	24'-7"	3,212

REINFORCING STEEL	LBS.	4,031
✳ EPOXY COATED REINFORCING STEEL	LBS.	3,007
CLASS AA CONCRETE	C.Y.	47.3

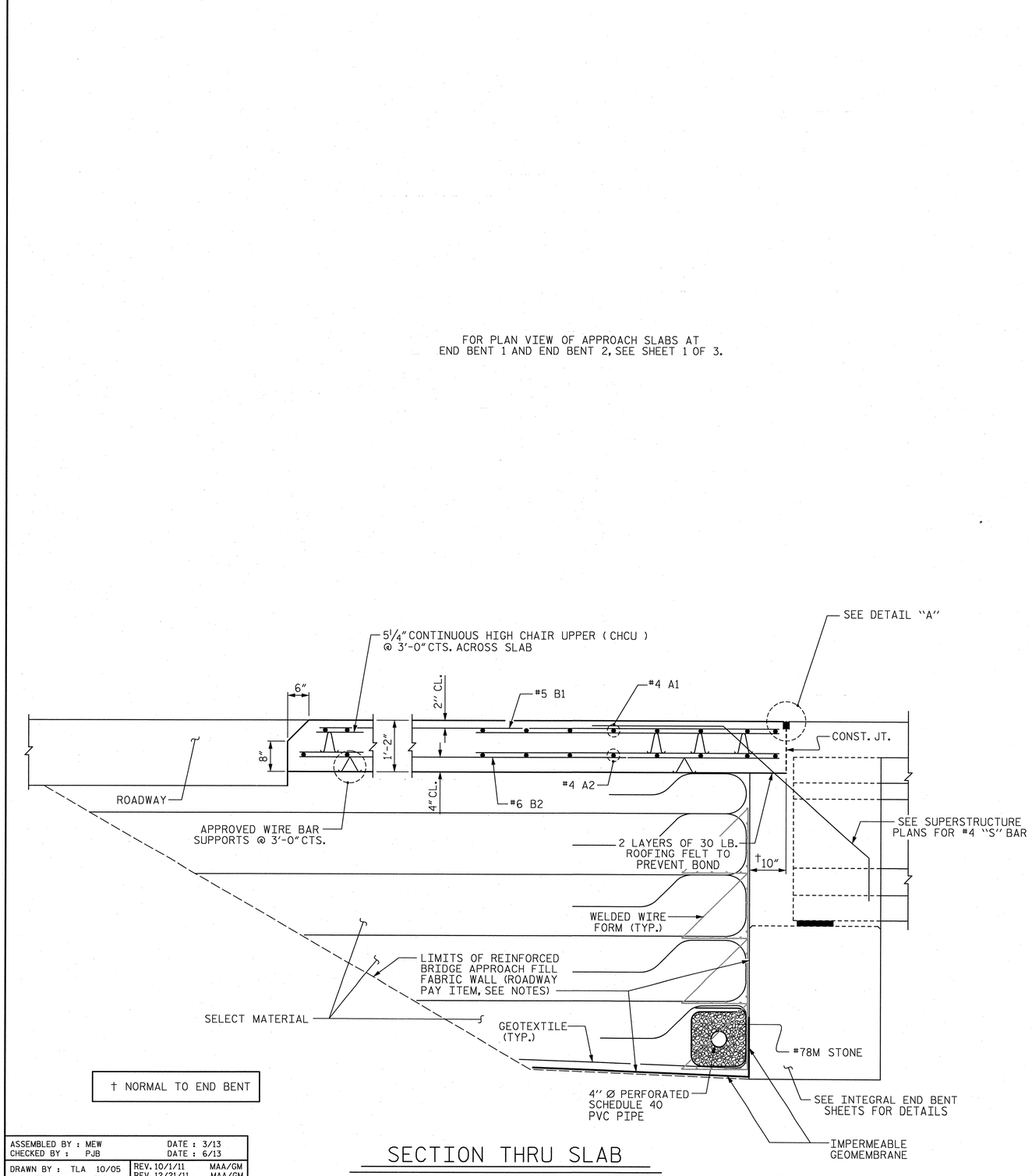

† NORMAL TO END BENT

SECTION THRU SLAB

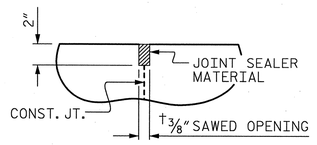

DETAIL "A"

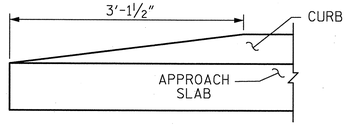

END OF CURB WITHOUT SHOULDER BERM GUTTER

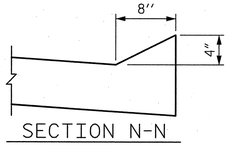

SECTION N-N

PROJECT NO. U-2525B

GUILFORD COUNTY

STATION: POC 129+37.56 -L-

SHEET 2 OF 3

STATE OF NORTH CAROLINA
DEPARTMENT OF TRANSPORTATION
RALEIGH

STANDARD

BRIDGE APPROACH SLAB
FOR INTEGRAL ABUTMENT

LEFT LANE

ASSEMBLED BY : MEW	DATE : 3/13
CHECKED BY : PJB	DATE : 6/13
DRAWN BY : TLA 10/05	REV. 10/1/11 MAA/GM
CHECKED BY : GM 5/06	REV. 12/21/11 MAA/GM
	REV. 6/13 MAA/GM

NORTH CAROLINA PROFESSIONAL SEAL 27812 ENGINEER DAVID W. HAWKINS 12/23/13

NORTH CAROLINA PROFESSIONAL SEAL 12916 ENGINEER PAUL J. BARBER 12/23/13

HNTB NORTH CAROLINA, P.C.
License No. C-1554
343 E. Six Forks Rd., Suite 200, Raleigh, N.C. 27609

DRAWN BY M. WRIGHT DATE 3/13
CHECKED BY P. BARBER DATE 6/13
DWG. NO. 30

REVISIONS						SHEET NO.
NO.	BY:	DATE:	NO.	BY:	DATE:	S-139
1			3			TOTAL SHEETS
2			4			541

STD. NO. BAS5

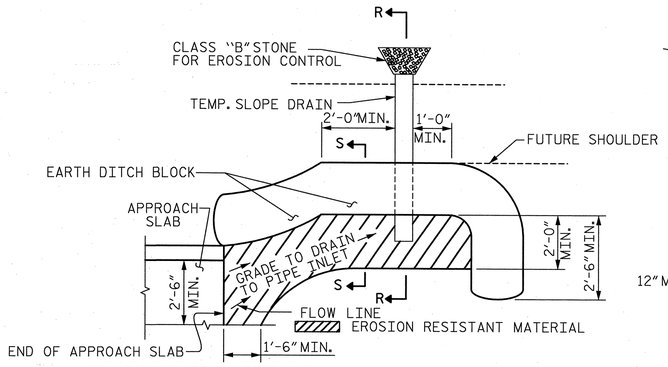

NOTE: IMMEDIATELY AFTER THE CONSTRUCTION OF THE APPROACH SLAB, THE CONTRACTOR SHALL PROVIDE TEMPORARY BERM AND SLOPE DRAIN. CONTRACTOR SHALL GRADE TO PIPE INLET AND PROVIDE EROSION RESISTANT MATERIAL AS SHOWN. THE EROSION RESISTANT MATERIAL SHALL BE EITHER 1) ASPHALT PLANT MIX, TYPE 1 OR TYPE 2, MIN. 2" DEPTH, 2) EROSION CONTROL MAT, OR 3) CONCRETE, AS DIRECTED BY THE ENGINEER. THE SLOPE DRAIN SHALL CONSIST OF A NON-PERFORATED TEMPORARY DRAINAGE PIPE, 12 INCHES IN DIAMETER.

PLAN VIEW

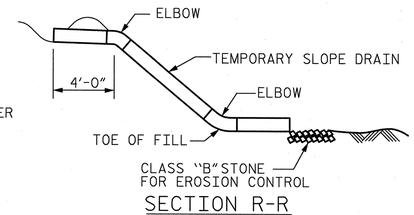

SECTION R-R

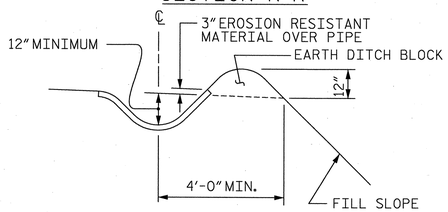

SECTION S-S

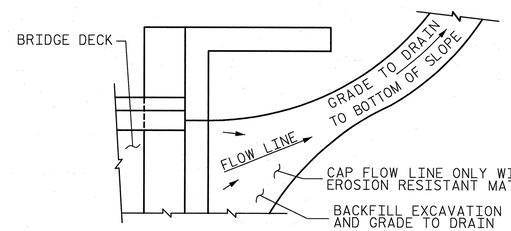

NOTE: IF THE APPROACH SLAB IS NOT CONSTRUCTED IMMEDIATELY AFTER THE BACKFILLING OF THE END BENT EXCAVATION, GRADE TO DRAIN TO THE BOTTOM OF THE SLOPE AND PROVIDE EROSION RESISTANT MATERIAL, SUCH AS FIBERGLASS ROVING OR AS DIRECTED BY THE ENGINEER TO PREVENT SOIL EROSION AND TO PROTECT THE AREA ADJACENT TO THE STRUCTURE. THE CONTRACTOR WILL BE REQUIRED TO REMOVE THESE MATERIALS PRIOR TO CONSTRUCTION OF THE APPROACH SLAB.

TEMPORARY DRAINAGE DETAIL

TEMPORARY BERM AND SLOPE DRAIN DETAILS

(TO BE USED WHEN SHOULDER BERM GUTTER IS REQUIRED)

PROJECT NO. U-2525B

GUILFORD COUNTY

STATION: POC 129+37.56 -L-

SHEET 3 OF 3

ASSEMBLED BY : M. WRIGHT		DATE : 6/13	
CHECKED BY : P. BARBER		DATE : 7/13	
DRAWN BY : FCJ	11/88	REV. 10/1/11	MAA/GM
CHECKED BY : ARB	11/88	REV. 7/12	MAA/GM
		REV. 6/13	MAA/GM

NORTH CAROLINA PROFESSIONAL SEAL 27812 ENGINEER DAVID W. HAWKINS 12/23/13

NORTH CAROLINA PROFESSIONAL SEAL 12916 ENGINEER PAUL J. BARBER 12/23/13

HNTB HNTB NORTH CAROLINA, P.C.
License No. C-1554
343 E. Six Forks Rd., Suite 200, Raleigh, N.C. 27609

DRAWN BY M. WRIGHT DATE 6/13
CHECKED BY P. BARBER DATE 6/13

DWG. NO. 31

STATE OF NORTH CAROLINA
DEPARTMENT OF TRANSPORTATION
RALEIGH

STANDARD

BRIDGE APPROACH SLAB DETAILS

LEFT LANE

REVISIONS						SHEET NO.
NO.	BY:	DATE:	NO.	BY:	DATE:	S-140
1			3			TOTAL SHEETS
2			4			54

STD. NO. BAS4

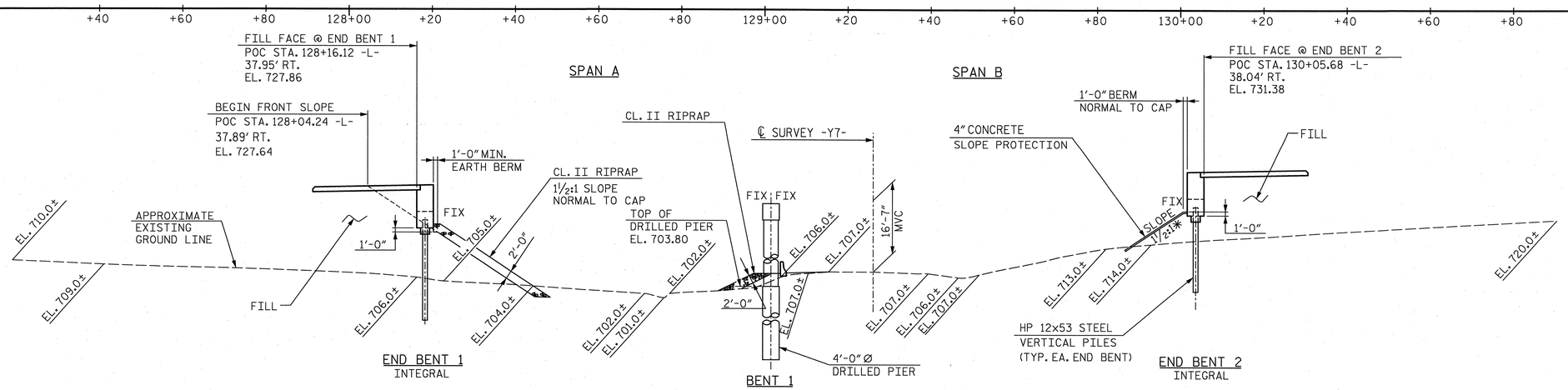

SECTION ALONG CONTROL LINE RIGHT & ℄ BRIDGE

* 1½:1 SLOPE NORMAL TO ℄ SURVEY -Y7-

NOTES: (END BENTS AND BENT ON SECTION AT RIGHT ANGLES TO END BENTS AND BENT)

THE APPROXIMATE NATURAL GROUND ELEVATIONS ARE ALONG THE EDGE OF BRIDGE ON THE UPSTREAM SIDE.

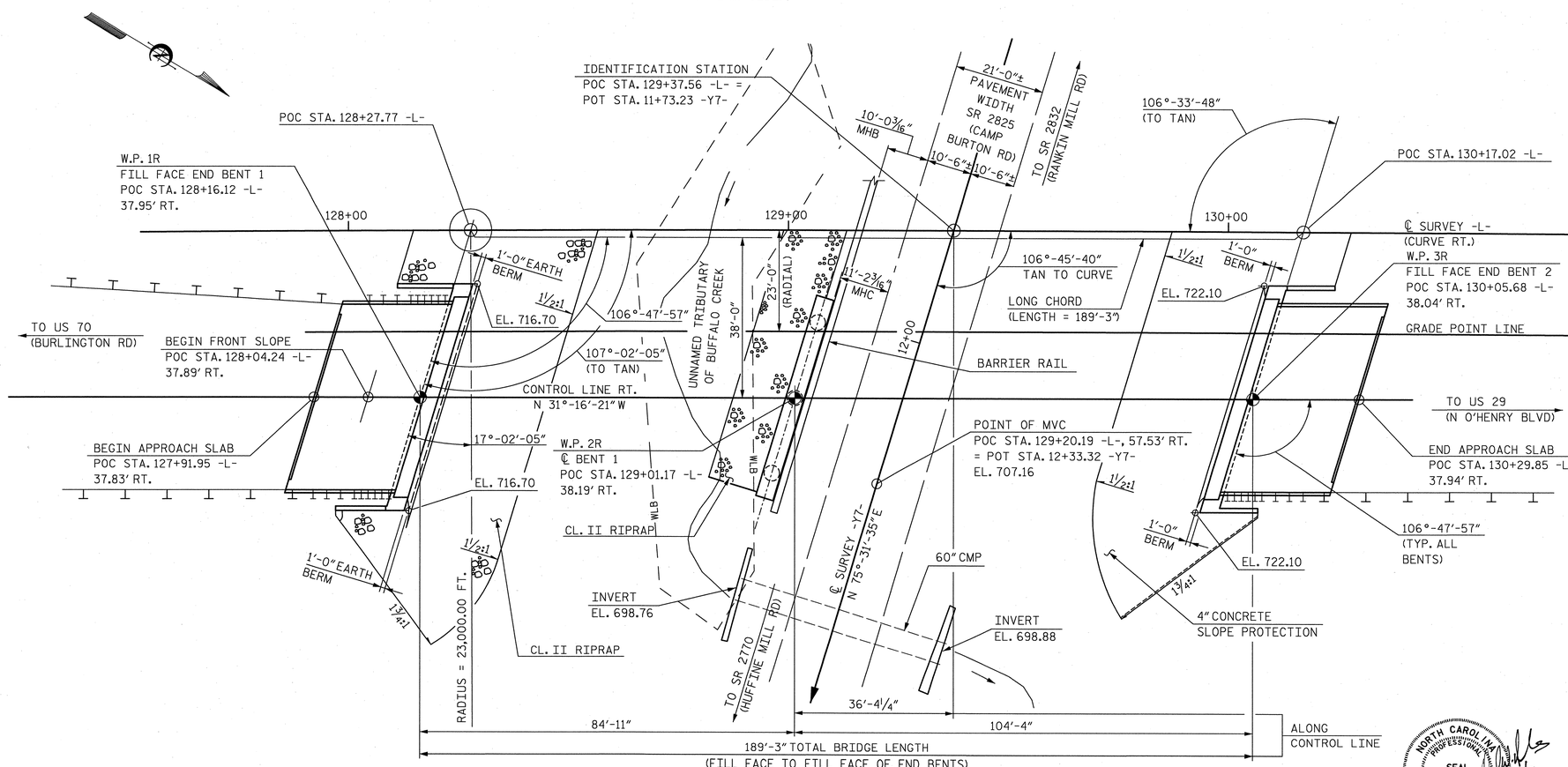

PLAN

NOTES: PILES NOT SHOWN FOR CLARITY.
CONTROL LINE FOR BRIDGE SHALL BE A 38'-0" OFFSET OF THE -L- ℄ SURVEY LONG CHORD.

NOTES:

MVC = MINIMUM VERTICAL CLEARANCE
MHC = MINIMUM HORIZONTAL CLEARANCE TO CAP
MHB = MINIMUM HORIZONTAL CLEARANCE TO BARRIER

NOTE: NO HYDRAULIC INFORMATION IS AVAILABLE.

FOR NOTES, SEE GENERAL DRAWING SHEET 2 OF 3.

CURVE DATA FOR -L-

PI STA 130+34.85
△ = 2°-24'-09.0"(RT)
L = 964.43 FT.
T = 482.29 FT.
R = 23,000.00 FT.
SE = NC

PI STA. = 135+20.00
ELEV. = 741.24
V.C. = 620'

(+)1.8588% (-)0.6493%

GRADE DATA FOR -L-

-2.690% (+)0.940%

PI STA. = 12+40.00
ELEV. = 705.60
V.C. = 330'

GRADE DATA FOR -Y7-

NOTE: GRADE DATA FOR -Y7- WAS APPROXIMATED USING AVAILABLE SURVEY INFORMATION. ROADWAY IS APPROXIMATELY NORMAL CROWN.

PROJECT NO. U-2525B
GUILFORD COUNTY
STATION: POC 129+37.56 -L- = POT 11+73.23 -Y7-

SHEET 1 OF 3 BRIDGE NO. 1137

STATE OF NORTH CAROLINA
DEPARTMENT OF TRANSPORTATION
RALEIGH

GENERAL DRAWING

BRIDGE OVER CAMP BURTON RD. ON GREENSBORO EASTERN LOOP BETWEEN US 70 AND US 29

RIGHT LANE

NORTH CAROLINA PROFESSIONAL SEAL 27812 ENGINEER DAVID W. HAWKINS 12/23/13

NORTH CAROLINA PROFESSIONAL SEAL 12916 ENGINEER PAUL J. BARBER 12/23/13

HNTB NORTH CAROLINA, P.C.
License No. C-1554
343 E. Six Forks Rd., Suite 200, Raleigh, N.C. 27609

DRAWN BY M. WRIGHT DATE 12/13
CHECKED BY P. BARBER DATE 12/13
DWG. NO. 1

REVISIONS						SHEET NO.
NO.	BY:	DATE:	NO.	BY:	DATE:	S-141
1			3			TOTAL SHEETS
2			4			54

STR. #5

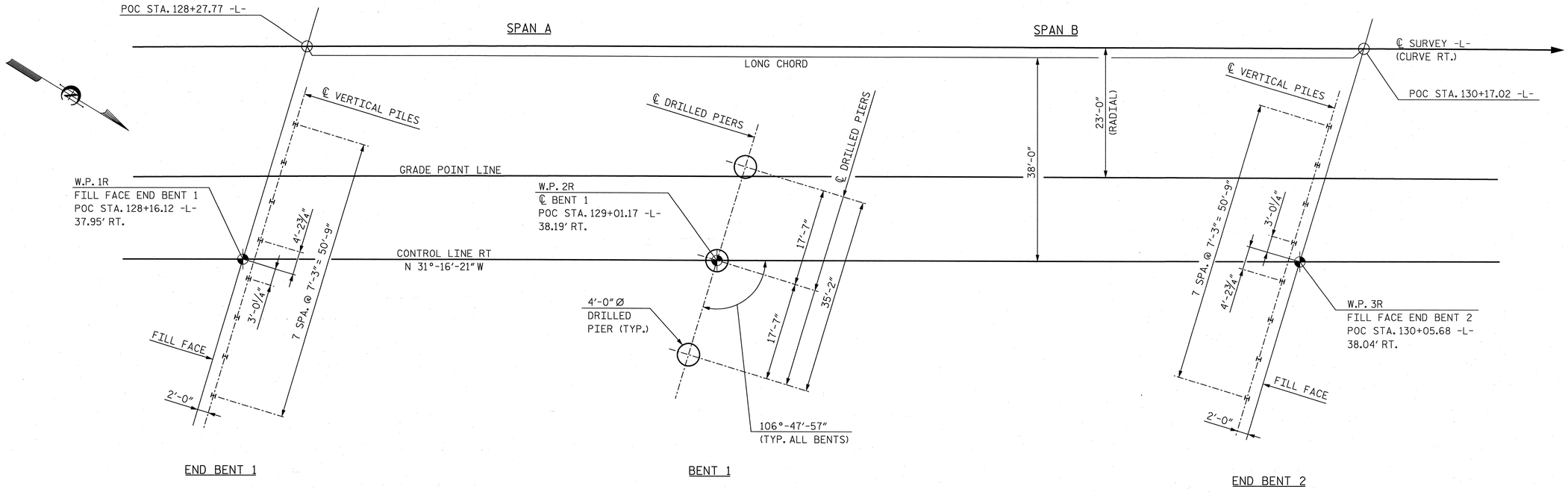

FOUNDATION LAYOUT PLAN

ALL DIMENSIONS ARE PARALLEL OR NORMAL TO FILL FACES AT END BENTS AND ℄ BENT AT BENT NO. 1.

ALL PILE DIMENSIONS ARE TO ℄ OF PILES.

PILES AT END BENT 1 AND END BENT 2 ARE HP 12x53 STEEL PILES.

FOR FOUNDATION ELEVATIONS AND DETAILS, SEE BENT AND END BENT SHEETS.

FOUNDATION NOTES:

FOR PILES, SEE SECTION 450 OF THE STANDARD SPECIFICATIONS.

PILES AT END BENT NO. 1 AND END BENT NO. 2 ARE DESIGNED FOR A FACTORED RESISTANCE OF 95 TONS AND 110 TONS PER PILE, RESPECTIVELY.

DRIVE PILES AT END BENT NO. 1 AND END BENT NO. 2 TO A REQUIRED DRIVING RESISTANCE OF 165 TONS AND 185 TONS PER PILE, RESPECTIVELY.

FOR DRILLED PIERS, SEE SECTION 411 OF THE STANDARD SPECIFICATIONS.

DRILLED PIERS AT BENT NO. 1 ARE DESIGNED FOR A FACTORED RESISTANCE OF 595 TONS PER PIER. CHECK FIELD CONDITIONS FOR THE REQUIRED TIP RESISTANCE OF 40 TSF.

INSTALL DRILLED PIERS AT BENT NO. 1 TO A TIP ELEVATION NO HIGHER THAN 691 FT. WITH THE REQUIRED TIP RESISTANCE.

DO NOT USE SLURRY CONSTRUCTION FOR DRILLED PIERS AT BENT NO. 1.

SID INSPECTIONS MAY BE REQUIRED FOR DRILLED PIERS. THE ENGINEER WILL DETERMINE THE NEED FOR SID INSPECTIONS. FOR SID INSPECTIONS, SEE SECTION 411 OF THE STANDARD SPECIFICATIONS.

PIT MAY BE REQUIRED FOR DRILLED PIERS. THE ENGINEER WILL DETERMINE THE NEED FOR PIT. FOR PILE INTEGRITY TESTING, SEE SECTION 411 OF THE STANDARD SPECIFICATIONS.

OBSERVE A THREE MONTH WAITING PERIOD AFTER CONSTRUCTING THE EMBANKMENT TO WITHIN 2 FT OF FINISHED GRADE BEFORE BEGINNING END BENT CONSTRUCTION AT END BENT NO. 2.

NORTH CAROLINA PROFESSIONAL SEAL 27812 ENGINEER DAVID W. HAWKINS 12/23/13

NORTH CAROLINA PROFESSIONAL SEAL 12916 ENGINEER PAUL J. BARBER 12/23/13

PROJECT NO. U-2525B

GUILFORD COUNTY

STATION: POC 129+37.56 -L-

SHEET 2 OF 3

STATE OF NORTH CAROLINA
DEPARTMENT OF TRANSPORTATION
RALEIGH

GENERAL DRAWING
FOUNDATION
LAYOUT

RIGHT LANE

HNTB NORTH CAROLINA, P.C.
License No. C-1554
343 E. Six Forks Rd., Suite 200, Raleigh, N.C. 27609

DRAWN BY M. WRIGHT DATE 6/13
CHECKED BY P. BARBER DATE 7/13
DWG. NO. 2

REVISIONS						SHEET NO.
NO.	BY:	DATE:	NO.	BY:	DATE:	S-42
1			3			TOTAL SHEETS
2			4			54

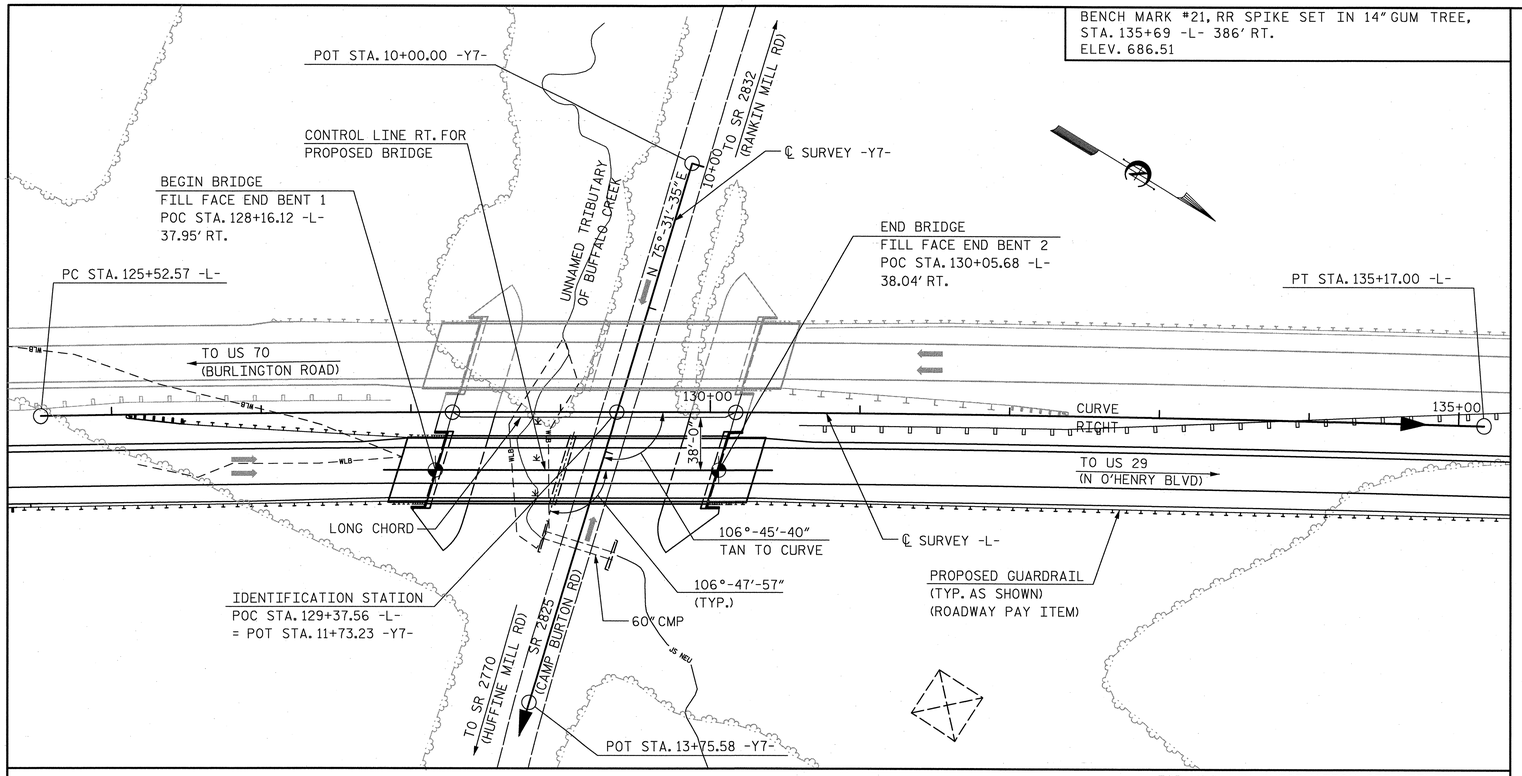

LOCATION SKETCH

FOR UTILITY INFORMATION, SEE UTILITY PLANS AND SPECIAL PROVISIONS

GENERAL NOTES

ASSUMED LIVE LOAD = HL-93 OR ALTERNATE LOADING.

THIS BRIDGE HAS BEEN DESIGNED IN ACCORDANCE WITH THE AASHTO LRFD BRIDGE DESIGN SPECIFICATIONS.

THIS BRIDGE IS LOCATED IN SEISMIC ZONE 1.

FOR OTHER DESIGN DATA AND GENERAL NOTES, SEE SHEET SN.

FOR SUBMITTAL OF WORKING DRAWINGS, SEE SPECIAL PROVISIONS.

FOR FALSEWORK AND FORMWORK, SEE SPECIAL PROVISIONS.

FOR CRANE SAFETY, SEE SPECIAL PROVISIONS.

FOR GROUT FOR STRUCTURES, SEE SPECIAL PROVISIONS.

THE ELEVATION(S) AND CLEARANCE(S) SHOWN ON THE PLANS AT THE POINT(S) OF MINIMUM VERTICAL CLEARANCE ARE FROM THE BEST INFORMATION AVAILABLE. PRIOR TO BEGINNING BRIDGE CONSTRUCTION, VERIFY THE ELEVATION(S) ON THE EXISTING PAVEMENT AND CHECK THE CLEARANCE. REPORT ANY VARIATIONS TO THE ENGINEER. ANY PLAN REVISIONS NECESSARY TO ACHIEVE THE REQUIRED MINIMUM VERTICAL CLEARANCE WILL BE PROVIDED BY THE DEPARTMENT.

FOR MAINTENANCE AND PROTECTION OF TRAFFIC BENEATH PROPOSED STRUCTURE, SEE SPECIAL PROVISIONS.

PRESTRESSED CONCRETE DECK PANELS MAY BE USED IN LIEU OF METAL STAY-IN-PLACE FORMS IN ACCORDANCE WITH ARTICLE 420-3 OF THE STANDARD SPECIFICATIONS.

REMOVABLE FORMS MAY BE USED IN LIEU OF METAL STAY-IN-PLACE FORMS IN ACCORDANCE WITH ARTICLE 420-3 OF THE STANDARD SPECIFICATIONS.

NEEDLE BEAMS WILL NOT BE ALLOWED UNLESS OTHERWISE CALLED FOR ON THE PLANS OR APPROVED BY THE ENGINEER.

THE CLASS AA CONCRETE IN THE BRIDGE DECK SHALL CONTAIN FLY ASH OR GROUND GRANULATED BLAST FURNACE SLAG AT THE SUBSTITUTION RATE SPECIFIED IN ARTICLE 1024-1 AND IN ACCORDANCE WITH ARTICLES 1024-5 AND 1024-6 OF THE STANDARD SPECIFICATIONS. NO PAYMENT WILL BE MADE FOR THIS SUBSTITUTION AS IT IS CONSIDERED INCIDENTAL TO THE COST OF THE REINFORCED CONCRETE DECK SLAB.

FOR EROSION CONTROL MEASURES SEE EROSION CONTROL PLANS.

THE LOCATION OF THE CONSTRUCTION JOINT IN THE DRILLED PIERS IS BASED ON AN APPROXIMATE GROUND LINE ELEVATION. IF THE CONSTRUCTION JOINT IS ABOVE THE ACTUAL GROUND LINE ELEVATION, THE CONTRACTOR SHALL PLACE THE CONSTRUCTION JOINT 1'-0" BELOW THE GROUND LINE.

FOR PLACING LOAD ON STRUCTURE MEMBERS, SEE SPECIAL PROVISIONS.

TOTAL BILL OF MATERIAL

	4'-0" Ø DRILLED PIERS IN SOIL	4'-0" Ø DRILLED PIERS NOT IN SOIL	SID INSPECTIONS	REINFORCED CONCRETE DECK SLAB	GROOVING BRIDGE FLOORS	CLASS A CONCRETE	BRIDGE APPROACH SLABS, STATION 129+37.56 -L- (RIGHT LANE)	REINFORCING STEEL	SPIRAL COLUMN REINFORCING STEEL	54" PRESTRESSED CONCRETE GIRDERS		HP 12x53 STEEL PILES		CONCRETE BARRIER RAIL	4" SLOPE PROTECTION	RIP RAP CLASS II (2'-0" THICK)	GEOTEXTILE FOR DRAINAGE	ELASTOMERIC BEARINGS	ELECTRICAL CONDUIT SYSTEM FOR SIGNALS AT STATION 129+37.56 -L-
	L.F.	L.F.	EACH	SQ. FT.	SQ. FT.	CU. YDS.	LUMP SUM	LBS.	LBS.	NO.	L.F.	NO.	L.F.	L.F.	SQ. YD.	TONS	SQ. YD.	LUMP SUM	LUMP SUM
SUPERSTRUCTURE	——	——	——	8,563	9,279	——	LUMP SUM	——	——	10	928.23	——	——	375.00	——	——	——	LUMP SUM	LUMP SUM
END BENT 1	——	——	——	——	——	40.8	——	5,905	——	——	——	8	160	——	——	300	335	——	——
BENT 1	15.0	24.0	1	——	——	47.3	——	11,927	2,226	——	——	——	——	——	——	51	84	——	——
END BENT 2	——	——	——	——	——	40.0	——	6,101	——	——	——	8	160	——	250	——	——	——	——
TOTAL	15.0	24.0	1	8,563	9,279	128.1	LUMP SUM	23,933	2,226	10	928.23	16	320	375.00	250	351	419	LUMP SUM	LUMP SUM

PROJECT NO. U-2525B

GUILFORD COUNTY

STATION: POC 129+37.56 -L-

SHEET 3 OF 3

NORTH CAROLINA PROFESSIONAL ENGINEER SEAL 27812 DAVID W. HAWKINS 12/13/13

NORTH CAROLINA PROFESSIONAL ENGINEER SEAL 12916 PAUL J. BARBER 12/13/13

HNTB NORTH CAROLINA, P.C.
License No. C-1554
343 E. Six Forks Rd., Suite 200, Raleigh, N.C. 27609

DRAWN BY M. WRIGHT DATE 12/13
CHECKED BY P. BARBER DATE 12/13
DWG. NO. 3

STATE OF NORTH CAROLINA
DEPARTMENT OF TRANSPORTATION
RALEIGH

GENERAL DRAWING LOCATION SKETCH, GENERAL NOTES AND TOTAL BILL OF MATERIAL RIGHT LANE

REVISIONS						SHEET NO.
NO.	BY:	DATE:	NO.	BY:	DATE:	S-43
1			3			TOTAL SHEETS
2			4			541

LOAD AND RESISTANCE FACTOR RATING (LRFR) SUMMARY FOR PRESTRESSED CONCRETE GIRDERS

LEVEL		VEHICLE	WEIGHT (W) (TONS)	⟨#⟩ CONTROLLING LOAD RATING	MINIMUM RATING FACTORS (RF)	TONS = W x RF	STRENGTH I LIMIT STATE											SERVICE III LIMIT STATE						COMMENT NUMBER
								MOMENT					SHEAR						MOMENT						
							LIVE-LOAD FACTORS (γ_{LL})	DISTRIBUTION FACTORS (DF)	RATING FACTOR	SPAN	GIRDER LOCATION	DISTANCE FROM LEFT END OF SPAN (ft)	DISTRIBUTION FACTORS (DF)	RATING FACTOR	SPAN	GIRDER LOCATION	DISTANCE FROM LEFT END OF SPAN (ft)	LIVE-LOAD FACTORS (γ_{LL})	DISTRIBUTION FACTORS (DF)	RATING FACTOR	SPAN	GIRDER LOCATION	DISTANCE FROM LEFT END OF SPAN (ft)	
DESIGN LOAD RATING		HL-93 (INVENTORY)	N/A	⟨1⟩	1.01	--	1.75	0.82	1.30	A	EL/ER	40.8	0.99	1.06	A	I	24.2	0.80	0.76	1.01	B	I	50.6	
		HL-93 (OPERATING)	N/A	--	1.67	--	1.35	0.82	1.69	A	EL/ER	40.8	0.99	1.67	B	I	19.8	N/A	--	--	--	--	--	
		HS-20 (INVENTORY)	36.000	⟨2⟩	1.35	48.6	1.75	0.82	1.74	A	EL/ER	40.8	0.99	1.65	A	I	15.9	0.80	0.79	1.35	A	I	40.8	
		HS-20 (OPERATING)	36.000	--	2.18	78.5	1.35	0.82	2.26	A	EL/ER	40.8	0.99	2.18	A	I	15.9	N/A	--	--	--	--	--	
LEGAL LOAD RATING	SINGLE VEHICLE (SV)	SH	12.500	--	3.38	42.3	1.40	0.82	5.45	A	EL/ER	40.8	0.99	5.63	A	I	15.9	0.80	0.79	3.38	A	I	40.8	
		S3C	21.500	--	1.98	42.6	1.40	0.82	3.19	A	EL/ER	40.8	0.99	3.25	A	I	15.9	0.80	0.79	1.98	A	I	40.8	
		S3A	22.750	--	1.87	42.5	1.40	0.82	3.02	A	EL/ER	40.8	0.99	3.08	A	I	15.9	0.80	0.79	1.87	A	I	40.8	
		S4A	26.750	--	1.65	44.1	1.40	0.82	2.67	A	EL/ER	40.8	0.99	2.69	A	I	15.9	0.80	0.79	1.65	A	I	40.8	
		S5A	30.500	--	1.46	44.5	1.40	0.82	2.35	A	EL/ER	40.8	0.99	2.47	A	I	15.9	0.80	0.79	1.46	A	I	40.8	
		S6A	34.500	--	1.33	45.9	1.40	0.82	2.14	A	EL/ER	40.8	0.99	2.22	A	I	15.9	0.80	0.79	1.33	A	I	40.8	
		S7B	38.500	--	1.21	46.6	1.40	0.82	1.95	A	EL/ER	40.8	0.99	2.09	A	I	15.9	0.80	0.79	1.21	A	I	40.8	
		S7A	40.000	⟨3⟩	1.20	48.0	1.40	0.82	1.93	A	EL/ER	40.8	0.99	2.14	B	I	19.8	0.80	0.79	1.20	A	I	40.8	
	TRUCK TRACTOR SEMI-TRAILER (TTST)	T4A	28.250	--	1.63	46.0	1.40	0.82	2.64	A	EL/ER	40.8	0.99	2.62	A	I	15.9	0.80	0.79	1.63	A	I	40.8	
		T5B	32.000	--	1.43	45.8	1.40	0.82	2.31	A	EL/ER	40.8	0.99	2.51	A	I	15.9	0.80	0.79	1.43	A	I	40.8	
		T6A	36.000	--	1.32	47.5	1.40	0.82	2.13	A	EL/ER	40.8	0.99	2.31	B	I	19.8	0.80	0.79	1.32	A	I	40.8	
		T7A	40.000	--	1.22	48.8	1.40	0.82	1.98	A	EL/ER	40.8	0.99	2.13	B	I	19.8	0.80	0.79	1.22	A	I	40.8	
		T7B	40.000	--	1.31	52.4	1.40	0.82	2.12	A	EL/ER	40.8	0.99	2.00	A	I	15.9	0.80	0.79	1.31	A	I	40.8	

LOAD FACTORS:

DESIGN LOAD RATING FACTORS	LIMIT STATE	γ_{DC}	γ_{DW}
	STRENGTH I	1.25	1.50
	SERVICE III	1.00	1.00

NOTES:

MINIMUM RATING FACTORS ARE BASED ON THE STRENGTH I AND SERVICE III LIMIT STATES.

ALLOWABLE STRESSES FOR SERVICE III LIMIT STATE ARE AS REQUIRED FOR DESIGN.

COMMENTS:

1.
2.
3.
4.

⟨#⟩ CONTROLLING LOAD RATING

⟨1⟩ DESIGN LOAD RATING (HL-93)

⟨2⟩ DESIGN LOAD RATING (HS-20)

⟨3⟩ LEGAL LOAD RATING **

** SEE CHART FOR VEHICLE TYPE

GIRDER LOCATION

I - INTERIOR GIRDER
EL - EXTERIOR LEFT GIRDER
ER - EXTERIOR RIGHTGIRDER

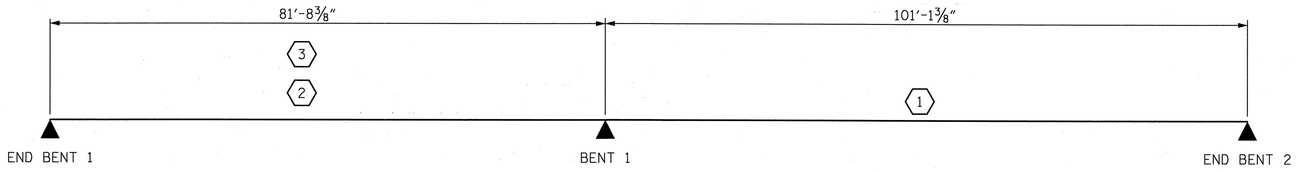

LRFR SUMMARY

NOTE: SPAN LENGTHS PROVIDED ARE BEARING TO BEARING LENGTHS

PROJECT NO. U-2525B

GUILFORD COUNTY

STATION: POC 129+37.56 -L-

NORTH CAROLINA PROFESSIONAL SEAL 27812 ENGINEER DAVID W. HAWKINS 12/23/13

NORTH CAROLINA PROFESSIONAL SEAL 12916 ENGINEER PAUL J. BARBER 12/23/13

STATE OF NORTH CAROLINA
DEPARTMENT OF TRANSPORTATION
RALEIGH

STANDARD
LRFR SUMMARY FOR PRESTRESSED CONCRETE GIRDERS
(INTERSTATE TRAFFIC)
RIGHT LANE

ASSEMBLED BY : MEW	DATE : 4/13
CHECKED BY : STF	DATE : 7/13
DRAWN BY : MAA 1/08	REV. 11/12/08RR MAA/GM
CHECKED BY : GM/DI 2/08	REV. 10/1/11 MAA/GM

HNTB NORTH CAROLINA, P.C.
License No. C-1554
343 E. Six Forks Rd., Suite 200, Raleigh, N.C. 27609

DRAWN BY M. WRIGHT DATE 7/13
CHECKED BY S. FISHER DATE 7/13

DWG. NO. 4

REVISIONS						SHEET NO.
NO.	BY:	DATE:	NO.	BY:	DATE:	S-144
1			3			TOTAL SHEETS
2			4			541

STD. NO. LRFR2

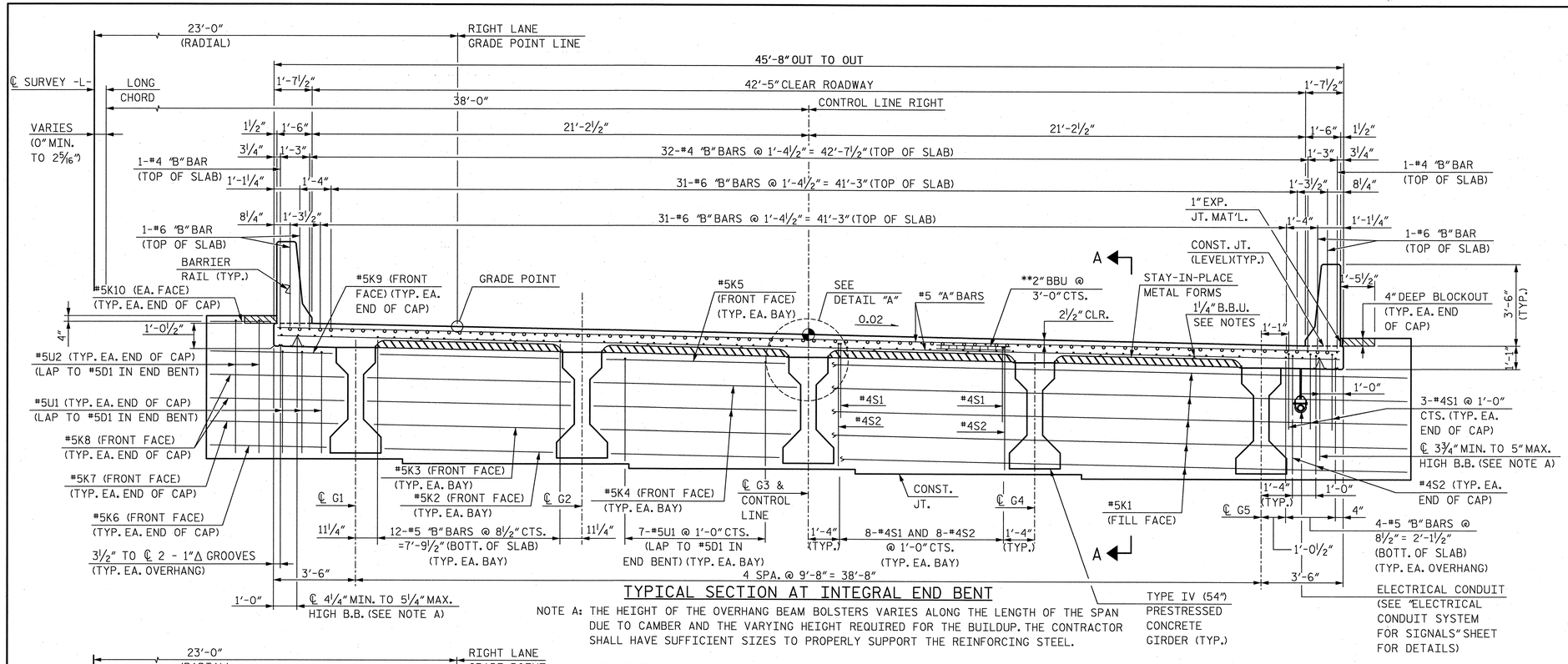

TYPICAL SECTION AT INTEGRAL END BENT

NOTE A: THE HEIGHT OF THE OVERHANG BEAM BOLSTERS VARIES ALONG THE LENGTH OF THE SPAN DUE TO CAMBER AND THE VARYING HEIGHT REQUIRED FOR THE BUILDUP. THE CONTRACTOR SHALL HAVE SUFFICIENT SIZES TO PROPERLY SUPPORT THE REINFORCING STEEL.

FOR SECTION THRU END BENT, SEE SECTION A-A SHEET 2 OF 2

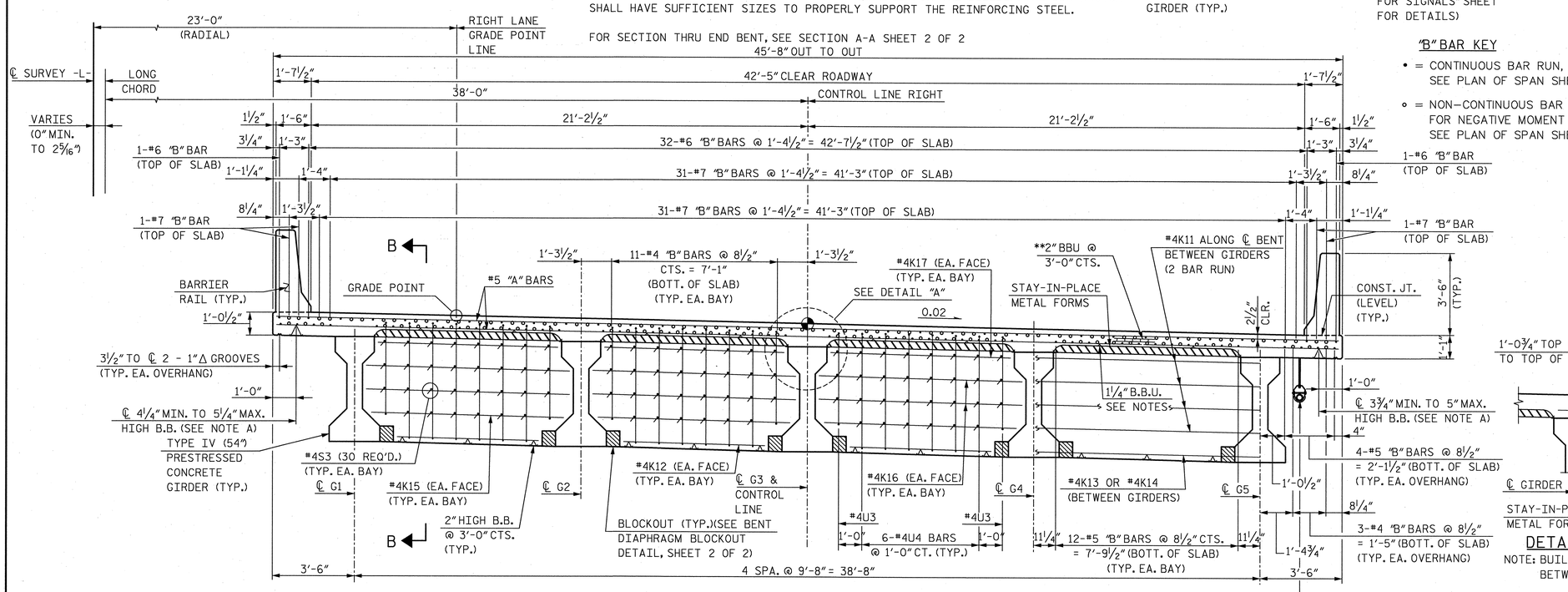

TYPICAL SECTION AT CONTINUOUS BENT DIAPHRAGM

FOR SECTION THRU BENT, SEE SECTION B-B SHEET 2 OF 2

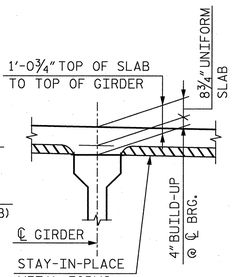

DETAIL "A"

NOTE: BUILD-UP VARIES BETWEEN ℄ BEARINGS

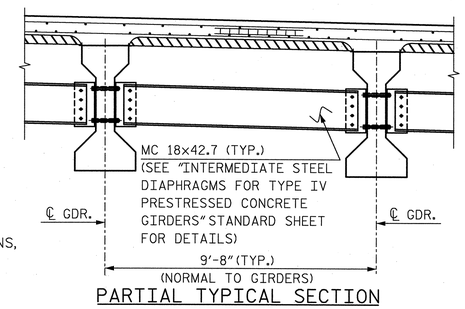

PARTIAL TYPICAL SECTION

(SHOWING INTERMEDIATE DIAPHRAGMS)

"B" BAR KEY

- • = CONTINUOUS BAR RUN, SEE PLAN OF SPAN SHEETS.
- ∘ = NON-CONTINUOUS BAR RUN FOR NEGATIVE MOMENT REGIONS, SEE PLAN OF SPAN SHEETS.

NOTES

PROVIDE 1¼" HIGH BEAM BOLSTERS UPPER AT 4'-0" CTS. ATOP THE METAL STAY-IN-PLACE FORMS TO SUPPORT THE BOTTOM MAT OF 'A' BARS. WHEN USING REMOVABLE FORMS, PROVIDE CONTINUOUS HIGH CHAIRS FOR METAL DECK (CHCM) AT 4'-0" CTS. WITH A HEIGHT TO SUPPORT THE BOTTOM MAT OF 'A' BARS A CLEAR DISTANCE OF 2½" ABOVE THE TOP OF THE REMOVABLE FORM.

LONGITUDINAL STEEL MAY BE SHIFTED SLIGHTLY, AS NECESSARY, TO AVOID INTERFERENCE WITH STIRRUPS IN PRESTRESSED CONCRETE GIRDERS.

PREVIOUSLY CAST CONCRETE IN A CONTINUOUS UNIT SHALL HAVE ATTAINED A MINIMUM COMPRESSIVE STRENGTH OF 3,000 PSI BEFORE ADDITIONAL CONCRETE IS CAST IN THE UNIT.

BARRIER RAIL IN A CONTINUOUS UNIT SHALL NOT BE CAST UNTIL ALL SLAB CONCRETE IN THAT UNIT HAS BEEN CAST AND HAS REACHED A MINIMUM COMPRESSIVE STRENGTH OF 3,000 PSI.

** TO MAINTAIN PROPER LOCATION OF "A" BARS IN THE TOP OF SLAB, BBU DEPTH MUST VARY IN UNIT AS THE MAXIMUM SIZE OF THE "B" BARS IN THE TOP OF THE SLAB VARIES. A 2¼" BBU SHALL BE USED WHERE ONLY #4 "B" BARS ARE PRESENT. WHERE #6 OR #7 "B" BARS ARE PRESENT, A 2" BBU SHALL BE USED.

NO CHAMFER IS REQUIRED ON CORNERS OF GIRDER BUILD-UPS.

THE SKEWED END CONDITIONS OF END BENTS AND BENT NO. 1 ARE SUCH THAT THE USE OF 4' WIDE PRESTRESSED CONCRETE DECK PANELS IS NOT POSSIBLE; USE OF 8' WIDE PRESTRESSED CONCRETE DECK PANELS IS NECESSARY.

FOR WINGWALLS OF INTEGRAL END BENTS, SEE "PLAN OF SPAN, WING DETAILS".

NORTH CAROLINA PROFESSIONAL SEAL 27812 ENGINEER DAVID W. HAWKINS 12/23/13

NORTH CAROLINA PROFESSIONAL SEAL 12916 ENGINEER PAUL J. BARBER 12/23/13

PROJECT NO. U-2525B

GUILFORD COUNTY

STATION: POC 129+37.56 -L-

SHEET 1 OF 2

STATE OF NORTH CAROLINA
DEPARTMENT OF TRANSPORTATION
RALEIGH

SUPERSTRUCTURE

TYPICAL SECTIONS

RIGHT LANE

HNTB NORTH CAROLINA, P.C.
License No. C-1554
343 E. Six Forks Rd., Suite 200, Raleigh, N.C. 27609

DRAWN BY M. WRIGHT DATE 12/13
CHECKED BY P. BARBER DATE 12/13
DWG. NO. 5

REVISIONS						SHEET NO.
NO.	BY:	DATE:	NO.	BY:	DATE:	S-145
1			3			TOTAL SHEETS
2			4			541

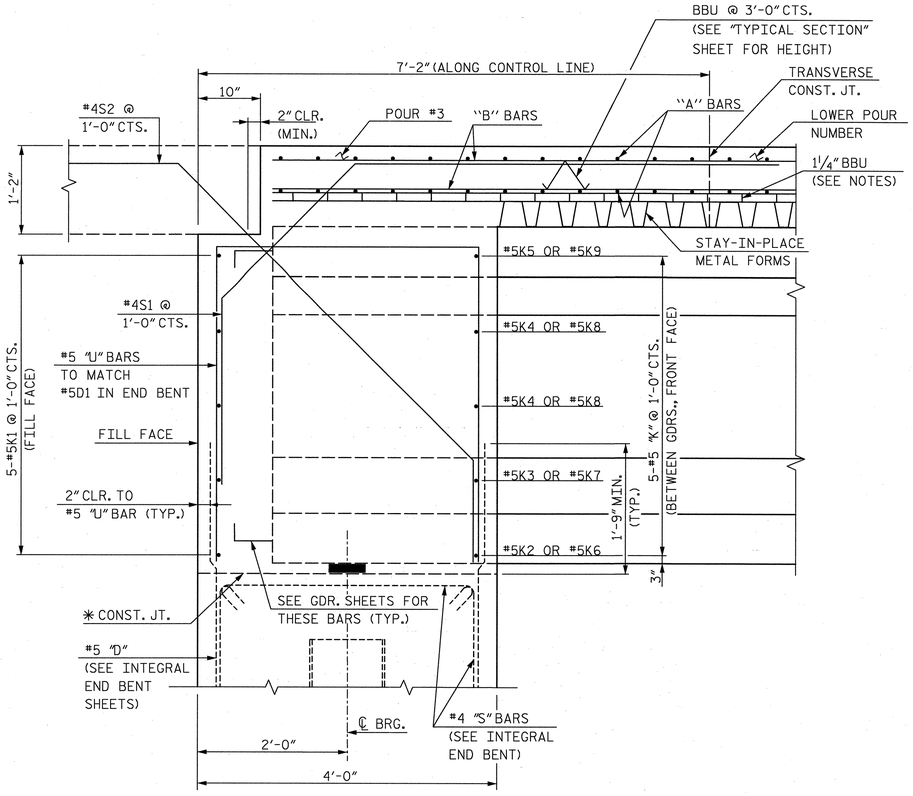

SECTION A-A
(END BENT 1 SHOWN, END BENT 2 SIMILAR)

* THE TOP SURFACE OF THE END BENT CAP AND WINGS EXCLUDING THE BEARING AREA SHALL BE RAKED TO A DEPTH OF ¼".

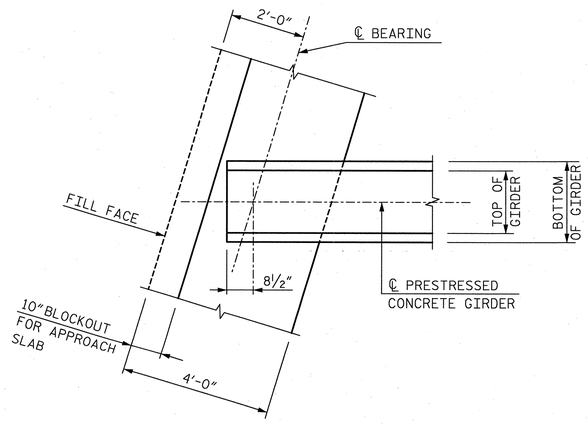

PLAN OF GIRDER AT INTEGRAL END BENT 1
(END BENT 2 SIMILAR)

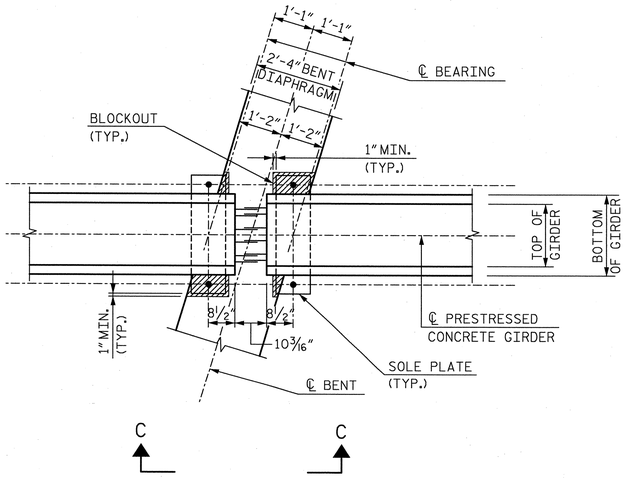

BENT DIAPHRAGM BLOCKOUT DETAIL

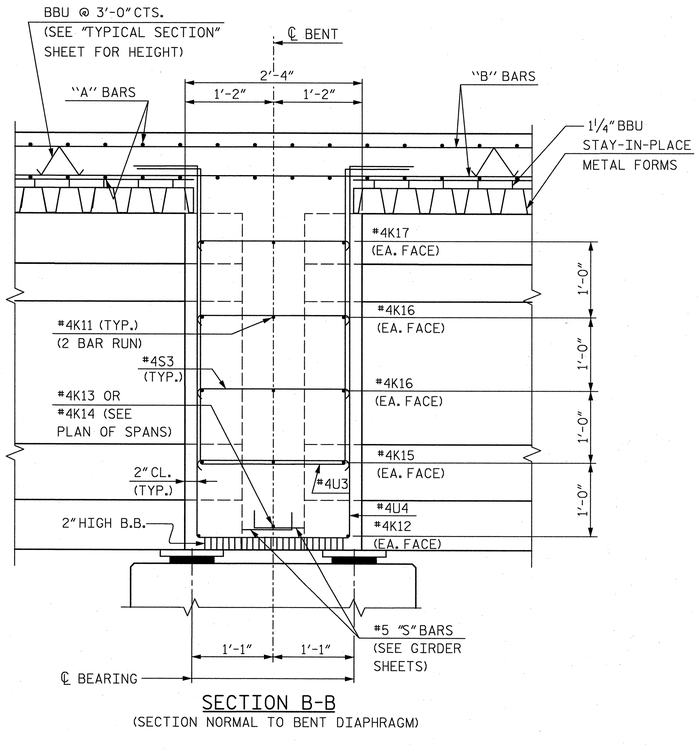

SECTION B-B
(SECTION NORMAL TO BENT DIAPHRAGM)

NOTE: BENT DIAPHRAGM SHALL BE CAST MONOLITHICALLY WITH DECK SLAB

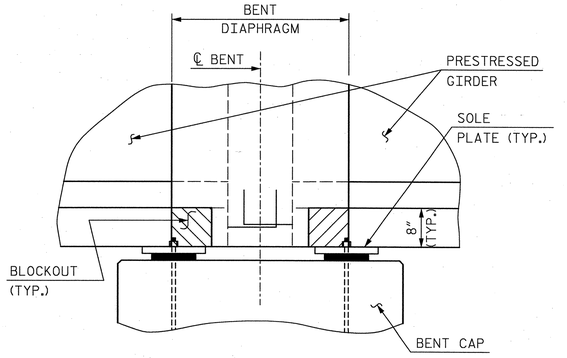

SECTION C-C

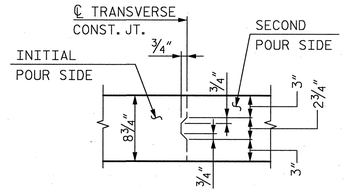

REINFORCING STEEL IN SLAB NOT SHOWN. REINFORCING STEEL SHALL BE CONTINUOUS THROUGH JOINT.

TRANSVERSE CONSTRUCTION JOINT DETAIL

PROJECT NO. U-2525B
GUILFORD COUNTY
STATION: POC 129+37.56 -L-

SHEET 2 OF 2

STATE OF NORTH CAROLINA
DEPARTMENT OF TRANSPORTATION
RALEIGH

SUPERSTRUCTURE
TYPICAL SECTION
DETAILS
RIGHT LANE

NORTH CAROLINA PROFESSIONAL ENGINEER SEAL 27812 DAVID W. HAWKINS 12/23/13

NORTH CAROLINA PROFESSIONAL ENGINEER SEAL 12916 PAUL J. BARBER 12/23/13

HNTB NORTH CAROLINA, P.C.
License No. C-1554
343 E. Six Forks Rd., Suite 200, Raleigh, N.C. 27609

DRAWN BY M. WRIGHT DATE 5/13
CHECKED BY P. BARBER DATE 7/13
DWG. NO. 6

REVISIONS						SHEET NO.
NO.	BY:	DATE:	NO.	BY:	DATE:	S-146
1			3			TOTAL SHEETS
2			4			541

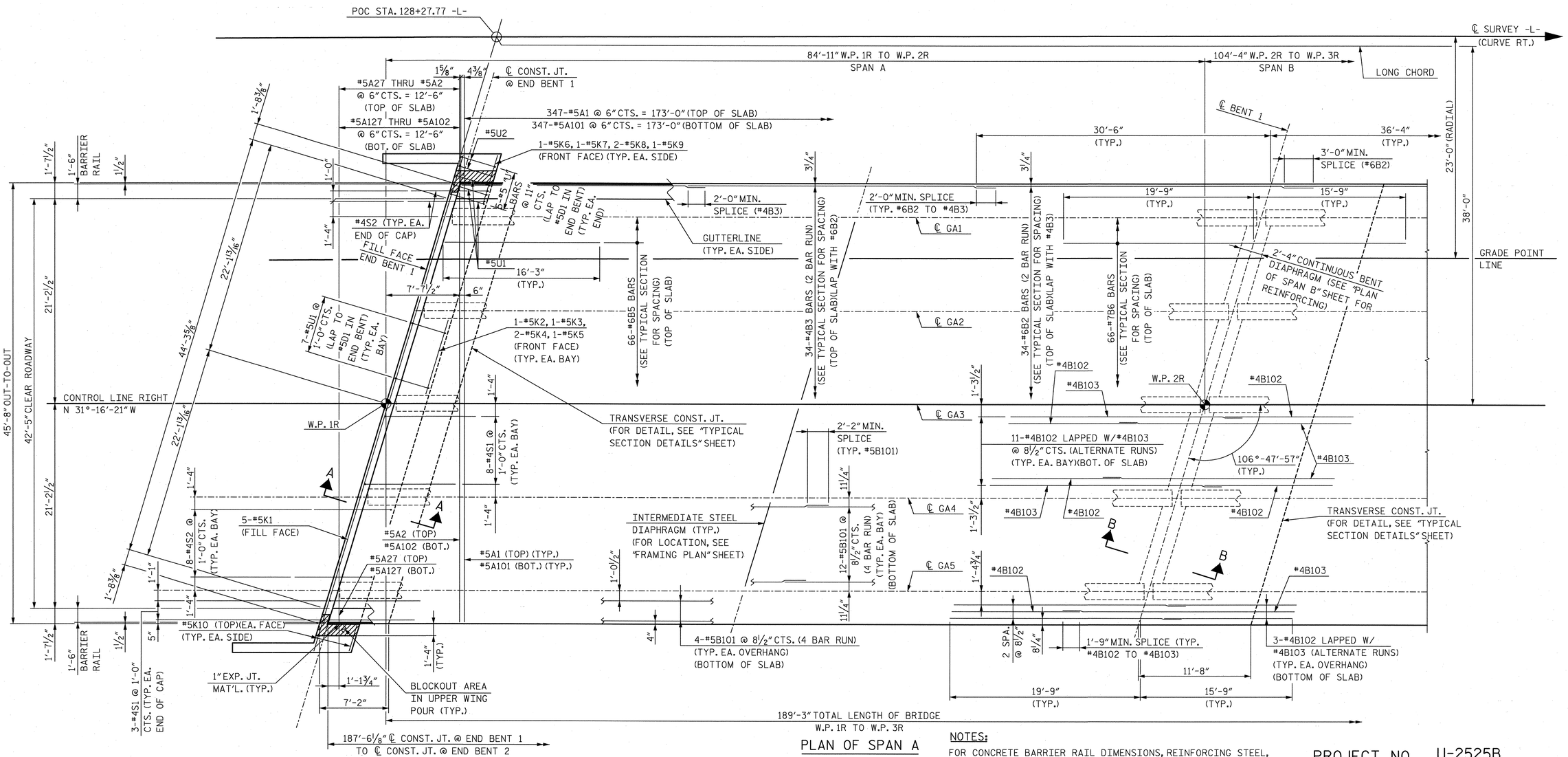

PLAN OF SPAN A

NOTES:

FOR CONCRETE BARRIER RAIL DIMENSIONS, REINFORCING STEEL, AND JOINT SPACING, SEE "CONCRETE BARRIER RAIL" SHEET.

FOR SECTION VIEWS, SEE "SUPERSTRUCTURE TYPICAL SECTION DETAILS" SHEET 2 OF 2.

SEE "PLAN OF SPAN WING DETAILS" SHEETS FOR ADDITIONAL REINFORCING STEEL IN WINGS.

FOR INTERMEDIATE STEEL DIAPHRAGMS, SEE "INTERMEDIATE STEEL DIAPHRAGMS FOR TYPE IV PRESTRESSED CONCRETE GIRDERS" SHEET FOR DETAILS. FOR LOCATION, SEE "SUPERSTRUCTURE FRAMING PLANS" SHEET.

PROJECT NO. U-2525B

GUILFORD COUNTY

STATION: POC 129+37.56 -L-

NORTH CAROLINA PROFESSIONAL ENGINEER SEAL 27812 DAVID W. HAWKINS 7/23/13

NORTH CAROLINA PROFESSIONAL ENGINEER SEAL 12916 PAUL J. BARBER 7/23/13

STATE OF NORTH CAROLINA
DEPARTMENT OF TRANSPORTATION
RALEIGH

SUPERSTRUCTURE

PLAN OF SPAN A

RIGHT LANE

HNTB NORTH CAROLINA, P.C.
License No. C-1554
343 E. Six Forks Rd., Suite 200, Raleigh, N.C. 27609

DRAWN BY M. WRIGHT DATE 5/13
CHECKED BY P. BARBER DATE 7/13
DWG. NO. 7

REVISIONS						SHEET NO.
NO.	BY:	DATE:	NO.	BY:	DATE:	S-47
1			3			TOTAL SHEETS
2			4			54

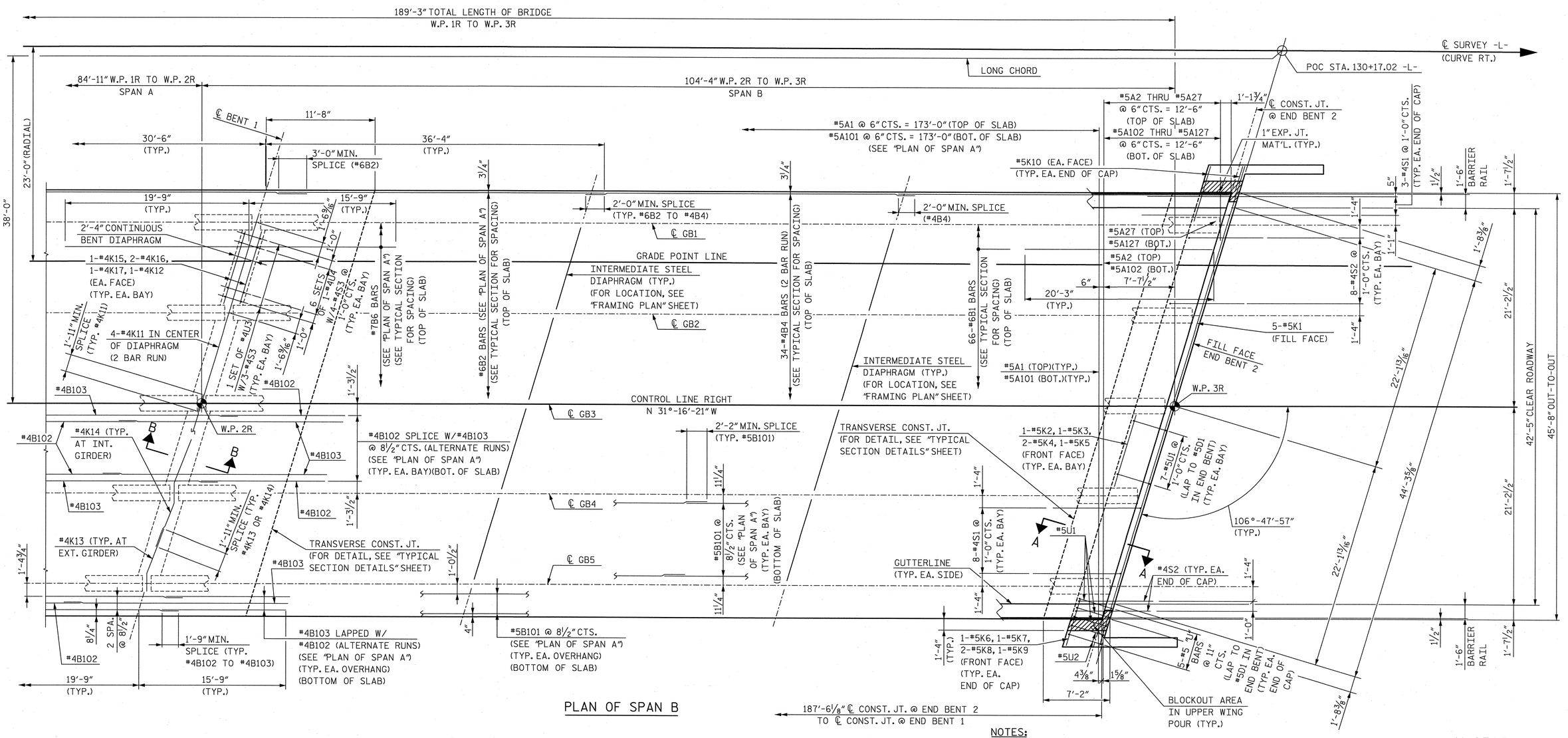

PLAN OF SPAN B

NOTES:

FOR CONCRETE BARRIER RAIL DIMENSIONS, REINFORCING STEEL, AND JOINT SPACING, SEE "CONCRETE BARRIER RAIL" SHEET.

FOR SECTION VIEWS, SEE "SUPERSTRUCTURE TYPICAL SECTION DETAILS" SHEET 2 OF 2.

SEE "PLAN OF SPAN WING DETAILS" SHEETS FOR ADDITIONAL REINFORCING STEEL IN WINGS.

FOR INTERMEDIATE STEEL DIAPHRAGMS, SEE "INTERMEDIATE STEEL DIAPHRAGMS FOR TYPE IV PRESTRESSED CONCRETE GIRDERS" SHEET FOR DETAILS. FOR LOCATION, SEE "SUPERSTRUCTURE FRAMING PLANS" SHEET.

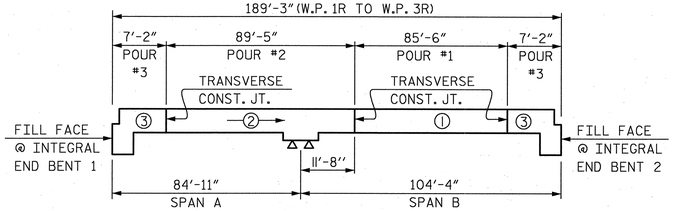

POURING SEQUENCE

DIMENSIONS GIVEN ALONG CONTROL LINE RIGHT

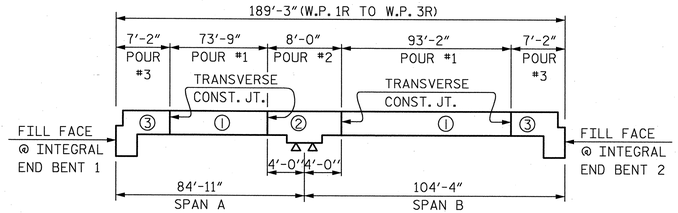

OPTIONAL POURING SEQUENCE

DIMENSIONS GIVEN ALONG CONTROL LINE RIGHT

NOTE: POUR ② CAN NOT BE STARTED UNTIL BOTH ADJACENT ① POURS REACH A MINIMUM OF 3000 PSI.

NORTH CAROLINA PROFESSIONAL SEAL 27812 ENGINEER DAVID W. HAWKINS 12/23/13

NORTH CAROLINA PROFESSIONAL SEAL 12916 ENGINEER PAUL J. BARBER 12/23/13

PROJECT NO. U-2525B

GUILFORD COUNTY

STATION: POC 129+37.56 -L-

STATE OF NORTH CAROLINA
DEPARTMENT OF TRANSPORTATION
RALEIGH

SUPERSTRUCTURE

PLAN OF SPAN B

RIGHT LANE

HNTB NORTH CAROLINA, P.C.
License No. C-1554
343 E. Six Forks Rd., Suite 200, Raleigh, N.C. 27609

DRAWN BY M. WRIGHT DATE 5/13
CHECKED BY P. BARBER DATE 7/13

DWG. NO. 8

REVISIONS					
NO.	BY:	DATE:	NO.	BY:	DATE:
1			3		
2			4		

SHEET NO. S-148

TOTAL SHEETS 541

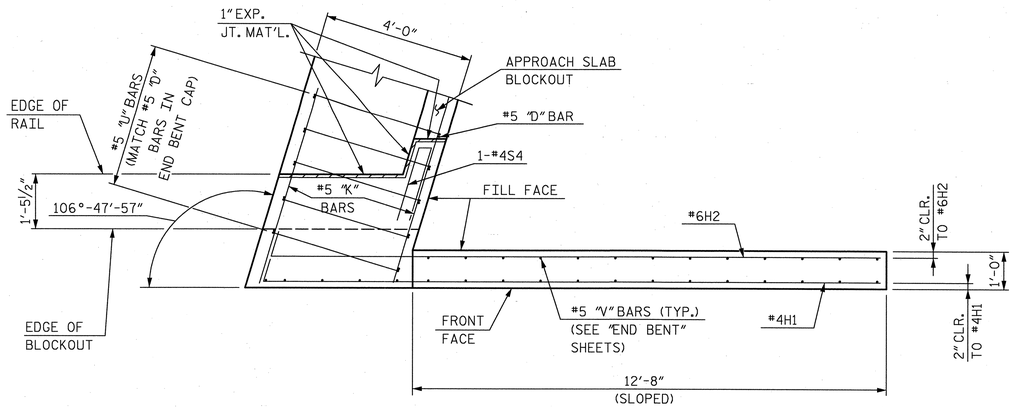

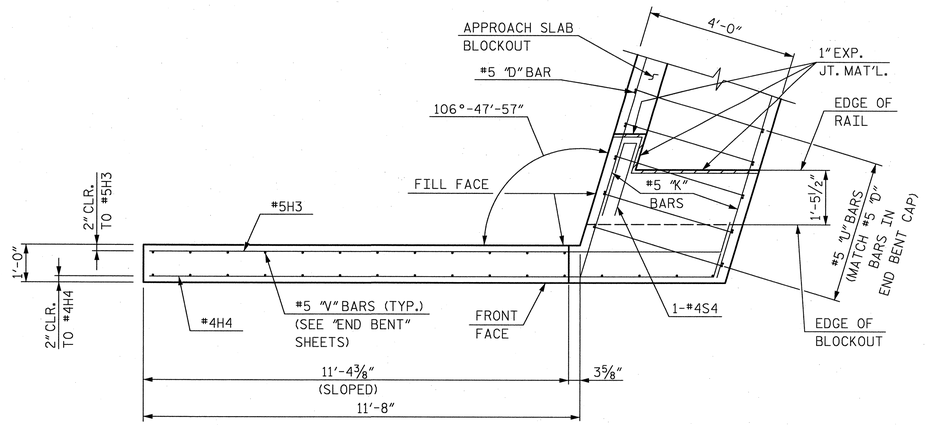

PLAN OF LEFT WING (W1)

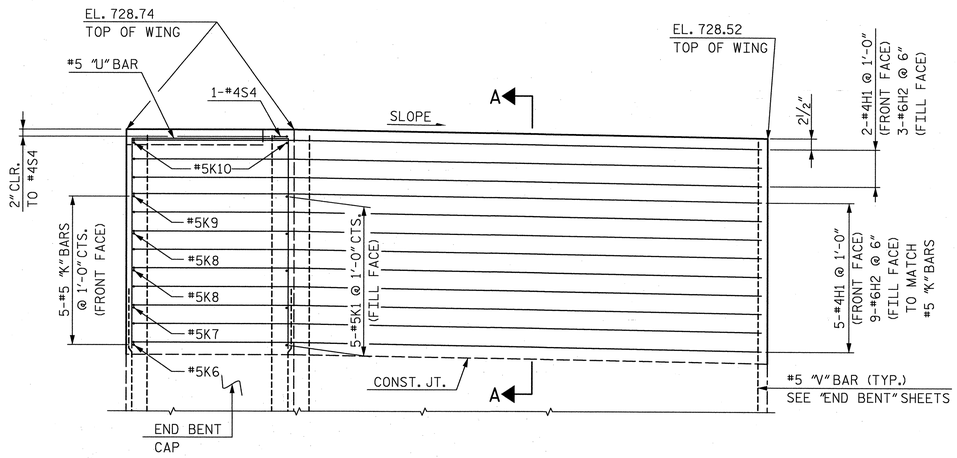

ELEVATION OF LEFT WING (W1)

PLAN OF RIGHT WING (W2)

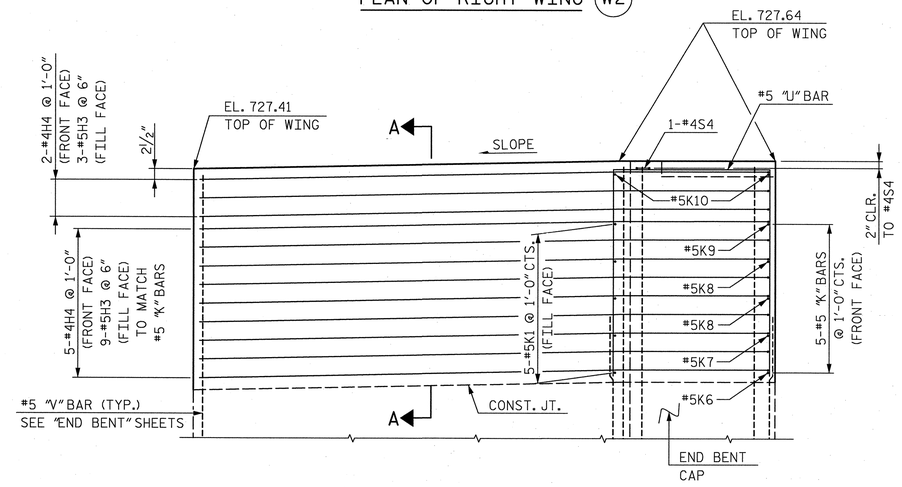

ELEVATION OF RIGHT WING (W2)

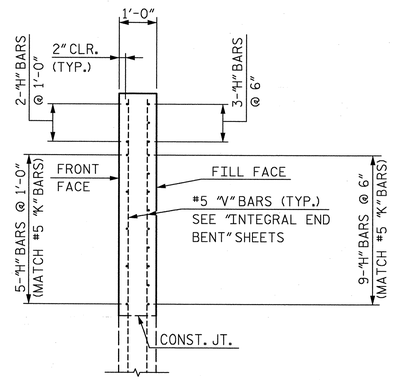

SECTION A-A

PROJECT NO. U-2525B
GUILFORD COUNTY
STATION: POC 129+37.56 -L-

STATE OF NORTH CAROLINA
DEPARTMENT OF TRANSPORTATION
RALEIGH

SUPERSTRUCTURE
PLAN OF SPAN
WING DETAILS - END BENT 1
RIGHT LANE

NORTH CAROLINA PROFESSIONAL SEAL 27812 ENGINEER DAVID W. HAWKINS 12/23/13

NORTH CAROLINA PROFESSIONAL SEAL 12916 ENGINEER PAUL J. BARBER 12/23/13

HNTB NORTH CAROLINA, P.C.
License No. C-1554
343 E. Six Forks Rd., Suite 200, Raleigh, N.C. 27609

DRAWN BY M. WRIGHT DATE 7/13
CHECKED BY P. BARBER DATE 7/13
DWG. NO. 9

REVISIONS						SHEET NO.
NO.	BY:	DATE:	NO.	BY:	DATE:	S-149
1			3			TOTAL SHEETS
2			4			541

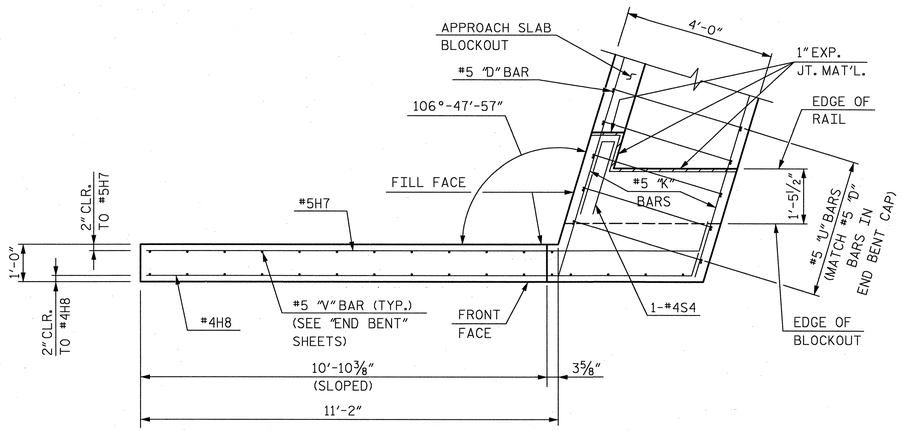

PLAN OF LEFT WING (W3)

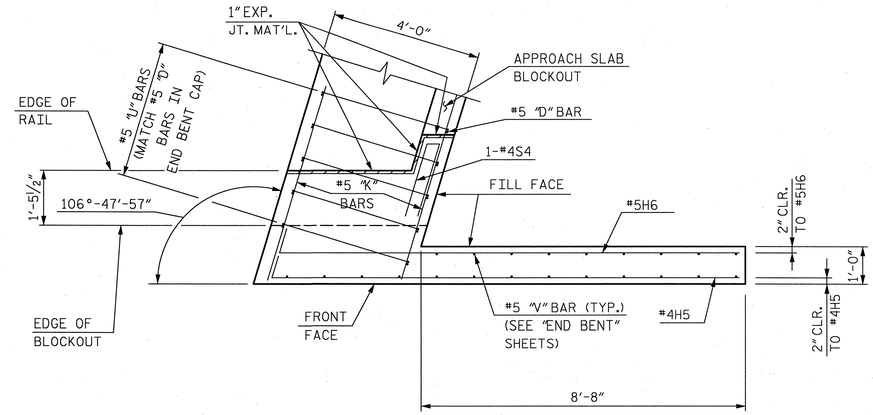

PLAN OF RIGHT WING (W4)

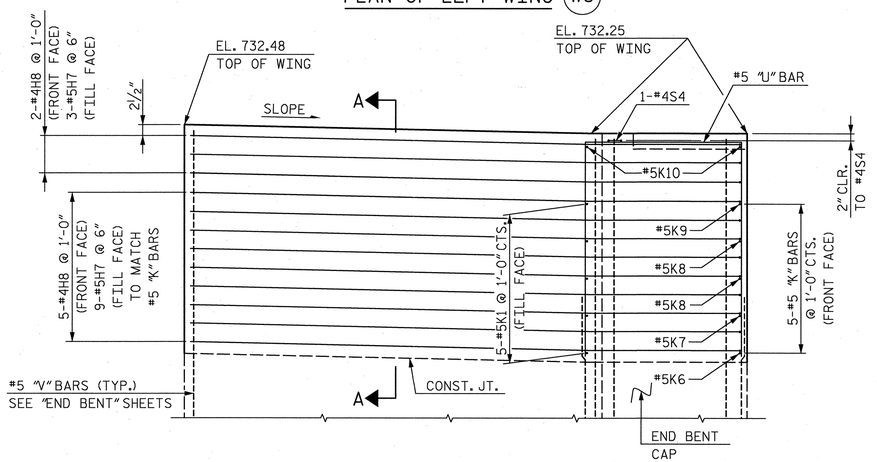

ELEVATION OF LEFT WING (W3)

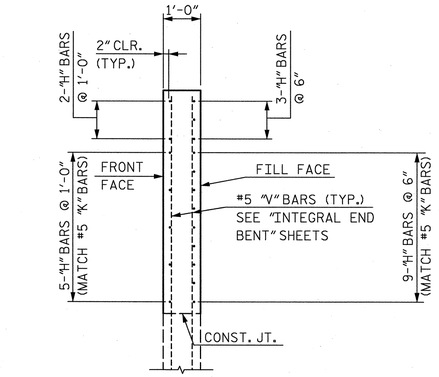

SECTION A-A

LEFT WING (W3) SHOWN, RIGHT WING (W4) SIMILAR

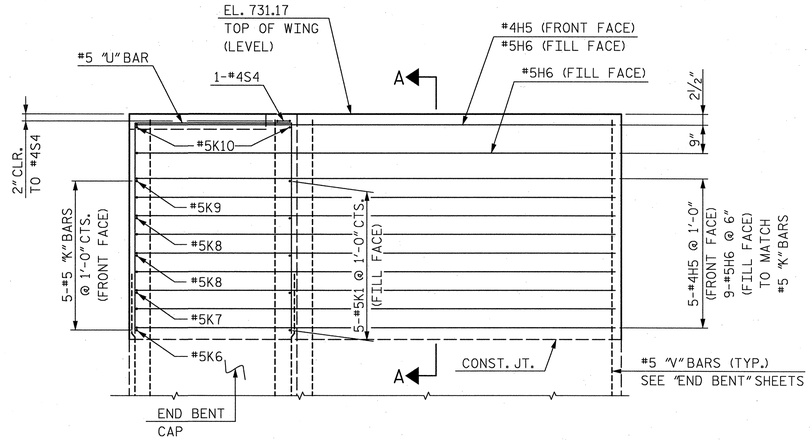

ELEVATION OF RIGHT WING (W4)

PROJECT NO. U-2525B

GUILFORD COUNTY

STATION: POC 129+37.56 -L-

STATE OF NORTH CAROLINA
DEPARTMENT OF TRANSPORTATION
RALEIGH

SUPERSTRUCTURE
PLAN OF SPAN
WING DETAILS - END BENT 2
RIGHT LANE

NORTH CAROLINA PROFESSIONAL SEAL 27812 ENGINEER DAVID W. HAWKINS 12/23/13

NORTH CAROLINA PROFESSIONAL SEAL 12916 ENGINEER PAUL J. BARBER 12/23/13

HNTB NORTH CAROLINA, P.C.
License No. C-1554
343 E. Six Forks Rd., Suite 200, Raleigh, N.C. 27609

DRAWN BY M. WRIGHT DATE 7/13
CHECKED BY P. BARBER DATE 7/13
DWG. NO. 10

REVISIONS						SHEET NO.
NO.	BY:	DATE:	NO.	BY:	DATE:	S-150
1			3			TOTAL SHEETS
2			4			541

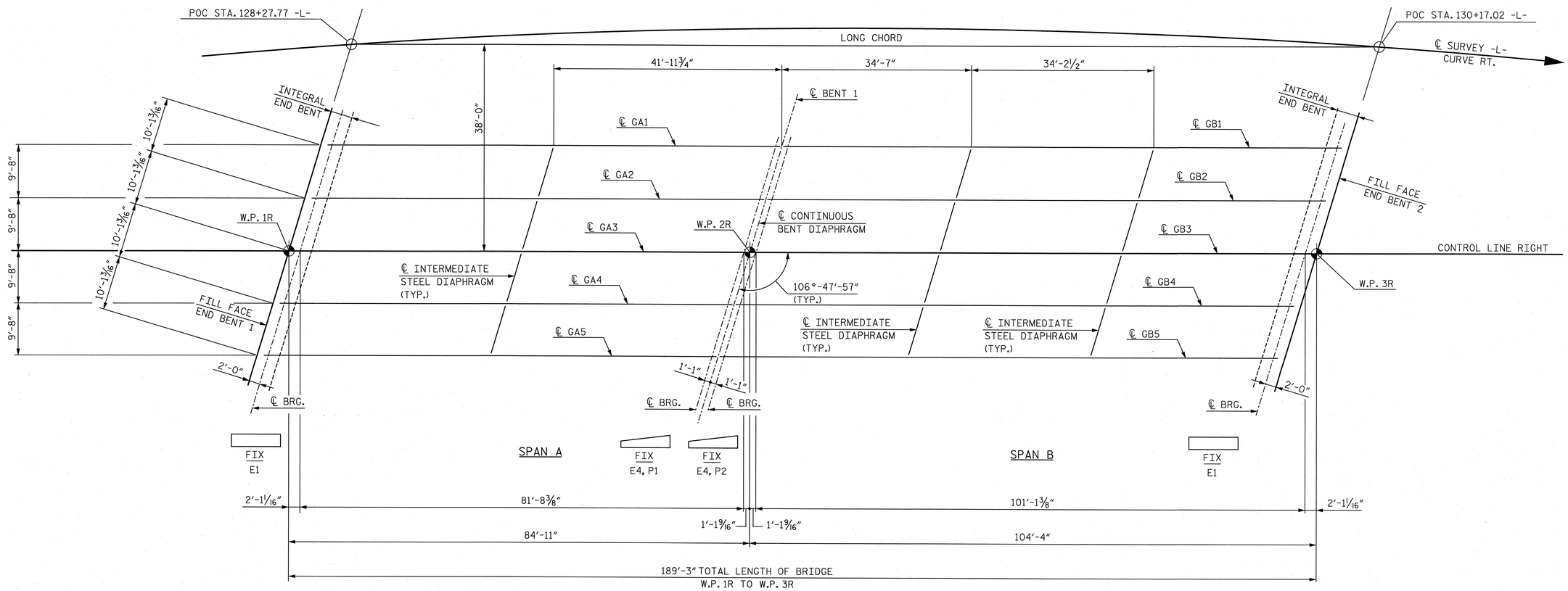

FRAMING PLAN

NOTES:

"FIX" DENOTES FIXED BEARING ASSEMBLY.
"E" DENOTES ELASTOMERIC BEARING PAD MARK.
"P" DENOTES STEEL SOLE PLATE MARK.

NO SOLE PLATES ARE REQUIRED AT INTEGRAL END BENTS.

PROJECT NO. U-2525B

GUILFORD COUNTY

STATION: POC 129+37.56 -L-

NORTH CAROLINA PROFESSIONAL SEAL 27812 ENGINEER DAVID W. HAWKINS 12/23/13

NORTH CAROLINA PROFESSIONAL SEAL 12916 ENGINEER PAUL J. BARBER 12/23/13

HNTB

HNTB NORTH CAROLINA, P.C.
License No. C-1554
343 E. Six Forks Rd., Suite 200, Raleigh, N.C. 27609

DRAWN BY M. WRIGHT DATE 6/13
CHECKED BY P. BARBER DATE 7/13

DWG. NO. 11

STATE OF NORTH CAROLINA
DEPARTMENT OF TRANSPORTATION
RALEIGH

SUPERSTRUCTURE

FRAMING PLAN

RIGHT LANE

REVISIONS						SHEET NO.
NO.	BY:	DATE:	NO.	BY:	DATE:	S-151
1			3			TOTAL SHEETS
2			4			541

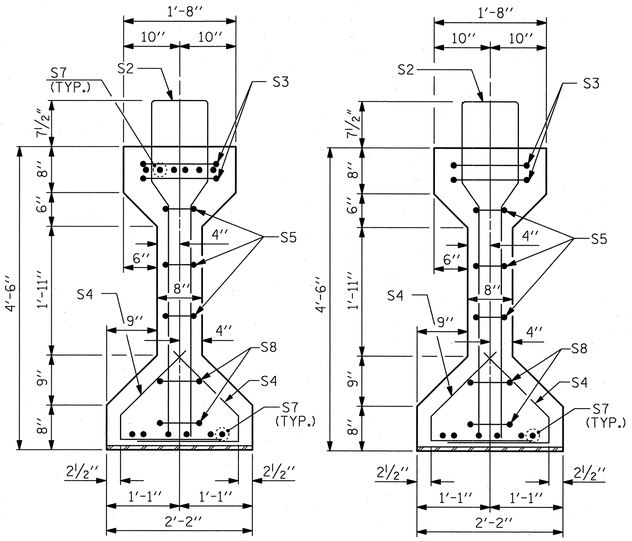

SECTION A-A

NOTE: FOR S7 BARS @ INTEGRAL END BENTS, SEE DETAIL A ON SHEET 3 OF 3.

SECTION B-B

NOTE: FOR S7 BARS @ CONTINUOUS BENT, SEE DETAIL B ON SHEET 3 OF 3.

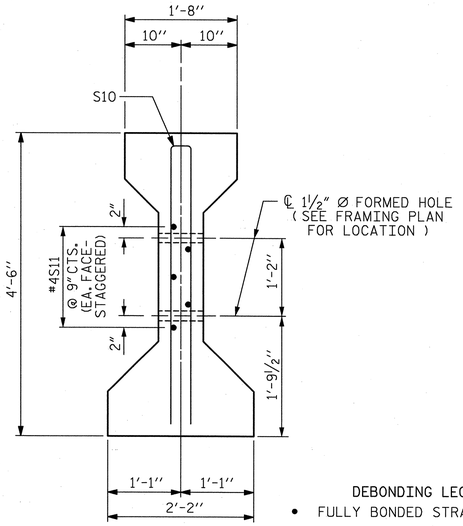

SECTION C-C

(S1 BARS NOT SHOWN)

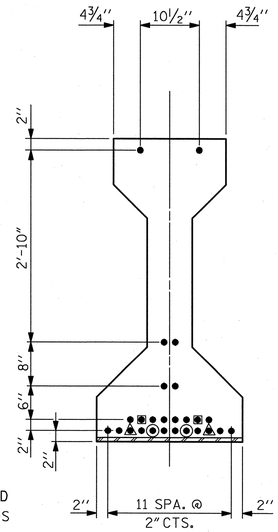

AT END OF GIRDER

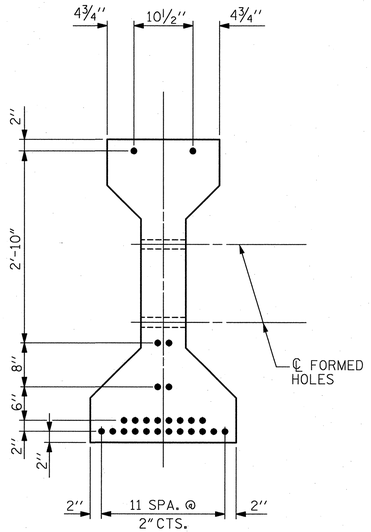

AT ℄ OF GIRDER

DEBONDING LEGEND

- • FULLY BONDED STRANDS
- ▣ STRANDS DEBONDED FOR 4'-0" FROM END OF GIRDER
- ▲ STRANDS DEBONDED FOR 8'-0" FROM END OF GIRDER
- ⊙ STRANDS DEBONDED FOR 16'-0" FROM END OF GIRDER

0.6" Ø LOW RELAXATION STRAND LAYOUT

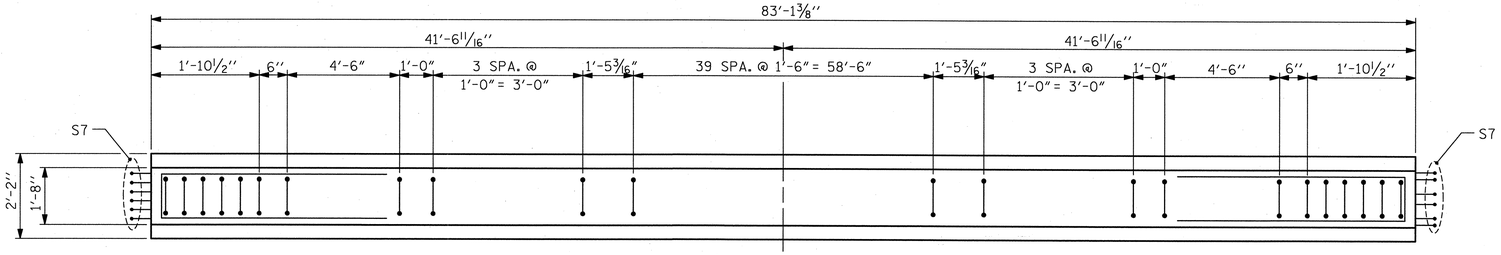

PLAN OF GIRDER

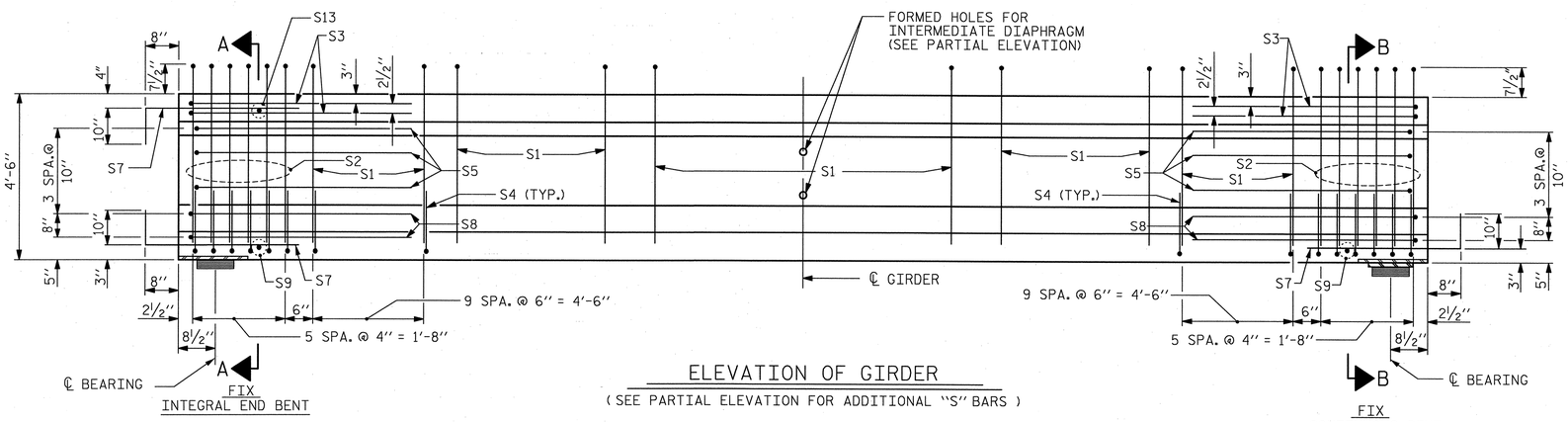

ELEVATION OF GIRDER

(SEE PARTIAL ELEVATION FOR ADDITIONAL "S" BARS)

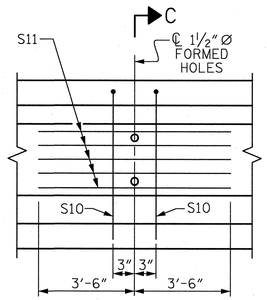

PARTIAL ELEVATION

SHOWING INTERMEDIATE DIAPHRAGM REINFORCING STEEL FOR GIRDERS A1 - A5

NOTES:

THE TRANSFER OF LOAD FROM THE ANCHORAGES TO THE GIRDER SHALL BE DONE WHEN CONCRETE HAS REACHED A COMPRESSIVE STRENGTH OF NOT LESS THAN 4,200 PSI FOR SPAN A GIRDERS

GIRDER CONCRETE SHALL HAVE A MINIMUM COMPRESSIVE STRENGTH OF 5500 PSI AT THE AGE OF 28 DAYS.

0.6" Ø L. R. GRADE 270 STRANDS

AREA (SQUARE INCHES)	ULTIMATE STRENGTH (LBS. PER STRAND)	APPLIED PRESTRESS (LBS. PER STRAND)
0.217	58,600	43,950

REINFORCING STEEL FOR ONE GIRDER

BAR	NUMBER	SIZE	TYPE	LENGTH	WEIGHT
S1	68	#4	1	10'-11"	496
S2	12	#6	1	10'-11"	197
S3	4	#4	2	9'-1"	24
S4	64	#4	3	3'-5"	146
S5	6	#4	2	8'-5"	34
✳S7	18	#5	STR	3'-8"	69
S8	4	#4	2	8'-7"	23
S9	2	#3	STR	1'-10"	1
S10	2	#5	2	8'-8"	18
S11	5	#4	STR	7'-0"	23
S13	1	#3	STR	1'-4"	1

✳NOTE: S7 BARS SHALL BE BENT BEFORE SHIPMENT. HEAT BENDING SHALL NOT BE ALLOWED.

BAR TYPES

ALL BAR DIMENSIONS ARE OUT-TO-OUT

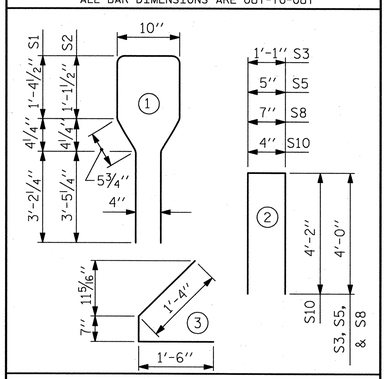

QUANTITIES FOR ONE GIRDER

	REINFORCING STEEL LB.	5,500 PSI CONCRETE C.Y.	0.6" Ø L. R. STRANDS No.
SPAN A GIRDER	1,032	16.9	26

GIRDERS REQUIRED

NUMBER	LENGTH	TOTAL LENGTH
5	83'-1⅜"	415.57'

PROJECT NO. U-2525B

GUILFORD COUNTY

STATION: POC 129+37.56 -L-

SHEET 1 OF 4

STATE OF NORTH CAROLINA
DEPARTMENT OF TRANSPORTATION
RALEIGH

STANDARD AASHTO TYPE IV PRESTRESSED CONCRETE GIRDER CONTINUOUS FOR LIVE LOAD SPAN A RIGHT LANE

NORTH CAROLINA PROFESSIONAL SEAL 27812 ENGINEER DAVID W. HAWKINS 12-23-13

NORTH CAROLINA PROFESSIONAL SEAL 12916 ENGINEER PAUL J. BARBER 12-23-13

HNTB HNTB NORTH CAROLINA, P.C.
License No. C-1554
343 E. Six Forks Rd., Suite 200, Raleigh, N.C. 27609

DRAWN BY M. WRIGHT DATE 5/13
CHECKED BY P. BARBER DATE 7/13
DWG. NO. 12

REVISIONS						SHEET NO.
NO.	BY:	DATE:	NO.	BY:	DATE:	S-1152
1			3			TOTAL SHEETS
2			4			541

ASSEMBLED BY : MEW DATE : 5/13
CHECKED BY : PJB DATE : 7/13

DRAWN BY : ELR 8/91
CHECKED BY : GRP 8/91

REV. 10/17/00R RWW/LES
REV. 5/1/06R TLA/GM
REV. 10/1/11 MAA/GM

STD. NO. PCG6

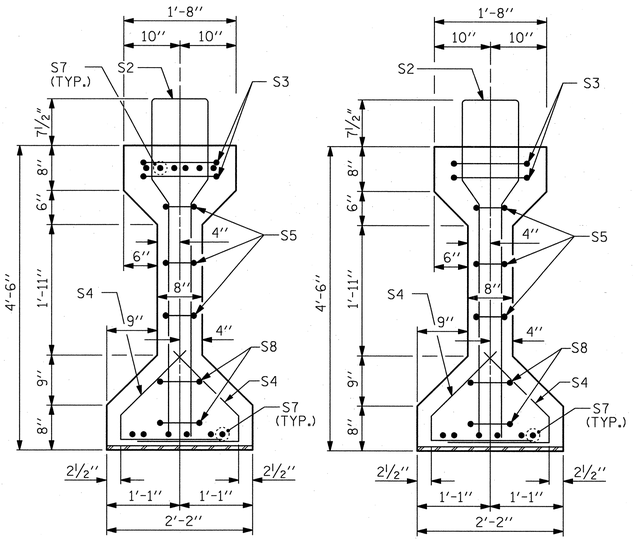

SECTION A-A

NOTE: FOR S7 BARS @ INTEGRAL END BENTS, SEE DETAIL A ON SHEET 3 OF 3.

SECTION B-B

NOTE: FOR S7 BARS @ CONTINUOUS BENT, SEE DETAIL B ON SHEET 3 OF 3.

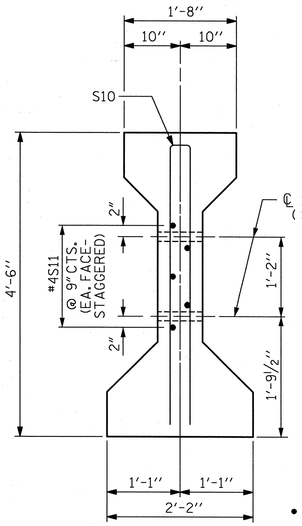

SECTION C-C

(S14 BARS NOT SHOWN)

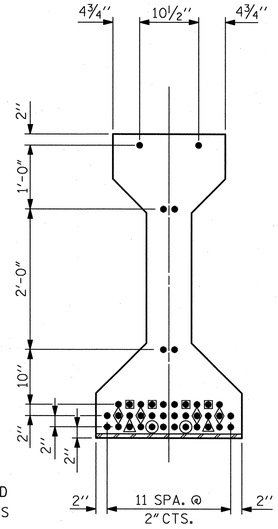

AT END OF GIRDER

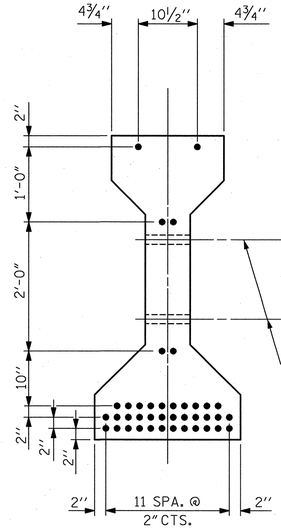

AT ℄ OF GIRDER

0.6" Ø LOW RELAXATION STRAND LAYOUT

DEBONDING LEGEND

- • FULLY BONDED STRANDS
- ▣ STRANDS DEBONDED FOR 4'-0" FROM END OF GIRDER
- ◆ STRANDS DEBONDED FOR 8'-0" FROM END OF GIRDER
- ▲ STRANDS DEBONDED FOR 12'-0" FROM END OF GIRDER
- ⊙ STRANDS DEBONDED FOR 22'-0" FROM END OF GIRDER

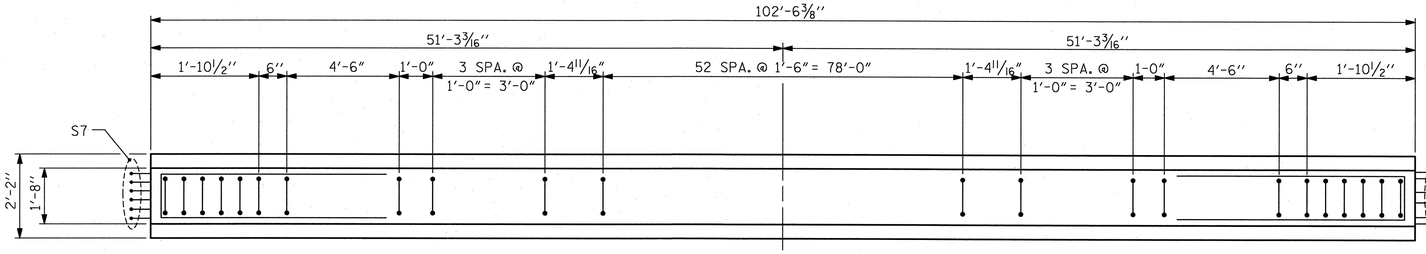

PLAN OF GIRDER

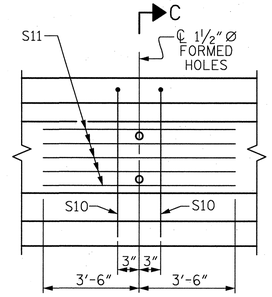

PARTIAL ELEVATION

SHOWING INTERMEDIATE DIAPHRAGM REINFORCING STEEL FOR GIRDERS B1 - B5

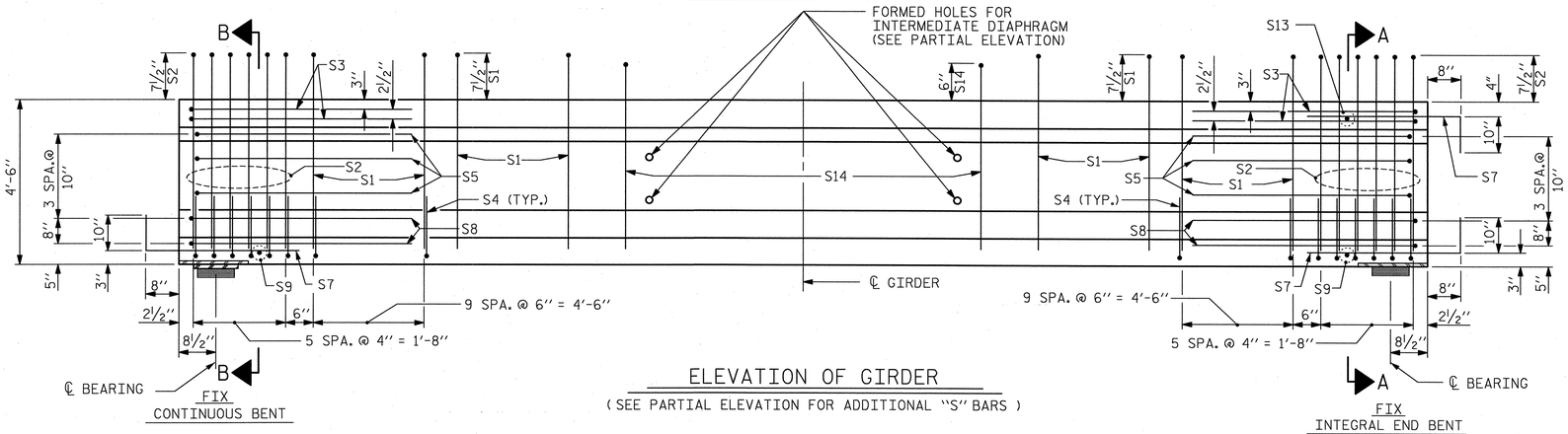

ELEVATION OF GIRDER

(SEE PARTIAL ELEVATION FOR ADDITIONAL "S" BARS)

NOTES:

THE TRANSFER OF LOAD FROM THE ANCHORAGES TO THE GIRDER SHALL BE DONE WHEN CONCRETE HAS REACHED A COMPRESSIVE STRENGTH OF NOT LESS THAN 6,000 PSI FOR SPAN B GIRDERS

GIRDER CONCRETE SHALL HAVE A MINIMUM COMPRESSIVE STRENGTH OF 8000 PSI AT THE AGE OF 28 DAYS.

0.6" Ø L. R. GRADE 270 STRANDS

AREA (SQUARE INCHES)	ULTIMATE STRENGTH (LBS. PER STRAND)	APPLIED PRESTRESS (LBS. PER STRAND)
0.217	58,600	43,950

REINFORCING STEEL FOR ONE GIRDER

BAR	NUMBER	SIZE	TYPE	LENGTH	WEIGHT
S1	28	#4	1	10'-11"	204
S2	12	#6	1	10'-11"	197
S3	4	#4	2	9'-1"	24
S4	64	#4	3	3'-5"	146
S5	6	#4	2	8'-5"	34
✳ S7	18	#5	STR	3'-8"	69
S8	4	#4	2	8'-7"	23
S9	2	#3	STR	1'-10"	1
S10	4	#5	2	8'-8"	36
S11	10	#4	STR	7'-0"	47
S13	1	#3	STR	1'-4"	1
S14	53	#4	1	10'-8"	378

✳ NOTE: S7 BARS SHALL BE BENT BEFORE SHIPMENT. HEAT BENDING SHALL NOT BE ALLOWED.

BAR TYPES

ALL BAR DIMENSIONS ARE OUT-TO-OUT

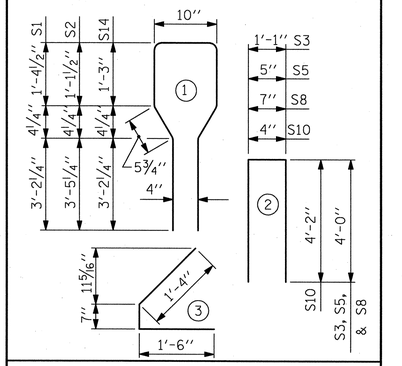

QUANTITIES FOR ONE GIRDER

	REINFORCING STEEL LB.	8,000 PSI CONCRETE C.Y.	0.6" Ø L.R. STRANDS No.
SPAN B GIRDER	1,160	20.8	40

GIRDERS REQUIRED

NUMBER	LENGTH	TOTAL LENGTH
5	102'-6⅜"	512.66'

PROJECT NO. U-2525B

GUILFORD COUNTY

STATION: POC 129+37.56 -L-

SHEET 2 OF 4

STATE OF NORTH CAROLINA
DEPARTMENT OF TRANSPORTATION
RALEIGH

STANDARD
AASHTO TYPE IV
PRESTRESSED CONCRETE GIRDER
CONTINUOUS FOR LIVE LOAD
SPAN B
RIGHT LANE

NORTH CAROLINA PROFESSIONAL SEAL 27812 ENGINEER DAVID W. HAWKINS 12/23/13

NORTH CAROLINA PROFESSIONAL SEAL 12916 ENGINEER PAUL J. BARBER 12/23/13

ASSEMBLED BY : MEW	DATE : 5/13
CHECKED BY : PJB	DATE : 7/13
DRAWN BY : ELR 8/91	REV. 10/17/00R RWW/LES
CHECKED BY : GRP 8/91	REV. 5/1/06R TLA/GM
	REV. 10/1/11 MAA/GM

HNTB NORTH CAROLINA, P.C.
License No. C-1554
343 E. Six Forks Rd., Suite 200, Raleigh, N.C. 27609

DRAWN BY M. WRIGHT DATE 5/13
CHECKED BY P. BARBER DATE 7/13
DWG. NO. 13

REVISIONS						SHEET NO.
NO.	BY:	DATE:	NO.	BY:	DATE:	S-153
1			3			TOTAL SHEETS
2			4			541

STD. NO. PCG6

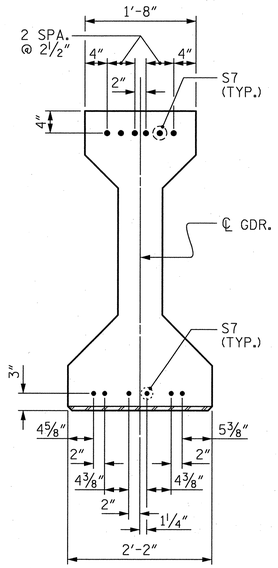

DETAIL "A"

(FOR AASHTO TYPE IV GIRDERS AT INTEGRAL END BENT)

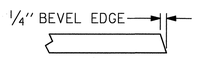

SECTION "G"

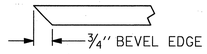

SECTION "F"

(SEE NOTES)

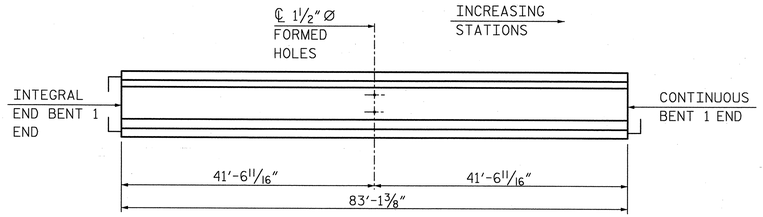

GIRDER ELEVATION

(SPAN A GIRDERS)

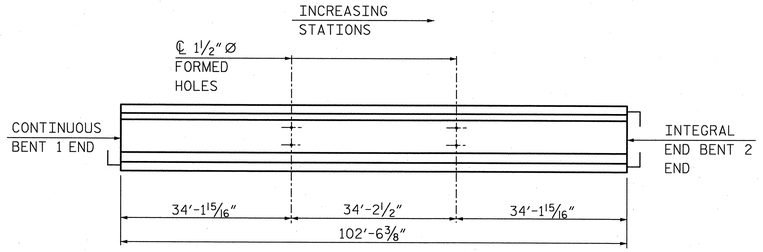

GIRDER ELEVATION

(SPAN B GIRDERS)

1½"Ø FORMED HOLE LOCATIONS

NOTES

ALL PRESTRESSING STRANDS SHALL BE 7-WIRE LOW-RELAXATION GRADE 270 STRANDS AND SHALL CONFORM TO AASHTO M203 EXCEPT FOR SAMPLING REQUIREMENTS WHICH SHALL BE IN ACCORDANCE WITH THE STANDARD SPECIFICATIONS.

ALL REINFORCING STEEL SHALL BE GRADE 60.

EMBEDDED PLATE "B-1" SHALL BE GALVANIZED IN ACCORDANCE WITH THE STANDARD SPECIFICATIONS. BEVEL EDGES OF PLATE "B-1" TO GIVE CLOSE FIT BUT NOT TIGHT FIT TO STEEL CASTING FORM.

ANCHOR STUDS SHALL CONFORM TO AASHTO M169 GRADES 1010 THROUGH 1020 OR APPROVED EQUAL, AND SHALL MEET THE TYPE "B" REQUIREMENTS OF SUBSECTION 7.3 OF THE ANSI/AASHTO/AWS D1.5 BRIDGE WELDING CODE.

AT ENDS OF GIRDERS TO BE EMBEDDED IN CONCRETE DIAPHRAGMS OR END WALLS, PRESTRESSING STRANDS MAY EXTEND A MAXIMUM OF 2" BEYOND THE GIRDER ENDS. OTHERWISE, PRESTRESSING STRANDS SHALL BE CUT FLUSH WITH THE GIRDER ENDS.

DEPENDING ON THE TYPE OF SYSTEM USED TO SUPPORT THE DECK SLAB FORMS, PRESET ANCHORS MAY BE NECESSARY IN THE PRESTRESSED CONCRETE GIRDER.

THE TOP SURFACE OF THE GIRDER, EXCLUDING THE OUTSIDE 4", SHALL BE RAKED TO A DEPTH OF ¼".

THE CONTRACTOR HAS THE OPTION TO PROVIDE, AT NO ADDITIONAL COST TO THE DEPARTMENT, 2 ADDITIONAL STRANDS AT THE TOP OF THE GIRDER TO FACILITATE TYING OF THE REINFORCING STEEL. THESE STRANDS SHALL BE PULLED TO A LOAD OF 4500 lbs.

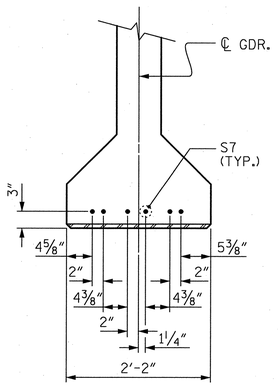

DETAIL "B"

(FOR AASHTO TYPE IV GIRDERS AT CONTINUOUS BENT)

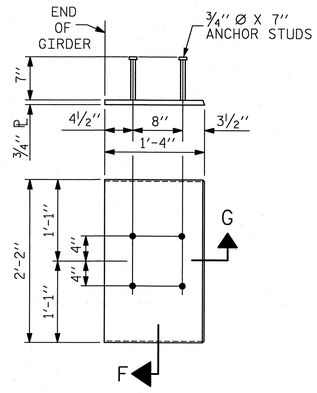

EMBEDDED PLATE "B-1" DETAILS FOR AASHTO TYPE IV GIRDER AND 63" & 72" MODIFIED BULB TEES

(2 REQ'D PER GIRDER)

ASSEMBLED BY : MEW	DATE : 6/13
CHECKED BY : PJB	DATE : 7/13
DRAWN BY : ELR 11/91	REV. 7/10/01RR LES/RDR
CHECKED BY : GRP 11/91	REV. 5/1/06 TLA/GM
	REV. 10/1/11 MAA/GM

PROJECT NO. U-2525B

GUILFORD COUNTY

STATION: POC 129+37.56 -L-

SHEET 3 OF 4

STATE OF NORTH CAROLINA
DEPARTMENT OF TRANSPORTATION
RALEIGH

STANDARD

PRESTRESSED CONCRETE GIRDER CONTINUOUS FOR LIVE LOAD DETAILS

RIGHT LANE

NORTH CAROLINA PROFESSIONAL SEAL 27812 ENGINEER DAVID W. HAWKINS 12/23/13

NORTH CAROLINA PROFESSIONAL SEAL 12916 ENGINEER PAUL L. BARBER 12/23/13

HNTB NORTH CAROLINA, P.C.
License No. C-1554
343 E. Six Forks Rd., Suite 200, Raleigh, N.C. 27609

DRAWN BY M. WRIGHT DATE 6/13
CHECKED BY P. BARBER DATE 7/13

DWG. NO. 14

REVISIONS						SHEET NO.
NO.	BY:	DATE:	NO.	BY:	DATE:	S-154
1			3			TOTAL SHEETS
2			4			54

STD. NO. PCG9

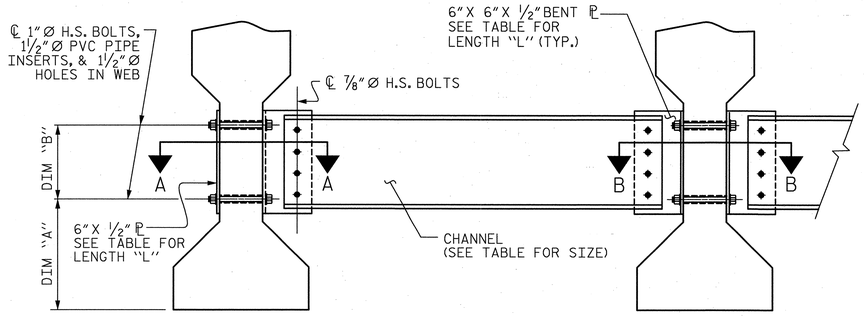

PART SECTION AT INTERMEDIATE DIAPHRAGM

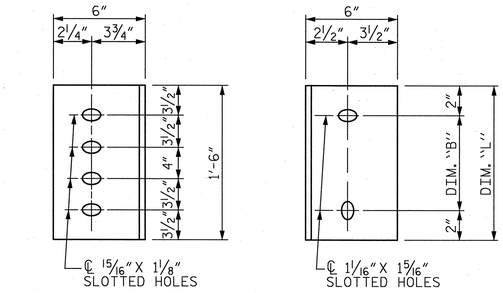

CONNECTOR PLATE DETAILS

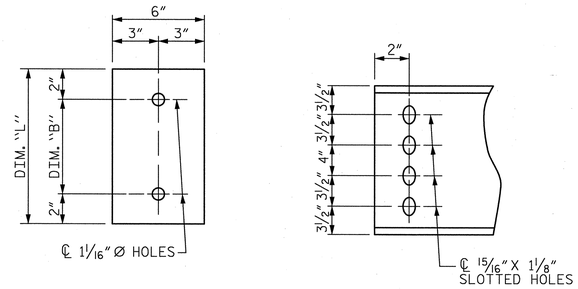

PLATE DETAILS CHANNEL END

STRUCTURAL STEEL NOTES

ALL INTERMEDIATE DIAPHRAGM STEEL AND CONNECTOR PLATES SHALL BE AASHTO M270 GRADE 50 OR APPROVED EQUAL.

TENSION ON THE ASTM A325 BOLTS THROUGH THE CHANNEL MEMBER SHALL BE CALIBRATED USING DIRECT TENSION INDICATOR WASHERS IN ACCORDANCE WITH THE STANDARD SPECIFICATIONS.

TENSION ON THE ASTM A449 BOLTS THROUGH THE GIRDER WEB SHALL BE SNUG TIGHTENED FOLLOWED BY AN ADDITIONAL ¼ TURN.

THE PLATES, BENT PLATES, CHANNELS, AND ANGLES SHALL BE GALVANIZED OR METALLIZED IN ACCORDANCE WITH THE STANDARD SPECIFICATIONS. FOR THERMAL SPRAYED COATINGS (METALLIZATION), SEE SPECIAL PROVISIONS.

FOR METALLIZATION, APPLY AN 8 MIL THICK 99.99 PERCENT ZINC (W-Zn-1) THERMAL SPRAYED COATING WITH A 0.5 MIL THICK SEAL COAT TO ALL STEEL DIAPHRAGM SURFACES IN ACCORDANCE WITH THE THERMAL SPRAYED COATINGS SPECIAL PROVISION AND SECTION 442 OF THE STANDARD SPECIFICATIONS.

GALVANIZE THE HIGH STRENGTH BOLTS, NUTS, WASHERS AND DIRECT TENSION INDICATORS IN ACCORDANCE WITH THE STANDARD SPECIFICATIONS.

USE AN ASTM F436 HARDENED WASHER WITH STANDARD AND SLOTTED HOLES UNDER EACH BOLT HEAD AND NUT.

FOR BOLTS THROUGH THE GIRDER WEB, PROVIDE SUFFICIENT LENGTH OF THREADS ON ALL BOLTS TO ACCOMMODATE WASHERS AND THE THICKNESS OF CONNECTING MEMBER PLUS AT LEAST ¼"PROJECTION BEYOND THE NUT.

INTERMEDIATE DIAPHRAGM ASSEMBLY SHALL COMPLY WITH SECTION 1072 OF THE STANDARD SPECIFICATIONS.

SUBMIT TWO SETS OF WORKING DRAWINGS FOR THE INTERMEDIATE DIAPHRAGM ASSEMBLY FOR REVIEW, COMMENTS AND ACCEPTANCE. AFTER REVIEW, COMMENTS, AND ACCEPTANCE, SUBMIT SEVEN SETS FOR DISTRIBUTION.

IN THE EXTERIOR BAYS, PLACE TEMPORARY STRUTS BETWEEN PRESTRESSED GIRDERS ADJACENT TO THE STEEL DIAPHRAGMS. STRUTS SHALL REMAIN IN PLACE 3 DAYS AFTER CONCRETE IS PLACED.

THE COST OF THE STEEL DIAPHRAGMS AND ASSEMBLIES SHALL BE INCLUDED IN THE UNIT PRICE BID FOR PRESTRESSED CONCRETE GIRDERS.

TABLE

GIRDER TYPE	CHANNEL SIZE	DIM "A"	DIM "B"	DIM "L"
IV	MC 18 x 42.7	1'-9½"	1'-2"	1'-6"

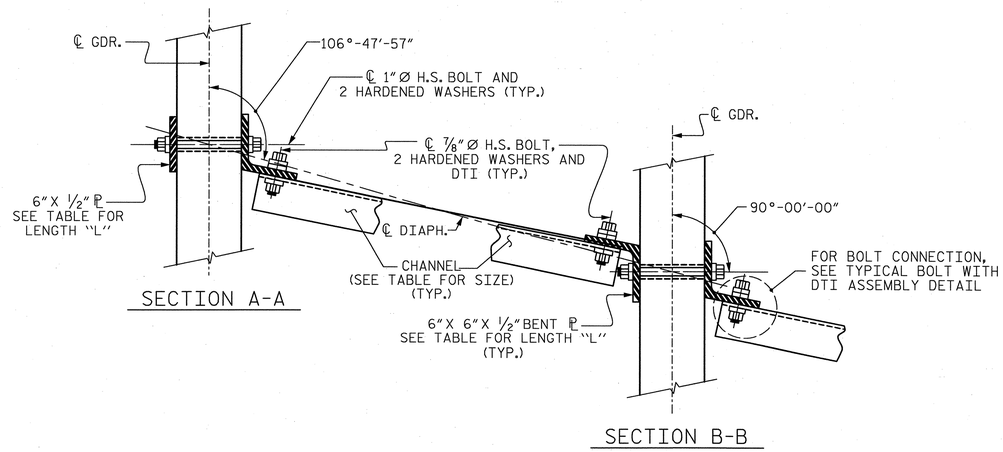

CONNECTION DETAILS

(FOR 70°≤ SKEW < 90° OR 90°< SKEW ≤ 110°)

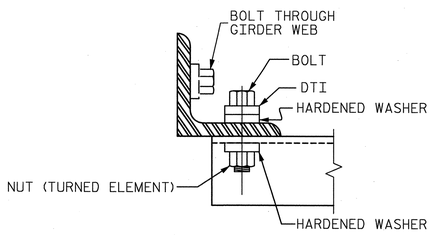

BOLT WITH DTI ASSEMBLY DETAIL

PROJECT NO. U-2525B

GUILFORD COUNTY

STATION: POC 129+37.56 -L-

SHEET 4 OF 4

STATE OF NORTH CAROLINA
DEPARTMENT OF TRANSPORTATION
RALEIGH

STANDARD
INTERMEDIATE
STEEL DIAPHRAGMS
FOR TYPE IV
PRESTRESSED CONCRETE
GIRDERS
RIGHT LANE

ASSEMBLED BY : M. WRIGHT	DATE : 6/13
CHECKED BY : P. BARBER	DATE : 7/13
DRAWN BY : TLA 6/05	ADDED 10/21/05
CHECKED BY : VC 6/05	REV. 5/1/06RRR KMM/GM
	REV. 10/1/11 MAA/GM

NORTH CAROLINA PROFESSIONAL SEAL 27812 ENGINEER DAVID W. HAWKINS 12/23/13

NORTH CAROLINA PROFESSIONAL SEAL 12916 ENGINEER PAUL J. BARBER 12/23/13

HNTB NORTH CAROLINA, P.C.
License No. C-1554
343 E. Six Forks Rd., Suite 200, Raleigh, N.C. 27609

DRAWN BY M. WRIGHT DATE 6/13
CHECKED BY P. BARBER DATE 7/13

DWG. NO. 15

REVISIONS					
NO.	BY:	DATE:	NO.	BY:	DATE:
1			3		
2			4		

SHEET NO. S-155

TOTAL SHEETS 54

STD. NO. PCG10

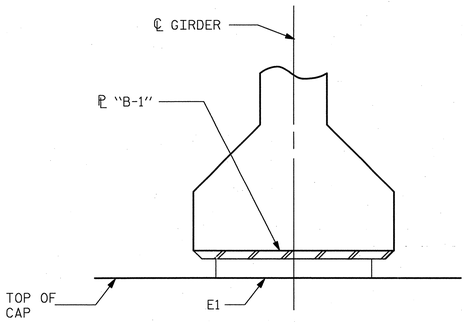

FIXED

SECTION D-D

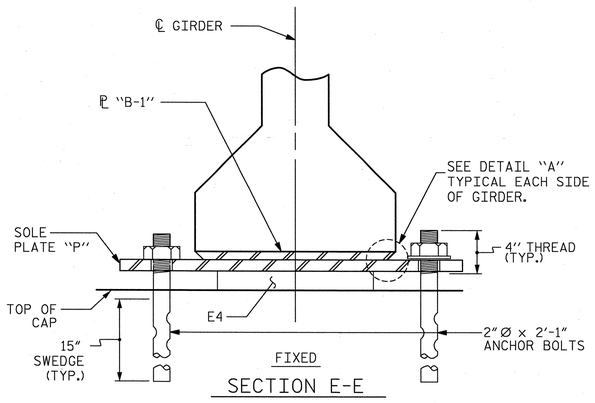

FIXED

SECTION E-E

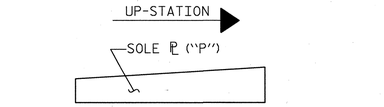

SOLE ℄ PLACEMENT DETAIL

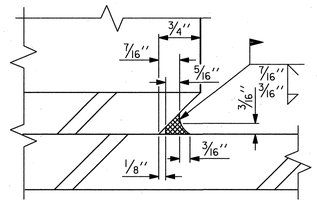

DETAIL "A"

NOTES

AT ALL FIXED POINTS OF SUPPORT, NUTS FOR ANCHOR BOLTS ARE TO BE TIGHTENED FINGER TIGHT AND THEN BACKED OFF 1/2 TURN. THE THREAD OF THE NUT AND BOLT SHALL THEN BE BURRED WITH A SHARP POINTED TOOL.

STEEL SOLE PLATES, ANCHOR BOLTS, NUTS, AND WASHERS SHALL BE GALVANIZED IN ACCORDANCE WITH THE STANDARD SPECIFICATIONS.

PRIOR TO WELDING, GRIND THE GALVANIZED SURFACE OF THE PORTION OF THE EMBEDDED PLATE AND SOLE PLATE THAT ARE TO BE WELDED. AFTER WELDING, DAMAGED GALVANIZED SURFACES SHALL BE REPAIRED IN ACCORDANCE WITH THE STANDARD SPECIFICATIONS.

WHEN WELDING THE SOLE PLATE TO THE EMBEDDED PLATE IN THE GIRDER, USE TEMPERATURE INDICATING WAX PENS, OR OTHER SUITABLE MEANS, TO ENSURE THAT THE TEMPERATURE OF THE SOLE PLATE DOES NOT EXCEED 300°F. TEMPERATURES ABOVE THIS MAY DAMAGE THE ELASTOMER.

SOLE PLATE "P", BOLTS, NUTS, WASHERS, AND PIPE SLEEVE SHALL BE INCLUDED IN THE PAY ITEM FOR PRESTRESSED CONCRETE GIRDERS.

ANCHOR BOLTS SHALL MEET THE REQUIREMENTS OF ASTM A449. NUTS SHALL MEET THE REQUIREMENTS OF AASHTO M291-DH OR AASHTO M292-2H. WASHERS SHALL MEET THE REQUIREMENTS OF AASHTO M293. NO SHOP DRAWINGS ARE REQUIRED FOR ANCHOR BOLTS, NUTS AND WASHERS. SHOP INSPECTION IS REQUIRED.

ALL SURFACES OF BEARING PLATES SHALL BE SMOOTH AND STRAIGHT.

THE ELASTOMER IN THE STEEL REINFORCED BEARINGS SHALL HAVE A SHEAR MODULUS OF 0.160 KSI, IN ACCORDANCE WITH AASHTO M251, AND SHALL BE 60 DUROMETER HARDNESS.

FOR STEEL REINFORCED ELASTOMERIC BEARINGS, SEE SPECIAL PROVISIONS.

ALL BEARING PLATES SHALL BE AASHTO M270 GRADE 36.

FOR BEARING AND SOLE PLATE LOCATIONS, SEE "FRAMING PLAN" SHEET.

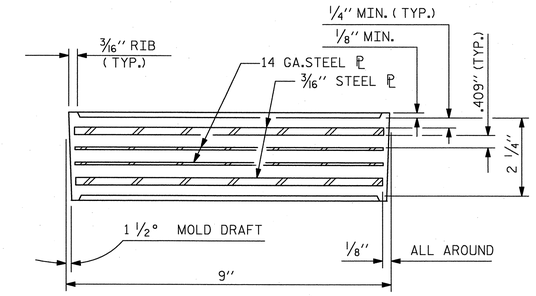

TYPICAL SECTION OF ELASTOMERIC BEARINGS

TYPICAL SECTION OF ELASTOMERIC BEARINGS

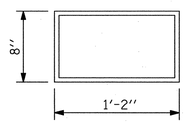

E1 (10 REQ'D)

PLAN VIEW OF ELASTOMERIC BEARING

TYPE II

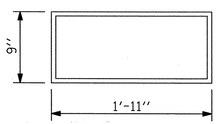

E4 (10 REQ'D)

PLAN VIEW OF ELASTOMERIC BEARING

TYPE V

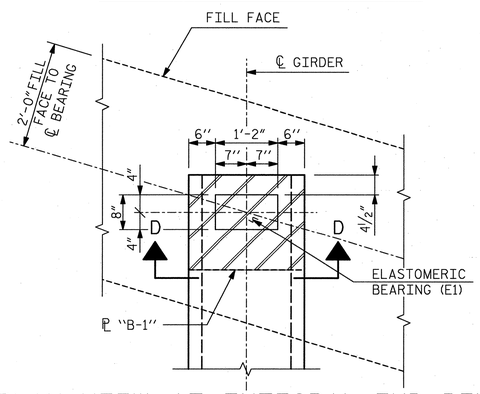

PLAN VIEW AT INTEGRAL END BENTS

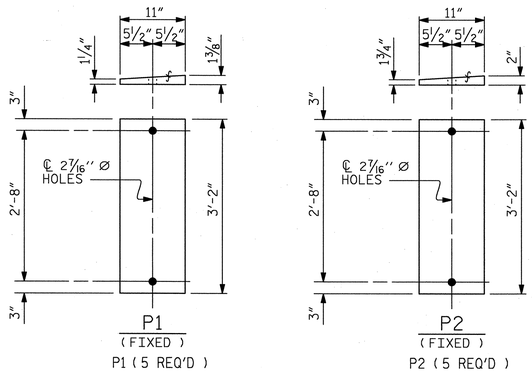

P1 (5 REQ'D)

P2 (5 REQ'D)

SOLE PLATE DETAILS ("P")

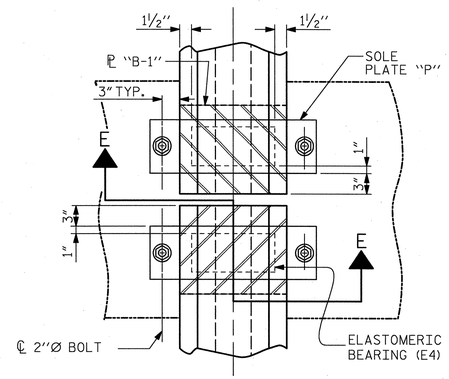

PLAN VIEW @ BENT

(SHOWING CONTINUOUS BENT)

MAXIMUM ALLOWABLE SERVICE LOADS	
D.L.+L.L. (NO IMPACT)	
TYPE II	145 k
TYPE V	365 k

PROJECT NO. U-2525B

GUILFORD COUNTY

STATION: POC 129+37.56 -L-

NORTH CAROLINA PROFESSIONAL SEAL 27812 ENGINEER DAVID W. HAWKINS 12/23/13

NORTH CAROLINA PROFESSIONAL SEAL 12916 ENGINEER PAUL J. BARBER 12/23/13

STATE OF NORTH CAROLINA
DEPARTMENT OF TRANSPORTATION
RALEIGH

STANDARD

ELASTOMERIC BEARING DETAILS

PRESTRESSED CONCRETE GIRDER SUPERSTRUCTURE

RIGHT LANE

ASSEMBLED BY : MEW	DATE : 6/13
CHECKED BY : PJB	DATE : 7/13
DRAWN BY : WJH 8/89	REV. 5/1/06 TLA/GM
CHECKED BY : CRK 8/89	REV. 10/1/11 MAA/GM
	REV. 10/24/12 AAC/MAA

HNTB NORTH CAROLINA, P.C.
License No. C-1554
343 E. Six Forks Rd., Suite 200, Raleigh, N.C. 27609

DRAWN BY M. WRIGHT DATE 6/13
CHECKED BY P. BARBER DATE 7/13
DWG. NO. 16

REVISIONS						SHEET NO.
NO.	BY:	DATE:	NO.	BY:	DATE:	S-156
1			3			TOTAL SHEETS
2			4			541

STD. NO. EB3 AND EB4

DEAD LOAD DEFLECTION TABLE FOR SPAN A

0.6"Ø LOW RELAXATION STRANDS	GIRDER 1 & 5										
TENTH POINTS	0.00	0.10	0.20	0.30	0.40	0.50	0.60	0.70	0.80	0.90	1.00
CAMBER (GIRDER ALONE IN PLACE) ↑	0.000	0.095	0.163	0.208	0.236	0.245	0.236	0.208	0.163	0.095	0.000
DEFLECTION DUE TO SUPERIMPOSED D.L. * ↓	0.000	0.030	0.059	0.082	0.097	0.102	0.097	0.082	0.059	0.030	0.000
FINAL CAMBER ↑	0	3/4"	1 1/4	1 1/2"	1 11/16	1 11/16	1 11/16	1 1/2	1 1/4	3/4	0

DEAD LOAD DEFLECTION TABLE FOR SPAN A

0.6"Ø LOW RELAXATION STRANDS	GIRDER 2, 3, & 4										
TENTH POINTS	0.00	0.10	0.20	0.30	0.40	0.50	0.60	0.70	0.80	0.90	1.00
CAMBER (GIRDER ALONE IN PLACE) ↑	0.000	0.095	0.163	0.208	0.236	0.245	0.236	0.208	0.163	0.095	0.000
DEFLECTION DUE TO SUPERIMPOSED D.L. * ↓	0.000	0.032	0.064	0.089	0.105	0.110	0.105	0.089	0.064	0.032	0.000
FINAL CAMBER ↑	0	3/4	1 3/16	1 7/16	1 9/16	1 5/8	1 9/16	1 7/16	1 3/16	3/4	0

DEAD LOAD DEFLECTION TABLE FOR SPAN B

0.6"Ø LOW RELAXATION STRANDS	GIRDER 1 & 5																					
TWENTIETH POINTS	0.00	0.05	0.10	0.15	0.20	0.25	0.30	0.35	0.40	0.45	0.50	0.55	0.60	0.65	0.70	0.75	0.80	0.85	0.90	0.95	1.00
CAMBER (GIRDER ALONE IN PLACE) ↑	0.000	0.090	0.169	0.237	0.295	0.343	0.382	0.411	0.432	0.445	0.449	0.445	0.432	0.411	0.382	0.343	0.295	0.237	0.169	0.090	0.000
DEFLECTION DUE TO SUPERIMPOSED D.L. * ↓	0.000	0.030	0.059	0.088	0.115	0.139	0.160	0.176	0.188	0.195	0.197	0.195	0.188	0.176	0.160	0.139	0.115	0.088	0.059	0.030	0.000
FINAL CAMBER ↑	0	3/4	1 5/16	1 13/16	2 1/8	2 7/16	2 11/16	2 13/16	2 15/16	3	3	3	2 15/16	2 13/16	2 11/16	2 7/16	2 1/8	1 13/16	1 5/16	3/4	0

DEAD LOAD DEFLECTION TABLE FOR SPAN B

0.6"Ø LOW RELAXATION STRANDS	GIRDER 2, 3, & 4																					
TWENTIETH POINTS	0.00	0.05	0.10	0.15	0.20	0.25	0.30	0.35	0.40	0.45	0.50	0.55	0.60	0.65	0.70	0.75	0.80	0.85	0.90	0.95	1.00
CAMBER (GIRDER ALONE IN PLACE) ↑	0.000	0.090	0.169	0.237	0.295	0.343	0.382	0.411	0.432	0.445	0.449	0.445	0.432	0.411	0.382	0.343	0.295	0.237	0.169	0.090	0.000
DEFLECTION DUE TO SUPERIMPOSED D.L. * ↓	0.000	0.032	0.064	0.095	0.125	0.150	0.173	0.190	0.202	0.211	0.214	0.211	0.202	0.190	0.173	0.150	0.125	0.095	0.064	0.032	0.000
FINAL CAMBER ↑	0	11/16	1 1/4	1 11/16	2 1/16	2 5/16	2 1/2	2 5/8	2 3/4	2 13/16	2 13/16	2 13/16	2 3/4	2 5/8	2 1/2	2 5/16	2 1/16	1 11/16	1 1/4	11/16	0

* INCLUDES FUTURE WEARING SURFACE IN SUPERIMPOSED DEAD LOAD
ALL VALUES ARE SHOWN IN FEET (DECIMAL FORM), EXCEPT " FINAL CAMBER ", WHICH IS GIVEN IN INCHES (FRACTION FORM).

PROJECT NO. U-2525B

GUILFORD COUNTY

STATION: POC 129+37.56 -L-

NORTH CAROLINA PROFESSIONAL SEAL 27812 ENGINEER DAVID W. HAWKINS 12/23/13

NORTH CAROLINA PROFESSIONAL SEAL 12916 ENGINEER PAUL J. BARBER 12/23/13

HNTB

HNTB NORTH CAROLINA, P.C.
License No. C-1554
343 E. Six Forks Rd., Suite 200, Raleigh, N.C. 27609

DRAWN BY M. WRIGHT DATE 6/13
CHECKED BY P. BARBER DATE 7/13

DWG. NO. 17

STATE OF NORTH CAROLINA
DEPARTMENT OF TRANSPORTATION
RALEIGH

SUPERSTRUCTURE
GIRDER
DEAD LOAD DEFLECTIONS AND CAMBER
RIGHT LANE

REVISIONS						SHEET NO.
NO.	BY:	DATE:	NO.	BY:	DATE:	S-150
1			3			TOTAL SHEETS
2			4			541

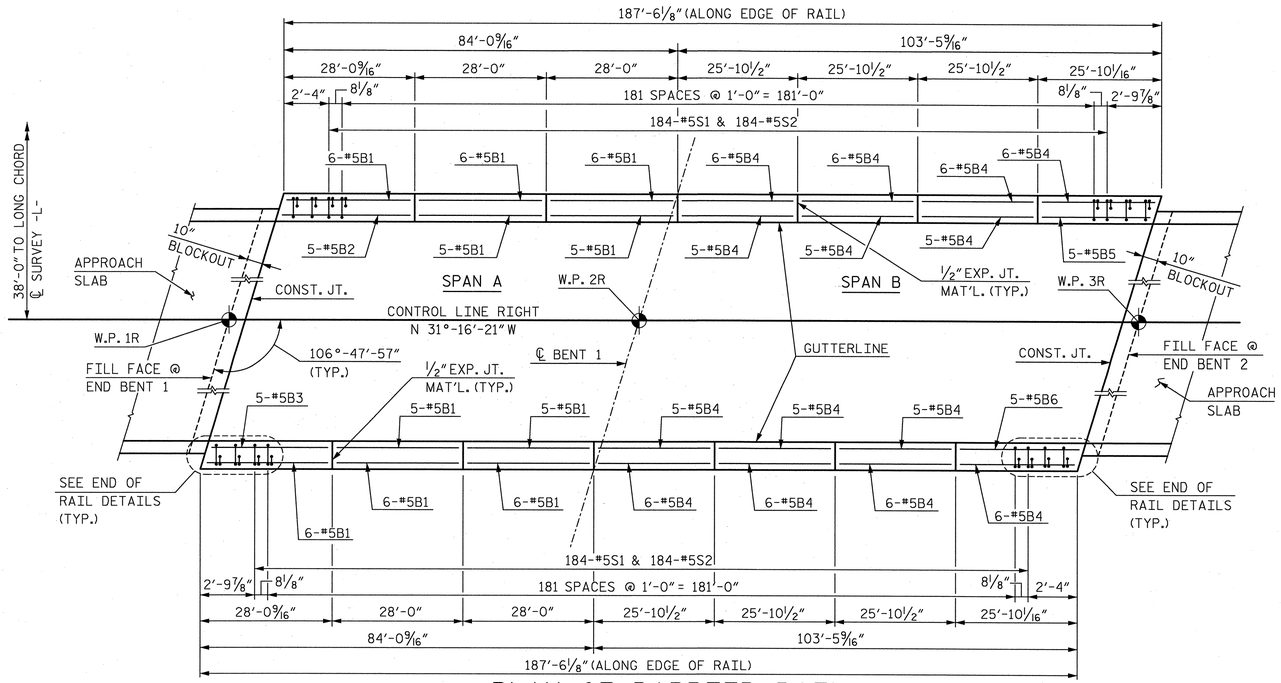

PLAN OF BARRIER RAIL

NOTE: EDGE OF SLAB NOT SHOWN FOR CLARITY.

NOTES

THE BARRIER RAIL IN EACH SPAN SHALL NOT BE CAST UNTIL ALL SLAB CONCRETE IN THAT SPAN HAS BEEN CAST AND HAS REACHED A MINIMUM COMPRESSIVE STRENGTH OF 3,000 PSI.

WHEN FOAM JOINT SEAL IS REQUIRED, THE JOINT IN THE DECK SHALL BE SAWED PRIOR TO THE CASTING OF BARRIER RAIL.

ALL REINFORCING STEEL IN BARRIER RAILS SHALL BE EPOXY COATED.

THE #5 S1 & #5 S2 MAY BE SHIFTED SLIGHTLY AS REQUIRED TO PROVIDE 2" MINIMUM CONCRETE COVER AT THE ½ INCH EXPANSION JOINTS IN THE BARRIER RAIL.

GROOVED CONTRACTION JOINTS, ½" IN DEPTH, SHALL BE TOOLED IN ALL EXPOSED FACES OF THE BARRIER RAIL AND IN ACCORDANCE WITH ARTICLE 825-10(B) OF THE STANDARD SPECIFICATIONS. THE CONTRACTION JOINT SHALL BE LOCATED AT EACH THIRD POINT BETWEEN BARRIER RAIL EXPANSION JOINTS. ONLY ONE CONTRACTION JOINT IS REQUIRED AT MIDPOINT OF BARRIER RAIL SEGMENTS LESS THAN 20 FEET IN LENGTH AND NO CONTRACTION JOINTS ARE REQUIRED FOR THOSE SEGMENTS LESS THAN 10 FEET IN LENGTH.

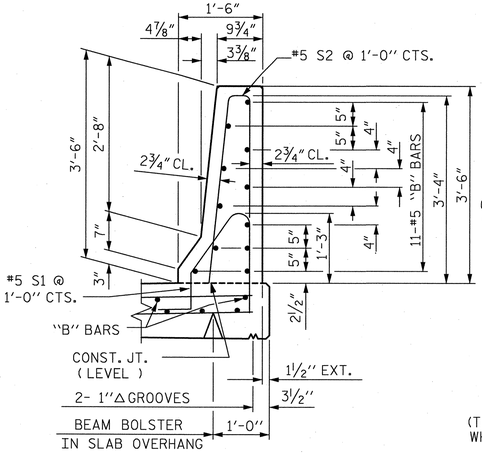

SECTION THRU RAIL

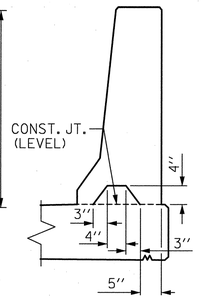

SECTION S-S

AT DAM IN OPEN JOINT
(THIS IS TO BE USED ONLY WHEN SLIP FORM IS USED)

℄ ½" EXP.JT.MAT'L HELD IN PLACE WITH GALVANIZED NAILS.
(NOTE: OMIT EXP. JT. MAT'L. WHEN SLIP FORM IS USED.)

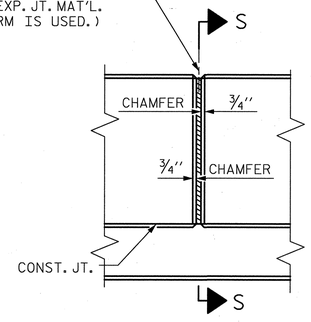

ELEVATION AT EXPANSION JOINTS

BAR TYPES

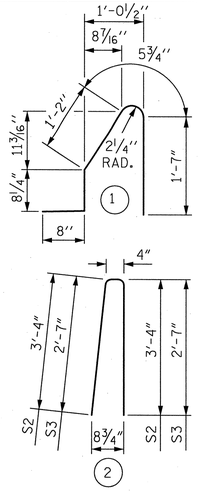

ALL BAR DIMENSIONS ARE OUT TO OUT

BILL OF MATERIAL

FOR CONCRETE BARRIER RAIL ONLY

BAR	NO.	SIZE	TYPE	LENGTH	WEIGHT
✳B1	56	5	STR.	27'-6"	1,606
✳B2	5	5	STR.	27'-10"	145
✳B3	5	5	STR.	27'-3"	142
✳B4	78	5	STR.	25'-3"	2,054
✳B5	5	5	STR.	25'-0"	130
✳B6	5	5	STR.	25'-7"	133
✳S1	376	5	1	4'-7"	1,797
✳S2	368	5	2	7'-0"	2,687
✳S3	8	5	2	5'-6"	46

✳ EPOXY COATED REINFORCING STEEL	8,740 LBS.
CLASS AA CONCRETE	51.0 CU. YDS.
CONCRETE BARRIER RAIL	375.00 LIN. FT.

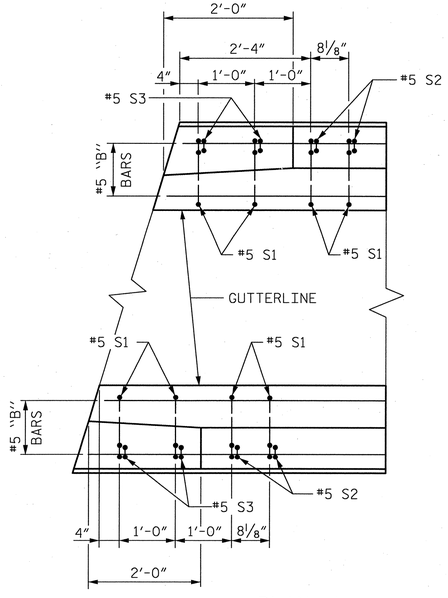

PLAN

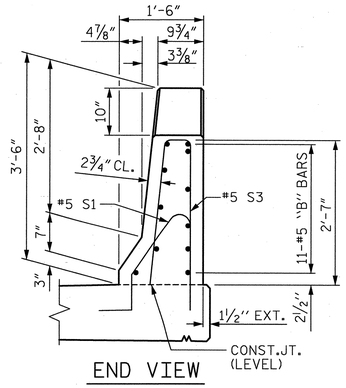

END VIEW

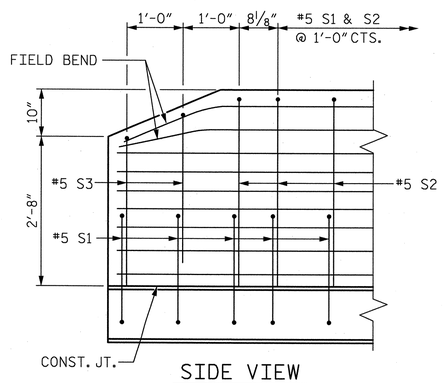

SIDE VIEW

END OF RAIL DETAILS

BARRIER RAIL DETAILS

PROJECT NO. U-2525B

GUILFORD COUNTY

STATION: POC 129+37.56 -L-

STATE OF NORTH CAROLINA
DEPARTMENT OF TRANSPORTATION
RALEIGH

STANDARD

CONCRETE BARRIER RAIL

RIGHT LANE

NORTH CAROLINA PROFESSIONAL SEAL 27812 ENGINEER DAVID W. HAWKINS 12/23/13

NORTH CAROLINA PROFESSIONAL SEAL 12916 ENGINEER PAUL J. BARBER 12/23/13

ASSEMBLED BY : MEW	DATE : 7/13
CHECKED BY : STF	DATE : 7/13
DRAWN BY : ARB 5/87	REV. 10/1/11 MAA/GM
CHECKED BY : SJD 9/87	REV. 7/12 MAA/GM
	REV. 6/13 MAA/GM

HNTB NORTH CAROLINA, P.C.
License No. C-1554
343 E. Six Forks Rd., Suite 200, Raleigh, N.C. 27609

DRAWN BY M. WRIGHT DATE 7/13
CHECKED BY S. FISHER DATE 7/13

DWG. NO. 18

REVISIONS						SHEET NO.
NO.	BY:	DATE:	NO.	BY:	DATE:	S-158
1			3			TOTAL SHEETS
2			4			541

STD. NO. CBR1

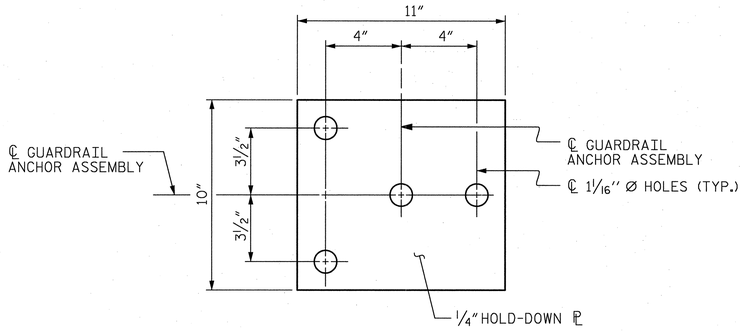

PLAN

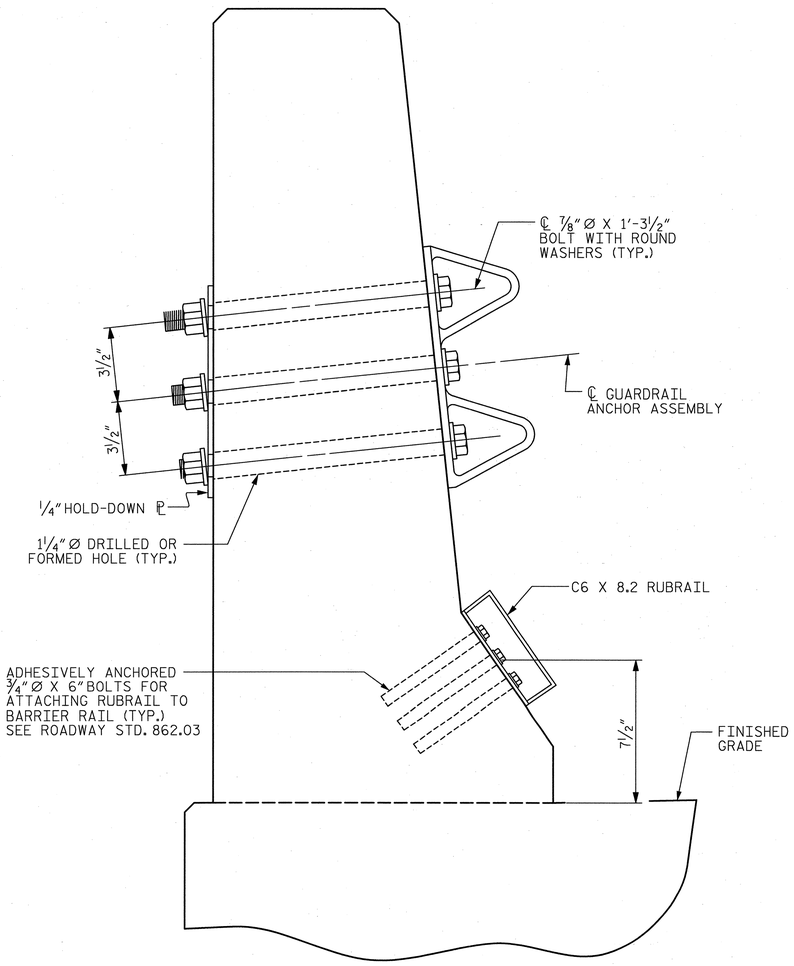

SECTION E-E

GUARDRAIL ANCHOR ASSEMBLY DETAILS

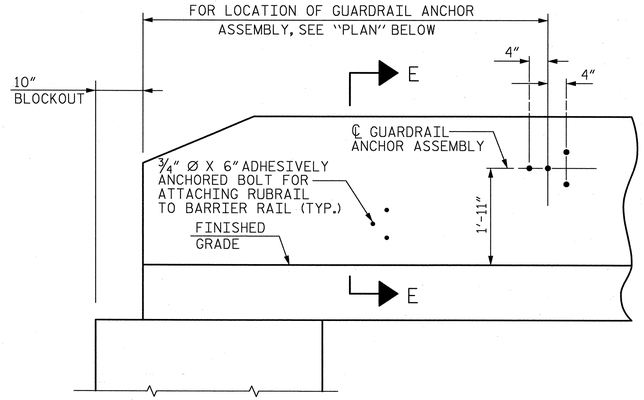

ELEVATION

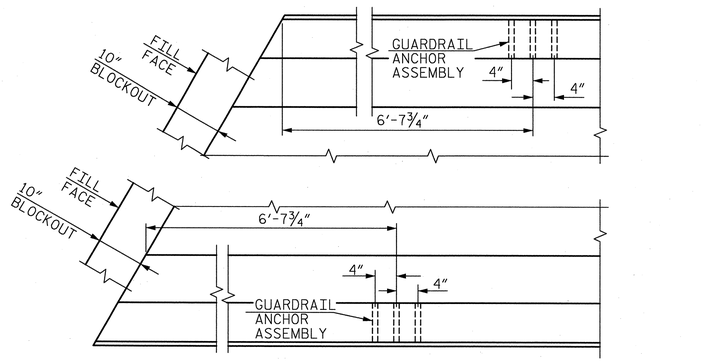

PLAN AT END BENT 1

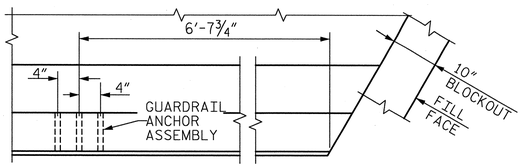

PLAN AT END BENT 2

LOCATION OF ANCHORS FOR GUARDRAIL

NOTES

THE GUARDRAIL ANCHOR ASSEMBLY SHALL CONSIST OF A ¼″ HOLD-DOWN PLATE AND 4 - ⅞″ Ø BOLTS WITH NUTS AND WASHERS, RUBRAIL, AND ADHESIVELY ANCHORED BOLTS.

THE HOLD-DOWN PLATE SHALL CONFORM TO AASHTO M270 GRADE 36. AFTER FABRICATION, THE HOLD-DOWN PLATE SHALL BE HOT-DIP GALVANIZED IN ACCORDANCE WITH AASHTO M111.

BOLTS SHALL CONFORM TO THE REQUIREMENTS OF ASTM A307 AND NUTS SHALL CONFORM TO THE REQUIREMENTS OF AASHTO M291. BOLTS, NUTS AND WASHERS SHALL BE GALVANIZED. (AT THE CONTRACTOR'S OPTION, STAINLESS STEEL BOLTS, NUTS AND WASHERS MAY BE USED AS AN ALTERNATE FOR THE ⅞″ Ø GALVANIZED BOLTS, NUTS AND WASHERS. THEY SHALL CONFORM TO OR EXCEED THE MECHANICAL REQUIREMENTS OF ASTM A307. THE USE OF THIS ALTERNATE SHALL BE APPROVED BY THE ENGINEER.)

THE GUARDRAIL ANCHOR ASSEMBLY IS REQUIRED AT ALL POINTS WHERE APPROACH GUARDRAIL IS TO BE ATTACHED TO THE END OF BARRIER RAIL. FOR POINTS OF ATTACHMENT, SEE SKETCH.

AFTER INSTALLATION, THE EXPOSED THREAD OF THE BOLT SHALL BE BURRED WITH A SHARP POINTED TOOL.

THE COST OF THE GUARDRAIL ANCHOR ASSEMBLY SHALL BE INCLUDED IN THE UNIT CONTRACT PRICE BID FOR CONCRETE BARRIER RAIL.

THE 1 ¼″ Ø HOLES SHALL BE FORMED OR DRILLED WITH A CORE BIT. IMPACT TOOLS WILL NOT BE PERMITTED. ANY CONCRETE DAMAGED BY THIS WORK SHALL BE REPAIRED TO THE SATISFACTION OF THE ENGINEER.

THE C6 X 8.2 RUBRAIL IS TO BE ADHESIVELY ANCHORED TO THE RAIL USING THREE ¾″Ø X 6″BOLTS WITH WASHERS. LEVEL ONE FIELD TESTING IS REQUIRED, AND THE YIELD LOAD OF THE ¾″Ø BOLT IS 12 KIPS. FOR ADHESIVELY ANCHORED ANCHOR BOLTS OR DOWELS, SEE STANDARD SPECIFICATIONS. SEE ROADWAY STANDARD 862.03 FOR DETAILS AND LOCATION OF THE RUBRAIL.

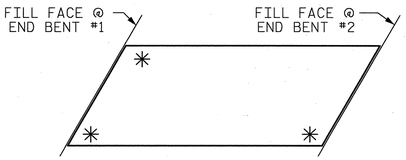

SKETCH SHOWING POINTS OF ATTACHMENTS

✳ DENOTES GUARDRAIL ANCHOR ASSEMBLY

PROJECT NO. U-2525B

GUILFORD COUNTY

STATION: POC 129+37.56 -L-

ASSEMBLED BY : J. BAYNE	DATE : 7/13		
CHECKED BY : S. FISHER	DATE : 7/13		
DRAWN BY : TLA 5/06	REV. 10/1/11	MAA/GM	
CHECKED BY : GM 5/06	REV. 7/12	MAA/GM	
	REV. 6/13	MAA/GM	

NORTH CAROLINA PROFESSIONAL SEAL 27812 ENGINEER DAVID W. HAWKINS 12/23/13

NORTH CAROLINA PROFESSIONAL SEAL 12916 ENGINEER PAUL J. BARBER 12/23/13

HNTB NORTH CAROLINA, P.C.
License No. C-1554
343 E. Six Forks Rd., Suite 200, Raleigh, N.C. 27609

DRAWN BY J. BAYNE DATE 7/13
CHECKED BY S. FISHER DATE 7/13
DWG. NO. 19

STATE OF NORTH CAROLINA
DEPARTMENT OF TRANSPORTATION
RALEIGH

STANDARD

GUARDRAIL ANCHORAGE FOR BARRIER RAIL

RIGHT LANE

REVISIONS						SHEET NO.
NO.	BY:	DATE:	NO.	BY:	DATE:	S-159
1			3			TOTAL SHEETS
2			4			541

STD. NO. GRA2

BILL OF MATERIAL

EPOXY COATED

BAR	NO.	SIZE	TYPE	LENGTH	WEIGHT
A1	347	5	STR.	45′-4″	16,407
A2	2	5	STR.	44′-4″	92
A3	2	5	STR.	42′-8″	89
A4	2	5	STR.	41′-0″	86
A5	2	5	STR.	39′-4″	82
A6	2	5	STR.	37′-8″	79
A7	2	5	STR.	36′-0″	75
A8	2	5	STR.	34′-4″	72
A9	2	5	STR.	32′-8″	68
A10	2	5	STR.	31′-1″	65
A11	2	5	STR.	29′-5″	61
A12	2	5	STR.	27′-9″	58
A13	2	5	STR.	26′-1″	54
A14	2	5	STR.	24′-5″	51
A15	2	5	STR.	22′-9″	47
A16	2	5	STR.	21′-1″	44
A17	2	5	STR.	19′-5″	41
A18	2	5	STR.	17′-10″	37
A19	2	5	STR.	16′-2″	34
A20	2	5	STR.	14′-6″	30
A21	2	5	STR.	12′-10″	27
A22	2	5	STR.	11′-2″	23
A23	2	5	STR.	9′-6″	20
A24	2	5	STR.	7′-10″	16
A25	2	5	STR.	6′-2″	13
A26	2	5	STR.	4′-7″	10
A27	2	5	STR.	2′-11″	6

BILL OF MATERIAL

EPOXY COATED

BAR	NO.	SIZE	TYPE	LENGTH	WEIGHT
B1	66	6	STR.	20′-0″	1,983
B2	68	6	STR.	34′-11″	3,566
B3	68	4	STR.	28′-9″	1,306
B4	68	4	STR.	35′-6″	1,613
B5	66	6	STR.	16′-0″	1,586
B6	66	7	STR.	35′-6″	4,789
S1	76	4	3	11′-11″	605
S2	72	4	3	11′-4″	545
U3	8	4	6	11′-4″	61
U4	24	4	6	13′-4″	214
				TOTAL	33,955

BILL OF MATERIAL

UNCOATED

BAR	NO.	SIZE	TYPE	LENGTH	WEIGHT
A101	347	5	STR.	45′-4″	16,407
A102	2	5	STR.	44′-4″	92
A103	2	5	STR.	42′-8″	89
A104	2	5	STR.	41′-0″	86
A105	2	5	STR.	39′-4″	82
A106	2	5	STR.	37′-8″	79
A107	2	5	STR.	36′-0″	75
A108	2	5	STR.	34′-4″	72
A109	2	5	STR.	32′-8″	68
A110	2	5	STR.	31′-1″	65
A111	2	5	STR.	29′-5″	61
A112	2	5	STR.	27′-9″	58
A113	2	5	STR.	26′-1″	54
A114	2	5	STR.	24′-5″	51
A115	2	5	STR.	22′-9″	47
A116	2	5	STR.	21′-1″	44
A117	2	5	STR.	19′-5″	41
A118	2	5	STR.	17′-10″	37
A119	2	5	STR.	16′-2″	34
A120	2	5	STR.	14′-6″	30
A121	2	5	STR.	12′-10″	27
A122	2	5	STR.	11′-2″	23
A123	2	5	STR.	9′-6″	20
A124	2	5	STR.	7′-10″	16
A125	2	5	STR.	6′-2″	13
A126	2	5	STR.	4′-7″	10
A127	2	5	STR.	2′-11″	6
B101	224	5	STR.	48′-5″	11,312
B102	50	4	STR.	13′-3″	443
B103	50	4	STR.	24′-0″	802

BILL OF MATERIAL

UNCOATED

BAR	NO.	SIZE	TYPE	LENGTH	WEIGHT
H1	7	4	1	17′-3″	81
H2	12	6	1	17′-5″	314
H3	12	5	2	16′-1″	201
H4	7	4	2	15′-9″	74
H5	6	4	1	13′-3″	53
H6	11	5	1	13′-3″	152
H7	12	5	2	15′-7″	195
H8	7	4	2	15′-3″	71
K1	10	5	STR.	53′-7″	559
K2	8	5	STR.	7′-5″	62
K3	8	5	STR.	8′-5″	70
K4	16	5	STR.	9′-0″	150
K5	8	5	STR.	8′-0″	67
K6	4	5	STR.	5′-3″	22
K7	4	5	STR.	5′-9″	24
K8	8	5	STR.	6′-1″	51
K9	4	5	STR.	5′-6″	23
K10	8	5	STR.	2′-9″	23
K11	8	4	STR.	22′-2″	118
K12	8	4	STR.	6′-3″	33
K13	2	4	7	6′-11″	9
K14	3	4	8	12′-2″	24
K15	8	4	STR.	8′-5″	45
K16	16	4	STR.	9′-0″	96
K17	8	4	STR.	8′-0″	43
S3	120	4	4	2′-9″	220
S4	4	4	9	4′-5″	12
U1	68	5	5	12′-0″	851
U2	8	5	5	15′-0″	125
				TOTAL	34,012

BAR TYPES

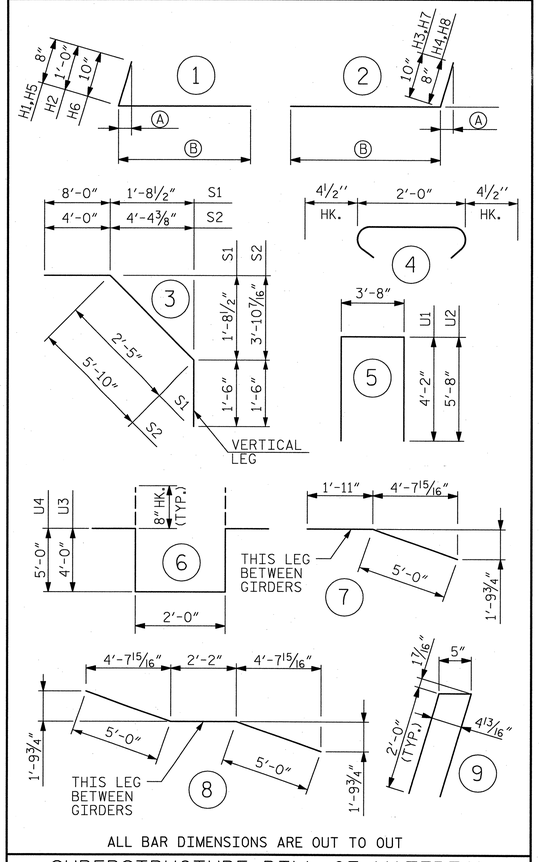

ALL BAR DIMENSIONS ARE OUT TO OUT

BAR TABLE

BAR	Ⓐ	Ⓑ
H1	2 5/16″	16′-7″
H2	3 7/16″	16′-5″
H3	2 7/8″	15′-3″
H4	2 5/16″	15′-1″
H5	2 5/16″	12′-7″
H6	2 7/8″	12′-5″
H7	2 7/8″	14′-9″
H8	2 5/16″	14′-7″

SUPERSTRUCTURE BILL OF MATERIAL

	CLASS AA CONCRETE	REINFORCING STEEL	EPOXY COATED REINFORCING STEEL
	(CU. YDS.)	(LBS.)	(LBS.)
POUR 1	128.3		
POUR 2	149.5		
POUR 3	103.0		
TOTALS**	380.8	34,012	33,955

**QUANTITIES FOR BARRIER RAIL ARE NOT INCLUDED

NOTE: QUANTITIES INCLUDE THE CONCRETE AND REINFORCING STEEL FOR THE UPPER PORTION OF THE WINGS AND INTEGRAL END BENTS.

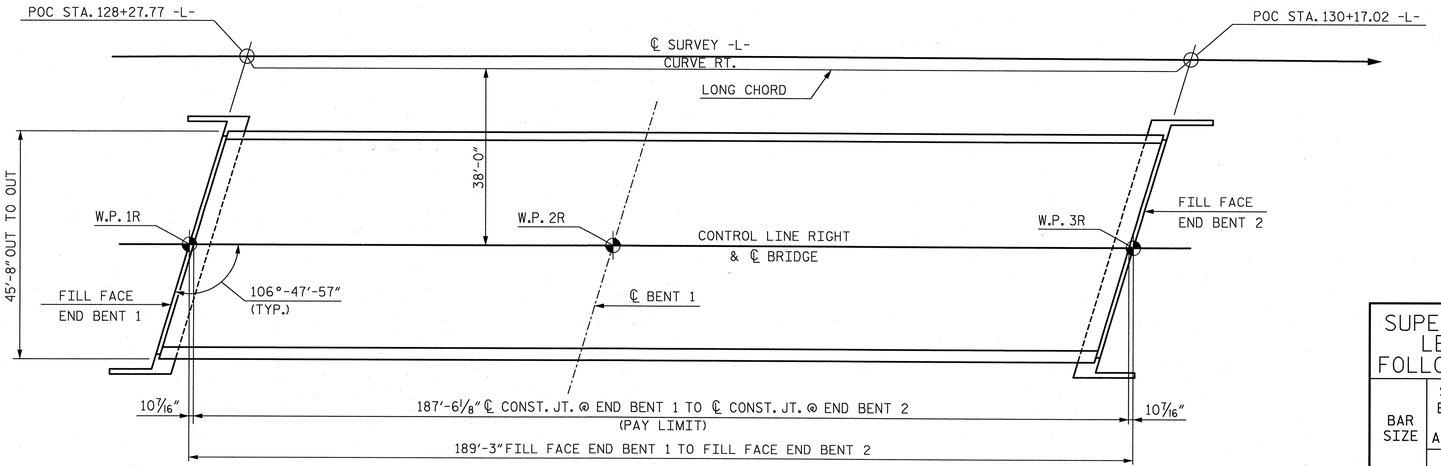

LAYOUT FOR COMPUTING AREA REINFORCED CONCRETE DECK SLAB
(SQ. FT. = 8,563)

SUPERSTRUCTURE REINFORCING STEEL LENGTHS ARE BASED ON THE FOLLOWING MINIMUM SPLICE LENGTHS

BAR SIZE	SUPERSTRUCTURE EXCEPT APPROACH SLABS, PARAPET, AND BARRIER RAIL		APPROACH SLABS		PARAPET AND BARRIER RAIL
	EPOXY COATED	UNCOATED	EPOXY COATED	UNCOATED	
#4	2′-0″	1′-9″	2′-0″	1′-9″	2′-9″
#5	2′-6″	2′-2″	2′-6″	2′-2″	3′-5″
#6	3′-0″	2′-7″	3′-10″	2′-7″	4′-4″
#7	5′-3″	3′-6″			
#8	6′-10″	4′-7″			

GROOVING BRIDGE FLOORS

APPROACH SLABS	1,902	SQ.FT.
BRIDGE DECK	7,377	SQ.FT.
TOTAL	9,279	SQ.FT.

PROJECT NO. U-2525B

GUILFORD COUNTY

STATION: POC 129+37.56 -L-

NORTH CAROLINA PROFESSIONAL SEAL 27812 ENGINEER DAVID W. HAWKINS 12/23/13

NORTH CAROLINA PROFESSIONAL SEAL 12916 ENGINEER PAUL J. BARBER 12/23/13

ASSEMBLED BY : MEW DATE : 4/18/13
CHECKED BY : PJB DATE : 6/20/13

DRAWN BY : JMB 5/87
CHECKED BY : SJD 9/87

REV. 8/16/99 RWW/LES
REV. 5/1/06 TLA/GM
REV. 10/1/11 MAA/GM

HNTB NORTH CAROLINA, P.C.
License No. C-1554
343 E. Six Forks Rd., Suite 200, Raleigh, N.C. 27609

DRAWN BY M. WRIGHT DATE 4/13
CHECKED BY P. BARBER DATE 6/13
DWG. NO. 20

STATE OF NORTH CAROLINA
DEPARTMENT OF TRANSPORTATION
RALEIGH

STANDARD

SUPERSTRUCTURE BILL OF MATERIAL

RIGHT LANE

REVISIONS						SHEET NO.
NO.	BY:	DATE:	NO.	BY:	DATE:	S-160
1			3			TOTAL SHEETS
2			4			541

STD. NO. BOM2

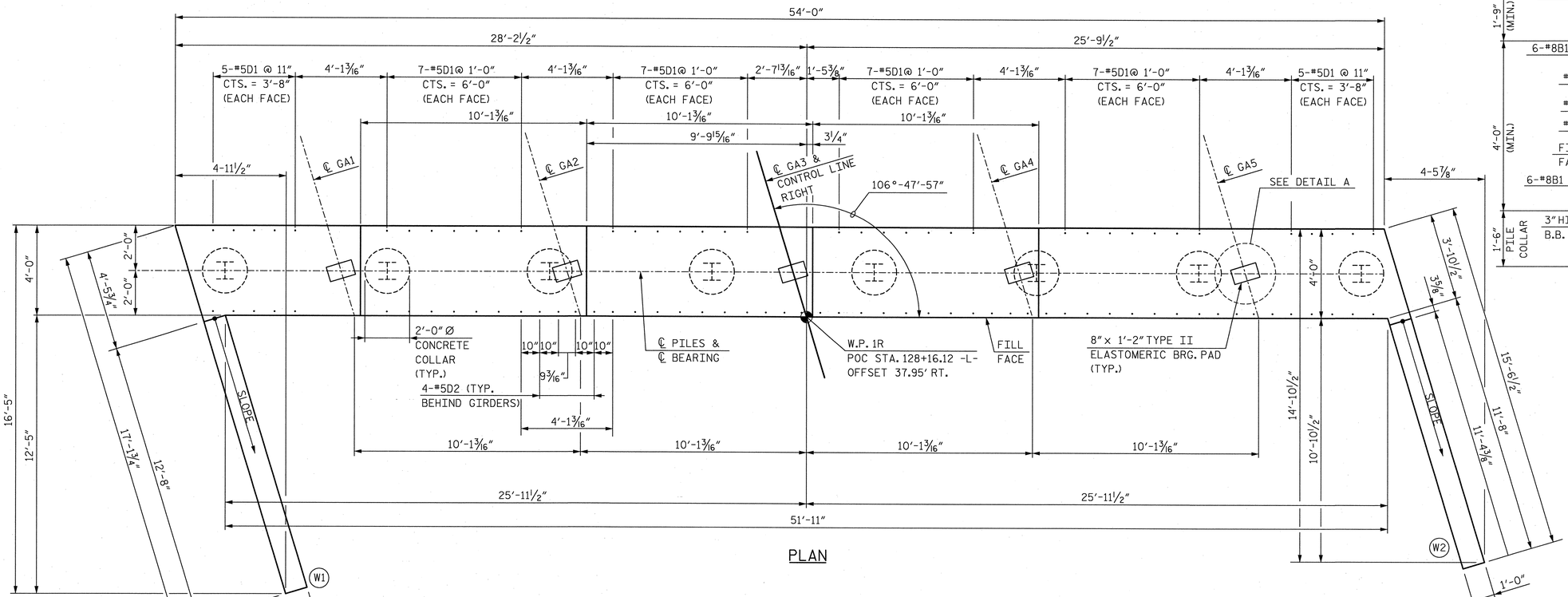

PLAN

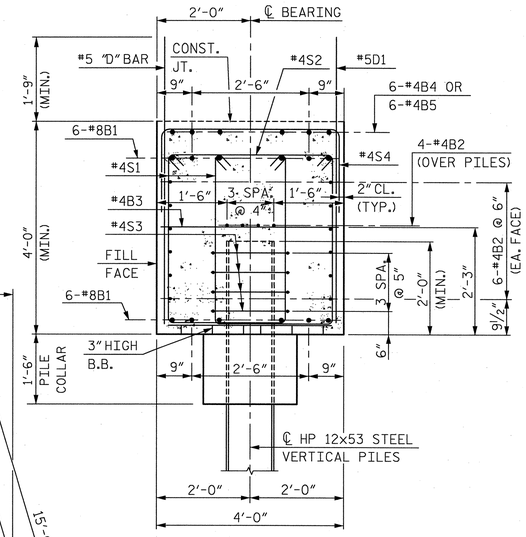

SECTION A-A

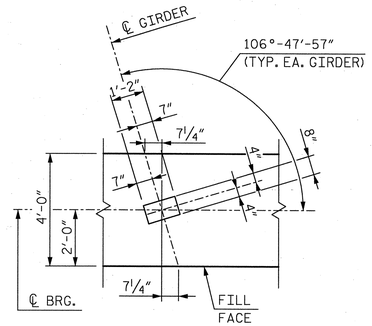

DETAIL A

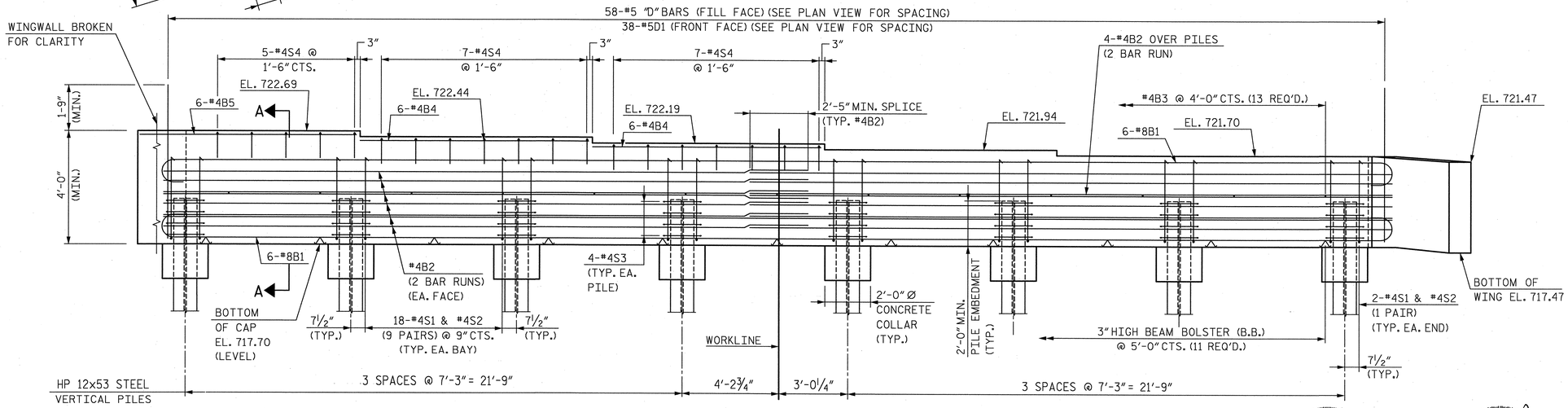

ELEVATION

NOTES:
FOR NOTES, SEE SHEET 2 OF 2.

PROJECT NO. U-2525B
GUILFORD COUNTY
STATION: POC 129+37.56 -L-

SHEET 1 OF 2

STATE OF NORTH CAROLINA
DEPARTMENT OF TRANSPORTATION
RALEIGH

SUBSTRUCTURE
END BENT 1
RIGHT LANE

NORTH CAROLINA PROFESSIONAL SEAL 27812 ENGINEER DAVID W. HAWKINS 12/23/13

NORTH CAROLINA PROFESSIONAL SEAL 12916 ENGINEER PAUL J. BARBER 12/23/13

HNTB NORTH CAROLINA, P.C.
License No. C-1554
343 E. Six Forks Rd., Suite 200, Raleigh, N.C. 27609

DRAWN BY M. WRIGHT DATE 7/13
CHECKED BY D. HAWKINS DATE 7/13
DWG. NO. 21

REVISIONS						SHEET NO.
NO.	BY:	DATE:	NO.	BY:	DATE:	S-161
1			3			TOTAL SHEETS
2			4			541

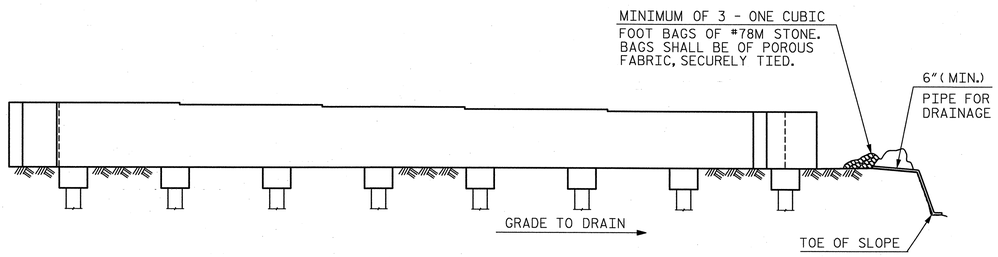

BAGGED STONE AND PIPE SHALL BE PLACED IMMEDIATELY AFTER COMPLETION OF END BENT EXCAVATION. PIPE MAY BE EITHER CONCRETE, CORRUGATED STEEL, CORRUGATED ALUMINUM ALLOY OR CORRUGATED PLASTIC. PERFORATED PIPE WILL NOT BE ALLOWED.

BAGGED STONE SHALL REMAIN IN PLACE UNTIL THE ENGINEER DIRECTS THAT IT BE REMOVED. THE CONTRACTOR SHALL REMOVE AND DISPOSE OF SILT ACCUMULATIONS AT BAGGED STONE WHEN SO DIRECTED BY THE ENGINEER. BAGS SHALL BE REMOVED AND REPLACED WHENEVER THE ENGINEER DETERMINES THAT THEY HAVE DETERIORATED AND LOST THEIR EFFECTIVENESS.

NO SEPARATE PAYMENT WILL BE MADE FOR THIS WORK AND THE ENTIRE COST OF THIS WORK SHALL BE INCLUDED IN THE UNIT CONTRACT PRICE FOR THE SEVERAL PAY ITEMS.

TEMPORARY DRAINAGE AT END BENT 1

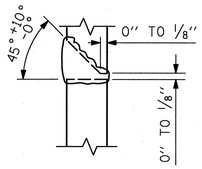

DETAIL "A"

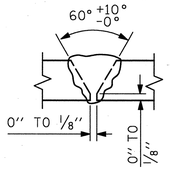

DETAIL "B"

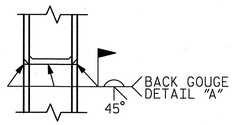

*PILE VERTICAL

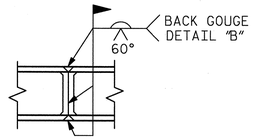

*PILE HORIZONTAL OR VERTICAL

* POSITION OF PILE DURING WELDING.

PILE SPLICE DETAILS

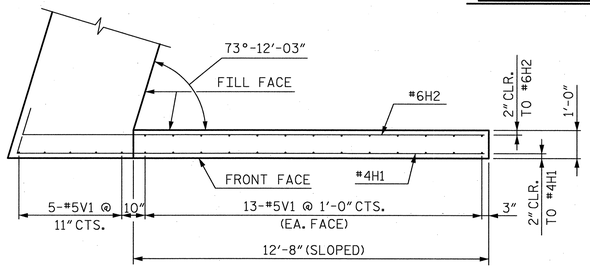

PLAN OF WING (W1)

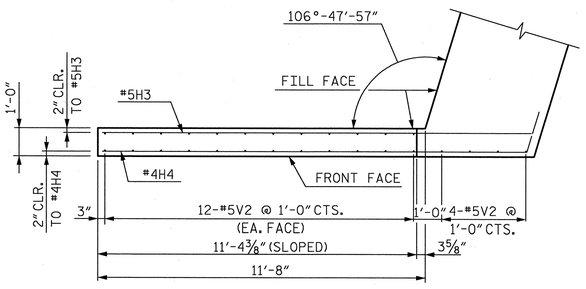

PLAN OF WING (W2)

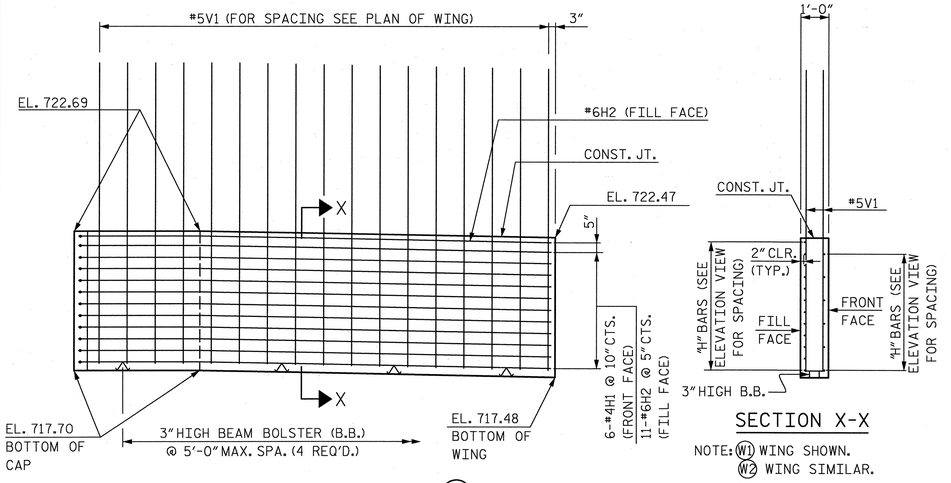

ELEVATION OF WING (W1)

SECTION X-X

NOTE: (W1) WING SHOWN. (W2) WING SIMILAR.

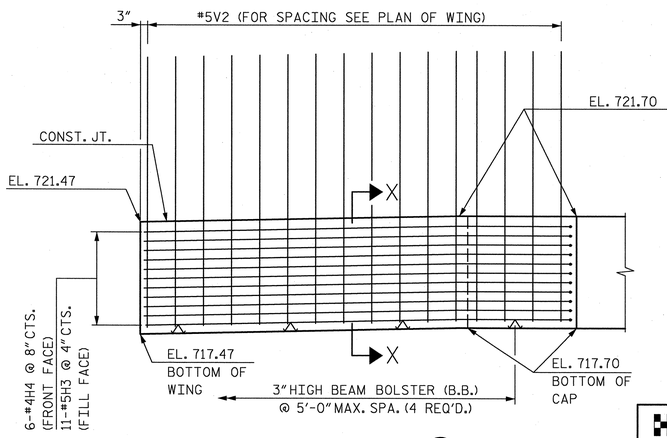

ELEVATION OF WING (W2)

BAR TYPES

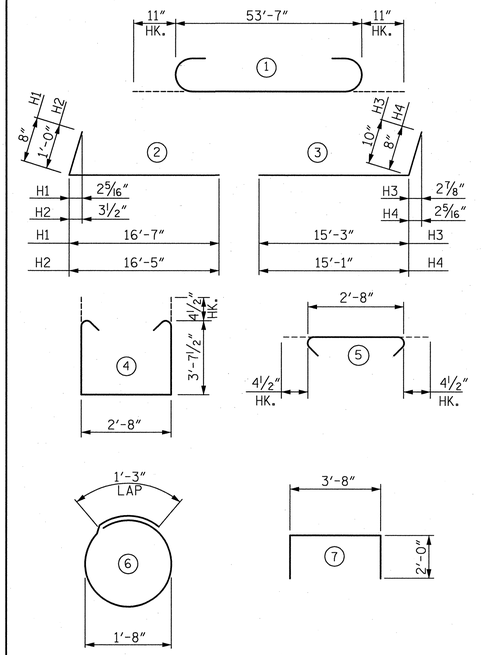

ALL BAR DIMENSIONS ARE OUT TO OUT

BILL OF REINFORCING

END BENT 1

BAR	NO.	SIZE	TYPE	LENGTH	WEIGHT
B1	12	8	1	55'-5"	1,776
B2	32	4	STR.	28'-0"	599
B3	13	4	STR.	3'-8"	32
B4	12	4	STR.	10'-0"	80
B5	6	4	STR.	6'-8"	27
D1	76	5	STR.	6'-6"	515
D2	20	5	STR.	8'-0"	167
H1	6	4	2	17'-3"	69
H2	12	6	2	17'-5"	314
H3	11	5	3	16'-1"	185
H4	6	4	3	15'-9"	63
S1	130	4	4	10'-8"	926
S2	130	4	5	3'-5"	297
S3	32	4	6	6'-6"	139
S4	19	4	7	7'-8"	97
V1	31	5	STR.	10'-7"	342
V2	28	5	STR.	9'-6"	277

QUANTITIES

REINFORCING STEEL	LBS.	5,905
CLASS A CONCRETE BREAKDOWN (CAP & BOTTOM OF WINGS)	CU. YDS.	40.8
HP 12x53 STEEL PILES	NO.	8
	LIN. FT.	160

NOTES:

THE TOP SURFACE OF THE END BENT CAP AND WINGS, EXCEPT THE BEARING AREA, SHALL BE RAKED TO A DEPTH OF 1/4".

THE TOP OF THE WINGS AND BACKWALL SHALL BE POURED WITH THE SUPERSTRUCTURE. CONCRETE AND REINFORCING STEEL QUANTITIES ARE INCLUDED IN THE SUPERSTRUCTURE BILL OF MATERIALS. FOR DETAILS, SEE SUPERSTRUCTURE PLANS.

THE CONTRACTOR SHALL PROVIDE FOR THE INSTALLATION OF THE 4" DIA. DRAIN PIPE THROUGH THE WING WALL AS REQUIRED FOR REINFORCED BRIDGE APPROACH FILLS. SEE ROADWAY PLANS. REINFORCING STEEL IN THE WING WALL MAY BE SHIFTED AS NECESSARY TO CLEAR THE DRAIN PIPE.

PROJECT NO. U-2525B

GUILFORD COUNTY

STATION: POC 129+37.56 -L-

SHEET 2 OF 2

STATE OF NORTH CAROLINA
DEPARTMENT OF TRANSPORTATION
RALEIGH

SUBSTRUCTURE

END BENT 1

RIGHT LANE

NORTH CAROLINA PROFESSIONAL SEAL 27812 ENGINEER DAVID W. HAWKINS 12/23/13

NORTH CAROLINA PROFESSIONAL SEAL 12916 ENGINEER PAUL J. BARBER 12/23/13

HNTB NORTH CAROLINA, P.C.
License No. C-1554
343 E. Six Forks Rd., Suite 200, Raleigh, N.C. 27609

DRAWN BY M. WRIGHT DATE 7/13
CHECKED BY D. HAWKINS DATE 7/13

DWG. NO. 22

REVISIONS						SHEET NO.
NO.	BY:	DATE:	NO.	BY:	DATE:	S-162
1			3			TOTAL SHEETS
2			4			541

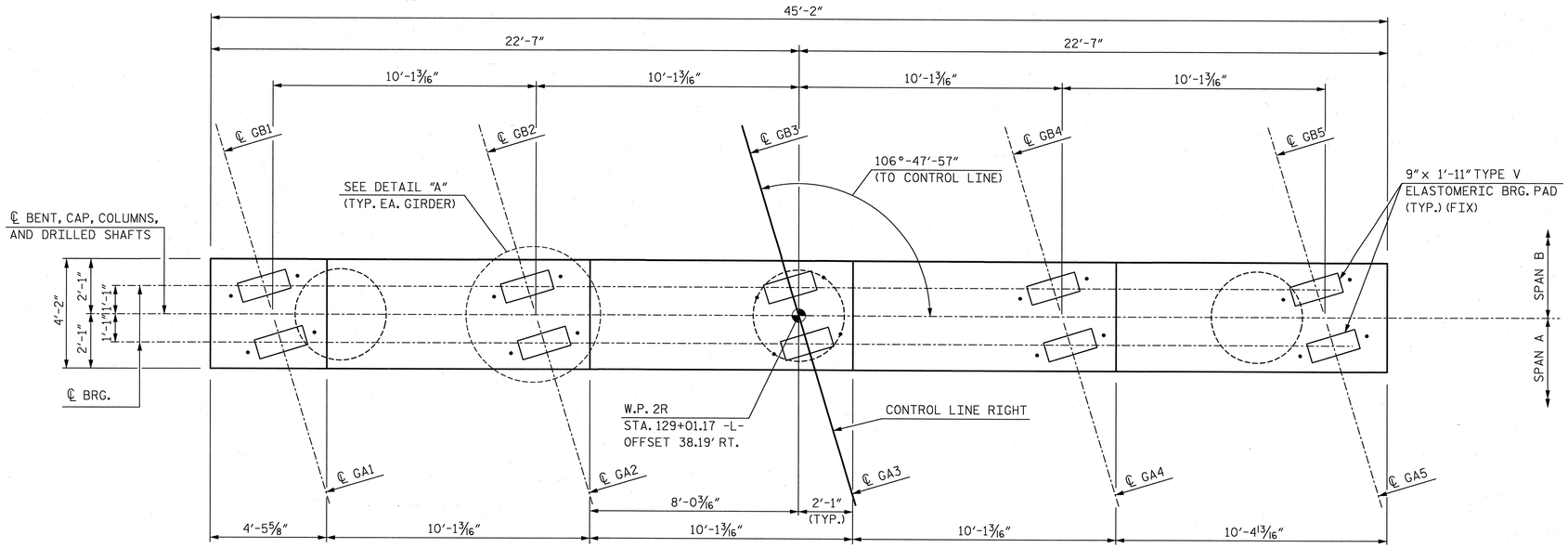

PLAN

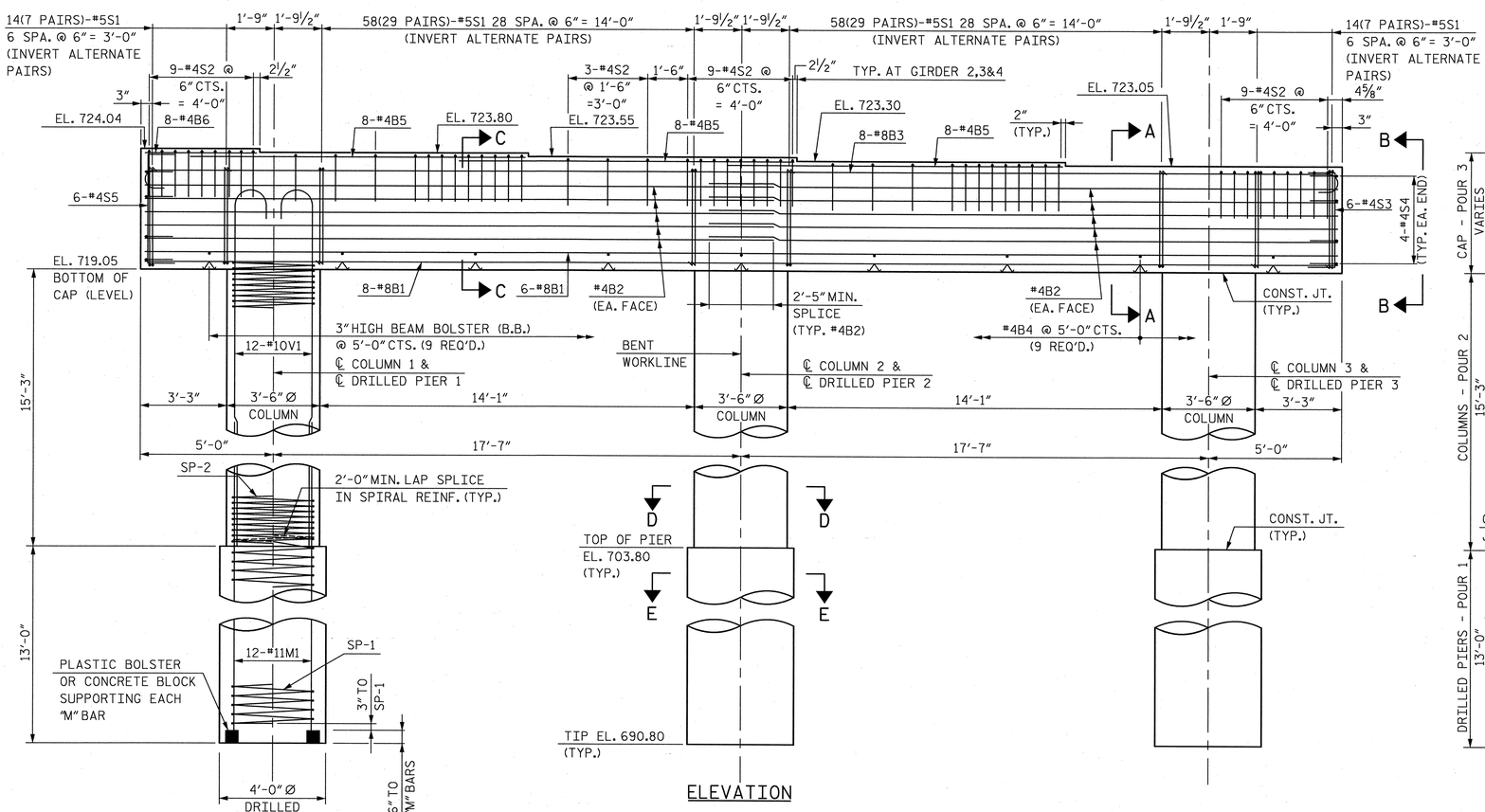

ELEVATION

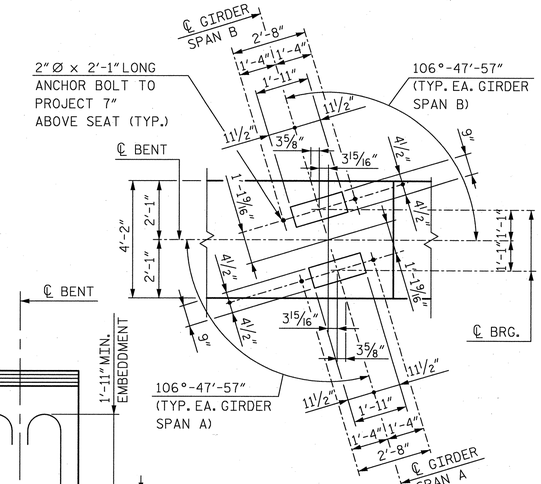

DETAIL A

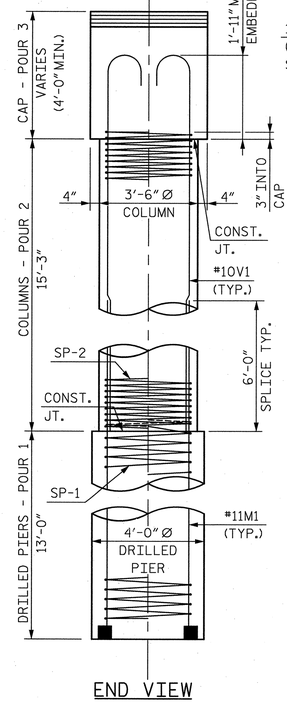

END VIEW

NOTES:

STIRRUPS IN CAP MAY BE SHIFTED AS NECESSARY TO CLEAR ANCHOR BOLTS.

HOOKS ON "V" BARS MAY BE TURNED AS NECESSARY FOR PLACING REINFORCING STEEL.

ALL STEEL IN THE DRILLED PIERS IS INCLUDED IN THE PAY ITEMS FOR "REINFORCING STEEL" AND "SPIRAL COLUMN REINFORCING STEEL".

NORTH CAROLINA PROFESSIONAL SEAL 27612 ENGINEER DAVID W. HAWKINS 12/23/13

NORTH CAROLINA PROFESSIONAL SEAL 12916 ENGINEER PAUL J. BARBER 12/23/13

PROJECT NO. U-2525B

GUILFORD COUNTY

STATION: POC 129+37.56 -L-

SHEET 1 OF 2

STATE OF NORTH CAROLINA
DEPARTMENT OF TRANSPORTATION
RALEIGH

SUBSTRUCTURE

BENT 1

RIGHT LANE

HNTB

HNTB NORTH CAROLINA, P.C.
License No. C-1554
343 E. Six Forks Rd., Suite 200, Raleigh, N.C. 27609

DRAWN BY M. WRIGHT DATE 7/13
CHECKED BY P. BARBER DATE 7/13

DWG. NO. 23

REVISIONS						SHEET NO.
NO.	BY:	DATE:	NO.	BY:	DATE:	S-163
1			3			TOTAL SHEETS
2			4			54-1

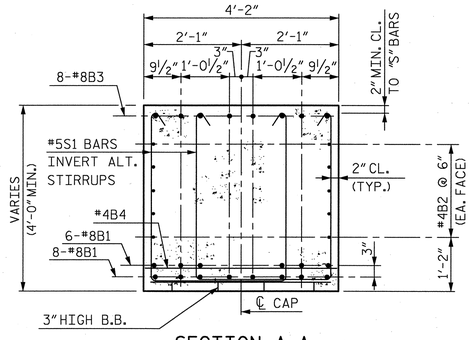

SECTION A-A

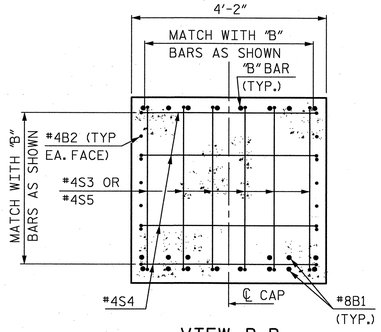

VIEW B-B

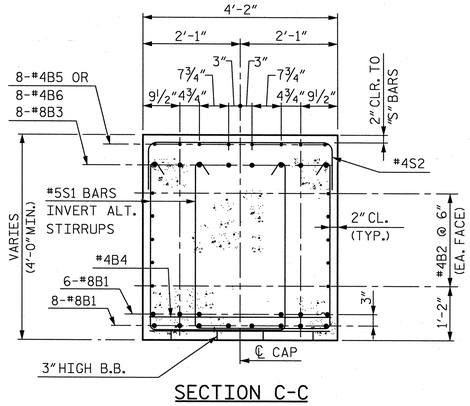

SECTION C-C

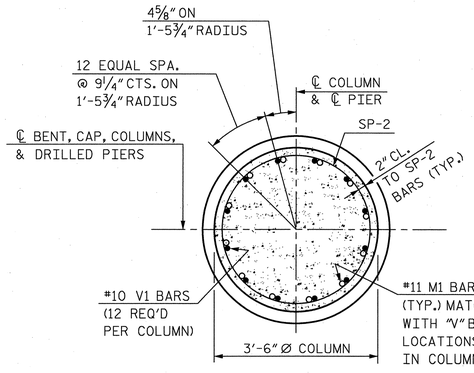

SECTION D-D

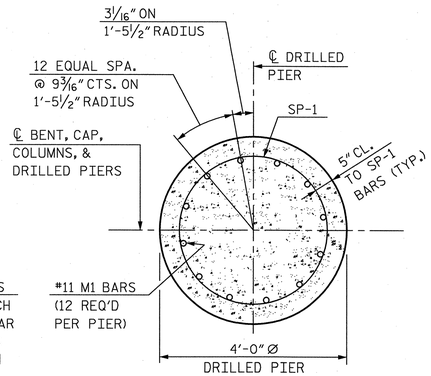

SECTION E-E

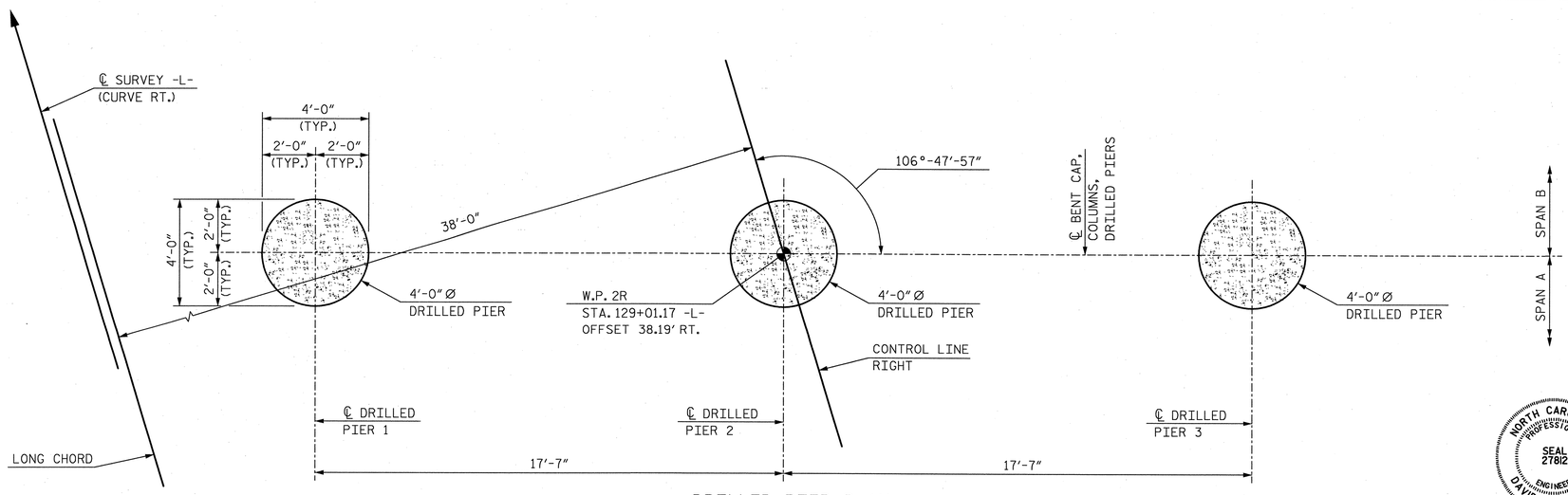

DRILLED PIER PLAN

NOTE: SEE SECTION E-E FOR DRILLED PIER REINFORCING.

BAR TYPES

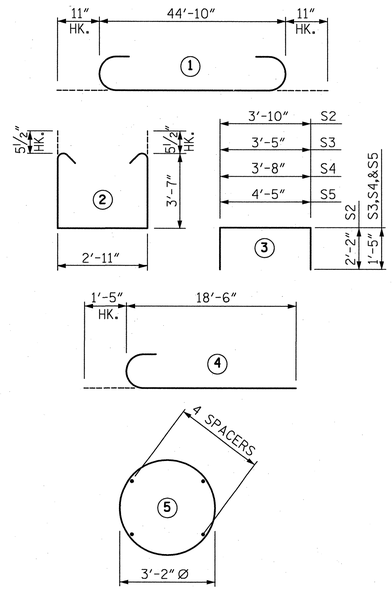

ALL BAR DIMENSIONS ARE OUT TO OUT

BILL OF REINFORCING

BENT 1

BAR	NO.	SIZE	TYPE	LENGTH	WEIGHT
B1	14	8	STR.	44'-10"	1,676
B2	20	4	STR.	23'-8"	316
B3	8	8	1	46'-8"	997
B4	9	4	STR.	3'-10"	23
B5	24	4	STR.	12'-7"	202
B6	8	4	STR.	4'-1"	22
M1	36	11	STR.	18'-8"	3,570
S1	144	5	2	11'-0"	1,652
S2	54	4	3	8'-2"	295
S3	6	4	3	6'-3"	25
S4	8	4	3	6'-6"	35
S5	6	4	3	7'-3"	29
V1	36	10	4	19'-11"	3,085
SP-1	3	✳	5	310'-6"	972
SP-2	3	✳✳	5	625'-8"	1,254

QUANTITIES

REINFORCING STEEL	LBS.	11,927
SPIRAL COLUMN REINFORCING STEEL	LBS.	2,226
CLASS A CONCRETE		
COLUMN POUR 2	CU. YDS.	16.3
CAP POUR 3	CU. YDS.	31.0
TOTAL	CU. YDS.	47.3
4'-0" Ø DRILLED PIERS	NO.	3
DRILLED PIERS, NOT IN SOIL	FEET	24.0
DRILLED PIERS, IN SOIL	FEET	15.0
DRILLED PIER CONCRETE POUR 1	CU. YDS.	18.2
SID INSPECTIONS	EA.	1

✳ THE SP-1 SPIRAL REINFORCING STEEL SHALL BE W31 OR D31 COLD DRAWN WIRE OR #5 PLAIN OR DEFORMED BAR.

✳✳ THE SP-2 SPIRAL REINFORCING STEEL SHALL BE W20 OR D20 COLD DRAWN WIRE OR #4 PLAIN OR DEFORMED BAR.

PROJECT NO. U-2525B

GUILFORD COUNTY

STATION: POC 129+37.56 -L-

SHEET 2 OF 2

STATE OF NORTH CAROLINA
DEPARTMENT OF TRANSPORTATION
RALEIGH

SUBSTRUCTURE

BENT 1

RIGHT LANE

NORTH CAROLINA PROFESSIONAL ENGINEER SEAL 27812 DAVID W. HAWKINS 12/23/13

NORTH CAROLINA PROFESSIONAL ENGINEER SEAL 12916 PAUL J. BARBER 12/23/13

HNTB NORTH CAROLINA, P.C.
License No. C-1554
343 E. Six Forks Rd., Suite 200, Raleigh, N.C. 27609

DRAWN BY M. WRIGHT DATE 4/13
CHECKED BY P. BARBER DATE 7/13

DWG. NO. 24

REVISIONS						SHEET NO.
NO.	BY:	DATE:	NO.	BY:	DATE:	S-164
1			3			TOTAL SHEETS
2			4			541

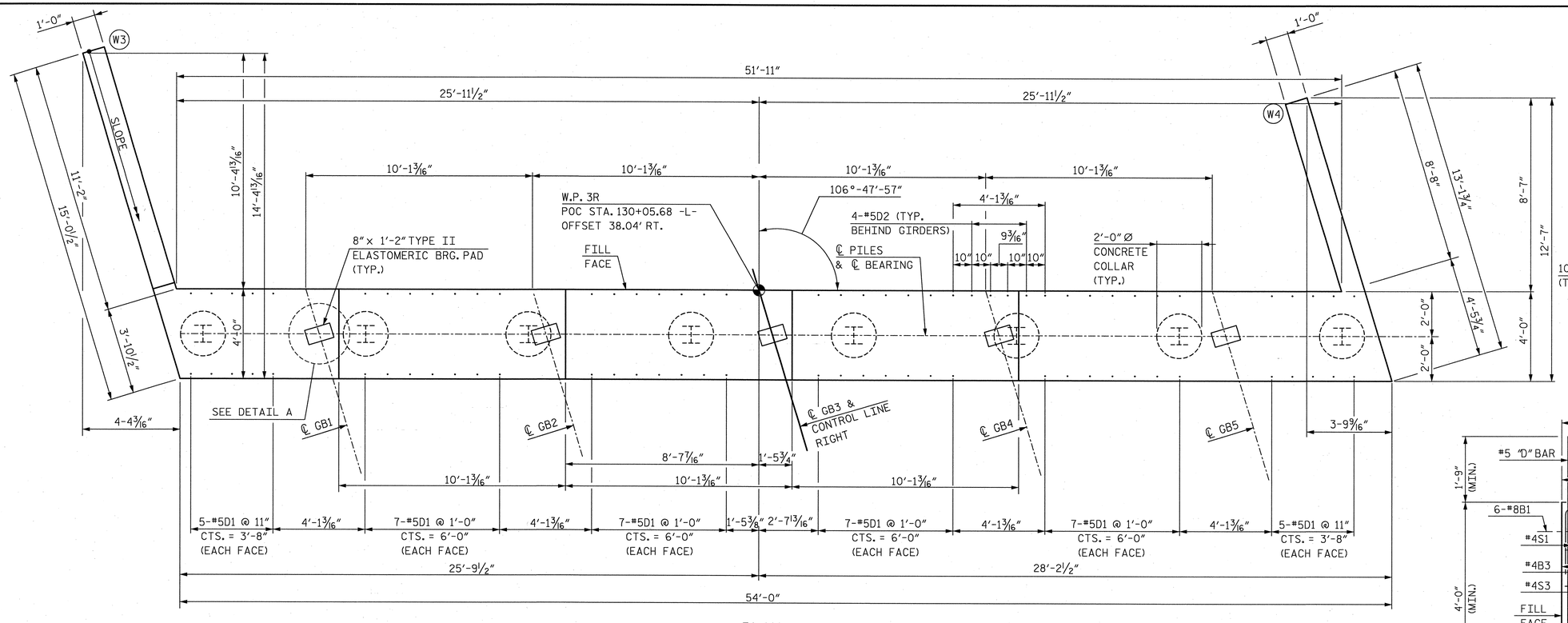

PLAN

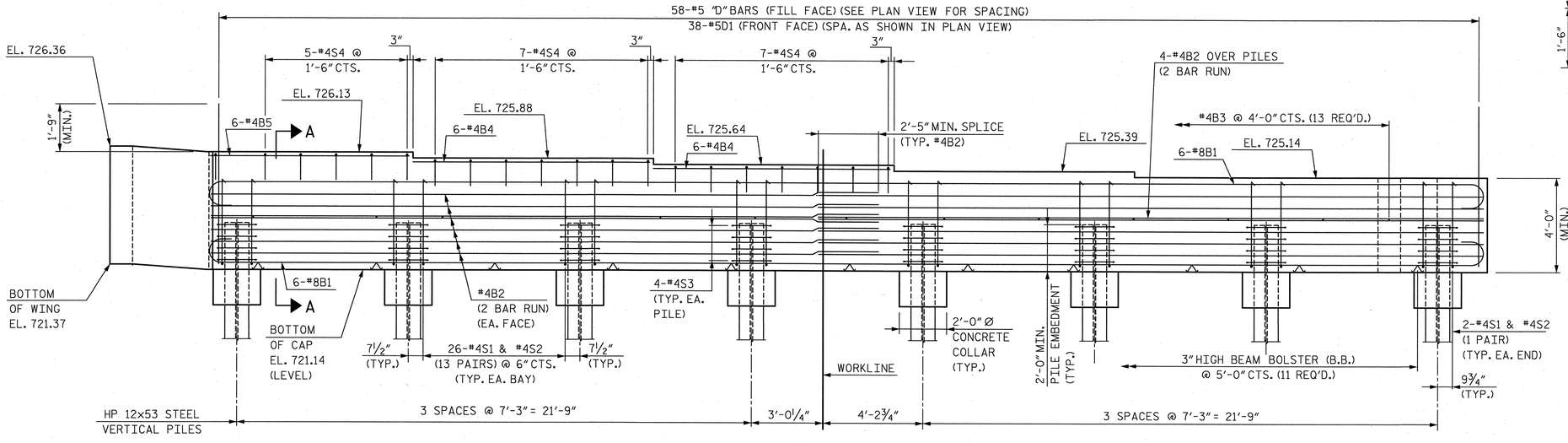

ELEVATION

NOTES:

FOR NOTES, SEE SHEET 2 OF 2.

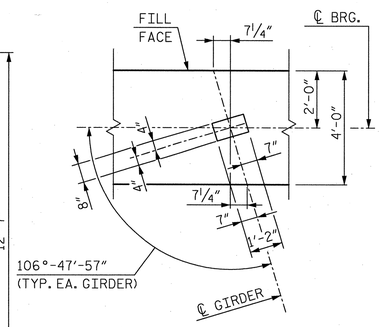

DETAIL A

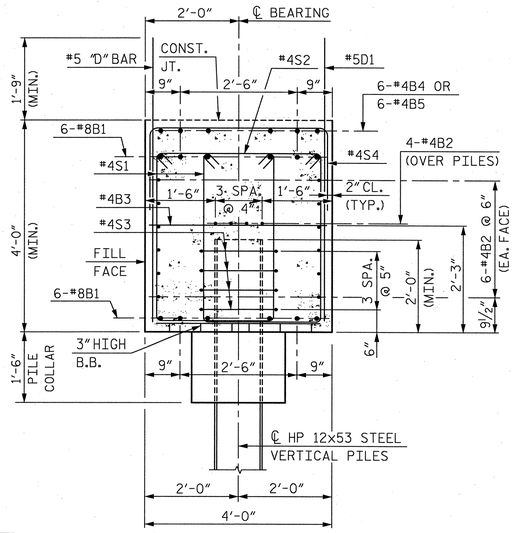

SECTION A-A

PROJECT NO. U-2525B

GUILFORD COUNTY

STATION: POC 129+37.56 -L-

SHEET 1 OF 2

STATE OF NORTH CAROLINA
DEPARTMENT OF TRANSPORTATION
RALEIGH

SUBSTRUCTURE

END BENT 2

RIGHT LANE

NORTH CAROLINA PROFESSIONAL SEAL 27812 ENGINEER DAVID W. HAWKINS 12/23/13

NORTH CAROLINA PROFESSIONAL SEAL 12916 ENGINEER PAUL J. BARBER 12/23/13

HNTB NORTH CAROLINA, P.C.
License No. C-1554
343 E. Six Forks Rd., Suite 200, Raleigh, N.C. 27609

DRAWN BY M. WRIGHT DATE 7/13
CHECKED BY D. HAWKINS DATE 7/13

DWG. NO. 25

REVISIONS						SHEET NO.
NO.	BY:	DATE:	NO.	BY:	DATE:	S-165
1			3			TOTAL SHEETS
2			4			54-1

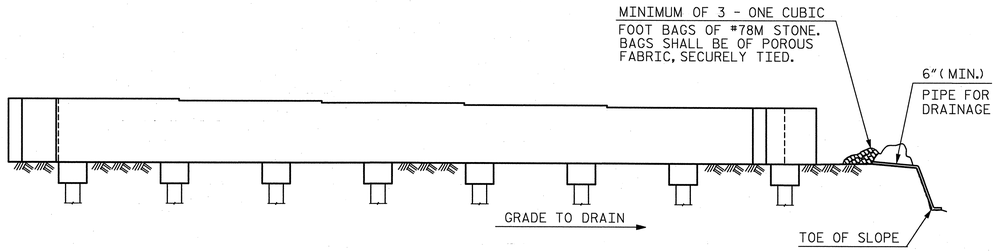

BAGGED STONE AND PIPE SHALL BE PLACED IMMEDIATELY AFTER COMPLETION OF END BENT EXCAVATION. PIPE MAY BE EITHER CONCRETE, CORRUGATED STEEL, CORRUGATED ALUMINUM ALLOY OR CORRUGATED PLASTIC. PERFORATED PIPE WILL NOT BE ALLOWED.

BAGGED STONE SHALL REMAIN IN PLACE UNTIL THE ENGINEER DIRECTS THAT IT BE REMOVED. THE CONTRACTOR SHALL REMOVE AND DISPOSE OF SILT ACCUMULATIONS AT BAGGED STONE WHEN SO DIRECTED BY THE ENGINEER. BAGS SHALL BE REMOVED AND REPLACED WHENEVER THE ENGINEER DETERMINES THAT THEY HAVE DETERIORATED AND LOST THEIR EFFECTIVENESS.

NO SEPARATE PAYMENT WILL BE MADE FOR THIS WORK AND THE ENTIRE COST OF THIS WORK SHALL BE INCLUDED IN THE UNIT CONTRACT PRICE FOR THE SEVERAL PAY ITEMS.

TEMPORARY DRAINAGE AT END BENT 2

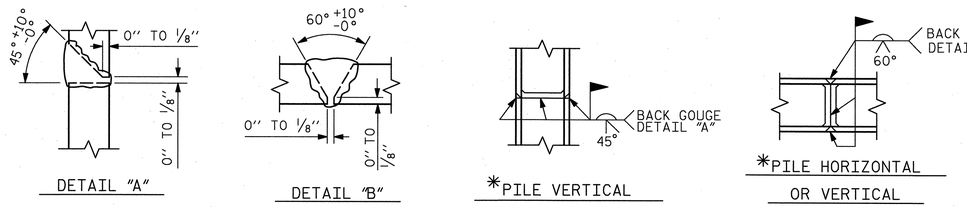

* POSITION OF PILE DURING WELDING.

PILE SPLICE DETAILS

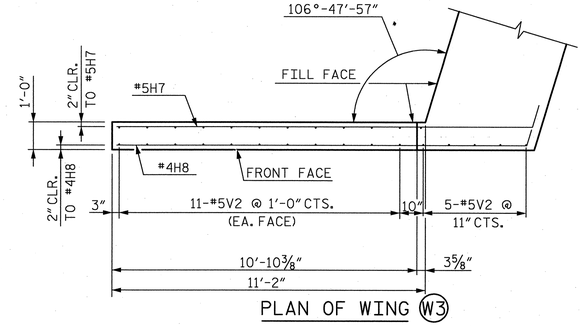

PLAN OF WING (W3)

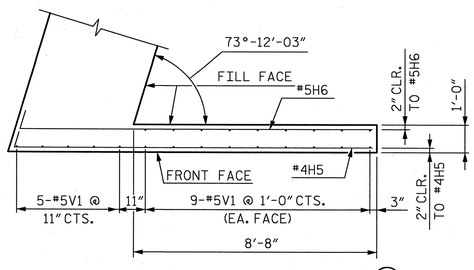

PLAN OF WING (W4)

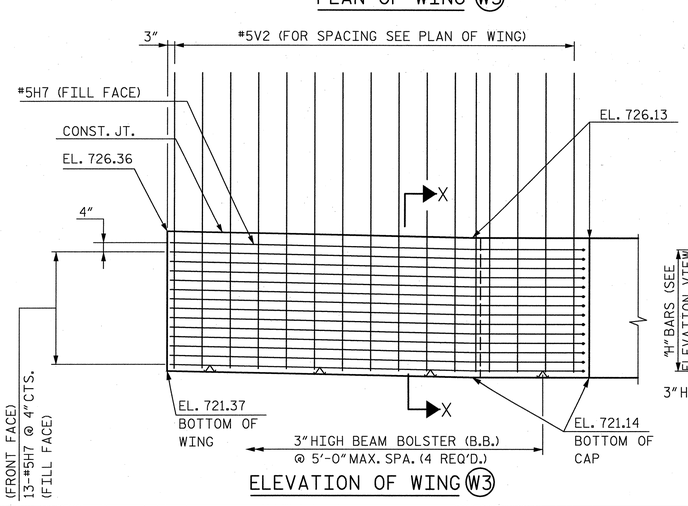

ELEVATION OF WING (W3)

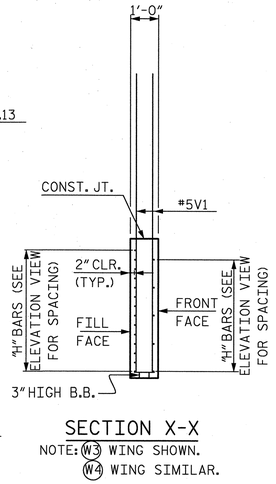

SECTION X-X

NOTE: (W3) WING SHOWN.
(W4) WING SIMILAR.

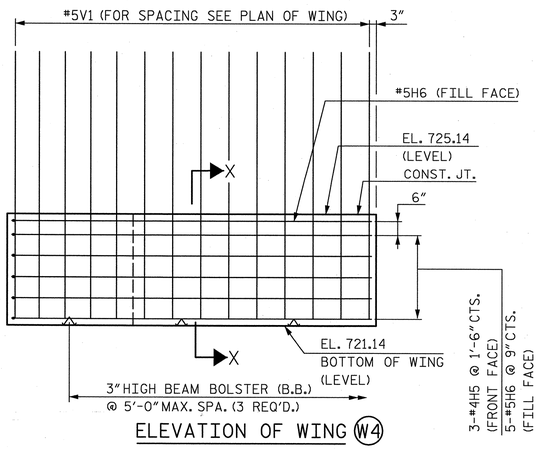

ELEVATION OF WING (W4)

BAR TYPES

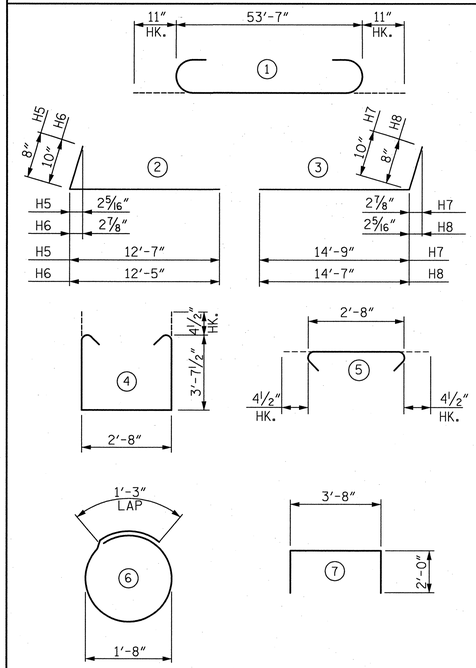

ALL BAR DIMENSIONS ARE OUT TO OUT

BILL OF REINFORCING

END BENT 2

MARK	NO.	SIZE	TYPE	LENGTH	WEIGHT
B1	12	8	1	55'-5"	1,776
B2	32	4	STR.	28'-0"	599
B3	13	4	STR.	3'-8"	32
B4	12	4	STR.	10'-0"	80
B5	6	4	STR.	6'-8"	27
D1	76	5	STR.	6'-6"	515
D2	20	5	STR.	8'-0"	167
H5	3	4	2	13'-3"	27
H6	6	5	2	13'-3"	83
H7	14	5	3	15'-7"	228
H8	5	4	3	15'-3"	51
S1	186	4	4	10'-8"	1,325
S2	186	4	5	3'-5"	425
S3	32	4	6	6'-6"	139
S4	19	4	7	7'-8"	97
V1	23	5	STR.	9'-7"	230
V2	27	5	STR.	10'-8"	300

QUANTITIES

REINFORCING STEEL	LBS.	6,101
CLASS A CONCRETE BREAKDOWN (CAP & BOTTOM OF WINGS)	CU. YDS.	40.0
HP 12x53 STEEL PILES	NO.	8
	LIN. FT.	160

NOTES:

THE TOP SURFACE OF THE END BENT CAP AND WINGS, EXCEPT THE BEARING AREA, SHALL BE RAKED TO A DEPTH OF 1/4".

THE TOP OF THE WINGS AND BACKWALL SHALL BE POURED WITH THE SUPERSTRUCTURE. CONCRETE AND REINFORCING STEEL QUANTITIES ARE INCLUDED IN THE SUPERSTRUCTURE BILL OF MATERIALS. FOR DETAILS, SEE SUPERSTRUCTURE PLANS.

THE CONTRACTOR SHALL PROVIDE FOR THE INSTALLATION OF THE 4"DIA. DRAIN PIPE THROUGH THE WING WALL AS REQUIRED FOR REINFORCED BRIDGE APPROACH FILLS. SEE ROADWAY PLANS. REINFORCING STEEL IN THE WING WALL MAY BE SHIFTED AS NECESSARY TO CLEAR THE DRAIN PIPE.

PROJECT NO. U-2525B

GUILFORD COUNTY

STATION: POC 129+37.56 -L-

SHEET 2 OF 2

STATE OF NORTH CAROLINA
DEPARTMENT OF TRANSPORTATION
RALEIGH

SUBSTRUCTURE

END BENT 2

RIGHT LANE

NORTH CAROLINA PROFESSIONAL SEAL 27812 ENGINEER DAVID W. HAWKINS 12/23/13

NORTH CAROLINA PROFESSIONAL SEAL 12916 ENGINEER PAUL J. BARBER 12/23/13

HNTB NORTH CAROLINA, P.C.
License No. C-1554
343 E. Six Forks Rd., Suite 200, Raleigh, N.C. 27609

DRAWN BY M. WRIGHT DATE 7/13
CHECKED BY D. HAWKINS DATE 7/13

DWG. NO. 26

REVISIONS						SHEET NO.
NO.	BY:	DATE:	NO.	BY:	DATE:	S-166
1			3			TOTAL SHEETS
2			4			541

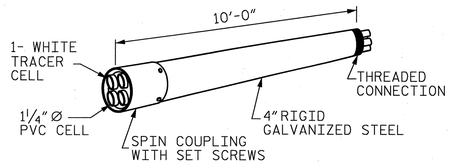

RIGID GALVANIZED (RGC)
MULTI-CELL RACEWAY

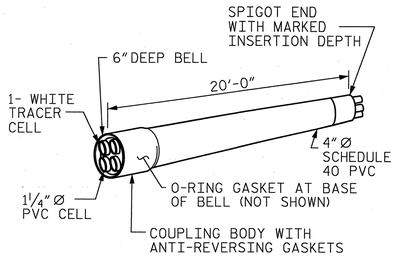

SCHEDULE 40 PVC
MULTI-CELL RACEWAY

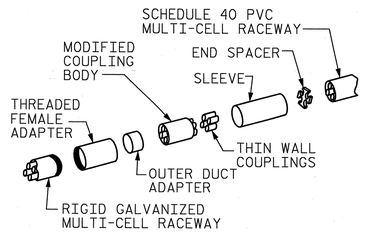

TRANSITION ADAPTER

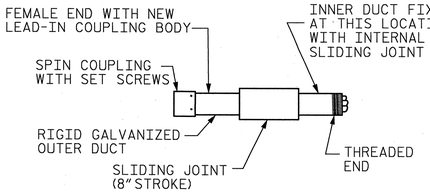

EXPANSION JOINT FITTING

DETAIL "D"

4" MULTI-CELL COMPONENTS

NOTES

THE CONTRACTOR SHALL BE RESPONSIBLE FOR DETERMINING THE TOTAL QUANTITY OF CONDUIT NEEDED TO COMPLETE THE WORK AND THAT THE CONDUIT(S) ARE PLACED AT THE NOTED DIMENSION AND ABOVE THE BOTTOM OF THE GIRDER.

THE INSTALLATION OF THE CONDUIT SYSTEM SHALL BE PAID FOR AS LUMP SUM. THE PRICE SHALL INCLUDE ALL CONDUIT, HANGERS, STABILIZERS, EXPANSION JOINTS, CONCRETE INSERTS, PVC SLEEVES AND ALL NECESSARY HARDWARE TO COMPLETE THE WORK.

THE CONTRACTOR SHALL FIELD VERIFY THAT THE CONDUIT SYSTEM IS NOT IN CONFLICT WITH THE GUARDRAIL POSTS.

SEE DETAIL "C" FOR HANGER ASSEMBLY INSTALLATION.

INSTALL SLEEVES PARALLEL TO GIRDERS. SEE DETAIL "B" FOR SLEEVE INSTALLATION.

PROVIDE TRANSITION ADAPTOR AND EXPANSION JOINT FOR CONDUIT AT END BENT 1 AND END BENT 2.

INSTALL STABILIZER'S MIDWAY BETWEEN DECK EXPANSION JOINTS. STABILIZER CAN NOT BE USED INSTEAD OF A HANGER ASSEMBLY.

THE CONCRETE SCREW INSERT SHALL HAVE A ROD SIZE OF 5/8" AND A PULL FORCE OF 1260 lbs.

FOR ELECTRICAL CONDUIT SYSTEM FOR SIGNALS, SEE SPECIAL PROVISIONS.

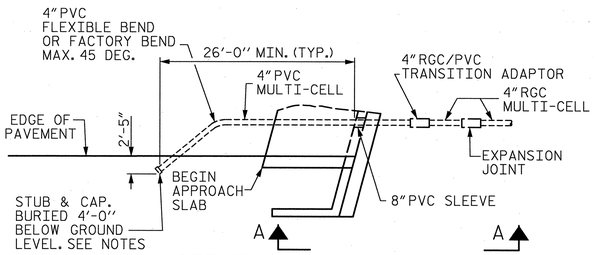

DETAIL "A"

TERMINATION OF CONDUIT AT WING WALL
END BENT 1 SHOWN, END BENT 2 SIMILAR

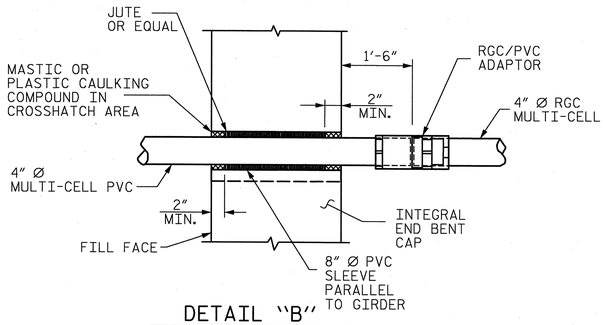

DETAIL "B"

PVC SLEEVE INSTALLATION & RGC/PVC
ADAPTOR AT BACKWALL.

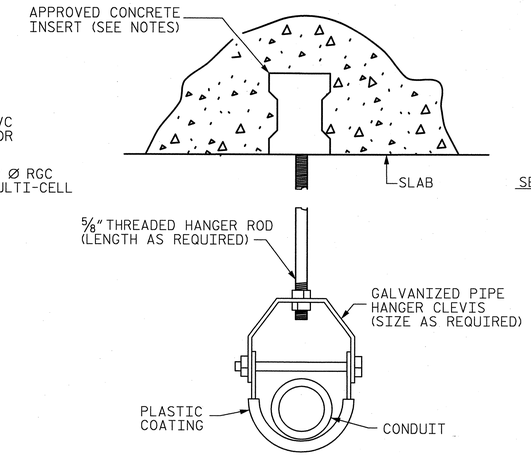

DETAIL "C"

HANGER ASSEMBLY

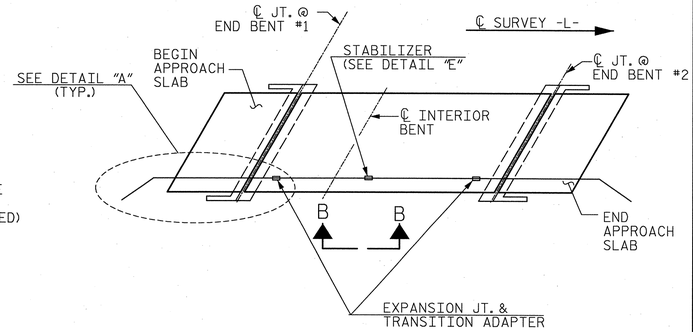

CONDUIT LAYOUT

NOTE: SUPERSTRUCTURE IS CONTINUOUS FOR LIVE LOAD OVER INTERIOR BENT.

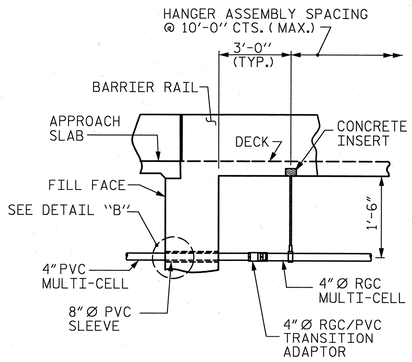

VIEW A-A

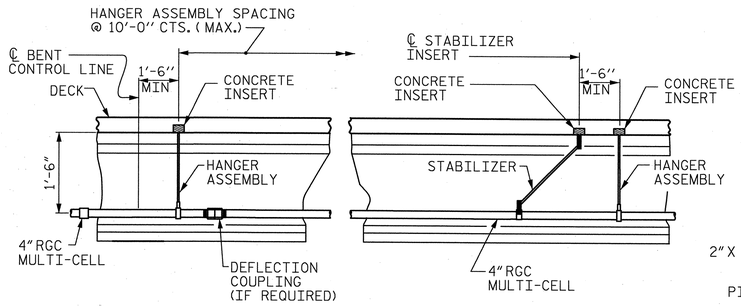

VIEW B-B

PRESTRESSED GIRDERS
CONTINUOUS FOR LIVE LOAD

VIEW "B-B"

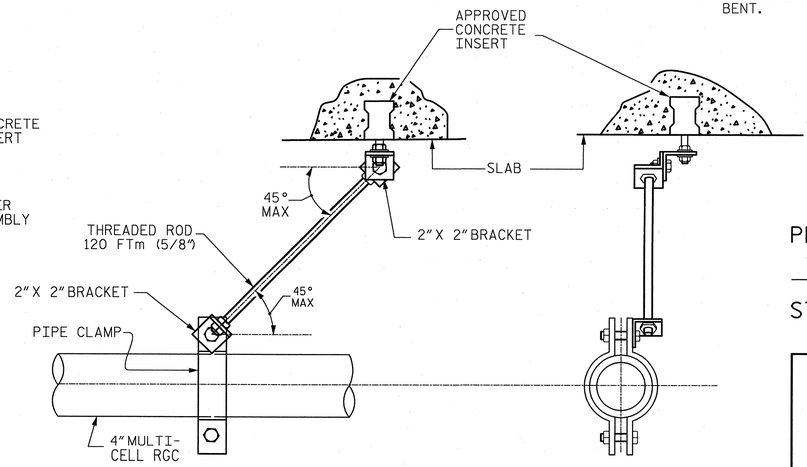

DETAIL "E"

STABILIZER

VIEW "C-C"

NORTH CAROLINA PROFESSIONAL ENGINEER SEAL 27812 DAVID W. HAWKINS 12/23/13

NORTH CAROLINA PROFESSIONAL ENGINEER SEAL 12916 PAUL J. BARBER 12/13/13

PROJECT NO. U-2525B

GUILFORD COUNTY

STATION: POC 129+37.56 -L-

STATE OF NORTH CAROLINA
DEPARTMENT OF TRANSPORTATION
RALEIGH

STANDARD

ELECTRICAL CONDUIT SYSTEM FOR SIGNALS

RIGHT LANE

ELECTRIC CONDUIT DETAILS

ASSEMBLED BY : J. BAYNE	DATE : 12/13		
CHECKED BY : P. BARBER	DATE : 12/13		
DRAWN BY : RWW 2-4-03	REV. 5/1/06	TLA/GM	
CHECKED BY : DBM 2-4-03	REV. 10/1/11	MAA/GM	

HNTB
HNTB NORTH CAROLINA, P.C.
License No. C-1554
343 E. Six Forks Rd., Suite 200, Raleigh, N.C. 27609

DRAWN BY J. BAYNE DATE 12/13
CHECKED BY P. BARBER DATE 12/13
DWG. NO. 27

REVISIONS						SHEET NO.
NO.	BY:	DATE:	NO.	BY:	DATE:	S-67
1			3			TOTAL SHEETS
2			4			541

STD. NO. ECS1

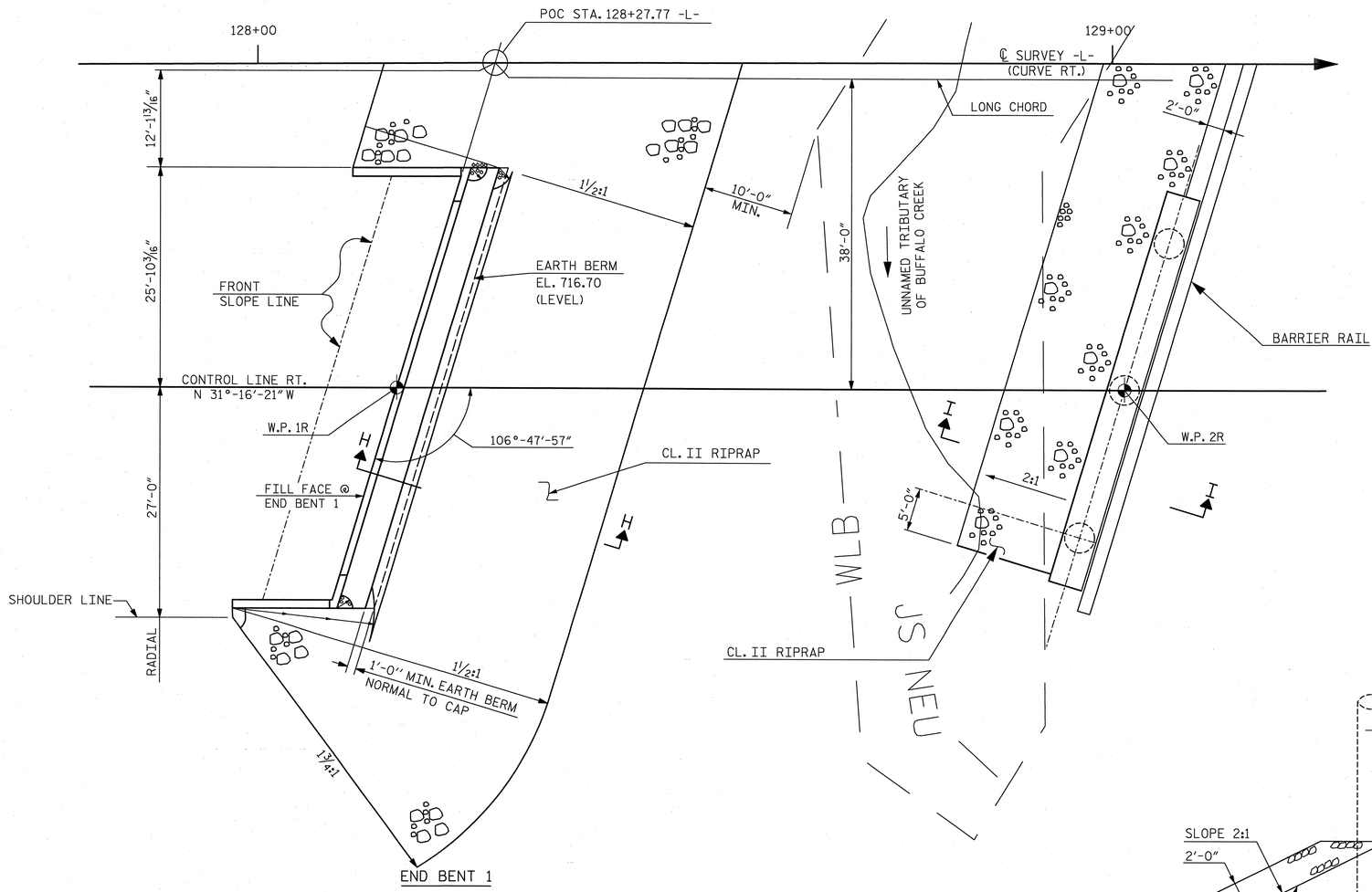

PLAN

SEE LEFT BRIDGE FOR SLOPE PROTECTION LEFT OF ℄ SURVEY -L-

NOTES :

FOR BERM WIDTH DIMENSIONS, SEE GENERAL DRAWING.

ESTIMATED QUANTITIES		
BRIDGE @ POC STA. 129+37.56 -L-	RIP RAP CLASS II (2'-0" THICK)	GEOTEXTILE FOR DRAINAGE
	TONS	SQUARE YARDS
END BENT 1	300	335
BENT 1	51	84

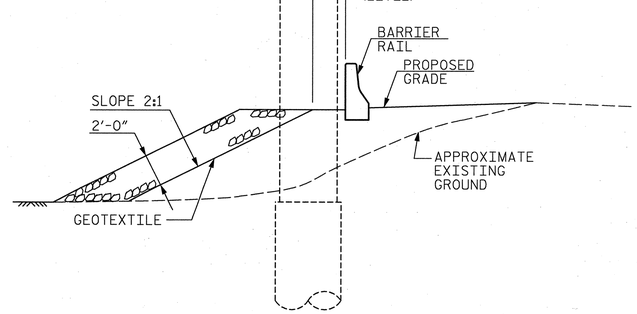

SECTION I-I

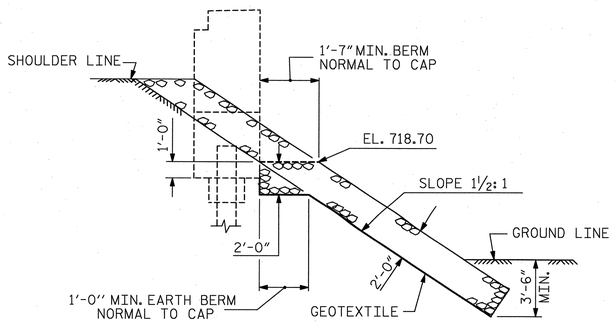

SECTION H-H

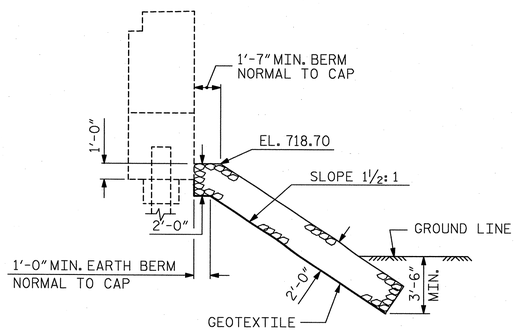

℄ SECTION BERM RIP RAPPED

PROJECT NO. U-2525B

GUILFORD COUNTY

STATION: POC 129+37.56 -L-

STATE OF NORTH CAROLINA
DEPARTMENT OF TRANSPORTATION
RALEIGH

STANDARD

RIP RAP DETAILS

RIGHT LANE

ASSEMBLED BY : MEW	DATE : 6/13
CHECKED BY : STF	DATE : 7/13
DRAWN BY : REK 1/84	REV. 5/1/06R TLA/GM
CHECKED BY : RDU 1/84	REV. 10/1/11 MAA/GM
	REV. 12/21/11 MAA/GM

NORTH CAROLINA PROFESSIONAL SEAL 27812 ENGINEER DAVID W. HAWKINS 12/23/13

NORTH CAROLINA PROFESSIONAL SEAL 12916 ENGINEER PAUL J. BARBER 12/23/13

HNTB NORTH CAROLINA, P.C.
License No. C-1554
343 E. Six Forks Rd., Suite 200, Raleigh, N.C. 27609

DRAWN BY M. WRIGHT DATE 12/13
CHECKED BY S. FISHER DATE 12/13

DWG. NO. 28

REVISIONS						SHEET NO.
NO.	BY:	DATE:	NO.	BY:	DATE:	S-168
1			3			TOTAL SHEETS
2			4			541

STD. NO. RR1

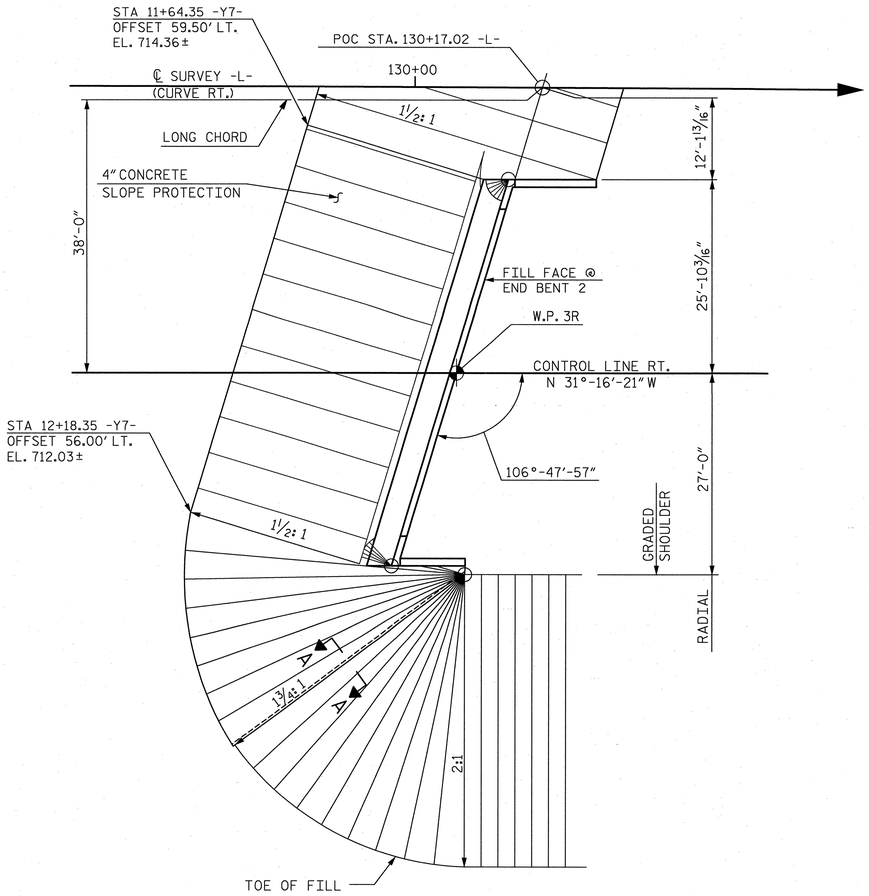

END BENT 2

PLAN

SEE LEFT BRIDGE FOR SLOPE PROTECTION LEFT OF ℄ SURVEY -L-

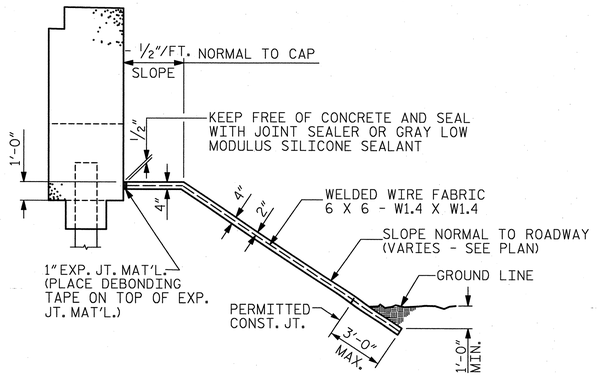

SECTION ALONG ℄ ROADWAY WHEN DITCH IS NOT PROVIDED

NOTES:

FOR BERM WIDTHS AND ELEVATIONS, SEE GENERAL DRAWING.

SLOPE PROTECTION SHALL CONSIST OF 4" POURED-IN-PLACE CONCRETE PAVING AS SHOWN IN THE DETAILS ON THIS SHEET. CONCRETE SHALL BE CLASS "B". THE CONCRETE SURFACE SHALL BE FLOATED WITH A WOODEN FLOAT AND FINISHED. WELDED WIRE FABRIC REINFORCING SHALL BE 6 X 6 - W1.4 X W1.4, 60" WIDE. SLOPE PROTECTION SHALL BE POURED IN 5' STRIPS AS SHOWN IN THE "POURING DETAIL" WITH 2'-0" LONG #4 BARS PLACED ALONG THE SLOPE BETWEEN STRIPS AT 1'-6" MAXIMUM SPACING. SLOPE PROTECTION MAY BE POURED IN ALTERNATE 4' AND 5' STRIPS AS SHOWN IN THE "OPTIONAL POURING DETAIL" WITH ADJACENT RUNS OF WELDED WIRE FABRIC LAPPING AT LEAST 6". THE COST OF THE WELDED WIRE FABRIC AND #4 BARS, IF USED, SHALL BE INCLUDED IN THE CONTRACT UNIT PRICE BID PER SQUARE YARD FOR SLOPE PROTECTION.

BRIDGE @ STA. POC 129+37.56 -L-	4" INCH SLOPE PROTECTION	✳ WELDED WIRE FABRIC 60 INCHES WIDE
	SQUARE YARDS	APPROX. L.F.
END BENT 2	250	500

✳ QUANTITY SHOWN IS BASED ON 5' POURS.

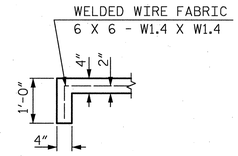

SECTION A-A

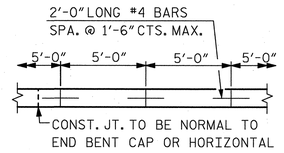

STRIP WIDTHS MAY VARY IN CURVED PORTION.

POURING DETAIL

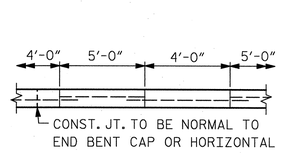

POUR A 4'-0" STRIP FIRST. STRIP WIDTHS MAY VARY IN CURVED PORTION.

OPTIONAL POURING DETAIL

PROJECT NO. U-2525B

GUILFORD COUNTY

STATION: POC 129+37.56 -L-

NORTH CAROLINA PROFESSIONAL SEAL 27812 ENGINEER DAVID W. HAWKINS 12/23/13

NORTH CAROLINA PROFESSIONAL SEAL 12916 ENGINEER PAUL J. BARBER 12/23/13

HNTB NORTH CAROLINA, P.C.
License No. C-1554
343 E. Six Forks Rd., Suite 200, Raleigh, N.C. 27609

DRAWN BY M. WRIGHT DATE 6/13
CHECKED BY S. FISHER DATE 7/13

DWG. NO. 29

STATE OF NORTH CAROLINA
DEPARTMENT OF TRANSPORTATION
RALEIGH

SLOPE PROTECTION DETAILS

RIGHT LANE

REVISIONS						SHEET NO.
NO.	BY:	DATE:	NO.	BY:	DATE:	5-169
1			3			TOTAL SHEETS
2			4			541

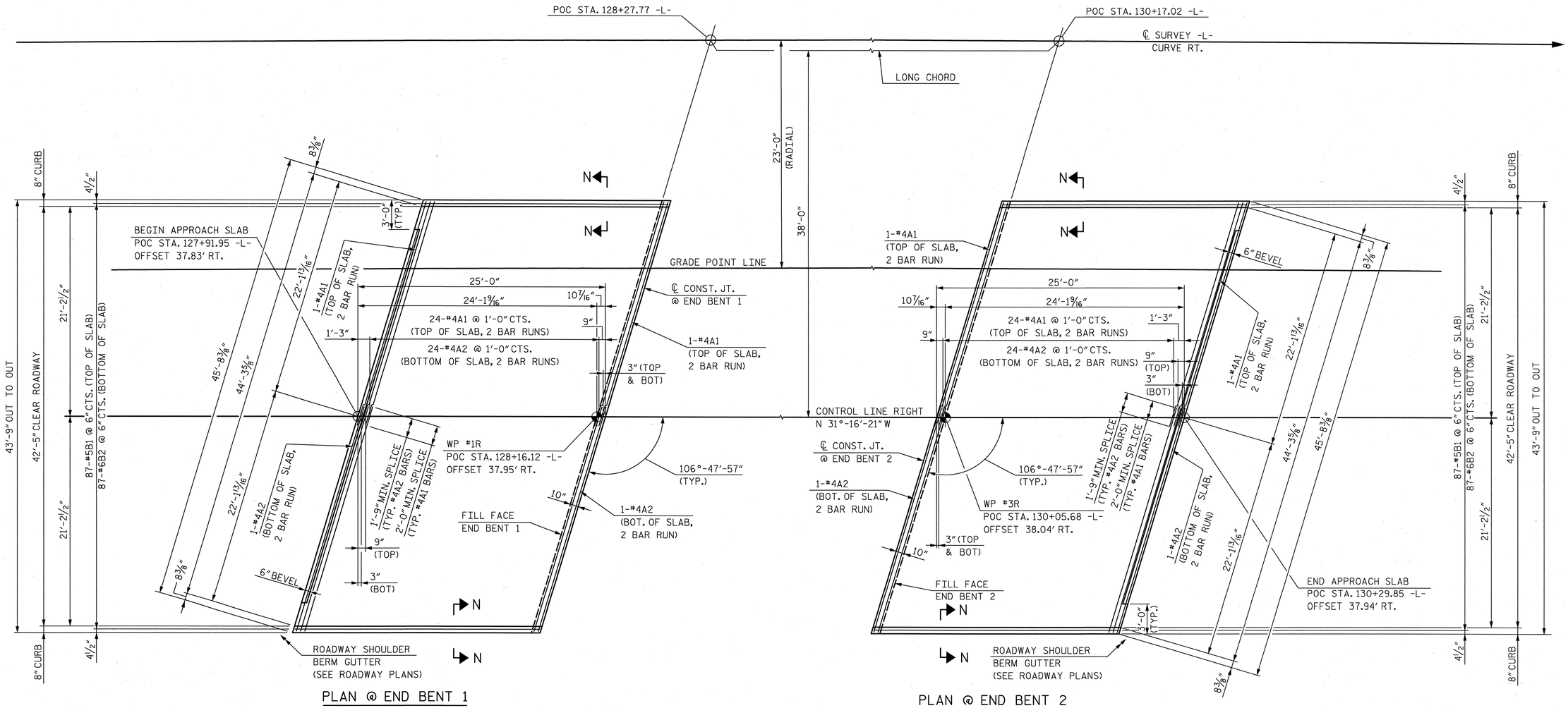

PLAN @ END BENT 1

PLAN @ END BENT 2

PROJECT NO. U-2525B

GUILFORD COUNTY

STATION: POC 129+37.56 -L-

NOTES:

FOR SECTION N-N, SEE "BRIDGE APPROACH SLAB FOR INTEGRAL ABUTMENT" SHEET 2 OF 3.

FOR APPROACH SLAB BILL OF MATERIAL, SEE "BRIDGE APPROACH SLAB FOR INTEGRAL ABUTMENT" SHEET 2 OF 3.

SHEET 1 OF 3

STATE OF NORTH CAROLINA
DEPARTMENT OF TRANSPORTATION
RALEIGH

BRIDGE APPROACH SLAB PLAN

RIGHT LANE

NORTH CAROLINA PROFESSIONAL SEAL 27812 ENGINEER DAVID W. HAWKINS 6/23/13

NORTH CAROLINA PROFESSIONAL SEAL 12916 ENGINEER PAUL J. BARBER 6/23/13

HNTB NORTH CAROLINA, P.C.
License No. C-1554
343 E. Six Forks Rd., Suite 200, Raleigh, N.C. 27609

DRAWN BY M. WRIGHT DATE 6/13
CHECKED BY S. FISHER DATE 7/13

DWG. NO. 30

REVISIONS					
NO.	BY:	DATE:	NO.	BY:	DATE:
1			3		
2			4		

SHEET NO. S-170

TOTAL SHEETS 541

FOR PLAN VIEW OF APPROACH SLABS AT
END BENT 1 AND END BENT 2, SEE SHEET 1 OF 3.

NOTES

APPROACH SLAB SHALL NOT BE CONSTRUCTED PRIOR TO COMPLETION OF THE BRIDGE DECK.

FOR REINFORCED BRIDGE APPROACH FILL FABRIC WALL INCLUDING GEOTEXTILE, IMPERMEABLE GEOMEMBRANE, 4" Ø DRAINAGE PIPE, #78M STONE, WELDED WIRE FORM, AND SELECT MATERIAL, SEE ROADWAY PLANS.

AREA BETWEEN THE WINGWALL AND APPROACH SLAB SHALL BE GRADED TO DRAIN THE WATER AWAY FROM THE FILL FACE OF THE BRIDGE AND SHALL BE PAVED. SEE ROADWAY PLANS.

THE JOINT OPENING AT THE APPROACH SLAB/DECK INTERFACE SHALL BE SAWED NO MORE THAN 12 HOURS AFTER THE APPROACH SLAB IS CAST. THE JOINT SHALL BE CLEANED OF ALL DEBRIS BEFORE THE SEALANT IS APPLIED. THE JOINT SEALER MATERIAL SHALL CONFORM TO THE REQUIREMENTS OF SECTION 1028-3 OF THE STANDARD SPECIFICATIONS.

BILL OF MATERIAL

FOR ONE APPROACH SLAB
(2 REQ'D)

BAR	NO.	SIZE	TYPE	LENGTH	WEIGHT
✳ A1	52	#4	STR	23'-8"	822
A2	52	#4	STR	23'-7"	819
✳ B1	87	#5	STR	24'-1"	2,185
B2	87	#6	STR	24'-7"	3,212

REINFORCING STEEL	LBS.	4,031
✳ EPOXY COATED REINFORCING STEEL	LBS.	3,007
CLASS AA CONCRETE	C.Y.	47.3

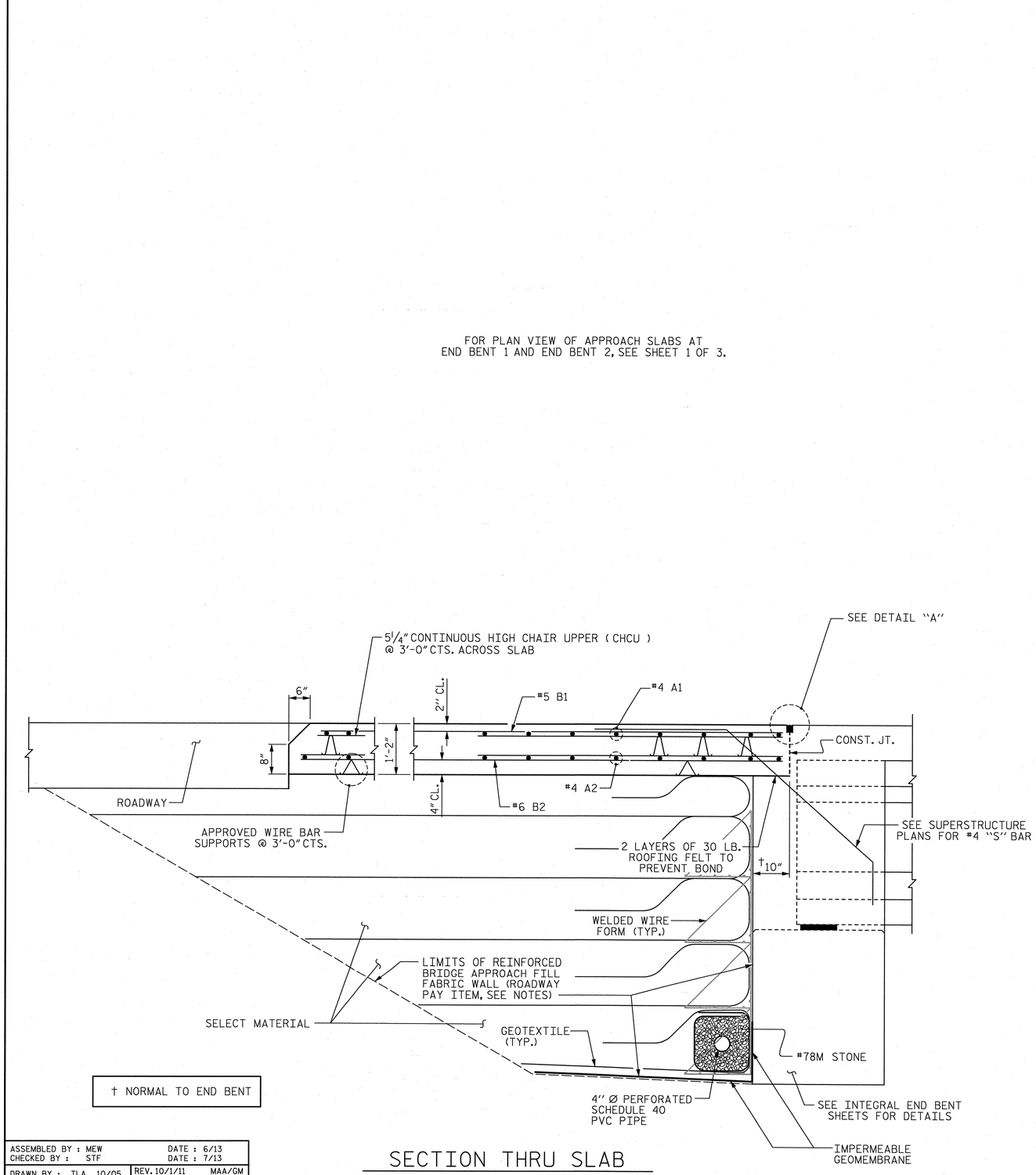

† NORMAL TO END BENT

SECTION THRU SLAB

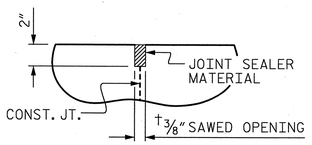

DETAIL "A"

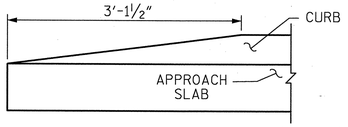

END OF CURB WITHOUT SHOULDER BERM GUTTER

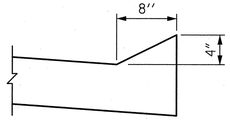

SECTION N-N

PROJECT NO. U-2525B

GUILFORD COUNTY

STATION: POC 129+37.56 -L-

SHEET 2 OF 3

STATE OF NORTH CAROLINA
DEPARTMENT OF TRANSPORTATION
RALEIGH

STANDARD

BRIDGE APPROACH SLAB
FOR INTEGRAL ABUTMENT

RIGHT LANE

NORTH CAROLINA PROFESSIONAL SEAL 27812 ENGINEER DAVID W. HAWKINS 12/23/13

NORTH CAROLINA PROFESSIONAL SEAL 12916 ENGINEER PAUL J. BARBER 12/23/13

ASSEMBLED BY : MEW	DATE : 6/13
CHECKED BY : STF	DATE : 7/13
DRAWN BY : TLA 10/05	REV. 10/1/11 MAA/GM
CHECKED BY : GM 5/06	REV. 12/21/11 MAA/GM
	REV. 6/13 MAA/GM

HNTB NORTH CAROLINA, P.C.
License No. C-1554
343 E. Six Forks Rd., Suite 200, Raleigh, N.C. 27609

DRAWN BY M. WRIGHT DATE 6/13
CHECKED BY S. FISHER DATE 7/13
DWG. NO. 31

REVISIONS						SHEET NO.
NO.	BY:	DATE:	NO.	BY:	DATE:	S-17(
1			3			TOTAL SHEETS
2			4			54

STD. NO. BAS5

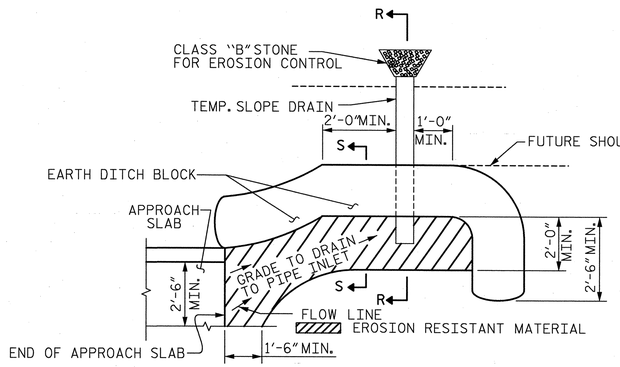

NOTE: IMMEDIATELY AFTER THE CONSTRUCTION OF THE APPROACH SLAB, THE CONTRACTOR SHALL PROVIDE TEMPORARY BERM AND SLOPE DRAIN. CONTRACTOR SHALL GRADE TO PIPE INLET AND PROVIDE EROSION RESISTANT MATERIAL AS SHOWN. THE EROSION RESISTANT MATERIAL SHALL BE EITHER 1) ASPHALT PLANT MIX, TYPE 1 OR TYPE 2, MIN. 2" DEPTH, 2) EROSION CONTROL MAT, OR 3) CONCRETE, AS DIRECTED BY THE ENGINEER. THE SLOPE DRAIN SHALL CONSIST OF A NON-PERFORATED TEMPORARY DRAINAGE PIPE, 12 INCHES IN DIAMETER.

PLAN VIEW

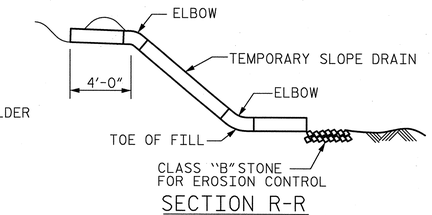

SECTION R-R

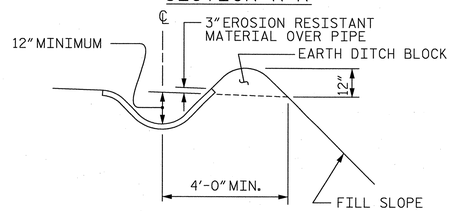

SECTION S-S

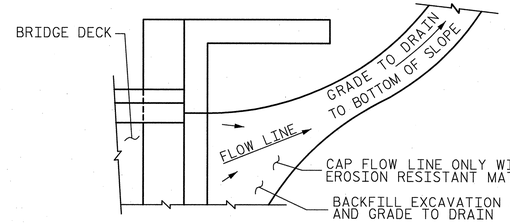

NOTE: IF THE APPROACH SLAB IS NOT CONSTRUCTED IMMEDIATELY AFTER THE BACKFILLING OF THE END BENT EXCAVATION, GRADE TO DRAIN TO THE BOTTOM OF THE SLOPE AND PROVIDE EROSION RESISTANT MATERIAL, SUCH AS FIBERGLASS ROVING OR AS DIRECTED BY THE ENGINEER TO PREVENT SOIL EROSION AND TO PROTECT THE AREA ADJACENT TO THE STRUCTURE. THE CONTRACTOR WILL BE REQUIRED TO REMOVE THESE MATERIALS PRIOR TO CONSTRUCTION OF THE APPROACH SLAB.

TEMPORARY DRAINAGE DETAIL

TEMPORARY BERM AND SLOPE DRAIN DETAILS

(TO BE USED WHEN SHOULDER BERM GUTTER IS REQUIRED)

PROJECT NO. U-2525B

GUILFORD COUNTY

STATION: POC 129+37.56 -L-

SHEET 3 OF 3

STATE OF NORTH CAROLINA
DEPARTMENT OF TRANSPORTATION
RALEIGH

STANDARD

BRIDGE APPROACH SLAB DETAILS

RIGHT LANE

ASSEMBLED BY : M. WRIGHT	DATE : 6/13
CHECKED BY : S. FISHER	DATE : 7/13

DRAWN BY : FCJ 11/88	REV. 10/1/11	MAA/GM
CHECKED BY : ARB 11/88	REV. 7/12	MAA/GM
	REV. 6/13	MAA/GM

NORTH CAROLINA PROFESSIONAL ENGINEER SEAL 27812 DAVID W. HAWKINS 12/23/13

NORTH CAROLINA PROFESSIONAL ENGINEER SEAL 12916 PAUL J. BARBER 12/23/13

HNTB NORTH CAROLINA, P.C.
License No. C-1554
343 E. Six Forks Rd., Suite 200, Raleigh, N.C. 27609

DRAWN BY M. WRIGHT DATE 6/13
CHECKED BY S. FISHER DATE 7/13

DWG. NO. 32

REVISIONS						SHEET NO.
NO.	BY:	DATE:	NO.	BY:	DATE:	S-172
1			3			TOTAL SHEETS
2			4			54-1

STD. NO. BAS4