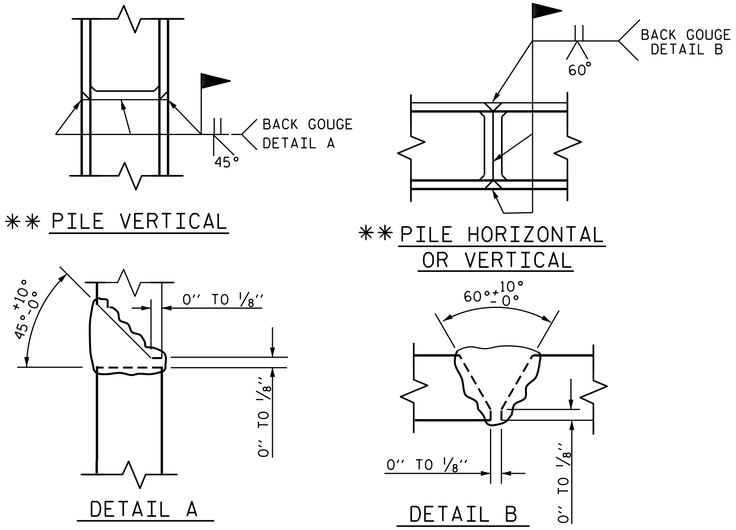

PILE SPLICE DETAILS

** POSITION OF PILE DURING WELDING.

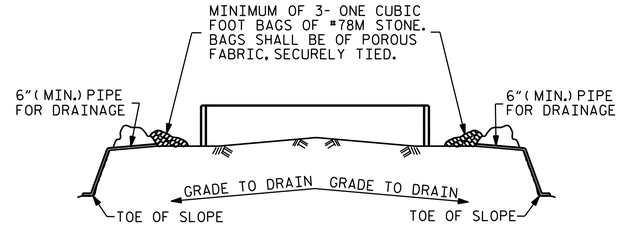

BAGGED STONE AND PIPE SHALL BE PLACED IMMEDIATELY AFTER COMPLETION OF END BENT EXCAVATION. PIPE MAY BE EITHER CONCRETE, CORRUGATED STEEL, CORRUGATED ALUMINUM ALLOY, OR CORRUGATED PLASTIC. PERFORATED PIPE WILL NOT BE ALLOWED.

BAGGED STONE SHALL REMAIN IN PLACE UNTIL THE ENGINEER DIRECTS THAT IT BE REMOVED. THE CONTRACTOR SHALL REMOVE AND DISPOSE OF SILT ACCUMULATIONS AT BAGGED STONE WHEN SO DIRECTED BY THE ENGINEER. BAGS SHALL BE REMOVED AND REPLACED WHENEVER THE ENGINEER DETERMINES THAT THEY HAVE DETERIORATED AND LOST THEIR EFFECTIVENESS.

NO SEPARATE PAYMENT WILL BE MADE FOR THIS WORK AND THE ENTIRE COST OF THIS WORK SHALL BE INCLUDED IN THE UNIT CONTRACT PRICE BID FOR THE SEVERAL PAY ITEMS.

TEMPORARY DRAINAGE AT END BENT

BAR TYPES

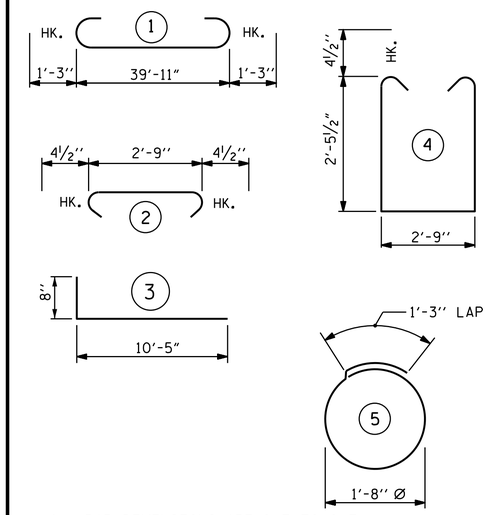

ALL BAR DIMENSIONS ARE OUT TO OUT

BILL OF MATERIAL

INTEGRAL END BENT #1

BAR	NO.	SIZE	TYPE	LENGTH	WEIGHT
* B1	8	9	1	42'-5"	1154
* B2	12	4	STR	21'-5"	172
* B3	11	4	STR	2'-9"	20
* B4	8	4	STR	21'-5"	114
* H1	16	4	3	11'-1"	118
* S1	42	4	4	8'-5"	236
* S2	42	4	2	3'-6"	98
* S3	20	4	5	6'-6"	87
* V1	116	4	STR	4'-9"	368

* EPOXY COATED REINFORCING STEEL LBS. 2,367

CLASS AA CONCRETE QUANTITIES:
POUR #1: (CAP, WINGS, & COLLARS) 17.6 C.Y.

HP 12 X 53 STEEL PILES:
NO. 5 LIN. FT. 275

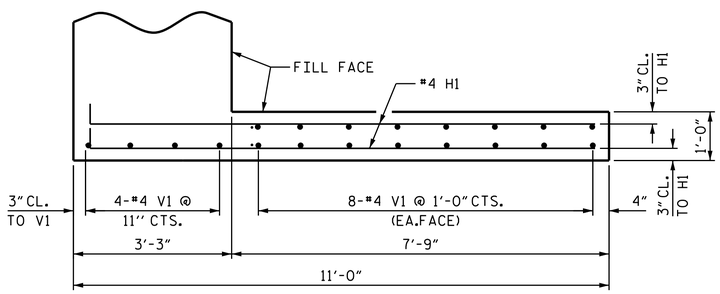

PLAN OF WING W1

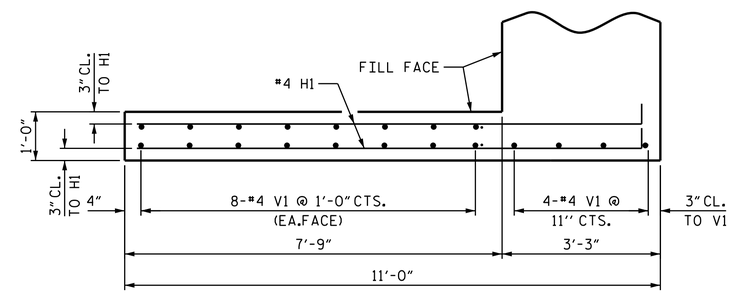

PLAN OF WING W2

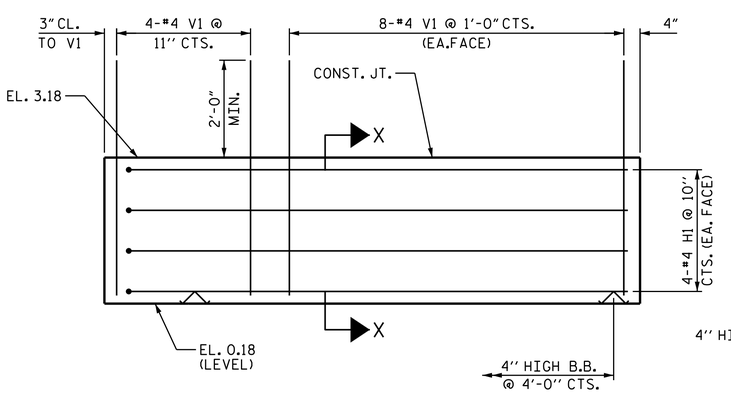

ELEVATION OF WING W1

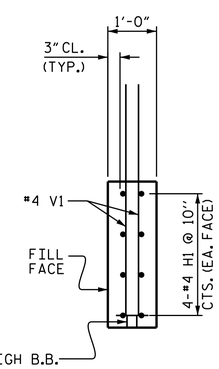

SECTION X-X

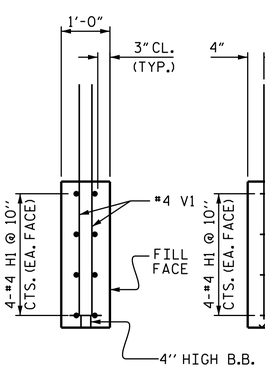

SECTION Y-Y

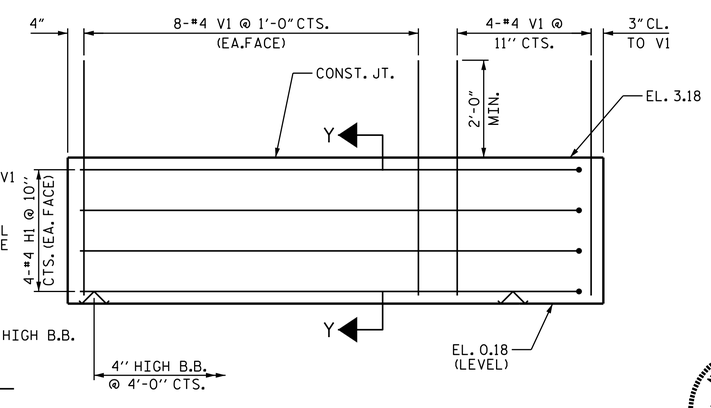

ELEVATION OF WING W2

PROJECT NO. B-4591
NEW HANOVER/PENDER COUNTY
STATION: 23+25.00 -L-

SHEET 2 OF 2

STATE OF NORTH CAROLINA
DEPARTMENT OF TRANSPORTATION
RALEIGH

SUBSTRUCTURE
INTEGRAL
END BENT #1

3/25/2014
NORTH CAROLINA PROFESSIONAL SEAL 14045 ENGINEER TIMOTHY L. COGGINS

DocuSigned by: Tim Coggins
DEFD4A8D48FA47B...

REVISIONS						SHEET NO.
NO.	BY:	DATE:	NO.	BY:	DATE:	S-23
1			3			TOTAL SHEETS
2			4			30

DRAWN BY : N. Ruffin DATE : 9/25/12
CHECKED BY : GHOLAMREZA KOUCHEKI DATE : 6/18/13
DESIGN ENGINEER OF RECORD: N. RUFFIN DATE : 7/26/13

25-MAR-2014 11:18
R:\Structures\Plans\nruffin\B-4591_sm_Plans_01.dgn
dstutts