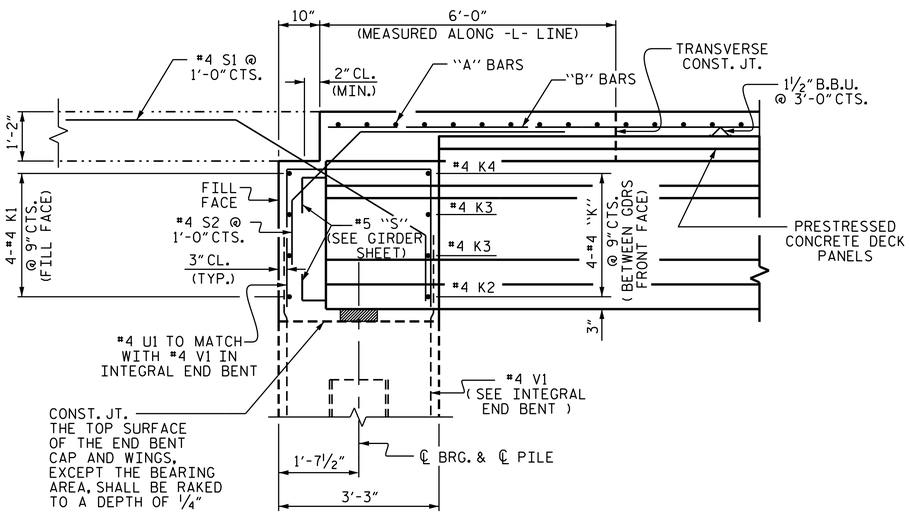

SECTION THRU INTEGRAL END BENT

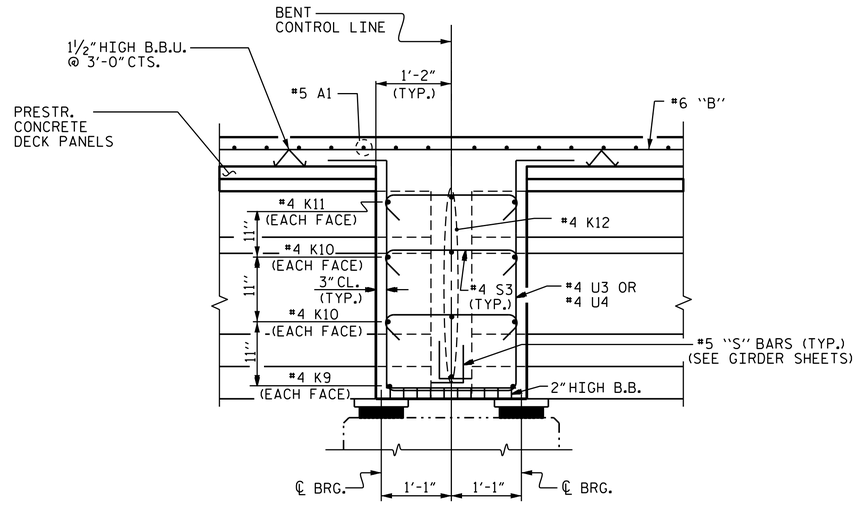

SECTION THRU
BENT DIAPHRAGM

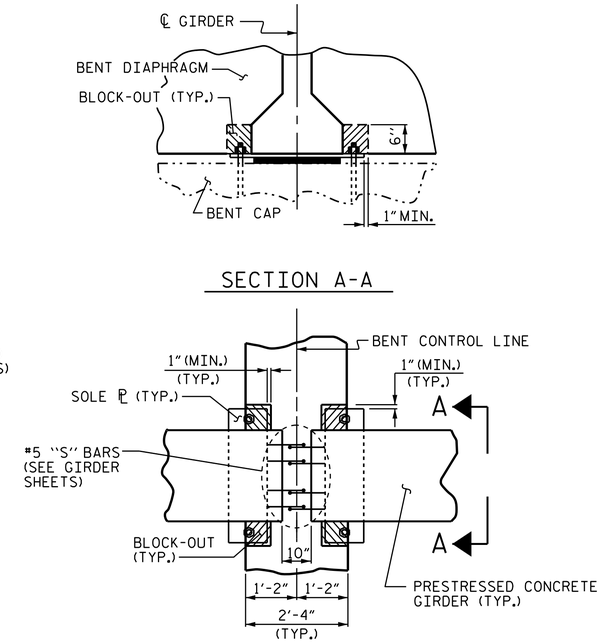

BENT DIAPHRAGM BLOCK-OUT DETAIL

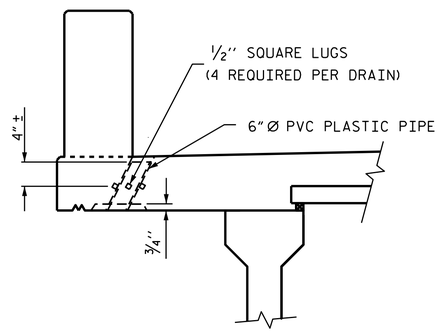

ELEVATION

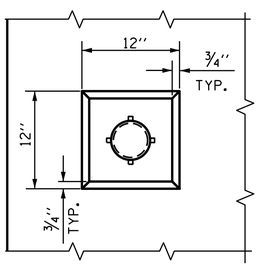

PLAN OF RECESS

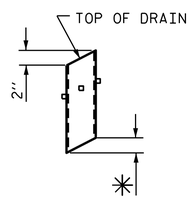

✳ TO BE SET TO MATCH SLOPE
OF BOTTOM OF OVERHANG
(14 DRAINS REQUIRED)

PIPE DETAIL

TOP OF FLOOR DRAINS TO BE SET ⅜" BELOW SURFACE OF SLAB.

4 - ½" SQUARE LUGS TO BE GLUED TO THE P.V.C. PLASTIC PIPE AT EQUAL SPACES AROUND THE PIPE DRAIN APPROXIMATELY 4" FROM THE TOP OF THE PIPE.

THE 6" Ø PVC PLASTIC PIPE AND FITTINGS SHALL BE SCHEDULE 40 AND CONFORM TO ASTM D1785.

DRAIN DETAILS

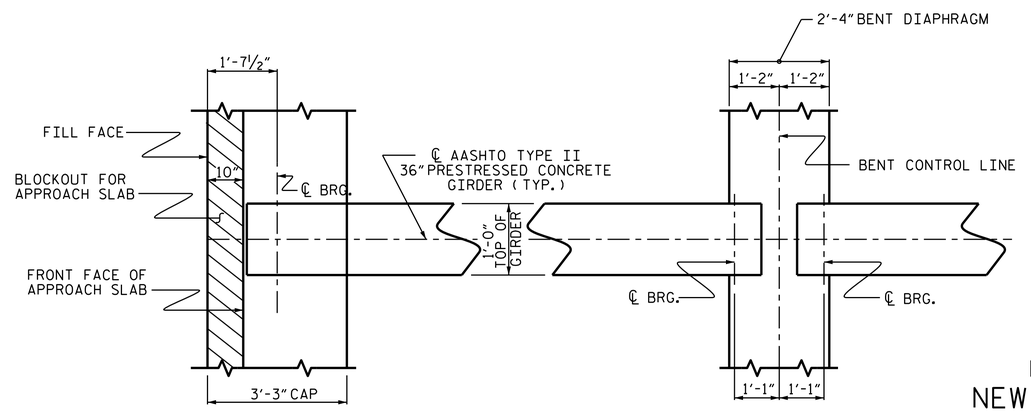

@ INTEGRAL END BENT

@ BENT DIAPHRAGM

PLAN OF GIRDER

PROJECT NO. B-4591
NEW HANOVER/PENDER COUNTY
STATION: 23+25.00 -L-

SHEET 2 OF 3

STATE OF NORTH CAROLINA
DEPARTMENT OF TRANSPORTATION
RALEIGH

SUPERSTRUCTURE

TYPICAL SECTION DETAILS

3/25/2014

NORTH CAROLINA PROFESSIONAL SEAL 14045 ENGINEER TIMOTHY L. COGGINS

DocuSigned by: Tim Coggins
DEFD4A8D48FA47B...

REVISIONS						SHEET NO.
NO.	BY:	DATE:	NO.	BY:	DATE:	S-6
1			3			TOTAL SHEETS
2			4			30

DRAWN BY : N. Ruffin DATE : 5/2/13
CHECKED BY : GHOLAMREZA KOUCHEKI DATE : 6/12/13
DESIGN ENGINEER OF RECORD: N. RUFFIN DATE : 7/25/13

25-MAR-2014 11:19
R:\Structures\Plans\nruffin\B-4591_sm_Plans_01.dgn
dstutts

NCBDS