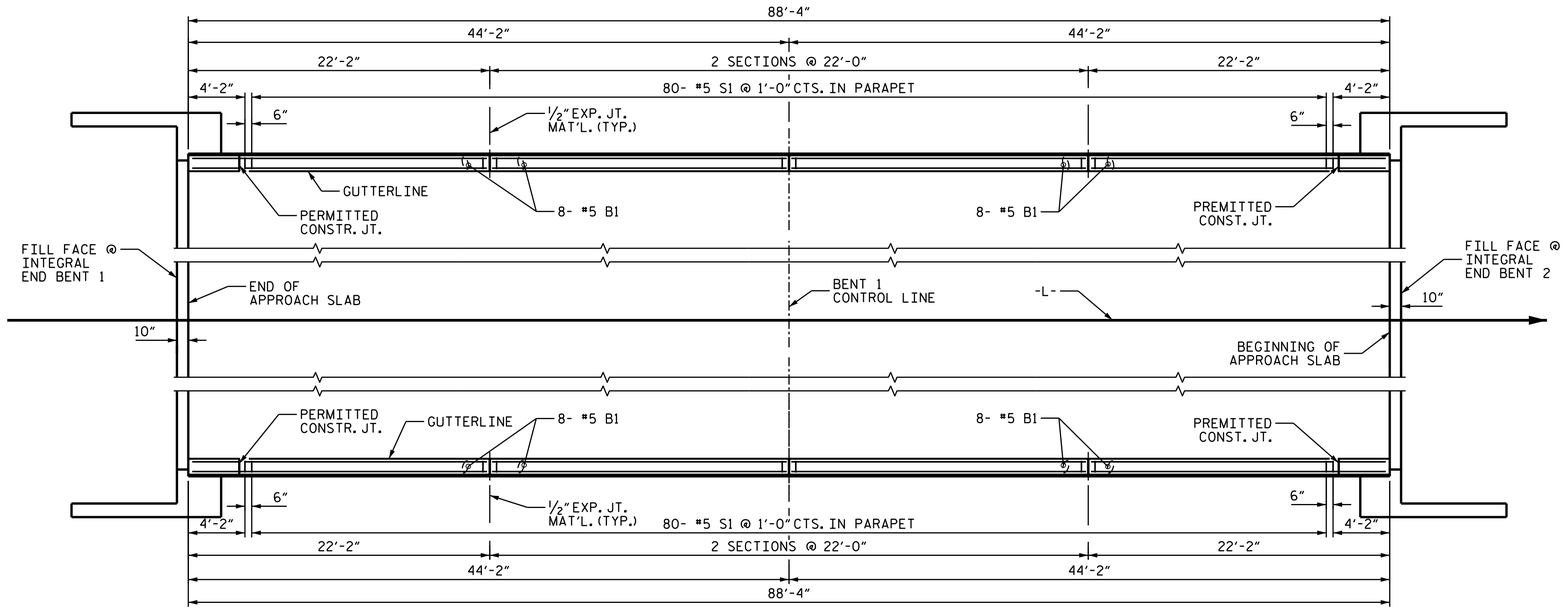

PLAN OF PARAPET

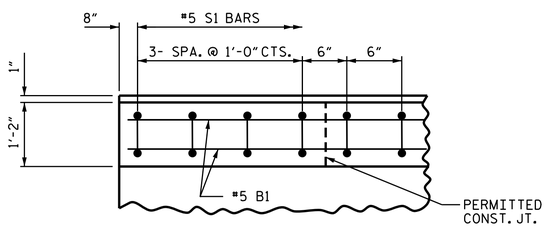

PLAN OF PARAPET

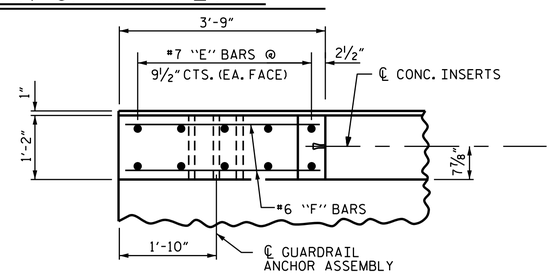

PLAN OF END POST

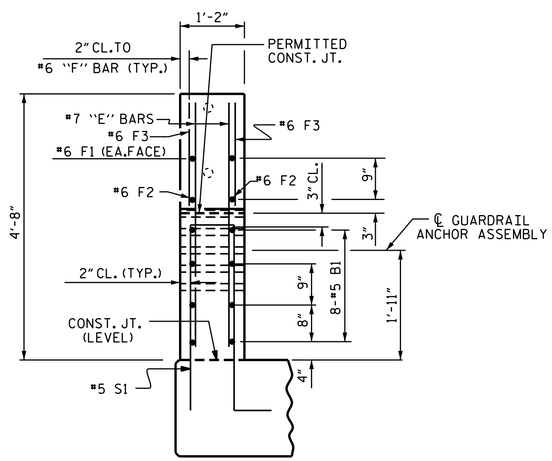

END VIEW

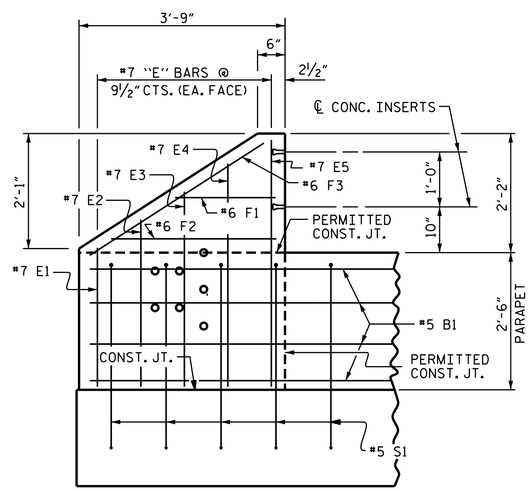

ELEVATION

PARAPET AND END POST FOR TWO BAR RAIL

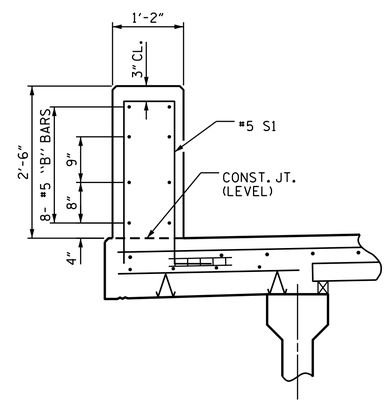

SECTION THRU PARAPET

BAR TYPE

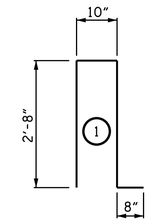

ALL BAR DIMENSIONS ARE OUT TO OUT.

BILL OF MATERIAL

FOR PARAPET AND FOUR END POST

	BAR	NO	SIZE	TYPE	LENGTH	WEIGHT
*	B1	64	5	STR	21'-8"	1446
*	S1	180	5	1	6'-10"	1283
*	E1	8	7	STR	2'-7"	42
*	E2	8	7	STR	3'-2"	52
*	E3	8	7	STR	3'-8"	60
*	E4	8	7	STR	4'-2"	68
*	E5	8	7	STR	4'-6"	74
*	F1	8	6	STR	1'-10"	22
*	F2	8	6	STR	3'-0"	36
*	F3	8	6	STR	3'-10"	46
*	EPOXY COATED REINFORCING STEEL				LBs.	3,129
	CLASS AA CONCRETE				C.Y.	19.9
	CONCRETE PARAPET				LIN. FT.	176.67

NOTES:

ALL REINFORCING STEEL IN THE PARAPETS AND END POSTS SHALL BE EPOXY COATED.

FOR DETAILS OF CONCRETE INSERT, SEE "2 BAR METAL RAIL" SHEET 2 OF 4 AND FOR GUARDRAIL ANCHOR ASSEMBLY, SEE "RAIL POST SPACINGS AND END OF RAIL DETAILS" SHEETS 3 OF 4.

GROOVED CONTRACTION JOINTS, 1/2" IN DEPTH, SHALL BE TOOLED IN ALL EXPOSED FACES OF THE PARAPET AND IN ACCORDANCE WITH ARTICLE 825-10(B) OF THE STANDARD SPECIFICATIONS. A CONTRACTION JOINT SHALL BE LOCATED AT EACH THIRD POINT BETWEEN PARAPET EXPANSION JOINTS. ONLY ONE CONTRACTION JOINT IS REQUIRED AT MIDPOINT OF PARAPET SEGMENTS LESS THAN 20 FEET IN LENGTH AND NO CONTRACTION JOINTS ARE REQUIRED FOR THOSE SEGMENTS LESS THAN 10 FEET IN LENGTH.

PARAPET IN A CONTINUOUS UNIT SHALL NOT BE CAST UNTIL ALL SLAB CONCRETE IN THE UNIT HAS BEEN CAST AND HAS REACHED A MINIMUM COMPRESSIVE STRENGTH OF 3,000 PSI.

PROJECT NO. B-4591
NEW HANOVER/PENDER COUNTY
STATION: 23+25.00 -L-

SHEET 4 OF 4

3/25/2014

NORTH CAROLINA PROFESSIONAL SEAL 14045 ENGINEER TIMOTHY L. COGGINS

DocuSigned by: Tim Coggins DEFD4A8D48FA47B...

STATE OF NORTH CAROLINA
DEPARTMENT OF TRANSPORTATION
RALEIGH

SUPERSTRUCTURE
CONCRETE PARAPET FOR 2 BAR METAL RAIL

REVISIONS						SHEET NO.
NO.	BY:	DATE:	NO.	BY:	DATE:	S-19
1			3			TOTAL SHEETS
2			4			30

DRAWN BY : N. Ruffin DATE : 5/15/13
CHECKED BY : G. KOUCHEKI DATE : 6/5/13
DESIGN ENGINEER OF RECORD: N. RUFFIN DATE : 7/25/13

25-MAR-2014 11:18
R:\Structures\Plans\nruffin\B-4591_sm_Plans_01.dgn
dstutts