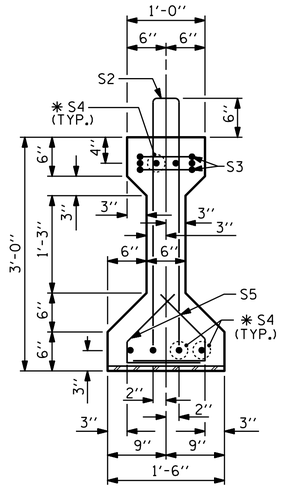

SECTION A-A

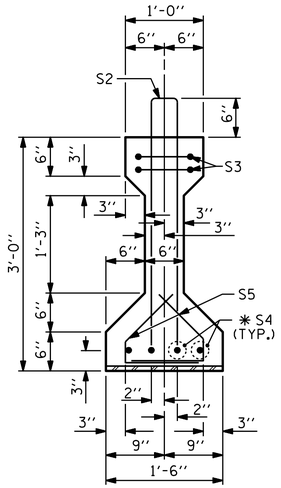

SECTION B-B

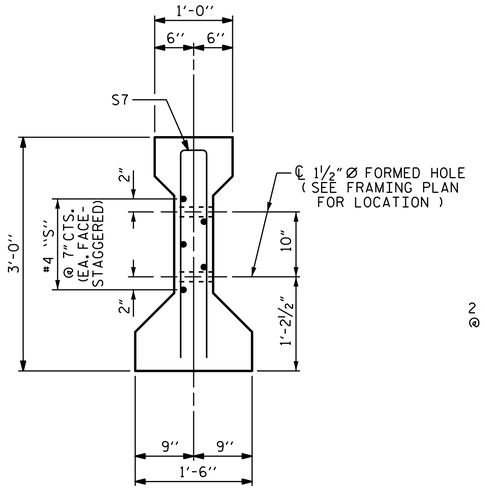

SECTION C-C

(S1 BARS NOT SHOWN)

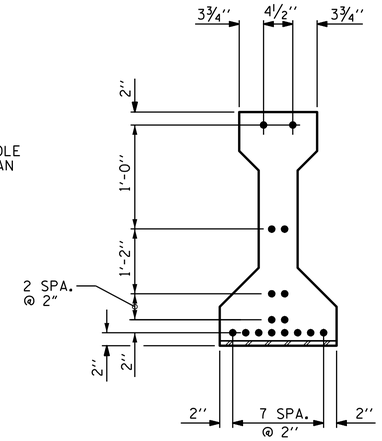

AT END OF GIRDER

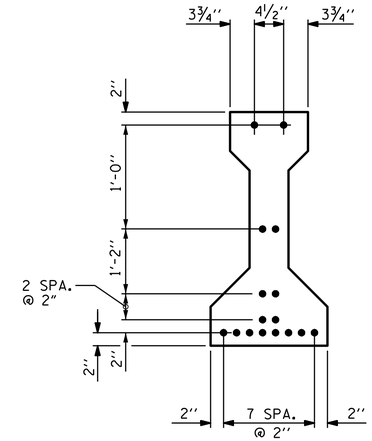

AT ℄ OF GIRDER

0.6" Ø LOW RELAXATION STRAND LAYOUT

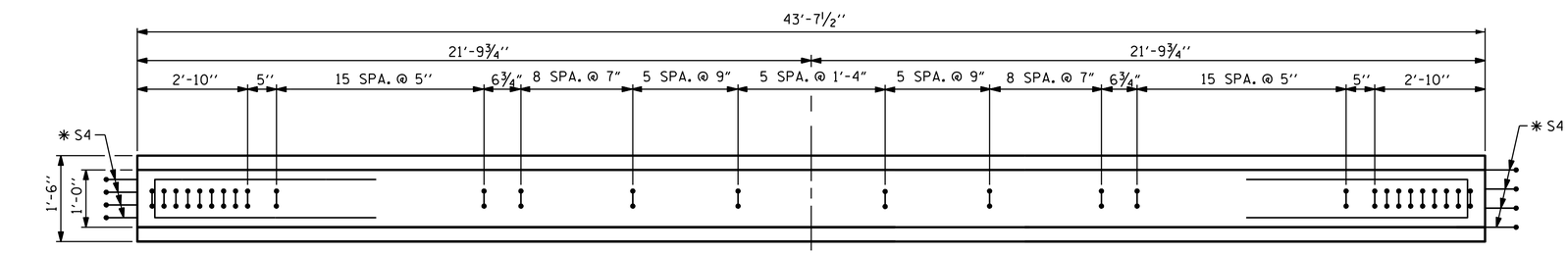

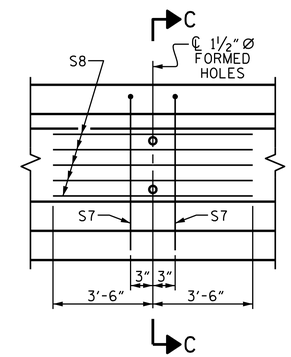

PARTIAL ELEVATION

SHOWING INTERMEDIATE DIAPHRAGM REINFORCING STEEL FOR GIRDER Nos. 1 THRU 4

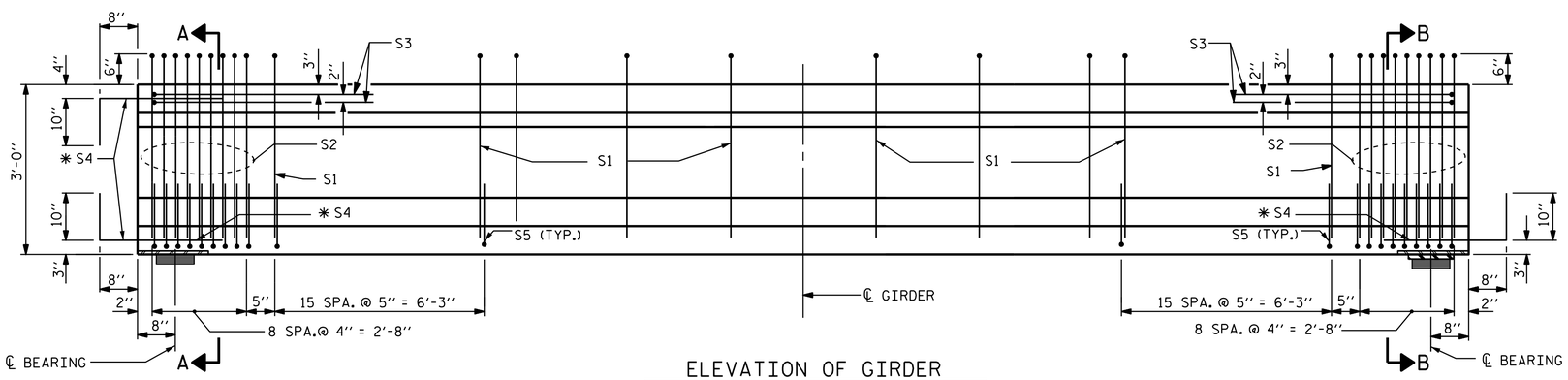

INTEGRAL END BENT

ELEVATION OF GIRDER

(SEE PARTIAL ELEVATION FOR ADDITIONAL "S" BARS)

FIX

0.6" Ø L. R. GRADE 270 STRANDS

AREA (SQUARE INCHES)	ULTIMATE STRENGTH (LBS. PER STRAND)	APPLIED PRESTRESS (LBS. PER STRAND)
0.217	58,600	43,950

REINFORCING STEEL FOR ONE GIRDER

	BAR	NUMBER	SIZE	TYPE	LENGTH	WEIGHT
EXTERIOR GDR.	S1	64	#4	1	6'-10"	292
INTERIOR GDR.	S1	64	#4	1	6'-10"	292
	S2	18	#5	1	6'-10"	128
	S3	4	#4	3	8'-8"	23
	✱ S4	12	#5	STR	3'-8"	46
	S5	100	#4	2	2'-4"	156
EXTERIOR GDR.	S7	2	#5	3	5'-8"	12
INTERIOR GDR.	S7	2	#5	3	5'-8"	12
EXTERIOR GDR.	S8	5	#4	STR	7'-0"	23
INTERIOR GDR.	S8	5	#4	STR	7'-0"	23

✱ NOTE: S4 BARS SHALL BE BENT BEFORE SHIPMENT. HEAT BENDING SHALL NOT BE ALLOWED.

BAR TYPES

ALL BAR DIMENSIONS ARE OUT-TO-OUT

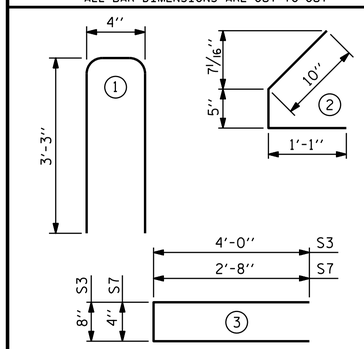

QUANTITIES FOR ONE GIRDER

	REINFORCING STEEL LB.	6000 PSI CONCRETE C.Y.	0.6" Ø L. R. STRANDS No.
EXTERIOR GIRDER	680	4.1	16
INTERIOR GIRDER	680	4.1	16

GIRDERS REQUIRED

	NUMBER	LENGTH	TOTAL LENGTH
SPAN A	4	43'-7½"	174'-6"
SPAN B	4	43'-7½"	174'-6"
TOTAL	8	43'-7½"	349'-0"

PROJECT NO. B-4591

NEW HANOVER/PENDER COUNTY

STATION: 23+25.00 -L-

SHEET 1 OF 3

STATE OF NORTH CAROLINA
DEPARTMENT OF TRANSPORTATION
RALEIGH

STANDARD

AASHTO TYPE II
PRESTRESSED CONCRETE GIRDER
CONTINUOUS FOR LIVE LOAD

3/25/2014

NORTH CAROLINA PROFESSIONAL SEAL 14045 ENGINEER TIMOTHY L. COGGINS

DocuSigned by: Tim Coggins
DEFD4A8D48F447B...

REVISIONS						SHEET NO.
NO.	BY:	DATE:	NO.	BY:	DATE:	S-12
1			3			TOTAL SHEETS
2			4			30

ASSEMBLED BY :	N. Ruffin	DATE :	5/2/13
CHECKED BY :	G. KOUCHEKI	DATE :	7/4/13
DRAWN BY : ELR 8/91	REV. 10/17/00R	RWW/LES	
CHECKED BY : GRP 8/91	REV. 5/1/06R	TLA/GM	
	REV. 10/1/11	MAA/GM	

25-MAR-2014 11:19
R:\Structures\Plans\nruffin\B-4591_sm_Plans_01.dgn
dstutts

STD. NO. PCG4 (Sht. 2)