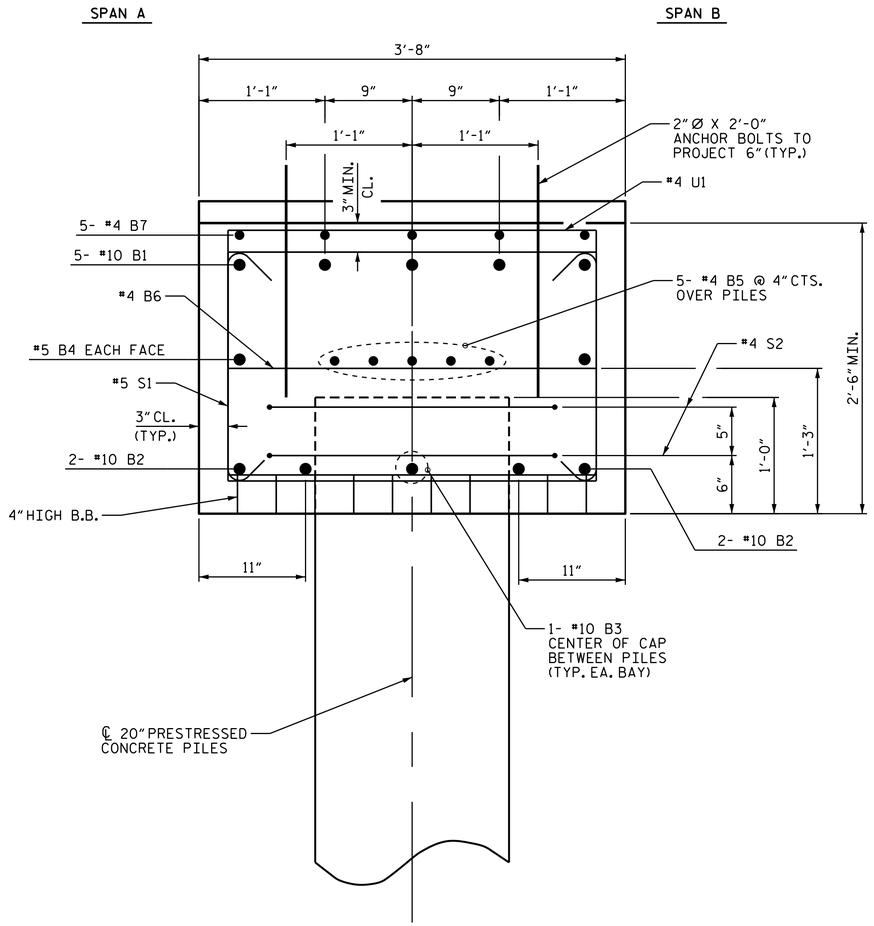

SECTION A-A

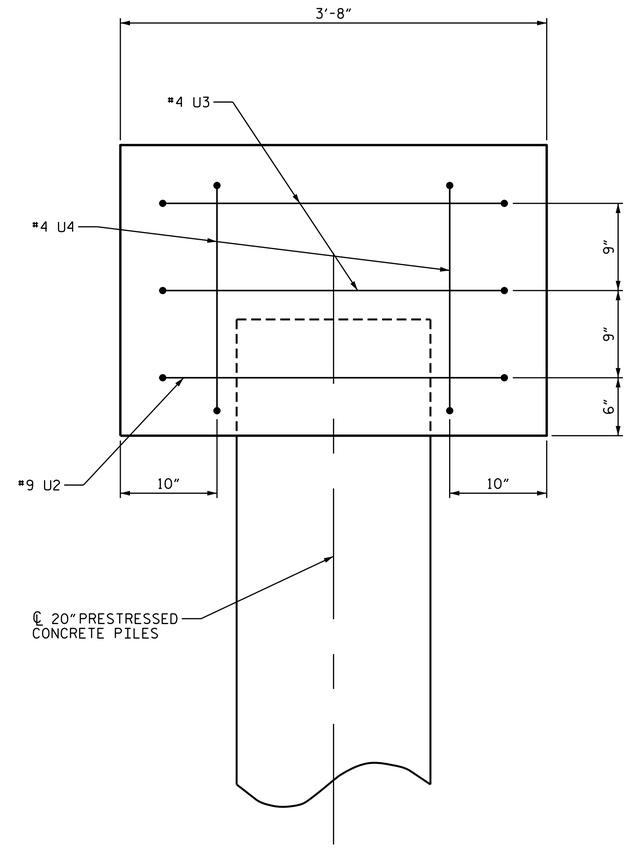

END VIEW

BAR TYPES

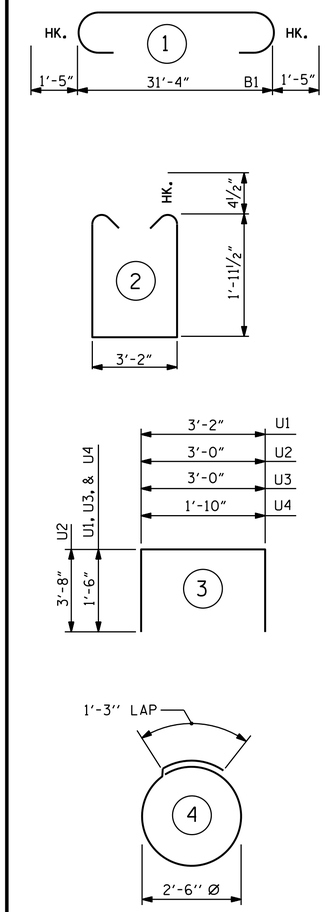

ALL BAR DIMENSIONS ARE OUT TO OUT.

BILL OF MATERIAL

BAR	NO.	SIZE	TYPE	LENGTH	WEIGHT
* B1	5	10	1	34'-2"	735
* B2	4	10	STR	31'-4"	539
* B3	4	10	STR	5'-2"	89
* B4	2	5	STR	31'-4"	65
* B5	10	4	STR	17'-1"	114
* B6	8	4	STR	3'-2"	17
* B7	5	4	STR	12'-8"	42
* S1	34	4	2	7'-10"	178
* S2	10	4	4	9'-2"	61
* U1	28	4	3	6'-2"	115
* U2	2	9	3	10'-4"	70
* U3	4	4	3	6'-0"	16
* U4	4	4	3	4'-10"	13

* EPOXY COATED REINFORCING STEEL LBS. 2,054

■ CLASS AA CONCRETE C.Y. 10.6

20" PRESTRESSED CONC. PILES NO. 5 LIN. FT. 275.0

■ CONCRETE DISPLACED BY THE 20" PRESTRESSED CONCRETE PILES HAS BEEN DEDUCTED FROM THE QUANTITY OF CLASS "AA" CONCRETE FOR THE BENT CAP.

PROJECT NO. B-4591

NEW HANOVER/PENDER COUNTY

STATION: 23+25.00 -L-

SHEET 2 OF 2

STATE OF NORTH CAROLINA
DEPARTMENT OF TRANSPORTATION
RALEIGH

SUBSTRUCTURE
BENT #1

3/25/2014

NORTH CAROLINA PROFESSIONAL SEAL 14045 ENGINEER TIMOTHY L. COGGINS

DocuSigned by: Tim Coggins
DEFD4A8D48FA47B...

REVISIONS						SHEET NO.
NO.	BY:	DATE:	NO.	BY:	DATE:	S-25
1			3			TOTAL SHEETS
2			4			30

DRAWN BY : N. Ruffin DATE : 11/27/12
CHECKED BY : GHOLAMREZA KOUCHEKI DATE : 6/20/13
DESIGN ENGINEER OF RECORD: N. RUFFIN DATE : 7/26/13

25-MAR-2014 11:18
R:\Structures\Plans\nruffin\B-4591_sm_Plans_01.dgn
dstutts