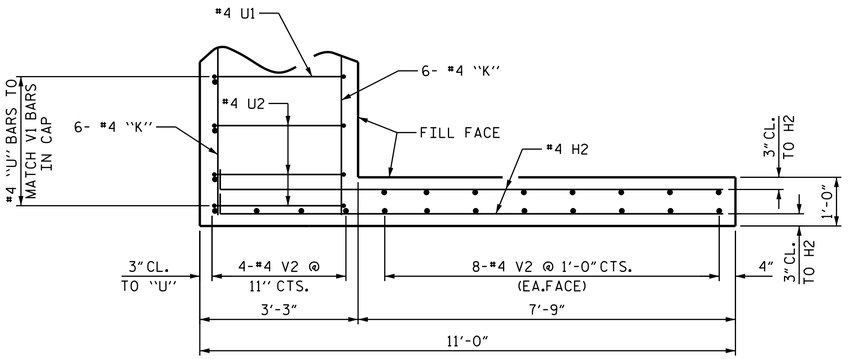

PLAN OF WING W1

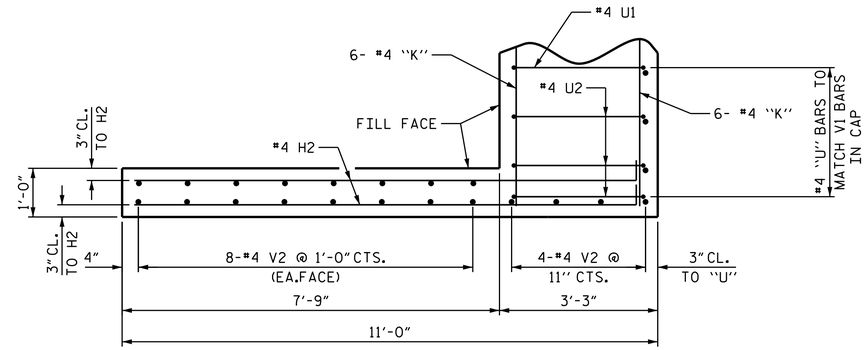

PLAN OF WING W2

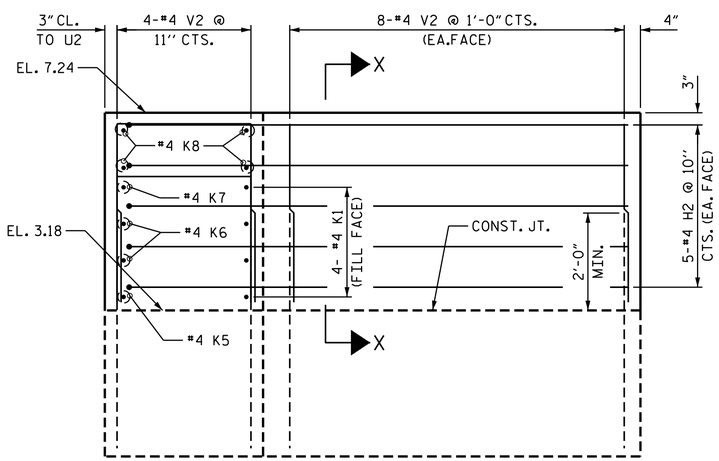

ELEVATION OF WING W1

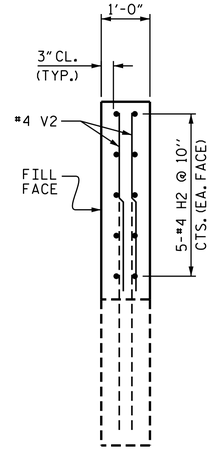

SECTION X-X

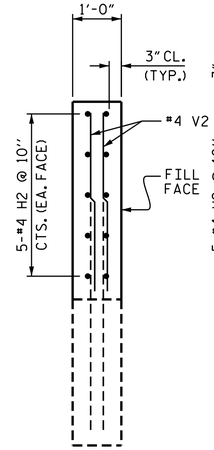

SECTION Y-Y

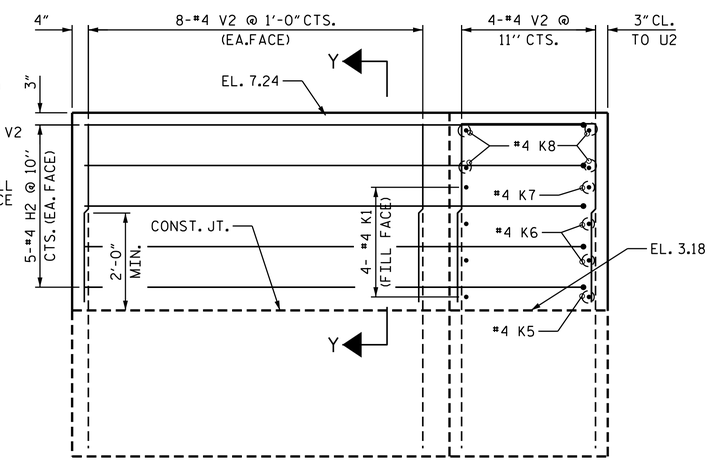

ELEVATION OF WING W2

PROJECT NO. B-4591

NEW HANOVER/PENDER COUNTY

STATION: 23+25.00 -L-

SHEET 2 OF 3

STATE OF NORTH CAROLINA
DEPARTMENT OF TRANSPORTATION
RALEIGH

SUPERSTRUCTURE

PLAN OF SPAN DETAILS

ABUTMENT WINGS @ INTEGRAL END BENT #1

(FOR INTEGRAL END BENT REINFORCING STEEL AND DETAILS, SEE "SUBSTRUCTURE INTEGRAL END BENT 1" SHEETS

3/25/2014

NORTH CAROLINA PROFESSIONAL SEAL 14045 ENGINEER TIMOTHY L. COGGINS

DocuSigned by: Tim Coggins DEFD4A8D48FA47B...

REVISIONS						SHEET NO.
NO.	BY:	DATE:	NO.	BY:	DATE:	S-9
1			3			TOTAL SHEETS
2			4			30

DRAWN BY : N. Ruffin DATE : 5/2/13
CHECKED BY : G. KOUCHEKI DATE : 6/19/13
DESIGN ENGINEER OF RECORD: N. RUFFIN DATE : 7/25/13

25-MAR-2014 11:19
R:\Structures\Plans\nruffin\B-4591_sm_Plans_01.dgn
dstutts