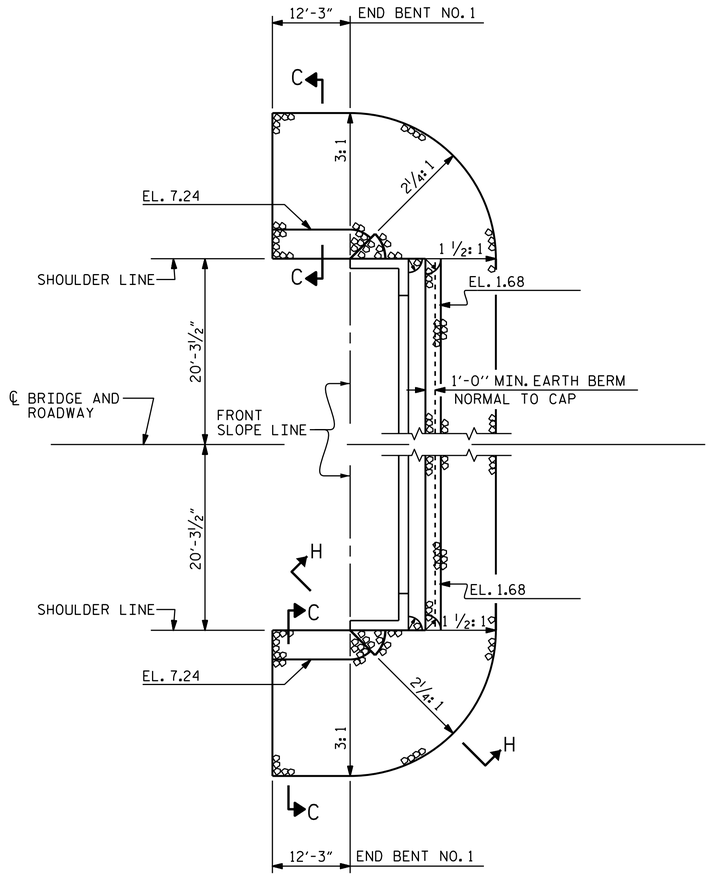

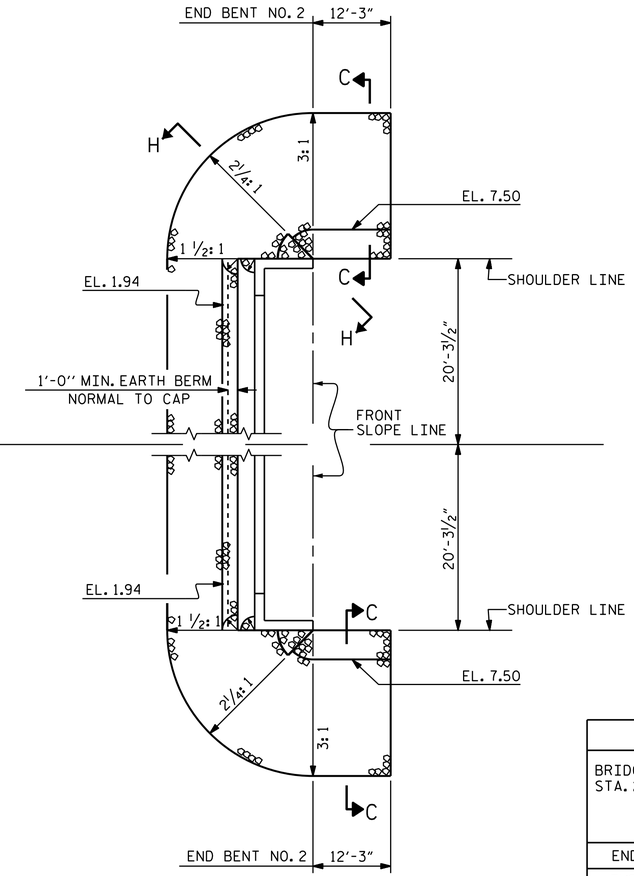

NOTES :

FOR BERM WIDTH DIMENSIONS, SEE GENERAL DRAWING.

ESTIMATED QUANTITIES		
BRIDGE @ STA. 23+25.00 -L-	RIP RAP CLASS II (2'-0" THICK)	GEOTEXTILE FOR DRAINAGE
	TONS	SQUARE YARDS
END BENT 1	235	256
END BENT 2	210	233

SHOULDER RIP RAP IS HIGHER THAN BERM RIP RAP

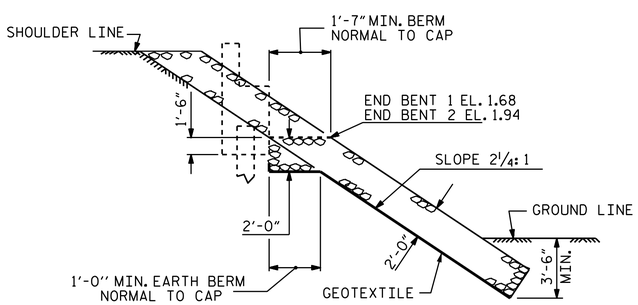

SECTION H-H

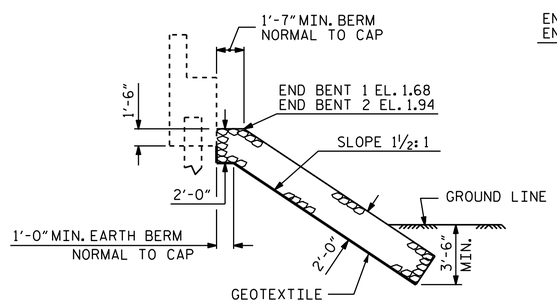

℄ SECTION
BERM RIP RAPPED

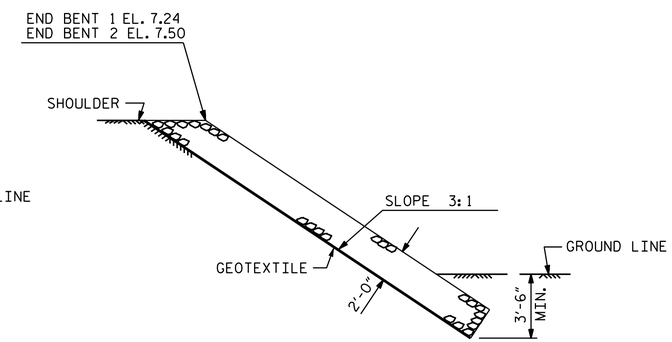

SECTION C-C

PROJECT NO. B-4591
NEW HANOVER/PENDER COUNTY
STATION: 23+25.00 -L-

3/25/2014

NORTH CAROLINA PROFESSIONAL SEAL 14045 ENGINEER TIMOTHY L. COGGINS

DocuSigned by: Tim Coggins
DEFD4A8D48FA47B...

STATE OF NORTH CAROLINA
DEPARTMENT OF TRANSPORTATION
RALEIGH

STANDARD

RIP RAP DETAILS

REVISIONS						SHEET NO.
NO.	BY:	DATE:	NO.	BY:	DATE:	S-29
1			3			TOTAL SHEETS
2			4			30

ASSEMBLED BY : N. Ruffin DATE : 5/20/13
CHECKED BY : G. KOUCHEKI DATE : 6/24/13

DRAWN BY : REK 1/84
CHECKED BY : RDU 1/84

REV. 5/1/06R TLA/GM
REV. 10/1/11 MAA/GM
REV. 12/21/11 MAA/GM

25-MAR-2014 11:18
R:\Structures\Plans\nruffin\B-4591_sm_Plans_01.dgn
dstutts

STD. NO. RR1 (Sht 2)