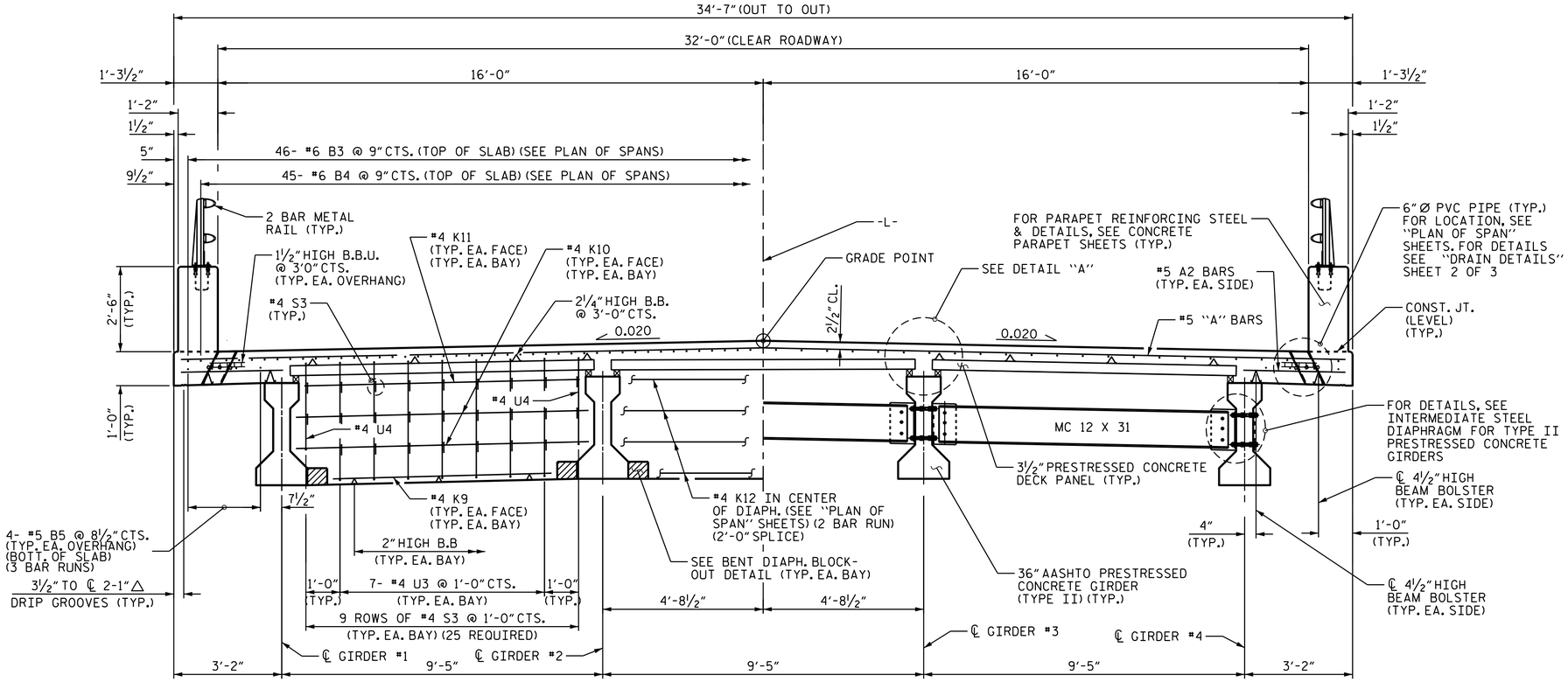

TYPICAL SECTION

(SHOWING BENT DIAPHRAGMS)

TYPICAL SECTION

(SHOWING INTERMEDIATE DIAPHRAGMS)

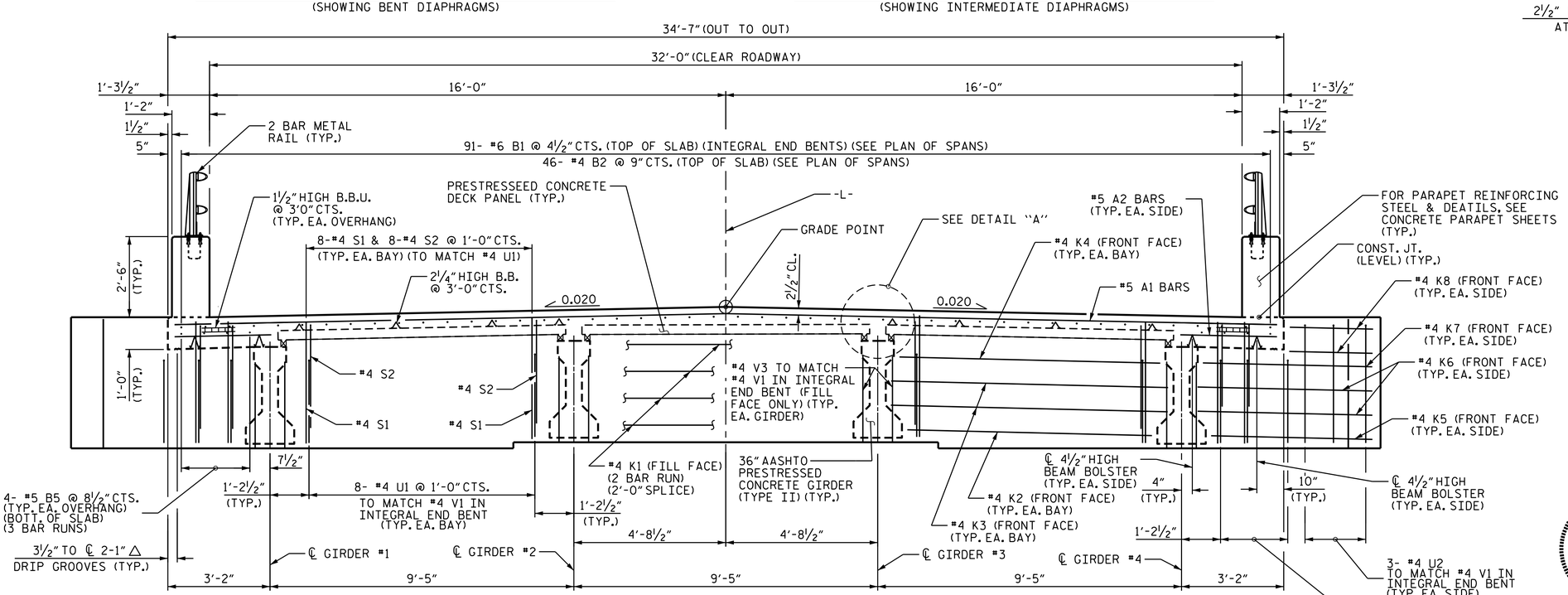

TYPICAL SECTION

(SHOWING INTEGRAL END BENTS)

NOTES

PROVIDE 1½" HIGH BEAM BOLSTERS UPPER AT 3'-0" CTS. AT TOP THE PRESTRESSED CONCRETE DECK PANELS TO SUPPORT THE TOP MAT OF 'B' BARS.

LONGITUDINAL STEEL MAY BE SHIFTED SLIGHTLY, AS NECESSARY, TO AVOID INTERFERENCE WITH STIRRUPS IN PRESTRESSED CONCRETE GIRDERS.

PREVIOUSLY CAST CONCRETE IN A CONTINUOUS UNIT SHALL HAVE ATTAINED A MINIMUM COMPRESSIVE STRENGTH OF 3,000 PSI BEFORE ADDITIONAL CONCRETE IS CAST IN THE UNIT.

FOR WING ELEVATIONS AND DETAILS, SEE "PLAN OF SPANS DETAILS" SHEETS.

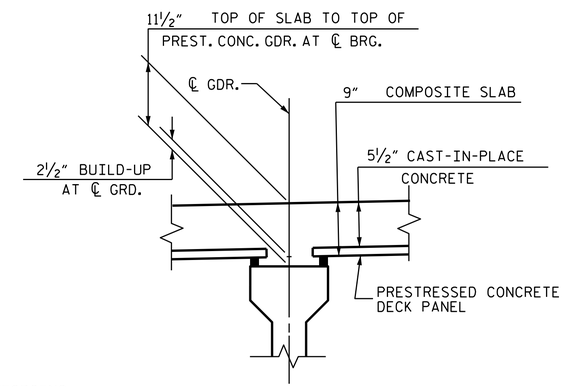

DETAIL "A"

PROJECT NO. B-4591

NEW HANOVER/PENDER COUNTY

STATION: 23+25.00 -L-

SHEET 1 OF 3

STATE OF NORTH CAROLINA
DEPARTMENT OF TRANSPORTATION
RALEIGH

SUPERSTRUCTURE

TYPICAL SECTION

3/25/2014

NORTH CAROLINA PROFESSIONAL SEAL 14045 ENGINEER TIMOTHY L. COGGINS

DocuSigned by: Tim Coggins
DEFD4A8D48FA47B...

REVISIONS						SHEET NO.
NO.	BY:	DATE:	NO.	BY:	DATE:	S-5
1			3			TOTAL SHEETS
2			4			30

DRAWN BY : N. Ruffin DATE : 5/2/13
CHECKED BY : GHOLAMREZA KOUCHEKI DATE : 6/10/13
DESIGN ENGINEER OF RECORD: N. RUFFIN DATE : 7/25/13

25-MAR-2014 11:19
R:\Structures\Plans\nruffin\B-4591_sm_Plans_01.dgn
dstutts

NCDDS