09/08/99

TIP PROJECT R-2707AB

CONTRACT: C203027

STRUCTURES

STATE OF NORTH CAROLINA
DIVISION OF HIGHWAYS

CLEVELAND COUNTY

STATE	STATE PROJECT REFERENCE NO.	SHEET NO.	TOTAL SHEETS
N.C.	R-2707AB		

STATE PROJ. NO.	F. A. PROJ. NO.	DESCRIPTION
34497.1.2	NHF-74(14)	PE
34497.2.3	NHF-74(76)	R/W & UTIL.
34497.3.~~FS4~~	NHF-0074(142)	CONST.

LOCATION: US 74 (SHELBY BYPASS) FROM EAST OF SR 1318 (KIMBRELL ROAD) TO EAST OF SR 1315 (PLATO LEE ROAD)

TYPE OF WORK: GRADING, PAVING, DRAINAGE, AND STRUCTURES

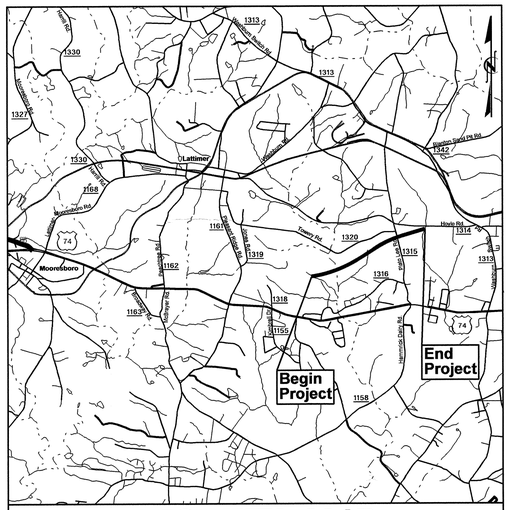

VICINITY MAP

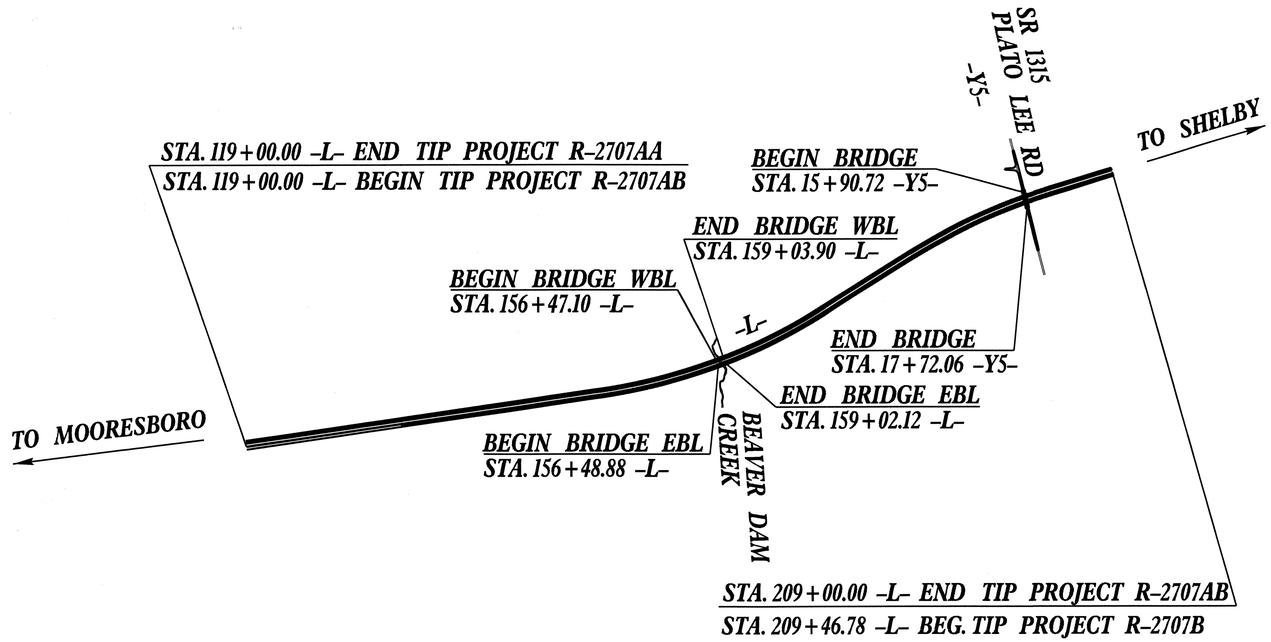

DESIGN DATA

ADT 2012 = 37,655
ADT 2035 = 54,360
DHV = 12 %
D = 60 %
T = 14 % *
V = 70 MPH
* TTST 8% DUAL 6%
FUNC CLASS = FREEWAY
STATEWIDE TIER DESIGN

PROJECT LENGTH

LENGTH OF ROADWAY TIP PROJECT R-2707AB = 1.657 miles
LENGTH OF STRUCTURE TIP PROJECT R-2707AB = 0.048 miles
TOTAL LENGTH TIP PROJECT R-2707AB = 1.705 miles

Prepared In The Office of:
DIVISION OF HIGHWAYS
1000 Birch Ridge Dr., Raleigh NC, 27610

2012 STANDARD SPECIFICATIONS

LETTING DATE:
MAY 20, 2014

B. C. HUNT, PE
PROJECT ENGINEER

D. A. DAVENPORT, JR., PE
PROJECT DESIGN ENGINEER

STRUCTURES MANAGMENT UNIT
1000 Birch Ridge Drive
Raleigh, NC 27610

ARCADIS G&M
Dates=$DATE$ Times: $TIME$
Filenames=$FILE$

INDEX

STR. NO.	STATION	DESCRIPTION	SHEET NUMBERS
(4)	157+55.50 -L- (WBL)	BRIDGE OVER BEAVERDAM CREEK ON US 74 BETWEEN SR 1161 AND SR 1315 (LEFT LANE)	S-1 THRU S-37
(5)	157+55.50 -L- (EBL)	BRIDGE OVER BEAVERDAM CREEK ON US 74 BETWEEN SR 1161 AND SR 1315 (RIGHT LANE)	S-38 THRU S-74
(6)	203+50.55-L-	BRIDGE OVER US 74 ON SR 1315 BETWEEN SR 1313 AND SR 1161	S-75 THRU S-104

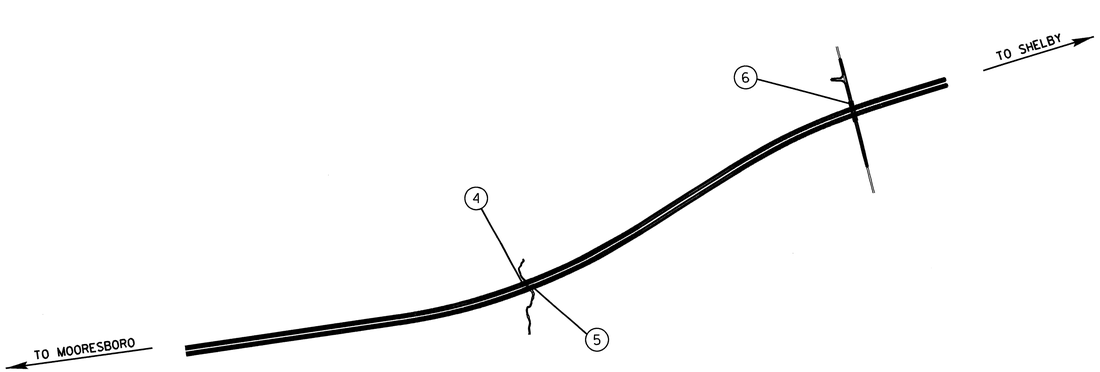

PROJECT NO. R-2707AB

CLEVELAND COUNTY

STATION:

STATE OF NORTH CAROLINA
DEPARTMENT OF TRANSPORTATION
RALEIGH

INDEX SHEET

NORTH CAROLINA PROFESSIONAL SEAL 10730 ENGINEER D. ANDREW DAVENPORT, JR.
6-13-13

REVISIONS						
NO.	BY:	DATE:	NO.	BY:	DATE:	
1			3			
2			4			

DRAWN BY : W. B. HILL DATE : 07/09
CHECKED BY : M. G. SHAIKH DATE : 08/09

13-JUN-2013 07:39
R:\Structures\Plans\title sheet\R2707A_SD_Ind.dgn
dadavenport

F. A. PROJ. No.: NHF-0074(142)

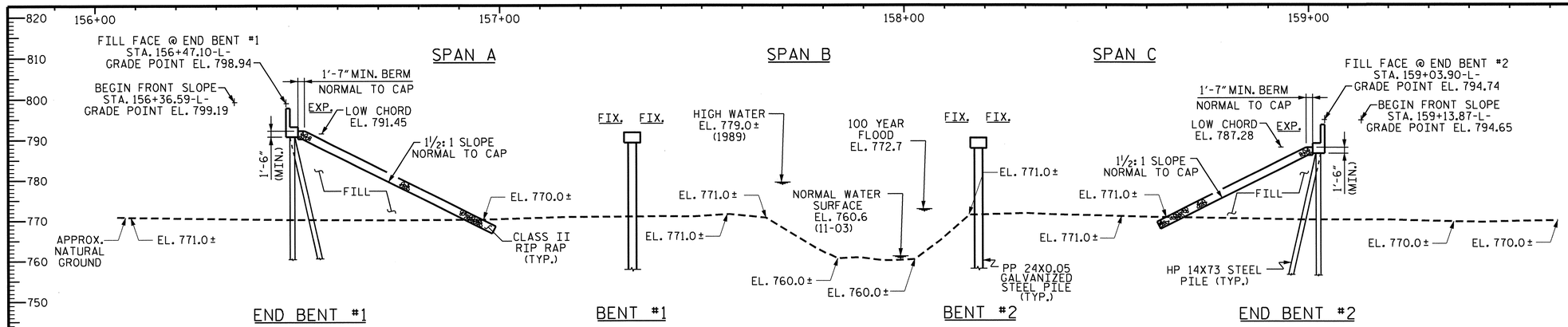

SECTION ALONG CONTROL LINE (WBL)

BENTS ON SECTION AT RIGHT ANGLES TO BENTS

(-)3.6739% (+)3.6580%

P.I. STA. = 160+75.00-L-
EL = 781.56
VC = 1,350

GRADE DATA -L-

P.I. STA. = 158+11.64-L-
DELTA = 23°-10'-04.9"(LT.)
D= 1°-44'-10.4"
L = 1334.38 FT.
T = 676.43 FT.
R = 3300.000 FT.

HORIZONTAL CURVE DATA

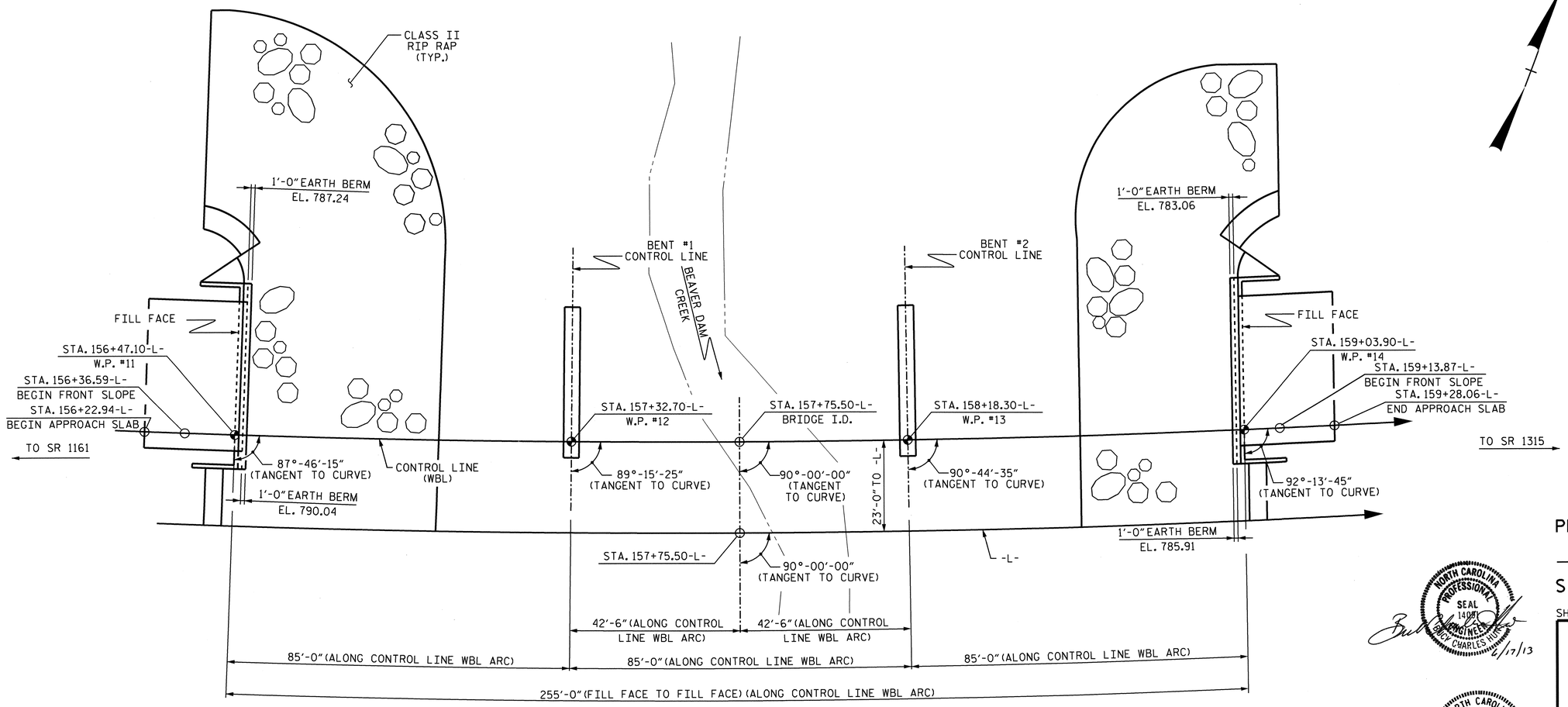

PLAN

PILES NOT SHOWN FOR CLARITY

NORTH CAROLINA PROFESSIONAL SEAL 14081 ENGINEER DARCY CHARLES TURK
6/17/13

NORTH CAROLINA PROFESSIONAL SEAL 10730 ENGINEER D. ANDRE' DAVENPORT, JR.
6-13-13

PROJECT NO. R-2707AB

CLEVELAND COUNTY

STATION: 157+75.50-L-

SHEET 1 OF 4 BRIDGE NO.454

STATE OF NORTH CAROLINA
DEPARTMENT OF TRANSPORTATION
RALEIGH

GENERAL DRAWING FOR BRIDGE OVER BEAVER DAM CREEK ON US 74 BETWEEN SR 1161 AND SR 1315 (WBL)

REVISIONS						SHEET NO.
NO.	BY:	DATE:	NO.	BY:	DATE:	S-1
1			3			TOTAL SHEETS
2			4			104

DRAWN BY : D.A. DAVENPORT DATE : 01/26/12
CHECKED BY : G.W. DICKEY DATE : 05/25/12
DESIGN ENGINEER OF RECORD: G.W. DICKEY DATE : 10/16/12

13-JUN-2013 07:40
R:\Structures\Plans\Str4and5\Plans\R-2707AB_sd_GD_Str4.dgn
ddavenport

STR. #4

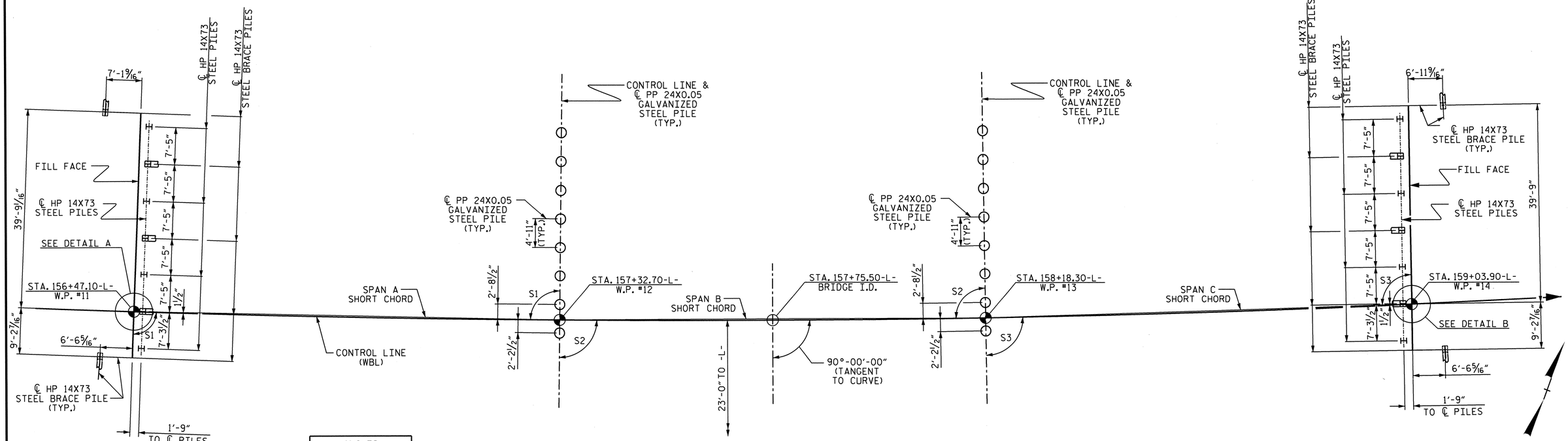

ANGLES SHORT CHORD	
S1	88°-30'-50"
S2	90°-00'-00"
S3	91°-29'-10"

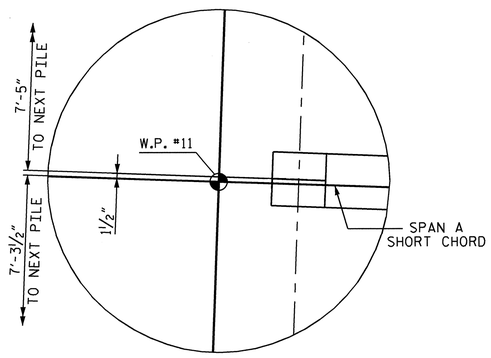

DETAIL A

FOUNDATION LAYOUT

BRACE PILES IN END BENTS ARE BATTERED 3:12.

FOR PILES, SEE SECTION 450 OF THE STANDARD SPECIFICATIONS.

PILES AT END BENT #1 ARE DESIGNED FOR A FACTORED RESISTANCE OF 120 TONS PER PILE.

DRIVE PILES AT END BENT #1 TO A REQUIRED DRIVING RESISTANCE OF 200 TONS PER PILE.

PILES AT BENT #1 ARE DESIGNED FOR A FACTORED RESISTANCE OF 210 TONS PER PILE.

DRIVE PILES AT BENT #1 TO A REQUIRED DRIVING RESISTANCE OF 350 TONS PER PILE.

INSTALL PILES AT BENT #1 TO A TIP ELEVATION NO HIGHER THAN 731.00.

THE SCOUR CRITICAL ELEVATIONS FOR BENT #1 ARE ELEVATION 749.5 (LT.) AND 747.0 (RT.). SCOUR CRITICAL ELEVATIONS ARE USED TO MONITOR POSSIBLE SCOUR PROBLEMS DURING THE LIFE OF THE STRUCTURE.

IT HAS BEEN ESTIMATED THAT A HAMMER WITH AN EQUIVALENT RATED ENERGY IN THE RANGE OF 80000 TO 85000 LB-FT PER BLOW WILL BE REQUIRED TO DRIVE PILES AT BENT #1. THIS ESTIMATED ENERGY RANGE DOES NOT RELEASE THE CONTRACTOR FROM PROVIDING DRIVING EQUIPMENT IN ACCORDANCE WITH SUB ARTICLE 450-3(D)(2) OF THE STANDARD SPECIFICATIONS.

PILES AT BENT #2 ARE DESIGNED FOR A FACTORED RESISTANCE OF 210 TONS PER PILE.

PIPE PILES AT BENT #1 SHALL BE OPEN END PILES.

PIPE PILES AT BENT #2 SHALL BE CLOSED END PILES WITH PIPE PILE PLATES.

DRIVE PILES AT BENT #2 TO A REQUIRED DRIVING RESISTANCE OF 350 TONS PER PILE.

INSTALL PILES AT BENT #2 TO A TIP ELEVATION NO HIGHER THAN 731 FEET.

THE SCOUR CRITICAL ELEVATIONS FOR BENT #2 ARE ELEVATION 750.0 (LT.) AND 748.5 (RT.). SCOUR CRITICAL ELEVATIONS ARE USED TO MONITOR POSSIBLE SCOUR PROBLEMS DURING THE LIFE OF THE STRUCTURE.

IT HAS BEEN ESTIMATED THAT A HAMMER WITH AN EQUIVALENT RATED ENERGY IN THE RANGE OF 80000 TO 85000 LB-FT PER BLOW WILL BE REQUIRED TO DRIVE PILES AT BENT #2. THIS ESTIMATED ENERGY RANGE DOES NOT RELEASE THE CONTRACTOR FROM PROVIDING DRIVING EQUIPMENT IN ACCORDANCE WITH SUB ARTICLE 450-3(D)(2) OF THE STANDARD SPECIFICATIONS.

PILES AT END BENT #2 ARE DESIGNED FOR A FACTORED RESISTANCE OF 120 TONS PER PILE.

DRIVE PILES AT END BENT #2 TO A REQUIRED DRIVING RESISTANCE OF 200 TONS PER PILE.

TESTING PILES WITH THE PDA DURING DRIVING, RESTRIKING OR REDRIVING MAY BE REQUIRED. THE ENGINEER WILL DETERMINE THE NEED FOR PDA TESTING. FOR PDA TESTING, SEE SECTION 450 OF THE STANDARD SPECIFICATIONS.

FOR INTERIOR BENTS, ONLY PARTIAL GALVANIZING OF THE PIPE PILES IS REQUIRED. SEE INTERIOR BENT SHEETS FOR REQUIRED GALVANIZED LENGTHS. PAYMENT FOR PARTIALLY GALVANIZED PIPE PILES WILL BE MADE UNDER THE CONTRACT UNIT PRICE FOR GALVANIZED STEEL PIPE PILES.

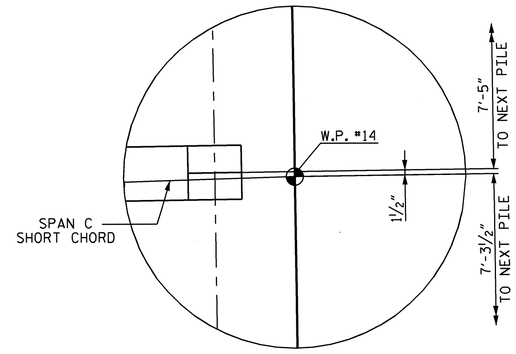

DETAIL B

PROJECT NO. R-2707AB

CLEVELAND COUNTY

STATION: 157+75.50-L-

SHEET 2 OF 4

STATE OF NORTH CAROLINA
DEPARTMENT OF TRANSPORTATION
RALEIGH

GENERAL DRAWING FOR BRIDGE OVER BEAVER DAM CREEK ON US 74 BETWEEN SR 1161 AND SR 1315 (WBL)

REVISIONS						SHEET NO.
NO.	BY:	DATE:	NO.	BY:	DATE:	S-2
1			3			TOTAL SHEETS
2			4			104

NORTH CAROLINA PROFESSIONAL SEAL 10730 ENGINEER D. ANDRE DAVENPORT
10-17-12

DRAWN BY : D.A. DAVENPORT DATE : 01/26/12
CHECKED BY : G.W. DICKEY DATE : 05/25/12
DESIGN ENGINEER OF RECORD: G.W. DICKEY DATE : 10/16/12

17-OCT-2012 10:53
R:\Structures\Plans\Str4and5\Plans\R-2707AB_sd_GD_Str4.dgn
adavenport

STR.#4

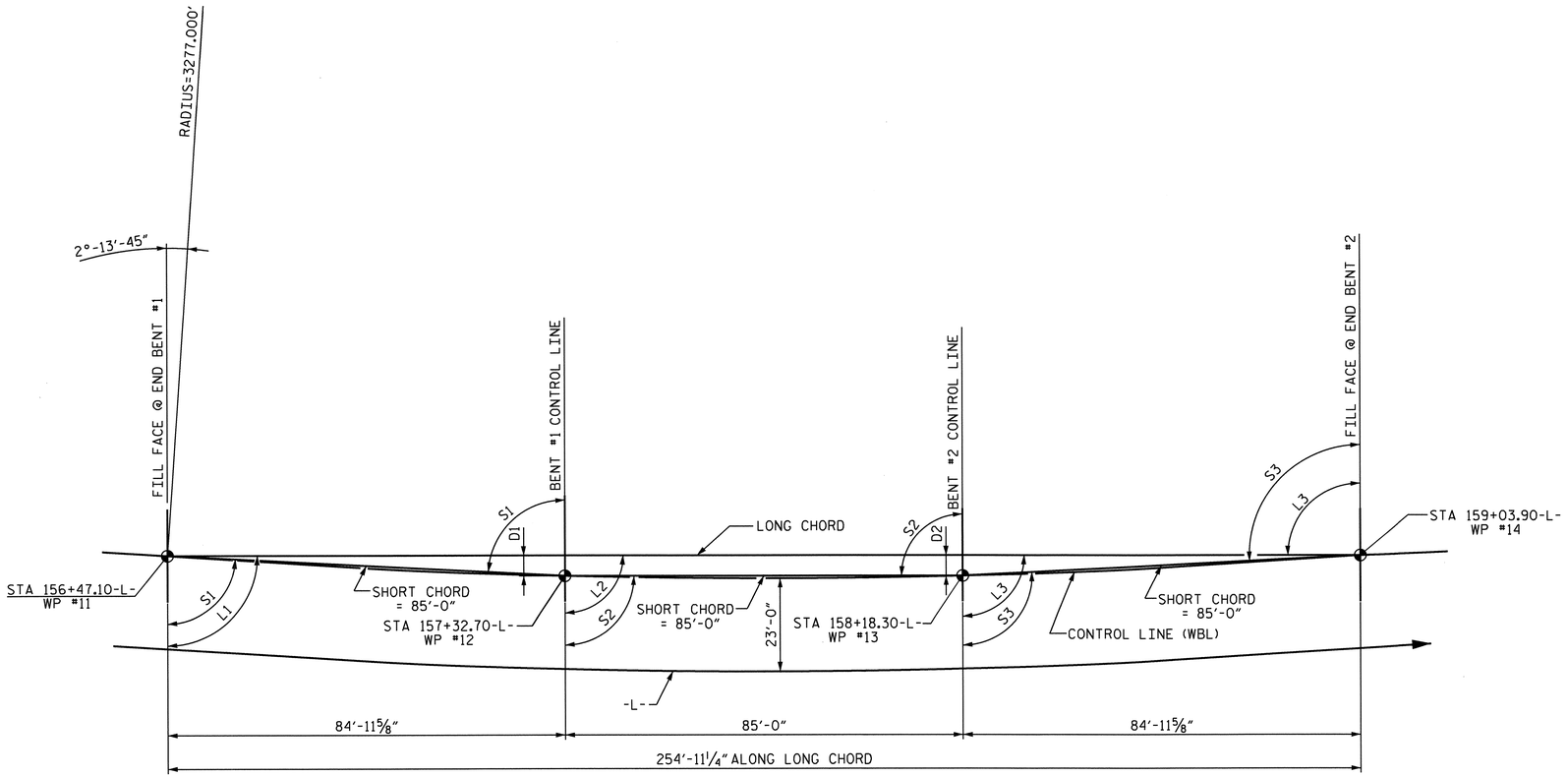

OFFSETS
D1=2'-2 7/16"
D2=2'-2 7/16"

HORIZONTAL CURVE DATA -L-

P.I. = 158+11.64
DELTA = 23°-10'-04.9"LT.
T = 676.430 FT.
L = 1334.400 FT.
R = 3300.000 FT.
D = 1°-44'-10.4"

ANGLES			
	LONG CHORD		SHORT CHORD
L1	90°-00'-00"	S1	88°-30'-50"
L2	90°-00'-00"	S2	90°-00'-00"
L3	90°-00'-00"	S3	91°-29'-10"

LONG CHORD

PROJECT NO. R-2707AB
CLEVELAND COUNTY
STATION: 157+75.50 -L-

SHEET 3 OF 4

STATE OF NORTH CAROLINA
DEPARTMENT OF TRANSPORTATION
RALEIGH

GENERAL DRAWING FOR BRIDGE OVER BEAVER DAM CREEK ON US 74 BETWEEN SR 1161 AND SR 1315 (WBL)

REVISIONS						SHEET NO.
NO.	BY:	DATE:	NO.	BY:	DATE:	S-3
1			3			TOTAL SHEETS
2			4			104

NORTH CAROLINA PROFESSIONAL SEAL 10730 ENGINEER D. ANDREW DAVENPORT
6-13-13

DRAWN BY : D.A. DAVENPORT DATE : 01/27/12
CHECKED BY : G.W. DICKEY DATE : 05/25/12
DESIGN ENGINEER OF RECORD: G.W. DICKEY DATE : 10/16/12

13-JUN-2013 08:09
R:\Structures\Plans\Str4and5\Plans\R-2707AB_sd_GD_Str4.dgn
dadavenport

STR.#4

NCDOT

BENCH MARK 66: 18"REBAR WITH CAP STA. 119+55.20-BL-, EL. 769.848

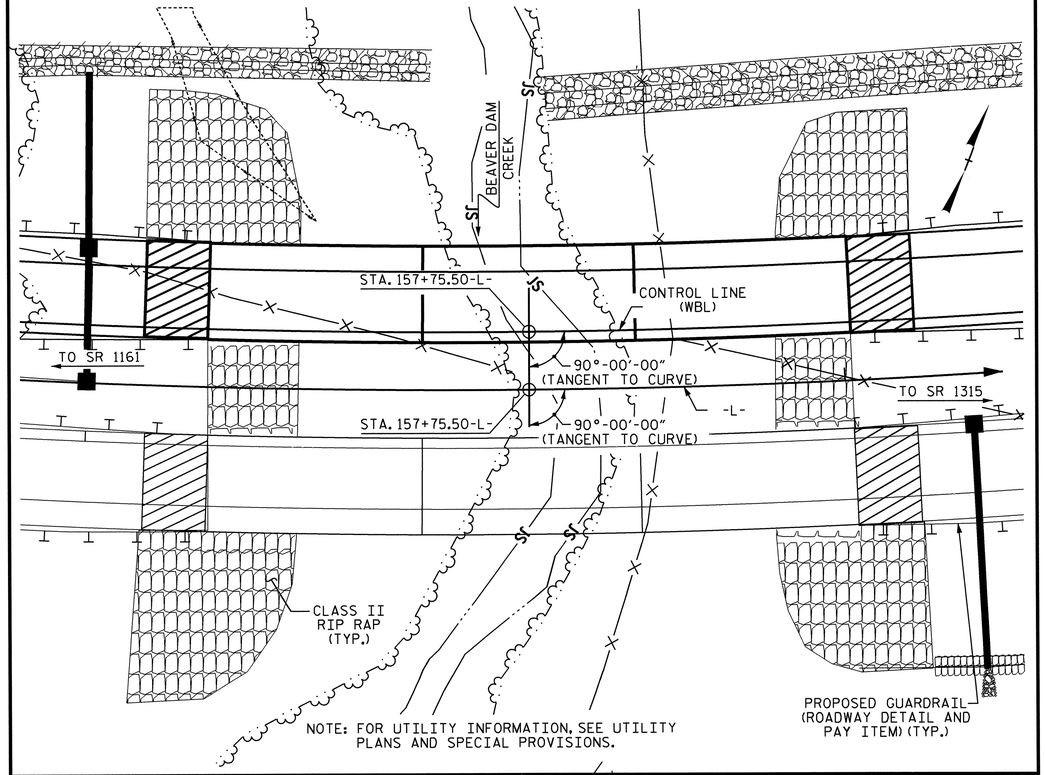

LOCATION SKETCH

HYDRAULIC DATA

DESIGN DISCHARGE ——— = 1760 CFS.
FREQUENCY OF DESIGN FLOOD ——— = 50 YR.
DESIGN HIGH WATER ELEVATION ——— = 771.52
DRAINAGE AREA ——— = 4.1 SQ. MI.
BASIC DISCHARGE (Q100) ——— = 2150 CFS.
BASIC HIGH WATER ELEVATION ——— = 772.70

OVERTOPPING FLOOD DATA

OVERTOPPING DISCHARGE ——— = 100000+ CFS.
FREQUENCY OF OVERTOPPING FLOOD ——— = 500 YR. +
OVERTOPPING FLOOD ELEVATION ——— = 797.75

TOTAL BILL OF MATERIAL

	PDA TESTING	REINFORCED CONCRETE DECK SLAB	GROOVING BRIDGE FLOORS	CLASS A CONCRETE	BRIDGE APPROACH SLABS	REINFORCING STEEL	54" PRESTRESSED CONCRETE GIRDERS		HP 14X73 STEEL PILES		PP 24X0.50 GALVANIZED STEEL PILES		PIPE PILE PLATES	PILE REDRIVES	CONCRETE BARRIER RAIL	CLASS II RIP RAP (2'-0" THICK)	GEOTEXTILE FOR DRAINAGE	ELASTOMERIC BEARINGS	FOAM JOINT SEALS
	EACH	SQ. FT.	SQ. FT.	CU. YDS.	LUMP SUM	LBS.	NO.	LIN. FT.	NO.	LIN. FT.	NO.	LIN. FT.	EACH	EACH	LIN. FT.	TONS	SQ. YDS.	LUMP SUM	LUMP SUM
SUPERSTRUCTURE		10433	10474				15	1252.08							505.67			LUMP SUM	LUMP SUM
END BENT 1				33.3		4819			9	585				7		485	540		
BENT 1				18.4		3090					8	480		8					
BENT 2				18.4		3090					8	440	8	8					
END BENT 2				33.0		4787			9	540				7		320	355		
TOTAL	1	10433	10474	103.1	LUMP SUM	15786	15	1252.08	18	1125	16	920	8	30	505.67	805	845	LUMP SUM	LUMP SUM

DRAWN BY : D.A. DAVENPORT DATE : 01/26/12
CHECKED BY : G.W. DICKEY DATE : 05/25/12
DESIGN ENGINEER OF RECORD: G.W. DICKEY DATE : 10/16/12

13-JUN-2013 07:42
R:\Structures\Plans\Str4and5\Plans\R-2707AB_sd_GD_Str4.dgn
dadavenport

NOTES

ASSUMED LIVE LOAD = HL 93 OR ALTERNATE LOADING.

FOR OTHER DESIGN DATA AND GENERAL NOTES, SEE SHEET SN.

THIS BRIDGE HAS BEEN DESIGNED IN ACCORDANCE WITH THE REQUIREMENTS OF THE AASHTO LRFD BRIDGE DESIGN SPECIFICATIONS.

FOR EROSION CONTROL MEASURES SEE EROSION CONTROL PLANS.

REMOVABLE FORMS MAY BE USED IN LIEU OF METAL STAY-IN-PLACE FORMS IN ACCORDANCE WITH ARTICLE 420-3 OF THE STANDARD SPECIFICATIONS.

THE CLASS AA CONCRETE IN THE BRIDGE DECK SHALL CONTAIN FLY ASH OR GROUND GRANULATED BLAST FURNACE SLAG AT THE SUBSTITUTION RATE SPECIFIED IN ARTICLE 1024-1 AND IN ACCORDANCE WITH ARTICLES 1024-5 AND 1024-6 OF THE STANDARD SPECIFICATIONS. NO PAYMENT WILL BE MADE FOR THIS SUBSTITUTION AS IT IS CONSIDERED INCIDENTAL TO THE COST OF THE REINFORCED CONCRETE DECK SLAB.

OBSERVE A 3 MONTH WAITING PERIOD AFTER CONSTRUCTION THE EMBANKMENT TO FINISHED GRADE BEFORE BEGINNING END BENT CONSTRUCTION AT END BENT #1 AND #2. THE WAITING PERIODS MAY BE REDUCED BY THE ENGINEER AFTER THE REVIEW AND ACCEPTANCE OF SETTLEMENT DATA THAT HAS BEEN OBTAINED BY EMBANKMENT MONITORING USING SURVEY HUBS. INSTALLATION AND MONITORING WILL BE THE RESPONSIBILITY OF THE CONTRACTOR AND WILL BE CONSIDERED INCIDENTAL TO THE PROJECT.

THIS STRUCTURE HAS BEEN DESIGNED IN ACCORDANCE WITH HEC 18, "EVALUATING SCOUR AT BRIDGES", MAY, 2001.

THIS BRIDGE IS LOCATED IN SEISMIC ZONE 1.

THE CONTRACTOR SHALL PROVIDE INDEPENDENT ASSURANCE SAMPLES OF REINFORCING STEEL AS FOLLOWS: FOR PROJECTS REQUIRING UP TO 400 TONS OF REINFORCING STEEL, ONE 30 INCH SAMPLE OF EACH SIZE BAR USED, AND FOR PROJECTS REQUIRING OVER 400 TONS OF REINFORCING STEEL, TWO 30 INCH SAMPLES OF EACH SIZE BAR USED. THE BARS FROM WHICH THE SAMPLES ARE TAKEN MUST THEN BE SPLICED WITH REPLACEMENT BARS OF THE SIZE AND LENGTH OF THE SAMPLE, PLUS A MINIMUM LAP SPLICE OF THIRTY BAR DIAMETERS. PAYMENT FOR THE SAMPLES OF REINFORCING STEEL SHALL BE CONSIDERED INCIDENTAL TO VARIOUS PAY ITEMS.

NEEDLE BEAMS WILL NOT BE ALLOWED UNLESS OTHERWISE CALLED FOR ON THE PLANS OR APPROVED BY THE ENGINEER.

FOR SUBMITTAL OF WORKING DRAWINGS, SEE SPECIAL PROVISIONS.

FOR FALSEWORK AND FORMWORK, SEE SPECIAL PROVISIONS.

FOR CRANE SAFETY, SEE SPECIAL PROVISIONS.

FOR GROUT FOR STRUCTURES, SEE SPECIAL PROVISIONS.

FOR PLACING LOADS ON STRUCTURES, SEE SPECIAL PROVISIONS.

NORTH CAROLINA PROFESSIONAL SEAL 10730 ENGINEER G. W. DICKEY
6-13-13

PROJECT NO. R-2707AB
CLEVELAND COUNTY
STATION: 157+75.50-L-

SHEET 4 OF 4

STATE OF NORTH CAROLINA
DEPARTMENT OF TRANSPORTATION
RALEIGH

GENERAL DRAWING FOR BRIDGE OVER BEAVER DAM CREEK ON US 74 BETWEEN SR 1161 AND SR 1315 (WBL)

REVISIONS						SHEET NO.
NO.	BY:	DATE:	NO.	BY:	DATE:	S-4
1			3			TOTAL SHEETS
2			4			104

STR. #4

LOAD AND RESISTANCE FACTOR RATING (LRFD) SUMMARY FOR PRESTRESSED CONCRETE GIRDERS

LEVEL		VEHICLE	WEIGHT (W) (TONS)	CONTROLLING LOAD RATING (#)	MINIMUM RATING FACTORS (RF)	TONS = W X RF	STRENGTH I LIMIT STATE										SERVICE III LIMIT STATE						COMMENT NUMBER
								MOMENT					SHEAR					MOMENT						
							LIVELOAD FACTORS	DISTRIBUTION FACTORS (DF)	RATING FACTOR	SPAN	GIRDER LOCATION	DISTANCE FROM LEFT END OF SPAN (ft)	DISTRIBUTION FACTORS (DF)	RATING FACTOR	SPAN	GIRDER LOCATION	DISTANCE FROM LEFT END OF SPAN (ft)	LIVELOAD FACTORS	DISTRIBUTION FACTORS (DF)	RATING FACTOR	SPAN	GIRDER LOCATION	DISTANCE FROM LEFT END OF SPAN (ft)	
DESIGN LOAD RATING		HL-93(Inv)	N/A	(1)	1.12	--	1.75	0.776	1.52	B	ER	41.374	0.778	2.14	B	ER	33.099	0.80	0.776	1.12	B	ER	41.374	
		HL-93(Opr)	N/A	--	1.97	--	1.35	0.776	1.97	B	ER	41.374	0.778	2.78	B	ER	33.099	N/A	--	--	--	--	--	
		HS-20(Inv)	36.000	(2)	1.50	54.044	1.75	0.776	2.04	B	ER	41.374	0.778	2.6	B	ER	33.099	0.80	0.776	1.50	B	ER	41.374	
		HS-20(Opr)	36.000	--	2.65	95.256	1.35	0.776	2.65	B	ER	41.374	0.778	3.37	B	ER	33.099	N/A	--	--	--	--	--	
LEGAL LOAD RATING	SV	SNSH	13.500	--	3.47	46.818	1.4	0.776	5.89	B	ER	41.374	0.778	7.42	B	ER	33.099	0.80	0.776	3.47	B	ER	41.374	
		SNGARBS2	20.000	--	2.55	51.003	1.4	0.776	4.33	B	ER	41.374	0.778	5.37	B	ER	33.099	0.80	0.776	2.55	B	ER	41.374	
		SNAGRIS2	22.000	--	2.40	52.821	1.4	0.776	4.08	B	ER	41.374	0.778	5.02	B	ER	33.099	0.80	0.776	2.40	B	ER	41.374	
		SNCOTTS3	27.250	--	1.72	47	1.4	0.776	2.93	B	ER	41.374	0.778	3.71	B	ER	33.099	0.80	0.776	1.72	B	ER	41.374	
		SNAGGRS4	34.925	--	1.43	49.88	1.4	0.776	2.43	B	ER	41.374	0.778	3.15	B	ER	33.099	0.80	0.776	1.43	B	ER	41.374	
		SNS5A	35.550	--	1.40	49.682	1.4	0.776	2.38	B	ER	41.374	0.778	3.23	B	ER	33.099	0.80	0.776	1.40	B	ER	41.374	
		SNS6A	39.950	--	1.28	51.008	1.4	0.776	2.17	B	ER	41.374	0.778	2.97	B	ER	33.099	0.80	0.776	1.28	B	ER	41.374	
		SNS7B	42.000	--	1.22	51.06	1.4	0.776	2.07	B	ER	41.374	0.778	2.96	B	ER	33.099	0.80	0.776	1.22	B	ER	41.374	
	TTST	TNAGRIT3	33.000	--	1.56	51.328	1.4	0.776	2.64	B	ER	41.374	0.778	3.51	B	ER	33.099	0.80	0.776	1.56	B	ER	41.374	
		TNT4A	33.075	--	1.56	51.622	1.4	0.776	2.65	B	ER	41.374	0.778	3.39	B	ER	33.099	0.80	0.776	1.56	B	ER	41.374	
		TNT6A	41.600	--	1.27	52.873	1.4	0.776	2.16	B	ER	41.374	0.778	3.22	B	ER	33.099	0.80	0.776	1.27	B	ER	41.374	
		TNT7A	42.000	--	1.27	53.533	1.4	0.776	2.17	B	ER	41.374	0.778	3.15	B	ER	33.099	0.80	0.776	1.27	B	ER	41.374	
		TNT7B	42.000	--	1.31	55.099	1.4	0.776	2.23	B	ER	41.374	0.778	2.86	B	ER	33.099	0.80	0.776	1.31	B	ER	41.374	
		TNAGRIT4	43.000	--	1.25	53.878	1.4	0.776	2.13	B	ER	41.374	0.778	2.76	B	ER	33.099	0.80	0.776	1.25	B	ER	41.374	
		TNAGT5A	45.000	--	1.18	53.269	1.4	0.776	2.01	B	ER	41.374	0.778	2.79	B	ER	33.099	0.80	0.776	1.18	B	ER	41.374	
		TNAGT5B	45.000	(3)	1.17	52.719	1.4	0.776	1.99	B	ER	41.374	0.778	2.62	B	ER	33.099	0.80	0.776	1.17	B	ER	41.374	

LOAD FACTORS:

DESIGN LOAD RATING FACTORS	LIMIT STATE	γ_{DC}	γ_{DW}
	STRENGTH I	1.25	1.50
	SERVICE III	1.00	1.00

NOTES:

MINIMUM RATING FACTORS ARE BASED ON THE STRENGTH I AND SERVICE III LIMIT STATES.

ALLOWABLE STRESSES FOR SERVICE III LIMIT STATE ARE AS REQUIRED FOR DESIGN.

COMMENTS:

1.
2.
3.
4.

(#) CONTROLLING LOAD RATING

(1) DESIGN LOAD RATING (HL-93)

(2) DESIGN LOAD RATING (HS-20)

(3) LEGAL LOAD RATING **

** SEE CHART FOR VEHICLE TYPE

GIRDER LOCATION

I - INTERIOR GIRDER
EL - EXTERIOR LEFT GIRDER
ER - EXTERIOR RIGHT GIRDER

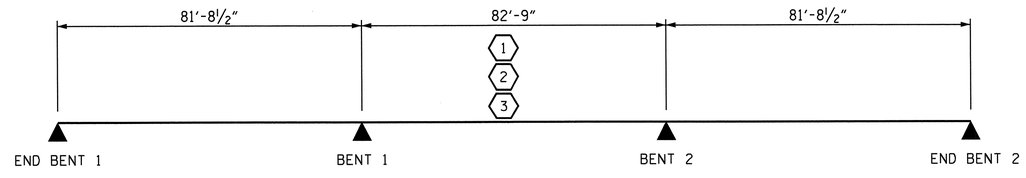

LRFR SUMMARY

PROJECT NO. R-2707AB

CLEVELAND COUNTY

STATION: 157+75.50-L-

STATE OF NORTH CAROLINA
DEPARTMENT OF TRANSPORTATION
RALEIGH

STANDARD

LRFR SUMMARY FOR PRESTRESSED CONCRETE GIRDERS
(NON-INTERSTATE TRAFFIC)
(WBL)

REVISIONS						SHEET NO.
NO.	BY:	DATE:	NO.	BY:	DATE:	S-5
1			3			TOTAL SHEETS
2			4			104

NORTH CAROLINA PROFESSIONAL SEAL 10730 ENGINEER D. ANDRE DAVENPORT

ASSEMBLED BY : D.A. DAVENPORT DATE : 01/26/12
CHECKED BY : G.W. DICKEY DATE : 05/22/12
DESIGN ENGINEER OF RECORD: G.W. DICKEY DATE : 10/16/12

DRAWN BY : MAA 1/08
CHECKED BY : GM/DI 2/08

REV. 11/12/08R MAA/GM

17-OCT-2012 10:54
R:\Structures\Plans\Str4and5\Plans\R-2707AB_sd_GD_Str4.dgn
adavenport

STR.#4

STD. NO. LRFR1

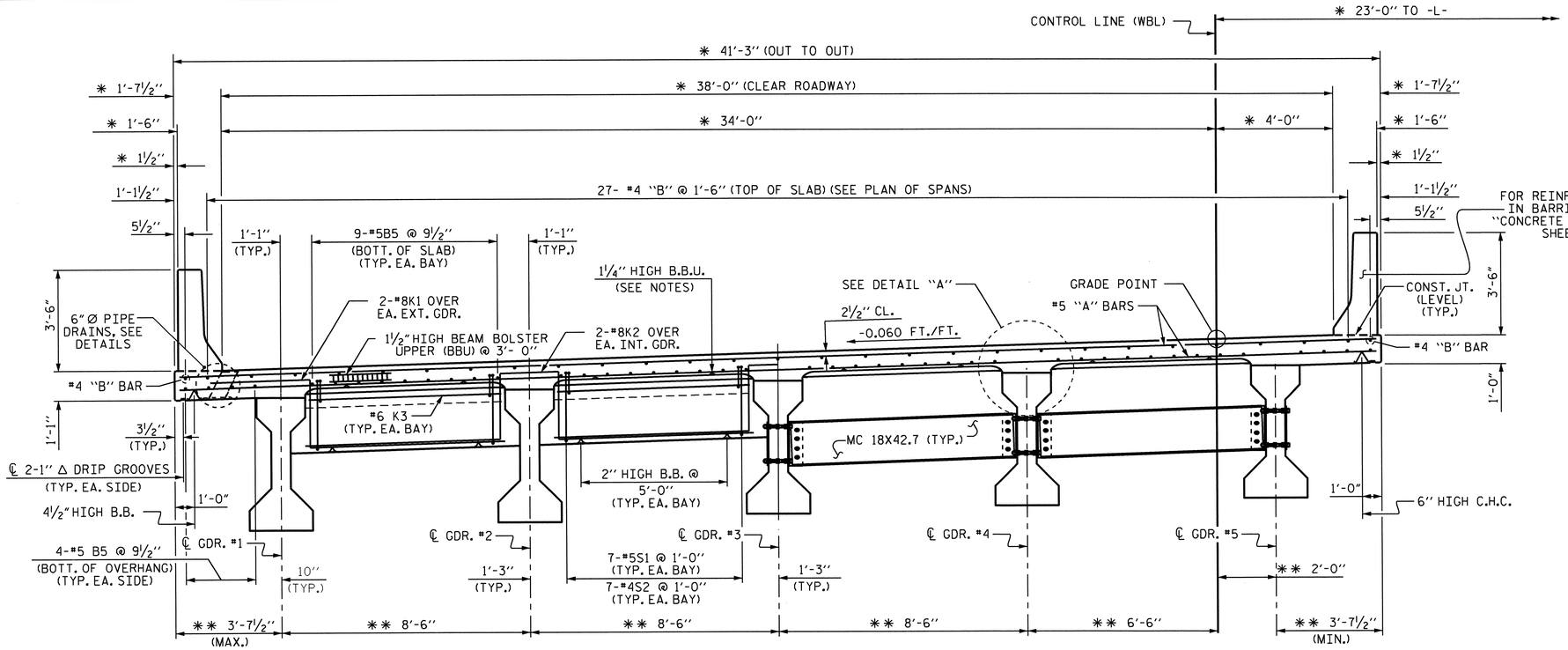

HALF TYPICAL SECTION AT END BENT DIAPHRAGM

HALF TYPICAL SECTION AT INTERMEDIATE DIAPHRAGM

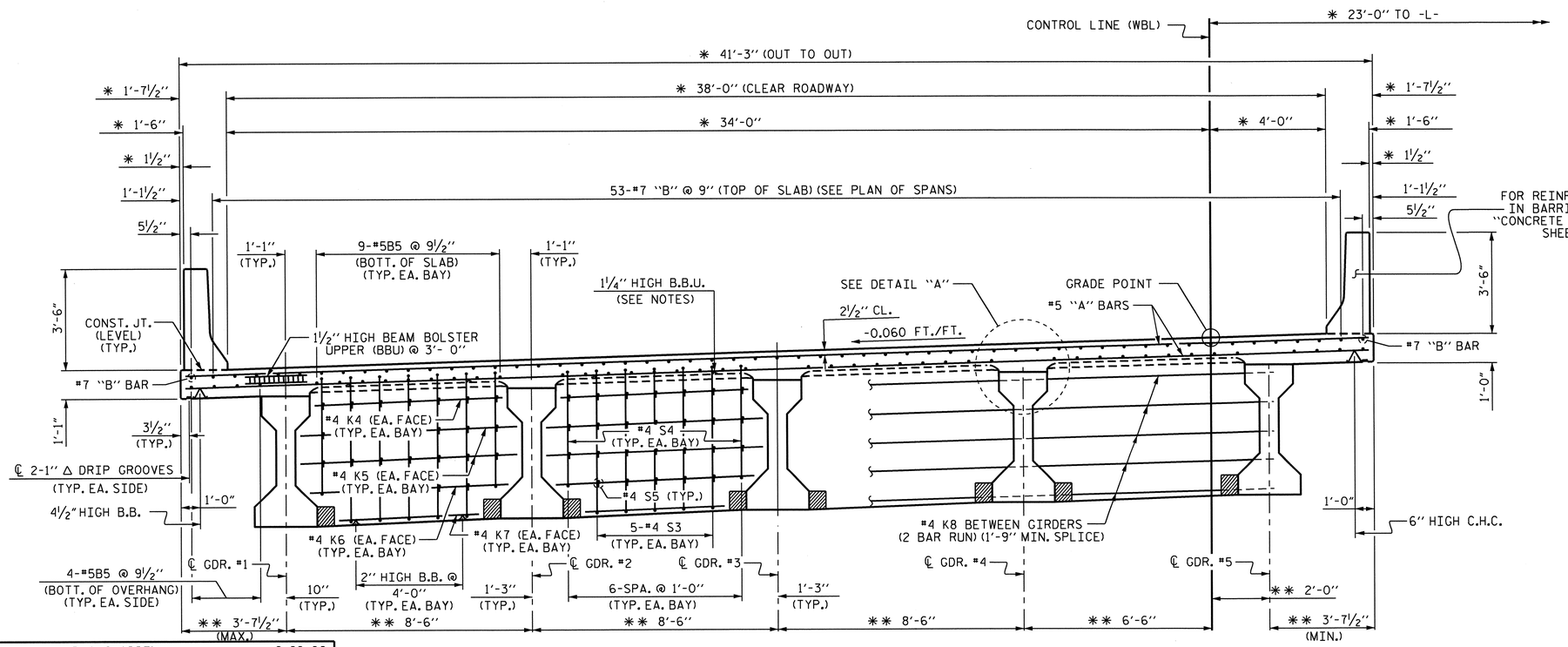

TYPICAL SECTION AT BENT DIAPHRAGM

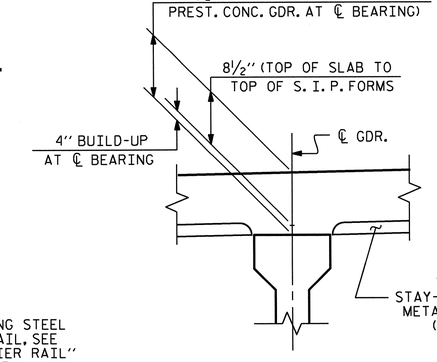

DETAIL "A"

NOTES

PROVIDE 1¼" HIGH BEAM BOLSTERS UPPER AT 4'-0" CTS. ATOP THE METAL STAY-IN-PLACE FORMS TO SUPPORT THE BOTTOM MAT OF 'A' BARS. WHEN USING REMOVABLE FORMS, PROVIDE CONTINUOUS HIGH CHAIRS FOR METAL DECK (C.H.C.M.) @ 4'-0" CTS. WITH A HEIGHT TO SUPPORT THE BOTTOM MAT OF 'A' BARS A CLEAR DISTANCE OF 2½" ABOVE THE TOP OF THE REMOVABLE FORM.

LONGITUDINAL STEEL MAY BE SHIFTED SLIGHTLY, AS NECESSARY, TO AVOID INTERFERENCE WITH STIRRUPS IN PRESTRESSED CONCRETE GIRDERS.

PREVIOUSLY CAST CONCRETE IN A CONTINUOUS UNIT SHALL HAVE ATTAINED A MINIMUM COMPRESSIVE STRENGTH OF 3,000 PSI BEFORE ADDITIONAL CONCRETE IS CAST IN THE UNIT.

BARRIER RAIL IN A CONTINUOUS UNIT SHALL NOT BE CAST UNTIL ALL SLAB CONCRETE IN THE UNIT HAS BEEN CAST AND HAS REACHED A MINIMUM COMPRESSIVE STRENGTH OF 3,000 PSI.

* RADIAL DIMENSIONS.

** RADIAL THROUGH THE WORKPOINT.

PROJECT NO. R-2707AB

CLEVELAND COUNTY

STATION: 157+75.50 -L-

SHEET 1 OF 2

STATE OF NORTH CAROLINA
DEPARTMENT OF TRANSPORTATION
RALEIGH

SUPERSTRUCTURE TYPICAL SECTION (WBL)

REVISIONS						SHEET NO.
NO.	BY:	DATE:	NO.	BY:	DATE:	S-6
1			3			TOTAL SHEETS
2			4			104

DRAWN BY : D. A. GLADDEN DATE : 6-29-09
CHECKED BY : M. G. SHAIKH DATE : 10-20-09
DESIGN ENGINEER OF RECORD: G.W. DICKEY DATE : 10/16/12

13-JUN-2013 07:43
R:\Structures\Plans\Str4and5\Plans\R-2707AB_sd_TS_Str4.dgn
dadavenport

STR. #4

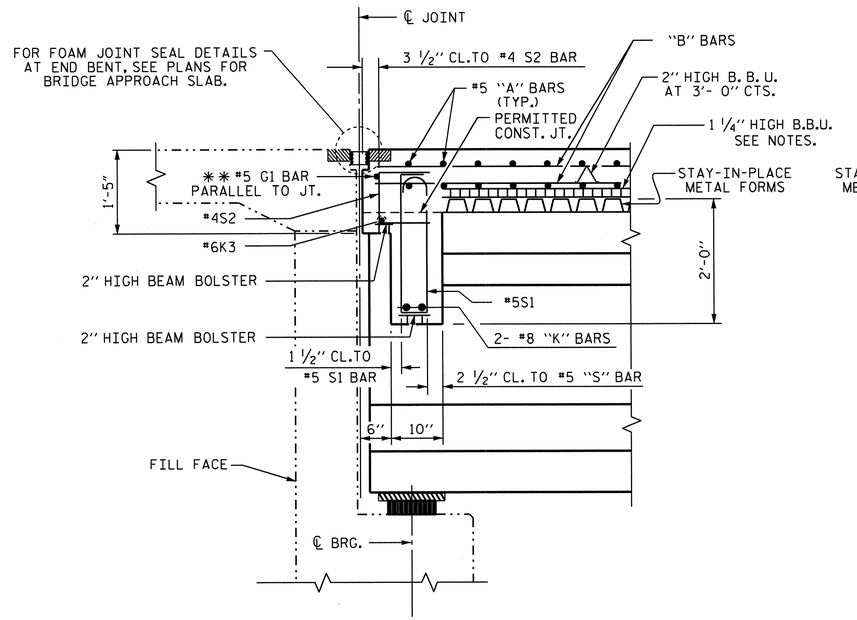

SECTION AT END BENT DIAPHRAGM

** #5 "G" BAR MAY BE SHIFTED SLIGHTLY, AS NECESSARY TO CLEAR REINFORCING STEEL AND STIRRUPS.

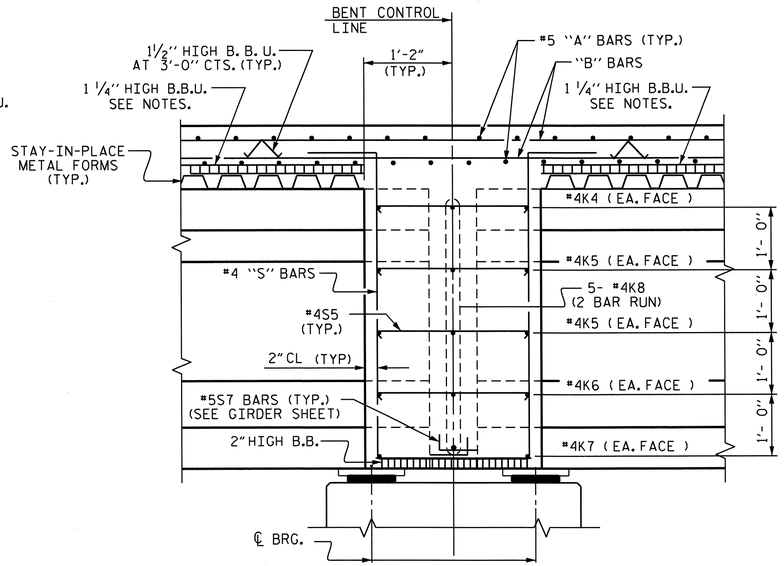

SECTION AT BENT DIAPHRAGM

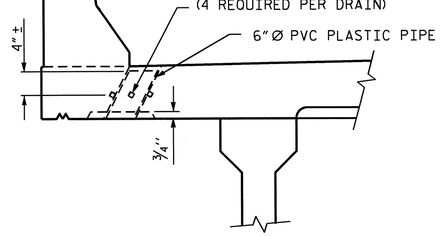

ELEVATION

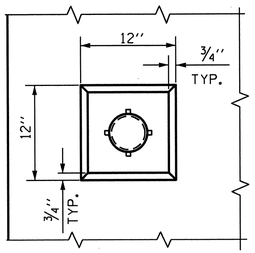

PLAN OF RECESS

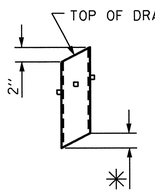

✳ TO BE SET TO MATCH SLOPE OF BOTTOM OF OVERHANG (14 DRAINS REQUIRED)

PIPE DETAIL

TOP OF FLOOR DRAINS TO BE SET ⅜" BELOW SURFACE OF SLAB.

4 - ½" SQUARE LUGS TO BE GLUED TO THE P.V.C. PLASTIC PIPE AT EQUAL SPACES AROUND THE PIPE DRAIN APPROXIMATELY 4" FROM THE TOP OF THE PIPE.

THE 6" Ø PVC PLASTIC PIPE AND FITTINGS SHALL BE SCHEDULE 40 AND CONFORM TO ASTM D1785.

DRAIN DETAILS

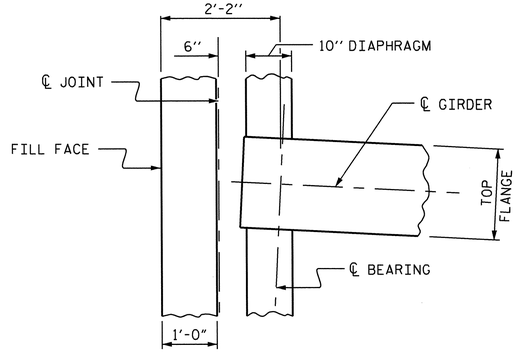

PLAN AT END BENT DIAPHRAGM

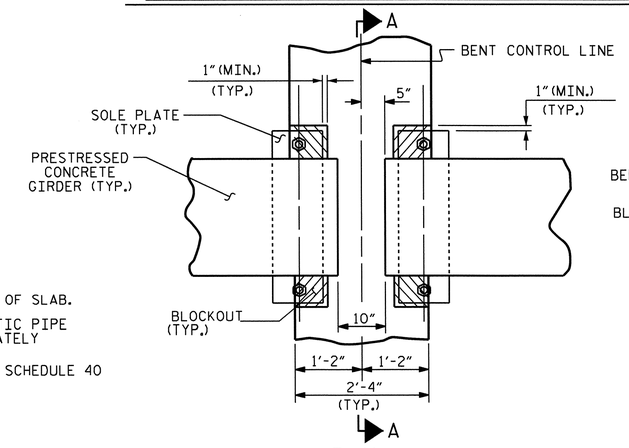

PLAN

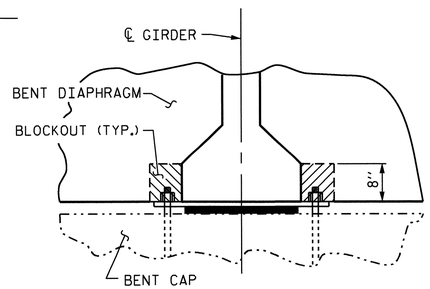

SECTION A-A

BENT DIAPHRAGM BLOCKOUT DETAIL

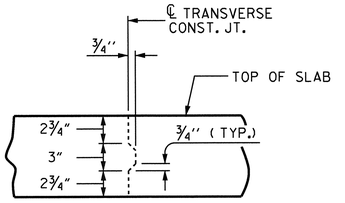

TRANSVERSE CONSTRUCTION JOINT DETAIL

NOTE: REINFORCING STEEL IN SLAB NOT SHOWN. LONGITUDINAL REINFORCING STEEL SHALL BE CONTINUOUS THRU JOINT

PROJECT NO. R-2707AB

CLEVELAND COUNTY

STATION: 157+75.50 -L-

SHEET 2 OF 2

STATE OF NORTH CAROLINA
DEPARTMENT OF TRANSPORTATION
RALEIGH

SUPERSTRUCTURE TYPICAL SECTION (WBL)

REVISIONS						SHEET NO.
NO.	BY:	DATE:	NO.	BY:	DATE:	S-7
1			3			TOTAL SHEETS
2			4			104

NORTH CAROLINA PROFESSIONAL SEAL 10730 ENGINEER D. ANDRE DAVENPORT, JR. 10/17/12

DRAWN BY : D. A. GLADDEN DATE : 6-29-09
CHECKED BY : M. G. SHAIKH DATE : 10-20-09
DESIGN ENGINEER OF RECORD: G.W. DICKEY DATE : 10/16/12

17-OCT-2012 10:58
R:\Structures\Plans\Str4and5\Plans\R-2707AB_sd_TS_Str4.dgn
addavenport

STR. #4

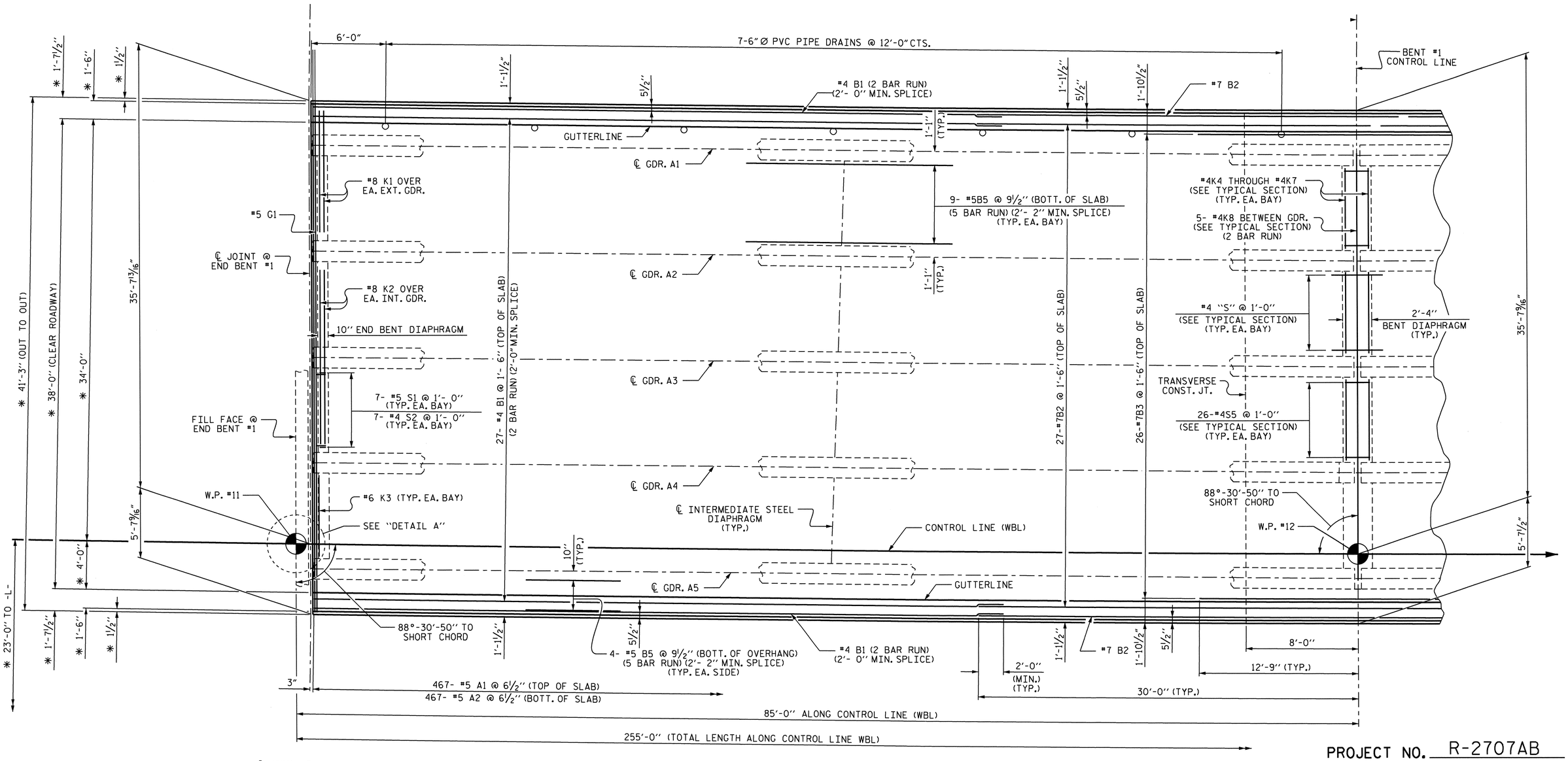

PLAN OF SPAN A

* RADIAL DIMENSION

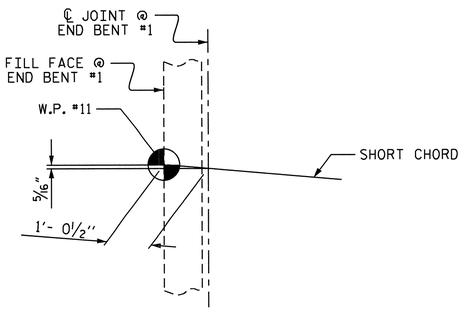

DETAIL A

PROJECT NO. R-2707AB

CLEVELAND COUNTY

STATION: 157+75.50 -L-

SHEET 1 OF 6

STATE OF NORTH CAROLINA
DEPARTMENT OF TRANSPORTATION
RALEIGH

SUPERSTRUCTURE PLAN OF SPAN A (WBL)

REVISIONS						SHEET NO.
NO.	BY:	DATE:	NO.	BY:	DATE:	S-8
1			3			TOTAL SHEETS
2			4			104

NORTH CAROLINA PROFESSIONAL SEAL 10730 ENGINEER D. ANDREW DAVENPORT 6-13-13

DRAWN BY : D. A. GLADDEN DATE : 7-6-09
CHECKED BY : M. G. SHAIKH DATE : 10-20-09
DESIGN ENGINEER OF RECORD: G.W. DICKEY DATE : 10/16/12

13-JUN-2013 07:43
R:\Structures\Plans\Str4and5\Plans\R-2707AB_sd_TS_Str4.dgn
dadavenport

STR. #4

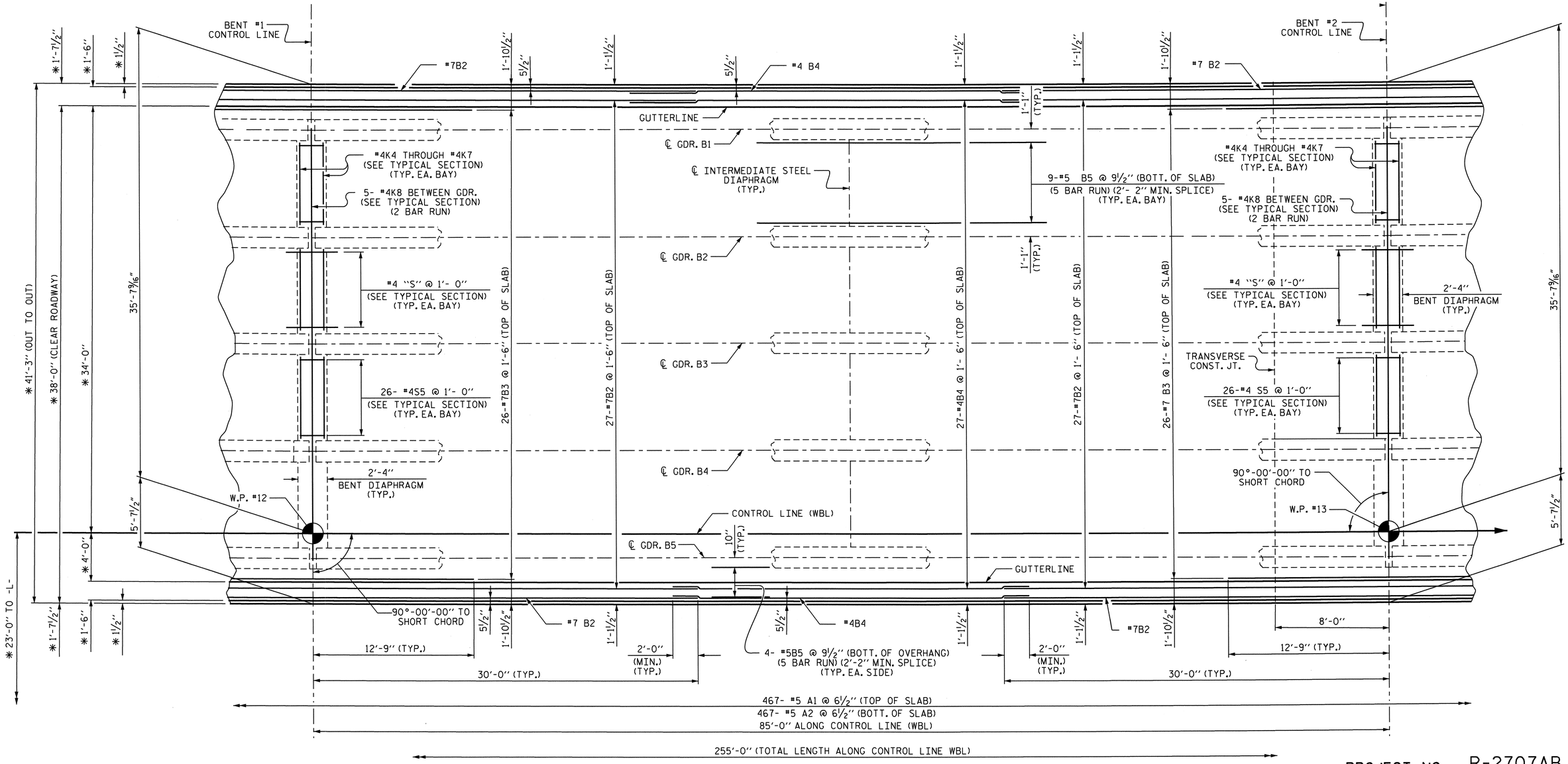

PLAN OF SPAN B

* RADIAL DIMENSION

PROJECT NO. R-2707AB

CLEVELAND COUNTY

STATION: 157+75.50 -L-

SHEET 2 OF 6

STATE OF NORTH CAROLINA
DEPARTMENT OF TRANSPORTATION
RALEIGH

SUPERSTRUCTURE PLAN OF SPAN B (WBL)

REVISIONS						SHEET NO.
NO.	BY:	DATE:	NO.	BY:	DATE:	S-9
1			3			TOTAL SHEETS
2			4			104

NORTH CAROLINA PROFESSIONAL SEAL 10730 ENGINEER D. ANDRE DAVENPORT
10-17-12

DRAWN BY : D. A. GLADDEN DATE : 7-6-09
CHECKED BY : M. G. SHAIKH DATE : 10-20-09
DESIGN ENGINEER OF RECORD: C.W. DICKEY DATE : 10/16/12

17-OCT-2012 11:00
R:\Structures\Plans\Str4and5\Plans\R-2707AB_sd_TS_Str4.dgn
ddavenport

STR. #4

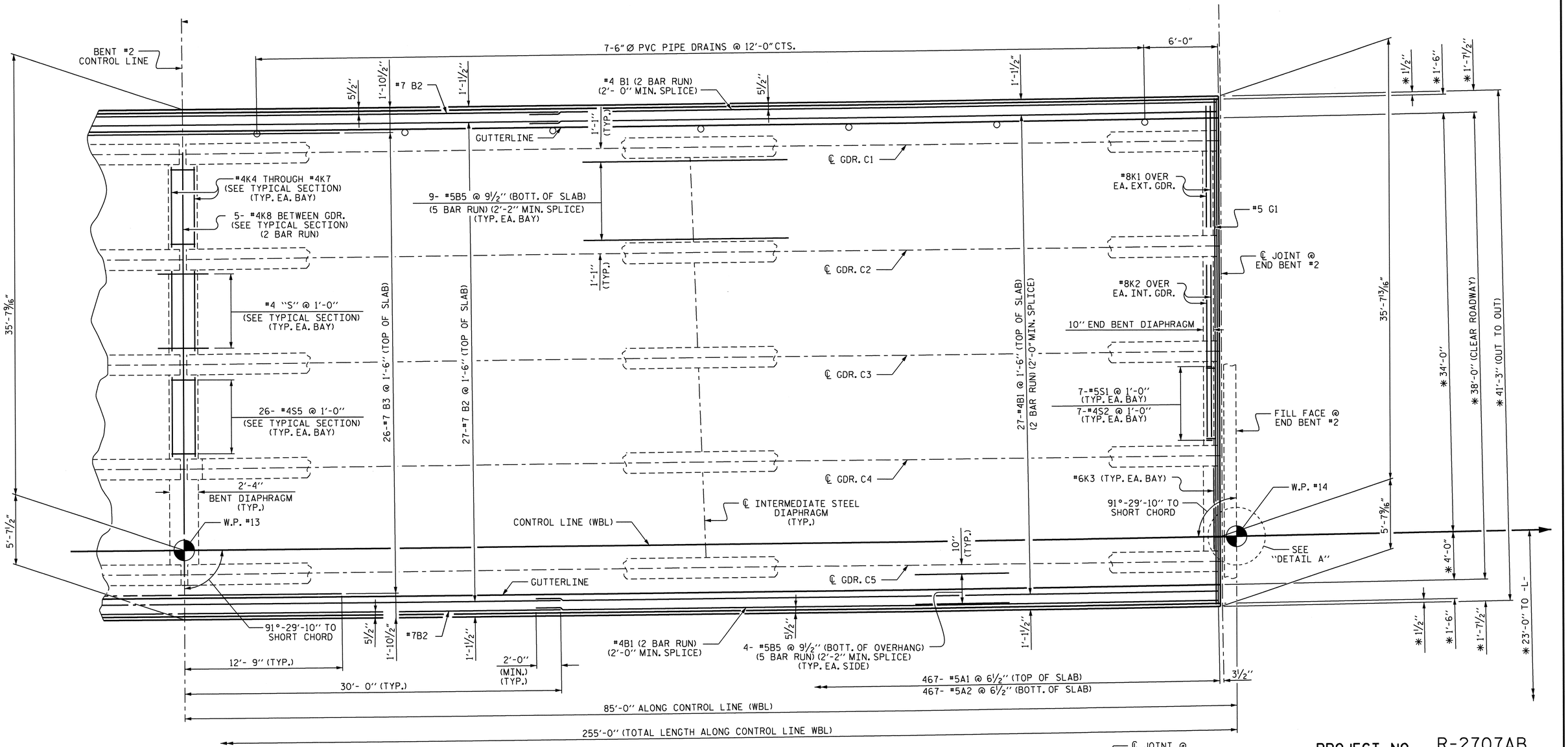

PLAN OF SPAN C

* RADIAL DIMENSION

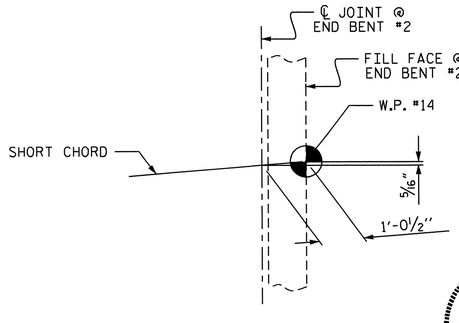

DETAIL A

PROJECT NO. R-2707AB

CLEVELAND COUNTY

STATION: 157+75.50 -L-

SHEET 3 OF 6

STATE OF NORTH CAROLINA
DEPARTMENT OF TRANSPORTATION
RALEIGH

SUPERSTRUCTURE PLAN OF SPAN C (WBL)

REVISIONS						SHEET NO.
NO.	BY:	DATE:	NO.	BY:	DATE:	S-10
1			3			TOTAL SHEETS
2			4			104

NORTH CAROLINA PROFESSIONAL SEAL 10730 ENGINEER D. ANDREW DAVENPORT, JR.

DRAWN BY : D. A. GLADDEN DATE : 7-6-09
CHECKED BY : M. G. SHAIKH DATE : 10-20-09
DESIGN ENGINEER OF RECORD: G.W. DICKEY DATE : 10/16/12

13-JUN-2013 07:44
R:\Structures\Plans\Str4and5\Plans\R-2707AB_sd_TS_Str4.dgn
ddavenport

STR. #4

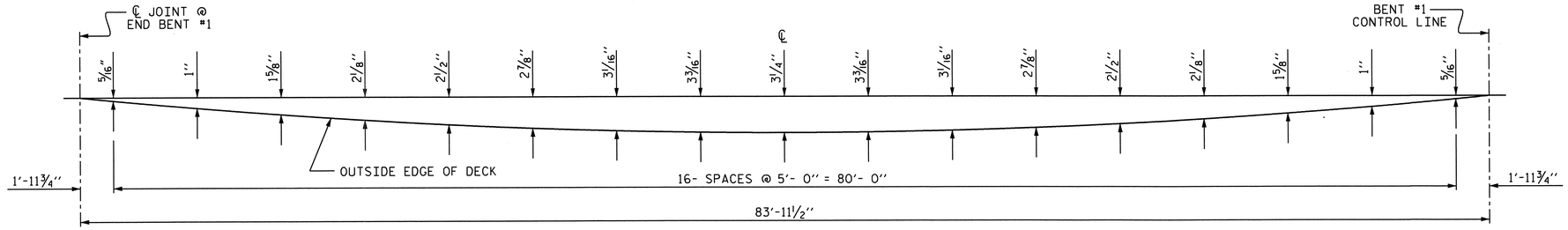

SPAN A ARC OFFSETS (LEFT SIDE)

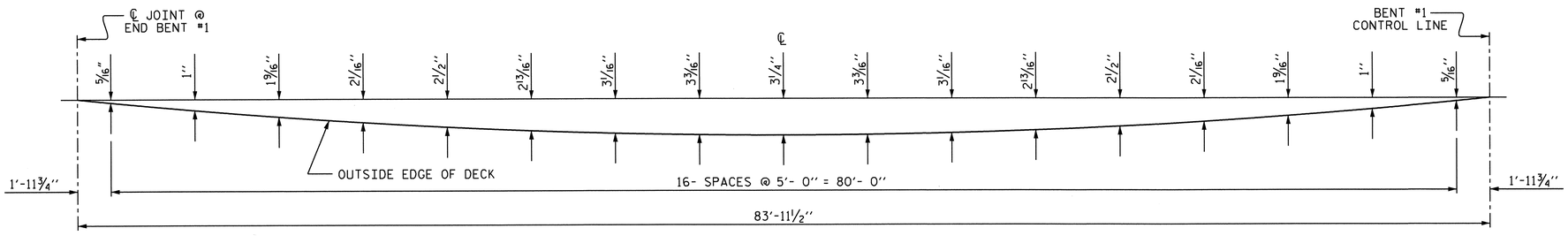

SPAN A ARC OFFSETS (RIGHT SIDE)

PROJECT NO. R-2707AB

CLEVELAND COUNTY

STATION: 157+75.50 -L-

SHEET 4 OF 6

STATE OF NORTH CAROLINA
DEPARTMENT OF TRANSPORTATION
RALEIGH

SUPERSTRUCTURE PLAN OF SPAN A ARC OFFSETS (WBL)

NORTH CAROLINA PROFESSIONAL SEAL 10730 ENGINEER DIANDRE DAVENPORT
10-17-12

REVISIONS						SHEET NO.
NO.	BY:	DATE:	NO.	BY:	DATE:	S-11
1			3			TOTAL SHEETS
2			4			104

DRAWN BY : D. A. GLADDEN DATE : 7-6-09
CHECKED BY : M. G. SHAIKH DATE : 10-20-09
DESIGN ENGINEER OF RECORD: G.W. DICKEY DATE : 10/16/12

17-OCT-2012 11:00
R:\Structures\Plans\Str4and5\Plans\R-2707AB_sd_TS_Str4.dgn
ddavenport

STR. #4

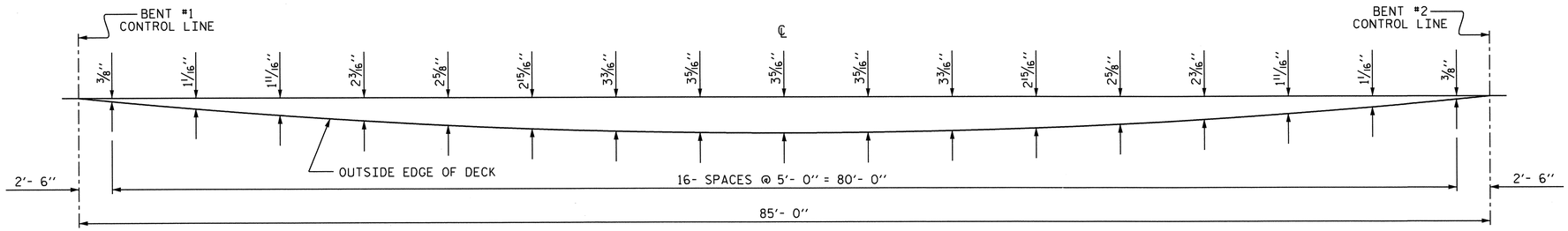

SPAN B ARC OFFSETS (LEFT SIDE)

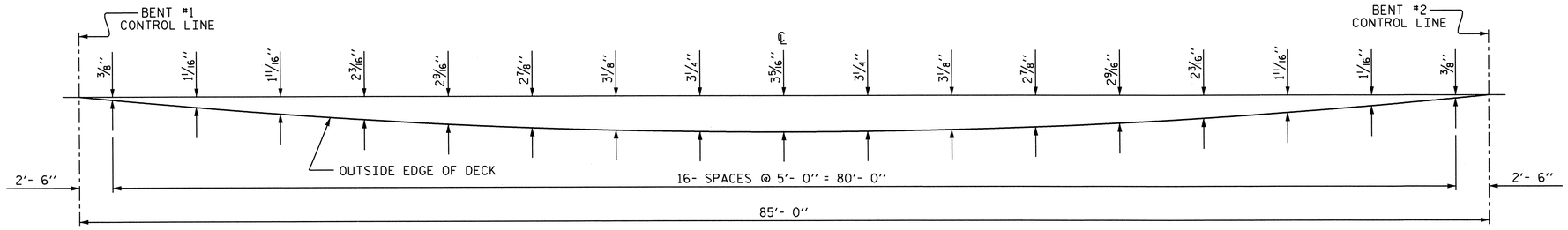

SPAN B ARC OFFSETS (RIGHT SIDE)

PROJECT NO. R-2707AB
CLEVELAND COUNTY
STATION: 157+75.50 -L-

SHEET 5 OF 6

STATE OF NORTH CAROLINA
DEPARTMENT OF TRANSPORTATION
RALEIGH

SUPERSTRUCTURE PLAN OF SPAN B ARC OFFSETS (WBL)

REVISIONS						SHEET NO.
NO.	BY:	DATE:	NO.	BY:	DATE:	S-12
1			3			TOTAL SHEETS
2			4			104

NORTH CAROLINA PROFESSIONAL SEAL 10730 ENGINEER D. ANDRE DAVENPORT
10-17-12

DRAWN BY : D. A. GLADDEN DATE : 7-6-09
CHECKED BY : M. G. SHAIKH DATE : 10-20-09
DESIGN ENGINEER OF RECORD: G.W. DICKEY DATE : 10/16/12

17-OCT-2012 11:00
R:\Structures\Plans\Str4and5\Plans\R-2707AB_sd_TS_Str4.dgn
adavenport

STR. #4

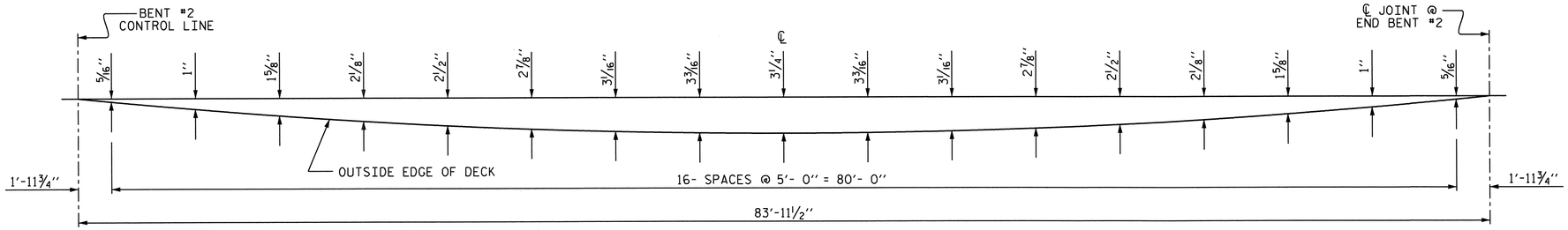

SPAN C ARC OFFSETS (LEFT SIDE)

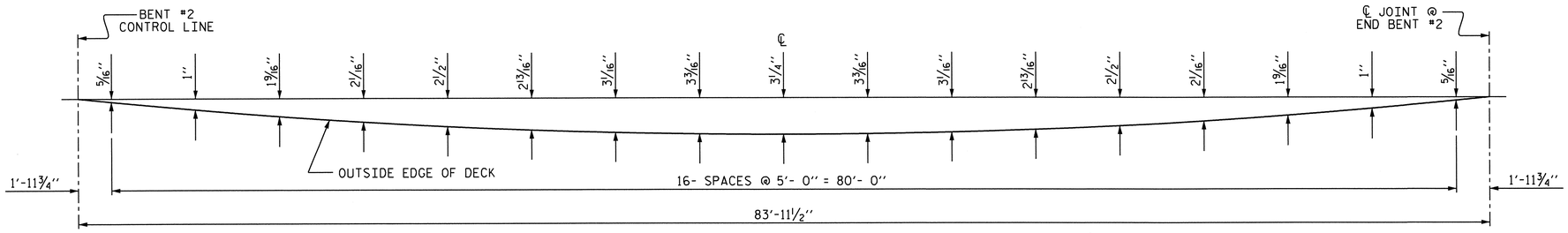

SPAN C ARC OFFSETS (RIGHT SIDE)

PROJECT NO. R-2707AB
CLEVELAND COUNTY
STATION: 157+75.50 -L-

SHEET 6 OF 6

STATE OF NORTH CAROLINA
DEPARTMENT OF TRANSPORTATION
RALEIGH

SUPERSTRUCTURE PLAN OF SPAN C ARC OFFSETS (WBL)

NORTH CAROLINA PROFESSIONAL SEAL 10730 ENGINEER D. ANDREW DAVENPORT
10-17-12

REVISIONS						SHEET NO.
NO.	BY:	DATE:	NO.	BY:	DATE:	S-13
1			3			TOTAL SHEETS
2			4			104

DRAWN BY : D. A. GLADDEN DATE : 7-6-09
CHECKED BY : M. G. SHAIKH DATE : 10-20-09
DESIGN ENGINEER OF RECORD: G.W. DICKEY DATE : 10/16/12

17-OCT-2012 11:00
R:\Structures\Plans\Str4and5\Plans\R-2707AB_sd_TS_Str4.dgn
adavenport

STR. #4

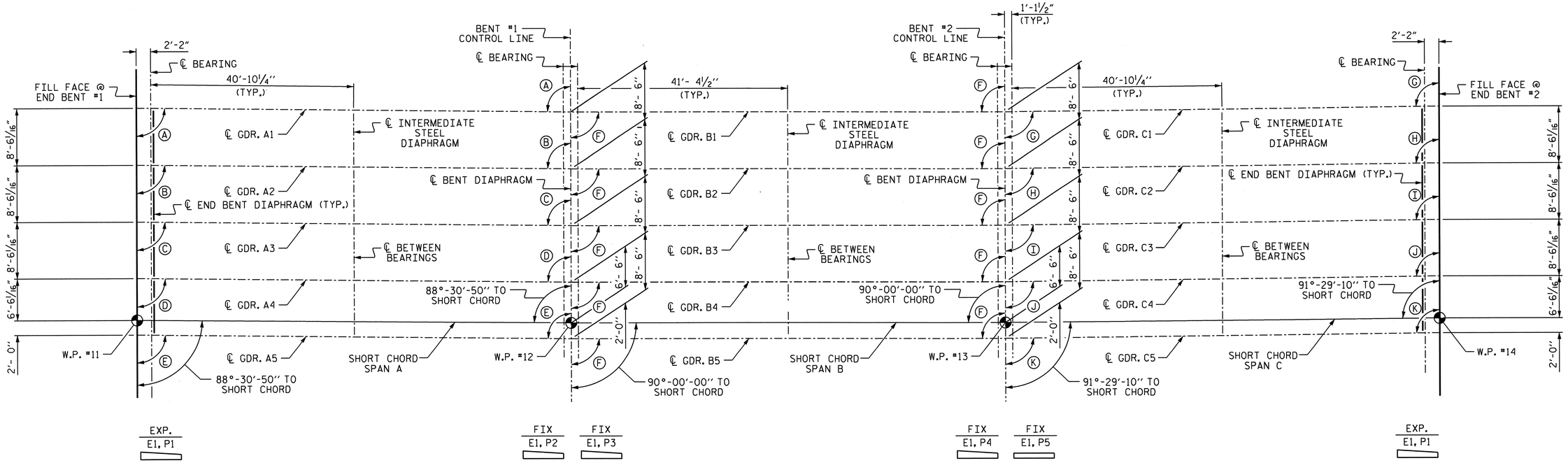

FRAMING PLAN

ANGLES

Ⓐ	88°-29'-57"	Ⓖ	91°-30'-03"
Ⓑ	88°-30'-11"	Ⓗ	91°-29'-49"
Ⓒ	88°-30'-25"	Ⓘ	91°-29'-35"
Ⓓ	88°-30'-39"	Ⓙ	91°-29'-21"
Ⓔ	88°-30'-53"	Ⓚ	91°-29'-07"
Ⓕ	90°-00'-00"		

PROJECT NO. R-2707AB

CLEVELAND COUNTY

STATION: 157+75.50 -L-

STATE OF NORTH CAROLINA
DEPARTMENT OF TRANSPORTATION
RALEIGH

SUPERSTRUCTURE FRAMING PLAN (WBL)

REVISIONS						SHEET NO.
NO.	BY:	DATE:	NO.	BY:	DATE:	S-14
1			3			TOTAL SHEETS
2			4			104

NORTH CAROLINA PROFESSIONAL SEAL 10730 ENGINEER D. ANDRE DAVENPORT, JR.
6-13-13

DRAWN BY : D. A. GLADDEN DATE : 7-9-09
CHECKED BY : M. G. SHAIKH DATE : 10-20-09
DESIGN ENGINEER OF RECORD: C.W. DICKEY DATE : 10/16/12

13-JUN-2013 07:45
R:\Structures\Plans\Str4and5\Plans\R-2707AB_sd_TS_Str4.dgn
ddavenport

STR. #4

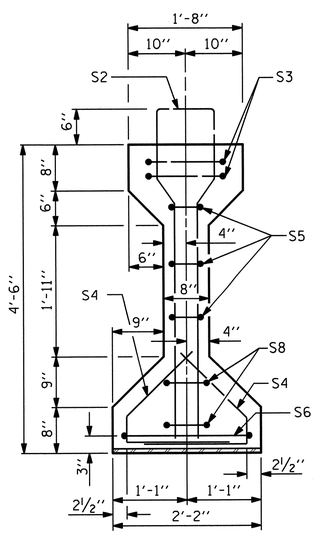

SECTION A-A

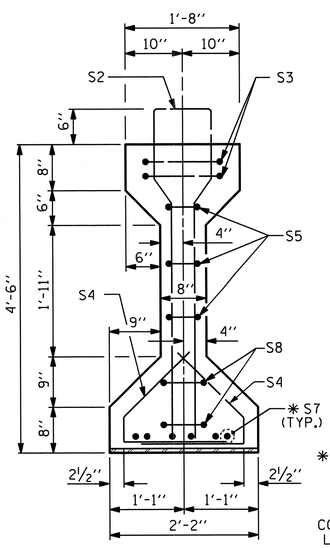

SECTION B-B

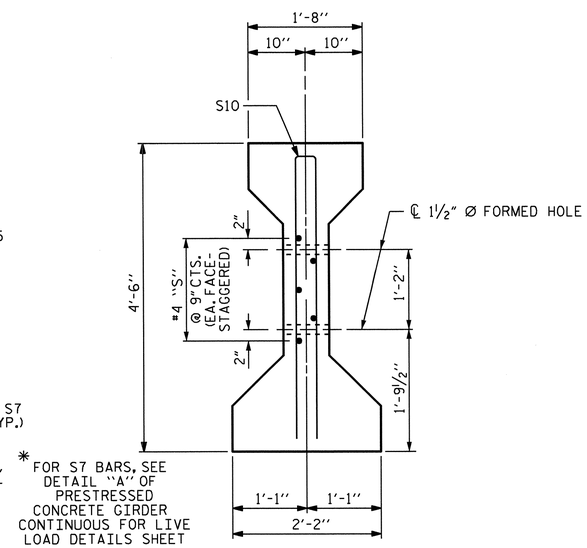

✱ FOR S7 BARS, SEE DETAIL "A" OF PRESTRESSED CONCRETE GIRDER CONTINUOUS FOR LIVE LOAD DETAILS SHEET

SECTION C-C
(S1 BARS NOT SHOWN)

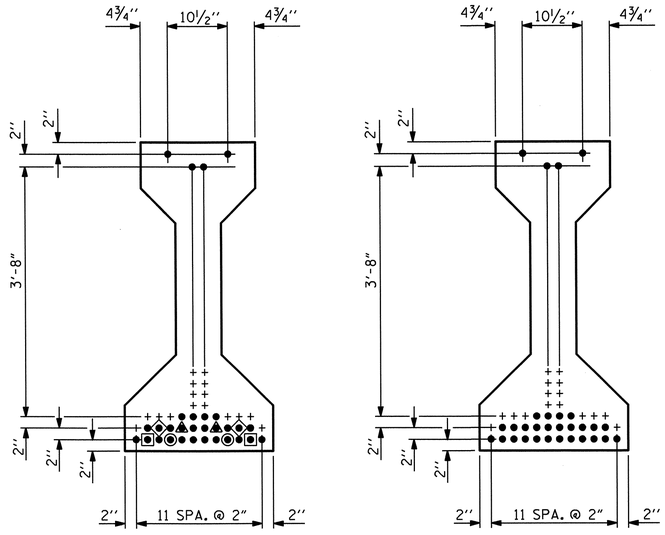

AT END OF GIRDER

AT ℄ OF GIRDER

0.6 " Ø LOW RELAXATION STRAND LAYOUT

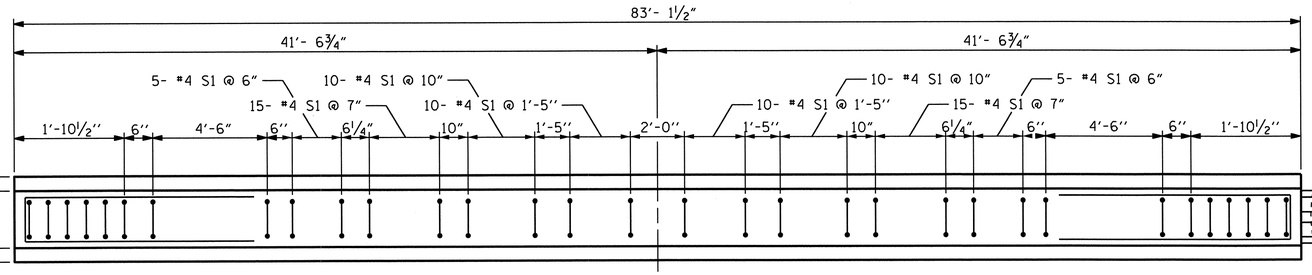

PLAN OF GIRDER

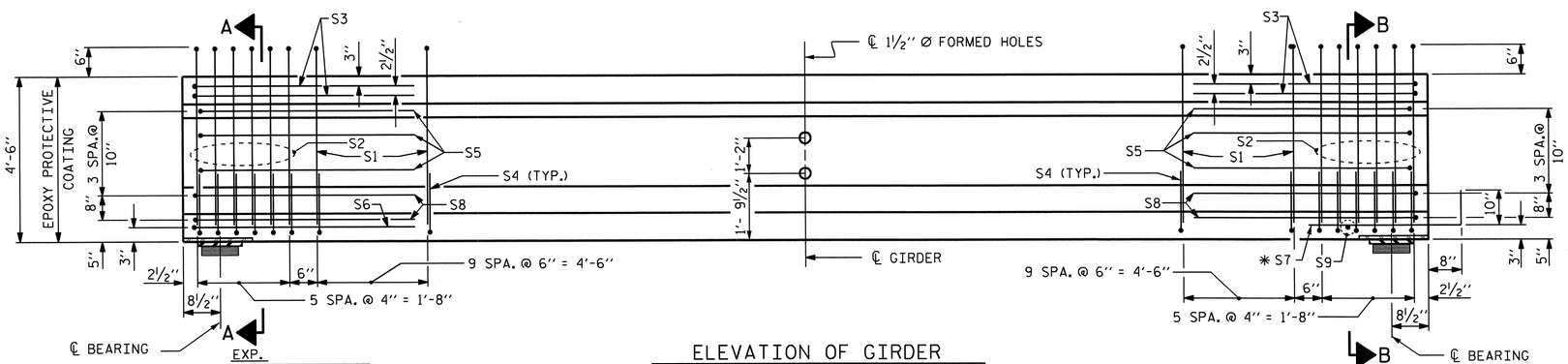

ELEVATION OF GIRDER
(SEE PARTIAL ELEVATION FOR ADDITIONAL "S" BARS)

DEBONDING LEGEND

- ● FULLY BONDED STRANDS
- ▣ STRANDS DEBONDED FOR 4'-0" FROM END OF GIRDER
- ◉ STRANDS DEBONDED FOR 6'-0" FROM END OF GIRDER
- ◈ STRANDS DEBONDED FOR 8'-0" FROM END OF GIRDER
- ▲ STRANDS DEBONDED FOR 10'-0" FROM END OF GIRDER

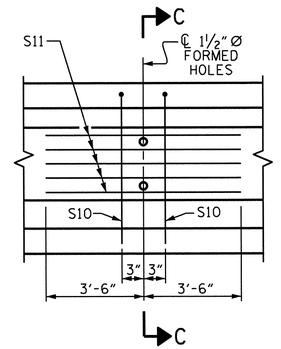

PARTIAL ELEVATION
SHOWING INTERMEDIATE DIAPHRAGM REINFORCING STEEL.

0.6" Ø L. R. GRADE 270 STRANDS

AREA (SQUARE INCHES)	ULTIMATE STRENGTH (LBS. PER STRAND)	APPLIED PRESTRESS (LBS. PER STRAND)
0.217	58,600	43,950

REINFORCING STEEL FOR ONE GIRDER

BAR	NUMBER	SIZE	TYPE	LENGTH	WEIGHT
S1	100	#4	1	10'-8"	713
S2	12	#6	1	10'-8"	192
S3	4	#4	2	9'-1"	24
S4	64	#4	3	3'-5"	146
S5	6	#4	2	8'-5"	34
S6	1	#4	2	9'-11"	7
✱S7	6	#5	STR	3'-8"	23
S8	4	#4	2	8'-7"	23
S9	1	#3	STR	1'-10"	1
S10	2	#5	2	8'-8"	18
S11	5	#4	STR	7'-0"	23

✱ NOTE: S7 BARS SHALL BE BENT BEFORE SHIPMENT. HEAT BENDING SHALL NOT BE ALLOWED.

BAR TYPES

ALL BAR DIMENSIONS ARE OUT-TO-OUT

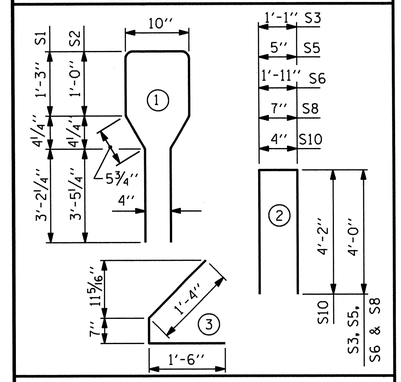

QUANTITIES FOR ONE GIRDER

	REINFORCING STEEL	6000 PSI CONCRETE	0.6" Ø L.R. STRANDS
	LB.	C.Y.	No.
	1204	16.9	30

GIRDERS REQUIRED

SPAN	NUMBER	LENGTH	TOTAL LENGTH
A	5	83'- 1½"	415.625'
C	5	83'- 1½"	415.625'

PROJECT NO. R-2707AB

CLEVELAND COUNTY

STATION: 157+75.50 -L-

SHEET 1 OF 4

STATE OF NORTH CAROLINA
DEPARTMENT OF TRANSPORTATION
RALEIGH

AASHTO TYPE IV PRESTRESSED CONCRETE GIRDER CONTINUOUS FOR LIVE LOAD SPANS A & C (WBL)

REVISIONS						SHEET NO.
NO.	BY:	DATE:	NO.	BY:	DATE:	S-15
1			3			TOTAL SHEETS
2			4			104

NORTH CAROLINA PROFESSIONAL SEAL 10730 ENGINEER D. ANDREW DAVENPORT

ASSEMBLED BY : D. A. GLADDEN DATE : 7-9-09
CHECKED BY : M. G. SHAIKH DATE : 10-20-09
DESIGN ENGINEER OF RECORD: G.W. DICKEY DATE : 10/16/12

DRAWN BY : ELR 8/91
CHECKED BY : GRP 8/91

REV. 10/17/00R RWW/LES
REV. 5/1/06R TLA/GM
REV. 10/1/11 MAA/GM

17-OCT-2012 10:57
R:\Structures\Plans\Str4and5\Plans\R-2707AB_sd_TS_Str4.dgn
adavenport

STR. #4 STD. NO. PCG6 (Sht. 1)

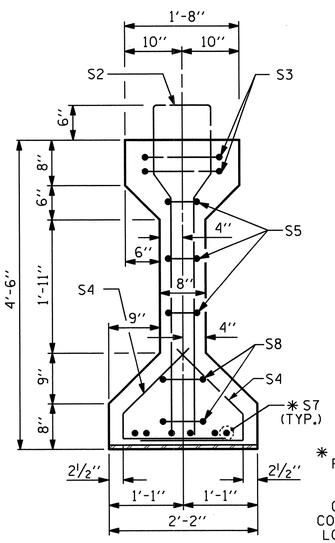

SECTION A-A

✱ FOR S7 BARS, SEE DETAIL "A" OF PRESTRESSED CONCRETE GIRDER CONTINUOUS FOR LIVE LOAD DETAILS SHEET

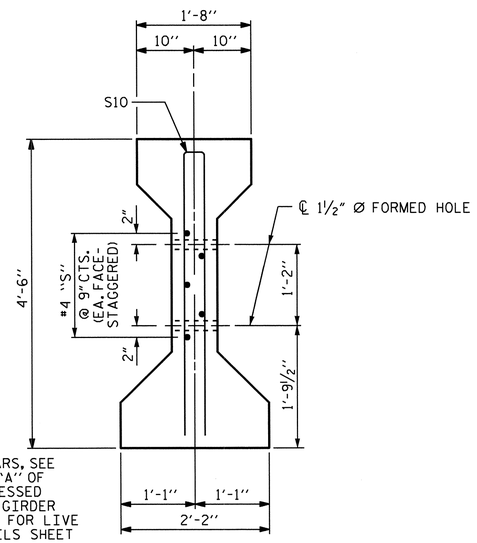

SECTION B-B

(S1 BARS NOT SHOWN)

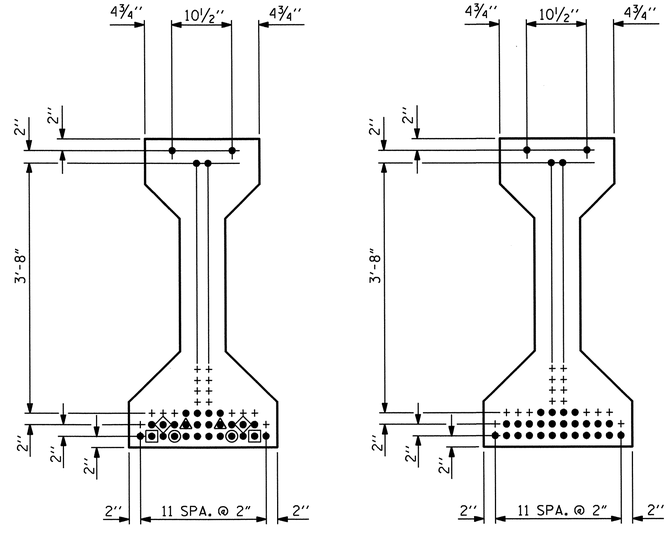

AT END OF GIRDER

AT ℄ OF GIRDER

0.6 " Ø LOW RELAXATION STRAND LAYOUT

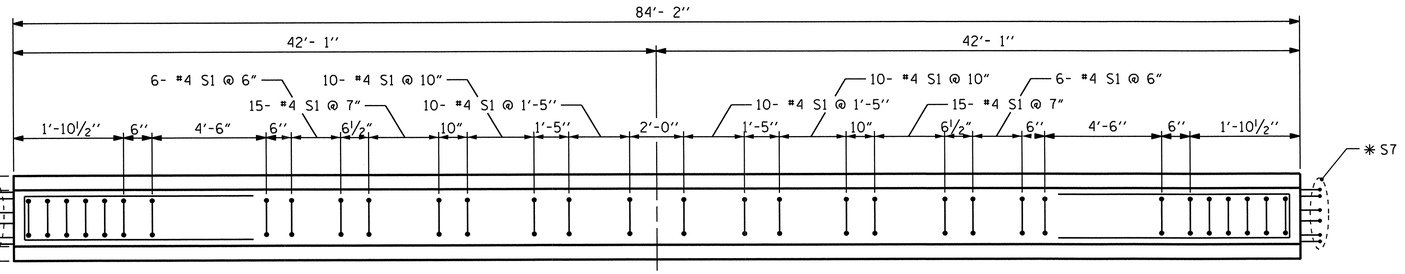

PLAN OF GIRDER

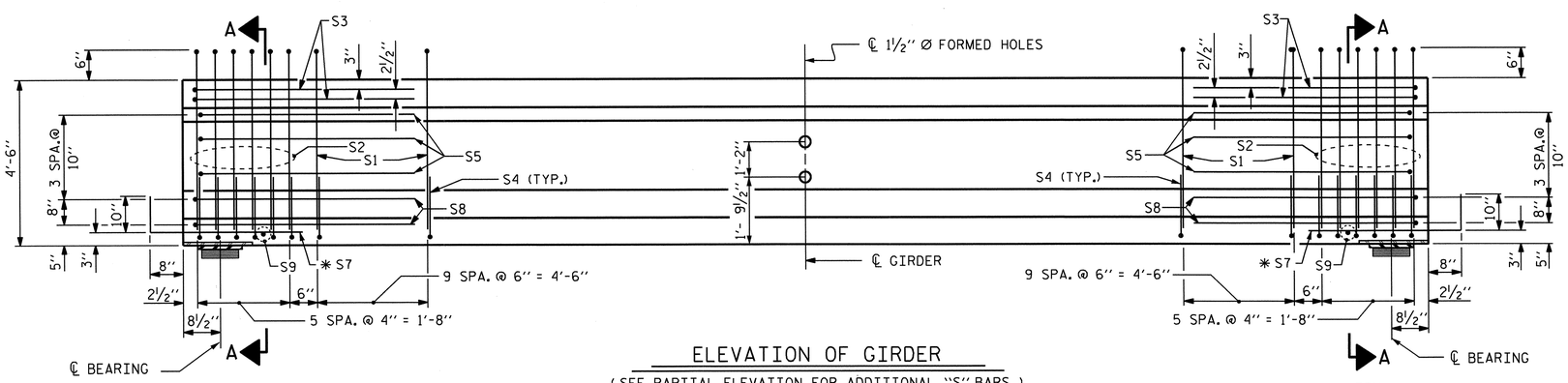

ELEVATION OF GIRDER

(SEE PARTIAL ELEVATION FOR ADDITIONAL "S" BARS)

DEBONDING LEGEND

- ● FULLY BONDED STRANDS
- ▣ STRANDS DEBONDED FOR 4'-0" FROM END OF GIRDER
- ◉ STRANDS DEBONDED FOR 6'-0" FROM END OF GIRDER
- ◈ STRANDS DEBONDED FOR 8'-0" FROM END OF GIRDER
- ▲ STRANDS DEBONDED FOR 10'-0" FROM END OF GIRDER

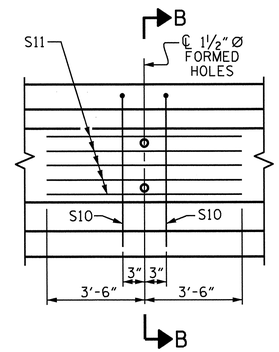

PARTIAL ELEVATION

SHOWING INTERMEDIATE DIAPHRAGM REINFORCING STEEL.

0.6" Ø L. R. GRADE 270 STRANDS

AREA (SQUARE INCHES)	ULTIMATE STRENGTH (LBS. PER STRAND)	APPLIED PRESTRESS (LBS. PER STRAND)
0.217	58,600	43,950

REINFORCING STEEL FOR ONE GIRDER

BAR	NUMBER	SIZE	TYPE	LENGTH	WEIGHT
S1	102	#4	1	10'-8"	727
S2	12	#6	1	10'-8"	192
S3	4	#4	2	9'-1"	24
S4	64	#4	3	3'-5"	146
S5	6	#4	2	8'-5"	34
✱S7	12	#5	STR	3'-8"	46
S8	4	#4	2	8'-7"	23
S9	2	#3	STR	1'-10"	1
S10	2	#5	2	8'-8"	18
S11	5	#4	STR	7'-0"	23

✱ NOTE: S7 BARS SHALL BE BENT BEFORE SHIPMENT. HEAT BENDING SHALL NOT BE ALLOWED.

BAR TYPES

ALL BAR DIMENSIONS ARE OUT-TO-OUT

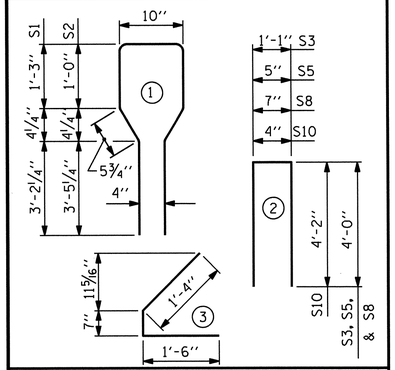

QUANTITIES FOR ONE GIRDER

	REINFORCING STEEL	6000 PSI CONCRETE	0.6" Ø L.R. STRANDS
	LB.	C.Y.	No.
	1234	17.1	30

GIRDERS REQUIRED

NUMBER	LENGTH	TOTAL LENGTH
5	84'- 2"	420.833'

PROJECT NO. R-2707AB

CLEVELAND COUNTY

STATION: 157+75.50 -L-

SHEET 2 OF 4

STATE OF NORTH CAROLINA
DEPARTMENT OF TRANSPORTATION
RALEIGH

AASHTO TYPE IV
PRESTRESSED CONCRETE GIRDER
CONTINUOUS FOR LIVE LOAD
SPAN B (WBL)

NORTH CAROLINA PROFESSIONAL SEAL 10730 ENGINEER D. ANDREW DAVENPORT

10-17-12

ASSEMBLED BY :	D. A. GLADDEN	DATE :	7-9-09
CHECKED BY :	M. G. SHAIKH	DATE :	10-20-09
DESIGN ENGINEER OF RECORD:	G.W. DICKEY	DATE :	10/16/12

DRAWN BY : ELR 8/91	REV. 10/17/00R	RWW/LES
CHECKED BY : GRP 8/91	REV. 5/1/06R	TLA/GM
	REV. 10/1/11	MAA/GM

REVISIONS						SHEET NO.
NO.	BY:	DATE:	NO.	BY:	DATE:	S-16
1			3			TOTAL SHEETS
2			4			104

17-OCT-2012 10:58
R:\Structures\Plans\Str4and5\Plans\R-2707AB_sd_TS_Str4.dgn
adavenport

STR. #4 STD. NO. PCG6 (Sht. 1)

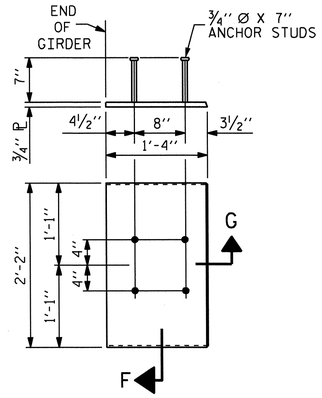

EMBEDDED PLATE "B-1" DETAILS FOR AASHTO TYPE IV GIRDER

(2 REQ'D. PER GIRDER)

NOTES

ALL PRESTRESSING STRANDS SHALL BE 7-WIRE LOW-RELAXATION GRADE 270 STRANDS AND SHALL CONFORM TO AASHTO M203 EXCEPT FOR SAMPLING REQUIREMENTS WHICH SHALL BE IN ACCORDANCE WITH THE STANDARD SPECIFICATIONS.

ALL REINFORCING STEEL SHALL BE GRADE 60.

APPLY EPOXY PROTECTIVE COATING TO END OF GIRDER SURFACES INDICATED IN ELEVATION VIEW.

EMBEDDED PLATE "B-1" SHALL BE GALVANIZED IN ACCORDANCE WITH THE STANDARD SPECIFICATIONS. BEVEL EDGES OF PLATE "B-1" TO GIVE CLOSE FIT BUT NOT TIGHT FIT TO STEEL CASTING FORM.

ANCHOR STUDS SHALL CONFORM TO AASHTO M169 GRADES 1010 THROUGH 1020 OR APPROVED EQUAL, AND SHALL MEET THE TYPE "B" REQUIREMENTS OF SUBSECTION 7.3 OF THE ANSI/AASHTO/AWS D1.5 BRIDGE WELDING CODE.

AT ENDS OF GIRDERS TO BE EMBEDDED IN CONCRETE DIAPHRAGMS OR END WALLS, PRESTRESSING STRANDS MAY EXTEND A MAXIMUM OF 2" BEYOND THE GIRDER ENDS. OTHERWISE, PRESTRESSING STRANDS SHALL BE CUT FLUSH WITH THE GIRDER ENDS.

THE TRANSFER OF LOAD FROM THE ANCHORAGES TO THE GIRDER SHALL BE DONE WHEN CONCRETE HAS REACHED A COMPRESSIVE STRENGTH OF NOT LESS THAN 4,800 PSI.

DEPENDING ON THE TYPE OF SYSTEM USED TO SUPPORT THE DECK SLAB FORMS, PRESET ANCHORS MAY BE NECESSARY IN THE PRESTRESSED CONCRETE GIRDER.

THE TOP SURFACE OF THE GIRDER, EXCLUDING THE OUTSIDE 4", SHALL BE RAKED TO A DEPTH OF ¼".

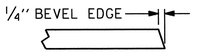

SECTION "G"

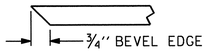

SECTION "F"

(SEE NOTES)

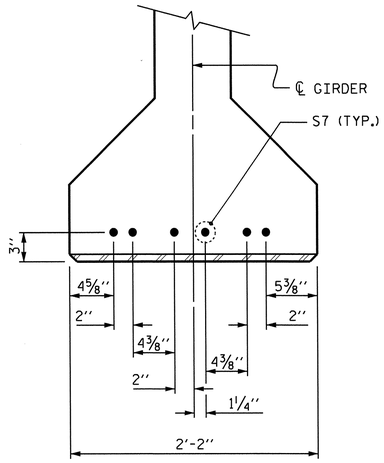

DETAIL "A"

(FOR AASHTO TYPE IV GIRDERS)

PROJECT NO. R-2707AB

CLEVELAND COUNTY

STATION: 157+75.50 -L-

SHEET 3 OF 4

STATE OF NORTH CAROLINA
DEPARTMENT OF TRANSPORTATION
RALEIGH

STANDARD

PRESTRESSED CONCRETE GIRDER CONTINUOUS FOR LIVE LOAD DETAILS

NORTH CAROLINA PROFESSIONAL SEAL 10730 ENGINEER D. ANDRE DAVENPORT
10-17-12

REVISIONS						SHEET NO.
NO.	BY:	DATE:	NO.	BY:	DATE:	S-17
1			3			TOTAL SHEETS
2			4			104

ASSEMBLED BY : D. A. GLADDEN/R.G.E.	DATE : 12/12
CHECKED BY : D.A. DAVENPORT	DATE : 12/08/12
DESIGN ENGINEER OF RECORD: G.W. DICKEY	DATE : 10/16/12
DRAWN BY : ELR 11/91	REV. 7/10/01RR LES/RDR
CHECKED BY : GRP 11/91	REV. 5/1/06 TLA/GM
	REV. 10/1/11 MAA/CM

17-OCT-2012 10:57
R:\Structures\Plans\Str4and5\Plans\R-2707AB_sd_TS_Str4.dgn
adavenport

STR. #4

STD. NO. PCG9 (Sht. 3)

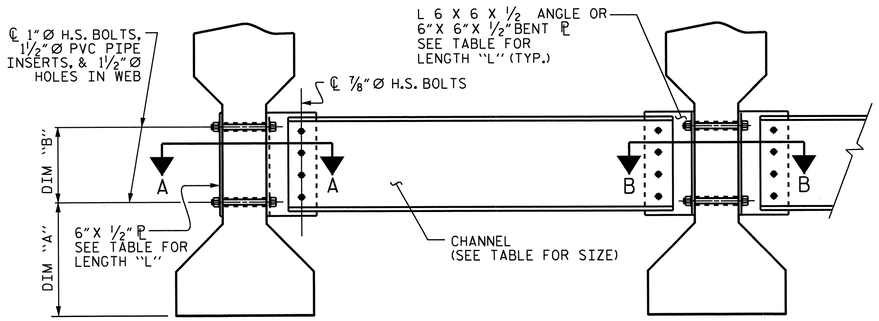

EXTERIOR GIRDER INTERIOR GIRDER

PART SECTION AT INTERMEDIATE DIAPHRAGM

(TYPE IV GIRDER SHOWN)

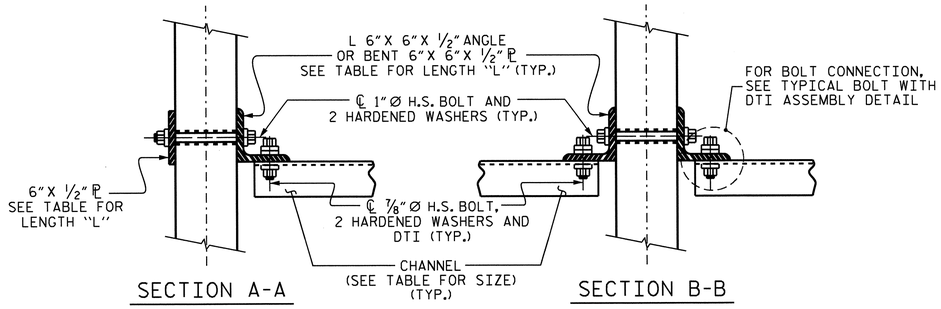

SECTION A-A SECTION B-B

CONNECTION DETAILS

(FOR SKEW = 90°)

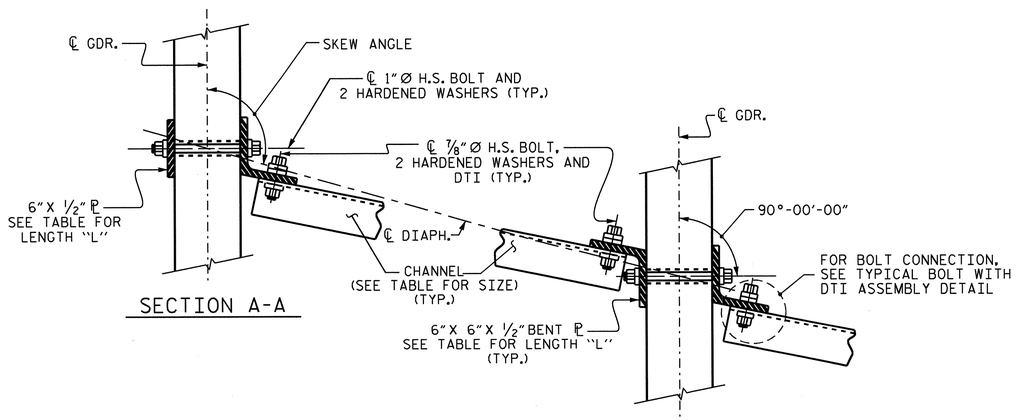

SECTION A-A SECTION B-B

CONNECTION DETAILS

(FOR 70°≤ SKEW < 90° OR 90°< SKEW ≤ 110°)

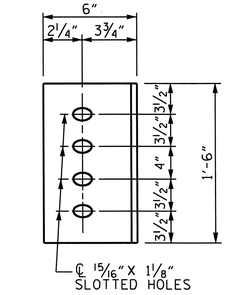

DIAPHRAGM FACE

(TYPE IV GDR.)

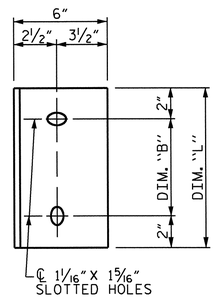

WEB FACE

CONNECTOR PLATE DETAILS

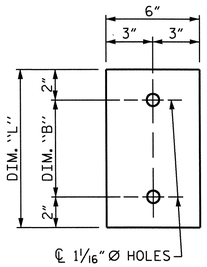

PLATE DETAILS

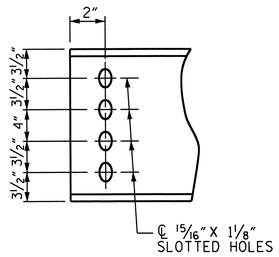

CHANNEL END

(TYPE IV GDR.)

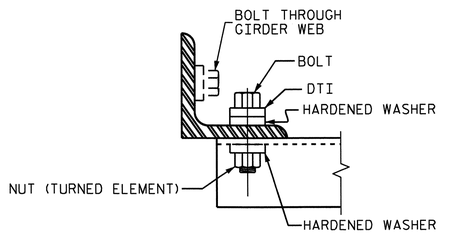

BOLT WITH DTI ASSEMBLY DETAIL

STRUCTURAL STEEL NOTES

ALL INTERMEDIATE DIAPHRAGM STEEL AND CONNECTOR PLATES SHALL BE AASHTO M270 GRADE 50 OR APPROVED EQUAL.

TENSION ON THE ASTM A325 BOLTS THROUGH THE CHANNEL MEMBER SHALL BE CALIBRATED USING DIRECT TENSION INDICATOR WASHERS IN ACCORDANCE WITH THE STANDARD SPECIFICATIONS.

TENSION ON THE ASTM A449 BOLTS THROUGH THE GIRDER WEB SHALL BE SNUG TIGHTENED FOLLOWED BY AN ADDITIONAL ¼ TURN.

THE PLATES, BENT PLATES, CHANNELS, AND ANGLES SHALL BE GALVANIZED OR METALLIZED IN ACCORDANCE WITH THE STANDARD SPECIFICATIONS. FOR THERMAL SPRAYED COATINGS (METALLIZATION), SEE SPECIAL PROVISIONS.

FOR METALLIZATION, APPLY AN 8 MIL THICK 99.99 PERCENT ZINC (W-Zn-1) THERMAL SPRAYED COATING WITH A 0.5 MIL THICK SEAL COAT TO ALL STEEL DIAPHRAGM SURFACES IN ACCORDANCE WITH THE THERMAL SPRAYED COATINGS SPECIAL PROVISION AND SECTION 442 OF THE STANDARD SPECIFICATIONS.

GALVANIZE THE HIGH STRENGTH BOLTS, NUTS, WASHERS AND DIRECT TENSION INDICATORS IN ACCORDANCE WITH THE STANDARD SPECIFICATIONS.

USE AN ASTM F436 HARDENED WASHER WITH STANDARD AND SLOTTED HOLES UNDER EACH BOLT HEAD AND NUT.

FOR BOLTS THROUGH THE GIRDER WEB, PROVIDE SUFFICIENT LENGTH OF THREADS ON ALL BOLTS TO ACCOMMODATE WASHERS AND THE THICKNESS OF CONNECTING MEMBER PLUS AT LEAST ¼" PROJECTION BEYOND THE NUT.

INTERMEDIATE DIAPHRAGM ASSEMBLY SHALL COMPLY WITH SECTION 1072 OF THE STANDARD SPECIFICATIONS.

SUBMIT TWO SETS OF WORKING DRAWINGS FOR THE INTERMEDIATE DIAPHRAGM ASSEMBLY FOR REVIEW. COMMENTS AND ACCEPTANCE. AFTER REVIEW, COMMENTS, AND ACCEPTANCE, SUBMIT SEVEN SETS FOR DISTRIBUTION.

IN THE EXTERIOR BAYS, PLACE TEMPORARY STRUTS BETWEEN PRESTRESSED GIRDERS ADJACENT TO THE STEEL DIAPHRAGMS. STRUTS SHALL REMAIN IN PLACE 3 DAYS AFTER CONCRETE IS PLACED.

THE COST OF THE STEEL DIAPHRAGMS AND ASSEMBLIES SHALL BE INCLUDED IN THE UNIT PRICE BID FOR PRESTRESSED CONCRETE GIRDERS.

TABLE

GIRDER TYPE	CHANNEL SIZE	DIM "A"	DIM "B"	DIM "L"
IV	MC 18 x 42.7	1'-9½"	1'-2"	1'-6"

ASSEMBLED BY : D. A. GLADDEN DATE : 12/12
CHECKED BY : D.A. DAVENPORT DATE : 12/08/12
DESIGN ENGINEER OF RECORD: G.W. DICKEY DATE : 10/16/12

DRAWN BY : TLA 6/05
CHECKED BY : VC 6/05

ADDED 10/21/05 KMM/GM
REV. 5/1/06RRR MAA/GM
REV. 10/1/11

17-OCT-2012 10:58
R:\Structures\Plans\Str4and5\Plans\R-2707AB_sd_TS_Str4.dgn
ddavenport

PROJECT NO. R-2707AB
CLEVELAND COUNTY
STATION: 157+75.50 -L-

SHEET 4 OF 4

STATE OF NORTH CAROLINA
DEPARTMENT OF TRANSPORTATION
RALEIGH

STANDARD
INTERMEDIATE STEEL DIAPHRAGMS FOR TYPE IV PRESTRESSED CONCRETE GIRDERS

REVISIONS						SHEET NO.
NO.	BY:	DATE:	NO.	BY:	DATE:	S-18
1			3			TOTAL SHEETS
2			4			104

NORTH CAROLINA PROFESSIONAL SEAL 10730 ENGINEER D. ANDRE DAVENPORT
10-17-12

STR. #4

STD. NO. PCG10

DEAD LOAD DEFLECTION TABLE FOR GIRDERS

0.6 "Ø LOW RELAXATION	SPAN "A" & "C" GIRDER #1											SPAN "A" & "C" GIRDERS 2,3,4											SPAN "A" & "C" GIRDER #5										
TENTH POINTS	0	.1	.2	.3	.4	.5	.6	.7	.8	.9	0	0	.1	.2	.3	.4	.5	.6	.7	.8	.9	0	0	.1	.2	.3	.4	.5	.6	.7	.8	.9	0
CAMBER (GIRDER ALONE IN PLACE) ↑	0	.0679	.1284	.1758	.2059	.2163	.2059	.1758	.1284	.0679	0	0	.0679	.1284	.1758	.2059	.2163	.2059	.1758	.1284	.0679	0	0	.0679	.1284	.1758	.2059	.2163	.2059	.1758	.1284	.0679	0
✳ DEFLECTION DUE TO SUPERIMPOSED D.L. ↓	0	.0268	.0506	.0693	.0811	.0852	.0811	.0693	.0506	.0268	0	0	.0274	.0518	.0710	.0832	.0873	.0832	.0710	.0518	.0274	0	0	.0285	.0539	.0738	.0864	.0908	.0864	.0738	.0539	.0285	0
FINAL CAMBER ↑	0	1/2	15/16	1 1/4	1 1/2	1 9/16	1 1/2	1 1/4	15/16	1/2	0	0	1/2	15/16	1 1/4	1 1/2	1 9/16	1 1/2	1 1/4	15/16	1/2	0	0	1/2	7/8	1 1/4	1 7/16	1 1/2	1 7/16	1 1/4	7/8	1/2	0

✳ INCLUDES FUTURE WEARING SURFACE
ALL VALUES ARE SHOWN IN FEET (DECIMAL FORM), EXCEPT "FINAL CAMBER", WHICH IS GIVEN IN INCHES (FRACTION FORM).

DEAD LOAD DEFLECTION TABLE FOR GIRDERS

0.6 "Ø LOW RELAXATION	SPAN "B" GIRDER #1											SPAN "B" GIRDERS 2,3,4											SPAN "B" GIRDER #5										
TENTH POINTS	0	.1	.2	.3	.4	.5	.6	.7	.8	.9	0	0	.1	.2	.3	.4	.5	.6	.7	.8	.9	0	0	.1	.2	.3	.4	.5	.6	.7	.8	.9	0
CAMBER (GIRDER ALONE IN PLACE) ↑	0	.0686	.1298	.1778	.2082	.2186	.2082	.1778	.1298	.0686	0	0	.0686	.1298	.1778	.2082	.2186	.2082	.1778	.1298	.0686	0	0	.0686	.1298	.1778	.2082	.2186	.2082	.1778	.1298	.0686	0
✳ DEFLECTION DUE TO SUPERIMPOSED D.L. ↓	0	.0281	.0532	.0728	.0853	.0895	.0853	.0728	.0532	.0281	0	0	.0288	.0546	.0747	.0875	.0918	.0875	.0747	.0546	.0288	0	0	.0300	.0568	.0777	.0910	.0955	.0910	.0777	.0568	.0300	0
FINAL CAMBER ↑	0	1/2	15/16	1 1/4	1 1/2	1 9/16	1 1/2	1 1/4	15/16	1/2	0	0	1/2	7/8	1 1/4	1 7/16	1 1/2	1 7/16	1 1/4	7/8	1/2	0	0	7/16	7/8	1 3/16	1 7/16	1 1/2	1 7/16	1 3/16	7/8	7/16	0

✳ INCLUDES FUTURE WEARING SURFACE
ALL VALUES ARE SHOWN IN FEET (DECIMAL FORM), EXCEPT "FINAL CAMBER", WHICH IS GIVEN IN INCHES (FRACTION FORM).

PROJECT NO. R-2707AB
CLEVELAND COUNTY
STATION: 157+75.50 -L-

STATE OF NORTH CAROLINA
DEPARTMENT OF TRANSPORTATION
RALEIGH

SUPERSTRUCTURE DEAD LOAD DEFLECTIONS (WBL)

REVISIONS						SHEET NO.
NO.	BY:	DATE:	NO.	BY:	DATE:	S-19
1			3			TOTAL SHEETS
2			4			104

NORTH CAROLINA PROFESSIONAL SEAL 10730 ENGINEER D. ANDRE DAVENPORT
6-13-13

DRAWN BY : D. A. GLADDEN DATE : 7-9-09
CHECKED BY : M. G. SHAIKH DATE : 10-20-09
DESIGN ENGINEER OF RECORD: G.W. DICKEY DATE : 10/16/12

13-JUN-2013 07:45
R:\Structures\Plans\Str4and5\Plans\R-2707AB_sd_TS_Str4.dgn
dadavenport

STR. #4

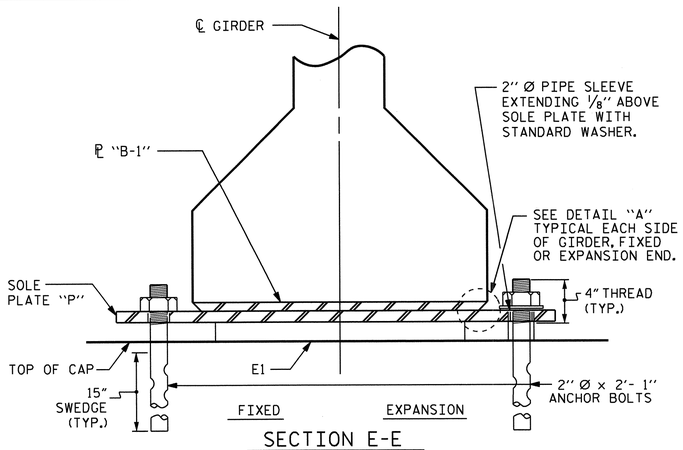

SECTION E-E

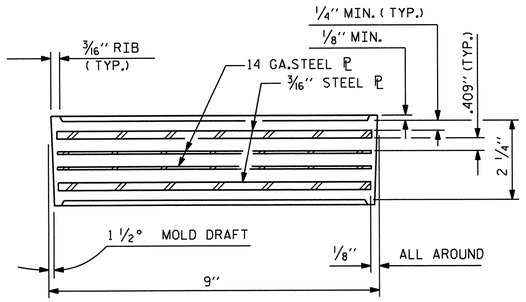

TYPICAL SECTION OF ELASTOMERIC BEARINGS

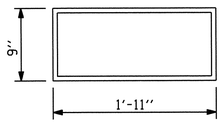

E1 (30 REQ'D)

PLAN VIEW OF ELASTOMERIC BEARING

TYPE V

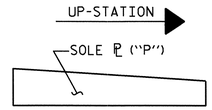

SOLE ℄ PLACEMENT DETAIL

NOTES

AT ALL FIXED POINTS OF SUPPORT, NUTS FOR ANCHOR BOLTS ARE TO BE TIGHTENED FINGER TIGHT AND THEN BACKED OFF 1/2 TURN. THE THREAD OF THE NUT AND BOLT SHALL THEN BE BURRED WITH A SHARP POINTED TOOL.

THE 2" Ø PIPE SLEEVE SHALL BE CUT FROM SCHEDULE 40 PVC PLASTIC PIPE. THE PVC PLASTIC PIPE SHALL MEET THE REQUIREMENTS OF ASTM D1785.

STEEL SOLE PLATES, ANCHOR BOLTS, NUTS, AND WASHERS SHALL BE GALVANIZED IN ACCORDANCE WITH THE STANDARD SPECIFICATIONS.

PRIOR TO WELDING, GRIND THE GALVANIZED SURFACE OF THE PORTION OF THE EMBEDDED PLATE AND SOLE PLATE THAT ARE TO BE WELDED. AFTER WELDING, DAMAGED GALVANIZED SURFACES SHALL BE REPAIRED IN ACCORDANCE WITH THE STANDARD SPECIFICATIONS.

WHEN WELDING THE SOLE PLATE TO THE EMBEDDED PLATE IN THE GIRDER, USE TEMPERATURE INDICATING WAX PENS, OR OTHER SUITABLE MEANS, TO ENSURE THAT THE TEMPERATURE OF THE SOLE PLATE DOES NOT EXCEED 300°F. TEMPERATURES ABOVE THIS MAY DAMAGE THE ELASTOMER.

SOLE PLATE "P", BOLTS, NUTS, WASHERS, AND PIPE SLEEVE SHALL BE INCLUDED IN THE PAY ITEM FOR PRESTRESSED CONCRETE GIRDERS.

ANCHOR BOLTS SHALL MEET THE REQUIREMENTS OF ASTM A449. NUTS SHALL MEET THE REQUIREMENTS OF AASHTO M291-DH OR AASHTO M292-2H. WASHERS SHALL MEET THE REQUIREMENTS OF AASHTO M293. NO SHOP DRAWINGS ARE REQUIRED FOR ANCHOR BOLTS, NUTS AND WASHERS. SHOP INSPECTION IS REQUIRED.

ALL SURFACES OF BEARING PLATES SHALL BE SMOOTH AND STRAIGHT.

FOR STEEL REINFORCED ELASTOMERIC BEARINGS, SEE SPECIAL PROVISIONS.

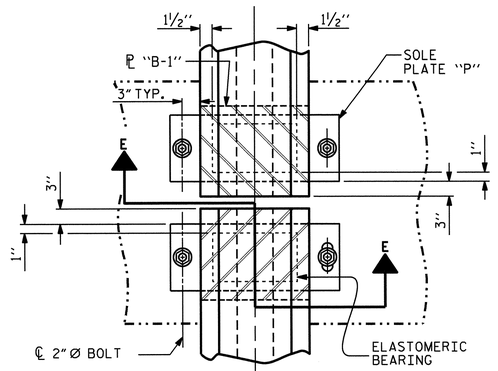

TYPICAL HALF-PLAN (SHOWING CONTINUOUS BENT)

TYPICAL HALF-PLAN (SHOWING SIMPLE SPAN BENT)

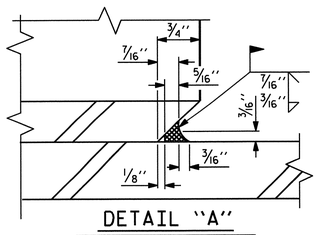

DETAIL "A"

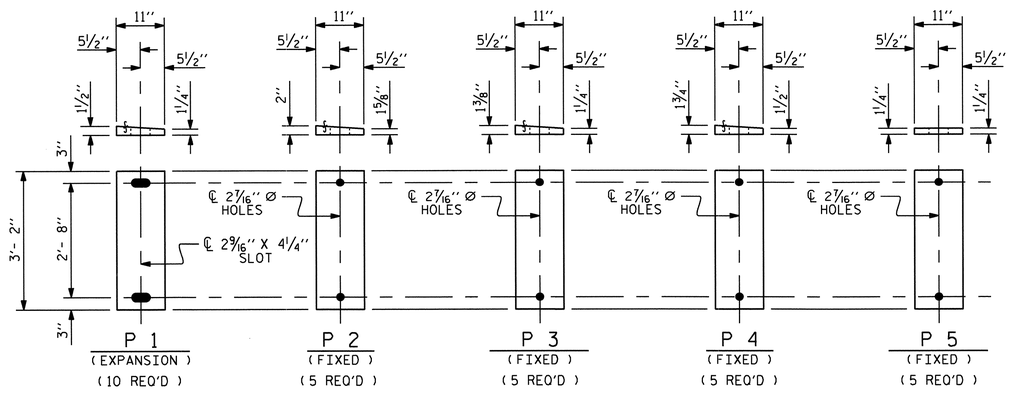

SOLE PLATE DETAILS ("P")

LOAD RATINGS	
	MAX.D.L.+ L.L.
TYPE V	180 K

PROJECT NO. R-2707AB

CLEVELAND COUNTY

STATION: 157+75.50 -L-

STATE OF NORTH CAROLINA
DEPARTMENT OF TRANSPORTATION
RALEIGH

ELASTOMERIC BEARING DETAILS

PRESTRESSED CONCRETE GIRDER SUPERSTRUCTURE (WBL)

REVISIONS						SHEET NO.
NO.	BY:	DATE:	NO.	BY:	DATE:	S-20
1			3			TOTAL SHEETS
2			4			104

ASSEMBLED BY : D. A. GLADDEN		DATE : 7-14-09
CHECKED BY : M. G. SHAIKH		DATE : 10-20-09
DESIGN ENGINEER OF RECORD: G.W. DICKEY		DATE : 10/16/12
DRAWN BY : EEM 2/97	REV. 10/17/00	RWW/LES
CHECKED BY : VAP 2/97	REV. 5/1/06	TLA/GM
	REV. 10/1/11	MAA/GM

NORTH CAROLINA PROFESSIONAL SEAL 10730 ENGINEER G. ANDRE DAVENPORT, JR.
6-13-13

13-JUN-2013 08:15
R:\Structures\Plans\Str4and5\Plans\R-2707AB_sd_TS_Str4.dgn
dadavenport

STR. #4 STD. NO. EB4 (SHT 1)

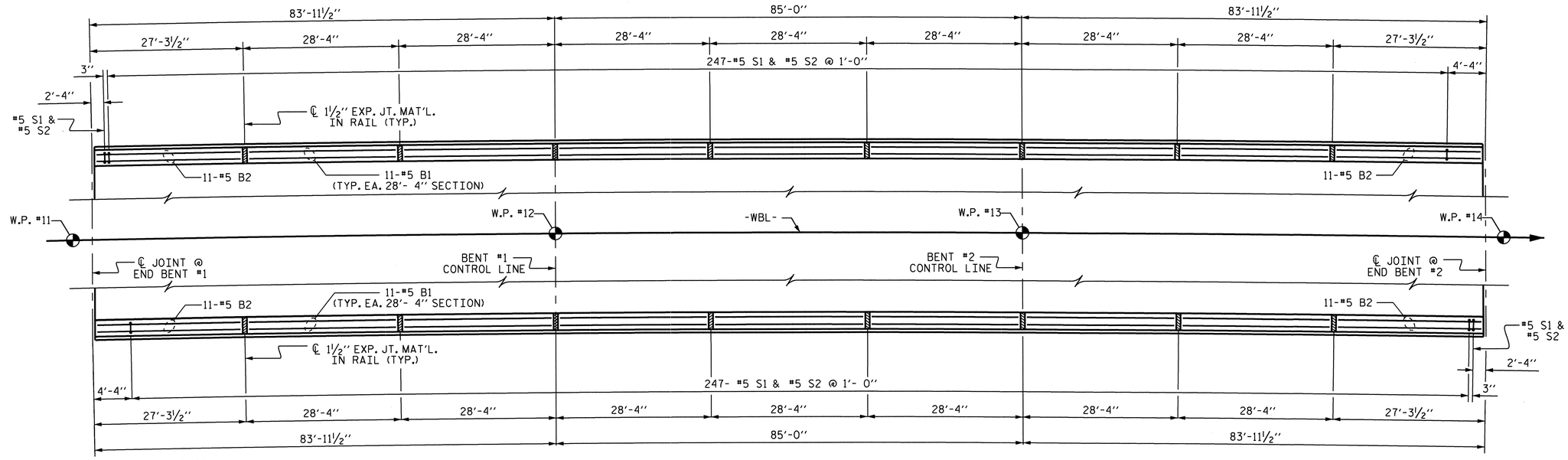

BAR TYPES

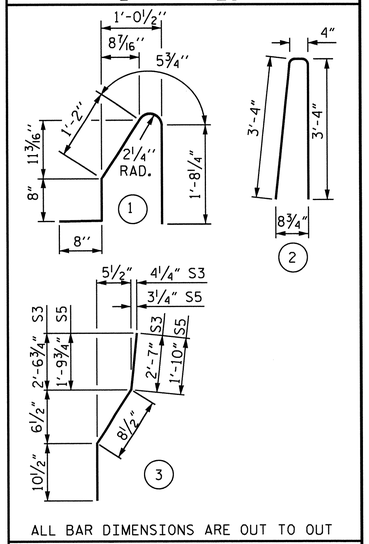

ALL BAR DIMENSIONS ARE OUT TO OUT

BILL OF MATERIAL

FOR CONCRETE BARRIER RAIL ONLY

BAR	NO.	SIZE	TYPE	LENGTH	WEIGHT
* S1	496	#5	1	4'- 8"	2414
* S2	496	#5	2	7'-0"	3621
* S3	4	#5	3	4'- 2"	17
* S4	4	#5	STR	4'- 0"	17
* S5	8	#5	3	3'- 5"	29
* S6	8	#5	STR	3'- 3"	27
* B1	154	#5	STR	27'-10"	4471
* B2	44	#5	STR	26'-10"	1231
* EPOXY COATED REINFORCING STEEL					11827 LBS.
CLASS AA CONCRETE					68.8 CU. YDS.
CONCRETE BARRIER RAIL					505.67 LIN. FT.

NOTES

THE BARRIER RAIL IN EACH CONTINUOUS UNIT SHALL NOT BE CAST UNTIL ALL SLAB CONCRETE IN THAT SPAN HAS BEEN CAST AND HAS REACHED A MINIMUM COMPRESSIVE STRENGTH OF 3,000 PSI.

THE JOINT IN THE DECK SHALL BE SAWED PRIOR TO THE CASTING OF BARRIER RAIL.

ALL REINFORCING STEEL IN BARRIER RAILS SHALL BE EPOXY COATED.

THE #5 S3 AND #5 S4 BARS SHALL BE INSTALLED, USING AN ADHESIVE ANCHORING SYSTEM, AFTER SAWING THE JOINT. THE YIELD LOAD FOR THE #5 S3 AND #5 S4 BARS IS 18.6 KIPS. FIELD TESTING FOR THE ADHESIVE BONDING SYSTEM IS NOT REQUIRED.

GROOVED CONTRACTION JOINTS, ½" IN DEPTH, SHALL BE TOOLED IN ALL EXPOSED FACES OF THE BARRIER RAIL AND IN ACCORDANCE WITH ARTICLE 825-10(B) OF THE STANDARD SPECIFICATIONS. THE CONTRACTION JOINT SHALL BE LOCATED AT EACH THIRD POINT BETWEEN BARRIER RAIL EXPANSION JOINTS. ONLY ONE CONTRACTION JOINT IS REQUIRED AT MIDPOINT OF BARRIER RAIL SEGMENTS LESS THAN 20 FEET IN LENGTH AND NO CONTRACTION JOINTS ARE REQUIRED FOR THOSE SEGMENTS LESS THAN 10 FEET IN LENGTH.

PLAN OF BARRIER RAIL

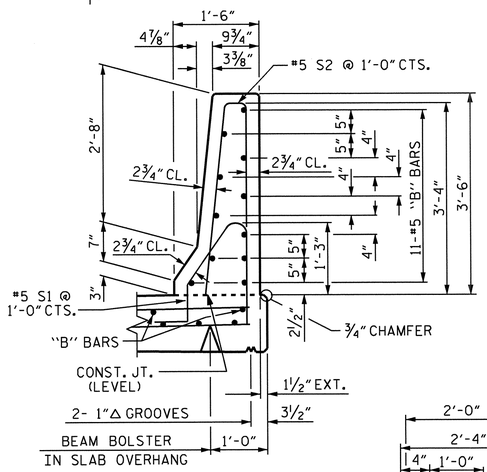

SECTION THRU RAIL

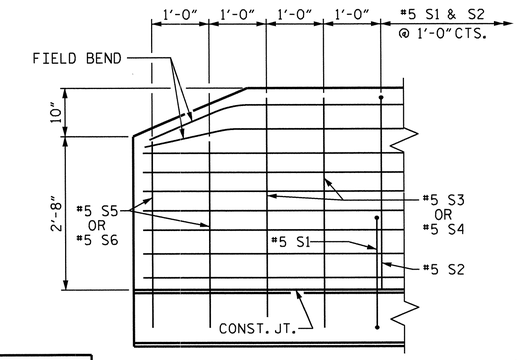

SIDE VIEW

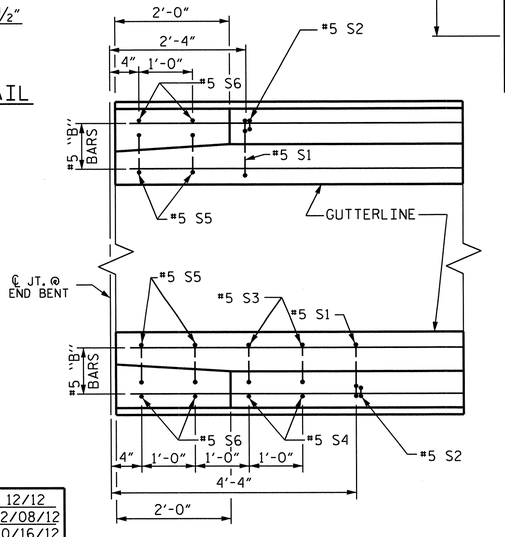

PLAN VIEW

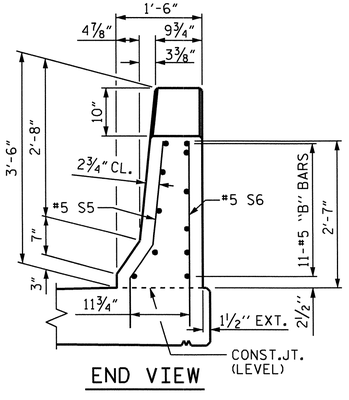

END VIEW

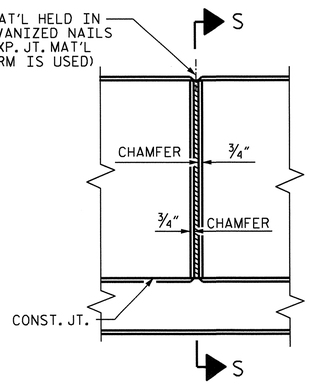

ELEVATION AT EXPANSION JOINTS

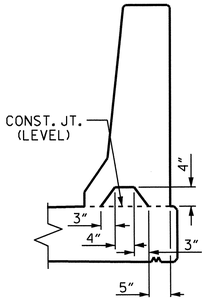

SECTION S-S

AT DAM IN OPEN JOINT (THIS IS TO BE USED ONLY WHEN SLIP FORM IS USED)

BARRIER RAIL DETAILS

END OF RAIL DETAIL

FOR ADHESIVE ANCHORING AT SAWED JOINTS

NORTH CAROLINA PROFESSIONAL SEAL 10730 ENGINEER D. ANDREW DAVENPORT, JR.

PROJECT NO. R-2707AB

CLEVELAND COUNTY

STATION: 157+75.50 -L-

STATE OF NORTH CAROLINA
DEPARTMENT OF TRANSPORTATION
RALEIGH

STANDARD
CONCRETE BARRIER RAIL
(WBL)

REVISIONS						SHEET NO.
NO.	BY:	DATE:	NO.	BY:	DATE:	S-21
1			3			TOTAL SHEETS
2			4			104

ASSEMBLED BY : D. A. GLADDEN/R. G. E	DATE : 12/12	
CHECKED BY : D.A. DAVENPORT	DATE : 12/08/12	
DESIGN ENGINEER OF RECORD: G.W. DICKEY	DATE : 10/16/12	
DRAWN BY : ARB 5/87	REV. 5/7/03R	RWW/JTE
CHECKED BY : SJD 9/87	REV. 5/1/06R	TLA/GM
	REV. 10/1/11	MAA/GM

14-JUN-2013 08:34
R:\Structures\Plans\Str4and5\Plans\R-2707AB_sd_TS_Str4.dgn
ddavenport

STR. #4

STD. NO. CBR1 (SHT 1)

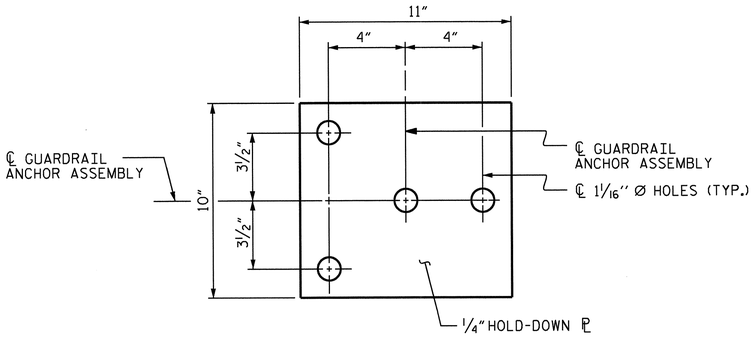

PLAN

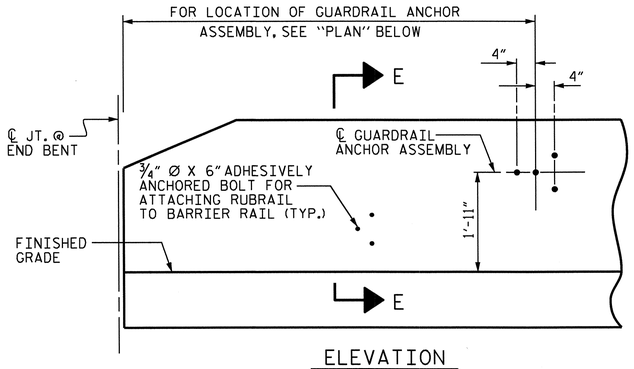

ELEVATION

NOTES

THE GUARDRAIL ANCHOR ASSEMBLY SHALL CONSIST OF A 1/4" HOLD-DOWN PLATE AND 4 - 7/8" Ø BOLTS WITH NUTS AND WASHERS, RUBRAIL, AND ADHESIVELY ANCHORED BOLTS.

THE HOLD-DOWN PLATE SHALL CONFORM TO AASHTO M270 GRADE 36. AFTER FABRICATION, THE HOLD-DOWN PLATE SHALL BE HOT-DIP GALVANIZED IN ACCORDANCE WITH AASHTO M111.

BOLTS SHALL CONFORM TO THE REQUIREMENTS OF ASTM A307 AND NUTS SHALL CONFORM TO THE REQUIREMENTS OF AASHTO M291. BOLTS, NUTS AND WASHERS SHALL BE GALVANIZED. (AT THE CONTRACTOR'S OPTION, STAINLESS STEEL BOLTS, NUTS AND WASHERS MAY BE USED AS AN ALTERNATE FOR THE 7/8" Ø GALVANIZED BOLTS, NUTS AND WASHERS. THEY SHALL CONFORM TO OR EXCEED THE MECHANICAL REQUIREMENTS OF ASTM A307. THE USE OF THIS ALTERNATE SHALL BE APPROVED BY THE ENGINEER.)

THE GUARDRAIL ANCHOR ASSEMBLY IS REQUIRED AT ALL POINTS WHERE APPROACH GUARDRAIL IS TO BE ATTACHED TO THE END OF BARRIER RAIL. FOR POINTS OF ATTACHMENT, SEE SKETCH.

AFTER INSTALLATION, THE EXPOSED THREAD OF THE BOLT SHALL BE BURRED WITH A SHARP POINTED TOOL.

THE COST OF THE GUARDRAIL ANCHOR ASSEMBLY SHALL BE INCLUDED IN THE UNIT CONTRACT PRICE BID FOR CONCRETE BARRIER RAIL.

THE 1 1/4" Ø HOLES SHALL BE FORMED OR DRILLED WITH A CORE BIT. IMPACT TOOLS WILL NOT BE PERMITTED. ANY CONCRETE DAMAGED BY THIS WORK SHALL BE REPAIRED TO THE SATISFACTION OF THE ENGINEER.

THE C6 X 8.2 RUBRAIL IS TO BE ADHESIVELY ANCHORED TO THE RAIL USING THREE ¾"Ø X 6" BOLTS WITH WASHERS. LEVEL ONE FIELD TESTING IS REQUIRED, AND THE YIELD LOAD OF THE ¾"Ø BOLT IS 12 KIPS. FOR ADHESIVELY ANCHORED ANCHOR BOLTS OR DOWELS, SEE STANDARD SPECIFICATIONS. SEE ROADWAY STANDARD 862.03 FOR DETAILS AND LOCATION OF THE RUBRAIL.

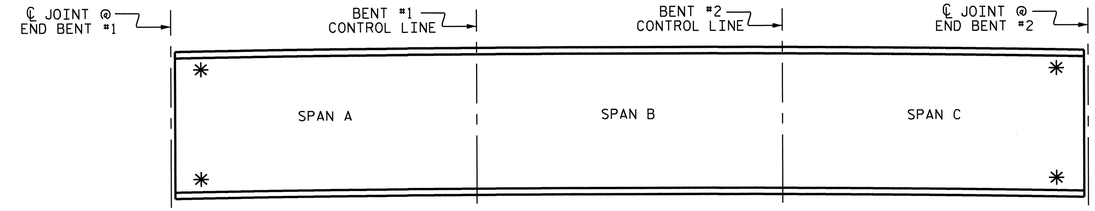

SKETCH SHOWING POINTS OF ATTACHMENTS

✳ DENOTES GUARDRAIL ANCHOR ASSEMBLY

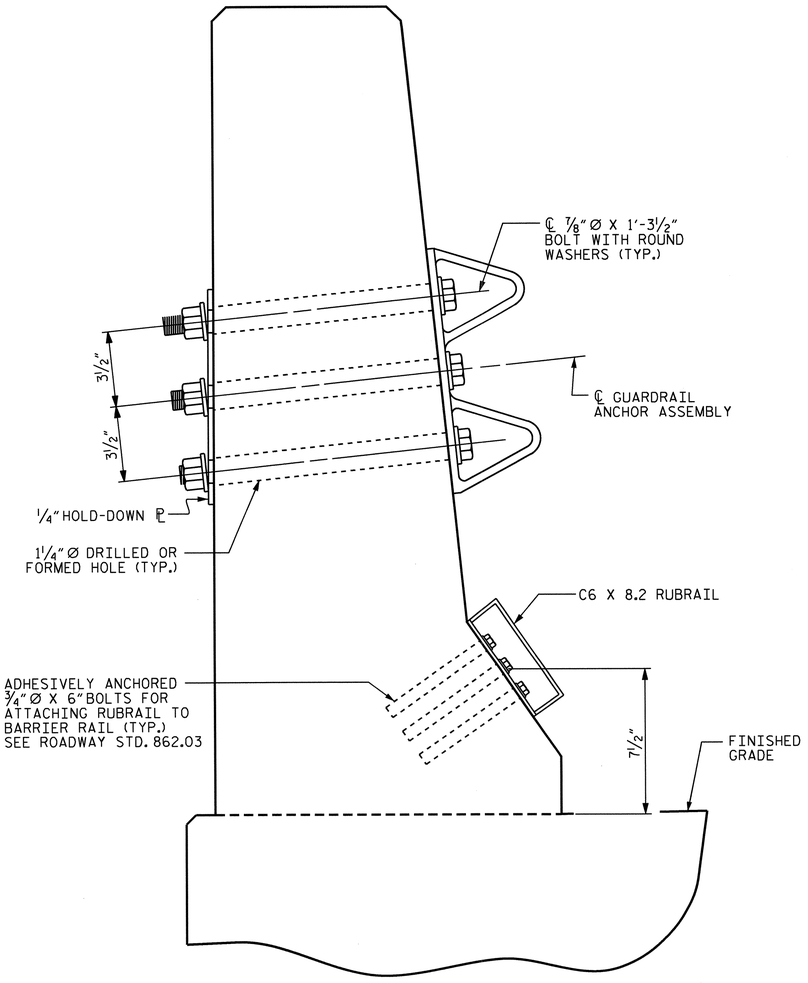

SECTION E-E

GUARDRAIL ANCHOR ASSEMBLY DETAILS

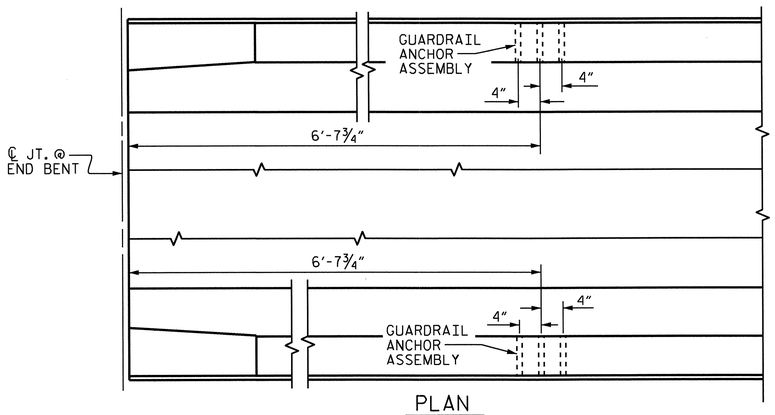

PLAN

LOCATION OF ANCHORS FOR GUARDRAIL

END BENT #1 SHOWN, END BENT #2 SIMILAR.

PROJECT NO. R-2707AB

CLEVELAND COUNTY

STATION: 157+75.50 -L-

STATE OF NORTH CAROLINA
DEPARTMENT OF TRANSPORTATION
RALEIGH

STANDARD

GUARDRAIL ANCHORAGE FOR BARRIER RAIL (WBL)

REVISIONS						SHEET NO.
NO.	BY:	DATE:	NO.	BY:	DATE:	S-22
1			3			TOTAL SHEETS
2			4			104

ASSEMBLED BY : D. A. GLADDEN	DATE : 7-20-09	
CHECKED BY : M. G. SHAIKH	DATE : 10-20-09	
DESIGN ENGINEER OF RECORD: G.W. DICKEY	DATE : 10/16/12	
DRAWN BY : TLA 5/06	REV. 10/1/11	MAA/GM
CHECKED BY : GM 5/06	REV. 7/12	MAA/GM
	REV. 10/12	MAA/GM

NORTH CAROLINA PROFESSIONAL SEAL 10730 ENGINEER D. ANDREW DAVENPORT, JR.
6-13-13

13-JUN-2013 08:28
R:\Structures\Plans\Str4and5\Plans\R-2707AB_sd_TS_Str4.dgn
dadavenport

(SHT 1 STR. #4 STD. NO. GRA2

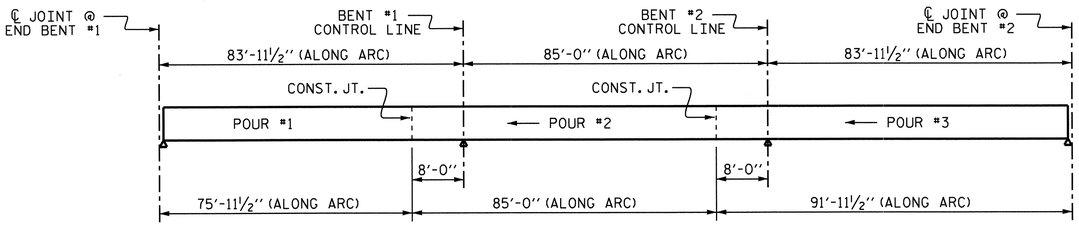

POURING SEQUENCE

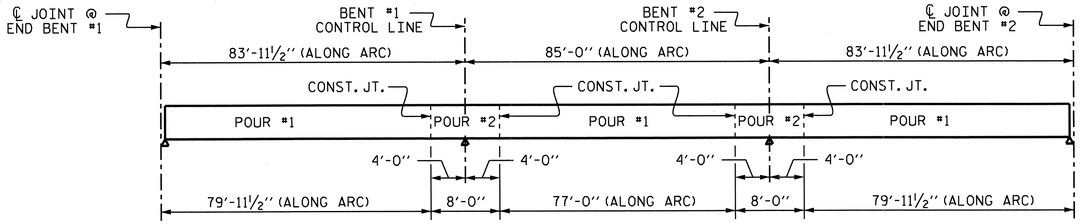

OPTIONAL POURING SEQUENCE

POUR #2 CANNNOT BE STARTED UNTIL BOTH ADJACENT #1 POURS REACH A MINIMUM 3,000 PSI

REINFORCING BAR SCHEDULE

SPANS A, B & C

BAR	NO.	SIZE	TYPE	LENGTH	WEIGHT
✱ A1	467	#5	STR	40'-11"	19930
A2	467	#5	STR	40'-11"	19930
✱ B1	116	#4	STR	28'-11''	2241
✱ B2	58	#7	STR	60'-0''	7113
✱ B3	52	#7	STR	25'-6''	2710
✱ B4	29	#4	STR	29'-0''	562
B5	220	#5	STR	52'-3''	11989
✱ G1	2	#5	STR	40'-11''	85
✱ K1	8	#8	1	13'-1''	279
✱ K2	12	#8	2	19'-11''	638
✱ K3	8	#6	STR	6'-7''	79
K4	16	#4	STR	6'-6''	69
K5	32	#4	STR	7'-6''	160
K6	16	#4	STR	6'-10''	73
K7	16	#4	STR	4'-10''	52
K8	20	#4	STR	18'-1''	242
✱ S1	56	#5	3	5'-8''	331
✱ S2	56	#4	5	2'-6''	94
S3	40	#4	2	13'-4''	356
S4	16	#4	2	11'-4''	121
S5	208	#4	4	2'-9''	382

REINFORCING STEEL 33374 LBS.

✱ EPOXY COATED REINFORCING STEEL 34062 LBS.

BAR TYPES

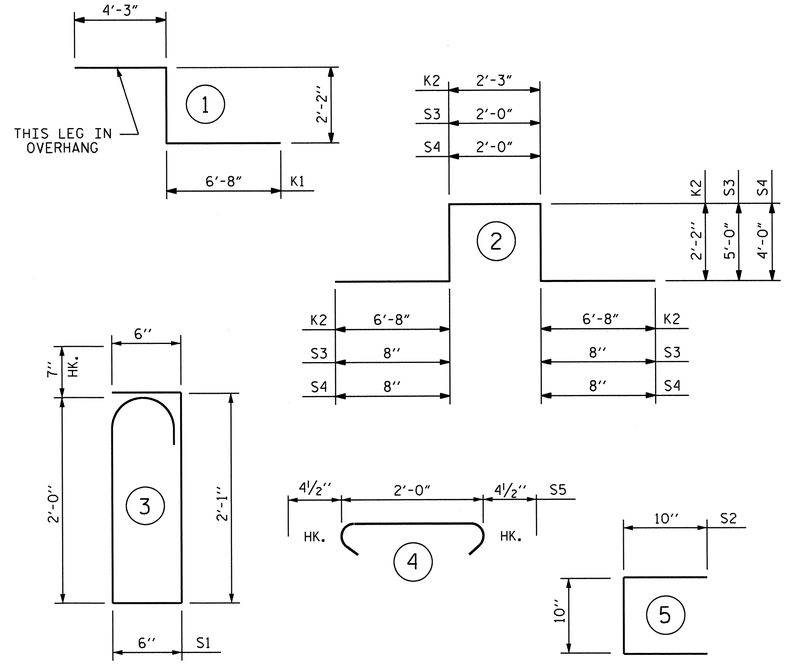

ALL BAR DIMENSIONS ARE OUT TO OUT

SUPERSTRUCTURE REINFORCING STEEL LENGTHS ARE BASED ON THE FOLLOWING MINIMUM SPLICE LENGTHS

BAR SIZE	SUPERSTRUCTURE EXCEPT APPROACH SLABS, PARAPET, AND BARRIER RAIL		APPROACH SLABS		PARAPET AND BARRIER RAIL
	EPOXY COATED	UNCOATED	EPOXY COATED	UNCOATED	
#4	2'-0"	1'-9"	2'-0"	1'-9"	2'-9"
#5	2'-6"	2'-2"	2'-6"	2'-2"	3'-5"
#6	3'-0"	2'-7"	3'-10"	2'-7"	4'-4"
#7	5'-3"	3'-6"			
#8	6'-10"	4'-7"			

SUPERSTRUCTURE BILL OF MATERIAL

	CLASS AA CONCRETE	REINFORCING STEEL	EPOXY COATED REINFORCING STEEL
	(CU. YDS.)	(LBS.)	(LBS.)
POUR 1	101.0		
POUR 2	123.6		
POUR 3	134.8		
✱✱ TOTALS	359.4	33374	34062

✱✱ QUANTITIES FOR BARRIER RAIL ARE NOT INCLUDED

GROOVING BRIDGE FLOORS

APPROACH SLABS	1671	SQ.FT.
BRIDGE DECK	8803	SQ.FT.
TOTAL	10,474	SQ.FT.

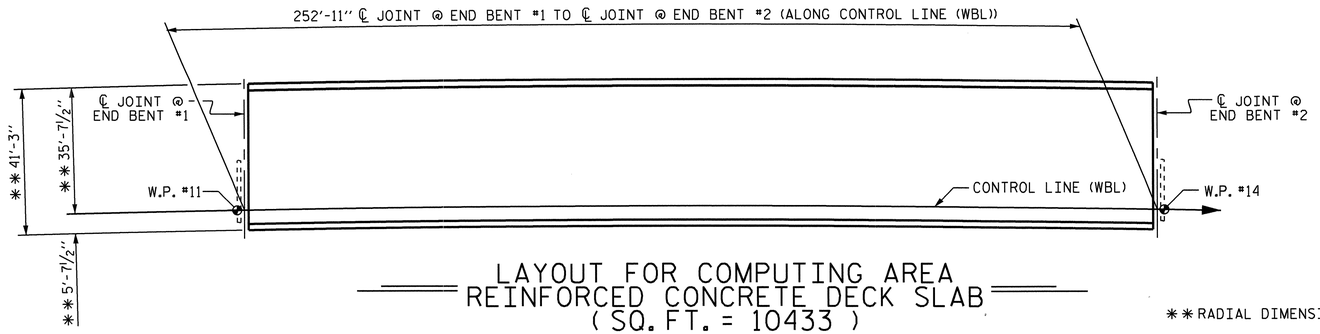

LAYOUT FOR COMPUTING AREA REINFORCED CONCRETE DECK SLAB (SQ. FT. = 10433)

✱✱ RADIAL DIMENSIONS

PROJECT NO. R-2707AB

CLEVELAND COUNTY

STATION: 157+75.50 -L-

STATE OF NORTH CAROLINA
DEPARTMENT OF TRANSPORTATION
RALEIGH

SUPERSTRUCTURE BILL OF MATERIAL (WBL)

REVISIONS						SHEET NO.
NO.	BY:	DATE:	NO.	BY:	DATE:	S-23
1			3			TOTAL SHEETS
2			4			104

STR. #4

STD. NO. BOM1

ASSEMBLED BY : D. A. GLADDEN DATE : 7-14-09
CHECKED BY : M. G. SHAIKH DATE : 10-20-09
DESIGN ENGINEER OF RECORD: C.W. DICKEY DATE : 10/16/12

DRAWN BY : JMB 5/87
CHECKED BY : SJD 9/87

REV. 8/16/99 RWW/LES
REV. 5/1/06 TLA/GM
REV. 10/1/11 MAA/GM

17-OCT-2012 10:59
R:\Structures\Plans\Str4and5\Plans\R-2707AB_sd_TS_Str4.dgn
ddavenport

NOTES:

STIRRUPS IN CAP MAY BE SHIFTED AS NECESSARY TO CLEAR ANCHOR BOLTS.

THE TOP SURFACE AREAS OF THE END BENT CAP SHALL BE CURED IN ACCORDANCE WITH THE STANDARD SPECIFICATIONS, EXCEPT THE MEMBRANE CURING COMPOUND METHOD SHALL NOT BE USED.

THE TOP SURFACE OF THE CAP EXCEPT THE BRIDGE SEAT BUILDUPS SHALL BE SLOPED TRANSVERSELY FROM THE FILL FACE TO THE BACK FACE AT THE RATE OF 2%.

INSTALL THE 4"DIAMETER DRAIN PIPE THROUGH THE WING WALL AS REQUIRED FOR REINFORCED BRIDGE APPROACH FILLS, SEE THE ROADWAY PLANS. REINFORCING STEEL IN THE WING WALL MAY BE SHIFTED AS NECESSARY TO CLEAR THE DRAIN PIPE.

THE CONCRETE IN THE SHADED AREA OF THE WING SHALL BE POURED AFTER THE JOINT BETWEEN THE DECK AND THE APPROACH SLAB HAS BEEN SAWED AND THE BARRIER RAIL IS CAST IF SLIP FORMING IS USED.

BACKWALL SHALL BE PLACED BEFORE APPLYING EPOXY PROTECTIVE COATING.

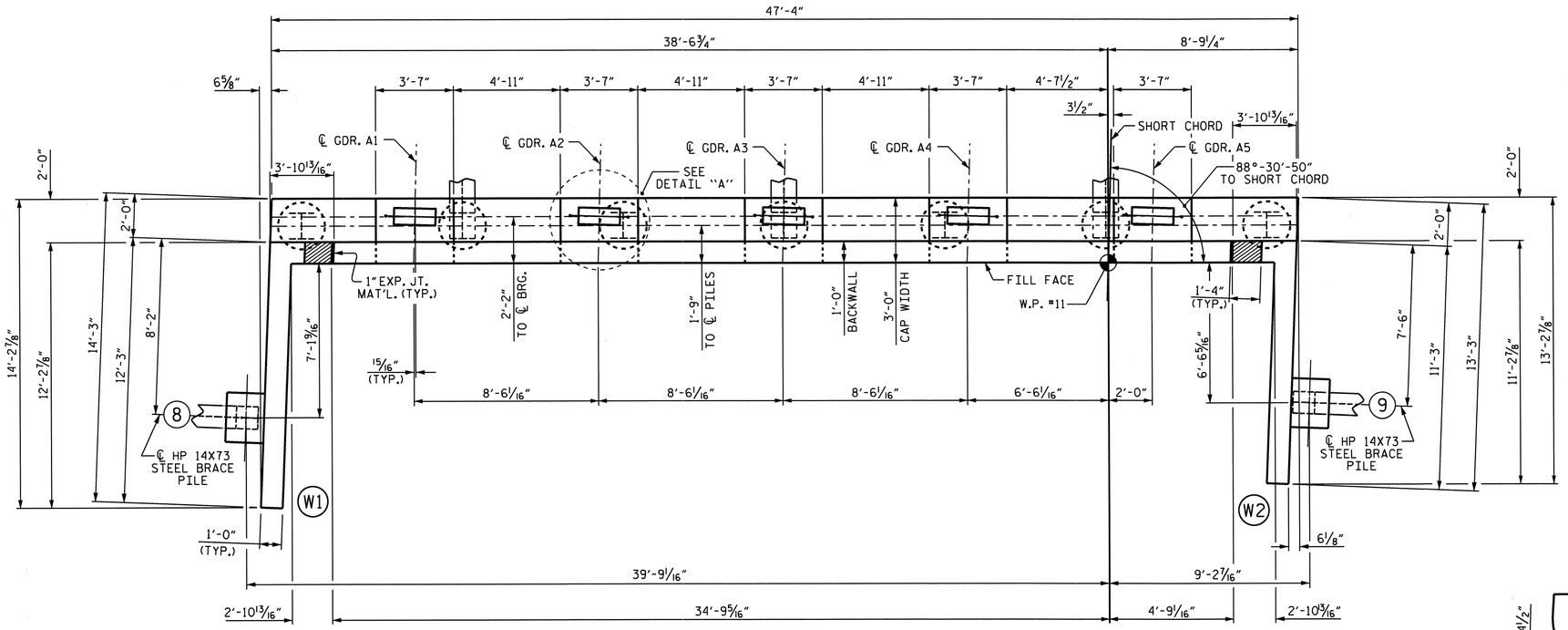

PLAN

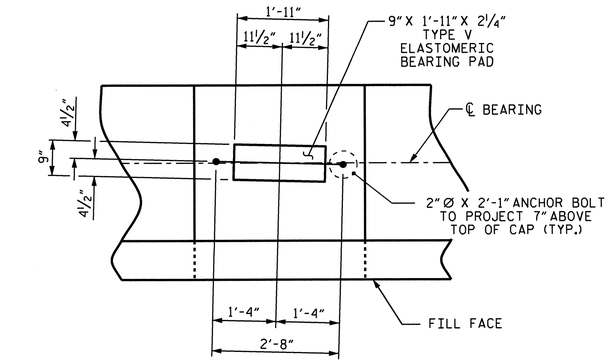

DETAIL "A"

(TYP. EA. GDR.)

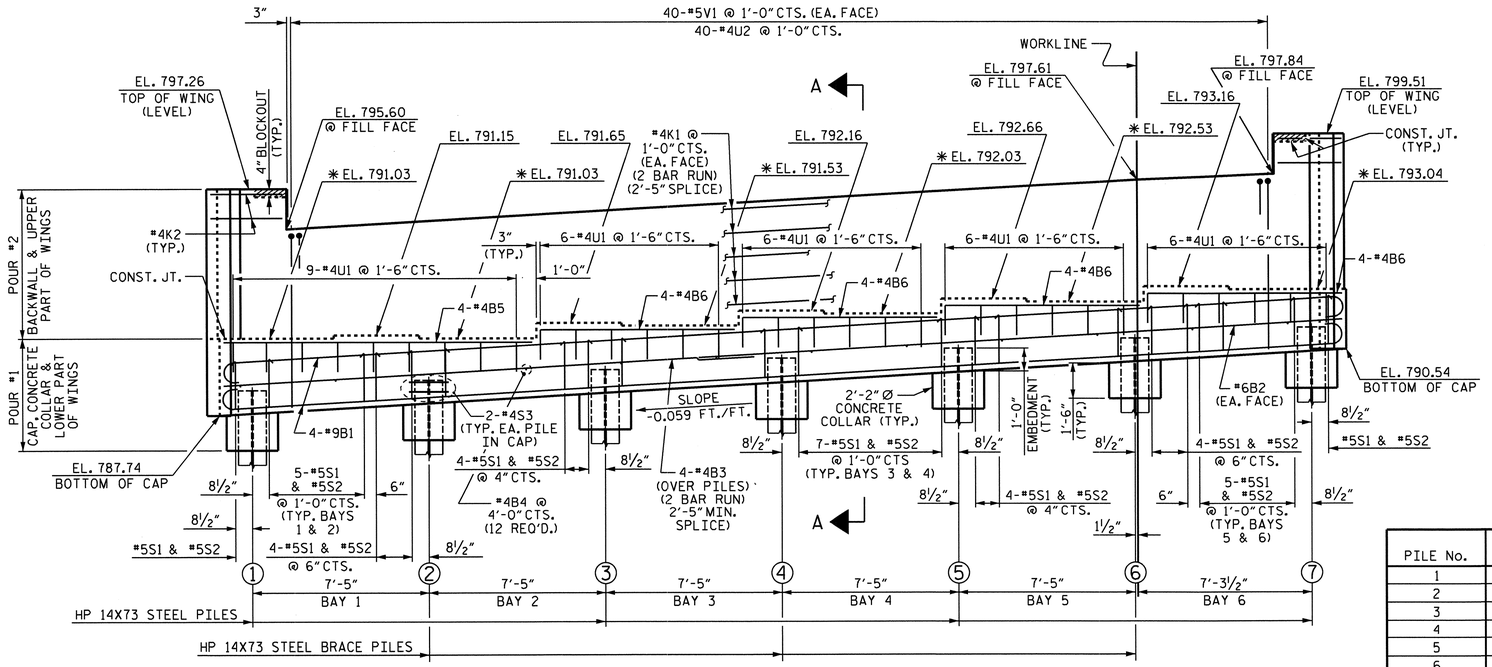

ELEVATION

* FOR LOCATION OF ELEVATIONS BETWEEN BRIDGE SEAT BUILDUPS, SEE SECTION A-A, SHEET 3 OF 3.
WING BRACE PILES NOT SHOWN FOR CLARITY.

PILE No.	TOP OF PILE EL.
1	788.86
2	789.29
3	789.73
4	790.17
5	790.61
6	791.04
7	791.48
8	788.74
9	791.54

NORTH CAROLINA PROFESSIONAL SEAL 10730 ENGINEER D. ANDREW DAVENPORT, JR.
10-17-12

PROJECT NO. R-2707AB
CLEVELAND COUNTY
STATION: 157+75.50 -L-

SHEET 1 OF 3

STATE OF NORTH CAROLINA
DEPARTMENT OF TRANSPORTATION
RALEIGH

SUBSTRUCTURE

END BENT #1
(WBL)

REVISIONS						SHEET NO.
NO.	BY:	DATE:	NO.	BY:	DATE:	S-24
1			3			TOTAL SHEETS
2			4			104

DRAWN BY : M.K. BEARD DATE : 2/21/12
CHECKED BY : D.A. DAVENPORT DATE : 3/16/12
DESIGN ENGINEER OF RECORD: G.W. DICKEY DATE : 10/16/12

17-OCT-2012 10:50
R:\Structures\Plans\Str4and5\Plans\R-2707AB_sd_E*.dgn
addavenport

STR. #4

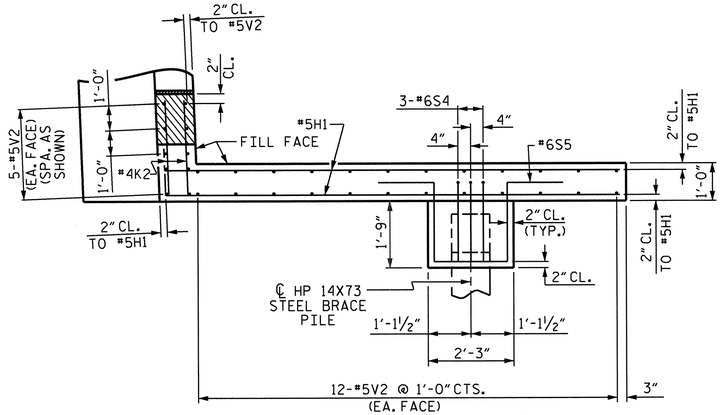

PLAN OF WING - W1

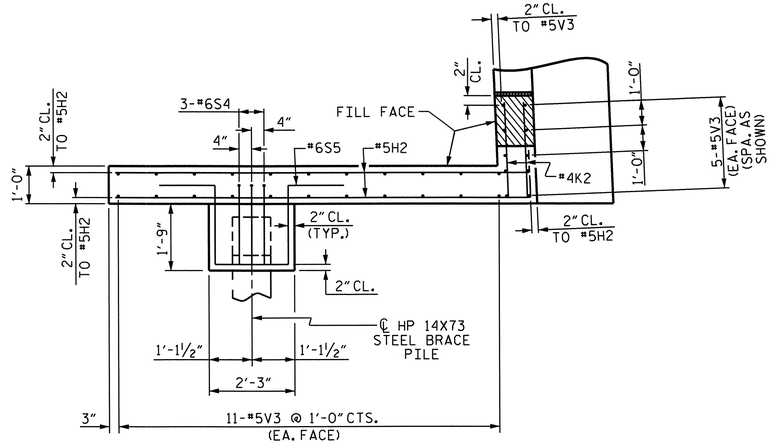

PLAN OF WING - W2

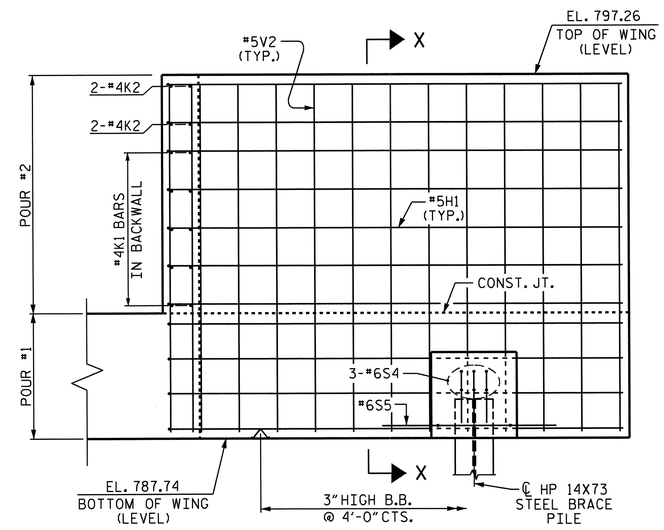

ELEVATION OF WING - W1

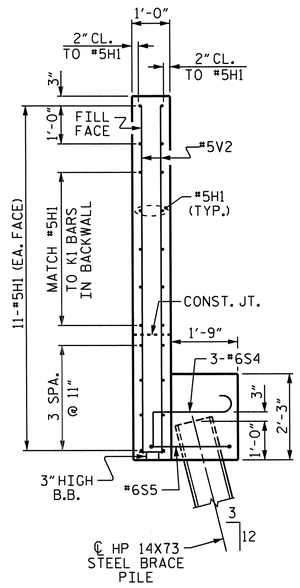

SECTION X-X

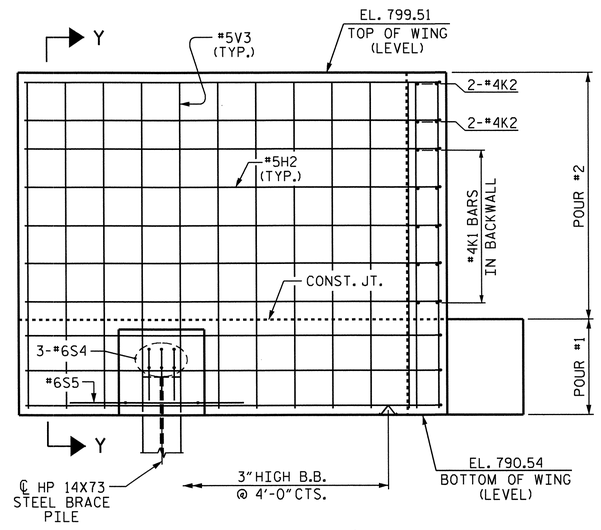

ELEVATION OF WING - W2

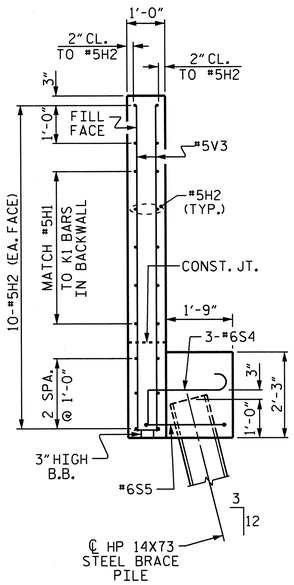

SECTION Y-Y

PROJECT NO. R-2707AB

CLEVELAND COUNTY

STATION: 157+75.50 -L-

SHEET 2 OF 3

STATE OF NORTH CAROLINA
DEPARTMENT OF TRANSPORTATION
RALEIGH

SUBSTRUCTURE

END BENT #1
(WBL)

NORTH CAROLINA PROFESSIONAL SEAL 10730 ENGINEER D. ANDRE DAVENPORT
6-13-13

REVISIONS						SHEET NO.
NO.	BY:	DATE:	NO.	BY:	DATE:	S-25
1			3			TOTAL SHEETS
2			4			104

DRAWN BY : M.K. BEARD DATE : 2/21/12
CHECKED BY : D.A. DAVENPORT DATE : 3/16/12
DESIGN ENGINEER OF RECORD: C.W. DICKEY DATE : 10/16/12

13-JUN-2013 07:48
R:\Structures\Plans\Str4and5\Plans\R-2707AB_sd_E*.dgn
dadavenport

STR. #4

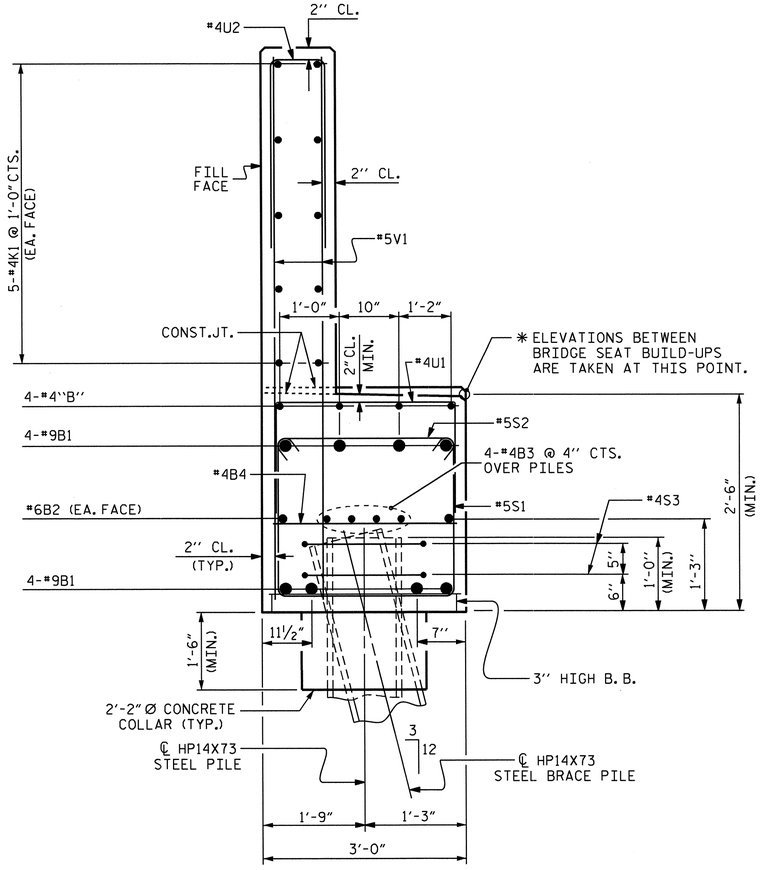

SECTION A-A

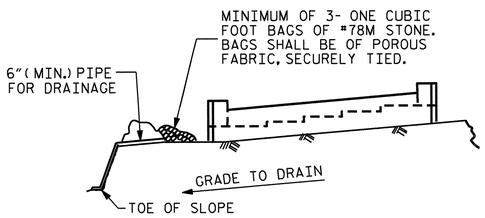

BAGGED STONE AND PIPE SHALL BE PLACED IMMEDIATELY AFTER COMPLETION OF END BENT EXCAVATION. PIPE MAY BE EITHER CONCRETE, CORRUGATED STEEL, CORRUGATED ALUMINUM ALLOY, OR CORRUGATED PLASTIC. PERFORATED PIPE WILL NOT BE ALLOWED.

BAGGED STONE SHALL REMAIN IN PLACE UNTIL THE ENGINEER DIRECTS THAT IT BE REMOVED. THE CONTRACTOR SHALL REMOVE AND DISPOSE OF SILT ACCUMULATIONS AT BAGGED STONE WHEN SO DIRECTED BY THE ENGINEER. BAGS SHALL BE REMOVED AND REPLACED WHENEVER THE ENGINEER DETERMINES THAT THEY HAVE DETERIORATED AND LOST THEIR EFFECTIVENESS.

NO SEPARATE PAYMENT WILL BE MADE FOR THIS WORK AND THE ENTIRE COST OF THIS WORK SHALL BE INCLUDED IN THE UNIT CONTRACT PRICE BID FOR THE SEVERAL PAY ITEMS.

TEMPORARY DRAINAGE AT END BENT

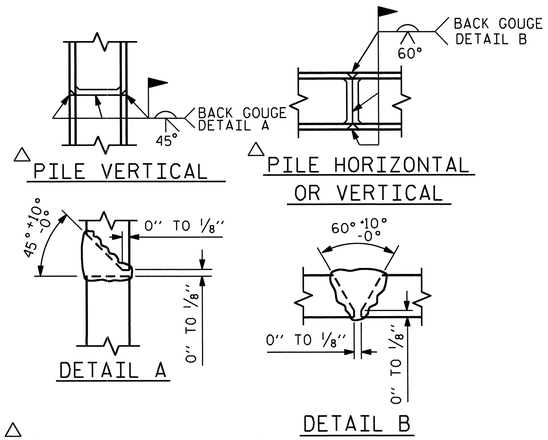

△ POSITION OF PILE DURING WELDING.

PILE SPLICE DETAILS

BAR TYPES

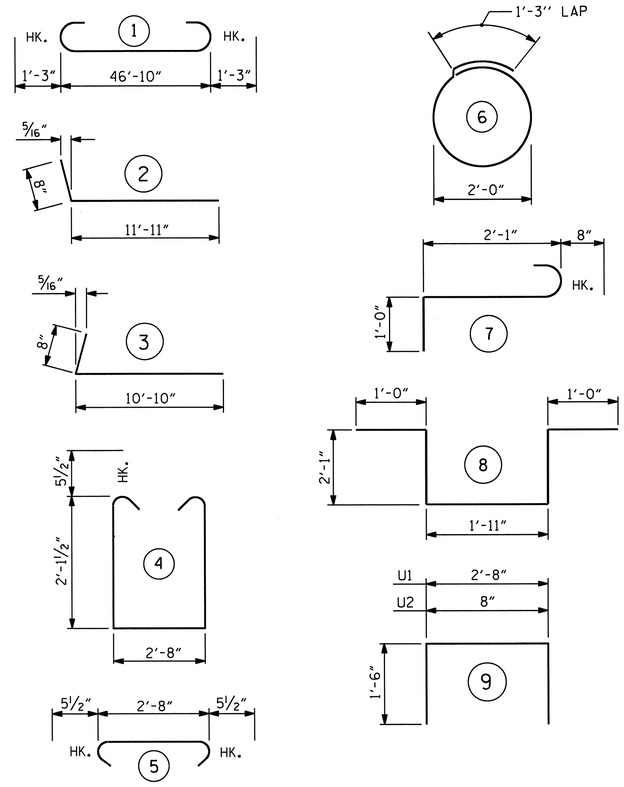

ALL BAR DIMENSIONS ARE OUT TO OUT.

BILL OF MATERIAL

END BENT #1

BAR	No.	SIZE	TYPE	LENGTH	WEIGHT
B1	8	#9	1	49'-4"	1342
B2	2	#6	STR.	46'-11"	141
B3	8	#4	STR.	24'-9"	132
B4	12	#4	STR.	2'-8"	21
B5	4	#4	STR.	12'-11"	35
B6	16	#4	STR.	8'-2"	87
H1	22	#5	2	12'-7"	289
H2	20	#5	3	11'-6"	240
K1	20	#4	STR.	24'-9"	331
K2	8	#4	STR.	3'-6"	19
S1	52	#5	4	7'-10"	425
S2	52	#5	5	3'-7"	194
S3	14	#4	6	7'-7"	71
S4	6	#6	7	3'-9"	34
S5	2	#6	8	8'-1"	24
U1	33	#4	9	5'-8"	125
U2	40	#4	9	3'-8"	98
V1	80	#5	STR.	7'-3"	605
V2	34	#5	STR.	9'-1"	322
V3	32	#5	STR.	8'-6"	284

REINFORCING STEEL LBS. 4819

CLASS "A" CONCRETE BREAKDOWN

POUR #1 CAP, LOWER WINGS & COLLARS CU.YDS. 19.4

POUR #2 UPPER WINGS & BACKWALL CU.YDS. 13.9

CLASS "A" CONCRETE TOTAL CU.YDS. 33.3

HP 14X73 STEEL PILES

No. 9 LIN.FT. 585

PILE REDRIVES 7 EA.

PROJECT NO. R-2707AB

CLEVELAND COUNTY

STATION: 157+75.50 -L-

SHEET 3 OF 3

STATE OF NORTH CAROLINA
DEPARTMENT OF TRANSPORTATION
RALEIGH

SUBSTRUCTURE

END BENT #1
(WBL)

NORTH CAROLINA PROFESSIONAL SEAL 10730 ENGINEER D. ANDREW DAVENPORT, JR.
10-17-12

REVISIONS						SHEET NO.
NO.	BY:	DATE:	NO.	BY:	DATE:	S-26
1			3			TOTAL SHEETS
2			4			104

DRAWN BY : M.K. BEARD DATE : 2/21/12
CHECKED BY : D.A. DAVENPORT DATE : 3/16/12
DESIGN ENGINEER OF RECORD: G.W. DICKEY DATE : 10/16/12

NOTES

STIRRUPS IN CAP MAY BE SHIFTED AS NECESSARY TO CLEAR ANCHOR BOLTS.

GALVANIZE THE TOP OF EACH INTERIOR BENT PILE A MINIMUM OF 40 FEET. GALVANIZE IN ACCORDANCE WITH SECTION 1076 OF THE STANDARD SPECIFICATIONS.

FOR PIPE PILES, SEE "24" STEEL PIPE PILE" SHEET.

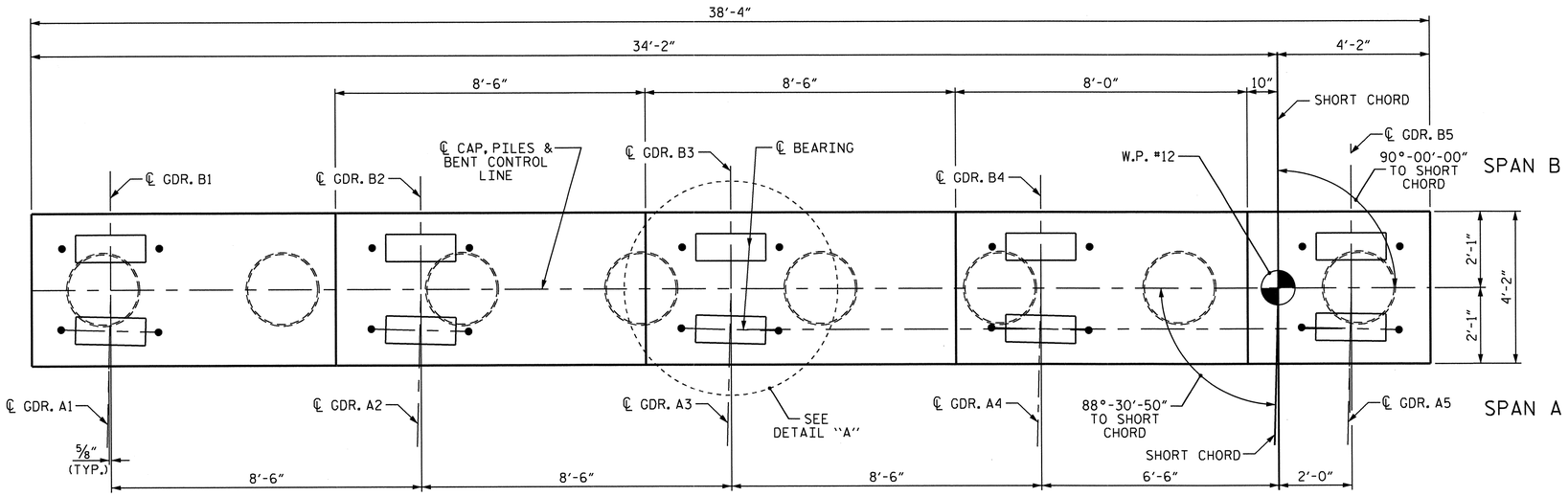

PLAN

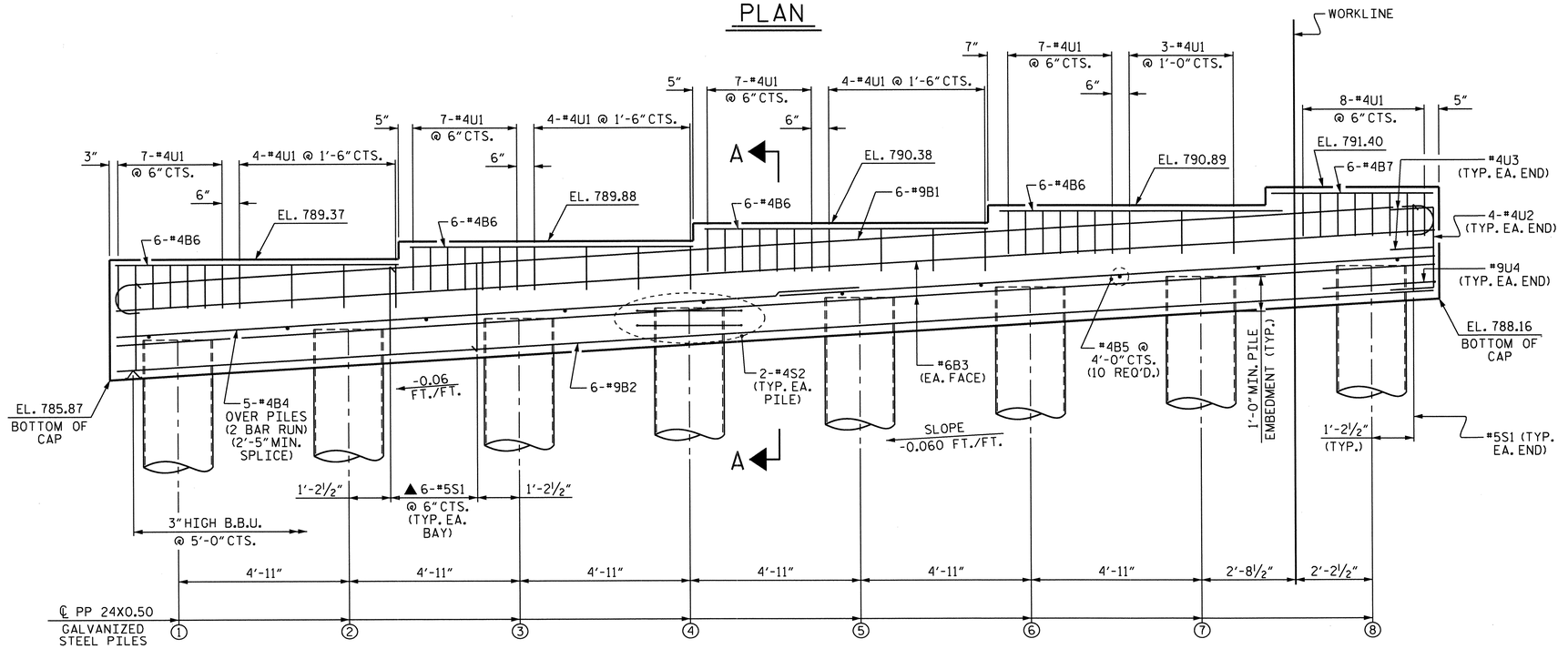

▲ INVERT ALTERNATE STIRRUPS

ELEVATION

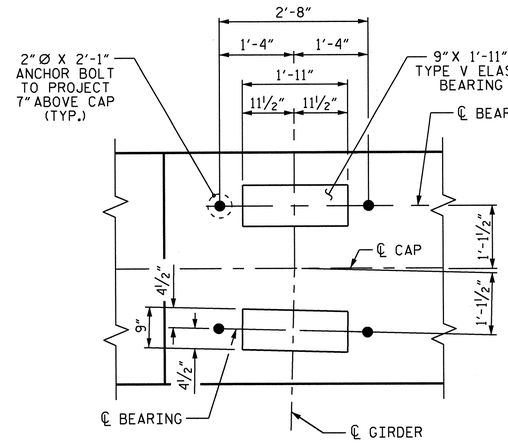

DETAIL "A"

(TYP. EA. GIRDER)

PILE No.	TOP OF PILE ELEV.
1	787.05
2	787.34
3	787.64
4	787.93
5	788.23
6	788.52
7	788.82
8	789.11

PROJECT NO. R-2707AB

CLEVELAND COUNTY

STATION: 157+75.50 -L-

SHEET 1 OF 2

STATE OF NORTH CAROLINA
DEPARTMENT OF TRANSPORTATION
RALEIGH

SUBSTRUCTURE

BENT #1
(WBL)

NORTH CAROLINA PROFESSIONAL SEAL 10730 ENGINEER D. ANDRE DAVENPORT, JR.
D. Andre Davenport 10-17-12

REVISIONS						SHEET NO.
NO.	BY:	DATE:	NO.	BY:	DATE:	S-27
1			3			TOTAL SHEETS
2			4			104

DRAWN BY : M.K. BEARD DATE : 2/29/12
CHECKED BY : D.A. DAVENPORT DATE : 3/21/12
DESIGN ENGINEER OF RECORD: G.W. DICKEY DATE : 10/16/12

17-OCT-2012 10:47
R:\Structures\Plans\Str4and5\Plans\R-2707AB_sd_Bts_Str4.dgn
addavenport

STR. #4

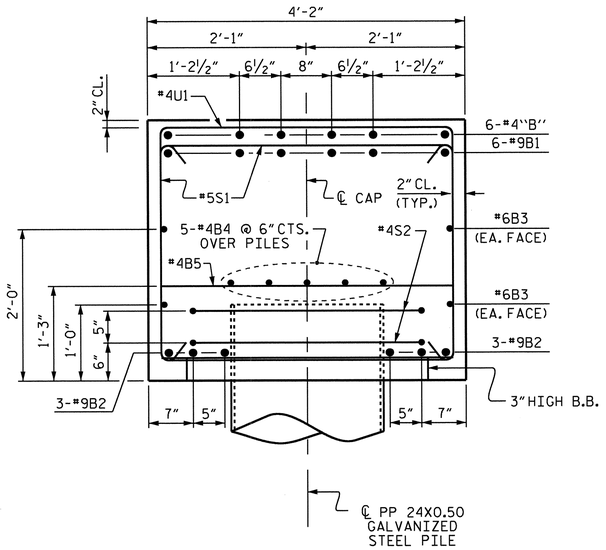

SECTION A-A

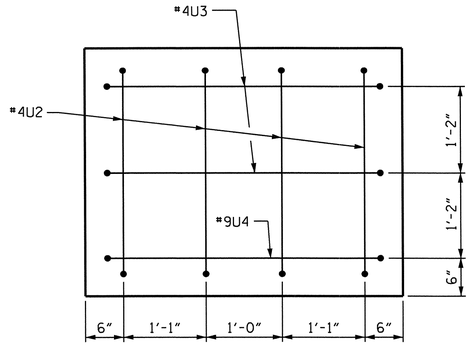

END VIEW
(TYP. EA. END)

BAR TYPES

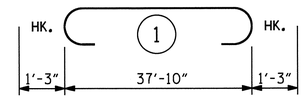

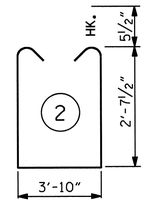

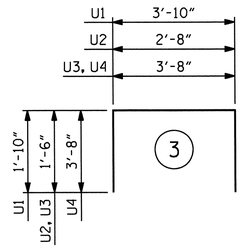

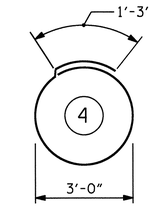

ALL BAR DIMENSIONS ARE OUT TO OUT.

BILL OF MATERIAL

BENT #1

BAR	NO.	SIZE	TYPE	LENGTH	WEIGHT
B1	6	#9	1	40'-4"	823
B2	6	#9	STR	38'-0"	775
B3	4	#6	STR	38'-0"	228
B4	10	#4	STR	20'-3"	135
B5	10	#4	STR	3'-10"	26
B6	24	#4	STR	8'-2"	131
B7	6	#4	STR	4'-8"	19
S1	44	#5	2	10'-0"	459
S2	16	#4	4	10'-9"	115
U1	51	#4	3	7'-6"	256
U2	8	#4	3	5'-8"	30
U3	4	#4	3	6'-8"	18
U4	2	#9	3	11'-0"	75

REINFORCING STEEL = 3090 LBS

CLASS A CONCRETE BREAKDOWN
POUR #1 (CAP) 18.4 C.Y.
TOTAL CLASS A CONCRETE 18.4 C.Y.

PP 24X0.50 GALVANIZED STEEL PILES
No. 8 480 LIN. FT.

PILE REDRIVES 8 EA.

NOTE: THE VOLUME OF CONCRETE DISPLACED BY THE PIPE PILES HAS BEEN DEDUCTED FROM THE TOTAL VOLUME.

ASSEMBLED BY : M.K. BEARD DATE : 2/29/12
CHECKED BY : D.A. DAVENPORT DATE : 3/21/12
DESIGN ENGINEER OF RECORD: G.W. DICKEY DATE : 10/16/12

17-OCT-2012 10:47
R:\Structures\Plans\Str4and5\Plans\R-2707AB_sd_Bts_Str4.dgn
ddavenport

PROJECT NO. R-2707AB
CLEVELAND COUNTY
STATION: 157+75.50 -L-

SHEET 2 OF 2

STATE OF NORTH CAROLINA
DEPARTMENT OF TRANSPORTATION
RALEIGH

SUBSTRUCTURE

BENT #1
(WBL)

NORTH CAROLINA PROFESSIONAL SEAL 10730 ENGINEER D. ANDRE DAVENPORT, JR.
10-17-12

REVISIONS						SHEET NO.
NO.	BY:	DATE:	NO.	BY:	DATE:	S-28
1			3			TOTAL SHEETS
2			4			104

STR. #4

NOTES

STIRRUPS IN CAP MAY BE SHIFTED AS NECESSARY TO CLEAR ANCHOR BOLTS.

GALVANIZE THE TOP OF EACH INTERIOR BENT PILE A MINIMUM OF 40 FEET. GALVANIZE IN ACCORDANCE WITH SECTION 1076 OF THE STANDARD SPECIFICATIONS.

FOR PIPE PILES, SEE "24" STEEL PIPE PILE" SHEET.

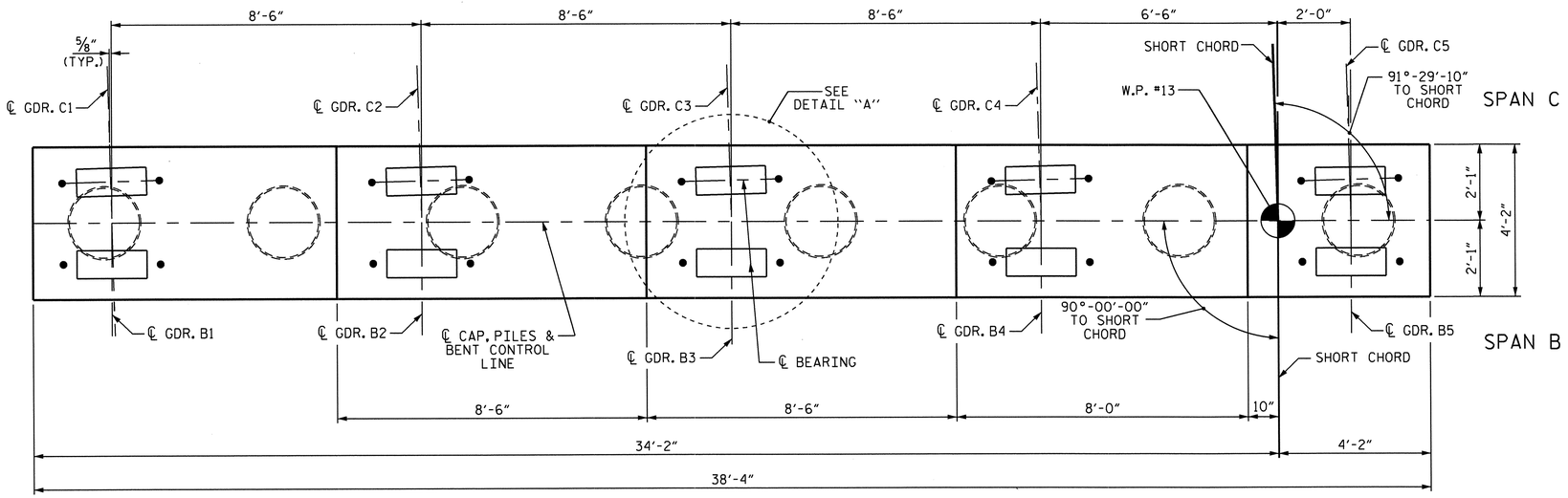

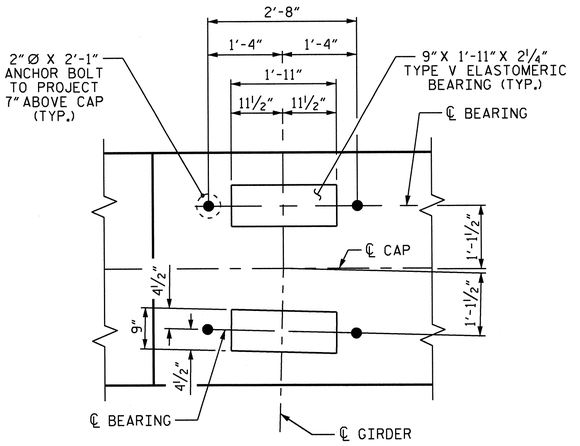

DETAIL "A"
(TYP. EA. GIRDER)

PLAN

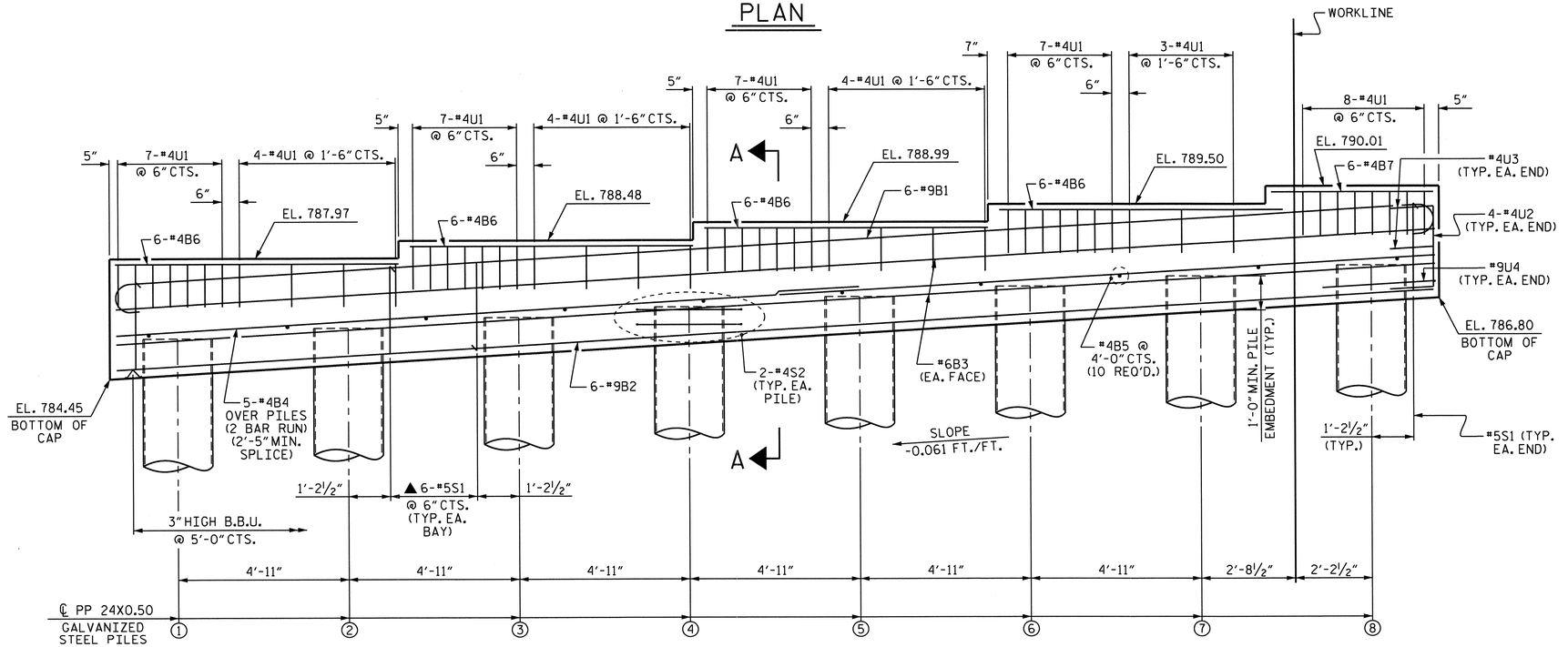

▲ INVERT ALTERNATE STIRRUPS

ELEVATION

PILE No.	TOP OF PILE ELEV.
1	785.63
2	785.94
3	786.24
4	786.55
5	786.85
6	787.16
7	787.46
8	787.77

PROJECT NO. R-2707AB

CLEVELAND COUNTY

STATION: 157+75.50 -L-

SHEET 1 OF 2

STATE OF NORTH CAROLINA
DEPARTMENT OF TRANSPORTATION
RALEIGH

SUBSTRUCTURE

BENT #2
(WBL)

NORTH CAROLINA PROFESSIONAL SEAL 10730 ENGINEER D. ANDREW DAVENPORT
10-17-12

REVISIONS						SHEET NO.
NO.	BY:	DATE:	NO.	BY:	DATE:	S-29
1			3			TOTAL SHEETS
2			4			104

DRAWN BY : M.K. BEARD DATE : 3/1/12
CHECKED BY : D.A. DAVENPORT DATE : 3/21/12
DESIGN ENGINEER OF RECORD: G.W. DICKEY DATE : 10/16/12

17-OCT-2012 10:48
R:\Structures\Plans\Str4and5\Plans\R-2707AB_sd_Bts_Str4.dgn
ddavenport

STR. #4

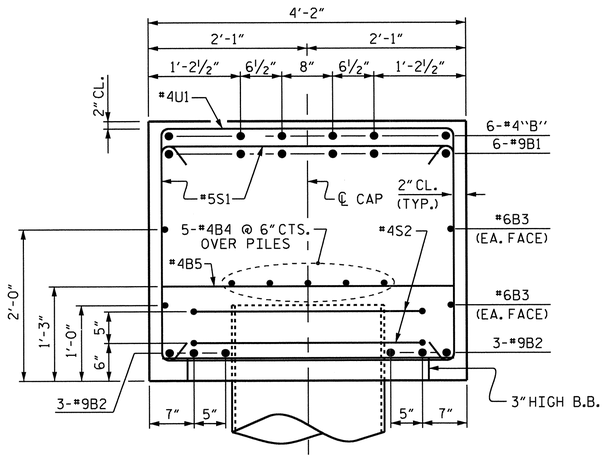

SECTION A-A

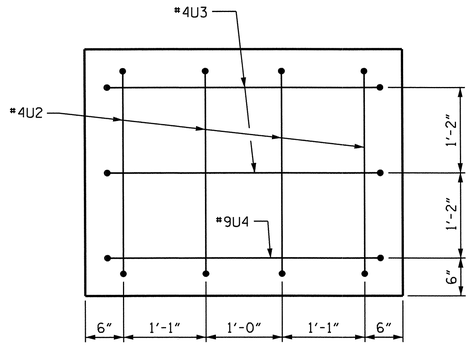

END VIEW
(TYP. EA. END)

BAR TYPES

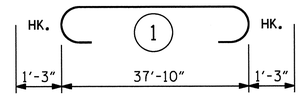

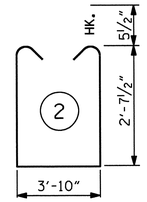

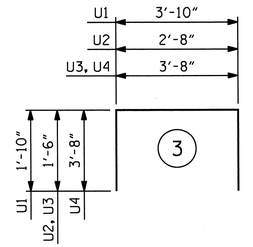

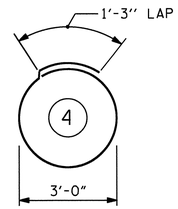

ALL BAR DIMENSIONS ARE OUT TO OUT.

BILL OF MATERIAL

BENT #2

BAR	NO.	SIZE	TYPE	LENGTH	WEIGHT
B1	6	#9	1	40'-4"	823
B2	6	#9	STR	38'-0"	775
B3	4	#6	STR	38'-0"	228
B4	10	#4	STR	20'-3"	135
B5	10	#4	STR	3'-10"	26
B6	24	#4	STR	8'-2"	131
B7	6	#4	STR	4'-8"	19
S1	44	#5	2	10'-0"	459
S2	16	#4	4	10'-9"	115
U1	51	#4	3	7'-6"	256
U2	8	#4	3	5'-8"	30
U3	4	#4	3	6'-8"	18
U4	2	#9	3	11'-0"	75

REINFORCING STEEL = 3090 LBS

CLASS A CONCRETE BREAKDOWN
POUR #1 (CAP) 18.4 C.Y.
TOTAL CLASS A CONCRETE 18.4 C.Y.

PP 24X0.50 GALVANIZED STEEL PILES
No. 8 440 LIN. FT.

PIPE PILE PLATES EA. 8

PILE REDRIVES 8 EA.

NOTE: THE VOLUME OF CONCRETE DISPLACED BY THE PIPE PILES HAS BEEN DEDUCTED FROM THE TOTAL VOLUME.

PROJECT NO. R-2707AB
CLEVELAND COUNTY
STATION: 157+75.50 -L-

SHEET 2 OF 2

NORTH CAROLINA PROFESSIONAL SEAL 10730 ENGINEER D. ANDRE DAVENPORT, JR.
10-17-12

STATE OF NORTH CAROLINA
DEPARTMENT OF TRANSPORTATION
RALEIGH

SUBSTRUCTURE

BENT #2
(WBL)

REVISIONS						SHEET NO.
NO.	BY:	DATE:	NO.	BY:	DATE:	S-30
1			3			TOTAL SHEETS
2			4			104

ASSEMBLED BY : M.K. BEARD DATE : 3/1/12
CHECKED BY : D.A. DAVENPORT DATE : 3/21/12
DESIGN ENGINEER OF RECORD: G.W. DICKEY DATE : 10/16/12

17-OCT-2012 10:48
R:\Structures\Plans\Str4and5\Plans\R-2707AB_sd_Bts_Str4.dgn
addavenport

STR. #4

NOTES:

STIRRUPS IN CAP MAY BE SHIFTED AS NECESSARY TO CLEAR ANCHOR BOLTS.

THE TOP SURFACE AREAS OF THE END BENT CAP SHALL BE CURED IN ACCORDANCE WITH THE STANDARD SPECIFICATIONS, EXCEPT THE MEMBRANE CURING COMPOUND METHOD SHALL NOT BE USED.

THE TOP SURFACE OF THE CAP EXCEPT THE BRIDGE SEAT BUILDUPS SHALL BE SLOPED TRANSVERSELY FROM THE FILL FACE TO THE BACK FACE AT THE RATE OF 2%.

INSTALL THE 4" DIAMETER DRAIN PIPE THROUGH THE WING WALL AS REQUIRED FOR REINFORCED BRIDGE APPROACH FILLS, SEE THE ROADWAY PLANS. REINFORCING STEEL IN THE WING WALL MAY BE SHIFTED AS NECESSARY TO CLEAR THE DRAIN PIPE.

THE CONCRETE IN THE SHADED AREA OF THE WING SHALL BE POURED AFTER THE JOINT BETWEEN THE DECK AND THE APPROACH SLAB HAS BEEN SAWED AND THE BARRIER RAIL IS CAST IF SLIP FORMING IS USED.

BACKWALL SHALL BE PLACED BEFORE APPLYING EPOXY PROTECTIVE COATING.

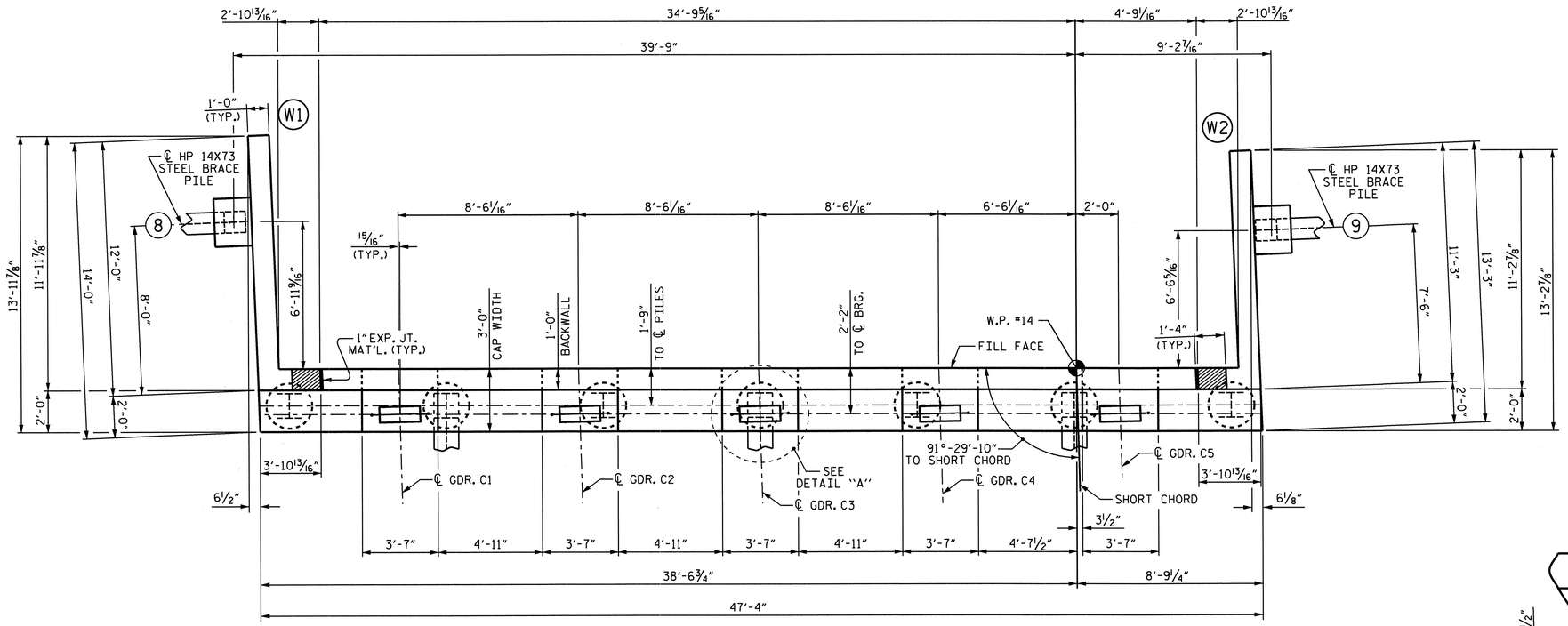

PLAN

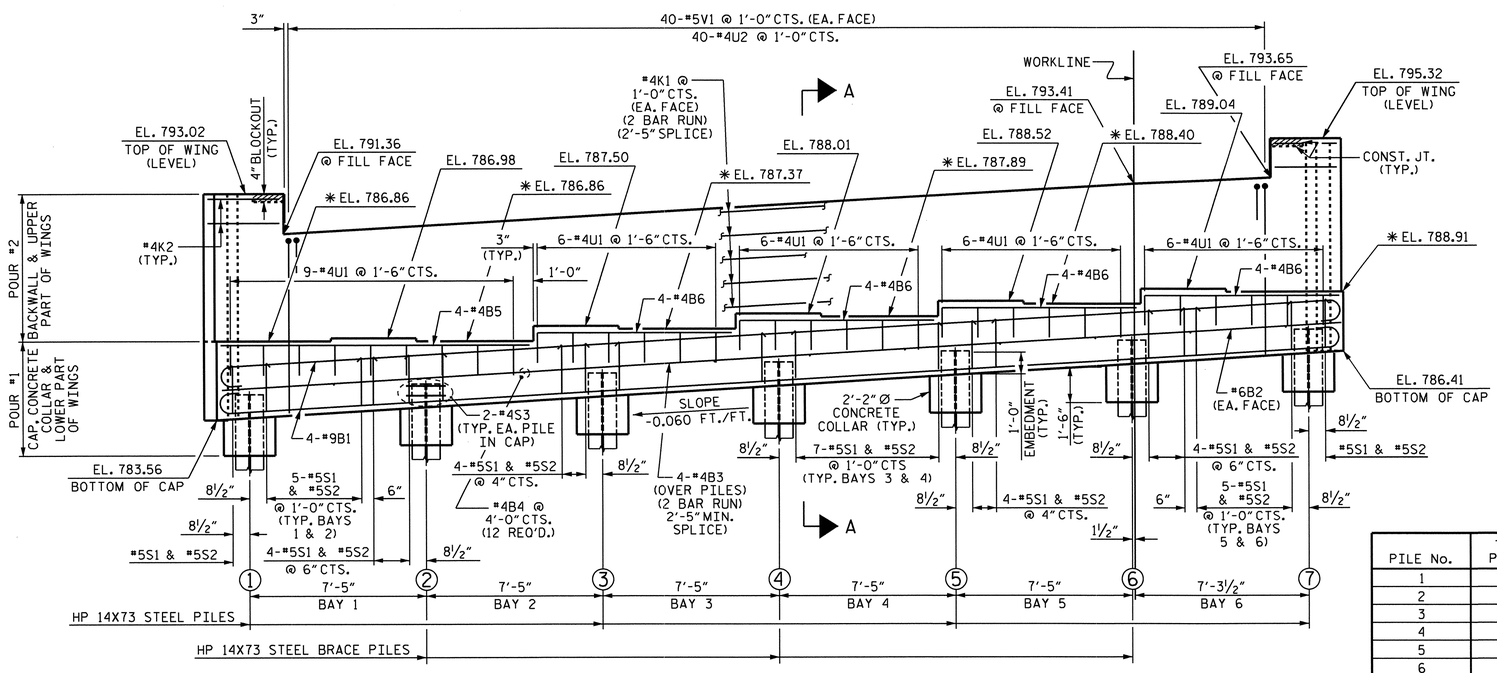

ELEVATION

*FOR LOCATION OF ELEVATIONS BETWEEN BRIDGE SEAT BUILDUPS, SEE SECTION A-A, SHEET 3 OF 3.
WING BRACE PILES NOT SHOWN FOR CLARITY.

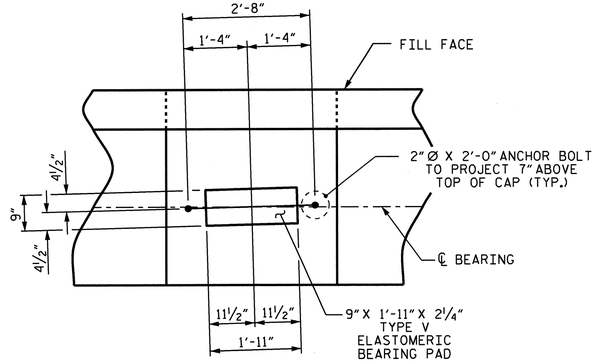

DETAIL "A"

(TYP. EA. GDR.)

PILE No.	TOP OF PILE EL.
1	784.68
2	785.12
3	785.57
4	786.01
5	786.46
6	786.90
7	787.35
8	784.56
9	787.41

PROJECT NO. R-2707AB

CLEVELAND COUNTY

STATION: 157+75.50 -L-

SHEET 1 OF 3

STATE OF NORTH CAROLINA
DEPARTMENT OF TRANSPORTATION
RALEIGH

SUBSTRUCTURE

END BENT #2
(WBL)

NORTH CAROLINA PROFESSIONAL SEAL 10730 ENGINEER D. ANDREW DAVENPORT, JR.
D. Andrew Davenport 10-17-12

REVISIONS						SHEET NO.
NO.	BY:	DATE:	NO.	BY:	DATE:	S-31
1			3			TOTAL SHEETS
2			4			104

DRAWN BY : M.K. BEARD DATE : 2/23/12
CHECKED BY : D.A. DAVENPORT DATE : 3/20/12
DESIGN ENGINEER OF RECORD: G.W. DICKEY DATE : 10/16/12

17-OCT-2012 10:51
R:\Structures\Plans\Str4and5\Plans\R-2707AB_sd_E*.dgn
adavenport

STR. #4

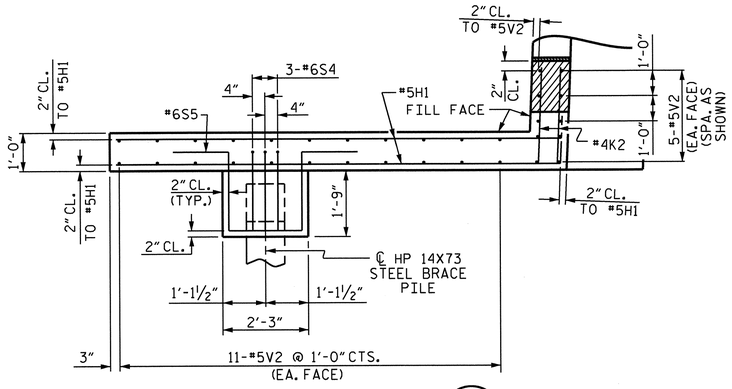

PLAN OF WING - W1

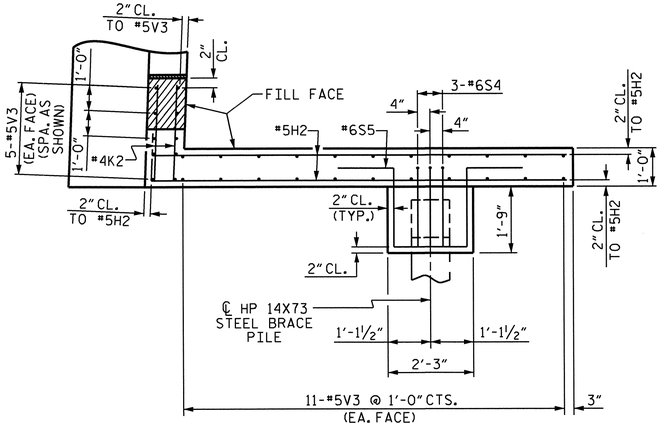

PLAN OF WING - W2

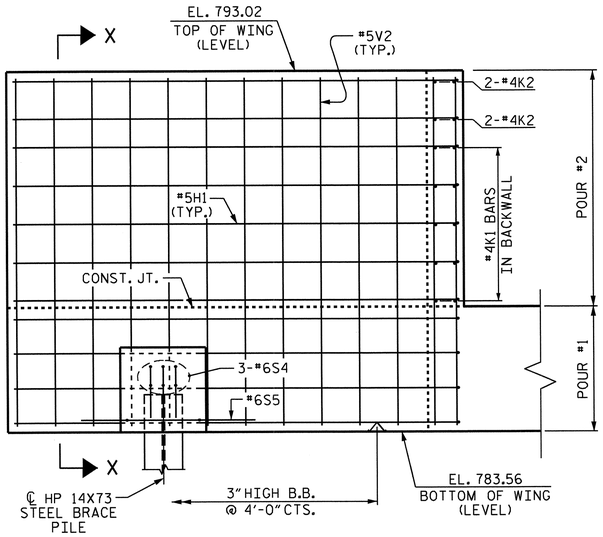

ELEVATION OF WING - W1

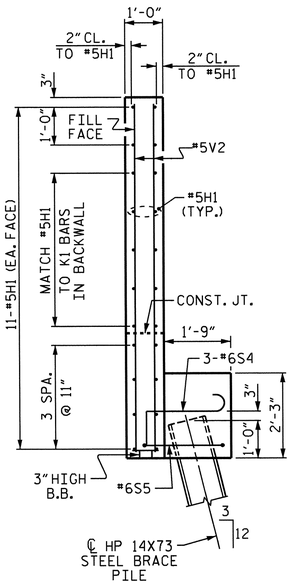

SECTION X-X

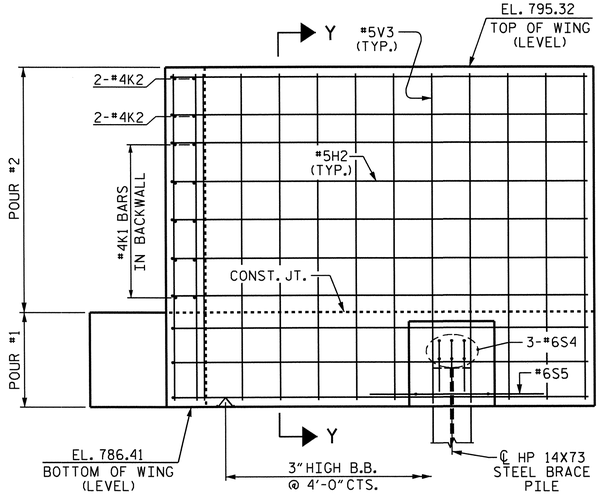

ELEVATION OF WING - W2

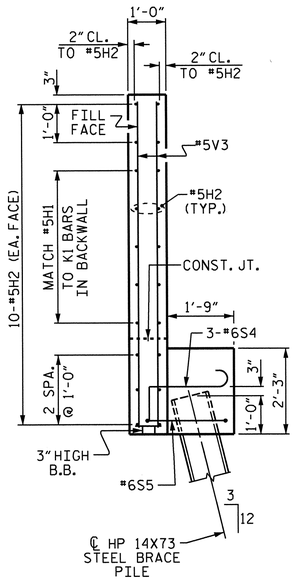

SECTION Y-Y

PROJECT NO. R-2707AB

CLEVELAND COUNTY

STATION: 157+75.50 -L-

SHEET 2 OF 3

STATE OF NORTH CAROLINA
DEPARTMENT OF TRANSPORTATION
RALEIGH

SUBSTRUCTURE

END BENT #2
(WBL)

NORTH CAROLINA PROFESSIONAL SEAL 10730 ENGINEER DANIEL A. DAVENPORT JR.
6-13-12

REVISIONS						SHEET NO.
NO.	BY:	DATE:	NO.	BY:	DATE:	S-32
1			3			TOTAL SHEETS
2			4			104

DRAWN BY : M.K. BEARD DATE : 2/23/12
CHECKED BY : D.A. DAVENPORT DATE : 3/20/12
DESIGN ENGINEER OF RECORD: G.W. DICKEY DATE : 10/16/12

13-JUN-2013 07:49
R:\Structures\Plans\Str4and5\Plans\R-2707AB_sd_E*.dgn
daddavenport

STR. #4

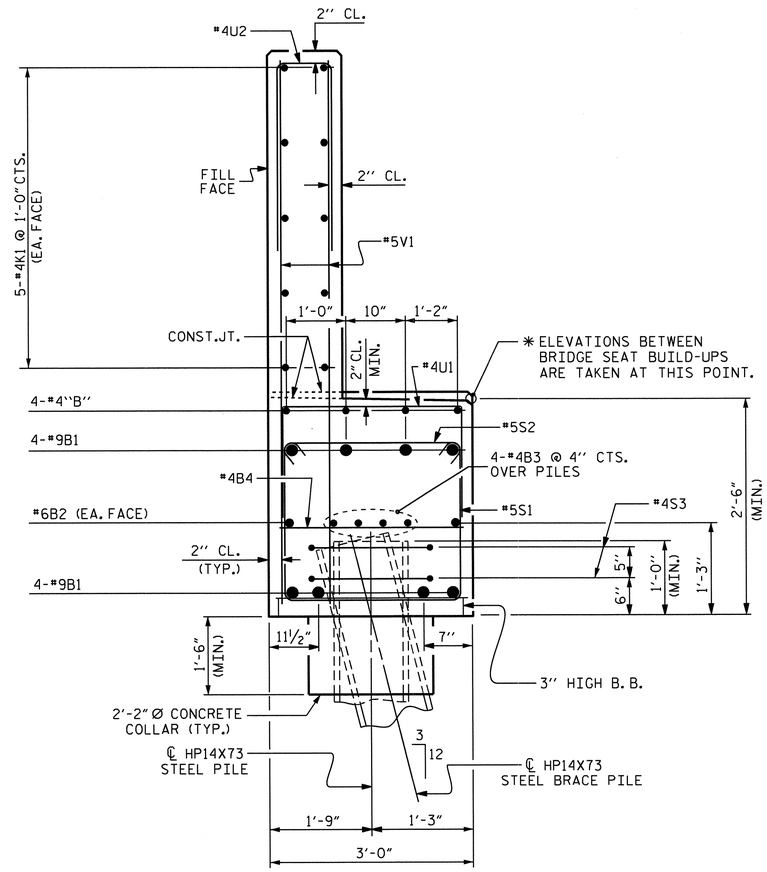

SECTION A-A

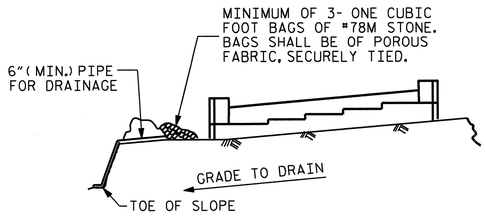

BAGGED STONE AND PIPE SHALL BE PLACED IMMEDIATELY AFTER COMPLETION OF END BENT EXCAVATION. PIPE MAY BE EITHER CONCRETE, CORRUGATED STEEL, CORRUGATED ALUMINUM ALLOY, OR CORRUGATED PLASTIC. PERFORATED PIPE WILL NOT BE ALLOWED.

BAGGED STONE SHALL REMAIN IN PLACE UNTIL THE ENGINEER DIRECTS THAT IT BE REMOVED. THE CONTRACTOR SHALL REMOVE AND DISPOSE OF SILT ACCUMULATIONS AT BAGGED STONE WHEN SO DIRECTED BY THE ENGINEER. BAGS SHALL BE REMOVED AND REPLACED WHENEVER THE ENGINEER DETERMINES THAT THEY HAVE DETERIORATED AND LOST THEIR EFFECTIVENESS.

NO SEPARATE PAYMENT WILL BE MADE FOR THIS WORK AND THE ENTIRE COST OF THIS WORK SHALL BE INCLUDED IN THE UNIT CONTRACT PRICE BID FOR THE SEVERAL PAY ITEMS.

TEMPORARY DRAINAGE AT END BENT

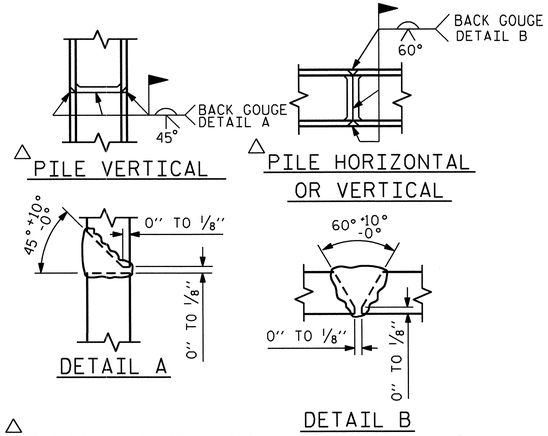

△ POSITION OF PILE DURING WELDING.

PILE SPLICE DETAILS

BAR TYPES

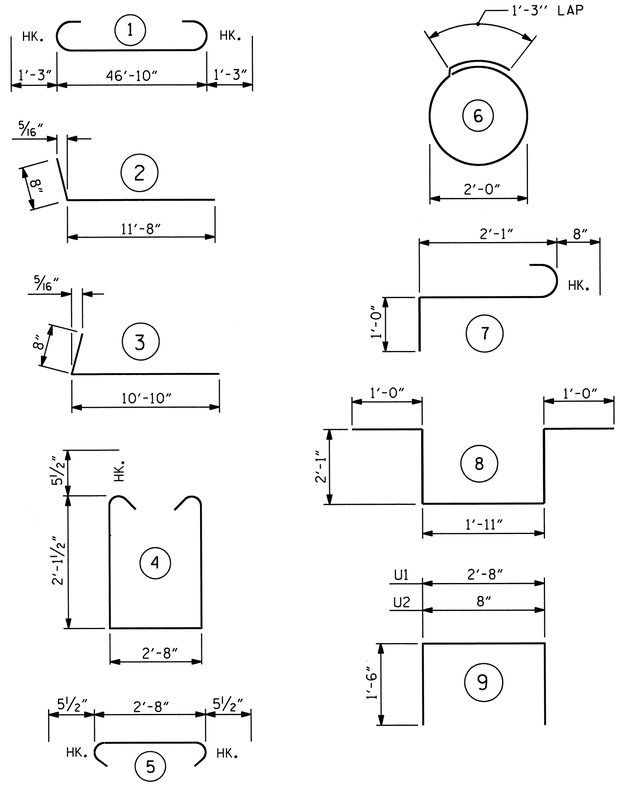

ALL BAR DIMENSIONS ARE OUT TO OUT.

BILL OF MATERIAL

END BENT #2

BAR	No.	SIZE	TYPE	LENGTH	WEIGHT
B1	8	#9	1	49'-4"	1342
B2	2	#6	STR.	46'-11"	141
B3	8	#4	STR.	24'-9"	132
B4	12	#4	STR.	2'-8"	21
B5	4	#4	STR.	12'-11"	35
B6	16	#4	STR.	8'-2"	87
H1	22	#5	2	12'-4"	283
H2	20	#5	3	11'-6"	240
K1	20	#4	STR.	24'-9"	331
K2	8	#4	STR.	3'-6"	19
S1	52	#5	4	7'-10"	425
S2	52	#5	5	3'-7"	194
S3	14	#4	6	7'-7"	71
S4	6	#6	7	3'-9"	34
S5	2	#6	8	8'-1"	24
U1	33	#4	9	5'-8"	125
U2	40	#4	9	3'-8"	98
V1	80	#5	STR.	7'-2"	598
V2	32	#5	STR.	9'-1"	303
V3	32	#5	STR.	8'-6"	284

REINFORCING STEEL LBS. 4787

CLASS "A" CONCRETE BREAKDOWN

POUR #1 CAP, LOWER WINGS & COLLARS CU.YDS. 19.4

POUR #2 UPPER WINGS & BACKWALL CU.YDS. 13.6

CLASS "A" CONCRETE TOTAL CU.YDS. 33.0

HP 14X73 STEEL PILES

No. 9 LIN.FT. 540

PILE REDRIVES 7 EA.

PROJECT NO. R-2707AB

CLEVELAND COUNTY

STATION: 157+75.50 -L-

SHEET 3 OF 3

STATE OF NORTH CAROLINA
DEPARTMENT OF TRANSPORTATION
RALEIGH

SUBSTRUCTURE

END BENT #2
(WBL)

NORTH CAROLINA PROFESSIONAL SEAL 10730 ENGINEER D. ANDRE DAVENPORT, JR
10-17-12

REVISIONS						SHEET NO.
NO.	BY:	DATE:	NO.	BY:	DATE:	S-33
1			3			TOTAL SHEETS
2			4			104

DRAWN BY : M.K. BEARD DATE : 2/23/12
CHECKED BY : D.A. DAVENPORT DATE : 3/20/12
DESIGN ENGINEER OF RECORD: G.W. DICKEY DATE : 10/16/12

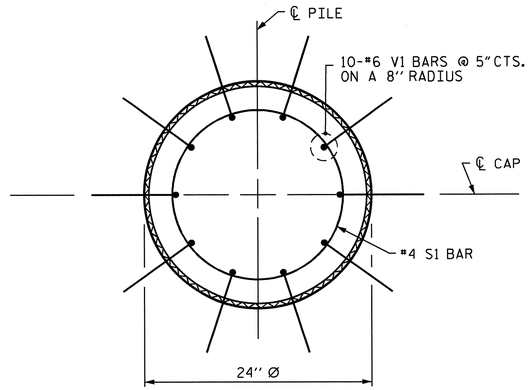

PLAN

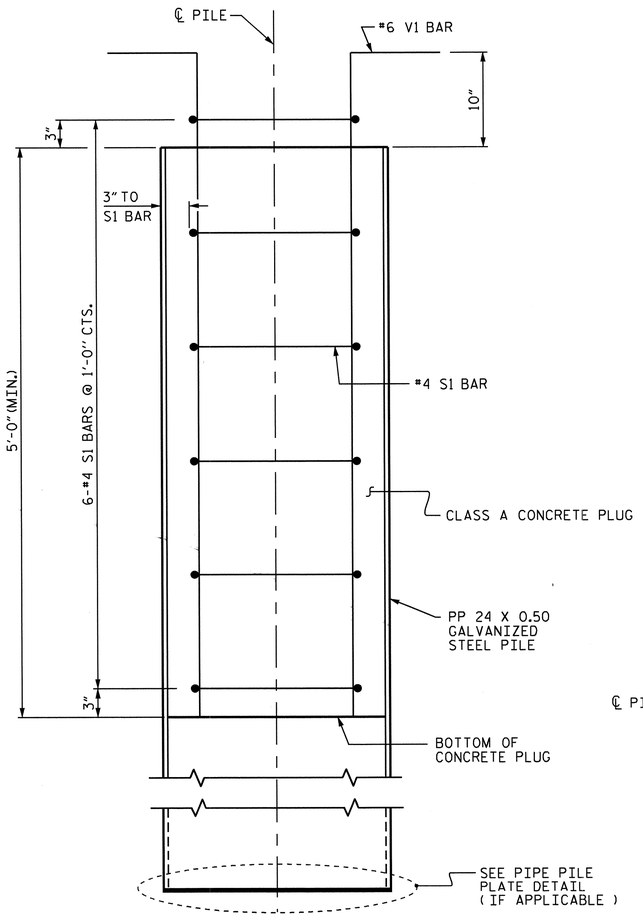

ELEVATION

PP 24 X 0.50 GALVANIZED STEEL PILE

(OPEN OR CLOSED END)

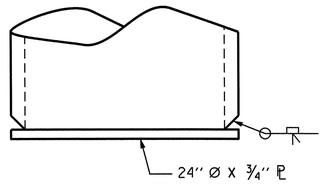

PIPE PILE PLATE DETAIL
(IF APPLICABLE)

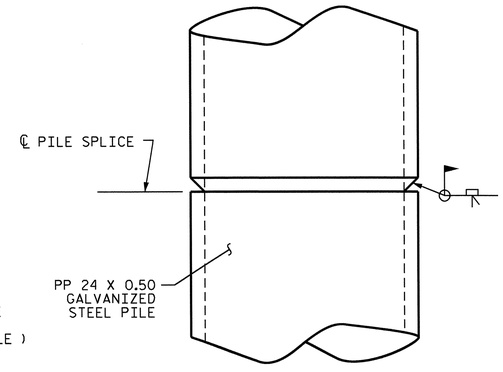

PIPE PILE SPLICE DETAIL

NOTES

PIPE PILES SHALL BE IN ACCORDANCE WITH SECTION 1084 OF THE STANDARD SPECIFICATIONS.

GALVANIZE STEEL PIPE PILES IN ACCORDANCE WITH SECTION 1076 OF THE STANDARD SPECIFICATIONS UNLESS METALLIZING IS REQUIRED. GALVANIZING OR METALLIZING PIPE PILE PLATES IS NOT REQUIRED.

PIPE PILE PLATES, IF REQUIRED, SHALL BE IN ACCORDANCE WITH SECTION 450 OF THE STANDARD SPECIFICATIONS.

REMOVE AND REPLACE OR REPAIR TO THE SATISFACTION OF THE ENGINEER PILES THAT ARE DAMAGED, DEFORMED OR COLLAPSED DURING INSTALLATION OR DRIVING.

PILE SPLICES SHALL BE IN ACCORDANCE WITH THE STANDARD SPECIFICATIONS AND AWS D1.1.

FOR CLOSED END PIPE PILES, REMOVE ALL SOIL AND WATER FROM INSIDE THE PILES JUST PRIOR TO PLACING REINFORCING STEEL AND CONCRETE FOR THE CONCRETE PLUG.

FOR OPEN END PIPE PILES, REMOVE ENOUGH SOIL AND WATER FROM INSIDE THE PILES TO CONSTRUCT THE CONCRETE PLUG WITHOUT FOULING THE CONCRETE.

FORM THE CONCRETE PLUG SUCH THAT THE REINFORCING STEEL OR CONCRETE DOES NOT MOVE AND THE CLEARANCE FROM THE REINFORCING STEEL TO THE INSIDE OF THE PILE IS MAINTAINED AFTER CONCRETE PLACEMENT. DO NOT PLACE CONCRETE IN THE BENT CAP UNTIL THE CONCRETE PLUG HAS ATTAINED A MINIMUM COMPRESSIVE STRENGTH OF 1500 PSI.

THE REINFORCING STEEL, CLASS A CONCRETE, AND GALVANIZING ARE CONSIDERED INCIDENTAL TO THE CONTRACT UNIT PRICE BID PER LINEAR FOOT FOR PP 24 X 0.50 GALVANIZED STEEL PILES.

PIPE PILES AT BENT #1 SHALL BE OPEN END PILES.

PIPE PILES AT BENT #2 SHALL BE CLOSED END PILES WITH PIPE PILE PLATES.

BILL OF MATERIAL FOR ONE PP 24 X 0.50 GALVANIZED STEEL PILE

BAR	NO.	SIZE	TYPE	LENGTH	WEIGHT
S1	6	#4	1	6'-0"	24
V1	10	#6	2	6'-8"	100
REINFORCING STEEL =				124	lbs
CLASS A CONCRETE					
5'-0" MINIMUM PLUG					0.5 CY

BAR TYPES

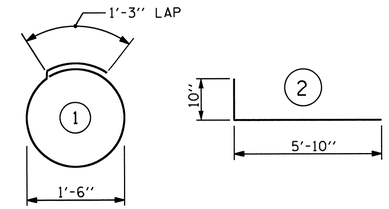

ALL BAR DIMENSIONS ARE OUT TO OUT.

PROJECT NO. R-2707AB

CLEVELAND COUNTY

STATION: 157+75.50 -L-

STATE OF NORTH CAROLINA
DEPARTMENT OF TRANSPORTATION
RALEIGH

STANDARD

24" STEEL PIPE PILE

(WBL)

NORTH CAROLINA PROFESSIONAL SEAL 10730 ENGINEER D. ANDRE' DAVENPORT, JR
10-17-12

REVISIONS						SHEET NO.
NO.	BY:	DATE:	NO.	BY:	DATE:	S-34
1			3			TOTAL SHEETS
2			4			104

ASSEMBLED BY : M.K. BEARD	DATE : 2/29/12
CHECKED BY : D.A. DAVENPORT	DATE : 3/22/12
DRAWN BY : TLA 8/05	ADDED 10/1/05
CHECKED BY : GM 9/05	REV. 5/1/06R MAA/KMM
	REV. 10/1/11 MAA/GM

17-OCT-2012 10:48
R:\Structures\Plans\Str4and5\Plans\R-2707AB_sd_Bts_Str4.dgn
ddavenport

STR. 4

STD. NO. SPP4

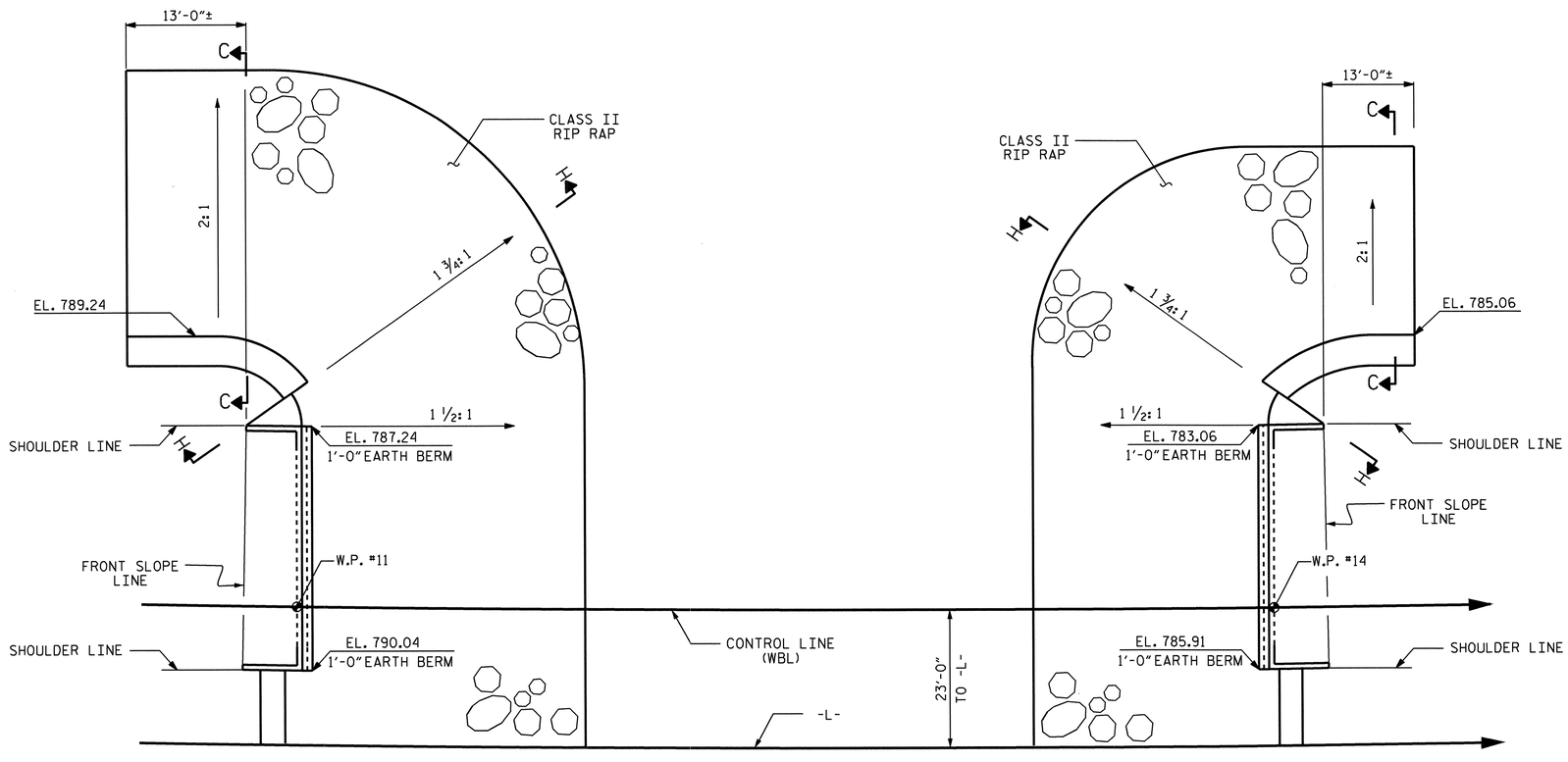

END BENT #1

END BENT #2

ESTIMATED QUANTITIES		
BRIDGE @ STA. 157+75.50 -L- (WBL)	RIP RAP CLASS II (2'-0" THICK)	GEOTEXTILE FOR DRAINAGE
	TONS	SQUARE YARDS
END BENT 1	485	540
END BENT 2	320	355
TOTAL	805	895

PLAN

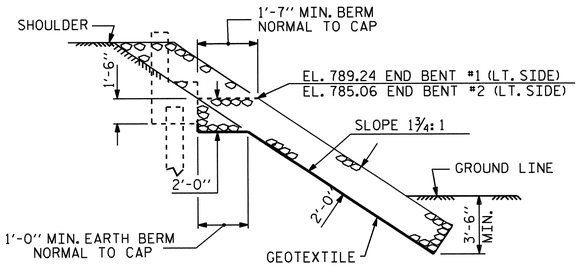

SECTION H-H

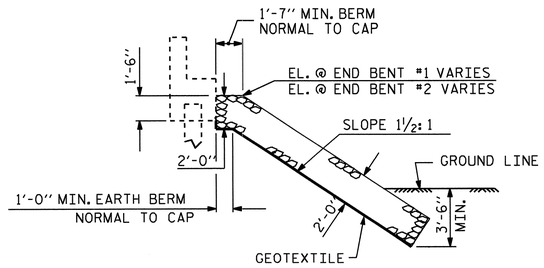

℄ SECTION
BERM RIP RAPPED

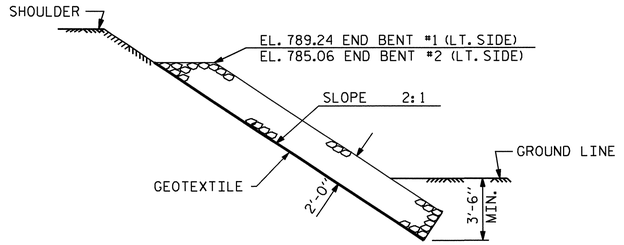

SECTION C-C

PROJECT NO. R-2707AB
CLEVELAND COUNTY
STATION: 157+75.50 -L-

STATE OF NORTH CAROLINA
DEPARTMENT OF TRANSPORTATION
RALEIGH

RIP RAP DETAILS (WBL)

REVISIONS						SHEET NO.
NO.	BY:	DATE:	NO.	BY:	DATE:	S-35
1			3			TOTAL SHEETS
2			4			104

NORTH CAROLINA PROFESSIONAL SEAL 10730 ENGINEER ANDREW DAVENPORT
6-13-13

ASSEMBLED BY : W. B. HILL		DATE : 11/09	
CHECKED BY : M.G.SHAIKH/DAD		DATE : 01/23/12	
DESIGN ENGINEER OF RECORD: G.W. DICKEY		DATE : 10/16/12	
DRAWN BY : FCJ 2/88	REV. 5/1/06	TLA/GM	
CHECKED BY : ARB 8/88	REV. 10/1/11	MAA/GM	
	REV. 12/21/11	MAA/GM	

13-JUN-2013 07:49
R:\Structures\Plans\Str4and5\Plans\R-2707AB_sd_RR.dgn
dadavenport

STR #4

STD. NO. RR1 (SHT 2)

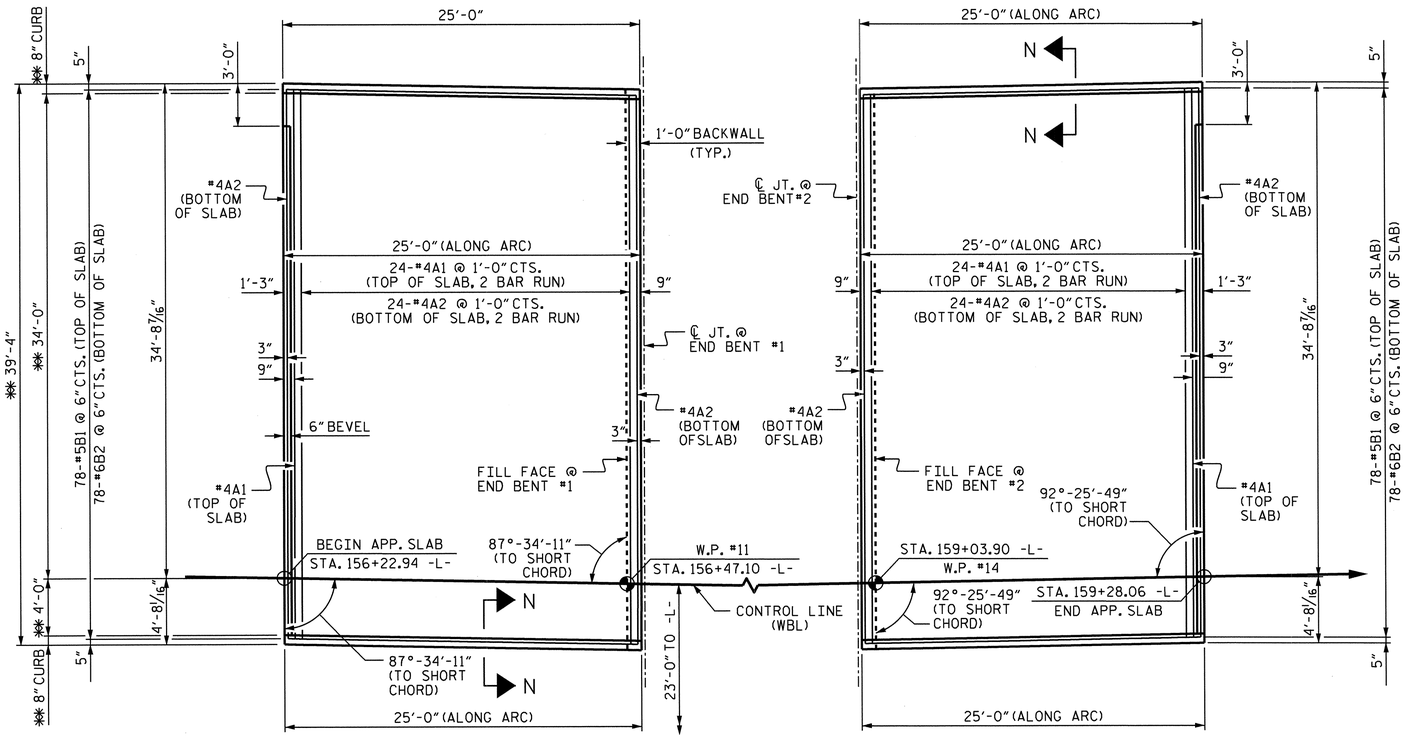

PLAN @ END BENT #1

PLAN @ END BENT #2

(✱✱ RADIAL DIMENSION)

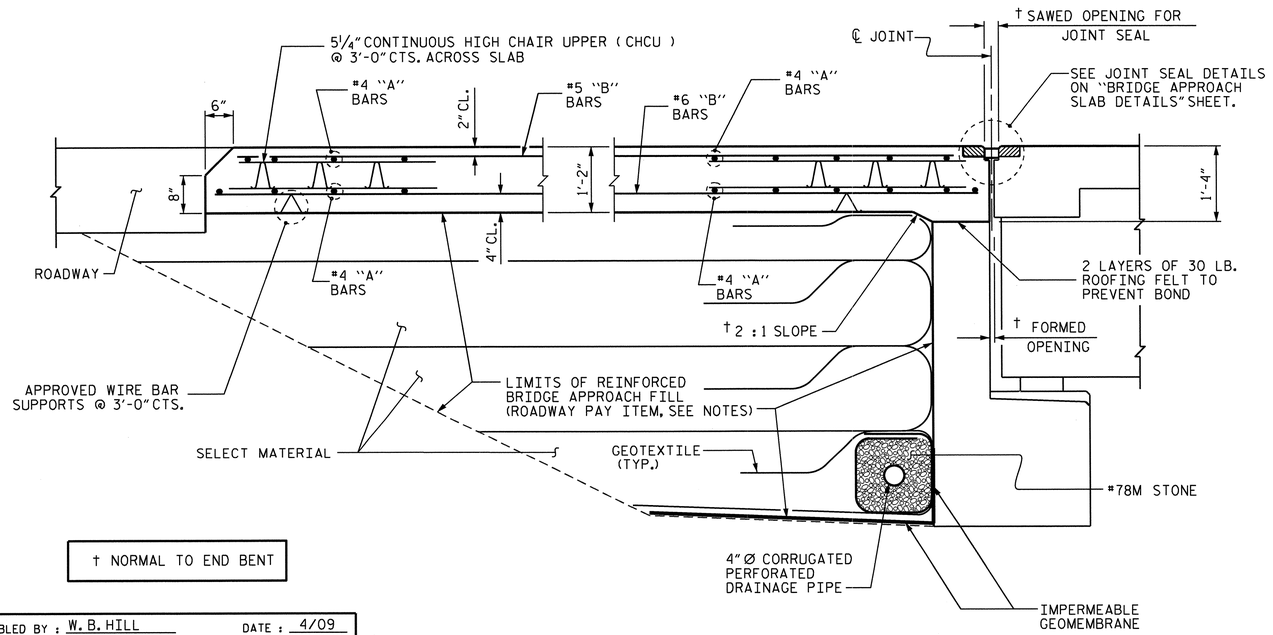

† NORMAL TO END BENT

SECTION THRU SLAB

NOTES

APPROACH SLAB SHALL NOT BE CONSTRUCTED PRIOR TO COMPLETION OF THE BRIDGE DECK.

FOR REINFORCED BRIDGE APPROACH FILL INCLUDING GEOTEXTILE, IMPERMEABLE GEOMEMBRANE, 4" Ø DRAINAGE PIPE, #78M STONE, AND SELECT MATERIAL, SEE ROADWAY PLANS.

AREA BETWEEN THE WINGWALL AND APPROACH SLAB SHALL BE GRADED TO DRAIN THE WATER AWAY FROM THE FILL FACE OF THE BRIDGE AND SHALL BE PAVED. SEE ROADWAY PLANS.

WITH FOAM JOINT SEAL

THE JOINT SHALL BE SAWED PRIOR TO THE CASTING OF THE BARRIER RAIL.

FOR FOAM JOINT SEALS, SEE SPECIAL PROVISIONS.

THE NOMINAL UNCOMPRESSED SEAL WIDTH OF THE FOAM JOINT SEAL SHALL BE 2½".

FOR ELASTOMERIC CONCRETE, SEE SPECIAL PROVISIONS.

SPLICE LENGTHS		
BAR SIZE	EPOXY COATED	UNCOATED
#4	2'-0"	1'-9"
#5	2'-6"	2'-2"
#6	3'-10"	2'-7"

BILL OF MATERIAL

APPROACH SLAB AT EB #1

BAR	NO.	SIZE	TYPE	LENGTH	WEIGHT
✱A1	50	#4	STR	20'-6"	685
A2	52	#4	STR	20'-5"	709
✱B1	78	#5	STR	23'-6"	1912
B2	78	#6	STR	24'-7"	2880
REINFORCING STEEL				LBS.	3589
✱EPOXY COATED REINFORCING STEEL				LBS.	2597
CLASS AA CONCRETE				C. Y.	42.8

APPROACH SLAB AT EB #2

BAR	NO.	SIZE	TYPE	LENGTH	WEIGHT
✱A1	50	#4	STR	20'-6"	685
A2	52	#4	STR	20'-5"	709
✱B1	78	#5	STR	23'-6"	1912
B2	78	#6	STR	24'-7"	2880
REINFORCING STEEL				LBS.	3589
✱EPOXY COATED REINFORCING STEEL				LBS.	2597
CLASS AA CONCRETE				C. Y.	42.8

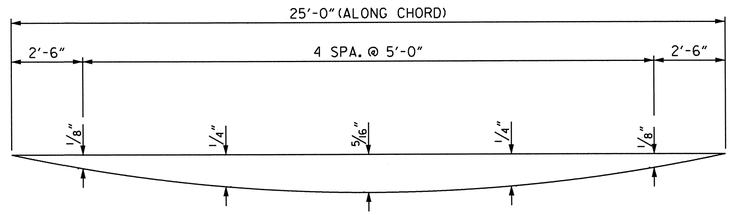

ARC OFFSET- LEFT SIDE

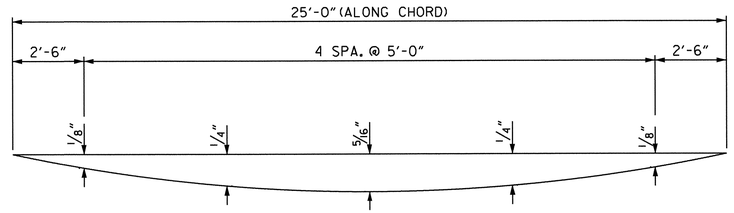

ARC OFFSET- RIGHT SIDE

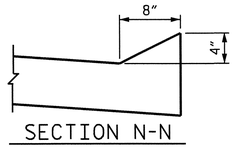

SECTION N-N

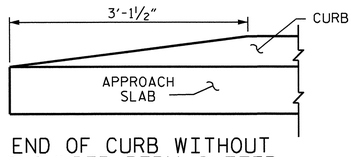

END OF CURB WITHOUT SHOULDER BERM GUTTER

CURB DETAILS

PROJECT NO. R-2707AB

CLEVELAND COUNTY

STATION: 157+75.50 -L-

SHEET 1 OF 2

STATE OF NORTH CAROLINA
DEPARTMENT OF TRANSPORTATION
RALEIGH

BRIDGE APPROACH SLAB FOR FLEXIBLE PAVEMENT (WBL)

REVISIONS						SHEET NO.
NO.	BY:	DATE:	NO.	BY:	DATE:	S-36
1			3			TOTAL SHEETS
2			4			104

STR. #4 STD. NO. BAS2 (SHT 2)

NORTH CAROLINA PROFESSIONAL SEAL 10730 ENGINEER ANDREW DAVENPORT

P. Andrew Davenport 10-17-12

ASSEMBLED BY : W. B. HILL	DATE : 4/09	
CHECKED BY : M. G. SHAIKH/DAD	DATE : 01/19/12	
DESIGN ENGINEER OF RECORD: G.W. DICKEY	DATE : 10/16/12	
DRAWN BY : LES 8/01	REV. 5/1/06R	KMM/GM
CHECKED BY : RDR 8/01	REV. 10/1/11	MAA/GM
	REV. 12/21/11	MAA/GM

17-OCT-2012 10:46
R:\Structures\Plans\Str4and5\Plans\R-2707AB_sd_AS.dgn
adavenport

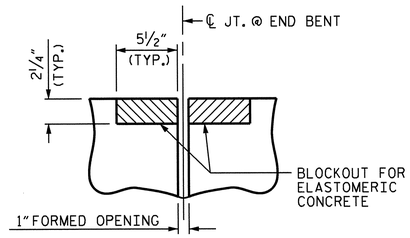

SECTION C-C
FOAM JOINT SEAL
(PRE-SAWED ELASTOMERIC CONCRETE DIMENSIONS)

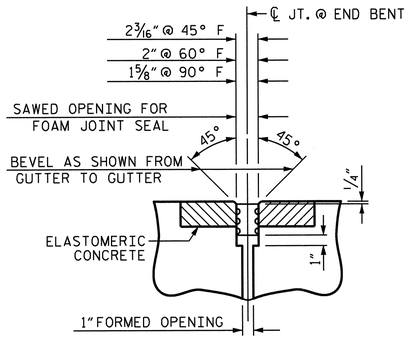

SECTION C-C
FOAM JOINT SEAL
(EXPANSION)

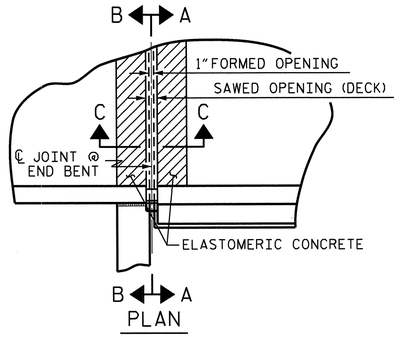

PLAN

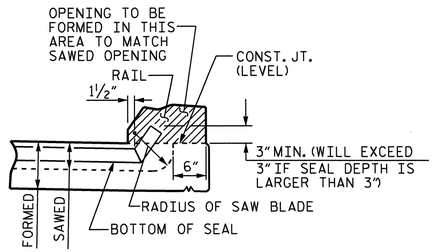

SECTION A-A

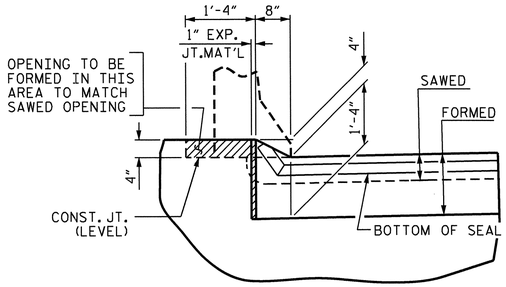

SECTION B-B

ELASTOMERIC CONCRETE	
END BENT NO.	ELASTOMERIC CONCRETE * (CU. FT.)
1	6.5
2	6.5
TOTAL	13.0

* BASED ON THE MINIMUM BLOCKOUT SHOWN.

JOINT SEAL DETAILS @ END BENT

FOAM JOINT SEAL TO BE CUT, HEAT WELDED AND TURNED UP PARALLEL TO SLOPED FACE OF THE BARRIER RAIL.

THE JOINT SHALL BE SAWED PRIOR TO THE CASTING OF THE BARRIER RAIL.

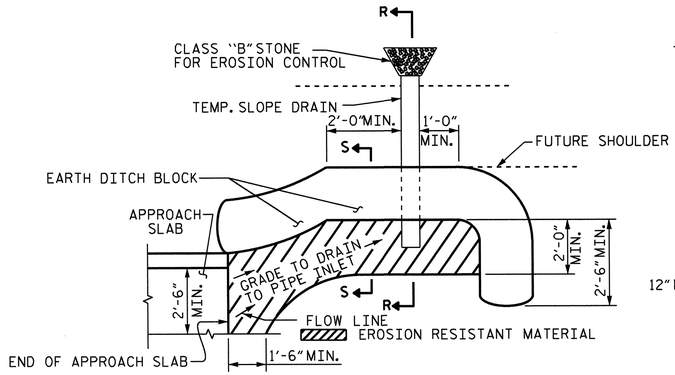

NOTE: IMMEDIATELY AFTER THE CONSTRUCTION OF THE APPROACH SLAB, THE CONTRACTOR SHALL PROVIDE TEMPORARY BERM AND SLOPE DRAIN. CONTRACTOR SHALL GRADE TO PIPE INLET AND PROVIDE EROSION RESISTANT MATERIAL AS SHOWN. THE EROSION RESISTANT MATERIAL SHALL BE EITHER 1) ASPHALT PLANT MIX, TYPE 1 OR TYPE 2, MIN. 2" DEPTH, 2) EROSION CONTROL MAT, OR 3) CONCRETE, AS DIRECTED BY THE ENGINEER. THE SLOPE DRAIN SHALL CONSIST OF A NON-PERFORATED TEMPORARY DRAINAGE PIPE, 12 INCHES IN DIAMETER.

PLAN VIEW

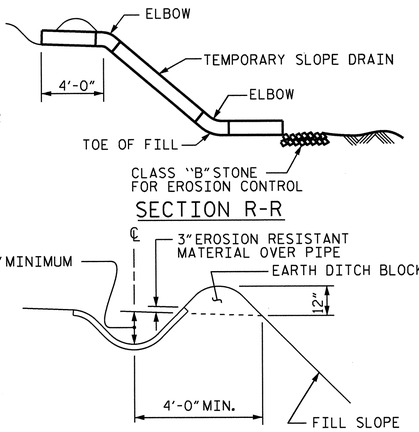

SECTION R-R

SECTION S-S

TEMPORARY BERM AND SLOPE DRAIN DETAILS

(TO BE USED WHEN SHOULDER BERM GUTTER IS REQUIRED)

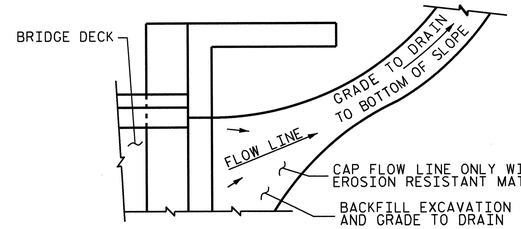

NOTE: IF THE APPROACH SLAB IS NOT CONSTRUCTED IMMEDIATELY AFTER THE BACKFILLING OF THE END BENT EXCAVATION, GRADE TO DRAIN TO THE BOTTOM OF THE SLOPE AND PROVIDE EROSION RESISTANT MATERIAL, SUCH AS FIBERGLASS ROVING OR AS DIRECTED BY THE ENGINEER TO PREVENT SOIL EROSION AND TO PROTECT THE AREA ADJACENT TO THE STRUCTURE. THE CONTRACTOR WILL BE REQUIRED TO REMOVE THESE MATERIALS PRIOR TO CONSTRUCTION OF THE APPROACH SLAB.

TEMPORARY DRAINAGE DETAIL

ASSEMBLED BY : W. B. HILL DATE : 4/09
CHECKED BY : M. G. SHAIKH/DAD DATE : 01/19/12
DESIGN ENGINEER OF RECORD: G.W. DICKEY DATE : 10/16/12

DRAWN BY : FCJ 11/88
CHECKED BY : ARB 11/88

REV. 5/7/03 RWW/JTE
REV. 5/1/06R MAA/KMM
REV. 10/1/11 MAA/GM

17-OCT-2012 10:46
R:\Structures\Plans\Str4and5\Plans\R-2707AB_sd_AS.dgn
adavenport

NORTH CAROLINA PROFESSIONAL SEAL 10730 ENGINEER D. ANDREW DAVENPORT, JR.
10-17-12

PROJECT NO. R-2707AB
CLEVELAND COUNTY
STATION: 157+75.50 -L-

SHEET 2 OF 2

STATE OF NORTH CAROLINA
DEPARTMENT OF TRANSPORTATION
RALEIGH

BRIDGE APPROACH SLAB DETAILS (WBL)

REVISIONS						SHEET NO.
NO.	BY:	DATE:	NO.	BY:	DATE:	S-37
1			3			TOTAL SHEETS
2			4			104

STR. #4 STD. NO. BAS4 (SHT 1)

F. A. PROJ. No.: NHF-0074(142)

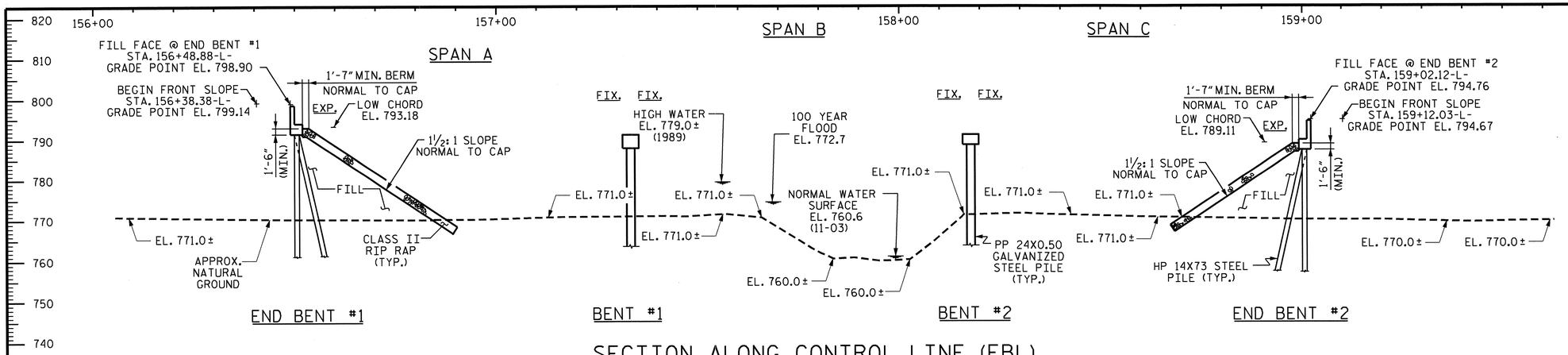

SECTION ALONG CONTROL LINE (EBL)

BENTS ON SECTION AT RIGHT ANGLES TO BENTS

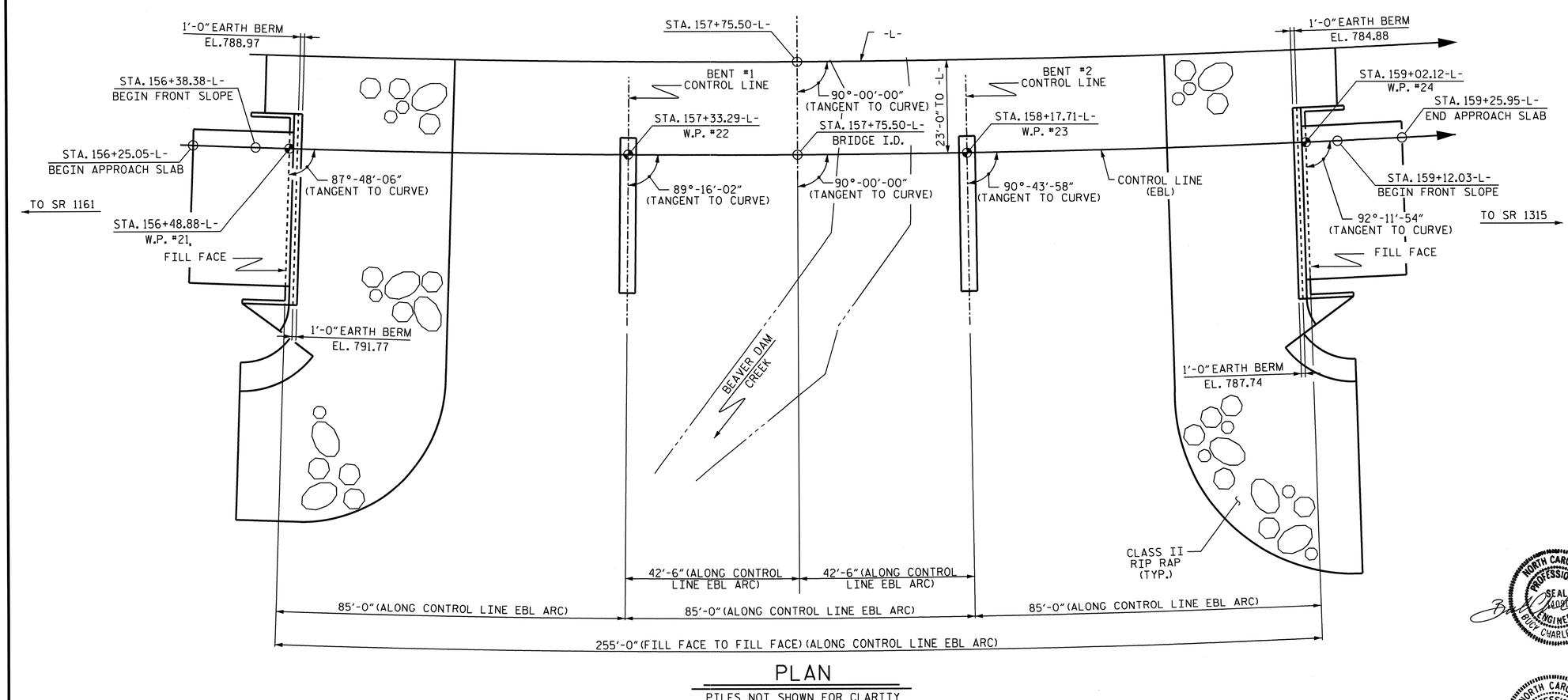

PLAN

PILES NOT SHOWN FOR CLARITY

(-)3.6739% (+)3.6580%

P.I. STA. = 160+75.00-L-
EL = 781.56
VC = 1.350

GRADE DATA -L-

P.I. STA. = 158+11.64-L-
DELTA = 23°-10'-04.9" (LT.)
D= 1°-44'-10.4"
L = 1334.38 FT.
T = 676.43 FT.
R = 3300.000 FT.

HORIZONTAL CURVE DATA

PROJECT NO. R-2707AB

CLEVELAND COUNTY

STATION: 157+75.50-L-

SHEET 1 OF 4 BRIDGE NO.455

NORTH CAROLINA PROFESSIONAL SEAL 14091 ENGINEER BUCK CHARLES HUNT 6/17/13

NORTH CAROLINA PROFESSIONAL SEAL 10730 ENGINEER D. ANDRE DAVENPORT, JR. 6-13-13

STATE OF NORTH CAROLINA
DEPARTMENT OF TRANSPORTATION
RALEIGH

GENERAL DRAWING FOR BRIDGE OVER BEAVER DAM CREEK ON US 74 BETWEEN SR 1161 AND SR 1315 (EBL)

REVISIONS						SHEET NO.
NO.	BY:	DATE:	NO.	BY:	DATE:	S-38
1			3			TOTAL SHEETS
2			4			104

DRAWN BY : D.A. DAVENPORT DATE : 01/27/12
CHECKED BY : G.W. DICKEY DATE : 05/25/12
DESIGN ENGINEER OF RECORD: G.W. DICKEY DATE : 10/16/12

13-JUN-2013 08:40
R:\Structures\Plans\Str4and5\Plans\R-2707AB_sd_GD_Str5.dgn
dadavenport

STR. 5

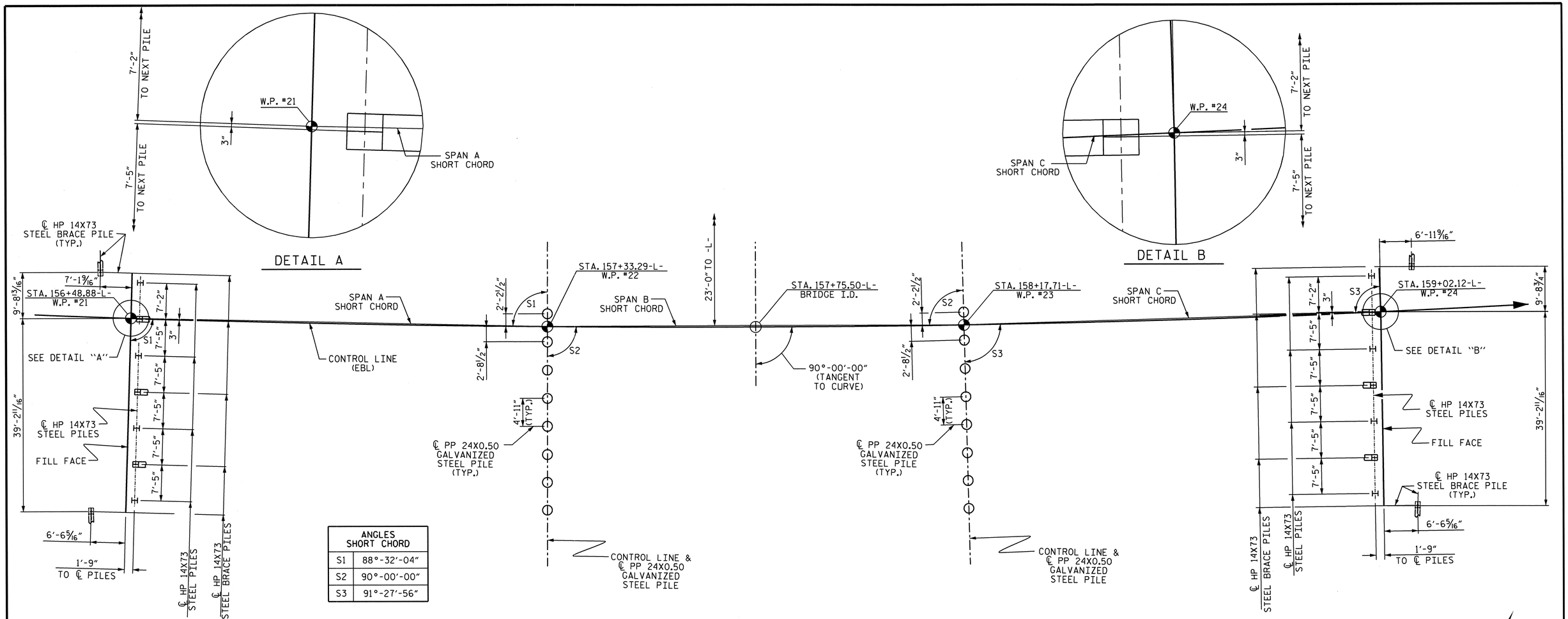

ANGLES SHORT CHORD	
S1	88°-32'-04"
S2	90°-00'-00"
S3	91°-27'-56"

FOUNDATION LAYOUT

BRACE PILES IN END BENTS ARE BATTERED 3:12.

FOR PILES, SEE SECTION 450 OF THE STANDARD SPECIFICATIONS.

PILES AT END BENT No. 1 ARE DESIGNED FOR A FACTORED RESISTANCE OF 120 TONS PER PILE.

DRIVE PILES AT END BENT No. 1 TO A REQUIRED DRIVING RESISTANCE OF 200 TONS PER PILE.

PILES AT BENT No. 1 ARE DESIGNED FOR A FACTORED RESISTANCE OF 210 TONS PER PILE.

DRIVE PILES AT BENT No. 1 TO A REQUIRED DRIVING RESISTANCE OF 367 TONS PER PILE.

INSTALL PILES AT BENT NO. 1 TO A TIP ELEVATION NO HIGHER THAN 733.00.

THE SCOUR CRITICAL ELEVATION FOR BENT NO. 1 ARE ELEVATION 751.0 FEET (LT.) AND 748.5 FEET (RT.). SCOUR CRITICAL ELEVATIONS ARE USED TO MONITOR POSSIBLE SCOUR PROBLEMS DURING THE LIFE OF THE STRUCTURE.

IT HAS BEEN ESTIMATED THAT A HAMMER WITH AN EQUIVALENT RATED ENERGY IN THE RANGE OF 80000 TO 85000 LB-FT PER BLOW WILL BE REQUIRED TO DRIVE PILES AT BENT NO. 1. THIS ESTIMATED ENERGY RANGE DOES NOT RELEASE THE CONTRACTOR FROM PROVIDING DRIVING EQUIPMENT IN ACCORDANCE WITH SUB ARTICLE 450-3(D)(2) OF THE STANDARD SPECIFICATIONS.

PILES AT BENT No. 2 ARE DESIGNED FOR A FACTORED RESISTANCE OF 210 TONS PER PILE.

PIPE PILES SHALL BE CLOSED END PILES WITH PIPE PILE PLATES.

DRIVE PILES AT BENT No. 2 TO A REQUIRED DRIVING RESISTANCE OF 367 TONS PER PILE.

INSTALL PILES AT BENT NO. 2 TO A TIP ELEVATION NO HIGHER THAN 733 FEET.

THE SCOUR CRITICAL ELEVATION FOR BENT NO. 2 ARE ELEVATION 752.0 FEET (LT.) AND 750.0 FEET (RT.). SCOUR CRITICAL ELEVATIONS ARE USED TO MONITOR POSSIBLE SCOUR PROBLEMS DURING THE LIFE OF THE STRUCTURE.

IT HAS BEEN ESTIMATED THAT A HAMMER WITH AN EQUIVALENT RATED ENERGY IN THE RANGE OF 80000 TO 85000 LB-FT PER BLOW WILL BE REQUIRED TO DRIVE PILES AT BENT NO. 2. THIS ESTIMATED ENERGY RANGE DOES NOT RELEASE THE CONTRACTOR FROM PROVIDING DRIVING EQUIPMENT IN ACCORDANCE WITH SUB ARTICLE 450-3(D)(2) OF THE STANDARD SPECIFICATIONS.

PILES AT END BENT No. 2 ARE DESIGNED FOR A FACTORED RESISTANCE OF 120 TONS PER PILE.

DRIVE PILES AT END BENT No. 2 TO A REQUIRED DRIVING RESISTANCE OF 200 TONS PER PILE.

TESTING PILES WITH THE PDA DURING DRIVING, RESTRIKING OR REDRIVING MAY BE REQUIRED. THE ENGINEER WILL DETERMINE THE NEED FOR PDA TESTING. FOR PDA TESTING, SEE SECTION 450 OF THE STANDARD SPECIFICATIONS.

FOR INTERIOR BENTS, ONLY PARTIAL GALVANIZING OF THE PIPE PILES IS REQUIRED. SEE INTERIOR BENT SHEETS FOR REQUIRED GALVANIZED LENGTHS. PAYMENT FOR PARTIALLY GALVANIZED PIPE PILES WILL BE MADE UNDER THE CONTRACT UNIT PRICE FOR GALVANIZED STEEL PIPE PILES.

NORTH CAROLINA PROFESSIONAL SEAL 10730 ENGINEER D. ANDRE DAVENPORT, JR.
10-17-12

DRAWN BY : D.A. DAVENPORT DATE : 01/30/12
CHECKED BY : G.W. DICKEY DATE : 05/25/12
DESIGN ENGINEER OF RECORD: G.W. DICKEY DATE : 10/16/12

17-OCT-2012 10:56
R:\Structures\Plans\Str4and5\Plans\R-2707AB_sd_GD_Str5.dgn
ddavenport

STR.#5

PROJECT NO. R-2707AB
CLEVELAND COUNTY
STATION: 157+75.50-L-

SHEET 2 OF 4

STATE OF NORTH CAROLINA
DEPARTMENT OF TRANSPORTATION
RALEIGH

GENERAL DRAWING FOR BRIDGE OVER BEAVER DAM CREEK ON US 74 BETWEEN SR 1161 AND SR 1315 (EBL)

REVISIONS						SHEET NO.
NO.	BY:	DATE:	NO.	BY:	DATE:	S-39
1			3			TOTAL SHEETS
2			4			104

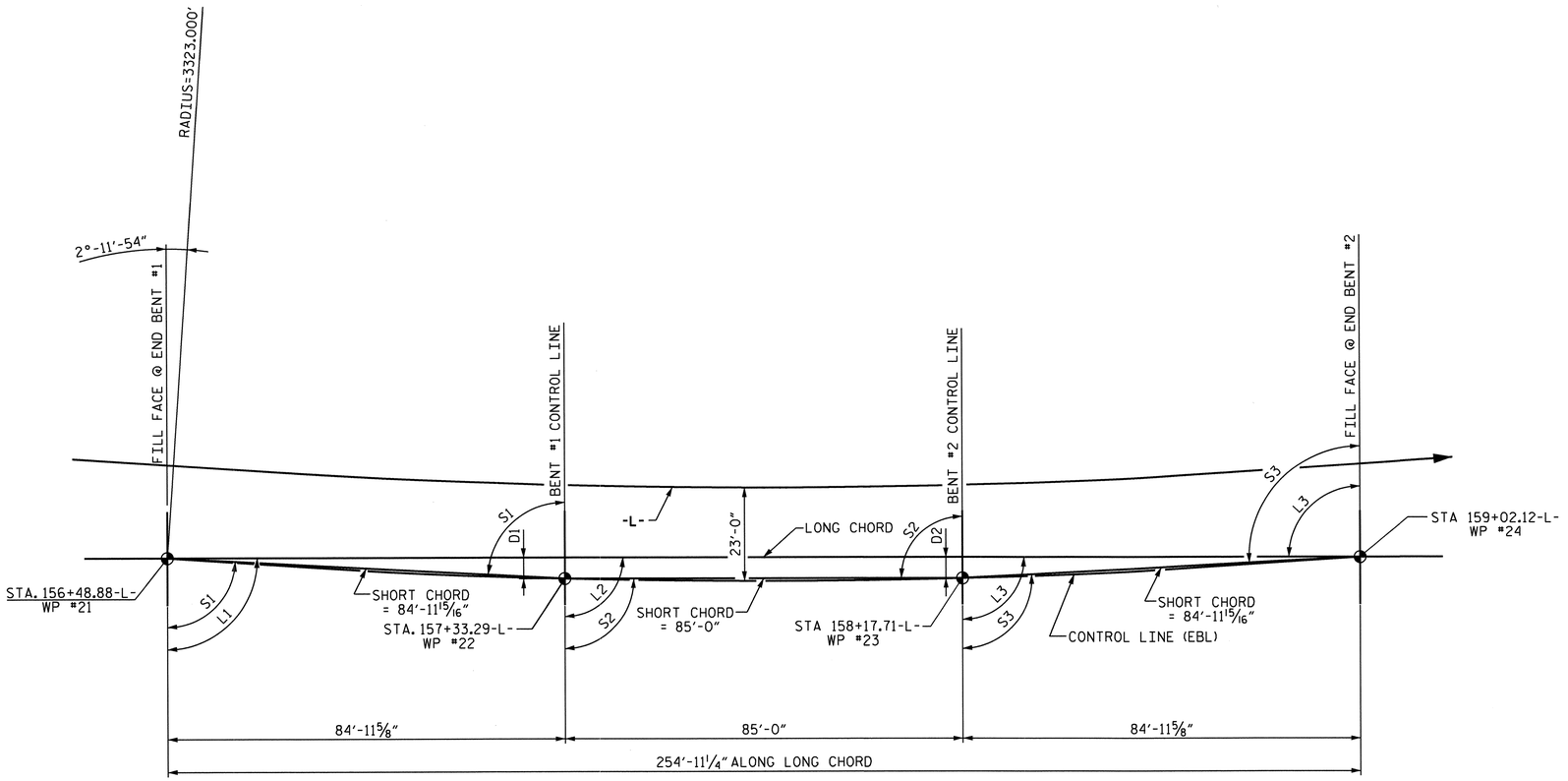

OFFSETS

D1=2'-2 1/16"

D2=2'-2 1/16"

HORIZONTAL CURVE DATA -L-

P.I. = 158+11.64

DELTA = 23°-10'-04.9" LT.

T = 676.430 FT.

L = 1334.380 FT.

R = 3300.000 FT.

D = 1°-44'-10.4"

ANGLES			
	LONG CHORD		SHORT CHORD
L1	90°-00'-00"	S1	88°-32'-04"
L2	90°-00'-00"	S2	90°-00'-00"
L3	90°-00'-00"	S3	91°-27'-56"

LONG CHORD

PROJECT NO. R-2707AB

CLEVELAND COUNTY

STATION: 157+75.50 -L-

SHEET 3 OF 4

STATE OF NORTH CAROLINA
DEPARTMENT OF TRANSPORTATION
RALEIGH

GENERAL DRAWING FOR BRIDGE OVER BEAVER DAM CREEK ON US 74 BETWEEN SR 1161 AND SR 1315 (EBL)

NORTH CAROLINA PROFESSIONAL SEAL 10730 ENGINEER D. ANDRE DAVENPORT, JR.

6-13-13

REVISIONS						SHEET NO.
NO.	BY:	DATE:	NO.	BY:	DATE:	S-40
1			3			TOTAL SHEETS
2			4			104

DRAWN BY : D.A. DAVENPORT DATE : 01/30/12

CHECKED BY : G.W. DICKEY DATE : 05/25/12

DESIGN ENGINEER OF RECORD: G.W. DICKEY DATE : 10/16/12

13-JUN-2013 07:51
R:\Structures\Plans\Str4and5\Plans\R-2707AB_sd_GD_Str5.dgn
dadavenport

STR.#5

NCDOT

BENCH MARK 66: 18"REBAR WITH CAP STA. 119+55.20-BL-, EL. 769.848

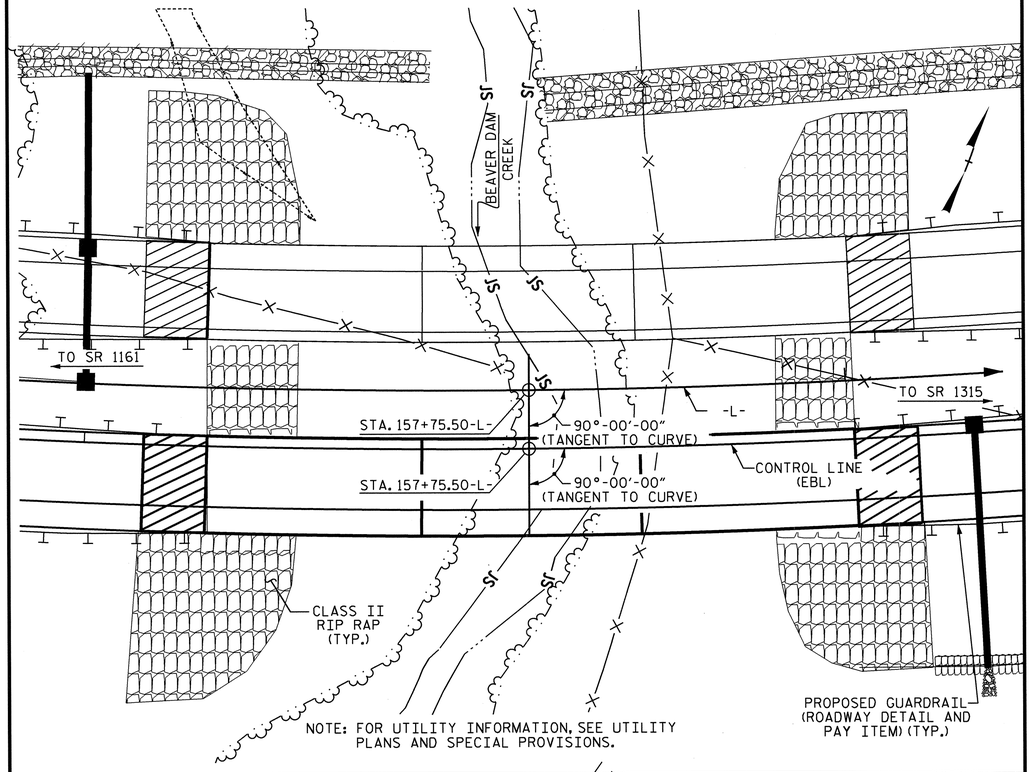

LOCATION SKETCH

HYDRAULIC DATA

DESIGN DISCHARGE ——— = 1760 CFS.
FREQUENCY OF DESIGN FLOOD ——— = 50 YR.
DESIGN HIGH WATER ELEVATION ——— = 771.52
DRAINAGE AREA ——— = 4.1 SQ. MI.
BASIC DISCHARGE (Q100) ——— = 2150 CFS.
BASIC HIGH WATER ELEVATION ——— = 772.70

OVERTOPPING FLOOD DATA

OVERTOPPING DISCHARGE ——— = 100000+ CFS.
FREQUENCY OF OVERTOPPING FLOOD ——— = 500 YR. +
OVERTOPPING FLOOD ELEVATION ——— = 797.75

TOTAL BILL OF MATERIAL

	PDA TESTING	REINFORCED CONCRETE DECK SLAB	GROOVING BRIDGE FLOORS	CLASS A CONCRETE	BRIDGE APPROACH SLABS	REINFORCING STEEL	54" PRESTRESSED CONCRETE GIRDERS		HP 14X73 STEEL PILES		PP 24X0.50 GALVANIZED STEEL PILES		PIPE PILE PLATES	PILE REDRIVES	CONCRETE BARRIER RAIL	CLASS II RIP RAP (2'-0" THICK)	GEOTEXTILE FOR DRAINAGE	ELASTOMERIC BEARINGS	FOAM JOINT SEALS
	EACH	SQ. FT.	SQ. FT.	CU. YDS.	LUMP SUM	LBS.	NO.	LIN. FT.	NO.	LIN. FT.	NO.	LIN. FT.	EACH	EACH	LIN. FT.	TONS	SQ. YDS.	LUMP SUM	LUMP SUM
SUPERSTRUCTURE		10433	10474				15	1252.08							505.67			LUMP SUM	LUMP SUM
END BENT 1				33.3		4819			9	585				7		565	630		
BENT 1				18.4		3090					8	460	8	8					
BENT 2				18.4		3090					8	460	8	8					
END BENT 2				33.0		4787			9	585				7		380	420		
TOTAL	1	10433	10474	103.1	LUMP SUM	15786	15	1252.08	18	1170	16	920	16	30	505.67	945	1050	LUMP SUM	LUMP SUM

NOTES

ASSUMED LIVE LOAD = HL 93 OR ALTERNATE LOADING.

FOR OTHER DESIGN DATA AND GENERAL NOTES, SEE SHEET SN.

THIS BRIDGE HAS BEEN DESIGNED IN ACCORDANCE WITH THE REQUIREMENTS OF THE AASHTO LRFD BRIDGE DESIGN SPECIFICATIONS.

FOR EROSION CONTROL MEASURES SEE EROSION CONTROL PLANS.

REMOVABLE FORMS MAY BE USED IN LIEU OF METAL STAY-IN-PLACE FORMS IN ACCORDANCE WITH ARTICLE 420-3 OF THE STANDARD SPECIFICATIONS.

THE CLASS AA CONCRETE IN THE BRIDGE DECK SHALL CONTAIN FLY ASH OR GROUND GRANULATED BLAST FURNACE SLAG AT THE SUBSTITUTION RATE SPECIFIED IN ARTICLE 1024-1 AND IN ACCORDANCE WITH ARTICLES 1024-5 AND 1024-6 OF THE STANDARD SPECIFICATIONS. NO PAYMENT WILL BE MADE FOR THIS SUBSTITUTION AS IT IS CONSIDERED INCIDENTAL TO THE COST OF THE REINFORCED CONCRETE DECK SLAB.

OBSERVE A 3 MONTH WAITING PERIOD AFTER CONSTRUCTION THE EMBANKMENT TO FINISHED GRADE BEFORE BEGINNING END BENT CONSTRUCTION AT END BENT NOS. 1 AND 2. THE WAITING PERIODS MAY BE REDUCED BY THE ENGINEER AFTER THE REVIEW AND ACCEPTANCE OF SETTLEMENT DATA THAT HAS BEEN OBTAINED BY EMBANKMENT MONITORING USING SURVEY HUBS. INSTALLATION AND MONITORING WILL BE THE RESPONSIBILITY OF THE CONTRACTOR AND WILL BE CONSIDERED INCIDENTAL TO THE PROJECT.

THIS STRUCTURE HAS BEEN DESIGNED IN ACCORDANCE WITH HEC 18, "EVALUATING SCOUR AT BRIDGES", MAY, 2001.

THIS BRIDGE IS LOCATED IN SEISMIC ZONE 1.

THE CONTRACTOR SHALL PROVIDE INDEPENDENT ASSURANCE SAMPLES OF REINFORCING STEEL AS FOLLOWS: FOR PROJECTS REQUIRING UP TO 400 TONS OF REINFORCING STEEL, ONE 30 INCH SAMPLE OF EACH SIZE BAR USED, AND FOR PROJECTS REQUIRING OVER 400 TONS OF REINFORCING STEEL, TWO 30 INCH SAMPLES OF EACH SIZE BAR USED. THE BARS FROM WHICH THE SAMPLES ARE TAKEN MUST THEN BE SPLICED WITH REPLACEMENT BARS OF THE SIZE AND LENGTH OF THE SAMPLE, PLUS A MINIMUM LAP SPLICE OF THIRTY BAR DIAMETERS. PAYMENT FOR THE SAMPLES OF REINFORCING STEEL SHALL BE CONSIDERED INCIDENTAL TO VARIOUS PAY ITEMS.

NEEDLE BEAMS WILL NOT BE ALLOWED UNLESS OTHERWISE CALLED FOR ON THE PLANS OR APPROVED BY THE ENGINEER.

FOR SUBMITTAL OF WORKING DRAWINGS, SEE SPECIAL PROVISIONS.

FOR FALSEWORK AND FORMWORK, SEE SPECIAL PROVISIONS.

FOR CRANE SAFETY, SEE SPECIAL PROVISIONS.

FOR GROUT FOR STRUCTURES, SEE SPECIAL PROVISIONS.

FOR PLACING LOADS ON STRUCTURES, SEE SPECIAL PROVISIONS.

NORTH CAROLINA PROFESSIONAL SEAL 10730 ENGINEER D. ANDREW DAVENPORT, JR.
6-13-13

PROJECT NO. R-2707AB
CLEVELAND COUNTY
STATION: 157+75.50-L-

SHEET 4 OF 4

STATE OF NORTH CAROLINA
DEPARTMENT OF TRANSPORTATION
RALEIGH

GENERAL DRAWING FOR BRIDGE OVER BEAVER DAM CREEK ON US 74 BETWEEN SR 1161 AND SR 1315 (EBL)

REVISIONS						SHEET NO.
NO.	BY:	DATE:	NO.	BY:	DATE:	S-41
1			3			TOTAL SHEETS
2			4			104

STR. #5

DRAWN BY : D.A. DAVENPORT DATE : 01/30/12
CHECKED BY : G.W. DICKEY DATE : 05/25/12
DESIGN ENGINEER OF RECORD: G.W. DICKEY DATE : 10/16/12

13-JUN-2013 07:52
R:\Structures\Plans\Str4and5\Plans\R-2707AB_sd_GD_Str5.dgn
dadavenport

LOAD AND RESISTANCE FACTOR RATING (LRFD) SUMMARY FOR PRESTRESSED CONCRETE GIRDERS

LEVEL		VEHICLE	WEIGHT (W) (TONS)	CONTROLLING LOAD RATING (#)	MINIMUM RATING FACTORS (RF)	TONS = W X RF	STRENGTH I LIMIT STATE											SERVICE III LIMIT STATE						COMMENT NUMBER
								MOMENT					SHEAR						MOMENT						
							LIVELOAD FACTORS	DISTRIBUTION FACTORS (DF)	RATING FACTOR	SPAN	GIRDER LOCATION	DISTANCE FROM LEFT END OF SPAN (ft)	DISTRIBUTION FACTORS (DF)	RATING FACTOR	SPAN	GIRDER LOCATION	DISTANCE FROM LEFT END OF SPAN (ft)	LIVELOAD FACTORS	DISTRIBUTION FACTORS (DF)	RATING FACTOR	SPAN	GIRDER LOCATION	DISTANCE FROM LEFT END OF SPAN (ft)	
DESIGN LOAD RATING		HL-93(Inv)	N/A	(1)	1.12	--	1.75	0.776	1.52	B	ER	41.374	0.778	2.14	B	ER	33.099	0.80	0.776	1.12	B	ER	41.374	
		HL-93(Opr)	N/A	--	1.97	--	1.35	0.776	1.97	B	ER	41.374	0.778	2.78	B	ER	33.099	N/A	--	--	--	--	--	
		HS-20(Inv)	36.000	(2)	1.50	54.044	1.75	0.776	2.04	B	ER	41.374	0.778	2.6	B	ER	33.099	0.80	0.776	1.50	B	ER	41.374	
		HS-20(Opr)	36.000	--	2.65	95.256	1.35	0.776	2.65	B	ER	41.374	0.778	3.37	B	ER	33.099	N/A	--	--	--	--	--	
LEGAL LOAD RATING	SV	SNSH	13.500	--	3.47	46.818	1.4	0.776	5.89	B	ER	41.374	0.778	7.42	B	ER	33.099	0.80	0.776	3.47	B	ER	41.374	
		SNGARBS2	20.000	--	2.55	51.003	1.4	0.776	4.33	B	ER	41.374	0.778	5.37	B	ER	33.099	0.80	0.776	2.55	B	ER	41.374	
		SNAGRIS2	22.000	--	2.40	52.821	1.4	0.776	4.08	B	ER	41.374	0.778	5.02	B	ER	33.099	0.80	0.776	2.40	B	ER	41.374	
		SNCOTTS3	27.250	--	1.72	47	1.4	0.776	2.93	B	ER	41.374	0.778	3.71	B	ER	33.099	0.80	0.776	1.72	B	ER	41.374	
		SNAGGRS4	34.925	--	1.43	49.88	1.4	0.776	2.43	B	ER	41.374	0.778	3.15	B	ER	33.099	0.80	0.776	1.43	B	ER	41.374	
		SNS5A	35.550	--	1.40	49.682	1.4	0.776	2.38	B	ER	41.374	0.778	3.23	B	ER	33.099	0.80	0.776	1.40	B	ER	41.374	
		SNS6A	39.950	--	1.28	51.008	1.4	0.776	2.17	B	ER	41.374	0.778	2.97	B	ER	33.099	0.80	0.776	1.28	B	ER	41.374	
		SNS7B	42.000	--	1.22	51.06	1.4	0.776	2.07	B	ER	41.374	0.778	2.96	B	ER	33.099	0.80	0.776	1.22	B	ER	41.374	
	TTST	TNAGRIT3	33.000	--	1.56	51.328	1.4	0.776	2.64	B	ER	41.374	0.778	3.51	B	ER	33.099	0.80	0.776	1.56	B	ER	41.374	
		TNT4A	33.075	--	1.56	51.622	1.4	0.776	2.65	B	ER	41.374	0.778	3.39	B	ER	33.099	0.80	0.776	1.56	B	ER	41.374	
		TNT6A	41.600	--	1.27	52.873	1.4	0.776	2.16	B	ER	41.374	0.778	3.22	B	ER	33.099	0.80	0.776	1.27	B	ER	41.374	
		TNT7A	42.000	--	1.27	53.533	1.4	0.776	2.17	B	ER	41.374	0.778	3.15	B	ER	33.099	0.80	0.776	1.27	B	ER	41.374	
		TNT7B	42.000	--	1.31	55.099	1.4	0.776	2.23	B	ER	41.374	0.778	2.86	B	ER	33.099	0.80	0.776	1.31	B	ER	41.374	
		TNAGRIT4	43.000	--	1.25	53.878	1.4	0.776	2.13	B	ER	41.374	0.778	2.76	B	ER	33.099	0.80	0.776	1.25	B	ER	41.374	
		TNAGT5A	45.000	--	1.18	53.269	1.4	0.776	2.01	B	ER	41.374	0.778	2.79	B	ER	33.099	0.80	0.776	1.18	B	ER	41.374	
		TNAGT5B	45.000	(3)	1.17	52.719	1.4	0.776	1.99	B	ER	41.374	0.778	2.62	B	ER	33.099	0.80	0.776	1.17	B	ER	41.374	

LOAD FACTORS:

DESIGN LOAD RATING FACTORS	LIMIT STATE	γ_{DC}	γ_{DW}
	STRENGTH I	1.25	1.50
	SERVICE III	1.00	1.00

NOTES:

MINIMUM RATING FACTORS ARE BASED ON THE STRENGTH I AND SERVICE III LIMIT STATES.

ALLOWABLE STRESSES FOR SERVICE III LIMIT STATE ARE AS REQUIRED FOR DESIGN.

COMMENTS:

1.
2.
3.
4.

(#) CONTROLLING LOAD RATING

(1) DESIGN LOAD RATING (HL-93)

(2) DESIGN LOAD RATING (HS-20)

(3) LEGAL LOAD RATING **

** SEE CHART FOR VEHICLE TYPE

GIRDER LOCATION

I - INTERIOR GIRDER
EL - EXTERIOR LEFT GIRDER
ER - EXTERIOR RIGHT GIRDER

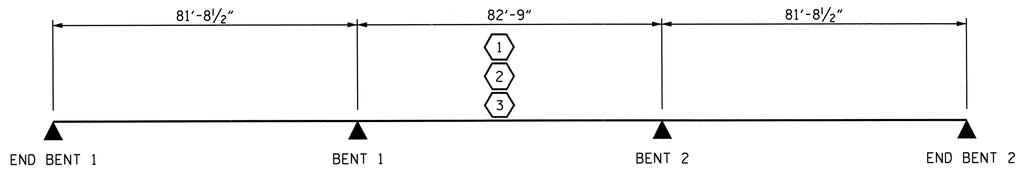

LRFR SUMMARY

PROJECT NO. R-2707AB
CLEVELAND COUNTY
STATION: 157+75.50-L-

STATE OF NORTH CAROLINA
DEPARTMENT OF TRANSPORTATION
RALEIGH

STANDARD

LRFR SUMMARY FOR PRESTRESSED CONCRETE GIRDERS
(NON-INTERSTATE TRAFFIC)
(EBL)

REVISIONS						SHEET NO.
NO.	BY:	DATE:	NO.	BY:	DATE:	S-42
1			3			TOTAL SHEETS
2			4			104

NORTH CAROLINA PROFESSIONAL SEAL 10730 ENGINEER D. ANDREW DAVENPORT JR.
6-17-14

ASSEMBLED BY : D.A. DAVENPORT	DATE : 01/26/12	
CHECKED BY : G.W. DICKEY	DATE : 05/22/12	
DESIGN ENGINEER OF RECORD: G.W. DICKEY	DATE : 10/16/12	
DRAWN BY : MAA 1/08	REV. 11/12/08R MAA/GM	
CHECKED BY : GM/DI 2/08		

17-OCT-2012 10:56
R:\Structures\Plans\Str4and5\Plans\R-2707AB_sd_GD_Str5.dgn
adavenport

STR.#5

STD. NO. LRFR1

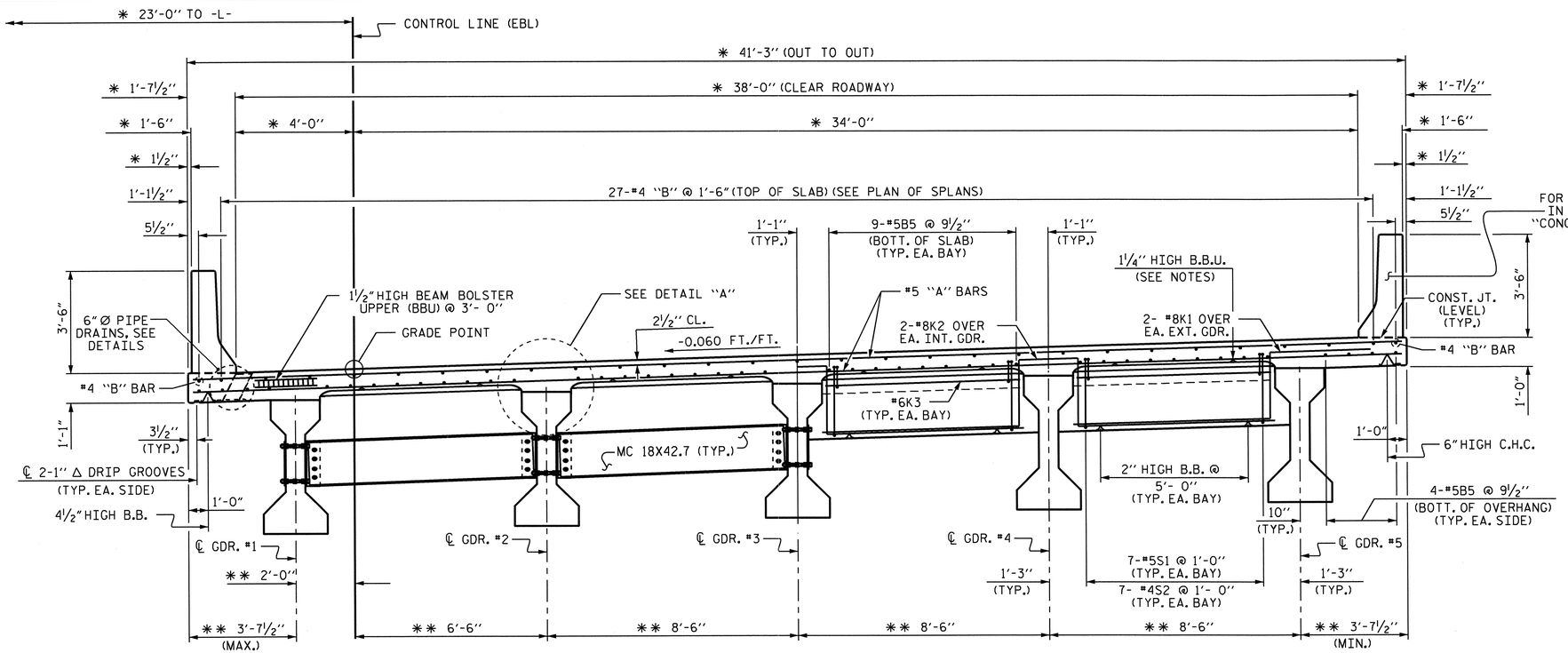

HALF TYPICAL SECTION AT INTERMEDIATE DIAPHRAGM

HALF TYPICAL SECTION AT END BENT DIAPHRAGM

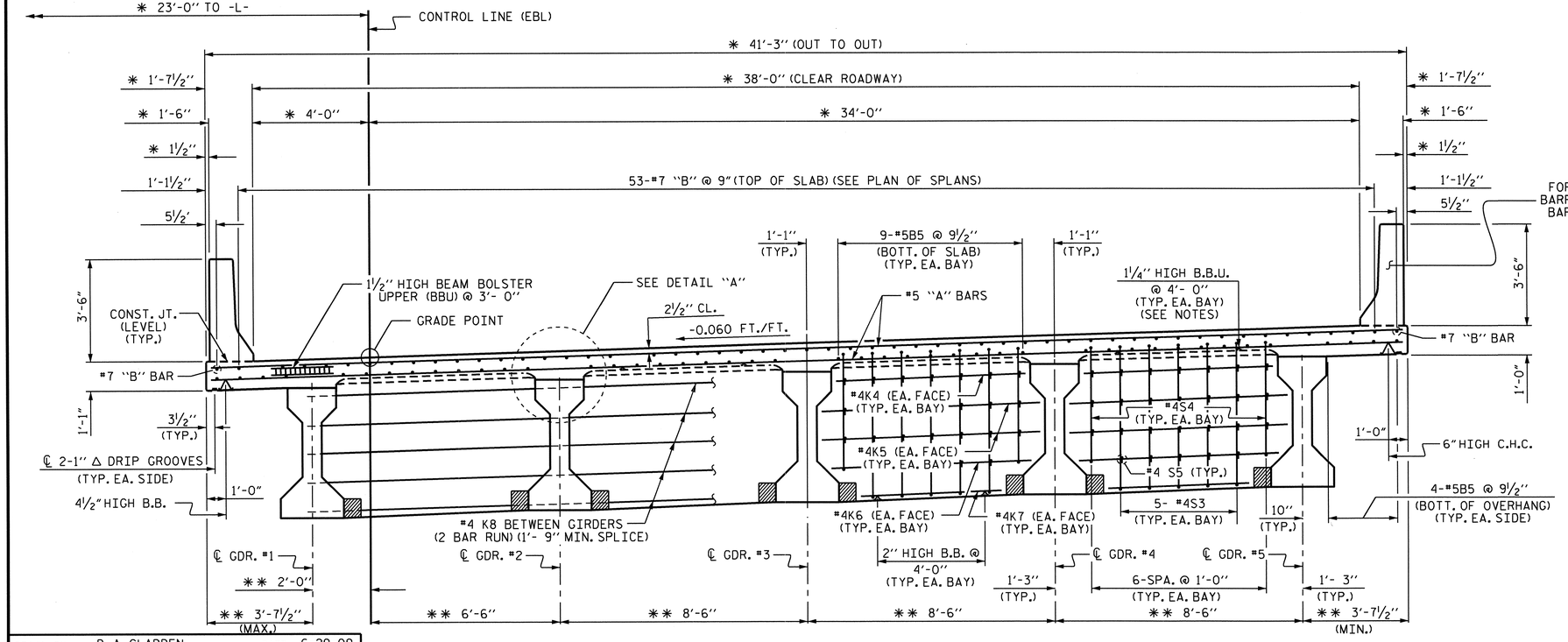

TYPICAL SECTION AT BENT DIAPHRAGM

NOTES

PROVIDE 1 1/4" HIGH BEAM BOLSTERS UPPER AT 4'-0" CTS. ATOP THE METAL STAY-IN-PLACE FORMS TO SUPPORT THE BOTTOM MAT OF 'A' BARS. WHEN USING REMOVABLE FORMS, PROVIDE CONTINUOUS HIGH CHAIRS FOR METAL DECK (C.H.C.M.) @ 4'-0" CTS. WITH A HEIGHT TO SUPPORT THE BOTTOM MAT OF 'A' BARS A CLEAR DISTANCE OF 2½" ABOVE THE TOP OF THE REMOVABLE FORM.

LONGITUDINAL STEEL MAY BE SHIFTED SLIGHTLY, AS NECESSARY, TO AVOID INTERFERENCE WITH STIRRUPS IN PRESTRESSED CONCRETE GIRDERS.

PREVIOUSLY CAST CONCRETE IN A CONTINUOUS UNIT SHALL HAVE ATTAINED A MINIMUM COMPRESSIVE STRENGTH OF 3,000 PSI BEFORE ADDITIONAL CONCRETE IS CAST IN THE UNIT.

BARRIER RAIL IN A CONTINUOUS UNIT SHALL NOT BE CAST UNTIL ALL SLAB CONCRETE IN THE UNIT HAS BEEN CAST AND HAS REACHED A MINIMUM COMPRESSIVE STRENGTH OF 3,000 PSI.

* RADIAL DIMENSIONS.

** RADIAL DIMENSIONS THROUGH WORKPOINT.

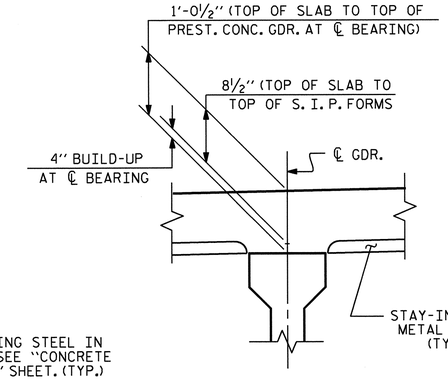

DETAIL "A"

PROJECT NO. R-2707AB

CLEVELAND COUNTY

STATION: 157+75.50 -L-

SHEET 1 OF 2

STATE OF NORTH CAROLINA
DEPARTMENT OF TRANSPORTATION
RALEIGH

SUPERSTRUCTURE TYPICAL SECTION (EBL)

REVISIONS						SHEET NO.
NO.	BY:	DATE:	NO.	BY:	DATE:	S-43
1			3			TOTAL SHEETS
2			4			104

DRAWN BY : D. A. GLADDEN DATE : 6-29-09
CHECKED BY : M. G. SHAIKH DATE : 10-20-09
DESIGN ENGINEER OF RECORD: G.W. DICKEY DATE : 10/16/12

NORTH CAROLINA PROFESSIONAL SEAL 10730 ENGINEER DAVID A. DAVENPORT, JR.
10-17-12

17-OCT-2012 11:02
R:\Structures\Plans\Str4and5\Plans\R-2707AB_sd_TS_Str5.dgn
adavenport

STR. #5

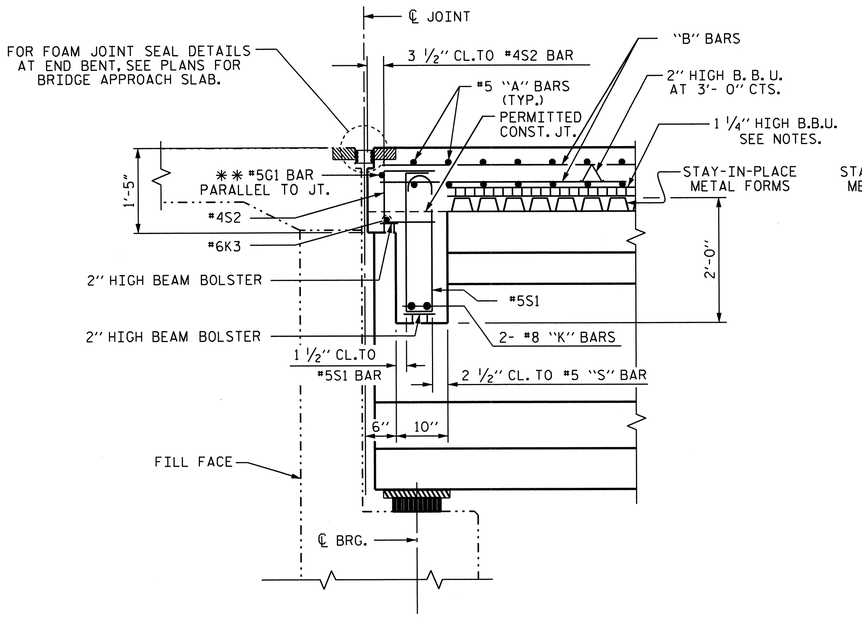

SECTION AT END BENT DIAPHRAGM

** #5 "G" BAR MAY BE SHIFTED SLIGHTLY, AS NECESSARY TO CLEAR REINFORCING STEEL AND STIRRUPS.

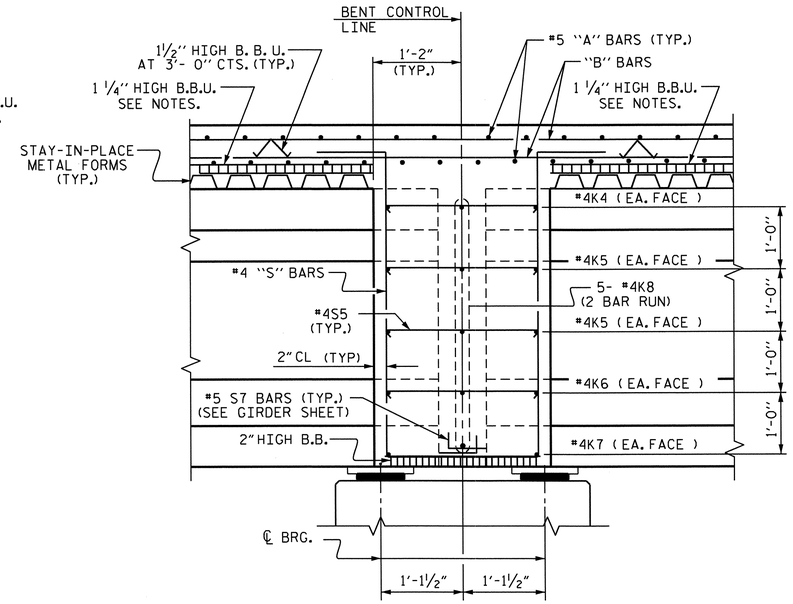

SECTION AT BENT DIAPHRAGM

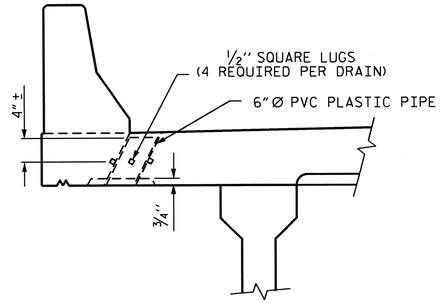

ELEVATION

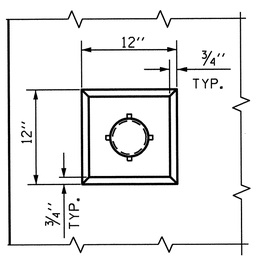

PLAN OF RECESS

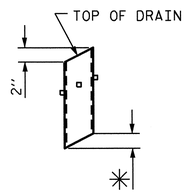

✳ TO BE SET TO MATCH SLOPE OF BOTTOM OF OVERHANG (14 DRAINS REQUIRED)

PIPE DETAIL

TOP OF FLOOR DRAINS TO BE SET ⅜" BELOW SURFACE OF SLAB.

4 - ½" SQUARE LUGS TO BE GLUED TO THE P.V.C. PLASTIC PIPE AT EQUAL SPACES AROUND THE PIPE DRAIN APPROXIMATELY 4" FROM THE TOP OF THE PIPE.

THE 6" Ø PVC PLASTIC PIPE AND FITTINGS SHALL BE SCHEDULE 40 AND CONFORM TO ASTM D1785.

DRAIN DETAILS

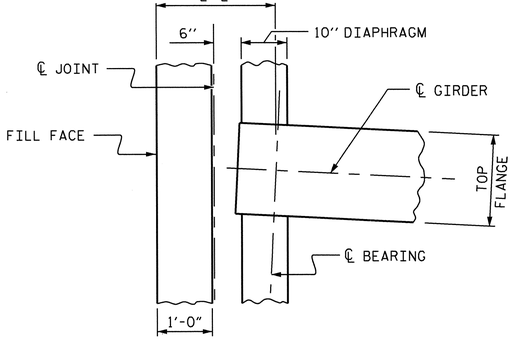

PLAN AT END BENT DIAPHRAGM

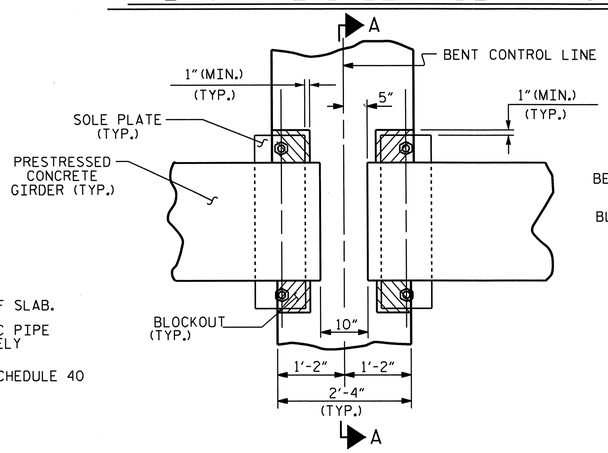

PLAN

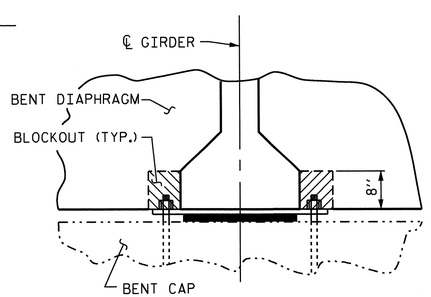

SECTION A-A

BENT DIAPHRAGM BLOCKOUT DETAIL

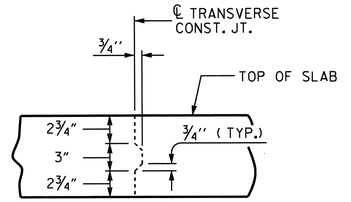

TRANSVERSE CONSTRUCTION JOINT DETAIL

NOTE: REINFORCING STEEL IN SLAB NOT SHOWN. LONGITUDINAL REINFORCING STEEL SHALL BE CONTINUOUS THRU JOINT

PROJECT NO. R-2707AB

CLEVELAND COUNTY

STATION: 157+75.50 -L-

SHEET 2 OF 2

STATE OF NORTH CAROLINA
DEPARTMENT OF TRANSPORTATION
RALEIGH

SUPERSTRUCTURE TYPICAL SECTION (EBL)

REVISIONS						SHEET NO.
NO.	BY:	DATE:	NO.	BY:	DATE:	S-44
1			3			TOTAL SHEETS
2			4			104

NORTH CAROLINA PROFESSIONAL SEAL 10730 ENGINEER D. ANDREW DAVENPORT, JR.
10-17-12

DRAWN BY : D. A. GLADDEN DATE : 6-29-09
CHECKED BY : M. G. SHAIKH DATE : 10-20-09
DESIGN ENGINEER OF RECORD: G.W. DICKEY DATE : 10/16/12

17-OCT-2012 11:03
R:\Structures\Plans\Str4and5\Plans\R-2707AB_sd_TS_Str5.dgn
adavenport

STR. #5

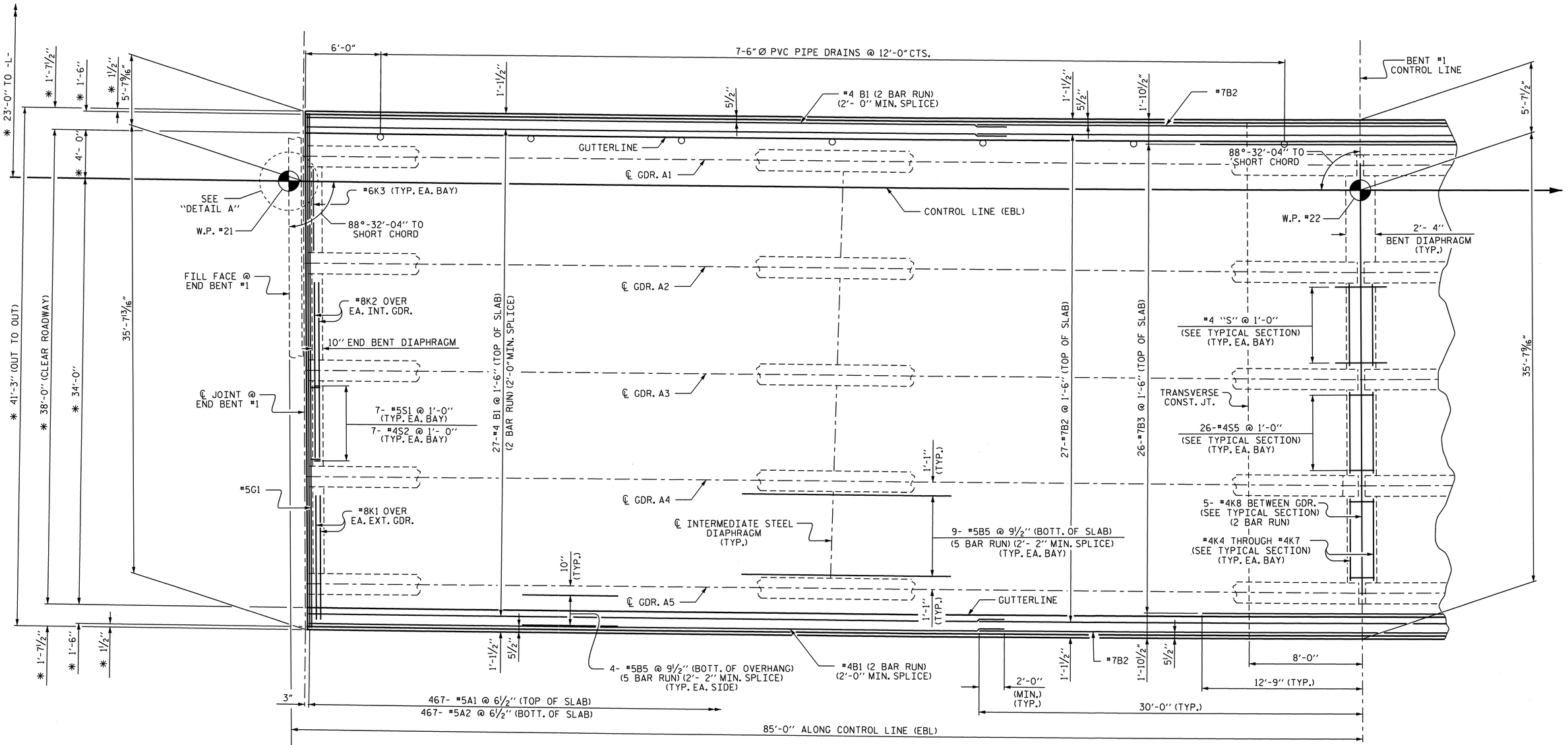

PLAN OF SPAN A

* RADIAL DIMENSION

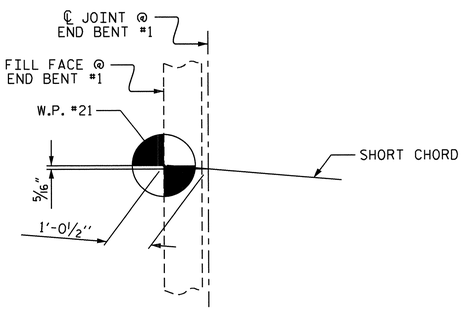

DETAIL A

PROJECT NO. R-2707AB

CLEVELAND COUNTY

STATION: 157+75.50 -L-

SHEET 1 OF 6

STATE OF NORTH CAROLINA
DEPARTMENT OF TRANSPORTATION
RALEIGH

SUPERSTRUCTURE
PLAN OF SPAN A
(EBL)

REVISIONS						SHEET NO.
NO.	BY:	DATE:	NO.	BY:	DATE:	S-45
1			3			TOTAL SHEETS
2			4			S-45

NORTH CAROLINA PROFESSIONAL SEAL 10730 ENGINEER D. ANDREW DAVENPORT, JR.
10-17-12

DRAWN BY : D. A. GLADDEN DATE : 7-6-09
CHECKED BY : M. G. SHAIKH DATE : 10-20-09
DESIGN ENGINEER OF RECORD: G.W. DICKEY DATE : 10/16/12

17-OCT-2012 11:03
R:\Structures\Plans\Str4and5\Plans\R-2707AB_sd_TS_Str5.dgn
adavenport

STR. #5

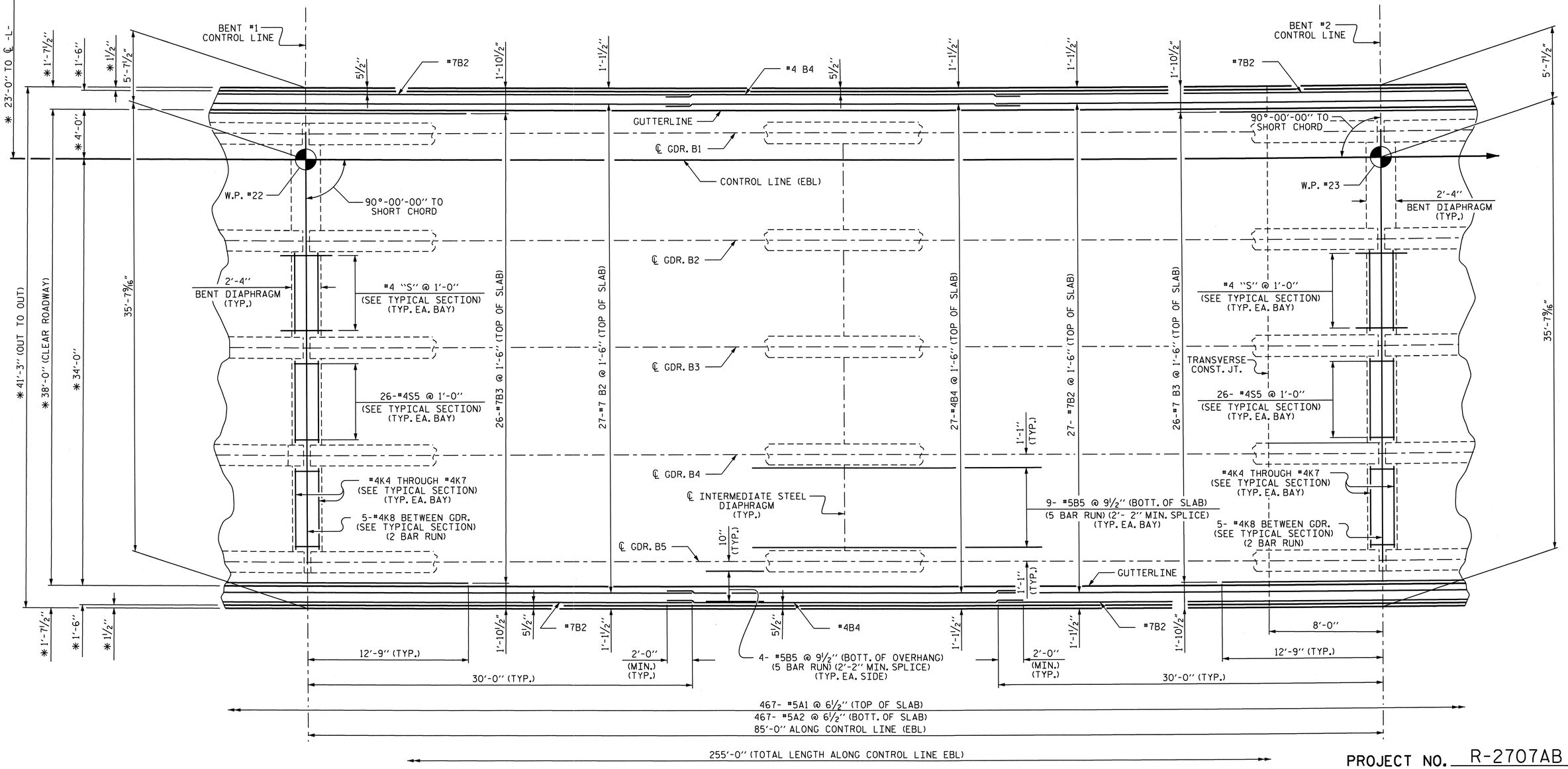

PLAN OF SPAN B

* RADIAL DIMENSION

PROJECT NO. R-2707AB

CLEVELAND COUNTY

STATION: 157+75.50 -L-

SHEET 2 OF 6

STATE OF NORTH CAROLINA
DEPARTMENT OF TRANSPORTATION
RALEIGH

SUPERSTRUCTURE PLAN OF SPAN B (EBL)

REVISIONS						SHEET NO.
NO.	BY:	DATE:	NO.	BY:	DATE:	S-46
1			3			TOTAL SHEETS
2			4			104

DRAWN BY : D. A. GLADDEN DATE : 7-6-09
CHECKED BY : M. G. SHAIKH DATE : 10-20-09
DESIGN ENGINEER OF RECORD: G.W. DICKEY DATE : 10/16/12

NORTH CAROLINA PROFESSIONAL SEAL 10730 ENGINEER D. ANDRE DAVENPORT
10-17-12

17-OCT-2012 11:04
R:\Structures\Plans\Str4and5\Plans\R-2707AB_sd_TS_Str5.dgn
ddavenport

STR. #5

BENT #2 CONTROL LINE

7-6" Ø PVC PIPE DRAINS @ 12'-0" CTS.

6'-0"

5'-7½"

5½"

#7B2

1'-10½"

1'-1½"

#4B1 (2 BAR RUN) (2'-0" MIN. SPLICE)

1'-1½"

5'-7⅞"

*1½"

*1'-6"

*1'-7½"

*23'-0" TO -L-

GUTTERLINE

℄ GDR. C1

91°-27'-56" TO SHORT CHORD

*4'-0"

W.P. #23

CONTROL LINE (EBL)

W.P. #24

SEE "DETAIL A"

*6K3 (TYP. EA. BAY)

℄ GDR. C2

2'-4" BENT DIAPHRAGM (TYP.)

#4 "S" @ 1'-0" (SEE TYPICAL SECTION) (TYP. EA. BAY)

26-#7B3 @ 1'-6" (TOP OF SLAB)

27-#7B2 @ 1'-6" (TOP OF SLAB)

*8K2 OVER EA. INT. GDR.

FILL FACE @ END BENT #2

10" END BENT DIAPHRAGM

℄ GDR. C3

35'-7⅞"

26- #4S5 @ 1'-0" (SEE TYPICAL SECTION) (TYP. EA. BAY)

27- #4B1 @ 1'-6" (TOP OF SLAB) (2 BAR RUN) (2'-0" MIN. SPLICE)

7- #5S1 @ 1'-0" (TYP. EA. BAY)

7- #4S2 @ 1'-0" (TYP. EA. BAY)

℄ JOINT @ END BENT #2

*34'-0"

*38'-0" (CLEAR ROADWAY)

*41'-3" (OUT TO OUT)

1'-1" (TYP.)

℄ GDR. C4

*5G1

5- #4K8 BETWEEN GDR. (SEE TYPICAL SECTION) (2 BAR RUN)

#4K4 THROUGH #4K7 (SEE TYPICAL SECTION) (TYP. EA. BAY)

9- #5B5 @ 9½" (BOTT. OF SLAB) (5 BAR RUN) (2'- 2" MIN. SPLICE) (TYP. EA. BAY)

℄ INTERMEDIATE STEEL DIAPHRAGM (TYP.)

*8K1 OVER EA. EXT. GDR.

10" (TYP.)

℄ GDR. C5

GUTTERLINE

1'-1" (TYP.)

*1½"

*1'-6"

*1'-7½"

1'-10½"

5½" (TYP.)

1'-1½"

*#7 B2

12'-9" (TYP.)

2'-0" (MIN.) (TYP.)

30'-0" (TYP.)

*4B1 (2 BAR RUN) (2'- 0" MIN. SPLICE)

5½" (TYP.)

4- #5B5 @ 9½" (BOTT. OF OVERHANG) (5 BAR RUN) (2'-2" MIN. SPLICE) (TYP. EA. SIDE)

1'-1½"

467- #5A2 @ 6½" (BOTT. OF SLAB)

467- #5A1 @ 6½" (TOP OF SLAB)

3"

85'-0" ALONG CONTROL LINE (EBL)

255'-0" (TOTAL LENGTH ALONG CONTROL LINE EBL)

PLAN OF SPAN C

* RADIAL DIMENSION

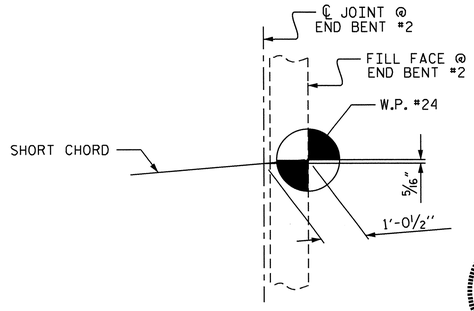

DETAIL A

NORTH CAROLINA PROFESSIONAL SEAL 10730 ENGINEER D. ANDREW DAVENPORT, JR.
10-17-12

PROJECT NO. R-2707AB

CLEVELAND COUNTY

STATION: 157+75.50 -L-

SHEET 3 OF 6

STATE OF NORTH CAROLINA
DEPARTMENT OF TRANSPORTATION
RALEIGH

SUPERSTRUCTURE
PLAN OF SPAN C
(EBL)

REVISIONS						SHEET NO.
NO.	BY:	DATE:	NO.	BY:	DATE:	S-47
1			3			TOTAL SHEETS
2			4			104

DRAWN BY : D. A. GLADDEN DATE : 7-6-09
CHECKED BY : M. G. SHAIKH DATE : 10-20-09
DESIGN ENGINEER OF RECORD: G.W. DICKEY DATE : 10/16/12

17-OCT-2012 11:04
R:\Structures\Plans\Str4and5\Plans\R-2707AB_sd_TS_Str5.dgn
adavenport

STR. #5

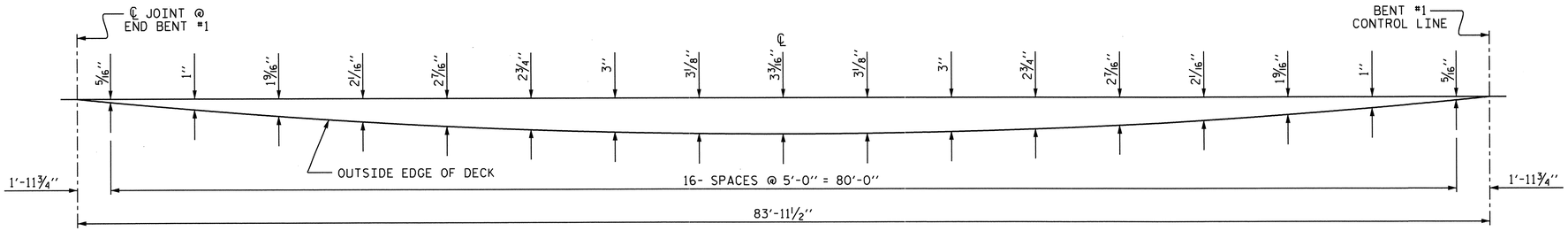

SPAN A ARC OFFSETS (LEFT SIDE)

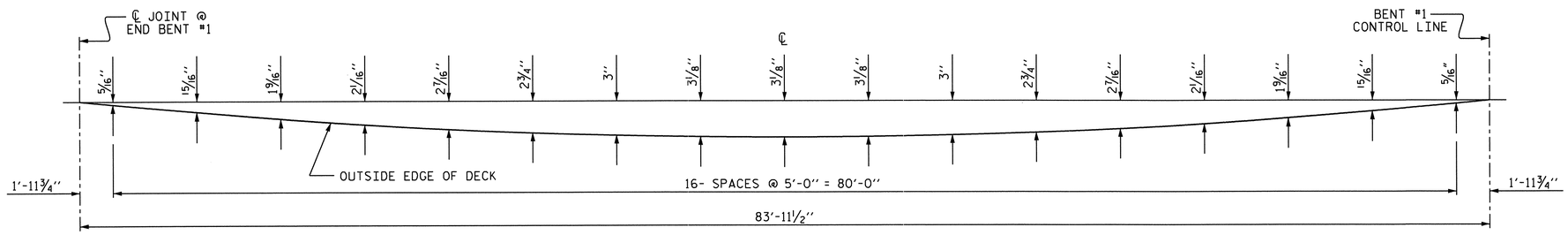

SPAN A ARC OFFSETS (RIGHT SIDE)

PROJECT NO. R-2707AB
CLEVELAND COUNTY
STATION: 157+75.50 -L-

SHEET 4 OF 6

STATE OF NORTH CAROLINA
DEPARTMENT OF TRANSPORTATION
RALEIGH

SUPERSTRUCTURE PLAN OF SPAN A ARC OFFSETS (EBL)

NORTH CAROLINA PROFESSIONAL SEAL 10730 ENGINEER D. ANDREW DAVENPORT, JR.
10-17-12

REVISIONS						SHEET NO.
NO.	BY:	DATE:	NO.	BY:	DATE:	S-48
1			3			TOTAL SHEETS
2			4			104

DRAWN BY : D. A. GLADDEN DATE : 7-6-09
CHECKED BY : M. G. SHAIKH DATE : 10-20-09
DESIGN ENGINEER OF RECORD: G.W. DICKEY DATE : 10/16/12

17-OCT-2012 11:04
R:\Structures\Plans\Str4and5\Plans\R-2707AB_sd_TS_Str5.dgn
adavenport

STR. #5

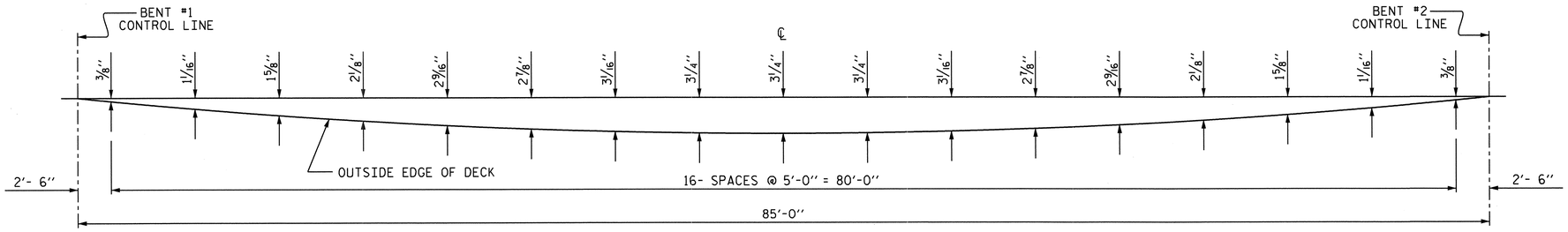

SPAN B ARC OFFSETS (LEFT SIDE)

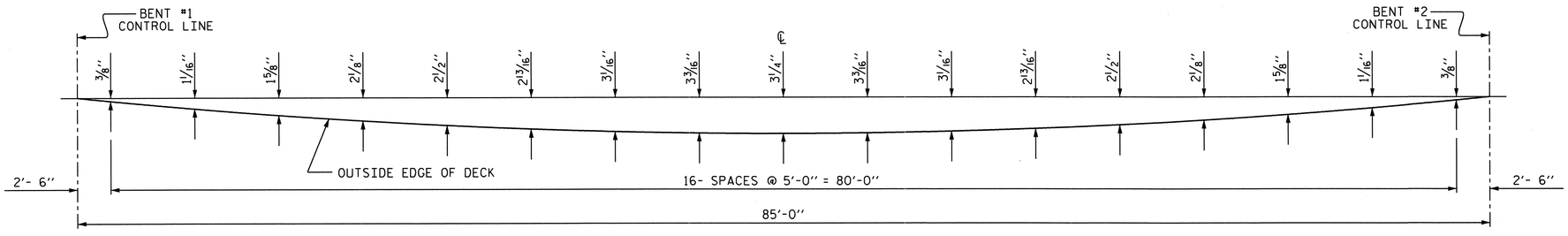

SPAN B ARC OFFSETS (RIGHT SIDE)

PROJECT NO. R-2707AB

CLEVELAND COUNTY

STATION: 157+75.50 -L-

SHEET 5 OF 6

STATE OF NORTH CAROLINA
DEPARTMENT OF TRANSPORTATION
RALEIGH

SUPERSTRUCTURE PLAN OF SPAN B ARC OFFSETS (EBL)

NORTH CAROLINA PROFESSIONAL SEAL 10730 ENGINEER D. ANDREW DAVENPORT

10-17-12

REVISIONS						SHEET NO.
NO.	BY:	DATE:	NO.	BY:	DATE:	S-49
1			3			TOTAL SHEETS
2			4			104

DRAWN BY : D. A. GLADDEN DATE : 7-6-09
CHECKED BY : M. G. SHAIKH DATE : 10-20-09
DESIGN ENGINEER OF RECORD: G.W. DICKEY DATE : 10/16/12

17-OCT-2012 11:04
R:\Structures\Plans\Str4and5\Plans\R-2707AB_sd_TS_Str5.dgn
ddavenport

STR. #5

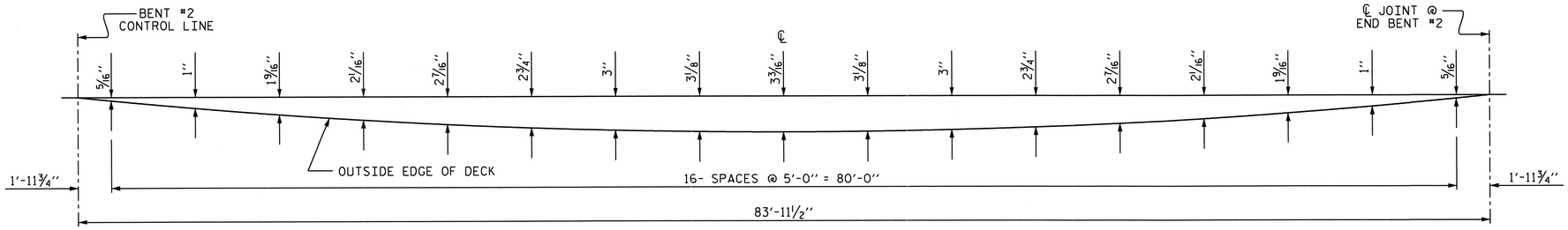

SPAN C ARC OFFSETS (LEFT SIDE)

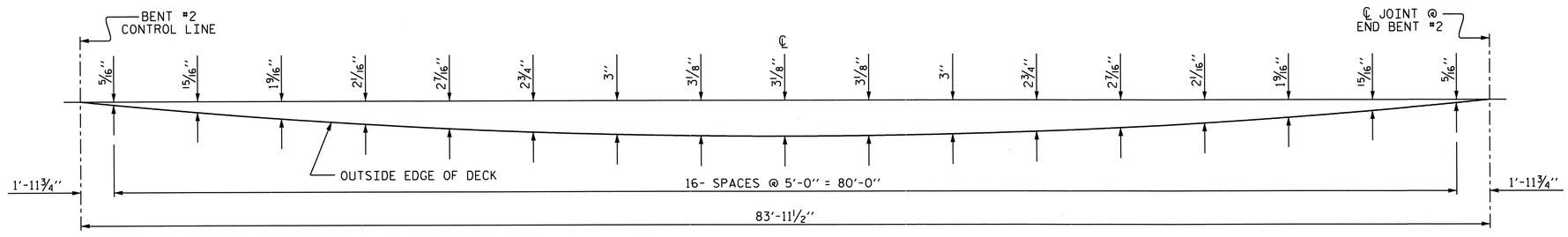

SPAN C ARC OFFSETS (RIGHT SIDE)

PROJECT NO. R-2707AB
CLEVELAND COUNTY
STATION: 157+75.50 -L-

SHEET 6 OF 6

STATE OF NORTH CAROLINA
DEPARTMENT OF TRANSPORTATION
RALEIGH

SUPERSTRUCTURE PLAN OF SPAN C ARC OFFSETS (EBL)

NORTH CAROLINA PROFESSIONAL SEAL 10730 ENGINEER D. ANDREW DAVENPORT
10-17-12

REVISIONS						SHEET NO.
NO.	BY:	DATE:	NO.	BY:	DATE:	S-50
1			3			TOTAL SHEETS
2			4			104

DRAWN BY : D. A. GLADDEN DATE : 7-6-09
CHECKED BY : M. G. SHAIKH DATE : 10-20-09
DESIGN ENGINEER OF RECORD: G.W. DICKEY DATE : 10/16/12

17-OCT-2012 11:04
R:\Structures\Plans\Str4and5\Plans\R-2707AB_sd_TS_Str5.dgn
ddavenport

STR. #5

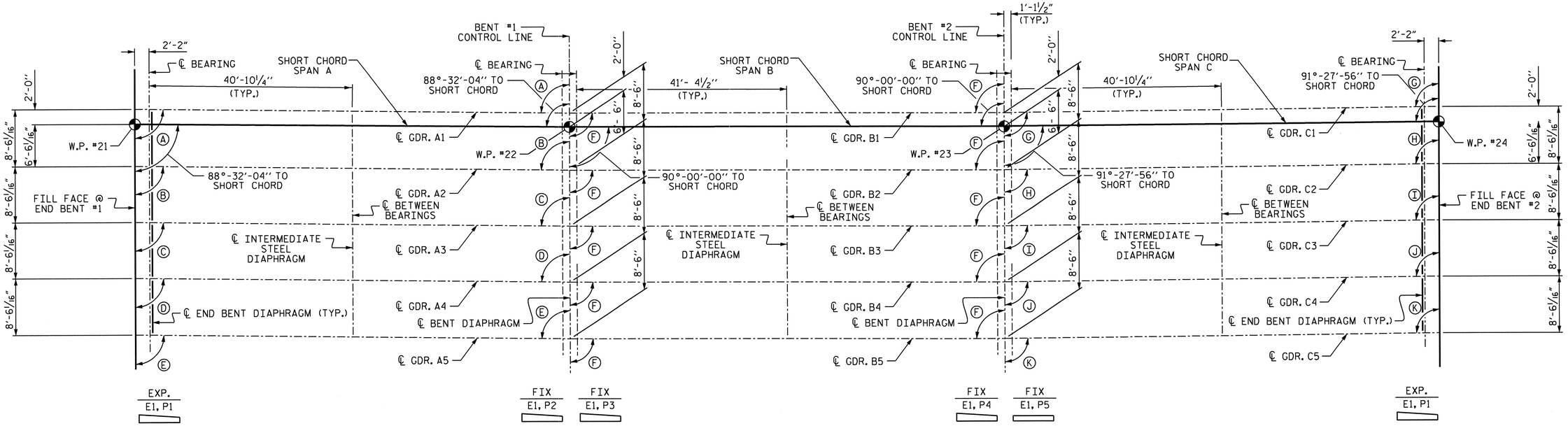

SPAN A SPAN B SPAN C

FRAMING PLAN

ANGLES

Ⓐ	88°-32'-01"	Ⓒ	91°-27'-59"
Ⓑ	88°-32'-14"	Ⓗ	91°-27'-46"
Ⓒ	88°-32'-28"	Ⓘ	91°-27'-32"
Ⓓ	88°-32'-41"	Ⓙ	91°-27'-19"
Ⓔ	88°-32'-54"	Ⓚ	91°-27'-06"
Ⓕ	90°-00'-00"		

PROJECT NO. R-2707AB

CLEVELAND COUNTY

STATION: 157+75.50 -L-

STATE OF NORTH CAROLINA
DEPARTMENT OF TRANSPORTATION
RALEIGH

SUPERSTRUCTURE FRAMING PLAN (EBL)

REVISIONS						SHEET NO.
NO.	BY:	DATE:	NO.	BY:	DATE:	S-51
1			3			TOTAL SHEETS
2			4			104

NORTH CAROLINA PROFESSIONAL SEAL 10730 ENGINEER D. ANDRE DAVENPORT JR
6-13-13

DRAWN BY : D. A. GLADDEN DATE : 7-9-09
CHECKED BY : M. G. SHAIKH DATE : 10-20-09
DESIGN ENGINEER OF RECORD: G.W. DICKEY DATE : 10/16/12

13-JUN-2013 07:54
R:\Structures\Plans\Str4and5\Plans\R-2707AB_sd_TS_Str5.dgn
dadavenport

STR. #5

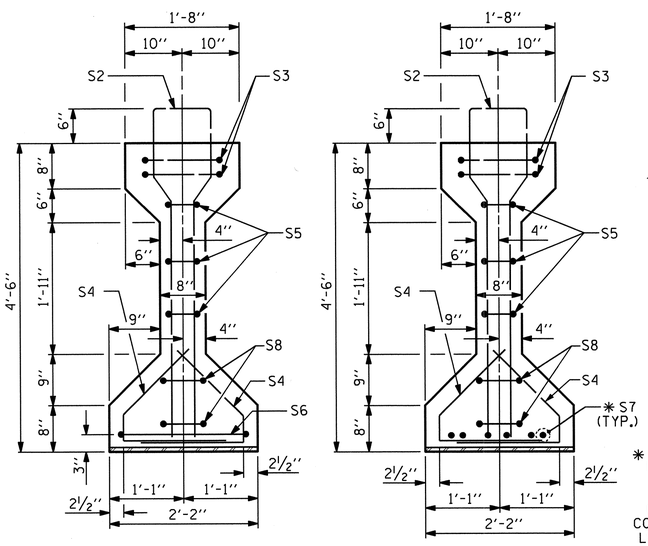

SECTION A-A

SECTION B-B

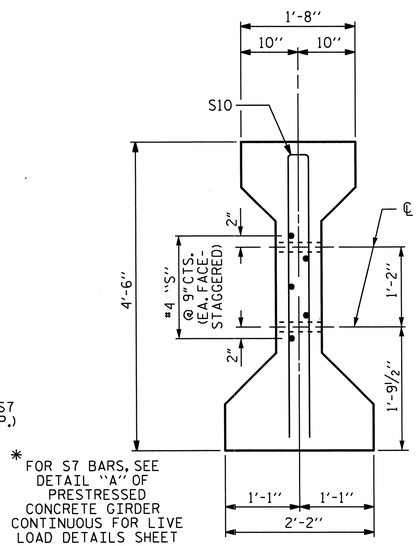

✱ FOR S7 BARS, SEE DETAIL "A" OF PRESTRESSED CONCRETE GIRDER CONTINUOUS FOR LIVE LOAD DETAILS SHEET

SECTION C-C

(S1 BARS NOT SHOWN)

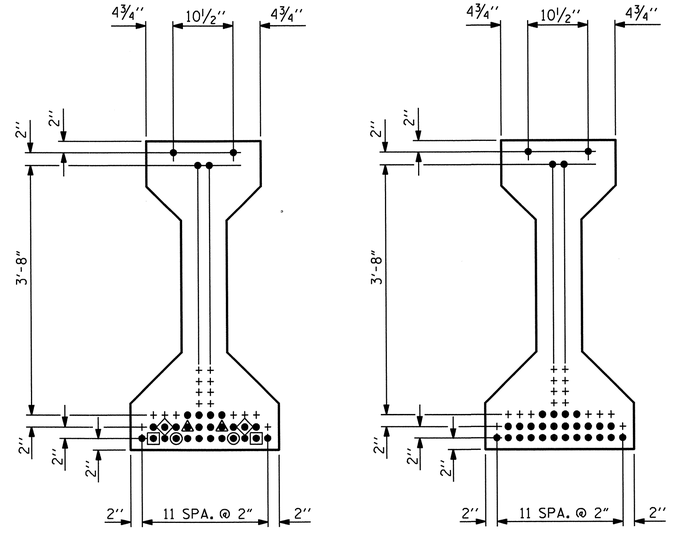

AT END OF GIRDER

AT ℄ OF GIRDER

0.6 " Ø LOW RELAXATION STRAND LAYOUT

DEBONDING LEGEND

- ● FULLY BONDED STRANDS
- ▣ STRANDS DEBONDED FOR 4'-0" FROM END OF GIRDER
- ◉ STRANDS DEBONDED FOR 6'-0" FROM END OF GIRDER
- ◈ STRANDS DEBONDED FOR 8'-0" FROM END OF GIRDER
- ▲ STRANDS DEBONDED FOR 10'-0" FROM END OF GIRDER

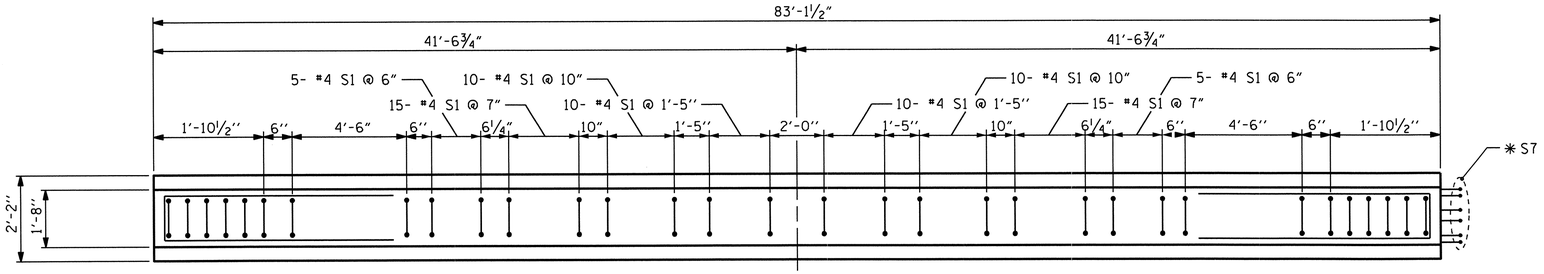

PLAN OF GIRDER

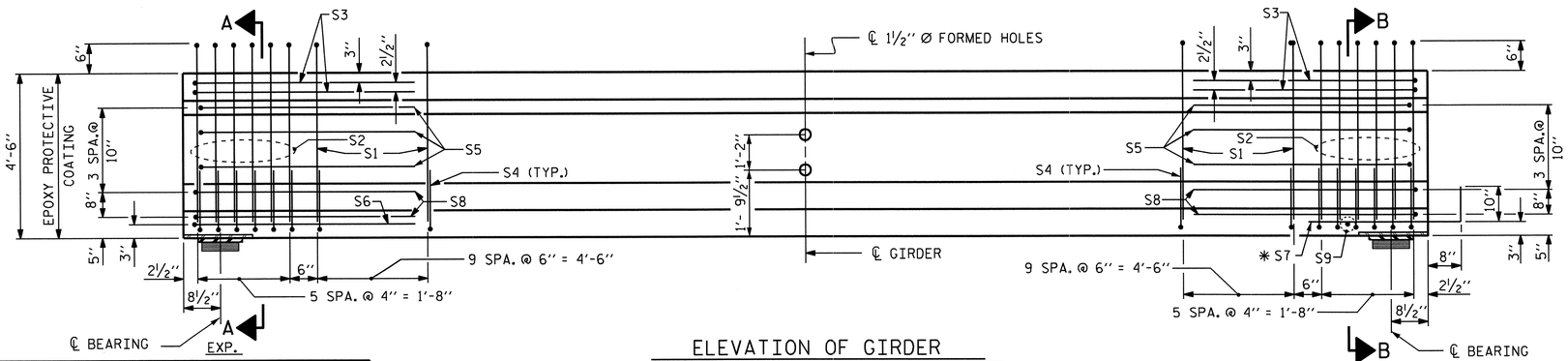

ELEVATION OF GIRDER

(SEE PARTIAL ELEVATION FOR ADDITIONAL "S" BARS)

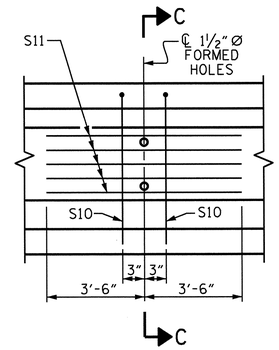

PARTIAL ELEVATION

SHOWING INTERMEDIATE DIAPHRAGM REINFORCING STEEL.

0.6" Ø L. R. GRADE 270 STRANDS

AREA (SQUARE INCHES)	ULTIMATE STRENGTH (LBS. PER STRAND)	APPLIED PRESTRESS (LBS. PER STRAND)
0.217	58,600	43,950

REINFORCING STEEL FOR ONE GIRDER

BAR	NUMBER	SIZE	TYPE	LENGTH	WEIGHT
S1	100	#4	1	10'-8"	713
S2	12	#6	1	10'-8"	192
S3	4	#4	2	9'-1"	24
S4	64	#4	3	3'-5"	146
S5	6	#4	2	8'-5"	34
S6	1	#4	2	9'-11"	7
✱S7	6	#5	STR	3'-8"	23
S8	4	#4	2	8'-7"	23
S9	1	#3	STR	1'-10"	1
S10	2	#5	2	8'-8"	18
S11	5	#4	STR	7'-0"	23

✱NOTE: S7 BARS SHALL BE BENT BEFORE SHIPMENT. HEAT BENDING SHALL NOT BE ALLOWED.

BAR TYPES

ALL BAR DIMENSIONS ARE OUT-TO-OUT

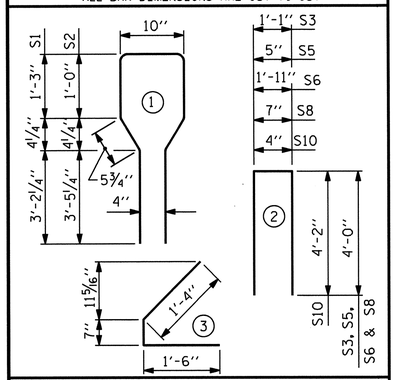

QUANTITIES FOR ONE GIRDER

	REINFORCING STEEL LB.	6000 PSI CONCRETE C.Y.	0.6" Ø L.R. STRANDS No.
	1204	16.9	30

GIRDERS REQUIRED

SPAN	NUMBER	LENGTH	TOTAL LENGTH
A	5	83'-1½"	415.625'
C	5	83'-1½"	415.625'

PROJECT NO. R-2707AB

CLEVELAND COUNTY

STATION: 157+75.50 -L-

SHEET 1 OF 4

STATE OF NORTH CAROLINA
DEPARTMENT OF TRANSPORTATION
RALEIGH

AASHTO TYPE IV PRESTRESSED CONCRETE GIRDER CONTINUOUS FOR LIVE LOAD SPANS A & C (EBL)

ASSEMBLED BY : D. A. GLADDEN	DATE : 7-9-09
CHECKED BY : M. G. SHAIKH	DATE : 10-20-09
DESIGN ENGINEER OF RECORD: G.W. DICKEY	DATE : 10/16/12

DRAWN BY : ELR 8/91	REV. 10/17/00R RWW/LES
CHECKED BY : GRP 8/91	REV. 5/1/06R TLA/GM
	REV. 10/1/11 MAA/GM

NORTH CAROLINA PROFESSIONAL SEAL 10730 ENGINEER D. ANDREW DAVENPORT, JR.
10-17-12

REVISIONS NO.	BY:	DATE:	NO.	BY:	DATE:
1			3		
2			4		

SHEET NO. S-52

TOTAL SHEETS 104

17-OCT-2012 11:01
R:\Structures\Plans\Str4and5\Plans\R-2707AB_sd_TS_Str5.dgn
ddavenport

STR. #5 STD. NO. PCG6 (Sht. 1)

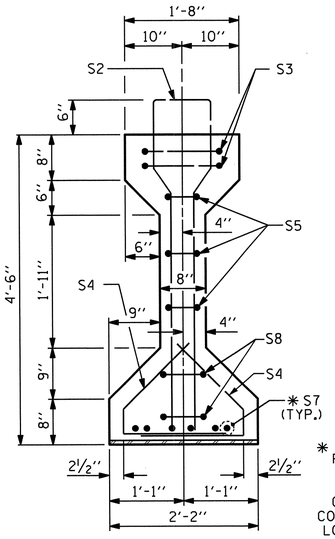

SECTION A-A

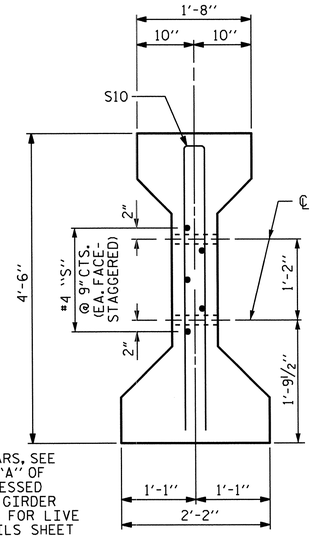

* FOR S7 BARS, SEE DETAIL "A" OF PRESTRESSED CONCRETE GIRDER CONTINUOUS FOR LIVE LOAD DETAILS SHEET

SECTION B-B
(S1 BARS NOT SHOWN)

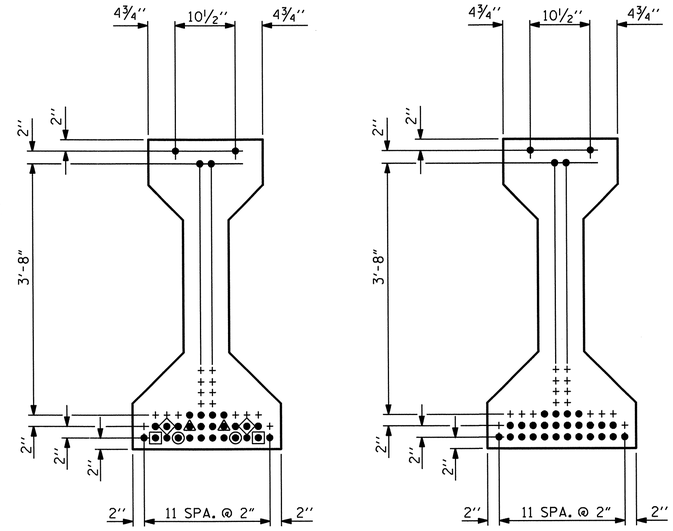

0.6 " Ø LOW RELAXATION STRAND LAYOUT

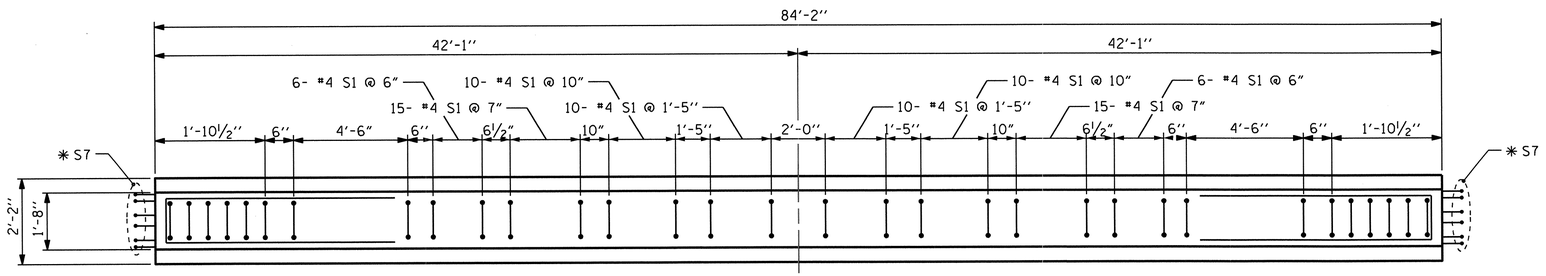

PLAN OF GIRDER

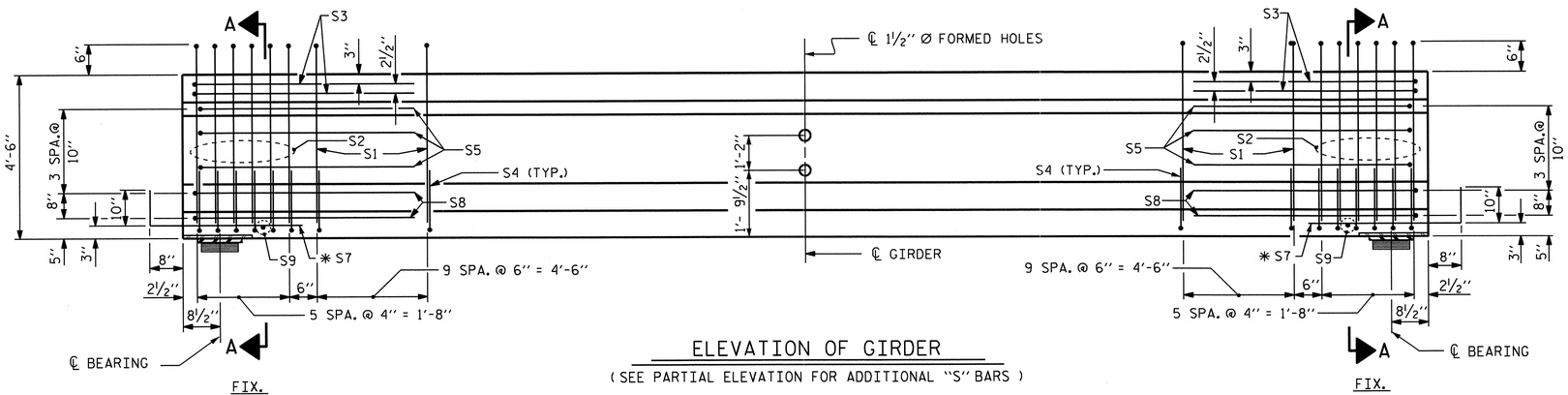

ELEVATION OF GIRDER
(SEE PARTIAL ELEVATION FOR ADDITIONAL "S" BARS)

DEBONDING LEGEND

- ● FULLY BONDED STRANDS
- ▣ STRANDS DEBONDED FOR 4'-0" FROM END OF GIRDER
- ◉ STRANDS DEBONDED FOR 6'-0" FROM END OF GIRDER
- ◈ STRANDS DEBONDED FOR 8'-0" FROM END OF GIRDER
- ▲ STRANDS DEBONDED FOR 10'-0" FROM END OF GIRDER

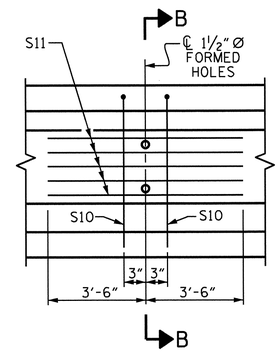

PARTIAL ELEVATION
SHOWING INTERMEDIATE DIAPHRAGM REINFORCING STEEL.

0.6" Ø L. R. GRADE 270 STRANDS

AREA (SQUARE INCHES)	ULTIMATE STRENGTH (LBS. PER STRAND)	APPLIED PRESTRESS (LBS. PER STRAND)
0.217	58,600	43,950

REINFORCING STEEL FOR ONE GIRDER

BAR	NUMBER	SIZE	TYPE	LENGTH	WEIGHT
S1	102	#4	1	10'-8"	727
S2	12	#6	1	10'-8"	192
S3	4	#4	2	9'-1"	24
S4	64	#4	3	3'-5"	146
S5	6	#4	2	8'-5"	34
* S7	12	#5	STR	3'-8"	46
S8	4	#4	2	8'-7"	23
S9	2	#3	STR	1'-10"	1
S10	2	#5	2	8'-8"	18
S11	5	#4	STR	7'-0"	23

* NOTE: S7 BARS SHALL BE BENT BEFORE SHIPMENT. HEAT BENDING SHALL NOT BE ALLOWED.

BAR TYPES

ALL BAR DIMENSIONS ARE OUT-TO-OUT

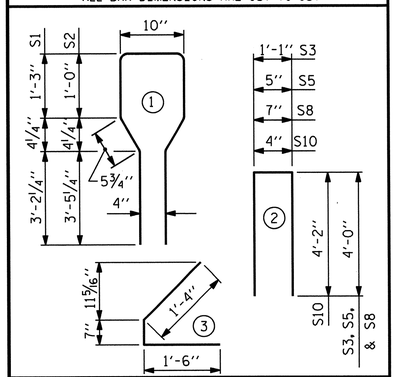

QUANTITIES FOR ONE GIRDER

	REINFORCING STEEL LB.	6000 PSI CONCRETE C.Y.	0.6" Ø L.R. STRANDS No.
	1234	17.1	30

GIRDERS REQUIRED

NUMBER	LENGTH	TOTAL LENGTH
5	84'-2"	420.833'

PROJECT NO. R-2707AB
CLEVELAND COUNTY
STATION: 157+75.50 -L-

SHEET 2 OF 4

STATE OF NORTH CAROLINA
DEPARTMENT OF TRANSPORTATION
RALEIGH

AASHTO TYPE IV PRESTRESSED CONCRETE GIRDER CONTINUOUS FOR LIVE LOAD SPAN B (EBL)

ASSEMBLED BY : D. A. GLADDEN	DATE : 7-9-09	DRAWN BY : ELR 8/91	REV. 10/17/00R RWW/LES
CHECKED BY : M. G. SHAIKH	DATE : 10-20-09	CHECKED BY : GRP 8/91	REV. 5/1/06R TLA/GM
DESIGN ENGINEER OF RECORD: G.W. DICKEY	DATE : 10/16/12		REV. 10/1/11 MAA/GM

REVISIONS						SHEET NO.
NO.	BY:	DATE:	NO.	BY:	DATE:	S-53
1			3			TOTAL SHEETS
2			4			104

NORTH CAROLINA PROFESSIONAL SEAL 10730 ENGINEER D. ANDRE DAVENPORT
10-17-12

17-OCT-2012 11:01
R:\Structures\Plans\Str4and5\Plans\R-2707AB_sd_TS_Str5.dgn
adavenport

STR. #5 STD. NO. PCG6 (Sht. 1)

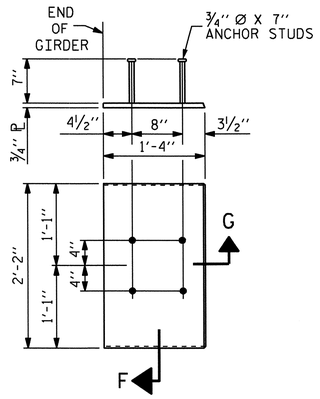

EMBEDDED PLATE "B-1" DETAILS FOR AASHTO TYPE IV GIRDER

(2 REQ'D PER GIRDER)

NOTES

ALL PRESTRESSING STRANDS SHALL BE 7-WIRE LOW-RELAXATION GRADE 270 STRANDS AND SHALL CONFORM TO AASHTO M203 EXCEPT FOR SAMPLING REQUIREMENTS WHICH SHALL BE IN ACCORDANCE WITH THE STANDARD SPECIFICATIONS.

ALL REINFORCING STEEL SHALL BE GRADE 60.

APPLY EPOXY PROTECTIVE COATING TO END OF GIRDER SURFACES INDICATED IN ELEVATION VIEW.

EMBEDDED PLATE "B-1" SHALL BE GALVANIZED IN ACCORDANCE WITH THE STANDARD SPECIFICATIONS. BEVEL EDGES OF PLATE "B-1" TO GIVE CLOSE FIT BUT NOT TIGHT FIT TO STEEL CASTING FORM.

ANCHOR STUDS SHALL CONFORM TO AASHTO M169 GRADES 1010 THROUGH 1020 OR APPROVED EQUAL, AND SHALL MEET THE TYPE "B" REQUIREMENTS OF SUBSECTION 7.3 OF THE ANSI/AASHTO/AWS D1.5 BRIDGE WELDING CODE.

AT ENDS OF GIRDERS TO BE EMBEDDED IN CONCRETE DIAPHRAGMS OR END WALLS, PRESTRESSING STRANDS MAY EXTEND A MAXIMUM OF 2" BEYOND THE GIRDER ENDS. OTHERWISE, PRESTRESSING STRANDS SHALL BE CUT FLUSH WITH THE GIRDER ENDS.

THE TRANSFER OF LOAD FROM THE ANCHORAGES TO THE GIRDER SHALL BE DONE WHEN CONCRETE HAS REACHED A COMPRESSIVE STRENGTH OF NOT LESS THAN 4,800 PSI.

DEPENDING ON THE TYPE OF SYSTEM USED TO SUPPORT THE DECK SLAB FORMS, PRESET ANCHORS MAY BE NECESSARY IN THE PRESTRESSED CONCRETE GIRDER.

THE TOP SURFACE OF THE GIRDER, EXCLUDING THE OUTSIDE 4", SHALL BE RAKED TO A DEPTH OF 1/4".

WHEN DRAPED STRANDS ARE DETAILED, THE LONGITUDINAL LOCATION OF THE HOLD DOWN DEVICES SHALL BE WITHIN 6" OF THE LOCATION SHOWN AND THE CENTER OF GRAVITY OF THE GROUP OF DRAPED STRANDS SHALL BE LOCATED WITHIN 1/2" OF THE THEORETICAL LOCATION SHOWN.

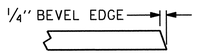

SECTION "G"

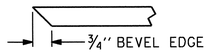

SECTION "F"

(SEE NOTES)

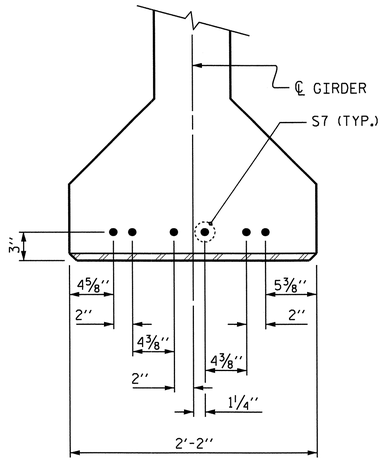

DETAIL "A"

(FOR AASHTO TYPE IV GIRDERS)

PROJECT NO. R-2707AB

CLEVELAND COUNTY

STATION: 157+75.50 -L-

SHEET 3 OF 4

STATE OF NORTH CAROLINA
DEPARTMENT OF TRANSPORTATION
RALEIGH

STANDARD

PRESTRESSED CONCRETE GIRDER CONTINUOUS FOR LIVE LOAD DETAILS

(EBL)

REVISIONS						SHEET NO.
NO.	BY:	DATE:	NO.	BY:	DATE:	S-54
1			3			TOTAL SHEETS
2			4			104

NORTH CAROLINA PROFESSIONAL SEAL 10730 ENGINEER D. ANDREW DAVENPORT, JR.

ASSEMBLED BY : D. A. GLADDEN/R.G.E. DATE : 12/12
CHECKED BY : D.A. DAVENPORT DATE : 12/08/12
DESIGN ENGINEER OF RECORD: G.W. DICKEY DATE : 10/16/12

DRAWN BY : ELR 11/91
CHECKED BY : GRP 11/91

REV. 7/10/01RR LES/RDR
REV. 5/1/06 TLA/GM
REV. 10/1/11 MAA/GM

17-OCT-2012 11:01
R:\Structures\Plans\Str4and5\Plans\R-2707AB_sd_TS_Str5.dgn
ddavenport

STR. #5

STD. NO. PCG9 (Sht. 3)

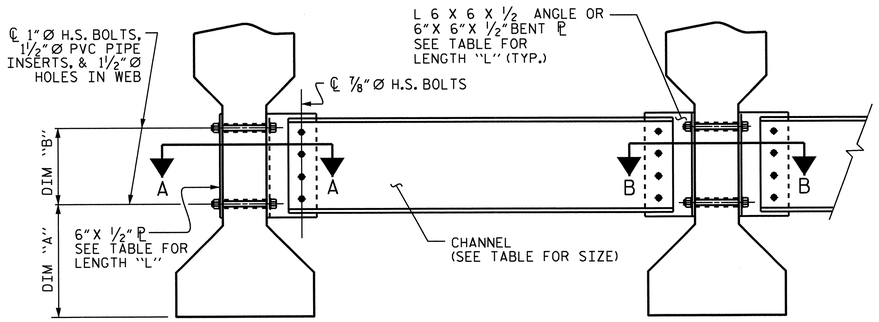

EXTERIOR GIRDER INTERIOR GIRDER

PART SECTION AT INTERMEDIATE DIAPHRAGM

(TYPE IV GIRDER SHOWN)

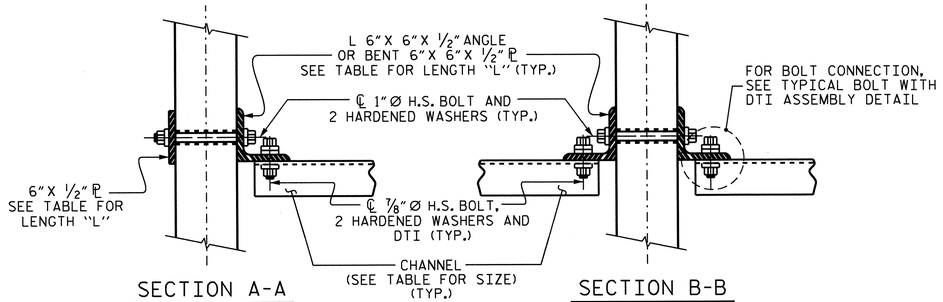

SECTION A-A SECTION B-B

CONNECTION DETAILS

(FOR SKEW = 90°)

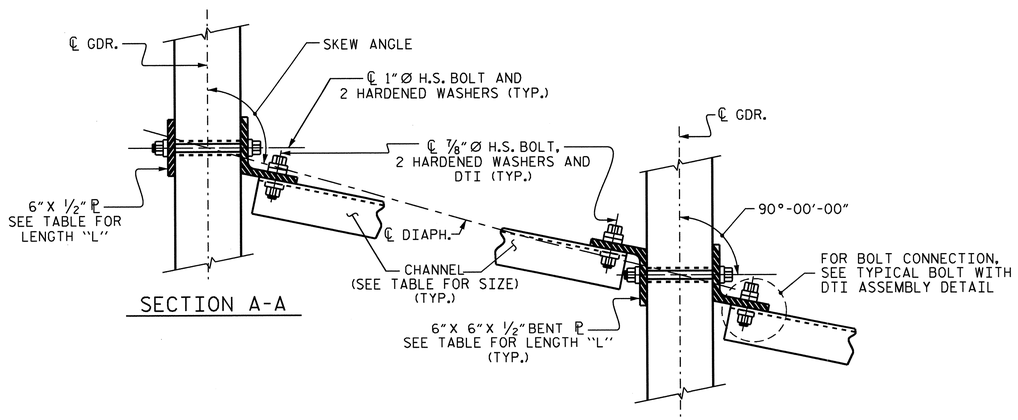

SECTION A-A SECTION B-B

CONNECTION DETAILS

(FOR 70°≤ SKEW < 90° OR 90°< SKEW ≤ 110°)

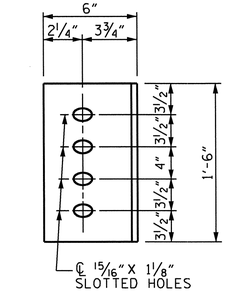

DIAPHRAGM FACE (TYPE IV GDR.)

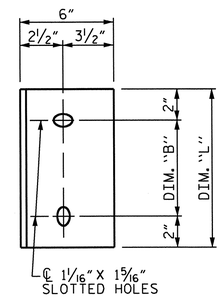

WEB FACE

CONNECTOR PLATE DETAILS

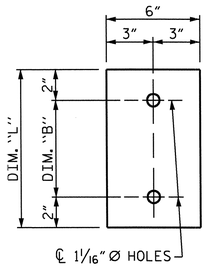

PLATE DETAILS

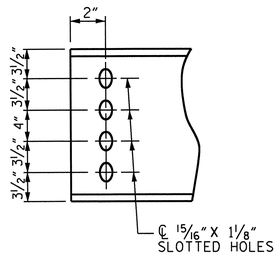

CHANNEL END (TYPE IV GDR.)

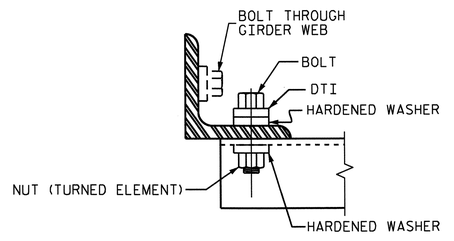

BOLT WITH DTI ASSEMBLY DETAIL

STRUCTURAL STEEL NOTES

ALL INTERMEDIATE DIAPHRAGM STEEL AND CONNECTOR PLATES SHALL BE AASHTO M270 GRADE 50 OR APPROVED EQUAL.

TENSION ON THE ASTM A325 BOLTS THROUGH THE CHANNEL MEMBER SHALL BE CALIBRATED USING DIRECT TENSION INDICATOR WASHERS IN ACCORDANCE WITH THE STANDARD SPECIFICATIONS.

TENSION ON THE ASTM A449 BOLTS THROUGH THE GIRDER WEB SHALL BE SNUG TIGHTENED FOLLOWED BY AN ADDITIONAL ¼ TURN.

THE PLATES, BENT PLATES, CHANNELS, AND ANGLES SHALL BE GALVANIZED OR METALLIZED IN ACCORDANCE WITH THE STANDARD SPECIFICATIONS. FOR THERMAL SPRAYED COATINGS (METALLIZATION), SEE SPECIAL PROVISIONS.

FOR METALLIZATION, APPLY AN 8 MIL THICK 99.99 PERCENT ZINC (W-Zn-1) THERMAL SPRAYED COATING WITH A 0.5 MIL THICK SEAL COAT TO ALL STEEL DIAPHRAGM SURFACES IN ACCORDANCE WITH THE THERMAL SPRAYED COATINGS SPECIAL PROVISION AND SECTION 442 OF THE STANDARD SPECIFICATIONS.

GALVANIZE THE HIGH STRENGTH BOLTS, NUTS, WASHERS AND DIRECT TENSION INDICATORS IN ACCORDANCE WITH THE STANDARD SPECIFICATIONS.

USE AN ASTM F436 HARDENED WASHER WITH STANDARD AND SLOTTED HOLES UNDER EACH BOLT HEAD AND NUT.

FOR BOLTS THROUGH THE GIRDER WEB, PROVIDE SUFFICIENT LENGTH OF THREADS ON ALL BOLTS TO ACCOMMODATE WASHERS AND THE THICKNESS OF CONNECTING MEMBER PLUS AT LEAST ¼" PROJECTION BEYOND THE NUT.

INTERMEDIATE DIAPHRAGM ASSEMBLY SHALL COMPLY WITH SECTION 1072 OF THE STANDARD SPECIFICATIONS.

SUBMIT TWO SETS OF WORKING DRAWINGS FOR THE INTERMEDIATE DIAPHRAGM ASSEMBLY FOR REVIEW. COMMENTS AND ACCEPTANCE. AFTER REVIEW, COMMENTS, AND ACCEPTANCE, SUBMIT SEVEN SETS FOR DISTRIBUTION.

IN THE EXTERIOR BAYS, PLACE TEMPORARY STRUTS BETWEEN PRESTRESSED GIRDERS ADJACENT TO THE STEEL DIAPHRAGMS. STRUTS SHALL REMAIN IN PLACE 3 DAYS AFTER CONCRETE IS PLACED.

THE COST OF THE STEEL DIAPHRAGMS AND ASSEMBLIES SHALL BE INCLUDED IN THE UNIT PRICE BID FOR PRESTRESSED CONCRETE GIRDERS.

TABLE

GIRDER TYPE	CHANNEL SIZE	DIM "A"	DIM "B"	DIM "L"
IV	MC 18 x 42.7	1'-9½"	1'-2"	1'-6"

PROJECT NO. R-2707AB

CLEVELAND COUNTY

STATION: 157+75.50 -L-

SHEET 4 OF 4

STATE OF NORTH CAROLINA
DEPARTMENT OF TRANSPORTATION
RALEIGH

STANDARD INTERMEDIATE STEEL DIAPHRAGMS FOR TYPE IV PRESTRESSED CONCRETE GIRDERS (EBL)

NORTH CAROLINA PROFESSIONAL SEAL 10730 ENGINEER D. ANDRE DAVENPORT
10-17-12

ASSEMBLED BY : D. A. GLADDEN	DATE : 12/12
CHECKED BY : D.A. DAVENPORT	DATE : 12/08/12
DESIGN ENGINEER OF RECORD: C.W. DICKEY	DATE : 10/16/12

DRAWN BY : TLA 6/05	ADDED 10/21/05	
CHECKED BY : VC 6/05	REV. 5/1/06RRR	KMM/GM
	REV. 10/1/11	MAA/GM

REVISIONS						SHEET NO.
NO.	BY:	DATE:	NO.	BY:	DATE:	S-55
1			3			TOTAL SHEETS
2			4			104

17-OCT-2012 11:01
R:\Structures\Plans\Str4and5\Plans\R-2707AB_sd_TS_Str5.dgn
adavenport

STR. #5 STD. NO. PCG10

DEAD LOAD DEFLECTION TABLE FOR GIRDERS

0.6 "Ø LOW RELAXATION	SPAN "A" & "C" GIRDER #1											SPAN "A" & "C" GIRDERS 2,3,4											SPAN "A" & "C" GIRDER #5										
TENTH POINTS	0	.1	.2	.3	.4	.5	.6	.7	.8	.9	0	0	.1	.2	.3	.4	.5	.6	.7	.8	.9	0	0	.1	.2	.3	.4	.5	.6	.7	.8	.9	0
CAMBER (GIRDER ALONE IN PLACE) ↑	0	.0679	.1284	.1758	.2059	.2163	.2059	.1758	.1284	.0679	0	0	.0679	.1284	.1758	.2059	.2163	.2059	.1758	.1284	.0679	0	0	.0679	.1284	.1758	.2059	.2163	.2059	.1758	.1284	.0679	0
*DEFLECTION DUE TO SUPERIMPOSED D.L. ↓	0	.0268	.0506	.0693	.0811	.0852	.0811	.0693	.0506	.0268	0	0	.0274	.0518	.0710	.0832	.0873	.0832	.0710	.0518	.0274	0	0	.0285	.0539	.0738	.0864	.0908	.0864	.0738	.0539	.0285	0
FINAL CAMBER ↑	0	1/2	15/16	1 1/4	1 1/2	1 9/16	1 1/2	1 1/4	15/16	1/2	0	0	1/2	15/16	1 1/4	1 1/2	1 9/16	1 1/2	1 1/4	15/16	1/2	0	0	1/2	7/8'	1 1/4	1 7/16	1 1/2	1 7/16	1 1/4	7/8	1/2	0

*INCLUDES FUTURE WEARING SURFACE
ALL VALUES ARE SHOWN IN FEET (DECIMAL FORM), EXCEPT "FINAL CAMBER", WHICH IS GIVEN IN INCHES (FRACTION FORM).

DEAD LOAD DEFLECTION TABLE FOR GIRDERS

0.6 "Ø LOW RELAXATION	SPAN "B" GIRDER #1											SPAN "B" GIRDERS 2,3,4											SPAN "B" GIRDER #5										
TENTH POINTS	0	.1	.2	.3	.4	.5	.6	.7	.8	.9	0	0	.1	.2	.3	.4	.5	.6	.7	.8	.9	0	0	.1	.2	.3	.4	.5	.6	.7	.8	.9	0
CAMBER (GIRDER ALONE IN PLACE) ↑	0	.0686	.1298	.1778	.2082	.2186	.2082	.1778	.1298	.0686	0	0	.0686	.1298	.1778	.2082	.2186	.2082	.1778	.1298	.0686	0	0	.0686	.1298	.1778	.2082	.2186	.2082	.1778	.1298	.0686	0
*DEFLECTION DUE TO SUPERIMPOSED D.L. ↓	0	.0281	.0532	.0728	.0853	.0895	.0853	.0728	.0532	.0281	0	0	.0288	.0546	.0747	.0875	.0918	.0875	.0747	.0546	.0288	0	0	.0300	.0568	.0777	.0910	.0955	.0910	.0777	.0568	.0300	0
FINAL CAMBER ↑	0	1/2	15/16	1 1/4	1 1/2	1 9/16	1 1/2	1 1/4	15/16	1/2	0	0	1/2	7/8	1 1/4	1 7/16	1 1/2	1 7/16	1 1/4	7/8	1/2	0	0	7/16	7/8	1 3/16	1 3/8	1 1/2	1 3/8	1 3/16	7/8	7/16	0

*INCLUDES FUTURE WEARING SURFACE
ALL VALUES ARE SHOWN IN FEET (DECIMAL FORM), EXCEPT "FINAL CAMBER", WHICH IS GIVEN IN INCHES (FRACTION FORM).

PROJECT NO. R-2707AB
CLEVELAND COUNTY
STATION: 157+75.50 -L-

STATE OF NORTH CAROLINA
DEPARTMENT OF TRANSPORTATION
RALEIGH

SUPERSTRUCTURE DEAD LOAD DEFLECTIONS (EBL)

NORTH CAROLINA PROFESSIONAL SEAL 10730 ENGINEER D. ANDREW DAVENPORT, JR.
6-13-13

REVISIONS						SHEET NO.
NO.	BY:	DATE:	NO.	BY:	DATE:	S-56
1			3			TOTAL SHEETS
2			4			104

DRAWN BY : D. A. GLADDEN DATE : 7-9-09
CHECKED BY : M. G. SHAIKH DATE : 10-20-09
DESIGN ENGINEER OF RECORD: G.W. DICKEY DATE : 10/16/12

13-JUN-2013 07:54
R:\Structures\Plans\Str4and5\Plans\R-2707AB_sd_TS_Str5.dgn
dadavenport

STR. #5

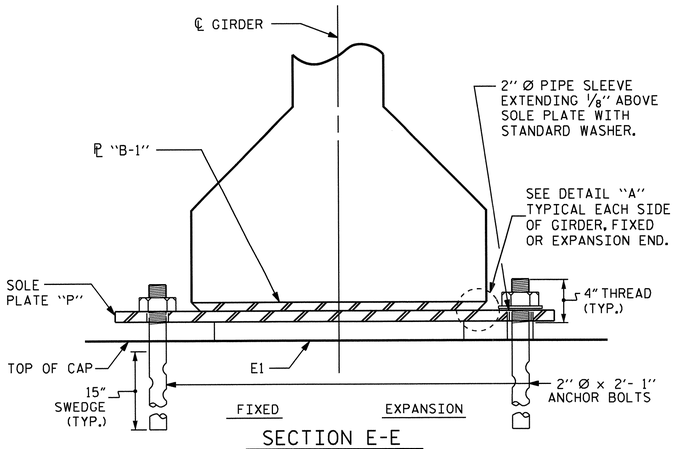

SECTION E-E

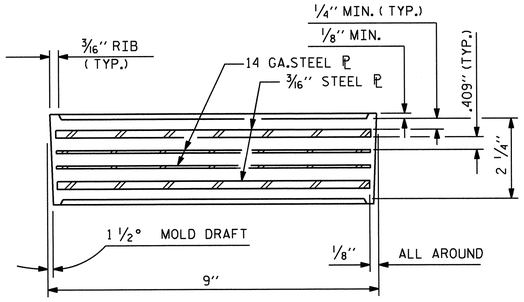

TYPICAL SECTION OF ELASTOMERIC BEARINGS

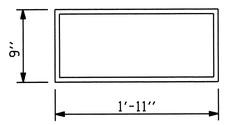

E1 (30 REQ'D)

PLAN VIEW OF ELASTOMERIC BEARING

TYPE V

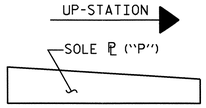

SOLE ℄ PLACEMENT DETAIL

NOTES

AT ALL FIXED POINTS OF SUPPORT, NUTS FOR ANCHOR BOLTS ARE TO BE TIGHTENED FINGER TIGHT AND THEN BACKED OFF 1/2 TURN. THE THREAD OF THE NUT AND BOLT SHALL THEN BE BURRED WITH A SHARP POINTED TOOL.

THE 2" Ø PIPE SLEEVE SHALL BE CUT FROM SCHEDULE 40 PVC PLASTIC PIPE. THE PVC PLASTIC PIPE SHALL MEET THE REQUIREMENTS OF ASTM D1785.

STEEL SOLE PLATES, ANCHOR BOLTS, NUTS, AND WASHERS SHALL BE GALVANIZED IN ACCORDANCE WITH THE STANDARD SPECIFICATIONS.

PRIOR TO WELDING, GRIND THE GALVANIZED SURFACE OF THE PORTION OF THE EMBEDDED PLATE AND SOLE PLATE THAT ARE TO BE WELDED. AFTER WELDING, DAMAGED GALVANIZED SURFACES SHALL BE REPAIRED IN ACCORDANCE WITH THE STANDARD SPECIFICATIONS.

WHEN WELDING THE SOLE PLATE TO THE EMBEDDED PLATE IN THE GIRDER, USE TEMPERATURE INDICATING WAX PENS, OR OTHER SUITABLE MEANS, TO ENSURE THAT THE TEMPERATURE OF THE SOLE PLATE DOES NOT EXCEED 300°F. TEMPERATURES ABOVE THIS MAY DAMAGE THE ELASTOMER.

SOLE PLATE "P", BOLTS, NUTS, WASHERS, AND PIPE SLEEVE SHALL BE INCLUDED IN THE PAY ITEM FOR PRESTRESSED CONCRETE GIRDERS.

ANCHOR BOLTS SHALL MEET THE REQUIREMENTS OF ASTM A449. NUTS SHALL MEET THE REQUIREMENTS OF AASHTO M291-DH OR AASHTO M292-2H. WASHERS SHALL MEET THE REQUIREMENTS OF AASHTO M293. NO SHOP DRAWINGS ARE REQUIRED FOR ANCHOR BOLTS, NUTS AND WASHERS. SHOP INSPECTION IS REQUIRED.

ALL SURFACES OF BEARING PLATES SHALL BE SMOOTH AND STRAIGHT.

FOR STEEL REINFORCED ELASTOMERIC BEARINGS, SEE SPECIAL PROVISIONS.

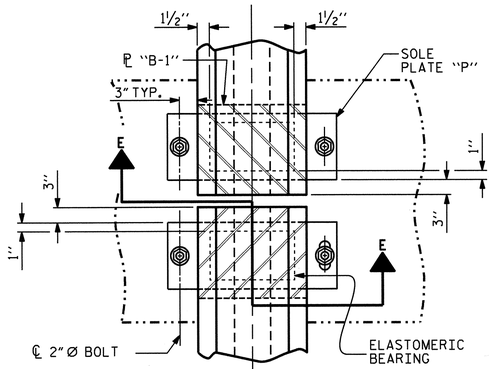

TYPICAL HALF-PLAN (SHOWING CONTINUOUS BENT)

TYPICAL HALF-PLAN (SHOWING SIMPLE SPAN BENT)

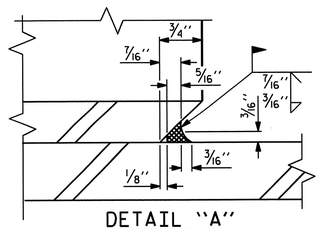

DETAIL "A"

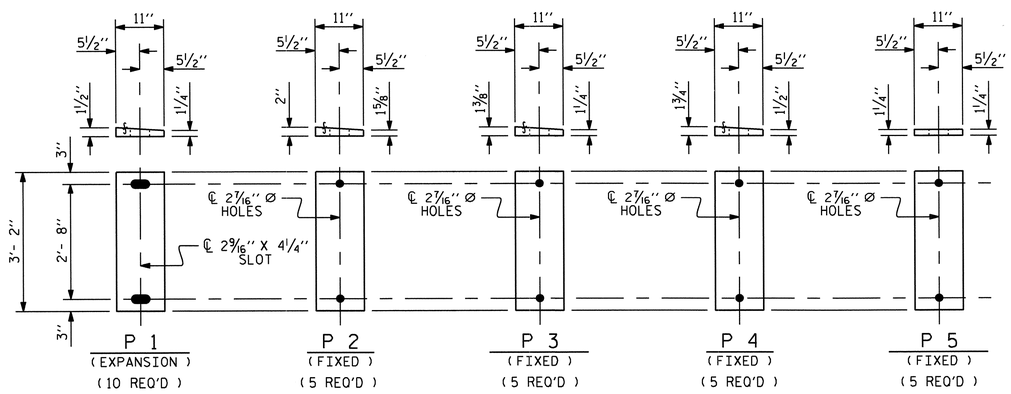

SOLE PLATE DETAILS ("P")

— LOAD RATINGS —	
	MAX.D.L.+ L.L.
TYPE V	180 K

PROJECT NO. R-2707AB

CLEVELAND COUNTY

STATION: 157+75.50 -L-

STATE OF NORTH CAROLINA
DEPARTMENT OF TRANSPORTATION
RALEIGH

ELASTOMERIC BEARING DETAILS

PRESTRESSED CONCRETE GIRDER SUPERSTRUCTURE (EBL)

REVISIONS						SHEET NO.
NO.	BY:	DATE:	NO.	BY:	DATE:	S-57
1			3			TOTAL SHEETS
2			4			104

ASSEMBLED BY : D. A. GLADDEN		DATE : 7-14-09
CHECKED BY : M. G. SHAIKH		DATE : 10-20-09
DESIGN ENGINEER OF RECORD: G.W. DICKEY		DATE : 10/16/12
DRAWN BY : EEM 2/97	REV. 10/17/00	RWW/LES
CHECKED BY : VAP 2/97	REV. 5/1/06	TLA/GM
	REV. 10/1/11	MAA/GM

NORTH CAROLINA PROFESSIONAL SEAL 10730 ENGINEER ANDREW DAVENPORT JR.
6-17-13

13-JUN-2013 08:17
R:\Structures\Plans\Str4and5\Plans\R-2707AB_sd_TS_Str5.dgn
dadavenport

STR. #5

STD. NO. EB4 (SHT 1)

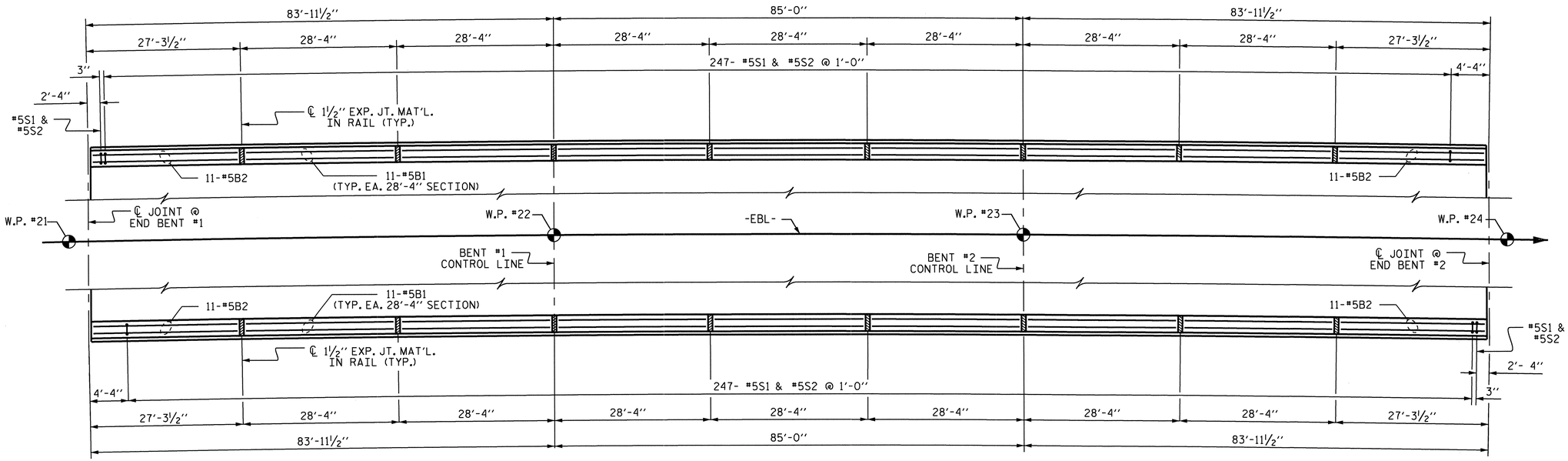

PLAN OF BARRIER RAIL

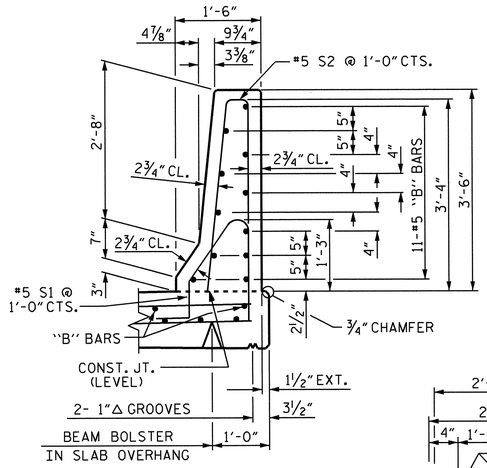

SECTION THRU RAIL

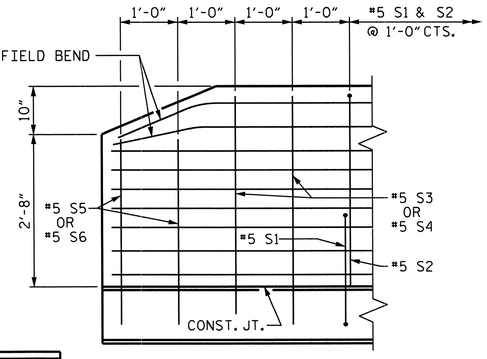

SIDE VIEW

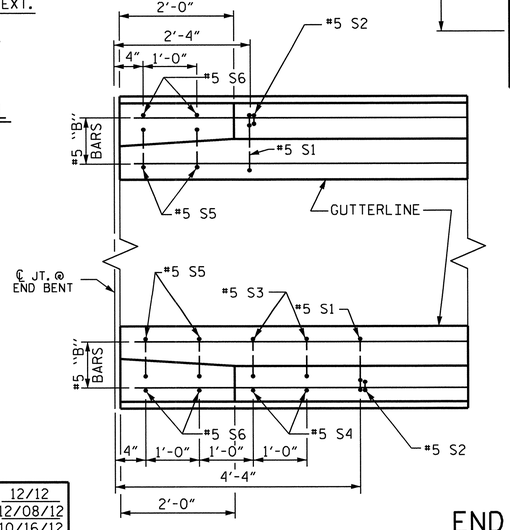

PLAN VIEW

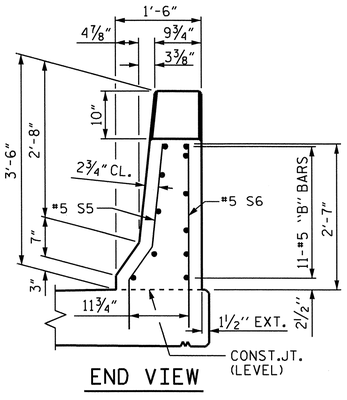

END VIEW

END OF RAIL DETAILS

FOR ADHESIVE ANCHORING AT SAWED JOINTS

NOTES

THE BARRIER RAIL IN EACH CONTINUOUS UNIT SHALL NOT BE CAST UNTIL ALL SLAB CONCRETE IN THAT UNIT HAS BEEN CAST AND HAS REACHED A MINIMUM COMPRESSIVE STRENGTH OF 3,000 PSI.

THE JOINT IN THE DECK SHALL BE SAWED PRIOR TO THE CASTING OF BARRIER RAIL.

ALL REINFORCING STEEL IN BARRIER RAILS SHALL BE EPOXY COATED.

THE #5 S3 AND #5 S4 BARS SHALL BE INSTALLED, USING AN ADHESIVE ANCHORING SYSTEM, AFTER SAWING THE JOINT. THE YIELD LOAD FOR THE #5 S3 AND #5 S4 BARS IS 18.6 KIPS. FIELD TESTING FOR THE ADHESIVE BONDING SYSTEM IS NOT REQUIRED.

GROOVED CONTRACTION JOINTS, ½" IN DEPTH, SHALL BE TOOLED IN ALL EXPOSED FACES OF THE BARRIER RAIL AND IN ACCORDANCE WITH ARTICLE 825-10(B) OF THE STANDARD SPECIFICATIONS. THE CONTRACTION JOINT SHALL BE LOCATED AT EACH THIRD POINT BETWEEN BARRIER RAIL EXPANSION JOINTS. ONLY ONE CONTRACTION JOINT IS REQUIRED AT MIDPOINT OF BARRIER RAIL SEGMENTS LESS THAN 20 FEET IN LENGTH AND NO CONTRACTION JOINTS ARE REQUIRED FOR THOSE SEGMENTS LESS THAN 10 FEET IN LENGTH.

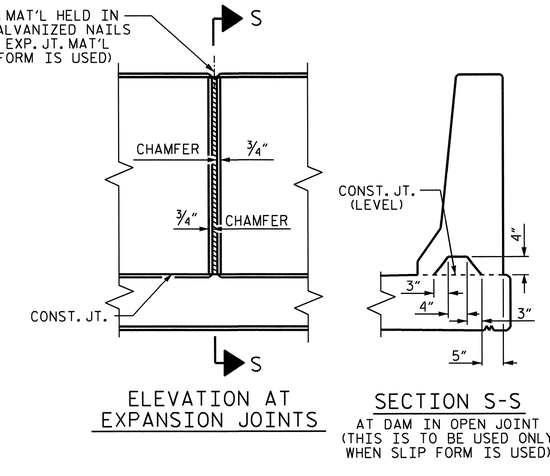

ELEVATION AT EXPANSION JOINTS

SECTION S-S

AT DAM IN OPEN JOINT (THIS IS TO BE USED ONLY WHEN SLIP FORM IS USED)

BARRIER RAIL DETAILS

BAR TYPES

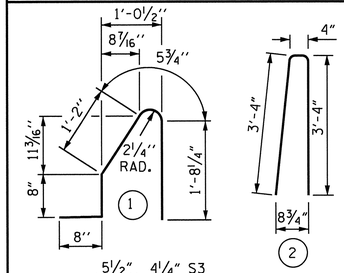

ALL BAR DIMENSIONS ARE OUT TO OUT

BILL OF MATERIAL

FOR CONCRETE BARRIER RAIL ONLY

BAR	NO.	SIZE	TYPE	LENGTH	WEIGHT
✱ S1	496	#5	1	4'- 8"	2414
✱ S2	496	#5	2	7'-0"	3621
✱ S3	4	#5	3	4'- 2"	17
✱ S4	4	#5	STR	4'- 0"	17
✱ S5	8	#5	3	3'- 5"	29
✱ S6	8	#5	STR	3'- 3"	27
✱ B1	154	#5	STR	27'-10"	4471
✱ B2	44	#5	STR	26'-10"	1231

✱ EPOXY COATED REINFORCING STEEL	11827 LBS.
CLASS AA CONCRETE	68.8 CU. YDS.
CONCRETE BARRIER RAIL	505.67 LIN. FT.

NORTH CAROLINA PROFESSIONAL SEAL 10730 ENGINEER D. ANDREW DAVENPORT
6/19/13

PROJECT NO. R-2707AB

CLEVELAND COUNTY

STATION: 157+75.50 -L-

STATE OF NORTH CAROLINA
DEPARTMENT OF TRANSPORTATION
RALEIGH

STANDARD

CONCRETE BARRIER RAIL

(EBL)

REVISIONS						SHEET NO.
NO.	BY:	DATE:	NO.	BY:	DATE:	S-58
1			3			TOTAL SHEETS
2			4			104

ASSEMBLED BY : D. A. GLADDEN/R. G. E	DATE : 12/12	REV. 5/7/03R	RWW/JTE
CHECKED BY : D.A. DAVENPORT	DATE : 12/08/12	REV. 5/1/06R	TLA/GM
DESIGN ENGINEER OF RECORD: G.W. DICKEY	DATE : 10/16/12	REV. 10/1/11	MAA/GM
DRAWN BY : ARB 5/87			
CHECKED BY : SJD 9/87			

14-JUN-2013 14:41
R:\Structures\Plans\Str4and5\Plans\R-2707AB_sd_TS_Str5.dgn
ddavenport

STR. #5

STD. NO. CBR1 (SHT 1)

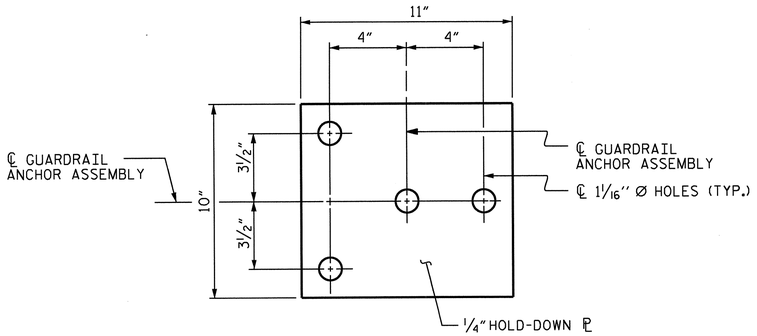

PLAN

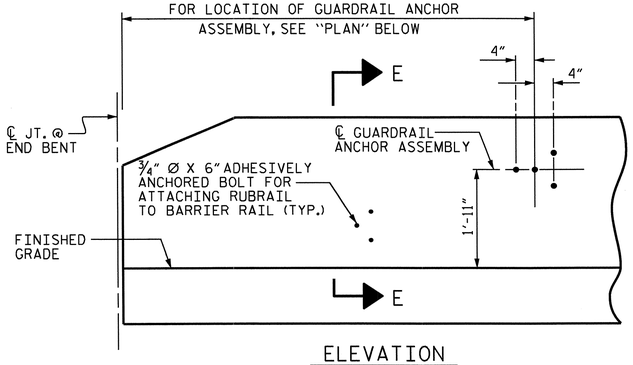

ELEVATION

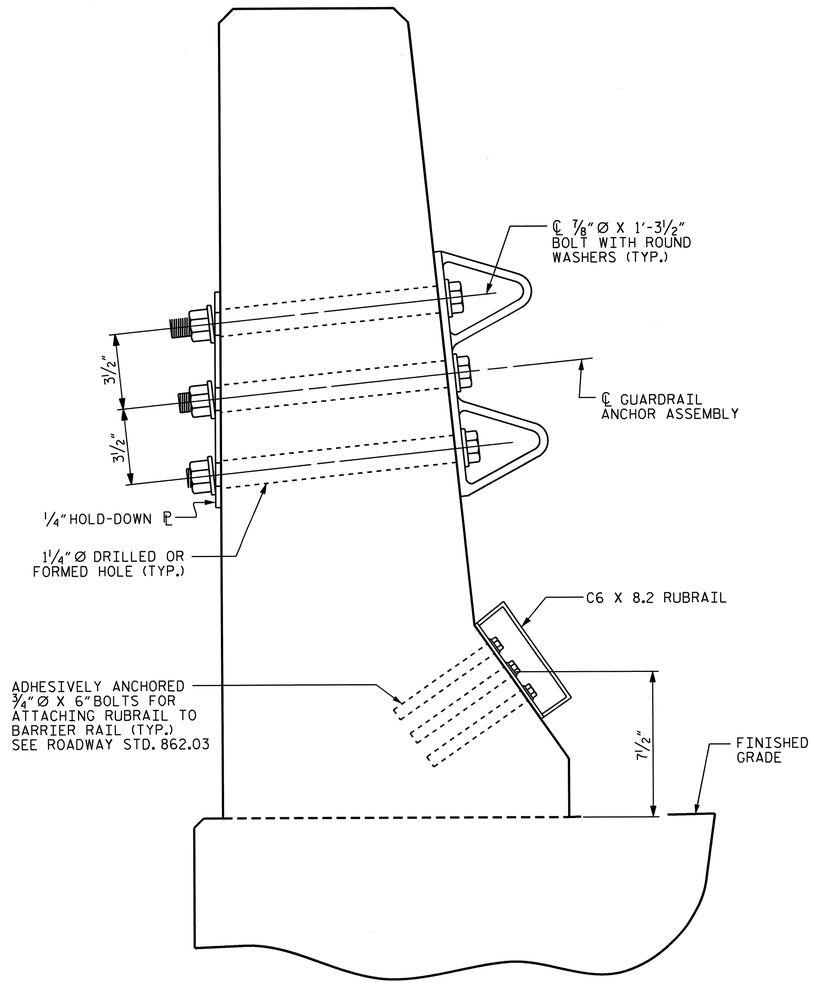

SECTION E-E

GUARDRAIL ANCHOR ASSEMBLY DETAILS

NOTES

THE GUARDRAIL ANCHOR ASSEMBLY SHALL CONSIST OF A 1/4" HOLD-DOWN PLATE AND 4 - 7/8" Ø BOLTS WITH NUTS AND WASHERS, RUBRAIL, AND ADHESIVELY ANCHORED BOLTS.

THE HOLD-DOWN PLATE SHALL CONFORM TO AASHTO M270 GRADE 36. AFTER FABRICATION, THE HOLD-DOWN PLATE SHALL BE HOT-DIP GALVANIZED IN ACCORDANCE WITH AASHTO M111.

BOLTS SHALL CONFORM TO THE REQUIREMENTS OF ASTM A307 AND NUTS SHALL CONFORM TO THE REQUIREMENTS OF AASHTO M291. BOLTS, NUTS AND WASHERS SHALL BE GALVANIZED. (AT THE CONTRACTOR'S OPTION, STAINLESS STEEL BOLTS, NUTS AND WASHERS MAY BE USED AS AN ALTERNATE FOR THE 7/8" Ø GALVANIZED BOLTS, NUTS AND WASHERS. THEY SHALL CONFORM TO OR EXCEED THE MECHANICAL REQUIREMENTS OF ASTM A307. THE USE OF THIS ALTERNATE SHALL BE APPROVED BY THE ENGINEER.)

THE GUARDRAIL ANCHOR ASSEMBLY IS REQUIRED AT ALL POINTS WHERE APPROACH GUARDRAIL IS TO BE ATTACHED TO THE END OF BARRIER RAIL. FOR POINTS OF ATTACHMENT, SEE SKETCH.

AFTER INSTALLATION, THE EXPOSED THREAD OF THE BOLT SHALL BE BURRED WITH A SHARP POINTED TOOL.

THE COST OF THE GUARDRAIL ANCHOR ASSEMBLY SHALL BE INCLUDED IN THE UNIT CONTRACT PRICE BID FOR CONCRETE BARRIER RAIL.

THE 1 1/4" Ø HOLES SHALL BE FORMED OR DRILLED WITH A CORE BIT. IMPACT TOOLS WILL NOT BE PERMITTED. ANY CONCRETE DAMAGED BY THIS WORK SHALL BE REPAIRED TO THE SATISFACTION OF THE ENGINEER.

THE C6 X 8.2 RUBRAIL IS TO BE ADHESIVELY ANCHORED TO THE RAIL USING THREE 3/4" Ø X 6" BOLTS WITH WASHERS. LEVEL ONE FIELD TESTING IS REQUIRED, AND THE YIELD LOAD OF THE 3/4" Ø BOLT IS 12 KIPS. FOR ADHESIVELY ANCHORED ANCHOR BOLTS OR DOWELS, SEE STANDARD SPECIFICATIONS. SEE ROADWAY STANDARD 862.03 FOR DETAILS AND LOCATION OF THE RUBRAIL.

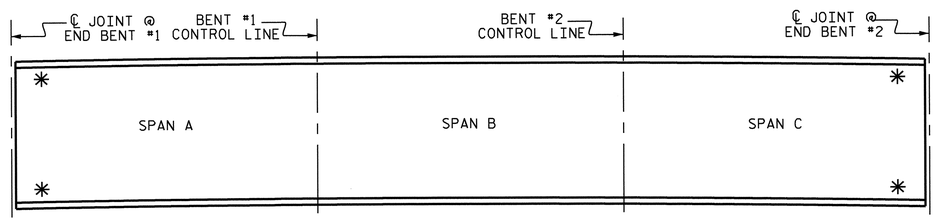

SKETCH SHOWING POINTS OF ATTACHMENTS

✳ DENOTES GUARDRAIL ANCHOR ASSEMBLY

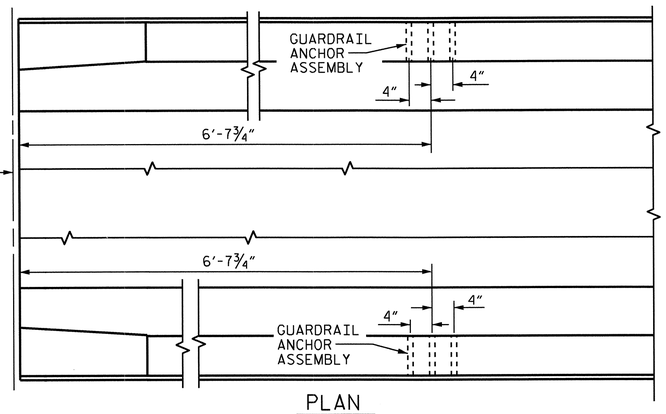

PLAN

LOCATION OF ANCHORS FOR GUARDRAIL

END BENT #1 SHOWN, END BENT #2 SIMILAR.

PROJECT NO. R-2707AB

CLEVELAND COUNTY

STATION: 157+75.50 -L-

STATE OF NORTH CAROLINA
DEPARTMENT OF TRANSPORTATION
RALEIGH

STANDARD
GUARDRAIL ANCHORAGE FOR BARRIER RAIL (EBL)

REVISIONS						SHEET NO.
NO.	BY:	DATE:	NO.	BY:	DATE:	S-59
1			3			TOTAL SHEETS
2			4			104

ASSEMBLED BY : D. A. GLADDEN		DATE : 7-20-09	
CHECKED BY : M. G. SHAIKH		DATE : 10-20-09	
DESIGN ENGINEER OF RECORD: G.W. DICKEY		DATE : 10/16/12	
DRAWN BY : TLA 5/06	REV. 10/1/11	MAA/GM	
CHECKED BY : GM 5/06	REV. 7/12	MAA/GM	
	REV. 10/12	MAA/GM	

NORTH CAROLINA PROFESSIONAL SEAL 10730 ENGINEER D. ANDREW DAVENPORT
6-13-13

13-JUN-2013 08:23
R:\Structures\Plans\Str4and5\Plans\R-2707AB_sd_TS_Str5.dgn
daddavenport

STR. #5

STD. NO. GRA2

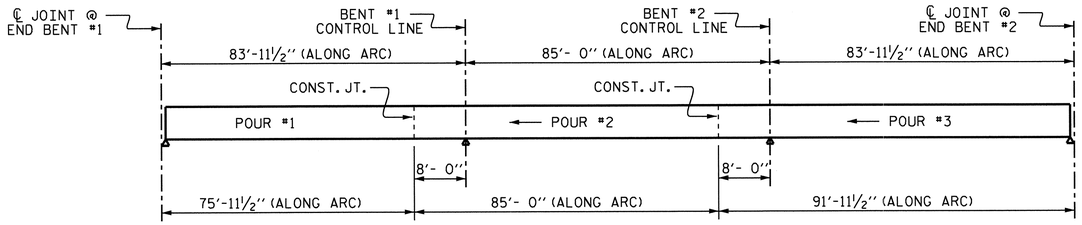

POURING SEQUENCE

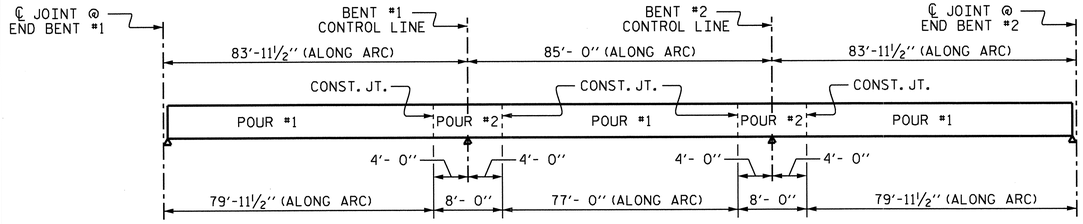

OPTIONAL POURING SEQUENCE

POUR #2 CANNNOT BE STARTED UNTIL BOTH ADJACENT #1 POURS REACH A MINIMUM 3,000 PSI

REINFORCING BAR SCHEDULE

SPANS A, B & C

BAR	NO.	SIZE	TYPE	LENGTH	WEIGHT
✱ A1	467	#5	STR	40'-11"	19930
A2	467	#5	STR	40'-11"	19930
✱ B1	116	#4	STR	28'-11"	2241
✱ B2	58	#7	STR	60'-0"	7113
✱ B3	52	#7	STR	25'-6"	2710
✱ B4	29	#4	STR	29'-0"	562
B5	220	#5	STR	52'-3"	11989
✱ G1	2	#5	STR	40'-11"	85
✱ K1	8	#8	1	13'-1"	279
✱ K2	12	#8	2	19'-11"	638
✱ K3	8	#6	STR	6'-7"	79
K4	16	#4	STR	6'-6"	69
K5	32	#4	STR	7'-6"	160
K6	16	#4	STR	6'-10"	73
K7	16	#4	STR	4'-10"	52
K8	20	#4	STR	18'-1"	242
✱ S1	56	#5	3	5'-8"	331
✱ S2	56	#4	5	2'-6"	94
S3	40	#4	2	13'-4"	356
S4	16	#4	2	11'-4"	121
S5	208	#4	4	2'-9"	382

REINFORCING STEEL 33374 LBS.

✱ EPOXY COATED REINFORCING STEEL 34062 LBS.

BAR TYPES

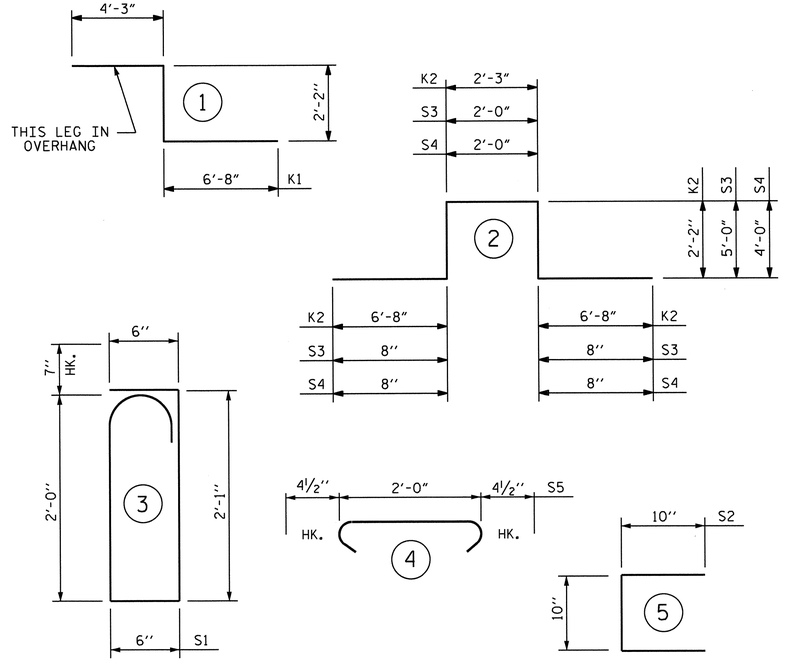

ALL BAR DIMENSIONS ARE OUT TO OUT

SUPERSTRUCTURE REINFORCING STEEL LENGTHS ARE BASED ON THE FOLLOWING MINIMUM SPLICE LENGTHS

BAR SIZE	SUPERSTRUCTURE EXCEPT APPROACH SLABS, PARAPET, AND BARRIER RAIL		APPROACH SLABS		PARAPET AND BARRIER RAIL
	EPOXY COATED	UNCOATED	EPOXY COATED	UNCOATED	
#4	2'-0"	1'-9"	2'-0"	1'-9"	2'-9"
#5	2'-6"	2'-2"	2'-6"	2'-2"	3'-5"
#6	3'-0"	2'-7"	3'-10"	2'-7"	4'-4"
#7	5'-3"	3'-6"			
#8	6'-10"	4'-7"			

SUPERSTRUCTURE BILL OF MATERIAL

	CLASS AA CONCRETE	REINFORCING STEEL	EPOXY COATED REINFORCING STEEL
	(CU. YDS.)	(LBS.)	(LBS.)
POUR 1	101.0		
POUR 2	123.6		
POUR 3	134.8		
✱✱ TOTALS	359.4	33374	34062

✱✱ QUANTITIES FOR BARRIER RAIL ARE NOT INCLUDED

GROOVING BRIDGE FLOORS

APPROACH SLABS	1671	SQ.FT.
BRIDGE DECK	8803	SQ.FT.
TOTAL	10474	SQ.FT.

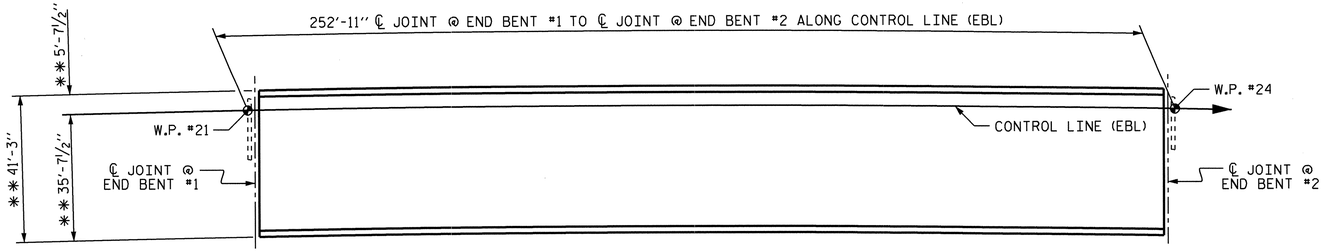

LAYOUT FOR COMPUTING AREA REINFORCED CONCRETE DECK SLAB (SQ. FT. = 10433)

✱✱ RADIAL DIMENSIONS

PROJECT NO. R-2707AB

CLEVELAND COUNTY

STATION: 157+75.50 -L-

STATE OF NORTH CAROLINA
DEPARTMENT OF TRANSPORTATION
RALEIGH

SUPERSTRUCTURE BILL OF MATERIAL (EBL)

REVISIONS						SHEET NO.
NO.	BY:	DATE:	NO.	BY:	DATE:	S-60
1			3			TOTAL SHEETS
2			4			104

ASSEMBLED BY : D. A. GLADDEN DATE : 7-14-09
CHECKED BY : M. G. SHAIKH DATE : 10-20-09
DESIGN ENGINEER OF RECORD: G.W. DICKEY DATE : 10/16/12

DRAWN BY : JMB 5/87
CHECKED BY : SJD 9/87

REV. 8/16/99 RWW/LES
REV. 5/1/06 TLA/GM
REV. 10/1/11 MAA/GM

17-OCT-2012 11:03
R:\Structures\Plans\Str4and5\Plans\R-2707AB_sd_TS_Str5.dgn
ddavenport

STR. #5 STD. NO. BOM1

NOTES:

STIRRUPS IN CAP MAY BE SHIFTED AS NECESSARY TO CLEAR ANCHOR BOLTS.

THE TOP SURFACE AREAS OF THE END BENT CAP SHALL BE CURED IN ACCORDANCE WITH THE STANDARD SPECIFICATIONS, EXCEPT THE MEMBRANE CURING COMPOUND METHOD SHALL NOT BE USED.

THE TOP SURFACE OF THE CAP EXCEPT THE BRIDGE SEAT BUILDUPS SHALL BE SLOPED TRANSVERSELY FROM THE FILL FACE TO THE BACK FACE AT THE RATE OF 2%.

INSTALL THE 4"DIAMETER DRAIN PIPE THROUGH THE WING WALL AS REQUIRED FOR REINFORCED BRIDGE APPROACH FILLS, SEE THE ROADWAY PLANS. REINFORCING STEEL IN THE WING WALL MAY BE SHIFTED AS NECESSARY TO CLEAR THE DRAIN PIPE.

THE CONCRETE IN THE SHADED AREA OF THE WING SHALL BE POURED AFTER THE JOINT BETWEEN THE DECK AND THE APPROACH SLAB HAS BEEN SAWED AND THE BARRIER RAIL IS CAST IF SLIP FORMING IS USED.

BACKWALL SHALL BE PLACED BEFORE APPLYING EPOXY PROTECTIVE COATING.

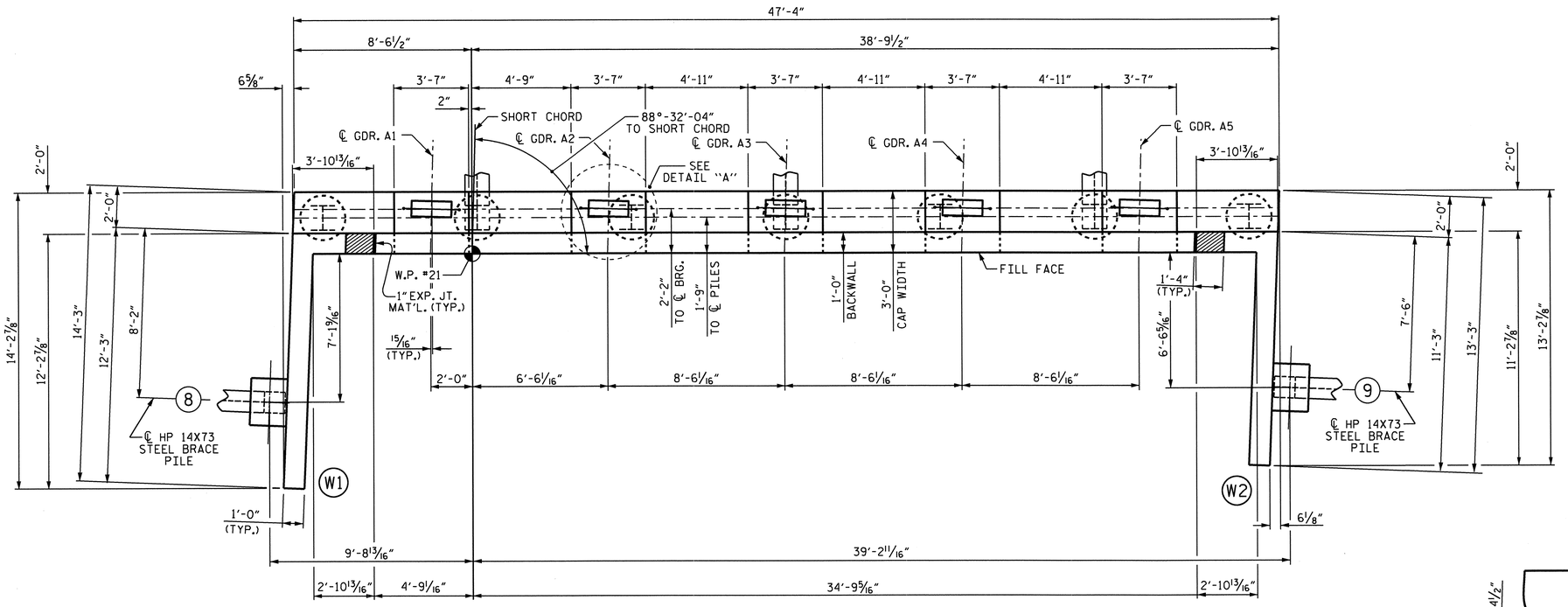

PLAN

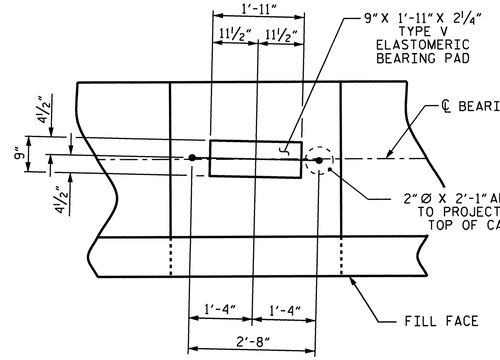

DETAIL "A"

(TYP. EA. GDR.)

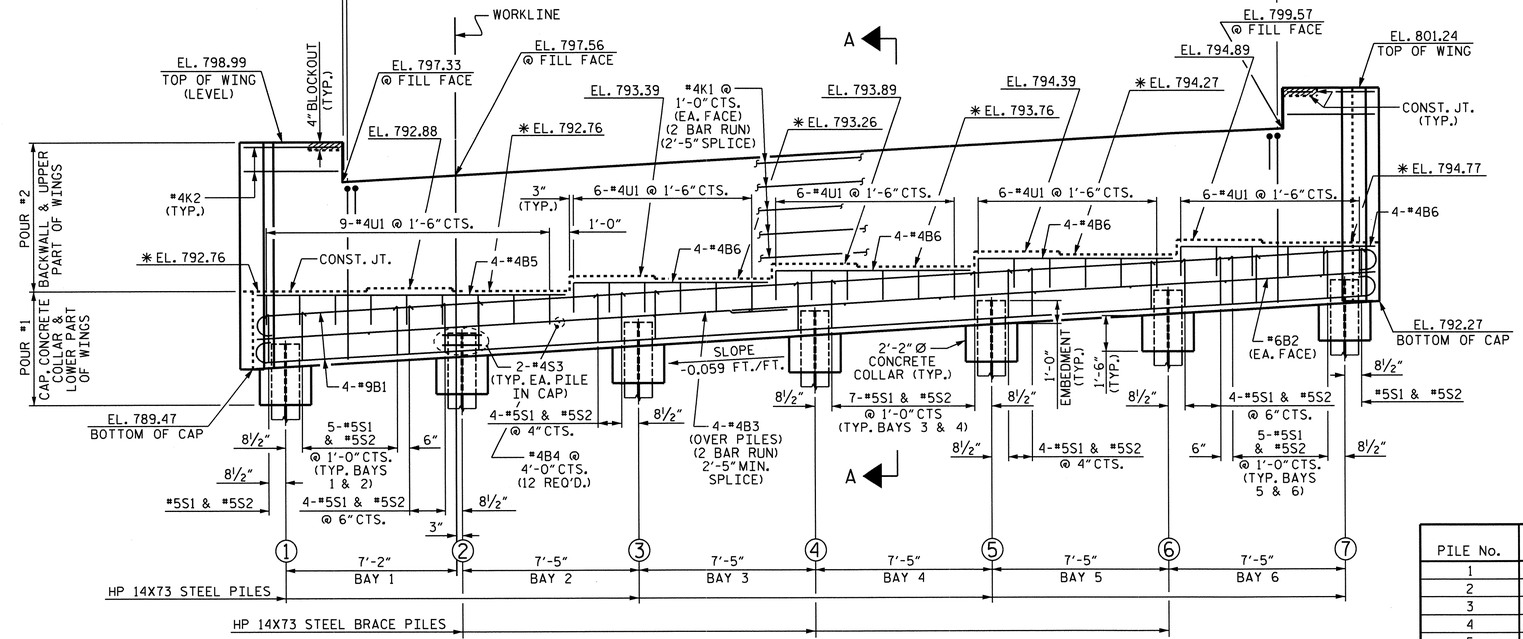

ELEVATION

∗FOR LOCATION OF ELEVATIONS BETWEEN BRIDGE SEAT BUILDUPS, SEE SECTION A-A, SHEET 3 OF 3.
WING BRACE PILES NOT SHOWN FOR CLARITY.

PILE No.	TOP OF PILE EL.
1	790.57
2	791.01
3	791.45
4	791.89
5	792.33
6	792.76
7	793.20
8	790.47
9	793.27

PROJECT NO. R-2707AB

CLEVELAND COUNTY

STATION: 157+75.50 -L-

SHEET 1 OF 3

STATE OF NORTH CAROLINA
DEPARTMENT OF TRANSPORTATION
RALEIGH

SUBSTRUCTURE

END BENT #1
(EBL)

NORTH CAROLINA PROFESSIONAL SEAL 10730 ENGINEER D. ANDREW DAVENPORT
10-17-12

REVISIONS						SHEET NO.
NO.	BY:	DATE:	NO.	BY:	DATE:	S-61
1			3			TOTAL SHEETS
2			4			104

DRAWN BY : M.K. BEARD DATE : 2/24/12
CHECKED BY : D.A. DAVENPORT DATE : 3/20/12
DESIGN ENGINEER OF RECORD: G.W. DICKEY DATE : 10/16/12

17-OCT-2012 10:52
R:\Structures\Plans\Str4and5\Plans\R-2707AB_sd_E*.dgn
ddavenport

STR. #5

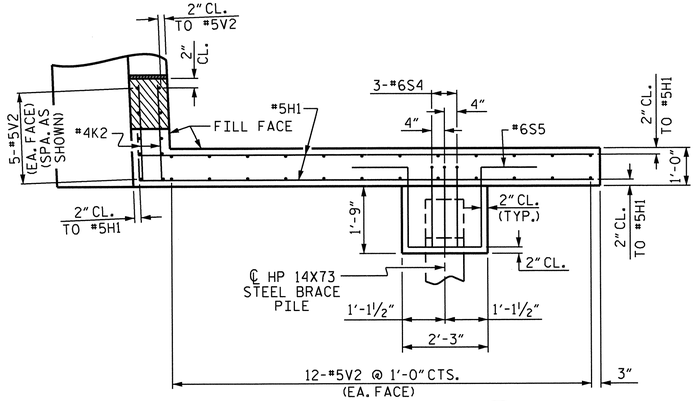

PLAN OF WING - W1

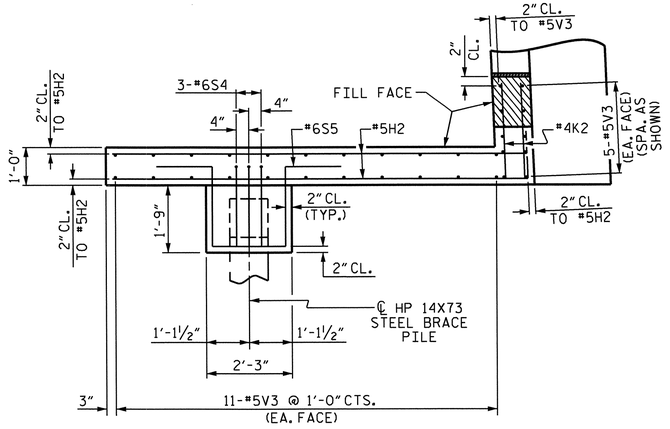

PLAN OF WING - W2

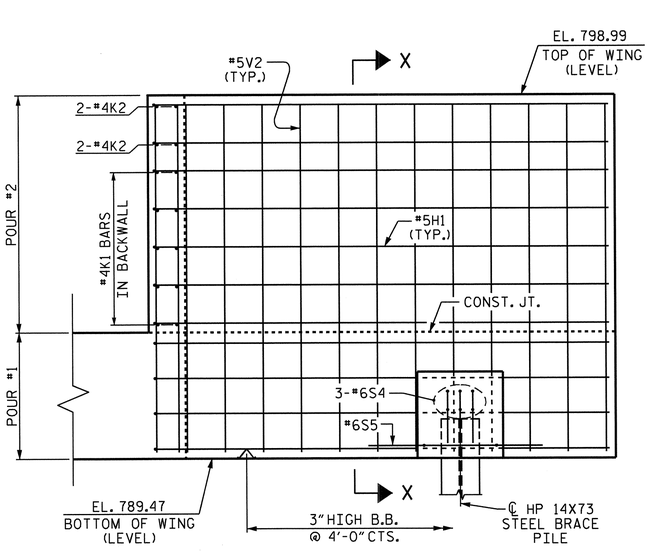

ELEVATION OF WING - W1

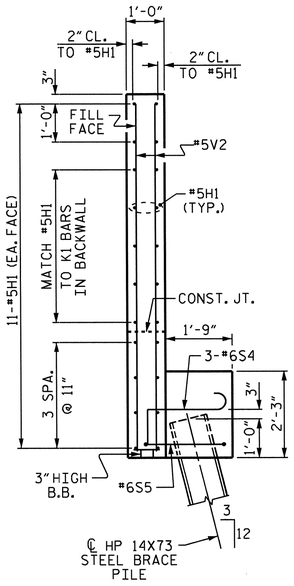

SECTION X-X

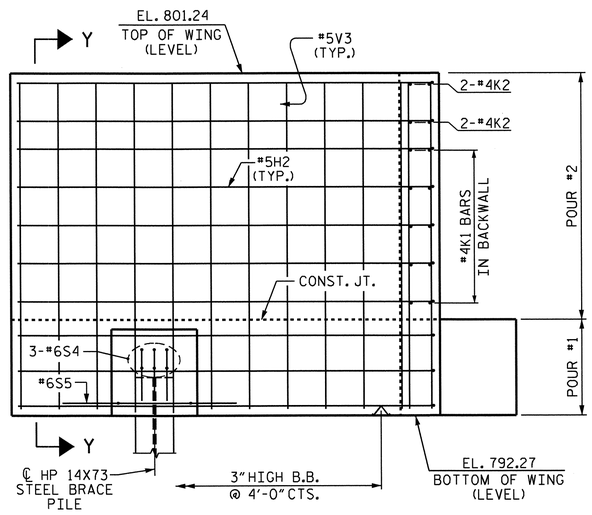

ELEVATION OF WING - W2

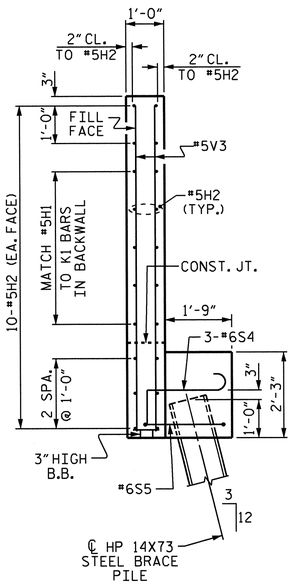

SECTION Y-Y

PROJECT NO. R-2707AB

CLEVELAND COUNTY

STATION: 157+75.50 -L-

SHEET 2 OF 3

STATE OF NORTH CAROLINA
DEPARTMENT OF TRANSPORTATION
RALEIGH

SUBSTRUCTURE

END BENT #1
(EBL)

NORTH CAROLINA PROFESSIONAL SEAL 10730 ENGINEER D. ANDRE DAVENPORT
6-13-13

REVISIONS						SHEET NO.
NO.	BY:	DATE:	NO.	BY:	DATE:	S-62
1			3			TOTAL SHEETS
2			4			104

STR. #5

DRAWN BY : M.K. BEARD DATE : 2/24/12
CHECKED BY : D.A. DAVENPORT DATE : 3/20/12
DESIGN ENGINEER OF RECORD: G.W. DICKEY DATE : 10/16/12

13-JUN-2013 07:56
R:\Structures\Plans\Str4and5\Plans\R-2707AB_sd_E*.dgn
dadavenport

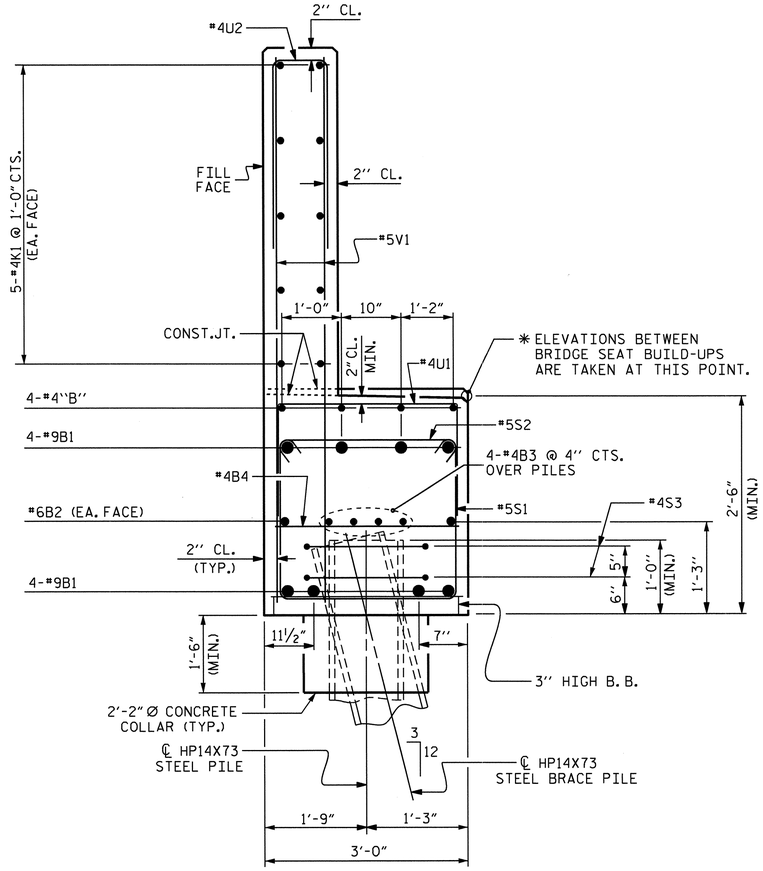

SECTION A-A

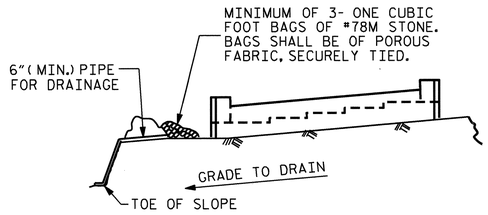

BAGGED STONE AND PIPE SHALL BE PLACED IMMEDIATELY AFTER COMPLETION OF END BENT EXCAVATION. PIPE MAY BE EITHER CONCRETE, CORRUGATED STEEL, CORRUGATED ALUMINUM ALLOY, OR CORRUGATED PLASTIC. PERFORATED PIPE WILL NOT BE ALLOWED.

BAGGED STONE SHALL REMAIN IN PLACE UNTIL THE ENGINEER DIRECTS THAT IT BE REMOVED. THE CONTRACTOR SHALL REMOVE AND DISPOSE OF SILT ACCUMULATIONS AT BAGGED STONE WHEN SO DIRECTED BY THE ENGINEER. BAGS SHALL BE REMOVED AND REPLACED WHENEVER THE ENGINEER DETERMINES THAT THEY HAVE DETERIORATED AND LOST THEIR EFFECTIVENESS.

NO SEPARATE PAYMENT WILL BE MADE FOR THIS WORK AND THE ENTIRE COST OF THIS WORK SHALL BE INCLUDED IN THE UNIT CONTRACT PRICE BID FOR THE SEVERAL PAY ITEMS.

TEMPORARY DRAINAGE AT END BENT

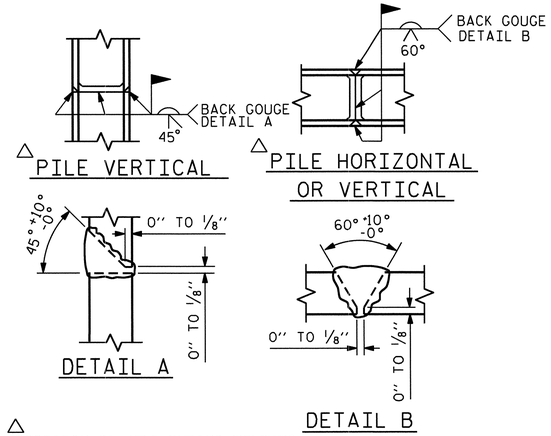

△ POSITION OF PILE DURING WELDING.

PILE SPLICE DETAILS

BAR TYPES

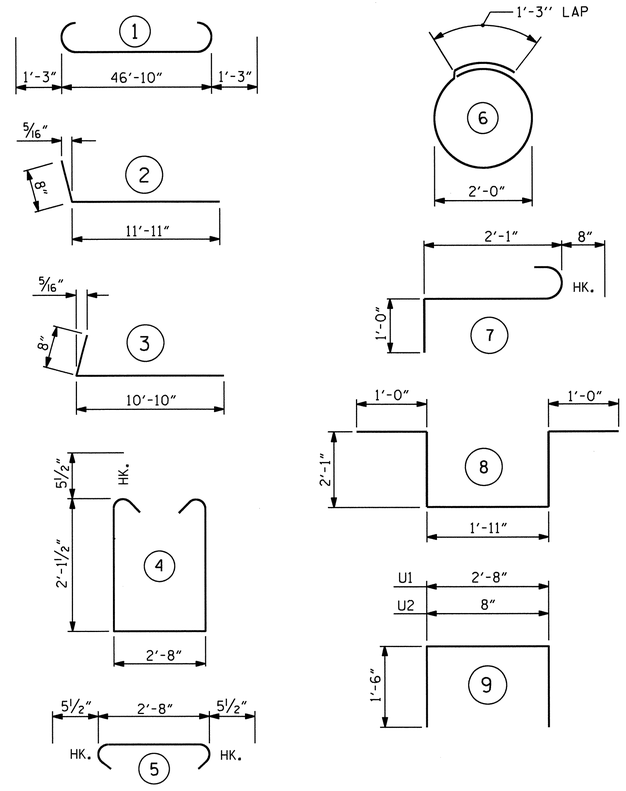

ALL BAR DIMENSIONS ARE OUT TO OUT.

BILL OF MATERIAL

END BENT #1

BAR	No.	SIZE	TYPE	LENGTH	WEIGHT
B1	8	#9	1	49'-4"	1342
B2	2	#6	STR.	46'-11"	141
B3	8	#4	STR.	24'-9"	132
B4	12	#4	STR.	2'-8"	21
B5	4	#4	STR.	12'-11"	35
B6	16	#4	STR.	8'-2"	87
H1	22	#5	2	12'-7"	289
H2	20	#5	3	11'-6"	240
K1	20	#4	STR.	24'-9"	331
K2	8	#4	STR.	3'-6"	19
S1	52	#5	4	7'-10"	425
S2	52	#5	5	3'-7"	194
S3	14	#4	6	7'-7"	71
S4	6	#6	7	3'-9"	34
S5	2	#6	8	8'-1"	24
U1	33	#4	9	5'-8"	125
U2	40	#4	9	3'-8"	98
V1	80	#5	STR.	7'-3"	605
V2	34	#5	STR.	9'-1"	322
V3	32	#5	STR.	8'-6"	284

REINFORCING STEEL	LBS.	4819
CLASS "A" CONCRETE BREAKDOWN		
CAP, LOWER WINGS & COLLARS	CU.YDS.	19.4
POUR #2 UPPER WINGS & BACKWALL	CU.YDS.	13.9
CLASS "A" CONCRETE TOTAL	CU.YDS.	33.3
HP 14X73 STEEL PILES		
No. 9	LIN.FT.	585
PILE REDRIVES		7 EA.

PROJECT NO. R-2707AB

CLEVELAND COUNTY

STATION: 157+75.50 -L-

SHEET 3 OF 3

STATE OF NORTH CAROLINA
DEPARTMENT OF TRANSPORTATION
RALEIGH

SUBSTRUCTURE

END BENT #1
(EBL)

NORTH CAROLINA PROFESSIONAL SEAL 10730 ENGINEER D. ANDRE DAVENPORT
10-17-12

REVISIONS						SHEET NO.
NO.	BY:	DATE:	NO.	BY:	DATE:	S-63
1			3			TOTAL SHEETS
2			4			104

DRAWN BY : M.K. BEARD DATE : 2/27/12
CHECKED BY : D.A. DAVENPORT DATE : 3/20/12
DESIGN ENGINEER OF RECORD: G.W. DICKEY DATE : 10/16/12

NOTES

STIRRUPS IN CAP MAY BE SHIFTED AS NECESSARY TO CLEAR ANCHOR BOLTS.

GALVANIZE THE TOP OF EACH INTERIOR BENT PILE A MINIMUM OF 40 FEET. GALVANIZE IN ACCORDANCE WITH SECTION 1076 OF THE STANDARD SPECIFICATIONS.

FOR PIPE PILES, SEE "24" STEEL PIPE PILE" SHEET.

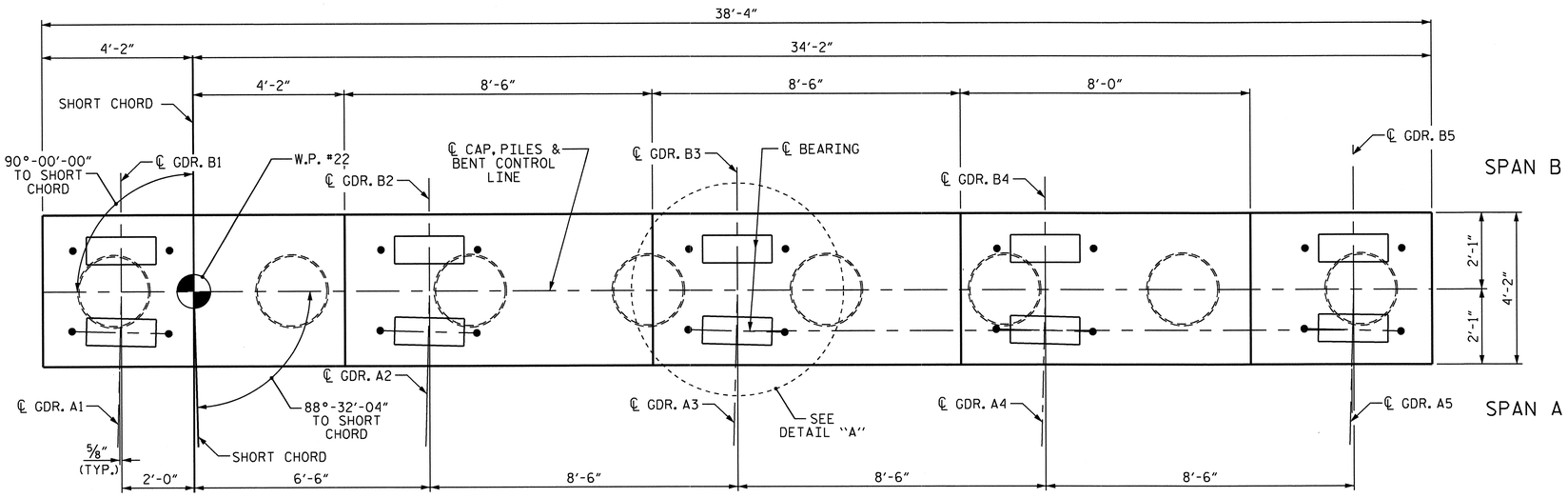

PLAN

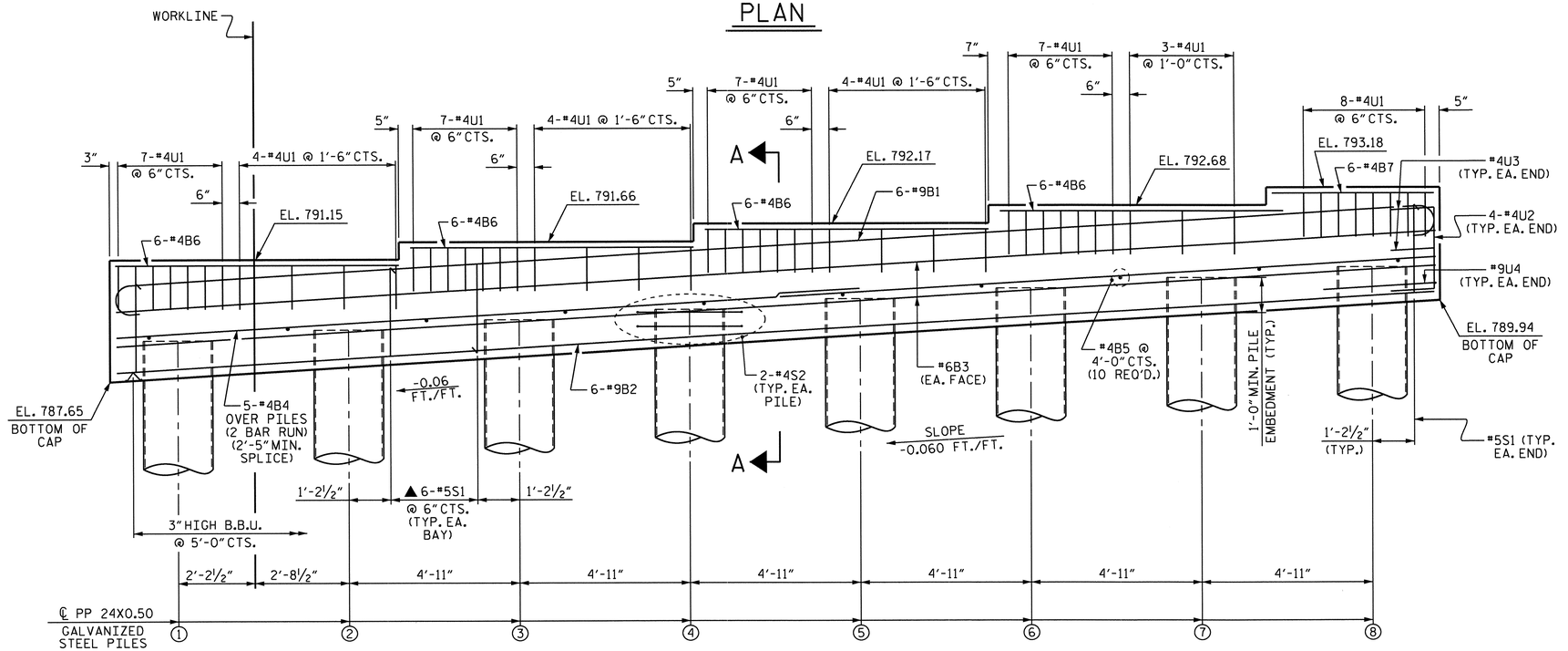

▲ INVERT ALTERNATE STIRRUPS

ELEVATION

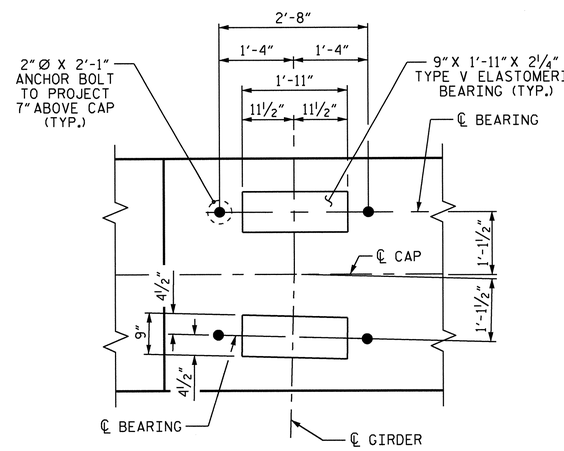

DETAIL "A"

(TYP. EA. GIRDER)

PILE No.	TOP OF PILE ELEV.
1	788.83
2	789.12
3	789.42
4	789.71
5	790.01
6	790.30
7	790.60
8	790.89

PROJECT NO. R-2707AB

CLEVELAND COUNTY

STATION: 157+75.50 -L-

SHEET 1 OF 2

STATE OF NORTH CAROLINA
DEPARTMENT OF TRANSPORTATION
RALEIGH

SUBSTRUCTURE

BENT #1
(EBL)

NORTH CAROLINA PROFESSIONAL SEAL 10730 ENGINEER D. ANDRE DAVENPORT
6-13-12

REVISIONS						SHEET NO.
NO.	BY:	DATE:	NO.	BY:	DATE:	S-64
1			3			TOTAL SHEETS
2			4			104

DRAWN BY : M.K. BEARD DATE : 2/29/12
CHECKED BY : D.A. DAVENPORT DATE : 3/21/12
DESIGN ENGINEER OF RECORD: G.W. DICKEY DATE : 10/16/12

13-JUN-2013 07:57
R:\Structures\Plans\Str4and5\Plans\R-2707AB_sd_Bts_Str5.dgn
dadavenport

STR. #5

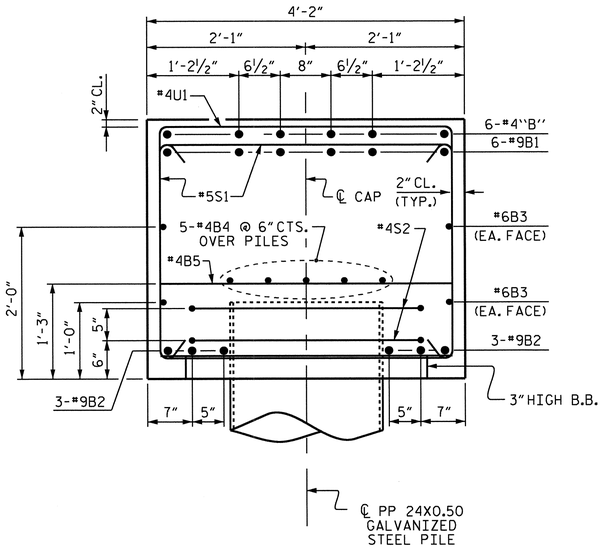

SECTION A-A

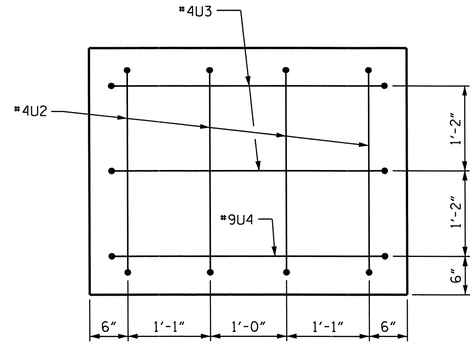

END VIEW
(TYP. EA. END)

BAR TYPES

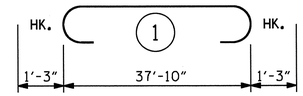

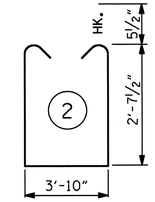

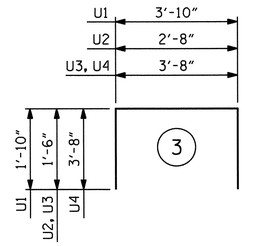

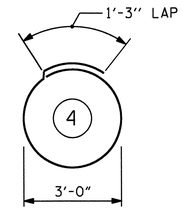

ALL BAR DIMENSIONS ARE OUT TO OUT.

BILL OF MATERIAL

BENT #1

BAR	NO.	SIZE	TYPE	LENGTH	WEIGHT
B1	6	#9	1	40'-4"	823
B2	6	#9	STR	38'-0"	775
B3	4	#6	STR	38'-0"	228
B4	10	#4	STR	20'-3"	135
B5	10	#4	STR	3'-10"	26
B6	24	#4	STR	8'-2"	131
B7	6	#4	STR	4'-8"	19
S1	44	#5	2	10'-0"	459
S2	16	#4	4	10'-9"	115
U1	51	#4	3	7'-6"	256
U2	8	#4	3	5'-8"	30
U3	4	#4	3	6'-8"	18
U4	2	#9	3	11'-0"	75

REINFORCING STEEL = 3090 LBS

CLASS A CONCRETE BREAKDOWN
POUR #1 (CAP) 18.4 C.Y.
TOTAL CLASS A CONCRETE 18.4 C.Y.

PP 24X0.50 GALVANIZED STEEL PILES
No. 8 460 LIN. FT.

PILE REDRIVES 8 EA.

NOTE: THE VOLUME OF CONCRETE DISPLACED BY THE PIPE PILES HAS BEEN DEDUCTED FROM THE TOTAL VOLUME.

PROJECT NO. R-2707AB
CLEVELAND COUNTY
STATION: 157+75.50 -L-

SHEET 2 OF 2

STATE OF NORTH CAROLINA
DEPARTMENT OF TRANSPORTATION
RALEIGH

SUBSTRUCTURE

BENT #1
(EBL)

NORTH CAROLINA PROFESSIONAL SEAL 10730 ENGINEER D. ANDREW DAVENPORT, JR
10-17-12

REVISIONS						SHEET NO.
NO.	BY:	DATE:	NO.	BY:	DATE:	S-65
1			3			TOTAL SHEETS
2			4			104

DRAWN BY : M.K. BEARD DATE : 2/29/12
CHECKED BY : D.A. DAVENPORT DATE : 3/21/12
DESIGN ENGINEER OF RECORD: G.W. DICKEY DATE : 10/16/12

17-OCT-2012 10:49
R:\Structures\Plans\Str4and5\Plans\R-2707AB_sd_Bts_Str5.dgn
addavenport

STR. #5

NOTES

STIRRUPS IN CAP MAY BE SHIFTED AS NECESSARY TO CLEAR ANCHOR BOLTS.

GALVANIZE THE TOP OF EACH INTERIOR BENT PILE A MINIMUM OF 40 FEET. GALVANIZE IN ACCORDANCE WITH SECTION 1076 OF THE STANDARD SPECIFICATIONS.

FOR PIPE PILES, SEE "24" STEEL PIPE PILE" SHEET.

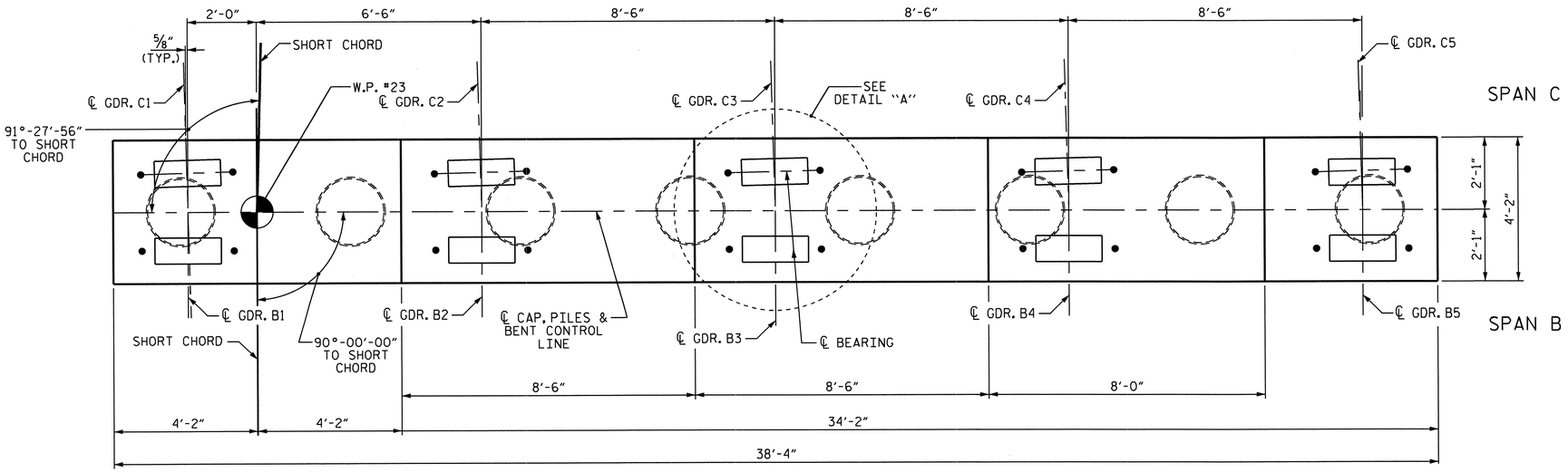

PLAN

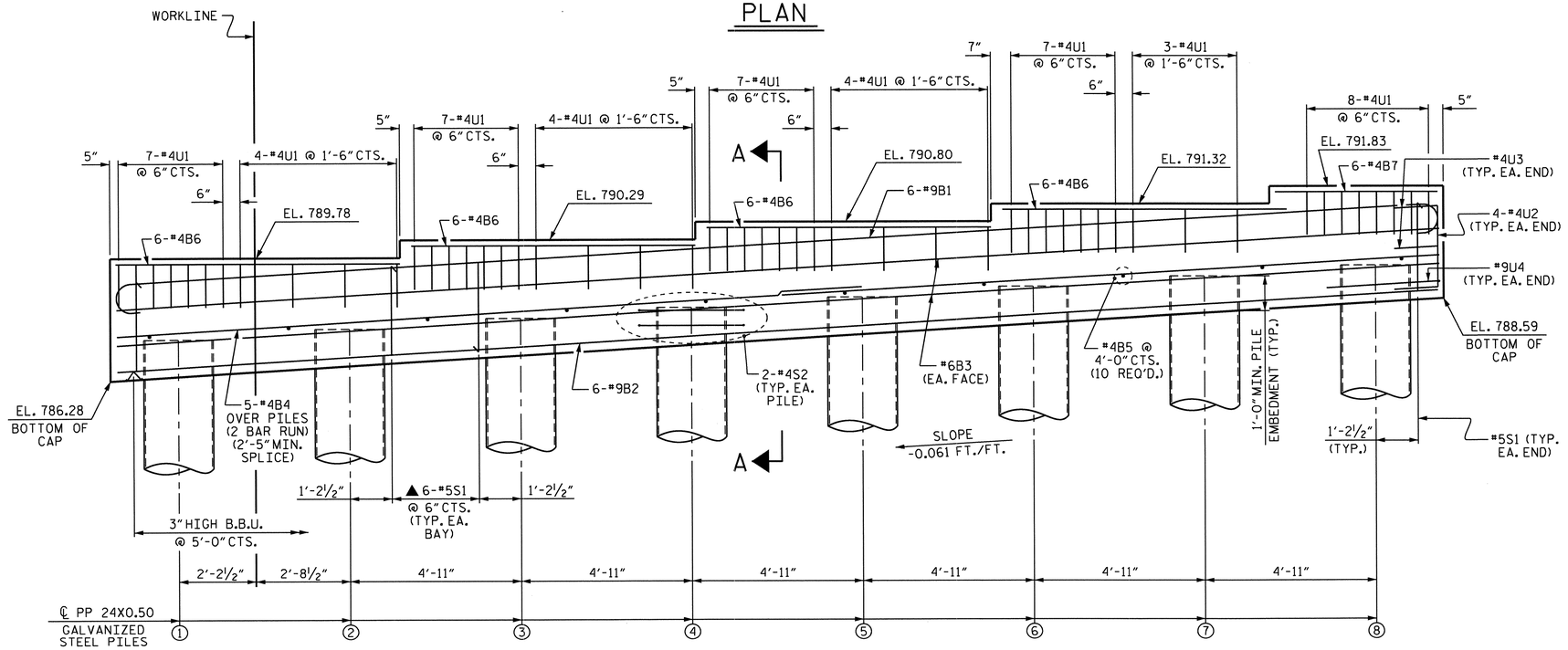

▲ INVERT ALTERNATE STIRRUPS

ELEVATION

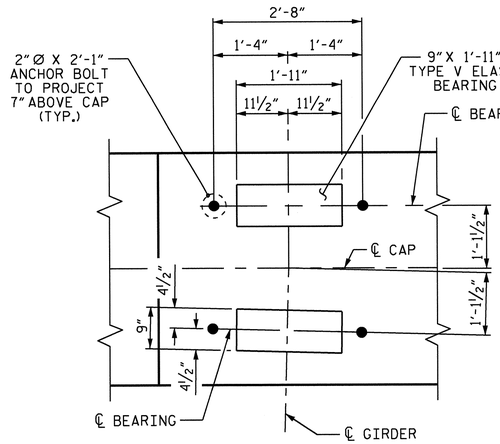

DETAIL "A"

(TYP. EA. GIRDER)

PILE No.	TOP OF PILE ELEV.
1	787.46
2	787.75
3	788.05
4	788.34
5	788.64
6	788.93
7	789.23
8	789.52

PROJECT NO. R-2707AB

CLEVELAND COUNTY

STATION: 157+75.50 -L-

SHEET 1 OF 2

STATE OF NORTH CAROLINA
DEPARTMENT OF TRANSPORTATION
RALEIGH

SUBSTRUCTURE

BENT #2
(EBL)

NORTH CAROLINA PROFESSIONAL SEAL 10730 ENGINEER D. ANDRE DAVENPORT
13-Jun-13

REVISIONS						SHEET NO.
NO.	BY:	DATE:	NO.	BY:	DATE:	S-66
1			3			TOTAL SHEETS
2			4			104

DRAWN BY : M.K. BEARD DATE : 3/1/12
CHECKED BY : D.A. DAVENPORT DATE : 3/21/12
DESIGN ENGINEER OF RECORD: G.W. DICKEY DATE : 10/16/12

13-JUN-2013 07:58
R:\Structures\Plans\Str4and5\Plans\R-2707AB_sd_Bts_Str5.dgn
ddavenport

STR. #5

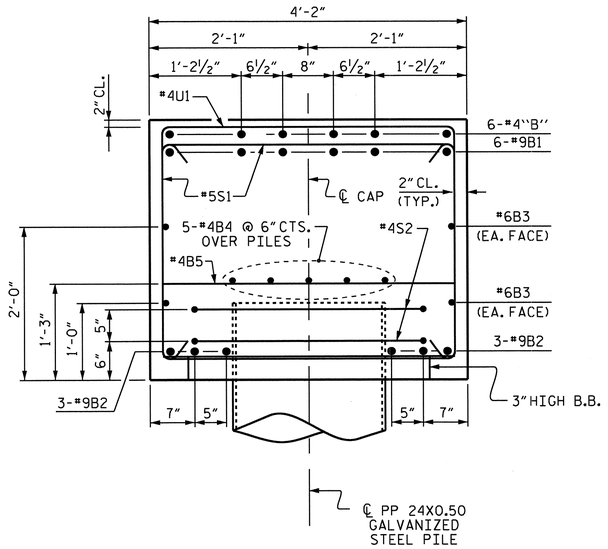

SECTION A-A

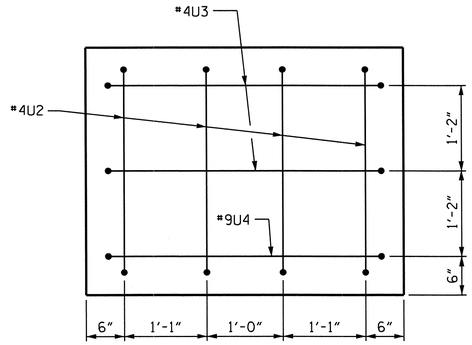

END VIEW
(TYP. EA. END)

BAR TYPES

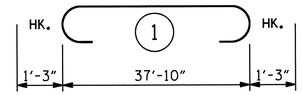

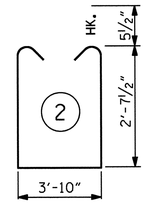

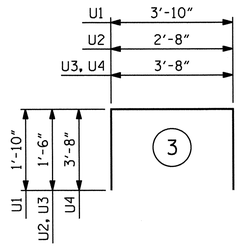

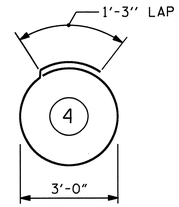

ALL BAR DIMENSIONS ARE OUT TO OUT.

BILL OF MATERIAL

BENT #2

BAR	NO.	SIZE	TYPE	LENGTH	WEIGHT
B1	6	#9	1	40'-4"	823
B2	6	#9	STR	38'-0"	775
B3	4	#6	STR	38'-0"	228
B4	10	#4	STR	20'-3"	135
B5	10	#4	STR	3'-10"	26
B6	24	#4	STR	8'-2"	131
B7	6	#4	STR	4'-8"	19
S1	44	#5	2	10'-0"	459
S2	16	#4	4	10'-9"	115
U1	51	#4	3	7'-6"	256
U2	8	#4	3	5'-8"	30
U3	4	#4	3	6'-8"	18
U4	2	#9	3	11'-0"	75

REINFORCING STEEL = 3090 LBS

CLASS A CONCRETE BREAKDOWN
POUR #1 (CAP) 18.4 C.Y.
TOTAL CLASS A CONCRETE 18.4 C.Y.

PP 24X0.50 GALVANIZED STEEL PILES
No. 8 440 LIN. FT.

PIPE PILE PLATES EA. 8

PILE REDRIVES 8 EA.

NOTE: THE VOLUME OF CONCRETE DISPLACED BY THE PIPE PILES HAS BEEN DEDUCTED FROM THE TOTAL VOLUME.

PROJECT NO. R-2707AB
CLEVELAND COUNTY
STATION: 157+75.50 -L-

SHEET 2 OF 2

NORTH CAROLINA PROFESSIONAL SEAL 10730 ENGINEER D. ANDRE DAVENPORT, JR.
10-17-12

STATE OF NORTH CAROLINA
DEPARTMENT OF TRANSPORTATION
RALEIGH

SUBSTRUCTURE

BENT #2
(EBL)

REVISIONS						SHEET NO.
NO.	BY:	DATE:	NO.	BY:	DATE:	S-67
1			3			TOTAL SHEETS
2			4			104

DRAWN BY : M.K. BEARD DATE : 3/1/12
CHECKED BY : D.A. DAVENPORT DATE : 3/21/12
DESIGN ENGINEER OF RECORD: G.W. DICKEY DATE : 10/16/12

17-OCT-2012 10:49
R:\Structures\Plans\Str4and5\Plans\R-2707AB_sd_Bts_Str5.dgn
ddavenport

NOTES:

STIRRUPS IN CAP MAY BE SHIFTED AS NECESSARY TO CLEAR ANCHOR BOLTS.

THE TOP SURFACE AREAS OF THE END BENT CAP SHALL BE CURED IN ACCORDANCE WITH THE STANDARD SPECIFICATIONS, EXCEPT THE MEMBRANE CURING COMPOUND METHOD SHALL NOT BE USED.

THE TOP SURFACE OF THE CAP EXCEPT THE BRIDGE SEAT BUILDUPS SHALL BE SLOPED TRANSVERSELY FROM THE FILL FACE TO THE BACK FACE AT THE RATE OF 2%.

INSTALL THE 4"DIAMETER DRAIN PIPE THROUGH THE WING WALL AS REQUIRED FOR REINFORCED BRIDGE APPROACH FILLS. SEE THE ROADWAY PLANS. REINFORCING STEEL IN THE WING WALL MAY BE SHIFTED AS NECESSARY TO CLEAR THE DRAIN PIPE.

THE CONCRETE IN THE SHADED AREA OF THE WING SHALL BE POURED AFTER THE JOINT BETWEEN THE DECK AND THE APPROACH SLAB HAS BEEN SAWED AND THE BARRIER RAIL IS CAST IF SLIP FORMING IS USED.

BACKWALL SHALL BE PLACED BEFORE APPLYING EPOXY PROTECTIVE COATING.

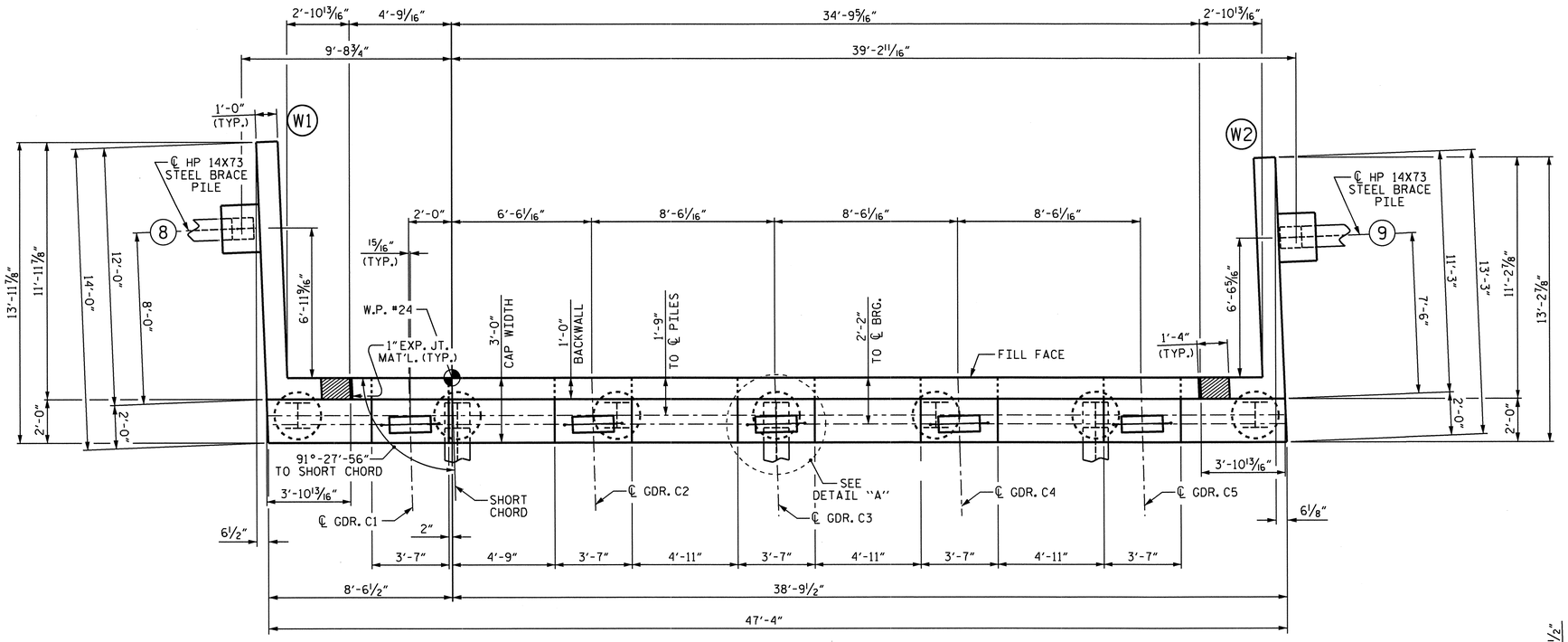

PLAN

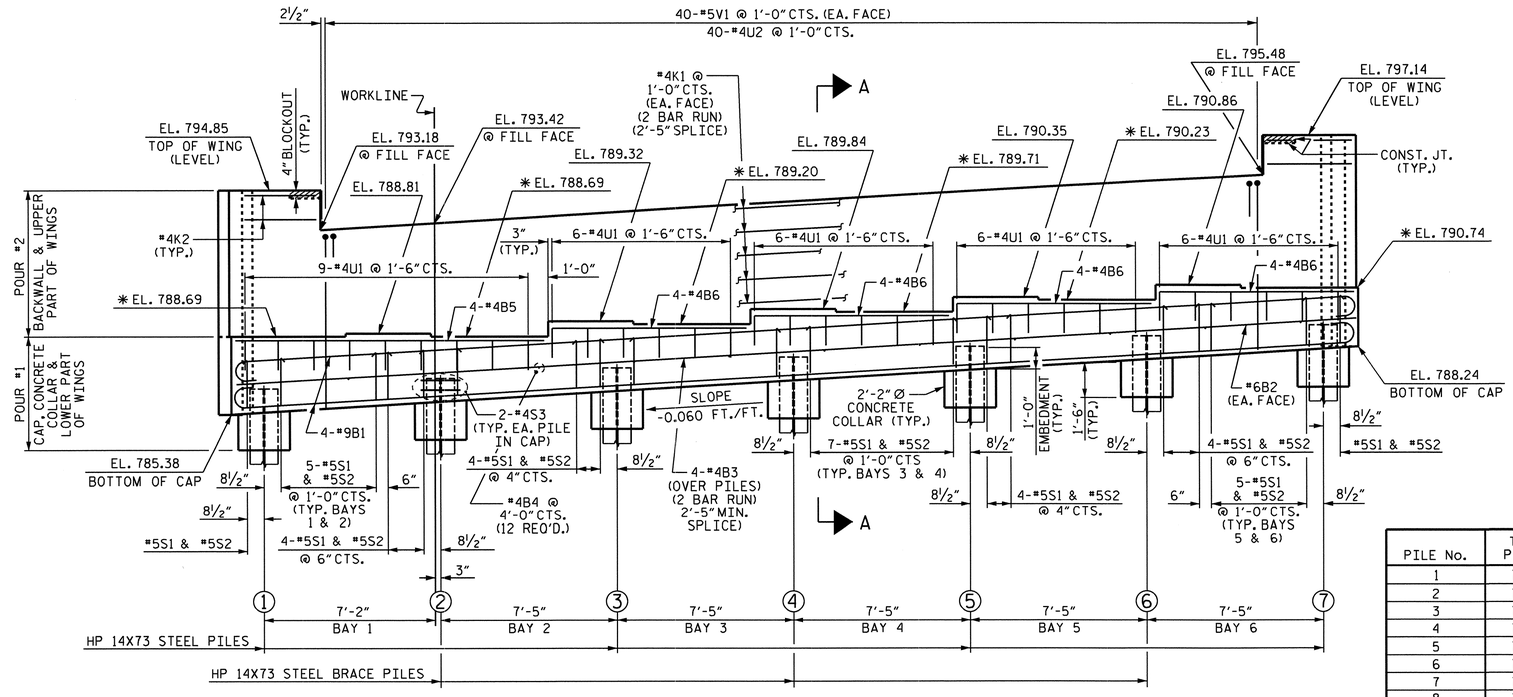

ELEVATION

* FOR LOCATION OF ELEVATIONS BETWEEN BRIDGE SEAT BUILDUPS, SEE SECTION A-A, SHEET 3 OF 3.
WING BRACE PILES NOT SHOWN FOR CLARITY.

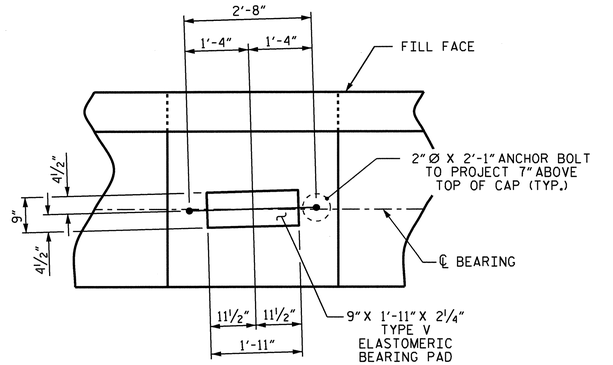

DETAIL "A"

(TYP. EA. GDR.)

PILE No.	TOP OF PILE EL.
1	786.48
2	786.93
3	787.38
4	787.83
5	788.27
6	788.72
7	789.17
8	786.38
9	789.24

PROJECT NO. R-2707AB

CLEVELAND COUNTY

STATION: 157+75.50 -L-

SHEET 1 OF 3

STATE OF NORTH CAROLINA
DEPARTMENT OF TRANSPORTATION
RALEIGH

SUBSTRUCTURE

END BENT #2
(EBL)

NORTH CAROLINA PROFESSIONAL SEAL 10730 ENGINEER D. ANDREW DAVENPORT
10-17-12

REVISIONS						SHEET NO.
NO.	BY:	DATE:	NO.	BY:	DATE:	S-68
1			3			TOTAL SHEETS
2			4			104

DRAWN BY : M.K. BEARD DATE : 2/27/12
CHECKED BY : D.A. DAVENPORT DATE : 3/20/12
DESIGN ENGINEER OF RECORD: G.W. DICKEY DATE : 10/16/12

17-OCT-2012 10:52
R:\Structures\Plans\Str4and5\Plans\R-2707AB_sd_E*.dgn
ddavenport

STR. #5

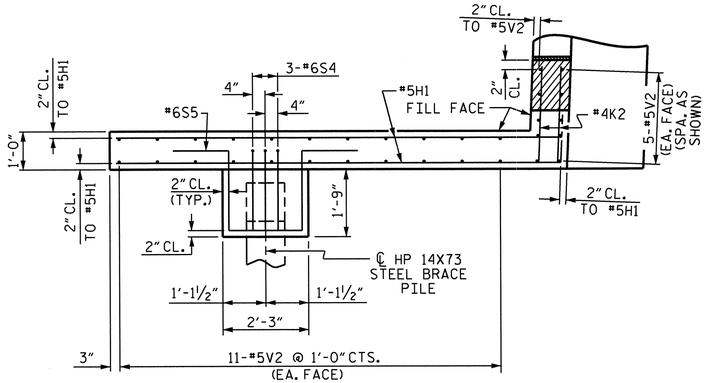

PLAN OF WING - W1

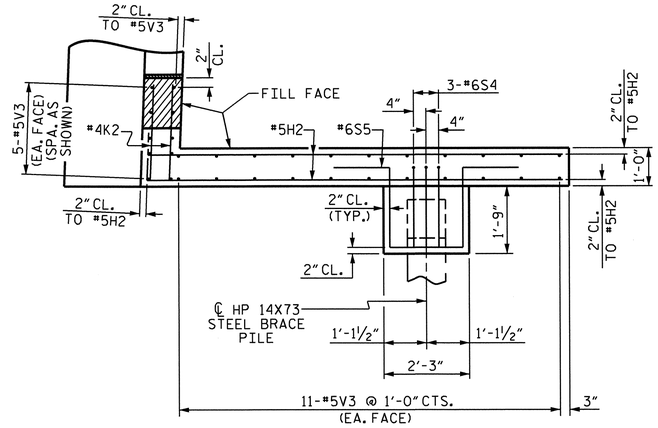

PLAN OF WING - W2

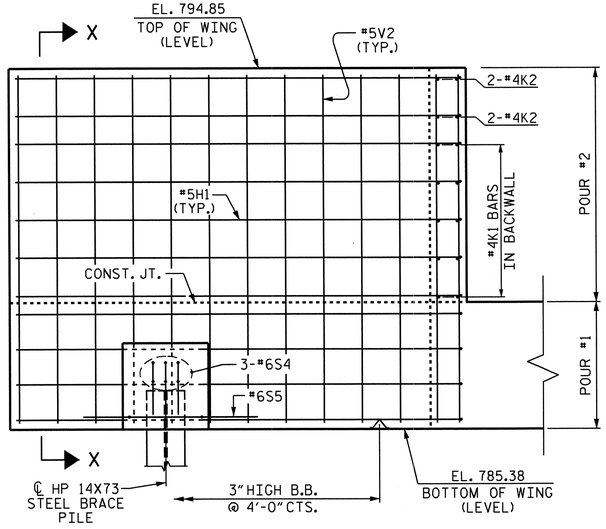

ELEVATION OF WING - W1

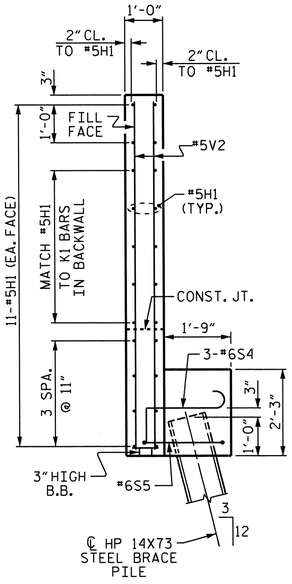

SECTION X-X

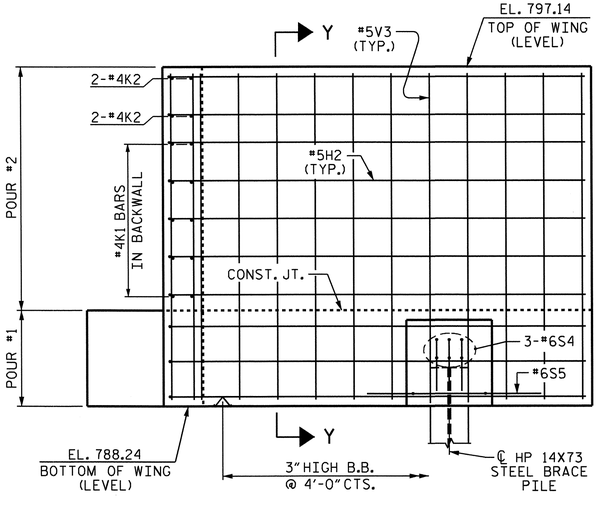

ELEVATION OF WING - W2

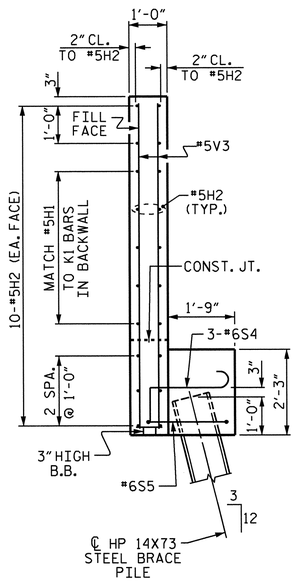

SECTION Y-Y

PROJECT NO. R-2707AB

CLEVELAND COUNTY

STATION: 157+75.50 -L-

SHEET 2 OF 3

STATE OF NORTH CAROLINA
DEPARTMENT OF TRANSPORTATION
RALEIGH

SUBSTRUCTURE

END BENT #2
(EBL)

NORTH CAROLINA PROFESSIONAL SEAL 10730 ENGINEER D. ANDRE DAVENPORT
6-13-13

REVISIONS						SHEET NO.
NO.	BY:	DATE:	NO.	BY:	DATE:	S-69
1			3			TOTAL SHEETS
2			4			104

DRAWN BY : M.K. BEARD DATE : 2/27/12
CHECKED BY : D.A. DAVENPORT DATE : 3/20/12
DESIGN ENGINEER OF RECORD: G.W. DICKEY DATE : 10/16/12

13-JUN-2013 07:57
R:\Structures\Plans\Str4and5\Plans\R-2707AB_sd_E*.dgn
dadavenport

STR. #5

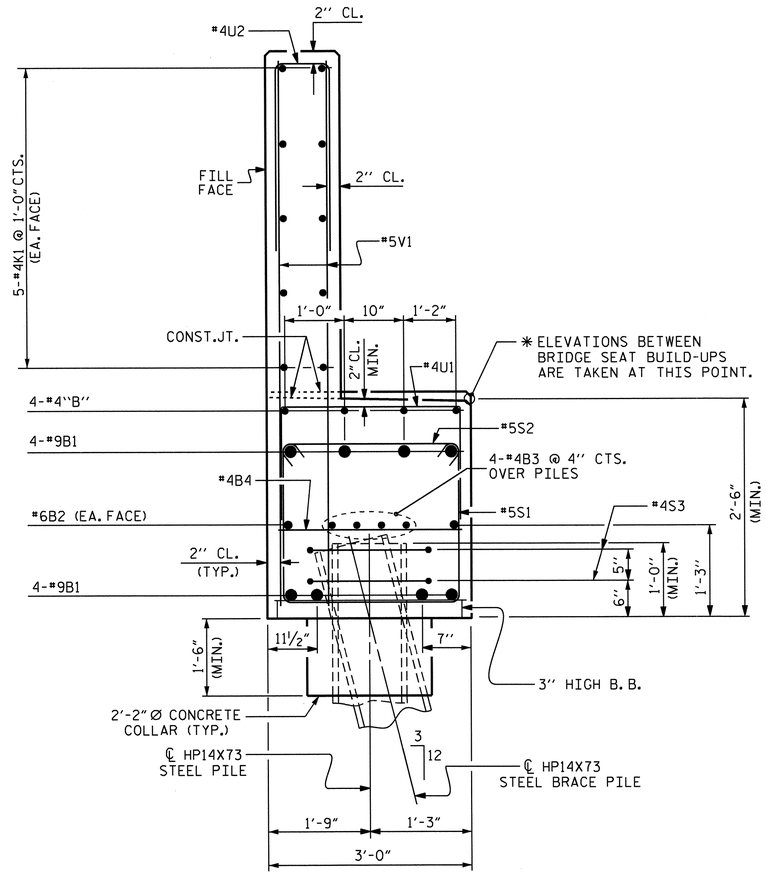

SECTION A-A

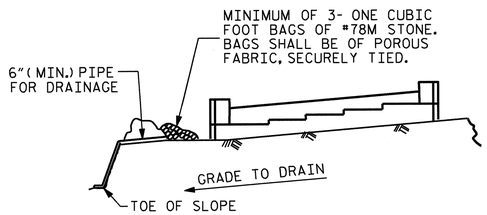

BAGGED STONE AND PIPE SHALL BE PLACED IMMEDIATELY AFTER COMPLETION OF END BENT EXCAVATION. PIPE MAY BE EITHER CONCRETE, CORRUGATED STEEL, CORRUGATED ALUMINUM ALLOY, OR CORRUGATED PLASTIC. PERFORATED PIPE WILL NOT BE ALLOWED.

BAGGED STONE SHALL REMAIN IN PLACE UNTIL THE ENGINEER DIRECTS THAT IT BE REMOVED. THE CONTRACTOR SHALL REMOVE AND DISPOSE OF SILT ACCUMULATIONS AT BAGGED STONE WHEN SO DIRECTED BY THE ENGINEER. BAGS SHALL BE REMOVED AND REPLACED WHENEVER THE ENGINEER DETERMINES THAT THEY HAVE DETERIORATED AND LOST THEIR EFFECTIVENESS.

NO SEPARATE PAYMENT WILL BE MADE FOR THIS WORK AND THE ENTIRE COST OF THIS WORK SHALL BE INCLUDED IN THE UNIT CONTRACT PRICE BID FOR THE SEVERAL PAY ITEMS.

TEMPORARY DRAINAGE AT END BENT

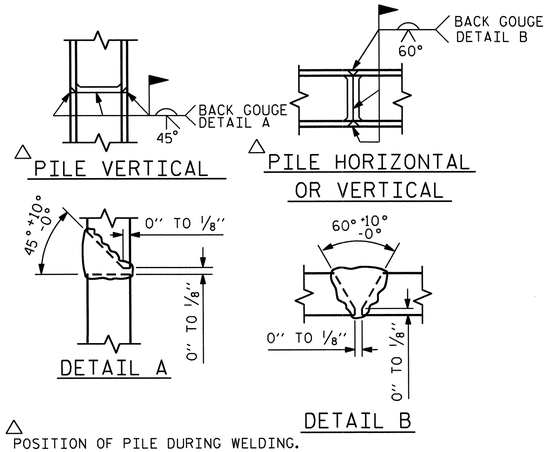

△ POSITION OF PILE DURING WELDING.

PILE SPLICE DETAILS

BAR TYPES

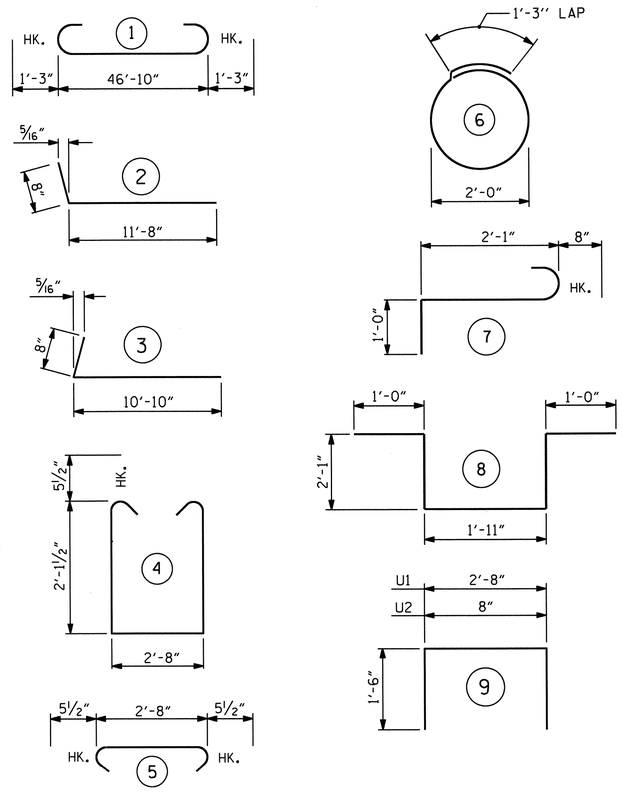

ALL BAR DIMENSIONS ARE OUT TO OUT.

BILL OF MATERIAL

END BENT #2

BAR	No.	SIZE	TYPE	LENGTH	WEIGHT
B1	8	#9	1	49'-4"	1342
B2	2	#6	STR.	46'-11"	141
B3	8	#4	STR.	24'-9"	132
B4	12	#4	STR.	2'-8"	21
B5	4	#4	STR.	12'-11"	35
B6	16	#4	STR.	8'-2"	87
H1	22	#5	2	12'-4"	283
H2	20	#5	3	11'-6"	240
K1	20	#4	STR.	24'-9"	331
K2	8	#4	STR.	3'-6"	19
S1	52	#5	4	7'-10"	425
S2	52	#5	5	3'-7"	194
S3	14	#4	6	7'-7"	71
S4	6	#6	7	3'-9"	34
S5	2	#6	8	8'-1"	24
U1	33	#4	9	5'-8"	125
U2	40	#4	9	3'-8"	98
V1	80	#5	STR.	7'-2"	598
V2	32	#5	STR.	9'-1"	303
V3	32	#5	STR.	8'-6"	284

REINFORCING STEEL LBS. 4787

CLASS "A" CONCRETE BREAKDOWN

POUR #1 CAP, LOWER WINGS & COLLARS CU.YDS. 19.4

POUR #2 UPPER WINGS & BACKWALL CU.YDS. 13.6

CLASS "A" CONCRETE TOTAL CU.YDS. 33.0

HP 14X73 STEEL PILES

No. 9 LIN.FT. 585

PILE REDRIVES 7 EA.

DRAWN BY : M.K. BEARD DATE : 2/27/12
CHECKED BY : D.A. DAVENPORT DATE : 3/20/12
DESIGN ENGINEER OF RECORD: G.W. DICKEY DATE : 10/16/12

PROJECT NO. R-2707AB
CLEVELAND COUNTY
STATION: 157+75.50 -L-

SHEET 3 OF 3

STATE OF NORTH CAROLINA
DEPARTMENT OF TRANSPORTATION
RALEIGH
SUBSTRUCTURE
END BENT #2
(EBL)

NORTH CAROLINA PROFESSIONAL SEAL 10730 ENGINEER D. ANDREW DAVENPORT, JR.
10-17-12

REVISIONS						SHEET NO.
NO.	BY:	DATE:	NO.	BY:	DATE:	S-70
1			3			TOTAL SHEETS
2			4			104

STR. #5

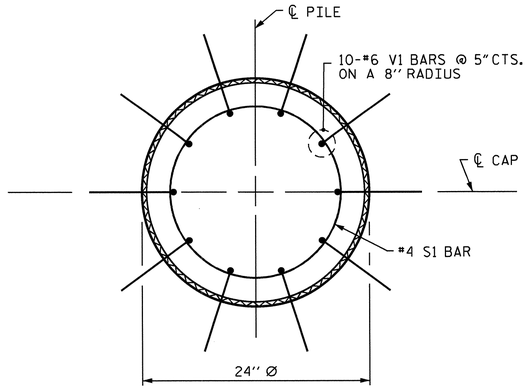

PLAN

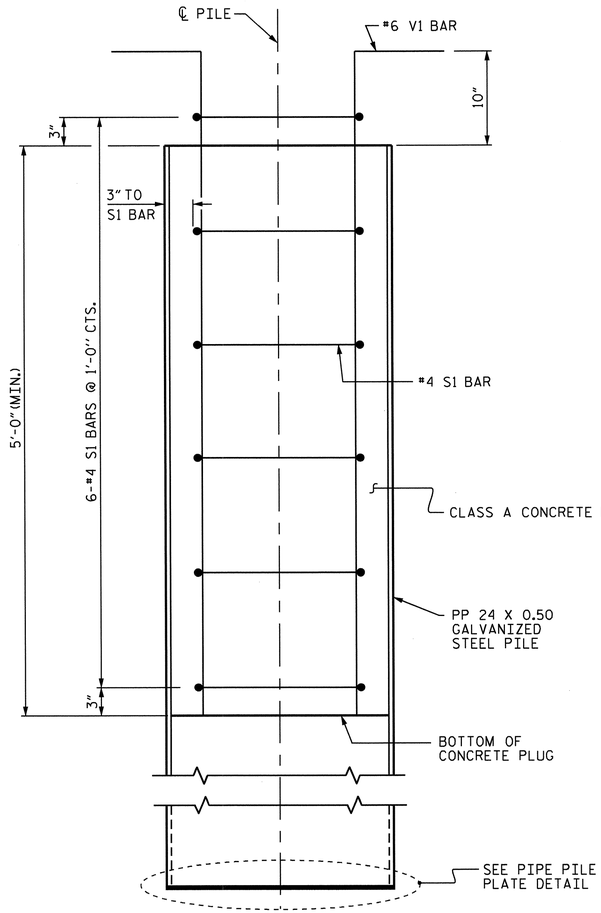

ELEVATION

PP 24 X 0.50 GALVANIZED STEEL PILE

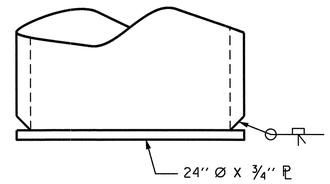

PIPE PILE PLATE DETAIL

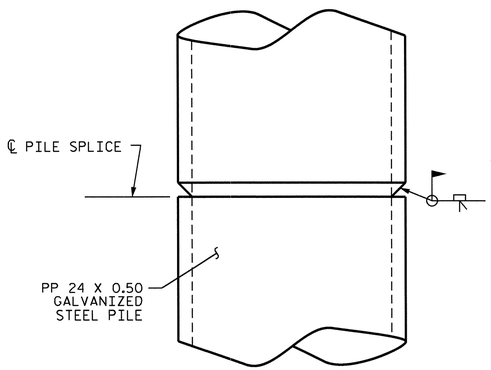

PIPE PILE SPLICE DETAIL

NOTES

PIPE PILES SHALL BE IN ACCORDANCE WITH SECTION 1084 OF THE STANDARD SPECIFICATIONS.

GALVANIZE STEEL PIPE PILES IN ACCORDANCE WITH SECTION 1076 OF THE STANDARD SPECIFICATIONS UNLESS METALLIZING IS REQUIRED. GALVANIZING OR METALLIZING PIPE PILE PLATES IS NOT REQUIRED.

PIPE PILE PLATES SHALL BE IN ACCORDANCE WITH SECTION 450 OF THE STANDARD SPECIFICATIONS.

REMOVE AND REPLACE OR REPAIR TO THE SATISFACTION OF THE ENGINEER PILES THAT ARE DAMAGED, DEFORMED OR COLLAPSED DURING INSTALLATION OR DRIVING.

PILE SPLICES SHALL BE IN ACCORDANCE WITH THE STANDARD SPECIFICATIONS AND AWS D1.1.

FOR CLOSED END PIPE PILES, REMOVE ALL SOIL AND WATER FROM INSIDE THE PILES JUST PRIOR TO PLACING REINFORCING STEEL AND CONCRETE FOR THE CONCRETE PLUG.

FORM THE CONCRETE PLUG SUCH THAT THE REINFORCING STEEL OR CONCRETE DOES NOT MOVE AND THE CLEARANCE FROM THE REINFORCING STEEL TO THE INSIDE OF THE PILE IS MAINTAINED AFTER CONCRETE PLACEMENT. DO NOT PLACE CONCRETE IN THE BENT CAP UNTIL THE CONCRETE PLUG HAS ATTAINED A MINIMUM COMPRESSIVE STRENGTH OF 1500 PSI.

THE REINFORCING STEEL, CLASS A CONCRETE, AND GALVANIZING ARE CONSIDERED INCIDENTAL TO THE CONTRACT UNIT PRICE BID PER LINEAR FOOT FOR PP 24 X 0.50 GALVANIZED STEEL PILES.

PIPE PILES AT BENTS SHALL BE CLOSED END PILES WITH PIPE PILE PLATES.

BILL OF MATERIAL FOR ONE PP 24 X 0.50 GALVANIZED STEEL PILE

BAR	NO.	SIZE	TYPE	LENGTH	WEIGHT
S1	6	#4	1	6'-0"	24
V1	10	#6	2	6'-8"	100
REINFORCING STEEL =					124 lbs
CLASS A CONCRETE					
5'-0" MINIMUM PLUG					0.5 CY

BAR TYPES

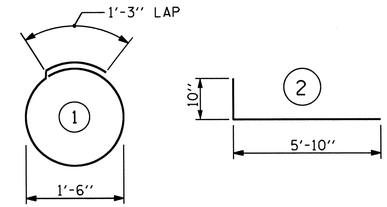

ALL BAR DIMENSIONS ARE OUT TO OUT.

PROJECT NO. R-2707AB

CLEVELAND COUNTY

STATION: 157+75.50 -L-

STATE OF NORTH CAROLINA
DEPARTMENT OF TRANSPORTATION
RALEIGH

STANDARD

24" STEEL PIPE PILE

(EBL)

NORTH CAROLINA PROFESSIONAL SEAL 10730 ENGINEER D. ANDREW DAVENPORT
10-17-12

REVISIONS						SHEET NO.
NO.	BY:	DATE:	NO.	BY:	DATE:	S-71
1			3			TOTAL SHEETS
2			4			104

ASSEMBLED BY : M.K. BEARD	DATE : 2/29/12
CHECKED BY : D.A. DAVENPORT	DATE : 3/22/12
DRAWN BY : TLA 8/05	ADDED 10/1/05
CHECKED BY : GM 9/05	REV. 5/1/06R MAA/KMM
	REV. 10/1/11 MAA/GM

17-OCT-2012 10:50
R:\Structures\Plans\Str4and5\Plans\R-2707AB_sd_Bts_Str5.dgn
ddavenport

STR. 5

STD. NO. SPP4

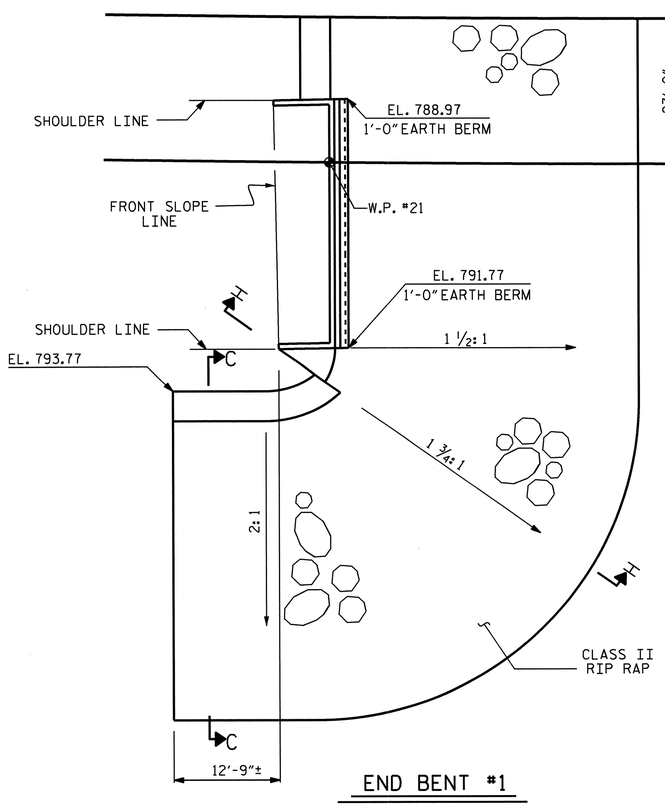

END BENT #1

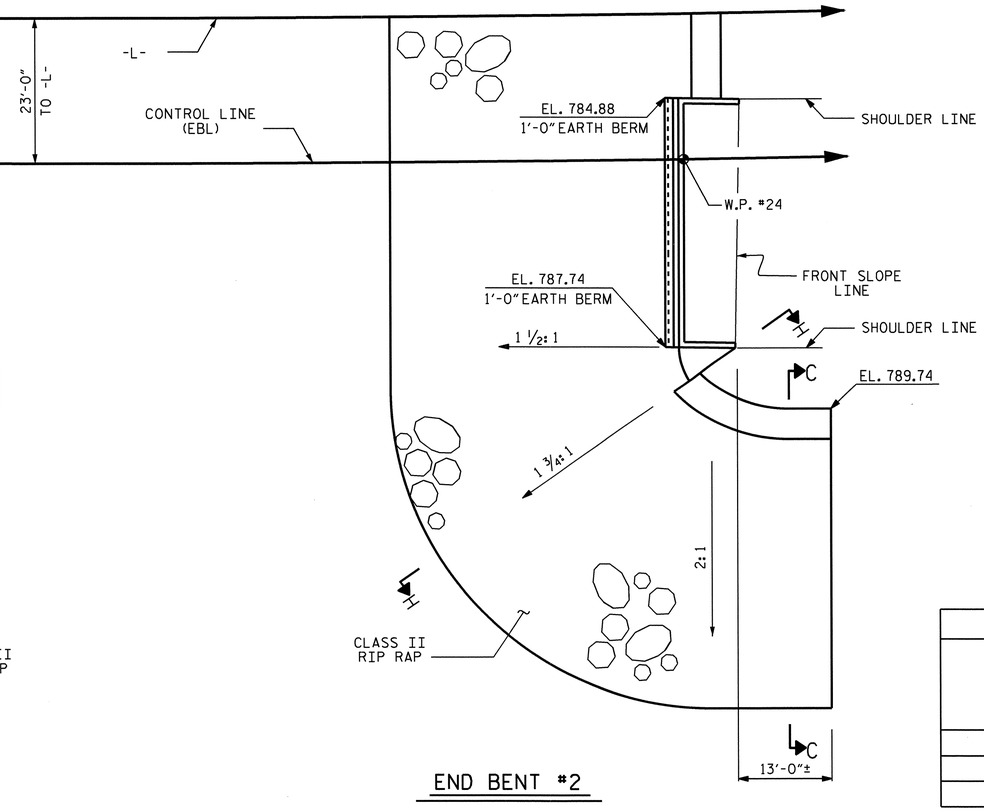

END BENT #2

PLAN

ESTIMATED QUANTITIES		
BRIDGE @ STA. 157+75.50-L- (EBL)	RIP RAP CLASS II (2'-0" THICK)	GEOTEXTILE FOR DRAINAGE
	TONS	SQUARE YARDS
END BENT 1	565	630
END BENT 2	380	420
TOTAL	945	1050

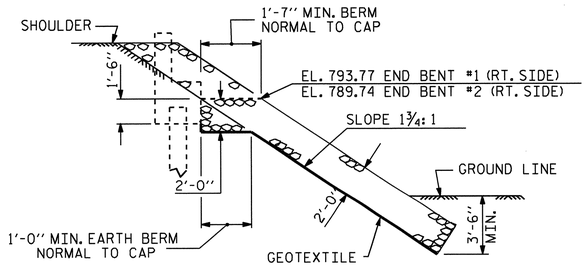

SECTION H-H

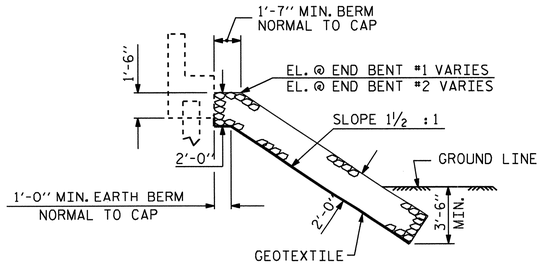

℄ SECTION
BERM RIP RAPPED

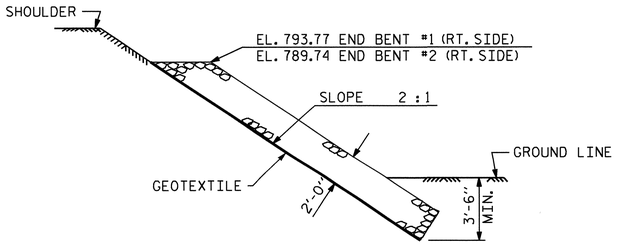

SECTION C-C

PROJECT NO. R-2707AB
CLEVELAND COUNTY
STATION: 157+75.50 -L-

STATE OF NORTH CAROLINA
DEPARTMENT OF TRANSPORTATION
RALEIGH

RIP RAP DETAILS (EBL)

REVISIONS						SHEET NO.
NO.	BY:	DATE:	NO.	BY:	DATE:	S-72
1			3			TOTAL SHEETS
2			4			104

NORTH CAROLINA PROFESSIONAL SEAL 10730 ENGINEER D. ANDRE DAVENPORT, JR.
6-13-13

ASSEMBLED BY : W. B. HILL		DATE : 11/09
CHECKED BY : M.G.SHAIKH/DAD		DATE : 01/23/12
DESIGN ENGINEER OF RECORD: G.W. DICKEY		DATE : 10/16/12
DRAWN BY : FCJ 2/88	REV. 5/1/06	TLA/GM
CHECKED BY : ARB 8/88	REV. 10/1/11	MAA/GM
	REV. 12/21/11	MAA/GM

13-JUN-2013 07:59
R:\Structures\Plans\Str4and5\Plans\R-2707AB_sd_RR.dgn
dadavenport

STR #5 STD. NO. RR1 (SHT 2)

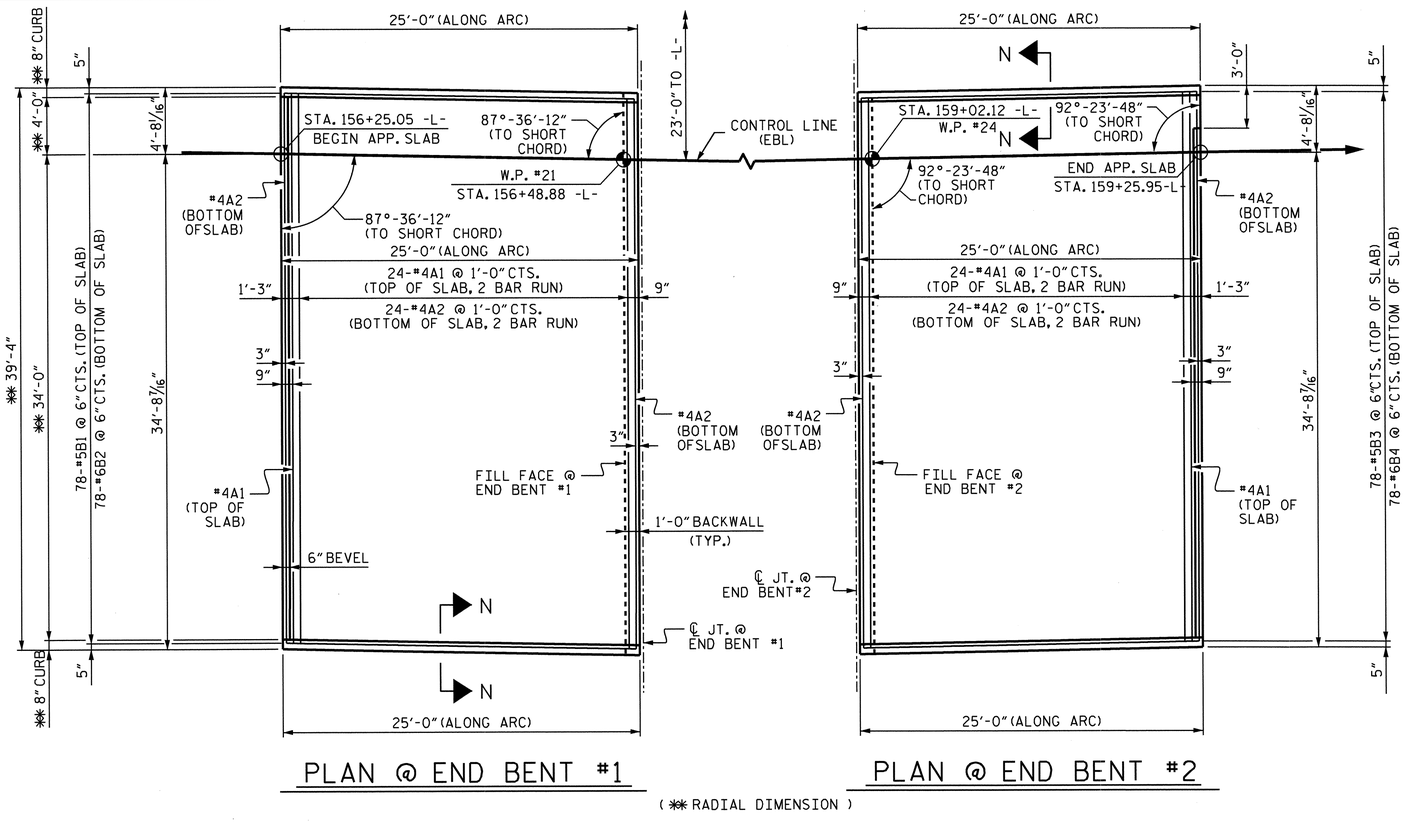

PLAN @ END BENT #1

PLAN @ END BENT #2

(✻✻ RADIAL DIMENSION)

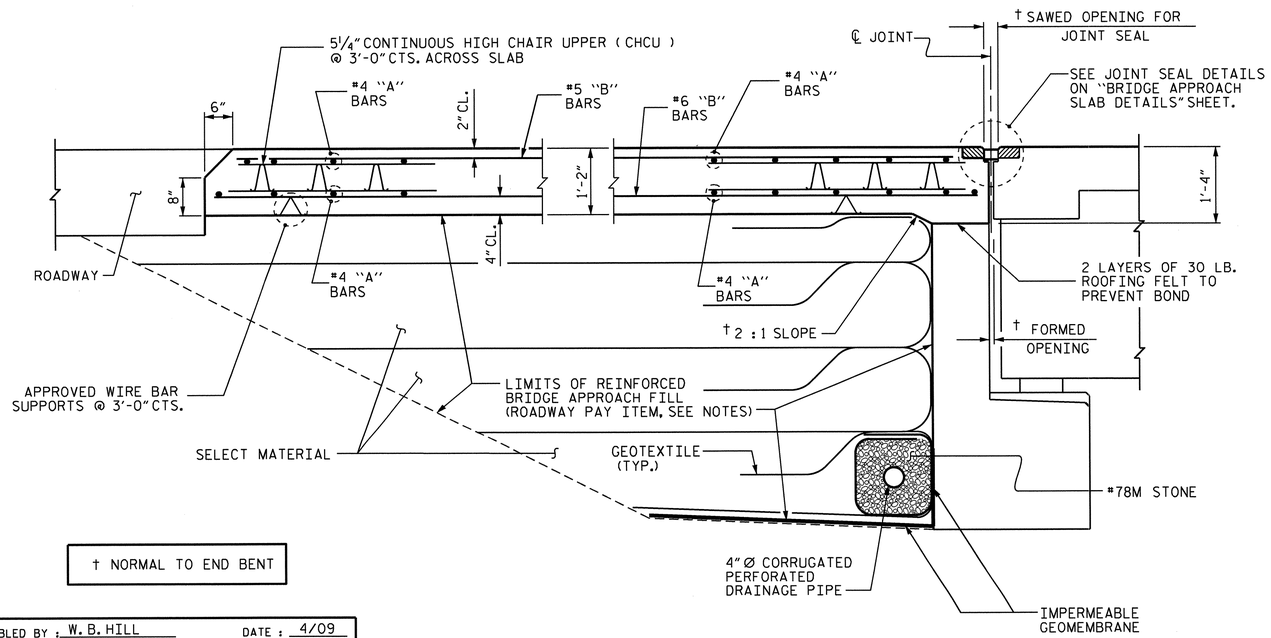

† NORMAL TO END BENT

SECTION THRU SLAB

NOTES

APPROACH SLAB SHALL NOT BE CONSTRUCTED PRIOR TO COMPLETION OF THE BRIDGE DECK.

FOR REINFORCED BRIDGE APPROACH FILL INCLUDING GEOTEXTILE, IMPERMEABLE GEOMEMBRANE, 4" Ø DRAINAGE PIPE, #78M STONE, AND SELECT MATERIAL, SEE ROADWAY PLANS.

AREA BETWEEN THE WINGWALL AND APPROACH SLAB SHALL BE GRADED TO DRAIN THE WATER AWAY FROM THE FILL FACE OF THE BRIDGE AND SHALL BE PAVED. SEE ROADWAY PLANS.

WITH FOAM JOINT SEAL

THE JOINT SHALL BE SAWED PRIOR TO THE CASTING OF THE BARRIER RAIL.

FOR FOAM JOINT SEALS, SEE SPECIAL PROVISIONS.

THE NOMINAL UNCOMPRESSED SEAL WIDTH OF THE FOAM JOINT SEAL SHALL BE 2½".

FOR ELASTOMERIC CONCRETE, SEE SPECIAL PROVISIONS.

SPLICE LENGTHS		
BAR SIZE	EPOXY COATED	UNCOATED
#4	2'-0"	1'-9"
#5	2'-6"	2'-2"
#6	3'-10"	2'-7"

BILL OF MATERIAL

APPROACH SLAB AT EB #1

BAR	NO.	SIZE	TYPE	LENGTH	WEIGHT
✻A1	50	#4	STR	20'-6"	685
A2	52	#4	STR	20'-5"	709
✻B1	78	#5	STR	23'-6"	1912
B2	78	#6	STR	24'-8"	2890
REINFORCING STEEL				LBS.	3599
✻EPOXY COATED REINFORCING STEEL				LBS.	2597
CLASS AA CONCRETE				C. Y.	42.8

APPROACH SLAB AT EB #2

BAR	NO.	SIZE	TYPE	LENGTH	WEIGHT
✻A1	50	#4	STR	20'-6"	685
A2	52	#4	STR	20'-5"	709
✻B1	78	#5	STR	23'-6"	1912
B2	78	#6	STR	24'-8"	2890
REINFORCING STEEL				LBS.	3599
✻EPOXY COATED REINFORCING STEEL				LBS.	2597
CLASS AA CONCRETE				C. Y.	42.8

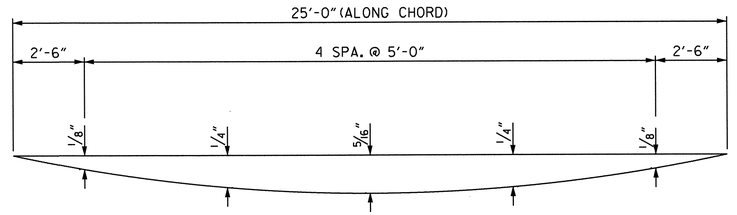

ARC OFFSET- LEFT SIDE

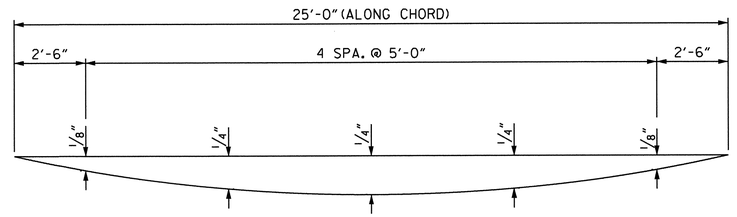

ARC OFFSET- RIGHT SIDE

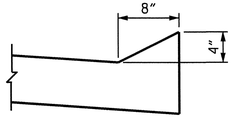

SECTION N-N

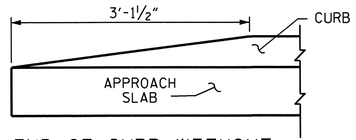

END OF CURB WITHOUT SHOULDER BERM GUTTER

CURB DETAILS

PROJECT NO. R-2707AB

CLEVELAND COUNTY

STATION: 157+75.50 -L-

SHEET 1 OF 2

STATE OF NORTH CAROLINA
DEPARTMENT OF TRANSPORTATION
RALEIGH

BRIDGE APPROACH SLAB FOR FLEXIBLE PAVEMENT (EBL)

REVISIONS						SHEET NO.
NO.	BY:	DATE:	NO.	BY:	DATE:	S-73
1			3			TOTAL SHEETS
2			4			104

STR. #5 STD. NO. BAS2 (SHT 2)

NORTH CAROLINA PROFESSIONAL SEAL 10730 ENGINEER D. ANDREW DAVENPORT JR.

ASSEMBLED BY : W. B. HILL		DATE : 4/09
CHECKED BY : M. G. SHAIKH/DAD		DATE : 01/19/12
DESIGN ENGINEER OF RECORD: G.W. DICKEY		DATE : 10/16/12
DRAWN BY : LES 8/01	REV. 5/1/06R	KMM/GM
CHECKED BY : RDR 8/01	REV. 10/1/11	MAA/GM
	REV. 12/21/11	MAA/GM

17-OCT-2012 10:46
R:\Structures\Plans\Str4and5\Plans\R-2707AB_sd_AS.dgn
adavenport

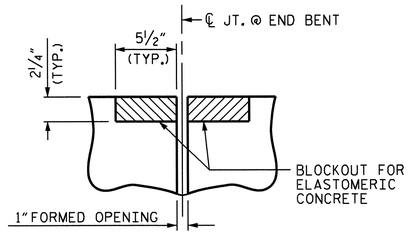

SECTION C-C
FOAM JOINT SEAL
(PRE-SAWED ELASTOMERIC
CONCRETE DIMENSIONS)

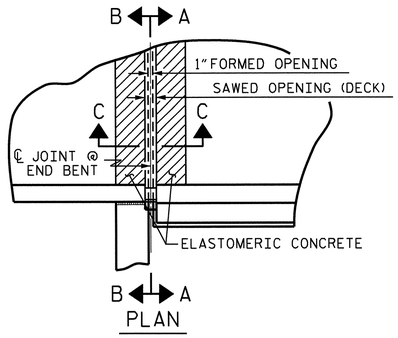

PLAN

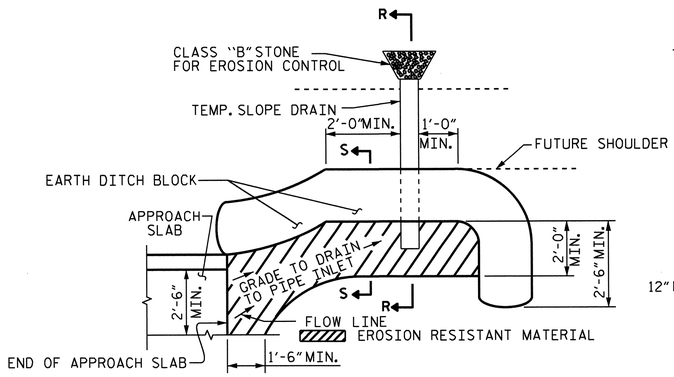

NOTE: IMMEDIATELY AFTER THE CONSTRUCTION OF THE APPROACH SLAB, THE CONTRACTOR SHALL PROVIDE TEMPORARY BERM AND SLOPE DRAIN. CONTRACTOR SHALL GRADE TO PIPE INLET AND PROVIDE EROSION RESISTANT MATERIAL AS SHOWN. THE EROSION RESISTANT MATERIAL SHALL BE EITHER 1) ASPHALT PLANT MIX, TYPE 1 OR TYPE 2, MIN. 2" DEPTH, 2) EROSION CONTROL MAT, OR 3) CONCRETE, AS DIRECTED BY THE ENGINEER. THE SLOPE DRAIN SHALL CONSIST OF A NON-PERFORATED TEMPORARY DRAINAGE PIPE, 12 INCHES IN DIAMETER.

PLAN VIEW

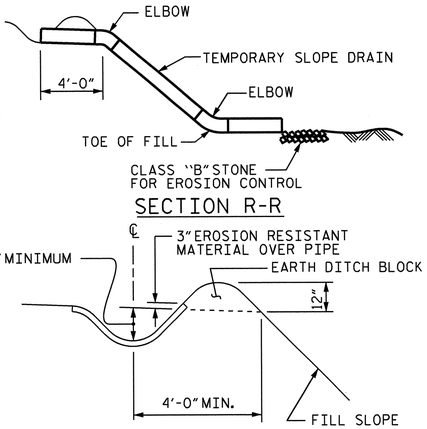

SECTION R-R

SECTION S-S

TEMPORARY BERM AND SLOPE DRAIN DETAILS

(TO BE USED WHEN SHOULDER BERM GUTTER IS REQUIRED)

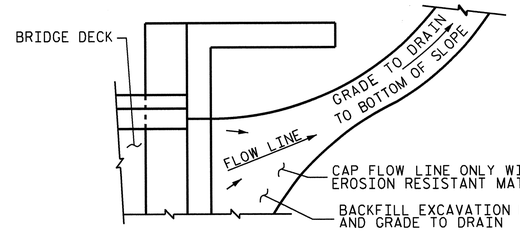

NOTE: IF THE APPROACH SLAB IS NOT CONSTRUCTED IMMEDIATELY AFTER THE BACKFILLING OF THE END BENT EXCAVATION, GRADE TO DRAIN TO THE BOTTOM OF THE SLOPE AND PROVIDE EROSION RESISTANT MATERIAL, SUCH AS FIBERGLASS ROVING OR AS DIRECTED BY THE ENGINEER TO PREVENT SOIL EROSION AND TO PROTECT THE AREA ADJACENT TO THE STRUCTURE. THE CONTRACTOR WILL BE REQUIRED TO REMOVE THESE MATERIALS PRIOR TO CONSTRUCTION OF THE APPROACH SLAB.

TEMPORARY DRAINAGE DETAIL

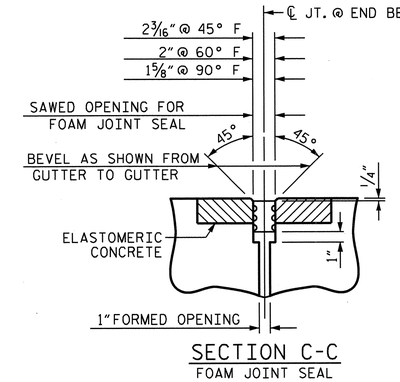

SECTION C-C
FOAM JOINT SEAL
(EXPANSION)

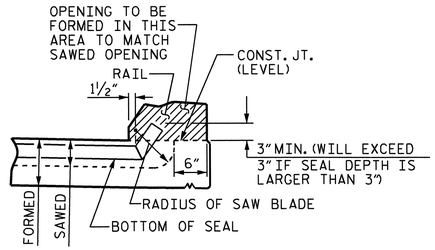

SECTION A-A

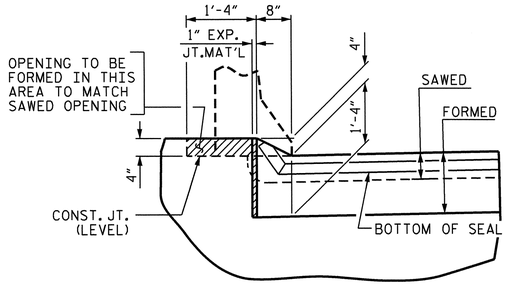

SECTION B-B

ELASTOMERIC CONCRETE	
END BENT NO.	ELASTOMERIC CONCRETE * (CU. FT.)
1	6.5
2	6.5
TOTAL	13.0

* BASED ON THE MINIMUM BLOCKOUT SHOWN.

JOINT SEAL DETAILS @ END BENT

FOAM JOINT SEAL TO BE CUT, HEAT WELDED AND TURNED UP PARALLEL TO SLOPED FACE OF THE BARRIER RAIL.

THE JOINT SHALL BE SAWED PRIOR TO THE CASTING OF THE BARRIER RAIL.

PROJECT NO. R-2707AB
CLEVELAND COUNTY
STATION: 157+75.50 -L-

SHEET 2 OF 2

STATE OF NORTH CAROLINA
DEPARTMENT OF TRANSPORTATION
RALEIGH

BRIDGE APPROACH SLAB DETAILS (EBL)

REVISIONS						SHEET NO.
NO.	BY:	DATE:	NO.	BY:	DATE:	S-74
1			3			TOTAL SHEETS
2			4			104

STR. #5 STD. NO. BAS4 (SHT 1)

ASSEMBLED BY : W. B. HILL		DATE : 4/09	
CHECKED BY : M. G. SHAIKH/DAD		DATE : 01/19/12	
DESIGN ENGINEER OF RECORD: G.W. DICKEY		DATE : 10/16/12	
DRAWN BY : FCJ 11/88	REV. 5/7/03	RWW/JTE	
CHECKED BY : ARB 11/88	REV. 5/1/06R	MAA/KMM	
	REV. 10/1/11	MAA/GM	

NORTH CAROLINA PROFESSIONAL SEAL 10730 ENGINEER D. ANDRE DAVENPORT, JR.
10-17-12

17-OCT-2012 10:46
R:\Structures\Plans\Str4and5\Plans\R-2707AB_sd_AS.dgn
adavenport

F.A. PROJECT NO. NHF-0074(142)

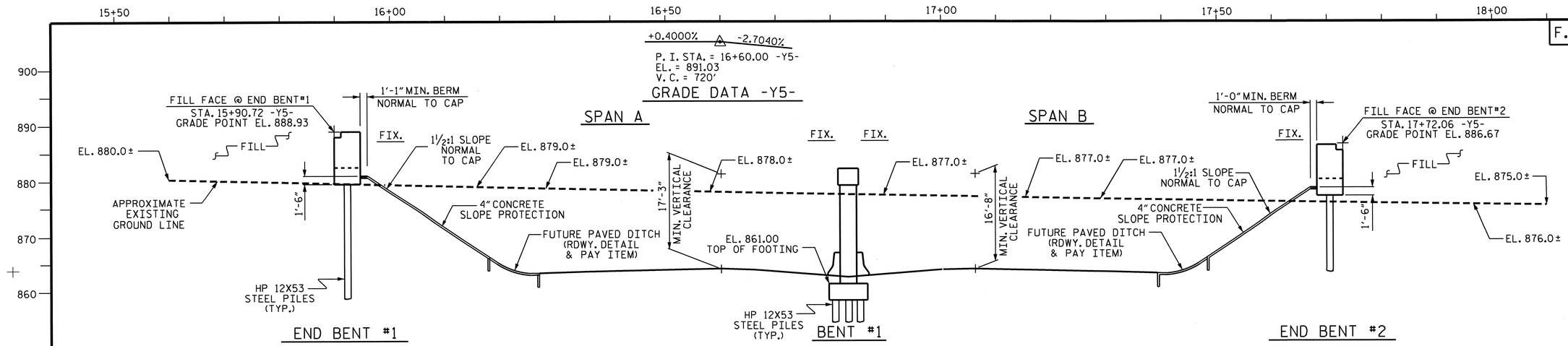

SECTION ALONG SURVEY LINE -Y5-

(BENTS ON SECTION AT RIGHT ANGLES TO BENTS)

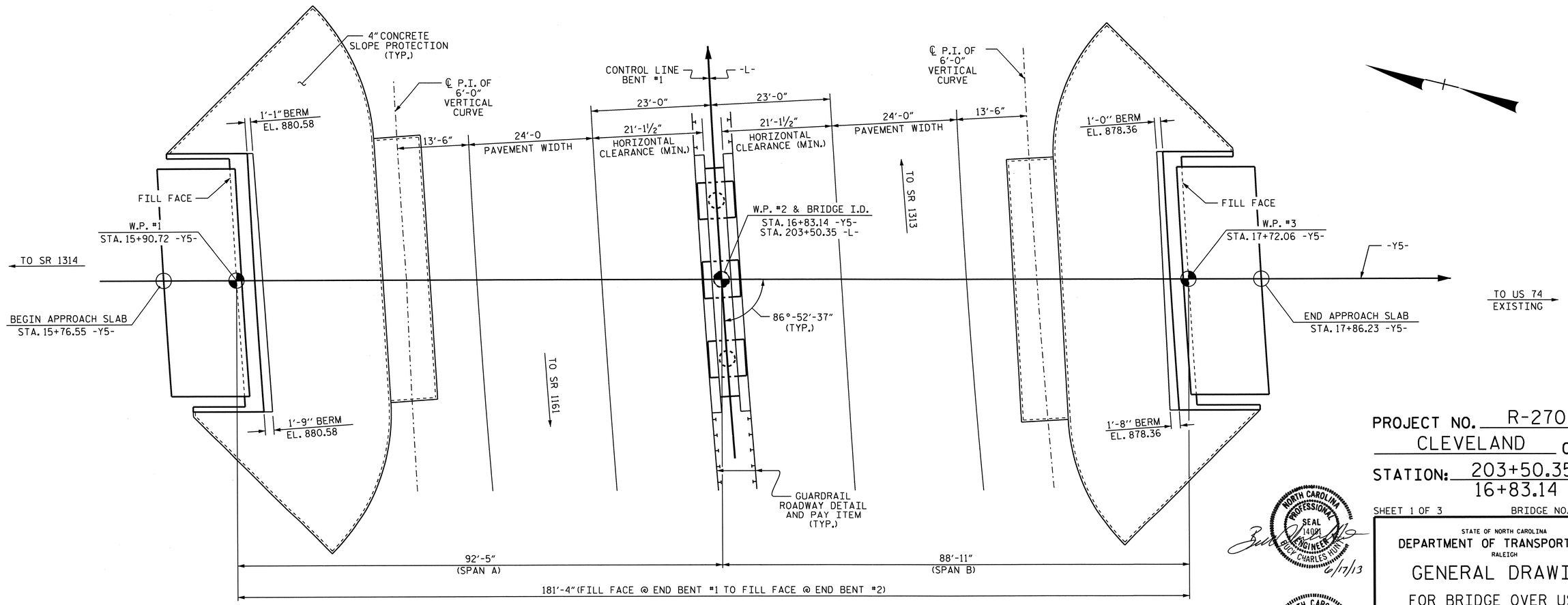

PLAN

(PILES NOT SHOWN IN PLAN VIEW)

NORTH CAROLINA PROFESSIONAL SEAL 14021 ENGINEER BILLY CHARLES HINN
6/17/13

NORTH CAROLINA PROFESSIONAL SEAL 10730 ENGINEER D. ANDREW DAVENPORT
6-13-13

PROJECT NO. R-2707AB

CLEVELAND COUNTY

STATION: 203+50.35 -L-
16+83.14 -Y5-

SHEET 1 OF 3 BRIDGE NO.456

STATE OF NORTH CAROLINA
DEPARTMENT OF TRANSPORTATION
RALEIGH

GENERAL DRAWING

FOR BRIDGE OVER US 74
ON SR 1315 (PLATO LEE RD.)
BETWEEN SR 1313 AND SR 1161

REVISIONS						SHEET NO.
NO.	BY:	DATE:	NO.	BY:	DATE:	S-75
1			3			TOTAL SHEETS
2			4			104

DRAWN BY : E.C. LOCKLEAR DATE : 10/12/11
CHECKED BY : D.A. DAVENPORT DATE : 05/18/12
DESIGN ENGINEER OF RECORD: G.W. DICKEY DATE : 10/16/12

13-JUN-2013 13:44
R:\Structures\Plans\Str6\Plans\R-2707AB_SD_GD_06.dgn
dadavenport

STR #6

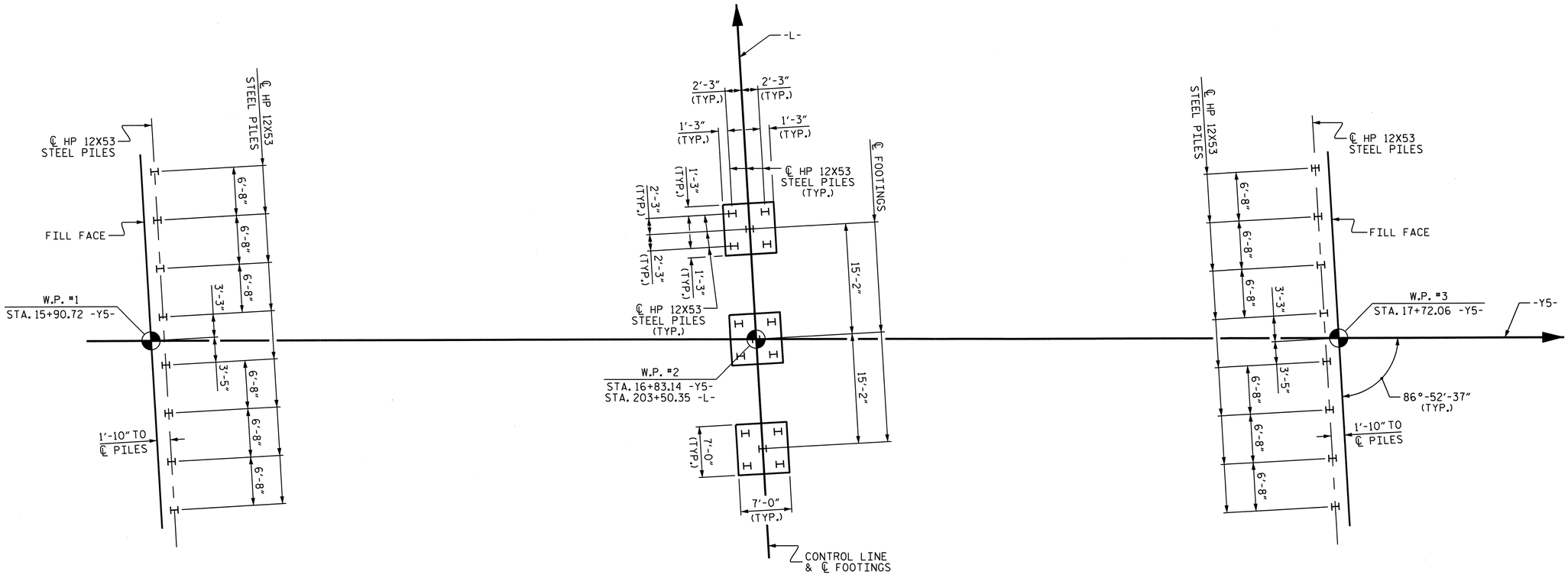

END BENT 1 | BENT 1 | END BENT 2

FOUNDATION LAYOUT

DIMENSIONS LOCATING PILES ARE SHOWN TO THE PILE CENTERLINE.
ORIENT PILES AS SHOWN.

NOTES

FOR PILES, SEE SECTION 450 OF THE STANDARD SPECIFICATIONS .

PILES AT END BENT #1 ARE DESIGNED FOR A FACTORED RESISTANCE OF 95 TONS PER PILE.

DRIVE PILES AT END BENT #1 TO A REQUIRED DRIVING RESISTANCE OF 158 TONS PER PILE.

PILES AT BENT #1 ARE DESIGNED FOR A FACTORED RESISTANCE OF 105 TONS PER PILE.

DRIVE PILES AT BENT #1 TO A REQUIRED DRIVING RESISTANCE OF 175 TONS PER PILE.

PILES AT END BENT #2 ARE DESIGNED FOR A FACTORED RESISTANCE OF 90 TONS PER PILE.

DRIVE PILES AT END BENT #2 TO A REQUIRED DRIVING RESISTANCE OF 150 TONS PER PILE.

PROJECT NO. R-2707AB
CLEVELAND COUNTY
STATION: 203+50.35-L-

SHEET 2 OF 3

STATE OF NORTH CAROLINA
DEPARTMENT OF TRANSPORTATION
RALEIGH

GENERAL DRAWING

FOR BRIDGE OVER US 74
ON SR 1315 (PLATO LEE RD.)
BETWEEN SR 1313 AND SR 1161

REVISIONS						SHEET NO.
NO.	BY:	DATE:	NO.	BY:	DATE:	S-76
1			3			TOTAL SHEETS
2			4			104

NORTH CAROLINA PROFESSIONAL SEAL 10730 ENGINEER D. ANDRE DAVENPORT, JR.
10-17-12

DRAWN BY : E.C. LOCKLEAR DATE : 10/12/11
CHECKED BY : D.A. DAVENPORT DATE : 05/18/12
DESIGN ENGINEER OF RECORD: G.W. DICKEY DATE : 10/16/12

17-OCT-2012 11:09
R:\Structures\Plans\Str6\Plans\R-2707AB_SD_GD_06.dgn
adavenport

STR.#6

BENCHMARK: BM 66 18"REBAR WITH CAP STA. 119+55.20 -BL-, EL. 769.848

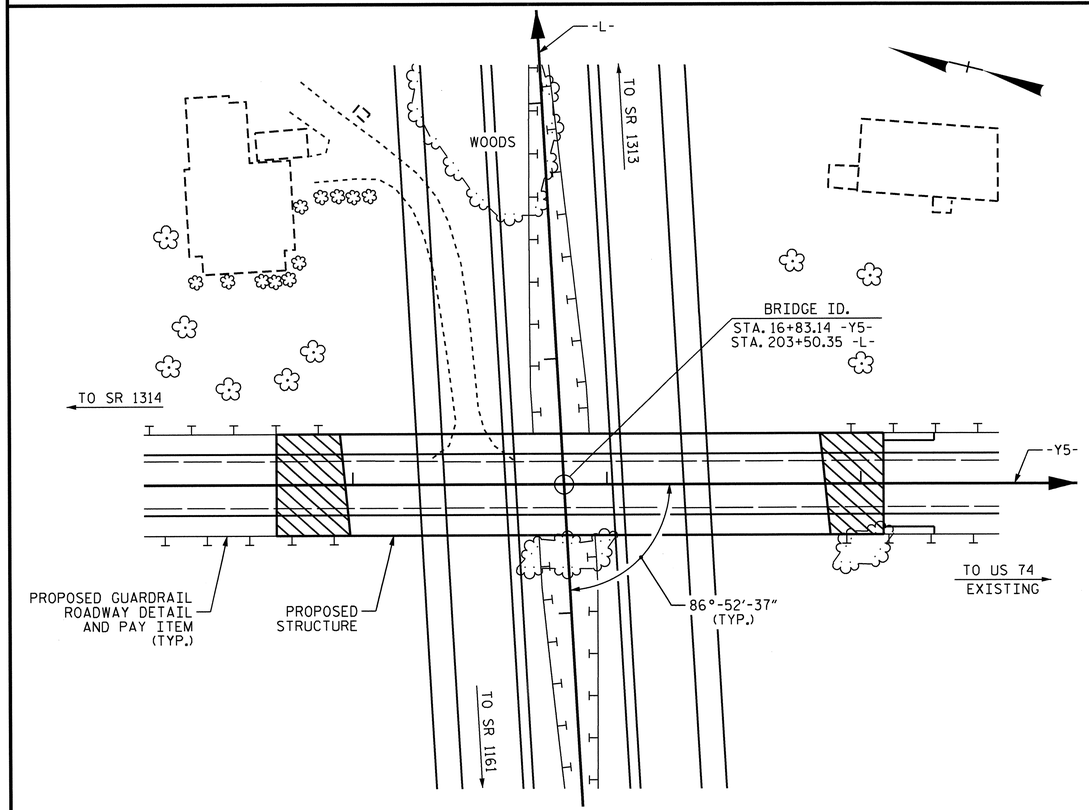

FOR UTILITY INFORMATION, SEE UTILITY PLANS AND SPECIAL PROVISIONS.

LOCATION SKETCH

NOTES

ASSUMED LIVE LOAD = HL 93 OR ALTERNATE LOADING.

FOR OTHER DESIGN DATA AND GENERAL NOTES, SEE SHEET SN.

THIS BRIDGE HAS BEEN DESIGNED IN ACCORDANCE WITH THE AASHTO LRFD BRIDGE DESIGN SPECIFICATIONS.

PRESTRESSED CONCRETE DECK PANELS MAY BE USED IN LIEU OF METAL STAY-IN-PLACE FORMS IN ACCORDANCE WITH ARTICLE 420-3 OF THE STANDARD SPECIFICATIONS.

REMOVABLE FORMS MAY BE USED IN LIEU OF METAL STAY-IN-PLACE FORMS IN ACCORDANCE WITH ARTICLE 420-3 OF THE STANDARD SPECIFICATIONS.

THE CLASS AA CONCRETE IN THE BRIDGE DECK SHALL CONTAIN FLY ASH OR GROUND GRANULATED BLAST FURNACE SLAG AT THE SUBSTITUTION RATE SPECIFIED IN ARTICLE 1024-1 AND IN ACCORDANCE WITH ARTICLES 1024-5 AND 1024-6 OF THE STANDARD SPECIFICATIONS. NO PAYMENT WILL BE MADE FOR THIS SUBSTITUTION AS IT IS CONSIDERED INCIDENTAL TO THE COST OF THE REINFORCED CONCRETE DECK SLAB.

THE CONTRACTOR SHALL PROVIDE INDEPENDENT ASSURANCE SAMPLES OF REINFORCING STEEL AS FOLLOWS: FOR PROJECTS REQUIRING UP TO 400 TONS OF REINFORCING STEEL, ONE 30 INCH SAMPLE OF EACH SIZE BAR USED, AND FOR PROJECTS REQUIRING OVER 400 TONS OF REINFORCING STEEL, TWO 30 INCH SAMPLES OF EACH SIZE BAR USED. THE BARS FROM WHICH THE SAMPLES ARE TAKEN MUST THEN BE SPLICED WITH REPLACEMENT BARS OF THE SIZE AND LENGTH OF THE SAMPLE, PLUS A MINIMUM LAP SPLICE OF THIRTY BAR DIAMETERS. PAYMENT FOR THE SAMPLES OF REINFORCING STEEL SHALL BE CONSIDERED INCIDENTAL TO VARIOUS PAY ITEMS.

NEEDLE BEAMS WILL NOT BE ALLOWED UNLESS OTHERWISE CALLED FOR ON THE PLANS OR APPROVED BY THE ENGINEER.

FOR SUBMITTAL OF WORKING DRAWINGS, SEE SPECIAL PROVISIONS.

FOR FALSEWORK AND FORMWORK, SEE SPECIAL PROVISIONS.

FOR CRANE SAFETY, SEE SPECIAL PROVISIONS.

FOR GROUT FOR STRUCTURES, SEE SPECIAL PROVISIONS.

THIS BRIDGE IS LOCATED IN SEISMIC ZONE 1.

WORK SHALL NOT BE STARTED ON THIS BRIDGE UNTIL THE ROADWAY SECTION HAS BEEN EXCAVATED.

FOR PLACING LOAD ON STRUCTURE MEMBERS, SEE SPECIAL PROVISIONS.

TOTAL BILL OF MATERIAL

	FOUNDATION EXCAVATION	REINFORCED CONCRETE DECK SLAB	GROOVING BRIDGE FLOORS	CLASS A CONCRETE	BRIDGE APPROACH SLABS	REINFORCING STEEL	SPIRAL COLUMN REINFORCING STEEL	63" MODIFIED PRESTRESSED CONCRETE GIRDERS		HP 12X53 STEEL PILES		CONCRETE BARRIER RAIL	4" SLOPE PROTECTION	ELASTOMERIC BEARINGS
	LUMP SUM	SQ. FT.	SQ. FT.	CU. YDS.	LUMP SUM	LBS.	LBS.	NO.	LIN. FT.	NO.	LIN. FT.	LIN. FT.	SQ. YDS.	LUMP SUM
SUPERSTRUCTURE		7771	7684					8	713.00			359.33		LUMP SUM
END BENT 1				23.5		4137				8	680		370	
BENT 1	LUMP SUM			49.0		8660	1155			15	675			
END BENT 2				23.5		4137				8	480		305	
TOTAL	LUMP SUM	7771	7684	96.0	LUMP SUM	16934	1155	8	713.00	31	1835	359.33	675	LUMP SUM

PROJECT NO. R-2707AB

CLEVELAND COUNTY

STATION: 203+50.35-L-

SHEET 3 OF 3

STATE OF NORTH CAROLINA
DEPARTMENT OF TRANSPORTATION
RALEIGH

GENERAL DRAWING

FOR BRIDGE OVER US 74
ON SR 1315 (PLATO LEE RD.)
BETWEEN SR 1313 AND SR 1161

NORTH CAROLINA PROFESSIONAL SEAL 10730 ENGINEER D. ANDREW DAVENPORT
6-17-13

REVISIONS						SHEET NO.
NO.	BY:	DATE:	NO.	BY:	DATE:	S-77
1			3			TOTAL SHEETS
2			4			104

DRAWN BY : E.C. LOCKLEAR DATE : 10/12/11
CHECKED BY : D.A. DAVENPORT DATE : 05/18/12
DESIGN ENGINEER OF RECORD: G.W. DICKEY DATE : 10/16/12

13-JUN-2013 14:13
R:\Structures\Plans\Str6\Plans\R-2707AB_SD_GD_06.dgn
dadavenport

STR.#6

LOAD AND RESISTANCE FACTOR RATING (LRFD) SUMMARY FOR PRESTRESSED CONCRETE GIRDERS

LEVEL		VEHICLE	WEIGHT (W) (TONS)	CONTROLLING LOAD RATING (#)	MINIMUM RATING FACTORS (RF)	TONS = W X RF	STRENGTH I LIMIT STATE											SERVICE III LIMIT STATE						COMMENT NUMBER
								MOMENT					SHEAR						MOMENT					
							LIVELOAD FACTORS	DISTRIBUTION FACTORS (DF)	RATING FACTOR	SPAN	GIRDER LOCATION	DISTANCE FROM LEFT END OF SPAN (ft)	DISTRIBUTION FACTORS (DF)	RATING FACTOR	SPAN	GIRDER LOCATION	DISTANCE FROM LEFT END OF SPAN (ft)	LIVELOAD FACTORS	DISTRIBUTION FACTORS (DF)	RATING FACTOR	SPAN	GIRDER LOCATION	DISTANCE FROM LEFT END OF SPAN (ft)	
DESIGN LOAD RATING		HL-93(Inv)	N/A	1	1.10	--	1.75	0.966	1.49	A	ER	44.73	1.064	1.17	A	I	26.838	0.80	1.064	1.10	A	I	44.73	
		HL-93(Opr)	N/A	--	1.52	--	1.35	0.966	1.93	A	ER	44.73	1.064	1.52	A	I	26.838	N/A	--	--	--	--	--	
		HS-20(Inv)	36.000	2	1.46	52.734	1.75	0.966	2.02	B	ER	42.98	1.064	1.46	A	I	26.838	0.80	0.902	1.49	A	I	44.73	
		HS-20(Opr)	36.000	--	1.90	68.359	1.35	0.966	2.62	B	ER	42.98	1.064	1.90	A	I	26.838	N/A	--	--	--	--	--	
LEGAL LOAD RATING	SV	SNSH	13.500	--	3.49	47.136	1.40	0.966	5.88	B	ER	42.98	1.064	4.32	B	I	25.788	0.80	0.902	3.49	A	I	44.73	
		SNGARBS2	20.000	--	2.55	50.986	1.40	0.966	4.31	B	ER	42.98	1.064	3.09	B	I	25.788	0.80	0.902	2.55	A	I	44.73	
		SNAGRIS2	22.000	--	2.39	52.642	1.40	0.966	4.05	B	ER	42.98	1.064	2.87	A	I	26.838	0.80	0.902	2.39	A	I	44.73	
		SNCOTTS3	27.250	--	1.74	47.305	1.40	0.966	2.92	B	ER	42.98	1.064	2.16	B	I	25.788	0.80	0.902	1.74	A	I	44.73	
		SNAGGRS4	34.925	--	1.43	49.959	1.40	0.966	2.41	B	ER	42.98	1.064	1.80	A	I	26.838	0.80	0.902	1.43	A	I	44.73	
		SNS5A	35.550	--	1.40	49.777	1.40	0.966	2.36	B	ER	42.98	1.064	1.83	A	I	26.838	0.80	0.902	1.40	A	I	44.73	
		SNS6A	39.950	--	1.28	50.991	1.40	0.966	2.16	B	ER	42.98	1.064	1.67	A	I	26.838	0.80	0.902	1.28	A	I	44.73	
		SNS7B	42.000	--	1.22	51.038	1.40	0.966	2.05	B	ER	42.98	1.064	1.64	A	I	26.838	0.80	0.902	1.22	A	I	44.73	
	TTST	TNAGRIT3	33.000	--	1.55	51.283	1.40	0.966	2.63	B	ER	42.98	1.064	1.99	A	I	26.838	0.80	0.902	1.55	A	I	44.73	
		TNT4A	33.075	--	1.56	51.551	1.40	0.966	2.63	B	ER	42.98	1.064	1.93	A	I	26.838	0.80	0.902	1.56	A	I	44.73	
		TNT6A	41.600	--	1.27	52.689	1.40	0.966	2.14	B	ER	42.98	1.064	1.75	A	I	26.838	0.80	0.902	1.27	A	I	44.73	
		TNT7A	42.000	--	1.27	53.287	1.40	0.966	2.15	B	ER	42.98	1.064	1.72	A	I	26.838	0.80	0.902	1.27	A	I	44.73	
		TNT7B	42.000	--	1.30	54.703	1.40	0.966	2.21	B	ER	42.98	1.064	1.60	A	I	26.838	0.80	0.902	1.30	A	I	44.73	
		TNAGRIT4	43.000	--	1.25	53.600	1.40	0.966	2.11	B	ER	42.98	1.064	1.55	A	I	26.838	0.80	0.902	1.25	A	I	44.73	
		TNAGT5A	45.000	--	1.18	53.048	1.40	0.966	2.00	B	ER	42.98	1.064	1.54	A	I	26.838	0.80	0.902	1.18	A	I	44.73	
		TNAGT5B	45.000	3	1.17	52.549	1.40	0.966	1.98	B	ER	42.98	1.064	1.47	A	I	26.838	0.80	0.902	1.17	A	I	44.73	

LOAD FACTORS:

DESIGN LOAD RATING FACTORS	LIMIT STATE	γ_{DC}	γ_{DW}
	STRENGTH I	1.25	1.50
	SERVICE III	1.00	1.00

NOTES:

MINIMUM RATING FACTORS ARE BASED ON THE STRENGTH I AND SERVICE III LIMIT STATES.

ALLOWABLE STRESSES FOR SERVICE III LIMIT STATE ARE AS REQUIRED FOR DESIGN.

COMMENTS:

1.
2.
3.
4.

(#) CONTROLLING LOAD RATING

(1) DESIGN LOAD RATING (HL-93)

(2) DESIGN LOAD RATING (HS-20)

(3) LEGAL LOAD RATING **

** SEE CHART FOR VEHICLE TYPE

GIRDER LOCATION

I - INTERIOR GIRDER
EL - EXTERIOR LEFT GIRDER
ER - EXTERIOR RIGHT GIRDER

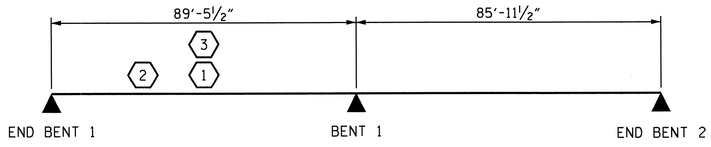

LRFR SUMMARY

PROJECT NO. R-2707AB

CLEVELAND COUNTY

STATION: 203+50.35 -L-

STATE OF NORTH CAROLINA
DEPARTMENT OF TRANSPORTATION
RALEIGH

STANDARD

LRFR SUMMARY FOR PRESTRESSED CONCRETE GIRDERS (NON-INTERSTATE TRAFFIC)

NORTH CAROLINA PROFESSIONAL SEAL 10730 ENGINEER D. ANDREW DAVENPORT
6-13-13

REVISIONS						SHEET NO.
NO.	BY:	DATE:	NO.	BY:	DATE:	S-78
1			3			TOTAL SHEETS
2			4			104

ASSEMBLED BY : E.C. LOCKLEAR DATE : 7-13-11
CHECKED BY : D.A. DAVENPORT DATE : 05/18/12
DESIGN ENGINEER OF RECORD: G.W. DICKEY DATE : 10/16/12

DRAWN BY : MAA 1/08
CHECKED BY : GM/DI 2/08

REV. 11/12/08R MAA/GM

13-JUN-2013 13:43
R:\Structures\Plans\Str6\Plans\R-2707AB_SD_GD_06.dgn
ddavenport

STR.#6

STD. NO. LRFR1

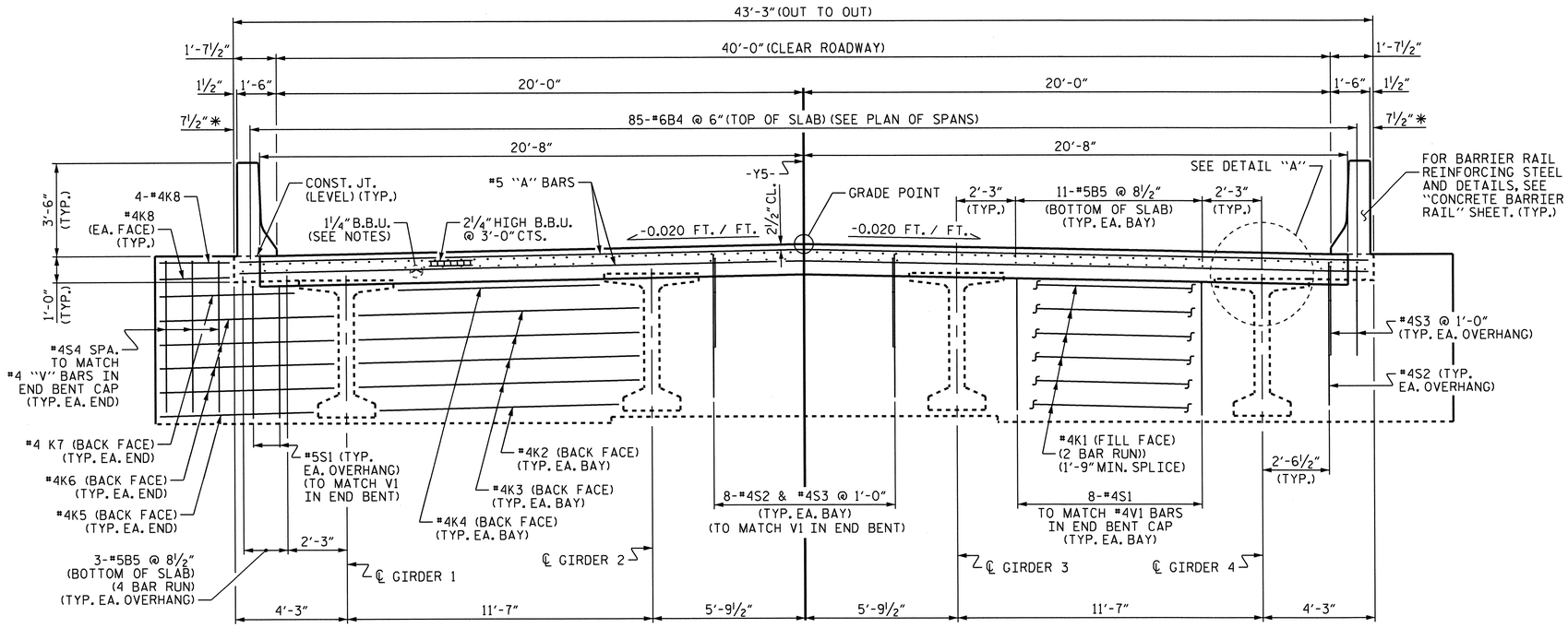

TYPICAL SECTION @ INTEGRAL END BENT

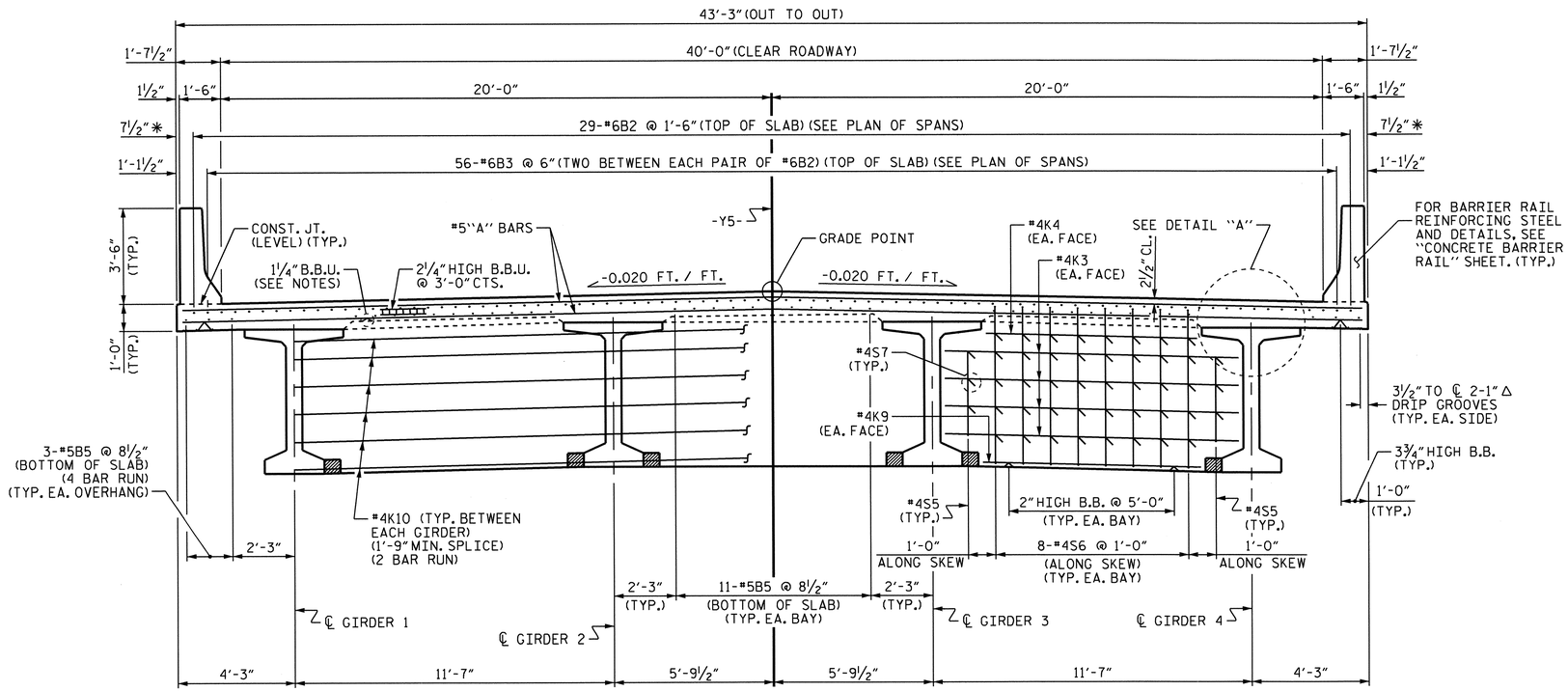

TYPICAL SECTION @ BENT DIAPHRAGM

NOTES

PROVIDE 1¼" HIGH BEAM BOLSTERS UPPER AT 4'-0" CTS. ATOP THE METAL STAY-IN-PLACE FORMS TO SUPPORT THE BOTTOM MAT OF "A" BARS. WHEN USING REMOVABLE FORMS, PROVIDE CONTINUOUS HIGH CHAIRS FOR METAL DECK (C.H.C.M.) @ 4'-0" CTS. WITH A HEIGHT TO SUPPORT THE BOTTOM MAT OF "A" BARS A CLEAR DISTANCE OF 2½" ABOVE THE TOP OF THE REMOVABLE FORM.

LONGITUDINAL STEEL MAY BE SHIFTED SLIGHTLY, AS NECESSARY, TO AVOID INTERFERENCE WITH STIRRUPS IN PRESTRESSED CONCRETE GIRDERS.

PREVIOUSLY CAST CONCRETE IN A CONTINUOUS UNIT SHALL HAVE ATTAINED A MINIMUM COMPRESSIVE STRENGTH OF 3,000 PSI BEFORE ADDITIONAL CONCRETE IS CAST IN THE UNIT.

FOR WING ELEVATIONS AND DETAILS, SEE "PLAN OF SPANS DETAILS" SHEETS.

BARRIER RAIL IN EACH CONTINUOUS UNIT SHALL NOT BE CAST UNTIL ALL SLAB CONCRETE IN THAT UNIT HAS BEEN CAST AND HAS REACHED A MINIMUM COMPRESSIVE STRENGTH OF 3,000 PSI.

* EXTERIOR "B" BAR IN TOP OF SLAB MAY BE SHIFTED AS NECESSARY FOR TIEING OF BARRIER RAIL REINFORCING.

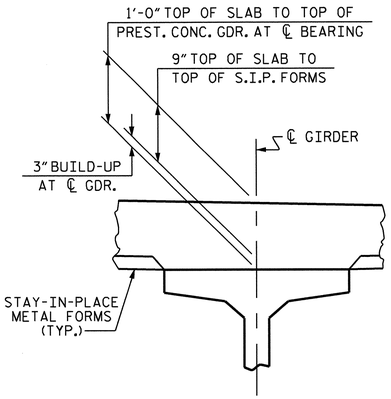

DETAIL "A"

PROJECT NO. R-2707AB

CLEVELAND COUNTY

STATION: 203+50.35-L-

SHEET 1 OF 3

STATE OF NORTH CAROLINA
DEPARTMENT OF TRANSPORTATION
RALEIGH

SUPERSTRUCTURE TYPICAL SECTION

REVISIONS						SHEET NO.
NO.	BY:	DATE:	NO.	BY:	DATE:	S-79
1			3			TOTAL SHEETS
2			4			104

DRAWN BY : E.C. LOCKLEAR DATE : 6-23-11
CHECKED BY : D.A. GLADDEN DATE : 12-19-11
DESIGN ENGINEER OF RECORD: G.W. DICKEY DATE : 10/16/12

13-JUN-2013 13:43
R:\Structures\Plans\Str6\Plans\R-2707AB_SD_TS_06.dgn
dadavenport

NORTH CAROLINA PROFESSIONAL SEAL 10730 ENGINEER D. ANDREW DAVENPORT
6-13-13

STR. #6

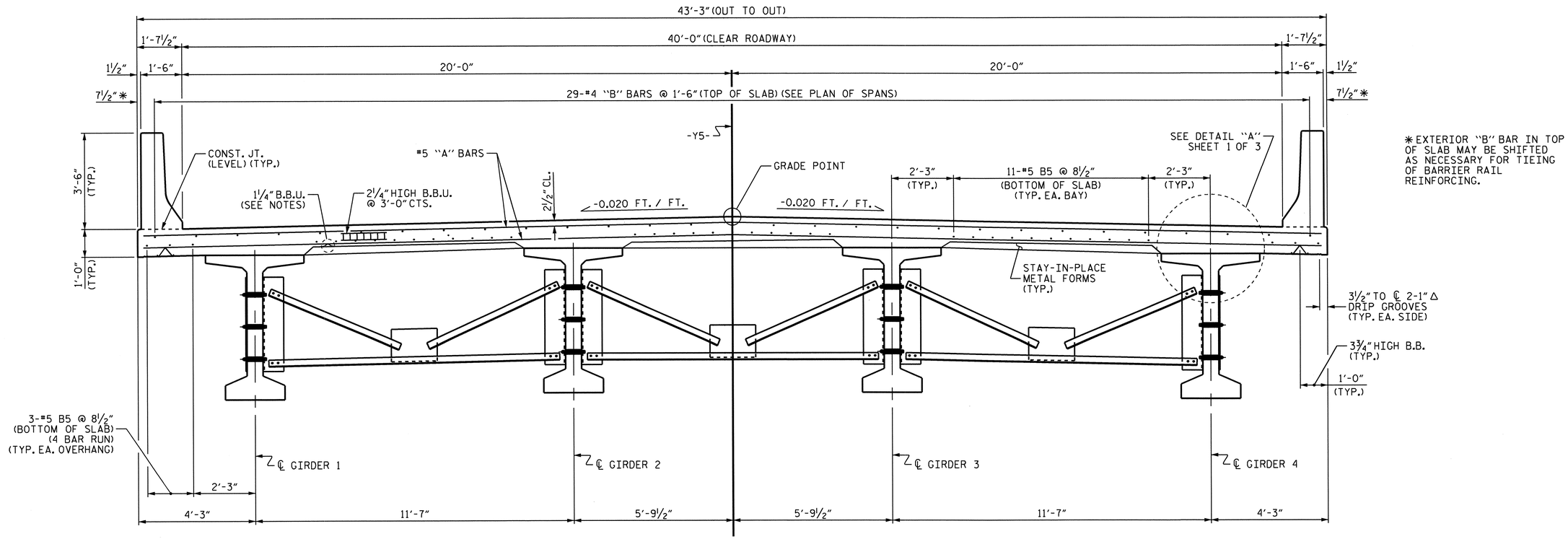

* EXTERIOR "B" BAR IN TOP OF SLAB MAY BE SHIFTED AS NECESSARY FOR TIEING OF BARRIER RAIL REINFORCING.

TYPICAL SECTION @ INTERMEDIATE DIAPHRAGMS

PROJECT NO. R-2707AB

CLEVELAND COUNTY

STATION: 203+50.35-L-

SHEET 2 OF 3

STATE OF NORTH CAROLINA
DEPARTMENT OF TRANSPORTATION
RALEIGH

SUPERSTRUCTURE TYPICAL SECTION

REVISIONS						SHEET NO.
NO.	BY:	DATE:	NO.	BY:	DATE:	S-80
1			3			TOTAL SHEETS
2			4			104

NORTH CAROLINA PROFESSIONAL SEAL 10730 ENGINEER D. ANDRE DAVENPORT

DRAWN BY : E.C. LOCKLEAR DATE : 7-01-11
CHECKED BY : D.A. GLADDEN DATE : 01/09/12
DESIGN ENGINEER OF RECORD: G.W. DICKEY DATE : 10/16/12

13-JUN-2013 13:43
R:\Structures\Plans\Str6\Plans\R-2707AB_SD_TS_06.dgn
dadavenport

STR. #6

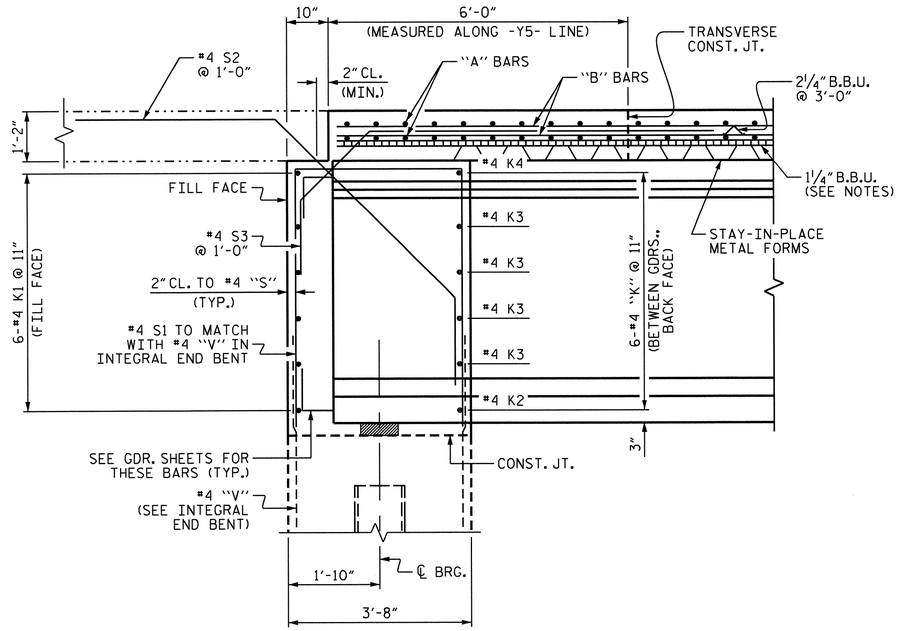

SECTION AT INTEGRAL END BENT

THE TOP SURFACE OF THE END BENT CAP AND WINGS, EXCLUDING THE BEARING AREA, SHALL BE RAKED TO A DEPTH OF 1/4"

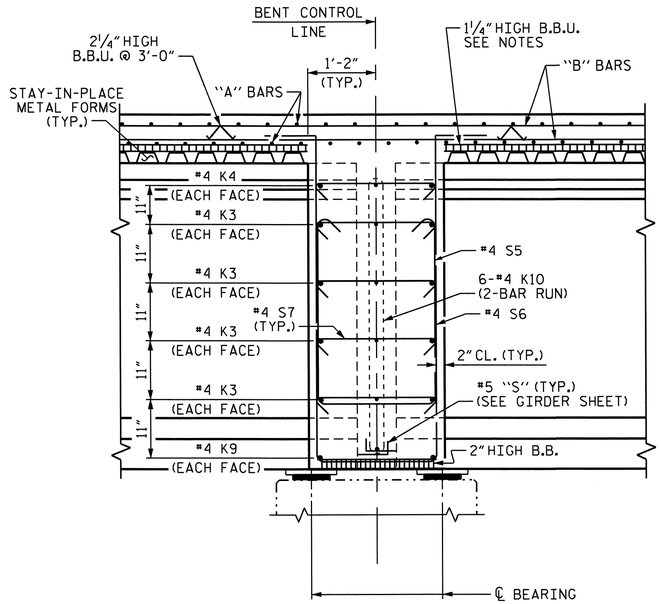

SECTION AT BENT DIAPHRAGM

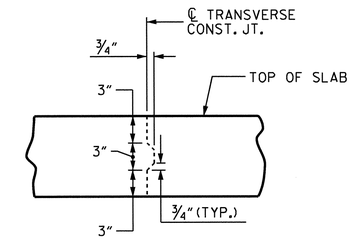

TRANSVERSE CONSTRUCTION JOINT DETAIL

NOTE: REINFORCING STEEL IN SLAB NOT SHOWN. LONGITUDINAL REINFORCING STEEL SHALL BE CONTINUOUS THRU JOINT

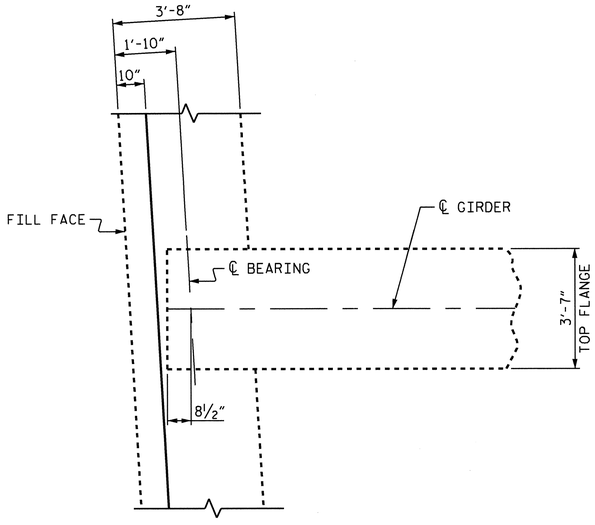

PLAN OF GIRDER AT INTEGRAL END BENT

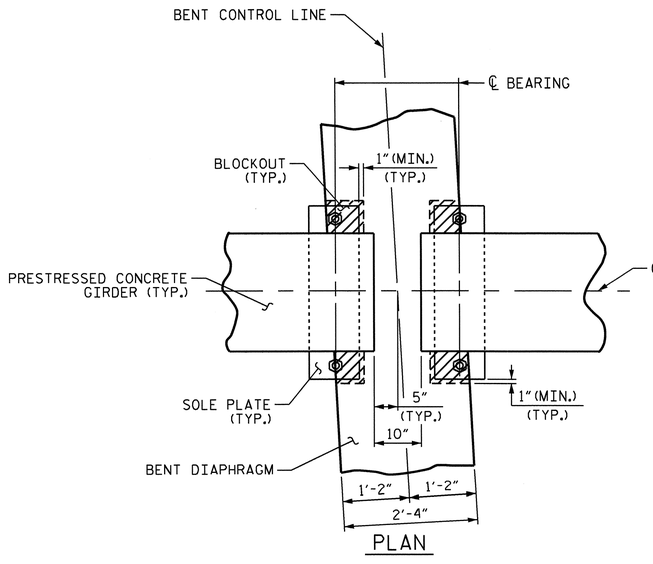

BENT DIAPHRAGM BLOCK-OUT DETAIL

PROJECT NO. R-2707AB

CLEVELAND COUNTY

STATION: 203+50.35-L-

SHEET 3 OF 3

STATE OF NORTH CAROLINA
DEPARTMENT OF TRANSPORTATION
RALEIGH

SUPERSTRUCTURE TYPICAL SECTION DETAILS

REVISIONS						SHEET NO.
NO.	BY:	DATE:	NO.	BY:	DATE:	S-81
1			3			TOTAL SHEETS
2			4			104

NORTH CAROLINA PROFESSIONAL SEAL 10730 ENGINEER D. ANDREW DAVENPORT, JR. 6-13-13

DRAWN BY : E.C. LOCKLEAR DATE : 6-24-11
CHECKED BY : D.A. GLADDEN DATE : 12-21-11
DESIGN ENGINEER OF RECORD: G.W. DICKEY DATE : 10/16/12

13-JUN-2013 13:42
R:\Structures\Plans\Str6\Plans\R-2707AB_SD_TS_06.dgn
dadavenport

STR. #6

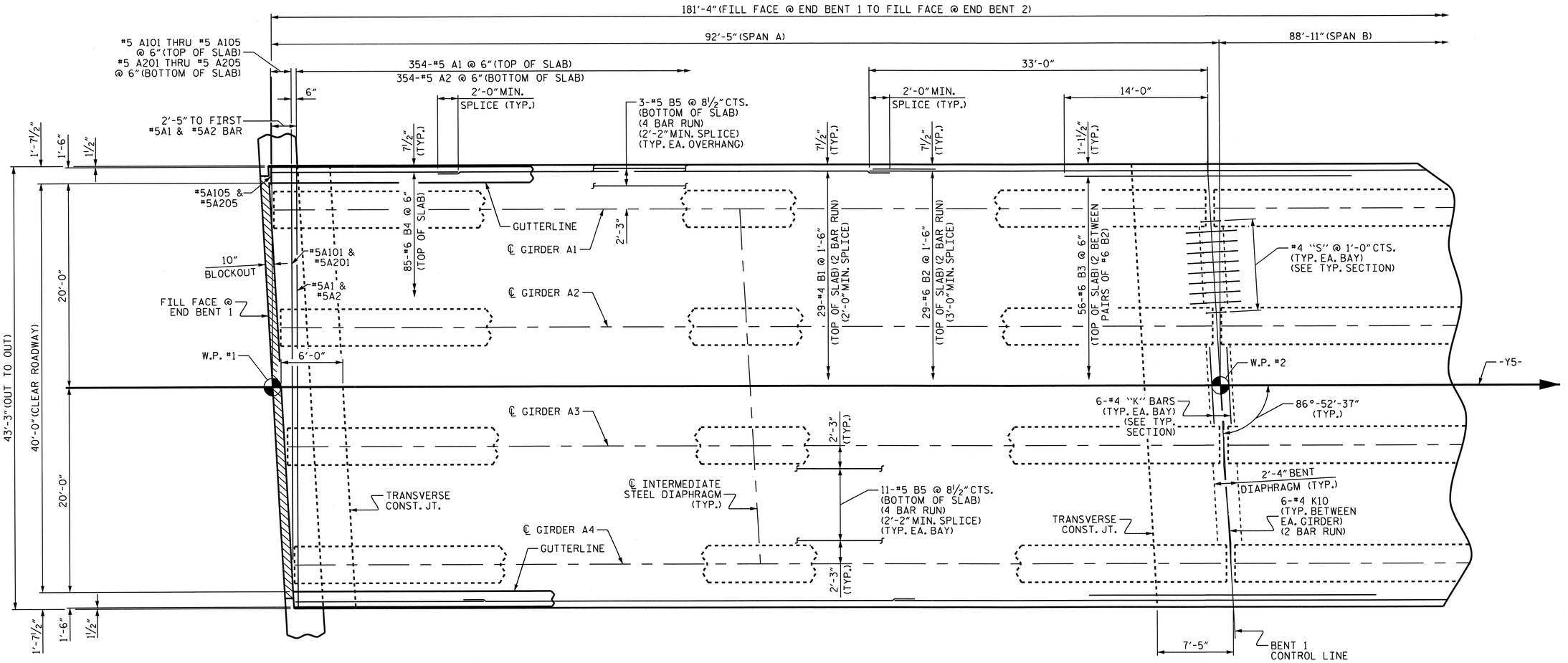

PLAN OF SPAN A

(SEE SHEET 3 OF 5 FOR PLAN OF INTEGRAL END BENTS)

PROJECT NO. R-2707AB

CLEVELAND COUNTY

STATION: 203+50.35-L-

SHEET 1 OF 5

STATE OF NORTH CAROLINA
DEPARTMENT OF TRANSPORTATION
RALEIGH

SUPERSTRUCTURE PLAN OF SPAN A

NORTH CAROLINA PROFESSIONAL SEAL 10730 ENGINEER D. ANDRE DAVENPORT

REVISIONS						SHEET NO.
NO.	BY:	DATE:	NO.	BY:	DATE:	S-82
1			3			TOTAL SHEETS
2			4			104

STR. #6

DRAWN BY : E.C. LOCKLEAR DATE : 6-20-11
CHECKED BY : D.A. GLADDEN DATE : 12-22-11
DESIGN ENGINEER OF RECORD: G.W. DICKEY DATE : 10/16/12

13-JUN-2013 13:42
R:\Structures\Plans\Str6\Plans\R-2707AB_SD_PS_06.dgn
ddavenport

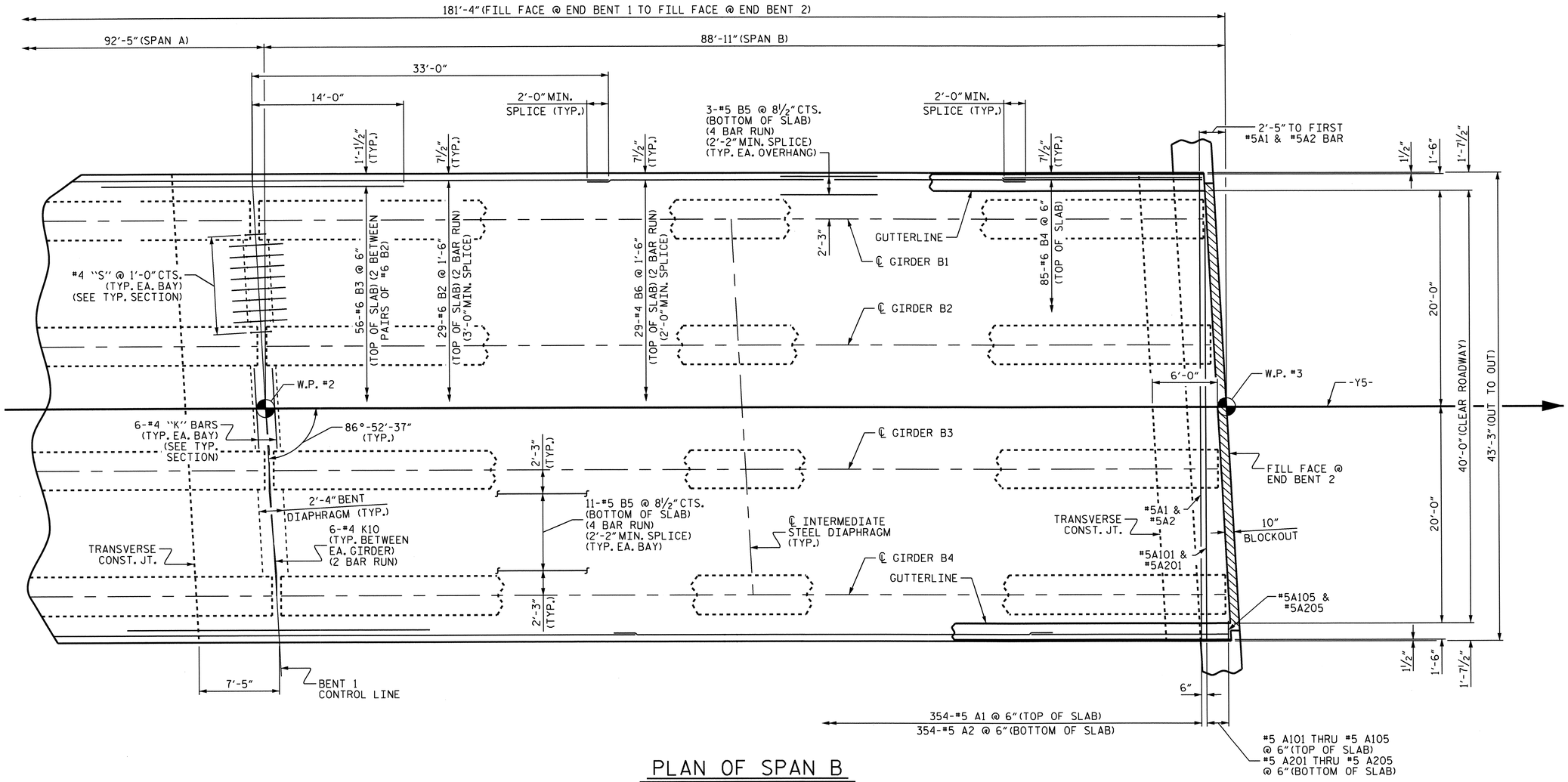

PLAN OF SPAN B

(SEE SHEET 3 OF 5 FOR PLAN OF INTEGRAL END BENTS)

PROJECT NO. R-2707AB

CLEVELAND COUNTY

STATION: 203+50.35-L-

SHEET 2 OF 5

STATE OF NORTH CAROLINA
DEPARTMENT OF TRANSPORTATION
RALEIGH

SUPERSTRUCTURE PLAN OF SPAN B

NORTH CAROLINA PROFESSIONAL SEAL 10730 ENGINEER D. ANDREW DAVENPORT, JR.

6-13-13

REVISIONS						SHEET NO.
NO.	BY:	DATE:	NO.	BY:	DATE:	S-83
1			3			TOTAL SHEETS
2			4			104

STR. #6

DRAWN BY : E.C. LOCKLEAR DATE : 6-20-11
CHECKED BY : D.A. GLADDEN DATE : 12-22-11
DESIGN ENGINEER OF RECORD: G.W. DICKEY DATE : 10/16/12

13-JUN-2013 13:41
R:\Structures\Plans\Str6\Plans\R-2707AB_SD_PS_06.dgn
dadavenport

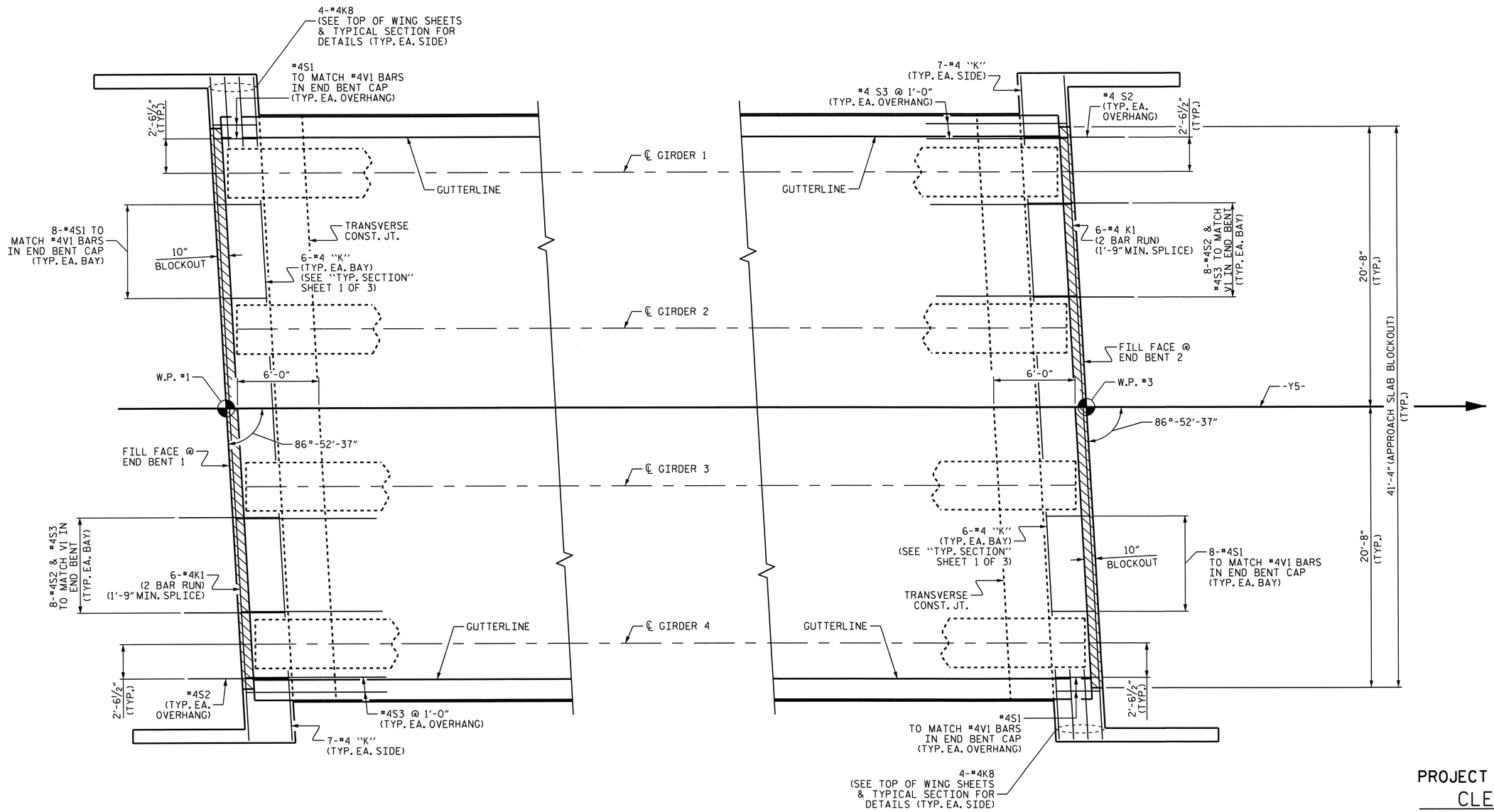

@ END BENT 1

@ END BENT 2

PLAN OF INTEGRAL END BENTS

PROJECT NO. R-2707AB

CLEVELAND COUNTY

STATION: 203+50.35-L-

SHEET 3 OF 5

STATE OF NORTH CAROLINA
DEPARTMENT OF TRANSPORTATION
RALEIGH

SUPERSTRUCTURE PLAN OF SPANS DETAILS

REVISIONS						SHEET NO.
NO.	BY:	DATE:	NO.	BY:	DATE:	S-84
1			3			TOTAL SHEETS
2			4			104

NORTH CAROLINA PROFESSIONAL SEAL 10730 ENGINEER D. ANDREW DAVENPORT, JR.
6-19-13

DRAWN BY : E.C. LOCKLEAR DATE : 6-27-11
CHECKED BY : D.A. GLADDEN DATE : 12-22-11
DESIGN ENGINEER OF RECORD: G.W. DICKEY DATE : 10/16/12

13-JUN-2013 13:41
R:\Structures\Plans\Str6\Plans\R-2707AB_SD_PS_06.dgn
ddavenport

STR. #6

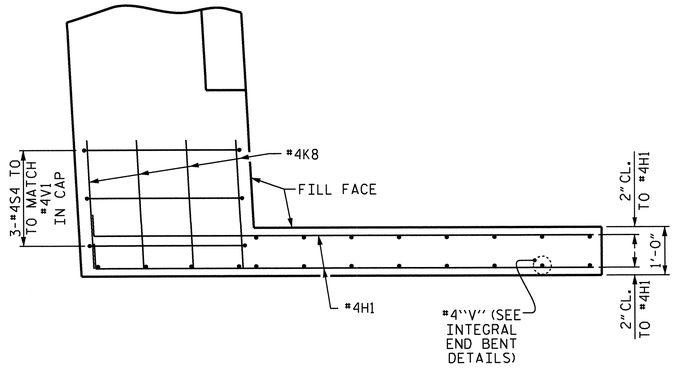

PLAN OF LEFT WING
@ END BENT #1

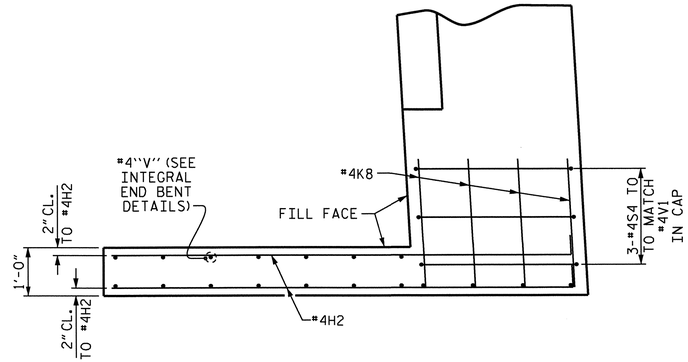

PLAN OF RIGHT WING
@ END BENT #1

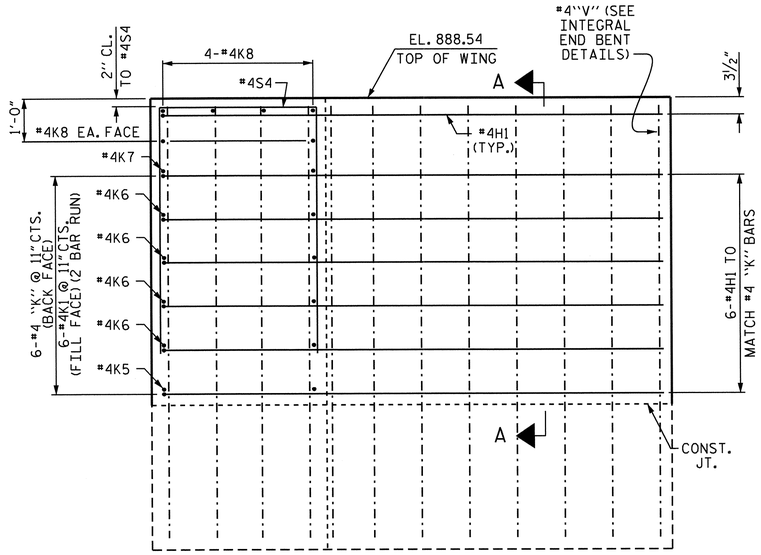

ELEVATION OF LEFT WING
@ END BENT #1

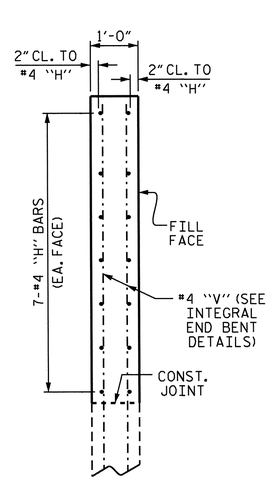

PART SECTION A-A

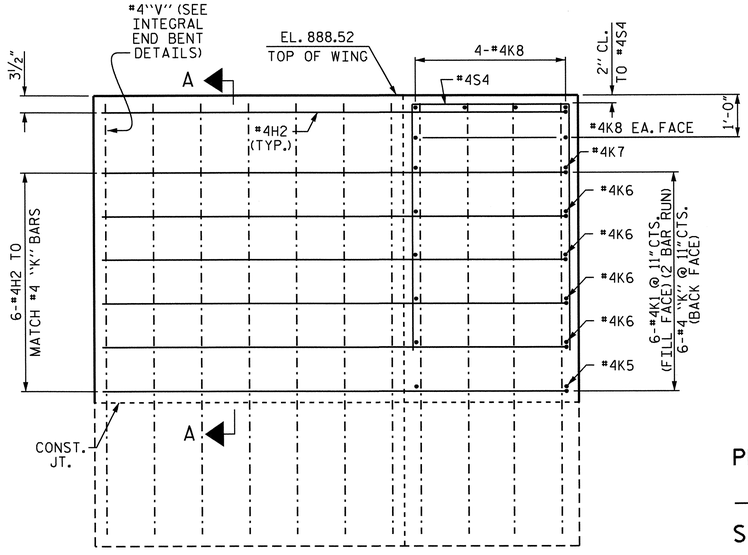

ELEVATION OF RIGHT WING
@ END BENT #1

PROJECT NO. R-2707AB

CLEVELAND COUNTY

STATION: 203+50.35-L-

SHEET 4 OF 5

STATE OF NORTH CAROLINA
DEPARTMENT OF TRANSPORTATION
RALEIGH

SUPERSTUCTURE

PLAN OF SPAN DETAILS

NORTH CAROLINA PROFESSIONAL SEAL 10730 ENGINEER ANDREW DAVENPORT JR.
6-13-13

REVISIONS						SHEET NO.
NO.	BY:	DATE:	NO.	BY:	DATE:	S-85
1			3			TOTAL SHEETS
2			4			104

DRAWN BY : K. D. LAYNE DATE : 01-11-12
CHECKED BY : D.A. DAVENPORT DATE : 1-20-12
DESIGN ENGINEER OF RECORD: G.W. DICKEY DATE : 10/16/12

13-JUN-2013 13:41
R:\Structures\Plans\Str6\Plans\R-2707AB_SD_PS_06.dgn
dadavenport

STR. #6

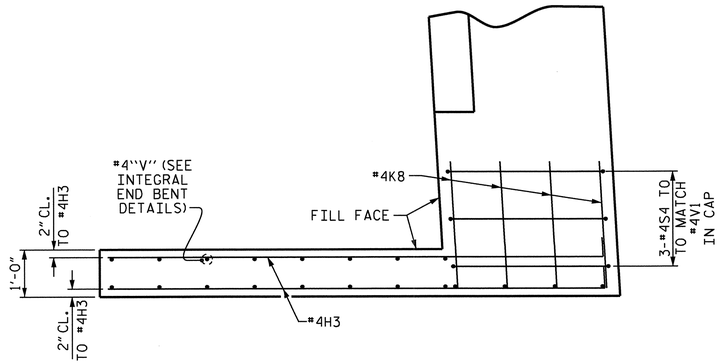

PLAN OF LEFT WING
@ END BENT #2

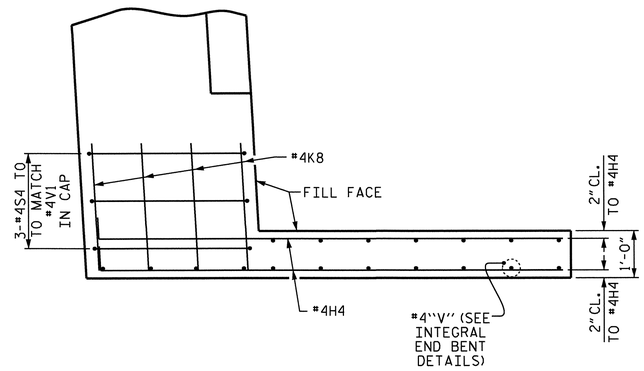

PLAN OF RIGHT WING
@ END BENT #2

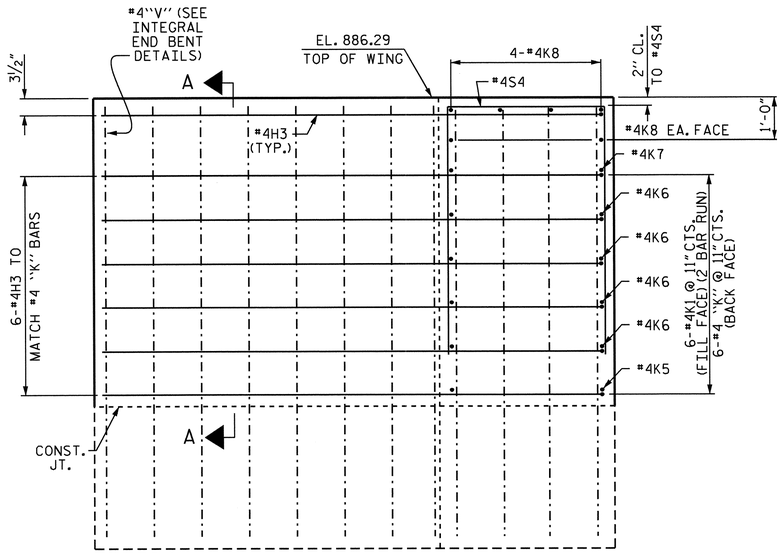

ELEVATION OF LEFT WING
@ END BENT #2

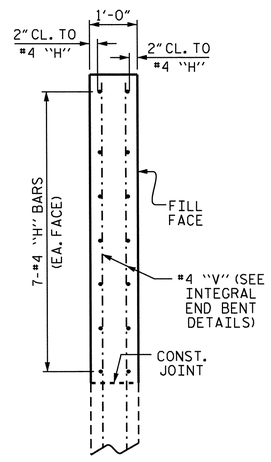

PART SECTION A-A

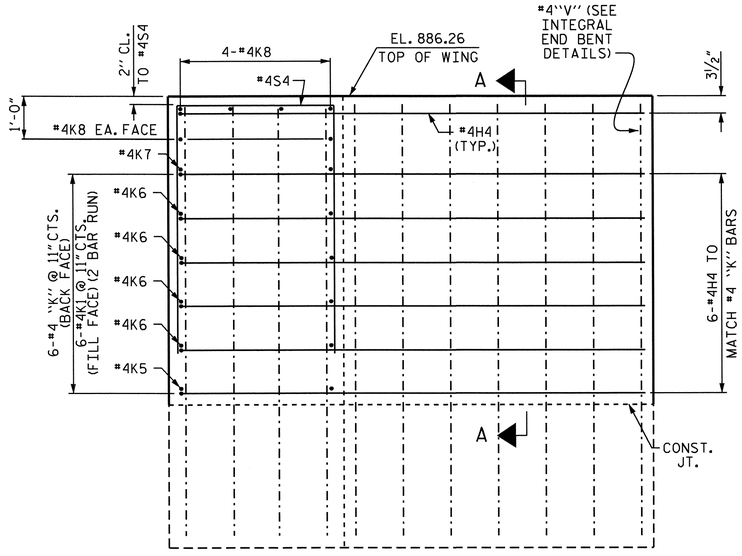

ELEVATION OF RIGHT WING
@ END BENT #2

PROJECT NO. R-2707AB
CLEVELAND COUNTY
STATION: 203+50.35-L-

SHEET 5 OF 5

STATE OF NORTH CAROLINA
DEPARTMENT OF TRANSPORTATION
RALEIGH

SUPERSTUCTURE

PLAN OF SPAN DETAILS

NORTH CAROLINA PROFESSIONAL SEAL 10730 ENGINEER D. ANDRE DAVENPORT

REVISIONS						SHEET NO.
NO.	BY:	DATE:	NO.	BY:	DATE:	S-86
1			3			TOTAL SHEETS
2			4			104

DRAWN BY : K. D. LAYNE DATE : 01-11-12
CHECKED BY : D.A. DAVENPORT DATE : 1-20-12
DESIGN ENGINEER OF RECORD: G.W. DICKEY DATE : 10/16/12

13-JUN-2013 13:41
R:\Structures\Plans\Str6\Plans\R-2707AB_SD_PS_06.dgn
dadavenport

STR. #6

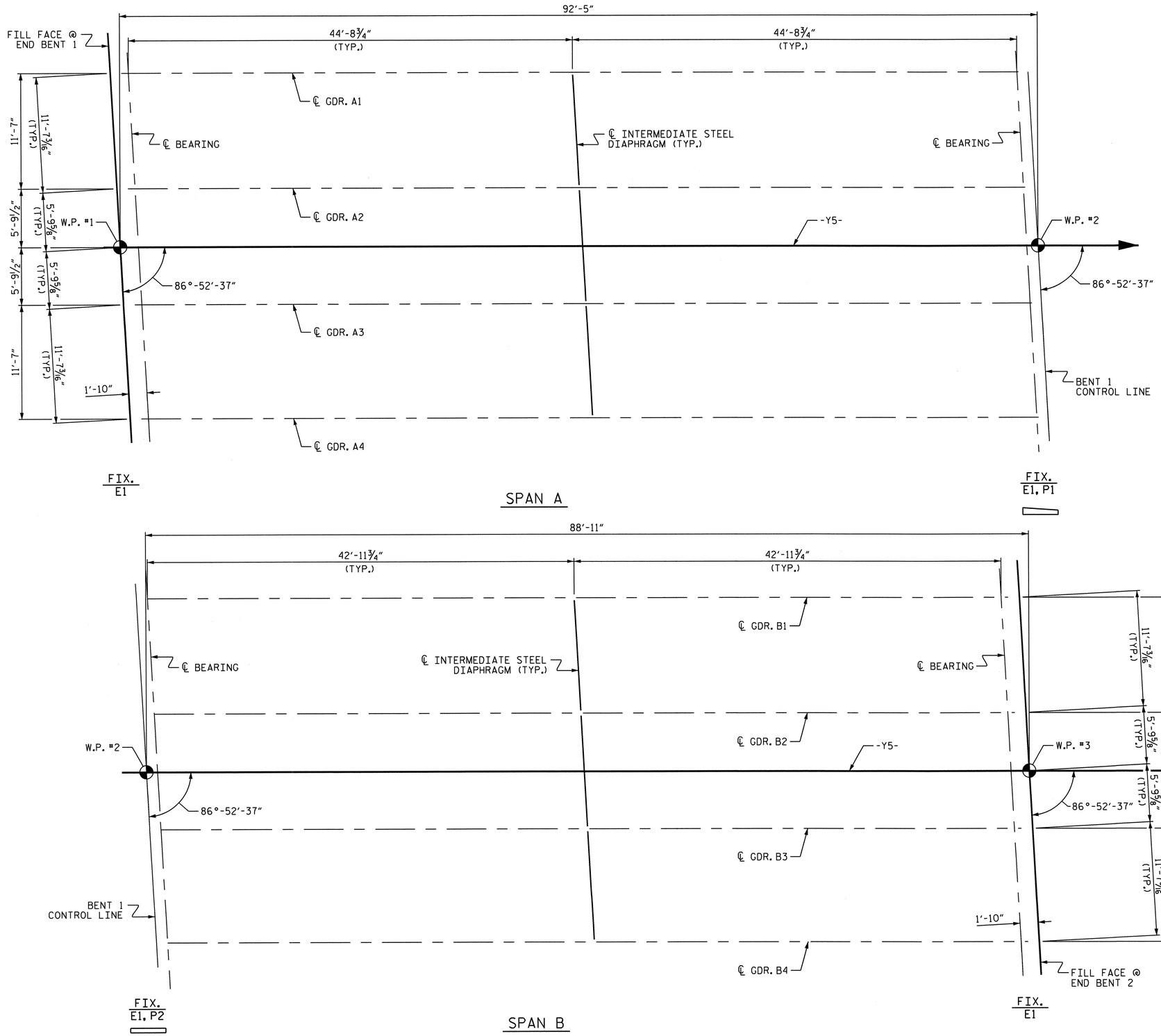

FRAMING PLAN

DRAWN BY : E.C. LOCKLEAR DATE : 6-24-11
CHECKED BY : D.A. GLADDEN DATE : 12-22-11
DESIGN ENGINEER OF RECORD: G.W. DICKEY DATE : 10/16/12

13-JUN-2013 13:40
R:\Structures\Plans\Str6\Plans\R-2707AB_SD_FP_06.dgn
dadavenport

PROJECT NO. R-2707AB
CLEVELAND COUNTY
STATION: 203+50.35-L-

STATE OF NORTH CAROLINA
DEPARTMENT OF TRANSPORTATION
RALEIGH

SUPERSTRUCTURE FRAMING PLAN

REVISIONS						SHEET NO.
NO.	BY:	DATE:	NO.	BY:	DATE:	S-87
1			3			TOTAL SHEETS
2			4			104

STR. #6

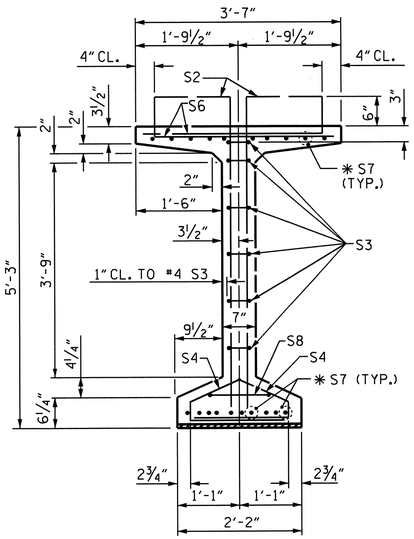

SECTION A-A

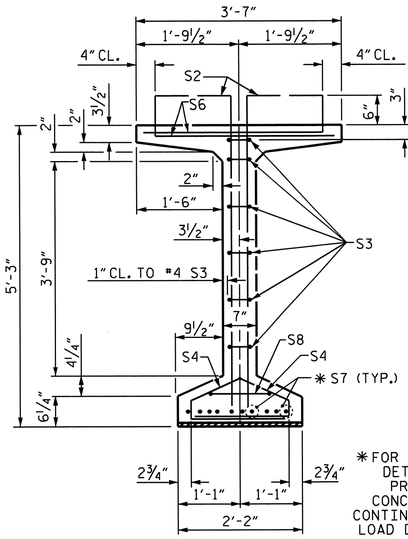

SECTION B-B

✱FOR S7 BARS, SEE DETAIL "C" OF PRESTRESSED CONCRETE GIRDER CONTINUOUS FOR LIVE LOAD DETAILS SHEET

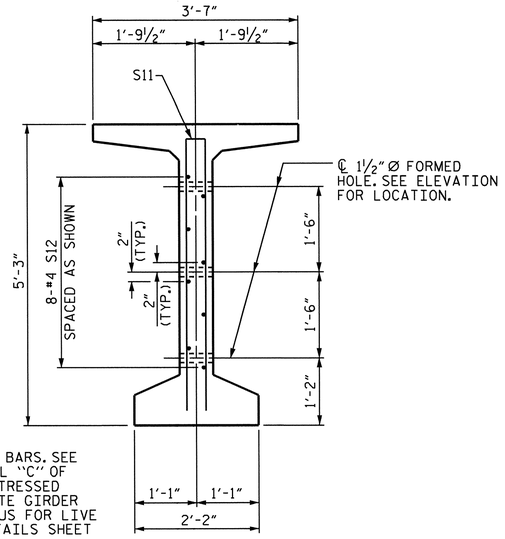

SECTION C-C

(S1, S6 AND S9 BARS NOT SHOWN)

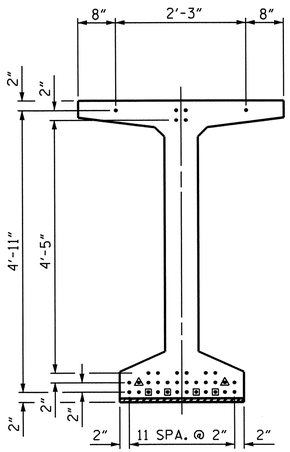

AT END OF GIRDER

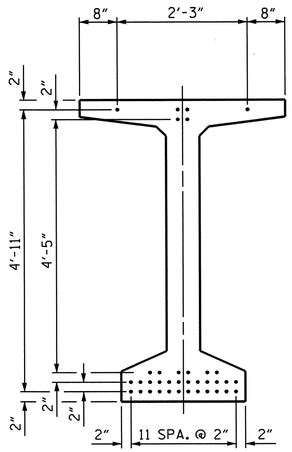

AT ℄ OF GIRDER

0.6" Ø LOW RELAXATION STRAND LAYOUT

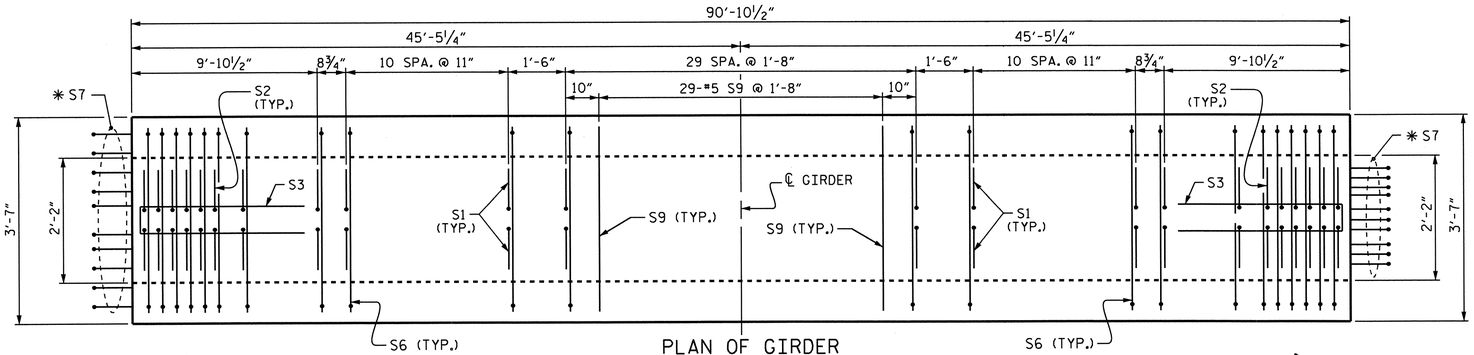

PLAN OF GIRDER

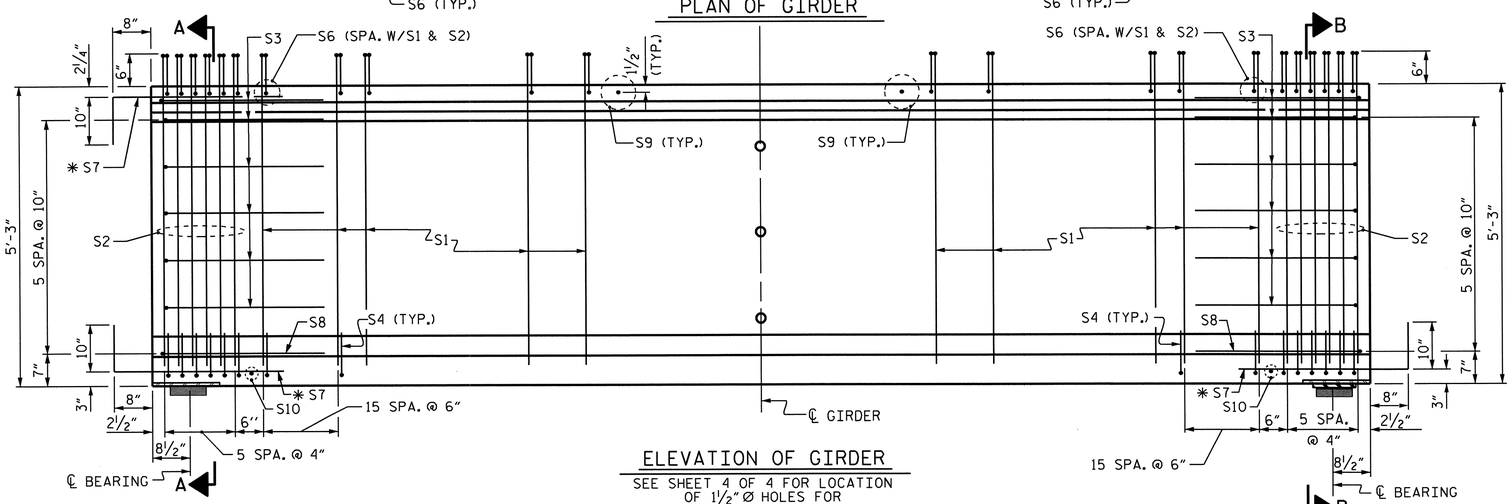

INTEGRAL END BENT

ELEVATION OF GIRDER

SEE SHEET 4 OF 4 FOR LOCATION OF 1½" Ø HOLES FOR INTERMEDIATE DIAPHRAGMS

DEBONDING LEGEND

- ● FULLY BONDED STRANDS
- ⊡ STRANDS DEBONDED FOR 4'-0" FROM END OF GIRDER
- ⧋ STRANDS DEBONDED FOR 6'-0" FROM END OF GIRDER

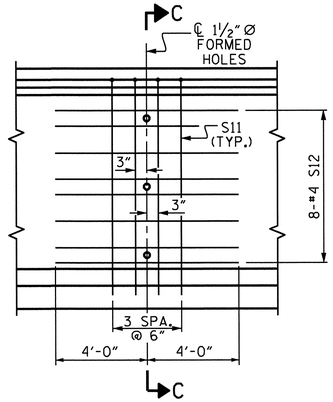

PARTIAL ELEVATION

0.6" Ø L. R. GRADE 270 STRANDS		
AREA (SQUARE INCHES)	ULTIMATE STRENGTH (LBS. PER STRAND)	APPLIED PRESTRESS (LBS. PER STRAND)
0.217	58,600	43,950

REINFORCING STEEL FOR ONE GDR

BAR	NUMBER	SIZE	TYPE	LENGTH	WEIGHT
S1	168	#4	1	6'-1"	683
S2	24	#5	1	6'-1"	152
S3	12	#4	2	8'-5"	67
S4	88	#4	3	3'-0"	176
S6	192	#5	4	4'-4"	868
✱S7	30	#5	STR	3'-8"	115
S8	2	#5	2	9'-0"	19
S9	29	#5	STR	3'-3"	98
S10	2	#3	STR	1'-10"	1
S11	4	#5	2	10'-2"	42
S12	8	#4	STR	8'-0"	43

✱NOTE: S7 BARS SHALL BE BENT BEFORE SHIPMENT. HEAT BENDING SHALL NOT BE ALLOWED.

BAR TYPES

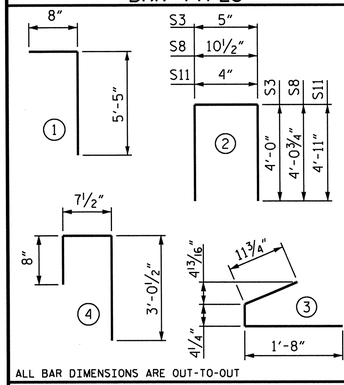

ALL BAR DIMENSIONS ARE OUT-TO-OUT

QUANTITIES FOR ONE GIRDER

	REINFORCING STEEL	8200 PSI CONCRETE	0.6" Ø L.R. STRANDS
	LB.	C.Y.	No.
	2264	18.0	36

GIRDERS REQUIRED

NUMBER	LENGTH	TOTAL LENGTH
4	90.8750	363.50

PROJECT NO. R-2707AB

CLEVELAND COUNTY

STATION: 203+50.35-L-

SHEET 1 OF 4

STATE OF NORTH CAROLINA
DEPARTMENT OF TRANSPORTATION
RALEIGH

STANDARD

63" PRESTRESSED CONCRETE MODIFIED BULB TEE CONTINUOUS FOR LIVE LOAD SPAN A

NORTH CAROLINA PROFESSIONAL SEAL 10730 ENGINEER DANIEL ANDREW DAVENPORT

6-19-13

REVISIONS						SHEET NO.
NO.	BY:	DATE:	NO.	BY:	DATE:	S-88
1			3			TOTAL SHEETS
2			4			104

ASSEMBLED BY : E.C. LOCKLEAR		DATE : 6-29-11
CHECKED BY : D.A. GLADDEN		DATE : 01/03/12
DESIGN ENGINEER OF RECORD: G.W. DICKEY		DATE : 10/16/12
DRAWN BY : EEM 2/6/97	REV. 10/17/00	RWW/LES
CHECKED BY : VAP 2/6/97	REV. 5/1/06R	TLA/GM
	REV. 10/1/11	MAA/GM

13-JUN-2013 13:40
R:\Structures\Plans\Str6\Plans\R-2707AB_SD_PCG_06.dgn
ddavenport

STR. #6

STD. NO. PCG7 (Sht. 2)

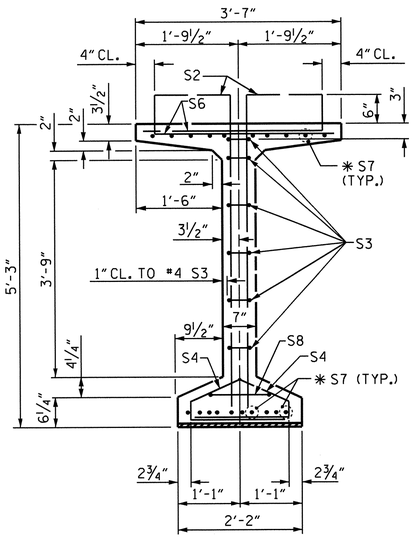

SECTION A-A

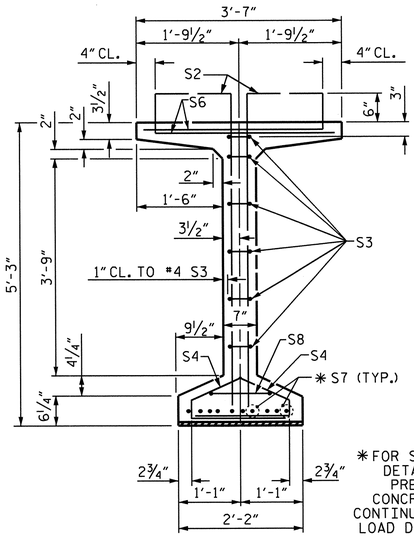

SECTION B-B

* FOR S7 BARS, SEE DETAIL "C" OF PRESTRESSED CONCRETE GIRDER CONTINUOUS FOR LIVE LOAD DETAILS SHEET

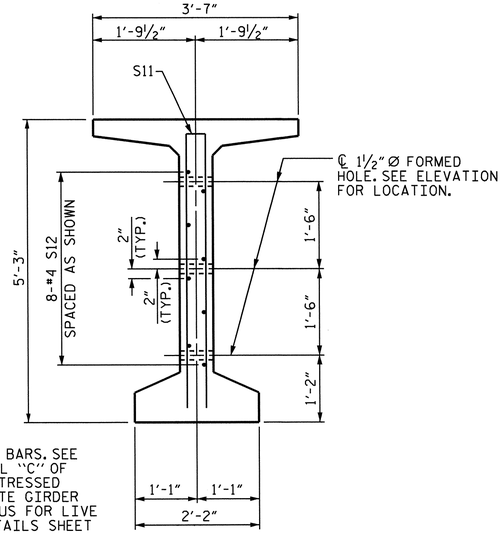

SECTION C-C

(S1, S6 AND S9 BARS NOT SHOWN)

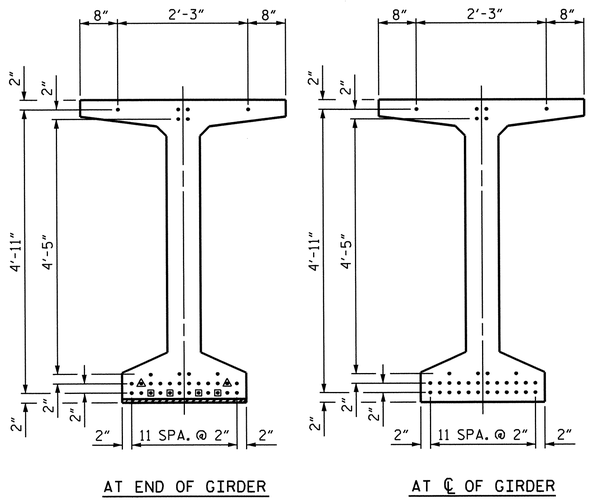

0.6" Ø LOW RELAXATION STRAND LAYOUT

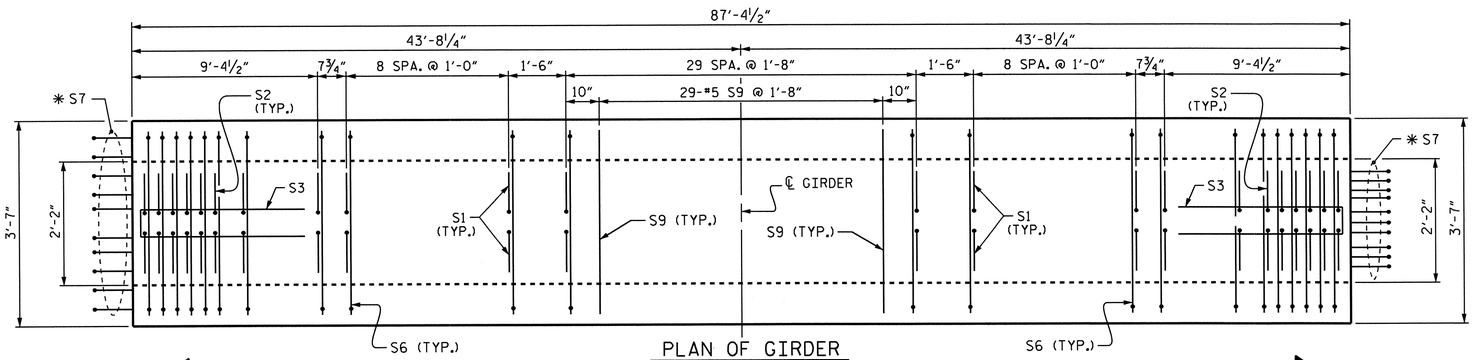

PLAN OF GIRDER

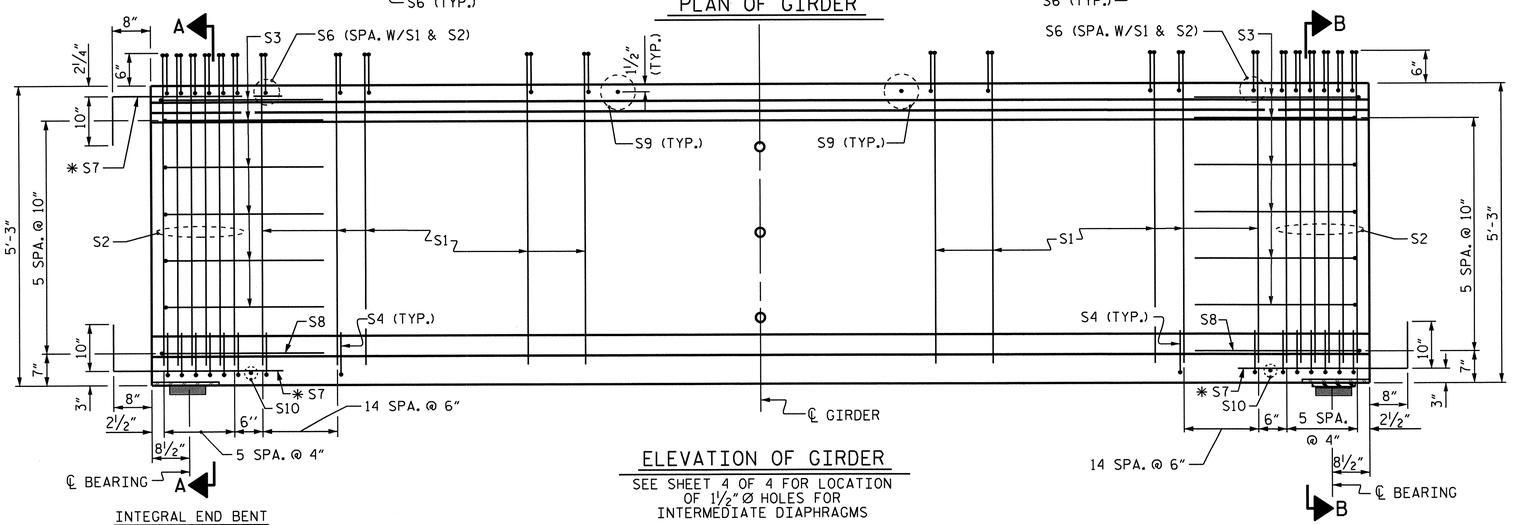

ELEVATION OF GIRDER

SEE SHEET 4 OF 4 FOR LOCATION OF 1½" Ø HOLES FOR INTERMEDIATE DIAPHRAGMS

INTEGRAL END BENT

DEBONDING LEGEND

- ● FULLY BONDED STRANDS
- ⊡ STRANDS DEBONDED FOR 4'-0" FROM END OF GIRDER
- ⊿ STRANDS DEBONDED FOR 6'-0" FROM END OF GIRDER

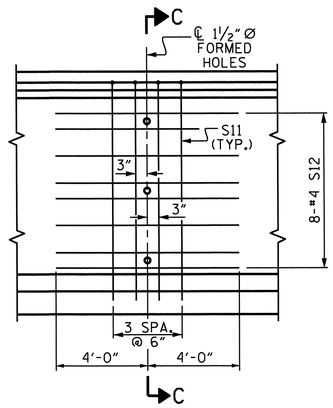

PARTIAL ELEVATION

0.6" Ø L. R. GRADE 270 STRANDS		
AREA (SQUARE INCHES)	ULTIMATE STRENGTH (LBS. PER STRAND)	APPLIED PRESTRESS (LBS. PER STRAND)
0.217	58,600	43,950

REINFORCING STEEL FOR ONE GDR

BAR	NUMBER	SIZE	TYPE	LENGTH	WEIGHT
S1	156	#4	1	6'-1"	634
S2	24	#5	1	6'-1"	152
S3	12	#4	2	8'-5"	67
S4	84	#4	3	3'-0"	168
S6	180	#5	4	4'-4"	814
* S7	30	#5	STR	3'-8"	115
S8	2	#5	2	9'-0"	19
S9	29	#5	STR	3'-3"	98
S10	2	#3	STR	1'-10"	1
S11	4	#5	2	10'-2"	42
S12	8	#4	STR	8'-0"	43

* NOTE: S7 BARS SHALL BE BENT BEFORE SHIPMENT. HEAT BENDING SHALL NOT BE ALLOWED.

BAR TYPES

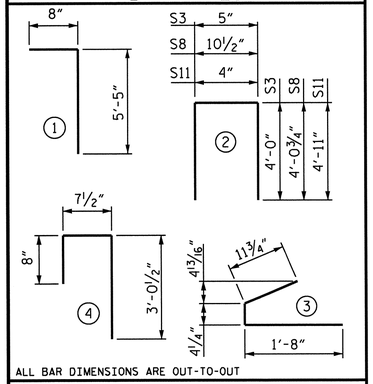

ALL BAR DIMENSIONS ARE OUT-TO-OUT

QUANTITIES FOR ONE GIRDER

	REINFORCING STEEL	8200 PSI CONCRETE	0.6" Ø L.R. STRANDS
	LB.	C.Y.	No.
	2153	17.3	34

GIRDERS REQUIRED

NUMBER	LENGTH	TOTAL LENGTH
4	87.3750	349.50

PROJECT NO. R-2707AB

CLEVELAND COUNTY

STATION: 203+50.35-L-

SHEET 2 OF 4

STATE OF NORTH CAROLINA
DEPARTMENT OF TRANSPORTATION
RALEIGH

STANDARD

63" PRESTRESSED CONCRETE MODIFIED BULB TEE CONTINUOUS FOR LIVE LOAD SPAN B

ASSEMBLED BY : E.C. LOCKLEAR	DATE : 6-29-11
CHECKED BY : D.A. GLADDEN	DATE : 01/03/12
DESIGN ENGINEER OF RECORD: C.W. DICKEY	DATE : 10/16/12

DRAWN BY : EEM 2/6/97	REV. 10/17/00 RWW/LES
CHECKED BY : VAP 2/6/97	REV. 5/1/06R TLA/GM
	REV. 10/1/11 MAA/GM

REVISIONS						SHEET NO.
NO.	BY:	DATE:	NO.	BY:	DATE:	S-89
1			3			TOTAL SHEETS
2			4			104

NORTH CAROLINA PROFESSIONAL SEAL 10730 ENGINEER D. ANDRE DAVENPORT

STR. #6 STD. NO. PCG7 (Sht. 2)

13-JUN-2013 13:39
R:\Structures\Plans\Str6\Plans\R-2707AB_SD_PCG_06.dgn
ddavenport

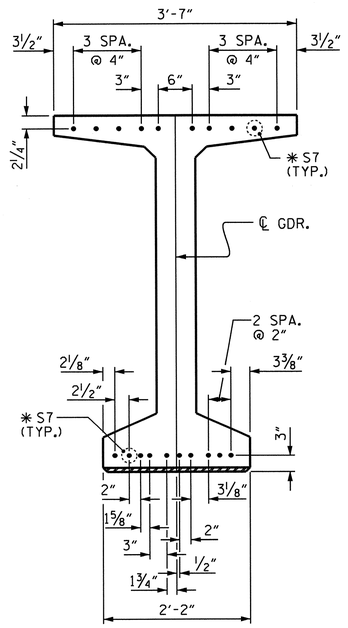

DETAIL "C"
(FOR 63" MODIFIED BULB TEES)

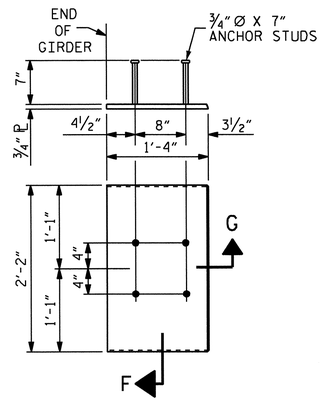

EMBEDDED PLATE "B-1" DETAILS FOR 63" MODIFIED BULB TEES
(2 REQ'D. PER GIRDER)

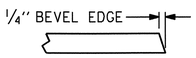

SECTION "G"

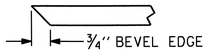

SECTION "F"
(SEE NOTES)

NOTES

ALL PRESTRESSING STRANDS SHALL BE 7-WIRE LOW-RELAXATION GRADE 270 STRANDS AND SHALL CONFORM TO AASHTO M203 EXCEPT FOR SAMPLING REQUIREMENTS WHICH SHALL BE IN ACCORDANCE WITH THE STANDARD SPECIFICATIONS.

ALL REINFORCING STEEL SHALL BE GRADE 60.

APPLY EPOXY PROTECTIVE COATING TO END OF GIRDER SURFACES INDICATED IN ELEVATION VIEW.

EMBEDDED PLATE "B-1" SHALL BE GALVANIZED IN ACCORDANCE WITH THE STANDARD SPECIFICATIONS. BEVEL EDGES OF PLATE "B-1" TO GIVE CLOSE FIT BUT NOT TIGHT FIT TO STEEL CASTING FORM.

ANCHOR STUDS SHALL CONFORM TO AASHTO M169 GRADES 1010 THROUGH 1020 OR APPROVED EQUAL, AND SHALL MEET THE TYPE "B" REQUIREMENTS OF SUBSECTION 7.3 OF THE ANSI/AASHTO/AWS D1.5 BRIDGE WELDING CODE.

AT ENDS OF GIRDERS TO BE EMBEDDED IN CONCRETE DIAPHRAGMS OR END WALLS, PRESTRESSING STRANDS MAY EXTEND A MAXIMUM OF 2" BEYOND THE GIRDER ENDS. OTHERWISE, PRESTRESSING STRANDS SHALL BE CUT FLUSH WITH THE GIRDER ENDS.

THE TRANSFER OF LOAD FROM THE ANCHORAGES TO THE GIRDER SHALL BE DONE WHEN CONCRETE HAS REACHED A COMPRESSIVE STRENGTH OF NOT LESS THAN 6500 PSI.

DEPENDING ON THE TYPE OF SYSTEM USED TO SUPPORT THE DECK SLAB FORMS, PRESET ANCHORS MAY BE NECESSARY IN THE PRESTRESSED CONCRETE GIRDER.

THE TOP SURFACE OF THE GIRDER, EXCLUDING THE OUTSIDE 4", SHALL BE RAKED TO A DEPTH OF ¼".

WHEN DRAPED STRANDS ARE DETAILED, THE LONGITUDINAL LOCATION OF THE HOLD DOWN DEVICES SHALL BE WITHIN 6" OF THE LOCATION SHOWN AND THE CENTER OF GRAVITY OF THE GROUP OF DRAPED STRANDS SHALL BE LOCATED WITHIN ½" OF THE THEORETICAL LOCATION SHOWN.

A 2" x 2" CHAMFER IS ALLOWED AT THE INTERSECTION OF THE WEB AND THE BOTTOM FLANGE OF THE 63" AND 72" MODIFIED BULB TEES ONLY.

DEAD LOAD DEFLECTION TABLE

0.6" Ø LOW RELAXATION	SPAN A											SPAN B										
	GIRDERS 1 & 4											GIRDERS 1 & 4										
TENTH POINTS	0	.1	.2	.3	.4	.5	.6	.7	.8	.9	0	0	.1	.2	.3	.4	.5	.6	.7	.8	.9	0
CAMBER (GIRDER ALONE IN PLACE) ↑	0.0	0.077	0.146	0.200	0.234	0.246	0.234	0.200	0.146	0.077	0.0	0.0	0.066	0.125	0.172	0.201	0.211	0.201	0.172	0.125	0.066	0.0
✱DEFLECTION DUE TO SUPERIMPOSED D.L. ↓	0.0	0.028	0.053	0.073	0.086	0.090	0.086	0.073	0.053	0.028	0.0	0.0	0.024	0.045	0.062	0.073	0.077	0.073	0.062	0.045	0.024	0.0
FINAL CAMBER ↑	0	9/16	1 1/8	1 1/2	1 3/4	1 7/8	1 3/4	1 1/2	1 1/8	9/16	0	0	1/2	15/16	1 5/16	1 3/16	1 1/8	1 3/16	1 5/16	1 5/16	1/2	0
	GIRDERS 2 & 3											GIRDERS 2 & 3										
TENTH POINTS	0	.1	.2	.3	.4	.5	.6	.7	.8	.9	0	0	.1	.2	.3	.4	.5	.6	.7	.8	.9	0
CAMBER (GIRDER ALONE IN PLACE) ↑	0.0	0.077	0.146	0.200	0.234	0.246	0.234	0.200	0.146	0.077	0.0	0.0	0.066	0.125	0.172	0.201	0.211	0.201	0.172	0.125	0.066	0.0
✱DEFLECTION DUE TO SUPERIMPOSED D.L. ↓	0.0	0.031	0.059	0.081	0.095	0.100	0.095	0.081	0.059	0.031	0.0	0.0	0.027	0.050	0.069	0.081	0.085	0.081	0.069	0.050	0.027	0.0
FINAL CAMBER ↑	0	9/16	1 1/16	1 7/16	1 11/16	1 3/4	1 11/16	1 7/16	1 1/16	9/16	0	0	1/2	7/8	1 1/4	1 7/16	1 1/2	1 7/16	1 1/4	7/8	1/2	0

✱ INCLUDES FUTURE WEARING SURFACE
ALL VALUES ARE SHOWN IN FEET (DECIMAL FORM), EXCEPT " FINAL CAMBER ", WHICH IS GIVEN IN INCHES (FRACTION FORM).

PROJECT NO. R-2707AB
CLEVELAND COUNTY
STATION: 203+50.35-L-

SHEET 3 OF 4

STATE OF NORTH CAROLINA
DEPARTMENT OF TRANSPORTATION
RALEIGH

STANDARD

PRESTRESSED CONCRETE GIRDER CONTINUOUS FOR LIVE LOAD DETAILS

REVISIONS						SHEET NO.
NO.	BY:	DATE:	NO.	BY:	DATE:	S-90
1			3			TOTAL SHEETS
2			4			104

ASSEMBLED BY : E.C. LOCKLEAR	DATE : 6-29-11	
CHECKED BY : D.A. GLADDEN	DATE : 1-3-12	
DESIGN ENGINEER OF RECORD: G.W. DICKEY	DATE : 10/16/12	
DRAWN BY : ELR 11/91	REV. 7/10/01RR LES/RDR	
CHECKED BY : GRP 11/91	REV. 5/1/06 TLA/GM	
	REV. 10/1/11 MAA/GM	

13-JUN-2013 13:39
R:\Structures\Plans\Str6\Plans\R-2707AB_SD_PCG_06.dgn
dadavenport

STR. #6

STD. NO. PCG9 (Sht. 5a)

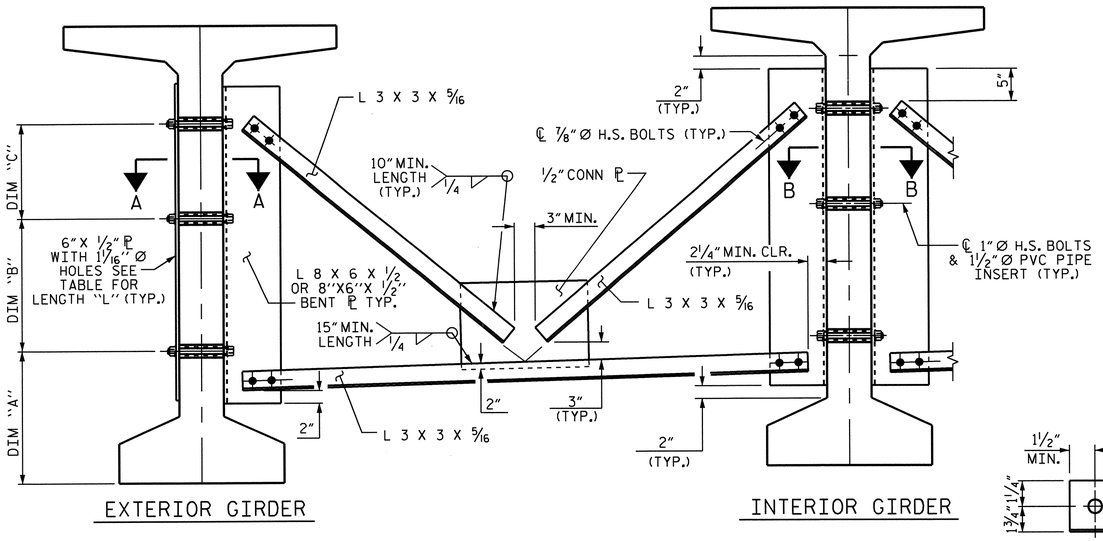

PART SECTION AT INTERMEDIATE DIAPHRAGM

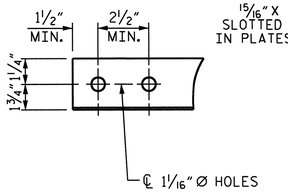

ANGLE END
(L 3 X 3 X 5/16)

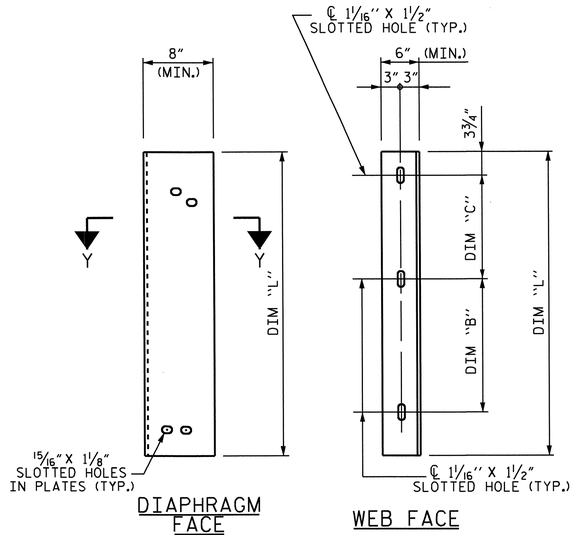

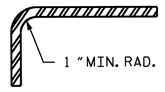

SECTION Y-Y

CONNECTOR PLATE DETAIL

STRUCTURAL STEEL NOTES

ALL INTERMEDIATE DIAPHRAGM STEEL AND CONNECTOR PLATES SHALL BE AASHTO M270 GRADE 50 OR APPROVED EQUAL.

TENSION ON THE ASTM A325 BOLTS THROUGH THE ANGLE MEMBER SHALL BE CALIBRATED USING DIRECT TENSION INDICATOR WASHERS IN ACCORDANCE WITH THE STANDARD SPECIFICATIONS.

TENSION ON THE ASTM A449 BOLTS THROUGH THE GIRDER WEB SHALL BE SNUG TIGHTENED FOLLOWED BY AN ADDITIONAL 1/4 TURN.

THE PLATES, BENT PLATES, AND ANGLES SHALL BE GALVANIZED OR METALLIZED IN ACCORDANCE WITH THE STANDARD SPECIFICATIONS. FOR THERMAL SPRAYED COATINGS (METALLIZATION), SEE SPECIAL PROVISIONS.

FOR METALLIZATION, APPLY AN 8 MIL THICK 99.99 PERCENT ZINC (W-Zn-1) THERMAL SPRAYED COATING WITH A 0.5 MIL THICK SEAL COAT TO ALL STEEL DIAPHRAGM SURFACES IN ACCORDANCE WITH THE THERMAL SPRAYED COATINGS SPECIAL PROVISION AND SECTION 442 OF THE STANDARD SPECIFICATIONS.

GALVANIZE THE HIGH STRENGTH BOLTS, NUTS, WASHERS AND DIRECT TENSION INDICATORS IN ACCORDANCE WITH THE STANDARD SPECIFICATIONS.

USE AN ASTM F436 HARDENED WASHER WITH STANDARD AND SLOTTED HOLES UNDER EACH BOLT HEAD AND NUT.

FOR BOLTS THROUGH THE GIRDER WEB, PROVIDE SUFFICIENT LENGTH OF THREADS ON ALL BOLTS TO ACCOMMODATE WASHERS AND THE THICKNESS OF CONNECTING MEMBER PLUS AT LEAST 1/4" PROJECTION BEYOND THE NUT.

INTERMEDIATE DIAPHRAGM ASSEMBLY SHALL COMPLY WITH SECTION 1072 OF THE STANDARD SPECIFICATIONS.

SUBMIT TWO SETS OF WORKING DRAWINGS FOR THE INTERMEDIATE DIAPHRAGM ASSEMBLY FOR REVIEW, COMMENTS AND ACCEPTANCE. AFTER REVIEW, COMMENTS, AND ACCEPTANCE, SUBMIT SEVEN SETS FOR DISTRIBUTION.

IN THE EXTERIOR BAYS, PLACE TEMPORARY STRUTS BETWEEN PRESTRESSED GIRDERS ADJACENT TO THE STEEL DIAPHRAGMS. STRUTS SHALL REMAIN IN PLACE 3 DAYS AFTER CONCRETE IS PLACED.

THE COST OF THE STEEL DIAPHRAGMS AND ASSEMBLIES SHALL BE INCLUDED IN THE UNIT PRICE BID FOR PRESTRESSED CONCRETE GIRDERS.

TABLE

GIRDER TYPE	DIM "A"	DIM "B"	DIM "C"	DIM "L"
63" BULB TEE	1'-2"	1'-6"	1'-6"	3'-5"

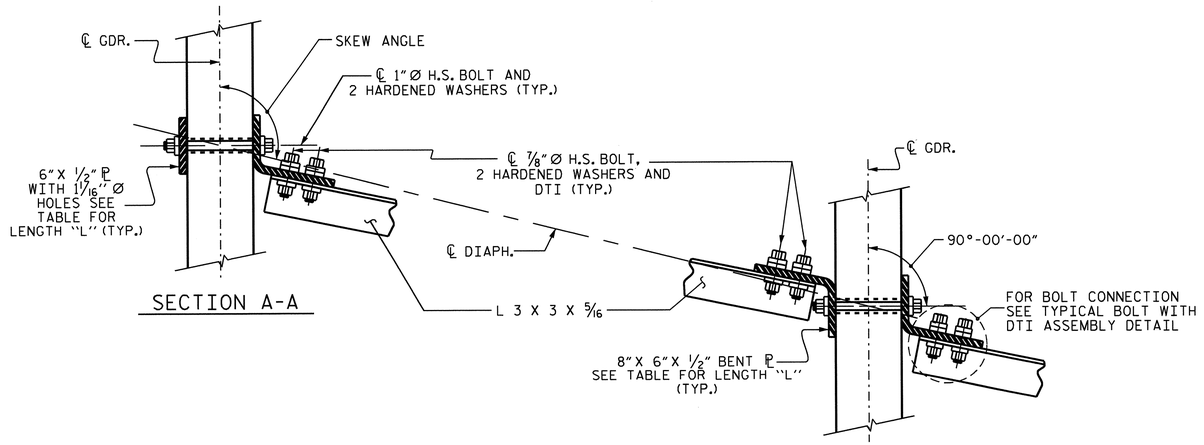

CONNECTION DETAILS

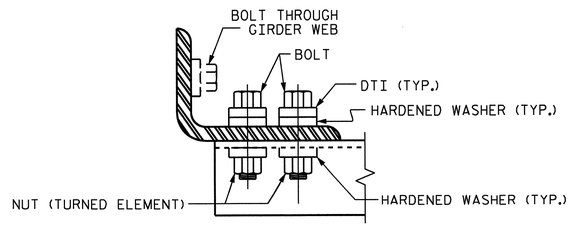

BOLT WITH DTI ASSEMBLY DETAIL

PROJECT NO. R-2707AB

CLEVELAND COUNTY

STATION: 203+50.35-L-

SHEET 4 OF 4

STATE OF NORTH CAROLINA
DEPARTMENT OF TRANSPORTATION
RALEIGH

STANDARD INTERMEDIATE STEEL DIAPHRAGMS FOR 63" MODIFIED BULB TEE PRESTRESSED CONCRETE GIRDERS

REVISIONS						SHEET NO.
NO.	BY:	DATE:	NO.	BY:	DATE:	S-91
1			3			TOTAL SHEETS
2			4			104

STR. #6 STD. NO. PCG11

NORTH CAROLINA PROFESSIONAL SEAL 10730 ENGINEER D. ANDRE DAVENPORT
6-13-13

ASSEMBLED BY : E.C. LOCKLEAR	DATE : 6-30-11		
CHECKED BY : D.A. GLADDEN	DATE : 1-3-12		
DESIGN ENGINEER OF RECORD: G.W. DICKEY	DATE : 10/16/12		
DRAWN BY : RWW 11/09	ADDED 11/23/09R		
CHECKED BY : GM 11/09	REV. 10/1/11 MAA/GM		

13-JUN-2013 13:39
R:\Structures\Plans\Str6\Plans\R-2707AB_SD_PCG_06.dgn
ddavenport

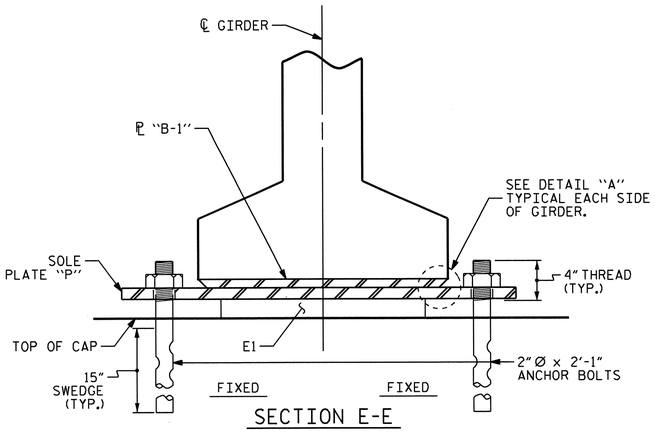

SECTION E-E

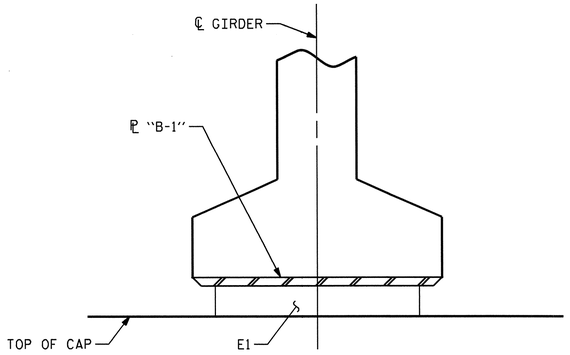

SECTION F-F

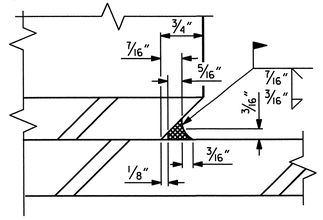

DETAIL "A"

NOTES

AT ALL FIXED POINTS OF SUPPORT, NUTS FOR ANCHOR BOLTS ARE TO BE TIGHTENED FINGER TIGHT AND THEN BACKED OFF 1/2 TURN. THE THREAD OF THE NUT AND BOLT SHALL THEN BE BURRED WITH A SHARP POINTED TOOL.

STEEL SOLE PLATES, ANCHOR BOLTS, NUTS, AND WASHERS SHALL BE GALVANIZED IN ACCORDANCE WITH THE STANDARD SPECIFICATIONS.

PRIOR TO WELDING, GRIND THE GALVANIZED SURFACE OF THE PORTION OF THE EMBEDDED PLATE AND SOLE PLATE THAT ARE TO BE WELDED. AFTER WELDING, DAMAGED GALVANIZED SURFACES SHALL BE REPAIRED IN ACCORDANCE WITH THE STANDARD SPECIFICATIONS.

WHEN WELDING THE SOLE PLATE TO THE EMBEDDED PLATE IN THE GIRDER, USE TEMPERATURE INDICATING WAX PENS, OR OTHER SUITABLE MEANS, TO ENSURE THAT THE TEMPERATURE OF THE SOLE PLATE DOES NOT EXCEED 300°F. TEMPERATURES ABOVE THIS MAY DAMAGE THE ELASTOMER.

SOLE PLATE "P", BOLTS, NUTS AND WASHERS SHALL BE INCLUDED IN THE PAY ITEM FOR PRESTRESSED CONCRETE GIRDERS.

ANCHOR BOLTS SHALL MEET THE REQUIREMENTS OF ASTM A449. NUTS SHALL MEET THE REQUIREMENTS OF AASHTO M291-DH OR AASHTO M292-2H. WASHERS SHALL MEET THE REQUIREMENTS OF AASHTO M293. NO SHOP DRAWINGS ARE REQUIRED FOR ANCHOR BOLTS, NUTS AND WASHERS. SHOP INSPECTION IS REQUIRED.

ALL SURFACES OF BEARING PLATES SHALL BE SMOOTH AND STRAIGHT.

FOR STEEL REINFORCED ELASTOMERIC BEARINGS, SEE SPECIAL PROVISIONS.

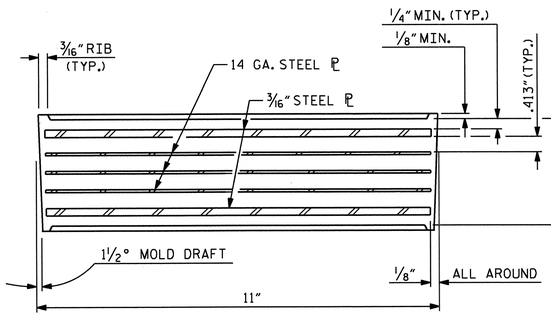

TYPICAL SECTION OF ELASTOMERIC BEARINGS

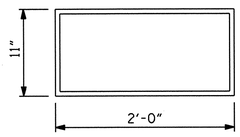

E1 (16 REQ'D.)

PLAN VIEW OF ELASTOMERIC BEARING

TYPE VII

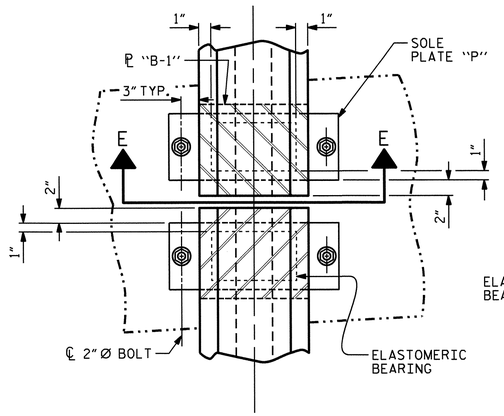

TYPICAL PLAN
(SHOWING CONTINUOUS BENT)

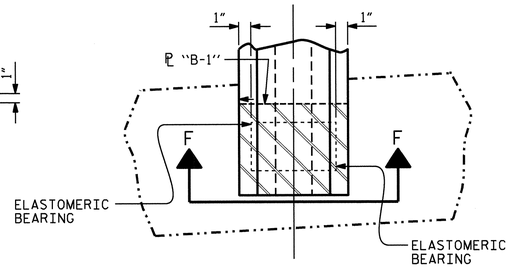

TYPICAL PLAN
(SHOWING INTEGRAL END BENT)

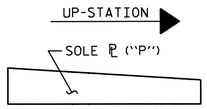

SOLE ℄ PLACEMENT DETAIL

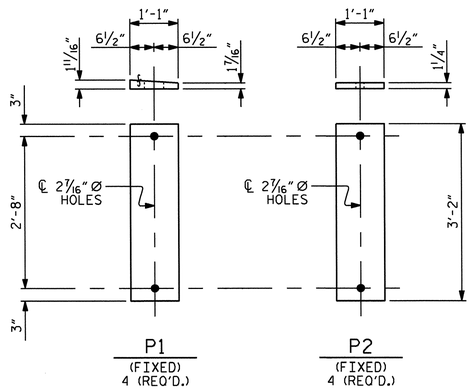

SOLE PLATE DETAILS ("P")

LOAD RATINGS	
	MAX.D.L.+ L.L.
TYPE VII	264 K

PROJECT NO. R-2707AB
CLEVELAND COUNTY
STATION: 203+50.35-L-

ASSEMBLED BY : E.C. LOCKLEAR	DATE : 6-28-11		
CHECKED BY : D.A. GLADDEN	DATE : 1-3-12		
DESIGN ENGINEER OF RECORD: G.W. DICKEY	DATE : 10/16/12		
DRAWN BY : EEM 2/97	REV. 10/17/00	RWW/LES	
CHECKED BY : VAP 2/97	REV. 5/1/06	TLA/GM	
	REV. 10/1/11	MAA/GM	

STATE OF NORTH CAROLINA
DEPARTMENT OF TRANSPORTATION
RALEIGH
STANDARD

ELASTOMERIC BEARING DETAILS

PRESTRESSED CONCRETE GIRDER SUPERSTRUCTURE

REVISIONS						SHEET NO.
NO.	BY:	DATE:	NO.	BY:	DATE:	S-92
1			3			TOTAL SHEETS
2			4			104

STR. #6 STD. NO. EB4 (SHT 3)

13-JUN-2013 13:38
R:\Structures\Plans\Str6\Plans\R-2707AB_SD_BG_06.dgn
dadavenport

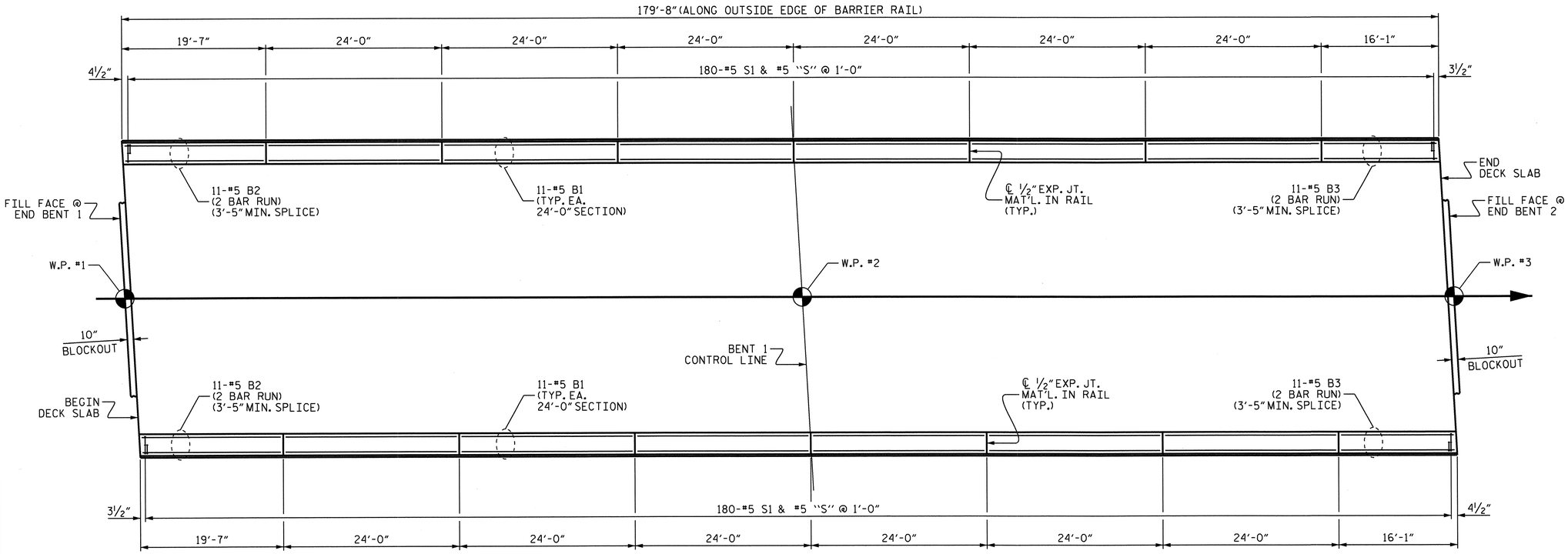

BAR TYPES

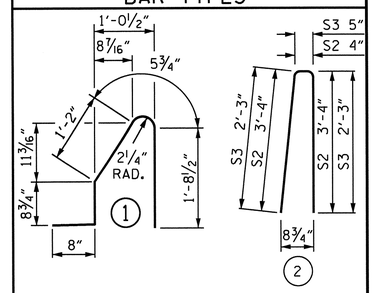

ALL BAR DIMENSIONS ARE OUT TO OUT

BILL OF MATERIAL

FOR CONCRETE BARRIER RAIL ONLY

BAR	NO.	SIZE	TYPE	LENGTH	WEIGHT
* B1	132	#5	STR	23'-7"	3247
* B2	44	#5	STR	11'-5"	524
* B3	44	#5	STR	9'-10"	451
* S1	360	#5	1	4'-9"	1784
* S2	352	#5	2	7'-0"	2570
* S3	8	#5	2	4'-11"	41

* EPOXY COATED REINFORCING STEEL	8617 LBS.
CLASS AA CONCRETE	48.9 CU. YDS.
CONCRETE BARRIER RAIL	359.33 LIN. FT.

NOTES

THE BARRIER RAIL IN EACH CONTINUOUS UNIT SHALL NOT BE CAST UNTIL ALL SLAB CONCRETE IN THAT UNIT HAS BEEN CAST AND HAS REACHED A MINIMUM COMPRESSIVE STRENGTH OF 3,000 PSI.

ALL REINFORCING STEEL IN BARRIER RAILS SHALL BE EPOXY COATED.

GROOVED CONTRACTION JOINTS, ½" IN DEPTH, SHALL BE TOOLED IN ALL EXPOSED FACES OF THE BARRIER RAIL AND IN ACCORDANCE WITH ARTICLE 825-10(B) OF THE STANDARD SPECIFICATIONS. THE CONTRACTION JOINT SHALL BE LOCATED AT EACH THIRD POINT BETWEEN BARRIER RAIL EXPANSION JOINTS. ONLY ONE CONTRACTION JOINT IS REQUIRED AT MIDPOINT OF BARRIER RAIL SEGMENTS LESS THAN 20 FEET IN LENGTH AND NO CONTRACTION JOINTS ARE REQUIRED FOR THOSE SEGMENTS LESS THAN 10 FEET IN LENGTH.

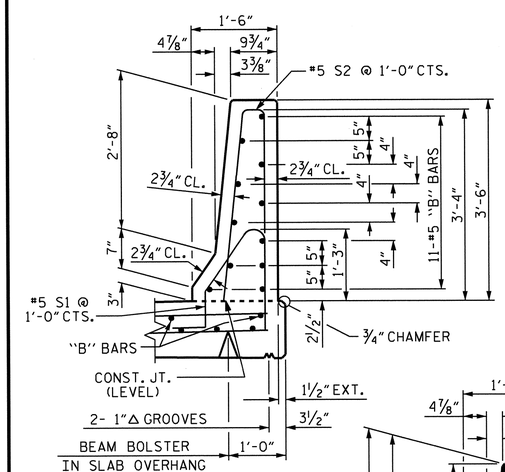

SECTION THRU RAIL

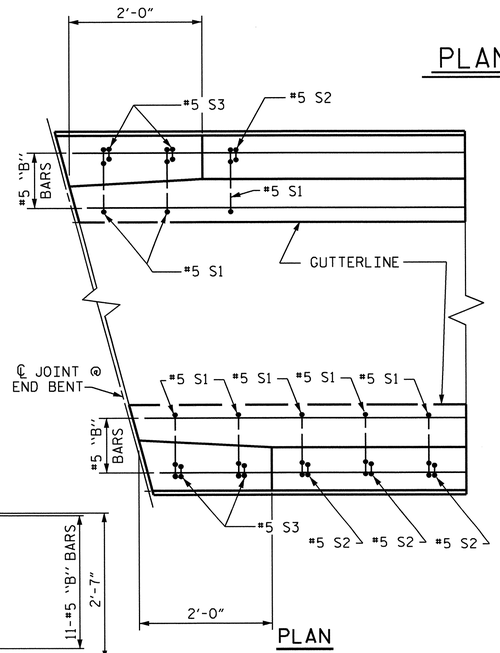

PLAN

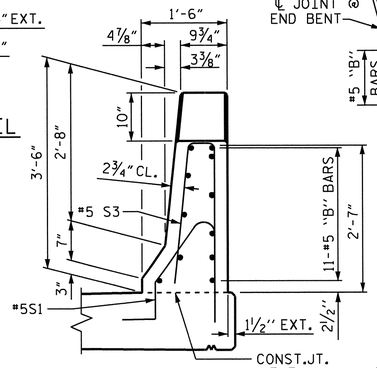

END VIEW

PLAN

BARRIER RAIL DETAILS

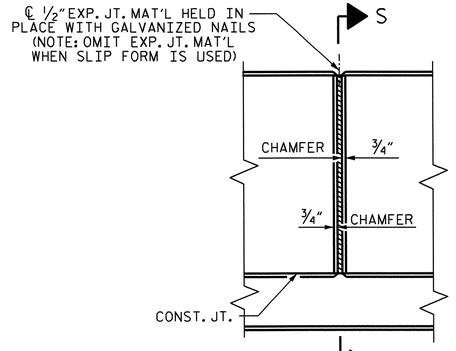

ELEVATION AT EXPANSION JOINTS

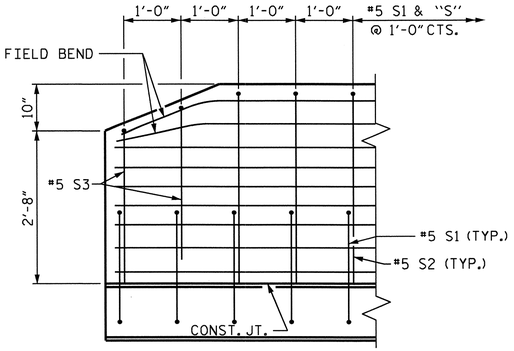

SIDE VIEW

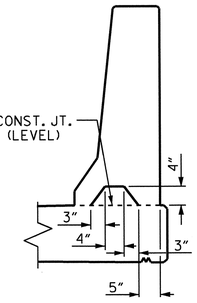

SECTION S-S

AT DAM IN OPEN JOINT (THIS IS TO BE USED ONLY WHEN SLIP FORM IS USED)

PROJECT NO. R-2707AB

CLEVELAND COUNTY

STATION: 203+50.35-L-

STATE OF NORTH CAROLINA
DEPARTMENT OF TRANSPORTATION
RALEIGH

CONCRETE BARRIER RAIL

REVISIONS						SHEET NO.
NO.	BY:	DATE:	NO.	BY:	DATE:	S-93
1			3			TOTAL SHEETS
2			4			104

DRAWN BY : E.C. LOCKLEAR DATE : 6-28-11
CHECKED BY : D.A. GLADDEN DATE : 1-2-12
DESIGN ENGINEER OF RECORD: G.W. DICKEY DATE : 10/16/12

14-JUN-2013 08:32
R:\Structures\Plans\Str6\Plans\R-2707AB_SD_BR_06.dgn
dadavenport

STR. #6

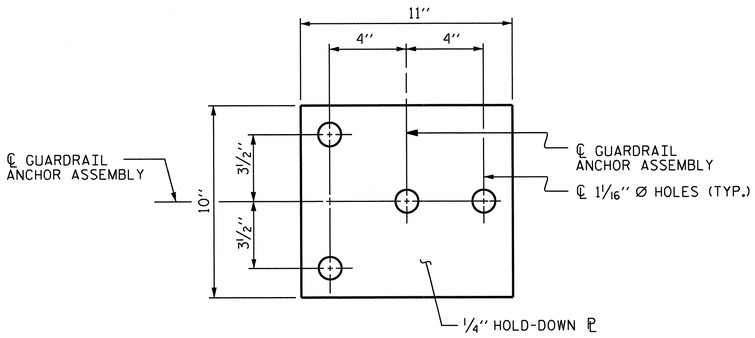

PLAN

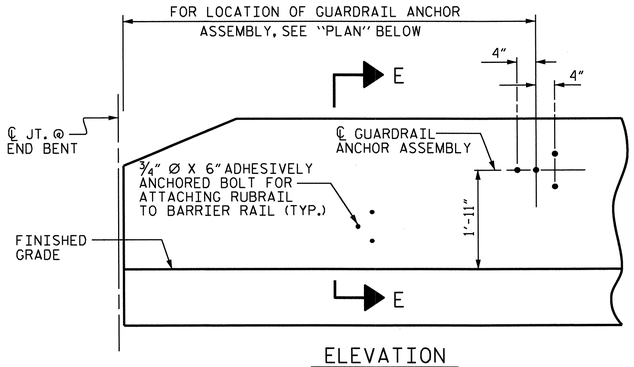

ELEVATION

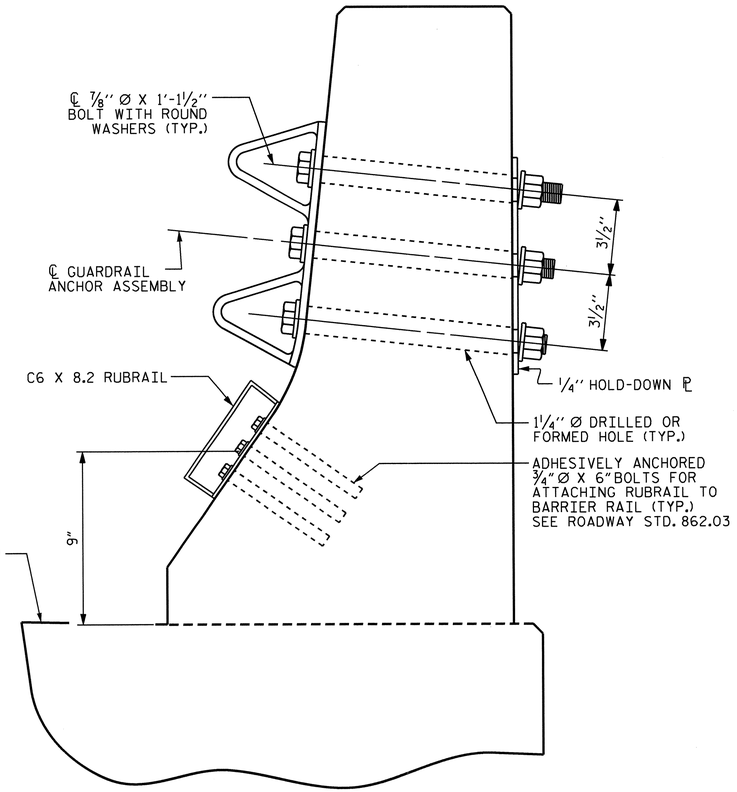

SECTION E-E

GUARDRAIL ANCHOR ASSEMBLY DETAILS

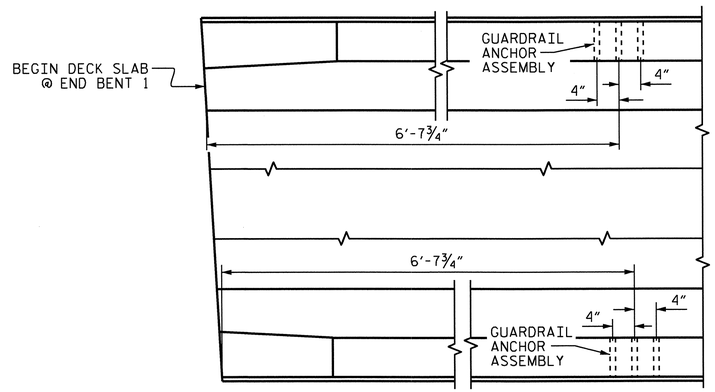

PLAN

LOCATION OF ANCHORS FOR GUARDRAIL

END BENT #1 SHOWN, END BENT #2 SIMILAR.

NOTES

THE GUARDRAIL ANCHOR ASSEMBLY SHALL CONSIST OF A 1/4'' HOLD DOWN PLATE AND 4 - 7/8'' Ø BOLTS WITH NUTS AND WASHERS, RUBRAIL, AND ADHESIVELY ANCHORED BOLTS.

THE HOLD-DOWN PLATE SHALL CONFORM TO AASHTO M270 GRADE 36. AFTER FABRICATION, THE HOLD-DOWN PLATE SHALL BE HOT-DIP GALVANIZED IN ACCORDANCE WITH AASHTO M111.

BOLTS SHALL CONFORM TO THE REQUIREMENTS OF ASTM A307 AND NUTS SHALL CONFORM TO THE REQUIREMENTS OF AASHTO M291. BOLTS, NUTS AND WASHERS SHALL BE GALVANIZED. (AT THE CONTRACTOR'S OPTION, STAINLESS STEEL BOLTS, NUTS AND WASHERS MAY BE USED AS AN ALTERNATE FOR THE 7/8'' Ø GALVANIZED BOLTS, NUTS AND WASHERS. THEY SHALL CONFORM TO OR EXCEED THE MECHANICAL REQUIREMENTS OF ASTM A307. THE USE OF THIS ALTERNATE SHALL BE APPROVED BY THE ENGINEER.)

THE GUARDRAIL ANCHOR ASSEMBLY IS REQUIRED AT ALL POINTS WHERE APPROACH GUARDRAIL IS TO BE ATTACHED TO THE END OF BARRIER RAIL. FOR POINTS OF ATTACHMENT, SEE SKETCH.

AFTER INSTALLATION, THE EXPOSED THREAD OF THE BOLT SHALL BE BURRED WITH A SHARP POINTED TOOL.

THE COST OF THE GUARDRAIL ANCHOR ASSEMBLY SHALL BE INCLUDED IN THE UNIT CONTRACT PRICE BID FOR CONCRETE BARRIER RAIL.

THE 1 1/4'' Ø HOLES SHALL BE FORMED OR DRILLED WITH A CORE BIT. IMPACT TOOLS WILL NOT BE PERMITTED. ANY CONCRETE DAMAGED BY THIS WORK SHALL BE REPAIRED TO THE SATISFACTION OF THE ENGINEER.

THE C6 X 8.2 RUBRAIL IS TO BE ADHESIVELY ANCHORED TO THE RAIL USING THREE 3/4''Ø X 6''BOLTS WITH WASHERS. LEVEL ONE FIELD TESTING IS REQUIRED, AND THE YIELD LOAD OF THE 3/4''Ø BOLT IS 12 KIPS. FOR ADHESIVELY ANCHORED ANCHOR BOLTS OR DOWELS, SEE STANDARD SPECIFICATIONS. SEE ROADWAY STANDARD 862.03 FOR DETAILS AND LOCATION OF THE RUBRAIL.

SKETCH SHOWING POINTS OF ATTACHMENTS

* DENOTES GUARDRAIL ANCHOR ASSEMBLY

PROJECT NO. R-2707AB

CLEVELAND COUNTY

STATION: 203+50.35-L-

STATE OF NORTH CAROLINA
DEPARTMENT OF TRANSPORTATION
RALEIGH

STANDARD

GUARDRAIL ANCHORAGE FOR BARRIER RAIL

REVISIONS						SHEET NO.
NO.	BY:	DATE:	NO.	BY:	DATE:	S-94
1			3			TOTAL SHEETS
2			4			104

STR. #6

STD. NO. GRA2

NORTH CAROLINA PROFESSIONAL SEAL 10730 ENGINEER DAVENPORT
6-13-13

ASSEMBLED BY : E.C. LOCKLEAR	DATE : 6-28-11
CHECKED BY : D.A. GLADDEN	DATE : 1-3-12
DRAWN BY : TLA 5/06	ADDED 5/1/06R KMM/GM
CHECKED BY : GM 5/06	REV. 10/01/11 MAA/GM

13-JUN-2013 13:37
R:\Structures\Plans\Str6\Plans\R-2707AB_SD_GR_06.dgn
ddavenport

13-JUN-2013 13:37
R:\Structures\Plans\Str6\Plans\R-2707AB_SD_BM_06.dgn
dadavenport

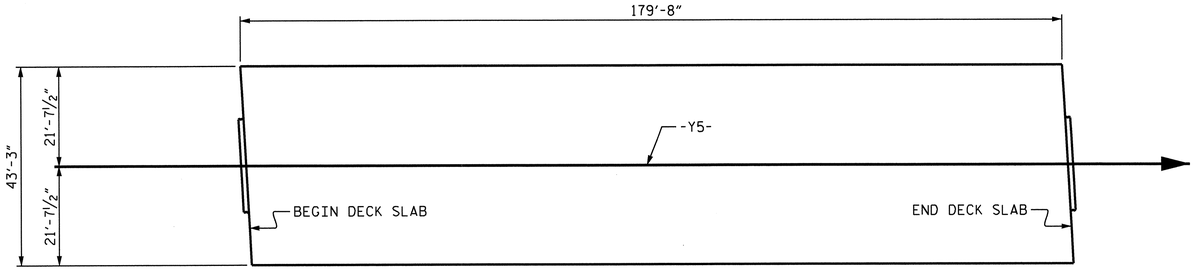

LAYOUT FOR COMPUTING AREA REINFORCED CONCRETE DECK SLAB (SQ. FT. = 7771)

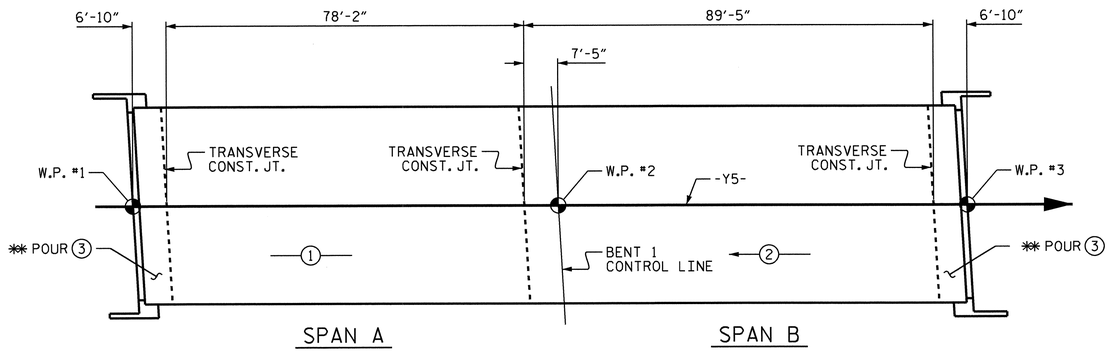

POURING SEQUENCE

✱✱ INCLUDES THE UPPER PART OF THE END BENT WINGS, UPPER PART OF THE INTEGRAL END BENT, AND 6'-0" SECTION OF THE BRIDGE DECK.

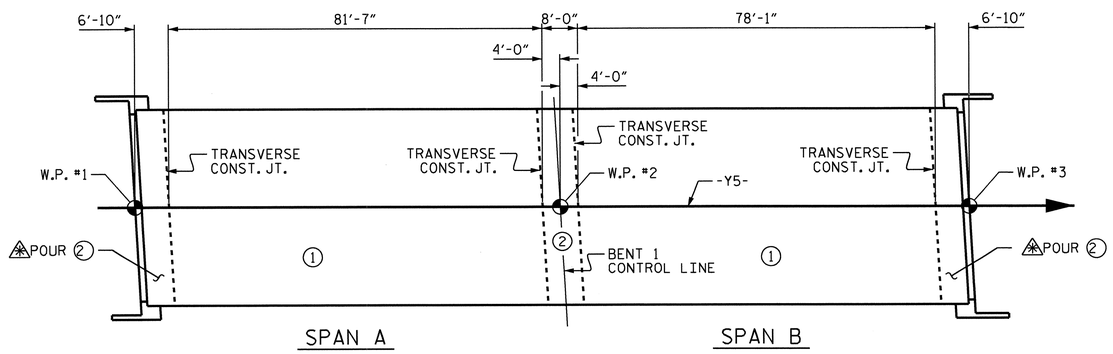

OPTIONAL POURING SEQUENCE

⚠ POUR 2 CANNOT BE STARTED UNTIL BOTH ADJACENT POUR 1 REACH A MINIMUM OF 3000 PSI. INCLUDES THE UPPER PART OF THE END BENT WINGS, UPPER PART OF THE INTEGRAL END BENT, AND 6'-0" SECTION OF THE BRIDGE DECK.

ASSEMBLED BY : E.C. LOCKLEAR	DATE : 7-01-11		
CHECKED BY : D.A. GLADDEN	DATE : 1/3/12		
DESIGN ENGINEER OF RECORD: G.W. DICKEY	DATE : 10/16/12		
DRAWN BY : JMB 5/87	REV. 6/1/94	EEM/GRP	
CHECKED BY : SJD 9/87	REV. 8/16/99	RWW/LES	

REINFORCING BAR SCHEDULE

BAR	NO.	SIZE	TYPE	LENGTH	WEIGHT
✱ A1	354	#5	STR	42'-11"	15846
A2	354	#5	STR	42'-11"	15846
✱ A101	2	#5	STR	38'-3"	80
✱ A102	2	#5	STR	29'-1"	61
✱ A103	2	#5	STR	19'-11"	42
✱ A104	2	#5	STR	10'-9"	22
✱ A105	2	#5	STR	1'-7"	3
A201	2	#5	STR	38'-3"	80
A202	2	#5	STR	29'-1"	61
A203	2	#5	STR	19'-11"	42
A204	2	#5	STR	10'-9"	22
A205	2	#5	STR	1'-7"	3
✱ B1	58	#4	STR	23'-0"	891
✱ B2	58	#6	STR	34'-6"	3006
✱ B3	56	#6	STR	28'-0"	2355
✱ B4	170	#6	STR	18'-6"	4724
B5	156	#5	STR	46'-6"	7566
✱ B6	58	#4	STR	21'-3"	823
H1	14	#4	3	11'-3"	105
H2	14	#4	4	10'-5"	97
H3	14	#4	4	11'-2"	104
H4	14	#4	3	10'-6"	98
K1	24	#4	STR	25'-5"	407
K2	6	#4	STR	9'-1"	36
K3	48	#4	STR	10'-8"	342
K4	12	#4	STR	7'-8"	61
K5	4	#4	STR	5'-10"	16
K6	16	#4	STR	6'-7"	70
K7	4	#4	STR	5'-1"	14
K8	24	#4	STR	2'-8"	43
K9	6	#4	STR	7'-11"	32
K10	12	#4	STR	18'-5"	148
S1	56	#4	1	13'-6"	505
✱ S2	52	#4	2	10'-11"	379
✱ S3	56	#4	2	11'-11"	446
S4	12	#4	1	15'-4"	123
S5	6	#4	5	8'-5"	34
S6	24	#4	6	14'-8"	235
S7	138	#4	7	2'-9"	254
REINFORCING STEEL = 26,344 LBS					
✱ EPOXY COATED REINF. STEEL = 28,678 LBS					

BAR TYPES

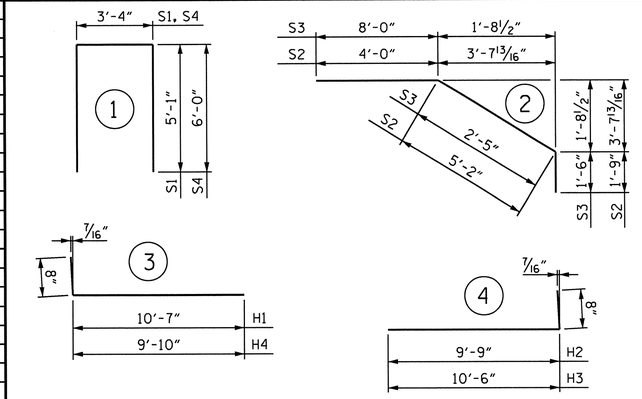

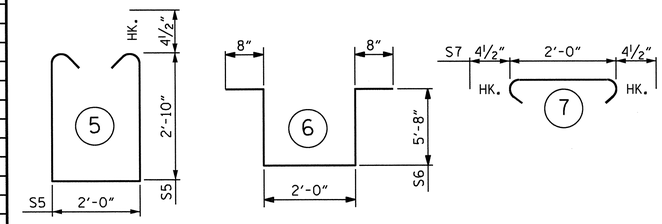

ALL BAR DIMENSIONS ARE OUT TO OUT

GROOVING BRIDGE FLOORS

BRIDGE DECK	6636	SQ.FT.
APPROACH SLAB	1048	SQ.FT.
TOTAL	7684	SQ.FT.

SUPERSTRUCTURE BILL OF MATERIAL

	CLASS AA CONCRETE	REINFORCING STEEL	✱EPOXY COATED REINFORCING STEEL
	(CU. YDS.)	(LBS.)	(LBS.)
POUR #1	114.9		
POUR #2	147.2		
POUR #3 ✱✱	102.7		
TOTALS✱✱✱	364.8	26,344	28,678

✱✱✱ QUANTITIES FOR BARRIER RAIL ARE NOT INCLUDED

SUPERSTRUCTURE REINFORCING STEEL LENGTHS ARE BASED ON THE FOLLOWING MINIMUM SPLICE LENGTHS

BAR SIZE	SUPERSTRUCTURE EXCEPT APPROACH SLABS, PARAPET, AND BARRIER RAIL		APPROACH SLABS		PARAPET AND BARRIER RAIL
	EPOXY COATED	UNCOATED	EPOXY COATED	UNCOATED	
#4	2'-0"	1'-9"	2'-0"	1'-9"	2'-9"
#5	2'-6"	2'-2"	2'-6"	2'-2"	3'-5"
#6	3'-0"	2'-7"	3'-10"	2'-7"	4'-4"
#7	5'-3"	3'-6"			
#8	6'-10"	4'-7"			

PROJECT NO. R-2707AB
CLEVELAND COUNTY
STATION: 203+50.35-L-

STATE OF NORTH CAROLINA
DEPARTMENT OF TRANSPORTATION
RALEIGH

SUPERSTRUCTURE BILL OF MATERIAL

REVISIONS						SHEET NO.
NO.	BY:	DATE:	NO.	BY:	DATE:	S-95
1			3			TOTAL SHEETS
2			4			104

STR. #6

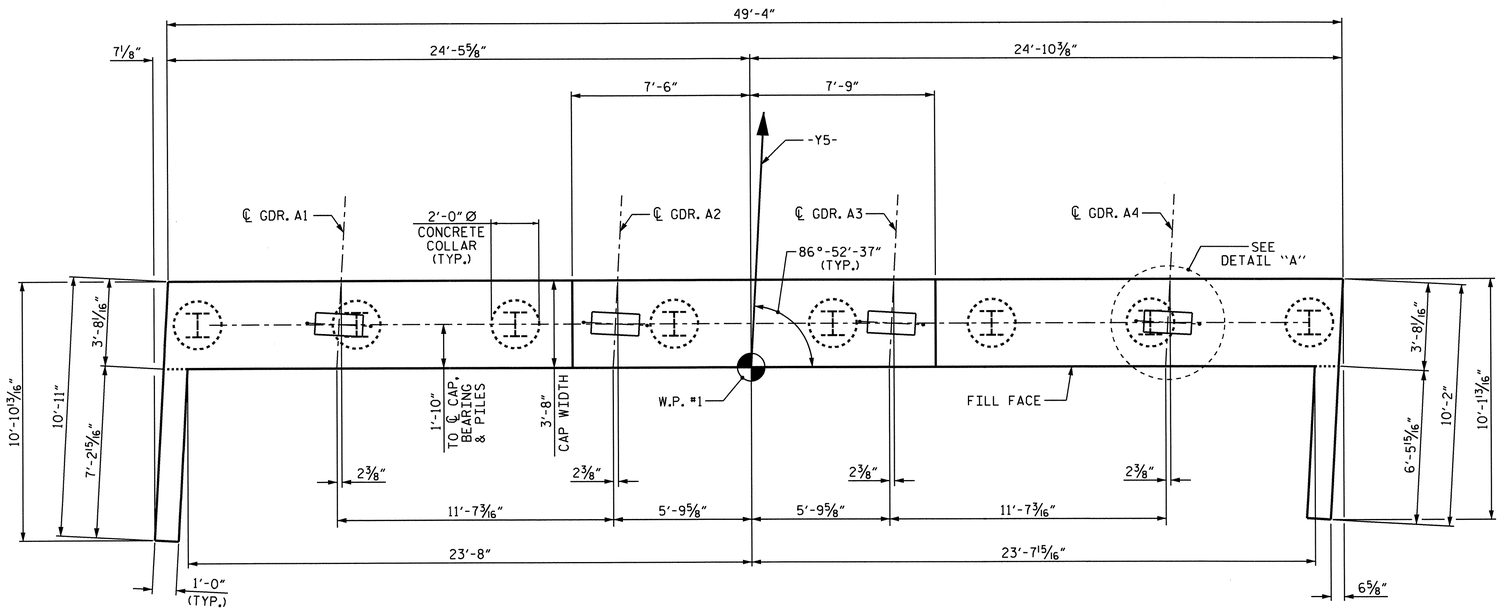

PLAN

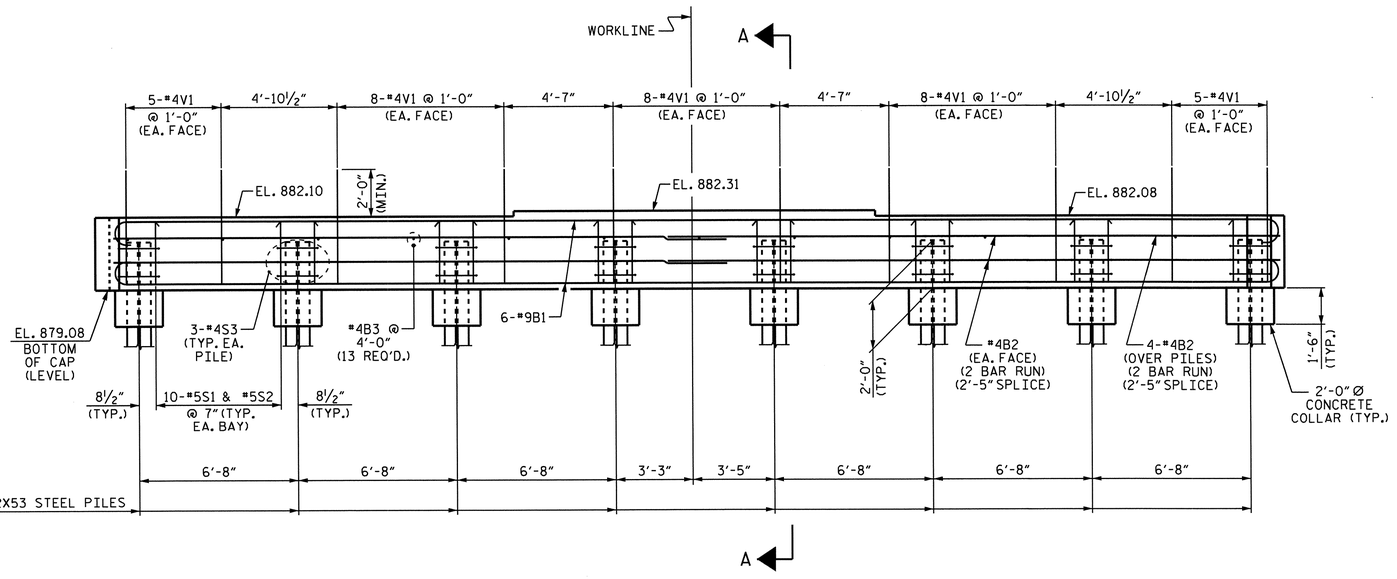

ELEVATION

NOTES

SEE SUPERSTRUCTURE SHEETS FOR UPPER PART OF INTEGRAL END BENT DETAILS.

STIRRUPS IN CAP MAY BE SHIFTED AS NECESSARY TO CLEAR ANCHOR BOLTS.

INSTALL THE 4"DIA. DRAIN PIPE THROUGH THE WING WALL AS REQUIRED FOR REINFORCED BRIDGE APPROACH FILLS, SEE THE ROADWAY PLANS. REINFORCING STEEL IN THE WING WALL MAY BE SHIFTED AS NECESSARY TO CLEAR THE DRAIN PIPE.

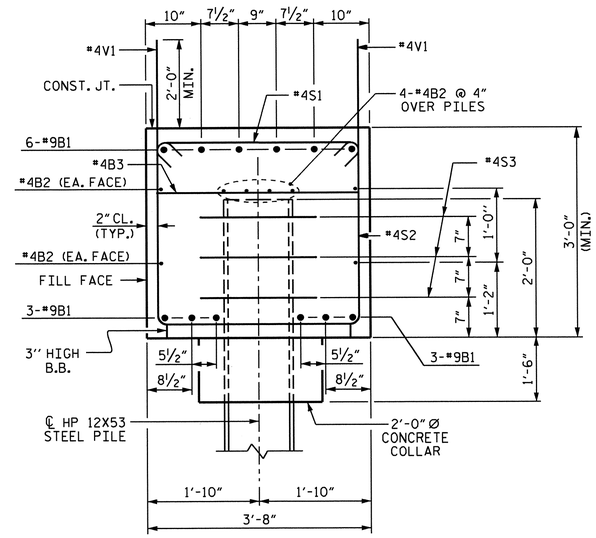

SECTION A-A

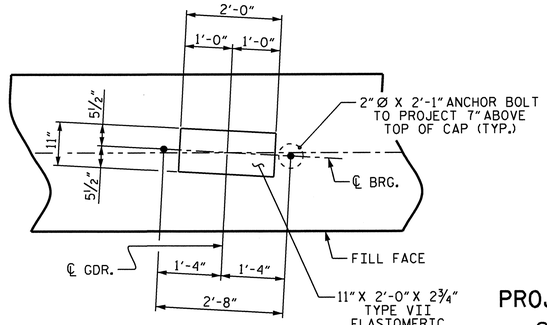

DETAIL "A"
(TYP. EA. GDR.)

PROJECT NO. R-2707AB
CLEVELAND COUNTY
STATION: 203+50.35-L-

SHEET 1 OF 2

STATE OF NORTH CAROLINA
DEPARTMENT OF TRANSPORTATION
RALEIGH

SUBSTRUCTURE

INTEGRAL END BENT #1

NORTH CAROLINA PROFESSIONAL SEAL 10730 ENGINEER D. ANDRE DAVENPORT
6-13-13

REVISIONS						SHEET NO.
NO.	BY:	DATE:	NO.	BY:	DATE:	S-96
1			3			TOTAL SHEETS
2			4			104

DRAWN BY : M.K. BEARD DATE : 5/1/12
CHECKED BY : D.A. DAVENPORT DATE : 5/16/12
DESIGN ENGINEER OF RECORD: G.W. DICKEY DATE : 10/16/12

13-JUN-2013 13:36
R:\Structures\Plans\Str6\Plans\R-2707AB_SD_E*.dgn
dadavenport

STR. #6

NC005

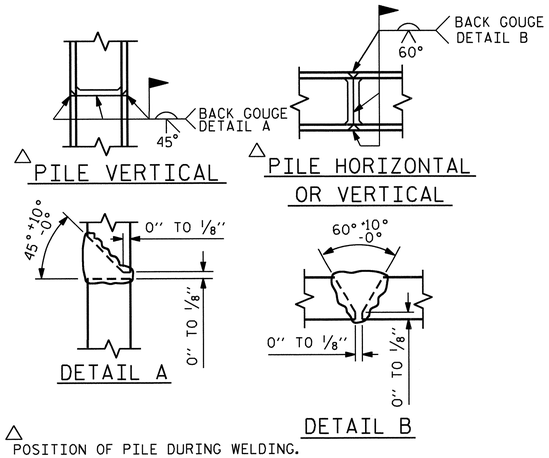

PILE SPLICE DETAILS

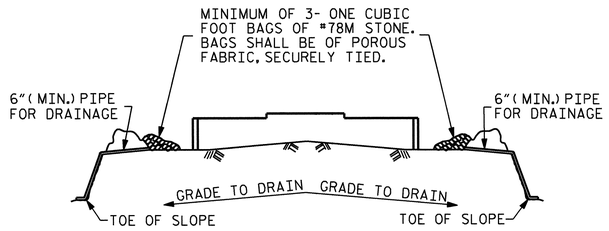

BAGGED STONE AND PIPE SHALL BE PLACED IMMEDIATELY AFTER COMPLETION OF END BENT EXCAVATION. PIPE MAY BE EITHER CONCRETE, CORRUGATED STEEL, CORRUGATED ALUMINUM ALLOY, OR CORRUGATED PLASTIC. PERFORATED PIPE WILL NOT BE ALLOWED.

BAGGED STONE SHALL REMAIN IN PLACE UNTIL THE ENGINEER DIRECTS THAT IT BE REMOVED. THE CONTRACTOR SHALL REMOVE AND DISPOSE OF SILT ACCUMULATIONS AT BAGGED STONE WHEN SO DIRECTED BY THE ENGINEER. BAGS SHALL BE REMOVED AND REPLACED WHENEVER THE ENGINEER DETERMINES THAT THEY HAVE DETERIORATED AND LOST THEIR EFFECTIVENESS.

NO SEPARATE PAYMENT WILL BE MADE FOR THIS WORK AND THE ENTIRE COST OF THIS WORK SHALL BE INCLUDED IN THE UNIT CONTRACT PRICE BID FOR THE SEVERAL PAY ITEMS.

TEMPORARY DRAINAGE AT END BENT

BAR TYPES

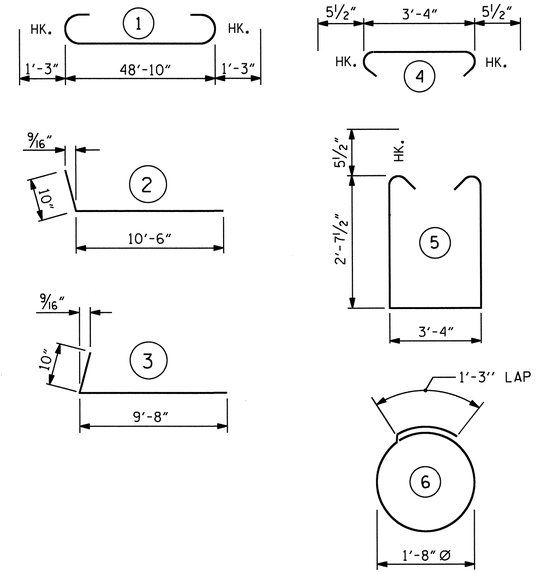

ALL BAR DIMENSIONS ARE OUT TO OUT.

BILL OF MATERIAL

END BENT #1

BAR	NO.	SIZE	TYPE	LENGTH	WEIGHT
B1	12	#9	1	51'-4"	2094
B2	16	#4	STR	25'-9"	275
B3	13	#4	STR	3'-4"	29
H1	8	#5	2	11'-4"	95
H2	8	#5	3	10'-6"	88
S1	70	#5	4	4'-3"	310
S2	70	#5	5	9'-6"	694
S3	24	#4	6	6'-6"	104
V1	68	#4	STR	4'-10"	220
V2	38	#4	STR	9'-0"	228

REINFORCING STEEL 4137 LBS.

CLASS A CONCRETE QUANTITIES:
POUR #1 CAP, WINGS & CONCRETE COLLAR 23.5 C.Y.

HP 12X53 STEEL PILES
NO. 8 680 LIN.FT.

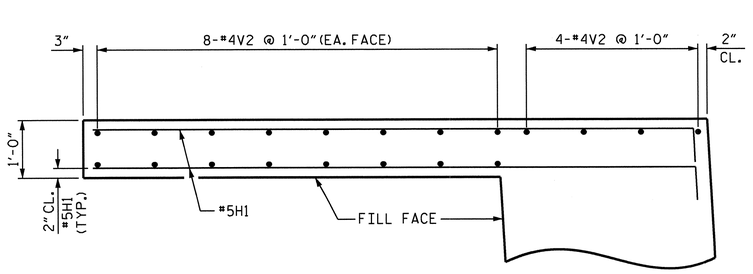

PLAN OF LEFT WING

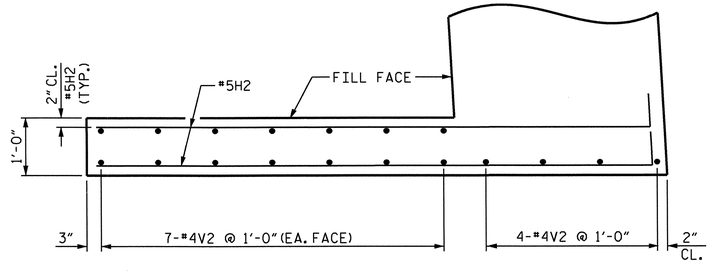

PLAN OF RIGHT WING

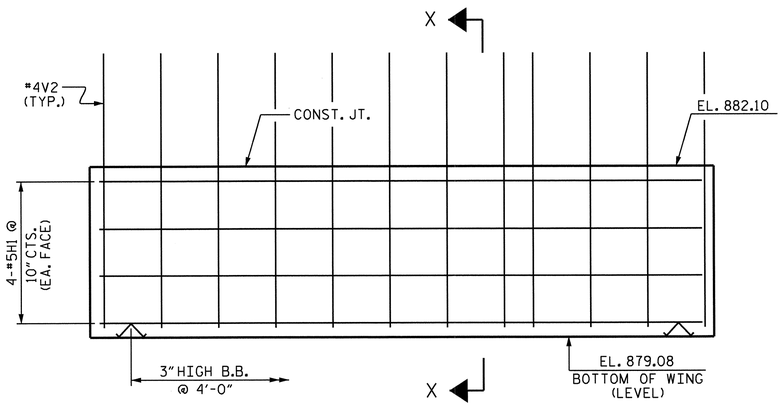

ELEVATION OF LEFT WING

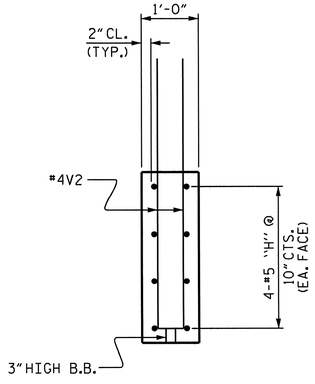

SECTION X-X

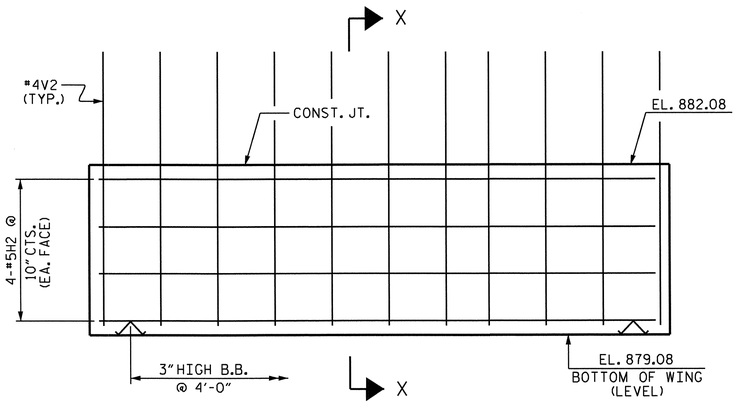

ELEVATION OF RIGHT WING

PROJECT NO. R-2707AB
CLEVELAND COUNTY
STATION: 203+50.35-L-

SHEET 2 OF 2

STATE OF NORTH CAROLINA
DEPARTMENT OF TRANSPORTATION
RALEIGH

SUBSTRUCTURE

INTEGRAL
END BENT #1

REVISIONS						SHEET NO.
NO.	BY:	DATE:	NO.	BY:	DATE:	S-97
1			3			TOTAL SHEETS
2			4			104

DRAWN BY : M.K. BEARD DATE : 5/2/12
CHECKED BY : D.A. DAVENPORT DATE : 5/16/12
DESIGN ENGINEER OF RECORD: G.W. DICKEY DATE : 10/16/12

STR. #6

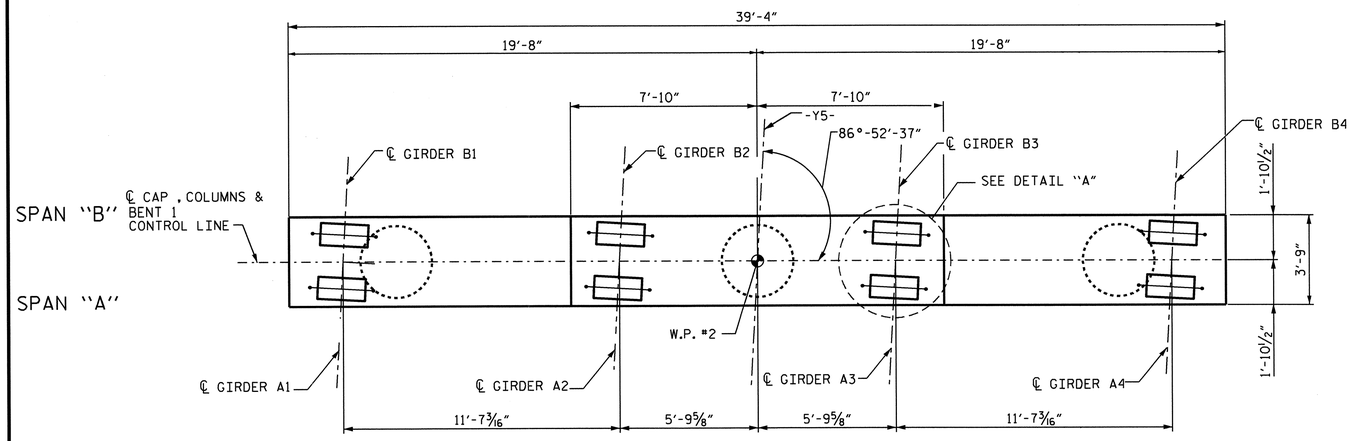

PLAN OF CAP

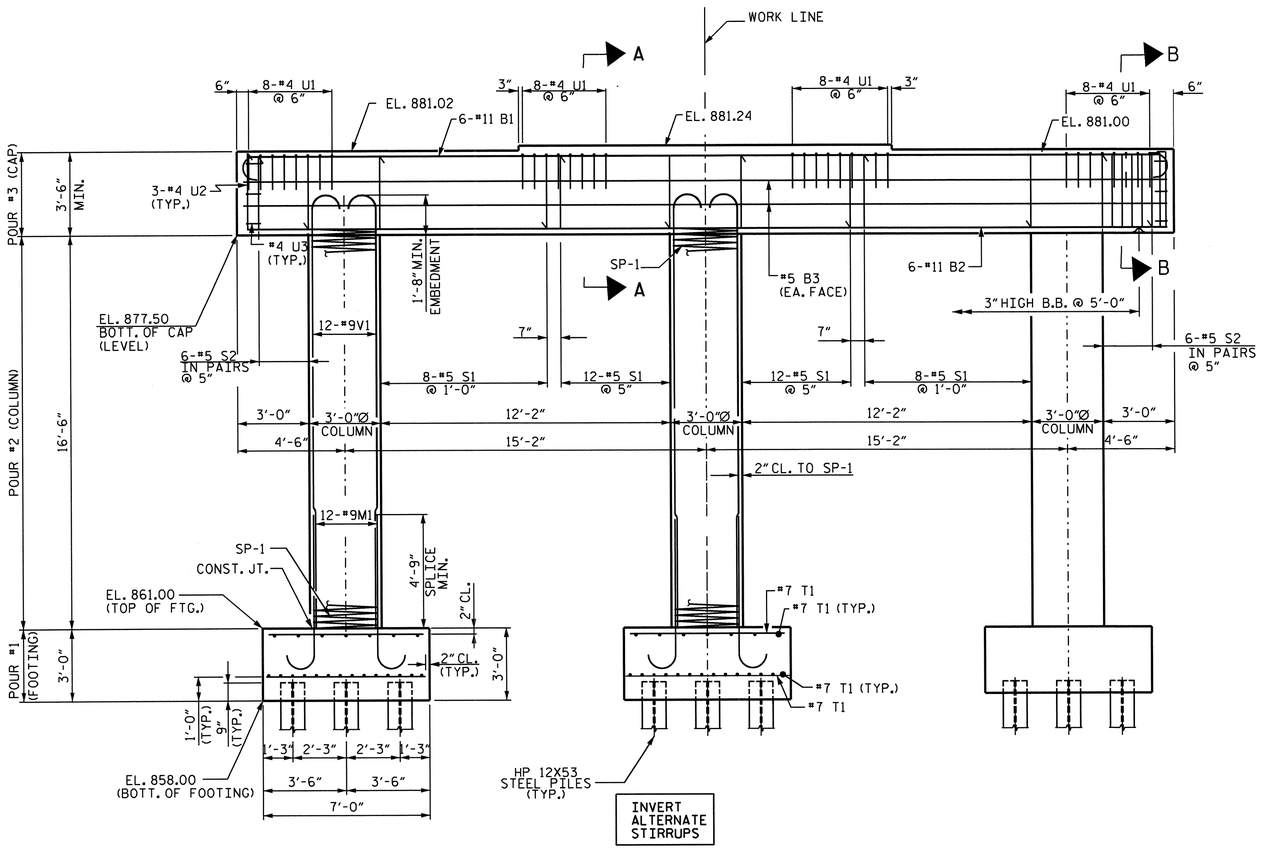

ELEVATION

COLUMN AND FOOTING INFORMATION IS TYPICAL UNLESS OTHERWISE NOTED

NOTE

STRRUPS IN CAP MAY BE SHIFTED AS NECESSARY TO CLEAR ANCHOR BOLTS.

HOOKS ON "V" BARS MAY BE TURNED AS NECESSARY FOR PLACING REINFORCING STEEL.

FOR PILE SPLICE DETAILS, SEE END BENT #1

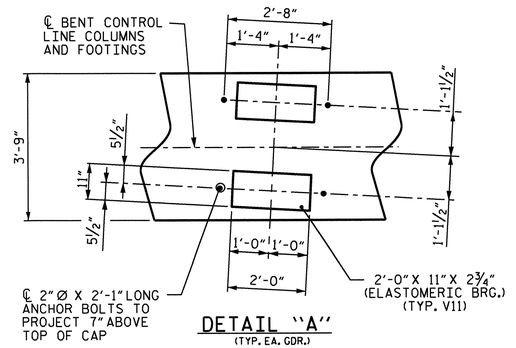

DETAIL "A"

(TYP. EA. GDR.)

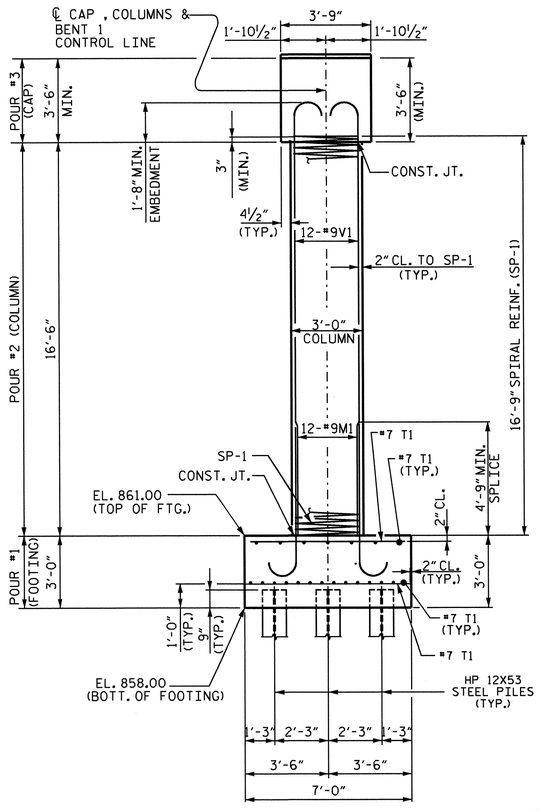

END ELEVATION

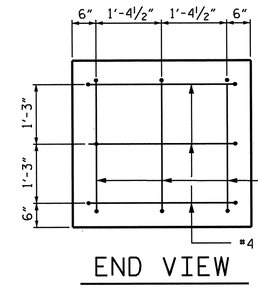

END VIEW

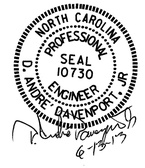

PROJECT NO. R-2707AB

CLEVELAND COUNTY

STATION: 203+50.35-L-

SHEET 1 OF 2

STATE OF NORTH CAROLINA
DEPARTMENT OF TRANSPORTATION
RALEIGH

SUBSTRUCTURE

BENT #1

REVISIONS						SHEET NO.
NO.	BY:	DATE:	NO.	BY:	DATE:	S-98
1			3			TOTAL SHEETS
2			4			104

DRAWN BY : M. ALI DATE : 2/23/12
CHECKED BY : K.D. LAYNE DATE : 4/05/12
DESIGN ENGINEER OF RECORD: G.W. DICKEY DATE : 10/16/12

13-JUN-2013 13:35
R:\Structures\Plans\Str6\Plans\R-2707AB_SD_Bt1.dgn
ddavenport

STR. #6

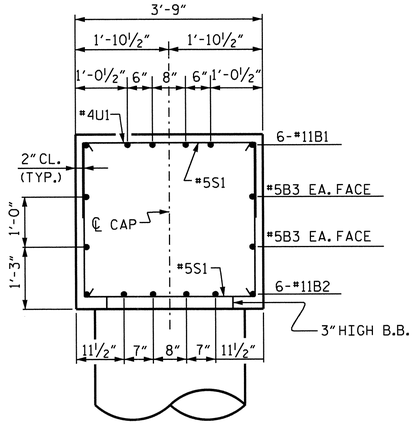

SECTION A-A
(INVERT ALTERNATE STIRRUPS)

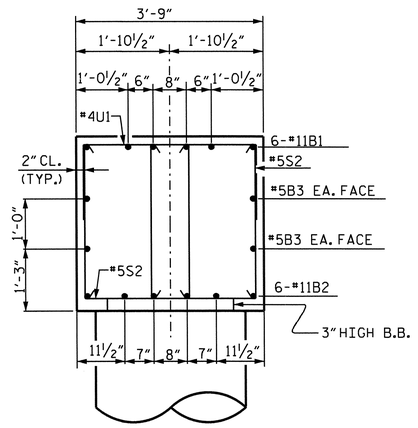

SECTION B-B
(INVERT ALTERNATE STIRRUPS)

BAR TYPES

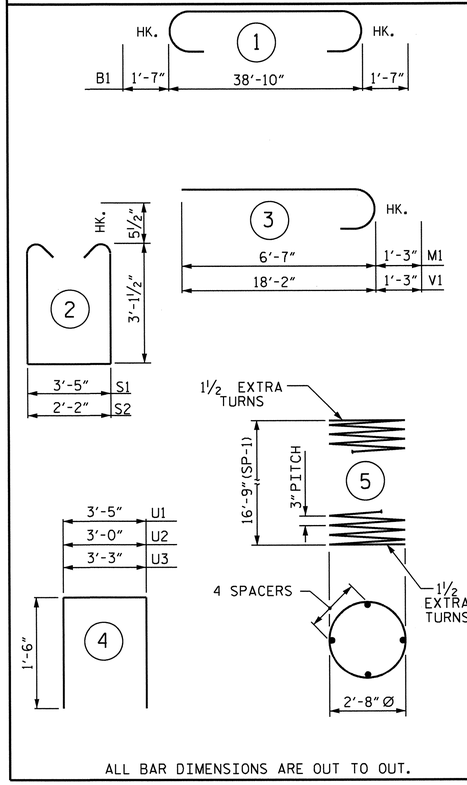

ALL BAR DIMENSIONS ARE OUT TO OUT.

BILL OF MATERIAL

BENT #1

BAR	NO.	SIZE	TYPE	LENGTH	WEIGHT
B1	6	#11	1	42'-0"	1339
B2	6	#11	STR	39'-0"	1243
B3	4	#5	STR	39'-0"	163
S1	40	#5	2	10'-7"	442
S2	24	#5	2	9'-4"	234
M1	36	#9	3	7'-10"	959
V1	36	#9	3	19'-5"	2377
T1	126	#7	STR	6'-8"	1717
U1	32	#4	4	6'-5"	137
U2	6	#4	4	6'-0"	24
U3	6	#4	4	6'-3"	25

REINFORCING STEEL = 8660 LBS.

SP-1	3	*	5	576'-5"	1155 LBS.

SPIRAL COLUMN REINFORCING STEEL 1155 LBS.

CLASS A CONCRETE BREAKDOWN

POUR #1 FOOTINGS	CU. YD.	16.3
POUR #2 COLUMNS	CU. YD.	13.0
POUR #3 CAP	CU. YD.	19.7
TOTAL CLASS A CONCRETE		49.0

HP 12X53 STEEL PILES
No. 15 LIN. FT. 675

FOUNDATION EXCAVATION LUMP SUM

* THE SP-1 SPIRAL REINFORCING STEEL SHALL BE W20 OR D-20 COLD DRAWN WIRE OR #4 PLAIN OR DEFORMED BAR.

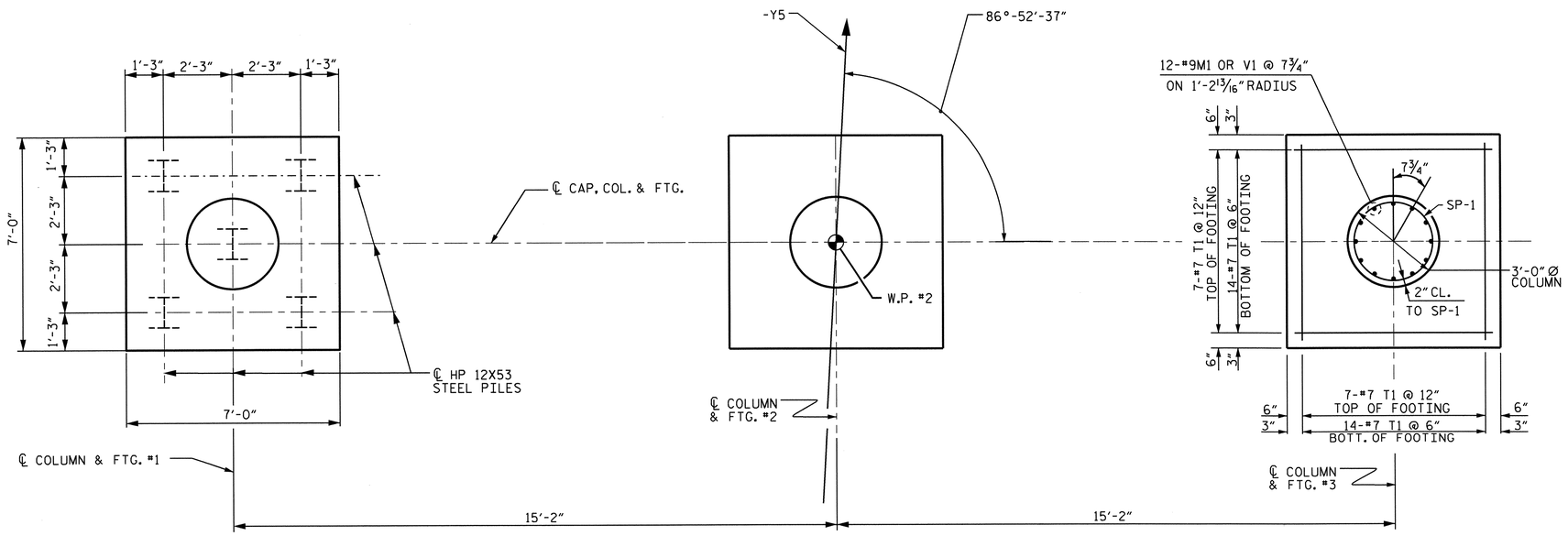

PLAN OF COLUMNS & FOOTINGS

COLUMN AND FOOTING INFORMATION
IS TYPICAL UNLESS OTHERWISE NOTED

PROJECT NO. R-2707AB
CLEVELAND COUNTY
STATION: 203+50.35-L-

SHEET 2 OF 2

STATE OF NORTH CAROLINA
DEPARTMENT OF TRANSPORTATION
RALEIGH

SUBSTRUCTURE
BENT #1

NORTH CAROLINA PROFESSIONAL SEAL 10730 ENGINEER D. ANDRE DAVENPORT, JR.

REVISIONS						SHEET NO.
NO.	BY:	DATE:	NO.	BY:	DATE:	S-99
1			3			TOTAL SHEETS
2			4			104

DRAWN BY : M. ALI DATE : 2/23/12
CHECKED BY : K.D. LAYNE DATE : 4/05/12
DESIGN ENGINEER OF RECORD: G.W. DICKEY DATE : 10/16/12

13-JUN-2013 13:35
R:\Structures\Plans\Str6\Plans\R-2707AB_SD_Bt1.dgn
dadavenport

STR. #6

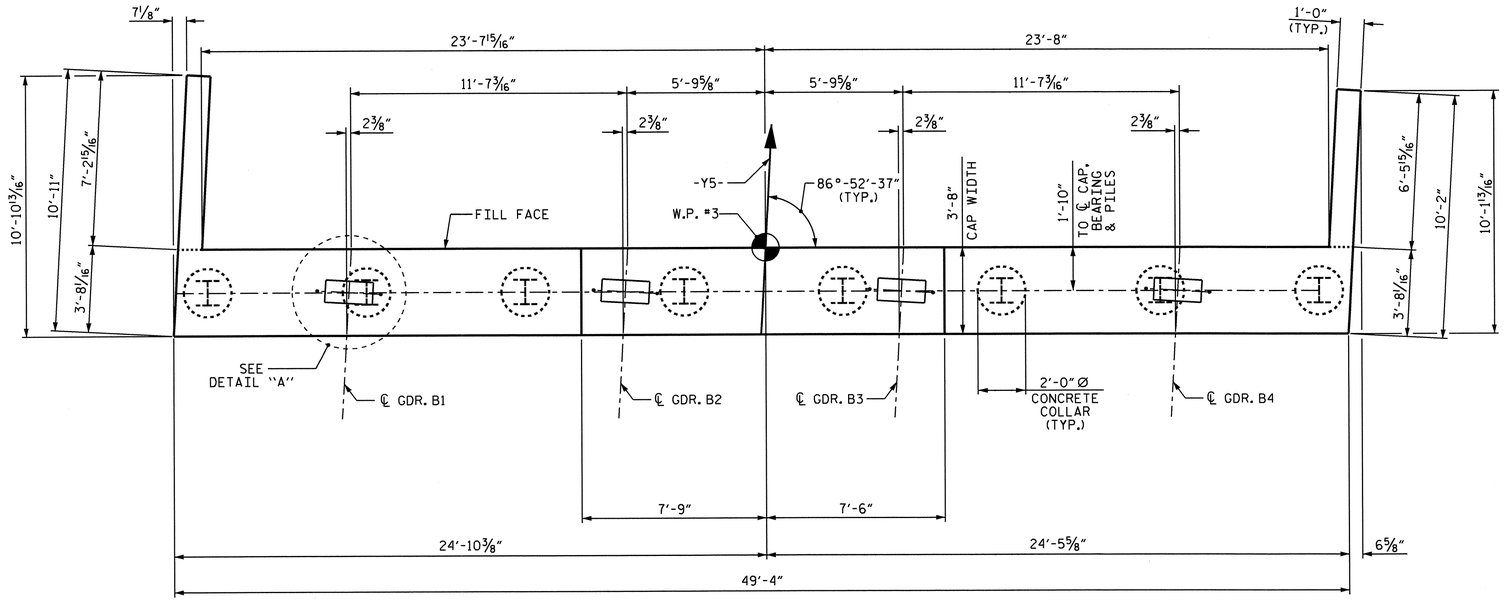

PLAN

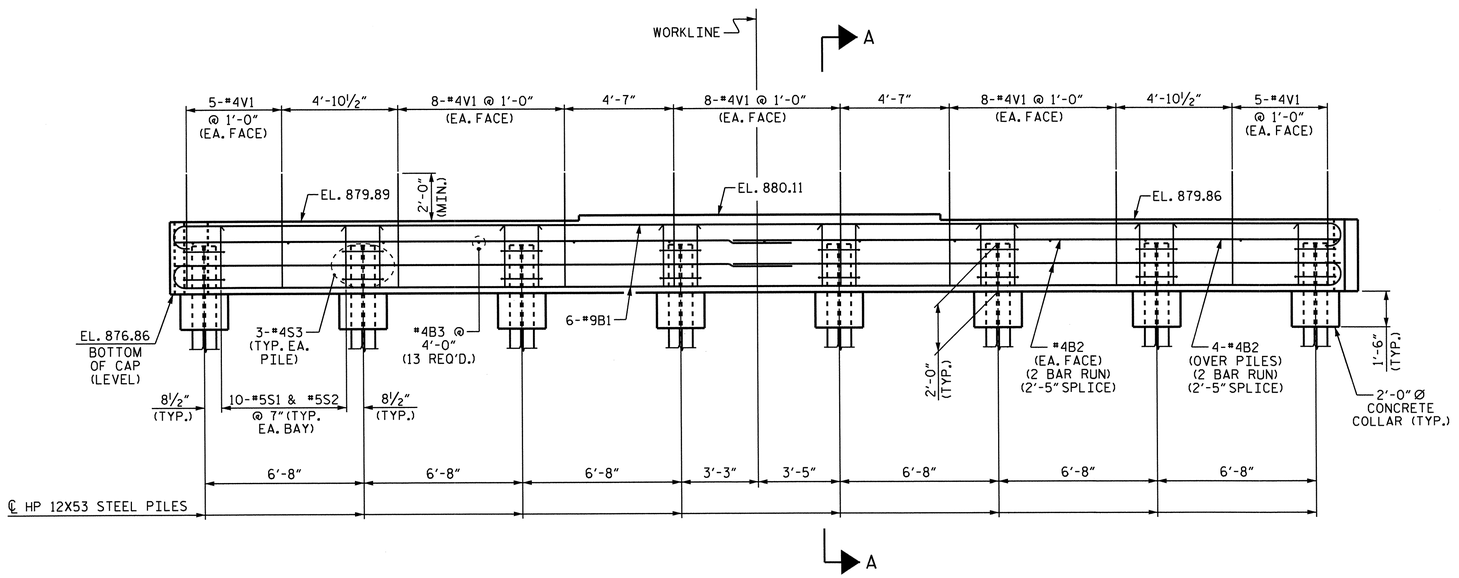

ELEVATION

NOTES

SEE SUPERSTRUCTURE SHEETS FOR UPPER PART OF INTEGRAL END BENT DETAILS.

STIRRUPS IN CAP MAY BE SHIFTED AS NECESSARY TO CLEAR ANCHOR BOLTS.

INSTALL THE 4"DIA. DRAIN PIPE THROUGH THE WING WALL AS REQUIRED FOR REINFORCED BRIDGE APPROACH FILLS, SEE THE ROADWAY PLANS. REINFORCING STEEL IN THE WING WALL MAY BE SHIFTED AS NECESSARY TO CLEAR THE DRAIN PIPE.

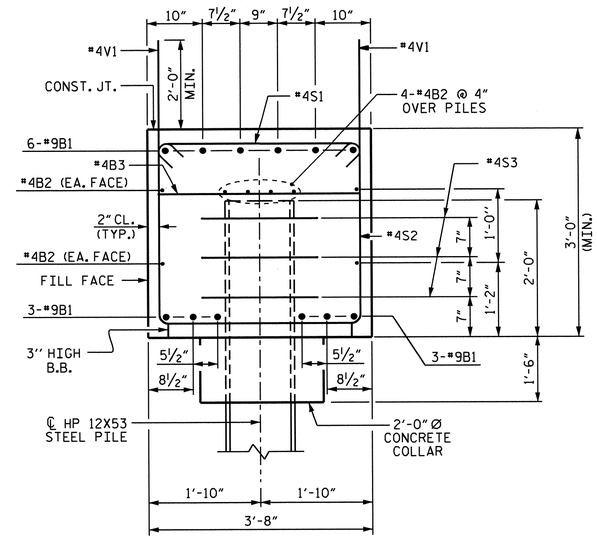

SECTION A-A

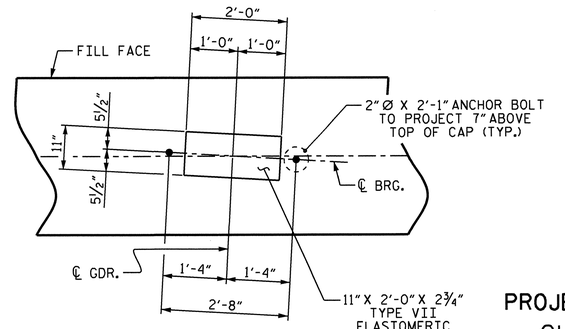

DETAIL "A"

(TYP. EA. GDR.)

PROJECT NO. R-2707AB

CLEVELAND COUNTY

STATION: 203+50.35-L-

SHEET 1 OF 2

STATE OF NORTH CAROLINA
DEPARTMENT OF TRANSPORTATION
RALEIGH

SUBSTRUCTURE

INTEGRAL END BENT #2

NORTH CAROLINA PROFESSIONAL SEAL 10730 ENGINEER D. ANDRE DAVENPORT, JR.
9-13-13

REVISIONS						SHEET NO.
NO.	BY:	DATE:	NO.	BY:	DATE:	S-100
1			3			TOTAL SHEETS
2			4			104

DRAWN BY : M.K. BEARD DATE : 5/1/12
CHECKED BY : D.A. DAVENPORT DATE : 5/16/12
DESIGN ENGINEER OF RECORD: G.W. DICKEY DATE : 10/16/12

13-JUN-2013 13:35
R:\Structures\Plans\Str6\Plans\R-2707AB_SD_E*.dgn
dadavenport

STR. #6

NCDOT

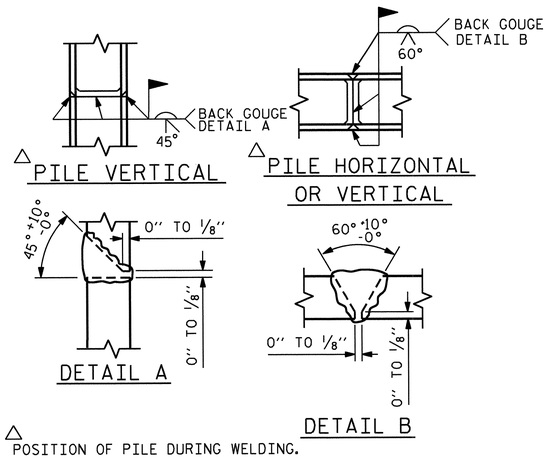

PILE SPLICE DETAILS

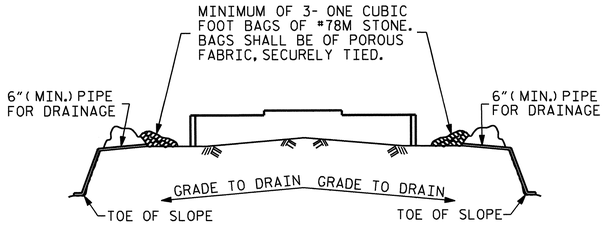

BAGGED STONE AND PIPE SHALL BE PLACED IMMEDIATELY AFTER COMPLETION OF END BENT EXCAVATION. PIPE MAY BE EITHER CONCRETE, CORRUGATED STEEL, CORRUGATED ALUMINUM ALLOY, OR CORRUGATED PLASTIC. PERFORATED PIPE WILL NOT BE ALLOWED.

BAGGED STONE SHALL REMAIN IN PLACE UNTIL THE ENGINEER DIRECTS THAT IT BE REMOVED. THE CONTRACTOR SHALL REMOVE AND DISPOSE OF SILT ACCUMULATIONS AT BAGGED STONE WHEN SO DIRECTED BY THE ENGINEER. BAGS SHALL BE REMOVED AND REPLACED WHENEVER THE ENGINEER DETERMINES THAT THEY HAVE DETERIORATED AND LOST THEIR EFFECTIVENESS.

NO SEPARATE PAYMENT WILL BE MADE FOR THIS WORK AND THE ENTIRE COST OF THIS WORK SHALL BE INCLUDED IN THE UNIT CONTRACT PRICE BID FOR THE SEVERAL PAY ITEMS.

TEMPORARY DRAINAGE AT END BENT

BAR TYPES

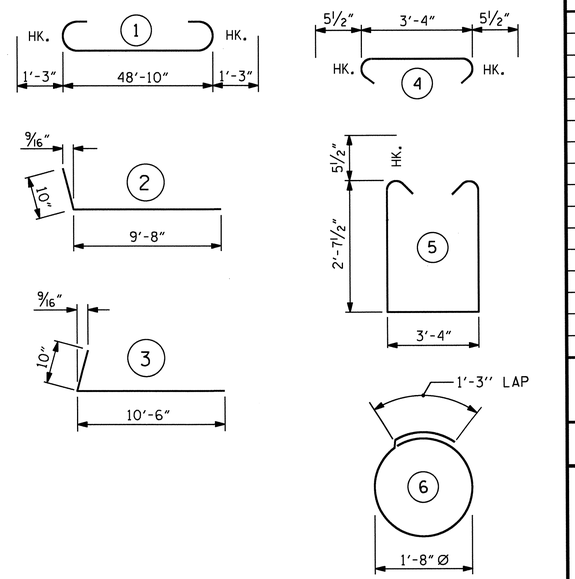

ALL BAR DIMENSIONS ARE OUT TO OUT.

BILL OF MATERIAL

END BENT #2

BAR	NO.	SIZE	TYPE	LENGTH	WEIGHT
B1	12	#9	1	51'-4"	2094
B2	16	#4	STR	25'-9"	275
B3	13	#4	STR	3'-4"	29
H1	8	#5	2	10'-6"	88
H2	8	#5	3	11'-4"	95
S1	70	#5	4	4'-3"	310
S2	70	#5	5	9'-6"	694
S3	24	#4	6	6'-6"	104
V1	68	#4	STR	4'-10"	220
V2	38	#4	STR	9'-0"	228

REINFORCING STEEL 4137 LBS.

CLASS A CONCRETE QUANTITIES:
POUR #1 CAP, WINGS & CONCRETE COLLAR 23.5 C.Y.

HP 12X53 STEEL PILES
NO. 8 480 LIN.FT.

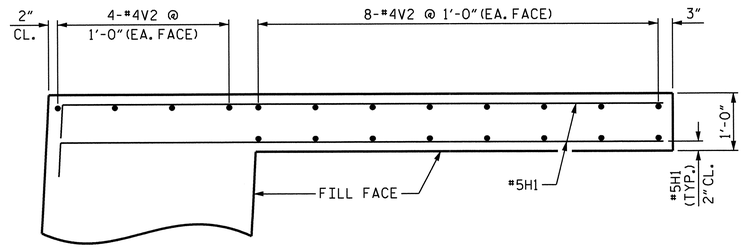

PLAN OF RIGHT WING

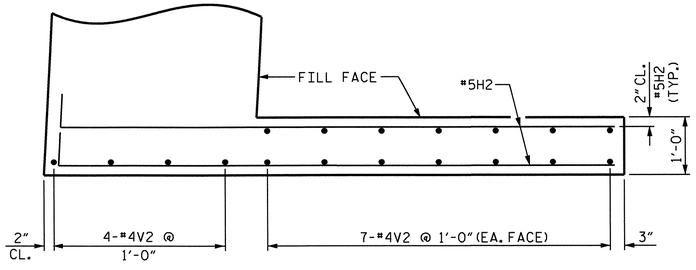

PLAN OF LEFT WING

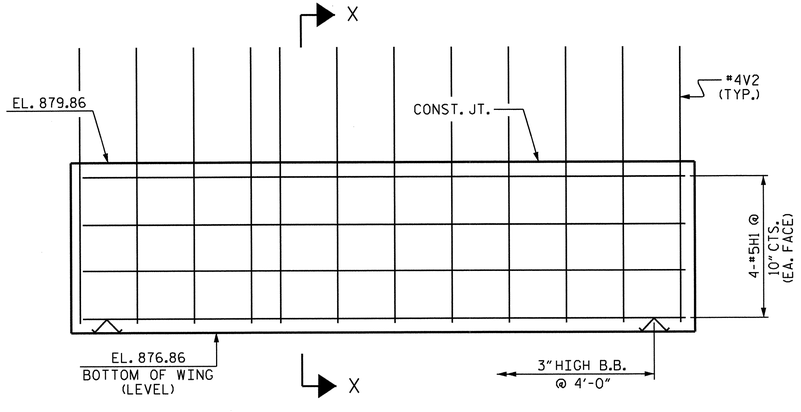

ELEVATION OF RIGHT WING

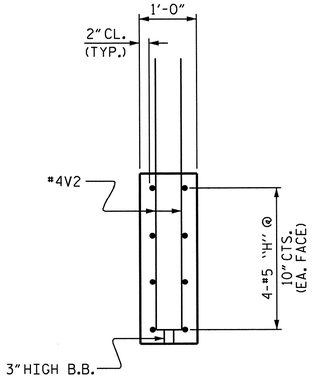

SECTION X-X

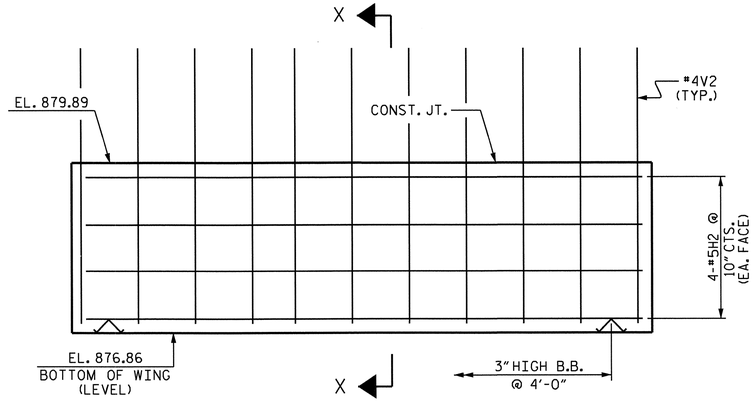

ELEVATION OF LEFT WING

DRAWN BY : M.K. BEARD DATE : 5/2/12
CHECKED BY : D.A. DAVENPORT DATE : 5/16/12
DESIGN ENGINEER OF RECORD: G.W. DICKEY DATE : 10/16/12

NORTH CAROLINA PROFESSIONAL SEAL 10730 ENGINEER ANDREW DAVENPORT JR
6/5/13

PROJECT NO. R-2707AB
CLEVELAND COUNTY
STATION: 203+50.35-L-

SHEET 2 OF 2

STATE OF NORTH CAROLINA
DEPARTMENT OF TRANSPORTATION
RALEIGH

SUBSTRUCTURE

INTEGRAL END BENT #2

REVISIONS						SHEET NO.
NO.	BY:	DATE:	NO.	BY:	DATE:	S-101
1			3			TOTAL SHEETS
2			4			104

STR. #6

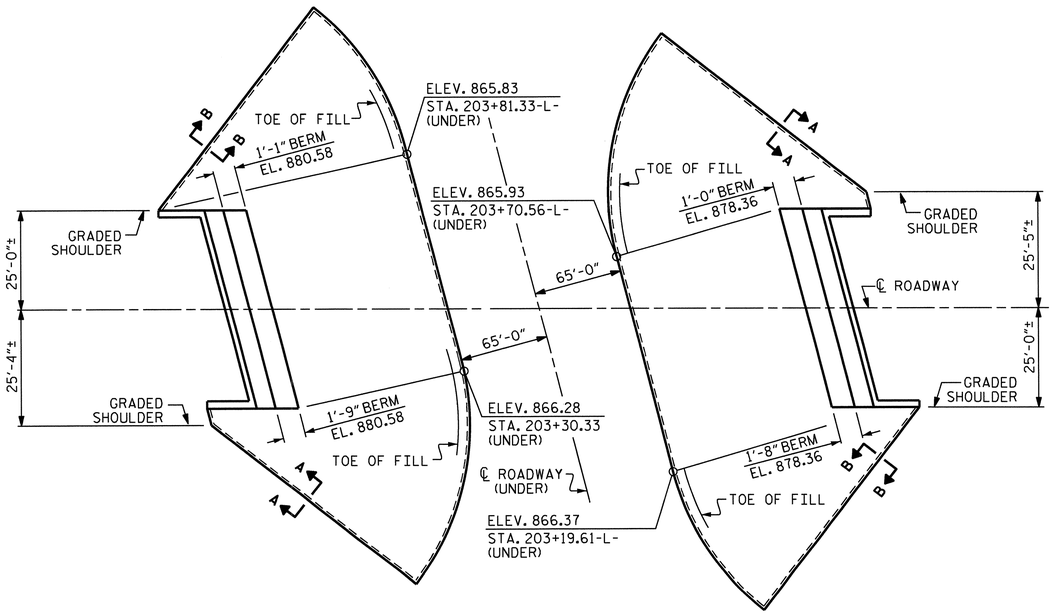

PLAN - END BENT WITH SWEPT BACK WINGS - SKEWED

(1 1/2: 1 SLOPE)

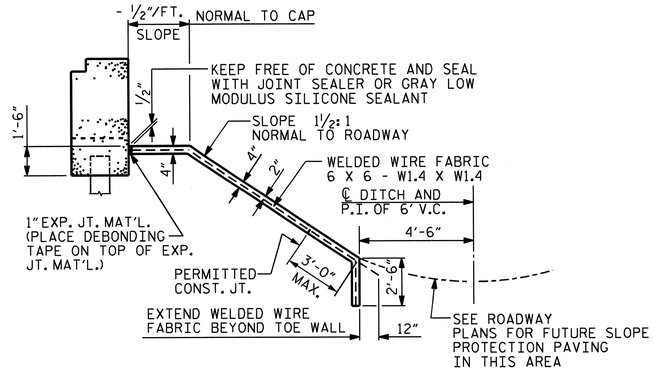

SECTION ALONG ℄ ROADWAY WHEN FILL CATCHES IN DITCH

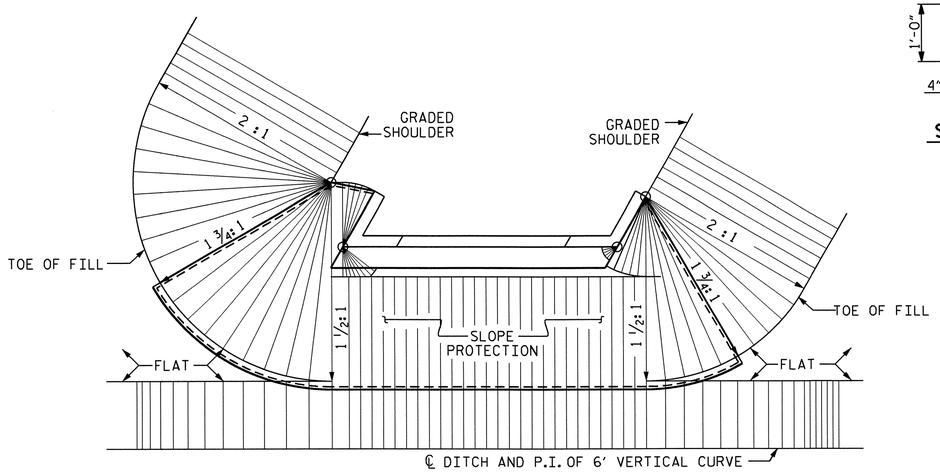

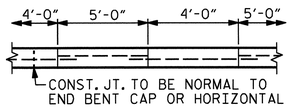

POUR A 4'-0" STRIP FIRST. STRIP WIDTHS MAY VARY IN CURVED PORTION.

OPTIONAL POURING DETAIL

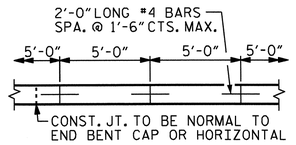

STRIP WIDTHS MAY VARY IN CURVED PORTION.

POURING DETAIL

GENERAL NOTES

SLOPE PROTECTION SHALL BE PLACED UNDER THE ENDS OF THE BRIDGE AS SHOWN IN THE DETAILS. STRAIGHT EDGING WILL NOT BE REQUIRED UNLESS, IN THE OPINION OF THE ENGINEER, VISUAL INSPECTION INDICATES A NEED FOR IT. MEASUREMENT AND PAYMENT SHALL BE AS PRESCRIBED IN SECTION 462 OF THE STANDARD SPECIFICATIONS.

SLOPE PROTECTION SHALL CONSIST OF 4" POURED-IN-PLACE CONCRETE PAVING AS SHOWN IN THE DETAILS ON THIS SHEET. CONCRETE SHALL BE CLASS "B". THE CONCRETE SURFACE SHALL BE FLOATED WITH A WOODEN FLOAT AND FINISHED. WELDED WIRE FABRIC REINFORCING SHALL BE 6 X 6 - W1.4 X W1.4, 60" WIDE. SLOPE PROTECTION SHALL BE POURED IN 5' STRIPS AS SHOWN IN THE "POURING DETAIL" WITH 2'-0" LONG #4 BARS PLACED ALONG THE SLOPE BETWEEN STRIPS AT 1'-6" MAXIMUM SPACING. SLOPE PROTECTION MAY BE POURED IN ALTERNATE 4' AND 5' STRIPS AS SHOWN IN THE "OPTIONAL POURING DETAIL" WITH ADJACENT RUNS OF WELDED WIRE FABRIC LAPPING AT LEAST 6". THE COST OF THE WELDED WIRE FABRIC AND #4 BARS, IF USED, SHALL BE INCLUDED IN THE CONTRACT UNIT PRICE BID PER SQUARE YARD FOR SLOPE PROTECTION.

BRIDGE @ STA. 203+50.35-L-	4" CONCRETE SLOPE PROTECTION	* WELDED WIRE FABRIC 60 INCHES WIDE
	SQUARE YARDS	APPROX. L.F.
END BENT 1	370	745
END BENT 2	305	606
TOTAL	675	1351

* QUANTITY SHOWN IS BASED ON 5' POURS.

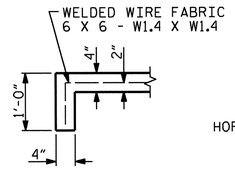

SECTION A-A

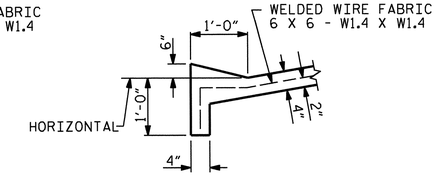

SECTION B-B

PROJECT NO. R-2707AB
CLEVELAND COUNTY
STATION: 203+50.35-L-

STATE OF NORTH CAROLINA
DEPARTMENT OF TRANSPORTATION
RALEIGH

STANDARD

SLOPE PROTECTION DETAILS

REVISIONS						SHEET NO.
NO.	BY:	DATE:	NO.	BY:	DATE:	S-102
1			3			TOTAL SHEETS
2			4			104

ASSEMBLED BY : D.A. DAVENPORT DATE : 05/17/12
CHECKED BY : G.W. DICKEY DATE : 05/18/12
DESIGN ENGINEER OF RECORD: G.W. DICKEY DATE : 10/16/12

DRAWN BY : ELR 5/92
CHECKED BY : GRP 6/92

REV. 5/1/06 TLA/GM
REV. 10/1/11 MAA/GM
REV. 12/21/11 MAA/GM

NORTH CAROLINA PROFESSIONAL SEAL 10730 ENGINEER D. ANDREW DAVENPORT

13-JUN-2013 13:34
R:\Structures\Plans\Str6\Plans\R2707AB_SD_SP_06.dgn
dadavenport

STR.#6

STD. NO. SP1 (SHT 5)

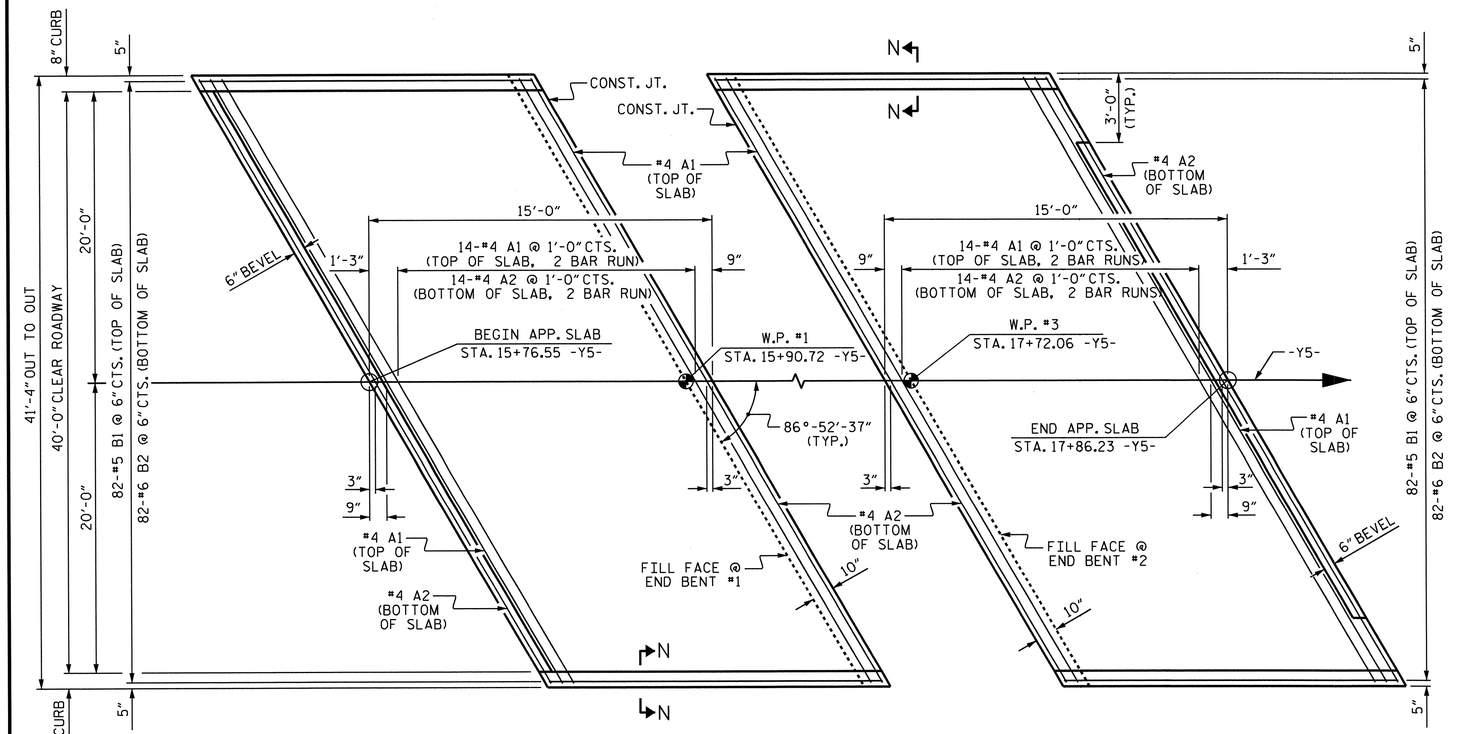

DIMENSIONS SHOWN ARE TYPICAL FOR BOTH APPROACH SLABS

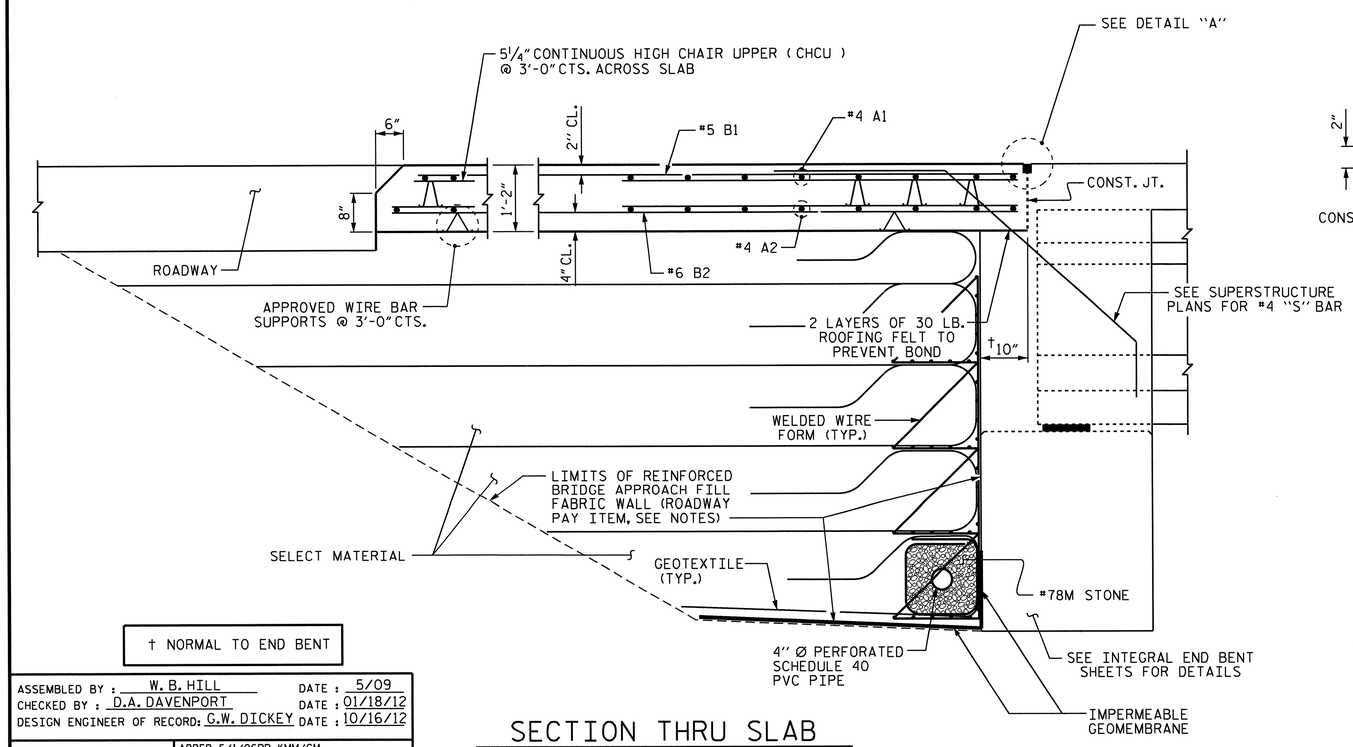

SECTION THRU SLAB

† NORMAL TO END BENT

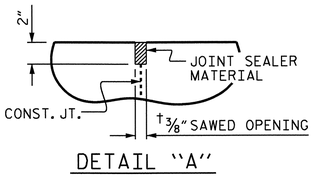

DETAIL "A"

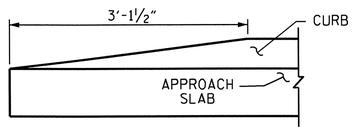

END OF CURB WITHOUT SHOULDER BERM GUTTER

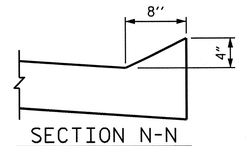

SECTION N-N

NOTES

APPROACH SLAB SHALL NOT BE CONSTRUCTED PRIOR TO COMPLETION OF THE BRIDGE DECK.

FOR REINFORCED BRIDGE APPROACH FILL FABRIC WALL INCLUDING GEOTEXTILE, IMPERMEABLE GEOMEMBRANE, 4" Ø DRAINAGE PIPE, #78M STONE, WELDED WIRE FORM, AND SELECT MATERIAL, SEE ROADWAY PLANS.

AREA BETWEEN THE WINGWALL AND APPROACH SLAB SHALL BE GRADED TO DRAIN THE WATER AWAY FROM THE FILL FACE OF THE BRIDGE AND SHALL BE PAVED. SEE ROADWAY PLANS.

THE JOINT OPENING AT THE APPROACH SLAB/DECK INTERFACE SHALL BE SAWED NO MORE THAN 12 HOURS AFTER THE APPROACH SLAB IS CAST. THE JOINT SHALL BE CLEANED OF ALL DEBRIS BEFORE THE SEALANT IS APPLIED. THE JOINT SEALER MATERIAL SHALL CONFORM TO THE REQUIREMENTS OF SECTION 1028-3 OF THE STANDARD SPECIFICATIONS.

BILL OF MATERIAL

FOR ONE APPROACH SLAB (2 REQ'D)

BAR	NO.	SIZE	TYPE	LENGTH	WEIGHT
* A1	32	#4	STR	21'-8"	463
A2	32	#4	STR	21'-6"	460
* B1	82	#5	STR	14'-2"	1212
B2	82	#6	STR	14'-8"	1806
REINFORCING STEEL				LBS.	2266
* EPOXY COATED REINFORCING STEEL				LBS.	1675
CLASS AA CONCRETE				C.Y.	26.8

ASSEMBLED BY : W. B. HILL DATE : 5/09
CHECKED BY : D.A. DAVENPORT DATE : 01/18/12
DESIGN ENGINEER OF RECORD: G.W. DICKEY DATE : 10/16/12

DRAWN BY : TLA 10/05
CHECKED BY : GM 5/06

ADDED 5/1/06RR KMM/GM
REV. 10/1/11 MAA/GM
REV. 12/21/11 MAA/GM

NORTH CAROLINA PROFESSIONAL SEAL 10730 ENGINEER D. ANDREW DAVENPORT
6-15-13

PROJECT NO. R-2707AB
CLEVELAND COUNTY
STATION: 203+50.35-L-

SHEET 1 OF 2

STATE OF NORTH CAROLINA
DEPARTMENT OF TRANSPORTATION
RALEIGH
STANDARD

BRIDGE APPROACH SLAB FOR INTEGRAL ABUTMENT

REVISIONS						SHEET NO.
NO.	BY:	DATE:	NO.	BY:	DATE:	S-103
1			3			TOTAL SHEETS 104
2			4			

13-JUN-2013 13:33
R:\Structures\Plans\Str6\Plans\R2707AB_SD_AS_06.dgn
dadavenport

STD. NO. BAS5 (SHT 1a)

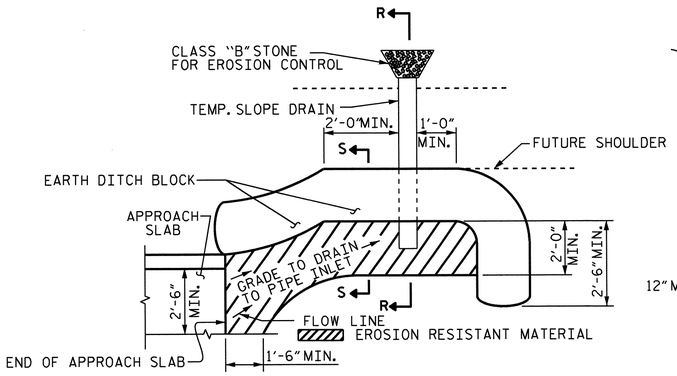

NOTE: IMMEDIATELY AFTER THE CONSTRUCTION OF THE APPROACH SLAB, THE CONTRACTOR SHALL PROVIDE TEMPORARY BERM AND SLOPE DRAIN. CONTRACTOR SHALL GRADE TO PIPE INLET AND PROVIDE EROSION RESISTANT MATERIAL AS SHOWN. THE EROSION RESISTANT MATERIAL SHALL BE EITHER 1) ASPHALT PLANT MIX, TYPE 1 OR TYPE 2, MIN. 2" DEPTH, 2) EROSION CONTROL MAT, OR 3) CONCRETE, AS DIRECTED BY THE ENGINEER. THE SLOPE DRAIN SHALL CONSIST OF A NON-PERFORATED TEMPORARY DRAINAGE PIPE, 12 INCHES IN DIAMETER.

PLAN VIEW

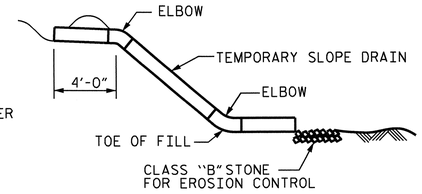

SECTION R-R

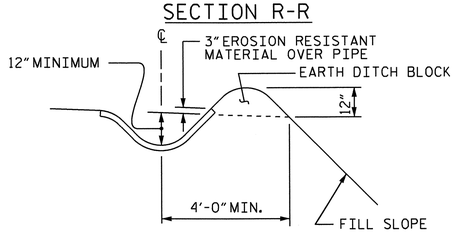

SECTION S-S

TEMPORARY BERM AND SLOPE DRAIN DETAILS

(TO BE USED WHEN SHOULDER BERM GUTTER IS REQUIRED)

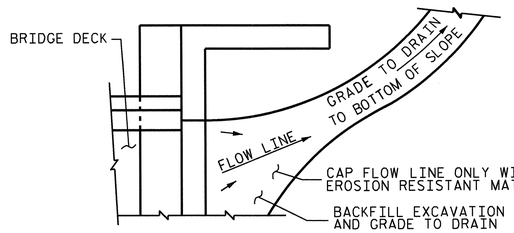

NOTE: IF THE APPROACH SLAB IS NOT CONSTRUCTED IMMEDIATELY AFTER THE BACKFILLING OF THE END BENT EXCAVATION, GRADE TO DRAIN TO THE BOTTOM OF THE SLOPE AND PROVIDE EROSION RESISTANT MATERIAL, SUCH AS FIBERGLASS ROVING OR AS DIRECTED BY THE ENGINEER TO PREVENT SOIL EROSION AND TO PROTECT THE AREA ADJACENT TO THE STRUCTURE. THE CONTRACTOR WILL BE REQUIRED TO REMOVE THESE MATERIALS PRIOR TO CONSTRUCTION OF THE APPROACH SLAB.

TEMPORARY DRAINAGE DETAIL

ASSEMBLED BY :	W. B. HILL	DATE :	5/09
CHECKED BY :	D.A. DAVENPORT	DATE :	01/18/12
DESIGN ENGINEER OF RECORD:	G.W. DICKEY	DATE :	10/16/12

DRAWN BY :	FCJ	11/88	REV. 5/7/03 RWW/JTE
CHECKED BY :	ARB	11/88	REV. 5/1/06RRR MAA/KMM
			REV. 10/1/11 MAA/GM

13-JUN-2013 13:33
R:\Structures\Plans\Str6\Plans\R2707AB_SD_AS_06.dgn
dadavenport

NORTH CAROLINA PROFESSIONAL SEAL 10730 ENGINEER DANIEL A. DAVENPORT, JR.

PROJECT NO. R-2707AB

CLEVELAND COUNTY

STATION: 203+50.35-L-

SHEET 2 OF 2

STATE OF NORTH CAROLINA
DEPARTMENT OF TRANSPORTATION
RALEIGH

STANDARD

BRIDGE APPROACH SLAB DETAILS

REVISIONS						SHEET NO.
NO.	BY:	DATE:	NO.	BY:	DATE:	S-104
1			3			TOTAL SHEETS
2			4			104

STR.#6

STD. NO. BAS4 (SHT 1a)

STANDARD NOTES

DESIGN DATA:

SPECIFICATIONS	A.A.S.H.T.O. (CURRENT)
LIVE LOAD	SEE PLANS
IMPACT ALLOWANCE	SEE A.A.S.H.T.O.
STRESS IN EXTREME FIBER OF	
STRUCTURAL STEEL - AASHTO M270 GRADE 36	20,000 LBS. PER SQ. IN.
- AASHTO M270 GRADE 50W	27,000 LBS. PER SQ. IN.
- AASHTO M270 GRADE 50	27,000 LBS. PER SQ. IN.
REINFORCING STEEL IN TENSION	
GRADE 60	24,000 LBS. PER SQ. IN.
CONCRETE IN COMPRESSION	1,200 LBS. PER SQ. IN.
CONCRETE IN SHEAR	SEE A.A.S.H.T.O.
STRUCTURAL TIMBER - TREATED OR	
UNTREATED - EXTREME FIBER STRESS	1,800 LBS. PER SQ. IN.
COMPRESSION PERPENDICULAR TO GRAIN OF TIMBER	375 LBS. PER SQ. IN.
EQUIVALENT FLUID PRESSURE OF EARTH	30 LBS. PER CU. FT. (MINIMUM)

MATERIAL AND WORKMANSHIP:

EXCEPT AS MAY OTHERWISE BE SPECIFIED ON PLANS OR IN THE SPECIAL PROVISIONS, ALL MATERIAL AND WORKMANSHIP SHALL BE IN ACCORDANCE WITH THE 2012 "STANDARD SPECIFICATIONS FOR ROADS AND STRUCTURES" OF THE N. C. DEPARTMENT OF TRANSPORTATION.

STEEL SHEET PILING FOR PERMANENT OR TEMPORARY APPLICATIONS SHALL BE HOT ROLLED.

CONCRETE:

UNLESS OTHERWISE REQUIRED ON PLANS, CLASS A CONCRETE SHALL BE USED FOR ALL PORTIONS OF ALL STRUCTURES WITH THE EXCEPTION THAT: CLASS AA CONCRETE SHALL BE USED IN BRIDGE SUPERSTRUCTURES, ABUTMENT BACKWALLS, AND APPROACH SLABS; AND CLASS B CONCRETE SHALL BE USED FOR SLOPE PROTECTION AND RIP RAP.

CONCRETE CHAMFERS:

UNLESS OTHERWISE NOTED ON THE PLANS, ALL EXPOSED CORNERS ON STRUCTURES SHALL BE CHAMFERED 3/4" WITH THE FOLLOWING EXCEPTIONS: TOP CORNERS OF CURBS MAY BE ROUNDED TO 1-1/2" RADIUS WHICH IS BUILT INTO CURB FORMS; CORNERS OF TRANSVERSE FLOOR EXPANSION JOINTS SHALL BE ROUNDED WITH A 1/4" FINISHING TOOL UNLESS OTHERWISE REQUIRED ON PLANS; AND CORNERS OF EXPANSION JOINTS IN THE ROADWAY FACES AND TOPS OF CURBS AND SIDEWALKS SHALL BE ROUNDED TO A 1/4" RADIUS WITH A FINISHING STONE OR TOOL UNLESS OTHERWISE REQUIRED ON PLANS.

DOWELS:

DOWELS WHEN INDICATED ON PLANS AS FOR CULVERT EXTENSIONS, SHALL BE EMBEDDED AT LEAST 12" INTO THE OLD CONCRETE AND GROUTED INTO PLACE WITH 1:2 CEMENT MORTAR.

ALLOWANCE FOR DEAD LOAD DEFLECTION, SETTLEMENT, ETC. IN CASTING SUPERSTRUCTURES:

BRIDGES SHALL BE BUILT ON THE GRADE OR VERTICAL CURVE SHOWN ON PLANS. SLABS, CURBS AND PARAPETS SHALL CONFORM TO THE GRADE OR CURVE.

ALL DIMENSIONS WHICH ARE GIVEN IN SECTION AND ARE AFFECTED BY DEAD LOAD DEFLECTIONS ARE DIMENSIONS AT CENTER LINE OF BEARING UNLESS OTHERWISE NOTED ON PLANS. IN SETTING FORMS FOR STEEL BEAM BRIDGES AND PRESTRESSED CONCRETE GIRDER BRIDGES, ADJUSTMENTS SHALL BE MADE DUE TO THE DEAD LOAD DEFLECTIONS FOR THE ELEVATIONS SHOWN. WHERE BLOCKS ARE SHOWN OVER BEAMS FOR BUILDING UP TO THE SLAB, THE VERTICAL DIMENSIONS OF THE BLOCKS SHALL BE ADJUSTED BETWEEN BEARINGS TO COMPENSATE FOR DEAD LOAD DEFLECTIONS, VERTICAL CURVE ORDINATE, AND ACTUAL BEAM CAMBER. WHERE BOTTOM OF SLAB IS IN LINE WITH BOTTOM OF TOP FLANGES, DEPTH OF SLAB BETWEEN BEARINGS SHALL BE ADJUSTED TO COMPENSATE FOR DEAD LOAD DEFLECTION, VERTICAL CURVE ORDINATE, AND ACTUAL BEAM CAMBER.

IN SETTING FALSEWORK AND FORMS FOR REINFORCED CONCRETE SPANS, AN ALLOWANCE SHALL BE MADE FOR DEAD LOAD DEFLECTIONS, SETTLEMENT OF FALSEWORK, AND PERMANENT CAMBER WHICH SHALL BE PROVIDED FOR IN ADDITION TO THE ELEVATIONS SHOWN. AFTER REMOVAL OF THE FALSEWORK, THE FINISHED STRUCTURES SHALL CONFORM TO THE PROFILE AND ELEVATIONS SHOWN ON THE PLANS AND CONSTRUCTION ELEVATIONS FURNISHED BY THE ENGINEER.

DETAILED DRAWINGS FOR FALSEWORK OR FORMS FOR BRIDGE SUPERSTRUCTURE AND ANY STRUCTURE OR PARTS OF A STRUCTURE AS NOTED ON THE PLANS SHALL BE SUBMITTED TO THE ENGINEER FOR APPROVAL BEFORE CONSTRUCTION OF THE FALSEWORK OR FORMS IS STARTED.

REINFORCING STEEL:

ALL REINFORCING STEEL SHALL BE DEFORMED. DIMENSIONS RELATIVE TO PLACEMENT OF REINFORCING ARE TO CENTERS OF BARS UNLESS OTHERWISE INDICATED IN THE PLANS. DIMENSIONS ON BAR DETAILS ARE TO CENTERS OF BARS OR ARE OUT TO OUT AS INDICATED ON PLANS.

WIRE BAR SUPPORTS SHALL BE PROVIDED FOR REINFORCING STEEL WHERE INDICATED ON THE PLANS. WHEN BAR SUPPORT PIECES ARE PLACED IN CONTINUOUS LINES, THEY SHALL BE SO PLACED THAT THE ENDS OF THE SUPPORTING WIRES SHALL BE LAPPED TO LOCK LEGS ON ADJOINING PIECES.

STRUCTURAL STEEL:

AT THE CONTRACTOR'S OPTION, HE MAY SUBSTITUTE 7/8" Ø SHEAR STUDS FOR THE 3/4" Ø STUDS SPECIFIED ON THE PLANS. THIS SUBSTITUTION SHALL BE MADE AT THE RATE OF 3 - 7/8" Ø STUDS FOR 4 - 3/4" Ø STUDS, AND STUD SPACING CHANGES SHALL BE MADE AS NECESSARY TO PROVIDE THE SAME EQUIVALENT NUMBER OF 7/8" Ø STUDS ALONG THE BEAM AS SHOWN FOR 3/4" Ø STUDS BASED ON THE RATIO OF 3 - 7/8" Ø STUDS FOR 4 - 3/4" Ø STUDS. STUDS OF THE LENGTH SPECIFIED ON THE PLANS MUST BE PROVIDED. THE MAXIMUM SPACING SHALL BE 2'-0".

EXCEPT AT THE INTERIOR SUPPORTS OF CONTINUOUS BEAMS WHERE THE COVER PLATE IS IN CONTACT WITH BEARING PLATE, THE CONTRACTOR MAY, AT HIS OPTION, SUBSTITUTE FOR THE COVER PLATES DESIGNATED ON THE PLANS COVER PLATES OF THE EQUIVALENT AREA PROVIDED THESE PLATES ARE AT LEAST 5/16" IN THICKNESS AND DO NOT EXCEED A WIDTH EQUAL TO THE FLANGE WIDTH LESS 2" OR A THICKNESS EQUAL TO 2 TIMES THE FLANGE THICKNESS. THE SIZE OF FILLET WELDS SHALL CONFORM TO THE REQUIREMENTS OF THE CURRENT ANSI/AASHTO/AWS "BRIDGE WELDING CODE". ELECTROSLAG WELDING WILL NOT BE PERMITTED.

WITH THE SOLE EXCEPTION OF EDGES AT SURFACES WHICH BEAR ON OTHER SURFACES, ALL SHARP EDGES AND ENDS OF SHAPES AND PLATES SHALL BE SLIGHTLY ROUNDED BY SUITABLE MEANS TO A RADIUS OF APPROXIMATELY 1/16 INCH OR EQUIVALENT FLAT SURFACE AT A SUITABLE ANGLE PRIOR TO PAINTING, GALVANIZING, OR METALLIZING.

HANDRAILS AND POSTS:

METAL STANDARDS AND FACES OF THE CONCRETE END POSTS FOR THE METAL RAIL SHALL BE SET NORMAL TO THE GRADE OF THE CURB, UNLESS OTHERWISE SHOWN ON PLANS. THE METAL RAIL AND TOPS OF CONCRETE POSTS USED WITH THE ALUMINUM RAIL SHALL BE BUILT PARALLEL TO THE GRADE OF THE CURB.

METAL HANDRAILS SHALL BE IN ACCORDANCE WITH THE PLANS. RAILS SHALL BE AS MANUFACTURED FOR BRIDGE RAILING. CASTINGS SHALL BE OF A UNIFORM APPEARANCE. FINS AND OTHER DEFORMATIONS RESULTING FROM CASTING OR OTHERWISE SHALL BE REMOVED IN A MANNER SO THAT A UNIFORM COLORING OF THE COMPLETED CASTING SHALL BE OBTAINED. CASTINGS WITH DISCOLORATIONS OR OF NON-UNIFORM COLORING WILL NOT BE ACCEPTED. CERTIFIED MILL REPORTS ARE REQUIRED FOR METAL RAILS AND POSTS.

SPECIAL NOTES:

GENERALLY, IN CASE OF DISCREPANCY, THIS STANDARD SHEET OF NOTES SHALL GOVERN OVER THE SPECIFICATIONS, BUT THE REMAINDER OF THE PLANS SHALL GOVERN OVER NOTES HEREON, AND SPECIAL PROVISIONS SHALL GOVERN OVER ALL. SEE SPECIFICATIONS ARTICLE 105-4.

ENGLISH

JANUARY, 1990

REV. 6-16-95 EEM (W) RGW REV. 5-7-03 RWW (W) JTE REV. 10-1-11 MAA (W) GM
REV. 8-16-99 RWW (W) LES REV. 5-1-06 TLA (W) GM