09/08/99

TIP PROJECT: R-5527B

STATE	STATE PROJECT REFERENCE NO.	SHEET NO.	TOTAL SHEETS
N.C.	R-5527B	1	

STATE PROJ. NO.	F. A. PROJ. NO.	DESCRIPTION
44097.1.D3		P.E.
44097.2.1		R/W
44097.3.D4		CONST.

STATE OF NORTH CAROLINA
DIVISION OF HIGHWAYS

CHEROKEE COUNTY

LOCATION: NEW ROUTE FROM THE US 74/19/129, SR 1366 INTERSECTION, EAST TO THE EBCI TRIBAL BOUNDARY IN CHEROKEE COUNTY

TYPE OF WORK: GRADING, DRAINAGE, PAVING, AND RETAINING WALLS

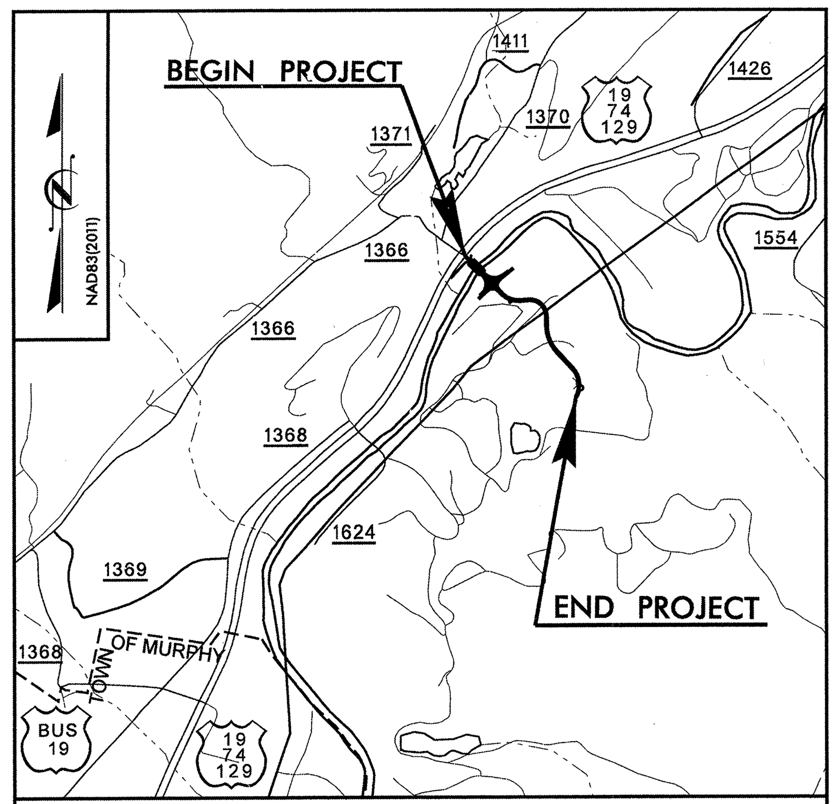

VICINITY MAP

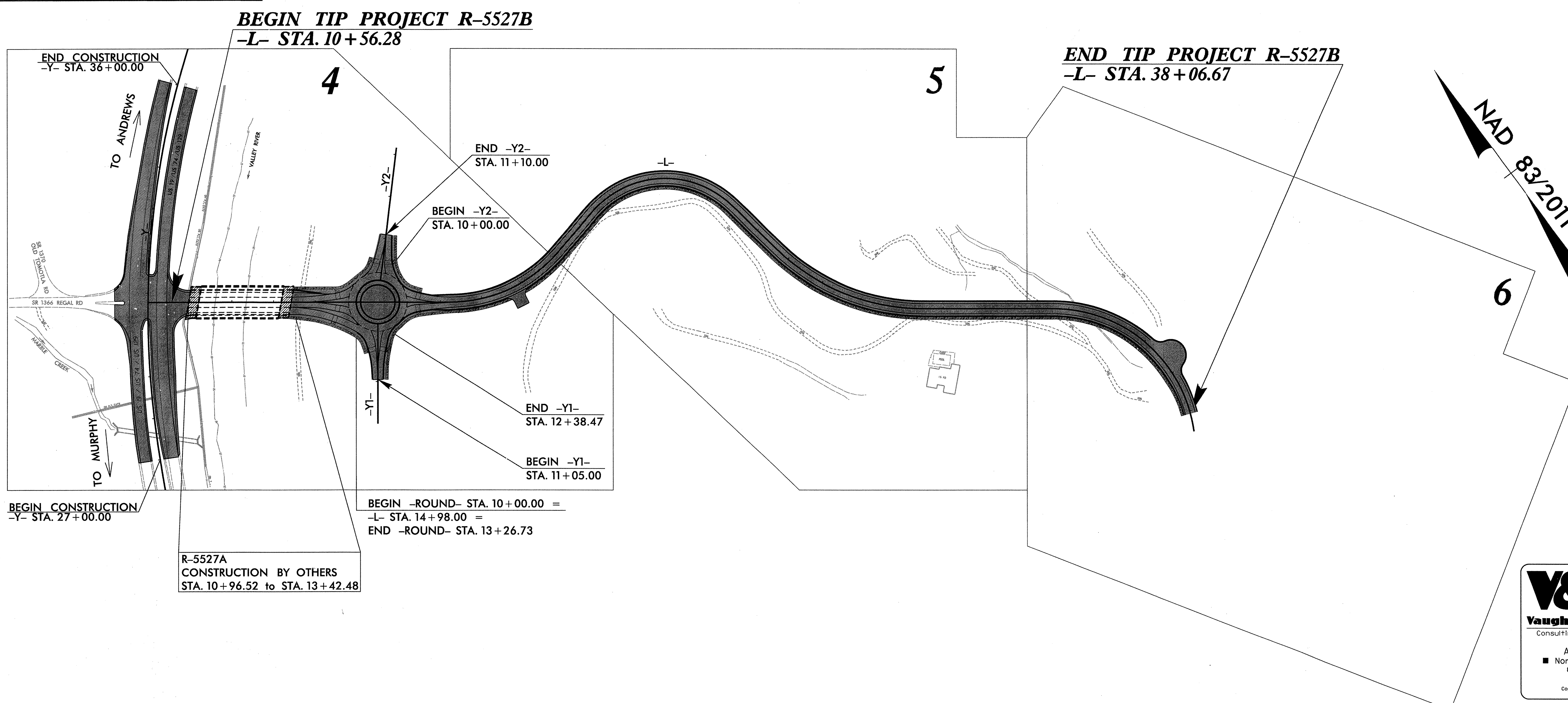

V&M Vaughn & Melton Consulting Engineers
Asheville, North Carolina 828·253·2796
Charlotte, North Carolina 704·357·0488
Tri-Cities, Tennessee 423·467·8401
Knoxville, Tennessee 865·546·5800
Middlesboro, Kentucky 606·248·6600
Spartanburg, South Carolina 864·574·4775

Copyright© 1994 Vaughn & Melton, Inc. All Rights Reserved

THIS IS A PARTIAL CONTROLLED-ACCESS PROJECT WITH ACCESS BEING LIMITED TO POINTS AS SHOWN ON THE PLANS.

CONTRACT: C203454

GRAPHIC SCALES

50 25 0 50 100
PLANS

50 25 0 50 100
PROFILE (HORIZONTAL)

10 5 0 10 20
PROFILE (VERTICAL)

DESIGN DATA

ADT 2015 = 8000
ADT 2035 = 20400
DHV = 10 %
D = 65 %
T = 9 %
V = 35 MPH
*(TTST 2% + DUALS 7%)
FUNC CLASS =
RURAL ARTERIAL
STATEWIDE TIER

PROJECT LENGTH

LENGTH ROADWAY TIP PROJECT R-5527B = 0.474 MI.
LENGTH STRUCTURES TIP PROJECT R-5527B = 0.000 MI.
TOTAL LENGTH OF TIP PROJECT R-5527B = 0.474 MI.

Prepared In the Office of:
VAUGHN & MELTON
1318-F PATTON AVE.
ASHEVILLE NC, 28806
FOR NCDOT DIVISION OF HIGHWAYS

2012 STANDARD SPECIFICATIONS

RIGHT OF WAY DATE:

LETTING DATE:
MARCH 18, 2014

HARDY WILLIS, PE
PROJECT ENGINEER

REECE SCHULER, PE
PROJECT DESIGN ENGINEER

NCDOT CONTACT:
RALPH CANNADY
DIVISION 14 PROJECT MANAGER

HYDRAULICS ENGINEER

NORTH CAROLINA PROFESSIONAL SEAL 030453 ENGINEER AARON C. CARVER

1/8/14 P.E.
SIGNATURE:

ROADWAY DESIGN ENGINEER

NORTH CAROLINA PROFESSIONAL SEAL 26960 ENGINEER REECE M. SCHULER

1/8/14 P.E.
SIGNATURE:

STATE OF NORTH CAROLINA · DEPARTMENT OF TRANSPORTATION

$$$$$$SYSTIME$$$$
$$$$$$$$$$$DGN$$$$$$$$$$$$$$$$
$$$$USERNAME$$$$

PROJECT REFERENCE NO.	SHEET NO.
R-5527A	1-A

ROADWAY DESIGN ENGINEER

NORTH CAROLINA PROFESSIONAL SEAL 26960 ENGINEER REECE M. SCHULER 1/27/14

INDEX OF SHEETS

SHEET NUMBER	SHEET
1	TITLE SHEET
1-A	INDEX OF SHEETS, GENERAL NOTES, AND LIST OF STANDARD DRAWINGS
1-B	CONVENTIONAL SYMBOLS
1-C	CENTERLINE COORDINATE LIST
2 THRU 2-A	PAVEMENT SCHEDULE, TYPICAL SECTIONS, AND WEDGING DETAILS
2-B	ROUNDABOUT DETAILS
2-C	ROUNDABOUT DETAILS
2-D	STRUCTURE ANCHOR UNIT DETAIL
2-E	STRUCTURE ANCHOR UNIT DETAIL
2-F	MODIFIED CONCRETE FLUME DETAIL
2-G	RIP RAPPED ENERGY DISSIPATOR BASIN DETAIL
2-H	CURB RAMP DETAIL
3	SUMMARY OF GUARDRAIL QUANTITIES
3-A	SUMMARY OF DRAINAGE QUANTITIES
3-B	SUMMARY OF DRAINAGE QUANTITIES
3-C	EARTHWORK SUMMARY
4 THRU 6	PLAN SHEETS
7 THRU 10	PROFILE SHEETS
TMP-1 THRU TMP-9	TRAFFIC CONTROL PLANS
SD-1	SPECIAL SIGN DESIGN
PMP-1 THRU PMP-4	PAVEMENT MARKING PLANS
EC-1 THRU EC-9	EROSION CONTROL PLANS
RF-1	REFORESTATION SHEET
SIGN-1 THRU SIGN-5	SIGNING PLANS
SIG-1 THRU SIG-10	SIGNAL PLANS
UO-1 THRU UO-4	UTILITIES BY OTHERS
X-0	CROSS-SECTIONS SUMMARY
X-1 THRU X-46	CROSS-SECTIONS
RW1-1 THRU RW4-2	RETAINING WALL PLANS

GENERAL NOTES:

2012 SPECIFICATIONS
EFFECTIVE: 01-17-12
REVISED 7-30-12

GRADING AND SURFACING OR RESURFACING AND WIDENING:
THE GRADE LINES SHOWN DENOTE THE FINISHED ELEVATION OF THE PROPOSED SURFACING AT GRADE POINTS SHOWN ON THE TYPICAL SECTIONS. WHERE NO GRADE LINES ARE SHOWN, THE PROFILES SHOWN DENOTE THE TOP ELEVATION OF THE EXISTING PAVEMENT ALONG THE CENTER LINE OF SURVEY ON WHICH THE PROPOSED RESURFACING WILL BE PLACED. GRADE LINES MAY BE ADJUSTED BY THE ENGINEER IN ORDER TO SECURE A PROPER TIE-IN.

CLEARING:
CLEARING ON THIS PROJECT SHALL BE PERFORMED TO THE LIMITS ESTABLISHED BY METHOD II.

SUPERELEVATION:
ALL CURVES ON THIS PROJECT SHALL BE SUPERELEVATED IN ACCORDANCE WITH STD. NO. 225.04 OR 225.05 USING THE RATE OF SUPERELEVATION AND RUNOFF SHOWN ON THE PLANS.SUPERELEVATION IS TO BE REVOLVED ABOUT THE GRADE POINTS SHOWN ON THE TYPICAL SECTIONS.

SHOULDER CONSTRUCTION:
ASPHALT, EARTH, AND CONCRETE SHOULDER CONSTRUCTION ON THE HIGH SIDE OF SUPERELEVATED CURVES SHALL BE IN ACCORDANCE WITH STD. 560.01

SIDE ROADS:
THE CONTRACTOR WILL BE REQUIRED TO DO ALL NECESSARY WORK TO PROVIDE SUITABLE CONNECTIONS WITH ALL ROADS, STREETS, AND DRIVES ENTERING THIS PROJECT. THIS WORK WILL BE PAID FOR AT THE CONTRACT UNIT PRICE FOR THE PARTICULAR ITEMS INVOLVED.

DRIVEWAYS:
DRIVEWAYS SHALL BE CONSTRUCTED IN ACCORDANCE WITH STD. 848.02 USING 3′ RADII OR RADII AS SHOWN ON THE PLANS. LOCATIONS OF DRIVES WILL BE AS SHOWN ON THE PLANS OR AS DIRECTED BY THE ENGINEER.

STREET TURNOUT:
STREET RETURNS SHALL BE CONSTRUCTED IN ACCORDANCE WITH STD.848.04 USING THE RADII NOTED ON PLANS.

GUARDRAIL:
THE GURADRAIL LOCATIONS SHOWN ON THE PLANS MAY BE ADJUSTED DURING CONSTRUCTION AS DIRECTED BY THE ENGINEER. THE CONTRACTOR SHOULD CONSULT WITH THE ENGINEER PRIOR TO ORDERING GUARDRAIL MATERIAL.

TEMPORARY SHORING:
SHORING REQUIRED FOR THE MAINTENANCE OF TRAFFIC NOT SHOWN ON THE PLANS WILL BE PAID FOR AS "EXTRA WORK" IN ACCORDANCE WITH SECTION 104-7.

UTILITIES:
UTILITY OWNERS ON THIS PROJECT ARE MURPHY POWER BOARD, FRONTIER COMMUNCATIONS, MURPHY CABLE TV, BALSAMWEST FIBERNET AND MURPHY WATER BOARD. ANY RELOCATION OF EXISTING UTILITIES WILL BE ACCOMPLISHED BY OTHERS.

RIGHT-OF-WAY MARKERS:
ALL RIGHT-OF-WAY MARKERS ON THIS PROJECT SHALL BE PLACED BY OTHERS.

CURB RAMPS:
CURB RAMPS ARE SHOWN ON THE PLANS AT APPROXIMATE LOCATIONS. CONSTRUCT ALL CURB RAMPS IN ACCORDANCE WITH STD. 848.05

ROCK:
ROCK IS ANTICIPATED BETWEEN STATIONS 19+50 AND 37+00. BLASTING MAY BE REQUIRED FOR EXCAVATION ON THE PROJECT. SEE SECTION 220 OF THE STANDARD SPECIFICATIONS AND IF APPLICABLE, ROCK BLASTING PROVISION.

2012 ROADWAY ENGLISH STANDARD DRAWINGS

The following Roadway Standards as appear in "Roadway Standard Drawings" Highway Design Branch - N. C. Department of Transportation - Raleigh, N. C., Dated January 17, 2012 are applicable to this project and by reference hereby are considered a part of these plans:

STD.NO.	TITLE
DIVISION 2 - EARTHWORK	
200.02	Method of Clearing - Method II
225.02	Guide for Grading Subgrade - Secondary and Local
225.04	Method of Obtaining Superelevation - Two Lane Pavement
225.05	Method of Obtaining Superelevation - Divided Highways
225.06	Method of Grading Sight Distance at Intersections
DIVISION 3 - PIPE CULVERTS	
300.01	Method of Pipe Installation
DIVISION 5 - SUBGRADE, BASES, AND SHOULDERS	
560.01	Method of Shoulder Construction - High Side of Superelevated Curve - Method 1
Division 8 - INCIDENTALS	
815.03	Pipe Underdrain and Blind Drain
840.00	Concrete Base Pad for Drainage Structures
840.01	Brick Catch Basin - 12" thru 54" Pipe
840.02	Concrete Catch Basin - 12" thru 54" Pipe
840.03	Frames, Grates, and Hood - for Use on Standard Catch Basin
840.14	Concrete Drop Inlet
840.15	Brick Drop Inlet
840.16	Drop Inlet Frame and Grates
840.18	Concrete Grated Drop Inlet Type "B"
840.24	Frames and Narrow Slot Sag Grates
840.25	Anchorage for Frames - Brick or Concrete or Precast
840.27	Brick Grated Drop Inlet Type "B"
840.31	Concrete Junction Box - 12" thru 66" Pipe
840.32	Brick Junction Box - 12" thru 66" Pipe
840.41	Spring Box
840.54	Manhole Frame and Cover
840.66	Drainage Structure Steps
846.01	Concrete Curb, Gutter and Curb & Gutter
848.01	Concrete Sidewalk
848.02	Driveway Turnout - Radius Type
848.04	Street Turnout
850.01	Concrete Paved Ditches
852.01	Concrete Islands
852.06	Method for Placement of Drop Inlets in Concrete Islands
862.01	Guardrail Placement
862.02	Guardrail Installation
862.03	Structure Anchor Units
876.02	Guide for Rip Rap at Pipe Outlets
876.04	Drainage Ditches with Class 'B' Rip Rap

$$$$$$SYSTIME$$$$$ $$$$$$$$$DGN$$$$$$$$$$$$$$$$ $$$$USERNAME$$$$

12/05/11

PROJECT REFERENCE NO.	SHEET NO.
R-5527B	1-B

Note: Not to Scale

****S.U.E. = Subsurface Utility Engineering***

STATE OF NORTH CAROLINA
DIVISION OF HIGHWAYS

CONVENTIONAL PLAN SHEET SYMBOLS

BOUNDARIES AND PROPERTY:

- State Line
- County Line
- Township Line
- City Line
- Reservation Line
- Property Line
- Existing Iron Pin — EIP
- Property Corner
- Property Monument — ECM
- Parcel/Sequence Number — 123
- Existing Fence Line
- Proposed Woven Wire Fence
- Proposed Chain Link Fence
- Proposed Barbed Wire Fence
- Existing Wetland Boundary — WLB
- Proposed Wetland Boundary — WLB
- Existing Endangered Animal Boundary — EAB
- Existing Endangered Plant Boundary — EPB
- Known Soil Contamination: Area or Site
- Potential Soil Contamination: Area or Site

BUILDINGS AND OTHER CULTURE:

- Gas Pump Vent or U/G Tank Cap
- Sign — S
- Well — W
- Small Mine
- Foundation
- Area Outline
- Cemetery
- Building
- School
- Church
- Dam

HYDROLOGY:

- Stream or Body of Water
- Hydro, Pool or Reservoir
- Jurisdictional Stream — JS
- Buffer Zone 1 — BZ 1
- Buffer Zone 2 — BZ 2
- Flow Arrow
- Disappearing Stream
- Spring
- Wetland
- Proposed Lateral, Tail, Head Ditch — FLOW
- False Sump

RAILROADS:

- Standard Gauge — CSX TRANSPORTATION
- RR Signal Milepost — MILEPOST 35
- Switch — SWITCH
- RR Abandoned
- RR Dismantled

RIGHT OF WAY:

- Baseline Control Point
- Existing Right of Way Marker
- Existing Right of Way Line
- Proposed Right of Way Line — RW
- Proposed Right of Way Line with Iron Pin and Cap Marker — RW
- Proposed Right of Way Line with Concrete or Granite R/W Marker — RW
- Proposed Control of Access Line with Concrete C/A Marker — CA
- Existing Control of Access — CA
- Proposed Control of Access — CA
- Existing Easement Line — E
- Proposed Temporary Construction Easement — E
- Proposed Temporary Drainage Easement — TDE
- Proposed Permanent Drainage Easement — PDE
- Proposed Permanent Drainage / Utility Easement — DUE
- Proposed Permanent Utility Easement — PUE
- Proposed Temporary Utility Easement — TUE
- Proposed Aerial Utility Easement — AUE
- Proposed Permanent Easement with Iron Pin and Cap Marker

ROADS AND RELATED FEATURES:

- Existing Edge of Pavement
- Existing Curb
- Proposed Slope Stakes Cut — C
- Proposed Slope Stakes Fill — F
- Proposed Curb Ramp — CR
- Existing Metal Guardrail
- Proposed Guardrail
- Existing Cable Guiderail
- Proposed Cable Guiderail
- Equality Symbol
- Pavement Removal

VEGETATION:

- Single Tree
- Single Shrub
- Hedge
- Woods Line
- Orchard
- Vineyard — Vineyard

EXISTING STRUCTURES:

MAJOR:

- Bridge, Tunnel or Box Culvert — CONC
- Bridge Wing Wall, Head Wall and End Wall — CONC WW

MINOR:

- Head and End Wall — CONC HW
- Pipe Culvert
- Footbridge
- Drainage Box: Catch Basin, DI or JB — CB
- Paved Ditch Gutter
- Storm Sewer Manhole — S
- Storm Sewer — S

UTILITIES:

POWER:

- Existing Power Pole
- Proposed Power Pole
- Existing Joint Use Pole
- Proposed Joint Use Pole
- Power Manhole — P
- Power Line Tower
- Power Transformer
- U/G Power Cable Hand Hole
- H-Frame Pole
- Recorded U/G Power Line — P
- Designated U/G Power Line (S.U.E.*) — P

TELEPHONE:

- Existing Telephone Pole
- Proposed Telephone Pole
- Telephone Manhole — T
- Telephone Booth
- Telephone Pedestal — T
- Telephone Cell Tower
- U/G Telephone Cable Hand Hole — HH
- Recorded U/G Telephone Cable — T
- Designated U/G Telephone Cable (S.U.E.*) — T
- Recorded U/G Telephone Conduit — TC
- Designated U/G Telephone Conduit (S.U.E.*) — TC
- Recorded U/G Fiber Optics Cable — T FO
- Designated U/G Fiber Optics Cable (S.U.E.*) — T FO

WATER:

- Water Manhole — W
- Water Meter
- Water Valve
- Water Hydrant
- Recorded U/G Water Line — W
- Designated U/G Water Line (S.U.E.*) — W
- Above Ground Water Line — A/G Water

TV:

- TV Satellite Dish
- TV Pedestal — C
- TV Tower
- U/G TV Cable Hand Hole — HH
- Recorded U/G TV Cable — TV
- Designated U/G TV Cable (S.U.E.*) — TV
- Recorded U/G Fiber Optic Cable — TV FO
- Designated U/G Fiber Optic Cable (S.U.E.*) — TV FO

GAS:

- Gas Valve
- Gas Meter
- Recorded U/G Gas Line — G
- Designated U/G Gas Line (S.U.E.*) — G
- Above Ground Gas Line — A/G Gas

SANITARY SEWER:

- Sanitary Sewer Manhole
- Sanitary Sewer Cleanout
- U/G Sanitary Sewer Line — SS
- Above Ground Sanitary Sewer — A/G Sanitary Sewer
- Recorded SS Forced Main Line — FSS
- Designated SS Forced Main Line (S.U.E.*) — FSS

MISCELLANEOUS:

- Utility Pole
- Utility Pole with Base
- Utility Located Object
- Utility Traffic Signal Box — S
- Utility Unknown U/G Line — ?UTL
- U/G Tank; Water, Gas, Oil
- Underground Storage Tank, Approx. Loc. — UST
- A/G Tank; Water, Gas, Oil
- Geoenvironmental Boring
- U/G Test Hole (S.U.E.*)
- Abandoned According to Utility Records — AATUR
- End of Information — E.O.I.

PROJ. REFERENCE NO.	SHEET NO.
R-5527B	1-C

STATE OF NORTH CAROLINA
DIVISION OF HIGHWAYS

CENTERLINE COORDINATE LIST

CHAIN -L-

Point #	Chain	Station	Northing (Y)	Easting (X)
1	-L-	10+00.00	536618.5134	505412.8731
2	-L-	10+50.00	536588.6065	505452.9427
3	-L-	11+00.00	536558.6996	505493.0124
4	-L-	11+50.00	536528.7927	505533.0820
5	-L-	12+00.00	536498.8859	505573.1517
6	-L-	12+50.00	536468.9790	505613.2214
7	-L-	13+00.00	536439.0721	505653.2910
8	-L-	13+50.00	536409.1652	505693.3607
9	-L-	14+00.00	536379.2583	505733.4303
10	-L-	14+50.00	536349.3514	505773.5000
11	-L-	15+00.00	536319.4445	505813.5697
12	-L-	15+50.00	536289.5376	505853.6393
13	-L-	16+00.00	536259.6307	505893.7090
14	-L-	16+50.00	536229.7238	505933.7786
15	-L-	17+00.00	536199.8169	505973.8483
16	-L-	17+50.00	536170.7910	506014.5398
17	-L-	18+00.00	536147.3692	506058.6637
18	-L-	18+50.00	536130.6657	506105.7433
19	-L-	19+00.00	536121.0411	506154.7623
20	-L-	19+50.00	536118.7030	506204.6625
21	-L-	20+00.00	536123.7021	506254.3667
22	-L-	20+50.00	536134.1087	506303.2684
23	-L-	21+00.00	536144.8075	506352.1104
24	-L-	21+50.00	536155.3642	506400.9817
25	-L-	22+00.00	536158.9536	506450.7549
26	-L-	22+50.00	536151.7698	506500.1375
27	-L-	23+00.00	536134.1480	506546.8251
28	-L-	23+50.00	536106.9105	506588.6387
29	-L-	24+00.00	536071.3286	506623.6270
30	-L-	24+50.00	536029.0627	506650.1571
31	-L-	25+00.00	535982.0853	506666.9910
32	-L-	25+50.00	535932.8656	506675.7274
33	-L-	26+00.00	535883.5333	506683.8717
34	-L-	26+50.00	535834.2010	506692.0159
35	-L-	27+00.00	535785.0695	506701.2289
36	-L-	27+50.00	535737.0308	506715.0203
37	-L-	28+00.00	535690.6089	506733.5387
38	-L-	28+50.00	535646.2678	506756.5990
39	-L-	29+00.00	535604.4503	506783.9708
40	-L-	29+50.00	535565.5744	506815.3807
41	-L-	30+00.00	535530.0284	506850.5147
42	-L-	30+50.00	535498.1676	506889.0219
43	-L-	31+00.00	535468.2876	506929.1117
44	-L-	31+50.00	535438.4077	506969.2015
45	-L-	32+00.00	535408.5278	507009.2913
46	-L-	32+50.00	535378.6479	507049.3811
47	-L-	33+00.00	535348.7680	507089.4709
48	-L-	33+50.00	535318.8882	507129.5607
49	-L-	34+00.00	535287.3914	507168.3501
50	-L-	34+50.00	535250.7131	507202.2647
51	-L-	35+00.00	535209.4612	507230.4388
52	-L-	35+50.00	535164.5262	507252.2641
53	-L-	36+00.00	535116.8782	507267.2697
54	-L-	36+50.00	535067.5458	507275.1314
55	-L-	37+00.00	535017.5938	507275.6796
56	-L-	37+50.00	534968.1007	507268.9024
57	-L-	38+00.00	534920.1349	507254.9462

CHAIN -Y-

Point #	Chain	Station	Northing (Y)	Easting (X)
58	-Y-	27+00.00	536299.7487	505210.9754
59	-Y-	27+50.00	536343.8730	505234.4910
60	-Y-	28+00.00	536387.5406	505258.8435
61	-Y-	28+50.00	536430.6423	505284.1837
62	-Y-	29+00.00	536473.1238	505310.5505
63	-Y-	29+50.00	536514.9602	505337.9291
64	-Y-	30+00.00	536556.1277	505366.3038
65	-Y-	30+50.00	536596.6025	505395.6581
66	-Y-	31+00.00	536636.3612	505425.9752
67	-Y-	31+50.00	536675.3809	505457.2376
68	-Y-	32+00.00	536713.6393	505489.4273
69	-Y-	32+50.00	536751.1142	505522.5258
70	-Y-	33+00.00	536787.7841	505556.5140
71	-Y-	33+50.00	536823.6279	505591.3723
72	-Y-	34+00.00	536858.6248	505627.0808
73	-Y-	34+50.00	536892.7549	505663.6187
74	-Y-	35+00.00	536925.9983	505700.9651
75	-Y-	35+50.00	536958.3360	505739.0984
76	-Y-	36+00.00	536989.7494	505777.9968

CHAIN -ROUND-

Point #	Chain	Station	Northing (Y)	Easting (X)
77	-ROUND-	10+00.00	536320.6408	505811.9669
78	-ROUND-	10+50.00	536273.1622	505804.2850
79	-ROUND-	11+00.00	536239.6925	505838.8249
80	-ROUND-	11+50.00	536248.8644	505886.0382
81	-ROUND-	12+00.00	536292.8314	505905.5349
82	-ROUND-	12+50.00	536333.9807	505880.6358
83	-ROUND-	13+00.00	536337.1097	505832.6417

CHAIN -Y1-

Point #	Chain	Station	Northing (Y)	Easting (X)
84	-Y1-	11+50.00	536176.9630	505769.6167
85	-Y1-	12+00.00	536217.0327	505799.5236

CHAIN -Y2-

Point #	Chain	Station	Northing (Y)	Easting (X)
86	-Y2-	10+00.00	536327.1089	505889.5892
87	-Y2-	10+50.00	536363.2352	505924.1565
88	-Y2-	11+00.00	536399.3614	505958.7237

PROJECT REFERENCE NO.	SHEET NO.
R-5527B	2
R/W SHEET NO.	
ROADWAY DESIGN ENGINEER	PAVEMENT DESIGN ENGINEER

NORTH CAROLINA PROFESSIONAL SEAL 20134 ENGINEER REECE M. SCHULER 1/8/14

NORTH CAROLINA PROFESSIONAL SEAL 20134 ENGINEER ROBERT M. MCCRAW 1/8/14

NOTE: INCIDENTAL MILLING TO OCCUR 25' FROM EACH TIE IN POINT TO PROVIDE A SMOOTH TRANSITION FOR ASPHALT PAVING

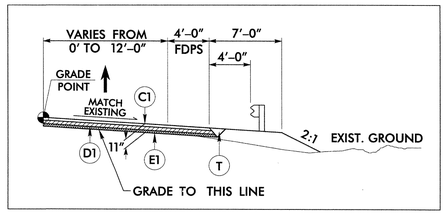

INSET A
-Y- STA. 27+00.00 TO STA. 30+00.00

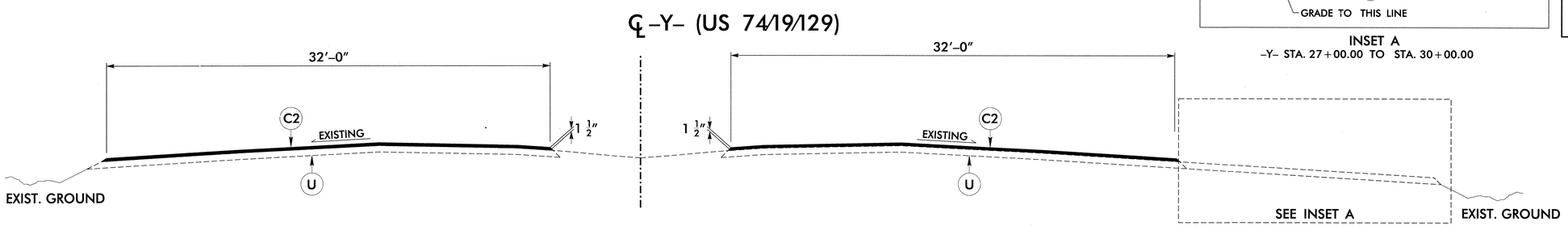

TYPICAL SECTION NO. 1

USE TYPICAL SECTION NO. 1

-Y- STA. 27+00.00 TO STA. 36+00.00

NOTE: FOR MEDIAN PAVING FROM -Y- STA. 30+00+/- TO 30+60+/- USE THE PAVEMENT SCHEDULE AS SHOWN ON INSET A.

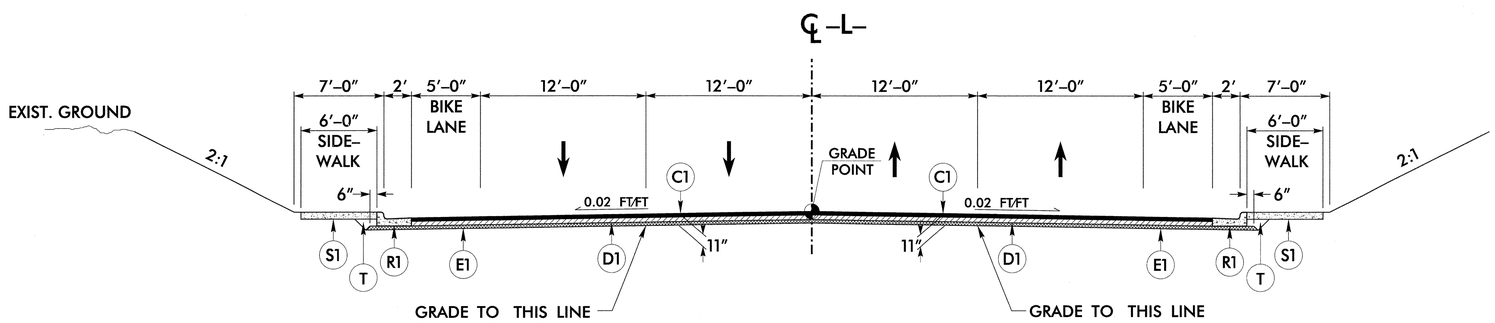

TYPICAL SECTION NO. 2

USE TYPICAL SECTION NO. 2

-L- STA. 10+56.28 TO 10+96.52
-L- STA. 13+42.48 TO 14+98.00

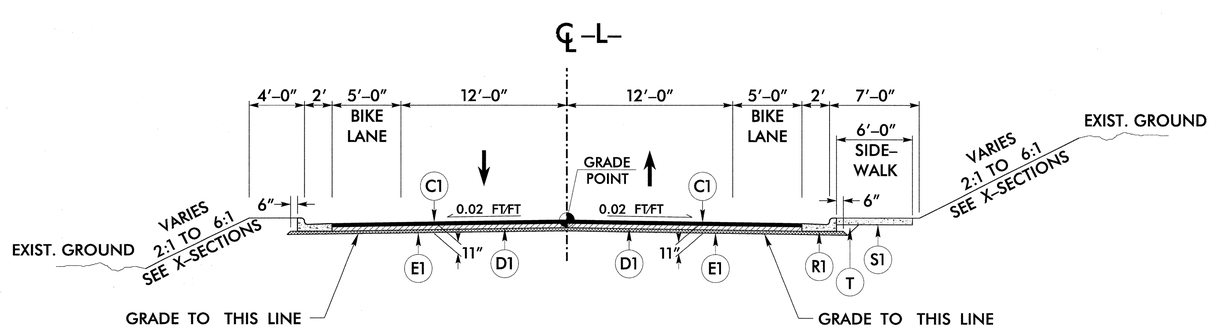

TYPICAL SECTION NO. 3

USE TYPICAL SECTION NO. 3

-L- STA. 16+02.00 TO STA. 38+06.67

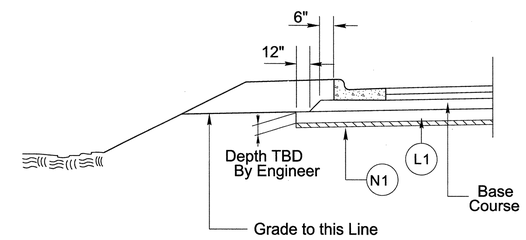

USE AGGREGATE SUBGRADE DETAIL

AT THE DISCRETION OF THE ENGINEER

	PAVEMENT SCHEDULE
A1	7" CONCRETE TRUCK APRON (4X4 W3.5 X W3.5 WELDED WIRE MESH)
C1	PROP. APPROX. 3" ASPHALT CONCRETE SURFACE COURSE, TYPE S9.5B, AT AN AVERAGE RATE OF 168 LBS. PER SQ. YD. IN EACH OF TWO 1½" LAYERS.
C2	PROP. APPROX. 1½" ASPHALT CONCRETE SURFACE COURSE, TYPE S9.5B, AT AN AVERAGE RATE OF 168 LBS. PER SQ. YD.
D1	PROP. APPROX. 4" ASPHALT CONCRETE INTERMEDIATE COURSE, TYPE I19.0B, AT AN AVERAGE RATE OF 456 LBS. PER SQ. YD.
E1	PROP. APPROX. 4" ASPHALT CONCRETE BASE COURSE, TYPE B25.0B, AT AN AVERAGE RATE OF 456 LBS. PER SQ. YD.
L1	CLASS IV SUBGRADE STABILIZATION
N1	GEOTEXTILE FOR SOIL STABILIZATION
R1	2'-6" CURB AND GUTTER NCDOT STANDARD. DRAWING NO. 846.01
R2	1'-6" CURB AND GUTTER NCDOT STANDARD. DRAWING NO. 846.01
S1	4" CONCRETE SIDEWALK
T	EARTH MATERIAL

NOTE: ALL PAVEMENT SLOPES ARE 1:1 UNLESS SHOWN OTHERWISE.

8/17/99

DGN FILE: R5527B_TYP_SECTION.DGN

PROJECT REFERENCE NO.	SHEET NO.
R-5527B	2-A
R/W SHEET NO.	
ROADWAY DESIGN ENGINEER	PAVEMENT DESIGN ENGINEER

NORTH CAROLINA PROFESSIONAL SEAL 24980 ENGINEER REECE M. SCHULER 1/8/14

NORTH CAROLINA PROFESSIONAL SEAL 20134 ENGINEER ROBERT M. CRISP 1/8/14

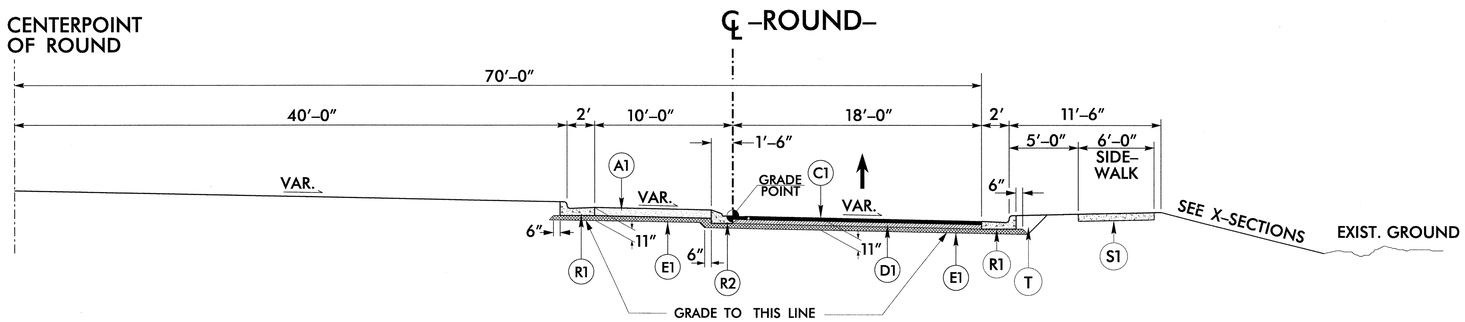

TYPICAL SECTION NO. 4

USE TYPICAL SECTION NO. 4

-ROUND- STA. 10+00.00 TO -ROUND- STA. 13+26.73

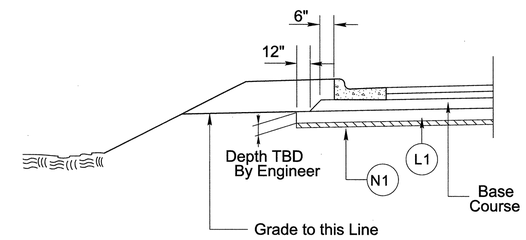

USE AGGREGATE SUBGRADE DETAIL

AT THE DISCRETION OF THE ENGINEER

* WIDTH VARIES FROM 11.8' TO 22.0' (-Y1- LT.)

** WIDTH VARIES FROM 12.0' TO 16.0' (-Y1- RT.)

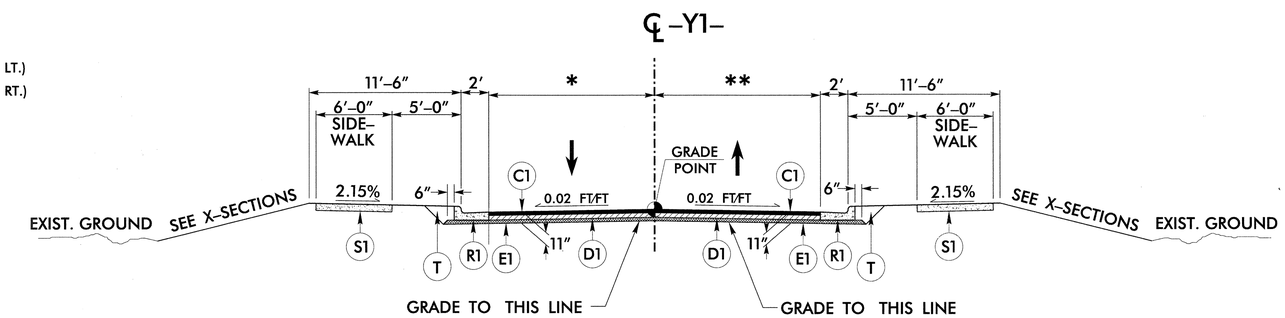

USE TYPICAL SECTION NO. 5

-Y1- STA. 11+05.00 TO STA. 12+38.47

TYPICAL SECTION NO. 5

* WIDTH VARIES FROM 13.4' TO 16.0' (-Y2- LT.)

** WIDTH VARIES FROM 13.3' TO 20.0' (-Y2- RT.)

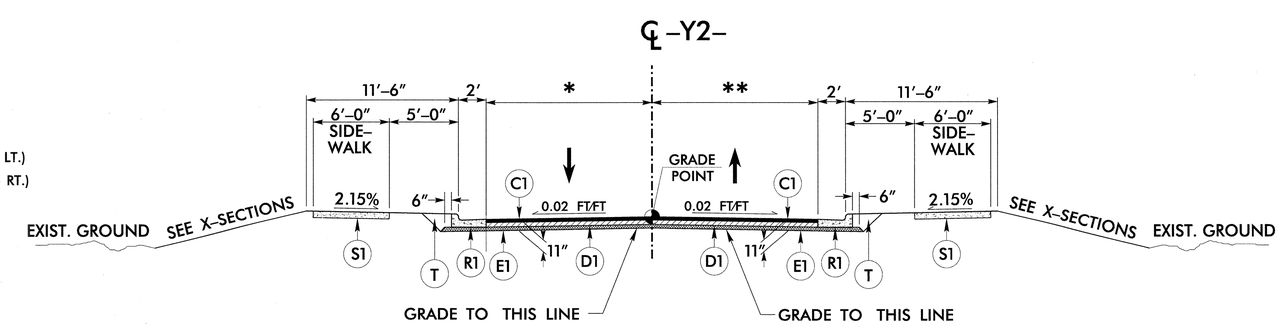

USE TYPICAL SECTION NO. 6

-Y2- STA. 10+00.00 TO STA. 11+10.00

TYPICAL SECTION NO. 6

	PAVEMENT SCHEDULE
A1	7" CONCRETE TRUCK APRON (4X4 W3.5 X W3.5 WELDED WIRE MESH)
C1	PROP. APPROX. 3" ASPHALT CONCRETE SURFACE COURSE, TYPE S9.5B, AT AN AVERAGE RATE OF 168 LBS. PER SQ. YD. IN EACH OF TWO 1½" LAYERS.
C2	PROP. APPROX. 1½" ASPHALT CONCRETE SURFACE COURSE, TYPE S9.5B, AT AN AVERAGE RATE OF 168 LBS. PER SQ. YD.
D1	PROP. APPROX. 4" ASPHALT CONCRETE INTERMEDIATE COURSE, TYPE I19.0B, AT AN AVERAGE RATE OF 456 LBS. PER SQ. YD.
E1	PROP. APPROX. 4" ASPHALT CONCRETE BASE COURSE, TYPE B25.0B, AT AN AVERAGE RATE OF 456 LBS. PER SQ. YD.
L1	CLASS IV SUBGRADE STABILIZATION
N1	GEOTEXTILE FOR SOIL STABILIZATION
R1	2'-6" CURB AND GUTTER NCDOT STANDARD. DRAWING NO. 846.01
R2	1'-6" CURB AND GUTTER NCDOT STANDARD. DRAWING NO. 846.01
S1	4" CONCRETE SIDEWALK
T	EARTH MATERIAL

NOTE: ALL PAVEMENT SLOPES ARE 1:1 UNLESS SHOWN OTHERWISE.

8/17/99

DATE: 1/8/2014
TIME: 3:02:22 PM

PROJECT REFERENCE NO.	SHEET NO.
R-5527B	2-B
R/W SHEET NO.	
ROADWAY DESIGN ENGINEER	HYDRAULICS ENGINEER

NORTH CAROLINA PROFESSIONAL SEAL 24360 ENGINEER REECE M. SCHULER 1/8/14

NORTH CAROLINA PROFESSIONAL SEAL 030453 ENGINEER JASON C. CRAWFORD 1/8/14

V&M
Vaughn & Melton
Consulting Engineers

Asheville, North Carolina 828-253-2796

Charlotte, North Carolina 704-357-0488
Tri-Cities, Tennessee 423-467-8401
Knoxville, Tennessee 865-546-5800
Middlesboro, Kentucky 606-248-6600
Spartanburg, South Carolina 864-574-4775

Copyright © 1994 Vaughn & Melton, Inc. All Rights Reserved

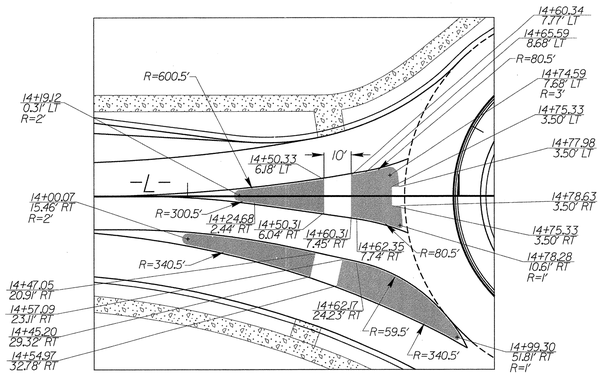

-L- ISLAND DETAIL
5" CONCRETE MONOLITHIC ISLAND - SURFACE MOUNTED

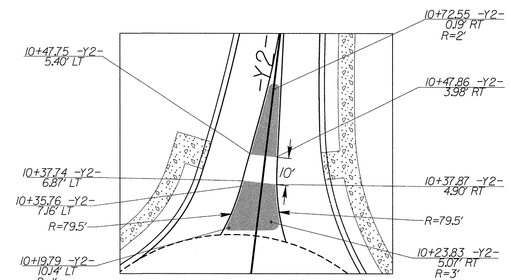

-Y2- ISLAND DETAIL
5" CONCRETE MONOLITHIC ISLAND - SURFACE MOUNTED

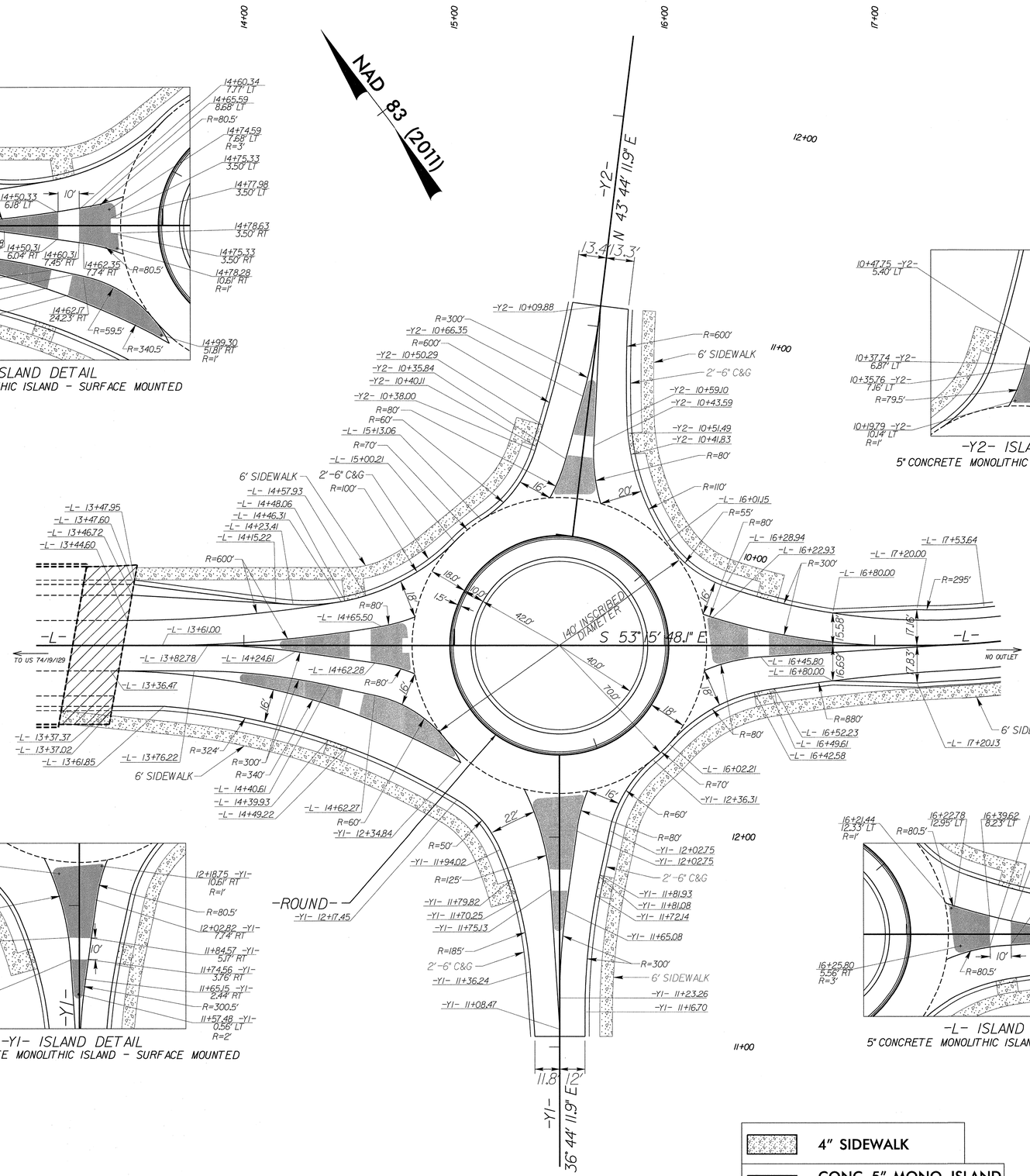

ROUNDABOUT DETAIL
NOT TO SCALE

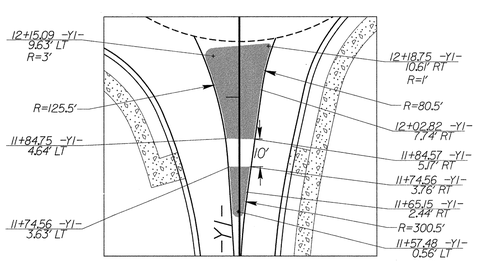

-Y1- ISLAND DETAIL
5" CONCRETE MONOLITHIC ISLAND - SURFACE MOUNTED

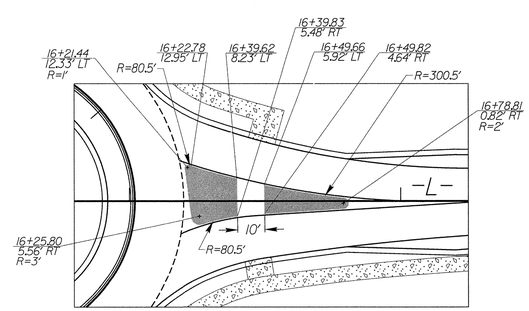

-L- ISLAND DETAIL
5" CONCRETE MONOLITHIC ISLAND - SURFACE MOUNTED

4" SIDEWALK

CONC. 5" MONO. ISLAND (SURFACE MOUNTED)

8/17/99

SYSTIME$$$$
SYSDUN$$$$
SYSNAME$$$$

PROJECT REFERENCE NO.	SHEET NO.
R-5527B	2-C
R/W SHEET NO.	
ROADWAY DESIGN ENGINEER	HYDRAULICS ENGINEER

NORTH CAROLINA PROFESSIONAL SEAL 26960 ENGINEER REECE M. SCHULER 1/8/14

NORTH CAROLINA PROFESSIONAL SEAL 030453 ENGINEER AARON C. CARVER 1/8/14

V&M Vaughn & Melton Consulting Engineers
Asheville, North Carolina 828-253-2796
Charlotte, North Carolina 704-357-0468
Tri-Cities, Tennessee 423-467-8408
Knoxville, Tennessee 865-546-5800
Middlesboro, Kentucky 606-248-6620
Spartanburg, South Carolina 864-574-4775

Copyright © 1994 Vaughn & Melton, Inc. All Rights Reserved

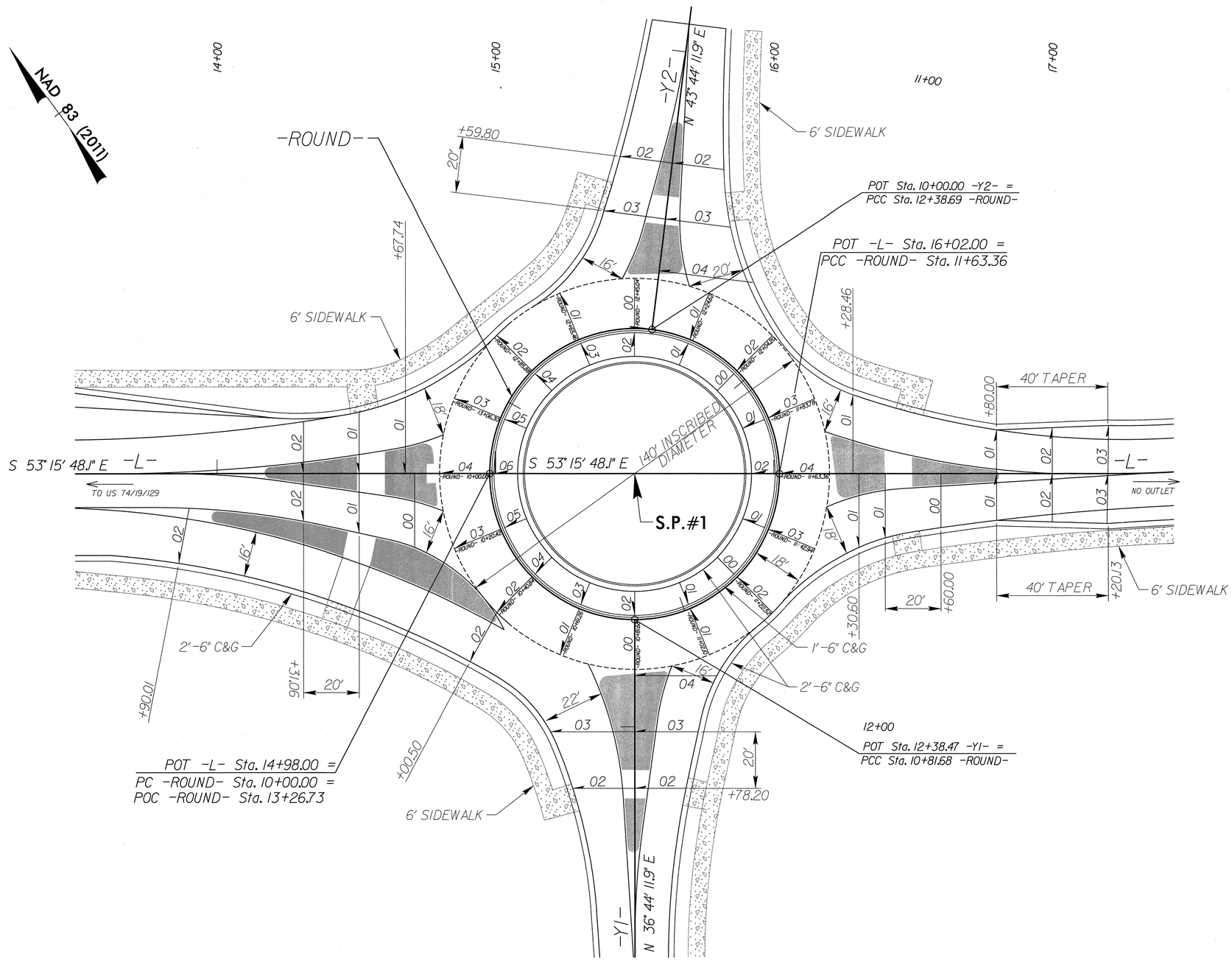

ROUNDABOUT CROSS SLOPE DETAIL

20 10 0 20 40

REVISIONS

8/17/99

$$$$$$SYSTIME$$$$$
$$$$$$$$$$$$$$$$DGN$$$$$$$$$$$$$$$$
$$$USERNAME$$$$

STATE OF
NORTH CAROLINA
DEPT. OF TRANSPORTATION
DIVISION OF HIGHWAYS
RALEIGH, N.C.

ENGLISH DETAIL DRAWING FOR
STRUCTURE ANCHOR UNITS
GUARDRAIL ANCHOR UNIT, TYPE III FOR ATTACHMENT TO
RAIL ON BRIDGE - SUB REGIONAL TIER

SHEET 2 OF 7
862d03

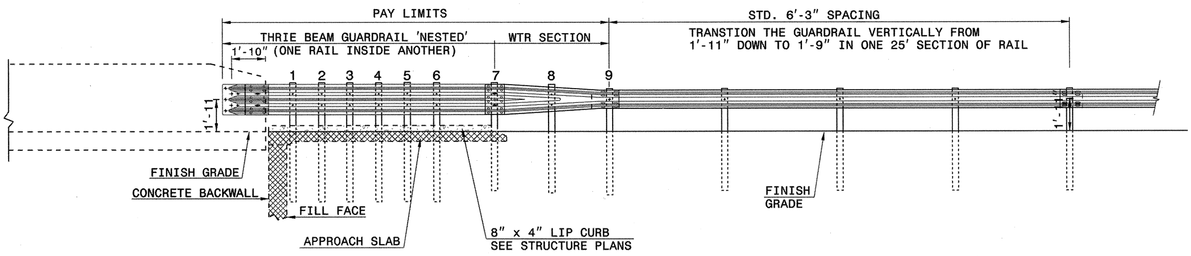

ELEVATION

NOTE:
**POST NOT REQUIRED FOR SKEW ANGLES GREATER THAN 150° OR LESS THAN 30° UNLESS OTHERWISE DIRECTED BY THE ENGINEER.
*THE DISTANCE FROM END OF BRIDGE RAIL TO CENTER LINE OF THE FIRST POST SHOULD BE 11½" IF CONCRETE BACKWALL IS NOT PRESENT.
-SHOULDER BERM GUTTER MUST BE INSTALLED TO THE LIMITS 8" x 4" LIP CURB IS SHOWN IF ANCHOR UNIT IS NOT ADJACENT TO AN APPROACH SLAB.
-MEASURE GUARDRAIL HEIGHT FROM THE TOP OF ADJACENT SURFACE (SHOULDER, BERM, OR GUTTER).
-LAP JOINTS IN THE DIRECTION OF TRAFFIC FLOW.
-SEE SHEET 5 FOR POST SECTIONS 1 THRU 9.

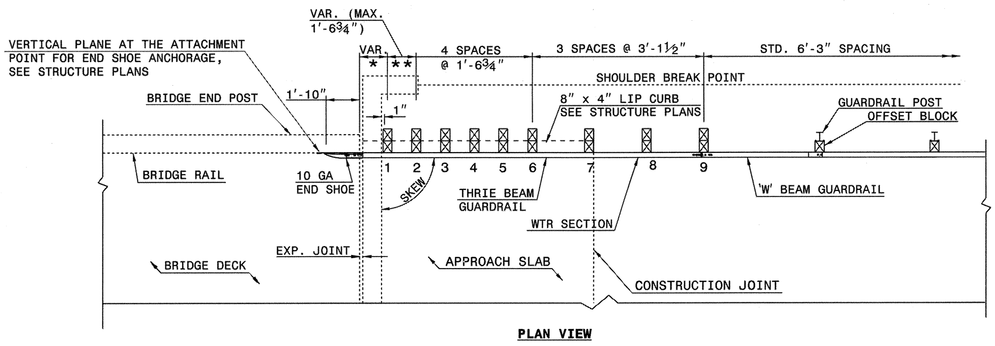

PLAN VIEW

GUARDRAIL ANCHOR UNIT, TYPE III FOR ATTACHMENT TO RAIL ON BRIDGE - SUB REGIONAL TIER

STATE OF
NORTH CAROLINA
DEPT. OF TRANSPORTATION
DIVISION OF HIGHWAYS
RALEIGH, N.C.

ENGLISH DETAIL DRAWING FOR
STRUCTURE ANCHOR UNITS
GUARDRAIL ANCHOR UNIT, TYPE III FOR ATTACHMENT TO
RAIL ON BRIDGE - SUB REGIONAL TIER

SHEET 2 OF 7
862d03

STATE OF
NORTH CAROLINA
DEPT. OF TRANSPORTATION
DIVISION OF HIGHWAYS
RALEIGH, N.C.

ENGLISH DETAIL DRAWING FOR
STRUCTURE ANCHOR UNITS
GUARDRAIL ANCHOR UNIT, TYPE III

SHEET 3 OF 7
862d03

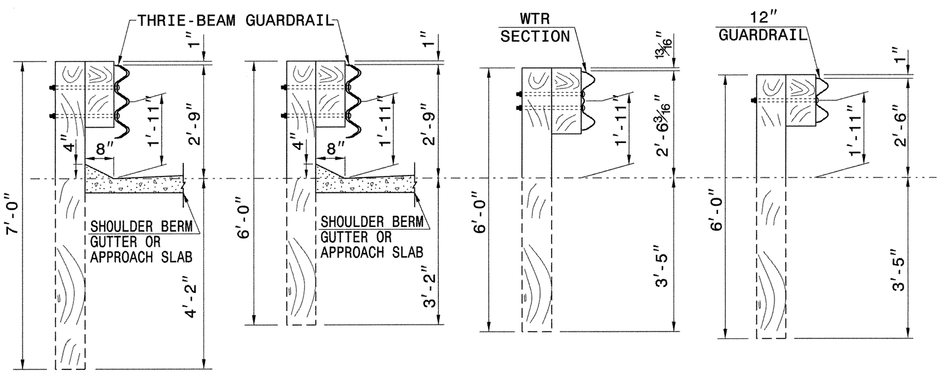

SECTION OF THRIE BEAM POSTS 1 THRU 6

SECTION OF THRIE BEAM POST 7

SECTION OF WTR BEAM POST 8

SECTION OF 'W' BEAM POST 9

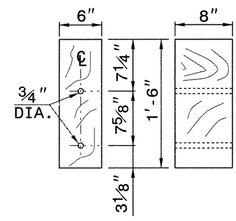

THRIE BEAM OFFSET BLOCK

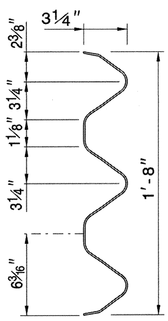

THRIE-BEAM SECTION

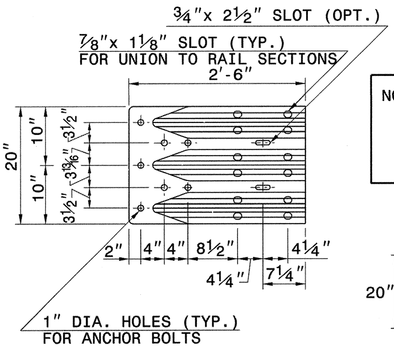

END SHOE

NOTE: THE MID POST AND OFFSET BLOCK OF THE WTR SECTION WILL REQUIRE SPECIAL BOLT HOLE DRILLING IN THE THRIE BEAM OFFSET BLOCK AND LINE POST.

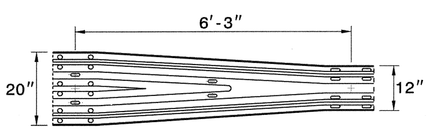

WTR SECTION
ELEVATION VIEW

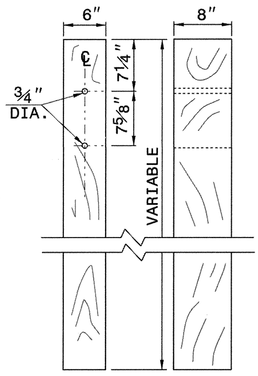

THRIE BEAM LINE POST

STATE OF
NORTH CAROLINA
DEPT. OF TRANSPORTATION
DIVISION OF HIGHWAYS
RALEIGH, N.C.

ENGLISH DETAIL DRAWING FOR
STRUCTURE ANCHOR UNITS
GUARDRAIL ANCHOR UNIT, TYPE III

SHEET 3 OF 7
862d03

CONTRACT STANDARDS AND DEVELOPMENT UNIT
Office 919-707-6950 FAX 919-250-4119

SEE TITLE BLOCK

ORIGINAL BY: J. HOWERTON DATE: 06-22-12
MODIFIED BY: DATE:
CHECKED BY: DATE:
FILE SPEC.:

NORTH CAROLINA PROFESSIONAL SEAL 022966 ENGINEER
JOHN D. HOWERTON
1/3/14

PROJECT REFERENCE NO. R-5527B
SHEET NO. 2D

STATE OF
NORTH CAROLINA
DEPT. OF TRANSPORTATION
DIVISION OF HIGHWAYS
RALEIGH, N.C.

ENGLISH DETAIL DRAWING FOR

TYPE III - SHOP CURVED
STRUCTURE ANCHOR UNIT

SHEET 1 OF 1

TYPE III SC

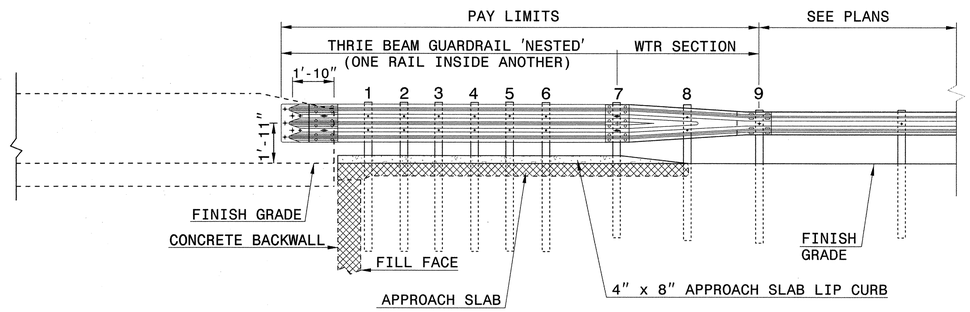

ELEVATION

SEE ROADWAY PLANS FOR END TREATMENT

NOTE:
- **POST NOT REQUIRED FOR SKEW ANGLES GREATER THAN 150° OR LESS THAN 30° UNLESS OTHERWISE DIRECTED BY THE ENGINEER.
- *THE DISTANCE FROM END OF BRIDGE RAIL TO CENTER LINE OF THE FIRST POST SHOULD BE 11½" IF CONCRETE BACKWALL IS NOT PRESENT.
- -SHOULDER BERM GUTTER MUST BE INSTALLED TO THE LIMITS 8" x 4" LIP CURB IS SHOWN IF ANCHOR UNIT IS NOT ADJACENT TO AN APPROACH SLAB.
- -MEASURE GUARDRAIL HEIGHT FROM THE TOP OF ADJACENT SURFACE (SHOULDER, BERM, OR GUTTER).
- -USE NO STEEL POSTS WITHIN THE GUARDRAIL ANCHOR UNIT LIMITS.
- -LAP JOINTS IN THE DIRECTION OF TRAFFIC FLOW.
- -SEE STANDARD 862.03 SHEET 4 FOR POST SECTIONS 1 THRU 9.

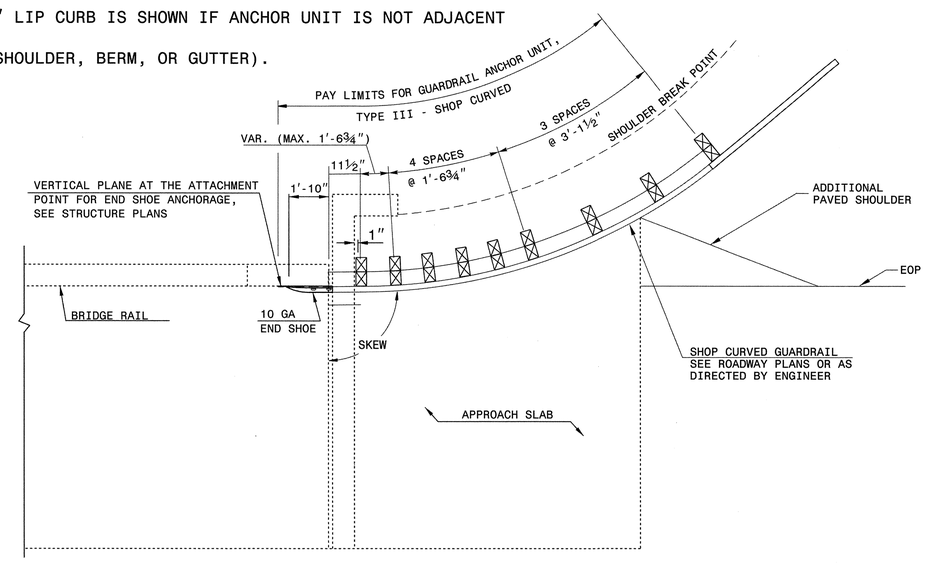

PLAN VIEW

GUARDRAIL ANCHOR UNIT, TYPE III - SHOP CURVED FOR ATTACHMENT TO RAIL ON BRIDGE

STATE OF
NORTH CAROLINA
DEPT. OF TRANSPORTATION
DIVISION OF HIGHWAYS
RALEIGH, N.C.

ENGLISH DETAIL DRAWING FOR

TYPE III - SHOP CURVED
STRUCTURE ANCHOR UNIT

SHEET 1 OF 1

TYPE III SC

NORTH CAROLINA PROFESSIONAL SEAL 022966 ENGINEER JOEL S. HONEYCUTT
11/13/14

CONTRACT STANDARDS AND DEVELOPMENT UNIT
Office 919-707-6950 FAX 919-250-4119

SEE PLATE FOR TITLE

ORIGINAL BY: E.E.Ward DATE: 4-4-02
MODIFIED BY: T.S.Spell DATE: 5-29-09
CHECKED BY: DATE:
FILE SPEC.: ward:\usr\details\stand\862stds\typeiiisc.dgn

$$$$SYSTIME$$$$
$$$$DGN$$$$
$$$$USERNAME$$$$

PROJECT REFERENCE NO.	SHEET NO.
R-5527B	2-F

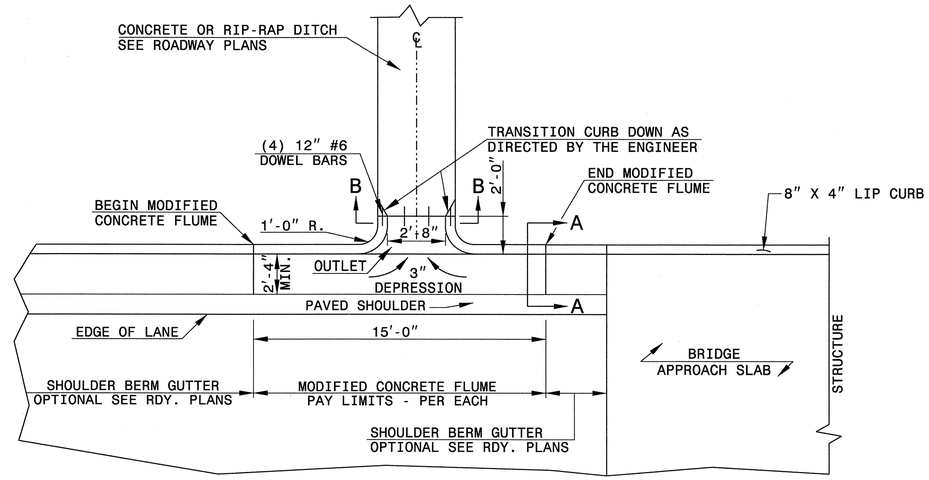

PLAN VIEW

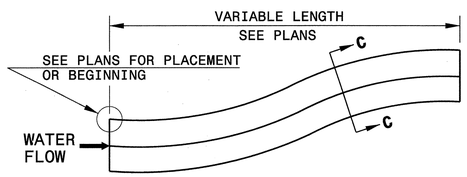

DOWNGRADE OR SAG

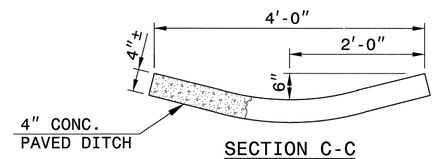

SECTION C-C

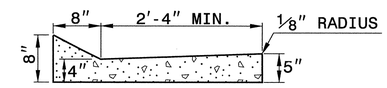

SECTION A-A

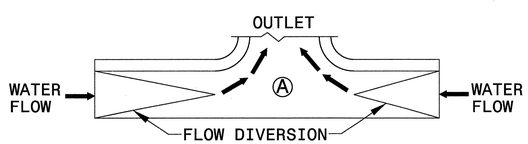

SAG

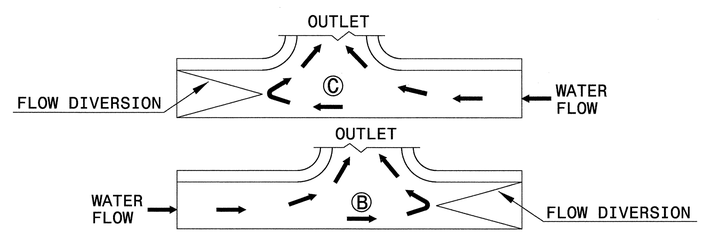

DOWN GRADE

FLOW DIVERSION EXAMPLES

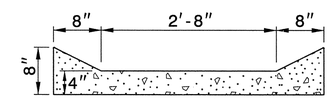

SECTION B-B

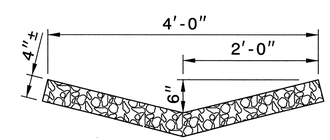

RIP-RAP LINED DITCH

NOTES:

- CONSTRUCT MODIFIED CONCRETE FLUME AND SHOULDER BERM GUTTER IN ACCORDANCE WITH THIS DETAIL.
- CONSTRUCT CONCRETE DITCH IN ACCORDANCE WITH STD. DWG. NO. 850.01.
- CONSTRUCT RIP RAP LINED DITCH IN ACCORDANCE WITH THIS DETAIL, IF CALLED FOR IN PLANS.
- CONCRETE OR RIP RAP LINED DITCH SHALL BE THE TYPE AND LENGTH SPECIFIED BY THE ROADWAY PLANS. THE DITCH SHALL TERMINATE AS SHOWN ON THE PLANS. IF NO TERMINATION IS INDICATED PLACE RIP-RAP AT THE END OF THE DITCH AS INDICATED BY STD. DWG. 876.02 FOR AN 18" PIPE. TRANSITIONS FROM THE DITCH TO TERMINATION SHALL BE AS DIRECTED BY THE ENGINEER.
- MODIFICATIONS SHALL BE AS DICTATED BY SITE CONDITIONS AND DIRECTED BY THE ENGINEER.

MODIFIED CONCRETE FLUME

NORTH CAROLINA PROFESSIONAL SEAL 022966 ENGINEER
11/13/14

8/17/99

REVISIONS

PROJECT REFERENCE NO.	SHEET NO.
R-5527B	2-G
R/W SHEET NO.	

HYDRAULICS ENGINEER

NORTH CAROLINA PROFESSIONAL SEAL 030453 ENGINEER AARON C. CARTER

1/8/14

RIP-RAPPED ENERGY DISSIPATOR BASIN

*NOTE A: IF EXIT VELOCITY OF BASIN IS SPECIFIED, EXTEND BASIN AS REQUIRED TO OBTAIN SUFFICIENT CROSS SECTIONAL AREA AT SECTION A-A SUCH THAT Q des/(CROSS SECTION AREA AT SEC. A-A) = SPECIFIED VELOCITY.

*NOTE B: WARP BASIN TO CONFORM TO NATURAL STREAM CHANNEL. TOP OF RIP-RAP IN FLOOR OF BASIN SHOULD BE AT SAME ELEVATION OR LOWER THAN NATURAL CHANNEL BOTTOM AT SEC. A-A. PROVIDE SMOOTH TRANSITION FROM END OF APRON TO NATURAL CHANNEL WIDTH.

℄ SECTION

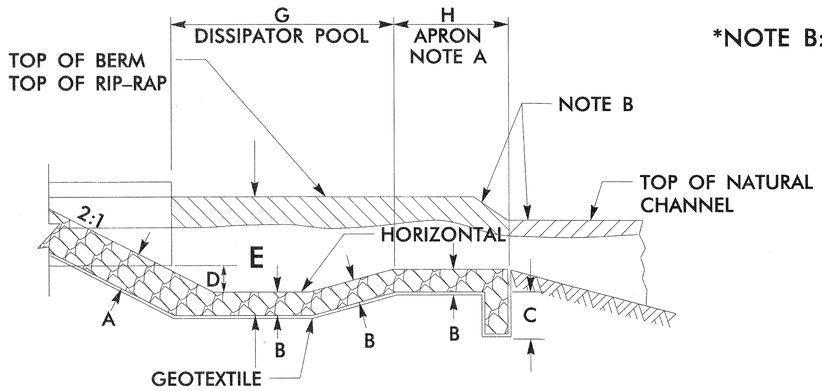

HALF PLAN

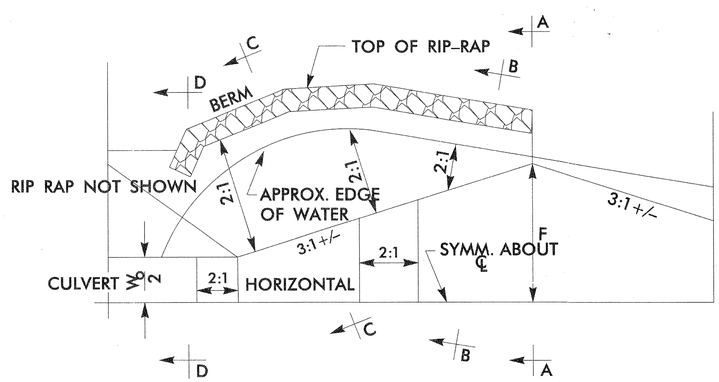

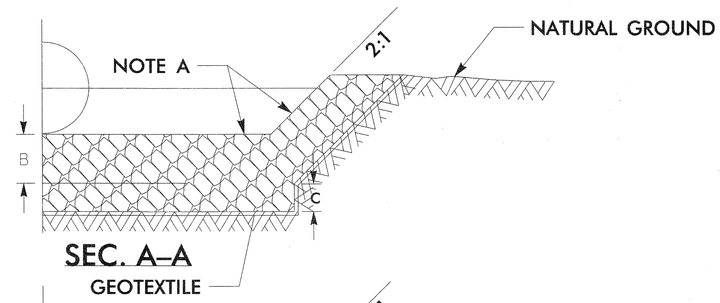

SEC. A-A

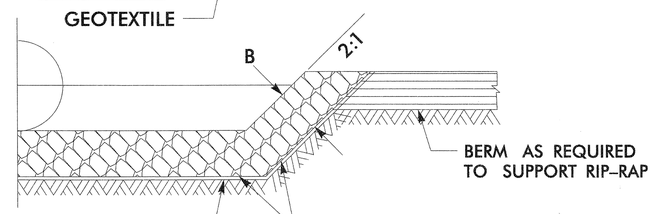

SEC. B-B

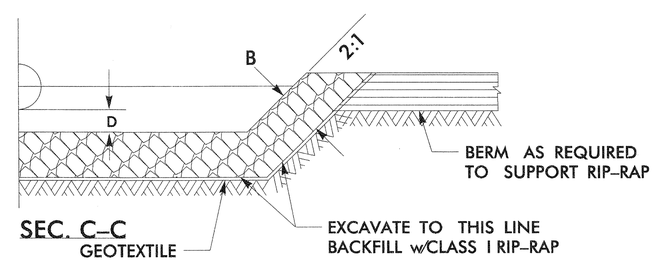

SEC. C-C

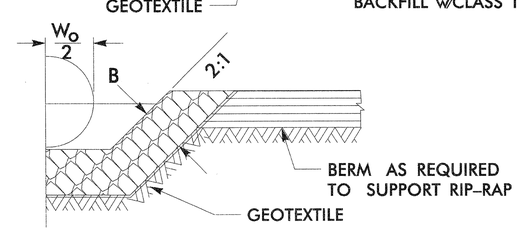

SEC. D-D

NOTE:
Wo = DIAMETER OF PIPE, WIDTH OF BOX OR SPAN OF PIPE-ARCH CULVERTS

DIM.	RIP RAP BASIN #							
	1	2	3	4	5	6	7	8
A	3′							
B	3′							
C	3′							
D	2′							
E	7′							
F	10′							
G	17′							
H	9′							

BASIN #	LOCATION (AT OUTLET)
1	
2	
3	
4	
5	
6	
7	
8	

Type of Liner = Est. 140 Tons Class I Rip-Rap
Est. 100 S.Y. Geotextile
Est. 150 C.Y. Unclassified Excavation

5/05

$$$$SYSTIME$$$$
$$$$DGN$$$$
$$$$USERNAME$$$$

PROJECT REFERENCE NO.	SHEET NO.
R-5527B	2-H

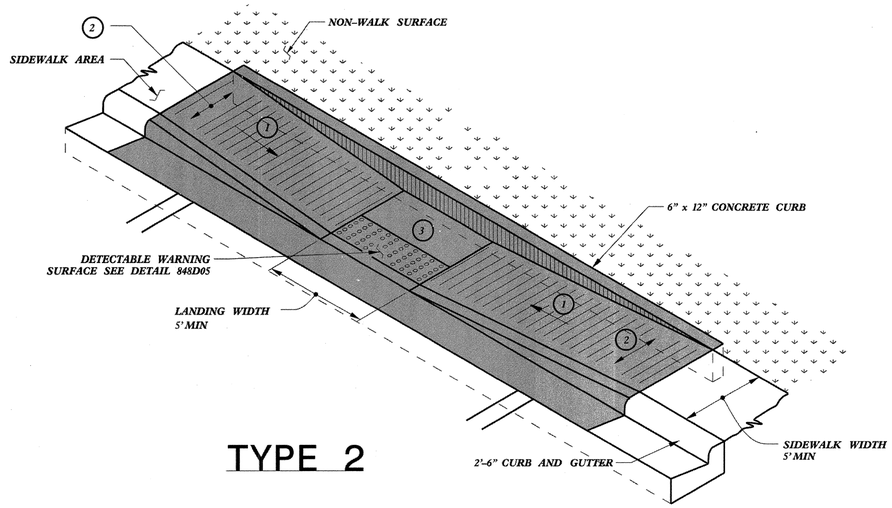

TYPE 2

PAY LIMITS FOR CURB RAMP

1. 8.33% (12:1) MAX RAMP SLOPE
2. CROSS SLOPE: 2.00%
3. CURB RAMPS REQUIRE A (4'-0") MINIMUM LANDING WITH A MAXIMUM CROSS SLOPE AND LONGITUDINAL SLOPE OF 2.00% WHERE PEDESTRIANS PERFORM TURNING MANEUVERS. SLOPE TO DRAIN TO CURB.

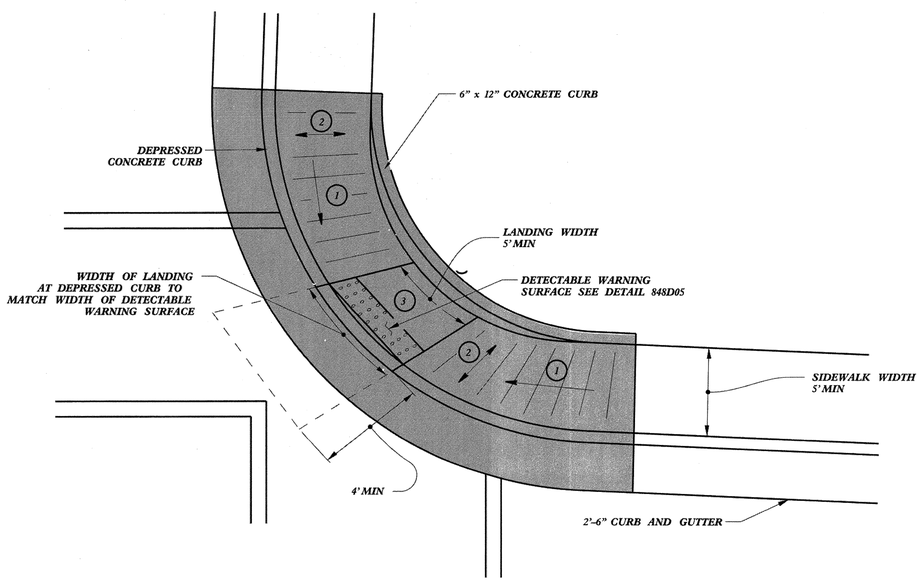

TYPE 2A

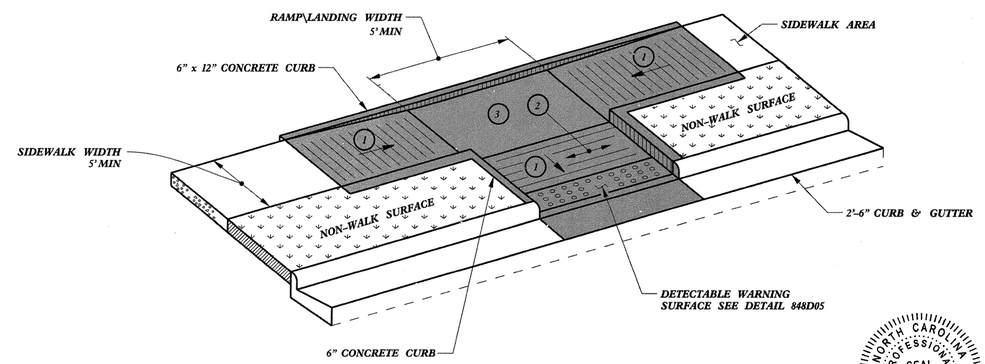

TYPE 3

NORTH CAROLINA PROFESSIONAL SEAL 022966 ENGINEER JOSE S. HOWERTON III
1/3/14

REFER TO ROADWAY STANDARD DRAWING NUMBER 848.05 SHEET 3 OF 3 FOR ALL RAMP NOTES

CONTRACT STANDARDS AND DEVELOPMENT UNIT
Office 919-707-6950 FAX 919-250-4119

CURB RAMPS

Parallel Ramps

ORIGINAL BY: J.S. HOWERTON DATE: 7/7/11
MODIFIED BY: DATE:
CHECKED BY: DATE:
FILE SPEC.: stds/2012CurbRamp/CurbRampDetails.dgn

5/14/99

22-MAR-2012 15:07
S:\Contracts\Contracts\Special Details\jhowerton\Standard Drawings\2012 Standard Drawings\2012 Curb Ramp Special Details\Curb Ramp Details.dgn
jhowerton
AT CSD237501

COMPUTED BY: WCC DATE: 10-21-13
CHECKED BY: RMS DATE: 10-21-13

PROJECT REFERENCE NO.	SHEET NO.
R-5527B	3

STATE OF NORTH CAROLINA
DIVISION OF HIGHWAYS

"N" = DISTANCE FROM EDGE OF LANE TO FACE OF GUARDRAIL.
TOTAL SHOULDER WIDTH = DISTANCE FROM EDGE OF TRAVEL LANE TO SHOULDER BREAK POINT.
FLARE LENGTH = DISTANCE FROM LAST SECTION OF PARALLEL GUARDRAIL TO END OF GUARDRAIL.
W = TOTAL WIDTH OF FLARE FROM BEGINNING OF TAPER TO END OF GUARDRAIL.
G = GATING IMPACT ATTENUATOR TYPE 350
NG = NON-GATING IMPACT ATTENUATOR TYPE 350

GUARDRAIL SUMMARY

SURVEY LINE	BEG. STA.	END STA.	LOCATION	LENGTH			WARRANT POINT		"N" DIST. FROM E.O.L.	TOTAL SHOULDER WIDTH	FLARE LENGTH		W		ANCHORS								IMPACT ATTENUATOR TYPE 350			REMOVE EXISTING GUARDRAIL			REMARKS
				STRAIGHT	SHOP CURVED	DOUBLE FACED	APPROACH END	TRAILING END			APPROACH END	TRAILING END	APPROACH END	TRAILING END	GRAU 350	TYPE III	TYPE III (SHOP CURVED)	CAT-1					NO.	PERMITTED G	PERMITTED NG				
-Y-	27+35.78	-L- 11+13.84	RT.	262.5	68.75			-L- 11+13.84	4'	7'							1									94			
-L-	13+25.11	14+43.85	LT.	118.75				13+25.16	4'	7'	50				1	1													
-L-	25+25.01	37+75.24	LT.	1150	162.5				4'	7'	50	50	1	1	2														
-L-	33+24.06	38+11.30	RT.	456.25					4'	7'	50	50	1	1	1			1											
			SUBTOTAL	1987.5	231.25			TOTALS							4	1	1	1								94			
	LESS ANCHOR DEDUCTIONS																												
			GRAU-350 5 @ 50'	-200																									
			TYPE III 1 @ 18.75'	-18.75																									
			TYPE III (SHOP CURVED) 1 @ 18.75'		-18.75																								
			CAT-1 1 @ 6.25'	-6.25																									
			SUBTOTAL	1762.5	212.5																								
			PROJECT TOTAL	1800	212.5																								
	ADDITIONAL GUARDRAIL POSTS = 5 EACH																												

PARCEL INDEX

PARCEL NUMBER	SHEET NUMBER	PROPERTY OWNER NAME
1	4-6	Hubert Wells, Jonathan Wells & Brian Wells
2	5	Timothy L. & Lori Nicholson
3	5-6	Walter Leon Tatham

6/16/99
$$$$SYSTIME$$$$
$$$$LENGUN$$$$

AARON2011-PC

COMPUTED BY:	BR	DATE:	12/19/13
CHECKED BY:	ACC	DATE:	12/19/13

NORTH CAROLINA DEPARTMENT OF TRANSPORTATION
DIVISION OF HIGHWAYS

PROJECT NO.	SHEET NO.
R-5527B	3-A

Note: Invert Elevations indicated are for Bid Purposes only and shall not be used for project construction stakeout.
See "Standard Specifications For Roads and Structures, Section 300-5".

LIST OF PIPES, ENDWALLS, ETC. (FOR PIPES 48 INCHES & UNDER)

LINE & STATION (SIZE / THICKNESS OR GAUGE)	OFFSET	STRUCTURE NUMBER FROM	STRUCTURE NUMBER TO	TOP ELEVATION FT.	INVERT ELEVATION FT.	INVERT ELEVATION FT.	MINIMUM REQUIRED SLOPE %
L 10+85		0401					
L 12+76	47 LT	0402		1550.0			
L 13+55	47 LT	0403		1585.3			
		0403	0402		1577.1	1547.0	5.6
L 13+55	31 RT	0404		1582.4			
		0404	0403		1579.2	1578.3	
L 14+81	64 RT	0405		1587.5			
		0405	0404		1584.4	1579.2	
L 14+91	43 LT	0406		1588.5			
		0406	0403		1583.2	1577.1	1.3
L 14+77	CL	0407		1587.9			
		0407	0406		1584.7	1584.5	
L 15+35	89 LT	0408		1589.8			
		0408	0406		1585.4	1583.2	1.2
L 15+88	84 LT	0409		1591.4			
		0409	0408		1587.0	1585.4	1.2
Y1 11+11	14 LT	0410		1588.2			
		0410	0411		1585.1	1585.0	
L 16+27	31 LT	0412		1593.6			
		0412	0409		1589.1	1587.0	1.2
L 16+82	19 LT	0412A		1595.9			
		0412A	0412		1591.5	1589.1	
L 17+61	19 LT	0413		1600.9			
		0413	412A		1596.4	1591.5	1.2
L 18+33	19 LT	0413A		1606.3			
		0413A	0413		1601.9	1596.4	
L 19+00	19 LT	0414		1611.7			
		0414	413A		1607.2	1601.9	1.1
L 19+10	28 RT	0415		1613.5			
		0415	0414A		1610.1	1610.0	0.8
L 19+10	19 RT	0414A		1614.6			
		0414A	0414		1610.0	1608.2	
L 20+18	19 LT	0501A		1621.7			
		0501A	0414		1617.3	1607.2	
L 20+98	19 LT	0501B		1628.7			
		0501B	0501A		1623.3	1617.3	
L 21+00	19 RT	0501		1628.5			
		0501	0501B		1623.5	1623.3	0.6
L 21+00	28 RT	0502		1628.3			
		0502	0501		1624.5	1624.4	
L 22+00	28 RT	0503A		1635.4			
		0503A	0503		1632.0	1631.9	
L 22+00	19 RT	0503		1635.7			
		0503	0501		1631.0	1623.5	0.5
L 23+25	28 RT	0504A		1645.5			
		0504A	0504		1642.0	1641.7	
L 23+25	19 RT	0504		1645.7			
		0504	0503		1641.2	1631.5	1.2
SHEET TOTALS							

FROM	TO	Drainage Pipe (RCP, CSP, CAAP, HDPE, or PVC) 12	15	18	24	30	36	42	48	DO NOT USE RCP	DO NOT USE CSP	DO NOT USE CAAP	DO NOT USE HDPE	DO NOT USE PVC	C. S. PIPE (SE: SHOP ELONGATED) 12 .064	15 .064	18 .064	24 .064		30 .138			36 .079			42 .109	48 .109	R. C. PIPE CLASS III 12	15	18	24	30	36	42	48	15" SIDE DRAIN PIPE	18" SIDE DRAIN PIPE	24" SIDE DRAIN PIPE	
0401																																							
0402																																							
0403																																							
0403	0402																			72																			
0404																																							
0404	0403																												80										
0405																																							
0405	0404																												132										
0406																																							
0406	0403																															140							
0407																																							
0407	0406																												48										
0408																																							
0408	0406																															64							
0409																																							
0409	0408																															56							
0410																																							
0410	0411																												12										
0412																																							
0412	0409																															68							
0412A																																							
0412A	0412																															56							
0413																																							
0413	412A																															76							
0413A																																							
0413A	0413																															68							
0414																																							
0414	413A																															60							
0415																																							
0415	0414A																													8									
0414A																																							
0414A	0414																													36									
0501A																																							
0501A	0414																															108							
0501B																																							
0501B	0501A																															76							
0501																																							
0501	0501B																															36							
0502																																							
0502	0501																													8									
0503A																																							
0503A	0503																													8									
0503																																							
0503	0501																															96							
0504A																																							
0504A	0504																													8									
0504																																							
0504	0503																														116								
SHEET TOTALS																				72									272	68	116	904							

FROM	TO	ENDWALLS STD. 838.01 OR STD. 838.11 (UNLESS NOTED OTHERWISE) CY	REINFORCED ENDWALLS CY	DRAINAGE STRUCTURE MASONRY CY	QUANTITIES FOR DRAINAGE STRUCTURES (NOTE: TOTAL LIN. FT. FOR PAY QUANTITY SHALL BE A + (1.3 X B)) 0' THRU 5' EACH	A 5' THRU 10' LIN. FT.	B 10' AND ABOVE LIN. FT.	C.B. STD. 840.01 OR STD. 840.02	FRAME, GRATES, AND HOOD STD. 840.03 GRATE TYPE E	F	G	D.I. STD. 852.04 OR STD. 852.06 (CONCRETE TRANSITIONAL)	OPEN THROAT C.B. STD. 840.04 OR STD. 840.05	D.I. STD. 840.14 OR STD. 840.15	D.I. FRAME AND GRATES STD. 840.16	G.D.I. TYPE "A" STD. 840.17 OR STD. 840.26	G.D.I. TYPE "B" STD. 840.18 OR STD. 840.27	G.D.I. (N.S. SAG) FRAME W/ 2 GRATES STD. 840.24	G.D.I. (N.S. FLAT) FRAME W/ GRATE STD. 840.29	DRIVEWAY D.I. STD. 840.30	FRAME W/ GRATE FOR DRIVEWAY STD. 840.30	J.B. STD. 840.31 OR STD. 840.32		SPRING BOX STD. 840.41			M.H. FRAME AND COVER STD. 840.54	30" C.S. ELBOW (.138)	MODIFIED CONC. FLUME	PREFORMED SCOUR HOLE (PER EACH)	ENERGY DISSIPATION BASIN	PIPE REMOVAL LIN. FT.	REMARKS
0401																													1				SEE DETAIL SHEET 2-E
0402																															1		SEE DETAIL SHEET 2-G
0403					1	3.2																1					1						
0403	0402																											2					
0404					1			1			1																						
0404	0403																																
0405					1			1			1																						
0405	0404																																
0406					1	0.3		1		1																							
0406	0403																																
0407					1							1		1	1																		SEE ISLAND DETAIL ON SHEET 2-B FOR TRANS. SECT.
0407	0406																																
0408					1			1			1																						
0408	0406																																
0409					1			1		1																							
0409	0408																																
0410					1			1		1																							
0410	0411																																
0412					1			1		1																							
0412	0409																																
0412A					1			1		1																							
0412A	0412																																
0413					1			1		1																							
0413	412A																																
0413A					1			1		1																							
0413A	0413																																
0414					1			1		1																							
0414	413A																																
0415					1												1	1															
0415	0414A																																
0414A					1			1			1																						
0414A	0414																																
0501A					1			1		1																							
0501A	0414																																
0501B					1			1		1																							
0501B	0501A																																
0501					1			1			1																						
0501	0501B																																
0502					1												1	1															
0502	0501																																
0503A					1												1	1															
0503A	0503																																
0503					1			1			1																						
0503	0501																																
0504A					1												1	1															
0504A	0504																																
0504					1			1			1																						
0504	0503																																
SHEET TOTALS					23	3.5		17		10	7	1		1	1		4	4				1					1	2	1		1		

ABBREVIATIONS

C.A.A.	CORRUGATED ALUMINIUM ALLOY
C.B.	CATCH BASIN
C.S.	CORRUGATED STEEL
D.I.	DROP INLET
G.D.I.	GRATED DROP INLET
H.D.P.E.	HIGH DENSITY POLYETHYLENE
J.B.	JUNCTION BOX
M.H.	MANHOLE
N.S.	NARROW SLOT
P.V.C.	POLYVINYL CHLORIDE
R.C.	REINFORCED CONCRETE
T.B.D.I.	TRAFFIC BEARING DROP INLET
T.B.J.B.	TRAFFIC BEARING JUNCTION BOX
W.S.	WIDE SLOT

AARON2011-PC

COMPUTED BY: BR DATE: 12/19/13

CHECKED BY: ACC DATE: 12/19/13

PROJECT NO.	SHEET NO.
R-5527B	3-B

NORTH CAROLINA DEPARTMENT OF TRANSPORTATION
DIVISION OF HIGHWAYS

Note: Invert Elevations indicated are for Bid Purposes only and shall not be used for project construction stakeout. See "Standard Specifications For Roads and Structures, Section 300-5".

LIST OF PIPES, ENDWALLS, ETC. (FOR PIPES 48 INCHES & UNDER)

LINE & STATION / SIZE / THICKNESS OR GAUGE	OFFSET	STRUCTURE NUMBER FROM	TO	TOP ELEVATION FT.	INVERT ELEVATION FT.	INVERT ELEVATION FT.	MINIMUM REQUIRED SLOPE %	Drainage Pipe (RCP, CSP, CAAP, HDPE, or PVC) 12	15	18	24	30	36	42	48	DO NOT USE RCP	DO NOT USE CSP	DO NOT USE CAAP	DO NOT USE HDPE	DO NOT USE PVC	C. S. PIPE (SE: SHOP ELONGATED) 12 .064	15 .064	18 .064	24 .064		30 .138			36 .079			42 .109	48 .109	R. C. PIPE CLASS III 12	15	18	24	30	36	42	48	15" SIDE DRAIN PIPE	18" SIDE DRAIN PIPE	24" SIDE DRAIN PIPE		ENDWALLS STD. 838.01 OR STD. 838.11 (UNLESS NOTED OTHERWISE) CY	REINFORCED ENDWALLS CY	DRAINAGE STRUCTURE MASONRY CY	QUANTITIES FOR DRAINAGE STRUCTURES (NOTE: TOTAL LIN. FT. FOR PAY QUANTITY SHALL BE A + (1.3 X B)) 0' THRU 5' EACH	A 5' THRU 10' LIN. FT.	B 10' AND ABOVE LIN. FT.	C.B. STD. 840.01 OR STD. 840.02	FRAME, GRATES, AND HOOD STD. 840.03 GRATE TYPE E	F	G	CONCRETE TRANSITIONAL D.I. STD. 852.04 OR STD. 852.06	OPEN THROAT C.B. STD. 840.04 OR STD. 840.05	D.I. STD. 840.14 OR STD. 840.15	D.I. FRAME AND GRATES STD. 840.16	G.D.I. TYPE "A" STD. 840.17 OR STD. 840.26	G.D.I. TYPE "B" STD. 840.18 OR STD. 840.27	G.D.I. (N.S. SAG) FRAME W/ 2 GRATES STD. 840.24	G.D.I. (N.S. FLAT) FRAME W/ GRATE STD. 840.29	DRIVEWAY D.I. STD. 840.30	FRAME W/ GRATE FOR DRIVEWAY STD. 840.30	J.B. STD. 840.31 OR STD. 840.32		SPRING BOX STD. 840.41			M.H. FRAME AND COVER STD. 840.54	30" C.S. ELBOW (.138)	MODIFIED CONC. FLUME	PREFORMED SCOUR HOLE (PER EACH)	ENERGY DISSIPATION BASIN	PIPE REMOVAL LIN. FT.	REMARKS
L 24+50	28 RT	0505		1655.4																																													1												1	1															
		0505	0506		1652.0	1651.9																														8																																										
L 24+50	19 RT	0506		1655.6																																													1			1			1																						
		0506	0504		1651.4	1641.2																															116																																								
L 24+68	19 LT	0507		1659.2																																													1			1		1																							
		0507	0506		1655.3	1651.4	0.4																														40																																								
L 26+15	19 LT	0508		1670.4																																													1	2.9		1		1																							
		0508	0507		1662.5	1655.3	0.4																														152																																								
L 27+10	19 LT	0508A		1673.5																																													1			1		1																							
		0508A	0508		1662.9	1662.5																															72																																								
L 27+88	19 LT	0509		1675.4																																													1	5.0	2.2	1		1																							
		0509	508A		1663.2	1662.9	0.4																														72																																								
L 28+75	19 LT	0509A		1675.1																																													1			1			1																						
		0509A	0509		1664.2	1663.7																														80																																									
L 27+88	48 RT	0510		1669.6																																																																										
		0510	0510A		1665.6	1665.4																														28																																									
L 27+88	19 RT	0510A		1677.4																																													1			1			1																						
		0510A	0509		1665.4	1663.7																														36																																									
L 29+67	19 LT	0511		1673.6																																													1	3.5		1			1																						
		0511	509A		1665.1	1664.4																													84																																										
L 30+90	19 LT	0511A		1672.2																																													1			1			1																						
		0511A	0511		1666.0	1665.1																													116																																										
L 30+51	CL	0512	OUT						80																																								1																			1									
L 32+15	19 LT	0513		1670.3																																													1			1			1																						
		0513	0511A		1666.6	1665.9																													120																																										
L 32+51	19 LT	0514		1670.2																																													1			1	1																								
		0514	0513		1666.8	1666.6	0.4																												36																																										
L 32+50	19 RT	0515		1670.2																																													1			1	1																								
		0515	0514		1667.0	1666.8	0.4																												36																																										
L 32+87	19 RT	0516		1670.3																																													1			1			1																						
		0516	0515		1667.1	1667.0	0.3																												40																																										
L 32+87	28 RT	0517		1675.9																																													1	3.7											1	1															
		0517	0516		1667.2	1667.1																													8																																										
L 34+19	19 RT	0602		1672.4																																													1			1			1																						
		0602	0516		1669.2	1667.1																													132																																										
L 34+37	CL	0603	0604																								256																																													1					
L 37+25	19 RT	0605		1663.8																																													1			1			1																						
		0605	0606		1659.9	1659.6																															60																																								
SHEET TOTALS									80																		256									572	152	512													18	15.1	2.2	15	2	4	9						2	2						1				1					
PROJECT TOTALS									80																		328									844	220	628	904												41	21.5		32	2	14	16	1		1	1		6	6				1		1			1	3	1		1		

ABBREVIATIONS

C.A.A.	CORRUGATED ALUMINIUM ALLOY
C.B.	CATCH BASIN
C.S.	CORRUGATED STEEL
D.I.	DROP INLET
G.D.I.	GRATED DROP INLET
H.D.P.E.	HIGH DENSITY POLYETHYLENE
J.B.	JUNCTION BOX
M.H.	MANHOLE
N.S.	NARROW SLOT
P.V.C.	POLYVINYL CHLORIDE
R.C.	REINFORCED CONCRETE
T.B.D.I.	TRAFFIC BEARING DROP INLET
T.B.J.B.	TRAFFIC BEARING JUNCTION BOX
W.S.	WIDE SLOT

COMPUTED BY: WCC	DATE: 11-25-13
CHECKED BY: RMS	DATE: 11-26-13

PROJECT REFERENCE NO.	SHEET NO.
R-5527B	3-C

DIVISION OF HIGHWAYS
STATE OF NORTH CAROLINA

SUMMARY OF EARTHWORK

IN CUBIC YARDS

LOCATION	UNCLASSIFIED EXCAVATION	UNDERCUT	EMBT+%	BORROW	WASTE
SUMMARY NO.1					
-L- STA. 10+56.28 TO STA. 10+96.52 (BEG. BRIDGE)	113		0		113
-Y- STA. 27+00 TO STA. 30+00	73		133	60	
SUBTOTAL SUMMARY NO.1	186		133	60	113
SUMMARY NO.2					
-L- STA. 13+42.48 TO STA. 38+06.67	264,779	3,800	98,017		170,562
-Y1- STA. 11+05 TO STA. 12+38.47	0		826	826	
-ROUND- STA. 10+00 TO STA. 13+26.73	0		5,663	5,663	
-Y2- STA. 10+50 TO STA. 11+10	0		945	945	
SUBTOTAL SUMMARY NO.2	264,779	3,800	105,451	7,434	170,562
PROJECT SUBTOTAL	264,965	3,800	105,584	7,494	170,675
LOSS DUE TO CLEARING & GRUBBING	-2450				-2,450
ADDITIONAL UNDERCUT		2,100	2,415	2,415	2,100
WASTE IN LIEU OF BORROW				-9,909	-9,909
GRAND TOTAL	262,515	5,900	107,999	0	160,416
SAY	262,600	5,900			

ESTIMATED DDE = 30 CUBIC YARDS

CONTINGENCY ITEMS:

INCIDENTAL STONE = 200 TONS

SHALLOW UNDERCUT = 200 CY

SELECT GRANULAR MATERIAL = 4,000 CY

CLASS IV SUBGRADE STABILIZATION = 400 TONS

GEOTEXTILE FOR SOIL STABILIZATION = 2,300 SY

NOTE: Earthwork quantities are calculated by the Roadway Design Unit. These earthwork quantities are based in part on subsurface data provided by the Geotechnical Engineering Unit.

PROJECT REFERENCE NO.	SHEET NO.
R-5527B	4
R/W SHEET NO.	
ROADWAY DESIGN ENGINEER	HYDRAULICS ENGINEER

NORTH CAROLINA PROFESSIONAL SEAL 22950 ENGINEER REECE M. SCHILLER 1/8/14

NORTH CAROLINA PROFESSIONAL SEAL 030453 ENGINEER AARON C. CARVER 1/8/14

-L- CURVE DATA

PI Sta 18+78.20
Δ = 49° 05' 31.2" (LT)
D = 16° 51' 06.1"
L = 291.32'
T = 155.28'
R = 340.00'
SE = 0.06
RO = 120'

-ROUND- CURVE DATA

PI Sta 10+52.00
Δ = 90° 00' 00.0" (LT)
D = 110° 11' 03.1"
L = 81.68'
T = 52.00'
R = 52.00'

PI Sta 11+33.68
Δ = 90° 00' 00.0" (LT)
D = 110° 11' 03.1"
L = 81.68'
T = 52.00'
R = 52.00'

PI Sta 12+09.37
Δ = 83° 00' 00.0" (LT)
D = 110° 11' 03.1"
L = 75.33'
T = 46.01'
R = 52.00'

PI Sta 12+97.47
Δ = 97° 00' 00.0" (LT)
D = 110° 11' 03.1"
L = 88.03'
T = 58.78'
R = 52.00'

-Y- CURVE DATA

PIs Sta 27+11.67
Θs = 4° 07' 30.0"
Ls = 300.00'
LT = 200.05'
ST = 100.05'

PI Sta 35+44.30
Δ = 38° 45' 00.1" (RT)
D = 2° 45' 00.0"
L = 1,409.09'
T = 732.69'
R = 2,083.48'

DATUM DESCRIPTION

THE LOCALIZED COORDINATE SYSTEM DEVELOPED FOR THIS PROJECT IS BASED ON THE STATE PLANE COORDINATES ESTABLISHED BY NCDOT FOR MONUMENT "19-EBCI GPS-106"
WITH NAD 83/NA 2011 STATE PLANE GRID COORDINATES OF
NORTHING: 537290.1470(ft) EASTING: 506482.9410(ft)
ELEVATION: 1628.04(ft)
THE AVERAGE COMBINED GRID FACTOR USED ON THIS PROJECT (GROUND TO GRID) IS: 0.999802395
THE N.C. LAMBERT GRID BEARING AND LOCALIZED HORIZONTAL GROUND DISTANCE FROM "19-EBCI GPS-106" TO -L- 10+00.00 STATION IS S 57°53'07.28" W - 1263.3832'
ALL LINEAR DIMENSIONS ARE LOCALIZED HORIZONTAL DISTANCES
VERTICAL DATUM USED IS NAVD 88

V&M Vaughn & Melton Consulting Engineers
Asheville, North Carolina 828-253-2796
Charlotte, North Carolina 704-331-0488
Tri-Cities, Tennessee 423-467-8401
Knoxville, Tennessee 865-546-6600
Middlesboro, Kentucky 606-248-6600
Spartanburg, South Carolina 864-574-4775

Copyright© 1994 Vaughn & Melton, Inc. All Rights Reserved.

NAD 83 (2011)

END CONSTRUCTION -Y- STA. 36+00.00

POC US 74 Sta. 30+77.86 = POT -L- Sta. 10+00.00

BEGIN PROJECT R-5527B -L- STA. 10+56.28

BEGIN APPROACH SLAB -L- STA. 10+96.52

SBG -Y- STA. 30+01.52 RT
TO -L- STA. 10+90.93 RT

BEGIN CONSTRUCTION -Y- STA. 27+00.00

POT -Y2- Sta. 13+15.83

POT -Y2- Sta. 10+00.00 = PCC -ROUND- Sta. 12+38.69

POT -L- Sta. 14+98.00 = PC -ROUND- Sta. 10+00.00 = POC -ROUND- Sta. 13+26.73

END APPROACH SLAB -L- STA. 13+42.48

BRIDGE BY OTHERS (NOT PART OF THIS CONTRACT)

END TAPER -Y- STA. 29+00.00

POT -Y1- Sta. 12+38.47 = PCC -ROUND- Sta. 10+81.68

SC Sta. 28+11.61

BEGIN TAPER -Y- STA. 27+00.00

END CONSTRUCTION -Y2- STA. 11+10.00

BEGIN CONSTRUCTION -Y2- STA. 10+00.00

POT -L- Sta. 16+02.00 = PCC -ROUND- Sta. 11+63.36

PC Sta. 17+22.92

END CONSTRUCTION -Y1- STA. 12+38.47

BEGIN CONSTRUCTION -Y1- STA. 11+05.00

POT -Y1- Sta. 10+00.00

MATCHLINE -L- STA. 20+00 SEE SHEET 5

SPECIAL BACK OF CURB CUT DITCH SEE DETAIL #2

LATERAL 'V' DITCH SEE DETAIL #1

HUBERT WELLS, JONATHAN WELLS & BRIAN WELLS
DB 720 PG 199

4" SIDEWALK

CONC. 5" MONO. ISLAND (KEYED IN)

FOR ROUNDABOUT DETAILS SEE SHEET 2-B AND 2-C

FOR -L- PROFILE SEE SHEET 7

FOR -Y1-, -Y2-, AND -ROUND- PROFILE SEE SHEET 10

DETAIL 1
LATERAL 'V' DITCH
(Not to Scale)

Natural Ground, Fill Slope, Geotextile, 2:1, 1:1, 1'Ft., d, b
Min. D = 1.0 Ft.
Max. d = 0.75 Ft.
b = 5.0 Ft.
Type of Liner = Est. 17 Tons Class B Rip-Rap
Est. 52 S.Y. Geotextile
DDE = 21 C.Y.

FROM STA. 18+00 RT. TO STA. 18+50 RT.

DETAIL 2
SPECIAL BACK OF CURB CUT DITCH
(Not to Scale)

6.5', Natural Ground, 2:1, d
Min. D = 1.0 Ft.
Max. d = 0.75 Ft.
Type of Liner = Est. 710 S.Y. PSRM

FROM STA. 18+50 RT. TO STA. 27+00 RT.

REVISIONS

8/17/99

V&M
Vaughn & Melton
Consulting Engineers
Asheville, North Carolina 828-253-2796
Charlotte, North Carolina 704-357-0488
Tri-Cities, Tennessee 423-467-540
Knoxville, Tennessee 865 546 6800
Middlesboro, Kentucky 606-248-6600
Spartanburg, South Carolina 864-574-4775
Copyright © 1994 Vaughn & Melton, Inc.
All Rights Reserved

8/17/99

REVISIONS

PROJECT REFERENCE NO.	SHEET NO.
R-5527B	5
R/W SHEET NO.	
ROADWAY DESIGN ENGINEER	HYDRAULICS ENGINEER
NORTH CAROLINA PROFESSIONAL SEAL 29960 ENGINEER PRECIE M. SCHULER 1/8/14	NORTH CAROLINA PROFESSIONAL SEAL 030453 ENGINEER AARON C. CARVER 1/8/14

-L- CURVE DATA

PI Sta 23+85.16	PI Sta 28+68.67
Δ = 92° 58' 51.5" (RT)	Δ = 43° 55' 39.3" (LT)
D = 24° 48' 12.1"	D = 11° 27' 33.0"
L = 374.87'	L = 383.34'
T = 243.34'	T = 201.65'
R = 231.00'	R = 500.00'
SE = 0.06	SE = 0.06
RO = 120'	RO = 120'

NAD 83 (2011)

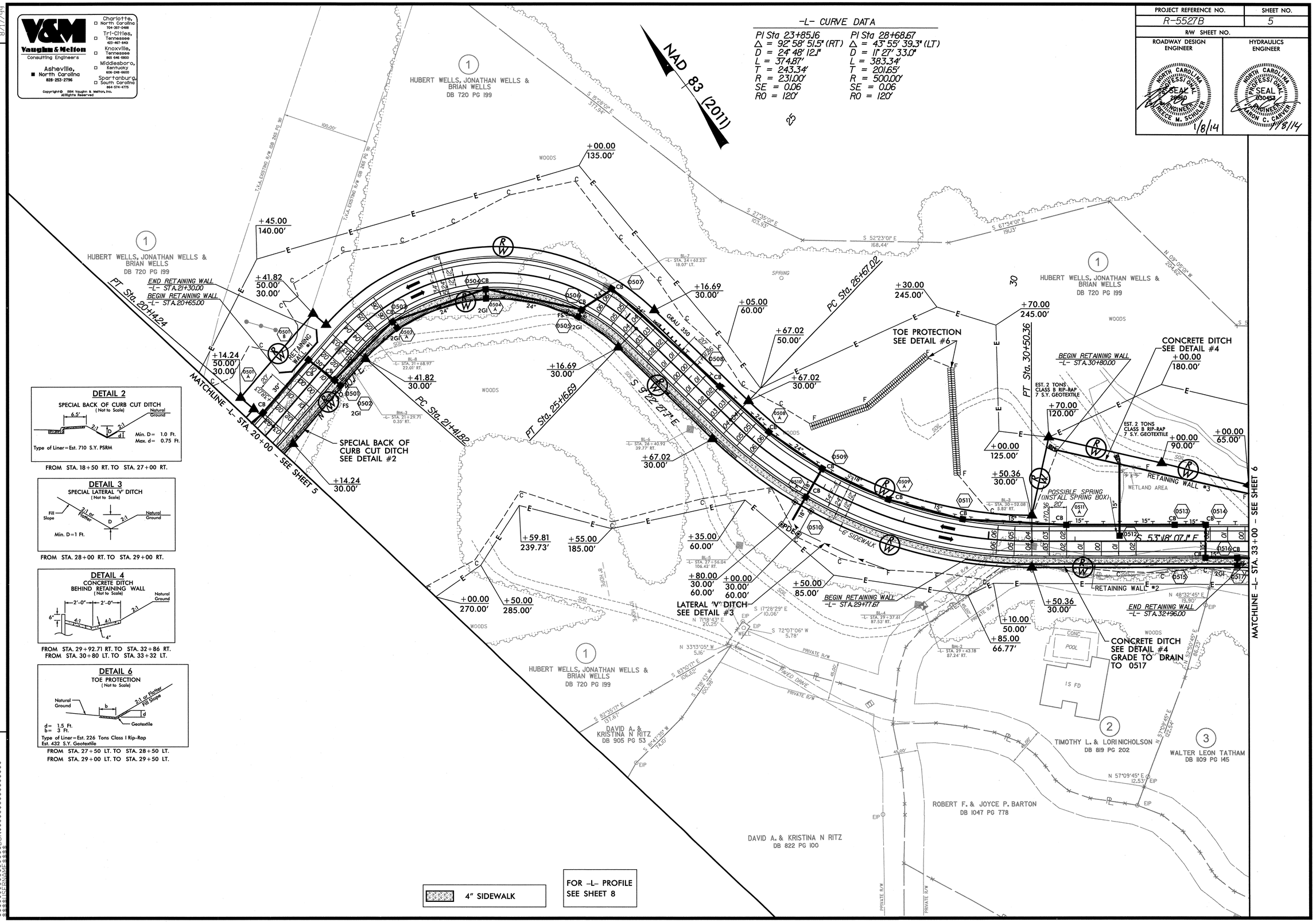

DETAIL 2
SPECIAL BACK OF CURB CUT DITCH
(Not to Scale)

Min. D = 1.0 Ft.
Max. d = 0.75 Ft.

Type of Liner = Est. 710 S.Y. PSRM

FROM STA. 18+50 RT. TO STA. 27+00 RT.

DETAIL 3
SPECIAL LATERAL 'V' DITCH
(Not to Scale)

Min. D = 1 Ft.

FROM STA. 28+00 RT. TO STA. 29+00 RT.

DETAIL 4
CONCRETE DITCH BEHIND RETAINING WALL
(Not to Scale)

FROM STA. 29+92.71 RT. TO STA. 32+86 RT.
FROM STA. 30+80 LT. TO STA. 33+32 LT.

DETAIL 6
TOE PROTECTION
(Not to Scale)

d = 1.5 Ft.
b = 3 Ft.

Type of Liner = Est. 226 Tons Class I Rip-Rap
Est. 432 S.Y. Geotextile

FROM STA. 27+50 LT. TO STA. 28+50 LT.
FROM STA. 29+00 LT. TO STA. 29+50 LT.

PROJECT REFERENCE NO.	SHEET NO.
R-5527B	6
RW SHEET NO.	
ROADWAY DESIGN ENGINEER	HYDRAULICS ENGINEER

NORTH CAROLINA PROFESSIONAL SEAL 030660 ENGINEER BRUCE M. SCHALLER 7/8/14

NORTH CAROLINA PROFESSIONAL SEAL 030453 ENGINEER AARON C. CRAVER 7/8/14

Vaughn & Melton
Consulting Engineers
Asheville, North Carolina 828-253-2796
Charlotte, North Carolina 704-357-0488
Tri-Cities, Tennessee 423-467-8410
Knoxville, Tennessee 865-546-0500
Middlesboro, Kentucky 606-248-5600
Spartanburg, South Carolina 864-574-4775

Copyright© 2014 Vaughn & Melton, Inc. All Rights Reserved

REVISIONS

8/17/99

DETAIL 4
CONCRETE DITCH BEHIND RETAINING WALL
(Not to Scale)

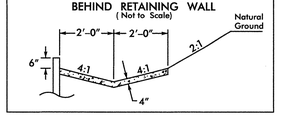

FROM STA. 30+80 LT. TO STA. 33+32 LT.
FROM STA. 35+00 RT. TO STA. 37+00 RT.

DETAIL 5
PIPE OUTLET CHANNEL
(Not to Scale)

D = 2 Ft.
Type of Liner = Est. 8 Tons Class B Rip-Rap
Est. 21 S.Y. Geotextile

STRUCTURE 0604

DETAIL 6
TOE PROTECTION
(Not to Scale)

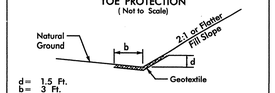

d = 1.5 Ft.
b = 3 Ft.
Type of Liner = Est. 108 Tons Class I Rip-Rap
Est. 206 S.Y. Geotextile

FROM -L- STA. 33+50 RT TO STA. 35+25 RT

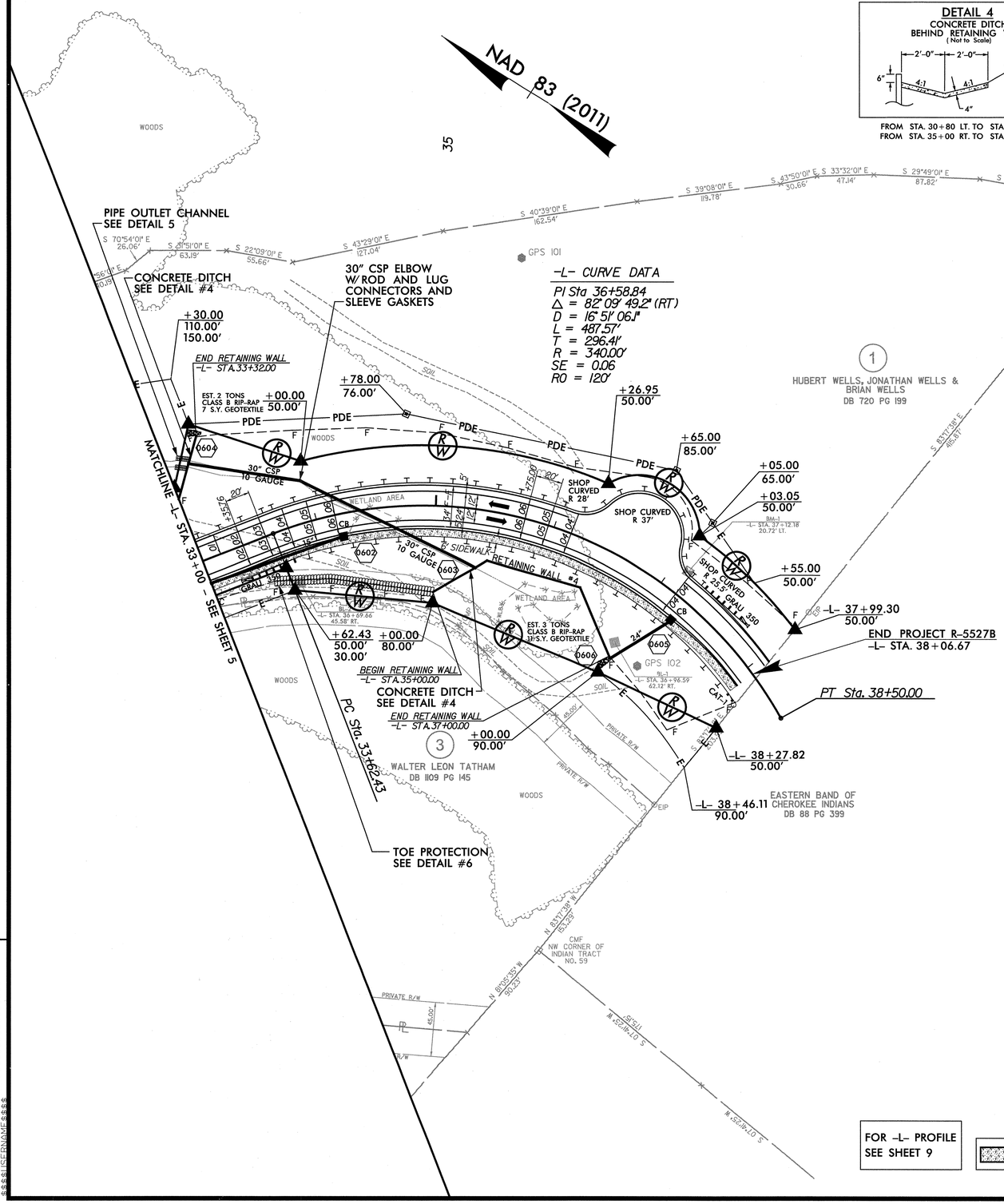

FOR -L- PROFILE SEE SHEET 9

4" SIDEWALK

5/14/99

PROJECT REFERENCE NO.	SHEET NO.
R-5527B	7

ROADWAY DESIGN ENGINEER

NORTH CAROLINA PROFESSIONAL SEAL 26506 ENGINEER PRECEE M. SCHULTZ

1/8/14

HYDRAULICS ENGINEER

NORTH CAROLINA PROFESSIONAL SEAL 030453 ENGINEER HAMON C. CARTER

1/8/14

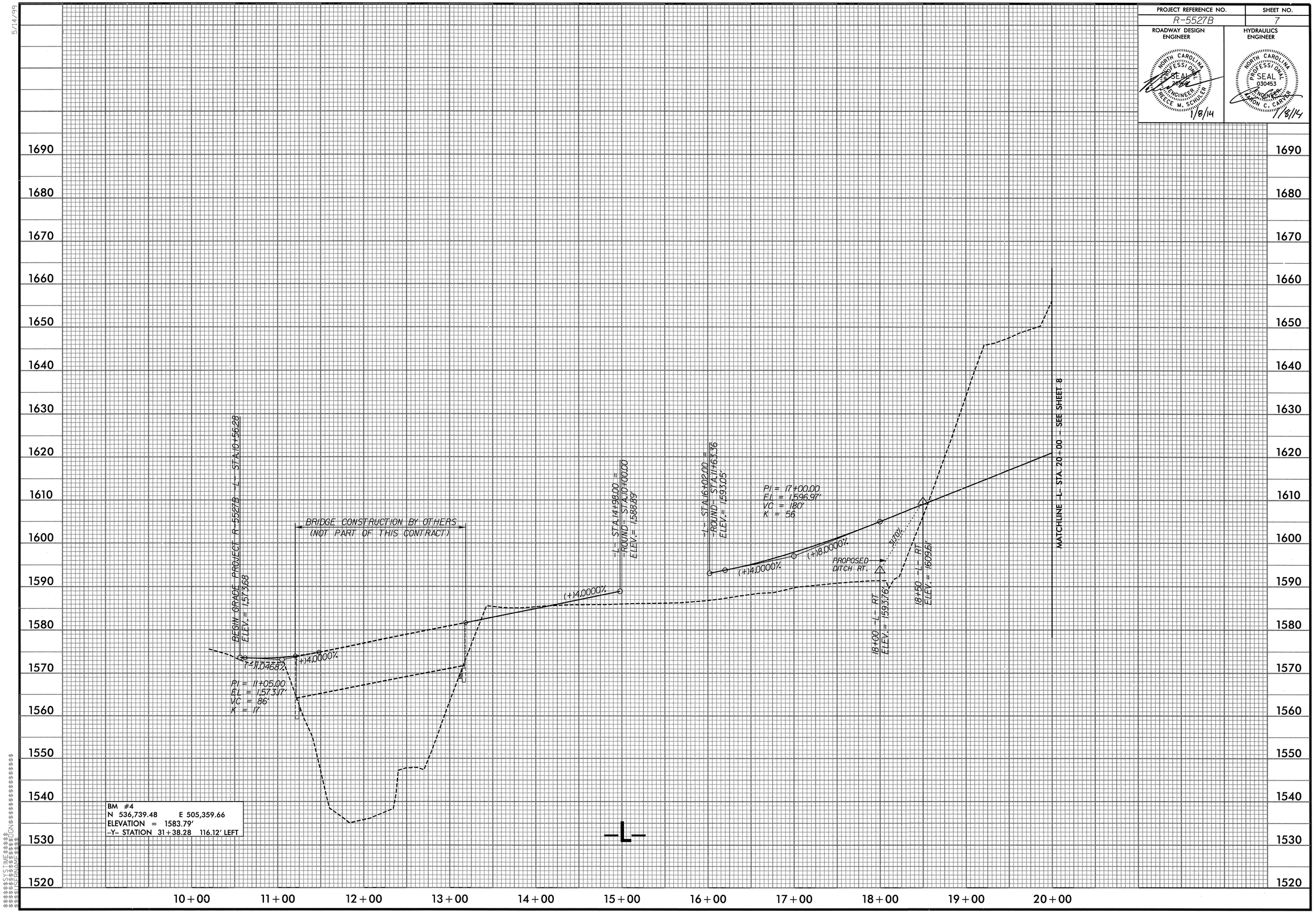

$$$$SYSTIME$$$$
$$$$DGN$$$$

PROJECT REFERENCE NO.	SHEET NO.
R-5527B	8

ROADWAY DESIGN ENGINEER

NORTH CAROLINA PROFESSIONAL SEAL 26920 ENGINEER REECE H. SCHULTZ

1/8/14

HYDRAULICS ENGINEER

NORTH CAROLINA PROFESSIONAL SEAL 030453 ENGINEER LEON C. CARVER

1/8/14

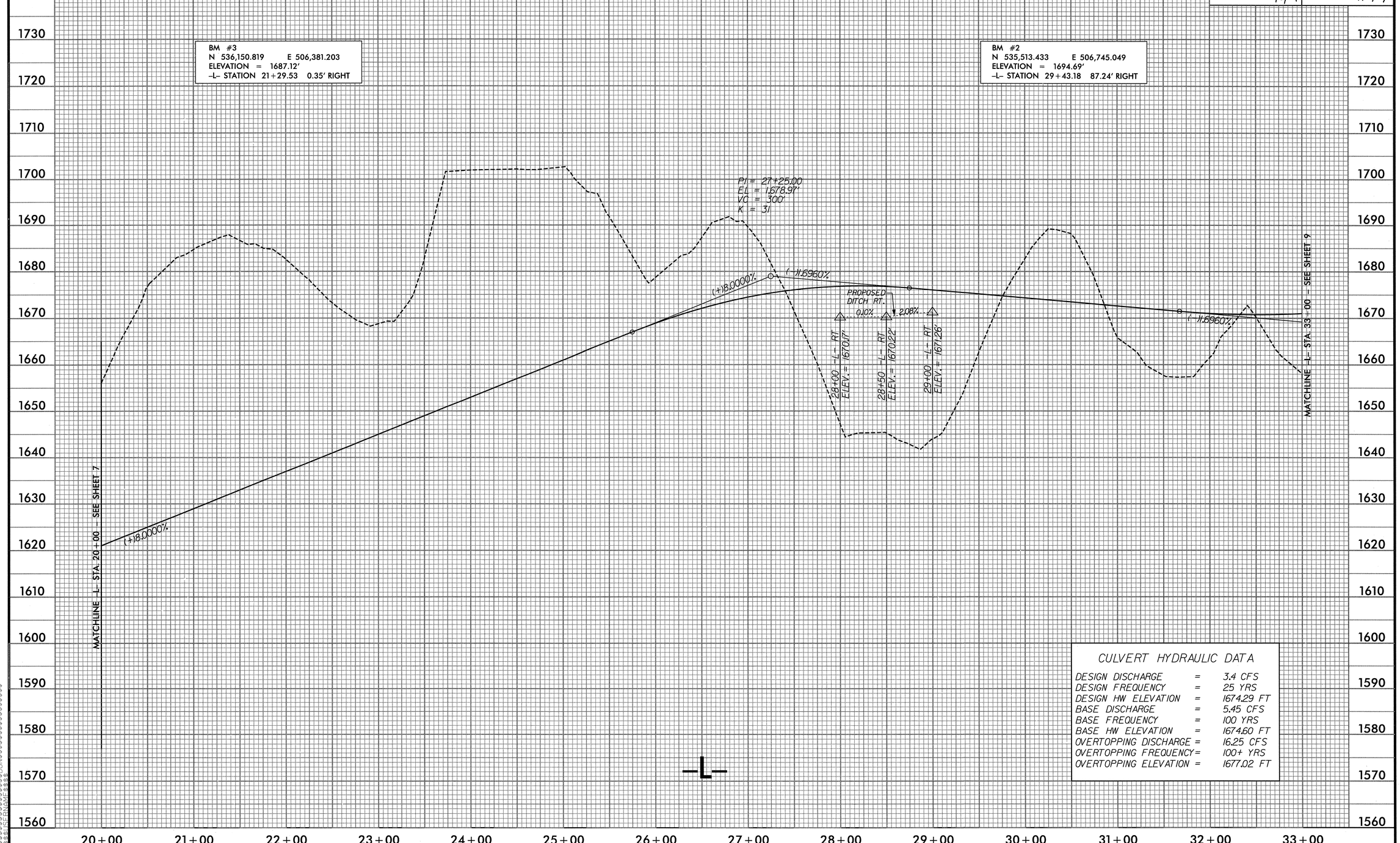

CULVERT HYDRAULIC DATA

DESIGN DISCHARGE	=	3.4 CFS
DESIGN FREQUENCY	=	25 YRS
DESIGN HW ELEVATION	=	1674.29 FT
BASE DISCHARGE	=	5.45 CFS
BASE FREQUENCY	=	100 YRS
BASE HW ELEVATION	=	1674.60 FT
OVERTOPPING DISCHARGE	=	16.25 CFS
OVERTOPPING FREQUENCY	=	100+ YRS
OVERTOPPING ELEVATION	=	1677.02 FT

5/14/99

SYSTIME$$$$ DGN$$$$ PWIDN$$$$ USERNAME$$$$

5/14/99

PROJECT REFERENCE NO.	SHEET NO.
R-5527B	9
ROADWAY DESIGN ENGINEER	HYDRAULICS ENGINEER

NORTH CAROLINA PROFESSIONAL SEAL 26340 ENGINEER PEYTON McCULLEN SCHULER 1/8/14

NORTH CAROLINA PROFESSIONAL SEAL 030453 ENGINEER AARON C. CARTER 1/8/14

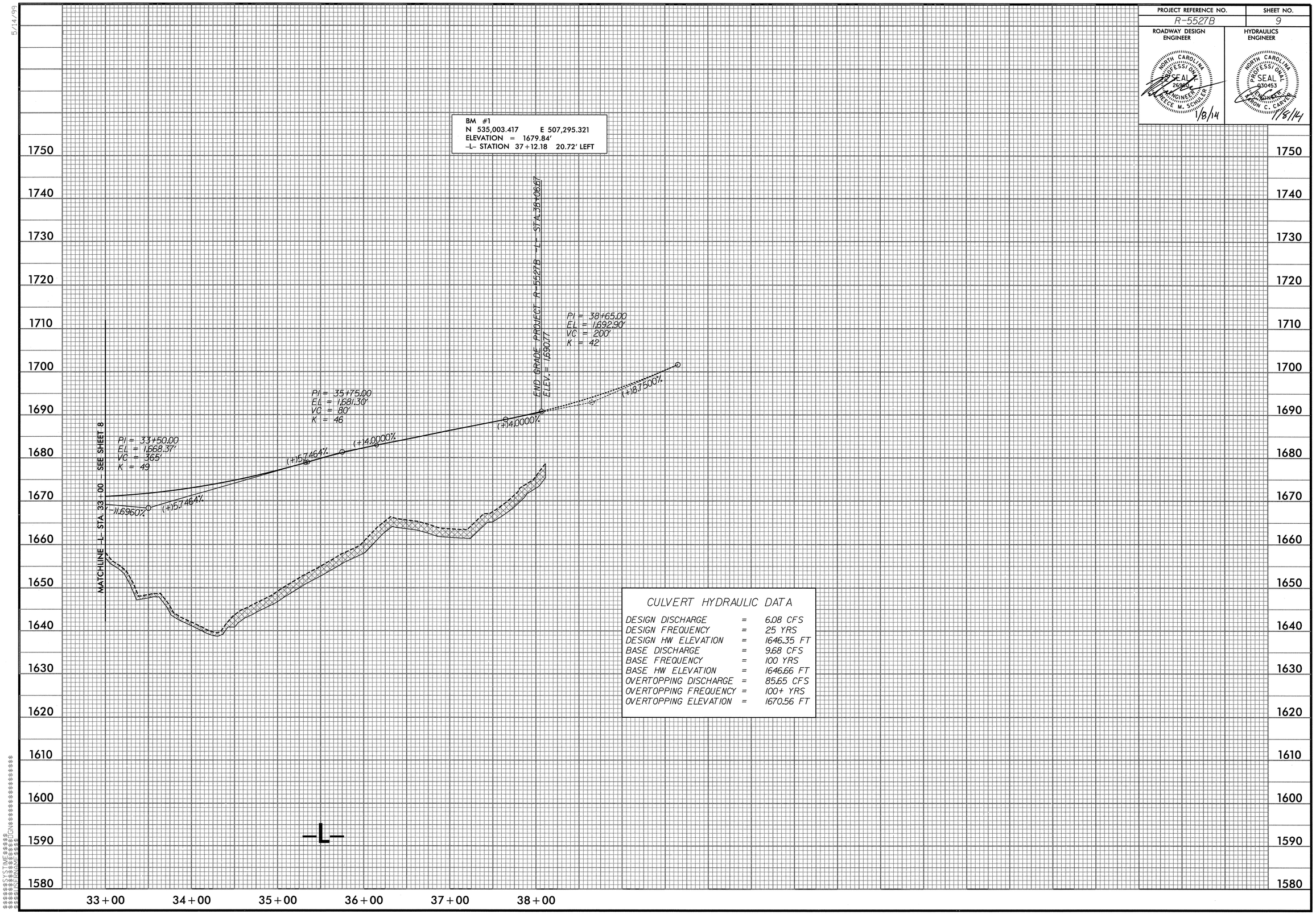

CULVERT HYDRAULIC DATA

DESIGN DISCHARGE	=	6.08 CFS
DESIGN FREQUENCY	=	25 YRS
DESIGN HW ELEVATION	=	1646.35 FT
BASE DISCHARGE	=	9.68 CFS
BASE FREQUENCY	=	100 YRS
BASE HW ELEVATION	=	1646.66 FT
OVERTOPPING DISCHARGE	=	85.65 CFS
OVERTOPPING FREQUENCY	=	100+ YRS
OVERTOPPING ELEVATION	=	1670.56 FT

PROJECT REFERENCE NO.	SHEET NO.
R-5527B	10

ROADWAY DESIGN ENGINEER

NORTH CAROLINA PROFESSIONAL SEAL 29966 ENGINEER REECE M. SCHULER

1/8/14

HYDRAULICS ENGINEER

NORTH CAROLINA PROFESSIONAL SEAL 030453 ENGINEER CARLTON C. CARTER

1/8/14

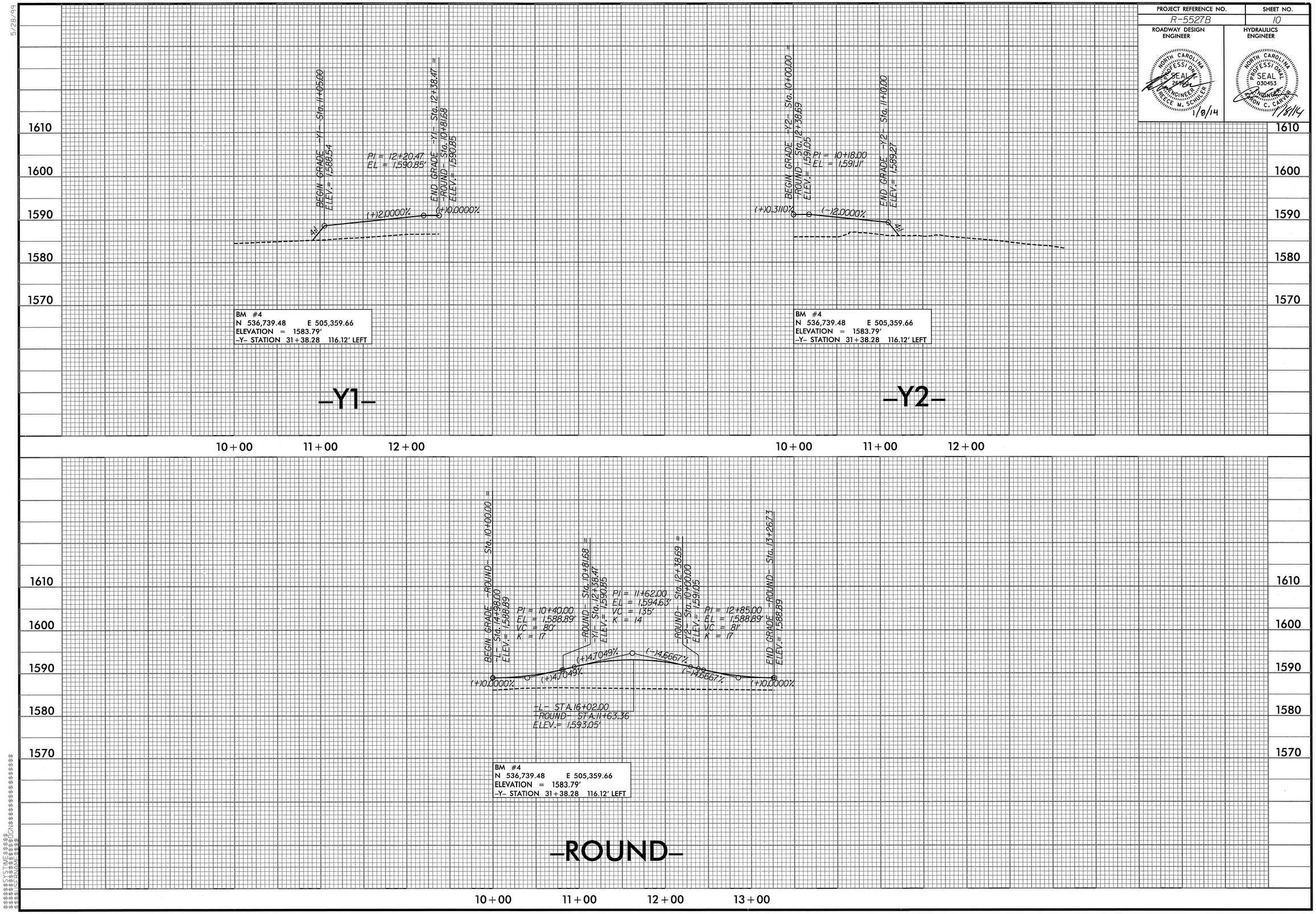

5/28/99

DGN FILE = DGN9 DATE = TIME =

STATE OF NORTH CAROLINA
DIVISION OF HIGHWAYS

TRANSPORTATION MANAGEMENT PLAN

CHEROKEE COUNTY

DIVISION 14

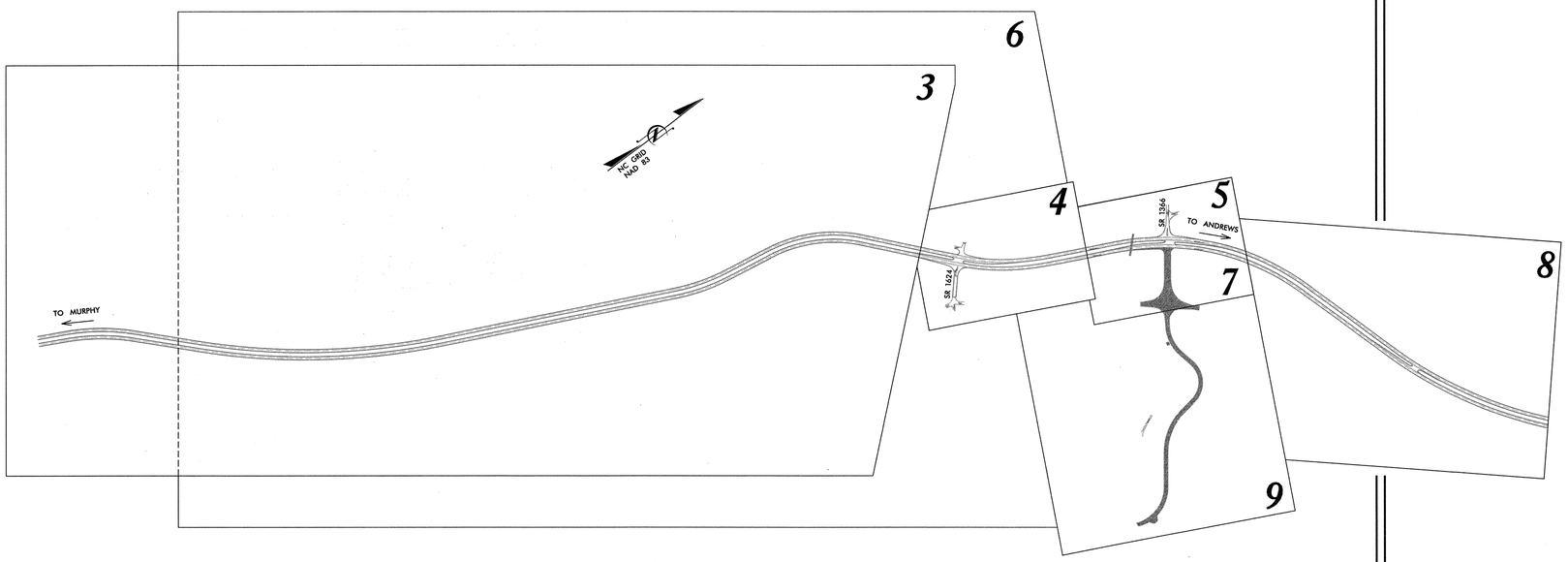

LOCATION: CHEROKEE CASINO ACCESS ROAD INTERSECTION WITH US 74/19/129 FROM SR 1624 (SNAP ON RD.) TO JUST EAST OF SR 1366 (REGAL RD)

INDEX OF SHEETS

SHEET NO.	TITLE
TMP-1	TITLE SHEET, AND INDEX OF SHEETS
TMP-1A	LIST OF APPLICABLE ROADWAY STANDARD DRAWINGS, LEGEND, AND TEMPORARY PAVEMENT MARKING
TMP-1B	TRANSPORTATION OPERATIONS PLAN: (MANAGEMENT STRATEGIES, GENERAL NOTES AND LOCAL NOTES)
TMP-2	TEMPORARY TRAFFIC CONTROL PHASING
TMP-3	TEMPORARY TRAFFIC CONTROL PHASE I DETAIL
TMP-4	TEMPORARY TRAFFIC CONTROL PHASE I DETAIL (CONT.)
TMP-5	TEMPORARY TRAFFIC CONTROL PHASE I DETAIL (CONT.)
TMP-6	TEMPORARY TRAFFIC CONTROL PHASE II DETAIL
TMP-7	TEMPORARY TRAFFIC CONTROL PHASE II DETAIL (CONT.)
TMP-8	TEMPORARY TRAFFIC CONTROL PHASE II DETAIL (CONT.)
TMP-9	TEMPORARY TRAFFIC CONTROL PHASE III DETAIL
SD-1	SPECIAL SIGN DESIGN

SHEET NO.
TMP-1

TIP PROJECT: R-5527B

WORK ZONE SAFETY & MOBILITY
"from the MOUNTAINS to the COAST"

N.C.D.O.T. WORK ZONE TRAFFIC CONTROL
1580 MAIL SERVICE CENTER (MSC) RALEIGH, NC 27699-1580
1020 BIRCH RIDGE DRIVE, RALEIGH, NC 27610 (DELIVERY)
PHONE: (919) 250-4094 FAX: (919) 250-4098

J.S. BOURNE, P.E. — STATE TRAFFIC MANAGEMENT ENGINEER
G.L. GETTIER, P.E. — TRAFFIC CONTROL PROJECT ENGINEER
J.W. WOOLARD, P.E. — TRAFFIC CONTROL PROJECT DESIGN ENGINEER
_____ — TRAFFIC CONTROL DESIGN ENGINEER

DIVISION OF HIGHWAYS · STATE OF NORTH CAROLINA · DEPARTMENT OF TRANSPORTATION · WORK ZONE TRAFFIC CONTROL

V&M Vaughn & Melton
Consulting Engineers
Asheville, North Carolina 828-253-2796
Charlotte, North Carolina 704-357-0488

Copyright © 2006 Vaughn & Melton, Inc.
All Rights Reserved

PROJECT ENGINEER: LLOYD D. BROWN, P.E.
DESIGN ENGINEER: AARON C. CARVER, P.E.

APPROVED: [signature]
DATE: January 7, 2014

SEAL
NORTH CAROLINA PROFESSIONAL SEAL 20119 ENGINEER LLOYD D. BROWN

$$$$$$$$SYSTIME$$$$$$$$
$$$$$$$$USERNAME$$$$$$$$

PROJ. REFERENCE NO.	SHEET NO.
R-5527B	TMP-1A

ROADWAY STANDARD DRAWINGS

THE FOLLOWING ROADWAY STANDARDS AS SHOWN IN "ROADWAY STANDARD DRAWINGS" - PROJECT SERVICES UNIT - N.C. DEPARTMENT OF TRANSPORTATION - RALEIGH, N.C., DATED JANUARY 2012 ARE APPLICABLE TO THIS PROJECT AND BY REFERENCE HEREBY ARE CONSIDERED A PART OF THESE PLANS:

STD. NO.	TITLE
1101.01	WORK ZONE ADVANCE WARNING SIGNS
1101.02	TEMPORARY LANE CLOSURES
1101.04	TEMPORARY SHOULDER CLOSURES
1101.11	TRAFFIC CONTROL DESIGN TABLES
1110.01	STATIONARY WORK ZONE SIGNS
1110.02	PORTABLE WORK ZONE SIGNS
1115.01	FLASHING ARROW PANELS
1130.01	DRUMS
1160.01	TEMPORARY CRASH CUSHION
1170.01	PORTABLE CONCRETE BARRIER
1205.01	PAVEMENT MARKINGS - LINE TYPES & OFFSETS
1205.04	PAVEMENT MARKINGS - INTERSECTIONS
1205.05	PAVEMENT MARKINGS - TURN LANES
1261.01	GUARDRAIL & BARRIER DELINEATOR SPACING
1261.02	GUARDRAIL & BARRIER DELINEATOR TYPES

LEGEND

GENERAL

- DIRECTION OF TRAFFIC FLOW
- DIRECTION OF PEDESTRIAN TRAFFIC FLOW
- EXIST. PVMT.
- NORTH ARROW
- PROPOSED PVMT.
- WORK AREA
- TEMPORARY PAVEMENT

TEMPORARY PAVEMENT MARKING

SYMBOL	DESCRIPTION
	PAINT
PA	WHITE EDGE LINE (4")
PD	2' WHITE MINISKIP (4")

TRAFFIC CONTROL DEVICES

- BARRICADE (TYPE III)
- CONE
- DRUM — SKINNY DRUM — TUBULAR MARKER
- TEMPORARY CRASH CUSHION
- FLASHING ARROW PANEL (TYPE C)
- FLAGGER
- LAW ENFORCEMENT
- TRUCK MOUNTED IMPACT ATTENUATOR (TMIA)
- CHANGEABLE MESSAGE SIGN

TEMPORARY SIGNING

- PORTABLE SIGN
- STATIONARY SIGN
- STATIONARY OR PORTABLE SIGN

SIGNALS

EXISTING — PROPOSED — TEMP TEMPORARY

PORTABLE TRAFFIC SIGNAL

PAVEMENT MARKINGS

- EXISTING LINES
- TEMPORARY LINES

PAVEMENT MARKING SYMBOLS

PAVEMENT MARKING SYMBOLS

V&M
Vaughn & Melton
Consulting Engineers

Asheville, North Carolina 828-253-2796
Charlotte, North Carolina 704-357-0488
Tri-Cities, Tennessee 423-467-8401
Knoxville, Tennessee 865-546-5800
Middlesboro, Kentucky 606-248-6600
Spartanburg, South Carolina 864-574-4775

Copyright © 2006 Vaughn & Melton, Inc. All Rights Reserved

APPROVED: DATE: 1/7/2014

SEAL

NORTH CAROLINA PROFESSIONAL SEAL 20119 ENGINEER LLOYD D. BROWN

ROADWAY STANDARD DRAWINGS & LEGEND

$$$$$$$$SYSTIME$$$$$$$$
$$$$$$$$$$$$$$$$DGN$$$$$$$$
$$$$$$$$SERNAME$$$$

PROJ. REFERENCE NO.	SHEET NO.
R-5527B	TMP-1B

GENERAL NOTES / LOCAL NOTES

CHANGES MAY BE REQUIRED WHEN PHYSICAL DIMENSIONS IN THE DETAIL DRAWINGS, STANDARD DETAILS, AND ROADWAY DETAILS ARE NOT ATTAINABLE TO MEET FIELD CONDITIONS OR RESULT IN DUPLICATE OR UNDESIRED OVERLAPPING OF DEVICES. MODIFICATION MAY INCLUDE: MOVING, SUPPLEMENTING, COVERING, OR REMOVAL OF DEVICES AS DIRECTED BY THE ENGINEER.

THE FOLLOWING GENERAL NOTES APPLY AT ALL TIMES FOR THE DURATION OF THE CONSTRUCTION PROJECT EXCEPT WHEN OTHERWISE NOTED IN THE PLAN OR DIRECTED BY THE ENGINEER.

TIME RESTRICTIONS

A) DO NOT CLOSE OR NARROW TRAVEL LANES DURING HOLIDAYS AND SPECIAL EVENTS AS FOLLOWS:

ROAD NAME

US 74/19/129

HOLIDAY

1. FOR ANY UNEXPECTED OCCURRENCE THAT CREATES UNUSUALLY HIGH TRAFFIC VOLUMES, AS DIRECTED BY THE ENGINEER.
2. FOR CHRISTMAS/ NEW YEAR, NO LANE CLOSURES FROM DECEMBER 18 THROUGH JANUARY 4TH.
3. FOR EASTER, THE THURSDAY BEFORE THROUGH THE TUESDAY AFTER.
4. FOR MEMORIAL DAY, THE THURSDAY BEFORE THROUGH THE TUESDAY AFTER.
5. FOR INDEPENDENCE DAY, IF INDEPENDENCE DAY FALLS ON A FRIDAY, SATURDAY, SUNDAY, OR MONDAY, NO LANE CLOSURES ON THURSDAY BEFORE JULY 4TH THROUGH TUESDAY AFTER JULY 4TH. IF INDEPENDENCE DAY FALLS ON A TUESDAY, WEDNESDAY, OR THURSDAY, NO LANE CLOSURES AFTER 12:00 NOON ON THE FRIDAY BEFORE JULY 4TH UNTILL 8:00 P.M. ON THE MONDAY AFTER JULY 4TH.
6. FOR LABOR DAY, THE THURSDAY BEFORE THROUGH THE THE TUESDAY AFTER.
7. FOR THANKSGIVING, NO LANE CLOSURES ON TUESDAY BEFORE THANKSGIVING THROUGH MONDAY AFTER THANKSGIVING.
8. FOR CHRISTMAS, NO LANE CLOSURES BETWEEN THE HOURS OF 12 P.M. THE FRIDAY BEFORE THE WEEK OF CHRISTMAS DAY AND 7 A.M. THE FOLLOWING TUESDAY AFTER THE WEEK OF CHRISTMAS.

LANE AND SHOULDER CLOSURE REQUIREMENTS

B) NOTIFY THE NCDOT DISTRICT ENGINEER 7 DAYS BEFORE ANY LANE CLOSURES.

C) EMERGENCY VEHICLE ACCESS MUST BE MAINTAINED AT ALL TIMES.

D) REMOVE LANE CLOSURE DEVICES FROM THE LANE WHEN WORK IS NOT BEING PERFORMED BEHIND THE LANE CLOSURE OR WHEN A LANE CLOSURE IS NO LONGER NEEDED OR AS DIRECTED BY THE ENGINEER.

E) WHEN PERSONNEL AND/OR EQUIPMENT ARE WORKING WITHIN 15 FT OF AN OPEN TRAVEL LANE, CLOSE THE NEAREST OPEN SHOULDER USING ROADWAY STANDARD DRAWING NO. 1101.04 UNLESS THE WORK AREA IS PROTECTED BY BARRIER OR GUARDRAIL OR A LANE CLOSURE IS INSTALLED.

F) WHEN PERSONNEL AND/OR EQUIPMENT ARE WORKING ON THE SHOULDER ADJACENT TO AN UNDIVIDED FACILITY AND WITHIN 5 FT OF AN OPEN TRAVEL LANE, CLOSE THE NEAREST OPEN TRAVEL LANE USING ROADWAY STANDARD DRAWING NO. 1101.02 UNLESS THE WORK AREA IS PROTECTED BY BARRIER OR GUARDRAIL.

WHEN PERSONNEL AND/OR EQUIPMENT ARE WORKING ON THE SHOULDER ADJACENT TO A DIVIDED FACILITY AND WITHIN 10 FT OF AN OPEN TRAVEL LANE, CLOSE THE NEAREST OPEN TRAVEL LANE USING ROADWAY STANDARD DRAWING NO. 1101.02 UNLESS THE WORK AREA IS PROTECTED BY BARRIER OR GUARDRAIL.

G) WHEN PERSONNEL AND/OR EQUIPMENT ARE WORKING WITHIN A LANE OF TRAVEL OF AN UNDIVIDED OR DIVIDED FACILITY, CLOSE THE LANE ACCORDING TO THE TRAFFIC CONTROL PLANS, ROADWAY STANDARD DRAWINGS, OR AS DIRECTED BY THE ENGINEER. CONDUCT THE WORK SO THAT ALL PERSONNEL AND/OR EQUIPMENT REMAIN WITHIN THE CLOSED TRAVEL LANE.

H) DO NOT WORK SIMULTANEOUSLY WITHIN 15 FT ON BOTH SIDES OF AN OPEN TRAVELWAY, RAMP, OR LOOP WITHIN THE SAME LOCATION UNLESS PROTECTED WITH GUARDRAIL OR BARRIER.

TRAFFIC PATTERN ALTERATIONS

I) NOTIFY THE ENGINEER TWENTY ONE (21) CALENDAR DAYS PRIOR TO ANY TRAFFIC PATTERN ALTERATION.

SIGNING

J) INSTALL ADVANCE WORK ZONE WARNING SIGNS WHEN WORK IS WITHIN 40 FT FROM THE EDGE OF TRAVEL LANE AND NO MORE THAN THREE (3) DAYS PRIOR TO THE BEGINNING OF CONSTRUCTION.

K) THE CONTRACTOR WILL BE RESPONSIBLE FOR PROVIDING SIGNING AND DEVICES REQUIRED TO CLOSE THE ROAD ACCORDING TO THE ROADWAY STANDARD DRAWINGS AND TRAFFIC CONTROL PLANS.

L) THE CONTRACTOR WILL COVER OR REMOVE ALL SIGNS AND DEVICES REQUIRED TO CLOSE THE ROAD WHEN ROAD CLOSURE IS NOT IN OPERATION.

M) ENSURE ALL NECESSARY SIGNING IS IN PLACE PRIOR TO ALTERING ANY TRAFFIC PATTERN.

TRAFFIC BARRIER

N) INSTALL TEMPORARY BARRIER ACCORDING TO THE TRANSPORTATION MANAGEMENT PLANS A MAXIMUM OF TWO (2) WEEKS PRIOR TO BEGINNING WORK IN ANY LOCATION. ONCE THE TEMPORARY BARRIER IS INSTALLED AT ANY LOCATION PROCEED IN A CONTINUOUS MANNER TO COMPLETE THE PROPOSED WORK IN THAT LOCATION UNLESS OTHERWISE STATED IN THE TRANSPORTATION MANAGEMENT PLANS OR AS DIRECTED BY THE ENGINEER.

DO NOT PLACE BARRIER DIRECTLY ON ANY SURFACE OTHER THAN ASPHALT OR CONCRETE

ONCE TEMPORARY BARRIER IS INSTALLED AT ANY LOCATION AND NO WORK IS PERFORMED BEHIND THE TEMPORARY BARRIER FOR A PERIOD LONGER THAN TWO (2) MONTHS, REMOVE/RESET TEMPORARY BARRIER AT NO COST TO THE DEPARTMENT UNLESS OTHERWISE STATED IN THE TRANSPORTATION MANAGEMENT PLANS, TEMPORARY BARRIER IS PROTECTING A HAZARD, OR AS DIRECTED BY THE ENGINEER

INSTALL TEMPORARY BARRIER WITH THE TRAFFIC FLOW BEGINNING WITH THE UPSTREAM SIDE OF TRAFFIC. REMOVE TEMPORARY BARRIER AGAINIST THE TRAFFIC FLOW BEGINNING WITH THE DOWNSTREAM SIDE OF TRAFFIC.

INSTALL AND SPACE DRUMS NO GREATER THAN TWICE THE POSTED SPEED LIMIT (MPH) TO CLOSE OR KEEP THE SECTION OF THE ROADWAY CLOSED UNTIL THE TEMPORARY BARRIER CAN BE PLACED OR AFTER TEMPORARY BARRIER IS REMOVED.

O) PROTECT THE APPROACH END OF MOVABLE/PORTABLE CONCRETE BARRIER AT ALL TIMES DURING THE INSTALLATION AND REMOVAL OF THE BARRIER BY EITHER A TRUCK MOUNTED ATTENUATOR (MAXIMUM 72 HOURS) OR A TEMPORARY CRASH CUSHION.

PROTECT THE APPROACH END OF MOVABLE/PORTABLE CONCRETE BARRIER FROM ONCOMING TRAFFIC AT ALL TIMES BY A TEMPORARY CRASH CUSHION UNLESS THE APPROACH END OF MOVABLE/PORTABLE CONCRETE BARRIER IS OFFSET FROM ONCOMING TRAFFIC AS FOLLOWS OR AS SHOWN IN THE PLANS: (SEE ALSO 1101.05)

POSTED SPEED LIMIT	MINIMUM OFFSET
40 OR LESS	15 FT
40-50	20 FT
55	25 FT
60 OR HIGHER	30 FT

TRAFFIC CONTROL DEVICES

P) WHEN LANE CLOSURES ARE NOT IN EFFECT SPACE CHANNELIZING DEVICES IN WORK AREAS NO GREATER IN FEET THAN TWICE THE POSTED SPEED LIMIT (MPH) EXCEPT, 10 FT ON-CENTER IN RADII, AND 3 FT OFF THE EDGE OF AN OPEN TRAVELWAY. REFER TO STANDARD SPECIFICATIONS FOR ROADS AND STRUCTURES SECTIONS 1130 (DRUMS), 1135 (CONES) AND 1180 (SKINNY DRUMS) FOR ADDITIONAL REQUIREMENTS.

Q) PLACE TYPE III BARRICADES WITH "ROAD CLOSED" SIGN R11-2 ATTACHED, OF SUFFICIENT LENGTH TO CLOSE ENTIRE ROADWAY.

R) PLACE ADDITIONAL SETS OF THREE CHANNELIZING DEVICES DRUMS PERPENDICULAR TO THE EDGE OF TRAVELWAY ON 500 FT CENTERS WHEN UNOPENED LANES ARE CLOSED TO TRAFFIC

LOCAL NOTES:

1) PHASE I LANE CLOSURE IS INTENDED TO COVER THE AREA OF CONSTRUCTION FROM -Y- STA. 16+25 TO -Y- STA. 35+00.

2) CONTRACTOR WILL NEED TO COORDINATE CONSTRUCTION, TRAFFIC PHASING AND MANAGEMENT WITH CONTRACTOR FOR R-5527A.

Vaughn & Melton
Consulting Engineers
Asheville, North Carolina 828·253·2796
Charlotte, North Carolina 704·357·0488
Tri-Cities, Tennessee 423·467·8401
Knoxville, Tennessee 865·546·5800
Middlesboro, Kentucky 606·248·6600
Spartanburg, South Carolina 864·574·4775

Copyright © 2006 Vaughn & Melton, Inc. All Rights Reserved

MANAGEMENT STRATEGIES

PHASE I: TRAFFIC WILL BE MAINTAINED ON THE EXISTING ROAD, (U.S. 19/74/129) BUT REDUCED TO ONE LANE USING RDWY STD. DRAWINGS, PORTABLE CONCRETE BARRIER RAIL AND DRUMS.

APPROVED: [signature] DATE: 1/7/2014

SEAL

NORTH CAROLINA PROFESSIONAL SEAL 20119 ENGINEER LLOYD D. BROWN

TRANSPORTATION OPERATIONS PLAN
(MANAGEMENT STRATEGIES & GENERAL NOTES)

$$$$$$SYSTIME$$$$$
$$$$$$$$$$$DGN$$$$$$$$$$$$$$$$$
$$$$USERNAME$$$$$

PROJ. REFERENCE NO.	SHEET NO.
R-5527B	TMP-2

PROJECT PHASING

PHASE I

STEP 1: - INSTALL WORK ZONE ADVANCED WARNING SIGNS.
(SEE RDWY STD. 1101.01 AND TMP-3 THRU 5)

NOTE: STEPS 2,3, AND 4 CAN OCCUR SIMULTANEOUSLY.

STEP 2: - CONSTRUCT -L-, -Y1- AND -Y2- UP TO, BUT NOT INCLUDING, FINAL LAYER OF SURFACE COURSE.

STEP 3: - INSTALL LANE CLOSURE AT APPROXIMATE -Y- STA. 16+25 TO -Y- STA. 35+00
(SEE TMP-3 THRU 5 AND RDWY STD. 1101.02)
-INSTALL PCB FROM -Y- STATION 24+00 TO -Y- STATION 35+50.

STEP 4: - CONSTRUCT TURN LANE, PLACE GUARDRAIL, AND PAVING UP TO BUT NOT INCLUDING THE FINAL LAYER OF SURFACE COURSE AND THE TEMPORARY PAVEMENT MARKINGS (PAINT) ALONG THE TURN LANE (SEE TMP-5).

PHASE II

STEP 1: - USING NCDOT ROADWAY STANDARD DRAWINGS, TEMPORARY LANE CLOSURES AND FLAGGERS, REMOVE PCB AND LANE CLOSURE ALONG -Y- (US 74/19/129).

STEP 2: - REVISE CHANGEABLE MESSAGE SIGN MESSAGES AND INSTALL LANE CLOSURES FROM APPROXIMATE -Y- STATION 24+00 TO -Y- STATION 31+50 AND FROM APPROXIMATE -Y- STATION 25+70 TO -ATC1- STATION 16+60 (SEE TMP-6 THRU 8 AND RDWY. STD. 1101.02).

STEP 3: - REMOVE MEDIAN ISLAND FROM -Y- STATION 30+00 TO -Y- STATION 30+60.05, AND CONSTRUCT MEDIAN ISLAND FROM -Y- STATION 30+00 TO -Y- STATION 30+40.05. CONSTRUCT -Y- STATION 30+00 TO -Y- STATION 30+60.05 UP TO EDGE AND ELEVATION OF EXISTING PAVEMENT.

PHASE III

STEP 1: - USING NCDOT ROADWAY STANDARD DRAWINGS, TEMPORARY LANE CLOSURES AND FLAGGERS, REMOVE LANE CLOSURES ALONG -Y- (US 74/19/129).
PLACE PAVING OVERLAY FROM -Y- STATION 27+00 TO -Y- STATION 36+00 AND FINAL LAYER OF SURFACE COURSE AND THE FINAL PAVEMENT MARKINGS.
(SEE PMP-1 THRU PMP-4 FOR PAVEMENT MARKING PLANS) ON THE ENTIRE PROJECT.
(SEE TMP-9 FOR PAVING ALONG -Y- (US 74/19/129) AND -L-)

STEP 2: - REMOVE ALL TEMPORARY TRAFFIC CONTROL DEVICES ALONG US 74/19/129.

STEP 3: - OPEN US 74/19/129 AND CASINO ACCESS ROAD (-L-) TO TRAFFIC.

V&M
Vaughn & Melton
Consulting Engineers
Asheville, North Carolina 828-253-2796
Charlotte, North Carolina 704-357-0488
Tri-Cities, Tennessee 423-467-8401
Knoxville, Tennessee 865-546-5800
Middlesboro, Kentucky 606-248-6600
Spartanburg, South Carolina 864-574-4775
Copyright © 2006 Vaughn & Melton, Inc.
All Rights Reserved

APPROVED: DATE: 1/7/2011

SEAL

NORTH CAROLINA PROFESSIONAL SEAL 20119 ENGINEER LLOYD D. BROWN

PHASING

$$$$$SYSTIME$$$$$
$$$$$$$$$$$$$$DGN$$$$$$$$$$$$$$
$$$$$$$$$$$$$$SENAME$$$$$$$$$$$$$$

PROJ. REFERENCE NO.	SHEET NO.
R-5527B	TMP-3

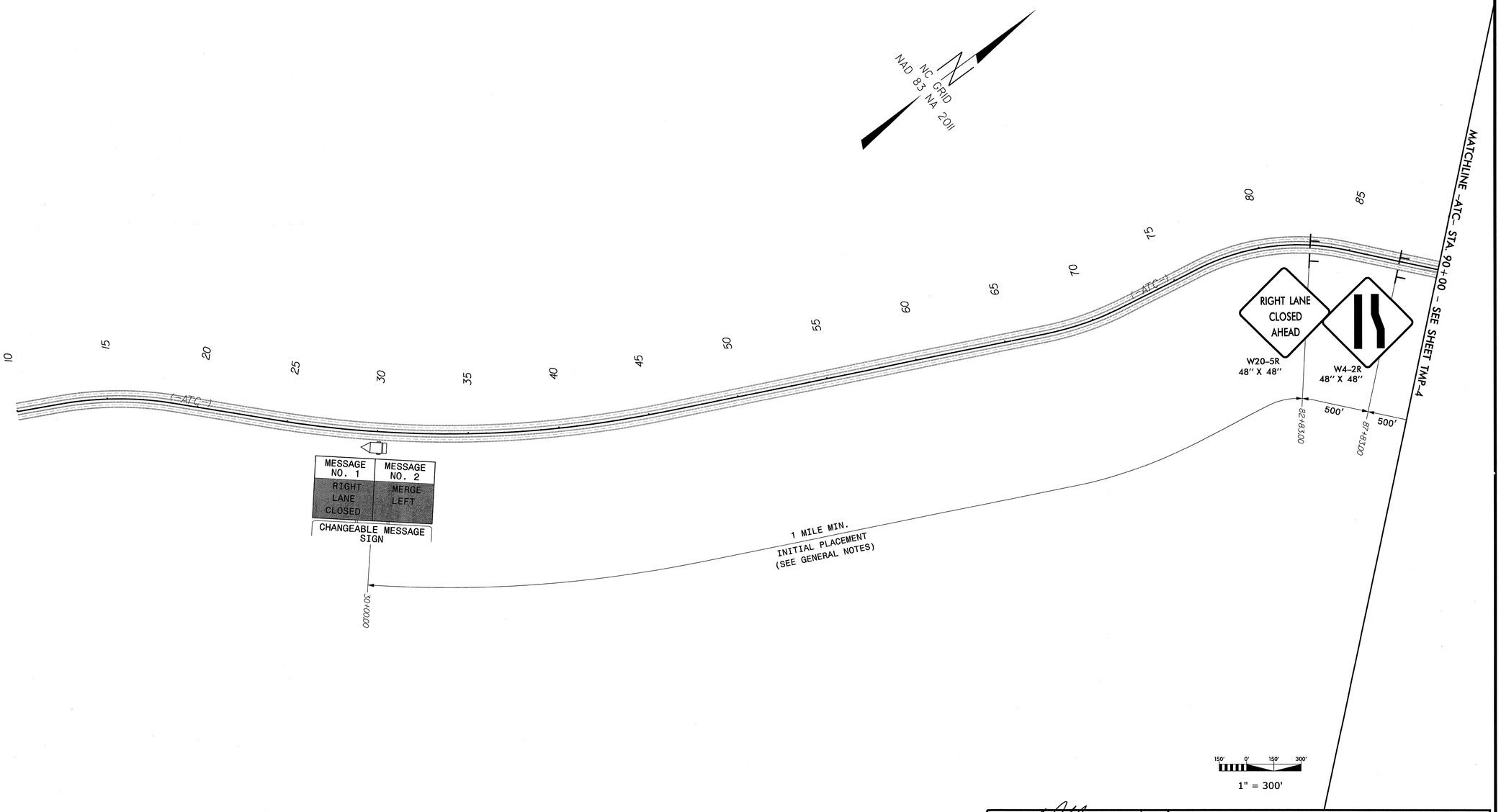

LEGEND

STATIONARY SIGN

CHANGEBLE MESSAGE SIGN

APPROVED: DATE: 1/7/2014

SEAL

NORTH CAROLINA PROFESSIONAL SEAL 20119 ENGINEER LLOYD D. BROWN

PHASE I

SCALE:	1" = 300'
DATE:	12-18-13
DWG. BY:	JDD
DESIGN BY:	WCC
REVIEWED BY:	LDB

DIVISION OF HIGHWAYS · STATE OF NORTH CAROLINA · WORK ZONE TRAFFIC CONTROL · DEPARTMENT OF TRANSPORTATION

REVISIONS

CADD FILE

$$$$SYSTIME$$$$
$$$$SYSTIME$$$$
$$$$SYSTIME$$$$
$$$$USERNAME$$$$

PROJ. REFERENCE NO.	SHEET NO.
R-5527B	TMP-4

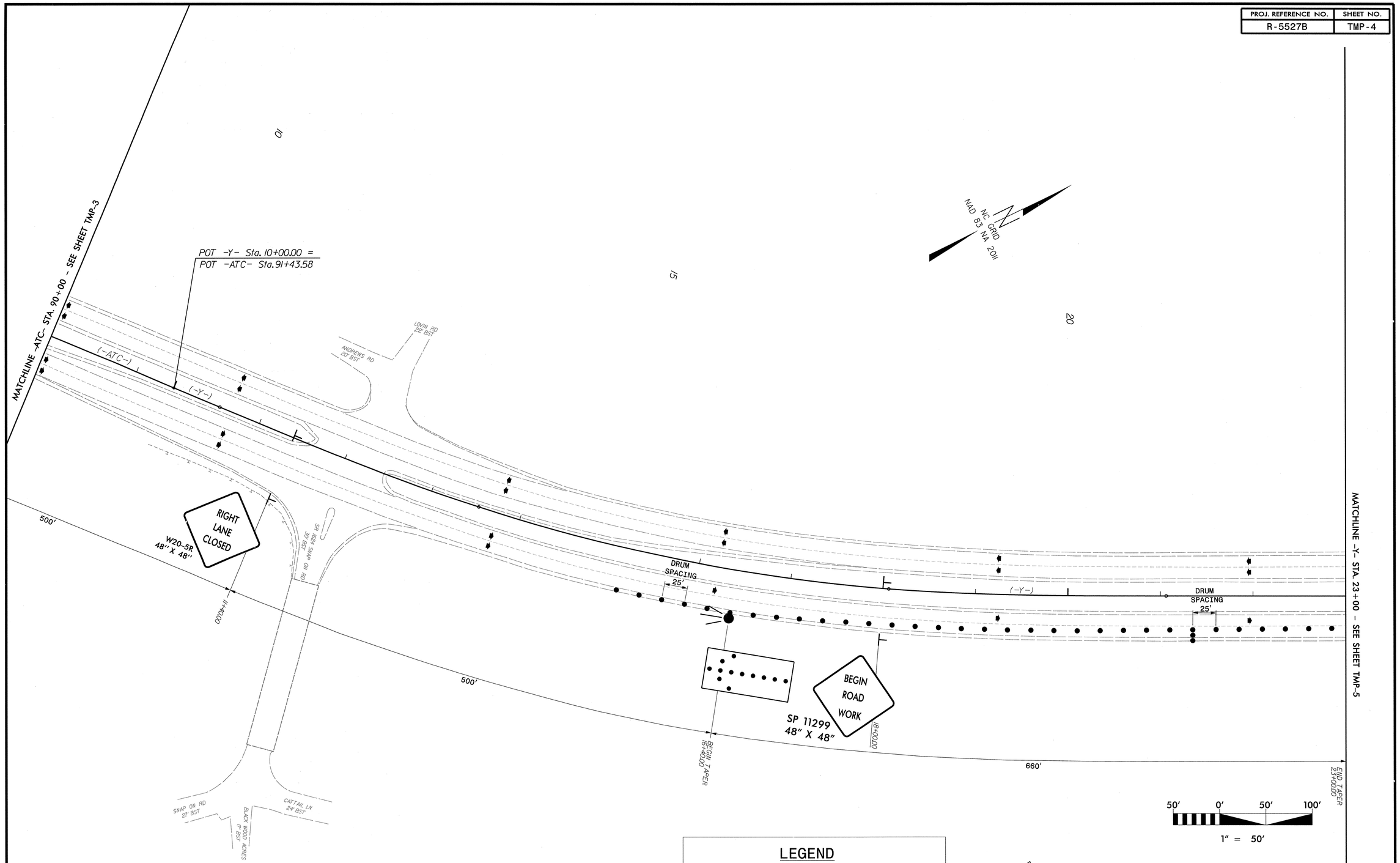

LEGEND

- FLASHING ARROW PANEL (TYPE C)
- DRUM
- STATIONARY SIGN
- DIRECTION OF TRAFFIC FLOW

APPROVED: DATE: 1/7/2014

SEAL

NORTH CAROLINA PROFESSIONAL SEAL 20119 ENGINEER LLOYD D. BROWN

PHASE I

SCALE:	1" = 50'
DATE:	12-18-13
DWG. BY:	JDD
DESIGN BY:	WCC
REVIEWED BY:	LDB

DIVISION OF HIGHWAYS · STATE OF NORTH CAROLINA · WORK ZONE TRAFFIC CONTROL

REVISIONS

CADD FILE

$$$$$SYSTIME$$$$$DGN$$$$$SCENAME$$$$$

PROJ. REFERENCE NO. R-5527B | SHEET NO. TMP-5

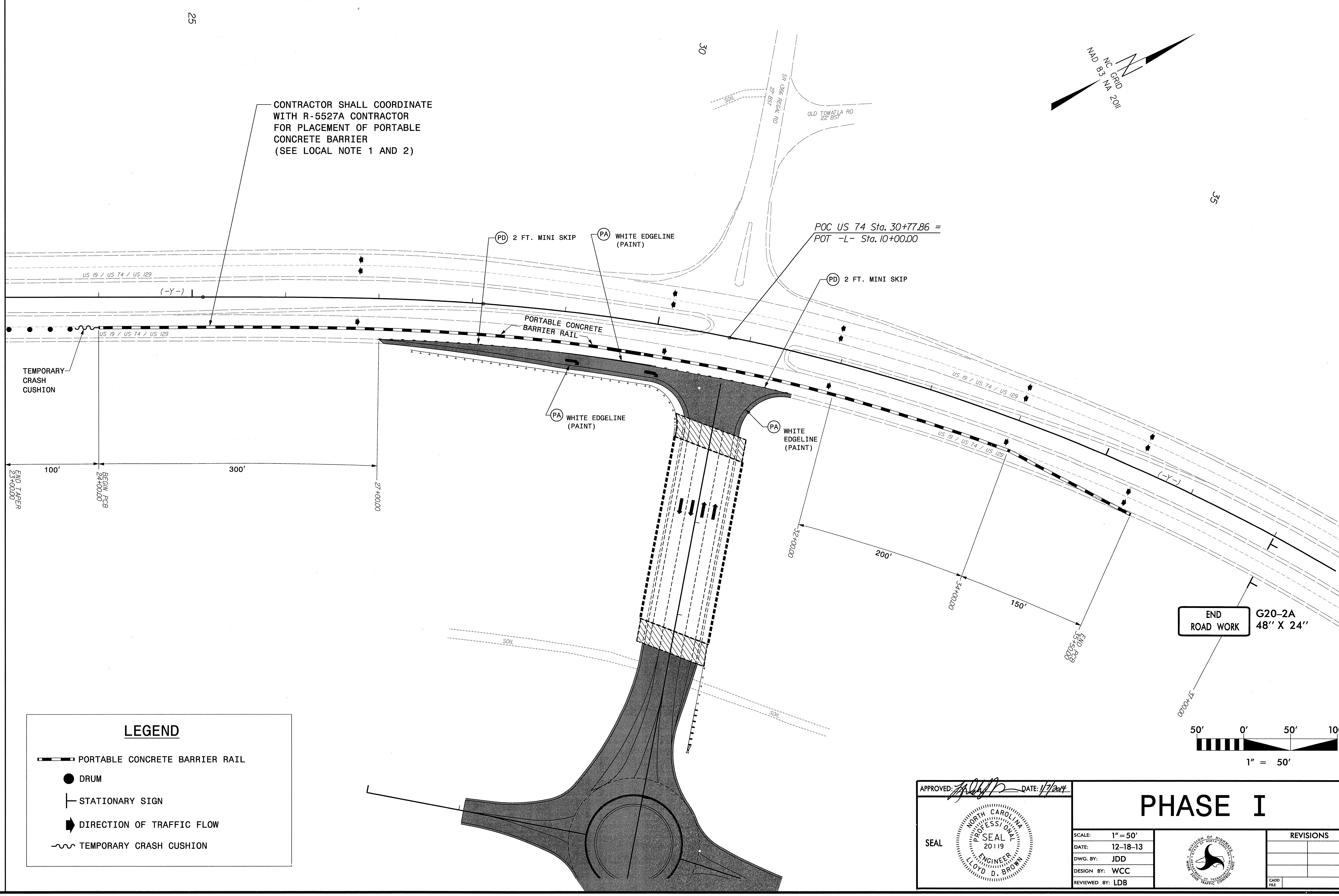

LEGEND

- PORTABLE CONCRETE BARRIER RAIL
- DRUM
- STATIONARY SIGN
- DIRECTION OF TRAFFIC FLOW
- TEMPORARY CRASH CUSHION

50' 0' 50' 100'

1" = 50'

APPROVED: [signature] DATE: 1/7/2014

SEAL

NORTH CAROLINA PROFESSIONAL SEAL 20119 ENGINEER LLOYD D. BROWN

PHASE I

SCALE:	1" = 50'
DATE:	12-18-13
DWG. BY:	JDD
DESIGN BY:	WCC
REVIEWED BY:	LDB

DIVISION OF HIGHWAYS STATE OF NORTH CAROLINA DEPARTMENT OF TRANSPORTATION WORK ZONE TRAFFIC CONTROL UNIT

REVISIONS

CADD FILE

$$$$SYSTIME$$$$
$$$$DGN$$$$$$$$$$$$$$$
$$$$USERNAME$$$$

PROJ. REFERENCE NO.	SHEET NO.
R-5527B	TMP-6

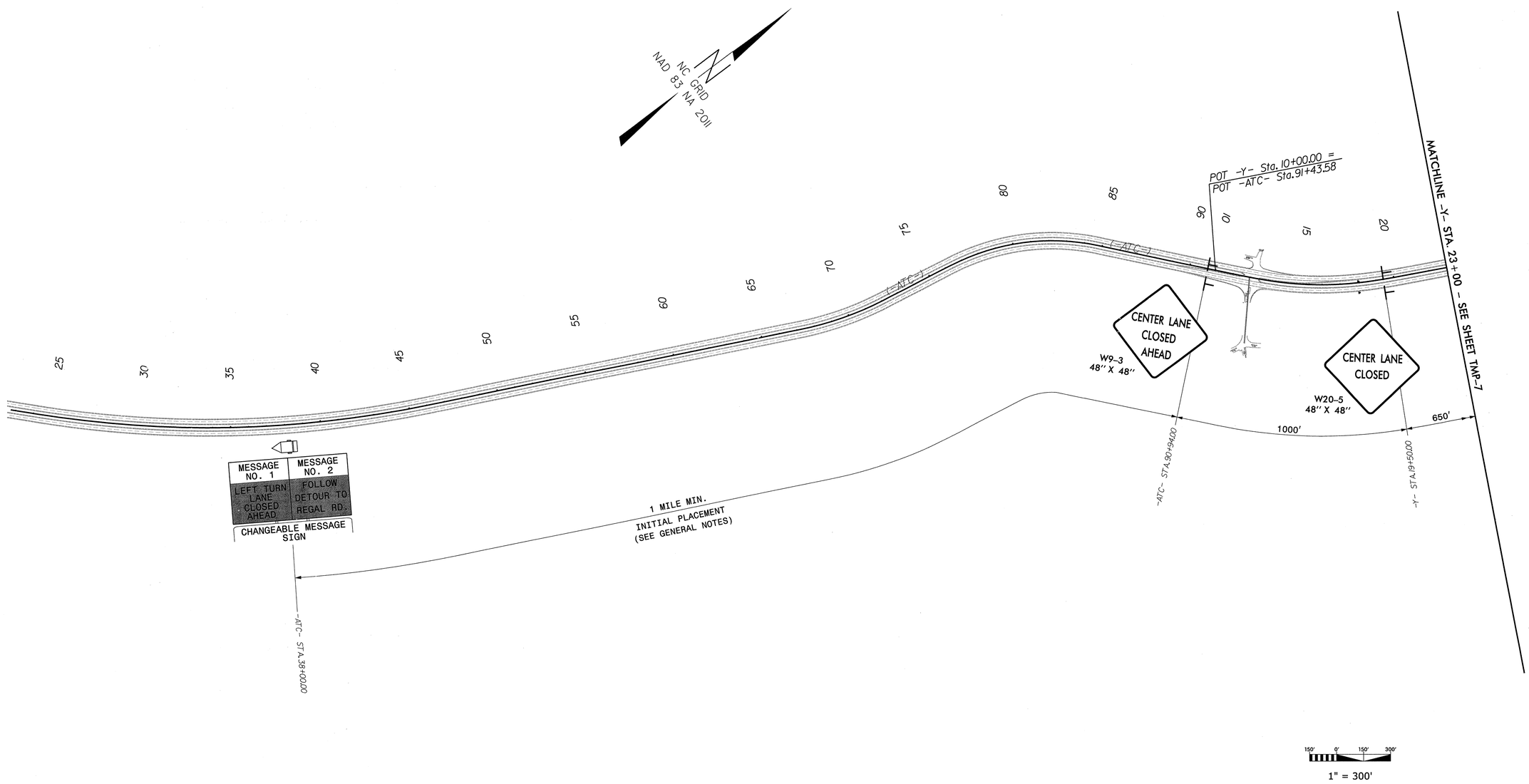

LEGEND

- STATIONARY SIGN
- CHANGEBLE MESSAGE SIGN

APPROVED: DATE: 1/7/2014

SEAL

NORTH CAROLINA PROFESSIONAL SEAL 20119 ENGINEER LLOYD D. BROWN

PHASE II

SCALE:	1" = 300'
DATE:	12-18-13
DWG. BY:	JDD
DESIGN BY:	WCC
REVIEWED BY:	LDB

DIVISION OF HIGHWAYS · STATE OF NORTH CAROLINA · DEPARTMENT OF TRANSPORTATION · WORK ZONE TRAFFIC CONTROL

REVISIONS

CADD FILE

$$$$SYSTIME$$$$
$$$$USERNAME$$$$DGN$$$$$$$$$$$$$$$$$$$$

PROJ. REFERENCE NO.	SHEET NO.
R-5527B	TMP-7

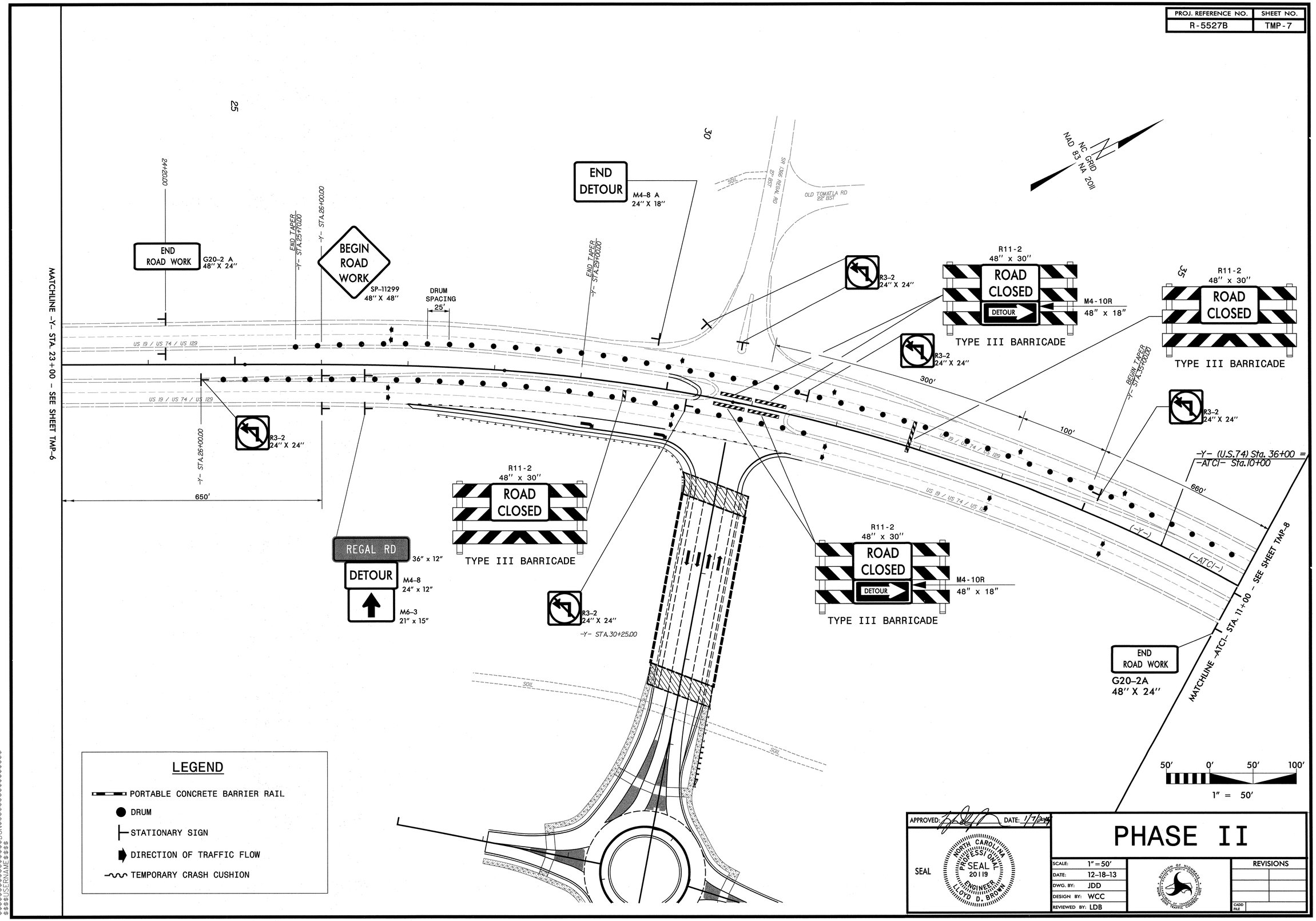

PROJ. REFERENCE NO.	SHEET NO.
R-5527B	TMP-8

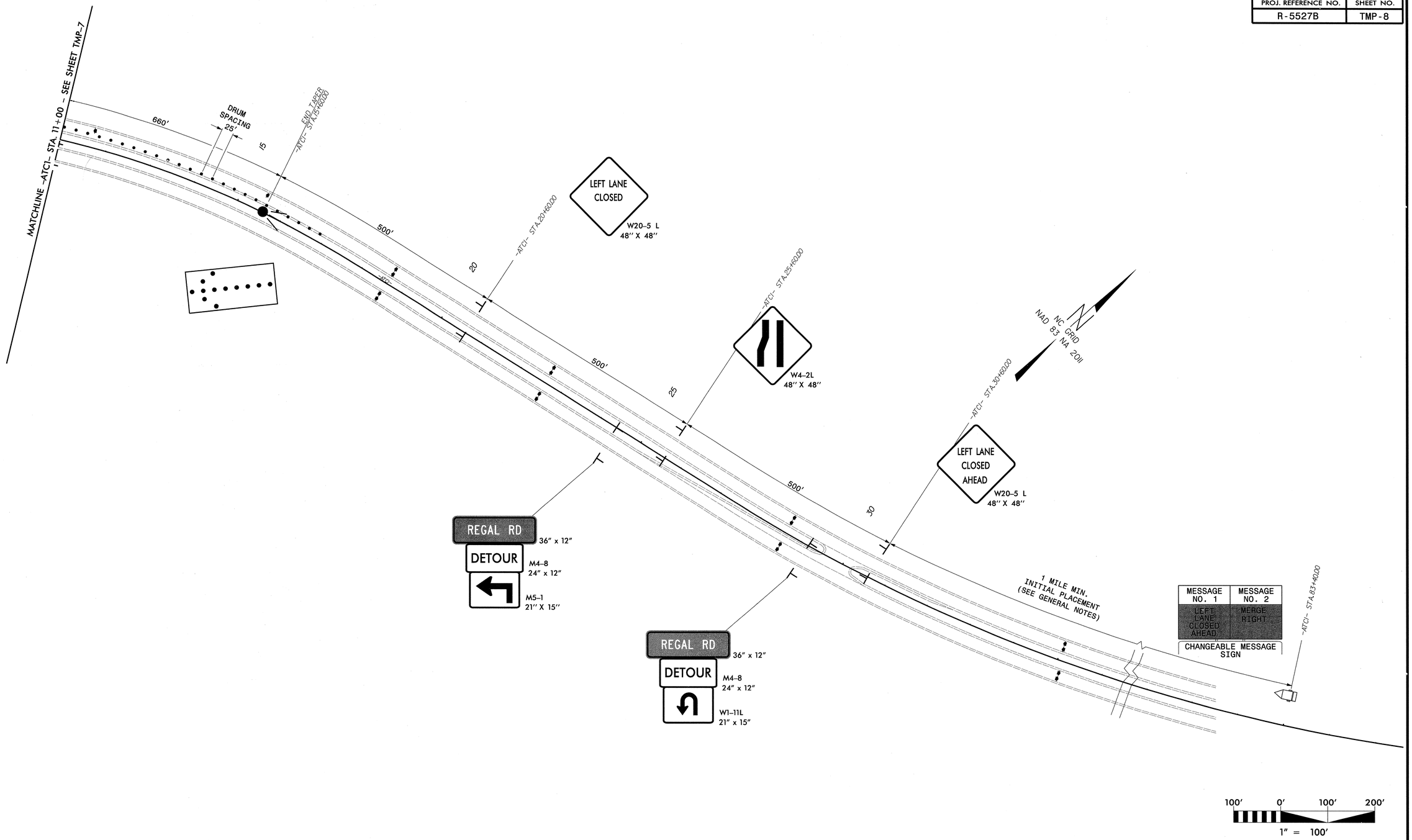

LEGEND

➡ DIRECTION OF TRAFFIC FLOW

APPROVED: DATE: 1/7/2014

SEAL

NORTH CAROLINA PROFESSIONAL SEAL 20119 ENGINEER LLOYD D. BROWN

PHASE II

SCALE:	1" = 100'
DATE:	12-18-13
DWG. BY:	JDD
DESIGN BY:	WCC
REVIEWED BY:	LDB

DIVISION OF HIGHWAYS · STATE OF NORTH CAROLINA · DEPARTMENT OF TRANSPORTATION · WORK ZONE TRAFFIC CONTROL

REVISIONS

CADD FILE

$$$$SYSTIME$$$$
$$$$USERNAME$$$$

PROJ. REFERENCE NO.	SHEET NO.
R-5527B	TMP-9

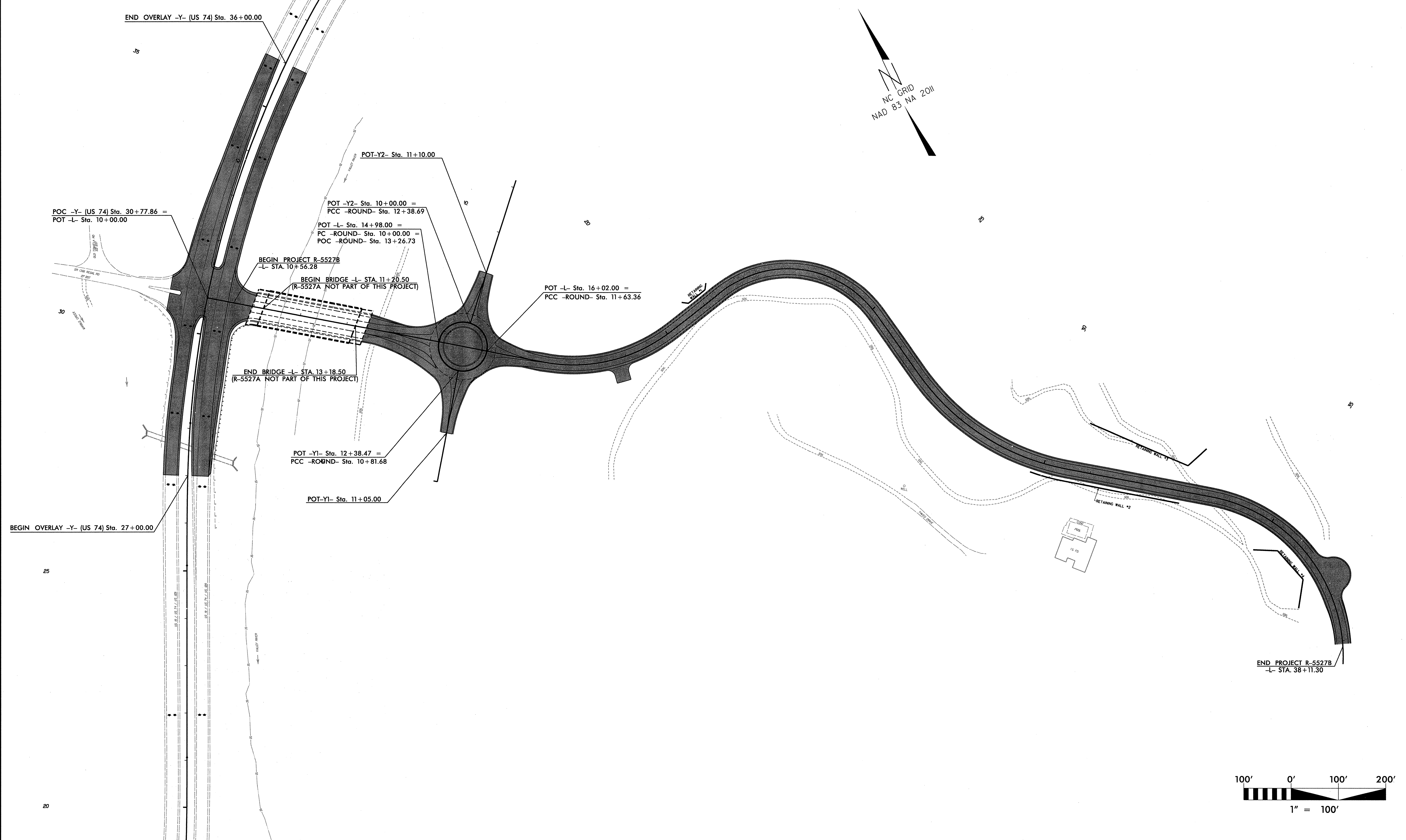

100' 0' 100' 200'

1" = 100'

LEGEND

DIRECTION OF TRAFFIC FLOW

APPROVED: DATE: 1/7/2014

SEAL

NORTH CAROLINA PROFESSIONAL SEAL 20119 ENGINEER LLOYD D. BROWN

PHASE III

SCALE:	1"=100'
DATE:	12-18-13
DWG. BY:	JDD
DESIGN BY:	WCC
REVIEWED BY:	LDB

DIVISION OF HIGHWAYS STATE OF NORTH CAROLINA DEPARTMENT OF TRANSPORTATION WORK ZONE TRAFFIC CONTROL UNIT

REVISIONS

CADD FILE

PROJ. REFERENCE NO.	SHEET NO.
R-5527B	SD-1

SIGN NUMR: REGAL RD
TYPE: D Ground
QUANTITY: 3

BACKG. COLOR: Orange
COPY COLOR: White

DESIGN BY: DAB
PROJECT ID: R-5527B

CHK BY: LDB
DIV: 14

STD #: STD
DATE: December 17, 2013

SIGN WIDTH: 3'-0"
HEIGHT: 1'-0"
TOTAL AREA: 3.00 Sq.Ft.

MAT'L: 0.063 in.(1.6 mm) ALUMINUM

BORDER TYPE: FLUSH
RECESS: 0.47"
WIDTH: 0.63"
RADII: 1.5"

NO. Z BARS:
LENGTH: in.

SYMBOL	X	Y	WID	HT

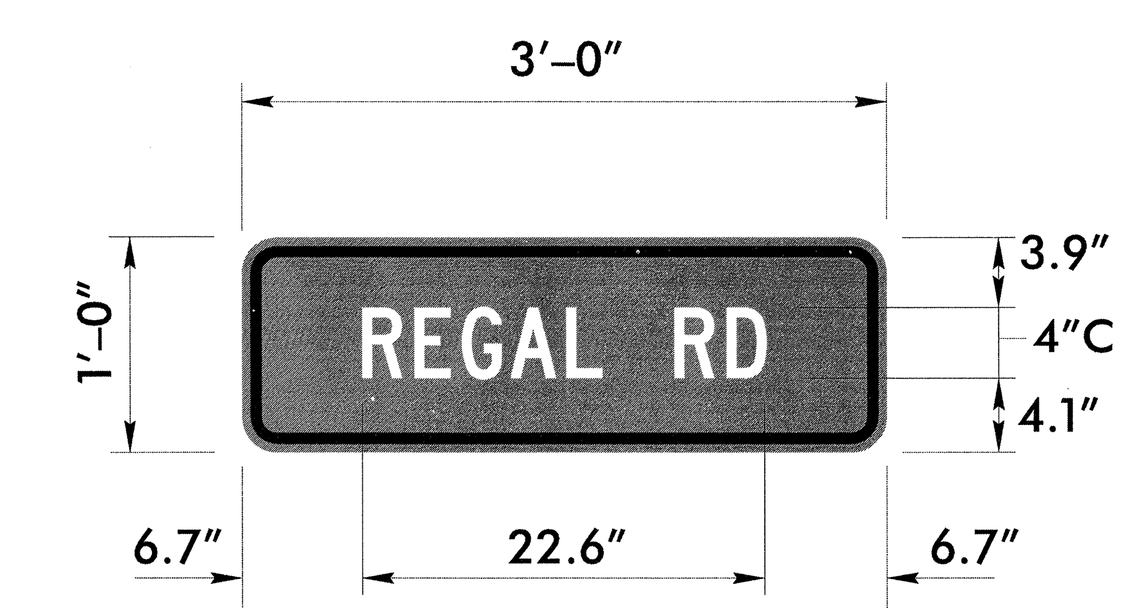

BORDER
R=1.5"
TH=0.63"
IN=0.47"

Panel Style: construction_guide.ssi
M.U.T.C.D.: 2009 Edition

USE NOTES: 1,3,4,6

1. Legend and border shall be direct applied encapsulated lens reflective sheeting.
2. Legend and border shall be direct applied enclosed lens reflective sheeting.
3. Shields shall be encapsulated lens reflective sheeting on 0.8mm aluminum and demountable.
4. Background shall be encapsulated lens reflective sheeting.
5. Background shall be enclosed lens reflective sheeting.
6. Center arrows vertically on sign.

LETTER POSITIONS

Letter spacings are to start of next letter

		R	E	G	A	L		R	D		Series/Size Text Length
	6.7	2.9	2.6	2.7	3.1	2	4.2	2.9	2.2	6.7	C 2000/4.0 22.6

Spacing Factor is 1 unless specified otherwise

FILENAME: GS40_ENGL

$$$$$$SYSTIME$$$$$
$$$$$$$$DGN$$$$$$$$$$$$$$$$$$$$$
$$$$$$USERNAME$$$$

APPROVED: [signature] DATE: 1/7/2014

SEAL

NORTH CAROLINA PROFESSIONAL SEAL 20119 ENGINEER LLOYD D. BROWN

DIVISION OF HIGHWAYS STATE OF NORTH CAROLINA DEPARTMENT OF TRANSPORTATION WORK ZONE TRAFFIC CONTROL

SPECIAL SIGN DESIGN

PROJECT: R-5527B

CONTRACT:

TIP NO.	SHEET NO.
R-5527B	PMP-1

APPROVED: Kit A. Persiani

DATE: 1/3/2014

SEAL

NORTH CAROLINA PROFESSIONAL SEAL 021655 ENGINEER KIT A. PERSIANI

STATE OF NORTH CAROLINA
DEPARTMENT OF TRANSPORTATION

PAVEMENT MARKING PLAN
CHEROKEE COUNTY

INDEX

SHEET NO.	DESCRIPTION
PMP-1	PAVEMENT MARKING PLAN COVER SHEET
PMP-1A	PAVEMENT MARKING SCHEDULE
PMP-2 THRU PMP-4	PAVEMENT MARKING DETAILS

ROADWAY STANDARD DRAWING

THE FOLLOWING ROADWAY STANDARDS AS APPEAR IN "ROADWAY STANDARD DRAWINGS" - PROJECT SERVICES UNIT - N.C. DEPARTMENT OF TRANSPORTATION - RALEIGH, N.C., DATED JANUARY 2012 ARE APPLICABLE TO THIS PROJECT AND BY REFERENCE HEREBY ARE CONSIDERED A PART OF THESE PLANS:

STD. NO.	TITLE
1205.01	PAVEMENT MARKINGS - LINE TYPES AND OFFSETS
1205.02	PAVEMENT MARKINGS - TWO-LANE AND MULTILANE ROADWAYS
1205.04	PAVEMENT MARKINGS - INTERSECTIONS
1205.05	PAVEMENT MARKINGS - TURN LANES
1205.08	PAVEMENT MARKINGS - SYMBOL AND WORD MESSAGES
1205.12	PAVEMENT MARKINGS - BRIDGES
1250.01	RAISED PAVEMENT MARKERS - INSTALLATION SPACING
1251.01	RAISED PAVEMENT MARKERS - PERMANENT AND TEMPORARY
1253.01	RAISED PAVEMENT MARKERS - SNOWPLOWABLE
1261.01	GUARDRAIL AND BARRIER DELINEATORS - INSTALLATION SPACING
1261.02	GUARDRAIL AND BARRIER DELINEATORS - TYPES AND MOUNTING
1262.01	GUARDRAIL END DELINEATION

GENERAL NOTES

THE FOLLOWING GENERAL NOTES APPLY AT ALL TIMES FOR THE DURATION OF THE CONSTRUCTION PROJECT, EXCEPT WHEN OTHERWISE NOTED IN THE PLAN, OR DIRECTED BY THE ENGINEER.

A) INSTALL PAVEMENT MARKINGS AND PAVEMENT MARKERS ON THE FINAL SURFACE AS FOLLOWS:

ROAD NAME	MARKING	MARKER
US 19 / US 74 / US 129	THERMOPLASTIC	SNOWPLOWABLE
CASINO ROAD (BRIDGE)	COLD APPLIED PLASTIC	RAISED
CASINO ROAD	THERMOPLASTIC	SNOWPLOWABLE

B) TYPE III COLD APPLIED PLASTIC MAY BE USED IN LIEU OF TYPE II COLD APPLIED PLASTIC. IF TYPE III COLD APPLIED PLASTIC IS USED, IT SHALL BE PAID FOR USING THE TYPE II COLD APPLIED PLASTIC PAY ITEM.

C) TIE PROPOSED PAVEMENT MARKING LINES TO EXISTING PAVEMENT MARKING LINES.

D) REMOVE/REPLACE ANY CONFLICTING/DAMAGED PAVEMENT MARKINGS AND MARKERS.

E) PASSING ZONES WILL BE DETERMINED IN THE FIELD AND MUST BE APPROVED BY THE ENGINEER.

F) REMOVE ALL RESIDUE AND SURFACE LAITANCE BY ACCEPTABLE METHODS ON THE CONCRETE SURFACES PRIOR TO PLACING COLD APPLIED PLASTIC PAVEMENT MARKING MATERIAL.

PLAN PREPARED BY:
STV /Ralph Whitehead Associates, Inc.

KIT A. PERSIANI, PE TRAFFIC ENGINEER

CLARK E. GROVES TRANSPORTATION DESIGNER

STV/ Ralph Whitehead Associates, Inc.
900 West Trade St., Ste. 715
Charlotte, NC 28202
NC License Number F-0991

1/2/2014
R:\Roadway\Proj\PMP - 5527\5527B_rdy_PMP_psh01.dgn
yordanns

FINAL PAVEMENT MARKING SCHEDULE

SYMBOL	DESCRIPTION

PAVEMENT MARKINGS

THERMOPLASTIC (12", 120 MILS)

T10	3 FT. - 3 FT. / SP WHITE MINISKIP

THERMOPLASTIC (24", 120 MILS)

T2	WHITE STOPBAR
T3	WHITE CROSSWALK LINE

COLD APPLIED PLASTIC (4") TYPE 2 - PERMANENT HIGH PERFORMANCE

CC	10' WHITE SKIP
CD	3 FT. - 9 FT. / SP WHITE MINISKIP
CE	WHITE SOLID LANE LINE
CI	YELLOW DOUBLE CENTER

THERMOPLASTIC (4", 120 MIL)

T8	2 FT. - 6 FT. / SP WHITE MINISKIP
TC	10 FT. WHITE SKIP
TD	3 FT. - 9 FT. / SP WHITE MINISKIP
TE	WHITE SOLID LANE LINE
TI	YELLOW DOUBLE CENTER

THERMOPLASTIC (4", 90 MIL)

TA	WHITE EDGELINE
TB	YELLOW EDGELINE

COLD APPLIED PLASTIC (8") TYPE 2 - PERMANENT HIGH PERFORMANCE

C13	3 FT. - 9 FT. / SP WHITE MINISKIP
CR	WHITE SOLID LANE LINE

THERMOPLASTIC (8", 120 MILS)

T13	3 FT. - 9 FT. / SP WHITE MINISKIP
TR	WHITE SOLID LANE LINE

THERMOPLASTIC (8", 90 MILS)

TN	WHITE GORELINE

COLD APPLIED PLASTIC PAVEMENT MARKING CHARACTER - TYPE 2 - PERMANENT HIGH PERFORMANCE

DI	ALPHANUMERIC CHARACTER

COLD APPLIED PLASTIC PAVEMENT MARKING SYMBOL - TYPE 2 - PERMANENT HIGH PERFORMANCE

DA	LEFT TURN ARROW
DB	RIGHT TURN ARROW
DE	COMBO STRAIGHT / RIGHT
DJ	BICYCLE SYMBOL
DK	BICYCLE STRAIGHT ARROW
XB	FISH-HOOK W/ CIRCLE LEFT / STRAIGHT ARROW

THERMOPLASTIC PAVEMENT MARKING SYMBOL (90 MIL)

UA	LEFT TURN ARROW
UB	RIGHT TURN ARROW
UC	STRAIGHT ARROW
UJ	BICYCLE SYMBOL
UK	BICYCLE STRAIGHT ARROW
UN	24" YEILD LINE TRIANGLE
WB	FISH - HOOK W/ CIRCLE LEFT/ STRAIGHT ARROW
WC	FISH - HOOK W/ CIRCLE LEFT/ RIGHT/ STRAIGHT ARROW

MARKERS

SNOWPLOWABLE RAISED PAVEMENT MARKERS

ME	YELLOW AND YELLOW
MF	CRYSTAL AND RED

PERMANENT RAISED PAVEMENT MARKERS

MB	CRYSTAL AND RED

STV/Ralph Whitehead Associates, Inc.
900 West Trade St., Ste. 715
Charlotte, NC 28202
NC License Number F-0991

TIP NO.	SHEET NO.
R-5527B	PMP-1A

APPROVED: [signature]

DATE: 2/11/2014

SEAL

NORTH CAROLINA PROFESSIONAL SEAL 021655 ENGINEER KIT A. PERSIANI

2/11/2014
I:\Projects\2516009\2516009.1003\50_Deliverables & Submittals\R-5527\Roadway\Proj\PMP - 5527\5527B_rdy_PMP_psh01A.dgn
jpersiani

STV/ Ralph Whitehead Associates, Inc.
900 West Trade St., Ste. 715
Charlotte, NC 28202
NC License Number F-0991

TIP NO.	SHEET NO.
R-5527B	PMP-2

APPROVED: Kit A. Persiani

DATE: 2/10/2014

SEAL

NORTH CAROLINA PROFESSIONAL SEAL 021655 ENGINEER KIT A. PERSIANI

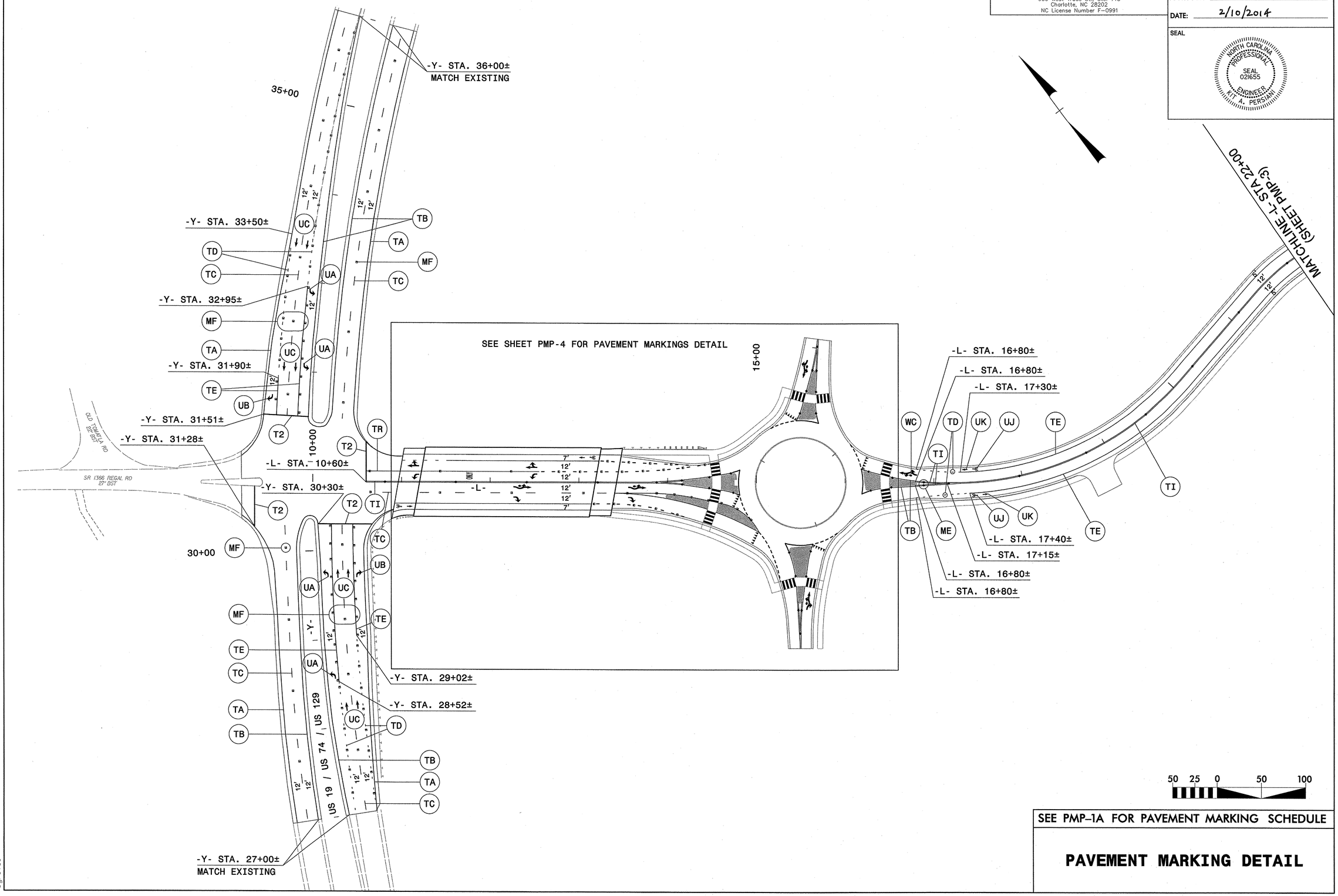

SEE PMP-1A FOR PAVEMENT MARKING SCHEDULE

PAVEMENT MARKING DETAIL

2/10/2014
R:\Roadway\Proj\PMP - 5527\5527B_rdy_PMP_psh02.dgn
cgroves

8/17/99

STV/ Ralph Whitehead Associates, Inc.
900 West Trade St., Ste. 715
Charlotte, NC 28202
NC License Number F-0991

TIP NO.	SHEET NO.
R-5527B	PMP-3

APPROVED: Kit A Persiani

DATE: 2/10/2014

SEAL

NORTH CAROLINA PROFESSIONAL SEAL 021655 ENGINEER KIT A. PERSIANI

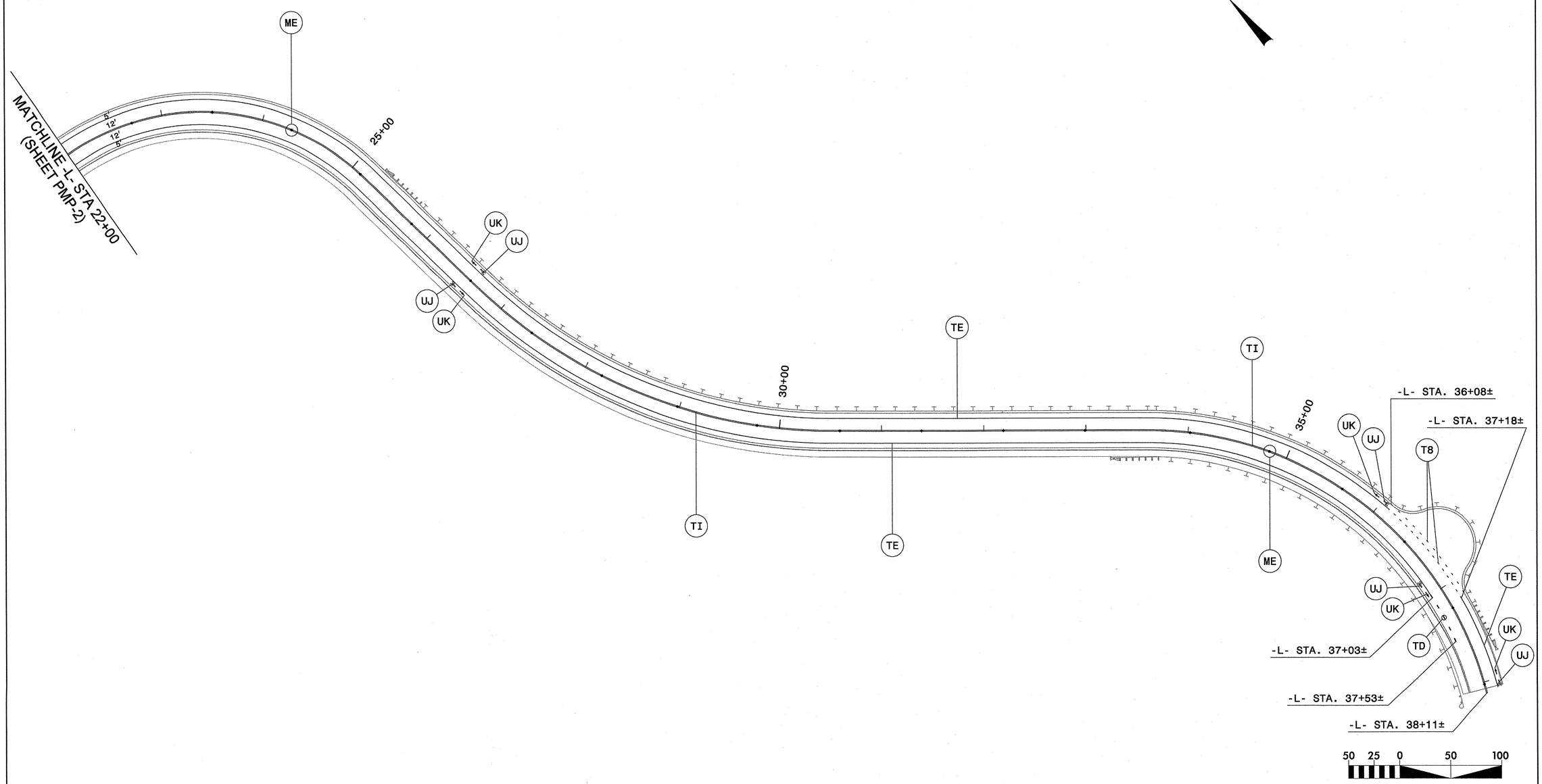

SEE PMP-1A FOR PAVEMENT MARKING SCHEDULE

PAVEMENT MARKING DETAIL

2/10/2014
R:\Roadway\Proj\PMP - 5527\5527B_rdy_PMP_psh03.dgn
cgroves

STV / Ralph Whitehead Associates, Inc.
900 West Trade St., Ste. 715
Charlotte, NC 28202
NC License Number F-0991

TIP NO.	SHEET NO.
R-5527B	PMP-4

APPROVED: [signature]

DATE: 2/10/2014

SEAL

NORTH CAROLINA PROFESSIONAL SEAL 021655 ENGINEER KIT A. PERSIAN

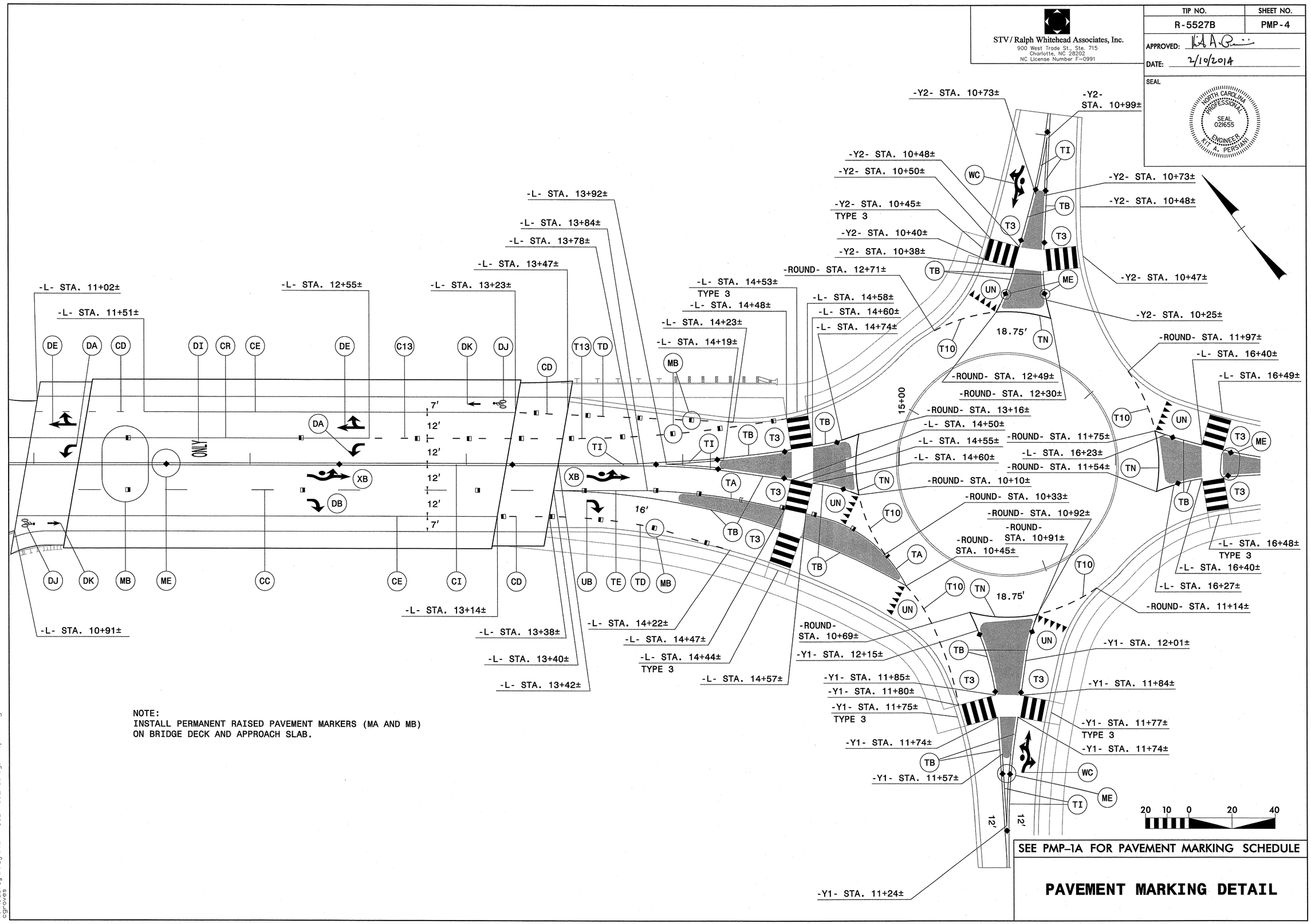

NOTE:
INSTALL PERMANENT RAISED PAVEMENT MARKERS (MA AND MB)
ON BRIDGE DECK AND APPROACH SLAB.

SEE PMP-1A FOR PAVEMENT MARKING SCHEDULE

PAVEMENT MARKING DETAIL

2/10/2014
R:\Roadway\Proj\PMP - 5527\5527B_rdg_PMP_psh04.dgn
cgroves

STRUCTURE: R-5527B

CONTRACT: C203454

STATE OF NORTH CAROLINA
DIVISION OF HIGHWAYS

PLANS FOR PROPOSED

HIGHWAY EROSION CONTROL

CHEROKEE COUNTY

LOCATION: NEW ROUTE FROM US 74 TO ECBI TRIBAL BOUNDARY IN CHEROKEE COUNTY

TYPE OF WORK: GRADING, DRAINAGE, PAVING, AND STRUCTURES

STATE	STATE PROJECT REFERENCE NO.	SHEET NO.	TOTAL SHEETS
N.C.	R-5527B	EC-1	

STATE PROJ. NO.	F.A. PROJ. NO.	DESCRIPTION

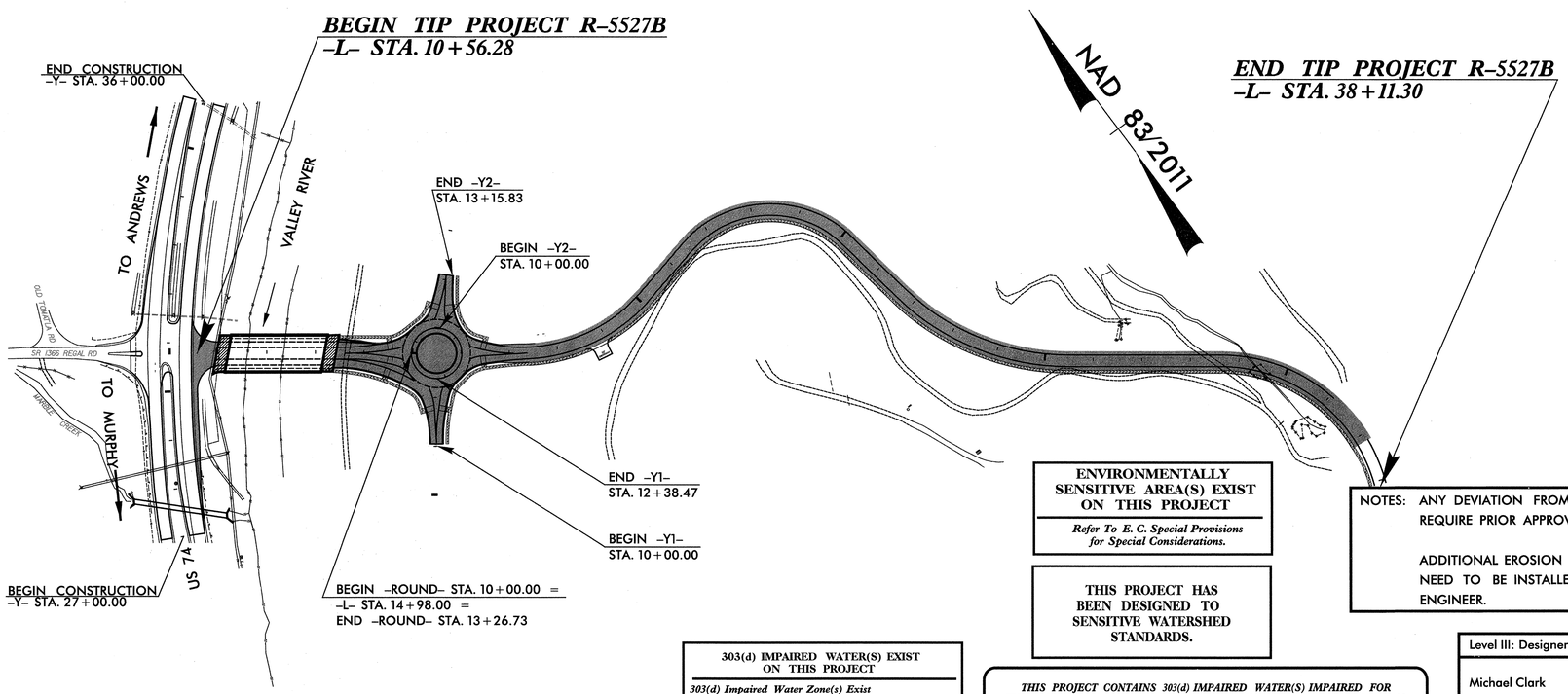

EROSION AND SEDIMENT CONTROL MEASURES

Std. #	Description	Symbol
1630.03	Temporary Silt Ditch	TSD
1630.05	Temporary Diversion	TD
1605.01	Temporary Silt Fence	
1606.01	Special Sediment Control Fence	
1622.01	Temporary Berms and Slope Drains	
1630.02	Silt Basin Type B	
1633.01	Temporary Rock Silt Check Type-A	
	Temporary Rock Silt Check Type-A with Matting and Polyacrylamide (PAM)	
1633.02	Temporary Rock Silt Check Type-B	
	Wattle / Coir Fiber Wattle	EW CFW
	Wattle / Coir Fiber Wattle with Polyacrylamide (PAM)	
1634.01	Temporary Rock Sediment Dam Type-A	
1634.02	Temporary Rock Sediment Dam Type-B	
1635.01	Rock Pipe Inlet Sediment Trap Type-A	
1635.02	Rock Pipe Inlet Sediment Trap Type-B	
1630.04	Stilling Basin	
1630.06	Special Stilling Basin	
	Rock Inlet Sediment Trap:	
1632.01	Type A	A
1632.02	Type B	B
1632.03	Type C	C
	Skimmer Basin	
	Tiered Skimmer Basin	
	Infiltration Basin	

ENVIRONMENTALLY SENSITIVE AREA(S) EXIST ON THIS PROJECT

Refer To E. C. Special Provisions for Special Considerations.

THIS PROJECT HAS BEEN DESIGNED TO SENSITIVE WATERSHED STANDARDS.

NOTES: ANY DEVIATION FROM OPTIONS GIVEN WILL REQUIRE PRIOR APPROVAL BY ENGINEER.

ADDITIONAL EROSION CONTROL DEVICES MAY NEED TO BE INSTALLED AS DIRECTED BY THE ENGINEER.

THIS PROJECT CONTAINS EROSION CONTROL PLANS FOR CLEARING AND GRUBBING PHASE OF CONSTRUCTION.

303(d) IMPAIRED WATER(S) EXIST ON THIS PROJECT

303(d) Impaired Water Zone(s) Exist From Sta. 10+96.52 to Sta. 13+42.48
Refer To E. C. Special Provisions for Special Considerations.

THIS PROJECT CONTAINS 303(d) IMPAIRED WATER(S) IMPAIRED FOR TURBIDITY FROM STORMWATER-RELATED IMPACTS, OR THE PROJECT IS WITHIN ONE MILE AND DRAINS TO WATER(S) LISTED ON THE 303(d) LIST FOR TURBIDITY IMPAIRMENT. THE CONTRACTOR SHALL ADHERE TO ALL CONDITIONS AND REGULATIONS REQUIRED FOR IMPACTS TO THESE WATERS.

Level III: Designer of Erosion and Sediment Control Plans

Michael Clark
Date Issued: June 5, 2013
Date Expires: December 13, 2016
Certification Number: 3376

V&M
Vaughn & Melton
Consulting Engineers
Asheville, North Carolina 828-253-2796
Charlotte, North Carolina 704-357-0488
Tri-Cities, Tennessee 423-467-9413
Knoxville, Tennessee 865-546-5800
Middlesboro, Kentucky 606-248-6600
Spartanburg, South Carolina 864-574-4775

Copyright © 1994 Vaughn & Melton, Inc.
All Rights Reserved

GRAPHIC SCALES

20 10 0 20 40
PLANS

ROADSIDE ENVIRONMENTAL UNIT
DIVISION OF HIGHWAYS
STATE OF NORTH CAROLINA

THESE EROSION AND SEDIMENT CONTROL PLANS COMPLY WITH THE REGULATIONS SET FORTH BY THE NCG-010000 GENERAL CONSTRUCTION PERMIT EFFECTIVE AUGUST 3, 2011 ISSUED BY THE NORTH CAROLINA DEPARTMENT OF ENVIRONMENT AND NATURAL RESOURCES DIVISION OF WATER QUALITY.

Prepared In the Office of:
VAUGHN & MELTON
1318-F PATTON AVE.
ASHEVILLE NC, 28806
FOR THE NORTH CAROLINA DIVISION OF HIGHWAYS

REECE SHULER, PE
PROJECT ENGINEER

MICHAEL CLARK
PROJECT DESIGN ENGINEER

NCDOT CONTACT:
RALPH CANNADY
DIVISION CONTRACT OFFICER

Roadway Standard Drawings

The following roadway english standards as appear in "Roadway Standard Drawings"- Roadway Design Unit - N. C. Department of Transportation - Raleigh, N. C., dated January 2012 and the latest revison thereto are applicable to this project and by reference hereby are considered a part of these plans.

1604.01	Railroad Erosion Control Detail	1632.01	Rock Inlet Sediment Trap Type A
1605.01	Temporary Silt Fence	1632.02	Rock Inlet Sediment Trap Type B
1606.01	Special Sediment Control Fence	1632.03	Rock Inlet Sediment Trap Type C
1607.01	Gravel Construction Entrance	1633.01	Temporary Rock Silt Check Type A
1622.01	Temporary Berms and Slope Drains	1633.02	Temporary Rock Silt Check Type B
1630.01	Riser Basin	1634.01	Temporary Rock Sediment Dam Type A
1630.02	Silt Basin Type B	1634.02	Temporary Rock Sediment Dam Type B
1630.03	Temporary Silt Ditch	1635.01	Rock Pipe Inlet Sediment Trap Type A
1630.04	Stilling Basin	1635.02	Rock Pipe Inlet Sediment Trap Type B
1630.05	Temporary Diversion	1640.01	Coir Fiber Baffle
1630.06	Special Stilling Basin	1645.01	Temporary Stream Crossing
1631.01	Matting Installation		

PROJECT REFERENCE NO.	SHEET NO.
R-5527B	EC-2
R/W SHEET NO.	
ROADWAY DESIGN ENGINEER	HYDRAULICS ENGINEER

SKIMMER BASIN WITH BAFFLES DETAIL

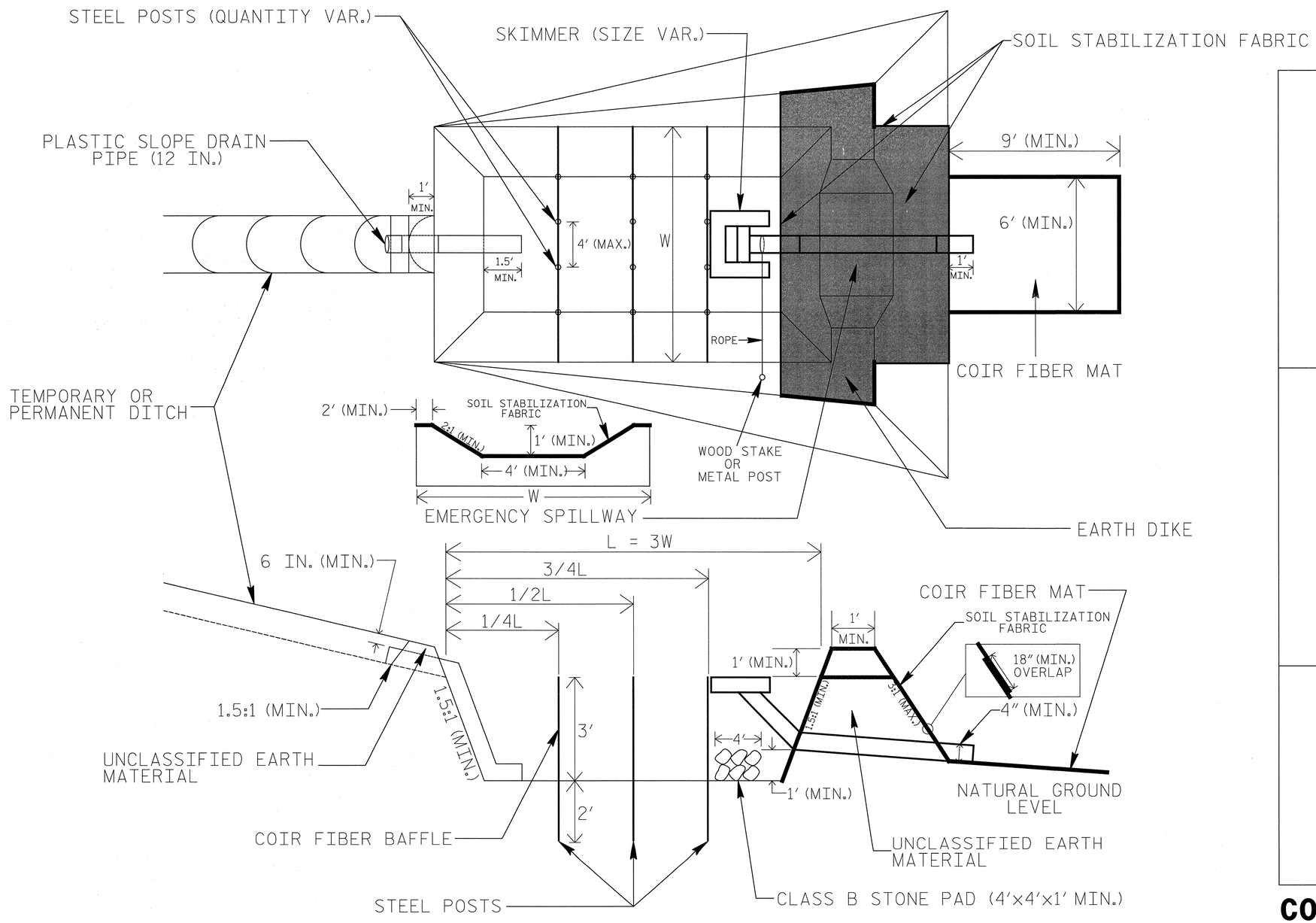

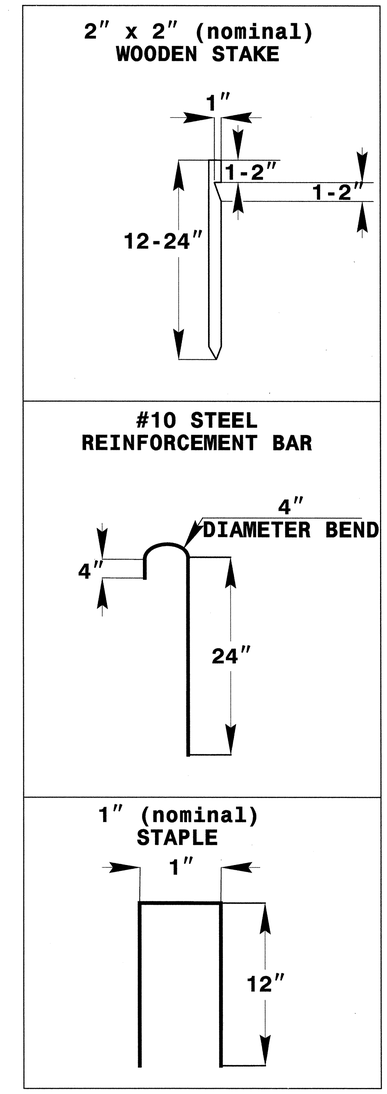

COIR FIBER MAT ANCHOR OPTIONS

NOTES

1. SEED AND PLACE MATTING FOR EROSION CONTROL ON INTERIOR AND EXTERIOR SIDESLOPES.
2. LIMIT EARTH DIKE HEIGHT TO 5 FT.
3. FOR BASIN DEPTH OF 3 FT., THE MINIMUM BASIN WIDTH SHALL BE 9 FT.
4. DETERMINE EMERGENCY SPILLWAY LENGTH (FT.) USING Q/0.8, WHERE Q IS FLOW RATE (CFS) INTO BASIN.
5. PLASTIC SLOPE DRAIN PIPE AT INLET OF BASIN MAY BE REPLACED BY FILTER FABRIC AS DIRECTED.
6. SOIL STABILIZATION FABRIC FOR EMERGENCY SPILLWAY SHALL BE ONE CONTINUOUS PIECE OF MATERIAL OR OVERLAPPED 18" AS SHOWN.

NOT TO SCALE

PROJECT REFERENCE NO.	SHEET NO.
R-5527B	EC-2A
R/W SHEET NO.	
ROADWAY DESIGN ENGINEER	HYDRAULICS ENGINEER

TEMPORARY ROCK SILT CHECK TYPE 'A' WITH EXCELSIOR MATTING AND POLYACRYLAMIDE (PAM)

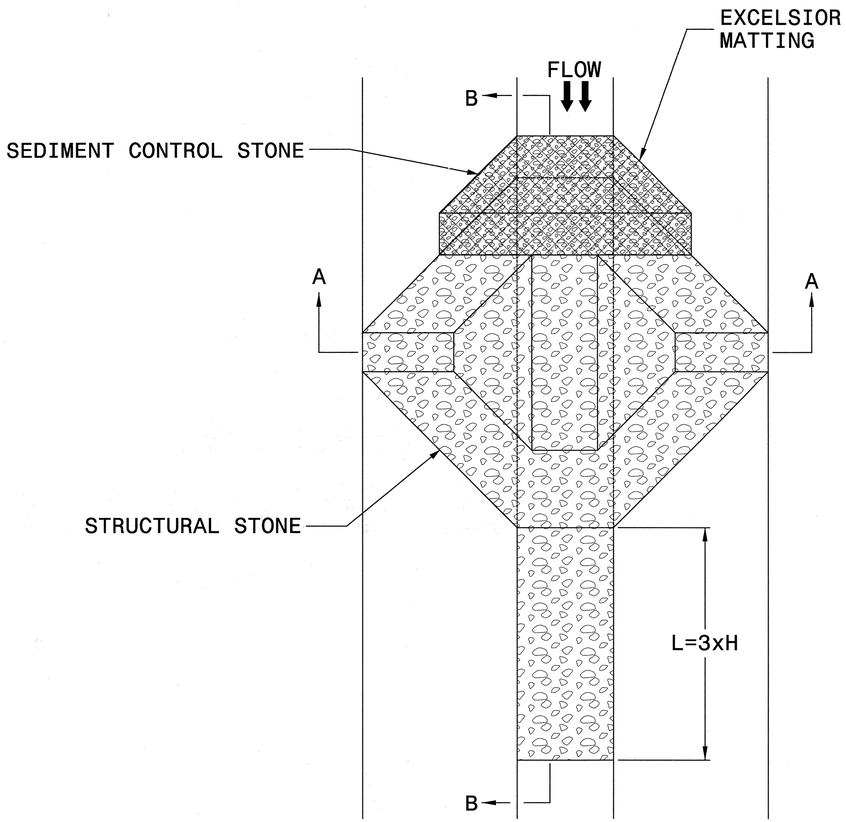

PLAN

NOTES

USE EXCELSIOR FOR MATTING MATERIAL AND ANCHOR MATTING SECTION AT TOP AND BOTTOM WITH CLASS B STONE.

PRIOR TO POLYACRYLAMIDE (PAM) APPLICATION, OBTAIN A SOIL SAMPLE FROM PROJECT LOCATION, AND FROM OFFSITE MATERIAL, AND ANALYZE FOR APPROPRIATE PAM FLOCCULANT TO BE APPLIED TO EACH ROCK SILT CHECK.

INITIALLY APPLY 3.5 OUNCES OF POLYACRYLAMIDE (PAM) TO TOP OF MATTING SECTION AND AFTER EVERY RAINFALL EVENT THAT EQUALS OR EXCEEDS 0.50 INCHES.

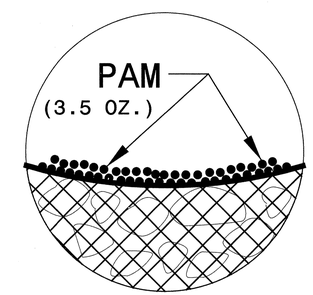

INSET A

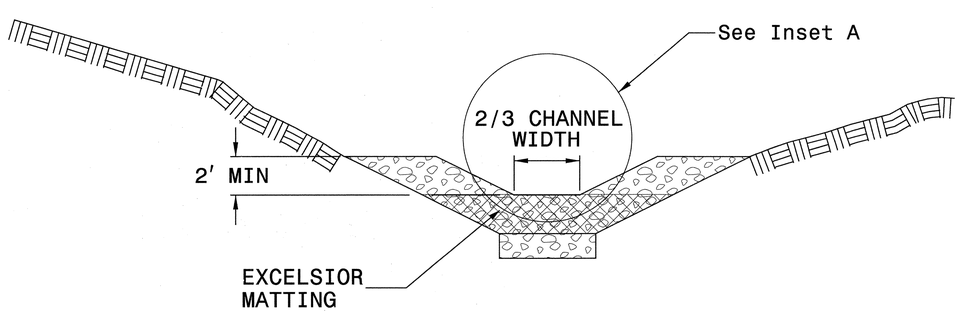

SECTION A-A

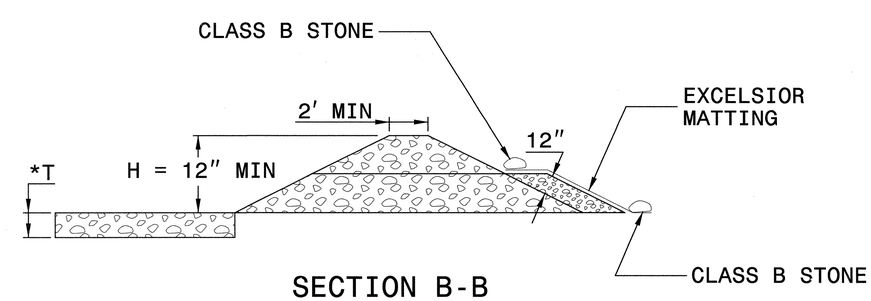

SECTION B-B

*T = 12" MIN., 18" MAX.

NOT TO SCALE

PROJECT REFERENCE NO.	SHEET NO.
R-5527B	EC-3

DIVISION OF HIGHWAYS
STATE OF NORTH CAROLINA

SOIL STABILIZATION SUMMARY SHEET

MATTING FOR EROSION CONTROL

CONST SHEET NO.	LINE	FROM STATION	TO STATION	SIDE	ESTIMATE (SY)
5	L	27+50	33+50	LT	870
5	L	27+50	33+50	RT	870
6	L	33+50	38+11	LT	645
6	L	33+50	38+11	RT	645
				SUBTOTAL	3,030
MISCELLANEOUS MATTING TO BE INSTALLED AS DIRECTED BY THE ENGINEER					35,000
				TOTAL	38,030
				SAY	40,000

PERMANENT SOIL REINFORCEMENT MAT

CONST SHEET NO.	LINE	FROM STATION	TO STATION	SIDE	ESTIMATE (SY)
7&8	L	18+50	27+00	RT	706
				SUBTOTAL	706
		ADDITIONAL PSRM TO BE INSTALLED			
				TOTAL	706
				SAY	710

PROJECT REFERENCE NO.	SHEET NO.
R-5527B	EC-3A
R/W SHEET NO.	
ROADWAY DESIGN ENGINEER	HYDRAULICS ENGINEER

STATE OF NORTH CAROLINA
DIVISION OF HIGHWAYS

SOIL STABILIZATION TIMEFRAMES

SITE DESCRIPTION	STABILIZATION TIME	TIMEFRAME EXCEPTIONS
PERIMETER DIKES, SWALES, DITCHES, AND SLOPES	7 DAYS	NONE
HIGH QUALITY WATER (HQW) ZONES	7 DAYS	NONE
SLOPES STEEPER THAN 3:1	7 DAYS	IF SLOPES ARE 10' OR LESS IN LENGTH AND ARE NOT STEEPER THAN 2:1, 14 DAYS ARE ALLOWED.
SLOPES 3:1 OR FLATTER	14 DAYS	7 DAYS FOR SLOPES GREATER THAN 50' IN LENGTH.
ALL OTHER AREAS WITH SLOPES FLATTER THAN 4:1	14 DAYS	NONE, EXCEPT FOR PERIMETERS AND HQW ZONES.

PROJECT REFERENCE NO.	SHEET NO.
R-5527B	EC4/CONST.4
R/W SHEET NO.	
ROADWAY DESIGN ENGINEER	HYDRAULICS ENGINEER

ENVIRONMENTALLY SENSITIVE AREA
SEE PROJECT SPECIAL PROVISIONS

NOTE:
PLACE TEMPORARY ROCK SEDIMENT DAMS TYPE – B AND TEMPORARY ROCK SILT CHECKS TYPE – A AT DRAINAGE OUTLETS.

CLEARING AND GRUBBING
EROSION CONTROL
FOR CONSTRUCTION SHEET 4

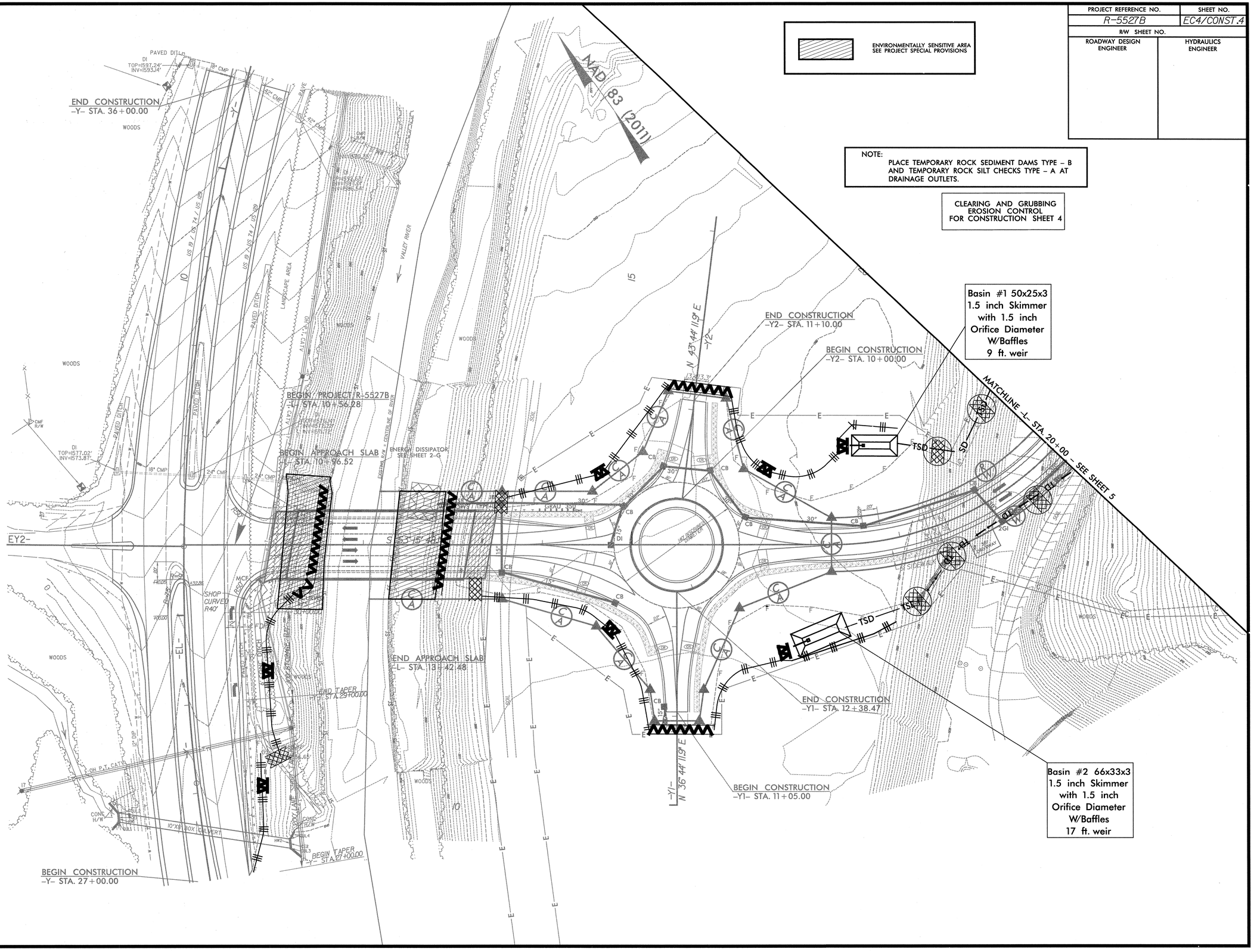

REVISIONS

8/17/99

$$$$SYSTIME$$$$
$$$$DGN$$$$

PROJECT REFERENCE NO.	SHEET NO.
R-5527B	EC5/CONST.5
R/W SHEET NO.	
ROADWAY DESIGN ENGINEER	HYDRAULICS ENGINEER

NOTE:
PLACE TEMPORARY ROCK SEDIMENT DAMS TYPE – B AND TEMPORARY ROCK SILT CHECKS TYPE – A AT DRAINAGE OUTLETS.

CLEARING AND GRUBBING
EROSION CONTROL
FOR CONSTRUCTION SHEET 5

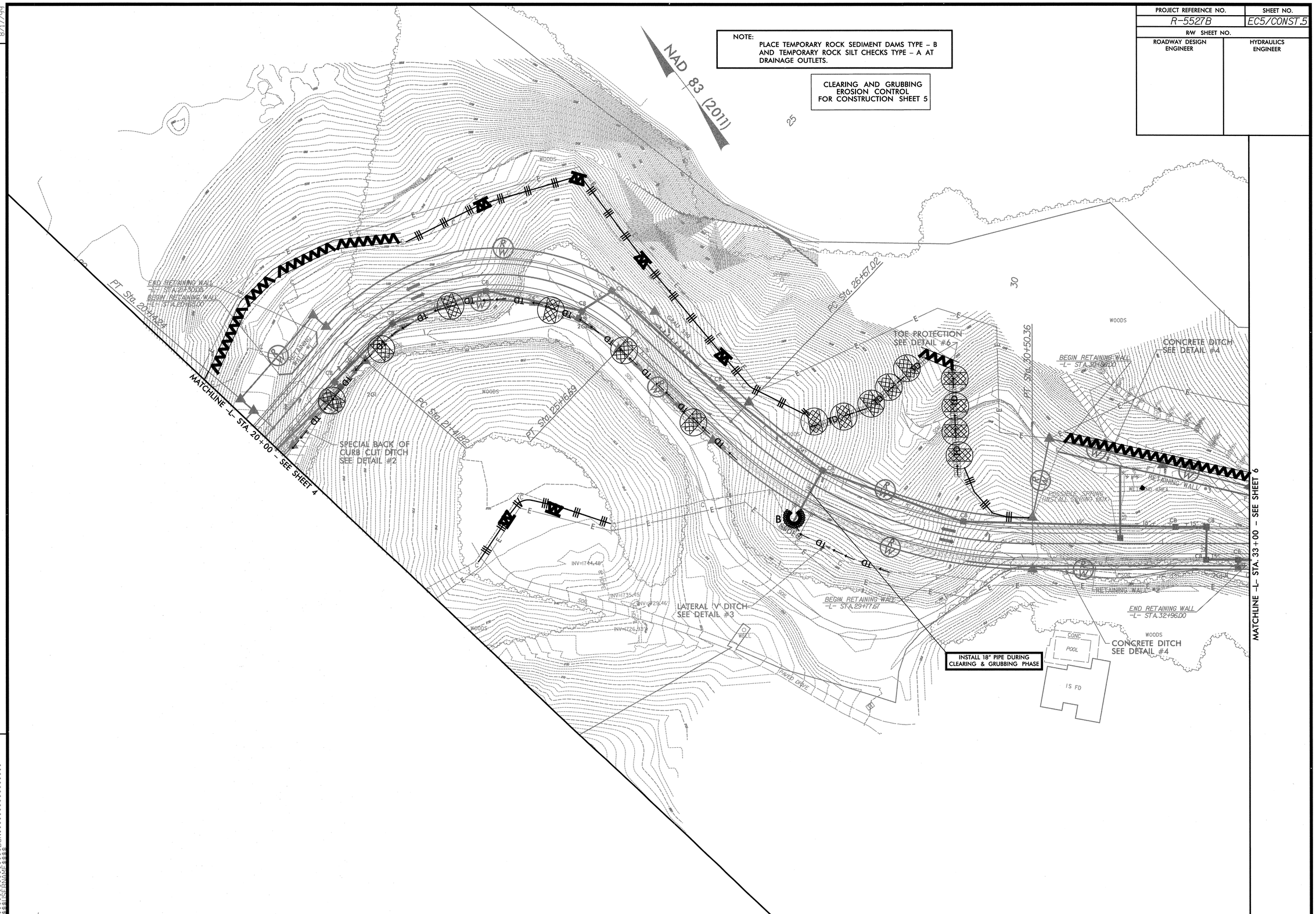

REVISIONS

8/17/99

$$$$YSTIME$$$$
$$$$DGN$$$$
USERNAME$$$$

PROJECT REFERENCE NO.	SHEET NO.
R-5527B	EC-6/CONST.6
R/W SHEET NO.	
ROADWAY DESIGN ENGINEER	HYDRAULICS ENGINEER

REVISIONS

8/17/99

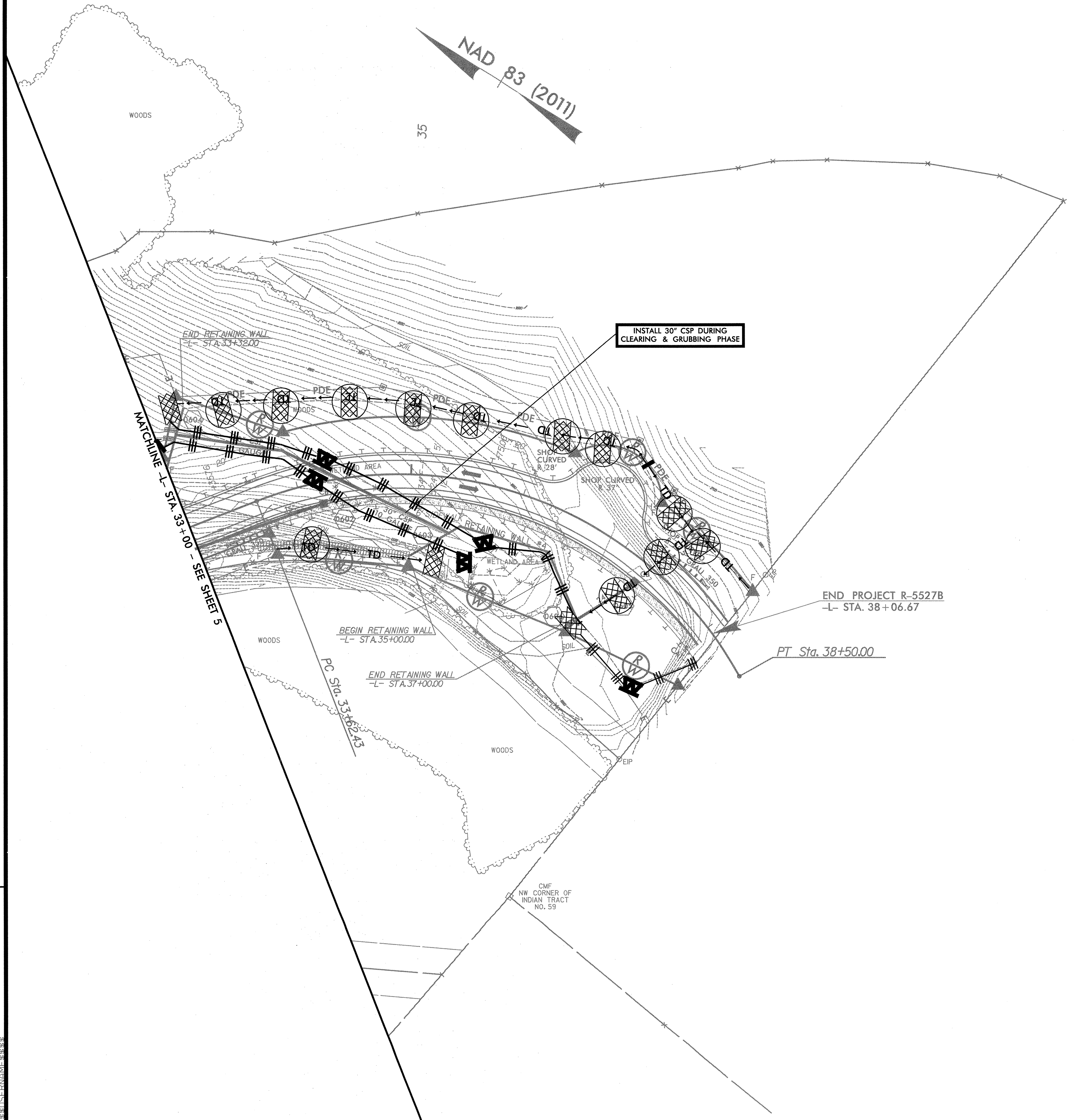

NOTE:
PLACE TEMPORARY ROCK SEDIMENT DAMS TYPE – B AND TEMPORARY ROCK SILT CHECKS TYPE – A AT DRAINAGE OUTLETS.

CLEARING AND GRUBBING
EROSION CONTROL
FOR CONSTRUCTION SHEET 6

INSTALL PIPE(S) IN JURISDICTIONAL AREAS ACCORDING TO NCDOT BEST MANAGEMENT PRACTICES FOR CONSTRUCTION AND MAINTENANCE ACTIVITIES MANUAL.

$$$$SYSTIME$$$$
$$$$$$$$DGN$$$$$$$$$$$$$$$$$
$$$USERNAME$$$$

PROJECT REFERENCE NO.
R-5527B
SHEET NO.
EC7/CONST.4
R/W SHEET NO.
ROADWAY DESIGN ENGINEER
HYDRAULICS ENGINEER
Place Matting for Erosion Control on Slope as Work Allows.
NAD 83 (2011)
Basin #1 50x25x3
1.5 inch Skimmer
with 1.5 inch
Orifice Diameter
W/Baffles
9 ft. weir
Basin #2 66x33x3
1.5 inch Skimmer
with 1.5 inch
Orifice Diameter
W/Baffles
17 ft. weir
MATCHLINE -L- STA. 20+00 - SEE SHEET 5
BM #6 ELEV=1601.38'
-BY- STA. 28+61.81 137.65' RT
8" SPIKE SET IN BASE OF 18" WHITE OAK
BM #4 ELEV=1583.79'
BL- STA. 34+07.83 85.99' RT
KE SET IN BASE OF 15" WHITE OAK
END CONSTRUCTION
-Y- STA. 36+00.00
BEGIN CONSTRUCTION
-Y- STA. 27+00.00
BEGIN PROJECT R-5527B
-L- STA. 10+56.28
BEGIN APPROACH SLAB
-L- STA. 10+96.52
END APPROACH SLAB
-L- STA. 13+42.48
EX. R/W
75.00'
+76.53
60.00'
75.00'
ENERGY DISSIPATOR
SEE SHEET 2-G
END CONSTRUCTION
-Y2- STA. 11+10.00
BEGIN CONSTRUCTION
-Y2- STA. 10+00.00
END CONSTRUCTION
-Y1- STA. 12+38.47
BEGIN CONSTRUCTION
-Y1- STA. 11+05.00
END TAPER
-Y- STA. 29+00.00
BEGIN TAPER
-Y- STA. 27+00.00
US 19 / US 74 / US 129
SR 1366 REGAL RD
27' BST
-EY2-
-EL-
OLD TOMATLA RD
22' BST
MARBLE CREEK
VALLEY RIVER
10'X8' BOX CULVERT
LANDSCAPE AREA
PAVED DITCH
WOODS
TSD
30' DRIVEWAY
T.V.A. EXISTING R/W (DB 265 PG 91)
N 58°12'59" E
277.10'
8/17/99
REVISIONS
$$$$$$SYSTIME$$$$$
$$$$$$$$$DGN$$$$$$$$$$$$$$$$$
$$$$USERNAME$$$$

PROJECT REFERENCE NO.	SHEET NO.
R-5527B	EC8/CONST.5
R/W SHEET NO.	
ROADWAY DESIGN ENGINEER	HYDRAULICS ENGINEER

Place Matting for Erosion Control on Slope as Work Allows.

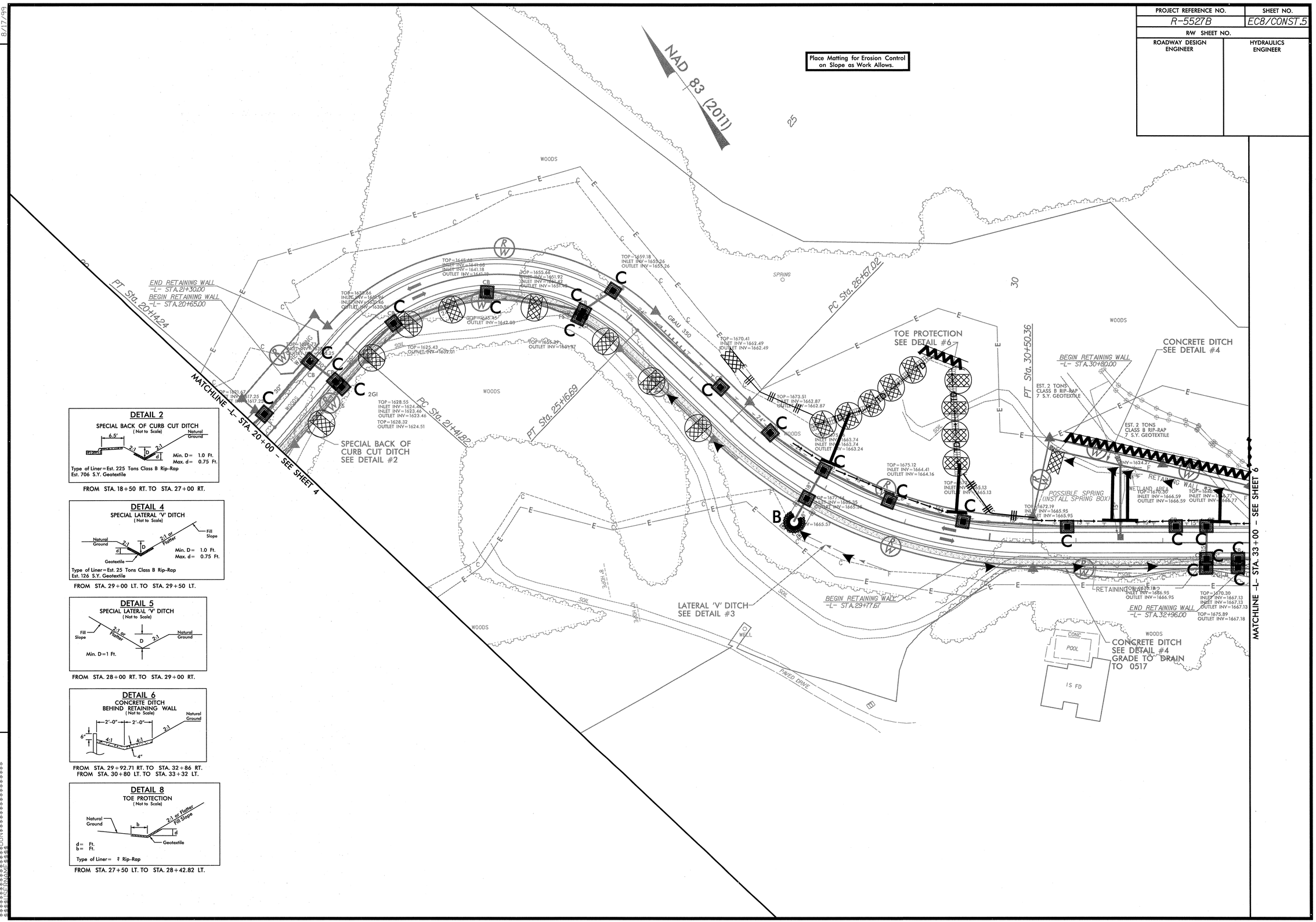

DETAIL 2
SPECIAL BACK OF CURB CUT DITCH
(Not to Scale)

Min. D = 1.0 Ft.
Max. d = 0.75 Ft.

Type of Liner = Est. 225 Tons Class B Rip-Rap
Est. 706 S.Y. Geotextile

FROM STA. 18+50 RT. TO STA. 27+00 RT.

DETAIL 4
SPECIAL LATERAL 'V' DITCH
(Not to Scale)

Min. D = 1.0 Ft.
Max. d = 0.75 Ft.

Type of Liner = Est. 25 Tons Class B Rip-Rap
Est. 126 S.Y. Geotextile

FROM STA. 29+00 LT. TO STA. 29+50 LT.

DETAIL 5
SPECIAL LATERAL 'V' DITCH
(Not to Scale)

Min. D = 1 Ft.

FROM STA. 28+00 RT. TO STA. 29+00 RT.

DETAIL 6
CONCRETE DITCH
BEHIND RETAINING WALL
(Not to Scale)

FROM STA. 29+92.71 RT. TO STA. 32+86 RT.
FROM STA. 30+80 LT. TO STA. 33+32 LT.

DETAIL 8
TOE PROTECTION
(Not to Scale)

d = Ft.
b = Ft.

Type of Liner = ? Rip-Rap

FROM STA. 27+50 LT. TO STA. 28+42.82 LT.

REVISIONS

8/17/99

SYSTEM ENGINEER
GERRAFE ENGINEER

PROJECT REFERENCE NO.	SHEET NO.
R-5527B	EC9/CONST.6
R/W SHEET NO.	
ROADWAY DESIGN ENGINEER	HYDRAULICS ENGINEER

8/17/99

REVISIONS

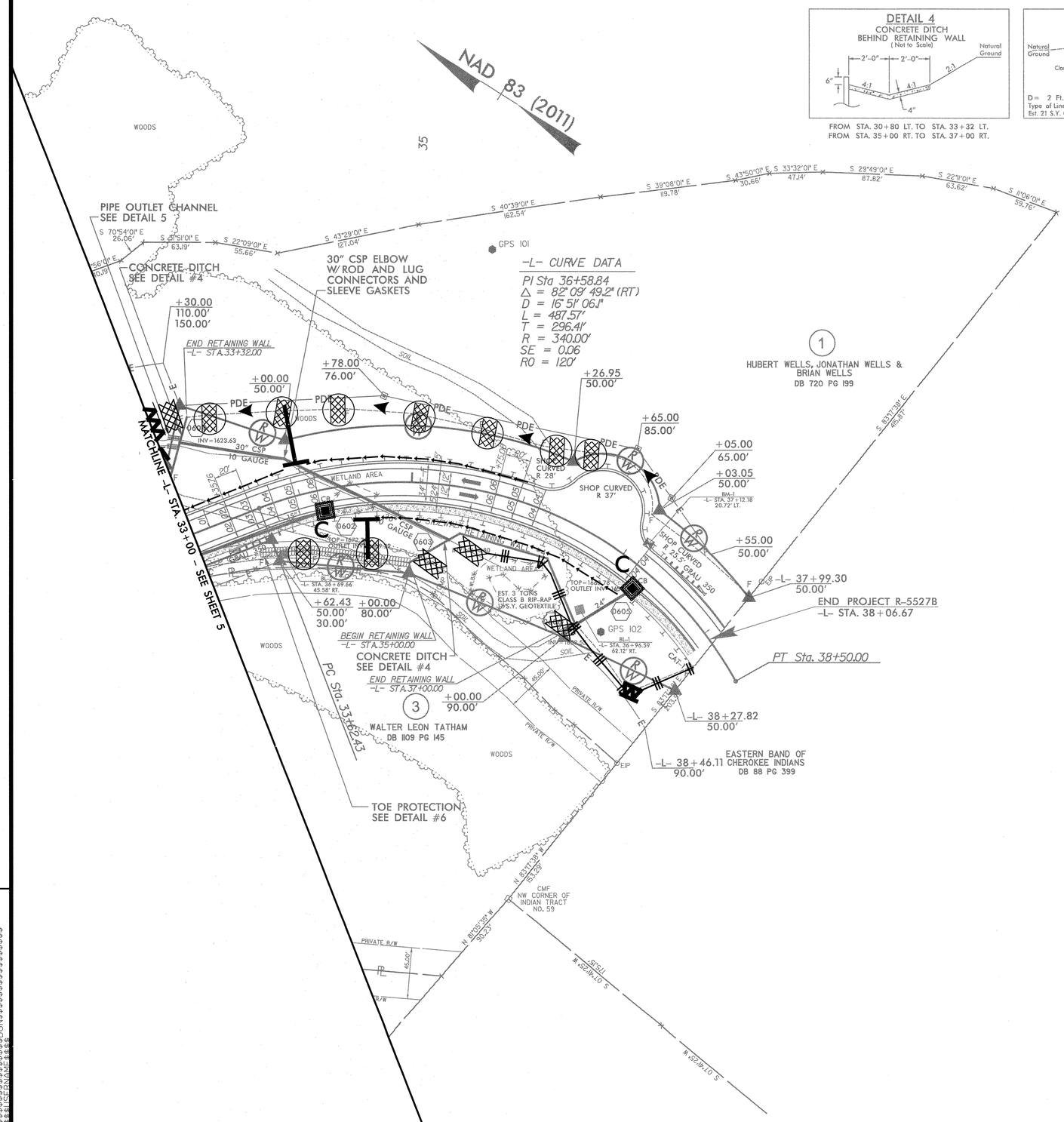

DETAIL 4
CONCRETE DITCH
BEHIND RETAINING WALL
(Not to Scale)

FROM STA. 30+80 LT. TO STA. 33+32 LT.
FROM STA. 35+00 RT. TO STA. 37+00 RT.

DETAIL 5
PIPE OUTLET CHANNEL
(Not to Scale)

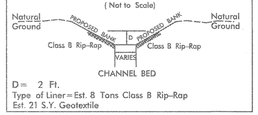

D= 2 Ft.
Type of Liner=Est. 8 Tons Class B Rip-Rap
Est. 21 S.Y. Geotextile

STRUCTURE 0604

DETAIL 6
TOE PROTECTION
(Not to Scale)

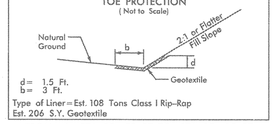

d= 1.5 Ft.
b= 3 Ft.
Type of Liner=Est. 108 Tons Class I Rip-Rap
Est. 206 S.Y. Geotextile

FROM -L- STA. 33+50 RT TO STA. 35+25 RT

Place Matting for Erosion Control on Slope as Work Allows.

$$$$SYSTIME$$$$DGN$$$$

STATE	STATE PROJECT REFERENCE NO.	SHEET NO.	TOTAL SHEETS
N.C.	R-5527B	RF-1	
STATE PROJ. NO.	F. A. PROJ. NO.	DESCRIPTION	

PLANTING DETAILS

SEEDLING / LINER BAREROOT PLANTING DETAIL

HEALING IN

1. Locate a healing-in site in a shady, well protected area.
2. Excavate a flat bottom trench 12 inches deep and provide drainage.

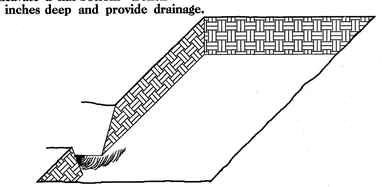

3. Backfill the trench with 2 inches well rotted sawdust. Place a 2 inch layer of well rotted sawdust at a sloping angle at one end of the trench.

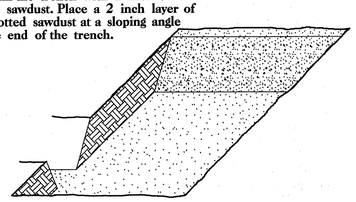

4. Place a single layer of plants against the sloping end so that the root collar is at ground level.

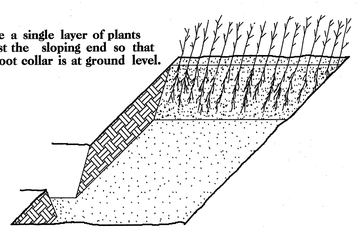

5. Place a 2 inch layer of well rotted sawdust over the roots maintaining a sloping angle.

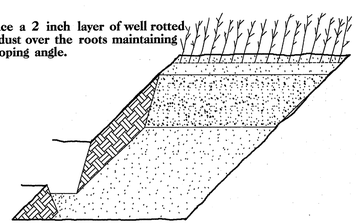

6. Repeat layers of plants and sawdust as necessary and water thoroughly.

DIBBLE PLANTING METHOD
USING THE KBC PLANTING BAR

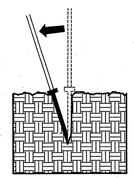

1. Insert planting bar as shown and pull handle toward planter.

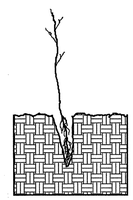

2. Remove planting bar and place seedling at correct depth.

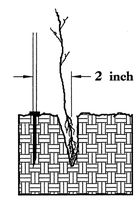

3. Insert planting bar 2 inches toward planter from seedling.

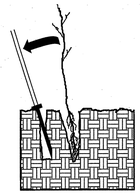

4. Pull handle of bar toward planter, firming soil at bottom.

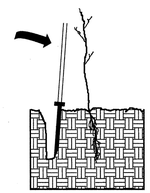

5. Push handle forward firming soil at top.

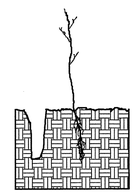

6. Leave compaction hole open. Water thoroughly.

PLANTING NOTES:

PLANTING BAG
During planting, seedlings shall be kept in a moist canvas bag or similar container to prevent the root systems from drying.

KBC PLANTING BAR
Planting bar shall have a blade with a triangular cross section, and shall be 12 inches long, 4 inches wide and 1 inch thick at center.

ROOT PRUNING
All seedlings shall be root pruned, if necessary, so that no roots extend more than 10 inches below the root collar.

REFORESTATION

☐ TREE REFORESTATION SHALL BE PLANTED 6 FT. TO 10 FT. ON CENTER, RANDOM SPACING, AVERAGING 8 FT. ON CENTER, APPROXIMATELY 680 PLANTS PER ACRE.

REFORESTATION

MIXTURE, TYPE, SIZE, AND FURNISH SHALL CONFORM TO THE FOLLOWING:

25%	LIRIODENDRON TULIPIFERA	TULIP POPLAR	12 in - 18 in BR
25%	PLATANUS OCCIDENTALIS	SYCAMORE	12 in - 18 in BR
25%	FRAXINUS PENNSYLVANICA	GREEN ASH	12 in - 18 in BR
25%	BETULA NIGRA	RIVER BIRCH	12 in - 18 in BR

REFORESTATION DETAIL SHEET

N.C.D.O.T. - ROADSIDE ENVIRONMENTAL UNIT

TIP NO.	SHEET NO.
R-5527B	SIGN-1

APPROVED: KAP

DATE: 1/3/2014

SEAL

NORTH CAROLINA PROFESSIONAL SEAL 021655 ENGINEER KIT A. PERSIANI

PROJECT: R-5527B

CONTRACT:

STATE OF NORTH CAROLINA
DEPARTMENT OF TRANSPORTATION

SIGNING PLAN
CHEROKEE COUNTY

LOCATION: NEW ROUTE FROM US 74 TO EBCI TRIBAL BOUNDARY IN CHEROKEE COUNTY

INDEX

SHEET NO.	DESCRIPTION
SIGN-1	SIGNING PLAN COVER SHEET
SIGN-2 AND SIGN-3	SIGNING PLAN SHEETS
SIGN-4	SIGNING DETAIL AT ROUNDABOUT
SIGN-5	TYPE "E" SIGNS

ROADWAY STANDARD DRAWING

THE FOLLOWING ROADWAY STANDARDS AS APPEAR IN "ROADWAY STANDARD DRAWINGS" - PROJECT SERVICES UNIT - N.C. DEPARTMENT OF TRANSPORTATION - RALEIGH, N.C., DATED JANUARY 2012 ARE APPLICABLE TO THIS PROJECT AND BY REFERENCE HEREBY ARE CONSIDERED A PART OF THESE PLANS:

STD. NO.	TITLE
903.30	BARRIER SIGN SUPPORT ASSEMBLY
904.10	ORIENTATION OF GROUND MOUNTED SIGNS
904.50	MOUNTING OF TYPE 'D', 'E', AND 'F' SIGNS ON 'U' CHANNEL POSTS

SUMMARY OF QUANTITIES

ITEM NO. DESC. NO.	ITEM NO. SECT. NO.	ITEM DESCRIPTION	QUANTITY	UNIT
4072000000	903	SUPPORTS, 3 LB STEEL U-CHANNEL	790	L.F.
4079000000	903	SUPPORTS, BARRIER (SMALL)	3	EA.
4102000000	904	SIGN ERECTION, TYPE E	66	EA.
4155000000	907	DISPOSAL OF SIGN SYSTEM, U-CHANNEL	1	EA.

GENERAL NOTES

- SIGNS FURNISHED BY STATE
- ALL TYPE 'D' SIGNS SHALL BE MOUNTED ON TWO U-CHANNEL POSTS UNLESS OTHERWISE INDICATED ON THE PLANS.
- IF REMOVAL OR RELOCATION OF SIGNS ON PRIVATE STREET (NON-STATE MAINTAINED) IS REQUIRED DUE TO CONSTRUCTION, THE CONTRACTOR SHALL INFORM THE ENGINEER. THE WORK WILL BE COMPLETED BY OTHERS.
- SIGNING PLANS DO NOT INCLUDE TEMPORARY CONSTRUCTION SIGNING OR PAVEMENT MARKINGS. SEE TRAFFIC CONTROL PLANS.
- WHEN NOT STATIONED OR DIMENSIONED ON PLANS, ALL 'E' AND 'F' SIGNS SHALL BE FIELD LOCATED BY THE ENGINEER
- ALL EXISTING SIGNS ON "U" CHANNEL POST WITHIN THE PROJECT LIMITS SHALL BE REMOVED AND DISPOSED OF UNLESS OTHERWISE NOTED ON PLANS.
- WHEN EXISTING SIGNS ARE REMOVED AND INSTALLED ON NEW SUPPORTS, THE RE-ERECTION SHALL IMMEDIATELY FOLLOW THE REMOVAL.
- THE BACKGROUND FOR TYPE E & F SIGNS SHALL BE TYPE C REFLECTIVE SHEETING.
- SEE ROADWAY PLANS FOR GUARD/GUIDE RAIL DETAILS.

PAY ITEM NOTES

1. DISPOSAL OF SIGN SYSTEM, U-CHANNEL.

PLAN PREPARED BY:
STV /Ralph Whitehead Associates, Inc.

KIT A. PERSIANI, PE — TRAFFIC ENGINEER

CLARK E. GROVES — TRANSPORTATION DESIGNER

STV/ Ralph Whitehead Associates, Inc.
900 West Trade St., Ste. 715
Charlotte, NC 28202
NC License Number F-0991

1/2/2014
i:\Projects\2516009\2516009_1003\50_Deliverables & Submittals\R-5527\Roadway\Proj\SIGN\5527B_rdy_SIGN_psh01.dgn
kpersiani

STV / Ralph Whitehead Associates, Inc.
900 West Trade St., Ste. 715
Charlotte, NC 28202
NC License Number F-0991

TIP NO.	SHEET NO.
R-5527B	SIGN-2

APPROVED: Kit A. Persiani
DATE: 1/3/2014

SEAL
NORTH CAROLINA PROFESSIONAL SEAL 021655 ENGINEER KIT A. PERSIANI

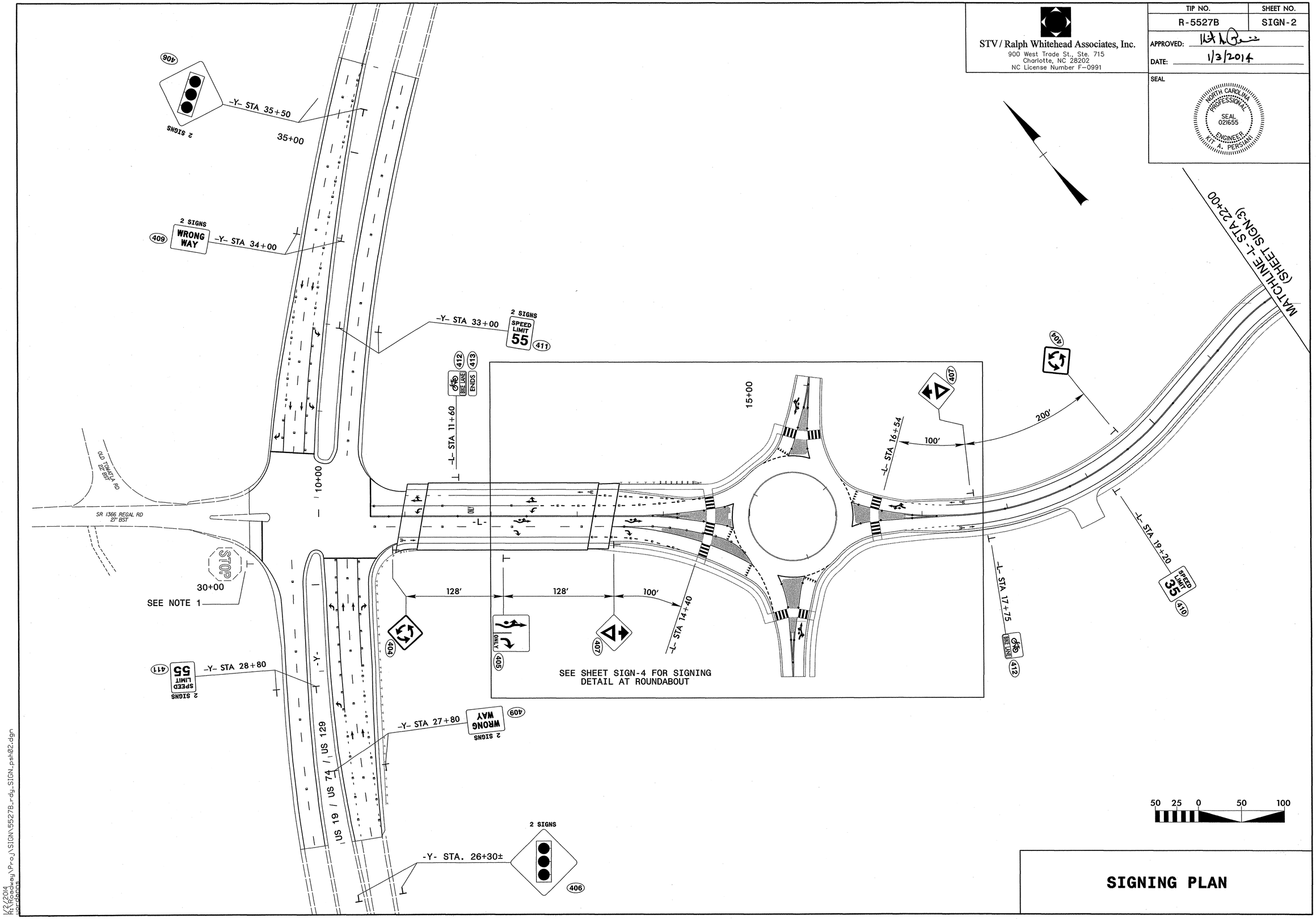

SIGNING PLAN

1/3/2014
H:\Roadway\Proj\SIGN\5527B_rdy_SIGN_psh02.dgn
jpcrocker

8/17/99

STV / Ralph Whitehead Associates, Inc.
900 West Trade St., Ste. 715
Charlotte, NC 28202
NC License Number F-0991

TIP NO.	SHEET NO.
R-5527B	SIGN-3

APPROVED: Kit A. Persian

DATE: 1/3/2014

SEAL

NORTH CAROLINA PROFESSIONAL SEAL 021655 ENGINEER KIT A. PERSIAN

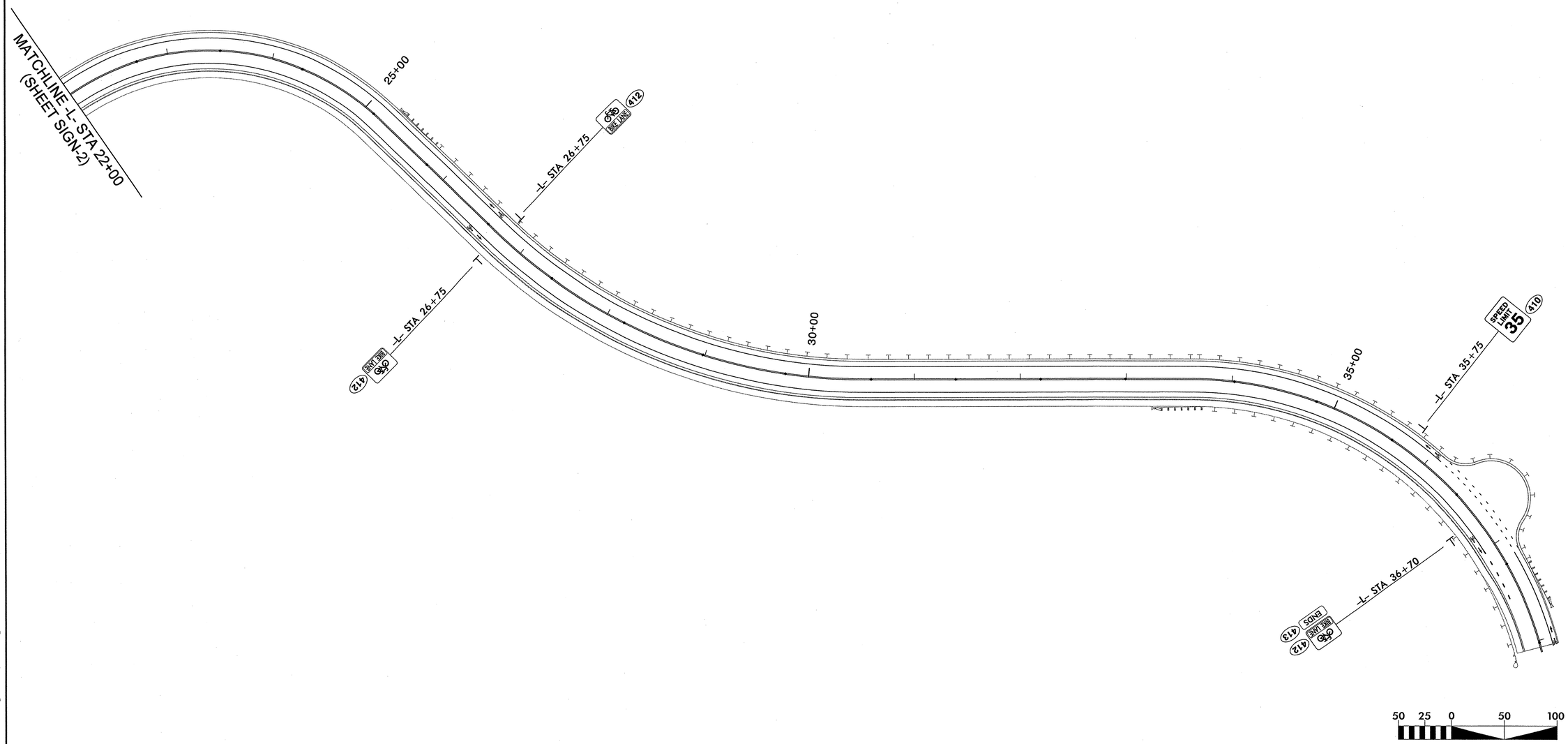

SIGNING PLAN

K:\2014
K:\Roadway\Proj\SIGN\5527B_rdy_SIGN_psh03.dgn
jordanpa

STV / Ralph Whitehead Associates, Inc.
900 West Trade St., Ste. 715
Charlotte, NC 28202
NC License Number F-0991

TIP NO.	SHEET NO.
R-5527B	SIGN-4

APPROVED: Kit A. Persiani
DATE: 1/3/2014

SEAL
NORTH CAROLINA PROFESSIONAL SEAL 021655 ENGINEER KIT A. PERSIANI

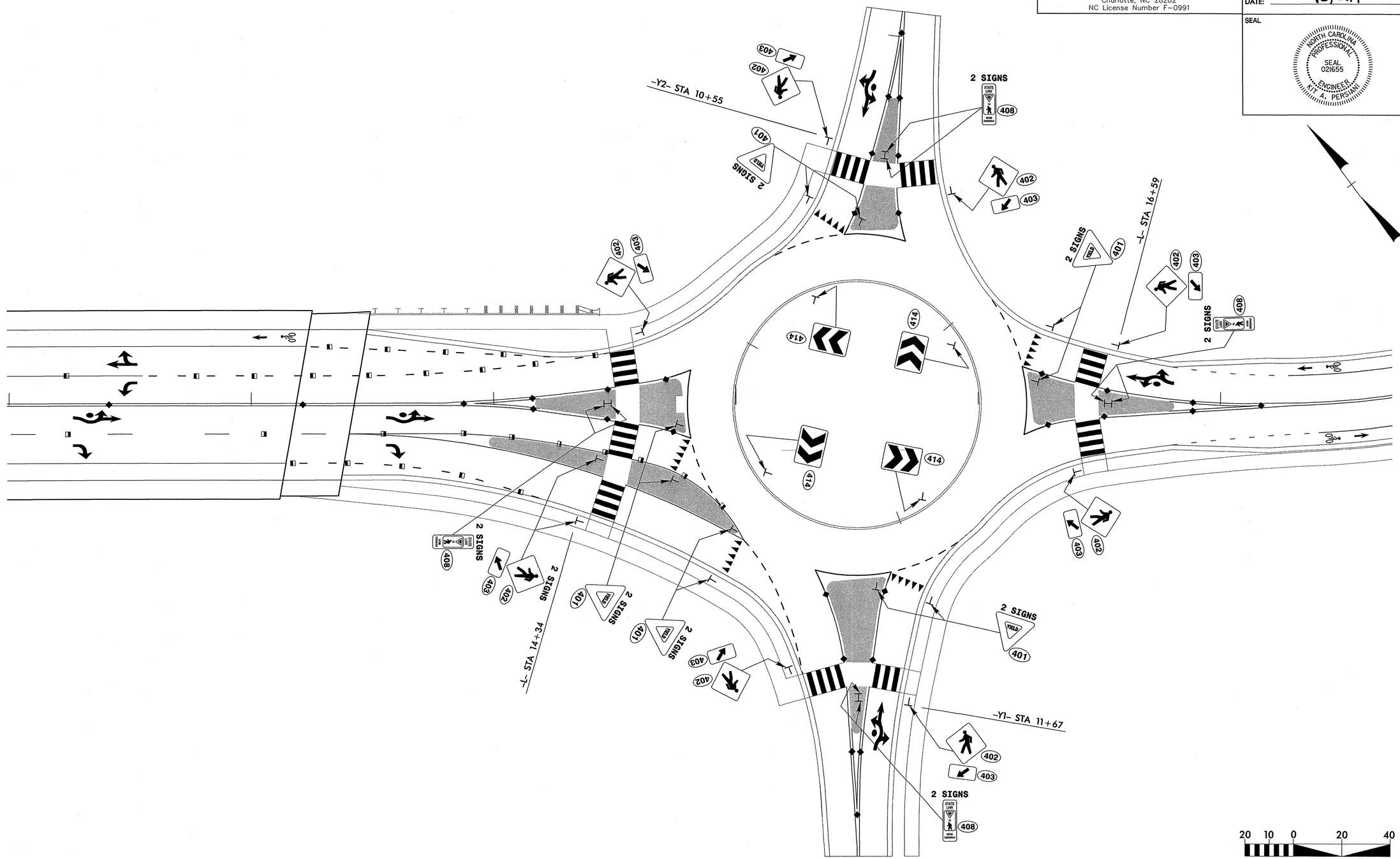

SIGNING DETAIL AT ROUNDABOUT

1/2/2014
R:\Roadway\Proj\SIGN\5527B_rdy_SIGN_psh04.dgn
bryadams

TIP NO.	SHEET NO.
R-5527B	SIGN-5

STV / Ralph Whitehead Associates, Inc.
900 West Trade St., Ste. 715
Charlotte, NC 28202
NC License Number F-0991

APPROVED: Kit A. Persian

DATE: 1/3/2014

SEAL

NORTH CAROLINA PROFESSIONAL SEAL 021655 ENGINEER KIT A. PERSIAN

401 QUANTITY REQ'D 10

R1 – 2
36" X 36" X 36"

ONE "U" POST PER SIGN

402 QUANTITY REQ'D 9

W11 – 2
36" X 36"

ONE "U" POST PER SIGN

403 QUANTITY REQ'D 9

W16 – 7PL
24" X 12"

MOUNT BELOW SIGN 402
IN 9 INSTALLATIONS

404 QUANTITY REQ'D 2

W2 – 6
30" X 30"

ONE "U" POST PER SIGN

405 QUANTITY REQ'D 1

R3 – 8
36" X 36"

(ATTACH ONE TO BRIDGE RAIL)
ONE "U" POST PER SIGN

406 QUANTITY REQ'D 4

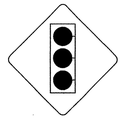

W3 – 3
48" X 48"

TWO "U" POSTS PER SIGN

407 QUANTITY REQ'D 2

W3 – 2
30" X 30"

ONE "U" POST PER SIGN

408 QUANTITY REQ'D 8

R1 – 6
12" X 36"

MOUNT BACK-TO-BACK WITH SIGN 408
IN 4 INSTALLATIONS
ONE "U" POST PER 2 SIGNS

409 QUANTITY REQ'D 4

R5 – 1A
24" X 36"

ONE "U" POST PER SIGN

410 QUANTITY REQ'D 2

R2 – 1
24" X 30"

ONE "U" POST PER SIGN

411 QUANTITY REQ'D 4

R2 – 1
24" X 30"

ONE "U" POST PER SIGN

412 QUANTITY REQ'D 5

R3 – 17
24" X 18"

(ATTACH ONE TO BRIDGE RAIL)
ONE "U" POST PER SIGN

413 QUANTITY REQ'D 2

R3 – 17bP
24" X 8"

MOUNT BELOW SIGN 412
IN 2 INSTALLATIONS

414 QUANTITY REQ'D 4

R6 – 4
30" X 24"

ONE "U" POST PER SIGN

TYPE "E" SIGNS

K2/2014
H:\Roadway\Proj\SIGN\55278_rdy_SIGN_psh05.dgn
jpcrosno

PHASING DIAGRAM

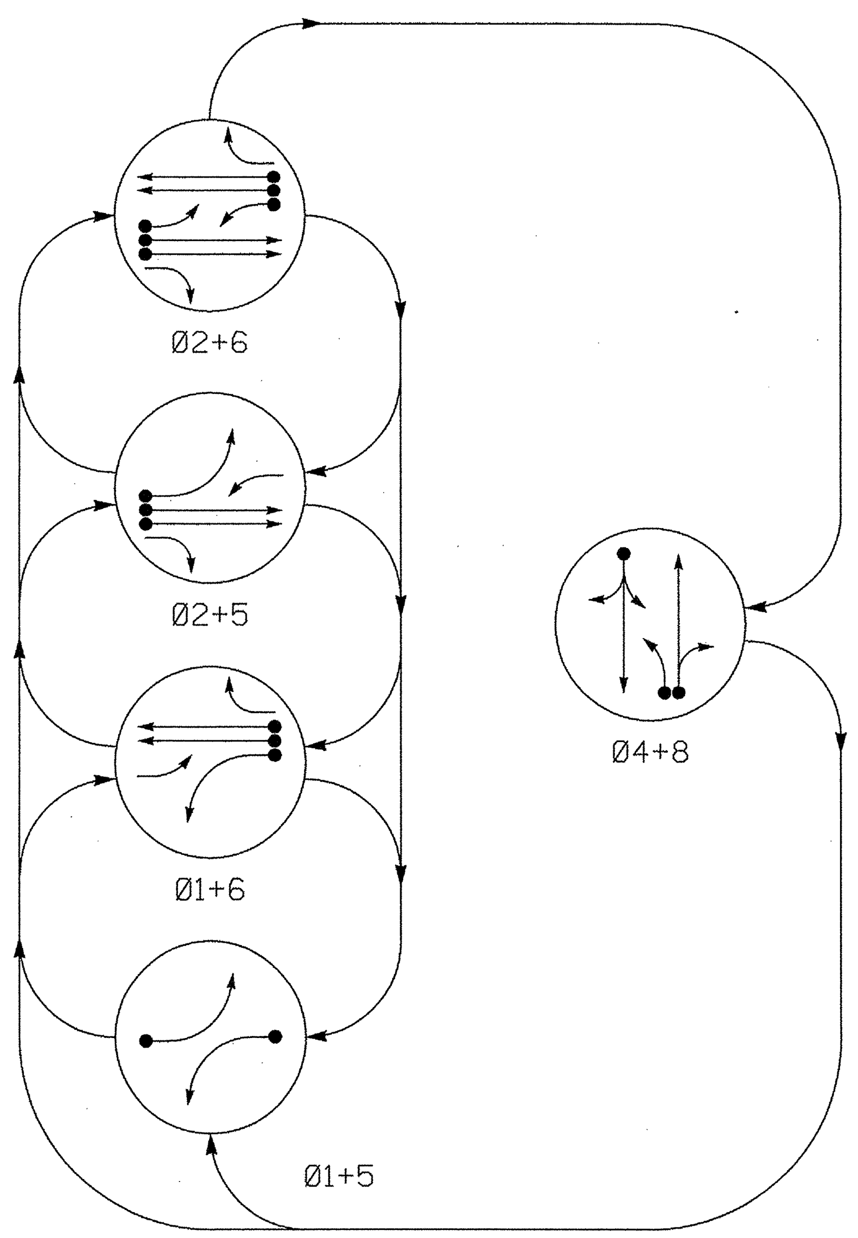

PHASING DIAGRAM DETECTION LEGEND

- ◄──● DETECTED MOVEMENT
- ◄─── UNDETECTED MOVEMENT (OVERLAP)
- ◄– – UNSIGNALIZED MOVEMENT
- <– – –> PEDESTRIAN MOVEMENT

TABLE OF OPERATION

SIGNAL FACE	PHASE Ø1+5	Ø1+6	Ø2+5	Ø2+6	Ø4+8	FLASH
11	←	←	←FY	←FY	←R	←Y
21,22	R	R	G	G	R	Y
41,42	R	R	R	R	G	R
51	←	←FY	←	←FY	←R	←Y
61,62	R	G	R	G	R	Y
81	←R	←R	←R	←R	←FY	←R
82,83	R	R	R	R	G	R

SIGNAL FACE I.D.

All Heads L.E.D.

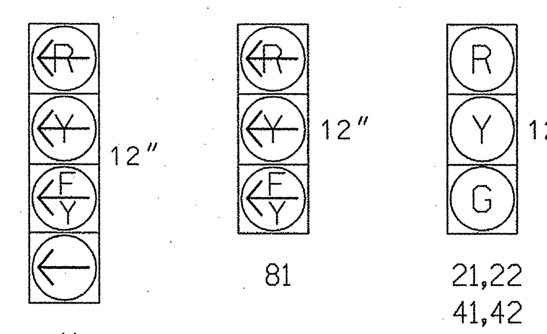

OASIS 2070L LOOP & DETECTOR INSTALLATION CHART

INDUCTIVE LOOPS: LOOP	SIZE (FT)	DISTANCE FROM STOPBAR (FT)	TURNS	NEW LOOP	DETECTOR PROGRAMMING: PHASE	CALLING	EXTENSION	FULL TIME DELAY	STRETCH TIME	DELAY TIME	SYSTEM LOOP	NEW CARD
1A	6X40	0	2-4-2	Y	1	Y	Y	-	-	15	-	Y
					6	Y	Y	Y	-	3	-	Y
2A	6X6	420	6	Y	2	Y	Y	-	-	-	-	Y
2B	6X6	420	6	Y	2	Y	Y	-	-	-	-	Y
4A	6X40	0	2-4-2	Y	4	Y	Y	-	-	-	-	Y
4B	6X6	0	4	Y	4	Y	Y	-	-	15	-	Y
5A	6X40	0	2-4-2	Y	5	Y	Y	-	-	15	-	Y
					2	Y	Y	Y	-	3	-	Y
6A	6X6	420	6	Y	6	Y	Y	-	-	-	-	Y
6B	6X6	420	6	Y	6	Y	Y	-	-	-	-	Y
8A	6X40	0	2-4-2	Y	8	Y	Y	-	-	3	-	Y
8B	6X40	0	2-4-2	Y	8	Y	Y	-	-	10	-	Y
8C	6X6	0	3	Y	8	Y	Y	-	-	15	-	Y

5 Phase
Fully Actuated
Isolated

NOTES

1. Refer to "Roadway Standard Drawings NCDOT" dated January 2012 and "Standard Specifications for Roads and Structures" dated January 2012.
2. Do not program signal for late night flashing operation unless otherwise directed by the Engineer.
3. Phase 1 and/or phase 5 may be lagged.
4. Set all detector units to presence mode.
5. Locate new cabinet so as not to obstruct sight distance of vehicles turning right on red.

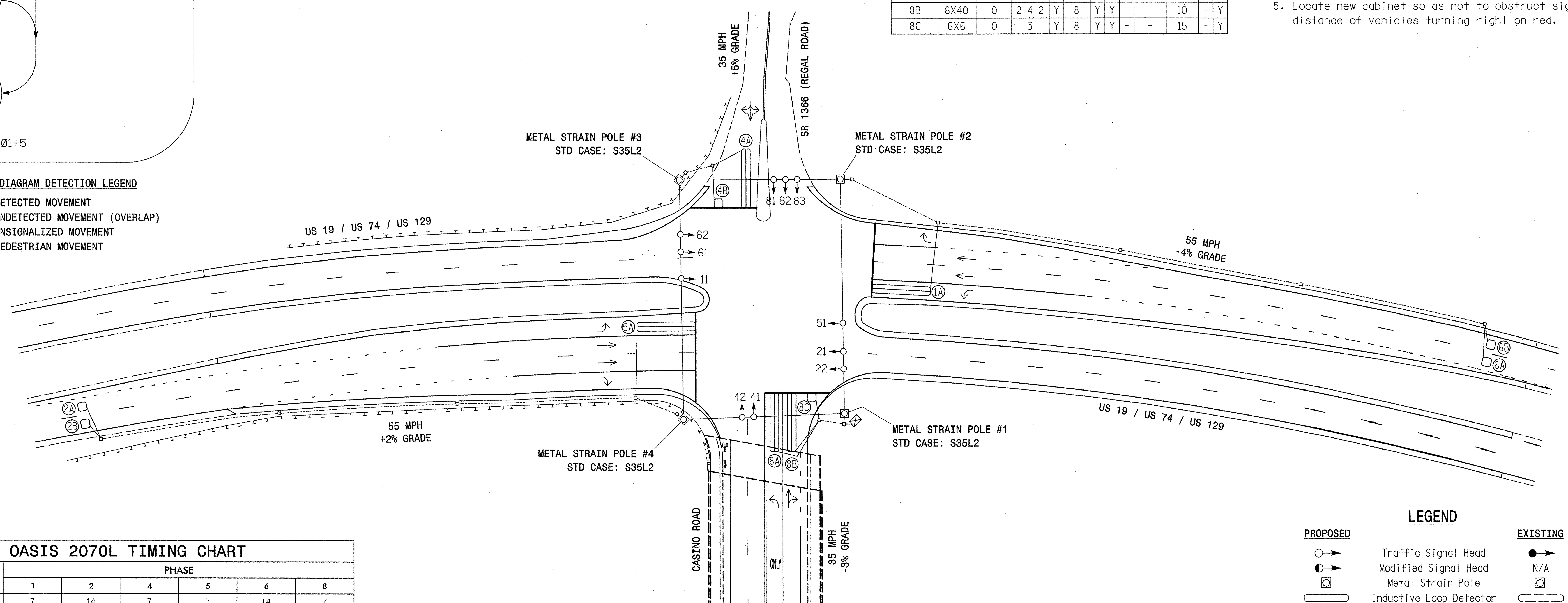

OASIS 2070L TIMING CHART

FEATURE	PHASE 1	2	4	5	6	8
Min Green 1 *	7	14	7	7	14	7
Extension 1	2.0	6.0	2.0	2.0	6.0	2.0
Max Green 1 *	20	90	30	20	90	30
Yellow Clearance	3.0	5.6	3.6	3.0	5.6	4.1
Red Clearance	3.9	1.4	2.5	3.4	1.4	2.3
Red Revert	2.0	2.0	2.0	2.0	2.0	2.0
Walk 1 *	-	-	-	-	-	-
Don't Walk 1	-	-	-	-	-	-
Seconds Per Actuation *	-	1.5	-	-	1.5	-
Max Variable Initial *	-	46	-	-	46	-
Time Before Reduction *	-	15	-	-	15	-
Time To Reduce *	-	30	-	-	30	-
Minimum Gap	-	3.4	-	-	3.4	-
Recall Mode	-	MIN RECALL	-	-	MIN RECALL	-
Vehicle Call Memory	-	YELLOW	-	-	YELLOW	-
Dual Entry	-	-	ON	-	-	ON
Simultaneous Gap	ON	ON	ON	ON	ON	ON

* These values may be field adjusted. Do not adjust Min Green and Extension times for phases 2 and 6 lower than what is shown. Min Green for all other phases should not be lower than 4 seconds.

LEGEND

PROPOSED		EXISTING
○→	Traffic Signal Head	●→
◐→	Modified Signal Head	N/A
⊡	Metal Strain Pole	⊡
▭	Inductive Loop Detector	⊏- -⊐
⊠	Controller & Cabinet	⊠ (dashed)
□	Junction Box	■
------------	2-in Underground Conduit	-·-·-·-·-
N/A	Right of Way	— — — —
⟶	Directional Arrow	⟶
→	Pavement Marking Arrow	→

NEW INSTALLATION

STV
900 West Trade St., Ste. 715
Charlotte, NC 28202
NC License Number F-0991

Prepared In the Offices of:
Transportation Mobility and Safety Division
State of North Carolina Department of Transportation
Signal Design Section
750 N.Greenfield Pkwy,Garner,NC 27529

SCALE 0 40
1"=40'

US 74 / US 19 / US 129
at
SR 1366 (Regal Rd) / Casino Rd

Division 14 Cherokee County Murphy

PLAN DATE:	October 2013	REVIEWED BY:	T. Hartzell
PREPARED BY:	J. Trueblood	REVIEWED BY:	

REVISIONS	INIT.	DATE

SEAL
NORTH CAROLINA PROFESSIONAL ENGINEER
SEAL 039097
TRISHA L. HARTZELL

SIGNATURE 02-13-14 DATE

SIG. INVENTORY NO. 14-1275

$$$$$$SYSTIME$$$$$$
$$$$$$$$$$$$$$$$DGN$$$$$$$$$$$$$$$$
$$$$$USERNAME$$$$$

PROJECT REFERENCE NO.	SHEET NO.
R-5527B	SIG-2

EDI MODEL 2018ECL-NC CONFLICT MONITOR PROGRAMMING DETAIL

(remove jumpers and set switches as shown)

REMOVE DIODE JUMPERS 1-5, 1-6, 1-9, 1-11, 2-5, 2-6, 2-9, 2-11, 4-8, 4-10, 5-9, 5-11, 6-9, 6-11, 8-10 and 9-11.

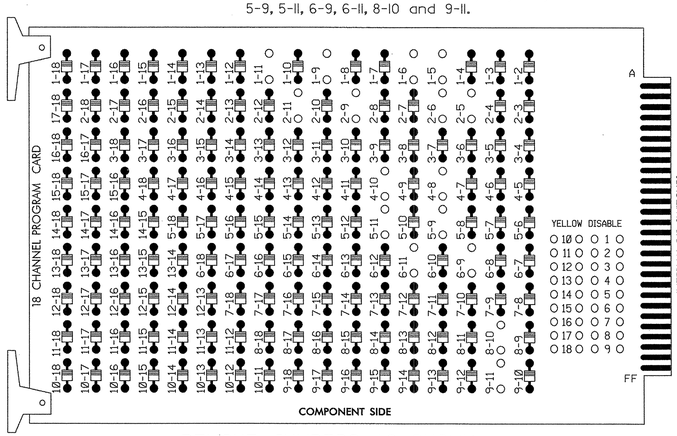

REMOVE JUMPERS AS SHOWN

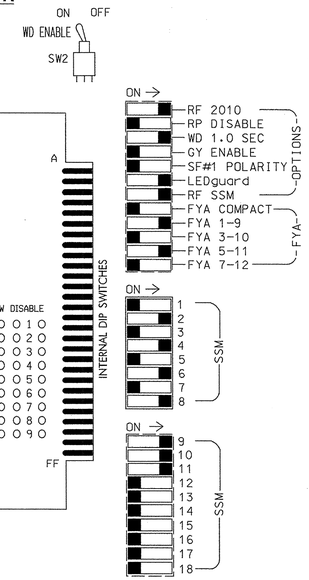

■ = DENOTES POSITION OF SWITCH

NOTES:

1. Card is provided with all diode jumpers in place. Removal of any jumper allows its channels to run concurrently.
2. Ensure jumpers SEL2-SEL5 and SEL9 are present on the monitor board.
3. Ensure that Red Enable is active at all times during normal operation.
4. Connect serial cable from conflict monitor to comm. port 1 of 2070 controller. Ensure conflict monitor communicates with 2070.

NOTES

1. To prevent "flash-conflict" problems, insert red flash program blocks for all unused vehicle load switches in the output file. The installer shall verify that signal heads flash in accordance with the Signal Plans.
2. Program phases 4 and 8 for Dual Entry.
3. Enable Simultaneous Gap-Out for all phases.
4. Program phases 2 and 6 for Variable Initial and Gap Reduction.
5. Program phases 2 and 6 for Start Up In Green.
6. Program phases 2 and 6 for Yellow Flash, and overlaps 1 and 2 as Wag Overlaps.

SIGNAL HEAD HOOK-UP CHART

LOAD SWITCH NO.	S1	S2	S3	S4	S5	S6	S7	S8	S9	S10	S11	S12	AUX S1	AUX S2	AUX S3	AUX S4	AUX S5	AUX S6
CMU CHANNEL NO.	1	2	13	3	4	14	5	6	15	7	8	16	9	10	17	11	12	18
PHASE	1	2	2 PED	3	4	4 PED	5	6	6 PED	7	8	8 PED	OLA	OLB	SPARE	OLC	OLD	SPARE
SIGNAL HEAD NO.	11★	21,22	NU	NU	41,42	NU	51★	61,62	NU	NU	82,83	NU	11★	81★	NU	51★	NU	NU
RED		128			101			134			107							
YELLOW	✳	129			102		✳	135			108							
GREEN		130			103			136			109							
RED ARROW													A121	A124		A114		
YELLOW ARROW													A122	A125		A115		
FLASHING YELLOW ARROW													A123	A126		A116		
GREEN ARROW	127						133											

NU = Not Used

✳ Denotes install load resistor. See load resistor installation detail this sheet.

★ See pictorial of head wiring in detail below.

EQUIPMENT INFORMATION

CONTROLLER.....2070L
CABINET .....332 W/ AUX
SOFTWARE .....ECONOLITE OASIS
CABINET MOUNT.....BASE
OUTPUT FILE POSITIONS..18 (12-STD, 6-AUX)
LOAD SWITCHES USED.....S1,S2,S5,S7,S8,S11,AUX S1,AUX S2,AUX S4
PHASES USED.....1,2,4,5,6,8
OVERLAP A.....1+2
OVERLAP B.....8
OVERLAP C.....5+6
OVERLAP D.....NOT USED

3 AND 4 SECTION FYA SIGNAL WIRING DETAIL

(wire signal heads as shown)

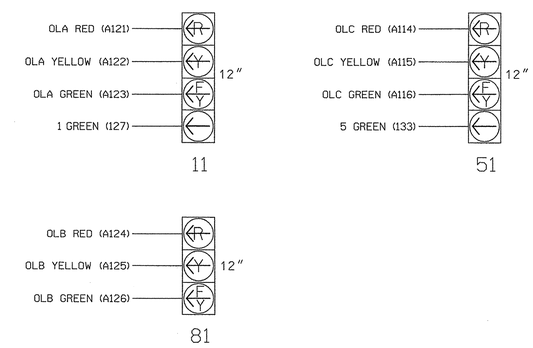

NOTE

1. The sequence display for signal heads 11 and 51 requires special logic programming. See sheet 2 of 2 for programming instructions.

INPUT FILE POSITION LAYOUT

(front view)

		1	2	3	4	5	6	7	8	9	10	11	12	13	14
FILE "I"	U	Ø1 1A	Ø2 2A	SLOT EMPTY	WIRED INPUT ⊗	SLOT EMPTY	Ø4 4A	SLOT EMPTY	SLOT EMPTY	SLOT EMPTY	SLOT EMPTY	SLOT EMPTY	SLOT EMPTY	SLOT EMPTY	FS DC ISOLATOR
	L	NOT USED	Ø2 2B				Ø4 4B								ST DC ISOLATOR
FILE "J"	U	Ø5 5A	Ø6 6A	SLOT EMPTY	WIRED INPUT ⊗	SLOT EMPTY	Ø8 8A	Ø8 8C	SLOT EMPTY	SLOT EMPTY	SLOT EMPTY	SLOT EMPTY	SLOT EMPTY	SLOT EMPTY	SLOT EMPTY
	L	NOT USED	Ø6 6B				Ø8 8B	NOT USED							

EX.: 1A, 2A, ETC. = LOOP NO.'S

FS = FLASH SENSE
ST = STOP TIME

⊗ Wired Input - Do not populate slot with detector card

INPUT FILE CONNECTION & PROGRAMMING CHART

LOOP NO.	LOOP TERMINAL	INPUT FILE POS.	PIN NO.	INPUT ASSIGNMENT NO.	DETECTOR NO.	NEMA PHASE	CALL	EXTEND	FULL TIME DELAY	STRETCH TIME	DELAY TIME
1A[1]	TB2-1,2	I1U	56	18	1	1	Y	Y	-	-	15
	-	J4U	48	10	26	6	Y	Y	Y	-	3
2A	TB2-5,6	I2U	39	1	2	2	Y	Y	-	-	-
2B	TB2-7,8	I2L	43	5	12	2	Y	Y	-	-	-
4A	TB4-9,10	I6U	41	3	4	4	Y	Y	-	-	-
4B	TB4-11,12	I6L	45	7	14	4	Y	Y	-	-	15
5A[2]	TB3-1,2	J1U	55	17	5	5	Y	Y	-	-	15
	-	I4U	47	9	22	2	Y	Y	Y	-	3
6A	TB3-5,6	J2U	40	2	6	6	Y	Y	-	-	-
6B	TB3-7,8	J2L	44	6	16	6	Y	Y	-	-	-
8A	TB5-9,10	J6U	42	4	8	8	Y	Y	-	-	3
8B	TB5-11,12	J6L	46	8	18	8	Y	Y	-	-	10
8C	TB7-1,2	J7U	66	28	38	8	Y	Y	-	-	15

[1] Add jumper from I1-W to J4-W, on rear of input file.

[2] Add jumper from J1-W to I4-W, on rear of input file.

INPUT FILE POSITION LEGEND: J2L

FILE J
SLOT 2
LOWER

LOAD RESISTOR INSTALLATION DETAIL

ACCEPTABLE VALUES

VALUE (ohms)	WATTAGE
1.5K - 1.9K	25W (min)
2.0K - 3.0K	10W (min)

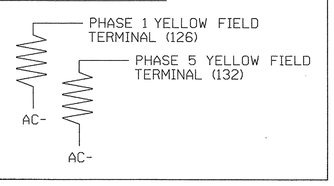

THIS ELECTRICAL DETAIL IS FOR
THE SIGNAL DESIGN: 14-1275
DESIGNED: 10-2013
SEALED: 2-13-2014
REVISED:

STV
900 West Trade St., Ste. 715
Charlotte, NC 28202
NC License Number F-0991

NEW INSTALLATION - ELECTRICAL DETAIL SHEET 1 OF 2

ELECTRICAL AND PROGRAMMING DETAILS FOR:

Prepared in the Offices of:
Transportation Mobility and Safety Division
STATE OF NORTH CAROLINA DEPARTMENT OF TRANSPORTATION
Signals Management Section
750 N.Greenfield Pkwy,Garner,NC 27529

US 74 / US 19 / US 129
at
SR 1366 (Regal Rd) / Casino Rd

Division 14 Cherokee County Murphy

PLAN DATE: October 2013	REVIEWED BY: T. Hartzell
PREPARED BY: J. Trueblood	REVIEWED BY:

REVISIONS	INIT.	DATE

SEAL
NORTH CAROLINA PROFESSIONAL SEAL 039097 ENGINEER TIMOTHY L. HARTZELL

SIGNATURE DATE 02-13-14

SIG. INVENTORY NO. 14-1275

2/12/2014
TIMHARTZELL
T:\Traffic Control Devices\Projects\R-5527B\Roadway\Proj\Signals\14-1275b.dgn

PROJECT REFERENCE NO.	SHEET NO.
R-5527B	SIG-3

LOGICAL I/O PROCESSOR PROGRAMMING DETAIL TO PRODUCE SPECIAL FYA-PPLT SIGNAL SEQUENCE

(program controller as shown below)

1. FROM MAIN MENU PRESS '2' (PHASE CONTROL), THEN '1' (PHASE CONTROL FUNCTIONS). SCROLL TO THE BOTTOM OF THE MENU AND ENABLE ACT LOGIC COMMANDS 1, 2, 3, 4, 5 AND 6.

2. FROM MAIN MENU PRESS '6' (OUTPUTS), THEN '3' (LOGICAL I/O PROCESSOR).

```
LOGICAL I/O COMMAND #1  (+/-COMMAND#)
IF  ACTIVE PHASE        #1  IS ON
AND RED CLEAR ON PHASE #1  IS ON

              SCROLL DOWN

THEN:
SET OUTPUT  ASSIGNMENT #50  ON
SET OUTPUT  ASSIGNMENT #51  OFF
```

NOTE: LOGIC FOR PHASE 1 RED CLEAR WHEN TRANSITIONING FROM PHASE 1 TO PHASE 2 (HEAD 11).

PRESS '+'

```
LOGICAL I/O COMMAND #2  (+/-COMMAND#)
IF  ACTIVE PHASE        #1  IS ON

              SCROLL DOWN

THEN:
SET OUTPUT  ASSIGNMENT #52  OFF
```

NOTE: LOGIC FOR SWITCHING FLASHING YELLOW ARROW "OFF" DURING PHASE 1 (HEAD 11).

PRESS '+'

```
LOGICAL I/O COMMAND #3  (+/-COMMAND#)
IF  YELLOW ON PHASE     #1  IS ON

              SCROLL DOWN

THEN:
SET OUTPUT  ASSIGNMENT #51  ON
```

NOTE: LOGIC FOR YELLOW ARROW CLEARANCE FROM PHASE 1 (HEAD 11).

PRESS '+'

```
LOGICAL I/O COMMAND #4  (+/-COMMAND#)
IF  ACTIVE PHASE        #5  IS ON
AND RED CLEAR ON PHASE #5  IS ON

              SCROLL DOWN

THEN:
SET OUTPUT  ASSIGNMENT #42  ON
SET OUTPUT  ASSIGNMENT #43  OFF
```

NOTE: LOGIC FOR PHASE 5 RED CLEAR WHEN TRANSITIONING FROM PHASE 5 TO PHASE 6 (HEAD 51).

PRESS '+'

```
LOGICAL I/O COMMAND #5  (+/-COMMAND#)
IF  ACTIVE PHASE        #5  IS ON

              SCROLL DOWN

THEN:
SET OUTPUT  ASSIGNMENT #44  OFF
```

NOTE: LOGIC FOR SWITCHING FLASHING YELLOW ARROW "OFF" DURING PHASE 5 (HEAD 51).

PRESS '+'

```
LOGICAL I/O COMMAND #6  (+/-COMMAND#)
IF  YELLOW ON PHASE     #5  IS ON

              SCROLL DOWN

THEN:
SET OUTPUT  ASSIGNMENT #43  ON
```

NOTE: LOGIC FOR YELLOW ARROW CLEARANCE FROM PHASE 5 (HEAD 51).

LOGIC I/O PROCESSOR PROGRAMMING COMPLETE

OVERLAP PROGRAMMING DETAIL

(program controller as shown below)

FROM MAIN MENU PRESS '8' (OVERLAPS), THEN '1' (VEHICLE OVERLAP SETTINGS).

```
PAGE 1: VEHICLE OVERLAP 'A' SETTINGS
PHASE:            |123456789101112131415 16
VEH OVL PARENTS:  |XX
VEH OVL NOT VEH:  |
VEH OVL NOT PED:  |
VEH OVL GRN EXT:  |
STARTUP COLOR: _ RED  _ YELLOW  _ GREEN
FLASH COLORS:  _ RED  _ YELLOW  X GREEN
SELECT VEHICLE OVERLAP OPTIONS:   (Y/N)
FLASH YELLOW IN CONTROLLER FLASH?...Y
GREEN EXTENSION (0-255 SEC).........0
YELLOW CLEAR (0=PARENT,3-25.5 SEC)..0.0
RED CLEAR (0=PARENT,0.1-25.5 SEC)...0.0
OUTPUT AS PHASE # (0=NONE, 1-16)....0
```

← NOTICE GREEN FLASH

PRESS '+'

```
PAGE 1: VEHICLE OVERLAP 'B' SETTINGS
PHASE:            |123456789101112131415 16
VEH OVL PARENTS:  |       X
VEH OVL NOT VEH:  |
VEH OVL NOT PED:  |
VEH OVL GRN EXT:  |
STARTUP COLOR: _ RED  _ YELLOW  _ GREEN
FLASH COLORS:  _ RED  _ YELLOW  X GREEN
SELECT VEHICLE OVERLAP OPTIONS:   (Y/N)
FLASH YELLOW IN CONTROLLER FLASH?...N
GREEN EXTENSION (0-255 SEC).........0
YELLOW CLEAR (0=PARENT,3-25.5 SEC)..0.0
RED CLEAR (0=PARENT,0.1-25.5 SEC)...0.0
OUTPUT AS PHASE # (0=NONE, 1-16)....0
```

← NOTICE GREEN FLASH

PRESS '+'

```
PAGE 1: VEHICLE OVERLAP 'C' SETTINGS
PHASE:            |123456789101112131415 16
VEH OVL PARENTS:  |     XX
VEH OVL NOT VEH:  |
VEH OVL NOT PED:  |
VEH OVL GRN EXT:  |
STARTUP COLOR: _ RED  _ YELLOW  _ GREEN
FLASH COLORS:  _ RED  _ YELLOW  X GREEN
SELECT VEHICLE OVERLAP OPTIONS:   (Y/N)
FLASH YELLOW IN CONTROLLER FLASH?...Y
GREEN EXTENSION (0-255 SEC).........0
YELLOW CLEAR (0=PARENT,3-25.5 SEC)..0.0
RED CLEAR (0=PARENT,0.1-25.5 SEC)...0.0
OUTPUT AS PHASE # (0=NONE, 1-16)....0
```

← NOTICE GREEN FLASH

OVERLAP PROGRAMMING COMPLETE

FLASHER CIRCUIT MODIFICATION DETAIL

IN ORDER TO INSURE THAT SIGNALS FLASH CONCURRENTLY ON THE SAME APPROACH, MAKE THE FOLLOWING FLASHER CIRCUIT CHANGES:

1. ON REAR OF PDA - REMOVE WIRE FROM TERM. T2-4 AND TERMINATE ON T2-2.
2. ON REAR OF PDA - REMOVE WIRE FROM TERM. T2-5 AND TERMINATE ON T2-3.
3. REMOVE FLASHER UNIT 2.

THE CHANGES LISTED ABOVE TIES ALL PHASES AND OVERLAPS TO FLASHER UNIT 1.

OUTPUT REFERENCE SCHEDULE

OUTPUT 42 = Overlap C Red
OUTPUT 43 = Overlap C Yellow
OUTPUT 44 = Overlap C Green
OUTPUT 50 = Overlap A Red
OUTPUT 51 = Overlap A Yellow
OUTPUT 52 = Overlap A Green

THIS ELECTRICAL DETAIL IS FOR
THE SIGNAL DESIGN: 14-1275
DESIGNED: 10-2013
SEALED: 2-13-2014
REVISED:

STV
900 West Trade St., Ste. 715
Charlotte, NC 28202
NC License Number F-0991

NEW INSTALLATION - ELECTRICAL DETAIL SHEET 2 OF 2

ELECTRICAL AND PROGRAMMING DETAILS FOR:

Prepared In the Offices of:
Transportation Mobility and Safety Division
STATE OF NORTH CAROLINA DEPARTMENT OF TRANSPORTATION
Signals Management Section
750 N.Greenfield Pkwy,Garner,NC 27529

US 74 / US 19 / US 129
at
SR 1366 (Regal Rd) / Casino Rd

Division 14 Cherokee County Murphy

PLAN DATE: October 2013 REVIEWED BY: T. Hartzell
PREPARED BY: J. Trueblood REVIEWED BY:

REVISIONS	INIT.	DATE

SEAL
NORTH CAROLINA PROFESSIONAL SEAL 039097 ENGINEER TRISHA L. HARTZELL

SIGNATURE Trisha L. Hartzell DATE 02-13-14

SIG. INVENTORY NO. 14-1275

2/12/2014
N:\Projects\2516009\2516009_1003\50_Deliverables & Submittals\R-5527\Woodway\Proj\Signal\14-1275a.dgn
Trueblj

STATE	PROJECT NO.	SHEET NO.
N.C.	R-5527	SIG-4
F. A. PROJ. NO.		M 1
PROJECT ID. NO.		

STATE OF NORTH CAROLINA
DIVISION OF HIGHWAYS

STANDARD DRAWINGS FOR METAL POLES

NCDOT METAL POLE STANDARDS

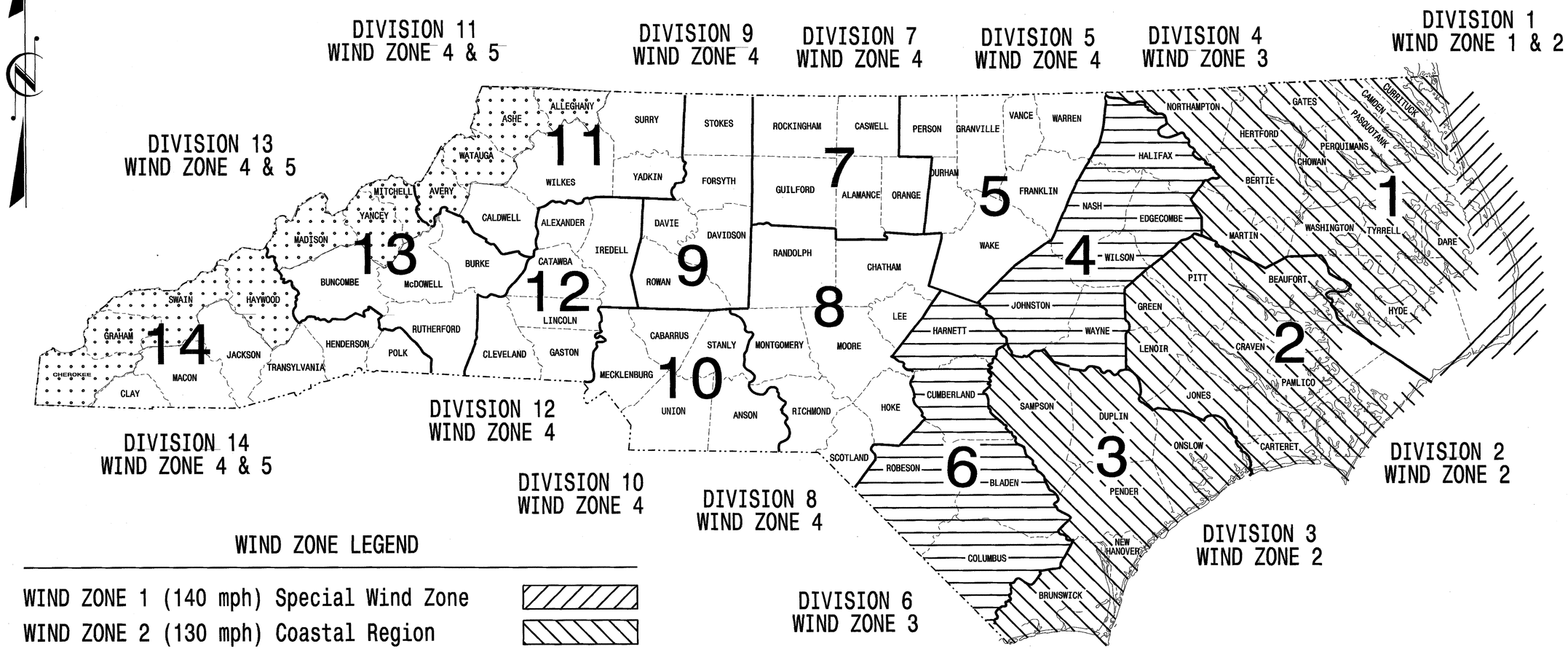

WIND ZONE LEGEND

WIND ZONE 1 (140 mph) Special Wind Zone	
WIND ZONE 2 (130 mph) Coastal Region	
WIND ZONE 3 (110 mph) Eastern Region	
WIND ZONE 4 (90 mph) Central & Mtn. Region	
WIND ZONE 5 (120 mph) Special Wind Zone	

https://connect.ncdot.gov/resources/safety/Pages/ITS-Design-Resources.aspx

Prepared in the Offices of:

Transportation Mobility and Safety Division
STATE OF NORTH CAROLINA DEPARTMENT OF TRANSPORTATION
Signal Design Section

750 N.Greenfield Pkwy.Garner,NC 27529

Designed in conformance with the latest 2012 Interim to the 5th Edition 2009

AASHTO

Standard Specifications for Structural Supports for Highway Signs, Luminares, and Traffic Signals

INDEX OF PLANS

DRAWING NUMBER	DESCRIPTION
M 1	Title Sheet
M 2	Fabrication Details – All Poles
M 3	Fabrication Details – Strain Poles
M 4,5	Fabrication Details – Mast Arm Poles
M 6	Construction Details – Strain Poles
M 7	Construction Details – Foundations
M 8	Standard Strain Poles

NCDOT CONTACTS:

MOBILITY AND SAFETY DIVISION – ITS AND SIGNALS UNIT

G. A. FULLER, P.E. – STATE ITS AND SIGNALS ENGNEER

G. G. MURR, JR., P.E. – STATE SIGNALS ENGINEER

D.C. SARKAR, P.E. – ITS AND SIGNALS SENIOR STRUCTURAL ENGINEER

C.F. ANDREWS – ITS AND SIGNALS JOURNEY STRUCTUIRAL ENGINEER

SEAL

NORTH CAROLINA PROFESSIONAL SEAL 028094 ENGINEER DEBESH C. SARKAR

D. Sarkar 8.7.2013
SIGNATURE DATE

PROJECT REFERENCE NO.	SHEET NO.
R-5527	SIG-5 M 2

Fabrication Details – All Poles

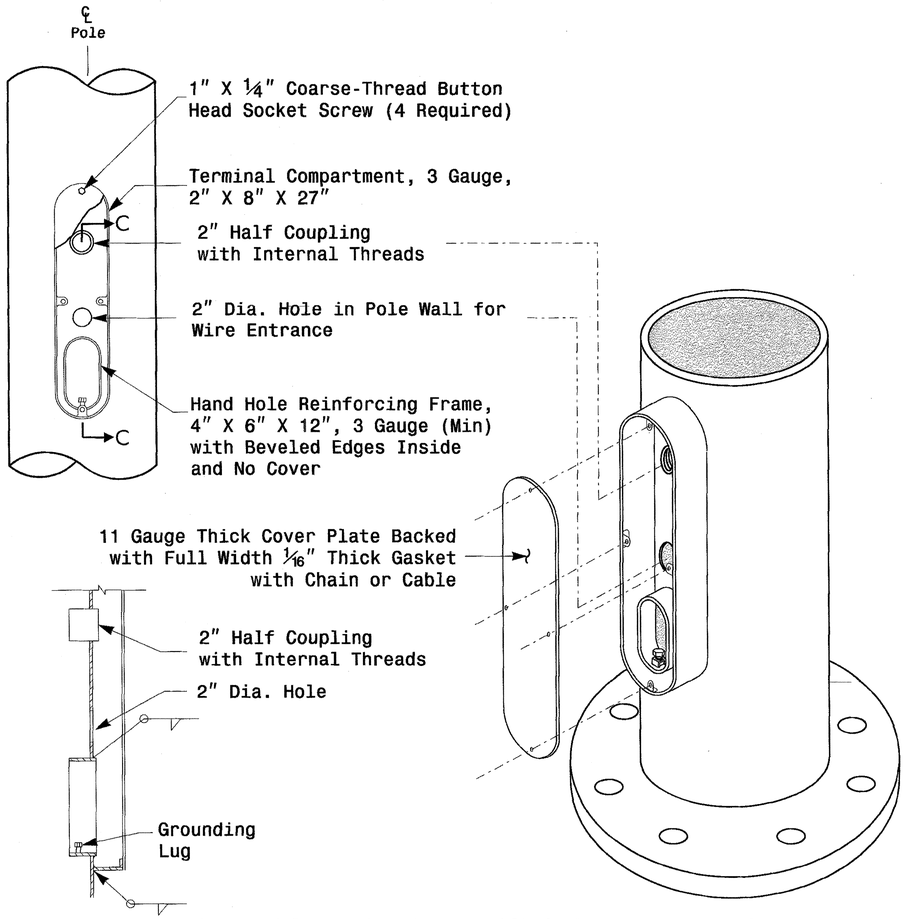

Note: Unless otherwise specified, locate Terminal Compartment 1 foot above the pole base plate at 180 degrees on the pole's radial index.

Terminal Compartment Detail

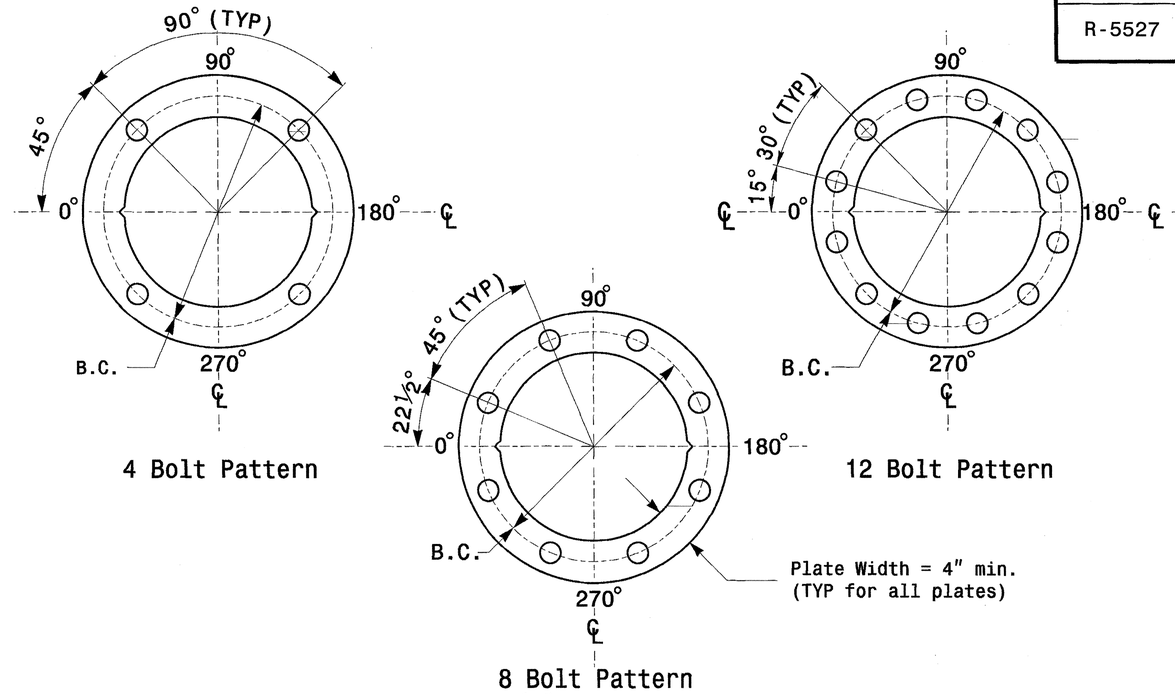

Construct Templates and Plates from ¼" min. thick Steel. Galvanizing is not required.

Base Plate Template and Anchor Bolt Lock Plate Details

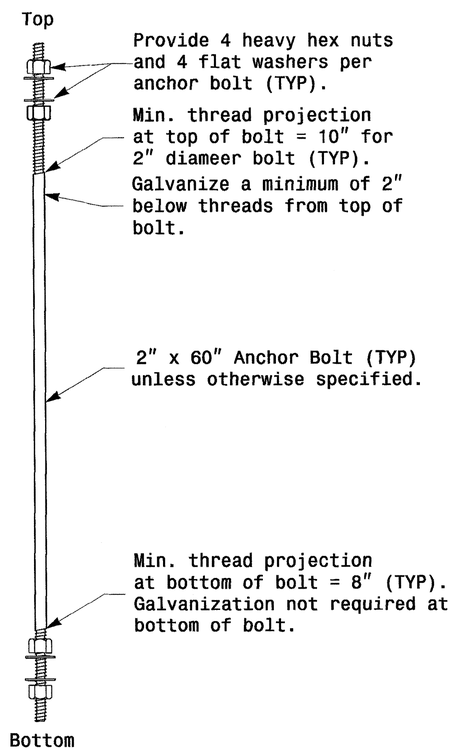

Anchor Bolt Detail

Note: See Strain Pole drawing M3 and Mast arm drawing M4 for base plate weld details.

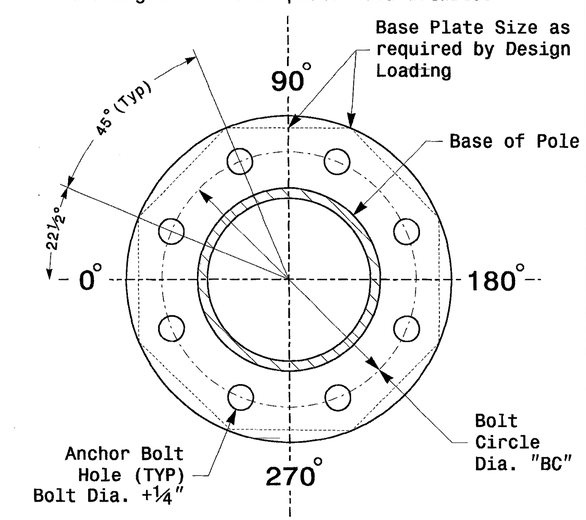

8 Bolt Base Plate Detail

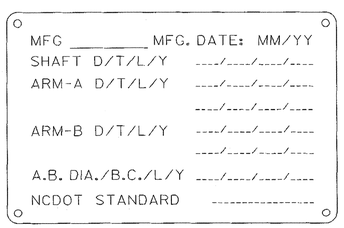

Shaft I.D. Tag
(Provide on Strain Poles and Mast Arm Poles)

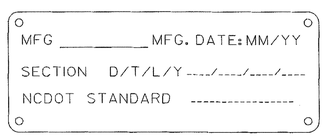

Arm I.D. Tag
(Provide on each section of a multi-section mast arm)

Notes:
1) D= Diameter, T= Thickness, L= Length, Y= Yield Strength
2) A.B. = Anchor Bolt
3) B.C. = Bolt Circle of Anchor Bolts
4) If Custom Design, use "NCDOT STANDARD" line for pole I.D. number and Signal Inv. Number.
5) See drawing M4 for mounting positions of I.D. tags.

Identification Tag Details

Prepared in the Offices of:
Transportation Mobility and Safety Division
Signal Design Section
750 N.Greenfield Pkwy,Garner,NC 27529

Typical Fabrication Details Common To All Metal Poles

PLAN DATE:	AUGUST 2013	DESIGNED BY:	C.F. ANDREWS
PREPARED BY:	N. BITTING	REVIEWED BY:	D.C. SARKAR

REVISIONS	INIT.	DATE

SCALE: 0 NA — NONE

SEAL: NORTH CAROLINA PROFESSIONAL SEAL 028094 ENGINEER DEBESH C. SARKAR

D. Sarkar 8-7-2013
SIGNATURE DATE

SIG. INVENTORY NO.

07-AUG-2013 13:15
S:\TSG&S\TS Signals\Workgroups\Structures\Drawings\2012 Standard Strain Pole Dwgs\2012 m2.dgn
rbitting

PROJECT REFERENCE NO.	SHEET NO.
R-5527	SIG-6 M 3

Fabrication Details – Strain Poles

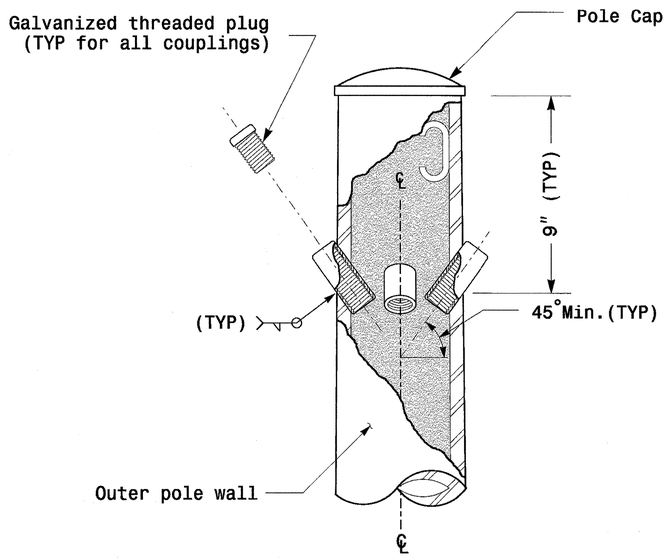

Cable Entrances at Top of Pole

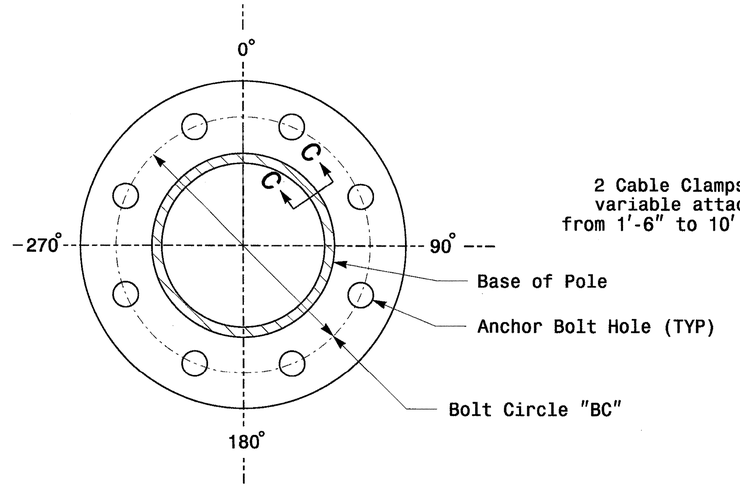

Section B-B

(See drawing M2)

Pole Base Plate

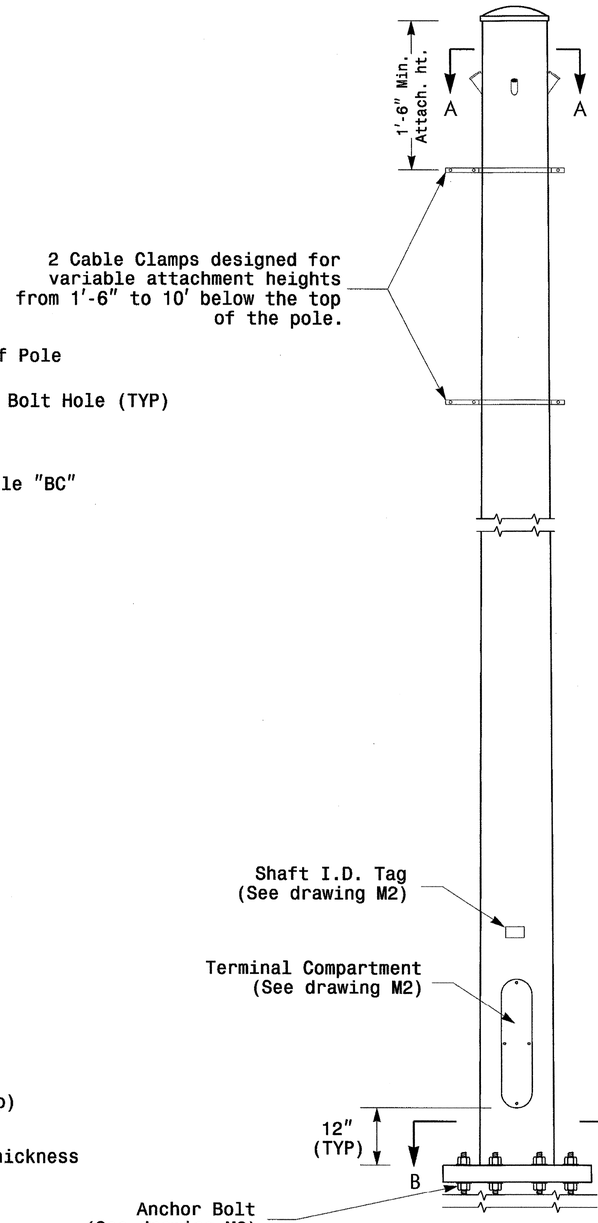

Monotube Strain Pole
(.14"/Foot Taper)

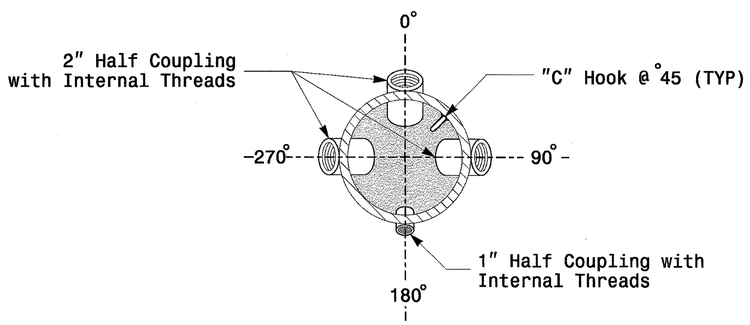

Section A-A

Radial Orientation for Factory Installed Accessories at Top of Pole

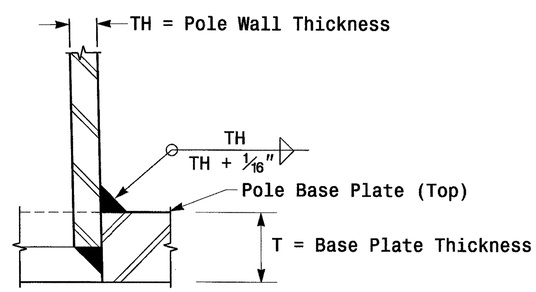

Section C-C

Socket Connection Weld Detail

Prepared in the Offices of:
Transportation Mobility and Safety Division
STATE OF NORTH CAROLINA DEPARTMENT OF TRANSPORTATION
Signal Design Section
750 N.Greenfield Pkwy, Garner, NC 27529

SCALE: 0 NA — NONE

Typical Fabrication Details
For Strain Poles

PLAN DATE:	AUGUST 2013	DESIGNED BY:	C.F. ANDREWS
PREPARED BY:	N. BITTING	REVIEWED BY:	D.C. SARKAR

REVISIONS	INIT.	DATE

SEAL
NORTH CAROLINA PROFESSIONAL SEAL 028094 ENGINEER DEBESH C. SARKAR

D. Sarkar 8.7.2013
SIGNATURE DATE

SIG. INVENTORY NO.

07-AUG-2013 13:11
S:\TS&S\TS Signals\Workgroups\Structures\Drawings\2012 Standard Strain Pole Dwgs\2012 m3.dgn
nbitting

PROJECT REFERENCE NO.	SHEET NO.
R-5527	SIG-7 M 6

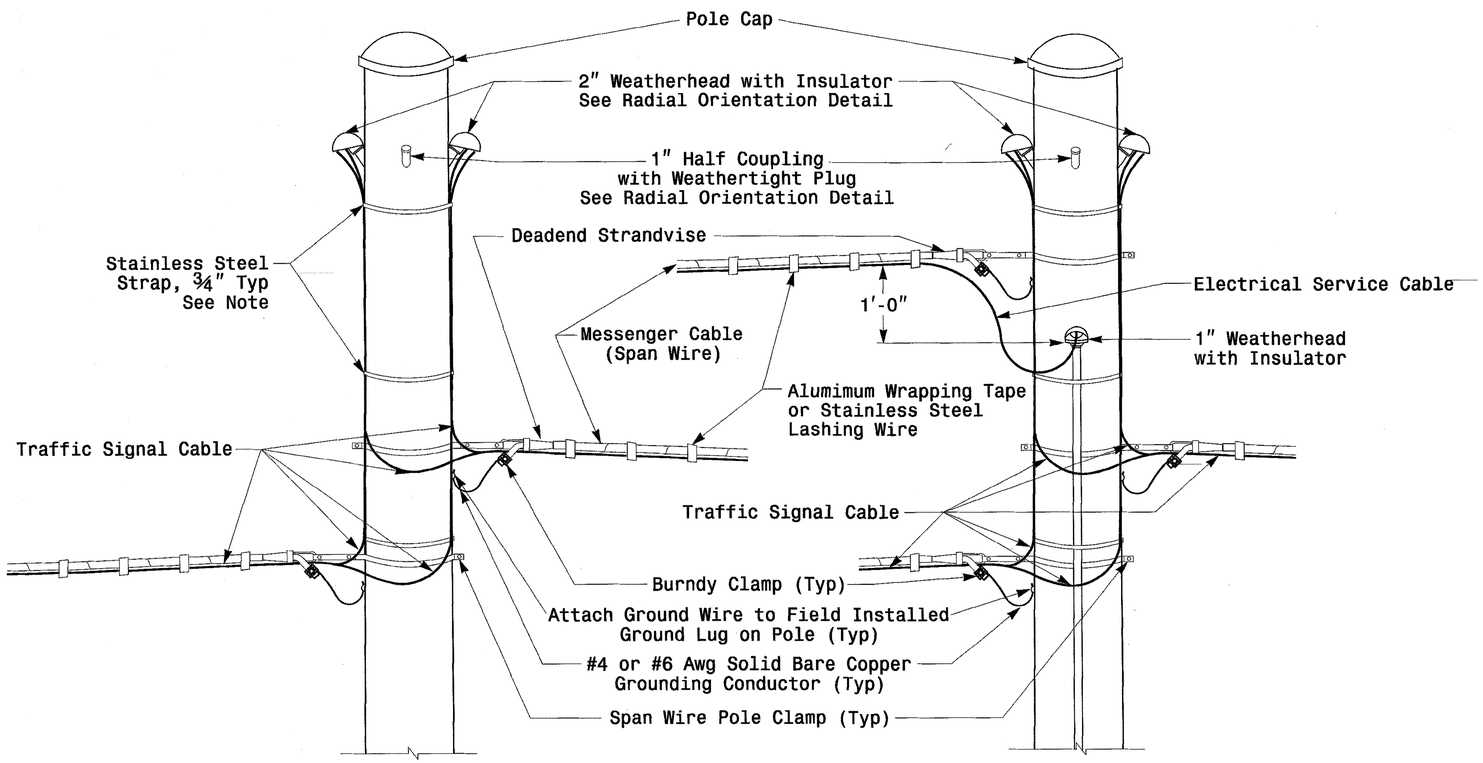

Strain Pole Attachments

Note: Strap all signal cables to the side of the pole with 3/4" stainless steel straps when the distance between the spanwire attachment clamp and the weatherheads exceeds 36"

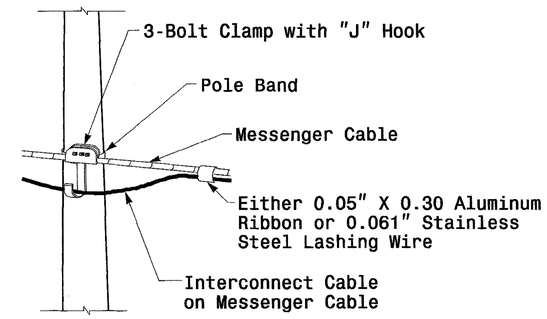

Attachment of Cable to Intermediate Metal Pole

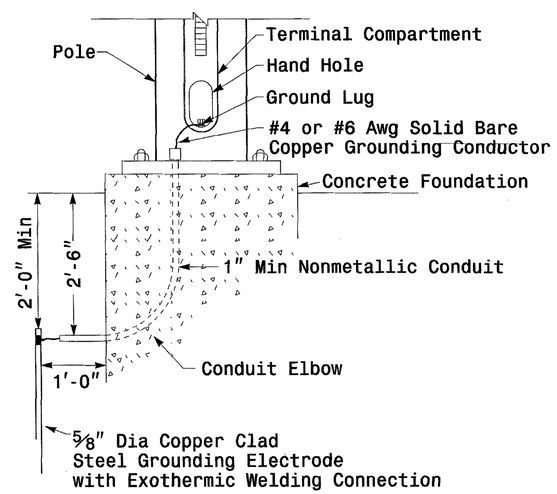

Metal Pole Grounding Detail

Construction Details – Strain Poles

Prepared in the Offices of:
Transportation Mobility and Safety Division
Signal Design Section
750 N.Greenfield Pkwy,Garner,NC 27529

SCALE
0 NA
NONE

Construction Details
Strain Poles

PLAN DATE:	AUGUST 2013	REVIEWED BY:	C.F. ANDREWS
PREPARED BY:	N. BITTING	REVIEWED BY:	D.C. SARKAR

REVISIONS	INIT.	DATE

SEAL
NORTH CAROLINA PROFESSIONAL SEAL 028094 ENGINEER DEBESH C. SARKAR

D. Sarkar 8.7.2013
SIGNATURE DATE

SIG. INVENTORY NO.

07-AUG-2013 13:39
S:\TSS\SU\TS Signals\Workgroups\Structures\Drawings\2012 Standard Strain Pole Dwgs\2012 ms.dgn
nbitting

PROJECT REFERENCE NO.	SHEET NO.
R-5527	SIG-8 M 7

Construction Details – Foundations

Reinforcing Steel Bars

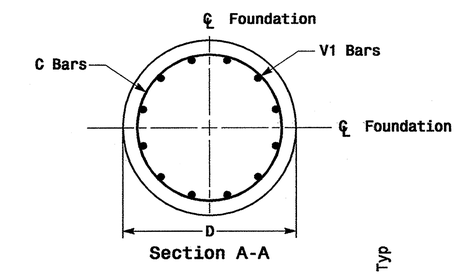

Section A-A

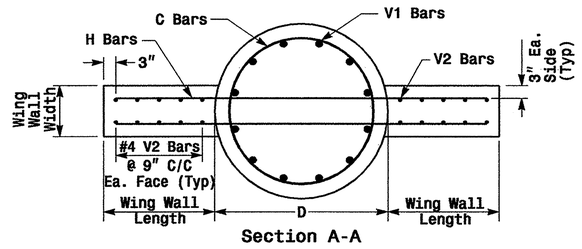

Section A-A

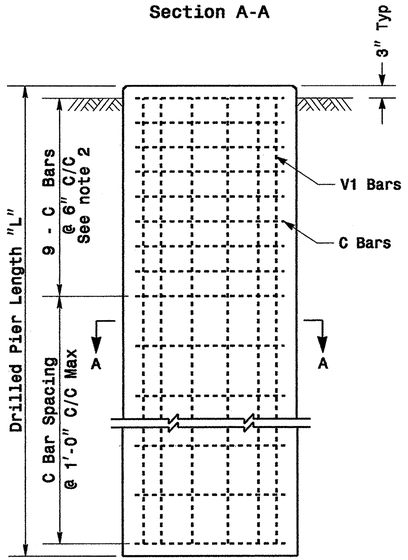

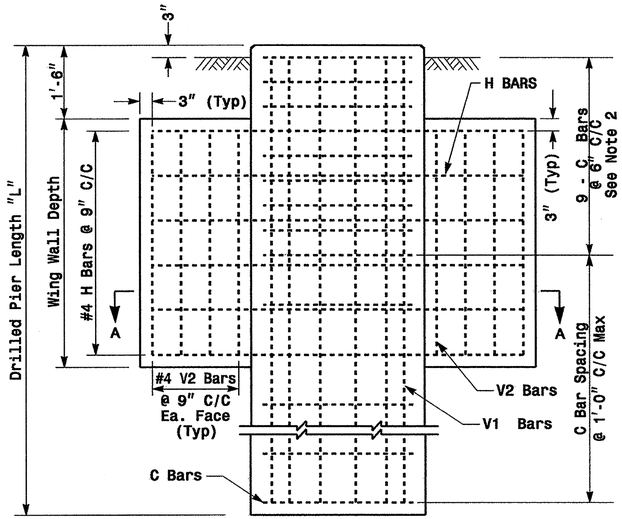

REINFORCING STEEL TABLE FOR STANDARD DRILL PIER SHAFT (42" & 48" DIAMETER)

Shaft Dia (in.)	Conc. Volume (cu. yds.)	Bar Name	No.	Size	Type	Length
42"	.356 x L	V1	9	#8	STR.	**
		C	*	#4	CIR.	10'-9"
48"	.465 x L	V1	12	#8	STR.	**
		C	*	#4	CIR.	12'-6"

* See Note No. 1
** See Note No. 3

REINFORCING STEEL TABLE FOR STANDARD 42" and 48" DRILL PIER SHAFT WITH TYPE 1 AND TYPE 2 WING WALLS

Wing Wall Type	Drill Pier Shaft Dia. (in.)	Reinforcing Steel				
		Bar Name	No.	Size	Type	Length
TYPE 1	42"	V1	9	#8	STR.	**
		V2	12	#4	STR.	2'-6"
		H	8	#4	STR.	6'-0"
		C	*	#4	CIR.	10'-9"
TYPE 2	42"	V1	9	#8	STR.	**
		V2	16	#4	STR.	4'-6"
		H	12	#4	STR.	9'-0"
		C	*	#4	CIR.	10'-9"
TYPE 2	48"	V1	12	#8	STR.	**
		V2	16	#4	STR.	4'-6"
		H	12	#4	STR.	9'-6"
		C	*	#4	CIR.	12'-6"

* See Note No. 1
** See Note No. 3

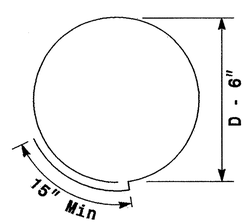

Typical "C" Bars

WING WALL DETAILS

Wing Wall Type	Wing Wall Length (Ft.)	Wing Wall Width (Ft.)	Wing Wall Depth (Ft.)	Concrete Volume (Cu. Yds.)
TYPE 1	1'-6"	1'-0"	3'-0"	.4
TYPE 2	3'-0"	1'-0"	5'-0"	1.2

See Note No. 4

Typical Foundation Anchor Bolt Details

(Reinforcing Cage Not Shown for Clarity)

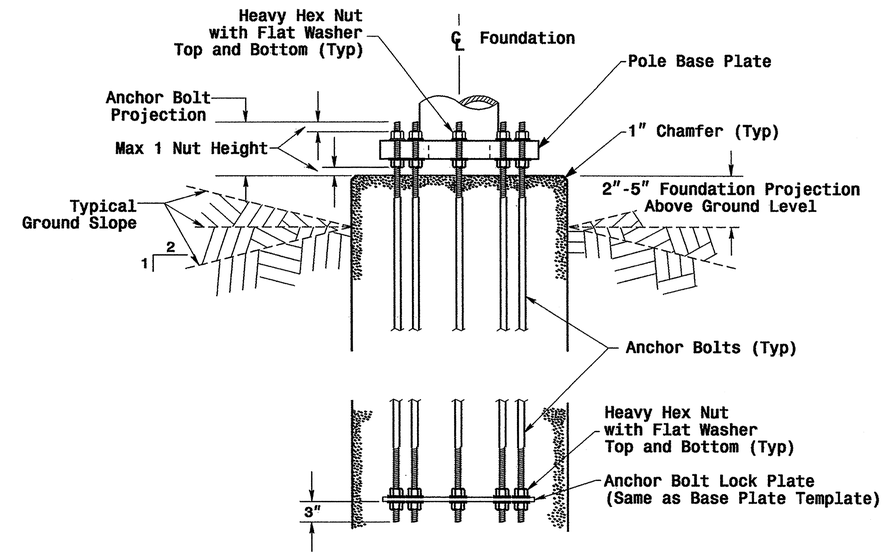

Typical Foundation Conduit Details

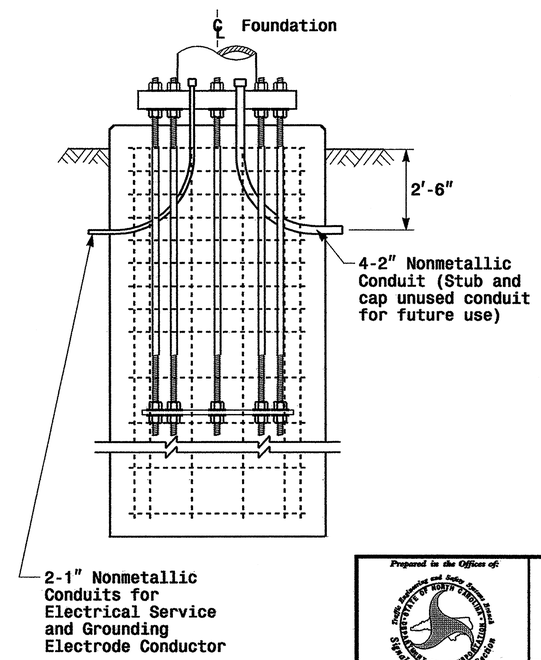

Notes

1. The number of C-bars is based on foundation depth. For standard foundations, see sheet M 8.
2. Circular tie reinforcing rings may be vertically adjusted by +/- 3" at a depth between 2'-0" and 3'-0" to facilitate the installation of electrical conduit entering in the cage.
3. The length of V1-bars is based on foundation depth. For standard foundations, see sheet M 8.
4. The quantities for steel and concrete shown in the Wing Wall Details Chart reflect the amount of material for 1 pair of wing walls (2 wing walls per drilled pier shaft.)

Prepared in the Offices of: Traffic Engineering and Safety Systems Branch, Signals and Geometrics Section, Department of Transportation, State of North Carolina
1122 N. McDowell St., Raleigh, NC 27603

SCALE: 0 NA — NONE

Construction Details
Foundations

PLAN DATE: May 2005	REVIEWED BY: P.L. ALEXANDER
PREPARED BY: C.F. ANDREWS	REVIEWED BY: A.M. ESPOSITO

REVISIONS	INIT.	DATE

SEAL: NORTH CAROLINA PROFESSIONAL SEAL 028094 ENGINEER DIBESH C. SARKAR

D. Sarkar 9.2.2005
SIGNATURE DATE

SIG. INVENTORY NO.

01-SEP-2005 11:48
w:\pecoles-unit\workgroups\2004 metal pole standards\2004 mf.dgn
pstevenson

PROJECT REFERENCE NO.	SHEET NO.
R-5527	SIG-9 M 8

		STANDARD STRAIN POLES				STANDARD FOUNDATIONS 42" Diameter Drilled Pier Length (L) – Feet						
						Clay				Sand		
		Case No.	Pole Height (Ft.)	Base Plate BC (In.)	Moment at the Pole Base (ft-kp)	Medium N-Value 4-8	Stiff N-Value 9-15	Very Stiff N-Value 16-30	Hard N-Value >30	Loose N-Value 4-10	Medium N-Value 11-30	Dense N-Value >30
WIND ZONE 1	LIGHT	S26L3	26	25	280	20.5	14.0	11.5	9.5	18.0	16.0	14.0
		S30L3	30	25	310	21.0	14.5	11.5	9.5	18.5	16.5	14.5
		S35L3	35	25	350	22.5	15.0	12.0	10.0	19.5	17.5	15.5
	HEAVY	S30H3	30	29	450	25.5	16.5	13.0	11.0	21.0	18.5	16.5
		S35H3	35	29	540	26.0	17.0	13.5	11.5	22.0	19.5	17.0
WIND ZONE 2	LIGHT	S26L2	26	23	250	19.5	13.5	11.0	9.0	18.0	15.5	14.0
		S30L2	30	23	290	20.0	14.0	11.5	9.5	18.5	16.0	14.0
		S35L2	35	23	315	21.0	14.5	11.5	9.5	19.0	16.5	14.5
	HEAVY	S30H2	30	29	415	24.5	16.0	13.0	10.5	21.0	18.5	16.0
		S35H2	35	29	485	25.5	16.5	13.5	11.0	21.5	19.0	16.5
WIND ZONE 3	LIGHT	S26L2	26	23	250	18.5	13.0	10.5	9.0	17.5	15.0	13.5
		S30L2	30	23	290	19.5	13.5	11.0	9.0	18.0	15.5	14.0
		S35L2	35	23	315	20.0	14.0	11.5	9.5	18.5	16.0	14.5
	HEAVY	S30H2	30	29	415	23.0	15.5	12.5	10.0	20.5	17.5	16.0
		S35H2	35	29	485	24.0	16.0	13.0	10.5	21.0	18.0	16.5
WIND ZONE 4	LIGHT	S26L1	26	22	195	18.0	13.0	10.5	9.0	16.5	14.5	13.0
		S30L1	30	22	225	18.5	13.0	10.5	9.0	17.0	15.0	13.5
		S35L1	35	22	255	19.0	13.5	11.0	9.0	17.5	15.5	14.0
	HEAVY	S30H1	30	25	330	22.0	15.0	12.0	9.5	19.5	17.0	15.0
		S35H1	35	25	385	23.0	15.5	12.5	10.0	20.0	17.5	15.5
WIND ZONE 5	LIGHT	S26L2	26	23	250	19.0	13.5	10.5	9.0	17.5	15.5	13.5
		S30L2	30	23	290	20.0	14.0	11.0	9.5	18.0	16.0	14.0
		S35L2	35	23	315	21.0	14.5	11.5	10.0	19.0	16.5	14.5
	HEAVY	S30H2	30	29	415	23.5	15.5	12.5	10.5	21.0	18.0	16.0
		S35H2	35	29	485	25.0	16.5	13.0	11.0	21.5	18.5	16.5

Concrete Volume (cubic yards)=.356 X L

Fabrication Design Notes:

1. Values shown in "Moment at the Pole Base" column represents the minimum acceptable capacity allowable for design using a design CSR of 1.
2. Base plate thickness (T) is 2.0 inches.

Foundation Selection:

1. Perform a standard penetration test at each proposed foundation site to determine "N" value.
2. Select the appropriate wind zone from sheet M 1.
3. Select the soil type (Clay or Sand) that best describes the soil characteristics.
4. Get the appropriate pole case load number from the plans or from the Engineer.
5. Select the appropriate column in the chart based on soil type and "N" value. Select the appropriate row based on the pole load case. The foundation depth is the value where the column and the row intersect.

Standard Strain Poles

Prepared in the Offices of: Traffic Engineering and Safety Systems Branch, Signals and Geometrics Section, Division of Highways, Department of Transportation, 122 N. McDowell St., Raleigh, NC 27603

Standard Strain Poles and Standard Foundations

PLAN DATE: May 2005	REVIEWED BY: C.F. Andrews
PREPARED BY: P.L. Alexander	REVIEWED BY: A.M. Esposito

SCALE 0 NA None

REVISIONS | INIT. | DATE

SEAL: NORTH CAROLINA PROFESSIONAL SEAL 028094 ENGINEER DEBESH C. SARKAR

D. Sarkar 9.2.2005
SIGNATURE DATE

02-SEP-2005 12:42
w:\#bridge-unit\#workgroups\2004 metal pole standards\2004 m8 std strain pole.dgn
pollexander

PROJECT REFERENCE NO.	SHEET NO.
R-5527	SIG-10

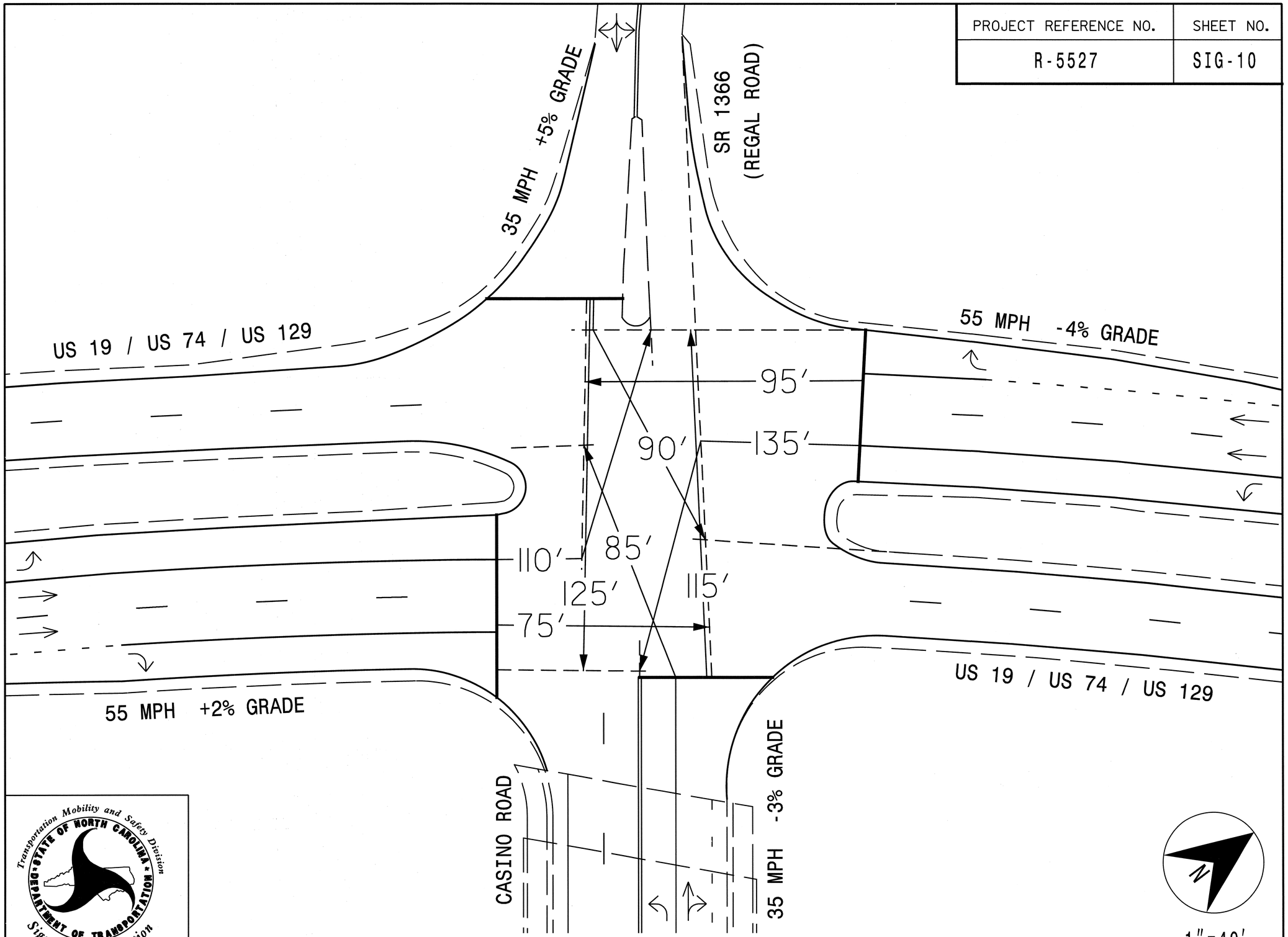

Clearance Distances For: US 74/US 19/US 129 AT SR 1366 (REGAL RD)/CASINO RD

TIP PROJECT: R-5527B

CONTRACT:

PROJECT REFERENCE NO.	SHEET NO.
R-5527B	UO-1

UTILITIES BY OTHERS

NOTE:
ALL PROPOSED UTILITY WORK SHOWN ON THIS SHEET WILL BE DONE BY OTHERS

STATE OF NORTH CAROLINA
DIVISION OF HIGHWAYS

UTILITIES BY OTHERS
CHEROKEE COUNTY

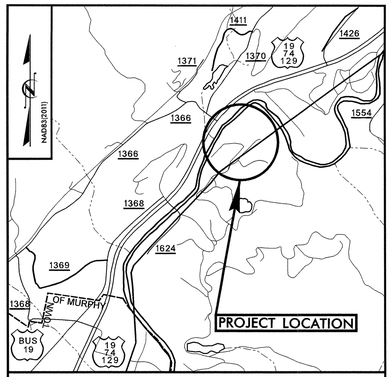

VICINITY MAP

LOCATION: NEW ROUTE FROM THE US74/19/129, SR 1366 INTERSECTION, EAST TO THE EBCI TRIBAL BOUNDARY IN CHEROKEE COUNTY

TYPE OF WORK: AERIAL AND BURIED POWER, TELEPHONE, CABLE TV, FIBER OPTIC, WATER AND SEWER

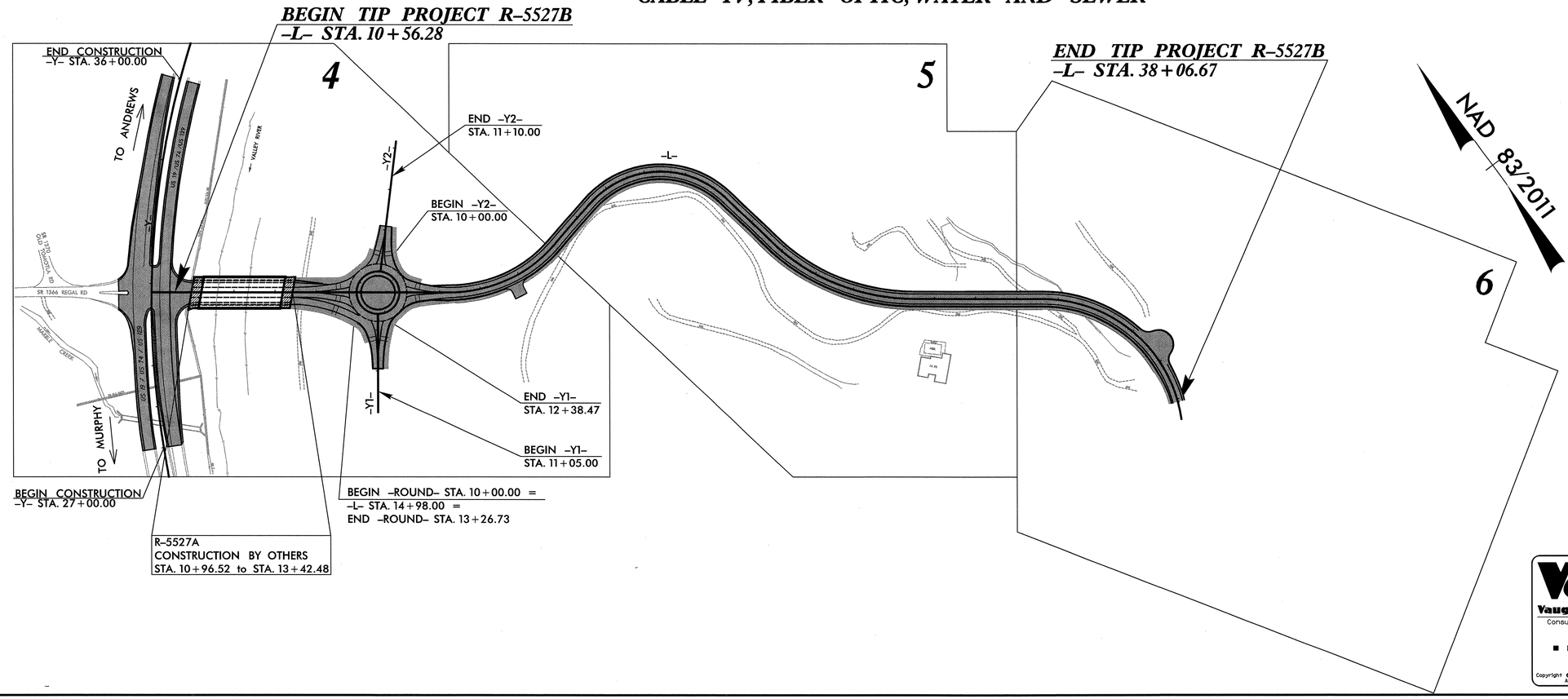

V&M
Vaughn & Melton
Consulting Engineers
Asheville, North Carolina 828-253-2796
Charlotte, North Carolina 704-357-0488
Tri-Cities, Tennessee 423-467-8401
Knoxville, Tennessee 865-546-5800
Middlesboro, Kentucky 606-248-6600
Spartanburg, South Carolina 864-574-4775

Copyright © 2006 Vaughn & Melton, Inc. All Rights Reserved

GRAPHIC SCALES

50 25 0 25 50
PLANS

INDEX OF SHEETS

SHEET NO.	DESCRIPTION
UO-1	TITLE SHEET
UO-2	UTILITIES BY OTHERS PLAN SHEET
UO-3	UTILITIES BY OTHERS PLAN SHEET
UO-4	UTILITIES BY OTHERS PLAN SHEET

UTILITY OWNERS ON PROJECT

(1) WATER & SEWER - TOWN OF MURPHY

(2) FIBER OPTIC - BALSAMWEST FIBERNET

(3) POWER - MURPHY POWER BOARD

PLANS PREPARED BY:

V&M
Vaughn & Melton
Consulting Engineers
1318-F Patton Ave.
Asheville, NC 28806
828-253-2796

PREPARED FOR THE OFFICE OF:

DIVISION OF HIGHWAYS
UTILITIES ENGINEERING SECTION

1591 MAIL SERVICES CENTER
RALEIGH NC 27699-1591
PHONE (919) 250-4128
FAX (919) 250-4119

Roger Worthington, P.E.	*UTILITIES SECTION ENGINEER*
Xxxxx Xxxxx, P.E.	*UTILITIES SQUAD LEADER PROJECT ENGINEER*
Lynn Mann, P.G.	*UTILITIES PROJECT DESIGNER*

V&M PROJECT #31237-01
TRANSPORTATION\31237-01\R-5527B\UTILITIES\UO-1.DGN
1-30-14

PROJECT REFERENCE NO.	SHEET NO.
R-5527B	U0-2

UTILITIES BY OTHERS

NOTE:
ALL PROPOSED UTILITY WORK SHOWN ON THIS SHEET WILL BE DONE BY OTHERS

V&M
Vaughn & Melton
Consulting Engineers
Asheville, North Carolina 828-253-2796
Charlotte, North Carolina 704-357-0488
Tri-Cities, Tennessee 423-467-940
Knoxville, Tennessee 865-546-5800
Middlesboro, Kentucky 606-248-6600
Spartanburg, South Carolina 864-574-4775

Copyright © 1994 Vaughn & Melton, Inc. All Rights Reserved

1. MURPHY POWER BOARD SHALL PROVIDE 1-1/2" PVC CONDUIT PER NCDOT STANDARDS WITH 2-#8 AND 1#10 GND.
2. MURPHY POWER BOARD SHALL PROVIDE SERVICE DROP AND METER PER NCDOT STANDARD DRAWINGS. LIGHTS SHALL BE CONNECTED TO TWO CIRCUITS.
3. MURPHY POWER BOARD SHALL PROVIDE 3" CONDUIT SLEEVE UNDER ROADWAY. LIGHTING CONDUIT SHALL BE INSTALLED IN SLEEVE.
4. ALL LIGHT STANDARDS SHALL BE LOCATED BEHIND SIDEWALK AND GUARDRAIL.

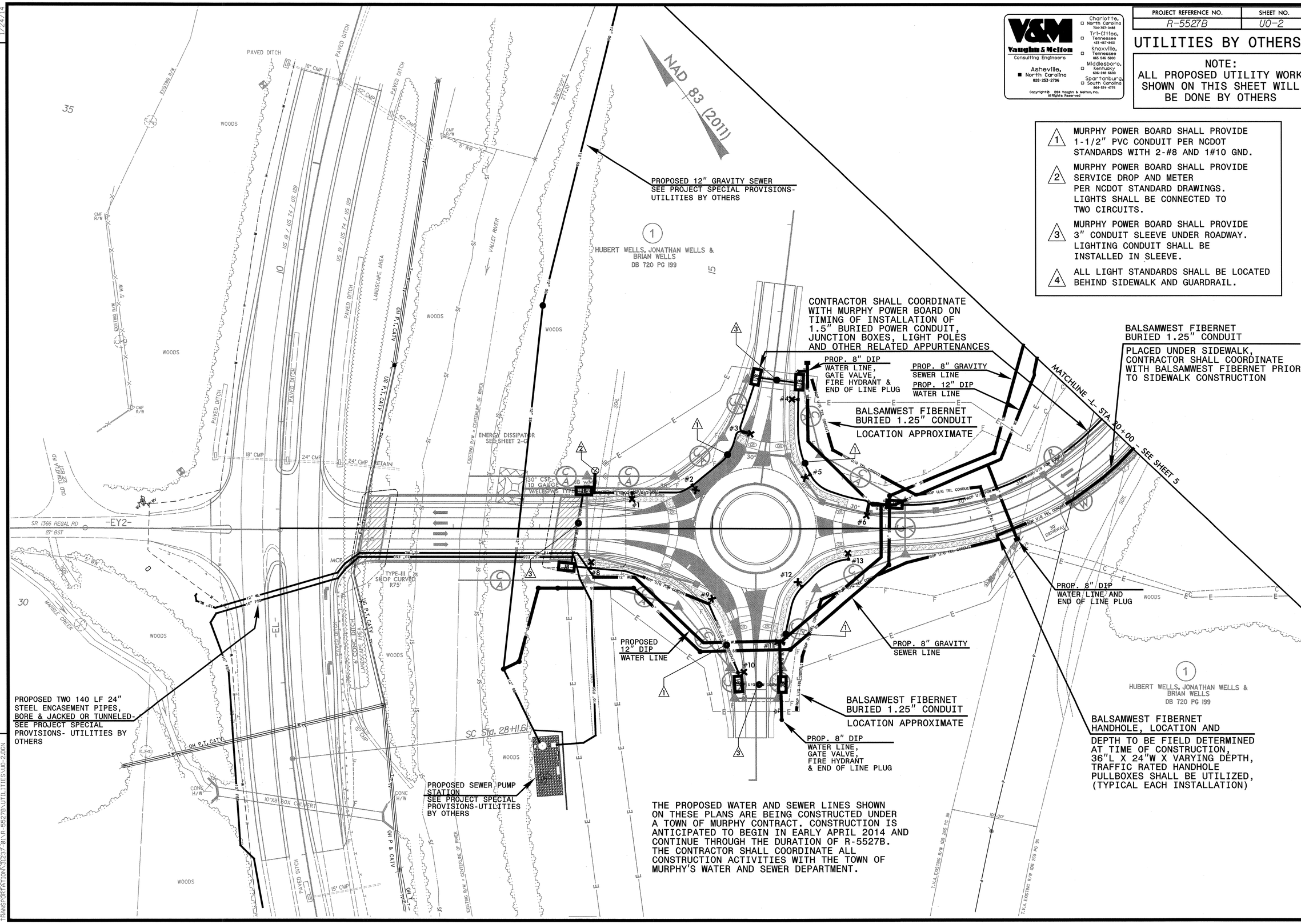

THE PROPOSED WATER AND SEWER LINES SHOWN ON THESE PLANS ARE BEING CONSTRUCTED UNDER A TOWN OF MURPHY CONTRACT. CONSTRUCTION IS ANTICIPATED TO BEGIN IN EARLY APRIL 2014 AND CONTINUE THROUGH THE DURATION OF R-5527B. THE CONTRACTOR SHALL COORDINATE ALL CONSTRUCTION ACTIVITIES WITH THE TOWN OF MURPHY'S WATER AND SEWER DEPARTMENT.

REVISIONS

1/24/14

V&M PROJECT #31237-01
TRANSPORTATION\31237-01\R-5527B\UTILITIES\U0-2.DGN

PROJECT REFERENCE NO.	SHEET NO.
R-5527B	U0-3

UTILITIES BY OTHERS

NOTE:
ALL PROPOSED UTILITY WORK SHOWN ON THIS SHEET WILL BE DONE BY OTHERS

Vaughn & Melton
Consulting Engineers
Asheville, North Carolina 828-253-2796
Charlotte, North Carolina 704-357-0489
Tri-Cities, Tennessee 423-467-8401
Knoxville, Tennessee 865-546-6800
Middlesboro, Kentucky 606-248-6600
Spartanburg, South Carolina 864-574-4775

Copyright © 1994 Vaughn & Melton, Inc. All Rights Reserved

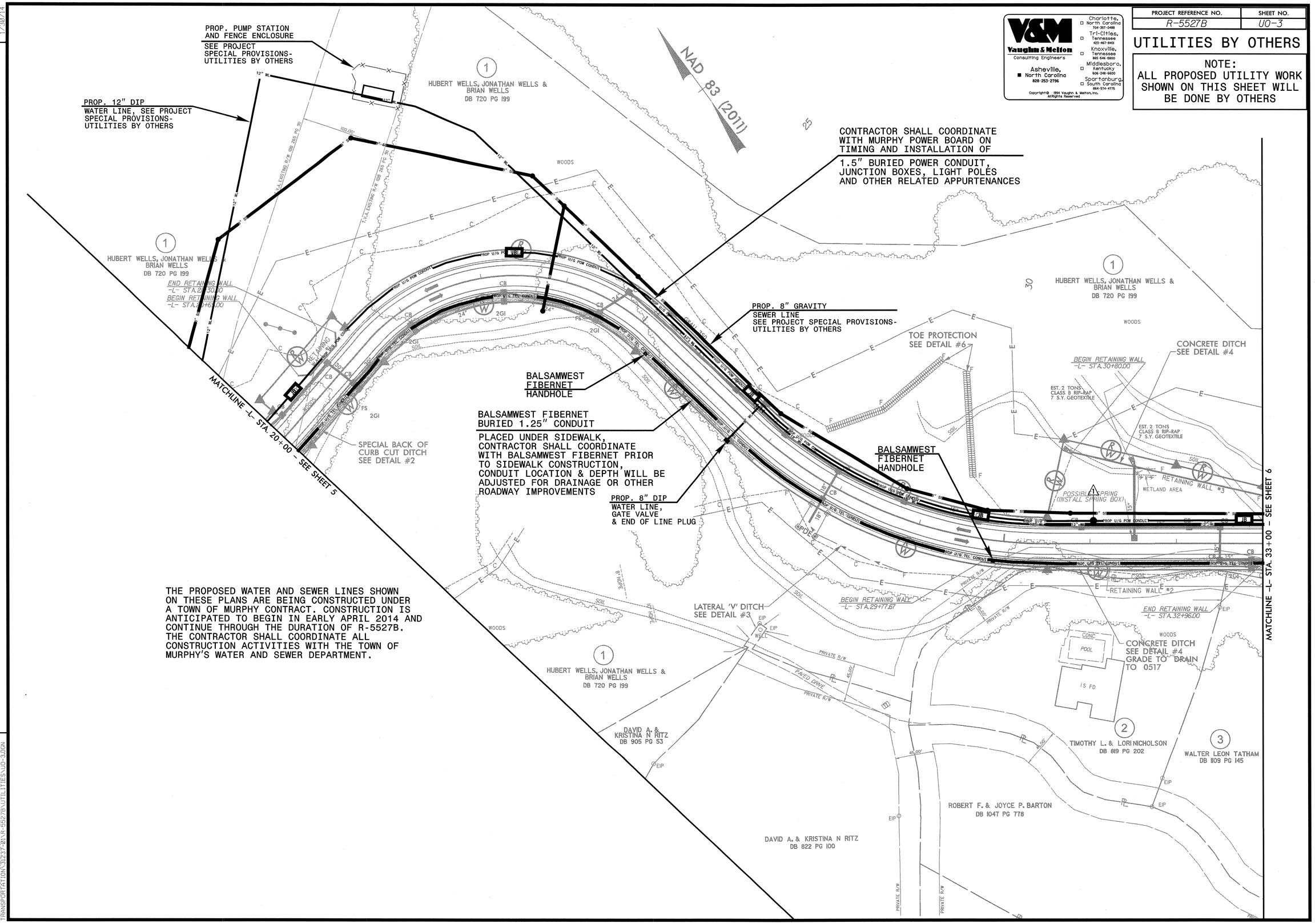

THE PROPOSED WATER AND SEWER LINES SHOWN ON THESE PLANS ARE BEING CONSTRUCTED UNDER A TOWN OF MURPHY CONTRACT. CONSTRUCTION IS ANTICIPATED TO BEGIN IN EARLY APRIL 2014 AND CONTINUE THROUGH THE DURATION OF R-5527B. THE CONTRACTOR SHALL COORDINATE ALL CONSTRUCTION ACTIVITIES WITH THE TOWN OF MURPHY'S WATER AND SEWER DEPARTMENT.

REVISIONS

1/30/14

V&M PROJECT #31237.01
TRANSPORTATION\31237-01\R-5527B\UTILITIES\U0-3.DGN

PROJECT REFERENCE NO.	SHEET NO.
R-5527B	U0-4

UTILITIES BY OTHERS

NOTE:
ALL PROPOSED UTILITY WORK SHOWN ON THIS SHEET WILL BE DONE BY OTHERS

Vaughn & Melton
Consulting Engineers
Asheville, North Carolina 828-253-2796
Charlotte, North Carolina 704-357-0488
Tri-Cities, Tennessee 423-467-8401
Knoxville, Tennessee 865 646 5800
Middlesboro, Kentucky 606-248-6600
Spartanburg, South Carolina 864-574-4775

Copyright © 1994 Vaughn & Melton, Inc. All Rights Reserved

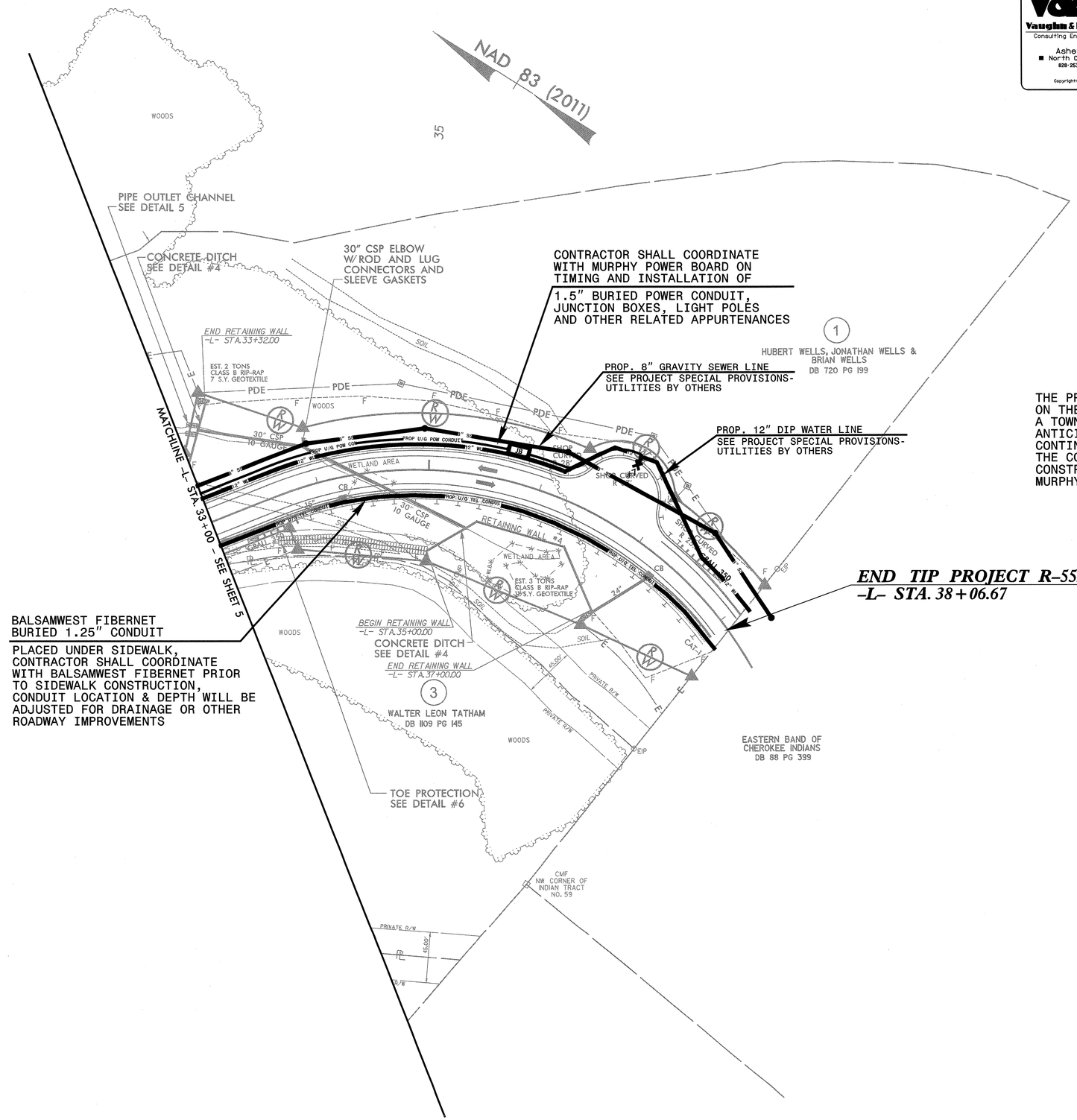

THE PROPOSED WATER AND SEWER LINES SHOWN ON THESE PLANS ARE BEING CONSTRUCTED UNDER A TOWN OF MURPHY CONTRACT. CONSTRUCTION IS ANTICIPATED TO BEGIN IN EARLY APRIL 2014 AND CONTINUE THROUGH THE DURATION OF R-5527B. THE CONTRACTOR SHALL COORDINATE ALL CONSTRUCTION ACTIVITIES WITH THE TOWN OF MURPHY'S WATER AND SEWER DEPARTMENT.

REVISIONS

1/30/14

V&M PROJECT #31237-01
TRANSPORTATION\31237-01\R-5527B\UTILITIES\U0-4.DGN

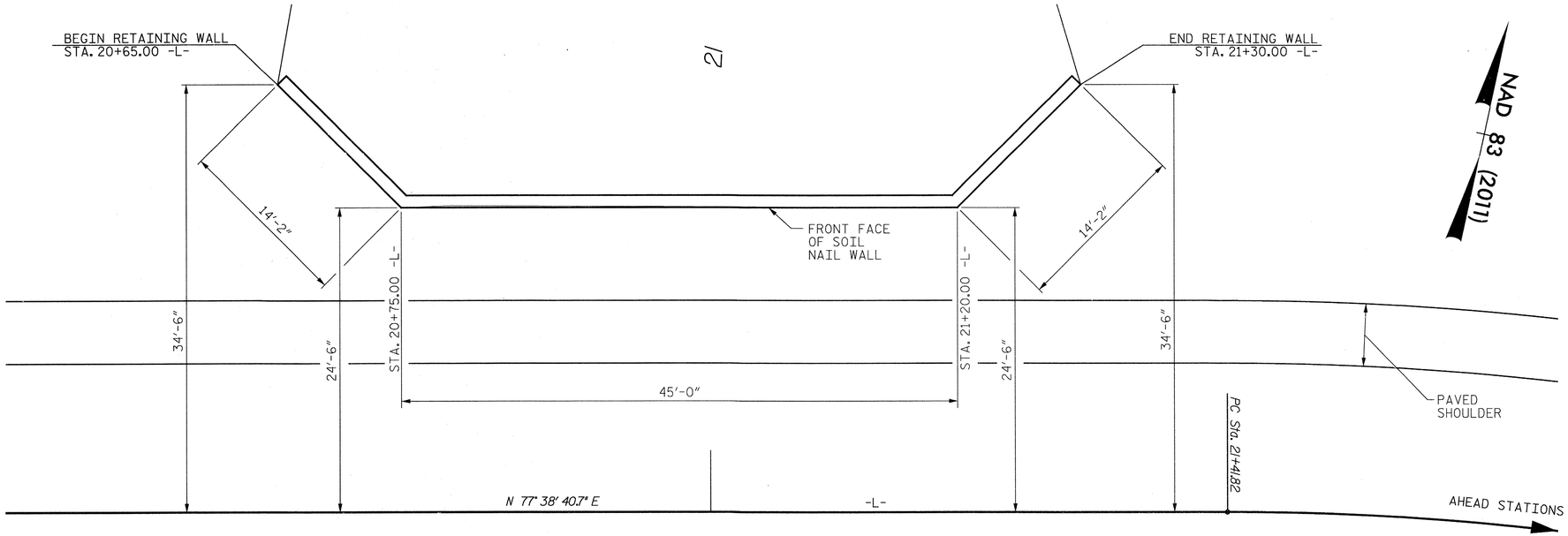

PLAN - RETAINING WALL #1

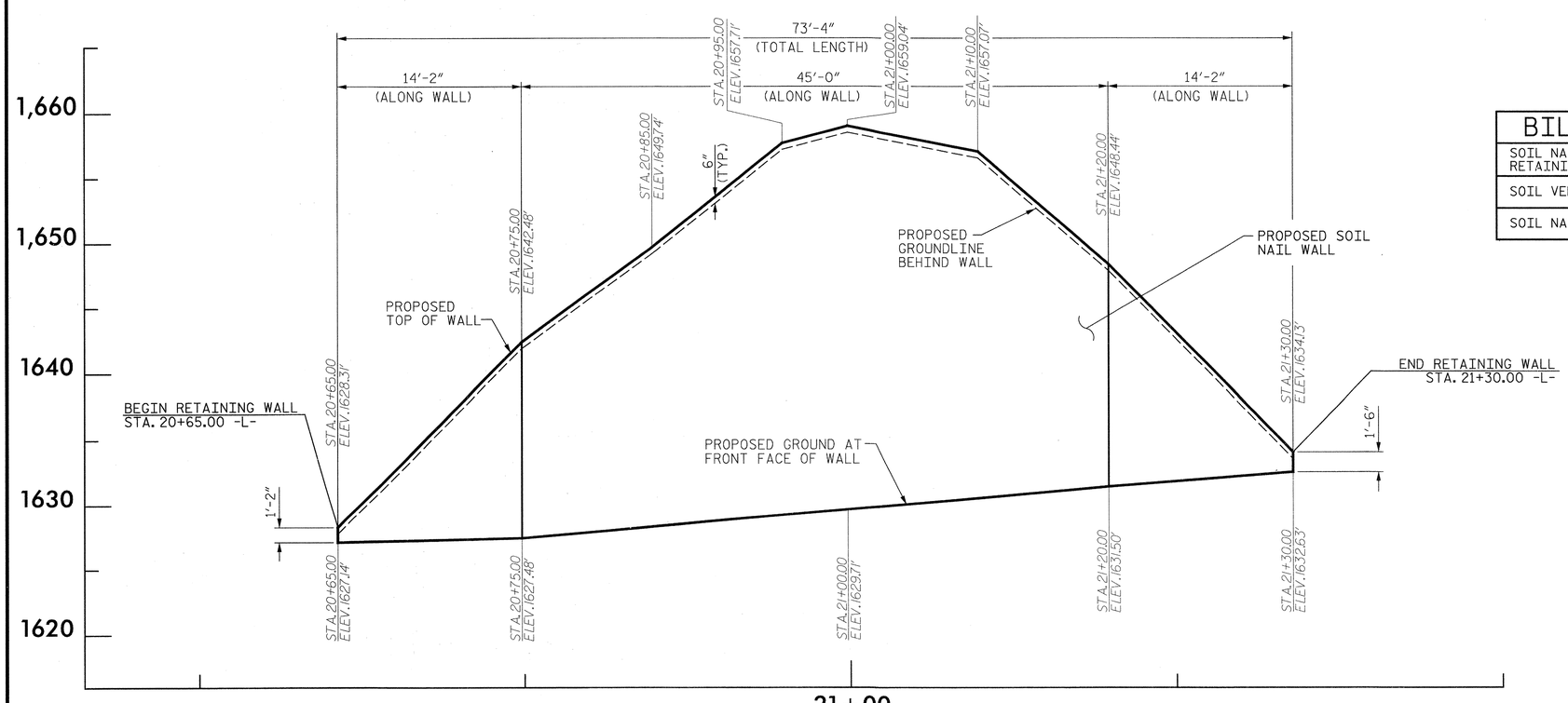

ELEVATION - RETAINING WALL #1

VIEWING FRONT FACE - UNFOLDED VIEW

NOTES:

ELEVATIONS SHOWN AT TOP OF WALL ARE ACTUAL TOP OF WALL ELEVATIONS, AND SHALL BE 6" ABOVE GROUND LINE.

SEE SPECIAL PROVISIONS FOR SOIL NAIL RETAINING WALLS.

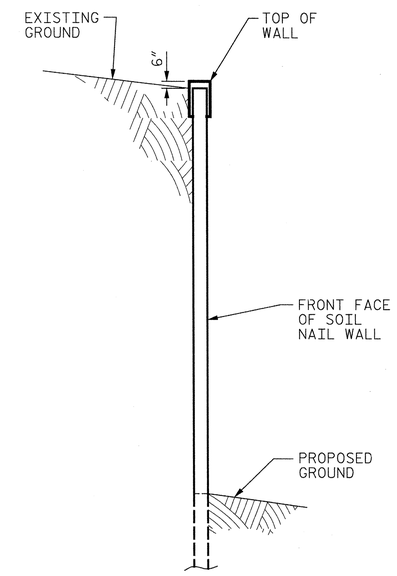

SECTION THRU WALL

BILL OF MATERIAL	
SOIL NAIL RETAINING WALL	1,316 SQ. FT.
SOIL VERIFICATION TEST	(EA.) 1
SOIL NAIL PROOF TEST	(EA.) 12

NORTH CAROLINA PROFESSIONAL SEAL 20713 ENGINEER HARDY L. WILLIS 11/6/14

PROJECT NO. R-5527B

CHEROKEE COUNTY

STATION 20+65.00 -L-

SHEET 1 OF 1

V&M Vaughn & Melton Consulting Engineers

Asheville, North Carolina 828-253-2796

Charlotte, North Carolina 704-357-0488

Tri-Cities, Tennessee 423-467-8401

Knoxville, Tennessee 865-546-5800

Middlesboro, Kentucky 606-248-6600

Spartanburg, South Carolina 864-574-4775

Copyright © 2006 Vaughn & Melton, Inc. All Rights Reserved

STATE OF NORTH CAROLINA
DEPARTMENT OF TRANSPORTATION
RALEIGH

SOIL NAIL RETAINING WALL #1

STA. 20+65.00 -L-
TO STA. 21+30.00 -L-

DWN. BY: MAF DATE: 11/13
CHKD. BY: HLW DATE: 11/13
DES. EGR. OF RECORD: HLW DATE: 11/13

REVISIONS						
NO.	BY:	DATE:	NO.	BY:	DATE:	
1			3			
2			4			

SHEET NO. RW1-1

TOTAL SHEETS 1

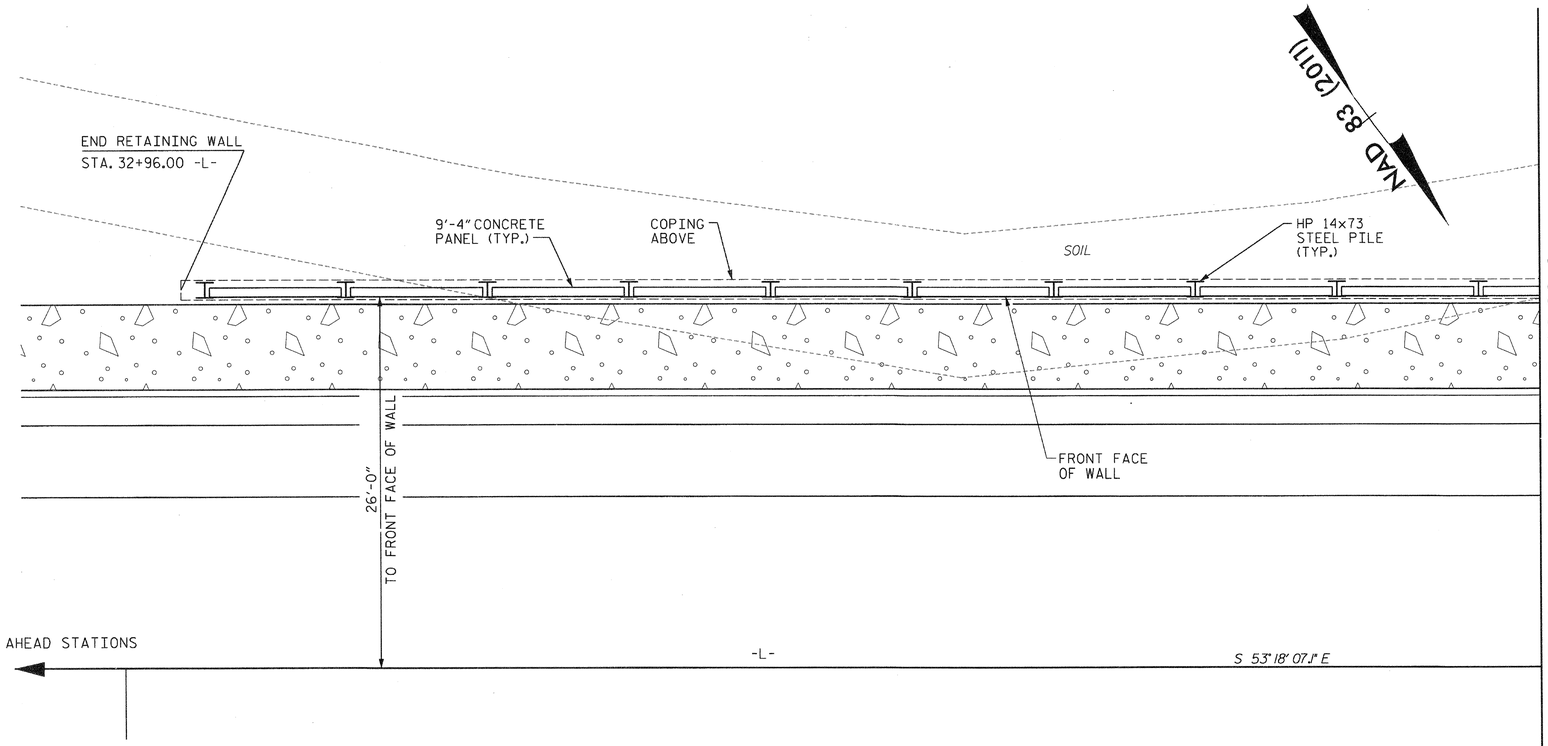

PARTIAL PLAN - RETAINING WALL #2

MATCHLINE SHEET RW2-2 STA. 32+00.00 -L-

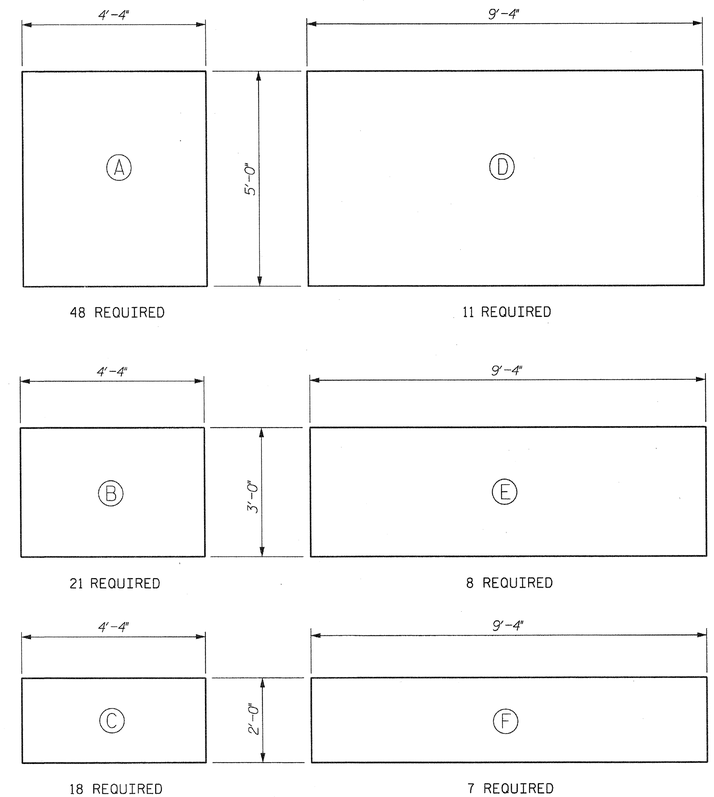

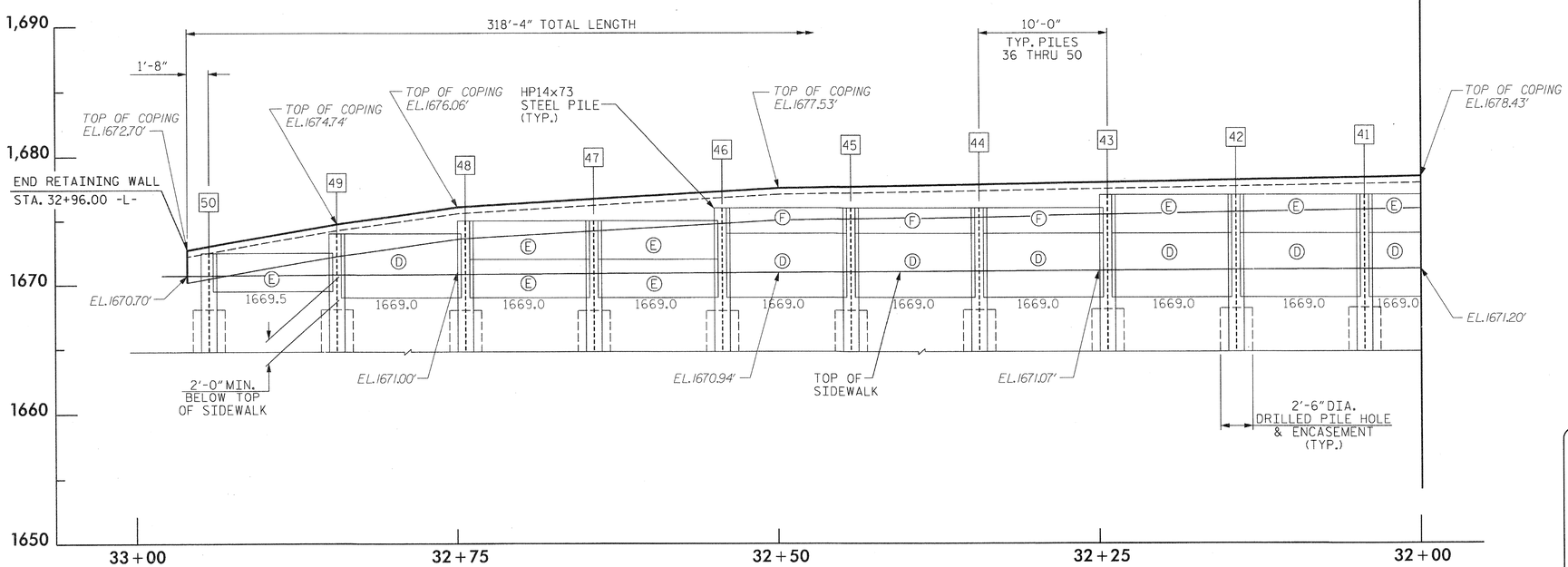

PARTIAL ELEVATION - RETAINING WALL #2

PANEL TYPES

NOTE: SEE SHEET 5 OF 7 FOR PANEL DETAILS.

BILL OF MATERIAL

SOLDIER PILE RETAINING WALL	2,534 SQ. FT.

NORTH CAROLINA PROFESSIONAL SEAL 024872 ENGINEER HARDY L. WILLIS 2/7/14

PROJECT NO. R-5527B

CHEROKEE COUNTY

STATION 29+86.00 -L-

SHEET 1 OF 7

STATE OF NORTH CAROLINA
DEPARTMENT OF TRANSPORTATION
RALEIGH

SOLDIER PILE RETAINING WALL #2

STA. 32+00.00 -L-
TO STA. 32+96.00 -L-

V&M
Vaughn & Melton
Consulting Engineers
Asheville, North Carolina 828-253-2796
Charlotte, North Carolina 704-357-0488
Tri-Cities, Tennessee 423-467-8401
Knoxville, Tennessee 865-546-5800
Middlesboro, Kentucky 606-248-6600
Spartanburg, South Carolina 864-574-4775

Copyright © 2006 Vaughn & Melton, Inc. All Rights Reserved

DWN. BY: MAF	DATE: 11/13	
CHKD. BY: HLW	DATE: 11/13	
DES. EGR. OF RECORD: HLW	DATE: 11/13	

REVISIONS							
NO.	BY:	DATE:	NO.	BY:	DATE:	SHEET NO.	RW2-1
1			3			TOTAL SHEETS	7
2			4				

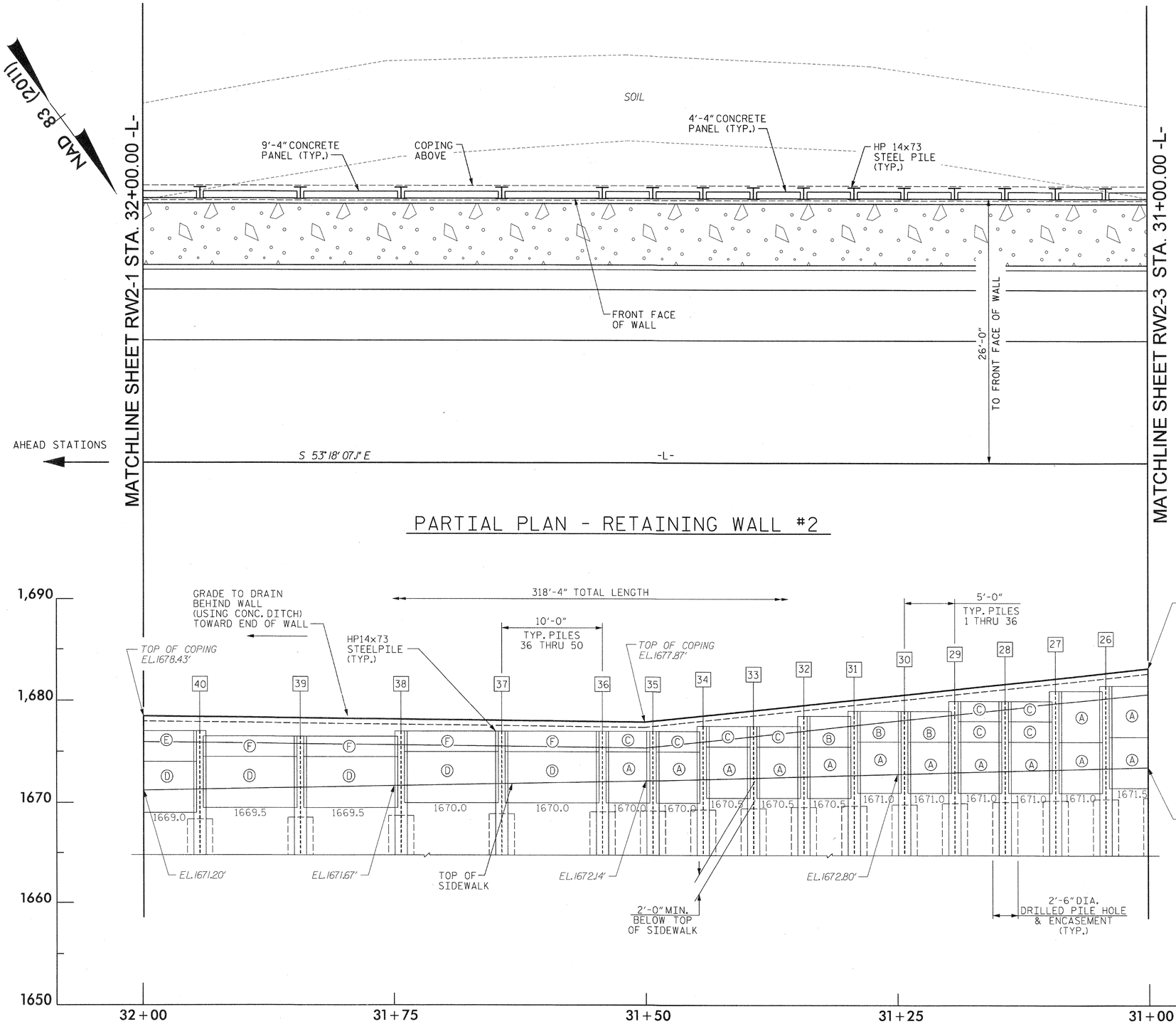

NORTH CAROLINA PROFESSIONAL SEAL 19777 ENGINEER HARDY L. WILLIS 2/7/14

PROJECT NO. R-5527B

CHEROKEE COUNTY

STATION 29+86.00 -L-

SHEET 2 OF 7

V&M Vaughn & Melton Consulting Engineers

Asheville, North Carolina 828-253-2796

Charlotte, North Carolina 704-357-0488

Tri-Cities, Tennessee 423-467-8401

Knoxville, Tennessee 865-546-5900

Middlesboro, Kentucky 606-248-6600

Spartanburg, South Carolina 864-574-4775

Copyright © 2006 Vaughn & Melton, Inc. All Rights Reserved

STATE OF NORTH CAROLINA
DEPARTMENT OF TRANSPORTATION
RALEIGH

SOLDIER PILE RETAINING WALL #2

STA. 31+00.00 -L-
TO STA. 32+00.00 -L-

DWN. BY: MAF DATE: 11/13
CHKD. BY: HLW DATE: 11/13
DES. EGR. OF RECORD: HLW DATE: 11/13

REVISIONS						SHEET NO.
NO.	BY:	DATE:	NO.	BY:	DATE:	RW2-2
1			3			TOTAL SHEETS
2			4			7

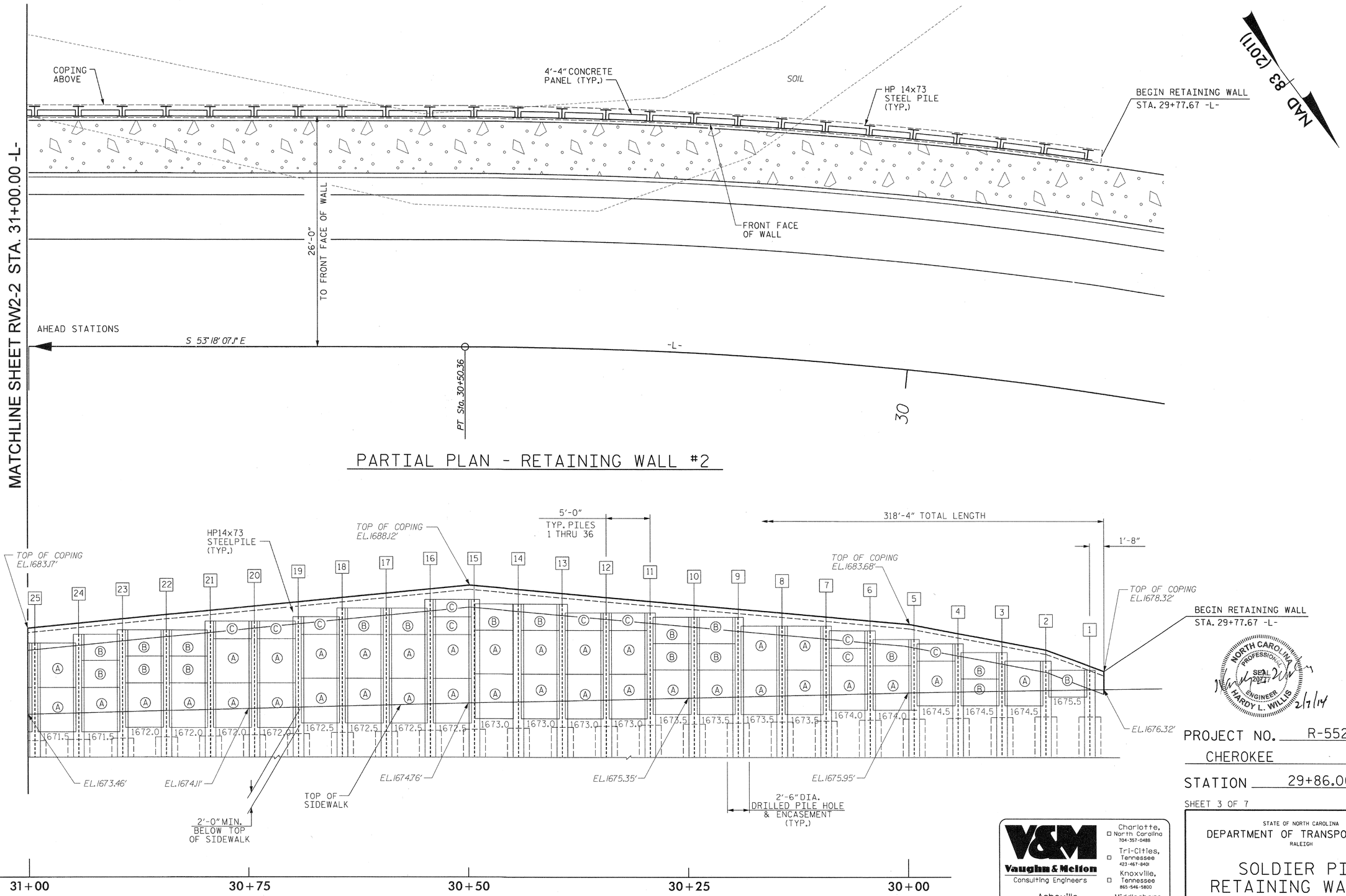

NORTH CAROLINA PROFESSIONAL SEAL 20277 ENGINEER HARDY L. WILLIS 2/7/14

PROJECT NO. R-5527B

CHEROKEE COUNTY

STATION 29+86.00 -L-

SHEET 3 OF 7

Vaughn & Melton Consulting Engineers

Asheville, North Carolina 828-253-2796

Charlotte, North Carolina 704-357-0488

Tri-Cities, Tennessee 423-467-8401

Knoxville, Tennessee 865-546-5800

Middlesboro, Kentucky 606-248-6600

Spartanburg, South Carolina 864-574-4775

Copyright © 2006 Vaughn & Melton, Inc. All Rights Reserved

STATE OF NORTH CAROLINA
DEPARTMENT OF TRANSPORTATION
RALEIGH

SOLDIER PILE RETAINING WALL #2

STA. 29+77.67 -L-
TO STA. 31+00.00 -L-

DWN. BY: MAF	DATE: 11/13	
CHKD. BY: HLW	DATE: 11/13	
DES. EGR. OF RECORD: HLW	DATE: 11/13	

REVISIONS						SHEET NO.
NO.	BY:	DATE:	NO.	BY:	DATE:	RW2-3
1			3			TOTAL SHEETS
2			4			7

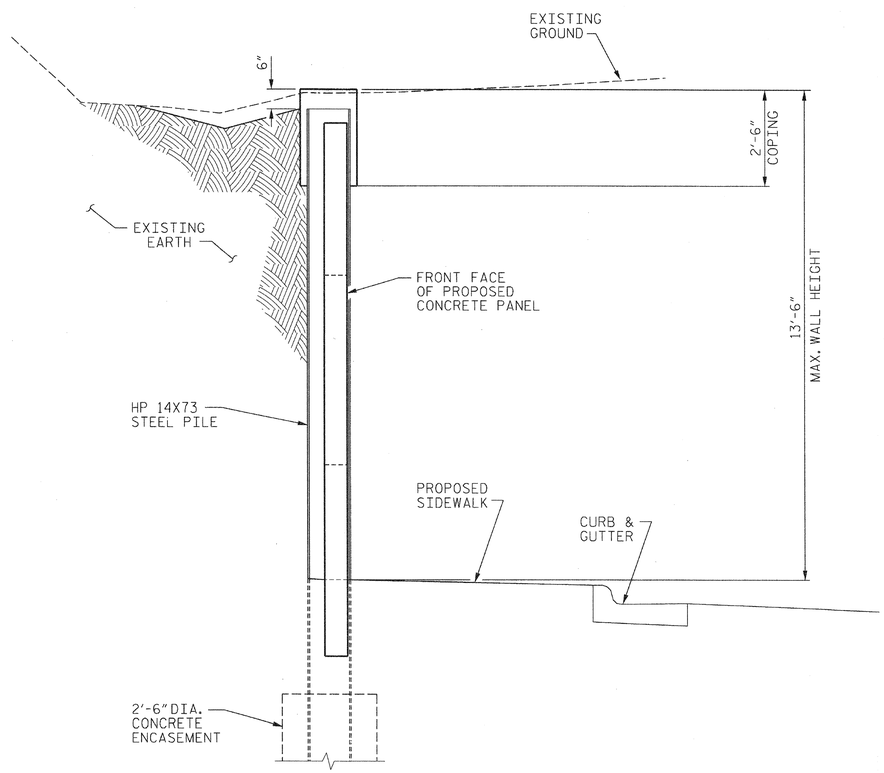

SECTION THRU WALL

PRECAST PANELS

PRECAST PANELS SHALL BE POURED WITH THE FILL FACE UP. PANELS MUST NOT BE REMOVED FROM THE FORMS UNTILTHE CONCRETE HAS ATTAINED SUFFICIENT STRENGTH TO PREVENT DAMAGE. CRACKED, SPALLED OR DAMAGED PANELS WILL BE REJECTED.

PANELS SHALL NOT RECEIVE BACKFILL UNTIL A MINIMUM OF 85% OF 28-DAY STRENGTH (3400 PSI) HAS BEEN ACHIEVED.

PANELS SHALL BE PLUMB AND HAVE A MINIMUM BEARING WIDTH OF 2" ON EACH PILE FLANGE. A 1/2" THICK EXPANSION JOINT MATERIAL SHALL BE PLACED BETWEEN THE PANELS AND PILE FLANGES FOR THE WIDTH OF THE BEARING SURFACE. THE PANEL SHALL BE SEATED FIRMLY ON THE CUSHIONING MATERIAL AND SHALL BE HELD SECURELY AGAINST THE PILE FLANGE UNTILTHE BACKFILL IS PLACED SUFFICIENTLY TO HOLD IT IN PLACE.

EXPANSION JOINTS IN THE COPING ARE NOT PERMITTED, BUT CONSTRUCTION JOINTS MAY BE USED WHERE THE COPING CHANGES SLOPES AND AT 90-FOOT CENTERS. FILTER FABRIC DRAINAGE MATS, USED IN CONJUNCTION WITH A GRANULAR MATERIAL OR WITH A MOLDED, POLYMERIC CORE, AND DRAIN PIPES AT MINIMUM 6-FOOT CENTERS ARE REQUIRED. POSITION DRAIN PIPES (NOT SHOWN) ALONG THE CENTERLINE OF EACH PANEL.

PIPE OR HOLE INSERT SHALL BE CAST INTO PANELS. CONCRETE PANELS SHALL BE EMBEDDED A MINIMUM OF 1'-0" BELOW THE PROPOSED FINISHED GRADE. THE PRECAST PANELS SHALL NOT BE INSTALLED BEFORE THE DRILLED PIER CONCRETE HAS CURED FOR A MINIMUM OF THREE DAYS.

TABLE OF QUANTITIES FOR PANELS

PANEL	NO.	REINFORCING STEEL					REINF. STEEL (LBS.)	REINF. STEEL PER PANEL (LBS.)	REINF. STEEL, TOTAL (LBS.)	CONCRETE PER PANEL (CU. YDS.)	TOTAL CONCRETE (CU. YDS.)
		MARK	SIZE	NO.	LENGTH FT.	LENGTH IN.					
A	48	P1	#5	7	4	0	29	45	2160	.54	25.9
		P2	#4	5	4	8	16				
B	21	P1	#5	4	4	0	17	26	546	.32	6.7
		P3	#4	5	2	8	9				
C	18	P1	#5	3	4	0	13	19	342	.21	3.8
		P4	#4	5	1	8	6				
D	11	P2	#4	10	4	8	31	97	1067	1.15	12.7
		P5	#5	7	9	0	66				
E	8	P3	#4	10	2	8	18	56	448	.69	5.5
		P5	#5	4	9	0	38				
F	7	P4	#4	10	1	8	11	39	273	.46	3.2
		P5	#5	3	9	0	28				
TOTAL	113								4836		57.8

TOTAL BILL OF MATERIAL

	PILE EXCAVATION IN SOIL	CLASS "AA" CONCRETE	REINFORCING STEEL	GALVANIZED HP 14 X 73 STEEL PILES		DRILLED PIER CONCRETE (ENCASEMENT)
	LINEAR FEET	CU. YARDS	LBS.	NO.	LINEAR FEET	CU. YARDS
WALL #2	1315	104.5	7811	50	1264.5	138.7

NORTH CAROLINA PROFESSIONAL SEAL 20211 ENGINEER HARDY L. WILLIS 2/7/14

PROJECT NO. R-5527B

CHEROKEE COUNTY

STATION 29+86.00 -L-

SHEET 4 OF 7

V&M Vaughn & Melton Consulting Engineers

Asheville, North Carolina 828-253-2796

Charlotte, North Carolina 704-357-0488

Tri-Cities, Tennessee 423-467-8401

Knoxville, Tennessee 865-546-5800

Middlesboro, Kentucky 606-248-6500

Spartanburg, South Carolina 864-574-4775

Copyright © 2006 Vaughn & Melton, Inc. All Rights Reserved

STATE OF NORTH CAROLINA
DEPARTMENT OF TRANSPORTATION
RALEIGH

NOTES, QUANTITIES, & BILL OF MATERIAL

DWN. BY: MAF DATE: 11/13
CHKD. BY: HLW DATE: 11/13
DES. EGR. OF RECORD: HLW DATE: 11/13

REVISIONS						
NO.	BY:	DATE:	NO.	BY:	DATE:	
1			3			
2			4			

SHEET NO. RW2-4

TOTAL SHEETS 7

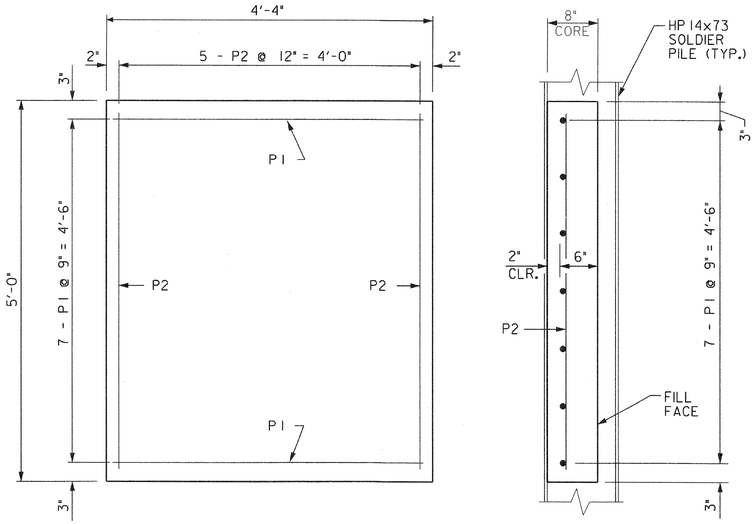

ELEVATION SECTION

PANEL 'A'

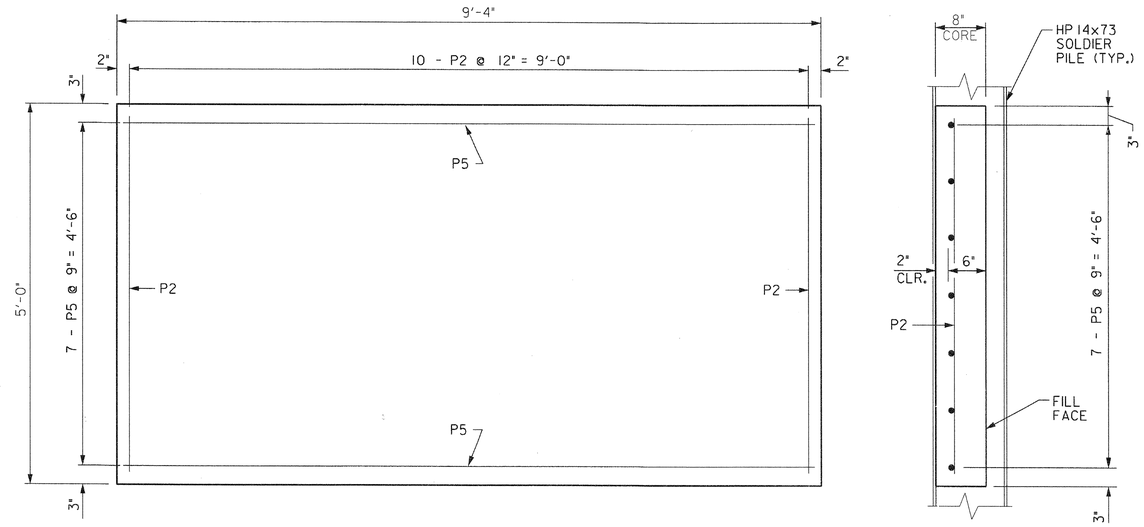

ELEVATION SECTION

PANEL 'D'

NOTE: FOR PRECAST PANEL QUANTITIES AND NOTES, SEE SHEET 4 OF 7.

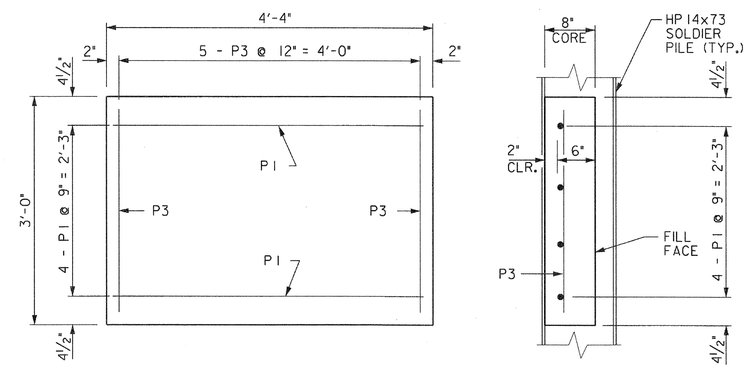

ELEVATION SECTION

PANEL 'B'

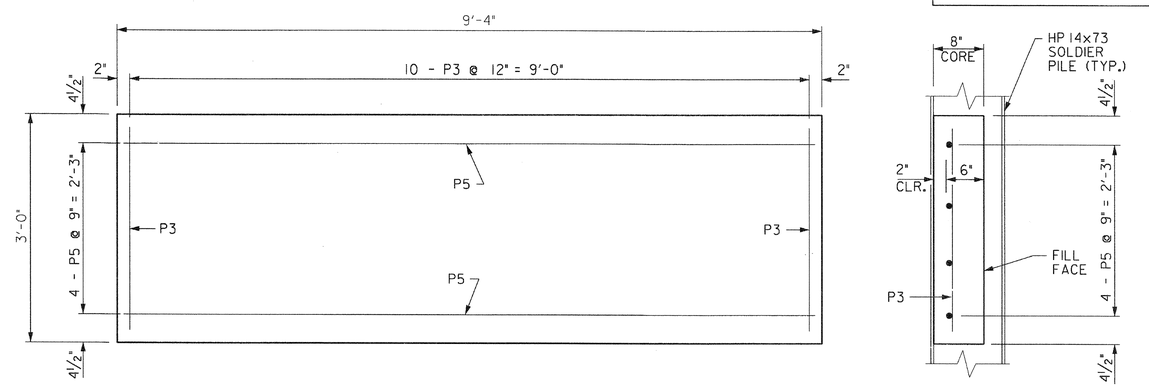

ELEVATION SECTION

PANEL 'E'

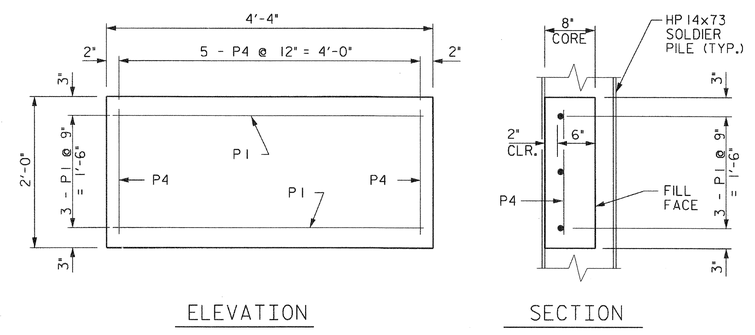

ELEVATION SECTION

PANEL 'C'

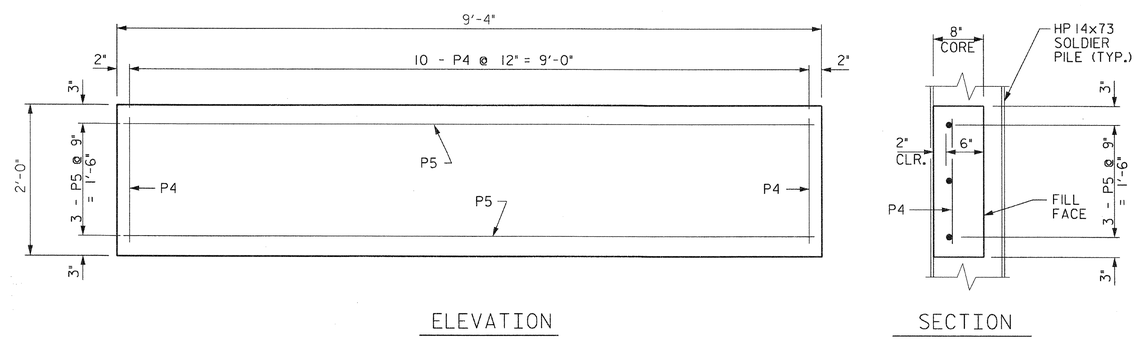

ELEVATION SECTION

PANEL 'F'

NORTH CAROLINA PROFESSIONAL ENGINEER SEAL 19076 HARDY L. WILLIS 2/7/14

V&M Vaughn & Melton Consulting Engineers
Charlotte, North Carolina 704-357-0488
Tri-Cities, Tennessee 423-467-8401
Knoxville, Tennessee 865-546-5800
Asheville, North Carolina 828-253-2796
Middlesboro, Kentucky 606-248-6609
Spartanburg, South Carolina 864-574-4775

Copyright © 2006 Vaughn & Melton, Inc. All Rights Reserved

PROJECT NO. R-5527B

CHEROKEE COUNTY

STATION 29+86.00 -L-

SHEET 5 OF 7

STATE OF NORTH CAROLINA
DEPARTMENT OF TRANSPORTATION
RALEIGH

PRECAST PANELS

DWN. BY: MAF DATE: 11/13
CHKD. BY: HLW DATE: 11/13
DES. EGR. OF RECORD: HLW DATE: 11/13

REVISIONS								SHEET NO.
NO.	BY:	DATE:	NO.	BY:	DATE:			RW2-5
1			3					TOTAL SHEETS
2			4					7

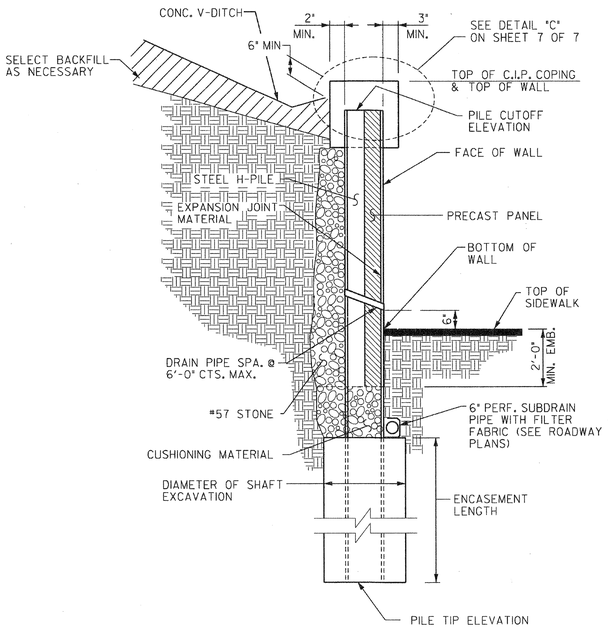

TYPICAL SECTION -WALL #2

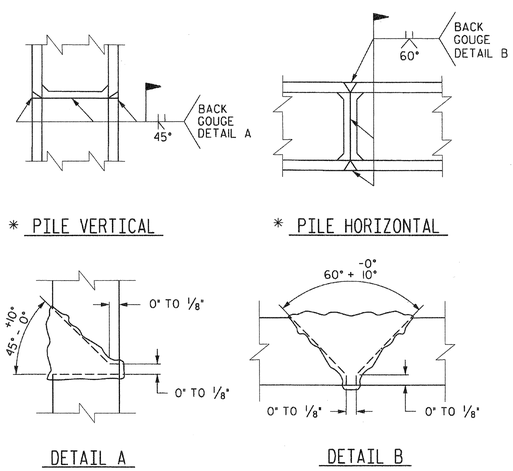

* POSITION OF PILE DURING WELDING

PILE SPLICE DETAILS

BILL OF MATERIAL		
GALVANIZED HP 14X73 STEEL PILES	LF	1264.5
DRILLED PIER CONCRETE	CY	138.7

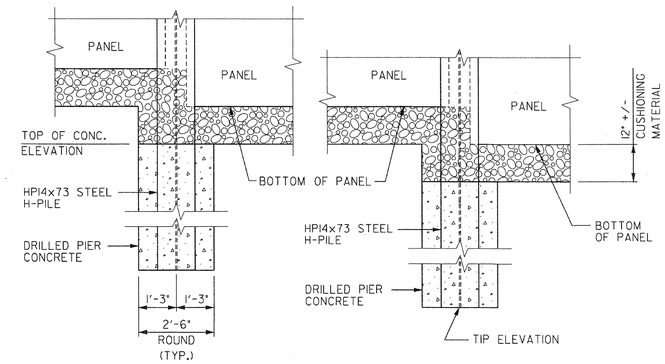

TYPICAL PILE EMBED INTO CONCRETE DETAIL

PILE DATA TABLE						
PILE NO.	TOP OF PILE ELEV.	PILE TIP ELEV.	PILE LENGTH (LF)	TOP OF CONCRETE ENCASEMENT ELEV.	BOTTOM OF CONCRETE ENCASEMENT ELEV.	LENGTH OF ENCASEMENT (LF)
1	1678.5	1660.5	18.0	1673.5	1660.5	13
2	1679.5	1660.5	19.0	1673.5	1660.5	13
3	1680.5	1660.5	20.0	1673.5	1660.5	13
4	1681.5	1660.5	21.0	1673.5	1660.5	13
5	1682.0	1660.0	22.0	1673.0	1660.0	13
6	1683.0	1660.0	23.0	1673.0	1660.0	13
7	1683.5	1659.5	24.0	1672.5	1659.5	13
8	1683.5	1659.5	24.0	1672.5	1659.5	13
9	1684.5	1652.5	32.0	1672.5	1652.5	20
10	1684.5	1652.5	32.0	1672.5	1652.5	20
11	1685.0	1652.0	33.0	1672.0	1652.0	20
12	1685.0	1652.0	33.0	1672.0	1652.0	20
13	1686.0	1652.0	34.0	1672.0	1652.0	20
14	1686.0	1652.0	34.0	1672.0	1652.0	20
15	1686.5	1651.5	35.0	1671.5	1651.5	20
16	1686.5	1651.5	35.0	1671.5	1651.5	20
17	1685.5	1651.5	34.0	1671.5	1651.5	20
18	1685.5	1651.5	34.0	1671.5	1651.5	20
19	1684.5	1651.0	33.5	1671.0	1651.0	20
20	1684.0	1651.0	33.0	1671.0	1651.0	20
21	1684.0	1651.0	33.0	1671.0	1651.0	20
22	1683.0	1651.0	32.0	1671.0	1651.0	20
23	1683.0	1650.5	32.5	1670.5	1650.5	20
24	1682.5	1650.5	32.0	1670.5	1650.5	20
25	1681.5	1650.5	31.0	1670.5	1650.5	20
26	1681.5	1650.0	31.5	1670.0	1650.0	20
27	1681.0	1650.0	31.0	1670.0	1650.0	20
28	1680.0	1657.0	23.0	1670.0	1657.0	13
29	1680.0	1657.0	23.0	1670.0	1657.0	13
30	1679.0	1657.0	22.0	1670.0	1657.0	13
31	1679.0	1656.5	22.5	1669.5	1656.5	13
32	1678.5	1656.5	22.0	1669.5	1656.5	13
33	1677.5	1656.5	21.0	1669.5	1656.5	13
34	1677.5	1656.0	21.5	1669.0	1656.0	13
35	1677.0	1656.0	21.0	1669.0	1656.0	13
36	1677.0	1656.0	21.0	1669.0	1656.0	13
37	1677.0	1656.0	21.0	1669.0	1656.0	13
38	1677.0	1655.5	21.5	1668.5	1655.5	13
39	1676.5	1655.5	21.0	1668.5	1655.5	13
40	1677.0	1655.0	22.0	1668.0	1655.0	13
41	1677.0	1655.0	22.0	1668.0	1655.0	13
42	1677.0	1655.0	22.0	1668.0	1655.0	13
43	1677.0	1655.0	22.0	1668.0	1655.0	13
44	1676.0	1655.0	21.0	1668.0	1655.0	13
45	1676.0	1655.0	21.0	1668.0	1655.0	13
46	1676.0	1659.0	17.0	1668.0	1659.0	9
47	1675.0	1659.0	16.0	1668.0	1659.0	9
48	1675.0	1659.0	16.0	1668.0	1659.0	9
49	1674.0	1659.0	15.0	1668.0	1659.0	9
50	1672.5	1659.0	13.5	1668.0	1659.0	9
		TOTAL	1264.5		TOTAL	763

INSTALLATION & EXCAVATION

THE CONTRACTOR SHALL VERIFY THE LOCATION OF DRAINAGE STRUCTURES AND UTILITIES PRIOR TO INSTALLING PILES.

PILES SHALL BE INSTALLED TO CUT OFF ELEVATIONS SHOWN BY PRE-AUGURING OR DRILLING A 2'-6" MINIMUM DIAMETER HOLE. REGARDLESS OF THE MATERIAL ENCOUNTERED, THE SHAFT SHALL BE EXCAVATED TO A DEPTH SUFFICIENT TO SET THE FULL LENGTH OF THE STEEL PILE TO GRADE, AND SHALL BE CONSTRUCTED IN ACCORDANCE WITH SECTION 825 OF THE STANDARD SPECIFICATIONS.

ALL PILES SHALL BE HOT-DIPPED GALVANIZED IN ACCORDANCE WITH SECTION 1076 OF THE STANDARD SPECIFICATIONS.

SPLICING OF PILES IS SUBJECT TO THE ENGINEER'S APPROVAL. WELDING SHALL CONFORM TO THE REQUIREMENTS OF ARTICLE 1072-20 OF THE STANDARD SPECIFICATIONS AND SHALL TAKE PLACE BEFORE GALVANIZING.

THE TOP OF THE INSTALLED PILES SHALL BE WITHIN 2" OF THEIR PLAN LOCATION IN ANY DIRECTION AND THE CENTER TO CENTER DISTANCE BETWEEN INSTALLED PILES SHALL NOT DIFFER FROM THE PLANS BY MORE THAN 3". THE PLUMBNESS OF THE PILES SHALL NOT VARY FROM THE VERTICAL BY MORE THAN 1" PER 100".

IF NECESSARY, SPECIAL MEASURES SHALL BE TAKEN TO ENSURE THE STABILITY OF THE SHAFT, SUCH AS INSTALLING TEMPORARY CASINGS PRIOR TO DRILLING, INSTALLING THE PILE AND PLACING CONCRETE IMMEDIATELY AFTER A SHAFT IS EXCAVATED BEFORE CAVING OCCURS, INSTALLING WELL POINTS OR OTHER MEASURES. IF CAVING OCCURS, THE SHAFT EXCAVATION OPERATION SHALL BE HALTED UNTIL SPECIAL APPROVED MEASURES ARE IMPLEMENTED.

THE HOLE SHALL BE BACKFILLED WITH DRILLED PIER CONCRETE UP TO THE BOTTOM OF THE CUSHIONING MATERIAL (SHOWN AS "TOP OF CONCRETE" ELEVATION IN TABLE). DRILLED PIER CONCRETE SHALL BE CAST AGAINST UNDISTURBED GROUND . IF OVER-EXCAVATION OCCURS VERTICALLY, THE CONTRACTOR SHALL BACKFILL WITH NO. 57 STONE BEFORE SETTING THE PILE. ALL LOOSE AND SOFT MATERIAL SHALL BE REMOVED AND THE EXCAVATION SHALL BE DEWATERED IMMEDIATELY BEFORE AND DURING THE CONCRETE CASTING OPERATION. THE TOP OF THE CONCRETE SHAFTS SHALL BE GENERALLY LEVEL.

PILE INSTALLATION, INCLUDING SET-UP OF THE DRILLED PIER CONCRETE, SHALL BE COMPLETE BEFORE EXCAVATING TO INSTALL PANELS.

EXCAVATION TO INSTALL PANELS SHALL BE LIMITED TO 6" BEHIND THE PILES. ALL EXCAVATION BEHIND THE PANELS AND ANY OVER-EXCAVATION SHALL BE BACKFILLED WITH NO. 57 STONE.

EXCAVATION TO INSTALL THE PANELS SHALL BE VERTICAL AND HAVE A MAXIMUM LIFT HEIGHT OF 4'-0". WHERE CUTS EXCEED 4'-0", TIMBER LAGGING SHALL BE USED TO MEET OSHA REQUIREMENTS FOR SAFE EXCAVATION HEIGHTS.

TIMBER LAGGING SHALL HAVE A MINIMUM BEARING DISTANCE OF 3" ON THE PILE FLANGE. LAGGING SHALL BE UNTREATED STRUCTURAL GRADE SOUTHERN PINE, A MINIMUM OF 3" THICK, AND SHALL CONFORM TO THE APPLICABLE PARTS OF SECTIONS 445 AND 1082 OF THE STANDARD SPECIFICATIONS.

ALL TEMPORARY TIMBER LAGGING SHALL BE REMOVED PRIOR TO BACKFILLING.

PRECAST PANELS SHALL BE HELD SECURELY AGAINST PILES UNTIL BACKFILL IS PLACED.

BOTH THE CUSHIONING MATERIAL AND BACKFILL MATERIAL BEHIND THE PANELS UP TO NATURAL GROUNDLINE SHALL BE NO. 57 STONE AND COMPACTED TO THE SATISFACTION OF THE ENGINEER. THE STONE SHALL BE RODDED AND SPREAD IN ORDER TO FILL ALL VOIDS AND ENSURE MAXIMUM DENSITY. LARGER AREAS SHALL BE COMPACTED WITH HAND OPERATED EQUIPMENT. HEAVY COMPACTION EQUIPMENT WILL NOT BE ALLOWED BEHIND THE WALL. FLUSHING THE STONE WITH WATER WILL NOT BE ALLOWED. THE CUSHIONING MATERIAL SHALL BE COMPACTED WITH AT LEAST (2) TWO PASSES OF LIGHTWEIGHT COMPACTION EQUIPMENT.

THE CONTRACTOR MAY ELECT TO USE AN ALTERNATE METHOD OF PROVIDING A SAFE EXCAVATION. HOWEVER, THE ALTERNATE METHOD SHALL BE SUBMITTED TO THE ENGINEER FOR REVIEW AND APPROVAL.

NORTH CAROLINA PROFESSIONAL SEAL 019772 ENGINEER HARDY L. WILLIS 2/7/14

PROJECT NO. R-5527B
CHEROKEE COUNTY
STATION 29+86.00 -L-

SHEET 6 OF 7

V&M Vaughn & Melton Consulting Engineers
Asheville, North Carolina 828-253-2796
Charlotte, North Carolina 704-357-0488
Tri-Cities, Tennessee 423-467-8401
Knoxville, Tennessee 865-546-5800
Middlesboro, Kentucky 606-248-6600
Spartanburg, South Carolina 864-574-4775

Copyright © 2006 Vaughn & Melton, Inc. All Rights Reserved

STATE OF NORTH CAROLINA
DEPARTMENT OF TRANSPORTATION
RALEIGH

WALL DETAILS & GENERAL NOTES

DWN. BY: MAF DATE: 11/13
CHKD. BY: HLW DATE: 11/13
DES. EGR. OF RECORD: HLW DATE: 11/13

REVISIONS						
NO.	BY:	DATE:	NO.	BY:	DATE:
1			3		
2			4		

SHEET NO. RW2-6
TOTAL SHEETS 7

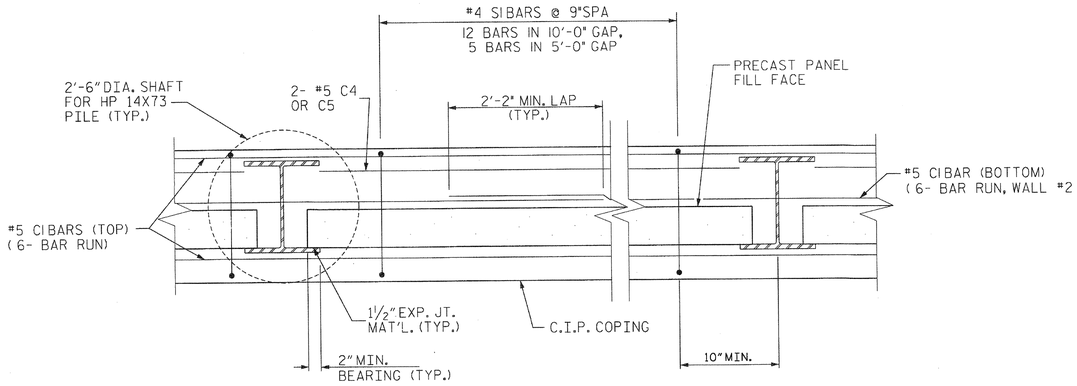

PLAN VIEW

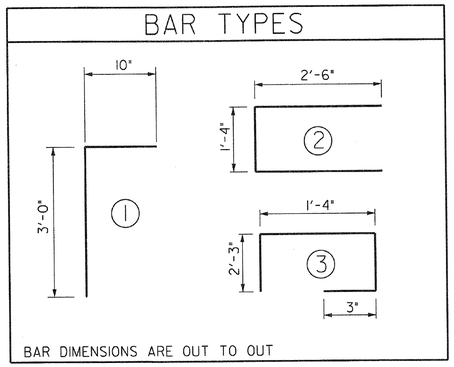

C.I.P. COPING BILL OF MATERIAL

BAR	NO.	SIZE	TYPE	LENGTH	WEIGHT
S1	345	#4	3	6'-1"	1402
C1	18	#5	STR	55'-10"	1048
C2	2	#5	1	3'-10"	8
C3	2	#5	2	6'-4"	13
C4	28	#5	STR	8'-6"	248
C5	70	#5	STR	3'-6"	256
REINFORCING STEEL (LBS) =					2975
CLASS AA CONCRETE (CY) =					46.7

CONCRETE MATERIALS

CONCRETE FOR THE PRECAST PANELS AND COPING SHALL BE CLASS AA.

REINFORCING STEEL SHALL BE GRADE 60.

CONCRETE FOR SHAFT EXCAVATION BELOW THE BOTTOM OF THE WALL SHALL BE DESIGNATED AS DRILLED PIER CONCRETE AND SHALL HAVE A MINIMUM COMPRESSIVE STRENGTH OF 4500 PSI AT 28 DAYS. THE CEMENTITIOUS MATERIAL CONTENT MUST COMPLY WITH ONE OF THE FOLLOWING OPTIONS:

(1) THE MIX MUST HAVE A MINIMUM CEMENT CONTENT OF 640 LBS PER CUBIC YARD AND A CEMENT CONTENT OF 800 LBS PER CUBIC YARD. HOWEVER, IF THE ALKALI CONTENT OF THE CEMENT EXCEEDS 0.4%, THE CEMENT CONTENT MUST BE REDUCED BY 20% AND REPLACED WITH FLY ASH AT THE RATE OF 1.2 LBS OF FLY ASH PER LBS OF CEMENT REMOVED.

(2) IF TYPE IP BLENDED CEMENT IS USED, THE MIX MUST HAVE A MINIMUM OF 665 LBS PER CUBIC YARD TYPE IP BLENDED CEMENT AND A MAXIMUM OF 833 LBS PER CUBIC YARD TYPE IP BLENDED CEMENT IN THE MIX.

THE MAXIMUM WATER-CEMENTITIOUS MATERIAL RATIO IS 0.45. THE CONCRETE MUST BE NON AIR-ENTRAINED. WORKABILITY MUST BE SUCH THAT VIBRATING OR PRODDING WILL NOT BE REQUIRED TO CONSOLIDATE THE CONCRETE. AT THE TIME OF CONCRETE PLACEMENT, THE SLUMP MUST BE WITHIN THE RANGE OF 6 INCHES TO 9 INCHES.

USE TYPE I OR TYPE II CEMENT OR TYPE IP BLENDED CEMENT IN THE MIX. USE EITHER NO. 67 OR NO. 78M COARSE AGGREGATE. AN APPROVED WATER-REDUCER, WATER-REDUCING RETARDER, HIGH-RANGE WATER-REDUCER, OR HIGH-RANGE WATER REDUCING RETARDER MAY BE USED TO FACILITATE PLACEMENT OF THE CONCRETE. ALL ADMIXTURES MUST MEET AASHTO M 194 AND MUST BE ADDED AT THE CONCRETE PLANT WHEN THE MIXING WATER IS INTRODUCED INTO THE CONCRETE. REDOSING OF ADMIXTURES IS NOT PERMITTED.

PLACE CONCRETE WITHIN TWO HOURS AFTER INTRODUCTION OF THE MIXING WATER, AND THE CONCRETE TEMPERATURE AT THE TIME OF PLACEMENT MUST NOT EXCEED 90 DEGREES FAHRENHEIT.

ALL EXPOSED CORNERS ON CONCRETE STRUCTURES SHALL BE CHAMFERED ¾".

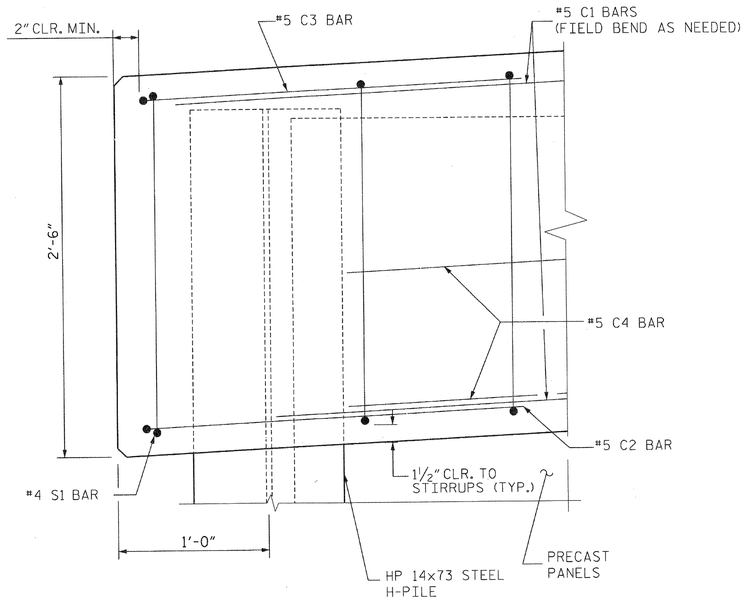

END OF COPING DETAIL

(OTHER END SIMILAR)

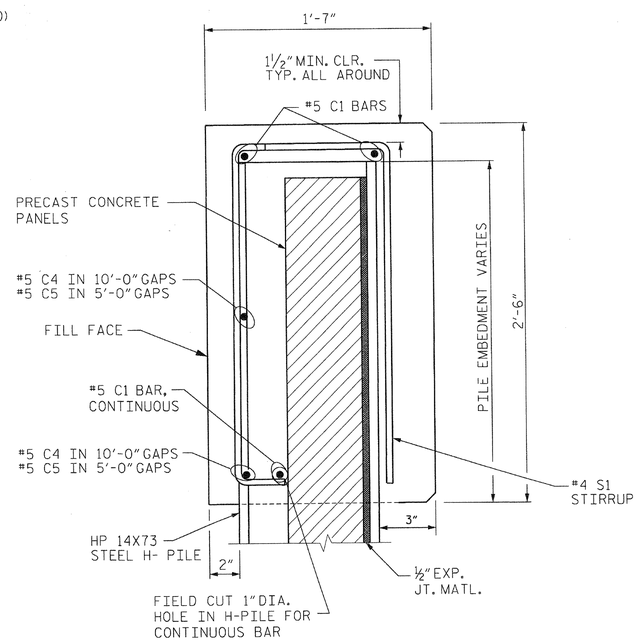

DETAIL C - COPING

NORTH CAROLINA PROFESSIONAL SEAL 20772 ENGINEER HARDY L. WILLIS
2/7/14

PROJECT NO. R-5527B
CHEROKEE COUNTY
STATION 29+86.00 -L-

SHEET 7 OF 7

Vaughn & Melton
Consulting Engineers
Asheville, North Carolina 828-253-2796
Charlotte, North Carolina 704-357-0488
Tri-Cities, Tennessee 423-467-8401
Knoxville, Tennessee 865-546-5800
Middlesboro, Kentucky 606-248-6600
Spartanburg, South Carolina 864-574-4775

Copyright © 2006 Vaughn & Melton, Inc. All Rights Reserved

STATE OF NORTH CAROLINA
DEPARTMENT OF TRANSPORTATION
RALEIGH

RETAINING WALL #2 COPING DETAILS

DWN. BY: MAF DATE: 11/13
CHKD. BY: HLW DATE: 11/13
DES. EGR. OF RECORD: HLW DATE: 11/13

REVISIONS						
NO.	BY:	DATE:	NO.	BY:	DATE:
1			3		
2			4		

SHEET NO. RW2-7
TOTAL SHEETS 7

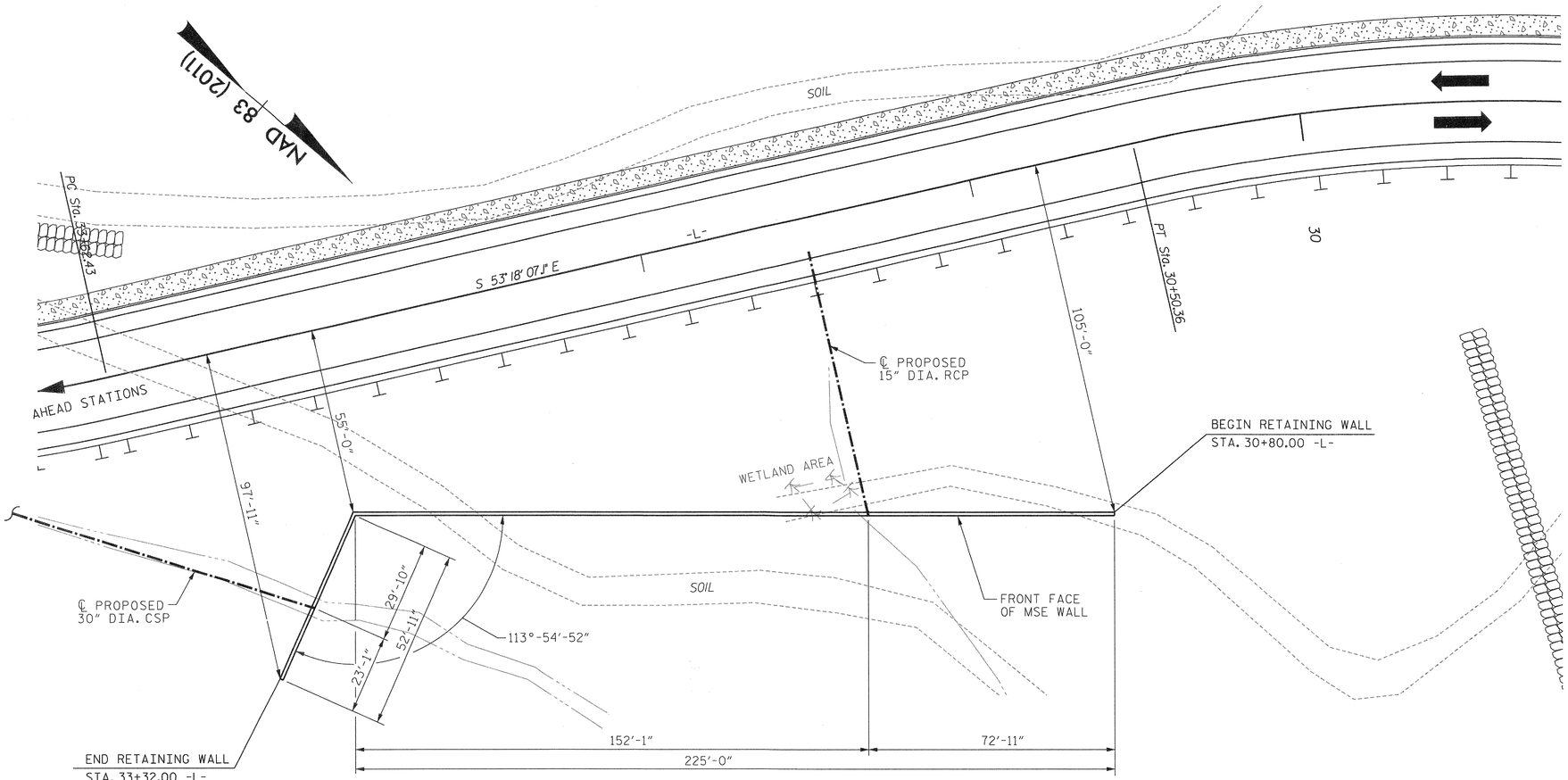

PLAN - RETAINING WALL #3

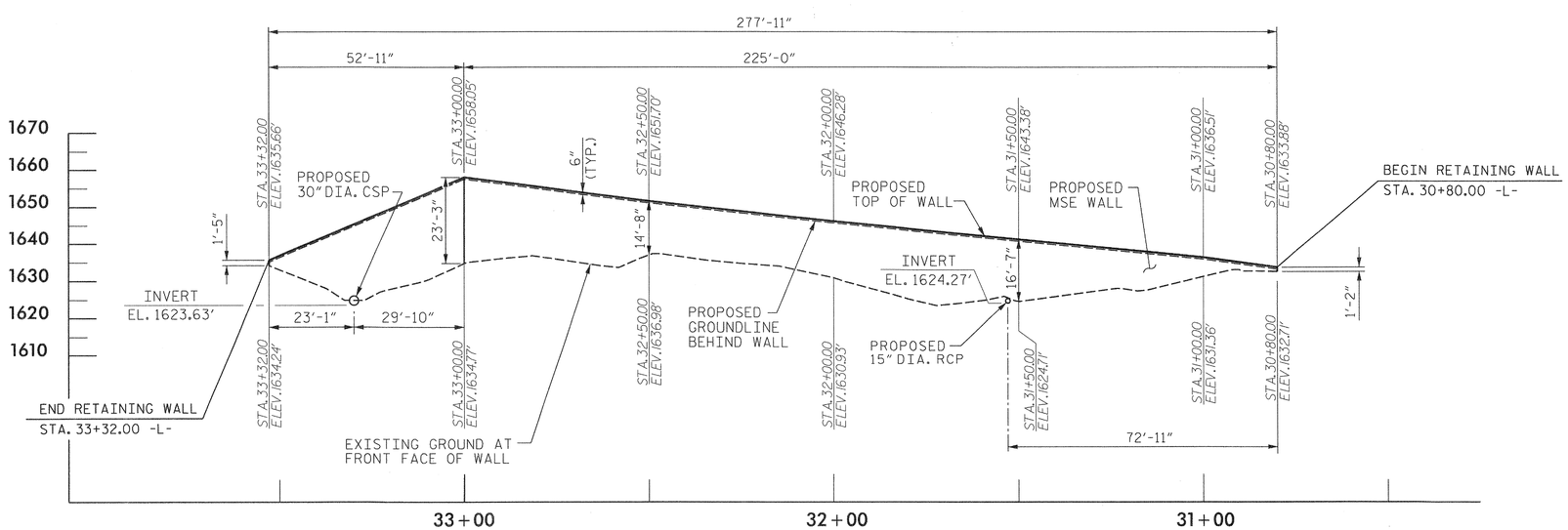

ELEVATION - RETAINING WALL #3

VIEWING FRONT FACE - UNFOLDED VIEW

NOTES:

ELEVATIONS SHOWN AT TOP OF WALL ARE ACTUAL TOP OF WALL ELEVATIONS, AND SHALL BE 6" ABOVE GROUND LINE.

SEE SPECIAL PROVISIONS FOR MECHANICALLY STABILIZED EARTH RETAINING WALLS.

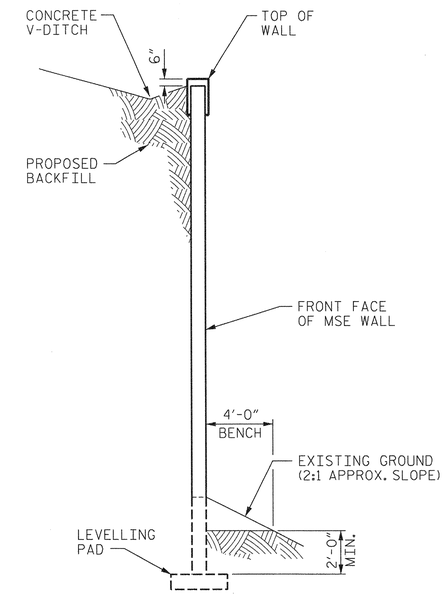

SECTION THRU WALL

BILL OF MATERIAL	
MSE RETAINING WALL	4,114 SQ. FT.

NORTH CAROLINA PROFESSIONAL SEAL 20717 ENGINEER HARDY L. WILLIS 3/7/14

PROJECT NO. R-5527B

CHEROKEE COUNTY

STATION 30+80.00 -L-

SHEET 1 OF 2

Vaughn & Melton
Consulting Engineers

Asheville, North Carolina 828-253-2796
Charlotte, North Carolina 704-357-0488
Tri-Cities, Tennessee 423-467-8401
Knoxville, Tennessee 865-546-5800
Middlesboro, Kentucky 606-248-6600
Spartanburg, South Carolina 864-574-4775

Copyright © 2006 Vaughn & Melton, Inc. All Rights Reserved

STATE OF NORTH CAROLINA
DEPARTMENT OF TRANSPORTATION
RALEIGH

MSE RETAINING WALL #3

STA. 30+80.00 -L-
TO STA. 33+32.00 -L-

DWN. BY: MAF	DATE: 11/13	
CHKD. BY: HLW	DATE: 11/13	
DES. EGR. OF RECORD: HLW	DATE: 11/13	

REVISIONS								SHEET NO.
NO.	BY:	DATE:	NO.	BY:	DATE:			RW3-1
1			3					TOTAL SHEETS
2			4					2

WALL NOTES:

FOR MECHANICALLY STABILIZED EARTH (MSE) RETAINING WALLS, SEE MECHANICALLY STABILIZED EARTH RETAINING WALLS PROVISION.

USE AN MSE WALL SYSTEM WITH SRW UNITS THAT MEET ARTICLE 1040-4 OF THE STANDARD SPECIFICATIONS FOR RETAINING WALL NO. 3.

WHEN USING AN MSE WALL SYSTEM WITH SEGMENTAL RETAINING WALL (SRW) UNITS FOR RETAINING WALL NO. 3, FREEZE-THAW DURABLE SRW UNITS THAT MEET ARTICLE 1040-4 OF THE STANDARD SPECIFICATIONS ARE REQUIRED.

CAST-IN-PLACE REINFORCED CONCRETE COPING IS REQUIRED FOR RETAINING WALL NO. 3

A DRAIN IS REQUIRED FOR RETAINING WALL NO. 3.

BEFORE BEGINNING MSE WALL DESIGN FOR RETAINING WALL NO. 3, SURVEY WALL LOCATION AND SUBMIT A REVISED WALL PROFILE VIEW (WALL ENVELOPE) FOR REVIEW. DO NOT START WALL DESIGN OR CONSTRUCTION UNTIL THE REVISED WALL ENVELOPE IS ACCEPTED.

DESIGN RETAINING WALL NO. 3 FOR THE FOLLOWING:

1) H = DESIGN HEIGHT + EMBEDMENT
2) DESIGN LIFE = 100 YEARS
3) MAXIMUM FACTORED VERTICAL STRESS ON FOUNDATION MATERIAL = 8000 LB/SF
4) MINIMUM REINFORCEMENT LENGTH (L) = 32 FT
5) MINIMUM EMBEDMENT ELEVATION = 2.0 FT
6) AGGREGATE PARAMETERS:

AGGREGATE TYPE*	UNIT WEIGHT (gamma) LB/CF	FRICTION ANGLE (phi) DEGREES	COHESION (C) LB/SF
COARSE	110	38	0
FINE	125	34	0

*SEE MSE RETAINING WALLS PROVISION FOR COARSE AND FINE AGGREGATE MATERIAL REQUIREMENTS.

7) IN-SITU ASSUMED MATERIAL PARAMETERS:

MATERIAL TYPE	UNIT WEIGHT (gamma) LB/CF	FRICTION ANGLE (phi) DEGREES	COHESION (C) LB/SF
BACKFILL	120	30	100
FOUNDATION	120	28	100

DESIGN RETAINING WALL NO. 3 FOR A PIPE EXTENDING THROUGH THE WALL AS SHOWN. VERIFY PIPE LOCATION AND ELEVATION BEFORE BEGINNING MSE WALL DESIGN OR CONSTRUCTION.

DO NOT PLACE LEVELING PAD CONCRETE, AGGREGATE OR REINFORCEMENT FOR RETAINING WALL NO. 3 UNTIL EXCAVATION DIMENSIONS AND FOUNDATION MATERIAL ARE APPROVED.

NORTH CAROLINA PROFESSIONAL SEAL 20771 ENGINEER HARDY L. WILLIS 1/7/14

PROJECT NO. R-5527B
CHEROKEE COUNTY
STATION 30+80.00 -L-

SHEET 2 OF 2

V&M
Vaughn & Melton
Consulting Engineers
Asheville, North Carolina 828-253-2796
Charlotte, North Carolina 704-357-0488
Tri-Cities, Tennessee 423-467-8401
Knoxville, Tennessee 865-546-5800
Middlesboro, Kentucky 606-248-6600
Spartanburg, South Carolina 864-574-4775

Copyright © 2006 Vaughn & Melton, Inc. All Rights Reserved

STATE OF NORTH CAROLINA
DEPARTMENT OF TRANSPORTATION
RALEIGH

MSE RETAINING WALL #3

STA. 30+80.00 -L-
TO STA. 33+32.00 -L-

DWN. BY: MAF	DATE: 11/13	
CHKD. BY: HLW	DATE: 11/13	
DES. EGR. OF RECORD: HLW	DATE: 11/13	

REVISIONS

NO.	BY:	DATE:	NO.	BY:	DATE:
1			3		
2			4		

SHEET NO. RW3-2
TOTAL SHEETS 2

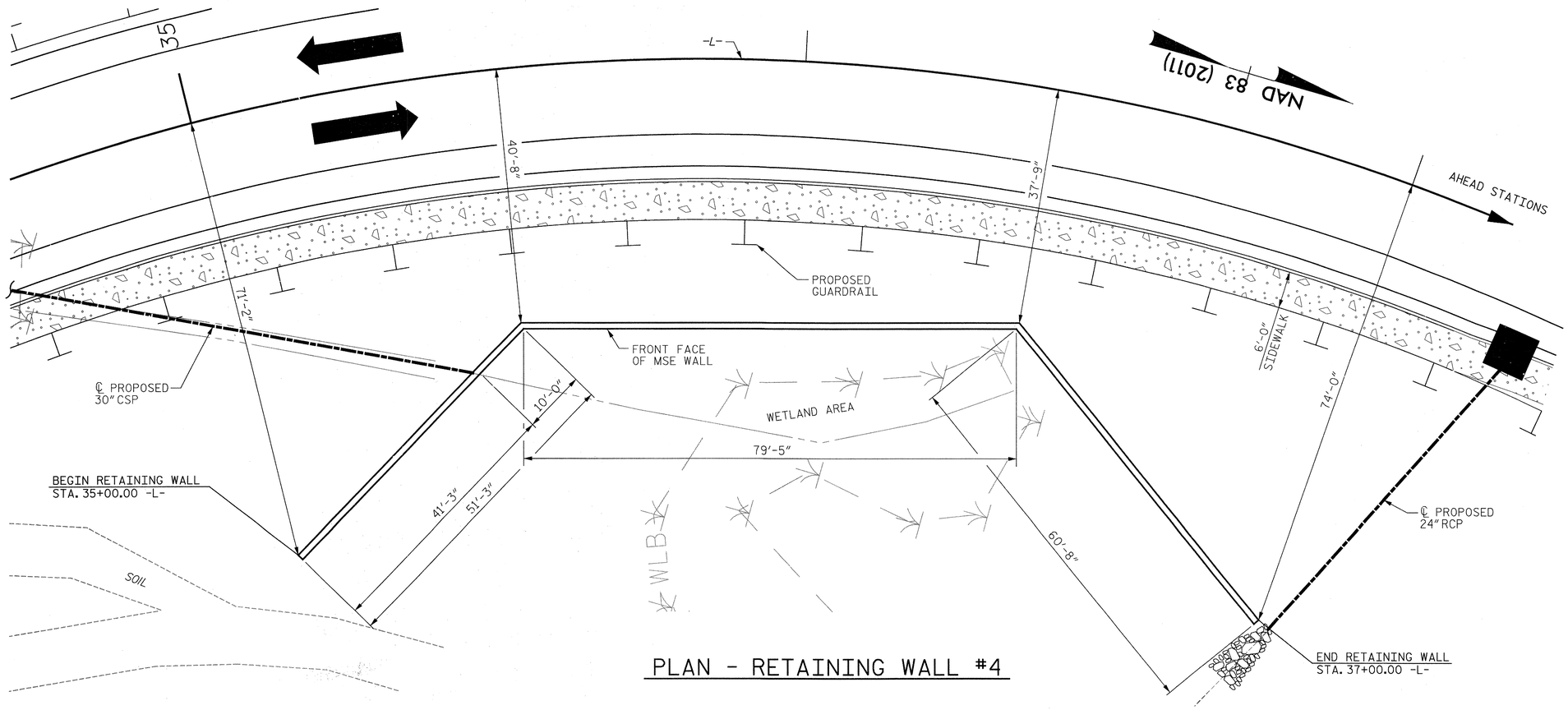

PLAN - RETAINING WALL #4

NOTES:

ELEVATIONS SHOWN AT TOP OF WALL ARE ACTUAL TOP OF WALL ELEVATIONS, AND SHALL BE 6" ABOVE GROUND LINE.

SEE SPECIAL PROVISIONS FOR MECHANICALLY STABILIZED EARTH RETAINING WALLS.

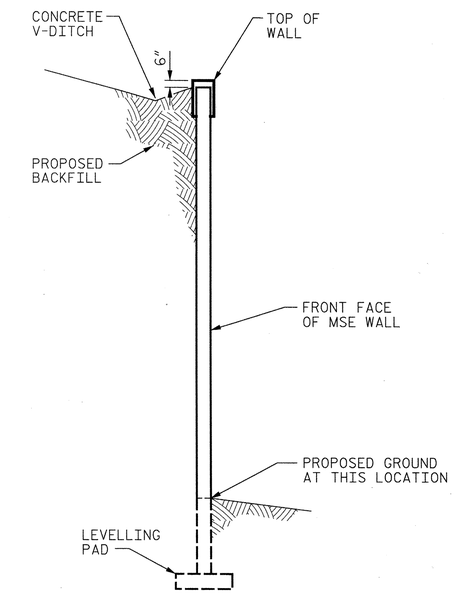

SECTION THRU WALL

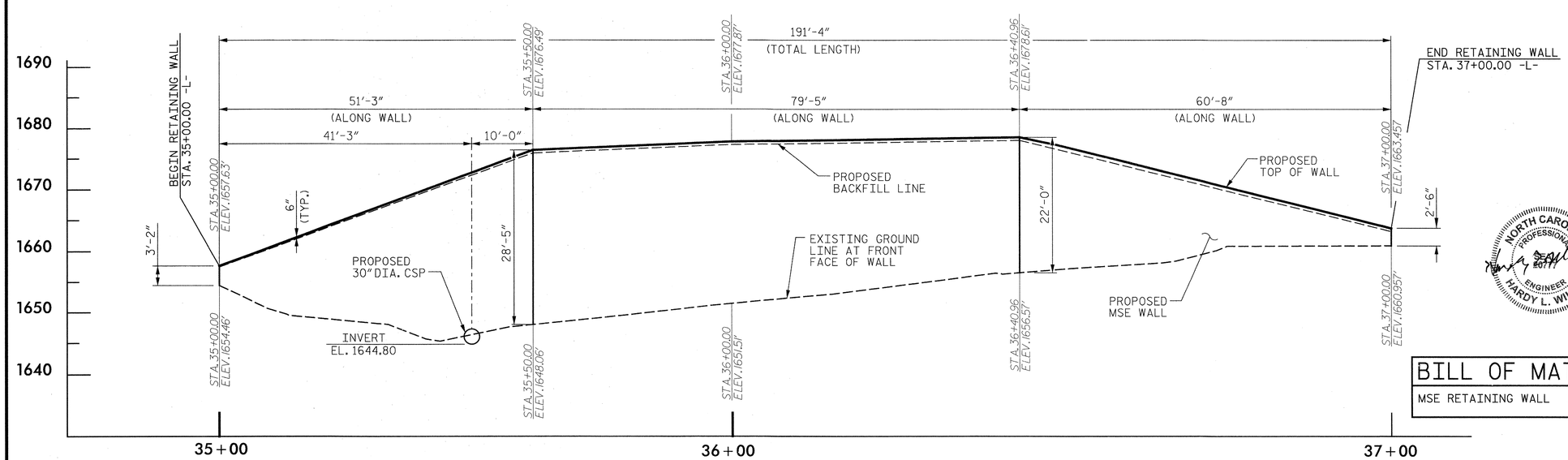

ELEVATION - RETAINING WALL #4

VIEWING FRONT FACE - UNFOLDED VIEW

BILL OF MATERIAL

MSE RETAINING WALL	3,694 SQ. FT.

V&M
Vaughn & Melton
Consulting Engineers

Charlotte, North Carolina 704·357·0488
Tri-Cities, Tennessee 423·467·8401
Knoxville, Tennessee 865·546·5800
Asheville, North Carolina 828·253·2796
Middlesboro, Kentucky 606·248·6600
Spartanburg, South Carolina 864·574·4775

Copyright © 2006 Vaughn & Melton, Inc. All Rights Reserved

NORTH CAROLINA PROFESSIONAL SEAL ENGINEER HARDY L. WILLIS 11/13/14

PROJECT NO. R-5527B

CHEROKEE COUNTY

STATION 35+00.00 -L-

SHEET 1 OF 2

STATE OF NORTH CAROLINA
DEPARTMENT OF TRANSPORTATION
RALEIGH

MSE RETAINING WALL #4

STA. 35+00.00 -L-
TO STA. 37+00.00 -L-

DWN. BY: MAF	DATE: 11/13	
CHKD. BY: HLW	DATE: 11/13	
DES. EGR. OF RECORD: HLW	DATE: 11/13	

REVISIONS						SHEET NO.
NO.	BY:	DATE:	NO.	BY:	DATE:	RW4-1
1			3			TOTAL SHEETS
2			4			2

WALL NOTES:

FOR MECHANICALLY STABILIZED EARTH (MSE) RETAINING WALLS, SEE MECHANICALLY STABILIZED EARTH RETAINING WALLS PROVISION.

USE AN MSE WALL SYSTEM WITH SRW UNITS THAT MEET ARTICLE 1040-4 OF THE STANDARD SPECIFICATIONS FOR RETAINING WALL NO. 4.

WHEN USING AN MSE WALL SYSTEM WITH SEGMENTAL RETAINING WALL (SRW) UNITS FOR RETAINING WALL NO. 4, FREEZE-THAW DURABLE SRW UNITS THAT MEET ARTICLE 1040-4 OF THE STANDARD SPECIFICATIONS ARE REQUIRED.

CAST-IN-PLACE REINFORCED CONCRETE COPING IS REQUIRED FOR RETAINING WALL NO. 4

A DRAIN IS REQUIRED FOR RETAINING WALL NO. 4.

BEFORE BEGINNING MSE WALL DESIGN FOR RETAINING WALL NO. 4, SURVEY WALL LOCATION AND SUBMIT A REVISED WALL PROFILE VIEW (WALL ENVELOPE) FOR REVIEW. DO NOT START WALL DESIGN OR CONSTRUCTION UNTIL THE REVISED WALL ENVELOPE IS ACCEPTED.

DESIGN RETAINING WALL NO. 4 FOR THE FOLLOWING:

1) H = DESIGN HEIGHT + EMBEDMENT
2) DESIGN LIFE = 100 YEARS
3) MAXIMUM FACTORED VERTICAL STRESS ON FOUNDATION MATERIAL = 9000 LB/SF
4) MINIMUM REINFORCEMENT LENGTH (L) = 32 FT
5) MINIMUM EMBEDMENT ELEVATION = 2.0 FT
6) AGGREGATE PARAMETERS:

AGGREGATE TYPE*	UNIT WEIGHT (gamma) LB/CF	FRICTION ANGLE (phi) DEGREES	COHESION (C) LB/SF
COARSE	110	38	0
FINE	125	34	0

*SEE MSE RETAINING WALLS PROVISION FOR COARSE AND FINE AGGREGATE MATERIAL REQUIREMENTS.

7) IN-SITU ASSUMED MATERIAL PARAMETERS:

MATERIAL TYPE	UNIT WEIGHT (gamma) LB/CF	FRICTION ANGLE (phi) DEGREES	COHESION (C) LB/SF
BACKFILL	120	30	100
FOUNDATION	120	28	100

DESIGN RETAINING WALL NO. 4 FOR A PIPE EXTENDING THROUGH THE WALL AS SHOWN. VERIFY PIPE LOCATION AND ELEVATION BEFORE BEGINNING MSE WALL DESIGN OR CONSTRUCTION.

DO NOT PLACE LEVELING PAD CONCRETE, AGGREGATE OR REINFORCEMENT FOR RETAINING WALL NO. 4 UNTIL EXCAVATION DIMENSIONS AND FOUNDATION MATERIAL ARE APPROVED.

NORTH CAROLINA PROFESSIONAL SEAL 28477 ENGINEER HARDY L. WILLIS 1/8/14

PROJECT NO. R-5527B

CHEROKEE COUNTY

STATION 35+00.00 -L-

SHEET 2 OF 2

V&M
Vaughn & Melton
Consulting Engineers
Asheville, North Carolina 828-253-2796
Charlotte, North Carolina 704-357-0488
Tri-Cities, Tennessee 423-467-8401
Knoxville, Tennessee 865-546-5800
Middlesboro, Kentucky 606-248-6600
Spartanburg, South Carolina 864-574-4775

Copyright © 2006 Vaughn & Melton, Inc. All Rights Reserved

STATE OF NORTH CAROLINA
DEPARTMENT OF TRANSPORTATION
RALEIGH

MSE RETAINING WALL #4

STA. 35+00.00 -L-
TO STA. 37+00.00 -L-

DWN. BY: MAF	DATE: 11/13	
CHKD. BY: HLW	DATE: 11/13	
DES. EGR. OF RECORD: HLW	DATE: 11/13	

REVISIONS

NO.	BY:	DATE:	NO.	BY:	DATE:
1			3		
2			4		

SHEET NO. RW4-2

TOTAL SHEETS 2