09/08/99

TIP PROJECT: I-5501

CONTRACT: C203483

See Sheet 1-A For Index of Sheets
See Sheet 1-B For Conventional Symbols

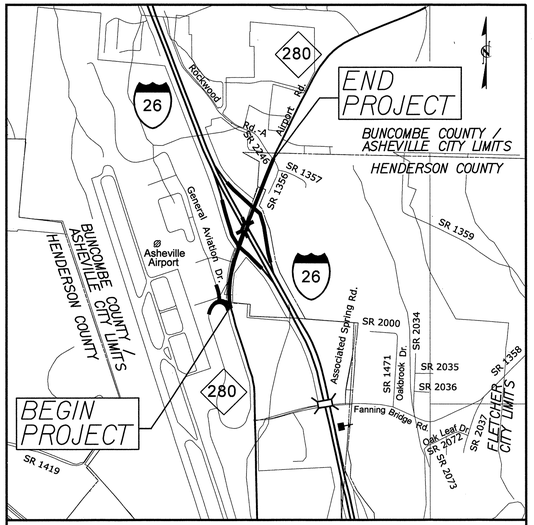

VICINITY MAP

STATE OF NORTH CAROLINA
DIVISION OF HIGHWAYS

BUNCOMBE & HENDERSON COUNTIES

STATE	STATE PROJECT REFERENCE NO.	SHEET NO.	TOTAL SHEETS
N.C.	I-5501	1	

STATE PROJ. NO.	F. A. PROJ. NO.	DESCRIPTION
46292.1.1	IMF-026-1(190)40	P.E.
46292.2.1	IMF-026-1(190)40	ROW/UTIL
46292.3.FS1	IMF-026-1(190)40	CONST

LOCATION: I-26 /NC 280 INTERCHANGE IN ASHEVILLE

TYPE OF WORK: GRADING, PAVING, DRAINAGE, SIGNALS AND STRUCTURES

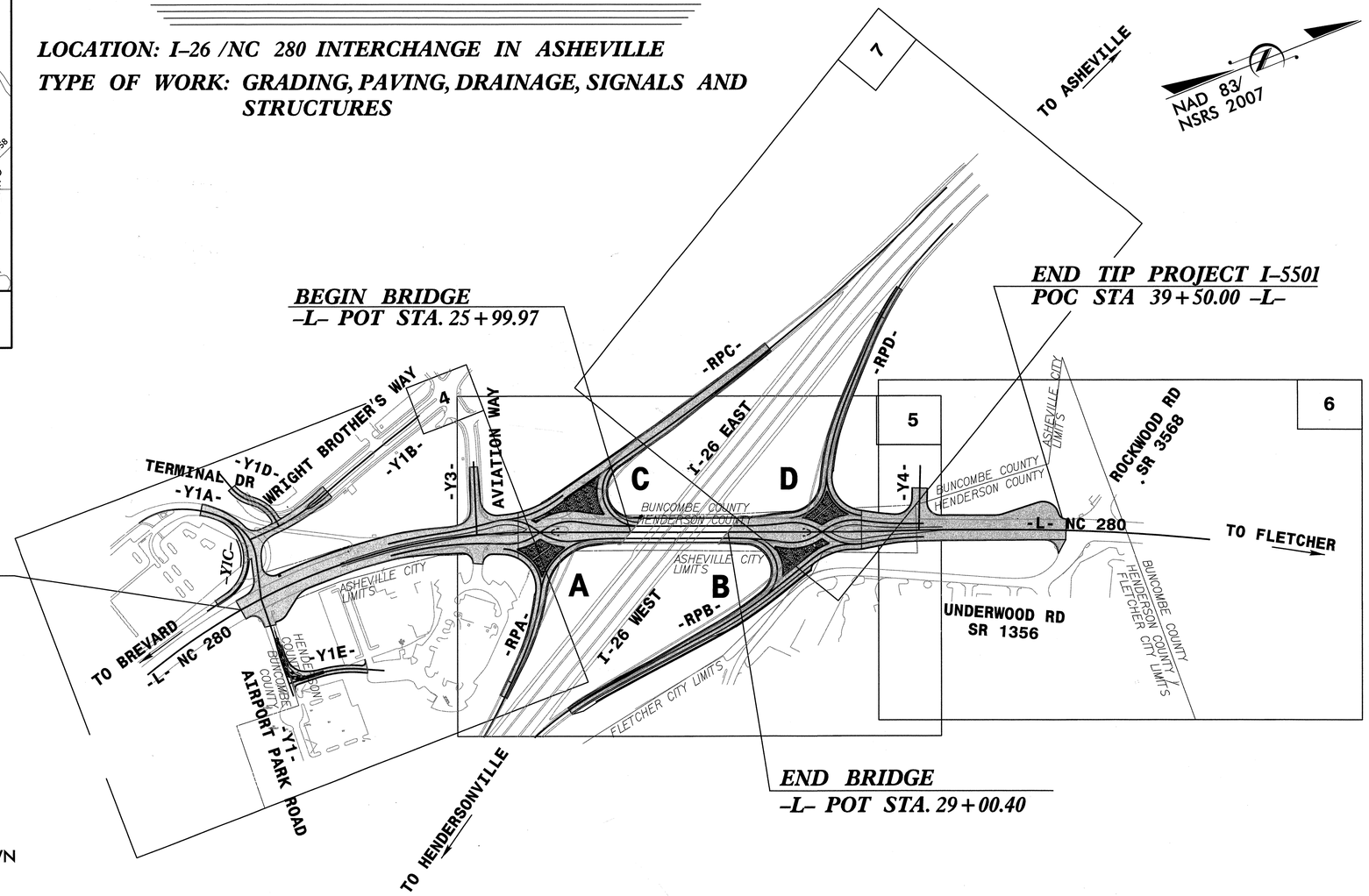

NOTES:

THIS IS A PARTIAL CONTROLLED ACCESS PROJECT WITH ACCESS BEING LIMITED TO POINTS AS SHOWN ON THE PLANS.

GRAPHIC SCALES

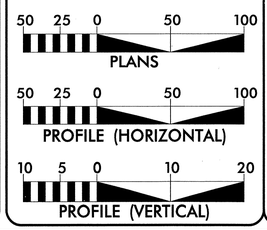

DESIGN DATA

ADT 2013 = 33,260
ADT 2033 = 36,845
DHV = 10 %
D = 55 %
T = 5 % *
V = 30 MPH
* TTST = 2% DUAL 3%
FUNC CLASS = URBAN ARTERIAL
STATEWIDE TIER

PROJECT LENGTH

LENGTH ROADWAY TIP PROJECT I-5501 = *0.435 MILE*
LENGTH STRUCTURE TIP PROJECT I-5501 = *0.057 MILE*
TOTAL LENGTH TIP PROJECT I-5501 = *0.492 MILE*

Prepared for the North Carolina Department of Transportation in the office of:

Florence & Hutcheson
An ICA Company
5121 Kingdom Way
Suite 100
Raleigh, NC 27607
License No. F-0258
Bus: 919-851-6066
Fax: 919-851-6846

2012 STANDARD SPECIFICATIONS

RIGHT OF WAY DATE: March 15, 2013

LETTING DATE: March 18,2014

DAVID C. WALLER, PE
PROJECT ENGINEER

NCDOT CONTACT: BRENDA L. MOORE, PE
ROADWAY DESIGN: ENGINEERING COORDINATION SECTION ENGINEER

HYDRAULICS ENGINEER
NORTH CAROLINA PROFESSIONAL SEAL 24451 ENGINEER STACEY H. BAILEY
SIGNATURE: 6-28-13 P.E.

ROADWAY DESIGN ENGINEER
NORTH CAROLINA PROFESSIONAL SEAL 22606 ENGINEER DAVID C. WALLER
SIGNATURE: 6-27-13 P.E.

STATE OF NORTH CAROLINA · DEPARTMENT OF TRANSPORTATION ·

6/27/2013
P:\TIP\I550I\Roadway\Proj\N-550I_Rdy_tsh.dgn
Florence & Hutcheson, Inc.

8/17/99

PROJECT REFERENCE NO.	SHEET NO.
I-5501	I-A

ROADWAY DESIGN ENGINEER

NORTH CAROLINA PROFESSIONAL SEAL 22606 ENGINEER DAVID C. WALKER

7-22-13

INDEX OF SHEETS

SHEET NUMBER	DESCRIPTION
1	Title Sheet
1-A	Index of Sheets, General Notes, List of Standards
1-B	Conventional Symbols
1-C thru 1-D	Survey Control Sheets
2 thru 2-C	Typical Sections and Pavement Schedule
2-D	Ditch Details
2-E	Detail of Diverging Diamond Interchange
2-F	Curve Data
2-G	Cross Section / Shear Point Layout
2-H	Detail of DDI Barrier Rail
2-I	Intersection Details
2-J	Bicycle Safe Steel Grate and Frame
2-K	Detail of Temporary 1" Steel Cover over Drainage structure
2-L	Detail for Guardrail Anchor Unit Type B-77 Shop Curve
2-M	Detail to Convert Existing Drop Inlet or Catch Basin to Junction Box
2-N	Detail for Special Catch Basin
~~3~~	~~Summary of Quantities~~
3-A thru 3-D	Drainage Summary Sheets
3-E	Summary of Earthwork, Pavement Removal, Shoulder Berm Gutter & Expressway Gutter
3-F	Guardrail Summary
3-G	Parcel Index Sheets
4 thru 7	Plan Sheets
8 thru 15	Profile Sheets
TMP-1 thru TMP-10	Transportation Management Plans
PMP-1 thru PMP-5	Pavement Marking Plans
E-1 thru E-2	Electrical Plans
EC-1 thru EC-11	Erosion Control Plans
SIGN-1 thru SIGN-8	Signing Plans
SIG-1 thru SIG-44	Signal Plans
UC-1 thru UC-10	Utility Plans
UD-1 thru UD-4	Utility Plans by Others
X-1A	Cross-Section Summary
X-1 thru X-49	Cross-Sections
S-1 thru S-7	Structure Plans
W-1 thru W-2	Retaining Wall No. 1 Plans

EFF. 01-17-2012
REV. 10-30-2012

2012 ROADWAY ENGLISH STANDARD DRAWINGS

The following Roadway Standards as appear in "Roadway Standard Drawings" Highway Design Branch - N. C. Department of Transportation - Raleigh, N. C., Dated January, 2012 are applicable to this project and by reference hereby are considered a part of these plans:

STD.NO.	TITLE
DIVISION 2 - EARTHWORK	
200.02	Method of Clearing - Method II
225.01	Guide for Grading Subgrade - Interstate and Freeway
225.02	Guide for Grading Subgrade - Secondary and Local
225.04	Method of Obtaining Superelevation - Two Lane Pavement
DIVISION 3 - PIPE CULVERTS	
300.01	Method of Pipe Installation
DIVISION 5 - SUBGRADE, BASES AND SHOULDERS	
560.01	Method of Shoulder Construction - High Side of Superelevated Curve - Method I
560.02	Method of Shoulder Construction - High Side of Superelevated Curve - Method II (Sheet 2 of 3 is no longer applicable)
DIVISION 6 - ASPHALT BASES AND PAVEMENTS	
654.01	Pavement Repairs
DIVISION 8 - INCIDENTALS	
806.01	Concrete Right-of-Way Marker
806.02	Granite Right-of-Way Marker
840.01	Brick Catch Basin - 12" thru 54" Pipe
840.02	Concrete Catch Basin - 12" thru 54" Pipe
840.03	Frame, Grates and Hood - for Use on Standard Catch Basin
840.14	Concrete Drop Inlet - 12" thru 30" Pipe
840.15	Brick Drop Inlet - 12" thru 30" Pipe
840.16	Drop Inlet Frame and Grates - for use with Std. Dwg 840.14 and 840.15
840.17	Concrete Grated Drop Inlet Type 'A' - 12" thru 72" Pipe
840.18	Concrete Grated Drop Inlet Type 'B' - 12" thru 36" Pipe
840.19	Concrete Grated Drop Inlet Type 'D' - 12" thru 36" Pipe
840.20	Frames and Wide Slot Flat Grates
840.22	Frames and Wide Slot Sag Grates
840.24	Frames and Narrow Slot Sag Grates
840.25	Anchorage for Frames - Brick or Concrete or Precast
840.26	Brick Grated Drop Inlet Type 'A' - 12" thru 72" Pipe
840.27	Brick Grated Drop Inlet Type 'B' - 12" thru 36" Pipe
840.28	Brick Grated Drop Inlet Type 'D' - 12" thru 36" Pipe
840.29	Frames and Narrow Slot Flat Grates
840.31	Concrete Junction Box - 12" thru 66" Pipe
840.32	Brick Junction Box - 12" thru 66" Pipe
840.33	Angled Vane Grates and Frames
840.34	Traffic Bearing Junction Box - for Use with Pipes 42" and Under
840.35	Traffic Bearing Grated Drop Inlet - for Cast Iron Double Frame and Grates
840.36	Traffic Bearing Grated Drop Inlet - for Steel (840.37) Double Frame and Grates
840.37	Steel Grate and Frame
840.45	Precast Drainage Structure
840.46	Traffic Bearing Precast Drainage Structure
840.54	Manhole Frame and Cover
840.66	Drainage Structure Steps
840.71	Concrete and Brick Pipe Plug
840.72	Pipe Collar
846.01	Concrete Curb, Gutter and Curb & Gutter
846.02	Drop Inlet Installation in Expressway Gutter
846.04	Drop Inlet Installation in Shoulder Berm Gutter
848.01	Concrete Sidewalk
848.02	Driveway Turnout - Radius Type
848.04	Street Turnout
848.05	Curb Ramp - Proposed Curb & Gutter
852.01	Concrete Islands
852.06	Method for Placement of Drop Inlets in Concrete Islands
854.01	Double Faced Concrete Barrier - Types I, II, III and IV
862.01	Guardrail Placement
862.02	Guardrail Installation
862.03	Structure Anchor Units (Details in Lieu of Standard Drawing as March 2013 Letting)
862.04	Anchoring End of Guardrail - B-77 and B-83 Anchor Units
866.02	Woven Wire Fence - with Wood Post
876.02	Guide for Rip Rap at Pipe Outlets

GENERAL NOTES:

2012 SPECIFICATIONS
EFFECTIVE: 01-17-2012
REVISED: 07-30-2012

GRADING AND SURFACING OR RESURFACING AND WIDENING:

THE GRADE LINES SHOWN DENOTE THE FINISHED ELEVATION OF THE PROPOSED SURFACING AT GRADE POINTS SHOWN ON THE TYPICAL SECTIONS. WHERE NO GRADE LINES ARE SHOWN, THE PROFILES SHOWN DENOTE THE TOP ELEVATION OF THE EXISTING PAVEMENT ALONG THE CENTER LINE OF SURVEY ON WHICH THE PROPOSED RESURFACING WILL BE PLACED. GRADE LINES MAY BE ADJUSTED BY THE ENGINEER IN ORDER TO SECURE A PROPER TIE-IN.

CLEARING:

CLEARING ON THIS PROJECT SHALL BE PERFORMED TO THE LIMITS ESTABLISHED BY METHOD II.

SUPERELEVATION:

ALL CURVES ON THIS PROJECT SHALL BE SUPERELEVATED IN ACCORDANCE WITH STD. NO. 225.04
SUPERELEVATION IS TO BE REVOLVED ABOUT THE GRADE POINTS SHOWN ON THE TYPICAL SECTIONS.

SHOULDER CONSTRUCTION:

ASPHALT, EARTH, AND CONCRETE SHOULDER CONSTRUCTION ON THE HIGH SIDE OF SUPERELEVATED CURVES SHALL BE IN ACCORDANCE WITH STD. 560.01 AND 560.02.

SIDE ROADS:

THE CONTRACTOR WILL BE REQUIRED TO DO ALL NECESSARY WORK TO PROVIDE SUITABLE CONNECTIONS WITH ALL ROADS, STREETS, AND DRIVES ENTERING THIS PROJECT. THIS WORK WILL BE PAID FOR AT THE CONTRACT UNIT PRICE FOR THE PARTICULAR ITEMS INVOLVED.

UNDERDRAINS:

UNDERDRAINS SHALL BE CONSTRUCTED IN ACCORDANCE WITH STD. NO. 815.03 AT LOCATIONS DIRECTED BY THE ENGINEER.

DRIVEWAYS:

DRIVEWAYS SHALL BE CONSTRUCTED IN ACCORDANCE WITH STD. 848.02 USING 3' RADII OR RADII AS SHOWN ON THE PLANS. LOCATIONS OF DRIVES WILL BE AS SHOWN ON THE PLANS OR AS DIRECTED BY THE ENGINEER.

STREET TURNOUT:

STREET RETURNS SHALL BE CONSTRUCTED IN ACCORDANCE WITH STD. NO. 848.04 USING THE RADII NOTED ON PLANS.

GUARDRAIL:

THE GUARDRAIL LOCATIONS SHOWN ON THE PLANS MAY BE ADJUSTED DURING CONSTRUCTION AS DIRECTED BY THE ENGINEER. THE CONTRACTOR SHOULD CONSULT WITH THE ENGINEER PRIOR TO ORDERING GUARDRAIL MATERIAL.

TEMPORARY SHORING:

SHORING REQUIRED FOR THE MAINTENANCE OF TRAFFIC WILL BE PAID FOR AS "EXTRA WORK" IN ACCORDANCE WITH SECTION 104-7.

SUBSURFACE PLANS:

NO SUBSURFACE PLANS ARE AVAILABLE ON THIS PROJECT. THE CONTRACTOR SHOULD MAKE HIS OWN INVESTIGATION AS TO THE SUBSURFACE CONDITIONS.

UTILITIES:

UTILITY OWNERS ON THIS PROJECT ARE PROGRESS ENERGY, AT&T, PSNC ENERGY, & CHARTER COMMUNICATIONS.

ANY RELOCATION OF EXISTING UTILITIES WILL BE ACCOMPLISHED BY OTHERS, EXCEPT AS SHOWN ON THE PLANS.

RIGHT-OF-WAY MARKERS:

ALL RIGHT-OF-WAY MARKERS ON THIS PROJECT SHALL BE PLACED BY CONTRACT.

CURB RAMPS

CURB RAMPS ARE SHOWN ON THE PLANS AT APPROXIMATE LOCATIONS.
CONSTRUCT ALL CURB RAMPS ACCORDANCE WITH STD 848.05 and/or 848.06.

7/18/2013
P:\TIP\I5501\Roadway\Proj\I5501_rdy_sheet1a.dgn
Jerries & Hutchison, Inc.

04/16/11

PROJECT REFERENCE NO.	SHEET NO.
I-5501	1-B

Note: Not to Scale

****S.U.E. = Subsurface Utility Engineering***

STATE OF NORTH CAROLINA
DIVISION OF HIGHWAYS

CONVENTIONAL PLAN SHEET SYMBOLS

BOUNDARIES AND PROPERTY:

- State Line
- County Line
- Township Line
- City Line
- Reservation Line
- Property Line
- Existing Iron Pin — EIP
- Property Corner
- Property Monument — ECM
- Parcel/Sequence Number — 23
- Existing Fence Line
- Proposed Woven Wire Fence
- Proposed Chain Link Fence
- Proposed Barbed Wire Fence
- Existing Wetland Boundary — WLB
- Proposed Wetland Boundary — WLB
- Existing Endangered Animal Boundary — EAB
- Existing Endangered Plant Boundary — EPB
- Known Soil Contamination: Area or Site
- Potential Soil Contamination: Area or Site

BUILDINGS AND OTHER CULTURE:

- Gas Pump Vent or U/G Tank Cap
- Sign — S
- Well — W
- Small Mine
- Foundation
- Area Outline
- Cemetery
- Building
- School
- Church
- Dam

HYDROLOGY:

- Stream or Body of Water
- Hydro, Pool or Reservoir
- Jurisdictional Stream — JS
- Buffer Zone 1 — BZ 1
- Buffer Zone 2 — BZ 2
- Flow Arrow
- Disappearing Stream
- Spring
- Wetland
- Proposed Lateral, Tail, Head Ditch — FLOW
- False Sump

RAILROADS:

- Standard Gauge — CSX TRANSPORTATION
- RR Signal Milepost — MILEPOST 35
- Switch — SWITCH
- RR Abandoned
- RR Dismantled

RIGHT OF WAY:

- Baseline Control Point
- Existing Right of Way Marker
- Existing Right of Way Line
- Proposed Right of Way Line — RW
- Proposed Right of Way Line with Iron Pin and Cap Marker — RW
- Proposed Right of Way Line with Concrete or Granite R/W Marker — RW
- Proposed Control of Access Line with Concrete C/A Marker — C/A
- Existing Control of Access — C/A
- Proposed Control of Access — C/A
- Existing Easement Line — E
- Proposed Temporary Construction Easement — E
- Proposed Temporary Drainage Easement — TDE
- Proposed Permanent Drainage Easement — PDE
- Proposed Permanent Drainage / Utility Easement — DUE
- Proposed Permanent Utility Easement — PUE
- Proposed Temporary Utility Easement — TUE
- Proposed Aerial Utility Easement — AUE
- Proposed Permanent Easement with Iron Pin and Cap Marker

ROADS AND RELATED FEATURES:

- Existing Edge of Pavement
- Existing Curb
- Proposed Slope Stakes Cut — C
- Proposed Slope Stakes Fill — F
- Proposed Curb Ramp — CR
- Existing Metal Guardrail
- Proposed Guardrail
- Existing Cable Guiderail
- Proposed Cable Guiderail
- Equality Symbol
- Pavement Removal

VEGETATION:

- Single Tree
- Single Shrub
- Hedge
- Woods Line
- Orchard
- Vineyard — Vineyard

EXISTING STRUCTURES:

MAJOR:

- Bridge, Tunnel or Box Culvert — CONC
- Bridge Wing Wall, Head Wall and End Wall — CONC WW

MINOR:

- Head and End Wall — CONC HW
- Pipe Culvert
- Footbridge
- Drainage Box: Catch Basin, DI or JB — CB
- Paved Ditch Gutter
- Storm Sewer Manhole — S
- Storm Sewer — S

UTILITIES:

POWER:

- Existing Power Pole
- Proposed Power Pole
- Existing Joint Use Pole
- Proposed Joint Use Pole
- Power Manhole — P
- Power Line Tower
- Power Transformer
- U/G Power Cable Hand Hole
- H-Frame Pole
- Recorded U/G Power Line — P
- Designated U/G Power Line (S.U.E.*) — P

TELEPHONE:

- Existing Telephone Pole
- Proposed Telephone Pole
- Telephone Manhole — T
- Telephone Booth
- Telephone Pedestal — T
- Telephone Cell Tower
- U/G Telephone Cable Hand Hole — HH
- Recorded U/G Telephone Cable — T
- Designated U/G Telephone Cable (S.U.E.*) — T
- Recorded U/G Telephone Conduit — TC
- Designated U/G Telephone Conduit (S.U.E.*) — TC
- Recorded U/G Fiber Optics Cable — T FO
- Designated U/G Fiber Optics Cable (S.U.E.*) — T FO

WATER:

- Water Manhole — W
- Water Meter
- Water Valve
- Water Hydrant
- Recorded U/G Water Line — W
- Designated U/G Water Line (S.U.E.*) — W
- Above Ground Water Line — A/G Water

TV:

- TV Satellite Dish
- TV Pedestal — C
- TV Tower
- U/G TV Cable Hand Hole — HH
- Recorded U/G TV Cable — TV
- Designated U/G TV Cable (S.U.E.*) — TV
- Recorded U/G Fiber Optic Cable — TV FO
- Designated U/G Fiber Optic Cable (S.U.E.*) — TV FO

GAS:

- Gas Valve
- Gas Meter
- Recorded U/G Gas Line — G
- Designated U/G Gas Line (S.U.E.*) — G
- Above Ground Gas Line — A/G Gas

SANITARY SEWER:

- Sanitary Sewer Manhole
- Sanitary Sewer Cleanout
- U/G Sanitary Sewer Line — SS
- Above Ground Sanitary Sewer — A/G Sanitary Sewer
- Recorded SS Forced Main Line — FSS
- Designated SS Forced Main Line (S.U.E.*) — FSS

MISCELLANEOUS:

- Utility Pole
- Utility Pole with Base
- Utility Located Object
- Utility Traffic Signal Box — S
- Utility Unknown U/G Line — ?UTL
- U/G Tank; Water, Gas, Oil
- Underground Storage Tank, Approx. Loc.
- A/G Tank; Water, Gas, Oil
- Geoenvironmental Boring
- U/G Test Hole (S.U.E.*)
- Abandoned According to Utility Records — AATUR
- End of Information — E.O.I.

6/2/99

PROJECT REFERENCE NO.	SHEET NO.
46292.1.1	1C
Location and Surveys	

SURVEY CONTROL SHEET I-5501
-PRELIMINARY-

BY6

POINT	DESC.	NORTH	EAST	ELEVATION	L STATION	OFFSET
1	BY6-1	632640.2333	946785.9339	2155.14	13+75.08	37.80 LT
2	BY6-2	633118.8935	946772.3942	2170.21	18+43.78	51.57 LT
3	BY6-3	633870.1347	947008.7859	2201.06	26+21.32	49.96 LT
4	BY6-4	634281.3211	947172.0552	2218.94	30+63.73	48.49 LT
5	BY6-5	634742.3569	947352.8706	2230.01	35+59.43	43.24 LT
6	BY6-6	635135.7615	947510.3118	2233.18	39+81.39	43.46 LT

BY6A

POINT	DESC.	NORTH	EAST	ELEVATION	L STATION	OFFSET
7	BY6A-7	635354.3968	947444.3588	2219.93	41+50.40	193.12 LT
16	BY6-6	635135.7615	947510.3118	2233.18	39+81.39	43.46 LT
8	BY6A-8	634974.4426	947700.3484	2229.06	39+05.88	194.43 RT

BY6B

POINT	DESC.	NORTH	EAST	ELEVATION	Y6B1 STATION	OFFSET
18	BY6A-8	634974.4426	947700.3484	2229.06	12+06.27	50.21 LT
9	BY6B-9	634607.6878	947475.7462	2230.76	16+13.24	20.00 RT
10	BY6B-10	634311.7089	947365.7382	2219.54	19+22.28	20.32 RT
11	BY6B-11	634079.7893	947471.8782	2208.82	21+70.78	18.43 RT

BM1 ELEVATION = 2159.27
N 632770 E 946772
L STATION 15+03.00 40 LEFT
NCGS MONUMENT 'AIRPORT'

BM2 ELEVATION = 2201.94
N 633881 E 947013
L STATION 26+33.00 50 LEFT
BOLT IN CONCRETE, SW END OF BRIDGE OVER I-26

BM3 ELEVATION = 2229.57
N 634762 E 947313
L STATION 35+63.00 88 LEFT
8 INCH SPIKE IN ROOT OF 18 INCH ASH TREE

BM4 ELEVATION = 2226.30
N 635366 E 947486
BY6A STATION 5+01.00 43 LEFT
8 INCH SPIKE IN ROOT OF 18 INCH POPLAR TREE

BM5 ELEVATION = 2207.64
N 633948 E 947558
BY6B STATION 15+00.88
S 33°13'46.80" E DIST 157.04'
NAIL AND CAP SET IN NE END OF CONCRETE WALK

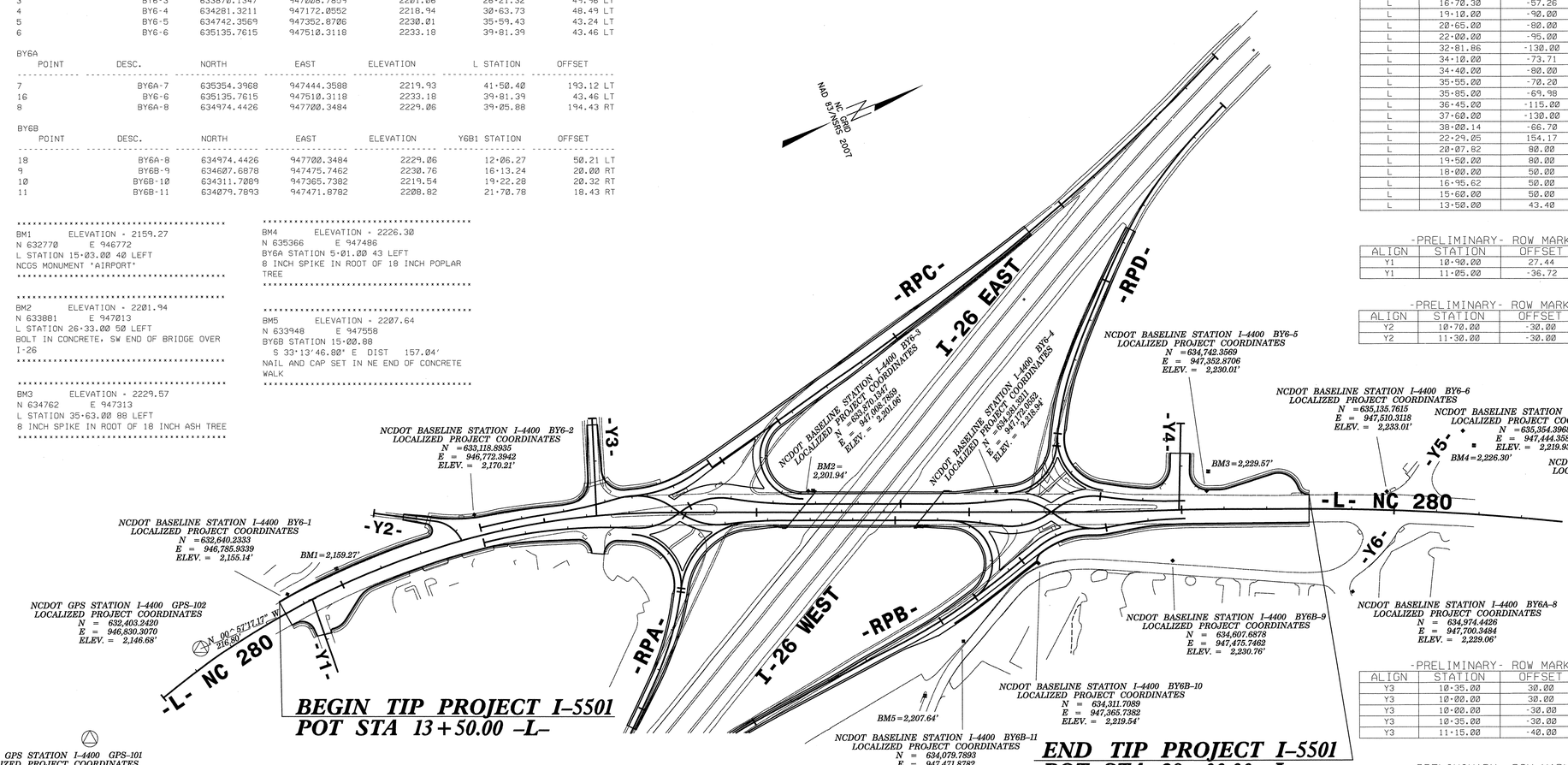

BEGIN TIP PROJECT I-5501
POT STA 13+50.00 -L-

END TIP PROJECT I-5501
POT STA 38+00.00 -L-

-PRELIMINARY- ROW MARKER IRON PIN AND CAP-E

ALIGN	STATION	OFFSET	NORTH	EAST
L	16+70.30	-57.26	632941.2878	946752.6692
L	19+10.00	-90.00	633192.5546	946744.3387
L	20+65.00	-80.00	633349.3171	946787.4275
L	22+00.00	-95.00	633489.2928	946813.1578
L	32+81.86	-130.00	634513.6861	947175.8078
L	34+10.00	-73.71	634611.5388	947272.5037
L	34+40.00	-80.00	634641.6396	947276.5525
L	35+55.00	-70.20	634747.7882	947326.0828
L	35+85.00	-69.98	634776.1004	947337.2118
L	36+45.00	-115.00	634848.7139	947317.3398
L	37+60.00	-130.00	634961.2258	947345.4647
L	38+00.14	-66.70	634975.4517	947419.0782
L	22+29.05	154.17	633434.8797	947057.9786
L	20+07.82	80.00	633256.6134	946929.7965
L	19+50.00	80.00	633202.4893	946918.7135
L	18+00.00	50.00	633063.7579	946868.2727
L	16+95.62	50.00	632962.5705	946860.8127
L	15+60.00	50.00	632830.5299	946859.6121
L	13+50.00	43.40	632625.9101	946869.6915

-PRELIMINARY- ROW MARKER IRON PIN AND CAP-E

ALIGN	STATION	OFFSET	NORTH	EAST
Y1	10+90.00	27.44	632659.6929	946907.2142
Y1	11+05.00	-36.72	632723.2242	946924.6861

-PRELIMINARY- ROW MARKER IRON PIN AND CAP-E

ALIGN	STATION	OFFSET	NORTH	EAST
Y2	10+70.00	-30.00	632975.7358	946690.5311
Y2	11+30.00	-30.00	633028.2100	946719.6249

-PRELIMINARY- ROW MARKER IRON PIN AND CAP-E

ALIGN	STATION	OFFSET	NORTH	EAST
Y3	10+35.00	30.00	633419.6379	946688.3979
Y3	10+00.00	30.00	633430.9725	946655.2840
Y3	10+00.00	-30.00	633487.7391	946674.7148
Y3	10+35.00	-30.00	633476.4045	946707.8287
Y3	11+15.00	-40.00	633459.9579	946786.7559

-PRELIMINARY- ROW MARKER IRON PIN AND CAP-E

ALIGN	STATION	OFFSET	NORTH	EAST
Y4	10+70.00	40.00	634679.1370	947233.5561
Y4	10+70.00	-40.00	634752.9238	947264.4675

-PRELIMINARY- ROW MARKER IRON PIN AND CAP-E

ALIGN	STATION	OFFSET	NORTH	EAST
RPA	17+60.00	-62.26	633435.1244	947114.4011

-PRELIMINARY- ROW MARKER IRON PIN AND CAP-E

ALIGN	STATION	OFFSET	NORTH	EAST
RPC	25+28.26	65.00	633664.7882	946812.2431
RPC	23+91.42	65.00	633797.8115	946780.1321

PRELIMINARY -L-

TYPE	STATION	NORTH	EAST
PC	10+00.00	632279.5447	946905.6942
PCC	16+95.62	632964.7997	946810.8624
PT	22+89.74	633543.2740	946933.9363
PC	32+62.31	634448.3752	947289.8552
PRC	34+34.51	634609.6838	947350.1017
PT	36+06.71	634770.9925	947410.3482
PC	37+96.83	634947.9294	947479.9262
PT	43+95.47	635492.5940	947727.6824

PRELIMINARY -Y1-

TYPE	STATION	NORTH	EAST
POT	10+00.00	632690.5956	946818.3436
POT	11+80.28	632683.6183	946998.4856

PRELIMINARY -Y2-

TYPE	STATION	NORTH	EAST
POT	10+00.00	632899.9689	946682.8254
PC	11+45.75	633027.4366	946753.4986
PT	12+25.94	633068.4903	946818.4957

PRELIMINARY -Y3-

TYPE	STATION	NORTH	EAST
POT	10+00.00	633459.3558	946664.9994
POT	12+27.50	633385.6811	946880.2387

PRELIMINARY -Y4-

TYPE	STATION	NORTH	EAST
POT	10+00.00	634743.0779	947184.4484
POT	12+01.34	634665.2809	947370.1529

PRELIMINARY -RPA-

TYPE	STATION	NORTH	EAST
TS	10+00.00	632914.5877	947634.5754
SC	12+00.00	633086.3260	947532.1614
CS	13+56.30	633211.7400	947439.0144
ST	15+56.30	633359.4118	947304.1970
PC	15+66.22	633366.5835	947297.3369
PT	19+79.43	633574.9332	946946.3859

PRELIMINARY -RPB-

TYPE	STATION	NORTH	EAST
TS	10+00.00	633087.6905	947642.4134
SC	12+00.00	633264.7895	947549.6600
CS	14+20.96	633474.6602	947481.8755
ST	16+20.96	633672.5561	947453.5122
TS	18+36.86	633887.1463	947429.7335
SC	19+61.86	634011.1387	947413.9941
CS	20+94.35	634140.6949	947386.5649
ST	22+19.35	634260.4271	947350.7036
PC	22+37.08	634277.3297	947345.3467
PT	23+73.55	634384.0311	947264.5528

PRELIMINARY -RPD-

TYPE	STATION	NORTH	EAST
CS	10+00.00	635109.8772	946526.8234
SC	12+00.00	634931.6801	946617.3454
CS	13+45.25	634813.7258	946701.8664
ST	15+45.25	634669.8831	946840.6839
TS	15+59.50	634659.9807	946850.9314
SC	17+59.50	634527.5427	947000.5932
PT	18+95.73	634456.7733	947116.7840
POT	20+60.43	634384.0311	947264.5528

PRELIMINARY -RPC-

TYPE	STATION	NORTH	EAST
POT	10+00.00	635134.2487	946415.3699
PC	11+05.97	635037.1338	946457.7649
CS	20+07.26	634186.2179	946752.0433
ST	22+07.26	633992.0810	946800.1036
PC	25+28.26	633680.0407	946875.4283
PT	26+59.96	633570.8863	946944.7945

DATUM DESCRIPTION

THE LOCALIZED COORDINATE SYSTEM DEVELOPED FOR THIS PROJECT IS BASED ON THE STATE PLANE COORDINATES ESTABLISHED BY NCDOT FOR MONUMENT "I4400 GPS-102" WITH NAD 83/NSRS 2007 STATE PLANE GRID COORDINATES OF NORTHING: 632403.2420(ft) EASTING: 946830.3070(ft) ELEVATION: 2146.68(ft)
THE AVERAGE COMBINED GRID FACTOR USED ON THIS PROJECT (GROUND TO GRID) IS: 0.999777801
THE N.C. LAMBERT GRID BEARING AND LOCALIZED HORIZONTAL GROUND DISTANCE FROM "I4400 GPS-102" TO -L- STATION 13+50.00 IS N 00°57'17.17" W 216.80 FT.
ALL LINEAR DIMENSIONS ARE LOCALIZED HORIZONTAL DISTANCES
VERTICAL DATUM USED IS NAVD 88

GEOIDAL MODEL: G09NC
NOTE: DRAWING NOT TO SCALE

NOTES:

1. *THE CONTROL DATA FOR THIS PROJECT CAN BE FOUND ELECTRONICALLY BY SELECTING PROJECT CONTROL DATA AT: HTTP://WWW.NCDOT.ORG/DOH/PRECONSTRUCT/HIGHWAY/LOCATION/PROJECT/*

   THE FILES TO BE FOUND ARE AS FOLLOWS: I-5501_LS_CONTROL.TXT

   SITE CALIBRATION INFORMATION HAS NOT BEEN PROVIDED FOR THIS PROJECT. IF FURTHER INFORMATION IS NEEDED, PLEASE CONTACT THE LOCATION AND SURVEYS UNIT.

△ *INDICATES GEODETIC CONTROL MONUMENTS USED OR SET FOR HORIZONTAL PROJECT CONTROL BY THE NCDOT LOCATION AND SURVEYS UNIT.*
PROJECT CONTROL ESTABLISHED USING GLOBAL POSITIONING SYSTEM.

5/13/2013
R:\Roadway\Pro\5501_ls_lc.dgn
Florence & Hutcheson, Inc.

6/2/99

PROJECT REFERENCE NO.	SHEET NO.
I-5501	1-D
Location and Surveys	

SURVEY CONTROL SHEET I-5501

FINAL

(DESIGN ALIGNMENTS)

L

TYPE	STATION	NORTH	EAST
PC	10+00.00	632279.5447	946905.6942
PCC	16+95.62	632964.7997	946810.8624
PT	22+89.74	633543.2740	946933.9363
PC	32+62.31	634448.3752	947289.8552
PRC	34+34.51	634609.6838	947350.1017
PT	36+06.71	634770.9925	947410.3482
PC	37+96.83	634947.9294	947479.9262
PT	43+95.47	635492.5940	947727.6824

Y1

TYPE	STATION	NORTH	EAST
POT	10+00.00	632690.5956	946818.3436
PC	11+03.85	632686.5761	946922.1206
PRC	11+60.17	632681.7609	946978.2079
PT	12+10.07	632677.6421	947027.9167
POT	13+13.93	632674.2390	947131.7265

Y3

TYPE	STATION	NORTH	EAST
POT	10+00.00	633459.3558	946664.9994
POT	12+27.50	633385.6811	946880.2387

Y1A

TYPE	STATION	NORTH	EAST
PC	10+00.00	632426.3559	946461.7044
PCC	11+11.06	632535.9895	946460.6060
PCC	13+07.42	632695.9987	946568.3745
PT	14+43.46	632722.0443	946697.1964
POT	15+68.62	632690.5956	946818.3436

Y1B

TYPE	STATION	NORTH	EAST
POT	10+00.00	632725.0009	946635.9865
PC	10+53.77	632778.7081	946633.4397
PT	12+57.44	632977.9025	946594.5382
PC	14+02.25	633114.5002	946546.4722
PT	15+14.75	633221.3446	946511.2714
POT	16+54.25	633354.6856	946470.2914

Y1C

TYPE	STATION	NORTH	EAST
PC	10+00.00	632662.4585	946531.3308
PT	13+14.83	632593.1168	946777.5222
POT	13+86.10	632523.3192	946791.8944

Y1D

TYPE	STATION	NORTH	EAST
POT	10+00.00	632710.8712	946403.4823
PC	10+66.01	632731.6546	946466.1386
PRC	11+39.80	632774.3100	946524.9220
PT	12+38.41	632822.2967	946607.9032
POT	12+60.37	632824.7828	946629.7270

Y1E

TYPE	STATION	NORTH	EAST
POT	10+00.00	632675.5265	947092.4524
PC	10+89.53	632764.9174	947097.4516
PT	12+25.98	632896.2671	947131.1028
POT	13+00.00	632963.0528	947163.0135

RPA

TYPE	STATION	NORTH	EAST
TS	10+00.00	632914.5877	947634.5754
SC	12+00.00	633086.3260	947532.1614
CS	13+56.30	633211.7400	947439.0144
ST	15+56.30	633359.4118	947304.1970
PC	15+66.22	633366.5835	947297.3369
PT	19+79.43	633574.9332	946946.3859

(DESIGN ALIGNMENTS)

RPB

TYPE	STATION	NORTH	EAST
TS	10+00.00	633087.6905	947642.4134
SC	12+00.00	633264.7895	947549.6600
CS	14+20.96	633474.6602	947481.8755
ST	16+20.96	633672.5561	947453.5122
TS	18+36.86	633887.1463	947429.7335
SC	19+61.86	634011.1387	947413.9941
CS	20+94.35	634140.6949	947386.5649
ST	22+19.35	634260.4271	947350.7036
PC	22+37.08	634277.3297	947345.3467
PT	23+73.55	634384.0311	947264.5528

RPC

TYPE	STATION	NORTH	EAST
POT	10+00.00	635134.2487	946415.3699
PC	11+05.97	635037.1338	946457.7649
CS	20+07.26	634186.2179	946752.0433
ST	22+07.26	633992.0810	946800.1036
PC	25+28.26	633680.0407	946875.4283
PT	26+59.96	633570.8863	946944.7945

RPD

TYPE	STATION	NORTH	EAST
CS	10+00.00	635109.8772	946526.8234
SC	12+00.00	634931.6801	946617.3454
CS	13+45.25	634813.7258	946701.8664
ST	15+45.25	634669.8831	946840.6839
TS	15+59.50	634659.9807	946850.9314
SC	17+59.50	634527.5427	947000.5932
PT	18+95.73	634456.7733	947116.7840
POT	20+60.43	634384.0311	947264.5528

ROW MARKERS

ROW MARKER CONCRETE OR GRANITE-E

ALIGN	STATION	OFFSET	NORTH	EAST
L	13+50.00	43.40	632625.9103	946869.6932
L	14+15.00	-75.00	632676.8826	946744.3477
L	14+15.00	-56.46	632678.7770	946762.7941
L	15+60.00	50.00	632830.5299	946859.6121
L	16+00.00	-56.82	632868.8927	946752.1685
L	16+00.00	-75.00	632868.7932	946733.9930
L	16+95.62	50.00	632962.5705	946860.8127
L	18+00.00	50.00	633063.7579	946868.2727
L	19+45.00	52.95	633202.7187	946891.2400
L	20+65.00	-80.00	633349.3171	946787.4275
L	20+65.00	-64.95	633345.5970	946802.0086
L	21+65.59	136.12	633385.2994	947022.3333
L	21+80.00	-105.00	633472.3870	946797.0374
L	22+30.00	-105.00	633522.4881	946814.0632
L	32+81.86	-130.00	634513.6861	947175.8078
L	34+10.00	-85.00	634615.3584	947261.8794
L	34+45.00	-90.00	634649.7824	947268.8355
L	35+54.57	-71.73	634747.9215	947324.4963
L	37+05.00	-69.10	634887.7535	947382.0144
L	38+20.00	-125.00	635015.6867	947372.3049
L	39+24.98	-145.00	635122.7243	947394.4326
L	39+51.98	-61.63	635115.6290	947481.9247

ROW MARKER CONCRETE OR GRANITE-E

ALIGN	STATION	OFFSET	NORTH	EAST
Y1	10+89.33	-60.51	632747.6056	946909.9527
Y1	11+10.00	50.00	632636.3667	946925.8131
Y1	11+10.00	26.20	632660.1419	946926.9779
Y1	12+25.33	-66.13	632743.2335	947045.3411
Y1	12+98.87	19.59	632655.1555	947116.0293
Y1	13+02.35	-30.44	632705.0422	947121.1456

NOTE: DRAWING NOT TO SCALE

ROW MARKERS

ROW MARKER CONCRETE OR GRANITE-E

ALIGN	STATION	OFFSET	NORTH	EAST
Y1E	11+72.09	-30.47	632854.8125	947082.5144
Y1E	11+86.66	21.46	632852.8814	947136.4514

ROW MARKER CONCRETE OR GRANITE-E

ALIGN	STATION	OFFSET	NORTH	EAST
Y4	10+70.00	40.00	634679.1370	947233.5561
Y4	10+70.00	-40.00	634752.9238	947264.4675

PERMANENT EASEMENTS

ROW MARKER PERMANENT EASEMENT-E

ALIGN	STATION	OFFSET	NORTH	EAST
L	14+87.00	-83.00	632750.9283	946730.1249
L	14+89.39	-75.00	632753.9238	946737.9493
L	15+06.00	-89.00	632770.3907	946722.9517
L	15+10.00	-75.00	632775.3070	946736.7079
L	15+32.48	65.00	632804.3536	946875.5011
L	15+59.10	-75.00	632826.2935	946734.6807
L	15+64.00	-93.00	632830.9465	946716.5556
L	15+89.20	-75.00	632857.5695	946734.0862
L	15+92.00	-85.00	632860.3827	946724.0564
L	16+05.00	65.00	632874.3889	946873.9708
L	16+05.00	50.00	632874.3461	946858.9709
L	16+74.00	-75.00	632945.6870	946735.0621
L	16+74.00	-82.00	632945.9199	946728.0660
L	16+95.62	-82.00	632968.4555	946728.9439
L	16+95.62	-75.00	632968.1434	946735.9370
L	18+00.00	-75.00	633076.5585	946743.9299
L	18+00.00	-58.68	633074.8874	946760.1631
L	18+20.00	-92.00	633099.1987	946729.2881
L	18+42.00	-59.37	633118.0596	946764.4219
L	18+50.00	-91.00	633130.3672	946734.1181
L	19+10.00	-90.00	633192.5546	946744.3387
L	20+30.00	-81.00	633314.0390	946777.7617
L	20+30.00	-63.86	633310.1263	946794.4448
L	22+13.00	-115.00	633508.7667	946798.6645
L	22+13.00	-104.84	633505.4533	946808.2742
L	22+33.00	-106.18	633525.8751	946814.0198
L	22+33.00	-116.00	633529.1798	946804.7702

NOTES:

1. *THE CONTROL DATA FOR THIS PROJECT CAN BE FOUND ELECTRONICALLY BY SELECTING PROJECT CONTROL DATA AT: HTTP://WWW.NCDOT.ORG/DOH/PRECONSTRUCT/HIGHWAY/LOCATION/PROJECT/*

   THE FILES TO BE FOUND ARE AS FOLLOWS: I-5501_LS_CONTROL.TXT

   SITE CALIBRATION INFORMATION HAS NOT BEEN PROVIDED FOR THIS PROJECT. IF FURTHER INFORMATION IS NEEDED, PLEASE CONTACT THE LOCATION AND SURVEYS UNIT.

△ *INDICATES GEODETIC CONTROL MONUMENTS USED OR SET FOR HORIZONTAL PROJECT CONTROL BY THE NCDOT LOCATION AND SURVEYS UNIT.*

PROJECT CONTROL ESTABLISHED USING GLOBAL POSITIONING SYSTEM.

DATUM DESCRIPTION

THE LOCALIZED COORDINATE SYSTEM DEVELOPED FOR THIS PROJECT IS BASED ON THE STATE PLANE COORDINATES ESTABLISHED BY NCGS FOR MONUMENT "I4400 GPS 102" WITH NAD 83 (NSRS2007) STATE PLANE GRID COORDINATES OF NORTHING: 632403.242(ft) EASTING: 946830.307(ft) ELEVATION: 2146.68(ft)
THE AVERAGE COMBINED GRID FACTOR USED ON THIS PROJECT (GROUND TO GRID) IS: 0.999777801
THE N.C. LAMBERT GRID BEARING AND LOCALIZED HORIZONTAL GROUND DISTANCE FROM "I4400 GPS 102" TO -L- STATION 13+50.00 IS N 00 57 17 W 216.7981'
ALL LINEAR DIMENSIONS ARE LOCALIZED HORIZONTAL DISTANCES
VERTICAL DATUM USED IS NAVD 88

7/8/2015
I:\5501\Roadway\Proj\I5501_ls_ld.dgn
Finance & Highways, Inc.

6/2/99

PRELIMINARY PAVEMENT SCHEDULE

C1	PROP. APPROX 1.5" ASPHALT CONCRETE SURFACE COURSE, TYPE S9.5B, AT AN AVERAGE RATE OF 168 LBS. PER SQ. YD.
C2	PROP. APPROX. 3" ASPHALT CONCRETE SURFACE COURSE, TYPE S9.5B, AT AN AVERAGE RATE OF 168 LBS. PER SQ. YD. IN EACH OF TWO LAYERS.
C3	PROP. VAR. DEPTH ASPHALT CONCRETE SURFACE COURSE, TYPE S9.5B, AT AN AVERAGE RATE OF 112 LBS. PER SQ. YD. PER 1" DEPTH. TO BE PLACED IN LAYERS NOT TO EXCEED 2" IN DEPTH.
C4	PROP. APPROX 1.5" ASPHALT CONCRETE SURFACE COURSE, TYPE S9.5C, AT AN AVERAGE RATE OF 168 LBS. PER SQ. YD.
C5	PROP. APPROX. 3" ASPHALT CONCRETE SURFACE COURSE, TYPE S9.5C, AT AN AVERAGE RATE OF 168 LBS. PER SQ. YD. IN EACH OF TWO LAYERS.
C6	PROP. VAR. DEPTH ASPHALT CONCRETE SURFACE COURSE, TYPE S9.5C, AT AN AVERAGE RATE OF 112 LBS. PER SQ. YD. PER 1" DEPTH. TO BE PLACED IN LAYERS NOT TO EXCEED 2" IN DEPTH.
D1	PROP. APPROX. 4" ASPHALT CONCRETE INTERMEDIATE COURSE, TYPE I19.0B, AT AN AVERAGE RATE OF 456 LBS. PER SQ. YD.
D2	PROP. VAR. DEPTH ASPHALT CONCRETE INTERMEDIATE COURSE, TYPE I19.0B, AT AN AVERAGE RATE OF 114 LBS. PER SQ. YD. PER 1" DEPTH, TO BE PLACED IN LAYERS NOT LESS THAN 2 1/2" IN DEPTH OR GREATER THAN 4" IN DEPTH.
D3	PROP. APPROX. 4" ASPHALT CONCRETE INTERMEDIATE COURSE, TYPE I19.0C, AT AN AVERAGE RATE OF 456 LBS. PER SQ. YD.
D4	PROP. VAR. DEPTH ASPHALT CONCRETE INTERMEDIATE COURSE, TYPE I19.0C, AT AN AVERAGE RATE OF 114 LBS. PER SQ. YD. PER 1" DEPTH, TO BE PLACED IN LAYERS NOT LESS THAN 2 1/2" IN DEPTH OR GREATER THAN 4" IN DEPTH.
E1	PROP. APPROX. 4" ASPHALT CONCRETE BASE COURSE, TYPE B25.0B, AT AN AVERAGE RATE OF 456 LBS. PER SQ. YD.
E2	PROP. APPROX. 5.5" ASPHALT CONCRETE BASE COURSE, TYPE B25.0B, AT AN AVERAGE RATE OF 627 LBS. PER SQ. YD.
E3	PROP. VAR. DEPTH ASPHALT CONCRETE BASE COURSE, TYPE B25.0B, AT AN AVERAGE RATE OF 114 LBS. PER SQ. YD. PER 1" DEPTH. TO BE PLACED IN LAYERS NOT LESS THAN 3" IN DEPTH OR GREATER THAN 5 1/2" IN DEPTH.
E4	PROP. APPROX. 5.5" ASPHALT CONCRETE BASE COURSE, TYPE B25.0C, AT AN AVERAGE RATE OF 627 LBS. PER SQ. YD.
E5	PROP. VAR. DEPTH ASPHALT CONCRETE BASE COURSE, TYPE B25.0C, AT AN AVERAGE RATE OF 114 LBS. PER SQ. YD. PER 1" DEPTH. TO BE PLACED IN LAYERS NOT LESS THAN 3" IN DEPTH OR GREATER THAN 5 1/2" IN DEPTH.
R1	2'-6" CONCRETE CURB AND GUTTER
R2	EXPRESSWAY GUTTER
R3	18" CONCRETE CURB AND GUTTER (SEE DETAIL E, SHEET 2-B)
R4	4" CONCRETE COVER
S	4" CONCRETE SIDEWALK
T	EARTH MATERIAL
U	EXISTING PAVEMENT
W	VARIABLE DEPTH ASPHALT PAVEMENT (SEE STANDARD WEDGING DETAIL ON THIS PAGE.)

NOTE: PAVEMENT EDGE SLOPES ARE 1:1 UNLESS SHOWN OTHERWISE. FOR CROSSOVER AREAS, PLEASE SEE PLANS.

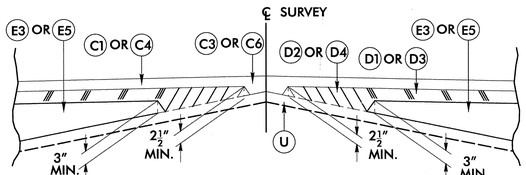

Detail Showing Method of Wedging

NOTE: –Y1A–, –Y1B– & –Y1C– HAS NO D2 OR D4 AND D1 OR D3

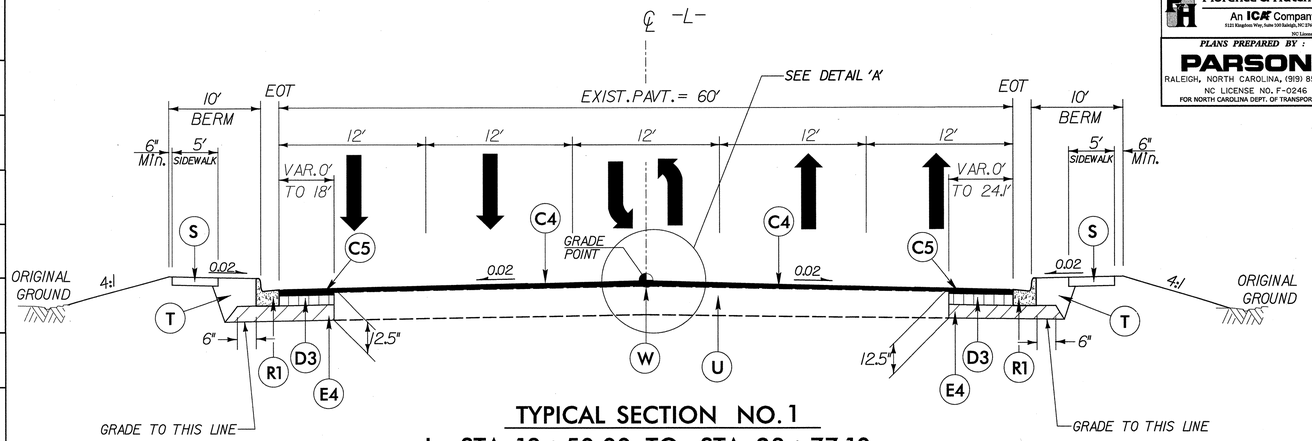

TYPICAL SECTION NO. 1

–L– STA. 13+50.00 TO STA. 23+77.10
–L– STA. 31+35.36 TO STA. 39+50.00

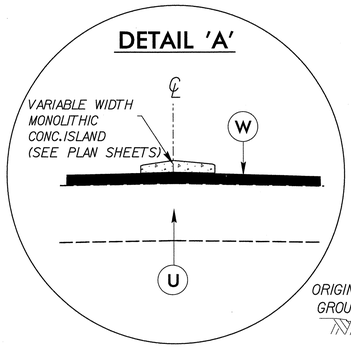

USE DETAIL 'A' IN CONJUNCTION WITH TYPICAL SECTIONS NO. 1 & 2

–L– STA. 14+55.00 TO STA. 22+75.48
–L– STA. 23+58.95 TO STA. 31+53.43
–L– STA. 32+21.94 TO STA. 38+64.25

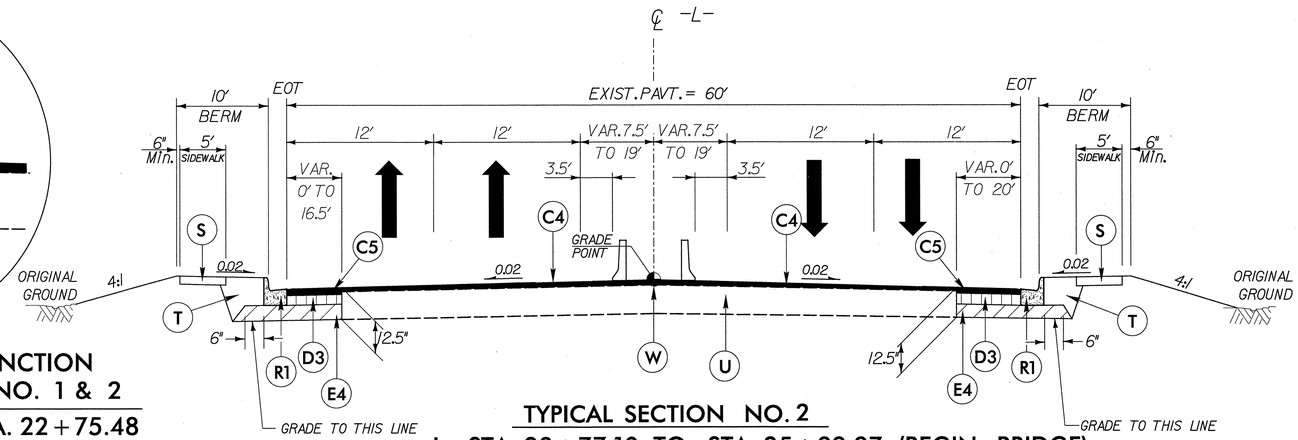

TYPICAL SECTION NO. 2

–L– STA. 23+77.10 TO STA. 25+99.97 (BEGIN BRIDGE)
–L– STA. 29+00.40 (END BRIDGE) TO STA. 31+35.36

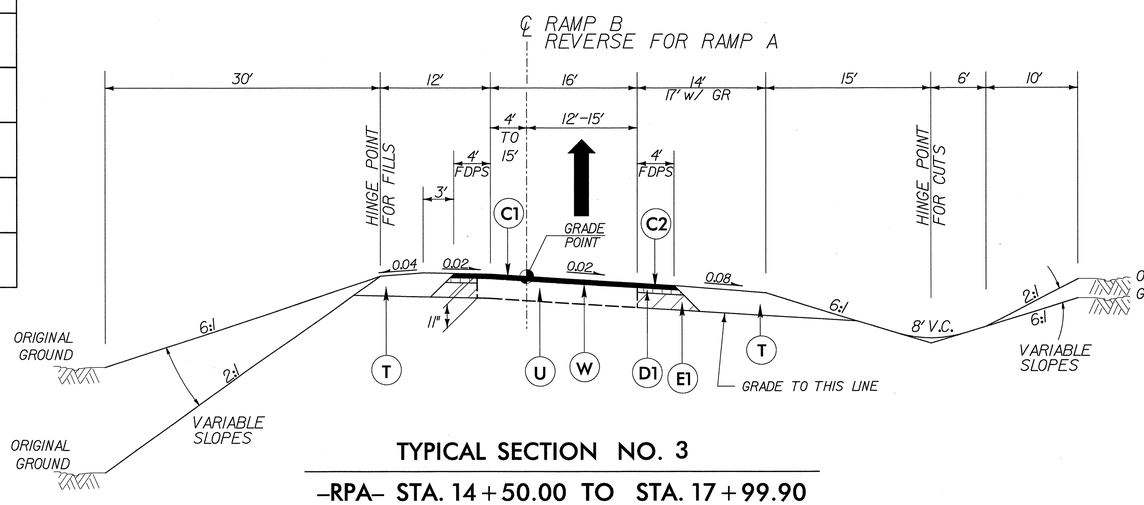

TYPICAL SECTION NO. 3

–RPA– STA. 14+50.00 TO STA. 17+99.90
–RPB– STA. 14+00.00 TO STA. 22+37.08

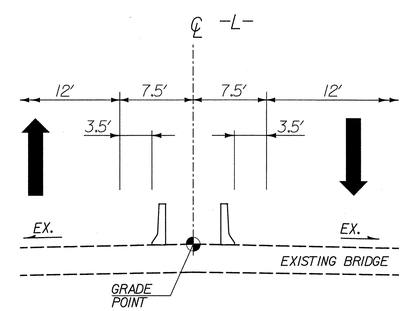

TYPICAL SECTION NO. 2A

–L– STA. 25+99.97 (BEGIN BRIDGE) TO STA. 29+00.40 (END BRIDGE)

Florence & Hutcheson
An ICA Company
5121 Kingdom Way, Suite 100 Raleigh, NC 27607
NC License No: P-0058

PLANS PREPARED BY :
PARSONS
RALEIGH, NORTH CAROLINA, (919) 854-1345
NC LICENSE NO. F-0246
FOR NORTH CAROLINA DEPT. OF TRANSPORTATION

PROJECT REFERENCE NO.	SHEET NO.
I-5501	2

ROADWAY DESIGN ENGINEER
NORTH CAROLINA PROFESSIONAL SEAL 22606 ENGINEER DAVID C. WALLER
7-29-13

PAVEMENT DESIGN ENGINEER
NORTH CAROLINA PROFESSIONAL SEAL 13368 ENGINEER JOHN-CHI CHEN
7/25/13

7/23/2013
R:\Roadway\Proj\I-5501_Rdy_typ.dgn
Florence & Hutcheson, Inc.

C1	1.5" S9.5B
C2	3" S9.5B
C3	VAR S9.5B
D1	4" I19.0B
D2	VAR I19.0B
E1	4" B25.0B
E2	5.5" B25.0B
E3	VAR B25.0B
R1	2'-6" C&G
R2	EXPRESSWAY C&G
R4	4" CONC. COVER
T	EARTH MATERIAL
U	EXIST. PAVEMENT
W	VAR WEDGING

Florence & Hutcheson
An ICF Company
1121 Kingdom Way, Suite 100 Raleigh, NC 27607
NC License No: P-0558

PLANS PREPARED BY :
PARSONS
RALEIGH, NORTH CAROLINA, (919) 854-1345
NC LICENSE NO. F-0246
FOR NORTH CAROLINA DEPT. OF TRANSPORTATION

PROJECT REFERENCE NO.	SHEET NO.
I-5501	2-A

ROADWAY DESIGN ENGINEER
NORTH CAROLINA PROFESSIONAL SEAL 22606 ENGINEER DAVID C. WALKER
6-25-13

PAVEMENT DESIGN ENGINEER
NORTH CAROLINA PROFESSIONAL SEAL 13368 ENGINEER GUO-CHI CHEN
7/25/13

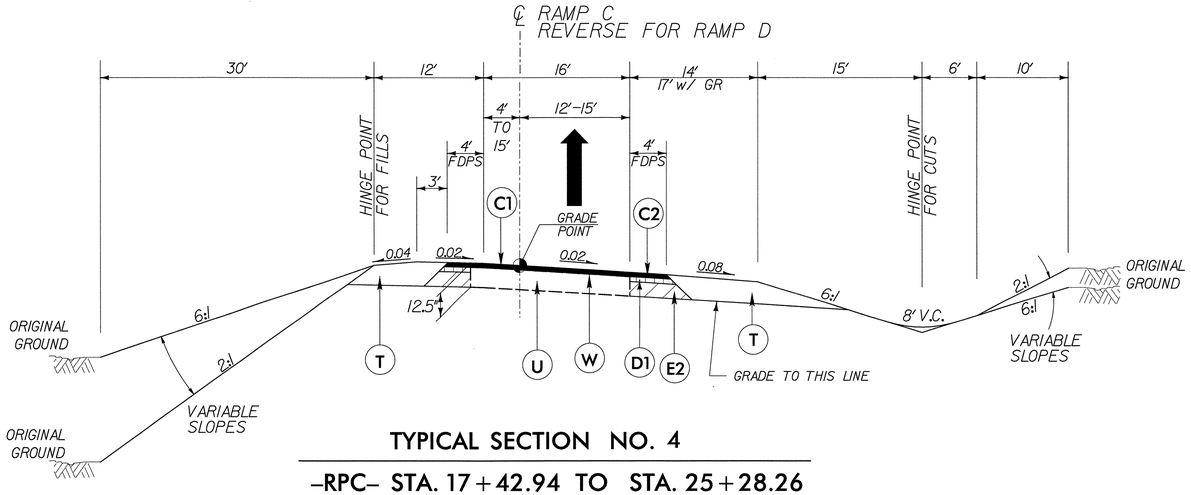

TYPICAL SECTION NO. 4

–RPC– STA. 17+42.94 TO STA. 25+28.26
–RPD– STA. 12+60.00 TO STA. 19+05.91

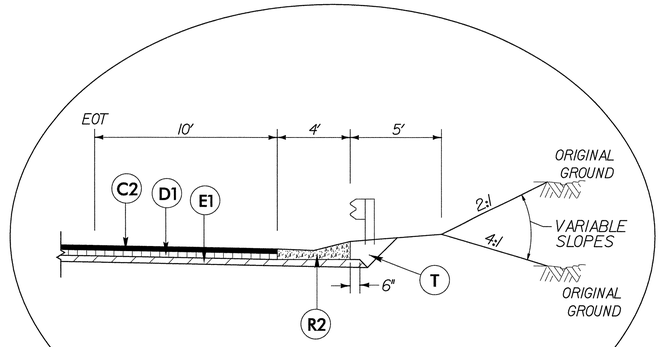

DETAIL 'B'

–RPB– STA. 14+00.00 RT. TO STA. 21+25.00 RT.

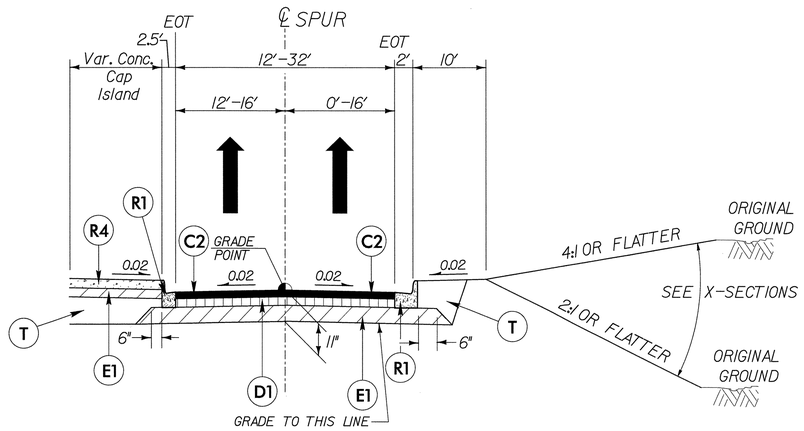

TYPICAL SECTION NO. 5

–RPA SPUR LT– STA. 10+00.00 TO STA. 11+98.96
–RPA SPUR RT– STA. 10+00.00 TO STA. 11+68.61
–RPB SPUR LT– STA. 10+00.00 TO STA. 11+87.86
–RPB SPUR RT– STA. 10+00.00 TO STA. 11+37.98

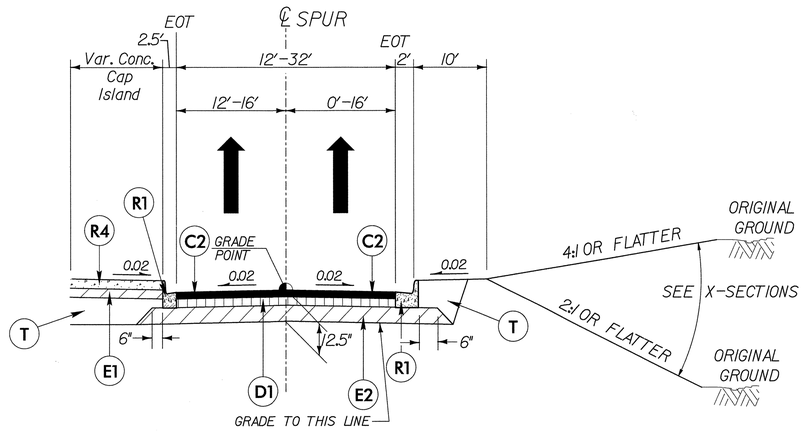

TYPICAL SECTION NO. 6

–RPC SPUR LT– STA. 10+00.00 TO STA. 12+00.10
–RPC SPUR RT– STA. 10+00.00 TO STA. 11+44.72
–RPD SPUR LT– STA. 10+00.00 TO STA. 11+86.86
–RPD SPUR RT– STA. 10+00.00 TO STA. 11+71.21

6/24/2013
R:\Roadway\Proj\I-5501_Rdy_typ.dgn
Florence & Hutcheson, Inc.

C1	1.5" S9.5B
C2	3" S9.5B
C3	VAR S9.5B
E1	4" B25.0B
E3	VAR B25.0B
R3	18" C&G
S	4" SIDEWALK
T	EARTH MATERIAL
U	EXIST. PAVEMENT
W	VAR WEDGING

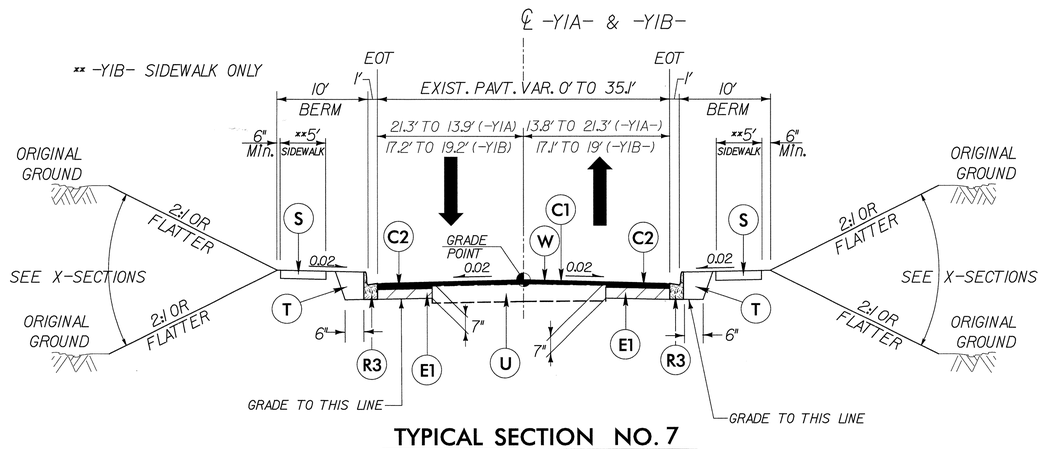

TYPICAL SECTION NO. 7

-Y1A- STA. 12+00.00 TO STA. 13+27.47
-Y1B- STA. 11+27.43 TO STA. 12+02.91

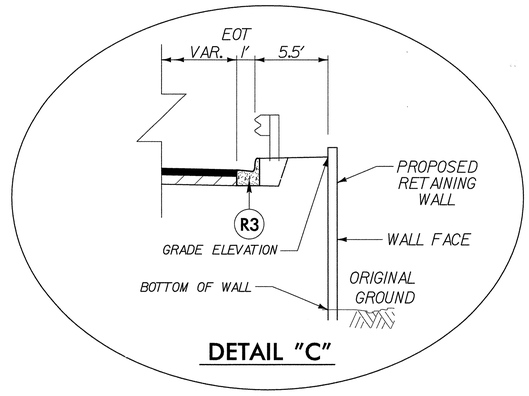

DETAIL "C"

-Y1A- STA. 12+79.32 RT. TO STA. 15+17.10 RT.

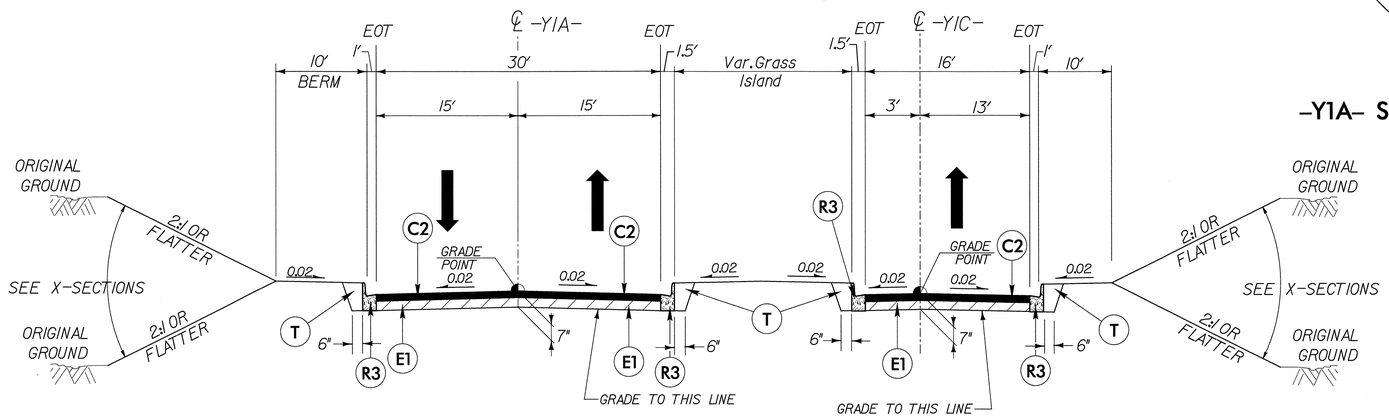

TYPICAL SECTION NO. 8

-Y1A- STA. 14+39.91 TO STA. 15+34.93
-Y1C- STA. 11+69.70 TO STA. 12+77.52

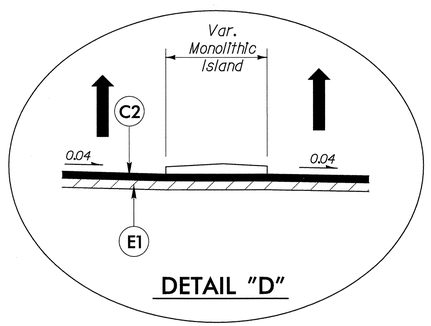

DETAIL "D"

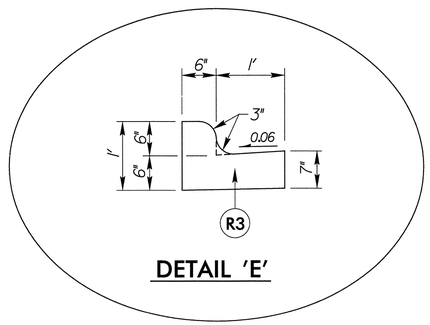

DETAIL 'E'

18" CONCRETE CURB AND GUTTER
(SEE GENERAL NOTES STD. 846.01)

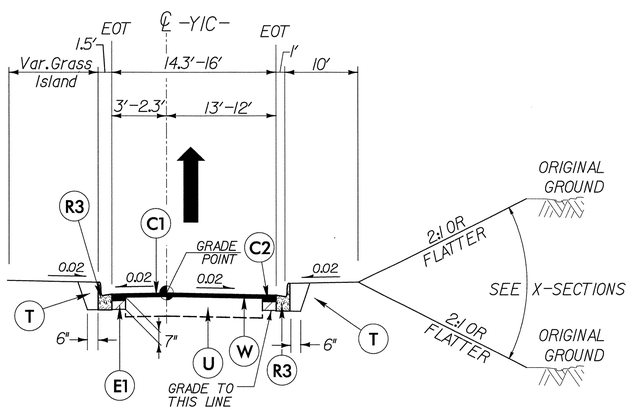

TYPICAL SECTION NO. 9

-Y1C- STA. 12+77.52 TO STA. 13+50.00

-Y1A- STA. 13+27.47 TO STA. 14+39.91

Florence & Hutcheson
An ICF Company
3121 Kingdom Way, Suite 100 Raleigh, NC 27607
NC License No: P-0558

PLANS PREPARED BY:
PARSONS
RALEIGH, NORTH CAROLINA, (919) 854-1345
NC LICENSE NO. F-0246
FOR NORTH CAROLINA DEPT. OF TRANSPORTATION

PROJECT REFERENCE NO.	SHEET NO.
I-5501	2-B

ROADWAY DESIGN ENGINEER
NORTH CAROLINA PROFESSIONAL SEAL 22606 ENGINEER DAVID C. WALLER
6-25-13

PAVEMENT DESIGN ENGINEER
NORTH CAROLINA PROFESSIONAL SEAL 13368 ENGINEER CHI CHEN
11/25/13

6/2/99

6/24/2013
R:\Roadway\Proj\I-5501 Rdy_typ.dgn
Florence & Hutcheson, Inc.

C1	1.5" S9.5B
C2	3" S9.5B
C3	VAR S9.5B
E1	4" B25.0B
E3	VAR B25.0B
R1	2'-6" C&G
R3	18" C&G
S	4" SIDEWALK
T	EARTH MATERIAL
U	EXIST. PAVEMENT
W	VAR WEDGING

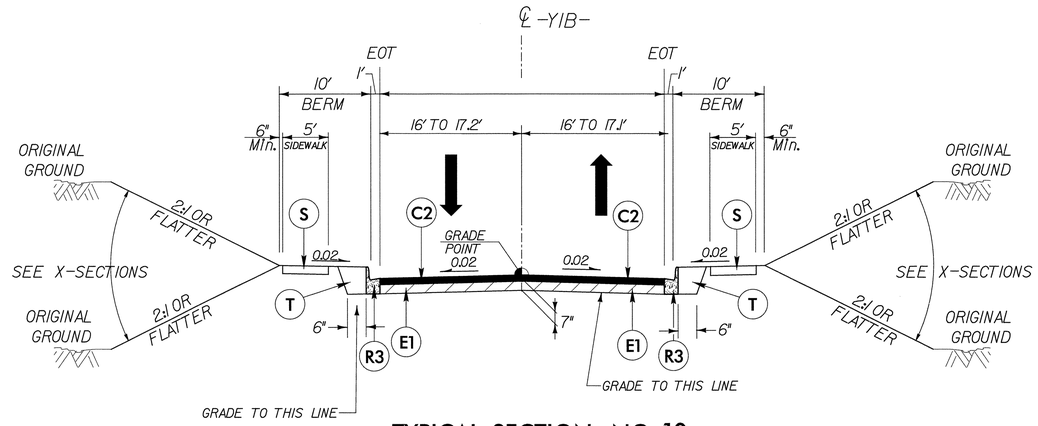

TYPICAL SECTION NO. 10
-Y1B- STA. 10+13.77 TO STA. 11+27.43

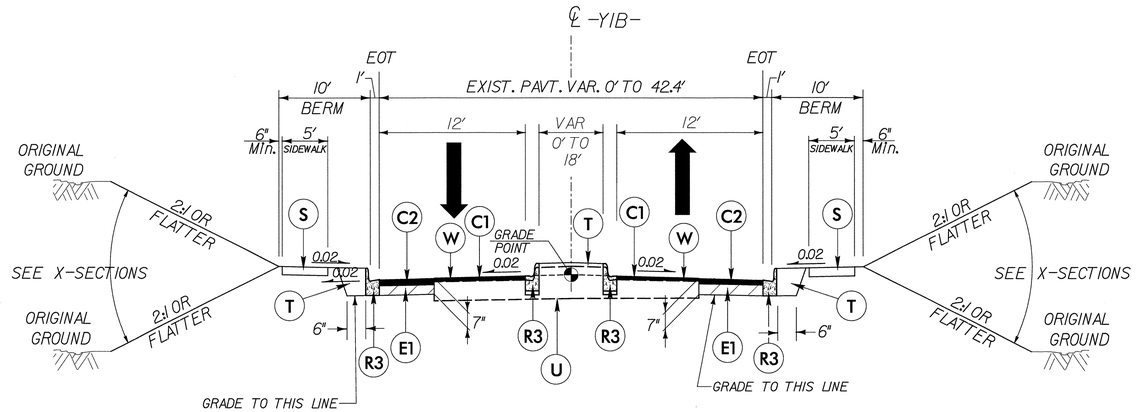

TYPICAL SECTION NO. 11
-Y1B- STA. 12+02.91 TO STA. 12+84.30

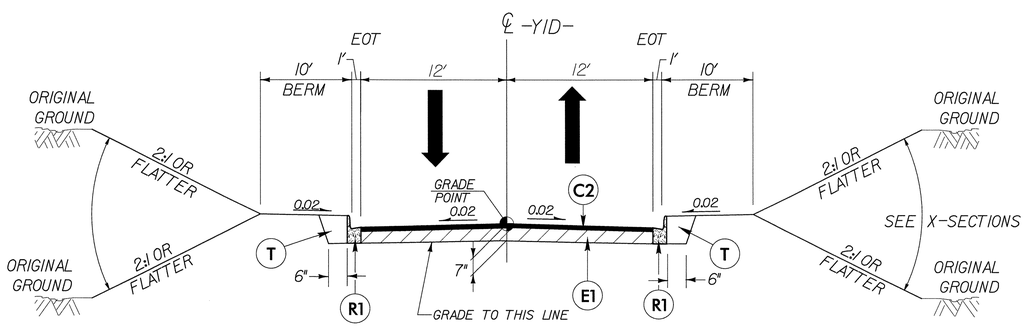

TYPICAL SECTION NO. 12
-Y1D- STA. 10+66.01 TO STA. 12+60.37

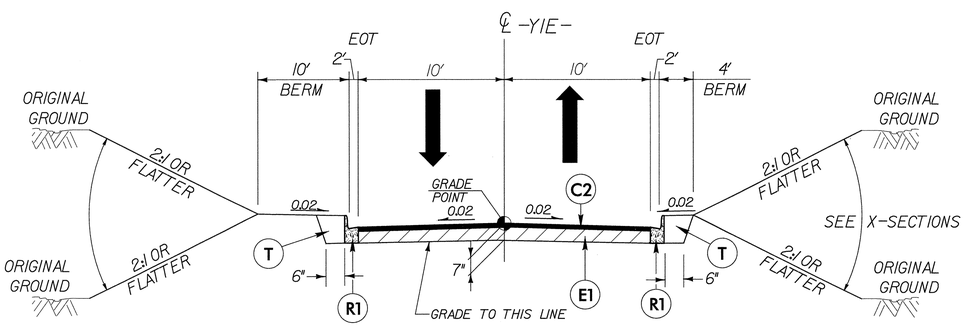

TYPICAL SECTION NO. 13
-Y1E- STA. 10+11.62 TO STA. 12+50.00

Florence & Hutcheson
An ICA Company
PLANS PREPARED BY :
PARSONS
RALEIGH, NORTH CAROLINA, (919) 854-1345
NC LICENSE NO. F-0246
FOR NORTH CAROLINA DEPT. OF TRANSPORTATION

PROJECT REFERENCE NO.	SHEET NO.
I-5501	2-C

ROADWAY DESIGN ENGINEER
NORTH CAROLINA PROFESSIONAL SEAL 22606 ENGINEER DAVID C. WALLER
6-25-13

PAVEMENT DESIGN ENGINEER
NORTH CAROLINA PROFESSIONAL SEAL 13308 ENGINEER DEN-CHI CHEN
7/25/13

6/2/99

6/24/2013
R:\Roadway\Proj\I-5501_Rdy_typ.dgn
Florence & Hutcheson, Inc.

8/17/99

Florence & Hutcheson
An ICA Company
5121 Kingdom Way, Suite 100 Raleigh, NC 27607
NC License No: P-0258

PROJECT REFERENCE NO.	SHEET NO.
I-5501	2-D
R/W SHEET NO.	

ROADWAY DESIGN ENGINEER
NORTH CAROLINA PROFESSIONAL SEAL 22606 ENGINEER DAVID C. WALLER
6-4-13

HYDRAULICS ENGINEER
NORTH CAROLINA PROFESSIONAL SEAL 24451 ENGINEER JACEY H. BAILEY
6/4/2013

DETAIL A
SPECIAL BACK OF CURB CUT DITCH
(NOT TO SCALE)

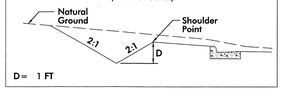

D = 1 FT

FROM STA. 14+40 TO STA. 15+40 –L– RT

DETAIL B
SPECIAL LATERAL 'V' DITCH
(Not to Scale)

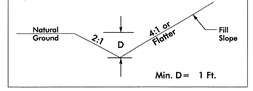

Min. D = 1 Ft.

FROM STA. 15+00 TO STA. 17+50 –L– LT
FROM STA. 18+36 TO STA. 20+50 –L– LT
FROM STA. 10+35 TO STA. 11+40 –RPB_SPUR_RT– RT
FROM STA. 21+00 TO STA. 23+00 –RPC— RT
FROM STA. 20+50 TO STA. 21+00 –RPC— RT
FROM STA. 10+54 TO STA. 11+50 –Y1B– RT

DETAIL C
TOE PROTECTION
(Not to Scale)

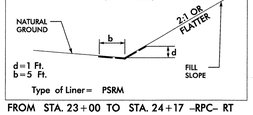

Type of Liner = PSRM

FROM STA. 23+00 TO STA. 24+17 –RPC– RT

DETAIL D
SPECIAL CUT DITCH w/HINGE
(Not to Scale)

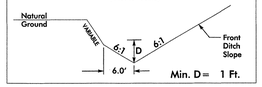

Min. D = 1 Ft.

FROM STA. 12+81 TO STA. 13+65 –RPD– LT

DETAIL E
TAIL 'V' DITCH
(Not to Scale)

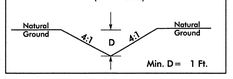

Min. D = 1 Ft.

STA. 10+50 –Y1E– LT

DETAIL I
FALSE SUMP
(Not to Scale)

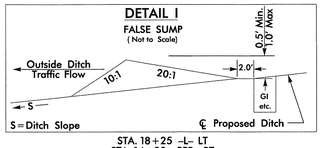

STA. 18+25 –L– LT
STA. 14+20 –RPB– RT
STA. 17+65 –RPD– LT

DETAIL III
FALSE SUMP
(Not to Scale)

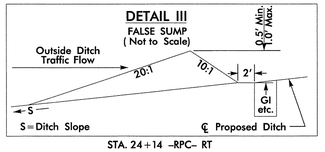

STA. 24+14 –RPC– RT

6/4/2013
R:\Drainage\I5501_hyd_drn_det.dgn
Florence & Hutcheson, Inc.

8/17/99

DDI DETAIL SHEET

Florence & Hutcheson
An ICA Company
5121 Kingdom Way, Suite 100 Raleigh, NC 27607
NC License No: F-0258

PROJECT REFERENCE NO.	SHEET NO.
I-5501	2-E
R/W SHEET NO.	

ROADWAY DESIGN ENGINEER
NORTH CAROLINA PROFESSIONAL SEAL 22606 ENGINEER DAVID C. WALLER
6-25-13

HYDRAULICS ENGINEER
NORTH CAROLINA PROFESSIONAL SEAL 24451 ENGINEER STACEY H. BAILEY
6-25-13

FOR -DDI- PLAN, SEE SHEET 5

NAD 83/NSRS 2007

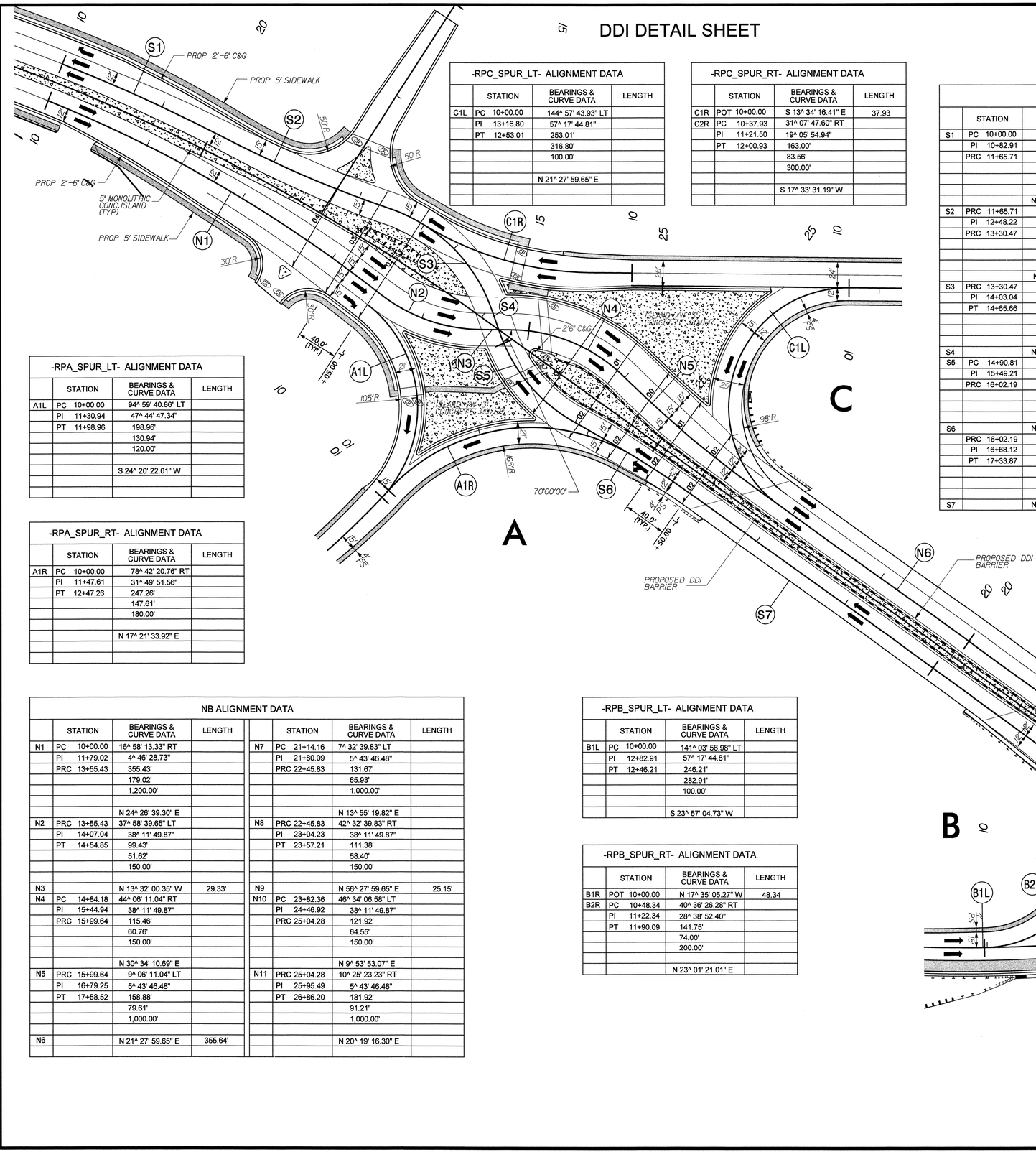

-RPC_SPUR_LT- ALIGNMENT DATA

		STATION	BEARINGS & CURVE DATA	LENGTH
C1L	PC	10+00.00	144^ 57' 43.93" LT	
	PI	13+16.80	57^ 17' 44.81"	
	PT	12+53.01	253.01'	
			316.80'	
			100.00'	
			N 21^ 27' 59.65" E	

-RPC_SPUR_RT- ALIGNMENT DATA

		STATION	BEARINGS & CURVE DATA	LENGTH
C1R	POT	10+00.00	S 13^ 34' 16.41" E	37.93
C2R	PC	10+37.93	31^ 07' 47.60" RT	
	PI	11+21.50	19^ 05' 54.94"	
	PT	12+00.93	163.00'	
			83.56'	
			300.00'	
			S 17^ 33' 31.19" W	

SB ALIGNMENT DATA

		STATION	BEARINGS & CURVE DATA	LENGTH
S1	PC	10+00.00	5^ 13' 21.10" RT	
	PI	10+82.91	3^ 09' 05.70"	
	PRC	11+65.71	165.71'	
			82.91'	
			1,818.00'	
			N 12^ 41' 47.07" E	
S2	PRC	11+65.71	7^ 52' 00.26" LT	
	PI	12+48.22	4^ 46' 28.73"	
	PRC	13+30.47	164.76'	
			82.51'	
			1,200.00'	
			N 4^ 49' 46.81" E	
S3	PRC	13+30.47	51^ 38' 12.84" RT	
	PI	14+03.04	38^ 11' 49.87"	
	PT	14+65.66	135.19'	
			72.57'	
			150.00'	
S4			N 56^ 27' 59.65" E	25.15'
S5	PC	14+90.81	42^ 32' 39.83" LT	
	PI	15+49.21	38^ 11' 49.87"	
	PRC	16+02.19	111.38'	
			58.40'	
			150.00'	
S6			N 13^ 55' 19.82" E	
	PRC	16+02.19	7^ 32' 39.83" RT	
	PI	16+68.12	5^ 43' 46.48"	
	PT	17+33.87	131.67'	
			65.93'	
			1,000.00'	
S7			N 21^ 27' 59.65" E	355.64'

		STATION	BEARINGS & CURVE DATA	LENGTH
S8	PC	20+89.50	9^ 06' 11.04" RT	
	PI	21+69.11	5^ 43' 46.48"	
	PRC	22+48.38	158.88'	
			79.61'	
			1,000.00'	
			N 30^ 34' 10.69" E	
S9	PRC	22+48.38	44^ 06' 11.04" LT	
	PI	23+09.14	38^ 11' 49.87"	
	PT	23+63.84	115.46'	
			60.76'	
			150.00'	
S10			N 13^ 32' 00.35" W	29.33'
S11	PC	23+93.17	43^ 16' 31.35" RT	
	PI	24+52.67	38^ 11' 49.87"	
	PRC	25+06.46	113.29'	
			59.50'	
			150.00'	
			N 29^ 44' 31.00" E	
S12	PRC	25+06.46	9^ 40' 51.16" LT	
	PI	25+91.15	5^ 43' 46.48"	
	PRC	26+75.43	168.96'	
			84.68'	
			1,000.00'	
			N 20^ 03' 39.84" E	
S13	PRC	26+75.43	0^ 15' 36.46" RT	
	PI	26+86.82	1^ 08' 28.04"	
	PT	26+98.22	22.80'	
			11.40'	
			5,021.00'	
			N 20^ 19' 16.30" E	

-RPA_SPUR_LT- ALIGNMENT DATA

		STATION	BEARINGS & CURVE DATA	LENGTH
A1L	PC	10+00.00	94^ 59' 40.86" LT	
	PI	11+30.94	47^ 44' 47.34"	
	PT	11+98.96	198.96'	
			130.94'	
			120.00'	
			S 24^ 20' 22.01" W	

-RPA_SPUR_RT- ALIGNMENT DATA

		STATION	BEARINGS & CURVE DATA	LENGTH
A1R	PC	10+00.00	78^ 42' 20.76" RT	
	PI	11+47.61	31^ 49' 51.56"	
	PT	12+47.26	247.26'	
			147.61'	
			180.00'	
			N 17^ 21' 33.92" E	

-RPD_SPUR_LT- ALIGNMENT DATA

		STATION	BEARINGS & CURVE DATA	LENGTH
D1L	PC	10+00.00	89^ 13' 15.05" LT	
	PI	11+18.38	47^ 44' 47.34"	
	PT	11+86.86	186.86'	
			118.38'	
			120.00'	
			N 28^ 24' 30.84" E	

-RPA_SPUR_RT- ALIGNMENT DATA

		STATION	BEARINGS & CURVE DATA	LENGTH
D1R	PC	10+00.00	81^ 44' 47.44" RT	
	PI	10+83.85	47^ 44' 47.34"	
	PT	11+71.21	171.21'	
			103.85'	
			120.00'	
			S 17^ 57' 22.11" W	

NB ALIGNMENT DATA

		STATION	BEARINGS & CURVE DATA	LENGTH
N1	PC	10+00.00	16^ 58' 13.33" RT	
	PI	11+79.02	4^ 46' 28.73"	
	PRC	13+55.43	355.43'	
			179.02'	
			1,200.00'	
			N 24^ 26' 39.30" E	
N2	PRC	13+55.43	37^ 58' 39.65" LT	
	PI	14+07.04	38^ 11' 49.87"	
	PT	14+54.85	99.43'	
			51.62'	
			150.00'	
N3			N 13^ 32' 00.35" W	29.33'
N4	PC	14+84.18	44^ 06' 11.04" RT	
	PI	15+44.94	38^ 11' 49.87"	
	PRC	15+99.64	115.46'	
			60.76'	
			150.00'	
			N 30^ 34' 10.69" E	
N5	PRC	15+99.64	9^ 06' 11.04" LT	
	PI	16+79.25	5^ 43' 46.48"	
	PT	17+58.52	158.88'	
			79.61'	
			1,000.00'	
N6			N 21^ 27' 59.65" E	355.64'

		STATION	BEARINGS & CURVE DATA	LENGTH
N7	PC	21+14.16	7^ 32' 39.83" LT	
	PI	21+80.09	5^ 43' 46.48"	
	PRC	22+45.83	131.67'	
			65.93'	
			1,000.00'	
			N 13^ 55' 19.82" E	
N8	PRC	22+45.83	42^ 32' 39.83" RT	
	PI	23+04.23	38^ 11' 49.87"	
	PT	23+57.21	111.38'	
			58.40'	
			150.00'	
N9			N 56^ 27' 59.65" E	25.15'
N10	PC	23+82.36	46^ 34' 06.58" LT	
	PI	24+46.92	38^ 11' 49.87"	
	PRC	25+04.28	121.92'	
			64.55'	
			150.00'	
			N 9^ 53' 53.07" E	
N11	PRC	25+04.28	10^ 25' 23.23" RT	
	PI	25+95.49	5^ 43' 46.48"	
	PT	26+86.20	181.92'	
			91.21'	
			1,000.00'	
			N 20^ 19' 16.30" E	

-RPB_SPUR_LT- ALIGNMENT DATA

		STATION	BEARINGS & CURVE DATA	LENGTH
B1L	PC	10+00.00	141^ 03' 56.98" LT	
	PI	12+82.91	57^ 17' 44.81"	
	PT	12+46.21	246.21'	
			282.91'	
			100.00'	
			S 23^ 57' 04.73" W	

-RPB_SPUR_RT- ALIGNMENT DATA

		STATION	BEARINGS & CURVE DATA	LENGTH
B1R	POT	10+00.00	N 17^ 35' 05.27" W	48.34
B2R	PC	10+48.34	40^ 36' 26.28" RT	
	PI	11+22.34	28^ 38' 52.40"	
	PT	11+90.09	141.75'	
			74.00'	
			200.00'	
			N 23^ 01' 21.01" E	

6/24/2013
R:\Roadway\Pro\I5501_Rdy_psh_DDI_det_2-.dgn
Florence & Hutcheson, PC

8/17/99

REVISIONS

CURVE DATA

Florence & Hutcheson
An ICA Company
5121 Kingdom Way, Suite 100 Raleigh, NC 27607
NC License No: F-0258

PROJECT REFERENCE NO.	SHEET NO.
I-5501	2-F
R/W SHEET NO.	

ROADWAY DESIGN ENGINEER
NORTH CAROLINA PROFESSIONAL ENGINEER SEAL 22606 DAVID C. WALLER
6-4-13

HYDRAULICS ENGINEER
NORTH CAROLINA PROFESSIONAL ENGINEER SEAL 24451 STACY H. BAILEY
6/4/2013

-L- ALIGNMENT DATA

	STATION	BEARINGS & CURVE DATA	LENGTH
L1	PC 10+00.00	20^ 52' 07.44" RT	
	PI 13+51.71	3^ 00' 00.00"	
	PCC 16+95.62	695.62'	
		351.71'	
		1,909.86'	
		N 2^ 33' 19.09" E	
L2	PCC 16+95.62	18^ 54' 40.56" RT	
	PI 19+95.41	3^ 10' 59.16"	
	PT 22+89.74	594.12'	
		299.78'	
		1,800.00'	
		N 21^ 27' 59.65" E	972.57'
L3	PC 32+62.31	1^ 58' 23.79" LT	
	PI 33+48.42	1^ 08' 45.30"	
	PRC 34+34.51	172.20'	
		86.11'	
		5,000.00'	
		N 19^ 29' 35.86" E	
L4	PRC 34+34.51	1^ 58' 23.79" RT	
	PI 35+20.62	1^ 08' 45.30"	
	PT 36+06.71	172.20'	
		86.11'	
		5,000.00'	
L5		N 21^ 27' 59.65" E	190.13'
	PC 37+96.83	5^ 59' 11.00" RT	
	PI 40+96.43	1^ 00' 00.00"	
	PT 43+95.47	598.64'	
		299.59'	
		5,729.58'	

NB ALIGNMENT DATA

	STATION	BEARINGS & CURVE DATA	LENGTH
N1	PC 10+00.00	16^ 58' 13.33" RT	
	PI 11+79.02	4^ 46' 28.73"	
	PRC 13+55.43	355.43'	
		179.02'	
		1,200.00'	
		N 24^ 26' 39.30" E	
N2	PRC 13+55.43	37^ 58' 39.65" LT	
	PI 14+07.04	38^ 11' 49.87"	
	PT 14+54.85	99.43'	
		51.62'	
		150.00'	
N3		N 13^ 32' 00.35" W	29.33'
N4	PC 14+84.18	44^ 06' 11.04" RT	
	PI 15+44.94	38^ 11' 49.87"	
	PRC 15+99.64	115.46'	
		60.76'	
		150.00'	
		N 30^ 34' 10.69" E	
N5	PRC 15+99.64	9^ 06' 11.04" LT	
	PI 16+79.25	5^ 43' 46.48"	
	PT 17+58.52	158.88'	
		79.61'	
		1,000.00'	
N6		N 21^ 27' 59.65" E	355.64'

	STATION	BEARINGS & CURVE DATA	LENGTH
N7	PC 21+14.16	7^ 32' 39.83" LT	
	PI 21+80.09	5^ 43' 46.48"	
	PRC 22+45.83	131.67'	
		65.93'	
		1,000.00'	
		N 13^ 55' 19.82" E	
N8	PRC 22+45.83	42^ 32' 39.83" RT	
	PI 23+04.23	38^ 11' 49.87"	
	PT 23+57.21	111.38'	
		58.40'	
		150.00'	
N9		N 56^ 27' 59.65" E	25.15'
N10	PC 23+82.36	46^ 34' 06.58" LT	
	PI 24+46.92	38^ 11' 49.87"	
	PRC 25+04.28	121.92'	
		64.55'	
		150.00'	
		N 9^ 53' 53.07" E	
N11	PRC 25+04.28	10^ 25' 23.23" RT	
	PI 25+95.49	5^ 43' 46.48"	
	PT 26+86.20	181.92'	
		91.21'	
		1,000.00'	
		N 20^ 19' 16.30" E	

SB ALIGNMENT DATA

	STATION	BEARINGS & CURVE DATA	LENGTH
S1	PC 10+00.00	5^ 13' 21.10" RT	
	PI 10+82.91	3^ 09' 05.70"	
	PRC 11+65.71	165.71'	
		82.91'	
		1,818.00'	
		N 12^ 41' 47.07" E	
S2	PRC 11+65.71	7^ 52' 00.26" LT	
	PI 12+48.22	4^ 46' 28.73"	
	PRC 13+30.47	164.76'	
		82.51'	
		1,200.00'	
		N 4^ 49' 46.81" E	
S3	PRC 13+30.47	51^ 38' 12.84" RT	
	PI 14+03.04	38^ 11' 49.87"	
	PT 14+65.66	135.19'	
		72.57'	
		150.00'	
S4		N 56^ 27' 59.65" E	25.15'
S5	PC 14+90.81	42^ 32' 39.83" LT	
	PI 15+49.21	38^ 11' 49.87"	
	PRC 16+02.19	111.38'	
		58.40'	
		150.00'	
S6		N 13^ 55' 19.82" E	
	PRC 16+02.19	7^ 32' 39.83" RT	
	PI 16+68.12	5^ 43' 46.48"	
	PT 17+33.87	131.67'	
		65.93'	
		1,000.00'	
S7		N 21^ 27' 59.65" E	355.64'

	STATION	BEARINGS & CURVE DATA	LENGTH
S8	PC 20+89.50	9^ 06' 11.04" RT	
	PI 21+69.11	5^ 43' 46.48"	
	PRC 22+48.38	158.88'	
		79.61'	
		1,000.00'	
		N 30^ 34' 10.69" E	
S9	PRC 22+48.38	44^ 06' 11.04" LT	
	PI 23+09.14	38^ 11' 49.87"	
	PT 23+63.84	115.46'	
		60.76'	
		150.00'	
S10		N 13^ 32' 00.35" W	29.33'
S11	PC 23+93.17	43^ 16' 31.35" RT	
	PI 24+52.67	38^ 11' 49.87"	
	PRC 25+06.46	113.29'	
		59.50'	
		150.00'	
		N 29^ 44' 31.00" E	
S12	PRC 25+06.46	9^ 40' 51.16" LT	
	PI 25+91.15	5^ 43' 46.48"	
	PRC 26+75.43	168.96'	
		84.68'	
		1,000.00'	
		N 20^ 03' 39.84" E	
S13	PRC 26+75.43	0^ 15' 36.46" RT	
	PI 26+86.83	1^ 08' 28.04"	
	PT 26+98.22	22.80'	
		11.40'	
		5,021.00'	
		N 20^ 19' 16.30" E	

-RPD- ALIGNMENT DATA

	STATION	BEARINGS & CURVE DATA	LENGTH
D1	TS 10+00.00	1^ 00' 29.14"	
	PIS 11+23.86	6^ 00' 00.00"	
	SC 12+00.00	200.00'	
		123.86'	
		76.36'	
		S 31^ 15' 58.56" E	
D2	SC 12+00.00	8^ 42' 54.06" LT	
	PI 12+72.77	6^ 00' 00.00"	
	CS 13+45.25	145.25'	
		72.77'	
		954.93'	
		S 39^ 58' 52.62" E	
D3	CS 13+45.25	6^ 00' 00.00" LT	
	PIS 14+11.99	200.00'	
	ST 15+45.25	133.41'	
		66.74'	
		N 19^ 23' 09.48" W	144.81'
		S 45^ 58' 52.62" E	14.25'
D4	TS 15+59.50	7^ 32' 20.11" LT	
	PIS 16+92.95	200.00'	
	SC 17+59.50	133.45'	
		66.78'	
		S 53^ 31' 12.72" E	
D5	SC 17+59.50	10^ 16' 12.60" LT	
	PI 18+27.80	7^ 32' 20.11"	
	PT 18+95.73	136.23'	
		68.30'	
		760.00'	
	POT 20+60.43	S 63^ 47' 25.33" E	164.70'

-Y1B- ALIGNMENT DATA

	STATION	BEARINGS & CURVE DATA	LENGTH
	POT 10+00.00	N 2^ 42' 53.73" W	53.77'
1B1	PC 10+53.77	16^ 40' 15.75" LT	
	PI 11+56.33	8^ 11' 06.40"	
	PT 12+57.44	203.68'	
		102.56'	
		700.00'	
		N 19^ 23' 09.48" W	144.81'
1B2	PC 14+02.25	2^ 18' 07.52" RT	
	PI 14+58.51	2^ 02' 46.60"	
	PT 15+14.75	112.50'	
		56.26'	
		2,800.00'	
		N 17^ 05' 01.96" W	139.50'

-Y1C- ALIGNMENT DATA

	STATION	BEARINGS & CURVE DATA	LENGTH
1C1	PC 10+00.00	125^ 16' 07.65" RT	
	PI 12+78.21	39^ 47' 19.45"	
	PT 13+14.83	314.83'	
		278.21'	
		144.00'	
		S 11^ 38' 07.16" E	71.26'

-Y1D- ALIGNMENT DATA

	STATION	BEARINGS & CURVE DATA	LENGTH
		N 71^ 38' 56.64" E	66.01'
Y1D-1			
	PC 10+66.01	35^ 13' 48.63" LT	
	PI 11+04.11	47^ 44' 47.34"	
	PCC 11+39.80	73.79'	
		38.10'	
		120.00'	
Y1D-2			
		N 36^ 25' 08.01" E	
	PCC 11+39.80	47^ 04' 55.21" RT	
	PI 11+92.08	47^ 44' 47.34"	
	PT 12+38.41	98.61'	
		52.28'	
		120.00'	
		N 83^ 30' 03.23" E	21.96'

-Y1E- ALIGNMENT DATA

	STATION	BEARINGS & CURVE DATA	LENGTH
		N 3^ 12' 03.36" E	89.53'
1E-1	PC 10+89.53	22^ 20' 16.37" RT	
	PI 11+58.64	16^ 22' 12.80"	
	PT 12+25.99	136.45'	
		69.10'	
		350.00'	
		N 25^ 32' 19.73" E	47.81'

-RPA- ALIGNMENT DATA

	STATION	BEARINGS & CURVE DATA	LENGTH
A1	TS 10+00.00	4^ 00' 00.00" LT	
	PIS 11+33.37	200.00'	
	SC 12+00.00	133.37'	
		66.70'	
		N 33^ 28' 33.35" W	
A2	SC 12+00.00	6^ 15' 07.00" LT	
	PI 12+78.23	4^ 00' 00.00"	
	CS 13+56.30	156.30'	
		78.23'	
		1,432.39'	
		N 39^ 43' 40.35" W	
A3	CS 13+56.30	4^ 00' 00.00" LT	
	PIS 14+23.00	200.00'	
	ST 15+56.30	133.37'	
		66.70'	
		N 43^ 43' 40.35" W	9.92'
A4	PC 15+66.22	31^ 09' 05.14" LT	
	PI 17+78.07	7^ 32' 20.11"	
	PT 19+79.43	413.21'	
		211.85'	
		760.00'	
		N 74^ 52' 45.49" W	

-RPA_SPUR_LT- ALIGNMENT DATA

	STATION	BEARINGS & CURVE DATA	LENGTH
A1L	PC 10+00.00	94^ 59' 40.86" LT	
	PI 11+30.94	47^ 44' 47.34"	
	PT 11+98.96	198.96'	
		130.94'	
		120.00'	
		S 24^ 20' 22.01" W	

-RPA_SPUR_RT- ALIGNMENT DATA

	STATION	BEARINGS & CURVE DATA	LENGTH
A1R	PC 10+00.00	78^ 42' 20.76" RT	
	PI 11+47.61	31^ 49' 51.56"	
	PT 12+47.26	247.26'	
		147.61'	
		180.00'	
		N 17^ 21' 33.92" E	

-RPB_SPUR_LT- ALIGNMENT DATA

	STATION	BEARINGS & CURVE DATA	LENGTH
B1L	PC 10+00.00	141^ 03' 56.98" LT	
	PI 12+82.91	57^ 17' 44.81"	
	PT 12+46.21	246.21'	
		282.91'	
		100.00'	
		S 23^ 57' 04.73" W	

-RPB_SPUR_RT- ALIGNMENT DATA

	STATION	BEARINGS & CURVE DATA	LENGTH
B1R	POT 10+00.00	N 17^ 35' 05.27" W	48.34'
B2R	PC 10+48.34	40^ 36' 26.28" RT	
	PI 11+22.34	28^ 38' 52.40"	
	PT 11+90.09	141.75'	
		74.00'	
		200.00'	
		N 23^ 01' 21.01" E	

-RPB- ALIGNMENT DATA

	STATION	BEARINGS & CURVE DATA	LENGTH
B1	TS 10+00.00	5^ 30' 00.00" RT	
	PIS 11+33.40	200.00'	
	SC 12+00.00	133.40'	
		66.73'	
		N 23^ 58' 33.35" W	
B2	SC 12+00.00	12^ 09' 10.04" RT	
	PI 13+10.90	5^ 30' 00.00"	
	CS 14+20.96	220.96'	
		110.90'	
		1,041.74'	
		N 11^ 49' 23.31" W	
B3	CS 14+20.96	5^ 30' 00.00" RT	
	PIS 14+87.69	200.00'	
	ST 16+20.96	133.40'	
		66.73'	
		N 6^ 19' 23.31" W	215.90'
B4	TS 18+36.86	2^ 44' 00.88" LT	
	PIS 19+20.21	125.00'	
	SC 19+61.86	83.34'	
		41.68'	
		N 9^ 03' 24.18" W	
B5	SC 19+61.86	5^ 47' 40.21" LT	
	PI 20+28.16	4^ 22' 25.41"	
	CS 20+94.35	132.48'	
		66.30'	
		1,310.00'	
		N 14^ 51' 04.40" W	
B6	CS 20+94.35	2^ 44' 00.88" LT	
	PIS 21+36.02	125.00'	
	ST 22+19.35	83.34'	
		41.68'	
		N 17^ 35' 05.27" W	17.73'
B7	PC 22+37.08	39^ 05' 45.94" LT	
	PI 23+08.09	28^ 38' 52.40"	
	PT 23+73.55	136.47'	
		71.01'	
		200.00'	
		N 56^ 40' 51.21" W	

-RPC_SPUR_LT- ALIGNMENT DATA

	STATION	BEARINGS & CURVE DATA	LENGTH
C1L	PC 10+00.00	144^ 57' 43.93" LT	
	PI 13+48.47	52^ 05' 13.46"	
	PT 12+78.31	278.31'	
		348.47'	
		110.00'	
		N 21^ 27' 59.65" E	

-RPC_SPUR_RT- ALIGNMENT DATA

	STATION	BEARINGS & CURVE DATA	LENGTH
C1R	POT 10+00.00	S 13^ 34' 16.41" E	37.93'
C2R	PC 10+37.93	31^ 07' 47.60" RT	
	PI 11+21.50	19^ 05' 54.94"	
	PT 12+00.93	163.00'	
		83.56'	
		300.00'	
		S 17^ 33' 31.19" W	

-RPD_SPUR_LT- ALIGNMENT DATA

	STATION	BEARINGS & CURVE DATA	LENGTH
D1L	PC 10+00.00	89^ 13' 15.05" LT	
	PI 11+18.38	47^ 44' 47.34"	
	PT 11+86.86	186.86'	
		118.38'	
		120.00'	
		N 28^ 24' 30.84" E	

-RPC- ALIGNMENT DATA

	STATION	BEARINGS & CURVE DATA	LENGTH
	POT 10+00.00	S 23^ 35' 00.35" E	105.97'
C1	PC 11+05.97	9^ 00' 44.20" RT	
	PI 15+57.54	0^ 59' 59.73"	
	PT 20+07.26	901.29'	
		451.58'	
		5,730.00'	
		S 14^ 34' 16.15" E	
C2	CS 20+07.26	0^ 59' 59.73"	
	PIS 20+73.93	200.00'	
	ST 22+07.26	133.34'	
		66.67'	
		S 13^ 34' 16.41" E	321.00'
C3	PC 25+28.26	37^ 43' 42.20" LT	
	PI 25+96.60	28^ 38' 52.40"	
	PT 26+59.96	131.70'	
		68.34'	
		200.00'	
		S 51^ 17' 58.61" E	

-RPD_SPUR_RT- ALIGNMENT DATA

	STATION	BEARINGS & CURVE DATA	LENGTH
D1R	PC 10+00.00	81^ 44' 47.44" RT	
	PI 11+03.85	47^ 44' 47.34"	
	PT 11+71.21	171.21'	
		103.85'	
		120.00'	
		S 17^ 57' 22.11" W	

-Y1- ALIGNMENT DATA

	STATION	BEARINGS & CURVE DATA	LENGTH
		S 87^ 46' 54.89" E	103.85'
Y1-1			
	PC 11+03.85	5^ 22' 39.41" RT	
	PI 11+32.03	9^ 32' 57.47"	
	PCC 11+60.17	56.31'	
		28.18'	
		600.00'	
Y1-2			
		S 82^ 24' 15.48" E	
	PCC 11+60.17	5^ 43' 05.18" LT	
	PI 11+85.14	11^ 27' 32.96"	
	PT 12+10.07	49.90'	
		24.97'	
		500.00'	
		S 88^ 07' 20.67" E	103.87'

-Y1A- ALIGNMENT DATA

	STATION	BEARINGS & CURVE DATA	LENGTH
1A1	PC 10+00.00	31^ 48' 59.50" RT	
	PI 10+57.00	28^ 38' 52.40"	
	PCC 11+11.06	111.06'	
		57.00'	
		200.00'	
		N 15^ 20' 03.35" E	
1A2	PCC 11+11.06	37^ 15' 11.39" RT	
	PI 12+12.85	18^ 58' 19.60"	
	PCC 13+07.42	196.36'	
		101.79'	
		302.00'	
		N 52^ 35' 14.74" E	972.57'
1A3	PCC 13+07.42	51^ 57' 53.38" RT	
	PI 13+80.52	38^ 11' 49.87"	
	PT 14+43.46	136.04'	
		73.10'	
		150.00'	
		S 75^ 26' 51.88" E	125.16'

8/17/99

Florence & Hutcheson
An ICA Company
5121 Kingdom Way, Suite 100 Raleigh, NC 27607
NC License No: P-0258

PROJECT REFERENCE NO.	SHEET NO.
I-5501	2-G
R/W SHEET NO.	

ROADWAY DESIGN ENGINEER
NORTH CAROLINA PROFESSIONAL SEAL 22606 ENGINEER DAVID C. WALLER
6-4-13

HYDRAULICS ENGINEER
NORTH CAROLINA PROFESSIONAL SEAL 24451 ENGINEER TRACEY H. BAILEY
6/4/2013

CROSS–SECTION /SHEAR POINT LAYOUT

NAD 83/NSRS 2007

REVISIONS

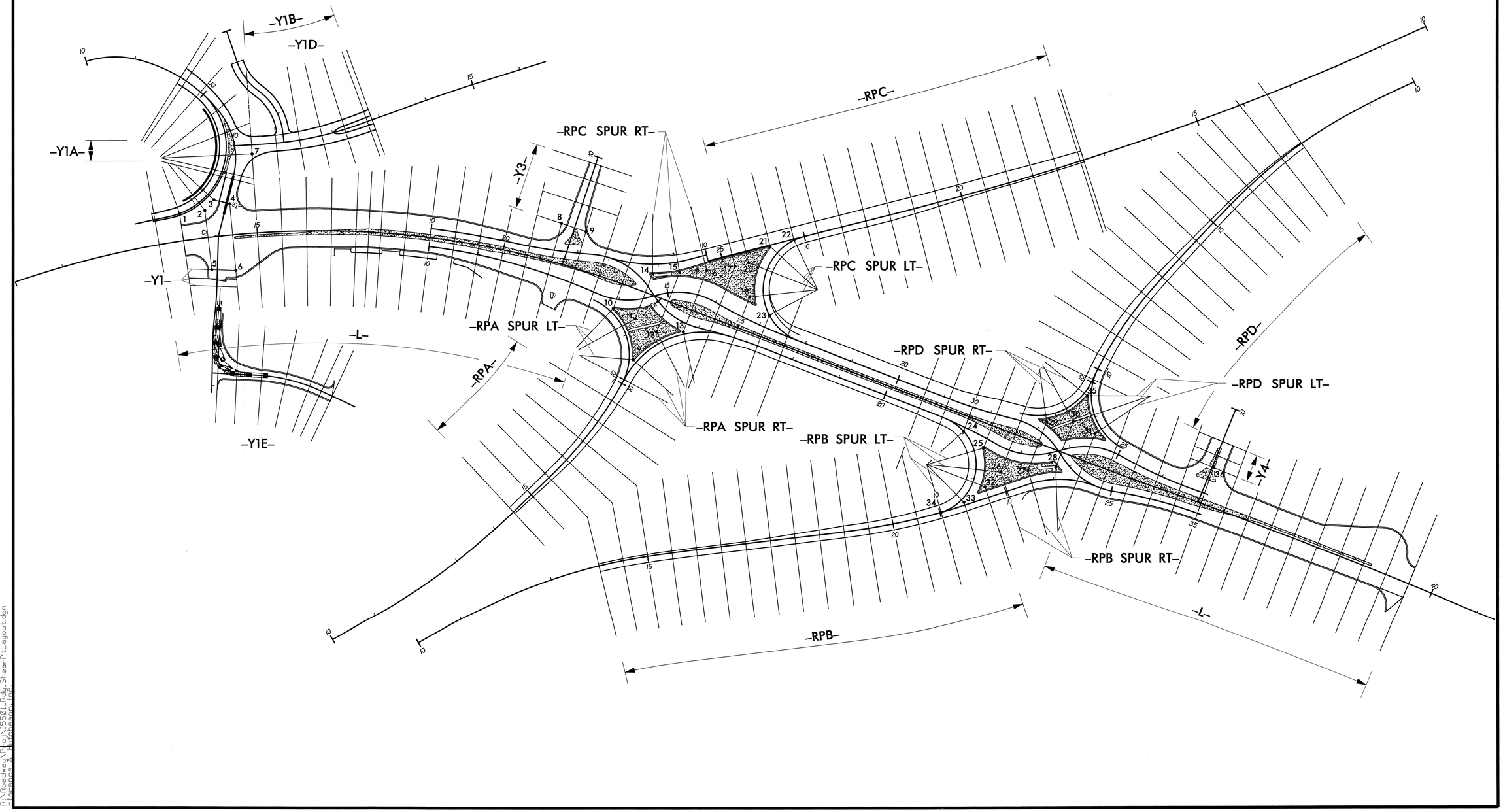

6/4/2013
R:\Roadway\Proj\I5501_Rdy_Shear-Pt_Layout.dgn
Florence & Hutcheson, PA

5/14/99

PROJECT REFERENCE NO.	SHEET NO.
I-5501	2-H

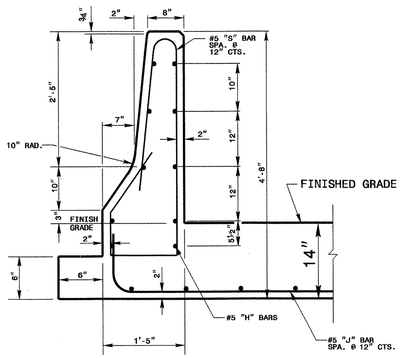

DETAIL X-X

CROSS SECTIONAL VIEW

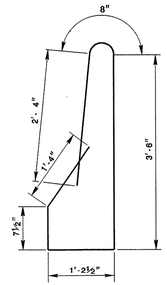

S - BARS

#5 BAR

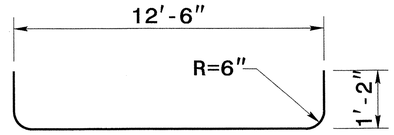

J - BARS

#5 BAR

GENERAL NOTES:

-CLASS 'B' CONCRETE TO BE USED THROUGHOUT.

-REINFORCING STEEL TO BE CUT, BENT OR RELOCATED TO POSITION PIPE AS DIRECTED BY THE ENGINEER.

-ALL EXPOSED CORNERS TO BE CHAMFERED 1".

-MAINTAIN 2" MINIMUM CONCRETE COVERAGE ON ALL STEEL.

BILL OF MATERIAL

CODE	BAR#	LENGTH	LBS/FT.	QTY.	LBS
H	5	19'-8"	1.043	968	19,856
J	5	14'-6"	1.043	924	13,974
S	5	9'-8"	1.043	924	9,317
				TOTAL WEIGHT STEEL	43,147
MASONARY QUANTITIES					
CLASS "B" CONCRETE					
SINGLE FACE BARRIER					
AND MEDIAN					695 CU.YDS.
TOTAL CLASS "B" CONCRETE					695 CU.YDS.

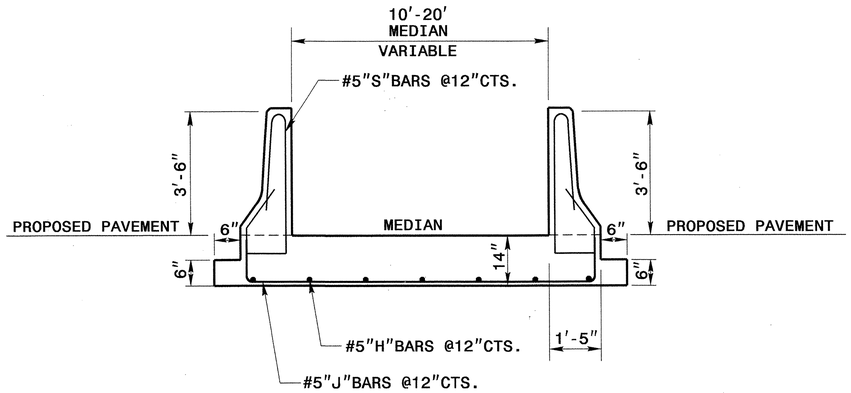

CROSS SECTIONAL VIEW

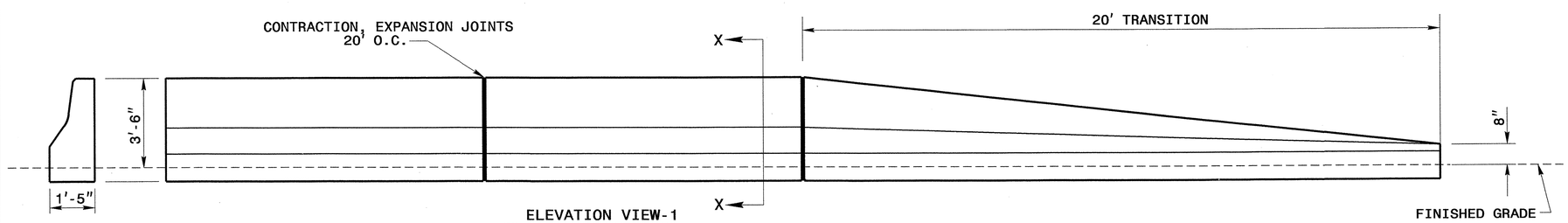

ELEVATION VIEW-1

CONTRACT STANDARDS
STANDARDS AND SPECIAL DESIGN
Office 919-250-4128 FAX 919-250-4119

DDI BARRIER

ORIGINAL BY: _____ DATE: _____
MODIFIED BY: nbritt DATE: 4-26-13
CHECKED BY: DATE: 4/30/13
FILE SPEC.: c:\mails\nbritt\english\interstate\i5501 bridge barrier.dgn

$$$$SYSTIME$$$$
$$$$SYSDATE$$$$
$$$$USERNAME$$$$

8.17.99

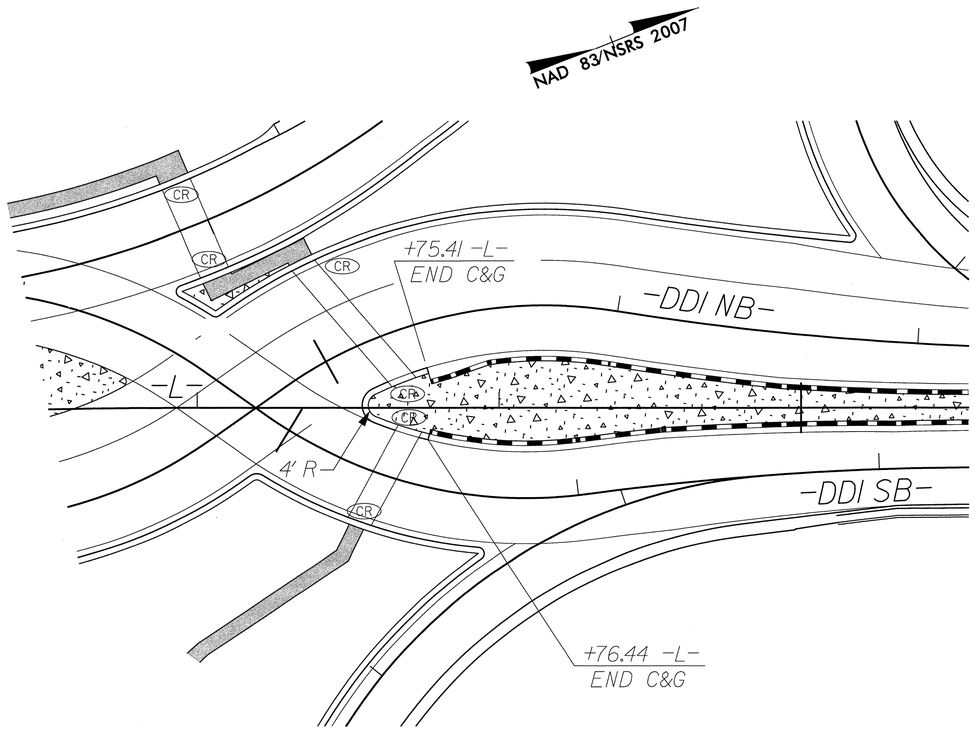

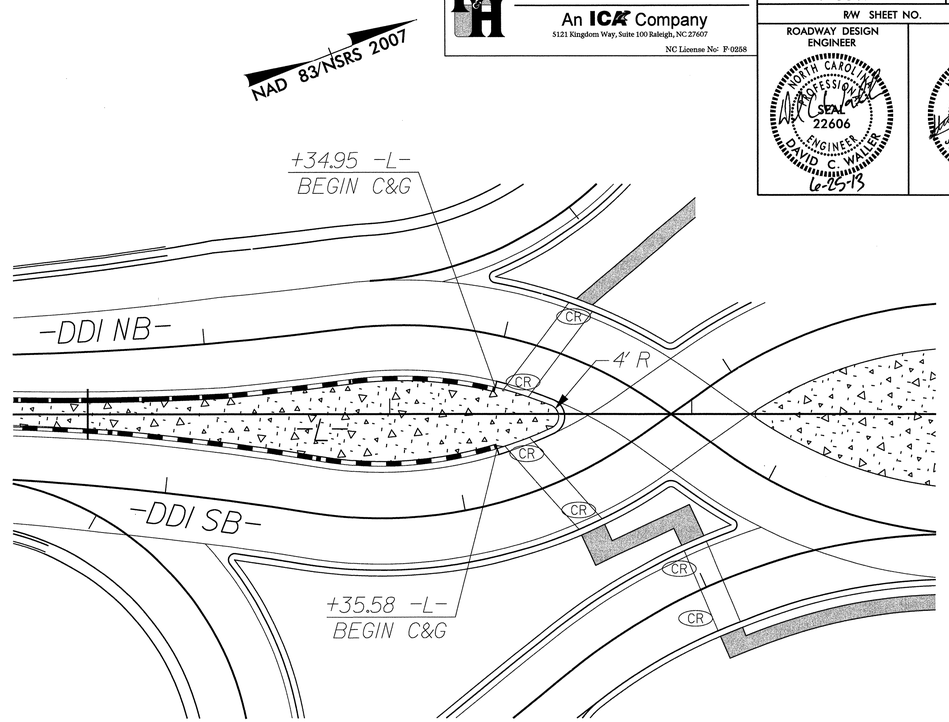

Florence & Hutcheson
An ICA Company
5121 Kingdom Way, Suite 100 Raleigh, NC 27607
NC License No: F-0258

PROJECT REFERENCE NO.	SHEET NO.
I-5501	2-I
R/W SHEET NO.	

ROADWAY DESIGN ENGINEER

NORTH CAROLINA PROFESSIONAL SEAL 22606 ENGINEER DAVID C. WALLER

6-25-13

HYDRAULICS ENGINEER

NORTH CAROLINA PROFESSIONAL SEAL 24451 ENGINEER STACEY H. BAILEY

6-25-13

INTERSECTION DETAILS

6/25/2013
R:\Roadway\Proj\I-5501_Rdy_intersection_det_21.dgn
Florence & Hutcheson, Inc.

PROJECT REFERENCE NO.	SHEET NO.
I-5501	2-J

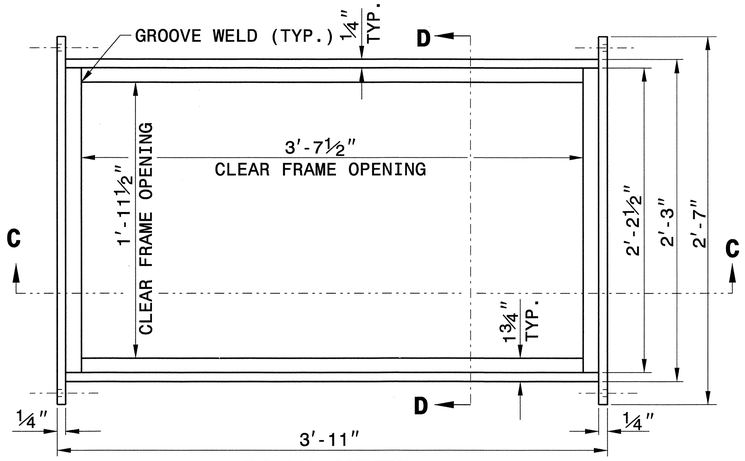

PLAN VIEW

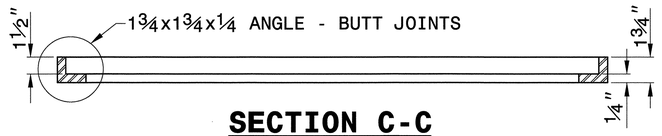

SECTION C-C
FRAME

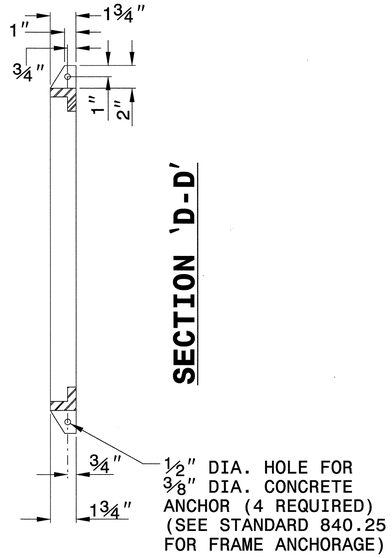

SECTION 'D-D'

NOTES:

1. HOT DIP GALVANIZE FRAME AND GRATE IN ACCORDANCE WITH ASTM DESIGNATION A-123 AND AASHTO M-111.
2. GRATE SHOULD MEET HS-20 LOADING.
3. PROVIDE STEEL CONFORMING TO THE REQUIREMENTS OF A.S.T.M. DESIGNATION A-36.
4. WELD IN ACCORDANCE WITH THE ANSI/AASHTO/AWS D1.5 WELDING CODE. SEAL WELD ALL CONNECTIONS ALONG TOP AND BOTTOM HORIZONTAL SEAMS OF CONNECTIONS IN ADDITION TO ANY REQUIRED STRUCTURAL WELDS.
5. SEE DETAIL DRAWING 840D25 FOR FRAME ANCHORAGE.

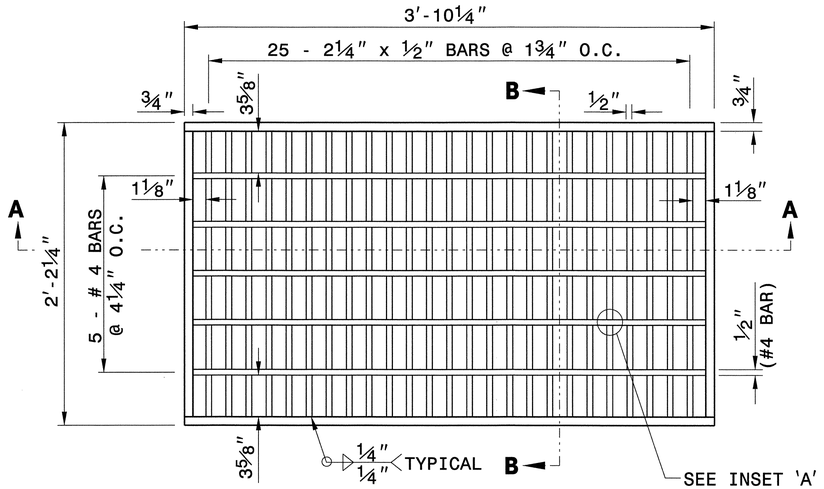

PLAN VIEW

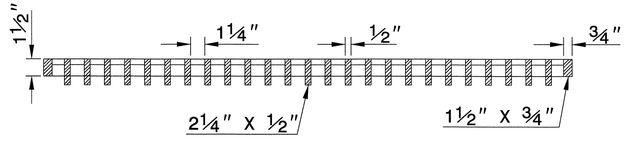

SECTION A-A
GRATE

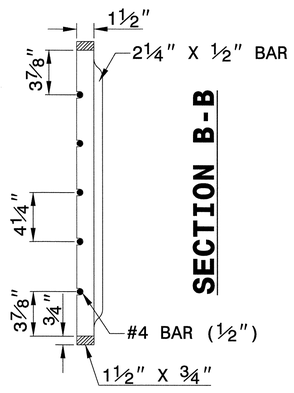

SECTION B-B

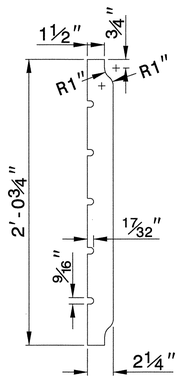

DETAIL OF BEARING BAR

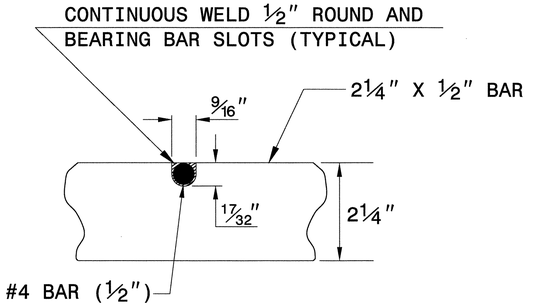

INSET 'A'

(17/32" X 9/16" NOTCH IN 2¼" X ½" BAR)

REVISED 10-10-02
FOR HS-20 LOADING

NORTH CAROLINA PROFESSIONAL SEAL 022966 ENGINEER E.E. WARD 7/12/13

CONTRACT STANDARDS AND DEVELOPMENT UNIT
Office 919-707-6950 FAX 919-250-4119

BICYCLE SAFE STEEL GRATE AND FRAME

ORIGINAL BY: E.E. WARD DATE: 11-12-98
MODIFIED BY: E.E. WARD DATE: 10-10-02
CHECKED BY: DATE:
FILE SPEC.: /usr/stand/details/bicyclesafe.dgn

$$$$SYSTIME$$$$
$$$$USERNAME$$$$

PROJECT REFERENCE NO.	SHEET NO.
I-5501	2-K

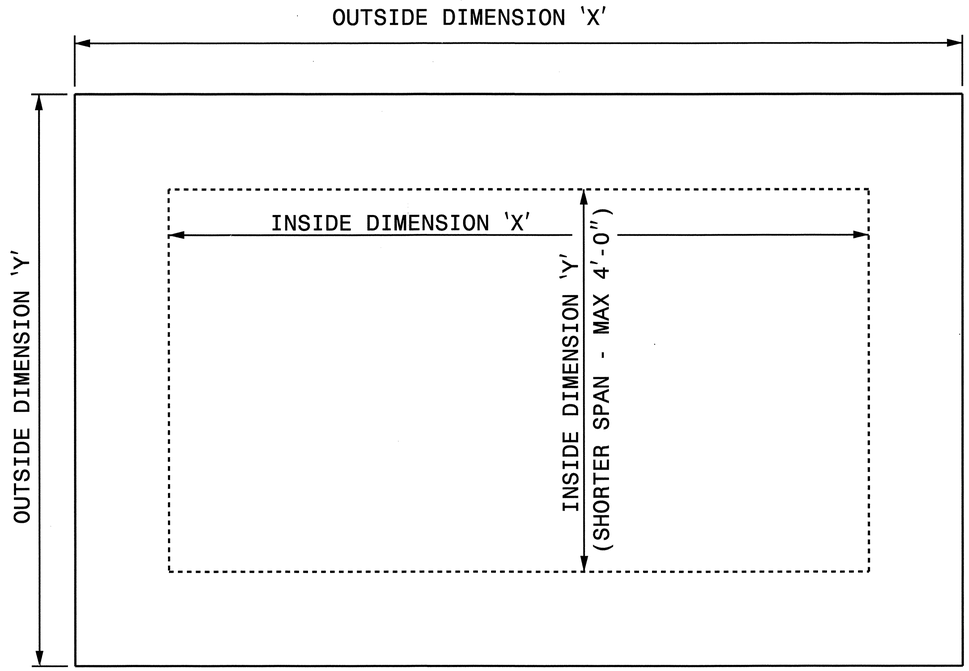

PLAN VIEWS

GENERAL NOTES:

-USE GRADE A36 STEEL
-STEEL COVERS ARE FOR TEMPORARY USE DURING PHASE CONSTRUCTION.
-FILL SHALL BE PLACED DIRECTLY OVER THE STEEL PLATES.
-SEE ROADWAY PLANS AND PROVISIONS FOR LOCATIONS
-QUANTITES TO BE PAID FOR AT THE UNIT PRICE BID PER EACH.

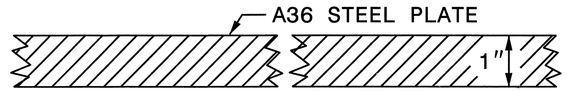

SECTION VIEW OF STEEL TOP PLATE

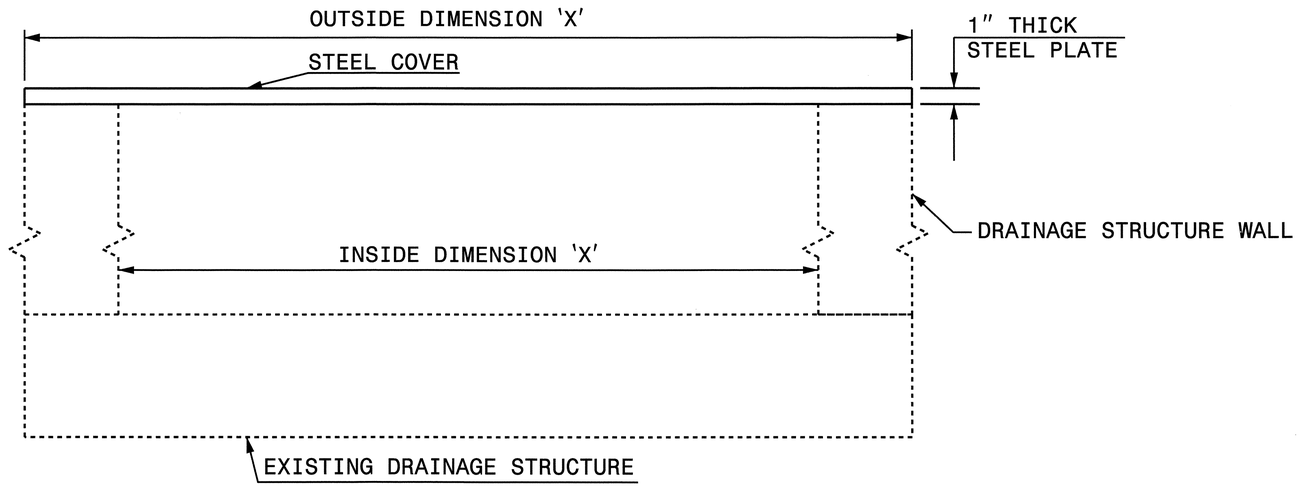

ELEVATION VIEWS

$$$$$$SYSTIME$$$$$$
$$$$$$USERNAME$$$$
$$$$$$DGN$$$$$$$$$$

NORTH CAROLINA PROFESSIONAL SEAL 022966 ENGINEER JOHN S. HOWINGTON 7/12/13

CONTRACT STANDARDS AND DEVELOPMENT UNIT
Office 919-707-6950 FAX 919-250-4119

DETAIL OF TEMPORARY 1" STEEL COVER OVER DRAINAGE STRUCTURE

ORIGINAL BY: E.E. WARD DATE: 2-2-98
MODIFIED BY: _____ DATE: _____
CHECKED BY: _____ DATE: _____
FILE SPEC.: eric:/usr/details/metric/stand/stlcvr2.dgn

PROJECT REFERENCE NO.	SHEET NO.
I-5501	2-L

STATE OF
NORTH CAROLINA
DEPT. OF TRANSPORTATION
DIVISION OF HIGHWAYS
RALEIGH, N.C.

ENGLISH DETAIL DRAWING FOR GUARDRAIL ANCHOR UNIT TYPE B-77 SHOP CURVED

SHEET 1 OF 2 — B-77SC

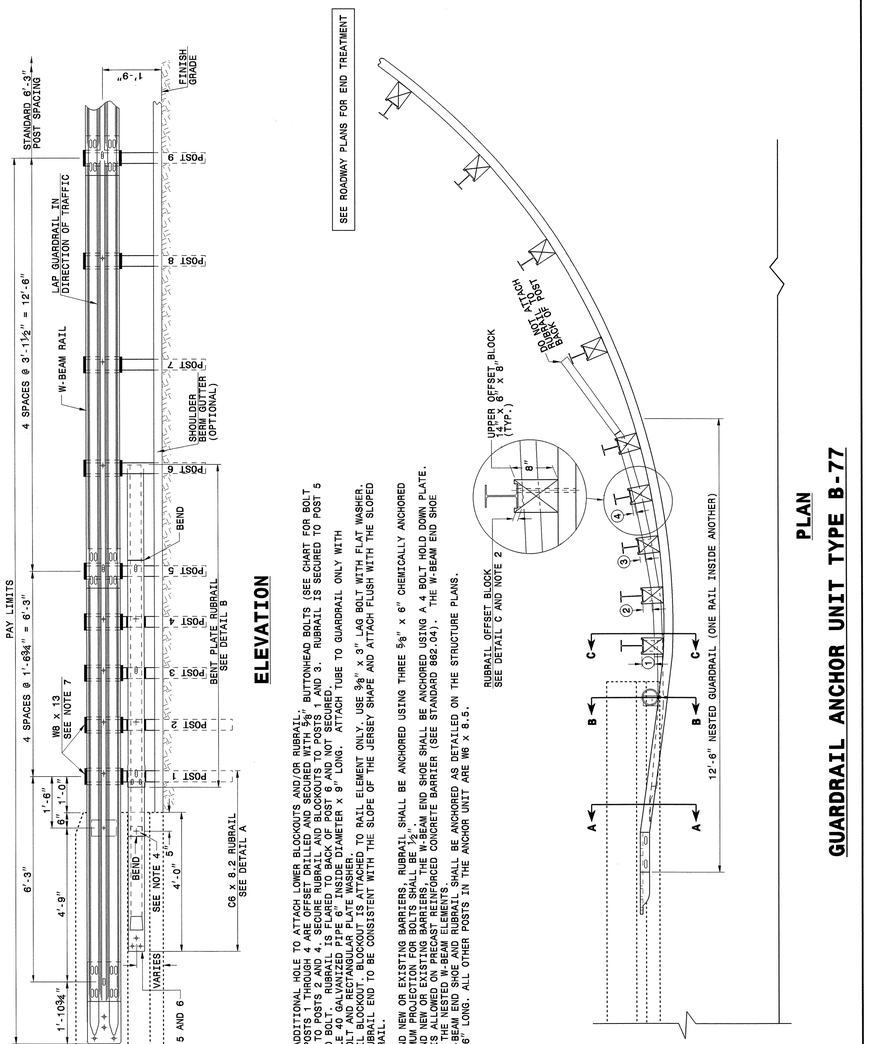

ELEVATION

GENERAL NOTES:
1) POSTS 1 THROUGH 5 REQUIRE AN ADDITIONAL HOLE TO ATTACH LOWER BLOCKOUTS AND/OR RUBRAIL.
2) RUBRAIL BLOCKOUTS LOCATED ON POSTS 1 THROUGH 4 ARE OFFSET DRILLED AND SECURED WITH ⅝" BUTTONHEAD BOLTS. RUBRAIL BLOCKOUTS LOCATED ON POSTS 1 AND 2 ARE SLOPED TO MATCH THE SLOPE OF THE JERSEY SHAPE AND ATTACH FLUSH WITH THE SLOPED RUBRAIL. RUBRAIL BLOCKOUTS LOCATED ON POSTS 3 AND 4 ARE SLOTTED TO ATTACH TUBE TO GUARDRAIL ONLY WITH ⅝" BUTTONHEAD BOLT. RUBRAIL IS FLARED TO BACK OF POST 6 AND NOT SECURED.
3) STEEL SPACER TUBE IS A SCHEDULE 40 GALVANIZED PIPE 6" INSIDE DIAMETER x 9" LONG. ATTACH TUBE WITH A ⅝" x 1¼ LONG BUTTONHEAD BOLT, WASHER, AND NUT. USE ⅝" x 3" LAG BOLT WITH FLAT WASHER. SEE DETAIL E FOR LAG BOLT DETAIL. BLOCKOUT IS ATTACHED TO RAIL ELEMENT ONLY. USE ⅝" x 3" LONG BUTTONHEAD BOLT AND RECTANGULAR PLATE WASHER.
4) SEE DETAIL D FOR SLOPED RUBRAIL BLOCKOUT DETAILS. THE W-BEAM END SHOE SHALL BE ANCHORED AS DETAILED ON THE STANDARD 862.04). THE W-BEAM END SHOE IS ALLOWED ON PRECAST REINFORCED CONCRETE BARRIER (SEE STANDARD 862.01).
5) SHOP FABRICATE THE C6 X 8.2 RUBRAIL END TO BE CONSISTENT WITH THE SLOPE OF THE JERSEY SHAPE AND ATTACH FLUSH WITH THE SLOPED TOE OF THE BARRIER OR BRIDGE RAIL.
6) ANCHORAGE:
   (a) AT EXISTING BRIDGE RAIL AND NEW OR EXISTING BARRIERS, RUBRAIL SHALL BE ANCHORED USING THREE ⅝" x 6" CHEMICALLY ANCHORED BOLTS WITH WASHERS. MAXIMUM PROJECTION FOR BOLTS SHALL BE ½". RUBRAIL SHALL BE ANCHORED AS DETAILED ON THE STANDARD 862.04). THE W-BEAM END SHOE IS ALLOWED ON PRECAST REINFORCED CONCRETE BARRIER (SEE STANDARD 862.01).
   (b) AT EXISTING BRIDGE RAIL AND NEW OR EXISTING BARRIERS, THE W-BEAM END SHOE SHALL BE ANCHORED USING A 4 BOLT HOLD DOWN PLATE. A 4 BOLT INSERT ASSEMBLY IS ALLOWED ON PRECAST REINFORCED CONCRETE BARRIER (SEE STANDARD 862.04). THE W-BEAM END SHOE SHALL BE ANCHORED AS DETAILED ON THE STANDARD 862.04).
   (c) AT NEW BRIDGE RAIL, THE W-BEAM END SHOE AND RUBRAIL SHALL BE ANCHORED AS DETAILED ON THE STRUCTURE PLANS.
7) POSTS 1 AND 2 ARE W6 x 13, 7'-6" LONG. ALL OTHER POSTS IN THE ANCHOR UNIT ARE W6 x 8.5.

PLAN

GUARDRAIL ANCHOR UNIT TYPE B-77

STATE OF
NORTH CAROLINA
DEPT. OF TRANSPORTATION
DIVISION OF HIGHWAYS
RALEIGH, N.C.

ENGLISH DETAIL DRAWING FOR GUARDRAIL ANCHOR UNIT TYPE B-77 SHOP CURVED

SHEET 2 OF 2 — B-77SC

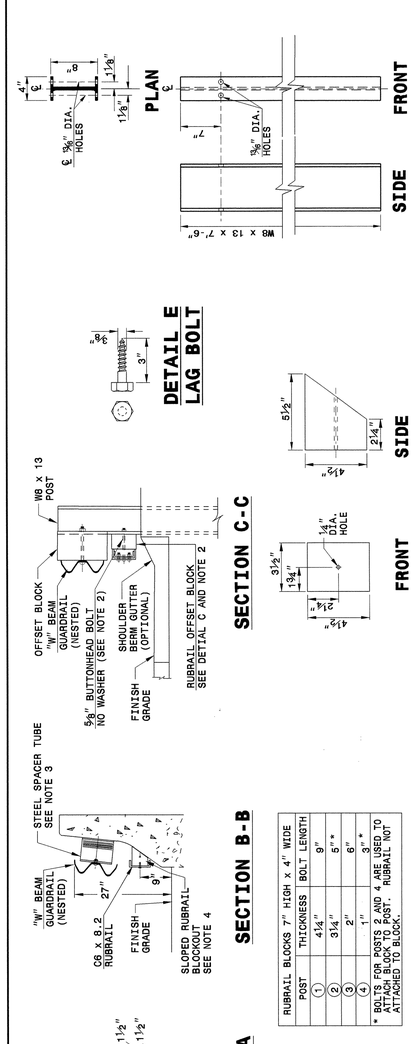

STATE OF
NORTH CAROLINA
DEPT. OF TRANSPORTATION
DIVISION OF HIGHWAYS
RALEIGH, N.C.

ENGLISH DETAIL DRAWING FOR GUARDRAIL ANCHOR UNIT TYPE B-77 SHOP CURVED

SHEET 1 OF 2 — B-77SC

STATE OF
NORTH CAROLINA
DEPT. OF TRANSPORTATION
DIVISION OF HIGHWAYS
RALEIGH, N.C.

ENGLISH DETAIL DRAWING FOR GUARDRAIL ANCHOR UNIT TYPE B-77 SHOP CURVED

SHEET 2 OF 2 — B-77SC

NORTH CAROLINA PROFESSIONAL SEAL 022966 ENGINEER JOHN C. HORTON 7/12/13

CONTRACT STANDARDS AND DEVELOPMENT UNIT
Office 919-707-6950 FAX 919-250-4119

SEE PLATE FOR TITLE

ORIGINAL BY: E.E. WARD DATE: 06-04-04
MODIFIED BY: DATE:
CHECKED BY: DATE: 6/20/13
FILE SPEC.: misc\guardrail\NCHRP350approved\B-77.dgn

\$\$\$\$\$\$SYSTIME\$\$\$\$\$\$
\$\$\$\$\$\$USERNAME\$\$\$\$\$\$

PROJECT REFERENCE NO.	SHEET NO.
I-5501	2-M

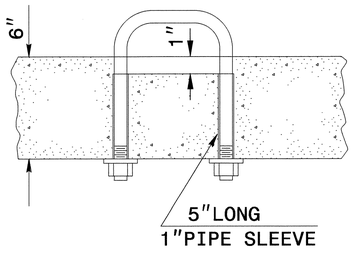

PARTIAL SECTION

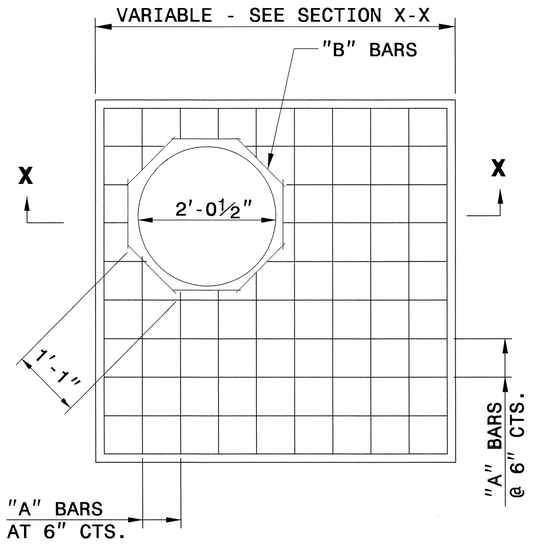

PLAN

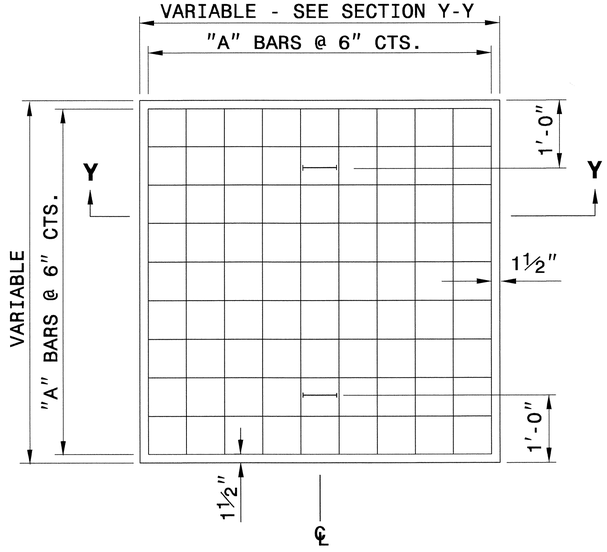

PLAN

GENERAL NOTES:

CONSTRUCT IN ACCORDANCE WITH SECTION 859 OF THE STANDARD SPECIFICATIONS.

THE DIMENSIONS FOR THE EXISTING BOXES ARE APPROXIMATE AND MAY VARY SLIGHTLY.

DETAIL INTENDED FOR NON-TRAFFIC BEARING DRAINAGE STRUCTURES.

BILL OF MATERIALS

REINFORCING STEEL

CODE	SIZE	QTY.	LENGTH	REINF. STEEL LBS.
A	#4	20	4'-6"	60.12
B	#4	8	1'-1"	5.79
TOTAL				65.91 *

MASONRY	CU YDS
TOP SLAB CONCRETE CLASS "B"	.4326 *
BRICK MASONRY PER FT HT (MIN)	.4111

★ NOTE:
QUANTITIES BASED ON 3'-6" X 3'-6" DRAINAGE STRUCTURE. ADJUST QUANTITIES FOR LARGER STRUCTURES AND MANHOLE CONSTRUCTION.

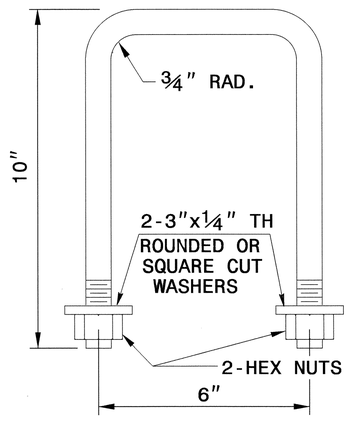

DETAIL OF HANDLE

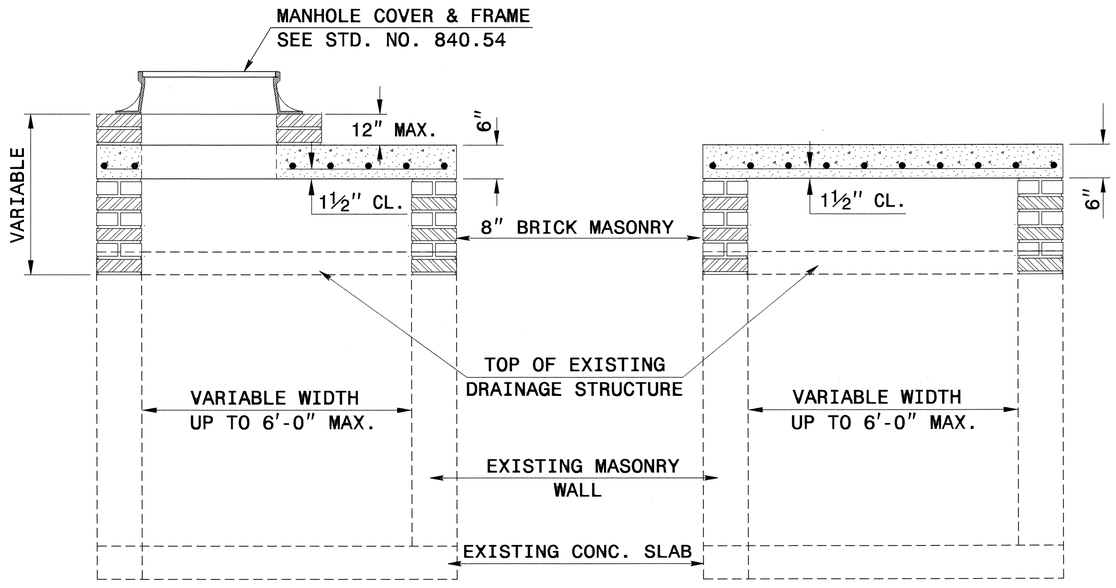

SECTION X-X

SECTION Y-Y

CONTRACT STANDARDS AND DEVELOPMENT UNIT
Office 919-707-6950 FAX 919-250-4119

DETAIL TO CONVERT EXISTING DROP INLET OR CATCH BASIN TO JUNCTION BOX (MANHOLE OPTIONAL)

ORIGINAL BY: T.S.S. DATE: NOV.1997
MODIFIED BY: T.S.S. DATE: FEB.2000
CHECKED BY: DATE: 6/20/13
FILE SPEC.: d6174:/usr/details/stand/boxtojbe.dgn

DOCUMENT NOT CONSIDERED FINAL UNLESS ALL SIGNATURES COMPLETED

PROJECT REFERENCE NO.	SHEET NO.
I-5501	2-N

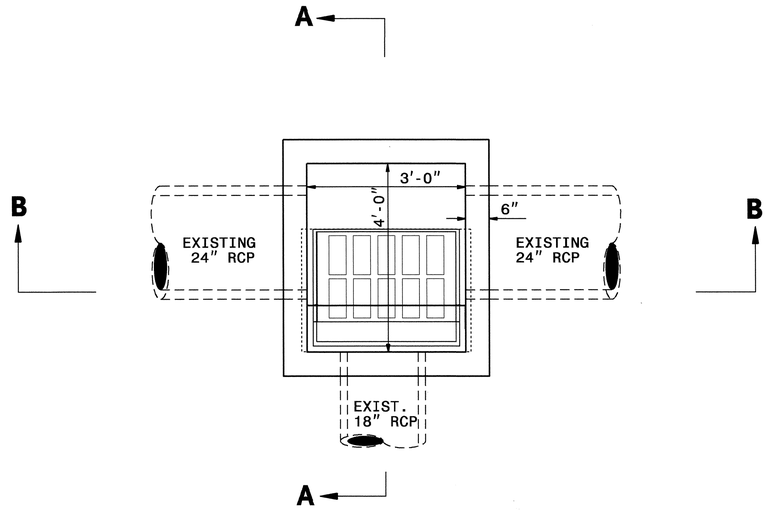

PLAN

GENERAL NOTES:

1. USE CLASS "B" CONCRETE THROUGHOUT.
2. CONSTRUCT CONCRETE BOX IN ACCORDANCE WITH SECTION 825 OF THE STANDARD SPECIFICATIONS.
3. USE FORMS TOR CONSTRUCT THE BOTTOM SLAB.
4. ADJUST LENGTH OF STEEL BARS AS NEEDED TO COMPENSATE FOR PIPES AND FRAME AND GRATE OPENINGS.
5. REINFORCING STEEL SHALL CONFORM TO ASTM A 615, GRADE 400.
6. CUT OR BEND STEEL BARS AS NEEDED TO PROVIDE 2" CLEARANCE.
7. LOCATE FRAME AND GRATE AS FIELD CONDITIONS DICTATE AND AS DIRECTED BY THE ENGINEER.
8. DIMENSIONS OF CATCH BASIN MAY BE ADSUSTED AS DIRECTED BY THE ENGINEER.
9. INSTALL STEPS FOR ALL STRUCTURES OVER 3' IN HEIGHT. SEE STANDARD. 840.66

BILL OF MATERIALS

BAR	QTY	SIZE	LENGTH	WEIGHT
A	15	#5	3'-8"	57
B	8	#5	4'-8"	39
C	8	#5	2'-0"	17
TOTAL REINF. STEEL (lbs.)				113
TOTAL CONC. CU. YDS.				1.7

NO DEDUCTIONS HAVE BEEN MADE TO ACCOMMODATE PIPES OR CATCH BASIN OPENING.

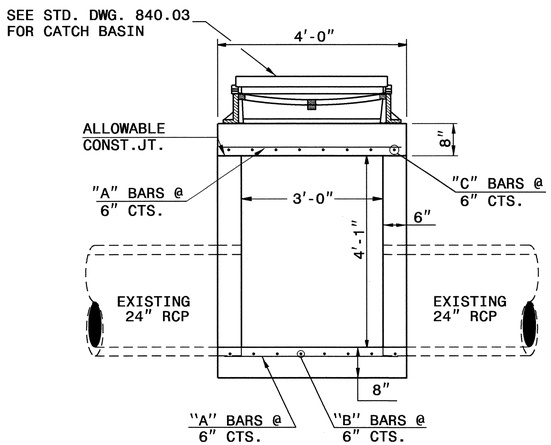

SECTION B-B

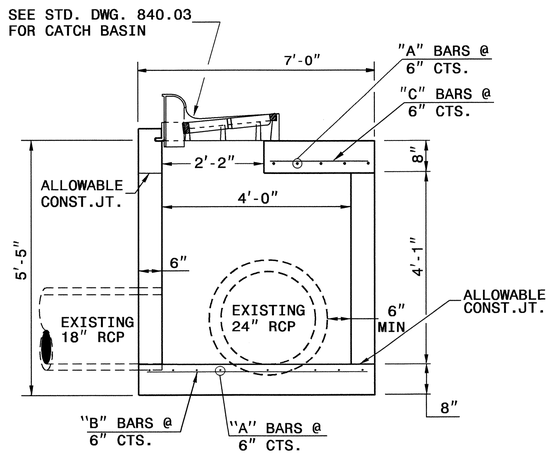

SECTION A-A

NORTH CAROLINA PROFESSIONAL SEAL 022986 ENGINEER JOHN C. HOUSTON 7/12/13

CONTRACTS STANDARDS AND DEVELOPMENT UNIT
Office 919-707-6950 FAX 919-250-4119

DETAIL OF SPECIAL CATCH BASIN

ORIGINAL BY: T.S.SPELL DATE: MAY 22, 2008
MODIFIED BY: K.A.KEMPF DATE: MAY 15, 2012
CHECKED BY: DATE: 4/26/13
FILE SPEC.: s/details/kkempf/english/cb36rcpoffset.dgn

26-JUN-2013 11:28
S:\Contracts\Contracts\Special Details\kkempf\english\cb36rcpoffset.dgn
$$$$USERNAME$$$$

COMPUTED BY: DBG DATE: 5/10/2013

CHECKED BY: JMP DATE: 5/10/2013

PROJECT NO.	SHEET NO.
I-5501	3-A

NORTH CAROLINA DEPARTMENT OF TRANSPORTATION
DIVISION OF HIGHWAYS

NC10404

Note: Invert Elevations indicated are for Bid Purposes only and shall not be used for project construction stakeout.

LIST OF PIPES, ENDWALLS, ETC. (FOR PIPES 48 INCHES & UNDER)

STATION	LOCATION (LT, RT, OR CL)'	STRUCTURE NO. FROM	STRUCTURE NO. TO	TOP ELEVATION	INVERT ELEVATION	INVERT ELEVATION	SLOPE CRITICAL
Y1 10+95	LT	0401		2153.2			
		0401	0402		2150.4	2150.1	
Y1 10+67	LT	0402		2153.3			
		0402	0403		2150.1	2148.5	
Y1 10+67	RT	0403		2151.8			
		0403	0404		2148.5	2147.3	
Y1 10+87	RT	0404		2152.8			
L 19+93	RT	0405					
L 19+40	RT	0406		2170.6			
		0406	0407		2163.9	2163.8	
L 19+28	RT	0407		2170.7			
L 18+09	RT	0408		2165.4			
L 18+36	LT	0409		2164.5			
		0409	0410		2161.5	2161.2	
L 18+34	LT	0410		2161.7			
L 18+19	CL	0411		2168.2	2160.7		
L 18+11	RT	0412		2160.4			
L 17+04	RT	0413					
L 17+11	RT	0414		2163.0			
Y1E 12+74	LT	0458		2166.5			
		0458	0415		2160.4	2159.0	
Y1E 12+00	LT	0415		2164.0			
L 16+11	RT	0416					
L 16+13	RT	0417		2159.8	2154.8		
L 17+26	LT	0419	0420		2156.2	2155.3	
L 15+62	LT	0420		2156.6			
L 15+39	RT	0421		2157.2			
		0421	0422		2154.0	2153.6	
L 15+39	RT	0422		2157.8			
L 15+00	CL	0423		2157.6			
		0423	0424		2154.4	2153.2	
L 14+65	CL	0424		2156.6			
		0424	0425		2153.2	2151.0	
L 14+65	RT	0425		2154.2			
L 13+35	RT	0426		2150.8			
Y3 11+73	LT	0427		2175.4			
		0427	0428		2174.2	2172.8	
		0434	0435		2157.5	2154.3	
Y1B 10+48	LT	0435		2157.8			
		0435	0438		2154.3	2152.4	
Y1B 11+27	LT	0436		2158.9			
	LT	0436	0437		2157.4	2156.0	
Y1D 12+14	RT	0437		2159.8			
Y1B 10+48		0438		2156.5			
Y1A 13+49	LT	0439		2153.6			
		0439	0441		2153.6	2151.5	
Y3 13+98	CL	0440		2156.4			
		0440	0441		2153.1	2152.2	
Y3 13+47	CL	0441		2155.5			
		0441	0442		2151.5	2150.6	
	CL	0442		2155.2			
Y1A 12+04	RT	0443		2149.4			
SHEET TOTALS							

STATION	FROM	TO	SIDE DRAIN PIPE (RCP, CSP, CAAP, HDPE, or PVC) 12"	15"	18"	24"	30"	36"	42"	48"	DO NOT USE RCP	DO NOT USE CSP	DO NOT USE CAAP	DO NOT USE HDPE	C.S. PIPE 12" (.064)	15" (.064)	18" (.064)	24" (.064)	30" (.079)	36" (.079)	42" (.109)	48" (.109)	R.C. PIPE CLASS III 12"	15"	18"	24"	30"	36"	42"	48"	R.C. PIPE CLASS IV 12"	15"	18"	24"	30"	36"	42"	48"
Y1 10+95	0401																																					
	0401	0402																														32						
Y1 10+67	0402																																					
	0402	0403																														48						
Y1 10+67	0403																																					
	0403	0404																														20						
Y1 10+87	0404																																					
L 19+93	0405																																					
L 19+40	0406																																					
	0406	0407																															12					
L 19+28	0407																																					
L 18+09	0408																																					
L 18+36	0409																																					
	0409	0410																							12													
L 18+34	0410																																					
L 18+19	0411																																					
L 18+11	0412																																					
L 17+04	0413																																					
L 17+11	0414																																					
Y1E 12+74	0458																																					
	0458	0415																																76				
Y1E 12+00	0415																																					
L 16+11	0416																																					
L 16+13	0417																																					
L 17+26	0419	0420																						32														
L 15+62	0420																																					
L 15+39	0421																																					
	0421	0422																														8						
L 15+39	0422																																					
L 15+00	0423																																					
	0423	0424																														36						
L 14+65	0424																																					
	0424	0425																														28						
L 14+65	0425																																					
L 13+35	0426																																					
Y3 11+73	0427																																					
	0427	0428																						40														
	0434	0435																															60					
Y1B 10+48	0435																																					
	0435	0438			12																																	
Y1B 11+27	0436																																					
	0436	0437																															42					
Y1D 12+14	0437																																					
Y1B 10+48	0438																																					
Y1A 13+49	0439																																					
	0439	0441																														8						
Y3 13+98	0440																																					
	0440	0441																														48						
Y3 13+47	0441																																					
	0441	0442																																12				
	0442																																					
Y1A 12+04	0443																																					
SHEET TOTALS					12																			72	12							228	114	88				

STATION	FROM	TO	24" WELDED STEEL PIPE, 0.50" THICK, GRADE B, IN SOIL	24" WELDED STEEL PIPE, 0.50" THICK, GRADE B, NOT IN SOIL	24" WELDED STEEL PIPE, 0.50" THICK, GRADE B, OPEN CUT	15" SIDE DRAIN PIPE	18" SIDE DRAIN PIPE	ENDWALLS STD. 838.01 838.11 OR STD. 838.80 (UNLESS NOTED OTHERWISE) CU. YARDS R.C.P.	C.S.P.	QUANTITIES FOR DRAINAGE STRUCTURES PER EACH (0' THRU 5.0')	*TOTAL L.F. FOR PAY QUANTITY SHALL BE COL. 'A' + (1.3 X COL.'B') LIN. FT. A 5.0' THRU 10.0'	B 10.0' AND ABOVE	C.B. STD. 840.01 OR STD. 840.02	FRAME, GRATES, AND HOOD STANDARD 840.03 TYPE OF GRATE E	F	G	CONCRETE TRANSITIONAL SECTION DROP INLET	CATCH BASIN
Y1 10+95	0401									1								
	0401	0402																
Y1 10+67	0402									1								
	0402	0403																
Y1 10+67	0403									1			1	1				
	0403	0404																
Y1 10+87	0404									1			1			1		
L 19+93	0405																	
L 19+40	0406									1	1.67		1			1		
	0406	0407																
L 19+28	0407									1	1.86							
L 18+09	0408																	
L 18+36	0409									1								
	0409	0410																
L 18+34	0410																	
L 18+19	0411									1	2.57						1	
L 18+11	0412																	
L 17+04	0413																	
L 17+11	0414																	
Y1E 12+74	0458									1	1.6							
	0458	0415																
Y1E 12+00	0415									1	1.11		1		1			
L 16+11	0416																	
L 16+13	0417									1	0.15					1		
L 17+26	0419	0420																
L 15+62	0420																	
L 15+39	0421									1			1			1		
	0421	0422																
L 15+39	0422									1								
L 15+00	0423									1							1	
	0423	0424																
L 14+65	0424									1							1	
	0424	0425																
L 14+65	0425									1								
L 13+35	0426																	
Y3 11+73	0427																	
	0427	0428																
	0434	0435																
Y1B 10+48	0435									1			1		1			
	0435	0438																
Y1B 11+27	0436																	
	0436	0437																
Y1D 12+14	0437									1			1		1			
Y1B 10+48	0438									1								
Y1A 13+49	0439																	
	0439	0441																
Y3 13+98	0440									1							1	
	0440	0441																
Y3 13+47	0441									1							1	
	0441	0442																
	0442									1							1	
Y1A 12+04	0443																	
SHEET TOTALS										22	8.96		7	1	3	4	6	

STATION	FROM	TO	D.I. STD. 840.14 OR STD. 840.15	D.I. FRAME AND GRATE STD. 840.16	G.D.I. TYPE "A" STD. 840.17 OR 840.26	G.D.I. TYPE "B" STD. 840.18 OR 840.27	G.D.I. TYPE "D" STD. 840.19 OR 840.28	ADJUSTMENT OF C.B.	T.B.D.I. FRAME WITH TWO GRATES STD. 840.33	G.D.I. FRAME WITH TWO GRATE STD. 840.20	G.D.I. FRAME WITH TWO GRATES STD. 840.22	G.D.I. (N.S.) FRAME WITH TWO GRATE STD. 840.24	G.D.I. (N.S.) FRAME WITH TWO GRATES STD. 840.29	J.B. STD. 840.31 OR 840.32	T.B.D.I. TRAFFIC BEARING GRATED DROP INLET STD. 840.35	T.B.D.I. STD. 840.36	STEEL GRATE AND FRAME STD. 840.37	T.B.J.B. STD. 840.34	M.H. FRAME & COVER STD. 840.54	CONVERT C.B. TO J.B. (SEE DETAIL 2-M)	BICYCLE SAFE STEEL GRATE AND FRAME (SEE DETAIL 2-J)	SIDE DRAIN PIPE ELBOWS NO. & SIZE	CONC. & BRICK PIPE PLUG, C.Y. STD. 840.71	CONC. COLLARS CL. "B" C.Y. STD. 840.72	PIPE REMOVAL LIN. FT.	REMARKS
Y1 10+95	0401					1						1														RETAIN 30" CMP
	0401	0402																								
Y1 10+67	0402															1	1									
	0402	0403																								
Y1 10+67	0403																									
	0403	0404																								
Y1 10+87	0404																									RETAIN 30" CMP
L 19+93	0405																									RETAIN MH, 15" CMP & 18" RCP
L 19+40	0406																									
	0406	0407																								
L 19+28	0407																	1	1							RETAIN 18" RCP
L 18+09	0408																									RETAIN DI, 15" RCP
L 18+36	0409					1						1														
	0409	0410																								
L 18+34	0410																							0.4465		REMOVE DI
L 18+19	0411															1	1									
L 18+11	0412							1																		ADJUST CB, RETAIN 24" RCP
L 17+04	0413																									RETAIN DI, 15" RCP
L 17+11	0414							1																		ADJUST CB, RETAIN 24" RCP
Y1E 12+74	0458																	1	1						72	TIE EXIST 24" HDPE TO TBJB w/MH
	0458	0415																								REMOVE CB
Y1E 12+00	0415																								8	TIE EXIST 24" HDPE TO CB
L 16+11	0416																									RETAIN DI, 18" RCP
L 16+13	0417																									SPECIAL CB, SEE DETAIL SHEET 2-N
L 17+26	0419	0420																								
L 15+62	0420																							0.399	196	REMOVE DI & CB
L 15+39	0421																									
	0421	0422																								
L 15+39	0422																	1	1							RETAIN 24" RCP &
L 15+00	0423															1	1									
	0423	0424																								
L 14+65	0424															1	1									
	0424	0425																								
L 14+65	0425																	1	1							REMOVE CB, RETAIN 24" RCP
L 13+35	0426																									RETAIN CB
Y3 11+73	0427																							0.399		REMOVE 2 CB'S, RETAIN 15" RCP
	0427	0428																								
	0434	0435																								
Y1B 10+48	0435																									
	0435	0438																								
Y1B 11+27	0436																								28	REMOVE MH
	0436	0437																								
Y1D 12+14	0437																									
Y1B 10+48	0438		1	1																						
Y1A 13+49	0439																							0.399		COLLAR AND RETAIN 24" RCP
	0439	0441																								
Y3 13+98	0440		1	1																						
	0440	0441																								
Y3 13+47	0441		1	1																						
	0441	0442																								
	0442		1	1																						
Y1A 12+04	0443							1																		ADJUST CB
SHEET TOTALS			4	4		2		3				2				4	4	4	4					1.6435	304	

ABBREVIATIONS

C.B.	CATCH BASIN
N.D.I.	NARROW DROP INLET
D.I.	DROP INLET
G.D.I.	GRATED DROP INLET
G.D.I.(N.S.)	GRATED DROP INLET (NARROW SLOT)
J.B.	JUNCTION BOX
M.H.	MANHOLE
T.B.D.I.	TRAFFIC BEARING DROP INLET
T.B.J.B.	TRAFFIC BEARING JUNCTION BOX

COMPUTED BY: DBG DATE: 5/10/2013

CHECKED BY: JMP DATE: 5/10/2013

NC10404

NORTH CAROLINA DEPARTMENT OF TRANSPORTATION
DIVISION OF HIGHWAYS

PROJECT NO.	SHEET NO.
I-5501	3-B

Note: Invert Elevations indicated are for Bid Purposes only and shall not be used for project construction stakeout.

LIST OF PIPES, ENDWALLS, ETC. (FOR PIPES 48 INCHES & UNDER)

STATION	LOCATION (LT, RT, OR CL)'	STRUCTURE NO. FROM	STRUCTURE NO. TO	TOP ELEVATION	INVERT ELEVATION	INVERT ELEVATION	SLOPE CRITICAL
Y1A 10+74	RT	0444					
Y1B 12+42	RT	0445		2154.1			
		0445	0446		2152.8	2152.7	
Y1B 12+13	RT	0446		2163.6			
		0446	0447		2152.7	2152.5	
Y1B 12+15	LT	0447		2163.4			
		0447	0464		2152.5	2152.0	
Y1B 11+25	LT	0464		2160.9			
		0464	0448		2152.0	2149.5	
Y1B 10+73		0448		2161.0			
Y1A 13+37	LT	0449		2155.1			
		0449	0442		2152.5	2151.4	
Y1A 13+07	LT	0450		2159.8			
Y1E 11+02	RT	0459		2161.1			
		0459	0460	2157.8	2157.7		
Y1E 11+02	LT	0460		2161.0			
		0460	0461	2157.7	2156.6		
Y1E 10+50	LT	0461		2159.8			
		0461	0462	2156.6	2156.5		
Y1A 15+14	CL	0451		2157.1			
		0451	0452	2153.8	2152.9		
Y1A 15+14	RT	0452		2156.2			
		0452	0453	2152.9	2148.2		
Y1C 13+29	RT	0453		2151.5			
		0453	0454	2148.2	2139.6		
Y1C 13+78	RT	0454		2142.4			
Y3 11+29	LT	0501		2180.3			
		0501	0502		2178.0	2177.5	
Y3 11+60	LT	0502		2183.6			
RPC 23+00		0503	0504		2181.5	2181.0	
RPC 24+16	RT	0504		2185.8			
		0504	0506		2181.0	2179.2	
RPC 23+06	LT	0505					
RPC 24+57	LT	0506		2192.3			
		0506	0514		2179.2	2177.7	
L 23+79	CL	0509		2191.9			
		0509	0556		2188.7	2188.5	
L 23+80	CL	0556		2191.9			
		0556	0510		2188.5	2185.7	
L 23+35	RT	0510		2188.9			
		0510	0511		2185.7	2182.0	
L 22+59	RT	0511		2185.2			
		0511	0513		2182.0	2181.0	
L 21+76	RT	0512		2180.7			
		0512	0513		2177.4	2177.1	
L 22+45	RT	0513		2184.3			
		0513	0515		2177.1	2176.7	
RPA 18+51	LT	0514		2184.4			
		0514	0515		2177.7	2176.0	
RPA 18+44	LT	0515		2184.0			
		0515	0516		2175.5	2175.3	
RPA 18+02	LT	0516		2181.1			
		0516	0517		2175.3	2170.8	
SHEET TOTALS							

SIDE DRAIN PIPE (RCP, CSP, CAAP, HDPE, or PVC) and C.S. PIPE (SIZE / THICKNESS OR GAUGE)

STATION	FROM	TO	SD 12"	SD 15"	SD 18"	SD 24"	SD 30"	SD 36"	SD 42"	SD 48"	DO NOT USE RCP	DO NOT USE CSP	DO NOT USE CAAP	DO NOT USE HDPE	C.S. 12" .064	C.S. 15" .064	C.S. 18" .064	C.S. 24" .064	C.S. 30" .079	C.S. 36" .079	C.S. 42" .109	C.S. 48" .109
Y1A 10+74	0444																					
Y1B 12+42	0445																					
	0445	0446																				
Y1B 12+13	0446																					
	0446	0447																				
Y1B 12+15	0447																					
	0447	0464																				
Y1B 11+25	0464																					
	0464	0448																				
Y1B 10+73	0448																					
Y1A 13+37	0449																					
	0449	0442																				
Y1A 13+07	0450																					
Y1E 11+02	0459																					
	0459	0460																				
Y1E 11+02	0460																					
	0460	0461																				
Y1E 10+50	0461																					
	0461	0462		24																		
Y1A 15+14	0451																					
	0451	0452																				
Y1A 15+14	0452																					
	0452	0453																				
Y1C 13+29	0453																					
	0453	0454		56																		
Y1C 13+78	0454																					
Y3 11+29	0501																					
	0501	0502		32																		
Y3 11+60	0502																					
RPC 23+00	0503	0504		116																		
RPC 24+16	0504																					
	0504	0506																				
RPC 23+06	0505																					
RPC 24+57	0506																					
	0506	0514																				
L 23+79	0509																					
	0509	0556																				
L 23+80	0556																					
	0556	0510																				
L 23+35	0510																					
	0510	0511																				
L 22+59	0511																					
	0511	0513																				
L 21+76	0512																					
	0512	0513		68																		
L 22+45	0513																					
	0513	0515		76																		
RPA 18+51	0514																					
	0514	0515																				
RPA 18+44	0515																					
	0515	0516																				
RPA 18+02	0516																					
	0516	0517					156															
SHEET TOTALS				372			156															

R.C. PIPE CLASS III and R.C. PIPE CLASS IV

STATION	FROM	TO	III 12"	III 15"	III 18"	III 24"	III 30"	III 36"	III 42"	III 48"	IV 12"	IV 15"	IV 18"	IV 24"	IV 30"	IV 36"	IV 42"	IV 48"
Y1A 10+74	0444																	
Y1B 12+42	0445																	
	0445	0446										32						
Y1B 12+13	0446																	
	0446	0447										44						
Y1B 12+15	0447																	
	0447	0464										88						
Y1B 11+25	0464																	
	0464	0448										52						
Y1B 10+73	0448																	
Y1A 13+37	0449																	
	0449	0442										28						
Y1A 13+07	0450																	
Y1E 11+02	0459																	
	0459	0460										24						
Y1E 11+02	0460																	
	0460	0461										56						
Y1E 10+50	0461																	
	0461	0462																
Y1A 15+14	0451																	
	0451	0452										20						
Y1A 15+14	0452																	
	0452	0453										112						
Y1C 13+29	0453																	
	0453	0454																
Y1C 13+78	0454																	
Y3 11+29	0501																	
	0501	0502																
Y3 11+60	0502																	
RPC 23+00	0503	0504																
RPC 24+16	0504																	
	0504	0506											72					
RPC 23+06	0505																	
RPC 24+57	0506																	
	0506	0514																
L 23+79	0509																	
	0509	0556										16						
L 23+80	0556																	
	0556	0510										52						
L 23+35	0510																	
	0510	0511										76						
L 22+59	0511																	
	0511	0513										32						
L 21+76	0512																	
	0512	0513																
L 22+45	0513																	
	0513	0515																
RPA 18+51	0514																	
	0514	0515				32												
RPA 18+44	0515																	
	0515	0516													42			
RPA 18+02	0516																	
	0516	0517																
SHEET TOTALS						32						632	72		42			

WELDED STEEL PIPE, SIDE DRAIN PIPE, ENDWALLS (STD. 838.01, 838.11 OR STD. 838.80 (UNLESS NOTED OTHERWISE), CU. YARDS), QUANTITIES FOR DRAINAGE STRUCTURES (*TOTAL L.F. FOR PAY QUANTITY SHALL BE COL. 'A' + (1.3 X COL.'B')), FRAME, GRATES, AND HOOD STANDARD 840.03 (TYPE OF GRATE), CONCRETE TRANSITIONAL SECTION

STATION	FROM	TO	24" WELDED STEEL PIPE, 0.50" THICK, GRADE B, IN SOIL	24" WELDED STEEL PIPE, 0.50" THICK, GRADE B, NOT IN SOIL	24" WELDED STEEL PIPE, 0.50" THICK, GRADE B, OPEN CUT	15" SIDE DRAIN PIPE	18" SIDE DRAIN PIPE	ENDWALLS R.C.P.	ENDWALLS C.S.P.	PER EACH (0' THRU 5.0')	LIN. FT. A 5.0' THRU 10.0'	LIN. FT. B 10.0' AND ABOVE	C.B. STD. 840.01 OR STD. 840.02	E	F	G	DROP INLET	CATCH BASIN
Y1A 10+74	0444																	
Y1B 12+42	0445																	
	0445	0446																
Y1B 12+13	0446									1			1			1		
	0446	0447																
Y1B 12+15	0447									1	5	0.97	1		1			
	0447	0464																
Y1B 11+25	0464									1	4.89		1		1			
	0464	0448																
Y1B 10+73	0448									1	5	1.8						
Y1A 13+37	0449									1								
	0449	0442																
Y1A 13+07	0450																	
Y1E 11+02	0459									1			1			1		
	0459	0460																
Y1E 11+02	0460									1			1			1		
	0460	0461																
Y1E 10+50	0461									1			1			1		
	0461	0462																
Y1A 15+14	0451									1								
	0451	0452																
Y1A 15+14	0452									1			1		1			
	0452	0453																
Y1C 13+29	0453									1			1		1			
	0453	0454																
Y1C 13+78	0454									1			1			1		
Y3 11+29	0501									1								
	0501	0502																
Y3 11+60	0502									1	1.17		1			1		
RPC 23+00	0503	0504																
RPC 24+16	0504									1								
	0504	0506																
RPC 23+06	0505																	
RPC 24+57	0506									1	5	3.06	1		1			
	0506	0514	150	150														
L 23+79	0509									1							1	
	0509	0556																
L 23+80	0556									1								
	0556	0510																
L 23+35	0510									1			1			1		
	0510	0511																
L 22+59	0511									1			1			1		
	0511	0513																
L 21+76	0512									1			1			1		
	0512	0513																
L 22+45	0513									1	2.16		1			1		
	0513	0515																
RPA 18+51	0514									1	1.74		1		1			
	0514	0515																
RPA 18+44	0515									1	3.49		1		1			
	0515	0516																
RPA 18+02	0516									1	0.89		1		1			
	0516	0517																
SHEET TOTALS			150	150						25	29.34	5.83	18		8	10	1	

STATION	FROM	TO	D.I. STD. 840.14 OR STD. 840.15	D.I. FRAME AND GRATE STD. 840.16	G.D.I. TYPE "A" STD. 840.17 OR 840.26	G.D.I. TYPE "B" STD. 840.18 OR 840.27	G.D.I. TYPE "D" STD. 840.19 OR 840.28	ADJUSTMENT OF C.B.	T.B.D.I. FRAME WITH TWO GRATES STD. 840.33	G.D.I. FRAME WITH TWO GRATE STD. 840.20	G.D.I. FRAME WITH TWO GRATES STD. 840.22	G.D.I. (N.S.) FRAME WITH TWO GRATE STD. 840.24	G.D.I. (N.S.) FRAME WITH TWO GRATES STD. 840.29	J.B. STD. 840.31 OR 840.32	T.B.D.I. TRAFFIC BEARING GRATED DROP INLET STD. 840.35	T.B.D.I. STD. 840.36	STEEL GRATE AND FRAME STD. 840.37	T.B.J.B. STD. 840.34	M.H. FRAME & COVER STD. 840.54	CONVERT C.B. TO J.B. (SEE DETAIL 2-M)	BICYCLE SAFE STEEL GRATE AND FRAME (SEE DETAIL 2-J)
Y1A 10+74	0444																				
Y1B 12+42	0445																				
	0445	0446																			
Y1B 12+13	0446																				
	0446	0447																			
Y1B 12+15	0447																				
	0447	0464																			
Y1B 11+25	0464																				
	0464	0448																			
Y1B 10+73	0448													1					1		
Y1A 13+37	0449		1	1																	
	0449	0442																			
Y1A 13+07	0450																			1	
Y1E 11+02	0459																				
	0459	0460																			
Y1E 11+02	0460																				
	0460	0461																			
Y1E 10+50	0461																				
	0461	0462																			
Y1A 15+14	0451															1	1				
	0451	0452																			
Y1A 15+14	0452																				
	0452	0453																			
Y1C 13+29	0453																				
	0453	0454																			
Y1C 13+78	0454																				
Y3 11+29	0501		1	1																	
	0501	0502																			
Y3 11+60	0502																				
RPC 23+00	0503	0504																			
RPC 24+16	0504					1					1										
	0504	0506																			
RPC 23+06	0505																				
RPC 24+57	0506																				
	0506	0514																			
L 23+79	0509															1	1				
	0509	0556																			
L 23+80	0556														1						1
	0556	0510																			
L 23+35	0510																				
	0510	0511																			
L 22+59	0511																				
	0511	0513																			
L 21+76	0512																				
	0512	0513																			
L 22+45	0513																				
	0513	0515																			
RPA 18+51	0514																				
	0514	0515																			
RPA 18+44	0515																				
	0515	0516																			
RPA 18+02	0516																				
	0516	0517																			
SHEET TOTALS			2	2		1					1			1	1	2	2		1	1	1

STATION	FROM	TO	SIDE DRAIN PIPE ELBOWS NO. & SIZE	CONC. & BRICK PIPE PLUG, C.Y. STD. 840.71	CONC. COLLARS CL. "B" C.Y. STD. 840.72	PIPE REMOVAL LIN. FT.	REMARKS
Y1A 10+74	0444						RETAIN REMAINDER OF SYSTEM
Y1B 12+42	0445				0.399		
	0445	0446					
Y1B 12+13	0446						
	0446	0447					
Y1B 12+15	0447					176	REMOVE 2 CBS AND 18" RCP
	0447	0464					
Y1B 11+25	0464						
	0464	0448					
Y1B 10+73	0448					32	
Y1A 13+37	0449						
	0449	0442					
Y1A 13+07	0450					24	REMOVE 1 CB
Y1E 11+02	0459						
	0459	0460					
Y1E 11+02	0460						
	0460	0461					
Y1E 10+50	0461						
	0461	0462					
Y1A 15+14	0451						REMOVE 15" RCP AND CB
	0451	0452					
Y1A 15+14	0452						
	0452	0453					
Y1C 13+29	0453						
	0453	0454					RETAIN REMAINDER OF SYSTEM
Y1C 13+78	0454						
Y3 11+29	0501						
	0501	0502					
Y3 11+60	0502					5	REMOVE DI
RPC 23+00	0503	0504					
RPC 24+16	0504						
	0504	0506					
RPC 23+06	0505						
RPC 24+57	0506					321	REMOVE 2 MH
	0506	0514					TRENCHLESS INSTILLATION
L 23+79	0509						
	0509	0556					
L 23+80	0556						
	0556	0510					
L 23+35	0510						
	0510	0511					
L 22+59	0511						
	0511	0513					
L 21+76	0512						
	0512	0513					
L 22+45	0513						
	0513	0515					
RPA 18+51	0514						
	0514	0515					
RPA 18+44	0515						
	0515	0516					
RPA 18+02	0516						
	0516	0517					
SHEET TOTALS					0.399	558	

ABBREVIATIONS

C.B.	CATCH BASIN
N.D.I.	NARROW DROP INLET
D.I.	DROP INLET
G.D.I.	GRATED DROP INLET
G.D.I.(N.S.)	(NARROW SLOT)
J.B.	JUNCTION BOX
M.H.	MANHOLE
T.B.D.I.	TRAFFIC BEARING DROP INLET
T.B.J.B.	TRAFFIC BEARING JUNCTION BOX

COMPUTED BY: DBG DATE: 5/10/2013

CHECKED BY: JMP DATE: 5/10/2013

NC10404

NORTH CAROLINA DEPARTMENT OF TRANSPORTATION
DIVISION OF HIGHWAYS

PROJECT NO.	SHEET NO.
I-5501	3-C

Note: Invert Elevations indicated are for Bid Purposes only and shall not be used for project construction stakeout.

LIST OF PIPES, ENDWALLS, ETC. (FOR PIPES 48 INCHES & UNDER)

STATION (SIZE / THICKNESS OR GAUGE)	LOCATION (LT, RT, OR CL)'	STRUCTURE NO. FROM	STRUCTURE NO. TO	TOP ELEVATION	INVERT ELEVATION	INVERT ELEVATION	SLOPE CRITICAL
L 25+12	RT	0518		2196.2			
		0518	0519		2192.9	2192.9	
L 25+25	RT	0519		2196.5			
		0519	0520		2192.9	2178.3	
L 25+81	LT	0521		2198.1			
		0521	0522		2194.8	2194.7	
L 26+10	LT	0522		2200.0			
		0522	0523		2194.7	2185.0	
L 29+00	RT	0524		2213.3			
		0524	0525		2210.0	2180.0	
L 29+65	LT	0526		2215.5			
		0526	0527		2212.3	2180.4	
L 28+89	LT	0527		2182.3			
		0527	0528				
L 27+86		0528	0529				
L 27+10		0529	0530				
L 24+92		0530					
L 33+78	RT	0531		2227.2			
		0531	0533		2223.9	2216.0	
RPB 22+89	RT	0532		2218.9			
		0532	0533		2216.1	2216.0	
RPB 22+97	RT	0533		2221.6			
		0533	0535		2216.0	2214.1	
L 30+57	RT	0534		2218.7			
		0534	0535		2215.5	2214.1	
RPB 22+24	RT	0535		2217.4			
		0535	0537		2214.1	2196.9	
RPB 19+56	RT	0536		2208.1			
		0536	0537		2204.0	2196.6	
RPB 19+49	RT	0537		2200.1			
		0537	0538		2196.6	2174.6	
RPB 16+00	RT	0538		2178.9			
		0538	0539		2174.1	2166.4	
RPB 14+90	RT	0539		2171.1			
		0539	0553		2166.4	2166.3	
RPB 14+91		0553		2174.0			
		0553	0550		2166.3	2165.3	
RPB 14+00		0540					
RPB 13+39		0541					
RPA 14+47		0542					
RPA 14+13	LT	0543					
L 32+01	LT	0545		2223.7			
		0545	0544		2220.4	2218.5	
L 31+43	LT	0544		2221.7			
		0544	0526		2218.5	2212.3	
RPD 19+26	LT	0547		2218.9			
		0547	0548		2215.7	2211.8	
RPD 18+80	LT	0548		2215.1			
		0548	0701		2211.8	2203.0	
RPB 19+56		0549					
RPB 12+60	RT	0550		2170.0			
		0550	0551		2165.3	2162.9	
L 25+25	LT	0554		2197.6			
		0554	0555		2194.4	2194.3	
L 25+25	RT	0555		2167.6			
SHEET TOTALS							

SIDE DRAIN PIPE (RCP, CSP, CAAP, HDPE, or PVC)

FROM	TO	12"	15"	18"	24"	30"	36"	42"	48"	DO NOT USE RCP	DO NOT USE CSP	DO NOT USE CAAP	DO NOT USE HDPE
0518													
0518	0519												
0519													
0519	0520												
0521													
0521	0522												
0522													
0522	0523												
0524													
0524	0525												
0526													
0526	0527												
0527													
0527	0528												
0528	0529												
0529	0530												
0530													
0531													
0531	0533												
0532													
0532	0533		24										
0533													
0533	0535		80										
0534													
0534	0535												
0535													
0535	0537												
0536													
0536	0537			60									
0537													
0537	0538												
0538													
0538	0539												
0539													
0539	0553												
0553													
0553	0550												
0540													
0541													
0542													
0543													
0545													
0545	0544		60										
0544													
0544	0526												
0547													
0547	0548												
0548													
0548	0701		112										
0549													
0550													
0550	0551												
0554													
0554	0555												
0555													
SHEET TOTALS			276	60									

C.S. PIPE / R.C. PIPE CLASS III

FROM	TO	C.S. 12" (.064)	C.S. 15" (.064)	C.S. 18" (.064)	C.S. 24" (.064)	C.S. 30" (.079)	C.S. 36" (.079)	C.S. 42" (.109)	C.S. 48" (.109)	R.C. III 12"	R.C. III 15"	R.C. III 18"	R.C. III 24"	R.C. III 30"	R.C. III 36"	R.C. III 42"	R.C. III 48"
0518																	
0518	0519																
0519																	
0519	0520		88														
0521																	
0521	0522																
0522																	
0522	0523		92														
0524																	
0524	0525		180														
0526																	
0526	0527		80														
0527																	
0527	0528																
0528	0529																
0529	0530																
0530																	
0531																	
0531	0533																
0532																	
0532	0533																
0533																	
0533	0535																
0534																	
0534	0535																
0535																	
0535	0537																
0536																	
0536	0537																
0537																	
0537	0538																
0538																	
0538	0539																
0539																	
0539	0553																
0553																	
0553	0550																
0540																	
0541																	
0542																	
0543																	
0545																	
0545	0544																
0544																	
0544	0526																
0547																	
0547	0548																
0548																	
0548	0701																
0549																	
0550																	
0550	0551																
0554																	
0554	0555																
0555																	
SHEET TOTALS			440														

R.C. PIPE CLASS IV / WELDED STEEL PIPE / ENDWALLS

FROM	TO	R.C. IV 12"	R.C. IV 15"	R.C. IV 18"	R.C. IV 24"	R.C. IV 30"	R.C. IV 36"	R.C. IV 42"	R.C. IV 48"	24" WELDED STEEL PIPE, 0.50" THICK, GRADE B, IN SOIL	24" WELDED STEEL PIPE, 0.50" THICK, GRADE B, NOT IN SOIL	24" WELDED STEEL PIPE, 0.50" THICK, GRADE B, OPEN CUT	15" SIDE DRAIN PIPE	18" SIDE DRAIN PIPE	ENDWALLS STD. 838.01 838.11 OR STD. 838.80 (UNLESS NOTED OTHERWISE) CU. YARDS R.C.P.	ENDWALLS C.S.P.
0518																
0518	0519		8													
0519																
0519	0520															
0521																
0521	0522		28													
0522																
0522	0523															
0524																
0524	0525															
0526																
0526	0527															
0527																
0527	0528															
0528	0529															
0529	0530															
0530																
0531																
0531	0533		204													
0532																
0532	0533															
0533																
0533	0535															
0534																
0534	0535		116													
0535																
0535	0537		280													
0536																
0536	0537															
0537																
0537	0538			352												
0538																
0538	0539				112											
0539																
0539	0553				12											
0553																
0553	0550				68											
0540																
0541																
0542																
0543																
0545																
0545	0544															
0544																
0544	0526		180													
0547																
0547	0548		52													
0548																
0548	0701															
0549																
0550																
0550	0551									134	134	20				
0554																
0554	0555		8													
0555																
SHEET TOTALS			876	352	192					134	134	20				

QUANTITIES FOR DRAINAGE STRUCTURES (*TOTAL L.F. FOR PAY QUANTITY SHALL BE COL. 'A' + (1.3 X COL.'B')) / FRAME, GRATES, AND HOOD STANDARD 840.03 / CONCRETE TRANSITIONAL SECTION

FROM	TO	PER EACH (0' THRU 5.0')	LIN. FT. A 5.0' THRU 10.0'	LIN. FT. B 10.0' AND ABOVE	C.B. STD. 840.01 OR STD. 840.02	TYPE OF GRATE E	TYPE OF GRATE F	TYPE OF GRATE G	DROP INLET	CATCH BASIN
0518		1								
0518	0519									
0519		1								
0519	0520									
0521		1								
0521	0522									
0522		1	0.32							
0522	0523									
0524		1								
0524	0525									
0526		1								
0526	0527									
0527		1								
0527	0528									
0528	0529									
0529	0530									
0530										
0531		1			1			1		
0531	0533									
0532		1								
0532	0533									
0533		1	0.56		1			1		
0533	0535									
0534		1			1			1		
0534	0535									
0535		1								
0535	0537									
0536		1								
0536	0537									
0537		1								
0537	0538									
0538		1								
0538	0539									
0539		1								
0539	0553									
0553		1	1.92							
0553	0550									
0540										
0541										
0542										
0543										
0545		1			1		1			
0545	0544									
0544		1			1		1			
0544	0526									
0547		1			1		1			
0547	0548									
0548		1			1		1			
0548	0701									
0549										
0550		1								
0550	0551									
0554		1								
0554	0555									
0555		1								
SHEET TOTALS		24	2.8		7		4	3		

FROM	TO	D.I. STD. 840.14 OR STD. 840.15	D.I. FRAME AND GRATE STD. 840.16	G.D.I. TYPE "A" STD. 840.17 OR 840.26	G.D.I. TYPE "B" STD. 840.18 OR 840.27	G.D.I. TYPE "D" STD. 840.19 OR 840.28	ADJUSTMENT OF C.B.	T.B.D.I. FRAME WITH TWO GRATES STD. 840.33	G.D.I. FRAME WITH TWO GRATE STD. 840.20	G.D.I. FRAME WITH TWO GRATES STD. 840.22	G.D.I. (N.S.) FRAME WITH TWO GRATE STD. 840.24	G.D.I. (N.S.) FRAME WITH TWO GRATES STD. 840.29	J.B. STD. 840.31 OR 840.32	T.B.D.I. TRAFFIC BEARING GRATED DROP INLET STD. 840.35	T.B.D.I. STD. 840.36	STEEL GRATE AND FRAME STD. 840.37	T.B.J.B. STD. 840.34	M.H. FRAME & COVER STD. 840.54	CONVERT C.B. TO J.B. (SEE DETAIL 2-M)	BICYCLE SAFE STEEL GRATE AND FRAME (SEE DETAIL 2-J)
0518					1							1								
0518	0519																			
0519					1							1								
0519	0520																			
0521												1		1						
0521	0522																			
0522								1						1						
0522	0523																			
0524					1							1								
0524	0525																			
0526												1		1						
0526	0527																			
0527						1				1										
0527	0528																			
0528	0529																			
0529	0530																			
0530																				
0531																				
0531	0533																			
0532					1						1									
0532	0533																			
0533																				
0533	0535																			
0534																				
0534	0535																			
0535					1				1											
0535	0537																			
0536		1	1																	
0536	0537																			
0537					1				1											
0537	0538																			
0538				1					1											
0538	0539																			
0539				1					1											
0539	0553																			
0553													1					1		
0553	0550																			
0540																				
0541																				
0542																				
0543																				
0545																				
0545	0544																			
0544																				
0544	0526																			
0547																				
0547	0548																			
0548																				
0548	0701																			
0549																				
0550				1					1											
0550	0551																			
0554														1						1
0554	0555																			
0555														1						1
SHEET TOTALS		1	1	3	6	1		1	5	1	1	5	1	5				1		2

FROM	TO	SIDE DRAIN PIPE ELBOWS NO. & SIZE	CONC. & BRICK PIPE PLUG, C.Y. STD. 840.71	CONC. COLLARS CL. "B" C.Y. STD. 840.72	PIPE REMOVAL LIN. FT.	REMARKS
0518						
0518	0519					
0519						
0519	0520	2 @ 15"			100	ROD & LUG CONNECTORS
0521						
0521	0522					
0522						
0522	0523	2 @ 15"				ROD & LUG CONNECTORS
0524						
0524	0525	2 @ 15"				ROD & LUG CONNECTORS
0526						
0526	0527	2 @ 15"				
0527						
0527	0528					RETAIN 18" RCP
0528	0529					RETAIN DI & 18" RCP
0529	0530					RETAIN DI & 24" RCP
0530						RETAIN DI
0531						
0531	0533					
0532						
0532	0533					
0533					50	REMOVE 15" RCP
0533	0535					
0534						
0534	0535					
0535						
0535	0537					
0536					78	REMOVE DI, RETAIN 18" CMP
0536	0537					
0537						
0537	0538					
0538						
0538	0539					
0539						REMOVE DI
0539	0553					
0553						
0553	0550					
0540			0.065		98	RETAIN DI & 18" RCP, REPLACE GRATE
0541						RETAIN DI & 24" RCP
0542						RETAIN DI & 24" RCP
0543						EX. 24" RCP PIPE CLEAN OUT
0545						
0545	0544					
0544						
0544	0526					
0547					126	REMOVE CB
0547	0548					
0548						
0548	0701					
0549						RETAIN 18" CMP
0550						
0550	0551					TRENCHLESS INSTAL. 24" WELDED STEEL
0554						
0554	0555					
0555						
SHEET TOTALS		8 @ 15"	0.065		452	

ABBREVIATIONS

C.B.	CATCH BASIN
N.D.I.	NARROW DROP INLET
D.I.	DROP INLET
G.D.I.	GRATED DROP INLET
G.D.I.(N.S.)	(NARROW SLOT)
J.B.	JUNCTION BOX
M.H.	MANHOLE
T.B.D.I.	TRAFFIC BEARING DROP INLET
T.B.J.B.	TRAFFIC BEARING JUNCTION BOX

NC10404

COMPUTED BY: DBG DATE: 5/10/2013

CHECKED BY: JMP DATE: 5/10/2013

PROJECT NO.	SHEET NO.
I-5501	3-D

NORTH CAROLINA DEPARTMENT OF TRANSPORTATION
DIVISION OF HIGHWAYS

Note: Invert Elevations indicated are for Bid Purposes only and shall not be used for project construction stakeout.

LIST OF PIPES, ENDWALLS, ETC. (FOR PIPES 48 INCHES & UNDER)

STATION	LOCATION (LT, RT, OR CL')	STRUCTURE NO. FROM	STRUCTURE NO. TO	TOP ELEVATION	INVERT ELEVATION	INVERT ELEVATION	SLOPE CRITICAL
		0555	0519		2194.3	2192.9	
L 37+36	LT	0601		2231.8			
		0601	0603		2228.5	2228.3	
L 37+78	CL	0603		2232.3			
		0603	0602		2229.0	2228.3	
L 38+54	CL	0602		2232.2			
		0603	0604		2228.3	2228.1	
L 37+77	RT	0604		2231.4			
		0604	0606		2228.1	2226.5	
L 35+79	LT	0605		2230.1			
		0605	0606		2226.9	2226.5	
L 35+78	RT	0606		2230.3			
		0606	0531		2226.5	2223.9	
RPD 17+65	LT	0701		2205.8			
		0701	0702		2202.8	2194.7	
RPD 17+12	RT	0702		2196.2			
RPD 16+57		0703					
RPC 17+14		0704					
RPC 13+88		0705					
SHEET 3-D TOTAL							
SHEET 3-A TOTAL							
SHEET 3-B TOTAL							
SHEET 3-C TOTAL							
GRAND TOTALS							

SIDE DRAIN PIPE (RCP, CSP, CAAP, HDPE, or PVC) and C.S. PIPE (SIZE / THICKNESS OR GAUGE):

STATION	FROM	TO	SD 12"	SD 15"	SD 18"	SD 24"	SD 30"	SD 36"	SD 42"	SD 48"	DO NOT USE RCP	DO NOT USE CSP	DO NOT USE CAAP	DO NOT USE HDPE	C.S. 12" .064	C.S. 15" .064	C.S. 18" .064	C.S. 24" .064	C.S. 30" .079	C.S. 36" .079	C.S. 42" .109	C.S. 48" .109
	0555	0519																				
L 37+36	0601																					
	0601	0603																				
L 37+78	0603																					
	0603	0602																				
L 38+54	0602																					
	0603	0604																				
L 37+77	0604																					
	0604	0606																				
L 35+79	0605																					
	0605	0606																				
L 35+78	0606																					
	0606	0531																				
RPD 17+65	0701																					
	0701	0702																				
RPD 17+12	0702																					
RPD 16+57	0703																					
RPC 17+14	0704																					
RPC 13+88	0705																					
SHEET 3-D TOTAL																						
SHEET 3-A TOTAL					12																	
SHEET 3-B TOTAL				372			156															
SHEET 3-C TOTAL				276	60											440						
GRAND TOTALS				648	72		156									440						

R.C. PIPE CLASS III and R.C. PIPE CLASS IV:

STATION	FROM	TO	III 12"	III 15"	III 18"	III 24"	III 30"	III 36"	III 42"	III 48"	IV 12"	IV 15"	IV 18"	IV 24"	IV 30"	IV 36"	IV 42"	IV 48"
	0555	0519										32						
L 37+36	0601																	
	0601	0603										52						
L 37+78	0603																	
	0603	0602										76						
L 38+54	0602																	
	0603	0604										40						
L 37+77	0604																	
	0604	0606										200						
L 35+79	0605																	
	0605	0606										80						
L 35+78	0606																	
	0606	0531										200						
RPD 17+65	0701																	
	0701	0702			84													
RPD 17+12	0702																	
RPD 16+57	0703																	
RPC 17+14	0704																	
RPC 13+88	0705																	
SHEET 3-D TOTAL					84							680						
SHEET 3-A TOTAL				72	12							228	114	88				
SHEET 3-B TOTAL						32						632	72		42			
SHEET 3-C TOTAL												876	352	192				
GRAND TOTALS				72	96	32						2416	538	280	42			

Welded steel pipe, side drain pipe, endwalls (STD. 838.01, 838.11 OR STD. 838.80 (UNLESS NOTED OTHERWISE), CU. YARDS), quantities for drainage structures (*TOTAL L.F. FOR PAY QUANTITY SHALL BE COL. 'A' + (1.3 X COL.'B')), C.B., frame, grates and hood standard 840.03, concrete transitional section:

STATION	FROM	TO	24" WELDED STEEL PIPE, 0.50" THICK, GRADE B, IN SOIL	24" WELDED STEEL PIPE, 0.50" THICK, GRADE B, NOT IN SOIL	24" WELDED STEEL PIPE, 0.50" THICK, GRADE B, OPEN CUT	15" SIDE DRAIN PIPE	18" SIDE DRAIN PIPE	ENDWALLS R.C.P.	ENDWALLS C.S.P.	PER EACH (0' THRU 5.0')	LIN. FT. A 5.0' THRU 10.0'	LIN. FT. B 10.0' AND ABOVE	C.B. STD. 840.01 OR STD. 840.02	TYPE OF GRATE E	TYPE OF GRATE F	TYPE OF GRATE G	DROP INLET	CATCH BASIN
	0555	0519																
L 37+36	0601									1			1	1				
	0601	0603																
L 37+78	0603									1								
	0603	0602																
L 38+54	0602									1								
	0603	0604																
L 37+77	0604									1			1			1		
	0604	0606																
L 35+79	0605									1			1		1			
	0605	0606																
L 35+78	0606									1			1			1		
	0606	0531																
RPD 17+65	0701									1								
	0701	0702																
RPD 17+12	0702																	
RPD 16+57	0703																	
RPC 17+14	0704																	
RPC 13+88	0705																	
SHEET 3-D TOTAL										7			4	1	1	2		
SHEET 3-A TOTAL										22	8.96		7	1	3	4	6	
SHEET 3-B TOTAL			150	150						25	29.34	5.83	18		8	10	1	
SHEET 3-C TOTAL			134	134	20					24	2.8		7		4	3		
GRAND TOTALS			284	284	20					78	41.10	5.83	36	2	16	19	7	

48.68
SAY 60

Inlets, frames, grates and boxes:

STATION	FROM	TO	D.I. STD. 840.14 OR STD. 840.15	D.I. FRAME AND GRATE STD. 840.16	G.D.I. TYPE "A" STD. 840.17 OR 840.26	G.D.I. TYPE "B" STD. 840.18 OR 840.27	G.D.I. TYPE "D" STD. 840.19 OR 840.28	ADJUSTMENT OF C.B.	T.B.D.I. FRAME WITH TWO GRATES STD. 840.33	G.D.I. FRAME WITH TWO GRATE STD. 840.20	G.D.I. FRAME WITH TWO GRATES STD. 840.22	G.D.I. (N.S.) FRAME WITH TWO GRATE STD. 840.24	G.D.I. (N.S.) FRAME WITH TWO GRATES STD. 840.29	J.B. STD. 840.31 OR 840.32	T.B.D.I. TRAFFIC BEARING GRATED DROP INLET STD. 840.35	T.B.D.I. STD. 840.36	STEEL GRATE AND FRAME STD. 840.37	T.B.J.B. STD. 840.34	M.H. FRAME & COVER STD. 840.54	CONVERT C.B. TO J.B. (SEE DETAIL 2-M)	BICYCLE SAFE STEEL GRATE AND FRAME (SEE DETAIL 2-J)
	0555	0519																			
L 37+36	0601																				
	0601	0603																			
L 37+78	0603															1	1				
	0603	0602																			
L 38+54	0602															1	1				
	0603	0604																			
L 37+77	0604																				
	0604	0606																			
L 35+79	0605																				
	0605	0606																			
L 35+78	0606																				
	0606	0531																			
RPD 17+65	0701					1					1										
	0701	0702																			
RPD 17+12	0702																				
RPD 16+57	0703																				
RPC 17+14	0704																				
RPC 13+88	0705																				
SHEET 3-D TOTAL						1					1					2	2				
SHEET 3-A TOTAL			4	4		2		3				2				4	4	4	4		
SHEET 3-B TOTAL			2	2		1					1			1	1	2	2		1	1	1
SHEET 3-C TOTAL			1	1	3	6	1		1	5	1	1	5	1	5				1		2
GRAND TOTALS			7	7	3	10	1	3	1	5	3	3	5	2	6	8	8	4	6	1	3

STATION	FROM	TO	SIDE DRAIN PIPE ELBOWS NO. & SIZE	CONC. & BRICK PIPE PLUG, C.Y. STD. 840.71	CONC. COLLARS CL. "B" C.Y. STD. 840.72	PIPE REMOVAL LIN. FT.	REMARKS
	0555	0519					
L 37+36	0601						
	0601	0603					
L 37+78	0603						
	0603	0602					
L 38+54	0602						
	0603	0604					
L 37+77	0604						
	0604	0606					
L 35+79	0605					310	REMOVE 2 CB's
	0605	0606					
L 35+78	0606						
	0606	0531					
RPD 17+65	0701						
	0701	0702					
RPD 17+12	0702				0.4465		RETAIN 18" RCP
RPD 16+57	0703						RETAIN DI & 18" RCP
RPC 17+14	0704						RETAIN DI
RPC 13+88	0705						RETAIN 18" RCP
SHEET 3-D TOTAL					0.4465	310	
SHEET 3-A TOTAL					1.6435	304	
SHEET 3-B TOTAL					0.399	558	
SHEET 3-C TOTAL			8 @ 15"	0.065		452	
GRAND TOTALS			8 @ 15"	0.07	2.49	1624	

ABBREVIATIONS

C.B.	CATCH BASIN
N.D.I.	NARROW DROP INLET
D.I.	DROP INLET
G.D.I.	GRATED DROP INLET
G.D.I.(N.S.)	(NARROW SLOT)
J.B.	JUNCTION BOX
M.H.	MANHOLE
T.B.D.I.	TRAFFIC BEARING DROP INLET
T.B.J.B.	TRAFFIC BEARING JUNCTION BOX

12/06/07

COMPUTED BY: HWB DATE: 3-07-2013
CHECKED BY: DCW DATE: 3-08-2013

PROJECT REFERENCE NO.	SHEET NO.
I-5501	3-E

STATE OF NORTH CAROLINA
DIVISION OF HIGHWAYS

Earthwork quantities are calculated by the Roadway Design Unit. These earthwork quantities are based in part on subsurface data provided by the Geotechnical Engineering Unit.

SUMMARY OF EARTHWORK

IN CUBIC YARDS

LOCATION	UNCLASSIFIED EXCAVATION	UNDERCUT	EMBT+%	BORROW	WASTE
SUMMARY NO. 1					
–L– 13+50.00 TO –L– 26+00.00	1111		2808	1697	
–Y1– 10+66.92 TO –Y1– 10+85.00	21		0		21
–Y1A– 12+00.00 TO –Y1A– 15+00.00	219		1143	924	
–Y1B– 10+34.01 TO –Y1B– 12+84.30	197		335	138	
–Y1C– 11+67.72 TO –Y1C– 13+50.00	48		483	435	
–Y1D– 10+66.01 TO –Y1D– 12+25.00	210		58		153
–Y1E– 10+11.62 TO –Y1E– 12+73.79	275		58		218
–Y3– 10+15.00 TO –Y3– 11+50.00	47		138	91	
–RPA– 15+00.00 TO –RPA– 17+50.00	79		430	351	
–RPA_SPUR_LT– 10+51.02 TO –RPA_SPUR_LT– 11+58.17	0		1915	1915	
–RPA_SPUR_RT– 10+00.00 TO –RPA_SPUR_RT– 11+56.09	2		715	713	
–RPC– 18+00.00 TO –RPC– 24+78.49	333		1887	1554	
–RPC_SPUR_RT– 10+07.36 TO –RPC_SPUR_RT– 11+11.06	6		1262	1256	
–RPC_SPUR_LT– 10+21.98 TO –RPC_SPUR_LT– 11+57.40	2		223	221	
TOTAL SUMMARY NO. 1	2550		11,454	9295	391
SUMMARY NO. 2					
–L– 29+00.00 TO –L– 39+50.00	1372		1984	612	
–RPB– 14+50.00 TO –RPA– 22+00.00	1492		935		557
–RPB_SPUR_LT– 10+02.60 TO –RPB_SPUR_LT– 11+57.95	0		1525	1525	
–RPB_SPUR_RT– 10+02.88 TO –RPB_SPUR_RT– 11+05.00	89		261	172	
–RPD– 12+60.00 TO –RPD– 19+00.00	1418		534		884
–RPD_SPUR_RT– 10+27.48 TO –RPD_SPUR_RT– 11+19.00	30		54	24	
–RPD_SPUR_LT– 10+56.36 TO –RPD_SPUR_LT– 11+28.00	319		36		283
–Y4– 10+70.00 TO –Y4– 11+25.00	19		15		4
TOTAL SUMMARY NO. 2	4739		5343	2333	1729
SUB–TOTAL SUMMARY NOS. 1 thru 2	7289		16,797	11,628	2120
LOSS DUE TO CLEARING AND GRUBBING	–750			750	
SHOULDER CONSTRUCTION			2473	2473	
WASTE IN LIEU OF BORROW				–2120	–2120
PROJECT TOTALS	6539		19,269	12,730	0
EST. 5% TO REPLACE TOP SOIL ON BORROW PIT				637	
GRAND TOTALS	6539		19,269	13,367	
SAY	6550			13,400	

SUMMARY OF EXISTING ASPHALT PAVEMENT REMOVAL SUMMARY

SURVEY LINE	STATION	STATION	LOCATION LT/RT/CL	YD²
–RPA–	17+71	19+17	RT.	460.11
–RPB–	16+90	19+71	LT.	91.33
–RPB–	20+00	20+42	LT.	19.44
–RPC–	23+24	23+74	LT.	15.67
–RPD_SPUR_LT–	10+69	10+82	LT.	428.56
–Y1A–	12+00	14+66	LT.	780.56
–Y1B–	10+34	11+54	LT./RT.	168.89
–Y1C–	12+29	13+15	LT.	173.33
–Y1D–	10+66	12+44	RT.	442.56
–L–	16+03	18+50	LT.	350.56
			TOTAL:	2941.00
			SAY:	2950

SUMMARY OF EXISTING CONCRETE PAVEMENT REMOVAL

SURVEY LINE	STATION	STATION	LOCATION LT/RT/CL	YD²
–RPA–	17+01	17+55	LT.	28.67
–RPB–	20+00	20+42	LT.	51.00
			TOTAL:	79.67
			SAY:	80

SUMMARY OF SUBSURFACE DRAINAGE

SURVEY LINE	STATION	STATION	LOCATION LT/RT/CL	DRAIN TYPE UD/BD/SD	LF
CONTINGENCY				UD	1500
				TOTAL LF:	1500

SUMMARY OF BREAKING EXISTING ASPHALT PAVEMENT

SURVEY LINE	STATION	STATION	LOCATION LT/RT/CL	YD²
–RPB–	20+42	23+47	LT.	779.56
–RPC–	24+06	25+25	LT.	1098.78
–Y1A–	14+76	15+20	LT./RT.	85.56
			TOTAL:	1963.89
			SAY:	1970

SHOULDER BERM GUTTER SUMMARY

SURVEY LINE	STATION	STATION	LENGTH
–L–	25+20.00	25+71.00	51.00
–L–	25+78.00	26+38.00	60.00
–L–	28+72.00	29+87.00	115.00
–L–	29+39.00	30+26.00	87.00
		TOTAL:	313.00
		SAY:	320

SUMMARY OF BREAKING EXISTING CONCRETE PAVEMENT

SURVEY LINE	STATION	STATION	LOCATION LT/RT/CL	YD²
–RPB–	20+42	20+95	LT.	91.67
			TOTAL:	91.67
			SAY:	100

EXPRESSWAY GUTTER SUMMARY

SURVEY LINE	STATION	STATION	LENGTH
–RPB–	14+85.00	22+37.08	752.08
–RPB_SPUR_RT–	10+00.00	10+26.63	26.63
		TOTAL:	778.71
		SAY:	780

UNDERCUT = 1300 CY PER GEOTECHNICAL RECOMM. DATED 9/18/2012
SHALLOW UNDERCUT = 440 CY PER GEOTECHNICAL RECOMM. DATED 9/18/2012
SELECT GRANULAR MATERIAL = 2000 CY PER GEOTECHNICAL RECOMM. DATED 9/18/2012
CLASS IV SUBGRADE STABILIZATION = 832 TONS PER GEOTECHNICAL RECOMM. DATED 9/18/2012

Note: Approximate quantities only. Unclassified Excavation, Borrow Excavation, Fine Grading, Clearing and Grubbing, Breaking of Existing Pavement and Removal of Existing Pavement will be paid for at the contract lump sum price for "Grading."

25-JUL-2013 09:22
C:\Users\rkluckman\Documents\I5501_Rdy_sum.dgn
$$$$USERNAME$$$$

CSD261653 7/25/2013 I5501_Rdy_sum rkluckman CSD-Oce860-34bond

6/16/99

COMPUTED BY: _____ DATE: _____
CHECKED BY: _____ DATE: _____

"N" = DISTANCE FROM EDGE OF LANE TO FACE OF GUARDRAIL.
TOTAL SHOULDER WIDTH = DISTANCE FROM EDGE OF TRAVEL LANE TO SHOULDER BREAK POINT.
FLARE LENGTH = DISTANCE FROM LAST SECTION OF PARALLEL GUARDRAIL TO END OF GUARDRAIL.
W = TOTAL WIDTH OF FLARE FROM BEGINNING OF TAPER TO END OF GUARDRAIL.
G = GATING IMPACT ATTENUATOR TYPE 350
NG = NON-GATING IMPACT ATTENUATOR TYPE 350

STATE OF NORTH CAROLINA
DIVISION OF HIGHWAYS

PROJECT REFERENCE NO.	SHEET NO.
I-5501	3-F

GUARDRAIL SUMMARY

SURVEY LINE	BEG. STA.	END STA.	LOCATION	LENGTH			WARRANT POINT		"N" DIST. FROM E.O.L.	TOTAL SHOULDER WIDTH	FLARE LENGTH		W		ANCHORS								IMPACT ATTENUATOR TYPE 350			SINGLE FACED GUARDRAIL	REMOVE EXISTING GUARDRAIL	REMOVE AND STOCKPILE EXISTING GUARDRAIL	REMARKS
				STRAIGHT	SHOP CURVED	DOUBLE FACED	APPROACH END	TRAILING END			APPROACH END	TRAILING END	APPROACH END	TRAILING END		M-350	GRAU 350	B-83	B-77	CAT-1	GRAU 350 TL-2	SHOP CURVED B-77		PERMITTED NO.	PERMITTED G	PERMITTED NG				
-RPC_SPUR_LT-/-DDI_NB-	11+53.06	18+00.00	LT/LT	81.25	31.05		18+00.00		4	12	50		1				1		1										
-DDI_NB-	21+00.00	22+35.21	LT	125.00				21+00.00	4	12									1	1									
-DDI_SB-	16+71.06	17+46.06	RT	75.00					4	12									1	1									
-DDI_SB-/-RPB_SPUR_LT-	20+46.67	11+46.21	RT/LT	131.25	32.42		20+46.67		4	12	50		1				1		1										
-RPB-	14+31.25	21+25.00	RT	693.75			14+85.00	21+25.00	14	19	50		1				1		1										
-DDI_SB-	16+51.76	17+46.38	RT																								94		
-DDI_NB-	20+99.54	22+67.55	LT																								169		
-L-	13+31.00	13+81.00	LT	50.00													1										228		TIE TO EXISTING
-Y1A-	12+05.80	15+51.56	RT	393.75					1	11	25		0.5							1	1								
-L-	21+50.35	22+36.15	LT	87.50			22+00.00									2													
-L-	21+64.22	22+42.26	LT	87.50			22+00.00									2													
-L-	33+03.81	33+45.21	RT	43.75			33+40.00									1				1									
-L-	33+34.75	33+76.37	LT	43.75			33+40.00									1				1									
-RPB-	20+25.71	21+25.00	RT	93.75													1					1							
-RPB_SPUR_RT-	10+26.54	11+42.14	RT	106.25													1					1							
		TOTALS		2012.50	63.47											6	6		5	5	1	2					491		
DEDUCT FOR ANCHOR UNITS		GRAU-350, 6 @ 50' =		-300.00																									
		B-77, 5 @ 18.75' =		-93.75																									
		SHOP CURVED B-77, 2 @ 18.75' =		-37.50																									
		GRAU-350 TL-2, 1 @ 25.00' =		-25.00																									
		CAT-1, 5 @ 6.25' =		-31.25																									
		M-350, 6 @ 37.5' =		-225.00																									
				1300.00	63.47																								
				SAY 1312.50			5 EA. ADDITIONAL GUARDRAIL POSTS																						

6/24/2013
R:\Roadway\Proj\I5501_Rdy_sum.dgn
Flowers & Hinkson, Inc.

PROJ. REFERENCE NO.	SHEET NO.
I-5501	3-G

STATE OF NORTH CAROLINA
DIVISION OF HIGHWAYS

PARCEL INDEX SHEET

PARCEL No.	SHEET No.	PROPERTY OWNER NAME
1	4,5,7	CITY OF ASHEVILLE
2	4	MURPHY WILSON INVESTMENT CO.
3	4,5	YOUNGBLOOD OIL COMPANY
4	5,6,7	CITY OF ASHEVILLE
5	6	W & K HOTELS, LLC

PARCEL No.	SHEET No.	PROPERTY OWNER NAME

8/17/99

NAD 83/NSRS 2007

SEWER LINE IS CURRENTLY UNDER CONSTRUCTION AND AS OF JANUARY 4TH, 2013, HAS NOT BEEN COMPLETED.

Florence & Hutcheson
An ICA Company
5121 Kingdom Way, Suite 100 Raleigh, NC 27607
NC License No: F-0258

PROJECT REFERENCE NO.	SHEET NO.
I-5501	4
R/W SHEET NO.	

ROADWAY DESIGN ENGINEER — NORTH CAROLINA PROFESSIONAL SEAL 22606 ENGINEER DAVID C. WALLER — 7-8-13

HYDRAULICS ENGINEER — NORTH CAROLINA PROFESSIONAL SEAL 24451 ENGINEER STACEY H. BAILEY — 7-8-13

AIRPORT TERMINAL
LAWN DRAINS
BREEZEWAY
BST PARKING
GUARD POSTS
CAMERA POLE
ELECTRIC SWITCHES
APPROX. JB
F/O SPLICE BOX
MTL AIRPLANE HANGAR
POWER METER
MONITORING WELLS
RADIO TOWER
GRAVEL PARKING AREA
WOODS
WRIGHT BROTHERS WAY
TERMINAL DR
NC 280 NEW AIRPORT RD
HENDERSON COUNTY
BUNCOMBE COUNTY
CITY OF ASHEVILLE (ASHEVILLE REGIONAL AIRPORT)
DB 1906 PG 324
DB 1735 PG 24
DB 1729 PG 320
DB 485 PG 83 (HENDERSON CO.)
YOUNGBLOOD OIL COMPANY INC.
DB 491 PG 571
DB 560 PG 755
JAI PRABHU RESTAURANT, LLC
DB 1306 PG 110

-YIA- PC 10+00.00
-YIA- POC 12+57.39 = -YIC- PC 10+00.00
-YIC- 10+23.84 19.5' RT. BEGIN RETAINING WALL NO.1
-YIA- PCC 13+07.42
-YIA- PT 14+43.46
-YIC- 12+75.43 19.5' RT. END RETAINING WALL NO.1
-YIC- PT 13+14.83
END CONSTRUCTION -YIC- POT 13+50.00
-YIC- POT 13+86.10
-YIA- POC 11+11.06
BEGIN CONSTRUCTION -YIA- POC 12+00.00
-YID- POT 10+00.00
BEGIN CONSTRUCTION -YID- PC 10+66.01
-YIA- POC 13+81.75 = -YIB- POT 10+00.00
-YIB- PC 10+53.77
-YID- PRC 11+39.80
-YIB- PT 12+38.41
-YIB- POC 11+00.00 = -YID- POT 12+60.37
END CONSTRUCTION -YIB- POT 12+84.30
-YIB- PC 14+02.25
-YIB- PT 12+57.44
-YIB- PT 15+14.75
-YIB- POT 16+54.25
N 17°05'02.0" W
N 19°23'09.5" W
-Y3- POT 10+00.00
BEGIN CONSTRUCTION -Y3- POT 10+15.00
-Y3- POT 12+27.50 = -L- POC 21+23.19
-DDI_SB- PC 10+00.00 = -L- POC 18+50.15, 18' LT.
-DDI_SB- PRC 11+65.71
-DDI_NB- PC 10+00.00 = -L- POC 18+50.15, 18' RT
-L- PCC 16+95.62
-MATCHLINE- -L- STA. 21+50.00 SEE SHEET NO. 5
-YIE- POT 13+00.00
END CONSTRUCTION -YIE- POT 12+50.00
-YIE- PT 12+25.00
-YIE- PC 10+89.55
-YIE- POT 12+74.64 = -YIE- POT 10+00.00
-YI- POT 13+13.93
-YI- PRC 11+60.17
-YI- PT 12+10.07
-YI- POT 11+87.32
-YI- PC 11+03.85
BEGIN TIP PROJECT I-5501
BEGIN CONSTRUCTION -L- POC 13+50.00
-L- POC 14+21.08 = -YI- POT 10+00.00 = -YIA- POT 15+68.62
-L- PC 10+00.00
-L- 14+45.00, 36' RT CENTER OF BULB RADIUS
S 11°38'07.2" E
S 88°07'20.7" E
N 12°03'4" E
S 2°42'5" W
S 3°52'187" E
S 6°15'5" E
S 17°06'15" E
S 13°13'02" E

RETAIN REMAINDER OF SYSTEM (0466)
RETAIN REMAINDER OF SYSTEM (0455)
RETAIN SYSTEM
RETAIN
REMOVE
PROPOSED 18" C&G
PROPOSED 6" C&G
PROPOSED 2-6" C&G
PROPOSED RETAINING WALL NO.1
PROP 8" X 12" CURB
PROP 6" X 12" CURB
SPECIAL LATERAL "V" DITCH SEE DETAIL B
SPECIAL BACK OF CURB CUT DITCH SEE DETAIL A
TAIL "V" DITCH SEE DETAIL E SHEET 2-D SLOPE=1.5% DDE=30CY
CLASS B RIP RAP EST 2 TONS EST 7 SY GT
90°-40'-90° 15' OF 5'-0"
80°-60'-80° 15' OF 5'-0"
PUE
EXISTING R/W
LEASE LINE
TYP

PAVEMENT REMOVAL

FOR -L- PROFILE, SEE SHEET 8
FOR -YI- PROFILE, SEE SHEET 14
FOR -Y3- PROFILE, SEE SHEET 14
FOR -YIA- PROFILE, SEE SHEET 15
FOR -YIB- PROFILE, SEE SHEET 15
FOR -YIC- PROFILE, SEE SHEET 15
FOR -YID- PROFILE, SEE SHEET 15
FOR -YIE- PROFILE, SEE SHEET 14
FOR DITCH DETAILS, SEE SHEET 2-D
FOR CURVE DATA, SEE SHEET 2-F
FOR CURB RAMP STATIONING, SEE PAVEMENT MARKING PLANS
FOR RETAINING WALL NO.1 PLANS, SEE SHEETS W-1 THRU W-2.

8/17/99

Florence & Hutcheson
An ICA Company
5121 Kingdom Way, Suite 100 Raleigh, NC 27607
NC License No: P-0258

PROJECT REFERENCE NO.	SHEET NO.
I-5501	5
R/W SHEET NO.	

ROADWAY DESIGN ENGINEER
NORTH CAROLINA PROFESSIONAL SEAL 22606 ENGINEER DAVID C. WALKER
7-25-13

HYDRAULICS ENGINEER
NORTH CAROLINA PROFESSIONAL SEAL 24451 ENGINEER JEFFREY H. BAILEY
7-25-13

NAD 83/NSRS 2007

CITY OF ASHEVILLE (ASHEVILLE REGIONAL AIRPORT)
DB 1906 PG 324
DB 1735 PG 24
DB 1729 PG 320

-MATCHLINE- -RPC- STA. 21+00.00 SEE SHEET NO. 7

-MATCHLINE- -RPD- STA. 18+00.00 SEE SHEET NO. 7

-MATCHLINE- -L- STA. 21+50.00 SEE SHEET NO. 4

-MATCHLINE- -L- STA. 35+00.00 SEE SHEET NO. 6

-RPC- ST 22+07.26

-RPC_SPUR_RT- POT 10+00.00 =
-RPC- POT 25+28.26, 12' RT

-RPC_SPUR_RT- PC 10+37.93

-DDI_SB- PRC 13+30.47

-RPC_SPUR_RT- PT 12+00.93

-DDI_SB- POC 13+63.80

-L- PT 22+89.74

-RPC SPUR LT- PC 10+00.00 =
-RPC- POT 23+27.84

-DDI_NB- PT 17+58.52

-RPC SPUR LT- PT 12+78.31 =
-DDI_NB- 17+84.20

-DDI_NB- PC 21+14.16

-RPD_SPUR_LT- PC 10+00.00 =
-RPD- POC 18+76.90

-RPD- PT 18+95.73

-RPD_SPUR_RT- PC 10+00.00 =
-RPD- POT 19+05.91

-RPD_SPUR_RT- PT 11+71.21 =
-DDI_NB- 22+56.39, 15' LT
-DDI_NB- PRC 22+45.83

-BY6-4

-RPD_SPUR_LT- PT 11+86.86 =
-DDI_SB- POC 25+02.97, 15' LT
-DDI_SB- PT 26+75.43 =
-L- POT 34+84.20, 21' LT

BEGIN CONSTRUCTION
-Y4- POT 10+70.00

CITY OF ASHEVILLE
DB 1195 PG 458

-DDI_SB- PRC 25+06.46

-DDI_NB- PRC 25+04.28

-RPB_SPUR_RT- PT 11+90.09 =
-DDI_NB- POC 24+69.92

-Y4- POT 12+01.34 =
-RPB_SPUR_RT- PC 10+48.34 =L- POT 34+93.61

-L- PRC 34+34.51

-RPB_SPUR_RT- POT 10+00.00 =
-RPB- PC 22+37.08

-RPB- ST 22+19.35

-RPB- 22+25.01, 12' RT
BEGIN 120' TAPER

-RPB_SPUR_LT- PC 10+00.00 =
-RPB- POS 20+97.41

-RPA_SPUR_RT- PT 12+47.26 =
-DDI_SB- POC 16+62.18

-DDI_SB- PRC 16+02.19

-RPA_SPUR_RT- PC 10+00.00 =
-RPA- PT 17+99.92

-RPA_SPUR_LT- PC 10+00.00 =
-RPA- POC 17+90.90

-RPA_SPUR_LT- PT 13+53.23, 15' RT
-DDI_NB- 13+53.23, 15' RT

-RPA- PC 15+66.22

-RPA- ST 15+56.30

BEGIN CONSTRUCTION
-RPA- POS 14+50.00

-RPA- CS 13+56.30

-DDI_SB- PT 17+33.87

-DDI_SB- PC 20+89.50

-RPB_SPUR_LT- PT 12+46.21 =
-DDI_SB- POC 21+32.87

-DDI_SB- PRC 22+48.38

-RPB- CS 20+94.35

-RPB- SC 19+61.86

-RPB- TS 18+36.86

-RPB- ST 16+20.96

-RPB- CS 14+20.96

BEGIN CONSTRUCTION
-RPB- POC 14+00.00

PROPOSED CONCRETE BARRIER RAIL (STRUCTURE ITEM)

PROPOSED DDI BARRIER

PROPOSED MONO CONC ISLAND

PROP. DOUBLE FACED BARRIER TYPE III

PROP. EXPRESSWAY GUTTER

SPECIAL LAT. 'V' DITCH SEE DETAIL B

SPECIAL LAT. 'V' DITCH SEE DETAIL C

TOE PROTECTION W/PSRM SEE DETAIL C

FS-III SEE DETAIL PSH 2-D

REMOVE APPROX. 24 LF OF EX. 18" RCP

REMOVE DI & 5 LF EX. 15" RCP

REMOVE 98 LF EX. 18" RCP

TRENCHLESS INSTALLATION 24" WELDED STEEL

RETAIN BOX REPLACE BROKEN GRATE

RETAIN CONC. DITCH

CLASS B RIP RAP EST 2 TONS EST 7 SY GT

CLASS B RIP RAP EST 8 TONS EST 21 SY GT

15" CSP W/ELBOWS ROD AND LUG CONNECTORS CLASS B RIP RAP EST 2 TONS EST 7 SY GT

15" CSP W/ELBOWS ROD AND LUG CONNECTORS

15" CSP W/ELBOWS

2GI-D

PROP SBG FROM STA. 25+78 TO STA. 26+38 -L- LT

PROP SBG FROM STA. 29+39 TO STA. 30+26 -L- LT

PROP SBG FROM STA. 28+72 TO STA. 29+87 -L- RT

PROP SBG FROM STA. 25+12 TO STA. 25+71 -L- RT

TB 2GI

TB 2GI W/ANGLED GR

TB DI W/STL GR

JB w/MH

BM#5
-BY6B- STA 15+00.88
S 33°13'47" E DIST. 157.04'
ELEV.=2207.64'

-BY6-10

-BY6B-9

-BY6-11

YOUNGBLOOD OIL COMPANY INC.
DB 501 PG 330

BRADSHAW FAMILY LIMITED PARTNERSHIP

ROBERT KRAFTON LOCKE & PATSY LOCKE

BUNCOMBE COUNTY
HENDERSON COUNTY

PAVEMENT REMOVAL

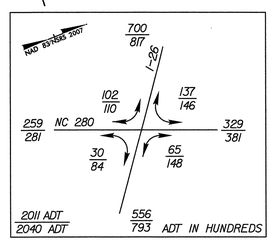

FOR DDI DETAIL SHEET, SEE SHEET 2-E
FOR -L- PROFILE, SEE SHEET 8
FOR -RPD- PROFILE, SEE SHEET 10
FOR -RPD_SPUR_LT- PROFILE, SEE SHEET 10
FOR -RPD_SPUR_RT- PROFILE, SEE SHEET 10
FOR -RPC- PROFILE, SEE SHEET 11
FOR -RPC_SPUR_LT- PROFILE, SEE SHEET 11
FOR -RPC_SPUR_RT- PROFILE, SEE SHEET 11
FOR -RPA- PROFILE, SEE SHEET 12
FOR -RPA_SPUR_LT- PROFILE, SEE SHEET 12
FOR -RPA_SPUR_RT- PROFILE, SEE SHEET 12
FOR -RPB- PROFILE, SEE SHEET 13
FOR -RPB_SPUR_LT- PROFILE, SEE SHEET 13
FOR -RPB_SPUR_RT- PROFILE, SEE SHEET 13
FOR -Y4- PROFILE, SEE SHEET 14
FOR DITCH DETAILS, SEE SHEET 2-D
FOR CURVE DATA, SEE SHEET 2-F
FOR CURB RAMP STATIONING, SEE PAVEMENT MARKING PLANS
FOR DDI BARRIER DETAIL SEE SHEET 2-H
FOR STRUCTURE PLANS, SEE SHEETS S-1 THRU S-7

7/25/2013
R:\5501_Asheville\Proj\I5501_Rdy_psh_05.dgn
USERNAME

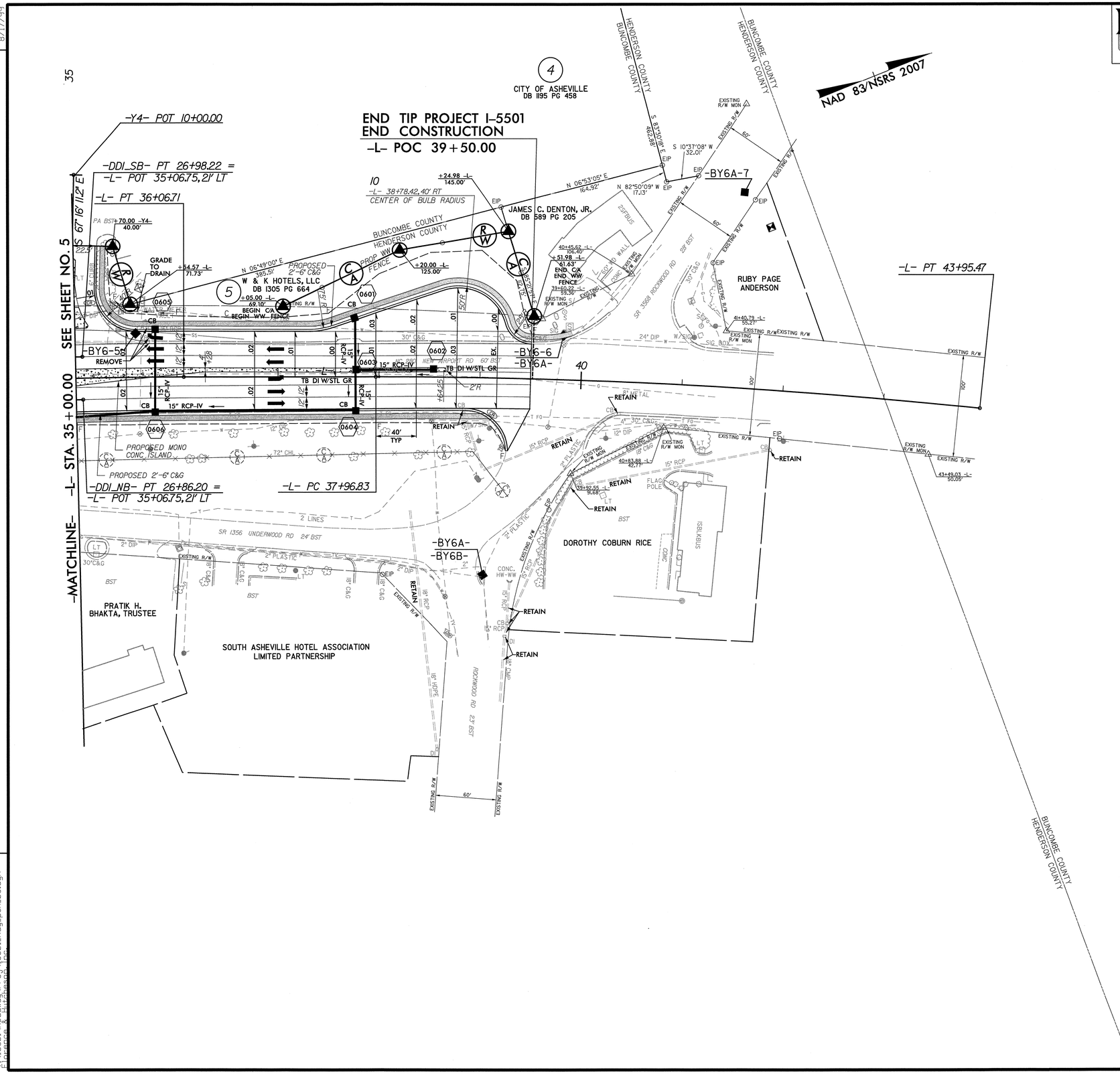

Florence & Hutcheson An ICA Company 5121 Kingdom Way, Suite 100 Raleigh, NC 27607 NC License No: F-0258	PROJECT REFERENCE NO. I-5501	SHEET NO. 6
	R/W SHEET NO.	
	ROADWAY DESIGN ENGINEER	HYDRAULICS ENGINEER
	NORTH CAROLINA PROFESSIONAL SEAL 22606 ENGINEER DAVID C. WALLER 7-8-13	NORTH CAROLINA PROFESSIONAL SEAL 24451 ENGINEER STACEY H. BAILEY 7-8-13

FOR -L- PROFILE, SEE SHEET 9
FOR -Y4- PROFILE, SEE SHEET 14
FOR -RPA- PROFILE, SEE SHEET 12
FOR -RPB- PROFILE, SEE SHEET 13
FOR DITCH DETAILS, SEE SHEET 2-D
FOR CURVE DATA, SEE SHEET 2-F
FOR CURB RAMP STATIONING, SEE PAVEMENT MARKING PLANS

REVISIONS

8/17/99

7/8/2013
I:\I5501\Roadway\Proj\I5501_Rdy_psh_06.dgn
Florence & Hutcheson, Inc.

Florence & Hutcheson
An ICA Company
5121 Kingdom Way, Suite 100 Raleigh, NC 27607
NC License No: F-0258

PROJECT REFERENCE NO.	SHEET NO.
I-5501	7
R/W SHEET NO.	
ROADWAY DESIGN ENGINEER	HYDRAULICS ENGINEER
NORTH CAROLINA PROFESSIONAL SEAL 22606 ENGINEER DAVID C. WALLER 6-4-13	NORTH CAROLINA PROFESSIONAL SEAL 24451 ENGINEER STACEY H. BAILEY 6/4/2013

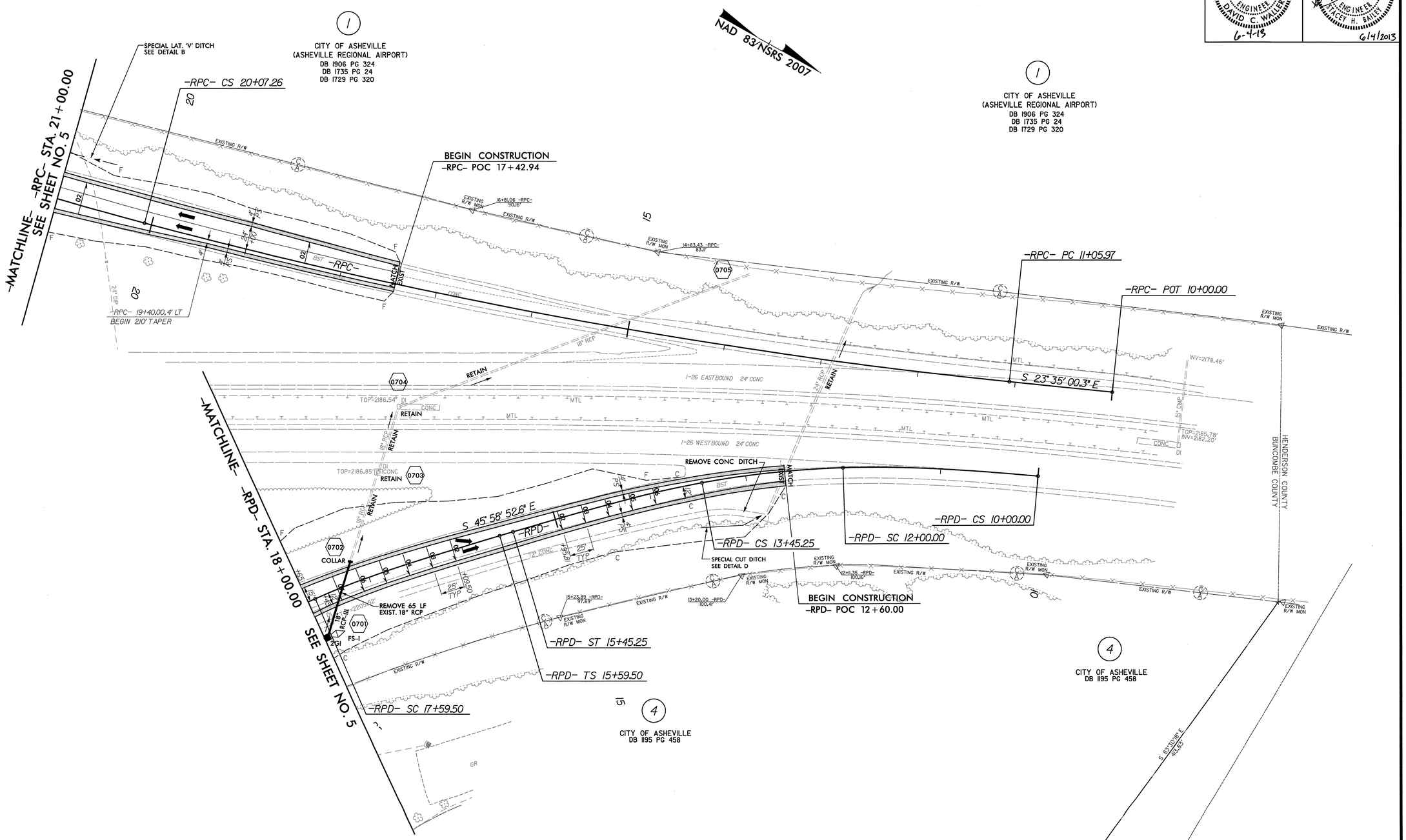

FOR -RPD- PROFILE, SEE SHEET 10
FOR -RPC- PROFILE, SEE SHEET 11
FOR DITCH DETAILS, SEE SHEET 2-D
FOR CURVE DATA SEE SHEET 2-F

8/17/99

6/4/2013
R:\Roadway\Proj\I5501_Rdy_psh_07.dgn
Florence & Hutcheson, Inc.

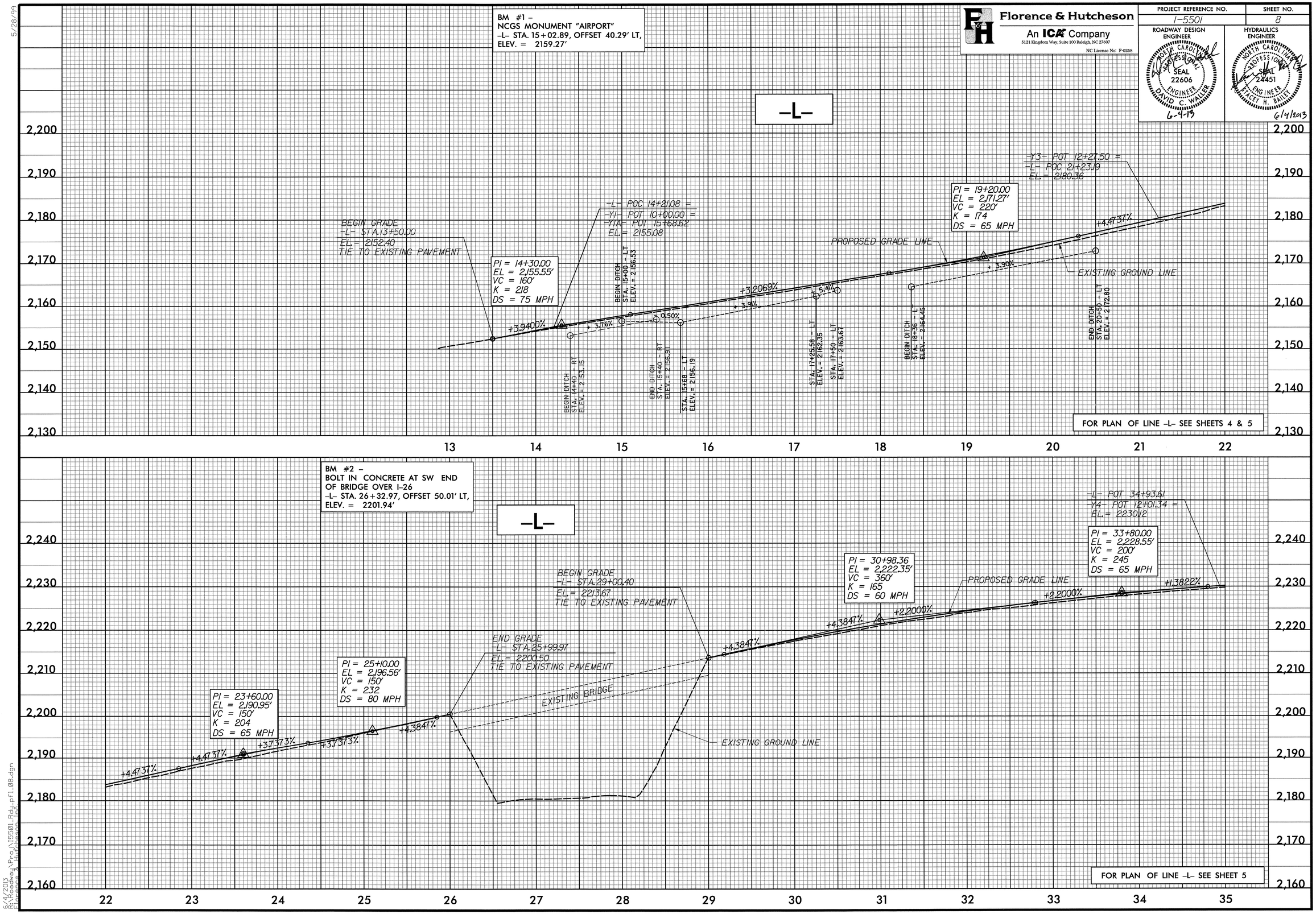

Florence & Hutcheson
An ICA Company
5121 Kingdom Way, Suite 100 Raleigh, NC 27607
NC License No: F-0258

PROJECT REFERENCE NO.	SHEET NO.
I-5501	8

ROADWAY DESIGN ENGINEER
NORTH CAROLINA PROFESSIONAL SEAL 22606 ENGINEER DAVID C. WALLER
6-4-13

HYDRAULICS ENGINEER
NORTH CAROLINA PROFESSIONAL SEAL 24451 ENGINEER STACEY H. BAILEY
6/4/2013

5/28/99

6/4/2013
R:\Roadway\Proj\I5501_Rdy_pfl_08.dgn
Florence & Hutcheson, Inc.

5/28/99

BM #3 –
8" SPIKE SET IN ROOT OF
18" ASH TREE
–L– STA. 35+63.47, OFFSET 87.49' LT,
ELEV. = 2229.59'

–L–

BM #4 –
8" SPIKE SET IN ROOT OF
18" POPLAR TREE
–L– STA. 41+77.75, OFFSET 160.36' LT,
ELEV. = 2226.30'

Florence & Hutcheson
An ICA Company
5121 Kingdom Way, Suite 100 Raleigh, NC 27607
NC License No: P-0258

PROJECT REFERENCE NO.	SHEET NO.
I-5501	9

ROADWAY DESIGN ENGINEER
NORTH CAROLINA PROFESSIONAL SEAL 22606 ENGINEER DAVID C. WALLER
6-4-13

HYDRAULICS ENGINEER
NORTH CAROLINA PROFESSIONAL SEAL 24451 ENGINEER STACEY H. BAILEY
6/4/2013

PI = 36+75.00
EL = 2,232.63'
VC = 210'
K = 122
DS = 55 MPH

PROPOSED GRADE LINE
+1.3822%
-0.3395%
EXISTING GROUND LINE

END GRADE
-L- STA. 39+50.00
EL = 2231.69
TIE TO EXISTING PAVEMENT

2,240
2,230
2,220
2,210
2,200
2,190

35 36 37 38 39 40 41

FOR PLAN OF LINE –L– SEE SHEET 6

6/4/2013
R:\Projects\Proj\15501 Rdy pf1 09.dgn
Florence & Hutcheson, Inc.

5/28/99

Florence & Hutcheson
An ICA Company
5121 Kingdom Way, Suite 100 Raleigh, NC 27607
NC License No: F-0258

PROJECT REFERENCE NO.	SHEET NO.
I-5501	10

ROADWAY DESIGN ENGINEER
NORTH CAROLINA PROFESSIONAL SEAL 22606 ENGINEER DAVID C. WALLER
6-4-13

HYDRAULICS ENGINEER
NORTH CAROLINA PROFESSIONAL SEAL 24451 ENGINEER STACEY H. BAILEY
6/4/2013

-RPD-

BEGIN GRADE
-RPD- STA.13+65.00
EL.= 2192.56
TIE TO EXISTING PAVEMENT

BEGIN RESURFACING
-RPD- STA.12+60.00
TIE TO EXISTING PAVEMENT

PI = 14+95.00
EL = 2,196.20'
VC = 240'
K = 98
DS = 50 MPH

PROPOSED GRADE LINE

+5.2069%

+2.7598%

+2.54%

EXISTING GROUND LINE

BEGIN DITCH
STA.: 12+81 - LT
ELEV.= 2185.06

END DITCH
STA.: 13+65 - LT
ELEV.: 2187.19

PI = 18+50.00
EL = 2,214.68'
VC = 100'
K = 483
DS = 80 MPH

+5.0000%

END GRADE
-RPD- STA.19+05.91 =
-RPD SPUR RT- STA.10+00.00
EL.= 2217.48

-RPD- STA.18+76.90 =
-RPD SPUR LT- STA.10+00.00
EL.= 2216.02

FOR PLAN OF LINE -RPD- SEE SHEETS 5 & 7

-RPD_SPUR_LT-

PI = 10+40.00
EL = 2,218.02'
VC = 80'
K = 35

PI = 11+30.00
EL = 2,224.56'
VC = 62'
K = 13

EXISTING GROUND LINE

+7.2636%

+2.6430%

+5.0000%

PROPOSED GRADE LINE

END GRADE
-RPD_SPUR_LT- STA.11+86.86 =
-L- STA.33+13.90, 50.62' LT
EL.= 2226.06

BEGIN GRADE
-RPD_SPUR_LT- STA.10+00.00 =
-RPD- STA.18+76.90
EL.= 2216.02

FOR PLAN OF LINE -RPD_SPUR_LT- SEE SHEET 5

-RPD_SPUR_RT-

PI = 11+00.00
EL = 2,222.48'
VC = 90'
K = 11

PROPOSED GRADE LINE

+5.0000%

-2.9883%

EXISTING GROUND LINE

END GRADE
-RPD_SPUR_RT- STA.11+71.21 =
-L- STA.30+93.70, 44.15' LT
EL.= 2220.35

BEGIN GRADE
-RPD_SPUR_RT- STA.10+00.00 =
-RPD- STA.19+05.91
EL.= 2217.48

FOR PLAN OF LINE -RPD_SPUR_RT- SEE SHEET 5

6/4/2013
R:\Roadway\Proj\15501_Rdy_pf1_10.dgn
Florence & Hutcheson, Inc.

5/28/99

Florence & Hutcheson An ICA Company 5121 Kingdom Way, Suite 100 Raleigh, NC 27607 NC License No: P-0258	PROJECT REFERENCE NO. I-5501	SHEET NO. 11

ROADWAY DESIGN ENGINEER
NORTH CAROLINA PROFESSIONAL SEAL 22606 ENGINEER DAVID C. WALLER
6-4-13

HYDRAULICS ENGINEER
NORTH CAROLINA PROFESSIONAL SEAL 24451 ENGINEER STACEY H. BAILEY
6/4/2013

–RPC–

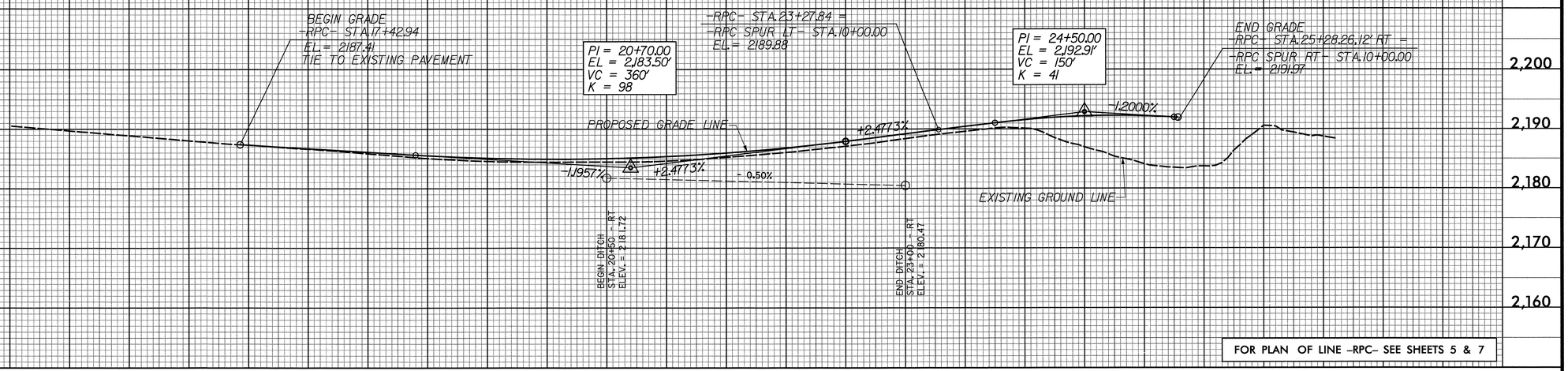

FOR PLAN OF LINE –RPC– SEE SHEETS 5 & 7

–RPC_SPUR_LT–

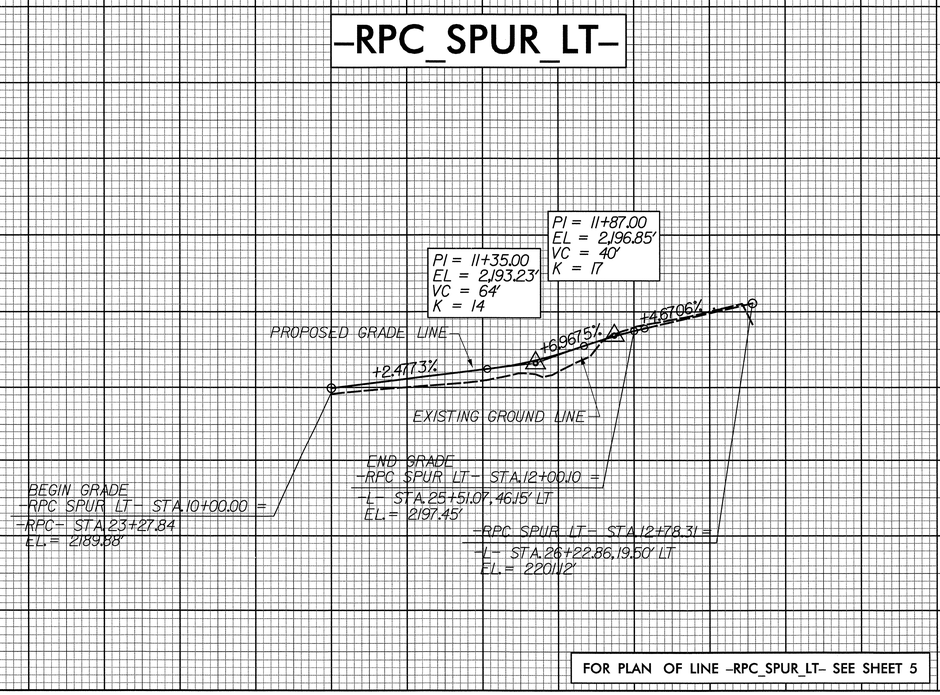

FOR PLAN OF LINE –RPC_SPUR_LT– SEE SHEET 5

–RPC_SPUR_RT–

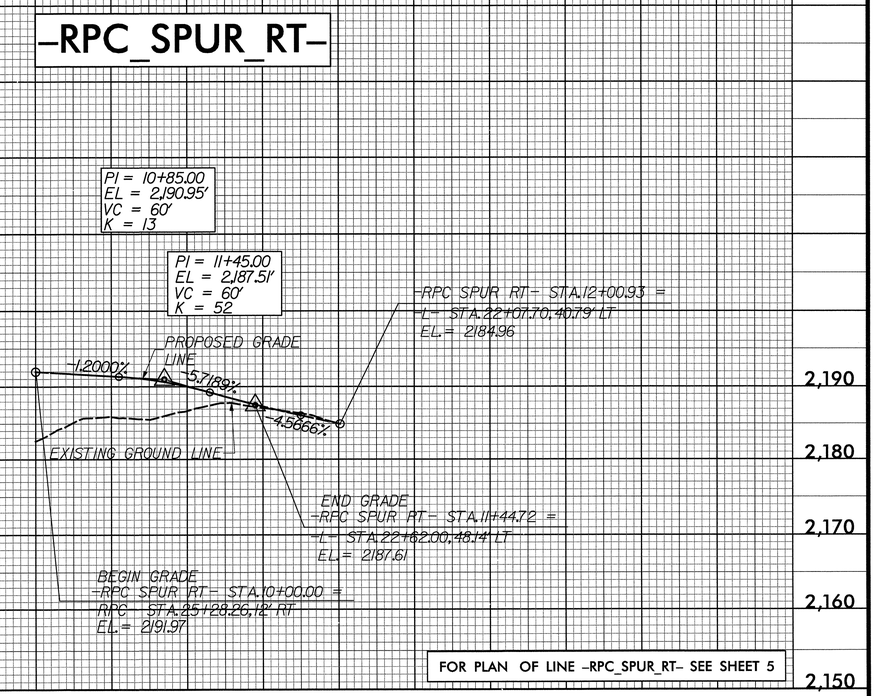

FOR PLAN OF LINE –RPC_SPUR_RT– SEE SHEET 5

6/4/2013
R:\Roadway\Proj\15501_Rdy_pl1.11.dgn
Florence & Hutcheson, Inc.

5/28/99

Florence & Hutcheson
An ICA Company
5121 Kingdom Way, Suite 100 Raleigh, NC 27607
NC License No: F-0258

PROJECT REFERENCE NO.	SHEET NO.
I-5501	12

ROADWAY DESIGN ENGINEER
NORTH CAROLINA PROFESSIONAL SEAL 22606 ENGINEER DAVID C. WALKER
6-4-13

HYDRAULICS ENGINEER
NORTH CAROLINA PROFESSIONAL SEAL 24451 ENGINEER STACEY H. BAILEY
6/4/2013

-RPA-

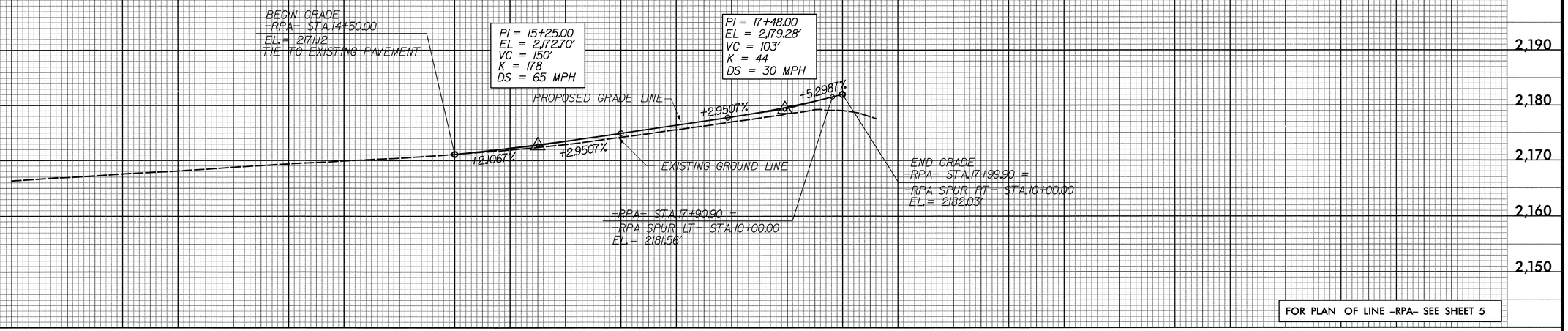

FOR PLAN OF LINE -RPA- SEE SHEET 5

-RPA_SPUR_LT-

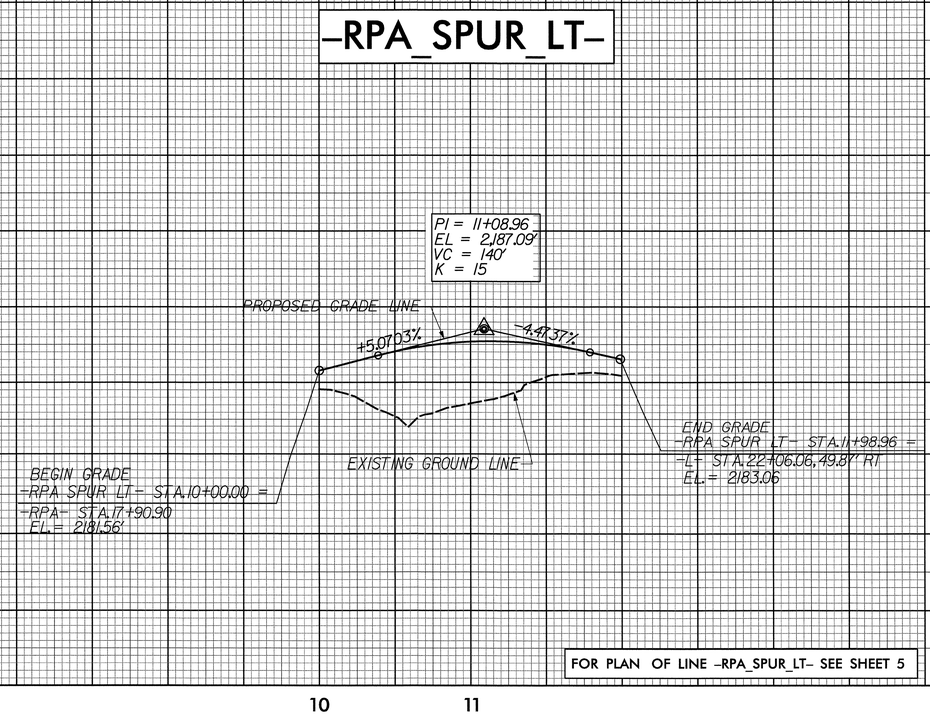

FOR PLAN OF LINE -RPA_SPUR_LT- SEE SHEET 5

-RPA_SPUR_RT-

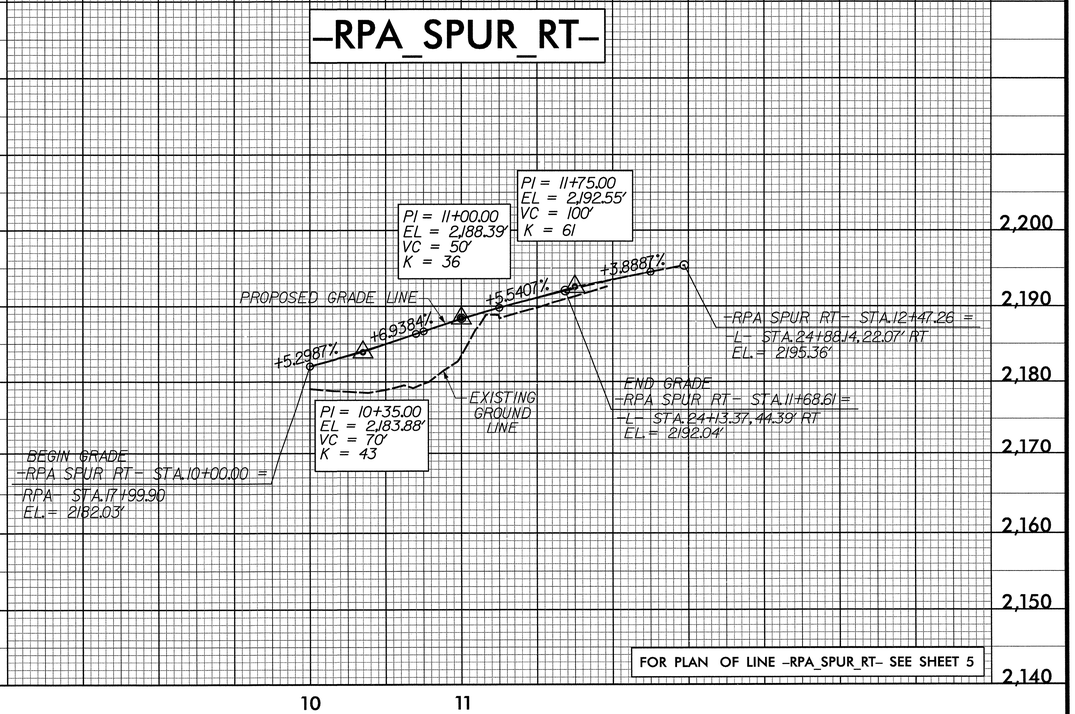

FOR PLAN OF LINE -RPA_SPUR_RT- SEE SHEET 5

6/4/2013
R:\Roadway\Proj\15501_Rdy_pfl_12.dgn
Florence & Hutcheson, Inc.

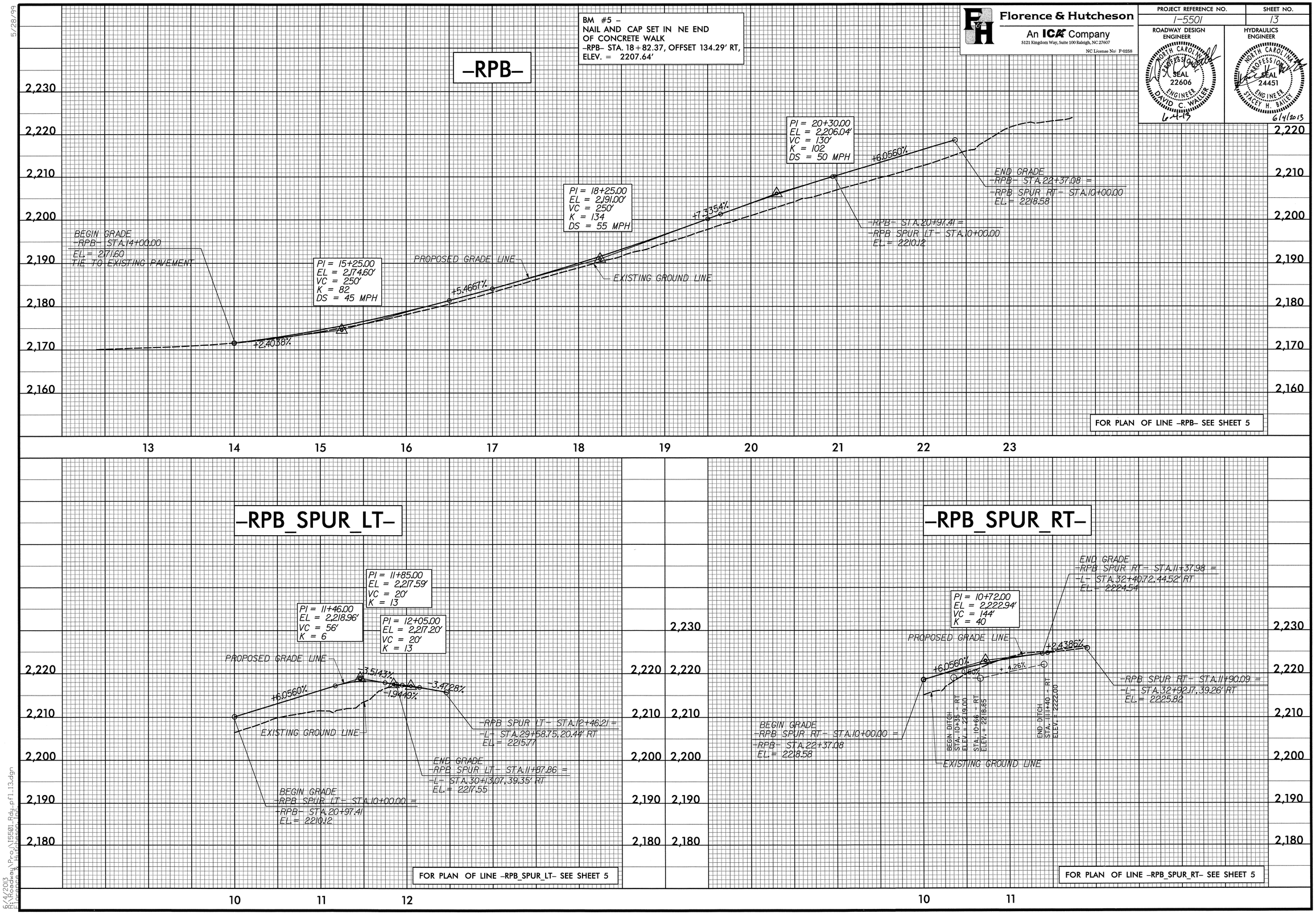

Florence & Hutcheson
An ICA Company
5121 Kingdom Way, Suite 100 Raleigh, NC 27607
NC License No: F-0258
PROJECT REFERENCE NO.
I-5501
SHEET NO.
13
ROADWAY DESIGN ENGINEER
NORTH CAROLINA PROFESSIONAL SEAL 22606 ENGINEER DAVID C. WALLER
6-4-13
HYDRAULICS ENGINEER
NORTH CAROLINA PROFESSIONAL SEAL 24451 ENGINEER STACEY H. BAILEY
6/4/2013
BM #5 -
NAIL AND CAP SET IN NE END
OF CONCRETE WALK
-RPB- STA. 18+82.37, OFFSET 134.29' RT,
ELEV. = 2207.64'
-RPB-
BEGIN GRADE
-RPB- STA.14+00.00
EL = 2171.60
TIE TO EXISTING PAVEMENT
PI = 15+25.00
EL = 2,174.60'
VC = 250'
K = 82
DS = 45 MPH
PI = 18+25.00
EL = 2,191.00'
VC = 250'
K = 134
DS = 55 MPH
PI = 20+30.00
EL = 2,206.04'
VC = 130'
K = 102
DS = 50 MPH
+2.4038%
+5.4667%
+7.3354%
+6.0560%
PROPOSED GRADE LINE
EXISTING GROUND LINE
-RPB- STA.20+97.41 =
-RPB SPUR LT- STA.10+00.00
EL = 2210.12
END GRADE
-RPB- STA.22+37.08 =
-RPB SPUR RT- STA.10+00.00
EL = 2218.58
FOR PLAN OF LINE -RPB- SEE SHEET 5
-RPB_SPUR_LT-
PI = 11+46.00
EL = 2,218.96'
VC = 56'
K = 6
PI = 11+85.00
EL = 2,217.59'
VC = 20'
K = 13
PI = 12+05.00
EL = 2,217.20'
VC = 20'
K = 13
PROPOSED GRADE LINE
+6.0560%
-3.5143%
-1.9449%
-3.4728%
EXISTING GROUND LINE
-RPB SPUR LT- STA.12+46.21 =
-L- STA.29+58.75, 20.44' RT
EL = 2215.77
END GRADE
-RPB SPUR LT- STA.11+87.86 =
-L- STA.30+13.07, 39.35' RT
EL = 2217.55
BEGIN GRADE
-RPB SPUR LT- STA.10+00.00 =
-RPB- STA.20+97.41
EL = 2210.12
FOR PLAN OF LINE -RPB_SPUR_LT- SEE SHEET 5
-RPB_SPUR_RT-
PI = 10+72.00
EL = 2,222.94'
VC = 144'
K = 40
END GRADE
-RPB SPUR RT- STA.11+37.98 =
-L- STA.32+40.72, 44.52' RT
EL = 2224.54
PROPOSED GRADE LINE
+6.0560%
+2.4386%
-RPB SPUR RT- STA.11+90.09 =
-L- STA.32+92.17, 39.26' RT
EL = 2225.82
BEGIN GRADE
-RPB SPUR RT- STA.10+00.00 =
-RPB- STA.22+37.08
EL = 2218.58
BEGIN DITCH
STA. 10+35 - RT
ELEV. = 2219.00
STA. 10+66 - RT
ELEV. = 2218.85
END DITCH
STA. 11+40 - RT
ELEV. = 2222.00
EXISTING GROUND LINE
FOR PLAN OF LINE -RPB_SPUR_RT- SEE SHEET 5
2,230
2,220
2,210
2,200
2,190
2,180
2,170
2,160
13
14
15
16
17
18
19
20
21
22
23
10
11
12

5/28/99

Florence & Hutcheson
An ICA Company
5121 Kingdom Way, Suite 100 Raleigh, NC 27607
NC License No: P-0258

PROJECT REFERENCE NO.	SHEET NO.
I-5501	14

ROADWAY DESIGN ENGINEER

NORTH CAROLINA PROFESSIONAL SEAL 22606 ENGINEER DAVID C. WALLER

6-4-13

HYDRAULICS ENGINEER

NORTH CAROLINA PROFESSIONAL SEAL 24451 ENGINEER STACEY H. BAILEY

6/4/2013

-Y1-

BEGIN GRADE
-Y1- STA. 10+00.00 =
-L- STA. 14+21.08
EL. 2155.08

-Y1- STA. 10+32.31 =
-L- STA. 14+16.57, 32' RT.
EL. 2153.64

END GRADE
-Y1- STA. 10+87.25
EL. 2153.02

-4.4568%
-4.4568%
+3.7406%

PI = 10+65.00
EL = 2,152.18'
VC = 44'
K = 5

FOR PLAN OF LINE -Y1- SEE SHEET 4

-Y1E-

BEGIN GRADE
-Y1E- STA. 10+11.62 =
-Y1- STA. 12+74.91, 11.62' RT.
EL = 2,159.93'

PI = 12+00.00
EL = 2,164.50'
VC = 40'
K = 69

END GRADE
-Y1E- STA. 12+50.00
EL 2,166.04'

+1.1041%
+3.6461%
+3.0709%

PI = 11+30.00
EL = 2,161.95'
VC = 100'
K = 51

FOR PLAN OF LINE -Y1E- SEE SHEET 4

-Y3-

BEGIN GRADE
-Y3- STA. 10+15.00
EL. 2180.32

PI = 10+90.00
EL = 2,181.12'
VC = 90'
K = 124

PI = 11+60.00
EL = 2,182.38'
VC = 50'
K = 18

END GRADE
-Y3- STA. 11+85.51 =
-L- STA. 21+25.14, 41.94' LT.
EL. 2182.12

-Y3- STA. 12+27.50 =
-L- STA. 21+23.19
EL. 2180.36

+1.0670%
+1.7930%
-1.0000%
-4.9167%

FOR PLAN OF LINE -Y3- SEE SHEET 4

-Y4-

BEGIN GRADE
-Y4- STA. 10+70.00
EL. 2227.48

END GRADE
-Y4- STA. 11+53.39 =
-L- STA. 34+95.73, 47.91' LT.
EL. 2229.19'

-Y4- STA. 12+01.34 =
-L- STA. 34+93.61
EL. 2230.12'

+2.0525%
+1.9362%

FOR PLAN OF LINE -Y4- SEE SHEETS 5 & 6

6/4/2013
R:\Roadway\Proj\I5501_Rdy_prfl_14.dgn
Florence & Hutcheson, Inc.

5/28/99

Florence & Hutcheson
An ICA Company
5121 Kingdom Way, Suite 100 Raleigh, NC 27607
NC License No: F-0288

PROJECT REFERENCE NO.	SHEET NO.
I-5501	15

ROADWAY DESIGN ENGINEER
NORTH CAROLINA PROFESSIONAL SEAL 22606 ENGINEER DAVID C. WALLER
6-4-13

HYDRAULICS ENGINEER
NORTH CAROLINA PROFESSIONAL SEAL 24451 ENGINEER STACEY H. BAILEY
6/4/2013

–Y1A–

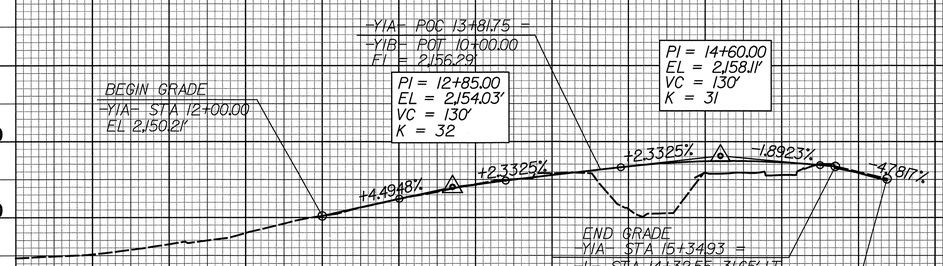

FOR PLAN OF LINE –Y1A– SEE SHEET 4

–Y1B–

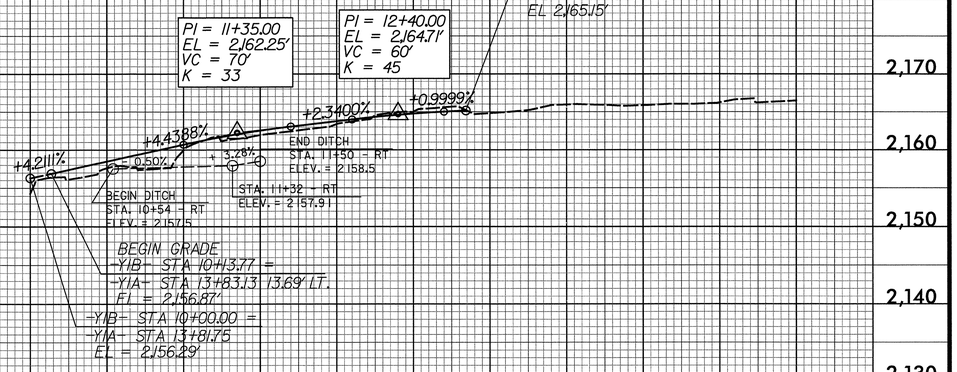

FOR PLAN OF LINE –Y1B– SEE SHEET 4

–Y1C–

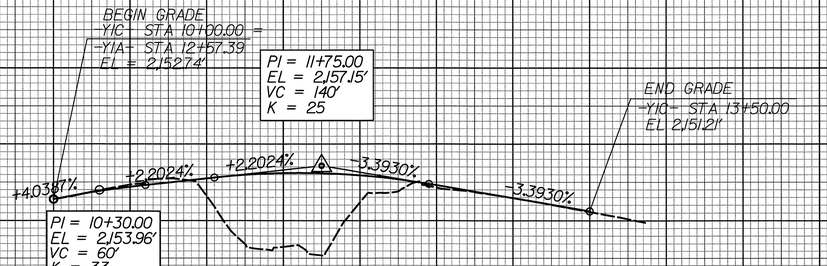

FOR PLAN OF LINE –Y1C– SEE SHEET 4

–Y1D–

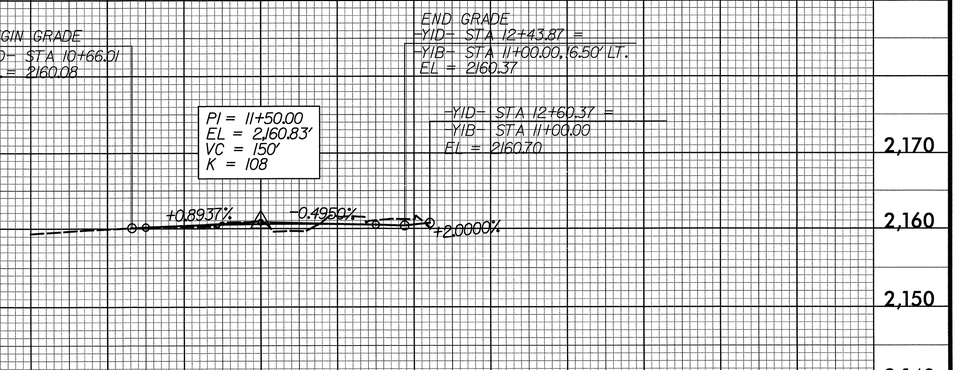

FOR PLAN OF LINE –Y1D– SEE SHEET 4

6/4/2013
R:\Roadway Proj\I5501_Rdy_pf1_15.dgn
Florence & Hutcheson, Inc.