TIP PROJECT: R-3421C

CONTRACT: C202962

STATE OF NORTH CAROLINA
DIVISION OF HIGHWAYS

RICHMOND COUNTY

STATE	STATE PROJECT REFERENCE NO.	SHEET NO.	TOTAL SHEETS
N.C.	R-3421C		

STATE PROJ. NO.	F.A. PROJ. NO.	DESCRIPTION
34542.1.2	NHF-0220(4)	PE
34542.2.5	HPPNHF-0220(56)	R/W & UTILITIES
34542.3.FS5	HPPNHF-0220(65)	CONSTRUCTION

LOCATION: US 220 BYPASS FROM 0.2 MILES SOUTHWEST OF SR 1304 (HARRINGTON RD) TO US 220 BUSINESS/BYPASS INTERCHANGE SOUTH OF ELLERBE

TYPE OF WORK: GRADING, PAVING, DRAINAGE, SIGNING, STRUCTURES, AND CULVERT

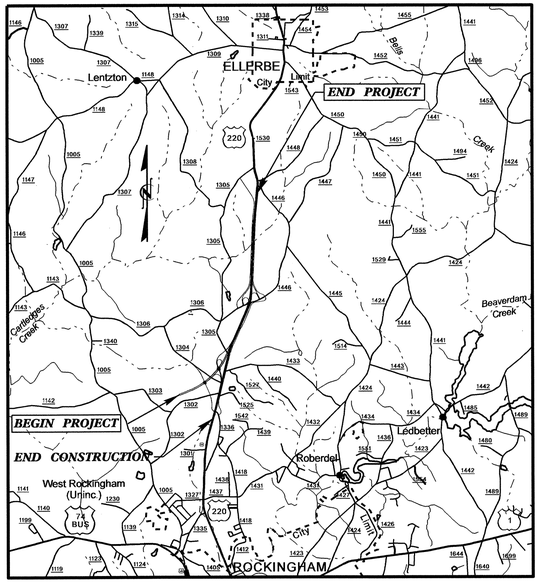

VICINITY MAP

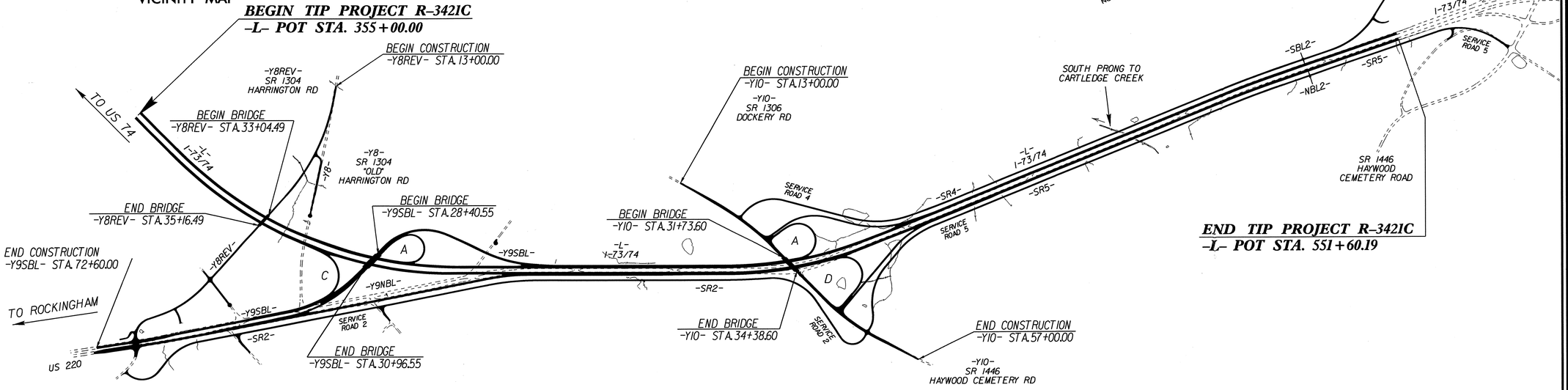

STRUCTURES

STATE OF NORTH CAROLINA DEPARTMENT OF TRANSPORTATION

DESIGN DATA

ADT 2012	=	14,270
ADT 2032	=	27,520
DHV	=	10 %
D	=	60 %
T	=	26 % *
V	=	70 MPH

* TTST 17 % DUAL 9 %
FUNC. CLASS = INTERSTATE
STATEWIDE TIER

PROJECT LENGTH

LENGTH ROADWAY TIP PROJECT R-3421C = 3.724 mi
TOTAL LENGTH TIP PROJECT R-3421C = 3.724 mi

-L- LINE USED FOR PROJECT LENGTH

Prepared for:
DIVISION OF HIGHWAYS
1000 Birch Ridge Dr., NC, 27610

2012 STANDARD SPECIFICATIONS

LETTING DATE:
JANUARY 21, 2014

B.C. HUNT, PE
PROJECT ENGINEER

V.A. PATEL, PE
PROJECT DESIGN ENGINEER

STRUCTURES MANAGEMENT UNIT
RALEIGH, NC 27610

DIVISION OF HIGHWAYS
STATE OF NORTH CAROLINA

09/08/06
18-SEP-2013 12:15
$$$$$$$$$$$$$$$$DGN$$$$$$$$$$$$$$$$$$
thcarroll

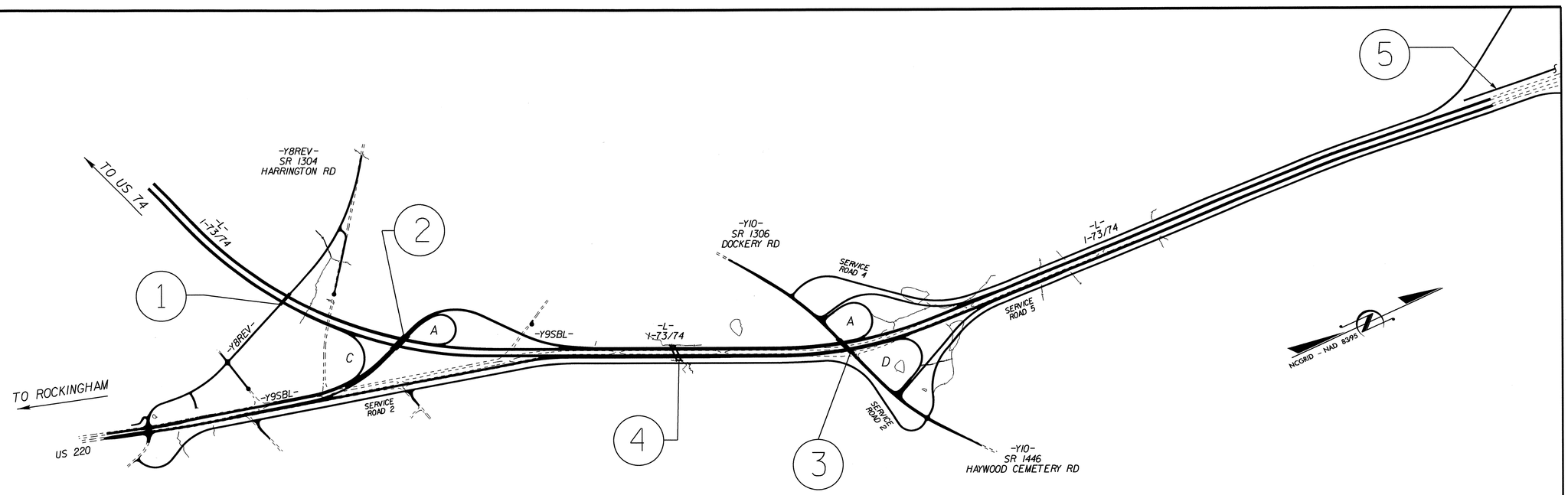

INDEX

STR. No.	STATION	DESCRIPTION	SHEETS
1	378+94.34 -L-	BRIDGE ON SR 1304 OVER US 220 BYPASS	S-1 THRU S-27
2	395+64.54 -L-	BRIDGE ON US 220 BUS. SBL OVER US 220 BYPASS	S-28 THRU S-58
3	456+99.33 -L-	BRIDGE ON SR 1306/SR 1446 OVER US 220 BYPASS	S-59 THRU S-86
4	509+83.00 -L-	DOUBLE 9 FT. X 9 FT. RCBC	C-1 THRU C-8
5	545+93.58 -L-	SOUND BARRIER WALL	W-1 THRU W-3

PROJECT NO. R-3421C

RICHMOND COUNTY

STATE OF NORTH CAROLINA
DEPARTMENT OF TRANSPORTATION
RALEIGH

INDEX

REVISIONS					
NO.	BY:	DATE:	NO.	BY:	DATE:
1			3		
2			4		

DRAWN BY : J.P. ADAMS DATE : 7/12
CHECKED BY : V.A. PATEL DATE : 7/12

18-MAR-2013 11:49
Y:\structures\Plans\str01_Y8REV\R3421C_SD_TSH.dgn
vpatel

F.A. PROJECT NO. HPPNHS-0220(65)

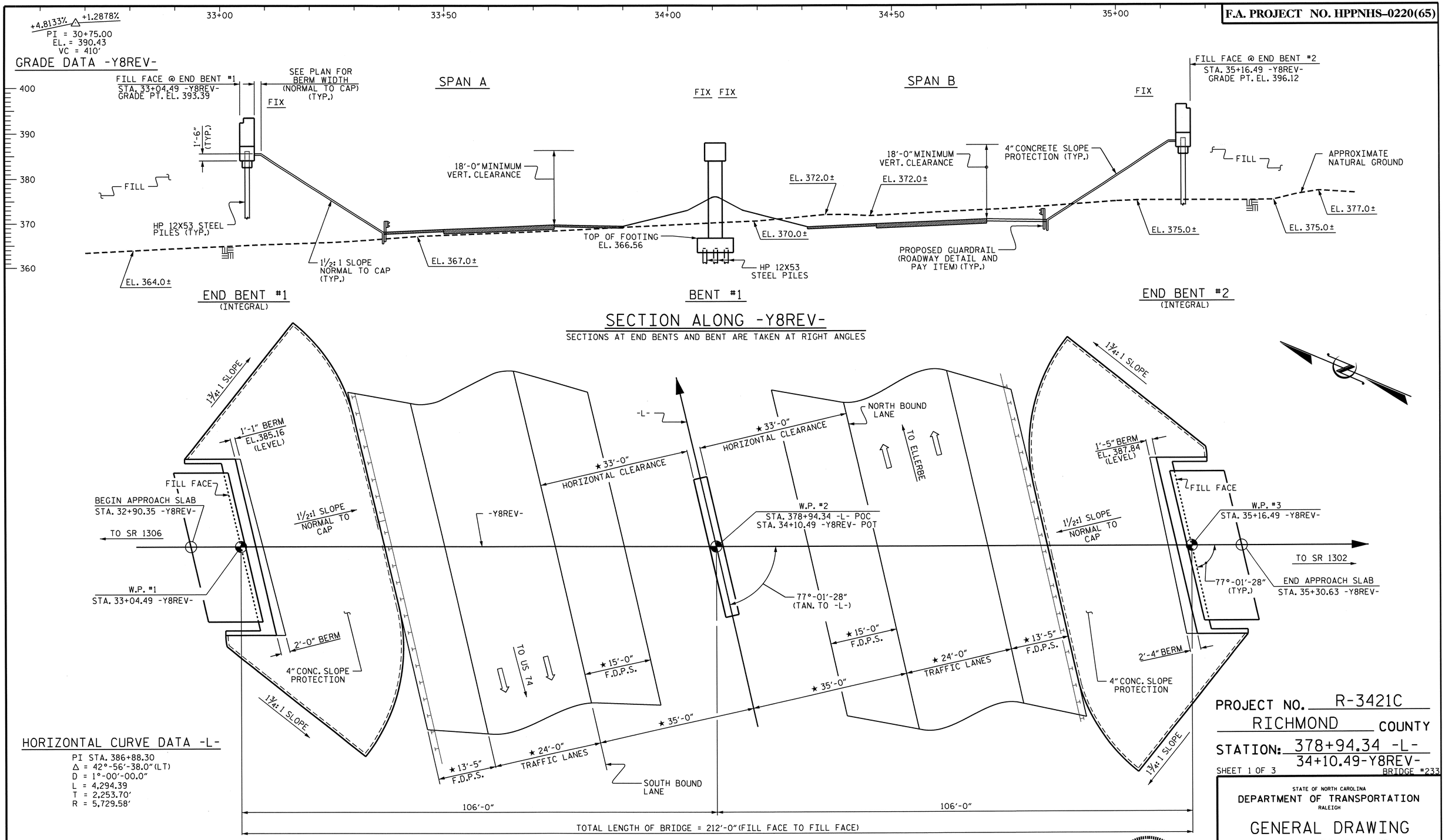

HORIZONTAL CURVE DATA -L-

PI STA. 386+88.30
Δ = 42°-56'-38.0" (LT)
D = 1°-00'-00.0"
L = 4,294.39
T = 2,253.70'
R = 5,729.58'

PLAN

FOR CLARITY, PILES & FOOTINGS ARE NOT SHOWN IN PLAN VIEW.

★ RADIAL DIMENSIONS

PROJECT NO. R-3421C
RICHMOND COUNTY
STATION: 378+94.34 -L-
34+10.49-Y8REV-
SHEET 1 OF 3 BRIDGE #233

STATE OF NORTH CAROLINA
DEPARTMENT OF TRANSPORTATION
RALEIGH

GENERAL DRAWING
FOR BRIDGE OVER
US 220 BYPASS ON SR 1304
(HARRINGTON RD.) BETWEEN
SR 1306 AND SR 1302

NORTH CAROLINA PROFESSIONAL SEAL 10081 ENGINEER BUCY CHARLES HUNT 3/19/13

NORTH CAROLINA PROFESSIONAL SEAL 23371 ENGINEER VIPUL A. PATEL 3/19/13

REVISIONS						SHEET NO.
NO.	BY:	DATE:	NO.	BY:	DATE:	S-1
1			3			TOTAL SHEETS
2			4			86

DRAWN BY : J. G. KHARVA DATE : 3/06/12
CHECKED BY : K. D. LAYNE DATE : 3/26/12

18-MAR-2013 11:49
R:\structures\Plans\str01_Y8REV\R-3421C_SD_GD.dgn
vpatel

STR. #1

NOTES

FOR PILES, SEE SECTION 450 OF THE STANDARD SPECIFICATIONS.

PILES AT END BENT No.1 AND END BENT No.2 ARE DESIGNED FOR A FACTORED RESISTANCE OF 115 TONS PER PILE.

DRIVE PILES AT END BENT No.1 AND END BENT No.2 TO A REQUIRED DRIVING RESISTANCE OF 195 TONS PER PILE.

PILES AT BENT No.1 ARE DESIGNED FOR A FACTORED RESISTANCE OF 130 TONS PER PILE.

DRIVE PILES AT BENT No.1 TO A REQUIRED DRIVING RESISTANCE OF 220 TONS PER PILE.

TESTING PILES WITH THE PILE DRIVING ANALYZER (PDA) DURING DRIVING, RESTRIKING, OR REDRIVING MAY BE REQUIRED. THE ENGINEER WILL DETERMINE THE NEED FOR PDA TESTING. FOR PDA TESTING, SEE SECTION 450 OF THE STANDARD SPECIFICATIONS.

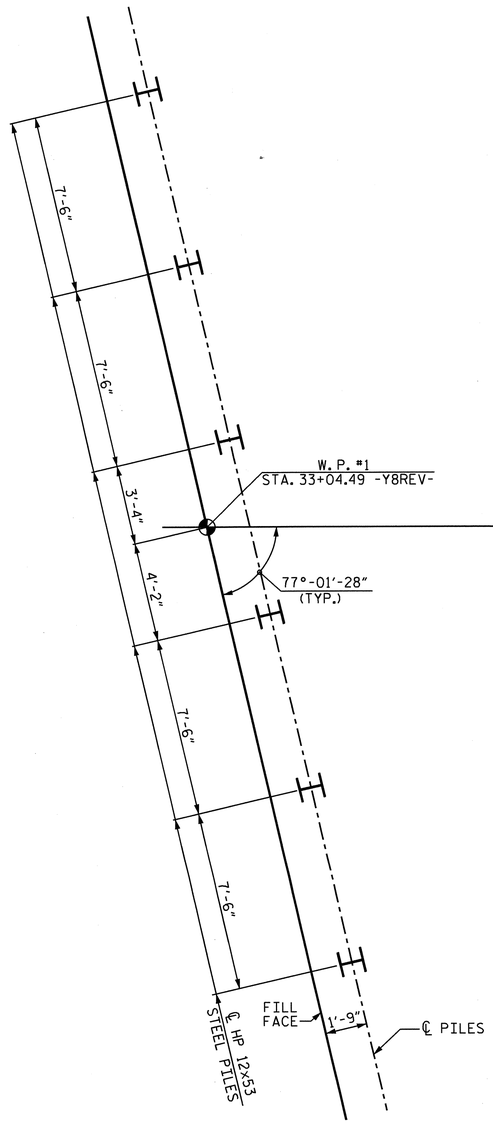

END BENT #1

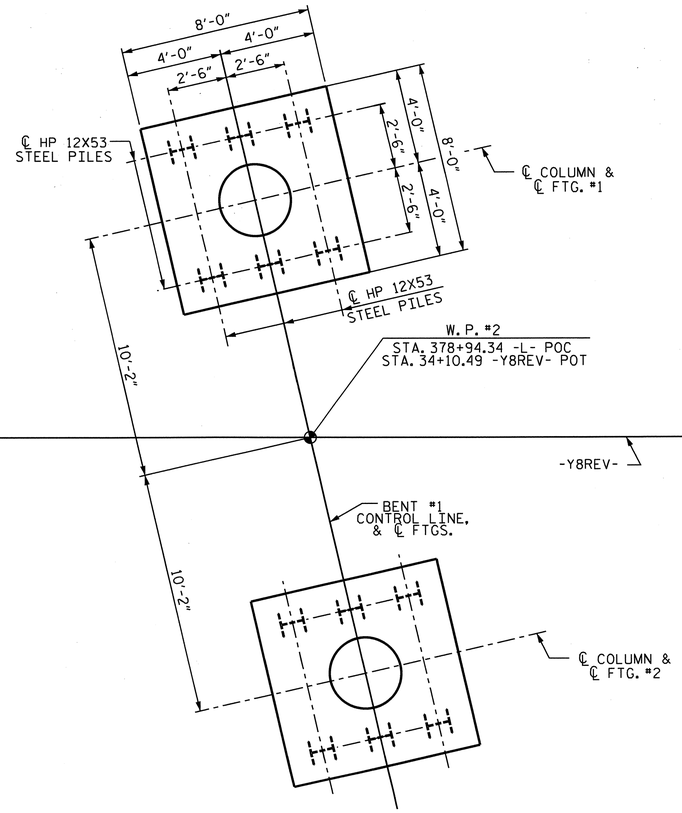

BENT #1

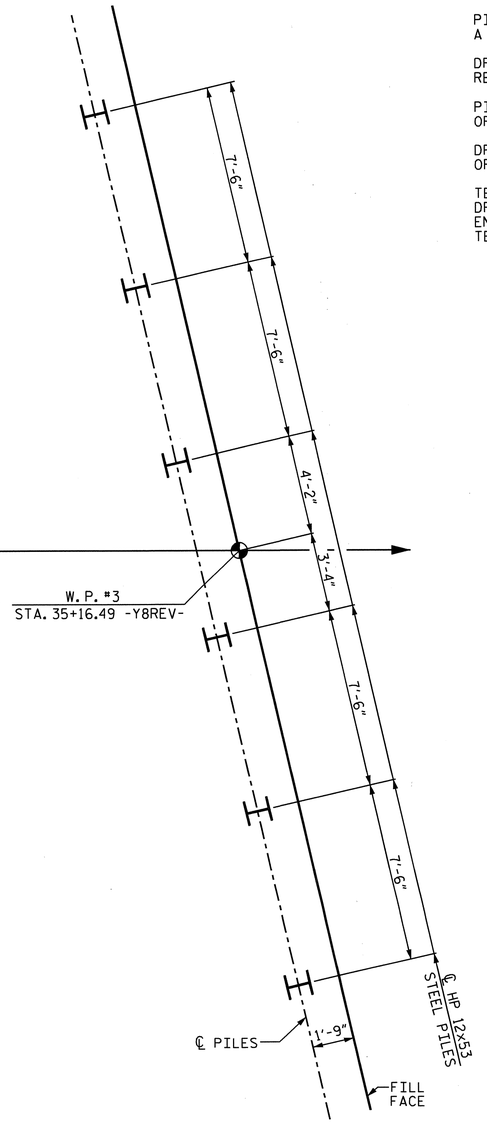

END BENT #2

FOUNDATION LAYOUT

DIMENSIONS LOCATING PILES ARE SHOWN TO THE CENTERLINE OF PILES.
ALL COLUMN FOOTINGS AND PILE SPACINGS ARE IDENTICAL AT BENT.

NORTH CAROLINA PROFESSIONAL SEAL 23371 ENGINEER VIPUL A. PATEL
3|19|13

PROJECT NO. R-3421C
RICHMOND COUNTY
STATION: 378+94.34 -L-

SHEET 2 OF 3

STATE OF NORTH CAROLINA
DEPARTMENT OF TRANSPORTATION
RALEIGH

GENERAL DRAWING
FOR BRIDGE OVER
US 220 BYPASS ON SR 1304
(HARRINGTON RD.) BETWEEN
SR 1306 AND SR 1302

REVISIONS						SHEET NO.
NO.	BY:	DATE:	NO.	BY:	DATE:	S-2
1			3			TOTAL SHEETS
2			4			86

DRAWN BY : J. G. KHARVA DATE : 03/07/12
CHECKED BY : K. D. LAYNE DATE : 03/26/12

08-AUG-2012 15:13
R:\structures\Plans\str01_Y8REV\R-3421C_SD_GD.dgn
jpadams

STR. #1

BENCH MARK #28: 118.24' RIGHT OF STA. 371+99.31 -L-, EL. 410.51

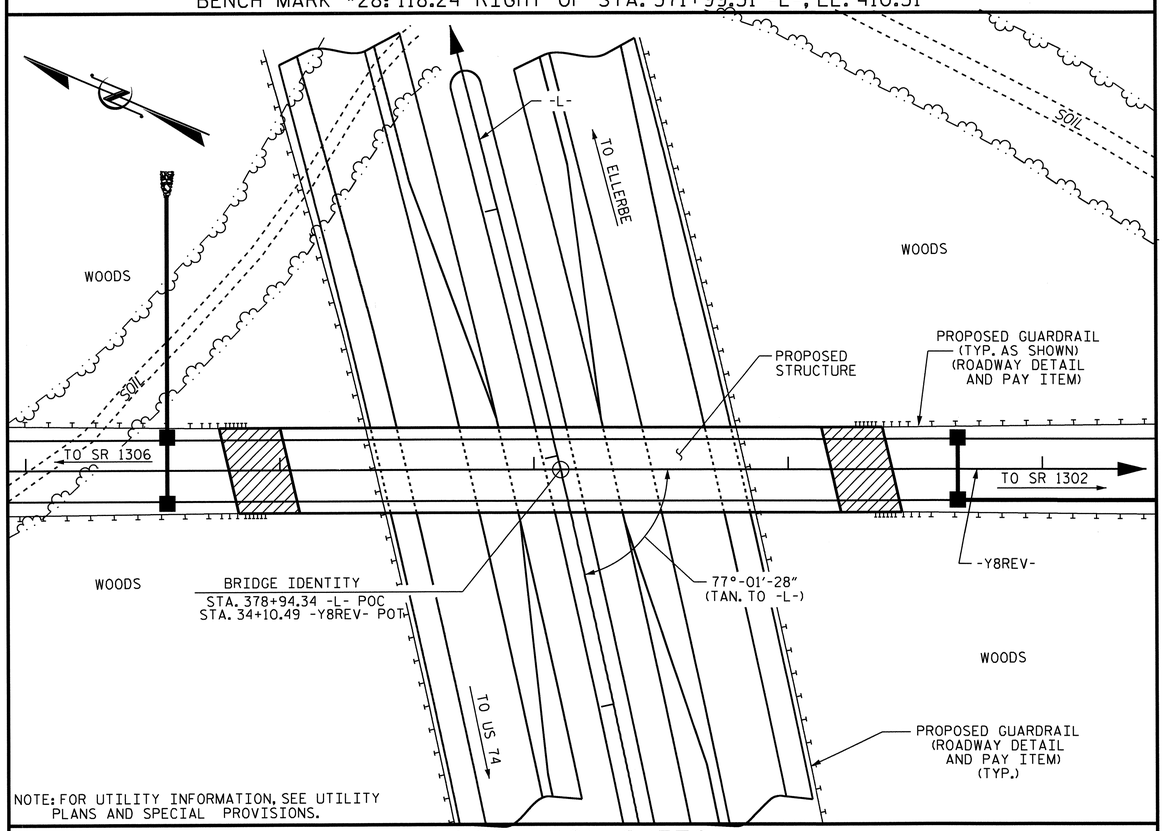

NOTE: FOR UTILITY INFORMATION, SEE UTILITY PLANS AND SPECIAL PROVISIONS.

LOCATION SKETCH

NOTES

ASSUMED LIVE LOAD = HL 93 OR ALTERNATE LOADING.

FOR OTHER DESIGN DATA AND GENERAL NOTES, SEE SHEET SN.

FOR EROSION CONTROL MEASURES, SEE EROSION CONTROL PLANS.

THIS BRIDGE HAS BEEN DESIGNED IN ACCORDANCE WITH THE AASHTO LRFD BRIDGE DESIGN SPECIFICATIONS.

PRESTRESSED CONCRETE DECK PANELS MAY BE USED IN LIEU OF METAL STAY-IN-PLACE FORMS IN ACCORDANCE WITH THE STANDARD SPECIFICATIONS.

REMOVABLE FORMS MAY BE USED IN LIEU OF METAL STAY-IN-PLACE FORMS IN ACCORDANCE WITH THE STANDARD SPECIFICATIONS.

THE CONTRACTOR SHALL PROVIDE INDEPENDENT ASSURANCE SAMPLES OF REINFORCING STEEL AS FOLLOWS: FOR PROJECTS REQUIRING UP TO 400 TONS OF REINFORCING STEEL, ONE 30 INCH SAMPLE OF EACH SIZE BAR USED, AND FOR PROJECTS REQUIRING OVER 400 TONS OF REINFORCING STEEL, TWO 30 INCH SAMPLES OF EACH SIZE BAR USED. THE BARS FROM WHICH THE SAMPLES ARE TAKEN MUST THEN BE SPLICED WITH REPLACEMENT BARS OF THE SIZE AND LENGTH OF THE SAMPLE, PLUS A MINIMUM LAP SPLICE OF THIRTY BAR DIAMETERS. PAYMENT FOR THE SAMPLES OF REINFORCING STEEL SHALL BE CONSIDERED INCIDENTAL TO VARIOUS PAY ITEMS.

NEEDLE BEAMS WILL NOT BE ALLOWED UNLESS OTHERWISE CALLED FOR ON THE PLANS OR APPROVED BY THE ENGINEER.

FOR SUBMITTAL OF WORKING DRAWINGS, SEE SPECIAL PROVISIONS.

FOR FALSEWORK AND FORMWORK, SEE SPECIAL PROVISIONS.

FOR CRANE SAFETY, SEE SPECIAL PROVISIONS.

FOR GROUT FOR STRUCTURES, SEE SPECIAL PROVISIONS.

WORK SHALL NOT BE STARTED ON THE BRIDGE UNTIL ROADWAY SECTION HAS BEEN EXCAVATED.

THE BRIDGE IS LOCATED IN SEISMIC ZONE 2.

FOR PLACING LOAD ON STRUCTURE MEMBERS, SEE SPECIAL PROVISIONS.

TOTAL BILL OF MATERIAL

	FOUNDATION EXCAVATION	PDA TESTING	REINFORCED CONCRETE DECK SLAB	GROOVING BRIDGE FLOORS	CLASS A CONCRETE	BRIDGE APPROACH SLABS	REINFORCING STEEL	SPIRAL COLUMN REINFORCING STEEL	MODIFIED 63" PRESTRESSED CONCRETE GIRDERS		HP 12x53 STEEL PILES		PILE REDRIVES	CONCRETE BARRIER RAIL	4" SLOPE PROTECTION	ELASTOMERIC BEARINGS
	LUMP SUM	EACH	SQ. FT.	SQ. FT.	CU. YDS.	LUMP SUM	LBS.	LBS.	NO.	LIN. FT.	NO.	LIN. FT.	EACH	LIN. FT.	SQ. YDS.	LUMP SUM
SUPERSTRUCTURE			7,049	6,433					8	836.00				420.58		LUMP SUM
END BENT #1					18.9		3,349				6	510	6		345	
BENT #1	LUMP SUM				43.4		8,326	805			12	720	12			
END BENT #2					18.9		3,351				6	510	6		330	
TOTAL	LUMP SUM	1	7,049	6,433	81.2	LUMP SUM	15,026	805	8	836.00	24	1,740	24	420.58	675	LUMP SUM

NORTH CAROLINA PROFESSIONAL SEAL 23371 ENGINEER VIRUL A. PATEL
9/19/13

PROJECT NO. R-3421C
RICHMOND COUNTY
STATION: 378+94.34 -L-

SHEET 3 OF 3

STATE OF NORTH CAROLINA
DEPARTMENT OF TRANSPORTATION
RALEIGH

GENERAL DRAWING
FOR BRIDGE OVER
US 220 BYPASS ON SR 1304
(HARRINGTON RD.) BETWEEN
SR 1306 AND SR 1302

REVISIONS						SHEET NO.
NO.	BY:	DATE:	NO.	BY:	DATE:	S-3
1			3			TOTAL SHEETS
2			4			86

DRAWN BY : J. G. KHARVA DATE : 3/06/12
CHECKED BY : K. D. LAYNE DATE : 3/26/12

18-SEP-2013 12:15
R:\structures\Plans\str01_Y8REV\R-3421C_SD_GD.dgn
thcarroll

STR. #1

LOAD AND RESISTANCE FACTOR RATING (LRFD) SUMMARY FOR PRESTRESSED CONCRETE GIRDERS

LEVEL		VEHICLE	WEIGHT (W) (TONS)	⟨#⟩ CONTROLLING LOAD RATING	MINIMUM RATING FACTORS (RF)	TONS = W X RF	STRENGTH I LIMIT STATE											SERVICE III LIMIT STATE						COMMENT NUMBER
								MOMENT					SHEAR						MOMENT					
							LIVELOAD FACTORS	DISTRIBUTION FACTORS (DF)	RATING FACTOR	SPAN	GIRDER LOCATION	DISTANCE FROM LEFT END OF SPAN (ft)	DISTRIBUTION FACTORS (DF)	RATING FACTOR	SPAN	GIRDER LOCATION	DISTANCE FROM LEFT END OF SPAN (ft)	LIVELOAD FACTORS	DISTRIBUTION FACTORS (DF)	RATING FACTOR	SPAN	GIRDER LOCATION	DISTANCE FROM LEFT END OF SPAN (ft)	
DESIGN LOAD RATING		HL-93(Inv)	N/A	1	1.029	--	1.75	0.785	1.44	A	EL	51.54	0.89	1.27	A	I	20.616	0.80	0.785	1.03	A	EL	51.54	
		HL-93(Opr)	N/A	--	1.647	--	1.35	0.785	1.87	A	EL	51.54	0.89	1.65	A	I	20.616	N/A	--	--	--	--	--	
		HS-20(Inv)	36.000	2	1.446	52.055	1.75	0.785	2.03	A	EL	51.54	0.89	1.66	A	I	20.616	0.80	0.785	1.45	A	EL	51.54	
		HS-20(Opr)	36.000	--	2.154	77.535	1.35	0.785	2.63	A	EL	51.54	0.89	2.15	A	I	20.616	N/A	--	--	--	--	--	
LEGAL LOAD RATING	SV	SNSH	13.500	--	3.447	46.54	1.4	0.785	6.05	A	EL	51.54	0.89	5.07	A	I	20.616	0.80	0.785	3.45	A	EL	51.54	
		SNGARBS2	20.000	--	2.489	49.777	1.4	0.785	4.37	A	EL	51.54	0.89	3.56	A	I	20.616	0.80	0.785	2.49	A	EL	51.54	
		SNAGRIS2	22.000	--	2.325	51.146	1.4	0.785	4.08	A	EL	51.54	0.89	3.29	A	I	20.616	0.80	0.785	2.32	A	EL	51.54	
		SNCOTTS3	27.250	--	1.713	46.684	1.4	0.785	3.01	A	EL	51.54	0.89	2.53	A	I	20.616	0.80	0.785	1.71	A	EL	51.54	
		SNAGGRS4	34.925	--	1.401	48.92	1.4	0.785	2.46	A	EL	51.54	0.89	2.07	A	I	20.616	0.80	0.785	1.40	A	EL	51.54	
		SNS5A	35.550	--	1.372	48.768	1.4	0.785	2.41	A	EL	51.54	0.89	2.08	A	I	20.616	0.80	0.785	1.37	A	EL	51.54	
		SNS6A	39.950	--	1.246	49.781	1.4	0.785	2.19	A	EL	51.54	0.89	1.89	A	I	20.616	0.80	0.785	1.25	A	EL	51.54	
		SNS7B	42.000	--	1.186	49.82	1.4	0.785	2.08	A	EL	51.54	0.89	1.84	A	I	20.616	0.80	0.785	1.19	A	EL	51.54	
	TTST	TNAGRIT3	33.000	--	1.516	50.023	1.4	0.785	2.66	A	EL	51.54	0.89	2.26	A	I	20.616	0.80	0.785	1.52	A	EL	51.54	
		TNT4A	33.075	--	1.519	50.245	1.4	0.785	2.67	A	EL	51.54	0.89	2.21	A	I	20.616	0.80	0.785	1.52	A	EL	51.54	
		TNT6A	41.600	--	1.23	51.185	1.4	0.785	2.16	A	EL	51.54	0.89	1.93	A	I	20.616	0.80	0.785	1.23	A	EL	51.54	
		TNT7A	42.000	--	1.23	51.676	1.4	0.785	2.16	A	EL	51.54	0.89	1.9	A	I	20.616	0.80	0.785	1.23	A	EL	51.54	
		TNT7B	42.000	--	1.258	52.832	1.4	0.785	2.21	A	EL	51.54	0.89	1.81	A	I	20.616	0.80	0.785	1.26	A	EL	51.54	
		TNAGRIT4	43.000	--	1.208	51.932	1.4	0.785	2.12	A	EL	51.54	0.89	1.75	A	I	20.616	0.80	0.785	1.21	A	EL	51.54	
		TNAGT5A	45.000	--	1.144	51.48	1.4	0.785	2.01	A	EL	51.54	0.89	1.73	A	I	20.616	0.80	0.785	1.14	A	EL	51.54	
		TNAGT5B	45.000	3	1.135	51.069	1.4	0.785	1.99	A	EL	51.54	0.89	1.67	A	I	20.616	0.80	0.785	1.13	A	EL	51.54	

LOAD FACTORS:

DESIGN LOAD RATING FACTORS	LIMIT STATE	γ_{DC}	γ_{DW}
	STRENGTH I	1.25	1.50
	SERVICE III	1.00	1.00

NOTES:

MINIMUM RATING FACTORS ARE BASED ON THE STRENGTH I AND SERVICE III LIMIT STATES.

ALLOWABLE STRESSES FOR SERVICE III LIMIT STATE ARE AS REQUIRED FOR DESIGN.

COMMENTS:

1. SPAN A & B ARE EQUIVALENT IN LENGTH
2.
3.
4.

⟨#⟩ CONTROLLING LOAD RATING

⟨1⟩ DESIGN LOAD RATING (HL-93)

⟨2⟩ DESIGN LOAD RATING (HS-20)

⟨3⟩ LEGAL LOAD RATING **

** SEE CHART FOR VEHICLE TYPE

GIRDER LOCATION

I - INTERIOR GIRDER
EL - EXTERIOR LEFT GIRDER
ER - EXTERIOR RIGHT GIRDER

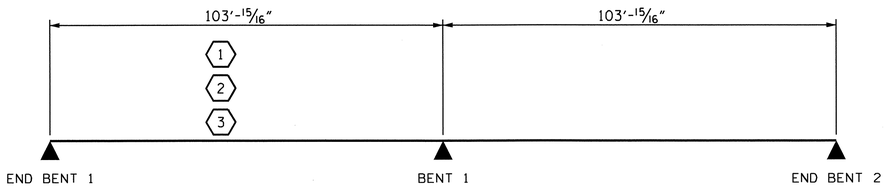

LRFR SUMMARY

PROJECT NO. R-3421C

RICHMOND COUNTY

STATION: 378+94.34 -L-

STATE OF NORTH CAROLINA
DEPARTMENT OF TRANSPORTATION
RALEIGH

STANDARD

LRFR SUMMARY FOR PRESTRESSED CONCRETE GIRDERS (NON-INTERSTATE TRAFFIC)

NORTH CAROLINA PROFESSIONAL SEAL 23371 ENGINEER VIMAL A. PATEL

3/19/13

REVISIONS						SHEET NO.
NO.	BY:	DATE:	NO.	BY:	DATE:	S-4
1			3			TOTAL SHEETS
2			4			86

STR. #1 STD. NO. LRFR1

ASSEMBLED BY : H. T. DIEU	DATE : 9/1/11
CHECKED BY : R.L. CHESSON	DATE : 9/11
DRAWN BY : MAA 1/08	REV. 11/12/08R MAA/GM
CHECKED BY : GM/DI 2/08	

08-AUG-2012 15:13
R:\structures\Plans\str01_Y8REV\R3421C_SD_LRFR.dgn
jpadams

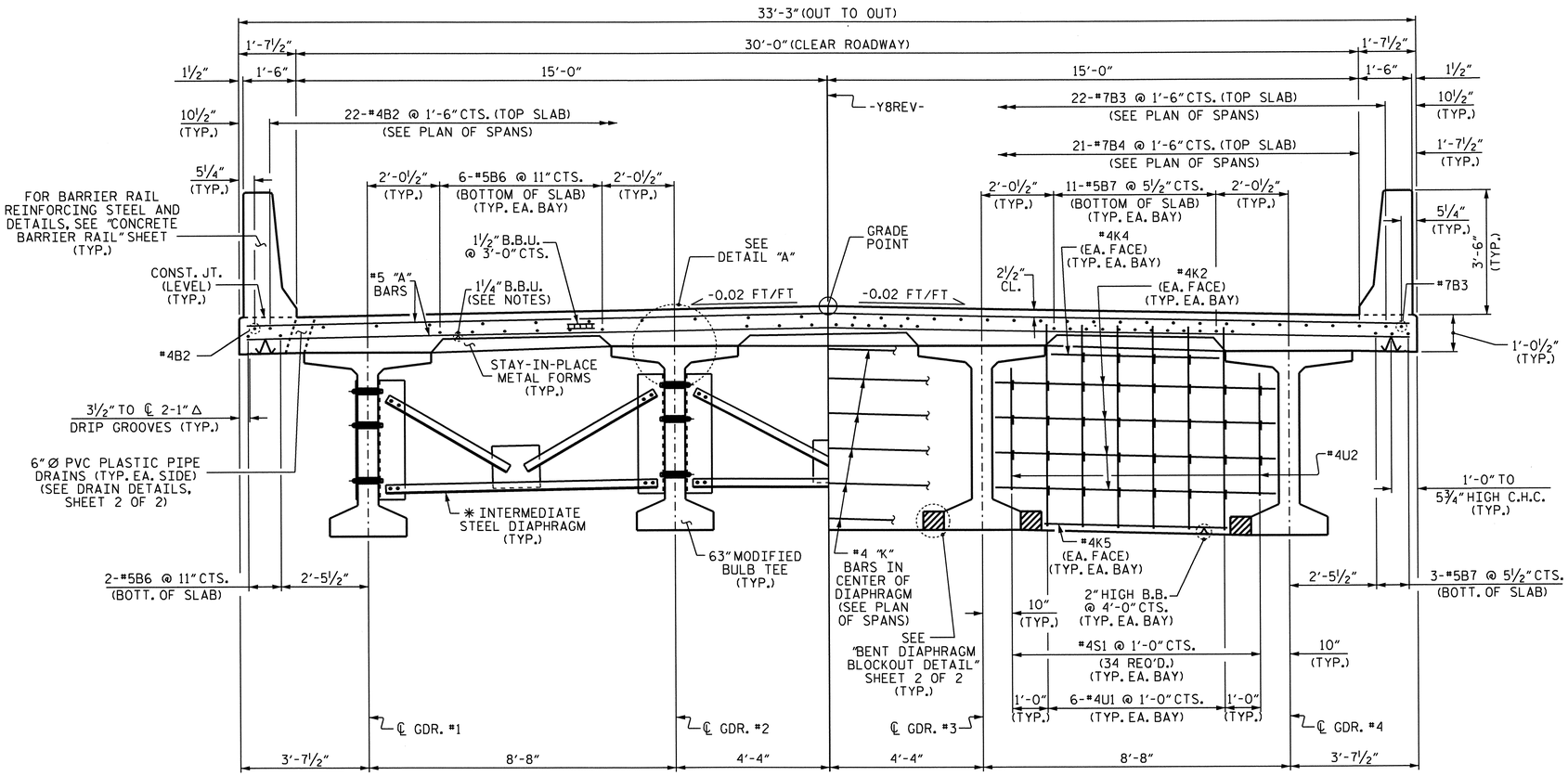

TYPICAL SECTION
(SHOWING INTERMEDIATE DIAPHRAGMS)

TYPICAL SECTION
(SHOWING BENT DIAPHRAGMS)

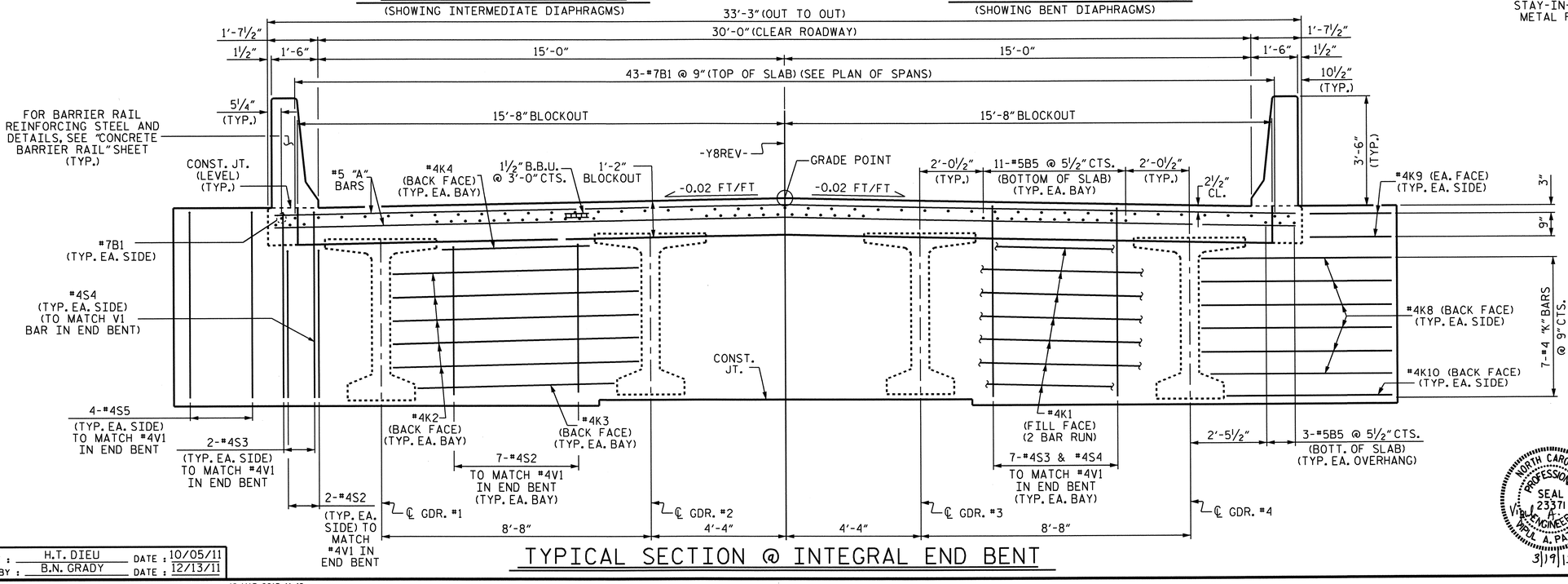

TYPICAL SECTION @ INTEGRAL END BENT

NOTES

PROVIDE 1¼" HIGH BEAM BOLSTERS UPPER AT 4'-0" CTS. ATOP THE METAL STAY-IN-PLACE FORMS TO SUPPORT THE BOTTOM MAT OF "A" BARS. WHEN USING REMOVABLE FORMS, PROVIDE CONTINUOUS HIGH CHAIRS FOR METAL DECK (C.H.C.M.) @ 4'-0" CTS. WITH A HEIGHT TO SUPPORT THE BOTTOM MAT OF "A" BARS A CLEAR DISTANCE OF 2½" ABOVE THE TOP OF THE REMOVABLE FORM.

LONGITUDINAL STEEL MAY BE SHIFTED SLIGHTLY, AS NECESSARY, TO AVOID INTERFERENCE WITH STIRRUPS IN PRESTRESSED CONCRETE GIRDERS.

PREVIOUSLY CAST CONCRETE IN A CONTINUOUS UNIT SHALL HAVE ATTAINED A MINIMUM COMPRESSIVE STRENGTH OF 3,000 PSI BEFORE ADDITIONAL CONCRETE IS CAST IN THE UNIT.

FOR WING ELEVATIONS AND DETAILS, SEE "PLAN OF SPANS DETAILS" SHEETS.

✳ FOR INTERMEDIATE STEEL DIAPHRAGM DETAILS, SEE "INTERMEDIATE STEEL DIAPHRAGMS FOR 63" MODIFIED BULB TEE PRESTRESSED CONCRETE GIRDERS" SHEET.

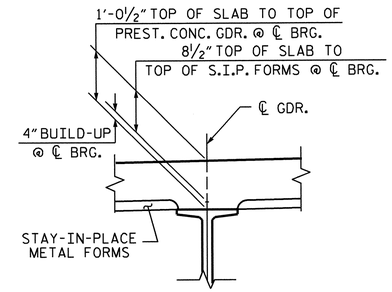

DETAIL "A"

PROJECT NO. R-3421C
RICHMOND COUNTY
STATION: 378+94.34 -L-

SHEET 1 OF 2

STATE OF NORTH CAROLINA
DEPARTMENT OF TRANSPORTATION
RALEIGH

SUPERSTRUCTURE

TYPICAL SECTION

REVISIONS						SHEET NO.
NO.	BY:	DATE:	NO.	BY:	DATE:	S-5
1			3			TOTAL SHEETS
2			4			86

NORTH CAROLINA PROFESSIONAL SEAL 23371 ENGINEER NIKUL A. PATEL
3/19/13

STR. #1

DRAWN BY : H.T. DIEU DATE : 10/05/11
CHECKED BY : B.N. GRADY DATE : 12/13/11

18-MAR-2013 11:49
R:\structures\Plans\str01_Y8REV\R-3421C_SD_TS.dgn
vpatel

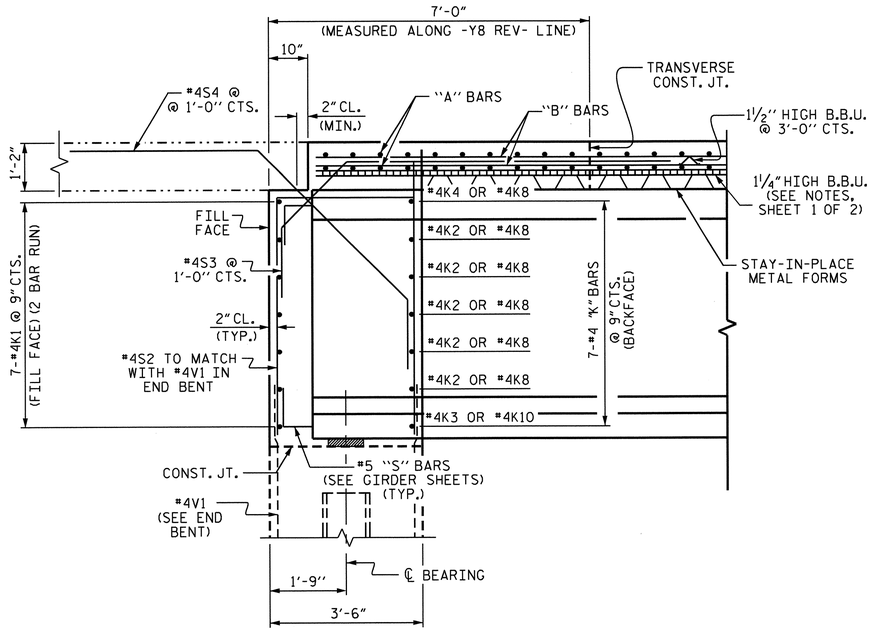

SECTION THRU INTEGRAL END BENT

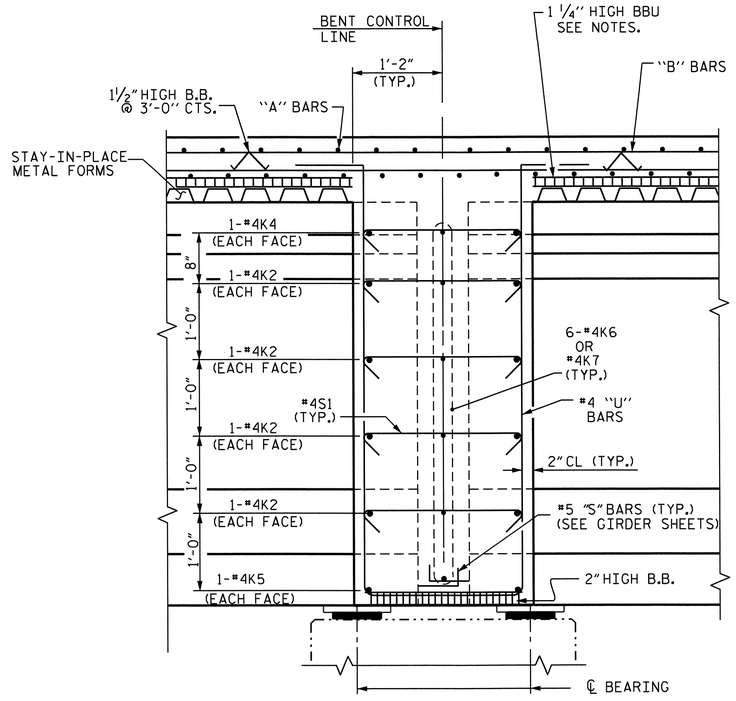

SECTION THRU BENT DIAPHRAGM

*MEASURED ALONG ℄ GIRDER

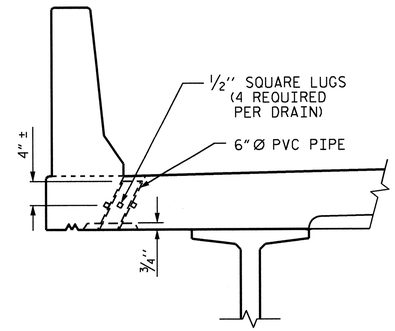

ELEVATION

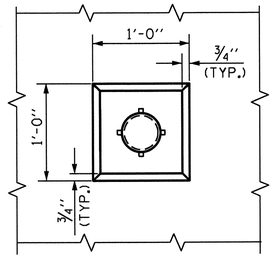

PLAN OF RECESS

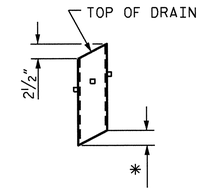

*TO BE SET TO MATCH SLOPE
OF BOTTOM OF OVERHANG
(16 DRAINS REQUIRED)

PIPE DETAIL

TOP OF FLOOR DRAINS TO BE SET ⅜" BELOW SURFACE OF SLAB.

4 - ½" SQUARE LUGS TO BE GLUED TO THE P.V.C. PLASTIC PIPE AT EQUAL SPACES AROUND THE PIPE DRAIN APPROXIMATELY 4" FROM THE TOP OF THE PIPE.

THE 6" Ø PVC PLASTIC PIPE AND FITTINGS SHALL BE SCHEDULE 40 AND CONFORM TO ASTM D1785.

DRAIN DETAILS

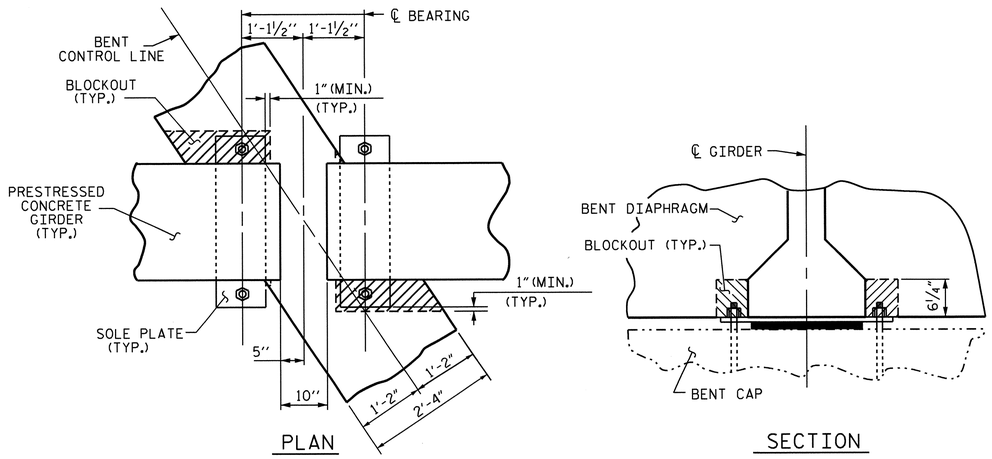

BENT DIAPHRAGM BLOCK-OUT DETAIL

PROJECT NO. R-3421C

RICHMOND COUNTY

STATION: 378+94.34 -L-

SHEET 2 OF 2

STATE OF NORTH CAROLINA
DEPARTMENT OF TRANSPORTATION
RALEIGH

SUPERSTRUCTURE

TYPICAL SECTION

REVISIONS						SHEET NO.
NO.	BY:	DATE:	NO.	BY:	DATE:	S-6
1			3			TOTAL SHEETS
2			4			86

NORTH CAROLINA PROFESSIONAL SEAL 23371 ENGINEER VIRUL A. PATEL
3/19/13

DRAWN BY : H.T. DIEU DATE : 10/05/11
CHECKED BY : B.N. GRADY DATE : 12/13/11

04-FEB-2013 07:59
R:\Structures\Plans\str01_Y8REV\R-3421C_SD_TS.dgn
vpatel

STR. #1

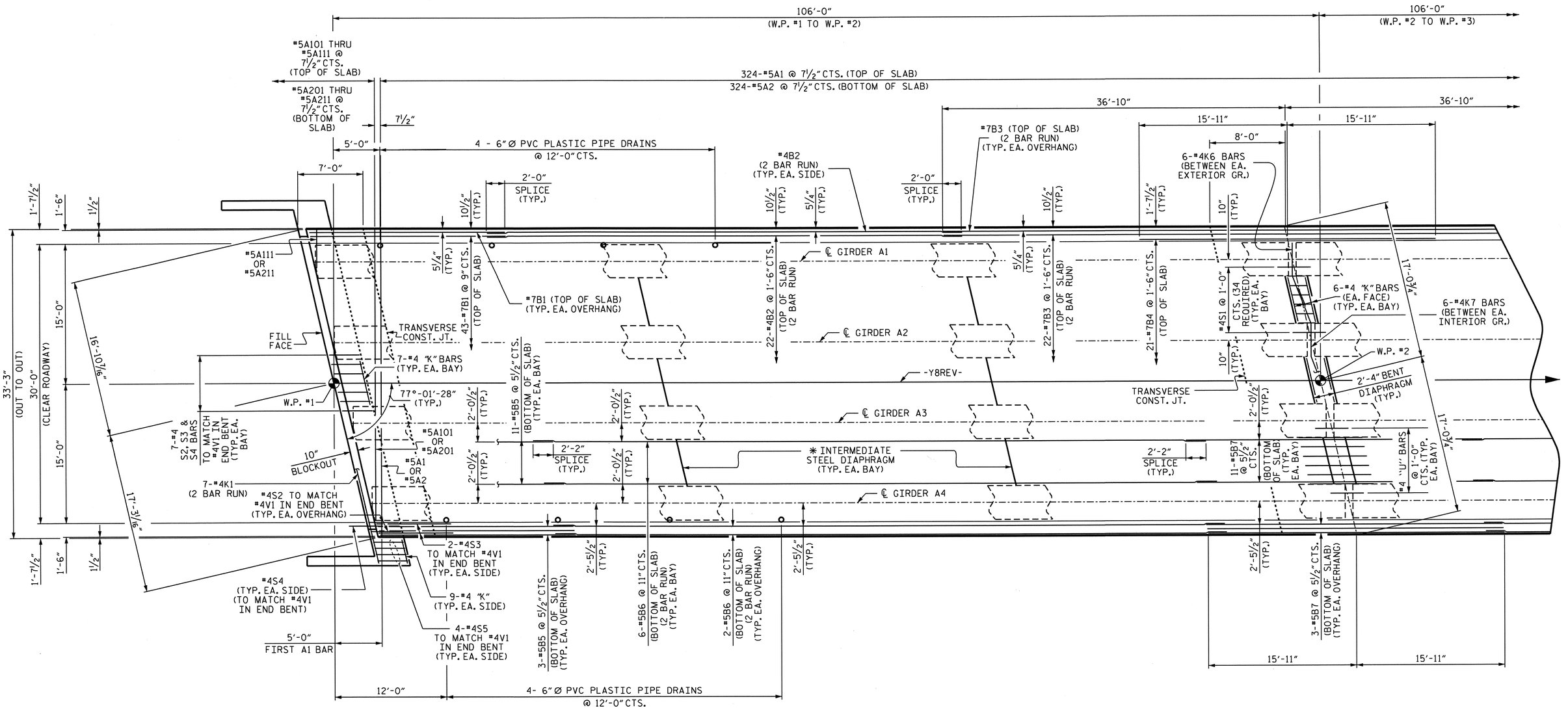

PLAN OF SPAN A & PARTIAL PLAN OF SPAN B

SEE "PLAN OF SPAN DETAILS" SHEETS FOR ADDITIONAL REINFORCING STEEL IN WINGS

✱ FOR INTERMEDIATE STEEL DIAPHRAGM DETAILS, SEE "INTERMEDIATE STEEL DIAPHRAGMS FOR 63" MODIFIED BULB TEE PRESTRESSED CONCRETE GIRDERS" SHEET.

PROJECT NO. R-3421C

RICHMOND COUNTY

STATION: 378+94.34 -L-

SHEET 1 OF 4

STATE OF NORTH CAROLINA
DEPARTMENT OF TRANSPORTATION
RALEIGH

PLAN OF SPAN A & PARTIAL PLAN OF SPAN B

REVISIONS						SHEET NO.
NO.	BY:	DATE:	NO.	BY:	DATE:	S-7
1			3			TOTAL SHEETS
2			4			86

NORTH CAROLINA PROFESSIONAL SEAL 23371 ENGINEER VIPUL A. PATEL
3/19/13

DRAWN BY : H.T. DIEU DATE : 10/5/11
CHECKED BY : B.N. GRADY DATE : 12/14/11

08-AUG-2012 15:13
R:\structures\Plans\str01_Y8REV\R-3421C_SD_S*.dgn
jpadams

STR. #1

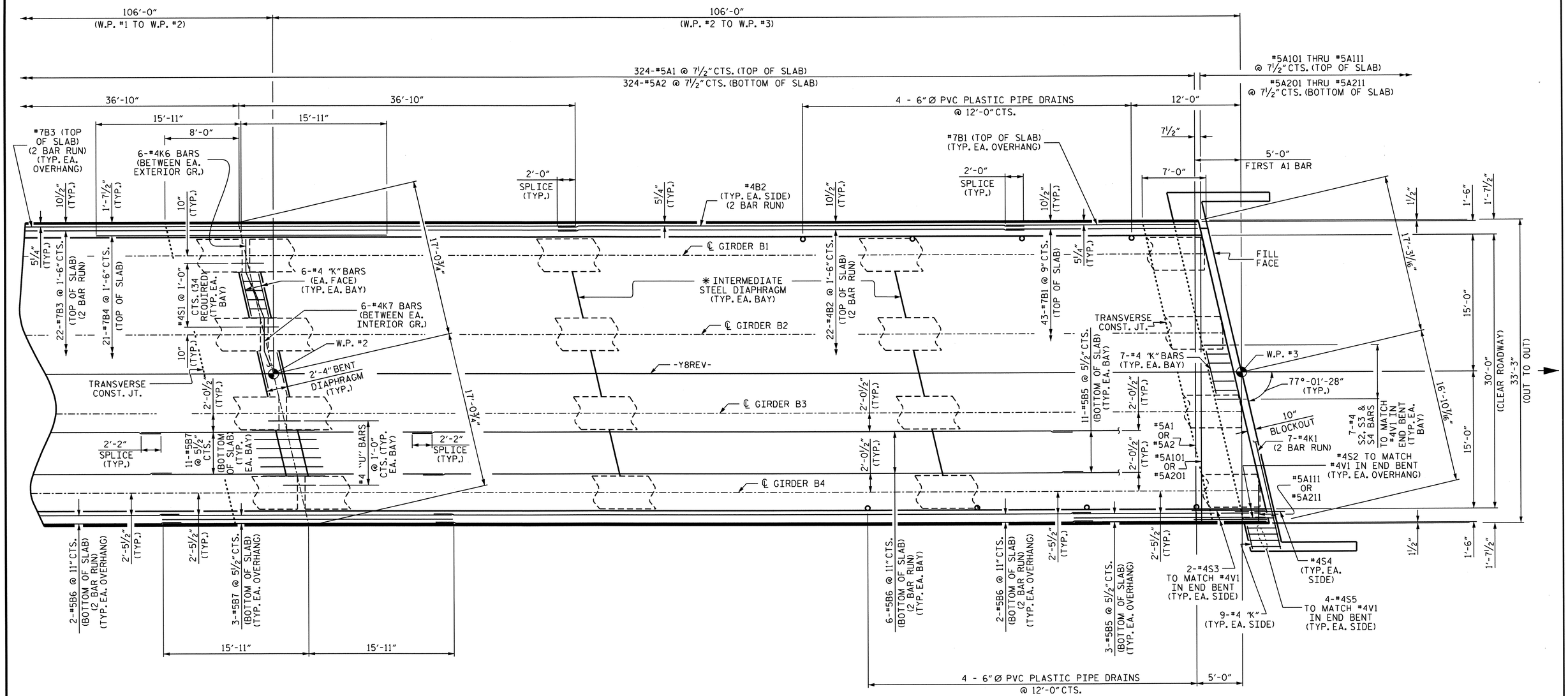

PARTIAL PLAN OF SPAN A & PLAN OF SPAN B

SEE "PLAN OF SPAN DETAILS" SHEETS FOR ADDITIONAL REINFORCING STEEL IN WINGS

* FOR INTERMEDIATE STEEL DIAPHRAGM DETAILS, SEE "INTERMEDIATE STEEL DIAPHRAGMS FOR 63" MODIFIED BULB TEE PRESTRESSED CONCRETE GIRDERS" SHEET.

PROJECT NO. R-3421C

RICHMOND COUNTY

STATION: 378+94.34 -L-

SHEET 2 OF 4

STATE OF NORTH CAROLINA
DEPARTMENT OF TRANSPORTATION
RALEIGH

PARTIAL PLAN OF SPAN A & PLAN OF SPAN B

REVISIONS						SHEET NO.
NO.	BY:	DATE:	NO.	BY:	DATE:	S-8
1			3			TOTAL SHEETS
2			4			86

NORTH CAROLINA PROFESSIONAL SEAL 23371 ENGINEER VIPUL A. PATEL
3/19/13

DRAWN BY : H.T. DIEU DATE : 10/5/11
CHECKED BY : B.N. GRADY DATE : 12/14/11

18-MAR-2013 11:49
R:\structures\Plans\str01_Y8REV\R-3421C_SD_S*.dgn
vpatel

STR. #1

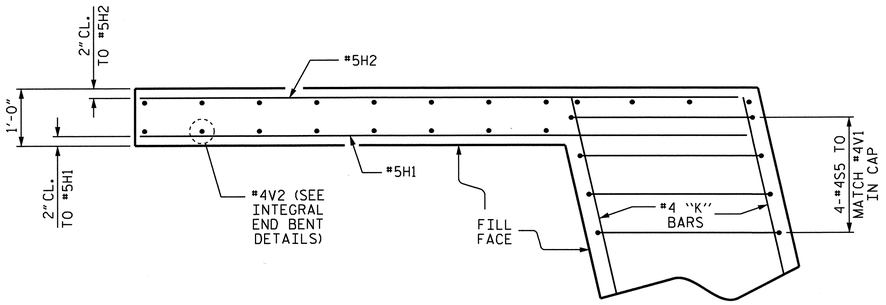

PLAN OF LEFT WING
@ END BENT #1

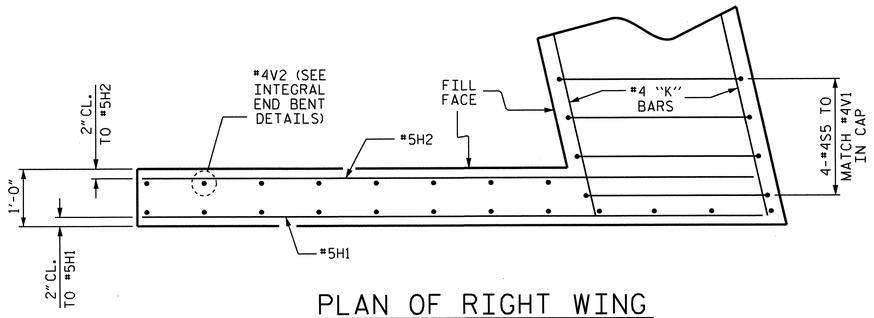

PLAN OF RIGHT WING
@ END BENT #1

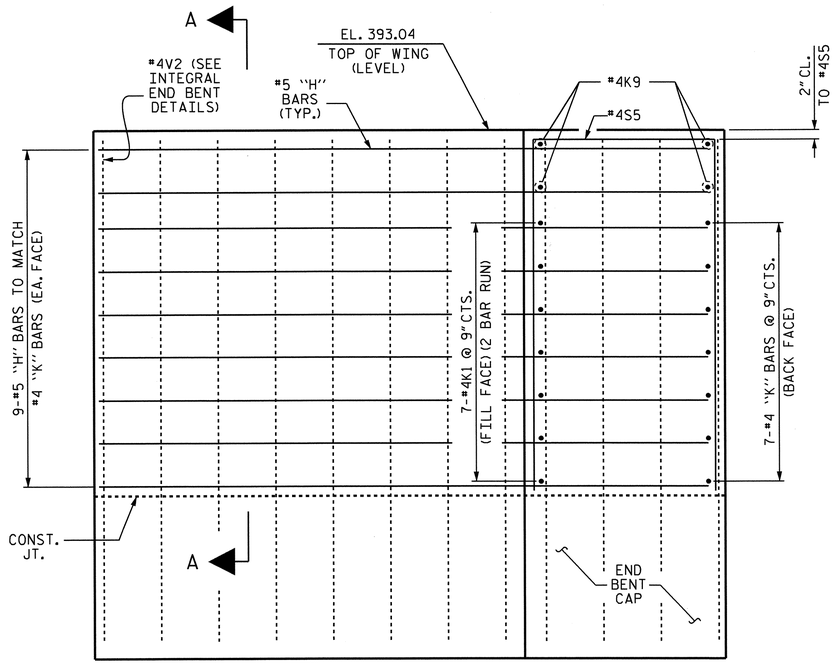

ELEVATION OF LEFT WING
@ END BENT #1

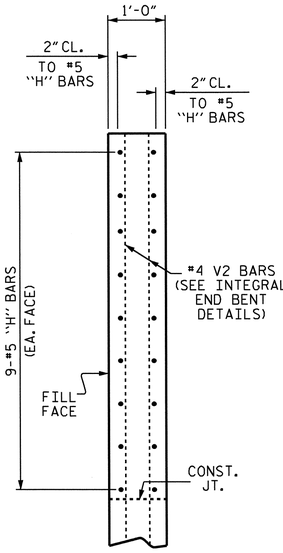

SECTION A-A

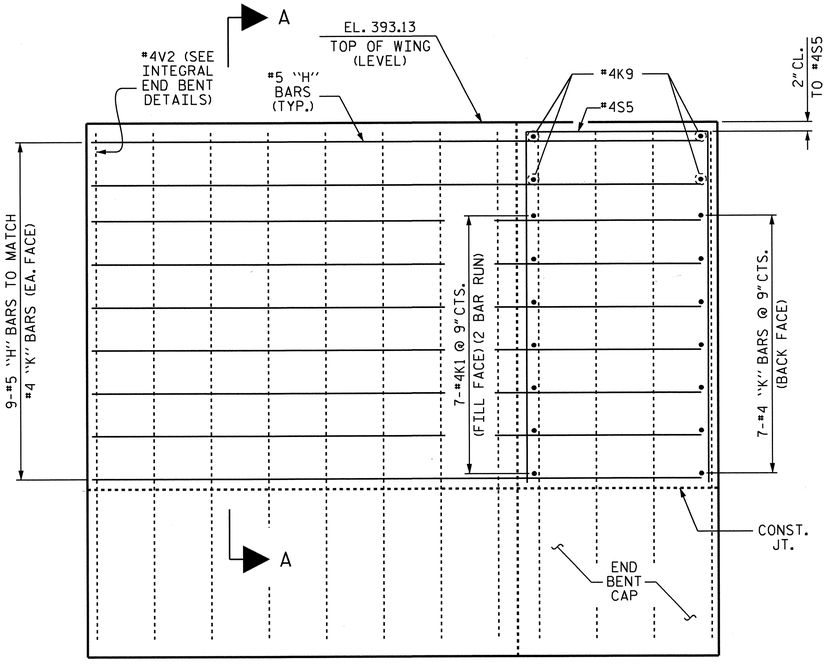

ELEVATION OF RIGHT WING
@ END BENT #1

PROJECT NO. R-3421C

RICHMOND COUNTY

STATION: 378+94.34 -L-

SHEET 3 OF 4

STATE OF NORTH CAROLINA
DEPARTMENT OF TRANSPORTATION
RALEIGH

SUPERSTRUCTURE

PLAN OF SPAN DETAILS

REVISIONS						SHEET NO.
NO.	BY:	DATE:	NO.	BY:	DATE:	S-9
1			3			TOTAL SHEETS
2			4			86

NORTH CAROLINA PROFESSIONAL SEAL 23371 ENGINEER VIPUL A. PATEL
3/19/13

DRAWN BY : H.T. DIEU DATE : 1/26/12
CHECKED BY : B.N. GRADY DATE : 2/2/12

08-AUG-2012 15:13
R:\structures\Plans\str01_Y8REV\R-3421C_SD_S*.dgn
jpadams

STR. #1

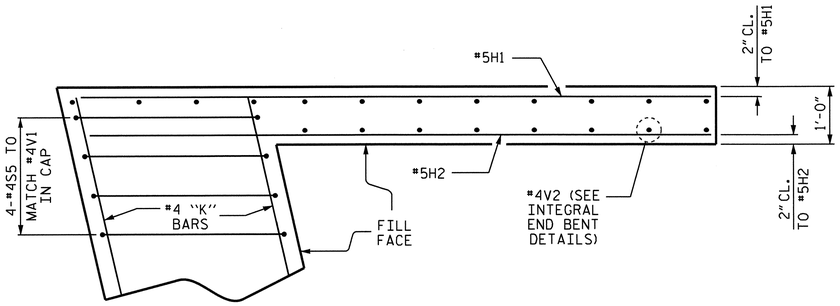

PLAN OF LEFT WING
@ END BENT #2

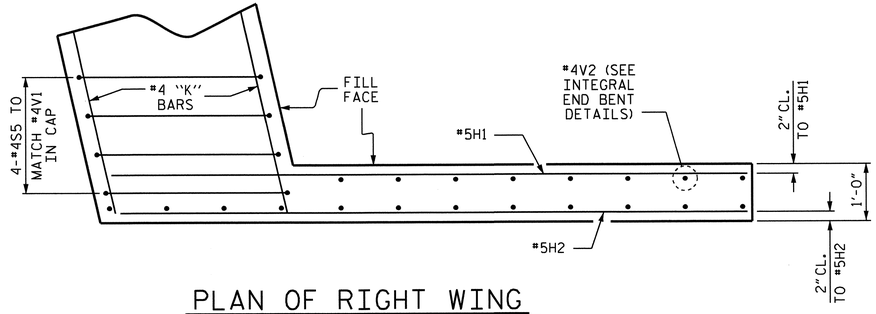

PLAN OF RIGHT WING
@ END BENT #2

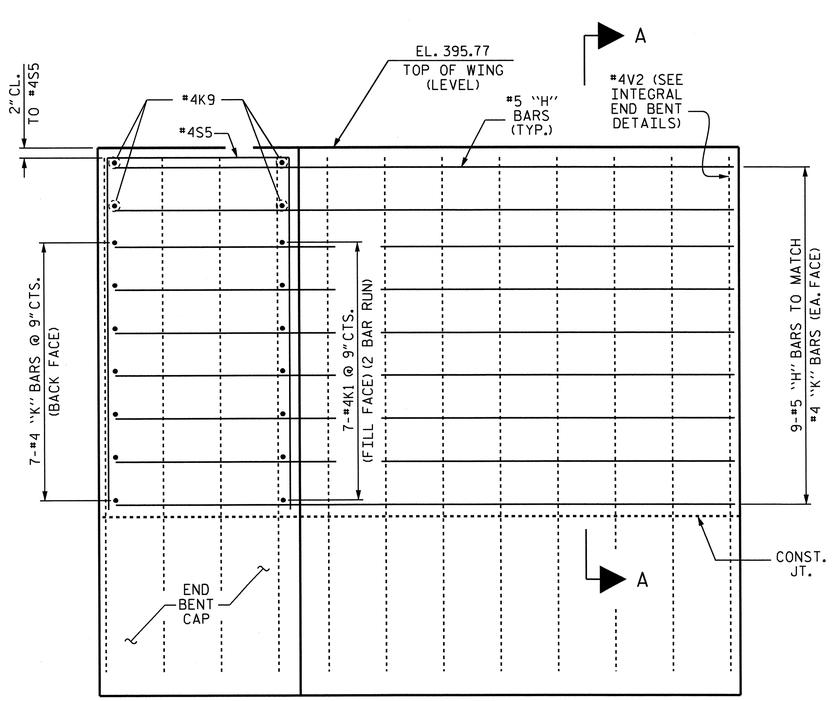

ELEVATION OF LEFT WING
@ END BENT #2

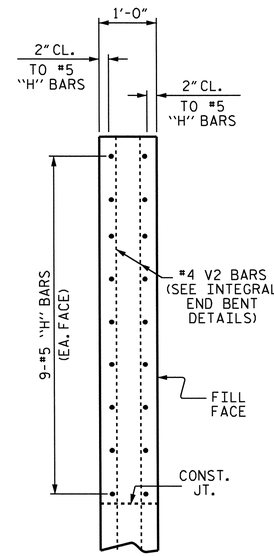

SECTION A-A

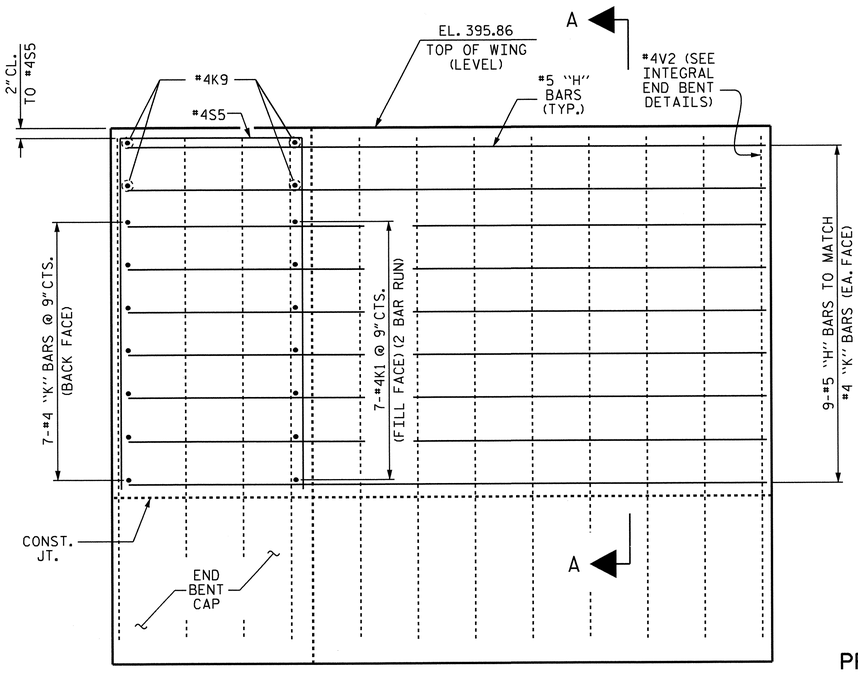

ELEVATION OF RIGHT WING
@ END BENT #2

PROJECT NO. R-3421C

RICHMOND COUNTY

STATION: 378+94.34 -L-

SHEET 4 OF 4

STATE OF NORTH CAROLINA
DEPARTMENT OF TRANSPORTATION
RALEIGH

SUPERSTRUCTURE

PLAN OF SPAN DETAILS

REVISIONS						SHEET NO.
NO.	BY:	DATE:	NO.	BY:	DATE:	S-10
1			3			TOTAL SHEETS
2			4			86

NORTH CAROLINA PROFESSIONAL SEAL 23371 ENGINEER VIPUL A. PATEL
3/17/13

DRAWN BY : H.T. DIEU DATE : 1/26/12
CHECKED BY : B.N. GRADY DATE : 2/2/12

18-MAR-2013 11:49
R:\structures\Plans\str01_Y8REV\R-3421C_SD_S*.dgn
vpatel

STR. #1

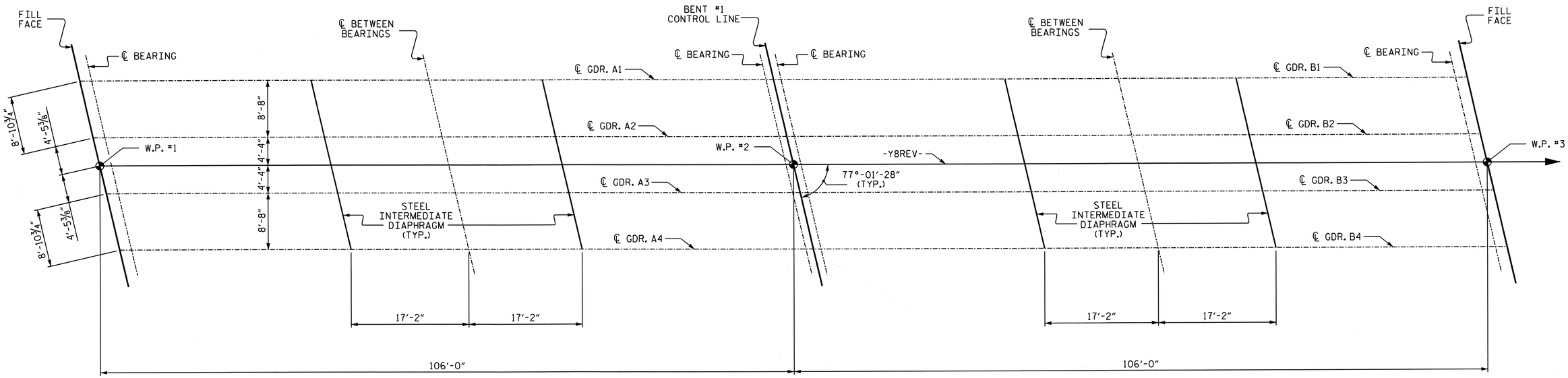

SPAN A

SPAN B

GIRDER LAYOUT

PROJECT NO. R-3421C

RICHMOND COUNTY

STATION: 378+94.34 -L-

STATE OF NORTH CAROLINA
DEPARTMENT OF TRANSPORTATION
RALEIGH

SUPERSTRUCTURE

GIRDER LAYOUT

NORTH CAROLINA PROFESSIONAL SEAL 23371 ENGINEER VIPUL A. PATEL
3/19/13

REVISIONS						SHEET NO.
NO.	BY:	DATE:	NO.	BY:	DATE:	S-11
1			3			TOTAL SHEETS
2			4			86

DRAWN BY : H.T. DIEU DATE : 10/11/11
CHECKED BY : B.N. GRADY DATE : 12/14/11

08-AUG-2012 15:13
R:\structures\Plans\str01_Y8REV\R-3421C_SD_S*.dgn
jpadams

STR. #1

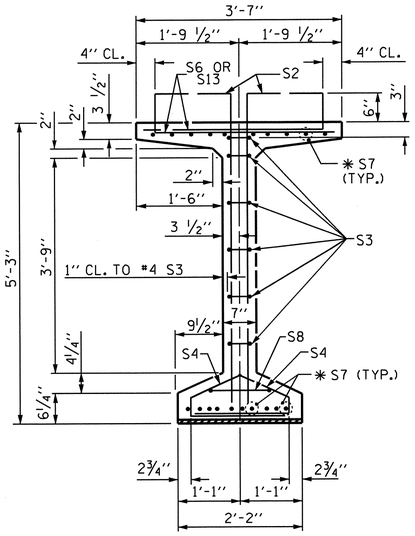

SECTION A-A

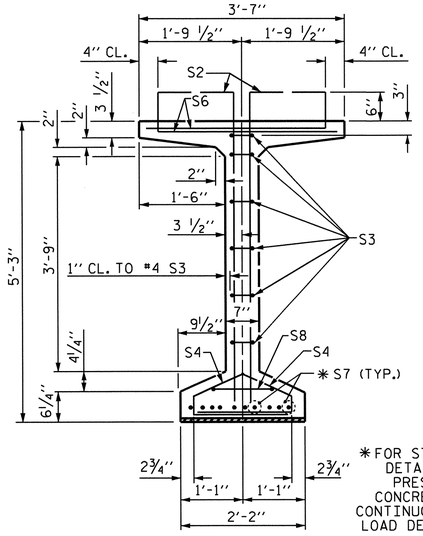

SECTION B-B

* FOR S7 BARS, SEE DETAIL "C" OF PRESTRESSED CONCRETE GIRDER CONTINUOUS FOR LIVE LOAD DETAILS SHEET

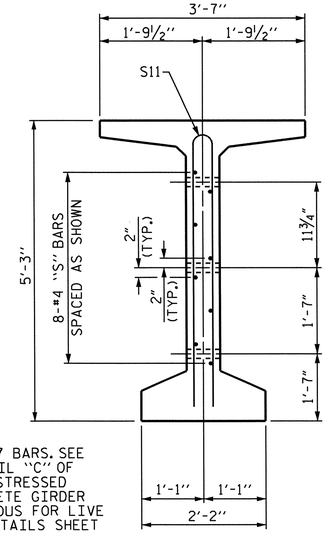

SECTION C-C

(S1, S6 AND S9 BARS NOT SHOWN)

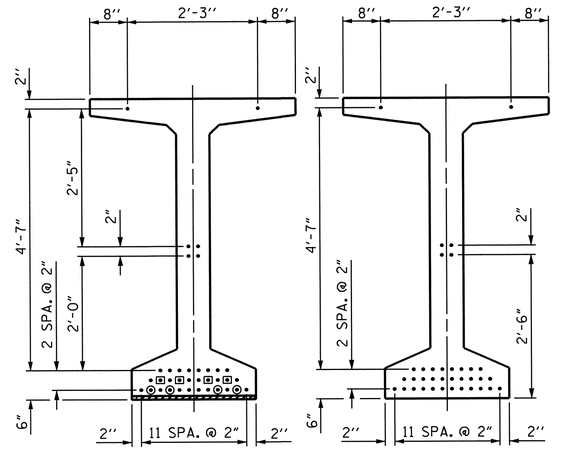

AT END OF GIRDER AT ℄ OF GIRDER

0.6" Ø LOW RELAXATION STRAND LAYOUT

DEBONDING LEGEND

- ● FULLY BONDED STRANDS
- ⊡ STRANDS DEBONDED FOR 4'-0" FROM END OF GIRDER
- ⊙ STRANDS DEBONDED FOR 8'-0" FROM END OF GIRDER

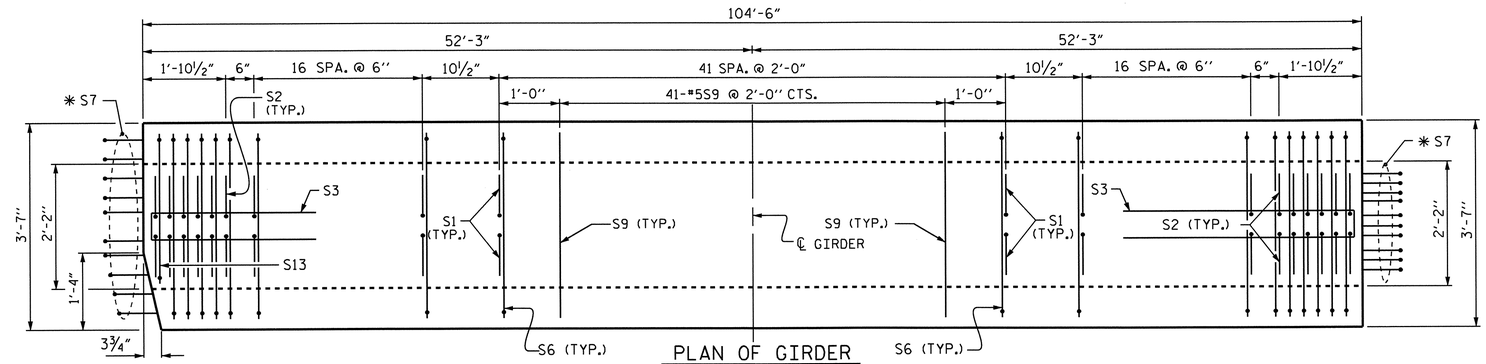

PLAN OF GIRDER

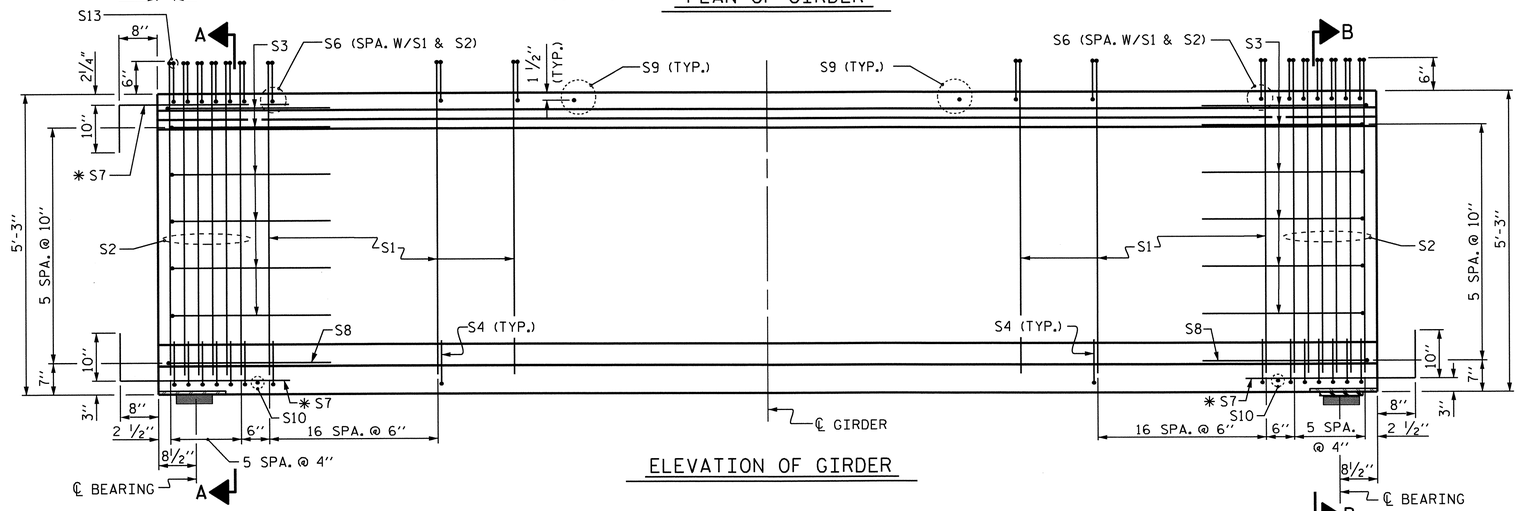

ELEVATION OF GIRDER

INTEGRAL END BENT

FIX

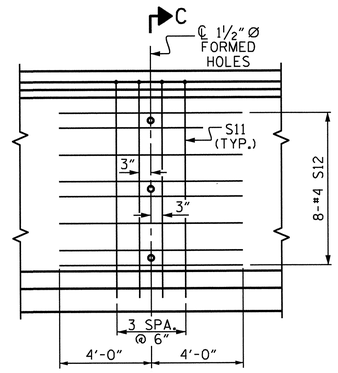

PARTIAL ELEVATION

SHOWING INTERMEDIATE STEEL DIAPHRAGM REINFORCING STEEL FOR ALL GIRDERS.

0.6" Ø L. R. GRADE 270 STRANDS		
AREA (SQUARE INCHES)	ULTIMATE STRENGTH (LBS. PER STRAND)	APPLIED PRESTRESS (LBS. PER STRAND)
0.217	58,600	43,950

REINFORCING STEEL FOR ONE GDR

BAR	NUMBER	SIZE	TYPE	LENGTH	WEIGHT
S1	152	#4	1	6'-1"	618
S2	24	#5	1	6'-1"	152
S3	12	#4	2	8'-5"	67
S4	92	#4	3	3'-0"	184
S6	174	#5	4	4'-4"	786
* S7	30	#5	STR	3'-8"	115
S8	2	#5	2	9'-0"	19
S9	41	#5	STR	3'-3"	139
S10	2	#3	STR	1'-10"	1
S11	8	#5	5	10'-0"	83
S12	16	#4	STR	8'-0"	86
S13	2	#5	4	3'-2"	7

* NOTE: S7 BARS SHALL BE BENT BEFORE SHIPMENT. HEAT BENDING SHALL NOT BE ALLOWED.

BAR TYPES

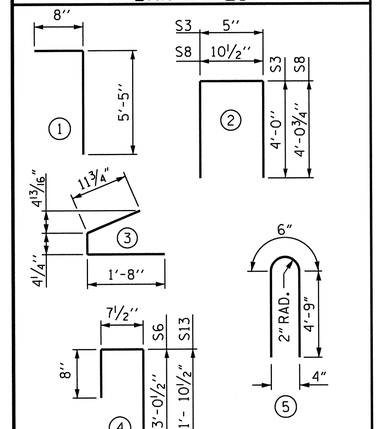

ALL BAR DIMENSIONS ARE OUT-TO-OUT

QUANTITIES FOR ONE GIRDER		
REINFORCING STEEL	9000 PSI CONCRETE	0.6" Ø L.R. STRANDS
LB.	C.Y.	NO.
2257	20.7	36

QUANTITIES FOR ONE GIRDER		
NUMBER	LENGTH	TOTAL LENGTH
8	104'-6"	836.00

PROJECT NO. R-3421C

RICHMOND COUNTY

STATION: 378+94.34 -L-

SHEET 1 OF 3

STATE OF NORTH CAROLINA
DEPARTMENT OF TRANSPORTATION
RALEIGH

STANDARD

63" PRESTRESSED CONCRETE MODIFIED BULB TEE CONTINUOUS FOR LIVE LOAD

REVISIONS						SHEET NO.
NO.	BY:	DATE:	NO.	BY:	DATE:	S-12
1			3			TOTAL SHEETS
2			4			86

NORTH CAROLINA PROFESSIONAL SEAL 23371 ENGINEER VIPUL A. PATEL 10/29/13

ASSEMBLED BY : H.T. DIEU	DATE : 10/11/11		
CHECKED BY : B.N. GRADY	DATE : 12/14/11		
DRAWN BY : EEM 2/6/97	REV. 10/17/00	RWW/LES	
CHECKED BY : VAP 2/6/97	REV. 5/1/08R	TLA/GM	
	REV. 10/1/11	MAA/GM	

29-OCT-2013 10:47
R:\structures\Plans\str01_Y8REV\R-3421C_SD_G*.dgn
thcarroll

STR. #1

STD. NO. PCG7 (Sht. 2)

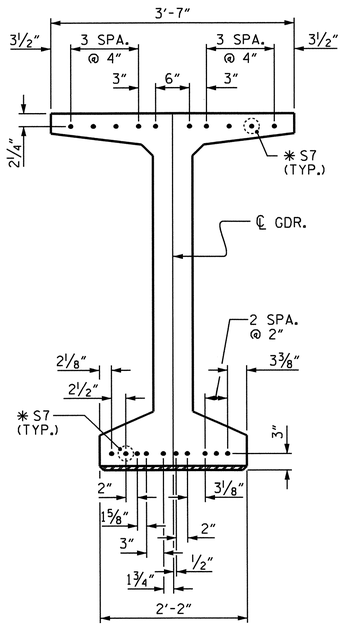

DETAIL "C"

(FOR 63" MODIFIED BULB TEES)

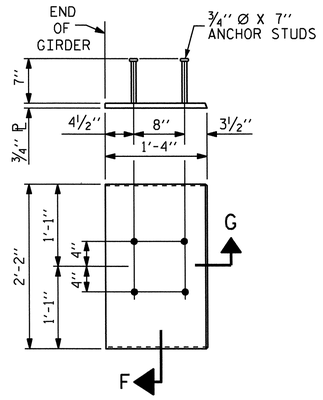

EMBEDDED PLATE "B-1" DETAILS FOR 63" MODIFIED BULB TEES

(2 REQ'D PER GIRDER)

NOTES

ALL PRESTRESSING STRANDS SHALL BE 7-WIRE LOW-RELAXATION GRADE 270 STRANDS AND SHALL CONFORM TO AASHTO M203 EXCEPT FOR SAMPLING REQUIREMENTS WHICH SHALL BE IN ACCORDANCE WITH THE STANDARD SPECIFICATIONS.

ALL REINFORCING STEEL SHALL BE GRADE 60.

EMBEDDED PLATE "B-1" SHALL BE GALVANIZED IN ACCORDANCE WITH THE STANDARD SPECIFICATIONS. BEVEL EDGES OF PLATE "B-1" TO GIVE CLOSE FIT BUT NOT TIGHT FIT TO STEEL CASTING FORM.

ANCHOR STUDS SHALL CONFORM TO AASHTO M169 GRADES 1010 THROUGH 1020 OR APPROVED EQUAL, AND SHALL MEET THE TYPE "B" REQUIREMENTS OF SUBSECTION 7.3 OF THE ANSI/AASHTO/AWS D1.5 BRIDGE WELDING CODE.

AT ENDS OF GIRDERS TO BE EMBEDDED IN CONCRETE DIAPHRAGMS OR END WALLS, PRESTRESSING STRANDS MAY EXTEND A MAXIMUM OF 2" BEYOND THE GIRDER ENDS. OTHERWISE, PRESTRESSING STRANDS SHALL BE CUT FLUSH WITH THE GIRDER ENDS.

THE TRANSFER OF LOAD FROM THE ANCHORAGES TO THE GIRDER SHALL BE DONE WHEN CONCRETE HAS REACHED A COMPRESSIVE STRENGTH OF NOT LESS THAN 7000 PSI.

DEPENDING ON THE TYPE OF SYSTEM USED TO SUPPORT THE DECK SLAB FORMS, PRESET ANCHORS MAY BE NECESSARY IN THE PRESTRESSED CONCRETE GIRDER.

THE TOP SURFACE OF THE GIRDER, EXCLUDING THE OUTSIDE 4", SHALL BE RAKED TO A DEPTH OF ¼".

A 2" x 2" CHAMFER IS ALLOWED AT THE INTERSECTION OF THE WEB AND THE BOTTOM FLANGE OF THE 63" AND 72" MODIFIED BULB TEES ONLY.

THE CONTRACTOR HAS THE OPTION TO PROVIDE, AT NO ADDITIONAL COST TO THE DEPARTMENT, 2 ADDITIONAL STRANDS AT THE TOP OF THE GIRDER TO FACILITATE TYING OF THE REINFORCING STEEL. THESE STRANDS SHALL BE PULLED TO A LOAD OF 4500 lbs.

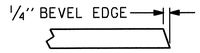

SECTION "G"

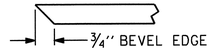

SECTION "F"

(SEE NOTES)

DEAD LOAD DEFLECTION TABLE FOR GIRDERS

0.6" Ø LOW RELAXATION	SPAN A & SPAN B GIRDERS 1-4																					
TWENTIETH POINTS	0	.05	.1	.15	.2	.25	.3	.35	.4	.45	.5	.55	.6	.65	.7	.75	.8	.85	.9	.95	0
CAMBER (GIRDER ALONE IN PLACE) ↑	0	0.054	0.107	0.155	0.202	0.239	0.276	0.300	0.323	0.332	0.340	0.332	0.323	0.300	0.276	0.239	0.202	0.155	0.107	0.054	0
* DEFLECTION DUE TO SUPERIMPOSED D.L. ↓	0	0.020	0.040	0.058	0.076	0.090	0.104	0.113	0.122	0.125	0.128	0.125	0.122	0.113	0.104	0.090	0.076	0.058	0.040	0.020	0
FINAL CAMBER ↑	0	7/16"	13/16"	1 3/16"	1½"	1 13/16"	2 1/16"	2¼"	2 7/16"	2½"	2 9/16"	2½"	2 7/16"	2¼"	2 1/16"	1 13/16"	1½"	1 3/16"	13/16"	7/16"	0

* INCLUDES FUTURE WEARING SURFACE
ALL VALUES ARE SHOWN IN FEET (DECIMAL FORM), EXCEPT "FINAL CAMBER", WHICH IS GIVEN IN INCHES (FRACTION FORM).

PROJECT NO. R-3421C

RICHMOND COUNTY

STATION: 378+94.34 -L-

SHEET 2 OF 3

STATE OF NORTH CAROLINA
DEPARTMENT OF TRANSPORTATION
RALEIGH

STANDARD

PRESTRESSED CONCRETE GIRDER CONTINUOUS FOR LIVE LOAD DETAILS

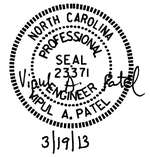

REVISIONS						SHEET NO.
NO.	BY:	DATE:	NO.	BY:	DATE:	S-13
1			3			TOTAL SHEETS
2			4			86

ASSEMBLED BY : H.T. DIEU	DATE : 10/12/11
CHECKED BY : B.N. GRADY	DATE : 12/14/11
DRAWN BY : ELR 11/91	REV. 7/10/01RR LES/RDR
CHECKED BY : GRP 11/91	REV. 5/1/06 TLA/GM
	REV. 10/1/11 MAA/GM

STR. #1

STD. NO. PCG9 (Sht. 5a)

18-MAR-2013 11:49
R:\structures\Plans\str01_Y8REV\R-3421C_SD_G*.dgn
vpatel

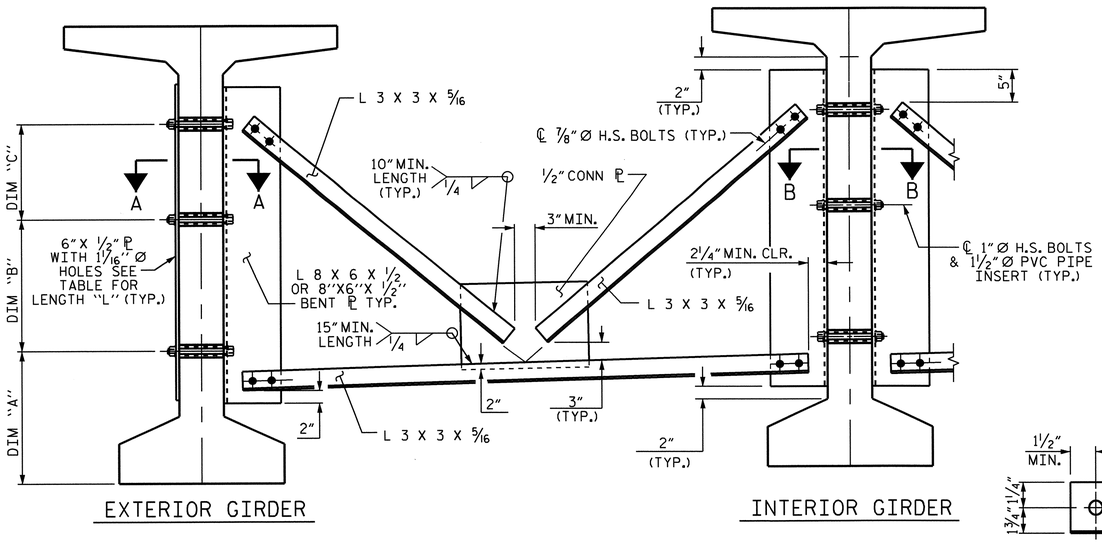

EXTERIOR GIRDER

INTERIOR GIRDER

PART SECTION AT INTERMEDIATE DIAPHRAGM

(63" BULB TEE GIRDER SHOWN)

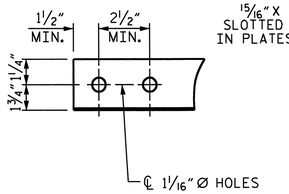

ANGLE END

(L 3 X 3 X 5/16)

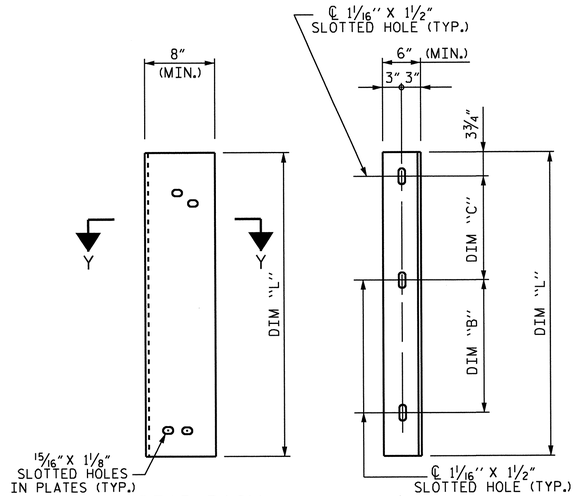

DIAPHRAGM FACE

WEB FACE

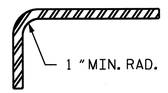

SECTION Y-Y

CONNECTOR PLATE DETAIL

STRUCTURAL STEEL NOTES

ALL INTERMEDIATE DIAPHRAGM STEEL AND CONNECTOR PLATES SHALL BE AASHTO M270 GRADE 50 OR APPROVED EQUAL.

TENSION ON THE ASTM A325 BOLTS THROUGH THE ANGLE MEMBER SHALL BE CALIBRATED USING DIRECT TENSION INDICATOR WASHERS IN ACCORDANCE WITH THE STANDARD SPECIFICATIONS.

TENSION ON THE ASTM A449 BOLTS THROUGH THE GIRDER WEB SHALL BE SNUG TIGHTENED FOLLOWED BY AN ADDITIONAL 1/4 TURN.

THE PLATES, BENT PLATES, AND ANGLES SHALL BE GALVANIZED OR METALLIZED IN ACCORDANCE WITH THE STANDARD SPECIFICATIONS. FOR THERMAL SPRAYED COATINGS (METALLIZATION), SEE SPECIAL PROVISIONS.

FOR METALLIZATION, APPLY AN 8 MIL THICK 99.99 PERCENT ZINC (W-Zn-1) THERMAL SPRAYED COATING WITH A 0.5 MIL THICK SEAL COAT TO ALL STEEL DIAPHRAGM SURFACES IN ACCORDANCE WITH THE THERMAL SPRAYED COATINGS SPECIAL PROVISION AND SECTION 442 OF THE STANDARD SPECIFICATIONS.

GALVANIZE THE HIGH STRENGTH BOLTS, NUTS, WASHERS AND DIRECT TENSION INDICATORS IN ACCORDANCE WITH THE STANDARD SPECIFICATIONS.

USE AN ASTM F436 HARDENED WASHER WITH STANDARD AND SLOTTED HOLES UNDER EACH BOLT HEAD AND NUT.

FOR BOLTS THROUGH THE GIRDER WEB, PROVIDE SUFFICIENT LENGTH OF THREADS ON ALL BOLTS TO ACCOMMODATE WASHERS AND THE THICKNESS OF CONNECTING MEMBER PLUS AT LEAST 1/4" PROJECTION BEYOND THE NUT.

INTERMEDIATE DIAPHRAGM ASSEMBLY SHALL COMPLY WITH SECTION 1072 OF THE STANDARD SPECIFICATIONS.

SUBMIT TWO SETS OF WORKING DRAWINGS FOR THE INTERMEDIATE DIAPHRAGM ASSEMBLY FOR REVIEW, COMMENTS AND ACCEPTANCE. AFTER REVIEW, COMMENTS, AND ACCEPTANCE, SUBMIT SEVEN SETS FOR DISTRIBUTION.

IN THE EXTERIOR BAYS, PLACE TEMPORARY STRUTS BETWEEN PRESTRESSED GIRDERS ADJACENT TO THE STEEL DIAPHRAGMS. STRUTS SHALL REMAIN IN PLACE 3 DAYS AFTER CONCRETE IS PLACED.

THE COST OF THE STEEL DIAPHRAGMS AND ASSEMBLIES SHALL BE INCLUDED IN THE UNIT PRICE BID FOR PRESTRESSED CONCRETE GIRDERS.

TABLE

GIRDER TYPE	DIM "A"	DIM "B"	DIM "C"	DIM "L"
63" BULB TEE	1'-7"	1'-7"	11 3/4"	3'-5"

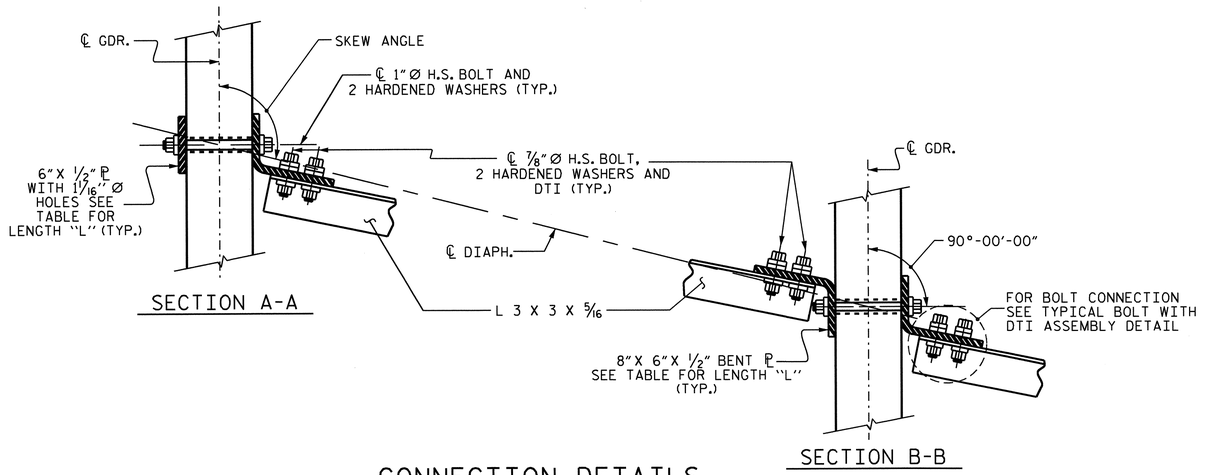

SECTION A-A

SECTION B-B

CONNECTION DETAILS

(FOR 70° ≤ SKEW < 90° OR 90° < SKEW ≤ 110°)

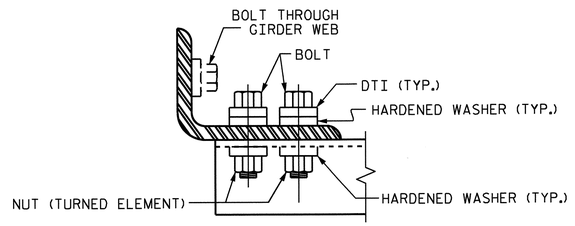

BOLT WITH DTI ASSEMBLY DETAIL

PROJECT NO. R-3421C

RICHMOND COUNTY

STATION: 378+94.34 -L-

SHEET 3 OF 3

STATE OF NORTH CAROLINA
DEPARTMENT OF TRANSPORTATION
RALEIGH

STANDARD

INTERMEDIATE STEEL DIAPHRAGMS FOR 63" MODIFIED BULB TEE PRESTRESSED CONCRETE GIRDERS

REVISIONS						SHEET NO.
NO.	BY:	DATE:	NO.	BY:	DATE:	S-14
1			3			TOTAL SHEETS
2			4			86

NORTH CAROLINA PROFESSIONAL SEAL 23371 ENGINEER VIPUL A. PATIL
3/19/13

STR. #1 STD. NO. PCG11

ASSEMBLED BY : H.T. DIEU	DATE : 10/12/11
CHECKED BY : B.N. GRADY	DATE : 12/14/11
DRAWN BY : RWW 11/09	ADDED 11/23/09R
CHECKED BY : GM 11/09	REV. 10/1/11 MAA/GM

08-AUG-2012 15:13
R:\structures\Plans\str01_Y8REV\R-3421C_SD_G*.dgn
jpadams

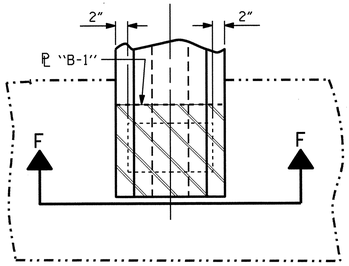

TYPICAL PLAN @ END BENT

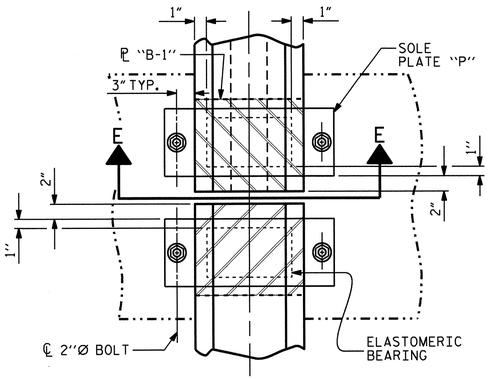

TYPICAL PLAN @ BENT

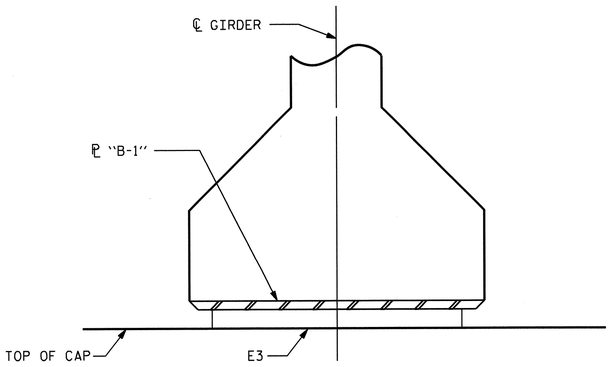

FIXED

SECTION F-F

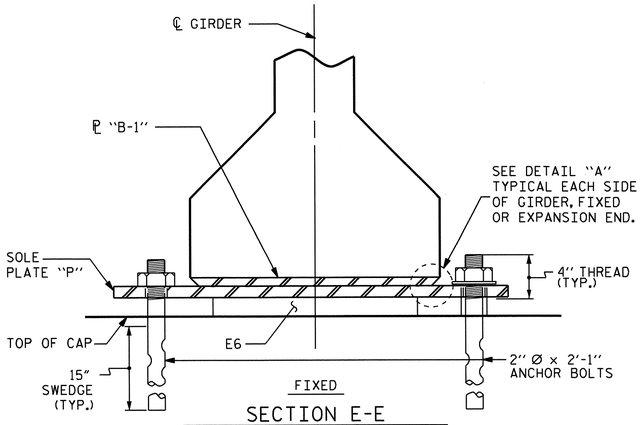

FIXED

SECTION E-E

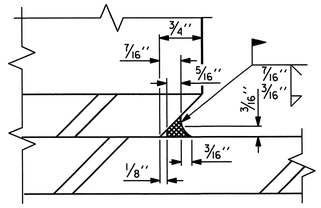

DETAIL "A"

NOTES

AT ALL FIXED POINTS OF SUPPORT, NUTS FOR ANCHOR BOLTS ARE TO BE TIGHTENED FINGER TIGHT AND THEN BACKED OFF 1/2 TURN. THE THREAD OF THE NUT AND BOLT SHALL THEN BE BURRED WITH A SHARP POINTED TOOL.

STEEL SOLE PLATES, ANCHOR BOLTS, NUTS, AND WASHERS SHALL BE GALVANIZED IN ACCORDANCE WITH THE STANDARD SPECIFICATIONS.

PRIOR TO WELDING, GRIND THE GALVANIZED SURFACE OF THE PORTION OF THE EMBEDDED PLATE AND SOLE PLATE THAT ARE TO BE WELDED. AFTER WELDING, DAMAGED GALVANIZED SURFACES SHALL BE REPAIRED IN ACCORDANCE WITH THE STANDARD SPECIFICATIONS.

WHEN WELDING THE SOLE PLATE TO THE EMBEDDED PLATE IN THE GIRDER, USE TEMPERATURE INDICATING WAX PENS, OR OTHER SUITABLE MEANS, TO ENSURE THAT THE TEMPERATURE OF THE SOLE PLATE DOES NOT EXCEED 300°F. TEMPERATURES ABOVE THIS MAY DAMAGE THE ELASTOMER.

SOLE PLATE "P", BOLTS, NUTS, WASHERS, AND PIPE SLEEVE SHALL BE INCLUDED IN THE PAY ITEM FOR PRESTRESSED CONCRETE GIRDERS.

ANCHOR BOLTS SHALL MEET THE REQUIREMENTS OF ASTM A449. NUTS SHALL MEET THE REQUIREMENTS OF AASHTO M291-DH OR AASHTO M292-2H. WASHERS SHALL MEET THE REQUIREMENTS OF AASHTO M293. SHOP DRAWINGS ARE NOT REQUIRED FOR ANCHOR BOLT, NUTS AND WASHERS. SHOP INSPECTION IS REQUIRED.

ALL SURFACES OF BEARING PLATES SHALL BE SMOOTH AND STRAIGHT.

THE ELASTOMER IN THE STEEL REINFORCED BEARINGS SHALL HAVE A SHEAR MODULUS OF 0.160 KSI, IN ACCORDANCE WITH AASHTO M251.

FOR STEEL REINFORCED ELASTOMERIC BEARINGS, SEE SPECIAL PROVISIONS.

MAXIMUM ALLOWABLE SERVICE LOADS	
D.L.+L.L. (NO IMPACT)	
TYPE IV	225 k
TYPE VII	470 k

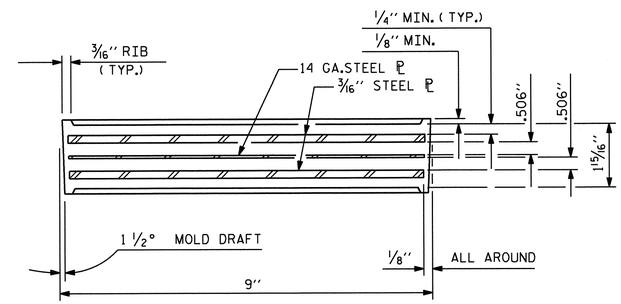

TYPICAL SECTION OF ELASTOMERIC BEARINGS

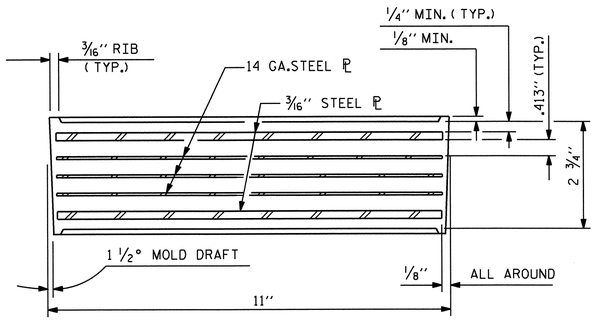

TYPICAL SECTION OF ELASTOMERIC BEARINGS

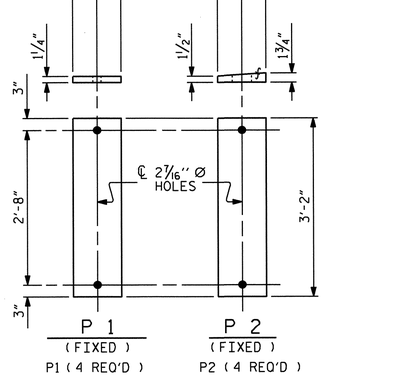

SOLE PLACE DETAILS ("P")

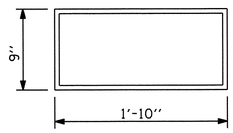

E3 (8 REQ'D)

PLAN VIEW OF ELASTOMERIC BEARING

TYPE IV

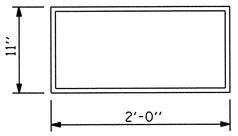

E6 (8 REQ'D)

PLAN VIEW OF ELASTOMERIC BEARING

TYPE VII

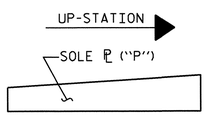

SOLE ℄ PLACEMENT DETAIL

PROJECT NO. R-3421C

RICHMOND COUNTY

STATION: 378+94.34 -L-

STATE OF NORTH CAROLINA
DEPARTMENT OF TRANSPORTATION
RALEIGH

STANDARD

ELASTOMERIC BEARING DETAILS

PRESTRESSED CONCRETE GIRDER SUPERSTRUCTURE

REVISIONS						SHEET NO.
NO.	BY:	DATE:	NO.	BY:	DATE:	S-15
1			3			TOTAL SHEETS
2			4			86

ASSEMBLED BY : H.T. DIEU		DATE : 10/11/11
CHECKED BY : B.N. GRADY		DATE : 12/14/11
DRAWN BY : WJH 8/89	REV. 5/1/06	TLA/GM
CHECKED BY : CRK 8/89	REV. 10/1/11	MAA/GM
	REV. 6/13	AAC/MAA

30-OCT-2013 10:55
R:\Structures\Plans\str01_Y8REV\R-3421C_SD_BG.dgn
vpatel

NORTH CAROLINA PROFESSIONAL SEAL 23371 ENGINEER VIPUL A. PATEL
10/30/13

STR. #1

STD. NO. EB3 (SHT 3)

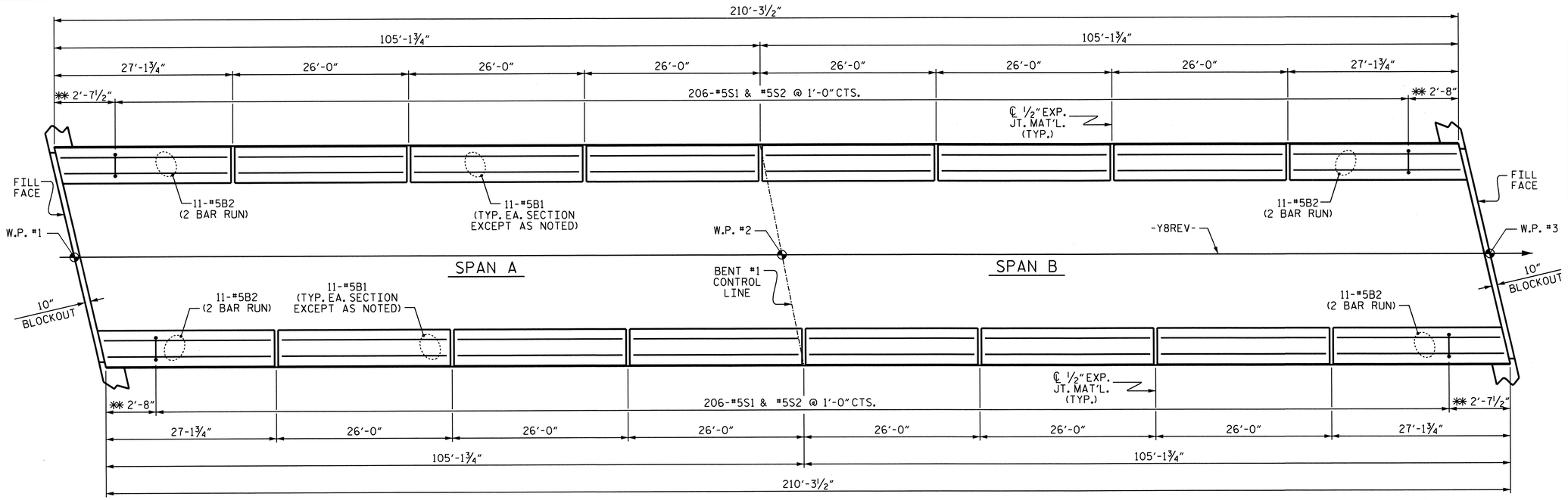

PLAN OF BARRIER RAIL

(DIMENSIONS SHOWN ALONG OUTSIDE FACE OF RAIL)
✱✱ SEE END OF RAIL DETAILS

NOTES

THE BARRIER RAIL IN EACH SPAN SHALL NOT BE CAST UNTIL ALL SLAB CONCRETE IN THAT SPAN HAS BEEN CAST AND HAS REACHED A MINIMUM COMPRESSIVE STRENGTH OF 3,000 PSI.

ALL REINFORCING STEEL IN BARRIER RAILS SHALL BE EPOXY COATED.

GROOVED CONTRACTION JOINTS, ½" IN DEPTH, SHALL BE TOOLED IN ALL EXPOSED FACES OF THE BARRIER RAIL AND IN ACCORDANCE WITH ARTICLE 825-10(B) OF THE STANDARD SPECIFICATIONS. THE CONTRACTION JOINT SHALL BE LOCATED AT EACH THIRD POINT BETWEEN BARRIER RAIL EXPANSION JOINTS. ONLY ONE CONTRACTION JOINT IS REQUIRED AT MIDPOINT OF BARRIER RAIL SEGMENTS LESS THAN 20 FEET IN LENGTH AND NO CONTRACTION JOINTS ARE REQUIRED FOR THOSE SEGMENTS LESS THAN 10 FEET IN LENGTH.

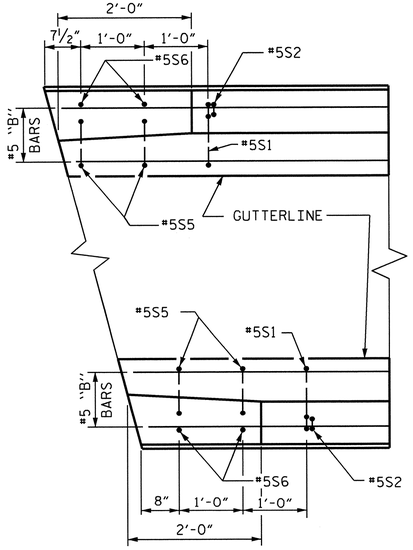

PLAN

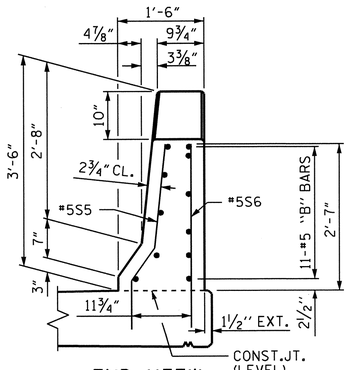

END VIEW

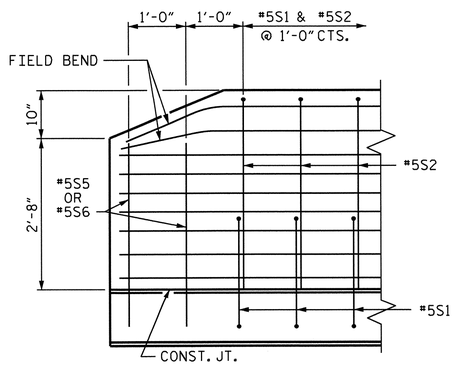

SIDE VIEW

END OF RAIL DETAILS

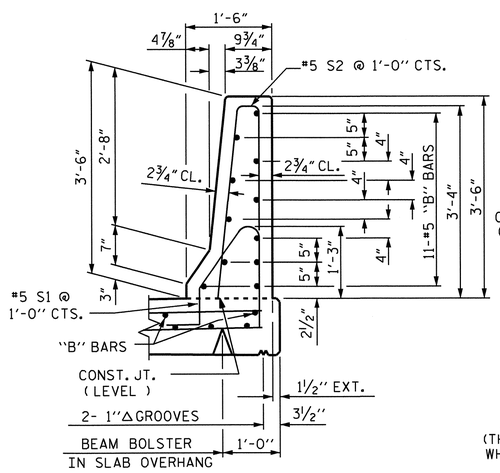

SECTION THRU RAIL

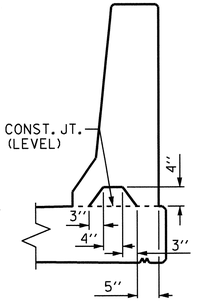

SECTION S-S
AT DAM IN OPEN JOINT
(THIS IS TO BE USED ONLY WHEN SLIP FORM IS USED)

℄ ½" EXP. JT. MAT'L HELD IN PLACE WITH GALVANIZED NAILS.
(NOTE: OMIT EXP. JT. MAT'L. WHEN SLIP FORM IS USED.)

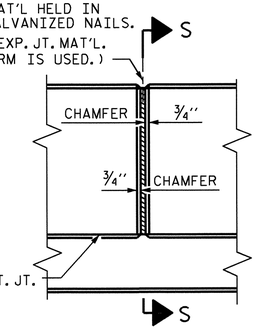

ELEVATION AT EXPANSION JOINTS

BARRIER RAIL DETAILS

BAR TYPES

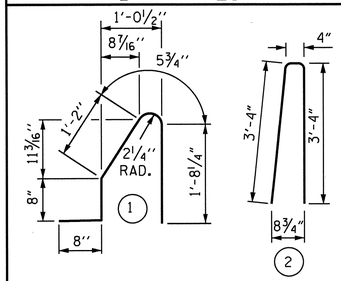

ALL BAR DIMENSIONS ARE OUT TO OUT

BILL OF MATERIAL

FOR CONCRETE BARRIER RAIL ONLY

BAR	NO.	SIZE	TYPE	LENGTH	WEIGHT
✱ B1	132	#5	STR	25'-7"	3,522
✱ B2	88	#5	STR	15'-3"	1,400
✱ S1	412	#5	1	4'-8"	2,005
✱ S2	412	#5	2	7'-0"	3,008
✱ S5	8	#5	3	3'-5"	29
✱ S6	8	#5	STR	3'-3"	27

✱ EPOXY COATED REINFORCING STEEL	9,991 LBS.
CLASS AA CONCRETE	57.2 CU.YDS.
CONCRETE BARRIER RAIL	420.58 LIN. FT.

PROJECT NO. R-3421C
RICHMOND COUNTY
STATION: 378+94.34 -L-

STATE OF NORTH CAROLINA
DEPARTMENT OF TRANSPORTATION
RALEIGH
STANDARD
CONCRETE BARRIER RAIL

REVISIONS						SHEET NO.
NO.	BY:	DATE:	NO.	BY:	DATE:	S-16
1			3			TOTAL SHEETS
2			4			86

NORTH CAROLINA PROFESSIONAL SEAL 23371 ENGINEER VIPUL A. PATEL
3/7/13

ASSEMBLED BY : H.T. DIEU	DATE : 10/12/11	
CHECKED BY : B.N. GRADY	DATE : 12/14/11	
DRAWN BY : ARB 5/87	REV. 10/1/11	MAA/GM
CHECKED BY : SJD 9/87	REV. 7/12	MAA/GM
	REV. 10/12	MAA/GM

04-FEB-2013 14:05
R:\Structures\Plans\str01_Y8REV\R-3421C_SD_BR.dgn
vpatel

STR. #1

STD. NO. CBR1 (SHT 3)

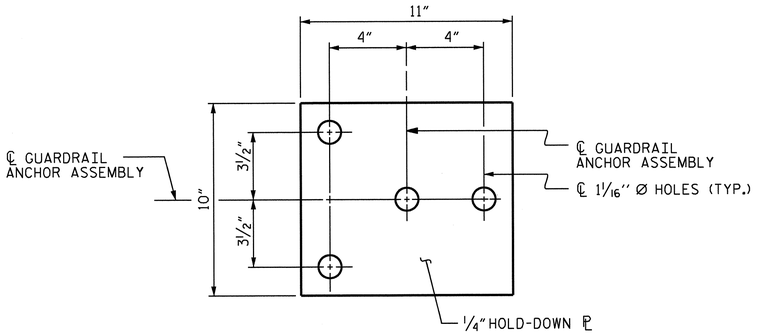

PLAN

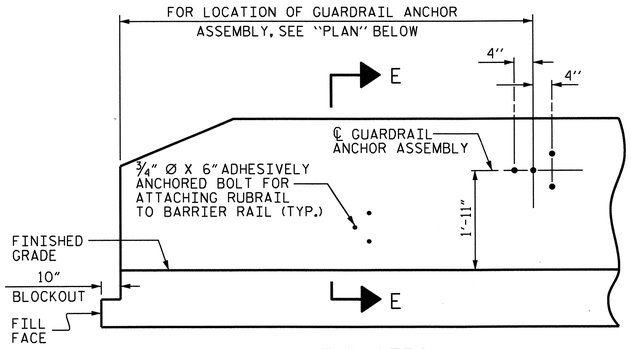

ELEVATION

FOR LOCATION OF RUBRAIL, SEE ROADWAY STD. 862.03

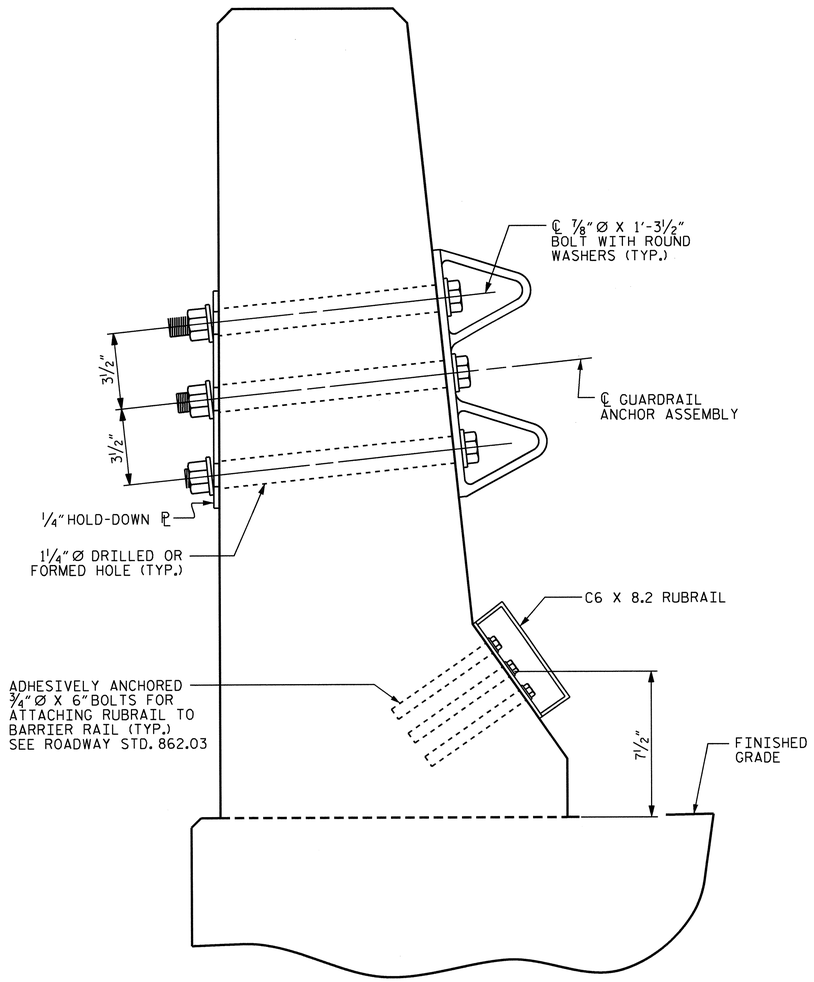

SECTION E-E

GUARDRAIL ANCHOR ASSEMBLY DETAILS

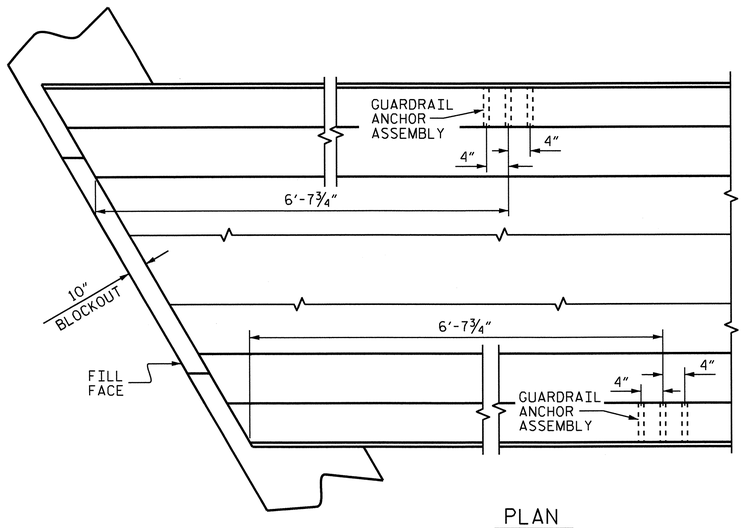

PLAN

LOCATION OF ANCHORS FOR GUARDRAIL

END BENT #1 SHOWN, END BENT #2 SIMILAR.

NOTES

THE GUARDRAIL ANCHOR ASSEMBLY SHALL CONSIST OF A 1/4" HOLD-DOWN PLATE AND 4 - 7/8" Ø BOLTS WITH NUTS AND WASHERS, RUBRAIL, AND ADHESIVELY ANCHORED BOLTS.

THE HOLD-DOWN PLATE SHALL CONFORM TO AASHTO M270 GRADE 36. AFTER FABRICATION, THE HOLD-DOWN PLATE SHALL BE HOT-DIP GALVANIZED IN ACCORDANCE WITH AASHTO M111.

BOLTS SHALL CONFORM TO THE REQUIREMENTS OF ASTM A307 AND NUTS SHALL CONFORM TO THE REQUIREMENTS OF AASHTO M291. BOLTS, NUTS AND WASHERS SHALL BE GALVANIZED. (AT THE CONTRACTOR'S OPTION, STAINLESS STEEL BOLTS, NUTS AND WASHERS MAY BE USED AS AN ALTERNATE FOR THE 7/8" Ø GALVANIZED BOLTS, NUTS AND WASHERS. THEY SHALL CONFORM TO OR EXCEED THE MECHANICAL REQUIREMENTS OF ASTM A307. THE USE OF THIS ALTERNATE SHALL BE APPROVED BY THE ENGINEER.)

THE GUARDRAIL ANCHOR ASSEMBLY IS REQUIRED AT ALL POINTS WHERE APPROACH GUARDRAIL IS TO BE ATTACHED TO THE END OF BARRIER RAIL. FOR POINTS OF ATTACHMENT, SEE SKETCH.

AFTER INSTALLATION, THE EXPOSED THREAD OF THE BOLT SHALL BE BURRED WITH A SHARP POINTED TOOL.

THE COST OF THE GUARDRAIL ANCHOR ASSEMBLY SHALL BE INCLUDED IN THE UNIT CONTRACT PRICE BID FOR CONCRETE BARRIER RAIL.

THE 1 1/4" Ø HOLES SHALL BE FORMED OR DRILLED WITH A CORE BIT. IMPACT TOOLS WILL NOT BE PERMITTED. ANY CONCRETE DAMAGED BY THIS WORK SHALL BE REPAIRED TO THE SATISFACTION OF THE ENGINEER.

THE C6 X 8.2 RUBRAIL IS TO BE ADHESIVELY ANCHORED TO THE RAIL USING THREE 3/4" Ø X 6" BOLTS WITH WASHERS. LEVEL ONE FIELD TESTING IS REQUIRED, AND THE YIELD LOAD OF THE 3/4" Ø BOLT IS 12 KIPS. FOR ADHESIVELY ANCHORED ANCHOR BOLTS OR DOWELS, SEE STANDARD SPECIFICATIONS. SEE ROADWAY STANDARD 862.03 FOR DETAILS AND LOCATION OF THE RUBRAIL.

SKETCH SHOWING POINTS OF ATTACHMENTS

✳ DENOTES GUARDRAIL ANCHOR ASSEMBLY

PROJECT NO. R-3421C

RICHMOND COUNTY

STATION: 378+94.34 -L-

STATE OF NORTH CAROLINA
DEPARTMENT OF TRANSPORTATION
RALEIGH

STANDARD

GUARDRAIL ANCHORAGE FOR BARRIER RAIL

NORTH CAROLINA PROFESSIONAL SEAL 23371 ENGINEER VIPUL A. PATEL

3/19/13

REVISIONS						SHEET NO.
NO.	BY:	DATE:	NO.	BY:	DATE:	S-17
1			3			TOTAL SHEETS
2			4			86

ASSEMBLED BY : H.T. DIEU		DATE : 10/12/11
CHECKED BY: B.N. GRADY		DATE : 12/14/11
DRAWN BY : TLA 5/06	REV. 10/1/11	MAA/GM
CHECKED BY : GM 5/06	REV. 7/12	MAA/GM
	REV. 10/12	MAA/GM

04-FEB-2013 14:04
R:\Structures\Plans\str01_Y8REV\R-3421C_SD_BR.dgn
vpatel

STR. #1

STD. NO. GRA2

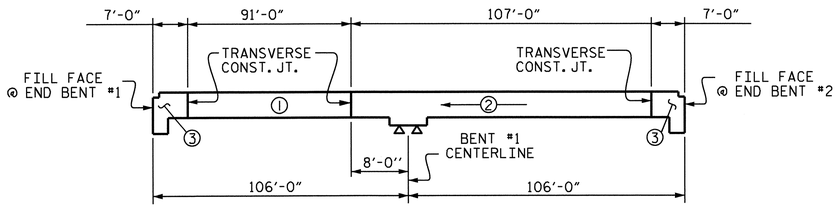

POUR SEQUENCE

(#) = INDICATES POUR NUMBER AND DIRECTION OF POUR

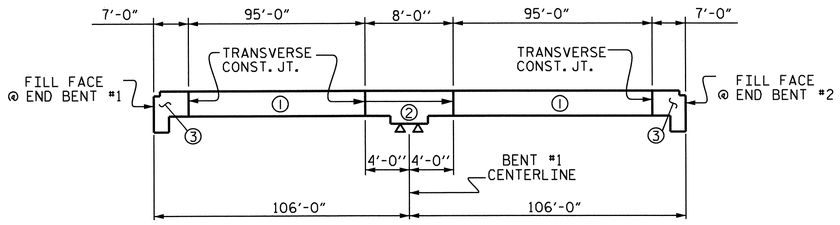

OPTIONAL POUR SEQUENCE

POUR ② CAN NOT BE STARTED UNTIL BOTH ADJACENT ①POURS REACH A MINIMUM OF 3000 PSI.

REINFORCING BAR SCHEDULE

SPANS A & B

BAR	NO.	SIZE	TYPE	LENGTH	WEIGHT
✱ A1	324	#5	STR.	32'-11"	11124
A2	324	#5	STR.	32'-11"	11124
✱ A101	2	#5	STR.	31'-3"	65
✱ A102	2	#5	STR.	28'-6"	59
✱ A103	2	#5	STR.	25'-10"	54
✱ A104	2	#5	STR.	23'-1"	48
✱ A105	2	#5	STR.	20'-5"	43
✱ A106	2	#5	STR.	17'-8"	37
✱ A107	2	#5	STR.	14'-11"	31
✱ A108	2	#5	STR.	12'-3"	26
✱ A109	2	#5	STR.	9'-6"	20
✱ A110	2	#5	STR.	6'-10"	14
✱ A111	2	#5	STR.	4'-1"	9
A201	2	#5	STR.	31'-3"	65
A202	2	#5	STR.	28'-6"	59
A203	2	#5	STR.	25'-10"	54
A204	2	#5	STR.	23'-1"	48
A205	2	#5	STR.	20'-5"	43
A206	2	#5	STR.	17'-8"	37
A207	2	#5	STR.	14'-11"	31
A208	2	#5	STR.	12'-3"	26
A209	2	#5	STR.	9'-6"	20
A210	2	#5	STR.	6'-10"	14
A211	2	#5	STR.	4'-1"	9
✱ B1	90	#7	STR.	21'-0"	3863
✱ B2	96	#4	STR.	26'-7"	1705
✱ B3	48	#7	STR.	39'-6"	3875
✱ B4	21	#7	STR.	31'-10"	1366
B5	78	#5	STR.	21'-0"	1708
B6	88	#5	STR.	37'-4"	3427
B7	39	#5	STR.	31'-10"	1295

BAR	NO.	SIZE	TYPE	LENGTH	WEIGHT
H1	36	#5	STR.	10'-11"	410
H2	36	#5	STR.	10'-9"	404
K1	28	#4	STR.	20'-10"	390
K2	54	#4	STR.	7'-11"	286
K3	6	#4	STR.	6'-3"	25
K4	12	#4	STR.	4'-9"	38
K5	6	#4	STR.	5'-1"	20
K6	12	#4	5	5'-5"	43
K7	12	#4	6	10'-11"	88
K8	24	#4	STR.	6'-1"	98
K9	16	#4	STR.	2'-7"	28
K10	4	#4	STR.	5'-4"	14
S1	102	#4	2	2'-9"	187
S2	50	#4	3	12'-10"	429
✱ S3	50	#4	4	11'-11"	398
✱ S4	46	#4	4	10'-8"	328
S5	16	#4	3	15'-2"	162
U1	18	#4	1	17'-4"	208
U2	6	#4	3	9'-0"	36

REINFORCING STEEL 20826 LBS

✱ EPOXY COATED REINFORCING STEEL 23065 LBS

BAR TYPES

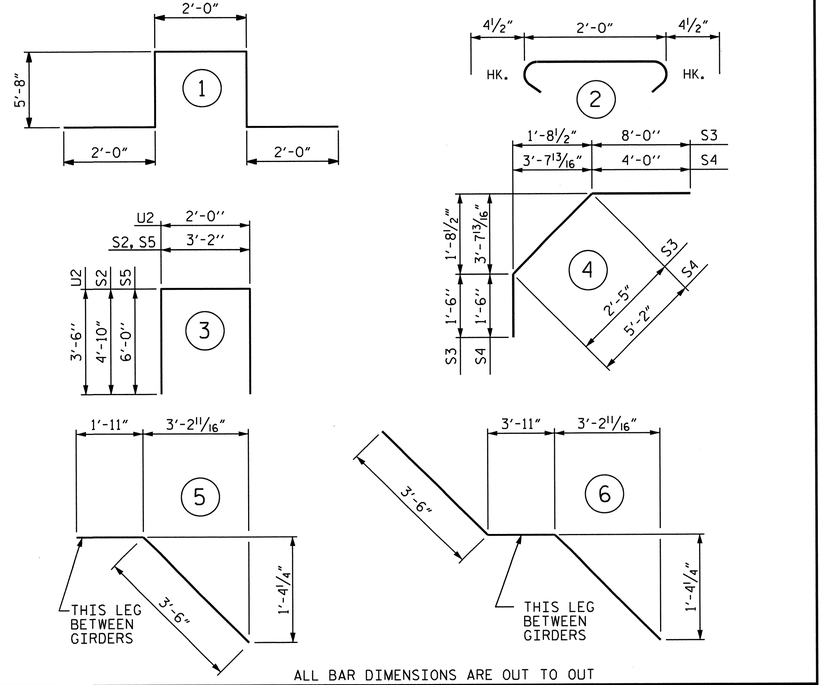

ALL BAR DIMENSIONS ARE OUT TO OUT

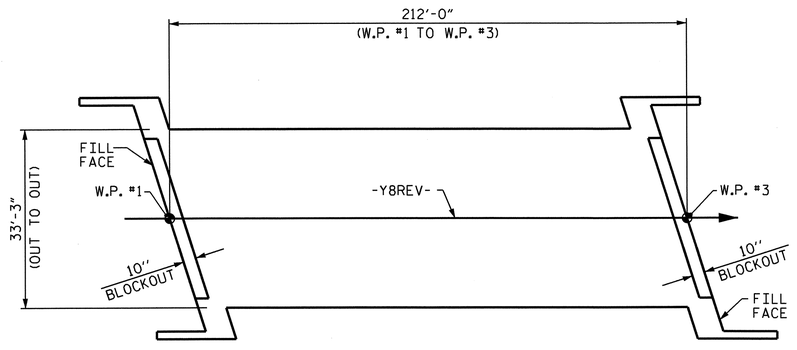

LAYOUT FOR COMPUTING AREA REINFORCED CONCRETE DECK SLAB (SQ. FT. = 7049)

GROOVING BRIDGE FLOORS

APPROACH SLABS	764 SQ.FT.
BRIDGE DECK	5669 SQ.FT.
TOTAL	6433 SQ.FT.

CLASS AA CONCRETE BREAKDOWN

POUR #1	105.1 CU. YDS.
POUR #2	135.4 CU. YDS.
POUR #3	74.8 CU. YDS.
CLASS AA CONCRETE	315.3 CU. YDS.

SUPERSTRUCTURE REINFORCING STEEL LENGTHS ARE BASED ON THE FOLLOWING MINIMUM SPLICE LENGTHS

BAR SIZE	SUPERSTRUCTURE EXCEPT APPROACH SLABS, PARAPET, AND BARRIER RAIL		APPROACH SLABS		PARAPET AND BARRIER RAIL
	EPOXY COATED	UNCOATED	EPOXY COATED	UNCOATED	
#4	2'-0"	1'-9"	2'-0"	1'-9"	2'-9"
#5	2'-6"	2'-2"	2'-6"	2'-2"	3'-5"
#6	3'-0"	2'-7"	3'-10"	2'-7"	4'-4"
#7	5'-3"	3'-6"			
#8	6'-10"	4'-7"			

SUPERSTRUCTURE BILL OF MATERIAL

	CLASS AA CONCRETE	REINFORCING STEEL	EPOXY COATED REINFORCING STEEL
	(CU. YDS.)	(LBS.)	(LBS.)
TOTALS**	315.3	20826	23065

**QUANTITIES FOR BARRIER RAIL ARE NOT INCLUDED

PROJECT NO. R-3421C

RICHMOND COUNTY

STATION: 378+94.34 -L-

STATE OF NORTH CAROLINA
DEPARTMENT OF TRANSPORTATION
RALEIGH

STANDARD
SUPERSTRUCTURE BILL OF MATERIAL

NORTH CAROLINA PROFESSIONAL SEAL 23371 ENGINEER VIPUL A. PATEL
3/19/13

REVISIONS						SHEET NO.
NO.	BY:	DATE:	NO.	BY:	DATE:	S-18
1			3			TOTAL SHEETS
2			4			86

ASSEMBLED BY : H.T. DIEU		DATE : 10/10/11
CHECKED BY : B.N. GRADY		DATE: 12/14/11
DRAWN BY : JMB 5/87	REV. 6/1/94	EEM/GRP
CHECKED BY : SJD 9/87	REV. 8/16/99	RWW/LES
	REV. 5/1/06	TLA/GM

08-AUG-2012 15:12
R:\structures\Plans\str01_Y8REV\R-3421C_SD_BM.dgn
jpadams

STR. #1 STD. NO. BOM2

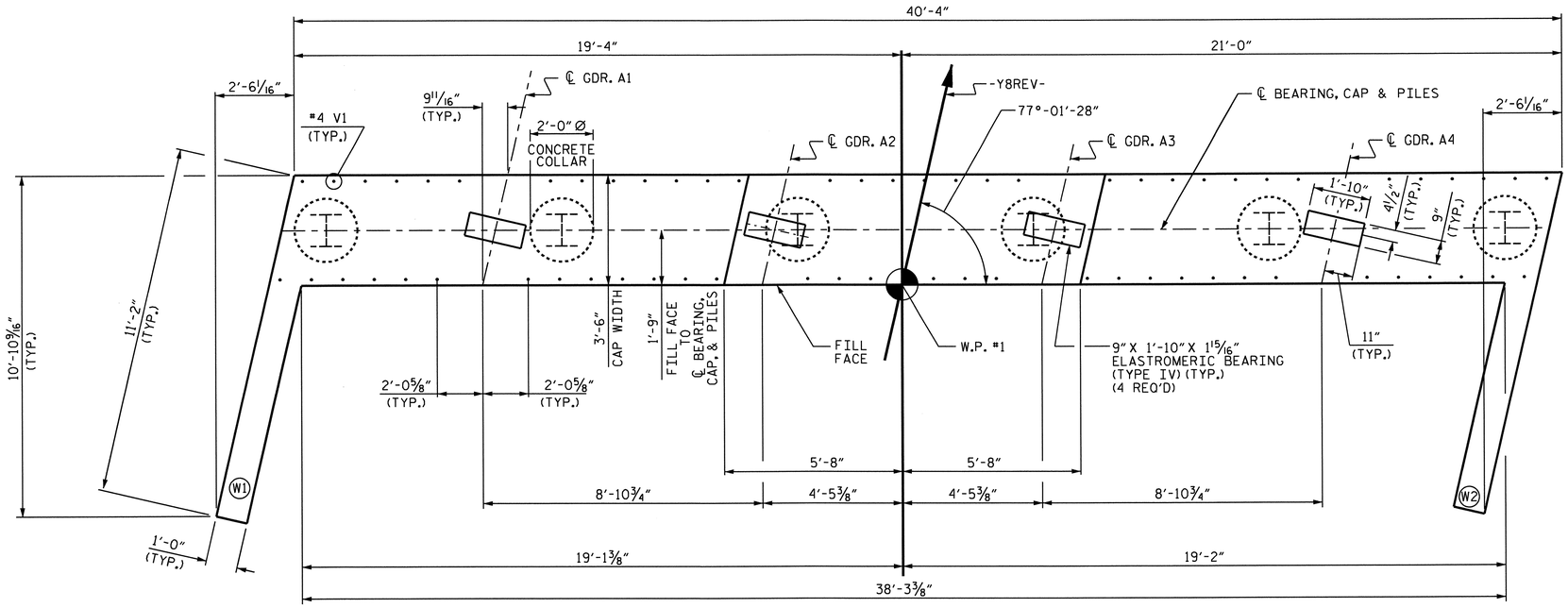

PLAN

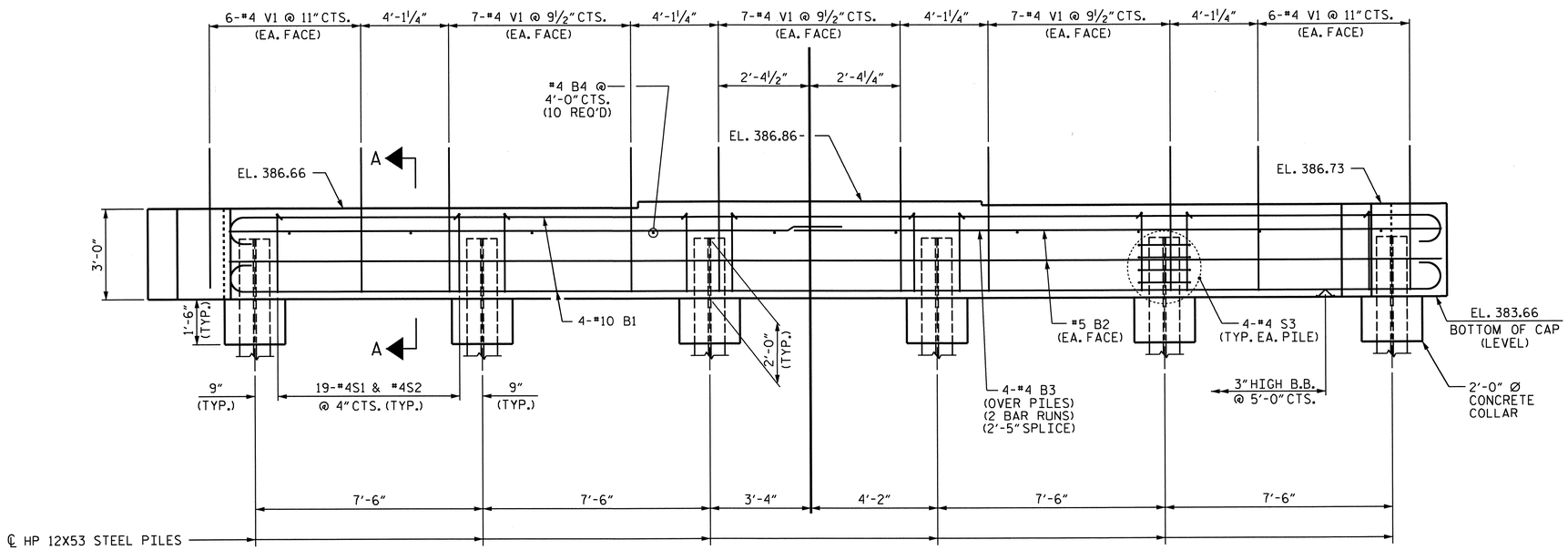

ELEVATION

NOTE

SEE SUPERSTRUCTURE SHEETS FOR UPPER PART OF INTEGRAL END BENT DETAILS.

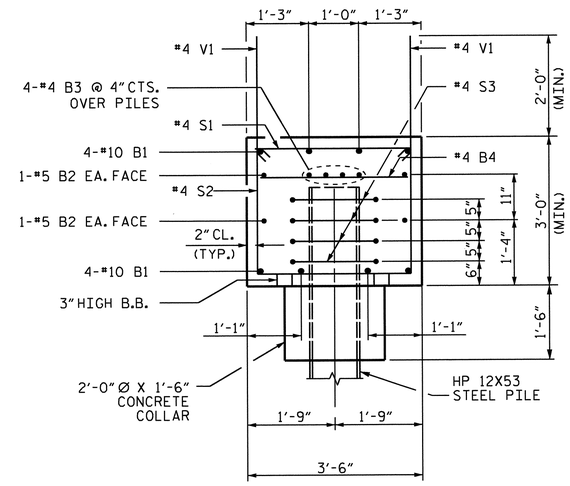

SECTION A-A

3/19/13

PROJECT NO. R-3421C

RICHMOND COUNTY

STATION: 378+94.34 -L-

SHEET 1 OF 2

STATE OF NORTH CAROLINA
DEPARTMENT OF TRANSPORTATION
RALEIGH

SUBSTRUCTURE

INTEGRAL END BENT #1

REVISIONS						SHEET NO.
NO.	BY:	DATE:	NO.	BY:	DATE:	S-19
1			3			TOTAL SHEETS
2			4			86

STR #1

DRAWN BY : R. L. CHESSON DATE : 01/2012
CHECKED BY : K. D. LAYNE DATE : 02/2012

08-AUG-2012 15:12
R:\structures\Plans\str01_Y8REV\R-3421C01_sd_Eb.dgn
jpadams

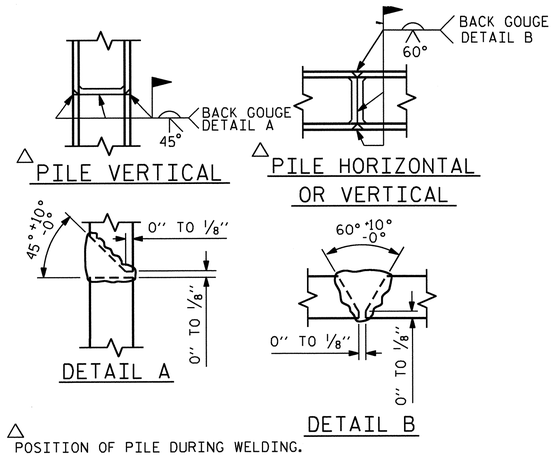

△ POSITION OF PILE DURING WELDING.

PILE SPLICE DETAILS

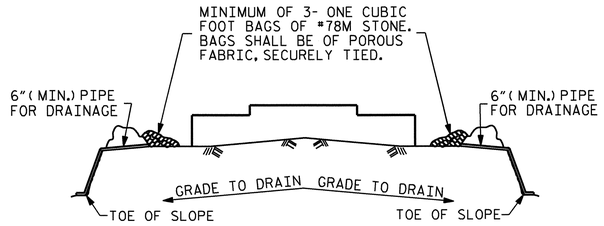

BAGGED STONE AND PIPE SHALL BE PLACED IMMEDIATELY AFTER COMPLETION OF END BENT EXCAVATION. PIPE MAY BE EITHER CONCRETE, CORRUGATED STEEL, CORRUGATED ALUMINUM ALLOY, OR CORRUGATED PLASTIC. PERFORATED PIPE WILL NOT BE ALLOWED.

BAGGED STONE SHALL REMAIN IN PLACE UNTIL THE ENGINEER DIRECTS THAT IT BE REMOVED. THE CONTRACTOR SHALL REMOVE AND DISPOSE OF SILT ACCUMULATIONS AT BAGGED STONE WHEN SO DIRECTED BY THE ENGINEER. BAGS SHALL BE REMOVED AND REPLACED WHENEVER THE ENGINEER DETERMINES THAT THEY HAVE DETERIORATED AND LOST THEIR EFFECTIVENESS.

NO SEPARATE PAYMENT WILL BE MADE FOR THIS WORK AND THE ENTIRE COST OF THIS WORK SHALL BE INCLUDED IN THE UNIT CONTRACT PRICE BID FOR THE SEVERAL PAY ITEMS.

TEMPORARY DRAINAGE AT END BENT

BAR TYPES

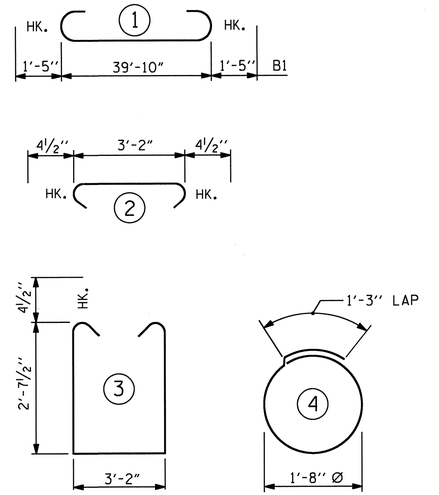

ALL BAR DIMENSIONS ARE OUT TO OUT

BILL OF MATERIAL

END BENT #1

BAR	NO.	SIZE	TYPE	LENGTH	WEIGHT
B1	8	#10	1	42'-8"	1,469
B2	4	#5	STR	40'-0"	167
B3	8	#4	STR	21'-3"	114
B4	10	#4	STR	3'-2"	21
H1	8	#5	STR	10'-11"	91
H2	8	#5	STR	10'-9"	90
S1	95	#4	2	3'-11'	249
S2	95	#4	3	9'-2"	582
S3	24	#4	4	6'-6"	104
V1	66	#4	STR	5'-1"	224
V2	40	#4	STR	8'-11"	238

REINFORCING STEEL = 3349 LBS

CLASS A CONCRETE QUANTITIES:
CAP, LOWER WINGS & COLLARS 18.9 CU.YD.

HP 12X53 STEEL PILES
NO. 6 510 LIN. FT.

PILE REDRIVES EACH 6

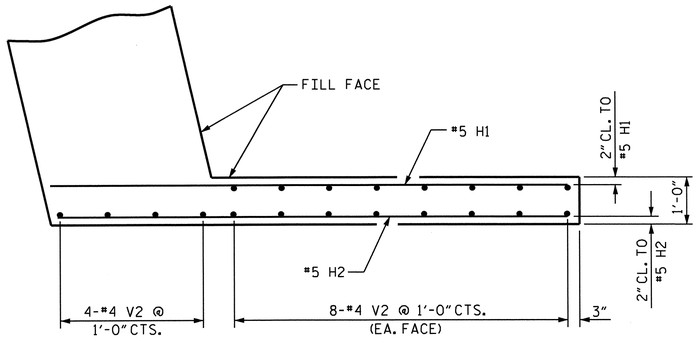

PLAN OF LEFT WING (W1)

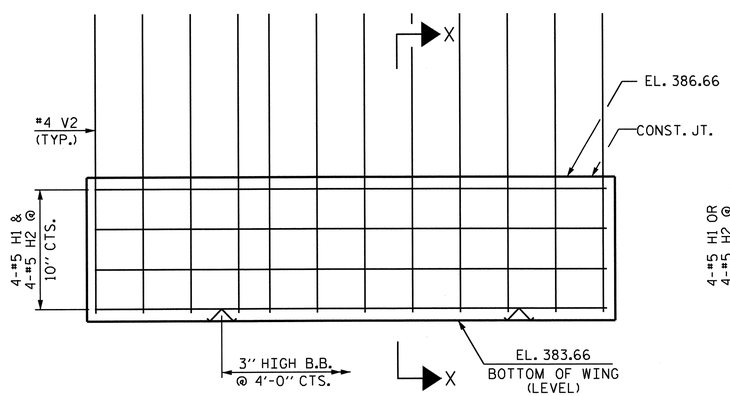

ELEVATION OF LEFT WING (W1)

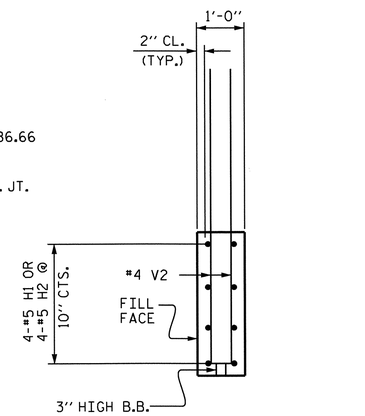

SECTION X-X

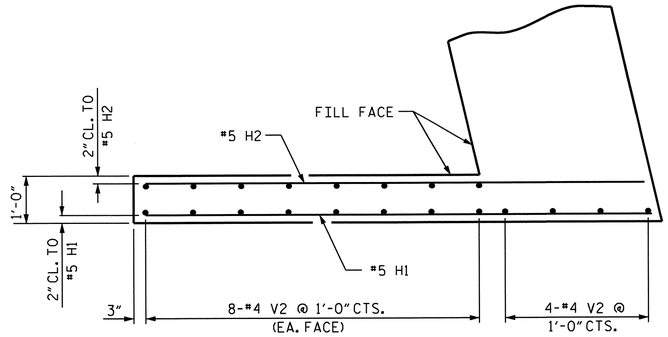

PLAN OF RIGHT WING (W2)

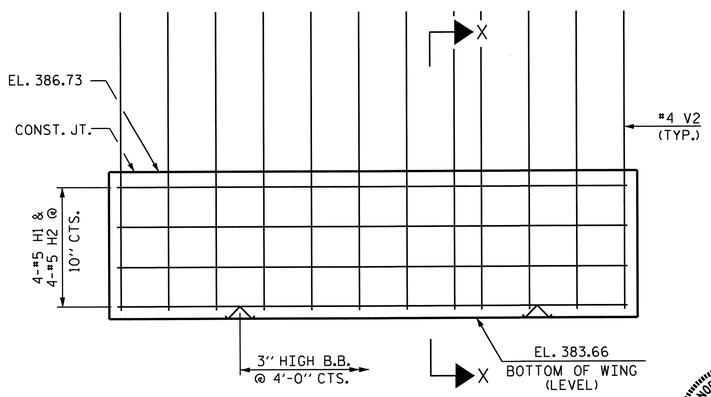

ELEVATION OF RIGHT WING (W2)

NORTH CAROLINA PROFESSIONAL SEAL 23371 ENGINEER VIPUL A. PATEL
3/19/13

PROJECT NO. R-3421C
RICHMOND COUNTY
STATION: 378+94.34 -L-

SHEET 2 OF 2

STATE OF NORTH CAROLINA
DEPARTMENT OF TRANSPORTATION
RALEIGH

SUBSTRUCTURE

INTEGRAL END BENT #1

REVISIONS						SHEET NO.
NO.	BY:	DATE:	NO.	BY:	DATE:	S-20
1			3			TOTAL SHEETS
2			4			86

STR #1

DRAWN BY : R. L. CHESSON DATE : 01/2012
CHECKED BY : K. D. LAYNE DATE : 02/2012

08-AUG-2012 15:12
R:\structures\Plans\str01_Y8REV\R-3421C01_sd_Eb.dgn
jpadams

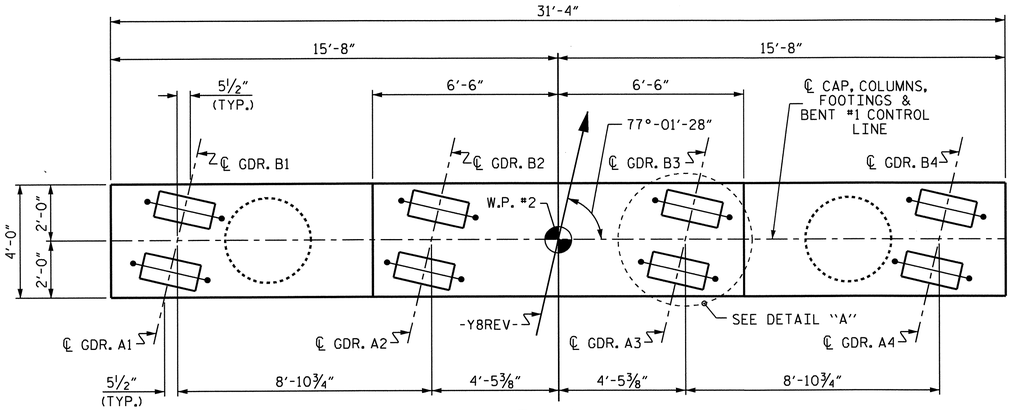

PLAN

SPAN B

SPAN A

NOTES

STIRRUPS IN CAP MAY BE SHIFTED AS NECESSARY TO CLEAR ANCHOR BOLTS.

HOOKS IN "V" BARS MAY BE TURNED AS NECESSARY FOR PLACING REINFORCING STEEL.

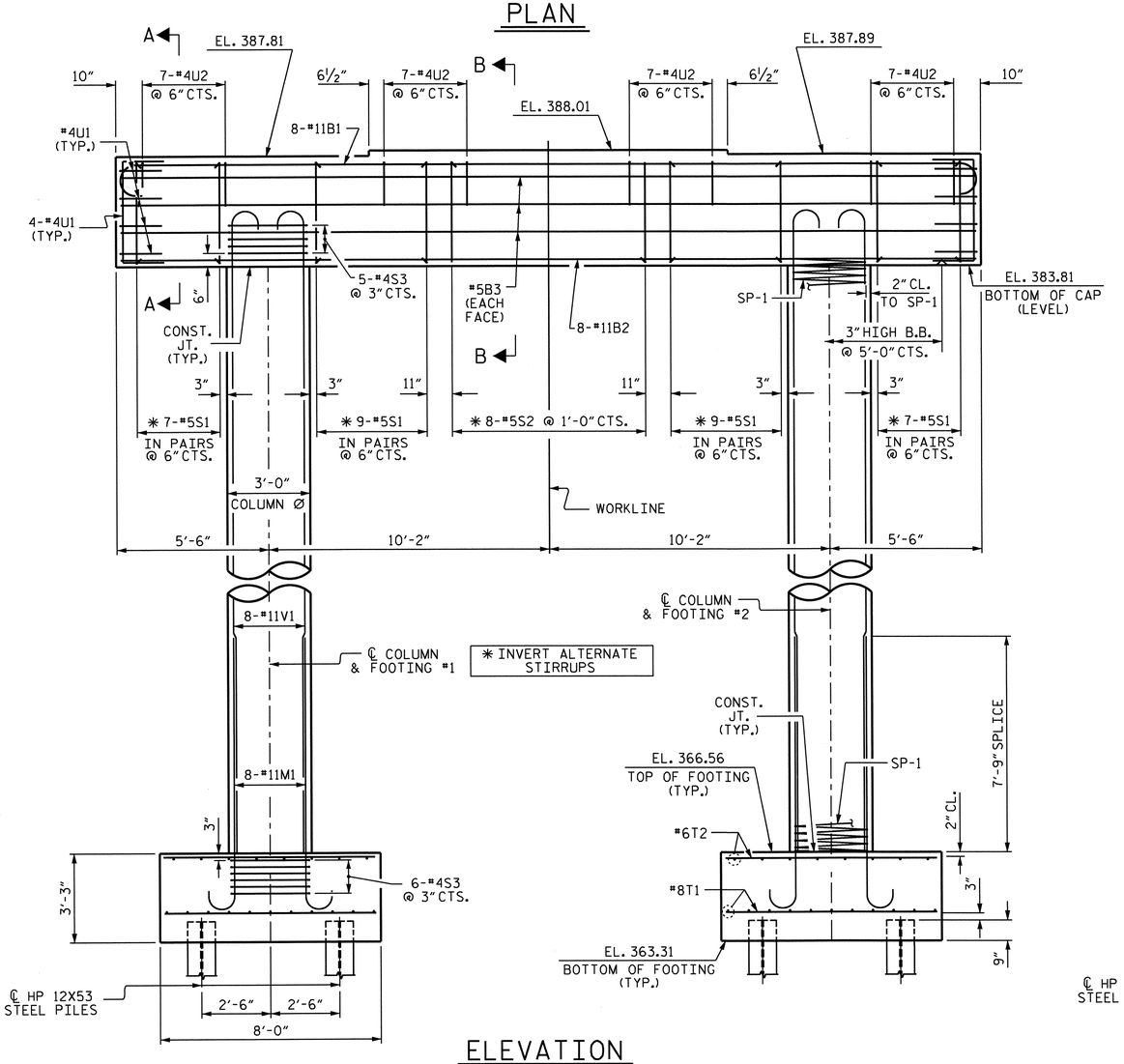

ELEVATION

REINFORCING STEEL, DIMENSIONS AND DETAILS ARE TYPICAL FOR EACH COLUMN AND FOOTING UNLESS OTHERWISE NOTED.

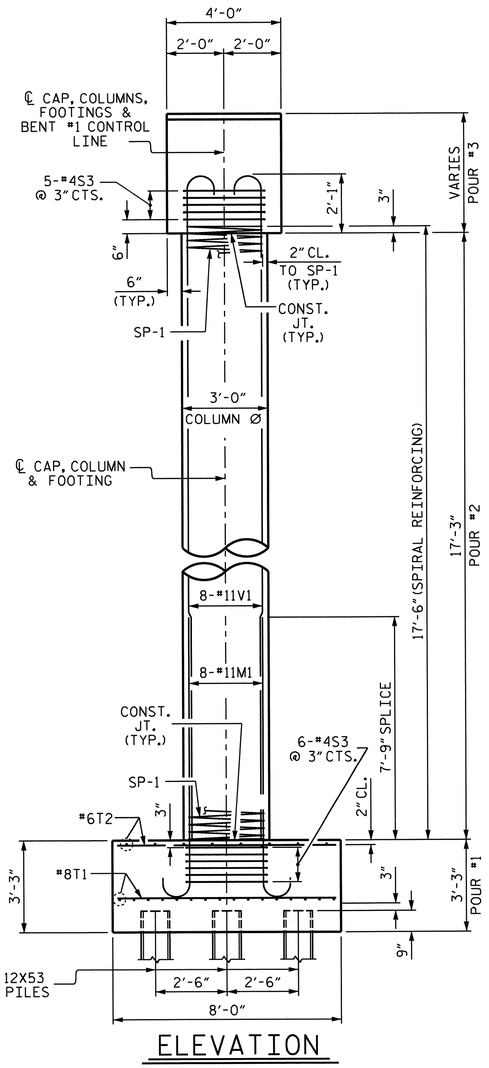

ELEVATION

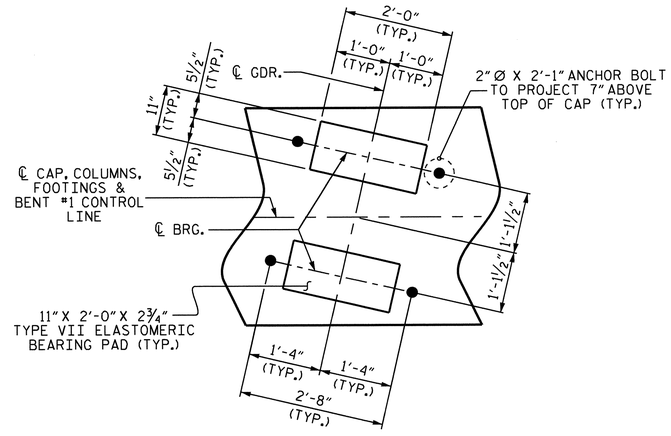

DETAIL "A"

(DIMENSIONS ARE TYPICAL EACH BEARING)

PROJECT NO. R-3421C

RICHMOND COUNTY

STATION: 378+94.34 -L-

SHEET 1 OF 2

STATE OF NORTH CAROLINA
DEPARTMENT OF TRANSPORTATION
RALEIGH

SUBSTRUCTURE

BENT #1

REVISIONS						SHEET NO.
NO.	BY:	DATE:	NO.	BY:	DATE:	S-21
1			3			TOTAL SHEETS
2			4			86

NORTH CAROLINA PROFESSIONAL SEAL 23371 ENGINEER VIPUL A. PATEL
9/19/13

STR. #1

DRAWN BY : H.T. DIEU DATE : 2/6/12
CHECKED BY : J.G. KHARVA DATE : 2/23/12

18-SEP-2013 12:15
R:\structures\Plans\str01_Y8REV\R-3421C_SD_Bt.dgn
thcarroll

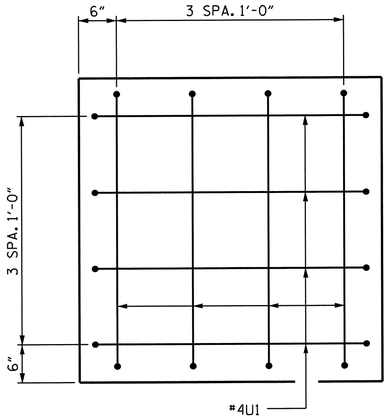

END VIEW

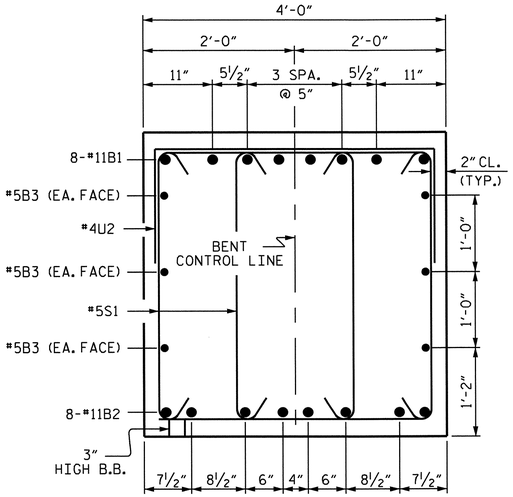

SECTION A-A

INVERT ALTERNATE STIRRUPS

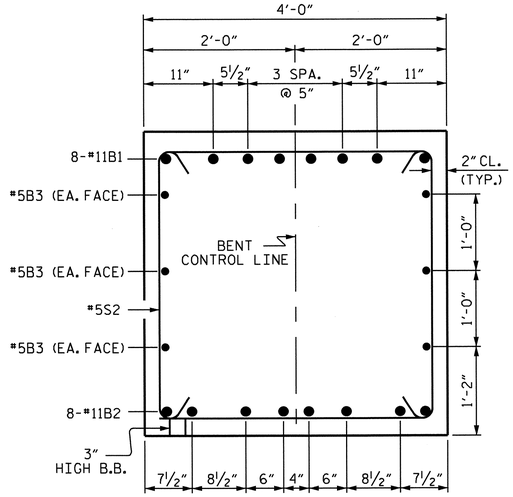

SECTION B-B

INVERT ALTERNATE STIRRUPS

BAR TYPES

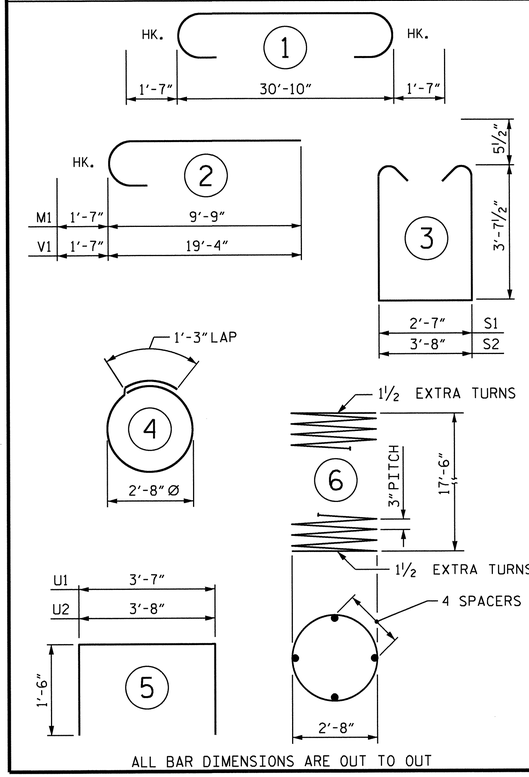

ALL BAR DIMENSIONS ARE OUT TO OUT

BILL OF MATERIAL

BENT #1

BAR	NO.	SIZE	TYPE	LENGTH	WEIGHT
B1	8	#11	1	34'-0"	1445
B2	8	#11	STR	31'-0"	1318
B3	6	#5	STR	31'-0"	194
M1	16	#11	2	11'-4"	963
S1	64	#5	3	10'-9"	718
S2	8	#5	3	11'-10"	99
S3	22	#4	4	9'-8"	142
T1	54	#8	STR	7'-8"	1105
T2	32	#6	STR	7'-8"	369
U1	16	#4	5	6'-7"	70
U2	28	#4	5	6'-8"	125
V1	16	#11	2	20'-11"	1778
REINFORCING STEEL					8326
SP1	2	**	6	602'-4"	805

SPIRAL COLUMN REINFORCING STEEL (SP-1) 805

CLASS A CONCRETE BREAKDOWN:

POUR #1 (FOOTINGS)	15.4 C.Y.
POUR #2 (COLUMNS)	9.0 C.Y.
POUR #3 (CAP)	19.0 C.Y.
TOTAL CLASS A CONCRETE	43.4 C.Y.

HP 12X53 STEEL PILES NO. 12 LIN. FT. 720

FOUNDATION EXCAVATION LUMP SUM

PILE REDRIVES EACH 12

** THE SP1 SPIRAL REINFORCING STEEL SHALL BE W-20 OR D-20 COLD DRAWN WIRE OR #4 PLAIN OR DEFORMED BAR

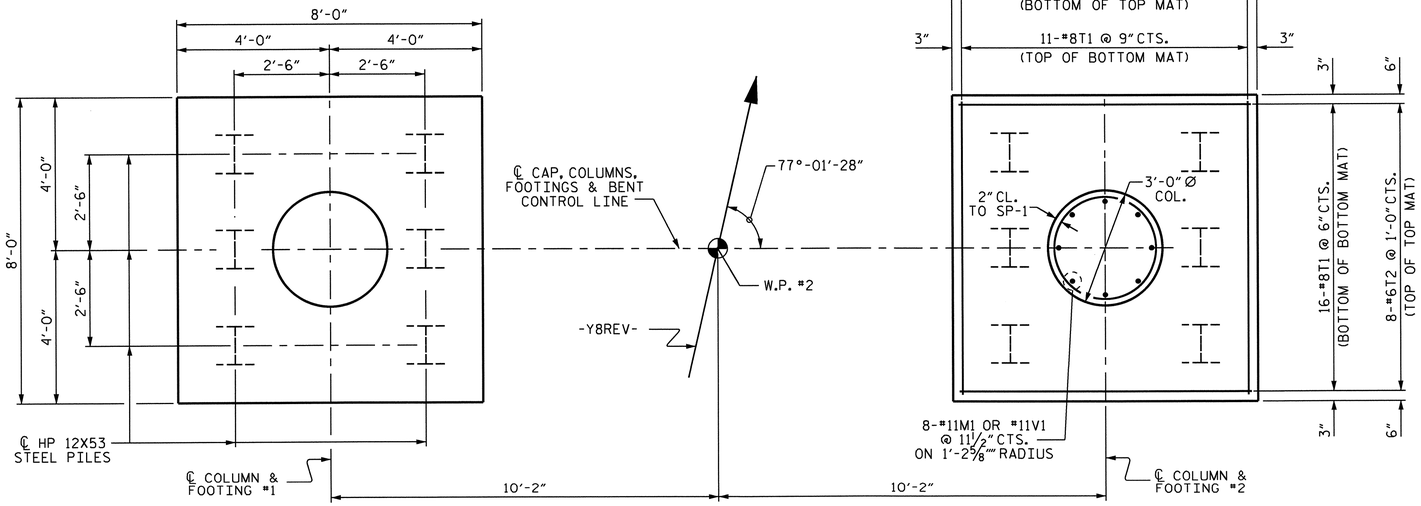

PLAN FOOTING & COLUMNS

REINFORCING STEEL, DIMENSIONS, AND DETAILS ARE TYPICAL FOR EACH COLUMN AND FOOTING.

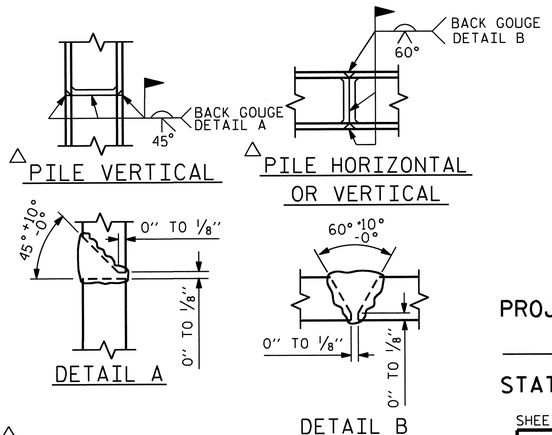

△ POSITION OF PILE DURING WELDING.

PILE SPLICE DETAILS

PROJECT NO. R-3421C

RICHMOND COUNTY

STATION: 378+94.34 -L-

SHEET 2 OF 2

STATE OF NORTH CAROLINA
DEPARTMENT OF TRANSPORTATION
RALEIGH

SUBSTRUCTURE

BENT #1

NORTH CAROLINA PROFESSIONAL SEAL 23371 ENGINEER VIPUL A. PATEL
9/9/13

REVISIONS						SHEET NO.
NO.	BY:	DATE:	NO.	BY:	DATE:	S-22
1			3			TOTAL SHEETS
2			4			86

DRAWN BY : H.T. DIEU DATE : 2/6/12
CHECKED BY : J.G. KHARVA DATE : 2/23/12

18-SEP-2013 12:15
R:\structures\Plans\str01_Y8REV\R-3421C_SD_Bt.dgn
thcarroll

STR. #1

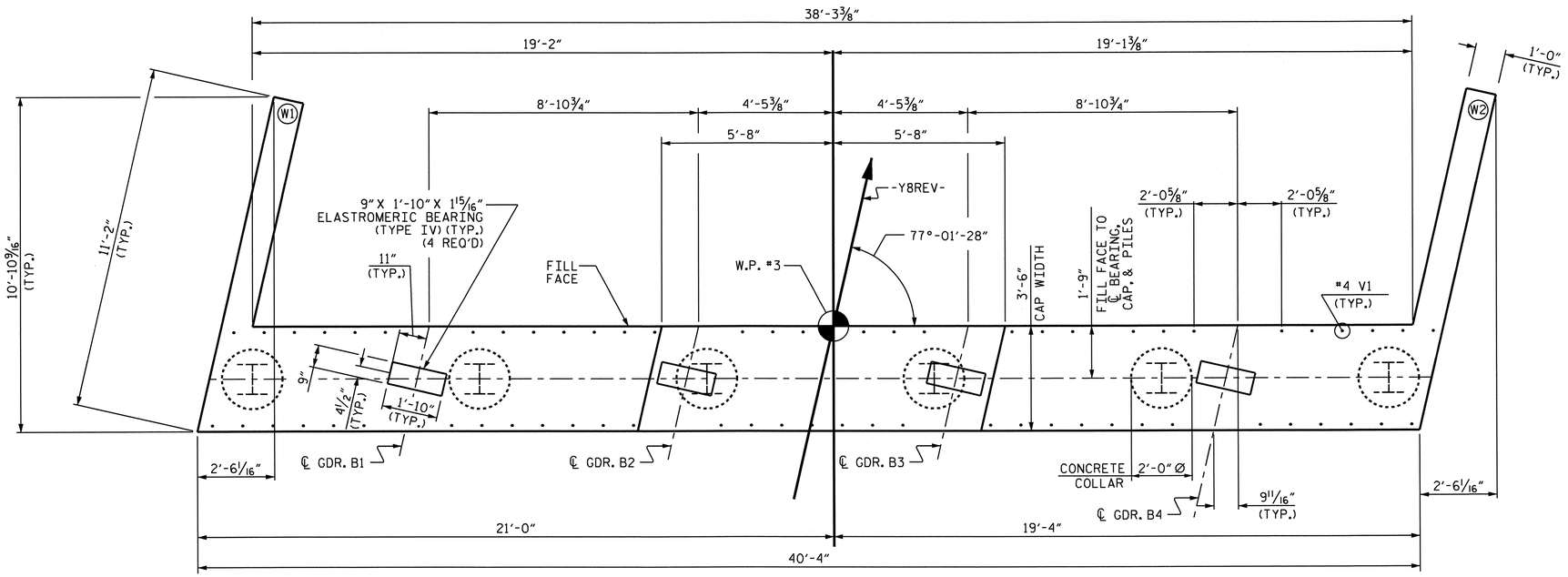

PLAN

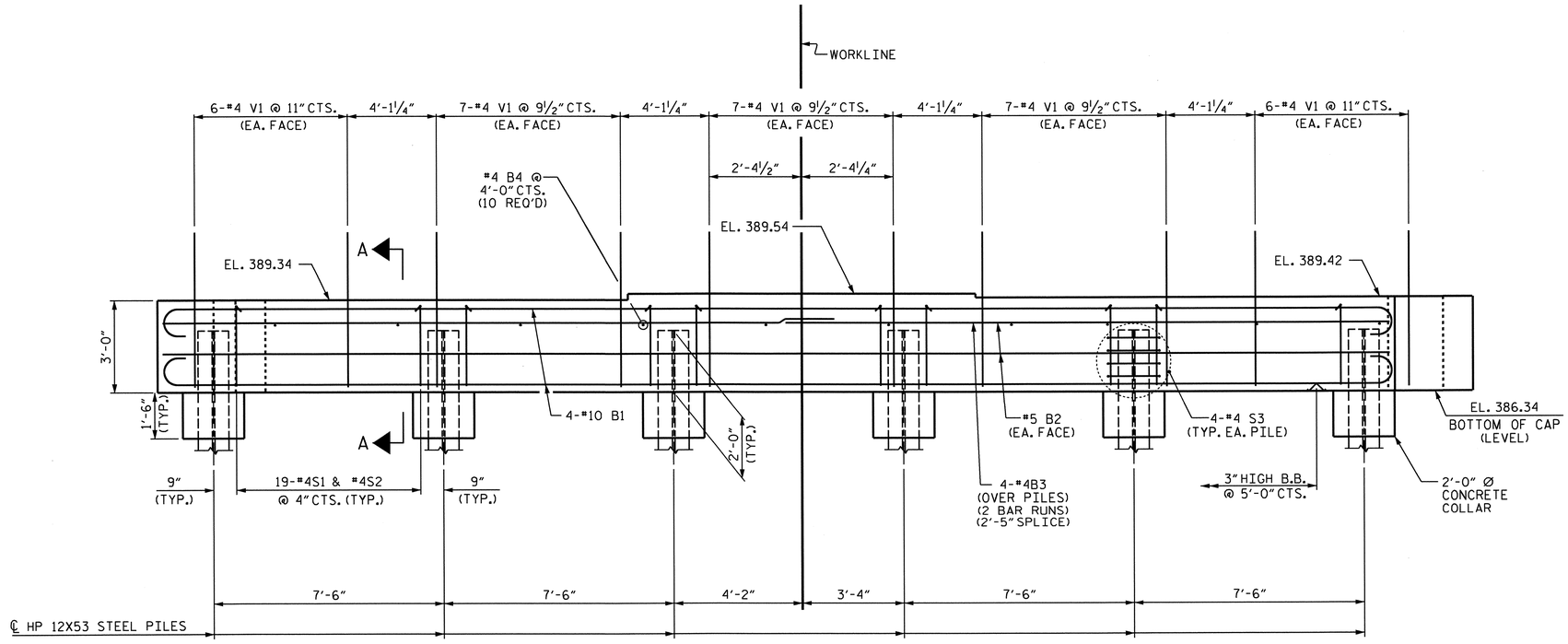

ELEVATION

NOTE

SEE SUPERSTRUCTURE SHEETS FOR UPPER PART OF INTEGRAL END BENT DETAILS.

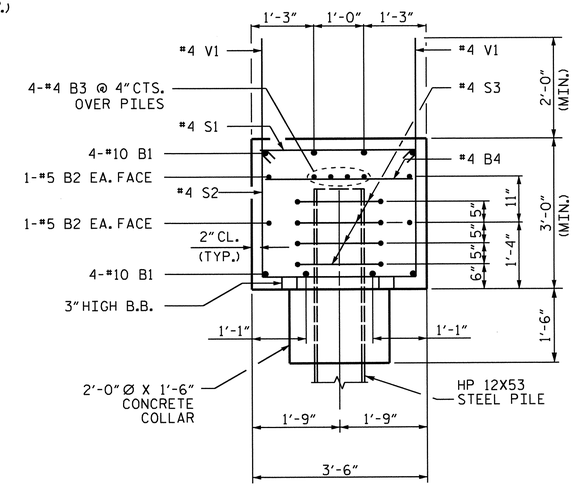

SECTION A-A

PROJECT NO. R-3421C

RICHMOND COUNTY

STATION: 378+94.34 -L-

SHEET 1 OF 2

STATE OF NORTH CAROLINA
DEPARTMENT OF TRANSPORTATION
RALEIGH

SUBSTRUCTURE

INTEGRAL END BENT #2

REVISIONS						SHEET NO.
NO.	BY:	DATE:	NO.	BY:	DATE:	S-23
1			3			TOTAL SHEETS
2			4			86

STR #1

NORTH CAROLINA PROFESSIONAL SEAL 23371 ENGINEER VIRAL A. PATEL

3|19|13

DRAWN BY : R. L. CHESSON DATE : 01/2012
CHECKED BY : K. D. LAYNE DATE : 02/2012

08-AUG-2012 15:12
R:\structures\Plans\str01_Y8REV\R-3421C01_sd_Eb.dgn
jpadams

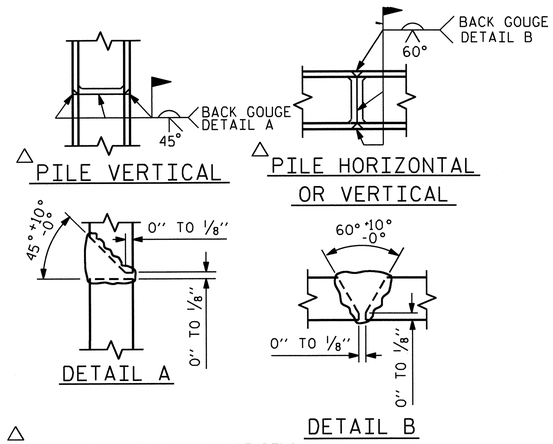

PILE SPLICE DETAILS

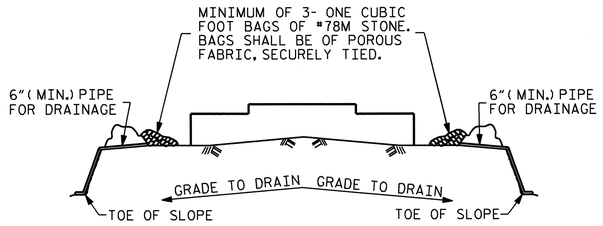

BAGGED STONE AND PIPE SHALL BE PLACED IMMEDIATELY AFTER COMPLETION OF END BENT EXCAVATION. PIPE MAY BE EITHER CONCRETE, CORRUGATED STEEL, CORRUGATED ALUMINUM ALLOY, OR CORRUGATED PLASTIC. PERFORATED PIPE WILL NOT BE ALLOWED.

BAGGED STONE SHALL REMAIN IN PLACE UNTIL THE ENGINEER DIRECTS THAT IT BE REMOVED. THE CONTRACTOR SHALL REMOVE AND DISPOSE OF SILT ACCUMULATIONS AT BAGGED STONE WHEN SO DIRECTED BY THE ENGINEER. BAGS SHALL BE REMOVED AND REPLACED WHENEVER THE ENGINEER DETERMINES THAT THEY HAVE DETERIORATED AND LOST THEIR EFFECTIVENESS.

NO SEPARATE PAYMENT WILL BE MADE FOR THIS WORK AND THE ENTIRE COST OF THIS WORK SHALL BE INCLUDED IN THE UNIT CONTRACT PRICE BID FOR THE SEVERAL PAY ITEMS.

TEMPORARY DRAINAGE AT END BENT

BAR TYPES

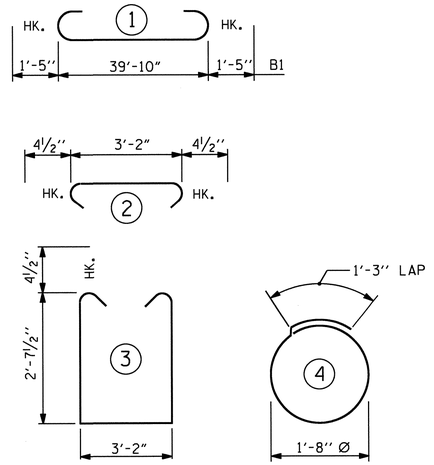

ALL BAR DIMENSIONS ARE OUT TO OUT

BILL OF MATERIAL
END BENT #2

BAR	NO.	SIZE	TYPE	LENGTH	WEIGHT
B1	8	#10	1	42'-8"	1,469
B2	4	#5	STR	40'-0"	167
B3	8	#4	STR	21'-3"	114
B4	10	#4	STR	3'-2"	21
H1	8	#5	STR	10'-11"	91
H2	8	#5	STR	10'-9"	90
S1	95	#4	2	3'-11'	249
S2	95	#4	3	9'-2"	582
S3	24	#4	4	6'-6"	104
V1	66	#4	STR	5'-1"	224
V2	40	#4	STR	9'-0"	240

REINFORCING STEEL = 3351 LBS

CLASS A CONCRETE QUANTITIES:
CAP, LOWER WINGS & COLLARS 18.9 CU.YD.

HP 12X53 STEEL PILES NO. 6 510 LIN. FT.

PILE REDRIVES EACH 6

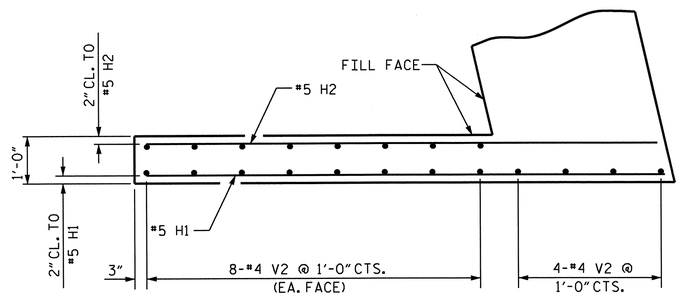

PLAN OF LEFT WING (W1)

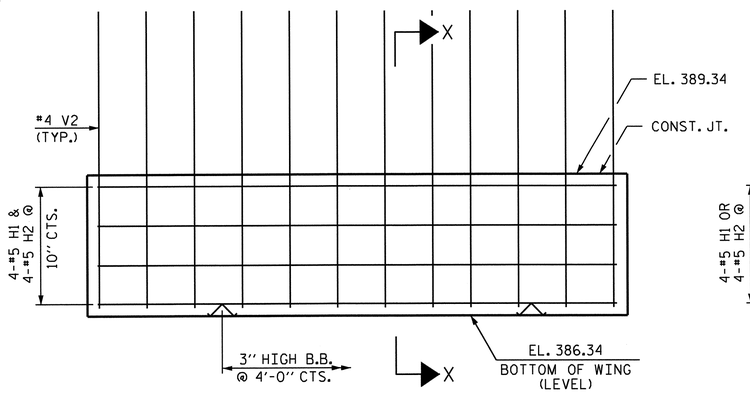

ELEVATION OF LEFT WING (W1)

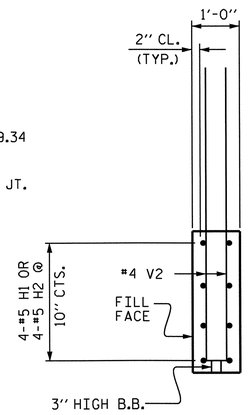

SECTION X-X

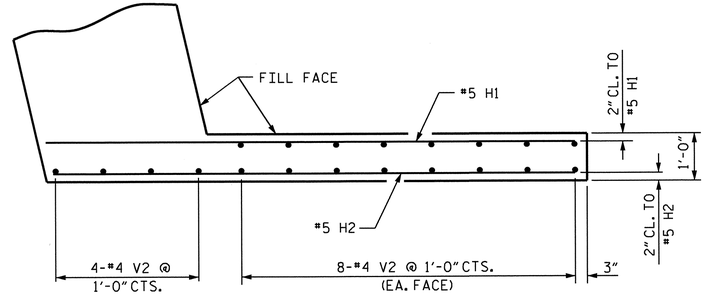

PLAN OF RIGHT WING (W2)

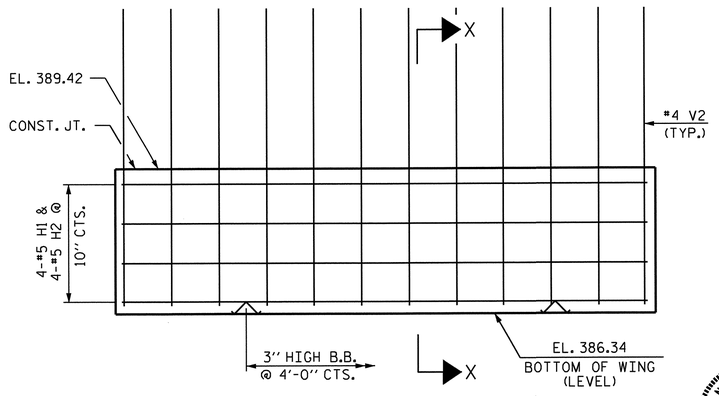

ELEVATION OF RIGHT WING (W2)

PROJECT NO. R-3421C
RICHMOND COUNTY
STATION: 378+94.34 -L-

SHEET 2 OF 2

STATE OF NORTH CAROLINA
DEPARTMENT OF TRANSPORTATION
RALEIGH

SUBSTRUCTURE

INTEGRAL END BENT #2

REVISIONS						SHEET NO.
NO.	BY:	DATE:	NO.	BY:	DATE:	S-24
1			3			TOTAL SHEETS
2			4			86

STR #1

DRAWN BY : R. L. CHESSON DATE : 01/2012
CHECKED BY : K. D. LAYNE DATE : 02/2012

08-AUG-2012 15:12
R:\structures\Plans\str01_Y8REV\R-3421C01_sd_Eb.dgn
jpadams

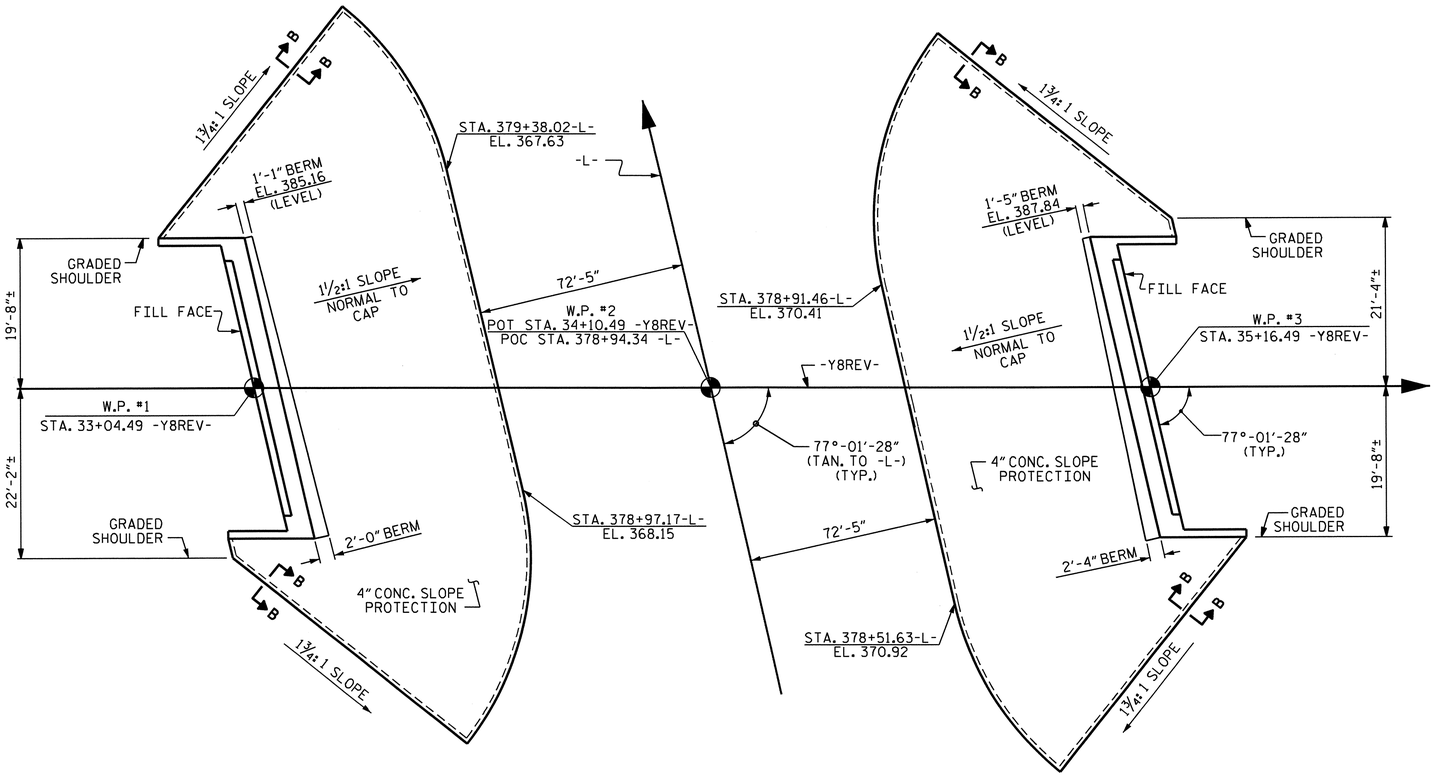

PLAN

GENERAL NOTES

SLOPE PROTECTION SHALL BE PLACED UNDER THE ENDS OF THE BRIDGE AS SHOWN IN THE DETAILS. MEASUREMENT AND PAYMENT SHALL BE AS PRESCRIBED IN SECTION 462 OF THE STANDARD SPECIFICATIONS. FOR BERM WIDTH, SEE GENERAL DRAWING.

SLOPE PROTECTION SHALL CONSIST OF 4'' POURED-IN-PLACE CONCRETE PAVING AS SHOWN IN THE DETAILS ON THIS SHEET. CONCRETE SHALL BE CLASS ''B''. THE CONCRETE SURFACE SHALL BE FLOATED WITH A WOODEN FLOAT AND FINISHED. WELDED WIRE FABRIC REINFORCING SHALL BE 6 X 6 - W1.4 X W1.4, 60'' WIDE. SLOPE PROTECTION SHALL BE POURED IN 5' STRIPS AS SHOWN IN THE ''POURING DETAIL'' WITH 2'-0" LONG #4 BARS PLACED ALONG THE SLOPE BETWEEN STRIPS AT 1'-6" MAXIMUM SPACING. SLOPE PROTECTION MAY BE POURED IN ALTERNATE 4' AND 5' STRIPS AS SHOWN IN THE ''OPTIONAL POURING DETAIL'' WITH ADJACENT RUNS OF WELDED WIRE FABRIC LAPPING AT LEAST 6''. THE COST OF THE WELDED WIRE FABRIC AND #4 BARS, IF USED, SHALL BE INCLUDED IN THE CONTRACT UNIT PRICE BID PER SQUARE YARD FOR SLOPE PROTECTION.

BRIDGE @ STA. 378+94.34 -L-	4 INCH SLOPE PROTECTION	* WELDED WIRE FABRIC 60 INCHES WIDE
	SQUARE YARDS	APPROX. L.F.
END BENT #1	345	690
END BENT #2	330	660

* QUANTITY SHOWN IS BASED ON 5' POURS.

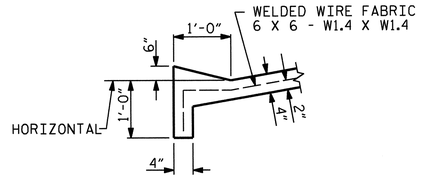

SECTION B-B

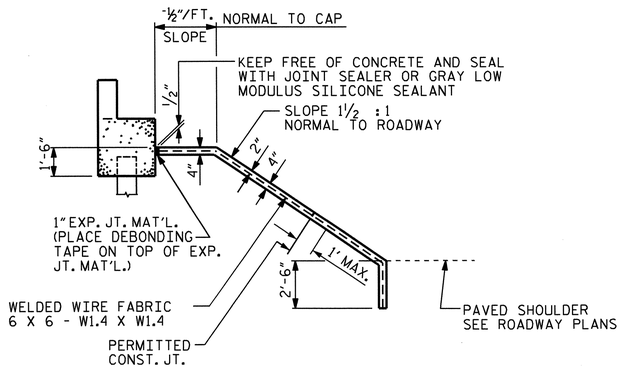

SECTION ALONG ℄ ROADWAY WITH SHOULDER PIER

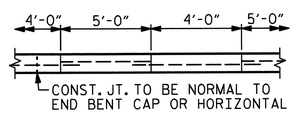

POUR A 4'-0'' STRIP FIRST. STRIP WIDTHS MAY VARY IN CURVED PORTION.

OPTIONAL POURING DETAIL

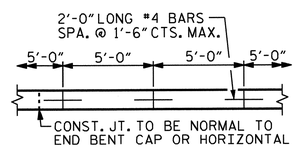

STRIP WIDTHS MAY VARY IN CURVED PORTION.

POURING DETAIL

NORTH CAROLINA PROFESSIONAL SEAL 23371 ENGINEER VIPUL A. PATEL

3/19/13

PROJECT NO. R-3421C

RICHMOND COUNTY

STATION: 378+94.34 -L-

STATE OF NORTH CAROLINA
DEPARTMENT OF TRANSPORTATION
RALEIGH

STANDARD

SLOPE PROTECTION DETAILS

REVISIONS						SHEET NO.
NO.	BY:	DATE:	NO.	BY:	DATE:	S-25
1			3			TOTAL SHEETS
2			4			86

ASSEMBLED BY:	KEITH D. LAYNE	DATE:	3-21-12
CHECKED BY :	HOANG T. DIEU	DATE :	4-11-12
DRAWN BY : ELR 5/92	REV. 5/7/03		RWW/JTE
CHECKED BY : GRP 6/92	REV. 5/1/06		TLA/GM
	REV. 10/1/11		MAA/GM

18-MAR-2013 11:49
R:\structures\Plans\str01_Y8REV\R-3421C_SD_SP.dgn
vpatel

STR. #1

STD. NO. SP1 (SHT 5)

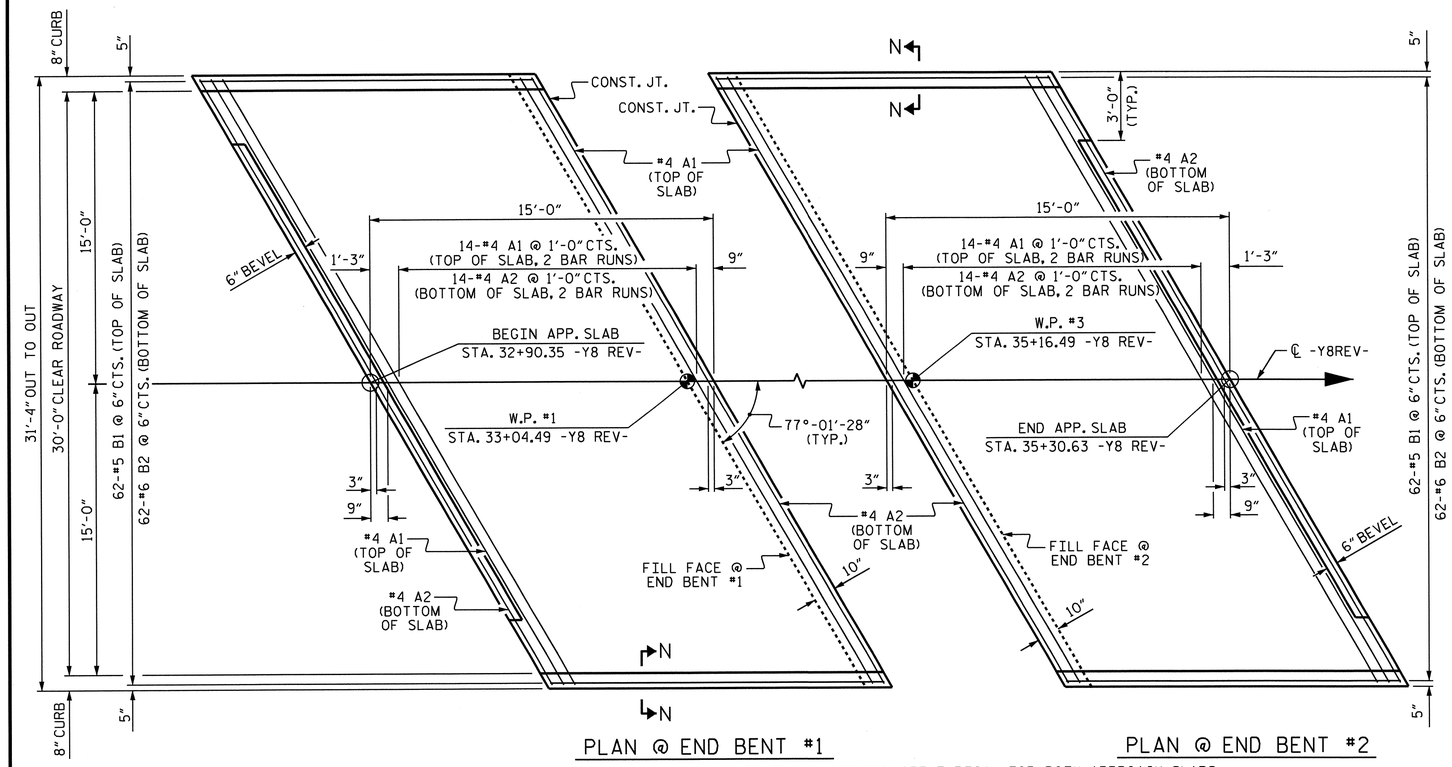

DIMENSIONS SHOWN ARE TYPICAL FOR BOTH APPROACH SLABS

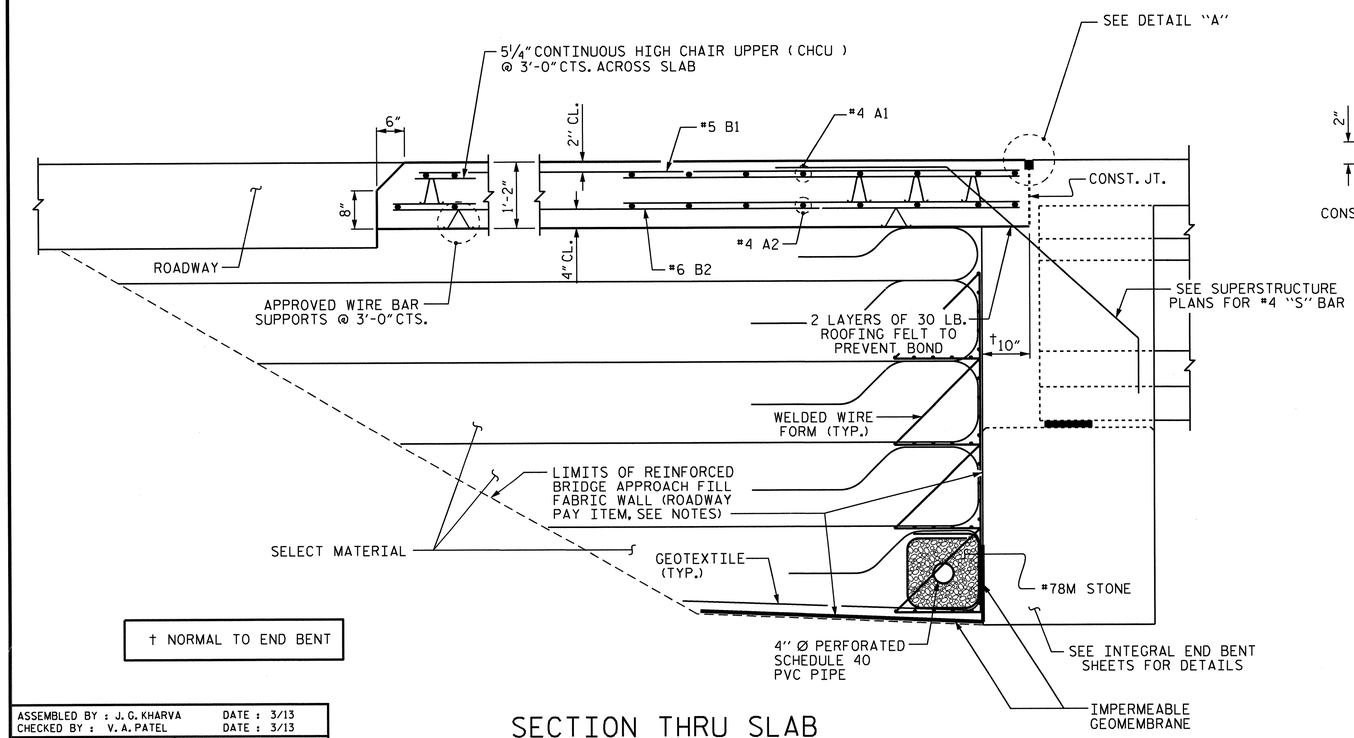

SECTION THRU SLAB

† NORMAL TO END BENT

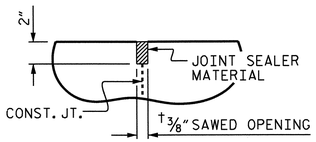

DETAIL "A"

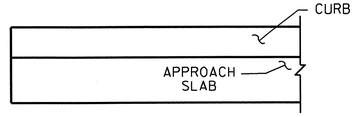

END OF CURB WITHOUT SHOULDER BERM GUTTER

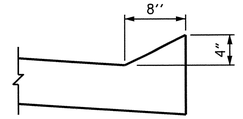

SECTION N-N

NOTES

APPROACH SLAB SHALL NOT BE CONSTRUCTED PRIOR TO COMPLETION OF THE BRIDGE DECK.

FOR REINFORCED BRIDGE APPROACH FILL INCLUDING GEOTEXTILE, IMPERMEABLE GEOMEMBRANE, 4" Ø DRAINAGE PIPE, #78M STONE, AND SELECT MATERIAL, SEE ROADWAY PLANS.

AREA BETWEEN THE WINGWALL AND APPROACH SLAB SHALL BE GRADED TO DRAIN THE WATER AWAY FROM THE FILL FACE OF THE BRIDGE AND SHALL BE PAVED. SEE ROADWAY PLANS.

THE JOINT OPENING AT THE APPROACH SLAB/DECK INTERFACE SHALL BE SAWED NO MORE THAN 12 HOURS AFTER THE APPROACH SLAB IS CAST. THE JOINT SHALL BE CLEANED OF ALL DEBRIS BEFORE THE SEALANT IS APPLIED. THE JOINT SEALER MATERIAL SHALL CONFORM TO THE REQUIREMENTS OF SECTION 1028-3 OF THE STANDARD SPECIFICATIONS.

BILL OF MATERIAL

FOR ONE APPROACH SLAB (2 REQ'D)

BAR	NO.	SIZE	TYPE	LENGTH	WEIGHT
* A1	32	#4	STR	16'-11"	362
A2	32	#4	STR	16'-10"	360
* B1	62	#5	STR	14'-1"	911
B2	62	#6	STR	14'-7"	1358
REINFORCING STEEL				LBS.	1718
* EPOXY COATED REINFORCING STEEL				LBS.	1273
CLASS AA CONCRETE				C.Y.	20.2

SPLICE LENGTHS

BAR SIZE	EPOXY COATED	UNCOATED
#4	2'-0"	1'-9"

ASSEMBLED BY : J. G. KHARVA	DATE : 3/13
CHECKED BY : V. A. PATEL	DATE : 3/13
DRAWN BY : TLA 10/05	ADDED 5/1/06RR KMM/GM
CHECKED BY : GM 5/06	REV. 10/1/11 MAA/GM
	REV. 12/21/11 MAA/GM

18-MAR-2013 12:04
R:\Structures\Plans\str01_Y8REV\R-3421_SD_AS.dgn
vpatel

PROJECT NO. R-3421C

RICHMOND COUNTY

STATION: 378+94.34 -L-

SHEET 1 OF 3

STATE OF NORTH CAROLINA
DEPARTMENT OF TRANSPORTATION
RALEIGH

STANDARD

BRIDGE APPROACH SLAB FOR INTEGRAL ABUTMENT

NORTH CAROLINA PROFESSIONAL SEAL 23371 ENGINEER VASU A. PATEL
3/1/13

REVISIONS						SHEET NO.
NO.	BY:	DATE:	NO.	BY:	DATE:	S-26
1			3			TOTAL SHEETS
2			4			86

STR. #1

STD. NO. BAS5 (SHT 1a)

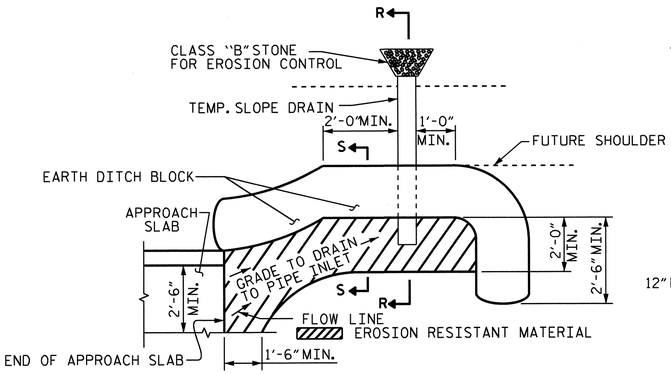

NOTE: IMMEDIATELY AFTER THE CONSTRUCTION OF THE APPROACH SLAB, THE CONTRACTOR SHALL PROVIDE TEMPORARY BERM AND SLOPE DRAIN. CONTRACTOR SHALL GRADE TO PIPE INLET AND PROVIDE EROSION RESISTANT MATERIAL AS SHOWN. THE EROSION RESISTANT MATERIAL SHALL BE EITHER 1) ASPHALT PLANT MIX, TYPE 1 OR TYPE 2, MIN. 2" DEPTH, 2) EROSION CONTROL MAT, OR 3) CONCRETE, AS DIRECTED BY THE ENGINEER. THE SLOPE DRAIN SHALL CONSIST OF A NON-PERFORATED TEMPORARY DRAINAGE PIPE, 12 INCHES IN DIAMETER.

PLAN VIEW

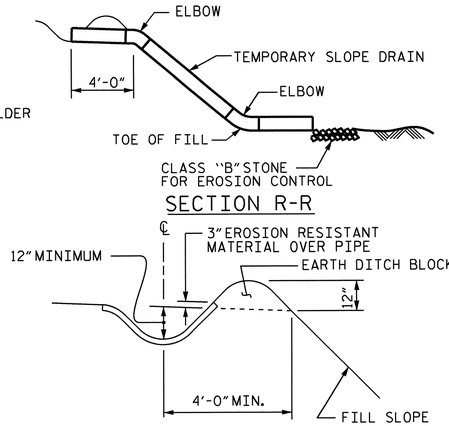

SECTION S-S

TEMPORARY BERM AND SLOPE DRAIN DETAILS

(TO BE USED WHEN SHOULDER BERM GUTTER IS REQUIRED)

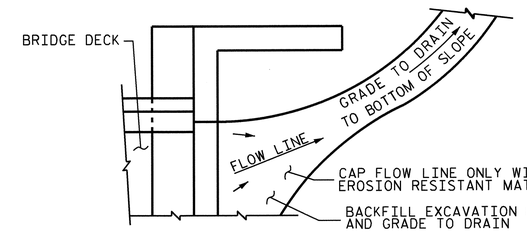

NOTE: IF THE APPROACH SLAB IS NOT CONSTRUCTED IMMEDIATELY AFTER THE BACKFILLING OF THE END BENT EXCAVATION, GRADE TO DRAIN TO THE BOTTOM OF THE SLOPE AND PROVIDE EROSION RESISTANT MATERIAL, SUCH AS FIBERGLASS ROVING OR AS DIRECTED BY THE ENGINEER TO PREVENT SOIL EROSION AND TO PROTECT THE AREA ADJACENT TO THE STRUCTURE. THE CONTRACTOR WILL BE REQUIRED TO REMOVE THESE MATERIALS PRIOR TO CONSTRUCTION OF THE APPROACH SLAB.

TEMPORARY DRAINAGE DETAIL

PROJECT NO. R-3421C

RICHMOND COUNTY

STATION: 378+94.34 -L-

SHEET 2 OF 2

STATE OF NORTH CAROLINA
DEPARTMENT OF TRANSPORTATION
RALEIGH

STANDARD

BRIDGE APPROACH SLAB DETAILS

NORTH CAROLINA PROFESSIONAL SEAL 23371 ENGINEER V.P.L. A. PATEL

3/19/13

REVISIONS						SHEET NO.
NO.	BY:	DATE:	NO.	BY:	DATE:	S-27
1			3			TOTAL SHEETS
2			4			86

ASSEMBLED BY : J. G. KHARVA		DATE : 6/12	
CHECKED BY : V. A. PATEL		DATE : 6/12	
DRAWN BY : FCJ	11/88	REV. 5/7/03	RWW/JTE
CHECKED BY : ARB	11/88	REV. 5/1/06RRR	MAA/KMM
		REV. 10/1/11	MAA/GM

08-AUG-2012 15:12
R:\structures\Plans\str01_Y8REV\R-3421_SD_AS.dgn
jpadams

STR. #1

STD. NO. BAS4

F.A. PROJECT NO. HPPNHS-0220(65)

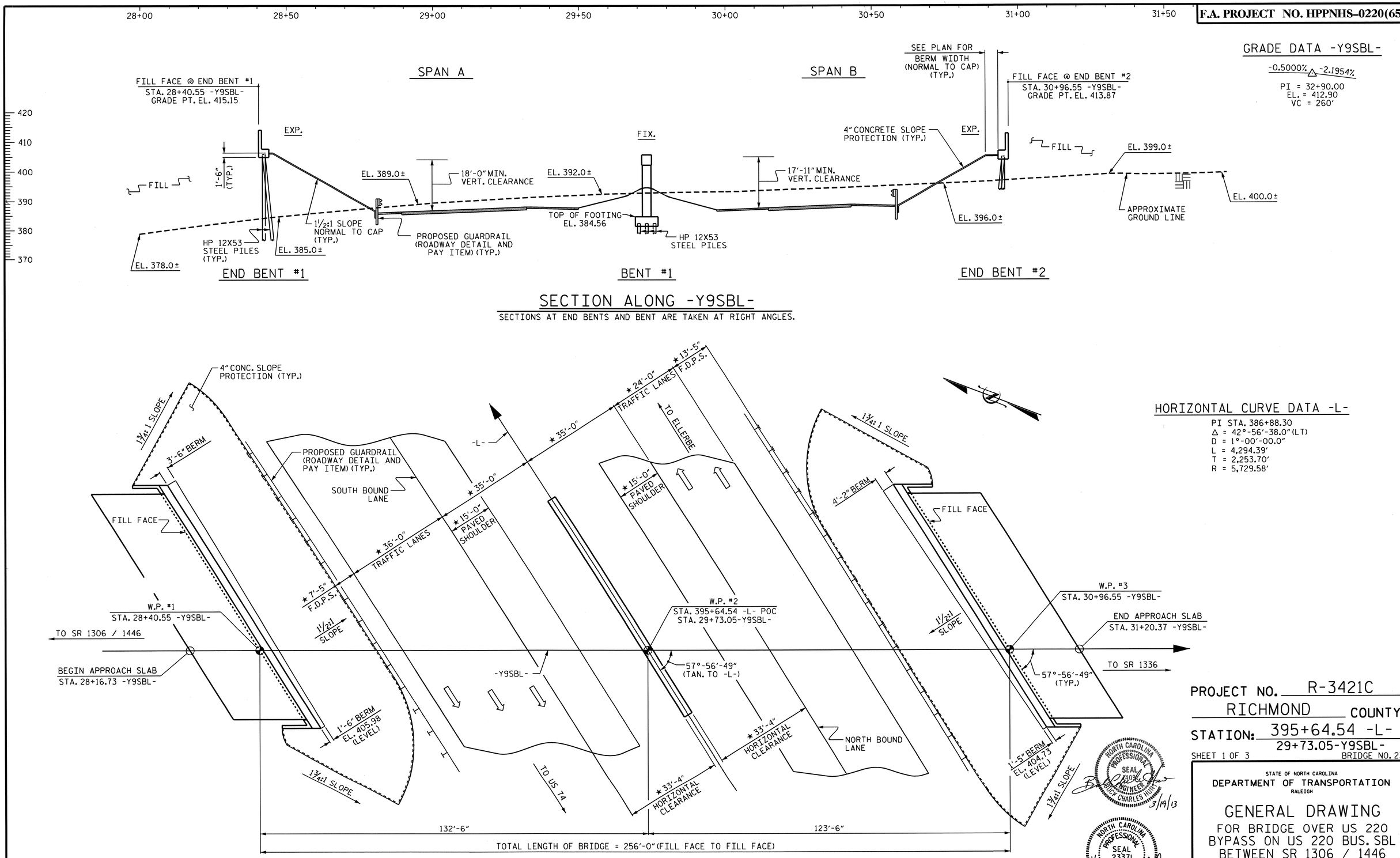

SECTION ALONG -Y9SBL-

SECTIONS AT END BENTS AND BENT ARE TAKEN AT RIGHT ANGLES.

PLAN

FOR CLARITY, FOUNDATIONS ARE NOT SHOWN IN PLAN VIEW.

GRADE DATA -Y9SBL-

-0.5000% △ -2.1954%

PI = 32+90.00
EL. = 412.90
VC = 260'

HORIZONTAL CURVE DATA -L-

PI STA. 386+88.30
Δ = 42°-56'-38.0" (LT)
D = 1°-00'-00.0"
L = 4,294.39'
T = 2,253.70'
R = 5,729.58'

PROJECT NO. R-3421C
RICHMOND COUNTY
STATION: 395+64.54 -L-
29+73.05-Y9SBL-

SHEET 1 OF 3 BRIDGE NO. 234

STATE OF NORTH CAROLINA
DEPARTMENT OF TRANSPORTATION
RALEIGH

GENERAL DRAWING

FOR BRIDGE OVER US 220
BYPASS ON US 220 BUS. SBL
BETWEEN SR 1306 / 1446
AND SR 1336

REVISIONS						SHEET NO.
NO.	BY:	DATE:	NO.	BY:	DATE:	S-28
1			3			TOTAL SHEETS
2			4			86

NORTH CAROLINA PROFESSIONAL SEAL 24096 ENGINEER BUCK CHARLES HUNT 3/19/13

NORTH CAROLINA PROFESSIONAL SEAL 23371 ENGINEER VIPUL A. PATEL 3/19/13

DRAWN BY : J. G. KHARVA DATE : 3/12
CHECKED BY : H. T. DIEU DATE : 3/21/12

08-AUG-2012 15:11
Y:\structures\Plans\str02_Y9SBL\R3421C_sd_GD_02.dgn
jpadams

STR. #2

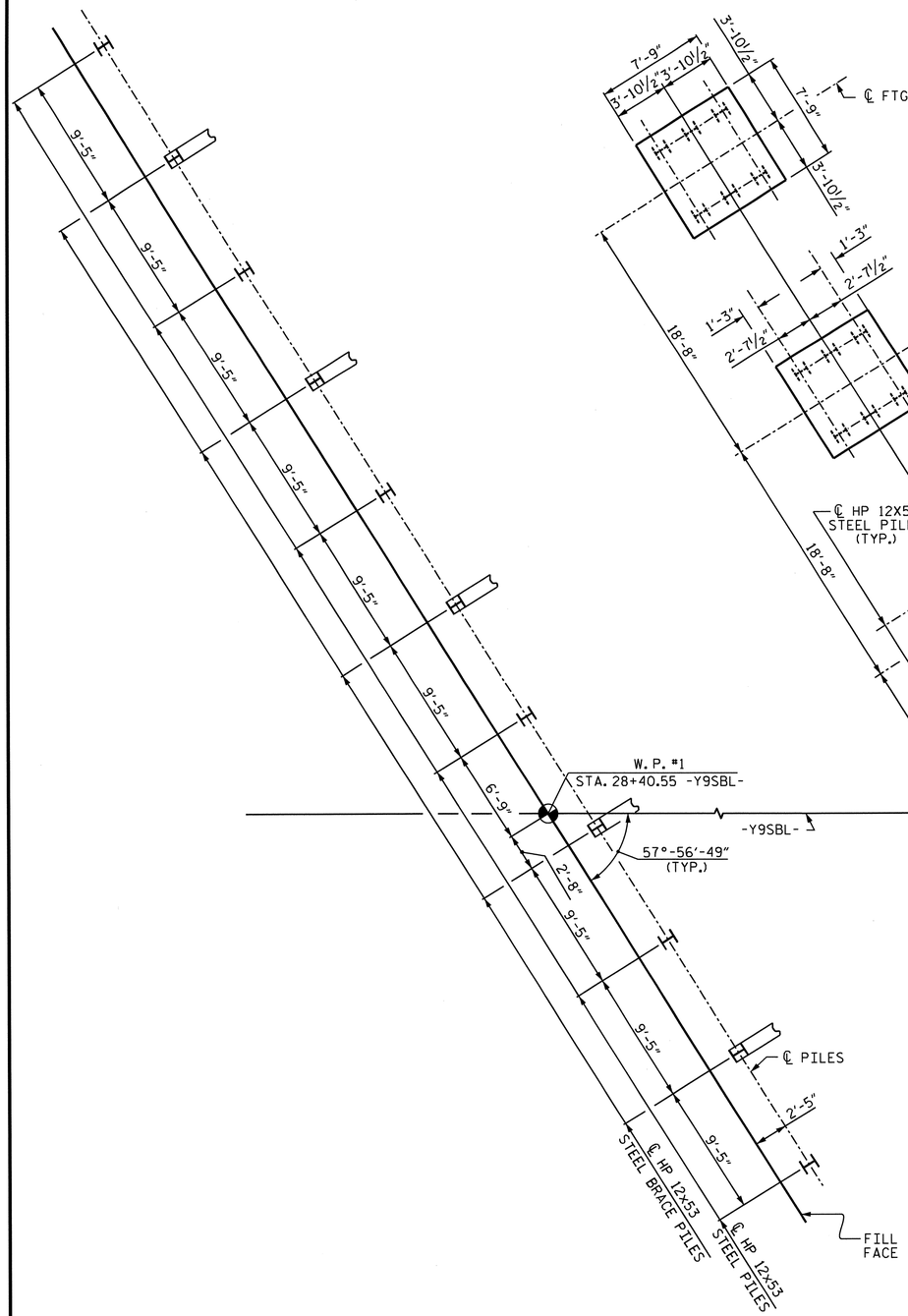

END BENT #1

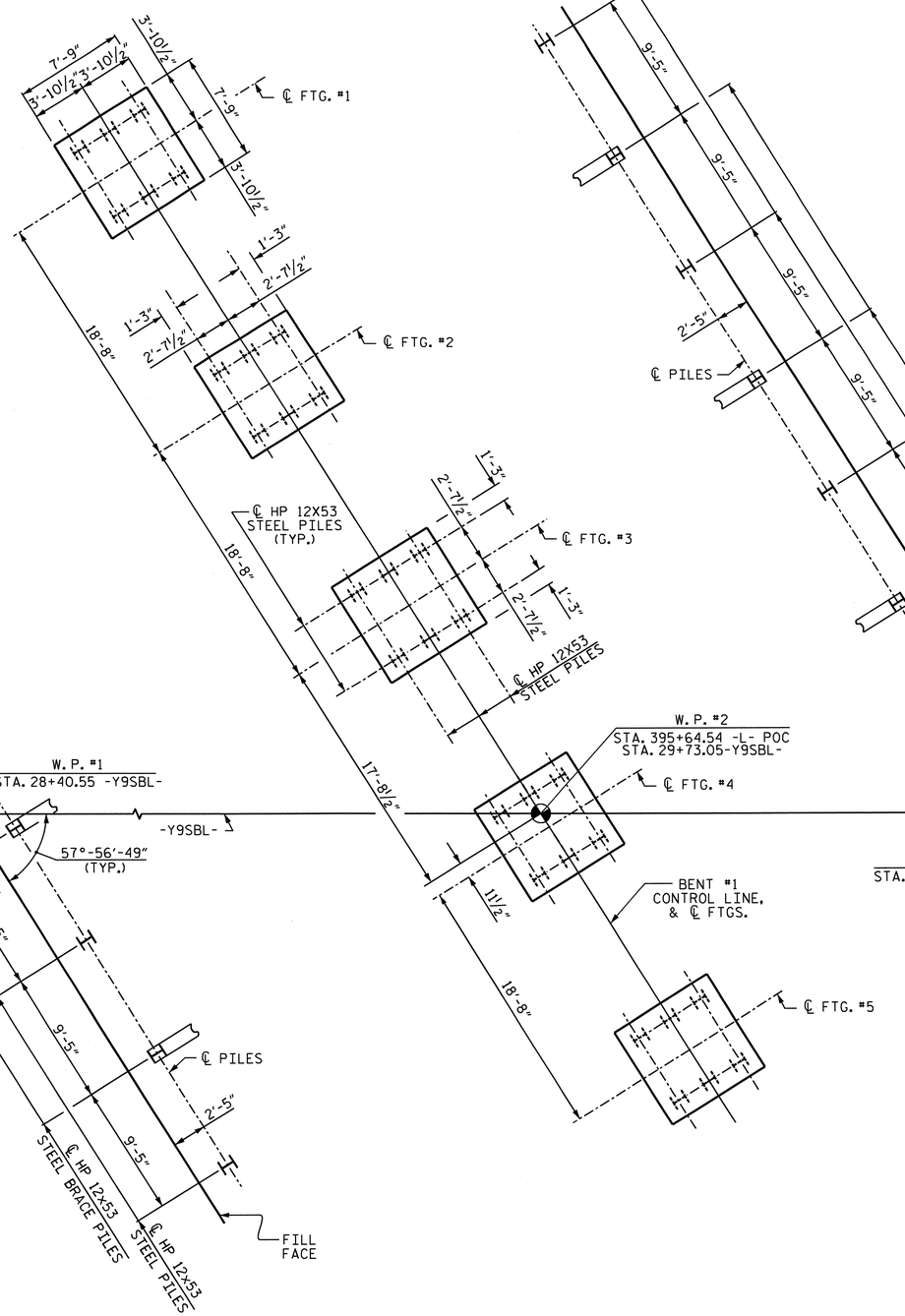

BENT #1

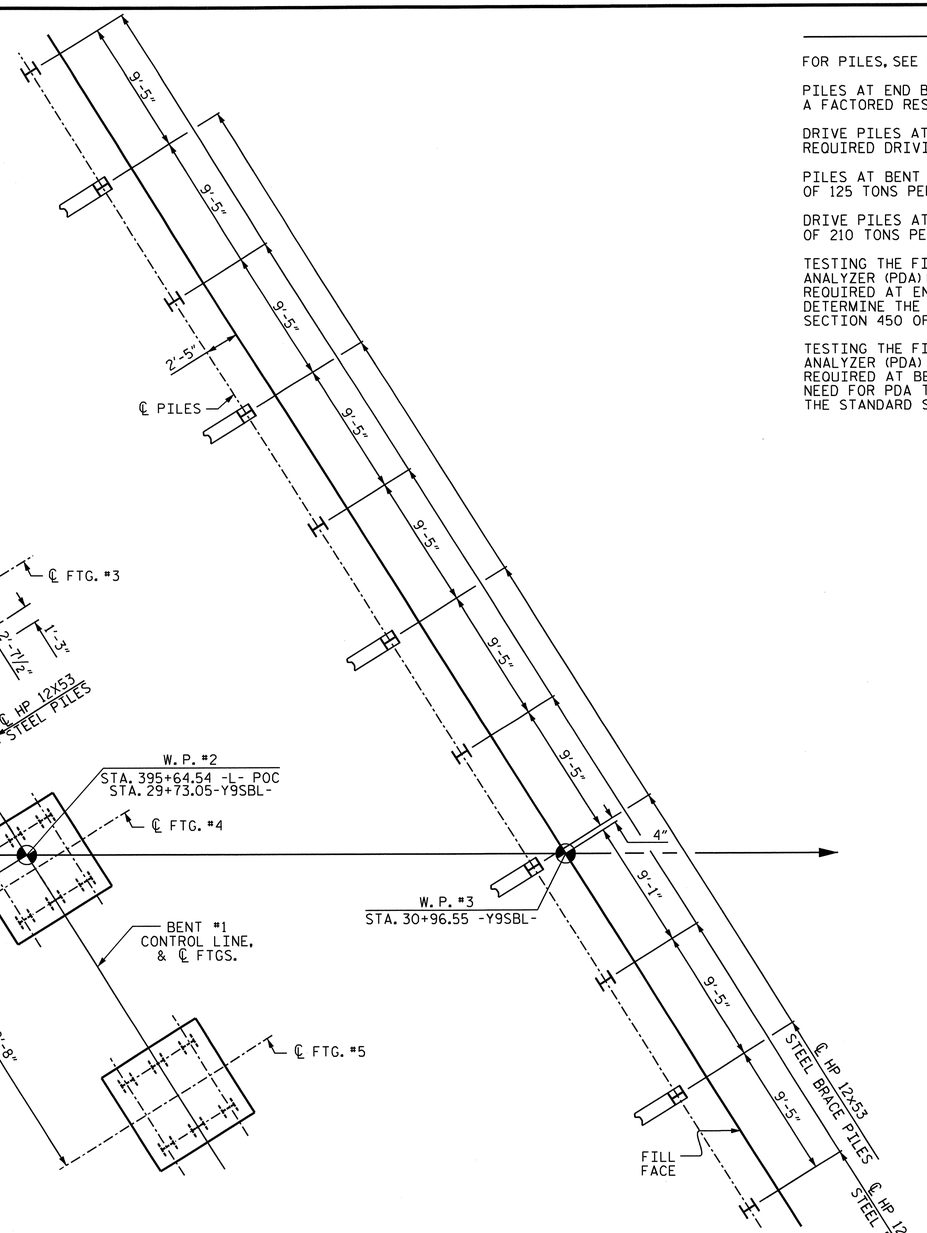

END BENT #2

NOTES

FOR PILES, SEE SECTION 450 OF THE STANDARD SPECIFICATIONS.

PILES AT END BENT No.1 AND END BENT No.2 ARE DESIGNED FOR A FACTORED RESISTANCE OF 125 TONS PER PILE.

DRIVE PILES AT END BENT No.1 AND END BENT No.2 TO A REQUIRED DRIVING RESISTANCE OF 210 TONS PER PILE.

PILES AT BENT No.1 ARE DESIGNED FOR A FACTORED RESISTANCE OF 125 TONS PER PILE.

DRIVE PILES AT BENT No.1 TO A REQUIRED DRIVING RESISTANCE OF 210 TONS PER PILE.

TESTING THE FIRST PRODUCTION PILE WITH THE PILE DRIVING ANALYZER (PDA) DURING DRIVING, RESTRIKING, OR REDRIVING IS REQUIRED AT END BENT NO. 1 OR 2. THE ENGINEER WILL DETERMINE THE NEED FOR PDA TESTING. FOR PDA TESTING, SEE SECTION 450 OF THE STANDARD SPECIFICATIONS.

TESTING THE FIRST PRODUCTION PILE WITH THE PILE DRIVING ANALYZER (PDA) DURING DRIVING, RESTRIKING, OR REDRIVING IS REQUIRED AT BENT NO. 1. THE ENGINEER WILL DETERMINE THE NEED FOR PDA TESTING. FOR PDA TESTING, SEE SECTION 450 OF THE STANDARD SPECIFICATIONS.

FOUNDATION LAYOUT

DIMENSIONS LOCATING PILES ARE SHOWN TO THE CENTERLINE OF PILES.
ALL COLUMN FOOTINGS AND PILE SPACINGS ARE IDENTICAL AT BENT 1
END BENT BRACE PILES ARE BATTERED 3:12.

NORTH CAROLINA PROFESSIONAL SEAL 23371 ENGINEER VIPUL A. PATEL
3/19/13

PROJECT NO. R-3421C
RICHMOND COUNTY
STATION: 395+64.54 -L-

SHEET 2 OF 3

STATE OF NORTH CAROLINA
DEPARTMENT OF TRANSPORTATION
RALEIGH

GENERAL DRAWING

FOR BRIDGE OVER US 220 BYPASS ON US 220 BUS. SBL BETWEEN SR 1306 / 1446 AND SR 1336

REVISIONS						SHEET NO.
NO.	BY:	DATE:	NO.	BY:	DATE:	S-29
1			3			TOTAL SHEETS
2			4			86

STR. #2

DRAWN BY : J. G. KHARVA DATE : 03/07/12
CHECKED BY : H. T. DIEU DATE : 03/21/12

08-AUG-2012 15:11
Y:\structures\Plans\str02_Y9SBL\R3421C_sd_GD_02.dgn
jpadams

BM #28: 118.24' RIGHT OF STA. 371+99.31 -L-, EL. 410.51

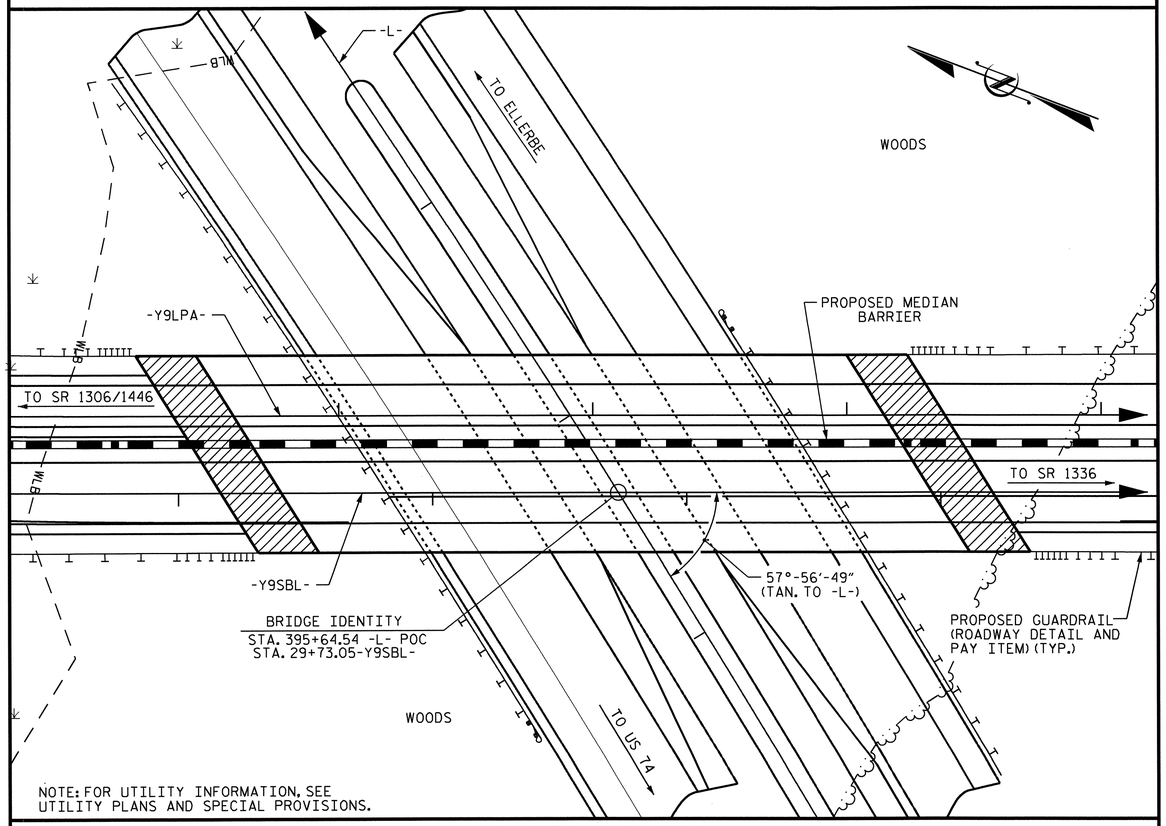

LOCATION SKETCH

GIRDER ERECTION SEQUENCE

THE STRUCTURAL STEEL SHALL BE SUPPORTED DURING ERECTION IN ITS CAMBERED POSITION. ONE EXTERIOR GIRDER AND ITS ADJACENT INTERIOR GIRDER SHALL BE ERECTED WITH ALL DIAPHRAGMS AND LATERAL BRACING BETWEEN THE GIRDERS IN PLACE AND ALL BOLTS TIGHTENED PRIOR TO RELEASE OF THE GIRDERS. THE REMAINING GIRDERS SHALL THEN BE ERECTED WITH DIAPHRAGMS CONNECTING THE GIRDER TO THE ADJACENT ERECTED GIRDER AND ALL BOLTS TIGHTENED BEFORE RELEASING THE GIRDER.

A TEMPORARY BENT MAY BE USED.

IF A TEMPORARY BENT IS USED, THE TEMPORARY BENT SHALL REMAIN IN PLACE UNTIL ALL CROSS FRAMES AND LATERAL BRACING ARE IN PLACE AND HIGH STRENGTH BOLTS TIGHTENED.

THE PLANS FOR TEMPORARY BENT, ERECTION SEQUENCE AND TEMPORARY BENT REMOVAL SHALL BE SUBMITTED TO THE ENGINEER FOR REVIEW IF TEMPORARY BENT IS USED.

THE TEMPORARY BENT SHALL BE DESIGNED BY A PROFESSIONAL ENGINEER REGISTERED IN THE STATE OF NORTH CAROLINA.

DURING THE GIRDER ERECTION PROCEDURE, THE CONTRACTOR IS RESPONSIBLE FOR PROVIDING TEMPORARY LATERAL BRACING AND OTHER MEANS OF SUPPORT, AS REQUIRED, TO ENSURE STABILITY OF THE GIRDERS, AVOID UPLIFT OF THE GIRDERS AT THE TEMPORARY ERECTION BENT AND MAINTAIN PLUMBNESS OF THE GIRDER WEBS.

THE CONTRACTOR'S ERECTION PLAN SHALL INCLUDE A METHOD OF TEMPORARY BENT REMOVAL THAT WILL UNIFORMLY APPLY THE STRUCTURAL STEEL WEIGHT TO THE BRIDGE CROSS FRAMES.

FOR TEMPORARY BENTS, SEE SPECIAL PROVISIONS.

NOTES

ASSUMED LIVE LOAD = HL 93 OR ALTERNATE LOADING.

FOR OTHER DESIGN DATA AND GENERAL NOTES, SEE SHEET SN.

THIS BRIDGE HAS BEEN DESIGNED IN ACCORDANCE WITH THE AASHTO LRFD BRIDGE DESIGN SPECIFICATIONS.

ALL STRUCTURAL STEEL MAY BE AASHTO M270 GRADE 50W AND PAINTED IN ACCORDANCE WITH SYSTEM 4 OF ARTICLE 442-7 OF THE STANDARD SPECIFICATIONS UNLESS OTHERWISE NOTED ON THE PLANS.

THE CONTRACTOR SHALL PROVIDE INDEPENDENT ASSURANCE SAMPLES OF REINFORCING STEEL AS FOLLOWS: FOR PROJECTS REQUIRING UP TO 400 TONS OF REINFORCING STEEL, ONE 30 INCH SAMPLE OF EACH SIZE BAR USED, AND FOR PROJECTS REQUIRING OVER 400 TONS OF REINFORCING STEEL, TWO 30 INCH SAMPLES OF EACH SIZE BAR USED. THE BARS FROM WHICH THE SAMPLES ARE TAKEN MUST THEN BE SPLICED WITH REPLACEMENT BARS OF THE SIZE AND LENGTH OF THE SAMPLE, PLUS A MINIMUM LAP SPLICE OF THIRTY BAR DIAMETERS. PAYMENT FOR THE SAMPLES OF REINFORCING STEEL SHALL BE CONSIDERED INCIDENTAL TO VARIOUS PAY ITEMS.

REMOVABLE FORMS MAY BE USED IN LIEU OF METAL STAY-IN-PLACE FORMS IN ACCORDANCE WITH THE STANDARD SPECIFICATIONS.

NEEDLE BEAMS WILL NOT BE ALLOWED UNLESS OTHERWISE CALLED FOR ON THE PLANS OR APPROVED BY THE ENGINEER.

FOR SUBMITTAL OF WORKING DRAWINGS, SEE SPECIAL PROVISIONS.

FOR FALSEWORK AND FORMWORK, SEE SPECIAL PROVISIONS.

FOR CRANE SAFETY, SEE SPECIAL PROVISIONS.

FOR GROUT FOR STRUCTURES, SEE SPECIAL PROVISIONS.

WORK SHALL NOT BE STARTED ON THE BRIDGE UNTIL ROADWAY SECTION HAS BEEN EXCAVATED.

THE BRIDGE IS LOCATED IN SEISMIC ZONE 2.

FOR EROSION CONTROL MEASURES, SEE EROSION CONTROL PLANS.

FOR PLACING LOAD ON STRUCTURE MEMBERS, SEE SPECIAL PROVISIONS.

TOTAL BILL OF MATERIAL

	FOUNDATION EXCAVATION	PDA TESTING	REINFORCED CONCRETE DECK SLAB	GROOVING BRIDGE FLOORS	CLASS A CONCRETE	BRIDGE APPROACH SLABS	REINFORCING STEEL	SPIRAL COLUMN REINFORCING STEEL	STRUCTURAL STEEL (APPROX.)	HP12x53 STEEL PILES		PILE REDRIVES	CONCRETE BARRIER RAIL	CONCRETE MEDIAN BARRIER RAIL	4" SLOPE PROTECTION	ELASTOMERIC BEARINGS	EXPANSION JOINT SEALS	DISC BEARINGS
	LUMP SUM	EACH	SQ. FT.	SQ. FT.	CU. YDS.	LUMP SUM	LBS.	LBS.	LBS.	NO.	LIN. FT.	EACH	LIN. FT.	LIN. FT.	SQ. YDS.	LUMP SUM	LUMP SUM	LUMP SUM
SUPERSTRUCTURE			19,586	19,761					622,000				548.88	304.83		LUMP SUM	LUMP SUM	LUMP SUM
END BENT #1					81.0		11,592			11	605	11			692			
BENT #1	LUMP SUM				111.6		23,710	3172		30	1050	30						
END BENT #2					81.1		11,554			11	605	11			570			
TOTAL	LUMP SUM	2	19,586	19,761	273.7	LUMP SUM	46,856	3172	622,000	52	2,260	52	548.88	304.83	1262	LUMP SUM	LUMP SUM	LUMP SUM

NORTH CAROLINA PROFESSIONAL SEAL 23371 ENGINEER VIPUL A. PATEL

9/19/13

DRAWN BY : J. G. KHARVA DATE : 3/12
CHECKED BY : H. T. DIEU DATE : 3/21/12

18-SEP-2013 12:17
Y:\structures\Plans\str02_Y9SBL\R3421C_sd_GD_02.dgn
thcarroll

PROJECT NO. R-3421C
RICHMOND COUNTY
STATION: 395+64.54 -L-

SHEET 3 OF 3

STATE OF NORTH CAROLINA
DEPARTMENT OF TRANSPORTATION
RALEIGH

GENERAL DRAWING
FOR BRIDGE OVER US 220 BYPASS ON US 220 BUS. SBL BETWEEN SR 1306 / 1446 AND SR 1336

REVISIONS						SHEET NO.
NO.	BY:	DATE:	NO.	BY:	DATE:	S-30
1			3			TOTAL SHEETS
2			4			86

STR. #2

LOAD AND RESISTANCE FACTOR RATING (LRFR) SUMMARY FOR STEEL GIRDERS

LEVEL		VEHICLE	WEIGHT (W) (TONS)	⟨#⟩ CONTROLLING LOAD RATING	MINIMUM RATING FACTORS (RF)	TONS = W × RF	STRENGTH I LIMIT STATE											SERVICE II LIMIT STATE						COMMENT NUMBER
								MOMENT					SHEAR						MOMENT						
							LIVE-LOAD FACTORS (γ_{LL})	DISTRIBUTION FACTORS (DF)	RATING FACTOR	SPAN	GIRDER LOCATION	DISTANCE FROM LEFT END OF SPAN (ft)	DISTRIBUTION FACTORS (DF)	RATING FACTOR	SPAN	GIRDER LOCATION	DISTANCE FROM LEFT END OF SPAN (ft)	LIVE-LOAD FACTORS (γ_{LL})	DISTRIBUTION FACTORS (DF)	RATING FACTOR	SPAN	GIRDER LOCATION	DISTANCE FROM LEFT END OF SPAN (ft)	
DESIGN LOAD RATING		HL-93 (INVENTORY)	N/A	⟨1⟩	1.01	--	1.75	0.80	1.07	A	I	129.45	1.06	1.01	A	I	6.47	1.30	0.80	1.21	A	I	129.45	
		HL-93 (OPERATING)	N/A		1.31	--	1.35	0.80	1.39	A	I	129.45	1.06	1.31	A	I	6.47	1.00	0.80	1.58	A	I	129.45	
		HS-20 (INVENTORY)	36.000	⟨2⟩	1.41	50.76	1.75	0.86	2.37	A	E	51.78	1.06	1.41	A	I	6.47	1.30	0.86	2.34	A	E	51.78	
		HS-20 (OPERATING)	36.000		1.82	65.52	1.35	0.86	3.07	A	E	51.78	1.06	1.82	A	I	6.47	1.00	0.86	3.04	A	E	51.78	
LEGAL LOAD RATING	SINGLE VEHICLE (SV)	SH	12.500		4.71	58.88	1.40	0.86	7.73	A	E	51.78	1.06	4.71	A	I	6.47	1.30	0.86	6.10	A	E	51.78	
		S3C	21.500		2.76	59.34	1.40	0.86	4.54	A	E	51.78	1.06	2.76	A	I	6.47	1.30	0.86	3.58	A	E	51.78	
		S3A	22.750		2.80	63.70	1.40	0.86	4.65	A	E	51.78	1.06	2.80	A	I	6.47	1.30	0.86	3.67	A	E	51.78	
		S4A	26.750		2.27	60.72	1.40	0.86	3.75	A	E	51.78	1.06	2.27	A	I	6.47	1.30	0.86	2.96	A	E	51.78	
		S5A	30.500		2.06	62.83	1.40	0.86	3.31	A	E	51.78	1.06	2.06	A	I	6.47	1.30	0.86	2.61	A	E	51.78	
		S6A	34.500		1.85	63.83	1.40	0.86	2.98	A	E	51.78	1.06	1.85	A	I	6.47	1.30	0.86	2.35	A	E	51.78	
		S7B	38.500		1.71	65.84	1.40	0.86	2.71	A	E	51.78	1.06	1.71	A	I	6.47	1.30	0.86	2.14	A	E	51.78	
		S7A	40.000		1.73	69.20	1.40	0.86	2.66	A	E	51.78	1.06	1.73	A	I	6.47	1.30	0.86	2.10	A	E	51.78	
	TRUCK TRACTOR SEMI-TRAILER (TTST)	T4A	28.250		2.19	61.87	1.40	0.86	3.65	A	E	51.78	1.06	2.19	A	I	6.47	1.30	0.86	2.88	A	E	51.78	
		T5B	32.000		2.05	65.60	1.40	0.86	3.23	A	E	51.78	1.06	2.05	A	I	6.47	1.30	0.86	2.55	A	E	51.78	
		T6A	36.000		1.87	67.32	1.40	0.86	2.94	A	E	51.78	1.06	1.87	A	I	6.47	1.30	0.86	2.32	A	E	51.78	
		T7A	40.000		1.73	69.20	1.40	0.86	2.71	A	E	51.78	1.06	1.73	A	I	6.47	1.30	0.86	2.13	A	E	51.78	
		T7B	40.000	⟨3⟩	1.65	66.00	1.40	0.86	2.80	A	E	51.78	1.06	1.65	A	I	6.47	1.30	0.86	2.21	A	E	51.78	
FATIGUE		HL-93 (INVENTORY)	γ_{LL}=0.75																					

LOAD FACTORS:

DESIGN LOAD RATING FACTORS	LIMIT STATE	γ_{DC}	γ_{DW}
	STRENGTH I	1.25	1.50
	SERVICE II	1.00	1.00

NOTES:

MINIMUM RATING FACTORS ARE BASED ON THE STRENGTH I AND SERVICE II LIMIT STATES.

ALLOWABLE STRESS FOR SERVICE II LIMIT STATE ARE AS REQUIRED FOR DESIGN.

COMMENTS:

1.

2.

3.

4.

⟨#⟩ CONTROLLING LOAD RATING

⟨1⟩ DESIGN LOAD RATING (HL-93)

⟨2⟩ DESIGN LOAD RATING (HS-20)

⟨3⟩ LEGAL LOAD RATING **

** SEE CHART FOR VEHICLE TYPE

GIRDER LOCATION

I - INTERIOR GIRDER
EL - EXTERIOR LEFT GIRDER
ER - EXTERIOR RIGHT GIRDER

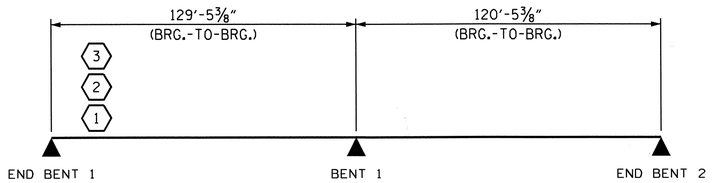

LRFR SUMMARY

PROJECT NO. R-3421C

RICHMOND COUNTY

STATION: 395+64.54 -L-

STATE OF NORTH CAROLINA
DEPARTMENT OF TRANSPORTATION
RALEIGH

STANDARD

LRFR SUMMARY FOR STEEL GIRDERS
(INTERSTATE TRAFFIC)

NORTH CAROLINA PROFESSIONAL SEAL 23371 ENGINEER VIPUL A. PATEL
3/19/13

REVISIONS						SHEET NO.
NO.	BY:	DATE:	NO.	BY:	DATE:	S-31
1			3			TOTAL SHEETS
2			4			86

STR. #2 STD. NO. LRFR4

ASSEMBLED BY : H.T. DIEU	DATE : 7/13/12
CHECKED BY : H. A. LOCKLEAR	DATE : 7/23/12
DRAWN BY : MAA 1/08	REV. 11/12/08RR MAA/GM
CHECKED BY : GM/DI 2/08	REV. 10/1/11 MAA/GM

08-AUG-2012 15:11
Y:\structures\Plans\str02_Y95BL\R-3421C_SD_LRFR_02.dgn
jpadams

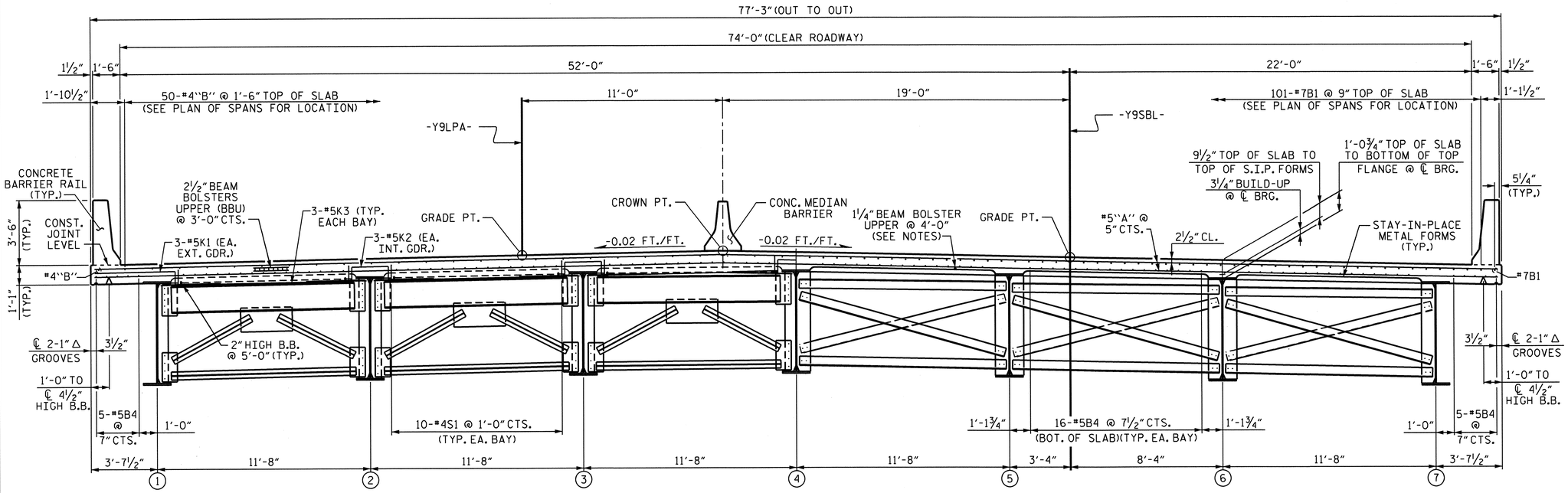

HALF SECTION AT END BENT DIAPHRAGMS

HALF SECTION AT BENT DIAPHRAGM

TYPICAL SECTION

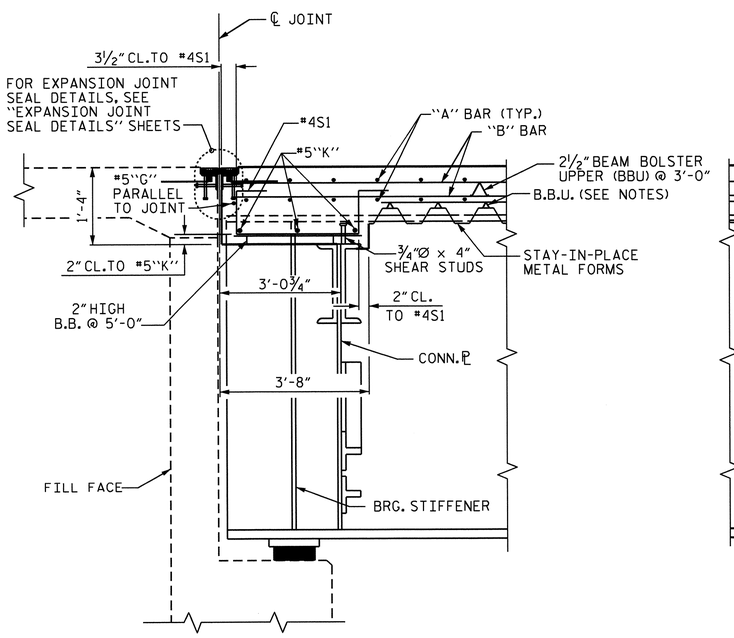

SECTION AT END BENTS

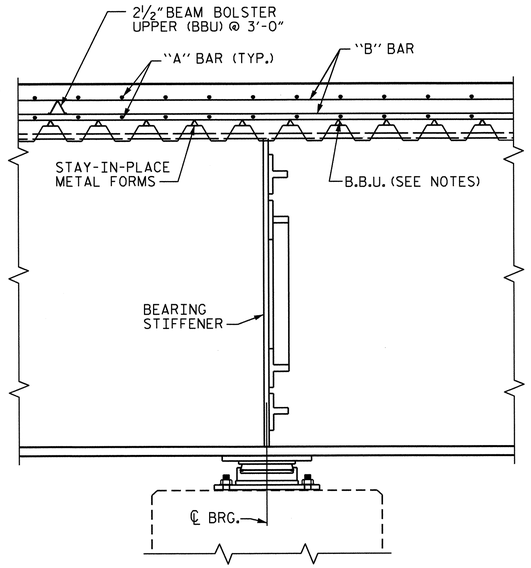

SECTION AT BENTS

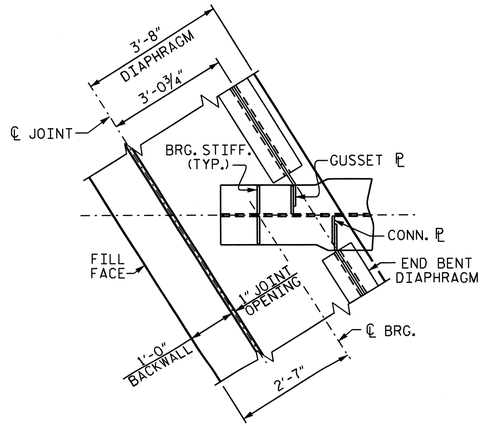

PART PLAN OF END BENT #1 DIAPHRAGM

NOTES

PROVIDE 1¼" HIGH BEAM BOLSTERS UPPER AT 4'-0" CTS. ATOP THE METAL STAY-IN-PLACE FORMS TO SUPPORT THE BOTTOM MAT OF 'A' BARS. WHEN USING REMOVABLE FORMS, PROVIDE CONTINUOUS HIGH CHAIRS FOR METAL DECK (C.H.C.M.) @ 4'-0" CTS. WITH A HEIGHT TO SUPPORT THE BOTTOM MAT OF 'A' BARS A CLEAR DISTANCE OF 2½" ABOVE THE TOP OF THE REMOVABLE FORM.

PREVIOUSLY CAST CONCRETE IN A CONTINUOUS UNIT SHALL HAVE ATTAINED A MINIMUM COMPRESSIVE STRENGTH OF 3,000 PSI BEFORE ADDITIONAL CONCRETE IS CAST IN THE UNIT.

BARRIER RAIL AND MEDIAN BARRIER RAIL IN A CONTINUOUS UNIT SHALL NOT BE CAST UNTIL ALL SLAB CONCRETE IN THAT UNIT HAS BEEN CAST AND HAS REACHED A MINIMUM COMPRESSIVE STRENGTH OF 3,000 PSI.

STRUCTURAL STEEL ERECTION IN A CONTINUOUS UNIT SHALL BE COMPLETE BEFORE FALSEWORK OR FORMS ARE PLACED ON THE UNIT.

#5G1 BAR MAY BE SHIFTED SLIGHTLY, AS NECESSARY, TO CLEAR REINFORCING STEEL AND STIRRUPS.

ALL REINFORCING STEEL IN CONCRETE BARRIER RAILS AND MEDIAN BARRIER RAIL SHALL BE EPOXY COATED.

THE CONTRACTOR MAY, WHEN NECESSARY, PROPOSE A SCHEME FOR AVOIDING INTERFERENCE BETWEEN METAL STAY-IN-PLACE FORM SUPPORTS OR FORMS AND GIRDER STIFFENERS OR CONNECTOR PLATES. THE PROPOSAL SHALL BE INDICATED, AS APPROPRIATE, ON EITHER THE STEEL WORKING DRAWINGS OR THE METAL STAY-IN-PLACE FORM WORKING DRAWINGS.

THE CONTRACTOR SHALL ADJUST THE GIRDER BUILDUPS AS NECESSARY TO INCORPORATE A MAXIMUM PERMISSIBLE VARIATION IN DISC BEARING DEPTH OF ½", SEE SPECIAL PROVISION FOR DISC BEARINGS.

DRAWN BY : Keith D. Layne DATE : 9-23-11
CHECKED BY : J. G. KHARVA DATE : 5-01-12

04-FEB-2013 14:36
R:\Structures\Plans\str02_Y9SBL\R-3421c_sd_TS_02.dgn
jpadams

NORTH CAROLINA PROFESSIONAL SEAL 23371 ENGINEER VIPUL A. PATEL
3/19/13

PROJECT NO. R-3421C
RICHMOND COUNTY
STATION: 395+64.54 -L-

STATE OF NORTH CAROLINA
DEPARTMENT OF TRANSPORTATION
RALEIGH

SUPERSTRUCTURE

TYPICAL SECTION

REVISIONS						SHEET NO.
NO.	BY:	DATE:	NO.	BY:	DATE:	S-32
1			3			TOTAL SHEETS
2			4			86

STR. #2

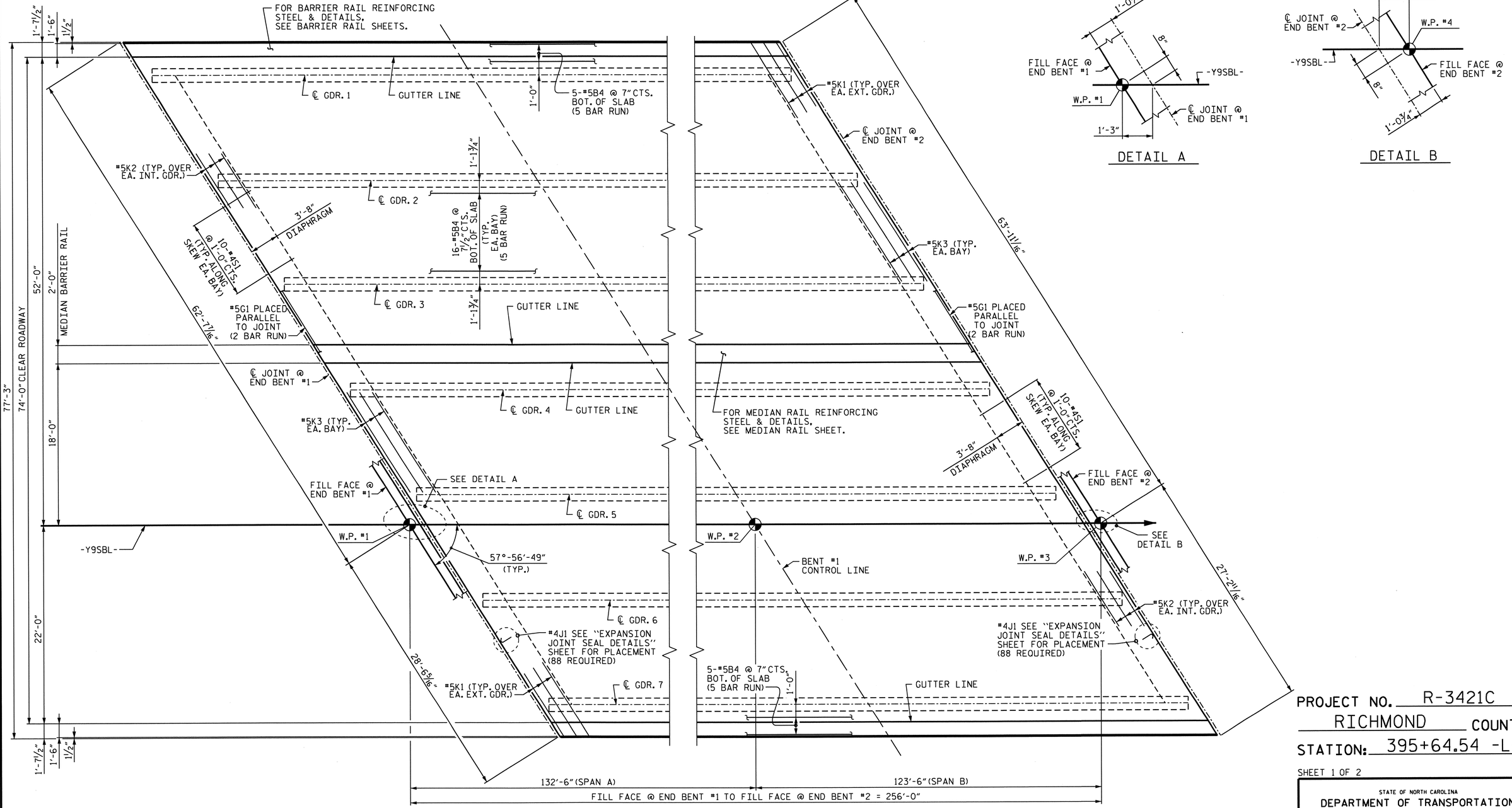

DETAIL A

DETAIL B

PART PLAN OF SPANS A & B

SEE SHEET 2 OF 2 FOR 'A' BARS AND TOP 'B' BARS

PROJECT NO. R-3421C

RICHMOND COUNTY

STATION: 395+64.54 -L-

SHEET 1 OF 2

STATE OF NORTH CAROLINA
DEPARTMENT OF TRANSPORTATION
RALEIGH

SUPERSTRUCTURE

PLAN OF SPANS A & B

REVISIONS						SHEET NO.
NO.	BY:	DATE:	NO.	BY:	DATE:	S-33
1			3			TOTAL SHEETS
2			4			86

NORTH CAROLINA PROFESSIONAL SEAL 23371 ENGINEER VIPUL A. PATEL
3/19/13

DRAWN BY : KEITH D. LAYNE DATE : 9-30-11
CHECKED BY : J. G. KHARVA DATE : 5-01-12

08-AUG-2012 15:11
Y:\structures\Plans\str02_Y9SBL\R-3412c_sd_PS_02.dgn
jpadams

STR. #2

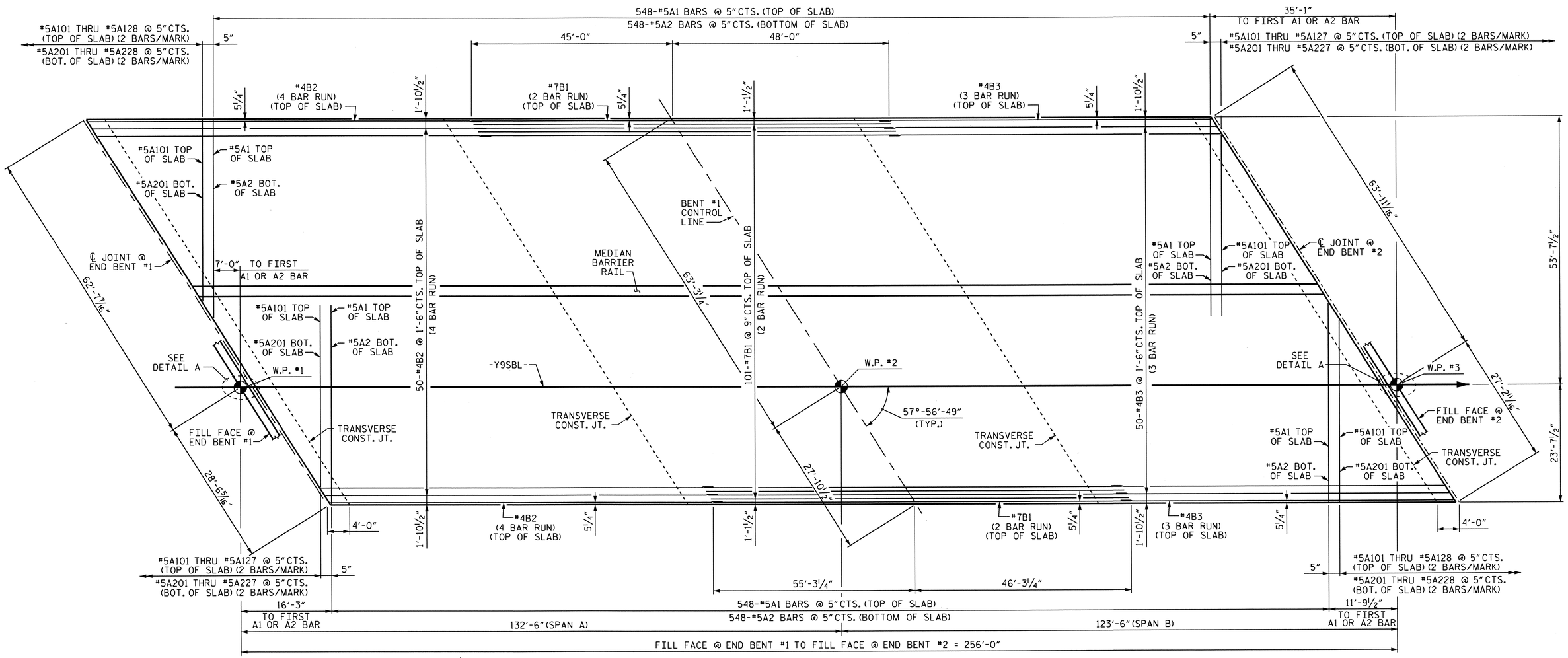

PART PLAN OF SPANS A & B

FOR "B" BARS IN BOTTOM OF SLAB AND REINFORCING BARS IN END BENT DIAPHRAGMS, SEE SHEET 1 OF 2

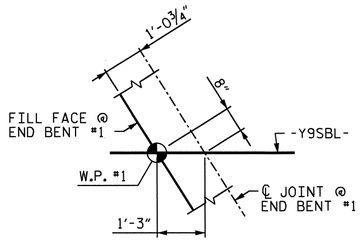

DETAIL A

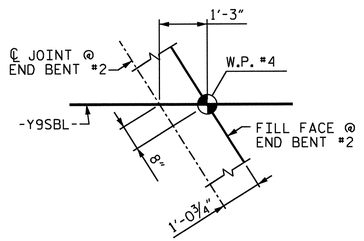

DETAIL B

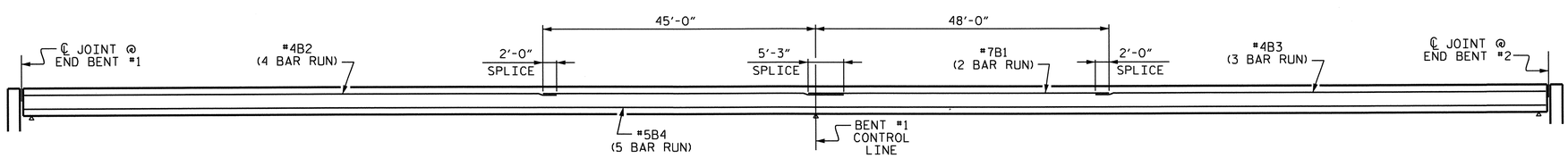

SCHEMATIC DIAGRAM OF SPANS A & B

NORTH CAROLINA PROFESSIONAL SEAL 23371 ENGINEER VIMAL A. PATEL
3/19/13

PROJECT NO. R-3421C
RICHMOND COUNTY
STATION: 395+64.54 -L-

SHEET 2 OF 2

STATE OF NORTH CAROLINA
DEPARTMENT OF TRANSPORTATION
RALEIGH

SUPERSTRUCTURE

PLAN OF SPANS A & B

REVISIONS						SHEET NO.
NO.	BY:	DATE:	NO.	BY:	DATE:	S-34
1			3			TOTAL SHEETS
2			4			86

DRAWN BY : KEITH D. LAYNE DATE : 9-30-11
CHECKED BY : J. G. KHARVA DATE : 5-01-12

08-AUG-2012 15:11
Y:\structures\Plans\str02_Y9SBL\R-3412c_sd_PS_02.dgn
jpodams

STR. #2

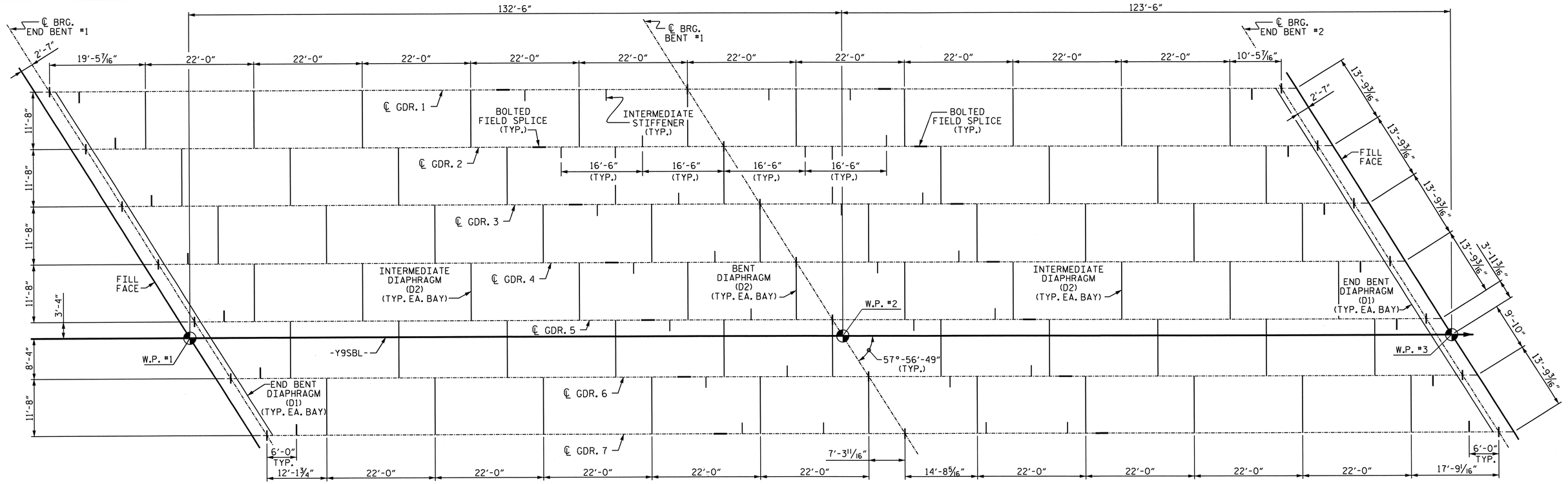

EXP. E1,P1 — SPAN A — FIX S1, DB1, M1 — SPAN B — EXP. E1,P1

FRAMING PLAN

FOR INTERMEDIATE STIFFENERS SEE "STRUCTURAL STEEL DETAILS" SHEET 1 OF 3

DEAD LOAD DEFLECTION TABLE FOR GDR. 1 THRU GDR. 7 (SPAN A)

TWENTIETH POINTS	0	0.05	0.1	0.15	0.2	0.25	0.3	0.35	0.4	0.45	0.5	0.55	0.6	0.65	0.7	0.75	0.8	0.85	0.9	0.95	0
DEFLECTION DUE TO WEIGHT OF GIRDER ↓	0	0.008	0.016	0.023	0.029	0.034	0.038	0.040	0.041	0.041	0.039	0.036	0.033	0.028	0.023	0.018	0.012	0.008	0.004	0.001	0
* DEFLECTION DUE TO WEIGHT OF SLAB ↓	0	0.035	0.068	0.099	0.126	0.148	0.164	0.175	0.180	0.179	0.172	0.160	0.144	0.124	0.102	0.079	0.056	0.035	0.018	0.006	0
DEFLECTION DUE TO WEIGHT OF BARRIER RAIL ↓	0	0.002	0.005	0.007	0.008	0.010	0.011	0.012	0.012	0.012	0.012	0.011	0.010	0.009	0.007	0.006	0.004	0.003	0.001	0.001	0
TOTAL DEAD LOAD DEFLECTION ↓	0	0.045	0.089	0.128	0.163	0.191	0.213	0.227	0.233	0.231	0.223	0.207	0.186	0.160	0.132	0.102	0.072	0.046	0.024	0.008	0
VERTICAL CURVE ORDINATE ↑	0	0	0	0	0	0	0	0	0	0	0	0	0	0	0	0	0	0	0	0	0
REQUIRED CAMBER ↑	0	9/16	1 1/16	1 9/16	1 15/16	2 5/16	2 9/16	2 3/4	2 13/16	2 3/4	2 11/16	2 1/2	2 1/4	1 15/16	1 9/16	1 1/4	7/8	9/16	5/16	1/8	0

DEAD LOAD DEFLECTION TABLE FOR GDR. 1 THRU GDR. 7 (SPAN B)

TWENTIETH POINTS	0	0.05	0.1	0.15	0.2	0.25	0.3	0.35	0.4	0.45	0.5	0.55	0.6	0.65	0.7	0.75	0.8	0.85	0.9	0.95	0
DEFLECTION DUE TO WEIGHT OF GIRDER ↓	0	0	0.001	0.003	0.006	0.009	0.012	0.016	0.019	0.022	0.024	0.026	0.026	0.026	0.024	0.022	0.019	0.015	0.010	0.005	0
* DEFLECTION DUE TO WEIGHT OF SLAB ↓	0	0.001	0.003	0.010	0.021	0.034	0.048	0.063	0.076	0.088	0.098	0.104	0.106	0.105	0.100	0.091	0.078	0.062	0.043	0.022	0
DEFLECTION DUE TO WEIGHT OF BARRIER RAIL ↓	0	0	0	0.001	0.002	0.003	0.003	0.004	0.005	0.006	0.007	0.007	0.007	0.007	0.007	0.006	0.005	0.004	0.003	0.002	0
TOTAL DEAD LOAD DEFLECTION ↓	0	0.001	0.004	0.014	0.028	0.045	0.064	0.083	0.101	0.116	0.128	0.136	0.140	0.138	0.131	0.119	0.102	0.081	0.056	0.029	0
VERTICAL CURVE ORDINATE ↑	0	0	0	0	0	0	0	0	0	0	0	0	0	0	0	0	0	0	0	0	0
REQUIRED CAMBER ↑	0	0	1/16	3/16	5/16	9/16	3/4	1	1 3/16	1 3/8	1 9/16	1 5/8	1 11/16	1 5/8	1 9/16	1 7/16	1 1/4	1	11/16	3/8	0

* INCLUDES SLAB, BUILDUPS & STAY-IN-PLACE FORMS.
ALL VALUES ARE SHOWN IN FEET, EXCEPT " REQUIRED CAMBER ", WHICH IS GIVEN IN INCHES.

SIGN CONVENTION FOR DEAD LOAD DEFLECTION TABLES — + ↑ 0 ↓ −

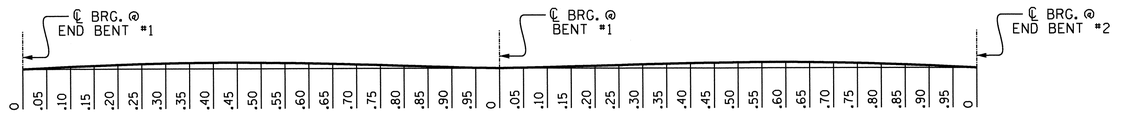

SCHEMATIC CAMBER ORDINATES

SLOPE FOR THE ZERO CAMBER BASE LINE VARIES.

PROJECT NO. R-3421C
RICHMOND COUNTY
STATION: 395+64.54 -L-

STATE OF NORTH CAROLINA
DEPARTMENT OF TRANSPORTATION
RALEIGH

SUPERSTRUCTURE

FRAMING PLAN & DEAD LOAD DEFLECTION TABLE

NORTH CAROLINA PROFESSIONAL SEAL 23371 ENGINEER VIPUL A. PATEL
3/19/13

REVISIONS						SHEET NO.
NO.	BY:	DATE:	NO.	BY:	DATE:	S-35
1			3			TOTAL SHEETS
2			4			86

DRAWN BY : KEITH D. LAYNE DATE : 9-28-11
CHECKED BY : J. G. KHARVA DATE : 5-01-12

18-MAR-2013 12:17
R:\Structures\Plans\str02_Y9SBL\R-3421c_sd_FP_02.dgn
vpatel

STR. #2

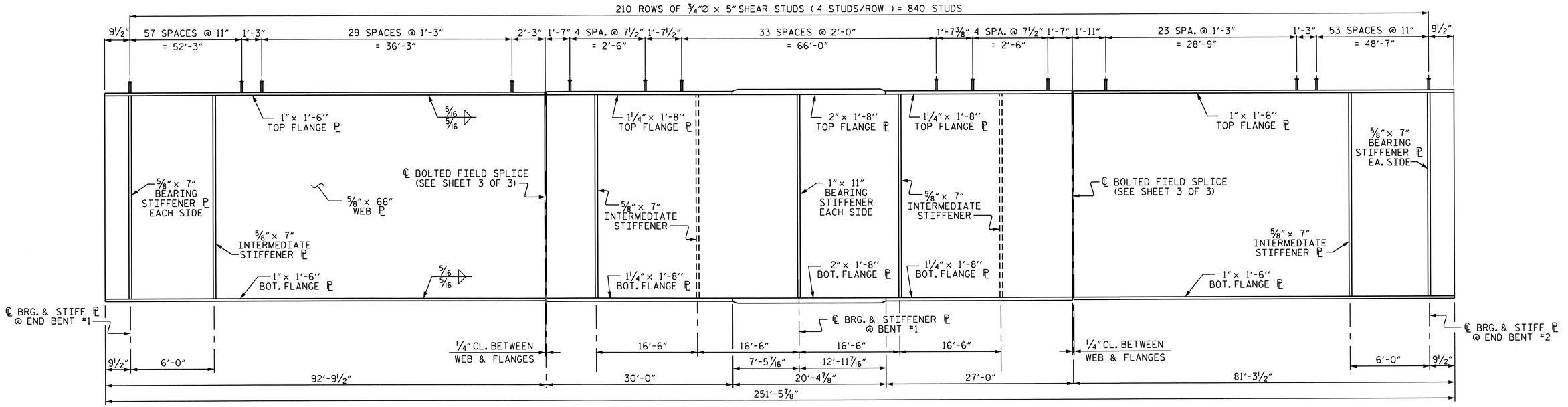

GIRDER ELEVATION - SPANS A & B

(SEE "BOLTED FIELD SPLICE DETAILS" FOR ADDITIONAL SHEAR STUDS)

FOR INTERIOR GIRDERS PLACE INTERMDEIATE STIFFENERS ON ALTERNATING SIDES OF WEB.
FOR EXTERIOR GIRDERS PLACE INTERMDEIATE STIFFENERS ON THE INSIDE OF WEB.

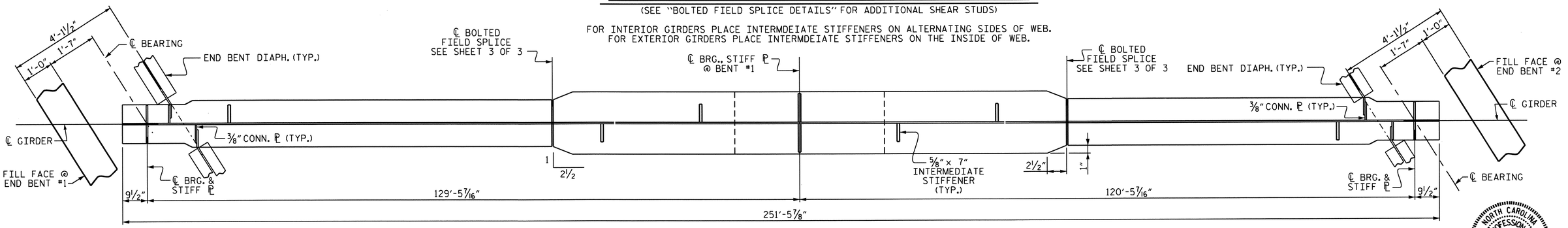

BOTTOM FLANGE DETAIL - SPANS A & B

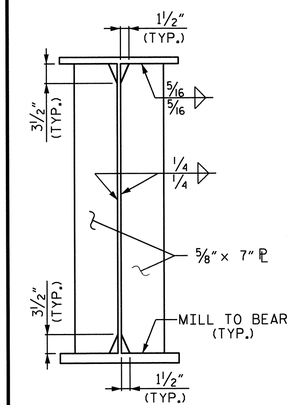

BEARING STIFFENER DETAIL

AT END BENTS

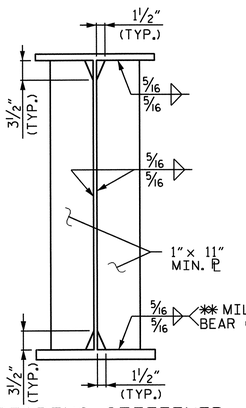

BEARING STIFFENER CONNECTOR ℄ DETAIL

AT BENT

✱✱ WELD WHEN USED AS CONN. ℄

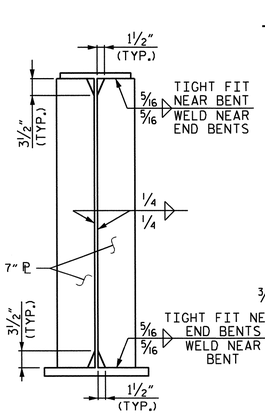

INTERMEDIATE STIFFENER DETAIL

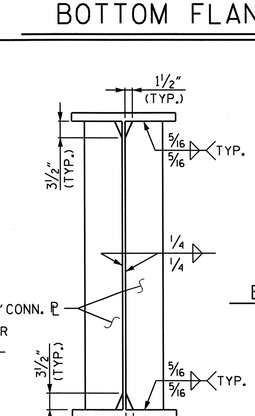

CONNECTOR PLATE DETAIL

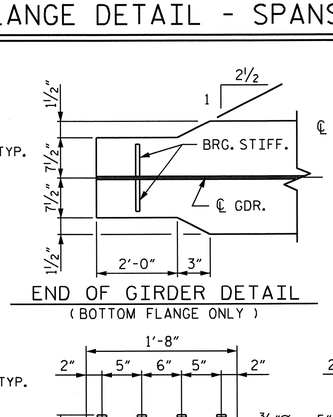

END OF GIRDER DETAIL

(BOTTOM FLANGE ONLY)

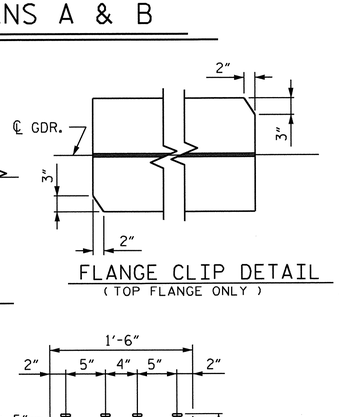

FLANGE CLIP DETAIL

(TOP FLANGE ONLY)

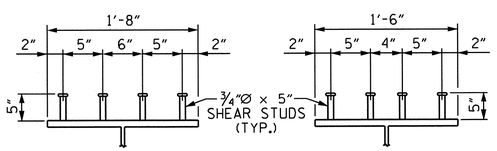

TOP FLANGE SHEAR STUD DETAILS

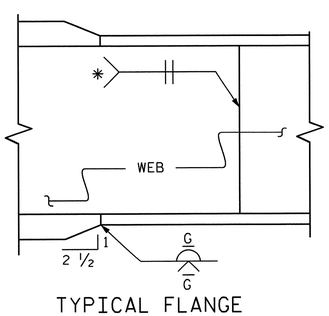

TYPICAL FLANGE AND WEB BUTT JOINT

✱ GRIND SMOOTH AND FLUSH ON OUTER FACE OF EXTERIOR GIRDERS

NORTH CAROLINA PROFESSIONAL SEAL 23371 ENGINEER VIPUL A. PATEL
7/17/13

PROJECT NO. R-3421C

RICHMOND COUNTY

STATION: 395+64.54 -L-

SHEET 1 OF 3

STATE OF NORTH CAROLINA
DEPARTMENT OF TRANSPORTATION
RALEIGH

SUPERSTRUCTURE

STRUCTURAL STEEL DETAILS

REVISIONS						SHEET NO.
NO.	BY:	DATE:	NO.	BY:	DATE:	S-36
1			3			TOTAL SHEETS
2			4			86

DRAWN BY : KEITH D. LAYNE DATE : 9-28-11
CHECKED BY : J. G. KHARVA DATE : 5-01-12

18-SEP-2013 12:17
Y:\structures\Plans\str02_Y9SBL\R-3412c_sd_SS_02.dgn
thcarroll

STR. #2

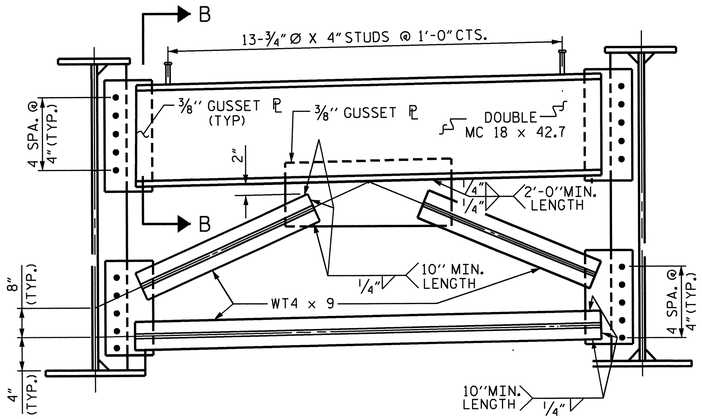

END BENT DIAPHRAGMS (D1)

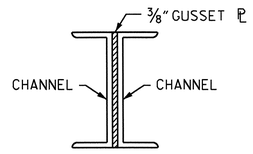

SECTION B-B

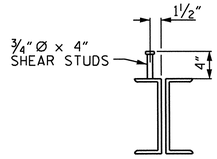

END BENT CROSSFRAME SHEAR STUD DETAILS

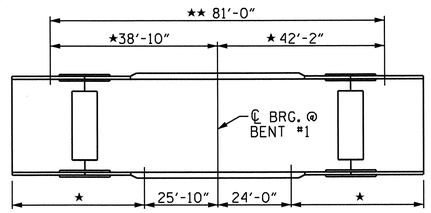

CHARPY V-NOTCH TEST FOR GIRDERS

★CHARPY V-NOTCH TEST ARE REQUIRED FOR ALL TOP OR BOTTOM FLANGE PLATES WHICH FALL WITHIN THESE LIMITS. CHARPY V-NOTCH TEST ARE REQUIRED FOR ALL WEB PLATES AND ALL SPLICE PLATES. IF THE PREMITTED SHOP FLANGE SPLICE IS NOT USED, CHARPY V-NOTCH TESTS WILL BE REQUIRED FOR THE ENTIRE FLANGE PLATE. FOR CHARPY V-NOTCH TEST, SEE ARTICLE 1072-9 OF THE STANDARD SPECIFICATIONS.

★★NO WELDING OF FORMS OR FALSEWORK TO THE TOP FLANGE WILL BE PERMITTED IN THIS REGION.

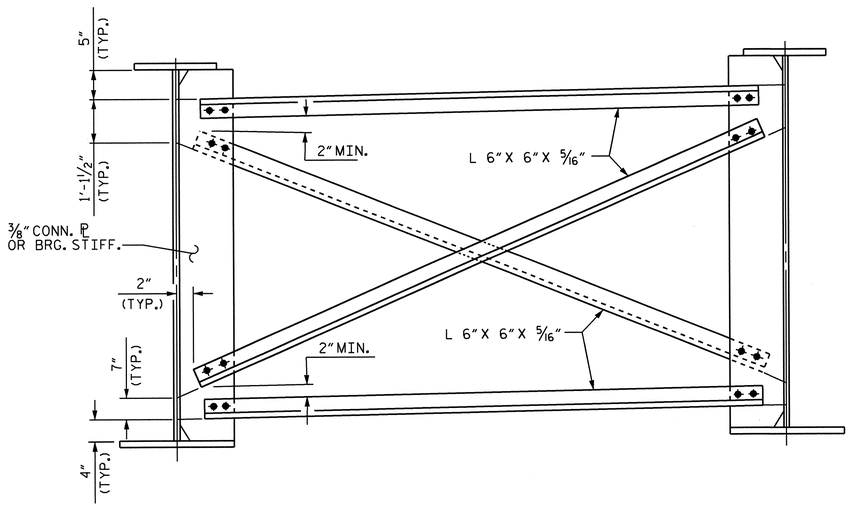

TYPICAL INTERMEDIATE & BENT DIAPHRAGMS (D2)

USE 1 ¼" THICK PLATE WHERE BEARING STIFFNERS ARE USED AS CONNECTOR PLATES FOR BENT DIAPHRAGMS

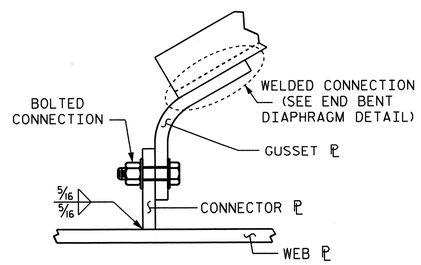

WELD DETAIL FOR CURVED GUSSET PL

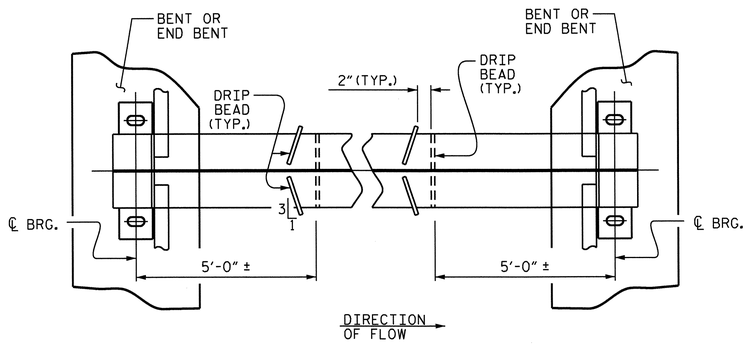

PART PLAN - BOTTOM FLANGE

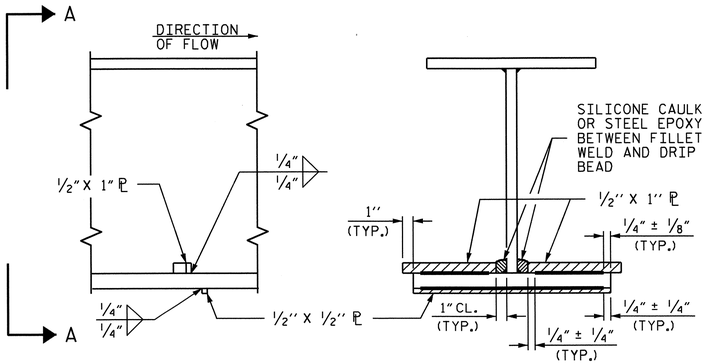

SECTION

VIEW A-A

DRIP BEAD DETAILS

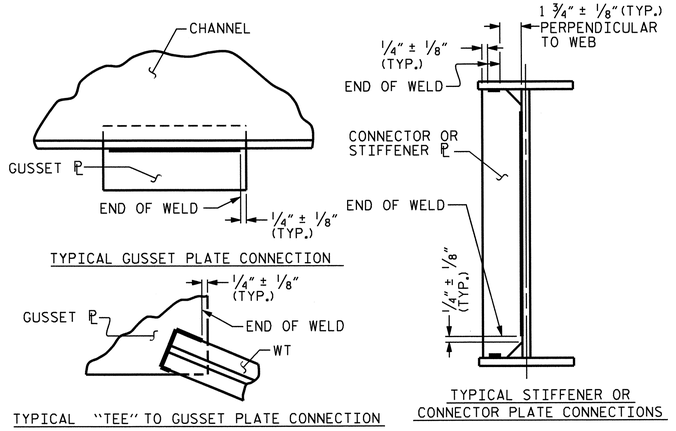

WELD TERMINATION DETAILS

PROJECT NO. R-3421C

RICHMOND COUNTY

STATION: 395+64.54 -L-

SHEET 2 OF 3

STATE OF NORTH CAROLINA
DEPARTMENT OF TRANSPORTATION
RALEIGH

SUPERSTRUCTURE

STRUCTURAL STEEL DETAILS

NORTH CAROLINA PROFESSIONAL SEAL 23371 ENGINEER VIPUL A. PATEL

3/13/13

REVISIONS						SHEET NO.
NO.	BY:	DATE:	NO.	BY:	DATE:	S-37
1			3			TOTAL SHEETS
2			4			86

DRAWN BY : KEIYH D. LAYNE DATE : 9-28-11
CHECKED BY : J. G. KHARVA DATE : 5-01-12

18-MAR-2013 12:19
R:\Structures\Plans\str02_Y95BL\R-3412c_sd_SS_02.dgn
vpatel

STR. #2

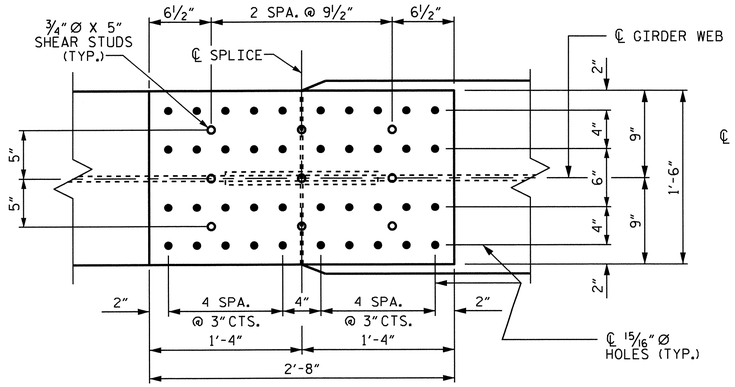

PLAN (TOP OF TOP FLANGE)

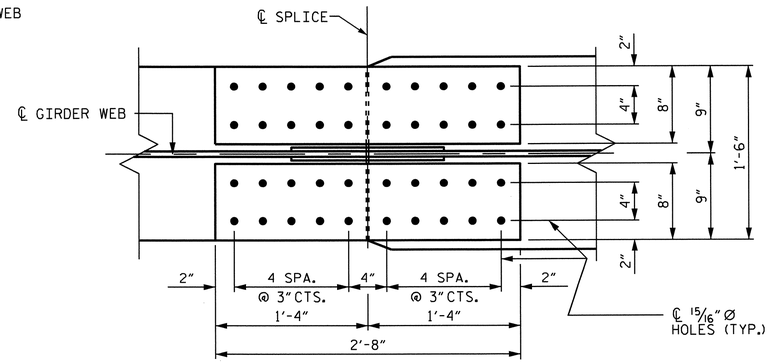

PLAN (TOP OF BOTTOM FLANGE)

NOTES

ALL STRUCTURAL STEEL SHALL BE AASHTO M270 GRADE 50W AND PAINTED IN ACCORDANCE WITH SYSTEM 4 OF ARTICLE 442-8 OF THE STANDARD SPECIFICATIONS UNLESS OTHERWISE NOTED ON THE PLANS.

ALL DIMENSIONS SHOWN ARE HORIZONTAL OR VERTICAL, UNLESS OTHERWISE NOTED.

ALL FIELD CONNECTIONS TO BE 7/8"DIA. HIGH STRENGTH BOLTS UNLESS OTHERWISE NOTED.

BEARING STIFFENERS ARE TO BE PLACED NORMAL TO THE WEB OF THE GIRDER AND SHALL BE PLUMB.

PERMITTED FLANGE AND WEB SHOP SPLICES SHALL NOT BE LOCATED WITHIN 15 FEET OF MAXIMUM DEAD LOAD DEFLECTION (NOR WITHIN 15 FEET OF INTERMEDIATE BEARINGS OF CONTINUOUS UNITS). KEEP 2 FEET MINIMUM BETWEEN WEB AND FLANGE SHOP SPLICES. KEEP 6"MINIMUM BETWEEN CONNECTOR PLATE OR TRANSVERSE STIFFENER WELDS AND WEB OR FLANGE SHOP SPLICES.

STUDS ON GIRDERS MAY BE SHIFTED UP TO 1"IF NECESSARY TO CLEAR FLANGE SPLICE WELD.

TENSION ON THE AASHTO M164 BOLTS SHALL BE CALIBRATED USING DIRECT TENSION INDICATOR WASHERS IN ACCORDANCE WITH ARTICLE 440-8 OF THE STANDARD SPECIFICATIONS.

END OF BEAMS AND GIRDERS SHALL BE PLUMB.

BEARING STIFFENER MAY REQUIRE COPING IF WIDER THAN BOTTOM FLANGE.

FABRICATORS SHALL DETAIL DIAPHRAGM MEMBERS AND CONNECTIONS FOR FULL DEAD LOAD FIT UP. GIRDERS SHALL BE PLUMB AFTER THE FULL AMOUNT OF DEAD LOAD IS APPLIED.

STRUCTURAL STEEL ERECTION IN A CONTINUOUS UNIT SHALL BE COMPLETE BEFORE FALSEWORK OR FORMS ARE PLACED ON THE UNIT.

SHEAR STUDS ARE TO BE SHOP WELDED ON TOP PLATE BEFORE FIELD ASSEMBLY.

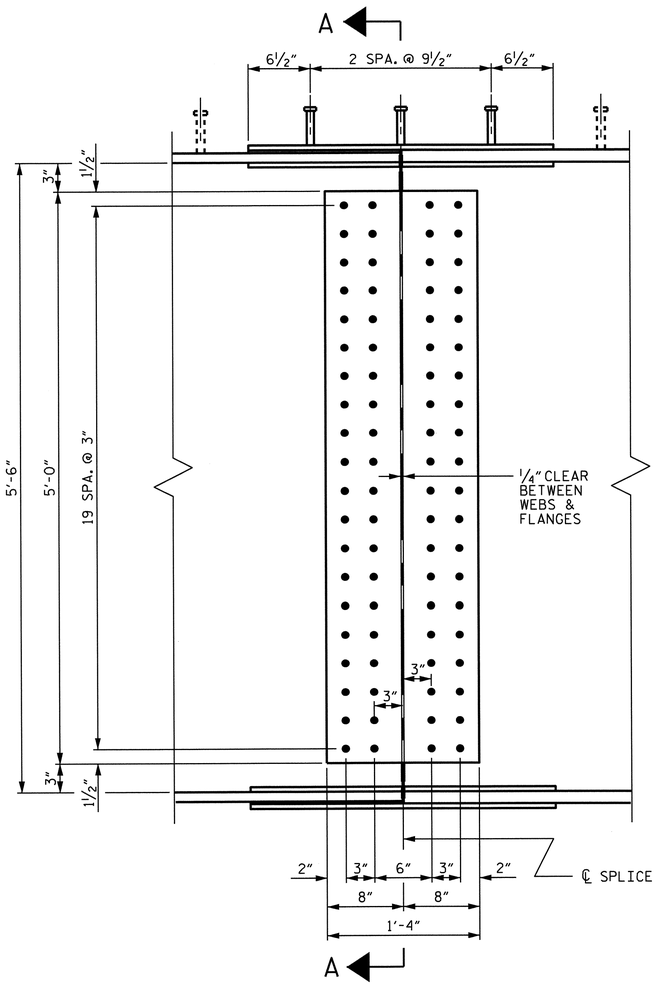

ELEVATION

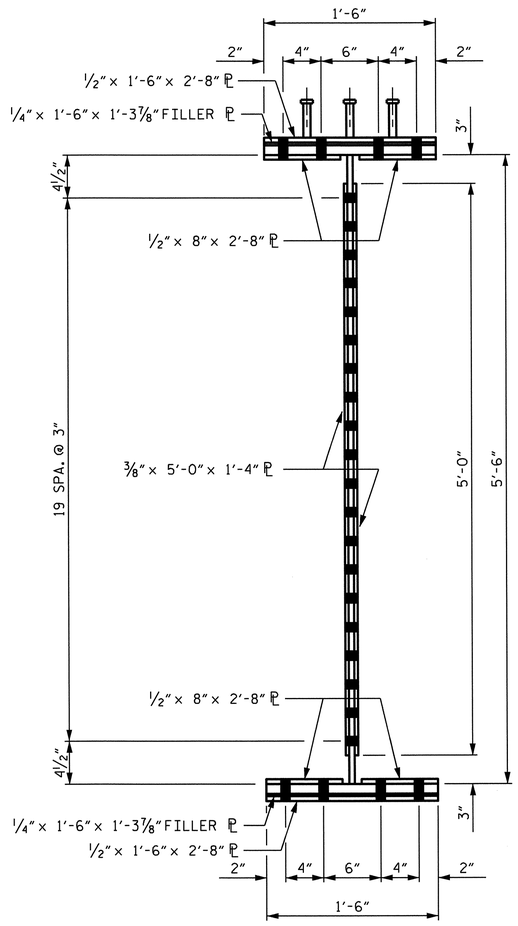

SECTION A-A

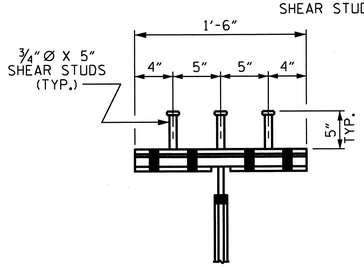

SHEAR STUD DETAIL FOR TOP FLANGE SPLICE PLATE

BOLTED FIELD SPLICE DETAILS

(TYPICAL EACH FIELD SPLICE)

DRAWN BY : KEITH D. LAYNE DATE : 9-28-11
CHECKED BY : J. G. KHARVA DATE : 5-01-12

18-SEP-2013 12:17
Y:\structures\Plans\str02_Y95BL\R-3412c_sd_SS_02.dgn
thcarroll

NORTH CAROLINA PROFESSIONAL SEAL 23371 ENGINEER VIPUL A. PATEL
7/17/13

PROJECT NO. R-3421C
RICHMOND COUNTY
STATION: 395+64.54 -L-

SHEET 3 OF 3

STATE OF NORTH CAROLINA
DEPARTMENT OF TRANSPORTATION
RALEIGH

SUPERSTRUCTURE

STRUCTURAL STEEL DETAILS

REVISIONS						SHEET NO.
NO.	BY:	DATE:	NO.	BY:	DATE:	S-38
1			3			TOTAL SHEETS
2			4			86

STR. #2

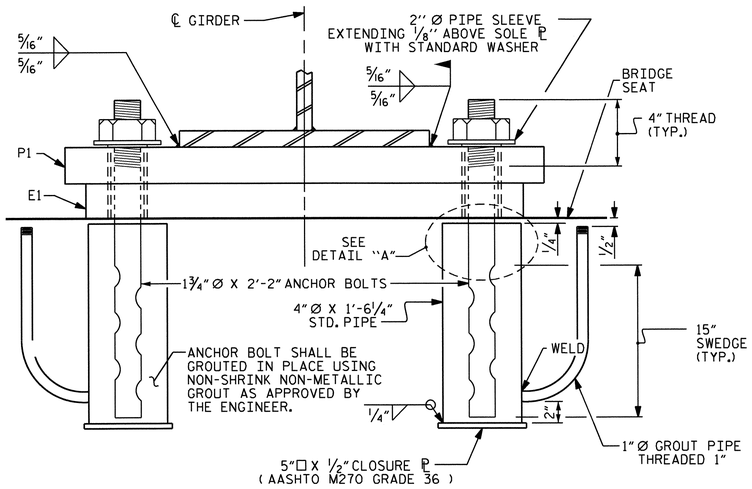

END VIEW
EXPANSION

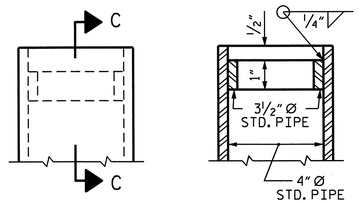

SECTION C-C

DETAIL "A"

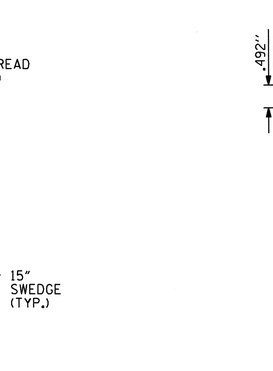

SOLE PLATE DETAILS

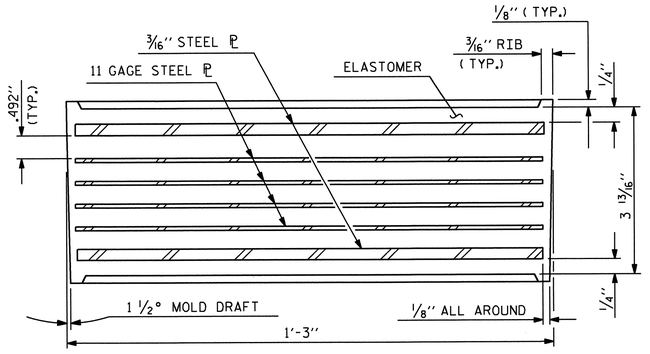

TYPICAL SECTION OF ELASTOMERIC BEARING

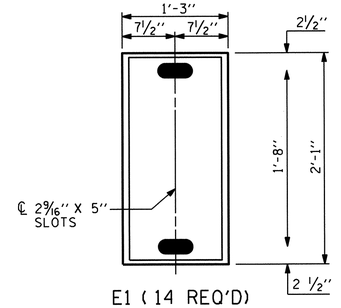

E1 (14 REQ'D)

PLAN VIEW OF ELASTOMERIC BEARING

TYPE VI

50 DUROMETER HARDNESS

NOTES

AT ALL FIXED POINTS OF SUPPORT, NUTS FOR ANCHOR BOLTS ARE TO BE TIGHTENED FINGER TIGHT AND THEN BACKED OFF 1/2 TURN, THE THREAD OF THE NUT AND BOLT SHALL THEN BE BURRED WITH A SHARP POINTED TOOL.

THE 2" Ø PIPE SLEEVE SHALL BE CUT FROM SCHEDULE 40 PVC PLASTIC PIPE. THE PVC PLASTIC PIPE SHALL MEET THE REQUIREMENTS OF ASTM D1785.

THE PAYMENT FOR THE PIPE SLEEVES SHALL BE INCLUDED IN THE SEVERAL PAY ITEMS.

FOR AASHTO M270 GRADE 50W STRUCTURAL STEEL, SOLE PLATE SHALL BE AASHTO M270 GRADE 50W AND SHALL NOT BE GALVANIZED. ANCHOR BOLTS, NUTS AND WASHERS SHALL BE GALVANIZED IN ACCORDANCE WITH THE STANDARD SPECIFICATIONS.

ANCHOR BOLTS SHALL MEET THE REQUIREMENTS OF ASTM A449. NUTS SHALL MEET THE REQUIREMENTS OF AASHTO M291-DH OR AASHTO M292-2H. WASHERS SHALL MEET THE REQUIREMENTS OF AASHTO M293. SHOP DRAWINGS ARE NOT REQUIRED FOR ANCHOR BOLTS, NUTS AND WASHERS. SHOP INSPECTION IS REQUIRED.

WHEN FIELD WELDING THE SOLE PLATE TO THE GIRDER FLANGE, USE TEMPERATURE INDICATING WAX PENS, OR OTHER SUITABLE MEANS, TO ENSURE THAT THE TEMPERATURE OF THE SOLE PLATE DOES NOT EXCEED 300°F. TEMPERATURES ABOVE THIS MAY DAMAGE THE ELASTOMER.

ALL SURFACES OF BEARING PLATES SHALL BE SMOOTH AND STRAIGHT.

THE ELASTOMER IN THE STEEL REINFORCED BEARINGS SHALL HAVE A SHEAR MODULUS OF 0.160 KSI, IN ACCORDANCE WITH AASHTO M251.

FOR STEEL REINFORCED ELASTOMERIC BEARINGS, SEE SPECIAL PROVISIONS.

THE CLOSURE PLATE, GROUT PIPE AND STANDARD PIPE FOR THE EXPANSION ASSEMBLY NEED NOT BE GALVANIZED.

THE CONTRACTOR'S ATTENTION IS CALLED TO THE FOLLOWING PROCEDURE, WHICH MAY BE REQUIRED BY THE ENGINEER, TO RESET ELASTOMERIC BEARINGS DUE TO GIRDER TRANSLATION AND END ROTATION:

1. ONCE THE DECK HAS CURED, THE GIRDERS SHALL BE JACKED THEN THE ANCHOR BOLTS AND ELASTOMERIC BEARING SLOTS CENTERED AS NEARLY AS PRACTICAL ABOUT THE BEARING STIFFENER. THIS OPERATION SHALL BE PERFORMED AT APPROXIMATELY 60°F.
2. AFTER CENTERING THE ELASTOMERIC BEARING SLOTS AND ANCHOR BOLTS, THE ANCHOR BOLTS SHALL BE GROUTED.

THE CONTRACTOR MAY PROPOSE ALTERNATE METHODS, PROVIDED DETAILS ARE SUBMITTED TO THE ENGINEER FOR REVIEW AND APPROVAL.

MAXIMUM ALLOWABLE SERVICE LOADS	
D.L.+L.L. (NO IMPACT)	
TYPE VI	375 k

PROJECT NO. R-3421C

RICHMOND COUNTY

STATION: 395+64.54 -L-

SHEET 1 OF 2

ASSEMBLED BY : K. D. LAYNE		DATE : 10/6/11			
CHECKED BY : J. G. KHARVA		DATE : 5/2/12			
DRAWN BY : EEM 10/95	REV. 5/1/06	TLA/GM			
CHECKED BY : PEK 10/95	REV. 10/1/11	MAA/GM			
	REV. 6/13	AAC/MAA			

29-OCT-2013 10:53
R:\Structures\Plans\str02_Y95BL\R-3412c_sd_BRG_02.dgn
thcarroll

NORTH CAROLINA PROFESSIONAL SEAL 23371 ENGINEER VIPUL A. PATEL
10/30/13

STATE OF NORTH CAROLINA
DEPARTMENT OF TRANSPORTATION
RALEIGH

STANDARD

ELASTOMERIC BEARING DETAILS

(STEEL SUPERSTRUCTURE)

REVISIONS						SHEET NO.
NO.	BY:	DATE:	NO.	BY:	DATE:	S-39
1			3			TOTAL SHEETS
2			4			86

STR. #2

STD. NO. EB2 (SHT 3b)

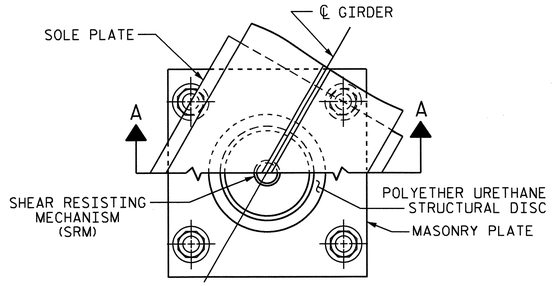

CUT-AWAY PLAN

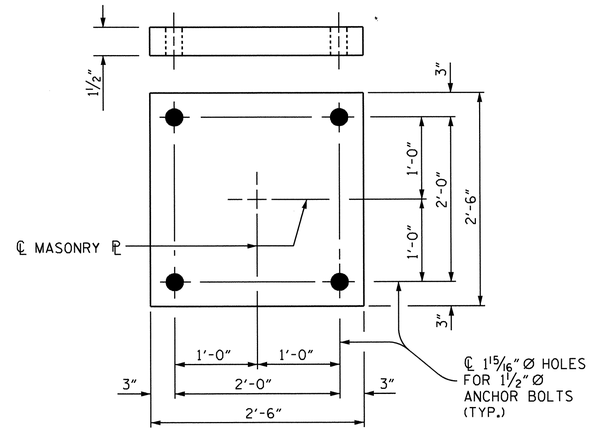

PLAN
M1 (7 REQ'D)

MASONRY PLATE DETAILS

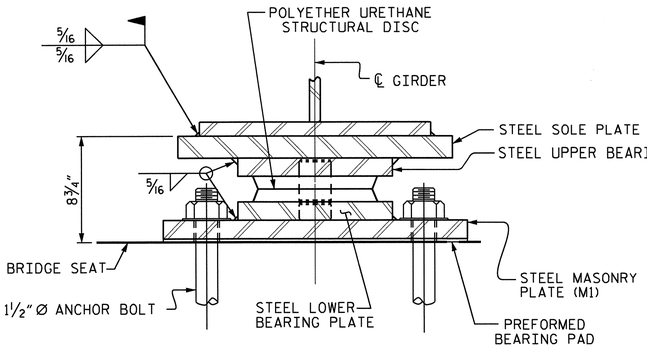

SECTION A-A

DB1, FIXED
(7 REQ'D)

DISC BEARING DETAILS

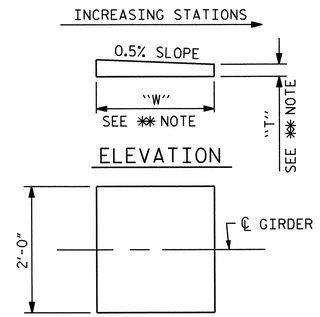

✱✱ NOTE:
DIMENSIONS "W" AND "T" ARE TO BE DETERMINED BY THE MANUFACTURER.

PLAN
S1 (7 REQ'D)

SOLE PLATE DETAILS

NOTES

FOR DISC BEARINGS, SEE SPECIAL PROVISIONS.

AT ALL POINTS OF SUPPORT, NUTS FOR ANCHOR BOLTS SHALL BE TIGHTENED FINGER TIGHT AND GIVEN AN ADDITIONAL ¼ TURN. THE THREAD OF THE NUT AND BOLT SHALL THEN BE BURRED WITH A SHARP POINTED TOOL.

WHEN WELDING THE SOLE PLATE TO THE GIRDER, USE TEMPERATURE INDICATING WAX PENS, OR OTHER SUITABLE MEANS, TO ENSURE THAT THE TEMPERATURE OF THE BEARING DOES NOT EXCEED 250°F TEMPERATURES ABOVE THIS MAY DAMAGE THE TFE OR ELASTOMER.

SOLE PLATES SHOULD BE WELDED TO BEAM FLANGES AND ANCHOR BOLTS SHOULD BE GROUTED BEFORE FALSEWORK IS PLACED.

ALL SURFACES OF BEARING PLATES SHALL BE SMOOTH AND STRAIGHT.

FOR THERMAL SPRAYED COATINGS (METALLIZATION), SEE SPECIAL PROVISIONS.

TABLE FOR UNFACTORED LOADS AND MOVEMENT

BEARING	LOCATION	VERTICAL LOAD (KIPS)				LATERAL LOAD (KIPS)	TOTAL MOVEMENT (INCHES)
		DEAD		LIVE	TOTAL		
		DC	DW	LL+IMP.			
DB1 (FIX.)	BENT #1	362	51	270	683	137	———

PROJECT NO. R-3421C
RICHMOND COUNTY
STATION: 395+64.54 -L-

SHEET 2 OF 2

STATE OF NORTH CAROLINA
DEPARTMENT OF TRANSPORTATION
RALEIGH

SUPERSTRUCTURE

DISC BEARING DETAILS

REVISIONS						SHEET NO.
NO.	BY:	DATE:	NO.	BY:	DATE:	S-40
1			3			TOTAL SHEETS
2			4			86

NORTH CAROLINA PROFESSIONAL SEAL 23371 ENGINEER VIRUL A. PATEL
3/19/13

DRAWN BY : KEITH D. LAYNE DATE : 10-06-11
CHECKED BY : J. G. KHARVA DATE : 5-02-12

08-AUG-2012 15:10
Y:\structures\Plans\str02_Y9SBL\R-3412c_sd_BRG_02.dgn
jpadams

STR. #2

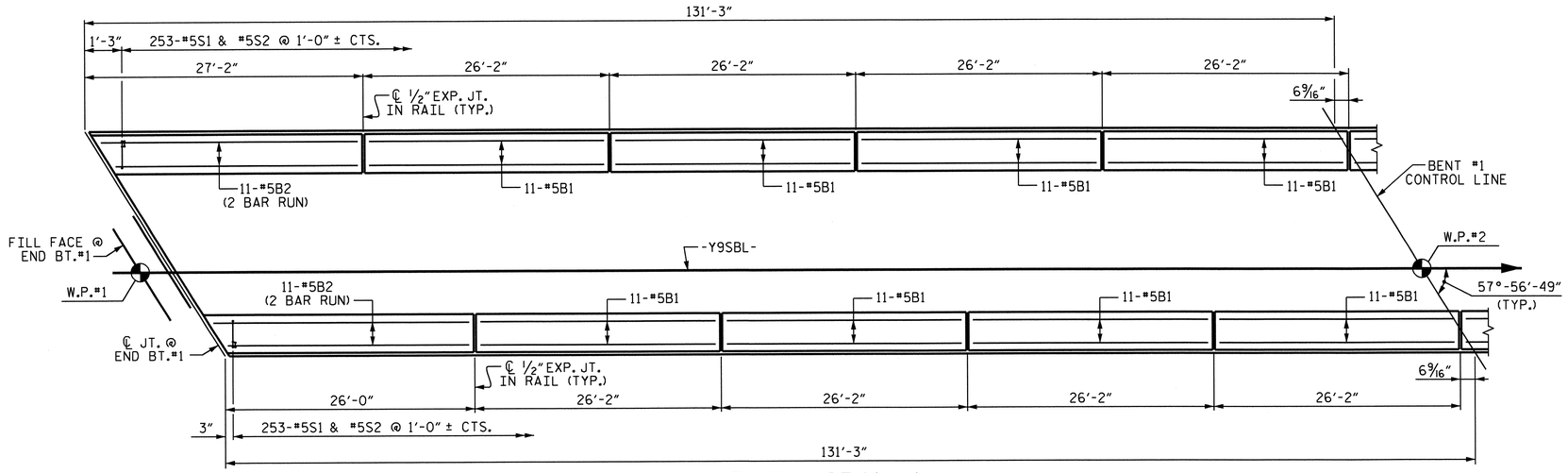

PLAN (SPAN A)

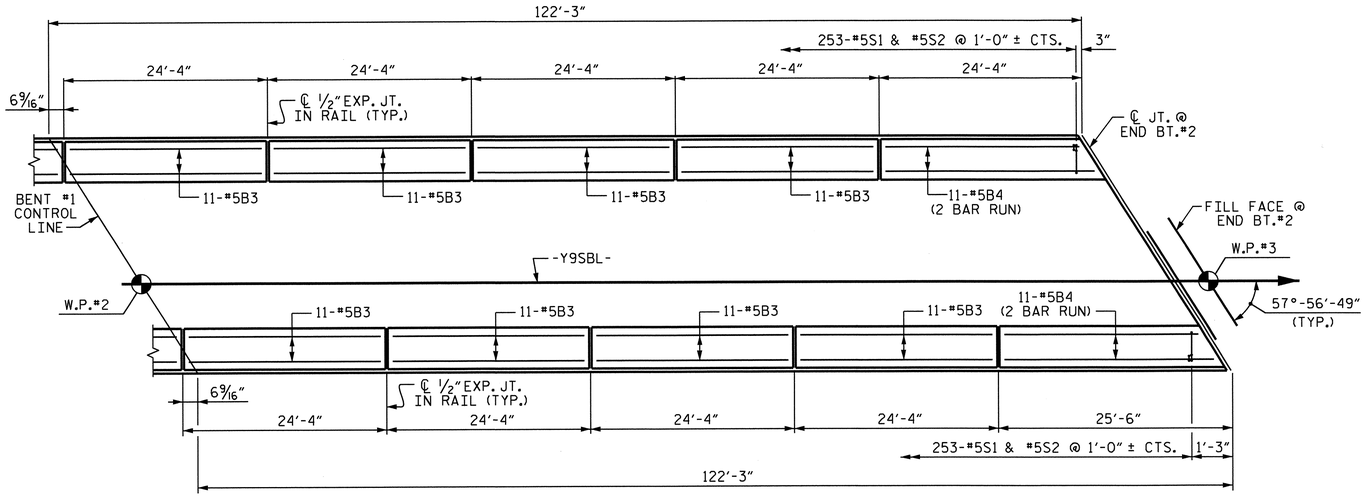

PLAN (SPAN B)

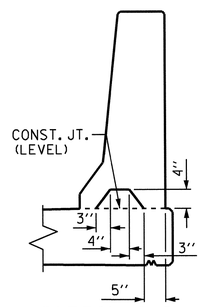

SECTION S-S

AT DAM IN OPEN JOINT
(THIS IS TO BE USED ONLY WHEN SLIP FORM IS USED)

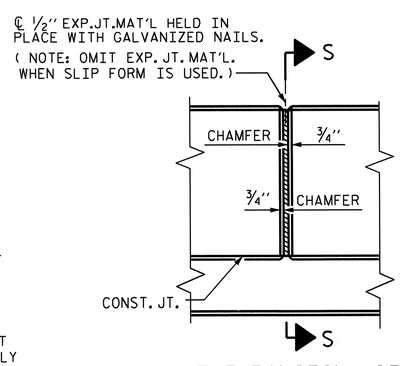

ELEVATION AT EXPANSION JOINTS

BARRIER RAIL DETAILS

NOTES

THE BARRIER RAIL IN EACH CONTINUOUS UNIT SHALL NOT BE CAST UNTIL ALL SLAB CONCRETE IN THAT UNIT HAS BEEN CAST AND HAS REACHED A MINIMUM COMPRESSIVE STRENGTH OF 3,000 PSI.

ALL REINFORCING STEEL IN BARRIER RAILS SHALL BE EPOXY COATED.

GROOVED CONTRACTION JOINTS, ½" IN DEPTH, SHALL BE TOOLED IN ALL EXPOSED FACES OF THE BARRIER RAIL AND IN ACCORDANCE WITH ARTICLE 825-10(B) OF THE STANDARD SPECIFICATIONS. THE CONTRACTION JOINT SHALL BE LOCATED AT EACH THIRD POINT BETWEEN BARRIER RAIL EXPANSION JOINTS. ONLY ONE CONTRACTION JOINT IS REQUIRED AT MIDPOINT OF BARRIER RAIL SEGMENTS LESS THAN 20 FEET IN LENGTH AND NO CONTRACTION JOINTS ARE REQUIRED FOR THOSE SEGMENTS LESS THAN 10 FEET IN LENGTH.

BAR TYPES

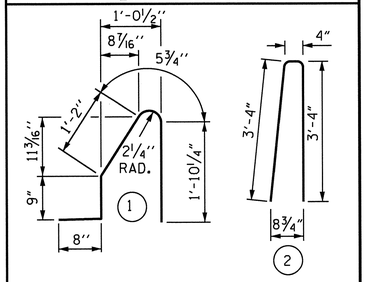

ALL BAR DIMENSIONS ARE OUT TO OUT

BILL OF MATERIAL

FOR CONCRETE BARRIER RAIL ONLY

BAR	NO.	SIZE	TYPE	LENGTH	WEIGHT
✳S1	506	#5	1	4'-11"	2,595
✳S2	506	#5	2	7'-0"	3,694
✳B1	88	#5	STR	25'-9"	2,364
✳B2	44	#5	STR	15'-0"	688
✳B3	88	#5	STR	23'-11"	2,195
✳B4	44	#5	STR	14'-2"	650

✳ EPOXY COATED REINFORCING STEEL	12,186 LBS
CLASS AA CONCRETE	69.0 CU. YDS
CONCRETE BARRIER RAIL	507.00 LIN. FT

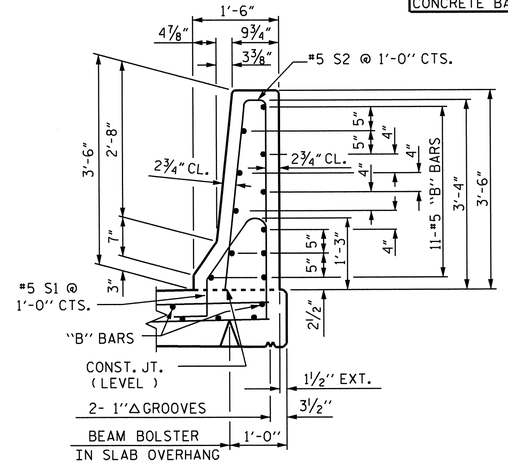

SECTION THRU RAIL

PROJECT NO. R-3421C

RICHMOND COUNTY

STATION: 395+64.54 -L-

STATE OF NORTH CAROLINA
DEPARTMENT OF TRANSPORTATION
RALEIGH

SUPERSTRUCTURE

CONCRETE BARRIER RAIL

NORTH CAROLINA PROFESSIONAL SEAL 23371 ENGINEER VIRAL A. PATEL

3/19/13

REVISIONS						SHEET NO.
NO.	BY:	DATE:	NO.	BY:	DATE:	S-41
1			3			TOTAL SHEETS
2			4			86

DRAWN BY : KEITH D. LAYNE DATE : 9-28-11
CHECKED BY : J. G. KHARVA DATE : 5-03-12

18-MAR-2013 12:21
R:\Structures\Plans\str02_Y9SBL\R-3421c_sd_CBR_02.dgn
vpatel

STR. #2

NOTES

THE MEDIAN BARRIER RAIL IN A CONTINUOUS UNIT SHALL NOT BE CAST UNTIL ALL SLAB CONCRETE IN THAT UNIT HAS BEEN CAST AND HAS REACHED MINIMUM COMPRESSIVE STRENGTH OF 3,000 PSI.

THE JOINT IN THE DECK SHALL BE FORMED PRIOR TO THE CASTING OF MEDIAN BARRIER RAIL.

ALL REINFORCING STEEL IN MEDIAN BARRIER RAIL SHALL BE EPOXY COATED.

VERTICAL GROOVED CONTRACTION JOINTS, ½" IN DEPTH, SHALL BE TOOLED IN ALL EXPOSED FACES OF THE MEDIAN BARRIER RAIL AND IN ACCORDANCE WITH ARTICLE 825-10(B) OF THE STANDARD SPECIFICATIONS. THE CONTRACTION JOINTS SHALL BE LOCATED AT A SPACING OF 8 FT. TO 10 FT. BETWEEN EXPANSION JOINTS. NO CONTRACTION JOINTS WILL BE REQUIRED FOR SEGMENTS LESS THAN 10 FEET IN LENGTH.

FOR MEDIAN BARRIER RAIL ON APPROACH SLABS, SEE APPROACH SLAB SHEETS.

THE *5S1, *5S2 AND *5S3 BARS MAY BE SHIFTED SLIGHTLY AS NECESSARY TO MAINTAIN A 2" CL. MINIMUM CLEARANCE TO EXPANSION JOINT SEAL AND TO EXPANSION JOINT MATERIAL IN MEDIAN BARRIER RAIL.

BAR TYPES

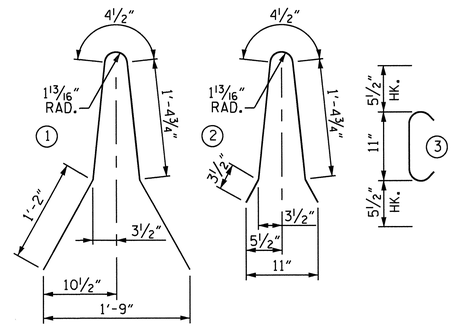

ALL BAR DIMENSIONS ARE OUT TO OUT.

BILL OF MATERIAL

BAR	NO.	SIZE	TYPE	LENGTH	WEIGHT
* B1	32	#5	STR	25'-9"	859
* B2	16	#5	STR	15'-0"	250
* B3	32	#5	STR	23'-11"	798
* B4	16	#5	STR	14'-2"	236
* B5	32	#5	STR	14'-8"	490
* S1	299	#5	1	5'-6"	1,715
* S2	598	#5	3	1'-10"	1,143
* S3	8	#5	2	3'-9"	31

* EPOXY COATED REINFORCING STEEL	LBS. 5,522
CLASS AA CONCRETE	CU. YDS. 30.9
CONCRETE MEDIAN BARRIER RAIL	LIN. FT. 304.83

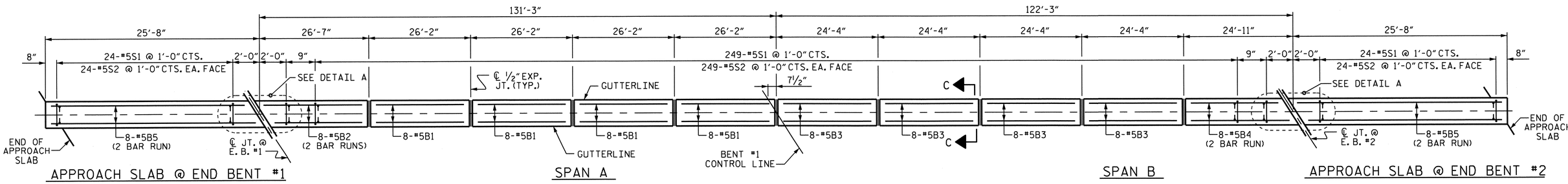

APPROACH SLAB @ END BENT #1 — SPAN A — SPAN B — APPROACH SLAB @ END BENT #2

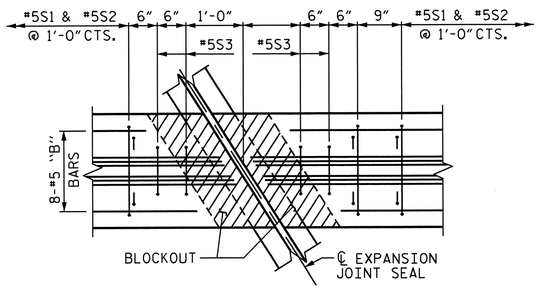

DETAIL A
END BENT 1 SHOWN
END BENT 2 SIMILAR

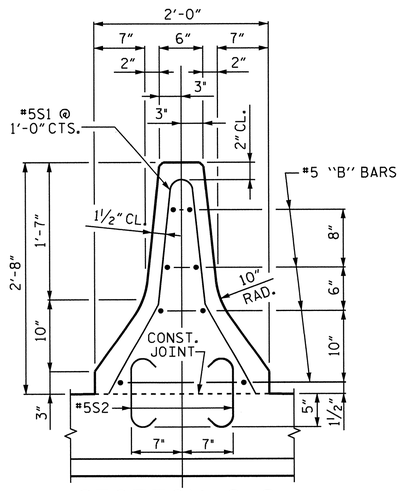

SECTION C-C
*5S3 MAY BE PUSHED INTO GREEN CONCRETE AFTER SCREEDING

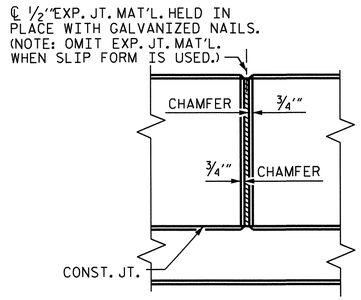

ELEVATION AT EXPANSION JOINTS

PROJECT NO. R-3421C
RICHMOND COUNTY
STATION: 395+64.54 -L-

STATE OF NORTH CAROLINA
DEPARTMENT OF TRANSPORTATION
RALEIGH

SUPERSTRUCTURE
MEDIAN BARRIER RAIL

NORTH CAROLINA PROFESSIONAL SEAL 23371 ENGINEER VIPUL A. PATEL
3/19/13

REVISIONS						SHEET NO.
NO.	BY:	DATE:	NO.	BY:	DATE:	S-42
1			3			TOTAL SHEETS
2			4			86

DRAWN BY : KEITH D. LAYNE DATE : 10-05-11
CHECKED BY : J. G. KHARVA DATE : 5-03-12

18-MAR-2013 12:21
R:\Structures\Plans\str02_Y9SBL\R-3421c_sd_MBR_02.dgn
vpatel

STR. #2

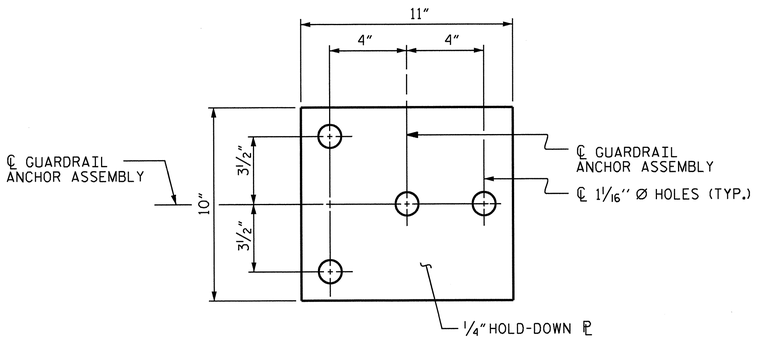

PLAN

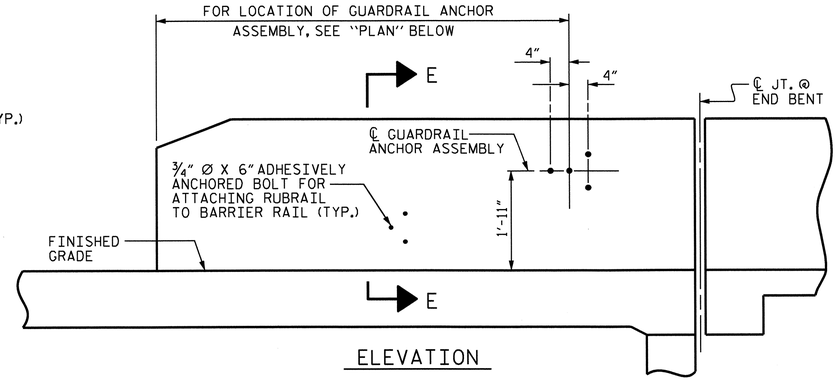

ELEVATION

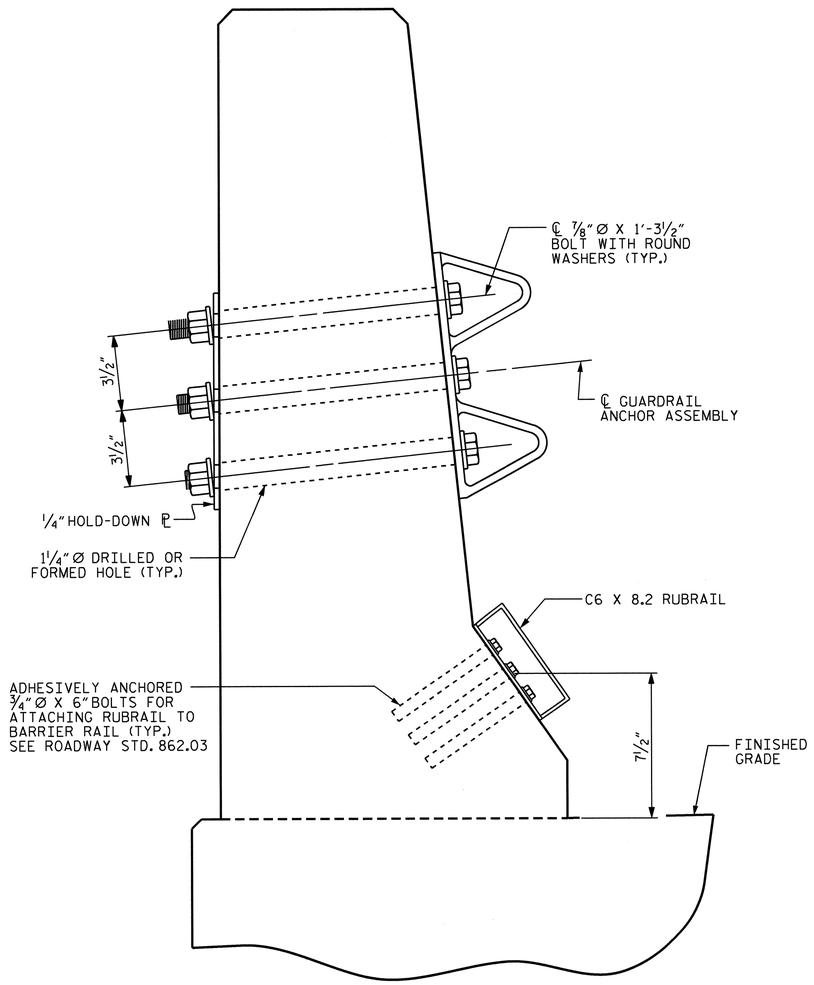

SECTION E-E

GUARDRAIL ANCHOR ASSEMBLY DETAILS

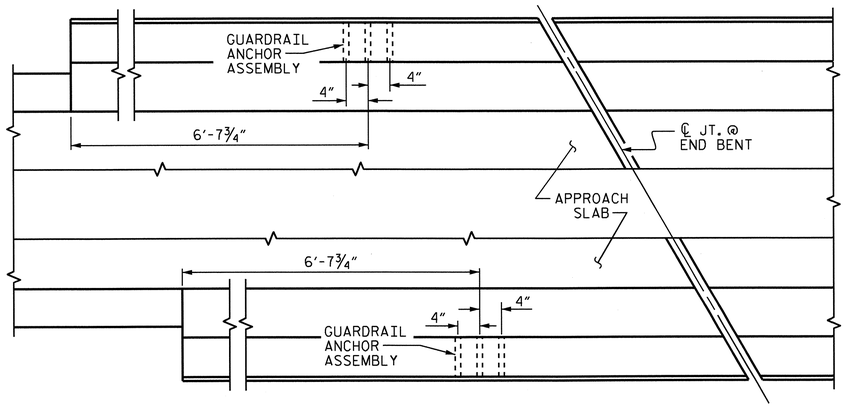

PLAN

LOCATION OF ANCHORS FOR GUARDRAIL

END BENT #1 SHOWN, END BENT #2 SIMILAR.

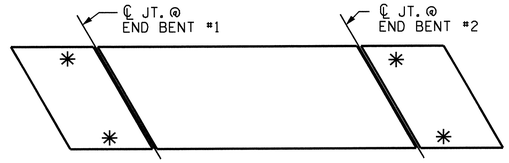

SKETCH SHOWING POINTS OF ATTACHMENTS

✳ DENOTES GUARDRAIL ANCHOR ASSEMBLY

NOTES

THE GUARDRAIL ANCHOR ASSEMBLY SHALL CONSIST OF A 1/4" HOLD-DOWN PLATE AND 4 - 7/8" Ø BOLTS WITH NUTS AND WASHERS, RUBRAIL, AND ADHESIVELY ANCHORED BOLTS.

THE HOLD-DOWN PLATE SHALL CONFORM TO AASHTO M270 GRADE 36. AFTER FABRICATION, THE HOLD-DOWN PLATE SHALL BE HOT-DIP GALVANIZED IN ACCORDANCE WITH AASHTO M111.

BOLTS SHALL CONFORM TO THE REQUIREMENTS OF ASTM A307 AND NUTS SHALL CONFORM TO THE REQUIREMENTS OF AASHTO M291. BOLTS, NUTS AND WASHERS SHALL BE GALVANIZED. (AT THE CONTRACTOR'S OPTION, STAINLESS STEEL BOLTS, NUTS AND WASHERS MAY BE USED AS AN ALTERNATE FOR THE 7/8" Ø GALVANIZED BOLTS, NUTS AND WASHERS. THEY SHALL CONFORM TO OR EXCEED THE MECHANICAL REQUIREMENTS OF ASTM A307. THE USE OF THIS ALTERNATE SHALL BE APPROVED BY THE ENGINEER.)

THE GUARDRAIL ANCHOR ASSEMBLY IS REQUIRED AT ALL POINTS WHERE APPROACH GUARDRAIL IS TO BE ATTACHED TO THE END OF BARRIER RAIL. FOR POINTS OF ATTACHMENT, SEE SKETCH.

AFTER INSTALLATION, THE EXPOSED THREAD OF THE BOLT SHALL BE BURRED WITH A SHARP POINTED TOOL.

THE COST OF THE GUARDRAIL ANCHOR ASSEMBLY SHALL BE INCLUDED IN THE UNIT CONTRACT PRICE BID FOR CONCRETE BARRIER RAIL.

THE 1 1/4" Ø HOLES SHALL BE FORMED OR DRILLED WITH A CORE BIT. IMPACT TOOLS WILL NOT BE PERMITTED. ANY CONCRETE DAMAGED BY THIS WORK SHALL BE REPAIRED TO THE SATISFACTION OF THE ENGINEER.

THE C6 X 8.2 RUBRAIL IS TO BE ADHESIVELY ANCHORED TO THE RAIL USING THREE 3/4" Ø X 6" BOLTS WITH WASHERS. LEVEL ONE FIELD TESTING IS REQUIRED, AND THE YIELD LOAD OF THE 3/4" Ø BOLT IS 12 KIPS. FOR ADHESIVELY ANCHORED ANCHOR BOLTS OR DOWELS, SEE STANDARD SPECIFICATIONS. SEE ROADWAY STANDARD 862.03 FOR DETAILS AND LOCATION OF THE RUBRAIL.

PROJECT NO. R-3421C

RICHMOND COUNTY

STATION: 395+64.54 -L-

STATE OF NORTH CAROLINA
DEPARTMENT OF TRANSPORTATION
RALEIGH

STANDARD

GUARDRAIL ANCHORAGE FOR BARRIER RAIL

NORTH CAROLINA PROFESSIONAL SEAL 23371 ENGINEER VIPUL A. PATEL
3/19/13

REVISIONS						SHEET NO.
NO.	BY:	DATE:	NO.	BY:	DATE:	S-43
1			3			TOTAL SHEETS
2			4			86

STR. #2

STD. NO. GRA2

ASSEMBLED BY : KEITH D. LAYNE	DATE : 9-28-11	
CHECKED BY : J. G. KHARVA	DATE : 5-03-12	
DRAWN BY : TLA 5/06	REV. 10/1/11	MAA/GM
CHECKED BY : GM 5/06	REV. 7/12	MAA/GM
	REV. 10/12	MAA/GM

04-FEB-2013 14:36
R:\Structures\Plans\str02_Y95BL\R-3421c_sd_CBR_02.dgn
jpadams

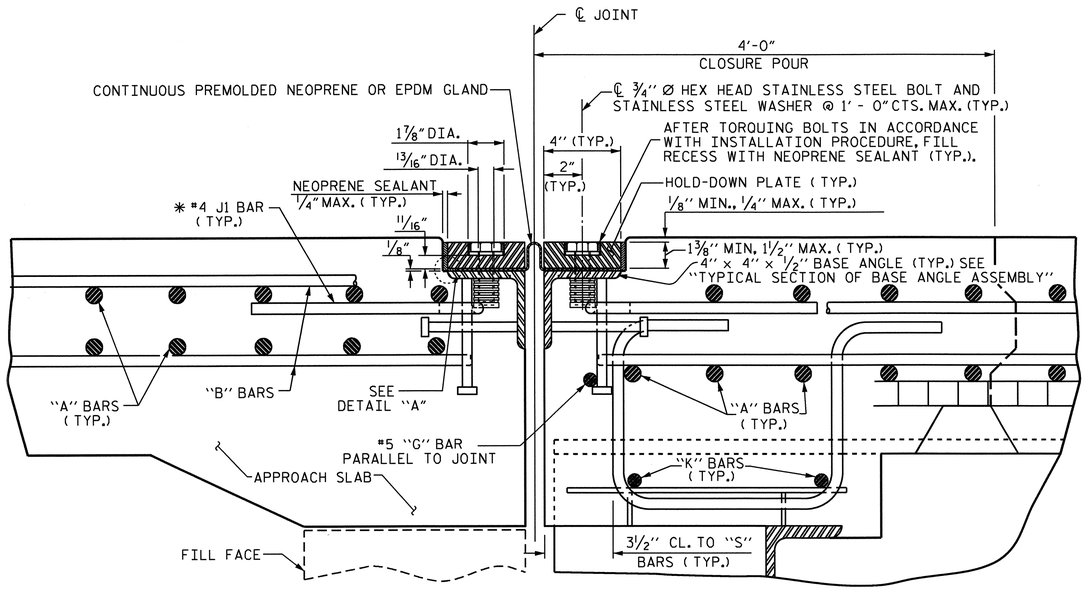

EXPANSION JOINT DETAILS

SECTION NORMAL TO JOINT

* THE QUANTITY OF #4 J1 BARS ON THE BILL OF MATERIAL IS BASED ON 1'-0" CENTERS. J1 BARS SHALL BE PLACED AT EACH VERTICAL STUD ANCHOR BOLT. IN THE EVENT THAT THE NUMBER OF VERTICAL STUD ANCHORS EXCEEDS THE NUMBER OF J1 BARS SPECIFIED, ADDITIONAL J1 BARS WILL NOT BE REQUIRED.

INSTALLATION PROCEDURE

1. A TEMPLATE OR OTHER SUITABLE DEVICE SHALL BE USED TO FORM THE TOP AND WIDTH. THE TEMPLATE SHALL BE 4⅛" TO 4¼" WIDE AND OF SUCH THICKNESS AS TO PROVIDE FOR CORRECT FINAL ELEVATION OF TOP OF HOLD-DOWN PLATES. THE TEMPLATE SHALL BE ATTACHED TO THE BASE ANGLE ASSEMBLY WITH THE ¾" Ø HEX HEAD BOLTS PROVIDED FOR THE HOLD-DOWN PLATES. A 1" Ø HOLE SHALL BE PROVIDED IN THE TEMPLATE CENTERED OVER EACH WEEP HOLE IN THE 4" X 4" X ½" BASE ANGLE. OTHER METHODS OF INSURING DRAINAGE THROUGH WEEP HOLES MAY BE EMPLOYED SUBJECT TO ENGINEER'S APPROVAL.
2. AFTER THE CONCRETE HAS BEEN CAST ON BOTH SIDES OF THE JOINT, REMOVE THE TEMPLATE. THOROUGHLY CLEAN THE BOLT HOLES AND THE ANGLE PLATE. REMOVE ANY EXCESS CONCRETE THAT COMES OUT OF THE WEEP HOLES. ANY DAMAGED STEEL SHALL BE COATED WITH A MINIMUM THICKNESS OF 4 DRY MILS OF ZINC-RICH PAINT IN ACCORDANCE WITH THE STANDARD SPECIFICATIONS.
3. LAY THE GLAND ON THE BASE ANGLE AND FIELD MARK THE GLAND FOR THE BOLT HOLES. HOLES IN THE GLAND SHALL BE PUNCHED ⅞" IN DIAMETER WITH A HAND PUNCH.
4. IN ORDER TO CHECK FOR PROPER ALIGNMENT, PLACE THE GLAND AND HOLD-DOWN PLATES ON THE BASE ANGLE. DO NOT APPLY NEOPRENE SEALANT. BOLT THE HOLD-DOWN PLATES TO THE BASE ANGLE BUT DO NOT TIGHTEN. THE ENGINEER SHALL INSPECT THE JOINT SEAL DEVICE FOR PROPER ALIGNMENT.
5. AFTER INSPECTION, REMOVE THE HOLD-DOWN PLATES AND GLAND. APPLY NEOPRENE SEALANT TO THE BASE ANGLE IN ACCORDANCE WITH THE "INSTALLATION SKETCH". PLACE GLAND AND HOLD-DOWN PLATES ON THE BASE ANGLE. BOLT THE HOLD-DOWN PLATES TO THE BASE ANGLE ASSEMBLY AND TORQUE THE BOLTS TO 88 FT-LBS WITH A TORQUE WRENCH. CHECK THE TORQUE AFTER THREE (3) HOURS AND, IF NECESSARY, RETIGHTEN TO 88 FT-LBS. A FINAL CHECK SHALL BE MADE AT SEVEN (7) DAYS. TORQUE SHALL NOT BE LESS THAN 80 FT-LBS AFTER SEVEN (7) DAYS.
6. AFTER PROPER TORQUING, CLEAN THE BOLT HOLE RECESSES AND THE RECESS BETWEEN THE JOINT SEAL DEVICE AND CONCRETE, COMPLETELY FILL THESE RECESSES WITH NEOPRENE SEALANT.

GENERAL NOTES

1. FOR EXPANSION JOINT SEALS, SEE SPECIAL PROVISIONS.
2. ALL PLATES AND ANGLES SHALL CONFORM TO AASHTO M270 GRADE 36 STEEL OR APPROVED EQUAL. ALL HOLD-DOWN BOLTS SHALL CONFORM TO ASTM F593 ALLOY 304 STAINLESS STEEL AND WASHERS SHALL CONFORM TO ASTM F844 EXCEPT THEY SHALL BE MADE FROM ALLOY 304 STAINLESS STEEL. ALL STUD ANCHORS SHALL CONFORM TO AASHTO M169, GRADES 1010 THRU 1020 OR APPROVED EQUAL. ALL CONCRETE INSERTS SHALL BE CLOSED END AND SHALL CONFORM TO AASHTO M169, GRADE 12L14. TENSILE CAPACITY SHALL BE 3000 LBS. MIN.
3. A PREMOLDED CORRUGATED OR NON-CORRUGATED GLAND SHALL BE USED FOR JOINTS SKEWED BETWEEN 50° THRU 130°. FOR JOINTS SKEWED LESS THAN 50° OR MORE THAN 130°, ONLY A CORRUGATED GLAND SHALL BE USED.
4. CLOSED END FERRULES AND STUD ANCHORS SHALL BE SHOP WELDED AND ALL HOLES SHALL BE SHOP DRILLED AS SHOWN ON PLANS. STUD ANCHORS SHALL BE ELECTRIC ARC END WELDED WITH COMPLETE FUSION.
5. SURFACES COMING IN CONTACT WITH NEOPRENE SHALL BE GROUND SMOOTH PRIOR TO METALLIZING.
6. UPON COMPLETION OF SHOP FABRICATION, THE HOLD DOWN PLATE AND BASE ANGLE ASSEMBLY, AS SHOWN IN THE "TYPICAL SECTION OF BASE ANGLE ASSEMBLY", SHALL BE METALLIZED. SEE SPECIAL PROVISION FOR THERMAL SPRAYED COATINGS (METALLIZATION).
7. BASE ANGLE ASSEMBLY SHALL BE CONTINUOUS FOR THE LENGTH OF THE JOINT. AT CROWN BREAKS, THE ENDS OF THE BASE ANGLE ASSEMBLY SHALL BE CUT PARALLEL TO THE BRIDGE CENTERLINE FOR SKEWS LESS THAN 80° AND GREATER THAN 100°. FINISHED WELD SHALL BE GROUND SMOOTH AND COATED WITH A MINIMUM THICKNESS OF 4 DRY MILS OF ZINC-RICH PAINT IN ACCORDANCE WITH THE STANDARD SPECIFICATIONS.
8. FIELD SPLICES OF HOLD-DOWN PLATES SHALL BE KEPT TO A MINIMUM. CONTRACTOR SHALL FURNISH DETAILED PLANS SHOWING PROPOSED SPLICE LOCATIONS FOR APPROVAL. HOLD-DOWN PLATES SHALL NOT EXCEED 20' LENGTHS UNLESS APPROVED BY THE ENGINEER.
9. NO ALTERNATE JOINT DETAILS SHALL BE PERMITTED IN LIEU OF THOSE SHOWN ON THESE PLANS.
10. THE CONTRACTOR MAY, AT HIS OPTION, USE ADHESIVELY ANCHORED ANCHOR BOLTS IN PLACE OF CONCRETE INSERTS FOR COVER PLATES. THE YIELD LOAD OF THE ¾" Ø BOLT IS 10 KIPS. FIELD TESTING OF THE ADHESIVE BONDING SYSTEM IS NOT REQUIRED.

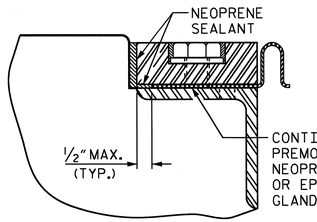

DETAIL "A"

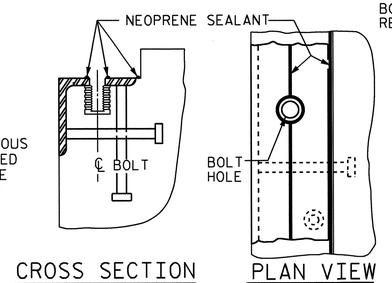

CROSS SECTION PLAN VIEW

INSTALLATION SKETCH

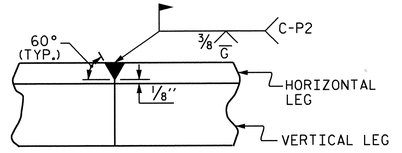

DETAIL- FIELD WELD SPLICE OF BASE ANGLE

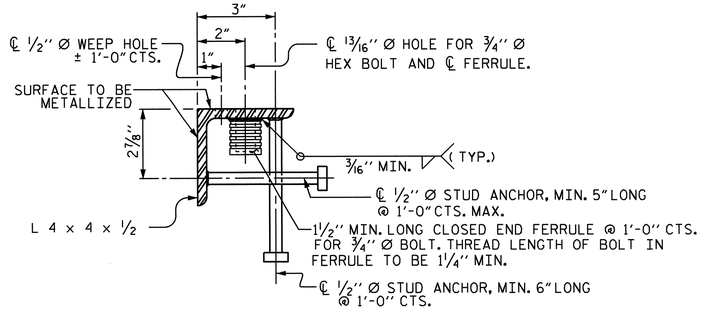

TYPICAL SECTION OF BASE ANGLE ASSEMBLY

MOVEMENT AND SETTING AT JOINT					
LOCATION	SKEW ANGLE	TOTAL MOVEMENT (ALONG ℄ RDWY)	PERPENDICULAR JOINT OPENING AT 45° F	PERPENDICULAR JOINT OPENING AT 60° F	PERPENDICULAR JOINT OPENING AT 90° F
END BENT #1	57°-56'-49"	1 5/16"	1¾"	1 3/16"	1¼"
END BENT #2	57°-56'-49"	1 5/16"	1¾"	1 3/16"	1¼"

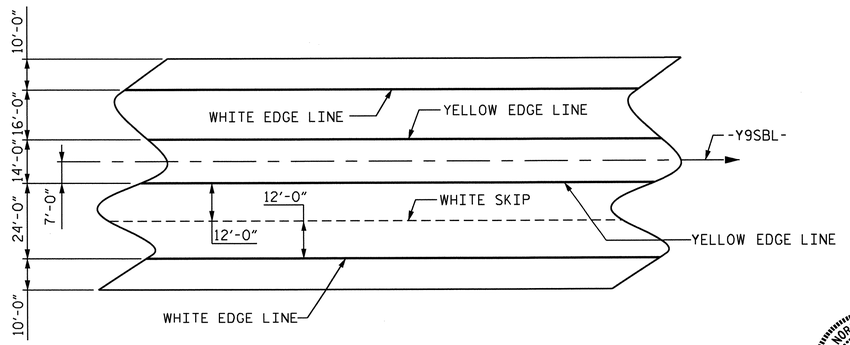

PAVEMENT MARKING ALIGNMENT

NORTH CAROLINA PROFESSIONAL SEAL 23371 ENGINEER PAUL A. PATEL
3/19/13

PROJECT NO. R-3421C
RICHMOND COUNTY
STATION: 395+64.54 -L-
SHEET 1 OF 3

STATE OF NORTH CAROLINA
DEPARTMENT OF TRANSPORTATION
RALEIGH
STANDARD
EXPANSION JOINT SEAL DETAILS

REVISIONS						SHEET NO.
NO.	BY:	DATE:	NO.	BY:	DATE:	S-44
1			3			TOTAL SHEETS
2			4			86

STR. #2 STD. NO. EJS1 (SHT 2)

ASSEMBLED BY : H.A. LOCKLEAR	DATE : 1-12		
CHECKED BY : D.R. SMITH	DATE : 2-12		
DRAWN BY : REK 9/87	REV. 5/7/03R	RWW/JTE	
CHECKED BY : CRK 10/87	REV. 5/1/06R	TLA/GM	
	REV. 10/1/11	MAA/GM	

08-AUG-2012 15:10
Y:\structures\Plans\str02_Y9SBL\R-3421_SD_EJS_02.dgn
jpadams

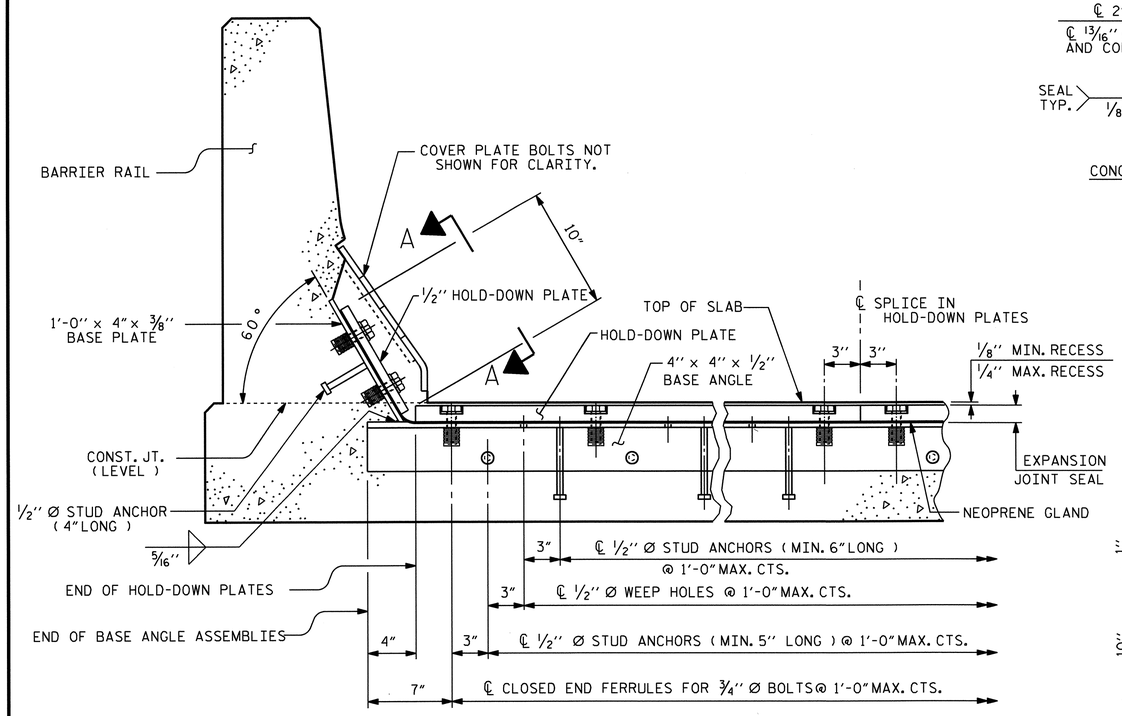

SECTION THRU RAIL NORMAL TO JOINT

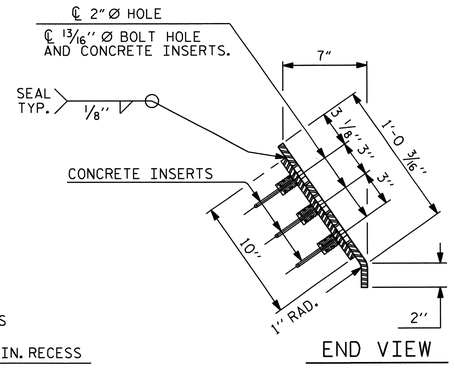

END VIEW

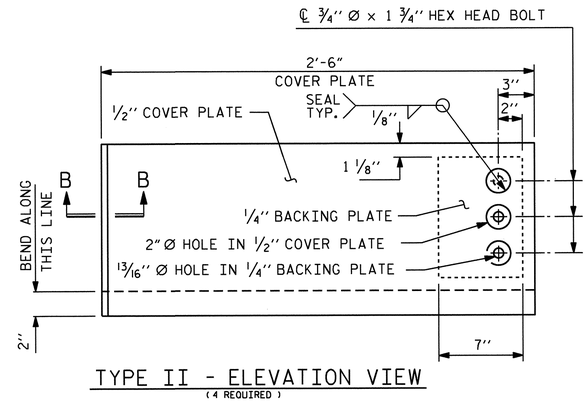

TYPE II - ELEVATION VIEW
(4 REQUIRED)

COVER PLATE DETAILS

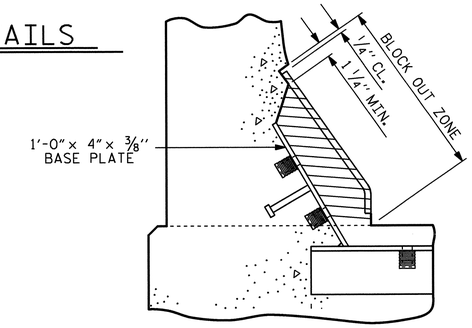

BLOCK OUT DETAIL

SEE " SECTION A - A " FOR OTHER DETAILS.

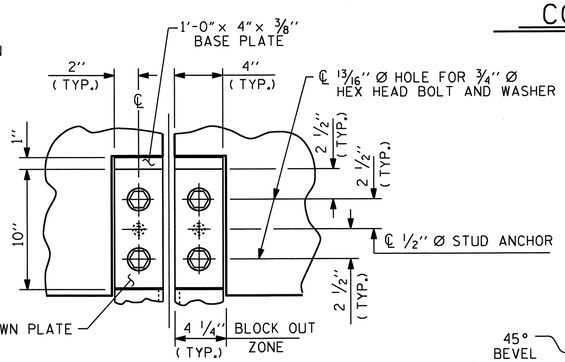

SECTION A - A

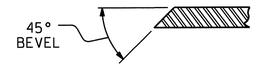

SECTION B - B

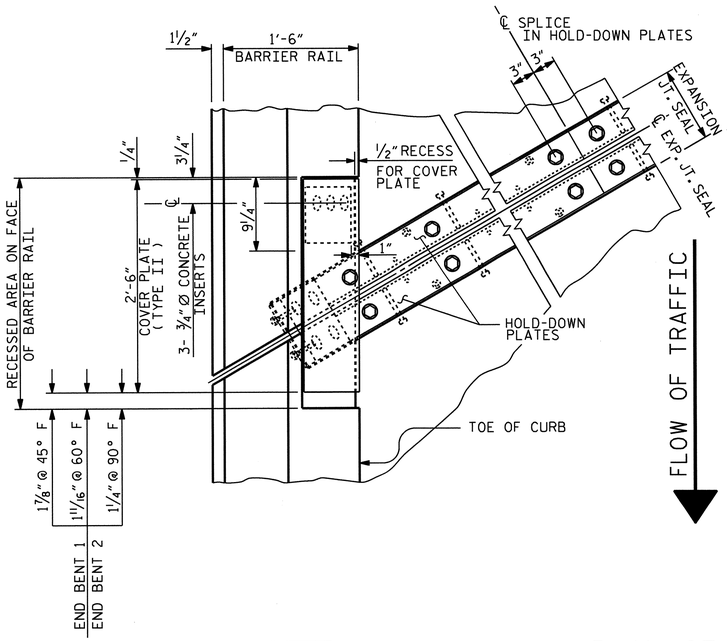

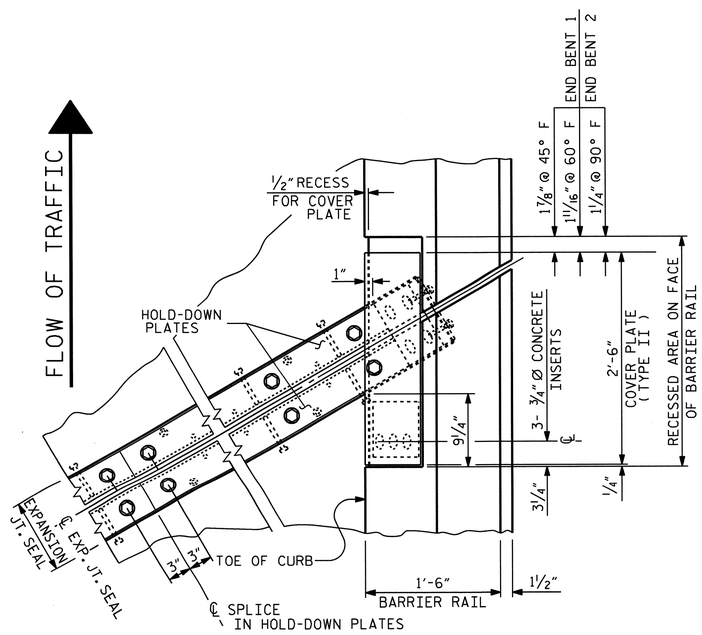

PLAN OF EXPANSION JOINT SEAL

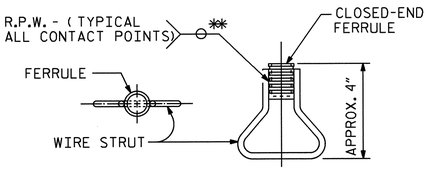

PLAN ELEVATION

CONCRETE INSERT

** EACH WELDED ATTACHMENT OF WIRE TO FERRULE SHALL DEVELOP THE TENSILE STRENGTH OF THE WIRE.

PROJECT NO. R-3421C

RICHMOND COUNTY

STATION: 395+64.54 -L-

SHEET 2 OF 3

ASSEMBLED BY :	H.A. LOCKLEAR	DATE :	1-12
CHECKED BY :	D.R. SMITH	DATE :	2-12
DRAWN BY : REK 9/87	REV. 10/17/00		RWW/LES
CHECKED BY : CRK 10/87	REV. 5/1/06		TLA/GM
	REV. 10/1/11		MAA/GM

08-AUG-2012 15:10
Y:\structures\Plans\str02_Y9SBL\R-3421_SD_EJS_02.dgn
jpadams

NORTH CAROLINA PROFESSIONAL SEAL 23371 ENGINEER VIPUL A. PATEL
Vipul A. Patel
3/11/13

STATE OF NORTH CAROLINA
DEPARTMENT OF TRANSPORTATION
RALEIGH

STANDARD

EXPANSION JOINT SEAL DETAILS FOR BARRIER RAIL

REVISIONS						SHEET NO.
NO.	BY:	DATE:	NO.	BY:	DATE:	S-45
1			3			TOTAL SHEETS
2			4			86

STR. #2

STD. NO. EJS2 SHT 3

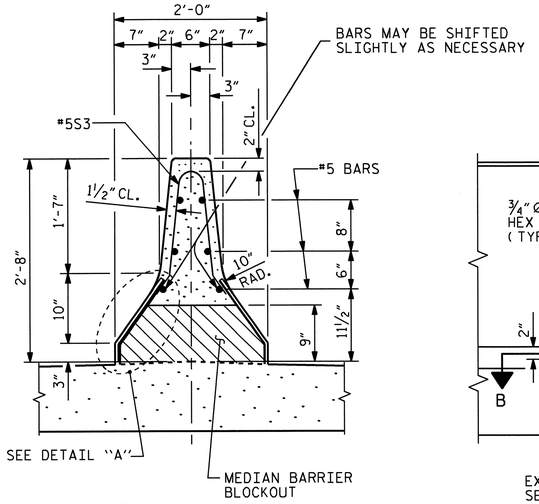

SECTION A-A

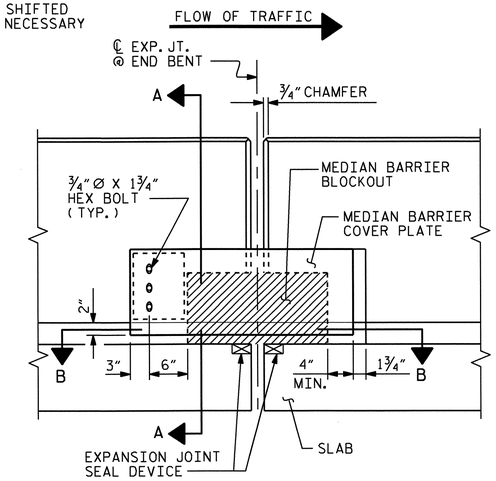

ELEVATION @ EXP. JT.

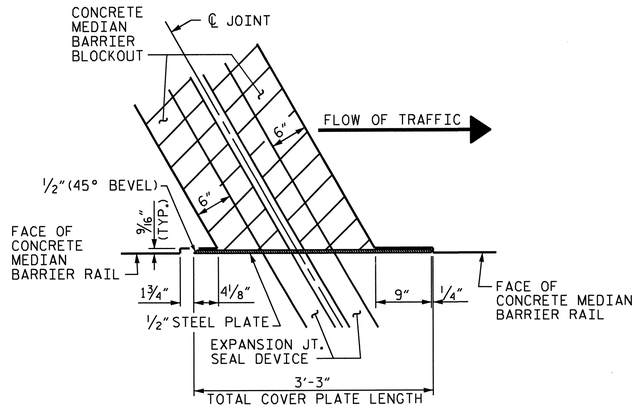

SECTION B-B
(LEFT SIDE SHOWN, RIGHT SIDE SIMILAR)

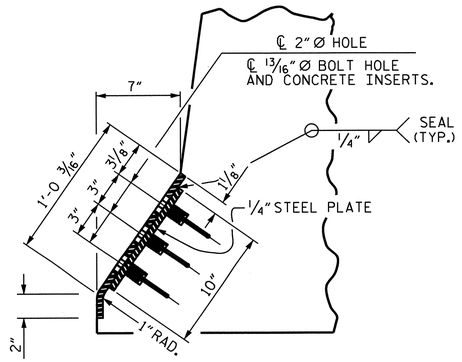

DETAIL "A"

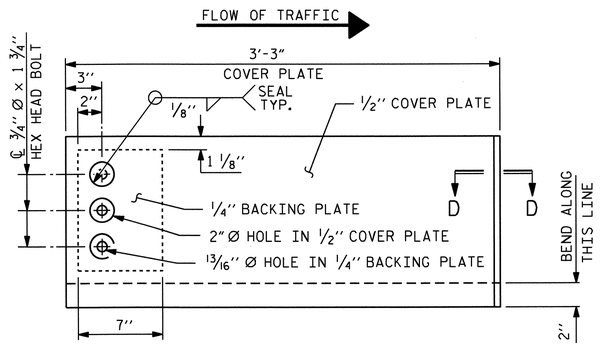

TYPE I - ELEVATION VIEW
4 REQUIRED

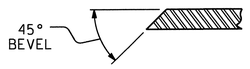

SECTION D-D

MEDIAN BARRIER COVER PLATE DETAILS

PROJECT NO. R-3421C
RICHMOND COUNTY
STATION: 395+64.54 -L-

SHEET 3 OF 3

STATE OF NORTH CAROLINA
DEPARTMENT OF TRANSPORTATION
RALEIGH

SUPERSTRUCTURE

EXPANSION JOINT DETAILS FOR MEDIAN BARRIER RAIL

REVISIONS						SHEET NO.
NO.	BY:	DATE:	NO.	BY:	DATE:	S-46
1			3			TOTAL SHEETS
2			4			86

NORTH CAROLINA PROFESSIONAL SEAL 23371 ENGINEER VIPUL A. PATEL
3/19/13

STR. #2

DRAWN BY : KEITH D. LAYNE DATE : 10-05-11
CHECKED BY : J. G. KHARVA DATE : 5-02-12

08-AUG-2012 15:10
Y:\structures\Plans\str02_Y9SBL\R-3421_SD_EJS_02.dgn
jpadams

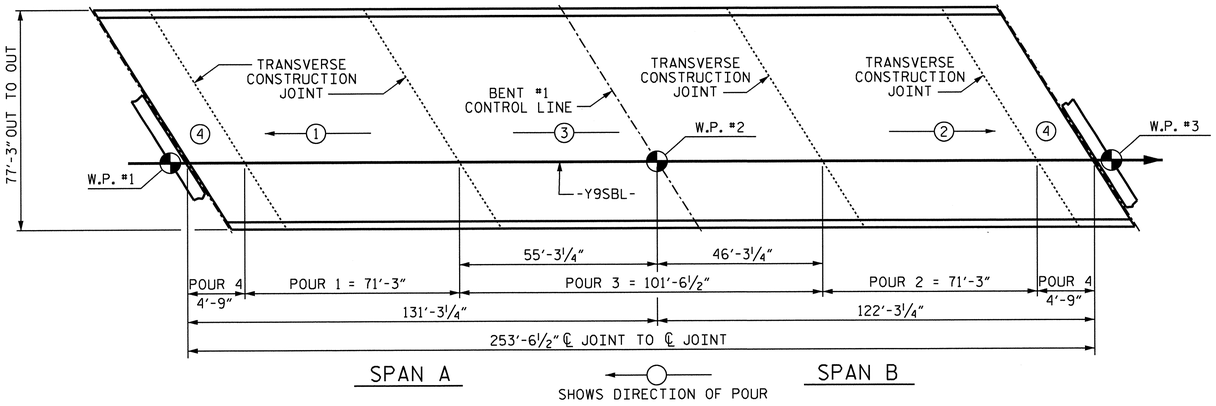

LAYOUT FOR COMPUTING AREA AND POUR SEQUENCE OF REINFORCED CONCRETE DECK SLAB

AREA CONCRETE DECK SLAB = 19,586 Sq. Ft.

BAR TYPES

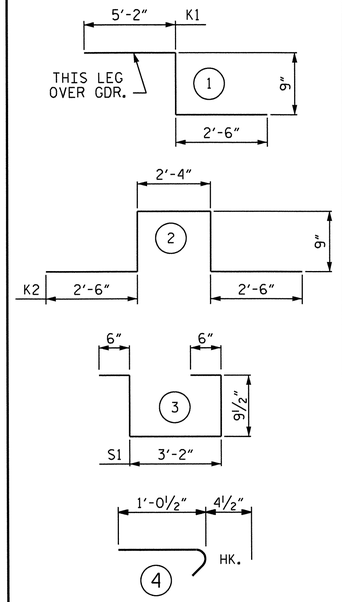

ALL BAR DIMENSIONS ARE OUT TO OUT.

REINFORCING BAR SCHEDULE (SPANS A & B)

BAR	NO.	SIZE	TYPE	LENGTH	WEIGHT	BAR	NO.	SIZE	TYPE	LENGTH	WEIGHT
✳ A1	1096	#5	STR.	39'-9"	45,439	A211	8	#5	STR.	25'-3"	211
						A212	8	#5	STR.	23'-11"	200
✳ A101	8	#5	STR.	38'-7"	322	A213	8	#5	STR.	22'-7"	188
✳ A102	8	#5	STR.	37'-3"	311	A214	8	#5	STR.	21'-3"	177
✳ A103	8	#5	STR.	35'-11"	300	A215	8	#5	STR.	19'-11"	166
✳ A104	8	#5	STR.	34'-7"	289	A216	8	#5	STR.	18'-7"	155
✳ A105	8	#5	STR.	33'-3"	277	A217	8	#5	STR.	17'-3"	144
✳ A106	8	#5	STR.	31'-11"	266	A218	8	#5	STR.	15'-11"	133
✳ A107	8	#5	STR.	30'-7"	255	A219	8	#5	STR.	14'-7"	122
✳ A108	8	#5	STR.	29'-3"	244	A220	8	#5	STR.	13'-3"	111
✳ A109	8	#5	STR.	27'-11"	233	A221	8	#5	STR.	11'-11"	99
✳ A110	8	#5	STR.	26'-7"	222	A222	8	#5	STR.	10'-7"	88
✳ A111	8	#5	STR.	25'-3"	211	A223	8	#5	STR.	9'-3"	77
✳ A112	8	#5	STR.	23'-11"	200	A224	8	#5	STR.	7'-11"	66
✳ A113	8	#5	STR.	22'-7"	188	A225	8	#5	STR.	6'-7"	55
✳ A114	8	#5	STR.	21'-3"	177	A226	8	#5	STR.	5'-3"	44
✳ A115	8	#5	STR.	19'-11"	166	A227	8	#5	STR.	3'-11"	33
✳ A116	8	#5	STR.	18'-7"	155	A228	4	#5	STR.	2'-7"	22
✳ A117	8	#5	STR.	17'-3"	144						
✳ A118	8	#5	STR.	15'-11"	133	✳ B1	206	#7	STR.	49'-2"	20,702
✳ A119	8	#5	STR.	14'-7"	122	✳ B2	208	#4	STR.	23'-7"	3,277
✳ A120	8	#5	STR.	13'-3"	111	✳ B3	156	#4	STR.	26'-9"	2,788
✳ A121	8	#5	STR.	11'-11"	99						
✳ A122	8	#5	STR.	10'-7"	88	B4	530	#5	STR.	52'-5"	27,781
✳ A123	8	#5	STR.	9'-3"	77						
✳ A124	8	#5	STR.	7'-11"	66	✳ G1	4	#5	STR.	46'-8"	195
✳ A125	8	#5	STR.	6'-7"	55						
✳ A126	8	#5	STR.	5'-3"	44	✳ J1	176	#4	4	1'-5"	167
✳ A127	8	#5	STR.	3'-11"	33						
✳ A128	4	#5	STR.	2'-7"	22	✳ K1	12	#5	1	8'-5"	105
						✳ K2	30	#5	2	8'-10"	276
A2	1096	#5	STR.	39'-9"	45,439	✳ K3	36	#5	STR.	13'-3"	498
A201	8	#5	STR.	38'-7"	322	✳ S1	120	#4	3	5'-9"	461
A202	8	#5	STR.	37'-3"	311						
A203	8	#5	STR.	35'-11"	300	REINFORCING STEEL (Lbs) =					78,030
A204	8	#5	STR.	34'-7"	289	✳ EPOXY COATED REINFORCING STEEL (Lbs) =					78,718
A205	8	#5	STR.	33'-3"	277						
A206	8	#5	STR.	31'-11"	266						
A207	8	#5	STR.	30'-7"	255						
A208	8	#5	STR.	29'-3"	244						
A209	8	#5	STR.	27'-11"	233						
A210	8	#5	STR.	26'-7"	222						

QUANTITIES FOR CONCRETE BARRIER RAIL AND CONCRETE MEDIAN BARRIER RAIL ARE NOT INCLUDED.

SUPERSTRUCTURE REINFORCING STEEL LENGTHS ARE BASED ON THE FOLLOWING MINIMUM SPLICE LENGTHS

BAR SIZE	SUPERSTRUCTURE EXCEPT APPROACH SLABS, PARAPET, AND BARRIER RAIL		APPROACH SLABS		PARAPET AND BARRIER RAIL
	EPOXY COATED	UNCOATED	EPOXY COATED	UNCOATED	
#4	2'-0"	1'-9"	2'-0"	1'-9"	2'-9"
#5	2'-6"	2'-2"	2'-6"	2'-2"	3'-5"
#6	3'-0"	2'-7"	3'-10"	2'-7"	4'-4"
#7	5'-3"	3'-6"			
#8	6'-10"	4'-7"			

SUPERSTRUCTURE BILL OF MATERIAL

	CLASS AA CONCRETE	REINFORCING STEEL	EPOXY COATED REINFORCING STEEL
	(CU. YDS.)	(LBS.)	(LBS.)
POUR #1	185.2		
POUR #2	185.2		
POUR #3	261.1		
POUR #4	28.6		
TOTALS**	660.0	78,030	78,718

**QUANTITIES FOR MEDIAN BARRIER RAIL AND BARRIER RAIL ARE NOT INCLUDED

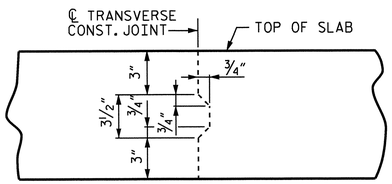

TRANSVERSE CONST. JOINT DETAIL

NOTE: REINFORCING STEEL IN SLAB NOT SHOWN. LONGITUDINAL REINFORCING STEEL SHALL BE CONTINUOUS THRU JOINT.

GROOVING BRIDGE FLOORS

BRIDGE DECK =	16,646 Sq. Ft.
APPROACH SLABS =	3,115 Sq. Ft.
TOTAL =	19,761 Sq. Ft.

PROJECT NO. R-3421C

RICHMOND COUNTY

STATION: 395+64.54 -L-

STATE OF NORTH CAROLINA
DEPARTMENT OF TRANSPORTATION
RALEIGH

SUPERSTRUCTURE
BILL OF MATERIAL

NORTH CAROLINA PROFESSIONAL SEAL 23371 ENGINEER VIPUL A. PATEL
3/19/13

REVISIONS						SHEET NO.
NO.	BY:	DATE:	NO.	BY:	DATE:	S-47
1			3			TOTAL SHEETS
2			4			86

DRAWN BY : KEITH D. LAYNE DATE : 9-30-11
CHECKED BY : J. G. KHARVA DATE : 5-01-12

18-MAR-2013 12:54
R:\Structures\Plans\str02_Y9SBL\R-3412c_sd_PS_02.dgn
vpatel

STR. #2

NOTES

STIRRUPS IN CAP MAY BE SHIFTED AS NECESSARY TO CLEAR ANCHOR BOLTS.

BACKWALL SHALL BE PLACED BEFORE APPLYING THE EPOXY PROTECTIVE COATING.

THE TOP SURFACE AREAS OF THE END BENT CAPS SHALL BE CURED IN ACCORDANCE WITH THE STANDARD SPECIFICATIONS EXCEPT THE MEMBRANE CURING COMPOUND METHOD SHALL NOT BE USED.

THE TOP SURFACE OF THE CAP EXCEPT THE BRIDGE SEAT BUILDUPS SHALL BE SLOPED TRANSVERSELY FROM THE FILL FACE TO THE BACK FACE AT THE RATE OF 2%.

THE CONCRETE IN THE SHADED AREA OF THE WING SHALL BE POURED AFTER THE BARRIER RAILS ARE CAST IF SLIP FORMING IS USED.

THE CONTRACTOR SHALL PROVIDE FOR INSTALLATION OF THE 4" DIAMETER DRAIN PIPE THROUGH THE WING WALL AS REQUIRED FOR REINFORCED BRIDGE APPROACH FILLS. SEE THE ROADWAY PLANS. REINFORCING STEEL IN THE WING WALL MAY BE SHIFTED AS NECESSARY TO CLEAR THE DRAIN PIPE.

EPOXY COAT THE END BENT CAP AFTER ADJUSTMENTS ARE MADE TO BEARINGS AND ANCHOR BOLTS ARE GROUTED.

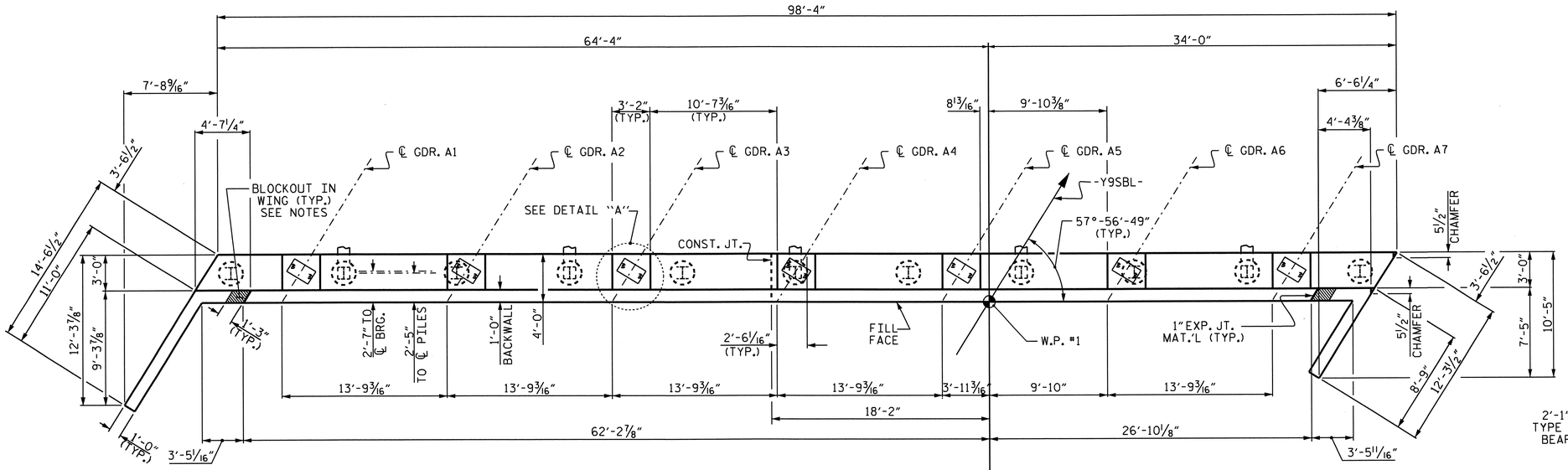

PLAN

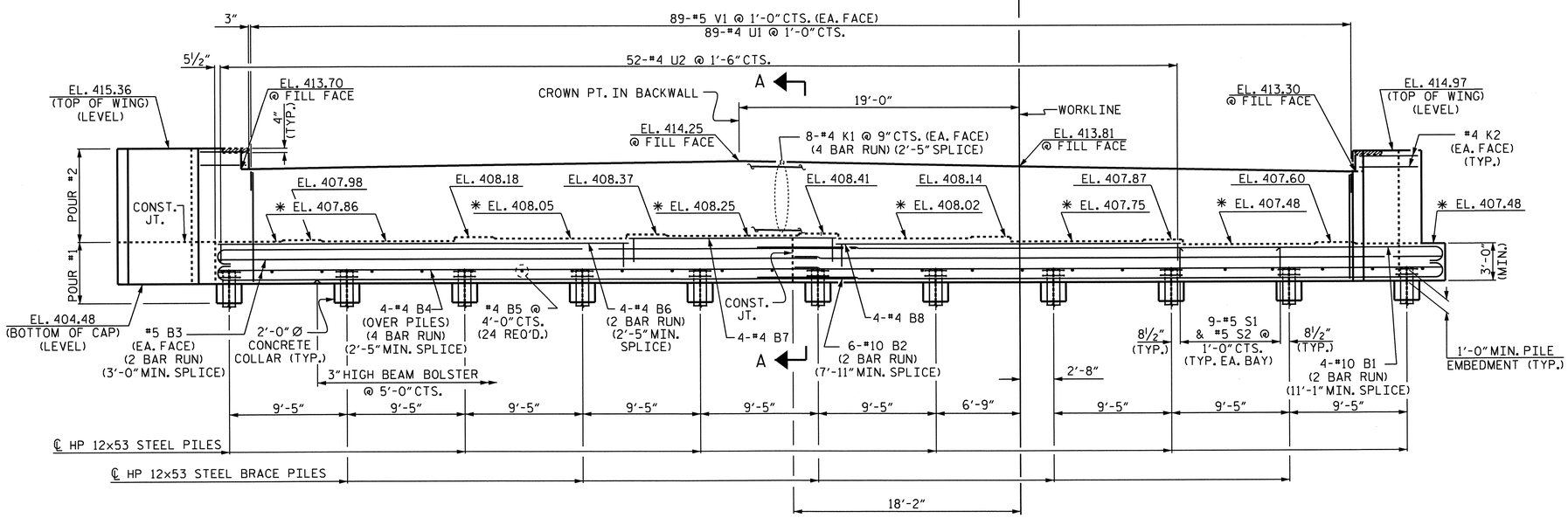

ELEVATION

* SEE SHEET 3 OF 3 FOR LOCATION OF ELEVATION.

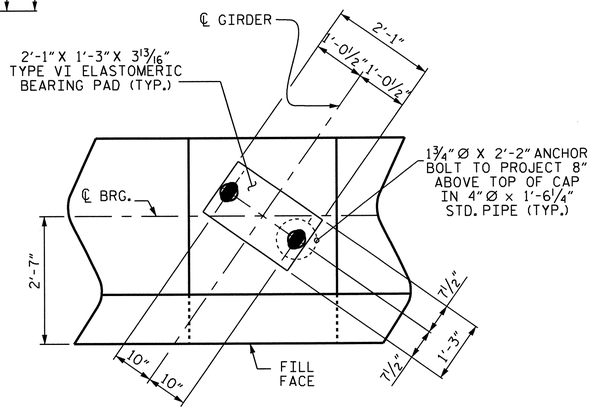

DETAIL "A"

(TYP. EA. BRIDGE SEAT)

PROJECT NO. R-3421C

RICHMOND COUNTY

STATION: 395+64.54 -L-

SHEET 1 OF 3

STATE OF NORTH CAROLINA
DEPARTMENT OF TRANSPORTATION
RALEIGH

SUBSTRUCTURE

END BENT #1

REVISIONS						SHEET NO.
NO.	BY:	DATE:	NO.	BY:	DATE:	S-48
1			3			TOTAL SHEETS
2			4			86

NORTH CAROLINA PROFESSIONAL SEAL 23371 ENGINEER VIRAL A. PATEL

10/30/13

DRAWN BY : J.G. KHARVA DATE 01/27/12
CHECKED BY : B.N. GRADY DATE : 02/12

29-OCT-2013 10:53
Y:\structures\Plans\str02_Y9SBL\R-3421C_sd_Ebts_02.dgn
thcarroll

STR. #2

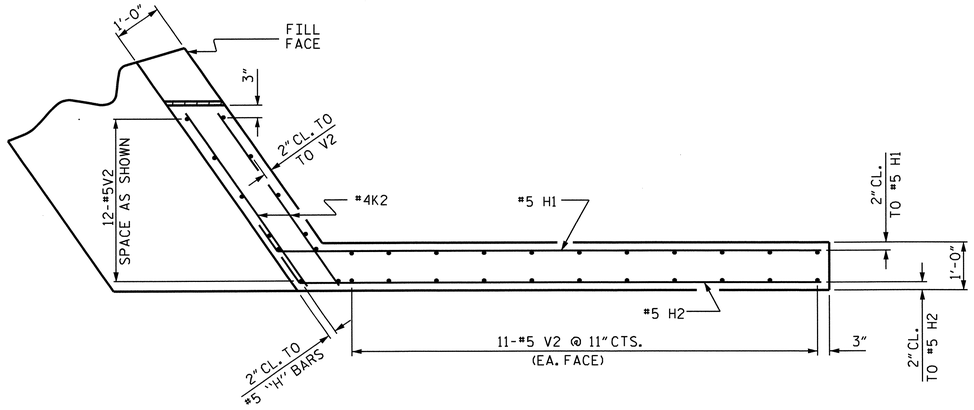

PLAN OF LEFT WING

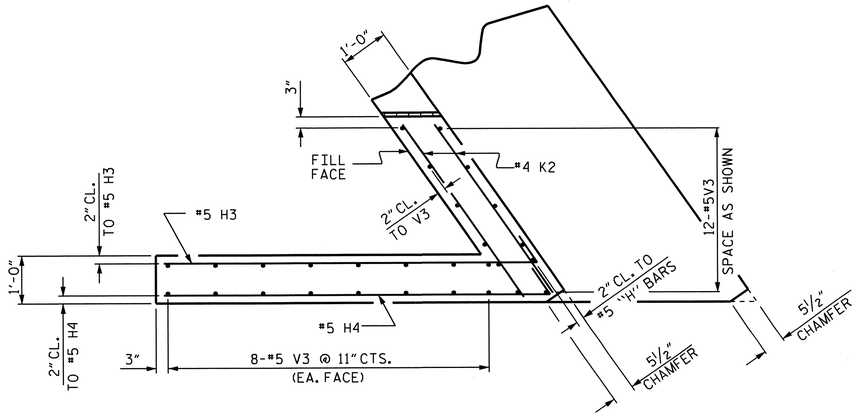

PLAN OF RIGHT WING

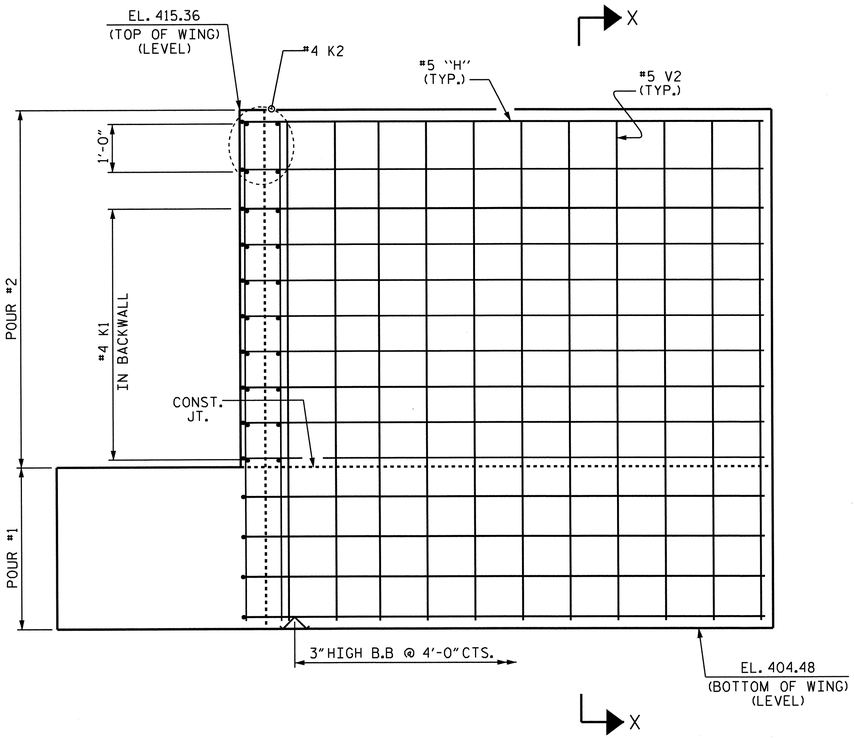

ELEVATION OF LEFT WING

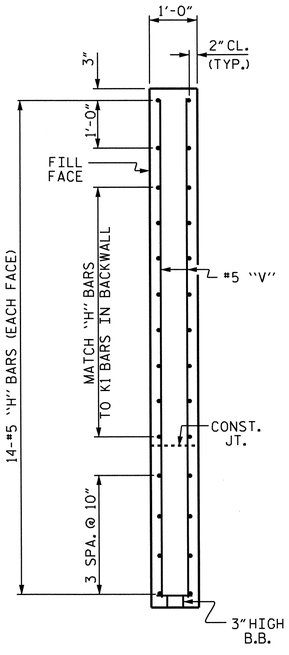

SECTION X-X

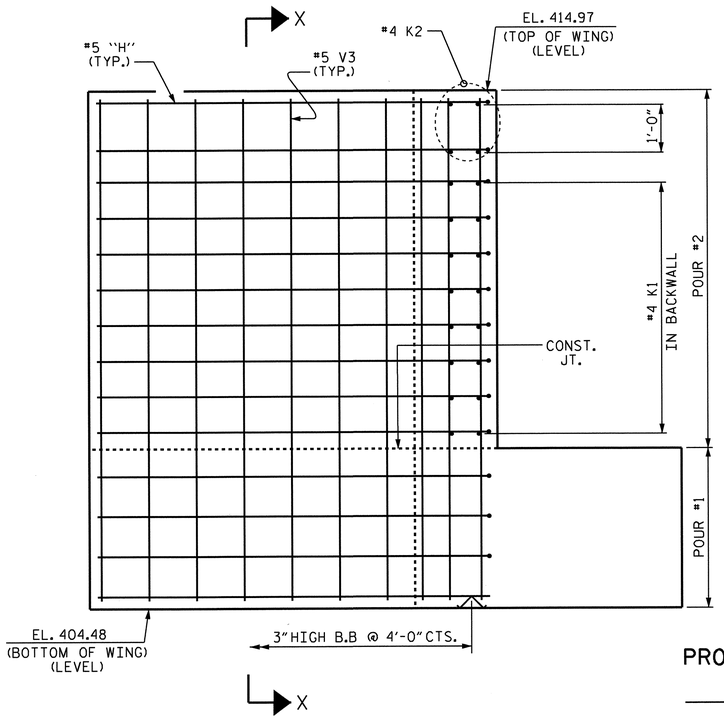

ELEVATION OF RIGHT WING

DRAWN BY : J. G. KHARVA DATE : 01/26/12
CHECKED BY : B. N. GRADY DATE : 02/12

08-AUG-2012 15:10
Y:\structures\Plans\str02_Y9SBL\R-3421C_sd_Ebts_02.dgn
jpadams

NORTH CAROLINA PROFESSIONAL SEAL 23371 ENGINEER VIPUL A. PATEL
3/19/13

PROJECT NO. R-3421C
RICHMOND COUNTY
STATION: 395+64.54 -L-

SHEET 2 OF 3

STATE OF NORTH CAROLINA
DEPARTMENT OF TRANSPORTATION
RALEIGH

SUBSTRUCTURE

END BENT #1

REVISIONS						SHEET NO.
NO.	BY:	DATE:	NO.	BY:	DATE:	S-49
1			3			TOTAL SHEETS
2			4			86

STR. #2

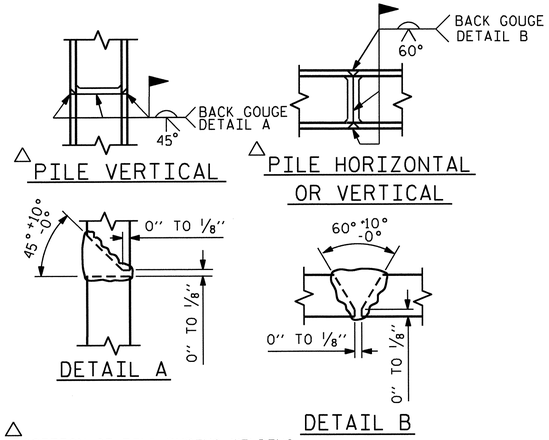

△ POSITION OF PILE DURING WELDING.

PILE SPLICE DETAILS

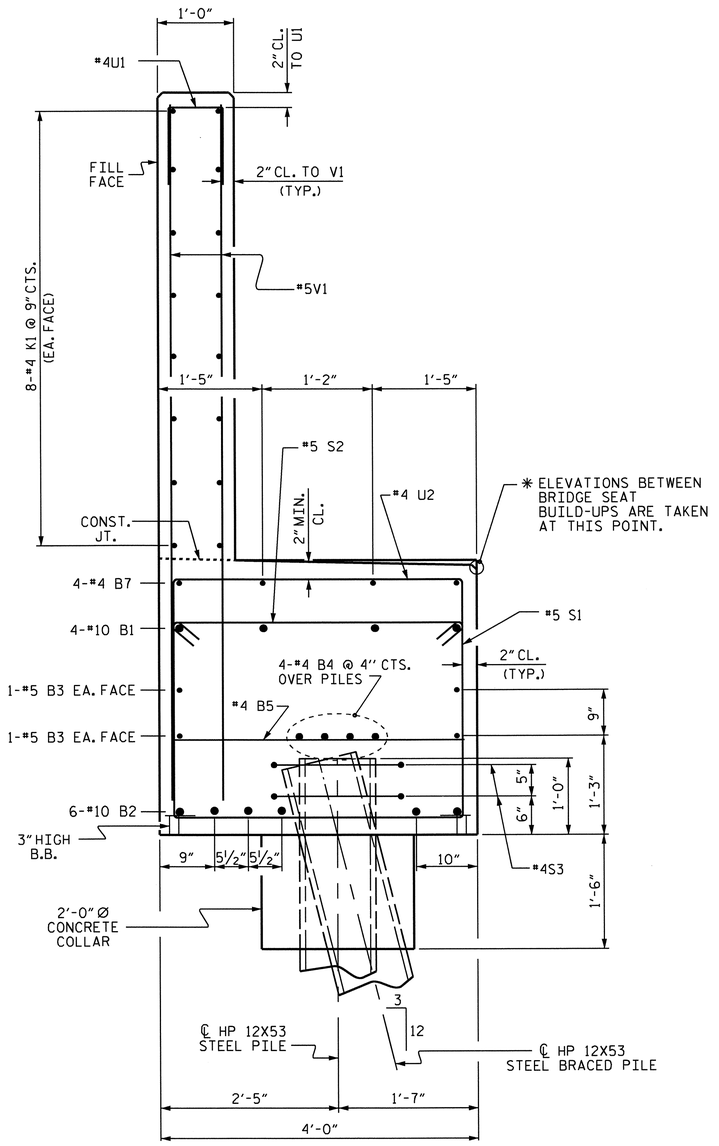

SECTION A-A

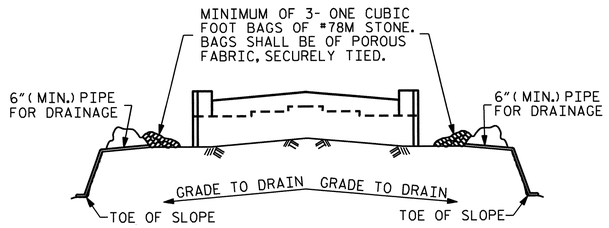

BAGGED STONE AND PIPE SHALL BE PLACED IMMEDIATELY AFTER COMPLETION OF END BENT EXCAVATION. PIPE MAY BE EITHER CONCRETE, CORRUGATED STEEL, CORRUGATED ALUMINUM ALLOY, OR CORRUGATED PLASTIC. PERFORATED PIPE WILL NOT BE ALLOWED.

BAGGED STONE SHALL REMAIN IN PLACE UNTIL THE ENGINEER DIRECTS THAT IT BE REMOVED. THE CONTRACTOR SHALL REMOVE AND DISPOSE OF SILT ACCUMULATIONS AT BAGGED STONE WHEN SO DIRECTED BY THE ENGINEER. BAGS SHALL BE REMOVED AND REPLACED WHENEVER THE ENGINEER DETERMINES THAT THEY HAVE DETERIORATED AND LOST THEIR EFFECTIVENESS.

NO SEPARATE PAYMENT WILL BE MADE FOR THIS WORK AND THE ENTIRE COST OF THIS WORK SHALL BE INCLUDED IN THE UNIT CONTRACT PRICE BID FOR THE SEVERAL PAY ITEMS.

TEMPORARY DRAINAGE AT END BENT

BAR TYPES

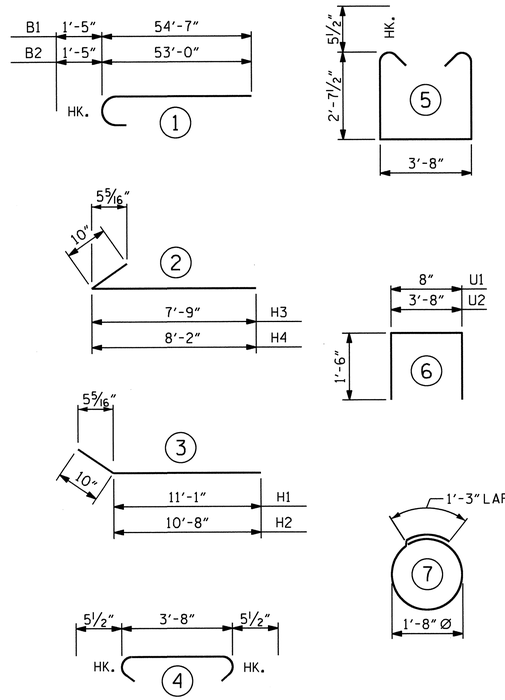

ALL BAR DIMENSIONS ARE OUT TO OUT.

BILL OF MATERIAL

END BENT #1

BAR	NO.	SIZE	TYPE	LENGTH	WEIGHT
B1	8	#10	1	56'-0"	1928
B2	12	#10	1	54'-5"	2810
B3	8	#5	STR	50'-6"	421
B4	16	#4	STR	26'-4"	281
B5	24	#4	STR	3'-8"	59
B6	8	#4	STR	18'-11"	101
B7	4	#4	STR	16'-7"	44
B8	4	#4	STR	27'-7"	74
H1	14	#5	3	11'-11"	174
H2	14	#5	3	11'-6"	168
H3	14	#5	2	8'-7"	125
H4	14	#5	2	9'-0"	131
K1	64	#4	STR	26'-4"	1126
K2	8	#4	STR	4'-2"	22
S1	90	#5	5	9'-10"	923
S2	90	#5	4	4'-7"	430
S3	22	#4	7	6'-6"	96
U1	89	#4	6	3'-8"	218
U2	52	#4	6	6'-8"	232
V1	178	#5	STR	8'-5"	1563
V2	34	#5	STR	10'-6"	372
V3	28	#5	STR	10'-1"	294

TOTAL REINFORCING STEEL LBS.		11592
CLASS A CONCRETE (CU. YARDS)		
POUR #1 CAP, COLLARS, & LOWER PART OF WINGS		54.0
POUR #2 BACKWALL & UPPER PART OF WINGS		27.0
TOTAL (CU. YARDS)		81.0
HP 12X53 STEEL PILES No. 11	LIN. FT.	605
PILE REDRIVES	EACH	11

PROJECT NO. R-3421C

RICHMOND COUNTY

STATION: 395+64.54 -L-

SHEET 3 OF 3

STATE OF NORTH CAROLINA
DEPARTMENT OF TRANSPORTATION
RALEIGH

SUBSTRUCTURE
END BENT #1

NORTH CAROLINA PROFESSIONAL SEAL 23371 ENGINEER VIPUL A. PATEL
3/19/13

REVISIONS						SHEET NO.
NO.	BY:	DATE:	NO.	BY:	DATE:	S-50
1			3			TOTAL SHEETS
2			4			86

DRAWN BY : J. G. KHARVA DATE : 12/2/11
CHECKED BY : B. N. GRADY DATE : 12/12

08-AUG-2012 15:10
Y:\structures\Plans\str02_Y9SBL\R-3421C_sd_Ebts_02.dgn
jpadams

STR. #2

NOTES

STIRRUPS IN CAP MAY BE SHIFTED AS NECESSARY TO CLEAR ANCHOR BOLTS.

HOOKS ON "V" BARS MAY BE TURNED AS NECESSARY FOR PLACING REINFORCING STEEL.

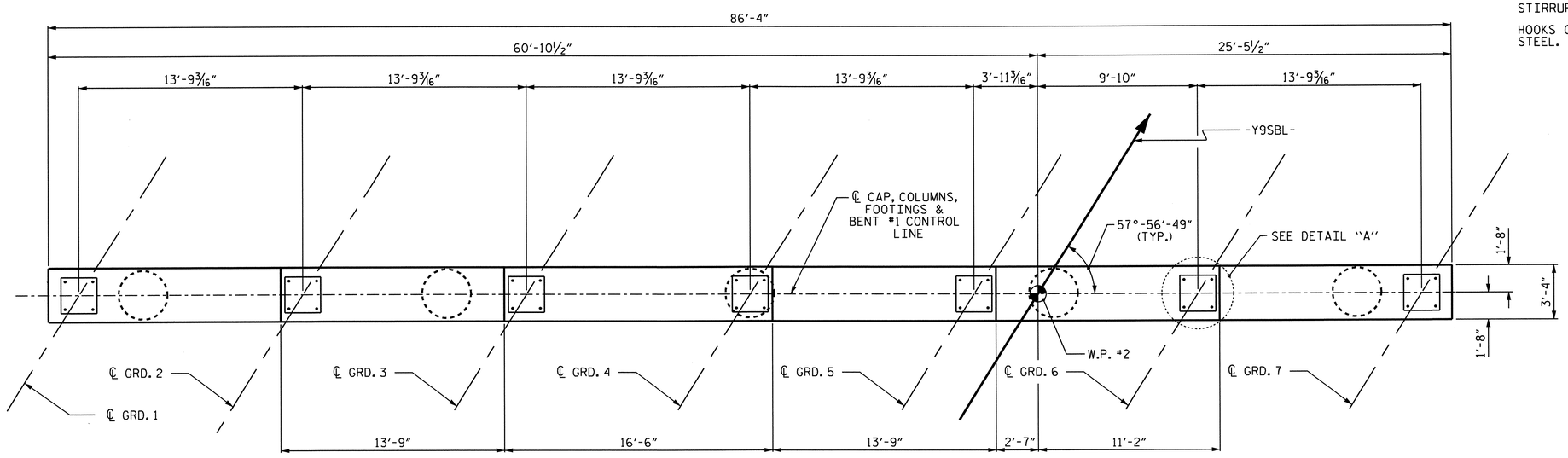

PLAN

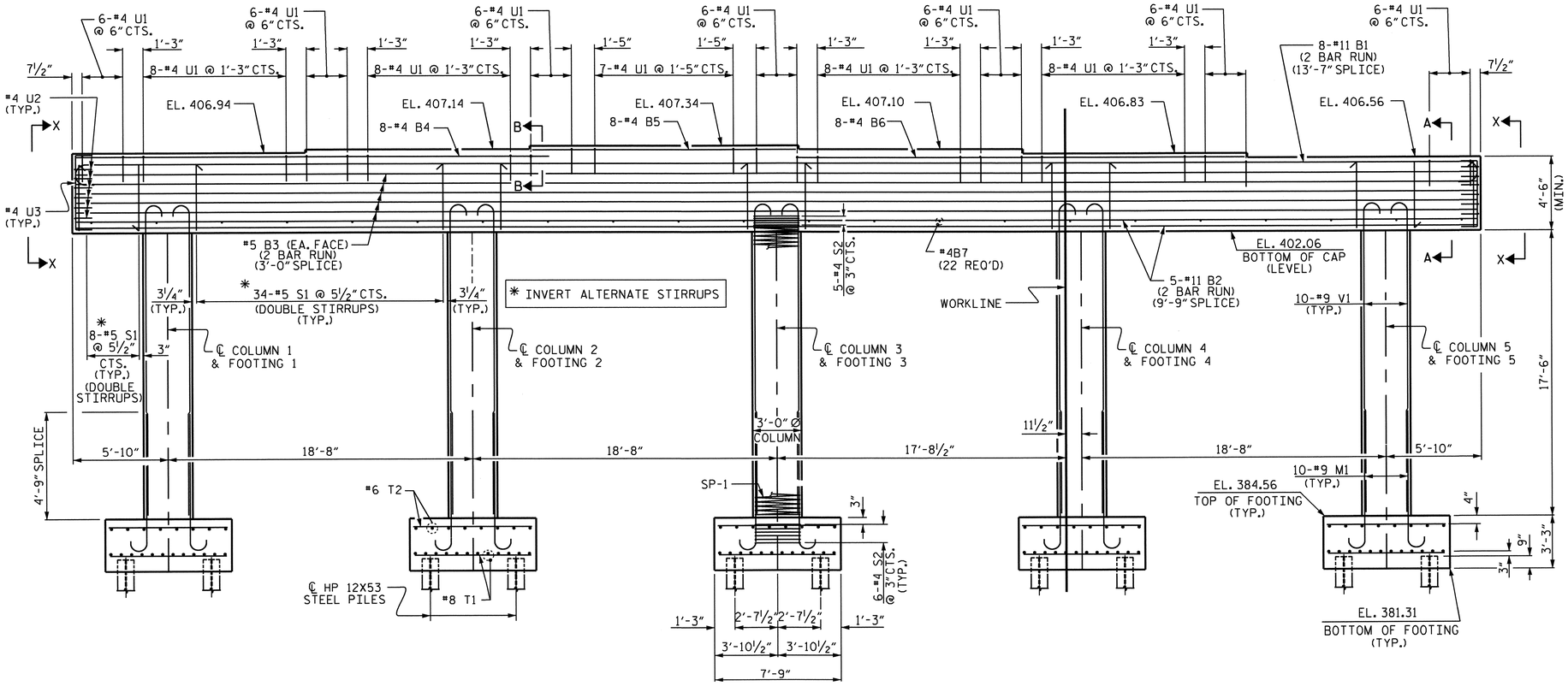

ELEVATION

(DIMENSIONS AND REINFORCING STEEL ARE TYPICAL FOR EACH COLUMN & FOOTING)

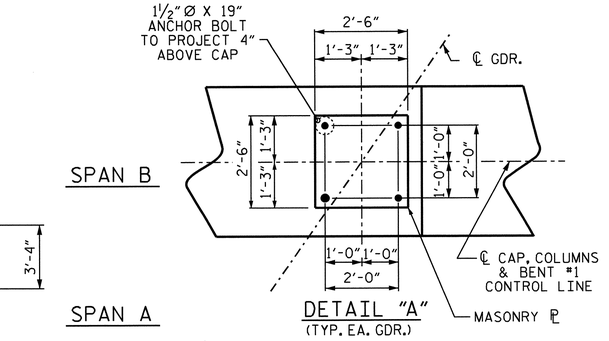

DETAIL "A" (TYP. EA. GDR.)

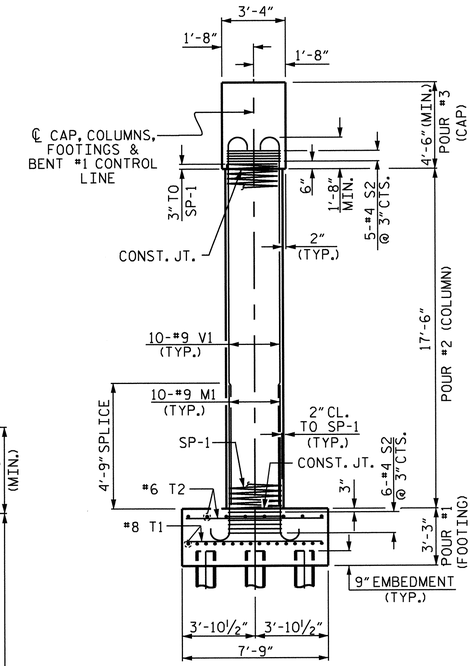

END ELEVATION

PROJECT NO. R-3421C

RICHMOND COUNTY

STATION: 395+64.54 -L-

SHEET 1 OF 2

STATE OF NORTH CAROLINA
DEPARTMENT OF TRANSPORTATION
RALEIGH

SUBSTRUCTURE
BENT #1

REVISIONS						SHEET NO.
NO.	BY:	DATE:	NO.	BY:	DATE:	S-51
1			3			TOTAL SHEETS
2			4			86

NORTH CAROLINA PROFESSIONAL SEAL 23371 ENGINEER VIPUL A. PATEL

9/19/13

DRAWN BY : J.G. KHARVA DATE : 02/12
CHECKED BY : J.P. ADAMS DATE : 02/27/12

18-SEP-2013 12:17
Y:\structures\Plans\str02_Y9SBL\R-3421C_SD_bt_02.dgn
thcarroll

STR. #2

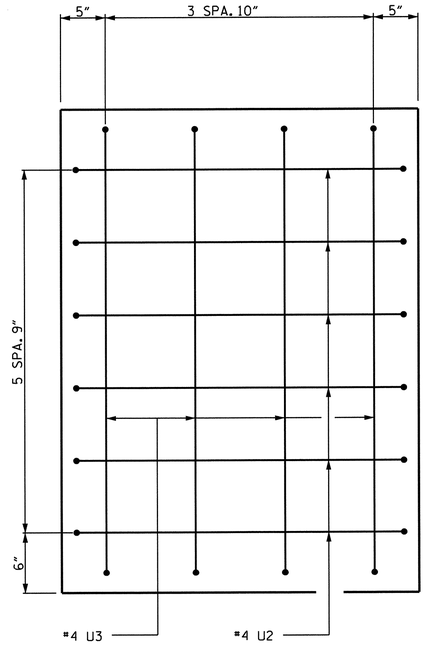

END VIEW X-X

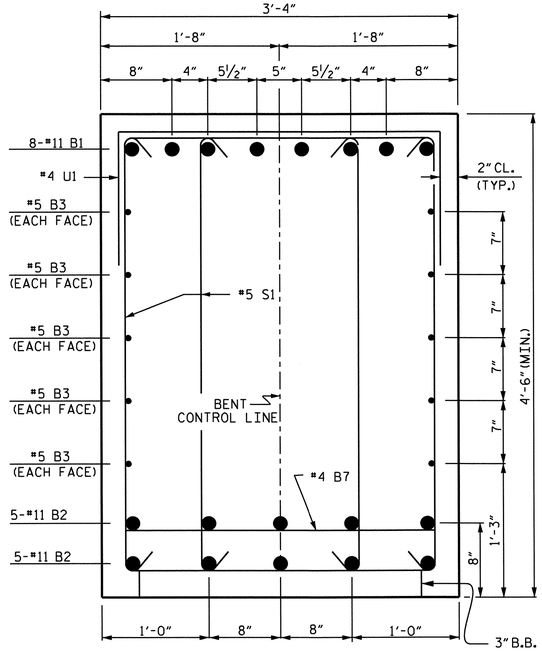

SECTION A-A

INVERT ALTERNATE STIRRUPS

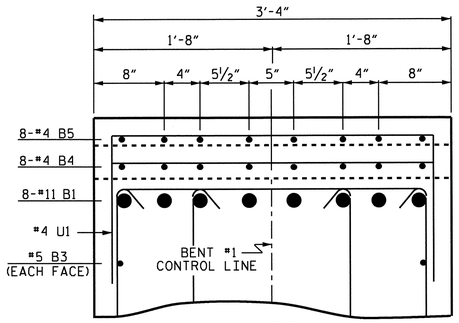

PARTIAL SECTION B-B

INVERT ALTERNATE STIRRUPS

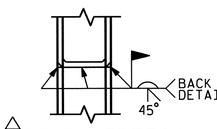

△ PILE VERTICAL

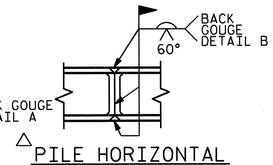

△ PILE HORIZONTAL OR VERTICAL

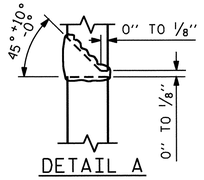

DETAIL A

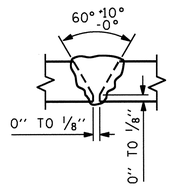

DETAIL B

△ POSITION OF PILE DURING WELDING.

PILE SPLICE DETAILS

BAR TYPES

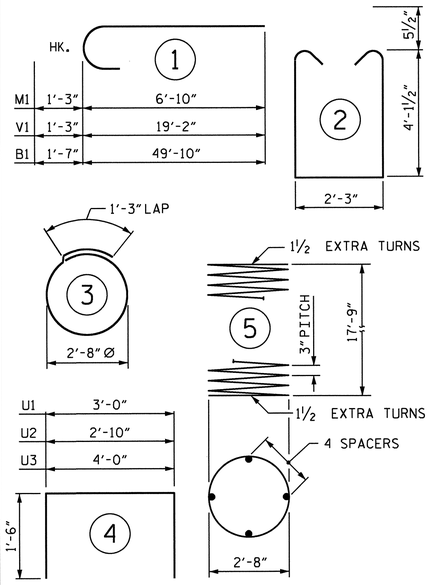

ALL BAR DIMENSIONS ARE OUT TO OUT.

BILL OF MATERIAL

BENT #1

BAR	NO.	SIZE	TYPE	LENGTH	WEIGHT
B1	16	#11	1	51'-5"	4371
B2	20	#11	STR	47'-11"	5092
B3	20	#5	STR	44'-6"	928
B4	8	#4	STR	28'-0"	150
B5	8	#4	STR	16'-2"	86
B6	8	#4	STR	27'-6"	147
B7	22	#4	STR	3'-0"	44
M1	50	#9	1	8'-1"	1374
S1	304	#5	2	11'-5"	3620
S2	55	#4	3	9'-8"	355
T1	140	#8	STR	7'-5"	2772
T2	80	#6	STR	7'-5"	891
U1	81	#4	4	6'-0"	325
U2	12	#4	4	5'-10"	47
U3	8	#4	4	7'-0"	37
V1	50	#9	1	20'-5"	3471
REINFORCING STEEL					23710
SP 1	5	**	5	608'-2"	3172

SPIRAL COLUMN REINFORCING STEEL (SP 1) 3172

CLASS A CONCRETE BREAKDOWN:

POUR #1 (FOOTINGS)	36.1 C.Y.
POUR #2 (COLUMNS)	22.9 C.Y.
POUR #3 (CAP)	52.6 C.Y.
TOTAL CLASS A CONCRETE	111.6 C.Y.

HP 12X53 STEEL PILES NO. 30 LIN. FT. 1050

FOUNDATION EXCAVATION LUMP SUM

PILE REDRIVES EACH 30

** THE SP1 SPIRAL REINFORCING STEEL SHALL BE W-31 OR D-31 COLD DRAW WIRE OR #5 PLAIN OR DEFORMED BAR

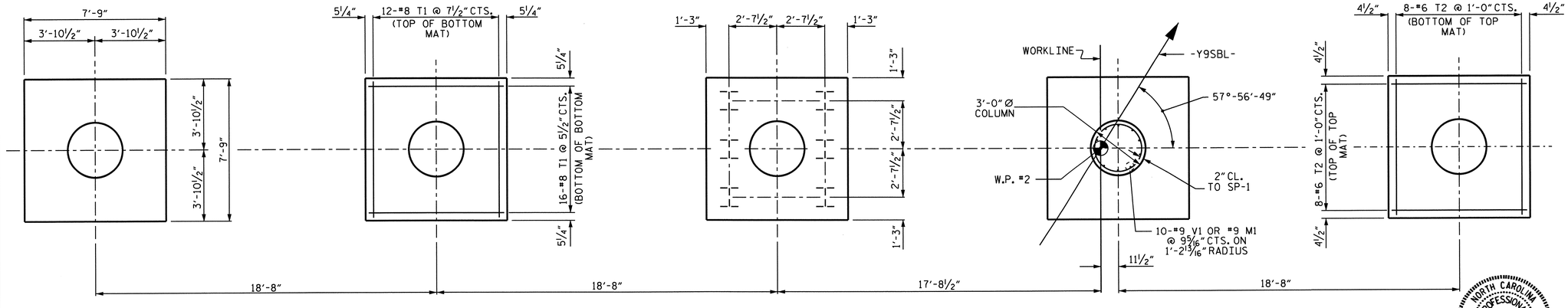

PLAN FOOTING & COLUMNS

REINFORCING STEEL DIMENSIONS AND DETAILS ARE TYPICAL FOR EACH COLUMN AND FOOTING UNLESS OTHERWISE NOTED.

NORTH CAROLINA PROFESSIONAL SEAL 23371 ENGINEER VIPUL A. PATEL

9/19/13

PROJECT NO. R-3421C

RICHMOND COUNTY

STATION: 395+64.54 -L-

SHEET 2 OF 2

STATE OF NORTH CAROLINA
DEPARTMENT OF TRANSPORTATION
RALEIGH

SUBSTRUCTURE
BENT #1

REVISIONS						SHEET NO.
NO.	BY:	DATE:	NO.	BY:	DATE:	S-52
1			3			TOTAL SHEETS
2			4			86

DRAWN BY : J. G. KHARVA DATE : 02/12
CHECKED BY : J. P. ADAMS DATE : 02/27/12

18-SEP-2013 12:17
Y:\structures\Plans\str02_Y9SBL\R-3421C_SD_bt_02.dgn
thcarroll

STR. #2

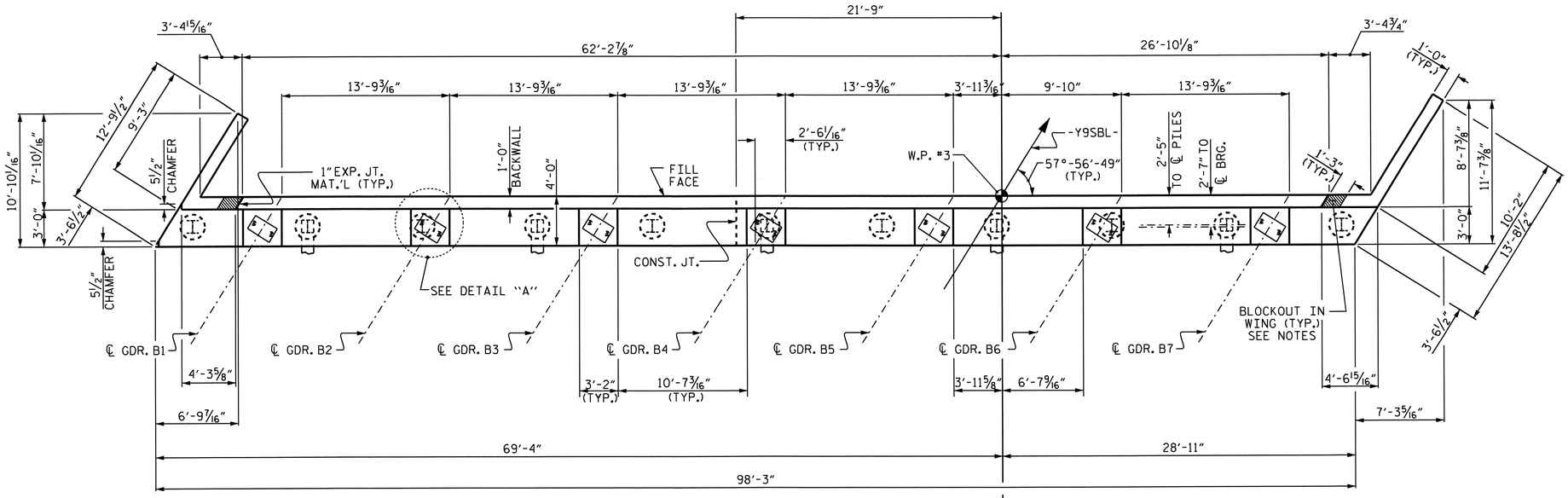

PLAN

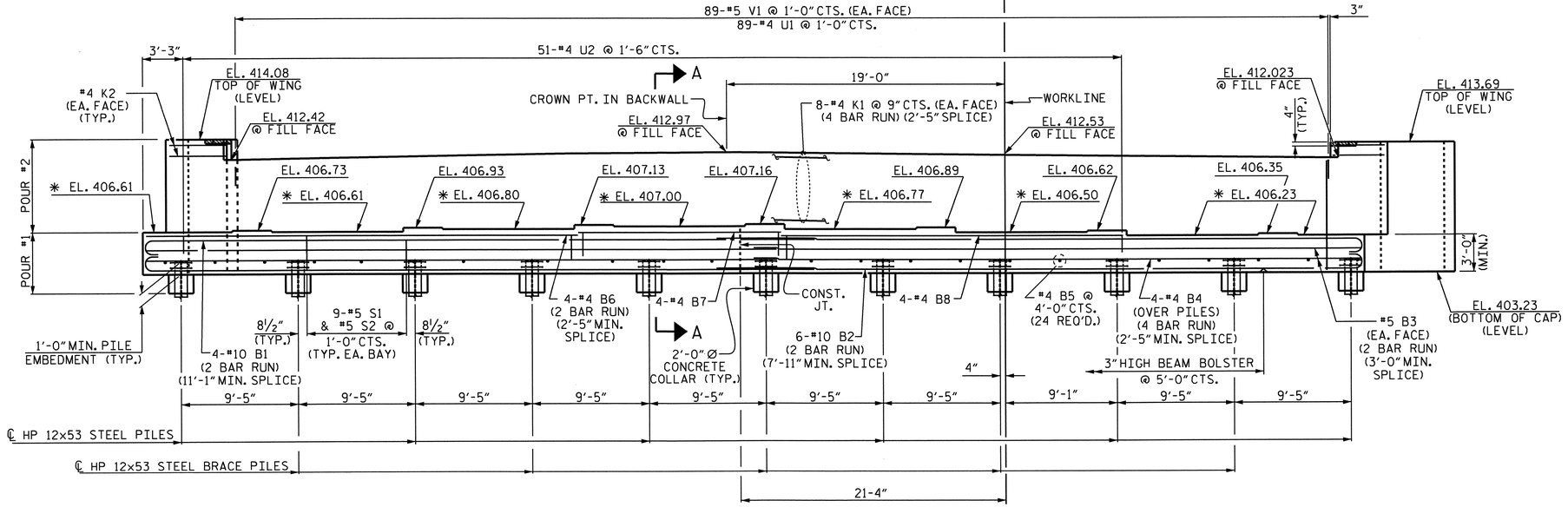

ELEVATION

* SEE SHEET 3 OF 3 FOR LOCATION OF ELEVATION.

NOTES

STIRRUPS IN CAP MAY BE SHIFTED AS NECESSARY TO CLEAR ANCHOR BOLTS.

BACKWALL SHALL BE PLACED BEFORE APPLYING THE EPOXY PROTECTIVE COATING.

THE TOP SURFACE AREAS OF THE END BENT CAPS SHALL BE CURED IN ACCORDANCE WITH THE STANDARD SPECIFICATIONS EXCEPT THE MEMBRANE CURING COMPOUND METHOD SHALL NOT BE USED.

THE TOP SURFACE OF THE CAP EXCEPT THE BRIDGE SEAT BUILDUPS SHALL BE SLOPED TRANSVERSELY FROM THE FILL FACE TO THE BACK FACE AT THE RATE OF 2%.

THE CONCRETE IN THE SHADED AREA OF THE WING SHALL BE POURED AFTER THE BARRIER RAILS ARE CAST IF SLIP FORMING IS USED.

THE CONTRACTOR SHALL PROVIDE FOR INSTALLATION OF THE 4" DIAMETER DRAIN PIPE THROUGH THE WING WALL AS REQUIRED FOR REINFORCED BRIDGE APPROACH FILLS. SEE THE ROADWAY PLANS. REINFORCING STEEL IN THE WING WALL MAY BE SHIFTED AS NECESSARY TO CLEAR THE DRAIN PIPE.

EPOXY COAT THE END BENT CAP AFTER ADJUSTMENTS ARE MADE TO BEARINGS AND ANCHOR BOLTS ARE GROUTED.

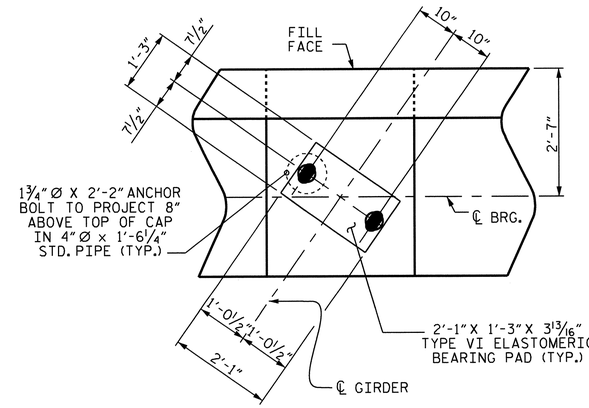

DETAIL "A"

(TYP. EA. BRIDGE SEAT)

NORTH CAROLINA PROFESSIONAL SEAL 23371 ENGINEER VIPUL A. PATEL

10/30/13

PROJECT NO. R-3421C

RICHMOND COUNTY

STATION: 395+64.54 -L-

SHEET 1 OF 3

STATE OF NORTH CAROLINA
DEPARTMENT OF TRANSPORTATION
RALEIGH

SUBSTRUCTURE
END BENT #2

REVISIONS						SHEET NO.
NO.	BY:	DATE:	NO.	BY:	DATE:	S-53
1			3			TOTAL SHEETS
2			4			86

STR. #2

DRAWN BY : J. G. KHARVA DATE : 02/01/12
CHECKED BY : B.N. GRADY DATE : 02/12

29-OCT-2013 10:53
Y:\structures\Plans\str02_Y9SBL\R-3421C_sd_Ebts_02.dgn
thcarroll

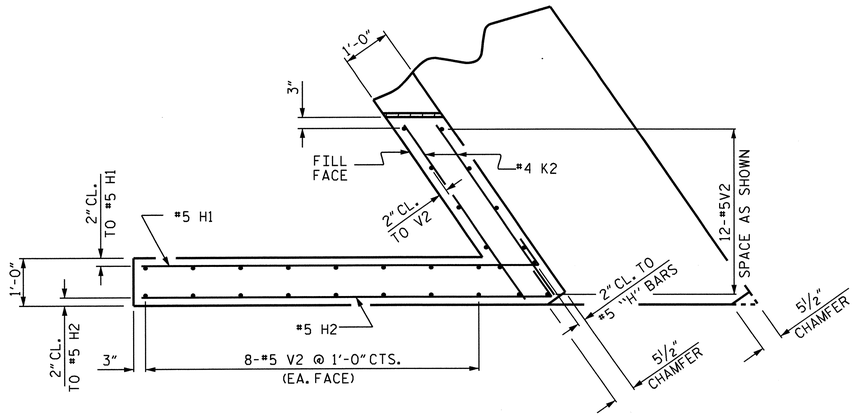

PLAN OF LEFT WING

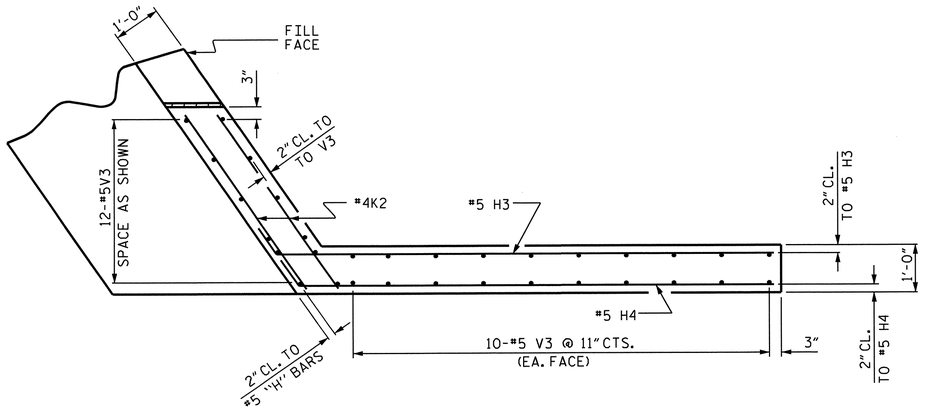

PLAN OF RIGHT WING

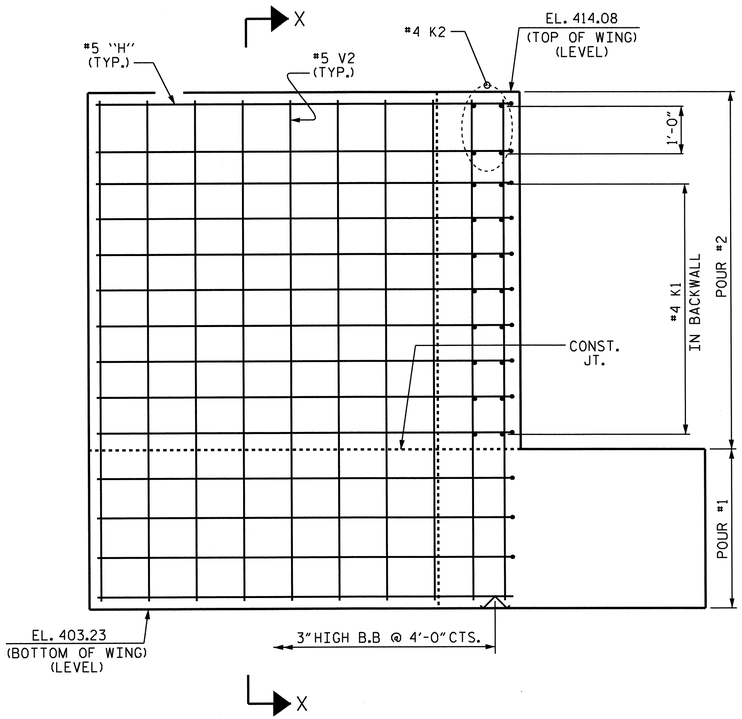

ELEVATION OF LEFT WING

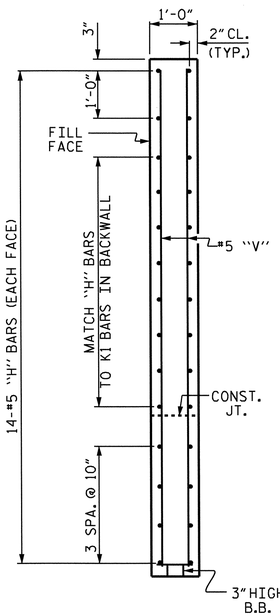

SECTION X-X

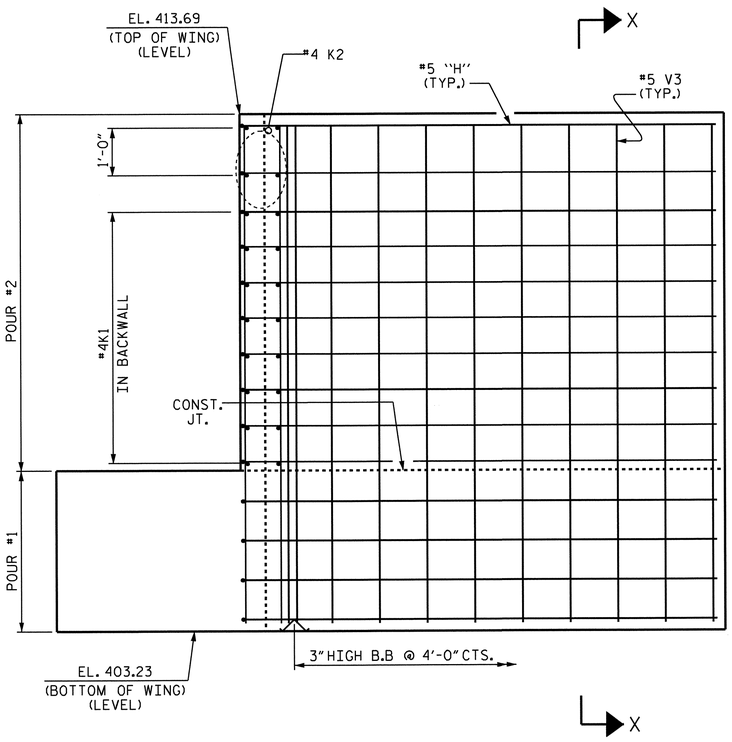

ELEVATION OF RIGHT WING

PROJECT NO. R-3421C

RICHMOND COUNTY

STATION: 395+64.54 -L-

SHEET 2 OF 3

STATE OF NORTH CAROLINA
DEPARTMENT OF TRANSPORTATION
RALEIGH

SUBSTRUCTURE

END BENT #2

NORTH CAROLINA PROFESSIONAL SEAL 23371 ENGINEER VIPUL A. PATEL
3/19/13

REVISIONS						SHEET NO.
NO.	BY:	DATE:	NO.	BY:	DATE:	S-54
1			3			TOTAL SHEETS
2			4			86

DRAWN BY : J. C. KHARVA DATE : 02/01/12
CHECKED BY : B. N. GRADY DATE : 02/12

08-AUG-2012 15:10
Y:\structures\Plans\str02_Y9SBL\R-3421C_sd_Ebts_02.dgn
jpadams

STR. #2

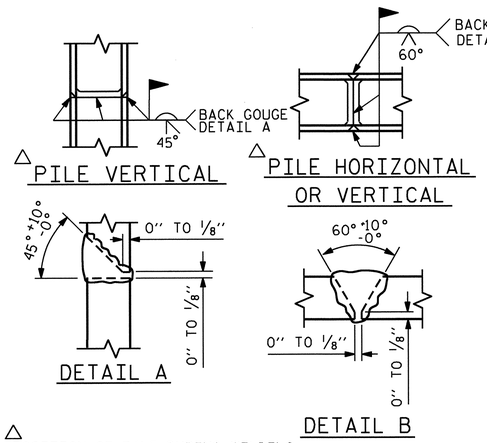

△ POSITION OF PILE DURING WELDING.

PILE SPLICE DETAILS

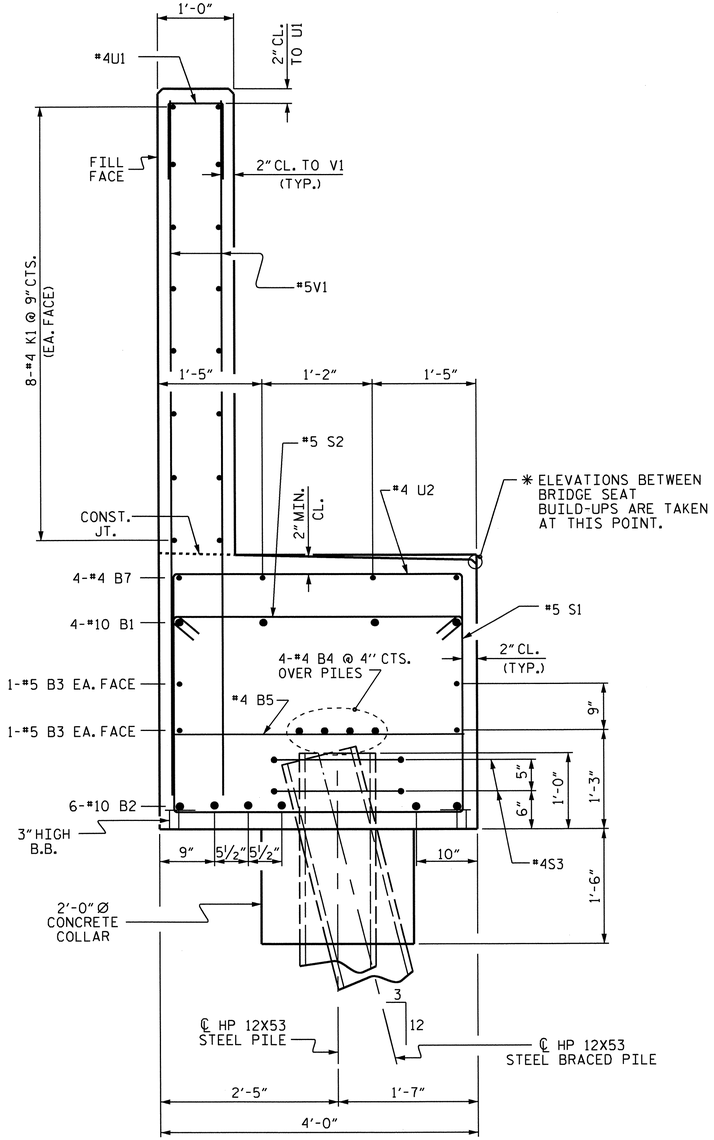

SECTION A-A

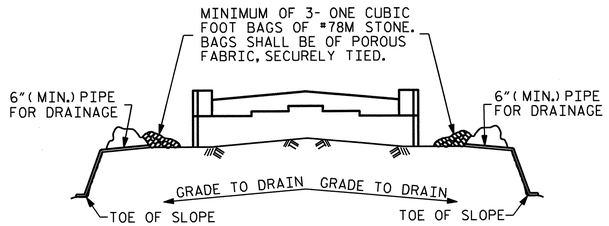

BAGGED STONE AND PIPE SHALL BE PLACED IMMEDIATELY AFTER COMPLETION OF END BENT EXCAVATION. PIPE MAY BE EITHER CONCRETE, CORRUGATED STEEL, CORRUGATED ALUMINUM ALLOY, OR CORRUGATED PLASTIC. PERFORATED PIPE WILL NOT BE ALLOWED.

BAGGED STONE SHALL REMAIN IN PLACE UNTIL THE ENGINEER DIRECTS THAT IT BE REMOVED. THE CONTRACTOR SHALL REMOVE AND DISPOSE OF SILT ACCUMULATIONS AT BAGGED STONE WHEN SO DIRECTED BY THE ENGINEER. BAGS SHALL BE REMOVED AND REPLACED WHENEVER THE ENGINEER DETERMINES THAT THEY HAVE DETERIORATED AND LOST THEIR EFFECTIVENESS.

NO SEPARATE PAYMENT WILL BE MADE FOR THIS WORK AND THE ENTIRE COST OF THIS WORK SHALL BE INCLUDED IN THE UNIT CONTRACT PRICE BID FOR THE SEVERAL PAY ITEMS.

TEMPORARY DRAINAGE AT END BENT

BAR TYPES

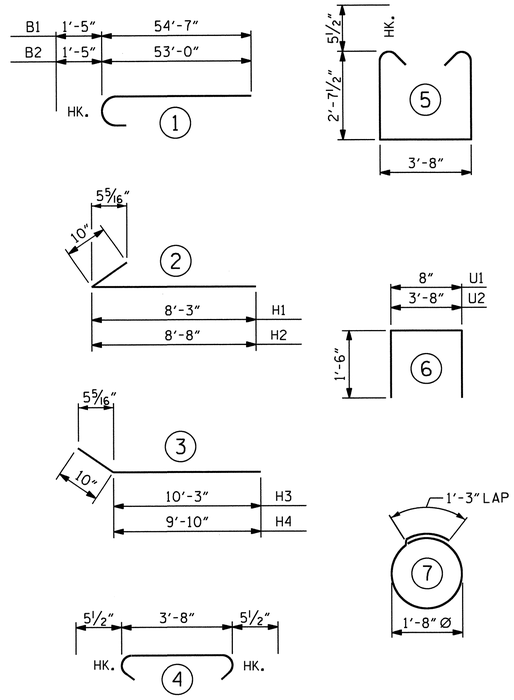

ALL BAR DIMENSIONS ARE OUT TO OUT.

BILL OF MATERIAL
END BENT #2

BAR	NO.	SIZE	TYPE	LENGTH	WEIGHT
B1	8	#10	1	56'-0"	1928
B2	12	#10	1	54'-5"	2810
B3	8	#5	STR	50'-6"	421
B4	16	#4	STR	26'-4"	281
B5	24	#4	STR	3'-8"	59
B6	8	#4	STR	18'-6"	99
B7	4	#4	STR	16'-7"	44
B8	4	#4	STR	27'-5"	73
H1	14	#5	2	9'-1"	133
H2	14	#5	2	9'-6"	139
H3	14	#5	3	11'-1"	162
H4	14	#5	3	10'-8"	156
K1	64	#4	STR	26'-4"	1126
K2	8	#4	STR	4'-2"	22
S1	90	#5	5	9'-10"	923
S2	90	#5	4	4'-7"	430
S3	22	#4	7	6'-6"	96
U1	89	#4	6	3'-8"	218
U2	51	#4	6	6'-8"	227
V1	178	#5	STR	8'-5"	1563
V2	28	#5	STR	10'-6"	307
V3	32	#5	STR	10'-1"	337

TOTAL REINFORCING STEEL LBS.		11,554
CLASS A CONCRETE (CU. YARDS)		
POUR #1 CAP, COLLARS, & LOWER PART OF WINGS		54.0
POUR #2 BACKWALL & UPPER PART OF WINGS		27.1
TOTAL (CU. YARDS)		81.1
HP 12X53 STEEL PILES No. 11	LIN. FT.	605
PILE REDRIVES	EACH	11

PROJECT NO. R-3421C

RICHMOND COUNTY

STATION: 395+64.54 -L-

SHEET 3 OF 3

STATE OF NORTH CAROLINA
DEPARTMENT OF TRANSPORTATION
RALEIGH

SUBSTRUCTURE
END BENT #2

NORTH CAROLINA PROFESSIONAL SEAL 23371 ENGINEER VIPUL A. PATEL
3/19/13

REVISIONS						SHEET NO.
NO.	BY:	DATE:	NO.	BY:	DATE:	S-55
1			3			TOTAL SHEETS
2			4			86

DRAWN BY : J. G. KHARVA DATE : 12/2/11
CHECKED BY : B. N. GRADY DATE : 12/12

08-AUG-2012 15:10
Y:\structures\Plans\str02_Y9SBL\R-3421C_sd_Ebts_02.dgn
jpadams

STR. #2

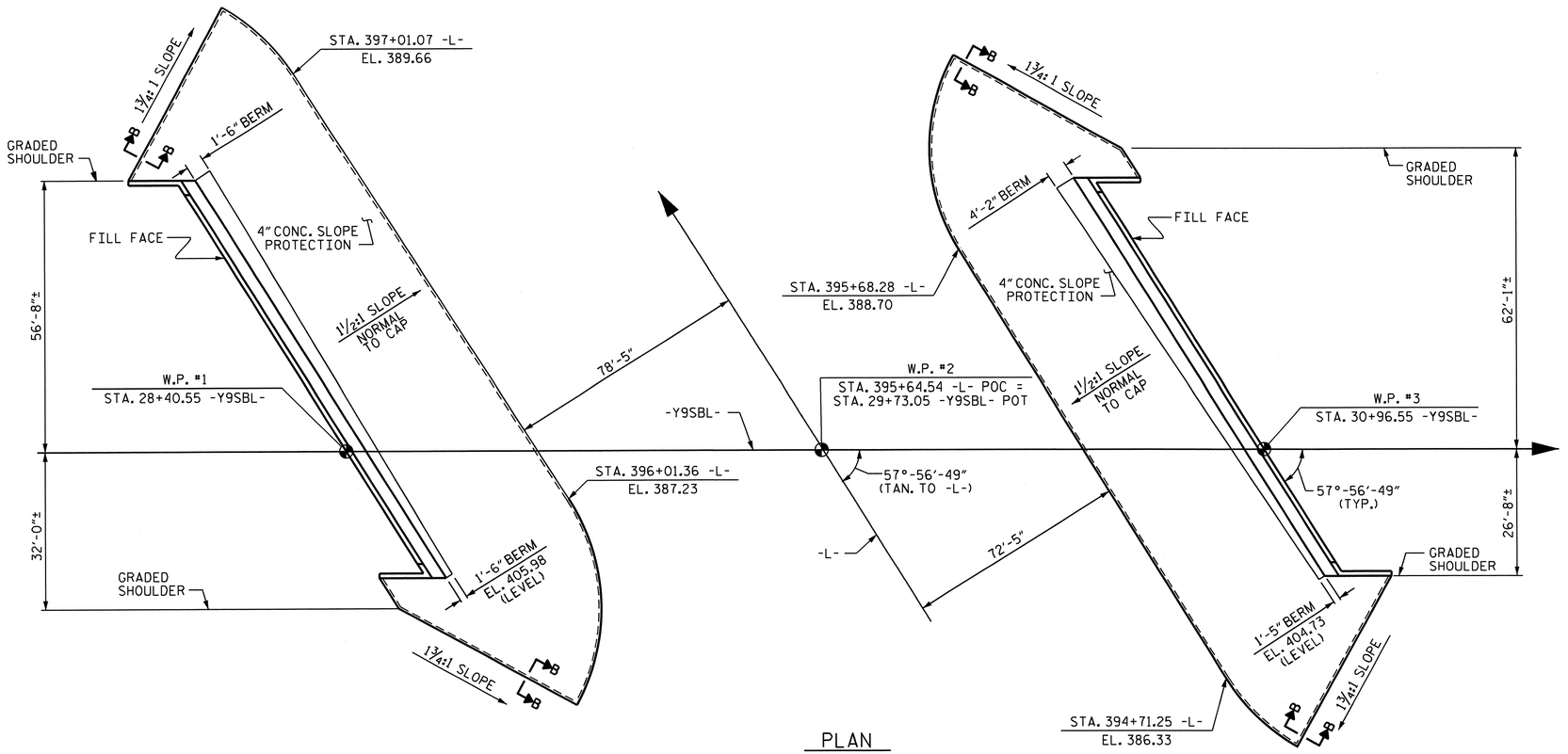

PLAN

GENERAL NOTES

SLOPE PROTECTION SHALL BE PLACED UNDER THE ENDS OF THE BRIDGE AS SHOWN IN THE DETAILS. MEASUREMENT AND PAYMENT SHALL BE AS PRESCRIBED IN SECTION 462 OF THE STANDARD SPECIFICATIONS. FOR BERM WIDTH, SEE GENERAL DRAWING.

SLOPE PROTECTION SHALL CONSIST OF 4" POURED-IN-PLACE CONCRETE PAVING AS SHOWN IN THE DETAILS ON THIS SHEET. CONCRETE SHALL BE CLASS "B". THE CONCRETE SURFACE SHALL BE FLOATED WITH A WOODEN FLOAT AND FINISHED. WELDED WIRE FABRIC REINFORCING SHALL BE 6 X 6 - W1.4 X W1.4, 60" WIDE. SLOPE PROTECTION SHALL BE POURED IN 5' STRIPS AS SHOWN IN THE "POURING DETAIL" WITH 2'-0" LONG #4 BARS PLACED ALONG THE SLOPE BETWEEN STRIPS AT 1'-6" MAXIMUM SPACING. SLOPE PROTECTION MAY BE POURED IN ALTERNATE 4' AND 5' STRIPS AS SHOWN IN THE "OPTIONAL POURING DETAIL" WITH ADJACENT RUNS OF WELDED WIRE FABRIC LAPPING AT LEAST 6". THE COST OF THE WELDED WIRE FABRIC AND #4 BARS, IF USED, SHALL BE INCLUDED IN THE CONTRACT UNIT PRICE BID PER SQUARE YARD FOR SLOPE PROTECTION.

BRIDGE @ STA. 395+64.54 -L-	4 INCH SLOPE PROTECTION	* WELDED WIRE FABRIC 60 INCHES WIDE
	SQUARE YARDS	APPROX. L.F.
END BENT #1	692	1384
END BENT #2	570	1140

* QUANTITY SHOWN IS BASED ON 5' POURS.

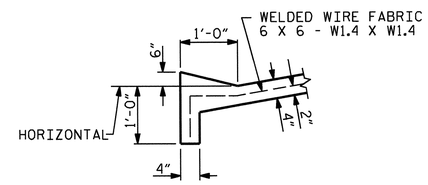

SECTION B-B

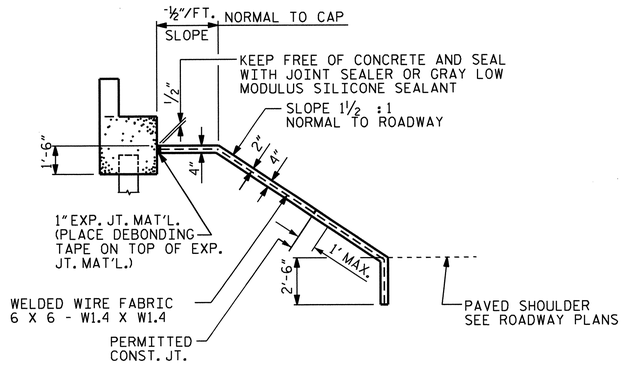

SECTION ALONG ℄ ROADWAY WITH SHOULDER PIER

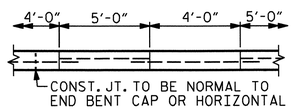

POUR A 4'-0" STRIP FIRST. STRIP WIDTHS MAY VARY IN CURVED PORTION.

OPTIONAL POURING DETAIL

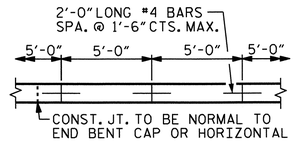

STRIP WIDTHS MAY VARY IN CURVED PORTION.

POURING DETAIL

3|19|13

PROJECT NO. R-3421C

RICHMOND COUNTY

STATION: 395+64.54 -L-

STATE OF NORTH CAROLINA
DEPARTMENT OF TRANSPORTATION
RALEIGH

STANDARD

SLOPE PROTECTION DETAILS

REVISIONS						SHEET NO.
NO.	BY:	DATE:	NO.	BY:	DATE:	S-56
1			3			TOTAL SHEETS
2			4			86

ASSEMBLED BY: KEITH D. LAYNE	DATE: 3-21-12	REV. 5/7/03	RWW/JTE
CHECKED BY : HOANG T. DIEU	DATE : 4-11-12	REV. 5/1/06	TLA/GM
DRAWN BY : ELR 5/92		REV. 10/1/11	MAA/GM
CHECKED BY : GRP 6/92			

18-MAR-2013 14:58
R:\Structures\Plans\str02_Y9SBL\R3421C_SD_SP_02.dgn
vpatel

STR. #2

STD. NO. SP1 (SHT 5)

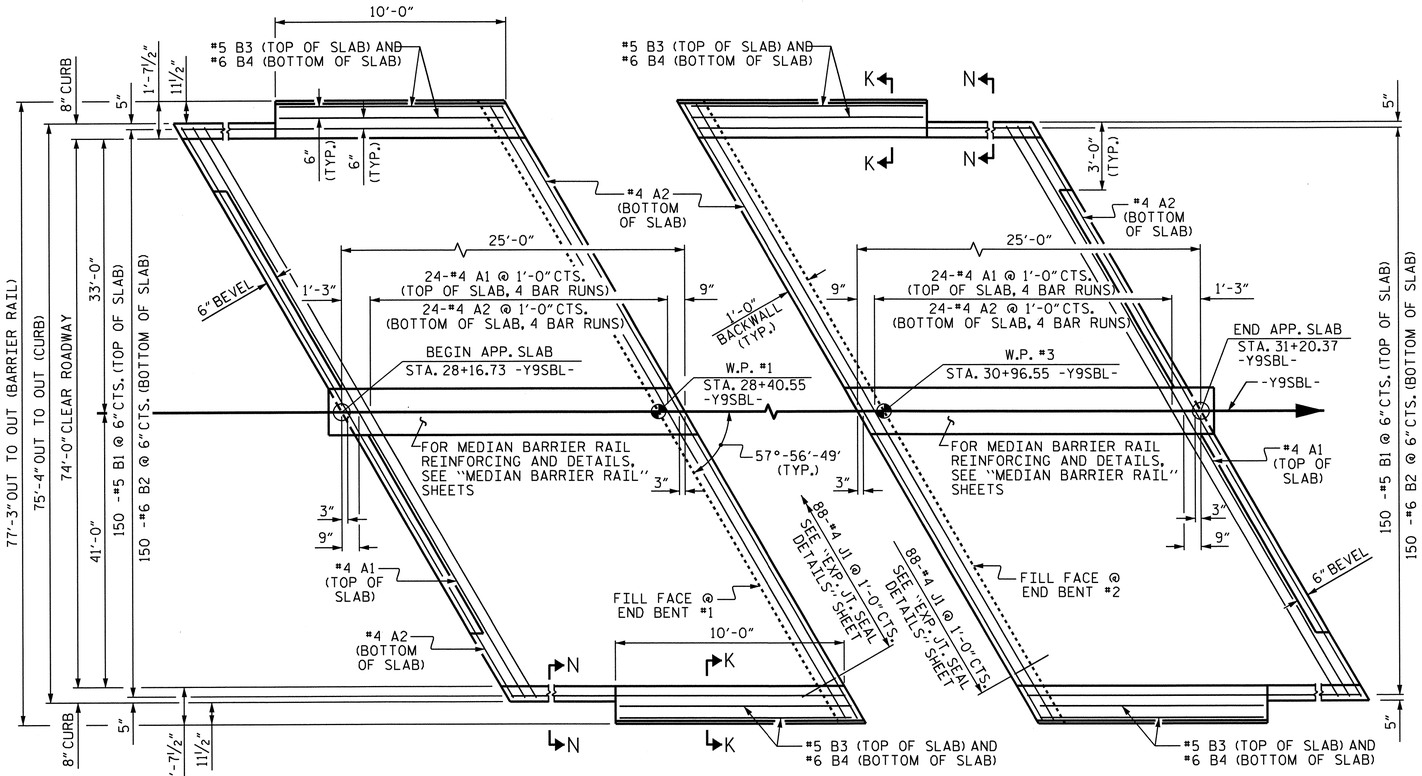

PLAN @ END BENT #1

PLAN @ END BENT #2

DIMENSIONS SHOWN ARE TYPICAL FOR BOTH APPROACH SLABS

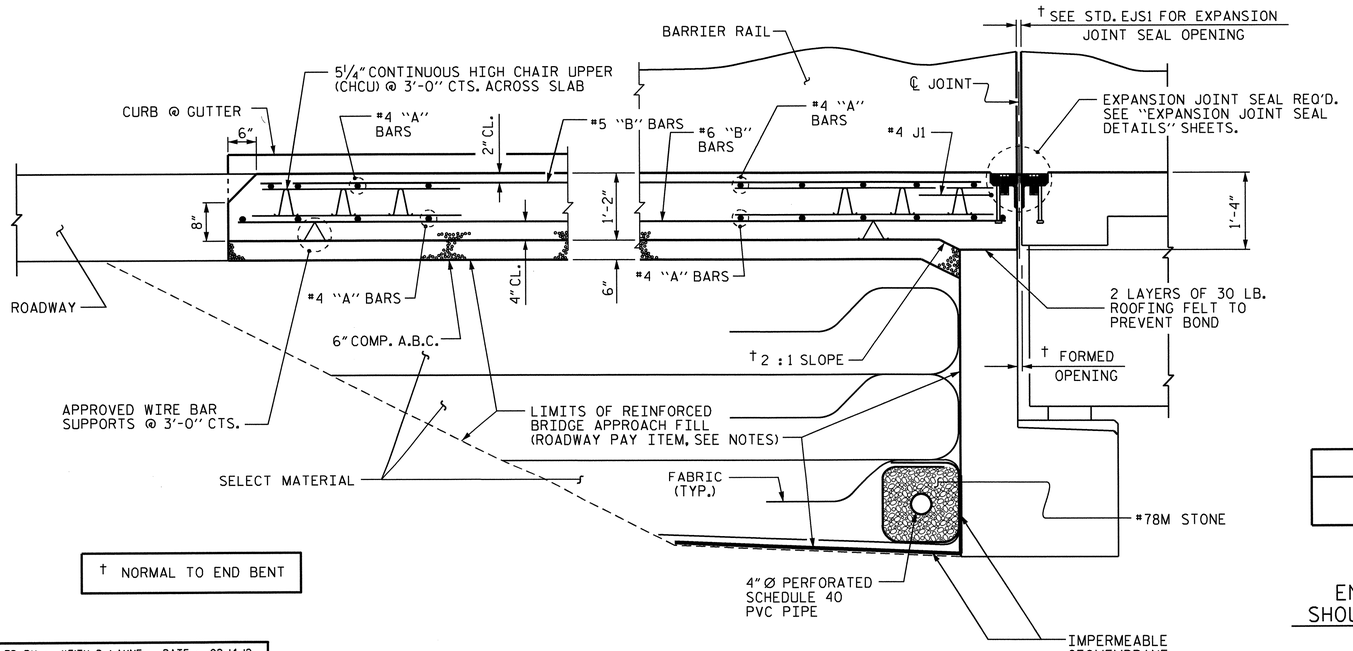

SECTION THRU SLAB

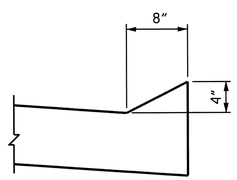

SECTION N-N

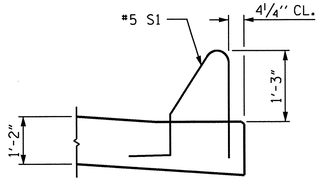

SECTION K-K

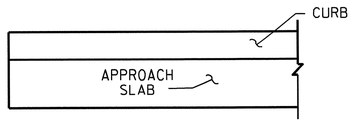

END OF CURB WITH SHOULDER BERM GUTTER

CURB DETAILS

NOTES

APPROACH SLAB SHALL NOT BE CONSTRUCTED PRIOR TO COMPLETION OF THE BRIDGE DECK.

FOR REINFORCED BRIDGE APPROACH FILL INCLUDING GEOTEXTILE, IMPERMEABLE GEOMEMBRANE, 4" Ø DRAINAGE PIPE, #78M STONE, AND SELECT MATERIAL, SEE ROADWAY PLANS.

AREA BETWEEN THE WINGWALL AND APPROACH SLAB SHALL BE GRADED TO DRAIN THE WATER AWAY FROM THE FILL FACE OF THE BRIDGE AND SHALL BE PAVED. SEE ROADWAY PLANS.

FOR EXPANSION JOINT SEALS, SEE SPECIAL PROVISIONS.

THE COST OF THE MEDIAN BARRIER RAIL ON THE APPROACH SLAB SHALL BE INCLUDED IN THE LINEAR FOOT CONTRACT PRICE BID FOR "MEDIAN CONCRETE BARRIER RAIL".

BILL OF MATERIAL

FOR ONE APPROACH SLAB (2 REQ'D)

BAR	NO.	SIZE	TYPE	LENGTH	WEIGHT
* A1	100	#4	STR	24'-3"	1,620
A2	104	#4	STR	24'-0"	1,667
* B1	150	#5	STR	23'-7"	3,690
B2	150	#6	STR	24'-7"	5,539
* B3	4	#5	STR	9'-0"	38
B4	4	#6	STR	9'-0"	54
* J1	88	#4	1	1'-5"	83
REINFORCING STEEL ** LBS.					7,260
* EPOXY COATED REINFORCING STEEL ** LBS.					5,431
CLASS AA CONCRETE ** C. Y.					81.4

BAR TYPE

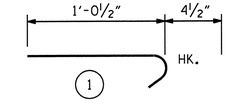

ALL BAR DIMENSIONS ARE OUT TO OUT

** QUANTITIES FOR BARRIER RAIL ARE NOT INCLUDED. SEE SHEET 2 OF 2.

SPLICE LENGTHS

BAR SIZE	EPOXY COATED	UNCOATED
#4	2'-0"	1'-9"
#5	2'-6"	2'-2"
#6	3'-10"	2'-7"

PROJECT NO. R-3421C

RICHMOND COUNTY

STATION: 395+64.54 -L-

SHEET 1 OF 2

STATE OF NORTH CAROLINA
DEPARTMENT OF TRANSPORTATION
RALEIGH

STANDARD
BRIDGE APPROACH SLAB FOR FLEXIBLE PAVEMENT

REVISIONS						SHEET NO.
NO.	BY:	DATE:	NO.	BY:	DATE:	S-57
1			3			TOTAL SHEETS
2			4			86

STR. #2

STD. NO. BAS2 (SHT 4a)

NORTH CAROLINA PROFESSIONAL SEAL 23371 ENGINEER VIRUL A. PATEL
1/30/13

ASSEMBLED BY : KEITH D. LAYNE	DATE : 02-14-12		
CHECKED BY : J. G. KHARVA	DATE : 4/12		
DRAWN BY : EEM 3/95	REV. 10/1/11	MAA/GM	
CHECKED BY : VAP 3/95	REV. 12/21/11	MAA/GM	
	REV. 6/13	MAA/GM	

29-OCT-2013 10:53
Y:\structures\Plans\str02_Y9SBL\R-3421c_sd_AS_02.dgn
thcarroll

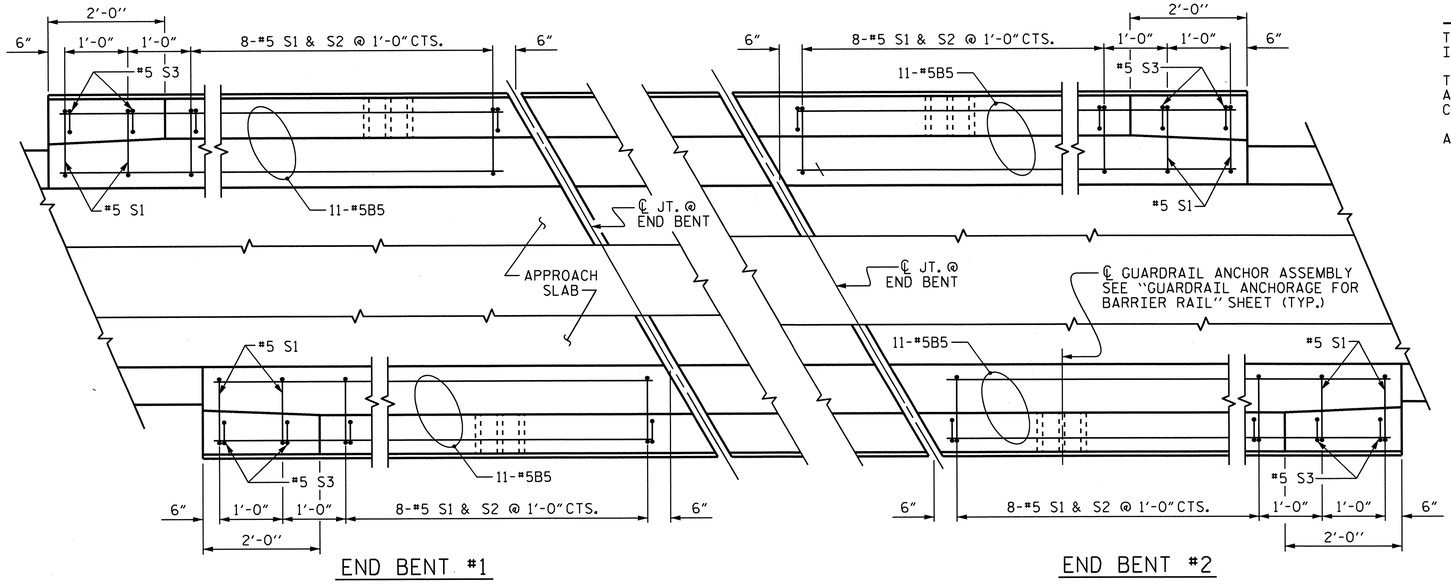

PLAN OF BARRIER RAIL

NOTES

THE COST OF THE BARRIER RAIL ON THE APPROACH SLAB SHALL BE INCLUDED IN THE LINEAR FOOT CONTRACT PRICE BID FOR "CONCRETE BARRIER RAIL".

THE BARRIER RAIL ON EACH APPROACH SLAB SHALL NOT BE CAST UNTIL ALL APPROACH SLAB CONCRETE HAS BEEN CAST AND HAS REACHED A MINIMUM COMPRESSIVE STRENGTH OF 3,000 PSI.

ALL REINFORCING STEEL IN BARRIER RAILS SHALL BE EPOXY COATED.

BAR TYPES

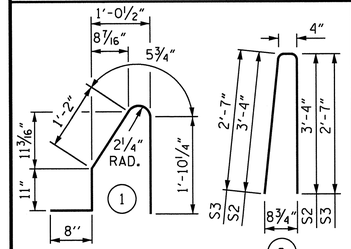

ALL BAR DIMENSIONS ARE OUT TO OUT

BILL OF MATERIAL

BARRIER RAIL ONLY

BAR	NO.	SIZE	TYPE	LENGTH	WEIGHT
✱B5	44	#5	STR	9'-7"	440
✱S1	40	#5	1	5'-1"	212
✱S2	32	#5	2	7'-0"	234
✱S3	8	#5	2	5'-6"	46
✱EPOXY COATED REINFORCING STEEL					932 LBS.
CLASS AA CONCRETE					5.7 Cu.Yds.
CONCRETE BARRIER RAIL					41.88 LIN. FT.

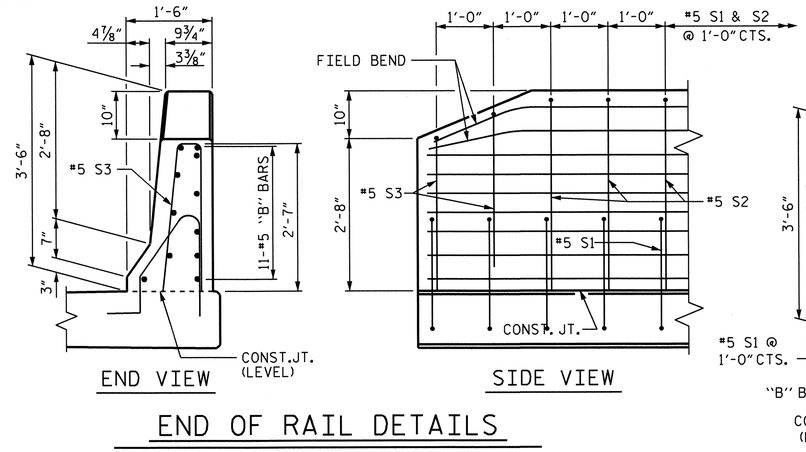

END VIEW — SIDE VIEW

END OF RAIL DETAILS

SECTION THRU RAIL

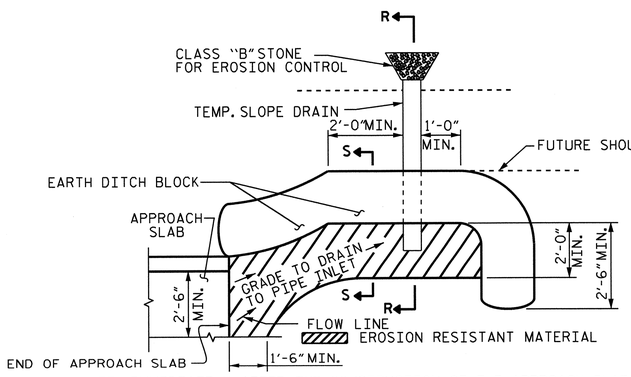

NOTE: IMMEDIATELY AFTER THE CONSTRUCTION OF THE APPROACH SLAB, THE CONTRACTOR SHALL PROVIDE TEMPORARY BERM AND SLOPE DRAIN. CONTRACTOR SHALL GRADE TO PIPE INLET AND PROVIDE EROSION RESISTANT MATERIAL AS SHOWN. THE EROSION RESISTANT MATERIAL SHALL BE EITHER 1) ASPHALT PLANT MIX, TYPE 1 OR TYPE 2, MIN. 2" DEPTH, 2) EROSION CONTROL MAT, OR 3) CONCRETE, AS DIRECTED BY THE ENGINEER. THE SLOPE DRAIN SHALL CONSIST OF A NON-PERFORATED TEMPORARY DRAINAGE PIPE, 12 INCHES IN DIAMETER.

PLAN VIEW

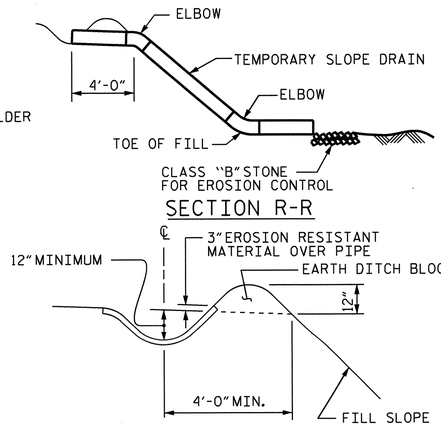

SECTION R-R

SECTION S-S

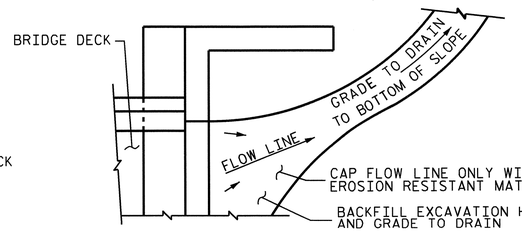

NOTE: IF THE APPROACH SLAB IS NOT CONSTRUCTED IMMEDIATELY AFTER THE BACKFILLING OF THE END BENT EXCAVATION, GRADE TO DRAIN TO THE BOTTOM OF THE SLOPE AND PROVIDE EROSION RESISTANT MATERIAL, SUCH AS FIBERGLASS ROVING OR AS DIRECTED BY THE ENGINEER TO PREVENT SOIL EROSION AND TO PROTECT THE AREA ADJACENT TO THE STRUCTURE. THE CONTRACTOR WILL BE REQUIRED TO REMOVE THESE MATERIALS PRIOR TO CONSTRUCTION OF THE APPROACH SLAB.

TEMPORARY DRAINAGE DETAIL

NORTH CAROLINA PROFESSIONAL SEAL 23371 ENGINEER VIPUL A. PATEL
3/19/13

TEMPORARY BERM AND SLOPE DRAIN DETAILS

(TO BE USED WHEN SHOULDER BERM GUTTER IS REQUIRED)

ASSEMBLED BY : KEITH D. LAYNE	DATE : 02-14-12		
CHECKED BY : J. G. KHARVA	DATE : 4/12		
DRAWN BY : FCJ	11/88	REV. 10/1/11	MAA/GM
CHECKED BY : ARB	11/88	REV. 7/12	MAA/GM
		REV. 10/12	MAA/GM

04-FEB-2013 14:36
R:\Structures\Plans\str02_Y95BL\R-3421c_sd_AS_02.dgn
jpaddams

PROJECT NO. R-3421C
RICHMOND COUNTY
STATION: 395+64.54 -L-

SHEET 2 OF 2

STATE OF NORTH CAROLINA
DEPARTMENT OF TRANSPORTATION
RALEIGH

STANDARD

BRIDGE APPROACH SLAB DETAILS

REVISIONS						SHEET NO.
NO.	BY:	DATE:	NO.	BY:	DATE:	S-58
1			3			TOTAL SHEETS
2			4			86

STR. #2 STD. NO. BAS4 (SHT 3a)

F.A. PROJECT NO. HPPNHS-0220(65)

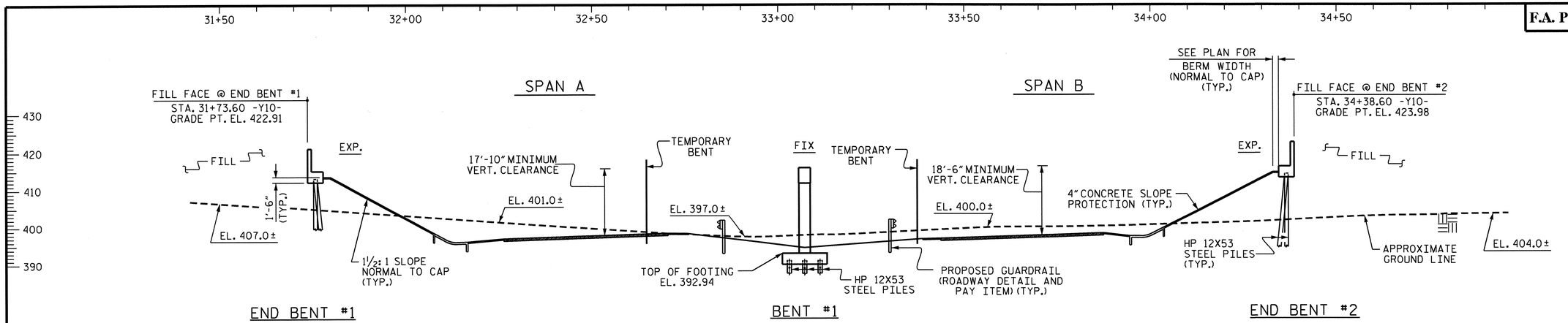

SECTION ALONG -Y10-

SECTIONS AT END BENTS AND BENT ARE TAKEN AT RIGHT ANGLES.

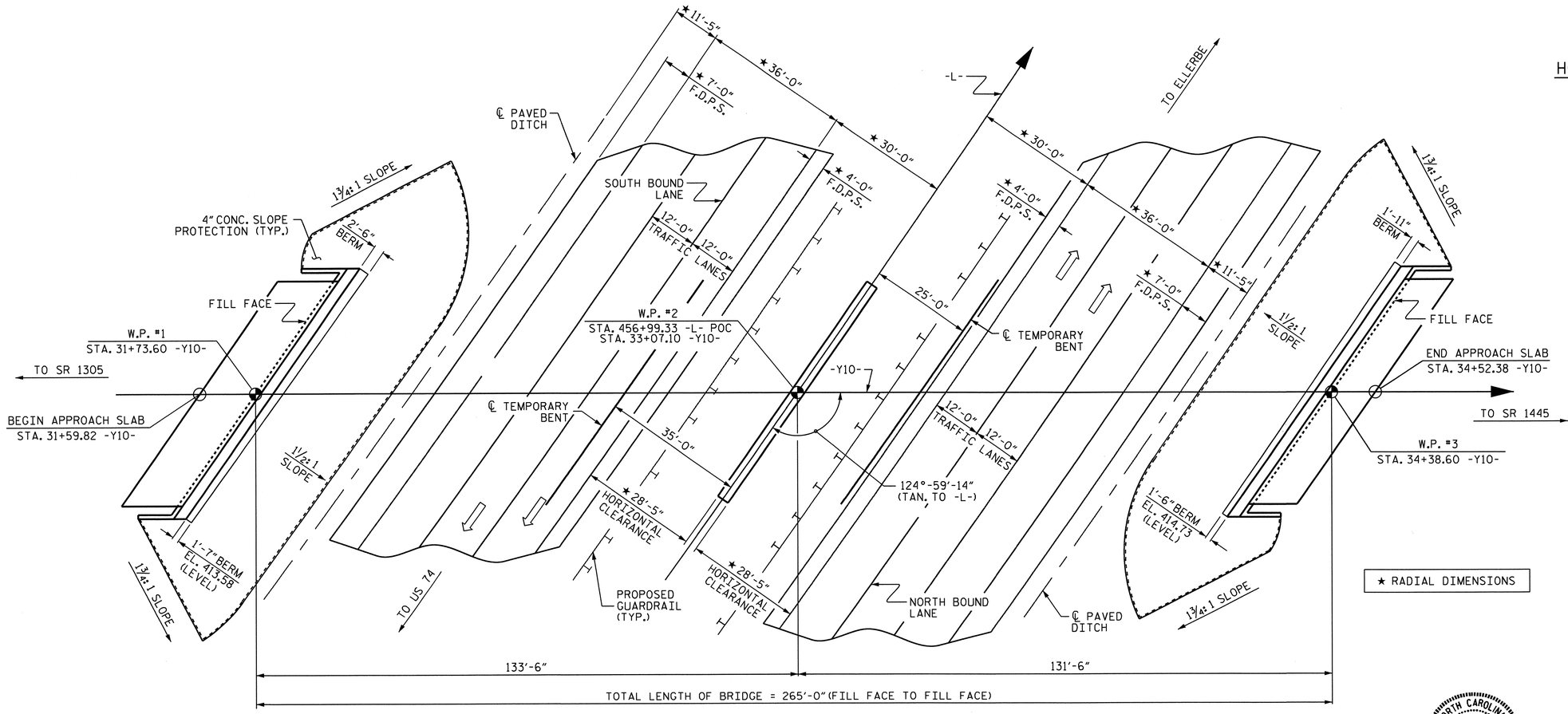

PLAN

FOR CLARITY, FOUNDATIONS ARE NOT SHOWN IN PLAN VIEW.

★ RADIAL DIMENSIONS

GRADE DATA -Y10-

+1.0000% △ -3.0465%

PI = 35+55.00
EL. = 426.72
VC = 700'

HORIZONTAL CURVE DATA -L-

PI STA. 458+60.22
△ = 19°-56'-57.5" (LT)
D = 1°-00'-00.0"
L = 1,994.93
T = 1,007.67'
R = 5,729.58'

PROJECT NO. R-3421C

RICHMOND COUNTY

STATION: 456+99.33 -L-
33+07.10 -Y10-

SHEET 1 OF 3 BRIDGE NO. 235

STATE OF NORTH CAROLINA
DEPARTMENT OF TRANSPORTATION
RALEIGH

GENERAL DRAWING

FOR BRIDGE OVER US 220 BYPASS ON SR 1306 (DOCKERY RD.) / SR 1446 (HAYWOOD CEMETERY RD.) BETWEEN SR 1305 AND SR 1445

REVISIONS						SHEET NO.
NO.	BY:	DATE:	NO.	BY:	DATE:	S-59
1			3			TOTAL SHEETS
2			4			86

NORTH CAROLINA PROFESSIONAL SEAL 023371 ENGINEER CHARLES HUNT
3/19/13

NORTH CAROLINA PROFESSIONAL SEAL 23371 ENGINEER VIRUL A. PATEL
3/19/13

DRAWN BY : J. G. KHARVA DATE : 03/12
CHECKED BY : H. T. DIEU DATE : 04/02/12

18-MAR-2013 13:07
R:\Structures\Plans\str03_Y10\R3421C_SD_GD_03.dgn
vpatel

STR. #3

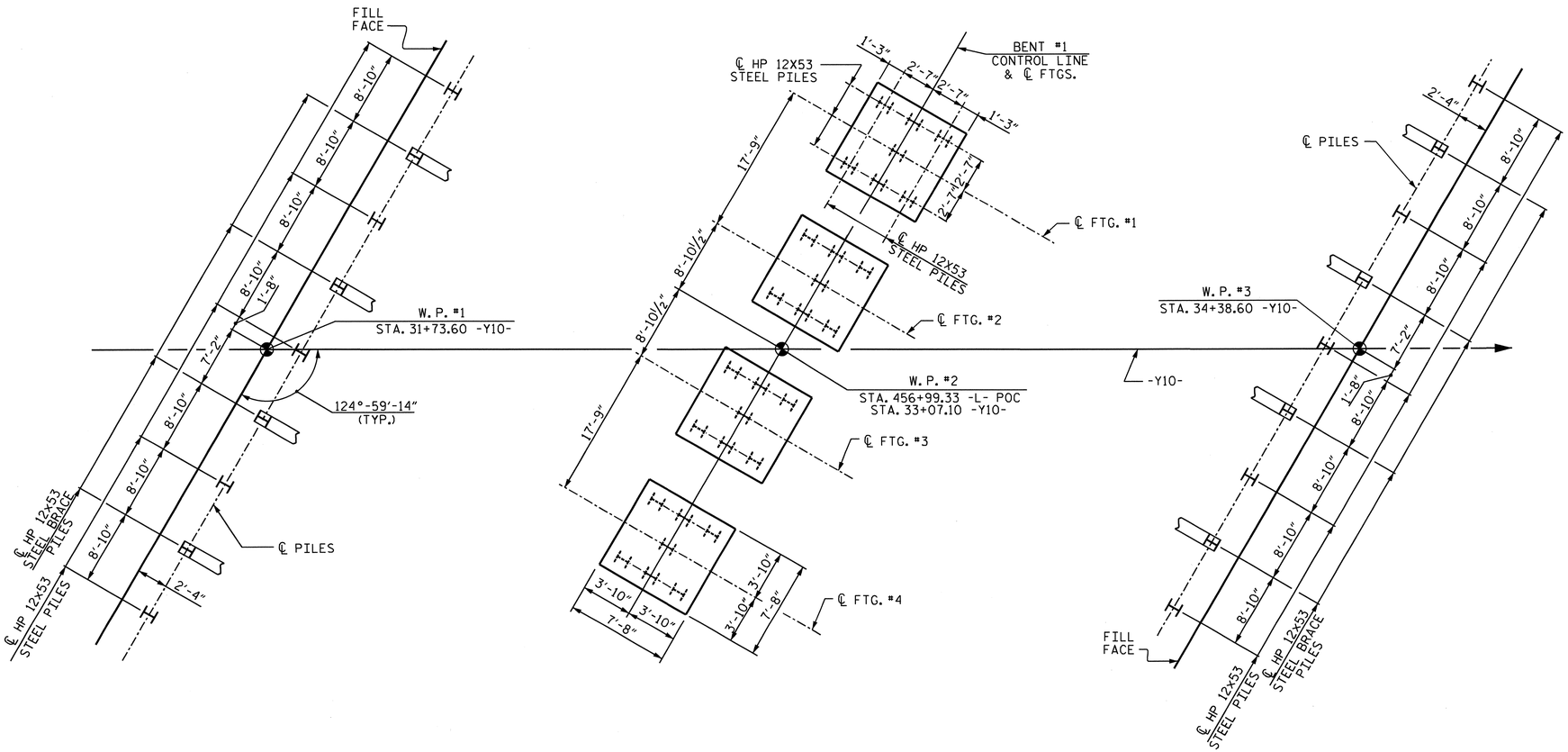

END BENT #1 | BENT #1 | END BENT #2

FOUNDATION LAYOUT

DIMENSIONS LOCATING PILES ARE SHOWN TO THE CENTERLINE OF PILES.
ALL COLUMN FOOTINGS AND PILE SPACINGS ARE IDENTICAL AT BENT 1

END BENT BRACE PILES ARE BATTERED 3:12

NOTES

FOR PILES, SEE SECTION 450 OF THE STANDARD SPECIFICATIONS.

PILES AT END BENT #1 AND END BENT #2 ARE DESIGNED FOR A FACTORED RESISTANCE OF 105 TONS PER PILE.

DRIVE PILES AT END BENT #1 AND END BENT #2 TO A REQUIRED DRIVING RESISTANCE OF 165 TONS PER PILE.

PILES AT BENT #1 ARE DESIGNED FOR A FACTORED RESISTANCE OF 105 TONS PER PILE.

DRIVE PILES AT BENT #1 TO A REQUIRED DRIVING RESISTANCE OF 165 TONS PER PILE.

TESTING THE FIRST PRODUCTION PILE WITH THE PILE DRIVING ANALYZER (PDA) DURING DRIVING, RESTRIKING, OR REDRIVING IS REQUIRED AT END BENT #1 OR #2. THE ENGINEER WILL DETERMINE THE NEED FOR PDA TESTING. FOR PDA TESTING, SEE SECTION 450 OF THE STANDARD SPECIFICATIONS.

TESTING THE FIRST PRODUCTION PILE WITH THE PILE DRIVING ANALYZER (PDA) DURING DRIVING, RESTRIKING, OR REDRIVING IS REQUIRED AT BENT #1. THE ENGINEER WILL DETERMINE THE NEED FOR PDA TESTING. FOR PDA TESTING, SEE SECTION 450 OF THE STANDARD SPECIFICATIONS.

NORTH CAROLINA PROFESSIONAL SEAL 23371 ENGINEER VIPUL A. PATEL
3/19/13

PROJECT NO. R-3421C
RICHMOND COUNTY
STATION: 456+99.33 -L-

SHEET 2 OF 3

STATE OF NORTH CAROLINA
DEPARTMENT OF TRANSPORTATION
RALEIGH

GENERAL DRAWING

FOR BRIDGE OVER US 220 BYPASS ON SR 1306 (DOCKERY RD.) / SR 1446 (HAYWOOD CEMETERY RD.) BETWEEN SR 1305 AND SR 1445

REVISIONS						SHEET NO.
NO.	BY:	DATE:	NO.	BY:	DATE:	S-60
1			3			TOTAL SHEETS
2			4			86

DRAWN BY : J. G. KHARVA DATE : 03/07/12
CHECKED BY : H. T. DIEU DATE : 04/02/12

08-AUG-2012 15:08
Y:\structures\Plans\str03_Y10\R3421C_SD_GD_03.dgn
jpadams

STR. #3

BENCH MARK #34: RR SPIKE IN BASE @ POWER POLE 79' LEFT OF STA. 19+85 -Y10-, EL. 420.23

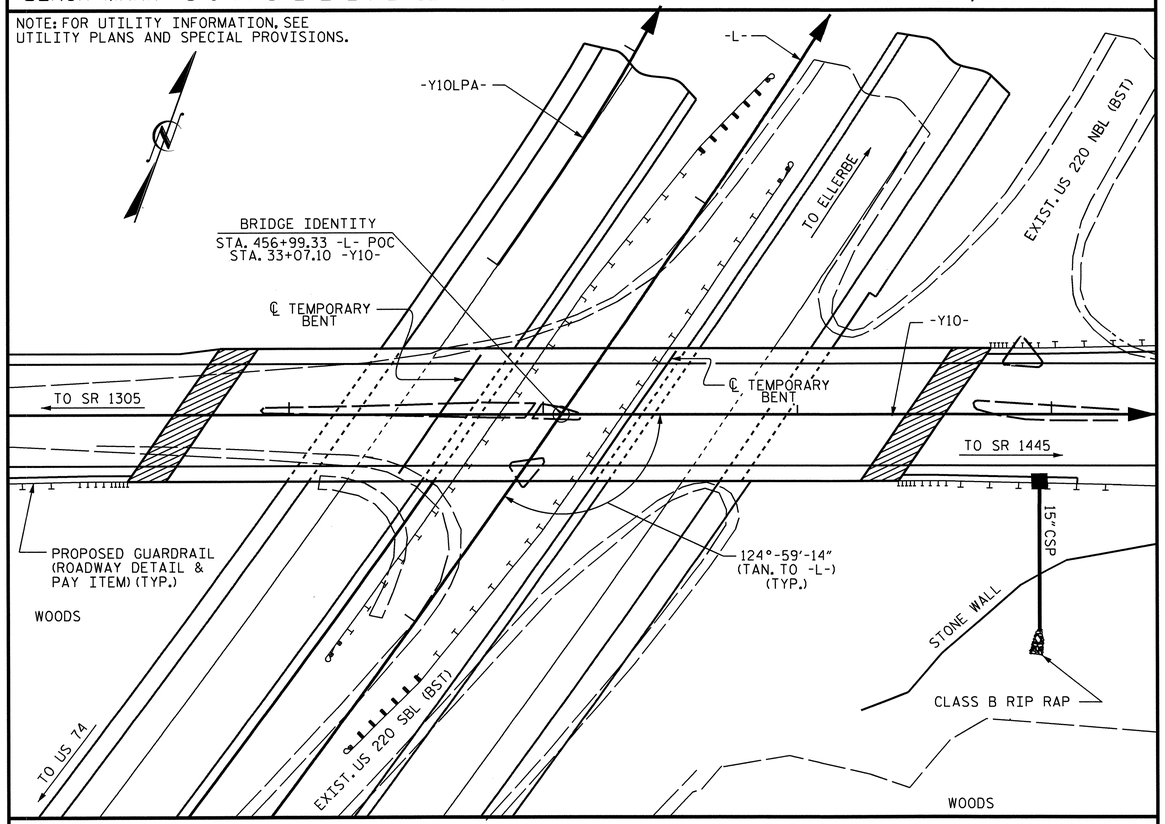

LOCATION SKETCH

NOTES

ASSUMED LIVE LOAD = HL 93 OR ALTERNATE LOADING.

FOR OTHER DESIGN DATA AND GENERAL NOTES, SEE SHEET SN.

THIS BRIDGE HAS BEEN DESIGNED IN ACCORDANCE WITH THE AASHTO LRFD BRIDGE DESIGN SPECIFICATIONS.

ALL STRUCTURAL STEEL MAY BE AASTO M270 GRADE 50W AND PAINTED IN ACCORDANCE WITH SYSTEM 4 OF ARTICLE 442-8 OF THE STANDARD SPECIFICATIONS UNLESS OTHERWISE NOTED ON THE PLANS.

THE CONTRACTOR SHALL PROVIDE INDEPENDENT ASSURANCE SAMPLES OF REINFORCING STEEL AS FOLLOWS: FOR PROJECTS REQUIRING UP TO 400 TONS OF REINFORCING STEEL, ONE 30 INCH SAMPLE OF EACH SIZE BAR USED, AND FOR PROJECTS REQUIRING OVER 400 TONS OF REINFORCING STEEL, TWO 30 INCH SAMPLES OF EACH SIZE BAR USED. THE BARS FROM WHICH THE SAMPLES ARE TAKEN MUST THEN BE SPLICED WITH REPLACEMENT BARS OF THE SIZE AND LENGTH OF THE SAMPLE, PLUS A MINIMUM LAP SPLICE OF THIRTY BAR DIAMETERS. PAYMENT FOR THE SAMPLES OF REINFORCING STEEL SHALL BE CONSIDERED INCIDENTAL TO VARIOUS PAY ITEMS.

REMOVABLE FORMS MAY BE USED IN LIEU OF METAL STAY-IN-PLACE FORMS IN ACCORDANCE WITH THE STANDARD SPECIFICATIONS.

NEEDLE BEAMS WILL NOT BE ALLOWED UNLESS OTHERWISE CALLED FOR ON THE PLANS OR APPROVED BY THE ENGINEER.

FOR SUBMITTAL OF WORKING DRAWINGS, SEE SPECIAL PROVISIONS.

FOR FALSEWORK AND FORMWORK, SEE SPECIAL PROVISIONS.

FOR CRANE SAFETY, SEE SPECIAL PROVISIONS.

FOR GROUT FOR STRUCTURES, SEE SPECIAL PROVISIONS.

THE BRIDGE IS LOCATED IN SEISMIC ZONE 2.

THE ELEVATIONS AND CLEARANCES SHOWN ON THE PLANS AT THE POINTS OF MINIMUM VERTICAL CLEARANCE ARE FROM THE BEST INFORMATION AVAILABLE. PRIOR TO BEGINNING BRIDGE CONSTRUCTION, VERIFY THE ELEVATIONS ON THE EXISTING PAVEMENT AND CHECK THE CLEARANCE. REPORT ANY VARIATIONS TO THE ENGINEER. ANY PLAN REVISIONS NECESSARY TO ACHIEVE THE REQUIRED MINIMUM VERTICAL CLEARANCE WILL BE PROVIDED BY THE DEPARTMENT.

FOR MAINTENANCE AND PROTECTION OF TRAFFIC BENEATH PROPOSED STRUCTURE, SEE SPECIAL PROVISIONS.

FOR PLACING LOAD ON STRUCTURE MEMBERS, SEE SPECIAL PROVISIONS.

FOR EROSION CONTROL MEASURES, SEE EROSION CONTROL PLANS.

GIRDER ERECTION SEQUENCE

THE STRUCTURAL STEEL SHALL BE SUPPORTED DURING ERECTION IN ITS CAMBERED POSITION. ONE EXTERIOR GIRDER AND ITS ADJACENT INTERIOR GIRDER SHALL BE ERECTED WITH ALL DIAPHRAGMS AND LATERAL BRACING BETWEEN THE GIRDERS IN PLACE AND ALL BOLTS TIGHTENED PRIOR TO RELEASE OF THE GIRDERS. THE REMAINING GIRDERS SHALL THEN BE ERECTED WITH DIAPHRAGMS CONNECTING THE GIRDER TO THE ADJACENT ERECTED GIRDER AND ALL BOLTS TIGHTENED BEFORE RELEASING THE GIRDER.

A MINIMUM OF TWO TEMPORARY BENTS SHALL BE USED.

TEMPORARY BENTS SHALL REMAIN IN PLACE UNTIL ALL CROSS FRAMES AND LATERAL BRACING ARE IN PLACE AND HIGH STRENGTH BOLTS TIGHTENED.

THE LOCATION OF THE TEMPORARY BENTS SHOWN ON SHEET 1 ARE APPROXIMATE LOCATIONS AND SHALL BE ADJUSTED BY THE CONTRACTOR AS NECESSARY.

PLANS FOR TEMPORARY BENTS, ERECTION SEQUENCE AND TEMPORARY BENT REMOVAL SHALL BE SUBMITTED TO THE ENGINEER FOR REVIEW.

TEMPORARY BENTS SHALL BE DESIGNED BY A PROFESSIONAL ENGINEER REGISTERED IN THE STATE OF NORTH CAROLINA.

DURING THE GIRDER ERECTION PROCEDURE, THE CONTRACTOR IS RESPONSIBLE FOR PROVIDING TEMPORARY LATERAL BRACING AND OTHER MEANS OF SUPPORT, AS REQUIRED, TO ENSURE STABILITY OF THE GIRDERS, AVOID UPLIFT OF THE GIRDERS AT THE TEMPORARY ERECTION BENTS AND MAINTAIN PLUMBNESS OF THE GIRDER WEBS.

THE CONTRACTOR'S ERECTION PLAN SHALL INCLUDE A METHOD OF TEMPORARY BENT REMOVAL THAT WILL UNIFORMLY APPLY THE STRUCTURAL STEEL WEIGHT TO THE BRIDGE CROSS FRAMES.

THE CONTRACTOR MAY SUBMIT ALTERNATE ERECTION METHODS. PLANS FOR SUCH ERECTION METHODS SHALL BE APPROVED BY THE ENGINEER.

FOR TEMPORARY BENTS, SEE SPECIAL PROVISIONS

TOTAL BILL OF MATERIAL

	FOUNDATION EXCAVATION	PDA TESTING	REINFORCED CONCRETE DECK SLAB	GROOVING BRIDGE FLOORS	CLASS A CONCRETE	BRIDGE APPROACH SLABS	REINFORCING STEEL	SPIRAL COLUMN REINFORCING STEEL	STRUCTURAL STEEL (APPROX.)	HP12x53 STEEL PILES		PILE REDRIVES	CONCRETE BARRIER RAIL	4" SLOPE PROTECTION	ELASTOMERIC BEARINGS	FOAM JOINT SEALS	DISC BEARINGS
	LUMP SUM	EACH	SQ. FT.	SQ. FT.	CU. YDS.	LUMP SUM	LBS.	LBS.	LBS.	NO.	LIN. FT.	EACH	LIN. FT.	SQ. YDS.	LUMP SUM	LUMP SUM	LUMP SUM
SUPERSTRUCTURE			14,501	14,092					445,000				524.92		LUMP SUM	LUMP SUM	LUMP SUM
END BENT #1					64.6		8,574			9	540	9		435			
BENT #1	LUMP SUM				77.9		15,955	2,719		28	1,120	28					
END BENT #2					62.1		8,422			9	540	9		390			
TOTAL	LUMP SUM	2	14,501	14,092	204.6	LUMP SUM	32,951	2,719	445,000	46	2,200	46	524.92	825	LUMP SUM	LUMP SUM	LUMP SUM

NORTH CAROLINA PROFESSIONAL SEAL 23371 ENGINEER VIPUL A. PATEL
10/30/13

PROJECT NO. R-3421C
RICHMOND COUNTY
STATION: 456+99.33 -L-

SHEET 3 OF 3

STATE OF NORTH CAROLINA
DEPARTMENT OF TRANSPORTATION
RALEIGH

GENERAL DRAWING
FOR BRIDGE OVER US 220 BYPASS ON SR 1306 (DOCKERY RD.) / SR 1446 (HAYWOOD CEMETERY RD.) BETWEEN SR 1305 AND SR 1445

REVISIONS						SHEET NO.
NO.	BY:	DATE:	NO.	BY:	DATE:	S-61
1			3			TOTAL SHEETS
2			4			86

STR. #3

DRAWN BY : J. G. KHARVA DATE : 3/12
CHECKED BY : H. T. DIEU DATE : 4/2/12

29-OCT-2013 10:59
Y:\structures\Plans\str03_Y10\R3421C_SD_GD_03.dgn
thcarroll

LOAD AND RESISTANCE FACTOR RATING (LRFR) SUMMARY FOR STEEL GIRDERS

LEVEL		VEHICLE	WEIGHT (W) (TONS)	CONTROLLING LOAD RATING (#)	MINIMUM RATING FACTORS (RF)	TONS = W × RF	STRENGTH I LIMIT STATE										SERVICE II LIMIT STATE						COMMENT NUMBER
								MOMENT					SHEAR					MOMENT						
							LIVE-LOAD FACTORS (γ_{LL})	DISTRIBUTION FACTORS (DF)	RATING FACTOR	SPAN	GIRDER LOCATION	DISTANCE FROM LEFT END OF SPAN (f+)	DISTRIBUTION FACTORS (DF)	RATING FACTOR	SPAN	GIRDER LOCATION	DISTANCE FROM LEFT END OF SPAN (f+)	LIVE-LOAD FACTORS (γ_{LL})	DISTRIBUTION FACTORS (DF)	RATING FACTOR	SPAN	GIRDER LOCATION	DISTANCE FROM LEFT END OF SPAN (f+)	
DESIGN LOAD RATING		HL-93 (INVENTORY)	N/A	1	1.02	--	1.75	0.81	1.02	A	I	130.35	1.22	1.04	A	I	117.32	1.30	0.81	1.15	A	I	130.35	
		HL-93 (OPERATING)	N/A		1.32	--	1.35	0.81	1.32	A	I	130.35	1.22	1.35	A	I	117.32	1.00	0.81	1.49	A	I	130.35	
		HS-20 (INVENTORY)	36.00	2	1.59	57.24	1.75	0.81	2.07	B	I	19.25	1.22	1.59	A	I	117.32	1.30	0.86	2.63	A	EL	52.14	
		HS-20 (OPERATING)	36.00		2.06	74.16	1.35	0.81	2.69	B	I	19.25	1.22	2.06	A	I	117.32	1.00	0.86	3.42	A	EL	52.14	
LEGAL LOAD RATING	SINGLE VEHICLE (SV)	SNSH	13.500		5.10	68.85	1.40	0.81	6.79	B	I	19.25	1.22	5.10	A	I	117.32	1.30	0.86	6.33	A	EL	52.14	
		SNGARBS2	20.000		3.50	70.00	1.40	0.81	4.61	B	I	19.25	1.22	3.50	A	I	117.32	1.30	0.86	4.53	A	EL	52.14	
		SNAGRIS2	22.000		3.21	70.62	1.40	0.81	4.20	B	I	19.25	1.22	3.21	A	I	117.32	1.30	0.86	4.21	A	EL	52.14	
		SNCOTTS3	27.250		2.53	68.94	1.40	0.81	3.35	B	I	19.25	1.22	2.53	A	I	117.32	1.30	0.86	3.16	A	EL	52.14	
		SNAGGRS4	34.925		2.02	70.55	1.40	0.81	2.63	B	I	19.25	1.22	2.02	A	I	117.32	1.30	0.86	2.57	A	EL	52.14	
		SNS5A	35.550		2.00	71.10	1.40	0.81	2.59	B	I	19.25	1.22	2.00	A	I	117.32	1.30	0.86	2.53	A	EL	52.14	
		SNS6A	39.950		1.80	71.91	1.40	0.81	2.31	B	I	19.25	1.22	1.80	A	I	117.32	1.30	0.86	2.28	A	EL	52.14	
		SNS7B	42.000		1.73	72.66	1.40	0.81	2.20	B	I	19.25	1.22	1.73	A	I	117.32	1.30	0.86	2.18	A	EL	52.14	
	TRUCK TRACTOR SEMI-TRAILER (TTST)	TNAGRIT3	33.000		2.16	71.28	1.40	0.81	2.81	B	I	19.25	1.22	2.16	A	I	117.32	1.30	0.86	2.79	A	EL	52.14	
		TNT4A	33.075		2.14	70.78	1.40	0.81	2.80	B	I	19.25	1.22	2.14	A	I	117.32	1.30	0.86	2.77	A	EL	52.14	
		TNT6A	41.600		1.78	74.05	1.40	0.81	2.24	B	I	19.25	1.22	1.78	A	I	117.32	1.30	0.86	2.25	A	EL	52.14	
		TNT7A	42.000		1.76	73.92	1.40	0.81	2.22	B	I	19.25	1.22	1.76	A	I	117.32	1.30	0.86	2.25	A	EL	52.14	
		TNT7B	42.000		1.72	72.24	1.40	0.81	2.23	B	I	19.25	1.22	1.72	A	I	117.32	1.30	0.86	2.27	A	EL	52.14	
		TNAGRIT4	43.000		1.67	71.81	1.40	0.81	2.16	B	I	19.25	1.22	1.67	A	I	117.32	1.30	0.86	2.20	A	EL	52.14	
		TNAGT5A	45.000		1.62	72.90	1.40	0.81	2.07	B	I	19.25	1.22	1.62	A	I	117.32	1.30	0.86	2.10	A	EL	52.14	
		TNAGT5B	45.000	3	1.59	71.55	1.40	0.81	2.06	B	I	19.25	1.22	1.59	A	I	117.32	1.30	0.86	2.07	A	EL	52.14	
FATIGUE		HL-93 (INVENTORY)	γ_{LL}=0.75	---	---																			

LOAD FACTORS:

DESIGN LOAD RATING FACTORS	LIMIT STATE	γ_{DC}	γ_{DW}
	STRENGTH I	1.25	1.50
	SERVICE II	1.00	1.00

NOTES:

MINIMUM RATING FACTORS ARE BASED ON THE STRENGTH I AND SERVICE II LIMIT STATES.

ALLOWABLE STRESS FOR SERVICE II LIMIT STATE ARE AS REQUIRED FOR DESIGN.

COMMENTS:

1.

2.

3.

4.

(#) CONTROLLING LOAD RATING

(1) DESIGN LOAD RATING (HL-93) **

(2) DESIGN LOAD RATING (HS-20) **

(3) LEGAL LOAD RATING **

** SEE CHART FOR VEHICLE TYPE

GIRDER LOCATION

I - INTERIOR GIRDER
EL - EXTERIOR LEFT GIRDER
ER - EXTERIOR RIGHT GIRDER

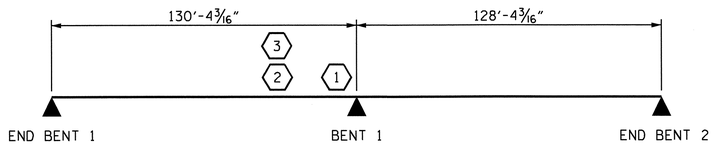

LRFR SUMMARY

PROJECT NO. R-3421C

RICHMOND COUNTY

STATION: 456+99.33 -L-

NORTH CAROLINA PROFESSIONAL SEAL 23371 ENGINEER VIRAL A. PATEL

3/19/13

STATE OF NORTH CAROLINA
DEPARTMENT OF TRANSPORTATION
RALEIGH

STANDARD

LRFR SUMMARY FOR STEEL GIRDERS
(NON-INTERSTATE TRAFFIC)

REVISIONS						SHEET NO.
NO.	BY:	DATE:	NO.	BY:	DATE:	S-62
1			3			TOTAL SHEETS
2			4			86

ASSEMBLED BY : H.A. LOCKLEAR DATE : 2/2012
CHECKED BY : R.L. CHESSON DATE : 2/2012

DRAWN BY : MAA 1/08
CHECKED BY : GM/DI 2/08

REV. 11/12/08RR MAA/GM
REV. 10/1/11 MAA/GM

08-AUG-2012 15:07
Y:\structures\Plans\str03_Y10\R-3421C_SD_LRFR_03.dgn
jpadams

STR. #3

STD. NO. LRFR3

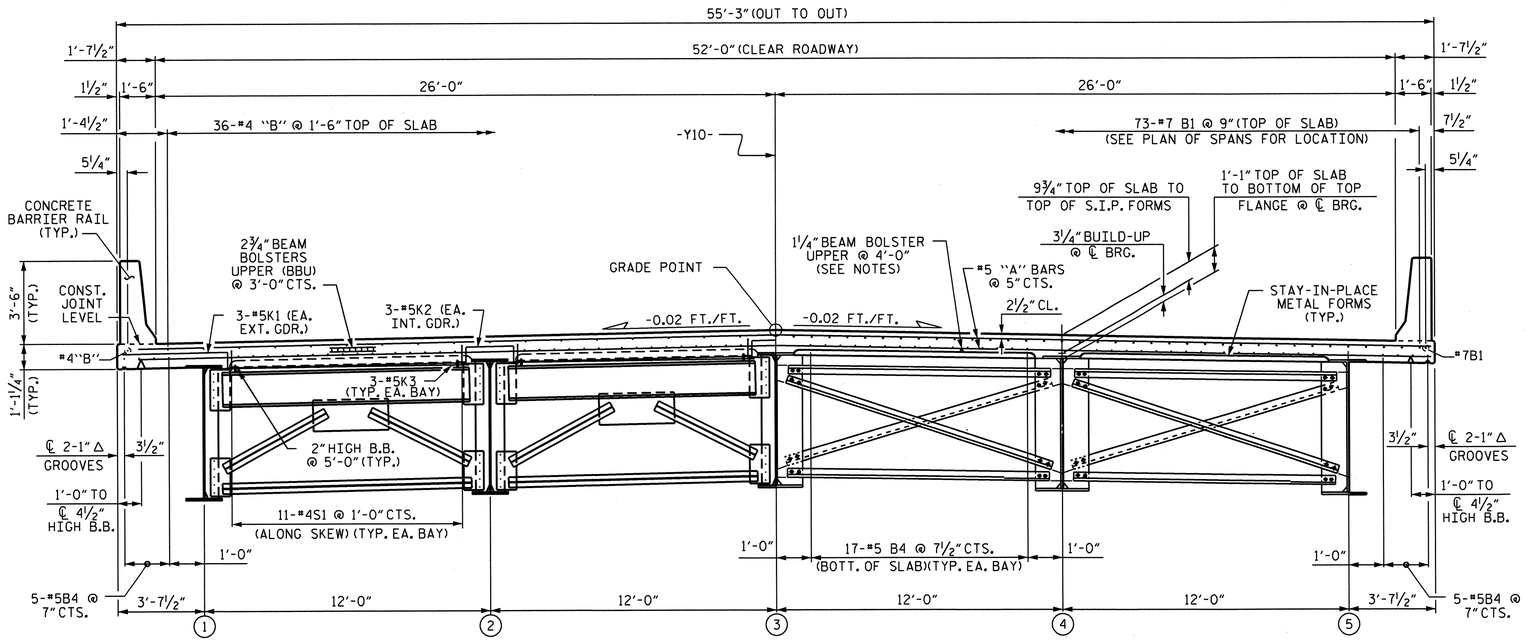

HALF SECTION AT END BENT DIAPHRAGMS

HALF SECTION AT BENT DIAPHRAGM

NOTES

PROVIDE 1¼" HIGH BEAM BOLSTERS UPPER AT 4'-0" CTS. ATOP THE METAL STAY-IN-PLACE FORMS TO SUPPORT THE BOTTOM MAT OF 'A' BARS. WHEN USING REMOVABLE FORMS, PROVIDE CONTINUOUS HIGH CHAIRS FOR METAL DECK (C.H.C.M.) @ 4'-0" CTS. WITH A HEIGHT TO SUPPORT THE BOTTOM MAT OF 'A' BARS A CLEAR DISTANCE OF 2½" ABOVE THE TOP OF THE REMOVABLE FORM.

PREVIOUSLY CAST CONCRETE IN A CONTINUOUS UNIT SHALL HAVE ATTAINED A MINIMUM COMPRESSIVE STRENGTH OF 3,000 PSI BEFORE ADDITIONAL CONCRETE IS CAST IN THE UNIT.

BARRIER RAIL IN A CONTINUOUS UNIT SHALL NOT BE CAST UNTIL ALL SLAB CONCRETE IN THE UNIT HAS BEEN CAST AND HAS REACHED A MINIMUM COMPRESSIVE STRENGTH OF 3,000 PSI.

STRUCTURAL STEEL ERECTION IN A CONTINUOUS UNIT SHALL BE COMPLETE BEFORE FALSEWORK OR FORMS ARE PLACED ON THE UNIT.

#5G1 BAR MAY BE SHIFTED SLIGHTLY, AS NECESSARY, TO CLEAR REINFORCING STEEL AND STIRRUPS.

ALL REINFORCING STEEL IN CONCRETE BARRIER RAILS SHALL BE EPOXY COATED.

THE CONTRACTOR MAY, WHEN NECESSARY, PROPOSE A SCHEME FOR AVOIDING INTERFERENCE BETWEEN METAL STAY-IN-PLACE FORM SUPPORTS OR FORMS AND GIRDER STIFFENERS OR CONNECTOR PLATES. THE PROPOSAL SHALL BE INDICATED, AS APPROPRIATE, ON EITHER THE STEEL WORKING DRAWINGS OR THE METAL STAY-IN-PLACE FORM WORKING DRAWINGS.

THE CONTRACTOR SHALL ADJUST THE GIRDER BUILDUPS AS NECESSARY TO INCORPORATE A MAXIMUM PERMISSIBLE VARIATION IN DISC BEARING DEPTH OF ½", SEE SPECIAL PROVISIONS FOR DISC BEARINGS.

TYPICAL SECTION

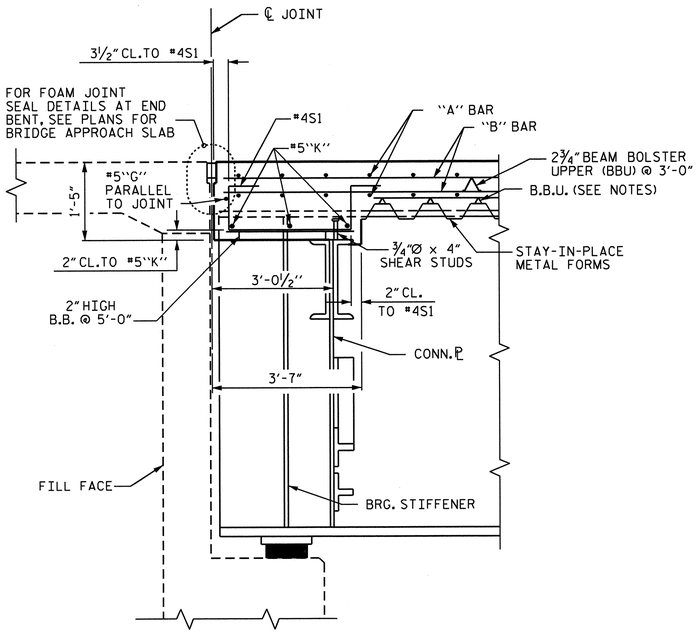

SECTION AT END BENTS

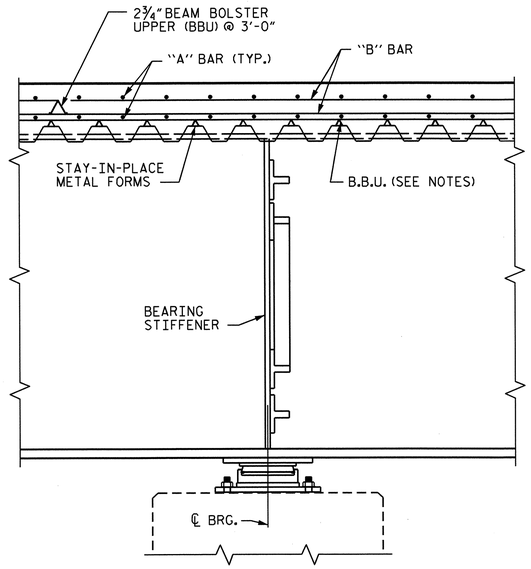

SECTION AT BENT

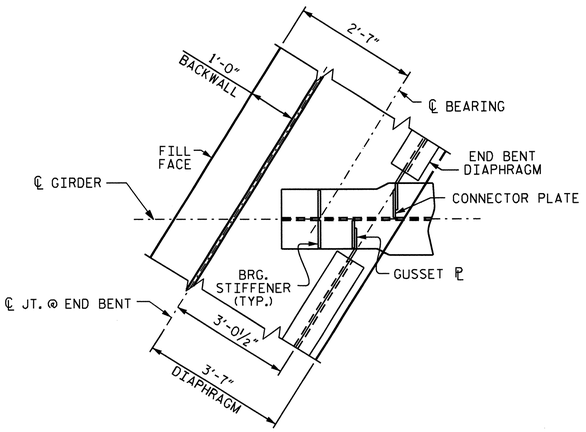

PART PLAN OF END BENT #1 DIAPHRAGM

PROJECT NO. R-3421C

RICHMOND COUNTY

STATION: 456+99.33 -L-

STATE OF NORTH CAROLINA
DEPARTMENT OF TRANSPORTATION
RALEIGH

SUPERSTRUCTURE
TYPICAL SECTION

NORTH CAROLINA PROFESSIONAL SEAL 23371 ENGINEER VIPUL A. PATEL
3/19/13

REVISIONS						SHEET NO.
NO.	BY:	DATE:	NO.	BY:	DATE:	S-63
1			3			TOTAL SHEETS
2			4			86

DRAWN BY : J. C. KHARVA DATE : 1-18-12
CHECKED BY : J. P. ADAMS DATE : 5-12

04-FEB-2013 14:36
R:\Structures\Plans\str03_Y10\R-3421c_sd_TS_03.dgn
jpadams

STR. #3

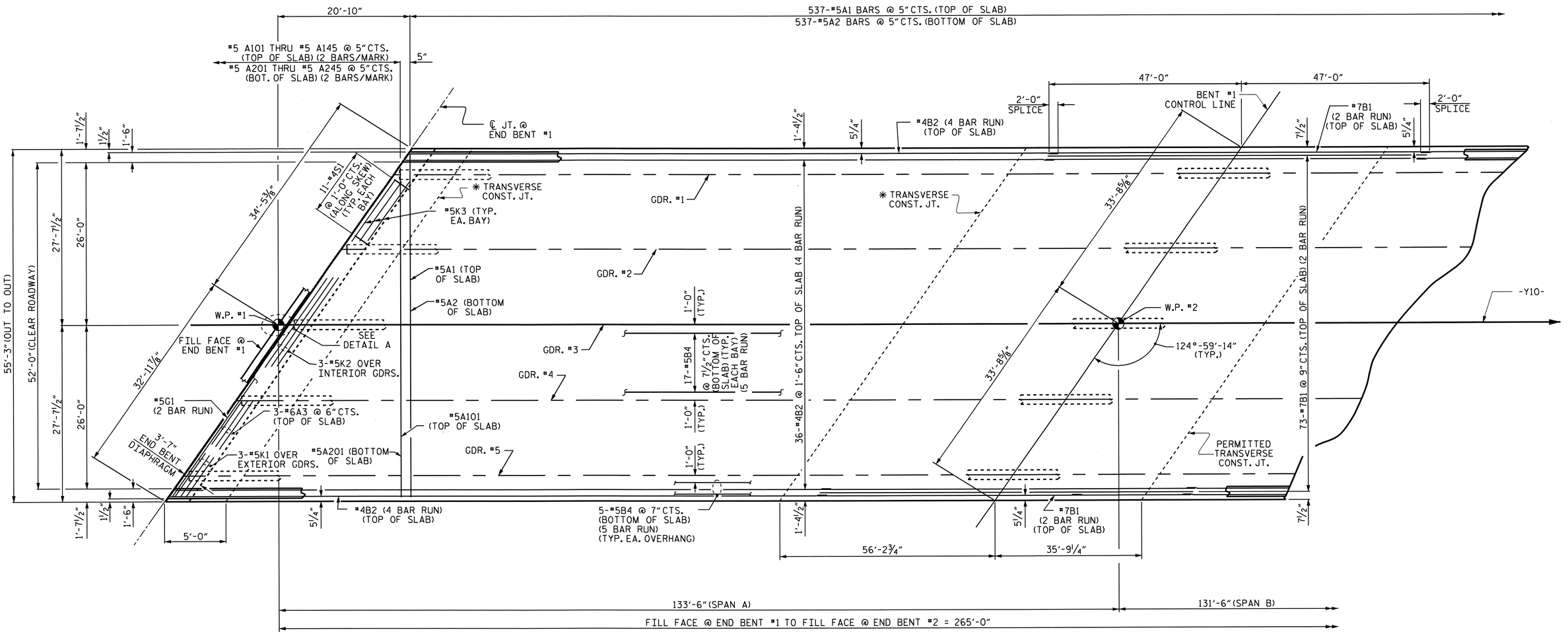

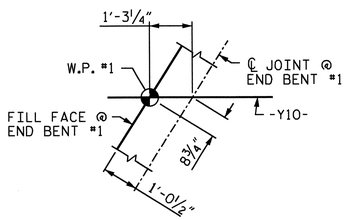

DETAIL A

PLAN OF SPAN A

✱FOR TRANSVERSE CONSTRUCTION JOINT DETAIL, SEE SUPERSTRUCTURE BILL OF MATERIAL SHEET.

PROJECT NO. R-3421C

RICHMOND COUNTY

STATION: 456+99.33 -L-

SHEET 1 OF 2

STATE OF NORTH CAROLINA
DEPARTMENT OF TRANSPORTATION
RALEIGH

SUPERSTRUCTURE
PLAN OF SPAN A

NORTH CAROLINA PROFESSIONAL SEAL 23371 ENGINEER VIMAL A. PATEL
3/19/13

REVISIONS						SHEET NO.
NO.	BY:	DATE:	NO.	BY:	DATE:	S-64
1			3			TOTAL SHEETS
2			4			86

DRAWN BY : J. G. KHARVA DATE : 3/12
CHECKED BY : J. P. ADAMS DATE : 5/12

08-AUG-2012 15:07
Y:\structures\Plans\str03_Y10\R-3412c_sd_PS_03.dgn
jpadams

STR. #3

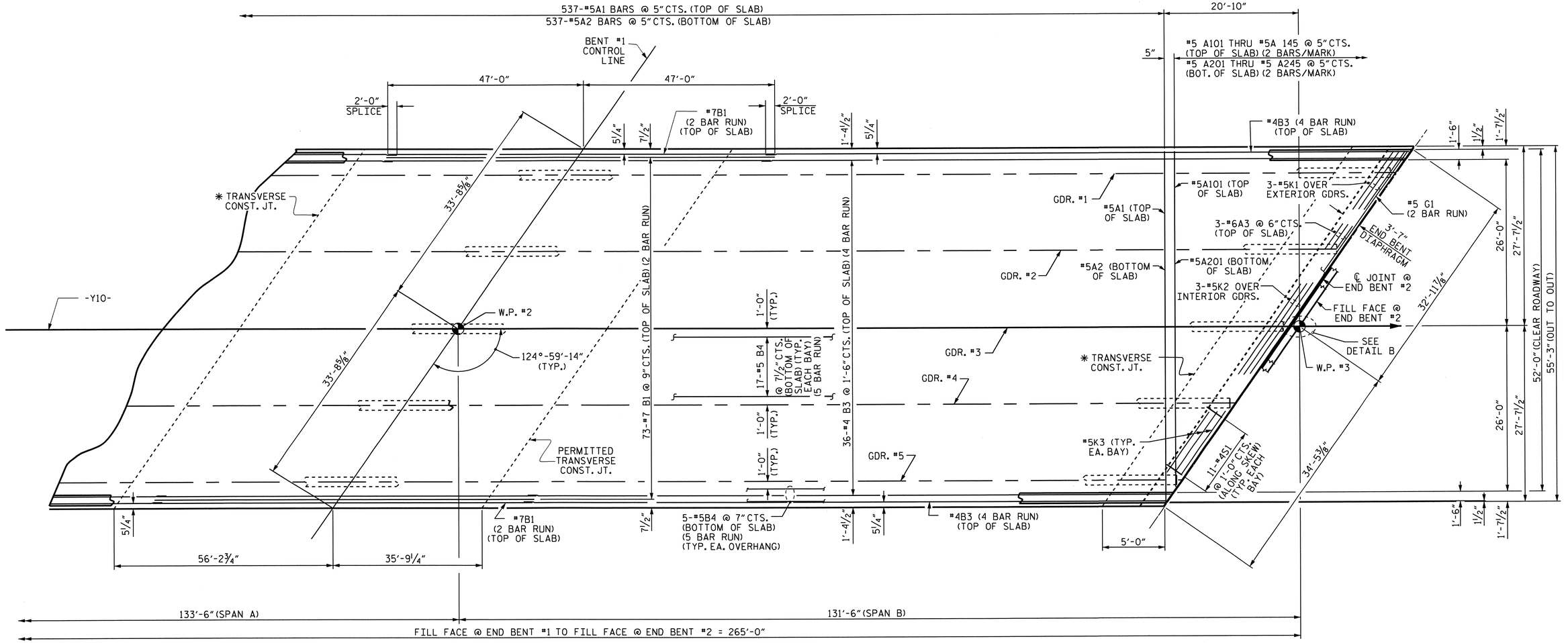

PLAN OF SPAN B

*FOR TRANSVERSE CONSTRUCTION JOINT DETAIL, SEE SUPERSTRUCTURE BILL OF MATERIAL SHEET.

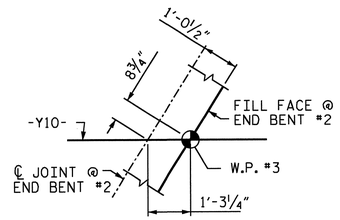

DETAIL B

NORTH CAROLINA PROFESSIONAL SEAL 23371 ENGINEER VIPUL A. PATEL
3/19/13

PROJECT NO. R-3421C
RICHMOND COUNTY
STATION: 456+99.33 -L-

SHEET 2 OF 2

STATE OF NORTH CAROLINA
DEPARTMENT OF TRANSPORTATION
RALEIGH

SUPERSTRUCTURE
PLAN OF SPAN B

REVISIONS						SHEET NO.
NO.	BY:	DATE:	NO.	BY:	DATE:	S-65
1			3			TOTAL SHEETS
2			4			86

DRAWN BY : J. C. KHARVA DATE : 3/12
CHECKED BY : J. P. ADAMS DATE : 5/12

08-AUG-2012 15:07
Y:\structures\Plans\str03_Y10\R-3412c_sd_PS_03.dgn
jpadams

STR. #3

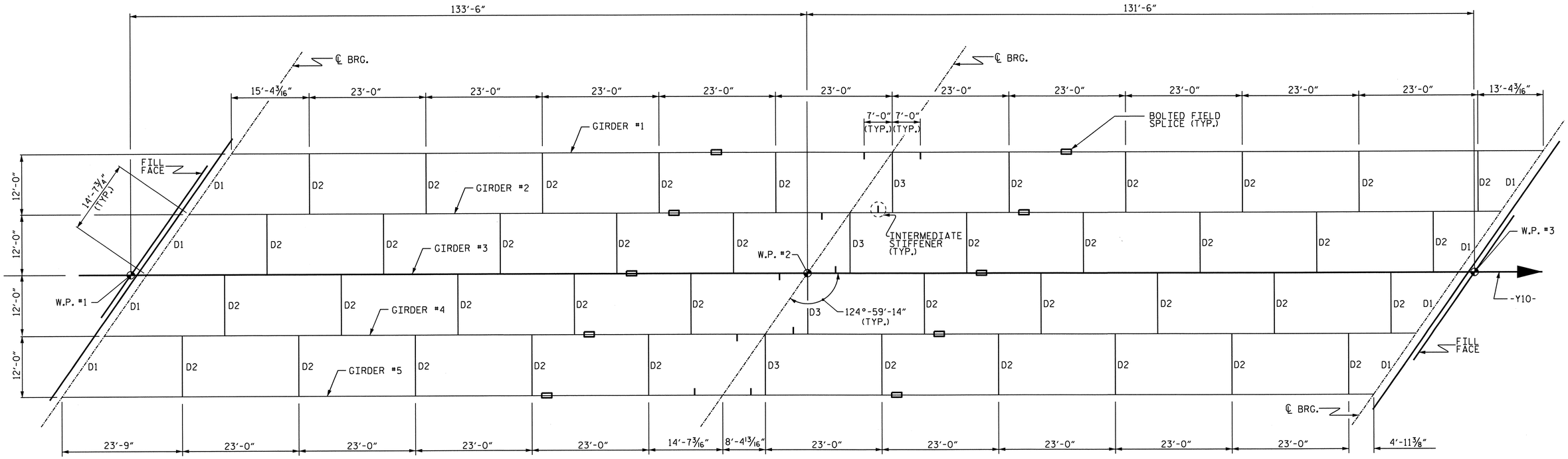

FRAMING PLAN

PROJECT NO. R-3421C

RICHMOND COUNTY

STATION: 456+99.33 -L-

STATE OF NORTH CAROLINA
DEPARTMENT OF TRANSPORTATION
RALEIGH

SUPERSTRUCTURE
FRAMING PLAN

NORTH CAROLINA PROFESSIONAL SEAL 23371 ENGINEER VIRAL A. PATEL
3/19/13

REVISIONS						SHEET NO.
NO.	BY:	DATE:	NO.	BY:	DATE:	S-66
1			3			TOTAL SHEETS
2			4			86

DRAWN BY : J. G. KHARVA DATE : 3/12
CHECKED BY : J. P. ADAMS DATE : 5/12

18-MAR-2013 13:08
R:\Structures\Plans\str03_Y10\R-3412c_sd_FP_03.dgn
vpatel

STR. #3

DEAD LOAD DEFLECTION TABLE FOR GIRDERS

	SPAN A																				
	GIRDER #1 THRU GIRDER #5																				
TWENTIETH POINTS	0	.05	.10	.15	.20	.25	.30	.35	.40	.45	.50	.55	.60	.65	.70	.75	.80	.85	.90	.95	0
DEFLECTION DUE TO WEIGHT OF GIRDER ↓	0.000	0.008	0.015	0.022	0.028	0.033	0.037	0.039	0.040	0.040	0.038	0.035	0.031	0.026	0.021	0.016	0.011	0.007	0.003	0.001	0.000
DEFLECTION DUE TO WEIGHT OF SLAB * ↓	0.000	0.032	0.063	0.091	0.115	0.135	0.150	0.159	0.163	0.161	0.154	0.142	0.127	0.108	0.087	0.065	0.044	0.026	0.013	0.004	0.000
DEFLECTION DUE TO WEIGHT OF BARRIER RAIL ↓	0.000	0.002	0.004	0.006	0.007	0.008	0.009	0.010	0.010	0.010	0.010	0.009	0.008	0.007	0.005	0.004	0.003	0.002	0.001	0.000	0.000
TOTAL DEAD LOAD DEFLECTION ↓	0.000	0.042	0.082	0.119	0.150	0.176	0.196	0.208	0.213	0.211	0.202	0.186	0.166	0.141	0.113	0.085	0.058	0.035	0.017	0.005	0.000
VERTICAL CURVE ORDINATE ↑	0.000	0.013	0.025	0.038	0.051	0.063	0.076	0.087	0.095	0.100	0.103	0.104	0.102	0.098	0.092	0.082	0.071	0.057	0.040	0.021	0.000
REQUIRED CAMBER ↑	0	5/16"	1 5/16"	1 7/8"	2 7/16"	2 7/8"	3 1/4"	3 9/16"	3 11/16"	3 3/4"	3 11/16"	3 1/2"	3 3/16"	2 7/8"	2 7/16"	2"	1 9/16"	1 1/8"	11/16"	5/16"	0

DEAD LOAD DEFLECTION TABLE FOR GIRDERS

	SPAN B																				
	GIRDER #1 THRU GIRDER #5																				
TWENTIETH POINTS	0	.05	.10	.15	.20	.25	.30	.35	.40	.45	.50	.55	.60	.65	.70	.75	.80	.85	.90	.95	0
DEFLECTION DUE TO WEIGHT OF GIRDER ↓	0.000	0.000	0.002	0.005	0.009	0.013	0.018	0.023	0.027	0.031	0.034	0.035	0.036	0.035	0.031	0.030	0.026	0.020	0.014	0.007	0.000
DEFLECTION DUE TO WEIGHT OF SLAB * ↓	0.000	0.002	0.008	0.020	0.036	0.054	0.074	0.093	0.110	0.125	0.136	0.143	0.146	0.143	0.135	0.122	0.104	0.082	0.057	0.029	0.000
DEFLECTION DUE TO WEIGHT OF BARRIER RAIL ↓	0.000	0.000	0.001	0.001	0.002	0.004	0.004	0.006	0.007	0.008	0.008	0.009	0.009	0.009	0.008	0.007	0.006	0.005	0.003	0.002	0.000
TOTAL DEAD LOAD DEFLECTION ↓	0.000	0.002	0.011	0.026	0.047	0.071	0.096	0.122	0.144	0.164	0.178	0.187	0.191	0.187	0.174	0.159	0.136	0.107	0.074	0.038	0.000
VERTICAL CURVE ORDINATE ↑	0.000	0.023	0.043	0.061	0.076	0.089	0.100	0.108	0.114	0.118	0.119	0.118	0.114	0.108	0.100	0.089	0.076	0.061	0.043	0.023	0.000
REQUIRED CAMBER ↑	0	5/16"	5/8"	1 1/16"	1 1/2"	1 15/16"	2 3/8"	2 3/4"	3 1/8"	3 3/8"	3 9/16"	3 11/16"	3 11/16"	3 9/16"	3 5/16"	3"	2 9/16"	2"	1 3/8"	3/4"	0

* INCLUDES SLAB, BUILDUPS & STAY-IN-PLACE FORMS.

ALL VALUES ARE SHOWN IN FEET (DECIMAL FORM), EXCEPT " REQUIRED CAMBER ", WHICH IS GIVEN IN INCHES (FRACTION FORM).

SIGN CONVENTION FOR DEAD LOAD DEFLECTION TABLES + ↑ 0 ↓ -

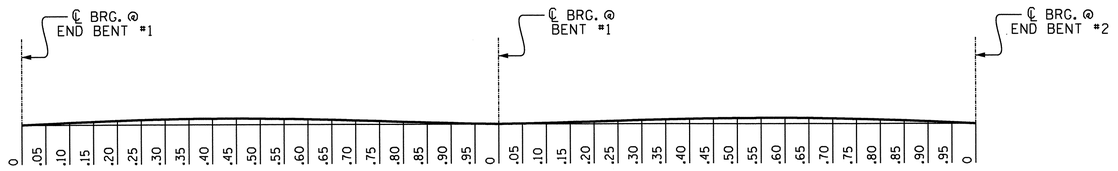

SCHEMATIC CAMBER ORDINATES

SLOPE FOR THE ZERO CAMBER BASE LINE VARIES.

PROJECT NO. R-3421C

RICHMOND COUNTY

STATION: 456+99.33 -L-

STATE OF NORTH CAROLINA
DEPARTMENT OF TRANSPORTATION
RALEIGH

SUPERSTRUCTURE

DEAD LOAD DEFLECTIONS

NORTH CAROLINA PROFESSIONAL SEAL 23371 ENGINEER VIPUL A. PATEL
3/19/13

REVISIONS						SHEET NO.
NO.	BY:	DATE:	NO.	BY:	DATE:	S-67
1			3			TOTAL SHEETS
2			4			86

STR. #3

DRAWN BY : H.A. LOCKLEAR DATE : 2/12
CHECKED BY : J. P. ADAMS DATE : 5/12

18-MAR-2013 13:09
R:\Structures\Plans\str03_Y10\R-3421_SD_DL.dgn

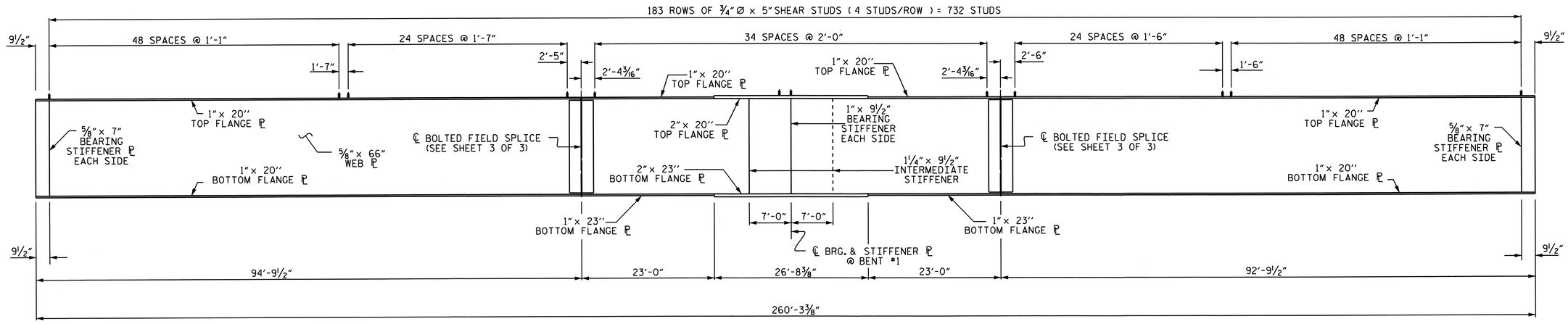

GIRDER ELEVATION

(SEE "BOLTED FIELD SPLICE DETAILS" FOR ADDITIONAL SHEAR STUDS)

FOR INTERIOR GIRDERS PLACE INTERMEDIATE STIFFENERS ON ALTERNATING SIDES OF WEB.
FOR EXTERIOR GIRDERS PLACE INTERMEDIATE STIFFENERS ON THE INSIDE OF WEB.
FOR LOCATION OF INTERMEDIATE STIFFENERS, SEE FRAMING PLAN.

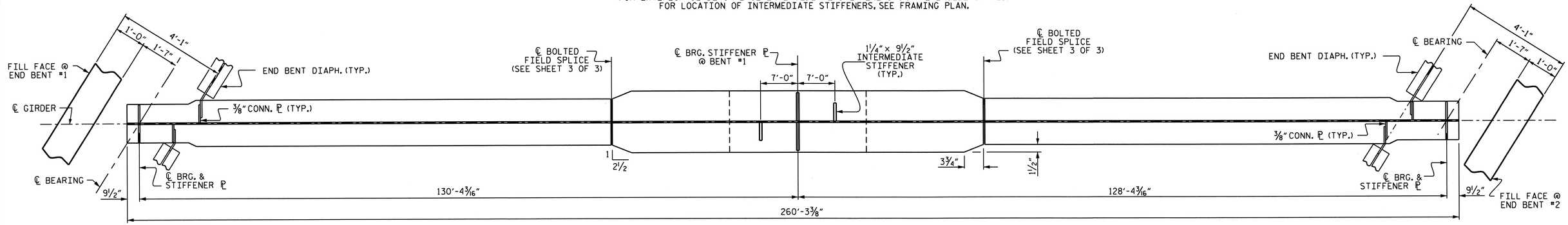

BOTTOM FLANGE DETAIL

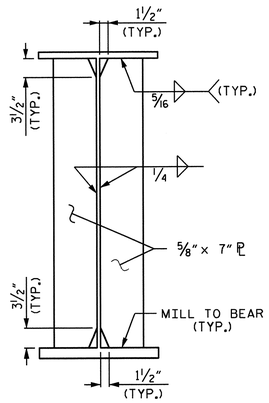

BEARING STIFFENER DETAIL
AT END BENTS

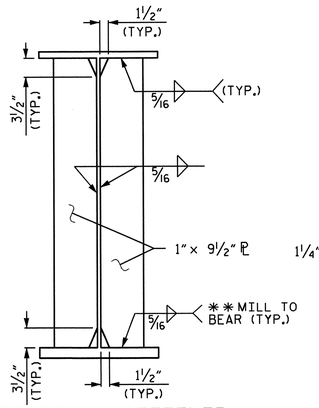

BEARING STIFFENER CONNECTOR PLATE DETAIL
AT BENT
** WELD WHEN USED AS CONNECTOR ℄.

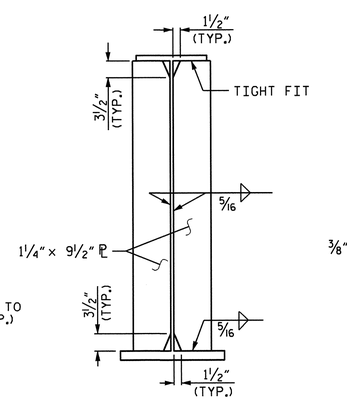

INTERMEDIATE STIFFENER PLATE DETAIL

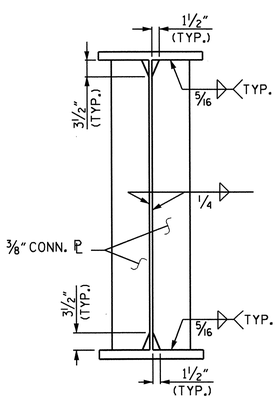

CONNECTOR PLATE DETAIL

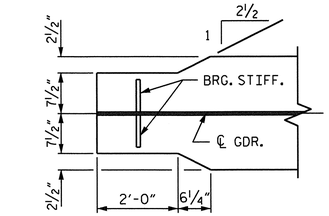

END OF GIRDER DETAIL
(BOTTOM FLANGE ONLY)

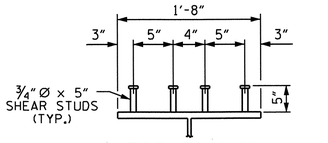

TOP FLANGE SHEAR STUD DETAILS

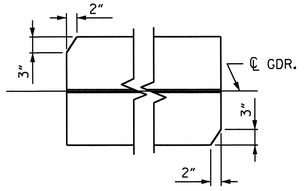

FLANGE CLIP DETAIL
(TOP FLANGE ONLY)

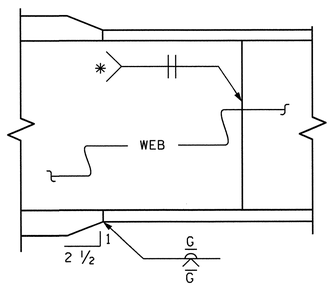

ELEVATION

TYPICAL FLANGE AND WEB BUTT JOINT
* GRIND SMOOTH AND FLUSH ON OUTER FACE OF EXTERIOR GIRDERS

NORTH CAROLINA PROFESSIONAL SEAL 23371 ENGINEER VIJAY A. PATEL
3|19|13

PROJECT NO. R-3421C
RICHMOND COUNTY
STATION: 456+99.33 -L-
SHEET 1 OF 3

STATE OF NORTH CAROLINA
DEPARTMENT OF TRANSPORTATION
RALEIGH

SUPERSTRUCTURE
STRUCTURAL STEEL DETAILS

REVISIONS						SHEET NO.
NO.	BY:	DATE:	NO.	BY:	DATE:	S-68
1			3			TOTAL SHEETS
2			4			86

DRAWN BY : J. G. KHARVA DATE : 3/12
CHECKED BY : J. P. ADAMS DATE : 5/12

18-MAR-2013 13:09
R:\Structures\Plans\str03_Y10\R-3412c_sd_SS_03.dgn
vpatel

STR. #3

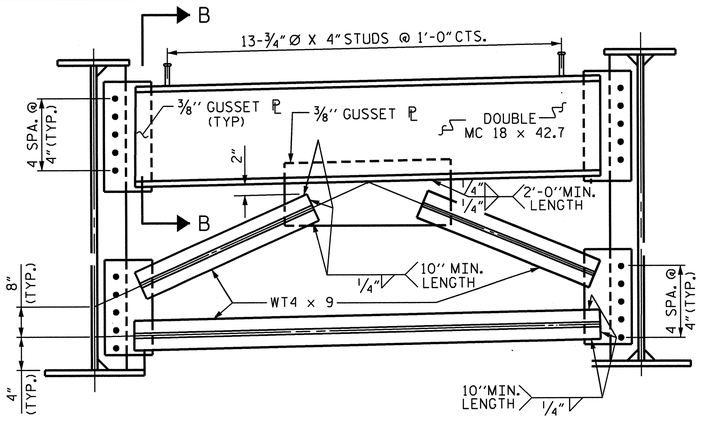

END BENT DIAPHRAGMS (D1)

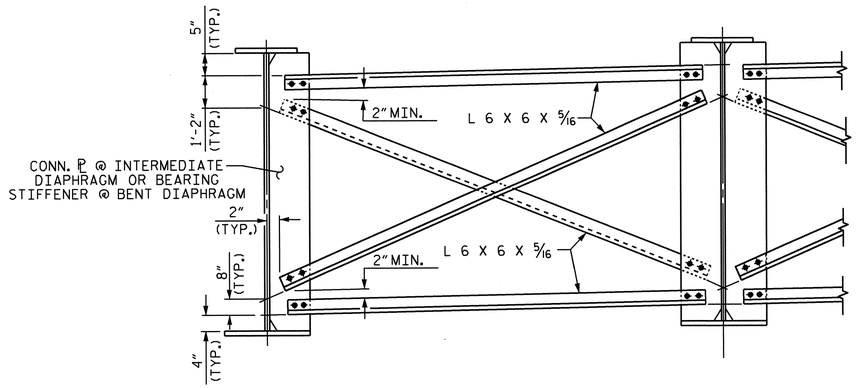

TYPICAL INTERMEDIATE DIAPHRAGM (D2) OR TYPICAL BENT DIAPHRAGM (D3)

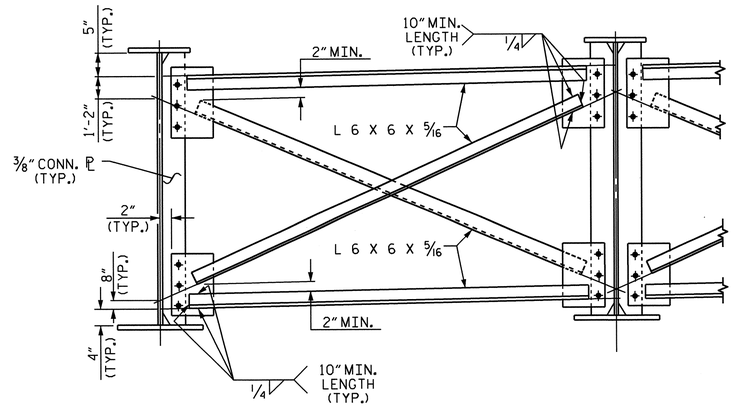

TYPICAL OPTIONAL INTERMEDIATE DIAPHRAGM (D2)

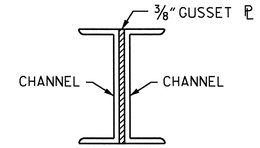

SECTION B-B

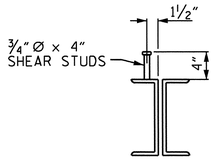

END BENT CROSSFRAME SHEAR STUD DETAILS

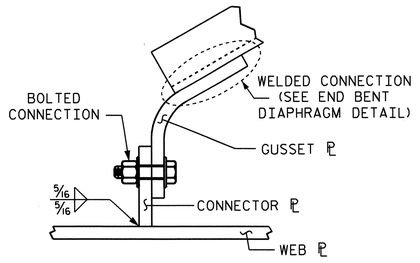

WELD DETAIL FOR CURVED GUSSET PL

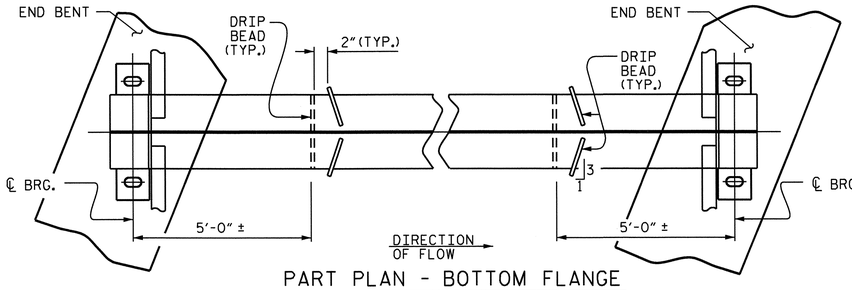

PART PLAN - BOTTOM FLANGE

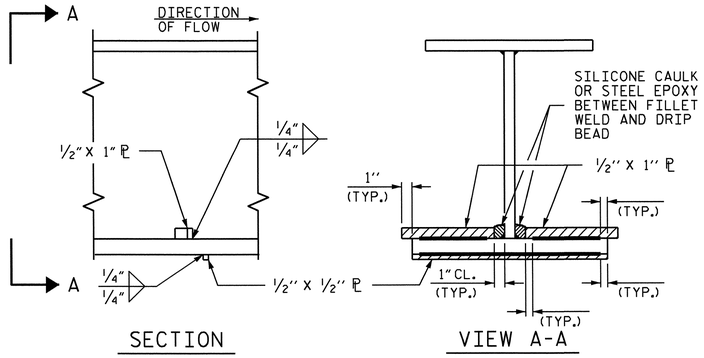

SECTION VIEW A-A

DRIP BEAD DETAILS

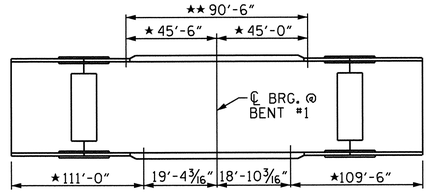

CHARPY V-NOTCH TEST FOR GIRDERS

★ CHARPY V-NOTCH TEST ARE REQUIRED FOR ALL TOP OR BOTTOM FLANGE PLATES WHICH FALL WITHIN THESE LIMITS. CHARPY V-NOTCH TEST ARE REQUIRED FOR ALL WEB PLATES AND ALL SPLICE PLATES. IF THE PREMITTED SHOP FLANGE SPLICE IS NOT USED, CHARPY V-NOTCH TESTS WILL BE REQUIRED FOR THE ENTIRE FLANGE PLATE. FOR CHARPY V-NOTCH TEST, SEE ARTICLE 1072-9 OF THE STANDARD SPECIFICATIONS.

★★ NO WELDING OF FORMS OR FALSEWORK TO THE TOP FLANGE WILL BE PERMITTED IN THIS REGION.

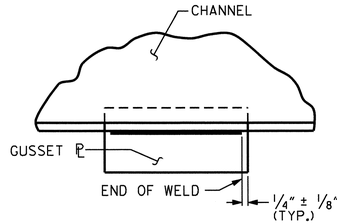

TYPICAL GUSSET PLATE CONNECTION

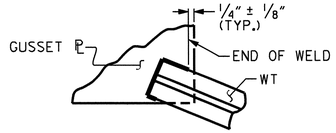

TYPICAL "TEE" TO GUSSET PLATE CONNECTION

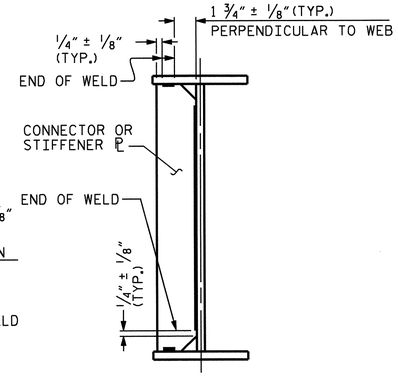

TYPICAL STIFFENER OR CONNECTOR PLATE CONNECTIONS

WELD TERMINATION DETAILS

PROJECT NO. R-3421C

RICHMOND COUNTY

STATION: 456+99.33 -L-

SHEET 2 OF 3

STATE OF NORTH CAROLINA
DEPARTMENT OF TRANSPORTATION
RALEIGH

SUPERSTRUCTURE

STRUCTURAL STEEL DETAILS

NORTH CAROLINA PROFESSIONAL SEAL 23371 ENGINEER VIMAL A. PATEL
3/19/13

REVISIONS						SHEET NO.
NO.	BY:	DATE:	NO.	BY:	DATE:	S-69
1			3			TOTAL SHEETS
2			4			86

DRAWN BY : J. G. KHARVA DATE : 3/12
CHECKED BY : J. P. ADAMS DATE : 5/12

18-MAR-2013 13:11
R:\Structures\Plans\str03_Y10\R-3412c_sd_SS_03.dgn
vpatel

STR. #3

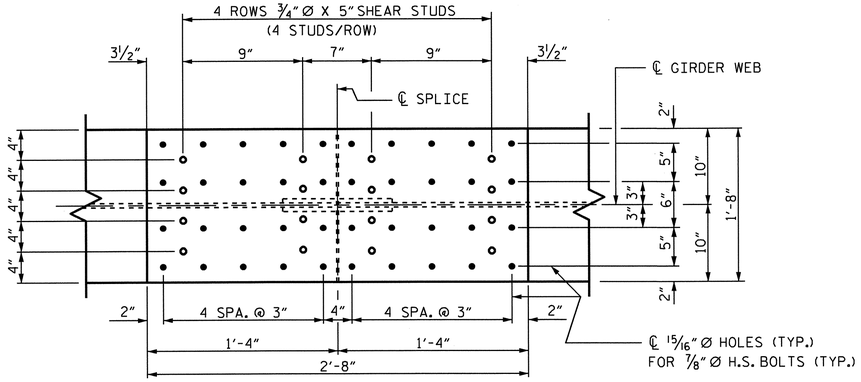

PLAN (TOP OF TOP FLANGE)

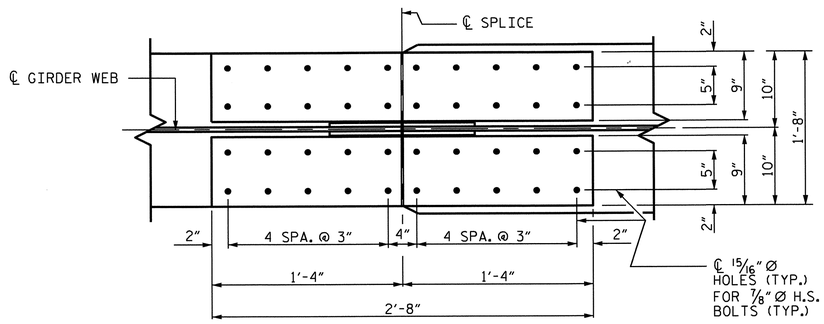

PLAN (TOP OF BOTTOM FLANGE)

NOTES

ALL STRUCTURAL STEEL SHALL BE AASHTO M270 GRADE 50W AND PAINTED IN ACCORDANCE WITH SYSTEM 4 OF ARTICLE 442-8 OF THE STANDARD SPECIFICATIONS UNLESS OTHERWISE NOTED ON THE PLANS

ALL DIMENSIONS SHOWN ARE HORIZONTAL OR VERTICAL, UNLESS OTHERWISE NOTED.

ALL FIELD CONNECTIONS TO BE 7/8" DIA. HIGH STRENGTH BOLTS UNLESS OTHERVISE NOTED.

BEARING STIFFENERS ARE TO BE PLACED NORMAL TO THE WEB OF THE GIRDER AND SHALL BE PLUMB.

TENSION ON THE AASHTO M164 BOLTS SHALL BE CALIBRATED USING DIRECT TENSION INDICATOR WASHERS IN ACCORDANCE WITH ARTICLE 440-8 OF THE STANDARD SPECIFICATIONS.

FABRICATORS SHALL DETAIL DIAPHRAGM MEMBERS AND CONNECTIONS FOR FULL DEAD LOAD FIT UP. GIRDERS SHALL BE PLUMB AFTER THE FULL AMOUNT OF DEAD LOAD IS APPLIED.

STUDS ON GIRDERS MAY BE SHIFTED UP TO 1" IF NECESSARY TO CLEAR FLANGE SPLICE WELD.

SHEAR STUDS ARE TO BE SHOP WELDED ON TOP OF PLATE BEFORE FIELD ASSEMBLY

PERMITTED FLANGE AND WEB SHOP SPLICES SHALL NOT BE LOCATED WITHIN 15 FEET OF MAXIMUM DEAD LOAD DEFLECTION (NOR WITHIN 15 FEET OF INTERMEDIATE BEARINGS OF CONTINUOUS UNITS). KEEP 2 FEET MINIMUM BETWEEN WEB AND FLANGE SHOP SPLICES. KEEP 6" MINIMUM BETWEEN CONNECTOR PLATE OR TRANSVERSE STIFFENER WELDS AND WEB OR FLANGE SHOP SPLICES.

END OF BEAMS AND GIRDERS SHALL BE PLUMB.

BEARING STIFFENER MAY REQUIRE COPING IF WIDER THAN BOTTOM FLANGE.

STRUCTURAL STEEL ERECTION IN A CONTINUOUS UNIT SHALL BE COMPLETE BEFORE FALSEWORK OR FORMS ARE PLACED ON THE UNIT.

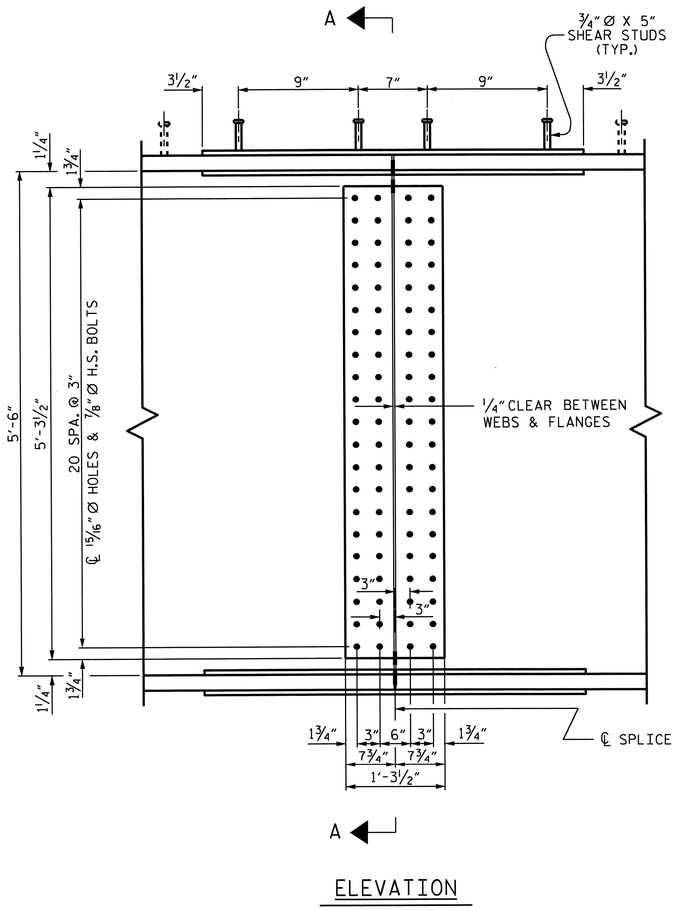

ELEVATION

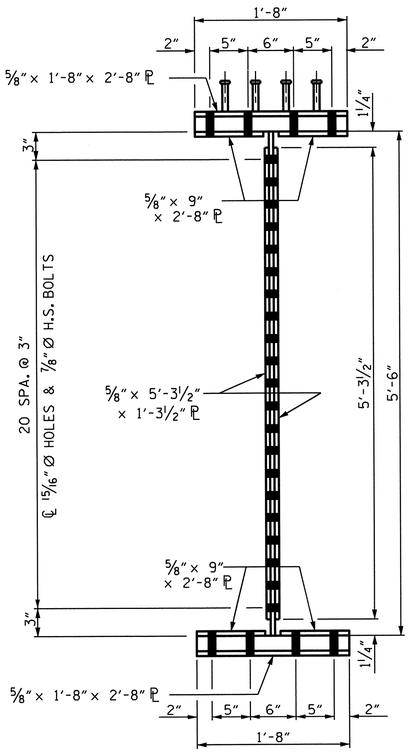

SECTION A-A

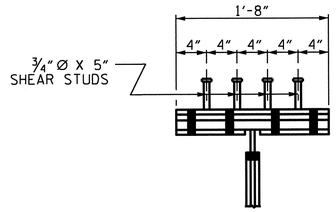

SHEAR STUD DETAIL
FOR TOP FLANGE SPLICE PLATE

BOLTED FIELD SPLICE DETAILS

(TYPICAL EACH FIELD SPLICE)

DRAWN BY : J. G. KHARVA DATE : 3/12
CHECKED BY : J. P. ADAMS DATE : 5/12

18-SEP-2013 12:18
Y:\structures\Plans\str03_Y10\R-3412c_sd_SS_03.dgn
thcarroll

NORTH CAROLINA PROFESSIONAL SEAL 23371 ENGINEER VIPUL A. PATEL
9/19/13

PROJECT NO. R-3421C
RICHMOND COUNTY
STATION: 456+99.33 -L-

SHEET 3 OF 3

STATE OF NORTH CAROLINA
DEPARTMENT OF TRANSPORTATION
RALEIGH

SUPERSTRUCTURE

STRUCTURAL STEEL DETAILS

REVISIONS						SHEET NO.
NO.	BY:	DATE:	NO.	BY:	DATE:	S-70
1			3			TOTAL SHEETS
2			4			86

STR. #3

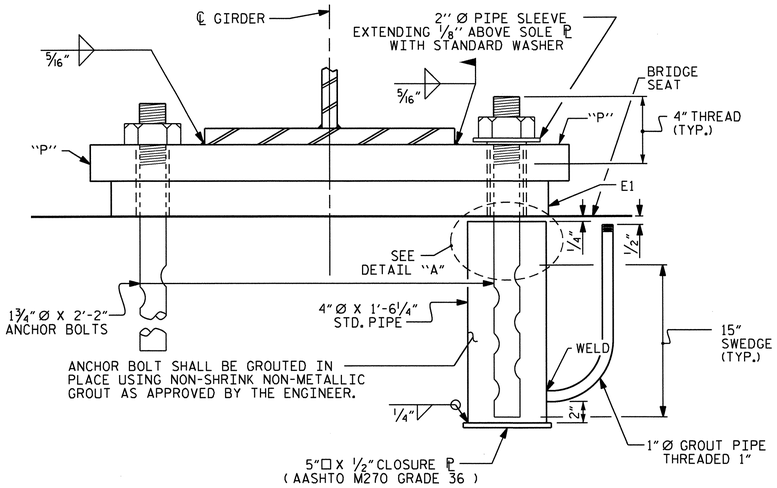

END VIEW
EXPANSION

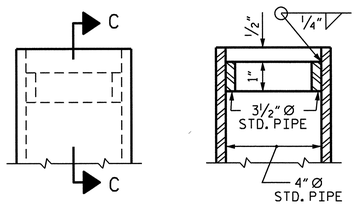

SECTION C-C

DETAIL "A"

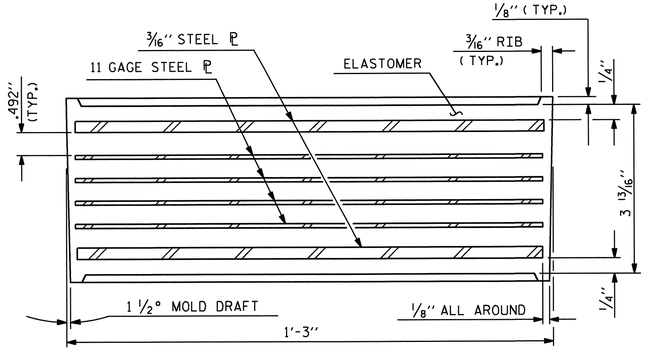

TYPICAL SECTION OF ELASTOMERIC BEARING

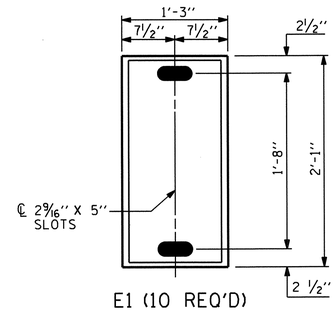

E1 (10 REQ'D)

PLAN VIEW OF ELASTOMERIC BEARING

TYPE VI

50 DUROMETER HARDNESS

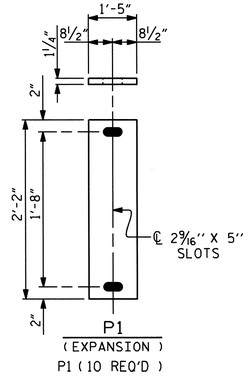

P1
(EXPANSION)
P1 (10 REQ'D)

SOLE PLATE DETAILS

NOTES

AT ALL FIXED POINTS OF SUPPORT, NUTS FOR ANCHOR BOLTS ARE TO BE TIGHTENED FINGER TIGHT AND THEN BACKED OFF ½ TURN. THE THREAD OF THE NUT AND BOLT SHALL THEN BE BURRED WITH A SHARP POINTED TOOL.

THE 2" Ø PIPE SLEEVE SHALL BE CUT FROM SCHEDULE 40 PVC PLASTIC PIPE. THE PVC PLASTIC PIPE SHALL MEET THE REQUIREMENTS OF ASTM D1785.

THE PAYMENT FOR THE PIPE SLEEVES SHALL BE INCLUDED IN THE SEVERAL PAY ITEMS.

FOR AASHTO M270 GRADE 50W STRUCTURAL STEEL, SOLE PLATE SHALL BE AASHTO M270 GRADE 50W AND SHALL NOT BE GALVANIZED. ANCHOR BOLTS, NUTS AND WASHERS SHALL BE GALVANIZED IN ACCORDANCE WITH THE STANDARD SPECIFICATIONS.

ANCHOR BOLTS SHALL MEET THE REQUIREMENTS OF ASTM A449. NUTS SHALL MEET THE REQUIREMENTS OF AASHTO M291-DH OR AASHTO M292-2H. WASHERS SHALL MEET THE REQUIREMENTS OF AASHTO M293. SHOP DRAWINGS ARE NOT REQUIRED FOR ANCHOR BOLTS, NUTS AND WASHERS. SHOP INSPECTION IS REQUIRED.

WHEN FIELD WELDING THE SOLE PLATE TO THE GIRDER FLANGE, USE TEMPERATURE INDICATING WAX PENS, OR OTHER SUITABLE MEANS, TO ENSURE THAT THE TEMPERATURE OF THE SOLE PLATE DOES NOT EXCEED 300°F. TEMPERATURES ABOVE THIS MAY DAMAGE THE ELASTOMER.

ALL SURFACES OF BEARING PLATES SHALL BE SMOOTH AND STRAIGHT.

THE ELASTOMER IN THE STEEL REINFORCED BEARINGS SHALL HAVE A SHEAR MODULUS OF 0.160 KSI, IN ACCORDANCE WITH AASHTO M251.

FOR STEEL REINFORCED ELASTOMERIC BEARINGS, SEE SPECIAL PROVISIONS.

THE CLOSURE PLATE, GROUT PIPE AND STANDARD PIPE FOR THE EXPANSION ASSEMBLY NEED NOT BE GALVANIZED.

THE CONTRACTOR'S ATTENTION IS CALLED TO THE FOLLOWING PROCEDURE, WHICH MAY BE REQUIRED BY THE ENGINEER, TO RESET ELASTOMERIC BEARINGS DUE TO GIRDER TRANSLATION AND END ROTATION:

1. ONCE THE DECK HAS CURED, THE GIRDERS SHALL BE JACKED THEN THE ANCHOR BOLTS AND ELASTOMERIC BEARING SLOTS CENTERED AS NEARLY AS PRACTICAL ABOUT THE BEARING STIFFENER. THIS OPERATION SHALL BE PERFORMED AT APPROXIMATELY 60°F.
2. AFTER CENTERING THE ELASTOMERIC BEARING SLOTS AND ANCHOR BOLTS, THE ANCHOR BOLTS SHALL BE GROUTED.

THE CONTRACTOR MAY PROPOSE ALTERNATE METHODS, PROVIDED DETAILS ARE SUBMITTED TO THE ENGINEER FOR REVIEW AND APPROVAL.

MAXIMUM ALLOWABLE SERVICE LOADS	
D.L.+L.L. (NO IMPACT)	
TYPE VI	375 k

PROJECT NO. R-3421C

RICHMOND COUNTY

STATION: 456+99.33 -L-

STATE OF NORTH CAROLINA
DEPARTMENT OF TRANSPORTATION
RALEIGH

STANDARD

ELASTOMERIC BEARING DETAILS

(STEEL SUPERSTRUCTURE)

NORTH CAROLINA PROFESSIONAL SEAL 23371 ENGINEER VIRAL A. PATEL
10/30/13

REVISIONS						SHEET NO.
NO.	BY:	DATE:	NO.	BY:	DATE:	S-71
1			3			TOTAL SHEETS
2			4			86

STR. #3 STD. NO. EB2 (SHT 3b)

ASSEMBLED BY : J. G. KHARVA	DATE : 3/12	
CHECKED BY : J. P. ADAMS	DATE : 5/12	
DRAWN BY : EEM 10/95	REV. 5/1/06	TLA/GM
CHECKED BY : PEK 10/95	REV. 10/1/11	MAA/GM
	REV. 6/13	AAC/MAA

29-OCT-2013 10:59
R:\Structures\Plans\str03_Y10\R-3412c_sd_BG_03.dgn
thcarroll

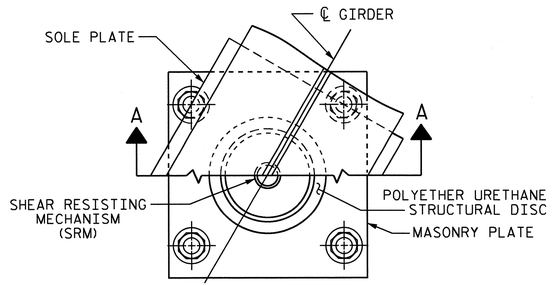

CUT-AWAY PLAN

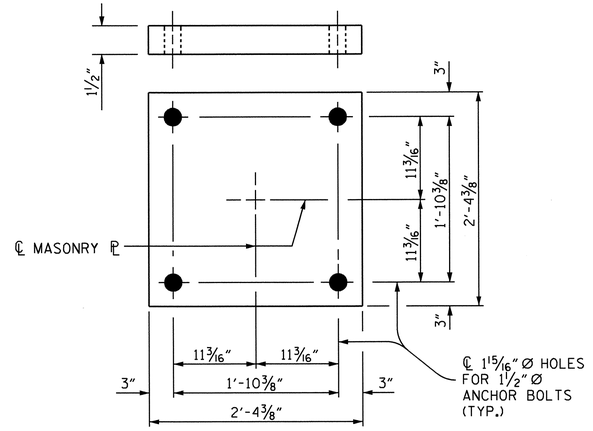

PLAN
M1 (5 REQ'D)

MASONRY PLATE DETAILS

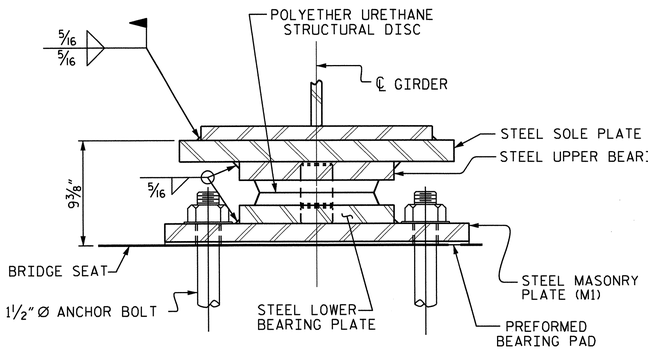

SECTION A-A

DB1, FIXED
(5 REQ'D)

DISC BEARING DETAILS

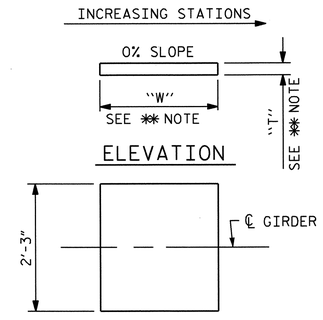

✱✱ NOTE:
DIMENSIONS "W" AND "T" ARE TO BE DETERMINED BY THE MANUFACTURER.

PLAN
S1 (5 REQ'D)

SOLE PLATE DETAILS

NOTES

FOR DISC BEARINGS, SEE SPECIAL PROVISIONS.

AT ALL POINTS OF SUPPORT, NUTS FOR ANCHOR BOLTS SHALL BE TIGHTENED FINGER TIGHT AND GIVEN AN ADDITIONAL 1/4 TURN. THE THREAD OF THE NUT AND BOLT SHALL THEN BE BURRED WITH A SHARP POINTED TOOL.

WHEN WELDING THE SOLE PLATE TO THE GIRDER, USE TEMPERATURE INDICATING WAX PENS, OR OTHER SUITABLE MEANS, TO ENSURE THAT THE TEMPERATURE OF THE BEARING DOES NOT EXCEED 250°F TEMPERATURES ABOVE THIS MAY DAMAGE THE TFE OR ELASTOMER.

SOLE PLATES SHOULD BE WELDED TO BEAM FLANGES AND ANCHOR BOLTS SHOULD BE GROUTED BEFORE FALSEWORK IS PLACED.

ALL SURFACES OF BEARING PLATES SHALL BE SMOOTH AND STRAIGHT.

FOR THERMAL SPRAYED COATINGS (METALLIZATION), SEE SPECIAL PROVISIONS.

TABLE FOR UNFACTORED LOADS AND MOVEMENT

BEARING	LOCATION	VERTICAL LOAD (KIPS)				LATERAL LOAD (KIPS)	TOTAL MOVEMENT (INCHES)
		DEAD		LIVE	TOTAL		
		DC	DW	LL+IMP.			
DB1 (FIX.)	BENT #1	373	51	282	706	141	———

PROJECT NO. R-3421C
RICHMOND COUNTY
STATION: 456+99.33 -L-

STATE OF NORTH CAROLINA
DEPARTMENT OF TRANSPORTATION
RALEIGH

SUPERSTRUCTURE

DISC BEARING DETAILS

NORTH CAROLINA PROFESSIONAL SEAL 23371 ENGINEER VIRUL A. PATEL
3/19/13

REVISIONS						SHEET NO.
NO.	BY:	DATE:	NO.	BY:	DATE:	S-72
1			3			TOTAL SHEETS
2			4			86

STR. #3

DRAWN BY : J. G. KHARVA DATE : 06/12
CHECKED BY : J. P. ADAMS DATE : 06/12

08-AUG-2012 15:07
Y:\structures\Plans\str03_Y10\R-3412c_sd_BG_03.dgn
jpadams

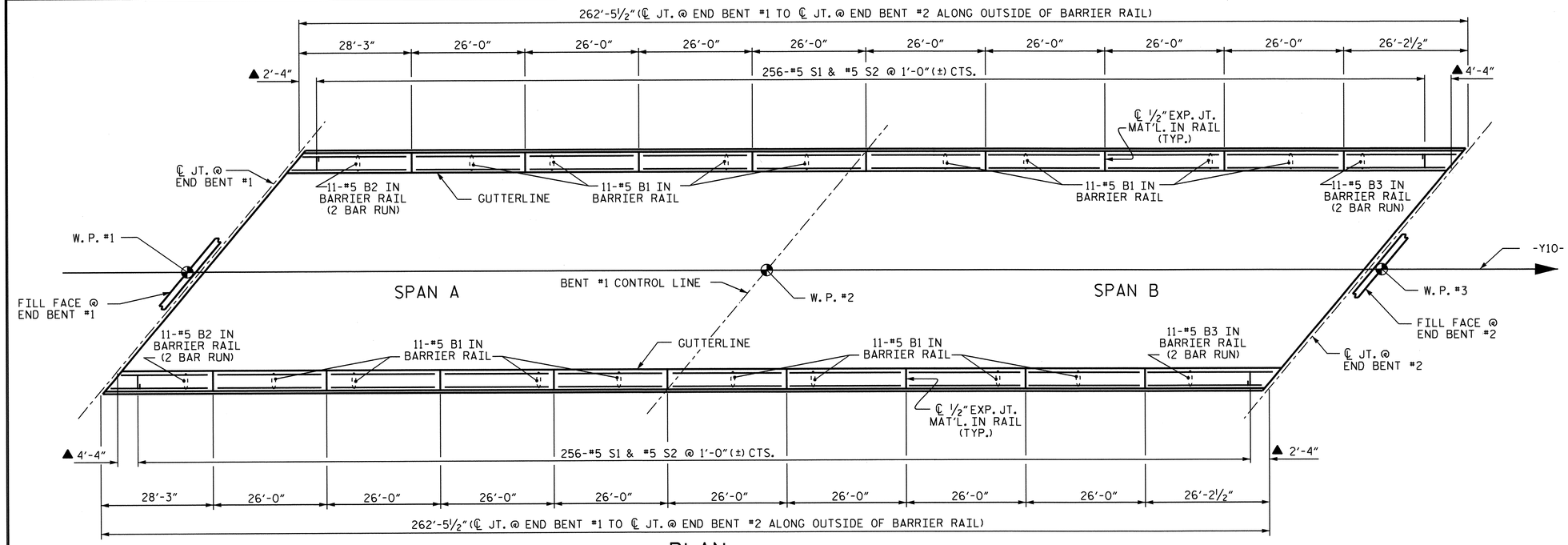

▲ FOR REINFORCING STEEL AT ENDS OF RAIL, SEE "END OF RAIL DETAILS".

PLAN

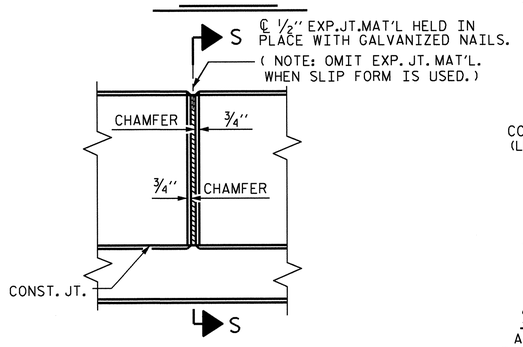

ELEVATION AT EXPANSION JOINTS

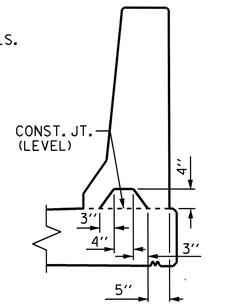

SECTION S-S
AT DAM IN OPEN JOINT
(THIS IS TO BE USED ONLY WHEN SLIP FORM IS USED)

NOTES

THE BARRIER RAIL IN EACH CONTINUOUS UNIT SHALL NOT BE CAST UNTIL ALL SLAB CONCRETE IN THAT UNIT HAS BEEN CAST AND HAS REACHED A MINIMUM COMPRESSIVE STRENGTH OF 3,000 PSI.

WHEN FOAM JOINT SEAL IS REQUIRED, THE JOINT IN THE DECK SHALL BE SAWED PRIOR TO THE CASTING OF BARRIER RAIL.

ALL REINFORCING STEEL IN BARRIER RAILS SHALL BE EPOXY COATED.

THE #5 S3, S4, S5 AND S6 BARS SHALL BE INSTALLED, USING AN ADHESIVE ANCHORING SYSTEM, AFTER SAWING THE JOINT. THE YIELD LOAD FOR THE #5 S3, S4, S5 AND S6 BARS IS 18.6 KIPS. FIELD TESTING FOR THE ADHESIVE BONDING SYSTEM IS NOT REQUIRED.

GROOVED CONTRACTION JOINTS, ½" IN DEPTH, SHALL BE TOOLED IN ALL EXPOSED FACES OF THE BARRIER RAIL AND IN ACCORDANCE WITH ARTICLE 825-10(B) OF THE STANDARD SPECIFICATIONS. THE CONTRACTION JOINT SHALL BE LOCATED AT EACH THIRD POINT BETWEEN BARRIER RAIL EXPANSION JOINTS. ONLY ONE CONTRACTION JOINT IS REQUIRED AT MIDPOINT OF BARRIER RAIL SEGMENTS LESS THAN 20 FEET IN LENGTH AND NO CONTRACTION JOINTS ARE REQUIRED FOR THOSE SEGMENTS LESS THAN 10 FEET IN LENGTH.

BAR TYPES

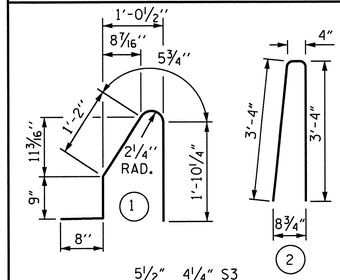

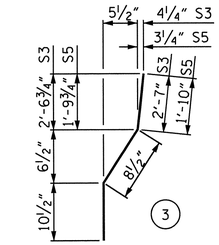

ALL BAR DIMENSIONS ARE OUT TO OUT

BILL OF MATERIAL

FOR CONCRETE BARRIER RAIL ONLY

BAR	NO.	SIZE	TYPE	LENGTH	WEIGHT
* S1	512	#5	1	4'-11"	2,626
* S2	512	#5	2	7'-0"	3,738
* S3	4	#5	3	4'-2"	17
* S4	4	#5	STR	4'-0"	17
* S5	8	#5	3	3'-5"	29
* S6	8	#5	STR	3'-3"	27
* B1	176	#5	STR	25'-7"	4,696
* B2	44	#5	STR	15'-9"	723
* B3	44	#5	STR	14'-10"	681

* EPOXY COATED REINFORCING STEEL	12,554 LBS.
CLASS AA CONCRETE	71.4 CU. YDS.
CONCRETE BARRIER RAIL	524.92 LIN. FT.

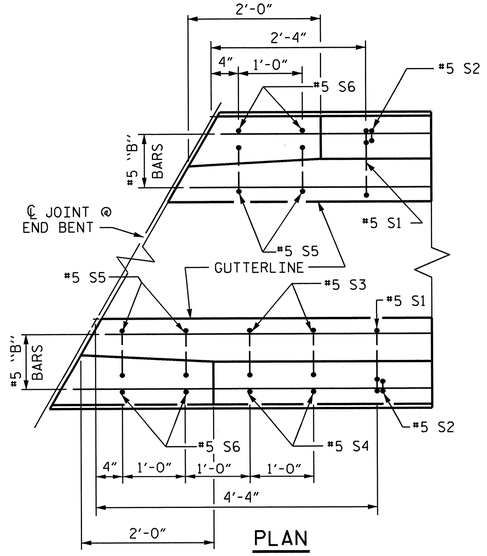

PLAN

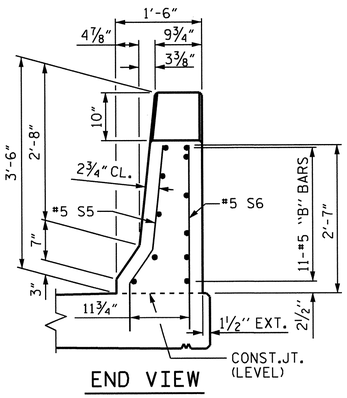

END VIEW

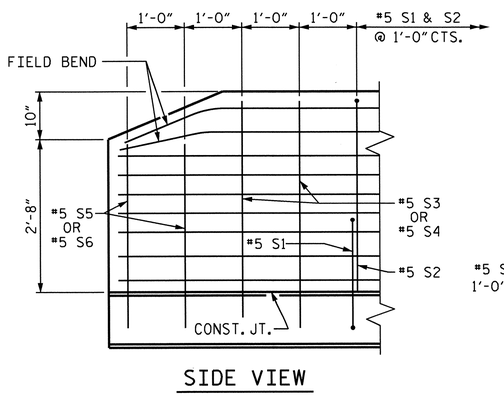

SIDE VIEW

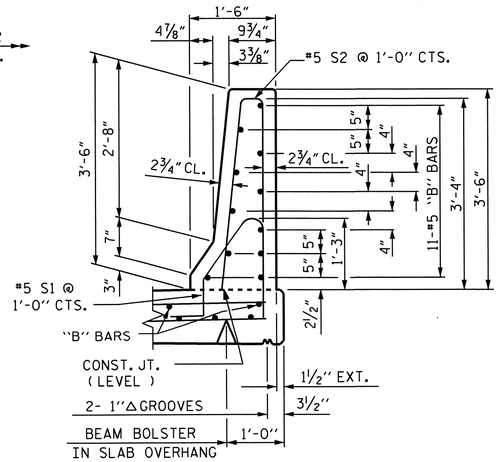

SECTION THRU RAIL

PROJECT NO. R-3421C

RICHMOND COUNTY

STATION: 456+99.33 -L-

STATE OF NORTH CAROLINA
DEPARTMENT OF TRANSPORTATION
RALEIGH

STANDARD

CONCRETE BARRIER RAIL

REVISIONS						SHEET NO.
NO.	BY:	DATE:	NO.	BY:	DATE:	S-73
1			3			TOTAL SHEETS
2			4			86

STR. #3

STD. NO. CBR1 (SHT 2)

ASSEMBLED BY : J. G. KHARVA	DATE : 3/12	
CHECKED BY : J. P. ADAMS	DATE : 6/12	
DRAWN BY : ARB 5/87	REV. 10/1/11	MAA/GM
CHECKED BY : SJD 9/87	REV. 7/12	MAA/GM
	REV. 10/12	MAA/GM

END OF RAIL DETAILS

FOR ADHESIVE ANCHORING AT SAWED JOINTS

NORTH CAROLINA PROFESSIONAL SEAL 23371 ENGINEER VIRUL A. PATEL
3/19/13

18-MAR-2013 13:13
R:\Structures\Plans\str03_Y10\R-3412c_sd_BR_03.dgn
vpatel

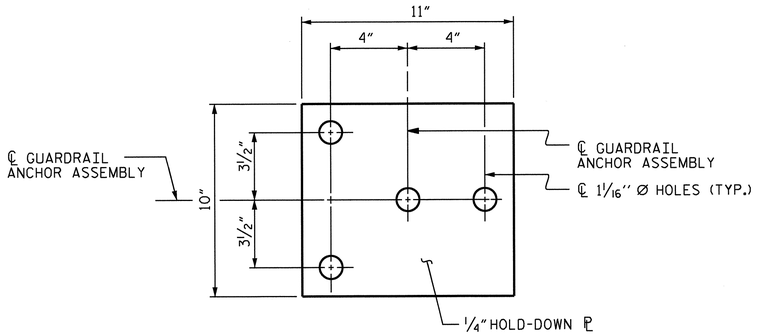

PLAN

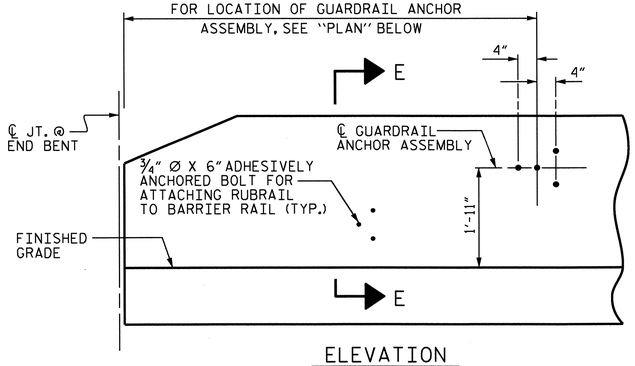

ELEVATION

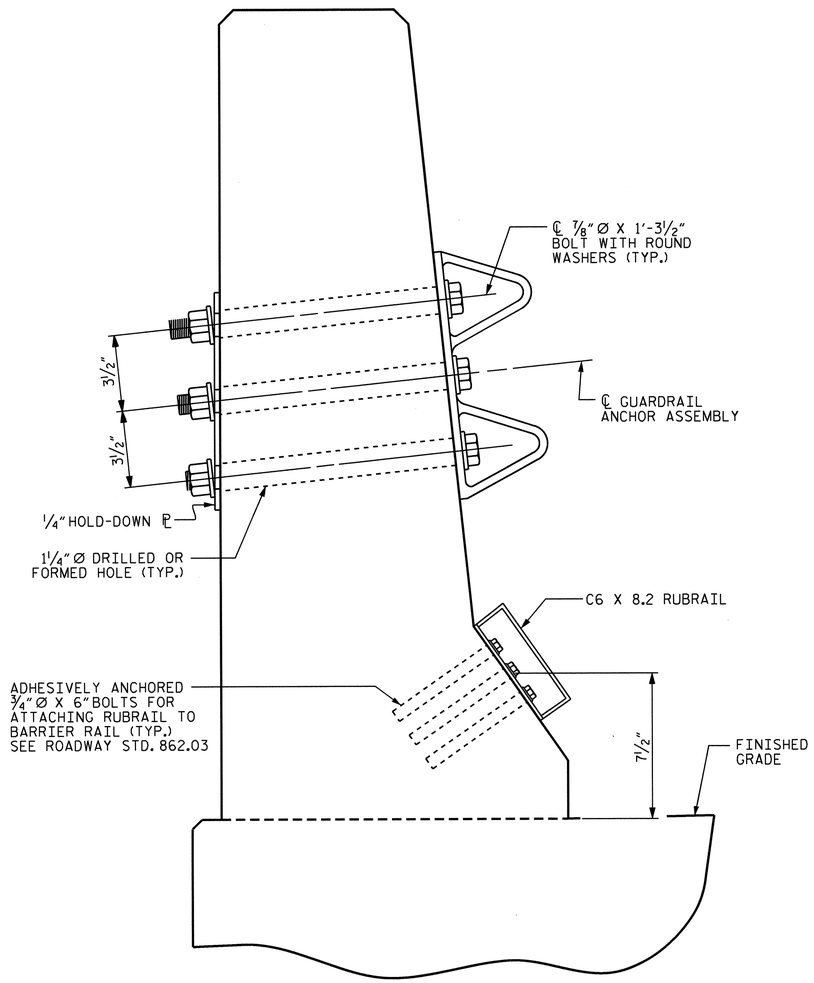

SECTION E-E

GUARDRAIL ANCHOR ASSEMBLY DETAILS

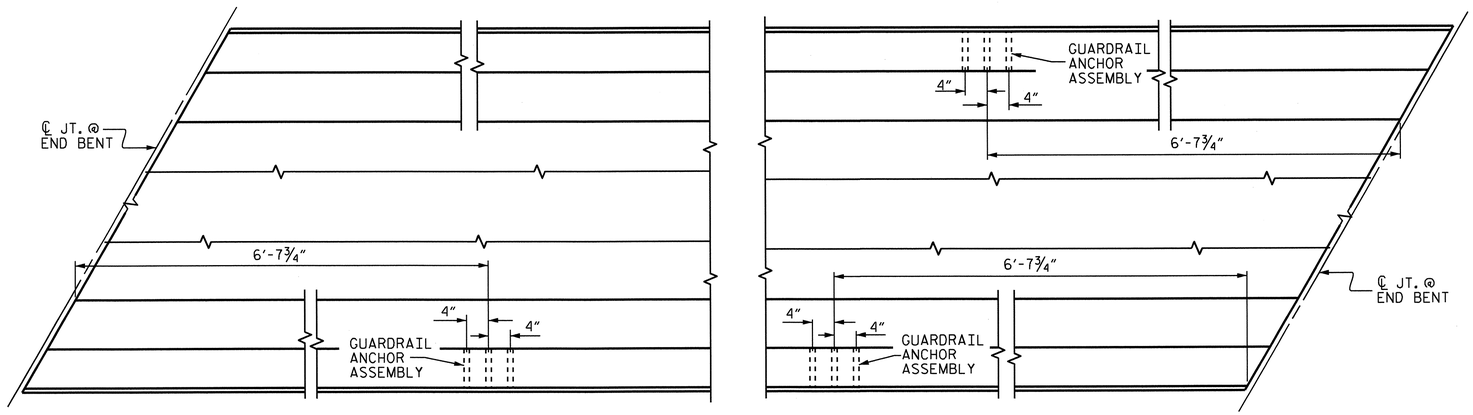

PLAN

LOCATION OF ANCHORS FOR GUARDRAIL

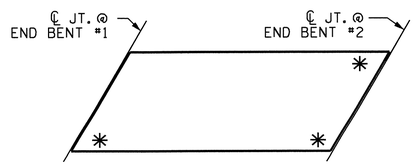

SKETCH SHOWING POINTS OF ATTACHMENTS

✳ DENOTES GUARDRAIL ANCHOR ASSEMBLY

NOTES

THE GUARDRAIL ANCHOR ASSEMBLY SHALL CONSIST OF A 1/4" HOLD-DOWN PLATE AND 4 - 7/8" Ø BOLTS WITH NUTS AND WASHERS, RUBRAIL, AND ADHESIVELY ANCHORED BOLTS.

THE HOLD-DOWN PLATE SHALL CONFORM TO AASHTO M270 GRADE 36. AFTER FABRICATION, THE HOLD-DOWN PLATE SHALL BE HOT-DIP GALVANIZED IN ACCORDANCE WITH AASHTO M111.

BOLTS SHALL CONFORM TO THE REQUIREMENTS OF ASTM A307 AND NUTS SHALL CONFORM TO THE REQUIREMENTS OF AASHTO M291. BOLTS, NUTS AND WASHERS SHALL BE GALVANIZED. (AT THE CONTRACTOR'S OPTION, STAINLESS STEEL BOLTS, NUTS AND WASHERS MAY BE USED AS AN ALTERNATE FOR THE 7/8" Ø GALVANIZED BOLTS, NUTS AND WASHERS. THEY SHALL CONFORM TO OR EXCEED THE MECHANICAL REQUIREMENTS OF ASTM A307. THE USE OF THIS ALTERNATE SHALL BE APPROVED BY THE ENGINEER.)

THE GUARDRAIL ANCHOR ASSEMBLY IS REQUIRED AT ALL POINTS WHERE APPROACH GUARDRAIL IS TO BE ATTACHED TO THE END OF BARRIER RAIL. FOR POINTS OF ATTACHMENT, SEE SKETCH.

AFTER INSTALLATION, THE EXPOSED THREAD OF THE BOLT SHALL BE BURRED WITH A SHARP POINTED TOOL.

THE COST OF THE GUARDRAIL ANCHOR ASSEMBLY SHALL BE INCLUDED IN THE UNIT CONTRACT PRICE BID FOR CONCRETE BARRIER RAIL.

THE 1 1/4" Ø HOLES SHALL BE FORMED OR DRILLED WITH A CORE BIT. IMPACT TOOLS WILL NOT BE PERMITTED. ANY CONCRETE DAMAGED BY THIS WORK SHALL BE REPAIRED TO THE SATISFACTION OF THE ENGINEER.

THE C6 X 8.2 RUBRAIL IS TO BE ADHESIVELY ANCHORED TO THE RAIL USING THREE 3/4" Ø X 6" BOLTS WITH WASHERS. LEVEL ONE FIELD TESTING IS REQUIRED, AND THE YIELD LOAD OF THE 3/4" Ø BOLT IS 12 KIPS. FOR ADHESIVELY ANCHORED ANCHOR BOLTS OR DOWELS, SEE STANDARD SPECIFICATIONS. SEE ROADWAY STANDARD 862.03 FOR DETAILS AND LOCATION OF THE RUBRAIL.

NORTH CAROLINA PROFESSIONAL SEAL 23371 ENGINEER VIPUL A. PATEL
3/19/13

PROJECT NO. R-3421C

RICHMOND COUNTY

STATION: 456+99.33 -L-

STATE OF NORTH CAROLINA
DEPARTMENT OF TRANSPORTATION
RALEIGH

STANDARD

GUARDRAIL ANCHORAGE FOR BARRIER RAIL

REVISIONS						SHEET NO.
NO.	BY:	DATE:	NO.	BY:	DATE:	S-74
1			3			TOTAL SHEETS
2			4			86

ASSEMBLED BY : J. G. KHARVA	DATE : 6/12	
CHECKED BY : J. P. ADAMS	DATE : 6/12	
DRAWN BY : TLA 5/06	REV. 10/1/11	MAA/GM
CHECKED BY : GM 5/06	REV. 7/12	MAA/GM
	REV. 10/12	MAA/GM

04-FEB-2013 14:36
R:\Structures\Plans\str03_Y10\R-3412c_sd_BR_03.dgn
jpadams

STR. #3 STD. NO. GRA2 (SHT 1b)

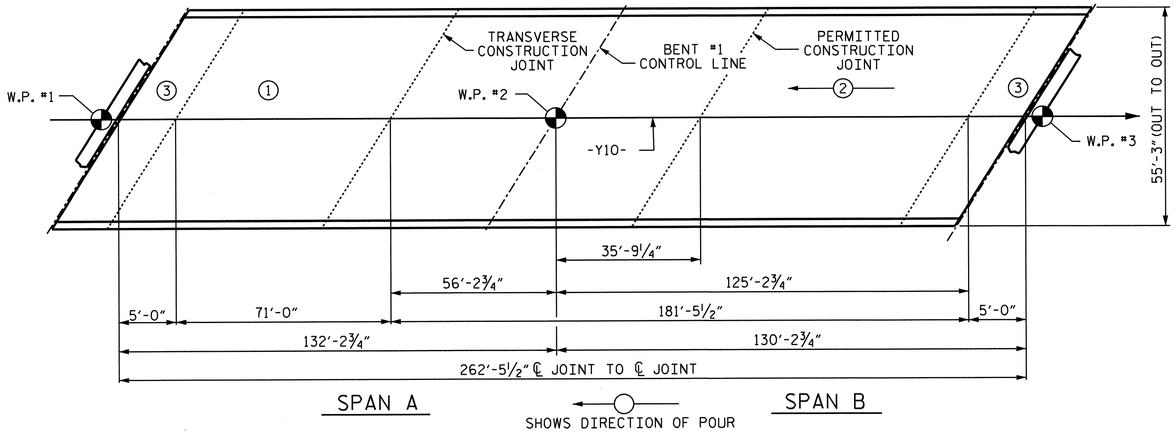

LAYOUT FOR COMPUTING AREA AND POUR SEQUENCE OF REINFORCED CONCRETE DECK SLAB

AREA CONCRETE DECK SLAB = 14,501 Sq. Ft.

REINFORCING BAR SCHEDULE (SPANS A & B)

BAR	NO.	SIZE	TYPE	LENGTH	WEIGHT	BAR	NO.	SIZE	TYPE	LENGTH	WEIGHT	BAR	NO.	SIZE	TYPE	LENGTH	WEIGHT
✱A1	537	#5	STR.	54'-11"	30758	A2	537	#5	STR.	54'-11"	30758	✱A3	6	#6	STR.	19'-2"	173
✱A101	4	#5	STR.	53'-10"	225	A201	4	#5	STR.	53'-10"	225	✱B1	150	#7	STR.	49'-8"	15228
✱A102	4	#5	STR.	52'-8"	220	A202	4	#5	STR.	52'-8"	220	✱B2	152	#4	STR.	23'-4"	2369
✱A103	4	#5	STR.	51'-5"	215	A203	4	#5	STR.	51'-5"	215	✱B3	152	#4	STR.	22'-9"	2310
✱A104	4	#5	STR.	50'-3"	210							B4	390	#5	STR.	54'-2"	22033
✱A105	4	#5	STR.	49'-1"	205	A204	4	#5	STR.	50'-3"	210						
✱A106	4	#5	STR.	47'-10"	200	A205	4	#5	STR.	49'-1"	205	✱G1	4	#5	STR.	34'-9"	145
✱A107	4	#5	STR.	46'-8"	195	A206	4	#5	STR.	47'-10"	200						
✱A108	4	#5	STR.	45'-6"	190	A207	4	#5	STR.	46'-8"	195	✱K1	12	#5	1	8'-8"	108
✱A109	4	#5	STR.	44'-4"	185	A208	4	#5	STR.	45'-6"	190	✱K2	18	#5	2	9'-2"	172
✱A110	4	#5	STR.	43'-1"	180	A209	4	#5	STR.	44'-4"	185	✱K3	24	#5	STR.	14'-2"	355
✱A111	4	#5	STR.	41'-11"	175	A210	4	#5	STR.	43'-1"	180						
✱A112	4	#5	STR.	40'-9"	170	A211	4	#5	STR.	41'-11"	175	✱S1	88	#4	3	5'-9"	338
✱A113	4	#5	STR.	39'-6"	165	A212	4	#5	STR.	40'-9"	170						
✱A114	4	#5	STR.	38'-4"	160	A213	4	#5	STR.	39'-6"	165	REINFORCING STEEL (Lbs) =					57,980
✱A115	4	#5	STR.	37'-2"	155	A214	4	#5	STR.	38'-4"	160	✱EPOXY COATED					
✱A116	4	#5	STR.	35'-11"	150	A215	4	#5	STR.	37'-2"	155	REINFORCING STEEL (Lbs) =					57,145
✱A117	4	#5	STR.	34'-9"	145	A216	4	#5	STR.	35'-11"	150						
✱A118	4	#5	STR.	33'-7"	140	A217	4	#5	STR.	34'-9"	145						
✱A119	4	#5	STR.	32'-5"	135	A218	4	#5	STR.	33'-7"	140						
✱A120	4	#5	STR.	31'-2"	130	A219	4	#5	STR.	32'-5"	135						
✱A121	4	#5	STR.	30'-0"	125	A220	4	#5	STR.	31'-2"	130						
✱A122	4	#5	STR.	28'-10"	120	A221	4	#5	STR.	30'-0"	125						
✱A123	4	#5	STR.	27'-8"	115	A222	4	#5	STR.	28'-10"	120						
✱A124	4	#5	STR.	26'-5"	110	A223	4	#5	STR.	27'-8"	115						
✱A125	4	#5	STR.	25'-3"	105	A224	4	#5	STR.	26'-5"	110						
✱A126	4	#5	STR.	24'-1"	100	A225	4	#5	STR.	25'-3"	105						
✱A127	4	#5	STR.	22'-10"	95	A226	4	#5	STR.	24'-1"	100						
✱A128	4	#5	STR.	21'-8"	90	A227	4	#5	STR.	22'-10"	95						
✱A129	4	#5	STR.	20'-6"	86	A228	4	#5	STR.	21'-8"	90						
✱A130	4	#5	STR.	19'-3"	80	A229	4	#5	STR.	20'-6"	86						
✱A131	4	#5	STR.	18'-1"	75	A230	4	#5	STR.	19'-3"	80						
✱A132	4	#5	STR.	16'-11"	71	A231	4	#5	STR.	18'-1"	75						
✱A133	4	#5	STR.	15'-9"	66	A232	4	#5	STR.	16'-11"	71						
✱A134	4	#5	STR.	14'-6"	60	A233	4	#5	STR.	15'-9"	66						
✱A135	4	#5	STR.	13'-4"	56	A234	4	#5	STR.	14'-6"	61						
✱A136	4	#5	STR.	12'-2"	51	A235	4	#5	STR.	13'-4"	56						
✱A137	4	#5	STR.	10'-11"	46	A236	4	#5	STR.	12'-2"	51						
✱A138	4	#5	STR.	9'-9"	41	A237	4	#5	STR.	10'-11"	46						
✱A139	4	#5	STR.	8'-7"	36	A238	4	#5	STR.	9'-9"	41						
✱A140	4	#5	STR.	7'-5"	31	A239	4	#5	STR.	8'-7"	36						
✱A141	4	#5	STR.	6'-2"	26	A240	4	#5	STR.	7'-5"	31						
✱A142	4	#5	STR.	5'-0"	21	A241	4	#5	STR.	6'-2"	26						
✱A143	4	#5	STR.	3'-10"	16	A242	4	#5	STR.	5'-0"	21						
✱A144	4	#5	STR.	2'-7"	11	A243	4	#5	STR.	3'-10"	16						
✱A145	4	#5	STR.	1'-5"	6	A244	4	#5	STR.	2'-7"	11						
						A245	4	#5	STR.	1'-5"	6						

BAR TYPES

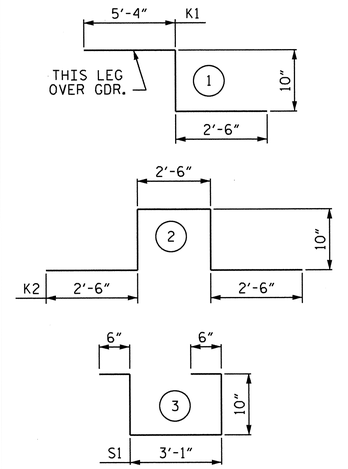

ALL BAR DIMENSIONS ARE OUT TO OUT.

QUANTITIES FOR CONCRETE BARRIER RAIL ARE NOT INCLUDED.

GROOVING BRIDGE FLOORS	
BRIDGE DECK =	12781 Sq. Ft.
APPROACH SLABS =	1311 Sq. Ft.
TOTAL =	14092 Sq. Ft.

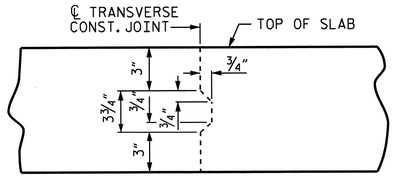

TRANSVERSE CONSTRUCTION JOINT DETAIL

NOTE: REINFORCING STEEL IN SLAB NOT SHOWN. LONGITUDINAL REINFORCING STEEL SHALL BE CONTINUOUS THRU JOINT.

SUPERSTRUCTURE REINFORCING STEEL LENGTHS ARE BASED ON THE FOLLOWING MINIMUM SPLICE LENGTHS

BAR SIZE	SUPERSTRUCTURE EXCEPT APPROACH SLABS, PARAPET, AND BARRIER RAIL		APPROACH SLABS		PARAPET AND BARRIER RAIL
	EPOXY COATED	UNCOATED	EPOXY COATED	UNCOATED	
#4	2'-0"	1'-9"	2'-0"	1'-9"	2'-9"
#5	2'-6"	2'-2"	2'-6"	2'-2"	3'-5"
#6	3'-0"	2'-7"	3'-10"	2'-7"	4'-4"
#7	5'-3"	3'-6"			
#8	6'-10"	4'-7"			

SUPERSTRUCTURE BILL OF MATERIAL

	CLASS AA CONCRETE	REINFORCING STEEL	EPOXY COATED REINFORCING STEEL
	(CU. YDS.)	(LBS.)	(LBS.)
POUR #1	135.8		
POUR #2	347.1		
POUR #3	26.6		
TOTALS**	509.5	57,980	57,145

**QUANTITIES FOR MEDIAN BARRIER RAIL AND BARRIER RAIL ARE NOT INCLUDED

NORTH CAROLINA PROFESSIONAL SEAL 23371 ENGINEER VIMAL A. PATEL
3|19|13

PROJECT NO. R-3421C
RICHMOND COUNTY
STATION: 456+99.33 -L-

STATE OF NORTH CAROLINA
DEPARTMENT OF TRANSPORTATION
RALEIGH

SUPERSTRUCTURE
BILL OF MATERIAL

REVISIONS						SHEET NO.
NO.	BY:	DATE:	NO.	BY:	DATE:	S-75
1			3			TOTAL SHEETS
2			4			86

DRAWN BY : J. G. KHARVA DATE : 03/12
CHECKED BY : J. P. ADAMS DATE : 06/12

18-MAR-2013 13:14
R:\Structures\Plans\str03_Y10\R-3412c_sd_BM_03.dgn
vpatel

STR. #3

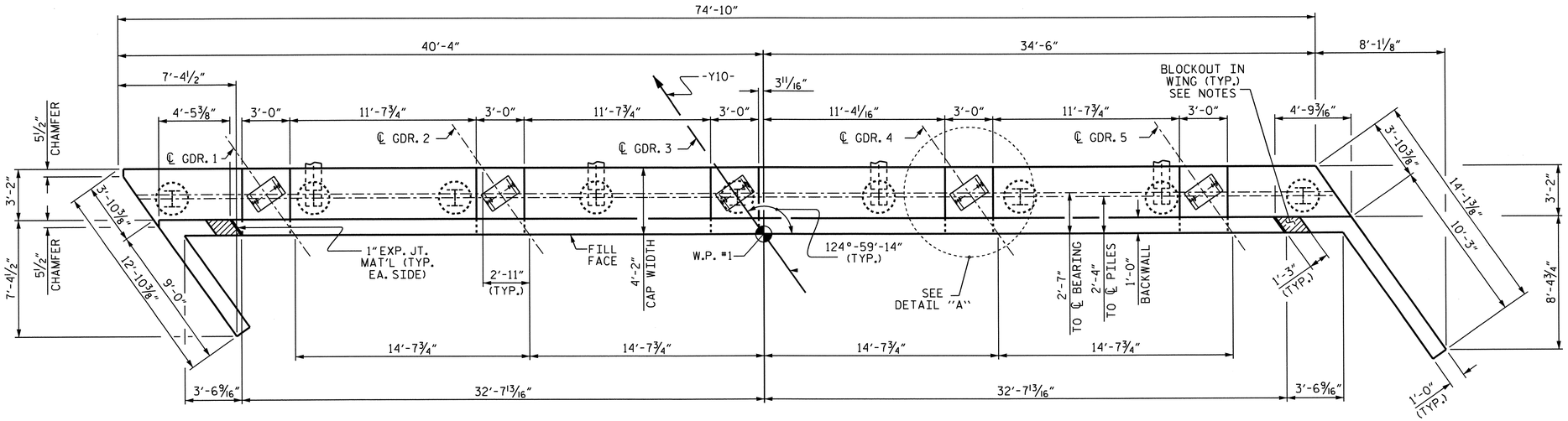

PLAN

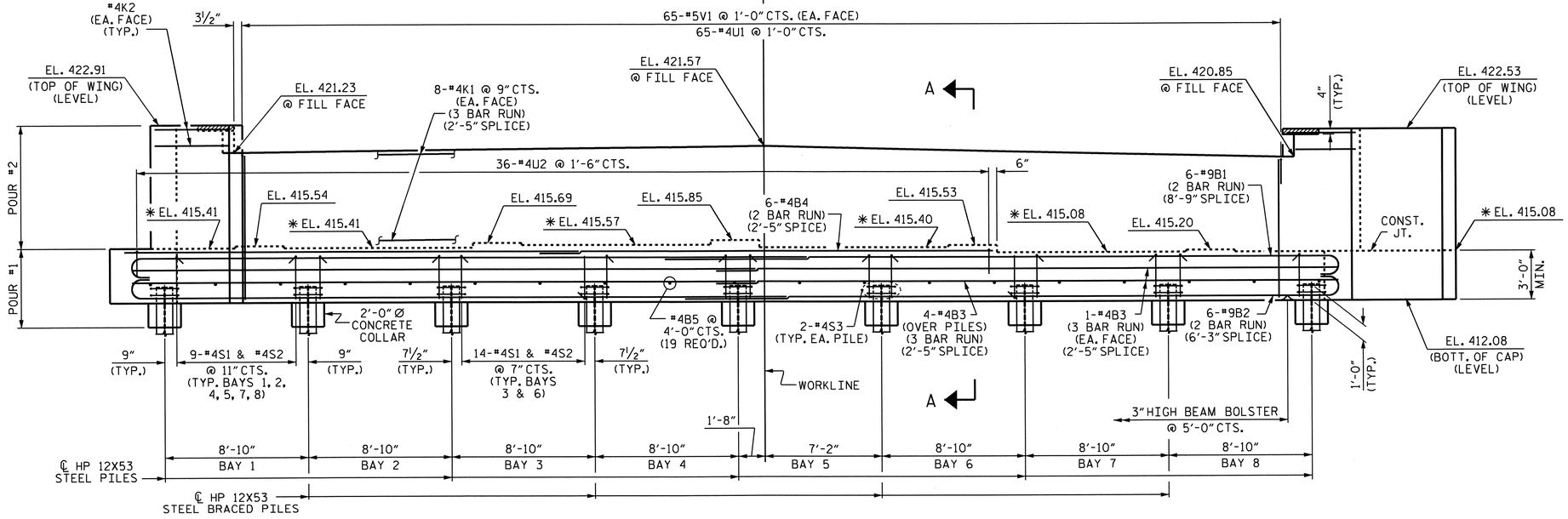

ELEVATION

*FOR LOCATION OF ELEVATIONS BETWEEN BRIDGE BUILDUPS, SEE SHEET 3 OF 3.

NOTES

STIRRUPS IN CAP MAY BE SHIFTED AS NECESSARY TO CLEAR ANCHOR BOLTS.

BACKWALL SHALL BE PLACED BEFORE APPLYING THE EPOXY PROTECTIVE COATING.

THE TOP SURFACE AREAS OF THE END BENT CAPS SHALL BE CURED IN ACCORDANCE WITH THE STANDARD SPECIFICATIONS EXCEPT THE MEMBRANE CURING COMPOUND METHOD SHALL NOT BE USED.

THE TOP SURFACE OF THE CAP EXCEPT THE BRIDGE SEAT BUILDUPS SHALL BE SLOPED TRANSVERSELY FROM THE FILL FACE TO THE BACK FACE AT THE RATE OF 2%.

THE CONCRETE IN THE SHADED AREA OF THE WING SHALL BE POURED AFTER THE JOINT BETWEEN THE DECK AND THE APPROACH SLAB HAS BEEN SAWED AND THE BARRIER RAILS ARE CAST IF SLIP FORMING IS USED.

THE CONTRACTOR SHALL PROVIDE FOR INSTALLATION OF THE 4" DIAMETER DRAIN PIPE THROUGH THE WING WALL AS REQUIRED FOR REINFORCED BRIDGE APPROACH FILLS. SEE THE ROADWAY PLANS. REINFORCING STEEL IN THE WING WALL MAY BE SHIFTED AS NECESSARY TO CLEAR THE DRAIN PIPE.

EPOXY COAT THE END BENT CAP AFTER ADJUSTMENTS ARE MADE TO BEARINGS AND ANCHOR BOLTS ARE GROUTED.

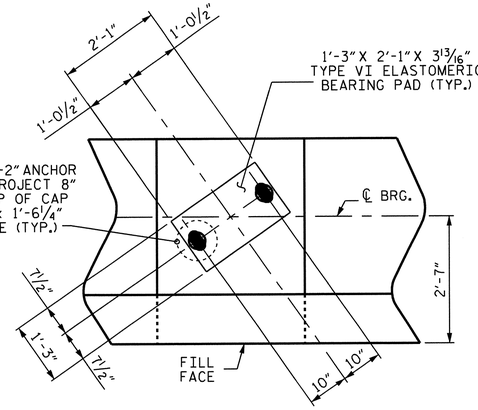

DETAIL "A"

(TYP. EA. BRIDGE SEAT)

PROJECT NO. R-3421C

RICHMOND COUNTY

STATION: 456+99.33 -L-

SHEET 1 OF 3

STATE OF NORTH CAROLINA
DEPARTMENT OF TRANSPORTATION
RALEIGH

SUBSTRUCTURE

END BENT #1

NORTH CAROLINA PROFESSIONAL SEAL 23371 ENGINEER VIPUL A. PATEL
10/30/13

REVISIONS						SHEET NO.
NO.	BY:	DATE:	NO.	BY:	DATE:	S-76
1			3			TOTAL SHEETS
2			4			86

STR. #3

DRAWN BY : H.T. DIEU DATE : 12/2/11
CHECKED BY : J. KHARVA DATE : 12/23/11

29-OCT-2013 10:59
Y:\structures\Plans\str03_Y10\R-3421C_SD_E*.dgn
thcarroll

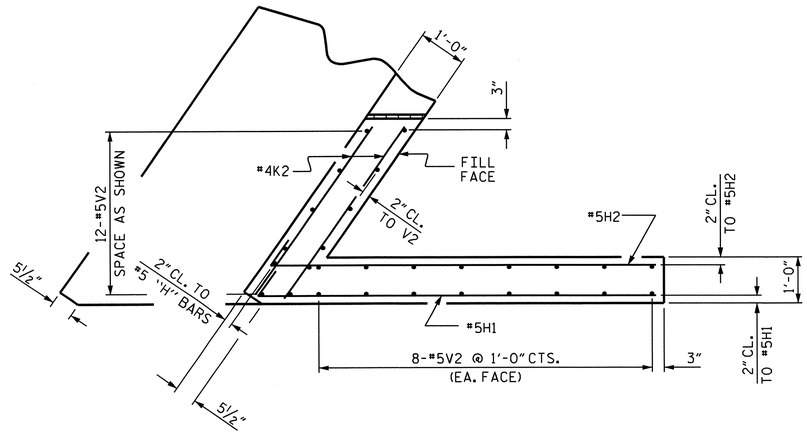

PLAN OF LEFT WING

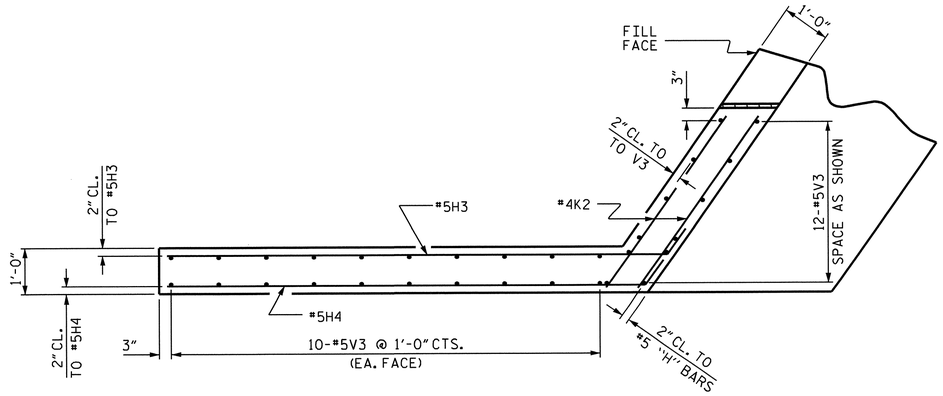

PLAN OF RIGHT WING

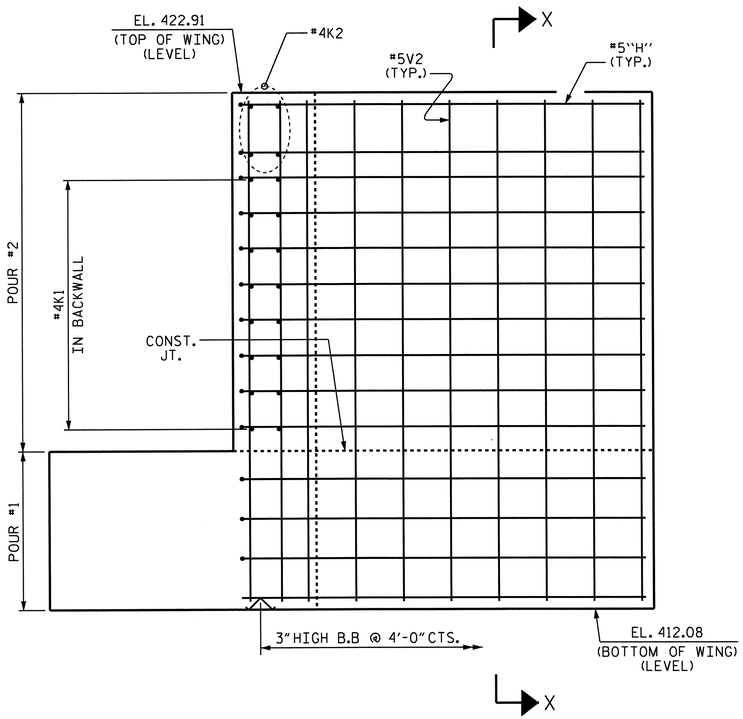

ELEVATION OF LEFT WING

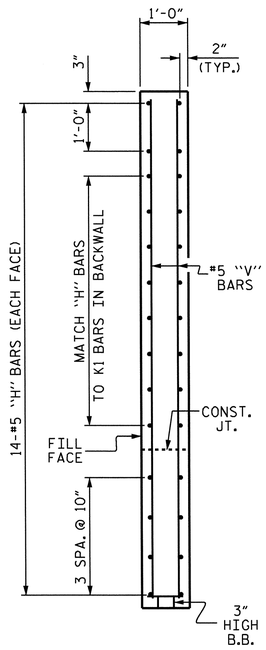

SECTION X-X

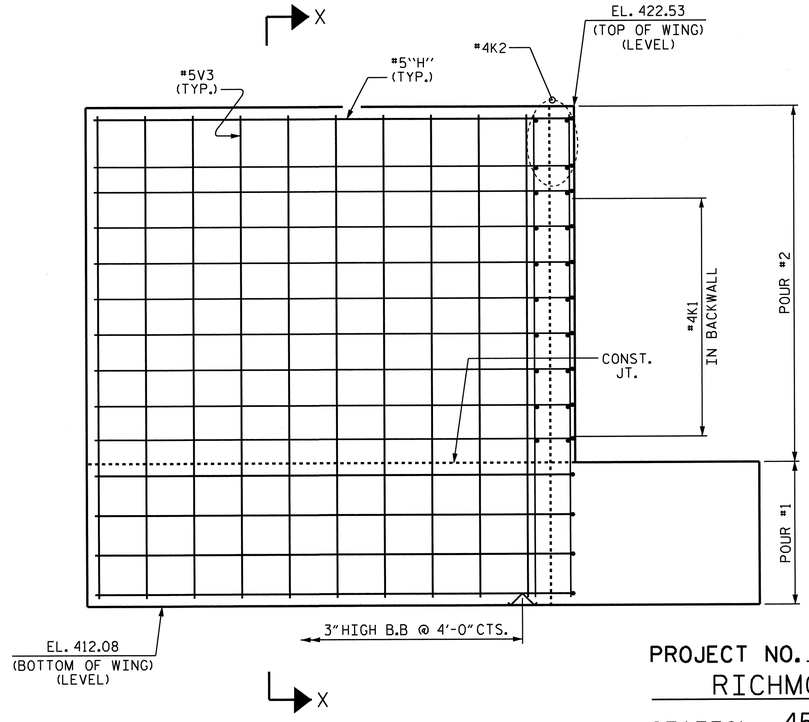

ELEVATION OF RIGHT WING

PROJECT NO. R-3421C

RICHMOND COUNTY

STATION: 456+99.33 -L-

SHEET 2 OF 3

STATE OF NORTH CAROLINA
DEPARTMENT OF TRANSPORTATION
RALEIGH

SUBSTRUCTURE

END BENT #1

REVISIONS						SHEET NO.
NO.	BY:	DATE:	NO.	BY:	DATE:	S-77
1			3			TOTAL SHEETS
2			4			86

STR. #3

NORTH CAROLINA PROFESSIONAL SEAL 23371 ENGINEER VIRAL A. PATEL
3/19/13

DRAWN BY : H.T. DIEU DATE : 12/2/11
CHECKED BY : J. KHARVA DATE : 12/23/11

08-AUG-2012 15:07
Y:\Structures\Plans\str03_Y10\R-3421C_SD_E*.dgn
jpadams

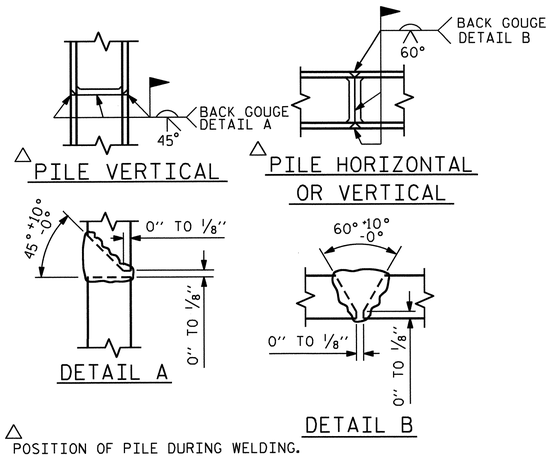

△ POSITION OF PILE DURING WELDING.

PILE SPLICE DETAILS

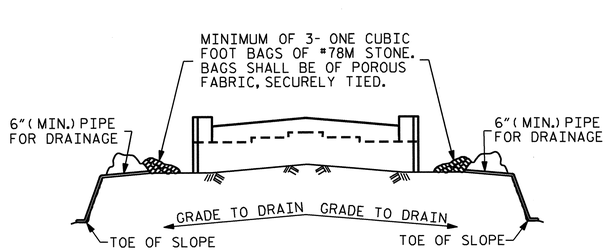

BAGGED STONE AND PIPE SHALL BE PLACED IMMEDIATELY AFTER COMPLETION OF END BENT EXCAVATION. PIPE MAY BE EITHER CONCRETE, CORRUGATED STEEL, CORRUGATED ALUMINUM ALLOY, OR CORRUGATED PLASTIC. PERFORATED PIPE WILL NOT BE ALLOWED.

BAGGED STONE SHALL REMAIN IN PLACE UNTIL THE ENGINEER DIRECTS THAT IT BE REMOVED. THE CONTRACTOR SHALL REMOVE AND DISPOSE OF SILT ACCUMULATIONS AT BAGGED STONE WHEN SO DIRECTED BY THE ENGINEER. BAGS SHALL BE REMOVED AND REPLACED WHENEVER THE ENGINEER DETERMINES THAT THEY HAVE DETERIORATED AND LOST THEIR EFFECTIVENESS.

NO SEPARATE PAYMENT WILL BE MADE FOR THIS WORK AND THE ENTIRE COST OF THIS WORK SHALL BE INCLUDED IN THE UNIT CONTRACT PRICE BID FOR THE SEVERAL PAY ITEMS.

TEMPORARY DRAINAGE AT END BENT

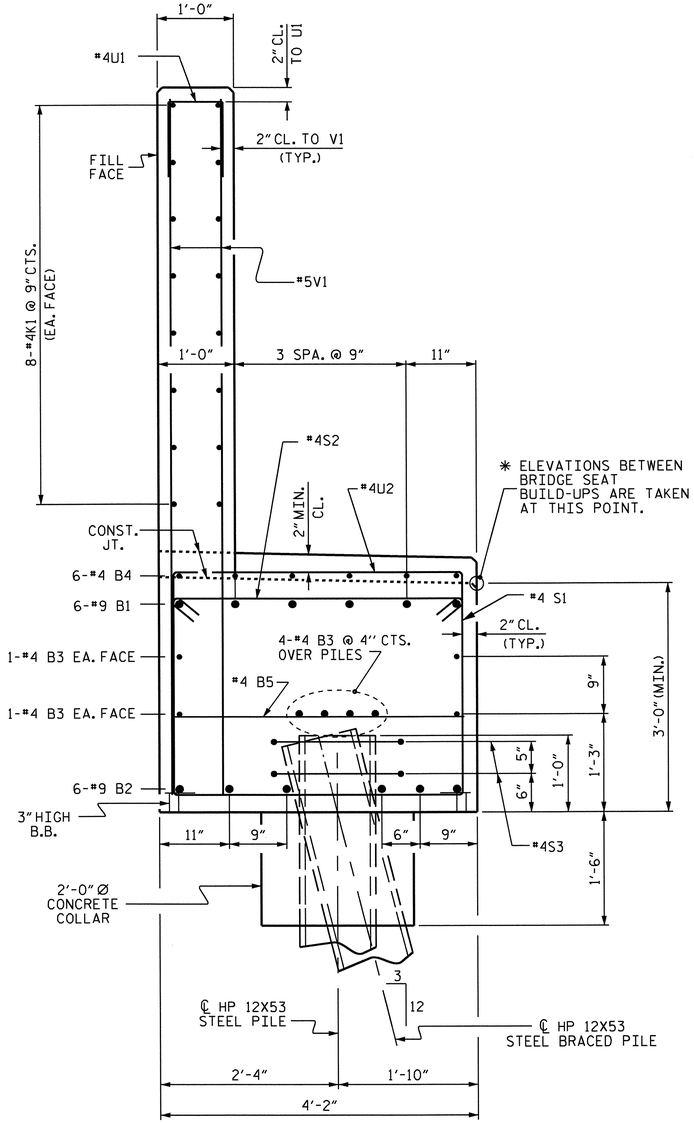

SECTION A-A

BAR TYPES

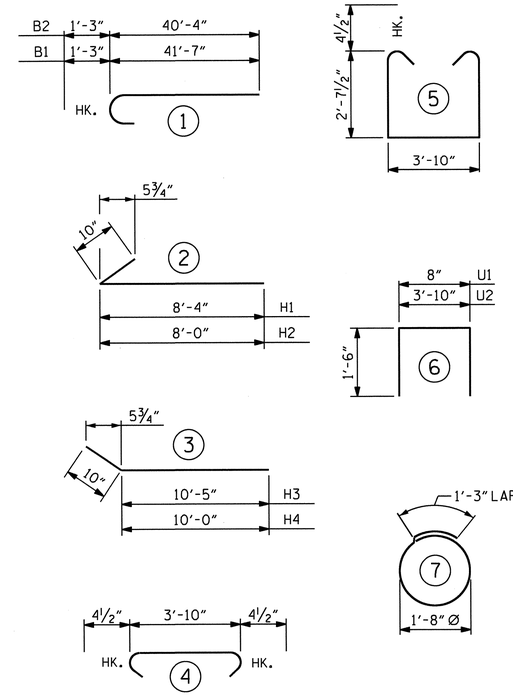

ALL BAR DIMENSIONS ARE OUT TO OUT.

BILL OF MATERIAL

END BENT #1

BAR	NO.	SIZE	TYPE	LENGTH	WEIGHT
B1	12	#9	1	42'-10"	1748
B2	12	#9	1	41'-7"	1697
B3	24	#4	STR	26'-6"	425
B4	12	#4	STR	28'-2"	226
B5	19	#4	STR	3'-10"	49
H1	14	#5	2	9'-2"	134
H2	14	#5	2	8'-10"	129
H3	14	#5	3	11'-3"	164
H4	14	#5	3	10'-10"	158
K1	48	#4	STR	26'-6"	850
K2	8	#4	STR	4'-5"	24
S1	82	#4	5	9'-10"	539
S2	82	#4	4	4'-7"	251
S3	18	#4	7	6'-6"	78
U1	65	#4	6	3'-8"	159
U2	36	#4	6	6'-10"	164
V1	130	#5	STR	8'-5"	1141
V2	28	#5	STR	10'-5"	304
V3	32	#5	STR	10'-0"	334

TOTAL REINFORCING STEEL LBS.	8574
CLASS A CONCRETE (CU. YARDS)	
POUR #1 CAP, COLLARS, & LOWER PART OF WINGS	42.9
POUR #2 BACKWALL & UPPER PART OF WINGS	21.7
TOTAL (CU. YARDS)	64.6
HP 12X53 STEEL PILES No. 9	LIN. FT. 540
PILE REDRIVES	EACH 9

PROJECT NO. R-3421C

RICHMOND COUNTY

STATION: 456+99.33 -L-

SHEET 3 OF 3

STATE OF NORTH CAROLINA
DEPARTMENT OF TRANSPORTATION
RALEIGH

SUBSTRUCTURE
END BENT #1

REVISIONS						SHEET NO.
NO.	BY:	DATE:	NO.	BY:	DATE:	S-78
1			3			TOTAL SHEETS
2			4			86

NORTH CAROLINA PROFESSIONAL SEAL 23371 ENGINEER VIPUL A. PATEL
3/19/13

DRAWN BY : H.T. DIEU DATE : 12/2/11
CHECKED BY : J. KHARVA DATE : 12/23/11

08-AUG-2012 15:07
Y:\structures\Plans\str03_Y10\R-3421C_SD_E*.dgn
jpadams

STR. #3

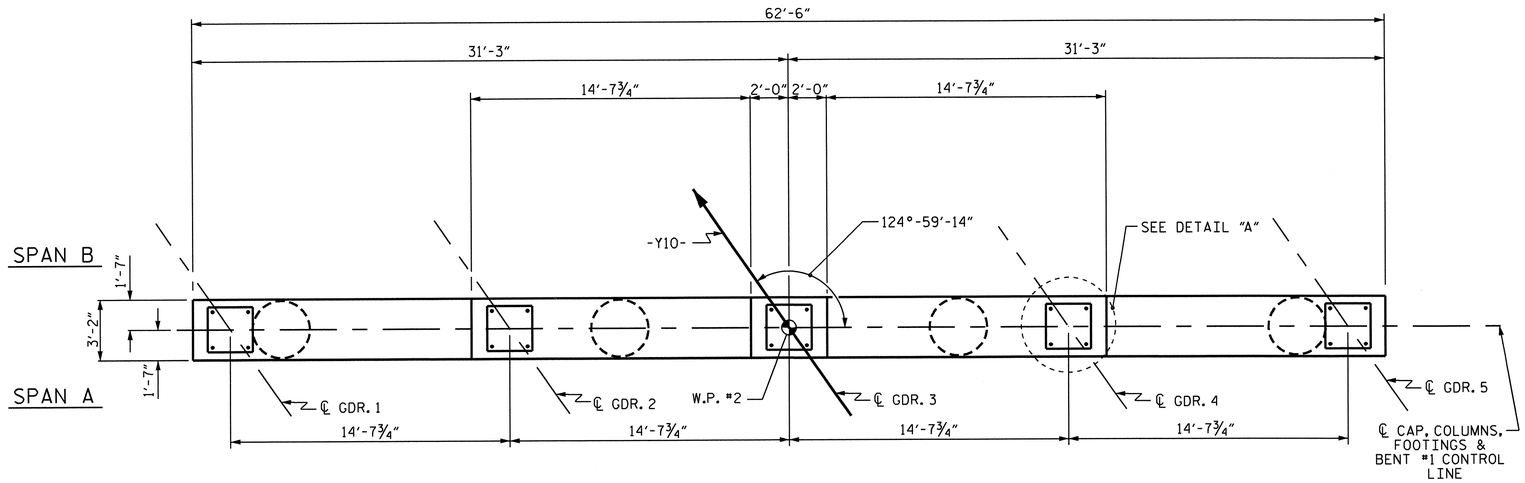

PLAN

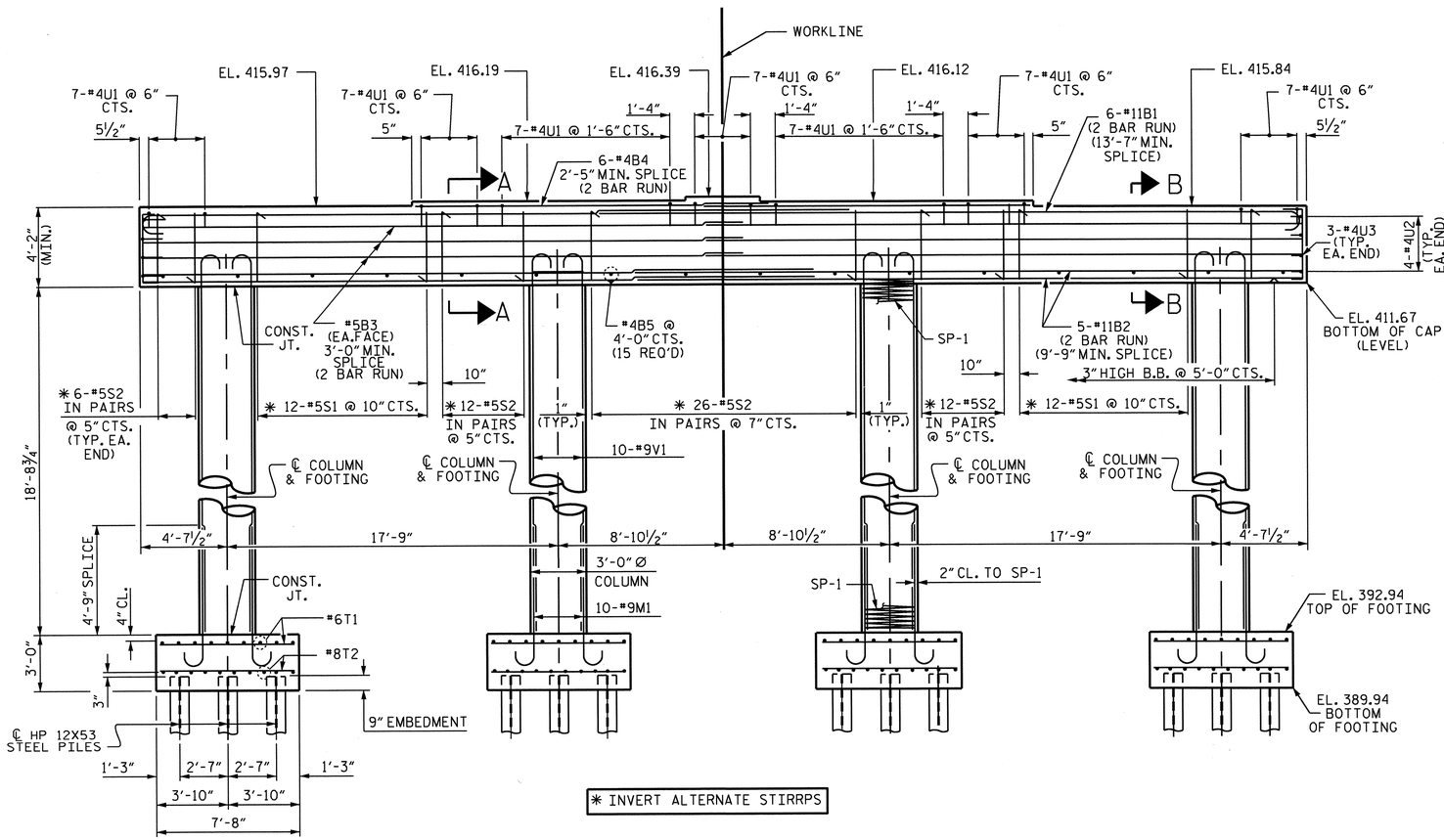

* INVERT ALTERNATE STIRRPS

ELEVATION

DIMENSIONS & REINFORCING STEEL ARE TYPICAL FOR EACH COLUMN & FOOTING.
FOR CLARITY, THE ADDITIONAL REINFORCING STEEL
REQUIRED FOR SEISMIC ZONE 2 HAS NOT BEEN SHOWN.
SEE COLUMN CONNECTION DETAILS FOR ADDITIONAL REINFORCING STEEL.

NOTES

STIRRUPS IN CAP MAY BE SHIFTED AS NECESSARY TO CLEAR ANCHOR BOLTS.

HOOKS ON "V" BARS MAY BE TURNED AS NECESSARY FOR PLACING REINFORCING STEEL.

FOR PILE SPLICE DETAILS, SEE END BENT #1, SHEET 3 OF 3.

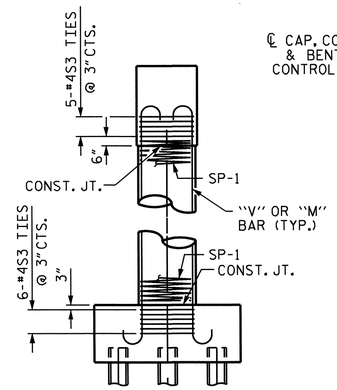

COLUMN CONNECTION DETAILS

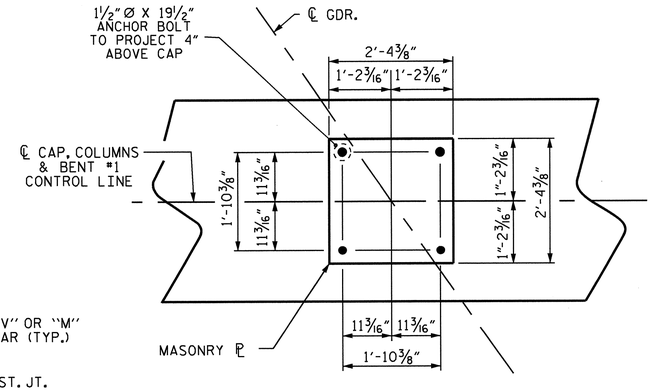

DETAIL "A"

(TYP. EA. GDR.)

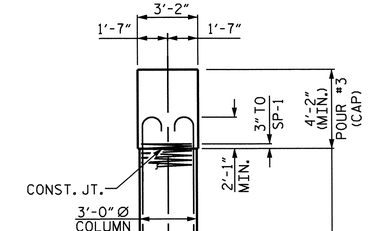

END ELEVATION

SEE COLUMN CONNECTION DETAILS
FOR ADDITIONAL REINFORCING STEEL

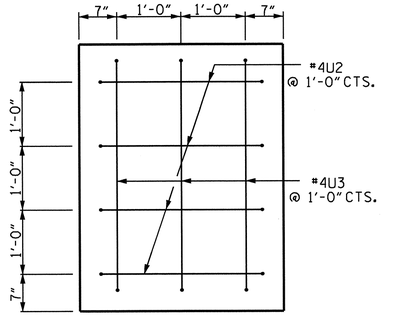

END VIEW

(TYP. EA. END)

PROJECT NO. R-3421C

RICHMOND COUNTY

STATION: 456+99.33 -L-

SHEET 1 OF 2

STATE OF NORTH CAROLINA
DEPARTMENT OF TRANSPORTATION
RALEIGH

SUBSTRUCTURE
BENT #1

NORTH CAROLINA PROFESSIONAL SEAL 23371 ENGINEER VIPUL A. PATEL
3/19/13

REVISIONS						SHEET NO.
NO.	BY:	DATE:	NO.	BY:	DATE:	S-79
1			3			TOTAL SHEETS
2			4			86

STR. #3

DRAWN BY : M. ALI DATE : 12/8/11
CHECKED BY : J. G. KHARVA DATE : 4/10/12

18-MAR-2013 13:18
R:\Structures\Plans\str03_Y10\R-3421C_SD_B*.dgn
vpatel

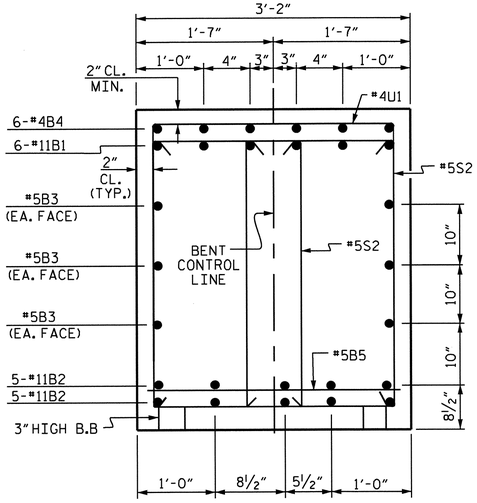

SECTION A-A
INVERT ALTERNATE STIRRUPS

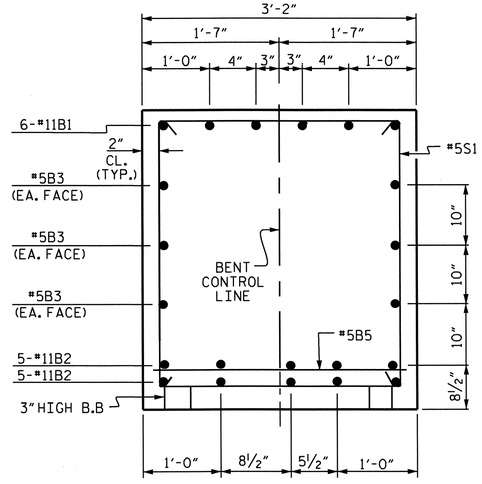

SECTION B-B
INVERT ALTERNATE STIRRUPS

BAR TYPES

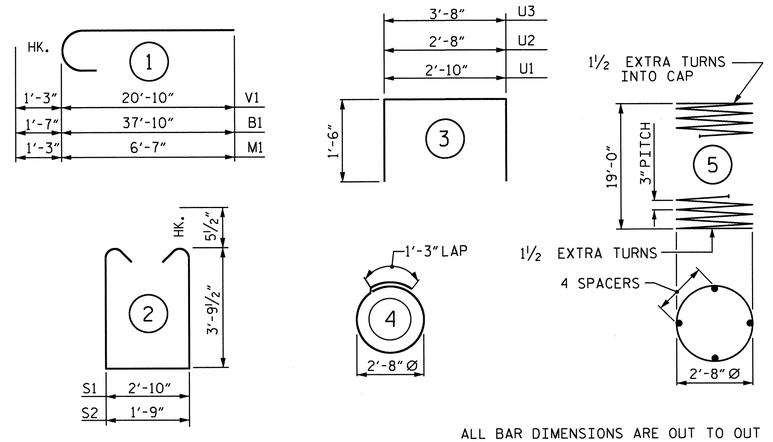

ALL BAR DIMENSIONS ARE OUT TO OUT

BILL OF MATERIAL

BENT #1

BAR	NO.	SIZE	TYPE	LENGTH	WEIGHT
B1	12	#11	1	39'-5"	2513
B2	20	#11	STR	36'-0"	3825
B3	12	#5	STR	32'-7"	408
B4	12	#4	STR	17'-9"	142
B5	15	#4	STR	2'-10"	28
M1	40	#9	1	7'-10"	1065
S1	24	#5	2	11'-4"	284
S2	124	#5	2	10'-3"	1326
S3	44	#4	4	9'-8"	284
T1	72	#6	STR	7'-4"	793
T2	104	#8	STR	7'-4"	2036
U1	49	#4	3	5'-10"	191
U2	8	#4	3	5'-8"	30
U3	6	#4	3	6'-8"	27
V1	40	#9	1	22'-1"	3003

REINFORCING STEEL 15955 LBS.

SP-1	4	**	5	651'-10"	2719

SPIRAL COLUMN REINFORCING STEEL 2719 LBS.

** THE SP-1 SPIRAL REINFORCING STEEL SHALL BE W-31 OR D-31 COLD DRAWN WIRE OR #5 PLAIN OR DEFORMED BAR

CLASS A CONCRETE BREAKDOWN

POUR #1 (FOOTINGS)	26.1 C.Y.
POUR #2 (COLUMNS)	19.7 C.Y.
POUR #3 (CAP)	32.1 C.Y.
TOTAL CLASS A CONCRETE	77.9 C.Y.

HP 12X53 STEEL PILES NO. 28	LIN. FT. 1120
PILE REDRIVES	EACH 28

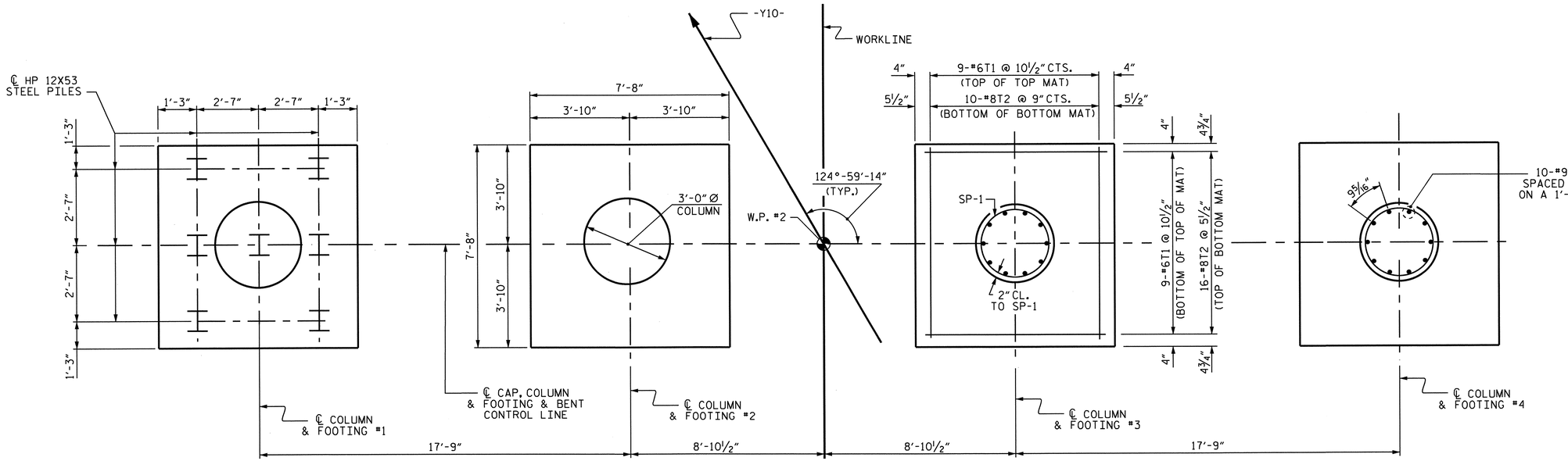

PLAN OF COLUMNS & FOOTINGS
DIMENSIONS AND REINFORCING STEEL ARE TYPICAL FOR EACH COLUMN & FOOTING

NORTH CAROLINA PROFESSIONAL SEAL 23371 ENGINEER VIPUL A. PATEL
3/19/13

PROJECT NO. R-3421C
RICHMOND COUNTY
STATION: 456+99.33 -L-

SHEET 2 OF 2

STATE OF NORTH CAROLINA
DEPARTMENT OF TRANSPORTATION
RALEIGH

SUBSTRUCTURE
BENT #1

REVISIONS						SHEET NO.
NO.	BY:	DATE:	NO.	BY:	DATE:	S-80
1			3			TOTAL SHEETS
2			4			86

STR #3

DRAWN BY : M. ALI DATE : 12/8/11
CHECKED BY : J. G. KHARVA DATE : 04-11-12

08-AUG-2012 15:07
Y:\structures\Plans\str03_Y10\R-3421C_SD_B*.dgn
jpaddams

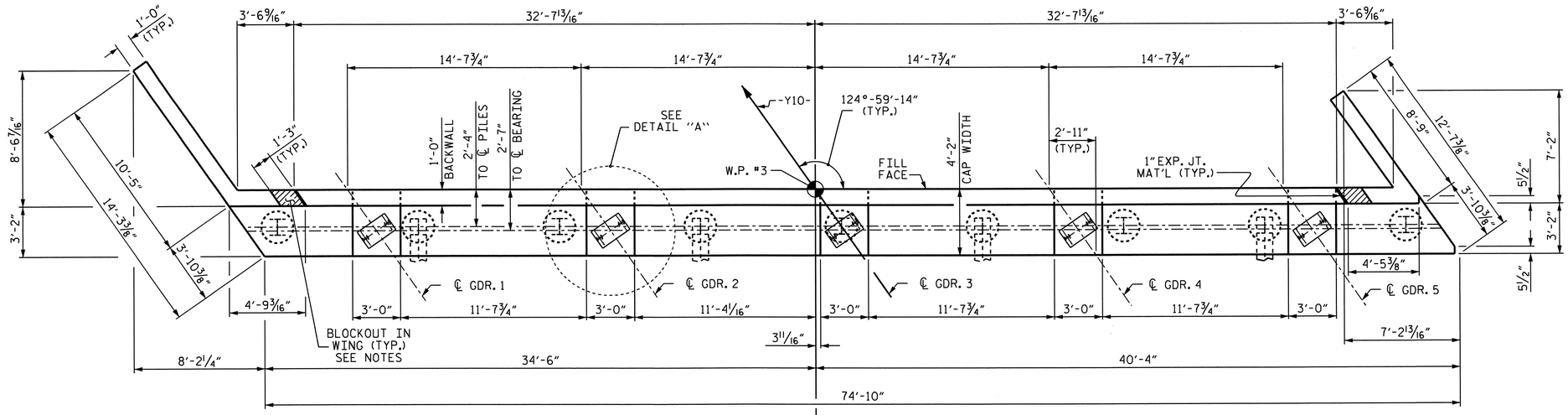

PLAN

NOTES

STIRRUPS IN CAP MAY BE SHIFTED AS NECESSARY TO CLEAR ANCHOR BOLTS.

BACKWALL SHALL BE PLACED BEFORE APPLYING THE EPOXY PROTECTIVE COATING.

THE TOP SURFACE AREAS OF THE END BENT CAPS SHALL BE CURED IN ACCORDANCE WITH THE STANDARD SPECIFICATIONS EXCEPT THE MEMBRANE CURING COMPOUND METHOD SHALL NOT BE USED.

THE TOP SURFACE OF THE CAP EXCEPT THE BRIDGE SEAT BUILDUPS SHALL BE SLOPED TRANSVERSELY FROM THE FILL FACE TO THE BACK FACE AT THE RATE OF 2%.

THE CONCRETE IN THE SHADED AREA OF THE WING SHALL BE POURED AFTER THE JOINT BETWEEN THE DECK AND THE APPROACH SLAB HAS BEEN SAWED AND THE BARRIER RAILS ARE CAST IF SLIP FORMING IS USED.

THE CONTRACTOR SHALL PROVIDE FOR INSTALLATION OF THE 4" DIAMETER DRAIN PIPE THROUGH THE WING WALL AS REQUIRED FOR REINFORCED BRIDGE APPROACH FILLS. SEE THE ROADWAY PLANS. REINFORCING STEEL IN THE WING WALL MAY BE SHIFTED AS NECESSARY TO CLEAR THE DRAIN PIPE.

EPOXY COAT THE END BENT CAP AFTER ADJUSTMENTS ARE MADE TO BEARINGS AND ANCHOR BOLTS ARE GROUTED.

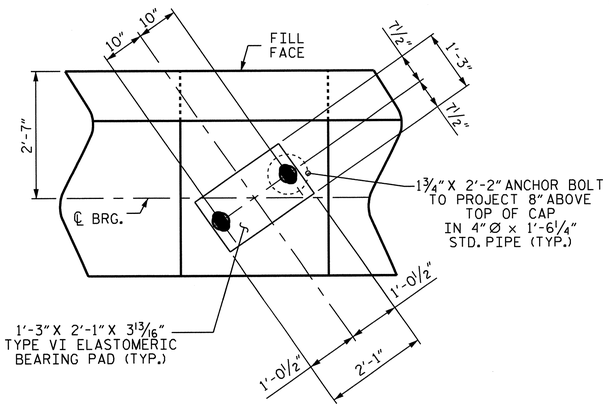

DETAIL "A"

(TYP. EA. BRIDGE SEAT)

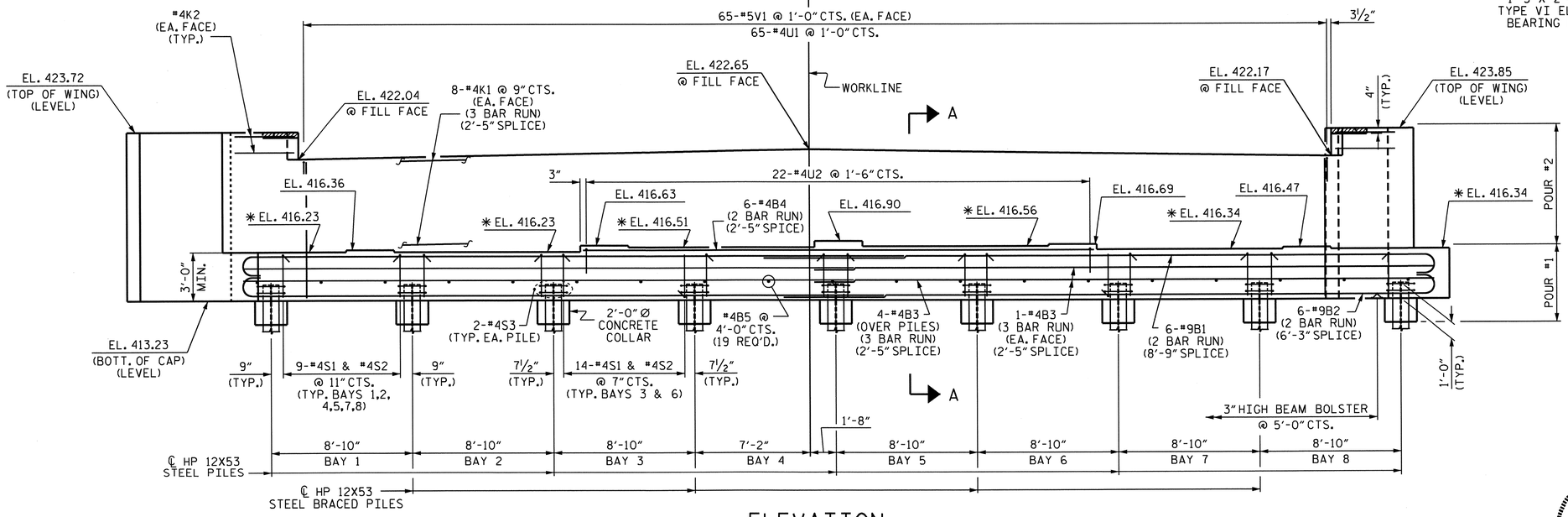

ELEVATION

*FOR LOCATION OF ELEVATIONS BETWEEN BRIDGE BUILDUPS, SEE SHEET 3 OF 3.

PROJECT NO. R-3421C

RICHMOND COUNTY

STATION: 456+99.33 -L-

SHEET 1 OF 3

STATE OF NORTH CAROLINA
DEPARTMENT OF TRANSPORTATION
RALEIGH

SUBSTRUCTURE

END BENT #2

REVISIONS						SHEET NO.
NO.	BY:	DATE:	NO.	BY:	DATE:	S-81
1			3			TOTAL SHEETS
2			4			86

STR. #3

NORTH CAROLINA PROFESSIONAL SEAL 23371 ENGINEER VIPUL A. PATEL

10/30/13

DRAWN BY : H.T. DIEU DATE : 12/12/11
CHECKED BY : J. KHARVA DATE : 12/23/11

29-OCT-2013 10:59
Y:\structures\Plans\str03_Y10\R-3421C_SD_E*.dgn
thcarroll

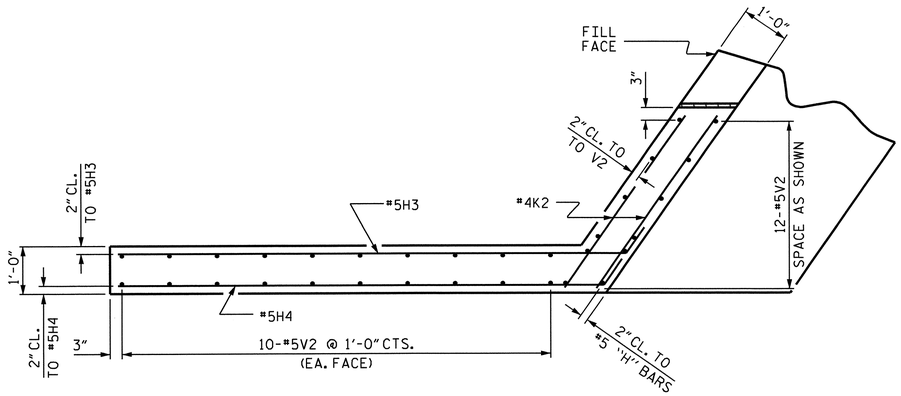

PLAN OF LEFT WING

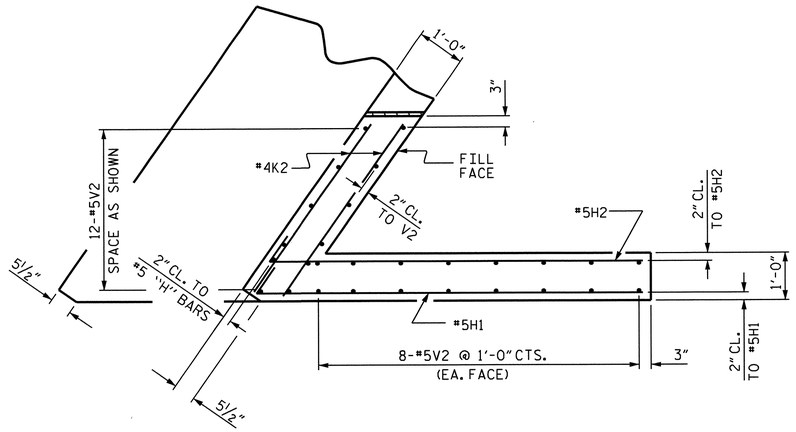

PLAN OF RIGHT WING

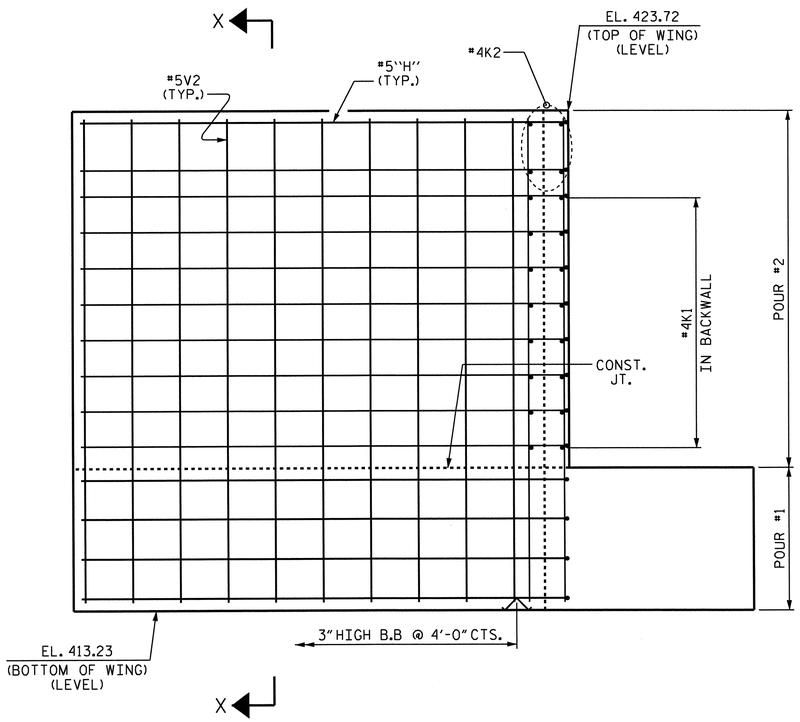

ELEVATION OF LEFT WING

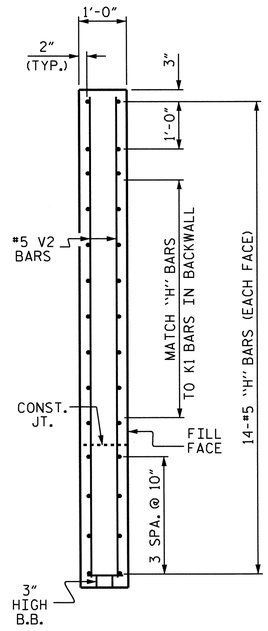

SECTION X-X

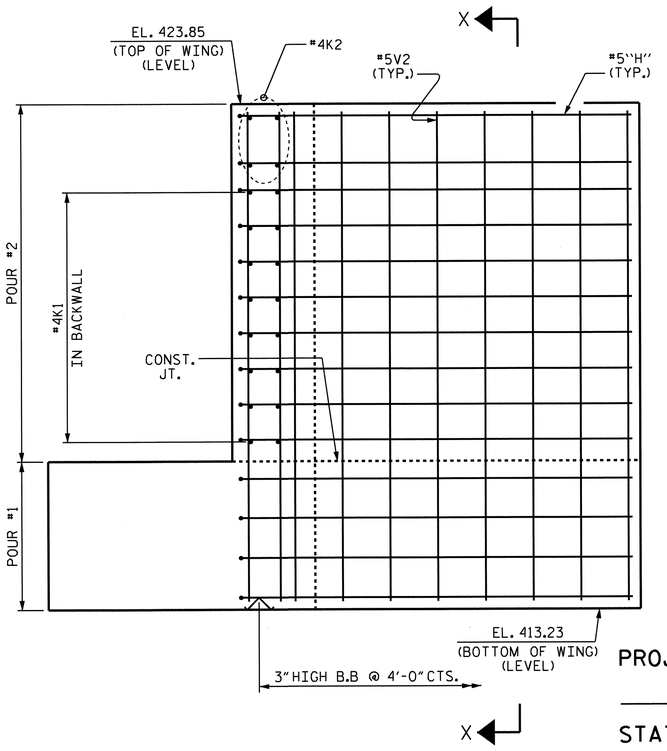

ELEVATION OF RIGHT WING

PROJECT NO. R-3421C

RICHMOND COUNTY

STATION: 456+99.33 -L-

SHEET 2 OF 3

STATE OF NORTH CAROLINA
DEPARTMENT OF TRANSPORTATION
RALEIGH

SUBSTRUCTURE

END BENT #2

NORTH CAROLINA PROFESSIONAL SEAL 23371 ENGINEER VIRUL A. PATEL
3|19|13

REVISIONS						SHEET NO.
NO.	BY:	DATE:	NO.	BY:	DATE:	S-82
1			3			TOTAL SHEETS
2			4			86

DRAWN BY : H.T. DIEU DATE : 12/12/11
CHECKED BY : J. KHARVA DATE : 12/23/11

08-AUG-2012 15:07
Y:\structures\Plans\str03_Y10\R-3421C_SD_E*.dgn
jpadams

STR. #3

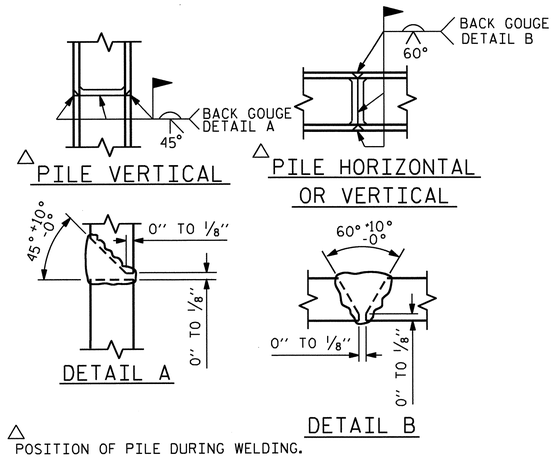

△ POSITION OF PILE DURING WELDING.

PILE SPLICE DETAILS

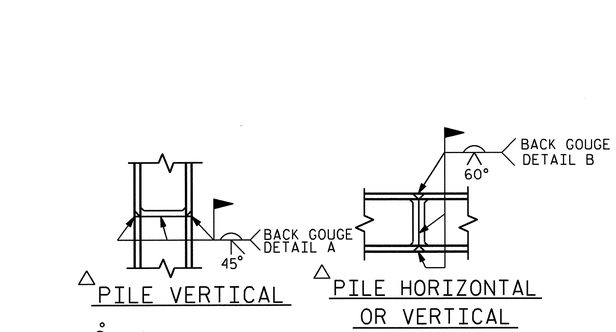

BAGGED STONE AND PIPE SHALL BE PLACED IMMEDIATELY AFTER COMPLETION OF END BENT EXCAVATION. PIPE MAY BE EITHER CONCRETE, CORRUGATED STEEL, CORRUGATED ALUMINUM ALLOY, OR CORRUGATED PLASTIC. PERFORATED PIPE WILL NOT BE ALLOWED.

BAGGED STONE SHALL REMAIN IN PLACE UNTIL THE ENGINEER DIRECTS THAT IT BE REMOVED. THE CONTRACTOR SHALL REMOVE AND DISPOSE OF SILT ACCUMULATIONS AT BAGGED STONE WHEN SO DIRECTED BY THE ENGINEER. BAGS SHALL BE REMOVED AND REPLACED WHENEVER THE ENGINEER DETERMINES THAT THEY HAVE DETERIORATED AND LOST THEIR EFFECTIVENESS.

NO SEPARATE PAYMENT WILL BE MADE FOR THIS WORK AND THE ENTIRE COST OF THIS WORK SHALL BE INCLUDED IN THE UNIT CONTRACT PRICE BID FOR THE SEVERAL PAY ITEMS.

TEMPORARY DRAINAGE AT END BENT

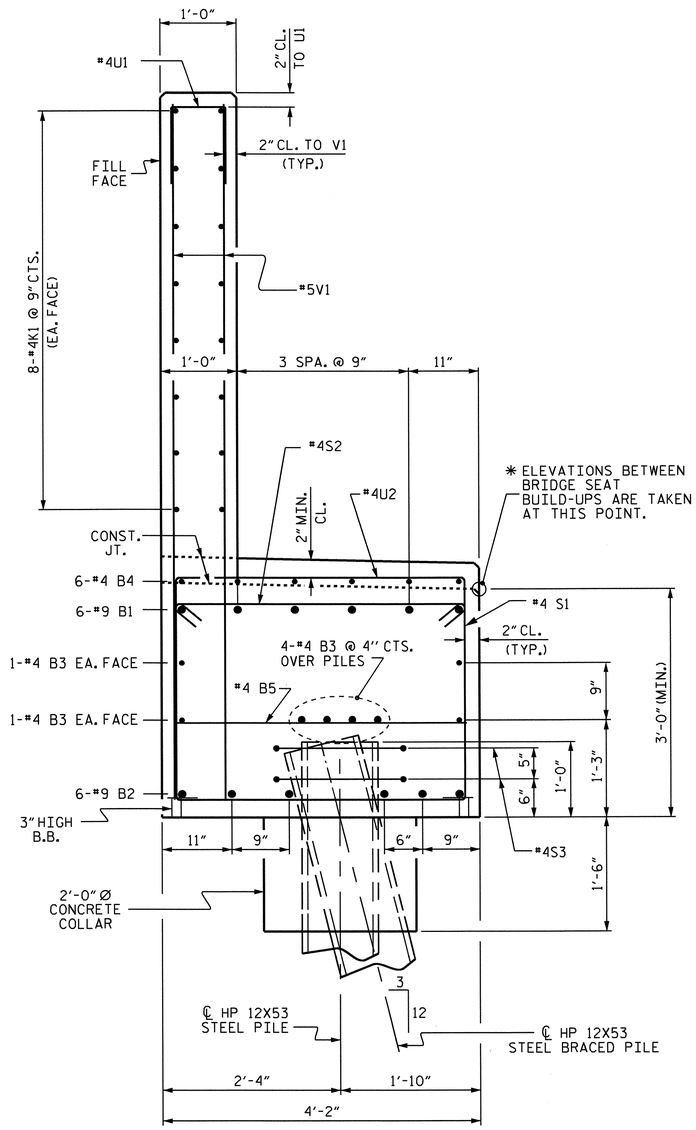

SECTION A-A

BAR TYPES

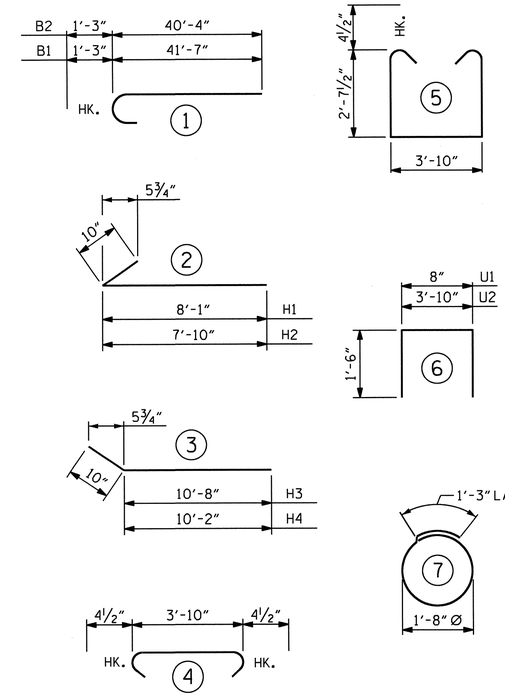

ALL BAR DIMENSIONS ARE OUT TO OUT.

BILL OF MATERIAL

END BENT #2

BAR	NO.	SIZE	TYPE	LENGTH	WEIGHT
B1	12	#9	1	42'-10"	1748
B2	12	#9	1	41'-7"	1697
B3	24	#4	STR	26'-6"	425
B4	12	#4	STR	17'-3"	138
B5	19	#4	STR	3'-10"	49
H1	14	#5	2	8'-11"	130
H2	14	#5	2	8'-8"	127
H3	14	#5	3	11'-6"	168
H4	14	#5	3	11'-0"	163
K1	48	#4	STR	26'-6"	850
K2	8	#4	STR	4'-4"	23
S1	82	#4	5	9'-10"	539
S2	82	#4	4	4'-7"	251
S3	18	#4	7	6'-6"	78
U1	65	#4	6	3'-8"	159
U2	22	#4	6	6'-10"	100
V1	130	#5	STR	8'-5"	1141
V2	60	#5	STR	10'-2"	636

TOTAL REINFORCING STEEL LBS.	8422
CLASS A CONCRETE (CU. YARDS)	
POUR #1 CAP, COLLARS, & LOWER PART OF WINGS	41.1
POUR #2 BACKWALL & UPPER PART OF WINGS	21.0
TOTAL (CU. YARDS)	62.1
HP 12X53 STEEL PILES No. 9	LIN. FT. 540
PILE REDRIVES	EACH 9

PROJECT NO. R-3421C

RICHMOND COUNTY

STATION: 456+99.33 -L-

SHEET 3 OF 3

STATE OF NORTH CAROLINA
DEPARTMENT OF TRANSPORTATION
RALEIGH

SUBSTRUCTURE
END BENT #2

NORTH CAROLINA PROFESSIONAL SEAL 23371 ENGINEER VIPUL A. PATEL
3/19/13

REVISIONS						SHEET NO.
NO.	BY:	DATE:	NO.	BY:	DATE:	S-83
1			3			TOTAL SHEETS
2			4			86

STR. #3

DRAWN BY : H.T. DIEU DATE : 12/12/11
CHECKED BY : J. KHARVA DATE : 12/23/11

08-AUG-2012 15:06
Y:\structures\Plans\str03_Y10\R-3421C_SD_E*.dgn
jpadams

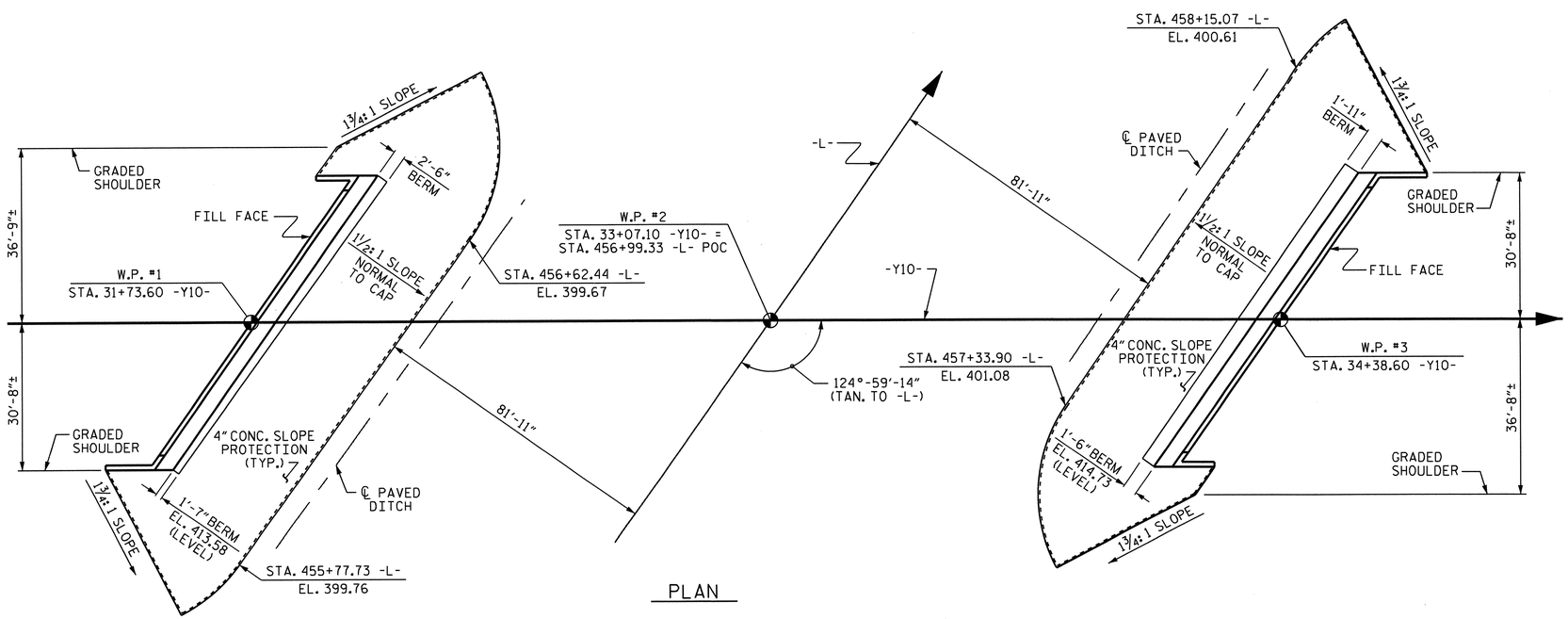

PLAN

GENERAL NOTES

SLOPE PROTECTION SHALL BE PLACED UNDER THE ENDS OF THE BRIDGE AS SHOWN IN THE DETAILS. MEASUREMENT AND PAYMENT SHALL BE AS PRESCRIBED IN SECTION 462 OF THE STANDARD SPECIFICATIONS.

SLOPE PROTECTION SHALL CONSIST OF 4'' POURED-IN-PLACE CONCRETE PAVING AS SHOWN IN THE DETAILS ON THIS SHEET. CONCRETE SHALL BE CLASS ''B''. THE CONCRETE SURFACE SHALL BE FLOATED WITH A WOODEN FLOAT AND FINISHED. WELDED WIRE FABRIC REINFORCING SHALL BE 6 X 6 - W1.4 X W1.4, 60'' WIDE. SLOPE PROTECTION SHALL BE POURED IN 5' STRIPS AS SHOWN IN THE ''POURING DETAIL'' WITH 2'-0'' LONG #4 BARS PLACED ALONG THE SLOPE BETWEEN STRIPS AT 1'-6'' MAXIMUM SPACING. SLOPE PROTECTION MAY BE POURED IN ALTERNATE 4' AND 5' STRIPS AS SHOWN IN THE ''OPTIONAL POURING DETAIL'' WITH ADJACENT RUNS OF WELDED WIRE FABRIC LAPPING AT LEAST 6''. THE COST OF THE WELDED WIRE FABRIC AND #4 BARS, IF USED, SHALL BE INCLUDED IN THE CONTRACT UNIT PRICE BID PER SQUARE YARD FOR SLOPE PROTECTION.

BRIDGE @ STA. 456+99.33 -L-	4 INCH SLOPE PROTECTION	* WELDED WIRE FABRIC 60 INCHES WIDE
	SQUARE YARDS	APPROX. L.F.
END BENT #1	435	870
END BENT #2	390	775

* QUANTITY SHOWN IS BASED ON 5' POURS.

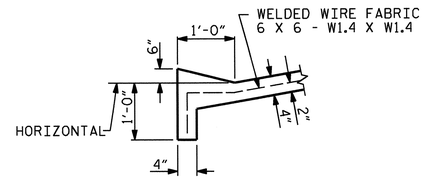

SECTION B-B

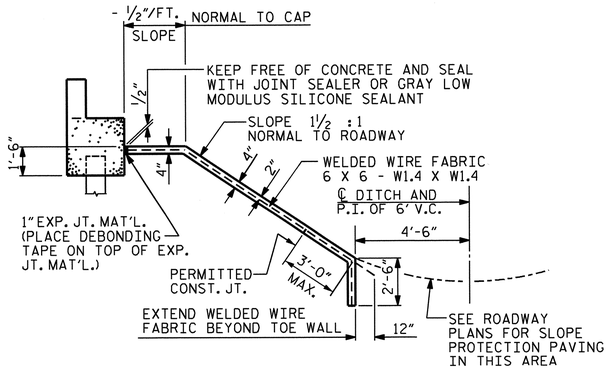

SECTION ALONG ℄ ROADWAY WHEN FILL CATCHES IN DITCH

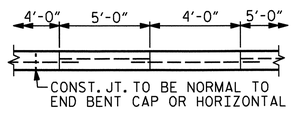

POUR A 4'-0'' STRIP FIRST. STRIP WIDTHS MAY VARY IN CURVED PORTION.

OPTIONAL POURING DETAIL

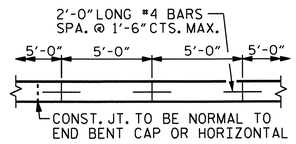

STRIP WIDTHS MAY VARY IN CURVED PORTION.

POURING DETAIL

NORTH CAROLINA PROFESSIONAL SEAL 23371 ENGINEER VIPUL A. PATEL
3/19/13

PROJECT NO. R-3421C
RICHMOND COUNTY
STATION: 456+99.33 -L-

STATE OF NORTH CAROLINA
DEPARTMENT OF TRANSPORTATION
RALEIGH

STANDARD

SLOPE PROTECTION DETAILS

REVISIONS						SHEET NO.
NO.	BY:	DATE:	NO.	BY:	DATE:	S-84
1			3			TOTAL SHEETS
2			4			86

ASSEMBLED BY: KEITH D. LAYNE	DATE: 3-21-12	REV. 5/7/03	RWW/JTE
CHECKED BY : HOANG T. DIEU	DATE : 4-11-12	REV. 5/1/06	TLA/GM
DRAWN BY : ELR 5/92		REV. 10/1/11	MAA/GM
CHECKED BY : GRP 6/92			

18-MAR-2013 14:59
R:\Structures\Plans\str03_Y10\R3421C_SD_SP_STR*3.dgn
vpatel

STR. #3

STD. NO. SP1 (SHT 5)

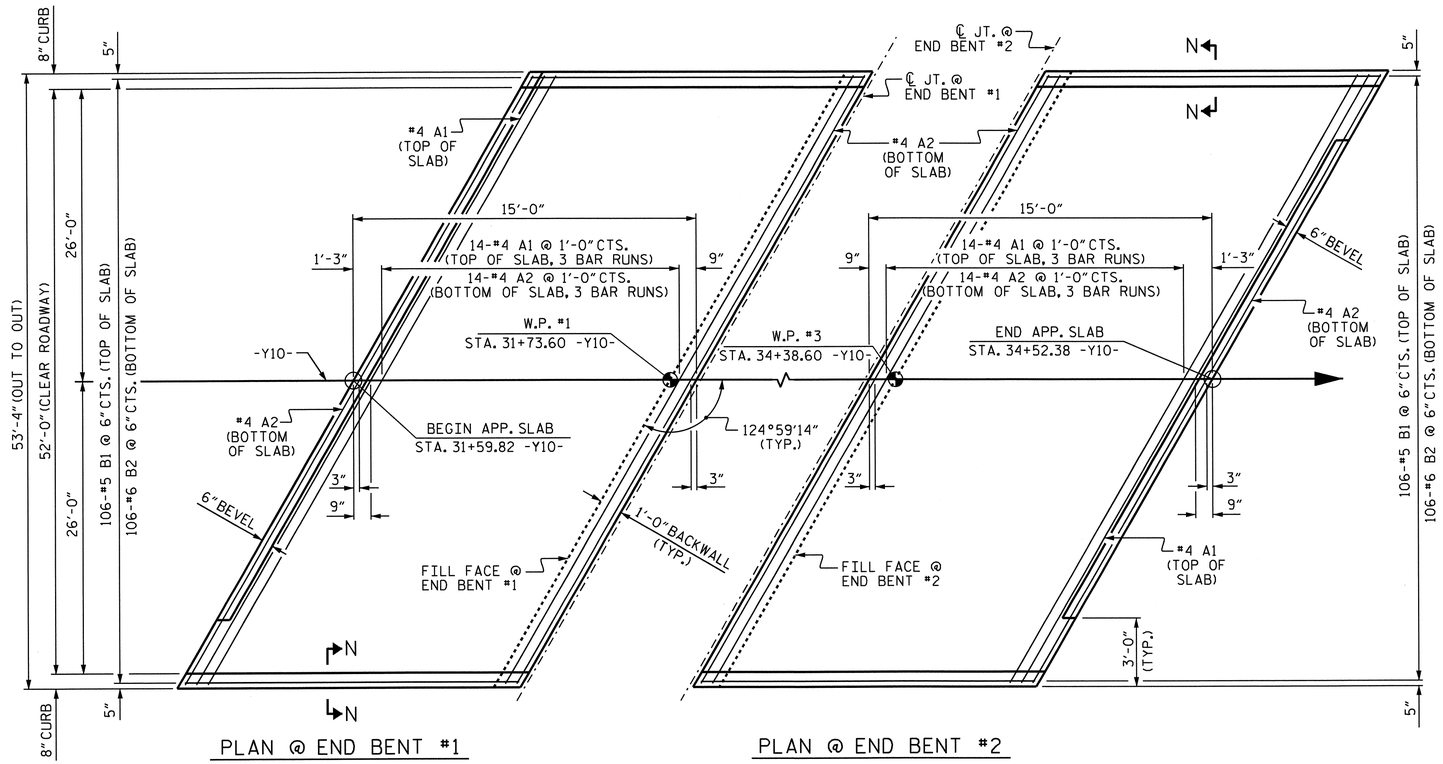

PLAN @ END BENT #1

PLAN @ END BENT #2

DIMENSIONS SHOWN ARE TYPICAL FOR BOTH APPROACH SLABS

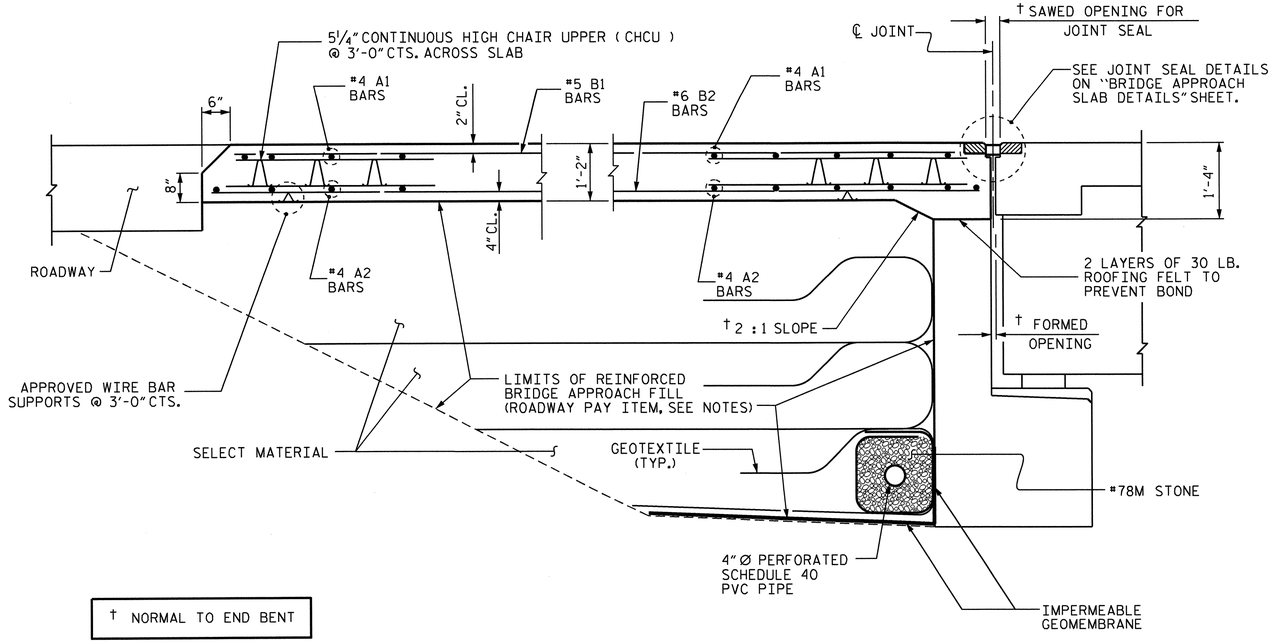

† NORMAL TO END BENT

SECTION THRU SLAB

SHOWING SECTION WITHOUT CONCRETE WEARING SURFACE

NOTES

APPROACH SLAB SHALL NOT BE CONSTRUCTED PRIOR TO COMPLETION OF THE BRIDGE DECK.

FOR REINFORCED BRIDGE APPROACH FILL INCLUDING GEOTEXTILE, IMPERMEABLE GEOMEMBRANE, 4" Ø DRAINAGE PIPE, #78M STONE, AND SELECT MATERIAL, SEE ROADWAY PLANS.

AREA BETWEEN THE WINGWALL AND APPROACH SLAB SHALL BE GRADED TO DRAIN THE WATER AWAY FROM THE FILL FACE OF THE BRIDGE AND SHALL BE PAVED. SEE ROADWAY PLANS.

THE JOINT SHALL BE SAWED PRIOR TO THE CASTING OF THE BARRIER RAIL OR PARAPET AND END POST.

WITH FOAM JOINT SEAL

FOR FOAM JOINT SEALS, SEE SPECIAL PROVISIONS.

THE NOMINAL UNCOMPRESSED SEAL WIDTH OF THE FOAM JOINT SEAL SHALL BE 2".

FOR ELASTOMERIC CONCRETE, SEE SPECIAL PROVISIONS.

BILL OF MATERIAL

APPROACH SLAB AT EB #1

BAR	NO.	SIZE	TYPE	LENGTH	WEIGHT
* A1	45	#4	STR	22'-11"	689
A2	48	#4	STR	22'-9"	729
* B1	106	#5	STR	13'-5"	1483
B2	106	#6	STR	14'-7"	2321
REINFORCING STEEL				LBS.	3050
* EPOXY COATED REINFORCING STEEL				LBS.	2172
CLASS AA CONCRETE				C. Y.	34.5

APPROACH SLAB AT EB #2

BAR	NO.	SIZE	TYPE	LENGTH	WEIGHT
* A1	45	#4	STR	22'-11"	689
A2	48	#4	STR	22'-9"	729
* B1	106	#5	STR	13'-5"	1483
B2	106	#6	STR	14'-7"	2321
REINFORCING STEEL				LBS.	3050
* EPOXY COATED REINFORCING STEEL				LBS.	2172
CLASS AA CONCRETE				C. Y.	34.5

SPLICE LENGTHS

BAR SIZE	EPOXY COATED	UNCOATED
#4	2'-0"	1'-9"
#5	2'-6"	2'-2"
#6	3'-10"	2'-7"

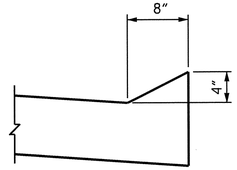

SECTION N-N

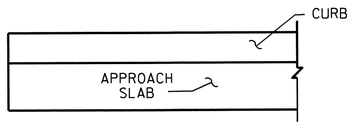

END OF CURB WITH SHOULDER BERM GUTTER

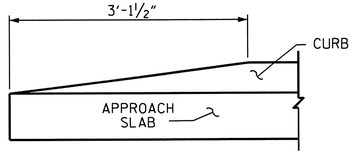

END OF CURB WITHOUT SHOULDER BERM GUTTER

CURB DETAILS

PROJECT NO. R-3421C

RICHMOND COUNTY

STATION: 456+99.33 -L-

SHEET 1 OF 2

STATE OF NORTH CAROLINA
DEPARTMENT OF TRANSPORTATION
RALEIGH

STANDARD

BRIDGE APPROACH SLAB FOR FLEXIBLE PAVEMENT

REVISIONS						SHEET NO.
NO.	BY:	DATE:	NO.	BY:	DATE:	S-85
1			3			TOTAL SHEETS
2			4			86

ASSEMBLED BY : J. G. KHARVA	DATE : 6/12	REV. 10/1/11	MAA/GM
CHECKED BY : H. T. DIEU	DATE : 6/12	REV. 12/21/11	MAA/GM
DRAWN BY : EEM 3/95		REV. 6/13	MAA/GM
CHECKED BY : VAP 3/95			

29-OCT-2013 10:59
Y:\structures\Plans\str03_Y10\R-3421C_SD_AS_03.dgn
thcarroll

STR. #3

STD. NO. BAS2 (SHT 1b)

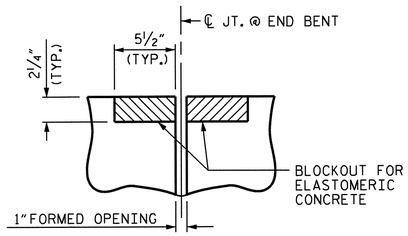

SECTION C-C

FOAM JOINT SEAL
(PRE-SAWED ELASTOMERIC
CONCRETE DIMENSIONS)

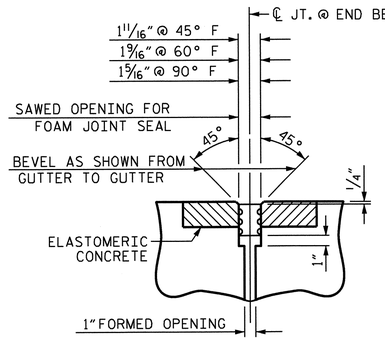

SECTION C-C

FOAM JOINT SEAL
(EXPANSION)

ELASTOMERIC CONCRETE	
END BENT NO.	ELASTOMERIC CONCRETE * (CU. FT.)
1	10.9
2	10.9
TOTAL	21.8

* BASED ON THE MINIMUM BLOCKOUT SHOWN.

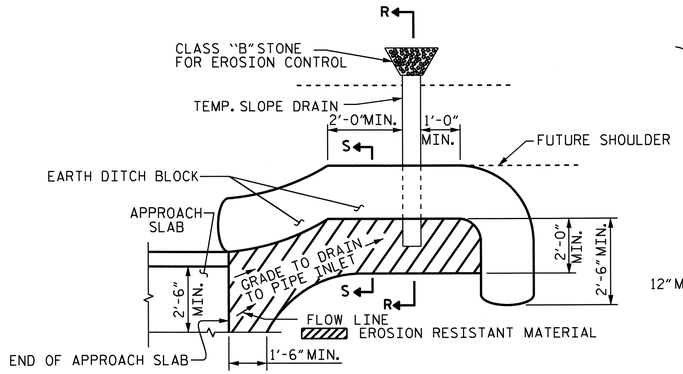

NOTE: IMMEDIATELY AFTER THE CONSTRUCTION OF THE APPROACH SLAB, THE CONTRACTOR SHALL PROVIDE TEMPORARY BERM AND SLOPE DRAIN. CONTRACTOR SHALL GRADE TO PIPE INLET AND PROVIDE EROSION RESISTANT MATERIAL AS SHOWN. THE EROSION RESISTANT MATERIAL SHALL BE EITHER 1) ASPHALT PLANT MIX, TYPE 1 OR TYPE 2, MIN. 2" DEPTH, 2) EROSION CONTROL MAT, OR 3) CONCRETE, AS DIRECTED BY THE ENGINEER. THE SLOPE DRAIN SHALL CONSIST OF A NON-PERFORATED TEMPORARY DRAINAGE PIPE, 12 INCHES IN DIAMETER.

PLAN VIEW

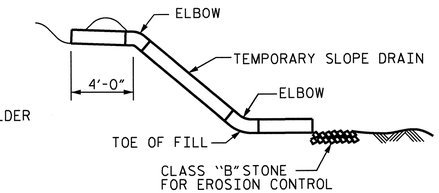

SECTION R-R

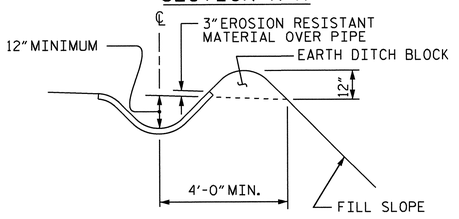

SECTION S-S

TEMPORARY BERM AND SLOPE DRAIN DETAILS

(TO BE USED WHEN SHOULDER BERM GUTTER IS REQUIRED)

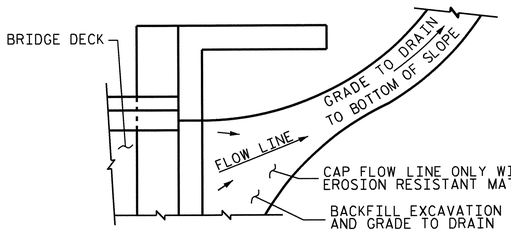

NOTE: IF THE APPROACH SLAB IS NOT CONSTRUCTED IMMEDIATELY AFTER THE BACKFILLING OF THE END BENT EXCAVATION, GRADE TO DRAIN TO THE BOTTOM OF THE SLOPE AND PROVIDE EROSION RESISTANT MATERIAL, SUCH AS FIBERGLASS ROVING OR AS DIRECTED BY THE ENGINEER TO PREVENT SOIL EROSION AND TO PROTECT THE AREA ADJACENT TO THE STRUCTURE. THE CONTRACTOR WILL BE REQUIRED TO REMOVE THESE MATERIALS PRIOR TO CONSTRUCTION OF THE APPROACH SLAB.

TEMPORARY DRAINAGE DETAIL

9/19/13

ASSEMBLED BY : M. D. IVY	DATE : 2/11/11		
CHECKED BY : H. T. DIEU	DATE : 6/12		
DRAWN BY : FCJ 11/88	REV. 5/7/03	RWW/JTE	
CHECKED BY : ARB 11/88	REV. 5/1/06RRR	MAA/KMM	
	REV. 10/1/11	MAA/GM	

18-SEP-2013 12:18
Y:\structures\Plans\str03_Y10\R-3421C_SD_AS_03.dgn
thcarroll

PROJECT NO. R-3421C

RICHMOND COUNTY

STATION: 456+99.33 -L-

SHEET 2 OF 2

STATE OF NORTH CAROLINA
DEPARTMENT OF TRANSPORTATION
RALEIGH

STANDARD

BRIDGE APPROACH
SLAB DETAILS

REVISIONS						SHEET NO.
NO.	BY:	DATE:	NO.	BY:	DATE:	S-86
1			3			TOTAL SHEETS
2			4			86

STR. #3

STD. NO. BAS10

F.A. PROJECT NO. HPPNHS-0220(65)

B.M.: #37 RR SPIKE SET IN BASE OF 15" SWEETGUM 376' RT. OF STA. 518+46-L- EL. 320.60

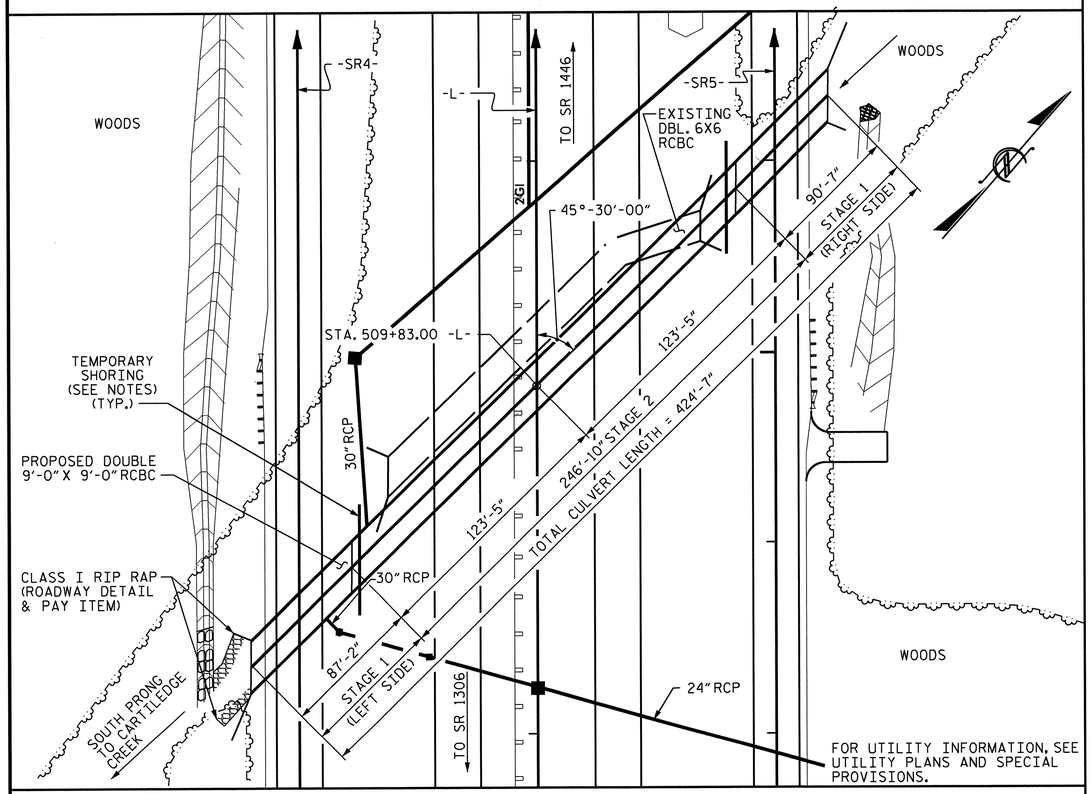

LOCATION SKETCH

TOTAL STRUCTURE QUANTITIES

CLASS A CONCRETE		
STAGE 1 (LEFT SIDE)	214.4	C.Y.
STAGE 1 (RIGHT SIDE)	221.9	C.Y.
STAGE 2A	269.8	C.Y.
STAGE 2B	274.4	C.Y.
TOTAL	980.5	C.Y.
REINFORCING STEEL		
STAGE 1 (LEFT SIDE)	22089	LBS.
STAGE 1 (RIGHT SIDE)	22764	LBS.
STAGE 2A	33923	LBS.
STAGE 2B	22800	LBS.
TOTAL	101576	LBS.
FOUNDATION COND. MAT'L		
STAGE 1 (LEFT SIDE)	148	TONS
STAGE 1 (RIGHT SIDE)	155	TONS
STAGE 2A	418	TONS
TOTAL	721	TONS
CULVERT EXCAVATION	LUMP SUM	
REMOVAL OF EXISTING STRUCTURE	LUMP SUM	

GRADE DATA

GRADE POINT ELEV. @ STA. 509+41.92 -SBL-	= 314.61
GRADE POINT ELEV. @ STA. 510+24.27 -NBL-	= 315.52
BED ELEV. @ STA. 509+83.00 -L-	= 299.20
ROADWAY SLOPES @ STA. 509+83.00 -L-	= 2:1

HYDRAULIC DATA

DESIGN DISCHARGE	= 1500 C.F.S.
FREQUENCY OF DESIGN FLOOD	= 50 YEARS
DESIGN HIGH WATER ELEVATION	= 310.70
DRAINAGE AREA	= 3.1 SQ. MI.
BASE DISCHARGE (Q100)	= 1700 C.F.S.
BASE HIGH WATER ELEVATION	= 312.00

OVERTOPPING FLOOD DATA

OVERTOPPING DISCHARGE	= 2100 C.F.S.
FREQUENCY OF OVERTOPPING FLOOD	= 200 YEARS ±
OVERTOPPING FLOOD ELEVATION	= 315.30

NOTES

ASSUMED LIVE LOAD ----------HL-93 OR ALTERNATE LOADING.

DESIGN FILL = 7.15 FEET.

FOR OTHER DESIGN DATA AND NOTES SEE STANDARD NOTE SHEET.

3" Ø WEEP HOLES INDICATED TO BE IN ACCORDANCE WITH THE SPECIFICATIONS.

CONCRETE IN CULVERTS TO BE POURED IN THE FOLLOWING ORDER:

1. WING FOOTINGS AND STAGE 1 FLOOR SLAB INCLUDING 4" OF ALL VERTICAL WALLS.
2. THE REMAINING PORTIONS OF STAGE 1 WALLS AND WINGS FULL HEIGHT, FOLLOWED BY STAGE 1 ROOF SLAB AND HEADWALLS.
3. STAGE 2A FLOOR SLAB INCLUDING 4" OF ALL VERTICAL WALLS.
4. THE REMAINING PORTION OF STAGE 2A WALLS FOR BARREL 2.
5. THE REMAINING PORTION OF STAGE 2B WALL FOR BARREL 1, FOLLOWED BY STAGE 2B ROOF SLAB AND HEADWALLS.

THE RESIDENT ENGINEER SHALL CHECK THE LENGTH OF CULVERT BEFORE STAKING IT OUT TO MAKE CERTAIN THAT IT WILL PROPERLY TAKE CARE OF THE FILL.

DIMENSIONS FOR WING LAYOUT AS WELL AS ADDITIONAL REINFORCING STEEL EMBEDDED IN BARREL ARE SHOWN ON WING SHEET.

TRANSVERSE CONSTRUCTION JOINTS SHALL BE USED IN THE BARREL, SPACED TO LIMIT THE POURS TO A MAXIMUM OF 70 FT. LOCATION OF JOINTS SHALL BE SUBJECT TO APPROVAL OF THE ENGINEER.

STEEL IN THE BOTTOM SLAB MAY BE SPLICED AT THE PERMITTED CONSTRUCTION JOINT AT THE CONTRACTOR'S OPTION. EXTRA WEIGHT OF STEEL DUE TO THE SPLICES SHALL BE PAID FOR BY THE CONTRACTOR.

AT THE CONTRACTOR'S OPTION, HE MAY SPLICE THE VERTICAL REINFORCING STEEL IN THE INTERIOR FACE OF EXTERIOR WALL AND BOTH FACES OF INTERIOR WALLS ABOVE LOWER WALL CONSTRUCTION JOINT. THE SPLICE LENGTH SHALL BE AS PROVIDED IN THE SPLICE LENGTH CHART SHOWN ON THE PLANS. EXTRA WEIGHT OF STEEL DUE TO THE SPLICES SHALL BE PAID FOR BY THE CONTRACTOR.

FOR LIMITS OF TEMPORARY SHORING FOR MAINTENANCE OF TRAFFIC, SEE TRAFFIC CONTROL PLANS. FOR PAY ITEM FOR TEMPORARY SHORING FOR MAINTENANCE OF TRAFFIC, SEE ROADWAY PLANS.

FOR SUBMITTAL OF WORKING DRAWINGS, SEE SPECIAL PROVISIONS.

FOR FALSEWORK AND FORMWORK, SEE SPECIAL PROVISIONS.

FOR CRANE SAFETY, SEE SPECIAL PROVISIONS.

FOR GROUT FOR STRUCTURES, SEE SPECIAL PROVISIONS.

AT THE CONTRACTOR'S OPTION HE MAY SUBMIT, TO THE ENGINEER FOR APPROVAL, DESIGN AND DETAIL DRAWINGS FOR A PRECAST REINFORCED CONCRETE BOX CULVERT IN LIEU OF THE CAST-IN-PLACE CULVERT SHOWN ON THE PLANS. THE DESIGN SHALL PROVIDE THE SAME SIZE AND NUMBER OF BARRELS AS USED ON THE CAST-IN-PLACE DESIGN. FOR OPTIONAL PRECAST REINFORCED CONCRETE BOX CULVERT, SEE SPECIAL PROVISIONS.

THE CONTRACTOR SHALL PROVIDE INDEPENDENT ASSURANCE SAMPLES OF REINFORCING STEEL AS FOLLOWS: FOR PROJECTS REQUIRING UP TO 400 TONS OF REINFORCING STEEL, ONE 30 INCH SAMPLE OF EACH SIZE BAR USED, AND FOR PROJECTS REQUIRING OVER 400 TONS OF REINFORCING STEEL, TWO 30 INCH SAMPLES OF EACH SIZE BAR USED. THE BARS FROM WHICH THE SAMPLES ARE TAKEN MUST THEN BE SPLICED WITH REPLACEMENT BARS OF THE SIZE AND LENGTH OF THE SAMPLE, PLUS A MINIMUM LAP SPLICE OF THIRTY BAR DIAMETERS. PAYMENT FOR THE SAMPLES OF REINFORCING STEEL SHALL BE CONSIDERED INCIDENTAL TO VARIOUS PAY ITEMS.

FOR CULVERT DIVERSION DETAILS AND PAY ITEM, SEE EROSION CONTROL PLANS.

A 3 FOOT STRIP OF FILTER FABRIC SHALL BE ATTACHED TO THE FILL FACE OF THE WING COVERING THE ENTIRE LENGTH OF THE EXPANSION JOINT.

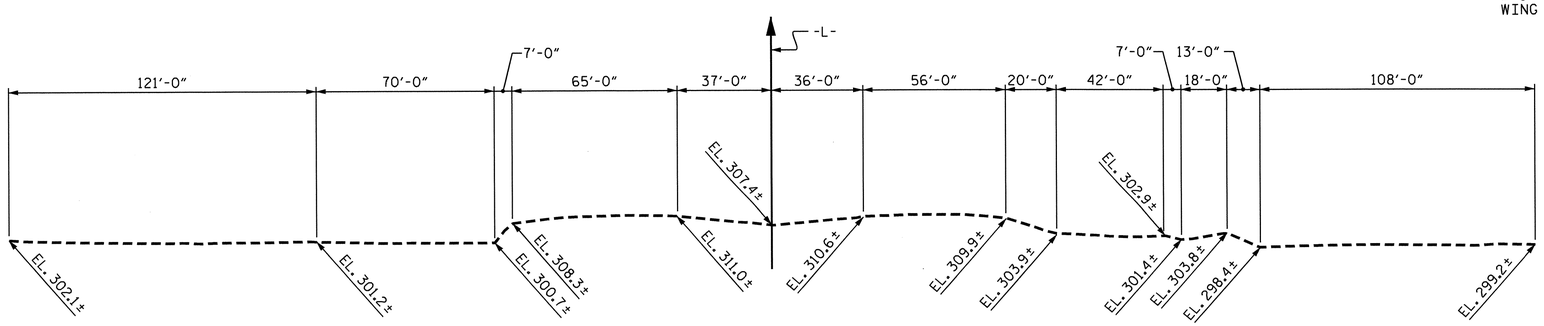

PROFILE ALONG ℄ CULVERT

PROJECT NO. R-3421C

RICHMOND COUNTY

STATION: 509+83.00 -L-

SHEET 1 OF 8 CULVERT #236

STATE OF NORTH CAROLINA
DEPARTMENT OF TRANSPORTATION
RALEIGH

DOUBLE BARREL 9.0 FT. X 9.0 FT. CONCRETE BOX CULVERT 45°-30' SKEW (STAGE 1 & 2)

NORTH CAROLINA PROFESSIONAL SEAL 24991 ENGINEER BRICE CHARLES HUNT — 3/19/13

NORTH CAROLINA PROFESSIONAL SEAL 23371 ENGINEER VIMAL A. PATEL — 3/19/13

REVISIONS						SHEET NO.
NO.	BY:	DATE:	NO.	BY:	DATE:	C-1
1			3			TOTAL SHEETS
2			4			8

STR. #4 STD. NO. CB52A

ASSEMBLED BY : J. G. KHARVA	DATE : 7/12	SPECIAL
CHECKED BY : K. D. LAYNE	DATE : 7-25-12	
DRAWN BY : D.P.DONOVAN	DATE : DEC.1989	STANDARD
CHECKED BY : E.L. ROSE	DATE : NOV. 90	

ADDED NOV. 90

18-MAR-2013 13:15
R:\Structures\Plans\str04\R3421C_SD_CU_04.dgn

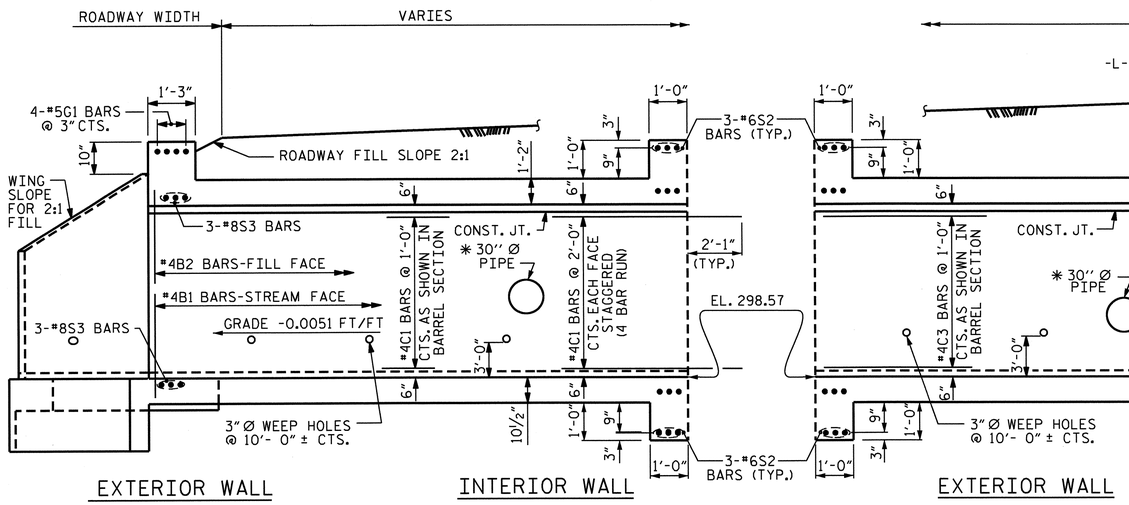

CULVERT SECTION NORMAL TO ROADWAY

STAGE 1 (LEFT SIDE)

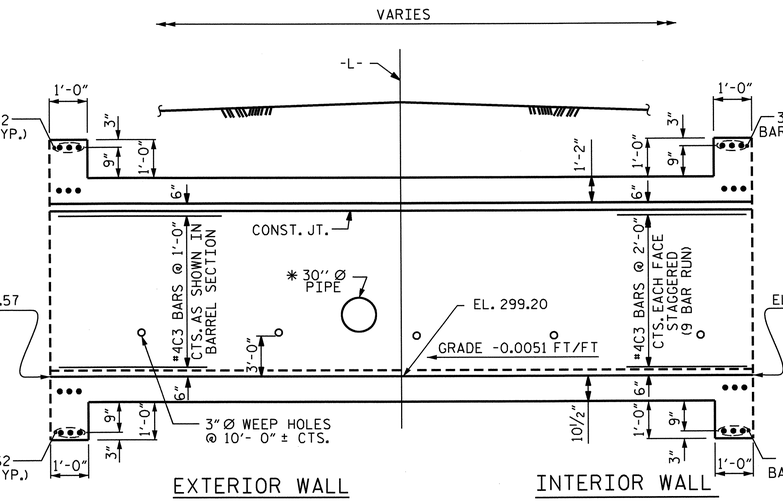

CULVERT SECTION NORMAL TO ROADWAY

STAGE 2A & 2B

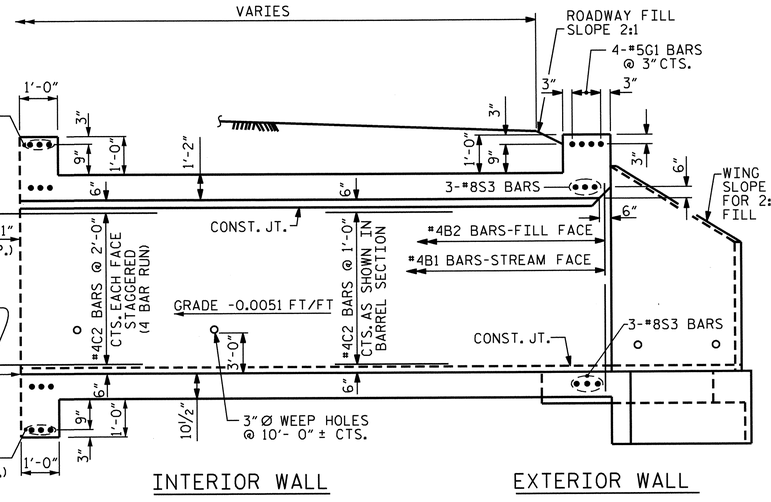

CULVERT SECTION NORMAL TO ROADWAY

STAGE 1 (RIGHT SIDE)

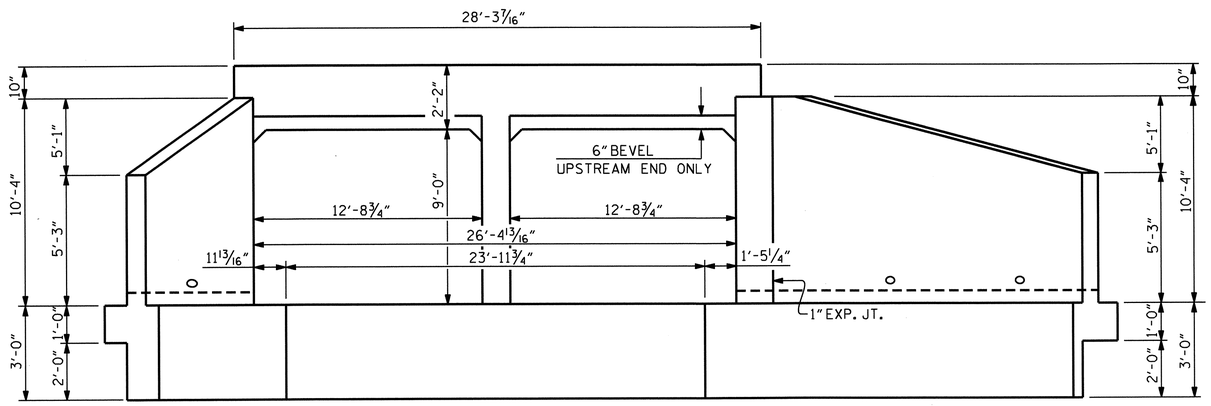

END ELEVATION NORMAL TO SKEW

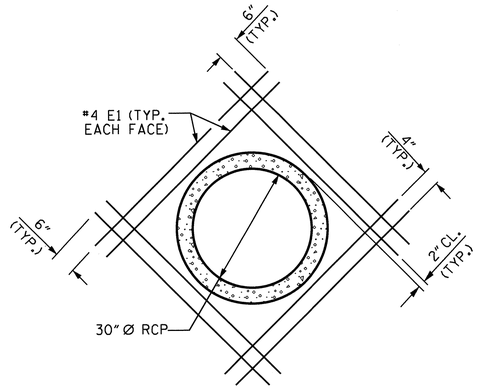

DETAIL OF REINFORCING AROUND 30" Ø PIPE

* THE 30" RCP THROUGH THE SIDEWALL OF THE CULVERT WILL BE LOCATED BY THE ENGINEER. THE REINFORCING STEEL SHALL BE FIELD BENT OR CUT AS NECESSARY TO CLEAR PIPE.

PROJECT NO. R-3421C

RICHMOND COUNTY

STATION: 509+83.00 -L-

SHEET 2 OF 8

STATE OF NORTH CAROLINA
DEPARTMENT OF TRANSPORTATION
RALEIGH

DOUBLE BARREL 9.0 FT.X 9.0 FT. CONCRETE BOX CULVERT 45°-30' SKEW

(STAGE 1 & 2)

NORTH CAROLINA PROFESSIONAL SEAL 23371 ENGINEER PAUL A. PATE

3/19/13

REVISIONS						SHEET NO.
NO.	BY:	DATE:	NO.	BY:	DATE:	C-2
1			3			TOTAL SHEETS
2			4			8

STR. #4 STD. NO. CB52

REVISED 11-19-99 BY M.M. CHECKED BY R.W.W.
REDRAWN : D.P.D. 11-90 CHECKED BY : E.L.R. 11-2-90

ASSEMBLED BY : J. G. KHARVA DATE : 6/12
CHECKED BY : K. D. LAYNE DATE : 7-25-12

06-AUG-2012 09:58
Y:\structures\Plans\str04\R3421C_SD_CU_04.dgn
jpadams

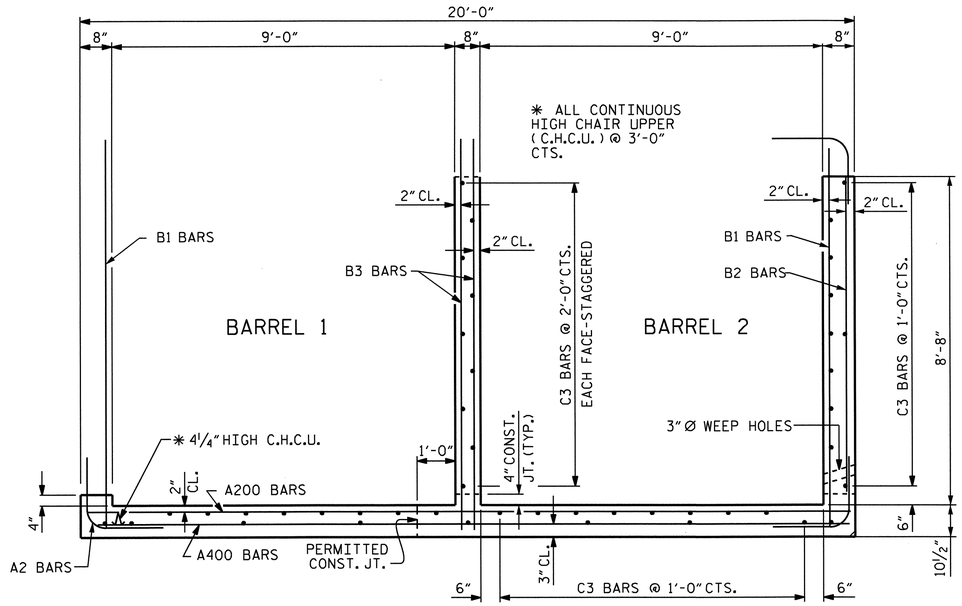

BARREL SECTION - STAGE 2A

THERE ARE 44 C3 BARS IN SECTION OF BARREL.

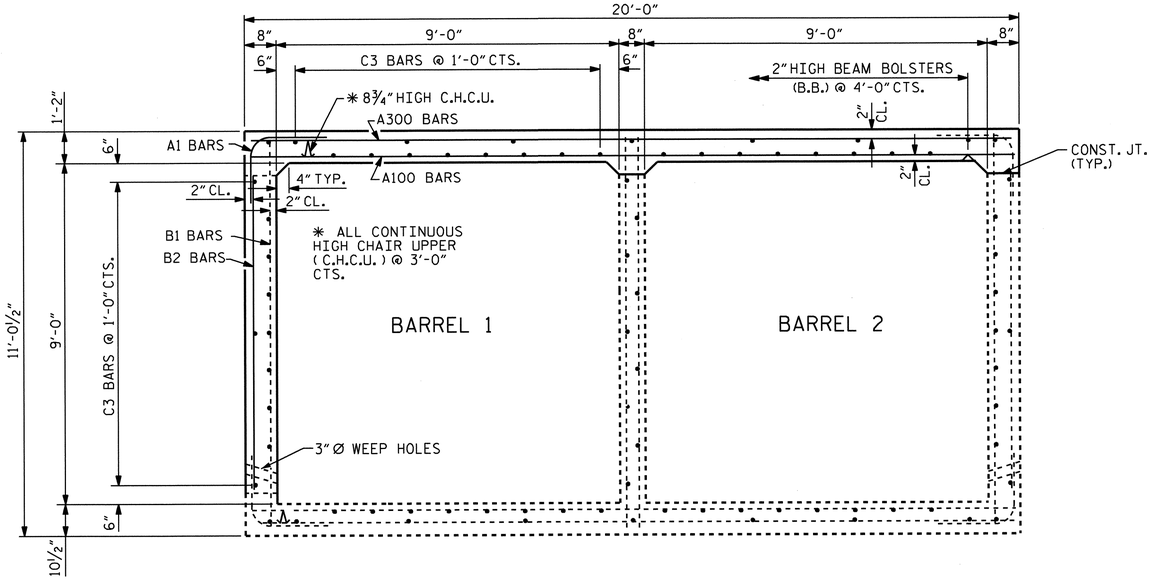

BARREL SECTION - STAGE 2B

THERE ARE 35 C3 BARS IN SECTION OF BARREL.

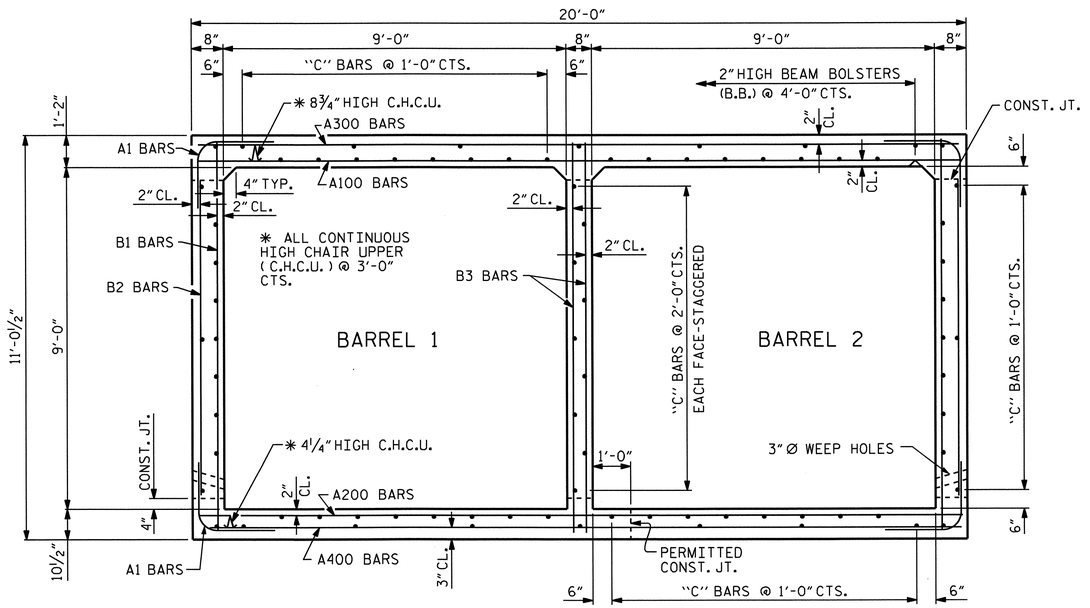

BARREL SECTION - STAGE 1 (LEFT & RIGHT)

THERE ARE 79 "C" BARS IN SECTION OF BARREL.

DRAWN BY : J. G. KHARVA DATE : 7/12
CHECKED BY : K. D. LAYNE DATE : 7-25-12

06-AUG-2012 09:58
Y:\structures\Plans\str04\R3421C_SD_CU_04.dgn
jpadams

NORTH CAROLINA PROFESSIONAL SEAL 23371 ENGINEER PAUL A. PATEL
3/19/13

PROJECT NO. R-3421C
RICHMOND COUNTY
STATION: 509+83.00 -L-

SHEET 3 OF 8

STATE OF NORTH CAROLINA
DEPARTMENT OF TRANSPORTATION
RALEIGH

DOUBLE BARREL 9.0 FT. X 9.0 FT. CONCRETE BOX CULVERT 45°-30' SKEW
(STAGE 1 & 2)

REVISIONS						SHEET NO.
NO.	BY:	DATE:	NO.	BY:	DATE:	C-3
1			3			TOTAL SHEETS
2			4			8

STR. #4

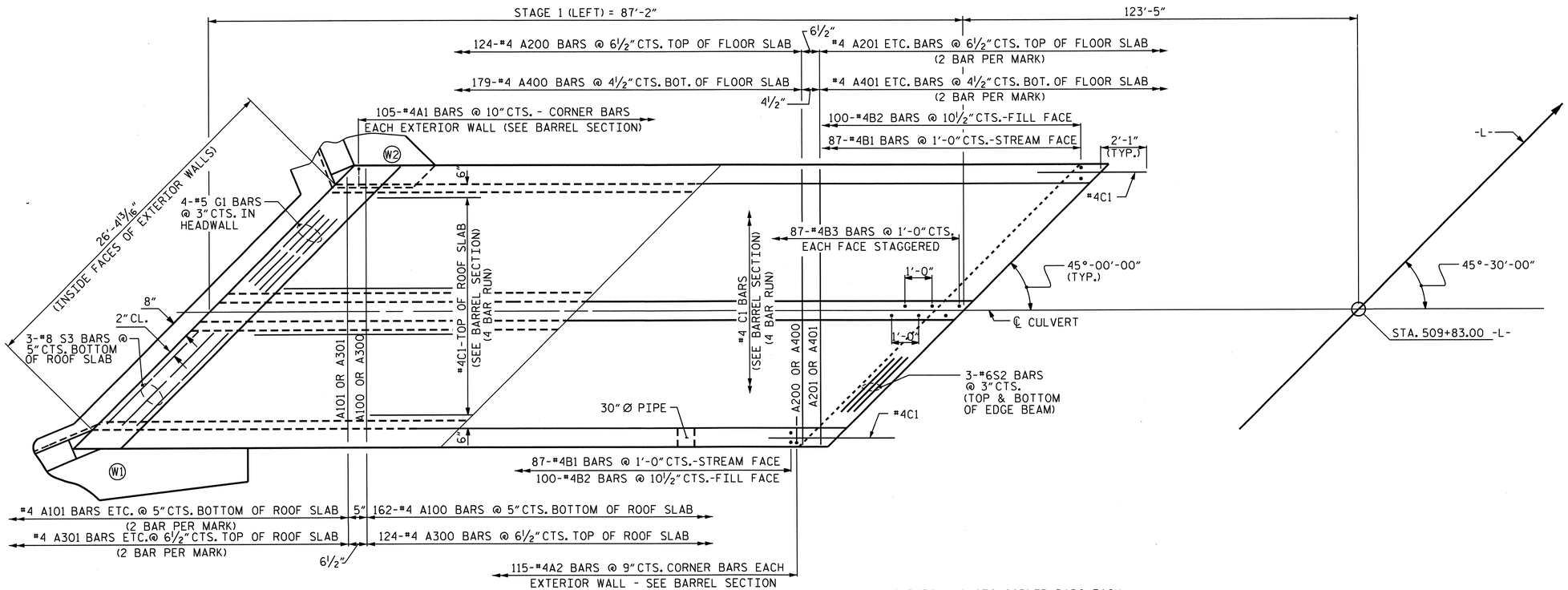

PART PLAN - ROOF SLAB

(STAGE 1 LEFT SIDE)

PART PLAN - FLOOR SLAB

(STAGE 1 LEFT SIDE)

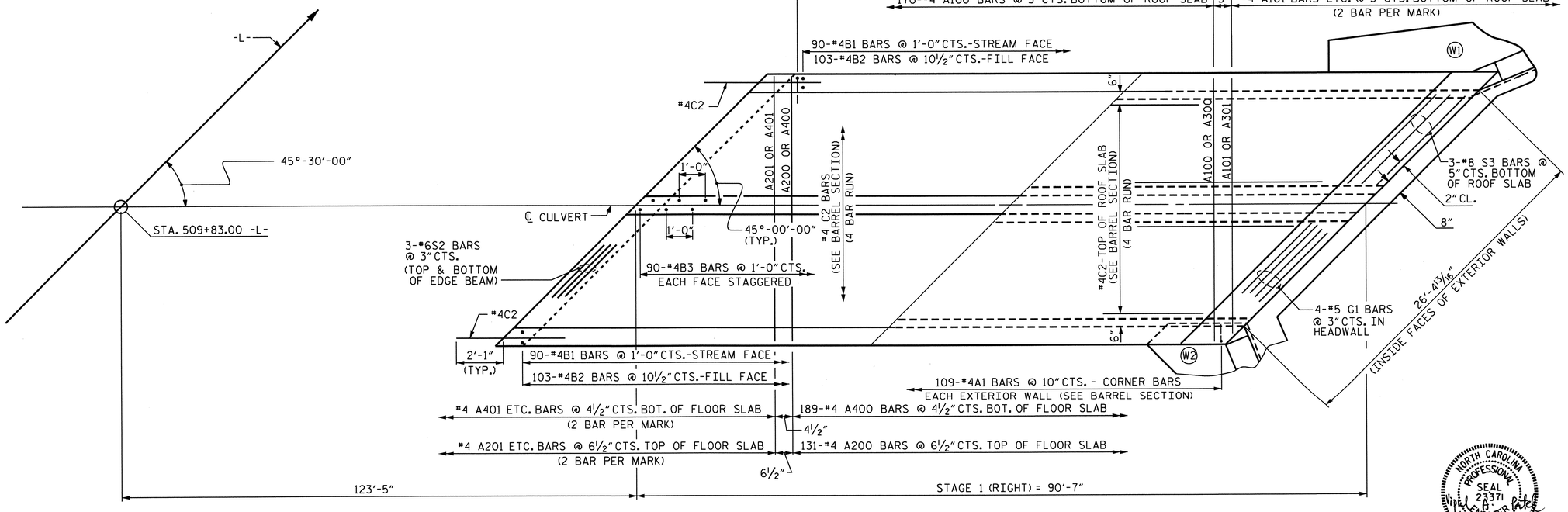

PART PLAN - FLOOR SLAB

(STAGE 1 RIGHT SIDE)

PART PLAN - ROOF SLAB

(STAGE 1 RIGHT SIDE)

STAGE 1 QUANTITIES

LEFT SIDE

CLASS A CONCRETE

BARREL	190.6	C.Y.
WINGS ETC.	23.8	C.Y.
TOTAL	214.4	C.Y.

REINFORCING STEEL

BARREL	20830	LBS.
WINGS ETC.	1,259	LBS.
TOTAL	22089	LBS.

FOUNDATION COND. MAT'L ---------- 148 TONS

RIGHT SIDE

CLASS A CONCRETE

BARREL	198.1	C.Y.
WINGS ETC.	23.8	C.Y.
TOTAL	221.9	C.Y.

REINFORCING STEEL

BARREL	21505	LBS.
WINGS ETC.	1,259	LBS.
TOTAL	22764	LBS.

FOUNDATION COND. MAT'L ---------- 155 TONS

PROJECT NO. R-3421C

RICHMOND COUNTY

STATION: 509+83.00 -L-

SHEET 4 OF 8

STATE OF NORTH CAROLINA
DEPARTMENT OF TRANSPORTATION
RALEIGH

DOUBLE BARREL 9.0 FT.X 9.0 FT. CONCRETE BOX CULVERT 45°-30' SKEW

(STAGE 1)

REVISIONS						SHEET NO.
NO.	BY:	DATE:	NO.	BY:	DATE:	C-4
1			3			TOTAL SHEETS
2			4			8

STR. #4

NORTH CAROLINA PROFESSIONAL SEAL 23371 ENGINEER VIPUL A. PATEL

3/19/13

DRAWN BY : J. G. KHARVA DATE : 6/12
CHECKED BY : K. D. LAYNE DATE : 7-25-12

06-AUG-2012 09:58
Y:\structures\Plans\str04\R3421C_SD_CU_04.dgn
jpadams

STAGE 2A QUANTITIES		STAGE 2B QUANTITIES	
CLASS A CONCRETE		CLASS A CONCRETE	
BARREL	267.7 C.Y.	BARREL	272.3 C.Y.
2 EDGE BEAMS	2.1 C.Y.	2 EDGE BEAMS	2.1 C.Y.
TOTAL	269.8 C.Y.	TOTAL	274.4 C.Y.
REINFORCING STEEL		REINFORCING STEEL	
BARREL	33923 LBS.	BARREL	22800 LBS.
TOTAL	33923 LBS.	TOTAL	22800 LBS.
FOUNDATION COND. MAT'L ---------- 418 TONS			

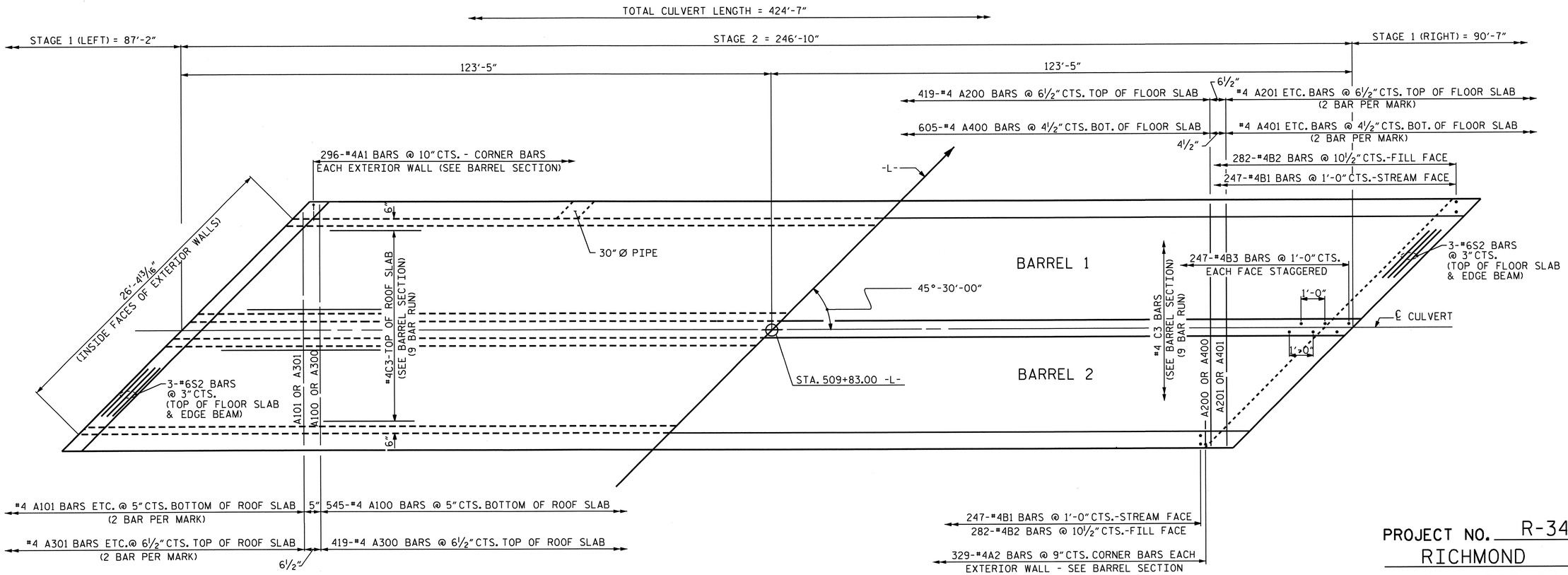

PART PLAN - ROOF SLAB
(STAGE 2A & 2B)

PART PLAN - FLOOR SLAB
(STAGE 2A & 2B)

PROJECT NO. R-3421C

RICHMOND COUNTY

STATION: 509+83.00 -L-

SHEET 5 OF 8

STATE OF NORTH CAROLINA
DEPARTMENT OF TRANSPORTATION
RALEIGH

DOUBLE BARREL 9.0 FT.X 9.0 FT. CONCRETE BOX CULVERT 45°-30' SKEW
(STAGE 2)

REVISIONS						SHEET NO.
NO.	BY:	DATE:	NO.	BY:	DATE:	C-5
1			3			TOTAL SHEETS
2			4			8

STR. #4

NORTH CAROLINA PROFESSIONAL SEAL 23371 ENGINEER VIPUL A. PATEL
3/19/13

DRAWN BY : J. G. KHARVA DATE : 7/12
CHECKED BY : K. D. LAYNE DATE : 7-25-12

06-AUG-2012 09:58
Y:\structures\Plans\str04\R3421C_SD_CU_04.dgn
jpodams

BILL OF MATERIAL

STAGE 1 (LEFT SIDE)

BAR	NO.	SIZE	TYPE	LENGTH	WEIGHT
A1	210	#4	6	4'-7"	643
A2	230	#4	6	4'-2"	640
A100	162	#4	STR	19'-7"	2119
A101	4	#4	STR	18'-9"	50
A102	4	#4	STR	17'-11"	48
A103	4	#4	STR	17'-1"	46
A104	4	#4	STR	16'-3"	43
A105	4	#4	STR	15'-5"	41
A106	4	#4	STR	14'-7"	39
A107	4	#4	STR	13'-9"	37
A108	4	#4	STR	12'-11"	35
A109	4	#4	STR	12'-1"	32
A110	4	#4	STR	11'-3"	30
A111	4	#4	STR	10'-5"	28
A112	4	#4	STR	9'-7"	26
A113	4	#4	STR	8'-9"	23
A114	4	#4	STR	7'-11"	21
A115	4	#4	STR	7'-1"	19
A116	4	#4	STR	6'-3"	17
A117	4	#4	STR	5'-5"	14
A118	4	#4	STR	4'-7"	12
A119	4	#4	STR	3'-9"	10
A120	4	#4	STR	2'-11"	8
A121	4	#4	STR	2'-1"	6
A200	124	#4	STR	19'-7"	1622
A201	4	#4	STR	18'-9"	50
A202	4	#4	STR	17'-8"	47
A203	4	#4	STR	16'-7"	44
A204	4	#4	STR	15'-6"	41
A205	4	#4	STR	14'-5"	39
A206	4	#4	STR	13'-4"	36
A207	4	#4	STR	12'-3"	33
A208	4	#4	STR	11'-2"	30
A209	4	#4	STR	10'-1"	27
A210	4	#4	STR	9'-0"	24
A211	4	#4	STR	7'-11"	21
A212	4	#4	STR	6'-10"	18
A213	4	#4	STR	5'-9"	15
A214	4	#4	STR	4'-8"	12
A215	4	#4	STR	3'-7"	10
A216	4	#4	STR	2'-6"	7
A300	124	#4	STR	19'-7"	1622
A301	4	#4	STR	18'-9"	50
A302	4	#4	STR	17'-8"	47
A303	4	#4	STR	16'-7"	44
A304	4	#4	STR	15'-6"	41
A305	4	#4	STR	14'-5"	39
A306	4	#4	STR	13'-4"	36
A307	4	#4	STR	12'-3"	33
A308	4	#4	STR	11'-2"	30
A309	4	#4	STR	10'-1"	27
A310	4	#4	STR	9'-0"	24
A311	4	#4	STR	7'-11"	21
A312	4	#4	STR	6'-10"	18
A313	4	#4	STR	5'-9"	15
A314	4	#4	STR	4'-8"	12
A315	4	#4	STR	3'-7"	10
A316	4	#4	STR	2'-6"	7
A400	179	#4	STR	19'-7"	2342
A401	4	#4	STR	19'-0"	51
A402	4	#4	STR	18'-3"	49
A403	4	#4	STR	17'-6"	47
A404	4	#4	STR	16'-9"	45
A405	4	#4	STR	16'-0"	43
A406	4	#4	STR	15'-3"	41
A407	4	#4	STR	14'-6"	39
A408	4	#4	STR	13'-9"	37
A409	4	#4	STR	13'-0"	35
A410	4	#4	STR	12'-3"	33
A411	4	#4	STR	11'-6"	31
A412	4	#4	STR	10'-9"	29
A413	4	#4	STR	10'-0"	27
A414	4	#4	STR	9'-3"	25
A415	4	#4	STR	8'-6"	23
A416	4	#4	STR	7'-9"	21
A417	4	#4	STR	7'-0"	19
A418	4	#4	STR	6'-3"	17
A419	4	#4	STR	5'-6"	15
A420	4	#4	STR	4'-9"	13
A421	4	#4	STR	4'-0"	11
A422	4	#4	STR	3'-3"	9
A423	4	#4	STR	2'-6"	7
B1	174	#4	STR	10'-6"	1220
B2	200	#4	STR	8'-4"	1113
B3	174	#4	STR	10'-6"	1220
C1	316	#4	STR	23'-9"	5013
E1	16	#4	STR	5'-2"	55
G1	4	#5	STR	27'-9"	116
S2	12	#6	STR	27'-9"	500
S3	6	#8	STR	27'-9"	445

REINFORCING STEEL	LBS.	20830
CLASS A CONCRETE BARREL	C.Y.	190.6

STAGE 1 (RIGHT SIDE)

BAR	NO.	SIZE	TYPE	LENGTH	WEIGHT
A1	218	#4	6	4'-7"	667
A2	242	#4	6	4'-2"	674
A100	170	#4	STR	19'-7"	2224
A101	4	#4	STR	18'-9"	50
A102	4	#4	STR	17'-11"	48
A103	4	#4	STR	17'-1"	46
A104	4	#4	STR	16'-3"	43
A105	4	#4	STR	15'-5"	41
A106	4	#4	STR	14'-7"	39
A107	4	#4	STR	13'-9"	37
A108	4	#4	STR	12'-11"	35
A109	4	#4	STR	12'-1"	32
A110	4	#4	STR	11'-3"	30
A111	4	#4	STR	10'-5"	28
A112	4	#4	STR	9'-7"	26
A113	4	#4	STR	8'-9"	23
A114	4	#4	STR	7'-11"	21
A115	4	#4	STR	7'-1"	19
A116	4	#4	STR	6'-3"	17
A117	4	#4	STR	5'-5"	14
A118	4	#4	STR	4'-7"	12
A119	4	#4	STR	3'-9"	10
A120	4	#4	STR	2'-11"	8
A121	4	#4	STR	2'-1"	6
A200	131	#4	STR	19'-7"	1714
A201	4	#4	STR	18'-6"	49
A202	4	#4	STR	17'-5"	47
A203	4	#4	STR	16'-4"	44
A204	4	#4	STR	15'-3"	41
A205	4	#4	STR	14'-2"	38
A206	4	#4	STR	13'-1"	35
A207	4	#4	STR	12'-0"	32
A208	4	#4	STR	10'-11"	29
A209	4	#4	STR	9'-10"	26
A210	4	#4	STR	8'-9"	23
A211	4	#4	STR	7'-8"	20
A212	4	#4	STR	6'-7"	18
A213	4	#4	STR	5'-6"	15
A214	4	#4	STR	4'-5"	12
A215	4	#4	STR	3'-4"	9
A216	4	#4	STR	2'-3"	6
A300	131	#4	STR	19'-7"	1714
A301	4	#4	STR	18'-6"	49
A302	4	#4	STR	17'-5"	47
A303	4	#4	STR	16'-4"	44
A304	4	#4	STR	15'-3"	41
A305	4	#4	STR	14'-2"	38
A306	4	#4	STR	13'-1"	35
A307	4	#4	STR	12'-0"	32
A308	4	#4	STR	10'-11"	29
A309	4	#4	STR	9'-10"	26
A310	4	#4	STR	8'-9"	23
A311	4	#4	STR	7'-8"	20
A312	4	#4	STR	6'-7"	18
A313	4	#4	STR	5'-6"	15
A314	4	#4	STR	4'-5"	12
A315	4	#4	STR	3'-4"	9
A316	4	#4	STR	2'-3"	6
A400	189	#4	STR	19'-7"	2472
A401	4	#4	STR	18'-10"	50
A402	4	#4	STR	18'-1"	48
A403	4	#4	STR	17'-4"	46
A404	4	#4	STR	16'-7"	44
A405	4	#4	STR	15'-10"	42
A406	4	#4	STR	15'-1"	40
A407	4	#4	STR	14'-4"	38
A408	4	#4	STR	13'-7"	36
A409	4	#4	STR	12'-10"	34
A410	4	#4	STR	12'-1"	32
A411	4	#4	STR	11'-4"	30
A412	4	#4	STR	10'-7"	28
A413	4	#4	STR	9'-10"	26
A414	4	#4	STR	9'-1"	24
A415	4	#4	STR	8'-4"	22
A416	4	#4	STR	7'-7"	20
A417	4	#4	STR	6'-10"	18
A418	4	#4	STR	6'-1"	16
A419	4	#4	STR	5'-4"	14
A420	4	#4	STR	4'-7"	12
A421	4	#4	STR	3'-10"	10
A422	4	#4	STR	3'-1"	8
A423	4	#4	STR	2'-4"	6
B1	180	#4	STR	10'-6"	1263
B2	206	#4	STR	8'-4"	1147
B3	180	#4	STR	10'-6"	1263
C2	316	#4	STR	24'-7"	5189
G1	4	#5	STR	27'-9"	116
S2	12	#6	STR	27'-9"	500
S3	6	#8	STR	27'-9"	445

REINFORCING STEEL	LBS.	21505
CLASS A CONCRETE BARREL	C.Y.	198.1

STAGE 2A

BAR	NO.	SIZE	TYPE	LENGTH	WEIGHT
A1	296	#4	6	4'-7"	906
A2	658	#4	6	4'-2"	1831
A200	419	#4	STR	19'-7"	5481
A201	4	#4	STR	18'-9"	50
A202	4	#4	STR	17'-8"	47
A203	4	#4	STR	16'-7"	44
A204	4	#4	STR	15'-6"	41
A205	4	#4	STR	14'-5"	39
A206	4	#4	STR	13'-4"	36
A207	4	#4	STR	12'-3"	33
A208	4	#4	STR	11'-2"	30
A209	4	#4	STR	10'-1"	27
A210	4	#4	STR	9'-0"	24
A211	4	#4	STR	7'-11"	21
A212	4	#4	STR	6'-10"	18
A213	4	#4	STR	5'-9"	15
A214	4	#4	STR	4'-8"	12
A215	4	#4	STR	3'-7"	10
A216	4	#4	STR	2'-6"	7
A400	605	#4	STR	19'-7"	7914
A401	4	#4	STR	18'-10"	50
A402	4	#4	STR	18'-1"	48
A403	4	#4	STR	17'-4"	46
A404	4	#4	STR	16'-7"	44
A405	4	#4	STR	15'-10"	42
A406	4	#4	STR	15'-1"	40
A407	4	#4	STR	14'-4"	38
A408	4	#4	STR	13'-7"	36
A409	4	#4	STR	12'-10"	34
A410	4	#4	STR	12'-1"	32
A411	4	#4	STR	11'-4"	30
A412	4	#4	STR	10'-7"	28
A413	4	#4	STR	9'-10"	26
A414	4	#4	STR	9'-1"	24
A415	4	#4	STR	8'-4"	22
A416	4	#4	STR	7'-7"	20
A417	4	#4	STR	6'-10"	18
A418	4	#4	STR	6'-1"	16
A419	4	#4	STR	5'-4"	14
A420	4	#4	STR	4'-7"	12
A421	4	#4	STR	3'-10"	10
A422	4	#4	STR	3'-1"	8
A423	4	#4	STR	2'-4"	6
B1	494	#4	STR	10'-6"	3465
B2	282	#4	STR	8'-4"	1570
B3	494	#4	STR	10'-6"	3465
C3	396	#4	STR	29'-1"	7693
S2	12	#6	STR	27'-9"	500

REINFORCING STEEL	LBS.	33923
CLASS A CONCRETE BARREL	C.Y.	267.7

STAGE 2B

BAR	NO.	SIZE	TYPE	LENGTH	WEIGHT
A1	296	#4	6	4'-7"	906
A100	545	#4	STR	19'-7"	7129
A101	4	#4	STR	18'-9"	50
A102	4	#4	STR	17'-11"	48
A103	4	#4	STR	17'-1"	46
A104	4	#4	STR	16'-3"	43
A105	4	#4	STR	15'-5"	41
A106	4	#4	STR	14'-7"	39
A107	4	#4	STR	13'-9"	37
A108	4	#4	STR	12'-11"	35
A109	4	#4	STR	12'-1"	32
A110	4	#4	STR	11'-3"	30
A111	4	#4	STR	10'-5"	28
A112	4	#4	STR	9'-7"	26
A113	4	#4	STR	8'-9"	23
A114	4	#4	STR	7'-11"	21
A115	4	#4	STR	7'-1"	19
A116	4	#4	STR	6'-3"	17
A117	4	#4	STR	5'-5"	14
A118	4	#4	STR	4'-7"	12
A119	4	#4	STR	3'-9"	10
A120	4	#4	STR	2'-11"	8
A121	4	#4	STR	2'-1"	6
A300	419	#4	STR	19'-7"	5481
A301	4	#4	STR	18'-9"	50
A302	4	#4	STR	17'-8"	47
A303	4	#4	STR	16'-7"	44
A304	4	#4	STR	15'-6"	41
A305	4	#4	STR	14'-5"	39
A306	4	#4	STR	13'-4"	36
A307	4	#4	STR	12'-3"	33
A308	4	#4	STR	11'-2"	30
A309	4	#4	STR	10'-1"	27
A310	4	#4	STR	9'-0"	24
A311	4	#4	STR	7'-11"	21
A312	4	#4	STR	6'-10"	18
A313	4	#4	STR	5'-9"	15
A314	4	#4	STR	4'-8"	12
A315	4	#4	STR	3'-7"	10
A316	4	#4	STR	2'-6"	7
B2	282	#4	STR	8'-4"	1570
C3	315	#4	STR	29'-1"	6120
E1	16	#4	STR	5'-2"	55
S2	12	#6	STR	27'-9"	500

REINFORCING STEEL	LBS.	22800
CLASS A CONCRETE BARREL	C.Y.	272.3

BAR TYPE

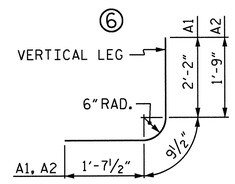

BAR DIMENSIONS ARE OUT TO OUT.

SPLICE LENGTH CHART

BAR	SIZE	LENGTH
C1, C2, C3	#4	1'-11"

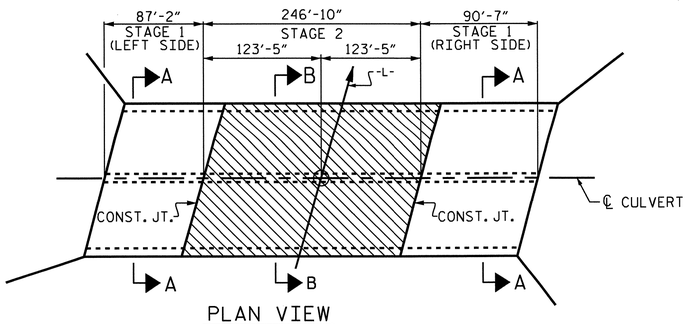

PLAN VIEW

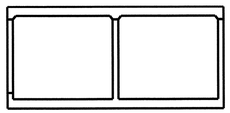

SECTION A-A

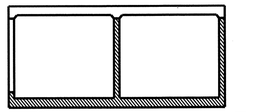

SECTION B-B

CONSTRUCTION SEQUENCE

PROJECT NO. R-3421C

RICHMOND COUNTY

STATION: 509+83.00 -L-

SHEET 6 OF 8

STATE OF NORTH CAROLINA
DEPARTMENT OF TRANSPORTATION
RALEIGH

DOUBLE BARREL 9.0 FT.X 9.0 FT. CONCRETE BOX CULVERT 45°-30' SKEW (STAGE 1 & 2)

REVISIONS						SHEET NO.
NO.	BY:	DATE:	NO.	BY:	DATE:	C-6
1			3			TOTAL SHEETS
2			4			8

STR. #4

DRAWN BY : J. G. KHARVA DATE : 7/12
CHECKED BY : K. D. LAYNE DATE : 7-25-12

06-AUG-2012 09:58
Y:\structures\Plans\str04\R3421C_SD_CU_04.dgn
jpadams

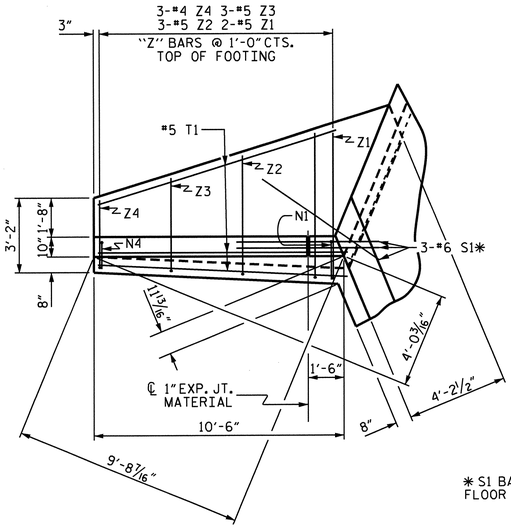

PLAN W2

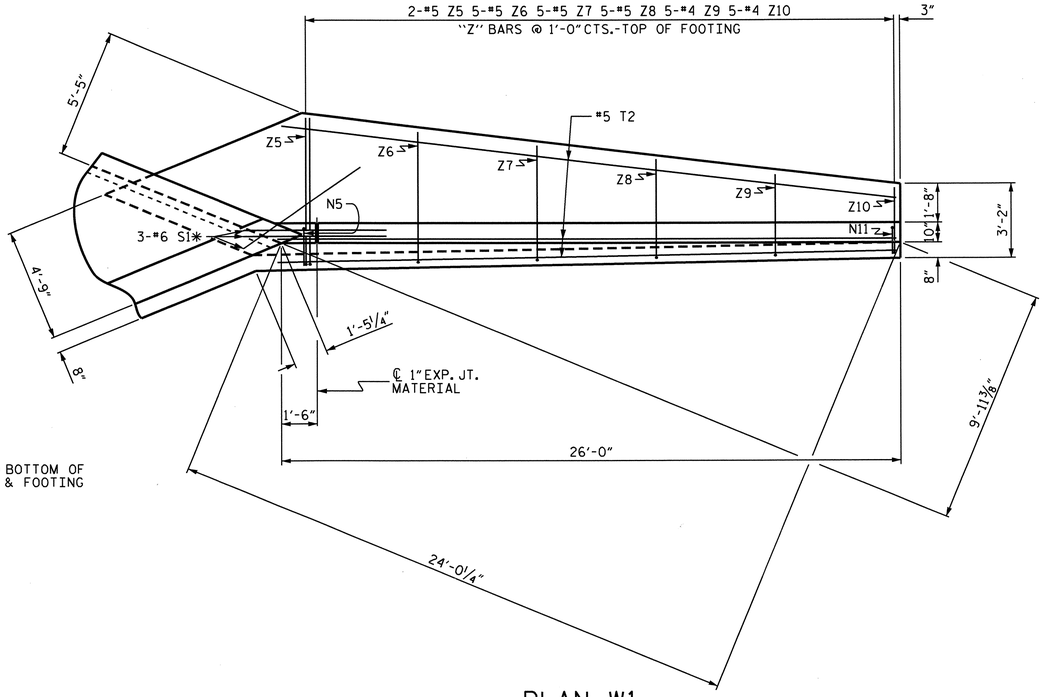

PLAN W1

* S1 BARS @ BOTTOM OF FLOOR SLAB & FOOTING

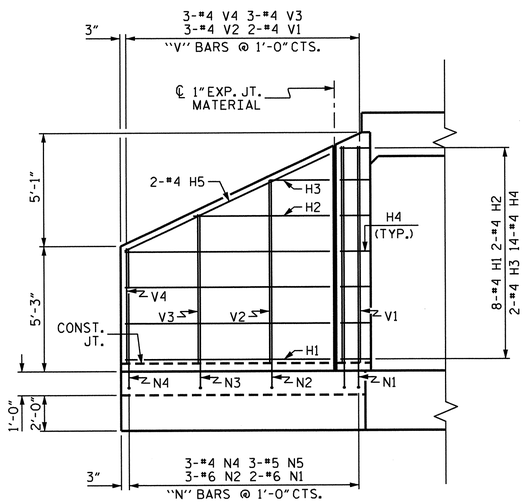

ELEVATION W2

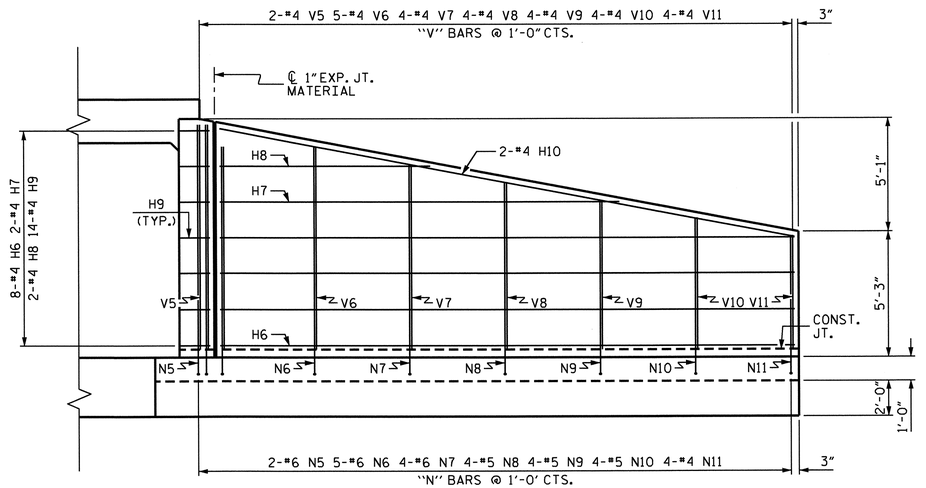

ELEVATION W1

BAR TYPES

ALL BAR DIMENSIONS ARE OUT TO OUT.

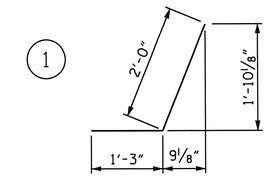

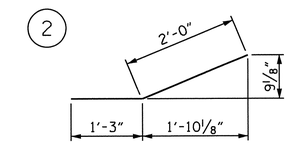

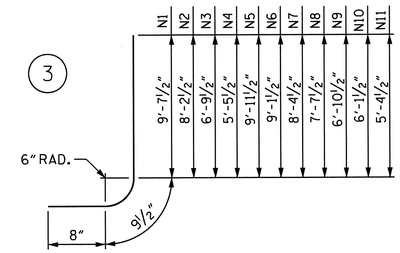

Z1	6'-2"	7"
Z2	5'-1"	7"
Z3	4'-0"	7"
Z4	2'-11"	6"
Z5	6'-3"	7"
Z6	5'-7"	7"
Z7	4'-11"	7"
Z8	4'-3"	7"
Z9	3'-6"	6"
Z10	2'-10"	6"

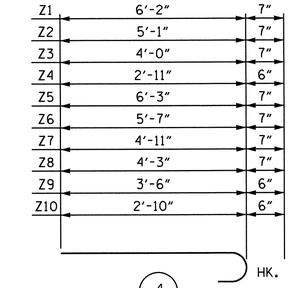

BILL OF MATERIAL FOR 2 WINGS

BAR	NO.	SIZE	TYPE	LENGTH	WEIGHT
H1	8	#4	STR	8'-7"	46
H2	2	#4	STR	5'-8"	8
H3	2	#4	STR	2'-6"	3
H4	14	#4	1	3'-3"	30
H5	2	#4	STR	9'-6"	13
H6	8	#4	STR	24'-1"	129
H7	2	#4	STR	16'-9"	22
H8	2	#4	STR	8'-10"	12
H9	14	#4	2	3'-3"	30
H10	2	#4	STR	24'-6"	33
N1	2	#6	3	11'-1"	33
N2	3	#6	3	9'-8"	44
N3	3	#5	3	8'-3"	26
N4	3	#4	3	6'-11"	14
N5	2	#6	3	11'-5"	34
N6	5	#6	3	10'-7"	79
N7	4	#6	3	9'-10"	59
N8	4	#5	3	9'-1"	38
N9	4	#5	3	8'-4"	35
N10	4	#5	3	7'-7"	32
N11	4	#4	3	6'-10"	18
S1	6	#6	STR	6'-0"	54
T1	3	#5	STR	10'-6"	33
T2	3	#5	STR	26'-0"	81
V1	2	#4	STR	9'-1"	12
V2	3	#4	STR	7'-8"	15
V3	3	#4	STR	6'-3"	13
V4	3	#4	STR	4'-10"	10
V5	2	#4	STR	9'-5"	13
V6	5	#4	STR	8'-6"	28
V7	4	#4	STR	7'-9"	21
V8	4	#4	STR	7'-0"	19
V9	4	#4	STR	6'-3"	17
V10	4	#4	STR	5'-6"	15
V11	4	#4	STR	4'-9"	13
Z1	2	#5	4	6'-9"	14
Z2	3	#5	4	5'-8"	18
Z3	3	#5	4	4'-7"	14
Z4	3	#4	4	3'-5"	7
Z5	2	#5	4	6'-10"	14
Z6	5	#5	4	6'-2"	32
Z7	5	#5	4	5'-6"	29
Z8	5	#5	4	4'-10"	25
Z9	5	#4	4	4'-0"	13
Z10	5	#4	4	3'-4"	11

REINFORCING STEEL FOR 2 WINGS	1259 LBS

CLASS A CONCRETE		
2 WINGS	18.6	CY
1 HEADWALL	1.3	CY
1 END CURTAIN WALL	1.8	CY
2 EDGE BEAMS	2.1	CY
TOTAL	23.8	CY

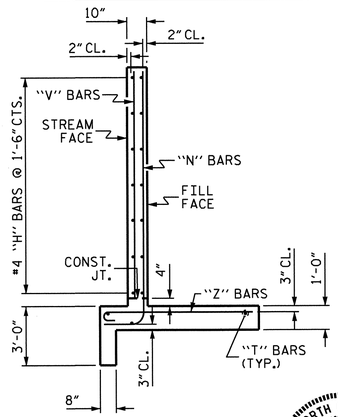

TYPICAL WING SECTION

NORTH CAROLINA PROFESSIONAL SEAL 23371 ENGINEER VIPUL A. PATEL
3/19/13

PROJECT NO. R-3421C

RICHMOND COUNTY

STATION: 509+83.00 -L-

SHEET 7 OF 8

STATE OF NORTH CAROLINA
DEPARTMENT OF TRANSPORTATION
RALEIGH

STANDARD WINGS FOR CONCRETE BOX CULVERT

H = 9'-0" SLOPE = 2:1
45° SKEW
STAGE 1
(LEFT SIDE & RIGHT SIDE)

REVISIONS						SHEET NO.
NO.	BY:	DATE:	NO.	BY:	DATE:	C-7
1			3			TOTAL SHEETS
2			4			8

STR. #4

STD. NO. CW4509

ASSEMBLED BY : J. G. KHARVA		DATE :	7/12
CHECKED BY : K. D. LAYNE		DATE :	7-25-12
DRAWN BY : CCJ	01/00		
CHECKED BY : RWW	03/00		

06-AUG-2012 09:58
Y:\structures\Plans\str04\R3421C_SD_CU_04.dgn
jpadams

LOAD AND RESISTANCE FACTOR RATING (LRFR) SUMMARY FOR REINFORCED CONCRETE BOX CULVERTS

LEVEL		VEHICLE	WEIGHT (W) (TONS)	CONTROLLING LOAD RATING (#)	MINIMUM RATING FACTORS (RF)	TONS = W x RF	STRENGTH I LIMIT STATE									COMMENT NUMBER
							LIVE-LOAD FACTORS (γ_{LL})	MOMENT				SHEAR				
								RATING FACTOR	BOX NO.	ELEMENT TYPE	DISTANCE FROM LEFT END OF ELEMENT (ft)	RATING FACTOR	BOX NO.	ELEMENT TYPE	DISTANCE FROM LEFT END OF ELEMENT (ft)	
DESIGN LOAD RATING		HL-93 (INVENTORY)	N/A	1	1.03	--	1.75	1.03	1	BOT CORNER WALL	9.77	1.59	1	BOTTOM SLAB	8.70	
		HL-93 (OPERATING)	N/A		1.34	--	1.35	1.34	1	BOT CORNER WALL	9.77	2.06	1	BOTTOM SLAB	8.70	
		HS-20 (INVENTORY)	36.000	2	1.06	38.18	1.75	1.06	1	BOT CORNER WALL	9.77	1.59	1	BOTTOM SLAB	8.70	
		HS-20 (OPERATING)	36.000		1.37	49.49	1.35	1.37	1	BOT CORNER WALL	9.77	2.06	1	BOTTOM SLAB	8.70	
LEGAL LOAD RATING	SINGLE VEHICLE (SV)	SNSH	13.500		1.64	22.17	1.40	1.64	1	BOT CORNER WALL	9.77	4.21	1	BOTTOM SLAB	8.70	
		SNGARBS2	20.000		1.53	30.69	1.40	1.53	1	BOT CORNER WALL	9.77	3.08	1	BOTTOM SLAB	8.70	
		SNAGRIS2	22.000		1.50	33.03	1.40	1.50	1	BOT CORNER WALL	9.77	2.90	1	BOTTOM SLAB	8.70	
		SNCOTTS3	27.250		1.26	34.28	1.40	1.26	1	BOT CORNER WALL	9.77	2.04	1	BOTTOM SLAB	8.70	
		SNAGGRS4	34.925		1.24	43.15	1.40	1.24	1	BOT CORNER WALL	9.77	1.86	1	BOTTOM SLAB	8.70	
		SNS5A	35.550		1.25	44.32	1.40	1.25	1	BOT CORNER WALL	9.77	1.76	1	BOTTOM SLAB	8.70	
		SNS6A	39.950		1.19	47.67	1.40	1.19	1	BOT CORNER WALL	9.77	1.71	1	BOTTOM SLAB	8.70	
		SNS7B	42.000		1.19	50.12	1.40	1.19	1	BOT CORNER WALL	9.77	1.71	1	BOTTOM SLAB	8.70	
	TRUCK TRACTOR SEMI-TRAILER (TTST)	TNAGRIT3	33.000		1.37	45.17	1.40	1.37	1	BOT CORNER WALL	9.77	2.27	1	BOTTOM SLAB	8.70	
		TNT4A	33.075		1.29	42.76	1.40	1.29	1	BOT CORNER WALL	9.77	2.08	1	BOTTOM SLAB	8.70	
		TNT6A	41.600		1.27	52.80	1.40	1.27	1	BOT CORNER WALL	9.77	2.01	1	BOTTOM SLAB	8.70	
		TNT7A	42.000		1.33	55.85	1.40	1.33	1	BOT CORNER WALL	9.77	1.99	1	BOTTOM SLAB	8.70	
		TNT7B	42.000		1.24	51.89	1.40	1.24	1	BOT CORNER WALL	9.77	1.84	1	BOTTOM SLAB	8.70	
		TNAGRIT4	43.000		1.21	52.21	1.40	1.21	1	BOT CORNER WALL	9.77	1.76	1	BOTTOM SLAB	8.70	
		TNAGT5A	45.000		1.20	54.16	1.40	1.20	1	BOT CORNER WALL	9.77	1.63	1	BOTTOM SLAB	8.70	
		TNAGT5B	45.000	3	1.18	53.24	1.40	1.18	1	BOT CORNER WALL	9.77	1.56	1	BOTTOM_SLAB	8.70	

LOAD FACTORS:

DESIGN LOAD RATING FACTORS

LOAD TYPE	MAX FACTOR	MIN FACTOR
DC	1.25	0.90
DW	1.50	0.65
EV	1.30	0.90
EH	1.35	0.90
ES	1.35	0.90
LS	1.75	--
WA	1.00	--

NOTE:

RATING FACTORS ARE BASED ON THE STRENGTH I LIMIT STATE.

(#) CONTROLLING LOAD RATING

(1) DESIGN LOAD RATING (HL-93)

(2) DESIGN LOAD RATING (HS-20)

(3) LEGAL LOAD RATING **

** SEE CHART FOR VEHICLE TYPE

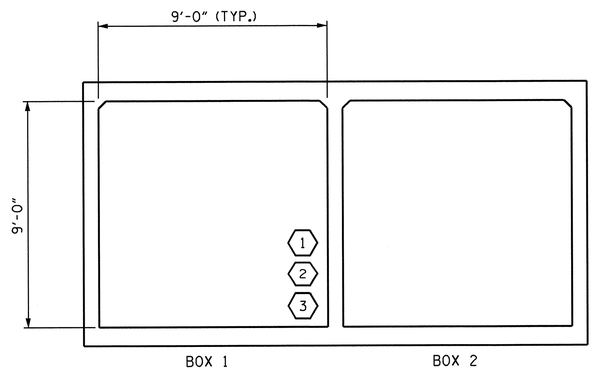

LRFR SUMMARY

(LOOKING DOWNSTREAM)

PROJECT NO. R-3421C

RICHMOND COUNTY

STATION: 509+83.00 -L-

SHEET 8 OF 8

STATE OF NORTH CAROLINA
DEPARTMENT OF TRANSPORTATION
RALEIGH

STANDARD

LRFR SUMMARY FOR REINFORCED CONCRETE BOX CULVERTS
(NON-INTERSTATE TRAFFIC)

NORTH CAROLINA PROFESSIONAL SEAL 23371 ENGINEER VIPUL A. PATEL
3/19/13

REVISIONS						SHEET NO.
NO.	BY:	DATE:	NO.	BY:	DATE:	C-8
1			3			TOTAL SHEETS
2			4			8

STR. #4

STD. NO. LRFR5

ASSEMBLED BY : R.L. CHESSON DATE : 06 / 2012
CHECKED BY : H.A. LOCKLEAR DATE : 06 / 2012

DRAWN BY : WMC 7/11
CHECKED BY : GM 7/11

REV. 10/1/11 MAA/GM

18-MAR-2013 13:16
R:\Structures\Plans\str04\R3421C_SD_CU_04.dgn
vpatel

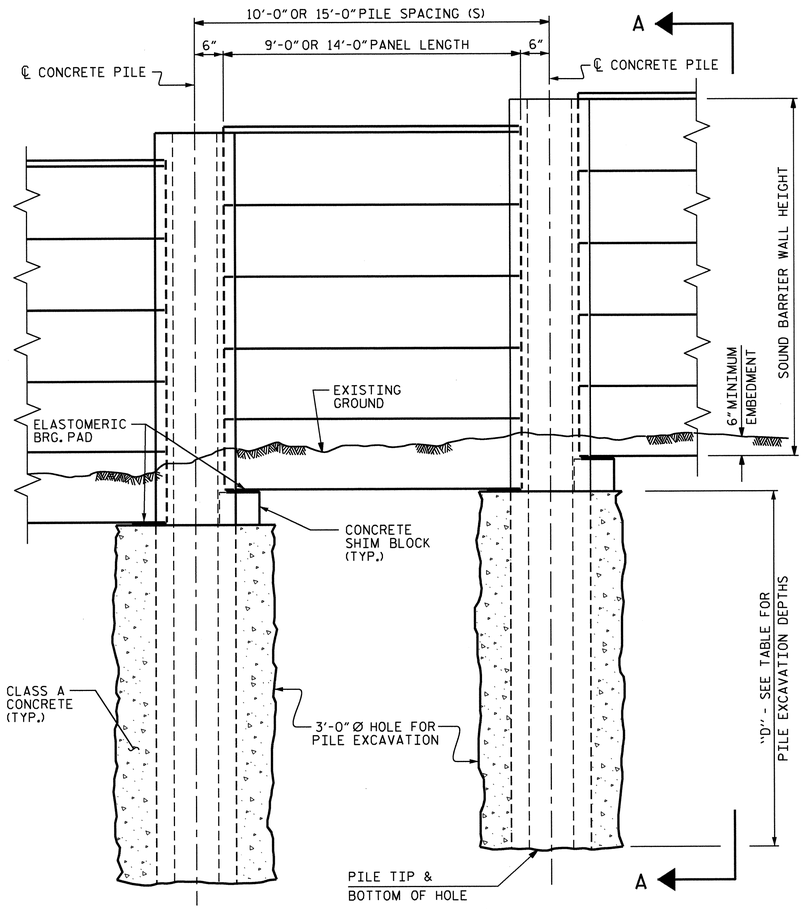

ELEVATION

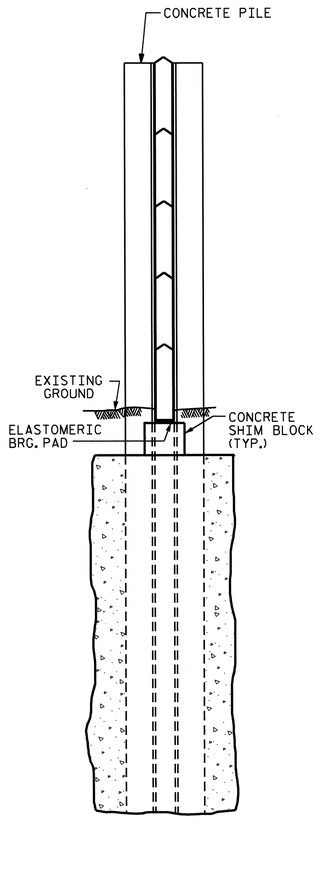

SECTION A-A

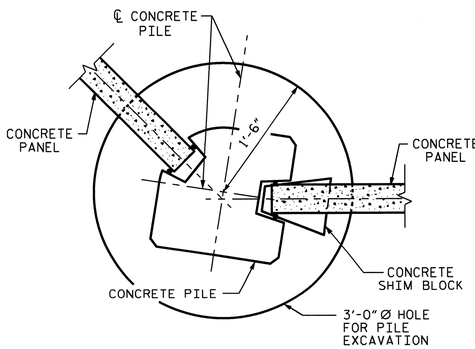

15° TO 45° TURNS
(PILE TYPE III)

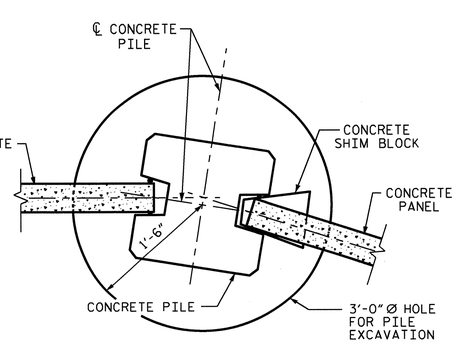

0° TO 15° TURNS
(PILE TYPE I)

TYPICAL WALL TURN DETAILS

NOISE WALL -NW1-				
STATION TO STATION	WALL HEIGHT	DESIGH WALL HEIGHT	PILE SPACING	DEPTH "D"
10+00 TO 11+50	10.0 FT. TO 14.0 FT.	13.5 FT.	10 FT.	11.5 FT.
			15 FT.	13.5 FT.
11+50 TO 14+35	15.0 FT. TO 16.0 FT.	17.0 FT.	10 FT.	13.5 FT.
			15 FT.	16.5 FT.
14+35 TO 17+00	11.0 FT. TO 14.0 FT.	13.5 FT.	10 FT.	16.5 FT.
			15 FT.	18.0 FT.
17+00 TO 22+00	8.0 FT. TO 12.0 FT.	13.5 FT.	10 FT.	18.0 FT.
			15 FT.	19.5 FT.
22+00 TO 26+05	9.0 FT. TO 14.0 FT.	13.5 FT.	10 FT.	16.5 FT.
			15 FT.	19.0 FT.
26+05 TO 27+70	15.0 FT. TO 17.0 FT.	17.0 FT.	10 FT.	17.5 FT.
			15 FT.	19.5 FT.
27+70 TO 29+80	8.0 FT. TO 14.0 FT.	13.5 FT.	10 FT.	13.0 FT.
			15 FT.	15.0 FT.

NOTES

FOR SOUND BARRIER WALL, SEE SPECIAL PROVISIONS.

CONSTRUCT SOUND BARRIER WALL TO LINES AND GRADES SHOWN ON THE ROADWAY PLANS.

PROVIDE PANELS WITH A FLAT BOTTOM.

VERIFY THE LOCATION OF UNDERGROUND UTILITIES BEFORE DRILLING HOLES TO ENSURE SUFFICIENT CLEARANCE IS AVAILABLE.

ADJUST PILE EXCAVATION ELEVATIONS TO MAINTAIN 6" MINIMUM EMBEDMENT OF THE BOTTOM PANEL.

USE CLASS AA FOR PANELS AND CLASS A CONCRETE PILE EXCAVATION BACKFILL, IN ACCORDANCE WITH ARTICLE 1000-4 OF THE STANDARD SPECIFICATIONS.

AT THE CONTRACTOR'S OPTION, USE EITHER 10 FOOT OR 15 FOOT PILE SPACINGS.

FOR SOUND BARRIER WALL STATIONS, OFFSETS, AND WALL ENVELOPE, SEE ROADWAY PLANS.

PLACE 1" Ø BACKER RODS FULL HEIGHT ON EACH SIDE OF THE PRECAST PANELS. SET AND SEAL THE BACKER ROD IN PLACE WITH SEALANT THAT CONFORMS WITH ARTICLE 1028-3 OF THE STANDARD SPECIFICATIONS.

FOR SUBMITTAL OF WORKING DRAWINGS, SEE SPECIAL PROVISIONS.

FOR FALSEWORK AND FORMWORK, SEE SPECIAL PROVISIONS.

EXPOSURE CATEGORY B - PILE REINFORCING STEEL

DESIGN WIND PRESSURE =
20 PSF (0'< H ≤ 14'); 25 PSF (14'< H ≤ 25')

PILE TYPE I				PILE TYPE III			
PILE SPACING	MAXIMUM WALL HEIGHT (H)	VERTICAL REINFORCING STEEL	TIES	PILE SPACING	MAXIMUM WALL HEIGHT (H)	VERTICAL REINFORCING STEEL	TIES
10'-0"	H ≤ 25'	4 - #6 EA. FACE	#3 @ 1'-4" CTS.	10'-0"	H ≤ 25'	3 - #7 SHORT FACE 4 - #7 LONG FACE	#3 @ 1'-4" CTS.
15'-0"	H ≤ 25'	4 - #7 EA. FACE	#3 @ 1'-4" CTS.	15'-0"	H ≤ 25'	3 - #8 SHORT FACE 4 - #8 LONG FACE	#3 @ 1'-4" CTS.

PILE TYPE II				PILE TYPE III ALT.			
PILE SPACING	MAXIMUM WALL HEIGHT (H)	VERTICAL REINFORCING STEEL	TIES	PILE SPACING	MAXIMUM WALL HEIGHT (H)	VERTICAL REINFORCING STEEL	TIES
10'-0"	H ≤ 25'	4 - #6 EA. FACE	#3 @ 1'-4" CTS.	10'-0"	H ≤ 25'	3 - #7 SHORT FACE 4 - #7 LONG FACE	#3 @ 1'-4" CTS.
15'-0"	H ≤ 25'	4 - #6 EA. FACE	#3 @ 1'-4" CTS.	15'-0"	H ≤ 25'	3 - #8 SHORT FACE 4 - #8 LONG FACE	#3 @ 1'-4" CTS.

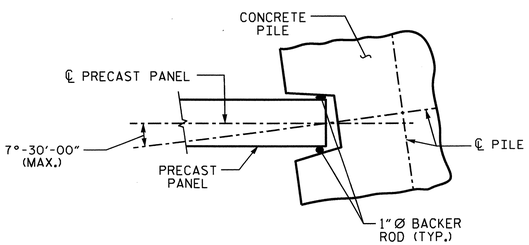

PILE ROTATION LIMIT FOR WALL TURN

(ROTATE THE CONCRETE PILE ±7°-30'-00" TO ACCOMODATE WALL TURN.)

BILL OF MATERIAL
SOUND BARRIER WALL = 24,362 Sq. Ft.
QUANTITIES PROVIDED ARE APPROXIMATE AND ARE FOR BID PURPOSES ONLY.

NORTH CAROLINA PROFESSIONAL SEAL 23091 ENGINEER BUCK CHARLES HUITT 3/19/13

NORTH CAROLINA PROFESSIONAL SEAL 23371 ENGINEER VIPUL A. PATEL 3/19/13

PROJECT NO. R-3421C
RICHMOND COUNTY
STATION: 545+93.58 -L-

SHEET 1 OF 3

STATE OF NORTH CAROLINA
DEPARTMENT OF TRANSPORTATION
RALEIGH
STANDARD
SOUND BARRIER WALL

REVISIONS						SHEET NO.
NO.	BY:	DATE:	NO.	BY:	DATE:	W-1
1			3			TOTAL SHEETS
2			4			3

ASSEMBLED BY : KEITH D. LAYNE	DATE : 01-02-13
CHECKED BY : V. A. PATEL	DATE : 01-02-13
DRAWN BY : MAA 6/11	ADDED 10/1/11
CHECKED BY : GM 6/11	

04-FEB-2013 14:45
R:\Structures\Plans\Sound Barrier Wall\R-3421C_sd_SBL.dgn
jpadams

(SHT 1) STD. NO. SBW1

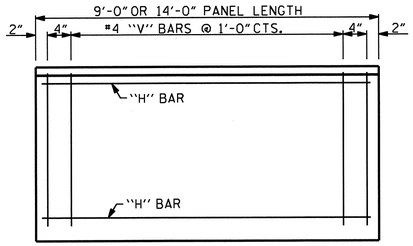

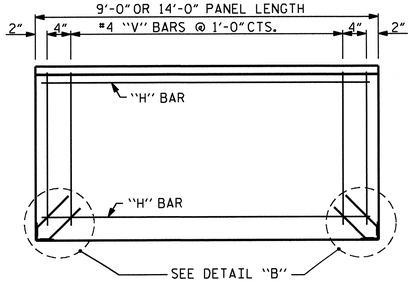

QUANTITIES FOR ONE PRECAST PANEL (FOR 10'-0" PILE SPACING)

PANEL HEIGHT	CLASS AA CONCRETE	BAR TYPES											
		HORIZONTAL						VERTICAL					
	C.Y.	NO.	BAR	SIZE	TYPE	LENGTH	WEIGHT (lb)	NO.	BAR	SIZE	TYPE	LENGTH	WEIGHT (lb)
2'-0"	0.22	3	H1	#4	STR	8'-8"	17	11	V1	#4	STR	1'-8"	12
3'-0"	0.33	4	H2	#4	STR	8'-8"	23	11	V2	#4	STR	2'-8"	20
4'-0"	0.44	5	H3	#4	STR	8'-8"	29	11	V3	#4	STR	3'-8"	27

QUANTITIES FOR ONE PRECAST PANEL (FOR 15'-0" PILE SPACING)

PANEL HEIGHT	CLASS AA CONCRETE	BAR TYPES											
		HORIZONTAL						VERTICAL					
	C.Y.	NO.	BAR	SIZE	TYPE	LENGTH	WEIGHT (lb)	NO.	BAR	SIZE	TYPE	LENGTH	WEIGHT (lb)
3'-0"	0.52	4	H1	#4	STR	13'-8"	37	16	V1	#4	STR	2'-8"	29
4'-0"	0.69	5	H2	#4	STR	13'-8"	46	16	V2	#4	STR	3'-8"	39
5'-0"	0.86	6	H3	#4	STR	13'-8"	55	16	V3	#4	STR	4'-8"	50
6'-0"	1.04	7	H4	#4	STR	13'-8"	64	16	V4	#4	STR	5'-8"	61

ADDITIONAL BARS FOR ONE BOTTOM PANEL

NO.	BAR	SIZE	TYPE	LENGTH	WEIGHT (lb)
4	S1	#5	1	1'-6"	6

BAR TYPE

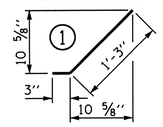

FRONT ELEVATION OF UPPER PRECAST PANELS

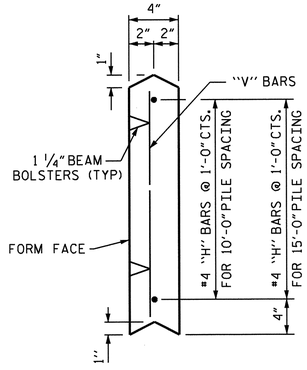

UPPER PANEL

FRONT ELEVATION OF BOTTOM PRECAST PANEL

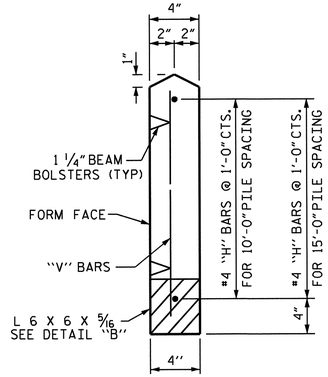

BOTTOM PANEL

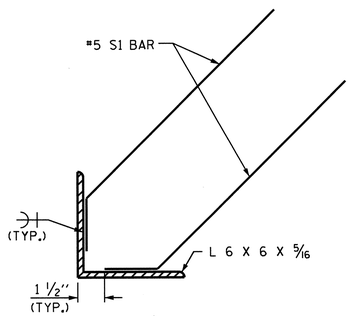

DETAIL "B"

SECTION THROUGH PRECAST PANELS

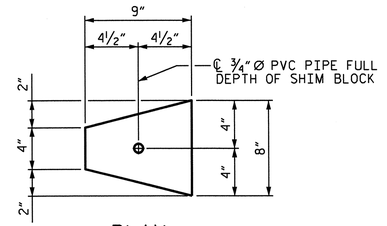

PLAN

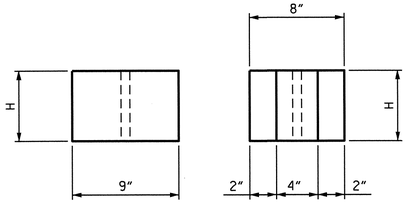

ELEVATION END

CONCRETE SHIM BLOCK

H = 3", 6" or 1'-0"

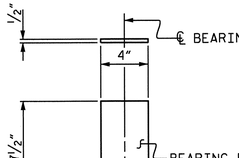

ELASTOMERIC BEARING DETAILS

ELASTOMER IN BEARINGS SHALL BE 50 DUROMETER HARDNESS.

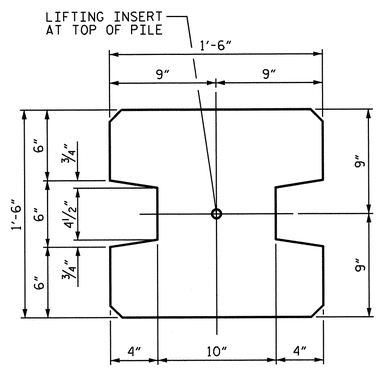

TYPE - I
(AREA = 1.9444 SQ. FT.)

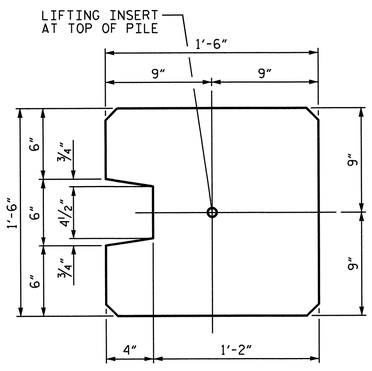

TYPE - II
(AREA = 2.0903 SQ. FT.)

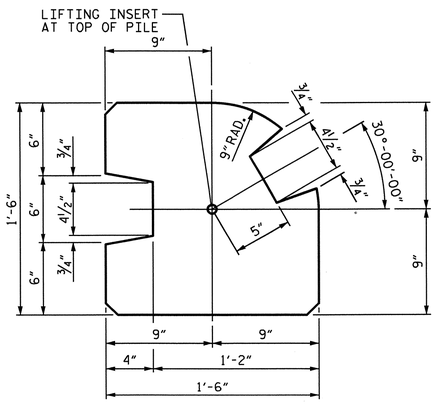

TYPE - III
(AREA = 1.8336 SQ. FT.)

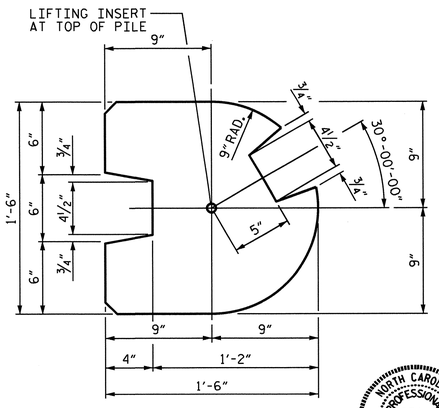

TYPE - III (ALT.)
(AREA = 1.7163 SQ. FT.)

PILE DETAIL

(ALL CORNERS TO BE CHAMFERED 1")

ASSEMBLED BY : KEITH D. LAYNE	DATE : 01-02-13
CHECKED BY : V. A. PATEL	DATE : 01-02-13
DRAWN BY : MAA 6/11	ADDED 8/31/11
CHECKED BY : GM 6/11	

04-FEB-2013 14:45
R:\Structures\Plans\Sound Barrier Wall\R-3421C_sd_SBL.dgn
jpadams

PROJECT NO. R-3421C
RICHMOND COUNTY
STATION: 545+93.58 -L-

SHEET 2 OF 3

STATE OF NORTH CAROLINA
DEPARTMENT OF TRANSPORTATION
RALEIGH
STANDARD

SOUND BARRIER WALL DETAILS

NORTH CAROLINA PROFESSIONAL SEAL 23371 ENGINEER VIRAL A. PATEL
3/19/13

REVISIONS						SHEET NO.
NO.	BY:	DATE:	NO.	BY:	DATE:	W-2
1			3			TOTAL SHEETS
2			4			3

STD. NO. SBW2

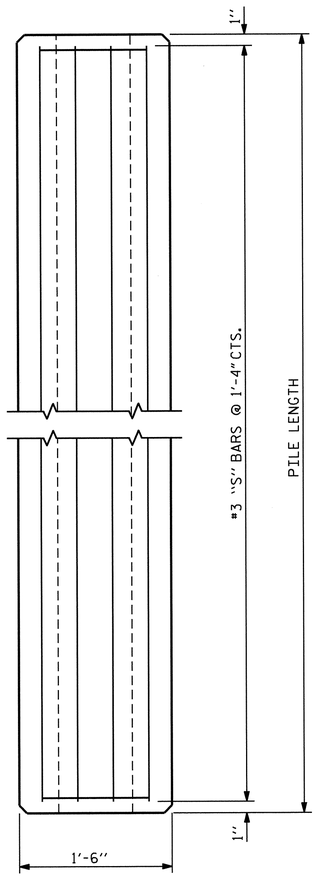

ELEVATION

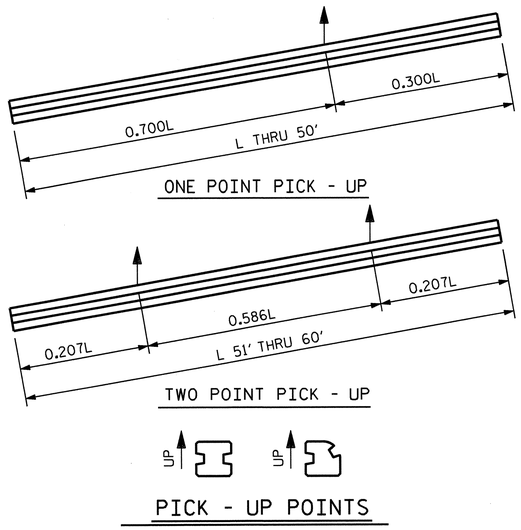

PICK - UP POINTS

NOTES

CONCRETE DESIGN DATA : f'c = 5,000 PSI

PROPOSED DEVICES FOR LIFTING PILES, RECESS DETAILS, AND PATCHING MATERIAL SHALL BE DETAILED IN SHOP DRAWINGS. AFTER ATTACHMENTS HAVE BEEN REMOVED, OPENINGS SHALL BE REPAIRED SUCH THAT THE APPEARANCE OF THE PILE IS UNIFORM.

WHERE CAST-IN-PLACE LIFTING DEVICES ARE NOT USED, PICK-UP POINTS TO BE INDICATED WITH A BLACK MARK 2" WIDE.

THE SLIP-FORM METHOD OF CASTING PILES WILL NOT BE PERMITTED.

ALL CORNERS TO BE CHAMFERED 1".

QUANTITIES FOR ONE PRECAST CONCRETE PILE

LENGTH	APPROX. PILE WT. TONS	ONE PICK-UP POINT		TWO PICK-UP POINT	
		0.300L	0.700L	0.207L	0.586L
10'-0"	1.56	3'-0"	7'-0"		
15'-0"	2.35	4'-6"	10'-6"		
20'-0"	3.14	6'-0"	14'-0"		
25'-0"	3.93	7'-6"	17'-6"		
30'-0"	4.70	9'-0"	21'-0"		
35'-0"	5.49	10'-6"	24'-6"		
40'-0"	6.28	12'-0"	28'-0"		
45'-0"	7.05	13'-6"	31'-6"		
50'-0"	7.84	15'-0"	35'-0"		
55'-0"	8.63			11'-4½"	32'-3"
60'-0"	9.42			12'-5"	35'-2"

BAR TYPES

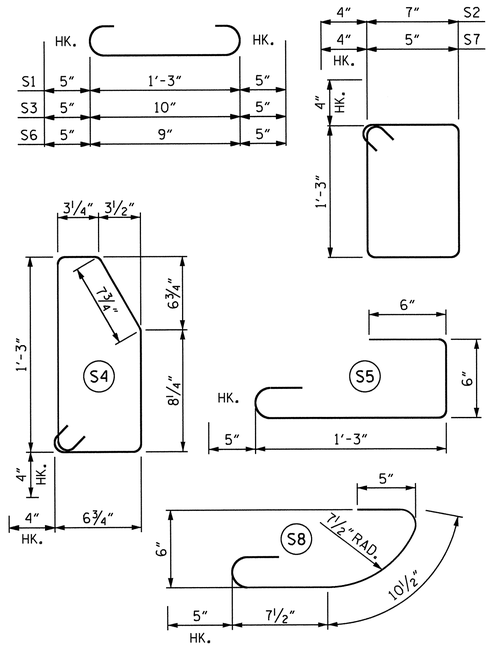

ALL BAR DIMENSIONS ARE OUT TO OUT.

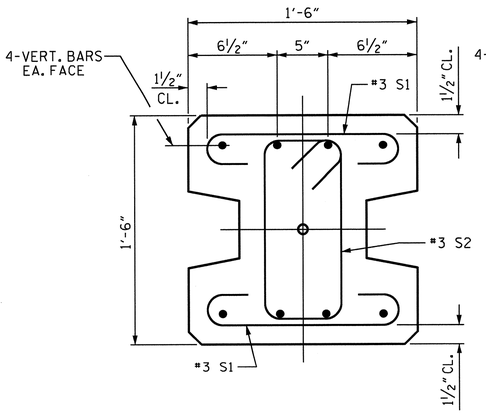

TYPE - I

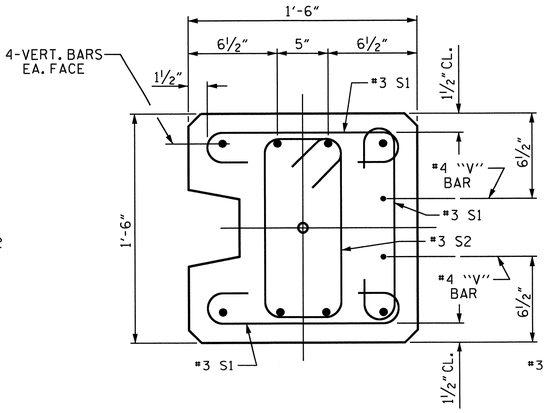

TYPE - II

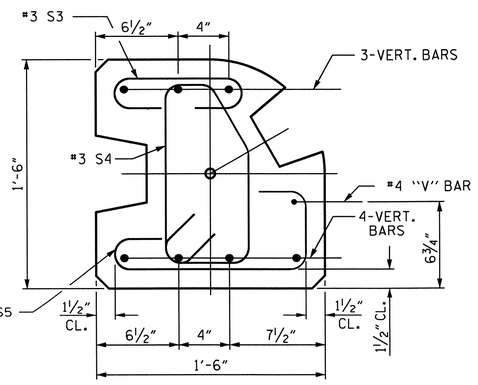

TYPE - III

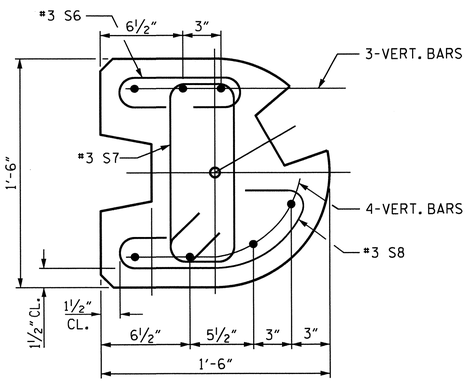

TYPE - III (ALT.)

PILE DETAIL

SEE EXPOSURE CATEGORY CHART FOR VERT. BAR PILE REINFORCING (SHEET 1 OF 3)

NORTH CAROLINA PROFESSIONAL SEAL 23371 ENGINEER VIRAL A. PATEL
3/19/13

PROJECT NO. R-3421C
RICHMOND COUNTY
STATION: 545+93.58 -L-

SHEET 3 OF 3

STATE OF NORTH CAROLINA
DEPARTMENT OF TRANSPORTATION
RALEIGH

STANDARD

SOUND BARRIER WALL DETAILS

REVISIONS						SHEET NO.
NO.	BY:	DATE:	NO.	BY:	DATE:	W-3
1			3			TOTAL SHEETS
2			4			3

STD. NO. SBW3

ASSEMBLED BY : KEITH D. LAYNE	DATE : 01-02-13
CHECKED BY : V. A. PATEL	DATE : 01-02-13
DRAWN BY : MAA 6/11	ADDED 8/31/11
CHECKED BY : GM 6/11	

04-FEB-2013 14:45
R:\Structures\Plans\Sound Barrier Wall\R-3421C_sd_SBL.dgn
jpadams

STANDARD NOTES

DESIGN DATA:

SPECIFICATIONS	A.A.S.H.T.O. (CURRENT)
LIVE LOAD	SEE PLANS
IMPACT ALLOWANCE	SEE A.A.S.H.T.O.
STRESS IN EXTREME FIBER OF	
STRUCTURAL STEEL - AASHTO M270 GRADE 36	20,000 LBS. PER SQ. IN.
- AASHTO M270 GRADE 50W	27,000 LBS. PER SQ. IN.
- AASHTO M270 GRADE 50	27,000 LBS. PER SQ. IN.
REINFORCING STEEL IN TENSION	
GRADE 60	24,000 LBS. PER SQ. IN.
CONCRETE IN COMPRESSION	1,200 LBS. PER SQ. IN.
CONCRETE IN SHEAR	SEE A.A.S.H.T.O.
STRUCTURAL TIMBER - TREATED OR	
UNTREATED - EXTREME FIBER STRESS	1,800 LBS. PER SQ. IN.
COMPRESSION PERPENDICULAR TO GRAIN OF TIMBER	375 LBS. PER SQ. IN.
EQUIVALENT FLUID PRESSURE OF EARTH	30 LBS. PER CU. FT. (MINIMUM)

MATERIAL AND WORKMANSHIP:

EXCEPT AS MAY OTHERWISE BE SPECIFIED ON PLANS OR IN THE SPECIAL PROVISIONS, ALL MATERIAL AND WORKMANSHIP SHALL BE IN ACCORDANCE WITH THE 2012 "STANDARD SPECIFICATIONS FOR ROADS AND STRUCTURES" OF THE N. C. DEPARTMENT OF TRANSPORTATION.

STEEL SHEET PILING FOR PERMANENT OR TEMPORARY APPLICATIONS SHALL BE HOT ROLLED.

CONCRETE:

UNLESS OTHERWISE REQUIRED ON PLANS, CLASS A CONCRETE SHALL BE USED FOR ALL PORTIONS OF ALL STRUCTURES WITH THE EXCEPTION THAT: CLASS AA CONCRETE SHALL BE USED IN BRIDGE SUPERSTRUCTURES, ABUTMENT BACKWALLS, AND APPROACH SLABS; AND CLASS B CONCRETE SHALL BE USED FOR SLOPE PROTECTION AND RIP RAP.

CONCRETE CHAMFERS:

UNLESS OTHERWISE NOTED ON THE PLANS, ALL EXPOSED CORNERS ON STRUCTURES SHALL BE CHAMFERED 3/4" WITH THE FOLLOWING EXCEPTIONS: TOP CORNERS OF CURBS MAY BE ROUNDED TO 1-1/2" RADIUS WHICH IS BUILT INTO CURB FORMS; CORNERS OF TRANSVERSE FLOOR EXPANSION JOINTS SHALL BE ROUNDED WITH A 1/4" FINISHING TOOL UNLESS OTHERWISE REQUIRED ON PLANS; AND CORNERS OF EXPANSION JOINTS IN THE ROADWAY FACES AND TOPS OF CURBS AND SIDEWALKS SHALL BE ROUNDED TO A 1/4" RADIUS WITH A FINISHING STONE OR TOOL UNLESS OTHERWISE REQUIRED ON PLANS.

DOWELS:

DOWELS WHEN INDICATED ON PLANS AS FOR CULVERT EXTENSIONS, SHALL BE EMBEDDED AT LEAST 12" INTO THE OLD CONCRETE AND GROUTED INTO PLACE WITH 1:2 CEMENT MORTAR.

ALLOWANCE FOR DEAD LOAD DEFLECTION, SETTLEMENT, ETC. IN CASTING SUPERSTRUCTURES:

BRIDGES SHALL BE BUILT ON THE GRADE OR VERTICAL CURVE SHOWN ON PLANS. SLABS, CURBS AND PARAPETS SHALL CONFORM TO THE GRADE OR CURVE.

ALL DIMENSIONS WHICH ARE GIVEN IN SECTION AND ARE AFFECTED BY DEAD LOAD DEFLECTIONS ARE DIMENSIONS AT CENTER LINE OF BEARING UNLESS OTHERWISE NOTED ON PLANS. IN SETTING FORMS FOR STEEL BEAM BRIDGES AND PRESTRESSED CONCRETE GIRDER BRIDGES, ADJUSTMENTS SHALL BE MADE DUE TO THE DEAD LOAD DEFLECTIONS FOR THE ELEVATIONS SHOWN. WHERE BLOCKS ARE SHOWN OVER BEAMS FOR BUILDING UP TO THE SLAB, THE VERTICAL DIMENSIONS OF THE BLOCKS SHALL BE ADJUSTED BETWEEN BEARINGS TO COMPENSATE FOR DEAD LOAD DEFLECTIONS, VERTICAL CURVE ORDINATE, AND ACTUAL BEAM CAMBER. WHERE BOTTOM OF SLAB IS IN LINE WITH BOTTOM OF TOP FLANGES, DEPTH OF SLAB BETWEEN BEARINGS SHALL BE ADJUSTED TO COMPENSATE FOR DEAD LOAD DEFLECTION, VERTICAL CURVE ORDINATE, AND ACTUAL BEAM CAMBER.

IN SETTING FALSEWORK AND FORMS FOR REINFORCED CONCRETE SPANS, AN ALLOWANCE SHALL BE MADE FOR DEAD LOAD DEFLECTIONS, SETTLEMENT OF FALSEWORK, AND PERMANENT CAMBER WHICH SHALL BE PROVIDED FOR IN ADDITION TO THE ELEVATIONS SHOWN. AFTER REMOVAL OF THE FALSEWORK, THE FINISHED STRUCTURES SHALL CONFORM TO THE PROFILE AND ELEVATIONS SHOWN ON THE PLANS AND CONSTRUCTION ELEVATIONS FURNISHED BY THE ENGINEER.

DETAILED DRAWINGS FOR FALSEWORK OR FORMS FOR BRIDGE SUPERSTRUCTURE AND ANY STRUCTURE OR PARTS OF A STRUCTURE AS NOTED ON THE PLANS SHALL BE SUBMITTED TO THE ENGINEER FOR APPROVAL BEFORE CONSTRUCTION OF THE FALSEWORK OR FORMS IS STARTED.

REINFORCING STEEL:

ALL REINFORCING STEEL SHALL BE DEFORMED. DIMENSIONS RELATIVE TO PLACEMENT OF REINFORCING ARE TO CENTERS OF BARS UNLESS OTHERWISE INDICATED IN THE PLANS. DIMENSIONS ON BAR DETAILS ARE TO CENTERS OF BARS OR ARE OUT TO OUT AS INDICATED ON PLANS.

WIRE BAR SUPPORTS SHALL BE PROVIDED FOR REINFORCING STEEL WHERE INDICATED ON THE PLANS. WHEN BAR SUPPORT PIECES ARE PLACED IN CONTINUOUS LINES, THEY SHALL BE SO PLACED THAT THE ENDS OF THE SUPPORTING WIRES SHALL BE LAPPED TO LOCK LEGS ON ADJOINING PIECES.

STRUCTURAL STEEL:

AT THE CONTRACTOR'S OPTION, HE MAY SUBSTITUTE 7/8" Ø SHEAR STUDS FOR THE 3/4" Ø STUDS SPECIFIED ON THE PLANS. THIS SUBSTITUTION SHALL BE MADE AT THE RATE OF 3 - 7/8" Ø STUDS FOR 4 - 3/4" Ø STUDS, AND STUD SPACING CHANGES SHALL BE MADE AS NECESSARY TO PROVIDE THE SAME EQUIVALENT NUMBER OF 7/8" Ø STUDS ALONG THE BEAM AS SHOWN FOR 3/4" Ø STUDS BASED ON THE RATIO OF 3 - 7/8" Ø STUDS FOR 4 - 3/4" Ø STUDS. STUDS OF THE LENGTH SPECIFIED ON THE PLANS MUST BE PROVIDED. THE MAXIMUM SPACING SHALL BE 2'-0".

EXCEPT AT THE INTERIOR SUPPORTS OF CONTINUOUS BEAMS WHERE THE COVER PLATE IS IN CONTACT WITH BEARING PLATE, THE CONTRACTOR MAY, AT HIS OPTION, SUBSTITUTE FOR THE COVER PLATES DESIGNATED ON THE PLANS COVER PLATES OF THE EQUIVALENT AREA PROVIDED THESE PLATES ARE AT LEAST 5/16" IN THICKNESS AND DO NOT EXCEED A WIDTH EQUAL TO THE FLANGE WIDTH LESS 2" OR A THICKNESS EQUAL TO 2 TIMES THE FLANGE THICKNESS. THE SIZE OF FILLET WELDS SHALL CONFORM TO THE REQUIREMENTS OF THE CURRENT ANSI/AASHTO/AWS "BRIDGE WELDING CODE". ELECTROSLAG WELDING WILL NOT BE PERMITTED.

WITH THE SOLE EXCEPTION OF EDGES AT SURFACES WHICH BEAR ON OTHER SURFACES, ALL SHARP EDGES AND ENDS OF SHAPES AND PLATES SHALL BE SLIGHTLY ROUNDED BY SUITABLE MEANS TO A RADIUS OF APPROXIMATELY 1/16 INCH OR EQUIVALENT FLAT SURFACE AT A SUITABLE ANGLE PRIOR TO PAINTING, GALVANIZING, OR METALLIZING.

HANDRAILS AND POSTS:

METAL STANDARDS AND FACES OF THE CONCRETE END POSTS FOR THE METAL RAIL SHALL BE SET NORMAL TO THE GRADE OF THE CURB, UNLESS OTHERWISE SHOWN ON PLANS. THE METAL RAIL AND TOPS OF CONCRETE POSTS USED WITH THE ALUMINUM RAIL SHALL BE BUILT PARALLEL TO THE GRADE OF THE CURB.

METAL HANDRAILS SHALL BE IN ACCORDANCE WITH THE PLANS. RAILS SHALL BE AS MANUFACTURED FOR BRIDGE RAILING. CASTINGS SHALL BE OF A UNIFORM APPEARANCE. FINS AND OTHER DEFORMATIONS RESULTING FROM CASTING OR OTHERWISE SHALL BE REMOVED IN A MANNER SO THAT A UNIFORM COLORING OF THE COMPLETED CASTING SHALL BE OBTAINED. CASTINGS WITH DISCOLORATIONS OR OF NON-UNIFORM COLORING WILL NOT BE ACCEPTED. CERTIFIED MILL REPORTS ARE REQUIRED FOR METAL RAILS AND POSTS.

SPECIAL NOTES:

GENERALLY, IN CASE OF DISCREPANCY, THIS STANDARD SHEET OF NOTES SHALL GOVERN OVER THE SPECIFICATIONS, BUT THE REMAINDER OF THE PLANS SHALL GOVERN OVER NOTES HEREON, AND SPECIAL PROVISIONS SHALL GOVERN OVER ALL. SEE SPECIFICATIONS ARTICLE 105-4.

ENGLISH

JANUARY, 1990

STD. NO. SN

REV. 6-16-95 EEM @ RGW REV. 5-7-03 RWW @ JTE REV. 10-1-11 MAA @ GM
REV. 8-16-99 RWW @ LES REV. 5-1-06 TLA @ GM