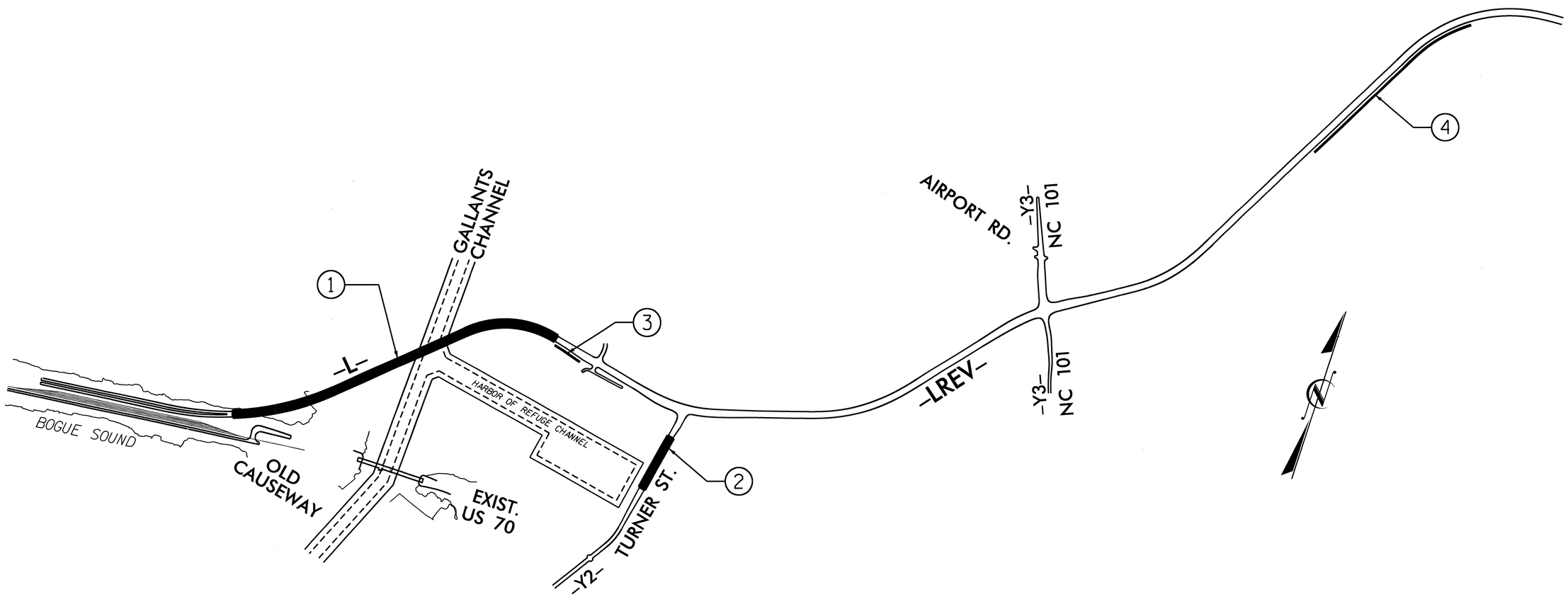

INDEX				
STR.	STATION	DESCRIPTION	SHEETS	
1	46+21.50 -L-	BRIDGE ON US-70 OVER GALLANTS CHANNEL (SUPERSTRUCTURE)	S-1 THRU S-204	PART 1
		BRIDGE ON US-70 OVER GALLANTS CHANNEL (SUBSTRUCTURE)	S-205 THRU S-282	PART 2
2	16+05.50 -Y2-	BRIDGE ON SR-1174 OVER TOWN CREEK	S-283 THRU S-333	PART 2
3	63+00.00 -L-	MSE RETAINING WALL	W1, W2	PART 2
4	145+49.89 -L-	SOUND BARRIER WALL	NW1 THRU NW3	PART 2

PROJECT NO. R-3307
CARTERET COUNTY
STATION:

STATE OF NORTH CAROLINA
DEPARTMENT OF TRANSPORTATION
RALEIGH

INDEX

REVISIONS					
NO.	BY:	DATE:	NO.	BY:	DATE:
1			3		
2			4		

PART 2 OF 2

23-OCT-2013 08:26
S:\PEF\Darrell\R3307_Index.dgn
dcrutcher

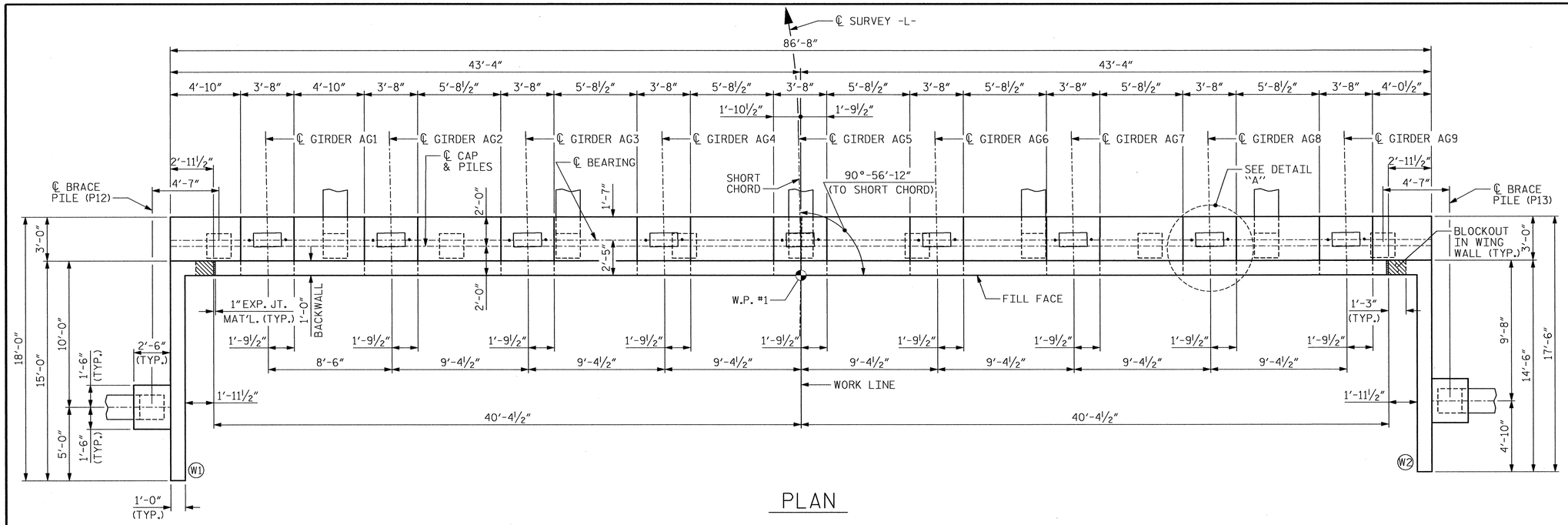

PLAN

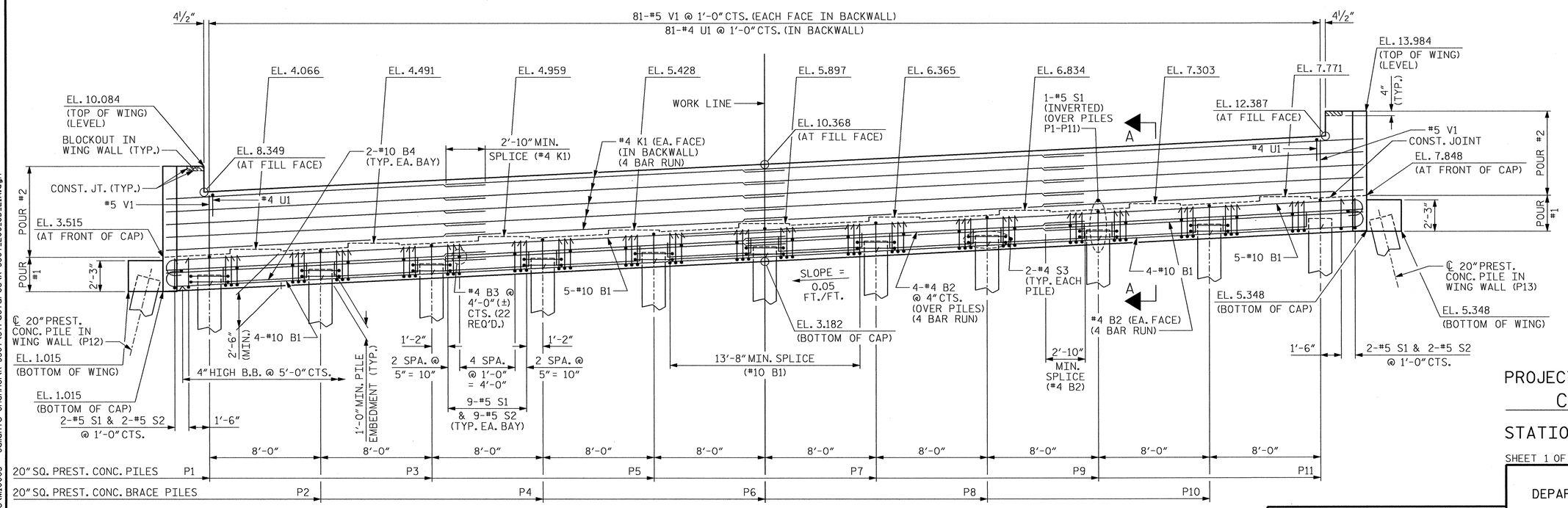

ELEVATION

NOTES:

STIRRUPS IN CAP MAY BE SHIFTED AS NECESSARY TO CLEAR ANCHOR BOLTS.

BACKWALL SHALL BE PLACED BEFORE APPLYING THE EPOXY PROTECTIVE COATING.

THE TOP SURFACE AREAS OF THE END BENT CAP SHALL BE CURED IN ACCORDANCE WITH THE STANDARD SPECIFICATIONS EXCEPT THAT THE MEMBRANE CURING COMPOUND METHOD SHALL NOT BE USED.

THE TOP SURFACE OF THE CAP EXCEPT THE BRIDGE SEAT BUILDUPS SHALL BE SLOPED TRANSVERSELY FROM THE FILL FACE TO THE BACK FACE AT THE RATE OF 2%.

FOR SECTION A-A, DETAIL "A", BLOCKOUT IN WING WALL DETAILS AND TEMPORARY DRAINAGE DETAILS, SEE SHEET 3 OF 3.

THE CONTRACTOR SHALL PROVIDE FOR INSTALLATION OF THE 4"Ø DRAIN PIPE THROUGH THE WING WALL AS REQUIRED FOR REINFORCED BRIDGE APPROACH FILLS, SEE ROADWAY PLANS. REINFORCING STEEL IN THE WING WALL MAY BE SHIFTED AS NECESSARY TO CLEAR THE DRAIN PIPE.

TOP OF PILE ELEVATIONS

PILE	ELEVATION
P1	2.223
P2	2.623
P3	3.023
P4	3.423
P5	3.823
P6	4.223
P7	4.623
P8	5.023
P9	5.423
P10	5.823
P11	6.223
P12	2.015
P13	6.298

PROJECT NO. R-3307

CARTERET COUNTY

STATION: 46+21.50 -L-

SHEET 1 OF 3

STATE OF NORTH CAROLINA
DEPARTMENT OF TRANSPORTATION
RALEIGH

SUBSTRUCTURE

END BENT 1
PLAN AND ELEVATION

NORTH CAROLINA PROFESSIONAL SEAL 12323 ENGINEER MORRIS ISRAELNAIM 3/30/2012

NORTH CAROLINA PROFESSIONAL SEAL 027799 ENGINEER ALLYSON K. ORR 3/30/2012

MI ENGINEERING
1011 SHAUB DRIVE, SUITE 100
RALEIGH, NC 27606
(919) 851-6606
FIRM PE NUMBER : P-0671

REVISIONS						SHEET NO.
NO.	BY:	DATE:	NO.	BY:	DATE:	S-205
1			3			TOTAL SHEETS
2			4			333

DRAWN BY : B.E. LANNING DATE : 11-11
CHECKED BY : A.K. ORR DATE : 12-11

DWG. 206 OF 282

3/26,)12
2:25:32 PM
User: blanning
Filename: P:\NC Projects\M10005 - Gallants Channel\R-3307\Structures\R-3307_206_SD_E1A.dgn

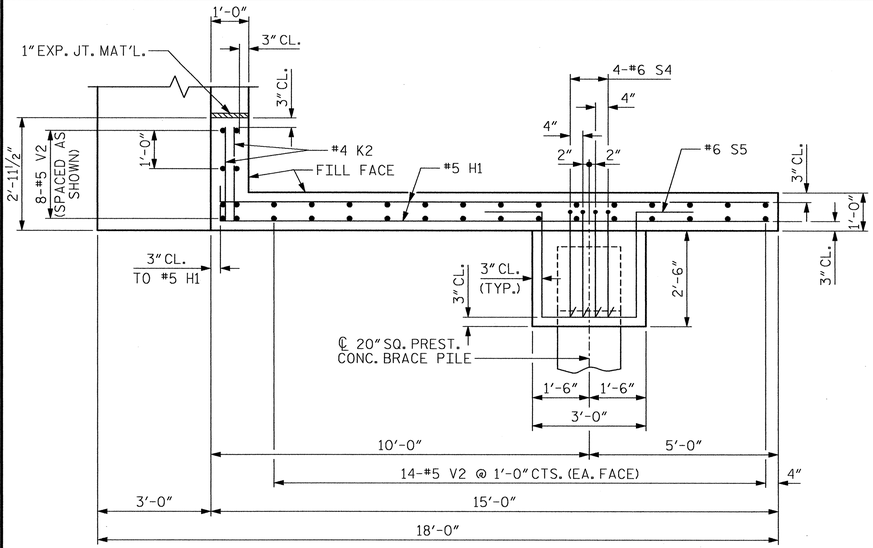

PLAN OF WING (W1)

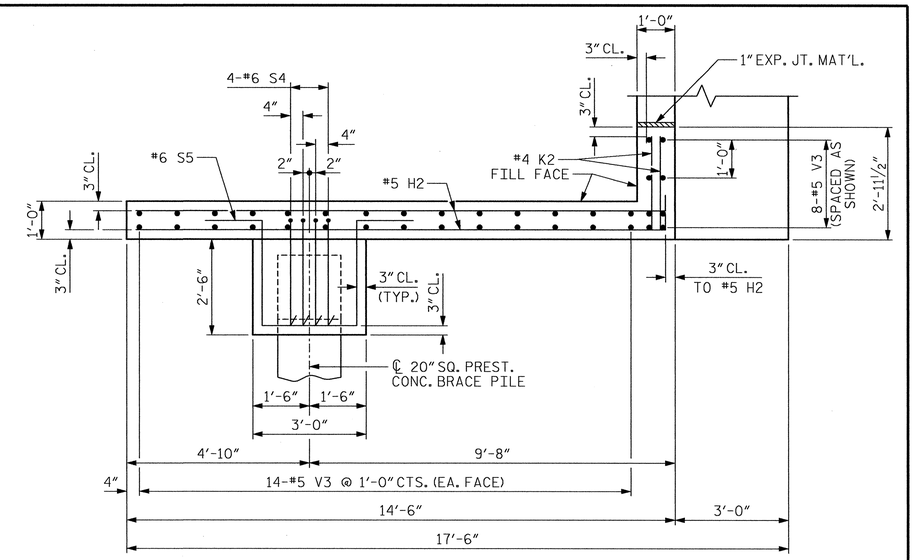

PLAN OF WING (W2)

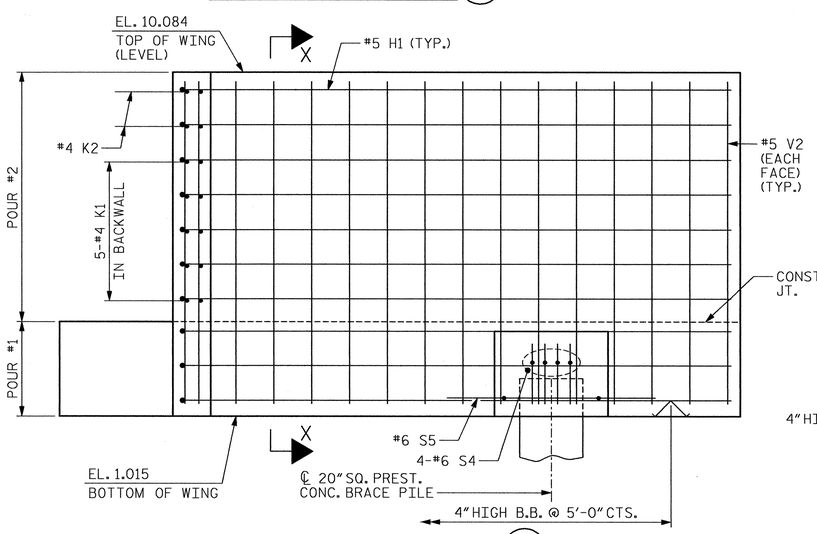

ELEVATION OF WING (W1)

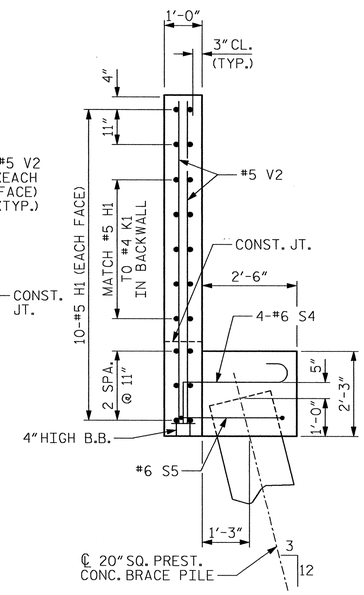

SECTION X-X

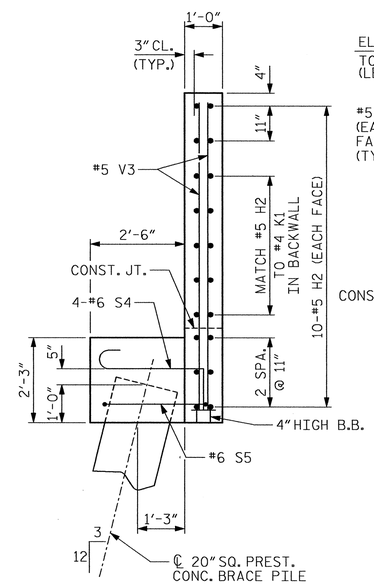

SECTION Y-Y

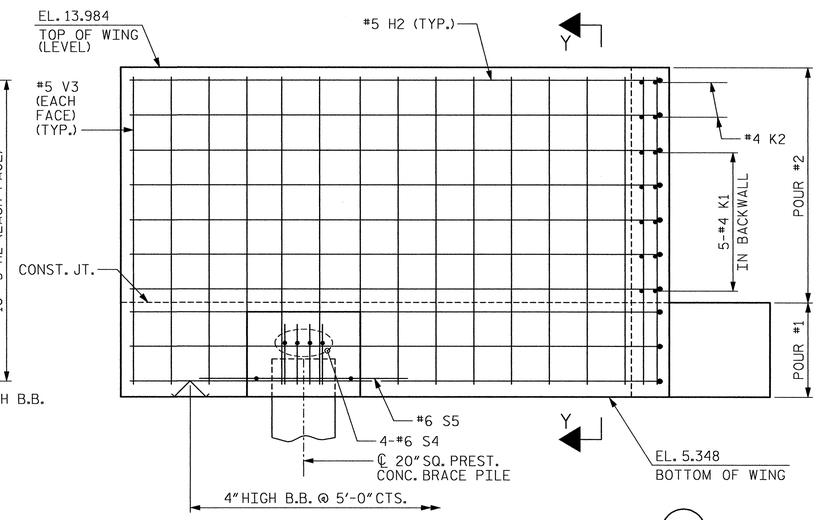

ELEVATION OF WING (W2)

PROJECT NO. R-3307

CARTERET COUNTY

STATION: 46+21.50 -L-

SHEET 2 OF 3

STATE OF NORTH CAROLINA
DEPARTMENT OF TRANSPORTATION
RALEIGH

SUBSTRUCTURE

END BENT 1
WING DETAILS

NORTH CAROLINA PROFESSIONAL SEAL 12323 ENGINEER MORRIS ISRAELNAM 3/30/2012

NORTH CAROLINA PROFESSIONAL SEAL 027799 ENGINEER ALLYSON K. ORR 3/30/2012

MI ENGINEERING
1011 SHAUB DRIVE, SUITE 100
RALEIGH, NC 27606
(919) 851-6606
FIRM PE NUMBER : P-0671

REVISIONS						SHEET NO.
NO.	BY:	DATE:	NO.	BY:	DATE:	S-206
1			3			TOTAL SHEETS
2			4			333

DRAWN BY : B.E. LANNING DATE : 11-11
CHECKED BY : A.K. ORR DATE : 12-11

DWG. 207 OF 282

3/26, 12
2:25:51 PM
User: planning
Filename: P:\NC Projects\MI0005 - Gallants Channel\R-3307\Structures\R-3307_207_SD_E1B.dgn

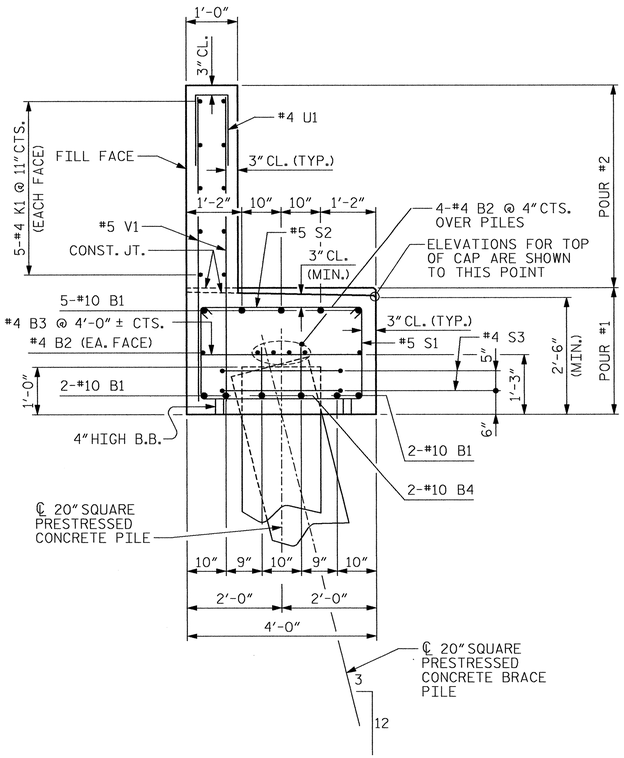

SECTION A-A

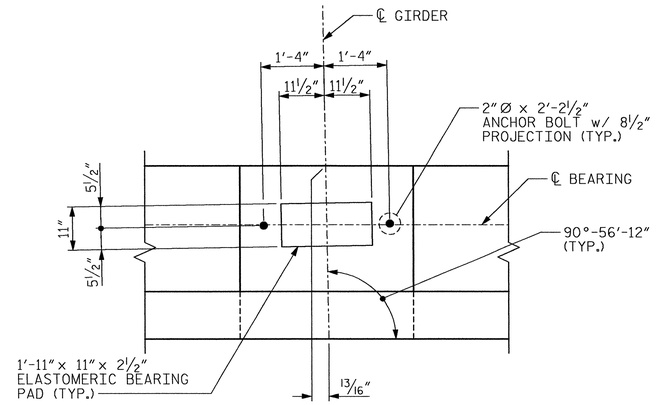

DETAIL "A"

(TYP. AT EACH BRIDGE SEAT)

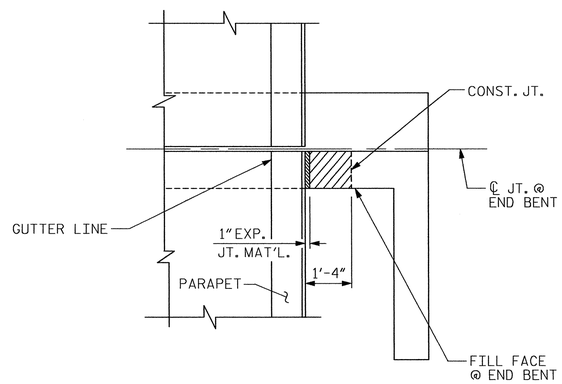

PLAN

NOTE

THE CONCRETE IN THE SHADED AREA OF THE WING SHALL BE POURED AFTER THE PARAPET AND END POST ARE CAST IF SLIP FORMING IS USED.

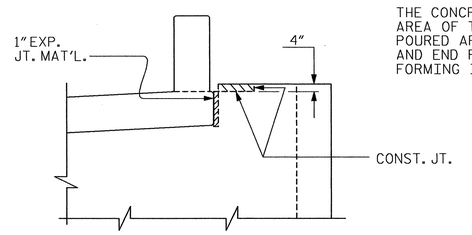

ELEVATION

BLOCKOUT IN WING WALL DETAILS

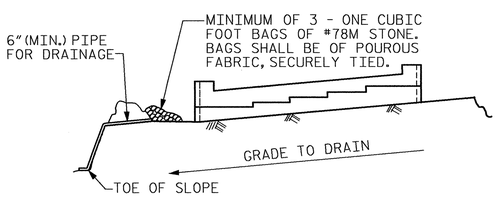

BAGGED STONE AND PIPE SHALL BE PLACED IMMEDIATELY AFTER COMPLETION OF END BENT EXCAVATION. PIPE MAY BE EITHER CONCRETE, CORRUGATED STEEL, CORRUGATED ALUMINUM ALLOY, OR CORRUGATED PLASTIC. PERFORATED PIPE WILL NOT BE ALLOWED.

BAGGED STONE SHALL REMAIN IN PLACE UNTIL THE ENGINEER DIRECTS THAT IT BE REMOVED. THE CONTRACTOR SHALL REMOVE AND DISPOSE OF SILT ACCUMULATIONS AT BAGGED STONE WHEN SO DIRECTED BY THE ENGINEER. BAGS SHALL BE REMOVED AND REPLACED WHENEVER THE ENGINEER DETERMINES THAT THEY HAVE DETERIORATED AND LOST THEIR EFFECTIVENESS.

NO SEPARATE PAYMENT WILL BE MADE FOR THIS WORK AND THE ENTIRE COST OF THIS WORK SHALL BE INCLUDED IN THE UNIT CONTRACT PRICE BID FOR THE SEVERAL PAY ITEMS.

TEMPORARY DRAINAGE AT END BENT

BAR TYPES

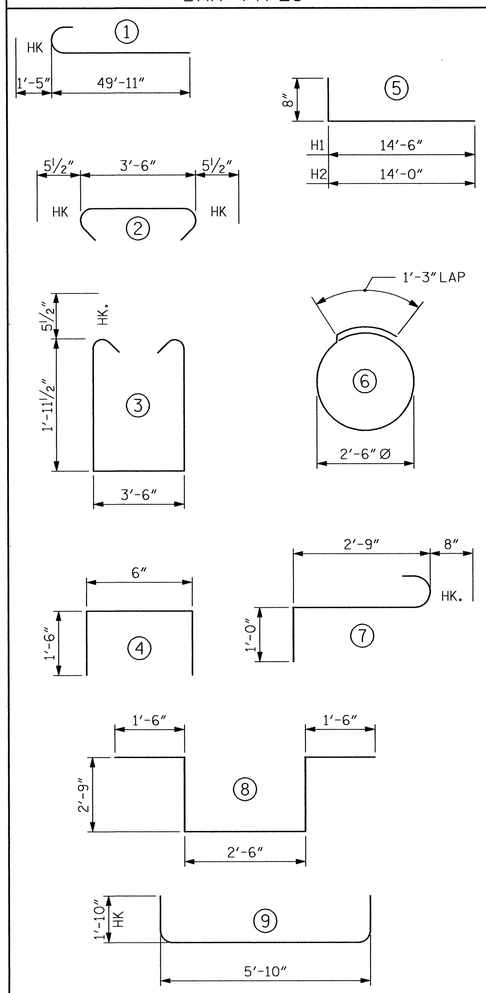

ALL BAR DIMENSIONS ARE OUT TO OUT.

BILL OF MATERIAL

END BENT 1

BAR	NO.	SIZE	TYPE	LENGTH	WEIGHT
B1	18	#10	1	51'-4"	3976
B2	24	#4	STR	23'-8"	379
B3	22	#4	STR	3'-6"	51
B4	20	#10	9	9'-6"	818
H1	20	#5	5	15'-2"	316
H2	20	#5	5	14'-8"	306
K1	40	#4	STR	23'-8"	632
K2	8	#4	STR	2'-5"	13
S1	105	#5	3	8'-4"	913
S2	94	#5	2	4'-5"	433
S3	22	#4	6	9'-2"	135
S4	8	#6	7	4'-5"	53
S5	2	#6	8	11'-0"	33
U1	81	#4	4	3'-6"	189
V1	162	#5	STR	6'-6"	1098
V2	36	#5	STR	8'-5"	316
V3	36	#5	STR	8'-0"	300

EPOXY COATED REINFORCING STEEL	9,961 LBS.
CLASS AA CONCRETE BREAKDOWN	
POUR #1 (CAP & LOWER WING)	36.1 C.Y.
POUR #2 (BACKWALL & UPPER WING)	21.4 C.Y.
TOTAL CLASS AA CONCRETE	57.5 C.Y.
20" SQUARE PRESTRESSED CONCRETE PILES NO. 13	520 LIN. FT.
PILE REDRIVES	7 EA.

PROJECT NO. R-3307

CARTERET COUNTY

STATION: 46+21.50 -L-

SHEET 3 OF 3

STATE OF NORTH CAROLINA
DEPARTMENT OF TRANSPORTATION
RALEIGH

SUBSTRUCTURE

END BENT 1
SECTION AND DETAILS

NORTH CAROLINA PROFESSIONAL SEAL 12323 ENGINEER MORRIS ISRAELNAIM 3/30/2012

NORTH CAROLINA PROFESSIONAL SEAL 027799 ENGINEER ALLYSON K. ORR 3/30/2012

MI ENGINEERING
1011 SHAUB DRIVE, SUITE 100
RALEIGH, NC 27606
(919) 851-6606
FIRM PE NUMBER : P-0671

REVISIONS						SHEET NO.
NO.	BY:	DATE:	NO.	BY:	DATE:	S-207
1			3			TOTAL SHEETS
2			4			333

DRAWN BY : B.E. LANNING DATE : 11-11
CHECKED BY : A.K. ORR DATE : 12-11

DWG. 208 OF 282

3/26/2012 2:26:06 PM
User: planning
Filename: P:\NC Projects\MI0005 - Gallants Channel\R-3307\Structures\R-3307_208_SD_EIC.dgn

NOTES:

STIRRUPS AND "U" BARS IN CAP MAY BE SHIFTED AS NECESSARY TO CLEAR ANCHOR BOLTS.

FOR PIPE INSERT DETAILS, SEE BEARINGS SHEET.

THE WATER/CEMENT RATIO FOR CONCRETE PILES SHALL NOT EXCEED 0.40.

FOR ELEVATIONS A THRU K, NEAR AND FAR SPAN DESIGNATIONS AND WORK POINT NUMBER, SEE PILE BENT REFERENCE CHART ON SHEET 2 OF 2.

FOR DETAILS "A" AND "B", SECTIONS A-A, B-B, C-C, D-D AND TOP OF PILE ELEVATIONS, SEE SHEET 2 OF 2.

U.O.N. - UNLESS OTHERWISE NOTED.

THE TOP SURFACE AREAS OF THE BENT 3 CAP SHALL BE CURED IN ACCORDANCE WITH THE STANDARD SPECIFICATIONS EXCEPT THE MEMBRANE CURING COMPOUND METHOD SHALL NOT BE USED.

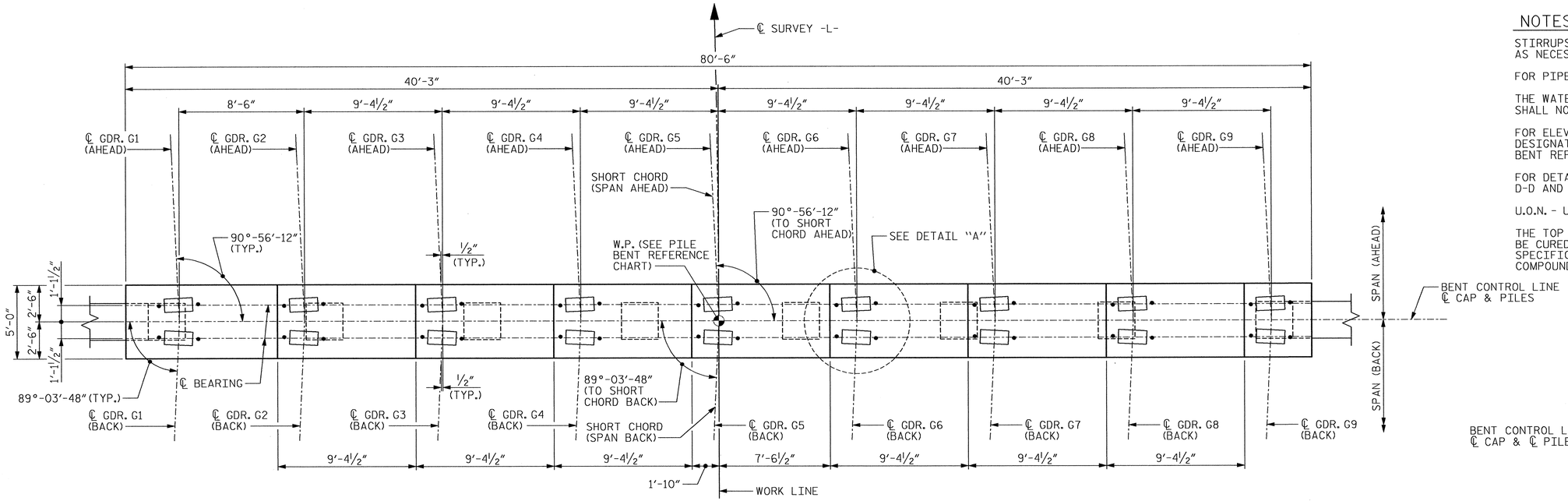

PLAN

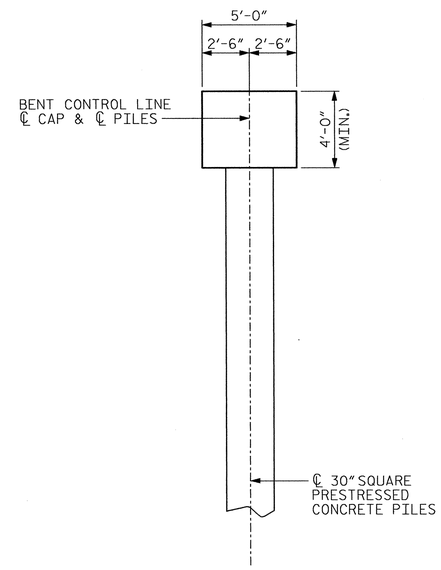

END VIEW

BENTS 2-4

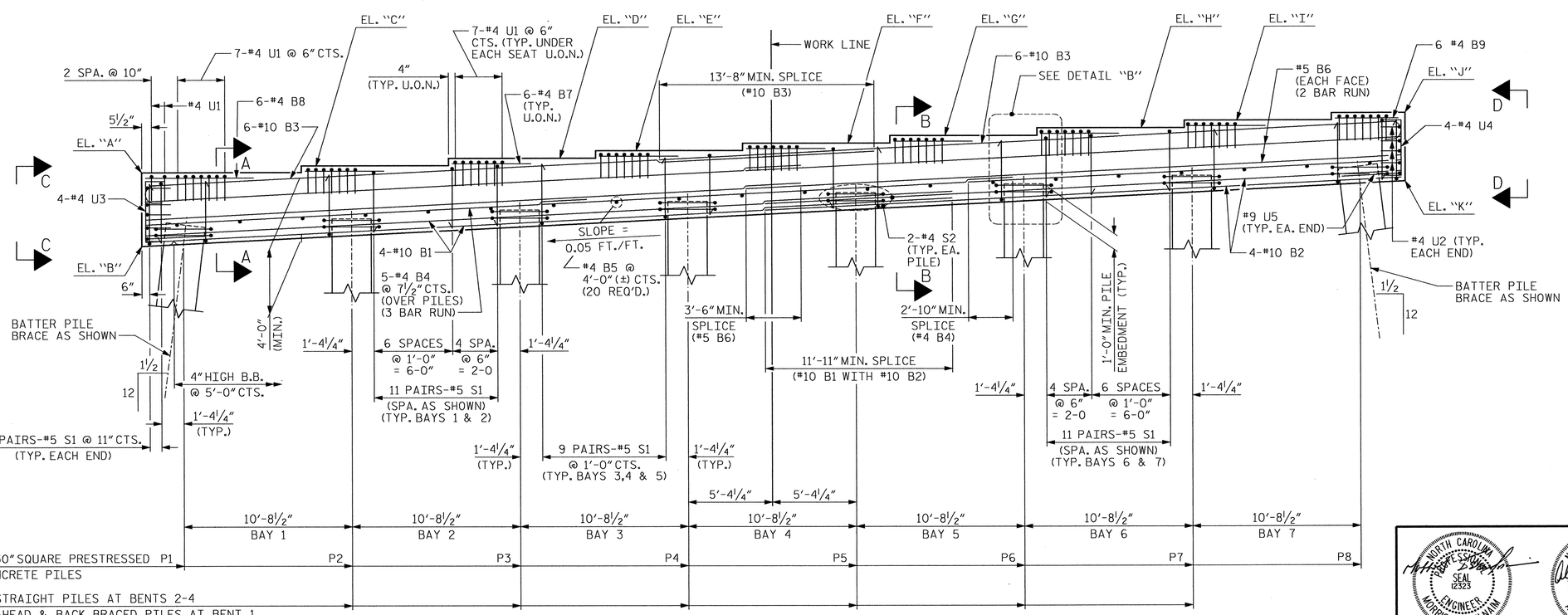

ELEVATION

NOTE: INVERT ALTERNATE PAIRS OF STIRRUPS

PROJECT NO. R-3307

CARTERET COUNTY

STATION: 46+21.50 -L-

SHEET 1 OF 2

STATE OF NORTH CAROLINA
DEPARTMENT OF TRANSPORTATION
RALEIGH

SUBSTRUCTURE

BENT 1 THRU BENT 4 PLAN AND ELEVATION

NORTH CAROLINA PROFESSIONAL SEAL 12323 ENGINEER MORRIS ISRAELNAM 3/30/2012

NORTH CAROLINA PROFESSIONAL SEAL 027799 ENGINEER ALLYSON K. ORR 3/30/2012

MI ENGINEERING
1011 SHAUB DRIVE, SUITE 100
RALEIGH, NC 27606
(919) 851-6606
FIRM PE NUMBER : P-0671

REVISIONS						SHEET NO.
NO.	BY:	DATE:	NO.	BY:	DATE:	S-208
1			3			TOTAL SHEETS
2			4			333

DRAWN BY : B.E. LANNING DATE : 12-11
CHECKED BY : A.K. ORR DATE : 1-12

DWG. 209 OF 282

3/26, 12
2:34:50 PM
User: bianning
Filename: P:\NC Projects\M10005 - Gallants Channel\R-3307\Structures\R-3307_209_SD_B1THRU4.dgn

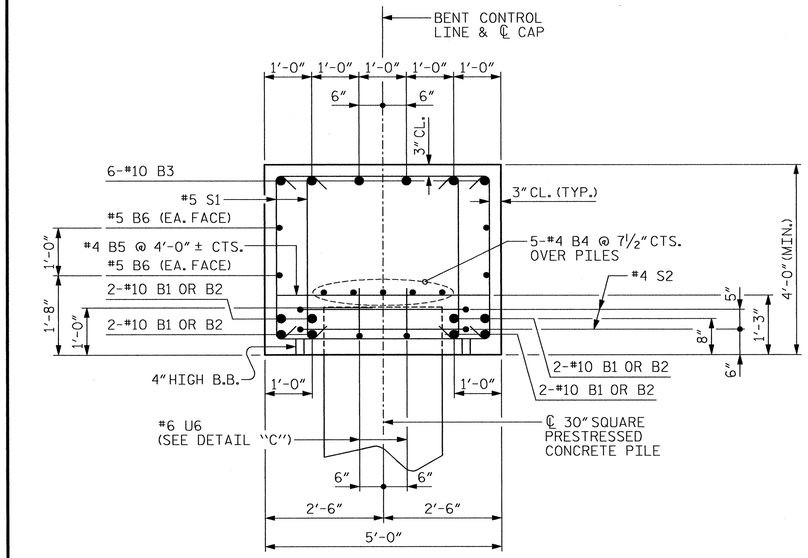

SECTION A-A

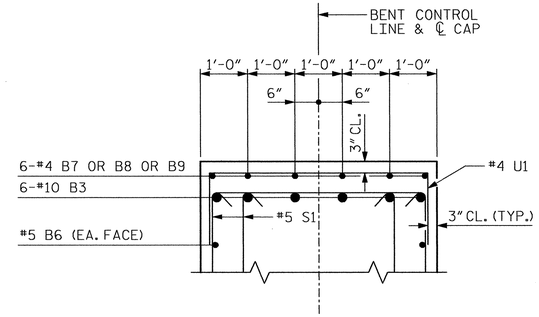

PARTIAL SECTION B-B

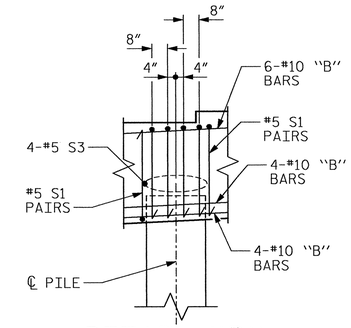

DETAIL "B" AT PILES

SHIFT AS NECESSARY TO CLEAR ANCHOR BOLTS.

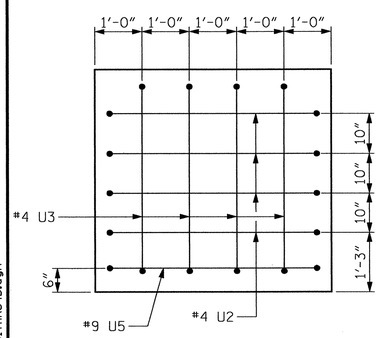

VIEW C-C

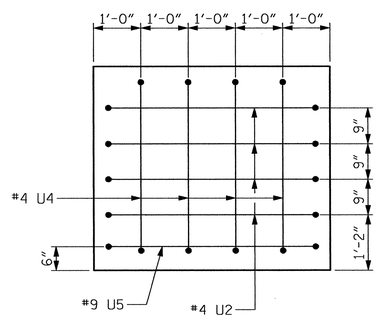

VIEW D-D

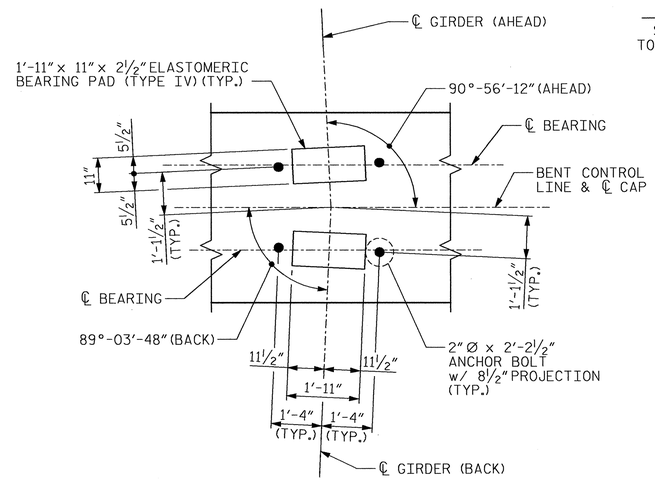

DETAIL "A"

BAR TYPES

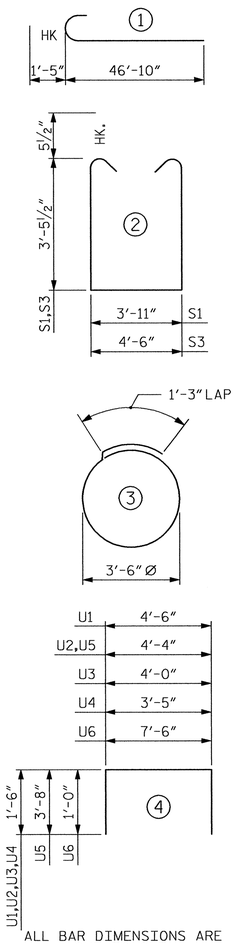

ALL BAR DIMENSIONS ARE OUT TO OUT.

BILL OF MATERIAL

BENT 1 THRU BENT 4

BAR	NO.	SIZE	TYPE	LENGTH	WEIGHT
B1	8	#10	STR	51'-4"	1767
B2	8	#10	STR	40'-7"	1397
B3	12	#10	1	48'-3"	2491
B4	15	#4	STR	28'-7"	286
B5	20	#4	STR	4'-6"	60
B6	8	#5	STR	41'-9"	348
B7	42	#4	STR	5'-0"	140
B8	6	#4	STR	6'-9"	27
B9	6	#4	STR	4'-1"	16
S1	150	#5	2	11'-9"	1838
S2	16	#4	3	12'-3"	131
S3	32	#5	2	12'-4"	412
U1	65	#4	4	7'-6"	326
U2	8	#4	4	7'-4"	39
U3	4	#4	4	7'-0"	19
U4	4	#4	4	6'-5"	17
U5	2	#9	4	11'-8"	79
U6	14	#6	4	9'-6"	200

EPOXY COATED REINFORCING STEEL (PER BENT) 9,593 LBS.

CLASS AA CONCRETE (PER BENT) 62 C.Y.

BENT 1

30" SQUARE PRESTRESSED CONCRETE PILES NO. 8 280 LIN. FT.

PILE REDRIVES 4 EA.

PDA TESTING 1 EA.

BENT 2

30" SQUARE PRESTRESSED CONCRETE PILES NO. 8 640 LIN. FT.

PILE REDRIVES 4 EA.

BENT 3

30" SQUARE PRESTRESSED CONCRETE PILES NO. 8 640 LIN. FT.

PILE REDRIVES 4 EA.

PDA TESTING 1 EA.

BENT 4

30" SQUARE PRESTRESSED CONCRETE PILES NO. 8 640 LIN. FT.

PILE REDRIVES 4 EA.

PILE BENT REFERENCE

BENT NO.	W.P. NO.	SPAN (AHEAD)	SPAN (BACK)	EL. "A"	EL. "B"	EL. "C"	EL. "D"	EL. "E"	EL. "F"	EL. "G"	EL. "H"	EL. "I"	EL. "J"	EL. "K"
1	2	B	A	5.107	0.549	5.532	6.001	6.470	6.939	7.407	7.876	8.345	8.814	4.574
2	3	C	B	6.196	1.638	6.621	7.090	7.559	8.027	8.496	8.965	9.434	9.902	5.663
3	4	D	C	7.285	2.726	7.710	8.178	8.647	9.116	9.585	10.053	10.522	10.991	6.751
4	5	E	D	8.373	3.815	8.798	9.267	9.736	10.204	10.673	11.142	11.611	12.080	7.840

TOP OF PILE ELEVATIONS BENT 1

PILE	BATTER	ELEVATION
P1	LEFT	1.750
P2	AHEAD	2.286
P3	BACK	2.821
P4	AHEAD	3.356
P5	BACK	3.892
P6	AHEAD	4.427
P7	BACK	4.963
P8	RIGHT	5.498

TOP OF PILE ELEVATIONS BENT 2

PILE	BATTER	ELEVATION
P1	LEFT	2.839
P2	STRAIGHT	3.374
P3	STRAIGHT	3.910
P4	STRAIGHT	4.445
P5	STRAIGHT	4.980
P6	STRAIGHT	5.516
P7	STRAIGHT	6.051
P8	RIGHT	6.587

TOP OF PILE ELEVATIONS BENT 3

PILE	BATTER	ELEVATION
P1	LEFT	3.927
P2	STRAIGHT	4.463
P3	STRAIGHT	4.998
P4	STRAIGHT	5.534
P5	STRAIGHT	6.069
P6	STRAIGHT	6.604
P7	STRAIGHT	7.140
P8	RIGHT	7.675

TOP OF PILE ELEVATIONS BENT 4

PILE	BATTER	ELEVATION
P1	LEFT	5.016
P2	STRAIGHT	5.551
P3	STRAIGHT	6.087
P4	STRAIGHT	6.622
P5	STRAIGHT	7.158
P6	STRAIGHT	7.693
P7	STRAIGHT	8.228
P8	RIGHT	8.764

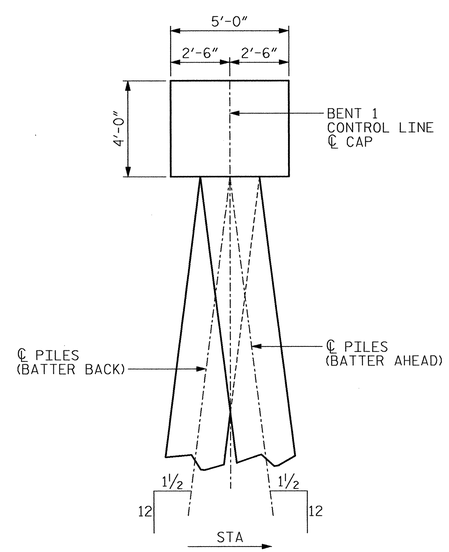

END VIEW

BENT 1

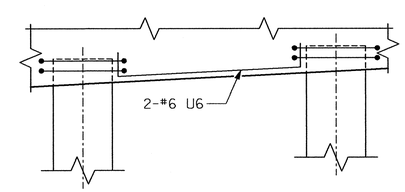

DETAIL "C"

NOTE: #6 U6 TO BE USED IN EACH BAY.

PROJECT NO. R-3307

CARTERET COUNTY

STATION: 46+21.50 -L-

SHEET 2 OF 2

STATE OF NORTH CAROLINA
DEPARTMENT OF TRANSPORTATION
RALEIGH

SUBSTRUCTURE

BENT 1 THRU BENT 4 SECTION AND DETAILS

NORTH CAROLINA PROFESSIONAL SEAL 12323 ENGINEER MORRIS ISRAELNAM 3/30/2012

NORTH CAROLINA PROFESSIONAL SEAL 027799 ENGINEER ALLYSON K. ORR 3/30/2012

MI ENGINEERING
1011 SHAUB DRIVE, SUITE 100
RALEIGH, NC 27606
(919) 851-6606
FIRM PE NUMBER : P-0671

REVISIONS						SHEET NO.
NO.	BY:	DATE:	NO.	BY:	DATE:	8-209
1			3			TOTAL SHEETS
2			4			333

DRAWN BY : B.E. LANNING DATE : 12-11
CHECKED BY : A.K. ORR DATE : 1-12

DWG. 210 OF 282

3/29,)12
5:16:38 PM
User: blanning
Filename: P:\NC Projects\M10005 - Gallants Channel\R-3307\Structures\R-3307_210_SD_B1THRU4B.dgn

NOTES:

STIRRUPS AND "U" BARS IN CAP MAY BE SHIFTED AS NECESSARY TO CLEAR ANCHOR BOLTS.

FOR PIPE INSERT DETAILS, SEE BEARINGS SHEET.

THE WATER/CEMENT RATIO FOR CONCRETE PILES SHALL NOT EXCEED 0.40.

FOR DETAILS "A" AND "B", SECTIONS A-A, B-B, C-C AND TOP OF PILE ELEVATIONS, SEE SHEET 2 OF 2.

U.O.N. - UNLESS OTHERWISE NOTED.

THE TOP SURFACE AREAS OF THE BENT 5 CAP SHALL BE CURED IN ACCORDANCE WITH THE STANDARD SPECIFICATIONS EXCEPT THE MEMBRANE CURING COMPOUND METHOD SHALL NOT BE USED.

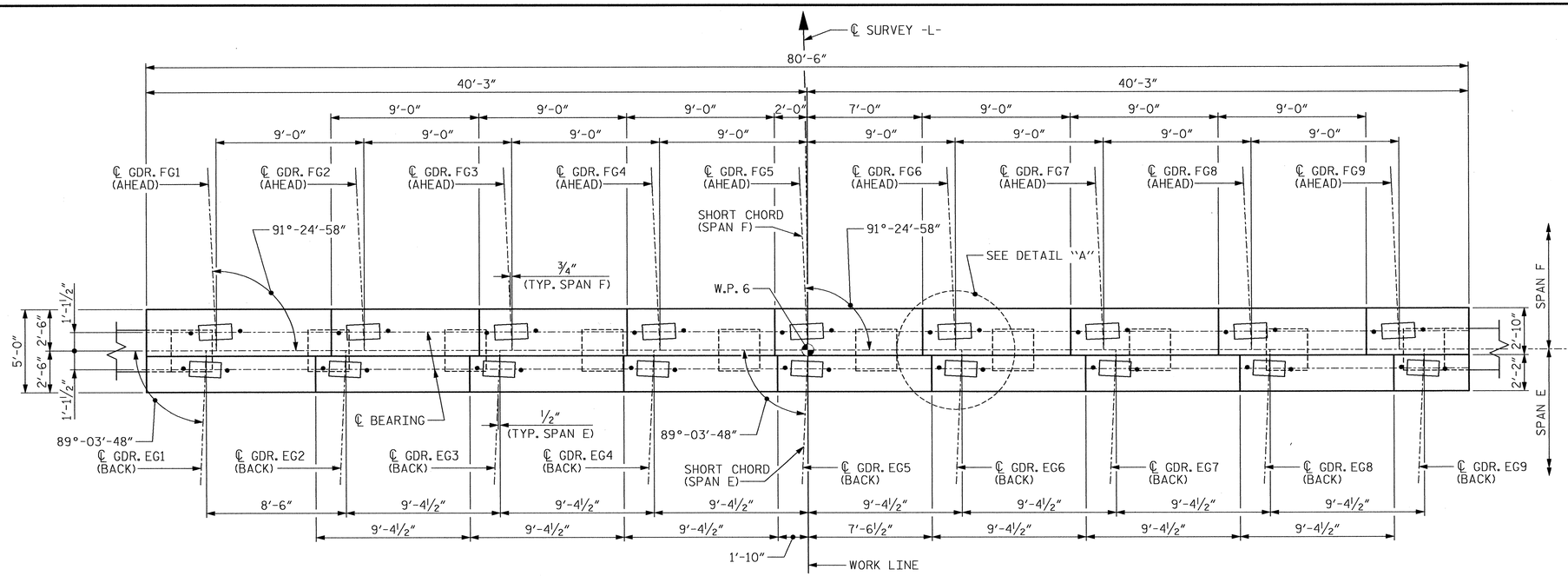

PLAN

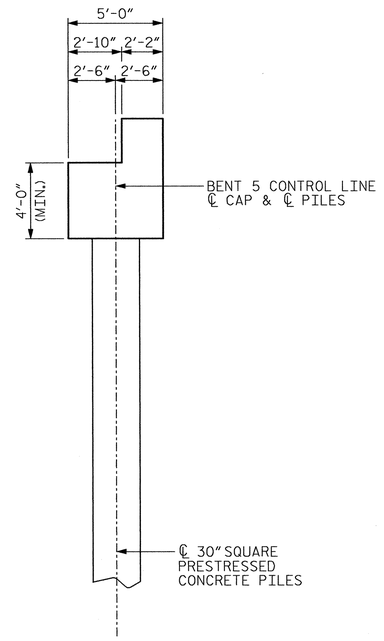

END VIEW

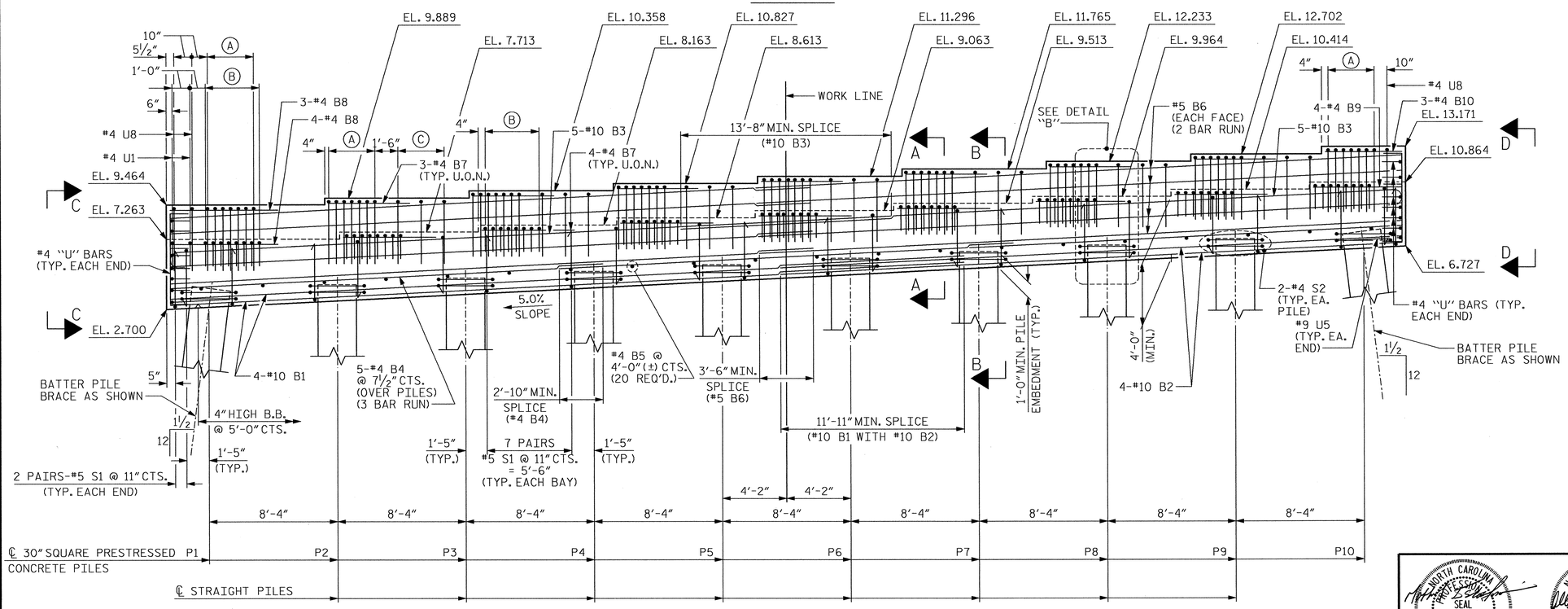

ELEVATION

NOTE: INVERT ALTERNATE PAIRS OF STIRRUPS

(A) 7-#4 U8 @ 6" CTS. (TYP. UNDER SPAN E BEARINGS U.O.N.)
(B) 8-#4 U1 @ 6" CTS. (TYP. UNDER SPAN F BEARINGS U.O.N.)
(C) 3-#4 U8 @ 1'-6" CTS. (TYP. UNDER SPAN F SEATS EXCEPT BEAM 9)

PROJECT NO. R-3307
CARTERET COUNTY
STATION: 46+21.50 -L-

SHEET 1 OF 2

STATE OF NORTH CAROLINA
DEPARTMENT OF TRANSPORTATION
RALEIGH

SUBSTRUCTURE

BENT 5
PLAN AND ELEVATION

NORTH CAROLINA PROFESSIONAL SEAL 12323 ENGINEER MORRIS ISRAELNAM 3/30/2012

NORTH CAROLINA PROFESSIONAL SEAL 027799 ENGINEER ALLYSON K. ORR 3/30/2012

MI ENGINEERING
1011 SHAUB DRIVE, SUITE 100
RALEIGH, NC 27606
(919) 851-6606
FIRM PE NUMBER : P-0671

REVISIONS						SHEET NO.
NO.	BY:	DATE:	NO.	BY:	DATE:	S-210
1			3			TOTAL SHEETS
2			4			333

DRAWN BY : B.E. LANNING DATE : 1-12
CHECKED BY : A.K. ORR DATE : 1-12

DWG. 211 OF 282

3/29/2012 5:16:35 PM
User: blanning
Filename: P:\NC Projects\M10005 - Gallants Channel\R-3307\Structures\R-3307_211_SD_B5A.dgn

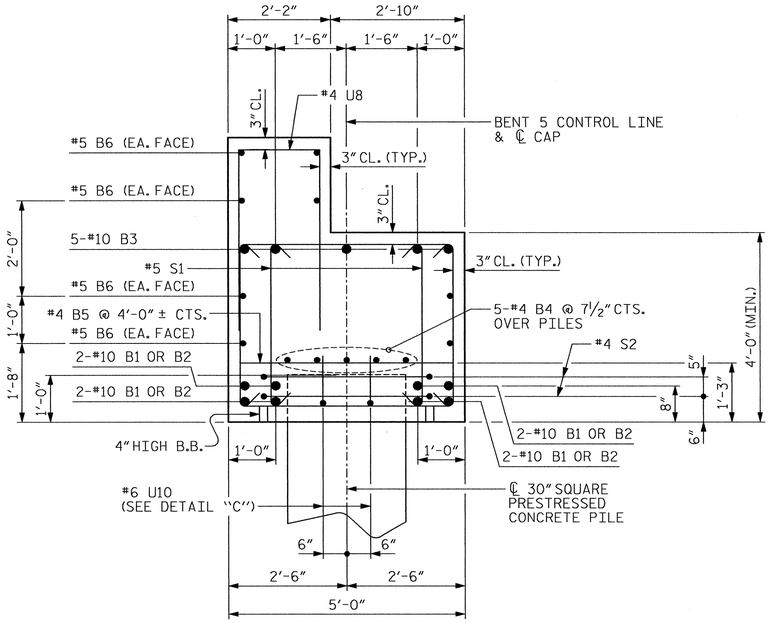

SECTION A-A

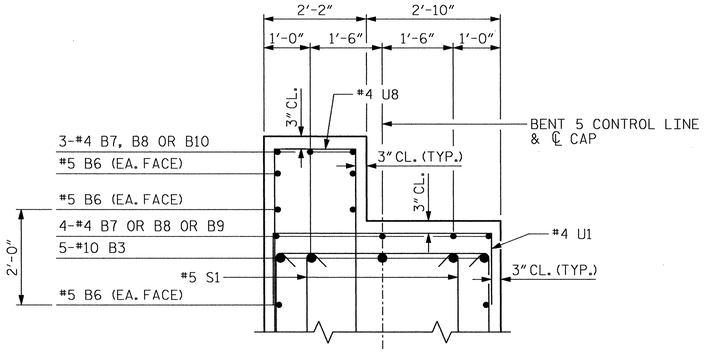

PARTIAL SECTION B-B

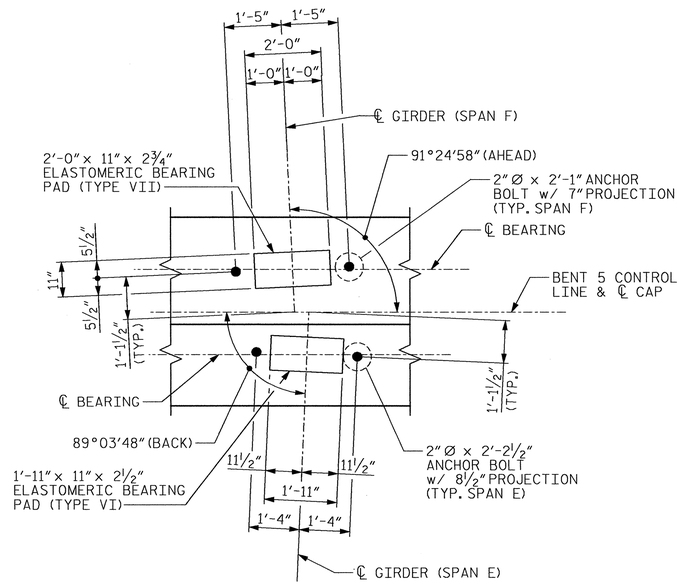

DETAIL "A"

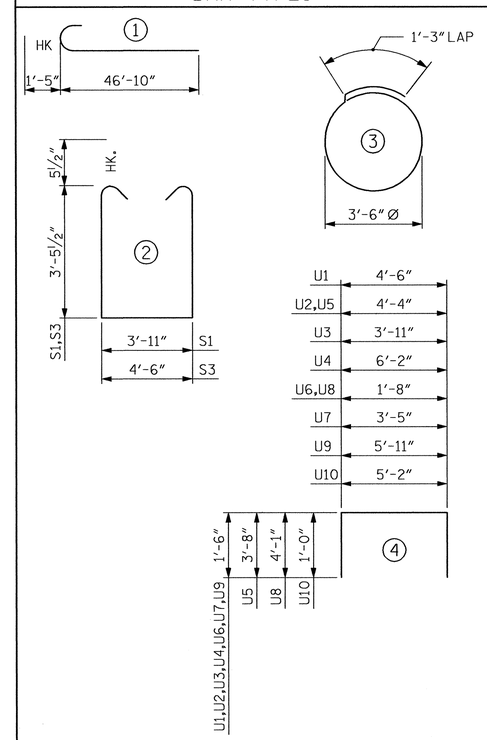

BILL OF MATERIAL

BENT 5

BAR	NO.	SIZE	TYPE	LENGTH	WEIGHT
B1	8	#10	STR	50'-2"	1727
B2	8	#10	STR	41'-10"	1440
B3	10	#10	1	48'-3"	2076
B4	15	#4	STR	28'-7"	286
B5	20	#4	STR	4'-6"	60
B6	16	#5	STR	41'-9"	697
B7	49	#4	STR	5'-0"	164
B8	7	#4	STR	7'-3"	34
B9	4	#4	STR	5'-9"	15
B10	3	#4	STR	4'-1"	8
S1	134	#5	2	11'-9"	1642
S2	20	#4	3	12'-3"	164
S3	40	#5	2	12'-4"	515
U1	74	#4	4	7'-6"	371
U2	8	#4	4	7'-4"	39
U3	4	#4	4	6'-11"	18
U4	4	#4	4	9'-2"	24
U5	2	#9	4	11'-8"	79
U6	4	#4	4	4'-8"	12
U7	3	#4	4	6'-5"	13
U8	82	#4	4	9'-10"	539
U9	2	#4	4	8'-11"	12
U10	18	#6	4	7'-2"	194

EPOXY COATED REINFORCING STEEL	10,129 LBS.
CLASS AA CONCRETE	75 C.Y.
30" SQUARE PRESTRESSED CONCRETE PILES NO. 10	800 LIN. FT.
PILE REDRIVES	5 EA.

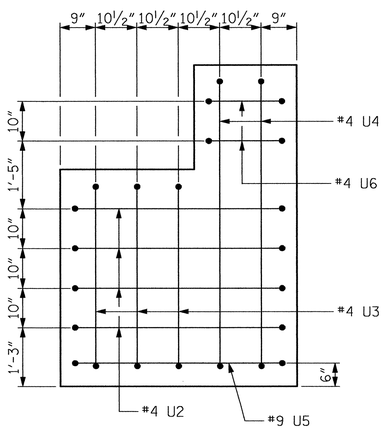

VIEW C-C

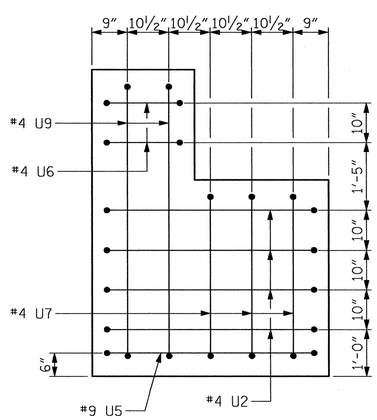

VIEW D-D

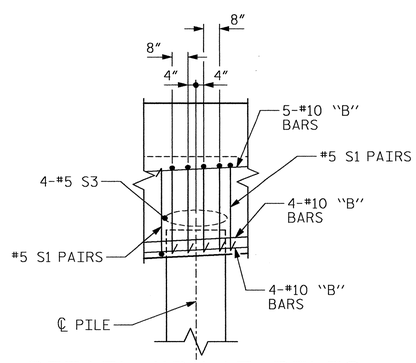

DETAIL "B" AT PILES

SHIFT AS NECESSARY TO CLEAR ANCHOR BOLTS.

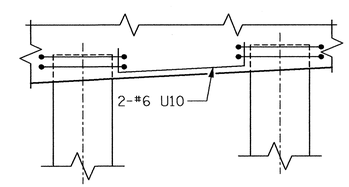

DETAIL "C"

NOTE: #6 U10 TO BE USED IN EACH BAY.

TOP OF PILE ELEVATIONS BENT 5		
PILE	BATTER	ELEVATION
P1	LEFT	3.900
P2	STRAIGHT	4.317
P3	STRAIGHT	4.734
P4	STRAIGHT	5.151
P5	STRAIGHT	5.568
P6	STRAIGHT	5.984
P7	STRAIGHT	6.401
P8	STRAIGHT	6.818
P9	STRAIGHT	7.235
P10	RIGHT	7.652

PROJECT NO. R-3307

CARTERET COUNTY

STATION: 46+21.50 -L-

SHEET 2 OF 2

STATE OF NORTH CAROLINA
DEPARTMENT OF TRANSPORTATION
RALEIGH

SUBSTRUCTURE

BENT 5
SECTION AND DETAILS

NORTH CAROLINA PROFESSIONAL SEAL 12323 ENGINEER MORRIS ISRAELIAN 3/30/2012

NORTH CAROLINA PROFESSIONAL SEAL 027199 ENGINEER ALLYSON K. ORR 3/30/2012

MI ENGINEERING
1011 SHAUB DRIVE, SUITE 100
RALEIGH, NC 27606
(919) 851-6606
FIRM PE NUMBER : P-0671

REVISIONS								SHEET NO.
NO.	BY:	DATE:	NO.	BY:	DATE:			S-211
1			3					TOTAL SHEETS
2			4					333

DRAWN BY : B.E. LANNING DATE : 1-12
CHECKED BY : A.K. ORR DATE : 1-12

DWG. 212 OF 282

3/29/2012 5:17:14 PM
User: planning
Filename: P:\NC Projects\MI0005 - Gallants Channel\R-3307\Structures\R-3307_212_SD_B5B.dgn

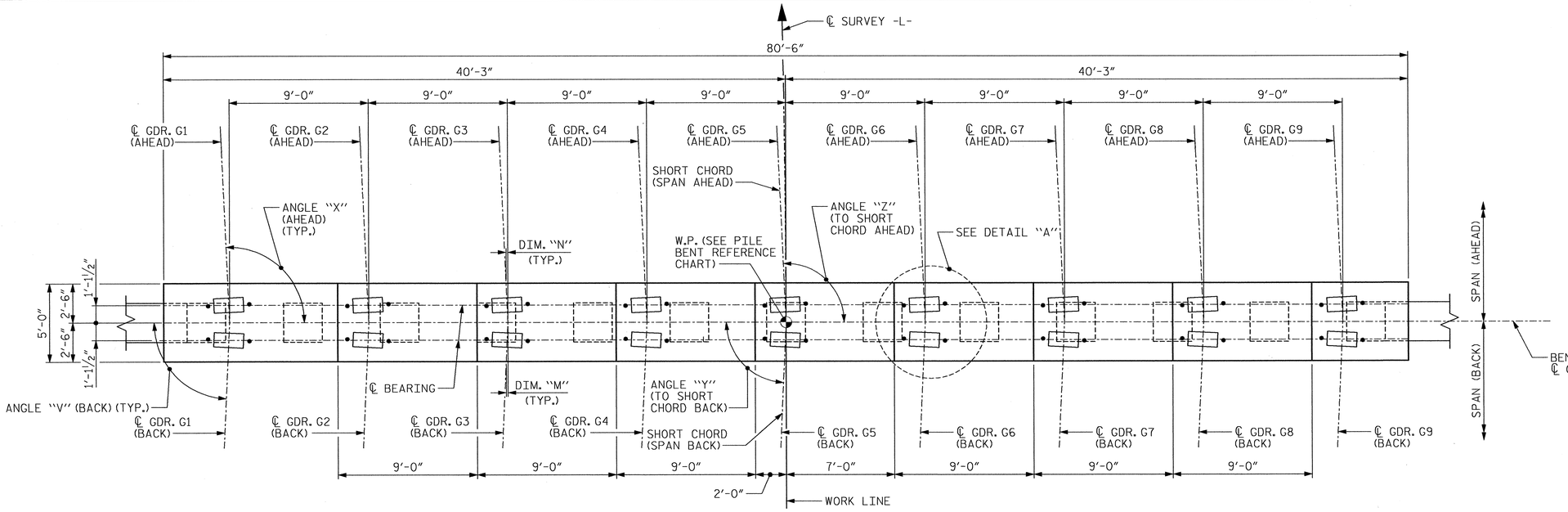

PLAN

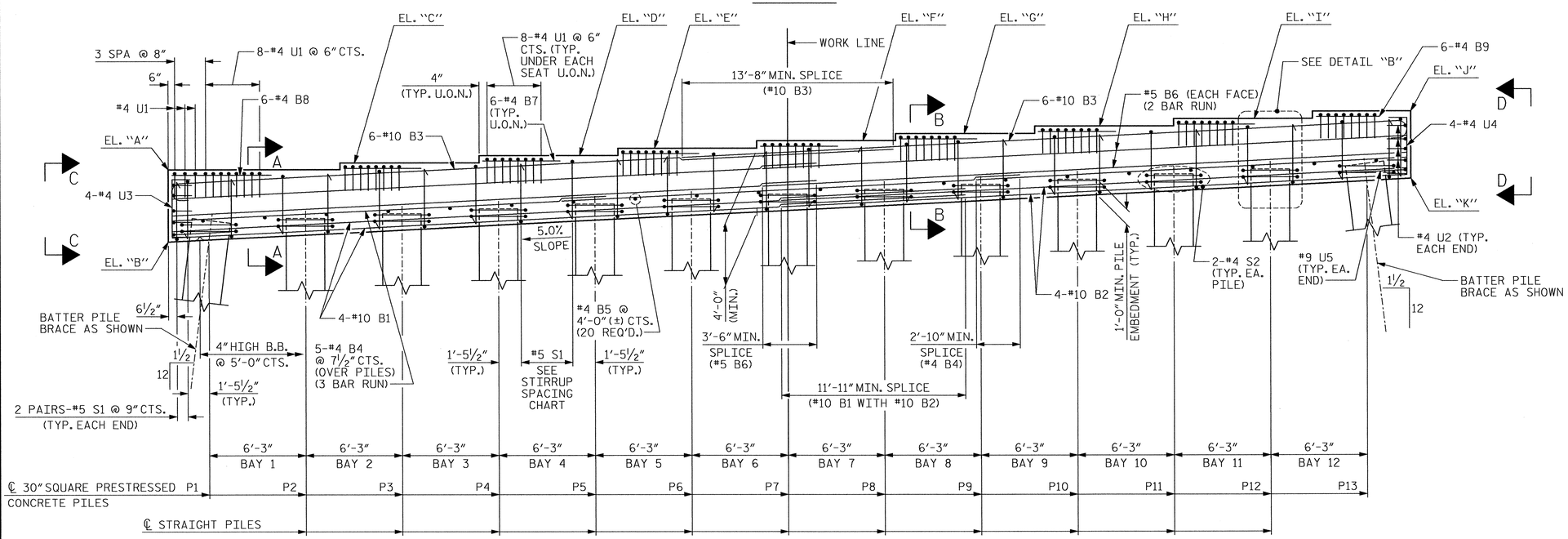

ELEVATION

NOTE: INVERT ALTERNATE PAIRS OF STIRRUPS

STIRRUP SPACING CHART		
BAYS	STIRRUP SPACING	NO. OF STIRRUPS
1	4 SPA. @ 4" = 1'-4" & 3 SPA. @ 8" = 2'-0"	8 PAIRS-#5 S1
2	3 SPA. @ 8" = 2'-0" & 4 SPA. @ 4" = 1'-4"	8 PAIRS-#5 S1
3,4,6,7,9 & 10	5 SPA. @ 8" = 3'-4"	6 PAIRS-#5 S1
5 & 8	10 SPA. @ 4" = 3'-4"	11 PAIRS-#5 S1
11	4 SPA. @ 4" = 1'-4" & 3 SPA. @ 8" = 2'-0"	8 PAIRS-#5 S1
12	3 SPA. @ 8" = 2'-0" & 4 SPA. @ 4" = 1'-4"	8 PAIRS-#5 S1

NOTES:

STIRRUPS AND "U" BARS IN CAP MAY BE SHIFTED AS NECESSARY TO CLEAR ANCHOR BOLTS.

FOR PIPE INSERT DETAILS, SEE BEARINGS SHEET.

THE WATER/CEMENT RATIO FOR CONCRETE PILES SHALL NOT EXCEED 0.40.

FOR ELEVATIONS A THRU K, DIMENSIONS "M" AND "N", NEAR AND FAR SPAN DESIGNATIONS, WORK POINT NUMBER, GIRDER ANGLES "V" AND "X", SHORT CHORD ANGLES "Y" AND "Z" AND CAP SLOPE, SEE PILE BENT REFERENCE CHART ON SHEET 2 OF 2.

FOR DETAILS "A" AND "B", SECTIONS A-A, B-B, C-C, D-D AND TOP OF PILE ELEVATIONS, SEE SHEET 2 OF 2.

U.O.N. - UNLESS OTHERWISE NOTED.

THE TOP SURFACE AREAS OF THE BENT 7 AND 9 CAPS SHALL BE CURED IN ACCORDANCE WITH THE STANDARD SPECIFICATIONS EXCEPT THE MEMBRANE CURING COMPOUND METHOD SHALL NOT BE USED.

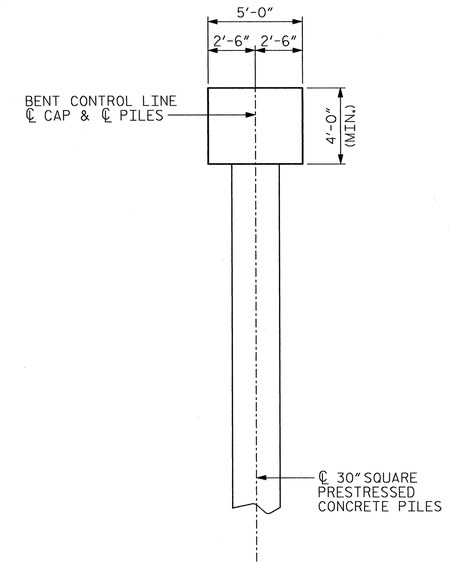

END VIEW

PROJECT NO. R-3307

CARTERET COUNTY

STATION: 46+21.50 -L-

SHEET 1 OF 2

STATE OF NORTH CAROLINA
DEPARTMENT OF TRANSPORTATION
RALEIGH

SUBSTRUCTURE

BENT 6 THRU BENT 9 PLAN AND ELEVATION

NORTH CAROLINA PROFESSIONAL SEAL 12323 ENGINEER MORRIS ISRAELNAM 3/30/2012

NORTH CAROLINA PROFESSIONAL SEAL 027799 ENGINEER ALLYSON K. ORR 3/30/2012

MI ENGINEERING
1011 SHAUB DRIVE, SUITE 100
RALEIGH, NC 27606
(919) 851-6606
FIRM PE NUMBER : P-0671

REVISIONS								SHEET NO.
NO.	BY:	DATE:	NO.	BY:	DATE:			S-212
1			3					TOTAL SHEETS
2			4					333

DRAWN BY : B.E. LANNING DATE : 12-11
CHECKED BY : A.K. ORR DATE : 1-12

DWG. 213 OF 282

3/26/2012 2:36:05 PM
User: planning
Filename: P:\NC Projects\MI0005 - Gallants Channel\R-3307\Structures\R-3307_213_SD_B6THRU9A.dgn

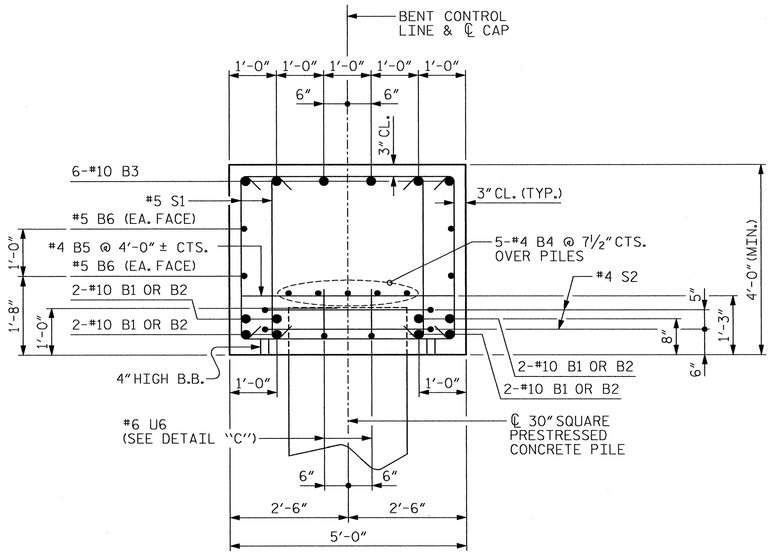

SECTION A-A

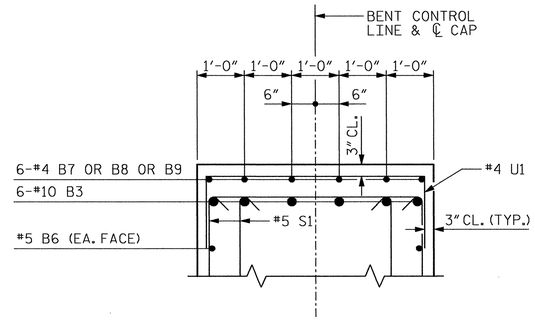

PARTIAL SECTION B-B

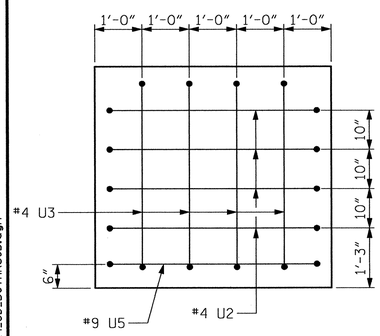

VIEW C-C

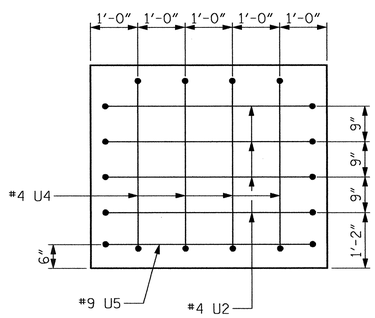

VIEW D-D

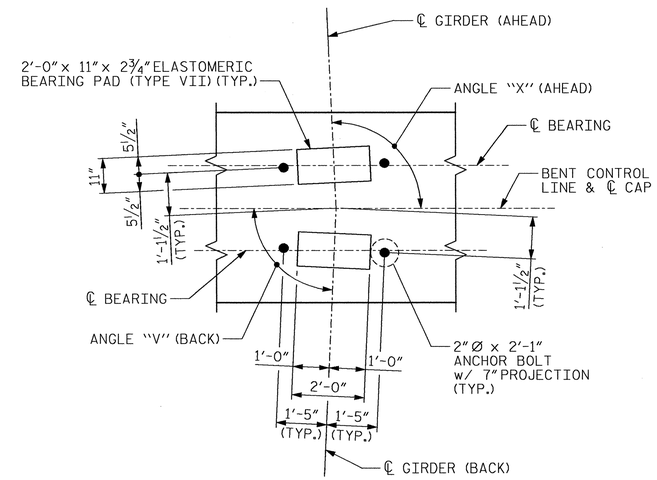

DETAIL "A"

BAR TYPES

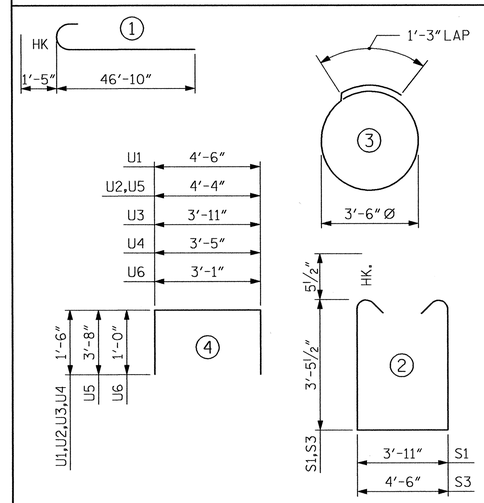

ALL BAR DIMENSIONS ARE OUT TO OUT.

BILL OF MATERIAL

BENT 6 THRU BENT 9

BAR	NO.	SIZE	TYPE	LENGTH	WEIGHT
B1	8	#10	STR	52'-3"	1799
B2	8	#10	STR	39'-9"	1368
B3	12	#10	1	48'-3"	2491
B4	15	#4	STR	28'-7"	286
B5	20	#4	STR	4'-6"	60
B6	8	#5	STR	41'-9"	348
B7	42	#4	STR	5'-0"	140
B8	6	#4	STR	7'-3"	29
B9	6	#4	STR	4'-1"	16
S1	188	#5	2	11'-9"	2304
S2	26	#4	3	12'-3"	213
S3	52	#5	2	12'-4"	669
U1	75	#4	4	7'-6"	376
U2	8	#4	4	7'-4"	39
U3	4	#4	4	6'-11"	18
U4	4	#4	4	6'-5"	17
U5	2	#9	4	11'-8"	79
U6	24	#6	4	5'-1"	183

EPOXY COATED REINFORCING STEEL (PER BENT) 10,435 LBS.

CLASS AA CONCRETE (PER BENT) 60 C.Y.

BENT 6	BENT 8
30" SQUARE PRESTRESSED CONCRETE PILES NO. 13 1040 LIN. FT.	30" SQUARE PRESTRESSED CONCRETE PILES NO. 13 1170 LIN. FT.
PILE REDRIVES 7 EA.	PILE REDRIVES 7 EA.
BENT 7	**BENT 9**
30" SQUARE PRESTRESSED CONCRETE PILES NO. 13 1105 LIN. FT.	30" SQUARE PRESTRESSED CONCRETE PILES NO. 13 1300 LIN. FT.
PILE REDRIVES 7 EA.	PILE REDRIVES 7 EA.

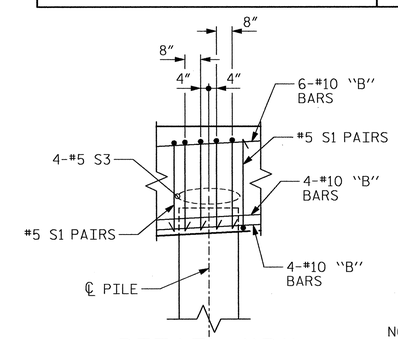

DETAIL "B"
AT PILES

SHIFT AS NECESSARY TO CLEAR ANCHOR BOLTS.

DETAIL "C"

NOTE: #6 U6 TO BE USED IN EACH BAY.

PILE BENT REFERENCE

BENT NO.	W.P. NO.	SPAN (AHEAD)	SPAN (BACK)	EL. "A"	EL. "B"	EL. "C"	EL. "D"	EL. "E"	EL. "F"	EL. "G"	EL. "H"	EL. "I"	EL. "J"	EL. "K"	ANGLE "V" (BACK)	ANGLE "X" (AHEAD)	ANGLE "Y" (BACK)	ANGLE "Z" (AHEAD)	DIM. "M"	DIM. "N"
6	7	G	F	9.377	4.814	9.827	10.277	10.728	11.178	11.628	12.078	12.529	12.979	8.842	88°-35'-02"	91°-24'-58"	88°-35'-02"	91°-24'-58"	¾"	¾"
7	8	H	G	12.744	8.181	13.195	13.645	14.095	14.545	14.996	15.446	15.896	16.346	12.209	88°-35'-02"	91°-24'-58"	88°-35'-02"	91°-24'-58"	¾"	¾"
8	9	I	H	17.332	12.769	17.783	18.233	18.683	19.133	19.584	20.034	20.484	20.935	16.797	88°-35'-02"	91°-24'-58"	88°-35'-02"	91°-24'-58"	¾"	¾"
9	10	J	I	23.162	18.599	23.612	24.062	24.513	24.963	25.413	25.864	26.314	26.764	22.627	88°-35'-02"	91°-13'-29"	88°-35'-02"	91°-13'-29"	¾"	⅝"

TOP OF PILE ELEVATIONS BENT 6

PILE	BATTER	ELEVATION
P1	LEFT	6.014
P2	STRAIGHT	6.327
P3	STRAIGHT	6.640
P4	STRAIGHT	6.952
P5	STRAIGHT	7.265
P6	STRAIGHT	7.578
P7	STRAIGHT	7.890
P8	STRAIGHT	8.203
P9	STRAIGHT	8.516
P10	STRAIGHT	8.829
P11	STRAIGHT	9.141
P12	STRAIGHT	9.454
P13	RIGHT	9.767

TOP OF PILE ELEVATIONS BENT 7

PILE	BATTER	ELEVATION
P1	LEFT	9.381
P2	STRAIGHT	9.694
P3	STRAIGHT	10.007
P4	STRAIGHT	10.319
P5	STRAIGHT	10.632
P6	STRAIGHT	10.945
P7	STRAIGHT	11.257
P8	STRAIGHT	11.570
P9	STRAIGHT	11.883
P10	STRAIGHT	12.196
P11	STRAIGHT	12.508
P12	STRAIGHT	12.821
P13	RIGHT	13.134

TOP OF PILE ELEVATIONS BENT 8

PILE	BATTER	ELEVATION
P1	LEFT	13.969
P2	STRAIGHT	14.282
P3	STRAIGHT	14.595
P4	STRAIGHT	14.907
P5	STRAIGHT	15.220
P6	STRAIGHT	15.533
P7	STRAIGHT	15.845
P8	STRAIGHT	16.158
P9	STRAIGHT	16.471
P10	STRAIGHT	16.784
P11	STRAIGHT	17.096
P12	STRAIGHT	17.409
P13	RIGHT	17.722

TOP OF PILE ELEVATIONS BENT 9

PILE	BATTER	ELEVATION
P1	LEFT	19.799
P2	STRAIGHT	20.112
P3	STRAIGHT	20.425
P4	STRAIGHT	20.737
P5	STRAIGHT	21.050
P6	STRAIGHT	21.363
P7	STRAIGHT	21.675
P8	STRAIGHT	21.988
P9	STRAIGHT	22.301
P10	STRAIGHT	22.614
P11	STRAIGHT	22.926
P12	STRAIGHT	23.239
P13	RIGHT	23.552

PROJECT NO. R-3307
CARTERET COUNTY
STATION: 46+21.50 -L-

SHEET 2 OF 2

STATE OF NORTH CAROLINA
DEPARTMENT OF TRANSPORTATION
RALEIGH

SUBSTRUCTURE

BENT 6 THRU BENT 9
SECTION AND DETAILS

NORTH CAROLINA PROFESSIONAL SEAL 12323 ENGINEER MORRIS ISRAELNAM 3/30/2012

NORTH CAROLINA PROFESSIONAL SEAL 027799 ENGINEER ALLYSON K. ORR 3/30/2012

MI ENGINEERING
1011 SHAUB DRIVE, SUITE 100
RALEIGH, NC 27606
(919) 851-6606
FIRM PE NUMBER : P-0671

REVISIONS								SHEET NO.
NO.	BY:	DATE:	NO.	BY:	DATE:			S-213
1			3					TOTAL SHEETS
2			4					333

DRAWN BY : B.E. LANNING DATE : 12-11
CHECKED BY : A.K. ORR DATE : 1-12

DWG. 214 OF 282

3/29)12
5:17:29 PM
User:blanning
Filename: P:\NC Projects\MI0005 - Gallants Channel\R-3307\Structures\R-3307_214_SD_B6THRUB9.dgn

NOTES:

STIRRUPS AND "U" BARS IN CAP MAY BE SHIFTED AS NECESSARY TO CLEAR ANCHOR BOLTS.

FOR PIPE INSERT DETAILS, SEE BEARINGS SHEET.

THE WATER/CEMENT RATIO FOR CONCRETE PILES SHALL NOT EXCEED 0.40.

FOR DETAILS "A" AND "B", SECTIONS A-A, B-B, C-C, D-D AND TOP OF PILE ELEVATIONS, SEE SHEET 2 OF 2.

U.O.N. - UNLESS OTHERWISE NOTED.

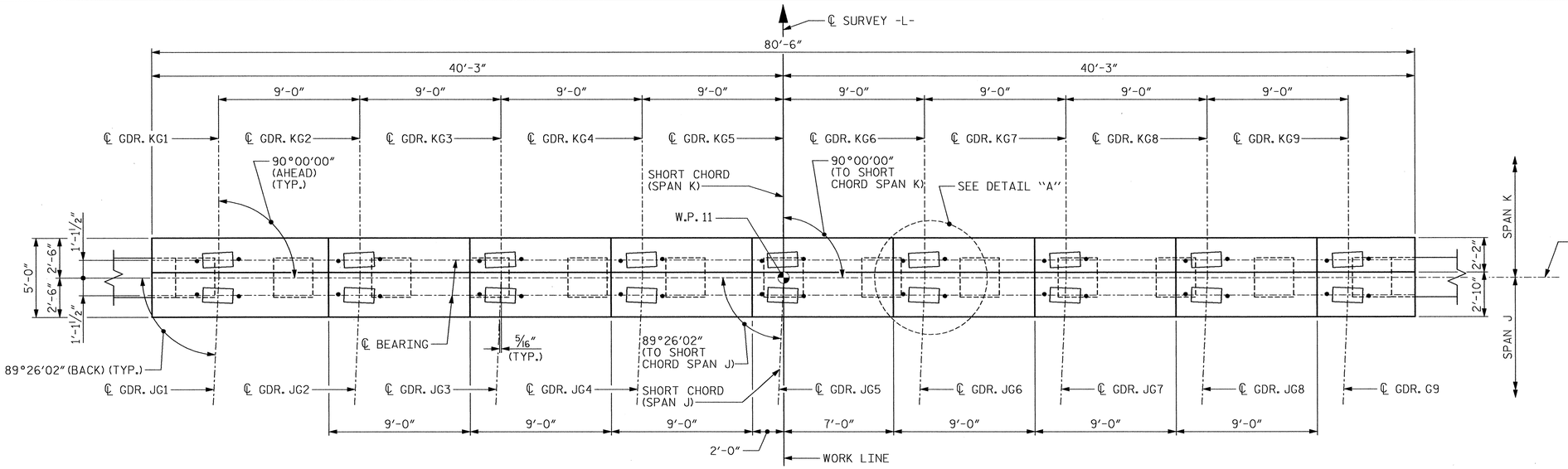

PLAN

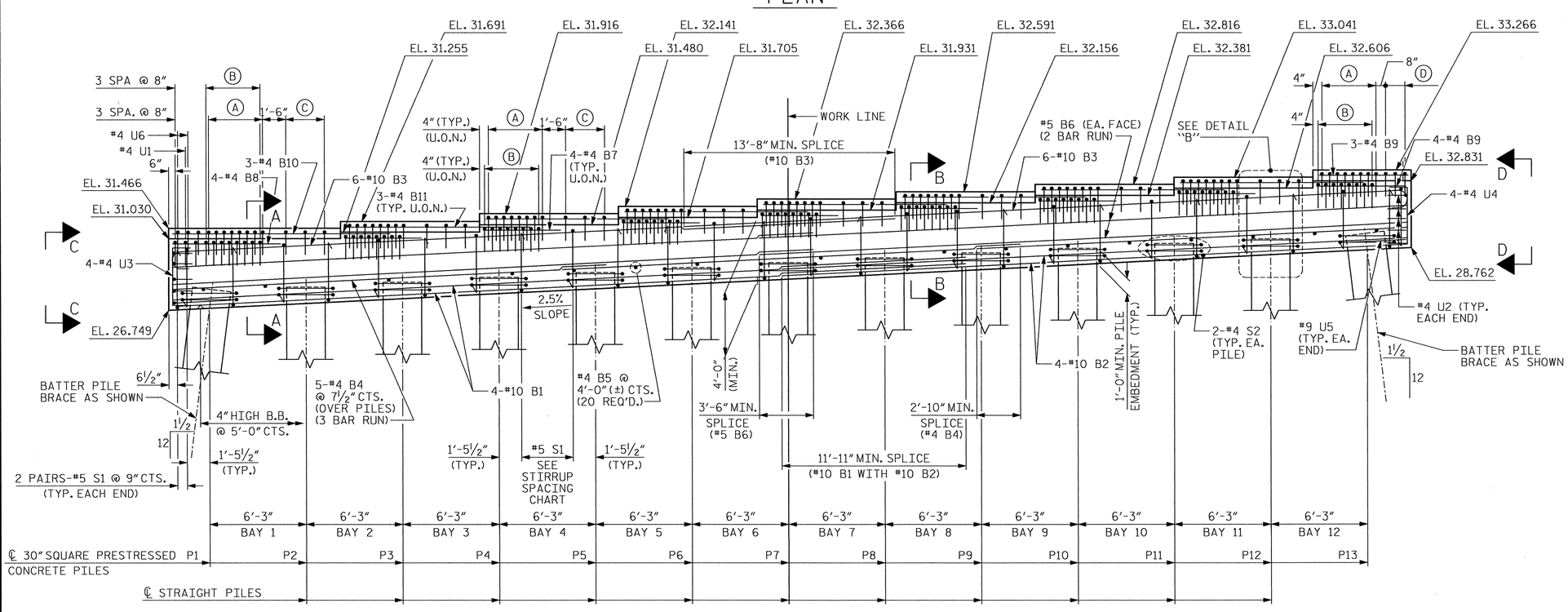

ELEVATION

NOTE: INVERT ALTERNATE PAIRS OF STIRRUPS

(A) 8-#4 U6 @ 6" CTS. (TYP. UNDER EACH SEAT SPAN K)
(B) 8-#4 U1 @ 6" CTS. (TYP. UNDER EACH SEAT SPAN J)
(C) 3-#4 U6 @ 1'-3" CTS. (TYP. SPAN K SEATS EXCEPT G9)
(D) 3-#4 U6 @ 8" CTS.

STIRRUP SPACING CHART

BAYS	STIRRUP SPACING	NO. OF STIRRUPS
1	4 SPA. @ 4" = 1'-4" & 3 SPA. @ 8" = 2'-0"	8 PAIRS-#5 S1
2	3 SPA. @ 8" = 2'-0" & 4 SPA. @ 4" = 1'-4"	8 PAIRS-#5 S1
3,4,6,7,9 & 10	5 SPA. @ 8" = 3'-4"	6 PAIRS-#5 S1
5 & 8	10 SPA. @ 4" = 3'-4"	11 PAIRS-#5 S1
11	4 SPA. @ 4" = 1'-4" & 3 SPA. @ 8" = 2'-0"	8 PAIRS-#5 S1
12	3 SPA. @ 8" = 2'-0" & 4 SPA. @ 4" = 1'-4"	8 PAIRS-#5 S1

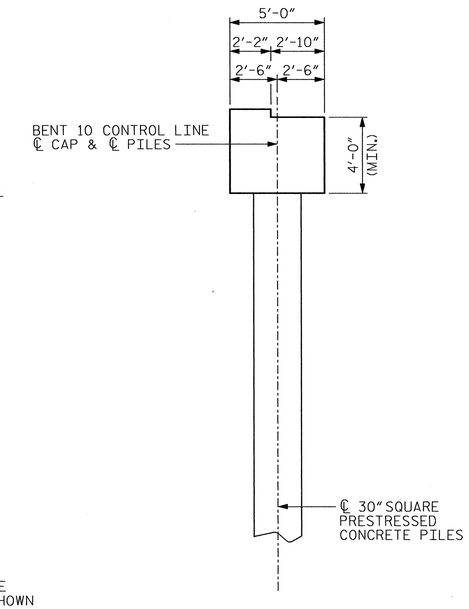

END VIEW

PROJECT NO. R-3307

CARTERET COUNTY

STATION: 46+21.50 -L-

SHEET 1 OF 2

STATE OF NORTH CAROLINA
DEPARTMENT OF TRANSPORTATION
RALEIGH

SUBSTRUCTURE

BENT 10 PLAN AND ELEVATION

NORTH CAROLINA PROFESSIONAL SEAL 12323 ENGINEER MORRIS ISRAELIANI 3/30/2012

NORTH CAROLINA PROFESSIONAL SEAL 027799 ENGINEER ALLYSON K. ORR 3/30/2012

MI ENGINEERING
1011 SHAUB DRIVE, SUITE 100
RALEIGH, NC 27606
(919) 851-6606
FIRM PE NUMBER : P-0671

REVISIONS								SHEET NO.
NO.	BY:	DATE:	NO.	BY:	DATE:			S-214
1			3					TOTAL SHEETS
2			4					333

DRAWN BY : B.E. LANNING DATE : 12-11
CHECKED BY : A.K. ORR DATE : 1-12

DWG. 215 OF 282

3/29/2012 5:17:48 PM
User: blanning
Filename: P:\NC Projects\MI0005 - Gallants Channel\R-3307\Structures\R-3307_215_SD_B10A.dgn

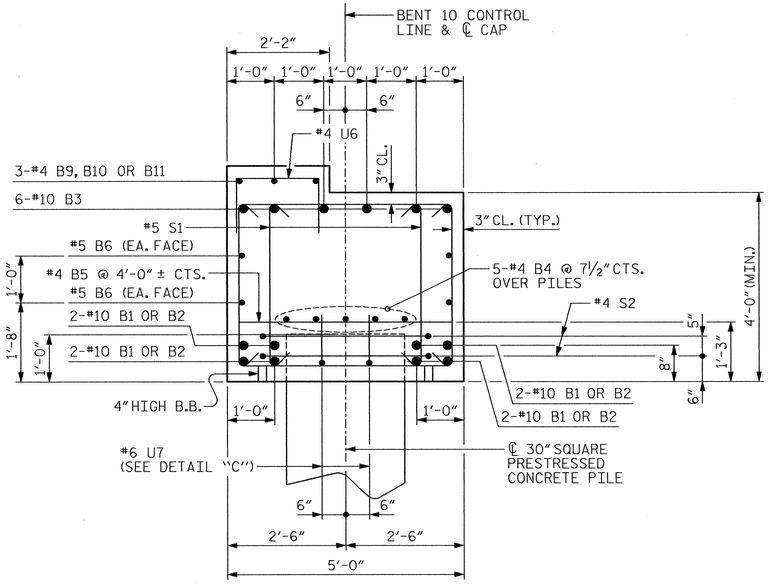

SECTION A-A

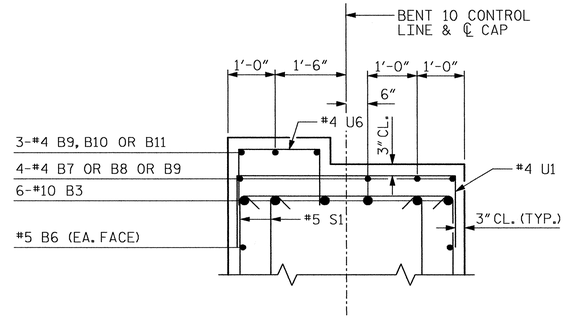

PARTIAL SECTION B-B

BAR TYPES

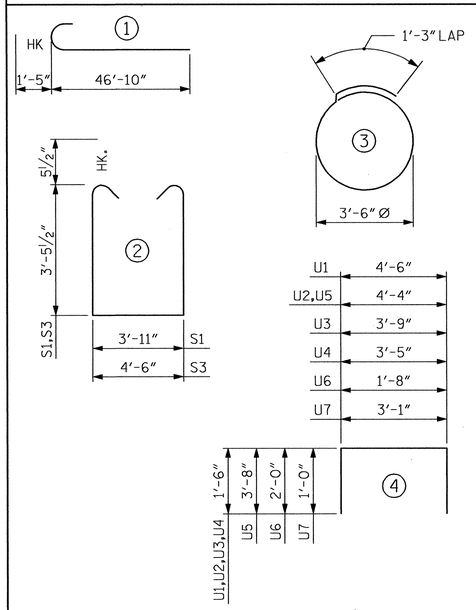

ALL BAR DIMENSIONS ARE OUT TO OUT.

BILL OF MATERIAL

BENT 10

BAR	NO.	SIZE	TYPE	LENGTH	WEIGHT
B1	8	#10	STR	52'-3"	1799
B2	8	#10	STR	39'-9"	1368
B3	12	#10	1	48'-3"	2491
B4	15	#4	STR	28'-7"	286
B5	20	#4	STR	4'-6"	60
B6	8	#5	STR	41'-9"	348
B7	28	#4	STR	5'-0"	94
B8	4	#4	STR	7'-3"	19
B9	7	#4	STR	5'-9"	27
B10	3	#4	STR	14'-1"	28
B11	21	#4	STR	11'-10"	166
S1	188	#5	2	11'-9"	2304
S2	26	#4	3	12'-3"	213
S3	52	#5	2	12'-4"	669
U1	75	#4	4	7'-6"	376
U2	8	#4	4	7'-4"	39
U3	4	#4	4	6'-9"	18
U4	4	#4	4	6'-5"	17
U5	2	#9	4	11'-8"	79
U6	102	#4	4	5'-8"	386
U7	24	#6	4	5'-1"	183

EPOXY COATED REINFORCING STEEL	10,970 LBS.
CLASS AA CONCRETE	61 C.Y.
30" SQUARE PRESTRESSED CONCRETE PILES NO. 13	1300 LIN. FT.
PILE REDRIVES	7 EA.
PDA TESTING	1 EA.

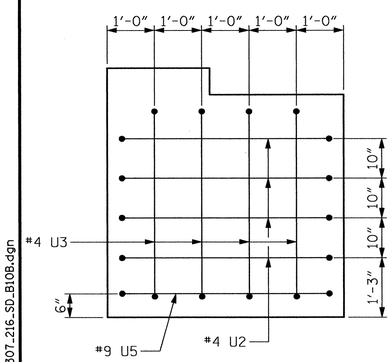

VIEW C-C

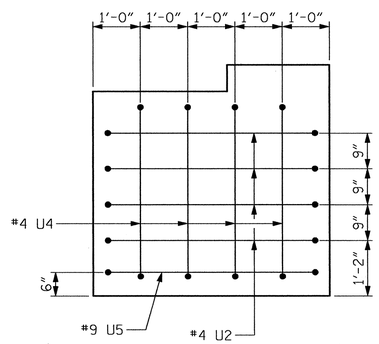

VIEW D-D

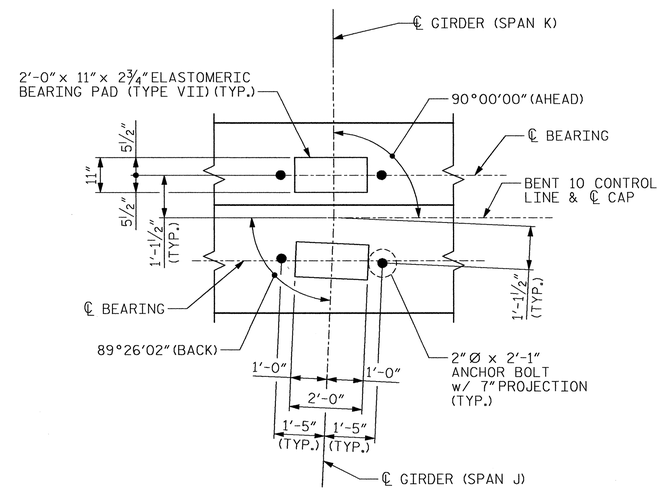

DETAIL "A"

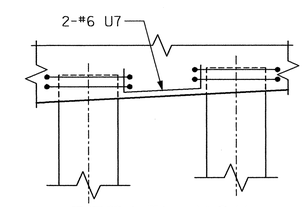

DETAIL "C"

NOTE: #6 U7 TO BE USED IN EACH BAY.

TOP OF PILE ELEVATIONS BENT 10		
PILE	BATTER	ELEVATION
P1	LEFT	27.849
P2	STRAIGHT	28.005
P3	STRAIGHT	28.161
P4	STRAIGHT	28.318
P5	STRAIGHT	28.474
P6	STRAIGHT	28.630
P7	STRAIGHT	28.787
P8	STRAIGHT	28.943
P9	STRAIGHT	29.099
P10	STRAIGHT	29.256
P11	STRAIGHT	29.412
P12	STRAIGHT	29.568
P13	RIGHT	29.725

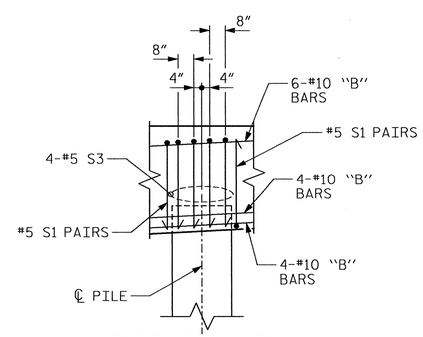

DETAIL "B" AT PILES

SHIFT AS NECESSARY TO CLEAR ANCHOR BOLTS.

PROJECT NO. R-3307

CARTERET COUNTY

STATION: 46+21.50 -L-

SHEET 2 OF 2

STATE OF NORTH CAROLINA
DEPARTMENT OF TRANSPORTATION
RALEIGH

SUBSTRUCTURE

BENT 10
SECTION AND DETAILS

NORTH CAROLINA PROFESSIONAL SEAL 12323 ENGINEER MORRIS ISRAELNAIN 3/30/2012

NORTH CAROLINA PROFESSIONAL SEAL 027799 ENGINEER ALLYSON K. ORR 3/30/2012

MI ENGINEERING
1011 SHAUB DRIVE, SUITE 100
RALEIGH, NC 27606
(919) 851-6606
FIRM PE NUMBER : P-0671

REVISIONS								
NO.	BY:	DATE:	NO.	BY:	DATE:			
1			3					
2			4					

SHEET NO. S-215

TOTAL SHEETS 333

DRAWN BY : B.E. LANNING DATE : 12-11
CHECKED BY : A.K. ORR DATE : 1-12

DWG. 216 OF 282

3/29/2012 5:18:03 PM
User: blanning
Filename: P:\NC Projects\MI0005 - Gallants Channel\R-3307\Structures\R-3307_216_SD_B10B.dgn

NOTES:

STIRRUPS IN CAP MAY BE SHIFTED AS NECESSARY TO CLEAR ANCHOR BOLTS.

ALTERNATELY INVERT STIRRUP PAIRS AS NOTED.

FOR FOUNDATION NOTES, SEE "GENERAL DRAWING FOUNDATION LAYOUT" SHEET 4 OF 4.

FOR FOOTING REINFORCING DETAILS, SEE SHEET 2 OF 3.

FOR SECTION A-A, SECTION B-B, VIEW C-C, AND SECTION D-D, SEE SHEET 2 OF 3.

✱ THE FOOTING HAS A DROP OF 2½" FROM THE CENTER OF THE FOOTING TO THE EDGE OF FOOTING TO ACCOMODATE DRAINAGE.

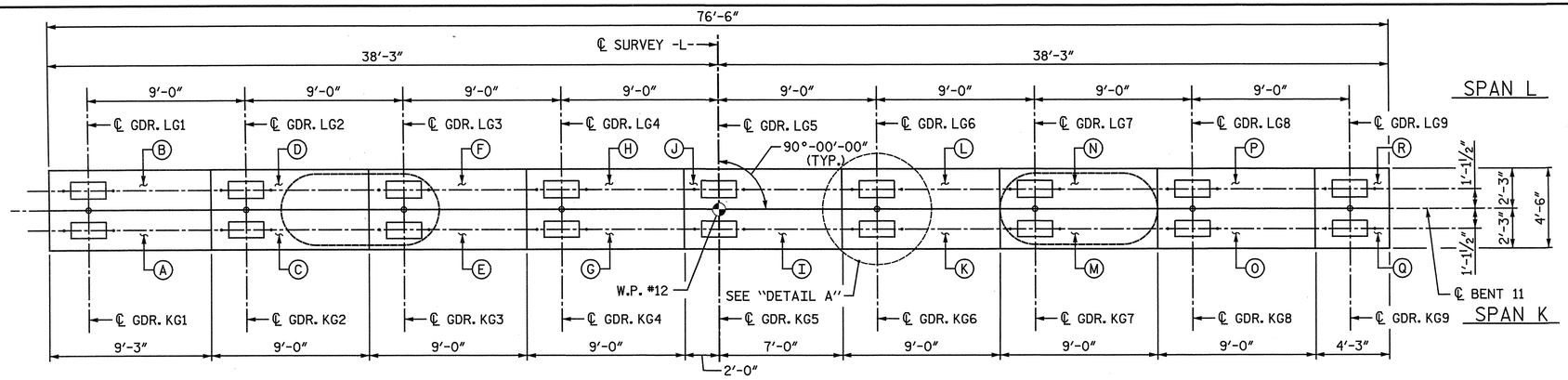

PLAN

NOTE: THE TOP SURFACE AREAS OF THE BENT CAPS SHALL BE CURED IN ACCORDANCE WITH THE STANDARD SPECIFICATIONS EXCEPT THE MEMBRANE CURING COMPOUND METHOD SHALL NOT BE USED.

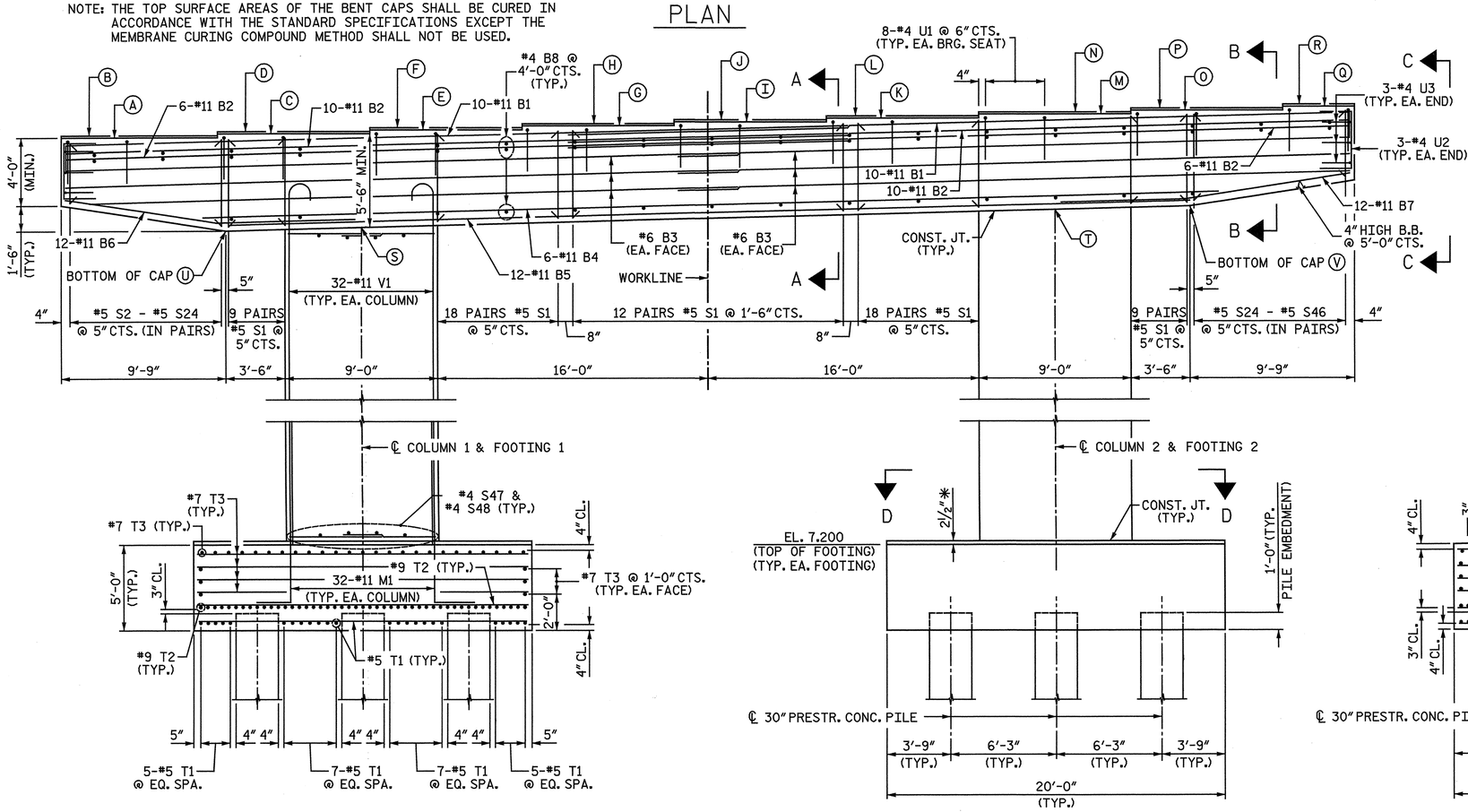

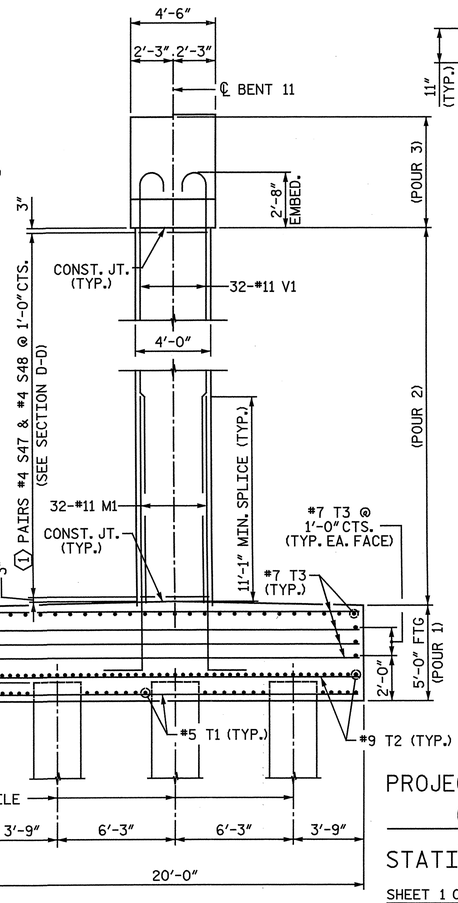

END VIEW

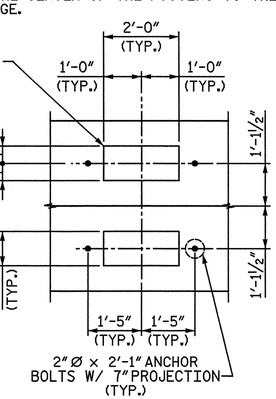

DETAIL A

ELEVATION

ALL DIMENSIONS AND DETAILS SHOWN FOR FOOTINGS ARE TYPICAL FOR EACH FOOTING UNLESS OTHERWISE NOTED.

COLUMN	①
1	28
2	29

MINIMUM SPLICE LENGTH	
#11 B1	16'-6"
#11 B2	16'-6"
#6 B3	4'-3"

ELEVATION TABLE

BENT	A	B	C	D	E	F	G	H	I	J	K	L	M	N	O	P	Q	R	S	T	U	V
11	39.137	39.262	39.362	39.487	39.587	39.712	39.812	39.937	40.037	40.162	40.262	40.387	40.487	40.612	40.712	40.837	40.937	41.062	33.837	34.862	33.637	35.062

PROJECT NO. R-3307

CARTERET COUNTY

STATION: 46+21.50 -L-

SHEET 1 OF 3

STATE OF NORTH CAROLINA
DEPARTMENT OF TRANSPORTATION
RALEIGH

SUBSTRUCTURE

BENT II
PLAN AND ELEVATION

NORTH CAROLINA PROFESSIONAL SEAL 25911 ENGINEER DWAIN G. HATHWAY 4-3-2012

NORTH CAROLINA PROFESSIONAL SEAL 033752 ENGINEER SETH A. DENNICK

THE LPA GROUP of North Carolina TRANSPORTATION CONSULTANTS

THE LPA GROUP of North Carolina
8000 Regency Parkway, Suite 600
Cary, North Carolina 27518
NC License No.: F-1084

REVISIONS									SHEET NO.
NO.	BY:	DATE:	NO.	BY:	DATE:				S-216
1			3						TOTAL SHEETS
2			4						333

DRAWN BY : M. D. MAYHEW DATE : 10-4-11
CHECKED BY : A. L. PHILLIPS DATE : 10-19-11

DWG. 217 OF 282

4/21/2012
8:44:12 AM
User: jaustin
Filename: Y:\Projects\NCDOT\R-3307\Dwgs\Final\R-3307_217_SD_B11_1.dgn

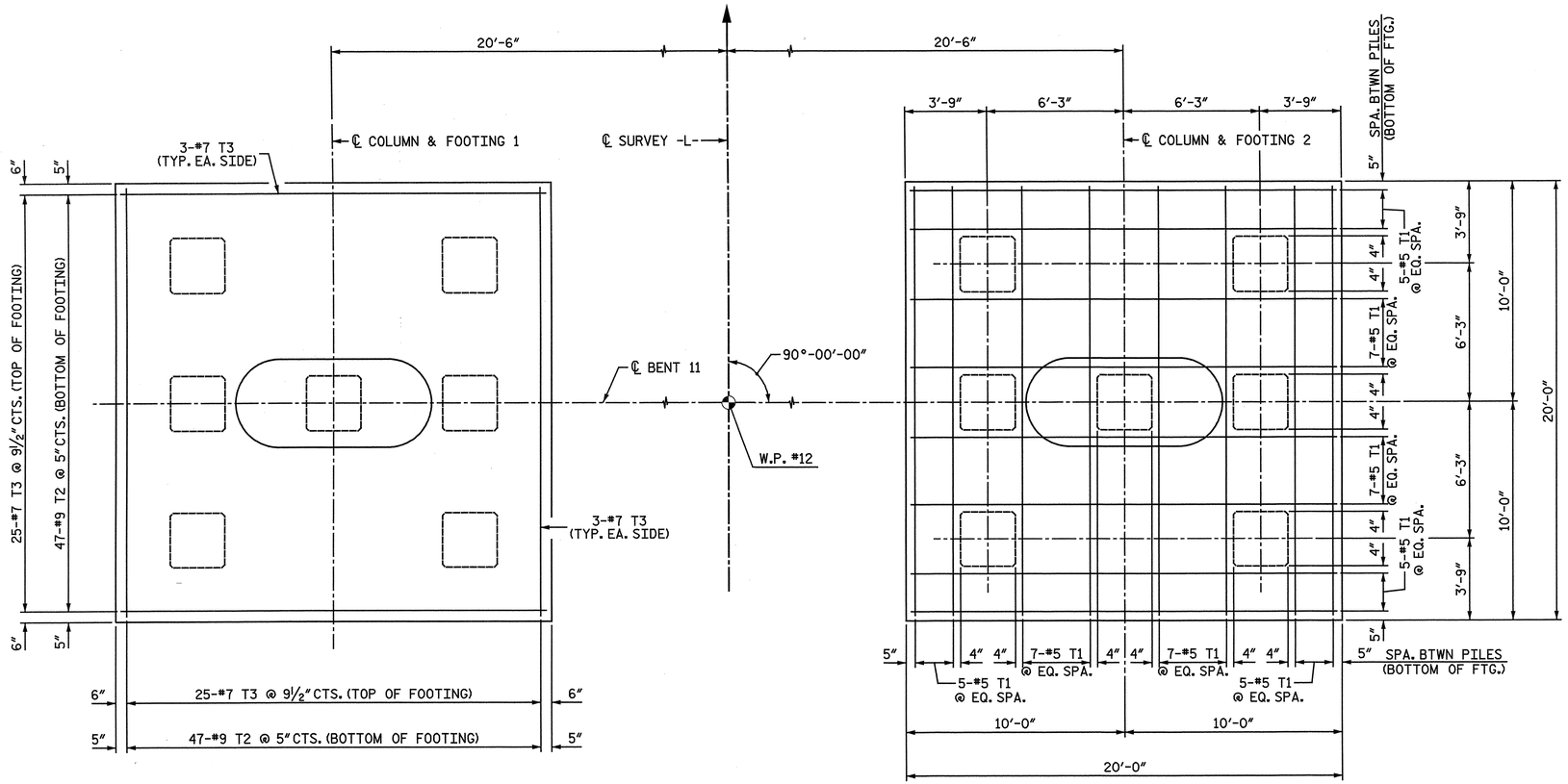

FOOTING PLAN

ALL DIMENSIONS AND DETAILS SHOWN FOR FOOTINGS ARE TYPICAL FOR EACH FOOTING UNLESS OTHERWISE NOTED.

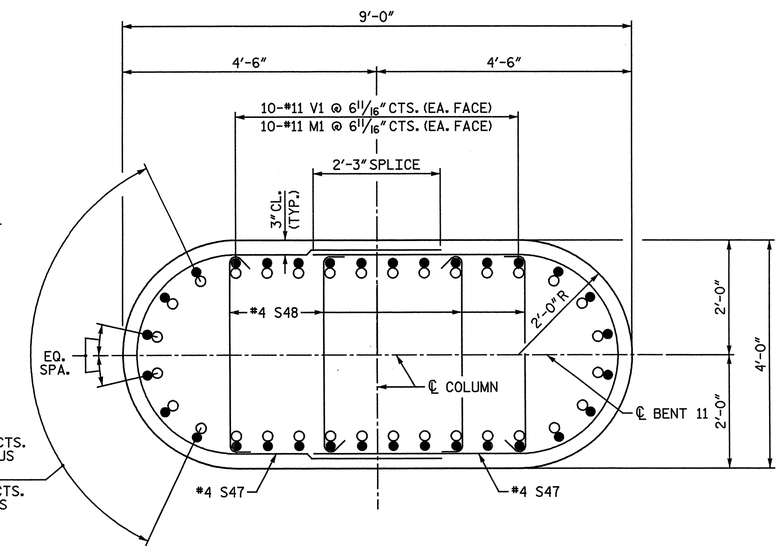

SECTION D-D

NOTE: WHEN PLACING CROSS-TIES, ALTERNATE THE POSITION OF THE 180-DEGREE HOOKS HORIZONTALLY AND VERTICALLY.

○ #11 M1
● #11 V1

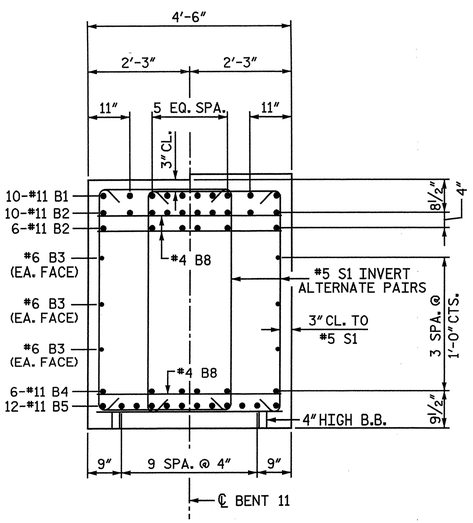

SECTION A-A

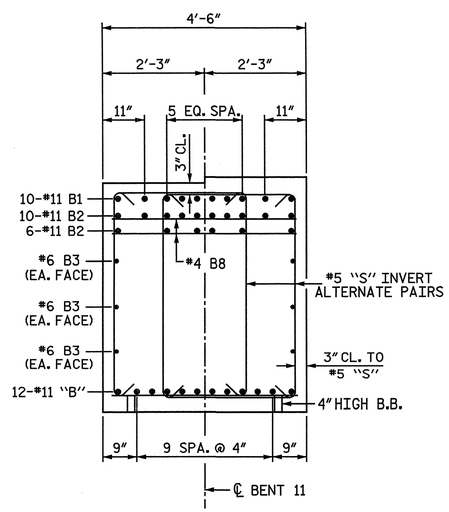

SECTION B-B

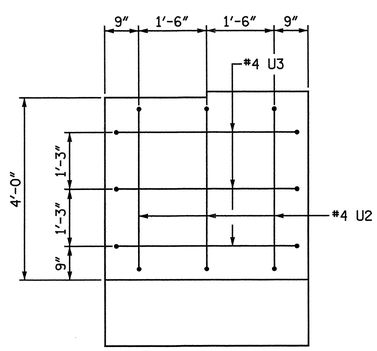

VIEW C-C

PROJECT NO. R-3307

CARTERET COUNTY

STATION: 46+21.50 -L-

SHEET 2 OF 3

STATE OF NORTH CAROLINA
DEPARTMENT OF TRANSPORTATION
RALEIGH

SUBSTRUCTURE

BENT II
FOOTING AND SECTIONS

NORTH CAROLINA PROFESSIONAL SEAL 25911 ENGINEER DAVID G. HATHAWAY 4-3-2012

NORTH CAROLINA PROFESSIONAL SEAL 033752 ENGINEER SETH A. DENNEY 04/09/12

THE LPA GROUP of North Carolina TRANSPORTATION CONSULTANTS

THE LPA GROUP of North Carolina
8000 Regency Parkway, Suite 600
Cary, North Carolina 27518
NC License No.: F-1084

REVISIONS							SHEET NO.
NO.	BY:	DATE:	NO.	BY:	DATE:		S-217
1			3				TOTAL SHEETS
2			4				333

DRAWN BY : M. D. MAYHEW DATE : 10-4-11
CHECKED BY : A. L. PHILLIPS DATE : 10-26-11

DWG. 218 OF 282

4/20/2012 8:44:17 AM
User: jaustin
Filename: I:\Projects\NCDOT\R-3307\Dwgs\Final\R-3307_218_SD_B11_2.dgn

BAR TYPES

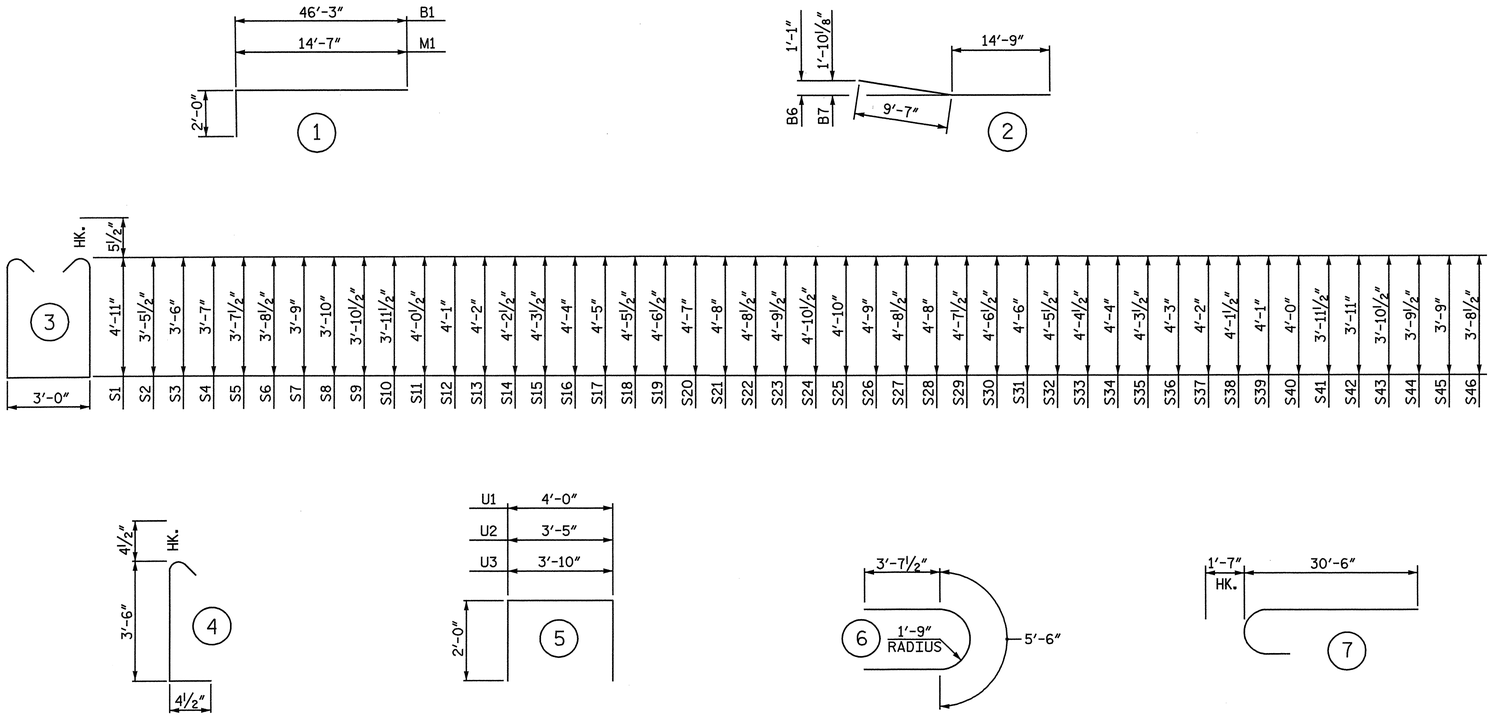

ALL BAR DIMENSIONS ARE OUT TO OUT.

BILL OF MATERIAL

BENT 11

BAR	NO.	SIZE	TYPE	LENGTH	WEIGHT
B1	20	11	1	48′ - 3″	5,127
B2	32	11	STR	46′ - 3″	7,863
B3	12	6	STR	40′ - 2″	724
B4	6	11	STR	60′ - 0″	1,913
B5	12	11	STR	57′ - 0″	3,634
B6	12	11	2	24′ - 4″	1,551
B7	12	11	2	24′ - 4″	1,551
B8	53	4	STR	4′ - 2″	148
M1	64	11	1	16′ - 7″	5,639
S1	132	5	3	13′ - 9″	1,893
S2	2	5	3	10′ - 10″	23
S3	2	5	3	10′ - 11″	23
S4	2	5	3	11′ - 1″	23
S5	2	5	3	11′ - 2″	23
S6	2	5	3	11′ - 4″	24
S7	2	5	3	11′ - 5″	24
S8	2	5	3	11′ - 7″	24
S9	2	5	3	11′ - 8″	24
S10	2	5	3	11′ - 10″	25
S11	2	5	3	12′ - 0″	25
S12	2	5	3	12′ - 1″	25
S13	2	5	3	12′ - 3″	26
S14	2	5	3	12′ - 4″	26
S15	2	5	3	12′ - 6″	26
S16	2	5	3	12′ - 7″	26
S17	2	5	3	12′ - 9″	27
S18	2	5	3	12′ - 10″	27
S19	2	5	3	13′ - 0″	27
S20	2	5	3	13′ - 1″	27
S21	2	5	3	13′ - 3″	28
S22	2	5	3	13′ - 4″	28
S23	2	5	3	13′ - 6″	28
S24	4	5	3	13′ - 8″	57
S25	2	5	3	13′ - 7″	28
S26	2	5	3	13′ - 5″	28
S27	2	5	3	13′ - 4″	28
S28	2	5	3	13′ - 3″	28
S29	2	5	3	13′ - 2″	27
S30	2	5	3	13′ - 0″	27
S31	2	5	3	12′ - 11″	27
S32	2	5	3	12′ - 10″	27
S33	2	5	3	12′ - 8″	26
S34	2	5	3	12′ - 7″	26
S35	2	5	3	12′ - 6″	26
S36	2	5	3	12′ - 5″	26
S37	2	5	3	12′ - 3″	26
S38	2	5	3	12′ - 2″	25
S39	2	5	3	12′ - 1″	25
S40	2	5	3	11′ - 11″	25
S41	2	5	3	11′ - 10″	25
S42	2	5	3	11′ - 9″	25
S43	2	5	3	11′ - 8″	24
S44	2	5	3	11′ - 6″	24
S45	2	5	3	11′ - 5″	24
S46	2	5	3	11′ - 4″	24
S47	114	4	6	12′ - 9″	971
S48	228	4	4	4′ - 3″	647
T1	96	5	STR	19′ - 4″	1,936
T2	188	9	STR	19′ - 4″	12,358
T3	124	7	STR	19′ - 4″	4,900
U1	72	4	5	8′ - 0″	385
U2	6	4	5	7′ - 5″	30
U3	6	4	5	7′ - 10″	31
V1	64	11	7	32′ - 1″	10,909

EPOXY COATED
REINFORCING STEEL LBS. 63,397

CLASS "AA" CONCRETE BREAKDOWN

POUR #1 - FOOTINGS C.Y. 148.0

POUR #2 - COLUMNS C.Y. 65.5

POUR #3 - CAP C.Y. 70.1

TOTAL CLASS "AA" CONCRETE C.Y. 283.6

30″ PRESTRESSED CONCRETE PILES
NO. 14 LIN FT. 955

PILE REDRIVES NO. 5

PROJECT NO. R-3307
CARTERET COUNTY
STATION: 46+21.50 -L-

SHEET 3 OF 3

STATE OF NORTH CAROLINA
DEPARTMENT OF TRANSPORTATION
RALEIGH

SUBSTRUCTURE

BENT II
BILL OF MATERIAL

NORTH CAROLINA PROFESSIONAL SEAL 25911 ENGINEER DWAIN G. HATHAWAY 4-3-2012

NORTH CAROLINA PROFESSIONAL SEAL 033752 ENGINEER SETH A. DENNEY

THE LPA GROUP of North Carolina TRANSPORTATION CONSULTANTS

THE LPA GROUP of North Carolina
8000 Regency Parkway, Suite 600
Cary, North Carolina 27518
NC License No.: F-1084

REVISIONS								SHEET NO.
NO.	BY:	DATE:	NO.	BY:	DATE:			S-218
1			3					TOTAL SHEETS
2			4					333

DRAWN BY : M. D. MAYHEW DATE : 10-10-11
CHECKED BY : A. L. PHILLIPS DATE : 10-19-11

DWG. 219 OF 282

4/20/2012
8:44:20 AM
User: jaustin
Filename: Y:\Projects\NCDOT\R-3307\Dwgs\Final\R-3307_219_SD_B11_3.dgn

NOTES:

STIRRUPS IN CAP MAY BE SHIFTED AS NECESSARY TO CLEAR ANCHOR BOLTS.

ALTERNATELY INVERT STIRRUP PAIRS AS NOTED.

FOR FOUNDATION NOTES, SEE "GENERAL DRAWING FOUNDATION LAYOUT" SHEET 4 OF 4.

FOR FOOTING REINFORCING DETAILS, SEE SHEET 2 OF 3.

FOR SECTION A-A, SECTION B-B, VIEW C-C, AND SECTION D-D, SEE SHEET 2 OF 3.

✱ THE FOOTING HAS A DROP OF 2½" FROM THE CENTER OF THE FOOTING TO THE EDGE OF FOOTING TO ACCOMODATE DRAINAGE.

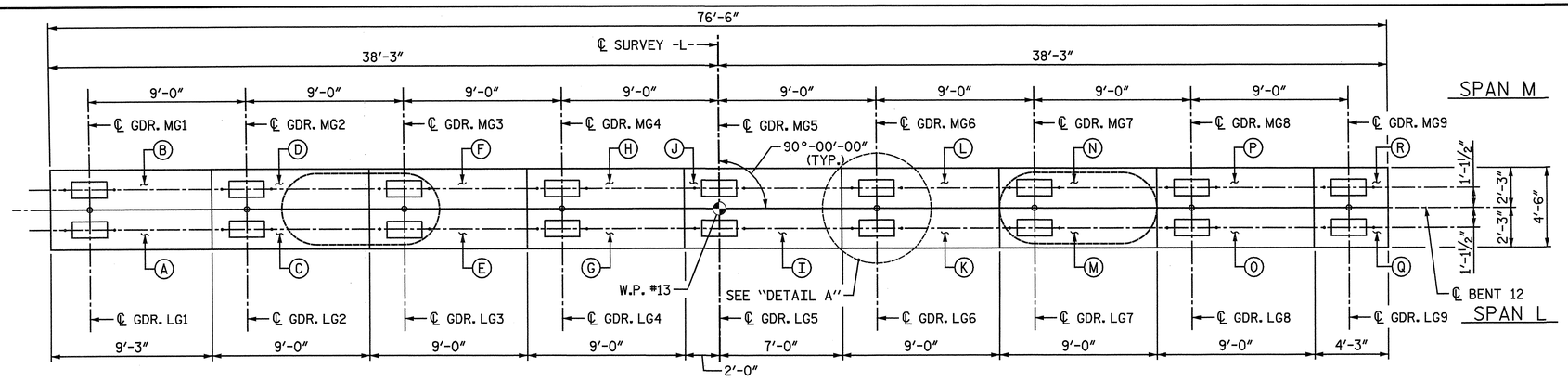

PLAN

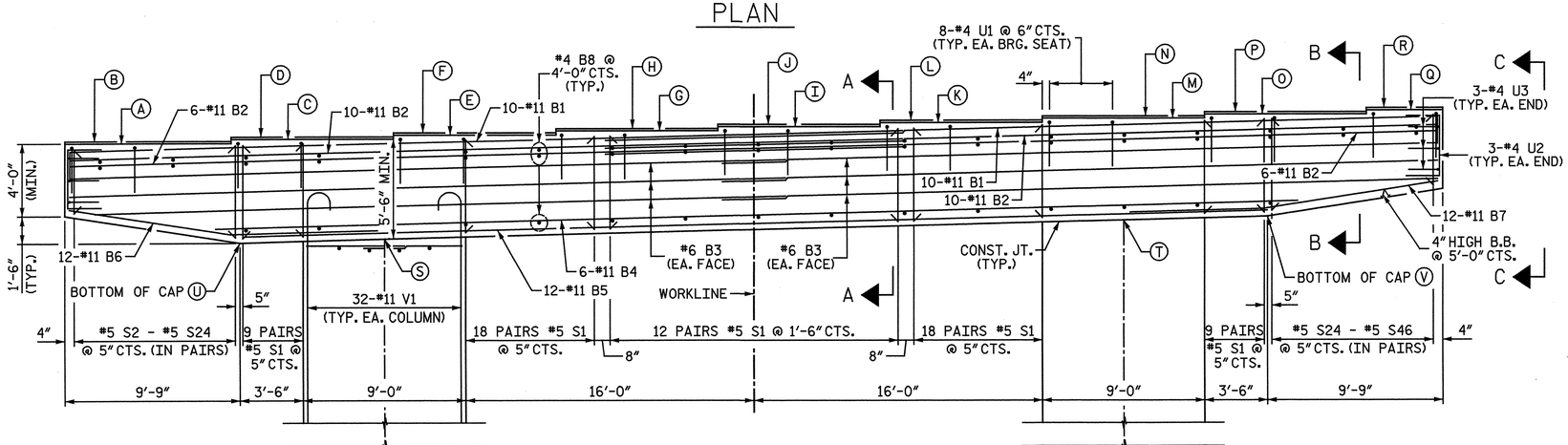

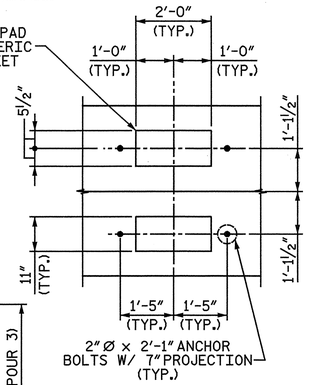

DETAIL A

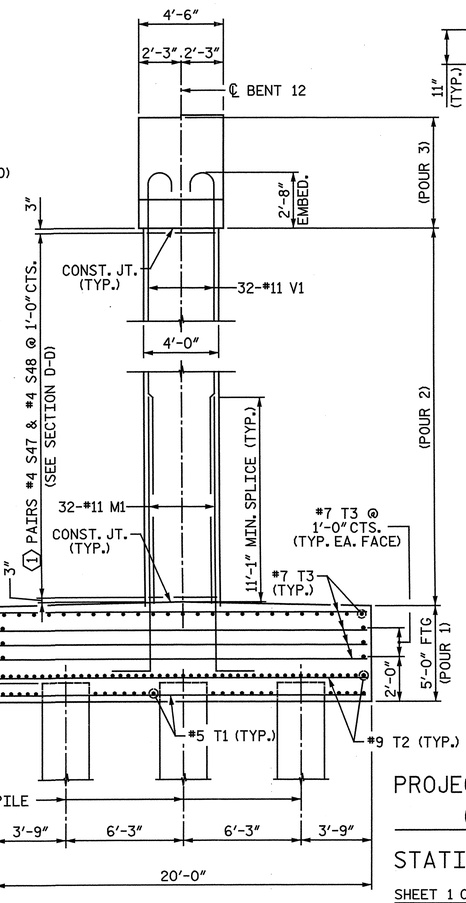

END VIEW

ELEVATION

ALL DIMENSIONS AND DETAILS SHOWN FOR FOOTINGS ARE TYPICAL FOR EACH FOOTING UNLESS OTHERWISE NOTED.

COLUMN	⟨1⟩
1	35
2	36

MINIMUM SPLICE LENGTH	
#11 B1	16'-6"
#11 B2	16'-6"
#6 B3	4'-3"

ELEVATION TABLE

BENT	A	B	C	D	E	F	G	H	I	J	K	L	M	N	O	P	Q	R	S	T	U	V
12	46.937	47.176	47.162	47.401	47.387	47.626	47.612	47.851	47.837	48.076	48.062	48.301	48.287	48.526	48.512	48.751	48.737	48.976	41.637	42.662	41.437	42.862

PROJECT NO. R-3307

CARTERET COUNTY

STATION: 46+21.50 -L-

SHEET 1 OF 3

STATE OF NORTH CAROLINA
DEPARTMENT OF TRANSPORTATION
RALEIGH

SUBSTRUCTURE

BENT 12
PLAN AND ELEVATION

NORTH CAROLINA PROFESSIONAL SEAL 25911 ENGINEER DWAIN G. HAYWAY

NORTH CAROLINA PROFESSIONAL SEAL 033752 ENGINEER SETH A. DENNEY

THE LPA GROUP of North Carolina TRANSPORTATION CONSULTANTS

THE LPA GROUP of North Carolina
8000 Regency Parkway, Suite 600
Cary, North Carolina 27518
NC License No.: F-1084

REVISIONS								SHEET NO.
NO.	BY:	DATE:	NO.	BY:	DATE:			S-219
1			3					TOTAL SHEETS
2			4					333

DRAWN BY : M. D. MAYHEW DATE : 10-26-11
CHECKED BY : A. L. PHILLIPS DATE : 10-31-11

DWG. 220 OF 282

4/20/2012
8:44:23 AM
User: jaustin
Filename: Y:\Projects\NCDOT\R-3307\Dwgs\Final\R-3307_220_SD_B12_1.dgn

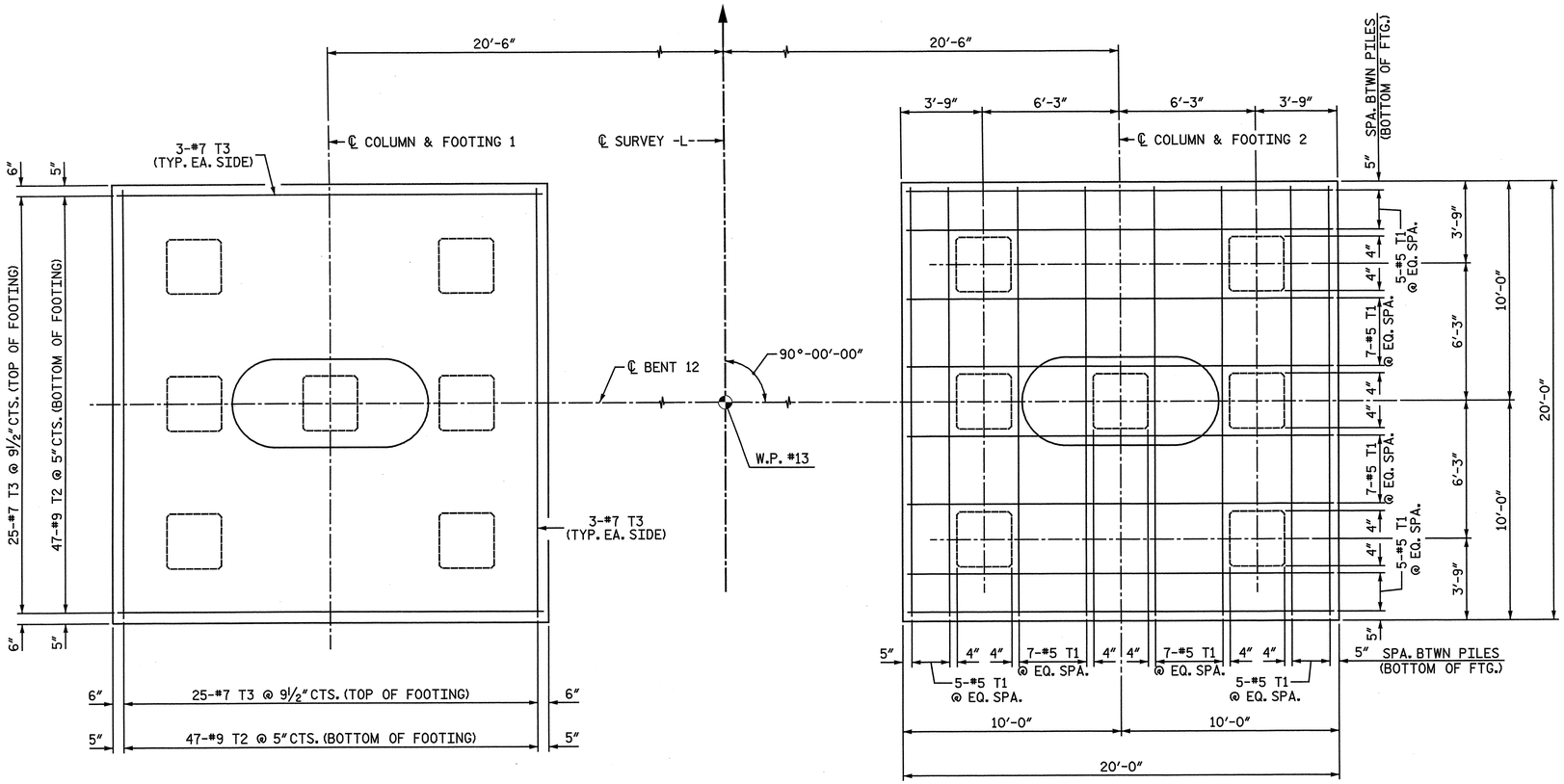

FOOTING PLAN

ALL DIMENSIONS AND DETAILS SHOWN FOR FOOTINGS ARE TYPICAL FOR EACH FOOTING UNLESS OTHERWISE NOTED.

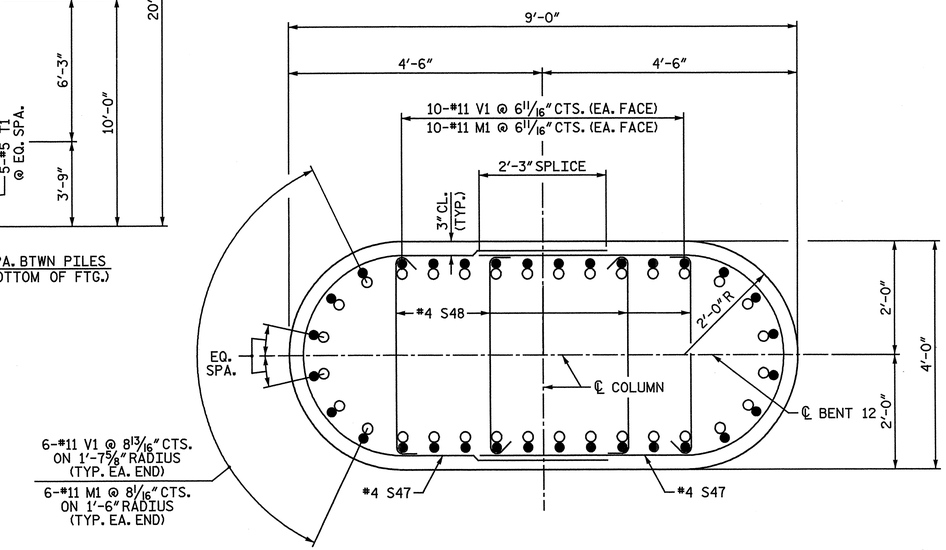

SECTION D-D

NOTE: WHEN PLACING CROSS-TIES, ALTERNATE THE POSITION OF THE 180-DEGREE HOOKS HORIZONTALLY AND VERTICALLY.

○ #11 M1
● #11 V1

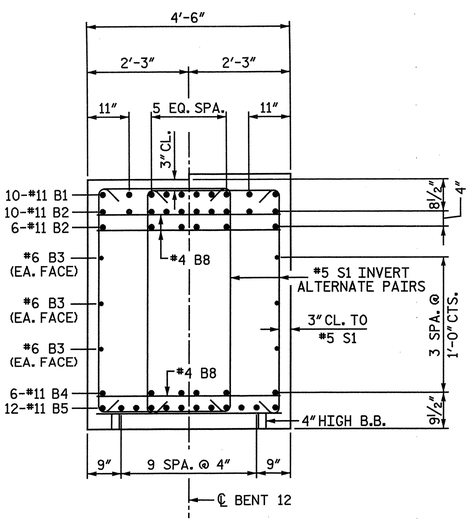

SECTION A-A

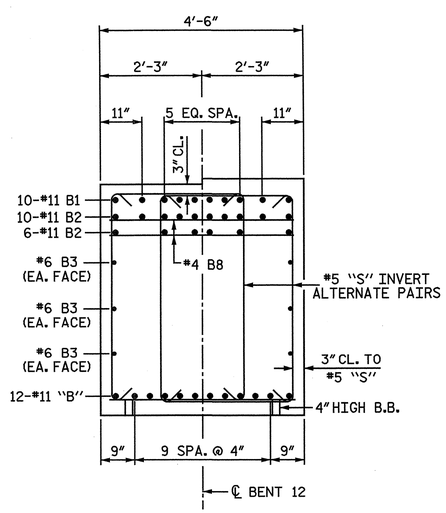

SECTION B-B

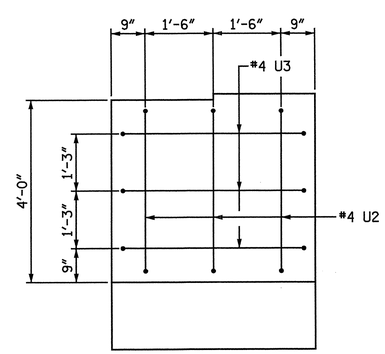

VIEW C-C

PROJECT NO. R-3307

CARTERET COUNTY

STATION: 46+21.50 -L-

SHEET 2 OF 3

STATE OF NORTH CAROLINA
DEPARTMENT OF TRANSPORTATION
RALEIGH

SUBSTRUCTURE

BENT 12
FOOTING AND SECTIONS

NORTH CAROLINA PROFESSIONAL SEAL 25911 ENGINEER DAVID C. HATHAWAY 4-3-2012

NORTH CAROLINA PROFESSIONAL SEAL 033752 ENGINEER SETH A. DENNEY

THE LPA GROUP of North Carolina TRANSPORTATION CONSULTANTS

THE LPA GROUP of North Carolina
8000 Regency Parkway, Suite 600
Cary, North Carolina 27518
NC License No.: F-1084

REVISIONS						SHEET NO.
NO.	BY:	DATE:	NO.	BY:	DATE:	S-220
1			3			TOTAL SHEETS
2			4			333

DRAWN BY : M. D. MAYHEW DATE : 10-26-11
CHECKED BY : A. L. PHILLIPS DATE : 10-31-11

DWG. 221 OF 282

4/20/2012
8:44:27 AM
User: jaustin
Filename: Y:\Projects\NCDOT\R-3307\Dwgs\Final\R-3307_221_SD_B12_2.dgn

BAR TYPES

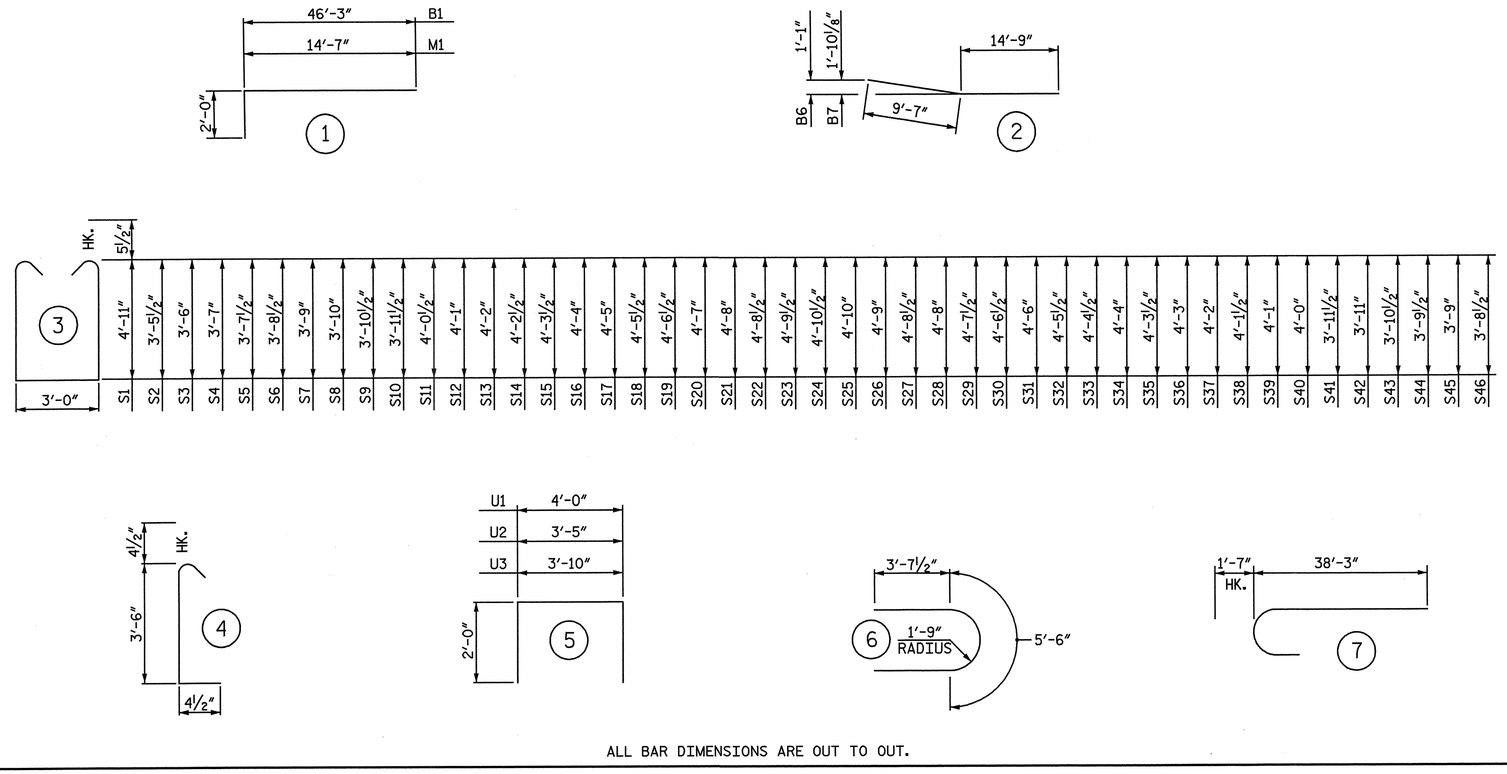

ALL BAR DIMENSIONS ARE OUT TO OUT.

BILL OF MATERIAL

BENT 12

BAR	NO.	SIZE	TYPE	LENGTH	WEIGHT
B1	20	11	1	48′ - 3″	5,127
B2	32	11	STR	46′ - 3″	7,863
B3	12	6	STR	40′ - 2″	724
B4	6	11	STR	60′ - 0″	1,913
B5	12	11	STR	57′ - 0″	3,634
B6	12	11	2	24′ - 4″	1,551
B7	12	11	2	24′ - 4″	1,551
B8	53	4	STR	4′ - 2″	148
M1	64	11	1	16′ - 7″	5,639
S1	132	5	3	13′ - 9″	1,893
S2	2	5	3	10′ - 10″	23
S3	2	5	3	10′ - 11″	23
S4	2	5	3	11′ - 1″	23
S5	2	5	3	11′ - 2″	23
S6	2	5	3	11′ - 4″	24
S7	2	5	3	11′ - 5″	24
S8	2	5	3	11′ - 7″	24
S9	2	5	3	11′ - 8″	24
S10	2	5	3	11′ - 10″	25
S11	2	5	3	12′ - 0″	25
S12	2	5	3	12′ - 1″	25
S13	2	5	3	12′ - 3″	26
S14	2	5	3	12′ - 4″	26
S15	2	5	3	12′ - 6″	26
S16	2	5	3	12′ - 7″	26
S17	2	5	3	12′ - 9″	27
S18	2	5	3	12′ - 10″	27
S19	2	5	3	13′ - 0″	27
S20	2	5	3	13′ - 1″	27
S21	2	5	3	13′ - 3″	28
S22	2	5	3	13′ - 4″	28
S23	2	5	3	13′ - 6″	28
S24	4	5	3	13′ - 8″	57
S25	2	5	3	13′ - 7″	28
S26	2	5	3	13′ - 5″	28
S27	2	5	3	13′ - 4″	28
S28	2	5	3	13′ - 3″	28
S29	2	5	3	13′ - 2″	27
S30	2	5	3	13′ - 0″	27
S31	2	5	3	12′ - 11″	27
S32	2	5	3	12′ - 10″	27
S33	2	5	3	12′ - 8″	26
S34	2	5	3	12′ - 7″	26
S35	2	5	3	12′ - 6″	26
S36	2	5	3	12′ - 5″	26
S37	2	5	3	12′ - 3″	26
S38	2	5	3	12′ - 2″	25
S39	2	5	3	12′ - 1″	25
S40	2	5	3	11′ - 11″	25
S41	2	5	3	11′ - 10″	25
S42	2	5	3	11′ - 9″	25
S43	2	5	3	11′ - 8″	24
S44	2	5	3	11′ - 6″	24
S45	2	5	3	11′ - 5″	24
S46	2	5	3	11′ - 4″	24
S47	142	4	6	12′ - 9″	1,209
S48	284	4	4	4′ - 3″	806
T1	96	5	STR	19′ - 4″	1,936
T2	188	9	STR	19′ - 4″	12,358
T3	124	7	STR	19′ - 4″	4,900
U1	72	4	5	8′ - 0″	385
U2	6	4	5	7′ - 5″	30
U3	6	4	5	7′ - 10″	31
V1	64	11	7	39′ - 10″	13,545

EPOXY COATED
REINFORCING STEEL LBS. 66,430

CLASS "AA" CONCRETE BREAKDOWN

POUR #1 - FOOTINGS C.Y. 148.0

POUR #2 - COLUMNS C.Y. 84.3

POUR #3 - CAP C.Y. 70.9

TOTAL CLASS "AA" CONCRETE C.Y. 303.2

30″ PRESTRESSED CONCRETE PILES
NO. 14 LIN FT. 955

PILE REDRIVES NO. 5

PDA TESTING EA. 1

PROJECT NO. R-3307
CARTERET COUNTY
STATION: 46+21.50 -L-

SHEET 3 OF 3

STATE OF NORTH CAROLINA
DEPARTMENT OF TRANSPORTATION
RALEIGH

SUBSTRUCTURE

BENT 12
BILL OF MATERIAL

NORTH CAROLINA PROFESSIONAL SEAL 25911 ENGINEER DWAIN G. HATHAWAY 4-3-2012

NORTH CAROLINA PROFESSIONAL SEAL 033752 ENGINEER SETH A. DERNCK

THE LPA GROUP of North Carolina TRANSPORTATION CONSULTANTS

THE LPA GROUP of North Carolina
8000 Regency Parkway, Suite 600
Cary, North Carolina 27518
NC License No.: F-1084

REVISIONS							SHEET NO.
NO.	BY:	DATE:	NO.	BY:	DATE:		S-221
1			3				TOTAL SHEETS
2			4				333

DRAWN BY : M. D. MAYHEW DATE : 10-26-11
CHECKED BY : A. L. PHILLIPS DATE : 10-31-11

DWG. 222 OF 282

4/20/2012
8:44:31 AM
User: jaustin
Filename: Y:\Projects\NCDOT\R-3307\Dwgs\Final\R-3307_222_SD_B12_3.dgn

NOTES:

STIRRUPS IN CAP MAY BE SHIFTED AS NECESSARY TO CLEAR ANCHOR BOLTS.

ALTERNATELY INVERT STIRRUP PAIRS AS NOTED.

FOR FOUNDATION NOTES, SEE "GENERAL DRAWING FOUNDATION LAYOUT" SHEET 4 OF 4.

FOR FOOTING REINFORCING DETAILS, SEE SHEET 2 OF 3.

FOR SECTION A-A, SECTION B-B, VIEW C-C, AND SECTION D-D, SEE SHEET 2 OF 3.

✳ THE FOOTING HAS A DROP OF 2½" FROM THE CENTER OF THE FOOTING TO THE EDGE OF FOOTING TO ACCOMODATE DRAINAGE.

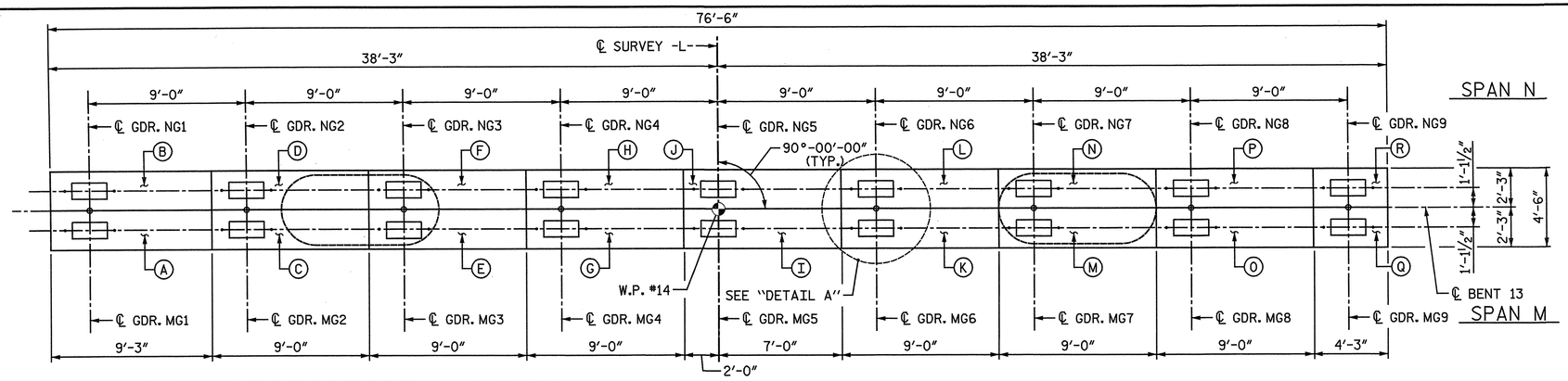

NOTE: THE TOP SURFACE AREAS OF THE BENT CAPS SHALL BE CURED IN ACCORDANCE WITH THE STANDARD SPECIFICATIONS EXCEPT THE MEMBRANE CURING COMPOUND METHOD SHALL NOT BE USED.

PLAN

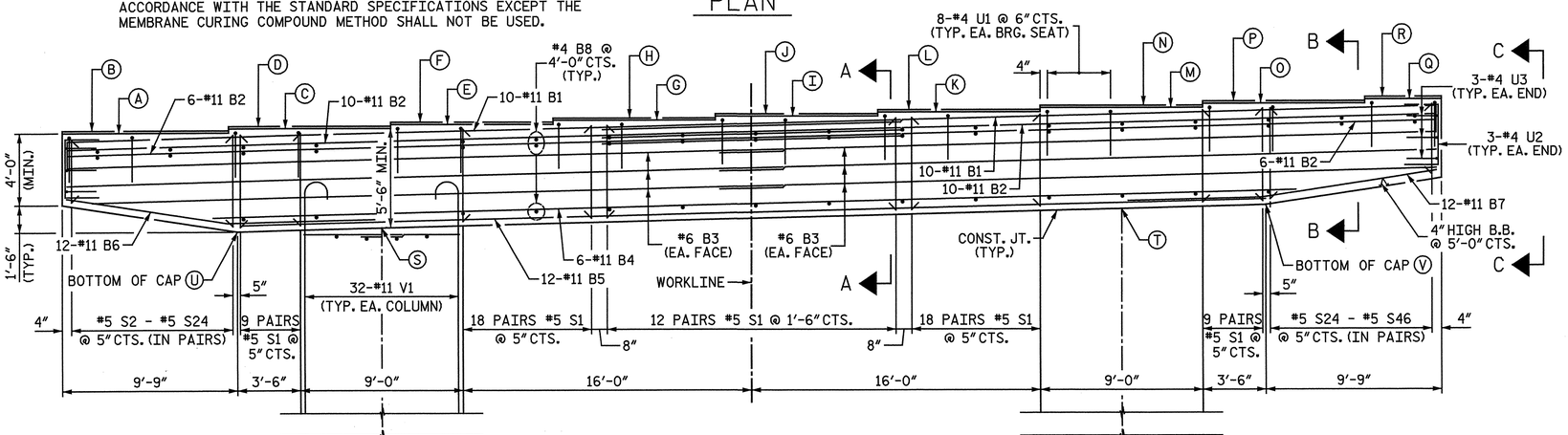

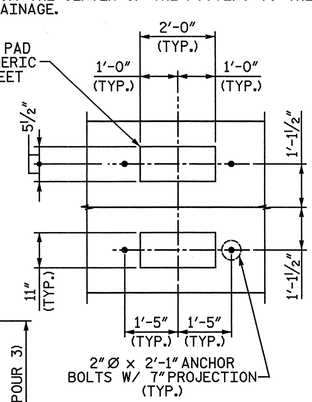

DETAIL A

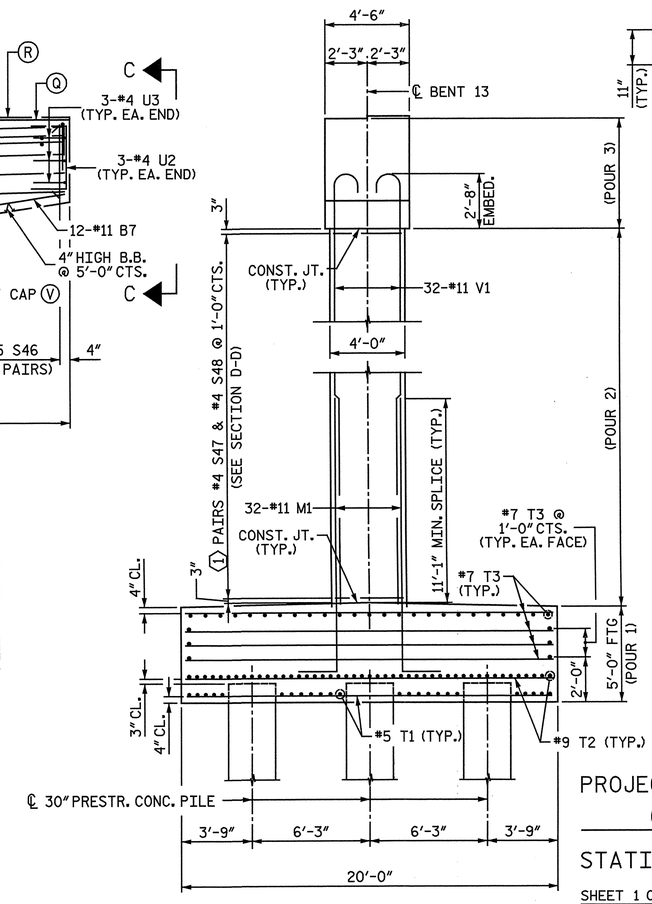

END VIEW

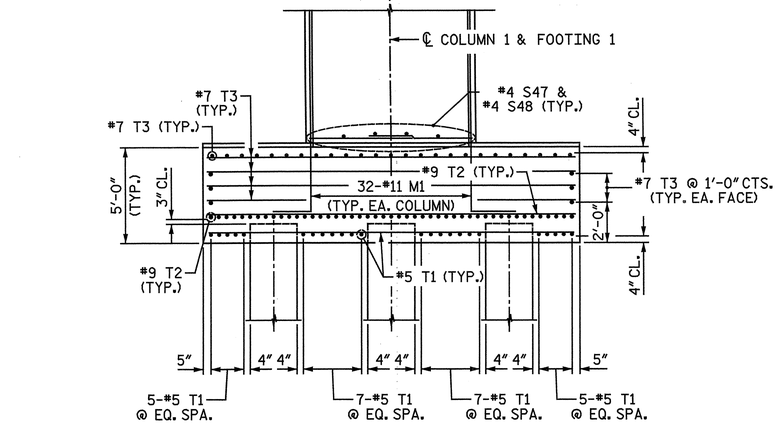

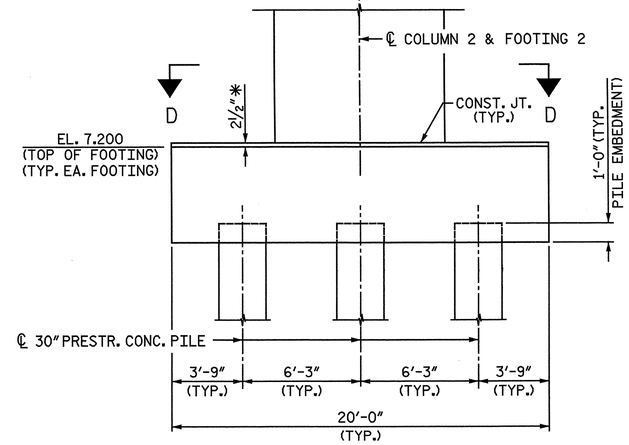

ELEVATION

ALL DIMENSIONS AND DETAILS SHOWN FOR FOOTINGS ARE TYPICAL FOR EACH FOOTING UNLESS OTHERWISE NOTED.

COLUMN	⟨I⟩
1	43
2	44

MINIMUM SPLICE LENGTH	
#11 B1	16'-6"
#11 B2	16'-6"
#6 B3	4'-3"

ELEVATION TABLE

BENT	A	B	C	D	E	F	G	H	I	J	K	L	M	N	O	P	Q	R	S	T	U	V
13	54.237	54.350	54.462	54.575	54.687	54.800	54.912	55.025	55.137	55.250	55.362	55.475	55.587	55.700	55.812	55.925	56.037	56.150	48.937	49.962	48.737	50.162

DRAWN BY : M. D. MAYHEW DATE : 10-26-11
CHECKED BY : A. L. PHILLIPS DATE : 10-31-11

DWG. 223 OF 282

PROJECT NO. R-3307
CARTERET COUNTY
STATION: 46+21.50 -L-

SHEET 1 OF 3

STATE OF NORTH CAROLINA
DEPARTMENT OF TRANSPORTATION
RALEIGH

SUBSTRUCTURE

BENT 13
PLAN AND ELEVATION

NORTH CAROLINA PROFESSIONAL SEAL 25911 ENGINEER DWIGHT G. HATTAWAY 4-7-2012

NORTH CAROLINA PROFESSIONAL SEAL 033752 ENGINEER SETH A. DEHNE 04/06/12

THE LPA GROUP of North Carolina TRANSPORTATION CONSULTANTS

THE LPA GROUP of North Carolina
8000 Regency Parkway, Suite 600
Cary, North Carolina 27518
NC License No. : F-1084

REVISIONS								SHEET NO.
NO.	BY:	DATE:	NO.	BY:	DATE:			S-222
1			3					TOTAL SHEETS
2			4					333

4/20/2012
8:44:33 AM
User: jaustin
Filename: Y:\Projects\NCDOT\R-3307\Dwgs\Final\R-3307.223.SD.B13.1.dgn

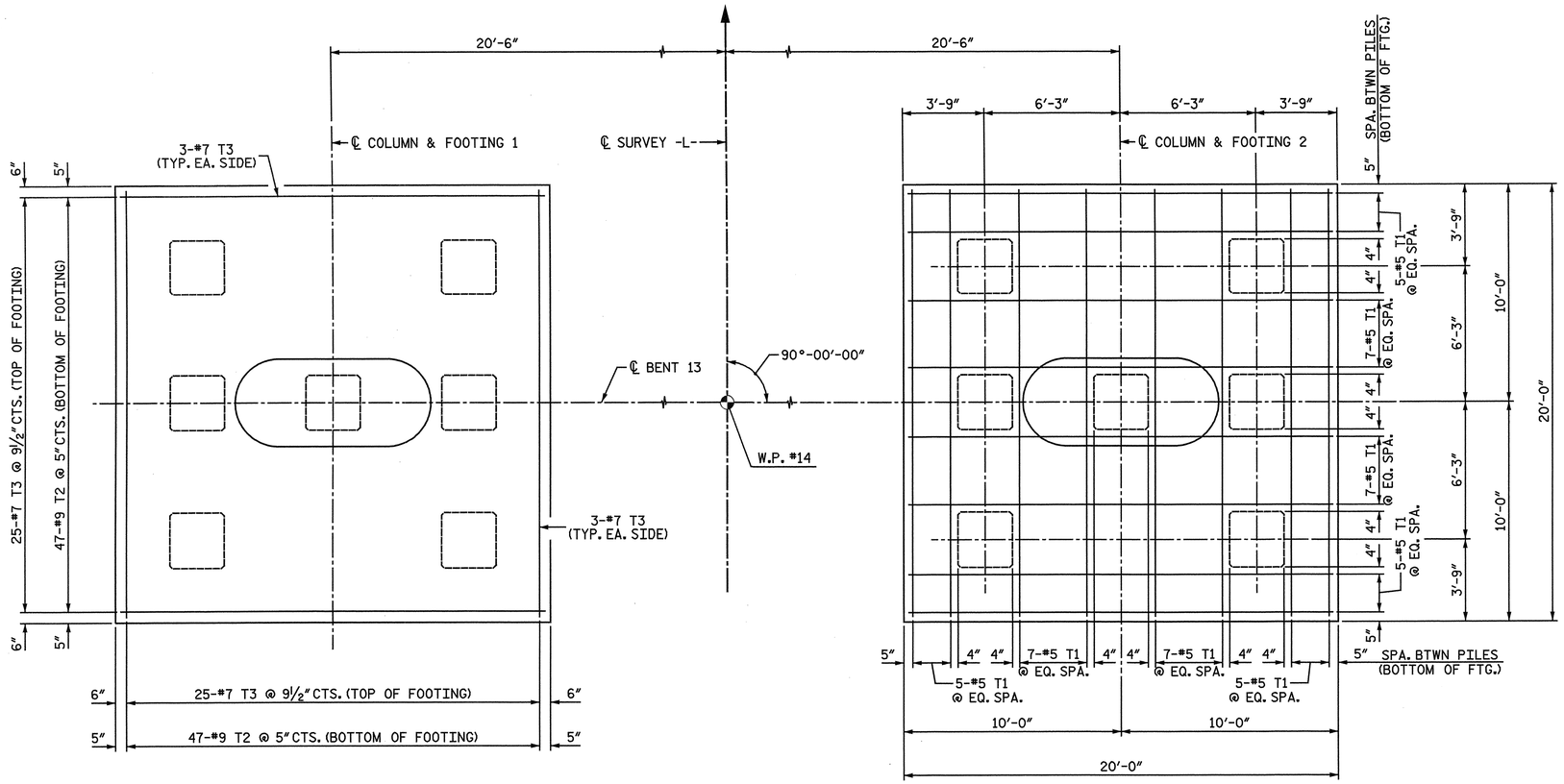

FOOTING PLAN

ALL DIMENSIONS AND DETAILS SHOWN FOR FOOTINGS ARE TYPICAL FOR EACH FOOTING UNLESS OTHERWISE NOTED.

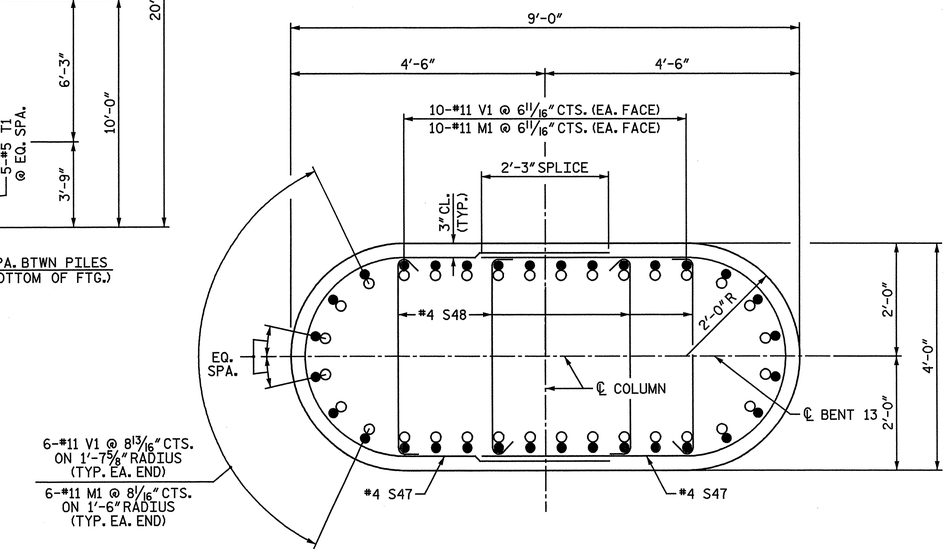

SECTION D-D

NOTE: WHEN PLACING CROSS-TIES, ALTERNATE THE POSITION OF THE 180-DEGREE HOOKS HORIZONTALLY AND VERTICALLY.

○ #11 M1
● #11 V1

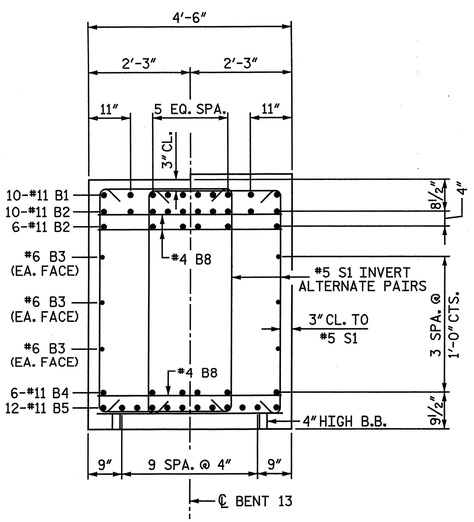

SECTION A-A

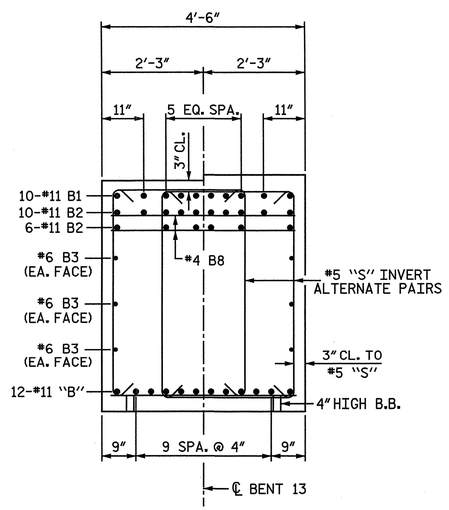

SECTION B-B

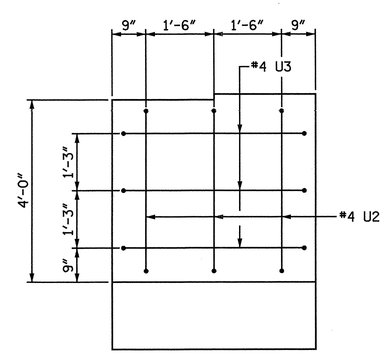

VIEW C-C

PROJECT NO. R-3307

CARTERET COUNTY

STATION: 46+21.50 -L-

SHEET 2 OF 3

STATE OF NORTH CAROLINA
DEPARTMENT OF TRANSPORTATION
RALEIGH

SUBSTRUCTURE

BENT 13
FOOTING AND SECTIONS

NORTH CAROLINA PROFESSIONAL SEAL 25911 ENGINEER DWAIN G. HATHAWAY

NORTH CAROLINA PROFESSIONAL SEAL 033752 ENGINEER SETH A. DENNEY

THE LPA GROUP of North Carolina TRANSPORTATION CONSULTANTS

THE LPA GROUP of North Carolina
8000 Regency Parkway, Suite 600
Cary, North Carolina 27518
NC License No.: F-1084

REVISIONS						SHEET NO.
NO.	BY:	DATE:	NO.	BY:	DATE:	S-223
1			3			TOTAL SHEETS
2			4			333

DRAWN BY : M. D. MAYHEW DATE : 10-26-11
CHECKED BY : A. L. PHILLIPS DATE : 10-31-11

DWG. 224 OF 282

4/20/2012
8:44:38 AM
User: jaustin
Filename: Y:\Projects\NCDOT\R-3307\Dwgs\Final\R-3307_224_SD_B13_2.dgn

BAR TYPES

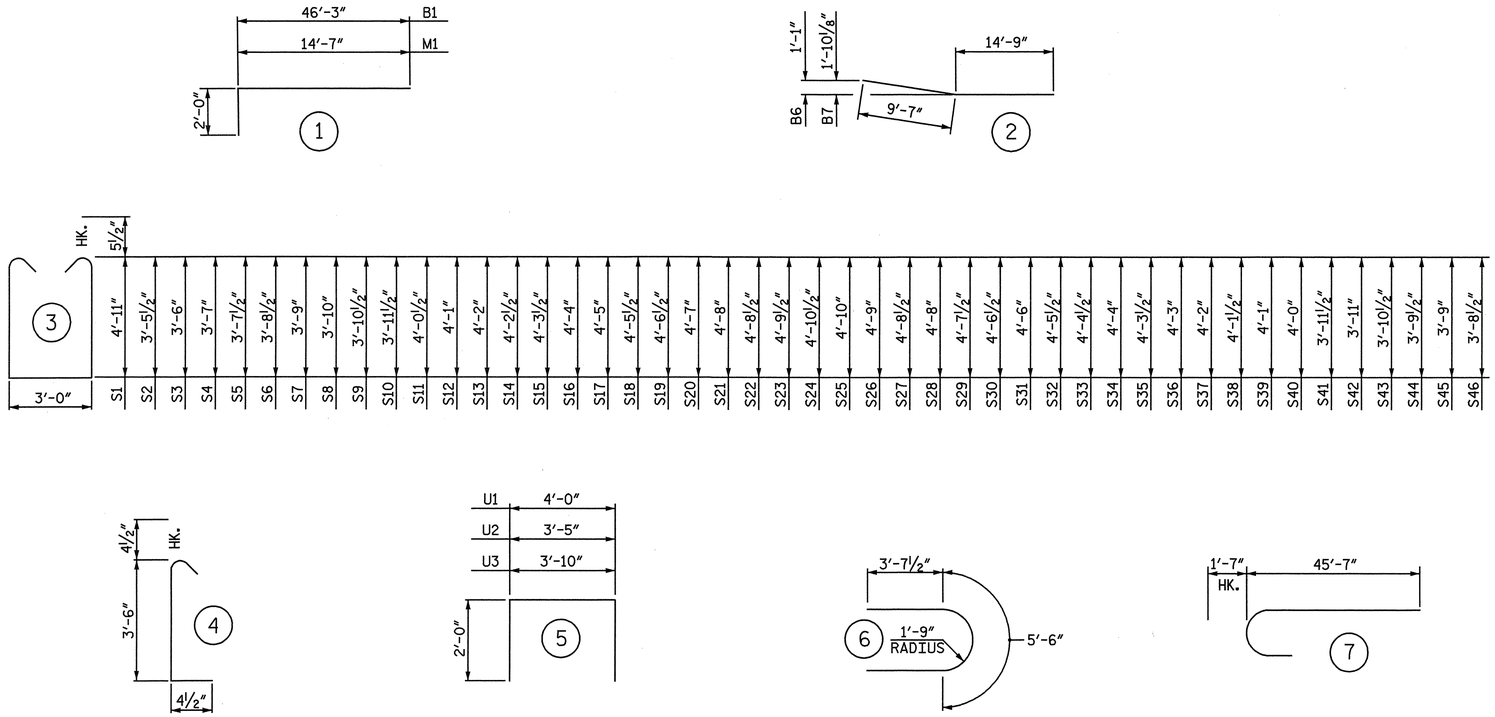

ALL BAR DIMENSIONS ARE OUT TO OUT.

BILL OF MATERIAL

BENT 13

BAR	NO.	SIZE	TYPE	LENGTH	WEIGHT
B1	20	11	1	48′ - 3″	5,127
B2	32	11	STR	46′ - 3″	7,863
B3	12	6	STR	40′ - 2″	724
B4	6	11	STR	60′ - 0″	1,913
B5	12	11	STR	57′ - 0″	3,634
B6	12	11	2	24′ - 4″	1,551
B7	12	11	2	24′ - 4″	1,551
B8	53	4	STR	4′ - 2″	148
M1	64	11	1	16′ - 7″	5,639
S1	132	5	3	13′ - 9″	1,893
S2	2	5	3	10′ - 10″	23
S3	2	5	3	10′ - 11″	23
S4	2	5	3	11′ - 1″	23
S5	2	5	3	11′ - 2″	23
S6	2	5	3	11′ - 4″	24
S7	2	5	3	11′ - 5″	24
S8	2	5	3	11′ - 7″	24
S9	2	5	3	11′ - 8″	24
S10	2	5	3	11′ - 10″	25
S11	2	5	3	12′ - 0″	25
S12	2	5	3	12′ - 1″	25
S13	2	5	3	12′ - 3″	26
S14	2	5	3	12′ - 4″	26
S15	2	5	3	12′ - 6″	26
S16	2	5	3	12′ - 7″	26
S17	2	5	3	12′ - 9″	27
S18	2	5	3	12′ - 10″	27
S19	2	5	3	13′ - 0″	27
S20	2	5	3	13′ - 1″	27
S21	2	5	3	13′ - 3″	28
S22	2	5	3	13′ - 4″	28
S23	2	5	3	13′ - 6″	28
S24	4	5	3	13′ - 8″	57
S25	2	5	3	13′ - 7″	28
S26	2	5	3	13′ - 5″	28
S27	2	5	3	13′ - 4″	28
S28	2	5	3	13′ - 3″	28
S29	2	5	3	13′ - 2″	27
S30	2	5	3	13′ - 0″	27
S31	2	5	3	12′ - 11″	27
S32	2	5	3	12′ - 10″	27
S33	2	5	3	12′ - 8″	26
S34	2	5	3	12′ - 7″	26
S35	2	5	3	12′ - 6″	26
S36	2	5	3	12′ - 5″	26
S37	2	5	3	12′ - 3″	26
S38	2	5	3	12′ - 2″	25
S39	2	5	3	12′ - 1″	25
S40	2	5	3	11′ - 11″	25
S41	2	5	3	11′ - 10″	25
S42	2	5	3	11′ - 9″	25
S43	2	5	3	11′ - 8″	24
S44	2	5	3	11′ - 6″	24
S45	2	5	3	11′ - 5″	24
S46	2	5	3	11′ - 4″	24
S47	174	4	6	12′ - 9″	1,482
S48	348	4	4	4′ - 3″	988
T1	96	5	STR	19′ - 4″	1,936
T2	188	9	STR	19′ - 4″	12,358
T3	124	7	STR	19′ - 4″	4,900
U1	72	4	5	8′ - 0″	385
U2	6	4	5	7′ - 5″	30
U3	6	4	5	7′ - 10″	31
V1	64	11	7	47′ - 2″	16,038

EPOXY COATED
REINFORCING STEEL LBS. 69,378

CLASS "AA" CONCRETE BREAKDOWN

POUR #1 - FOOTINGS C.Y. 148.0

POUR #2 - COLUMNS C.Y. 101.9

POUR #3 - CAP C.Y. 70.1

TOTAL CLASS "AA" CONCRETE C.Y. 320.0

30″ PRESTRESSED CONCRETE PILES
NO. 14 LIN FT. 885

PILE REDRIVES NO. 5

PROJECT NO. R-3307
CARTERET COUNTY
STATION: 46+21.50 -L-

SHEET 3 OF 3

STATE OF NORTH CAROLINA
DEPARTMENT OF TRANSPORTATION
RALEIGH

SUBSTRUCTURE

BENT 13
BILL OF MATERIAL

NORTH CAROLINA PROFESSIONAL SEAL 25911 ENGINEER DWAIN G. HATHAWAY 4-3-2012

NORTH CAROLINA PROFESSIONAL SEAL 033752 ENGINEER SETH A. DENNEY

THE LPA GROUP of North Carolina
TRANSPORTATION CONSULTANTS

THE LPA GROUP of North Carolina
8000 Regency Parkway, Suite 600
Cary, North Carolina 27518
NC License No.: F-1084

REVISIONS								SHEET NO.
NO.	BY:	DATE:	NO.	BY:	DATE:			S-224
1			3					TOTAL SHEETS
2			4					333

DRAWN BY : M. D. MAYHEW DATE : 10-26-11
CHECKED BY : A. L. PHILLIPS DATE : 10-31-11

DWG. 225 OF 282

4/20/2012
8:44:41 AM
User: jaustin
Filename: Y:\Projects\NCDOT\R-3307\Dwgs\Final\R-3307_225_SD_B13_3.dgn

NOTES:

STIRRUPS IN CAP MAY BE SHIFTED AS NECESSARY TO CLEAR ANCHOR BOLTS.

ALTERNATELY INVERT STIRRUP PAIRS AS NOTED.

FOR FOUNDATION NOTES, SEE "GENERAL DRAWING FOUNDATION LAYOUT" SHEET 4 OF 4.

✱ THE FOOTING HAS A DROP OF 2½" FROM THE CENTER OF THE FOOTING TO THE EDGE OF FOOTING TO ACCOMODATE DRAINAGE.

✱✱ V2 BARS FOR ALL OTHER PILES WERE OMITTED FOR CLARITY.

FOR FOOTING REINFORCING DETAILS, SEE SHEET 3 OF 4.

FOR SECTION A-A, SECTION B-B, VIEW C-C, AND SECTION D-D, SEE SHEET 2 OF 4.

TOF = TOP OF FOOTING

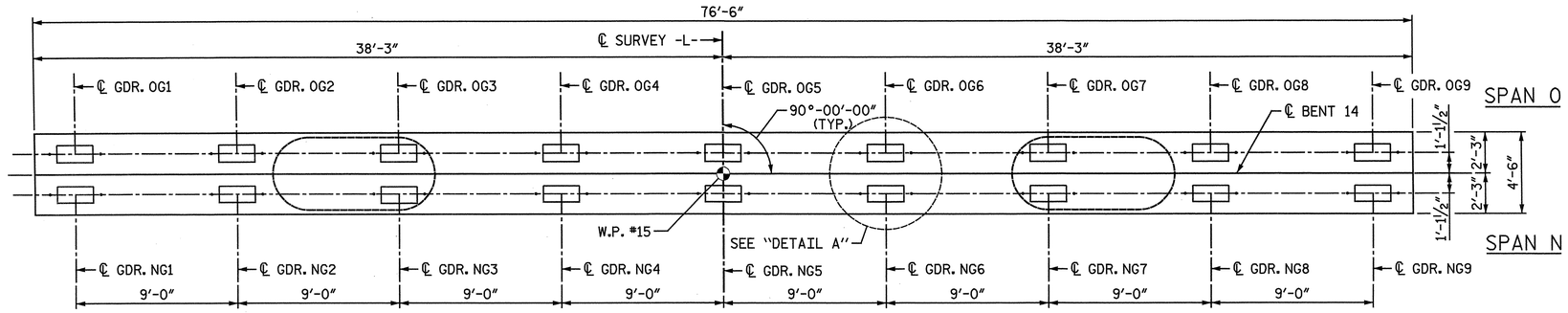

NOTE: THE TOP SURFACE AREAS OF THE BENT CAPS SHALL BE CURED IN ACCORDANCE WITH THE STANDARD SPECIFICATIONS EXCEPT THE MEMBRANE CURING COMPOUND METHOD SHALL NOT BE USED.

PLAN

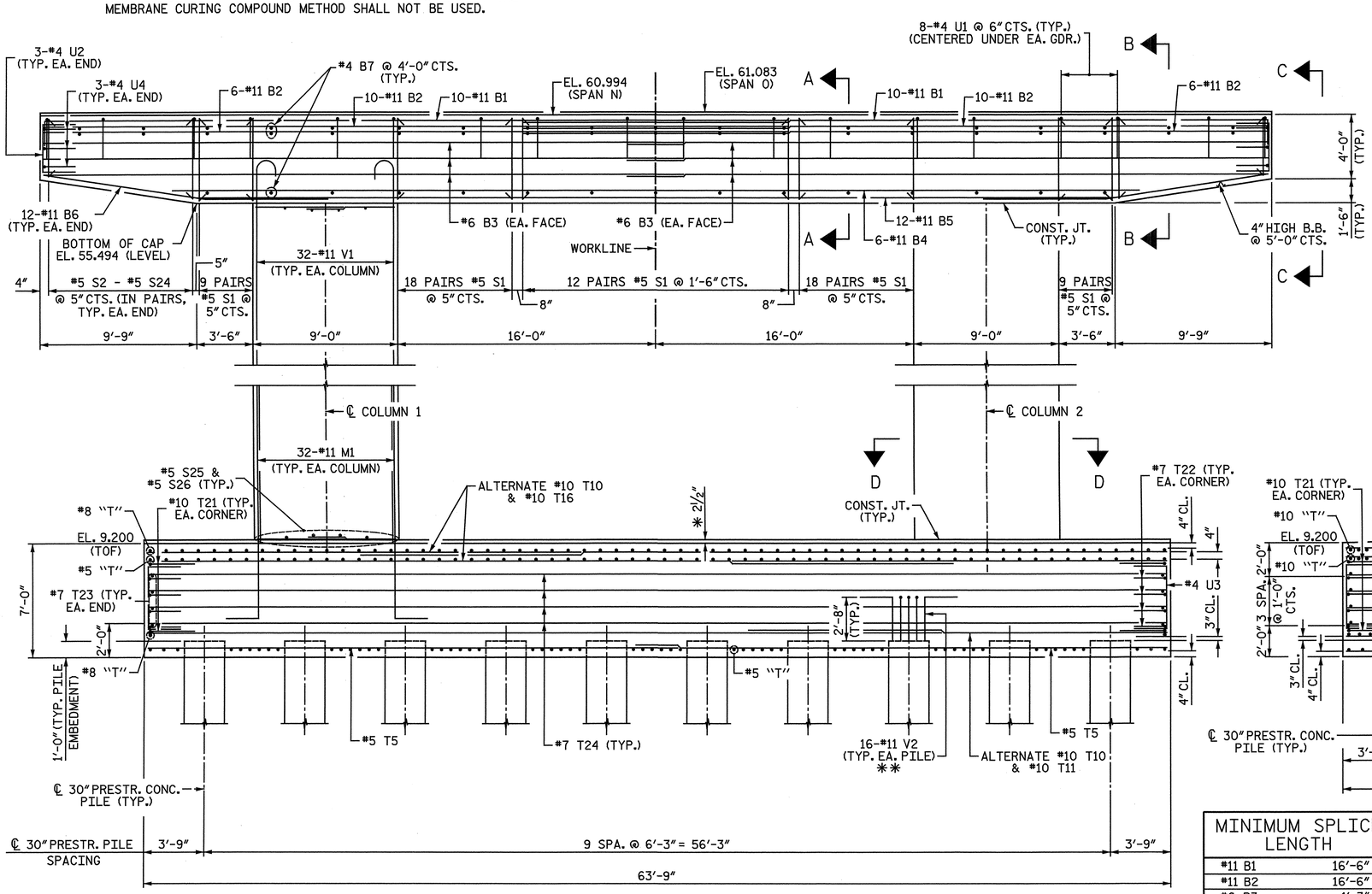

ELEVATION

MINIMUM SPLICE LENGTH	
#11 B1	16'-6"
#11 B2	16'-6"
#6 B3	4'-3"
#5 T5	2'-7"
#10 T11	11'-11"
#10 T16	13'-8"

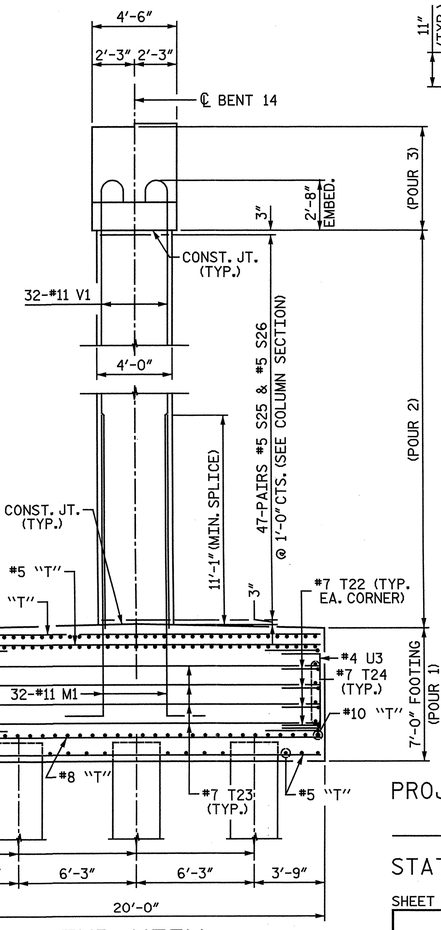

END VIEW

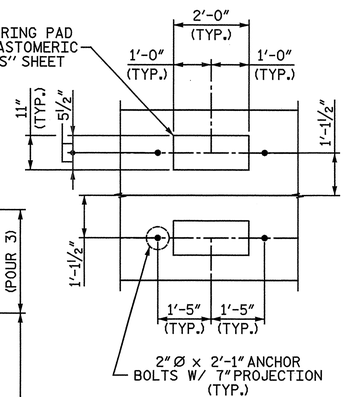

DETAIL A

PROJECT NO. R-3307

CARTERET COUNTY

STATION: 46+21.50 -L-

SHEET 1 OF 4

STATE OF NORTH CAROLINA
DEPARTMENT OF TRANSPORTATION
RALEIGH

SUBSTRUCTURE

BENT 14
PLAN AND ELEVATION

NORTH CAROLINA PROFESSIONAL SEAL 25911 ENGINEER DRAIN C. HATHWAY 4-3-12

NORTH CAROLINA PROFESSIONAL SEAL 033752 ENGINEER SETH A. DENNEY

THE LPA GROUP of North Carolina TRANSPORTATION CONSULTANTS

THE LPA GROUP of North Carolina
8000 Regency Parkway, Suite 600
Cary, North Carolina 27518
NC License No.: F-1084

REVISIONS								
NO.	BY:	DATE:	NO.	BY:	DATE:			
1			3					
2			4					

SHEET NO. S-225

TOTAL SHEETS 333

DRAWN BY : M. D. MAYHEW DATE : 10-3-11
CHECKED BY : A. L. PHILLIPS DATE : 10-19-11

DWG. 226 OF 282

4/20/2012
8:44:43 AM
User: jaustin
Filename: Y:\Projects\NCDOT\R-3307\Dwgs\Final\R-3307_226_SD_B14_1.dgn

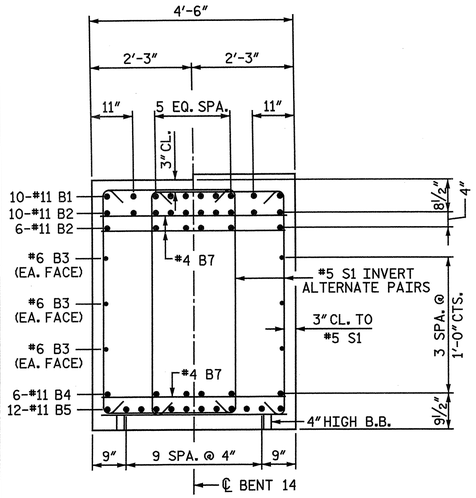

SECTION A-A

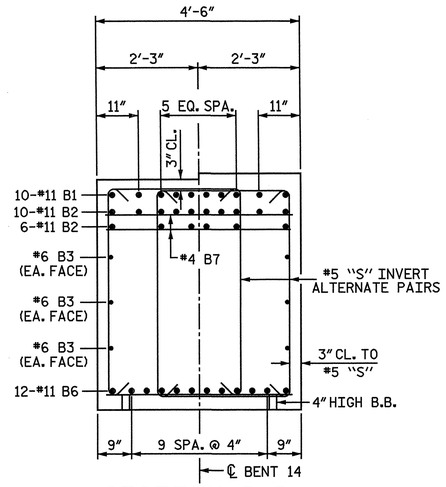

SECTION B-B

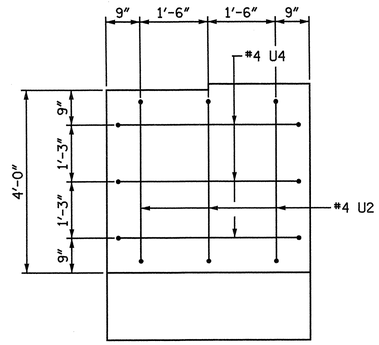

VIEW C-C

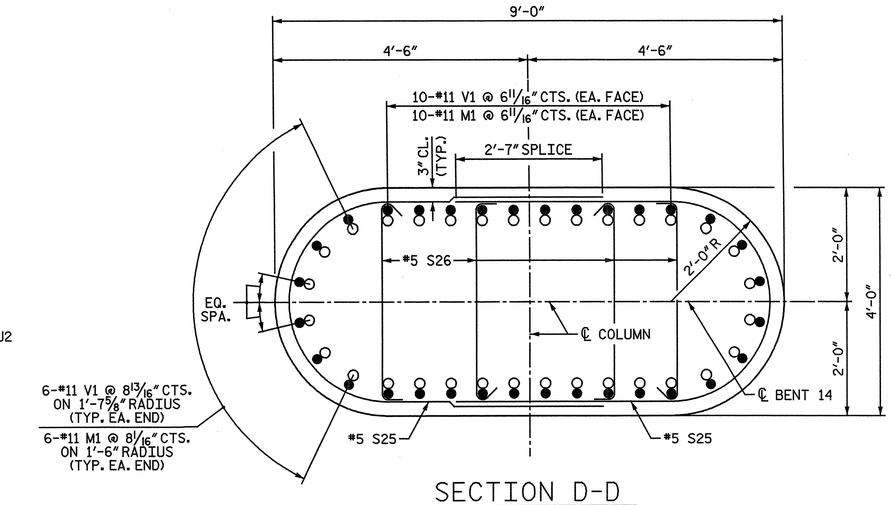

SECTION D-D

NOTE: WHEN PLACING CROSS-TIES, ALTERNATE THE POSITION OF THE 180-DEGREE HOOKS HORIZONTALLY AND VERTICALLY.

○ #11 M1
● #11 V1

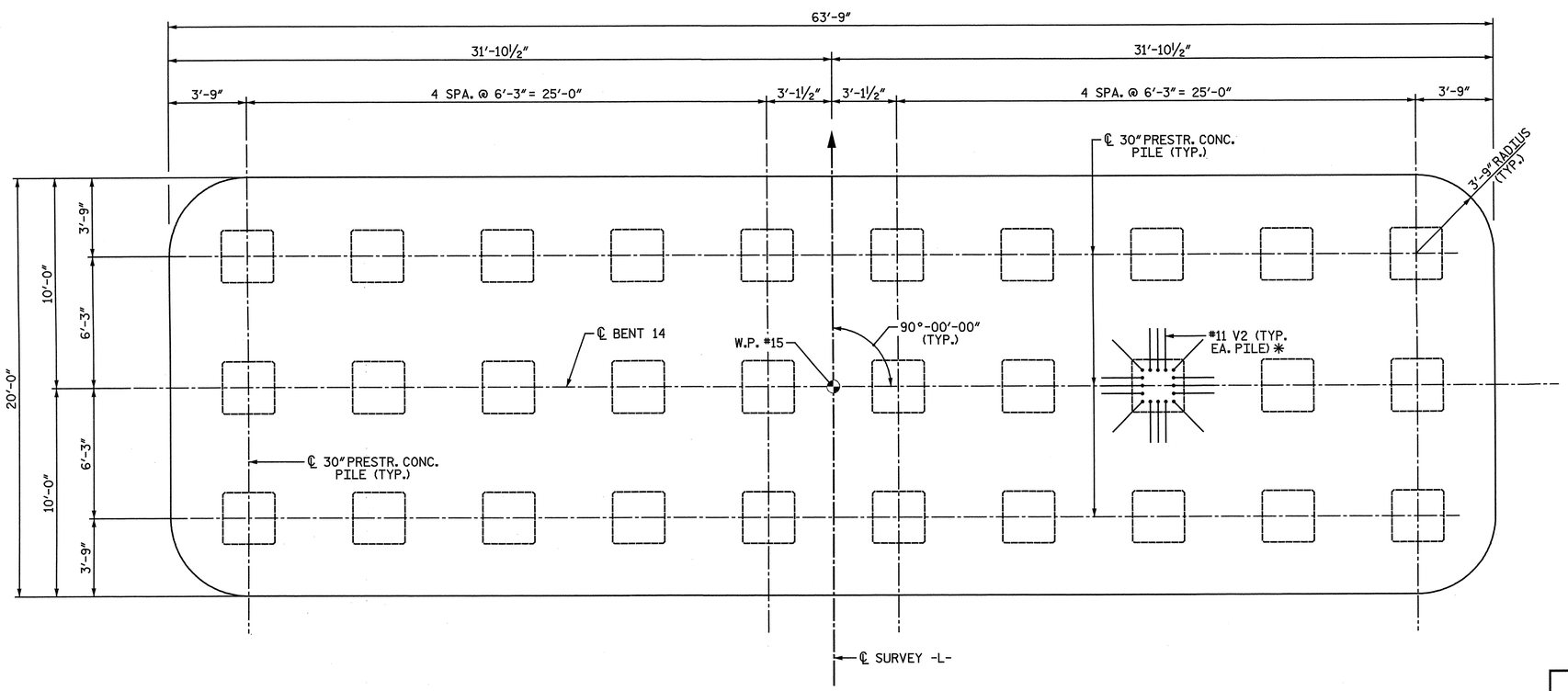

FOOTING PLAN

✱ V2 BARS FOR ALL OTHER PILES OMITTED FOR CLARITY

PROJECT NO. R-3307
CARTERET COUNTY
STATION: 46+21.50 -L-

SHEET 2 OF 4

STATE OF NORTH CAROLINA
DEPARTMENT OF TRANSPORTATION
RALEIGH

SUBSTRUCTURE

BENT 14
FOOTING AND SECTIONS

NORTH CAROLINA PROFESSIONAL SEAL 25911 ENGINEER IWAIN G. HATHMAN 4-3-12

NORTH CAROLINA PROFESSIONAL SEAL 033752 ENGINEER SETH A. DENNEY

THE LPA GROUP of North Carolina
TRANSPORTATION CONSULTANTS

THE LPA GROUP of North Carolina
8000 Regency Parkway, Suite 600
Cary, North Carolina 27518
NC License No.: F-1084

REVISIONS						SHEET NO.
NO.	BY:	DATE:	NO.	BY:	DATE:	S-226
1			3			TOTAL SHEETS
2			4			333

DRAWN BY: M. D. MAYHEW DATE: 10-17-11
CHECKED BY: A. L. PHILLIPS DATE: 10-31-11

DWG. 227 OF 282

4/20/2012
8:44:47 AM
User: jaustin
Filename: Y:\Projects\NCDOT\R-3307\Dwgs\Final\R-3307_227_SD_B14_2.dgn

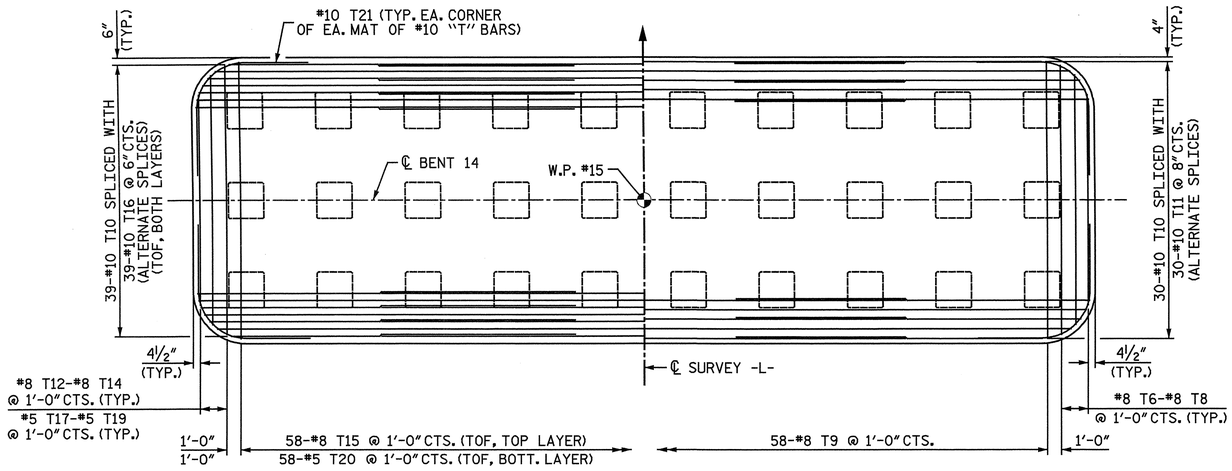

PARTIAL FOOTING PLAN
(TOP OF FOOTING REINFORCING SHOWN)

PARTIAL FOOTING PLAN
(BOTTOM OF FOOTING REINFORCING, ABOVE PILES, SHOWN)

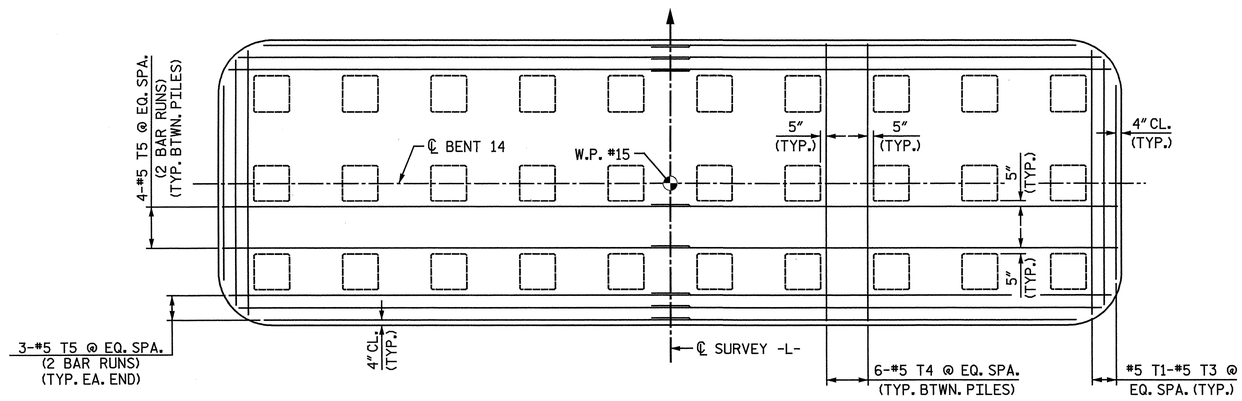

FOOTING PLAN
(BOTTOM OF FOOTING BETWEEN PILES)

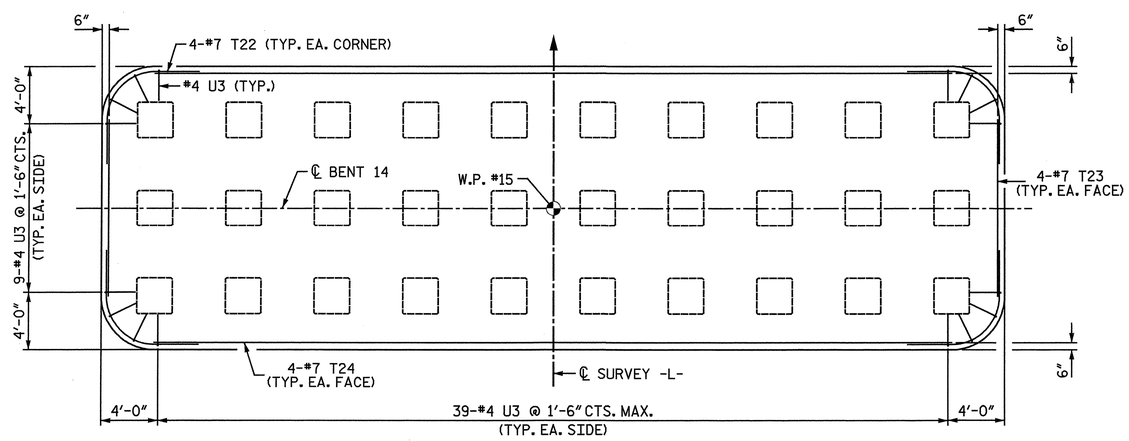

FOOTING PLAN
(TEMPERATURE REINFORCING)

NOTE:

TOF = TOP OF FOOTING

V2 BARS IN PILES OMITTED FOR CLARITY.

PROJECT NO. R-3307

CARTERET COUNTY

STATION: 46+21.50 -L-

SHEET 3 OF 4

STATE OF NORTH CAROLINA
DEPARTMENT OF TRANSPORTATION
RALEIGH

SUBSTRUCTURE

BENT 14
PLAN OF FOOTING

NORTH CAROLINA PROFESSIONAL SEAL 25911 ENGINEER DWIGHT G. HATHAWAY 4-3-2012

NORTH CAROLINA PROFESSIONAL SEAL 033752 ENGINEER SETH A. DENNETT 4/20/12

THE LPA GROUP of North Carolina TRANSPORTATION CONSULTANTS

THE LPA GROUP of North Carolina
8000 Regency Parkway, Suite 600
Cary, North Carolina 27518
NC License No.: F-1084

REVISIONS						SHEET NO.
NO.	BY:	DATE:	NO.	BY:	DATE:	S-227
1			3			TOTAL SHEETS
2			4			333

DRAWN BY : M. D. MAYHEW DATE : 10-25-11
CHECKED BY : A. L. PHILLIPS DATE : 10-31-11

DWG. 228 OF 282

4/2/2012 12:44:1 PM
User: jaustin
Filename: Y:\Projects\NCDOT\R-3307\Dwgs\Final\R-3307_228_SD_B14_3.dgn

BAR TYPES

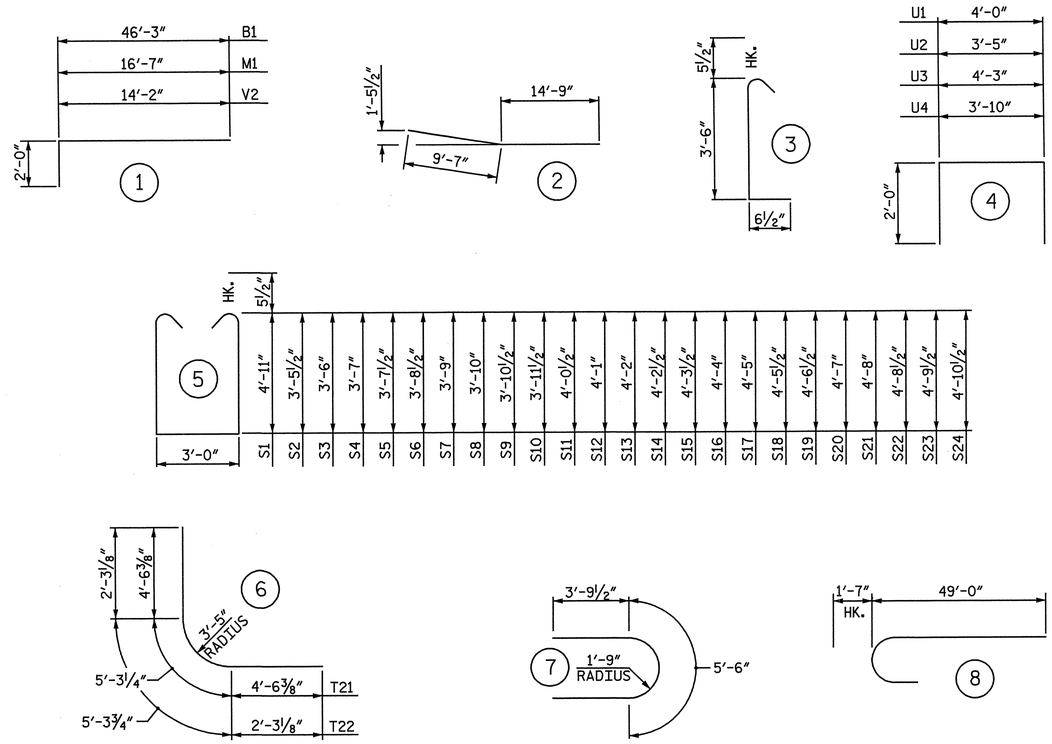

ALL BAR DIMENSIONS ARE OUT TO OUT.

BILL OF MATERIAL
BENT 14

BAR	NO.	SIZE	TYPE	LENGTH	WEIGHT
B1	20	11	1	48' - 3"	5,127
B2	32	11	STR	46' - 3"	7,863
B3	12	6	STR	40' - 2"	724
B4	6	11	STR	60' - 0"	1,913
B5	12	11	STR	56' - 11"	3,629
B6	24	11	2	24' - 4"	3,103
B7	53	4	STR	4' - 2"	148
M1	64	11	1	18' - 7"	6,319
S1	132	5	5	13' - 9"	1,893
S2	4	5	5	10' - 10"	45
S3	4	5	5	10' - 11"	46
S4	4	5	5	11' - 1"	46
S5	4	5	5	11' - 2"	47
S6	4	5	5	11' - 4"	47
S7	4	5	5	11' - 5"	48
S8	4	5	5	11' - 7"	48
S9	4	5	5	11' - 8"	49
S10	4	5	5	11' - 10"	49
S11	4	5	5	12' - 0"	50
S12	4	5	5	12' - 1"	50
S13	4	5	5	12' - 3"	51
S14	4	5	5	12' - 4"	51
S15	4	5	5	12' - 6"	52
S16	4	5	5	12' - 7"	52
S17	4	5	5	12' - 9"	53
S18	4	5	5	12' - 10"	54
S19	4	5	5	13' - 0"	54
S20	4	5	5	13' - 1"	55
S21	4	5	5	13' - 3"	55
S22	4	5	5	13' - 4"	56
S23	4	5	5	13' - 6"	56
S24	4	5	5	13' - 8"	57
S25	188	5	7	13' - 1"	2,565
S26	376	5	3	4' - 6"	1,765
T1	2	5	STR	18' - 5"	38
T2	2	5	STR	17' - 0"	35
T3	2	5	STR	12' - 6"	26
T4	54	5	STR	19' - 4"	1,089
T5	28	5	STR	32' - 10"	959
T6	2	8	STR	18' - 9"	100
T7	2	8	STR	17' - 4"	93
T8	2	8	STR	13' - 6"	72
T9	58	8	STR	19' - 4"	2,994
T10	108	10	STR	50' - 0"	23,236
T11	30	10	STR	25' - 0"	3,227
T12	2	8	STR	13' - 6"	72
T13	2	8	STR	17' - 4"	93
T14	2	8	STR	18' - 9"	100
T15	58	8	STR	19' - 4"	2,994
T16	78	10	STR	26' - 9"	8,978
T17	2	5	STR	13' - 6"	28
T18	2	5	STR	17' - 4"	36
T19	2	5	STR	18' - 9"	39
T20	58	5	STR	19' - 4"	1,170
T21	8	10	6	14' - 4"	493
T22	16	7	6	9' - 10"	322
T23	8	7	STR	12' - 6"	204
T24	8	7	STR	56' - 3"	920
U1	72	4	4	8' - 0"	385
U2	6	4	4	7' - 5"	30
U3	104	4	4	8' - 3"	573
U4	6	4	4	7' - 10"	31
V1	64	11	8	50' - 7"	17,200
V2	480	11	1	16' - 2"	41,229

EPOXY COATED
REINFORCING STEEL LBS. 142,986

CLASS "AA" CONCRETE BREAKDOWN

POUR #1 - FOOTINGS C.Y. 325.4

POUR #2 - COLUMNS C.Y. 111.7

POUR #3 - CAP C.Y. 68.3

TOTAL CLASS "AA" CONCRETE C.Y. 505.3

30" PRESTRESSED CONCRETE PILES
NO. 30 LIN FT. 2,346

PILE REDRIVES NO. 7

PROJECT NO. R-3307
CARTERET COUNTY
STATION: 46+21.50 -L-

SHEET 4 OF 4

STATE OF NORTH CAROLINA
DEPARTMENT OF TRANSPORTATION
RALEIGH

SUBSTRUCTURE

BENT 14
BILL OF MATERIAL

NORTH CAROLINA PROFESSIONAL SEAL 25911 ENGINEER DAVID G. HATHAWAY
NORTH CAROLINA PROFESSIONAL SEAL 033752 ENGINEER SETH A. DENNEY

THE LPA GROUP of North Carolina TRANSPORTATION CONSULTANTS

THE LPA GROUP of North Carolina
8000 Regency Parkway, Suite 600
Cary, North Carolina 27518
NC License No.: F-1084

REVISIONS								SHEET NO.
NO.	BY:	DATE:	NO.	BY:	DATE:			S-228
1			3					TOTAL SHEETS
2			4					333

DRAWN BY : M. D. MAYHEW DATE : 12-1-11
CHECKED BY : A. L. PHILLIPS DATE : 12-13-11

DWG. 229 OF 282

4/20/2012
8:44:49 AM
User: jaustin
Filename: Y:\Projects\NCDOT\R-3307\Dwgs\Final\R-3307_229_SD_B14_4.dgn

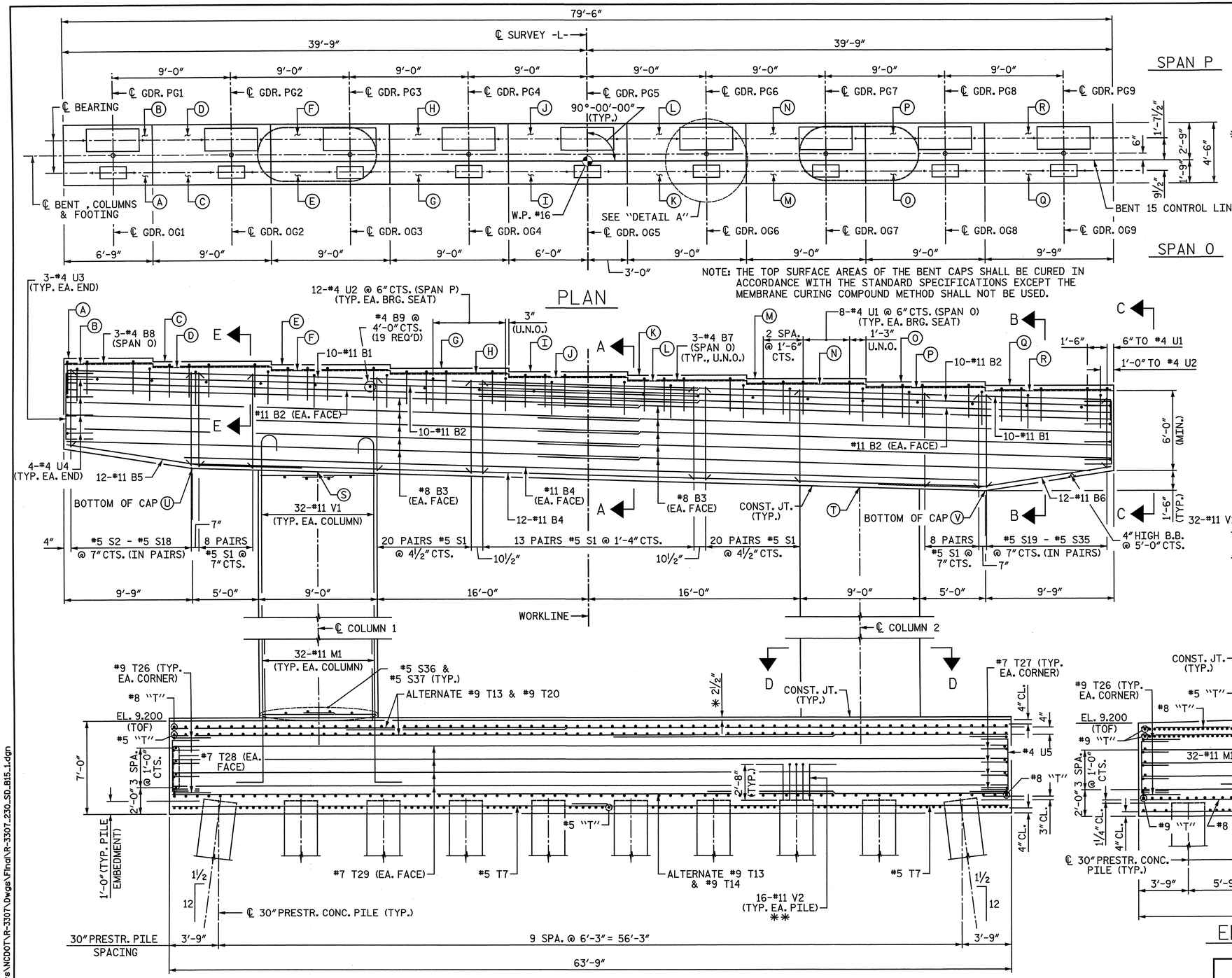

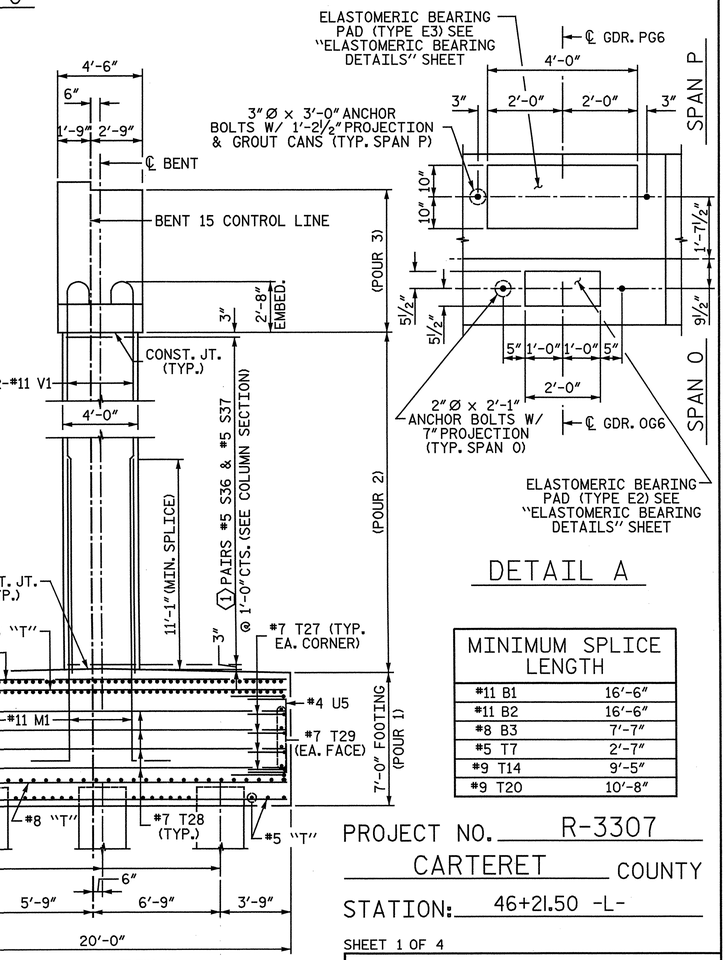

NOTES:

STIRRUPS IN CAP MAY BE SHIFTED AS NECESSARY TO CLEAR ANCHOR BOLTS.

ALTERNATELY INVERT STIRRUP PAIRS AS NOTED.

FOR FOUNDATION NOTES, SEE "GENERAL DRAWING FOUNDATION LAYOUT" SHEET 4 OF 4.

* THE FOOTING HAS A DROP OF 2½" FROM THE CENTER OF THE FOOTING TO THE EDGE OF FOOTING TO ACCOMODATE DRAINAGE.

** V2 BARS FOR ALL OTHER PILES WERE OMITTED FOR CLARITY.

FOR FOOTING REINFORCING DETAILS, SEE SHEET 3 OF 4.

FOR SECTION A-A, SECTION B-B, VIEW C-C, SECTION D-D, AND SECTION E-E, SEE SHEET 2 OF 4.

TOF = TOP OF FOOTING

THE CONTRACTOR'S ATTENTION IS CALLED TO THE FACT THAT THE CENTERLINE JOINT IN THE DECK SLAB (BENT CONTROL LINE) IS OFFSET FROM THE CENTERLINE BENT.

MINIMUM SPLICE LENGTH	
#11 B1	16'-6"
#11 B2	16'-6"
#8 B3	7'-7"
#5 T7	2'-7"
#9 T14	9'-5"
#9 T20	10'-8"

PROJECT NO. R-3307

CARTERET COUNTY

STATION: 46+21.50 -L-

SHEET 1 OF 4

STATE OF NORTH CAROLINA
DEPARTMENT OF TRANSPORTATION
RALEIGH

SUBSTRUCTURE

BENT 15
PLAN AND ELEVATION

ELEVATION TABLE

BENT	A	B	C	D	E	F	G	H	I	J	K	L	M	N	O	P	Q	R	S	T	U	V
15	66.578	66.107	66.308	65.837	66.038	65.567	65.768	65.297	65.498	65.027	65.228	64.757	64.958	64.487	64.688	64.217	64.418	63.947	58.000	56.770	58.285	56.485

COLUMN	1
1	50
2	49

NORTH CAROLINA PROFESSIONAL SEAL 25911 ENGINEER DWIGHT G. HATHAWAY 4-13-2012

NORTH CAROLINA PROFESSIONAL SEAL 033752 ENGINEER SETH A. DEHNERT

THE LPA GROUP of North Carolina TRANSPORTATION CONSULTANTS

THE LPA GROUP of North Carolina
8000 Regency Parkway, Suite 600
Cary, North Carolina 27518
NC License No.: F-1084

REVISIONS						SHEET NO.
NO.	BY:	DATE:	NO.	BY:	DATE:	S-229
1			3			TOTAL SHEETS
2			4			333

DRAWN BY : M. D. MAYHEW DATE : 10-26-11
CHECKED BY : A. L. PHILLIPS DATE : 11-4-11

DWG. 230 OF 282

4/20/2012
8:44:51 AM
User: jaustin
Filename: Y:\Projects\NCDOT\R-3307\Dwgs\Final\R-3307_230_SD_B15_1.dgn

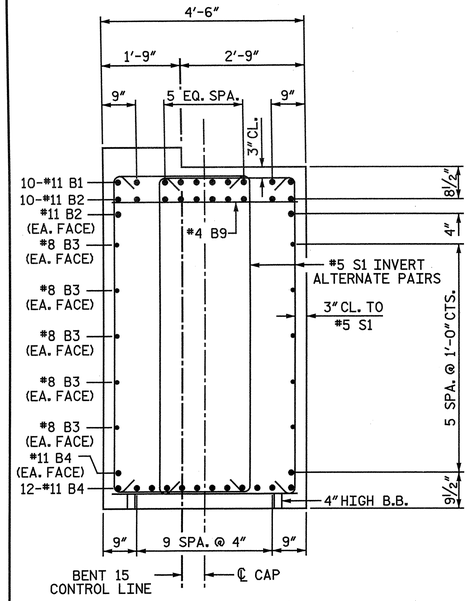

SECTION A-A

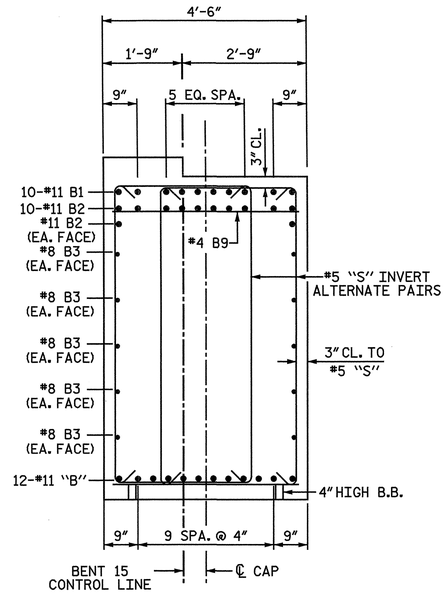

SECTION B-B

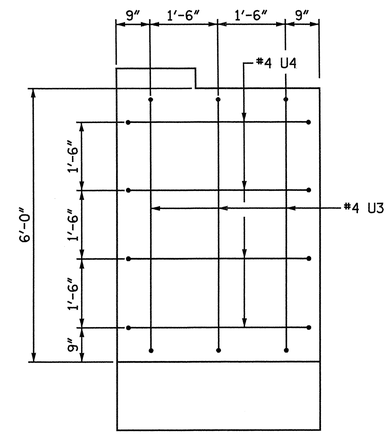

VIEW C-C

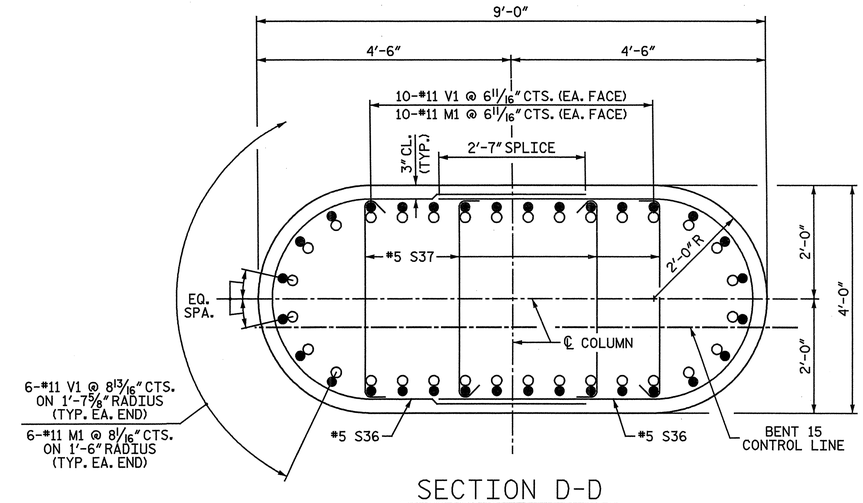

SECTION D-D

NOTE: WHEN PLACING CROSS-TIES, ALTERNATE THE POSITION OF THE 180-DEGREE HOOKS HORIZONTALLY AND VERTICALLY.

○ #11 M1
● #11 V1

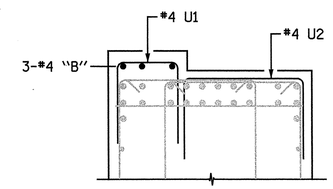

SECTION E-E

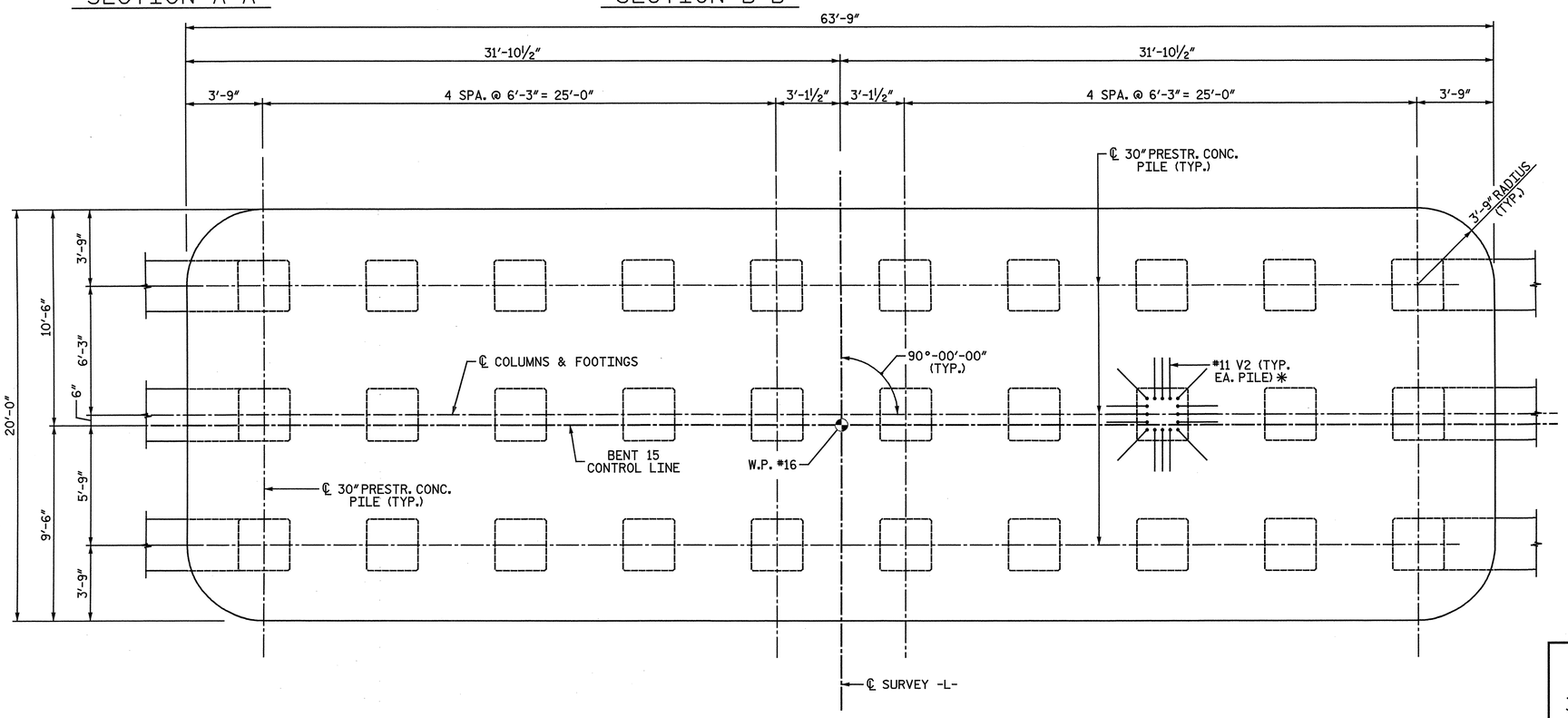

FOOTING PLAN

✱ V2 BARS FOR ALL OTHER PILES OMITTED FOR CLARITY

PROJECT NO. R-3307

CARTERET COUNTY

STATION: 46+21.50 -L-

SHEET 2 OF 4

STATE OF NORTH CAROLINA
DEPARTMENT OF TRANSPORTATION
RALEIGH

SUBSTRUCTURE

BENT 15 FOOTING AND SECTIONS

NORTH CAROLINA PROFESSIONAL SEAL 25911 ENGINEER DRAIN C. HATHAWAY 4-3-2012

NORTH CAROLINA PROFESSIONAL SEAL 033752 ENGINEER JEFF A. DENNEY

THE LPA GROUP of North Carolina TRANSPORTATION CONSULTANTS

THE LPA GROUP of North Carolina
8000 Regency Parkway, Suite 600
Cary, North Carolina 27518
NC License No.: F-1084

REVISIONS						SHEET NO.
NO.	BY:	DATE:	NO.	BY:	DATE:	S-230
1			3			TOTAL SHEETS
2			4			333

DRAWN BY : M. D. MAYHEW DATE : 10-26-11
CHECKED BY : A. L. PHILLIPS DATE : 11-4-11

DWG. 231 OF 282

4/20/2012
8:44:55 AM
User: jaustin
Filename: Y:\Projects\NCDOT\R-3307\Dwgs\Final\R-3307_231_SD_B15_2.dgn

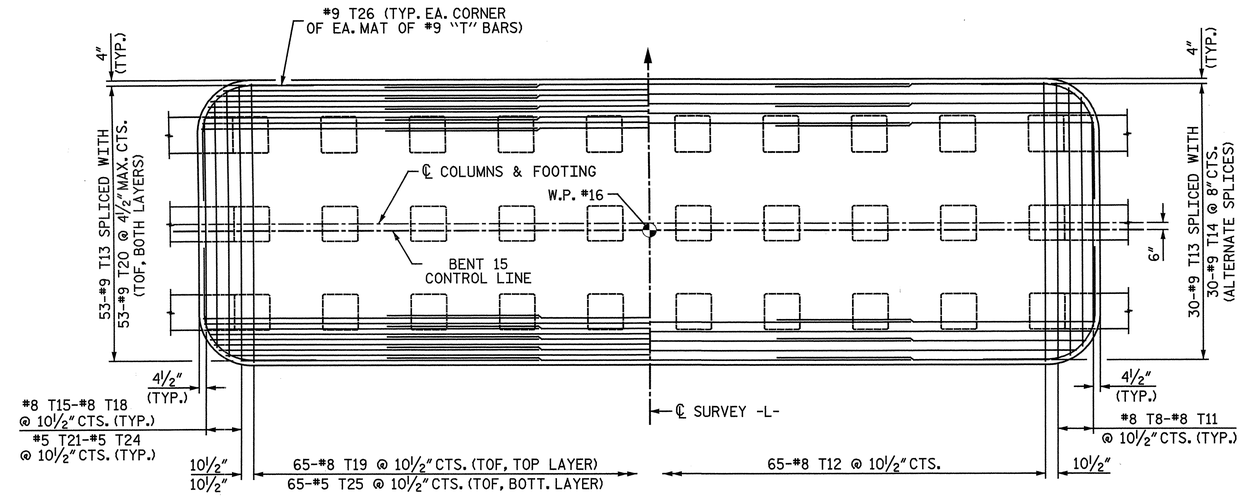

PARTIAL FOOTING PLAN
(TOP OF FOOTING REINFORCING SHOWN)

PARTIAL FOOTING PLAN
(BOTTOM OF FOOTING REINFORCING, ABOVE PILES, SHOWN)

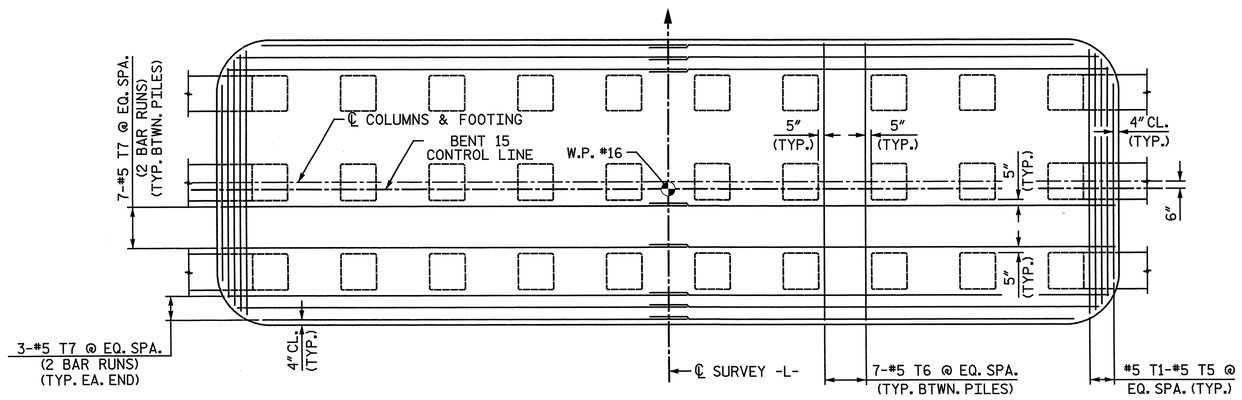

FOOTING PLAN
(BOTTOM OF FOOTING BETWEEN PILES)

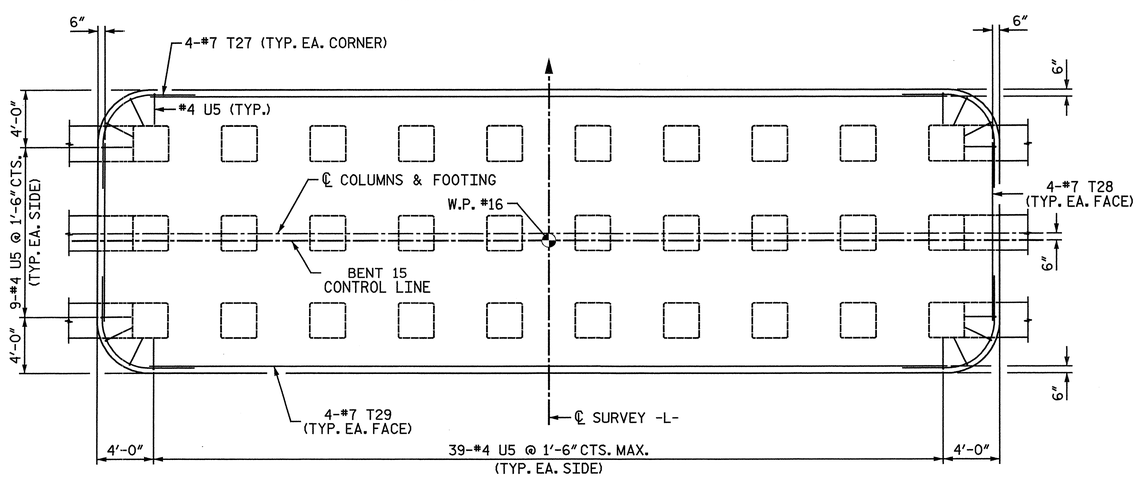

FOOTING PLAN
(TEMPERATURE REINFORCING)

NOTE:

TOF = TOP OF FOOTING

V2 BARS IN PILES OMITTED FOR CLARITY.

PROJECT NO. R-3307

CARTERET COUNTY

STATION: 46+21.50 -L-

SHEET 3 OF 4

STATE OF NORTH CAROLINA
DEPARTMENT OF TRANSPORTATION
RALEIGH

SUBSTRUCTURE

BENT 15
PLAN OF FOOTING

NORTH CAROLINA PROFESSIONAL SEAL 25911 ENGINEER DWAIN G. HATHAWAY 4-3-2012

NORTH CAROLINA PROFESSIONAL SEAL 033752 ENGINEER SETH A. DENNEY 04/03/12

THE LPA GROUP of North Carolina TRANSPORTATION CONSULTANTS

THE LPA GROUP of North Carolina
8000 Regency Parkway, Suite 600
Cary, North Carolina 27518
NC License No.: F-1084

REVISIONS						SHEET NO.
NO.	BY:	DATE:	NO.	BY:	DATE:	S-231
1			3			TOTAL SHEETS
2			4			333

DRAWN BY : M. D. MAYHEW DATE : 10-26-11
CHECKED BY : A. L. PHILLIPS DATE : 11-4-11

DWG. 232 OF 282

4/2/2012
12:44: PM
User: jaustin
Filename: Y:\Projects\NCDOT\R-3307\Dwgs\Final\R-3307_232_SD_B15_3.dgn

BAR TYPES

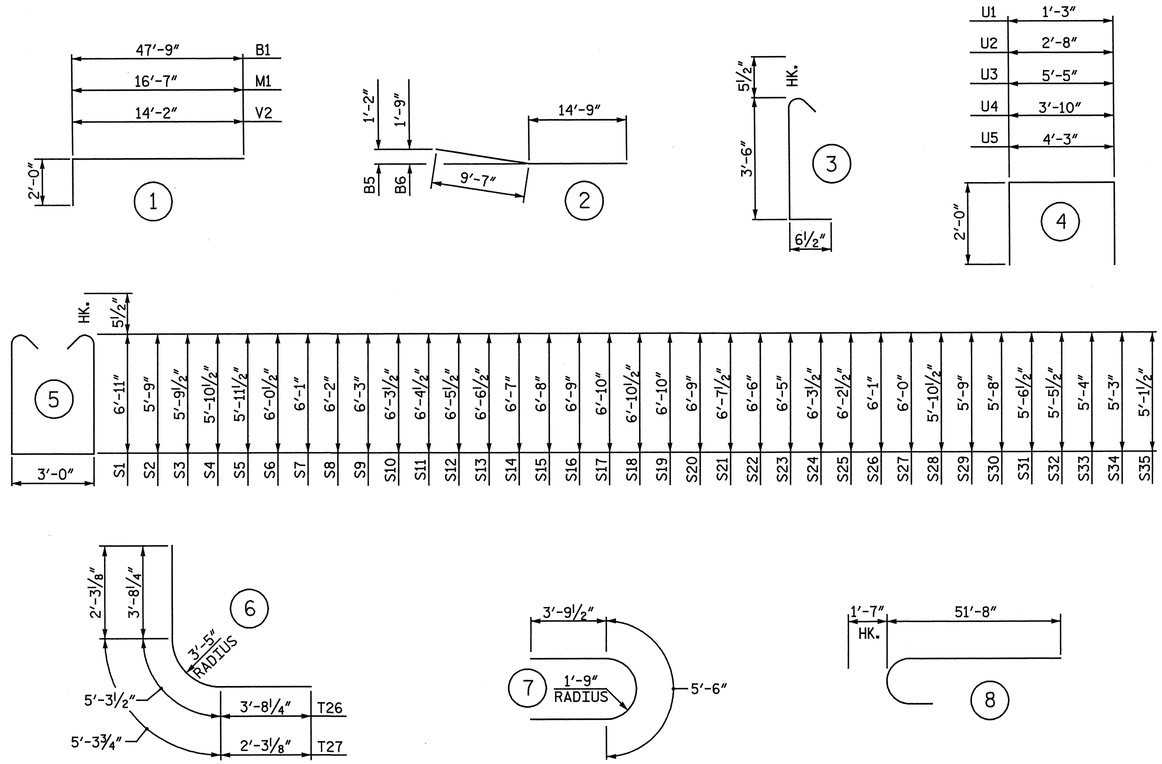

ALL BAR DIMENSIONS ARE OUT TO OUT.

BILL OF MATERIAL
BENT 15

BAR	NO.	SIZE	TYPE	LENGTH	WEIGHT
B1	20	11	1	49′ - 9″	5,286
B2	24	11	STR	47′ - 9″	6,089
B3	20	8	STR	43′ - 4″	2,314
B4	14	11	STR	60′ - 0″	4,463
B5	12	11	2	24′ - 4″	1,551
B6	12	11	2	24′ - 4″	1,551
B7	24	4	STR	8′ - 9″	140
B8	3	4	STR	6′ - 3″	13
B9	19	4	STR	4′ - 2″	53
M1	64	11	1	18′ - 7″	6,319
S1	138	5	5	17′ - 9″	2,555
S2	2	5	5	15′ - 5″	32
S3	2	5	5	15′ - 6″	32
S4	2	5	5	15′ - 8″	33
S5	2	5	5	15′ - 10″	33
S6	2	5	5	16′ - 0″	33
S7	2	5	5	16′ - 1″	34
S8	2	5	5	16′ - 3″	34
S9	2	5	5	16′ - 5″	34
S10	2	5	5	16′ - 6″	34
S11	2	5	5	16′ - 8″	35
S12	2	5	5	16′ - 10″	35
S13	2	5	5	17′ - 0″	35
S14	2	5	5	17′ - 1″	36
S15	2	5	5	17′ - 3″	36
S16	2	5	5	17′ - 5″	36
S17	2	5	5	17′ - 7″	37
S18	2	5	5	17′ - 8″	37
S19	2	5	5	17′ - 7″	37
S20	2	5	5	17′ - 5″	36
S21	2	5	5	17′ - 2″	36
S22	2	5	5	16′ - 11″	35
S23	2	5	5	16′ - 9″	35
S24	2	5	5	16′ - 6″	34
S25	2	5	5	16′ - 4″	34
S26	2	5	5	16′ - 1″	34
S27	2	5	5	15′ - 11″	33
S28	2	5	5	15′ - 8″	33
S29	2	5	5	15′ - 5″	32
S30	2	5	5	15′ - 3″	32
S31	2	5	5	15′ - 0″	31
S32	2	5	5	14′ - 10″	31
S33	2	5	5	14′ - 7″	30
S34	2	5	5	14′ - 5″	30
S35	2	5	5	14′ - 2″	30
S36	198	5	7	13′ - 1″	2,702
S37	396	5	3	4′ - 6″	1,859
T1	2	5	STR	18′ - 5″	38
T2	2	5	STR	17′ - 10″	37
T3	2	5	STR	17′ - 0″	35
T4	2	5	STR	15′ - 10″	33
T5	2	5	STR	12′ - 6″	26
T6	63	5	STR	19′ - 4″	1,270
T7	40	5	STR	32′ - 10″	1,370
T8	2	8	STR	19′ - 2″	102
T9	2	8	STR	18′ - 6″	99
T10	2	8	STR	17′ - 1″	91
T11	2	8	STR	13′ - 6″	72
T12	65	8	STR	19′ - 4″	3,355
T13	136	9	STR	50′ - 0″	23,120
T14	30	9	STR	22′ - 6″	2,295
T15	2	8	STR	13′ - 6″	72
T16	2	8	STR	17′ - 1″	91
T17	2	8	STR	18′ - 6″	99
T18	2	8	STR	19′ - 2″	102
T19	65	8	STR	19′ - 4″	3,355
T20	106	9	STR	23′ - 9″	8,560
T21	2	5	STR	13′ - 6″	28
T22	2	5	STR	17′ - 1″	36
T23	2	5	STR	18′ - 6″	39
T24	2	5	STR	19′ - 2″	40
T25	65	5	STR	19′ - 4″	1,311
T26	8	9	6	12′ - 8″	345
T27	16	7	6	9′ - 10″	322
T28	8	7	STR	12′ - 6″	204
T29	8	7	STR	56′ - 3″	920
U1	90	4	4	5′ - 3″	316
U2	108	4	4	6′ - 8″	481
U3	6	4	4	9′ - 5″	38
U4	8	4	4	7′ - 10″	42
U5	104	4	4	8′ - 3″	573
V1	64	11	8	53′ - 3″	18,107
V2	480	11	1	16′ - 2″	41,229

EPOXY COATED
REINFORCING STEEL LBS. 144,297

CLASS "AA" CONCRETE BREAKDOWN

POUR #1 - FOOTING	C.Y.	325.3
POUR #2 - COLUMNS	C.Y.	116.2
POUR #3 - CAP	C.Y.	101.1
TOTAL CLASS "AA" CONCRETE	C.Y.	542.6

30″ PRESTRESSED CONCRETE PILES
NO. 30 LIN FT. 2,500

PILE REDRIVES NO. 7

PDA TESTING EA. 1

PROJECT NO. R-3307
CARTERET COUNTY
STATION: 46+21.50 -L-

SHEET 4 OF 4

STATE OF NORTH CAROLINA
DEPARTMENT OF TRANSPORTATION
RALEIGH

SUBSTRUCTURE

BENT 15
BILL OF MATERIAL

NORTH CAROLINA PROFESSIONAL SEAL 25911 ENGINEER DWIGHT G. HATHAWAY 4-3-2012

NORTH CAROLINA PROFESSIONAL SEAL 033752 ENGINEER SETH A. DEHNERT

THE LPA GROUP of North Carolina TRANSPORTATION CONSULTANTS

THE LPA GROUP of North Carolina
8000 Regency Parkway, Suite 600
Cary, North Carolina 27518
NC License No.: F-1084

REVISIONS						SHEET NO.
NO.	BY:	DATE:	NO.	BY:	DATE:	S-232
1			3			TOTAL SHEETS
2			4			333

DRAWN BY : M. D. MAYHEW DATE : 11-22-11
CHECKED BY : A. L. PHILLIPS DATE : 12-14-11

DWG. 233 OF 282

4/20/2012
8:44:57 AM
User: jaustin
Filename: Y:\Projects\NCDOT\R-3307\Dwgs\Final\R-3307_233_SD_B15_4.dgn

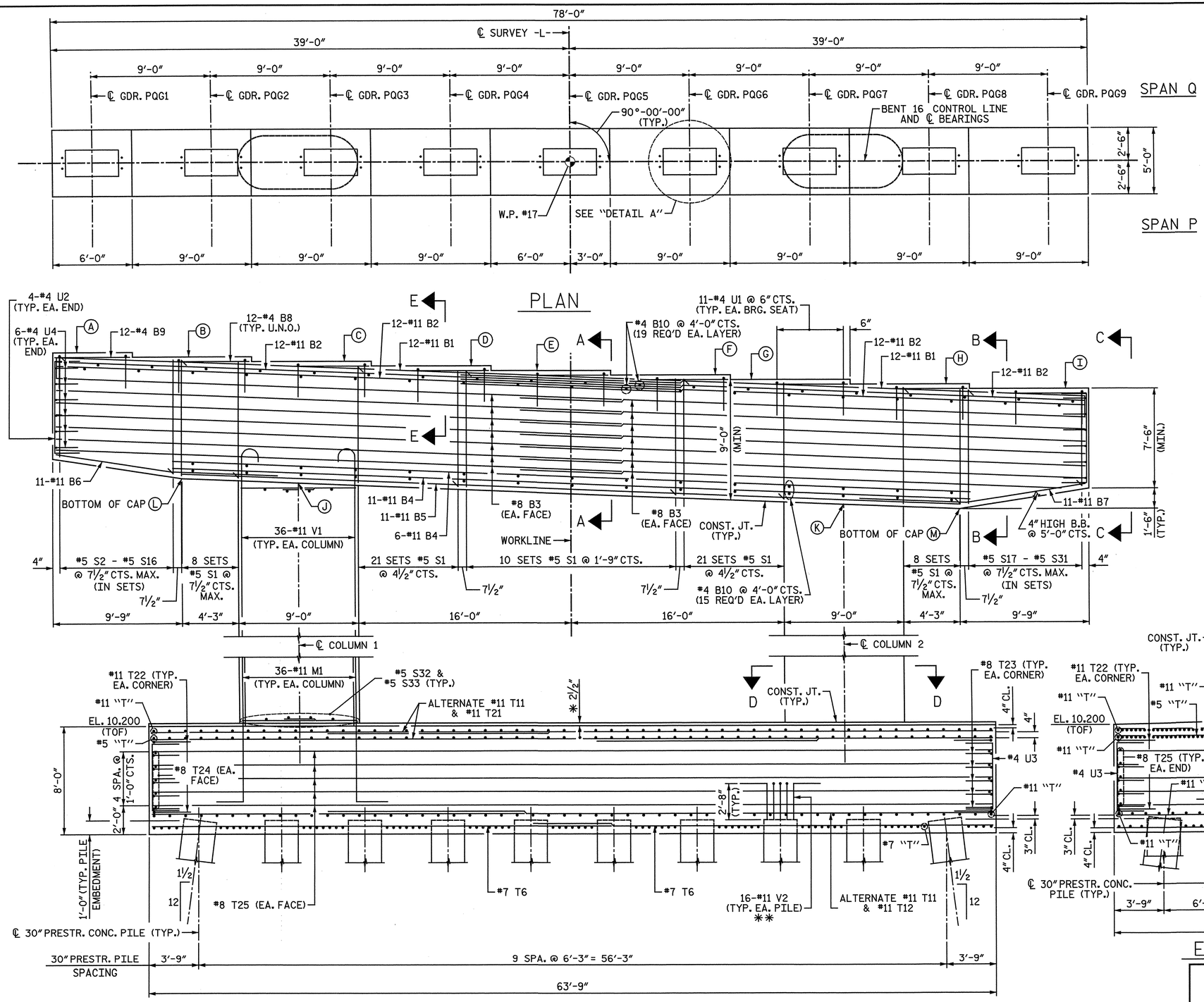

NOTES:

STIRRUPS IN CAP MAY BE SHIFTED AS NECESSARY TO CLEAR ANCHOR BOLTS.

STIRRUP SETS INCLUDE 3 "S" BARS AS SHOWN (INVERT ALTERNATE SETS).

FOR FOUNDATION NOTES, SEE "GENERAL DRAWING FOUNDATION LAYOUT" SHEET 4 OF 4.

* THE FOOTING HAS A DROP OF 2½" FROM THE CENTER OF THE FOOTING TO THE EDGE OF FOOTING TO ACCOMODATE DRAINAGE.

** V2 BARS FOR ALL OTHER PILES WERE OMITTED FOR CLARITY.

FOR FOOTING REINFORCING DETAILS, SEE SHEET 3 OF 4.

FOR SECTION A-A, SECTION B-B, VIEW C-C, AND SECTION D-D, AND SECTION E-E, SEE SHEET 2 OF 4.

TIMBER FENDER SYSTEM REQUIRED AT THIS BENT BUT NOT SHOWN. SEE "TIMBER FENDER SYSTEM" SHEET FOR DETAILS.

TOF = TOP OF FOOTING

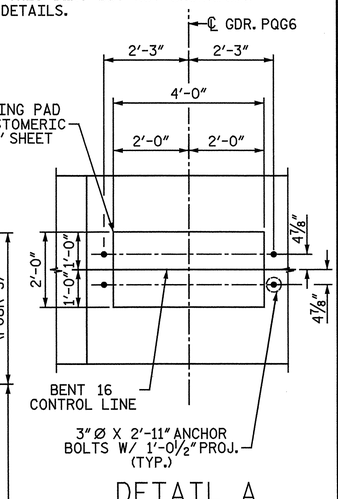

DETAIL A

MINIMUM SPLICE LENGTH	
#11 B1	16'-6"
#11 B2	16'-6"
#8 B3	7'-7"
#7 T6	5'-10"
#11 T12	14'-9"
#11 T21	16'-6"

COLUMN	①
1	46
2	44

ELEVATION TABLE													
BENT	A	B	C	D	E	F	G	H	I	J	K	L	M
16	64.498	64.138	63.778	63.418	63.058	62.698	62.338	61.978	61.619	54.609	52.969	54.959	52.619

PROJECT NO. R-3307

CARTERET COUNTY

STATION: 46+21.50 -L-

SHEET 1 OF 4

STATE OF NORTH CAROLINA
DEPARTMENT OF TRANSPORTATION
RALEIGH

SUBSTRUCTURE

BENT 16
PLAN AND ELEVATION

NORTH CAROLINA PROFESSIONAL SEAL 25911 ENGINEER DWAIN G. HATHAWAY 4-12-12

NORTH CAROLINA PROFESSIONAL SEAL 033752 ENGINEER SETH A. DENNEY

THE LPA GROUP of North Carolina TRANSPORTATION CONSULTANTS

THE LPA GROUP of North Carolina
8000 Regency Parkway, Suite 600
Cary, North Carolina 27518
NC License No.: F-1084

REVISIONS								SHEET NO.
NO.	BY:	DATE:	NO.	BY:	DATE:			S-233
1			3					TOTAL SHEETS
2			4					333

DRAWN BY : M. D. MAYHEW DATE : 10-28-11
CHECKED BY : A. L. PHILLIPS DATE : 11-1-11

DWG. 234 OF 282

4/20/2012
8:45:00 AM
User: jaustin
Filename: Y:\Projects\NCDOT\R-3307\Dwgs\Final\R-3307_234_SD_B16_1.dgn

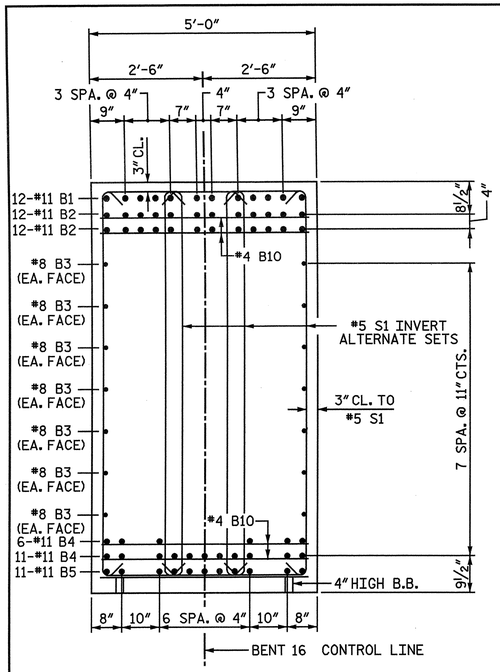

SECTION A-A

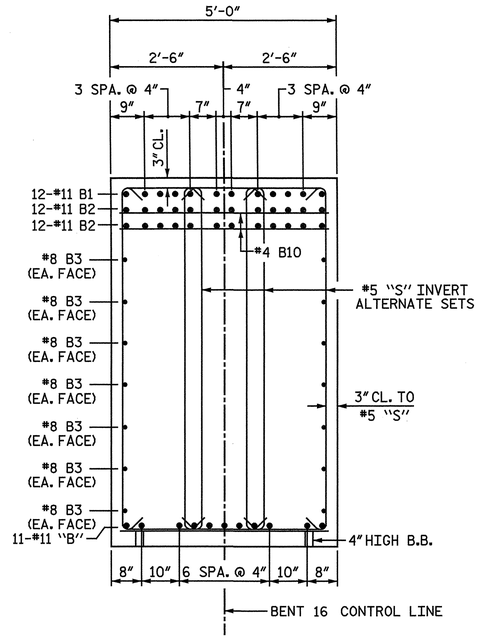

SECTION B-B

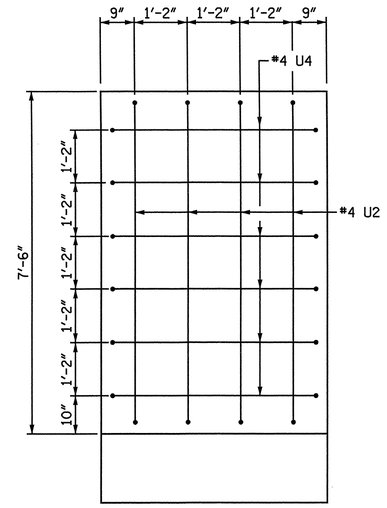

VIEW C-C

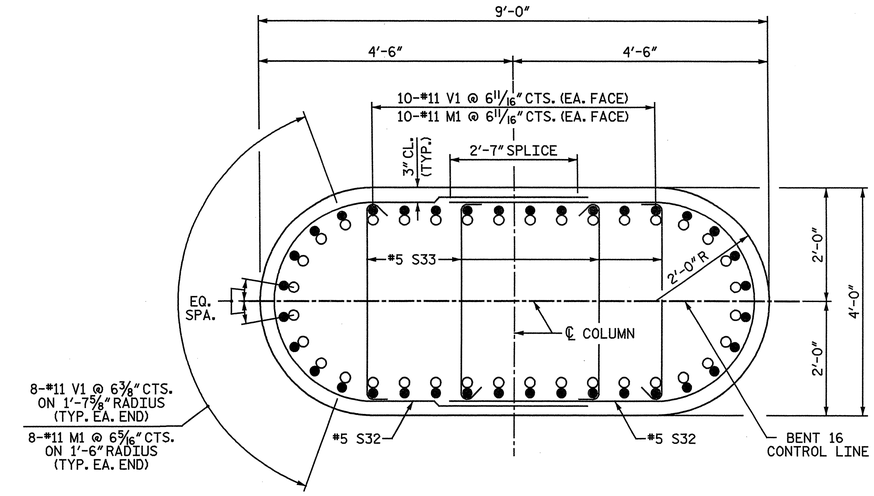

SECTION D-D

NOTE: WHEN PLACING CROSS-TIES, ALTERNATE THE POSITION OF THE 180-DEGREE HOOKS HORIZONTALLY AND VERTICALLY.

○ #11 M1
● #11 V1

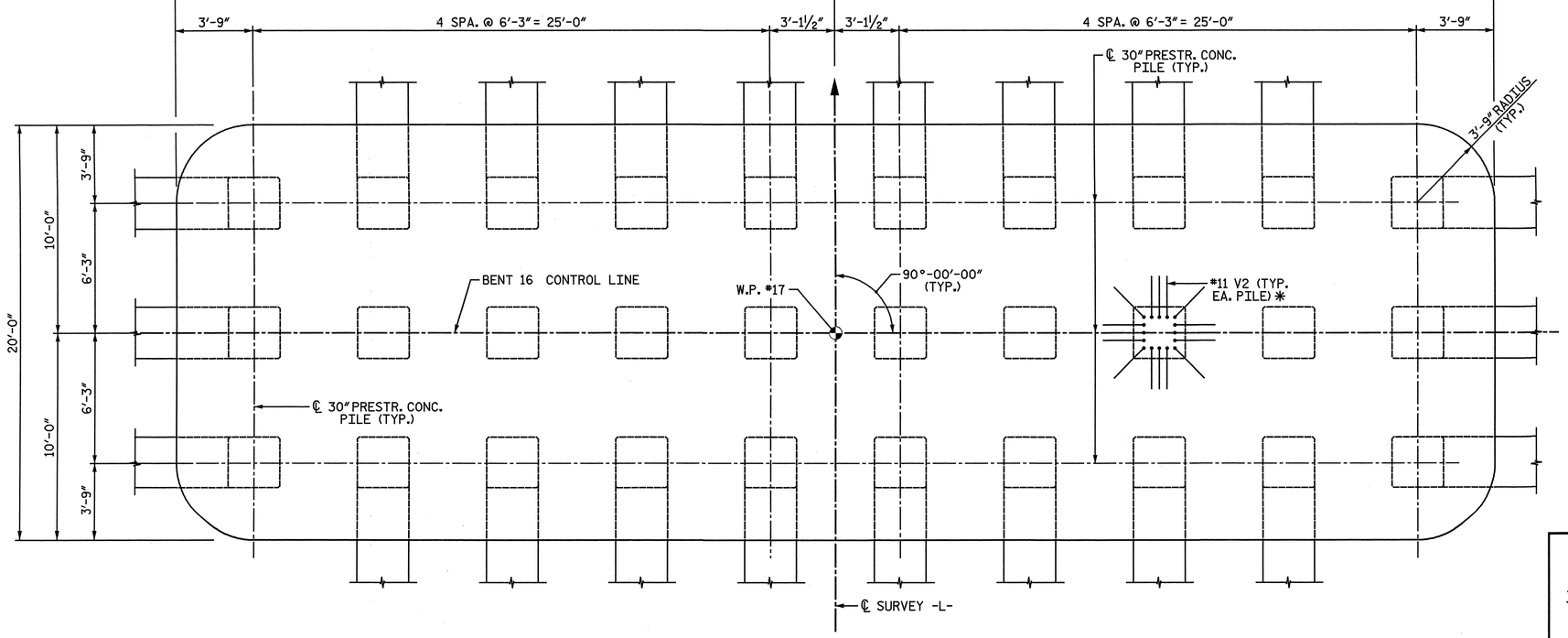

FOOTING PLAN

✱ V2 BARS FOR ALL OTHER PILES OMITTED FOR CLARITY

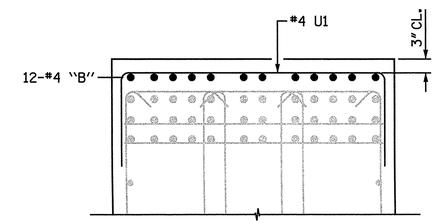

SECTION E-E

PROJECT NO. R-3307

CARTERET COUNTY

STATION: 46+21.50 -L-

SHEET 2 OF 4

STATE OF NORTH CAROLINA
DEPARTMENT OF TRANSPORTATION
RALEIGH

SUBSTRUCTURE

BENT 16
FOOTING AND SECTIONS

NORTH CAROLINA PROFESSIONAL SEAL 25911 ENGINEER DWAIN G. HATHAWAY 4-22-12

NORTH CAROLINA PROFESSIONAL SEAL 033752 ENGINEER SETH A. DENNEY 04/05/12

THE LPA GROUP of North Carolina
TRANSPORTATION CONSULTANTS

THE LPA GROUP of North Carolina
8000 Regency Parkway, Suite 600
Cary, North Carolina 27518
NC License No.: F-1084

REVISIONS						SHEET NO.
NO.	BY:	DATE:	NO.	BY:	DATE:	S-23A
1			3			TOTAL SHEETS
2			4			333

DRAWN BY : M. D. MAYHEW DATE : 10-28-11
CHECKED BY : A. L. PHILLIPS DATE : 11-1-11

DWG. 235 OF 282

4/20/2012
8:45:05 AM
User: jaustin
Filename: Y:\Projects\NCDOT\R-3307\Dwgs\Final\R-3307_235_SD_B16_2.dgn

NOTES:

TOF = TOP OF FOOTING

V2 BARS IN PILES OMITTED FOR CLARITY.

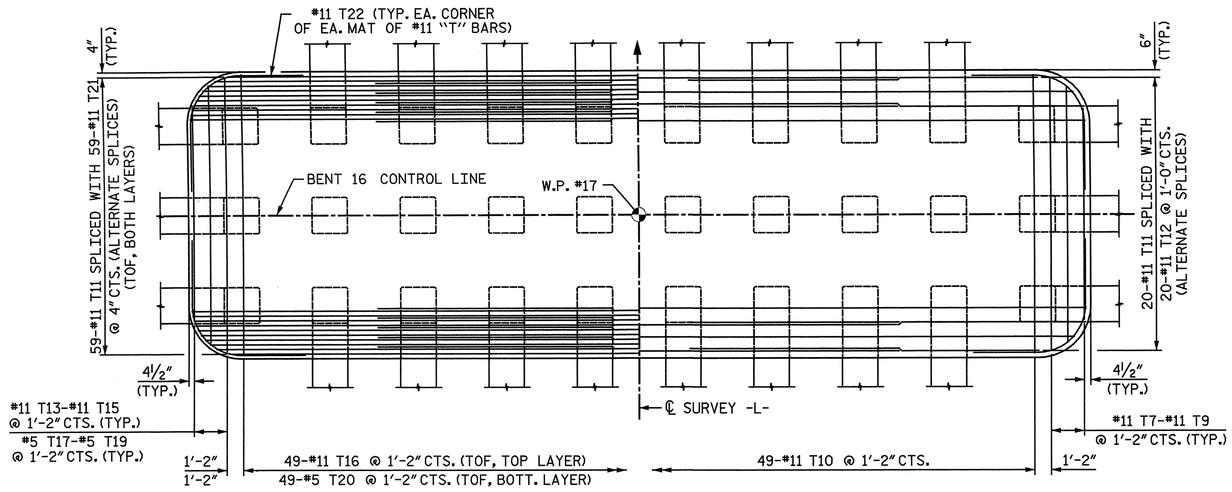

PARTIAL FOOTING PLAN
(TOP OF FOOTING REINFORCING SHOWN)

PARTIAL FOOTING PLAN
(BOTTOM OF FOOTING REINFORCING, ABOVE PILES, SHOWN)

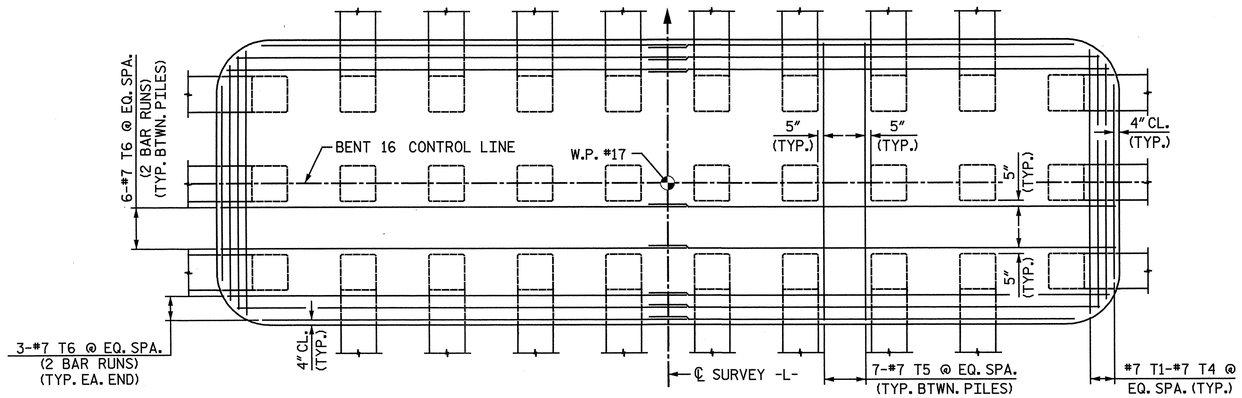

FOOTING PLAN
(BOTTOM OF FOOTING BETWEEN PILES)

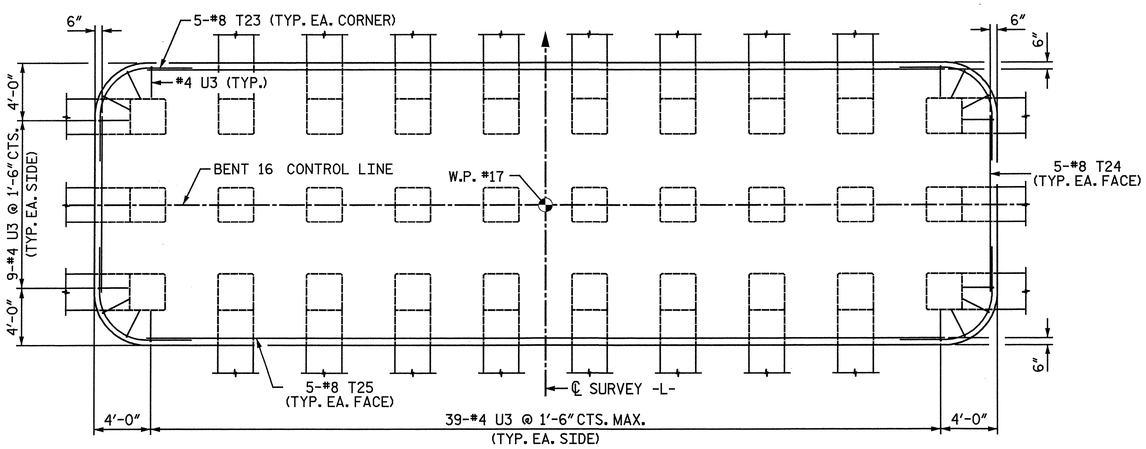

FOOTING PLAN
(TEMPERATURE REINFORCING)

PROJECT NO. R-3307

CARTERET COUNTY

STATION: 46+21.50 -L-

SHEET 3 OF 4

STATE OF NORTH CAROLINA
DEPARTMENT OF TRANSPORTATION
RALEIGH

SUBSTRUCTURE

BENT 16
PLAN OF FOOTING

NORTH CAROLINA PROFESSIONAL SEAL 25911 ENGINEER DWAIN G. HAYWARD 4-3-2012

NORTH CAROLINA PROFESSIONAL SEAL 033752 ENGINEER SETH A. DENNEY 04/04/12

THE LPA GROUP of North Carolina TRANSPORTATION CONSULTANTS

THE LPA GROUP of North Carolina
8000 Regency Parkway, Suite 600
Cary, North Carolina 27518
NC License No.: F-1084

REVISIONS						SHEET NO.
NO.	BY:	DATE:	NO.	BY:	DATE:	S-235
1			3			TOTAL SHEETS
2			4			333

DRAWN BY : M. D. MAYHEW DATE : 10-28-11
CHECKED BY : A. L. PHILLIPS DATE : 11-2-11

DWG. 236 OF 282

4/2/2012 12:44: PM
User: jaustin
Filename: Y:\Projects\NCDOT\R-3307\Dwgs\Final\R-3307_236_SD_B16_3.dgn

BAR TYPES

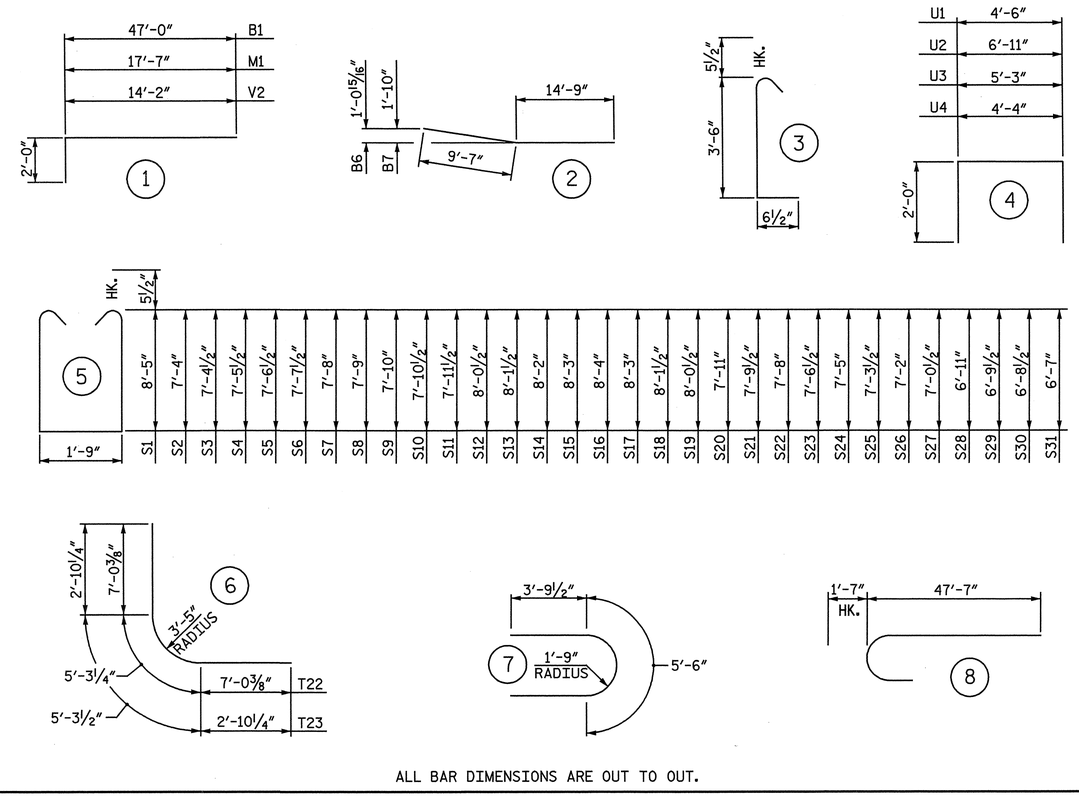

ALL BAR DIMENSIONS ARE OUT TO OUT.

BILL OF MATERIAL
BENT 16

BAR	NO.	SIZE	TYPE	LENGTH	WEIGHT
B1	24	11	1	49' - 0"	6,248
B2	48	11	STR	47' - 0"	11,986
B3	28	8	STR	42' - 7"	3,184
B4	17	11	STR	60' - 0"	5,419
B5	11	11	STR	58' - 5"	3,414
B6	11	11	2	24' - 4"	1,422
B7	11	11	2	24' - 4"	1,422
B8	96	4	STR	5' - 11"	379
B9	12	4	STR	5' - 6"	44
B10	68	4	STR	4' - 8"	212
M1	72	11	1	19' - 7"	7,491
S1	204	5	5	19' - 6"	4,149
S2	3	5	5	17' - 4"	54
S3	3	5	5	17' - 5"	54
S4	3	5	5	17' - 7"	55
S5	3	5	5	17' - 9"	56
S6	3	5	5	17' - 11"	56
S7	3	5	5	18' - 0"	56
S8	3	5	5	18' - 2"	57
S9	3	5	5	18' - 4"	57
S10	3	5	5	18' - 5"	58
S11	3	5	5	18' - 7"	58
S12	3	5	5	18' - 9"	59
S13	3	5	5	18' - 11"	59
S14	3	5	5	19' - 0"	59
S15	3	5	5	19' - 2"	60
S16	3	5	5	19' - 4"	60
S17	3	5	5	19' - 2"	60
S18	3	5	5	18' - 11"	59
S19	3	5	5	18' - 9"	59
S20	3	5	5	18' - 6"	58
S21	3	5	5	18' - 3"	57
S22	3	5	5	18' - 0"	56
S23	3	5	5	17' - 9"	56
S24	3	5	5	17' - 6"	55
S25	3	5	5	17' - 3"	54
S26	3	5	5	17' - 0"	53
S27	3	5	5	16' - 9"	52
S28	3	5	5	16' - 6"	52
S29	3	5	5	16' - 3"	51
S30	3	5	5	16' - 1"	50
S31	3	5	5	15' - 10"	50
S32	180	5	7	13' - 1"	2,456
S33	360	5	3	4' - 6"	1,690
T1	2	7	STR	18' - 5"	75
T2	2	7	STR	17' - 7"	72
T3	2	7	STR	16' - 3"	66
T4	2	7	STR	12' - 6"	51
T5	63	7	STR	19' - 4"	2,490
T6	36	7	STR	34' - 6"	2,539
T7	2	11	STR	19' - 0"	202
T8	2	11	STR	17' - 8"	188
T9	2	11	STR	13' - 6"	143
T10	49	11	STR	19' - 4"	5,033
T11	138	11	STR	50' - 0"	36,660
T12	20	11	STR	27' - 10"	2,958
T13	2	11	STR	13' - 6"	143
T14	2	11	STR	17' - 8"	188
T15	2	11	STR	19' - 0"	202
T16	49	11	STR	19' - 4"	5,033
T17	2	5	STR	13' - 6"	28
T18	2	5	STR	17' - 8"	37
T19	2	5	STR	19' - 0"	40
T20	49	5	STR	19' - 4"	988
T21	118	11	STR	29' - 7"	18,547
T22	8	11	6	19' - 4"	822
T23	20	8	6	11' - 0"	587
T24	10	8	STR	12' - 6"	334
T25	10	8	STR	56' - 3"	1,502
U1	99	4	4	8' - 6"	562
U2	8	4	4	10' - 11"	58
U3	104	4	4	9' - 3"	643
U4	12	4	4	8' - 4"	67
V1	72	11	8	49' - 2"	18,808
V2	480	11	1	16' - 2"	41,229

EPOXY COATED
REINFORCING STEEL LBS. 191,491

CLASS "AA" CONCRETE BREAKDOWN

POUR #1 - FOOTING	C.Y.	372.1
POUR #2 - COLUMNS	C.Y.	105.8
POUR #3 - CAP	C.Y.	130.4
TOTAL CLASS "AA" CONCRETE	C.Y.	608.3

30" PRESTRESSED CONCRETE PILES
NO. 30 LIN FT. 2,812

PILE REDRIVES NO. 7

PROJECT NO. R-3307
CARTERET COUNTY
STATION: 46+21.50 -L-

SHEET 4 OF 4

STATE OF NORTH CAROLINA
DEPARTMENT OF TRANSPORTATION
RALEIGH

SUBSTRUCTURE

BENT 16
BILL OF MATERIAL

NORTH CAROLINA PROFESSIONAL SEAL 25911 ENGINEER DWIGHT C. HATHWAY 4-3-2012

NORTH CAROLINA PROFESSIONAL SEAL 033752 ENGINEER SETH A. DENNEY

THE LPA GROUP of North Carolina TRANSPORTATION CONSULTANTS

THE LPA GROUP of North Carolina
8000 Regency Parkway, Suite 600
Cary, North Carolina 27518
NC License No.: F-1084

REVISIONS						SHEET NO.
NO.	BY:	DATE:	NO.	BY:	DATE:	S-236
1			3			TOTAL SHEETS
2			4			333

DRAWN BY : M. D. MAYHEW DATE : 11-28-11
CHECKED BY : A. L. PHILLIPS DATE : 12-22-11

DWG. 237 OF 282

4/20/2012
8:45:08 AM
User: jaustin
Filename: Y:\Projects\NCDOT\R-3307\Dwgs\Final\R-3307_237_SD_B16_4.dgn

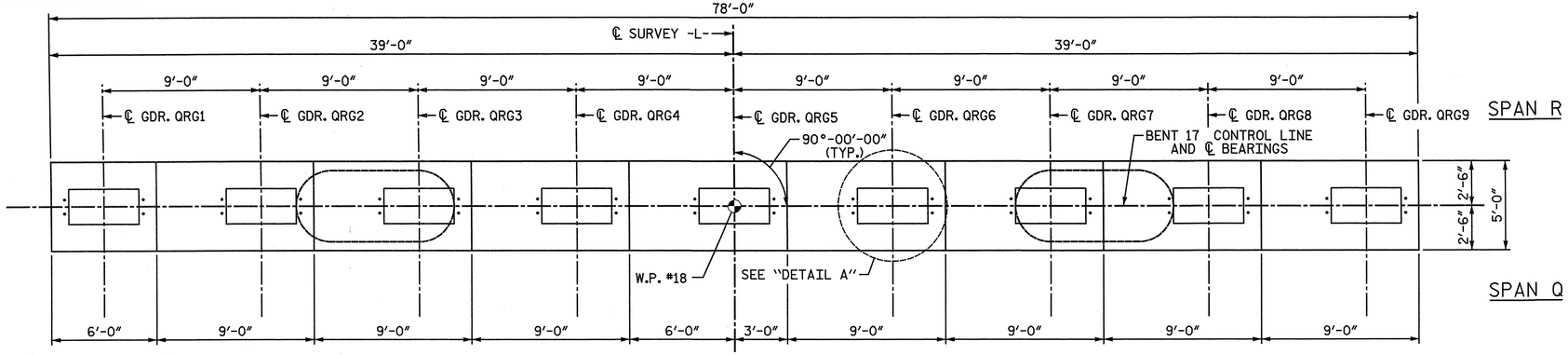

NOTES:

STIRRUPS IN CAP MAY BE SHIFTED AS NECESSARY TO CLEAR ANCHOR BOLTS.

STIRRUP SETS INCLUDE 3 "S" BARS AS SHOWN (INVERT ALTERNATE SETS).

FOR FOUNDATION NOTES, SEE "GENERAL DRAWING FOUNDATION LAYOUT" SHEET 4 OF 4.

✱ THE FOOTING HAS A DROP OF 2½" FROM THE CENTER OF THE FOOTING TO THE EDGE OF FOOTING TO ACCOMODATE DRAINAGE.

✱✱ V2 BARS FOR ALL OTHER PILES WERE OMITTED FOR CLARITY.

FOR FOOTING REINFORCING DETAILS, SEE SHEET 3 OF 4.

FOR SECTION A-A, SECTION B-B, VIEW C-C, AND SECTION D-D, AND SECTION E-E, SEE SHEET 2 OF 4.

TIMBER FENDER SYSTEM REQUIRED AT THIS BENT BUT NOT SHOWN. SEE "TIMBER FENDER SYSTEM" SHEET FOR DETAILS.

TOF = TOP OF FOOTING

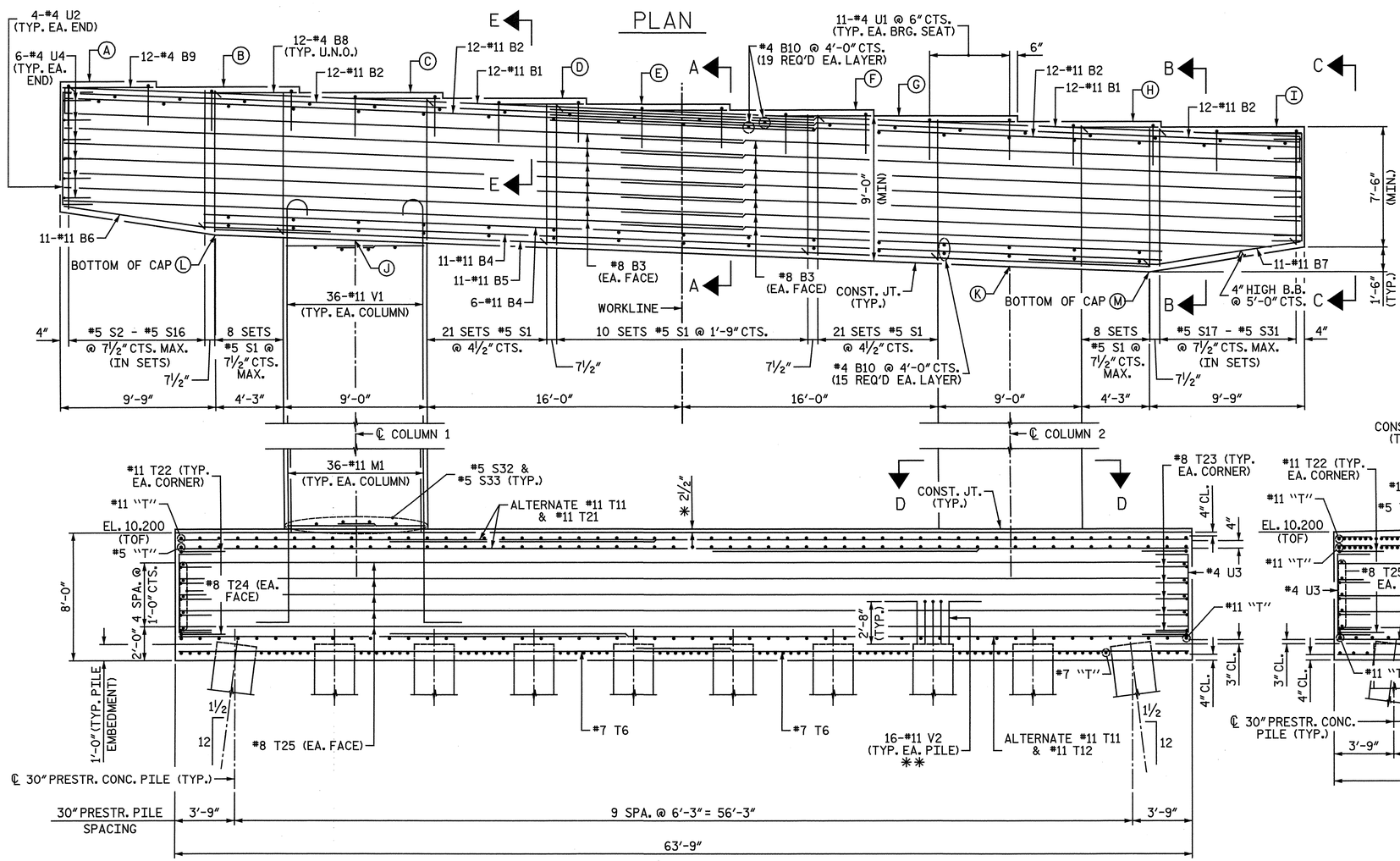

ELEVATION

ELEVATION TABLE													
BENT	A	B	C	D	E	F	G	H	I	J	K	L	M
17	64.880	64.430	63.980	63.530	63.080	62.630	62.180	61.730	61.280	54.768	52.718	54.795	52.280

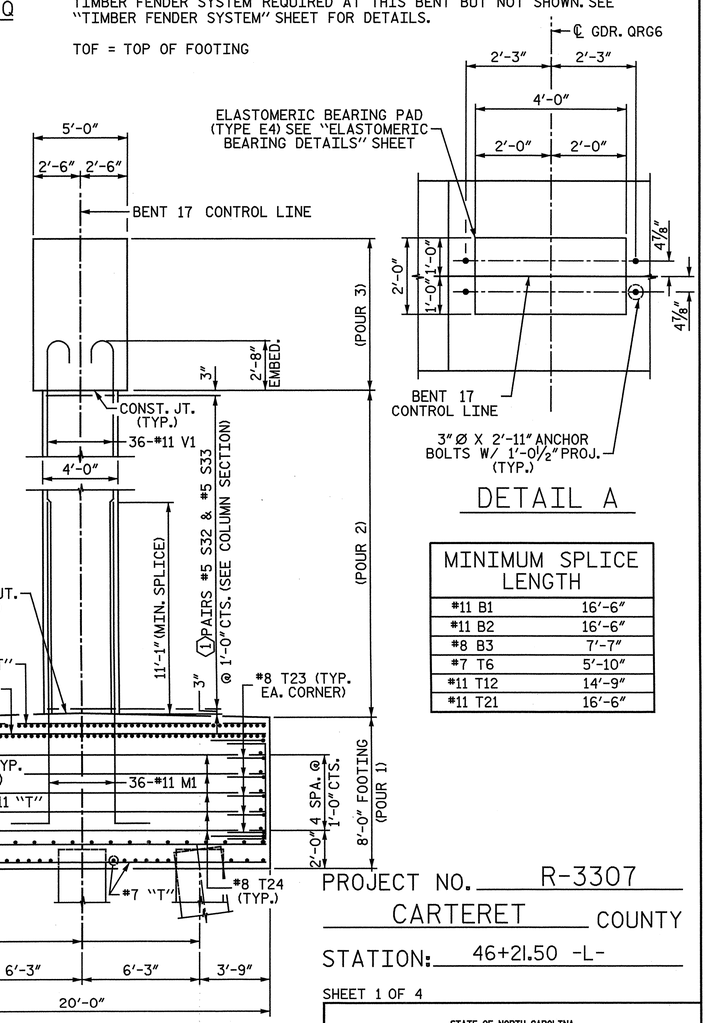

END VIEW

DETAIL A

MINIMUM SPLICE LENGTH	
#11 B1	16'-6"
#11 B2	16'-6"
#8 B3	7'-7"
#7 T6	5'-10"
#11 T12	14'-9"
#11 T21	16'-6"

COLUMN	①
1	46
2	44

PROJECT NO. R-3307

CARTERET COUNTY

STATION: 46+21.50 -L-

SHEET 1 OF 4

STATE OF NORTH CAROLINA
DEPARTMENT OF TRANSPORTATION
RALEIGH

SUBSTRUCTURE

BENT 17
PLAN AND ELEVATION

THE LPA GROUP of North Carolina TRANSPORTATION CONSULTANTS

THE LPA GROUP of North Carolina
8000 Regency Parkway, Suite 600
Cary, North Carolina 27518
NC License No.: F-1084

REVISIONS											
NO.	BY:	DATE:	NO.	BY:	DATE:	NO.	BY:	DATE:	NO.	BY:	DATE:
1			3								
2			4								

SHEET NO. S-237

TOTAL SHEETS 333

DRAWN BY: M. D. MAYHEW DATE: 10-28-11
CHECKED BY: A. L. PHILLIPS DATE: 11-2-11

DWG. 238 OF 282

4/20/2012
8:45:11 AM
User: jaustin
Filename: Y:\Projects\NCDOT\R-3307\Dwgs\Final\R-3307_238_SD_B17_1.dgn

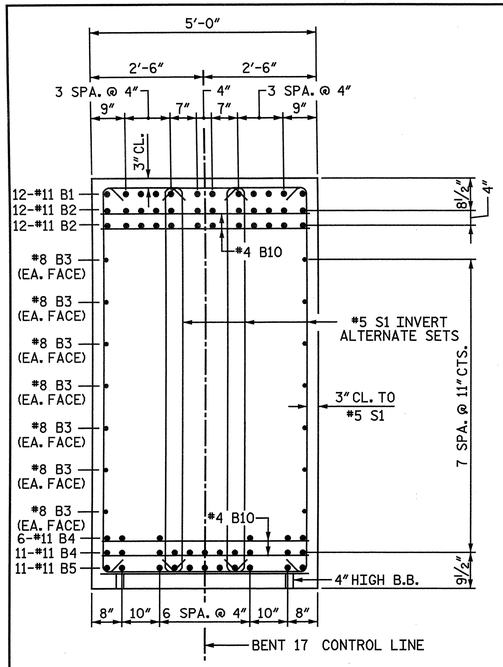

SECTION A-A

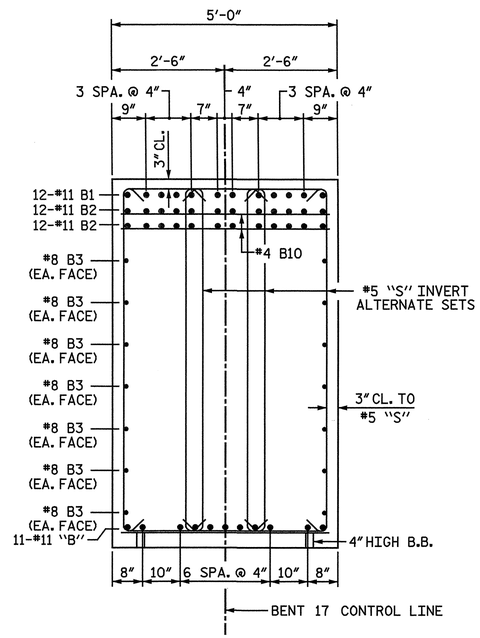

SECTION B-B

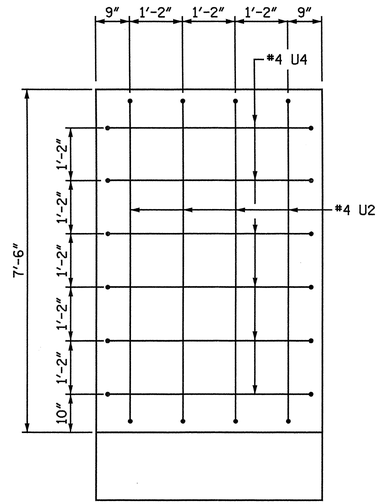

VIEW C-C

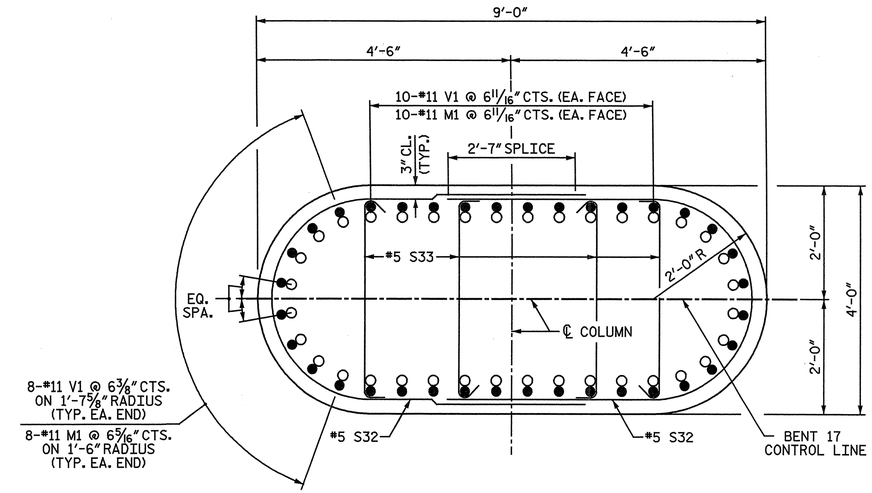

SECTION D-D

NOTE: WHEN PLACING CROSS-TIES, ALTERNATE THE POSITION OF THE 180-DEGREE HOOKS HORIZONTALLY AND VERTICALLY.

○ #11 M1
● #11 V1

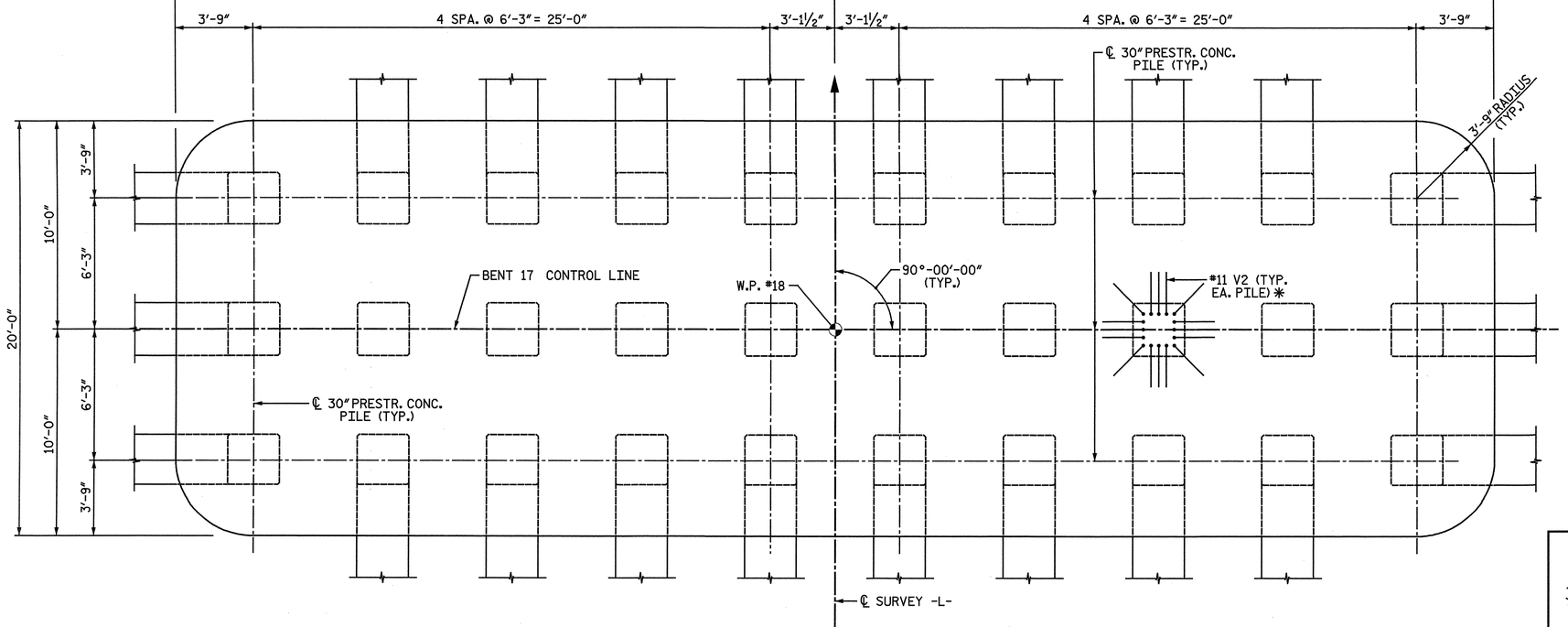

FOOTING PLAN

* V2 BARS FOR ALL OTHER PILES OMITTED FOR CLARITY

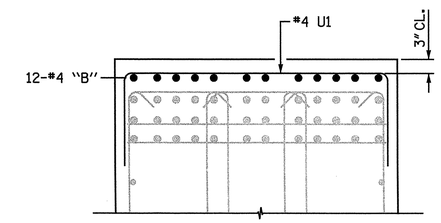

SECTION E-E

PROJECT NO. R-3307
CARTERET COUNTY
STATION: 46+21.50 -L-

SHEET 2 OF 4

STATE OF NORTH CAROLINA
DEPARTMENT OF TRANSPORTATION
RALEIGH

SUBSTRUCTURE

BENT 17
FOOTING AND SECTIONS

NORTH CAROLINA PROFESSIONAL SEAL 25911 ENGINEER DWAIN G. WATKINS 4-3-2012

NORTH CAROLINA PROFESSIONAL SEAL 033752 ENGINEER SETH A. DENNEY

THE LPA GROUP of North Carolina TRANSPORTATION CONSULTANTS

THE LPA GROUP of North Carolina
8000 Regency Parkway, Suite 600
Cary, North Carolina 27518
NC License No.: F-1084

REVISIONS								
NO.	BY:	DATE:	NO.	BY:	DATE:			
1			3					
2			4					

SHEET NO. S-238
TOTAL SHEETS 333

DRAWN BY: M. D. MAYHEW DATE: 10-28-11
CHECKED BY: A. L. PHILLIPS DATE: 11-2-11

DWG. 239 OF 282

4/20/2012
8:45:16 AM
User: jaustin
Filename: Y:\Projects\NCDOT\R-3307\Dwgs\Final\R-3307_239_SD_BIT_2.dgn

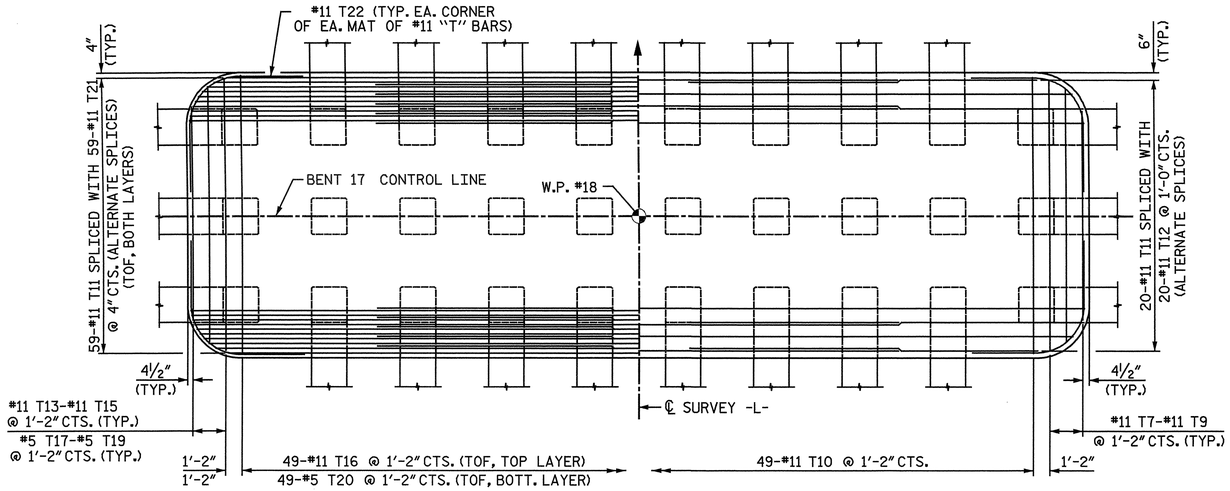

PARTIAL FOOTING PLAN
(TOP OF FOOTING REINFORCING SHOWN)

PARTIAL FOOTING PLAN
(BOTTOM OF FOOTING REINFORCING, ABOVE PILES, SHOWN)

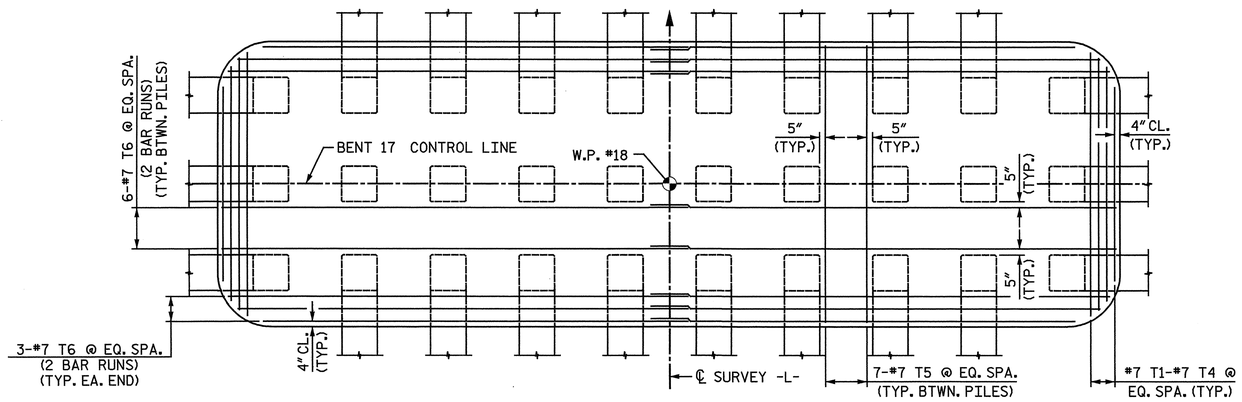

FOOTING PLAN
(BOTTOM OF FOOTING BETWEEN PILES)

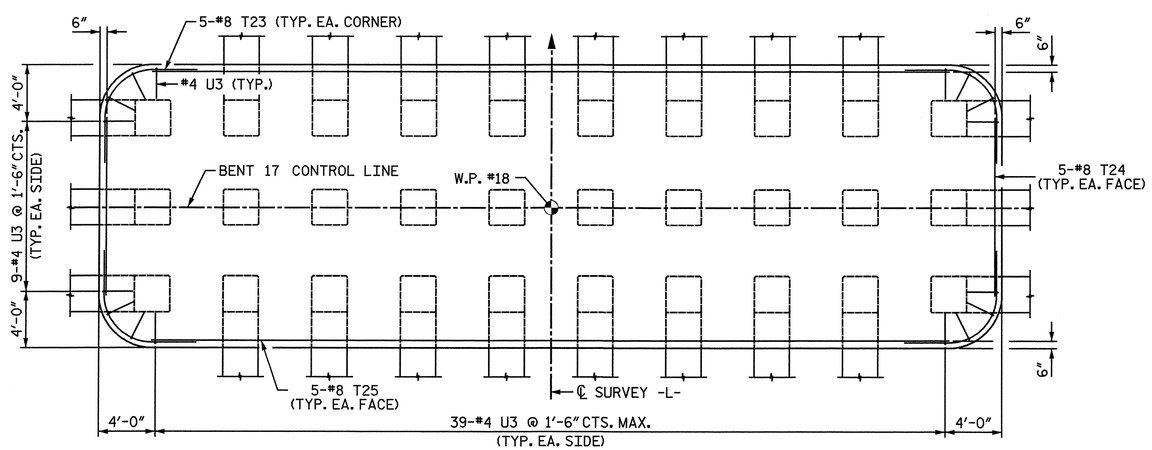

FOOTING PLAN
(TEMPERATURE REINFORCING)

NOTES:

TOF = TOP OF FOOTING

V2 BARS IN PILES OMITTED FOR CLARITY.

PROJECT NO. R-3307
CARTERET COUNTY
STATION: 46+21.50 -L-

SHEET 3 OF 4

STATE OF NORTH CAROLINA
DEPARTMENT OF TRANSPORTATION
RALEIGH

SUBSTRUCTURE

BENT 17
PLAN OF FOOTING

NORTH CAROLINA PROFESSIONAL SEAL 25911 ENGINEER DWIN G. HATHAWAY 4-23-2012

NORTH CAROLINA PROFESSIONAL SEAL 033752 ENGINEER SETH A. DENNEY 04/20/12

THE LPA GROUP of North Carolina TRANSPORTATION CONSULTANTS

THE LPA GROUP of North Carolina
8000 Regency Parkway, Suite 600
Cary, North Carolina 27518
NC License No.: F-1084

REVISIONS						
NO.	BY:	DATE:	NO.	BY:	DATE:	
1			3			
2			4			

SHEET NO. S-239
TOTAL SHEETS 333

DRAWN BY : M. D. MAYHEW DATE : 10-28-11
CHECKED BY : A. L. PHILLIPS DATE : 11-2-11

DWG. 240 OF 282

4/2/2012 12:44:... PM
User: jaustin
Filename: Y:\Projects\NCDOT\R-3307\Dwgs\Final\R-3307_240_SD_B17_3.dgn

BAR TYPES

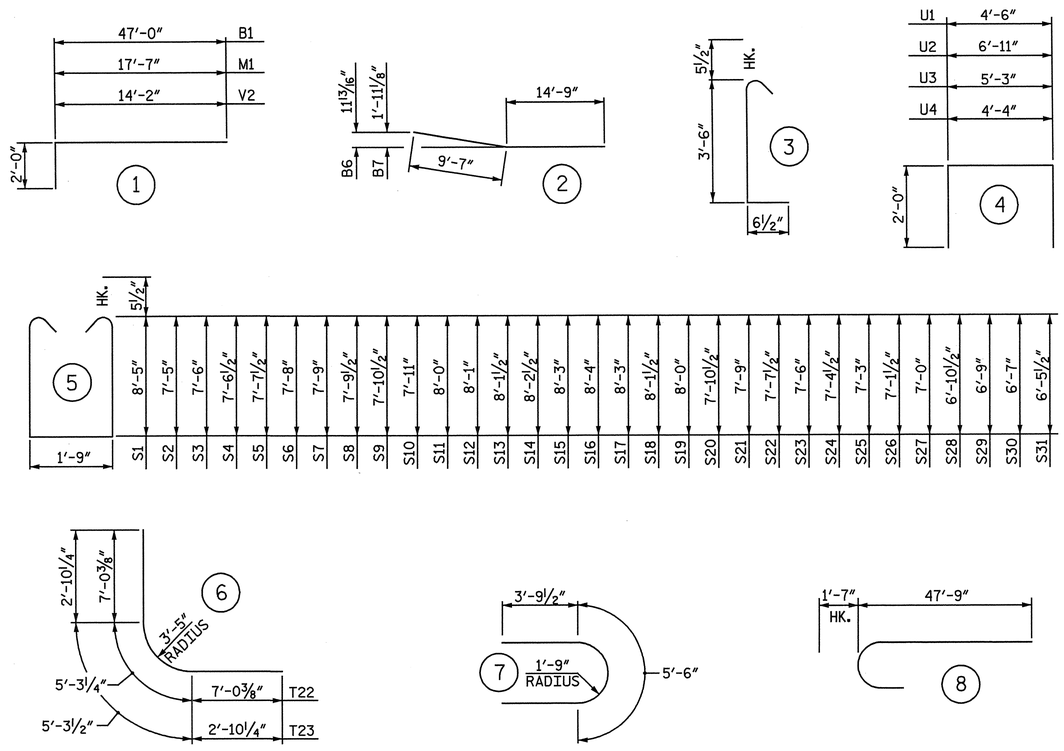

ALL BAR DIMENSIONS ARE OUT TO OUT.

BILL OF MATERIAL
BENT 17

BAR	NO.	SIZE	TYPE	LENGTH	WEIGHT
B1	24	11	1	49' - 0"	6,248
B2	48	11	STR	47' - 0"	11,986
B3	28	8	STR	42' - 7"	3,184
B4	17	11	STR	60' - 0"	5,419
B5	11	11	STR	58' - 5"	3,414
B6	11	11	2	24' - 4"	1,422
B7	11	11	2	24' - 4"	1,422
B8	96	4	STR	5' - 11"	379
B9	12	4	STR	5' - 6"	44
B10	68	4	STR	4' - 8"	212
M1	72	11	1	19' - 7"	7,491
S1	204	5	5	19' - 6"	4,149
S2	3	5	5	17' - 6"	55
S3	3	5	5	17' - 8"	55
S4	3	5	5	17' - 9"	56
S5	3	5	5	17' - 11"	56
S6	3	5	5	18' - 0"	56
S7	3	5	5	18' - 2"	57
S8	3	5	5	18' - 3"	57
S9	3	5	5	18' - 5"	58
S10	3	5	5	18' - 6"	58
S11	3	5	5	18' - 8"	58
S12	3	5	5	18' - 10"	59
S13	3	5	5	18' - 11"	59
S14	3	5	5	19' - 1"	60
S15	3	5	5	19' - 2"	60
S16	3	5	5	19' - 4"	60
S17	3	5	5	19' - 2"	60
S18	3	5	5	18' - 11"	59
S19	3	5	5	18' - 8"	58
S20	3	5	5	18' - 5"	58
S21	3	5	5	18' - 2"	57
S22	3	5	5	17' - 11"	56
S23	3	5	5	17' - 8"	55
S24	3	5	5	17' - 5"	54
S25	3	5	5	17' - 2"	54
S26	3	5	5	16' - 11"	53
S27	3	5	5	16' - 8"	52
S28	3	5	5	16' - 5"	51
S29	3	5	5	16' - 2"	51
S30	3	5	5	15' - 10"	50
S31	3	5	5	15' - 7"	49
S32	180	5	7	13' - 1"	2,456
S33	360	5	3	4' - 6"	1,690
T1	2	7	STR	18' - 5"	75
T2	2	7	STR	17' - 7"	72
T3	2	7	STR	16' - 3"	66
T4	2	7	STR	12' - 6"	51
T5	63	7	STR	19' - 4"	2,490
T6	36	7	STR	34' - 6"	2,539
T7	2	11	STR	19' - 0"	202
T8	2	11	STR	17' - 8"	188
T9	2	11	STR	13' - 6"	143
T10	49	11	STR	19' - 4"	5,033
T11	138	11	STR	50' - 0"	36,660
T12	20	11	STR	27' - 10"	2,958
T13	2	11	STR	13' - 6"	143
T14	2	11	STR	17' - 8"	188
T15	2	11	STR	19' - 0"	202
T16	49	11	STR	19' - 4"	5,033
T17	2	5	STR	13' - 6"	28
T18	2	5	STR	17' - 8"	37
T19	2	5	STR	19' - 0"	40
T20	49	5	STR	19' - 4"	988
T21	118	11	STR	29' - 7"	18,547
T22	8	11	6	19' - 4"	822
T23	20	8	6	11' - 0"	587
T24	10	8	STR	12' - 6"	334
T25	10	8	STR	56' - 3"	1,502
U1	99	4	4	8' - 6"	562
U2	8	4	4	10' - 11"	58
U3	104	4	4	9' - 3"	643
U4	12	4	4	8' - 4"	67
V1	72	11	8	49' - 4"	18,872
V2	480	11	1	16' - 2"	41,229

EPOXY COATED
REINFORCING STEEL LBS. 191,556

CLASS "AA" CONCRETE BREAKDOWN

POUR #1 - FOOTING	C.Y.	372.1
POUR #2 - COLUMNS	C.Y.	105.7
POUR #3 - CAP	C.Y.	131.2
TOTAL CLASS "AA" CONCRETE	C.Y.	609.0

30" PRESTRESSED CONCRETE PILES
NO. 30 LIN FT. 3,265

PILE REDRIVES	NO.	7
PDA TESTING	EA.	1

PROJECT NO. R-3307
CARTERET COUNTY
STATION: 46+21.50 -L-

SHEET 4 OF 4

STATE OF NORTH CAROLINA
DEPARTMENT OF TRANSPORTATION
RALEIGH

SUBSTRUCTURE

BENT 17
BILL OF MATERIAL

NORTH CAROLINA PROFESSIONAL SEAL 25911 4-3-12 ENGINEER DWAIN G. HATHMAN

NORTH CAROLINA PROFESSIONAL SEAL 033752 ENGINEER SETH A. DENNEY

THE LPA GROUP of North Carolina TRANSPORTATION CONSULTANTS

THE LPA GROUP of North Carolina
8000 Regency Parkway, Suite 600
Cary, North Carolina 27518
NC License No.: F-1084

REVISIONS							SHEET NO.
NO.	BY:	DATE:	NO.	BY:	DATE:		S-240
1			3				TOTAL SHEETS
2			4				333

DRAWN BY : M. D. MAYHEW DATE : 11-28-11
CHECKED BY : A. L. PHILLIPS DATE : 1-3-12

DWG. 241 OF 282

4/20/2012
8:45:18 AM
User: austin
Filename: Y:\Projects\NCDOT\R-3307\Dwgs\Final\R-3307_241_SD_BI7_A.dgn

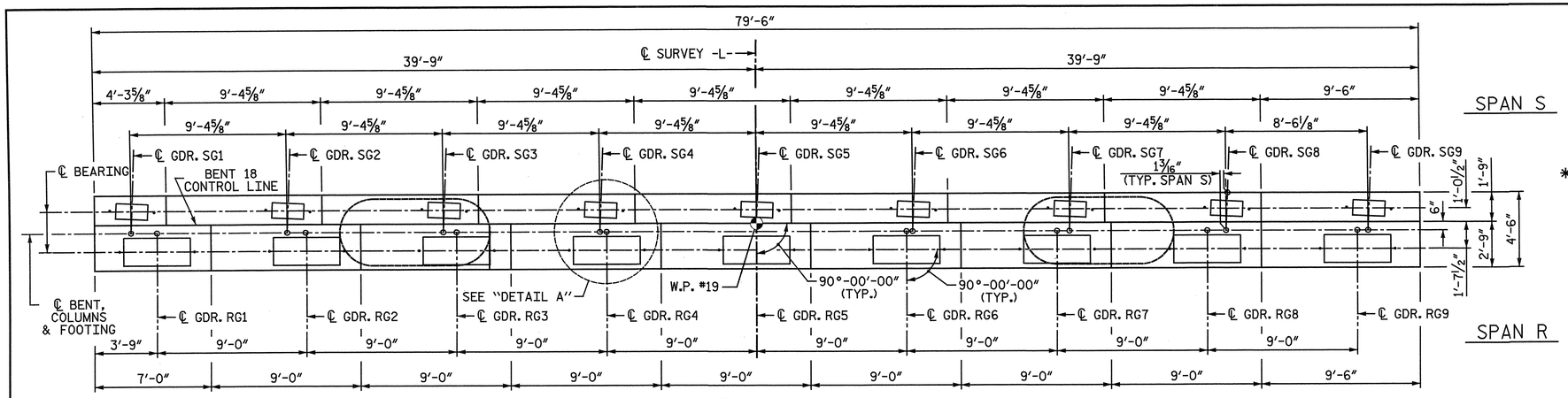

PLAN

NOTE: THE TOP SURFACE AREAS OF THE BENT CAPS SHALL BE CURED IN ACCORDANCE WITH THE STANDARD SPECIFICATIONS EXCEPT THE MEMBRANE CURING COMPOUND METHOD SHALL NOT BE USED.

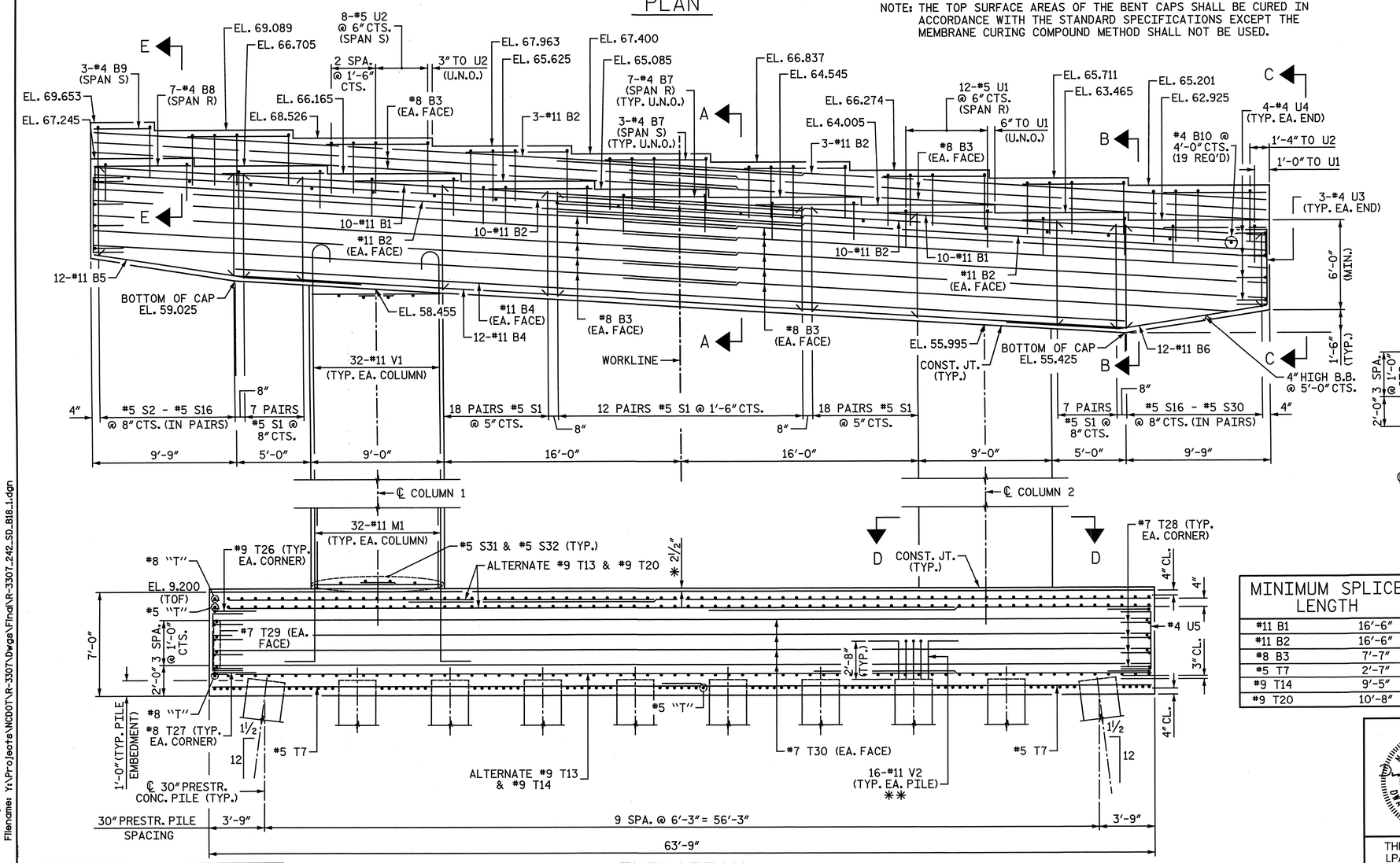

ELEVATION

TOF - DENOTES "TOP OF FOOTING"

NOTES:

STIRRUPS IN CAP MAY BE SHIFTED AS NECESSARY TO CLEAR ANCHOR BOLTS.

ALTERNATELY INVERT STIRRUP PAIRS AS NOTED.

FOR FOUNDATION NOTES, SEE "GENERAL DRAWING FOUNDATION LAYOUT" SHEET 4 OF 4.

✱ THE FOOTING HAS A DROP OF 2½" FROM THE CENTER OF THE FOOTING TO THE EDGE OF FOOTING TO ACCOMODATE DRAINAGE.

✱✱ V2 BARS FOR ALL OTHER PILES WERE OMITTED FOR CLARITY.

FOR FOOTING REINFORCING DETAILS, SEE SHEET 3 OF 4.

FOR SECTION A-A, SECTION B-B, VIEW C-C, SECTION D-D, AND SECTION E-E, SEE SHEET 2 OF 4.

FOR "DETAIL A", SEE SHEET 3 OF 4

THE CONTRACTOR'S ATTENTION IS CALLED TO THE FACT THAT THE CENTERLINE JOINT IN THE DECK SLAB (BENT CONTROL LINE) IS OFFSET FROM THE CENTERLINE BENT.

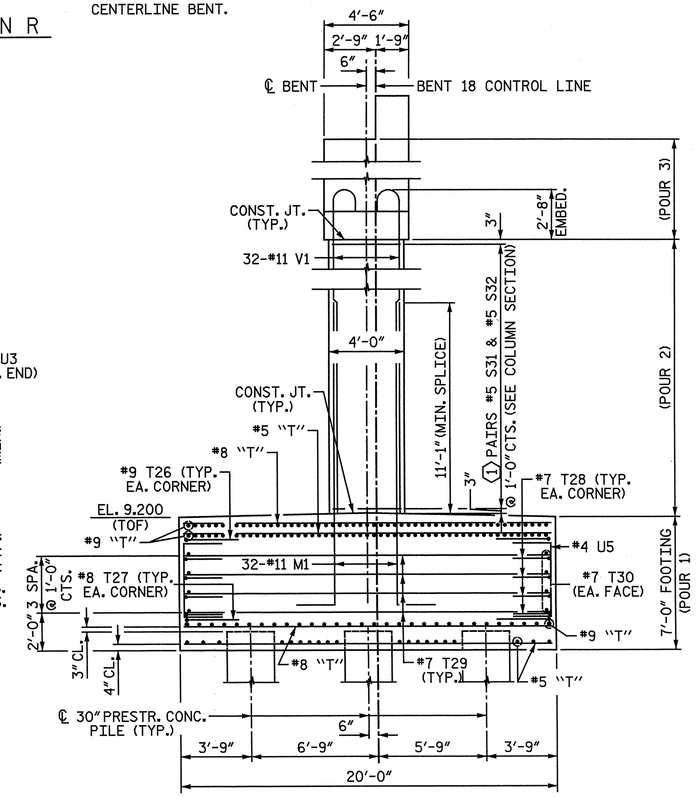

END VIEW

MINIMUM SPLICE LENGTH	
#11 B1	16'-6"
#11 B2	16'-6"
#8 B3	7'-7"
#5 T7	2'-7"
#9 T14	9'-5"
#9 T20	10'-8"

COLUMN	(1)
1	50
2	48

PROJECT NO. R-3307

CARTERET COUNTY

STATION: 46+21.50 -L-

SHEET 1 OF 4

STATE OF NORTH CAROLINA
DEPARTMENT OF TRANSPORTATION
RALEIGH

SUBSTRUCTURE

BENT 18
PLAN AND ELEVATION

NORTH CAROLINA PROFESSIONAL SEAL 25911 ENGINEER DRAIN G. HATHWAY 4-3-2012

NORTH CAROLINA PROFESSIONAL SEAL 033752 ENGINEER JEFF A. DENNICK

THE LPA GROUP of North Carolina
TRANSPORTATION CONSULTANTS

THE LPA GROUP of North Carolina
8000 Regency Parkway, Suite 600
Cary, North Carolina 27518
NC License No.: F-1084

REVISIONS							
NO.	BY:	DATE:	NO.	BY:	DATE:	SHEET NO.	
1			3			S-241	
2			4			TOTAL SHEETS	
						333	

DRAWN BY : M. D. MAYHEW DATE : 11-11-11
CHECKED BY : A. L. PHILLIPS DATE : 11-11-11

DWG. 242 OF 282

4/20/2012
8:45:20 AM
User: jaustin
Filename: Y:\Projects\NCDOT\R-3307\Dwgs\Final\R-3307_242_SD_B18_1.dgn

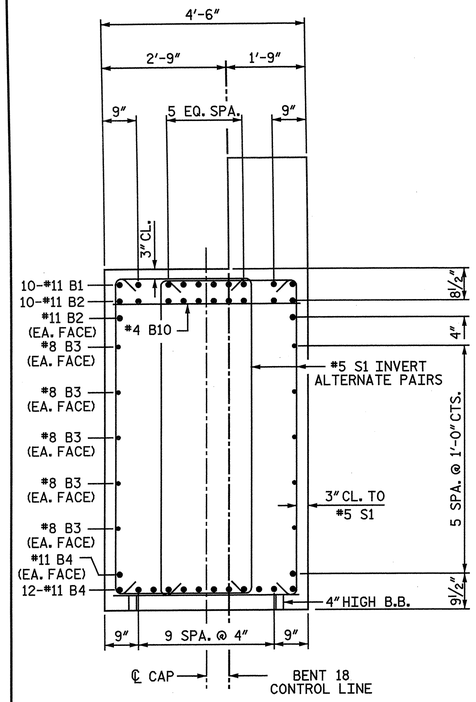

SECTION A-A

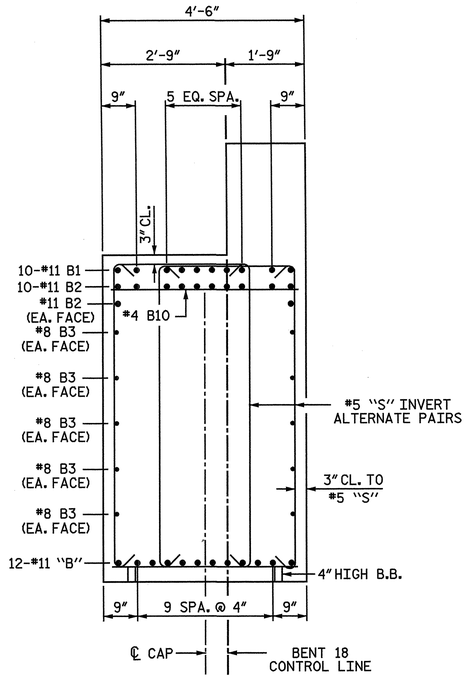

SECTION B-B

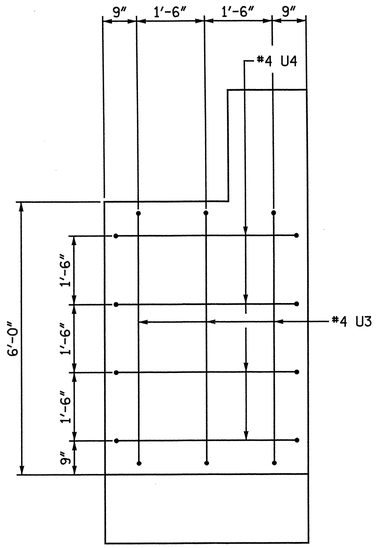

VIEW C-C

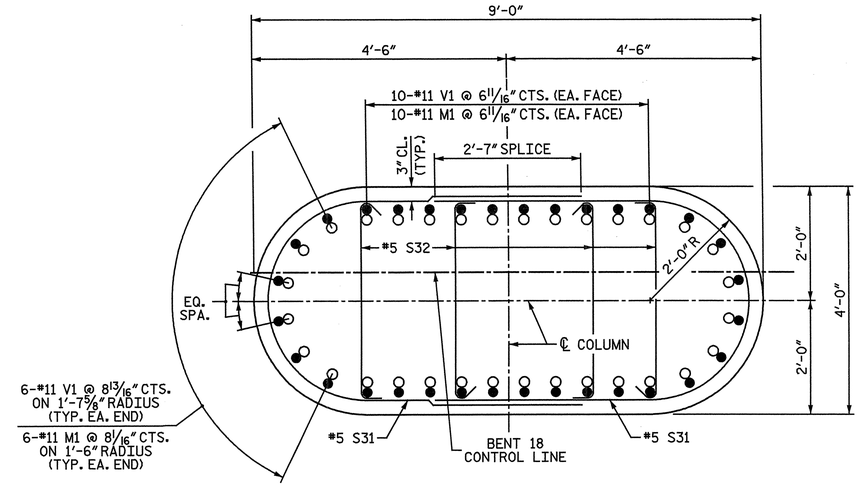

SECTION D-D

NOTE: WHEN PLACING CROSS-TIES, ALTERNATE THE POSITION OF THE 180-DEGREE HOOKS HORIZONTALLY AND VERTICALLY.

○ #11 M1
● #11 V1

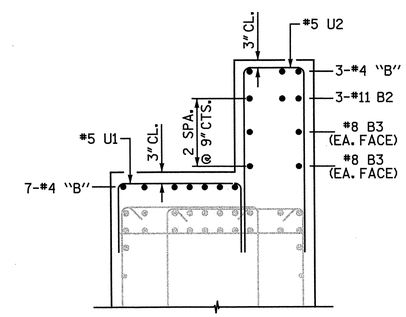

SECTION E-E

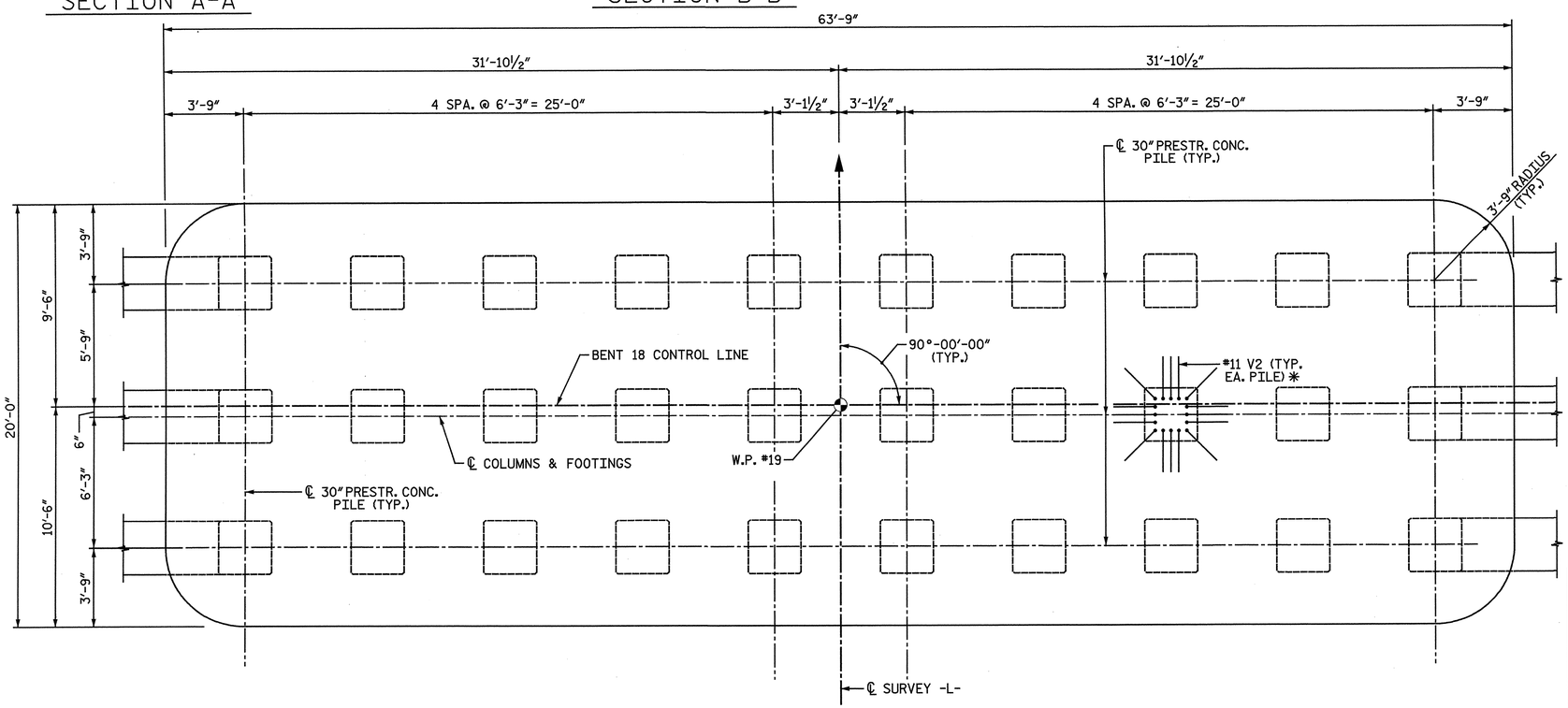

FOOTING PLAN

✱ V2 BARS FOR ALL OTHER PILES OMITTED FOR CLARITY

PROJECT NO. R-3307
CARTERET COUNTY
STATION: 46+21.50 -L-

SHEET 2 OF 4

STATE OF NORTH CAROLINA
DEPARTMENT OF TRANSPORTATION
RALEIGH

SUBSTRUCTURE

BENT 18
FOOTING AND SECTIONS

NORTH CAROLINA PROFESSIONAL SEAL 25911 ENGINEER DWIN G. HATHAWAY 4-3-2012

NORTH CAROLINA PROFESSIONAL SEAL 033752 ENGINEER SETH A. DENNICK 4/26/12

THE LPA GROUP of North Carolina
TRANSPORTATION CONSULTANTS

THE LPA GROUP of North Carolina
8000 Regency Parkway, Suite 600
Cary, North Carolina 27518
NC License No.: F-1084

REVISIONS								SHEET NO.
NO.	BY:	DATE:	NO.	BY:	DATE:			S-242
1			3					TOTAL SHEETS
2			4					333

DRAWN BY : M. D. MAYHEW DATE : 11-11-11
CHECKED BY : A. L. PHILLIPS DATE : 11-11-11

DWG. 243 OF 282

4/26/2012
8:45:24 AM
User: jaustin
Filename: Y:\Projects\NCDOT\R-3307\Dwgs\Find\R-3307_243_SD_B18_2.dgn

NOTE:

TOF = TOP OF FOOTING

V2 BARS IN PILES OMITTED FOR CLARITY.

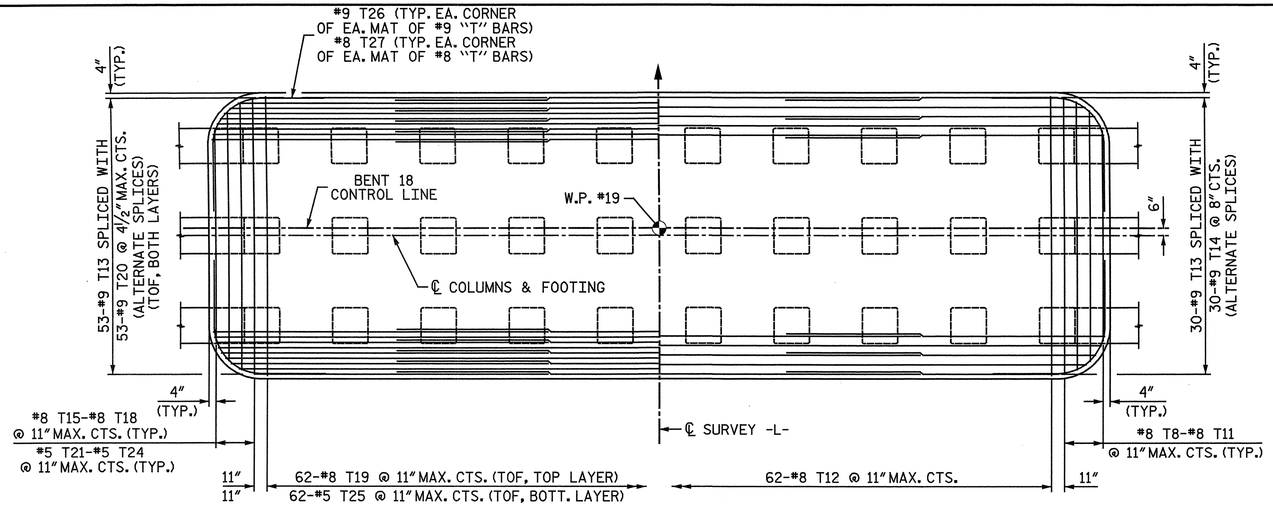

PARTIAL FOOTING PLAN
(TOP OF FOOTING REINFORCING SHOWN)

PARTIAL FOOTING PLAN
(BOTTOM OF FOOTING REINFORCING, ABOVE PILES, SHOWN)

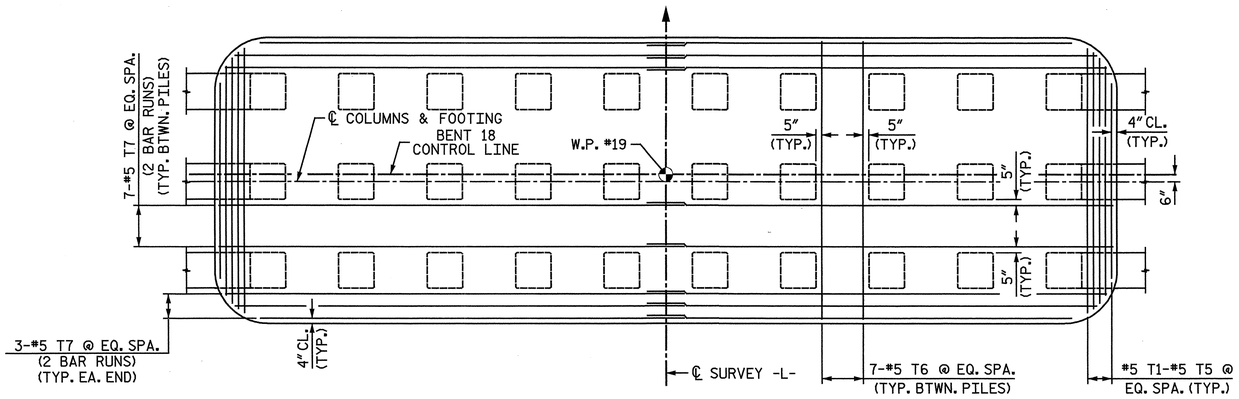

FOOTING PLAN
(BOTTOM OF FOOTING BETWEEN PILES)

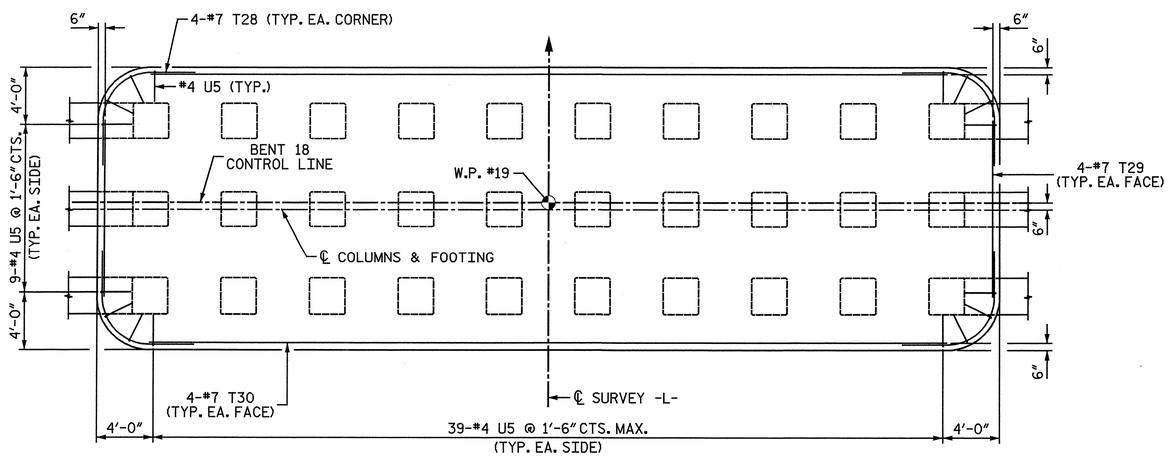

FOOTING PLAN
(TEMPERATURE REINFORCING)

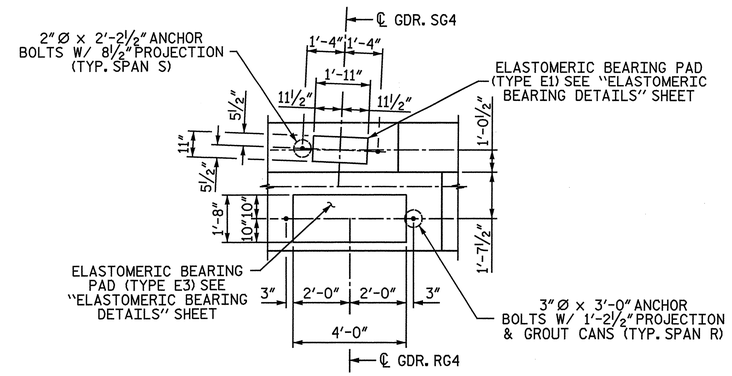

DETAIL A

PROJECT NO. R-3307

CARTERET COUNTY

STATION: 46+21.50 -L-

SHEET 3 OF 4

STATE OF NORTH CAROLINA
DEPARTMENT OF TRANSPORTATION
RALEIGH

SUBSTRUCTURE

BENT 18
PLAN OF FOOTING

NORTH CAROLINA PROFESSIONAL SEAL 25911 ENGINEER DWIGHT G. HATHAWAY 4-3-2012

NORTH CAROLINA PROFESSIONAL SEAL 033752 ENGINEER SETH A. DENNEY 04/04/12

THE LPA GROUP of North Carolina TRANSPORTATION CONSULTANTS

THE LPA GROUP of North Carolina
8000 Regency Parkway, Suite 600
Cary, North Carolina 27518
NC License No.: F-1084

REVISIONS						SHEET NO.
NO.	BY:	DATE:	NO.	BY:	DATE:	S-243
1			3			TOTAL SHEETS
2			4			333

DRAWN BY : M. D. MAYHEW DATE : 11-11-11
CHECKED BY : A. L. PHILLIPS DATE : 11-11-11

DWG. 244 OF 282

4/2/2012
12:45: PM
User: jaustin
Filename: Y:\Projects\NCDOT\R-3307\Dwgs\Final\R-3307_244_SD_B18_3.dgn

BAR TYPES

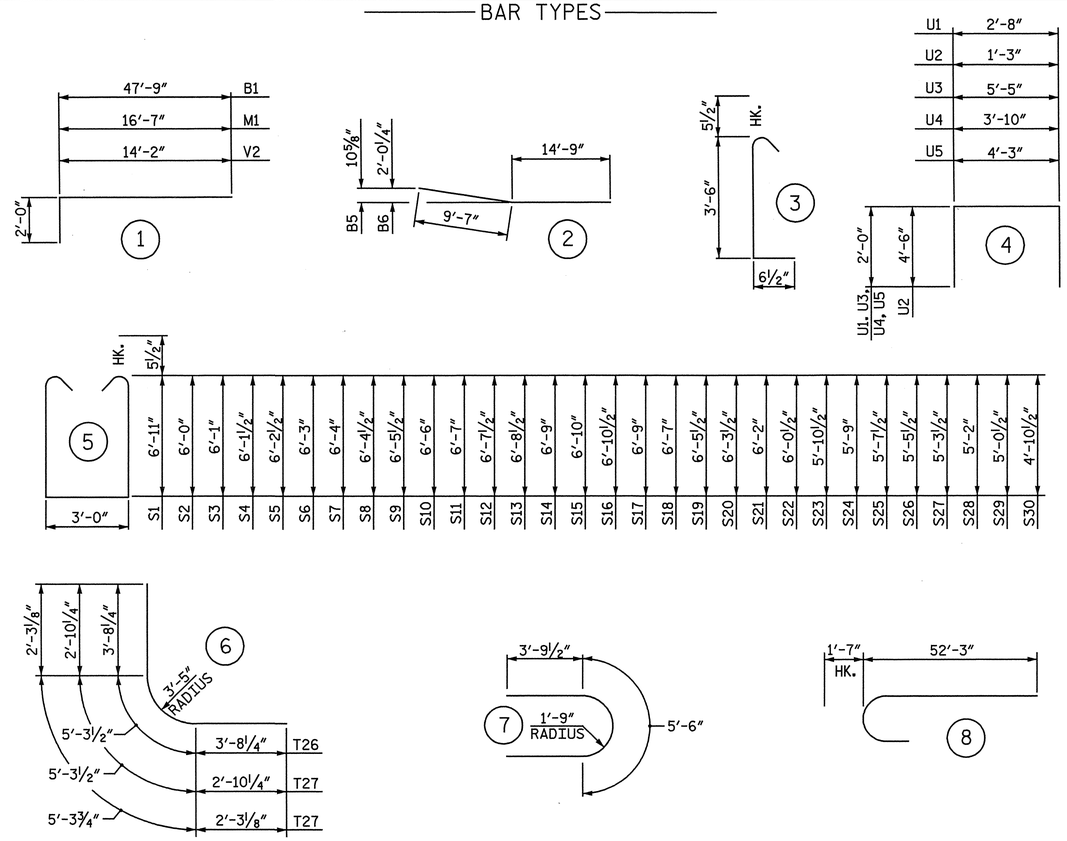

ALL BAR DIMENSIONS ARE OUT TO OUT.

BILL OF MATERIAL
BENT 18

BAR	NO.	SIZE	TYPE	LENGTH	WEIGHT
B1	20	11	1	49' - 9"	5,286
B2	30	11	STR	47' - 9"	7,611
B3	28	8	STR	43' - 4"	3,240
B4	14	11	STR	60' - 0"	4,463
B5	12	11	2	24' - 4"	1,551
B6	12	11	2	24' - 4"	1,551
B7	80	4	STR	6' - 10"	365
B8	7	4	STR	6' - 6"	30
B9	3	4	STR	3' - 9"	8
B10	19	4	STR	4' - 2"	53
M1	64	11	1	18' - 7"	6,319
S1	124	5	5	17' - 9"	2,296
S2	2	5	5	15' - 11"	33
S3	2	5	5	16' - 1"	34
S4	2	5	5	16' - 2"	34
S5	2	5	5	16' - 4"	34
S6	2	5	5	16' - 5"	34
S7	2	5	5	16' - 7"	35
S8	2	5	5	16' - 8"	35
S9	2	5	5	16' - 10"	35
S10	2	5	5	16' - 11"	35
S11	2	5	5	17' - 1"	36
S12	2	5	5	17' - 2"	36
S13	2	5	5	17' - 4"	36
S14	2	5	5	17' - 5"	36
S15	2	5	5	17' - 7"	37
S16	4	5	5	17' - 8"	74
S17	2	5	5	17' - 5"	36
S18	2	5	5	17' - 1"	36
S19	2	5	5	16' - 10"	35
S20	2	5	5	16' - 6"	34
S21	2	5	5	16' - 3"	34
S22	2	5	5	16' - 0"	33
S23	2	5	5	15' - 8"	33
S24	2	5	5	15' - 5"	32
S25	2	5	5	15' - 2"	32
S26	2	5	5	14' - 10"	31
S27	2	5	5	14' - 6"	30
S28	2	5	5	14' - 3"	30
S29	2	5	5	14' - 0"	29
S30	2	5	5	13' - 8"	29
S31	196	5	7	13' - 1"	2,675
S32	392	5	3	4' - 6"	1,840
T1	2	5	STR	18' - 5"	38
T2	2	5	STR	17' - 10"	37
T3	2	5	STR	17' - 0"	35
T4	2	5	STR	15' - 10"	33
T5	2	5	STR	12' - 6"	26
T6	63	5	STR	19' - 4"	1,270
T7	40	5	STR	32' - 10"	1,370
T8	2	8	STR	19' - 2"	102
T9	2	8	STR	18' - 6"	99
T10	2	8	STR	17' - 1"	91
T11	2	8	STR	12' - 6"	67
T12	62	8	STR	19' - 4"	3,200
T13	136	9	STR	50' - 0"	23,120
T14	30	9	STR	22' - 6"	2,295
T15	2	8	STR	12' - 6"	67
T16	2	8	STR	17' - 1"	91
T17	2	8	STR	18' - 6"	99
T18	2	8	STR	19' - 2"	102
T19	62	8	STR	19' - 4"	3,200
T20	106	9	STR	23' - 9"	8,560
T21	2	5	STR	12' - 6"	26
T22	2	5	STR	17' - 1"	36
T23	2	5	STR	18' - 6"	39
T24	2	5	STR	19' - 2"	40
T25	62	5	STR	19' - 4"	1,250
T26	4	9	6	12' - 8"	172
T27	4	8	6	11' - 0"	117
T28	16	7	6	9' - 10"	322
T29	8	7	STR	12' - 6"	204
T30	8	7	STR	56' - 3"	920
U1	108	5	4	6' - 8"	751
U2	88	5	4	10' - 3"	941
U3	6	4	4	9' - 5"	38
U4	8	4	4	7' - 10"	42
U5	104	4	4	8' - 3"	573
V1	64	11	8	53' - 10"	18,305
V2	480	11	1	16' - 2"	41,229

EPOXY COATED
REINFORCING STEEL LBS. 147,213

CLASS "AA" CONCRETE BREAKDOWN

POUR #1 - FOOTING	C.Y.	325.3
POUR #2 - COLUMNS	C.Y.	115.9
POUR #3 - CAP	C.Y.	112.6
TOTAL CLASS "AA" CONCRETE	C.Y.	553.8

30" PRESTRESSED CONCRETE PILES
NO. 30 LIN FT. 3,402

PILE REDRIVES NO. 7

PDA TESTING EA. 1

PROJECT NO. R-3307
CARTERET COUNTY
STATION: 46+21.50 -L-

SHEET 4 OF 4

STATE OF NORTH CAROLINA
DEPARTMENT OF TRANSPORTATION
RALEIGH

SUBSTRUCTURE

BENT 18
BILL OF MATERIAL

NORTH CAROLINA PROFESSIONAL SEAL 25911 ENGINEER DWAIN G. HATHWAY 4-3-12

NORTH CAROLINA PROFESSIONAL SEAL 033752 ENGINEER SETH A. DENNIS 4/25/12

THE LPA GROUP of North Carolina TRANSPORTATION CONSULTANTS

THE LPA GROUP of North Carolina
8000 Regency Parkway, Suite 600
Cary, North Carolina 27518
NC License No.: F-1084

REVISIONS								SHEET NO.
NO.	BY:	DATE:	NO.	BY:	DATE:			S-244
1			3					TOTAL SHEETS
2			4					333

DRAWN BY : M. D. MAYHEW DATE : 11-30-11
CHECKED BY : A. L. PHILLIPS DATE : 1-3-12

DWG. 245 OF 282

4/20. .012
8:45:26 AM
User: jaustin
Filename: T:\Projects\NCDOT\R-3307\Dwgs\Final\R-3307_245_SD_B18_4.dgn

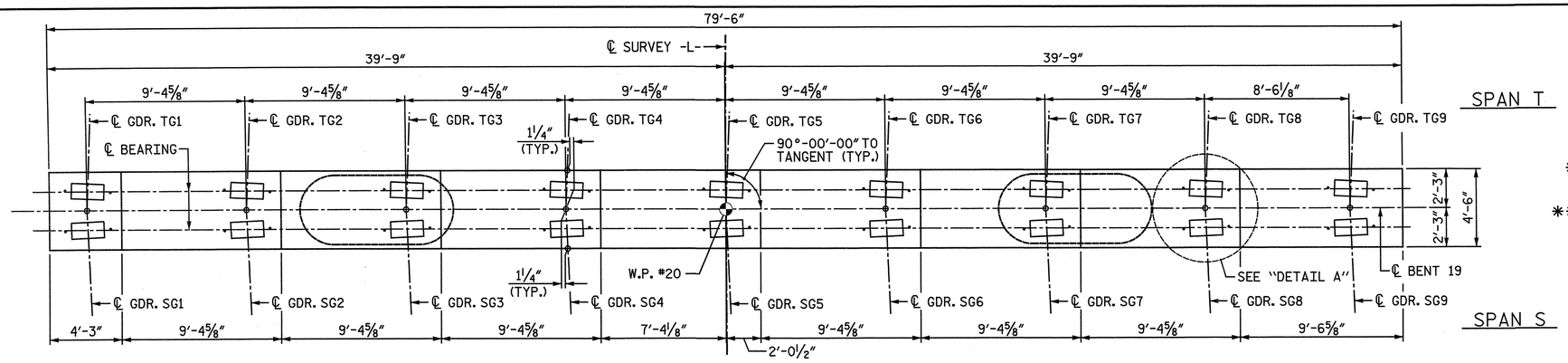

PLAN

NOTES:

STIRRUPS IN CAP MAY BE SHIFTED AS NECESSARY TO CLEAR ANCHOR BOLTS.

ALTERNATELY INVERT STIRRUP PAIRS AS NOTED.

FOR FOUNDATION NOTES, SEE "GENERAL DRAWING FOUNDATION LAYOUT" SHEET 4 OF 4.

✱ THE FOOTING HAS A DROP OF 2½" FROM THE CENTER OF THE FOOTING TO THE EDGE OF FOOTING TO ACCOMODATE DRAINAGE.

✱✱ V2 BARS FOR ALL OTHER PILES WERE OMITTED FOR CLARITY.

FOR FOOTING REINFORCING DETAILS, SEE SHEET 3 OF 4.

FOR SECTION A-A, SECTION B-B, VIEW C-C, AND SECTION D-D, AND SECTION E-E, SEE SHEET 2 OF 4.

TOF = TOP OF FOOTING

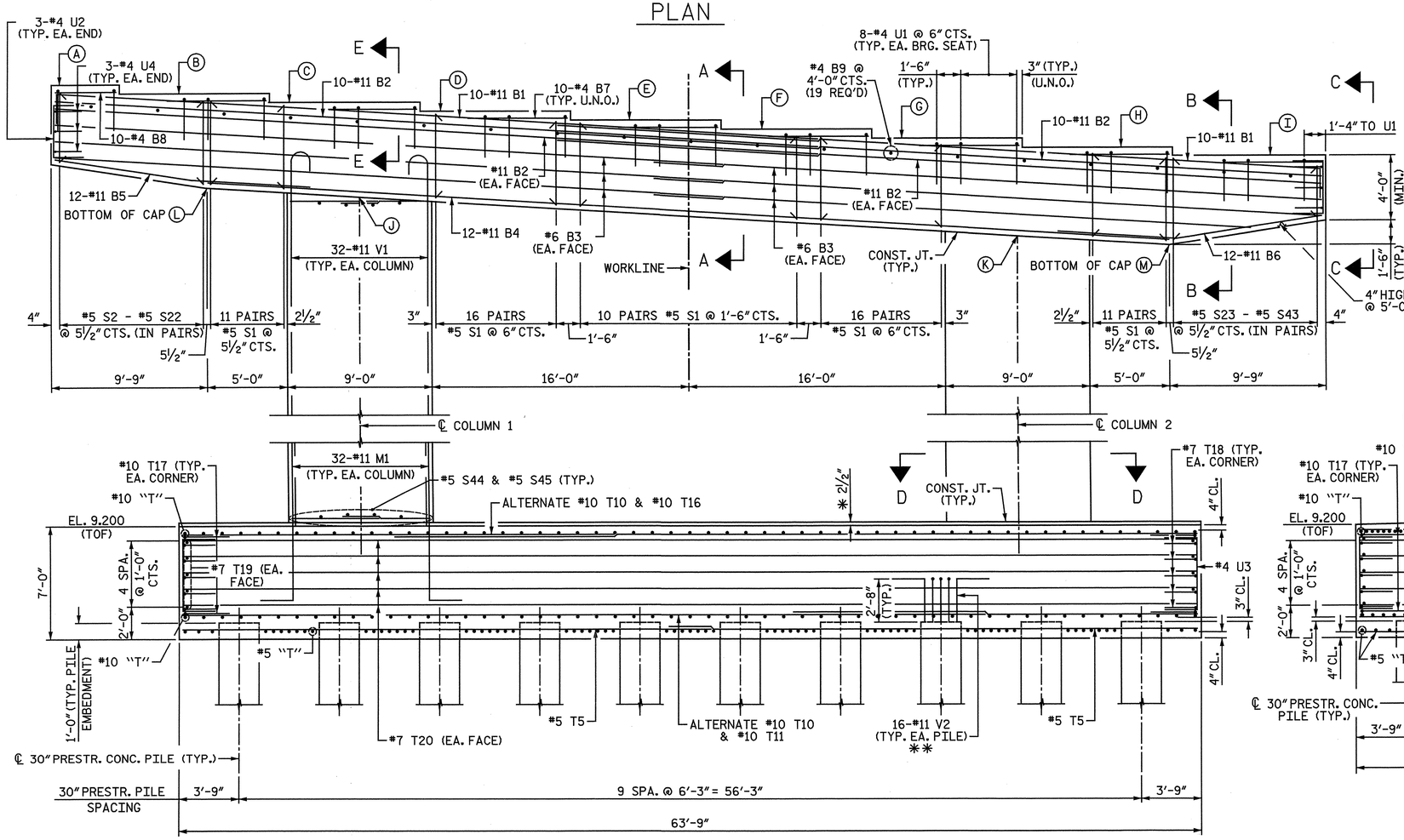

ELEVATION

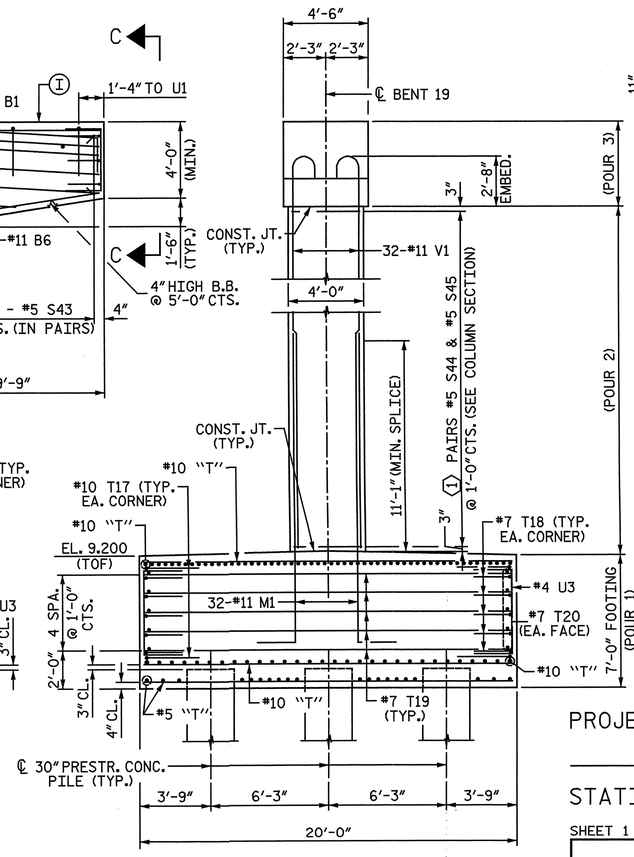

END VIEW

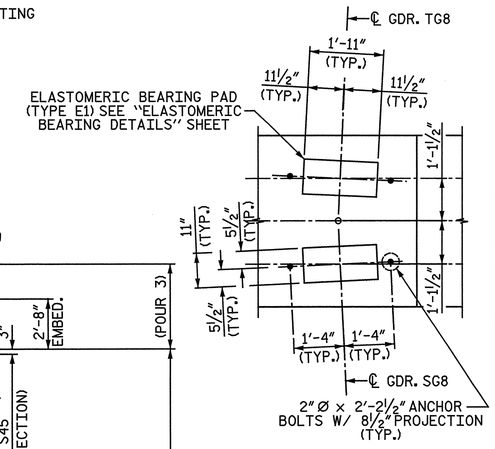

DETAIL A

PROJECT NO. R-3307

CARTERET COUNTY

STATION: 46+21.50 -L-

SHEET 1 OF 4

STATE OF NORTH CAROLINA
DEPARTMENT OF TRANSPORTATION
RALEIGH

SUBSTRUCTURE

BENT 19 PLAN AND ELEVATION

ELEVATION TABLE													
BENT	A	B	C	D	E	F	G	H	I	J	K	L	M
19	66.874	66.312	65.749	65.186	64.623	64.061	63.498	62.935	62.424	59.954	57.494	60.524	56.924

MINIMUM SPLICE LENGTH	
#11 B1	16'-6"
#11 B2	16'-6"
#6 B3	4'-3"
#5 T5	2'-7"
#10 T11	11'-11"
#10 T16	13'-8"

COLUMN	1
1	52
2	49

NORTH CAROLINA PROFESSIONAL SEAL 25911 ENGINEER DRAIN G. HATHAWAY 11-3-2012

NORTH CAROLINA PROFESSIONAL SEAL 033752 ENGINEER SETH A. DENNEY 11/14/12

THE LPA GROUP of North Carolina TRANSPORTATION CONSULTANTS

THE LPA GROUP of North Carolina
8000 Regency Parkway, Suite 600
Cary, North Carolina 27518
NC License No.: F-1084

REVISIONS								SHEET NO.
NO.	BY:	DATE:	NO.	BY:	DATE:			S-245
1			3					TOTAL SHEETS
2			4					333

DRAWN BY : M. D. MAYHEW DATE : 11-14-11
CHECKED BY : A. L. PHILLIPS DATE : 11-14-11

DWG. 246 OF 282

4/20/2012 8:45:29 AM
User: jaustin
Filename: Y:\Projects\NCDOT\R-3307\Dwgs\Final\R-3307_246_SD_B19_1.dgn

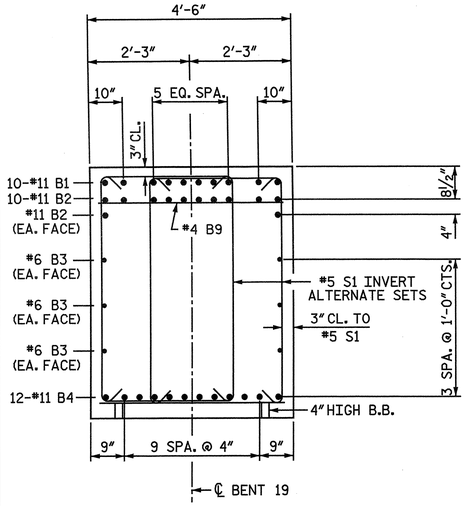

SECTION A-A

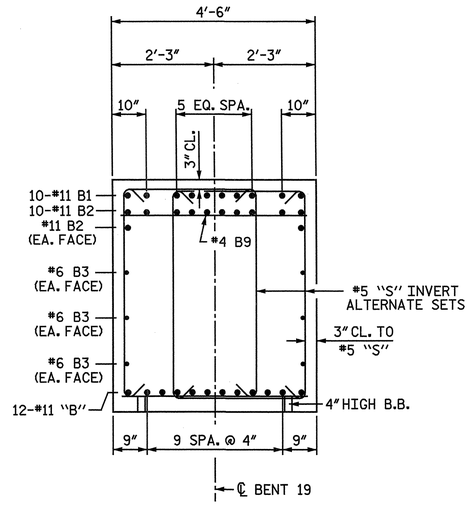

SECTION B-B

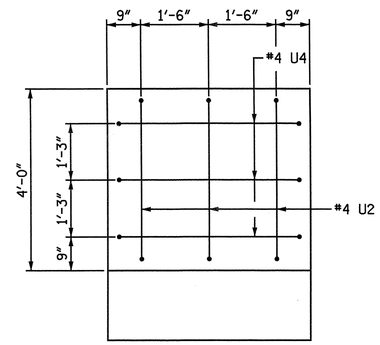

VIEW C-C

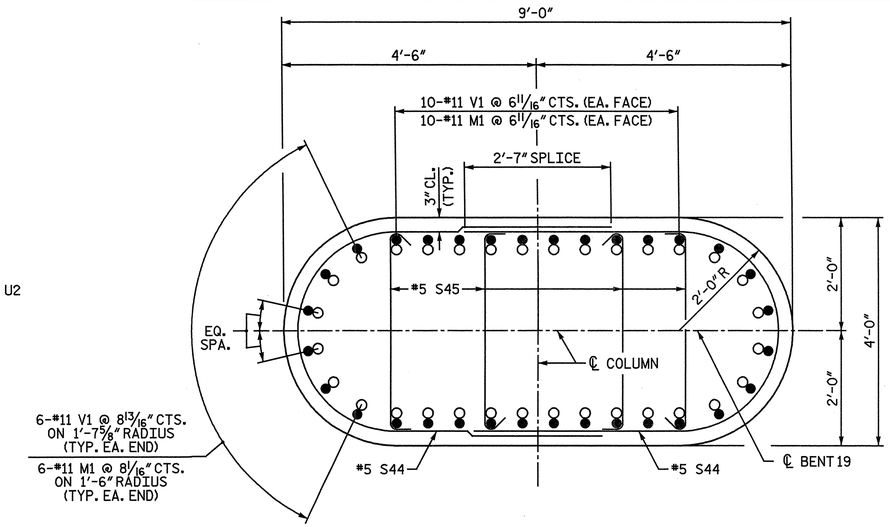

SECTION D-D

NOTE: WHEN PLACING CROSS-TIES, ALTERNATE THE POSITION OF THE 180-DEGREE HOOKS HORIZONTALLY AND VERTICALLY.

○ #11 M1
● #11 V1

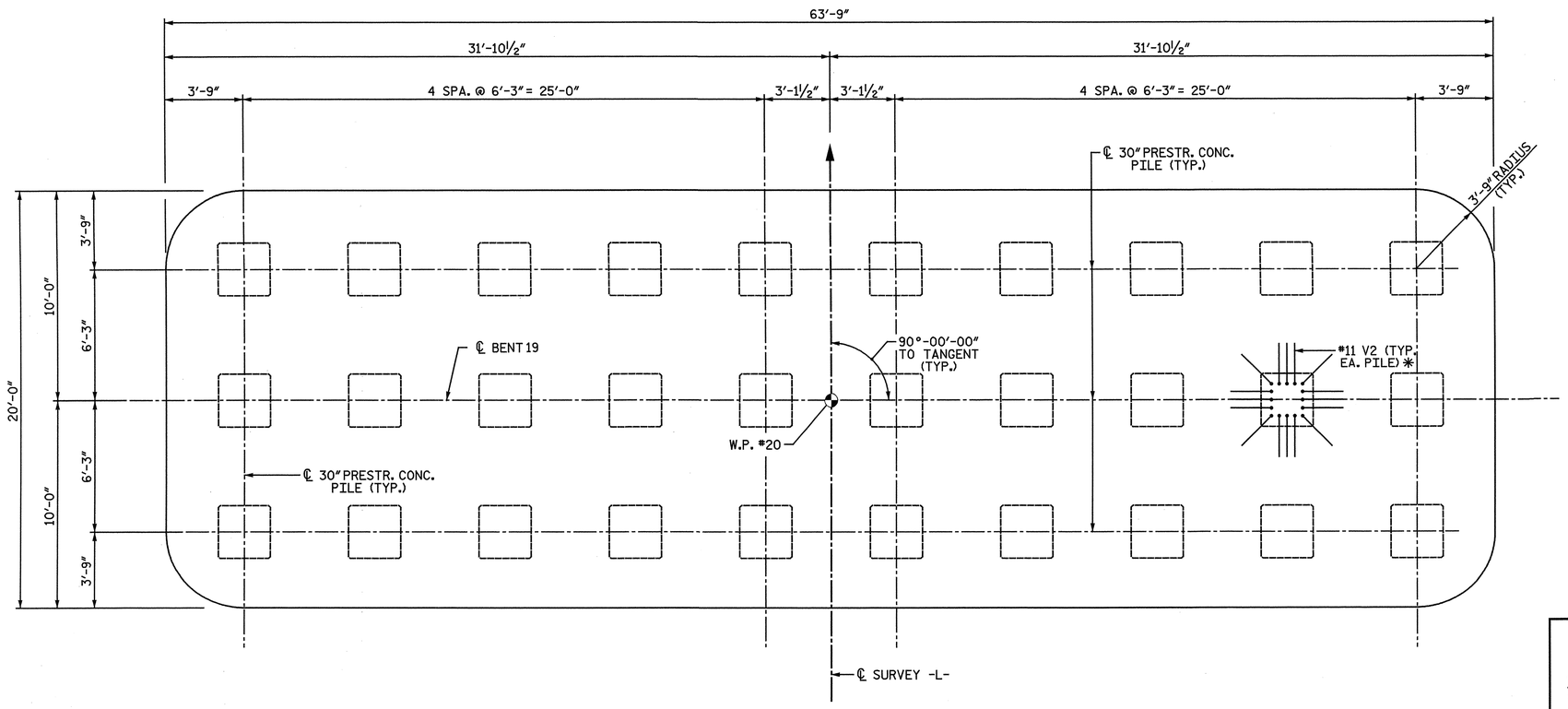

FOOTING PLAN

✱ V2 BARS FOR ALL OTHER PILES OMITTED FOR CLARITY

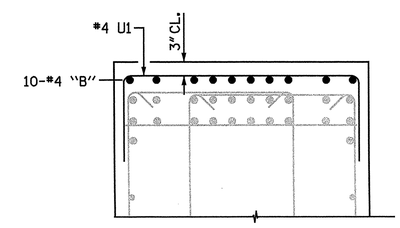

SECTION E-E

PROJECT NO. R-3307
CARTERET COUNTY
STATION: 46+21.50 -L-

SHEET 2 OF 4

STATE OF NORTH CAROLINA
DEPARTMENT OF TRANSPORTATION
RALEIGH

SUBSTRUCTURE

BENT 19
FOOTING AND SECTIONS

NORTH CAROLINA PROFESSIONAL SEAL 25911 ENGINEER DWAIN G. HATHMAN 4-3-2012

NORTH CAROLINA PROFESSIONAL SEAL 033752 ENGINEER SETH A. DENNEY

THE LPA GROUP of North Carolina TRANSPORTATION CONSULTANTS

THE LPA GROUP of North Carolina
8000 Regency Parkway, Suite 600
Cary, North Carolina 27518
NC License No. : F-1084

REVISIONS						SHEET NO.
NO.	BY:	DATE:	NO.	BY:	DATE:	S-246
1			3			TOTAL SHEETS
2			4			333

DRAWN BY : M. D. MAYHEW DATE : 11-14-11
CHECKED BY : A. L. PHILLIPS DATE : 11-14-11

DWG. 247 OF 282

4/20/2012
8:45:34 AM
User: jaustin
Filename: Y:\Projects\NCDOT\R-3307\Dwgs\Final\R-3307_247_SD_B19_2.dgn

NOTES:

TOF = TOP OF FOOTING

V2 BARS IN PILES OMITTED FOR CLARITY.

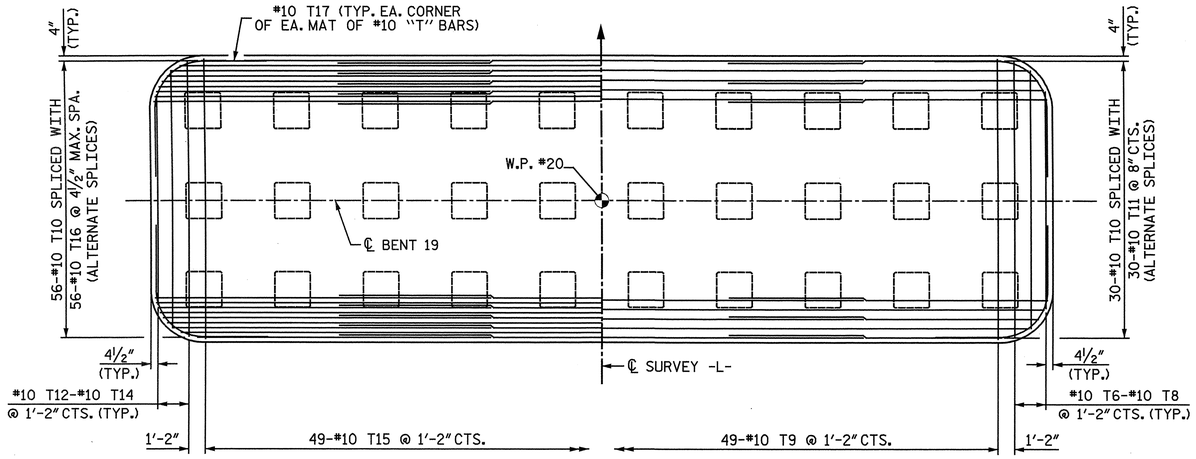

PARTIAL FOOTING PLAN
(TOP OF FOOTING REINFORCING SHOWN)

PARTIAL FOOTING PLAN
(BOTTOM OF FOOTING REINFORCING, ABOVE PILES, SHOWN)

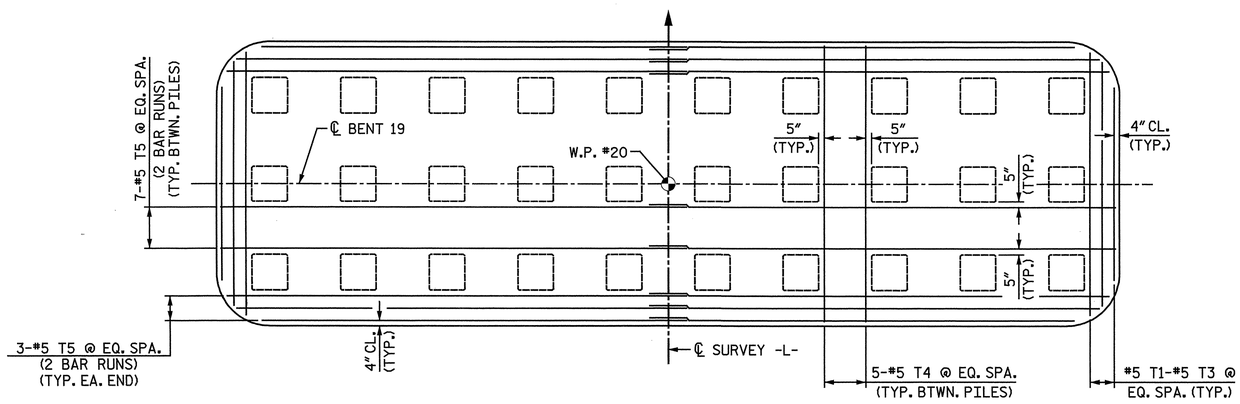

FOOTING PLAN
(BOTTOM OF FOOTING BETWEEN PILES)

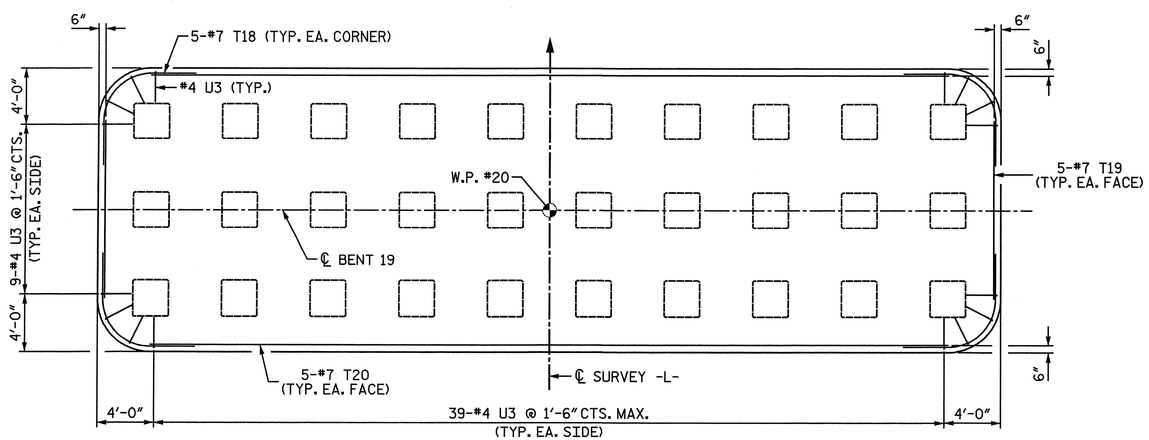

FOOTING PLAN
(TEMPERATURE REINFORCING)

PROJECT NO. R-3307

CARTERET COUNTY

STATION: 46+21.50 -L-

SHEET 3 OF 4

STATE OF NORTH CAROLINA
DEPARTMENT OF TRANSPORTATION
RALEIGH

SUBSTRUCTURE

BENT 19
PLAN OF FOOTING

NORTH CAROLINA PROFESSIONAL SEAL 25911 ENGINEER DWAIN G. HATHAWAY 4-3-2012

NORTH CAROLINA PROFESSIONAL SEAL 033752 ENGINEER SETH A. DENNEY 4/02/12

THE LPA GROUP of North Carolina TRANSPORTATION CONSULTANTS

THE LPA GROUP of North Carolina
8000 Regency Parkway, Suite 600
Cary, North Carolina 27518
NC License No.: F-1084

REVISIONS						SHEET NO.
NO.	BY:	DATE:	NO.	BY:	DATE:	S-247
1			3			TOTAL SHEETS
2			4			333

DRAWN BY : M. D. MAYHEW DATE : 11-14-11
CHECKED BY : A. L. PHILLIPS DATE : 11-14-11

DWG. 248 OF 282

4/2/2012
12:45: PM
User: jaustin
Filename: Y:\Projects\NCDOT\R-3307\Dwgs\Final\R-3307_248_SD_B19_3.dgn

BAR TYPES

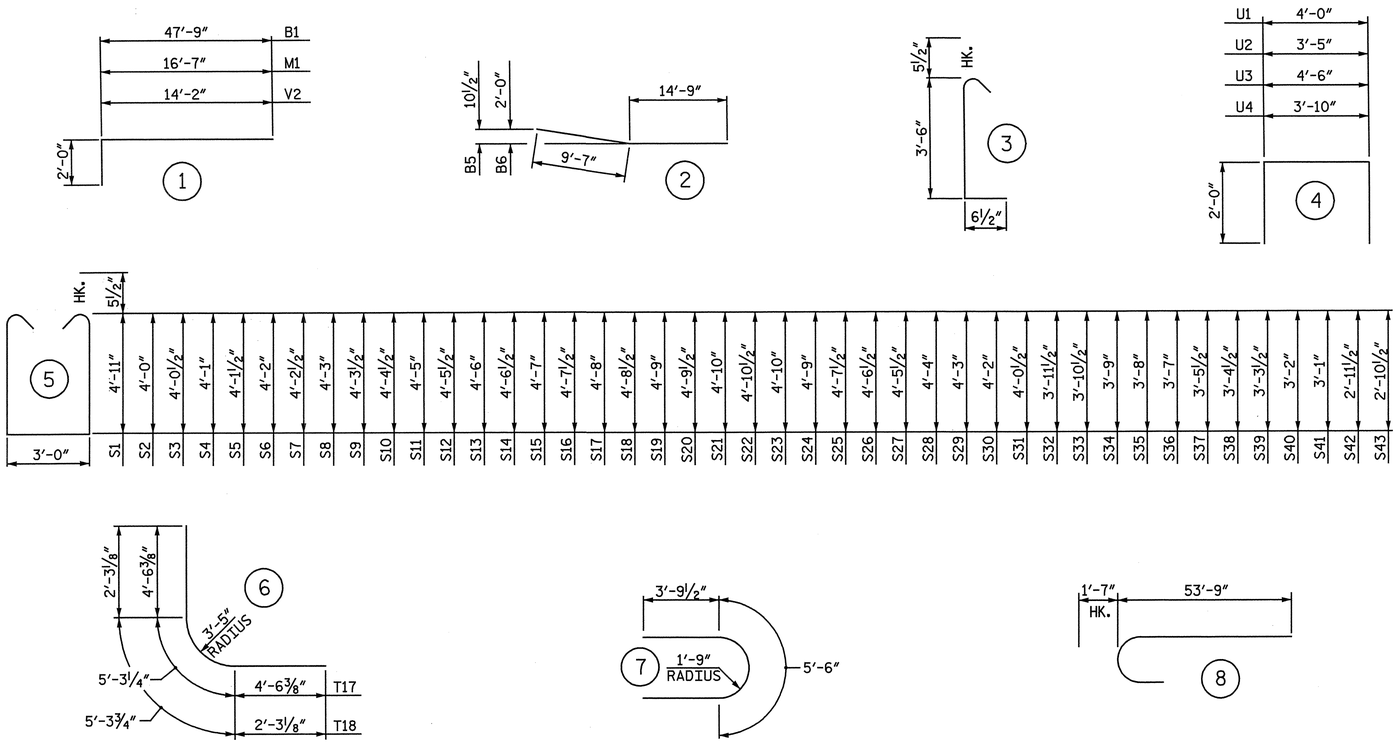

ALL BAR DIMENSIONS ARE OUT TO OUT.

BILL OF MATERIAL
BENT 19

BAR	NO.	SIZE	TYPE	LENGTH	WEIGHT
B1	20	11	1	49' - 9"	5,286
B2	24	11	STR	47' - 9"	6,089
B3	12	6	STR	41' - 8"	751
B4	12	11	STR	60' - 0"	3,825
B5	12	11	2	24' - 4"	1,551
B6	12	11	2	24' - 4"	1,551
B7	80	4	STR	6' - 6"	347
B8	10	4	STR	3' - 9"	25
B9	19	4	STR	4' - 2"	53
M1	64	11	1	18' - 7"	6,319
S1	128	5	5	13' - 9"	1,836
S2	2	5	5	11' - 11"	25
S3	2	5	5	12' - 0"	25
S4	2	5	5	12' - 1"	25
S5	2	5	5	12' - 2"	25
S6	2	5	5	12' - 3"	26
S7	2	5	5	12' - 4"	26
S8	2	5	5	12' - 5"	26
S9	2	5	5	12' - 6"	26
S10	2	5	5	12' - 8"	26
S11	2	5	5	12' - 9"	27
S12	2	5	5	12' - 10"	27
S13	2	5	5	12' - 11"	27
S14	2	5	5	13' - 0"	27
S15	2	5	5	13' - 1"	27
S16	2	5	5	13' - 2"	27
S17	2	5	5	13' - 3"	28
S18	2	5	5	13' - 4"	28
S19	2	5	5	13' - 5"	28
S20	2	5	5	13' - 6"	28
S21	2	5	5	13' - 7"	28
S22	2	5	5	13' - 8"	29
S23	2	5	5	13' - 7"	28
S24	2	5	5	13' - 5"	28
S25	2	5	5	13' - 2"	27
S26	2	5	5	13' - 0"	27
S27	2	5	5	12' - 10"	27
S28	2	5	5	12' - 7"	26
S29	2	5	5	12' - 5"	26
S30	2	5	5	12' - 3"	26
S31	2	5	5	12' - 0"	25
S32	2	5	5	11' - 10"	25
S33	2	5	5	11' - 8"	24
S34	2	5	5	11' - 5"	24
S35	2	5	5	11' - 3"	23
S36	2	5	5	11' - 1"	23
S37	2	5	5	10' - 10"	23
S38	2	5	5	10' - 8"	22
S39	2	5	5	10' - 6"	22
S40	2	5	5	10' - 3"	21
S41	2	5	5	10' - 1"	21
S42	2	5	5	9' - 10"	21
S43	2	5	5	9' - 8"	20
S44	202	5	7	13' - 1"	2,756
S45	404	5	3	4' - 6"	1,896

BAR	NO.	SIZE	TYPE	LENGTH	WEIGHT
T1	2	5	STR	18' - 5"	38
T2	2	5	STR	17' - 0"	35
T3	2	5	STR	12' - 6"	26
T4	45	5	STR	19' - 4"	907
T5	40	5	STR	32' - 10"	1,370
T6	2	10	STR	19' - 0"	164
T7	2	10	STR	17' - 8"	152
T8	2	10	STR	13' - 6"	116
T9	49	10	STR	19' - 4"	4,076
T10	86	10	STR	50' - 0"	18,503
T11	30	10	STR	25' - 0"	3,227
T12	2	10	STR	13' - 6"	116
T13	2	10	STR	17' - 8"	152
T14	2	10	STR	19' - 0"	164
T15	49	10	STR	19' - 4"	4,076
T16	56	10	STR	26' - 9"	6,446
T17	8	10	6	14' - 4"	493
T18	20	7	6	9' - 10"	402
T19	10	7	STR	12' - 6"	256
T20	10	7	STR	56' - 3"	1,150
U1	80	4	4	8' - 0"	428
U2	6	4	4	7' - 5"	30
U3	104	4	4	8' - 6"	591
U4	6	4	4	7' - 10"	31
V1	64	11	8	55' - 4"	18,815
V2	480	11	1	16' - 2"	41,229

EPOXY COATED
REINFORCING STEEL LBS. 136,348

CLASS "AA" CONCRETE BREAKDOWN

POUR #1 - FOOTINGS	C.Y.	325.4
POUR #2 - COLUMNS	C.Y.	119.5
POUR #3 - CAP	C.Y.	74.5
TOTAL CLASS "AA" CONCRETE	C.Y.	519.4

30" PRESTRESSED CONCRETE PILES
NO. 30 LIN FT. 2,646

PILE REDRIVES NO. 7

PROJECT NO. R-3307
CARTERET COUNTY
STATION: 46+21.50 -L-

SHEET 4 OF 4

STATE OF NORTH CAROLINA
DEPARTMENT OF TRANSPORTATION
RALEIGH

SUBSTRUCTURE

BENT 19
BILL OF MATERIAL

NORTH CAROLINA PROFESSIONAL SEAL 25911 ENGINEER DWAIN C. HATHAWAY 4-30-12

NORTH CAROLINA PROFESSIONAL SEAL 033752 ENGINEER SETH A. DENNEY 4/30/12

THE LPA GROUP of North Carolina TRANSPORTATION CONSULTANTS

THE LPA GROUP of North Carolina
8000 Regency Parkway, Suite 600
Cary, North Carolina 27518
NC License No.: F-1084

REVISIONS								SHEET NO.
NO.	BY:	DATE:	NO.	BY:	DATE:			S-2A8
1			3					TOTAL SHEETS
2			4					333

DRAWN BY : M. D. MAYHEW DATE : 12-1-11
CHECKED BY : A. L. PHILLIPS DATE : 12-16-11

DWG. 249 OF 282

4/20/2012
8:45:37 AM
User: jaustin
Filename: Y:\Projects\NCDOT\R-3307\Dwgs\Final\R-3307_249_SD_B19_4.dgn

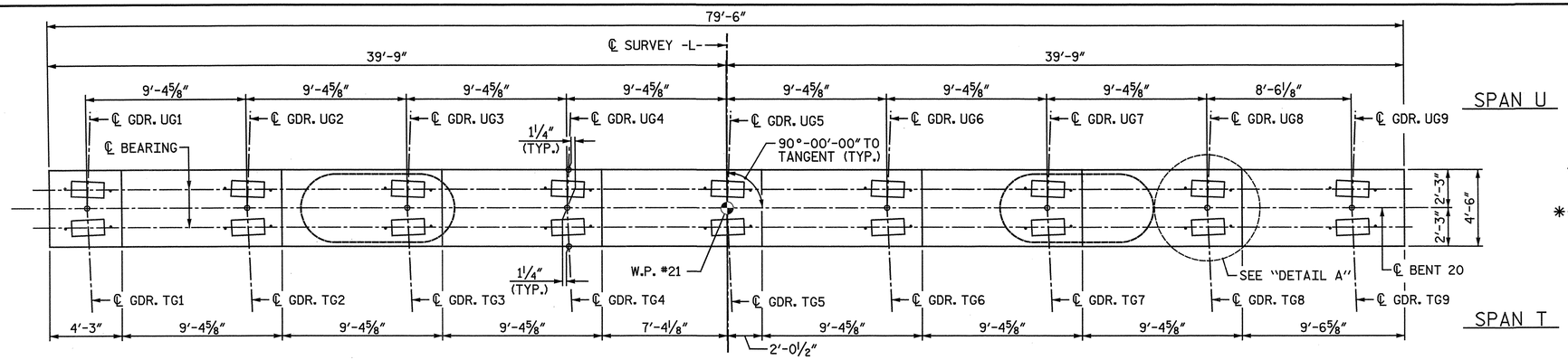

PLAN

NOTES:

STIRRUPS IN CAP MAY BE SHIFTED AS NECESSARY TO CLEAR ANCHOR BOLTS.

ALTERNATELY INVERT STIRRUP PAIRS AS NOTED.

FOR FOUNDATION NOTES, SEE "GENERAL DRAWING FOUNDATION LAYOUT" SHEET 4 OF 4.

✱ THE FOOTING HAS A DROP OF 2½" FROM THE CENTER OF THE FOOTING TO THE EDGE OF FOOTING TO ACCOMODATE DRAINAGE.

✱✱ V2 BARS FOR ALL OTHER PILES WERE OMITTED FOR CLARITY.

FOR FOOTING REINFORCING DETAILS, SEE SHEET 3 OF 4.

FOR SECTION A-A, SECTION B-B, VIEW C-C, AND SECTION D-D, AND SECTION E-E, SEE SHEET 2 OF 4.

TOF = TOP OF FOOTING

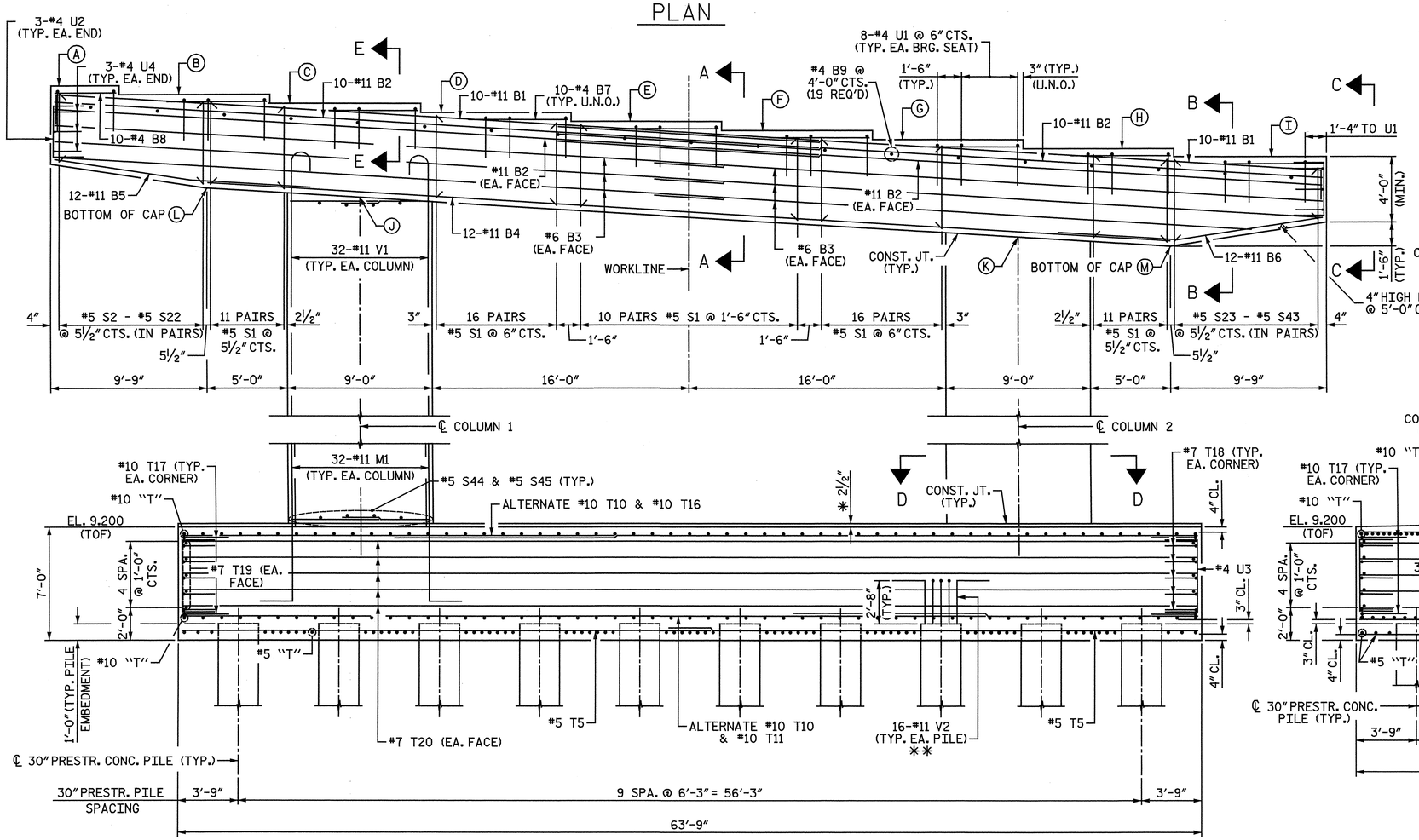

ELEVATION

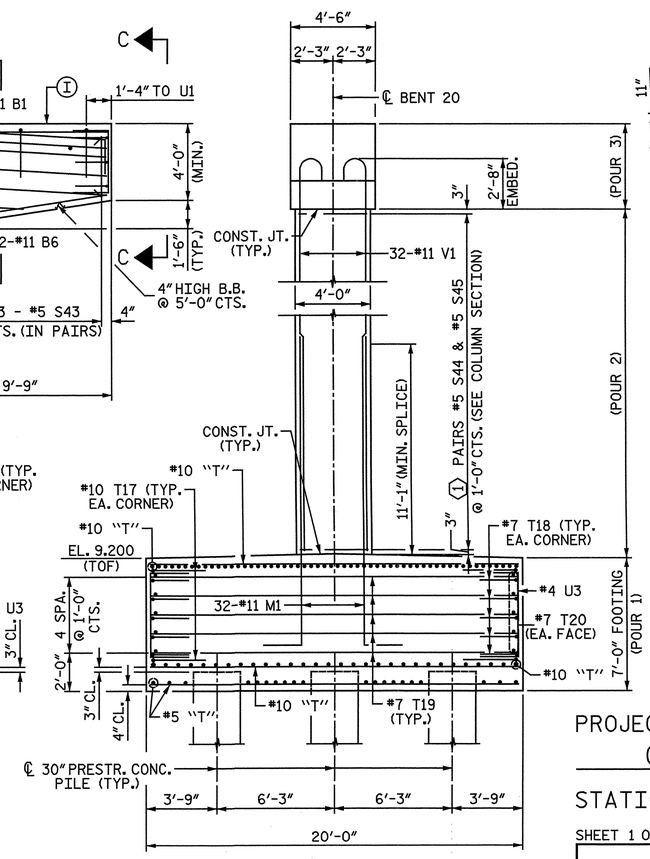

END VIEW

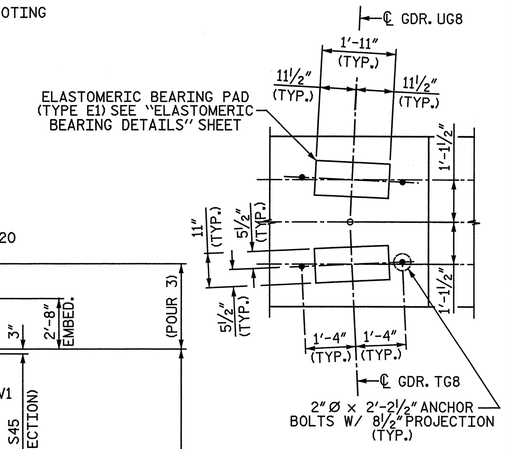

DETAIL A

PROJECT NO. R-3307

CARTERET COUNTY

STATION: 46+21.50 -L-

SHEET 1 OF 4

ELEVATION TABLE													
BENT	A	B	C	D	E	F	G	H	I	J	K	L	M
20	63.528	62.966	62.403	61.840	61.276	60.712	60.149	59.585	59.074	56.604	54.144	57.174	53.574

MINIMUM SPLICE LENGTH	
#11 B1	16'-6"
#11 B2	16'-6"
#6 B3	4'-3"
#5 T5	2'-7"
#10 T11	11'-11"
#10 T16	13'-8"

COLUMN	①
1	48
2	46

NORTH CAROLINA PROFESSIONAL SEAL 25911 ENGINEER DAN G. HATHAWAY

NORTH CAROLINA PROFESSIONAL SEAL 033752 ENGINEER SETH A. DENNICK

THE LPA GROUP of North Carolina TRANSPORTATION CONSULTANTS

THE LPA GROUP of North Carolina
8000 Regency Parkway, Suite 600
Cary, North Carolina 27518
NC License No.: F-1084

STATE OF NORTH CAROLINA
DEPARTMENT OF TRANSPORTATION
RALEIGH

SUBSTRUCTURE

BENT 20
PLAN AND ELEVATION

REVISIONS								SHEET NO.
NO.	BY:	DATE:	NO.	BY:	DATE:			S-249
1			3					TOTAL SHEETS
2			4					333

DRAWN BY : M. D. MAYHEW DATE : 11-14-11
CHECKED BY : A. L. PHILLIPS DATE : 11-14-11

DWG. 250 OF 282

4/20/2012
8:45:40 AM
User: jaustin
Filename: Y:\Projects\NCDOT\R-3307\Dwgs\Final\R-3307_250_SD_B20_1.dgn

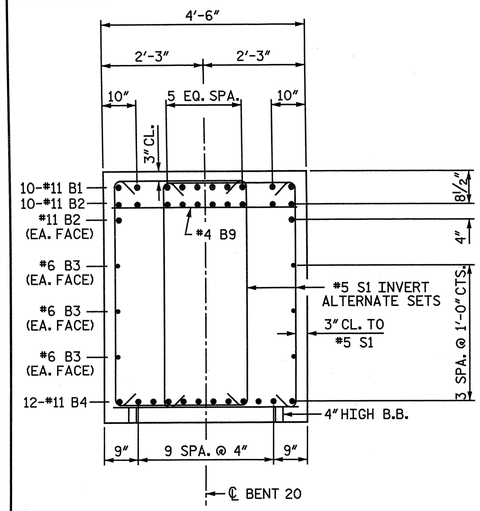

SECTION A-A

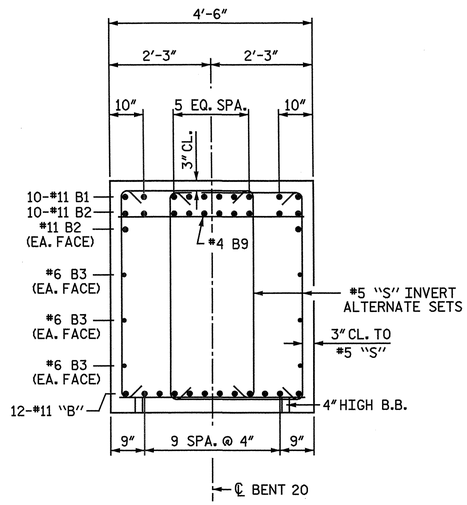

SECTION B-B

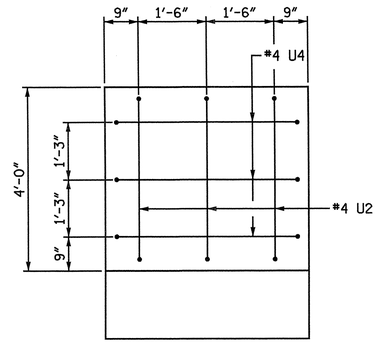

VIEW C-C

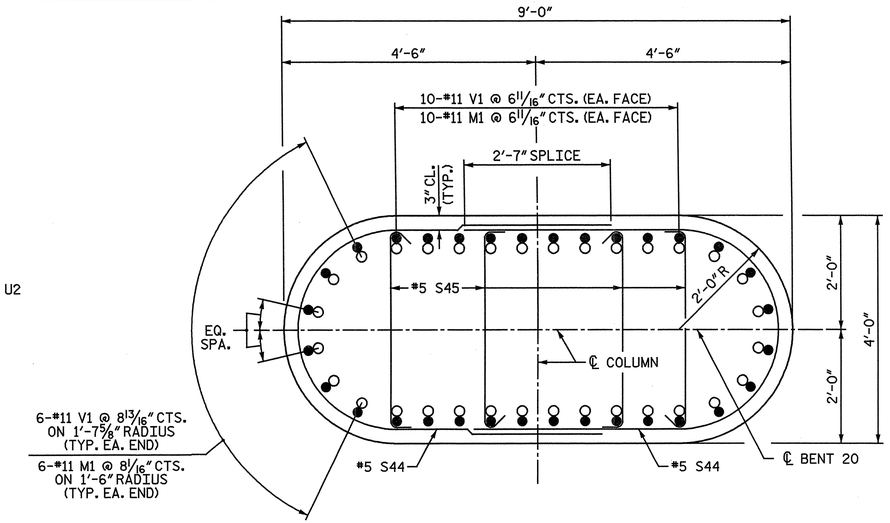

SECTION D-D

NOTE: WHEN PLACING CROSS-TIES, ALTERNATE THE POSITION OF THE 180-DEGREE HOOKS HORIZONTALLY AND VERTICALLY.

○ #11 M1
● #11 V1

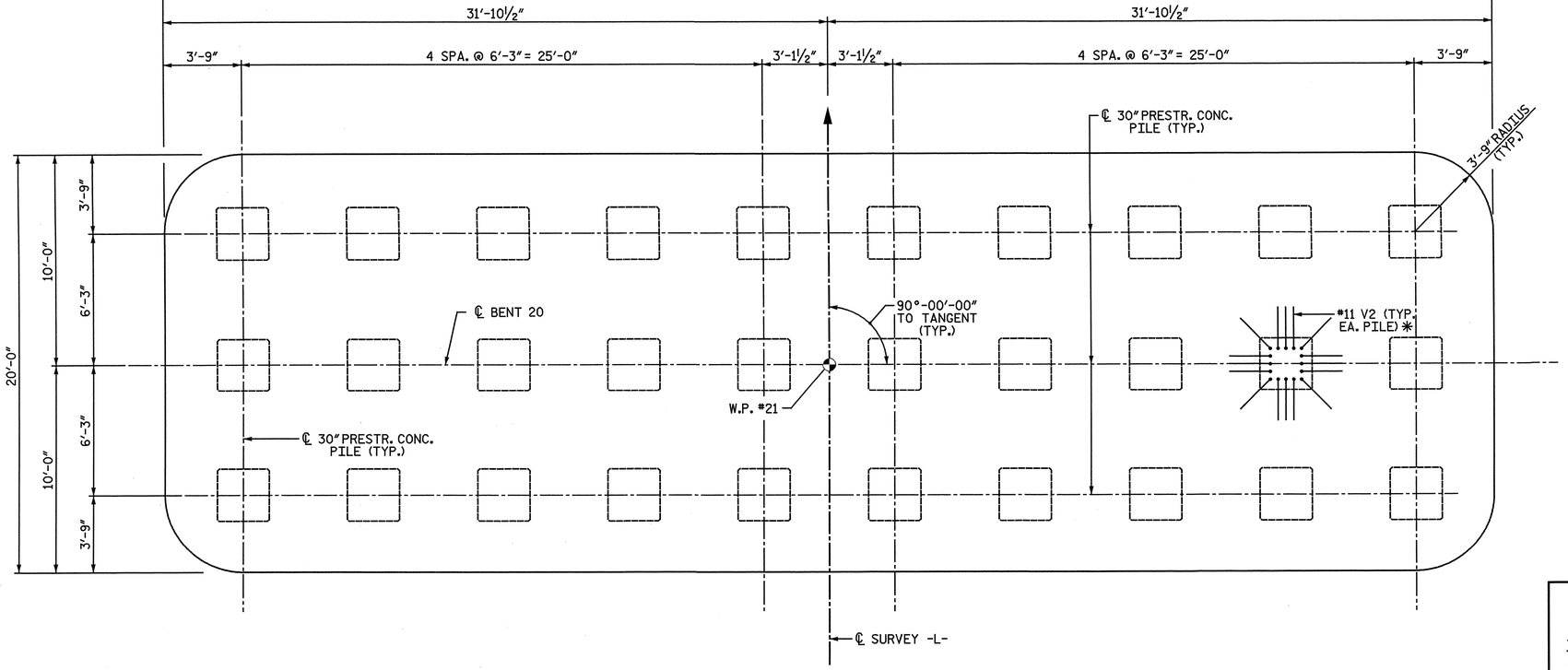

FOOTING PLAN

✱ V2 BARS FOR ALL OTHER PILES OMITTED FOR CLARITY

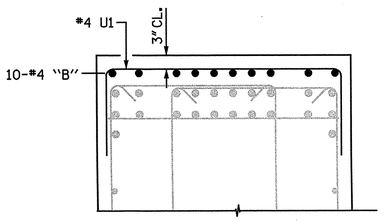

SECTION E-E

PROJECT NO. R-3307

CARTERET COUNTY

STATION: 46+21.50 -L-

SHEET 2 OF 4

STATE OF NORTH CAROLINA
DEPARTMENT OF TRANSPORTATION
RALEIGH

SUBSTRUCTURE

BENT 20
FOOTING AND SECTIONS

NORTH CAROLINA PROFESSIONAL SEAL 25911 ENGINEER DWAIN G. HATHAWAY 4-3-2012

NORTH CAROLINA PROFESSIONAL SEAL 033752 ENGINEER SETH A. DENNEY 4/18/12

THE LPA GROUP of North Carolina TRANSPORTATION CONSULTANTS

THE LPA GROUP of North Carolina
8000 Regency Parkway, Suite 600
Cary, North Carolina 27518
NC License No.: F-1084

REVISIONS						SHEET NO.
NO.	BY:	DATE:	NO.	BY:	DATE:	S-250
1			3			TOTAL SHEETS
2			4			333

DRAWN BY : M. D. MAYHEW DATE : 11-14-11
CHECKED BY : A. L. PHILLIPS DATE : 11-14-11

DWG. 251 OF 282

4/20/2012
8:45:45 AM
User: jaustin
Filename: Y:\Projects\NCDOT\R-3307\Dwgs\Final\R-3307_251_SD_B20_2.dgn

NOTES:

TOF = TOP OF FOOTING

V2 BARS IN PILES OMITTED FOR CLARITY.

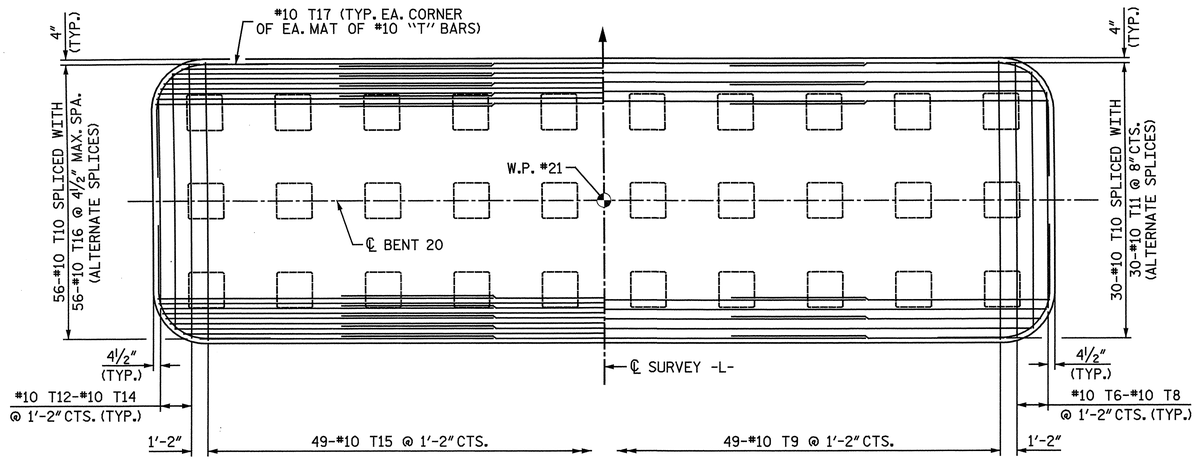

PARTIAL FOOTING PLAN
(TOP OF FOOTING REINFORCING SHOWN)

PARTIAL FOOTING PLAN
(BOTTOM OF FOOTING REINFORCING, ABOVE PILES, SHOWN)

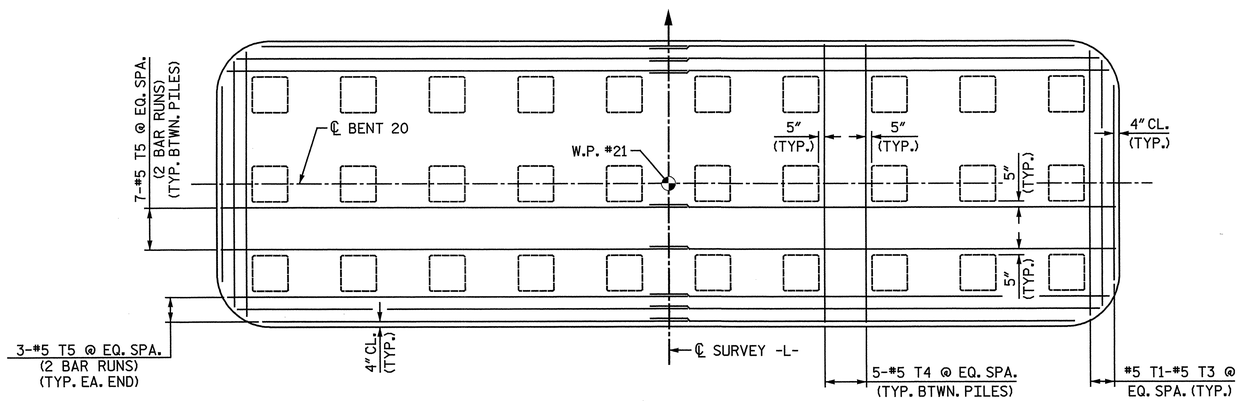

FOOTING PLAN
(BOTTOM OF FOOTING BETWEEN PILES)

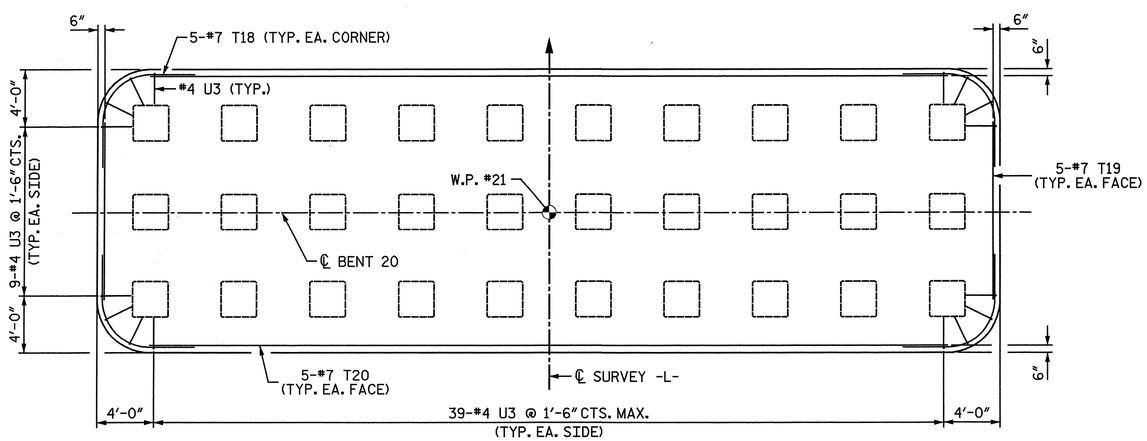

FOOTING PLAN
(TEMPERATURE REINFORCING)

PROJECT NO. R-3307

CARTERET COUNTY

STATION: 46+21.50 -L-

SHEET 3 OF 4

STATE OF NORTH CAROLINA
DEPARTMENT OF TRANSPORTATION
RALEIGH

SUBSTRUCTURE

BENT 20
PLAN OF FOOTING

NORTH CAROLINA PROFESSIONAL SEAL 25911 ENGINEER DUANE G. HATHAWAY 4-3-2012

NORTH CAROLINA PROFESSIONAL SEAL 033752 ENGINEER SETH A. DENNIS 04/03/12

THE LPA GROUP of North Carolina TRANSPORTATION CONSULTANTS

THE LPA GROUP of North Carolina
8000 Regency Parkway, Suite 600
Cary, North Carolina 27518
NC License No.: F-1084

REVISIONS						SHEET NO.
NO.	BY:	DATE:	NO.	BY:	DATE:	S-251
1			3			TOTAL SHEETS
2			4			333

DRAWN BY: M. D. MAYHEW DATE: 11-14-11

CHECKED BY: A. L. PHILLIPS DATE: 11-14-11

DWG. 252 OF 282

4/2/2012 12:45:_ PM
User: jaustin
Filename: Y:\Projects\NCDOT\R-3307\Dwgs\Final\R-3307_252_SD_B20_3.dgn

BAR TYPES

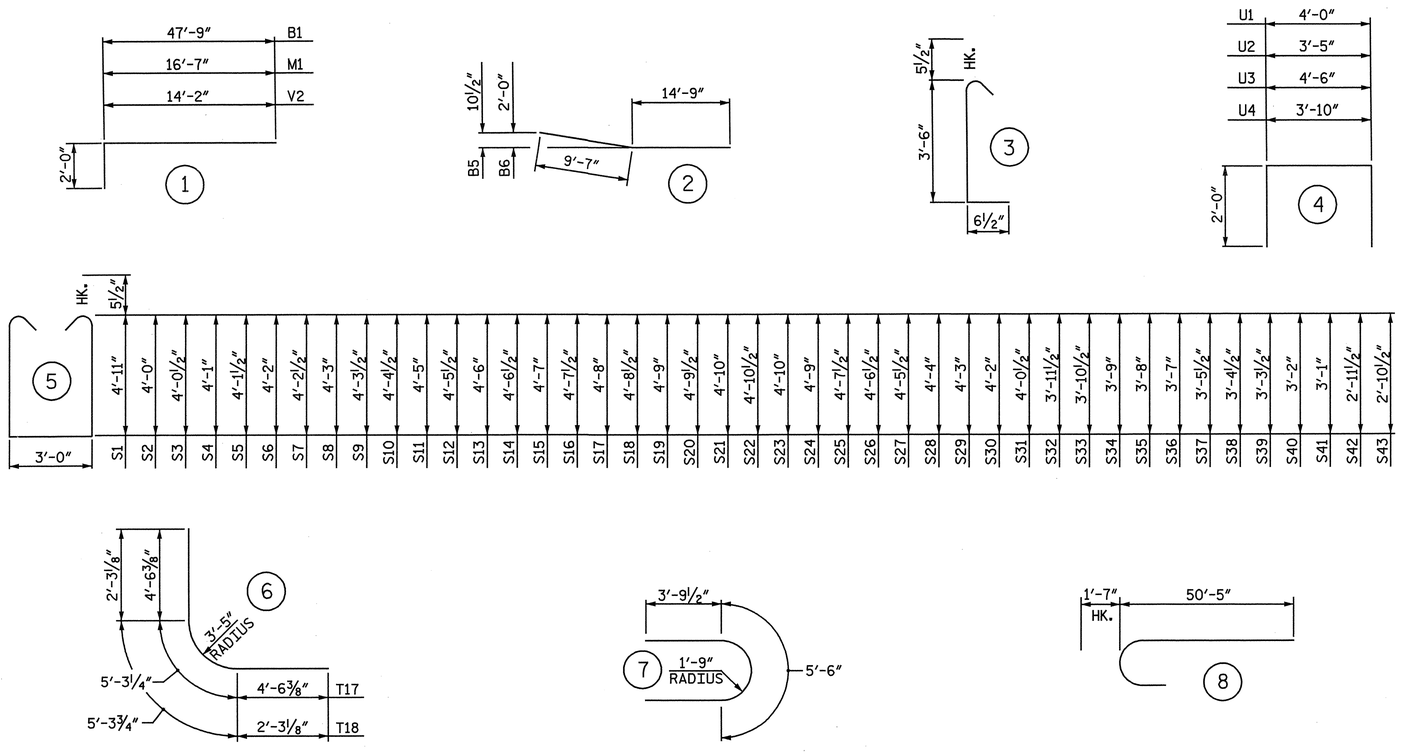

ALL BAR DIMENSIONS ARE OUT TO OUT.

BILL OF MATERIAL
BENT 20

BAR	NO.	SIZE	TYPE	LENGTH	WEIGHT
B1	20	11	1	49′ - 9″	5,286
B2	24	11	STR	47′ - 9″	6,089
B3	12	6	STR	41′ - 8″	751
B4	12	11	STR	60′ - 0″	3,825
B5	12	11	2	24′ - 4″	1,551
B6	12	11	2	24′ - 4″	1,551
B7	80	4	STR	6′ - 6″	347
B8	10	4	STR	3′ - 9″	25
B9	19	4	STR	4′ - 2″	53
M1	64	11	1	18′ - 7″	6,319
S1	128	5	5	13′ - 9″	1,836
S2	2	5	5	11′ - 11″	25
S3	2	5	5	12′ - 0″	25
S4	2	5	5	12′ - 1″	25
S5	2	5	5	12′ - 2″	25
S6	2	5	5	12′ - 3″	26
S7	2	5	5	12′ - 4″	26
S8	2	5	5	12′ - 5″	26
S9	2	5	5	12′ - 6″	26
S10	2	5	5	12′ - 8″	26
S11	2	5	5	12′ - 9″	27
S12	2	5	5	12′ - 10″	27
S13	2	5	5	12′ - 11″	27
S14	2	5	5	13′ - 0″	27
S15	2	5	5	13′ - 1″	27
S16	2	5	5	13′ - 2″	27
S17	2	5	5	13′ - 3″	28
S18	2	5	5	13′ - 4″	28
S19	2	5	5	13′ - 5″	28
S20	2	5	5	13′ - 6″	28
S21	2	5	5	13′ - 7″	28
S22	2	5	5	13′ - 8″	29
S23	2	5	5	13′ - 7″	28
S24	2	5	5	13′ - 5″	28
S25	2	5	5	13′ - 2″	27
S26	2	5	5	13′ - 0″	27
S27	2	5	5	12′ - 10″	27
S28	2	5	5	12′ - 7″	26
S29	2	5	5	12′ - 5″	26
S30	2	5	5	12′ - 3″	26
S31	2	5	5	12′ - 0″	25
S32	2	5	5	11′ - 10″	25
S33	2	5	5	11′ - 8″	24
S34	2	5	5	11′ - 5″	24
S35	2	5	5	11′ - 3″	23
S36	2	5	5	11′ - 1″	23
S37	2	5	5	10′ - 10″	23
S38	2	5	5	10′ - 8″	22
S39	2	5	5	10′ - 6″	22
S40	2	5	5	10′ - 3″	21
S41	2	5	5	10′ - 1″	21
S42	2	5	5	9′ - 10″	21
S43	2	5	5	9′ - 8″	20
S44	188	5	7	13′ - 1″	2,565
S45	376	5	3	4′ - 6″	1,765

BAR	NO.	SIZE	TYPE	LENGTH	WEIGHT
T1	2	5	STR	18′ - 5″	38
T2	2	5	STR	17′ - 0″	35
T3	2	5	STR	12′ - 6″	26
T4	45	5	STR	19′ - 4″	907
T5	40	5	STR	32′ - 10″	1,370
T6	2	10	STR	19′ - 0″	164
T7	2	10	STR	17′ - 8″	152
T8	2	10	STR	13′ - 6″	116
T9	49	10	STR	19′ - 4″	4,076
T10	86	10	STR	50′ - 0″	18,503
T11	30	10	STR	25′ - 0″	3,227
T12	2	10	STR	13′ - 6″	116
T13	2	10	STR	17′ - 8″	152
T14	2	10	STR	19′ - 0″	164
T15	49	10	STR	19′ - 4″	4,076
T16	56	10	STR	26′ - 9″	6,446
T17	8	10	6	14′ - 4″	493
T18	20	7	6	9′ - 10″	402
T19	10	7	STR	12′ - 6″	256
T20	10	7	STR	56′ - 3″	1,150
U1	80	4	4	8′ - 0″	428
U2	6	4	4	7′ - 5″	30
U3	104	4	4	8′ - 6″	591
U4	6	4	4	7′ - 10″	31
V1	64	11	8	52′ - 0″	17,682
V2	480	11	1	16′ - 2″	41,229

EPOXY COATED
REINFORCING STEEL LBS. 134,893

CLASS "AA" CONCRETE BREAKDOWN

POUR #1 - FOOTINGS C.Y. 325.4
POUR #2 - COLUMNS C.Y. 111.5
POUR #3 - CAP C.Y. 74.6

TOTAL CLASS "AA" CONCRETE C.Y. 511.5

30″ PRESTRESSED CONCRETE PILES
NO. 30 LIN FT. 2,646

PILE REDRIVES NO. 7

PDA TESTING EA. 1

PROJECT NO. R-3307
CARTERET COUNTY
STATION: 46+21.50 -L-

SHEET 4 OF 4

STATE OF NORTH CAROLINA
DEPARTMENT OF TRANSPORTATION
RALEIGH

SUBSTRUCTURE

BENT 20
BILL OF MATERIAL

NORTH CAROLINA PROFESSIONAL SEAL 25911 ENGINEER DWAIN G. HATHAWAY 4-3-2012

NORTH CAROLINA PROFESSIONAL SEAL 033752 ENGINEER SETH A. DENNEY 4/03/12

THE LPA GROUP of North Carolina TRANSPORTATION CONSULTANTS

THE LPA GROUP of North Carolina
8000 Regency Parkway, Suite 600
Cary, North Carolina 27518
NC License No.: F-1084

REVISIONS						SHEET NO.
NO.	BY:	DATE:	NO.	BY:	DATE:	S-252
1			3			TOTAL SHEETS
2			4			333

DRAWN BY : M. D. MAYHEW DATE : 12-1-11
CHECKED BY : A. L. PHILLIPS DATE : 1-3-12

DWG. 253 OF 282

4/2. 2012
8:45:48 AM
User: jaustin
Filename: Y:\Projects\NCDOT\R-3307\Dwgs\Final\R-3307_253_SD_B20_4.dgn

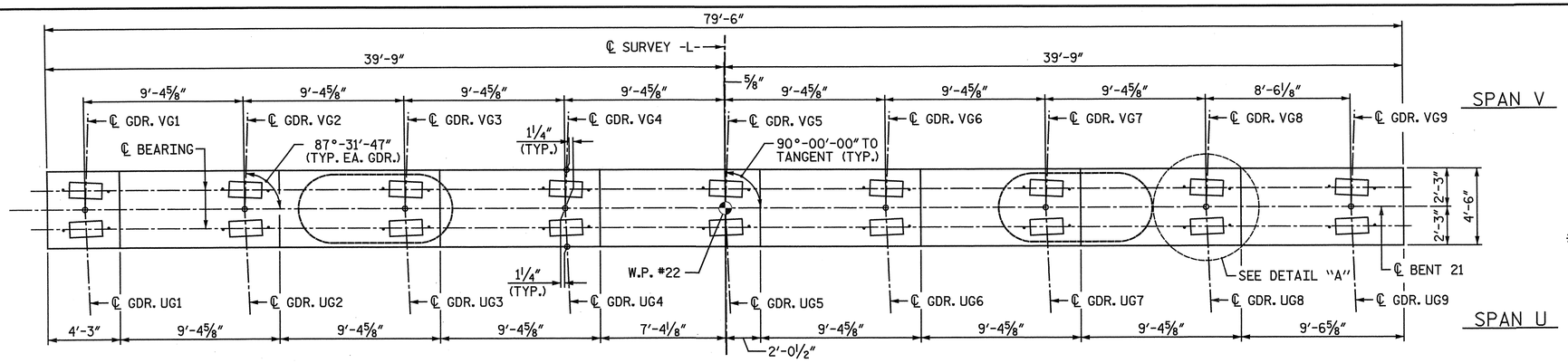

PLAN

NOTE: THE TOP SURFACE AREAS OF THE BENT CAPS SHALL BE CURED IN ACCORDANCE WITH THE STANDARD SPECIFICATIONS EXCEPT THE MEMBRANE CURING COMPOUND METHOD SHALL NOT BE USED.

NOTES:

STIRRUPS IN CAP MAY BE SHIFTED AS NECESSARY TO CLEAR ANCHOR BOLTS.

ALTERNATELY INVERT STIRRUP PAIRS AS NOTED.

FOR FOUNDATION NOTES, SEE "GENERAL DRAWING FOUNDATION LAYOUT" SHEET 4 OF 4.

FOR FOOTING REINFORCING DETAILS, SEE SHEET 2 OF 3.

FOR SECTION A-A, SECTION B-B, VIEW C-C, SECTION D-D, AND SECTION E-E, SEE SHEET 2 OF 3.

✱ THE FOOTING HAS A DROP OF 2½" FROM THE CENTER OF THE FOOTING TO THE EDGE OF FOOTING TO ACCOMODATE DRAINAGE.

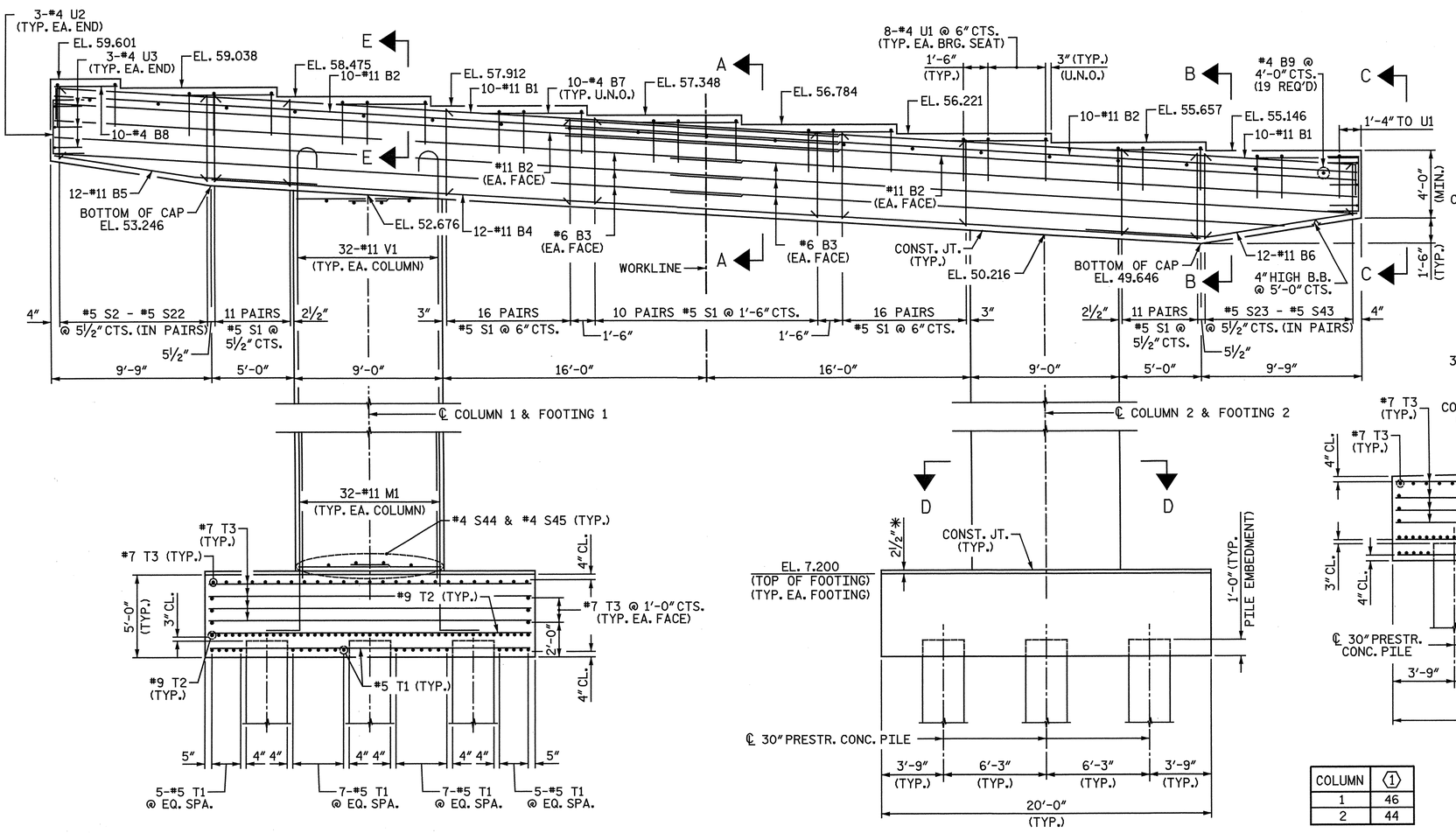

ELEVATION

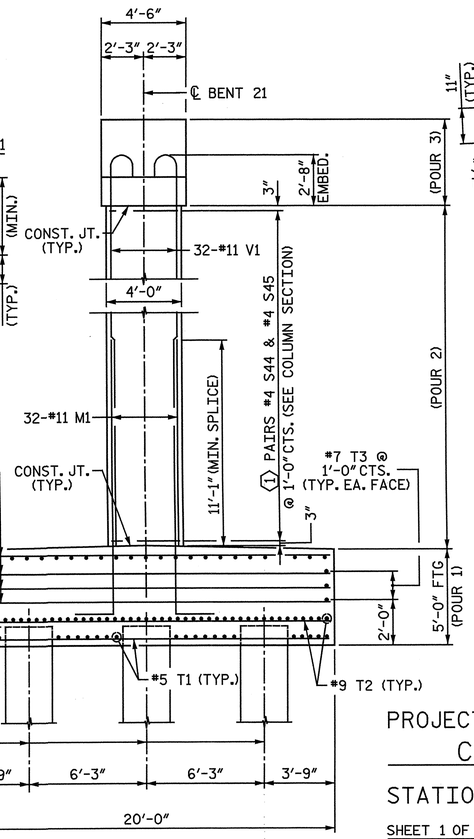

END VIEW

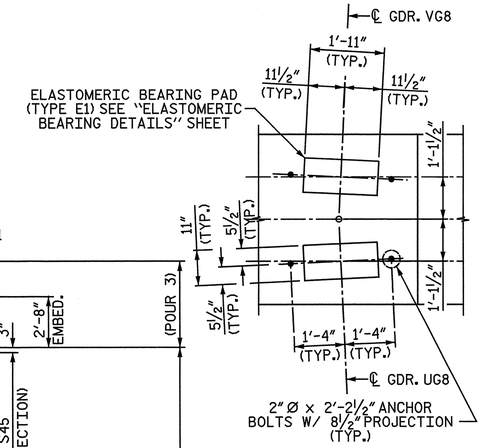

DETAIL A

COLUMN	①
1	46
2	44

MINIMUM SPLICE LENGTH	
#11 B1	16'-6"
#11 B2	16'-6"
#6 B3	4'-3"

PROJECT NO. R-3307

CARTERET COUNTY

STATION: 46+21.50 -L-

SHEET 1 OF 3

STATE OF NORTH CAROLINA
DEPARTMENT OF TRANSPORTATION
RALEIGH

SUBSTRUCTURE

BENT 21 PLAN AND ELEVATION

NORTH CAROLINA PROFESSIONAL SEAL 25911 ENGINEER IRWIN G. HATHAWAY

NORTH CAROLINA PROFESSIONAL SEAL 033752 ENGINEER SETH A. DENNEY

THE LPA GROUP of North Carolina TRANSPORTATION CONSULTANTS

THE LPA GROUP of North Carolina
8000 Regency Parkway, Suite 600
Cary, North Carolina 27518
NC License No.: F-1084

REVISIONS								SHEET NO.
NO.	BY:	DATE:	NO.	BY:	DATE:			S-253
1			3					TOTAL SHEETS
2			4					333

DRAWN BY : M. D. MAYHEW DATE : 11-15-11
CHECKED BY : A. L. PHILLIPS DATE : 11-16-11

DWG. 254 OF 282

4/20/2012
8:45:50 AM
User: jaustin
Filename: Y:\Projects\NCDOT\R-3307\Dwgs\Final\R-3307_254_SD_B21_1.dgn

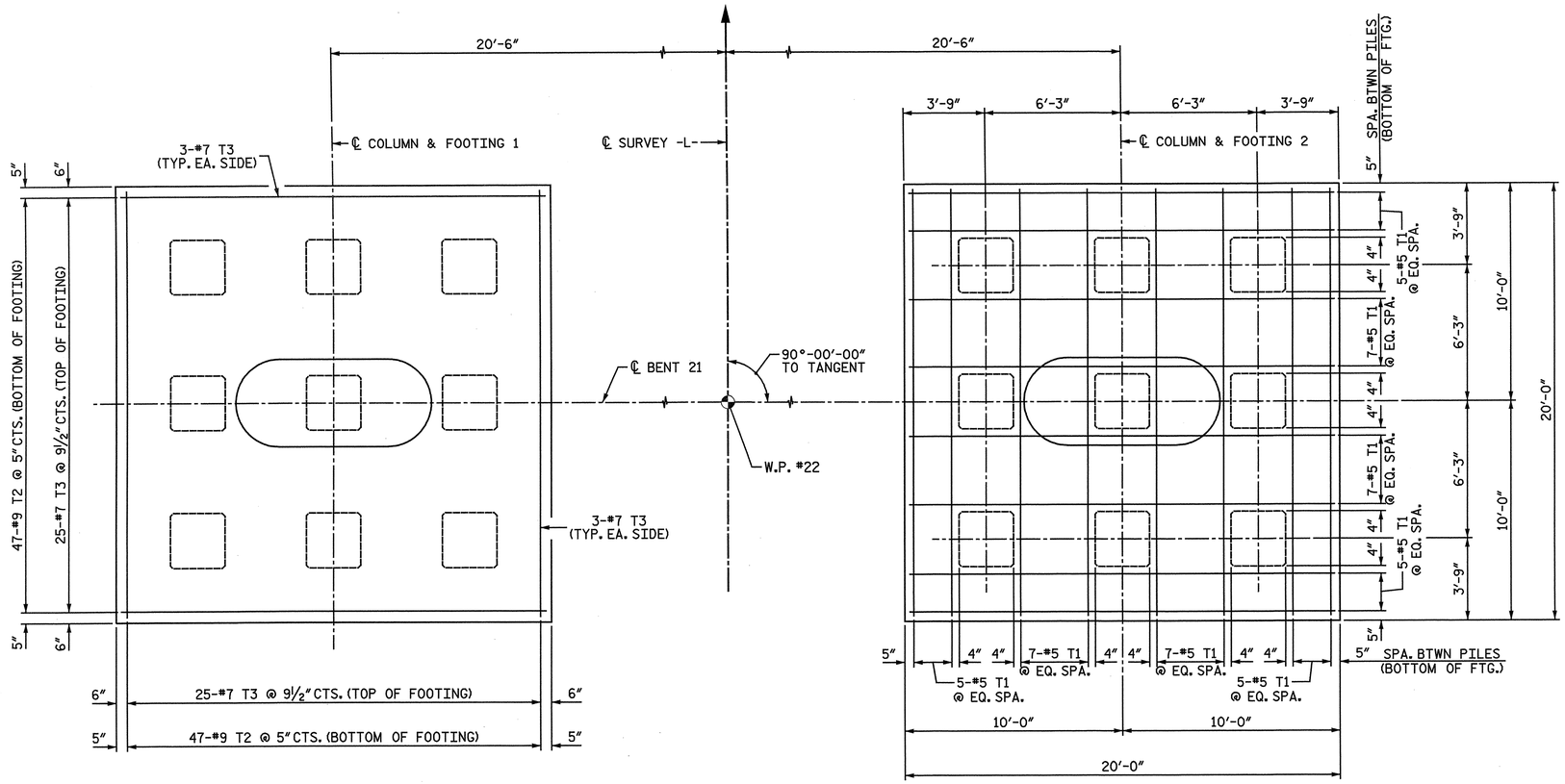

FOOTING PLAN

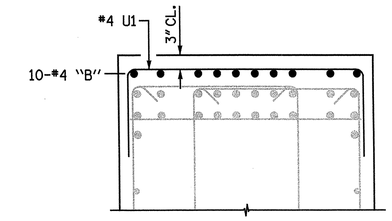

SECTION E-E

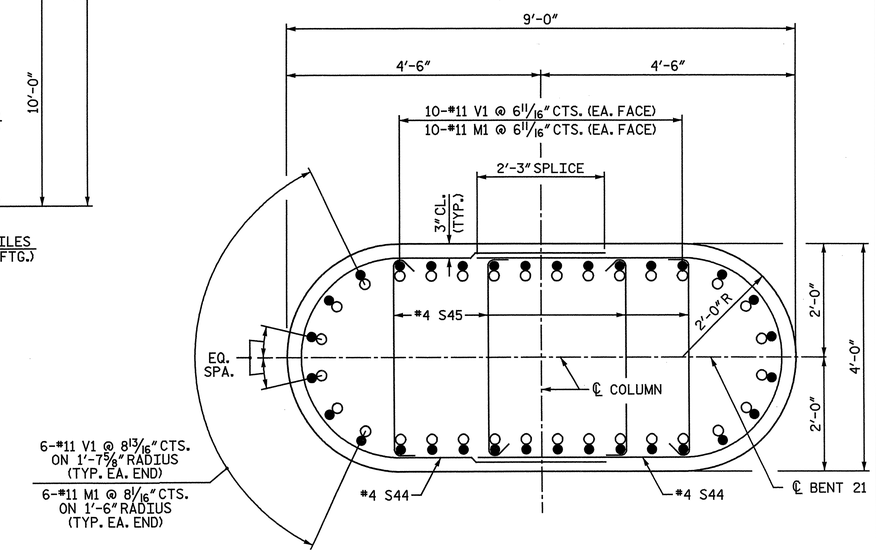

SECTION D-D

NOTE: WHEN PLACING CROSS-TIES, ALTERNATE THE POSITION OF THE 180-DEGREE HOOKS HORIZONTALLY AND VERTICALLY.

○ #11 M1
● #11 V1

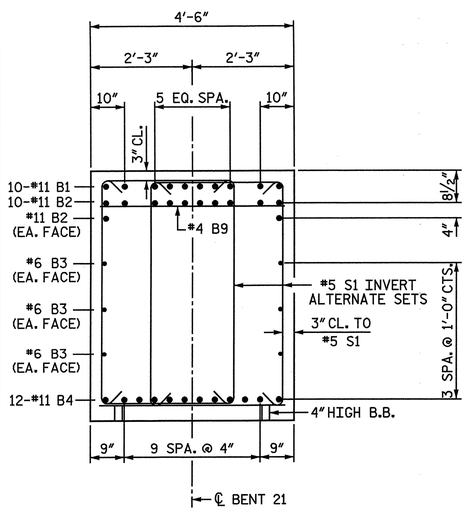

SECTION A-A

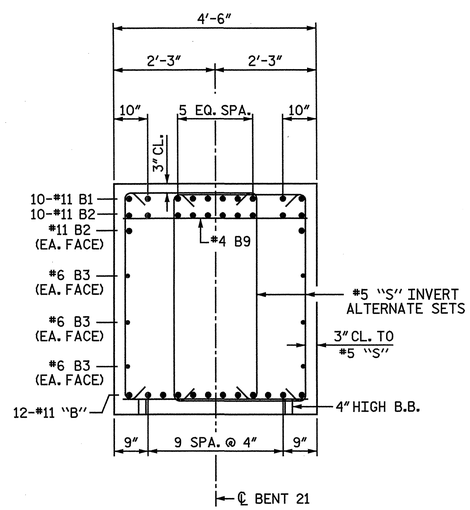

SECTION B-B

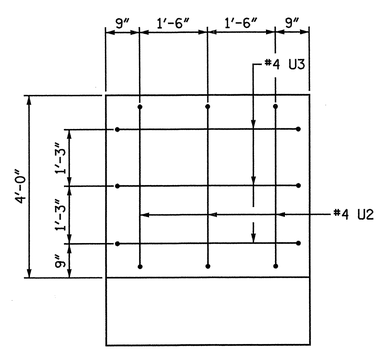

VIEW C-C

PROJECT NO. R-3307

CARTERET COUNTY

STATION: 46+21.50 -L-

SHEET 2 OF 3

STATE OF NORTH CAROLINA
DEPARTMENT OF TRANSPORTATION
RALEIGH

SUBSTRUCTURE

BENT 21
FOOTING AND SECTIONS

NORTH CAROLINA PROFESSIONAL SEAL 25911 ENGINEER DWAIN G. HATHAWAY 4-3-2012

NORTH CAROLINA PROFESSIONAL SEAL 033752 ENGINEER SETH A. DENNEY 04/03/12

THE LPA GROUP of North Carolina TRANSPORTATION CONSULTANTS

THE LPA GROUP of North Carolina
8000 Regency Parkway, Suite 600
Cary, North Carolina 27518
NC License No.: F-1084

REVISIONS						SHEET NO.
NO.	BY:	DATE:	NO.	BY:	DATE:	S-254
1			3			TOTAL SHEETS
2			4			333

DRAWN BY : M. D. MAYHEW DATE : 11-15-11
CHECKED BY : A. L. PHILLIPS DATE : 11-16-11

DWG. 255 OF 282

4/20/2012
8:45:55 AM
User: jaustin
Filename: Y:\Projects\NCDOT\R-3307\Dwgs\Final\R-3307_255_SD_B21_2.dgn

BAR TYPES

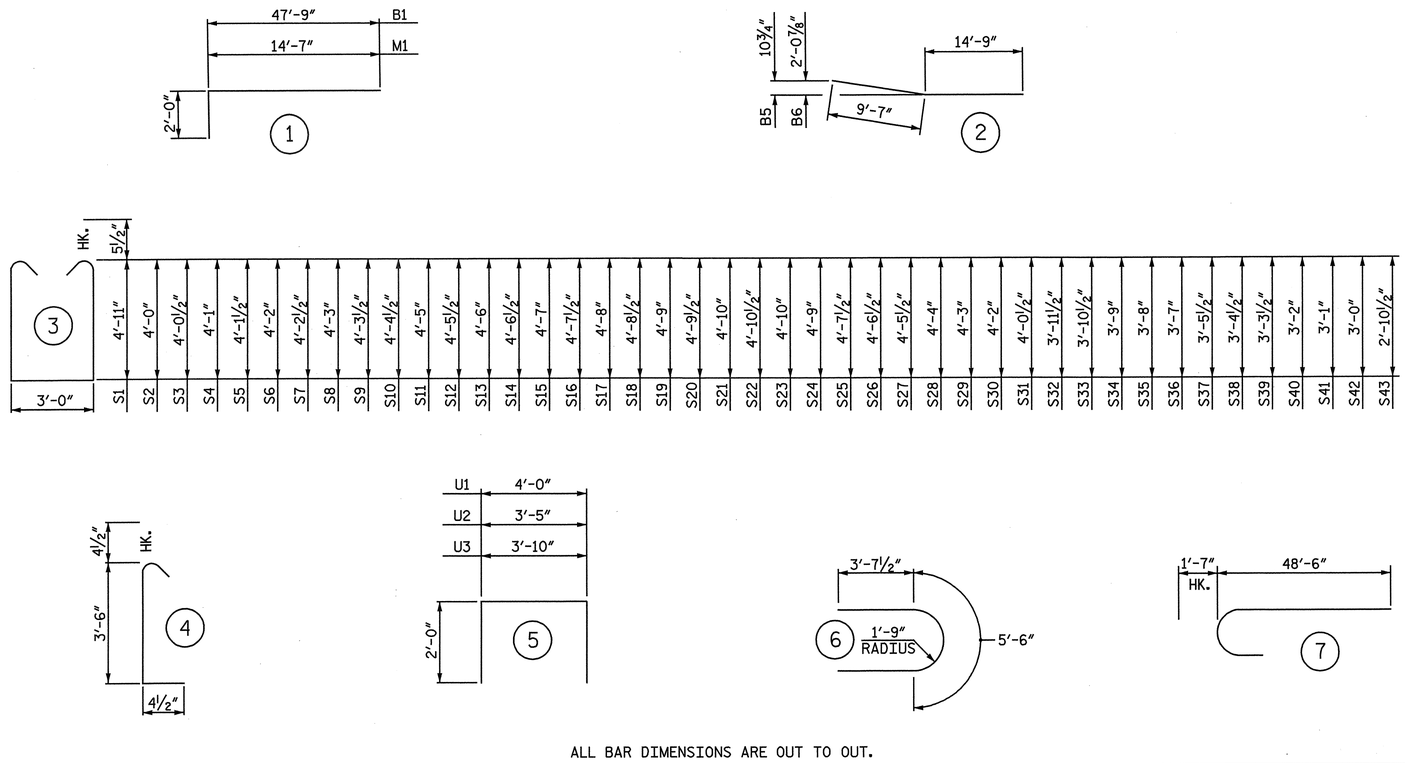

ALL BAR DIMENSIONS ARE OUT TO OUT.

BILL OF MATERIAL

BENT 21

BAR	NO.	SIZE	TYPE	LENGTH	WEIGHT
B1	20	11	1	49′ - 9″	5,286
B2	24	11	STR	47′ - 9″	6,089
B3	12	6	STR	41′ - 8″	751
B4	12	11	STR	60′ - 0″	3,825
B5	12	11	2	24′ - 4″	1,551
B6	12	11	2	24′ - 4″	1,551
B7	80	4	STR	6′ - 6″	347
B8	10	4	STR	3′ - 9″	25
B9	19	4	STR	4′ - 2″	53
M1	64	11	1	16′ - 7″	5,639
S1	128	5	3	13′ - 9″	1,836
S2	2	5	3	11′ - 11″	25
S3	2	5	3	12′ - 0″	25
S4	2	5	3	12′ - 1″	25
S5	2	5	3	12′ - 2″	25
S6	2	5	3	12′ - 3″	26
S7	2	5	3	12′ - 4″	26
S8	2	5	3	12′ - 5″	26
S9	2	5	3	12′ - 6″	26
S10	2	5	3	12′ - 8″	26
S11	2	5	3	12′ - 9″	27
S12	2	5	3	12′ - 10″	27
S13	2	5	3	12′ - 11″	27
S14	2	5	3	13′ - 0″	27
S15	2	5	3	13′ - 1″	27
S16	2	5	3	13′ - 2″	27
S17	2	5	3	13′ - 3″	28
S18	2	5	3	13′ - 4″	28
S19	2	5	3	13′ - 5″	28
S20	2	5	3	13′ - 6″	28
S21	2	5	3	13′ - 7″	28
S22	2	5	3	13′ - 8″	29
S23	2	5	3	13′ - 7″	28
S24	2	5	3	13′ - 5″	28
S25	2	5	3	13′ - 2″	27
S26	2	5	3	13′ - 0″	27
S27	2	5	3	12′ - 10″	27
S28	2	5	3	12′ - 7″	26
S29	2	5	3	12′ - 5″	26
S30	2	5	3	12′ - 3″	26
S31	2	5	3	12′ - 0″	25
S32	2	5	3	11′ - 10″	25
S33	2	5	3	11′ - 8″	24
S34	2	5	3	11′ - 5″	24
S35	2	5	3	11′ - 3″	23
S36	2	5	3	11′ - 1″	23
S37	2	5	3	10′ - 10″	23
S38	2	5	3	10′ - 8″	22
S39	2	5	3	10′ - 6″	22
S40	2	5	3	10′ - 3″	21
S41	2	5	3	10′ - 1″	21
S42	2	5	3	9′ - 11″	21
S43	2	5	3	9′ - 8″	20
S44	180	4	6	12′ - 9″	1,533
S45	360	4	4	4′ - 3″	1,022
T1	96	5	STR	19′ - 4″	1,936
T2	188	9	STR	19′ - 4″	12,358
T3	124	7	STR	19′ - 4″	4,900
U1	80	4	5	8′ - 0″	428
U2	6	4	5	7′ - 5″	30
U3	6	4	5	7′ - 10″	31
V1	64	11	7	50′ - 1″	17,030

EPOXY COATED
REINFORCING STEEL LBS. 67,291

CLASS "AA" CONCRETE BREAKDOWN

POUR #1 - FOOTINGS C.Y. 147.1

POUR #2 - COLUMNS C.Y. 106.8

POUR #3 - CAP C.Y. 74.5

TOTAL CLASS "AA" CONCRETE C.Y. 328.4

30″ PRESTRESSED CONCRETE PILES
NO. 18 LIN FT. 1,678

PILE REDRIVES NO. 5

PROJECT NO. R-3307
CARTERET COUNTY
STATION: 46+21.50 -L-

SHEET 3 OF 3

STATE OF NORTH CAROLINA
DEPARTMENT OF TRANSPORTATION
RALEIGH

SUBSTRUCTURE

BENT 21
BILL OF MATERIAL

NORTH CAROLINA PROFESSIONAL SEAL 25911 ENGINEER DUANE G. HAYNMAN 4-3-2012

NORTH CAROLINA PROFESSIONAL SEAL 033752 ENGINEER SETH A. DENNEY 04/03/12

THE LPA GROUP of North Carolina TRANSPORTATION CONSULTANTS

THE LPA GROUP of North Carolina
8000 Regency Parkway, Suite 600
Cary, North Carolina 27518
NC License No.: F-1084

REVISIONS						SHEET NO.
NO.	BY:	DATE:	NO.	BY:	DATE:	S-255
1			3			TOTAL SHEETS
2			4			333

DRAWN BY : M. D. MAYHEW DATE : 12-19-11
CHECKED BY : A. L. PHILLIPS DATE : 1-3-12

DWG. 256 OF 282

4/20/2012
8:45:56 AM
User: jaustin
Filename: Y:\Projects\NCDOT\R-3307\Dwgs\Final\R-3307_256_SD_B21_3.dgn

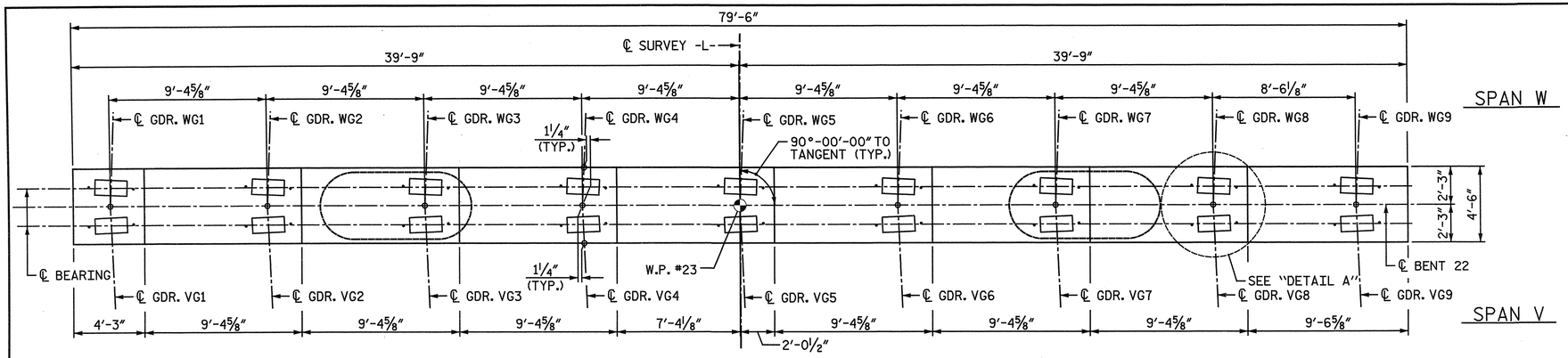

PLAN

NOTES:

STIRRUPS IN CAP MAY BE SHIFTED AS NECESSARY TO CLEAR ANCHOR BOLTS.

ALTERNATELY INVERT STIRRUP PAIRS AS NOTED.

FOR FOUNDATION NOTES, SEE "GENERAL DRAWING FOUNDATION LAYOUT" SHEET 4 OF 4.

FOR FOOTING REINFORCING DETAILS, SEE SHEET 2 OF 3.

FOR SECTION A-A, SECTION B-B, VIEW C-C, SECTION D-D, AND SECTION E-E, SEE SHEET 2 OF 3.

✱ THE FOOTING HAS A DROP OF 2½" FROM THE CENTER OF THE FOOTING TO THE EDGE OF FOOTING TO ACCOMODATE DRAINAGE.

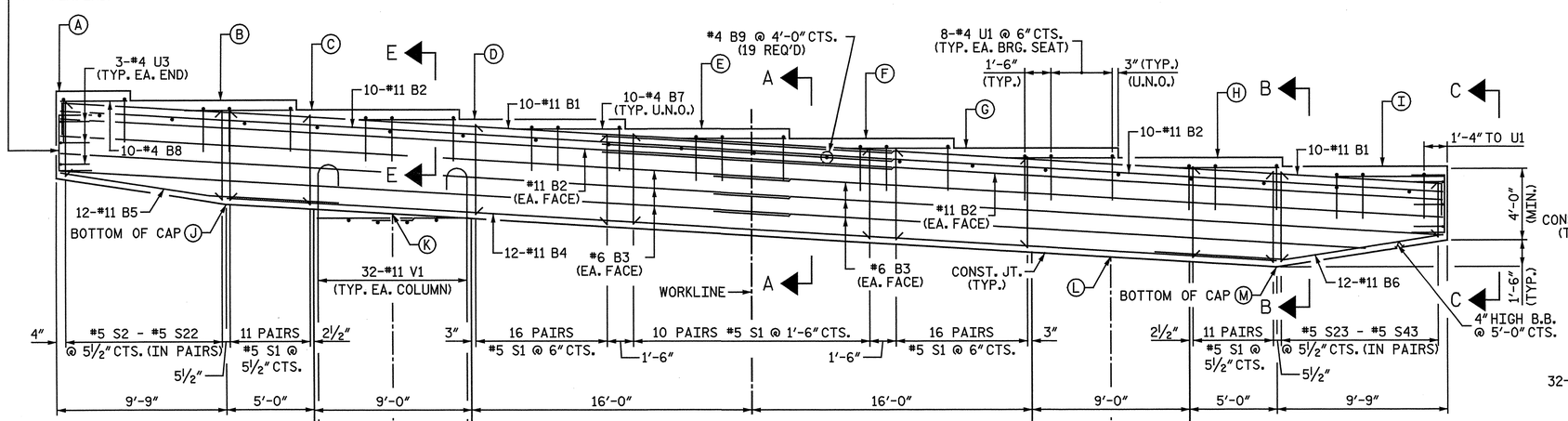

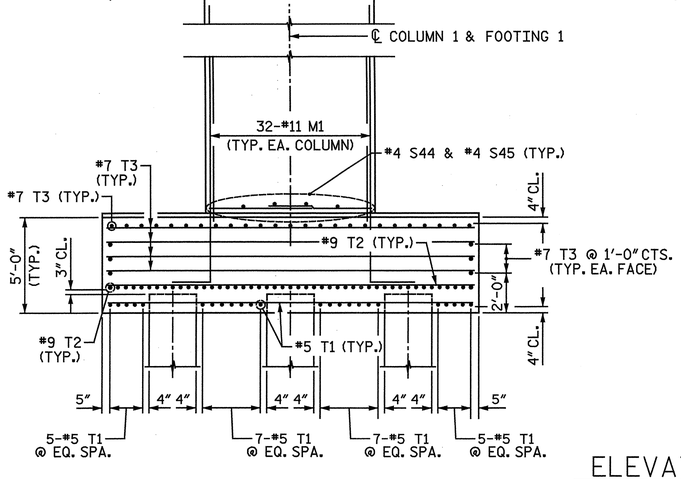

ELEVATION

ALL DIMENSIONS AND DETAILS SHOWN FOR FOOTINGS ARE TYPICAL FOR EACH FOOTING UNLESS OTHERWISE NOTED.

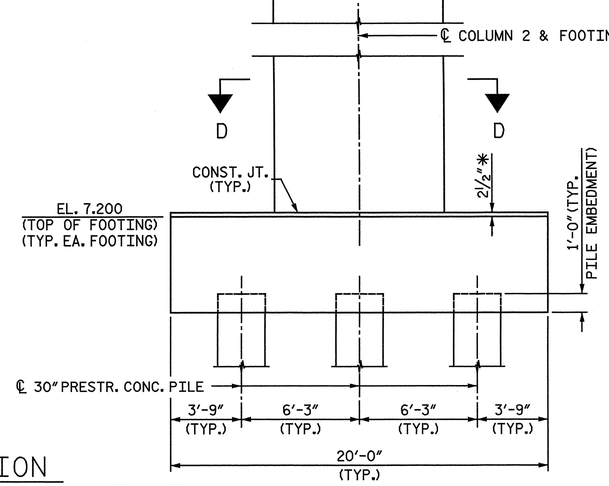

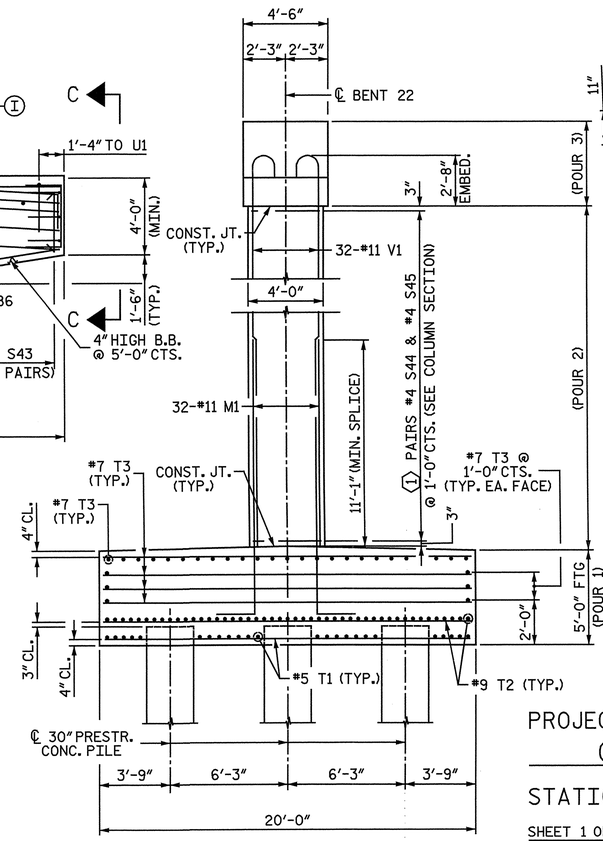

END VIEW

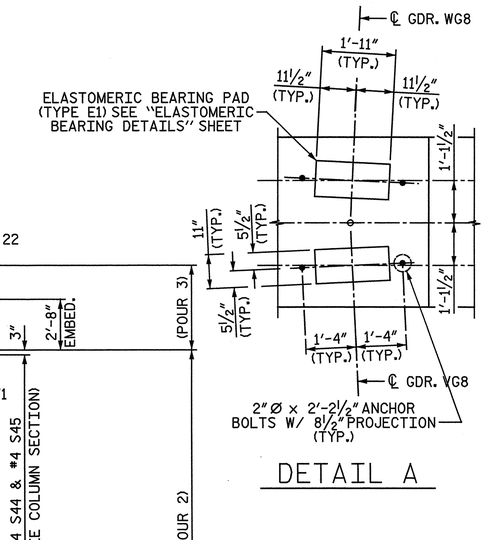

DETAIL A

COLUMN	①
1	42
2	39

MINIMUM SPLICE LENGTH	
#11 B1	16'-6"
#11 B2	16'-6"
#6 B3	4'-3"

ELEVATION TABLE

BENT	A	B	C	D	E	F	G	H	I	J	K	L	M
22	55.094	54.531	53.969	53.406	52.842	52.279	51.715	51.151	50.640	48.740	48.170	45.710	45.140

PROJECT NO. R-3307

CARTERET COUNTY

STATION: 46+21.50 -L-

SHEET 1 OF 3

STATE OF NORTH CAROLINA
DEPARTMENT OF TRANSPORTATION
RALEIGH

SUBSTRUCTURE

BENT 22
PLAN AND ELEVATION

NORTH CAROLINA PROFESSIONAL SEAL 25911 ENGINEER DWAIN G. HATHAWAY

NORTH CAROLINA PROFESSIONAL SEAL 033752 ENGINEER SETH A. DENNEY

THE LPA GROUP of North Carolina TRANSPORTATION CONSULTANTS

THE LPA GROUP of North Carolina
8000 Regency Parkway, Suite 600
Cary, North Carolina 27518
NC License No.: F-1084

REVISIONS						SHEET NO.
NO.	BY:	DATE:	NO.	BY:	DATE:	S-256
1			3			TOTAL SHEETS
2			4			333

DRAWN BY : M. D. MAYHEW DATE : 11-16-11
CHECKED BY : A. L. PHILLIPS DATE : 11-16-11

DWG. 257 OF 282

4/20/2012
8:45:59 AM
User: jaustin
Filename: Y:\Projects\NCDOT\R-3307\Dwgs\Final\R-3307_257_SD_B22_1.dgn

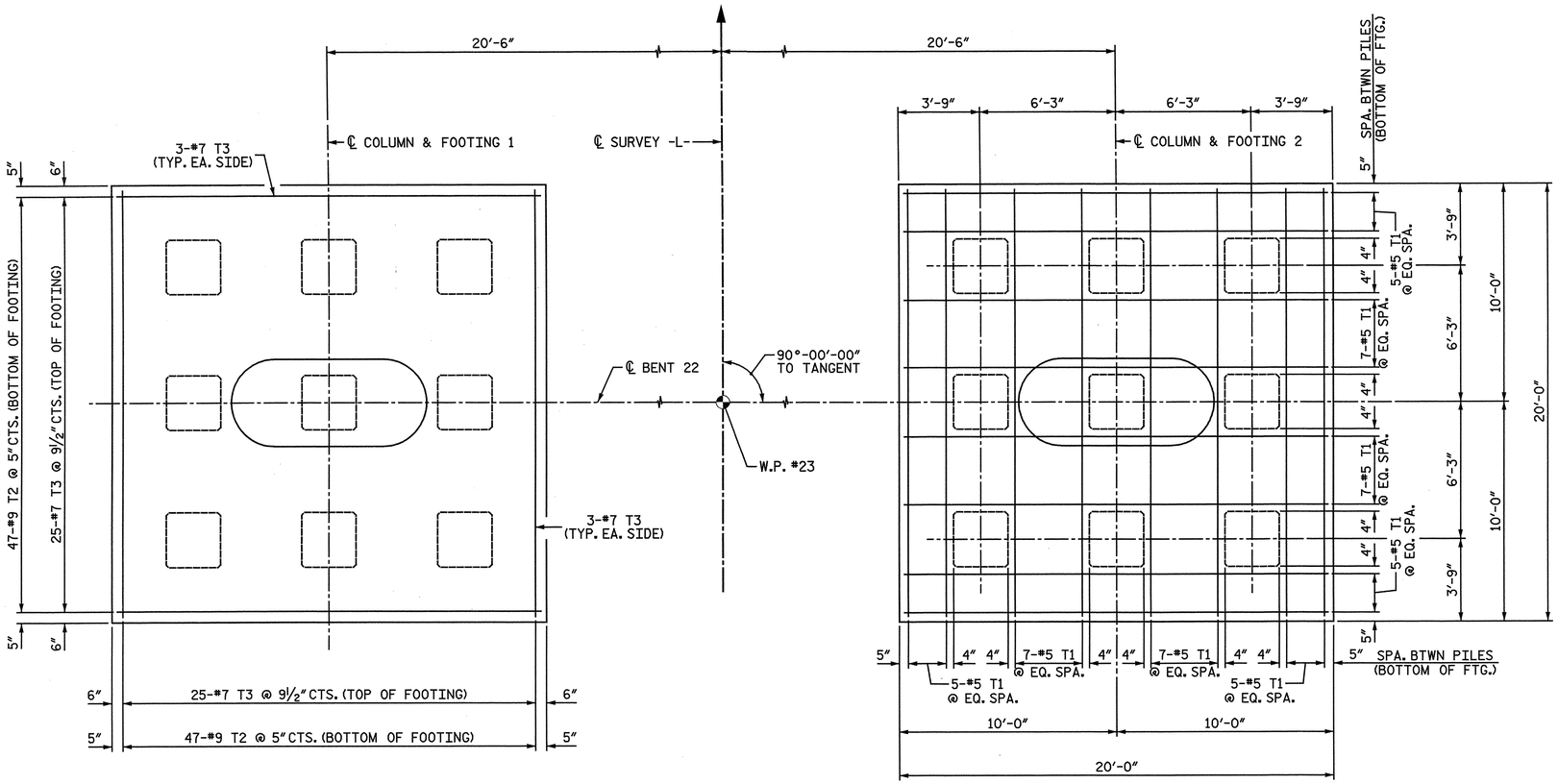

FOOTING PLAN

ALL DIMENSIONS AND DETAILS SHOWN FOR FOOTINGS ARE TYPICAL FOR EACH FOOTING UNLESS OTHERWISE NOTED.

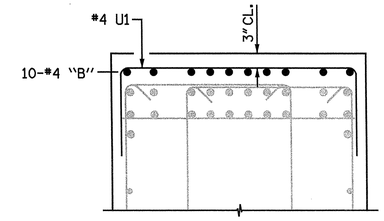

SECTION E-E

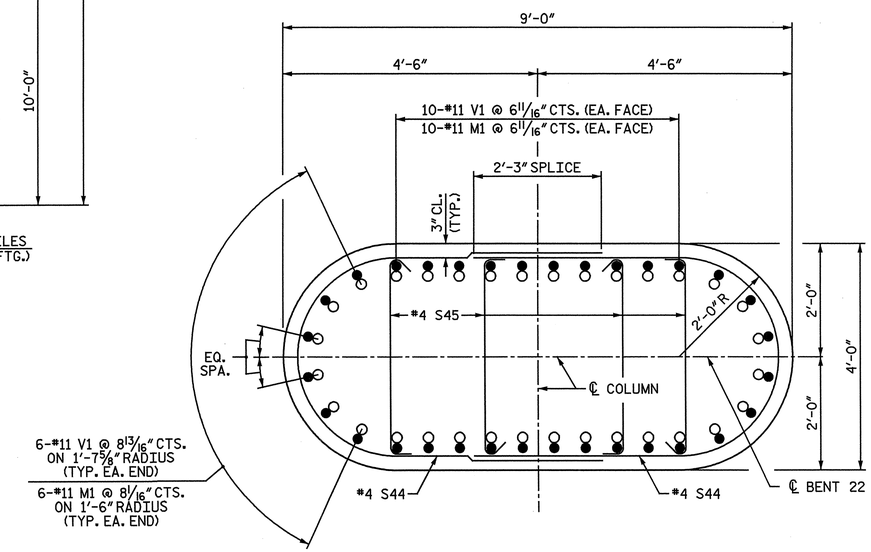

SECTION D-D

NOTE: WHEN PLACING CROSS-TIES, ALTERNATE THE POSITION OF THE 180-DEGREE HOOKS HORIZONTALLY AND VERTICALLY.

○ #11 M1
● #11 V1

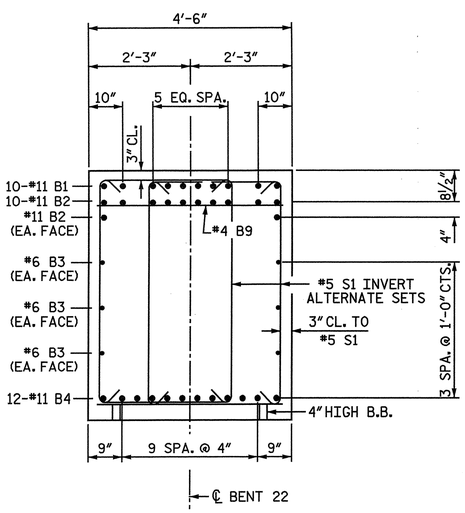

SECTION A-A

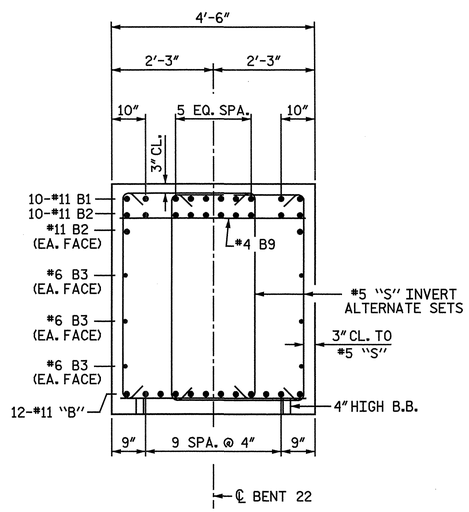

SECTION B-B

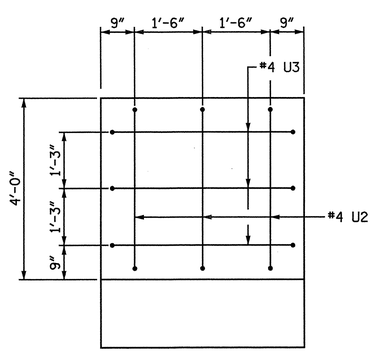

VIEW C-C

PROJECT NO. R-3307

CARTERET COUNTY

STATION: 46+21.50 -L-

SHEET 2 OF 3

STATE OF NORTH CAROLINA
DEPARTMENT OF TRANSPORTATION
RALEIGH

SUBSTRUCTURE

BENT 22
FOOTING AND SECTIONS

NORTH CAROLINA PROFESSIONAL SEAL 25911 ENGINEER DWAIN G. HATHAWAY 4-3-2012

NORTH CAROLINA PROFESSIONAL SEAL 033752 ENGINEER SETH A. DENNEY

THE LPA GROUP of North Carolina TRANSPORTATION CONSULTANTS

THE LPA GROUP of North Carolina
8000 Regency Parkway, Suite 600
Cary, North Carolina 27518
NC License No.: F-1084

REVISIONS						SHEET NO.
NO.	BY:	DATE:	NO.	BY:	DATE:	S-257
1			3			TOTAL SHEETS
2			4			333

DRAWN BY : M. D. MAYHEW DATE : 11-16-11
CHECKED BY : A. L. PHILLIPS DATE : 11-16-11

DWG. 258 OF 282

4/20/2012
8:46:04 AM
User: jaustin
Filename: Y:\Projects\NCDOT\R-3307\Dwgs\Final\R-3307_258_SD_B22_2.dgn

BAR TYPES

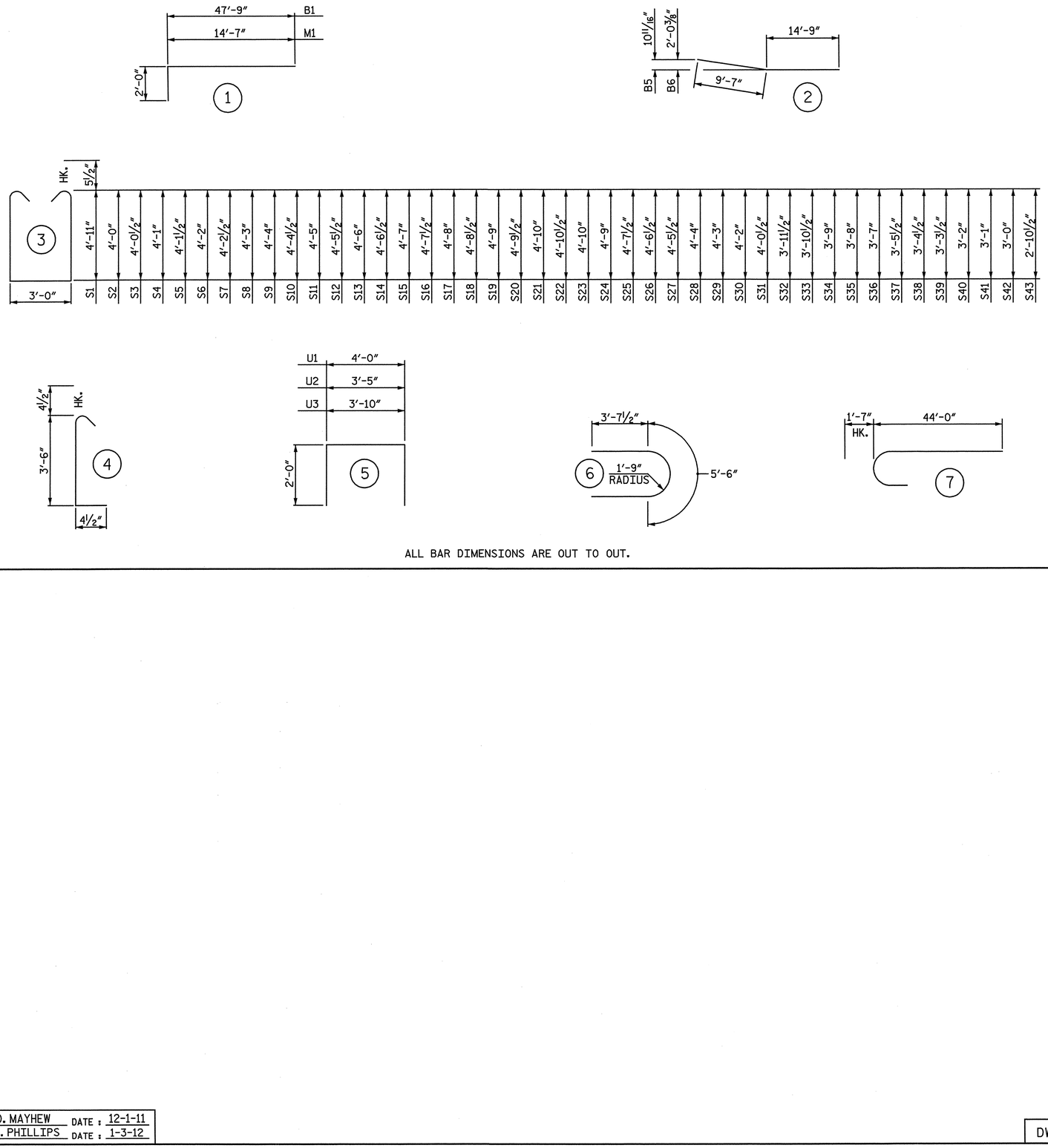

ALL BAR DIMENSIONS ARE OUT TO OUT.

BILL OF MATERIAL

BENT 22

BAR	NO.	SIZE	TYPE	LENGTH	WEIGHT
B1	20	11	1	49′ - 9″	5,286
B2	24	11	STR	47′ - 9″	6,089
B3	12	6	STR	41′ - 8″	751
B4	12	11	STR	60′ - 0″	3,825
B5	12	11	2	24′ - 4″	1,551
B6	12	11	2	24′ - 4″	1,551
B7	80	4	STR	6′ - 6″	347
B8	10	4	STR	3′ - 9″	25
B9	19	4	STR	4′ - 2″	53
M1	64	11	1	16′ - 7″	5,639
S1	128	5	3	13′ - 9″	1,836
S2	2	5	3	11′ - 11″	25
S3	2	5	3	12′ - 0″	25
S4	2	5	3	12′ - 1″	25
S5	2	5	3	12′ - 2″	25
S6	2	5	3	12′ - 3″	26
S7	2	5	3	12′ - 4″	26
S8	2	5	3	12′ - 5″	26
S9	2	5	3	12′ - 7″	26
S10	2	5	3	12′ - 8″	26
S11	2	5	3	12′ - 9″	27
S12	2	5	3	12′ - 10″	27
S13	2	5	3	12′ - 11″	27
S14	2	5	3	13′ - 0″	27
S15	2	5	3	13′ - 1″	27
S16	2	5	3	13′ - 2″	27
S17	2	5	3	13′ - 3″	28
S18	2	5	3	13′ - 4″	28
S19	2	5	3	13′ - 5″	28
S20	2	5	3	13′ - 6″	28
S21	2	5	3	13′ - 7″	28
S22	2	5	3	13′ - 8″	29
S23	2	5	3	13′ - 7″	28
S24	2	5	3	13′ - 5″	28
S25	2	5	3	13′ - 2″	27
S26	2	5	3	13′ - 0″	27
S27	2	5	3	12′ - 10″	27
S28	2	5	3	12′ - 7″	26
S29	2	5	3	12′ - 5″	26
S30	2	5	3	12′ - 3″	26
S31	2	5	3	12′ - 0″	25
S32	2	5	3	11′ - 10″	25
S33	2	5	3	11′ - 8″	24
S34	2	5	3	11′ - 5″	24
S35	2	5	3	11′ - 3″	23
S36	2	5	3	11′ - 1″	23
S37	2	5	3	10′ - 10″	23
S38	2	5	3	10′ - 8″	22
S39	2	5	3	10′ - 6″	22
S40	2	5	3	10′ - 3″	21
S41	2	5	3	10′ - 1″	21
S42	2	5	3	9′ - 11″	21
S43	2	5	3	9′ - 8″	20
S44	162	4	6	12′ - 9″	1,380
S45	324	4	4	4′ - 3″	920
T1	96	5	STR	19′ - 4″	1,936
T2	188	9	STR	19′ - 4″	12,358
T3	124	7	STR	19′ - 4″	4,900
U1	80	4	5	8′ - 0″	428
U2	6	4	5	7′ - 5″	30
U3	6	4	5	7′ - 10″	31
V1	64	11	7	45′ - 7″	15,500

EPOXY COATED
REINFORCING STEEL LBS. 65,506

CLASS "AA" CONCRETE BREAKDOWN

POUR #1 - FOOTINGS C.Y. 147.1

POUR #2 - COLUMNS C.Y. 95.9

POUR #3 - CAP C.Y. 75.4

TOTAL CLASS "AA" CONCRETE C.Y. 318.4

30″ PRESTRESSED CONCRETE PILES
NO. 18 LIN FT. 1,678

PILE REDRIVES NO. 5

PROJECT NO. R-3307
CARTERET COUNTY
STATION: 46+21.50 -L-

SHEET 3 OF 3

STATE OF NORTH CAROLINA
DEPARTMENT OF TRANSPORTATION
RALEIGH

SUBSTRUCTURE

BENT 22
BILL OF MATERIAL

NORTH CAROLINA PROFESSIONAL SEAL 25911 ENGINEER DWAIN C. HATHWAY 4-3-2012

NORTH CAROLINA PROFESSIONAL SEAL 033752 ENGINEER SETH A. DENNEY

THE LPA GROUP of North Carolina
TRANSPORTATION CONSULTANTS

THE LPA GROUP of North Carolina
8000 Regency Parkway, Suite 600
Cary, North Carolina 27518
NC License No.: F-1084

REVISIONS						SHEET NO.
NO.	BY:	DATE:	NO.	BY:	DATE:	S-258
1			3			TOTAL SHEETS
2			4			333

DRAWN BY : M. D. MAYHEW DATE : 12-1-11
CHECKED BY : A. L. PHILLIPS DATE : 1-3-12

DWG. 259 OF 282

4/20/2012
8:46:07 AM
User: jaustin
Filename: Y:\Projects\NCDOT\R-3307\Dwgs\Final\R-3307_259_SD_B22_3.dgn

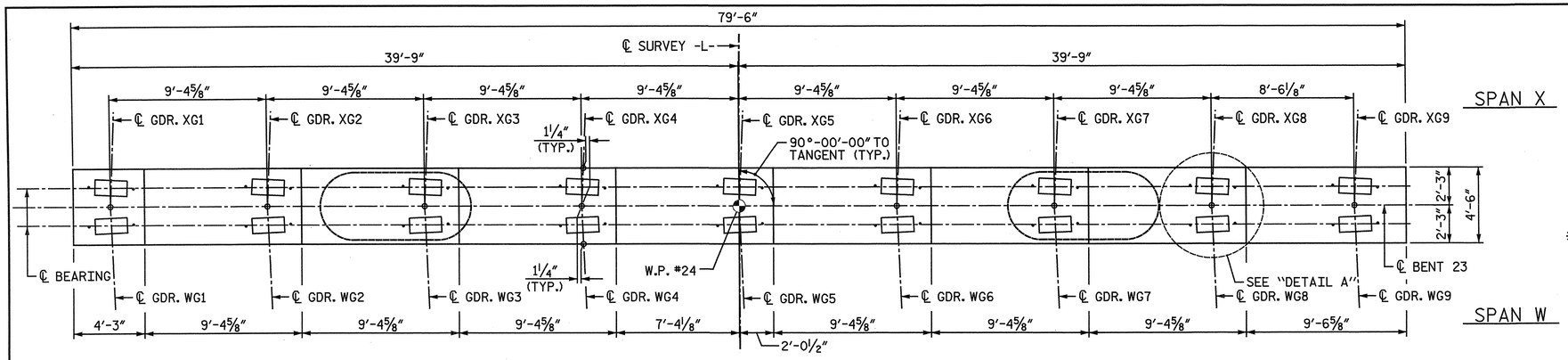

PLAN

NOTES:

STIRRUPS IN CAP MAY BE SHIFTED AS NECESSARY TO CLEAR ANCHOR BOLTS.

ALTERNATELY INVERT STIRRUP PAIRS AS NOTED.

FOR FOUNDATION NOTES, SEE "GENERAL DRAWING FOUNDATION LAYOUT" SHEET 4 OF 4.

FOR FOOTING REINFORCING DETAILS, SEE SHEET 2 OF 3.

FOR SECTION A-A, SECTION B-B, VIEW C-C, SECTION D-D, AND SECTION E-E, SEE SHEET 2 OF 3.

✱ THE FOOTING HAS A DROP OF 2½" FROM THE CENTER OF THE FOOTING TO THE EDGE OF FOOTING TO ACCOMODATE DRAINAGE.

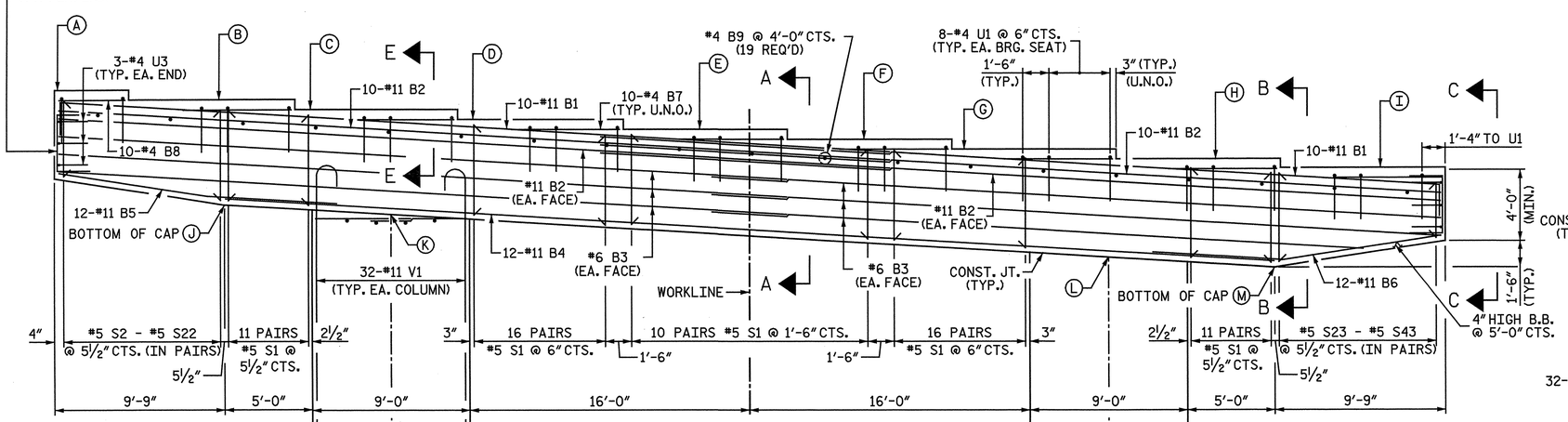

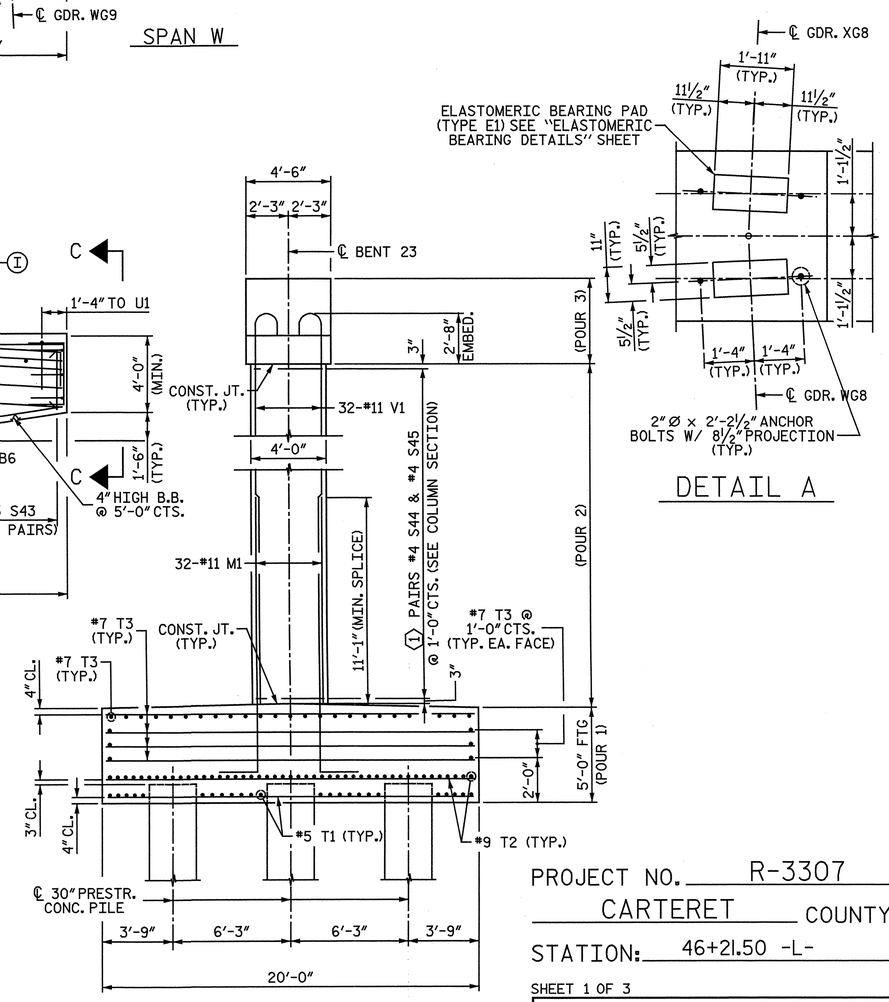

END VIEW

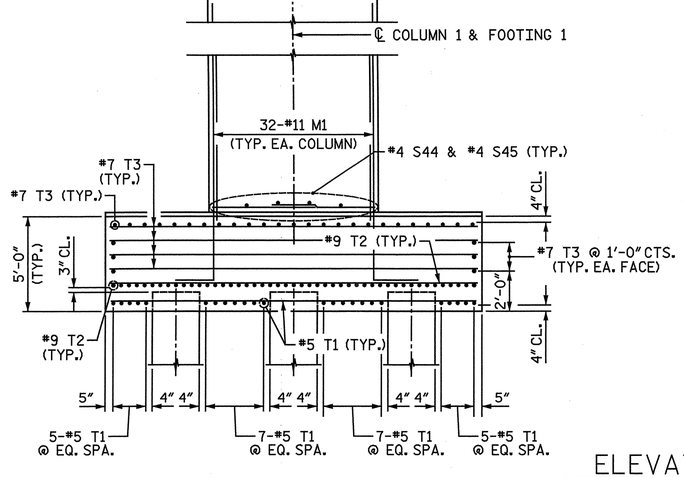

ELEVATION

ALL DIMENSIONS AND DETAILS SHOWN FOR FOOTINGS ARE TYPICAL FOR EACH FOOTING UNLESS OTHERWISE NOTED.

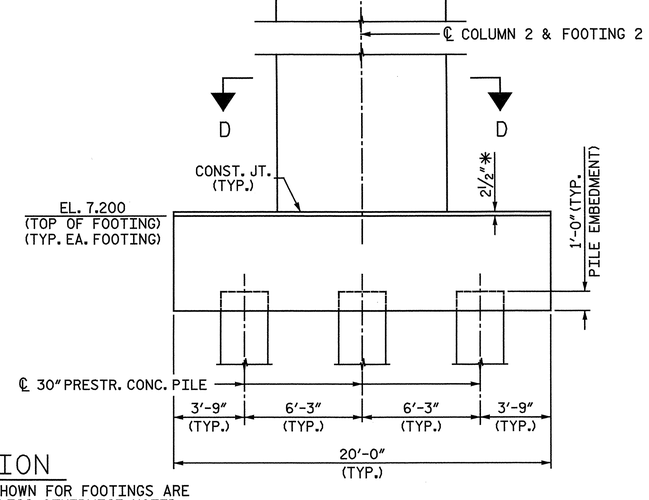

ELEVATION TABLE													
BENT	A	B	C	D	E	F	G	H	I	J	K	L	M
23	50.072	49.510	48.947	48.385	47.823	47.259	46.695	46.132	45.620	43.720	43.150	40.690	40.120

COLUMN	①
1	37
2	34

MINIMUM SPLICE LENGTH	
#11 B1	16'-6"
#11 B2	16'-6"
#6 B3	4'-3"

PROJECT NO. R-3307

CARTERET COUNTY

STATION: 46+21.50 -L-

SHEET 1 OF 3

STATE OF NORTH CAROLINA
DEPARTMENT OF TRANSPORTATION
RALEIGH

SUBSTRUCTURE

BENT 23
PLAN AND ELEVATION

NORTH CAROLINA PROFESSIONAL SEAL 25911 ENGINEER DAVID G. HATHAWAY 7-3-2012

NORTH CAROLINA PROFESSIONAL SEAL 033752 ENGINEER SETH A. DENNEY 7-3-2012

THE LPA GROUP of North Carolina TRANSPORTATION CONSULTANTS

THE LPA GROUP of North Carolina
8000 Regency Parkway, Suite 600
Cary, North Carolina 27518
NC License No.: F-1084

REVISIONS								SHEET NO.
NO.	BY:	DATE:	NO.	BY:	DATE:			S-259
1			3					TOTAL SHEETS
2			4					333

DWG. 260 OF 282

DRAWN BY: M. D. MAYHEW DATE: 11-16-11
CHECKED BY: A. L. PHILLIPS DATE: 11-16-11

4/20/2012
8:46:10 AM
User: jaustin
Filename: Y:\Projects\NCDOT\R-3307\Dwgs\Find\R-3307_260_SD_B23_1.dgn

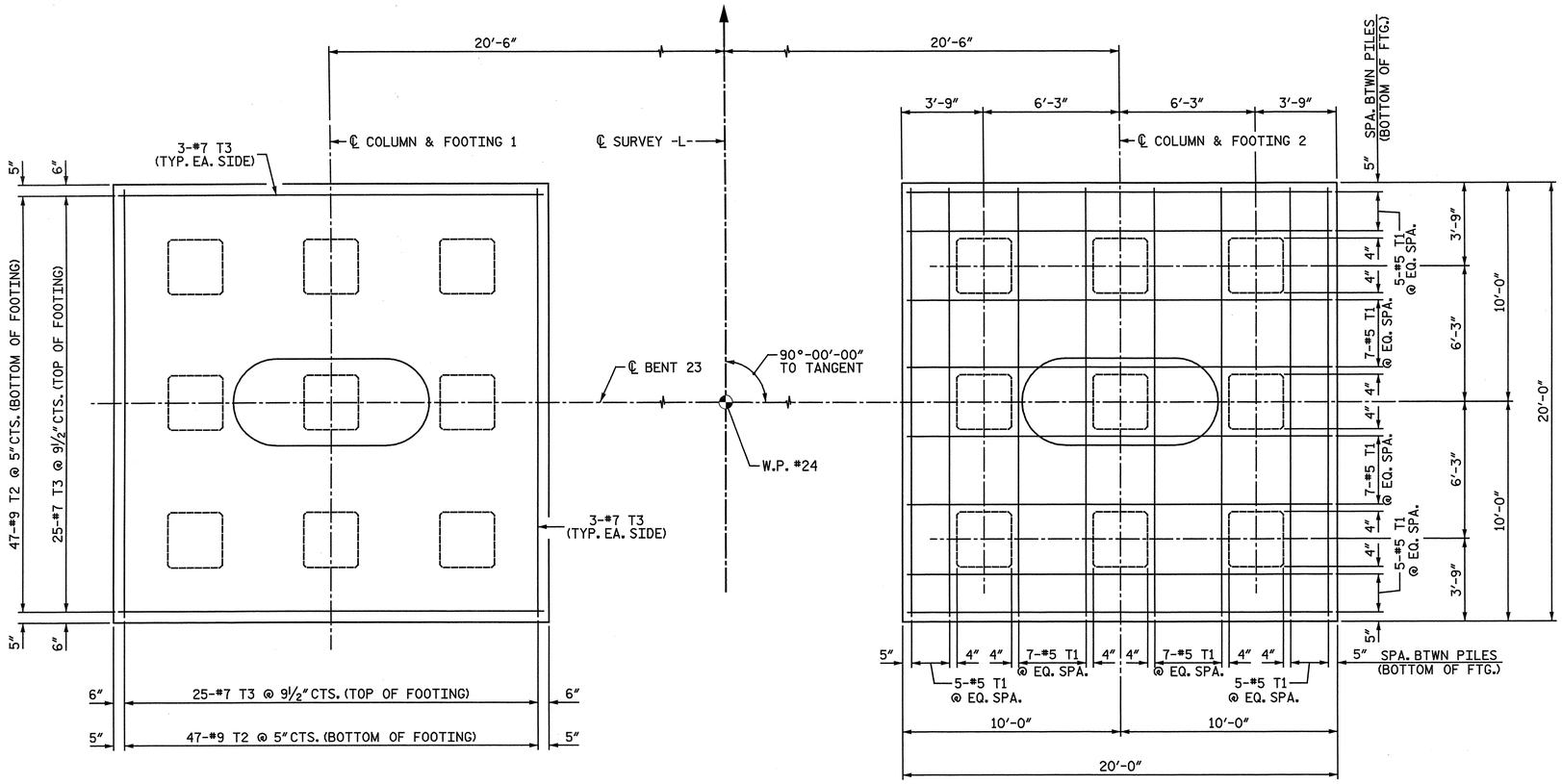

FOOTING PLAN

ALL DIMENSIONS AND DETAILS SHOWN FOR FOOTINGS ARE TYPICAL FOR EACH FOOTING UNLESS OTHERWISE NOTED.

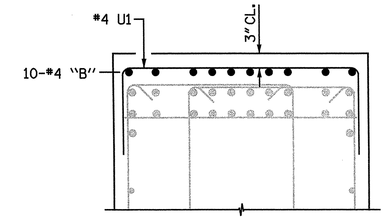

SECTION E-E

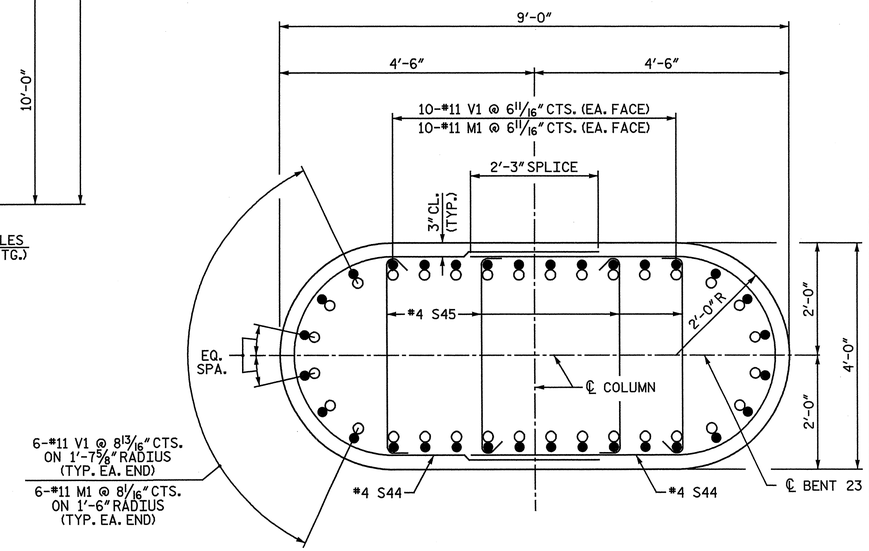

SECTION D-D

NOTE: WHEN PLACING CROSS-TIES, ALTERNATE THE POSITION OF THE 180-DEGREE HOOKS HORIZONTALLY AND VERTICALLY.

○ #11 M1
● #11 V1

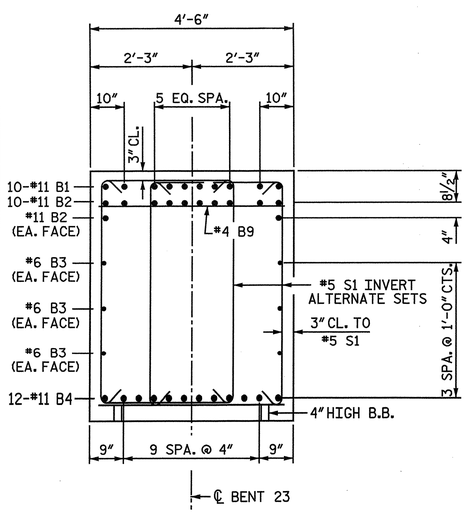

SECTION A-A

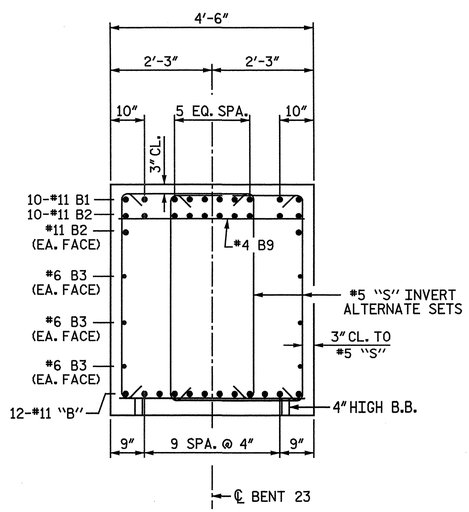

SECTION B-B

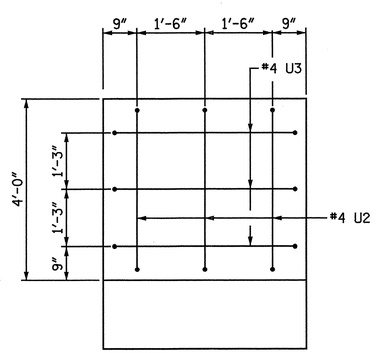

VIEW C-C

PROJECT NO. R-3307

CARTERET COUNTY

STATION: 46+21.50 -L-

SHEET 2 OF 3

STATE OF NORTH CAROLINA
DEPARTMENT OF TRANSPORTATION
RALEIGH

SUBSTRUCTURE

BENT 23 FOOTING AND SECTIONS

NORTH CAROLINA PROFESSIONAL SEAL 25911 ENGINEER DARIN G. HATHAWAY 4-3-2012

NORTH CAROLINA PROFESSIONAL SEAL 033752 ENGINEER SETH A. DENNEY 4-04-12

THE LPA GROUP of North Carolina TRANSPORTATION CONSULTANTS

THE LPA GROUP of North Carolina
8000 Regency Parkway, Suite 600
Cary, North Carolina 27518
NC License No.: F-1084

REVISIONS								SHEET NO.
NO.	BY:	DATE:	NO.	BY:	DATE:			S-266
1			3					TOTAL SHEETS
2			4					333

DRAWN BY : M. D. MAYHEW DATE : 11-16-11
CHECKED BY : A. L. PHILLIPS DATE : 11-16-11

DWG. 261 OF 282

4/20/2012
8:46:16 AM
User: jaustin
Filename: Y:\Projects\NCDOT\R-3307\Dwgs\Final\R-3307_261_SD_B23_2.dgn

BAR TYPES

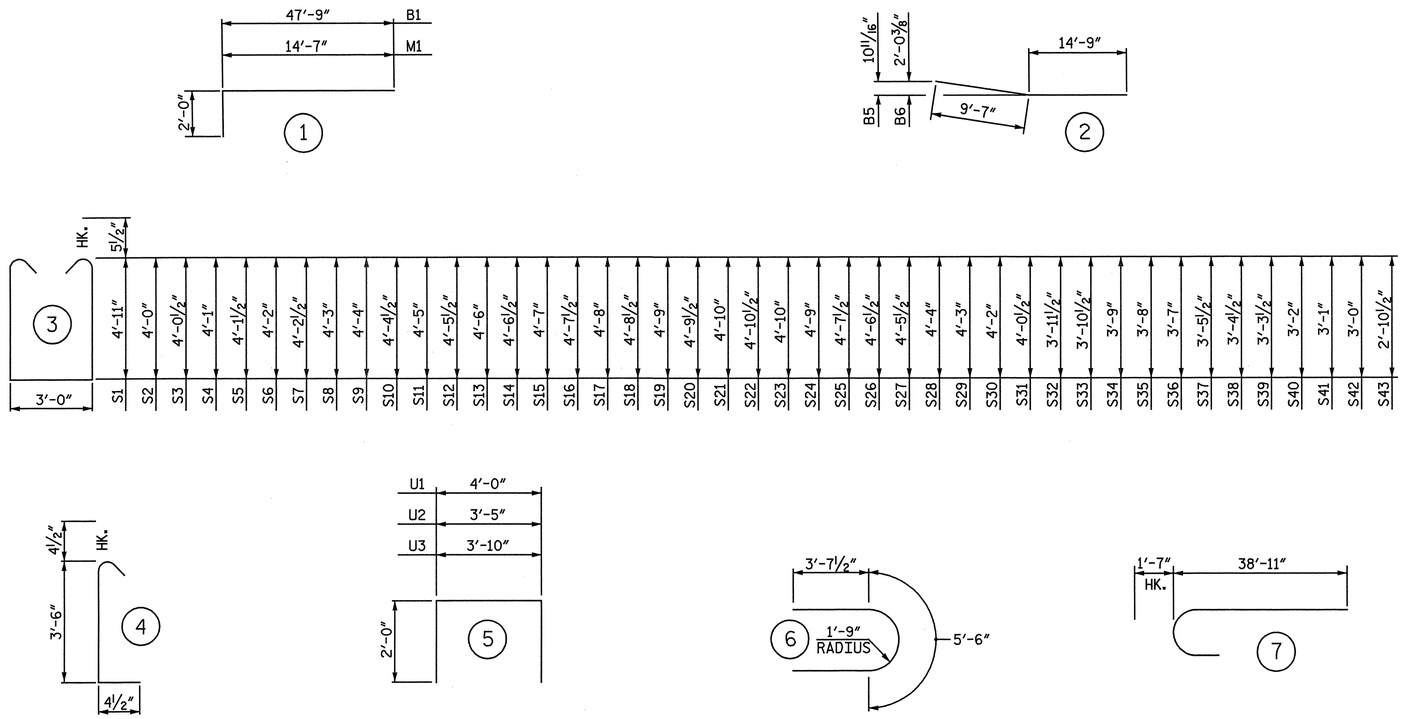

ALL BAR DIMENSIONS ARE OUT TO OUT.

BILL OF MATERIAL
BENT 23

BAR	NO.	SIZE	TYPE	LENGTH	WEIGHT
B1	20	11	1	49′ - 9″	5,286
B2	24	11	STR	47′ - 9″	6,089
B3	12	6	STR	41′ - 8″	751
B4	12	11	STR	60′ - 0″	3,825
B5	12	11	2	24′ - 4″	1,551
B6	12	11	2	24′ - 4″	1,551
B7	80	4	STR	6′ - 6″	347
B8	10	4	STR	3′ - 9″	25
B9	19	4	STR	4′ - 2″	53
M1	64	11	1	16′ - 7″	5,639
S1	128	5	3	13′ - 9″	1,836
S2	2	5	3	11′ - 11″	25
S3	2	5	3	12′ - 0″	25
S4	2	5	3	12′ - 1″	25
S5	2	5	3	12′ - 2″	25
S6	2	5	3	12′ - 3″	26
S7	2	5	3	12′ - 4″	26
S8	2	5	3	12′ - 5″	26
S9	2	5	3	12′ - 7″	26
S10	2	5	3	12′ - 8″	26
S11	2	5	3	12′ - 9″	27
S12	2	5	3	12′ - 10″	27
S13	2	5	3	12′ - 11″	27
S14	2	5	3	13′ - 0″	27
S15	2	5	3	13′ - 1″	27
S16	2	5	3	13′ - 2″	27
S17	2	5	3	13′ - 3″	28
S18	2	5	3	13′ - 4″	28
S19	2	5	3	13′ - 5″	28
S20	2	5	3	13′ - 6″	28
S21	2	5	3	13′ - 7″	28
S22	2	5	3	13′ - 8″	29
S23	2	5	3	13′ - 7″	28
S24	2	5	3	13′ - 5″	28
S25	2	5	3	13′ - 2″	27
S26	2	5	3	13′ - 0″	27
S27	2	5	3	12′ - 10″	27
S28	2	5	3	12′ - 7″	26
S29	2	5	3	12′ - 5″	26
S30	2	5	3	12′ - 3″	26
S31	2	5	3	12′ - 0″	25
S32	2	5	3	11′ - 10″	25
S33	2	5	3	11′ - 8″	24
S34	2	5	3	11′ - 5″	24
S35	2	5	3	11′ - 3″	23
S36	2	5	3	11′ - 1″	23
S37	2	5	3	10′ - 10″	23
S38	2	5	3	10′ - 8″	22
S39	2	5	3	10′ - 6″	22
S40	2	5	3	10′ - 3″	21
S41	2	5	3	10′ - 1″	21
S42	2	5	3	9′ - 11″	21
S43	2	5	3	9′ - 8″	20
S44	142	4	6	12′ - 9″	1,209
S45	284	4	4	4′ - 3″	806
T1	96	5	STR	19′ - 4″	1,936
T2	188	9	STR	19′ - 4″	12,358
T3	124	7	STR	19′ - 4″	4,900
U1	80	4	5	8′ - 0″	428
U2	6	4	5	7′ - 5″	30
U3	6	4	5	7′ - 10″	31
V1	64	11	7	40′ - 6″	13,771

EPOXY COATED
REINFORCING STEEL LBS. 63,492

CLASS "AA" CONCRETE BREAKDOWN

POUR #1 - FOOTINGS C.Y. 147.1

POUR #2 - COLUMNS C.Y. 83.8

POUR #3 - CAP C.Y. 75.4

TOTAL CLASS "AA" CONCRETE C.Y. 306.3

30″ PRESTRESSED CONCRETE PILES
NO. 18 LIN FT. 1,678

PILE REDRIVES NO. 5

PDA TESTING EA. 1

PROJECT NO. R-3307
CARTERET COUNTY
STATION: 46+21.50 -L-

SHEET 3 OF 3

STATE OF NORTH CAROLINA
DEPARTMENT OF TRANSPORTATION
RALEIGH

SUBSTRUCTURE

BENT 23
BILL OF MATERIAL

NORTH CAROLINA PROFESSIONAL SEAL 25911 ENGINEER DWAIN G. HAYNAM 1-3-2012

NORTH CAROLINA PROFESSIONAL SEAL 033752 ENGINEER SETH A. DENNEY 2/10/12

THE LPA GROUP of North Carolina
TRANSPORTATION CONSULTANTS

THE LPA GROUP of North Carolina
8000 Regency Parkway, Suite 600
Cary, North Carolina 27518
NC License No.: F-1084

REVISIONS						SHEET NO.
NO.	BY:	DATE:	NO.	BY:	DATE:	S-261
1			3			TOTAL SHEETS
2			4			333

DRAWN BY : M. D. MAYHEW DATE : 12-1-11
CHECKED BY : A. L. PHILLIPS DATE : 1-3-12

DWG. 262 OF 282

4/20/2012
8:46:18 AM
User: jaustin
Filename: Y:\Projects\NCDOT\R-3307\Dwgs\Final\R-3307_262_SD_B23_3.dgn

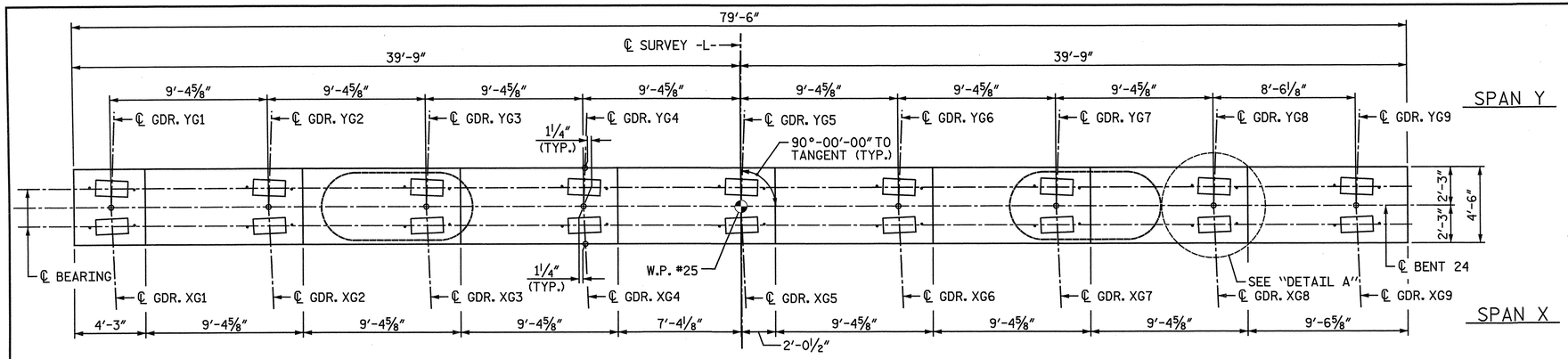

PLAN

NOTE: THE TOP SURFACE AREAS OF THE BENT CAPS SHALL BE CURED IN ACCORDANCE WITH THE STANDARD SPECIFICATIONS EXCEPT THE MEMBRANE CURING COMPOUND METHOD SHALL NOT BE USED.

NOTES:

STIRRUPS IN CAP MAY BE SHIFTED AS NECESSARY TO CLEAR ANCHOR BOLTS.

ALTERNATELY INVERT STIRRUP PAIRS AS NOTED.

FOR FOUNDATION NOTES, SEE "GENERAL DRAWING FOUNDATION LAYOUT" SHEET 4 OF 4.

FOR FOOTING REINFORCING DETAILS, SEE SHEET 2 OF 3.

FOR SECTION A-A, SECTION B-B, VIEW C-C, SECTION D-D, AND SECTION E-E, SEE SHEET 2 OF 3.

✱ THE FOOTING HAS A DROP OF 2½" FROM THE CENTER OF THE FOOTING TO THE EDGE OF FOOTING TO ACCOMODATE DRAINAGE.

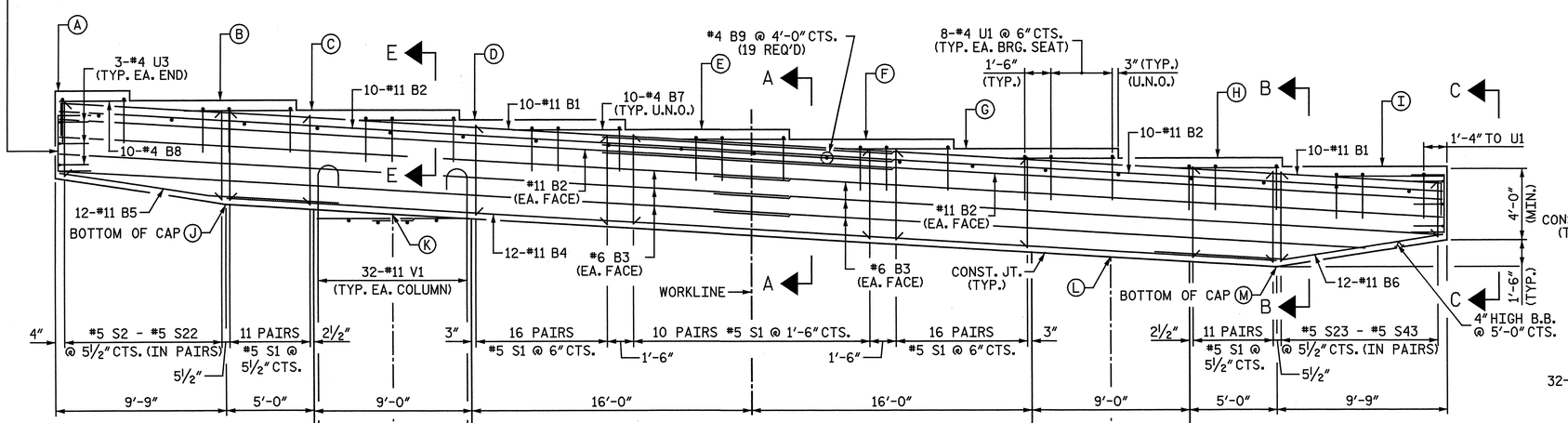

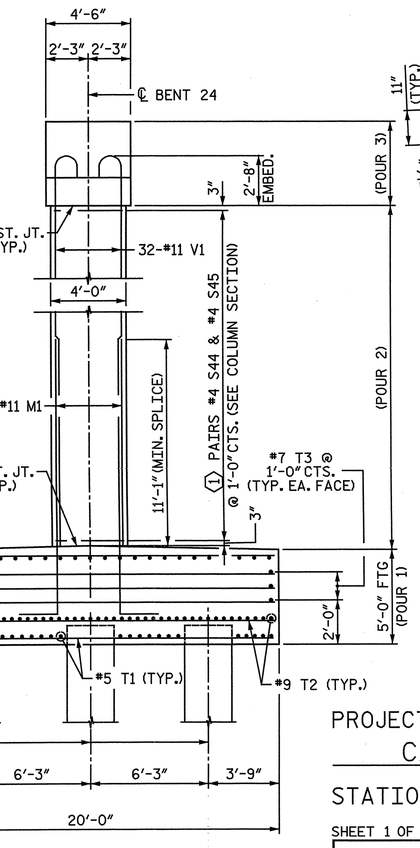

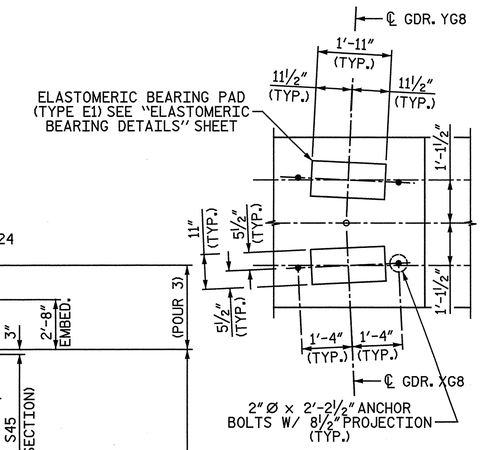

DETAIL A

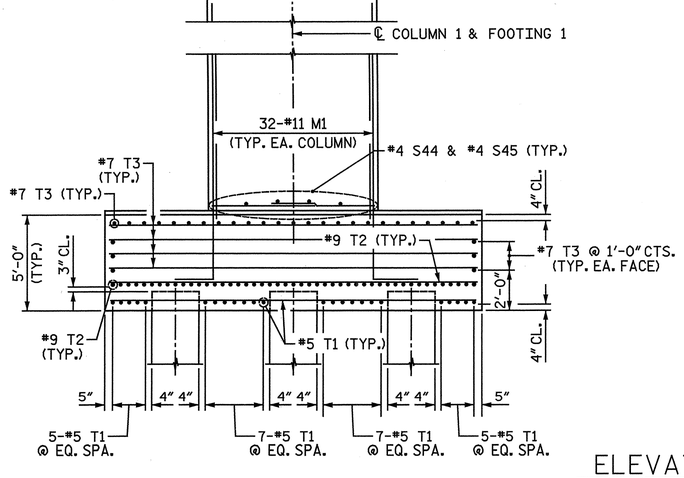

ELEVATION

ALL DIMENSIONS AND DETAILS SHOWN FOR FOOTINGS ARE TYPICAL FOR EACH FOOTING UNLESS OTHERWISE NOTED.

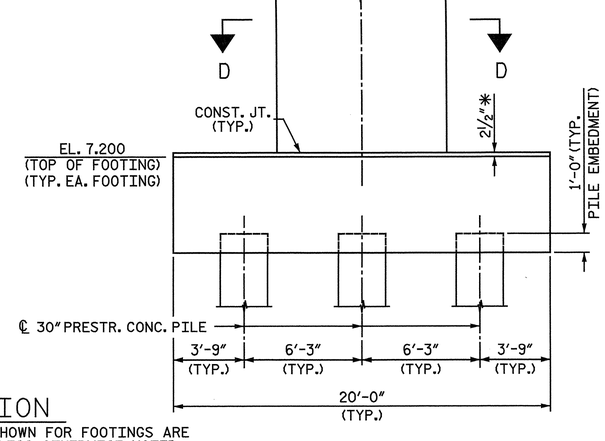

END VIEW

COLUMN	①
1	32
2	29

ELEVATION TABLE													
BENT	A	B	C	D	E	F	G	H	I	J	K	L	M
24	44.972	44.410	43.847	43.285	42.723	42.159	41.595	41.032	40.520	38.620	38.050	35.590	35.020

MINIMUM SPLICE LENGTH	
#11 B1	16'-6"
#11 B2	16'-6"
#6 B3	4'-3"

PROJECT NO. R-3307
CARTERET COUNTY
STATION: 46+21.50 -L-

SHEET 1 OF 3

STATE OF NORTH CAROLINA
DEPARTMENT OF TRANSPORTATION
RALEIGH
SUBSTRUCTURE

BENT 24
PLAN AND ELEVATION

NORTH CAROLINA PROFESSIONAL SEAL 25911 ENGINEER DARIN G. HATHAWAY 1-3-2012

NORTH CAROLINA PROFESSIONAL SEAL 033752 ENGINEER SETH A. DENNEY 01/04/12

THE LPA GROUP of North Carolina
TRANSPORTATION CONSULTANTS
THE LPA GROUP of North Carolina
8000 Regency Parkway, Suite 600
Cary, North Carolina 27518
NC License No.: F-1084

REVISIONS								SHEET NO.
NO.	BY:	DATE:	NO.	BY:	DATE:			S-222
1			3					TOTAL SHEETS
2			4					333

DRAWN BY : M. D. MAYHEW DATE : 11-16-11
CHECKED BY : A. L. PHILLIPS DATE : 11-16-11

DWG. 263 OF 282

4/20/2012
8:46:21 AM
User: jaustin
Filename: Y:\Projects\NCDOT\R-3307\Dwgs\Final\R-3307_263_SD_B24_1.dgn

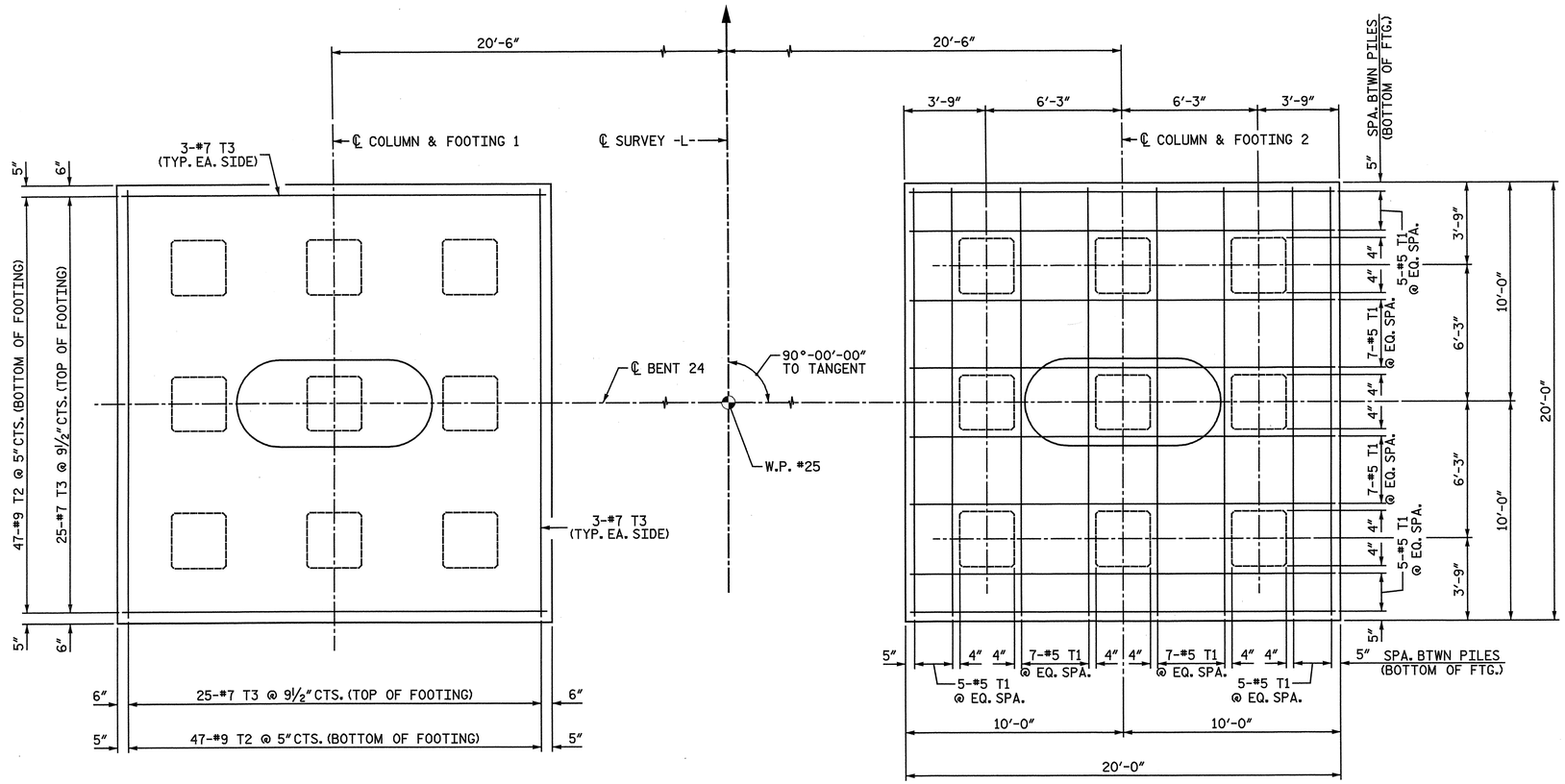

FOOTING PLAN

ALL DIMENSIONS AND DETAILS SHOWN FOR FOOTINGS ARE TYPICAL FOR EACH FOOTING UNLESS OTHERWISE NOTED.

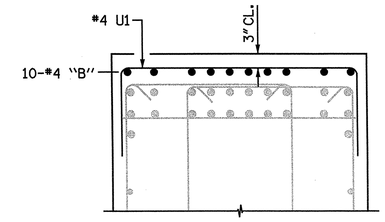

SECTION E-E

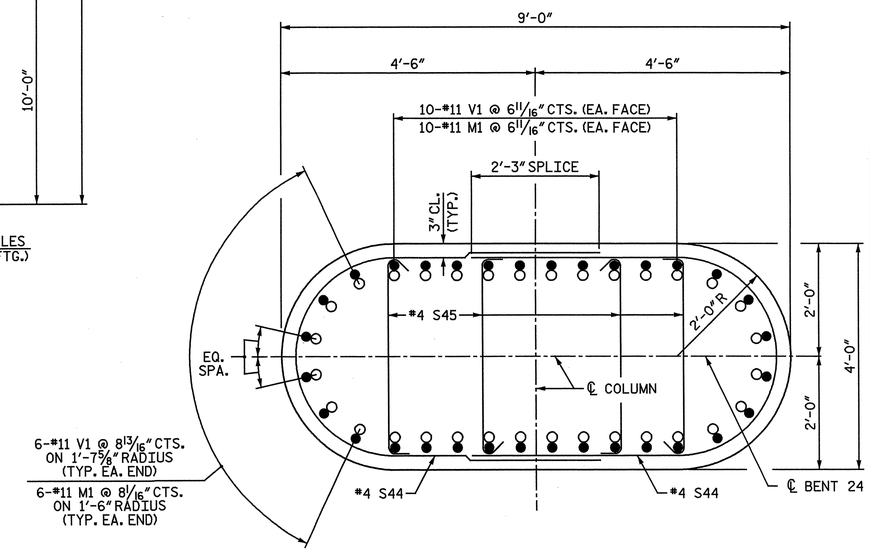

SECTION D-D

NOTE: WHEN PLACING CROSS-TIES, ALTERNATE THE POSITION OF THE 180-DEGREE HOOKS HORIZONTALLY AND VERTICALLY.

○ #11 M1
● #11 V1

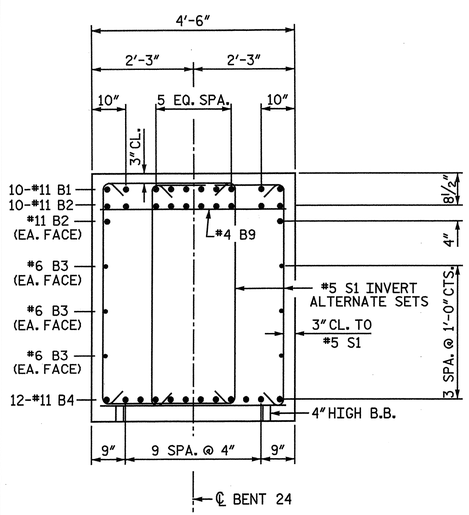

SECTION A-A

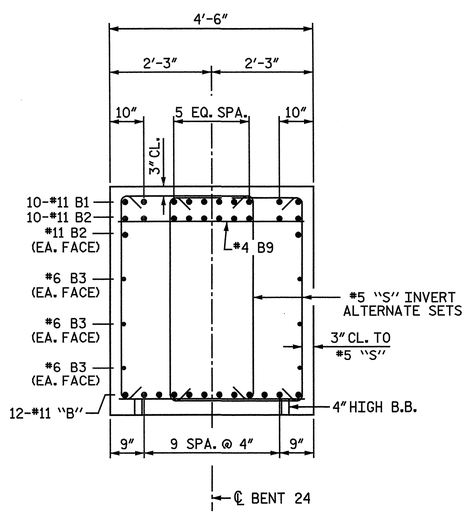

SECTION B-B

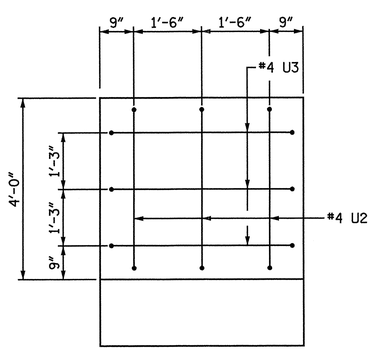

VIEW C-C

NOTE: WHEN PLACING CROSS-TIES, ALTERNATE THE POSITION OF THE 180-DEGREE HOOKS HORIZONTALLY AND VERTICALLY.

PROJECT NO. R-3307

CARTERET COUNTY

STATION: 46+21.50 -L-

SHEET 2 OF 3

STATE OF NORTH CAROLINA
DEPARTMENT OF TRANSPORTATION
RALEIGH

SUBSTRUCTURE

BENT 24
FOOTING AND SECTIONS

NORTH CAROLINA PROFESSIONAL SEAL 25911 ENGINEER DWAIN G. HATHMAN 4-3-2012

NORTH CAROLINA PROFESSIONAL SEAL 033752 ENGINEER SETH A. DENNEY 4/20/12

THE LPA GROUP of North Carolina TRANSPORTATION CONSULTANTS

THE LPA GROUP of North Carolina
8000 Regency Parkway, Suite 600
Cary, North Carolina 27518
NC License No.: F-1054

REVISIONS								SHEET NO.
NO.	BY:	DATE:	NO.	BY:	DATE:			S-263
1			3					TOTAL SHEETS
2			4					333

DRAWN BY : M. D. MAYHEW DATE : 11-16-11
CHECKED BY : A. L. PHILLIPS DATE : 11-16-11

DWG. 264 OF 282

4/20/2012
8:46:27 AM
User: jaustin
Filename: Y:\Projects\NCDOT\R-3307\Dwgs\Final\R-3307_264_SD_B24_2.dgn

BAR TYPES

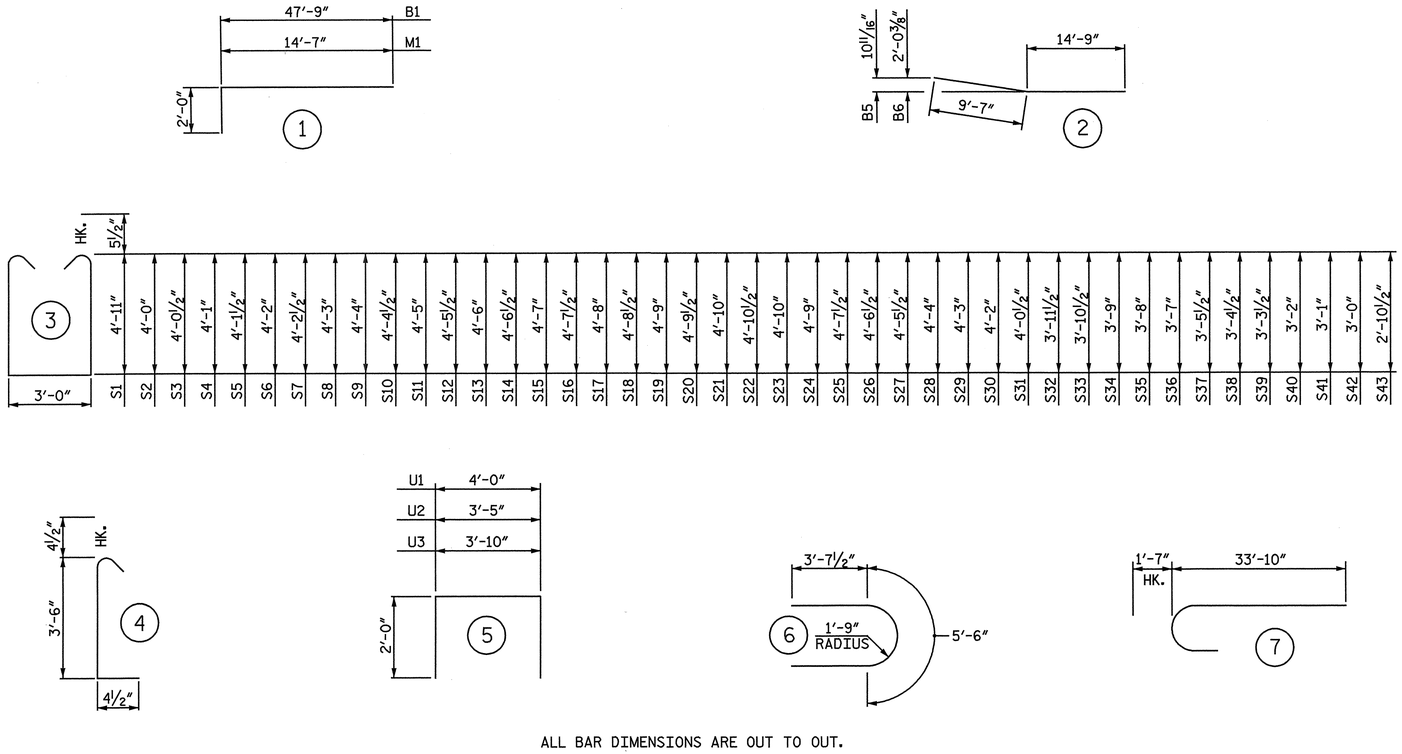

ALL BAR DIMENSIONS ARE OUT TO OUT.

BILL OF MATERIAL

BENT 24

BAR	NO.	SIZE	TYPE	LENGTH	WEIGHT
B1	20	11	1	49′ - 9″	5,286
B2	24	11	STR	47′ - 9″	6,089
B3	12	6	STR	41′ - 8″	751
B4	12	11	STR	60′ - 0″	3,825
B5	12	11	2	24′ - 4″	1,551
B6	12	11	2	24′ - 4″	1,551
B7	80	4	STR	6′ - 6″	347
B8	10	4	STR	3′ - 9″	25
B9	19	4	STR	4′ - 2″	53
M1	64	11	1	16′ - 7″	5,639
S1	128	5	3	13′ - 9″	1,836
S2	2	5	3	11′ - 11″	25
S3	2	5	3	12′ - 0″	25
S4	2	5	3	12′ - 1″	25
S5	2	5	3	12′ - 2″	25
S6	2	5	3	12′ - 3″	26
S7	2	5	3	12′ - 4″	26
S8	2	5	3	12′ - 5″	26
S9	2	5	3	12′ - 7″	26
S10	2	5	3	12′ - 8″	26
S11	2	5	3	12′ - 9″	27
S12	2	5	3	12′ - 10″	27
S13	2	5	3	12′ - 11″	27
S14	2	5	3	13′ - 0″	27
S15	2	5	3	13′ - 1″	27
S16	2	5	3	13′ - 2″	27
S17	2	5	3	13′ - 3″	28
S18	2	5	3	13′ - 4″	28
S19	2	5	3	13′ - 5″	28
S20	2	5	3	13′ - 6″	28
S21	2	5	3	13′ - 7″	28
S22	2	5	3	13′ - 8″	29
S23	2	5	3	13′ - 7″	28
S24	2	5	3	13′ - 5″	28
S25	2	5	3	13′ - 2″	27
S26	2	5	3	13′ - 0″	27
S27	2	5	3	12′ - 10″	27
S28	2	5	3	12′ - 7″	26
S29	2	5	3	12′ - 5″	26
S30	2	5	3	12′ - 3″	26
S31	2	5	3	12′ - 0″	25
S32	2	5	3	11′ - 10″	25
S33	2	5	3	11′ - 8″	24
S34	2	5	3	11′ - 5″	24
S35	2	5	3	11′ - 3″	23
S36	2	5	3	11′ - 1″	23
S37	2	5	3	10′ - 10″	23
S38	2	5	3	10′ - 8″	22
S39	2	5	3	10′ - 6″	22
S40	2	5	3	10′ - 3″	21
S41	2	5	3	10′ - 1″	21
S42	2	5	3	9′ - 11″	21
S43	2	5	3	9′ - 8″	20
S44	122	4	6	12′ - 9″	1,039
S45	244	4	4	4′ - 3″	693
T1	96	5	STR	19′ - 4″	1,936
T2	188	9	STR	19′ - 4″	12,358
T3	124	7	STR	19′ - 4″	4,900
U1	80	4	5	8′ - 0″	428
U2	6	4	5	7′ - 5″	30
U3	6	4	5	7′ - 10″	31
V1	64	11	7	35′ - 5″	12,043

EPOXY COATED
REINFORCING STEEL LBS. 61,481

CLASS "AA" CONCRETE BREAKDOWN

POUR #1 - FOOTINGS C.Y. 147.1

POUR #2 - COLUMNS C.Y. 71.5

POUR #3 - CAP C.Y. 75.4

TOTAL CLASS "AA" CONCRETE C.Y. 294.0

30″ PRESTRESSED CONCRETE PILES
NO. 18 LIN FT. 1,678

PILE REDRIVES NO. 5

PROJECT NO. R-3307
CARTERET COUNTY
STATION: 46+21.50 -L-

SHEET 3 OF 3

STATE OF NORTH CAROLINA
DEPARTMENT OF TRANSPORTATION
RALEIGH

SUBSTRUCTURE

BENT 24
BILL OF MATERIAL

NORTH CAROLINA PROFESSIONAL SEAL 25911 ENGINEER DWIN G. HATHAWAY 4-3-2012

NORTH CAROLINA PROFESSIONAL SEAL 033752 ENGINEER SETH A. DENNEY 4/20/12

THE LPA GROUP of North Carolina TRANSPORTATION CONSULTANTS

THE LPA GROUP of North Carolina
8000 Regency Parkway, Suite 600
Cary, North Carolina 27518
NC License No.: F-1084

REVISIONS						SHEET NO.
NO.	BY:	DATE:	NO.	BY:	DATE:	S-2C4
1			3			TOTAL SHEETS
2			4			333

DRAWN BY : M. D. MAYHEW DATE : 12-1-11
CHECKED BY : A. L. PHILLIPS DATE : 1-3-12

DWG. 265 OF 282

4/20/2012
8:46:30 AM
User: jaustin
Filename: Y:\Projects\NCDOT\R-3307\Dwgs\Final\R-3307_265_SD_B24_3.dgn

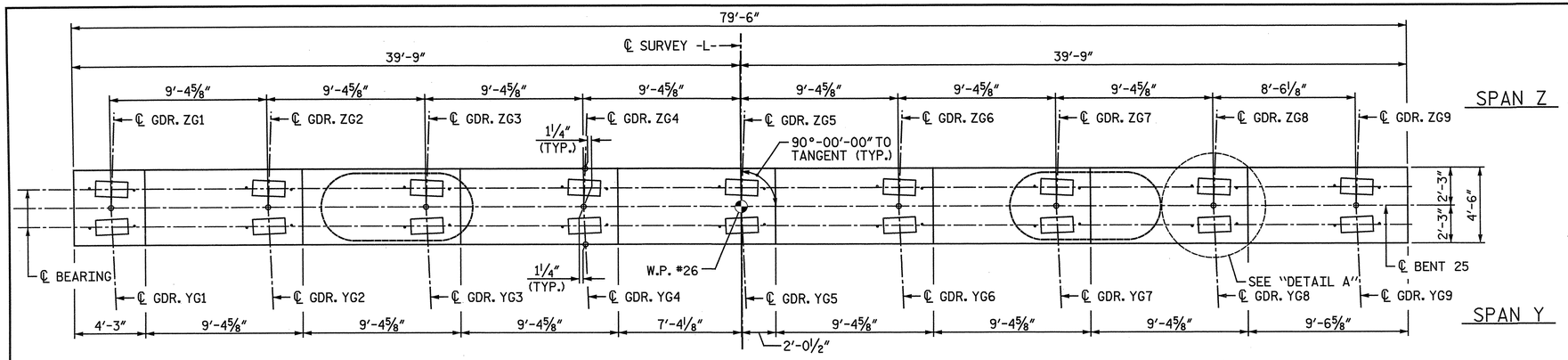

PLAN

NOTES:

STIRRUPS IN CAP MAY BE SHIFTED AS NECESSARY TO CLEAR ANCHOR BOLTS.

ALTERNATELY INVERT STIRRUP PAIRS AS NOTED.

FOR FOUNDATION NOTES, SEE "GENERAL DRAWING FOUNDATION LAYOUT" SHEET 4 OF 4.

FOR FOOTING REINFORCING DETAILS, SEE SHEET 2 OF 3.

FOR SECTION A-A, SECTION B-B, VIEW C-C, SECTION D-D, AND SECTION E-E, SEE SHEET 2 OF 3.

✱ THE FOOTING HAS A DROP OF 2½" FROM THE CENTER OF THE FOOTING TO THE EDGE OF FOOTING TO ACCOMODATE DRAINAGE.

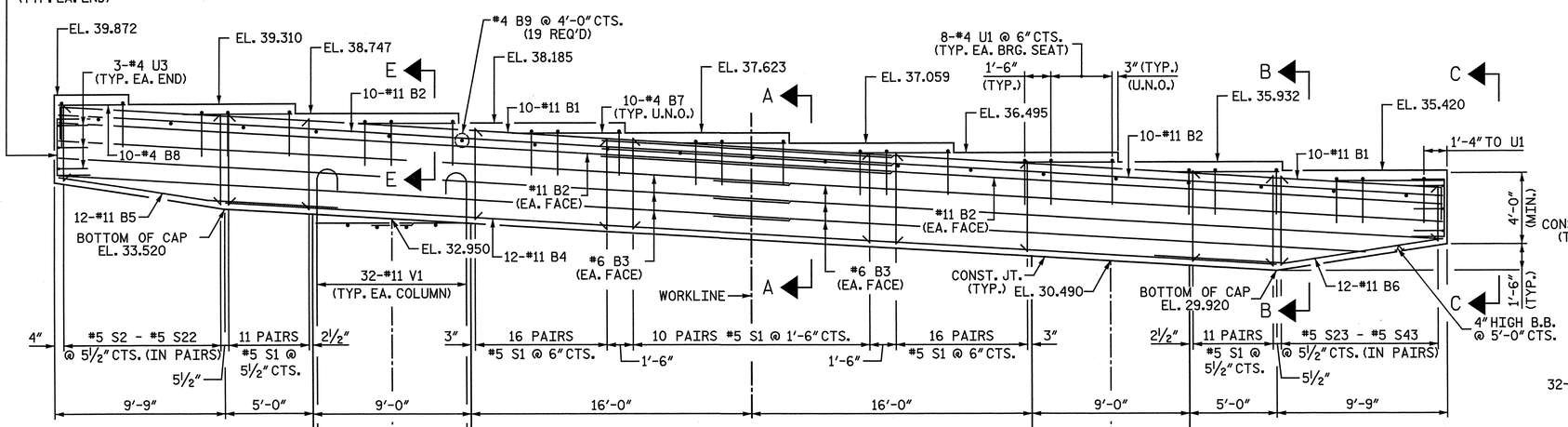

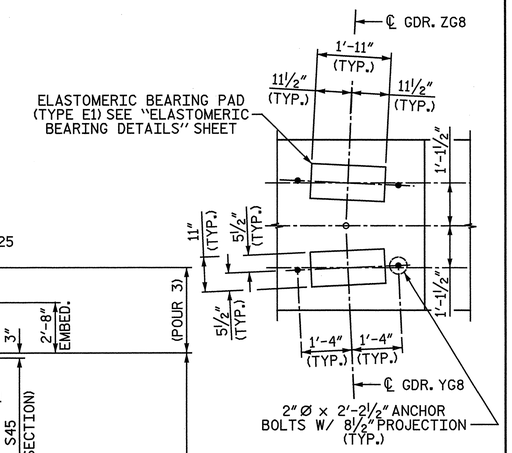

DETAIL A

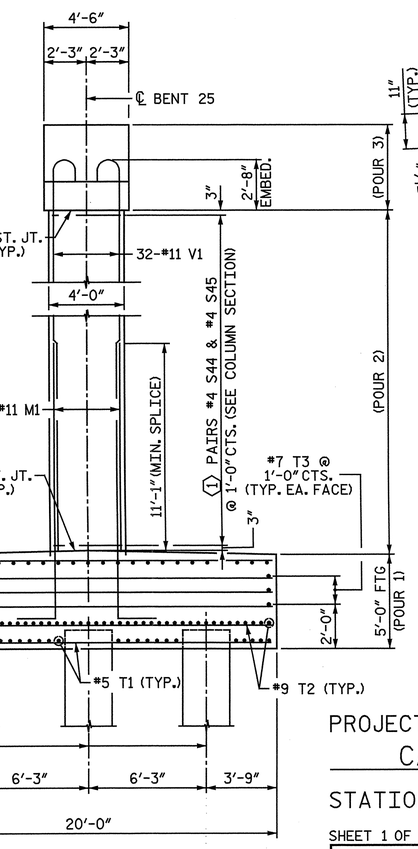

END VIEW

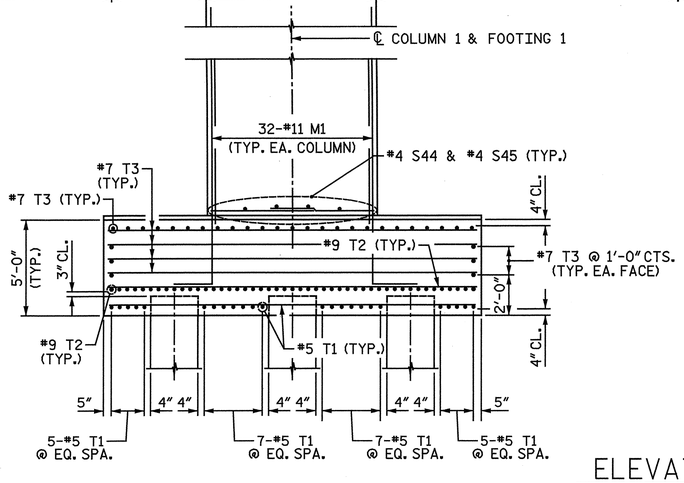

ELEVATION

ALL DIMENSIONS AND DETAILS SHOWN FOR FOOTINGS ARE TYPICAL FOR EACH FOOTING UNLESS OTHERWISE NOTED.

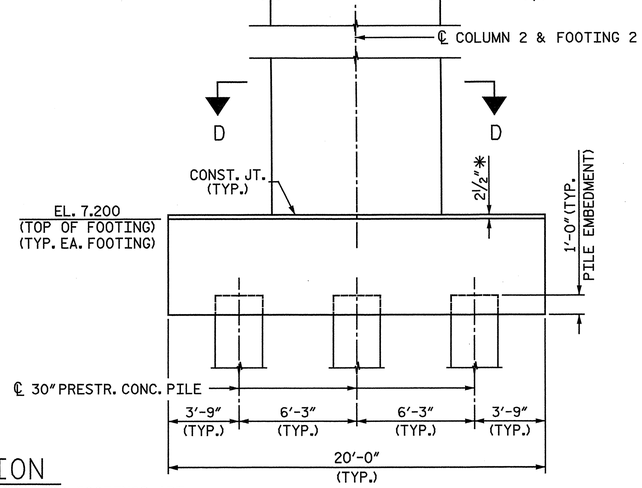

COLUMN	①
1	27
2	24

MINIMUM SPLICE LENGTH	
#11 B1	16'-6"
#11 B2	16'-6"
#6 B3	4'-3"

PROJECT NO. R-3307

CARTERET COUNTY

STATION: 46+21.50 -L-

SHEET 1 OF 3

STATE OF NORTH CAROLINA
DEPARTMENT OF TRANSPORTATION
RALEIGH

SUBSTRUCTURE

BENT 25
PLAN AND ELEVATION

NORTH CAROLINA PROFESSIONAL SEAL 25911 ENGINEER DWAIN C. HATHAWAY 4-3-2012

NORTH CAROLINA PROFESSIONAL SEAL 033752 ENGINEER SETH A. DENNEY 4/20/12

THE LPA GROUP of North Carolina TRANSPORTATION CONSULTANTS

THE LPA GROUP of North Carolina
8000 Regency Parkway, Suite 600
Cary, North Carolina 27518
NC License No.: F-1084

REVISIONS								SHEET NO.
NO.	BY:	DATE:	NO.	BY:	DATE:			S-265
1			3					TOTAL SHEETS
2			4					333

DRAWN BY: M. D. MAYHEW DATE: 12-1-11
CHECKED BY: A. L. PHILLIPS DATE: 12-2-11

DWG. 266 OF 282

4/20/2012
8:46:32 AM
User: jaustin
Filename: Y:\Projects\NCDOT\R-3307\Dwgs\Final\R-3307_266_SD_B25_1.dgn

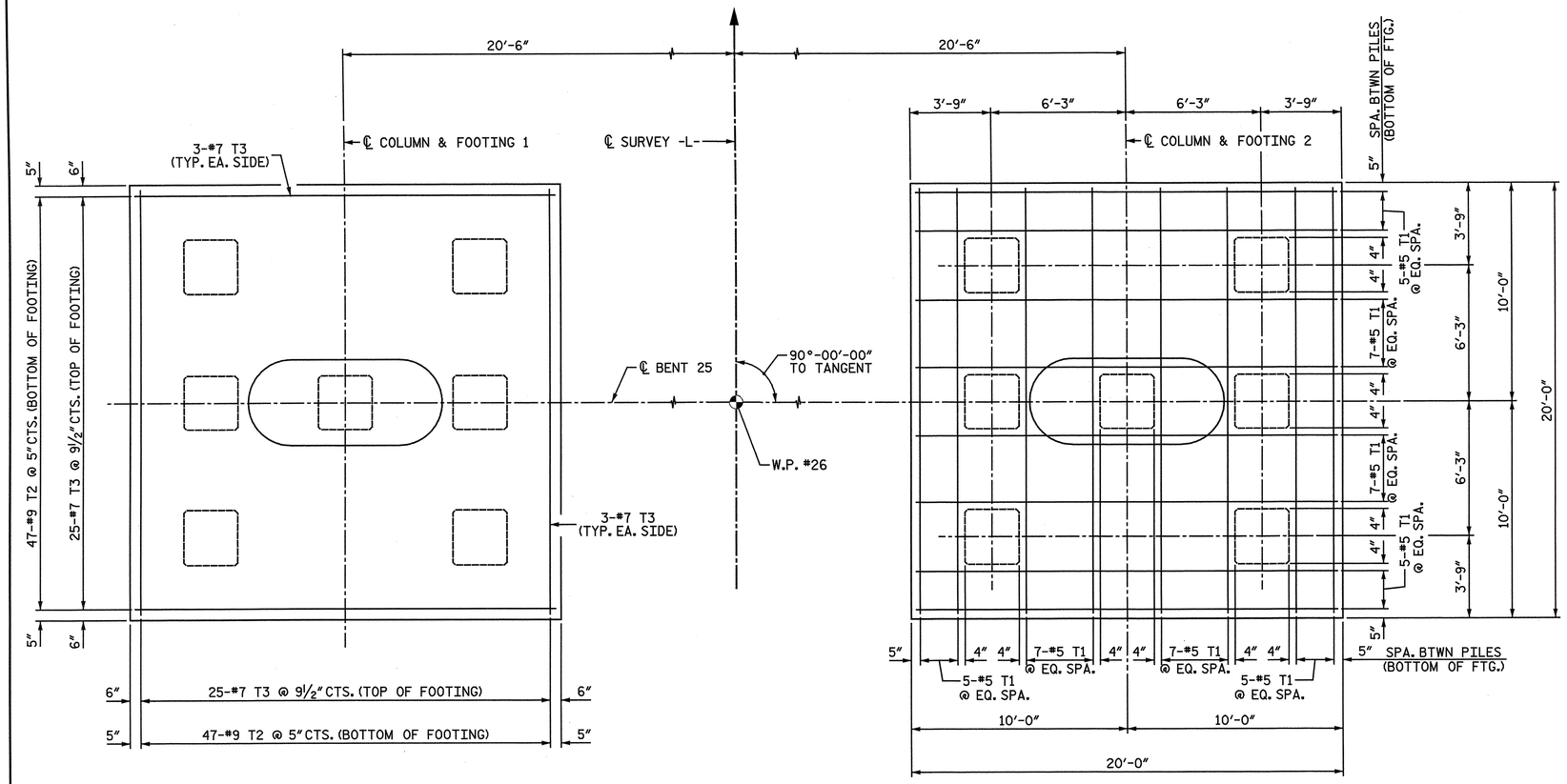

FOOTING PLAN

ALL DIMENSIONS AND DETAILS SHOWN FOR FOOTINGS ARE TYPICAL FOR EACH FOOTING UNLESS OTHERWISE NOTED.

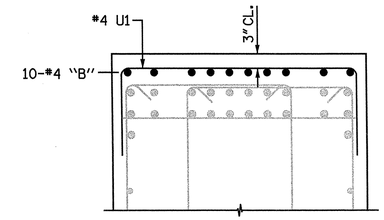

SECTION E-E

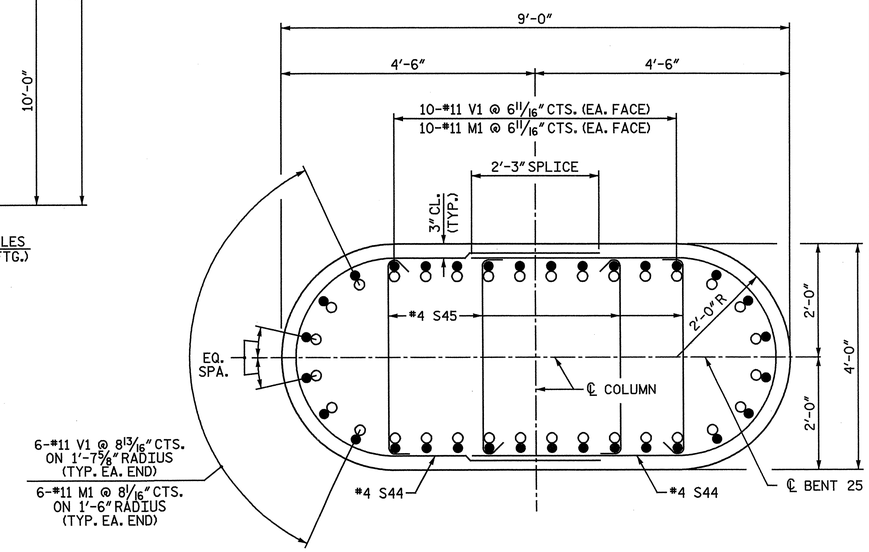

SECTION D-D

NOTE: WHEN PLACING CROSS-TIES, ALTERNATE THE POSITION OF THE 180-DEGREE HOOKS HORIZONTALLY AND VERTICALLY.

○ #11 M1
● #11 V1

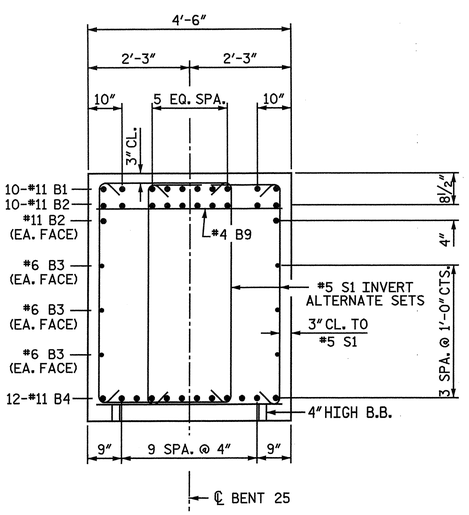

SECTION A-A

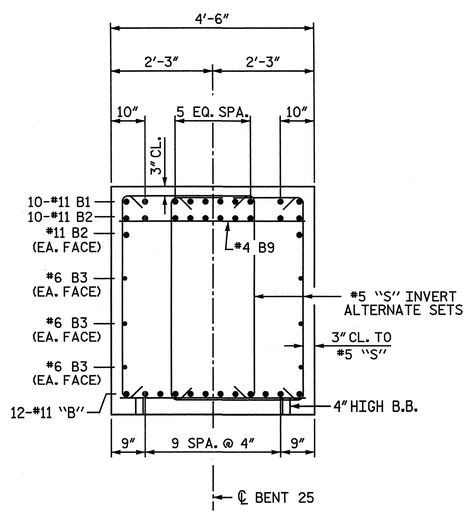

SECTION B-B

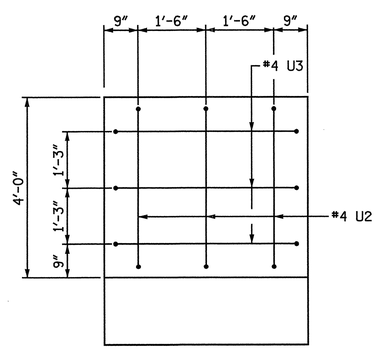

VIEW C-C

PROJECT NO. R-3307

CARTERET COUNTY

STATION: 46+21.50 -L-

SHEET 2 OF 3

STATE OF NORTH CAROLINA
DEPARTMENT OF TRANSPORTATION
RALEIGH

SUBSTRUCTURE

BENT 25 FOOTING AND SECTIONS

NORTH CAROLINA PROFESSIONAL SEAL 25911 ENGINEER DWAIN G. HATHAWAY 4-13-2012

NORTH CAROLINA PROFESSIONAL SEAL 033752 ENGINEER SETH A. DENNEY 4-20-12

THE LPA GROUP of North Carolina TRANSPORTATION CONSULTANTS

THE LPA GROUP of North Carolina
8000 Regency Parkway, Suite 600
Cary, North Carolina 27518
NC License No.: F-1084

REVISIONS								
NO.	BY:	DATE:	NO.	BY:	DATE:			
1			3					
2			4					

SHEET NO. S-266

TOTAL SHEETS 333

DWG. 267 OF 282

DRAWN BY: M. D. MAYHEW DATE: 11-16-11
CHECKED BY: A. L. PHILLIPS DATE: 12-2-11

4/20/2012
8:46:37 AM
User: jaustin
Filename: Y:\Projects\NCDOT\R-3307\Dwgs\Final\R-3307_267_SD_B25_2.dgn

BAR TYPES

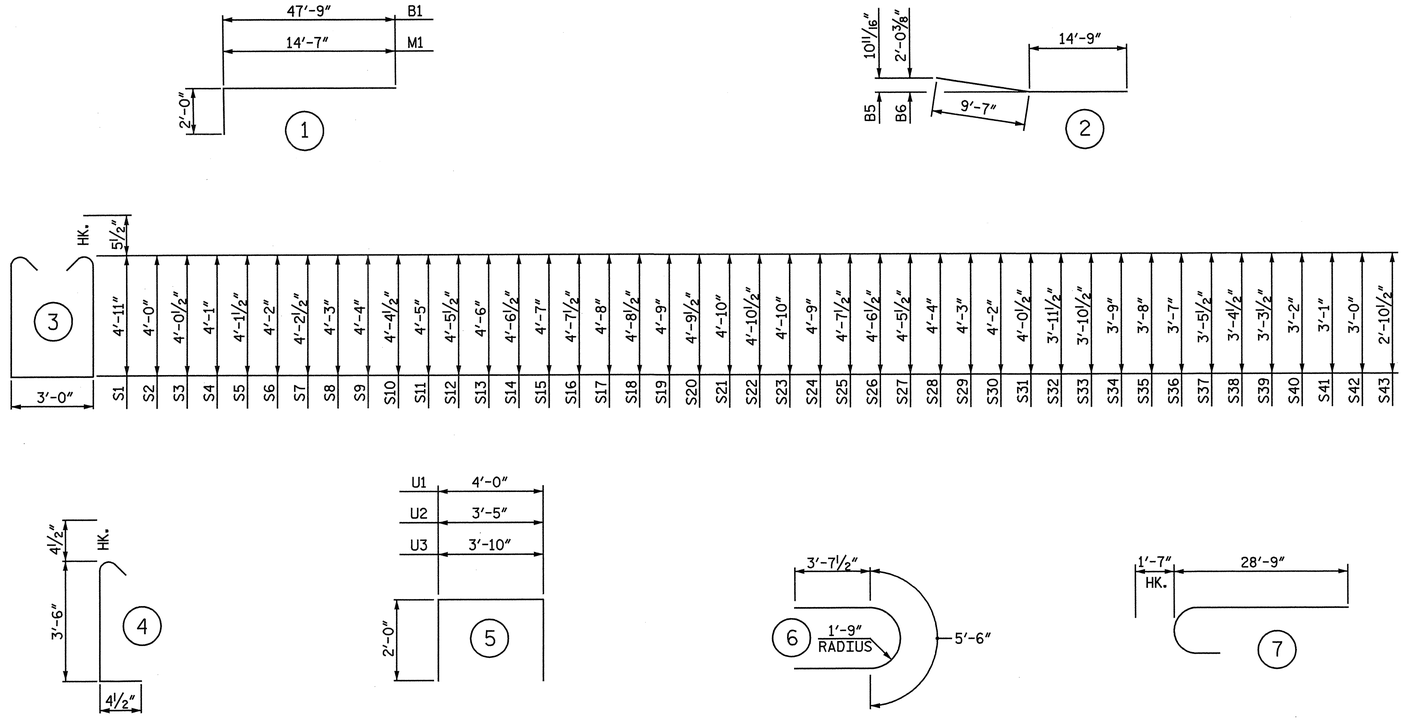

ALL BAR DIMENSIONS ARE OUT TO OUT.

BILL OF MATERIAL
BENT 25

BAR	NO.	SIZE	TYPE	LENGTH	WEIGHT
B1	20	11	1	49' - 9"	5,286
B2	24	11	STR	47' - 9"	6,089
B3	12	6	STR	41' - 8"	751
B4	12	11	STR	60' - 0"	3,825
B5	12	11	2	24' - 4"	1,551
B6	12	11	2	24' - 4"	1,551
B7	80	4	STR	6' - 6"	347
B8	10	4	STR	3' - 9"	25
B9	19	4	STR	4' - 2"	53
M1	64	11	1	16' - 7"	5,639
S1	128	5	3	13' - 9"	1,836
S2	2	5	3	11' - 11"	25
S3	2	5	3	12' - 0"	25
S4	2	5	3	12' - 1"	25
S5	2	5	3	12' - 2"	25
S6	2	5	3	12' - 3"	26
S7	2	5	3	12' - 4"	26
S8	2	5	3	12' - 5"	26
S9	2	5	3	12' - 7"	26
S10	2	5	3	12' - 8"	26
S11	2	5	3	12' - 9"	27
S12	2	5	3	12' - 10"	27
S13	2	5	3	12' - 11"	27
S14	2	5	3	13' - 0"	27
S15	2	5	3	13' - 1"	27
S16	2	5	3	13' - 2"	27
S17	2	5	3	13' - 3"	28
S18	2	5	3	13' - 4"	28
S19	2	5	3	13' - 5"	28
S20	2	5	3	13' - 6"	28
S21	2	5	3	13' - 7"	28
S22	2	5	3	13' - 8"	29
S23	2	5	3	13' - 7"	28
S24	2	5	3	13' - 5"	28
S25	2	5	3	13' - 2"	27
S26	2	5	3	13' - 0"	27
S27	2	5	3	12' - 10"	27
S28	2	5	3	12' - 7"	26
S29	2	5	3	12' - 5"	26
S30	2	5	3	12' - 3"	26
S31	2	5	3	12' - 0"	25
S32	2	5	3	11' - 10"	25
S33	2	5	3	11' - 8"	24
S34	2	5	3	11' - 5"	24
S35	2	5	3	11' - 3"	23
S36	2	5	3	11' - 1"	23
S37	2	5	3	10' - 10"	23
S38	2	5	3	10' - 8"	22
S39	2	5	3	10' - 6"	22
S40	2	5	3	10' - 3"	21
S41	2	5	3	10' - 1"	21
S42	2	5	3	9' - 11"	21
S43	2	5	3	9' - 8"	20
S44	102	4	6	12' - 9"	869
S45	204	4	4	4' - 3"	579
T1	96	5	STR	19' - 4"	1,936
T2	188	9	STR	19' - 4"	12,358
T3	124	7	STR	19' - 4"	4,900
U1	80	4	5	8' - 0"	428
U2	6	4	5	7' - 5"	30
U3	6	4	5	7' - 10"	31
V1	64	11	7	30' - 4"	10,314

EPOXY COATED
REINFORCING STEEL LBS. 59,468

CLASS "AA" CONCRETE BREAKDOWN

POUR #1 - FOOTINGS	C.Y.	147.1
POUR #2 - COLUMNS	C.Y.	59.2
POUR #3 - CAP	C.Y.	75.4
TOTAL CLASS "AA" CONCRETE	C.Y.	281.7

30" PRESTRESSED CONCRETE PILES
NO. 14 LIN FT. 1,011

PILE REDRIVES NO. 5

PROJECT NO. R-3307
CARTERET COUNTY
STATION: 46+21.50 -L-

SHEET 3 OF 3

STATE OF NORTH CAROLINA
DEPARTMENT OF TRANSPORTATION
RALEIGH

SUBSTRUCTURE

BENT 25
BILL OF MATERIAL

NORTH CAROLINA PROFESSIONAL SEAL 25911 ENGINEER DWAIN G. HATHAWAY 1-3-2012

NORTH CAROLINA PROFESSIONAL SEAL 033752 ENGINEER SETH A. DEVNEY 2/03/12

THE LPA GROUP of North Carolina TRANSPORTATION CONSULTANTS

THE LPA GROUP of North Carolina
8000 Regency Parkway, Suite 600
Cary, North Carolina 27518
NC License No.: F-1084

REVISIONS						SHEET NO.
NO.	BY:	DATE:	NO.	BY:	DATE:	S-267
1			3			TOTAL SHEETS
2			4			333

DRAWN BY : M. D. MAYHEW DATE : 12-1-11
CHECKED BY : A. L. PHILLIPS DATE : 1-3-12

DWG. 268 OF 282

4/20/2012
8:46:40 AM
User: jaustin
Filename: Y:\Projects\NCDOT\R-3307\Dwgs\Final\R-3307_268_SD_B25_3.dgn

NOTES:

STIRRUPS AND "U" BARS IN CAP MAY BE SHIFTED AS NECESSARY TO CLEAR ANCHOR BOLTS.

FOR PIPE INSERT DETAILS, SEE BEARINGS SHEET.

THE WATER/CEMENT RATIO FOR CONCRETE PILES SHALL NOT EXCEED 0.40.

FOR DETAILS "A" AND "B", SECTIONS A-A, B-B, C-C AND D-D SEE SHEET 2 OF 2.

U.O.N. - UNLESS OTHERWISE NOTED.

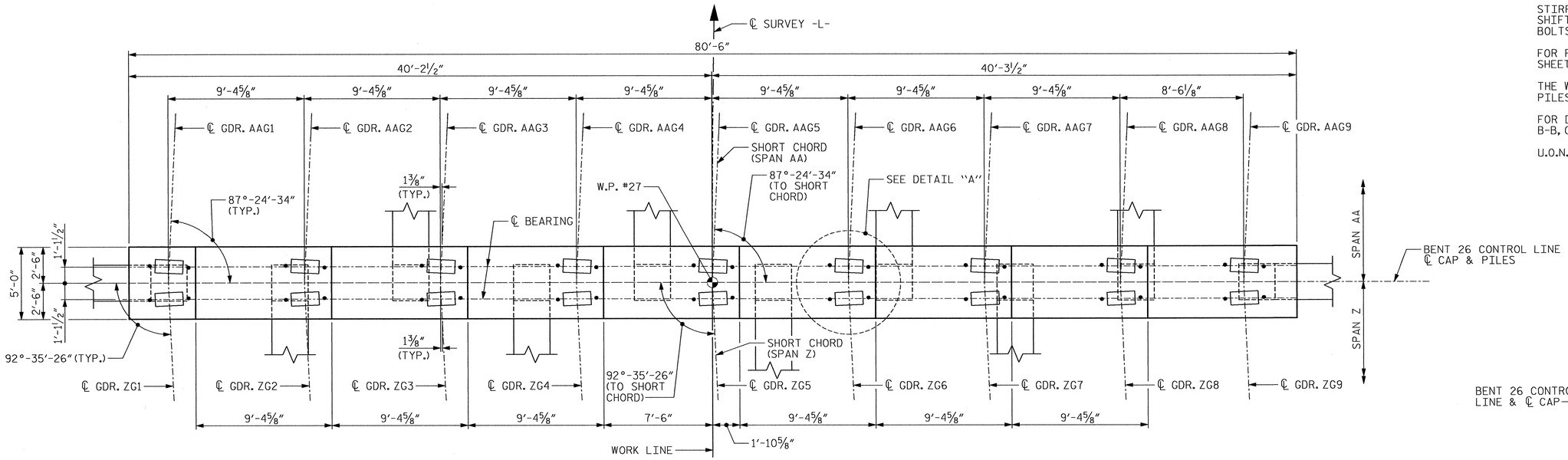

PLAN

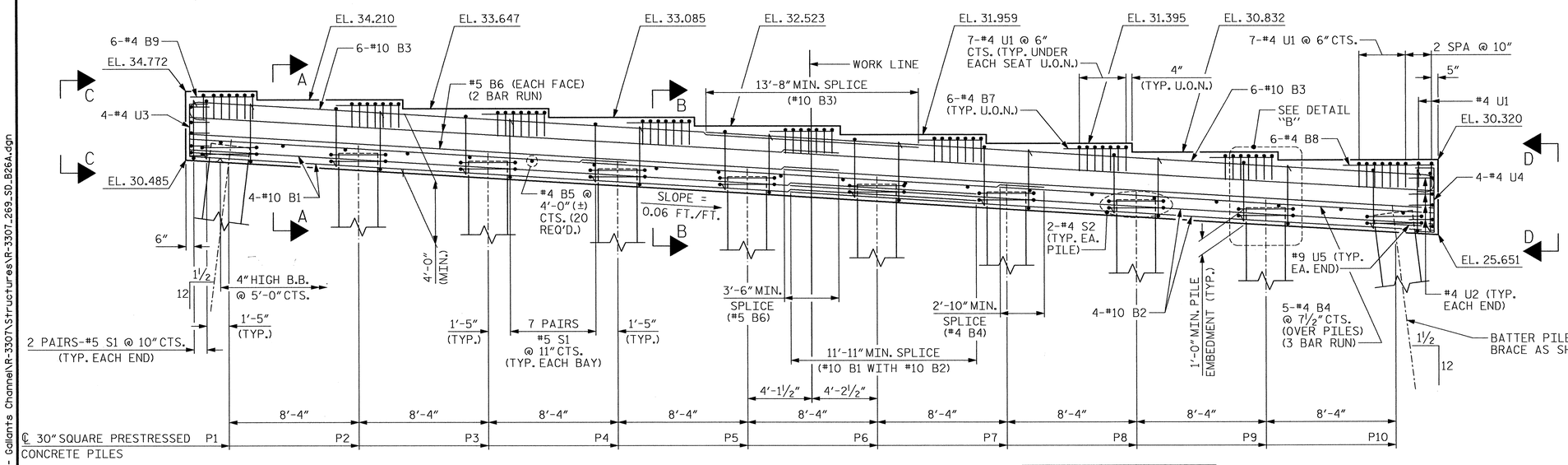

ELEVATION

NOTE: INVERT ALTERNATE PAIRS OF STIRRUPS

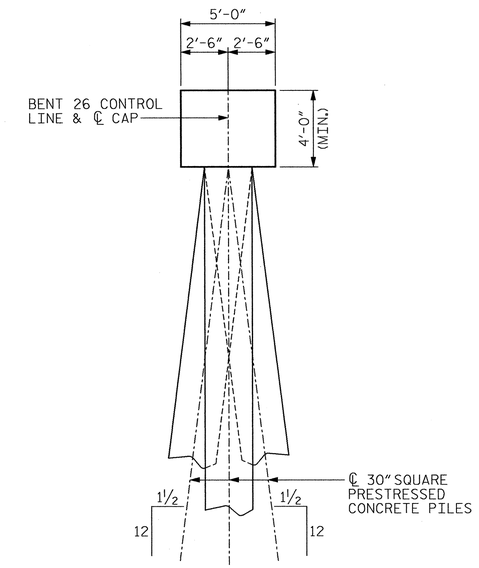

END VIEW

TOP OF PILE ELEVATIONS	
PILE	ELEVATION
P1	31.395
P2	30.894
P3	30.394
P4	29.893
P5	29.393
P6	28.892
P7	28.392
P8	27.892
P9	27.391
P10	26.891

PROJECT NO. R-3307

CARTERET COUNTY

STATION: 46+21.50 -L-

SHEET 1 OF 2

NORTH CAROLINA PROFESSIONAL SEAL 12323 ENGINEER MORRIS ISRAELNAIM 3/30/2012

NORTH CAROLINA PROFESSIONAL SEAL 027799 ENGINEER ALLYSON K. ORR 3/30/2012

MI ENGINEERING
1011 SHAUB DRIVE, SUITE 100
RALEIGH, NC 27606
(919) 851-6606
FIRM PE NUMBER : P-0671

STATE OF NORTH CAROLINA
DEPARTMENT OF TRANSPORTATION
RALEIGH

SUBSTRUCTURE

BENT 26
PLAN AND ELEVATION

REVISIONS								SHEET NO.
NO.	BY:	DATE:	NO.	BY:	DATE:			S-208
1			3					TOTAL SHEETS
2			4					333

DRAWN BY : B.E. LANNING DATE : 11-11
CHECKED BY : A.K. ORR DATE : 1-12

DWG. 269 OF 282

3/26, 12
2:37:20 PM
User: blanning
Filename: P:\NC Projects\MI0005 - Gallants Channel\R-3307\Structures\R-3307_269_SD_B26A.dgn

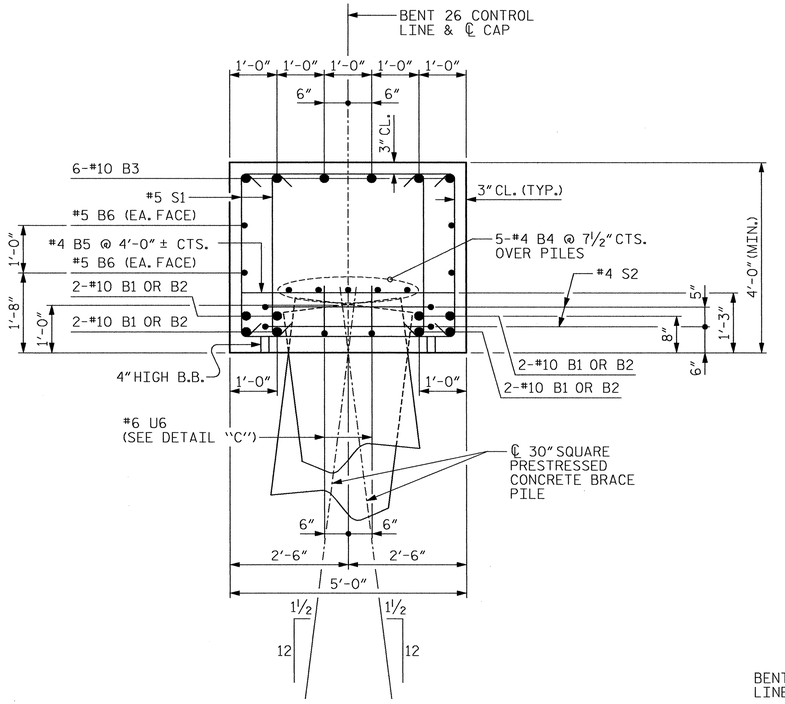

SECTION A-A

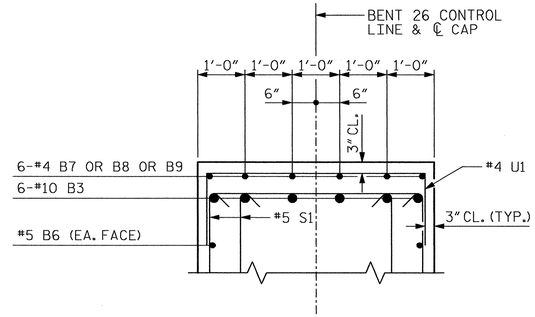

PARTIAL SECTION B-B

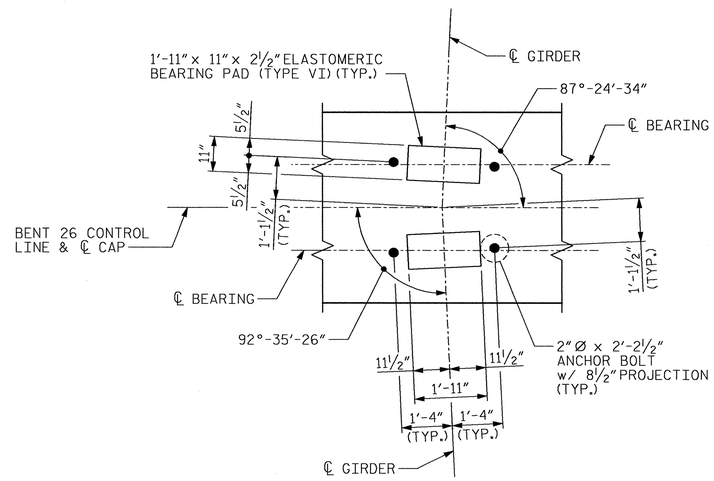

DETAIL "A"

BAR TYPES

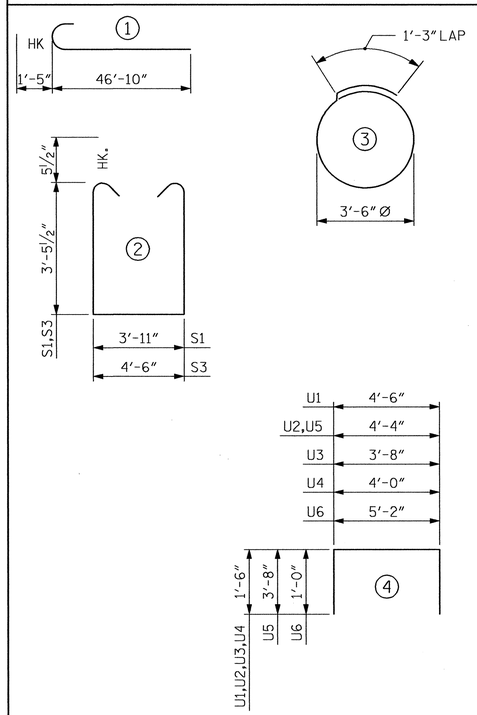

ALL BAR DIMENSIONS ARE OUT TO OUT.

BILL OF MATERIAL

BENT #26

BAR	NO.	SIZE	TYPE	LENGTH	WEIGHT
B1	8	#10	STR	50'-2"	1727
B2	8	#10	STR	41'-10"	1440
B3	12	#10	1	48'-3"	2491
B4	15	#4	STR	28'-7"	286
B5	20	#4	STR	4'-6"	60
B6	8	#5	STR	41'-9"	348
B7	42	#4	STR	5'-0"	140
B8	6	#4	STR	6'-9"	27
B9	6	#4	STR	4'-1"	16
S1	134	#5	2	11'-9"	1642
S2	20	#4	3	12'-3"	164
S3	40	#5	2	12'-4"	515
U1	65	#4	4	7'-6"	326
U2	8	#4	4	7'-4"	39
U3	4	#4	4	6'-8"	18
U4	4	#4	4	7'-0"	19
U5	2	#9	4	11'-8"	79
U6	18	#6	4	7'-2"	194

EPOXY COATED REINFORCING STEEL 9,531 LBS.

CLASS AA CONCRETE 62 C.Y.

30" SQUARE PRESTRESSED CONCRETE PILES
NO. 10 1050 LIN. FT.

PILE REDRIVES 5 EA.

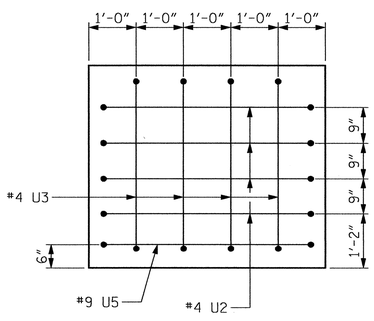

VIEW C-C

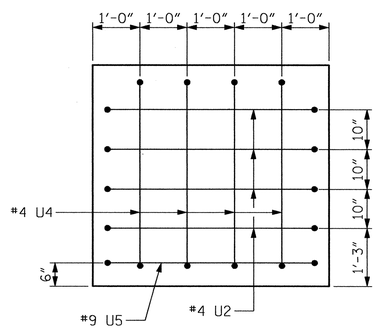

VIEW D-D

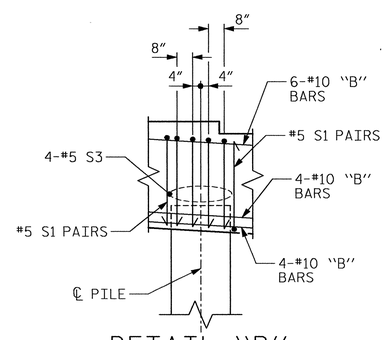

DETAIL "B"
AT PILES

SHIFT AS NECESSARY TO CLEAR ANCHOR BOLTS.

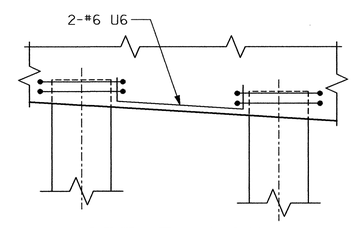

DETAIL "C"

NOTE: #6 U6 TO BE USED IN EACH BAY.

PROJECT NO. R-3307
CARTERET COUNTY
STATION: 46+21.50 -L-

SHEET 2 OF 2

STATE OF NORTH CAROLINA
DEPARTMENT OF TRANSPORTATION
RALEIGH

SUBSTRUCTURE

BENT 26
SECTION AND DETAILS

NORTH CAROLINA PROFESSIONAL SEAL 12323 ENGINEER MORRIS ISRAELMAN 3/30/2012

NORTH CAROLINA PROFESSIONAL SEAL 027799 ENGINEER ALLYSON K. ORR 3/30/2012

MI ENGINEERING
1011 SHAUB DRIVE, SUITE 100
RALEIGH, NC 27606
(919) 851-6606
FIRM PE NUMBER : P-0671

REVISIONS						SHEET NO.
NO.	BY:	DATE:	NO.	BY:	DATE:	S-269
1			3			TOTAL SHEETS
2			4			333

DRAWN BY : B.E. LANNING DATE : 11-11
CHECKED BY : A.K. ORR DATE : 1-12

DWG. 270 OF 282

3/29/2012
5:18:24 PM
User: blanning
Filename: P:\NC Projects\M10005 - Gallants Channel\R-3307\Structures\R-3307.270.SD_B268.dgn

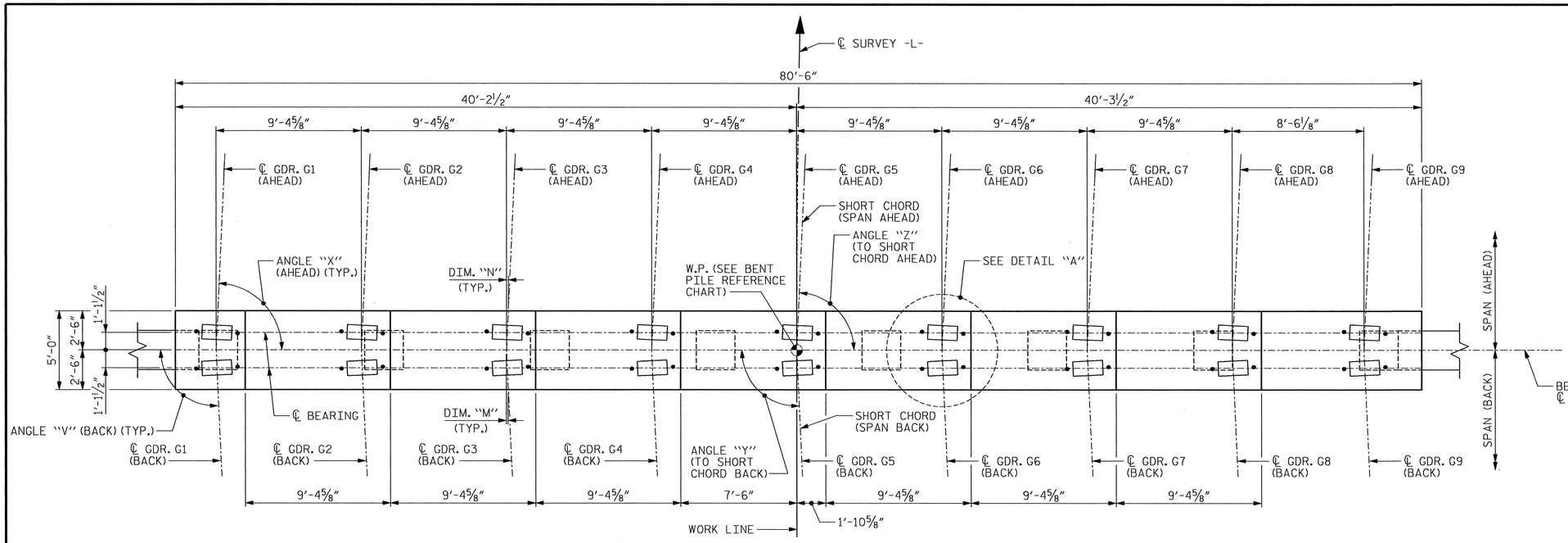

PLAN

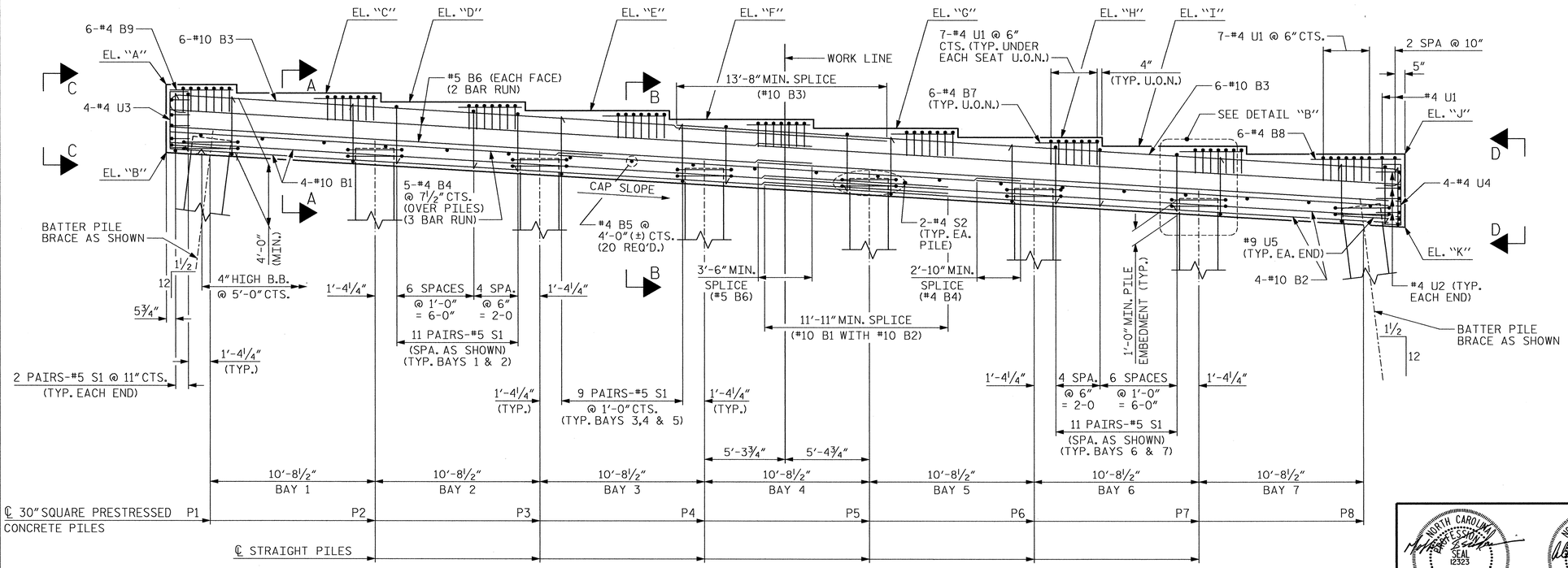

ELEVATION

NOTE: INVERT ALTERNATE PAIRS OF STIRRUPS

NOTES:

STIRRUPS AND "U" BARS IN CAP MAY BE SHIFTED AS NECESSARY TO CLEAR ANCHOR BOLTS.

FOR PIPE INSERT DETAILS, SEE BEARINGS SHEET.

THE WATER/CEMENT RATIO FOR CONCRETE PILES SHALL NOT EXCEED 0.40.

FOR ELEVATIONS A THRU K, DIMENSIONS "M" AND "N", NEAR AND FAR SPAN DESIGNATIONS, WORK POINT NUMBER, GIRDER ANGLES "V" AND "X", SHORT CHORD ANGLES "Y" AND "Z" AND CAP SLOPE, SEE PILE BENT REFERENCE CHART ON SHEET 2 OF 2.

FOR DETAILS "A" AND "B", SECTIONS A-A, B-B, C-C, D-D AND TOP OF PILE ELEVATIONS, SEE SHEET 2 OF 2.

U.O.N. - UNLESS OTHERWISE NOTED.

THE TOP SURFACE AREAS OF THE BENT 27 CAP SHALL BE CURED IN ACCORDANCE WITH THE STANDARD SPECIFICATIONS EXCEPT THE MEMBRANE CURING COMPOUND METHOD SHALL NOT BE USED.

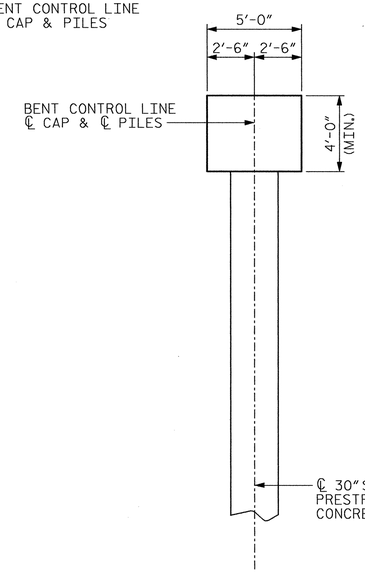

END VIEW

PROJECT NO. R-3307

CARTERET COUNTY

STATION: 46+21.50 -L-

SHEET 1 OF 2

STATE OF NORTH CAROLINA
DEPARTMENT OF TRANSPORTATION
RALEIGH

SUBSTRUCTURE

BENT 27 & BENT 28 PLAN AND ELEVATION

NORTH CAROLINA PROFESSIONAL SEAL 12323 ENGINEER MORRIS ISRAELMANN 3/30/2012

NORTH CAROLINA PROFESSIONAL SEAL 027799 ENGINEER ALLYSON K. ORR 3/30/2012

MI ENGINEERING
1011 SHAUB DRIVE, SUITE 100
RALEIGH, NC 27606
(919) 851-6606
FIRM PE NUMBER : P-0671

REVISIONS						SHEET NO.
NO.	BY:	DATE:	NO.	BY:	DATE:	S-270
1			3			TOTAL SHEETS
2			4			333

DRAWN BY : B.E. LANNING DATE : 12-11
CHECKED BY : A.K. ORR DATE : 1-12

DWG. 271 OF 282

3/26/12 2:42:22 PM
User: blanning
Filename: P:\NC Projects\MI0005 - Gallants Channel\R-3307\Structures\R-3307_271_SD_B27&28A.dgn

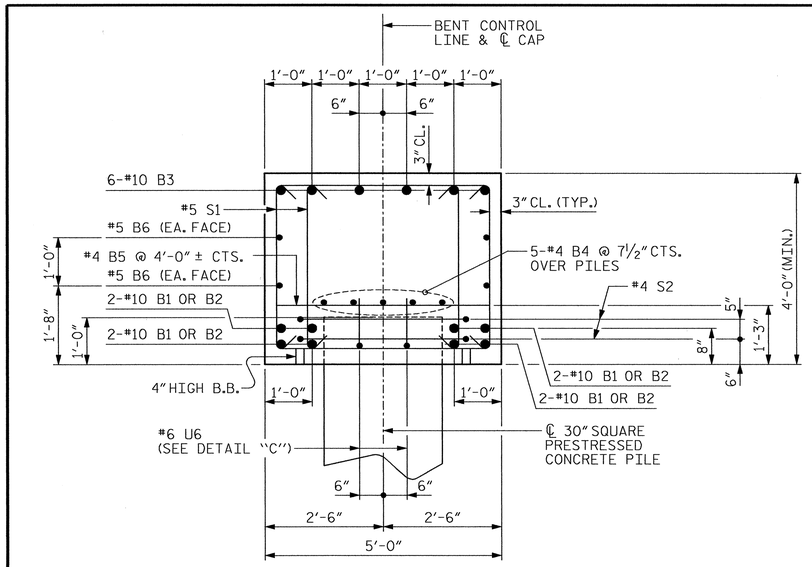

SECTION A-A

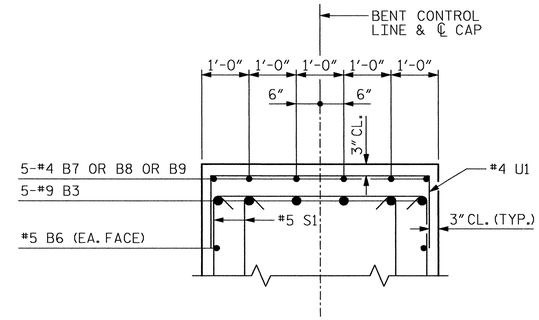

PARTIAL SECTION B-B

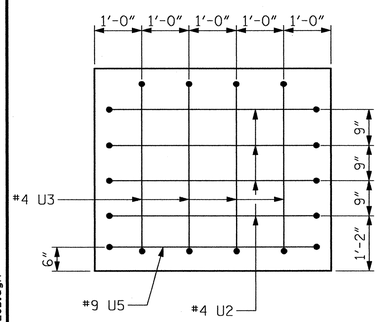

VIEW C-C

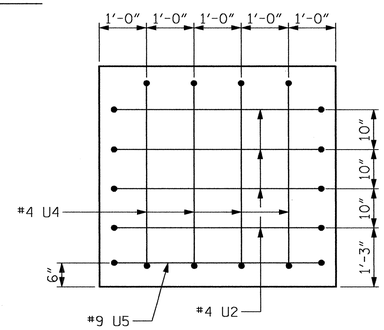

VIEW D-D

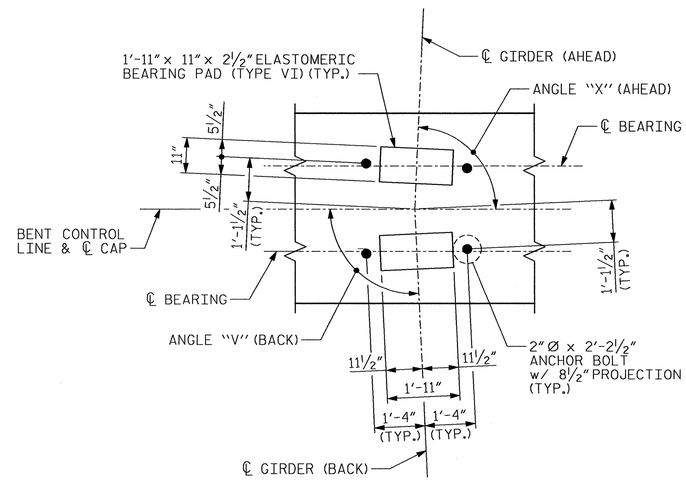

DETAIL "A"

BAR TYPES

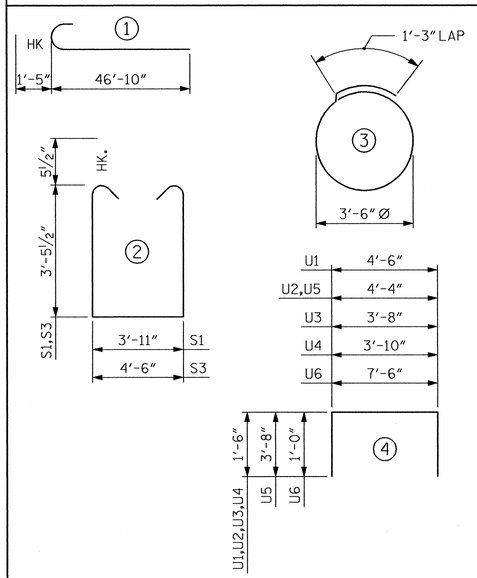

ALL BAR DIMENSIONS ARE OUT TO OUT.

BILL OF MATERIAL

BENT 27 OR BENT 28

BAR	NO.	SIZE	TYPE	LENGTH	WEIGHT
B1	8	#10	STR	51'-4"	1767
B2	8	#10	STR	40'-8"	1400
B3	12	#10	1	48'-3"	2491
B4	15	#4	STR	28'-7"	286
B5	20	#4	STR	4'-6"	60
B6	8	#5	STR	41'-9"	348
B7	42	#4	STR	5'-0"	140
B8	6	#4	STR	6'-9"	27
B9	6	#4	STR	4'-1"	16
S1	150	#5	2	11'-9"	1838
S2	16	#4	3	12'-3"	131
S3	32	#5	2	12'-4"	412
U1	65	#4	4	7'-6"	326
U2	8	#4	4	7'-4"	39
U3	4	#4	4	6'-8"	18
U4	4	#4	4	6'-10"	18
U5	2	#9	4	11'-8"	79
U6	14	#6	4	9'-6"	200

EPOXY COATED REINFORCING STEEL 9,596 LBS.

BENT 27

CLASS AA CONCRETE 62 C.Y.

30" SQUARE PRESTRESSED CONCRETE PILES
NO. 8 800 LIN. FT.

PILE REDRIVES 4 EA.

BENT 28

CLASS AA CONCRETE 61 C.Y.

30" SQUARE PRESTRESSED CONCRETE PILES
NO. 8 800 LIN. FT.

PILE REDRIVES 4 EA.

PDA TESTING 1 EA.

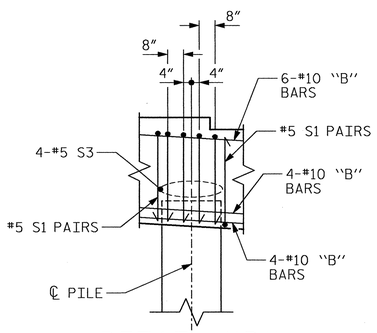

DETAIL "B"
AT PILES

SHIFT AS NECESSARY TO CLEAR ANCHOR BOLTS.

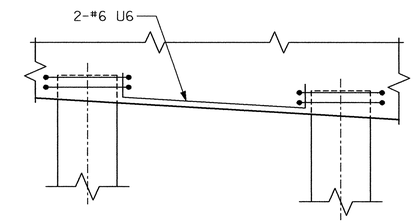

DETAIL "C"

NOTE: #6 U6 TO BE USED IN EACH BAY.

PILE BENT REFERENCE

BENT NO.	W.P. NO.	SPAN (AHEAD)	SPAN (BACK)	EL. "A"	EL. "B"	EL. "C"	EL. "D"	EL. "E"	EL. "F"	EL. "G"	EL. "H"	EL. "I"	EL. "J"	EL. "K"	ANGLE "V" (BACK)	ANGLE "X" (AHEAD)	ANGLE "Y" (BACK)	ANGLE "Z" (AHEAD)	DIM. "M"	DIM. "N"	CAP SLOPE
27	28	BB	AA	29.752	25.463	29.190	28.627	28.065	27.503	26.940	26.378	25.815	25.305	20.639	92°-35'-26"	87°-24'-34"	92°-35'-26"	87°-24'-34"	1⅜"	1⅜"	0.06 FT/FT
28	29	CC	BB	24.604	20.385	24.181	23.758	23.341	22.920	22.498	22.074	21.657	21.276	16.777	92°-35'-26"	87°-46'-37"	92°-35'-26"	87°-46'-37"	1⅜"	1 3/16"	0.045 FT/FT

TOP OF PILE ELEVATIONS BENT 27

PILE	BATTER	ELEVATION
P1	LEFT	26.372
P2	STRAIGHT	25.730
P3	STRAIGHT	25.088
P4	STRAIGHT	24.446
P5	STRAIGHT	23.805
P6	STRAIGHT	23.163
P7	STRAIGHT	22.521
P8	RIGHT	21.880

TOP OF PILE ELEVATIONS BENT 28

PILE	BATTER	ELEVATION
P1	LEFT	21.317
P2	STRAIGHT	20.837
P3	STRAIGHT	20.357
P4	STRAIGHT	19.877
P5	STRAIGHT	19.397
P6	STRAIGHT	18.917
P7	STRAIGHT	18.437
P8	RIGHT	17.957

PROJECT NO. R-3307
CARTERET COUNTY
STATION: 46+21.50 -L-

SHEET 2 OF 2

STATE OF NORTH CAROLINA
DEPARTMENT OF TRANSPORTATION
RALEIGH

SUBSTRUCTURE

BENT 27 & BENT 28
SECTION AND DETAILS

NORTH CAROLINA PROFESSIONAL SEAL 12323 ENGINEER MORRIS ISRAELNAM 3/30/2012

NORTH CAROLINA PROFESSIONAL SEAL 027799 ENGINEER ALLYSON K. ORR 3/30/2012

MI ENGINEERING
1011 SHAUB DRIVE, SUITE 100
RALEIGH, NC 27606
(919) 851-6606
FIRM PE NUMBER : P-0671

REVISIONS						SHEET NO.
NO.	BY:	DATE:	NO.	BY:	DATE:	S-271
1			3			TOTAL SHEETS
2			4			333

DRAWN BY : B.E. LANNING DATE : 12-11
CHECKED BY : A.K. ORR DATE : 1-12

DWG. 272 OF 282

3/29/2012
5:18:43 PM
User: blanning
Filename: P:\NC Projects\WI0005 - Gallants Channel\R-3307\Structures\R-3307_272_SD_B27&28B.dgn

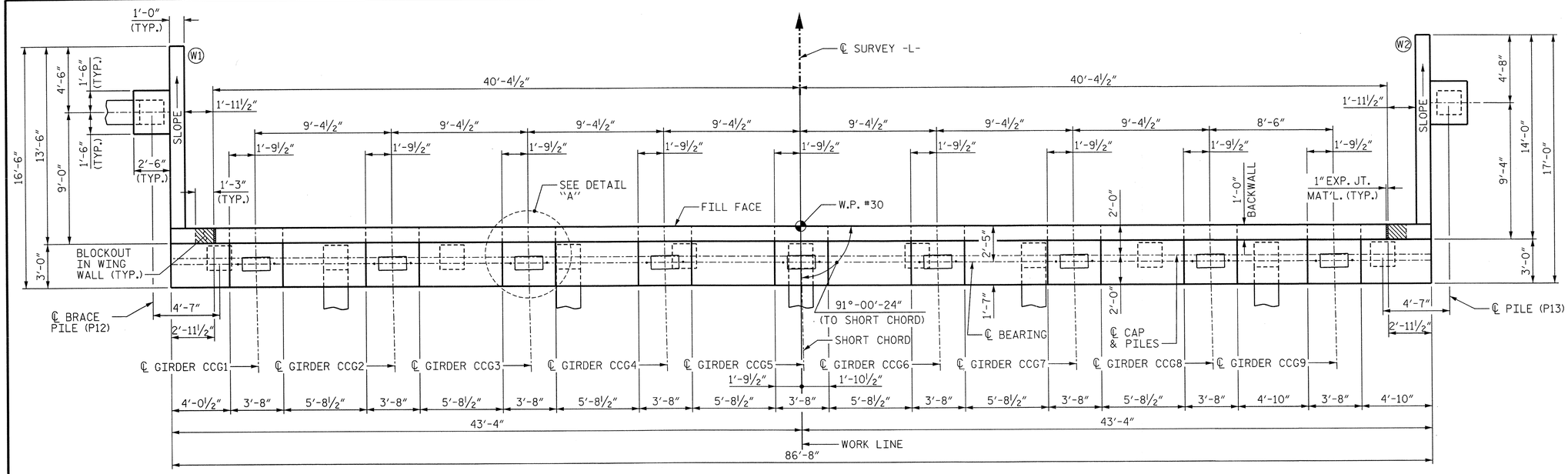

PLAN

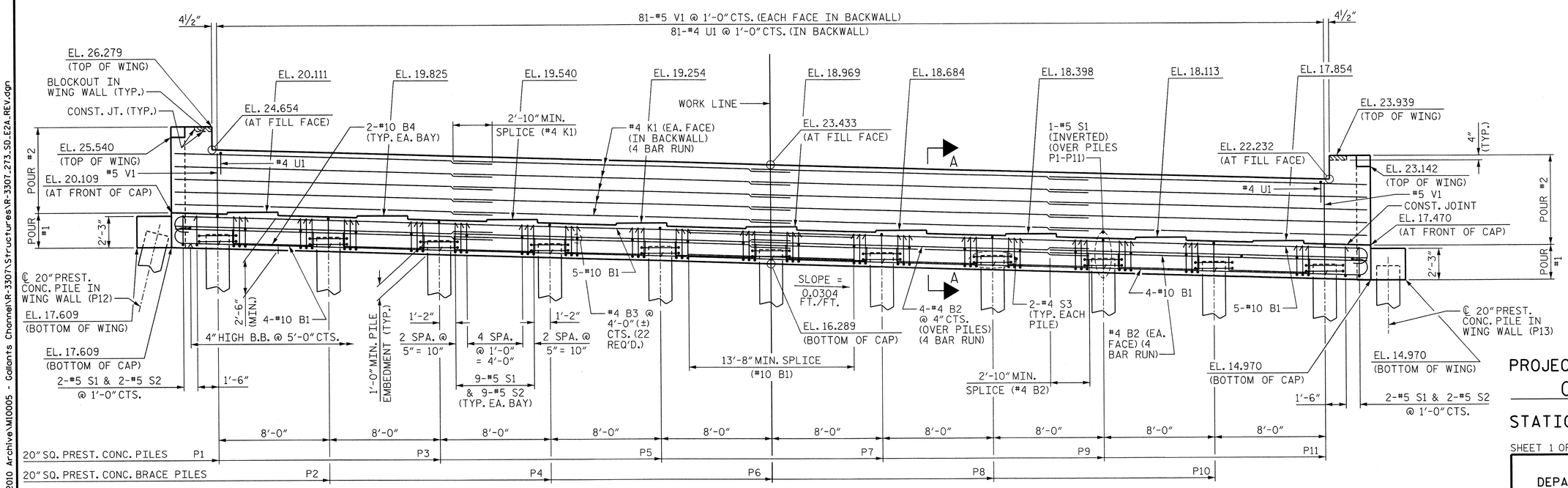

ELEVATION

NOTES:

STIRRUPS IN CAP MAY BE SHIFTED AS NECESSARY TO CLEAR ANCHOR BOLTS.

BACKWALL SHALL BE PLACED BEFORE APPLYING THE EPOXY PROTECTIVE COATING.

THE TOP SURFACE AREAS OF THE END BENT CAP SHALL BE CURED IN ACCORDANCE WITH THE STANDARD SPECIFICATIONS EXCEPT THAT THE MEMBRANE CURING COMPOUND METHOD SHALL NOT BE USED.

THE TOP SURFACE OF THE CAP EXCEPT THE BRIDGE SEAT BUILDUPS SHALL BE SLOPED TRANSVERSELY FROM THE FILL FACE TO THE BACK FACE AT THE RATE OF 2%.

FOR SECTION A-A, DETAIL "A", BLOCKOUT IN WING WALL DETAILS AND TEMPORARY DRAINAGE DETAILS, SEE SHEET 3 OF 3.

THE CONTRACTOR SHALL PROVIDE FOR INSTALLATION OF THE 4" Ø DRAIN PIPE THROUGH THE WING WALL AS REQUIRED FOR REINFORCED BRIDGE APPROACH FILLS, SEE ROADWAY PLANS. REINFORCING STEEL IN THE WING WALL MAY BE SHIFTED AS NECESSARY TO CLEAR THE DRAIN PIPE.

PREDRILLING FOR PILES IS REQUIRED AT END BENT 2. PREDRILL PILE LOCATIONS THROUGH THE FILL AND THE HIGH STRENGTH GEOTEXTILE TO ELEVATION 3.5 FT WITH EQUIPMENT THAT WILL RESULT IN A MAXIMUM PREDRILLING DIAMETER OF 20". FOR PREDRILLING FOR PILES, SEE SECTION 450 OF THE STANDARD SPECIFICATIONS.

TOP OF PILE ELEVATIONS

PILE	ELEVATION
P1	18.533
P2	18.289
P3	18.045
P4	17.802
P5	17.558
P6	17.315
P7	17.071
P8	16.828
P9	16.584
P10	16.341
P11	16.097
P12	18.609
P13	15.970

PROJECT NO. R-3307

CARTERET COUNTY

STATION: 46+21.50 -L-

SHEET 1 OF 3

STATE OF NORTH CAROLINA
DEPARTMENT OF TRANSPORTATION
RALEIGH

SUBSTRUCTURE

END BENT 2 PLAN AND ELEVATION

NORTH CAROLINA PROFESSIONAL SEAL 12323 ENGINEER MORRIS ISRAELNAIM
10-23/2013

MI ENGINEERING
1011 SHAUB DRIVE, SUITE 100
RALEIGH, NC 27606
(919) 851-6606
FIRM PE NUMBER : P-0671

REVISIONS							SHEET NO.
NO.	BY:	DATE:	NO.	BY:	DATE:		S-272
1			3				TOTAL SHEETS
2			4				333

DRAWN BY : B.E. LANNING DATE : 10-13
CHECKED BY : M. ISRAELNAIM DATE : 10-13

DWG. 273 OF 282

10/23/2013
10:31:24 AM
User: blanning
Filename: P:\NC Projects\2010 Archive\M10005 - Gallants Channel\R-3307\Structures\R-3307_273_SD_E2A_REV.dgn

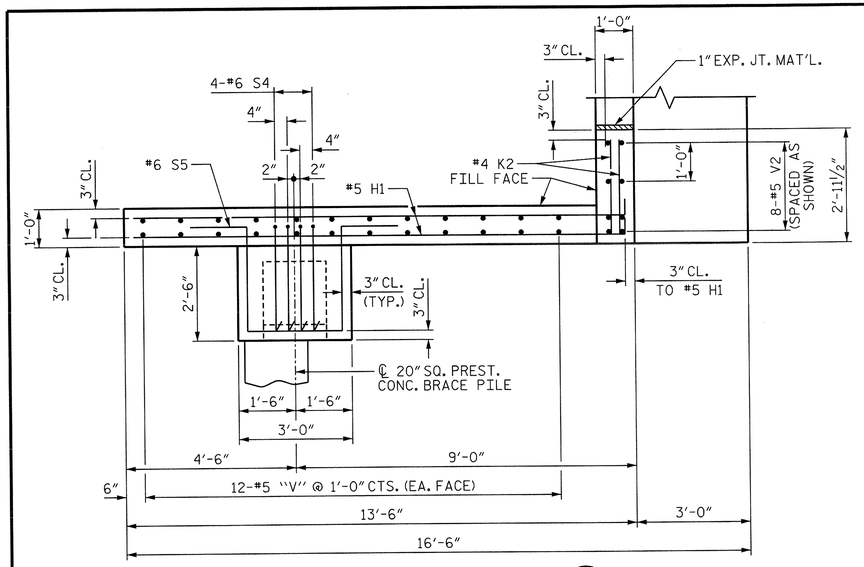

PLAN OF WING (W1)

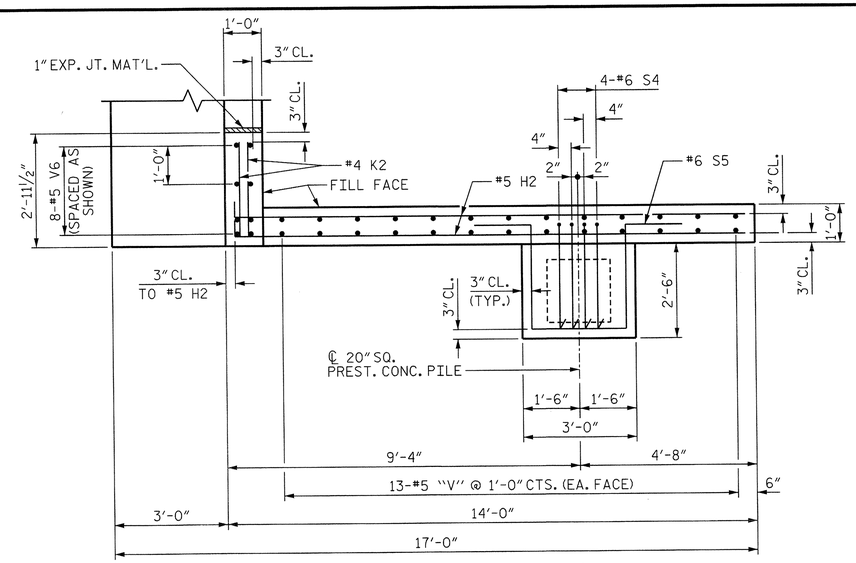

PLAN OF WING (W2)

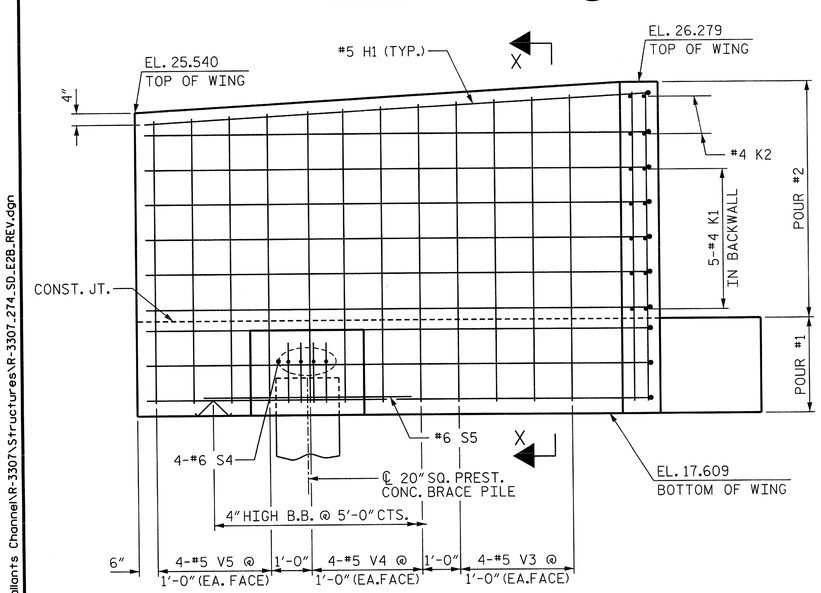

ELEVATION OF WING (W1)

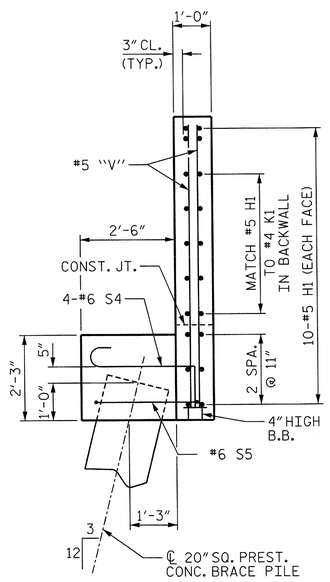

SECTION X-X

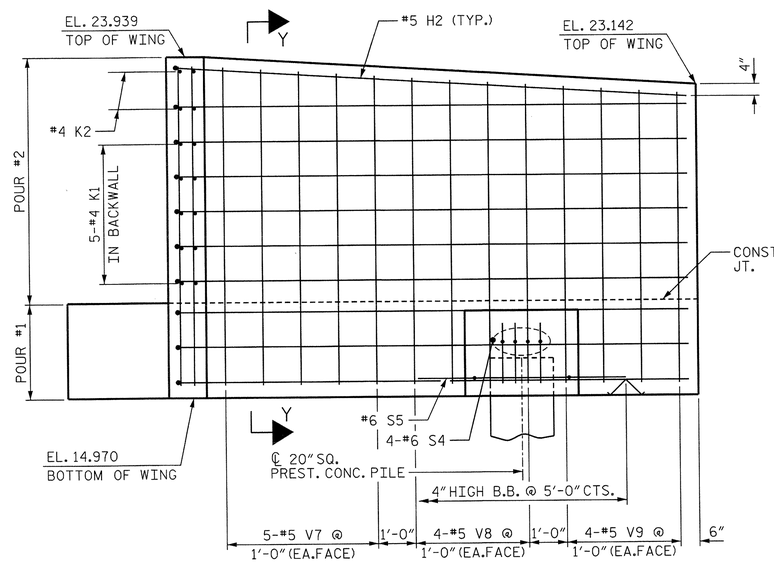

ELEVATION OF WING (W2)

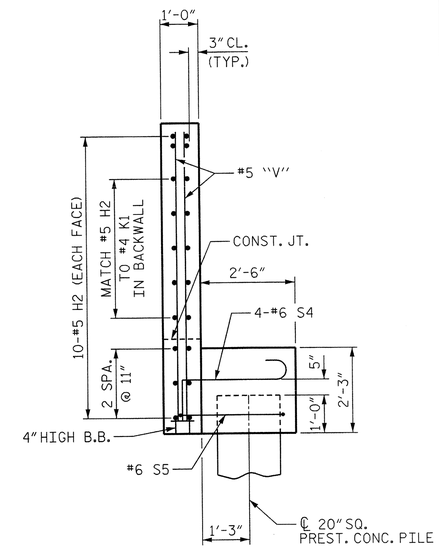

SECTION Y-Y

PROJECT NO. R-3307

CARTERET COUNTY

STATION: 46+21.50 -L-

SHEET 2 OF 3

STATE OF NORTH CAROLINA
DEPARTMENT OF TRANSPORTATION
RALEIGH

SUBSTRUCTURE

END BENT 2
WING DETAILS

NORTH CAROLINA PROFESSIONAL SEAL 12323 ENGINEER MORRIS ISRAELNAIM
10-23-2013

MI ENGINEERING
1011 SHAUB DRIVE, SUITE 100
RALEIGH, NC 27606
(919) 851-6606
FIRM PE NUMBER : P-0671

REVISIONS						SHEET NO.
NO.	BY:	DATE:	NO.	BY:	DATE:	S-273
1			3			TOTAL SHEETS
2			4			333

DRAWN BY : B.E. LANNING DATE : 10-13
CHECKED BY : M. ISRAELNAIM DATE : 10-13

DWG. 274 OF 282

10/23/2013
10:41:49 AM
User: blanning
Filename: P:\NC Projects\2010 Archive\MI0005 - Gallants Channel\R-3307\Structures\R-3307_274_SD_E2B_REV.dgn

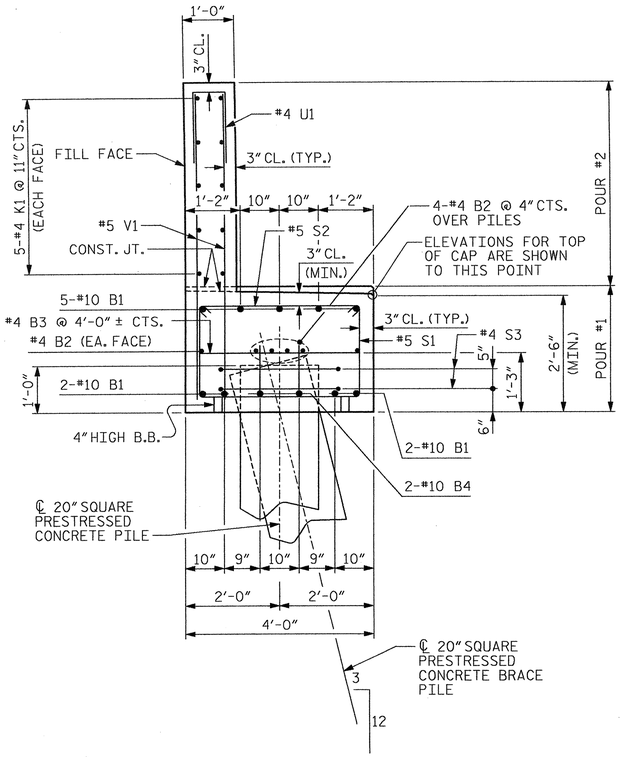

SECTION A-A

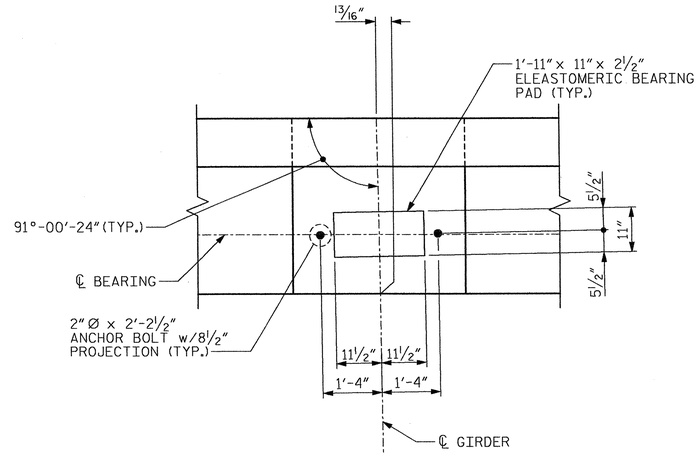

DETAIL "A"

(TYP. AT EACH BRIDGE SEAT)

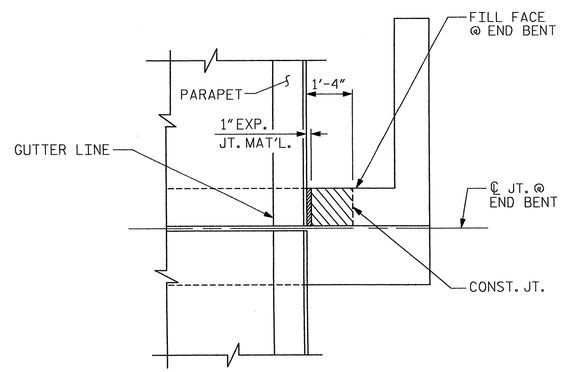

PLAN

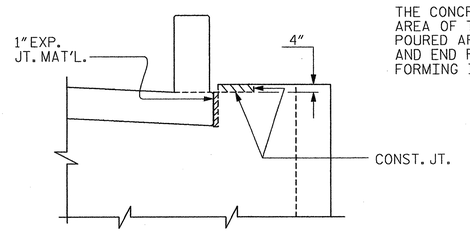

ELEVATION

NOTE

THE CONCRETE IN THE SHADED AREA OF THE WING SHALL BE POURED AFTER THE PARAPET AND END POST ARE CAST IF SLIP FORMING IS USED.

BLOCKOUT IN WING WALL DETAILS

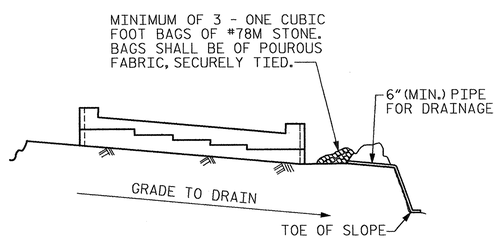

BAGGED STONE AND PIPE SHALL BE PLACED IMMEDIATELY AFTER COMPLETION OF END BENT EXCAVATION. PIPE MAY BE EITHER CONCRETE, CORRUGATED STEEL, CORRUGATED ALUMINUM ALLOY, OR CORRUGATED PLASTIC. PERFORATED PIPE WILL NOT BE ALLOWED.

BAGGED STONE SHALL REMAIN IN PLACE UNTIL THE ENGINEER DIRECTS THAT IT BE REMOVED. THE CONTRACTOR SHALL REMOVE AND DISPOSE OF SILT ACCUMULATIONS AT BAGGED STONE WHEN SO DIRECTED BY THE ENGINEER. BAGS SHALL BE REMOVED AND REPLACED WHENEVER THE ENGINEER DETERMINES THAT THEY HAVE DETERIORATED AND LOST THEIR EFFECTIVENESS.

NO SEPARATE PAYMENT WILL BE MADE FOR THIS WORK AND THE ENTIRE COST OF THIS WORK SHALL BE INCLUDED IN THE UNIT CONTRACT PRICE BID FOR THE SEVERAL PAY ITEMS.

TEMPORARY DRAINAGE AT END BENT

BAR TYPES

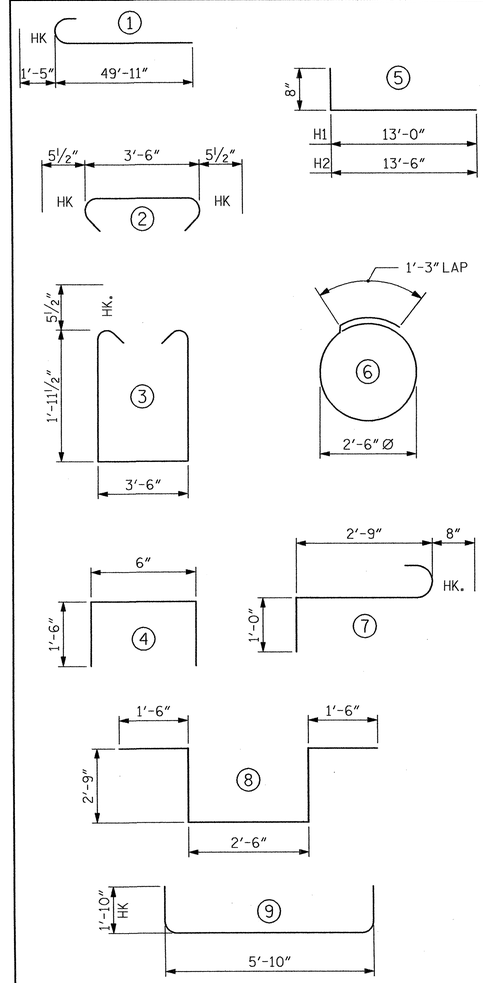

ALL BAR DIMENSIONS ARE OUT TO OUT.

BILL OF MATERIAL

END BENT 2

BAR	NO.	SIZE	TYPE	LENGTH	WEIGHT
B1	18	#10	1	51'-4"	3976
B2	24	#4	STR	23'-8"	379
B3	22	#4	STR	3'-6"	51
B4	20	#10	9	9'-6"	818
H1	20	#5	5	13'-8"	285
H2	20	#5	5	14'-2"	296
K1	40	#4	STR	23'-8"	632
K2	8	#4	STR	2'-5"	13
S1	105	#5	3	8'-4"	913
S2	94	#5	2	4'-5"	433
S3	22	#4	6	9'-2"	135
S4	8	#6	7	4'-5"	53
S5	2	#6	8	11'-0"	33
U1	81	#4	4	3'-6"	189
V1	162	#5	STR	6'-6"	1098
V2	8	#5	STR	8'-1"	67
V3	8	#5	STR	7'-10"	65
V4	8	#5	STR	7'-7"	63
V5	8	#5	STR	7'-4"	61
V6	8	#5	STR	8'-4"	70
V7	10	#5	STR	8'-1"	84
V8	8	#5	STR	7'-10"	65
V9	8	#5	STR	7'-7"	63

EPOXY COATED REINFORCING STEEL	9,842 LBS.
CLASS AA CONCRETE BREAKDOWN	
POUR #1 (CAP & LOWER WING)	35.7 C.Y.
POUR #2 (BACKWALL & UPPER WING)	20.5 C.Y.
TOTAL CLASS AA CONCRETE	56.2 C.Y.
20" SQUARE PRESTRESSED CONCRETE PILES NO. 13	1105 LIN. FT.
PILE REDRIVES	7 EA.
PREDRILLING FOR PILES	167 LIN. FT.

PROJECT NO. R-3307

CARTERET COUNTY

STATION: 46+21.50 -L-

SHEET 3 OF 3

STATE OF NORTH CAROLINA
DEPARTMENT OF TRANSPORTATION
RALEIGH

SUBSTRUCTURE

END BENT 2 SECTION AND DETAILS

NORTH CAROLINA PROFESSIONAL SEAL 12323 ENGINEER MORRIS ISRAELMAN 04/17/2012

NORTH CAROLINA PROFESSIONAL SEAL 027199 ENGINEER ALLYSON K. ORR 04/17/2012

MI ENGINEERING
1011 SHAUB DRIVE, SUITE 100
RALEIGH, NC 27606
(919) 851-6606
FIRM PE NUMBER : P-0671

REVISIONS							SHEET NO.
NO.	BY:	DATE:	NO.	BY:	DATE:		S-274
1			3				TOTAL SHEETS
2			4				333

DRAWN BY : B.E. LANNING DATE : 11-11
CHECKED BY : A.K. ORR DATE : 12-11

DWG. 275 OF 282

4/16/ 12
4:28:21 PM
User: blanning
Filename: P:\NC Projects\MI0005 - Gallants Channel\R-3307\Structures\R-3307_275_SD_E2C.dgn

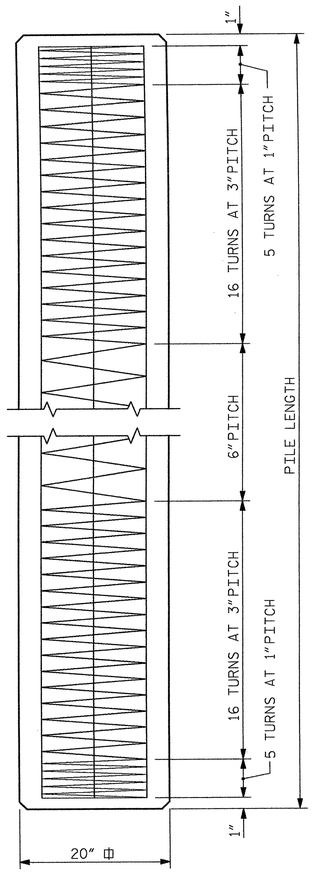

ELEVATION

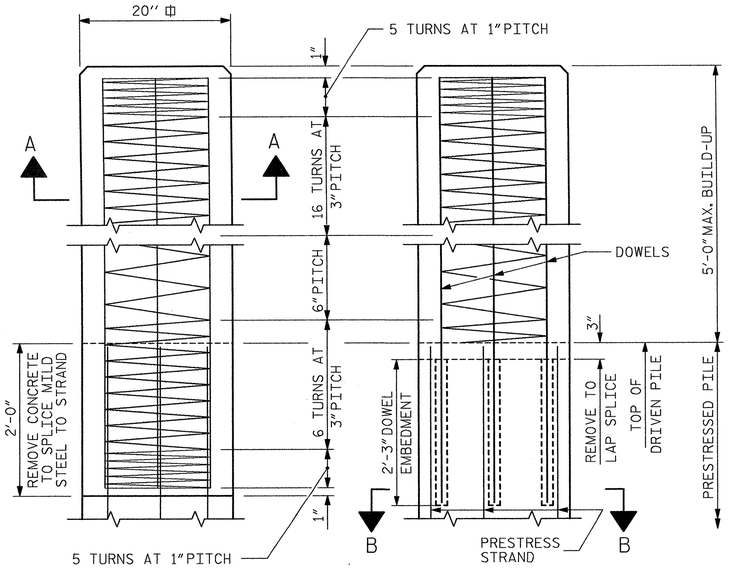

BUILD-UP AND SPIRAL REINFORCING

OPTIONAL BUILD-UP WITH DOWELS

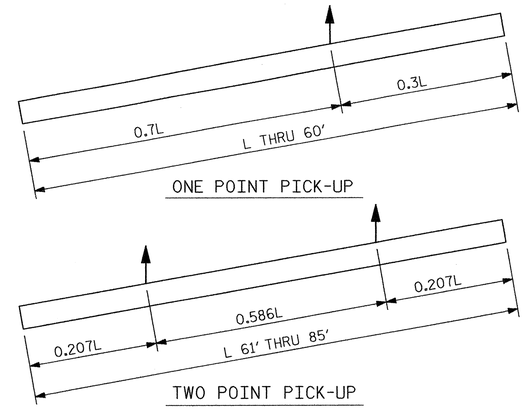

PICK-UP POINTS

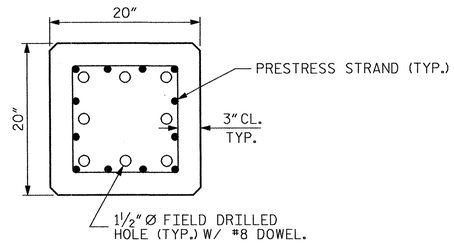

SECTION "B-B"

(AT THE CONTRACTOR'S OPTION, PILE BUILD-UP MAY BE CONSTRUCTED WITH DOWELS.)

QUANTITIES FOR ONE 20" SQUARE PILE						
	CONCRETE	PILE WT.	ONE POINT PICK-UP		TWO POINT PICK-UP	
LENGTH	CU. YDS.	TONS	0.3L	0.7L	0.207L	0.586L
25'-0"	2.56	5.18	7'-6"	17'-6"		
30'-0"	3.07	6.22	9'-0"	21'-0"		
35'-0"	3.58	7.26	10'-6"	24'-6"		
40'-0"	4.09	8.29	12'-0"	28'-0"		
45'-0"	4.61	9.33	13'-6"	31'-6"		
50'-0"	5.12	10.36	15'-0"	35'-0"		
55'-0"	5.63	11.40	16'-6"	38'-6"		
60'-0"	6.14	12.44	18'-0"	42'-0"		
65'-0"	6.65	13.47			13'-5½"	38'-1"
70'-0"	7.17	14.51			14'-6"	41'-0"
75'-0"	7.68	15.55			15'-6½"	43'-11"
80'-0"	8.19	16.58			16'-6½"	46'-11"
85'-0"	8.70	17.62			17'-7"	49'-10"

NOTES

PRESTRESSED CONCRETE STRENGTH : f'c= 7,500 PSI

BUILD-UP CONCRETE STRENGTH : f'c= 7,500 PSI

STRAND DATA:

SIZE	GRADE	AREA	ULTIMATE STRENGTH	APPLIED PRESTRESS FORCE
½"	270 L.R.	0.153	41,300# PER STRAND	30,980# PER STRAND
0.6"	270 L.R.	0.217	58,600# PER STRAND	43,940# PER STRAND

ALL PRESTRESSING STRANDS SHALL BE 7-WIRE LOW-RELAXATION GRADE 270 STRANDS CONFORMING TO AASHTO M203. STRAND SAMPLING REQUIREMENTS SHALL BE IN ACCORDANCE WITH THE STANDARD SPECIFICATIONS.

AT THE CONTRACTOR'S OPTION, ½" OR 0.6" STRANDS MAY BE USED IN THE STRAND CONFIGURATION SHOWN IN THE TYPICAL SECTION DETAIL. MIXING OF STRAND SIZE IS NOT ALLOWED.

THE SLIP-FORM METHOD OF CASTING PILES WILL NOT BE PERMITTED.

TRANSFER THE LOAD FROM THE ANCHORAGES TO THE PILE AFTER THE CONCRETE HAS ATTAINED A MINIMUM COMPRESSIVE STRENGTH OF 4,000 PSI.

IF STRAND STRESS IS RELIEVED BY BURNING, THE STRANDS SHALL BE BURNED IN OPPOSITE PAIRS AS INDICATED IN THE TYPICAL PATTERN SHOWN. FOR ANY NUMBER OF STRANDS, BURN IN OPPOSITE PAIRS AND SYMMETRICALLY ABOUT BOTH THE VERTICAL AND HORIZONTAL AXES, STRANDS 1-1 SHALL BE BURNED BEFORE 2-2, ETC. NOT MORE THAN 4 STRANDS, SAY 5-5 AND 6-6, MAY BE BURNED AT ANY ONE SECTION BEFORE THESE SAME PAIRS OF STRANDS ARE BURNED AT BOTH ENDS OF THE BED AND BETWEEN EACH PAIR OF PILES IN THE BED.

PROPOSED DEVICES FOR LIFTING PILES, RECESS DETAILS, AND PATCHING MATERIAL SHALL BE DETAILED IN SHOP DRAWINGS. AFTER ATTACHMENTS HAVE BEEN REMOVED, OPENINGS SHALL BE REPAIRED SUCH THAT THE APPEARANCE OF THE PILE IS UNIFORM.

WHERE CAST-IN-PLACE LIFTING DEVICES ARE NOT USED, PICK-UP POINTS ARE TO BE INDICATED WITH A 2" WIDE BLACK MARK.

DRIVE PILES USING A METHOD APPROVED BY THE ENGINEER, WHEREBY THE HEAD OF THE PILE IS NOT DAMAGED.

DRIVING OF THE BUILT-UP PILE WILL NOT BE PERMITTED UNTIL THE CONCRETE HAS REACHED A COMPRESSIVE STRENGTH OF 5,000 PSI AND UNTIL A PERIOD OF SEVEN DAYS HAS ELAPSED SINCE CASTING OF THE BUILD-UP.

THE WATER/CEMENT RATIO FOR THE CONCRETE PILES SHALL NOT EXCEED 0.40.

DOWEL INSTALLATION FOR OPTIONAL BUILD-UP

GROUT COMPRESSIVE STRENGTH: f'c= 5,000 PSI

BEFORE DRILLING DOWEL HOLES, REMOVE THE UPPER 3" OF CONCRETE FROM THE TOP OF THE PILE WITHOUT DAMAGE TO THE REINFORCING STEEL. THE REMOVAL PLANE SHOULD BE NORMAL TO THE EDGE OF THE PILE.

DOWEL HOLES SHALL BE POSITIONED TO MAINTAIN ½" CLEAR TO ALL EXISTING PRESTRESSING STRANDS IN THE CONCRETE PILE.

FIELD DRILLED HOLES SHALL BE CLEAN AND FREE OF ANY OBSTRUCTIONS BEFORE GROUTING OF DOWELS. DOWEL BARS SHALL BE INSTALLED AND GROUTED WITH AN APPROVED NON-SHRINK GROUT.

THE SPIRAL REINFORCING IN ALL BUILD-UPS SHALL BE W4.0 COLD DRAWN WIRE WHICH SHALL BE SECURED TO THE LONGITUDINAL REINFORCEMENT TO MAINTAIN PITCH.

THE SPIRAL REINFORCING IN THE BUILD-UP AND THE PRESTRESSED CONCRETE PILE SHALL BE SPLICED BY OVERLAPPING A MIN. OF ONE TURN.

PROJECT NO. R-3307

CARTERET COUNTY

STATION: 46+21.50 -L-

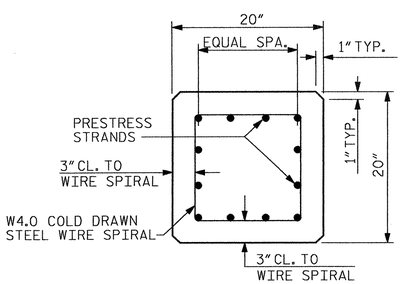

TYPICAL SECTION

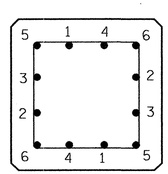

TYPICAL PATTERN FOR BURNING STRANDS

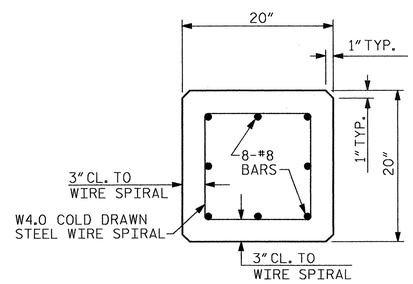

SECTION A-A

½" OR 0.6" Ø GRADE 270 L.R. PRESTRESS STRANDS

NORTH CAROLINA PROFESSIONAL SEAL 12323 ENGINEER MORRIS ISRAELNAIM 04/17/2012

NORTH CAROLINA PROFESSIONAL SEAL 027799 ENGINEER ALLYSON K. ORR 04/17/2012

MI ENGINEERING
1011 SHAUB DRIVE, SUITE 100
RALEIGH, NC 27606
(919) 851-6606
FIRM PE NUMBER : P-0671

STATE OF NORTH CAROLINA
DEPARTMENT OF TRANSPORTATION
RALEIGH

STANDARD

20" PRESTRESSED CONCRETE PILE

REVISIONS							
NO.	BY:	DATE:	NO.	BY:	DATE:		SHEET NO. S-275
1			3				TOTAL SHEETS 333
2			4				

STD. NO. PCP3

ASSEMBLED BY : B.E. LANNING DATE : 11-11
CHECKED BY : A.K. ORR DATE : 12-11

DRAWN BY : WJH 1/89 REV. 5/1/06R TLA/GM
CHECKED BY : CRK 3/89 REV. 11/30/10 WMC/GM
REV. 10/1/11 MAA/GM

DWG. 276 OF 282

4/16/ 12
4:34:06 PM
User: blanning
Filename: P:\NC Projects\MI0005 - Gallants Channel\R-3307\Structures\R-3307_276_SD_PCP1.dgn

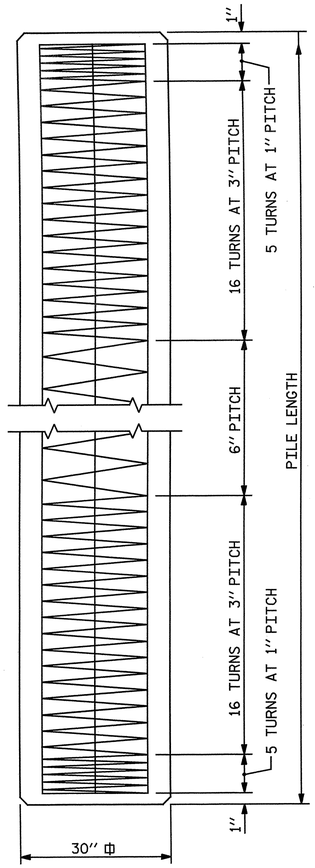

ELEVATION

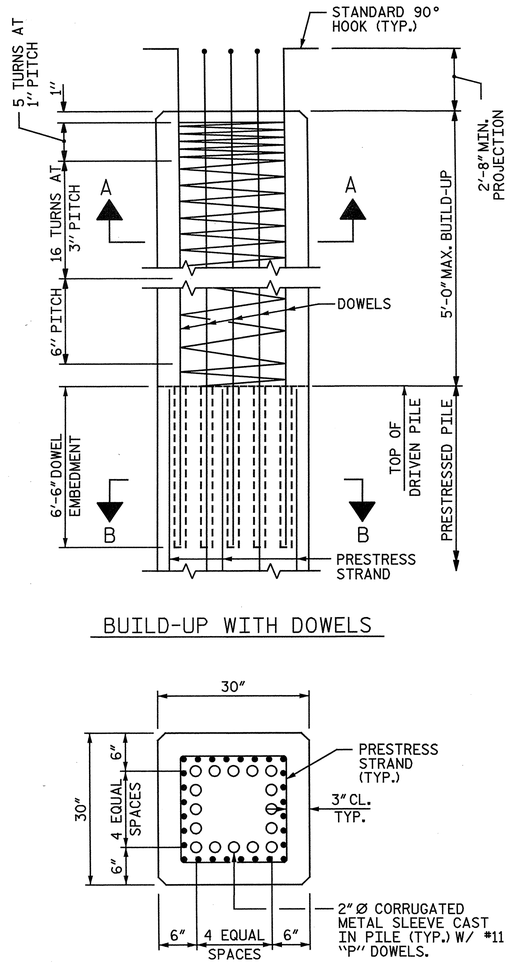

BUILD-UP WITH DOWELS

SECTION B-B

DOWEL INSTALLATION FOR BUILD-UP

GROUT COMPRESSIVE STRENGTH: f'c= 7,500 PSI

DOWEL HOLES SHALL BE POSITIONED TO MAINTAIN ½" CLEAR TO ALL EXISTING PRESTRESSING STRANDS IN THE CONCRETE PILE.

THE SPIRAL REINFORCING IN ALL BUILD-UPS SHALL BE W4.0 COLD DRAWN WIRE WHICH SHALL BE SECURED TO THE LONGITUDINAL REINFORCEMENT TO MAINTAIN PITCH.

THE SPIRAL REINFORCING IN THE BUILD-UP AND THE PRESTRESSED CONCRETE PILE SHALL BE SPLICED BY OVERLAPPING A MIN. OF ONE TURN.

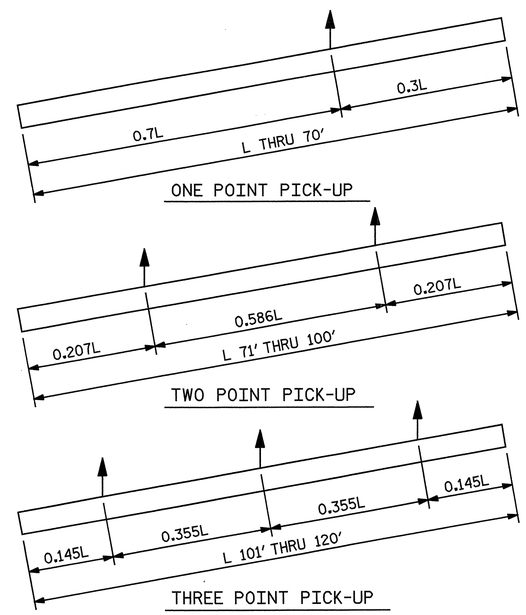

PICK-UP POINTS

NOTES:

PRESTRESSED CONCRETE STRENGTH : f'c= 7,500 PSI

BUILD-UP CONCRETE STRENGTH : f'c= 7,500 PSI

STRAND DATA:

SIZE	GRADE	AREA	ULTIMATE STRENGTH	APPLIED PRESTRESS FORCE
0.6"	270 L.R.	0.217	58,600# PER STRAND	43,940# PER STRAND

ALL PRESTRESSING STRANDS SHALL BE 7-WIRE LOW-RELAXATION GRADE 270 STRANDS CONFORMING TO AASHTO M203. STRAND SAMPLING REQUIREMENTS SHALL BE IN ACCORDANCE WITH THE STANDARD SPECIFICATIONS.

THE SLIP-FORM METHOD OF CASTING PILES WILL NOT BE PERMITTED.

TRANSFER THE LOAD FROM THE ANCHORAGES TO THE PILE AFTER THE CONCRETE HAS ATTAINED A MINIMUM COMPRESSIVE STRENGTH OF 4,000 PSI.

IF STRAND STRESS IS RELIEVED BY BURNING, THE STRANDS SHALL BE BURNED IN OPPOSITE PAIRS AS INDICATED IN THE TYPICAL PATTERN SHOWN. FOR ANY NUMBER OF STRANDS, BURN IN OPPOSITE PAIRS AND SYMMETRICALLY ABOUT BOTH THE VERTICAL AND HORIZONTAL AXES, STRANDS 1-1 SHALL BE BURNED BEFORE 2-2, ETC. NOT MORE THAN 4 STRANDS, SAY 5-5 AND 6-6, MAY BE BURNED AT ANY ONE SECTION BEFORE THESE SAME PAIRS OF STRANDS ARE BURNED AT BOTH ENDS OF THE BED AND BETWEEN EACH PAIR OF PILES IN THE BED.

PROPOSED DEVICES FOR LIFTING PILES, RECESS DETAILS, AND PATCHING MATERIAL SHALL BE DETAILED IN SHOP DRAWINGS. AFTER ATTACHMENTS HAVE BEEN REMOVED, OPENINGS SHALL BE REPAIRED SUCH THAT THE APPEARANCE OF THE PILE IS UNIFORM.

WHERE CAST-IN-PLACE LIFTING DEVICES ARE NOT USED, PICK-UP POINTS ARE TO BE INDICATED WITH A 2" WIDE BLACK MARK.

DRIVE PILES USING A METHOD APPROVED BY THE ENGINEER, WHEREBY THE HEAD OF THE PILE IS NOT DAMAGED.

DRIVING OF THE BUILT-UP PILE WILL NOT BE PERMITTED UNTIL THE CONCRETE HAS REACHED A COMPRESSIVE STRENGTH OF 5,000 PSI AND UNTIL A PERIOD OF SEVEN DAYS HAS ELAPSED SINCE CASTING OF THE BUILD-UP.

THE WATER/CEMENT RATIO FOR CONCRETE PILES SHALL NOT EXCEED 0.40.

PRESTRESSED CONCRETE PILES SHALL CONTAIN CALCIUM NITRITE CORROSION INHIBITOR. SEE STANDARD SPECIFICATIONS FOR CALCIUM NITRITE CORROSION INHIBITOR.

THE CONCRETE IN THE PILES OF BENTS 2-25 SHALL CONTAIN SILICA FUME. SILICA FUME SHALL BE SUBSTITUED FOR 5% OF THE PORTLAND CEMENT BY WEIGHT. IF THE OPTION OF ARTICLE 1024-1 OF THE STANDARD SPECIFICATIONS TO PARTIALLY SUBSTITUTE CLASS F FLY ASH FOR PORTLAND CEMENT IS EXERCISED, THEN THE RATE OF FLAY ASH SUBSTITUTION SHALL BE REDUCED TO 1.0 LB OF FLY ASH PER 1.0 LB. NO PAYMENT WILL BE MADE FOR THIS SUBSTITUTION AS IT IS CONSIDERED INCIDENTAL TO THE VARIOUS PAY ITEMS.

CORRUGATED METAL TUBES SHALL BE GALVANIZED, HAVE A MINIMUM WALL THICKNESS OF 0.025", AND A MINIMUM INTERNAL DIMENSION AS INDICATED. TUBES SHALL BE CAPPED TO PREVENT INFILTRATION OF CONCRETE DURING PLACING. TUBES SHALL BE CLEANED OF ALL DUST, DEBRIS, AND OTHER DELETERIOUS MATERIALS BEFORE INSTALLING DOWELS.

DOWELS SHALL BE SET AFTER PILE DRIVING. PROVIDE AN APPROVED NON-SHRINK, NON METALLIC EPOXY GROUT FOR SETTING OF DOWELS. GROUT SHALL EXTEND FOR THE FULL HEIGHT OF THE HOLE.

EXCEPT FOR THE COST OF THE DOWELS, ALL COSTS ASSOCIATED WITH THE CONNECTION AND/OR BUILD UP OF THE PILES SHALL BE INCLUDED IN THE UNIT PRICE FOR 30" PRESTRESSED CONCRETE PILES.

"P" BARS (DOWELS) FOR PILE CONNECTION SHALL BE PAID FOR IN THE QUANTITIES OF INDIVIDUAL BENTS.

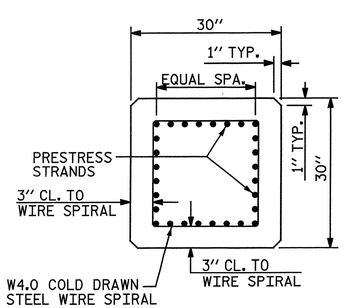

TYPICAL SECTION

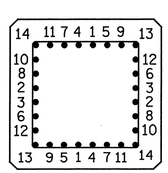

TYPICAL PATTERN FOR BURNING STRANDS

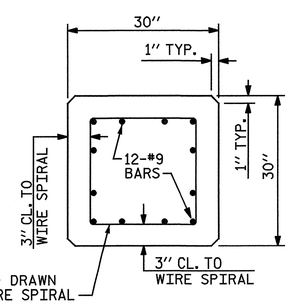

SECTION A-A

0.6" Ø GRADE 270 L.R. PRESTRESS STRANDS

QUANTITIES FOR ONE 30" SQUARE PILE

LENGTH	CONCRETE CU. YDS.	PILE WT. TONS	ONE POINT PICK-UP		TWO POINT PICK-UP		THREE POINT PICK-UP	
			0.3L	0.7L	0.207L	0.586L	0.145L	0.355L
25'-0"	5.77	11.69	7'-6"	17'-6"				
30'-0"	6.93	14.03	9'-0"	21'-0"				
35'-0"	8.08	16.37	10'-6"	24'-6"				
40'-0"	9.24	18.71	12'-0"	28'-0"				
45'-0"	10.39	21.05	13'-6"	31'-6"				
50'-0"	11.55	23.39	15'-0"	35'-0"				
55'-0"	12.70	25.72	16'-6"	38'-6"				
60'-0"	13.86	28.06	18'-0"	42'-0"				
65'-0"	15.01	30.40	19'-6"	45'-6"				
70'-0"	16.17	32.74	21'-0"	49'-0"				
75'-0"	17.32	35.08			15'-6½"	43'-11"		
80'-0"	18.48	37.42			16'-6½"	46'-11"		
85'-0"	19.63	39.76			17'-7"	49'-10"		
90'-0"	20.79	42.09			18'-7½"	52'-9"		
95'-0"	21.94	44.43			19'-8"	55'-8"		
100'-0"	23.10	46.77			20'-8½"	58'-7"		
105'-0"	24.25	49.11					15'-3"	37'-3"
110'-0"	25.41	51.45					15'-11½"	39'-0½"
115'-0"	26.56	53.79					16'-8"	40'-10"
120'-0"	27.72	56.13					17'-5"	42'-7"

PROJECT NO. R-3307

CARTERET COUNTY

STATION: 46+21.50 -L-

STATE OF NORTH CAROLINA
DEPARTMENT OF TRANSPORTATION
RALEIGH

SUBSTRUCTURE

30" PRESTRESSED CONCRETE PILE

NORTH CAROLINA PROFESSIONAL SEAL 25911 ENGINEER DWAIN G. HAYMAN 4-3-2012

NORTH CAROLINA PROFESSIONAL SEAL 033752 ENGINEER SETH A. DENNEY

THE LPA GROUP of North Carolina TRANSPORTATION CONSULTANTS

THE LPA GROUP of North Carolina
8000 Regency Parkway, Suite 600
Cary, North Carolina 27518
NC License No.: F-1084

REVISIONS						SHEET NO.
NO.	BY:	DATE:	NO.	BY:	DATE:	S-276
1			3			TOTAL SHEETS
2			4			333

DRAWN BY : J. N. AUSTIN DATE : 11-8-11
CHECKED BY : S. A. DENNEY DATE : 11-9-11

DWG. 277 OF 282

4/2/2012 12:46:_ PM
User: austin
Filename: Y:\Projects\NCDOT\R-3307\Dwgs\Final\R-3307_277_SD_PC_Pile.dgn

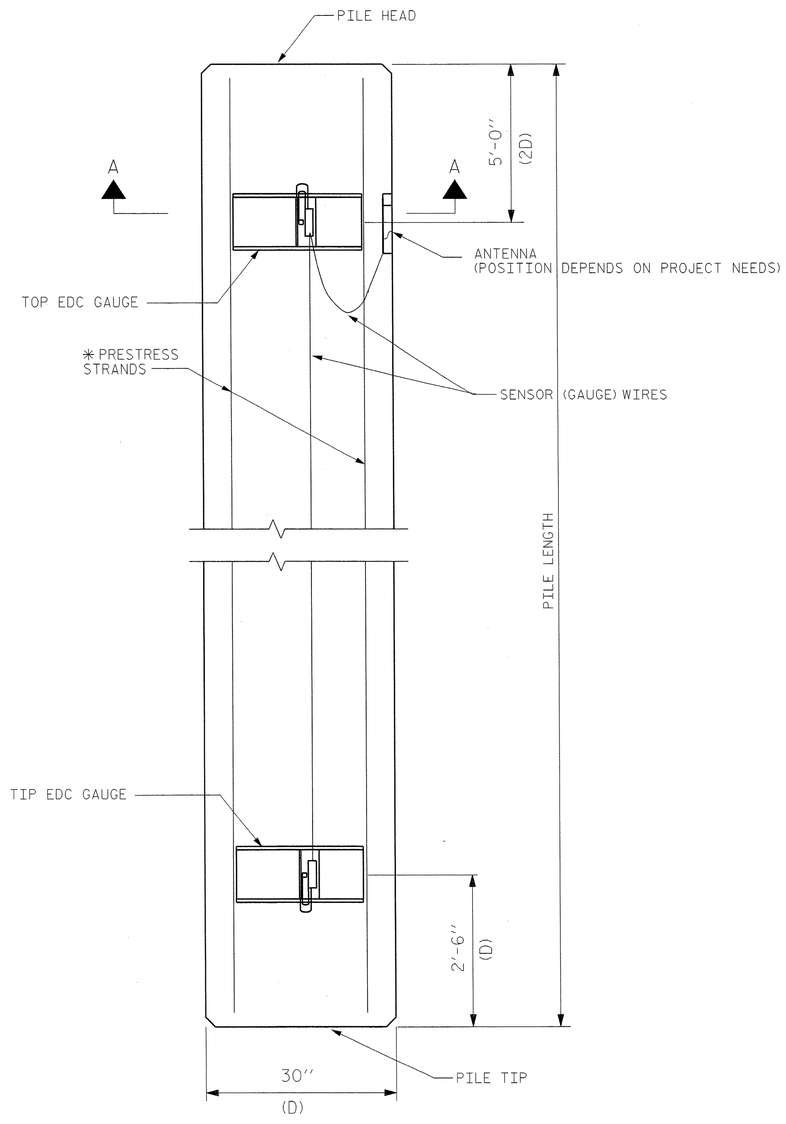

ELEVATION

(SPIRAL REIFORCEMENT NOT SHOWN FOR CLARITY.)

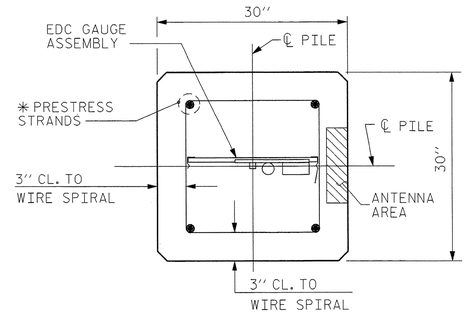

SECTION A-A

* ALL PRESTRESS STRANDS NOT SHOWN FOR CLARITY.

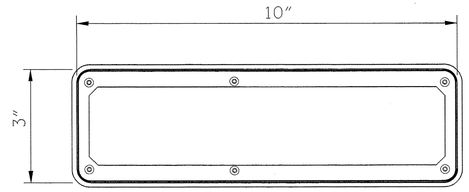

ANTENNA TOP VIEW

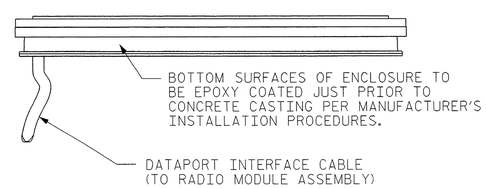

ANTENNA SIDE VIEW

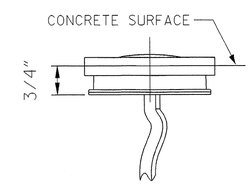

ANTENNA END VIEW

NOTES

FOR ADDITIONAL NOTES AND DETAILS, SEE "30" PRESTRESSED CONCRETE PILE" SHEET. ONLY THE 28 STRAND PATTERN CONFIGURATION IS PERMITTED FOR THE TEST PILES. BUILD-UP OF TEST PILES IS NOT PERMITTED.

FOR EMBEDDED DATA COLLECTORS (EDC), SEE SPECIAL PROVISIONS.

THE EDC CONSULTANT WILL PROVIDE AND INSTALL THE EDC DURING PILE FABRICATION. NOTIFY THE ENGINEER OF THE PILE FABRICATION SCHEDULE A MINIMUM OF 14 CALENDAR DAYS IN ADVANCE.

WRAP THE SENSOR (GAUGE) WIRES, USING PLASTIC TIES, AGAINST THE PRESTRESS STRANDS EVERY 12" WHERE APPROPRIATE.

CLEARLY MARK THE TOP AND TIP EDC GAUGE LOCATIONS ON THE PILE FORM.

DURING THE PLACEMENT AND SETTING OF THE CONCRETE, ENSURE THAT VIBRATION SETTLING IS NOT PERFORMED WITHIN 4" ON EITHER SIDE OF THE ANTENNA AND TRANSDUCER PACKAGES. (CAUTION : DO NOT ALLOW VIBRATOR TO COME IN CONTACT WITH EMBEDDED DATA COLLECTORS.)

COMPLETE THE PILE FINISHING PROCESS BY PLACING AND SCRIBING / MARKING EMBEDDED DATA COLLECTOR RADIO IDENTIFICATION CODE (LAST FOUR DIGITS ONLY) ALONG WITH OTHER PILE DETAILS (E.G. PILE LENGTH, CASTING DATA, JOB NUMBERS) ON THE HAND-FINISHED SURFACE AT THE TOP OF THE PILE.

PROJECT NO. R-3307
CARTERET COUNTY
STATION: 46+21.50 -L-

NORTH CAROLINA PROFESSIONAL SEAL 022122 ENGINEER S. HUNYI CHEN
3/14/2012

STATE OF NORTH CAROLINA
DEPARTMENT OF TRANSPORTATION
RALEIGH

EMBEDDED
DATA COLLECTORS
FOR
30" PRESTRESSED
CONCRETE PILES

REVISIONS						SHEET NO.
NO.	BY:	DATE:	NO.	BY:	DATE:	S-277
1			3			TOTAL SHEETS
2			4			333

DRAWN BY : R.W. WRIGHT DATE : 1-31-12
CHECKED BY : DATE :

14-MAR-2012 09:29
$$$$$$$$$$$$$$$$$$$$$$$$DGN$$$$$$$$$$$$$$$$$$$$$$$$
cchen AT GEC248238

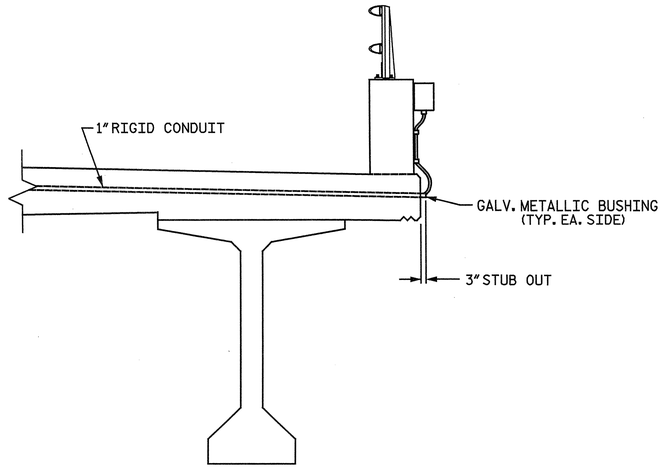

SECTION A-A

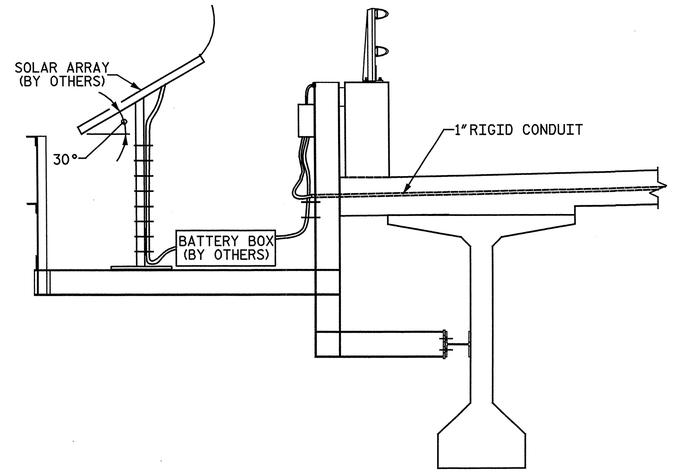

SECTION B-B

NOTES:

FOR NAVIGATIONAL LIGHTING SYSTEM, SEE SPECIAL PROVISIONS.

REFERENCE "SOLAR ARRAY SUPPORT PLATFORM" DRAWING FOR ADDITIONAL DETAILS.

1" RIGID CONDUIT TO BE PLACED DURING SPAN "Q" CONSTRUCTION.

SEE "GENERAL DRAWING" SHEET 4 OF 7 AND SHEET 5 OF 7 FOR NAVIGATIONAL CHANNEL AND NAVAGATIONAL CLEARANCES.

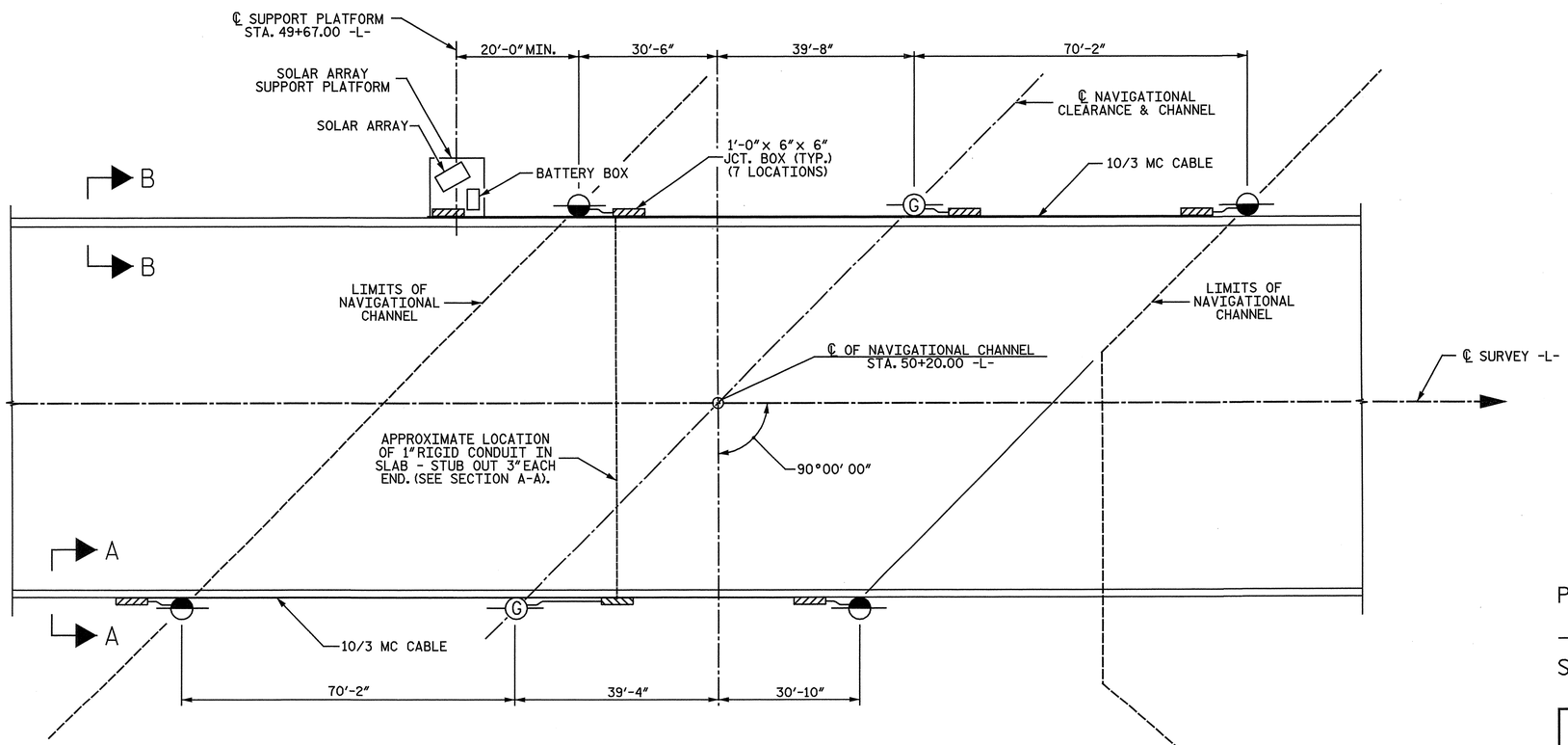

G — 360° GREEN NAVIGATIONAL LIGHT - CHANNEL CENTERLINE

180° RED NAVIGATIONAL LIGHT - CHANNEL MARGIN

PLAN

PROJECT NO. R-3307

CARTERET COUNTY

STATION: 46+21.50 -L-

STATE OF NORTH CAROLINA
DEPARTMENT OF TRANSPORTATION
RALEIGH

NAVIGATIONAL LIGHTING AND CONDUIT SYSTEM

NORTH CAROLINA PROFESSIONAL SEAL 25911 ENGINEER DWAIN G. HATHAWAY 4-3-2012

NORTH CAROLINA PROFESSIONAL SEAL 033752 ENGINEER SETH A. DENNEY 04/03/12

THE LPA GROUP of North Carolina TRANSPORTATION CONSULTANTS

THE LPA GROUP of North Carolina
8000 Regency Parkway, Suite 600
Cary, North Carolina 27518
NC License No.: F-1084

REVISIONS						SHEET NO.
NO.	BY:	DATE:	NO.	BY:	DATE:	S-278
1			3			TOTAL SHEETS
2			4			333

DRAWN BY : N. B. SPEAKS DATE : 10-25-11
CHECKED BY : J. N. AUSTIN DATE : 10-26-11

DWG. 278 OF 282

4/2/2012
12:46: PM
User: jaustin
Filename: Y:\Projects\NCDOT\R-3307\Dwgs\Final\R-3307_278_SD_NAV.dgn

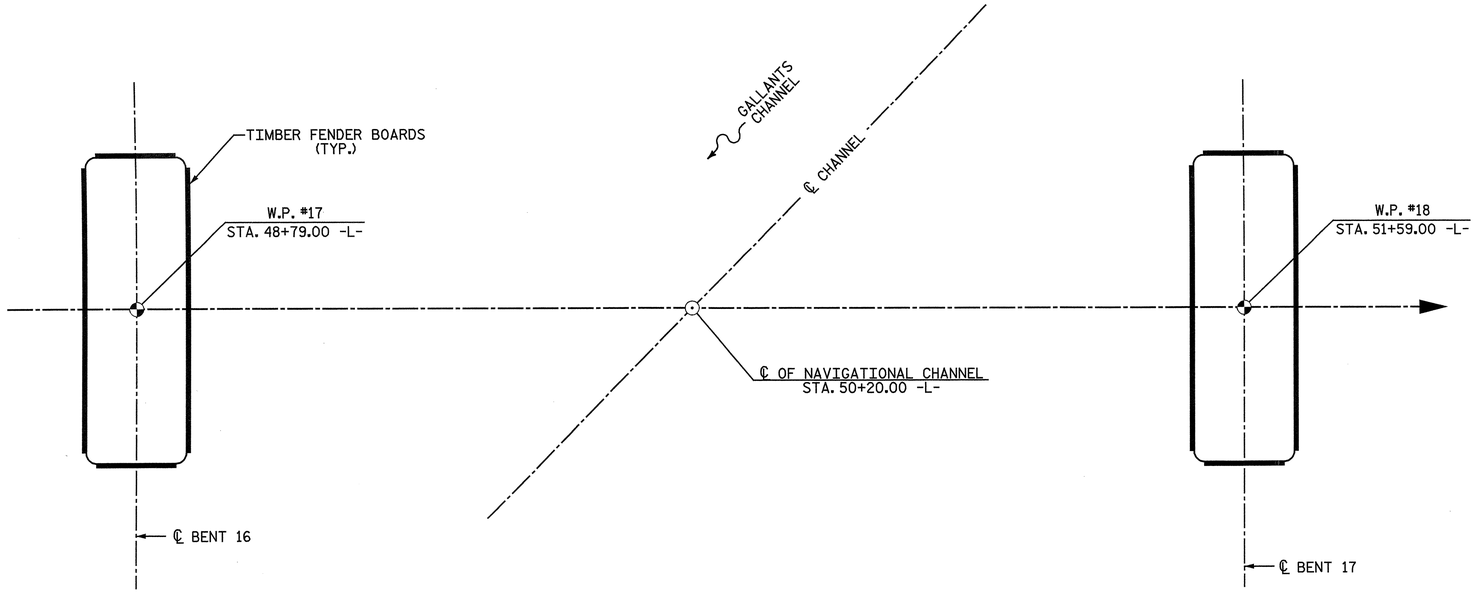

CHANNEL BENT FOOTING LAYOUT

BENT COLUMNS AND PILES NOT SHOWN FOR CLARITY.
SEE BENT DRAWINGS FOR SIZE OF FOOTINGS.

NOTES:

THE STRUCTURAL CONCRETE INSERT ASSEMBLY SHALL CONSIST OF THE FOLLOWING COMPONENTS:

A. FERRULES SHALL BE MADE FROM STEEL MEETING THE REQUIREMENTS OF AASHTO M169, GRADE 12L14 AND SHALL HAVE A MINIMUM LENGTH OF THREADS OF 1½".

B. 1 - ¾" Ø X 4" BOLT WITH WASHER. BOLT SHALL CONFORM TO THE REQUIREMENTS OF ASTM A307. BOLT AND WASHER SHALL BE GALVANIZED. (AT THE CONTRACTOR'S OPTION, STAINLESS STEEL BOLT AND WASHER MAY BE USED AS AN ALTERNATE FOR THE ¾" Ø X 4" GALVANIZED BOLT AND WASHER. THEY SHALL CONFORM TO OR EXCEED THE MECHANICAL REQUIREMENTS OF ASTM A307. THE USE OF THIS ALTERNATE SHALL BE APPROVED BY THE ENGINEER.)

C. WIRE STRUT SHOWN IN THE CONCRETE INSERT ASSEMBLY DETAIL IS THE MINIMUM ALLOWABLE SIZE AND SHALL HAVE A MINIMUM TENSILE STRENGTH OF 100,000 PSI. AS AN OPTION, A 7/16" Ø WIRE STRUT WITH A MINIMUM TENSILE STRENGTH OF 90,000 PSI IS ACCEPTABLE.

EACH TREATED TIMBER BOARD SHALL NOT EXCEED 16'-0" IN LENGTH AND SHALL CONTAIN AT LEAST THREE SETS OF FASTENERS SPACED AT A MAXIMUM OF 5'-0"

THE ¾" STRUCTURAL CONCRETE INSERT WITH BOLT SHALL BE ASSEMBLED IN THE SHOP.

THE COST OF THE ¾" STRUCTURAL CONCRETE INSERT ASSEMBLY COMPLETE IN PLACE SHALL BE INCLUDED IN THE VARIOUS PAY ITEMS.

THE CONTRACTOR, AT HIS OPTION, MAY USE AN ADHESIVE BONDING SYSTEM IN LIEU OF THE STRUCTURAL CONCRETE INSERT EMBEDDED IN THE BENT FOOTING. IF THE ADHESIVE BONDING SYSTEM IS USED, THE ¾" Ø X 4" BOLT WITH WASHER SHALL BE REPLACED WITH A ¾"Ø X 6½" BOLT AND 2" O.D. WASHER. ALL SPECIFICATIONS THAT APPLY TO THE ¾" Ø X 4" BOLT SHALL APPLY TO THE ¾"Ø X 6 ½" BOLT. FIELD TESTING OF THE ADHESIVE BONDING SYSTEM IS NOT REQUIRED.

FOR TIMBER FENDER BOARDS AT CHANNEL BENTS, SEE SPECIAL PROVISIONS.

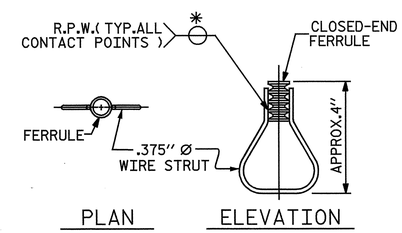

STRUCTURAL CONCRETE INSERT

* EACH WELDED ATTACHMENT OF WIRE TO FERRULE SHALL DEVELOP THE TENSILE STRENGTH OF THE WIRE.

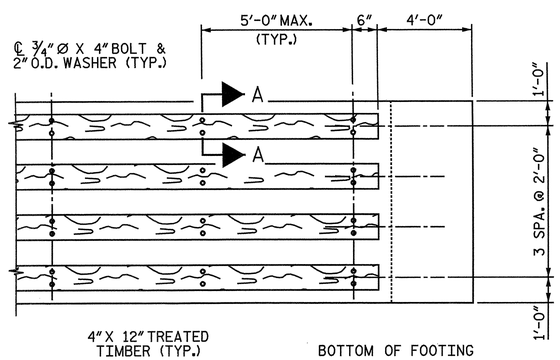

ELEVATION

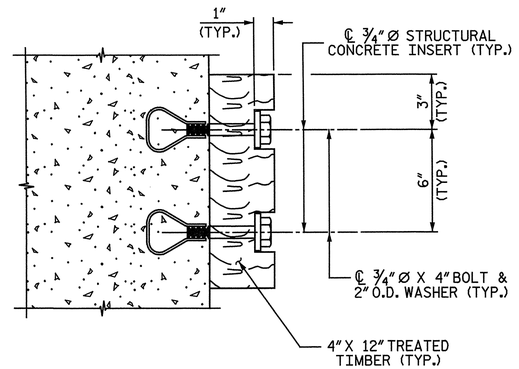

SECTION A-A

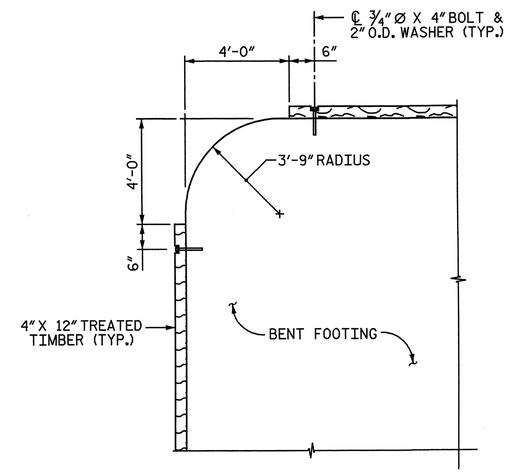

CORNER DETAIL

TYP. AT EACH CORNER

PROJECT NO. R-3307
CARTERET COUNTY
STATION: 46+21.50 -L-

STATE OF NORTH CAROLINA
DEPARTMENT OF TRANSPORTATION
RALEIGH

TIMBER FENDER SYSTEM

BENTS 16 AND 17

NORTH CAROLINA PROFESSIONAL SEAL 25911 ENGINEER DWIN G. HATHAWAY 4-9-2012

NORTH CAROLINA PROFESSIONAL SEAL 033752 ENGINEER SETH A. DENNEY 04/09/12

THE LPA GROUP of North Carolina
THE LPA GROUP of North Carolina
8000 Regency Parkway, Suite 600
Cary, North Carolina 27518
NC License No.: F-1084
TRANSPORTATION CONSULTANTS

REVISIONS								SHEET NO.
NO.	BY:	DATE:	NO.	BY:	DATE:			S-279
1			3					TOTAL SHEETS
2			4					333

DRAWN BY : J. N. AUSTIN DATE : 1-7-12
CHECKED BY : S. A. DENNEY DATE : 1-8-12

DWG. 279 OF 282

4/2/2012
12:46:... PM
User: jaustin
Filename: Y:\Projects\NCDOT\R-3307\Dwgs\Final\R-3307_279_SD_Fender.dgn

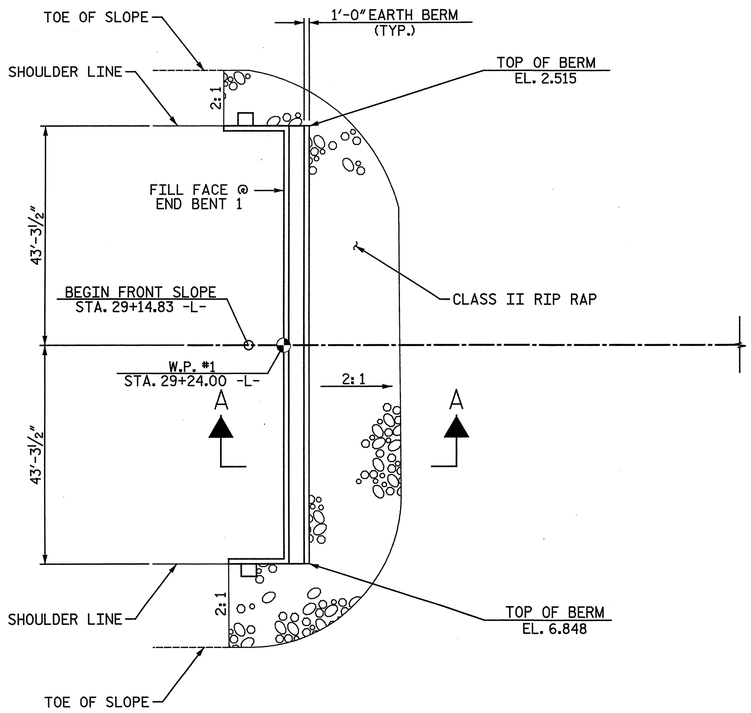

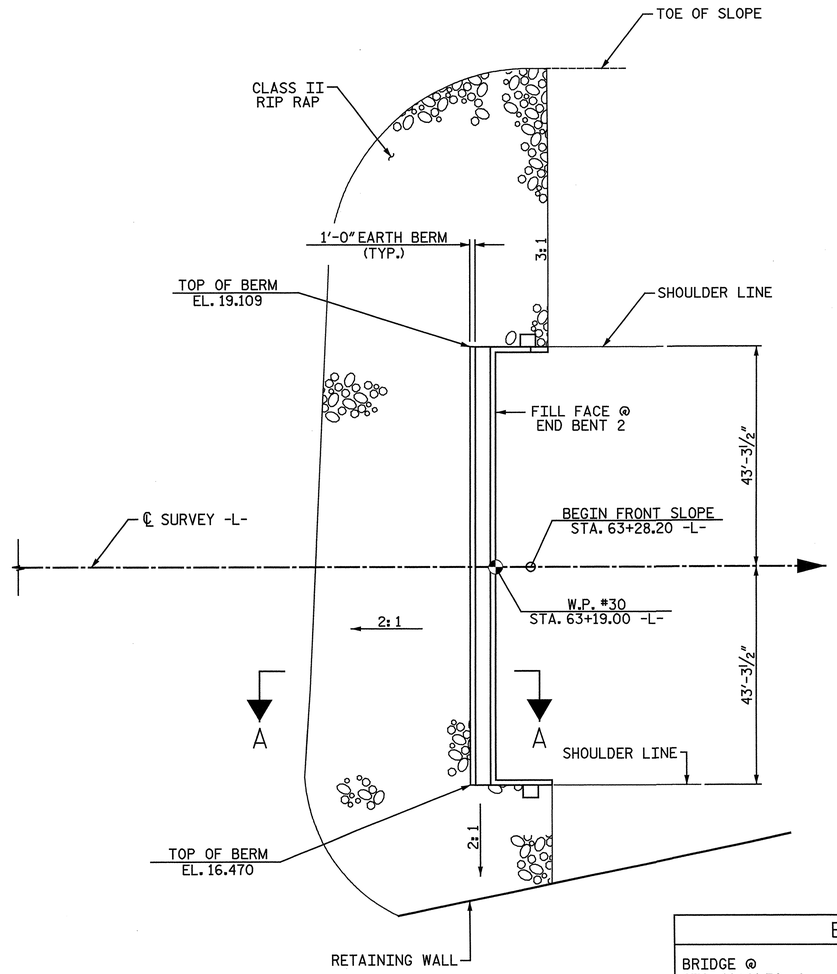

PLAN OF SLOPE PROTECTION

ESTIMATED QUANTITIES		
BRIDGE @ STA. 46+21.50 -L-	RIP RAP CLASS II (2'-0" THICK)	GEOTEXTILE FOR DRAINAGE
	TONS	SQUARE YARDS
END BENT 1	304	337
END BENT 2	736	818

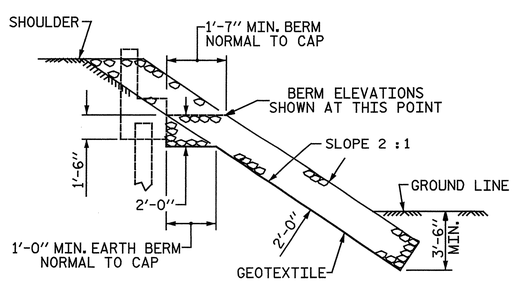

SECTION A-A

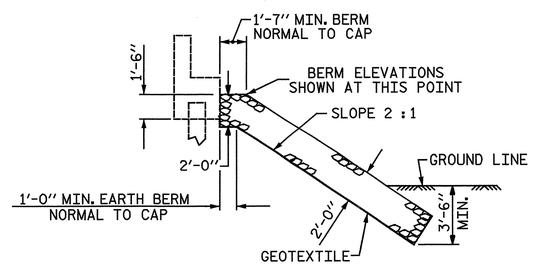

℄ SECTION RIP RAPPED BERM

PROJECT NO. R-3307
CARTERET COUNTY
STATION: 46+21.50 -L-

STATE OF NORTH CAROLINA
DEPARTMENT OF TRANSPORTATION
RALEIGH

SLOPE PROTECTION

NORTH CAROLINA PROFESSIONAL SEAL 25911 ENGINEER DWAIN G. HATHAWAY 4-3-2012

NORTH CAROLINA PROFESSIONAL SEAL 033752 ENGINEER SETH A. DENNEY

THE LPA GROUP of North Carolina TRANSPORTATION CONSULTANTS

THE LPA GROUP of North Carolina
8000 Regency Parkway, Suite 600
Cary, North Carolina 27518
NC License No.: F-1084

REVISIONS							SHEET NO.
NO.	BY:	DATE:	NO.	BY:	DATE:		S-280
1			3				TOTAL SHEETS
2			4				333

DRAWN BY : N. B. SPEAKS DATE : 10-26-11
CHECKED BY : R. F. DeCOLA DATE : 11-21-11

DWG. 280 OF 282

4/2/2012 12:46:... PM
User: jaustin
Filename: Y:\Projects\NCDOT\R-3307\Dwgs\Final\R-3307_280_SD_SP.dgn

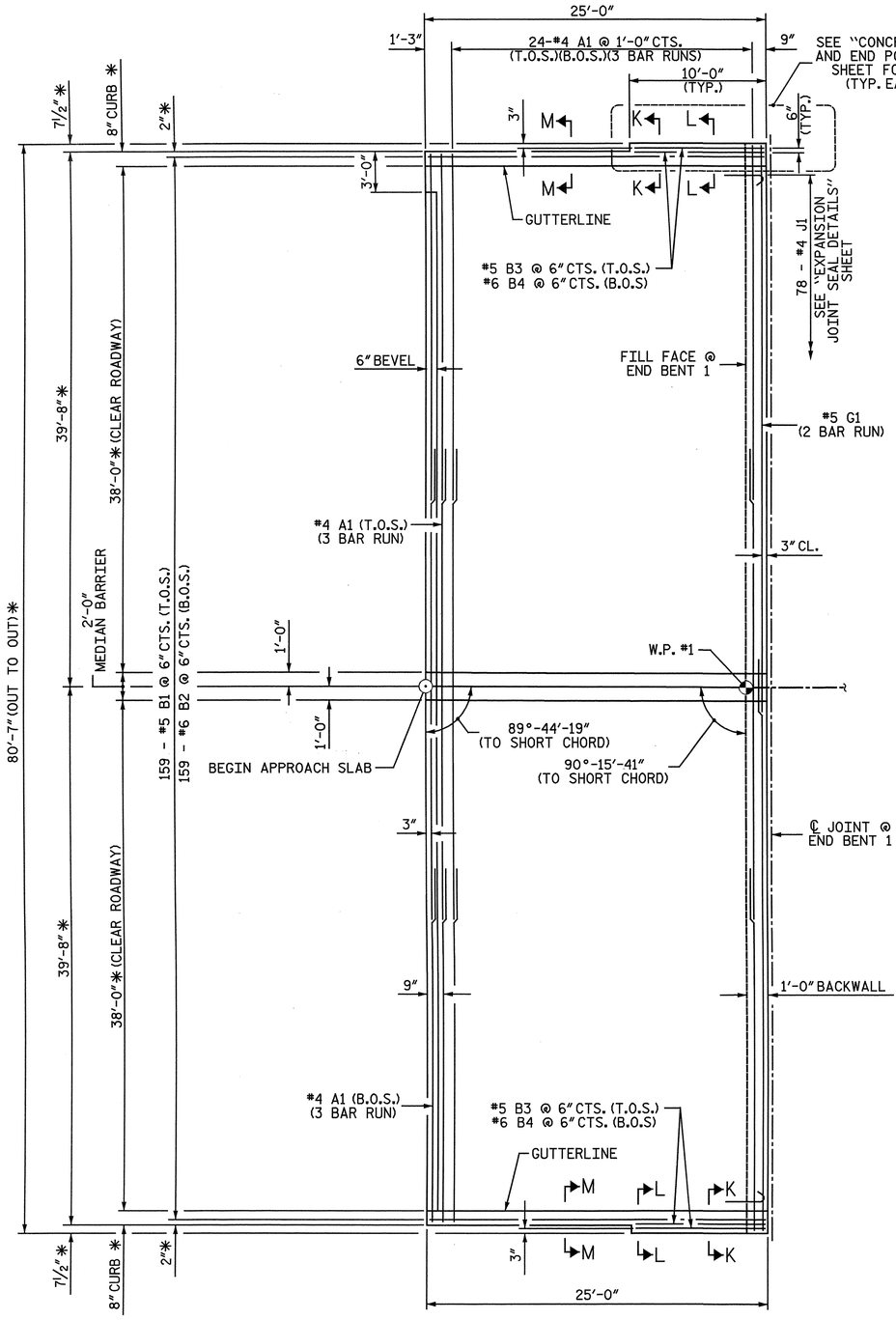

PLAN OF APPROACH SLAB
@ END BENT 1

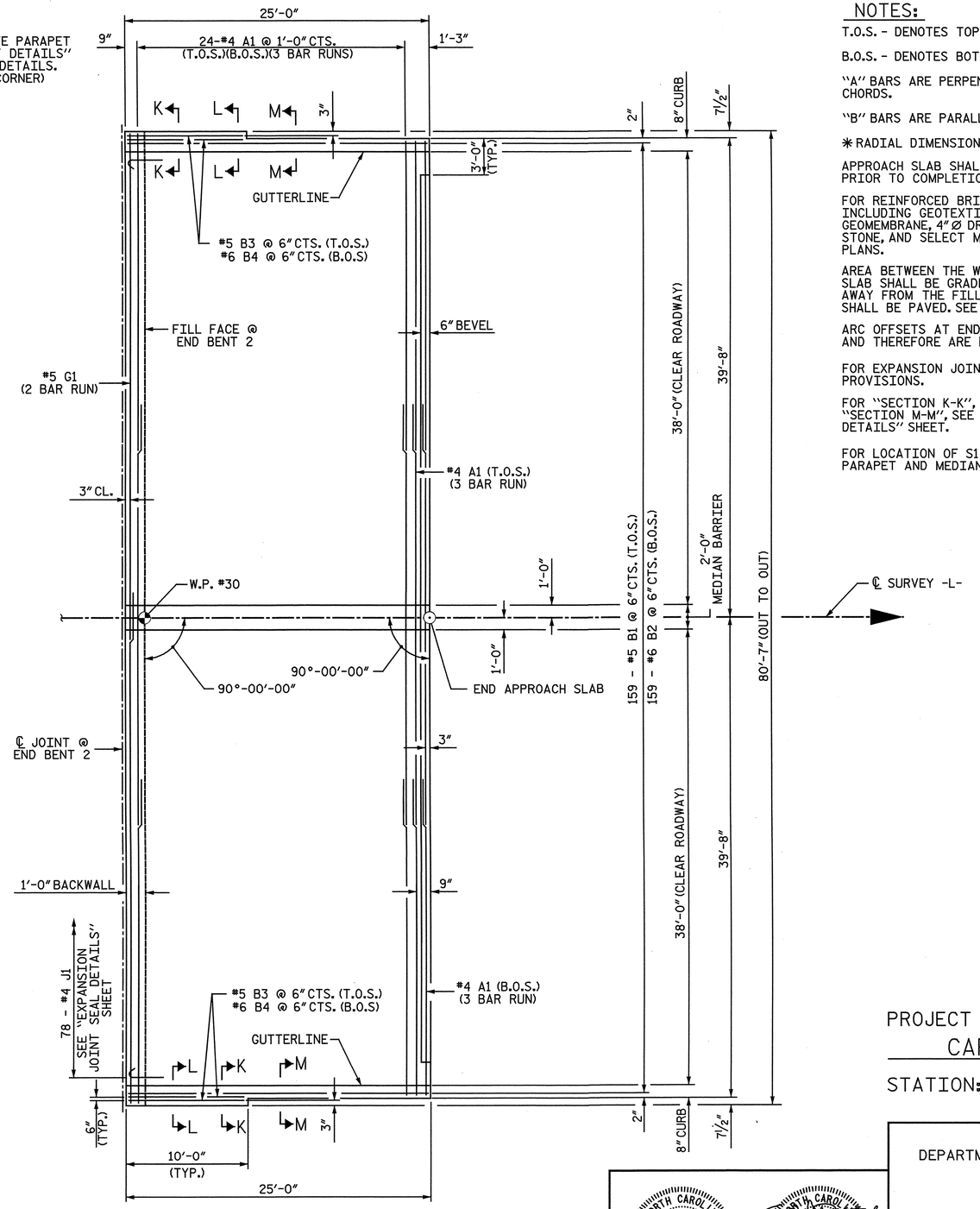

PLAN OF APPROACH SLAB
@ END BENT 2

NOTES:

T.O.S. - DENOTES TOP OF SLAB

B.O.S. - DENOTES BOTT. OF SLAB

"A" BARS ARE PERPENDICULAR TO SHORT CHORDS.

"B" BARS ARE PARALLEL TO SHORT CHORDS.

* RADIAL DIMENSION

APPROACH SLAB SHALL NOT BE CONSTRUCTED PRIOR TO COMPLETION OF THE BRIDGE DECK.

FOR REINFORCED BRIDGE APPROACH FILL INCLUDING GEOTEXTILE, IMPERMEABLE GEOMEMBRANE, 4" Ø DRAINAGE PIPE, #78M STONE, AND SELECT MATERIAL, SEE ROADWAY PLANS.

AREA BETWEEN THE WINGWALL AND APPROACH SLAB SHALL BE GRADED TO DRAIN THE WATER AWAY FROM THE FILL FACE OF THE BRIDGE AND SHALL BE PAVED. SEE ROADWAY PLANS.

ARC OFFSETS AT END BENT 1 ARE NEGLIGIBLE AND THEREFORE ARE NOT SHOWN.

FOR EXPANSION JOINT SEALS, SEE SPECIAL PROVISIONS.

FOR "SECTION K-K", "SECTION L-L", AND "SECTION M-M", SEE "BRIDGE APPROACH SLAB DETAILS" SHEET.

FOR LOCATION OF S1 & S5 BARS, SEE "CONCRETE PARAPET AND MEDIAN BARRIER" SHEETS.

PROJECT NO. R-3307
CARTERET COUNTY
STATION: 46+21.50 -L-

STATE OF NORTH CAROLINA
DEPARTMENT OF TRANSPORTATION
RALEIGH

BRIDGE APPROACH SLAB

NORTH CAROLINA PROFESSIONAL SEAL 25911 ENGINEER DWAIN G. HATHAWAY 4-3-2012

NORTH CAROLINA PROFESSIONAL SEAL 033752 ENGINEER SETH A. DENNEY 4/4/12

THE LPA GROUP of North Carolina TRANSPORTATION CONSULTANTS

THE LPA GROUP of North Carolina
8000 Regency Parkway, Suite 600
Cary, North Carolina 27518
NC License No.: F-1084

REVISIONS						SHEET NO.
NO.	BY:	DATE:	NO.	BY:	DATE:	S-281
1			3			TOTAL SHEETS
2			4			333

DRAWN BY : N. B. SPEAKS DATE : 8-22-11
CHECKED BY : R. F. DeCOLA DATE : 11-10-11

DWG. 281 OF 282

4/2/2 ?
12:46:24 PM
User: jaustin
Filename: Y:\Projects\NCDOT\R-3307\Dwgs\Final\R-3307_281_SD_AS1.dgn

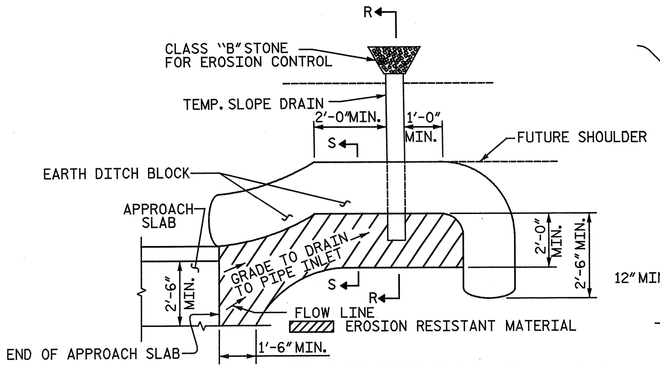

NOTE: IMMEDIATELY AFTER THE CONSTRUCTION OF THE APPROACH SLAB, THE CONTRACTOR SHALL PROVIDE TEMPORARY BERM AND SLOPE DRAIN. CONTRACTOR SHALL GRADE TO PIPE INLET AND PROVIDE EROSION RESISTANT MATERIAL AS SHOWN. THE EROSION RESISTANT MATERIAL SHALL BE EITHER 1) ASPHALT PLANT MIX, TYPE 1 OR TYPE 2, MIN. 2" DEPTH, 2) EROSION CONTROL MAT, OR 3) CONCRETE, AS DIRECTED BY THE ENGINEER. THE SLOPE DRAIN SHALL CONSIST OF A NON-PERFORATED TEMPORARY DRAINAGE PIPE, 12 INCHES IN DIAMETER.

PLAN VIEW

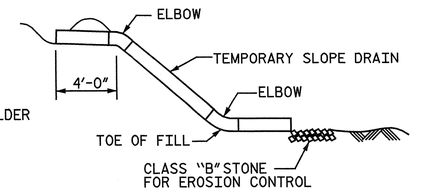

SECTION R-R

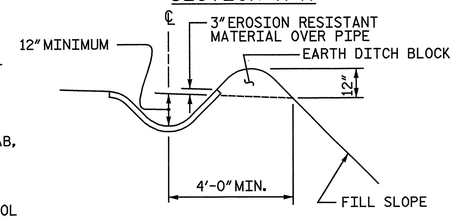

SECTION S-S

TEMPORARY BERM AND SLOPE DRAIN DETAILS

(TO BE USED WHEN SHOULDER BERM GUTTER IS REQUIRED)

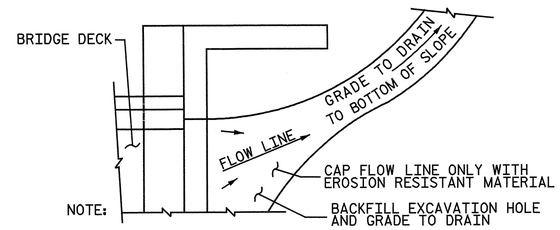

NOTE: IF THE APPROACH SLAB IS NOT CONSTRUCTED IMMEDIATELY AFTER THE BACKFILLING OF THE END BENT EXCAVATION, GRADE TO DRAIN TO THE BOTTOM OF THE SLOPE AND PROVIDE EROSION RESISTANT MATERIAL, SUCH AS FIBERGLASS ROVING OR AS DIRECTED BY THE ENGINEER TO PREVENT SOIL EROSION AND TO PROTECT THE AREA ADJACENT TO THE STRUCTURE. THE CONTRACTOR WILL BE REQUIRED TO REMOVE THESE MATERIALS PRIOR TO CONSTRUCTION OF THE APPROACH SLAB.

TEMPORARY DRAINAGE DETAIL

BILL OF MATERIAL

APPROACH SLAB @ END BENT 1						APPROACH SLAB @ END BENT 2					
BAR	NO.	SIZE	TYPE	LENGTH	WEIGHT	BAR	NO.	SIZE	TYPE	LENGTH	WEIGHT
A1	150	#4	STR	28'-1"	2,814	A1	150	#4	STR	28'-1"	2,814
B1	159	#5	STR	24'-2"	4,008	B1	159	#5	STR	24'-2"	4,008
B2	159	#6	STR	24'-8"	5,891	B2	159	#6	STR	24'-8"	5,891
B3	4	#5	STR	9'-8"	40	B3	4	#5	STR	9'-8"	40
B4	4	#6	STR	9'-8"	58	B4	4	#6	STR	9'-8"	58
G1	2	#5	STR	41'-5"	86	G1	2	#5	STR	41'-5"	86
J1	78	#4	1	1'-5"	74	J1	78	#4	1	1'-5"	74
EPOXY COATED REINFORCING STEEL				LBS.	12,971	EPOXY COATED REINFORCING STEEL				LBS.	12,971
CLASS AA CONCRETE				C. Y.	86.4	CLASS AA CONCRETE				C. Y.	86.4

BAR TYPE

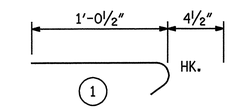

ALL BAR DIMENSIONS ARE OUT TO OUT

BAR TYPE

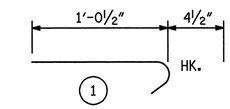

ALL BAR DIMENSIONS ARE OUT TO OUT

**QUANTITIES FOR PARAPET AND MEDIAN BARRIER ARE NOT INCLUDED. SEE "MEDIAN BARRIER DETAILS" AND "CONCRETE PARAPET AND END POST DETAILS" SHEETS.

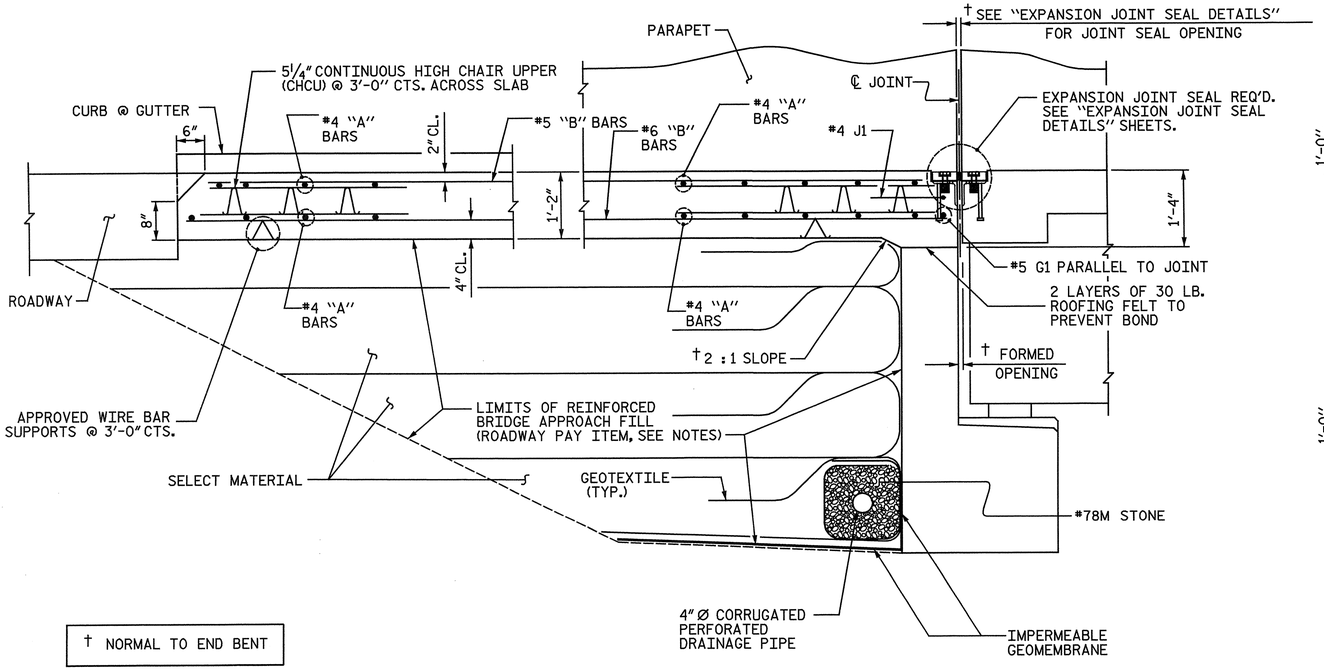

† NORMAL TO END BENT

SECTION THRU SLAB

SHOWING SECTION WITHOUT CONCRETE WEARING SURFACE

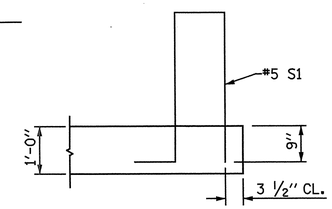

SECTION K-K

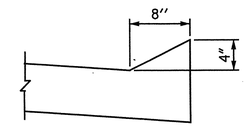

SECTION M-M

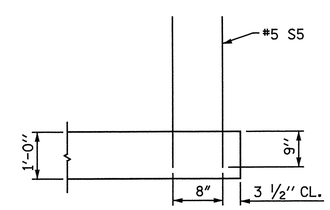

SECTION L-L

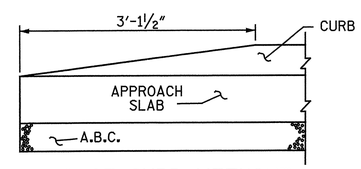

END OF CURB WITHOUT SHOULDER BERM GUTTER

REINFORCING STEEL SPLICE LENGTHS	
BAR SIZE	APPROACH SLABS
	EPOXY COATED
#4	2'-0"
#5	2'-6"
#6	3'-10"

PROJECT NO. R-3307

CARTERET COUNTY

STATION: 46+21.50 -L-

STATE OF NORTH CAROLINA
DEPARTMENT OF TRANSPORTATION
RALEIGH

BRIDGE APPROACH SLAB DETAILS

NORTH CAROLINA PROFESSIONAL SEAL 25911 ENGINEER DWAIN G. HATHAWAY 4-3-2012

NORTH CAROLINA PROFESSIONAL SEAL 033752 ENGINEER SETH A. DENNEY 04/03/12

THE LPA GROUP of North Carolina TRANSPORTATION CONSULTANTS

THE LPA GROUP of North Carolina
8000 Regency Parkway, Suite 600
Cary, North Carolina 27518
NC License No.: F-1084

REVISIONS							
NO.	BY:	DATE:	NO.	BY:	DATE:		
1			3				
2			4				

SHEET NO. S-282

TOTAL SHEETS 333

DRAWN BY : N. B. SPEAKS DATE : 8-23-11
CHECKED BY : R. F. DeCOLA DATE : 11-10-11

DWG. 282 OF 282

4/2/2012
12:46:25 PM
User: jaustin
Filename: Y:\Projects\NCDOT\R-3307\Dwgs\Final\R-3307_282_SD_AS2.dgn

F.A. PROJECT NO.: STPNHF-70(132)

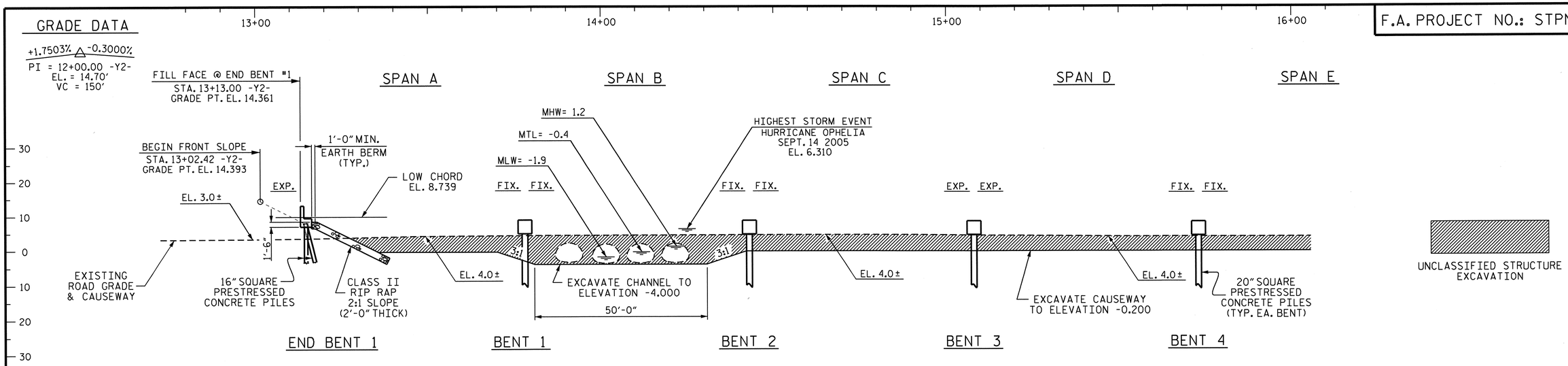

SECTION ALONG -Y2-

UNCLASSIFIED STRUCTURE EXCAVATION

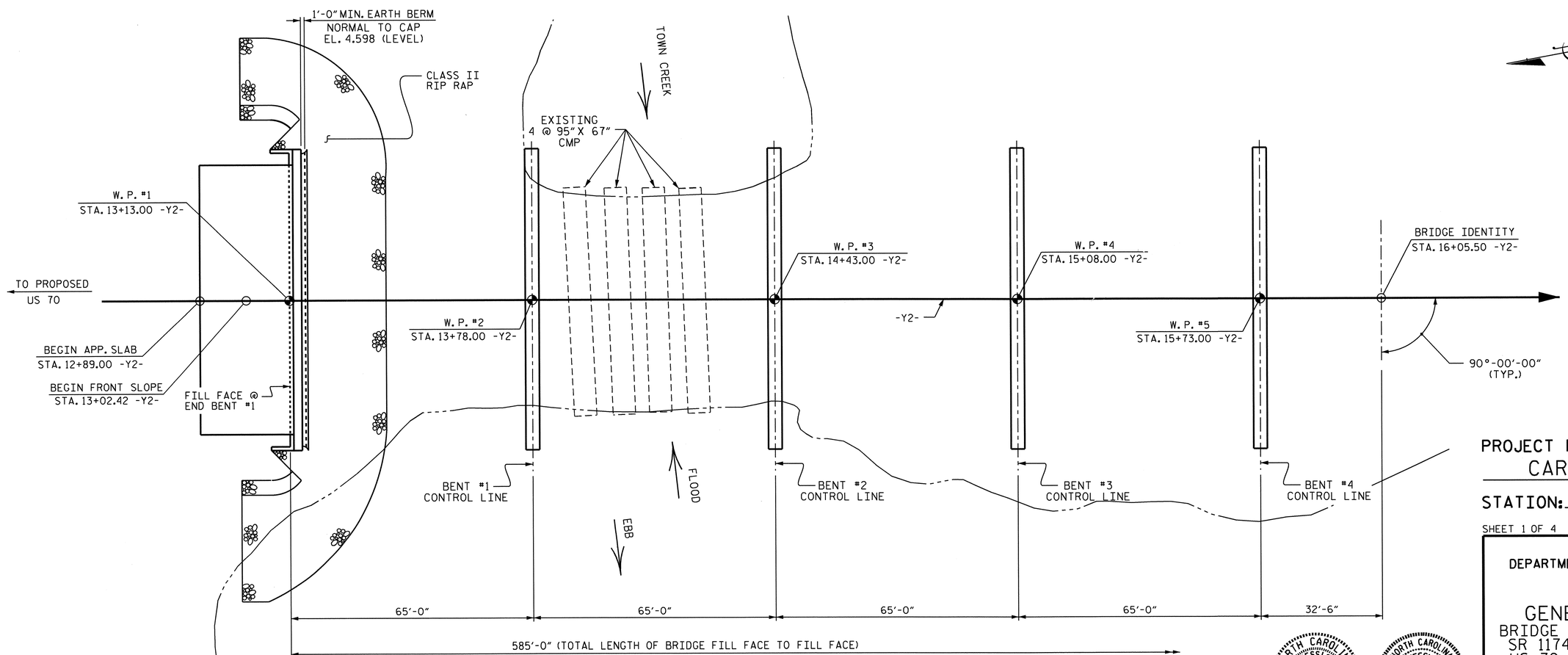

PLAN

(PILES ARE NOT SHOWN IN PLAN VIEW FOR CLARITY)

PROJECT NO. R-3307

CARTERET COUNTY

STATION: 16+05.50 -Y2-

SHEET 1 OF 4 BRIDGE #118

STATE OF NORTH CAROLINA
DEPARTMENT OF TRANSPORTATION
RALEIGH

GENERAL DRAWING

BRIDGE OVER TOWN CREEK ON SR 1174 BETWEEN EXISTING US 70 AND PROPOSED US 70

NORTH CAROLINA PROFESSIONAL SEAL 022506 ENGINEER JESSE McARTHUR BAILEY
10/23/13

NORTH CAROLINA PROFESSIONAL SEAL 14855 ENGINEER DOUGLAS R. CALHOUN
10-22-13

REVISIONS								SHEET NO.
NO.	BY:	DATE:	NO.	BY:	DATE:			S-283
1			3					TOTAL SHEETS
2			4					333

DRAWN BY : A. SORSENGINH DATE : 3/2012
CHECKED BY : D.R. CALHOUN DATE : 3/2012

21-OCT-2013 15:55
R:\Structures\Plans\GENERAL DRAWING\R-3307_SD_GD.dgn
dbly

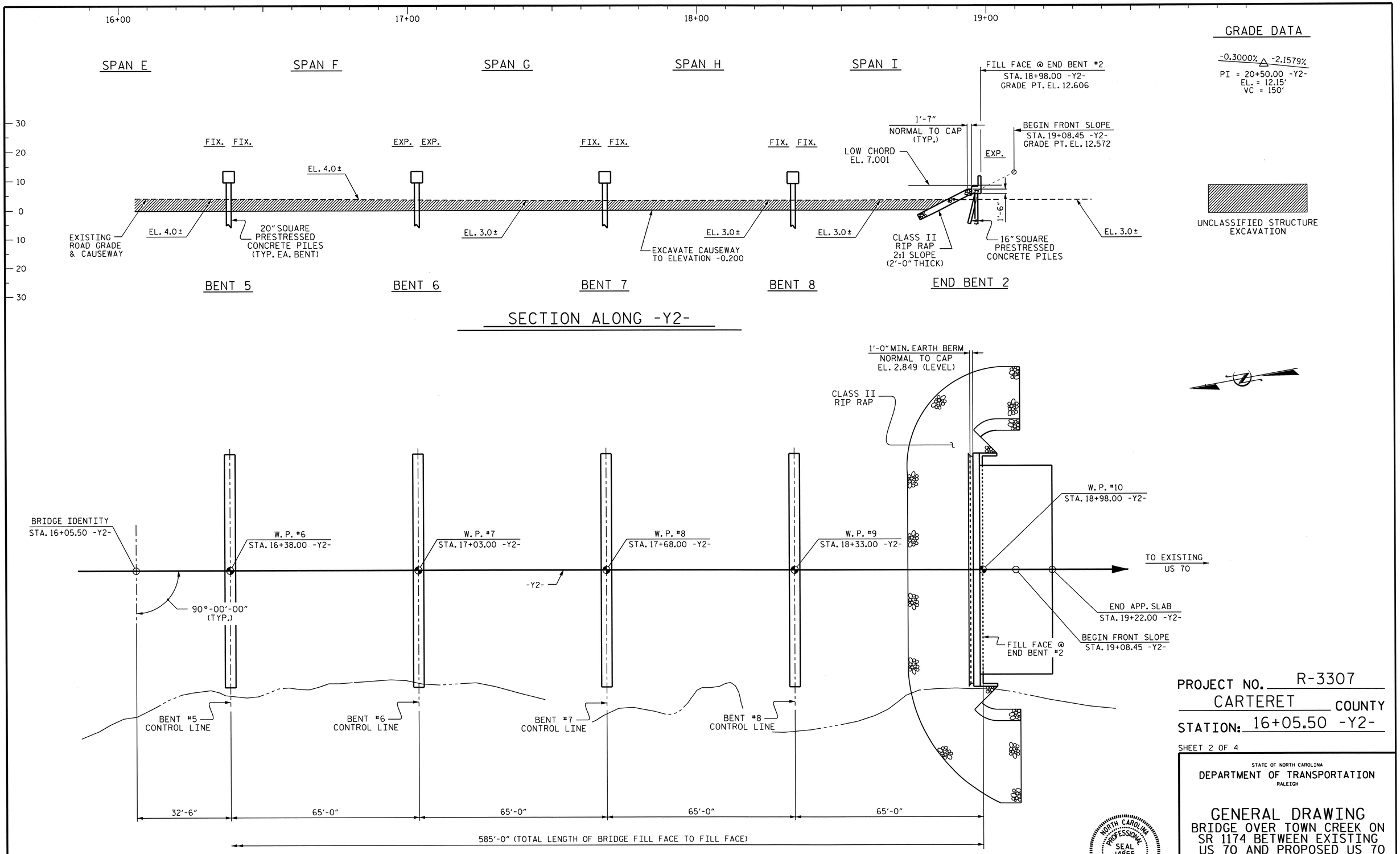

PROJECT NO. R-3307

CARTERET COUNTY

STATION: 16+05.50 -Y2-

SHEET 2 OF 4

STATE OF NORTH CAROLINA
DEPARTMENT OF TRANSPORTATION
RALEIGH

GENERAL DRAWING
BRIDGE OVER TOWN CREEK ON SR 1174 BETWEEN EXISTING US 70 AND PROPOSED US 70

REVISIONS						SHEET NO.
NO.	BY:	DATE:	NO.	BY:	DATE:	S-284
1			3			TOTAL SHEETS
2			4			333

DRAWN BY : A. SORSENGINH DATE : 3/2012
CHECKED BY : D.R. CALHOUN DATE : 3/2012

21-OCT-2013 15:54
R:\Structures\Plans\GENERAL DRAWING\R-3307_SD_GD.dgn
dely

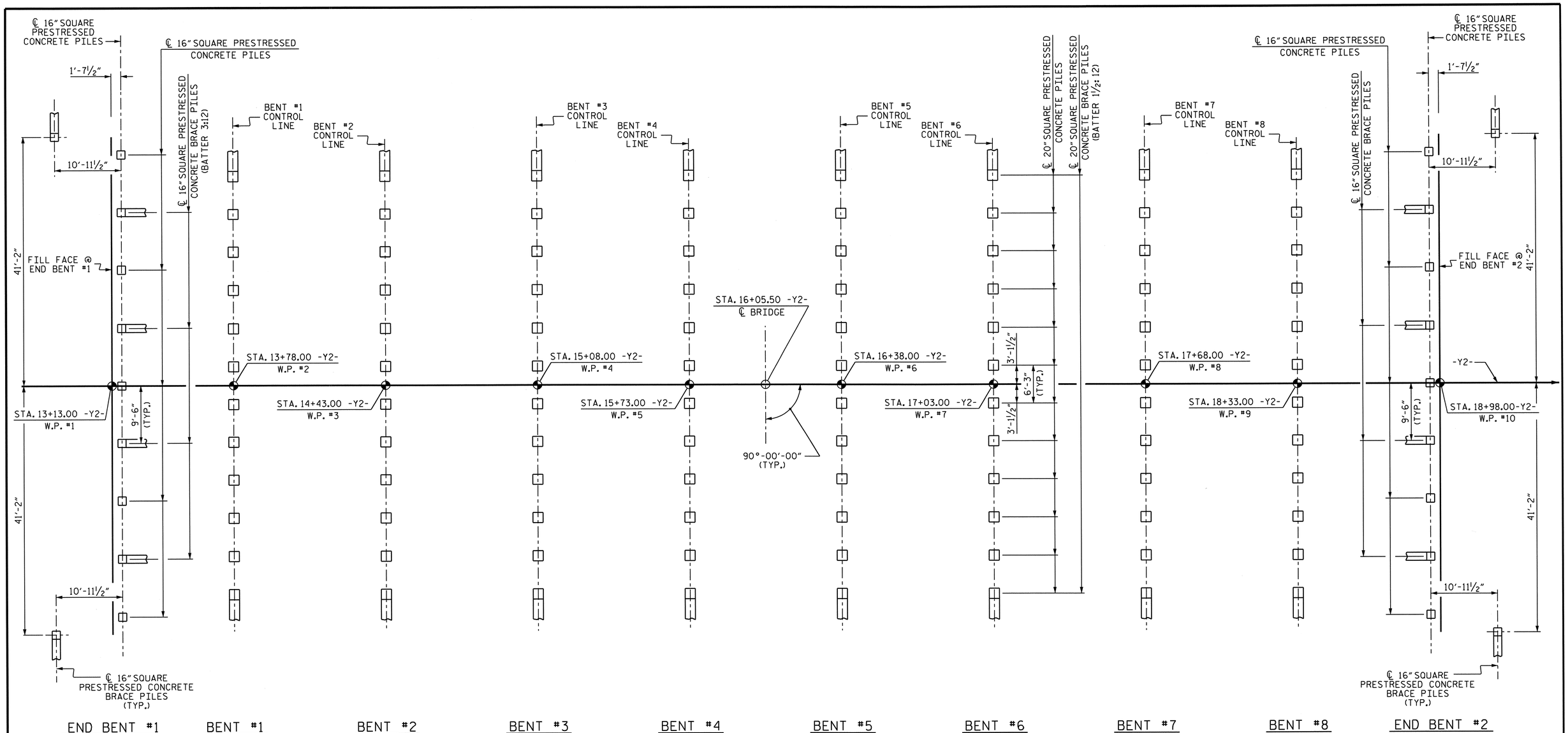

FOUNDATION LAYOUT

DIMENSIONS LOCATING PILES ARE SHOWN TO THE PILE CENTERLINE AT BOTTOM OF CAP
BRACE PILES AT END BENTS ARE BATTERED AT 3:12. BRACE PILES AT BENTS ARE BATTERED AT 1½:12
DIMENSIONS SHOWN FOR INTERIOR BENT #6 ARE TYPICAL FOR BENTS #1 THRU #8.

NOTES

FOR PILES, SEE SECTION 450 OF THE STANDARD SPECIFICATIONS.

PILES AT END BENT NO. 1 AND END BENT NO. 2 ARE DESIGNED FOR A FACTORED RESISTANCE OF 110 TONS PER PILE.

PILES AT BENT NO. 1 THROUGH BENT NO. 8 ARE DESIGNED FOR A FACTORED RESISTANCE OF 155 TONS PER PILE.

DRIVE PILES AT END BENT NO. 1 AND END BENT NO. 2 TO A REQUIRED DRIVING RESISTANCE OF 150 TONS PER PILE.

DRIVE PILES AT BENT NO. 1 AND BENT NO. 3 THROUGH BENT NO. 8 TO A REQUIRED DRIVING RESISTANCE OF 215 TONS PER PILE.

DRIVE PILES AT BENT NO. 2 TO A REQUIRED DRIVING RESISTANCE OF 225 TONS PER PILE.

INSTALL PILES AT BENT NO. 1 THROUGH BENT NO. 8 TO A TIP ELEVATION NO HIGHER THAN -39.0 FT, -33.0 FT, -35.0 FT, -35.0 FT, -35.0 FT, -35.0 FT, -42.0 FT, AND -34.0 FT, RESPECTIVELY.

THE SCOUR CRITICAL ELEVATION FOR BENT NO. 1 AND BENT NO. 2 IS ELEVATION -13.0 FT. SCOUR CRITICAL ELEVATIONS ARE USED TO MONITOR POSSIBLE SCOUR PROBLEMS DURING THE LIFE OF THE STRUCTURE.

STEEL PILE TIPS ARE REQUIRED FOR PRESTRESSED CONCRETE PILES AT BENT NO. 2. FOR STEEL PILE TIPS, SEE SECTION 450 OF THE STANDARD SPECIFICATIONS.

THE SCOUR CRITICAL ELEVATION FOR BENT NO. 3 THROUGH BENT NO. 8 IS ELEVATION -8.5 FT. SCOUR CRITICAL ELEVATIONS ARE USED TO MONITOR POSSIBLE SCOUR PROBLEMS DURING THE LIFE OF THE STRUCTURE.

IT HAS BEEN ESTIMATED THAT A HAMMER WITH AN EQUIVALENT RATED ENERGY IN THE RANGE OF 50-110 FT-KIPS PER BLOW WILL BE REQUIRED TO DRIVE PILES AT BENT NO. 1 THROUGH BENT NO. 8. THIS ESTIMATED ENERGY RANGE DOES NOT RELEASE THE CONTRACTOR FROM PROVIDING DRIVING EQUIPMENT IN ACCORDANCE WITH SUBARTICLE 450-3(D)(2) OF THE STANDARD SPECIFICATIONS.

TESTING THE PRODUCTION PILES WITH THE PILE DRIVING ANALYZER (PDA) DURING DRIVING, RESTRIKING OR REDRIVING IS REQUIRED AT BENT NO. 1, BENT NO. 2 AND BENT NO. 6. FOR PDA TESTING, SEE SECTION 450 OF THE STANDARD SPECIFICATIONS.

OBSERVE A 3 MONTH WAITING PERIOD AFTER CONSTRUCTING THE EMBANKMENT TO WITHIN 2 FT OF FINISHED GRADE BEFORE BEGINNING END BENT CONSTRUCTION AT END BENT NO. 1.

OBSERVE A 1 MONTH WAITING PERIOD AFTER CONSTRUCTING THE EMBANKMENT TO WITHIN 2 FT OF FINISHED GRADE BEFORE BEGINNING END BENT CONSTRUCTION AT END BENT NO. 2.

FOR EMBANKMENT MONITORING AT END BENT NO. 1, SEE ROADWAY PLANS.

NORTH CAROLINA PROFESSIONAL SEAL 14855 ENGINEER DOUGLAS R. CALHOUN
10-22-13

PROJECT NO. R-3307
CARTERET COUNTY
STATION: 16+05.50 -Y2-

SHEET 3 OF 4

STATE OF NORTH CAROLINA
DEPARTMENT OF TRANSPORTATION
RALEIGH

GENERAL DRAWING
BRIDGE OVER TOWN CREEK ON SR 1174 BETWEEN EXISTING US 70 AND PROPOSED US 70

REVISIONS						SHEET NO.
NO.	BY:	DATE:	NO.	BY:	DATE:	S-285
1			3			TOTAL SHEETS
2			4			333

DRAWN BY : A. SORSENGINH DATE : 2/2012
CHECKED BY : D.R. CALHOUN DATE : 3/2012

10-SEP-2013 16:11
R:\Structures\Plans\SUPERSTRUCTURE\Microstation\R-3307_SD_FL.dgn
dely

BM: NCDOT GPS R-3307-2 1,589.93' RT. OF STA 11+29.69 -Y2- ELEV. 3.570'

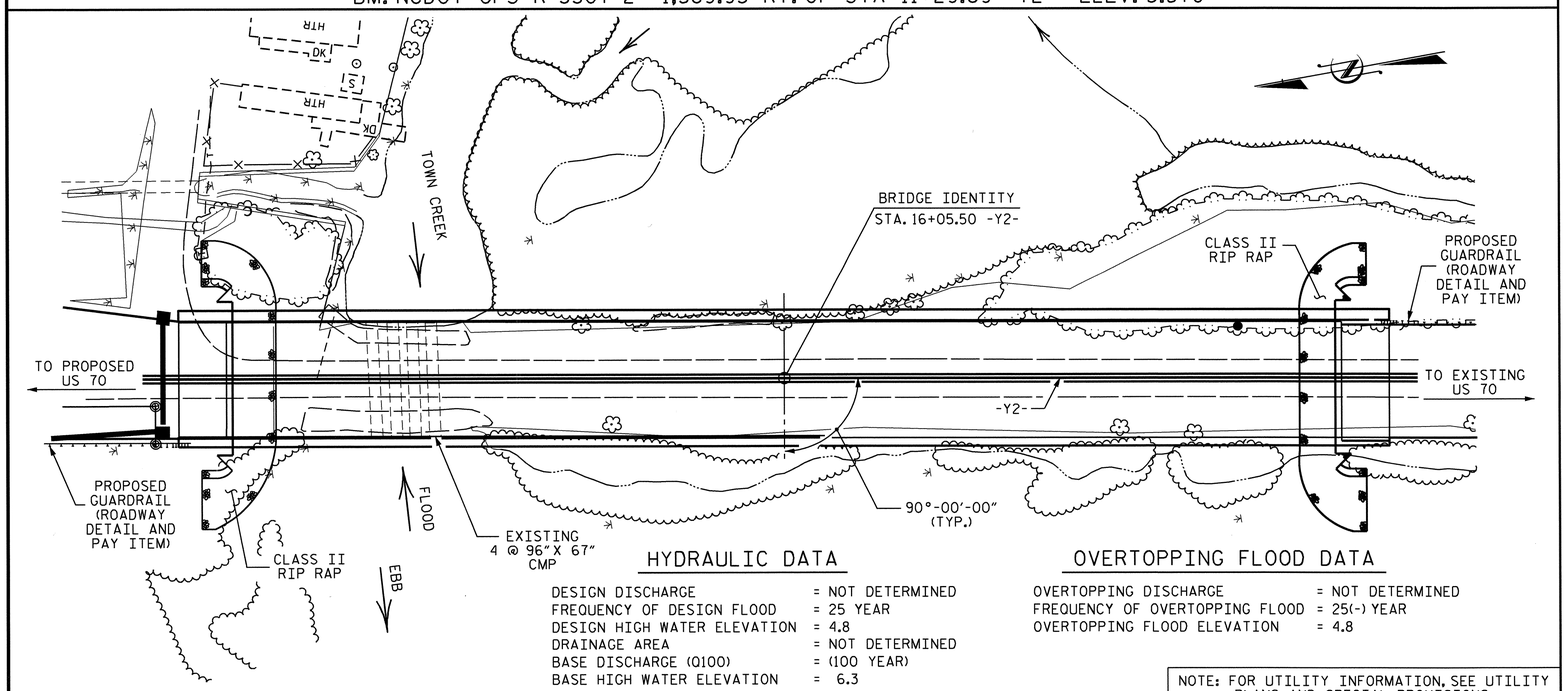

HYDRAULIC DATA

DESIGN DISCHARGE	= NOT DETERMINED
FREQUENCY OF DESIGN FLOOD	= 25 YEAR
DESIGN HIGH WATER ELEVATION	= 4.8
DRAINAGE AREA	= NOT DETERMINED
BASE DISCHARGE (Q100)	= (100 YEAR)
BASE HIGH WATER ELEVATION	= 6.3

OVERTOPPING FLOOD DATA

OVERTOPPING DISCHARGE	= NOT DETERMINED
FREQUENCY OF OVERTOPPING FLOOD	= 25(-) YEAR
OVERTOPPING FLOOD ELEVATION	= 4.8

NOTE: FOR UTILITY INFORMATION, SEE UTILITY PLANS AND SPECIAL PROVISIONS.

LOCATION SKETCH

NOTES

ASSUMED LIVE LOAD = HL-93 OR ALTERNATE LOADING.

FOR OTHER DESIGN DATA AND GENERAL NOTES, SEE SHEET SN.

FOR EROSION CONTROL MEASURES SEE EROSION CONTROL PLANS.

THIS BRIDGE HAS BEEN DESIGNED IN ACCORDANCE WITH THE AASHTO LRFD BRIDGE DESIGN SPECIFICATIONS.

THE MATERIAL SHOWN IN THE CROSS-HATCHED AREA SHALL BE EXCAVATED FOR A DISTANCE OF 60 FT. EACH SIDE OF CENTERLINE ROADWAY AS DIRECTED BY THE ENGINEER. THIS WORK WILL BE PAID FOR AT THE CONTRACT LUMP SUM PRICE FOR UNCLASSIFIED STRUCTURE EXCAVATION. SEE SECTION 412 OF THE STANDARD SPECIFICATIONS.

CLASS AA CONCRETE SHALL BE USED IN ALL CAST-IN-PLACE BENT CAPS AND SHALL CONTAIN CALCIUM NITRITE CORROSION INHIBITOR. FOR CALCIUM NITRITE CORROSION INHIBITOR SEE STANDARD SPECIFICATIONS.

ALL BAR SUPPORTS USED IN THE PARAPET, SIDEWALK, DECK, BENT CAPS AND ALL INCIDENTAL REINFORCING STEEL SHALL BE EPOXY COATED IN ACCORDANCE WITH THE STANDARD SPECIFICATIONS.

THE CONCRETE IN THE BENT CAPS AND PILES OF BENT NO. 1 THRU 8 SHALL CONTAIN SILICA FUME. SILICA FUME SHALL BE SUBSTITUTED FOR 5% OF THE PORTLAND CEMENT BY WEIGHT. IF THE OPTION OF ARTICLE 1024-1 OF THE STANDARD SPECIFICATIONS TO PARTIALLY SUBSTITUTE CLASS F FLY ASH FOR PORTLAND CEMENT IS EXERCISED, THEN THE RATE OF FLY ASH SUBSTITUTION SHALL BE REDUCED TO 1.0 LB OF FLY ASH PER 1.0 LB OF CEMENT. NO PAYMENT WILL BE MADE FOR THIS SUBSTITUTION AS IT IS CONSIDERED INCIDENTAL TO THE VARIOUS PAY ITEMS.

THE EXISTING PAVEMENT WITHIN THE AREA OF THE END BENT PILES SHALL BE REMOVED AND THE ROADBED SCARIFIED TO A MINIMUM DEPTH OF 2'-0".

FOR PLACING LOAD ON STRUCTURE MEMBERS, SEE SPECIAL PROVISIONS.

ALL METALLIZED SURFACES SHALL RECEIVE A SEAL COATING AS SPECIFIED IN THE SPECIAL PROVISION FOR THERMAL SPRAYED COATINGS (METALLIZATION).

THE CONTRACTOR SHALL PROVIDE INDEPENDENT ASSURANCE SAMPLES OF REINFORCING STEEL AS FOLLOWS: FOR PROJECTS REQUIRING UP TO 400 TONS OF REINFORCING STEEL, ONE 30 INCH SAMPLE OF EACH SIZE BAR USED, AND FOR PROJECTS REQUIRING OVER 400 TONS OF REINFORCING STEEL, TWO 30 INCH SAMPLES OF EACH SIZE BAR USED. THE BARS FROM WHICH THE SAMPLES ARE TAKEN MUST THEN BE SPLICED WITH REPLACEMENT BARS OF THE SIZE AND LENGTH OF THE SAMPLE, PLUS A MINIMUM LAP SPLICE OF THIRTY BAR DIAMETERS. PAYMENT FOR THE SAMPLES OF REINFORCING STEEL SHALL BE CONSIDERED INCIDENTAL TO VARIOUS PAY ITEMS.

THIS STRUCTURE HAS BEEN DESIGNED IN ACCORDANCE WITH "HEC 18-EVALUATING SCOUR AT BRIDGES."

NEEDLE BEAMS WILL NOT BE ALLOWED UNLESS OTHERWISE CALLED FOR ON THE PLANS OR APPROVED BY THE ENGINEER.

FOR SUBMITTAL OF WORKING DRAWINGS, SEE SPECIAL PROVISIONS.

FOR FALSEWORK AND FORMWORK, SEE SPECIAL PROVISIONS.

FOR CRANE SAFETY, SEE SPECIAL PROVISIONS.

FOR GROUT FOR STRUCTURES, SEE SPECIAL PROVISIONS.

FOR CLASSIC CONCRETE BRIDGE RAIL, SEE SPECIAL PROVISIONS.

THIS BRIDGE IS LOCATED IN SEISMIC ZONE 1.

REMOVAL OF THE 4 - 96"X 67" CORRUGATED METAL PIPES SHALL BE INCLUDED IN THE LUMP SUM PAY ITEM FOR UNCLASSIFIED STRUCTURE EXCAVATION.

THIS STRUCTURE CONTAINS THE NECESSARY CORROSION PROTECTION REQUIRED FOR A CORROSIVE SITE.

THE CLASS AA CONCRETE IN THE BRIDGE DECK SHALL CONTAIN FLY ASH OR GROUND GRANULATED BLAST FURNACE SLAG AT THE SUBSTITUTION RATE SPECIFIED IN ARTICLE 1024-1 AND IN ACCORDANCE WITH ARTICLES 1024-5 AND 1024-6 OF THE STANDARD SPECIFICATIONS. NO PAYMENT WILL BE MADE FOR THIS SUBSTITUTION AS IT IS CONSIDERED INCIDENTAL TO THE COST OF THE REINFORCED CONCRETE DECK SLAB.

FOR ELECTRICAL CONDUIT SYSTEM AT STATION 16+05.50 -Y2-, SEE SPECIAL PROVISIONS.

TOTAL BILL OF MATERIAL

	PDA TESTING	UNCLASSIFIED STRUCTURE EXCAVATION	REINFORCED CONCRETE DECK SLAB	GROOVING BRIDGE FLOORS	CLASS AA CONCRETE	BRIDGE APPROACH SLABS	EPOXY COATED REINFORCING STEEL	45" PRESTRESSED CONCRETE GIRDERS		16" PRESTRESSED CONCRETE PILES		20" PRESTRESSED CONCRETE PILES		PILE REDRIVES	RIP RAP CLASS II (2'-0" THICK)	GEOTEXTILE FOR DRAINAGE	ELASTOMERIC BEARINGS	FOAM JOINT SEALS	ELECTRICAL CONDUIT SYSTEM	CLASSIC CONCRETE BRIDGE RAIL
	EACH	LUMP SUM	SQ. FT.	SQ. FT.	CU. YDS.	LUMP SUM	LBS.	NO.	LIN. FT.	NO.	LIN. FT.	NO.	LIN. FT.	EACH	TONS	SQ. YDS	LUMP SUM	LUMP SUM	LUMP SUM	LIN. FT.
SUPERSTRUCTURE			43476	36540		LUMP SUM		72	4614.66								LUMP SUM	LUMP SUM	LUMP SUM	1262.0
END BENT 1		LUMP SUM			57.1		8113			11	715			5	320	352				
BENT 1	1	LUMP SUM			35.0		5595					12	1080	6						
BENT 2	1	LUMP SUM			35.0		5595					12	900	6						
BENT 3		LUMP SUM			35.0		5595					12	900	6						
BENT 4		LUMP SUM			35.0		5595					12	900	6						
BENT 5		LUMP SUM			35.0		5595					12	960	6						
BENT 6	1	LUMP SUM			35.0		5595					12	960	6						
BENT 7		LUMP SUM			35.0		5595					12	960	6						
BENT 8		LUMP SUM			35.0		5595					12	840	6						
END BENT 2		LUMP SUM			57.1		8113			11	715			5	235	259				
TOTAL	3	LUMP SUM	43476	36540	394.2	LUMP SUM	60978	72	4614.66	22	1430	96	7500	58	555	611	LUMP SUM	LUMP SUM	LUMP SUM	1262.0

PROJECT NO. R-3307

CARTERET COUNTY

STATION: 16+05.50 -Y2-

SHEET 4 OF 4

STATE OF NORTH CAROLINA
DEPARTMENT OF TRANSPORTATION
RALEIGH

GENERAL DRAWING
BRIDGE OVER TOWN CREEK ON SR 1174 BETWEEN EXISTING US 70 AND PROPOSED US 70

NORTH CAROLINA PROFESSIONAL SEAL 14855 ENGINEER DOUGLAS R. CALHOUN
10-22-13

REVISIONS						SHEET NO.
NO.	BY:	DATE:	NO.	BY:	DATE:	S-28
1			3			TOTAL SHEETS
2			4			333

DRAWN BY : A. SORSENGINH DATE : 3/2012
CHECKED BY : D.R. CALHOUN DATE : 3/2012

21-OCT-2013 15:34
R:\Structures\Plans\GENERAL DRAWING\R-3307_SD_GD.dgn
dely

LOAD AND RESISTANCE FACTOR RATING (LRFD) SUMMARY FOR PRESTRESSED CONCRETE GIRDERS

LEVEL		VEHICLE	WEIGHT (W) (TONS)	CONTROLLING LOAD RATING (#)	MINIMUM RATING FACTORS (RF)	TONS = W X RF	STRENGTH I LIMIT STATE											SERVICE III LIMIT STATE						COMMENT NUMBER
								MOMENT					SHEAR						MOMENT					
							LIVELOAD FACTORS	DISTRIBUTION FACTORS (DF)	RATING FACTOR	SPAN	GIRDER LOCATION	DISTANCE FROM LEFT END OF SPAN (ft)	DISTRIBUTION FACTORS (DF)	RATING FACTOR	SPAN	GIRDER LOCATION	DISTANCE FROM LEFT END OF SPAN (ft)	LIVELOAD FACTORS	DISTRIBUTION FACTORS (DF)	RATING FACTOR	SPAN	GIRDER LOCATION	DISTANCE FROM LEFT END OF SPAN (ft)	
DESIGN LOAD RATING		HL-93(Inv)	N/A	1	1.032	--	1.75	0.848	1.74	C	EL	31.542	0.929	2.76	C	I	3.154	0.80	0.848	1.03	C	EL	31.542	
		HL-93(Opr)	N/A	--	2.256	--	1.35	0.848	2.26	C	EL	31.542	0.929	3.58	C	I	3.154	N/A	--	--	--	--	--	
		HS-20(Inv)	36.000	2	1.392	52.123	1.75	0.848	2.35	C	EL	31.542	0.929	3.46	C	I	31.542	0.80	0.848	1.39	C	EL	31.542	
		HS-20(Opr)	36.000	--	3.045	109.629	1.35	0.848	3.05	C	EL	31.542	0.929	4.49	C	I	31.542	N/A	--	--	--	--	--	
LEGAL LOAD RATING	SV	SNSH	13.500	--	3.048	41.145	1.4	0.848	6.43	C	EL	31.542	0.929	8.86	C	I	31.542	0.80	0.848	3.05	C	EL	31.542	
		SNGARBS2	20.000	--	2.311	46.227	1.4	0.848	4.87	C	EL	31.542	0.929	6.72	C	I	31.542	0.80	0.848	2.31	C	EL	31.542	
		SNAGRIS2	22.000	--	2.206	48.534	1.4	0.848	4.65	C	EL	31.542	0.929	6.41	C	I	31.542	0.80	0.848	2.21	C	EL	31.542	
		SNCOTTS3	27.250	--	1.518	41.360	1.4	0.848	3.20	C	EL	31.542	0.929	4.46	C	I	31.542	0.80	0.848	1.52	C	EL	31.542	
		SNAGGRS4	34.925	--	1.284	44.832	1.4	0.848	2.71	C	EL	31.542	0.929	4.01	C	I	31.542	0.80	0.848	1.28	C	EL	31.542	
		SNS5A	35.550	--	1.254	44.589	1.4	0.848	2.65	C	EL	31.542	0.929	4.24	C	I	31.542	0.80	0.848	1.25	C	EL	31.542	
		SNS6A	39.950	--	1.157	46.233	1.4	0.848	2.44	C	EL	31.542	0.929	4.01	C	I	31.542	0.80	0.848	1.16	C	EL	31.542	
		SNS7B	42.000	--	1.102	46.297	1.4	0.848	2.32	C	EL	31.542	0.929	3.99	C	I	3.154	0.80	0.848	1.10	C	EL	31.542	
	TTST	TNAGRIT3	33.000	--	1.413	46.634	1.4	0.848	2.98	C	EL	31.542	0.929	4.65	C	I	31.542	0.80	0.848	1.41	C	EL	31.542	
		TNT4A	33.075	--	1.421	47.005	1.4	0.848	3.00	C	EL	31.542	0.929	4.38	C	I	31.542	0.80	0.848	1.42	C	EL	31.542	
		TNT6A	41.600	--	1.168	48.601	1.4	0.848	2.46	C	EL	31.542	0.929	4.28	C	I	3.154	0.80	0.848	1.17	C	EL	31.542	
		TNT7A	42.000	--	1.178	49.455	1.4	0.848	2.48	C	EL	31.542	0.929	4.16	C	I	3.154	0.80	0.848	1.18	C	EL	31.542	
		TNT7B	42.000	--	1.227	51.518	1.4	0.848	2.59	C	EL	31.542	0.929	3.88	C	I	31.542	0.80	0.848	1.23	C	EL	31.542	
		TNAGRIT4	43.000	--	1.161	49.906	1.4	0.848	2.45	C	EL	31.542	0.929	3.72	C	I	31.542	0.80	0.848	1.16	C	EL	31.542	
		TNAGT5A	45.000	--	1.091	49.112	1.4	0.848	2.30	C	EL	31.542	0.929	3.75	C	I	3.154	0.80	0.848	1.09	C	EL	31.542	
		TNAGT5B	45.000	3	1.076	48.403	1.4	0.848	2.27	C	EL	31.542	0.929	3.52	C	I	31.542	0.80	0.848	1.08	C	EL	31.542	

LOAD FACTORS:

DESIGN LOAD RATING FACTORS	LIMIT STATE	γ_{DC}	γ_{DW}
	STRENGTH I	1.25	1.50
	SERVICE III	1.00	1.00

NOTES:

MINIMUM RATING FACTORS ARE BASED ON THE STRENGTH I AND SERVICE III LIMIT STATES.

ALLOWABLE STRESSES FOR SERVICE III LIMIT STATE ARE AS REQUIRED FOR DESIGN.

COMMENTS:

1.
2.
3.
4.

(#) CONTROLLING LOAD RATING

(1) DESIGN LOAD RATING (HL-93)

(2) DESIGN LOAD RATING (HS-20)

(3) LEGAL LOAD RATING **

** SEE CHART FOR VEHICLE TYPE

GIRDER LOCATION

I - INTERIOR GIRDER
EL - EXTERIOR LEFT GIRDER
ER - EXTERIOR RIGHT GIRDER

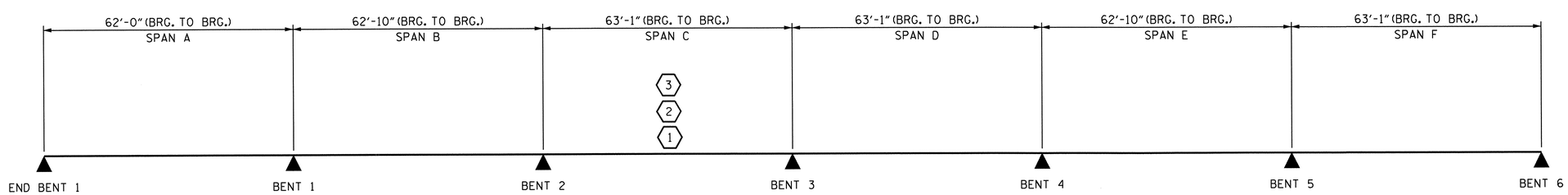

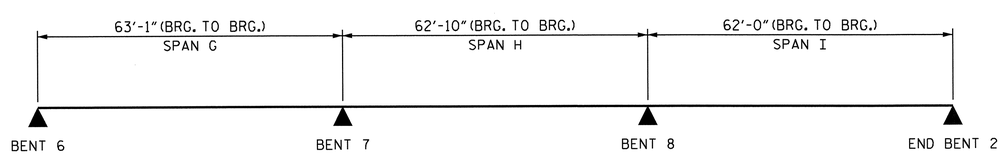

LRFR SUMMARY

PROJECT NO. R-3307
CARTERET COUNTY
STATION: 16+05.50 -Y2-

STATE OF NORTH CAROLINA
DEPARTMENT OF TRANSPORTATION
RALEIGH

STANDARD
LRFR SUMMARY FOR PRESTRESSED CONCRETE GIRDERS
(NON-INTERSTATE TRAFFIC)

NORTH CAROLINA PROFESSIONAL SEAL 14855 ENGINEER DOUGLAS R. CALHOUN
10-22-13

REVISIONS								SHEET NO.
NO.	BY:	DATE:	NO.	BY:	DATE:			S-287
1			3					TOTAL SHEETS
2			4					333

ASSEMBLED BY : A. PATEL DATE : 05/2013
CHECKED BY : D. G. ELY DATE : 09/2013
DESIGN ENGINEER OF RECORD : A. SORSENGINH DATE : 09/2013

DRAWN BY : MAA 1/08
CHECKED BY : GM/DI 2/08
REV. 11/12/08R MAA/GM

10-SEP-2013 16:09
R:\Structures\Plans\SUPERSTRUCTURE\Microstation\R-3307_SD_LRFR.dgn
dely

NOTES:

LONGITUDINAL STEEL MAY BE SHIFTED SLIGHTLY, AS NECESSARY, TO AVOID INTERFERENCE WITH STIRRUPS IN PRESTRESSED CONCRETE GIRDERS.

PREVIOUSLY CAST CONCRETE IN A CONTINUOUS UNIT SHALL HAVE ATTAINED A MINIMUM COMPRESSIVE STRENGTH OF 3,000 PSI BEFORE ADDITIONAL CONCRETE IS CAST IN THE UNIT.

SIDEWALK, CLASSIC CONCRETE BRIDGE RAIL, AND CONCRETE ISLAND IN A CONTINUOUS UNIT SHALL NOT BE CAST UNTIL ALL SLAB CONCRETE IN THE UNIT HAS BEEN CAST AND HAS REACHED A MINIMUM COMPRESSIVE STRENGTH OF 3,000 PSI.

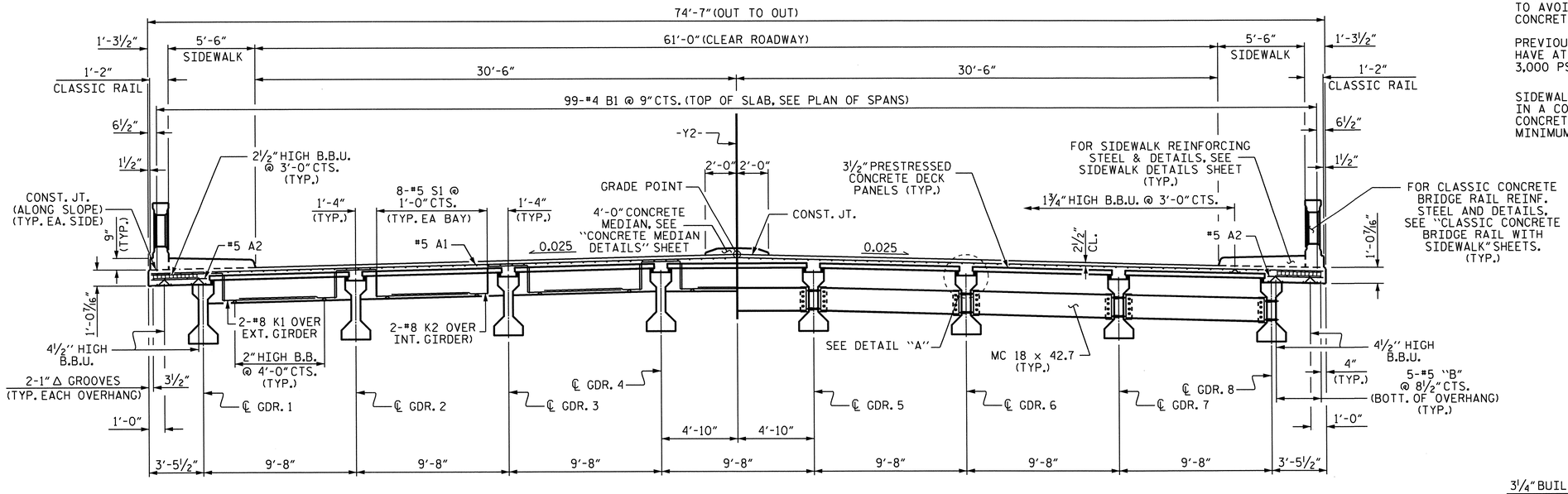

HALF TYPICAL SECTION
SHOWING END BENT 1 AND 2 DIAPHRAGMS

TYPICAL SECTION

HALF TYPICAL SECTION
SHOWING INTERMEDIATE STEEL DIAPHRAGMS

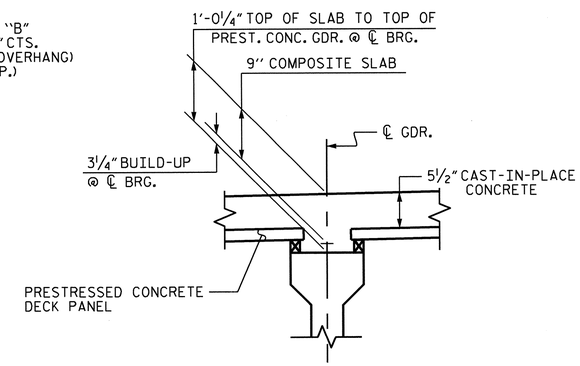

DETAIL "A"

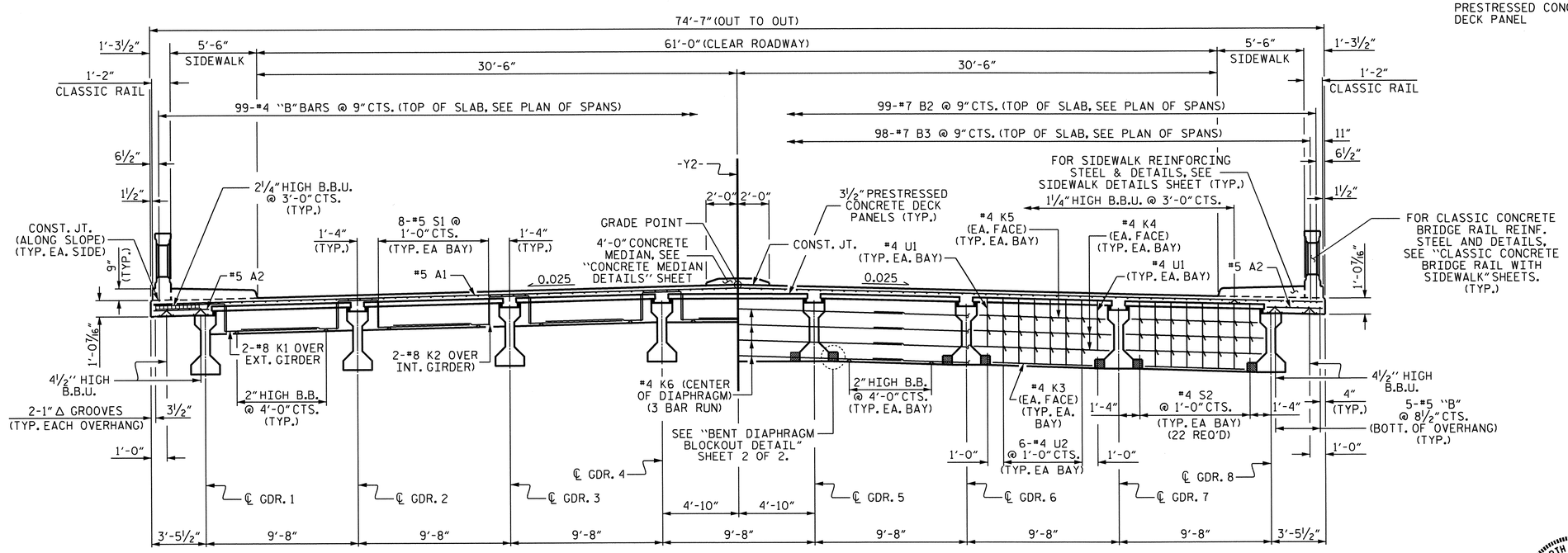

HALF TYPICAL SECTION
SHOWING BENT DIAPHRAGMS FOR BENTS 3 & 6

TYPICAL SECTION

HALF TYPICAL SECTION
SHOWING BENT DIAPHRAGMS FOR BENTS 1, 2, 4, 5, 7, & 8

PROJECT NO. R-3307
CARTERET COUNTY
STATION: 16+05.50 -Y2-

SHEET 1 OF 2

STATE OF NORTH CAROLINA
DEPARTMENT OF TRANSPORTATION
RALEIGH

SUPERSTRUCTURE
TYPICAL SECTION

NORTH CAROLINA PROFESSIONAL SEAL 14855 ENGINEER DOUGLAS R. CALHOUN
10-22-13

REVISIONS						SHEET NO.
NO.	BY:	DATE:	NO.	BY:	DATE:	S-288
1			3			TOTAL SHEETS
2			4			333

DRAWN BY : A. SORSENGINH/J.W. DATE : 11/18/2011
CHECKED BY : D.G. ELY DATE : 1/2012
DESIGN ENGINEER OF RECORD : D. R. CALHOUN DATE : 9/2013

21-OCT-2013 15:33
R:\Structures\Plans\SUPERSTRUCTURE\Microstation\R-3307_SD_TS.dgn
dely

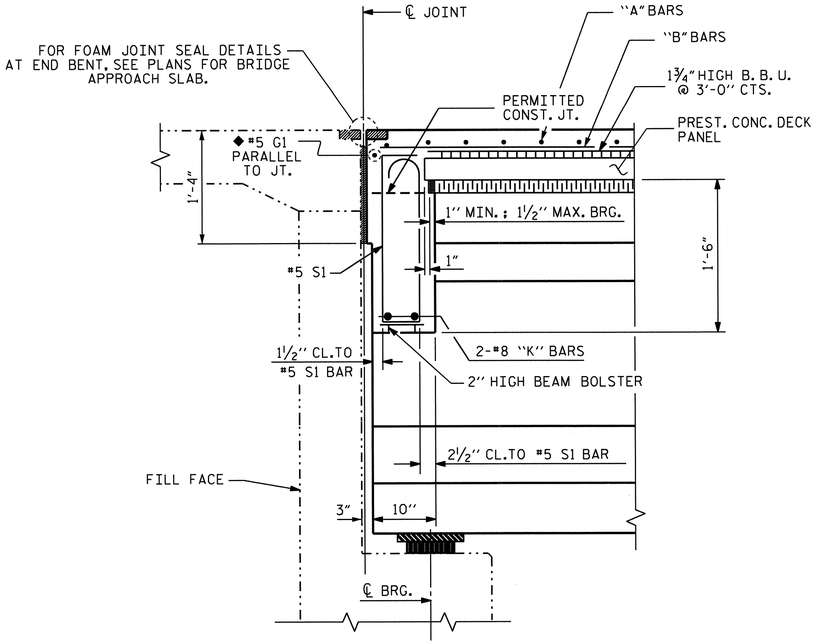

SECTION THRU END BENT DIAPHRAGM

◆ #5G BAR MAY BE SHIFTED SLIGHTLY, AS NECESSARY, TO CLEAR REINFORCING STEEL AND STIRRUPS.

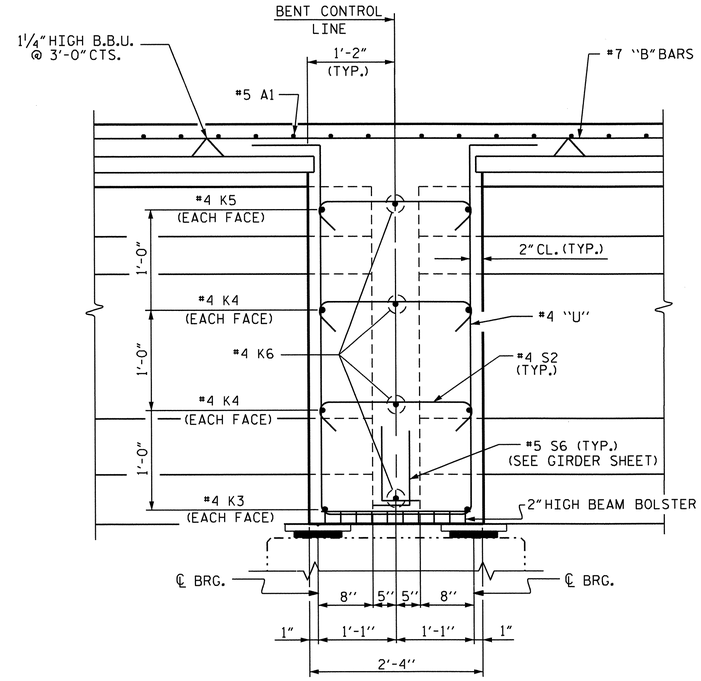

SECTION THRU BENT DIAPHRAGM

(BENTS 1, 2, 4, 5, 7 & 8)

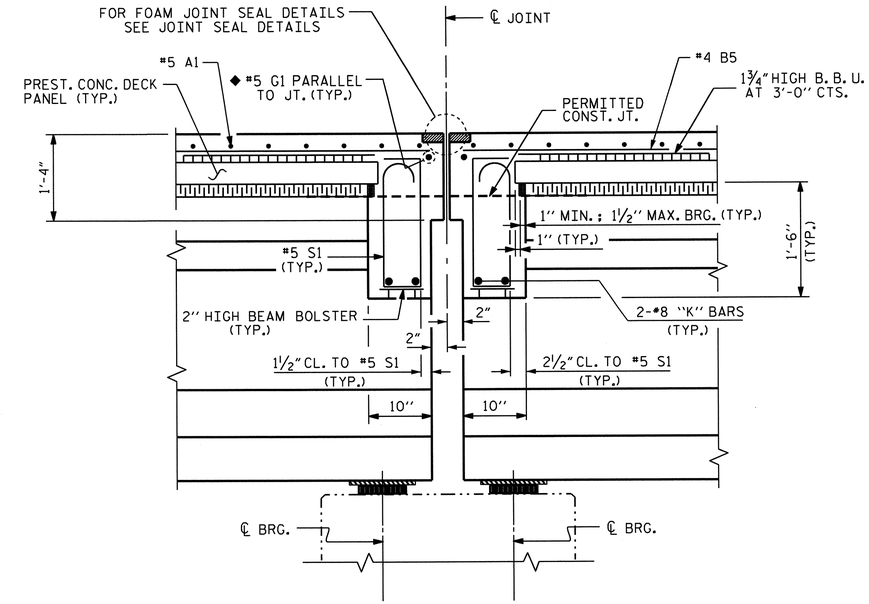

SECTION THRU BENT DIAPHRAGM

(BENTS 3, & 6)

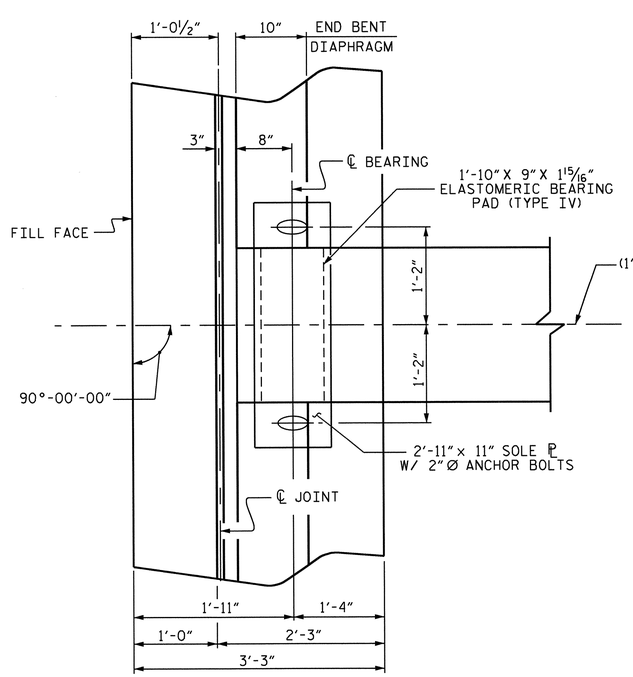

PLAN OF END BENT DIAPHRAGM

ELASTOMERIC CONCRETE	
BENT NO.	ELASTOMERIC CONCRETE * (CU. FT.)
3	10.5
6	10.5
TOTAL	21.0

* BASED ON THE MINIMUM BLOCKOUT SHOWN.

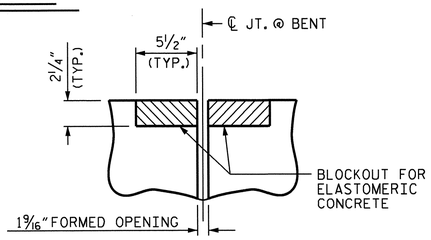

SECTION C-C

FOAM JOINT SEAL
(PRE-SAWED ELASTOMERIC CONCRETE DIMENSIONS)

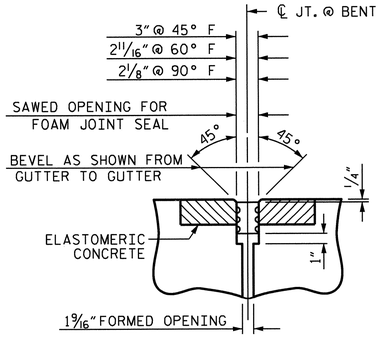

SECTION C-C

FOAM JOINT SEAL
(EXPANSION)

FOAM JOINT SEAL DETAILS

(@ BENTS 3, & 6)

FOR FOAM JOINT SEALS, SEE SPECIAL PROVISIONS.

THE NOMINAL UNCOMPRESSED SEAL WIDTH OF THE FOAM JOINT SEAL SHALL BE 3 7/16".

FOR ELASTOMERIC CONCRETE, SEE SPECIAL PROVISIONS.

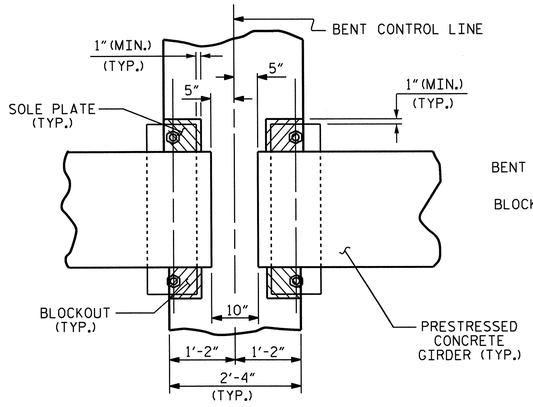

PLAN

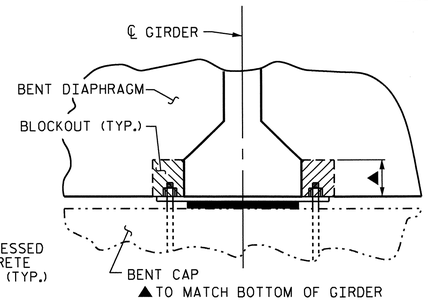

SECTION

BENT DIAPHRAGM BLOCKOUT DETAIL

(BENTS 1, 2, 4, 5, 7 & 8)

PROJECT NO. R-3307
CARTERET COUNTY
STATION: 16+05.50 -Y2-

SHEET 2 OF 2

STATE OF NORTH CAROLINA
DEPARTMENT OF TRANSPORTATION
RALEIGH

SUPERSTRUCTURE
TYPICAL SECTION
DETAILS

NORTH CAROLINA PROFESSIONAL SEAL 14855 ENGINEER DOUGLAS R. CALHOUN
10-22-13

REVISIONS								SHEET NO.
NO.	BY:	DATE:	NO.	BY:	DATE:			S-287
1			3					TOTAL SHEETS
2			4					333

DRAWN BY : A. SORSENGINH/J.W. DATE : 11/21/11
CHECKED BY : D.G. ELY DATE : 1/2012
DESIGN ENGINEER OF RECORD : D. R. CALHOUN DATE : 9/2013

10-SEP-2013 16:08
R:\Structures\Plans\SUPERSTRUCTURE\Microstation\R-3307_SD_TS.dgn
dely

DECK PANEL SUPPORTS

THE CONTRACTOR SHALL PROVIDE THE DECK PANEL SUPPORT SYSTEM SHOWN OR HE MAY SUBMIT A DECK PANEL SUPPORT SYSTEM OF HIS OWN DESIGN TO THE ENGINEER FOR APPROVAL.

POLYSTYRENE SUPPORT SYSTEM

1. ALL POLYSTYRENE SHALL BE DOW STYROFOAM 60 HIGH-LOAD, UC INDUSTRIES FOAMULAR 600 OR APPROVED EQUAL.
2. THE POLYSTYRENE SUPPORT SYSTEM SHALL CONSIST OF ONE LAYER WITH A MINIMUM WIDTH OF 1½" AND A MAXIMUM WIDTH OF 2". THE POLYSTYRENE SHALL HAVE ½" X ½" WIDE SLOTS OR ½" DIAMETER HOLES AT 4'-0" CENTERS STAGGERED ALONG THE TOP AND BOTTOM.
3. THE POLYSTYRENE MAY BE CUT AND PLACED ON EDGE AS NECESSARY TO MATCH THE REQUIRED BUILDUP PROFILE ALONG THE GIRDER.
4. ADHESIVE, AS APPROVED BY THE ENGINEER, SHALL BE APPLIED TO THE TOP OF THE GIRDER IN A CONTINUOUS BEAD AND IN SUFFICIENT AMOUNT TO PREVENT THE POLYSTYRENE FROM BLOWING OUT AND TO PREVENT GAPS FROM FORMING BETWEEN THE POLYSTYRENE AND THE GIRDER. PRIOR TO PLACEMENT OF THE DECK PANELS, THE ADHESIVE SHALL ALSO BE APPLIED TO THE TOP OF THE POLYSTYRENE.
5. CONCRETE-FILLED BUCKETS, STACKS OF DECK PANELS, BUNDLED REINFORCING BARS OR OTHER HEAVY CONCENTRATED LOADS WILL NOT BE PERMITTED ON THE DECK PANEL ONCE THE PANEL HAS BEEN PLACED ON THE POLYSTYRENE SUPPORT SYSTEM.

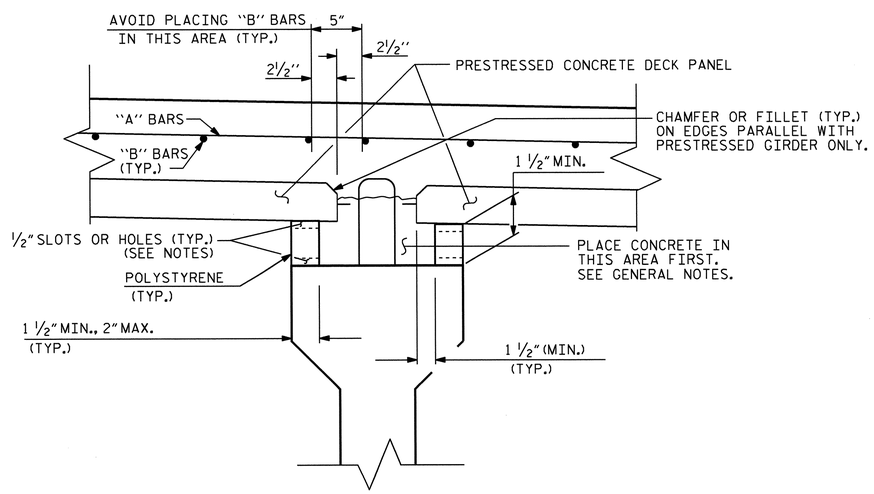

POLYSTYRENE SUPPORT

GENERAL NOTES

1. THE DESIGN COMPRESSIVE STRENGTH (f'c) FOR THE CONCRETE IN PRESTRESSED PANELS SHALL BE 5000 PSI MINIMUM AT 28 DAYS. COMPRESSIVE STRENGTH OF CONCRETE AT TIME OF RELEASE OF STRANDS SHALL BE 4000 PSI MINIMUM.
2. THE PRECAST PRESTRESSED PANEL SHALL HAVE A THICKNESS OF 3½" WITH THE PRESTRESSED STRANDS LOCATED AT HALF THE DEPTH OF THE PANEL.
3. FOR SKEWED SPANS, TRAPEZOIDAL CLOSURE PANELS SHALL HAVE A MINIMUM WIDTH OF 2 FEET ON THE SHORT SIDE.
4. ALL PRESTRESSING STRANDS SHALL EXTEND 2" BEYOND THE PANEL EDGES.
5. SHEAR REINFORCING OF 0.60 SQ. INCHES OF REINFORCING STEEL PER 10 SQ. FEET OF PANEL SURFACE SHALL BE PROVIDED IN THE PANEL TO ENSURE COMPOSITE ACTION BETWEEN PANEL AND THE CAST-IN-PLACE CONCRETE. SHEAR REINFORCEMENT SHALL BE MADE OF WELDED WIRE HAVING A MINIMUM YIELD STRENGTH OF 60 KSI.
6. SHEAR REINFORCEMENT AND LIFTING DEVICES SHALL BE CONSTRUCTED AND PLACED SO AS TO AVOID ANY INTERFERENCE WITH REINFORCING STEEL IN THE CAST-IN-PLACE DECK SLAB AND TO ALLOW FOR PROPER CONCRETE CONSOLIDATION IN THE DECK PANEL.
7. SHIFT LONGITUDINAL "B" BARS AS NECESSARY TO OBTAIN A MINIMUM CLEAR DISTANCE OF 2½" TO THE RIGHT OR LEFT OF THE EDGE OF THE DECK PANEL. IF, IN SHIFTING TO OBTAIN THIS CLEARANCE, THE "B" BAR INTERFERES WITH THE STIRRUP IN THE TOP OF THE GIRDER THE "B" BAR MAY BE ELIMINATED.
8. WHEN CASTING THE DECK, PLACE CONCRETE FIRST OVER THE GIRDERS IN CONTINUOUS STRIPS A MINIMUM OF THREE PANEL LENGTHS AHEAD OF THE REST OF THE CONCRETE. CAREFULLY VIBRATE THE CONCRETE OVER THE GIRDERS SO THAT CONCRETE COMPLETELY FILLS THE AREA UNDER THE DECK PANEL OVERHANGS. THEN PLACE AND VIBRATE THE REMAINING DECK CONCRETE.
9. PRECAST PANELS SHALL BE DESIGNED FOR AN ALLOWABLE TENSILE STRESS OF 0 PSI IN THE PRECOMPRESSED TENSILE ZONE UNDER ALL LOADING CONDITIONS.
10. PRESTRESSED CONCRETE PRECAST DECK PANELS SHALL CONTAIN CALCIUM NITRITE CORROSION INHIBITOR. SEE STANDARD SPECIFICATIONS FOR CALCIUM NITRITE CORROSION INHIBITOR.

PROJECT NO. R-3307
CARTERET COUNTY
STATION: 16+05.50 -Y2-

STATE OF NORTH CAROLINA
DEPARTMENT OF TRANSPORTATION
RALEIGH

SUPERSTRUCTURE
PRECAST PRESTRESSED CONCRETE DECK PANELS

NORTH CAROLINA PROFESSIONAL SEAL 14855 ENGINEER DOUGLAS R. CALHOUN
10-22-13

REVISIONS							SHEET NO.
NO.	BY:	DATE:	NO.	BY:	DATE:		S-290
1			3				TOTAL SHEETS
2			4				333

ASSEMBLED BY : A. SORSENGINH		DATE :	11/22/11
CHECKED BY : D.G. ELY		DATE :	1/2012
DRAWN BY : ELR 1/92	REV. 5/7/03R		RWW/JTE
CHECKED BY : GRP 4/92	REV. 5/1/06R		TLA/GM
	REV. 10/1/11		MAA/GM

STD. NO. PDP1

10-SEP-2013 16:08
R:\Structures\Plans\SUPERSTRUCTURE\Microstation\R-3307_SD_DP.dgn
dely

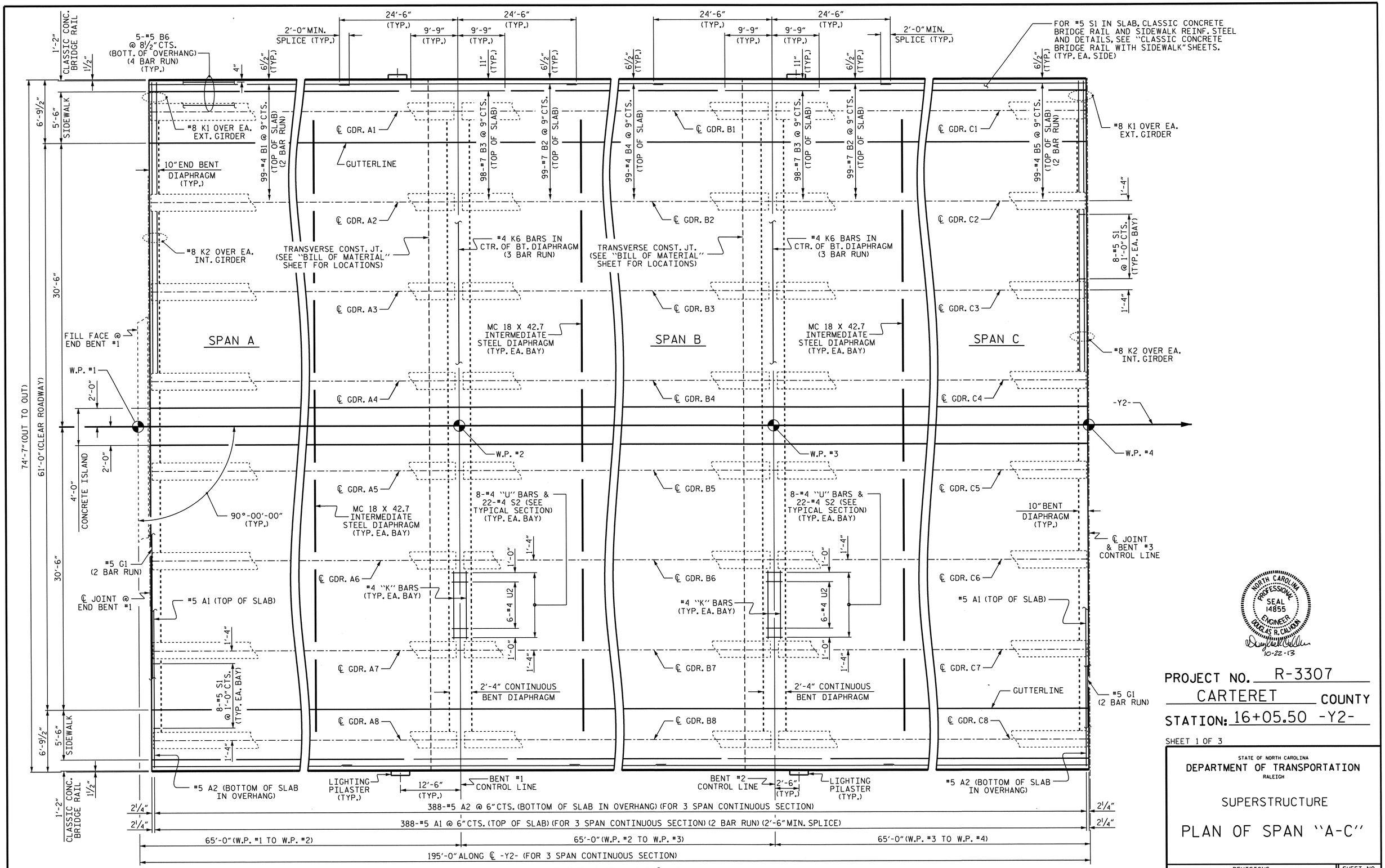

PLAN OF SPAN "A-C"

NORTH CAROLINA PROFESSIONAL SEAL 14855 ENGINEER DOUGLAS R. CALHOUN
10-22-13

PROJECT NO. R-3307
CARTERET COUNTY
STATION: 16+05.50 -Y2-

SHEET 1 OF 3

STATE OF NORTH CAROLINA
DEPARTMENT OF TRANSPORTATION
RALEIGH

SUPERSTRUCTURE

PLAN OF SPAN "A-C"

REVISIONS						SHEET NO.
NO.	BY:	DATE:	NO.	BY:	DATE:	S-291
1			3			TOTAL SHEETS
2			4			333

DRAWN BY : D. G. ELY DATE : 1/12/12
CHECKED BY : A. SORSENGINH DATE : 2/2012
DESIGN ENGINEER OF RECORD : D. R. CALHOUN DATE : 9/2013

21-OCT-2013 15:32
R:\Structures\Plans\SUPERSTRUCTURE\Microstation\R-3307_SD_S*.dgn
dely

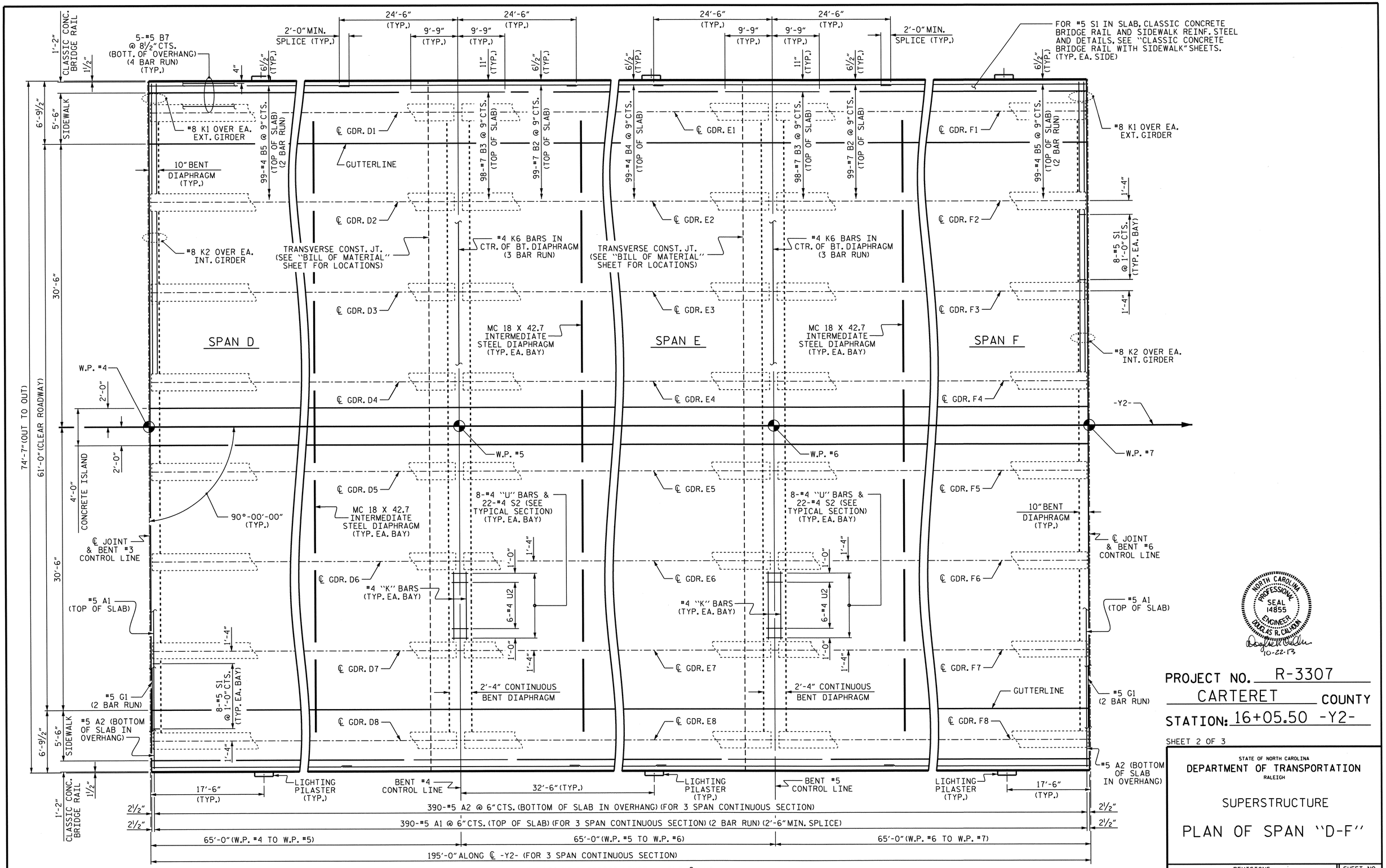

PLAN OF SPAN "D-F"

NORTH CAROLINA PROFESSIONAL SEAL 14855 ENGINEER DOUGLAS R. CALHOUN
10-22-13

PROJECT NO. R-3307
CARTERET COUNTY
STATION: 16+05.50 -Y2-

SHEET 2 OF 3

STATE OF NORTH CAROLINA
DEPARTMENT OF TRANSPORTATION
RALEIGH

SUPERSTRUCTURE

PLAN OF SPAN "D-F"

REVISIONS							SHEET NO.
NO.	BY:	DATE:	NO.	BY:	DATE:		S-292
1			3				TOTAL SHEETS
2			4				333

DRAWN BY : D. G. ELY DATE : 1/12/12
CHECKED BY : A. SORSENGINH DATE : 2/2012
DESIGN ENGINEER OF RECORD : D. R. CALHOUN DATE : 9/2013

21-OCT-2013 15:32
R:\Structures\Plans\SUPERSTRUCTURE\Microstation\R-3307_SD_S*.dgn
dely

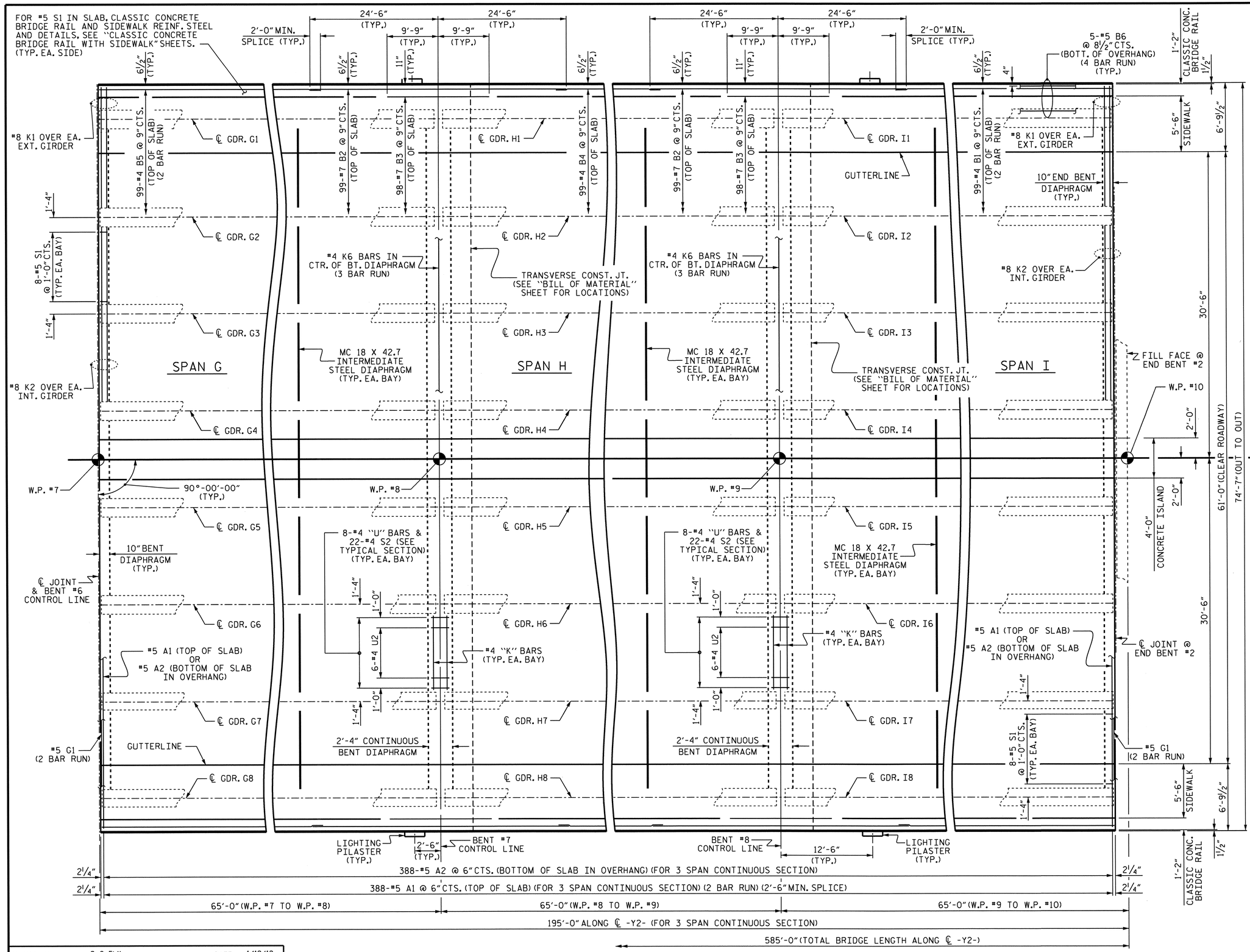

PLAN OF SPAN "G-I"

NORTH CAROLINA PROFESSIONAL SEAL 14855 ENGINEER DOUGLAS R. CALHOUN
10-22-13

PROJECT NO. R-3307
CARTERET COUNTY
STATION: 16+05.50 -Y2-

SHEET 3 OF 3

STATE OF NORTH CAROLINA
DEPARTMENT OF TRANSPORTATION
RALEIGH

SUPERSTRUCTURE

PLAN OF SPAN "G-I"

REVISIONS							
NO.	BY:	DATE:	NO.	BY:	DATE:	SHEET NO.	S-293
1			3			TOTAL SHEETS	333
2			4				

DRAWN BY : D. G. ELY DATE : 1/12/12
CHECKED BY : A. SORSENGINH DATE : 2/2012
DESIGN ENGINEER OF RECORD : D. R. CALHOUN DATE : 9/2013

21-OCT-2013 15:32
R:\Structures\Plans\SUPERSTRUCTURE\Microstation\R-3307_SD_S*.dgn
dely

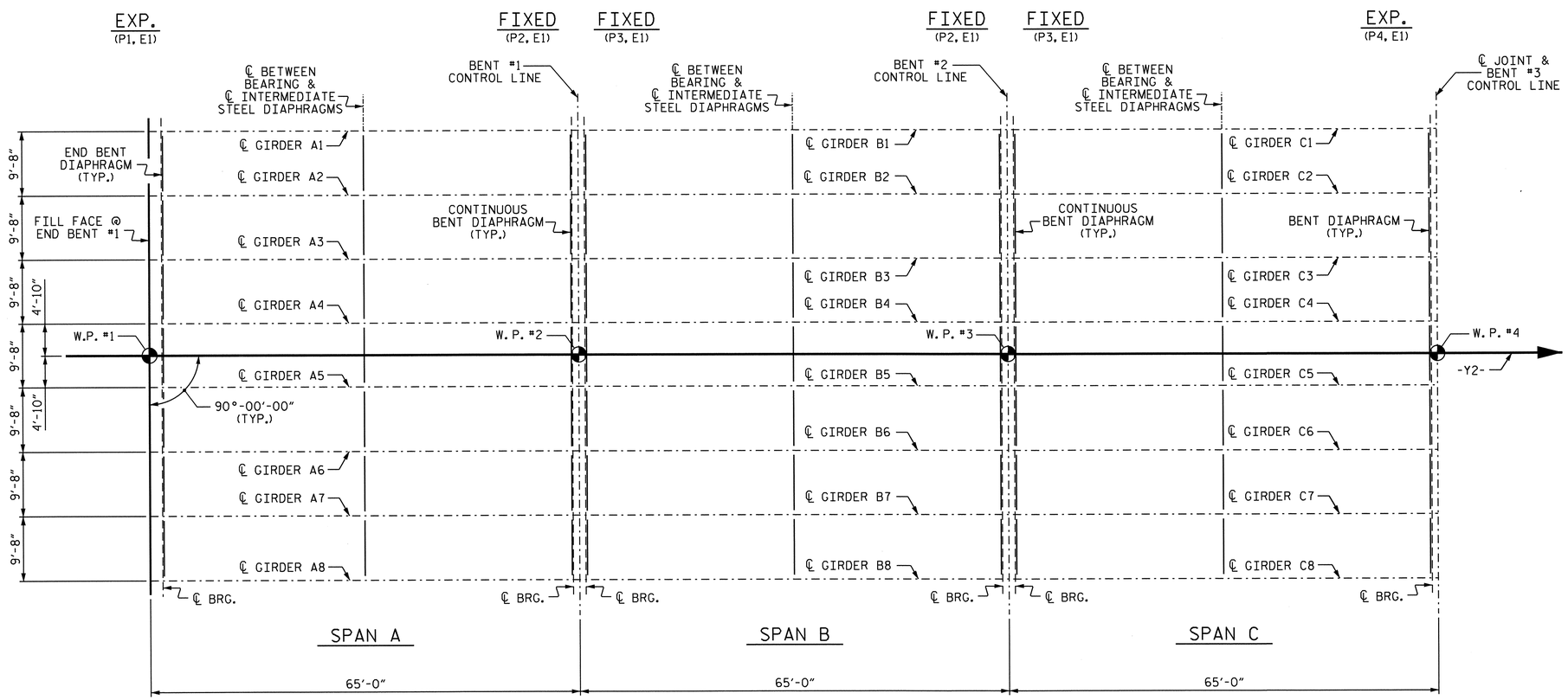

FRAMING PLAN

PROJECT NO. R-3307

CARTERET COUNTY

STATION: 16+05.50 -Y2-

SHEET 1 OF 3

STATE OF NORTH CAROLINA
DEPARTMENT OF TRANSPORTATION
RALEIGH

SUPERSTRUCTURE
FRAMING PLAN
SPANS A-C

NORTH CAROLINA PROFESSIONAL SEAL 14855 ENGINEER DOUGLAS R. CALHOUN
10-22-13

REVISIONS						SHEET NO.
NO.	BY:	DATE:	NO.	BY:	DATE:	S-294
1			3			TOTAL SHEETS
2			4			333

NCBDS

DRAWN BY : A. SORSENGINH DATE : 11/22/11
CHECKED BY : D.G. ELY DATE : 2/2012
DESIGN ENGINEER OF RECORD : D. R. CALHOUN DATE : 9/2013

21-OCT-2013 15:30
R:\Structures\Plans\SUPERSTRUCTURE\Microstation\R-3307_SD_FP.dgn
dely

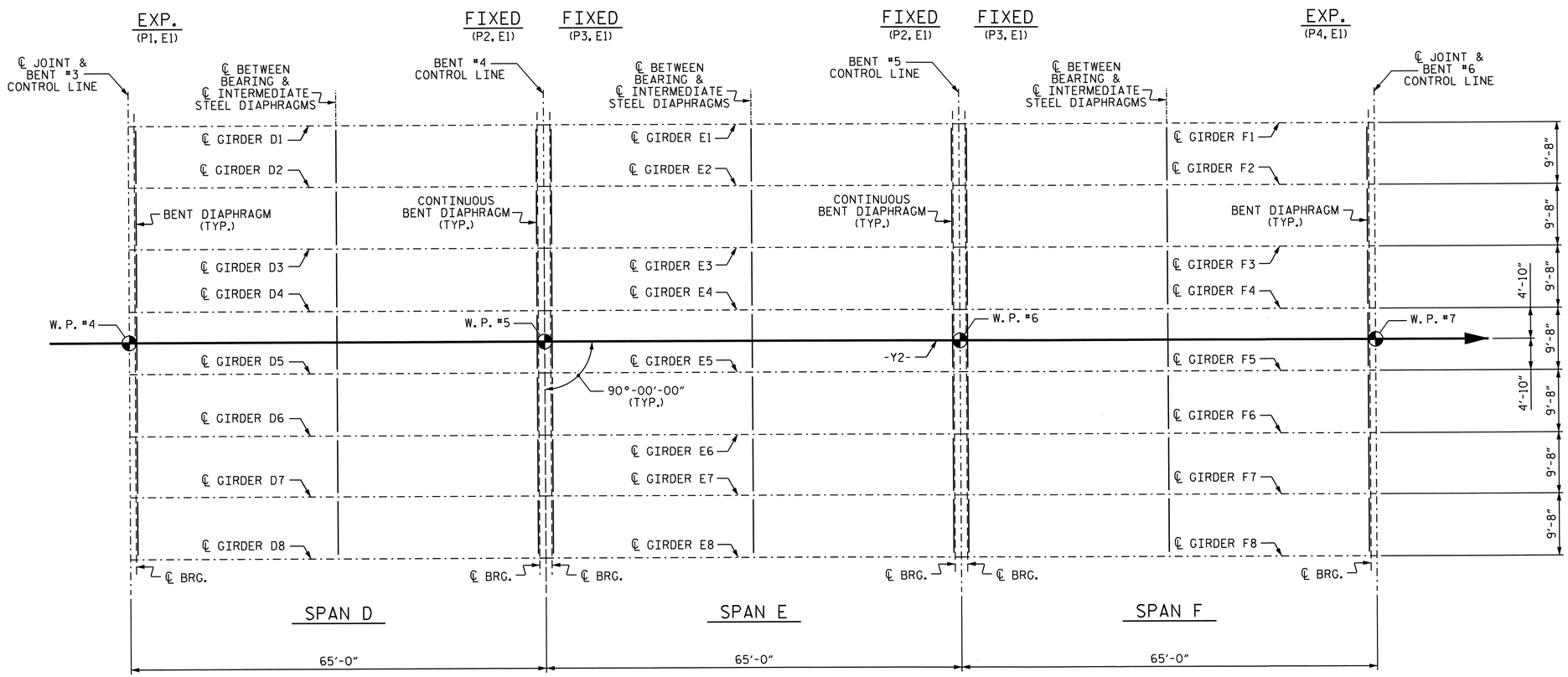

FRAMING PLAN

PROJECT NO. R-3307

CARTERET COUNTY

STATION: 16+05.50 -Y2-

SHEET 2 OF 3

STATE OF NORTH CAROLINA
DEPARTMENT OF TRANSPORTATION
RALEIGH

SUPERSTRUCTURE
FRAMING PLAN
SPANS D-F

NORTH CAROLINA PROFESSIONAL SEAL 14855 ENGINEER DOUGLAS R. CALHOUN
10-22-13

REVISIONS						SHEET NO.
NO.	BY:	DATE:	NO.	BY:	DATE:	S-295
1			3			TOTAL SHEETS
2			4			333

DRAWN BY : A. SORSENGINH DATE : 11/22/11
CHECKED BY : D.G. ELY DATE : 2/2012
DESIGN ENGINEER OF RECORD : D. R. CALHOUN DATE : 9/2013

21-OCT-2013 15:30
R:\Structures\Plans\SUPERSTRUCTURE\Microstation\R-3307_SD_FP.dgn
dely

NCBDS

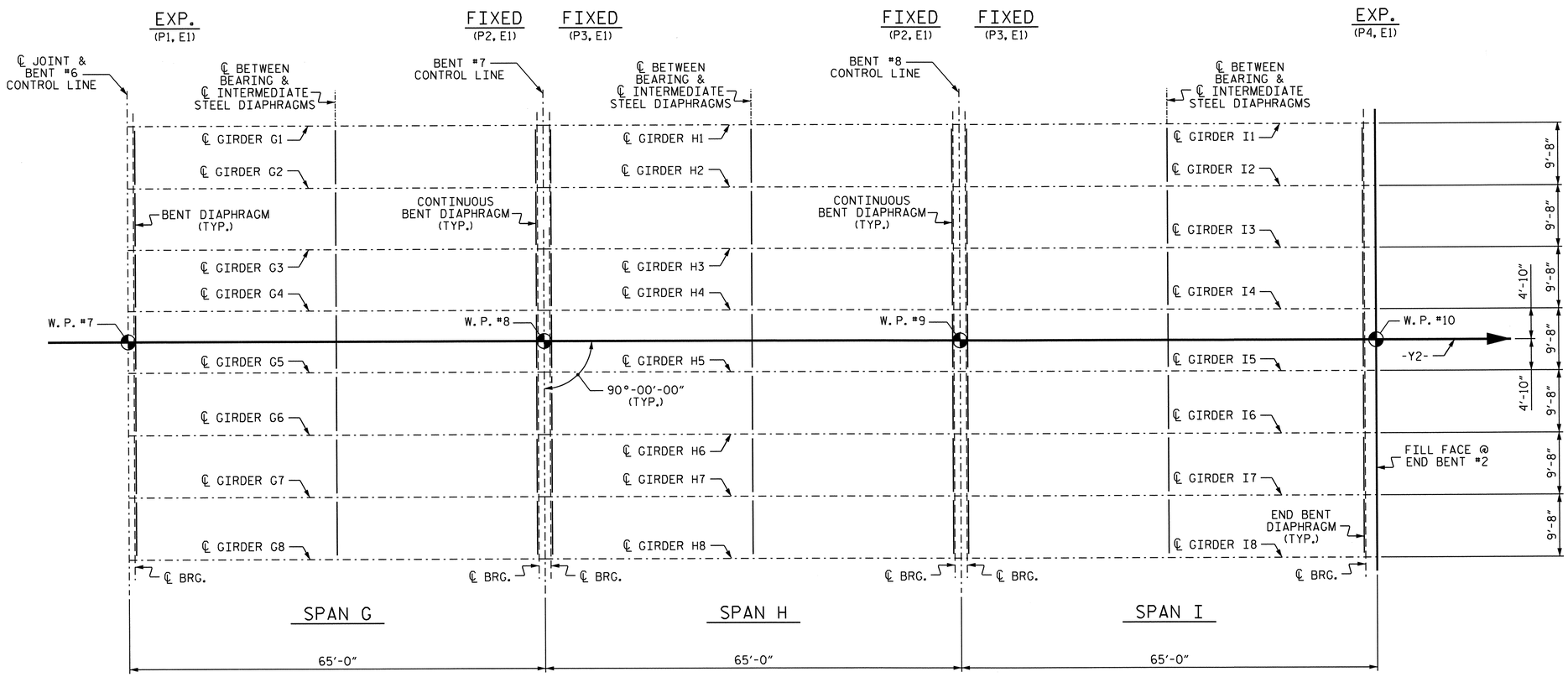

FRAMING PLAN

PROJECT NO. R-3307

CARTERET COUNTY

STATION: 16+05.50 -Y2-

SHEET 3 OF 3

STATE OF NORTH CAROLINA
DEPARTMENT OF TRANSPORTATION
RALEIGH

SUPERSTRUCTURE
FRAMING PLAN
SPANS G-I

NORTH CAROLINA PROFESSIONAL SEAL 14855 ENGINEER DOUGLAS R. CALHOUN
10-22-13

REVISIONS						SHEET NO.
NO.	BY:	DATE:	NO.	BY:	DATE:	S-29C
1			3			TOTAL SHEETS
2			4			333

DRAWN BY : A. SORSENGINH DATE : 11/22/11
CHECKED BY : D.G. ELY DATE : 2/2012
DESIGN ENGINEER OF RECORD : D. R. CALHOUN DATE : 9/2013

21-OCT-2013 15:30
R:\Structures\Plans\SUPERSTRUCTURE\Microstation\R-3307_SD_FP.dgn
dely

NCDOS

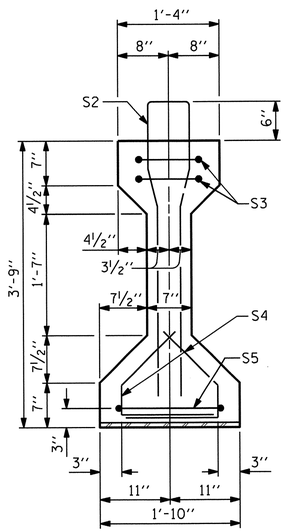

SECTION A-A

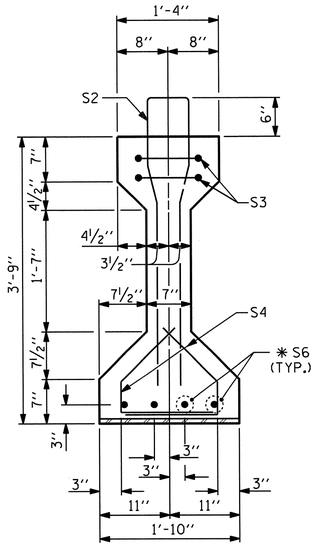

SECTION B-B

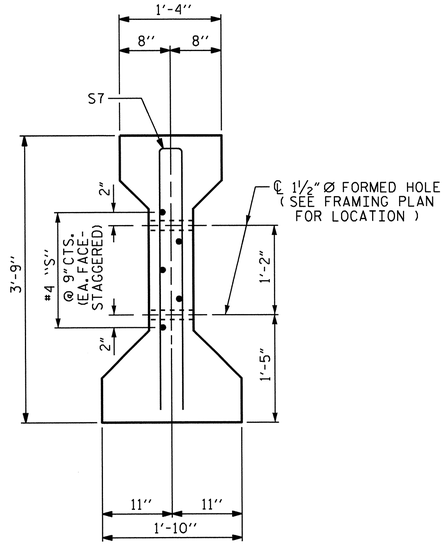

SECTION C-C

(S1 BARS NOT SHOWN)

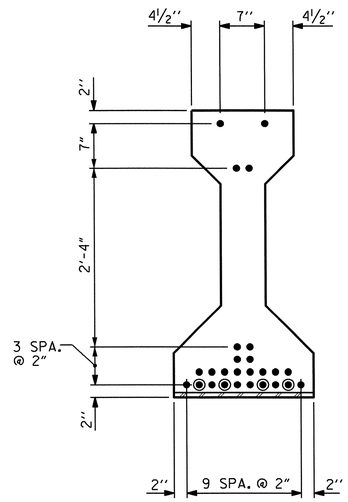

AT END OF GIRDER

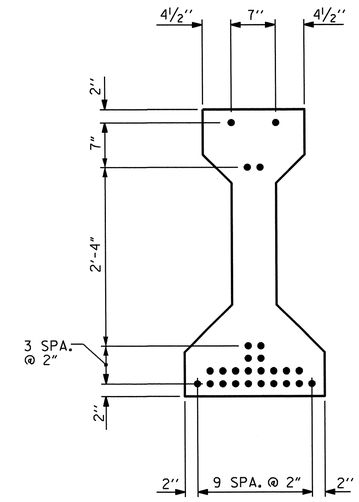

AT ℄ OF GIRDER

0.6" Ø LOW RELAXATION STRAND LAYOUT

DEBONDING LEGEND

- ● FULLY BONDED STRANDS
- ⊙ STRANDS DEBONDED FOR 4'-0" FROM END OF GIRDER

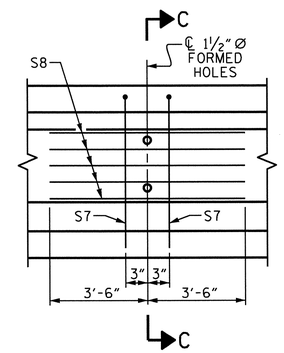

PARTIAL ELEVATION

SHOWING INTERMEDIATE DIAPHRAGM REINFORCING STEEL

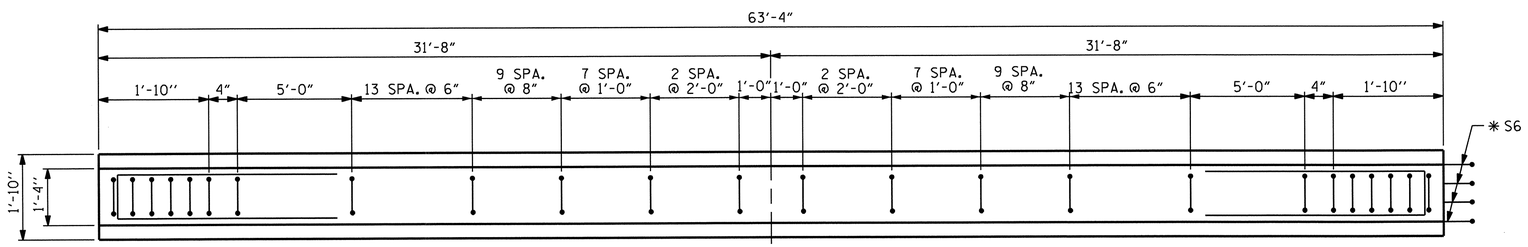

PLAN OF GIRDER

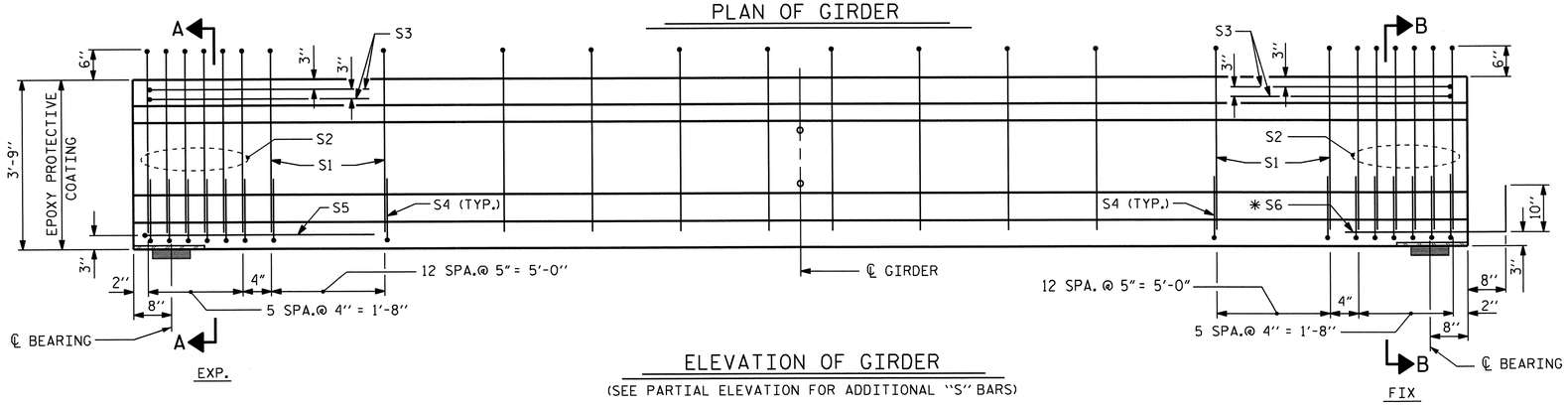

ELEVATION OF GIRDER

(SEE PARTIAL ELEVATION FOR ADDITIONAL "S" BARS)

0.6" Ø L. R. GRADE 270 STRANDS

AREA (SQUARE INCHES)	ULTIMATE STRENGTH (LBS. PER STRAND)	APPLIED PRESTRESS (LBS. PER STRAND)
0.217	58,600	43,950

REINFORCING STEEL FOR ONE GIRDER

BAR	NUMBER	SIZE	TYPE	LENGTH	WEIGHT
S1	88	#4	1	8'-6"	500
S2	12	#6	1	8'-6"	153
S3	4	#4	3	8'-8"	23
S4	76	#4	2	2'-9"	140
S5	1	#4	3	9'-6"	6
✱ S6	4	#5	STR	3'-8"	15
S7	2	#5	3	7'-2"	15
S8	5	#4	STR	7'-0"	23

✱ NOTE: S6 BARS SHALL BE BENT BEFORE SHIPMENT. HEAT BENDING SHALL NOT BE ALLOWED.

BAR TYPES

ALL BAR DIMENSIONS ARE OUT-TO-OUT

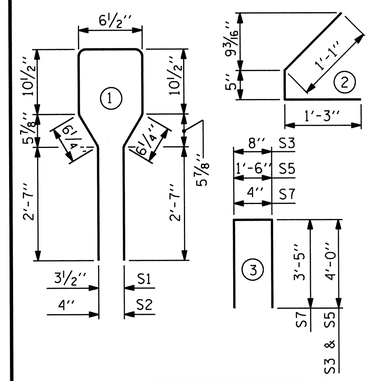

QUANTITIES FOR ONE GIRDER

	REINFORCING STEEL	8000 PSI CONCRETE	0.6" Ø L. R. STRANDS
	LB.	C.Y.	No.
SPANS A & I	875	9.1	26

GIRDERS REQUIRED

NUMBER	LENGTH	TOTAL LENGTH
16	63'-4"	1013.33'

PROJECT NO. R-3307

CARTERET COUNTY

STATION: 16+05.50 -Y2-

SHEET 1 OF 5

STATE OF NORTH CAROLINA
DEPARTMENT OF TRANSPORTATION
RALEIGH

AASHTO TYPE III
PRESTRESSED CONCRETE GIRDER
CONTINUOUS FOR LIVE LOAD
(SPANS A & I)

NORTH CAROLINA PROFESSIONAL SEAL 14855 ENGINEER DOUGLAS R. CALHOUN
10-22-13

REVISIONS							
NO.	BY:	DATE:	NO.	BY:	DATE:	SHEET NO.	S-297
1			3			TOTAL SHEETS	333
2			4				

ASSEMBLED BY : A. SORSENGINH/J.W		DATE :	11/22/11
CHECKED BY : D.G. ELY		DATE :	2/2012
DESIGN ENGINEER OF RECORD: D. R. CALHOUN		DATE :	9/2013
DRAWN BY : ELR 8/91	REV. 10/17/00R		RWW/LES
CHECKED BY : GRP 8/91	REV. 5/1/06R		TLA/GM
	REV. 10/1/11		MAA/GM

10-SEP-2013 16:04
R:\Structures\Plans\SUPERSTRUCTURE\Microstation\R-3307_SD_G*.dgn
dely

STD. NO. PCG5

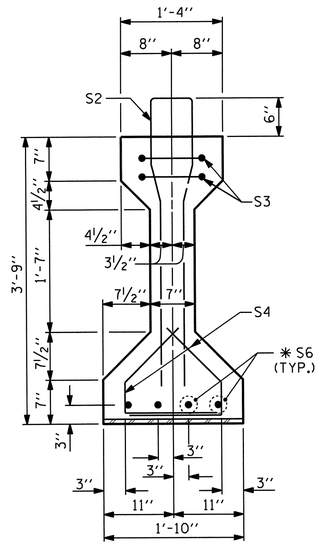

SECTION B-B

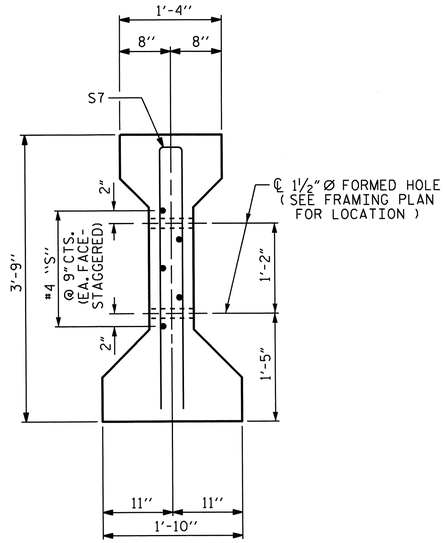

SECTION C-C

(S1 BARS NOT SHOWN)

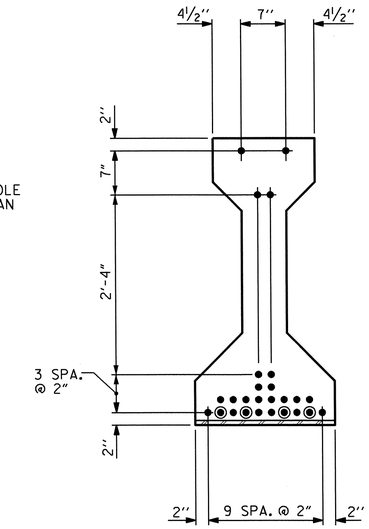

AT END OF GIRDER

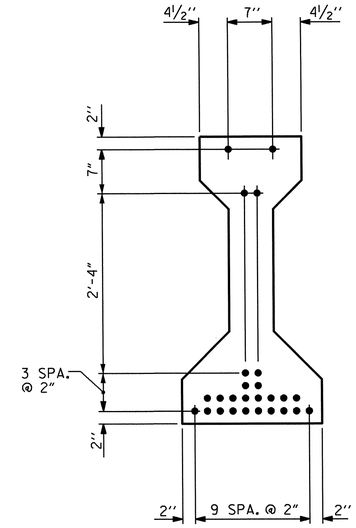

AT ℄ OF GIRDER

0.6" Ø LOW RELAXATION STRAND LAYOUT

DEBONDING LEGEND

- ● FULLY BONDED STRANDS
- ⊙ STRANDS DEBONDED FOR 4'-0" FROM END OF GIRDER

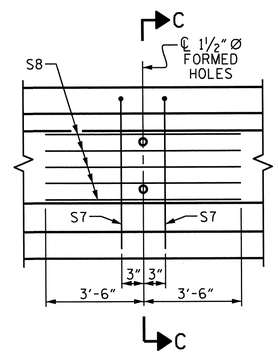

PARTIAL ELEVATION

SHOWING INTERMEDIATE DIAPHRAGM REINFORCING STEEL

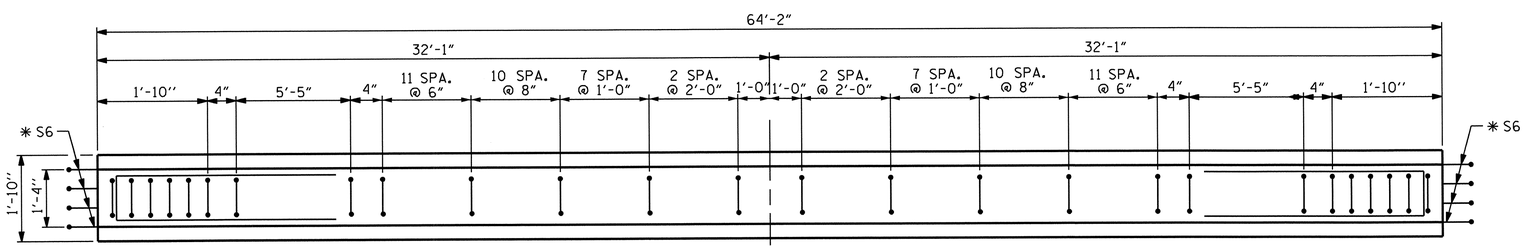

PLAN OF GIRDER

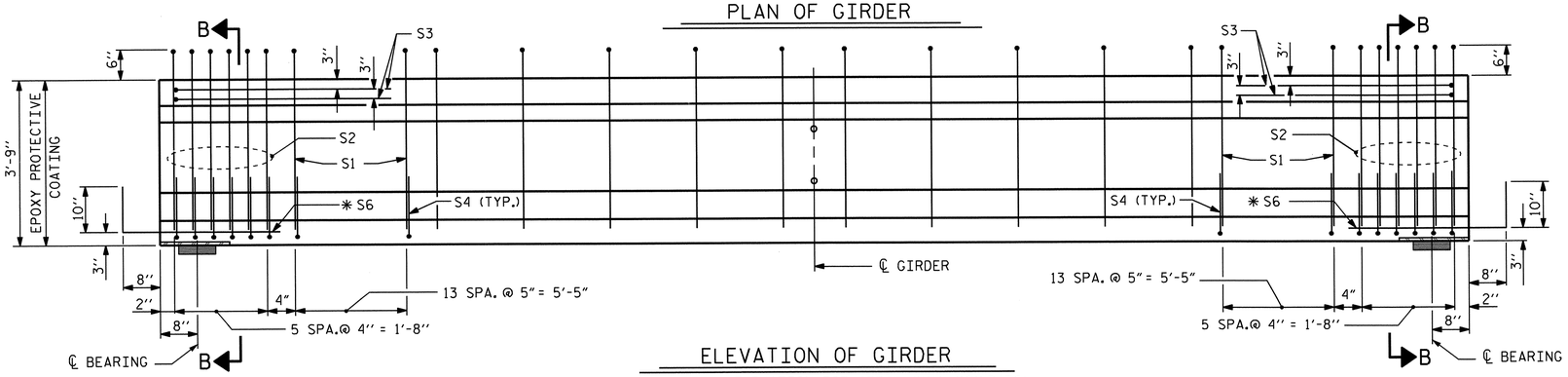

ELEVATION OF GIRDER

(SEE PARTIAL ELEVATION FOR ADDITIONAL "S" BARS)

0.6" Ø L. R. GRADE 270 STRANDS

AREA (SQUARE INCHES)	ULTIMATE STRENGTH (LBS. PER STRAND)	APPLIED PRESTRESS (LBS. PER STRAND)
0.217	58,600	43,950

REINFORCING STEEL FOR ONE GIRDER

BAR	NUMBER	SIZE	TYPE	LENGTH	WEIGHT
S1	90	#4	1	8'-6"	511
S2	12	#6	1	8'-6"	153
S3	4	#4	3	8'-8"	23
S4	80	#4	2	2'-9"	147
* S6	8	#5	STR	3'-8"	31
S7	2	#5	3	7'-2"	15
S8	5	#4	STR	7'-0"	23

* NOTE: S6 BARS SHALL BE BENT BEFORE SHIPMENT. HEAT BENDING SHALL NOT BE ALLOWED.

BAR TYPES

ALL BAR DIMENSIONS ARE OUT-TO-OUT

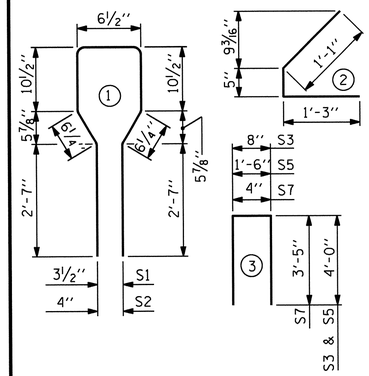

QUANTITIES FOR ONE GIRDER

SPANS B, E, & H	REINFORCING STEEL	8000 PSI CONCRETE	0.6" Ø L. R. STRANDS
	LB.	C.Y.	No.
	903	9.2	26

GIRDERS REQUIRED

NUMBER	LENGTH	TOTAL LENGTH
24	64'-2"	1540.00'

PROJECT NO. R-3307

CARTERET COUNTY

STATION: 16+05.50 -Y2-

SHEET 2 OF 5

STATE OF NORTH CAROLINA
DEPARTMENT OF TRANSPORTATION
RALEIGH

AASHTO TYPE III
PRESTRESSED CONCRETE GIRDER
CONTINUOUS FOR LIVE LOAD
(SPANS B, E & H)

NORTH CAROLINA PROFESSIONAL SEAL 14855 ENGINEER DOUGLAS R. CALHOUN
10-22-13

REVISIONS						SHEET NO.
NO.	BY:	DATE:	NO.	BY:	DATE:	S-298
1			3			TOTAL SHEETS
2			4			333

STD. NO. PCG5

ASSEMBLED BY : A. SORSENGINH/J.W DATE : 11/22/11
CHECKED BY : D.G. ELY DATE : 2/2012
DESIGN ENGINEER OF RECORD : D. R. CALHOUN DATE : 9/2013

DRAWN BY : ELR 8/91
CHECKED BY : GRP 8/91

REV. 10/17/00R RWW/LES
REV. 5/1/06R TLA/GM
REV. 10/1/11 MAA/GM

10-SEP-2013 16:03
R:\Structures\Plans\SUPERSTRUCTURE\Microstation\R-3307_SD_G*.dgn
dely

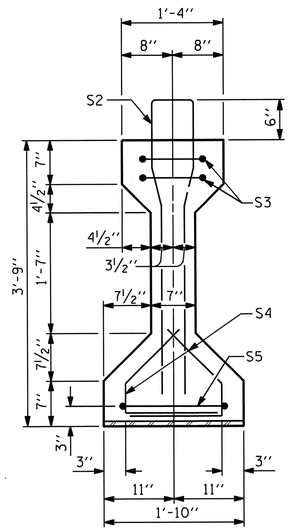

SECTION A-A

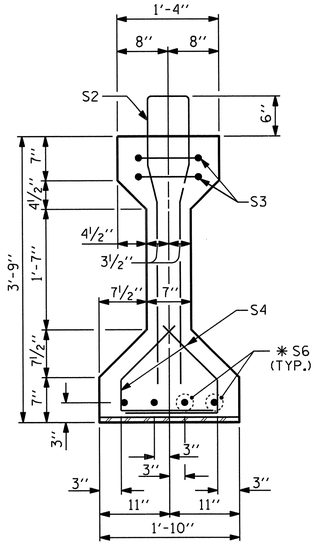

SECTION B-B

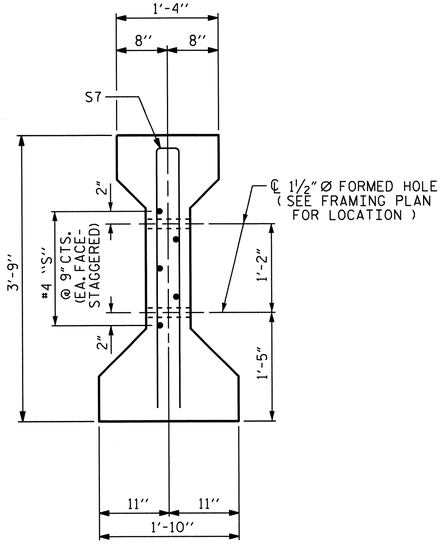

SECTION C-C

(S1 BARS NOT SHOWN)

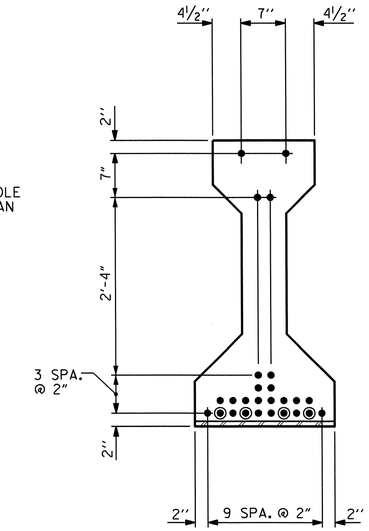

AT END OF GIRDER

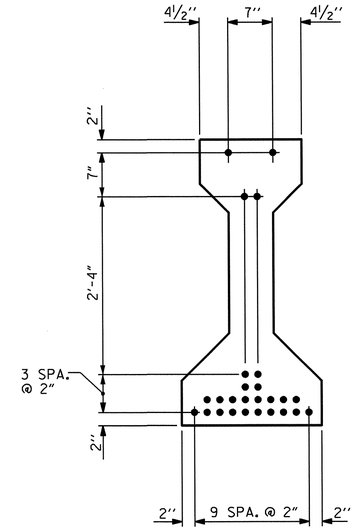

AT ℄ OF GIRDER

0.6" Ø LOW RELAXATION STRAND LAYOUT

DEBONDING LEGEND

- ● FULLY BONDED STRANDS
- ⊙ STRANDS DEBONDED FOR 4'-0" FROM END OF GIRDER

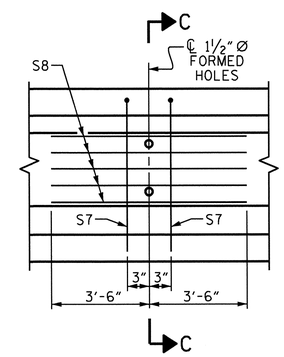

PARTIAL ELEVATION

SHOWING INTERMEDIATE DIAPHRAGM REINFORCING STEEL

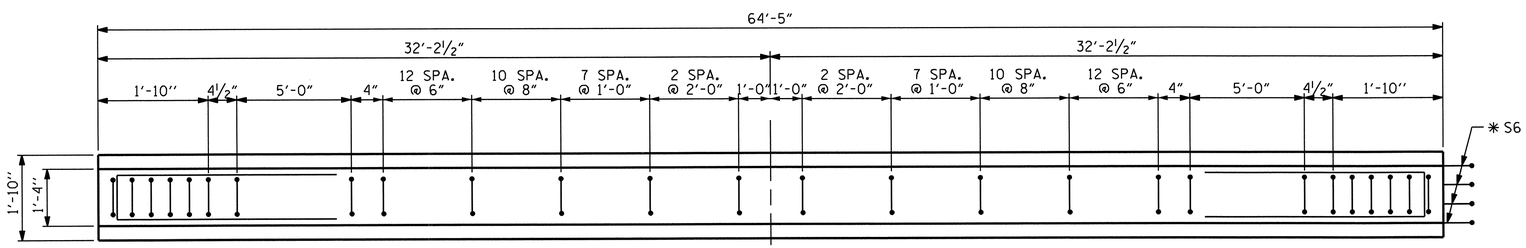

PLAN OF GIRDER

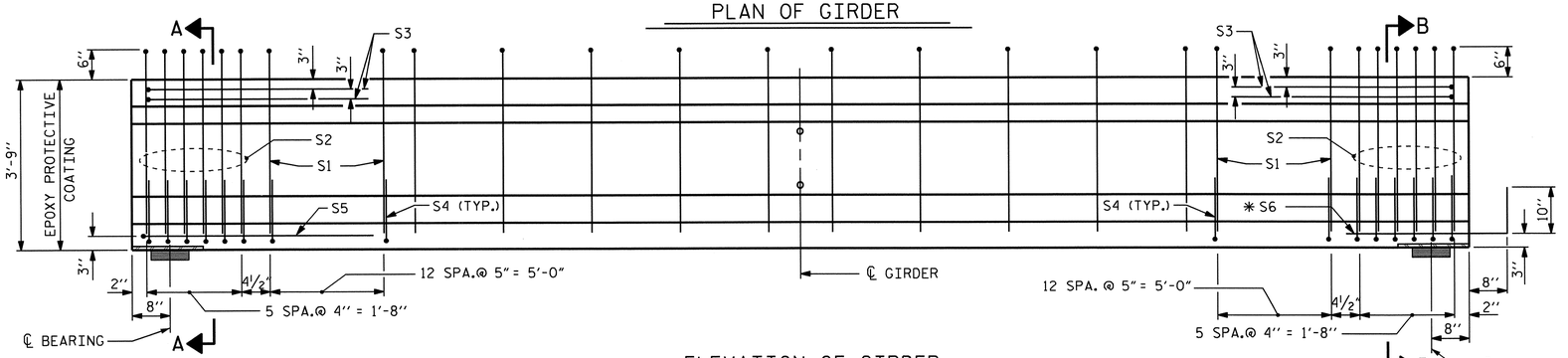

ELEVATION OF GIRDER

(SEE PARTIAL ELEVATION FOR ADDITIONAL "S" BARS)

0.6" Ø L. R. GRADE 270 STRANDS

AREA (SQUARE INCHES)	ULTIMATE STRENGTH (LBS. PER STRAND)	APPLIED PRESTRESS (LBS. PER STRAND)
0.217	58,600	43,950

REINFORCING STEEL FOR ONE GIRDER

BAR	NUMBER	SIZE	TYPE	LENGTH	WEIGHT
S1	90	#4	1	8'-6"	511
S2	12	#6	1	8'-6"	153
S3	4	#4	3	8'-8"	23
S4	76	#4	2	2'-9"	140
S5	1	#4	3	9'-6"	6
✱ S6	4	#5	STR	3'-8"	15
S7	2	#5	3	7'-2"	15
S8	5	#4	STR	7'-0"	23

✱ NOTE: S6 BARS SHALL BE BENT BEFORE SHIPMENT. HEAT BENDING SHALL NOT BE ALLOWED.

BAR TYPES

ALL BAR DIMENSIONS ARE OUT-TO-OUT

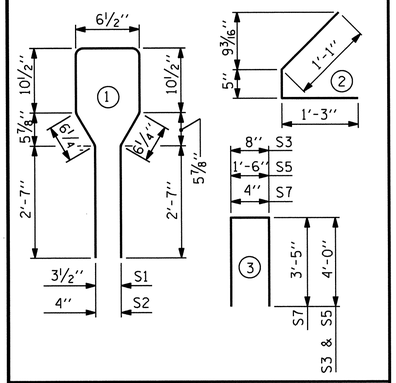

QUANTITIES FOR ONE GIRDER

SPANS C, D, F, & G	REINFORCING STEEL LB.	8000 PSI CONCRETE C.Y.	0.6" Ø L.R. STRANDS No.
	886	9.3	26

GIRDERS REQUIRED

NUMBER	LENGTH	TOTAL LENGTH
32	64'-5"	2061.33'

PROJECT NO. R-3307

CARTERET COUNTY

STATION: 16+05.50 -Y2-

SHEET 3 OF 5

STATE OF NORTH CAROLINA
DEPARTMENT OF TRANSPORTATION
RALEIGH

AASHTO TYPE III
PRESTRESSED CONCRETE GIRDER
CONTINUOUS FOR LIVE LOAD
(SPANS C, D, F & G)

NORTH CAROLINA PROFESSIONAL SEAL 14855 ENGINEER DOUGLAS R. CALHOUN
10-22-13

REVISIONS						SHEET NO.
NO.	BY:	DATE:	NO.	BY:	DATE:	S-299
1			3			TOTAL SHEETS
2			4			333

ASSEMBLED BY : A. SORSENGINH/J.W DATE : 11/22/11
CHECKED BY : D.G. ELY DATE : 2/2012
DESIGN ENGINEER OF RECORD : D. R. CALHOUN DATE : 9/2013

DRAWN BY : ELR 8/91
CHECKED BY : GRP 8/91

REV. 10/17/00R RWW/LES
REV. 5/1/06R TLA/GM
REV. 10/1/11 MAA/GM

10-SEP-2013 16:03
R:\Structures\Plans\SUPERSTRUCTURE\Microstation\R-3307_SD_G*.dgn
dely

STD. NO. PCG5

DEAD LOAD DEFLECTION TABLE FOR GIRDERS OF SPANS A & I

0.6" Ø LOW RELAXATION	GIRDERS 1 & 8											GIRDERS 2, 3, 4, 5, 6 & 7										
TENTH POINTS	0	.1	.2	.3	.4	.5	.6	.7	.8	.9	0	0	.1	.2	.3	.4	.5	.6	.7	.8	.9	0
CAMBER (GIRDER ALONE IN PLACE) ↑	0	0.054	0.103	0.141	0.165	0.173	0.165	0.141	0.103	0.054	0	0	0.054	0.103	0.141	0.165	0.173	0.165	0.141	0.103	0.054	0
* DEFLECTION DUE TO SUPERIMPOSED D.L. ↓	0	0.016	0.031	0.043	0.050	0.052	0.050	0.043	0.031	0.016	0	0	0.017	0.031	0.043	0.050	0.053	0.050	0.043	0.031	0.017	0
FINAL CAMBER ↑	0	7/16"	7/8"	1 3/16"	1 3/8"	1 7/16"	1 3/8"	1 3/16"	7/8"	7/16"	0	0	7/16"	7/8"	1 3/16"	1 3/8"	1 7/16"	1 3/8"	1 3/16"	7/8"	7/16"	0

* INCLUDES FUTURE WEARING SURFACE
ALL VALUES ARE SHOWN IN FEET (DECIMAL FORM), EXCEPT "FINAL CAMBER", WHICH IS GIVEN IN INCHES (FRACTION FORM).

DEAD LOAD DEFLECTION TABLE FOR GIRDERS OF SPANS B, E, & H

0.6" Ø LOW RELAXATION	GIRDERS 1 & 8											GIRDERS 2, 3, 4, 5, 6 & 7										
TENTH POINTS	0	.1	.2	.3	.4	.5	.6	.7	.8	.9	0	0	.1	.2	.3	.4	.5	.6	.7	.8	.9	0
CAMBER (GIRDER ALONE IN PLACE) ↑	0	0.055	0.105	0.143	0.168	0.176	0.168	0.143	0.105	0.055	0	0	0.055	0.105	0.143	0.168	0.176	0.168	0.143	0.105	0.055	0
* DEFLECTION DUE TO SUPERIMPOSED D.L. ↓	0	0.017	0.033	0.045	0.053	0.055	0.053	0.045	0.033	0.017	0	0	0.018	0.033	0.045	0.053	0.056	0.053	0.045	0.033	0.018	0
FINAL CAMBER ↑	0	7/16"	7/8"	1 3/16"	1 3/8"	1 7/16"	1 3/8"	1 3/16"	7/8"	7/16"	0	0	7/16"	7/8"	1 3/16"	1 3/8"	1 7/16"	1 3/8"	1 3/16"	7/8"	7/16"	0

* INCLUDES FUTURE WEARING SURFACE
ALL VALUES ARE SHOWN IN FEET (DECIMAL FORM), EXCEPT "FINAL CAMBER", WHICH IS GIVEN IN INCHES (FRACTION FORM).

DEAD LOAD DEFLECTION TABLE FOR GIRDERS OF SPANS C, D, F, & G

0.6" Ø LOW RELAXATION	GIRDERS 1 & 8											GIRDERS 2, 3, 4, 5, 6 & 7										
TENTH POINTS	0	.1	.2	.3	.4	.5	.6	.7	.8	.9	0	0	.1	.2	.3	.4	.5	.6	.7	.8	.9	0
CAMBER (GIRDER ALONE IN PLACE) ↑	0	0.056	0.105	0.144	0.169	0.177	0.169	0.144	0.105	0.056	0	0	0.056	0.105	0.144	0.169	0.177	0.169	0.144	0.105	0.056	0
* DEFLECTION DUE TO SUPERIMPOSED D.L. ↓	0	0.018	0.033	0.046	0.053	0.056	0.053	0.046	0.033	0.018	0	0	0.018	0.034	0.046	0.054	0.057	0.054	0.046	0.034	0.018	0
FINAL CAMBER ↑	0	7/16"	7/8"	1 3/16"	1 3/8"	1 7/16"	1 3/8"	1 3/16"	7/8"	7/16"	0	0	7/16"	7/8"	1 3/16"	1 3/8"	1 7/16"	1 3/8"	1 3/16"	7/8"	7/16"	0

* INCLUDES FUTURE WEARING SURFACE
ALL VALUES ARE SHOWN IN FEET (DECIMAL FORM), EXCEPT "FINAL CAMBER", WHICH IS GIVEN IN INCHES (FRACTION FORM).

NOTES

ALL PRESTRESSING STRANDS SHALL BE 7-WIRE LOW-RELAXATION GRADE 270 STRANDS AND SHALL CONFORM TO AASHTO M203 EXCEPT FOR SAMPLING REQUIREMENTS WHICH SHALL BE IN ACCORDANCE WITH THE STANDARD SPECIFICATIONS.

ALL REINFORCING STEEL SHALL BE GRADE 60.

APPLY EPOXY PROTECTIVE COATING TO END OF GIRDER SURFACES INDICATED IN ELEVATION VIEW.

EMBEDDED PLATE "B-1" SHALL BE GALVANIZED IN ACCORDANCE WITH THE STANDARD SPECIFICATIONS. BEVEL EDGES OF PLATE "B-1" TO GIVE CLOSE FIT BUT NOT TIGHT FIT TO STEEL CASTING FORM.

ANCHOR STUDS SHALL CONFORM TO AASHTO M169 GRADES 1010 THROUGH 1020 OR APPROVED EQUAL, AND SHALL MEET THE TYPE "B" REQUIREMENTS OF SUBSECTION 7.3 OF THE ANSI/AASHTO/AWS D1.5 BRIDGE WELDING CODE.

AT ENDS OF GIRDERS TO BE EMBEDDED IN CONCRETE DIAPHRAGMS, PRESTRESSING STRANDS MAY EXTEND A MAXIMUM OF 2" BEYOND THE GIRDER ENDS. OTHERWISE, PRESTRESSING STRANDS SHALL BE CUT FLUSH WITH THE GIRDER ENDS.

THE TRANSFER OF LOAD FROM THE ANCHORAGES TO THE GIRDER SHALL BE DONE WHEN CONCRETE HAS REACHED A COMPRESSIVE STRENGTH OF NOT LESS THAN 6000 PSI.

DEPENDING ON THE TYPE OF SYSTEM USED TO SUPPORT THE DECK SLAB FORMS, PRESET ANCHORS MAY BE NECESSARY IN THE PRESTRESSED CONCRETE GIRDER.

THE TOP SURFACE OF THE GIRDER, EXCLUDING THE OUTSIDE 4", SHALL BE RAKED TO A DEPTH OF 1/4".

PRESTRESSED CONCRETE GIRDERS ARE DESIGNED FOR 0 PSI TENSION IN THE PRECOMPRESSED TENSILE ZONE UNDER ALL LOADING CONDITIONS.

PRESTRESSED CONCRETE GIRDERS SHALL CONTAIN CALCIUM NITRITE CORROSION INHIBITOR. SEE STANDARD SPECIFICATIONS FOR CALCIUM NITRITE CORROSION INHIBITOR.

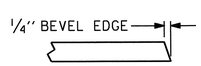

SECTION "G"

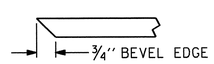

SECTION "F"

(SEE NOTES)

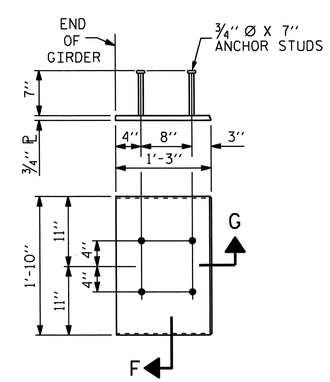

EMBEDDED PLATE "B-1" DETAILS FOR AASHTO TYPE III GIRDER

(2 REQ'D PER GIRDER)

PROJECT NO. R-3307
CARTERET COUNTY
STATION: 16+05.50 -Y2-

SHEET 4 OF 5

STATE OF NORTH CAROLINA
DEPARTMENT OF TRANSPORTATION
RALEIGH

PRESTRESSED CONCRETE GIRDER CONTINUOUS FOR LIVE LOAD DETAILS AND DEAD LOAD DEFLECTION TABLES

NORTH CAROLINA PROFESSIONAL SEAL 14855 ENGINEER DOUGLAS R. CALHOUN
10-22-13

REVISIONS						SHEET NO.
NO.	BY:	DATE:	NO.	BY:	DATE:	S-300
1			3			TOTAL SHEETS
2			4			333

ASSEMBLED BY : A. SORSENGINH/J.W DATE : 11/22/11
CHECKED BY : D.G. ELY DATE : 2/2012
DESIGN ENGINEER OF RECORD : D. R. CALHOUN DATE : 9/2013

DRAWN BY : ELR 8/91
CHECKED BY : GRP 8/91

REV. 10/17/00R RWW/LES
REV. 5/1/06R TLA/GM
REV. 10/1/11 MAA/GM

21-OCT-2013 15:29
R:\Structures\Plans\SUPERSTRUCTURE\Microstation\R-3307_SD_G*.dgn
dely

STD. NO. PCG9 (Sht. 2)

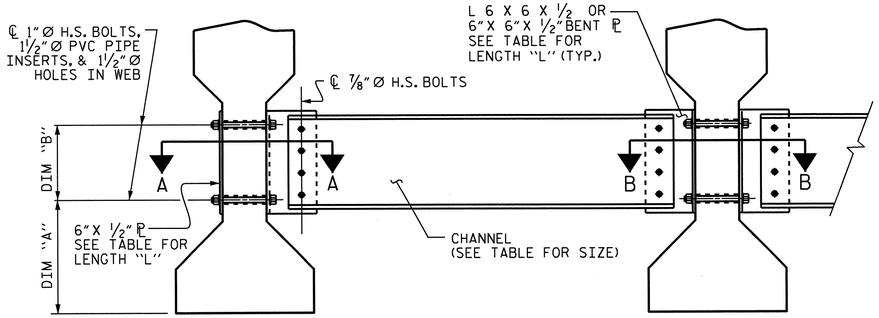

EXTERIOR GIRDER

INTERIOR GIRDER

PART SECTION AT INTERMEDIATE DIAPHRAGM

(TYPE III)

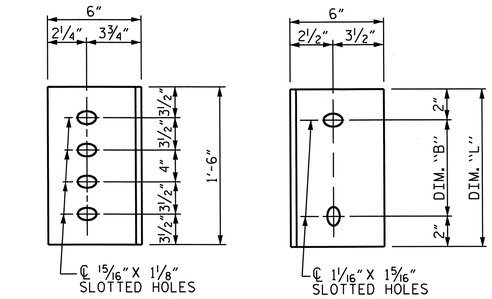

DIAPHRAGM FACE

(TYPE III)

WEB FACE

CONNECTOR PLATE DETAILS

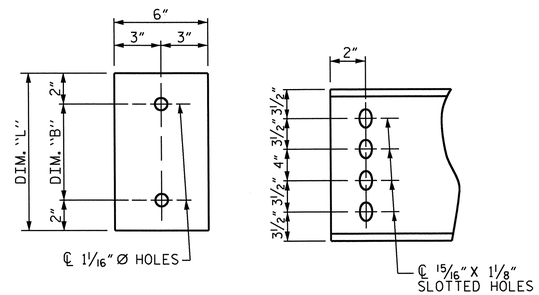

PLATE DETAILS

CHANNEL END

(TYPE III)

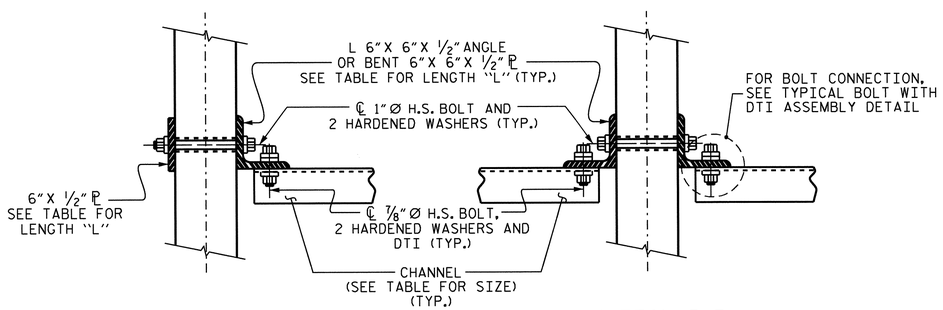

SECTION A-A

SECTION B-B

CONNECTION DETAILS

(FOR SKEW = 90°)

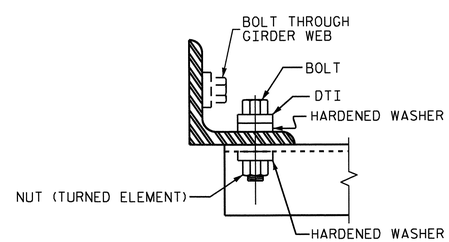

BOLT WITH DTI ASSEMBLY DETAIL

STRUCTURAL STEEL NOTES

ALL INTERMEDIATE DIAPHRAGM STEEL AND CONNECTOR PLATES SHALL BE AASHTO M270 GRADE 50 OR APPROVED EQUAL.

TENSION ON THE ASTM A325 BOLTS THROUGH THE CHANNEL MEMBER SHALL BE CALIBRATED USING DIRECT TENSION INDICATOR WASHERS IN ACCORDANCE WITH THE STANDARD SPECIFICATIONS.

TENSION ON THE ASTM A449 BOLTS THROUGH THE GIRDER WEB SHALL BE SNUG TIGHTENED FOLLOWED BY AN ADDITIONAL ¼ TURN.

THE PLATES, BENT PLATES, CHANNELS, AND ANGLES SHALL BE METALLIZED IN ACCORDANCE WITH THE STANDARD SPECIFICATIONS. FOR THERMAL SPRAYED COATINGS (METALLIZATION), SEE SPECIAL PROVISIONS.

FOR METALLIZATION, APPLY AN 8 MIL THICK 99.50 PERCENT 1350 ALUMINUM (W-A1-1350) THERMAL SPRAYED COATING WITH A 0.5 MIL THICK SEAL COAT TO ALL PLATES, BENT PLATES, CHANNELS, ANGLES, AND PLATE WASHERS IN ACCORDANCE WITH THE THERMAL SPRAYED COATINGS SPECIAL PROVISIONS AND SECTION 442 OF THE STANDARD SPECIFICATIONS.

APPLY 1 COAT EACH OF 1080-12 BROWN AND 1080-12 GRAY PAINT ON THE EDGES AND THE WEB FACE OF THE CONNECTOR PLATE WHICH COMES IN CONTACT WITH THE CONCRETE GIRDER IN ACCORDANCE WITH SECTION 442 OF THE STANDARD SPECIFICATIONS.

GALVANIZE THE HIGH STRENGTH BOLTS, NUTS, WASHERS AND DIRECT TENSION INDICATORS IN ACCORDANCE WITH THE STANDARD SPECIFICATIONS.

USE AN ASTM F436 HARDENED WASHER WITH STANDARD AND SLOTTED HOLES UNDER EACH BOLT HEAD AND NUT.

FOR BOLTS THROUGH THE GIRDER WEB, PROVIDE SUFFICIENT LENGTH OF THREADS ON ALL BOLTS TO ACCOMMODATE WASHERS AND THE THICKNESS OF CONNECTING MEMBER PLUS AT LEAST ¼" PROJECTION BEYOND THE NUT.

INTERMEDIATE DIAPHRAGM ASSEMBLY SHALL COMPLY WITH SECTION 1072 OF THE STANDARD SPECIFICATIONS.

SUBMIT TWO SETS OF WORKING DRAWINGS FOR THE INTERMEDIATE DIAPHRAGM ASSEMBLY FOR REVIEW, COMMENTS AND ACCEPTANCE. AFTER REVIEW, COMMENTS, AND ACCEPTANCE, SUBMIT SEVEN SETS FOR DISTRIBUTION.

IN THE EXTERIOR BAYS, PLACE TEMPORARY STRUTS BETWEEN PRESTRESSED GIRDERS ADJACENT TO THE STEEL DIAPHRAGMS. STRUTS SHALL REMAIN IN PLACE 3 DAYS AFTER CONCRETE IS PLACED.

THE COST OF THE STEEL DIAPHRAGMS AND ASSEMBLIES SHALL BE INCLUDED IN THE UNIT PRICE BID FOR PRESTRESSED CONCRETE GIRDERS.

TABLE

GIRDER TYPE	CHANNEL SIZE	DIM "A"	DIM "B"	DIM "L"
III	MC 18 x 42.7	1'-5"	1'-2"	1'-6"

PROJECT NO. R-3307

CARTERET COUNTY

STATION: 16+05.50 -Y2-

SHEET 5 OF 5

NORTH CAROLINA PROFESSIONAL SEAL 14855 ENGINEER DOUGLAS R. CALHOUN

10-22-13

STATE OF NORTH CAROLINA
DEPARTMENT OF TRANSPORTATION
RALEIGH

STANDARD
INTERMEDIATE
STEEL DIAPHRAGMS
FOR TYPE III
PRESTRESSED CONCRETE
GIRDERS

REVISIONS							SHEET NO.
NO.	BY:	DATE:	NO.	BY:	DATE:		S-301
1			3				TOTAL SHEETS
2			4				333

STD. NO. PCG10 (Sht. 3)

ASSEMBLED BY :	A. SORSENGINH	DATE :	11/23/11
CHECKED BY :	D.G. ELY	DATE :	1/2012
DRAWN BY : TLA 6/05	ADDED 10/21/05		
CHECKED BY : VC 6/05	REV. 5/1/06RRR		KMM/GM
	REV. 10/1/11		MAA/GM

21-OCT-2013 15:29
R:\Structures\Plans\SUPERSTRUCTURE\Microstation\R-3307_SD_G*.dgn
dely

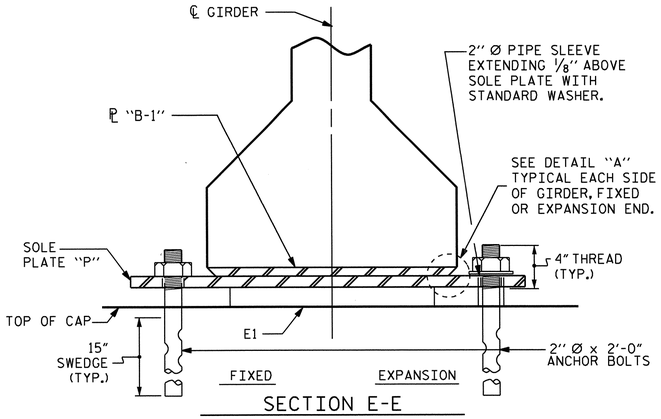

SECTION E-E

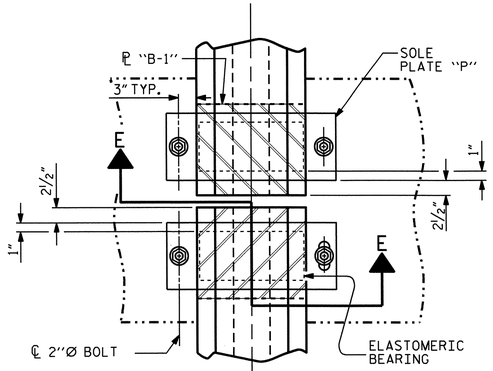

TYPICAL HALF-PLAN (SHOWING CONTINUOUS BENT)

TYPICAL HALF-PLAN (SHOWING SIMPLE SPAN BENT)

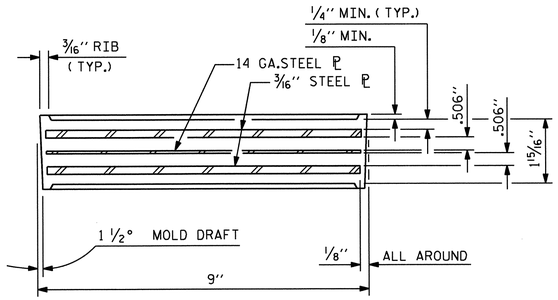

TYPICAL SECTION OF ELASTOMERIC BEARINGS

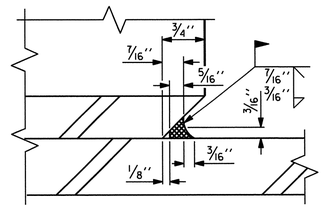

DETAIL "A"

— LOAD RATINGS —	
	MAX.D.L.+L.L.
45"PCG -TYPE III	115 K

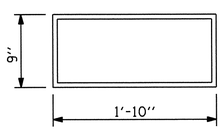

E1 (144 REQ'D)

PLAN VIEW OF ELASTOMERIC BEARING

TYPE IV

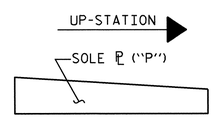

SOLE ℗ PLACEMENT DETAIL

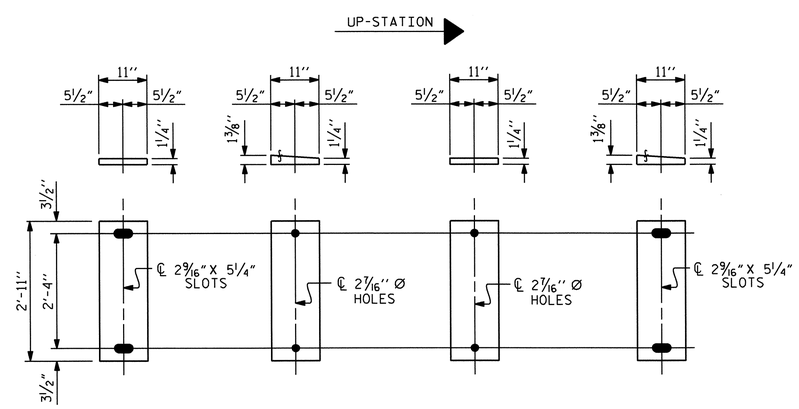

P1 (EXPANSION) (24 REQ'D)

P2 (FIXED) (48 REQ'D)

P3 (FIXED) (48 REQ'D)

P4 (EXPANSION) (24 REQ'D)

NOTES

AT ALL FIXED POINTS OF SUPPORT, NUTS FOR ANCHOR BOLTS ARE TO BE TIGHTENED FINGER TIGHT AND THEN BACKED OFF 1/2 TURN. THE THREAD OF THE NUT AND BOLT SHALL THEN BE BURRED WITH A SHARP POINTED TOOL.

THE 2" Ø PIPE SLEEVE SHALL BE CUT FROM SCHEDULE 40 PVC PLASTIC PIPE. THE PVC PLASTIC PIPE SHALL MEET THE REQUIREMENTS OF ASTM D1785.

STEEL SOLE PLATES, ANCHOR BOLTS, NUTS, AND WASHERS SHALL BE GALVANIZED IN ACCORDANCE WITH THE STANDARD SPECIFICATIONS.

PRIOR TO WELDING, GRIND THE GALVANIZED SURFACE OF THE PORTION OF THE EMBEDDED PLATE AND SOLE PLATE THAT ARE TO BE WELDED. AFTER WELDING, DAMAGED GALVANIZED SURFACES SHALL BE REPAIRED IN ACCORDANCE WITH THE STANDARD SPECIFICATIONS.

WHEN WELDING THE SOLE PLATE TO THE EMBEDDED PLATE IN THE GIRDER, USE TEMPERATURE INDICATING WAX PENS, OR OTHER SUITABLE MEANS, TO ENSURE THAT THE TEMPERATURE OF THE SOLE PLATE DOES NOT EXCEED 300°F. TEMPERATURES ABOVE THIS MAY DAMAGE THE ELASTOMER.

SOLE PLATE "P", BOLTS, NUTS, WASHERS, AND PIPE SLEEVE SHALL BE INCLUDED IN THE PAY ITEM FOR PRESTRESSED CONCRETE GIRDERS.

ANCHOR BOLTS SHALL MEET THE REQUIREMENTS OF ASTM A449. NUTS SHALL MEET THE REQUIREMENTS OF AASHTO M291-DH OR AASHTO M292-2H. WASHERS SHALL MEET THE REQUIREMENTS OF AASHTO M293. SHOP DRAWINGS ARE NOT REQUIRED FOR ANCHOR BOLT, NUTS AND WASHERS. SHOP INSPECTION IS REQUIRED.

ALL SURFACES OF BEARING PLATES SHALL BE SMOOTH AND STRAIGHT.

THE ELASTOMER IN THE STEEL REINFORCED BEARINGS SHALL HAVE A SHEAR MODULUS OF 0.160 KSI, IN ACCORDANCE WITH AASHTO M251.

FOR STEEL REINFORCED ELASTOMERIC BEARINGS, SEE SPECIAL PROVISIONS.

PROJECT NO. R-3307

CARTERET COUNTY

STATION: 16+05.50 -Y2-

STATE OF NORTH CAROLINA
DEPARTMENT OF TRANSPORTATION
RALEIGH

STANDARD

ELASTOMERIC BEARING DETAILS

PRESTRESSED CONCRETE GIRDER SUPERSTRUCTURE

NORTH CAROLINA PROFESSIONAL SEAL 14855 ENGINEER DOUGLAS R. CALDWELL
10-22-13

REVISIONS							
NO.	BY:	DATE:	NO.	BY:	DATE:	SHEET NO.	S-302
1			3			TOTAL SHEETS	333
2			4				

ASSEMBLED BY : A. SORSENGINH/J.W.		DATE :	11/23/11
CHECKED BY : D.G. ELY		DATE :	1/2012
DRAWN BY : WJH 8/89	REV. 5/1/06		TLA/GM
CHECKED BY : CRK 8/89	REV. 10/1/11		MAA/GM
	REV. 6/13		AAC/MAA

21-OCT-2013 15:28
R:\Structures\Plans\SUPERSTRUCTURE\Microstation\R-3307_SD_BG.dgn
dely

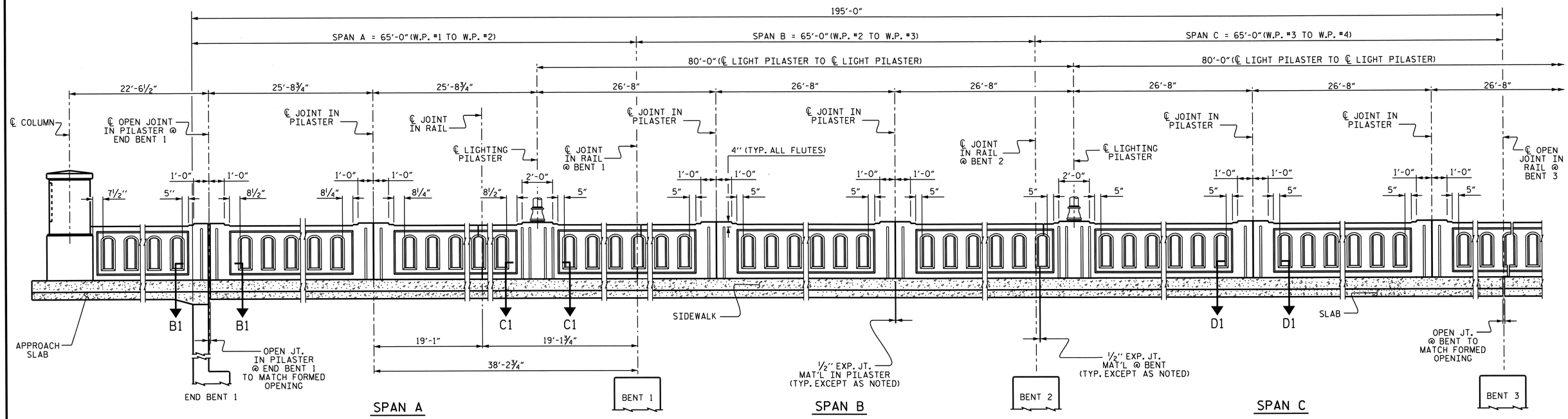

ROADWAY ELEVATION OF RAIL

(APPROACH SLAB & SPAN A-C)
(LEFT SIDE SHOWN, RIGHT SIDE SIMILAR)

PROJECT NO. R-3307
CARTERET COUNTY
STATION: 16+05.50 -Y2-

SHEET 1 OF 12

STATE OF NORTH CAROLINA
DEPARTMENT OF TRANSPORTATION
RALEIGH

SUPERSTRUCTURE

CLASSIC CONCRETE BRIDGE RAIL WITH SIDEWALK

NORTH CAROLINA PROFESSIONAL SEAL 14855 ENGINEER DOUGLAS R. CALHOUN
10-22-13

REVISIONS								SHEET NO.
NO.	BY:	DATE:	NO.	BY:	DATE:			S-303
1			3					TOTAL SHEETS
2			4					333

DRAWN BY :	D. G. ELY	DATE :	03/2013
CHECKED BY :	ASHVIN PATEL	DATE :	05/2013
DESIGN ENGINEER OF RECORD :	D. R. CALHOUN	DATE :	09/2013

10-SEP-2013 16:01
R:\Structures\Plans\SUPERSTRUCTURE\Microstation\R-3307_SD_classic rail.dgn
dely

NCBDS

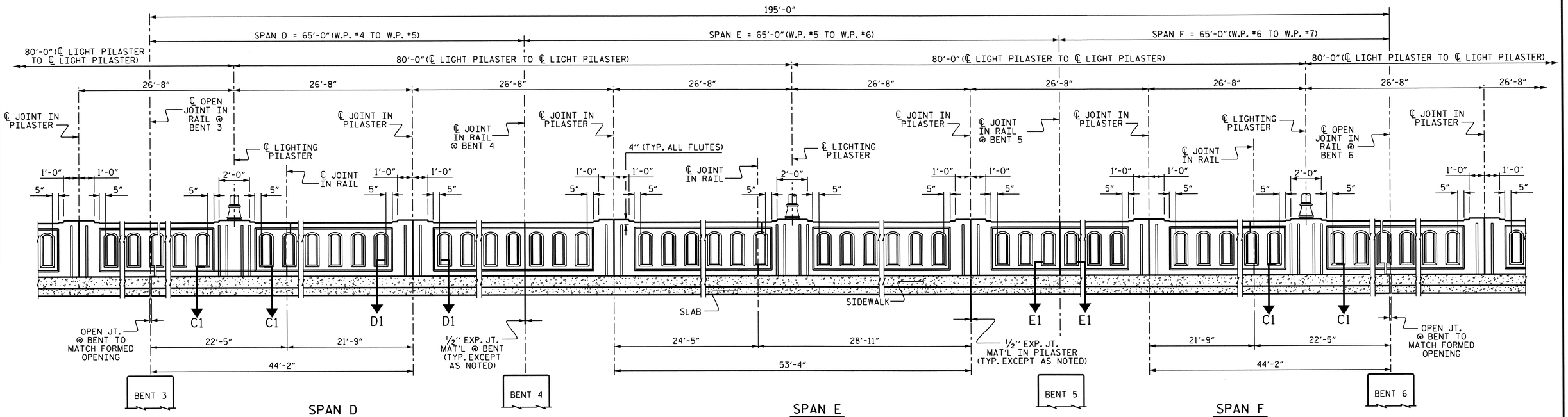

ROADWAY ELEVATION OF RAIL

(SPAN D-F)
(LEFT SIDE SHOWN, RIGHT SIDE SIMILAR)

PROJECT NO. R-3307
CARTERET COUNTY
STATION: 16+05.50 -Y2-

SHEET 2 OF 12

STATE OF NORTH CAROLINA
DEPARTMENT OF TRANSPORTATION
RALEIGH

SUPERSTRUCTURE

CLASSIC CONCRETE BRIDGE RAIL WITH SIDEWALK

NORTH CAROLINA PROFESSIONAL SEAL 14855 ENGINEER DOUGLAS R. CALHOUN
10-22-13

REVISIONS						SHEET NO.
NO.	BY:	DATE:	NO.	BY:	DATE:	S-324
1			3			TOTAL SHEETS
2			4			333

DRAWN BY : D. G. ELY DATE : 03/2013
CHECKED BY : ASHVIN PATEL DATE : 05/2013
DESIGN ENGINEER OF RECORD : D. R. CALHOUN DATE : 09/2013

21-OCT-2013 15:27
R:\Structures\Plans\SUPERSTRUCTURE\Microstation\R-3307_SD_classic rail.dgn
dely

NCBDS

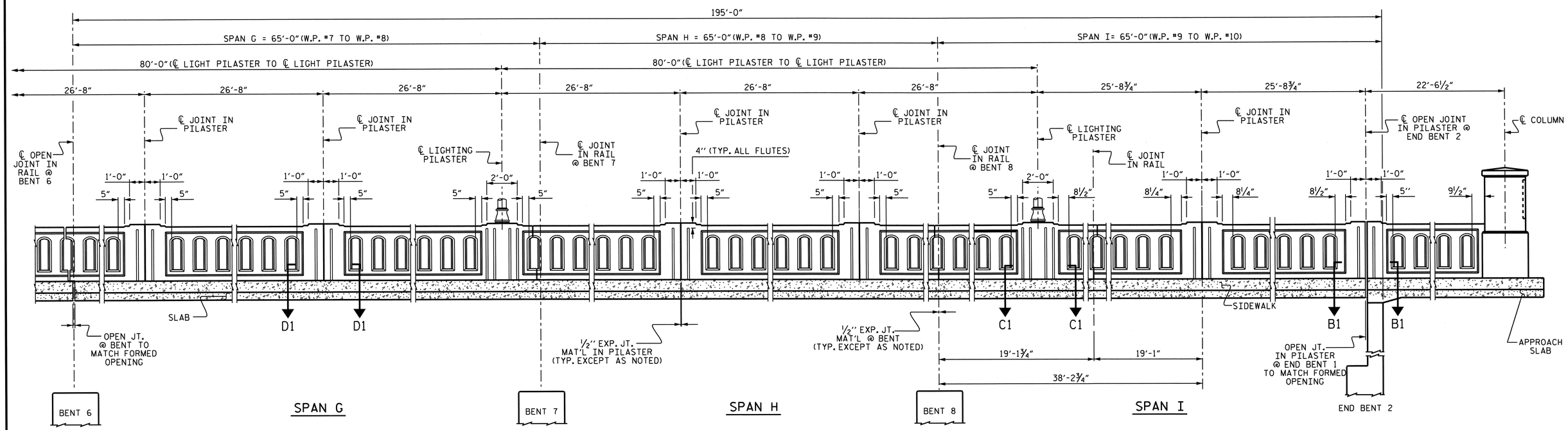

ROADWAY ELEVATION OF RAIL

(SPAN G-I & APPROACH SLAB)
(LEFT SIDE SHOWN, RIGHT SIDE SIMILAR)

PROJECT NO. R-3307
CARTERET COUNTY
STATION: 16+05.50 -Y2-

SHEET 3 OF 12

STATE OF NORTH CAROLINA
DEPARTMENT OF TRANSPORTATION
RALEIGH

SUPERSTRUCTURE

CLASSIC CONCRETE BRIDGE RAIL WITH SIDEWALK

NORTH CAROLINA PROFESSIONAL SEAL 14855 ENGINEER DOUGLAS R. CALHOUN
10-22-13

REVISIONS						SHEET NO.
NO.	BY:	DATE:	NO.	BY:	DATE:	S-305
1			3			TOTAL SHEETS
2			4			333

DRAWN BY : D. G. ELY DATE : 03/2013
CHECKED BY : ASHVIN PATEL DATE : 05/2013
DESIGN ENGINEER OF RECORD : D. R. CALHOUN DATE : 09/2013

10-SEP-2013 16:01
R:\Structures\Plans\SUPERSTRUCTURE\Microstation\R-3307_SD_classic rail.dgn
dely

NCDOS

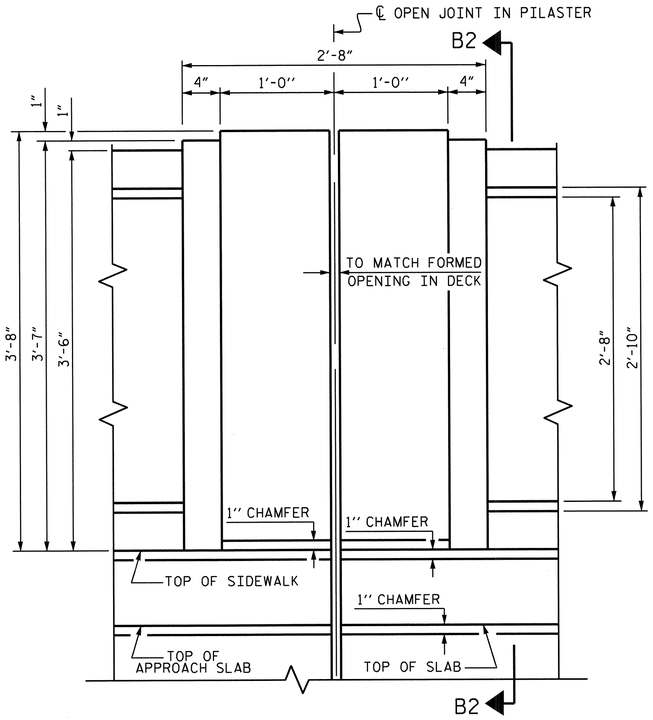

OPEN JOINT IN PILASTER @ END BENTS

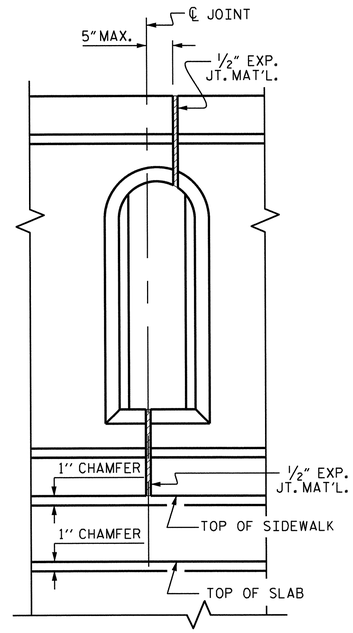

JOINT IN WINDOW

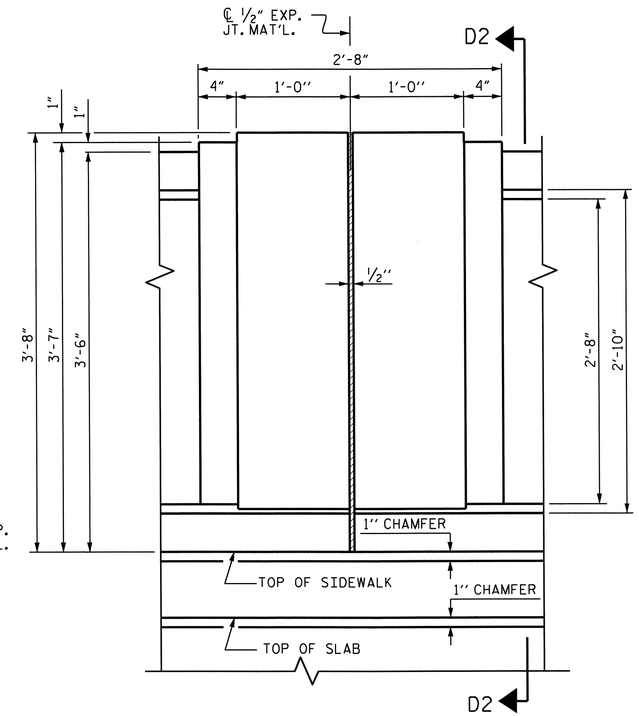

JOINT IN PILASTER

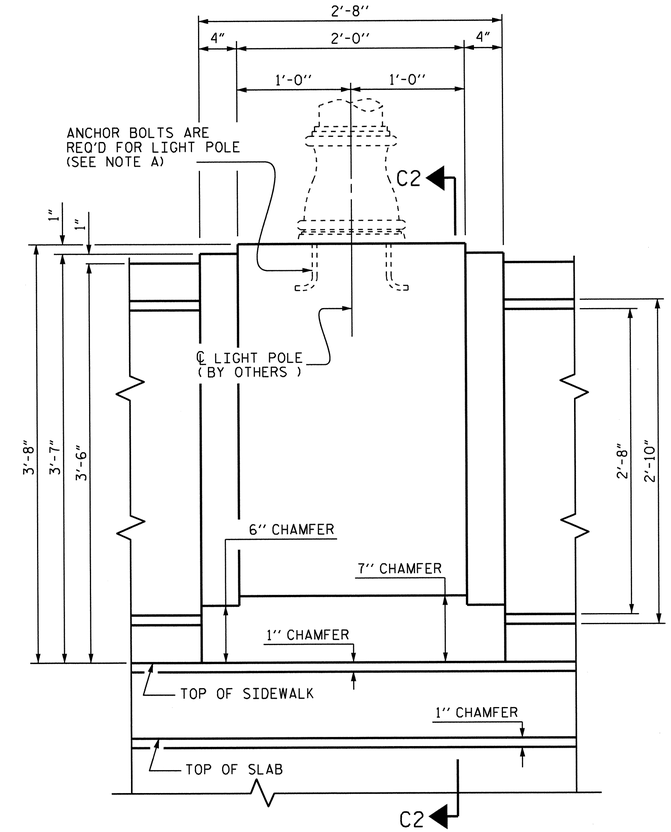

LIGHTING PILASTER

NOTE A:
COORDINATE WITH CITY OF BEAUFORT FOR INSTALLATION OF ANCHOR BOLTS. ANCHOR BOLT SIZE & LOCATION ARE TO BE AS SPECIFIED BY LIGHT POLE MANUFACTURER.

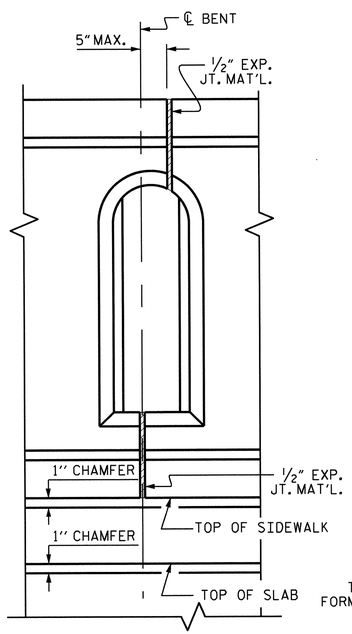

JOINT IN WINDOW @ CONTINUOUS BENTS 1, 2, 7 AND 8

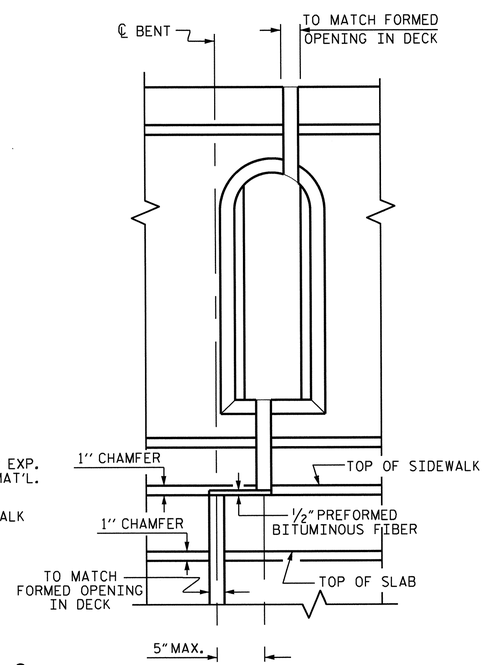

OPEN JOINT @ BENTS 3 & 6

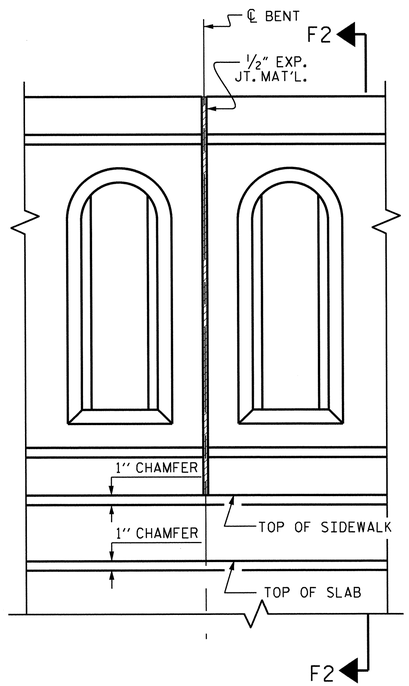

JOINT @ BENTS 4 & 5

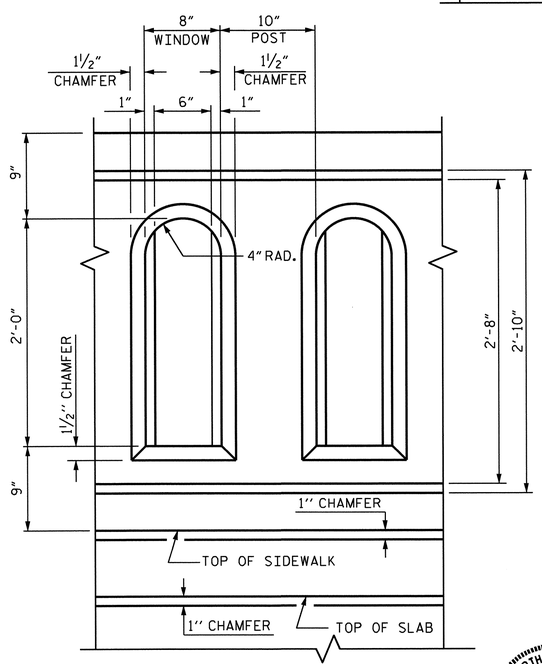

WINDOW DETAIL

NOTE : WINDOW DETAILS ARE TYPICAL FOR EACH FACE.

EXTERIOR RAIL & PILASTER ELEVATIONS

PROJECT NO. R-3307
CARTERET COUNTY
STATION: 16+05.50 -Y2-

SHEET 4 OF 12

STATE OF NORTH CAROLINA
DEPARTMENT OF TRANSPORTATION
RALEIGH

SUPERSTRUCTURE

CLASSIC CONCRETE BRIDGE RAIL WITH SIDEWALK

NORTH CAROLINA PROFESSIONAL SEAL 14855 ENGINEER DOUGLAS R. CALHOUN
10-22-13

REVISIONS							
NO.	BY:	DATE:	NO.	BY:	DATE:	SHEET NO.	S-306
1			3			TOTAL SHEETS	333
2			4				

DRAWN BY : D.G. ELY DATE : 03/2013
CHECKED BY : ASHVIN PATEL DATE : 05/2013
DESIGN ENGINEER OF RECORD : D. R. CALHOUN DATE : 09/2013

10-SEP-2013 16:00
R:\Structures\Plans\SUPERSTRUCTURE\Microstation\R-3307_SD_classic rail.dgn
dely

NOTE A:
COORDINATE WITH CITY OF BEAUFORT FOR INSTALLATION OF ANCHOR BOLTS. ANCHOR BOLT SIZE & LOCATION ARE TO BE AS SPECIFIED BY LIGHT POLE MANUFACTURER.

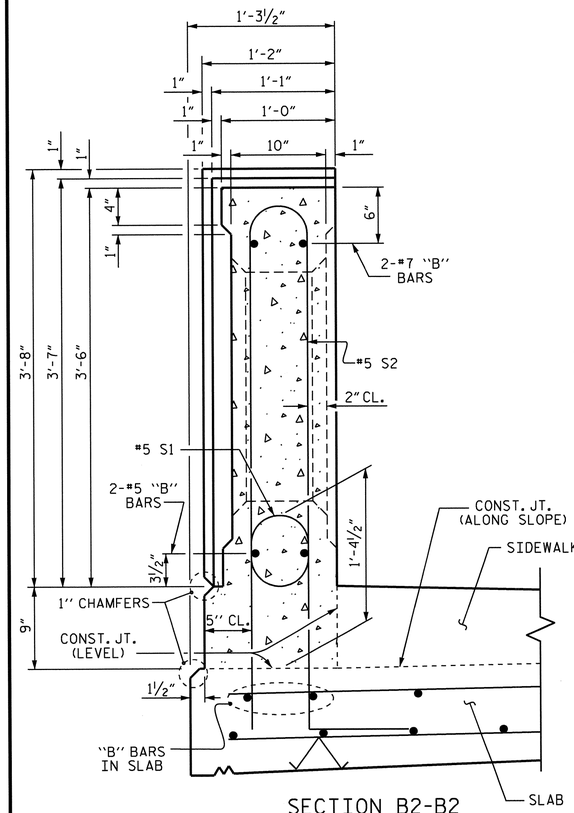

SECTION B2-B2
(SHOWING END BENT BENT PILASTER)

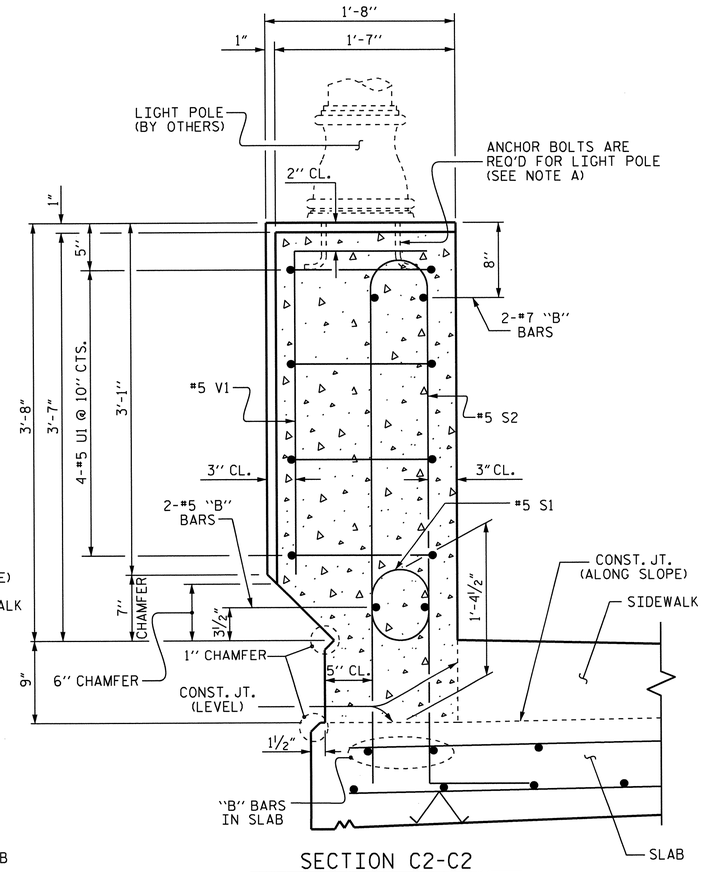

SECTION C2-C2
(SHOWING LIGHTING PILASTER)
(FOR LOCATION OF CONDUIT, SEE ELECTRICAL CONDUIT SYSTEM SHEET)

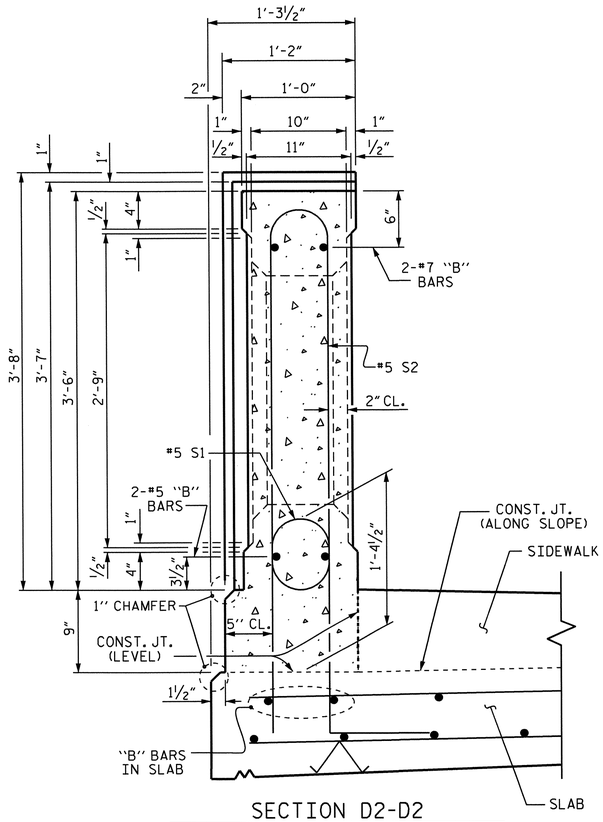

SECTION D2-D2
(SHOWING JOINT IN PILASTER)

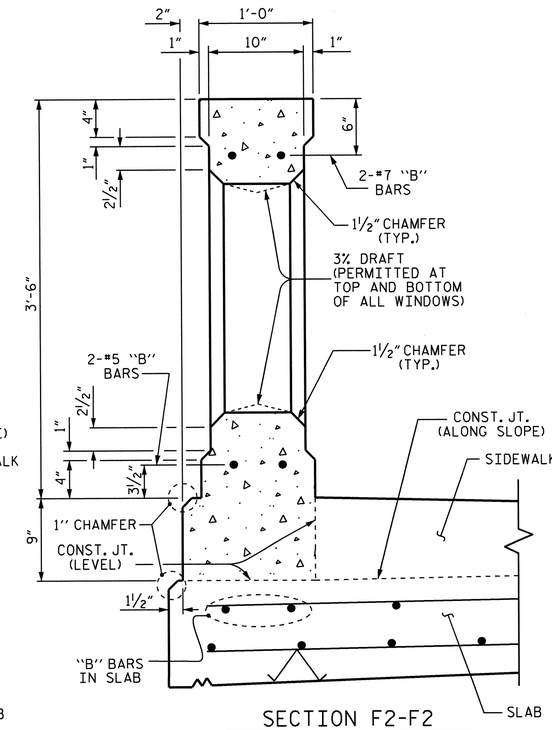

SECTION F2-F2
(SHOWING WINDOW OF RAIL)

NOTE :
FOR LOCATION OF SECTIONS, SEE SHEET 4 OF 12.

PROJECT NO. R-3307
CARTERET COUNTY
STATION: 16+05.50 -Y2-

SHEET 5 OF 12

STATE OF NORTH CAROLINA
DEPARTMENT OF TRANSPORTATION
RALEIGH

SUPERSTRUCTURE

CLASSIC CONCRETE BRIDGE RAIL WITH SIDEWALK

NORTH CAROLINA PROFESSIONAL SEAL 14855 ENGINEER DOUGLAS R. CALHOUN
10-22-13

REVISIONS						SHEET NO.
NO.	BY:	DATE:	NO.	BY:	DATE:	S-307
1			3			TOTAL SHEETS
2			4			333

DRAWN BY : D.G. ELY DATE : 03/2013
CHECKED BY : ASHVIN PATEL DATE : 05/2013
DESIGN ENGINEER OF RECORD : D. R. CALHOUN DATE : 09/2013

10-SEP-2013 16:00
R:\Structures\Plans\SUPERSTRUCTURE\Microstation\R-3307_SD_classic rail.dgn
dely

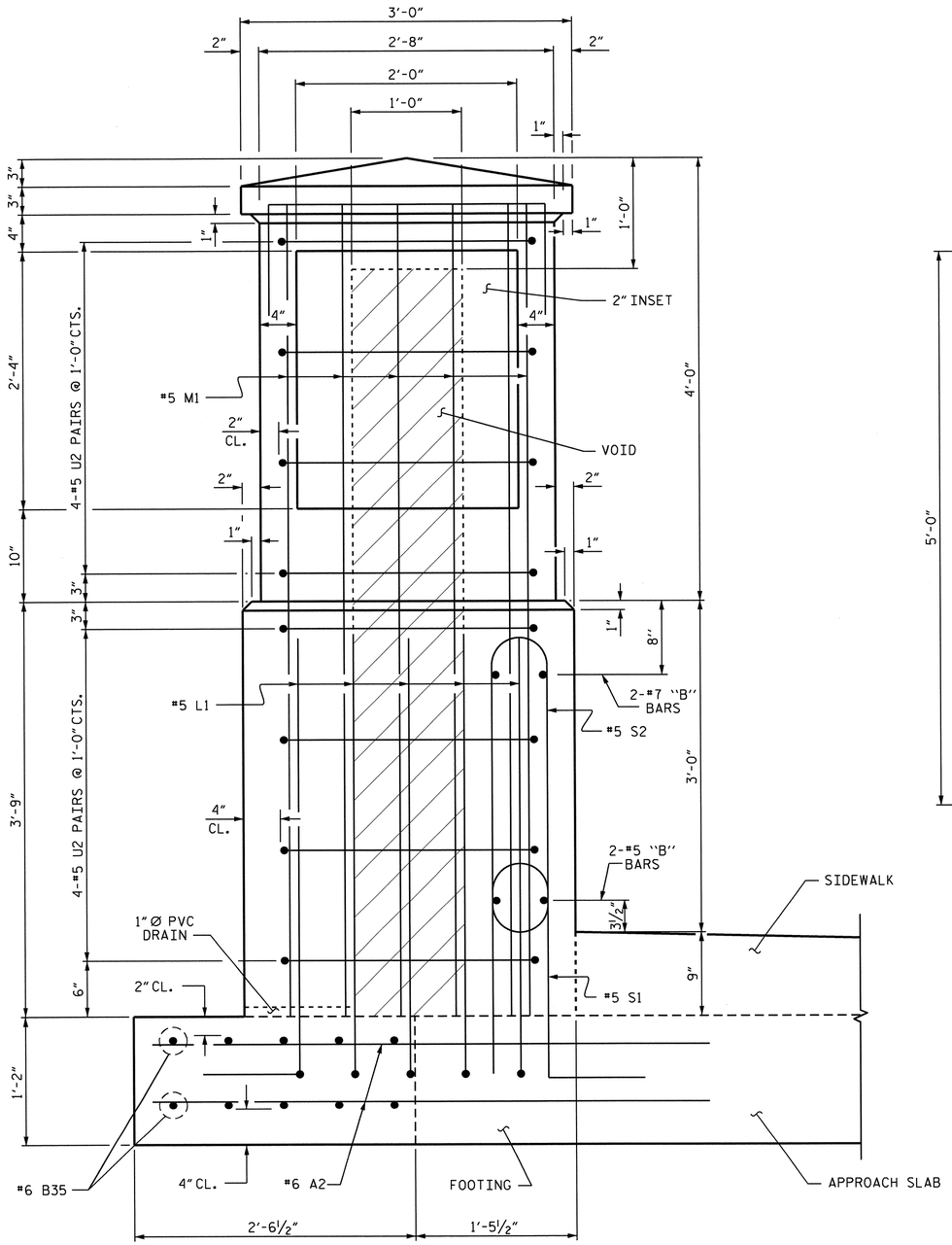

ELEVATION

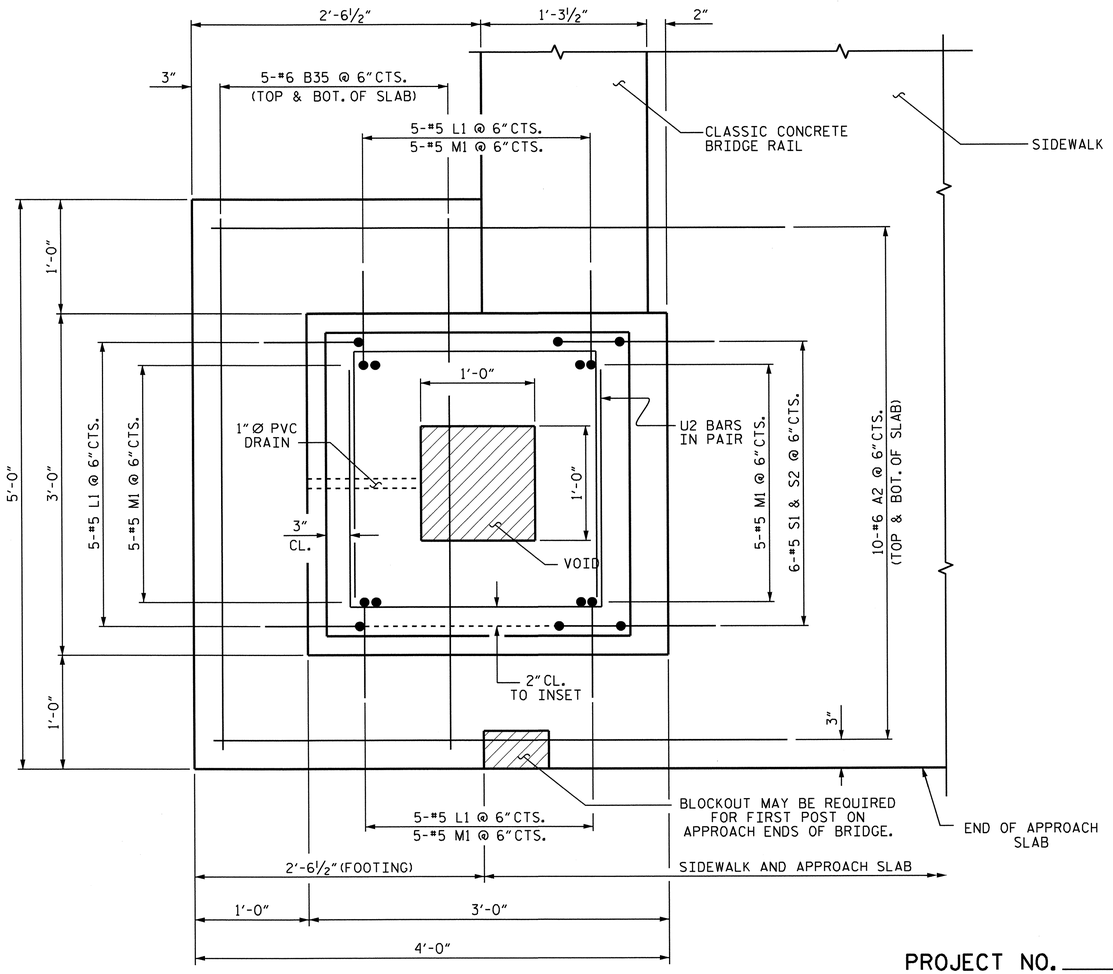

PLAN

PROJECT NO. R-3307

CARTERET COUNTY

STATION: 16+05.50 -Y2-

SHEET 6 OF 12

STATE OF NORTH CAROLINA
DEPARTMENT OF TRANSPORTATION
RALEIGH

SUPERSTRUCTURE

CLASSIC CONCRETE BRIDGE RAIL WITH SIDEWALK

NORTH CAROLINA PROFESSIONAL SEAL 14855 ENGINEER DOUGLAS R. CALHOUN
10-22-13

REVISIONS						SHEET NO.
NO.	BY:	DATE:	NO.	BY:	DATE:	S-308
1			3			TOTAL SHEETS
2			4			333

COLUMN & FOOTING DETAILS

(COLUMN AT END BENT 1, LEFT SIDE SHOWN. OTHER COLUMNS SIMILAR.)

DRAWN BY :	D.G. ELY	DATE :	03/2013
CHECKED BY :	ASHVIN PATEL	DATE :	05/2013
DESIGN ENGINEER OF RECORD :	D. R. CALHOUN	DATE :	09/2013

10-SEP-2013 16:00
R:\Structures\Plans\SUPERSTRUCTURE\Microstation\R-3307_SD_classic rail.dgn
dely

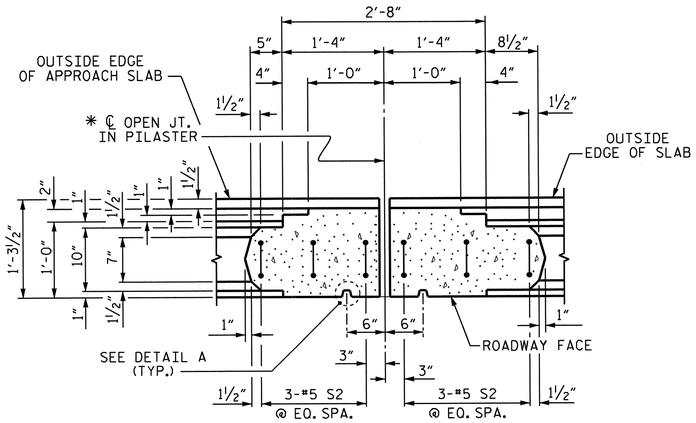

SECTION B1-B1

SHOWING JOINT IN PILASTER @ END BENT 1
(END BENT 2 SIMILAR BY ROTATION)

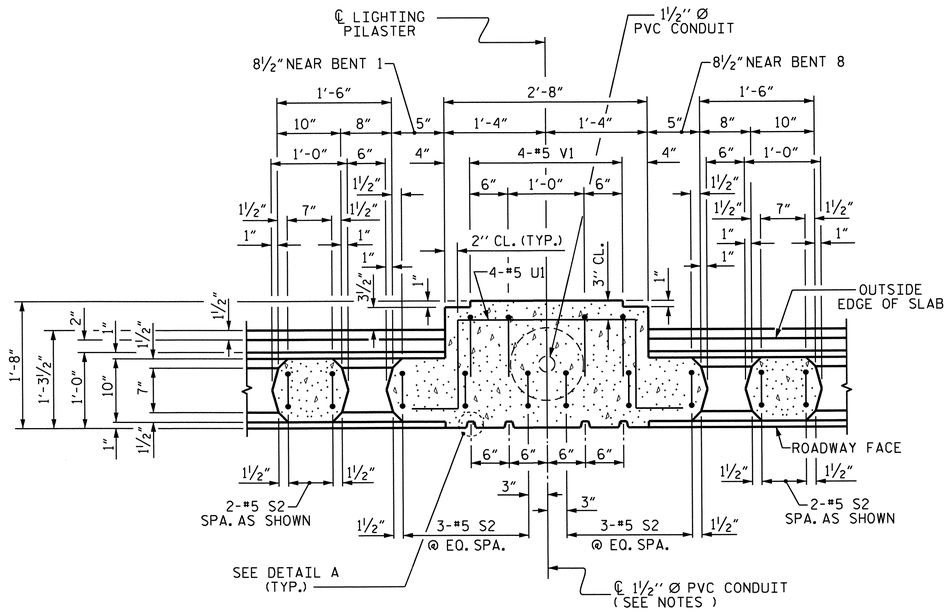

SECTION C1-C1

SHOWING LIGHTING PILASTER

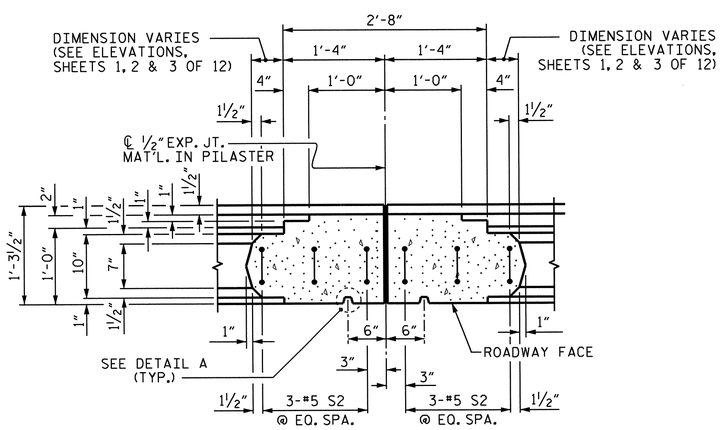

SECTION D1-D1

SHOWING JOINT IN PILASTER
(FOR LOCATIONS SEE ELEVATIONS, SHEETS 1, 2 & 3 OF 12)

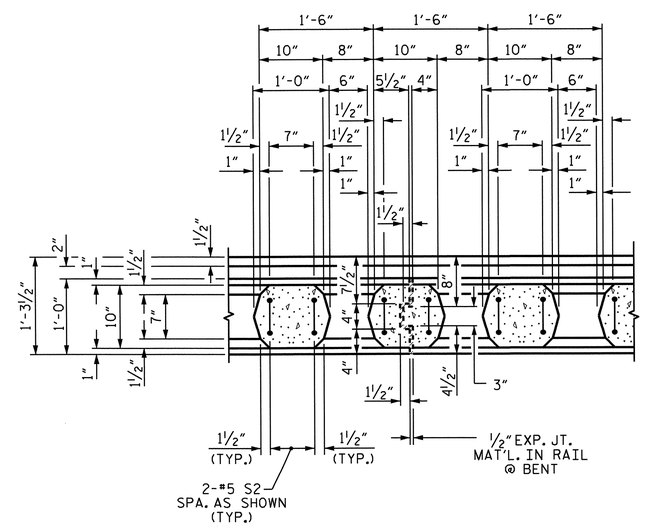

SECTION E1-E1

(KEY DETAIL)

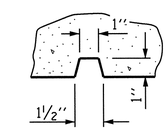

DETAIL A

TYPICAL FLUTE

NOTES

FOR CONDUIT DETAILS, SEE "ELECTRICAL CONDUIT SYSTEM" PLAN SHEET.

ANCHOR BOLTS FOR LIGHT POLE ARE REQUIRED IN LIGHTING PILASTER. COORDINATE WITH CITY OF BEAUFORT TO INSTALL ANCHOR BOLTS ACCORDING TO POLE MANUFACTURER SPECIFICATIONS.

✱ THIS OPENING TO MATCH FORMED OPENING IN DECK.

NORTH CAROLINA PROFESSIONAL SEAL 14855 ENGINEER DOUGLAS R. CALHOUN
10-22-13

PROJECT NO. R-3307
CARTERET COUNTY
STATION: 16+05.50 -Y2-

SHEET 7 OF 12

STATE OF NORTH CAROLINA
DEPARTMENT OF TRANSPORTATION
RALEIGH

SUPERSTRUCTURE

CLASSIC CONCRETE BRIDGE RAIL WITH SIDEWALK

REVISIONS						SHEET NO.
NO.	BY:	DATE:	NO.	BY:	DATE:	S-309
1			3			TOTAL SHEETS
2			4			333

DRAWN BY : D.G. ELY DATE : 03/2013
CHECKED BY : ASHVIN PATEL DATE : 05/2013
DESIGN ENGINEER OF RECORD : D. R. CALHOUN DATE : 09/2013

10-SEP-2013 15:59
R:\Structures\Plans\SUPERSTRUCTURE\Microstation\R-3307_SD_classic rail.dgn
dely

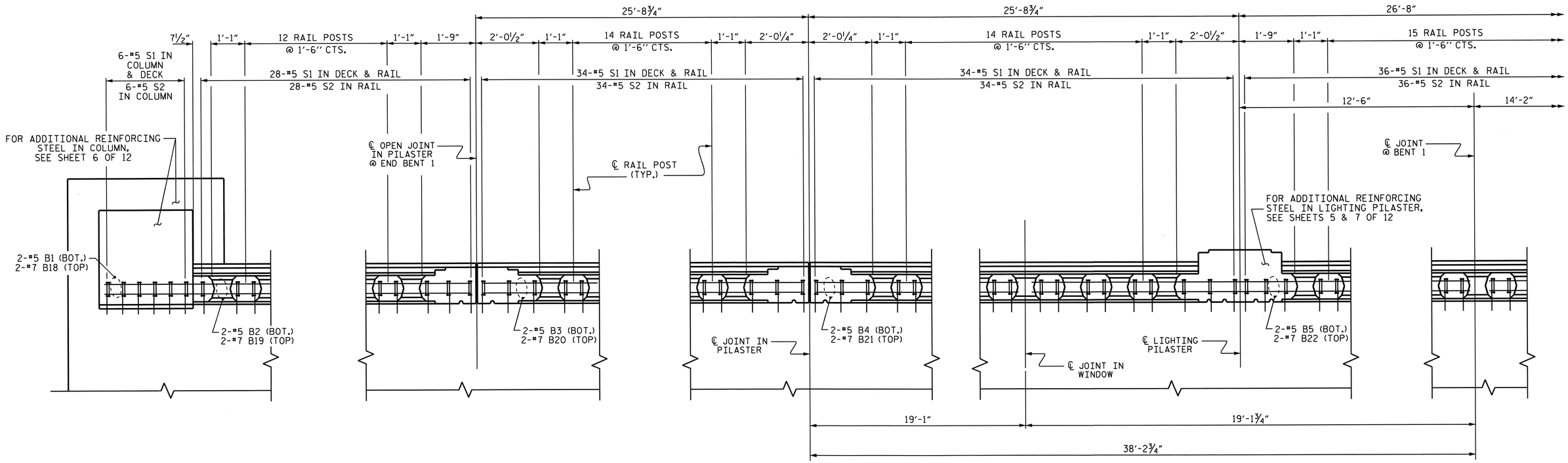

PLAN OF SPAN A

(FOR EXACT PLACEMENT OF "S" BARS IN DECK & RAIL, SEE SHEET 7 OF 12)
(LEFT SIDE SHOWN, RIGHT SIDE SIMILAR)

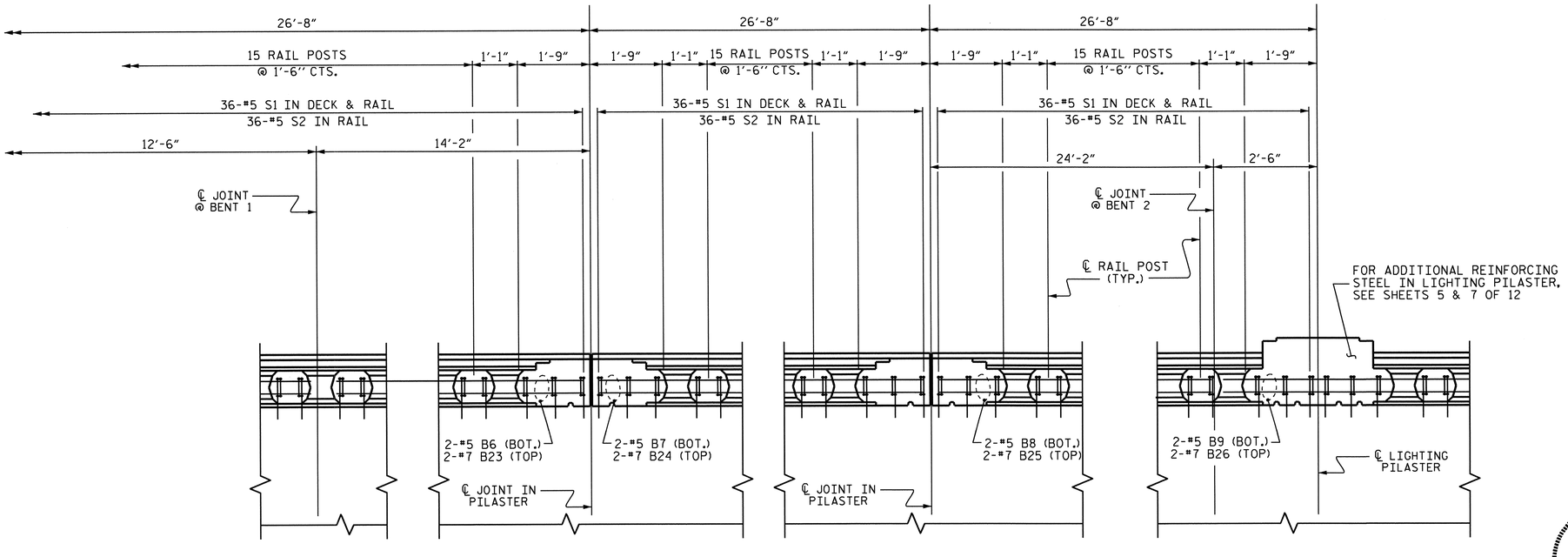

PLAN OF SPAN B

(FOR EXACT PLACEMENT OF "S" BARS IN DECK & RAIL, SEE SHEET 7 OF 12)
(LEFT SIDE SHOWN, RIGHT SIDE SIMILAR)

PROJECT NO. R-3307
CARTERET COUNTY
STATION: 16+05.50 -Y2-

SHEET 8 OF 12

STATE OF NORTH CAROLINA
DEPARTMENT OF TRANSPORTATION
RALEIGH

SUPERSTRUCTURE

CLASSIC CONCRETE BRIDGE RAIL WITH SIDEWALK

NORTH CAROLINA PROFESSIONAL SEAL 14855 ENGINEER DOUGLAS R. CALHOUN
10-22-13

REVISIONS						SHEET NO.
NO.	BY:	DATE:	NO.	BY:	DATE:	S-310
1			3			TOTAL SHEETS
2			4			333

DRAWN BY : D.G. ELY DATE : 03/2013
CHECKED BY : ASHVIN PATEL DATE : 05/2013
DESIGN ENGINEER OF RECORD : D. R. CALHOUN DATE : 09/2013

10-SEP-2013 15:59
R:\Structures\Plans\SUPERSTRUCTURE\Microstation\R-3307_SD_classic rail.dgn
dely

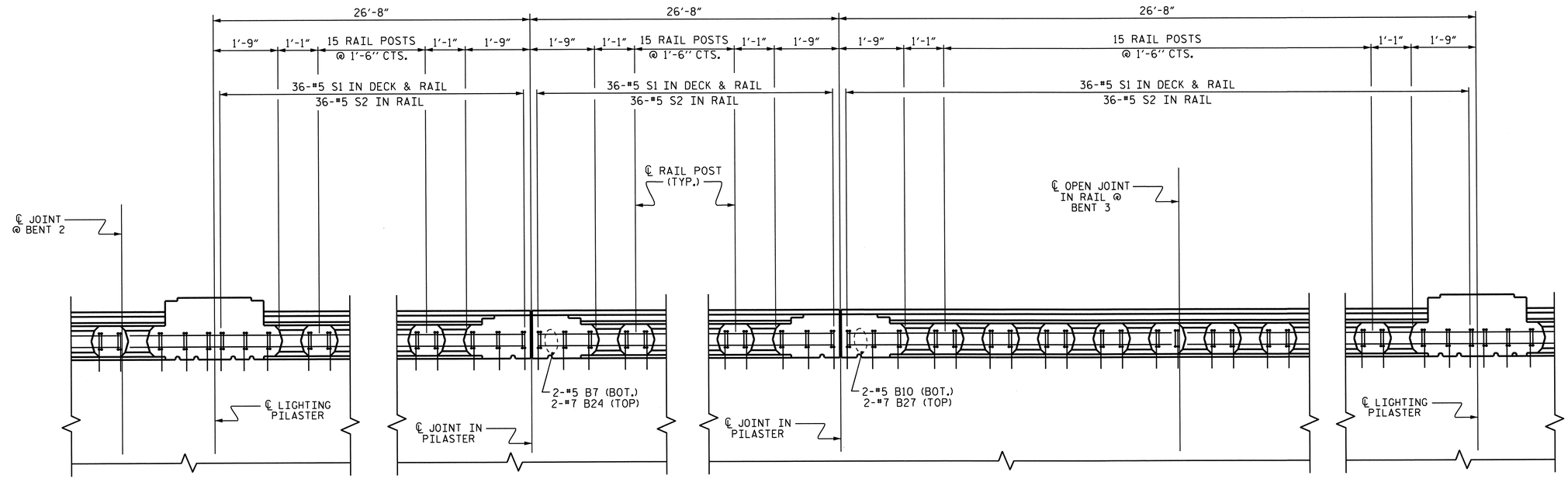

PLAN OF SPAN C

(FOR EXACT PLACEMENT OF "S" BARS IN DECK & RAIL, SEE SHEET 7 OF 12)
(LEFT SIDE SHOWN, RIGHT SIDE SIMILAR)

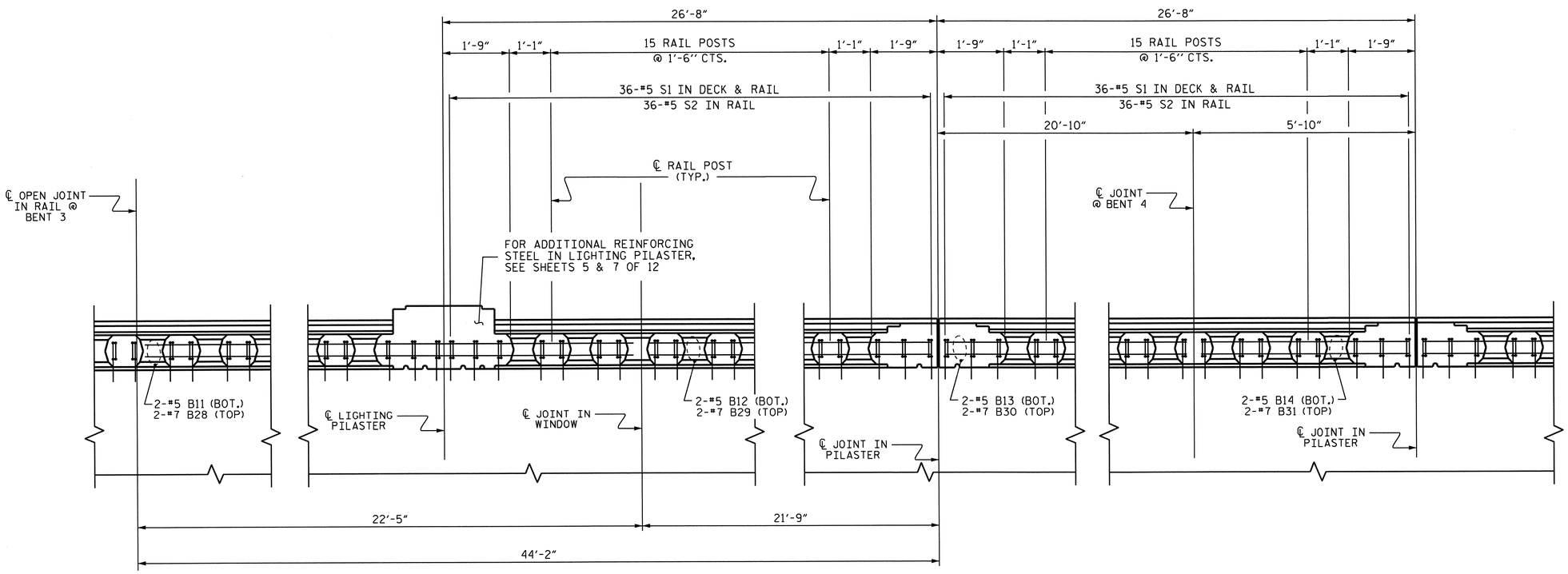

PLAN OF SPAN D

(FOR EXACT PLACEMENT OF "S" BARS IN DECK & RAIL, SEE SHEET 7 OF 12)
(LEFT SIDE SHOWN, RIGHT SIDE SIMILAR)

NORTH CAROLINA PROFESSIONAL SEAL 14855 ENGINEER DOUGLAS R. CALHOUN
10-22-13

PROJECT NO. R-3307
CARTERET COUNTY
STATION: 16+05.50 -Y2-

SHEET 9 OF 12

STATE OF NORTH CAROLINA
DEPARTMENT OF TRANSPORTATION
RALEIGH

SUPERSTRUCTURE

CLASSIC CONCRETE BRIDGE RAIL WITH SIDEWALK

REVISIONS						SHEET NO.
NO.	BY:	DATE:	NO.	BY:	DATE:	S-311
1			3			TOTAL SHEETS
2			4			333

DRAWN BY : D.G. ELY DATE : 03/2013
CHECKED BY : ASHVIN PATEL DATE : 05/2013
DESIGN ENGINEER OF RECORD : D. R. CALHOUN DATE : 09/2013

10-SEP-2013 15:59
R:\Structures\Plans\SUPERSTRUCTURE\Microstation\R-3307_SD_classic rail.dgn
dely

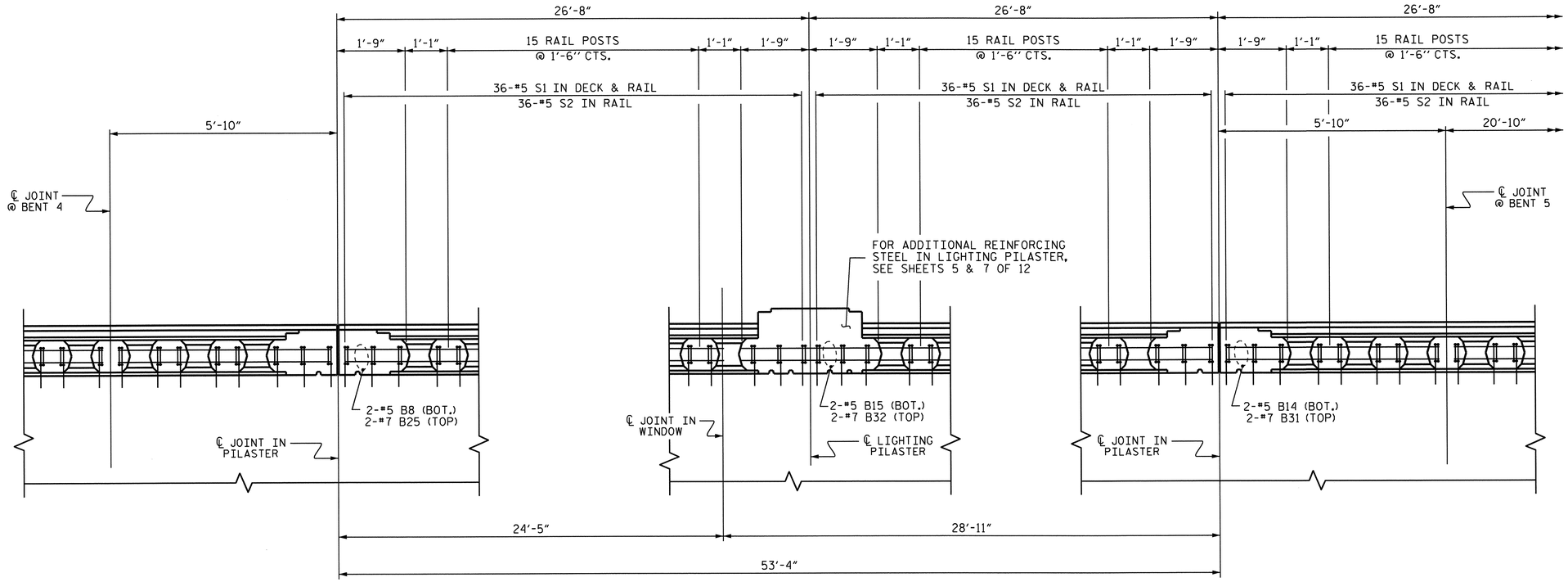

PLAN OF SPAN E

(FOR EXACT PLACEMENT OF "S" BARS IN DECK & RAIL, SEE SHEET 7 OF 12)
(LEFT SIDE SHOWN, RIGHT SIDE SIMILAR)

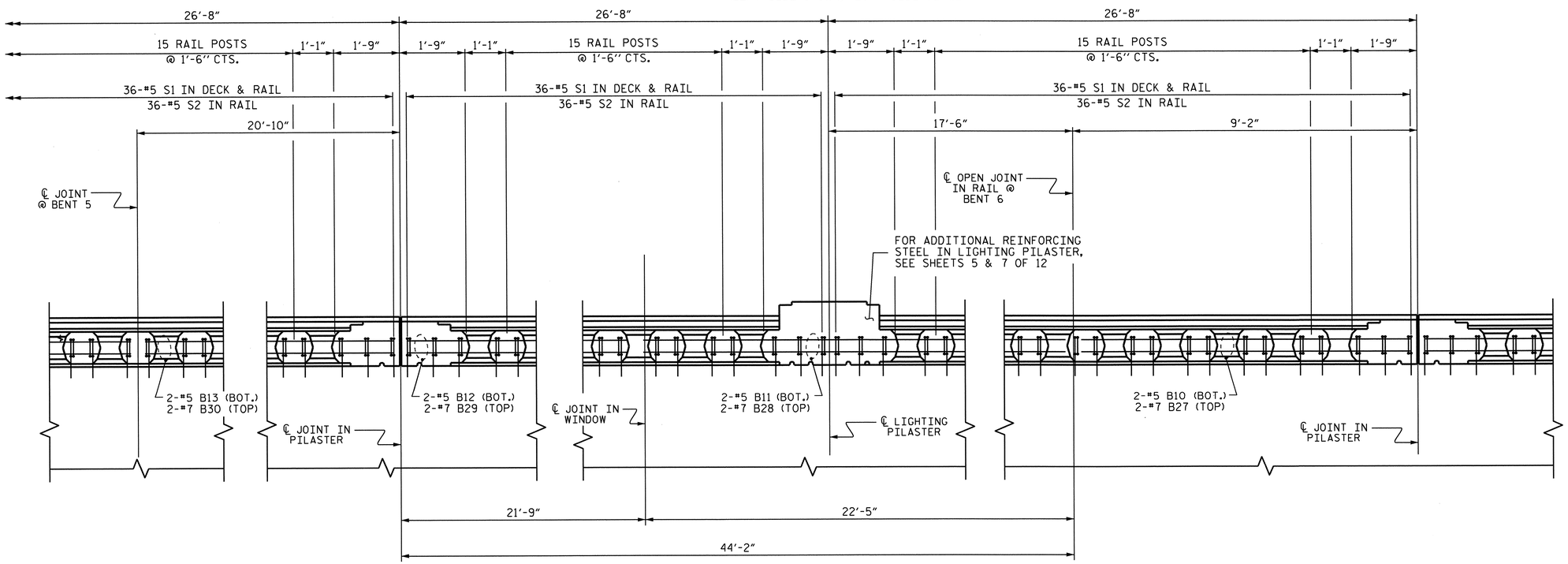

PLAN OF SPAN F

(FOR EXACT PLACEMENT OF "S" BARS IN DECK & RAIL, SEE SHEET 7 OF 12)
(LEFT SIDE SHOWN, RIGHT SIDE SIMILAR)

NORTH CAROLINA PROFESSIONAL SEAL 14855 ENGINEER DOUGLAS R. CALHOUN
10-22-13

PROJECT NO. R-3307
CARTERET COUNTY
STATION: 16+05.50 -Y2-

SHEET 10 OF 12

STATE OF NORTH CAROLINA
DEPARTMENT OF TRANSPORTATION
RALEIGH

SUPERSTRUCTURE

CLASSIC CONCRETE BRIDGE RAIL WITH SIDEWALK

REVISIONS						SHEET NO.
NO.	BY:	DATE:	NO.	BY:	DATE:	S-312
1			3			TOTAL SHEETS
2			4			333

DRAWN BY : D.G. ELY DATE : 03/2013
CHECKED BY : ASHVIN PATEL DATE : 05/2013
DESIGN ENGINEER OF RECORD : D. R. CALHOUN DATE : 09/2013

10-SEP-2013 15:59
R:\Structures\Plans\SUPERSTRUCTURE\Microstation\R-3307_SD_classic rail.dgn
dely

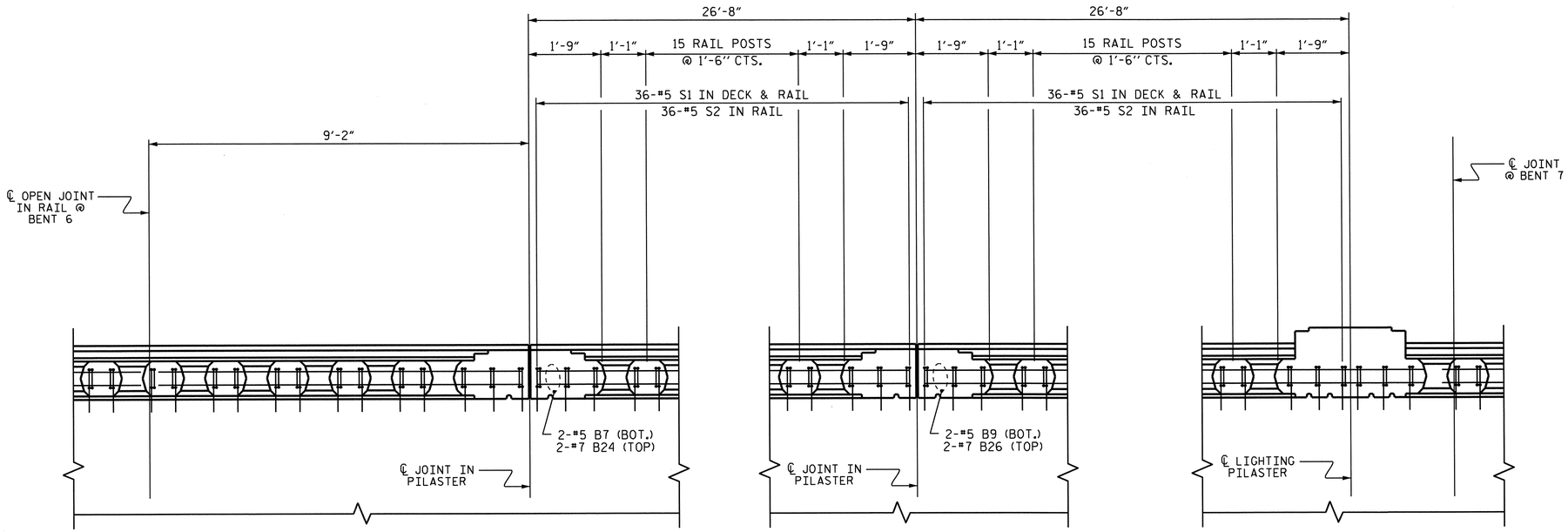

PLAN OF SPAN G

(FOR EXACT PLACEMENT OF "S" BARS IN DECK & RAIL, SEE SHEET 7 OF 12)
(LEFT SIDE SHOWN, RIGHT SIDE SIMILAR)

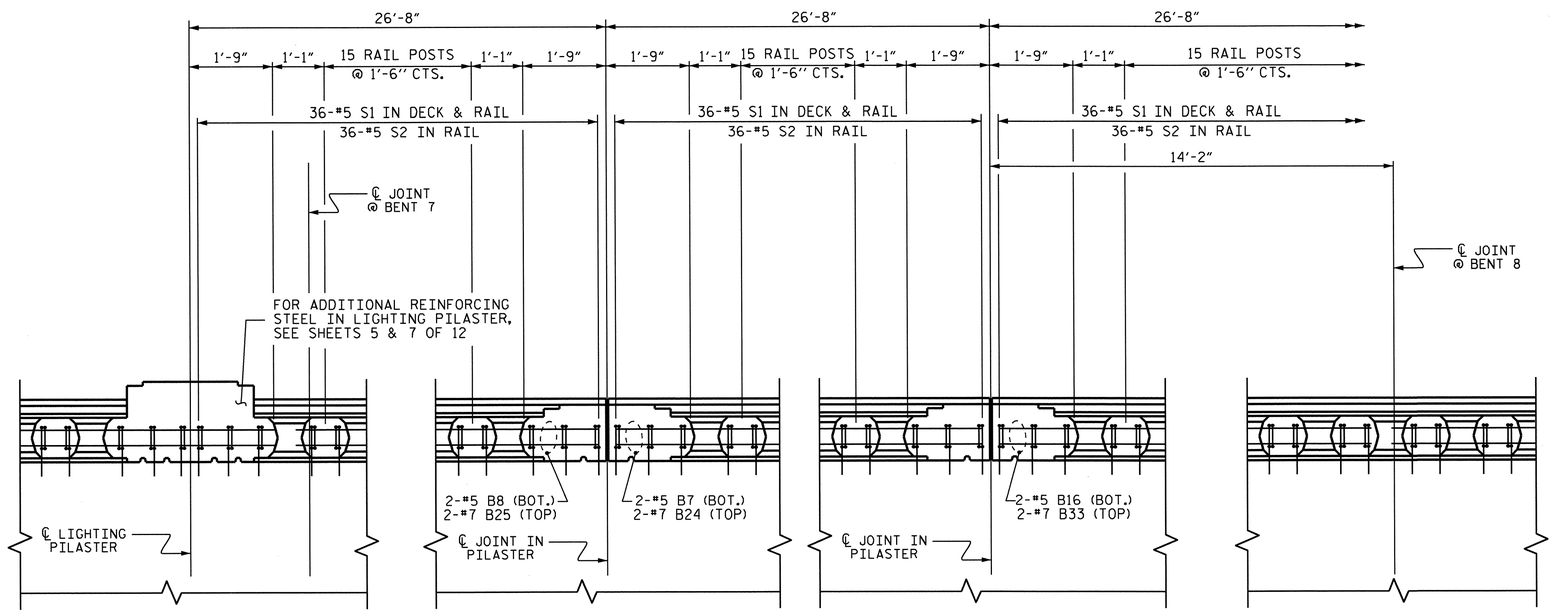

PLAN OF SPAN H

(FOR EXACT PLACEMENT OF "S" BARS IN DECK & RAIL, SEE SHEET 7 OF 12)
(LEFT SIDE SHOWN, RIGHT SIDE SIMILAR)

NORTH CAROLINA PROFESSIONAL SEAL 14855 ENGINEER DOUGLAS R. CALHOUN
10-22-13

PROJECT NO. R-3307
CARTERET COUNTY
STATION: 16+05.50 -Y2-

SHEET 11 OF 12

STATE OF NORTH CAROLINA
DEPARTMENT OF TRANSPORTATION
RALEIGH

SUPERSTRUCTURE

CLASSIC CONCRETE BRIDGE RAIL WITH SIDEWALK

REVISIONS						SHEET NO.
NO.	BY:	DATE:	NO.	BY:	DATE:	S-313
1			3			TOTAL SHEETS
2			4			333

DRAWN BY : D.G. ELY DATE : 03/2013
CHECKED BY : ASHVIN PATEL DATE : 05/2013
DESIGN ENGINEER OF RECORD : D. R. CALHOUN DATE : 09/2013

10-SEP-2013 15:58
R:\Structures\Plans\SUPERSTRUCTURE\Microstation\R-3307_SD_classic rail.dgn
dely

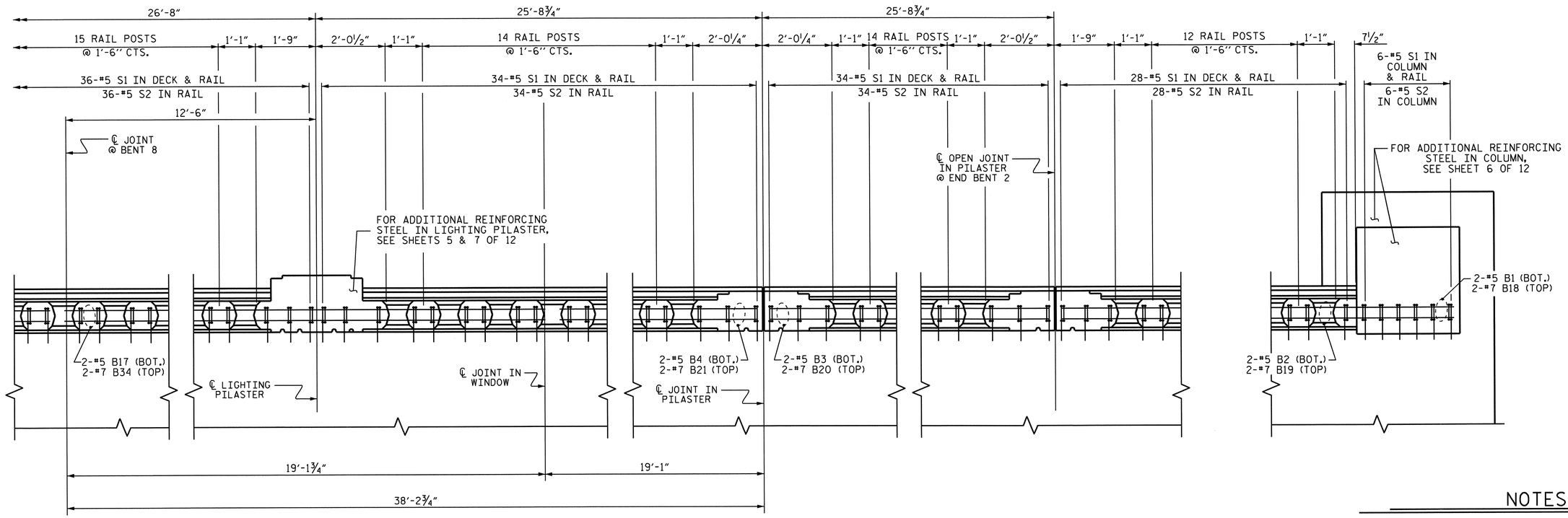

PLAN OF SPAN I

(FOR EXACT PLACEMENT OF "S" BARS IN DECK & RAIL, SEE SHEET 7 OF 12)
(LEFT SIDE SHOWN, RIGHT SIDE SIMILAR)

NOTES

CLASSIC CONCRETE BRIDGE RAIL IN A CONTINUOUS UNIT SHALL NOT BE CAST UNTIL ALL SLAB CONCRETE IN THE UNIT HAS BEEN CAST AND HAS REACHED A MINIMUM COMPRESSIVE STRENGTH OF 3,000 PSI.

ALL REINFORCING STEEL IN THE CLASSIC CONCRETE BRIDGE RAIL SHALL BE EPOXY COATED.

THE COST OF THE BRIDGE COLUMNS ARE INCLUDED IN THE PAY ITEM "CLASSIC CONCRETE BRIDGE RAIL."

BILL OF MATERIAL

FOR CLASSIC CONCRETE BRIDGE RAIL AND COLUMNS ONLY

BAR	No.	SIZE	TYPE	LENGTH	WEIGHT
✱ A2	80	#6	STR	5'-0"	601
✱ B1	8	#5	STR	6'-3"	52
✱ B2	8	#5	STR	20'-7"	172
✱ B3	8	#5	STR	25'-3"	211
✱ B4	8	#5	STR	18'-8"	156
✱ B5	4	#5	STR	18'-9"	78
✱ B6	4	#5	STR	13'-9"	57
✱ B7	16	#5	STR	26'-3"	438
✱ B8	12	#5	STR	24'-0"	300
✱ B9	8	#5	STR	28'-6"	238
✱ B10	8	#5	STR	9'-0"	75
✱ B11	8	#5	STR	21'-8"	181
✱ B12	8	#5	STR	21'-4"	178
✱ B13	8	#5	STR	20'-5"	170
✱ B14	8	#5	STR	5'-5"	45
✱ B15	4	#5	STR	28'-9"	120
✱ B16	4	#5	STR	13'-6"	56
✱ B17	4	#5	STR	19'-0"	79
✱ B18	8	#7	STR	10'-0"	164
✱ B19	8	#7	STR	20'-7"	337
✱ B20	8	#7	STR	25'-3"	413
✱ B21	8	#7	STR	18'-5"	301
✱ B22	4	#7	STR	19'-3"	157
✱ B23	4	#7	STR	13'-6"	110
✱ B24	16	#7	STR	26'-3"	858
✱ B25	12	#7	STR	24'-3"	595
✱ B26	8	#7	STR	28'-3"	462
✱ B27	8	#7	STR	9'-3"	151
✱ B28	8	#7	STR	21'-8"	354
✱ B29	8	#7	STR	21'-1"	345
✱ B30	8	#7	STR	20'-5"	334
✱ B31	8	#7	STR	5'-5"	89
✱ B32	4	#7	STR	28'-6"	233
✱ B33	4	#7	STR	13'-9"	112
✱ B34	4	#7	STR	19'-0"	155
✱ B35	40	#6	STR	4'-8"	280
✱ L1	60	#5	5	5'-4"	334
✱ M1	80	#5	STR	7'-7"	633
✱ S1	1704	#5	1	4'-10"	8590
✱ S2	1704	#5	2	8'-6"	15107
✱ U1	56	#5	3	6'-0"	350
✱ U2	64	#5	4	6'-2"	412
✱ V1	56	#5	5	4'-0"	234

✱ EPOXY COATED REINFORCING STEEL 34,317 LBS.

CLASS AA CONCRETE 170.4 CU. YDS.

CLASSIC CONCRETE BRIDGE RAIL 1262.0 LIN. FT.

✱ THESE BARS ARE EPOXY COATED

BAR TYPES

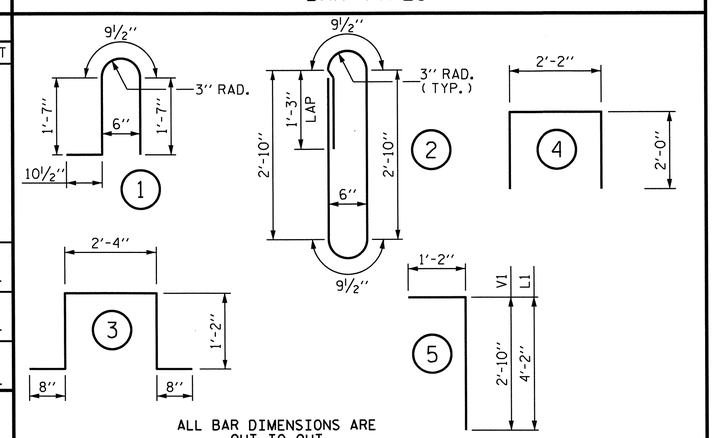

PROJECT NO. R-3307
CARTERET COUNTY
STATION: 16+05.50 -Y2-

SHEET 12 OF 12

STATE OF NORTH CAROLINA
DEPARTMENT OF TRANSPORTATION
RALEIGH

SUPERSTRUCTURE

CLASSIC CONCRETE BRIDGE RAIL WITH SIDEWALK

NORTH CAROLINA PROFESSIONAL SEAL 14855 ENGINEER DOUGLAS R. CALHOUN
10-22-13

REVISIONS						SHEET NO.
NO.	BY:	DATE:	NO.	BY:	DATE:	S-314
1			3			TOTAL SHEETS
2			4			333

DRAWN BY : D.G. ELY DATE : 03/2013
CHECKED BY : ASHVIN PATEL DATE : 05/2013
DESIGN ENGINEER OF RECORD : D. R. CALHOUN DATE : 09/2013

10-SEP-2013 15:58
R:\Structures\Plans\SUPERSTRUCTURE\Microstation\R-3307_SD_classic rail.dgn
dely

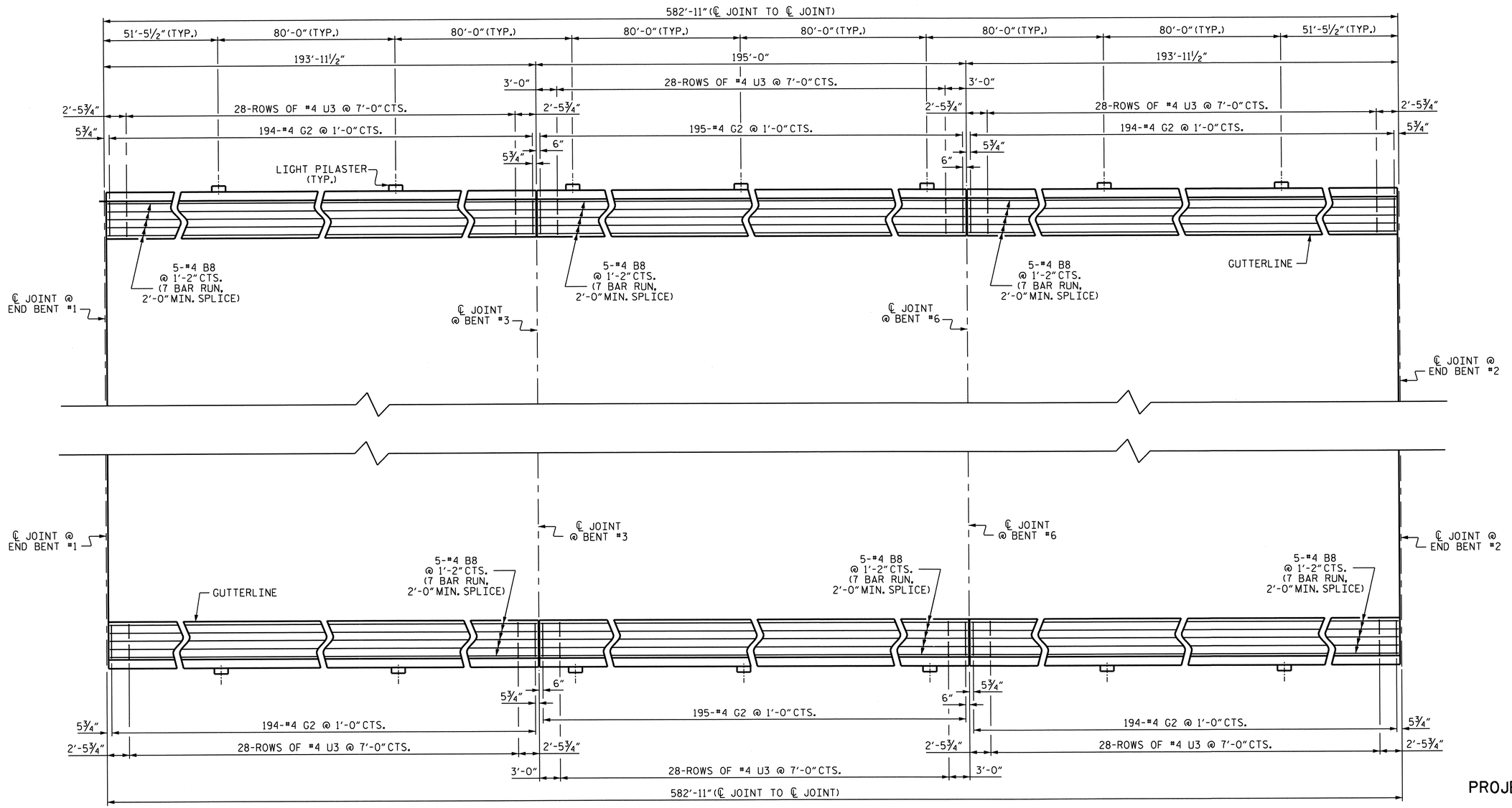

PLAN

FOR SIDEWALK ON APPROACH SLABS, SEE BRIDGE APPROACH SLAB DETAILS SHEET.

NOTES :

FOR CLASSIC CONCRETE BRIDGE RAIL REINFORCING STEEL AND DETAILS, SEE "CLASSIC CONCRETE BRIDGE RAIL" SHEETS.

THE JOINT IN THE DECK AT THE END BENTS SHALL BE SAWED PRIOR TO CASTING OF THE SIDEWALKS.

GROOVED CONTRACTION JOINTS ½" IN DEPTH, SHALL BE TOOLED IN ALL EXPOSED FACES OF SIDEWALK IN ACCORDANCE WITH ARTICLE 825-10(B) OF THE STANDARD SPECIFICATIONS. THE CONTRACTION JOINTS SHALL BE LOCATED AT A SPACING OF 8 FEET TO 10 FEET BETWEEN JOINTS. NO CONTRACTION JOINTS WILL BE REQUIRED FOR SEGMENTS LESS THAN 10 FEET IN LENGTH.

THE SIDEWALK IN A CONTINUOUS UNIT SHALL NOT BE CAST UNTIL ALL SLAB CONCRETE IN THE UNIT HAS BEEN CAST AND HAS REACHED A MINIMUM COMPRESSIVE STRENGTH OF 3000 PSI.

SIDEWALK ON THE BRIDGE IS PAID FOR AS PART OF THE "REINFORCED CONCRETE DECK SLAB" PAY ITEM.

ALL REINFORCING STEEL IN SIDEWALK SHALL BE EPOXY COATED.

FOR GROUT FOR STRUCTURES, SEE SPECIAL PROVISIONS.

FOR PVC CONDUIT AND JUNCTION BOX LOCATIONS, SEE ELECTRICAL CONDUIT SYSTEM SHEET.

NORTH CAROLINA PROFESSIONAL SEAL 14855 ENGINEER DOUGLAS R. CALHOUN
8-22-13

PROJECT NO. R-3307
CARTERET COUNTY
STATION: 16+05.50 -Y2-

SHEET 1 OF 2

STATE OF NORTH CAROLINA
DEPARTMENT OF TRANSPORTATION
RALEIGH

SIDEWALK DETAIL

REVISIONS						SHEET NO.
NO.	BY:	DATE:	NO.	BY:	DATE:	S-315
1			3			TOTAL SHEETS
2			4			333

DRAWN BY : A. SORSENGINH/J.W./A. PATEL DATE : 11/28/11
CHECKED BY : D.G. ELY DATE : 1/2012
DESIGN ENGINEER OF RECORD : D. R. CALHOUN DATE : 9/2013

10-SEP-2013 15:57
R:\Structures\Plans\SUPERSTRUCTURE\Microstation\R-3307_SD_SW.dgn
dely

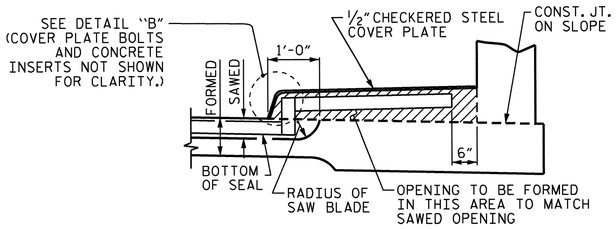

SECTION H-H

THE STEEL PLATES SHALL CONFORM TO AASHTO M270 GRADE 36 OR APPROVED EQUAL. AFTER FABRICATION, THE PLATES SHALL BE COMMERCIALLY BLAST CLEANED AND EITHER COATED WITH A MINIMUM THICKNESS OF 4 MILS (DRY) OF ZINC-RICH PAINT, GALVANIZED OR METALLIZED TO A MINIMUM THICKNESS OF 6 MILS IN ACCORDANCE WITH THE STANDARD SPECIFICATIONS. FOR THERMAL SPRAYED COATINGS (METALLIZATION), SEE SPECIAL PROVISIONS.

THE 3/4" DIAMETER HEX HEAD BOLTS SHALL CONFORM TO ASTM F593 ALLOY 304 STAINLESS STEEL.

NO SEPARATE PAYMENT WILL BE MADE FOR FURNISHING AND INSTALLING THE COVER PLATE. THE ENTIRE COST OF THIS WORK SHALL BE INCLUDED IN THE LUMP SUM PRICE FOR "FOAM JOINT SEALS".

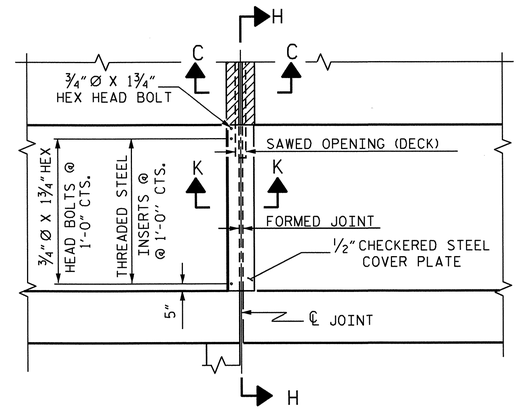

PLAN OF FOAM JOINT SEAL @ BENTS 3 & 6

BILL OF MATERIAL FOR SIDEWALK

BAR	NO.	SIZE	TYPE	LENGTH	WEIGHT
* B8	210	4	STR	29'-6"	4138
* G2	1166	4	STR	5'-0"	3894
* U3	336	4	1	3'-4"	748

* EPOXY COATED REINFORCING STEEL 8780 LBS.

CLASS AA CONCRETE 146.6 CU.YDS.

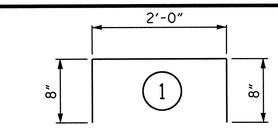

ALL BAR DIMENSIONS ARE OUT TO OUT

FOR SIDEWALK ON APPROACH SLABS, SEE BRIDGE APPROACH SLAB DETAILS SHEET.

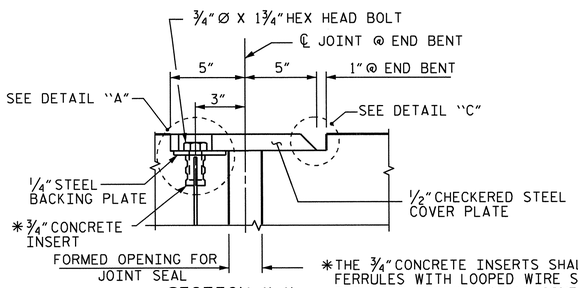

SECTION K-K

* THE 3/4" CONCRETE INSERTS SHALL BE CLOSED-END FERRULES WITH LOOPED WIRE STRUTS ATTACHED TO THEM. THE INSERTS SHALL CONFORM TO AASHTO M169, GRADE 12L14 AND SHALL HAVE A TENSILE WORKING LOAD CAPACITY OF 3000 LBS.

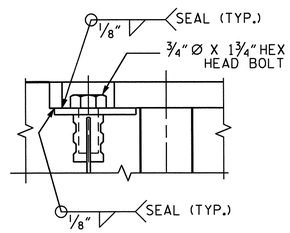

DETAIL "A"

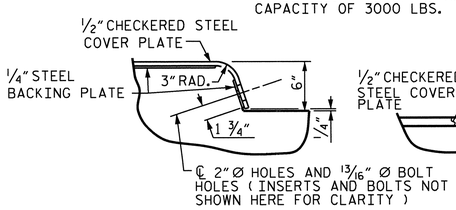

DETAIL "B"

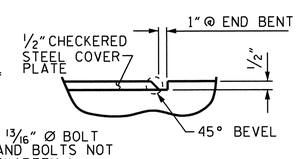

DETAIL "C"

JOINT SEAL DETAILS @ BENTS 3 & 6

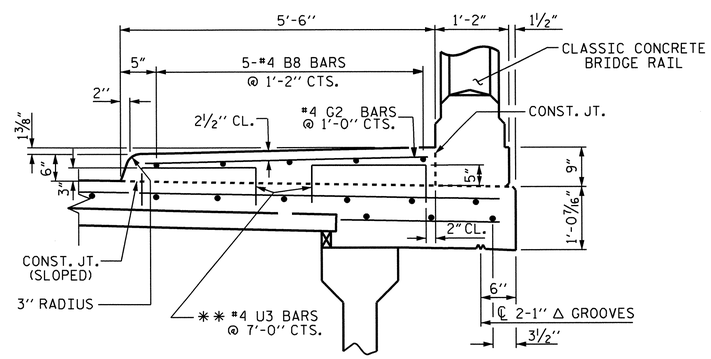

SECTION THROUGH SIDEWALK

** U3 BARS MAY BE PUSHED INTO GREEN CONCRETE AFTER SPAN HAS BEEN SCREEDED OFF.

PROJECT NO. R-3307

CARTERET COUNTY

STATION: 16+05.50 -Y2-

SHEET 2 OF 2

STATE OF NORTH CAROLINA
DEPARTMENT OF TRANSPORTATION
RALEIGH

SIDEWALK DETAIL

NORTH CAROLINA PROFESSIONAL SEAL 14855 ENGINEER DOUGLAS R. CALHOUN
10-22-13

REVISIONS						SHEET NO.
NO.	BY:	DATE:	NO.	BY:	DATE:	S-316
1			3			TOTAL SHEETS
2			4			333

DRAWN BY : A. SORSENGINH/J.W./A. PATEL DATE : 11/28/11
CHECKED BY : D.G. ELY DATE : 1/2012
DESIGN ENGINEER OF RECORD : D. R. CALHOUN DATE : 9/2013

10-SEP-2013 15:56
R:\Structures\Plans\SUPERSTRUCTURE\Microstation\R-3307_SD_SW.dgn
dely

NOTES

ALL REINFORCING STEEL IN THE MEDIAN SHALL BE EPOXY COATED.

CONCRETE MEDIAN SHALL NOT BE CAST UNTIL ALL SLAB CONCRETE HAS BEEN CAST AND HAS REACHED A MINIMUM COMPRESSIVE STRENGTH OF 3,000 PSI.

GROOVED CONTRACTION JOINTS 1/2" IN DEPTH, SHALL BE TOOLED IN ALL EXPOSED FACES OF THE CONCRETE MEDIAN IN ACCORDANCE WITH ARTICLE 825-10(B) OF THE STANDARD SPECIFICATIONS. THE CONTRACTION JOINTS SHALL BE LOCATED AT A SPACING OF 8 FEET TO 10 FEET BETWEEN EXPANSION JOINTS. NO CONTRACTION JOINTS WILL BE REQUIRED FOR SEGMENTS LESS THAN 10 FEET IN LENGTH.

THE COST OF THE CONCRETE MEDIAN SHALL BE INCLUDED IN THE PAY ITEM "REINFORCED CONCRETE DECK SLAB".

FOR CONCRETE MEDIAN ON APPROACH SLABS, SEE BRIDGE APPROACH SLAB DETAILS SHEET.

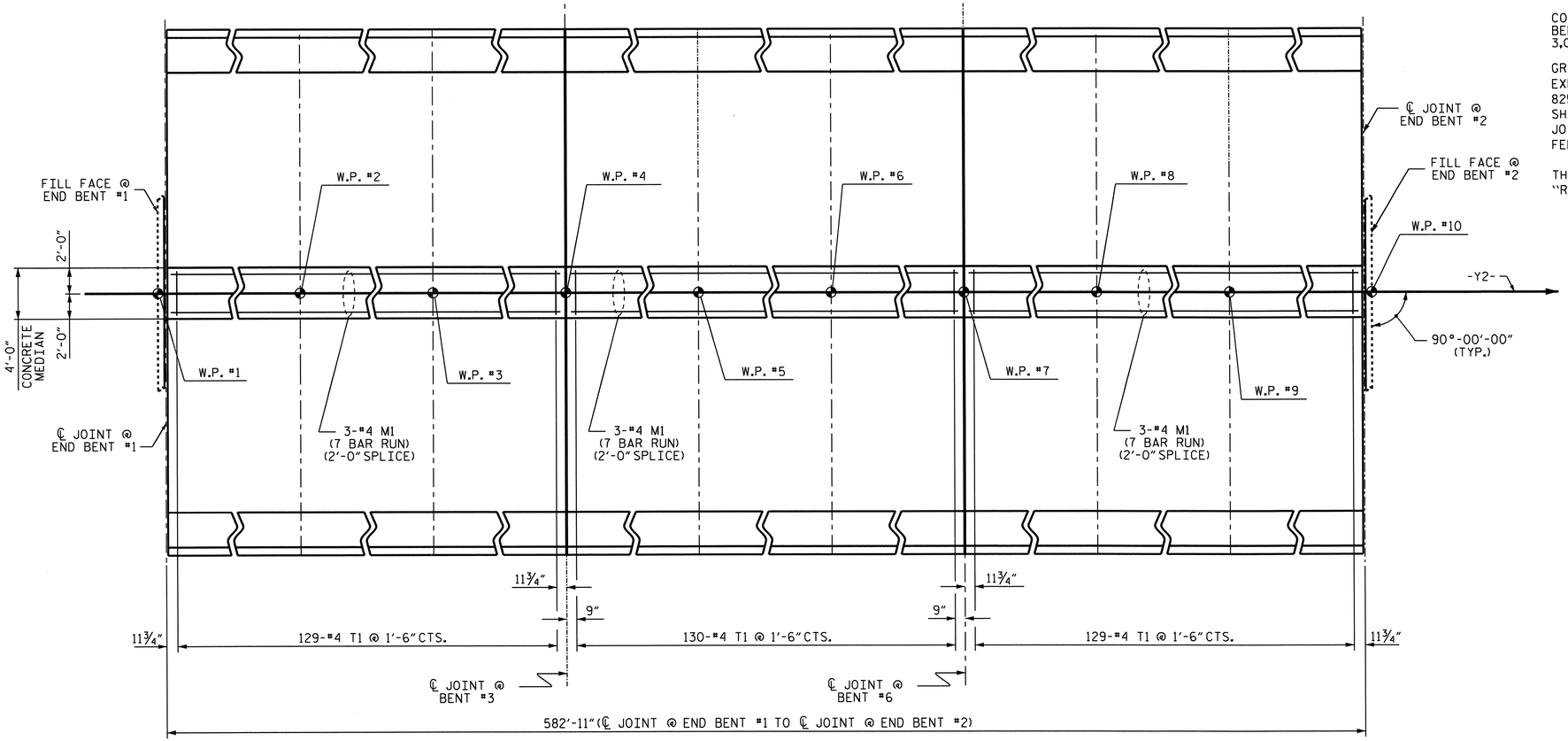

PLAN OF CONCRETE MEDIAN

BILL OF MATERIAL FOR CONCRETE MEDIAN					
BAR	NO.	SIZE	TYPE	LENGTH	WEIGHT
* M1	63	#4	STR	29'-6"	1241
* T1	388	#4	STR	2'-10"	734
* EPOXY COATED REINFORCING STEEL					LBS. 1975
CLASS AA CONCRETE					C.Y. 31.5

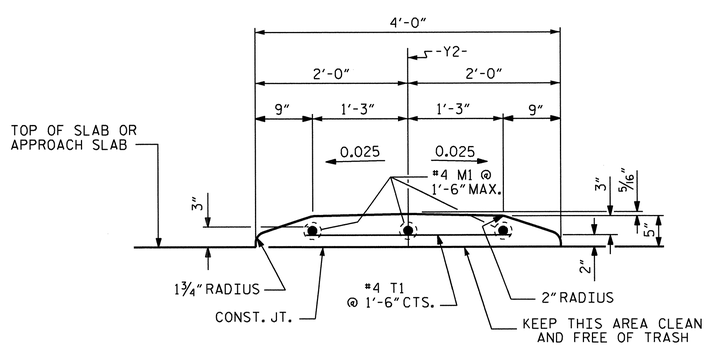

SECTION THRU CONCRETE MEDIAN

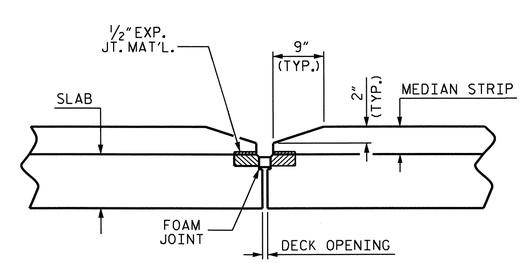

DETAILS AT FOAM JOINT

PROJECT NO. R-3307

CARTERET COUNTY

STATION: 16+05.50 -Y2-

STATE OF NORTH CAROLINA
DEPARTMENT OF TRANSPORTATION
RALEIGH

SUPERSTRUCTURE
CONCRETE MEDIAN DETAILS

NORTH CAROLINA PROFESSIONAL SEAL 14855 ENGINEER DOUGLAS R. CALHOUN
10-22-13

REVISIONS						SHEET NO.
NO.	BY:	DATE:	NO.	BY:	DATE:	S-317
1			3			TOTAL SHEETS
2			4			333

DRAWN BY : A. SORSENGINH/J.W. DATE : 11-29-11
CHECKED BY : D.G. ELY DATE : 1/2012
DESIGN ENGINEER OF RECORD : D. R. CALHOUN DATE : 9/2013

21-OCT-2013 15:25
R:\Structures\Plans\SUPERSTRUCTURE\Microstation\R-3307_SD_BM.dgn
dely

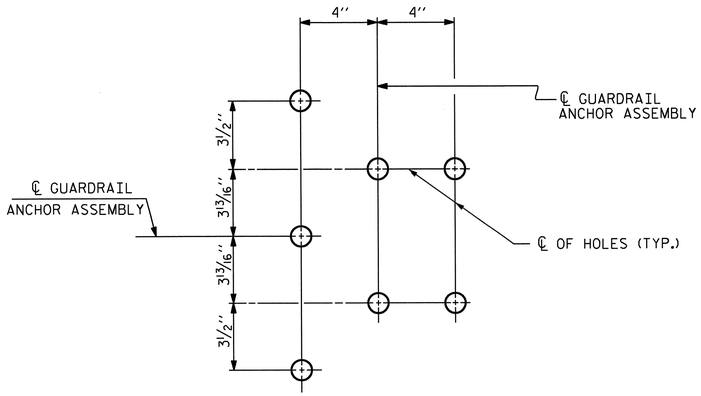

ELEVATION
(HOLE PATTERN)

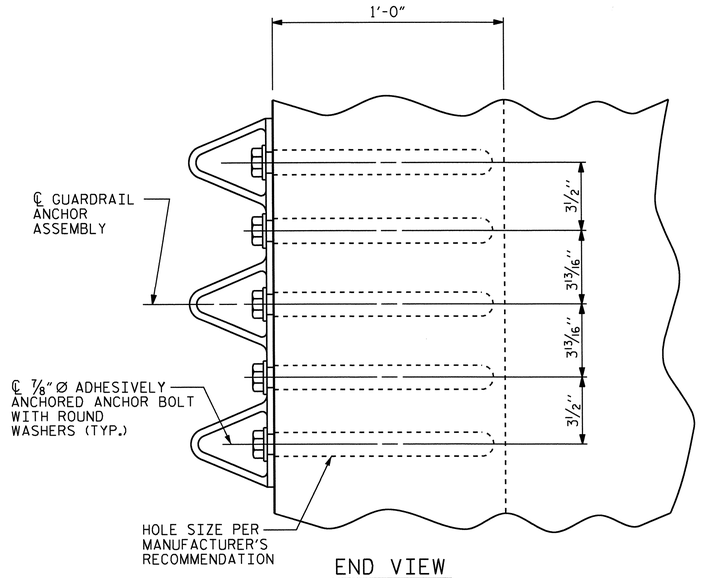

END VIEW

GUARDRAIL ANCHOR ASSEMBLY DETAILS

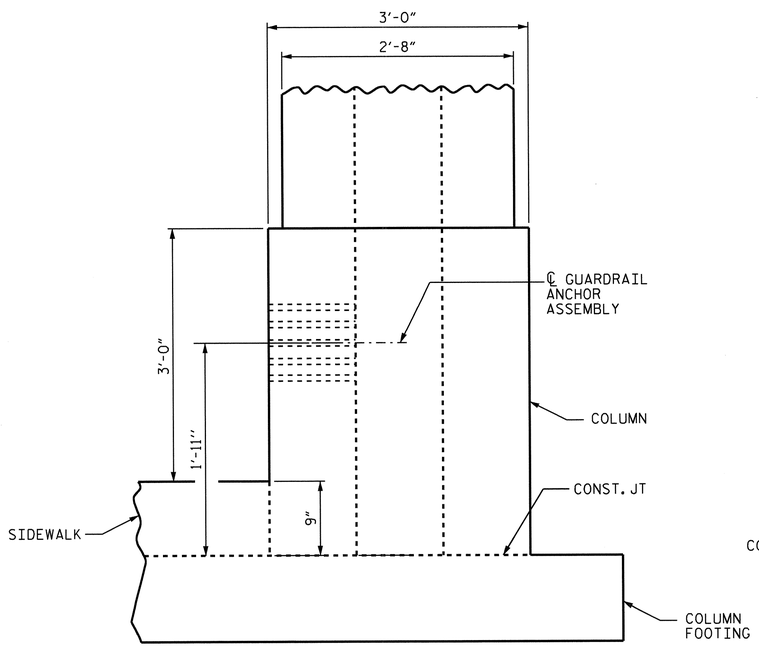

END VIEW

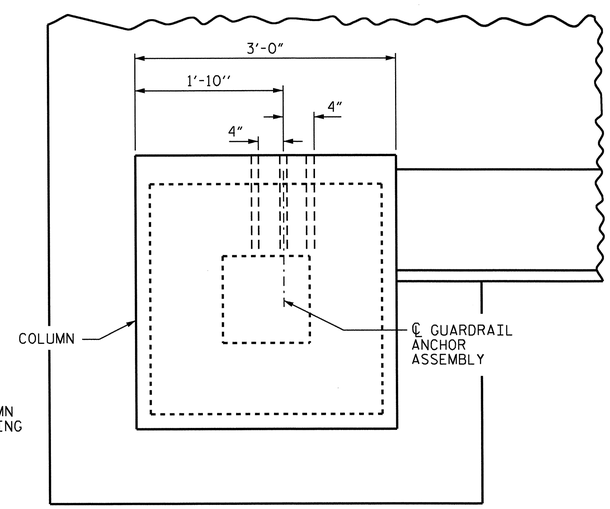

PLAN

LOCATION OF GUARDRAIL ANCHOR AT COLUMN

NOTES

THE GUARDRAIL ANCHOR ASSEMBLY SHALL CONSIST OF 7 - 7/8" Ø ADHESIVELY ANCHORED ANCHOR BOLTS AND WASHERS.

BOLTS SHALL CONFORM TO THE REQUIREMENTS OF ASTM A307. BOLTS AND WASHERS SHALL BE GALVANIZED. AT THE CONTRACTOR'S OPTION, STAINLESS STEEL BOLTS AND WASHERS MAY BE USED AS AN ALTERNATE FOR THE 7/8" Ø GALVANIZED BOLTS AND WASHERS. THEY SHALL CONFORM TO OR EXCEED THE MECHANICAL REQUIREMENTS OF ASTM A307. THE USE OF THIS ALTERNATE SHALL BE APPROVED BY THE ENGINEER.

THE GUARDRAIL ANCHOR ASSEMBLY IS REQUIRED AT ALL POINTS WHERE APPROACH GUARDRAIL IS TO BE ATTACHED TO THE END POST. FOR POINTS OF ATTACHMENT, SEE SKETCH.

THE COST OF THE GUARDRAIL ANCHOR ASSEMBLIES WITH ADHESIVELY ANCHORED ANCHOR BOLTS AND WASHERS COMPLETE IN PLACE, SHALL BE INCLUDED IN THE VARIOUS PAY ITEMS.

THE VERTICAL REINFORCING BARS MAY BE SHIFTED SLIGHTLY IN THE COLUMN TO CLEAR ASSEMBLY BOLTS.

THE ANCHOR BOLT HOLES SHALL BE DRILLED WITH A CORE BIT. IMPACT TOOLS WILL NOT BE PERMITTED. ANY CONCRETE DAMAGED BY THIS WORK SHALL BE REPAIRED TO THE SATISFACTION OF THE ENGINEER.

LEVEL I FIELD TESTING IS REQUIRED FOR THE ADHESIVELY ANCHORED ANCHOR BOLTS AND THE YIELD LOAD OF THE ANCHOR BOLT IS 28 KIPS. FOR ADHESIVELY ANCHORED ANCHOR BOLTS, SEE SECTION 420 OF THE STANDARD SPECIFICATIONS.

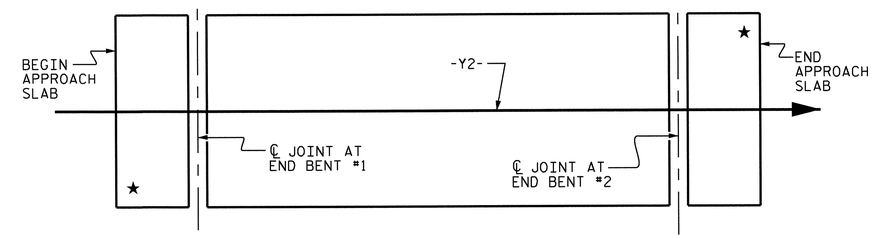

SKETCH SHOWING POINTS OF ATTACHMENT

★ LOCATION OF GUARDRAIL ATTACHMENT

PROJECT NO. R-3307
CARTERET COUNTY
STATION: 16+05.50 -Y2-

STATE OF NORTH CAROLINA
DEPARTMENT OF TRANSPORTATION
RALEIGH

STANDARD
GUARDRAIL ANCHORAGE DETAILS
FOR CLASSIC CONCRETE BRIDGE RAIL

NORTH CAROLINA PROFESSIONAL SEAL 14855 ENGINEER DOUGLAS R. CALHOUN
10-22-13

REVISIONS								SHEET NO.
NO.	BY:	DATE:	NO.	BY:	DATE:			S-318
1			3					TOTAL SHEETS
2			4					333

ASSEMBLED BY :	A. SORSENGINH	DATE :	11/29/11
CHECKED BY :	D.G. ELY/AKP	DATE :	1/2012
DRAWN BY : MAA	5/10	ADDED 5/6/10	
CHECKED BY : GM	5/10	REV. 10/1/11	MAA/GM
		REV. 12/5/11	MAA/GM

STD. NO. GRA3

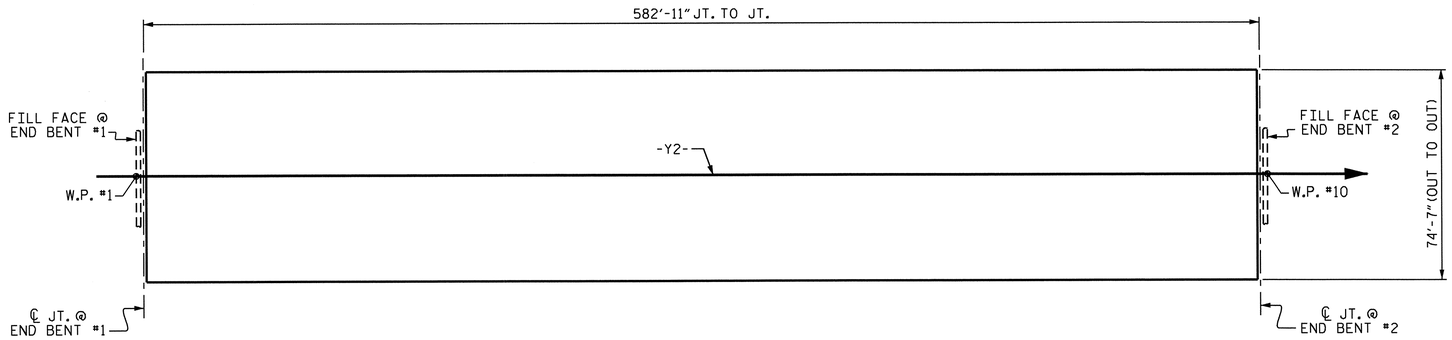

LAYOUT FOR COMPUTING AREA OF REINFORCED CONCRETE DECK SLAB (SQ. FT. = 43,476)

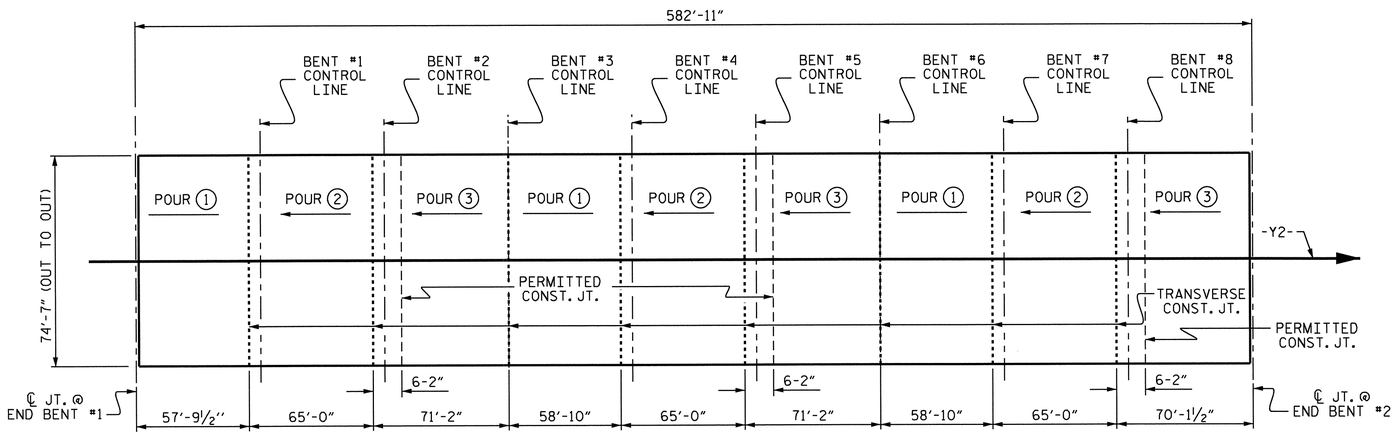

POURING SEQUENCE

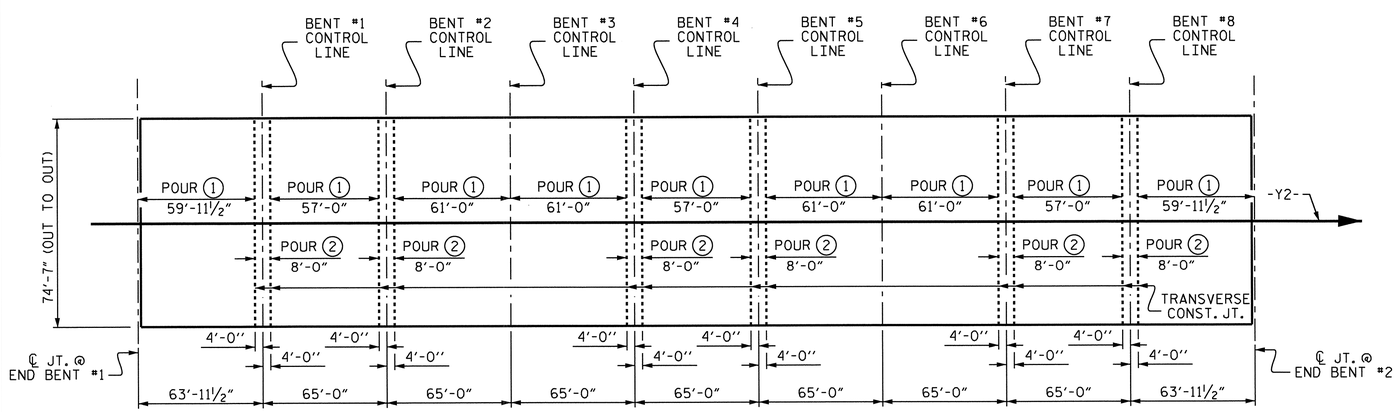

OPTIONAL POURING SEQUENCE PRESTRESSED CONCRETE SUPERSTRUCTURE

REINFORCING BAR SCHEDULE

SPANS A THRU I

BAR	NO.	SIZE	TYPE	LENGTH	WEIGHT
✳ A1	2332	#5	STR	38'-5"	93440
✳ A2	2332	#5	STR	3'-4"	8108
✳ B1	396	#4	STR	21'-8"	5731
✳ B2	594	#7	STR	49'-0"	59493
✳ B3	588	#7	STR	19'-6"	23437
✳ B4	297	#4	STR	20'-0"	3968
✳ B5	792	#4	STR	22'-2"	11727
✳ B6	80	#5	STR	50'-3"	4193
✳ B7	40	#5	STR	50'-7"	2110
✳ G1	12	#5	STR	38'-5"	481
✳ K1	24	#8	1	13'-6"	865
✳ K2	72	#8	2	20'-7"	3957
✳ K3	84	#4	STR	6'-4"	355
✳ K4	168	#4	STR	8'-6"	954
✳ K5	84	#4	STR	8'-0"	449
✳ K6	72	#4	STR	23'-11"	1150
✳ S1	336	#5	3	4'-10"	1694
✳ S2	924	#4	4	2'-9"	1697
✳ U1	84	#4	2	13'-6"	758
✳ U2	252	#4	2	11'-6"	1936

✳ EPOXY COATED REINF. STEEL = 226,503 LBS

BAR TYPES

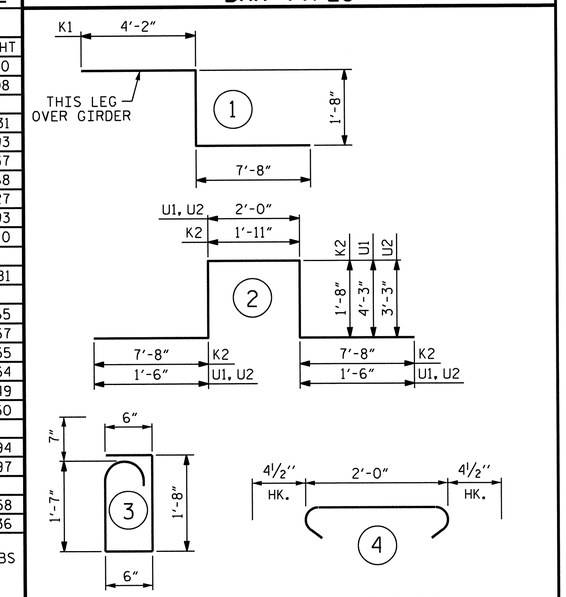

ALL BAR DIMENSIONS ARE OUT TO OUT

CLASS AA CONCRETE BREAKDOWN

3 SPAN CONTINUOUS	POUR #1 EA. CONTINUOUS UNIT (CU. YDS.)	POUR #2 EA. CONTINUOUS UNIT (CU. YDS.)	POUR #3 EA. CONTINUOUS UNIT (CU. YDS.)	TOTAL CLASS AA CONCRETE PER CONTINUOUS UNIT (CU. YDS.)	✳ EPOXY COATED REINFORCING STEEL (LBS.)
SPAN A-C	112.2	145.4	159.5	417.7	226,503
SPAN D-F	114.1	145.4	160.0	419.5	
SPAN G-I	112.6	145.4	157.7	415.7	
✳✳ TOTAL				1252.9	226,503

✳✳ QUANTITIES FOR CLASSIC RAIL, COLUMNS, SIDEWALK, CONCRETE MEDIAN, AND LIGHT PEDESTALS ARE NOT INCLUDED.

GROOVING BRIDGE FLOORS

APPROACH SLABS	2,803	SQ.FT.
BRIDGE DECK	33,737	SQ.FT.
TOTAL	36,540	SQ.FT.

SUPERSTRUCTURE REINFORCING STEEL LENGTHS ARE BASED ON THE FOLLOWING MINIMUM SPLICE LENGTHS

BAR SIZE	SUPERSTRUCTURE EXCEPT APPROACH SLABS, PARAPET, AND BARRIER RAIL		APPROACH SLABS		PARAPET AND BARRIER RAIL
	EPOXY COATED	UNCOATED	EPOXY COATED	UNCOATED	
#4	2'-0"	1'-9"	2'-0"	1'-9"	2'-9"
#5	2'-6"	2'-2"	2'-6"	2'-2"	3'-5"
#6	3'-0"	2'-7"	3'-10"	2'-7"	4'-4"
#7	5'-3"	3'-6"			
#8	6'-10"	4'-7"			

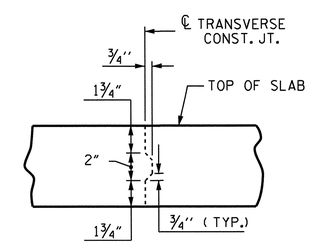

TRANSVERSE CONSTRUCTION JOINT DETAIL

NOTE: REINFORCING STEEL IN SLAB NOT SHOWN. LONGITUDINAL REINFORCING STEEL SHALL BE CONTINUOUS THRU JOINT.

THIS DETAIL DOES NOT APPLY TO ℄ OF JOINTS @ BENT #3 AND BENT #6.

PROJECT NO. R-3307
CARTERET COUNTY
STATION: 16+05.50 -Y2-

STATE OF NORTH CAROLINA
DEPARTMENT OF TRANSPORTATION
RALEIGH

STANDARD
SUPERSTRUCTURE BILL OF MATERIAL

NORTH CAROLINA PROFESSIONAL SEAL 14855 ENGINEER DOUGLAS R. CALOUN
10-22-13

ASSEMBLED BY : A. SORSENGINH/J.W.		DATE :	11/30/11
CHECKED BY : D.G. ELY		DATE :	1/2012
DESIGN ENGINEER OF RECORD : D. R. CALOUN		DATE :	9/2013
DRAWN BY : JMB 5/87	REV. 8/16/99	RWW/LES	
CHECKED BY : SJD 9/87	REV. 5/1/06	TLA/GM	
	REV. 10/1/11	MAA/GM	

REVISIONS							SHEET NO.
NO.	BY:	DATE:	NO.	BY:	DATE:		S-319
1			3				TOTAL SHEETS
2			4				333

10-SEP-2013 15:53
R:\Structures\Plans\SUPERSTRUCTURE\Microstation\R-3307_SD_BM.dgn
dely

USE FOR LIGHTING CONSTRUCTION ONLY

NAD 83

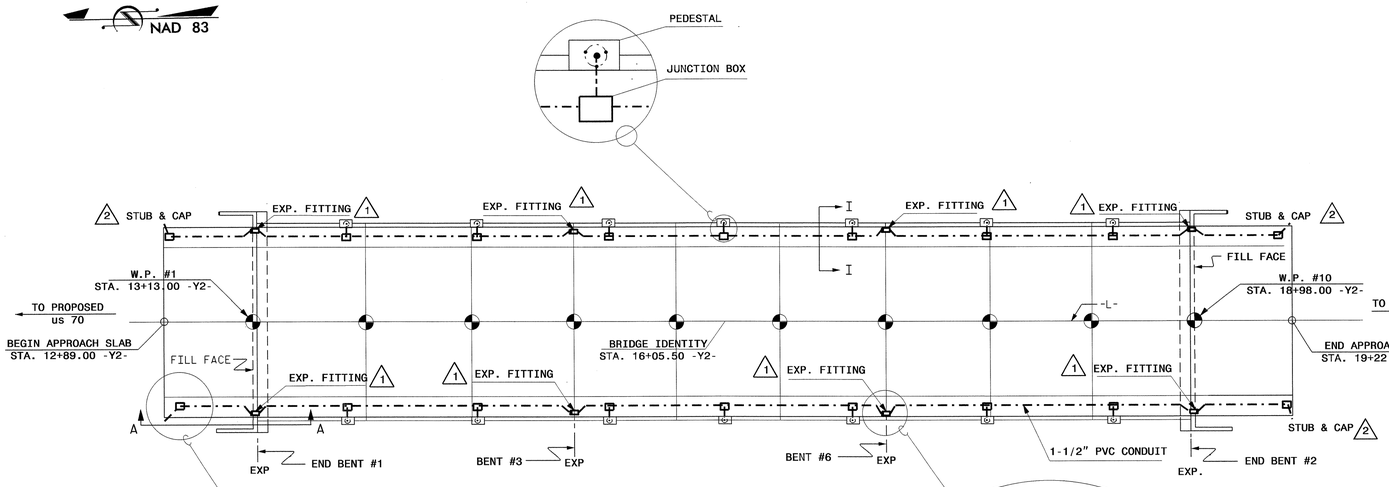

CONDUIT SYSTEM LAYOUT

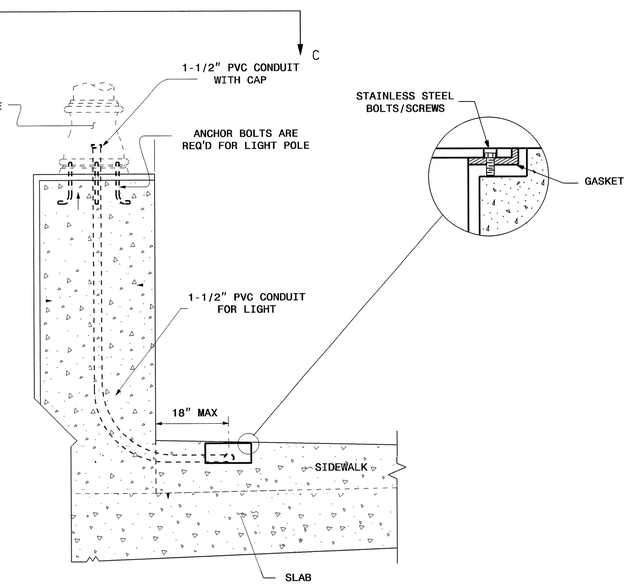

VIEW I-I

LIGHT POLE, PEDESTAL AND JUNCTION BOX

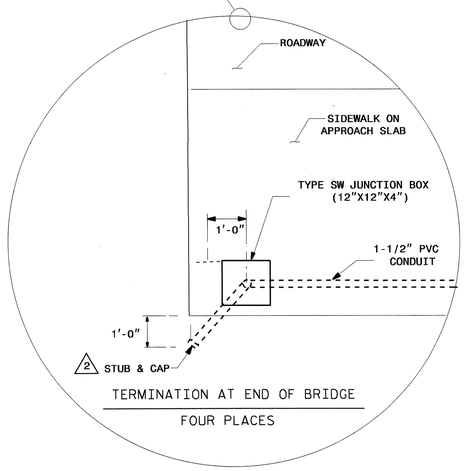

TERMINATION AT END OF BRIDGE

FOUR PLACES

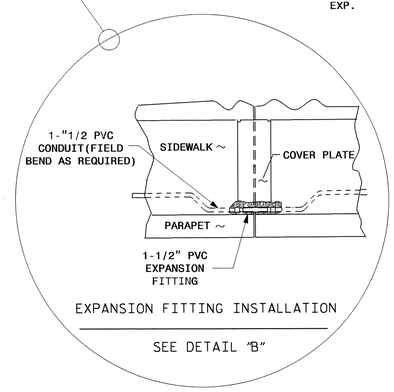

EXPANSION FITTING INSTALLATION

SEE DETAIL "B"

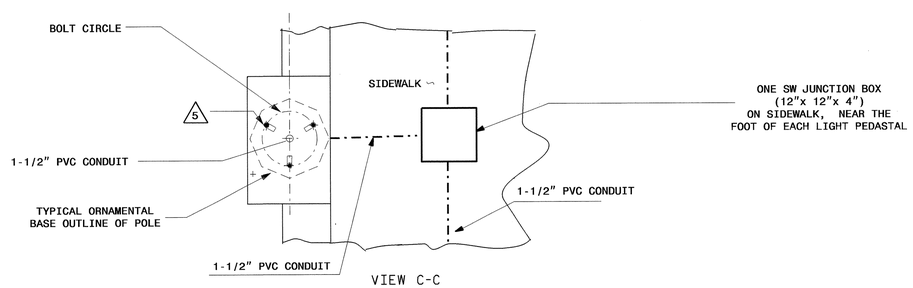

VIEW C-C

PEDESTAL AND JUNCTION BOX

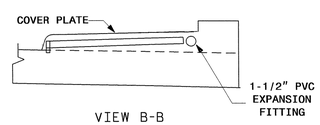

VIEW B-B

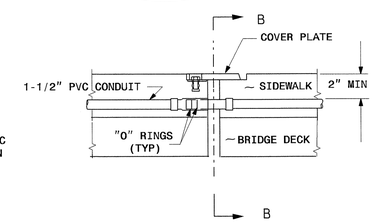

DETAIL "B"

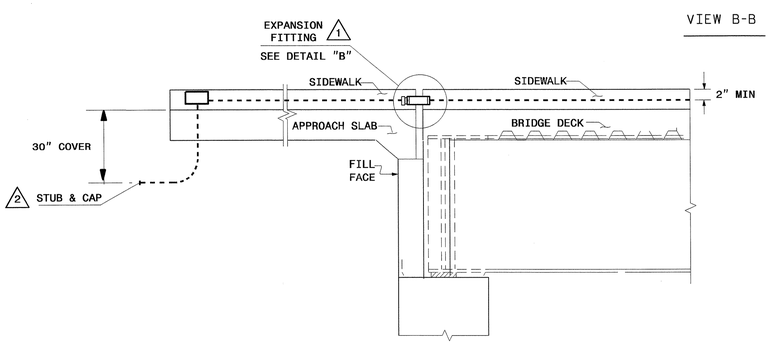

VIEW A-A

SECTION THRU END BENT

(PARAPET REMOVED)

ESTIMATED BILL OF MATERIAL LIGHTING CONDUIT SYSTEM		
UNIT	ITEMS	LIGHTING QTY
EA.	TYPE SW JN. BOX (12" X 12" X 4")	18
EA.	1-1/2" PVC 90° BEND	18
FT.	1-1/2" PVC CONDUIT	1600
EA.	1-1/2" PVC EXPANSION JOINT	8
FT.	POLYETHYLENE PULL LINE	2000
LOT	MASTIC	1

NOTES

1. PROVIDE EXPANSION FITTING AT ALL EXPANSION JOINTS.
2. COORDINATE ELECTRICAL CONNECTION WORK WITH OTHERS.
3. SEE STRUCTURE PLANS FOR LOCATION OF LIGHT PEDESTALS.
4. INSTALL ANCHOR BOLTS ACCORDING TO MANUFACURER'S RECOMMENDATION.
5. ANCHOR BOLTS SHALL BE SUPPLIED BY THE POLE MANUFACTURER.

SEE PROJECT SPECIAL PROVISIONS TITLED "ELECTRICAL CONDUIT SYSTEM" FOR MATERIALS CONSTRUCTION METHODS AND PAYMENT.

PROJECT NO. R-3307

CARTERET COUNTY

STATION: 16+05.50 -Y2-

SHEET 1 OF 1

Rev.	Date	Description	Approved
2			
1	4/10/13		

NORTH CAROLINA
DEPARTMENT OF TRANSPORTATION

ROADWAY DESIGN — LIGHTING/ELECTRICAL SECTION

NORTH CAROLINA PROFESSIONAL SEAL 022582 ENGINEER PAUL KI-BUN CHAN 4-10-13

ELECTRICAL CONDUIT SYSTEM

BRIDGE OVER TOWN CREEK ON SR 1174 BETWEEN EXISTING US 70 AND PROPOSED US 70

Drawn By	Approved By	Dwg No.
SKS	PKC	6-320/333

DRAWN BY : S.K. SAHA DATE : 4/10/13

CHECKED BY : P.K. Chan DATE : 4-10-13

02/03/98

10-APR-2013 12:22
R:\Lighting\Electrical\TIP\ECS\PlanShts\R3307_ECS.dgn
$$$$USERNAME$$$$

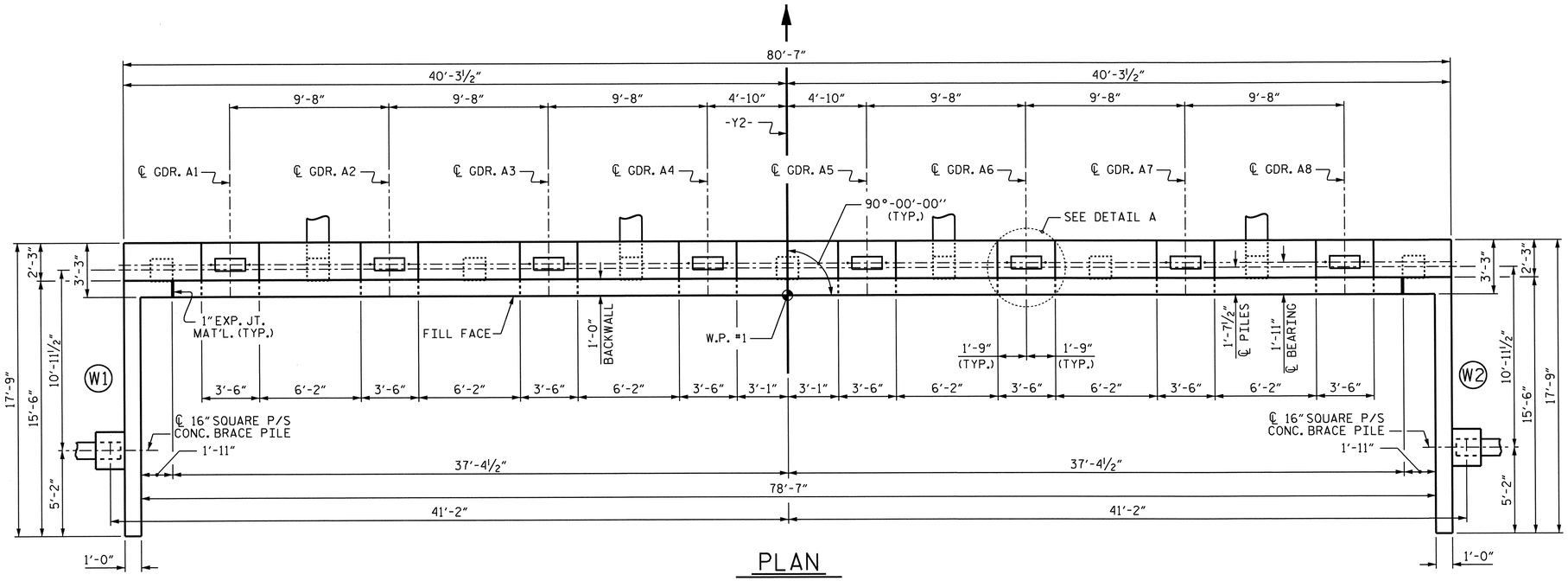

PLAN

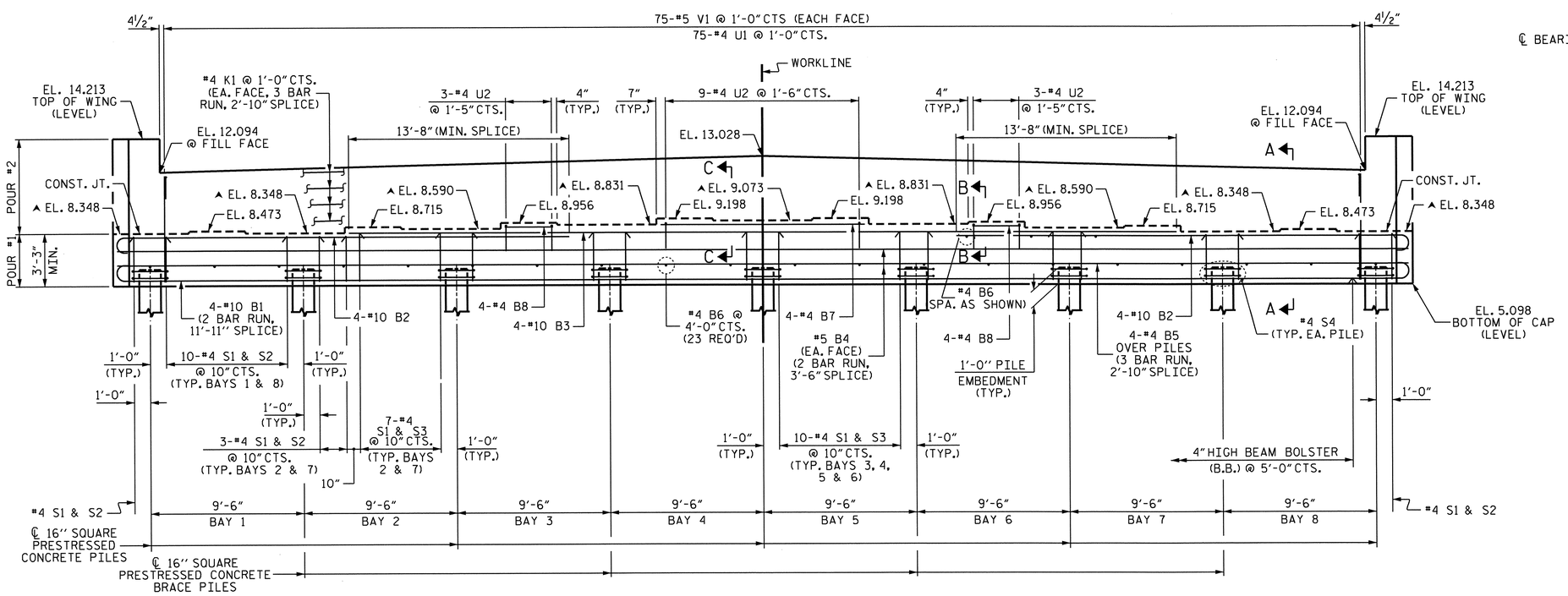

ELEVATION

PILES IN WINGS NOT SHOWN FOR CLARITY

NOTES

STIRRUPS IN CAP MAY BE SHIFTED AS NECESSARY TO CLEAR ANCHOR BOLTS.

BACKWALL SHALL BE PLACED BEFORE APPLYING THE EPOXY PROTECTIVE COATING.

THE TOP SURFACE AREAS OF THE END BENT CAPS SHALL BE CURED IN ACCORDANCE WITH THE STANDARD SPECIFICATIONS EXCEPT THE MEMBRANE CURING COMPOUND METHOD SHALL NOT BE USED.

THE TOP SURFACE OF THE CAP EXCEPT THE BRIDGE SEAT BUILDUPS SHALL BE SLOPED TRANSVERSELY FROM THE FILL FACE TO THE BACK FACE AT THE RATE OF 2%.

THE CONTRACTOR SHALL PROVIDE FOR INSTALLATION OF THE 4" DIAMETER DRAIN PIPE THROUGH THE WING WALL AS REQUIRED FOR REINFORCED BRIDGE APPROACH FILLS, SEE THE ROADWAY PLANS. REINFORCING STEEL IN THE WING WALL MAY BE SHIFTED AS NECESSARY TO CLEAR THE DRAIN PIPE.

▲ FOR LOCATION OF ELEVATION BETWEEN BUILDUPS, SEE SECTION A-A, ON SHEET 3 OF 3.

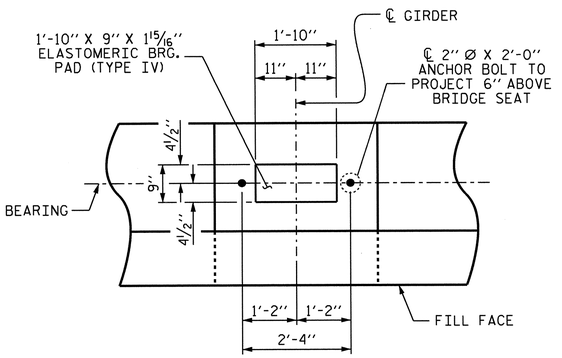

DETAIL A

(TYP. EA. BEARING)

PROJECT NO. R-3307

CARTERET COUNTY

STATION: 16+05.50 -Y2-

SHEET 1 OF 3

STATE OF NORTH CAROLINA
DEPARTMENT OF TRANSPORTATION
RALEIGH

SUBSTRUCTURE
END BENT #1

NORTH CAROLINA PROFESSIONAL SEAL 14855 ENGINEER DOUGLAS R. CALHOUN
10-22-12

REVISIONS							SHEET NO.
NO.	BY:	DATE:	NO.	BY:	DATE:		S-321
1			3				TOTAL SHEETS
2			4				333

DRAWN BY :	A. SORSENGINH	DATE :	12/2/11
CHECKED BY :	D.G. ELY	DATE :	2/2012
DESIGN ENGINEER OF RECORD :	D. R. CALHOUN	DATE :	9/2013

21-OCT-2013 15:22
R:\Structures\Plans\SUBSTRUCTURE\R-3307_SD_E*.dgn
dely

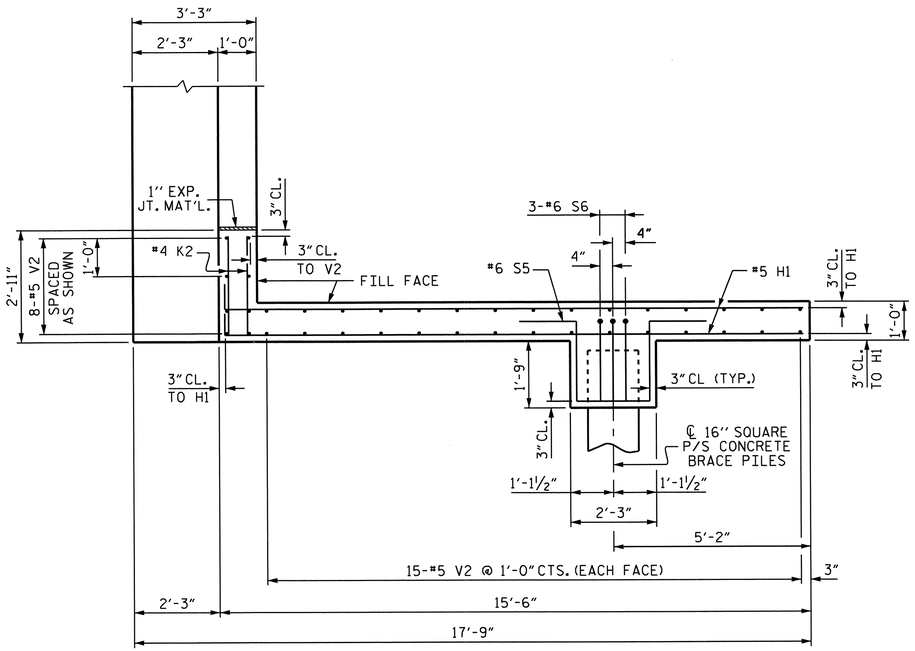

PLAN OF LEFT WING (W1)

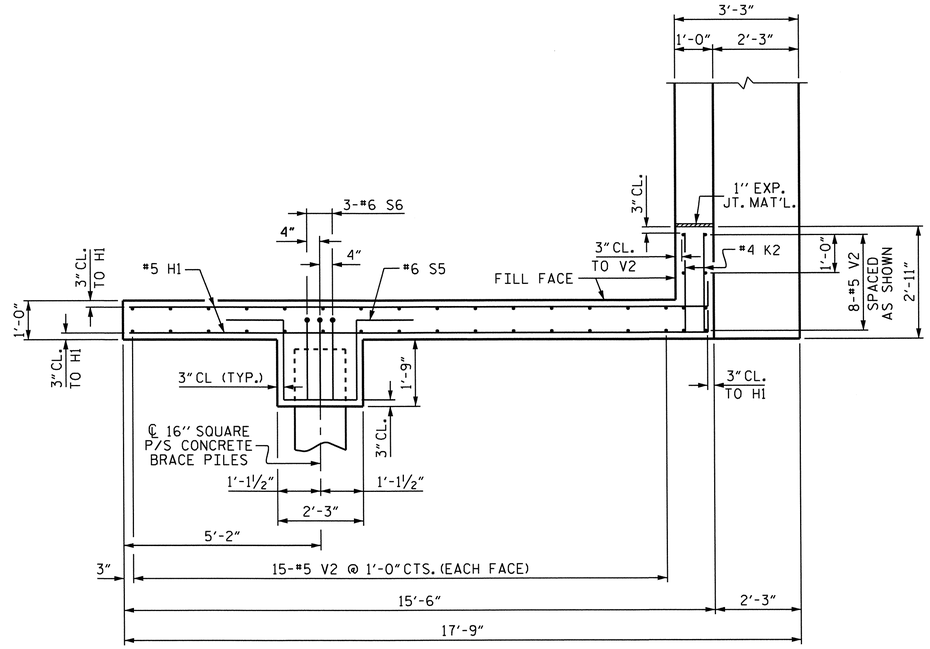

PLAN OF RIGHT WING (W2)

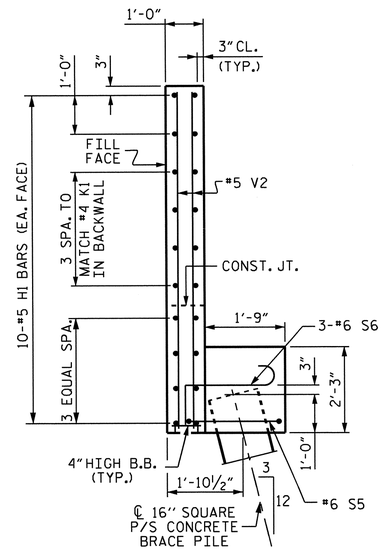

SECTION X-X

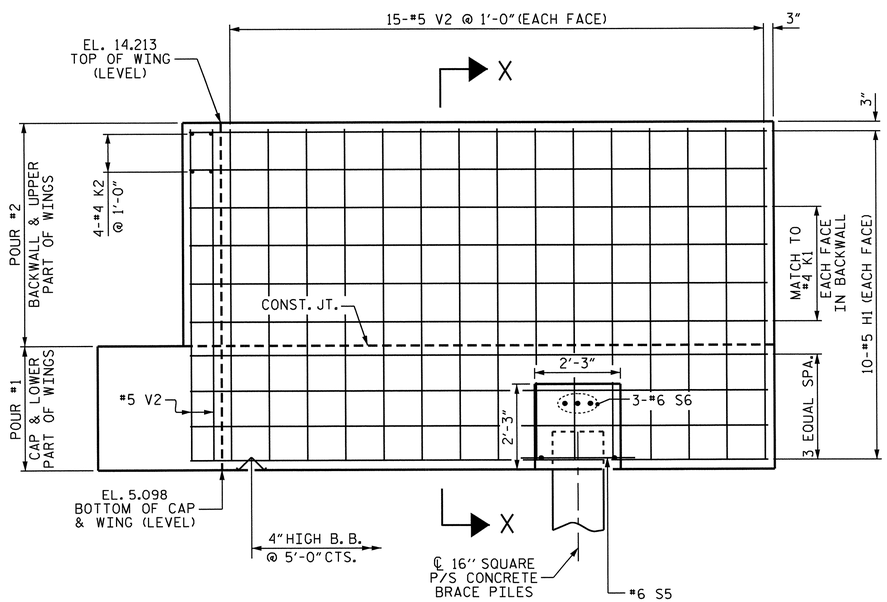

ELEVATION OF LEFT WING (W1)

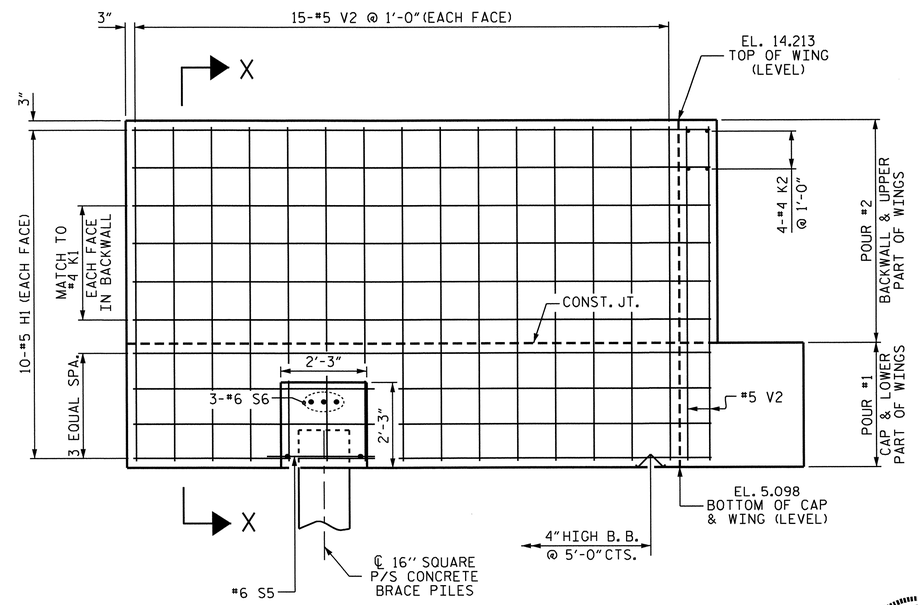

ELEVATION OF RIGHT WING (W2)

PROJECT NO. R-3307

CARTERET COUNTY

STATION: 16+05.50 -Y2-

SHEET 2 OF 3

STATE OF NORTH CAROLINA
DEPARTMENT OF TRANSPORTATION
RALEIGH

SUBSTRUCTURE
END BENT #1

NORTH CAROLINA PROFESSIONAL SEAL 14855 ENGINEER DOUGLAS R. CALHOUN
10-22-13

REVISIONS						SHEET NO.
NO.	BY:	DATE:	NO.	BY:	DATE:	S-322
1			3			TOTAL SHEETS
2			4			333

DRAWN BY : A. SORSENGINH DATE : 12/2/11
CHECKED BY : D.G. ELY DATE : 2/2012
DESIGN ENGINEER OF RECORD : D. R. CALHOUN DATE : 9/2013

10-SEP-2013 15:52
R:\Structures\Plans\SUBSTRUCTURE\R-3307_SD_E*.dgn
dely

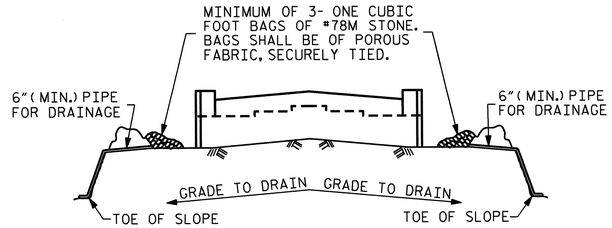

BAGGED STONE AND PIPE SHALL BE PLACED IMMEDIATELY AFTER COMPLETION OF END BENT EXCAVATION. PIPE MAY BE EITHER CONCRETE, CORRUGATED STEEL, CORRUGATED ALUMINUM ALLOY, OR CORRUGATED PLASTIC. PERFORATED PIPE WILL NOT BE ALLOWED.

BAGGED STONE SHALL REMAIN IN PLACE UNTIL THE ENGINEER DIRECTS THAT IT BE REMOVED. THE CONTRACTOR SHALL REMOVE AND DISPOSE OF SILT ACCUMULATIONS AT BAGGED STONE WHEN SO DIRECTED BY THE ENGINEER. BAGS SHALL BE REMOVED AND REPLACED WHENEVER THE ENGINEER DETERMINES THAT THEY HAVE DETERIORATED AND LOST THEIR EFFECTIVENESS.

NO SEPARATE PAYMENT WILL BE MADE FOR THIS WORK AND THE ENTIRE COST OF THIS WORK SHALL BE INCLUDED IN THE UNIT CONTRACT PRICE BID FOR THE SEVERAL PAY ITEMS.

TEMPORARY DRAINAGE AT END BENT

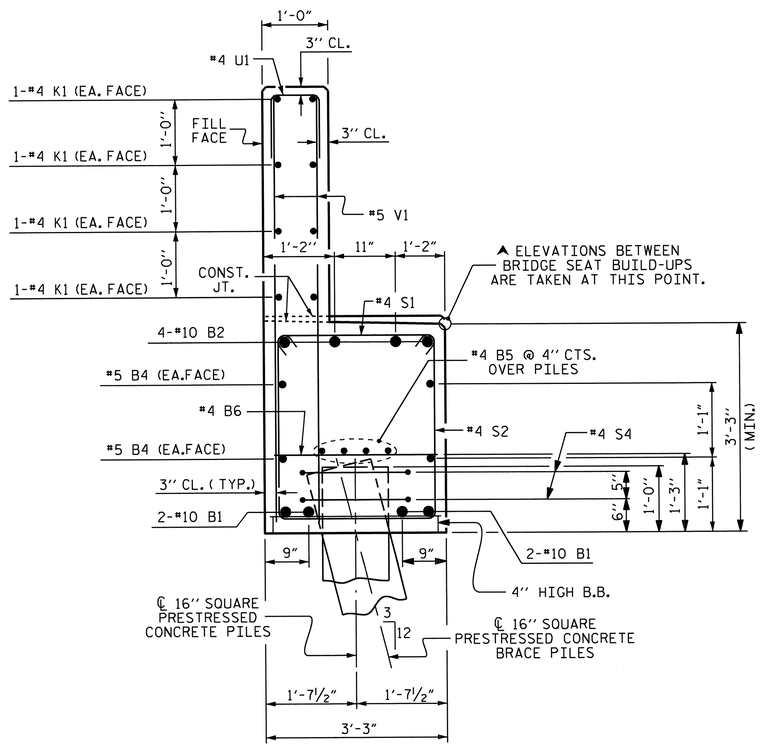

SECTION A-A

(SEE SHEET 1 OF 3)

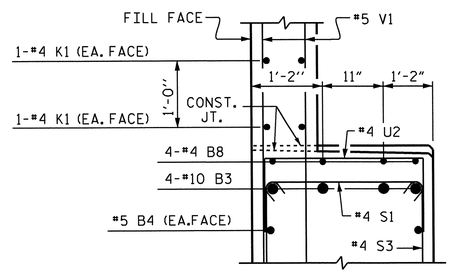

SECTION B-B

(SEE SHEET 1 OF 3)

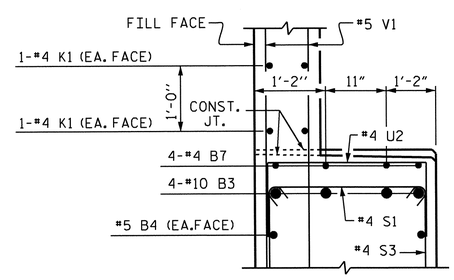

SECTION C-C

(SEE SHEET 1 OF 3)

BAR TYPES

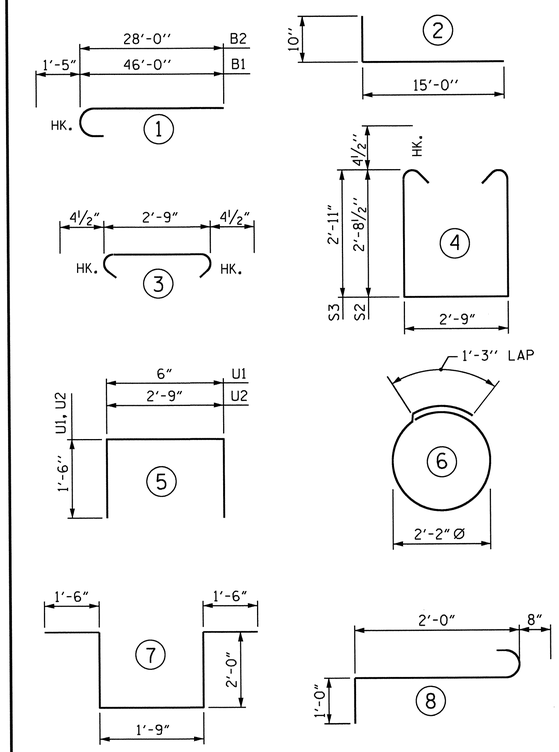

ALL BAR DIMENSIONS ARE OUT TO OUT.

BILL OF MATERIAL

END BENT #1

BAR	NO.	SIZE	TYPE	LENGTH	WEIGHT
✱B1	8	#10	1	47'-5"	1632
✱B2	8	#10	1	29'-5"	1013
✱B3	4	#10	STR	51'-4"	884
✱B4	8	#5	STR	41'-10"	349
✱B5	12	#4	STR	28'-7"	229
✱B6	23	#4	STR	2'-9"	42
✱B7	4	#4	STR	12'-8"	34
✱B8	8	#4	STR	3'-0"	16
✱H1	40	#5	2	15'-10"	661
✱K1	24	#4	STR	28'-7"	458
✱K2	8	#4	STR	2'-5"	13
✱S1	82	#4	3	3'-6"	192
✱S2	28	#4	4	8'-11"	167
✱S3	54	#4	4	9'-4"	337
✱S4	18	#4	6	8'-1"	97
✱S5	2	#6	7	8'-9"	26
✱S6	6	#6	8	3'-8"	33
✱U1	75	#4	5	3'-6"	175
✱U2	15	#4	5	5'-9"	58
✱V1	150	#5	STR	6'-6"	1017
✱V2	76	#5	STR	8'-7"	680

✱EPOXY COATED REINFORCING STEEL LBS 8113

CLASS AA CONCRETE BREAKDOWN

POUR 1 (CAP & LOWER PART OF WINGS)	C.Y.	38.9
POUR 2 (BACKWALL & UPPER PART OF WINGS)	C.Y.	18.2
▲ TOTAL	C.Y.	57.1

16" SQUARE P/S CONC. PILES:

NO.: 11 LIN. FT.: 715

PILE REDRIVES EA.: 5

▲ CONCRETE DISPLACED BY THE 16" PRESTRESSED CONCRETE PILES HAS BEEN DEDUCTED FROM THE CONCRETE QUANTITY.

PROJECT NO. R-3307

CARTERET COUNTY

STATION: 16+05.50 -Y2-

SHEET 3 OF 3

STATE OF NORTH CAROLINA
DEPARTMENT OF TRANSPORTATION
RALEIGH

SUBSTRUCTURE
END BENT #1

NORTH CAROLINA PROFESSIONAL SEAL 14855 ENGINEER DOUGLAS R. CALHOUN
10-22-13

REVISIONS						SHEET NO.
NO.	BY:	DATE:	NO.	BY:	DATE:	S-323
1			3			TOTAL SHEETS
2			4			333

DRAWN BY :	A. SORSENGINH	DATE :	12/2/11
CHECKED BY :	D.G. ELY	DATE :	2/2012
DESIGN ENGINEER OF RECORD :	D. R. CALHOUN	DATE :	9/2013

21-OCT-2013 15:22
R:\Structures\Plans\SUBSTRUCTURE\R-3307_SD_E*.dgn
dely

NOTES

STIRRUPS IN CAP MAY BE SHIFTED AS NECESSARY TO CLEAR ANCHOR BOLTS.

THE TOP SURFACE AREA OF BENTS 3 & 6 SHALL BE CURED IN ACCORDANCE WITH THE STANDARD SPECIFICATIONS, EXCEPT THAT THE MEMBRANE CURING COMPOUND METHOD SHALL NOT BE USED.

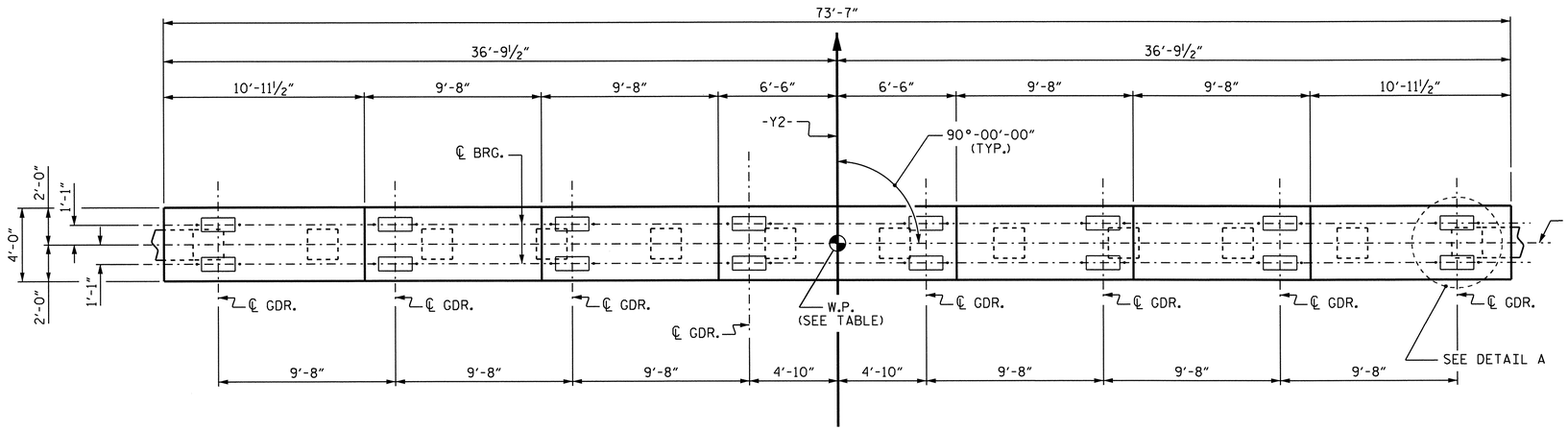

PLAN

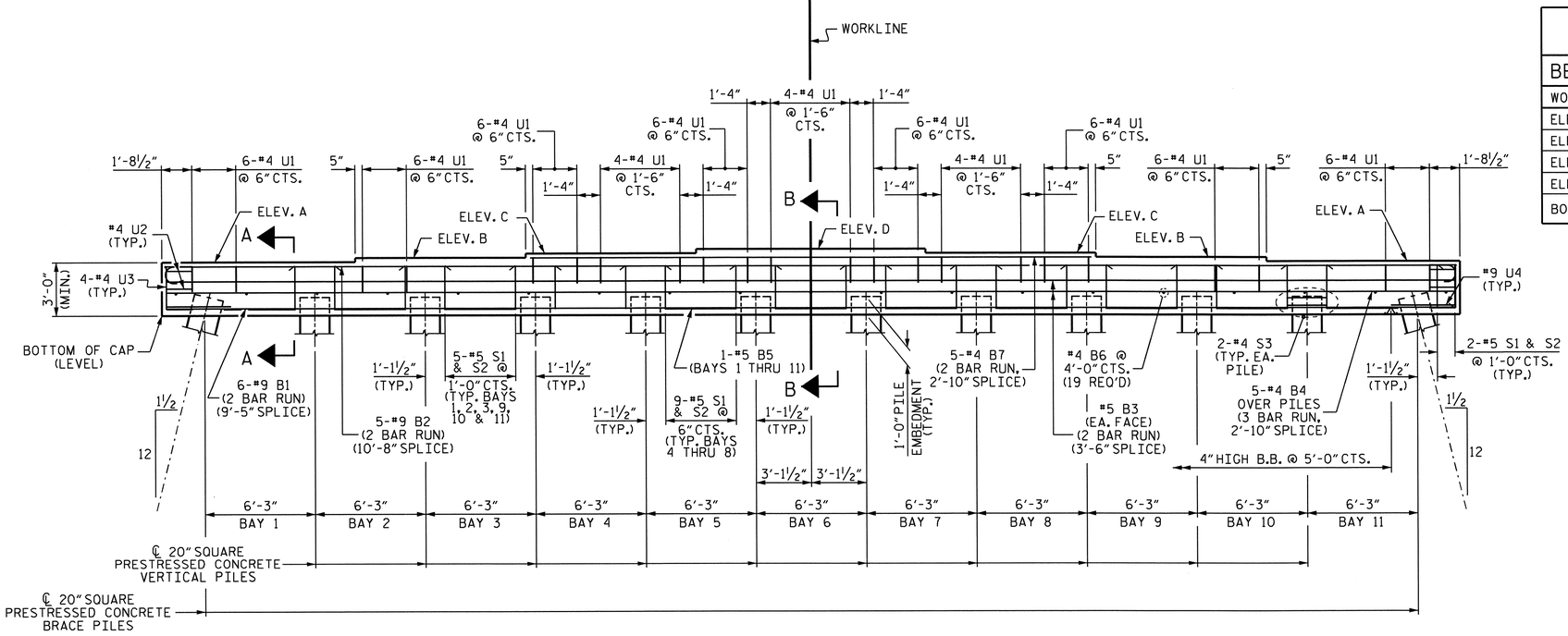

ELEVATION

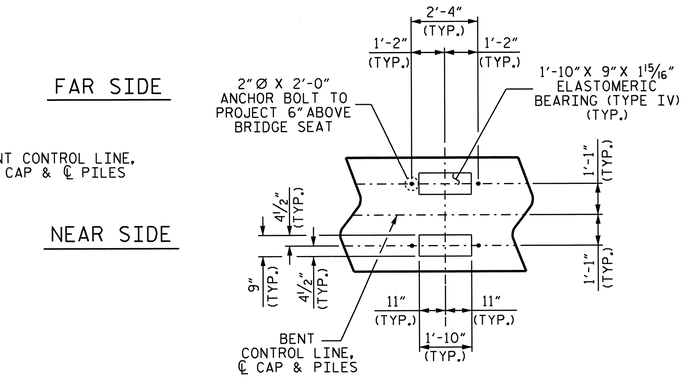

DETAIL A

CAP ELEVATIONS

BENT	1	2	3	4	5	6	7	8
WORK POINT	2	3	4	5	6	7	8	9
ELEV. A	8.280	8.085	7.891	7.695	7.500	7.306	7.110	6.915
ELEV. B	8.522	8.327	8.133	7.937	7.742	7.548	7.352	7.157
ELEV. C	8.764	8.569	8.374	8.179	7.984	7.789	7.594	7.399
ELEV. D	9.005	8.810	8.616	8.420	8.225	8.031	7.835	7.640
BOTTOM OF CAP	5.280	5.085	4.891	4.695	4.500	4.306	4.110	3.915

PROJECT NO. R-3307
CARTERET COUNTY
STATION: 16+05.50-Y2-

SHEET 1 OF 2

STATE OF NORTH CAROLINA
DEPARTMENT OF TRANSPORTATION
RALEIGH

SUBSTRUCTURE
BENTS 1 THRU 8

NORTH CAROLINA PROFESSIONAL SEAL 14855 ENGINEER DOUGLAS R. CALHOUN
10-22-13

REVISIONS						SHEET NO.
NO.	BY:	DATE:	NO.	BY:	DATE:	S-324
1			3			TOTAL SHEETS
2			4			333

DRAWN BY : A. SORSENGINH DATE : 12/7/11
CHECKED BY : D.G. ELY DATE : 2/2012
DESIGN ENGINEER OF RECORD: D. R. CALHOUN DATE : 9/2013

21-OCT-2013 15:22
R:\Structures\Plans\SUBSTRUCTURE\R-3307_SD_B*.dgn
dely

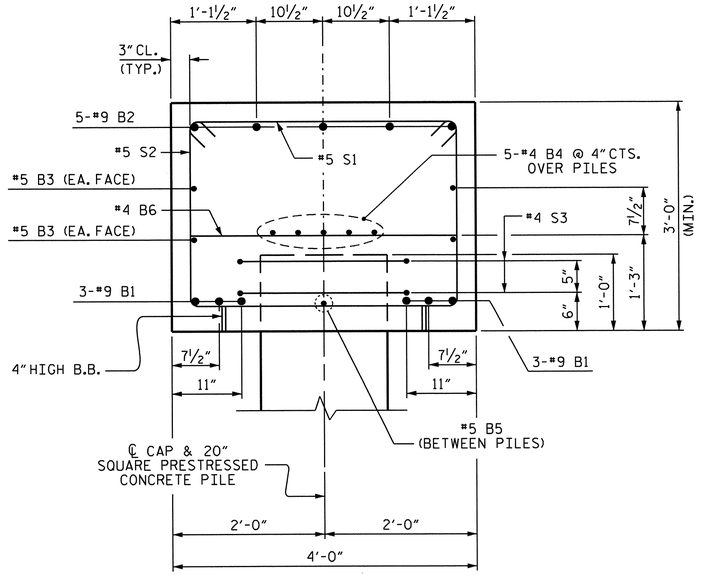

SECTION A-A

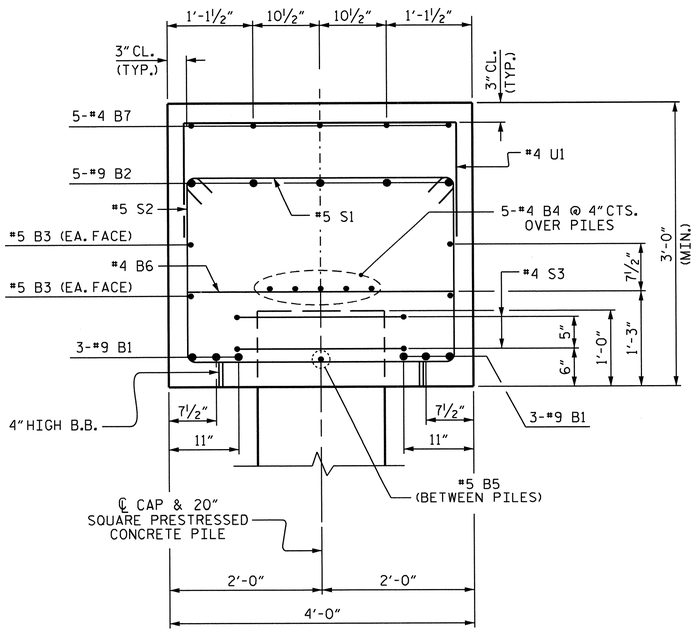

SECTION B-B

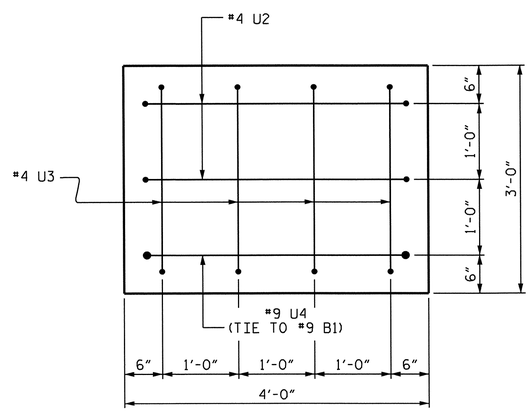

END VIEW

3" MIN. CONCRETE COVER FROM END OF CAP REQUIRED FOR ALL #4 U2, #4 U3 AND #9 U4 BARS.

#4 U2 AND #4 U3 MAY BE SHIFTED UP TO 2" TO CLEAR "B" BARS.

BAR TYPES

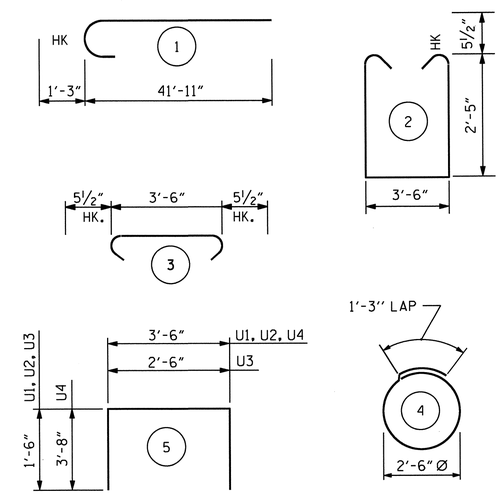

ALL BAR DIMENSIONS ARE OUT TO OUT.

BILL OF MATERIAL FOR ONE BENT

BAR	NO.	SIZE	TYPE	LENGTH	WEIGHT
* B1	12	#9	STR	41'-3"	1683
* B2	10	#9	1	43'-2"	1468
* B3	8	#5	STR	38'-4"	320
* B4	15	#4	STR	26'-3"	263
* B5	11	#5	STR	4'-1"	47
* B6	19	#4	STR	3'-6"	44
* B7	10	#4	STR	17'-4"	116
* S1	79	#5	3	4'-5"	364
* S2	79	#5	2	9'-3"	762
* S3	24	#4	4	9'-2"	147
* U1	60	#4	5	6'-6"	261
* U2	4	#4	5	6'-6"	17
* U3	8	#4	5	5'-6"	29
* U4	2	#9	5	10'-10"	74

* EPOXY COATED REINFORCING STEEL = 5595 LBS

▲ TOTAL CLASS AA CONCRETE 35.0 CU. YDS.

▲ CONCRETE DISPLACED BY THE 20" PRESTRESSED CONCRETE PILES HAS BEEN DEDUCTED FROM THE CONCRETE QUANTITY.

20" SQUARE PRESTRESSED CONCRETE PILES

BENT NO.	No.	LIN. FT.	PILE REDRIVES EACH	PDA TESTING EACH
1	12	1080	6	1
2	12	900	6	1
3	12	900	6	
4	12	900	6	
5	12	960	6	
6	12	960	6	1
7	12	960	6	
8	12	840	6	

PROJECT NO. R-3307
CARTERET COUNTY
STATION: 16+05.50 -Y2-

SHEET 2 OF 2

STATE OF NORTH CAROLINA
DEPARTMENT OF TRANSPORTATION
RALEIGH

SUBSTRUCTURE
BENTS 1 THRU 8

NORTH CAROLINA PROFESSIONAL SEAL 14855 ENGINEER DOUGLAS R. CALHOUN
10-22-13

REVISIONS						SHEET NO.
NO.	BY:	DATE:	NO.	BY:	DATE:	S-323
1			3			TOTAL SHEETS
2			4			333

DRAWN BY : A. SORSENGINH DATE : 12/7/11
CHECKED BY : D. G. ELY DATE : 2/2012
DESIGN ENGINEER OF RECORD : D. R. CALHOUN DATE : 9/2013

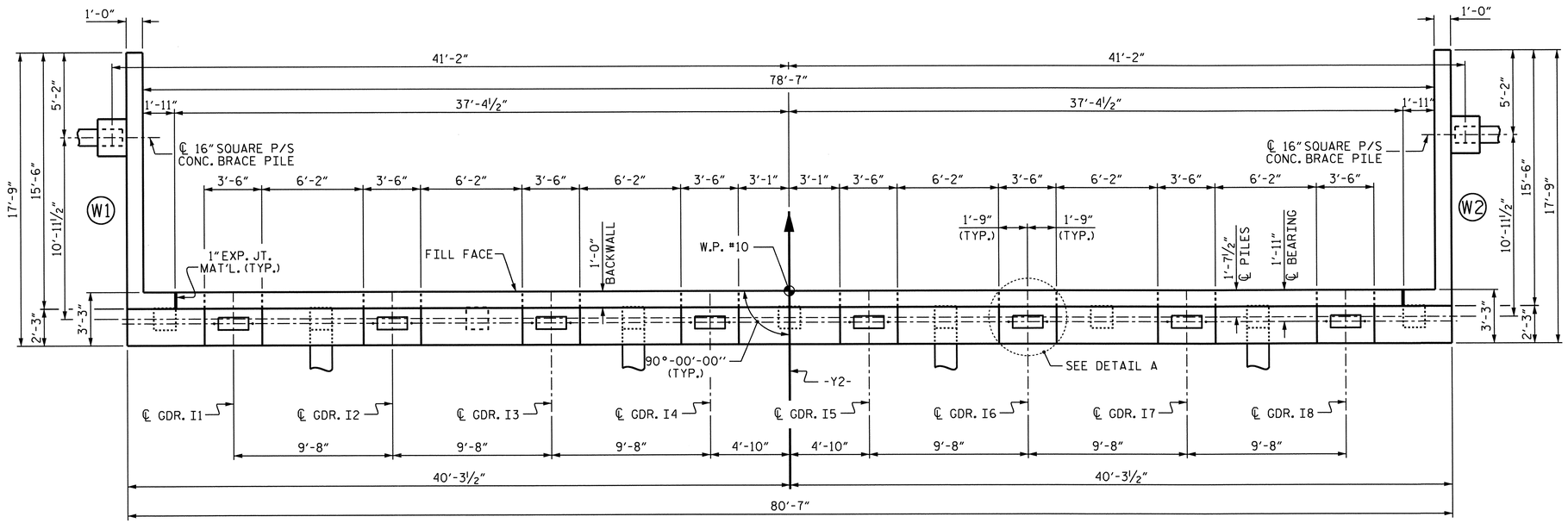

PLAN

NOTES

STIRRUPS IN CAP MAY BE SHIFTED AS NECESSARY TO CLEAR ANCHOR BOLTS.

BACKWALL SHALL BE PLACED BEFORE APPLYING THE EPOXY PROTECTIVE COATING.

THE TOP SURFACE AREAS OF THE END BENT CAPS SHALL BE CURED IN ACCORDANCE WITH THE STANDARD SPECIFICATIONS EXCEPT THE MEMBRANE CURING COMPOUND METHOD SHALL NOT BE USED.

THE TOP SURFACE OF THE CAP EXCEPT THE BRIDGE SEAT BUILDUPS SHALL BE SLOPED TRANSVERSELY FROM THE FILL FACE TO THE BACK FACE AT THE RATE OF 2%.

THE CONTRACTOR SHALL PROVIDE FOR INSTALLATION OF THE 4" DIAMETER DRAIN PIPE THROUGH THE WING WALL AS REQUIRED FOR REINFORCED BRIDGE APPROACH FILLS, SEE THE ROADWAY PLANS. REINFORCING STEEL IN THE WING WALL MAY BE SHIFTED AS NECESSARY TO CLEAR THE DRAIN PIPE.

▲ FOR LOCATION OF ELEVATION BETWEEN BUILDUPS, SEE SECTION A-A, ON SHEET 3 OF 3.

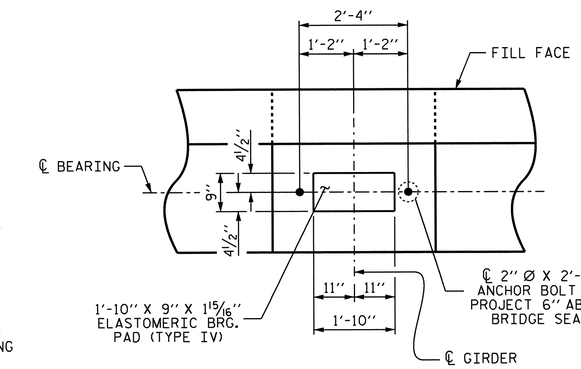

DETAIL A

(TYP. EA. BEARING)

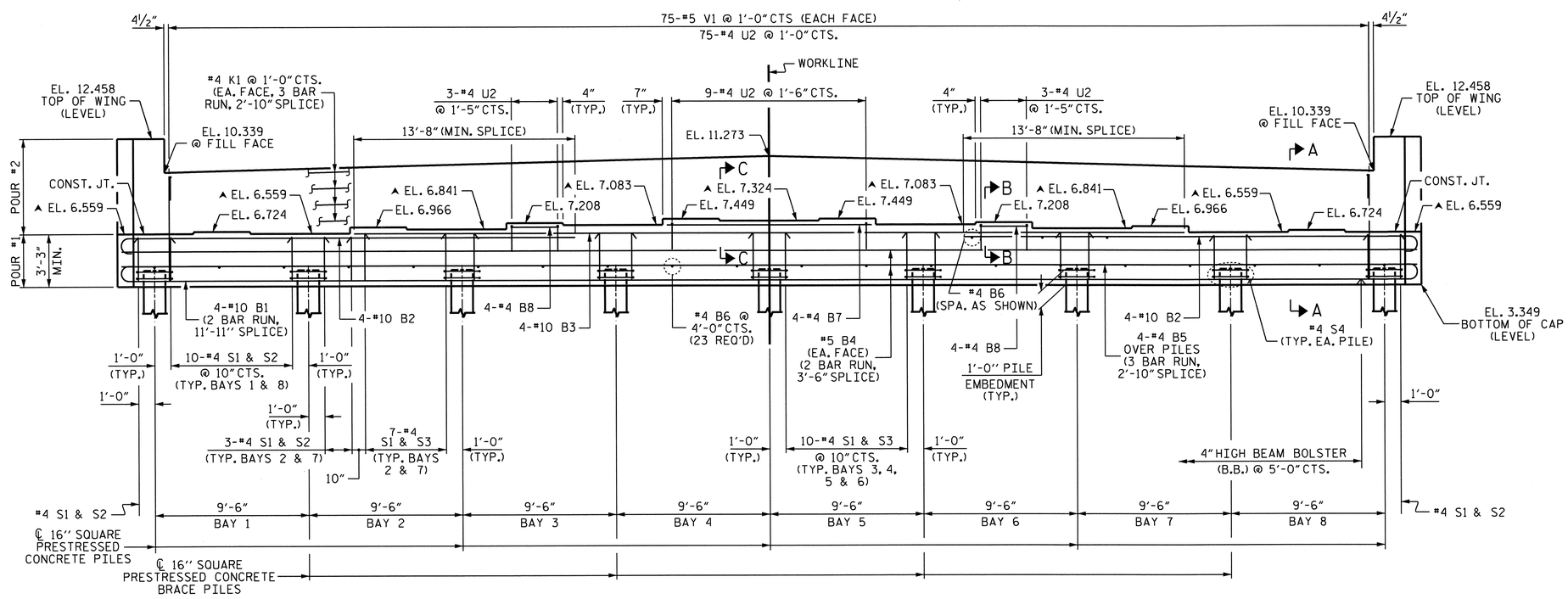

ELEVATION

PILES IN WINGS NOT SHOWN FOR CLARITY

PROJECT NO. R-3307

CARTERET COUNTY

STATION: 16+05.50 -Y2-

SHEET 1 OF 3

STATE OF NORTH CAROLINA
DEPARTMENT OF TRANSPORTATION
RALEIGH

SUBSTRUCTURE
END BENT #2

NORTH CAROLINA PROFESSIONAL SEAL 14855 ENGINEER DOUGLAS R. CALHOUN
10-22-13

REVISIONS						SHEET NO.
NO.	BY:	DATE:	NO.	BY:	DATE:	S-326
1			3			TOTAL SHEETS
2			4			333

DRAWN BY : A. SORSENGINH DATE : 12/5/11
CHECKED BY : D.G. ELY DATE : 2/2012
DESIGN ENGINEER OF RECORD : D. R. CALHOUN DATE : 9/2013

21-OCT-2013 15:20
R:\Structures\Plans\SUBSTRUCTURE\R-3307_SD_E*.dgn
dely

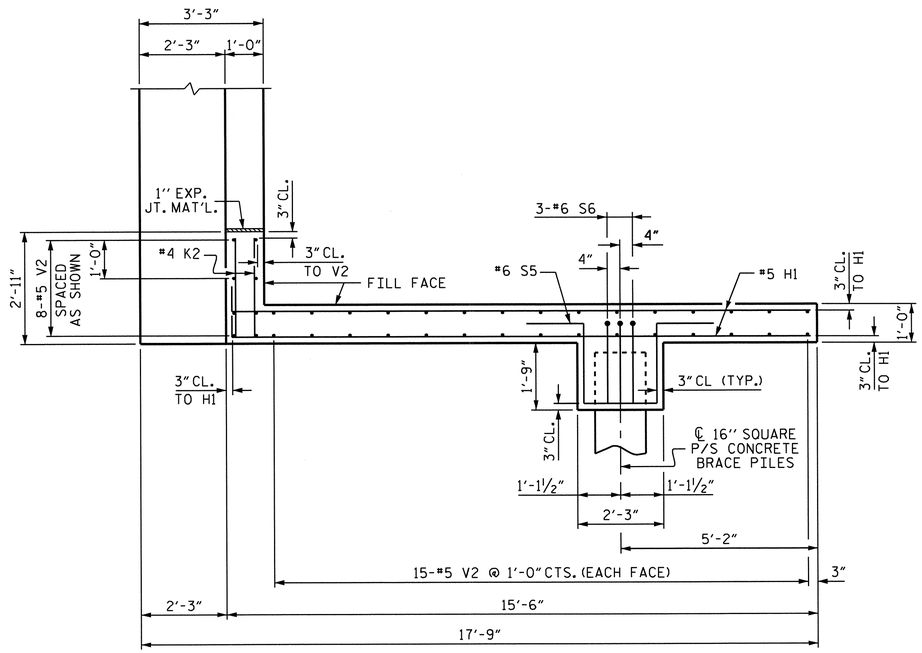

PLAN OF LEFT WING (W1)

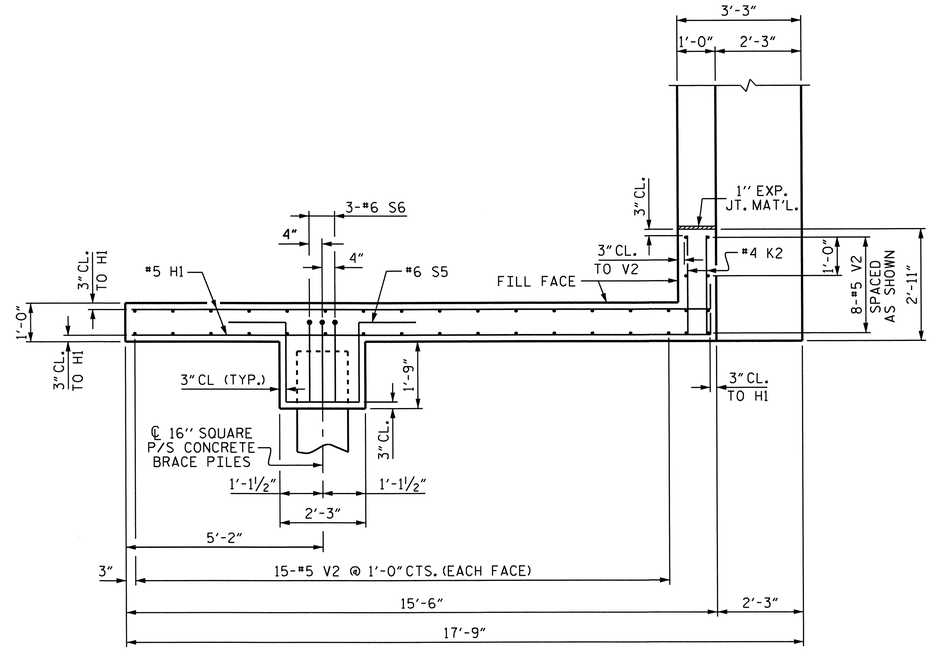

PLAN OF RIGHT WING (W2)

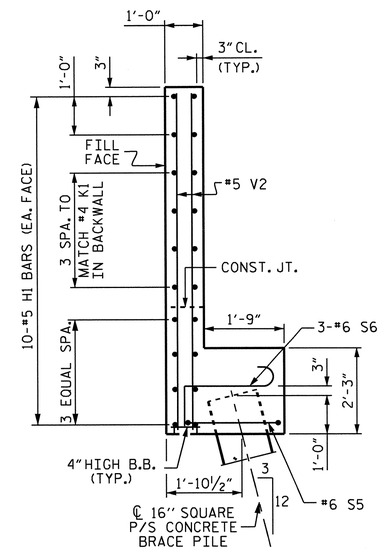

SECTION X-X

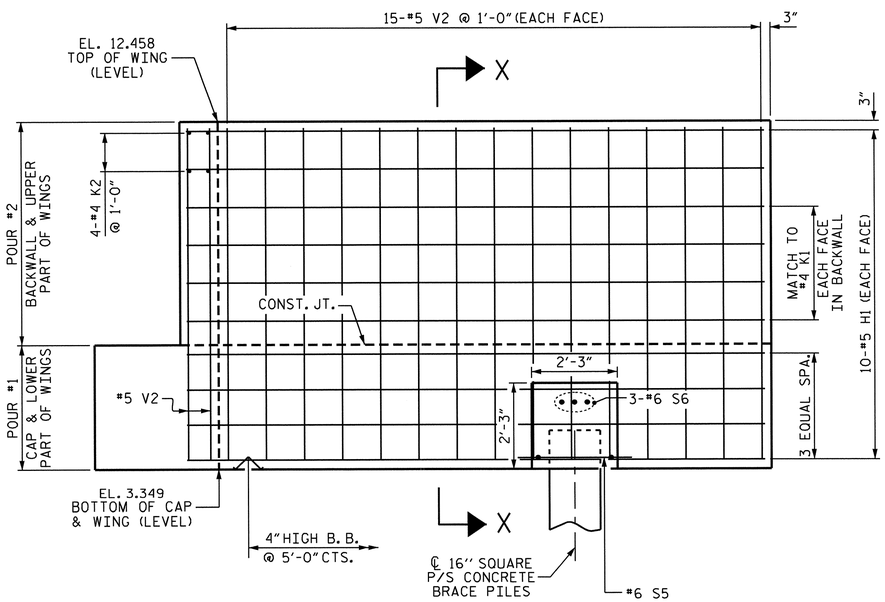

ELEVATION OF LEFT WING (W1)

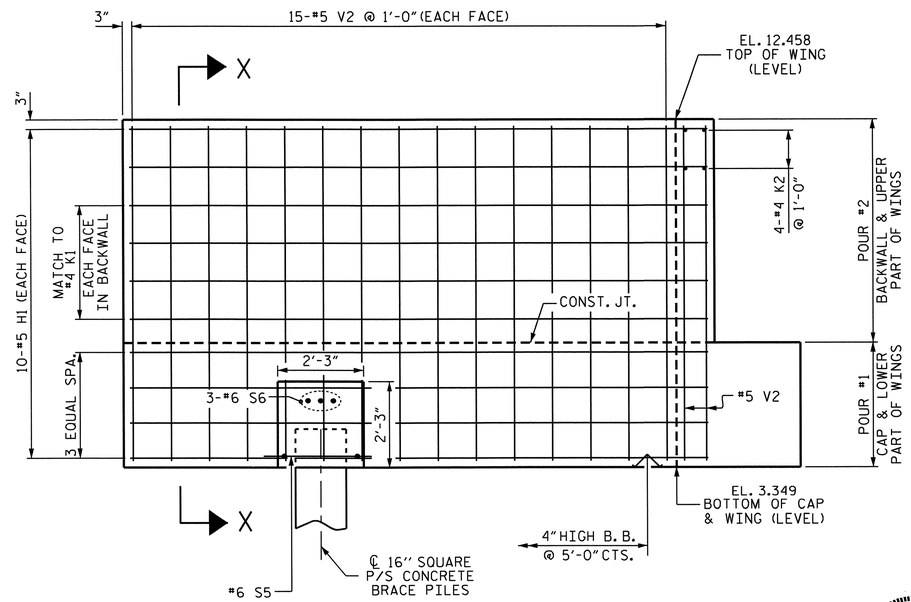

ELEVATION OF RIGHT WING (W2)

PROJECT NO. R-3307

CARTERET COUNTY

STATION: 16+05.50 -Y2-

SHEET 2 OF 3

STATE OF NORTH CAROLINA
DEPARTMENT OF TRANSPORTATION
RALEIGH

SUBSTRUCTURE
END BENT #2

NORTH CAROLINA PROFESSIONAL SEAL 14855 ENGINEER DOUGLAS R. CALHOUN
10-22-13

REVISIONS						
NO.	BY:	DATE:	NO.	BY:	DATE:	
1			3			
2			4			

SHEET NO. S-327

TOTAL SHEETS 333

DRAWN BY : A. SORSENGINH DATE : 12/5/11
CHECKED BY : D.G. ELY DATE : 2/2012
DESIGN ENGINEER OF RECORD : D. R. CALHOUN DATE : 9/2013

10-SEP-2013 15:50
R:\Structures\Plans\SUBSTRUCTURE\R-3307_SD_E*.dgn
dely

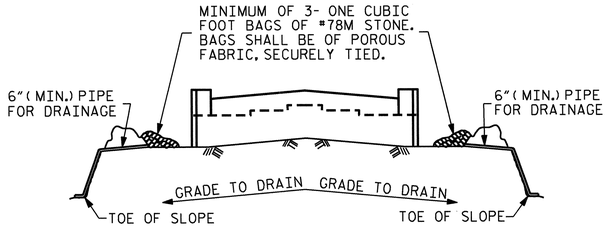

BAGGED STONE AND PIPE SHALL BE PLACED IMMEDIATELY AFTER COMPLETION OF END BENT EXCAVATION. PIPE MAY BE EITHER CONCRETE, CORRUGATED STEEL, CORRUGATED ALUMINUM ALLOY, OR CORRUGATED PLASTIC. PERFORATED PIPE WILL NOT BE ALLOWED.

BAGGED STONE SHALL REMAIN IN PLACE UNTIL THE ENGINEER DIRECTS THAT IT BE REMOVED. THE CONTRACTOR SHALL REMOVE AND DISPOSE OF SILT ACCUMULATIONS AT BAGGED STONE WHEN SO DIRECTED BY THE ENGINEER. BAGS SHALL BE REMOVED AND REPLACED WHENEVER THE ENGINEER DETERMINES THAT THEY HAVE DETERIORATED AND LOST THEIR EFFECTIVENESS.

NO SEPARATE PAYMENT WILL BE MADE FOR THIS WORK AND THE ENTIRE COST OF THIS WORK SHALL BE INCLUDED IN THE UNIT CONTRACT PRICE BID FOR THE SEVERAL PAY ITEMS.

TEMPORARY DRAINAGE AT END BENT

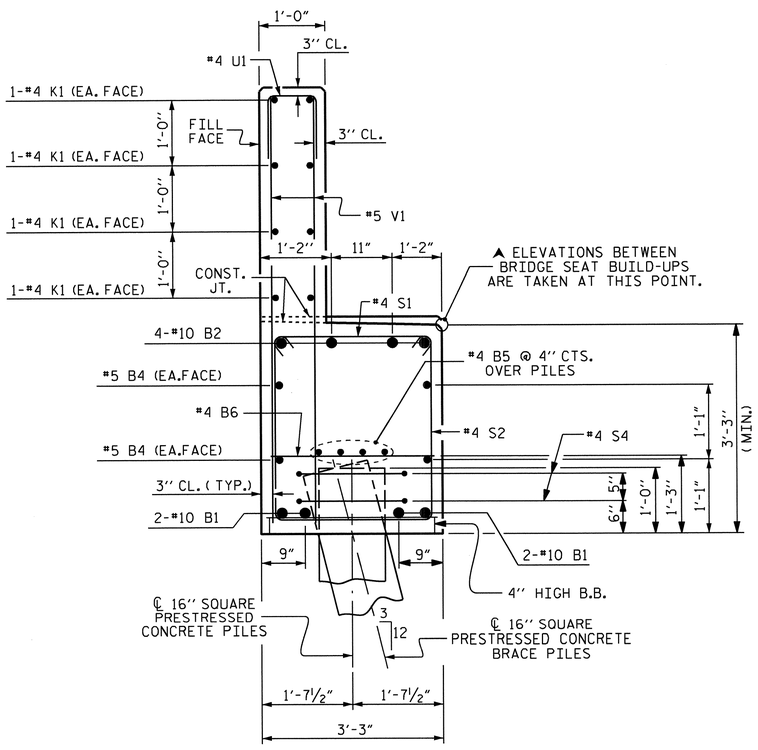

SECTION A-A

(SEE SHEET 1 OF 3)

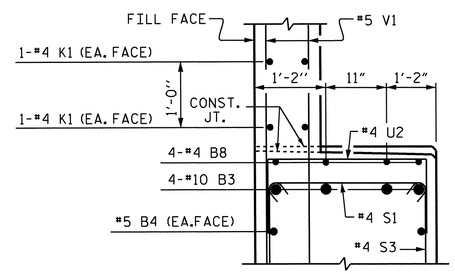

SECTION B-B

(SEE SHEET 1 OF 3)

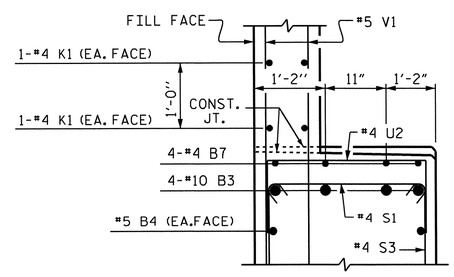

SECTION C-C

(SEE SHEET 1 OF 3)

BAR TYPES

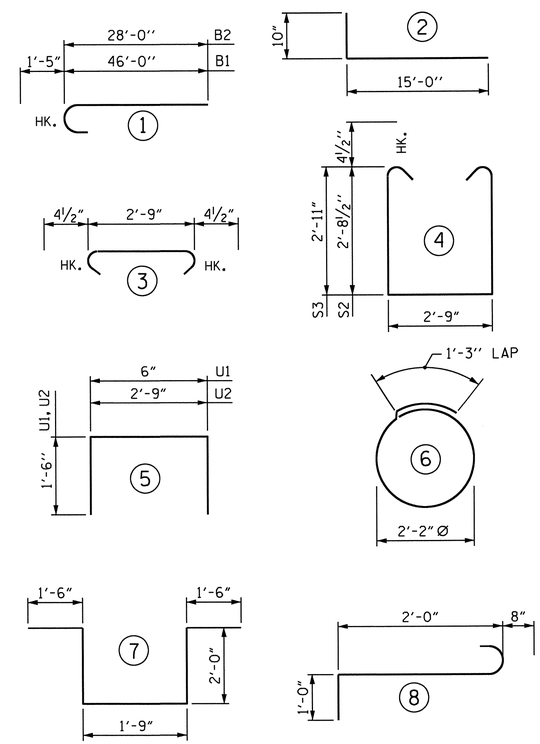

ALL BAR DIMENSIONS ARE OUT TO OUT.

BILL OF MATERIAL

END BENT #2

BAR	NO.	SIZE	TYPE	LENGTH	WEIGHT
✱B1	8	#10	1	47'-5"	1632
✱B2	8	#10	1	29'-5"	1013
✱B3	4	#10	STR	51'-4"	884
✱B4	8	#5	STR	41'-10"	349
✱B5	12	#4	STR	28'-7"	229
✱B6	23	#4	STR	2'-9"	42
✱B7	4	#4	STR	12'-8"	34
✱B8	8	#4	STR	3'-0"	16
✱H1	40	#5	2	15'-10"	661
✱K1	24	#4	STR	28'-7"	458
✱K2	8	#4	STR	2'-5"	13
✱S1	82	#4	3	3'-6"	192
✱S2	28	#4	4	8'-11"	167
✱S3	54	#4	4	9'-4"	337
✱S4	18	#4	6	8'-1"	97
✱S5	2	#6	7	8'-9"	26
✱S6	6	#6	8	3'-8"	33
✱U1	75	#4	5	3'-6"	175
✱U2	15	#4	5	5'-9"	58
✱V1	150	#5	STR	6'-6"	1017
✱V2	76	#5	STR	8'-7"	680

✱EPOXY COATED REINFORCING STEEL — LBS 8113

CLASS AA CONCRETE BREAKDOWN

POUR 1 (CAP & LOWER PART OF WINGS)	C.Y.	38.9
POUR 2 (BACKWALL & UPPER PART OF WINGS)	C.Y.	18.2
▲ TOTAL	C.Y.	57.1

16" SQUARE P/S CONC. PILES:

NO.: 11 — LIN. FT.: 715

PILE REDRIVES — EA.: 5

▲ CONCRETE DISPLACED BY THE 16" PRESTRESSED CONCRETE PILES HAS BEEN DEDUCTED FROM THE CONCRETE QUANTITY.

PROJECT NO. R-3307

CARTERET COUNTY

STATION: 16+05.50 -Y2-

SHEET 3 OF 3

STATE OF NORTH CAROLINA
DEPARTMENT OF TRANSPORTATION
RALEIGH

SUBSTRUCTURE
END BENT #2

NORTH CAROLINA PROFESSIONAL SEAL 14855 ENGINEER DOUGLAS R. CALHOUN
10-22-13

REVISIONS						SHEET NO.
NO.	BY:	DATE:	NO.	BY:	DATE:	S-323
1			3			TOTAL SHEETS
2			4			333

DRAWN BY : A. SORSENGINH — DATE : 12/5/11
CHECKED BY : D.G. ELY — DATE : 2/2012
DESIGN ENGINEER OF RECORD : D. R. CALHOUN — DATE : 9/2013

21-OCT-2013 15:19
R:\Structures\Plans\SUBSTRUCTURE\R-3307_SD_E*.dgn
dely

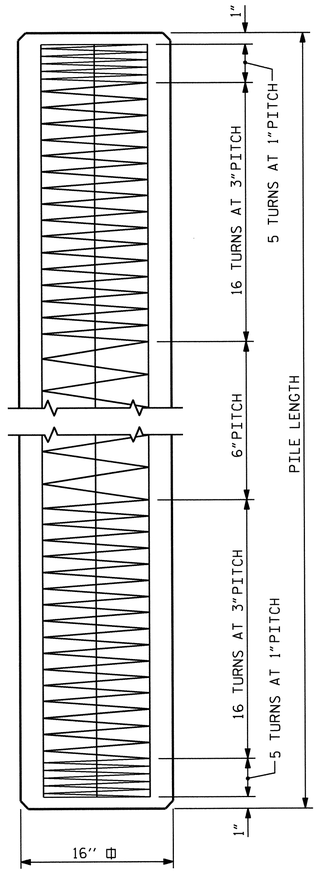

ELEVATION

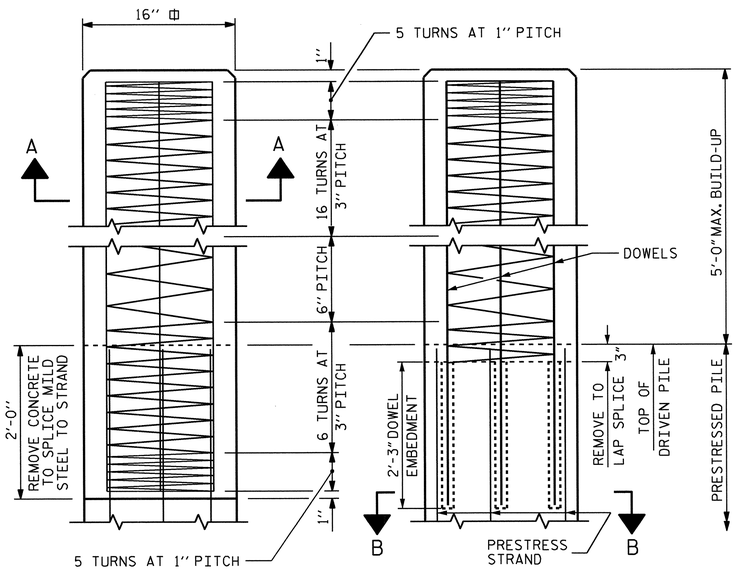

BUILD-UP AND SPIRAL REINFORCING

OPTIONAL BUILD-UP WITH DOWELS

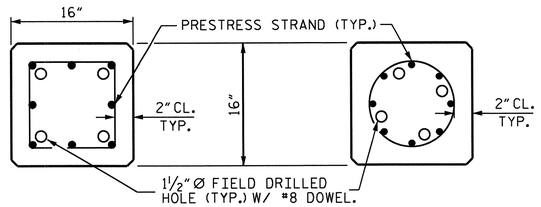

SECTION "B-B"

(AT THE CONTRACTOR'S OPTION, PILE BUILD-UP MAY BE CONSTRUCTED WITH DOWELS.)

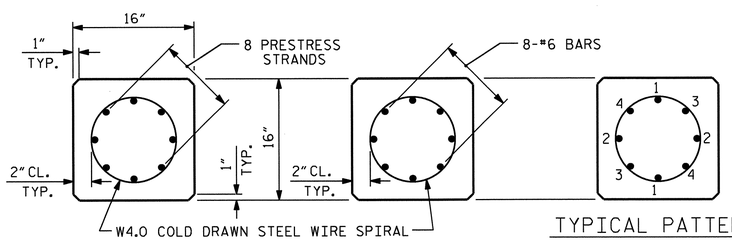

TYPICAL SECTION

SECTION "A-A"

TYPICAL PATTERN FOR BURNING STRANDS

½" OR 0.6" Ø GRADE 270 L.R. PRESTRESS STRANDS

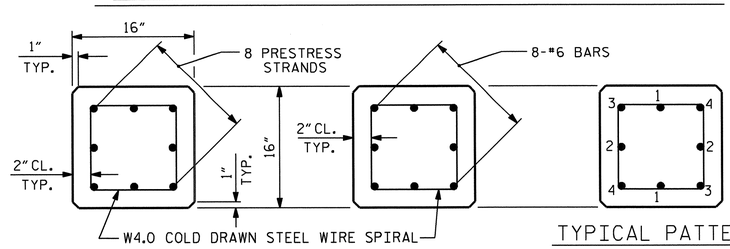

TYPICAL SECTION

SECTION "A-A"

TYPICAL PATTERN FOR BURNING STRANDS

½" OR 0.6" Ø GRADE 270 L.R. PRESTRESS STRANDS

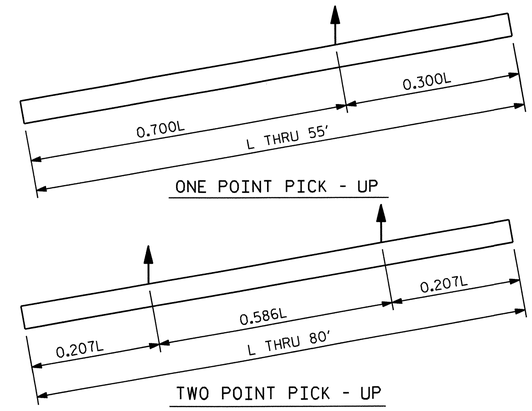

ONE POINT PICK - UP

TWO POINT PICK - UP

PICK - UP POINTS

QUANTITIES FOR ONE 16" PRESTRESSED PILE						
	CONCRETE	PILE WT.	ONE POINT PICK-UP		TWO POINT PICK-UP	
LENGTH	CU. YDS.	TONS	0.300L	0.700L	0.207L	0.586L
25'-0"	1.63	3.31	7'-6"	17'-6"	5'-2"	14'-8"
30'-0"	1.96	3.97	9'-0"	21'-0"	6'-2½"	17'-7"
35'-0"	2.29	4.63	10'-6"	24'-6"	7'-3"	20'-6"
40'-0"	2.61	5.29	12'-0"	28'-0"	8'-3½"	23'-5"
45'-0"	2.94	5.95	13'-6"	31'-6"	9'-4"	26'-4"
50'-0"	3.27	6.61	15'-0"	35'-0"	10'-4"	29'-4"
55'-0"	3.59	7.28	16'-6"	38'-6"	11'-4½"	32'-3"
60'-0"	3.92	7.94			12'-5"	35'-2"
65'-0"	4.25	8.60			13'-5½"	38'-1"
70'-0"	4.57	9.26			14'-6"	41'-0"
75'-0"	4.90	9.92			15'-6½"	43'-11"
80'-0"	5.23	10.58			16'-7"	46'-10"

DOWEL INSTALLATION FOR OPTIONAL BUILD-UP

GROUT COMPRESSIVE STRENGTH: f'c= 5,000 PSI

BEFORE DRILLING DOWEL HOLES, REMOVE THE UPPER 3" OF CONCRETE FROM THE TOP OF THE PILE WITHOUT DAMAGE TO THE REINFORCING STEEL. THE REMOVAL PLANE SHOULD BE NORMAL TO THE EDGE OF THE PILE.

DOWEL HOLES SHALL BE POSITIONED TO MAINTAIN ½" CLEAR TO ALL EXISTING PRESTRESSING STRANDS IN THE CONCRETE PILE.

FIELD DRILLED HOLES SHALL BE CLEAN AND FREE OF ANY OBSTRUCTIONS BEFORE GROUTING OF DOWELS. DOWEL BARS SHALL BE INSTALLED AND GROUTED WITH AN APPROVED NON-SHRINK GROUT.

THE SPIRAL REINFORCING IN ALL BUILD-UPS SHALL BE W4.0 COLD DRAWN WIRE WHICH SHALL BE SECURED TO THE LONGITUDINAL REINFORCEMENT TO MAINTAIN PITCH.

THE SPIRAL REINFORCING IN THE BUILD-UP AND THE PRESTRESSED CONCRETE PILE SHALL BE SPLICED BY OVERLAPPING A MIN. OF ONE TURN.

NOTES

PRESTRESSED CONCRETE STRENGTH : f'c= 7,500 PSI

BUILD-UP CONCRETE STRENGTH : f'c= 7,500 PSI

STRAND DATA:

SIZE	GRADE	AREA	ULTIMATE STRENGTH	APPLIED PRESTRESS FORCE
½"	270 L.R.	0.153	41,300# PER STRAND	30,980# PER STRAND
0.6"	270 L.R.	0.217	58,600# PER STRAND	43,940# PER STRAND

ALL PRESTRESSING STRANDS SHALL BE 7-WIRE LOW-RELAXATION GRADE 270 STRANDS CONFORMING TO AASHTO M203. STRAND SAMPLING REQUIREMENTS SHALL BE IN ACCORDANCE WITH THE STANDARD SPECIFICATIONS.

AT THE CONTRACTOR'S OPTION, ½" OR 0.6" STRANDS MAY BE USED IN EITHER STRAND CONFIGURATION SHOWN IN THE TYPICAL SECTION DETAIL. MIXING OF STRAND SIZE IS NOT ALLOWED.

THE SLIP-FORM METHOD OF CASTING PILES WILL NOT BE PERMITTED.

TRANSFER THE LOAD FROM THE ANCHORAGES TO THE PILE AFTER THE CONCRETE HAS ATTAINED A MINIMUM COMPRESSIVE STRENGTH OF 4,000 PSI.

IF STRAND STRESS IS RELIEVED BY BURNING, THE STRANDS SHALL BE BURNED IN OPPOSITE PAIRS AS INDICATED IN THE TYPICAL PATTERN SHOWN. FOR ANY NUMBER OF STRANDS, BURN IN OPPOSITE PAIRS AND SYMMETRICALLY ABOUT BOTH THE VERTICAL AND HORIZONTAL AXES. STRANDS 1-1 SHALL BE BURNED BEFORE 2-2, ETC. NOT MORE THAN 4 STRANDS, SAY 3-3 AND 4-4, MAY BE BURNED AT ANY ONE SECTION BEFORE THESE SAME PAIRS OF STRANDS ARE BURNED AT BOTH ENDS OF THE BED AND BETWEEN EACH PAIR OF PILES IN THE BED.

PROPOSED DEVICES FOR LIFTING PILES, RECESS DETAILS, AND PATCHING MATERIAL SHALL BE DETAILED IN SHOP DRAWINGS. AFTER ATTACHMENTS HAVE BEEN REMOVED, OPENINGS SHALL BE REPAIRED SUCH THAT THE APPEARANCE OF THE PILE IS UNIFORM.

WHERE CAST-IN-PLACE LIFTING DEVICES ARE NOT USED, PICK-UP POINTS ARE TO BE INDICATED WITH A 2" WIDE BLACK MARK.

DRIVE PILES USING A METHOD APPROVED BY THE ENGINEER, WHEREBY THE HEAD OF THE PILE IS NOT DAMAGED.

DRIVING OF THE BUILT-UP PILE WILL NOT BE PERMITTED UNTIL THE CONCRETE HAS REACHED A COMPRESSIVE STRENGTH OF 5,000 PSI AND UNTIL A PERIOD OF SEVEN DAYS HAS ELAPSED SINCE CASTING OF THE BUILD-UP.

THE WATER/CEMENT RATIO FOR CONCRETE PILES SHALL NOT EXCEED 0.40.

THE CONCRETE IN THE PRESTRESSED CONCRETE PILES OF END BENT NO. 1 AND 2 SHALL CONTAIN SILICA FUME. SILICA FUME SHALL BE SUBSTITUTED FOR 5% OF THE PORTLAND CEMENT BY WEIGHT. IF THE OPTION OF ARTICLE 1024-1 OF THE STANDARD SPECIFICATIONS TO PARTIALLY SUBSTITUTE CLASS F FLY ASH FOR PORTLAND CEMENT IS EXERCISED, THEN THE RATE OF FLY ASH SUBSTITUTION SHALL BE REDUCED TO 1.0 LB OF FLY ASH PER 1.0 LB OF CEMENT. NO PAYMENT WILL BE MADE FOR THIS SUBSTITUTION AS IT IS CONSIDERED INCIDENTAL TO THE VARIOUS PAY ITEMS.

PRESTRESSSED CONCRETE PILES SHALL CONTAIN CALCIUM NITRITE CORROSION INHIBITOR. FOR CALCIUM NITRITE CORROSION INHIBITOR, SEE STANDARD SPECIFICATIONS.

PROJECT NO. R-3307

CARTERET COUNTY

STATION: 16+05.50 -Y2-

SHEET 1 OF 2

NORTH CAROLINA PROFESSIONAL SEAL 14855 ENGINEER DOUGLAS R. CALHOUN

10-22-13

STATE OF NORTH CAROLINA
DEPARTMENT OF TRANSPORTATION
RALEIGH

STANDARD

16" PRESTRESSED CONCRETE PILE

REVISIONS							SHEET NO.
NO.	BY:	DATE:	NO.	BY:	DATE:		S-329
1			3				TOTAL SHEETS
2			4				333

ASSEMBLED BY : A. SORSENGINH		DATE : 2/2012	
CHECKED BY : D.G. ELY		DATE : 2/2012	
DRAWN BY : RH 9/98	REV. 5/1/06R	TLA/GM	
CHECKED BY : LES 10/98	REV. 11/30/10	WMC/GM	
	REV. 10/1/11	MAA/GM	

10-SEP-2013 15:49
R:\Structures\Plans\SUBSTRUCTURE\R-3307_SD_CP.dgn
dely

STD. NO. PCP2

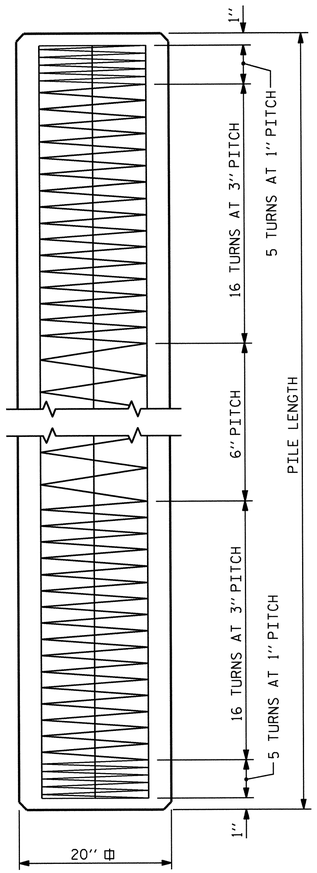

ELEVATION

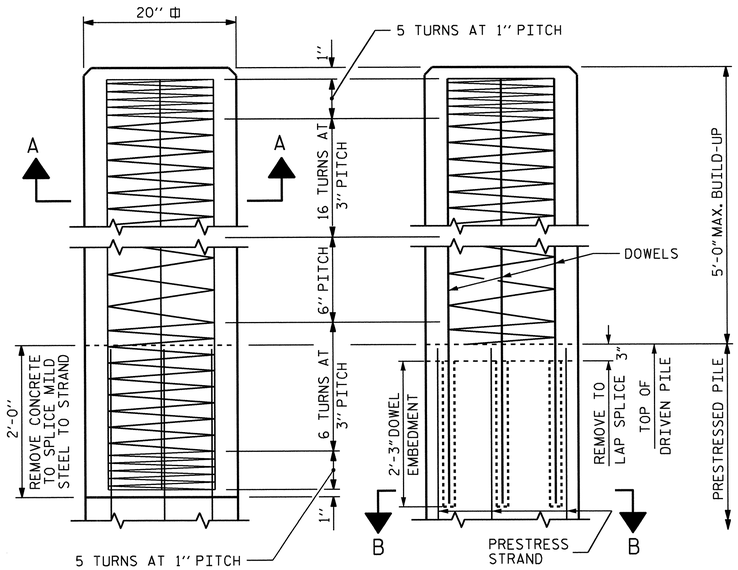

BUILD-UP AND SPIRAL REINFORCING

OPTIONAL BUILD-UP WITH DOWELS

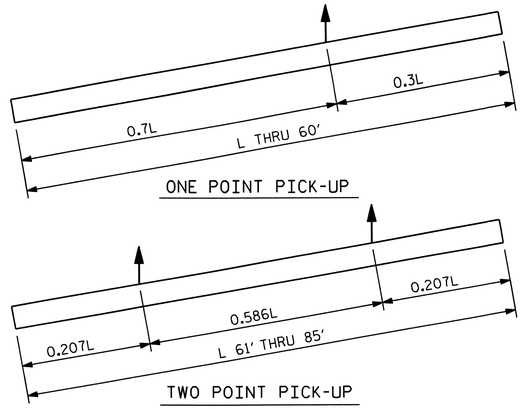

PICK-UP POINTS

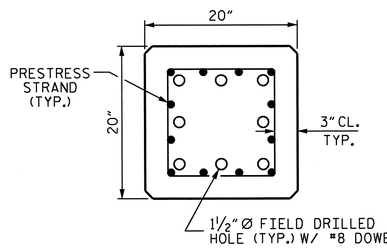

SECTION "B-B"

(AT THE CONTRACTOR'S OPTION, PILE BUILD-UP MAY BE CONSTRUCTED WITH DOWELS.)

QUANTITIES FOR ONE 20" SQUARE PILE

LENGTH	CONCRETE CU. YDS.	PILE WT. TONS	ONE POINT PICK-UP 0.3L	ONE POINT PICK-UP 0.7L	TWO POINT PICK-UP 0.207L	TWO POINT PICK-UP 0.586L
25'-0"	2.56	5.18	7'-6"	17'-6"		
30'-0"	3.07	6.22	9'-0"	21'-0"		
35'-0"	3.58	7.26	10'-6"	24'-6"		
40'-0"	4.09	8.29	12'-0"	28'-0"		
45'-0"	4.61	9.33	13'-6"	31'-6"		
50'-0"	5.12	10.36	15'-0"	35'-0"		
55'-0"	5.63	11.40	16'-6"	38'-6"		
60'-0"	6.14	12.44	18'-0"	42'-0"		
65'-0"	6.65	13.47			13'-5½"	38'-1"
70'-0"	7.17	14.51			14'-6"	41'-0"
75'-0"	7.68	15.55			15'-6½"	43'-11"
80'-0"	8.19	16.58			16'-6½"	46'-11"
85'-0"	8.70	17.62			17'-7"	49'-10"

NOTES

PRESTRESSED CONCRETE STRENGTH : f'c= 7,500 PSI

BUILD-UP CONCRETE STRENGTH : f'c= 7,500 PSI

STRAND DATA:

SIZE	GRADE	AREA	ULTIMATE STRENGTH	APPLIED PRESTRESS FORCE
½"	270 L.R.	0.153	41,300# PER STRAND	30,980# PER STRAND
0.6"	270 L.R.	0.217	58,600# PER STRAND	43,940# PER STRAND

ALL PRESTRESSING STRANDS SHALL BE 7-WIRE LOW-RELAXATION GRADE 270 STRANDS CONFORMING TO AASHTO M203. STRAND SAMPLING REQUIREMENTS SHALL BE IN ACCORDANCE WITH THE STANDARD SPECIFICATIONS.

AT THE CONTRACTOR'S OPTION, ½" OR 0.6" STRANDS MAY BE USED IN THE STRAND CONFIGURATION SHOWN IN THE TYPICAL SECTION DETAIL. MIXING OF STRAND SIZE IS NOT ALLOWED.

THE SLIP-FORM METHOD OF CASTING PILES WILL NOT BE PERMITTED.

TRANSFER THE LOAD FROM THE ANCHORAGES TO THE PILE AFTER THE CONCRETE HAS ATTAINED A MINIMUM COMPRESSIVE STRENGTH OF 4,000 PSI.

IF STRAND STRESS IS RELIEVED BY BURNING, THE STRANDS SHALL BE BURNED IN OPPOSITE PAIRS AS INDICATED IN THE TYPICAL PATTERN SHOWN. FOR ANY NUMBER OF STRANDS, BURN IN OPPOSITE PAIRS AND SYMMETRICALLY ABOUT BOTH THE VERTICAL AND HORIZONTAL AXES, STRANDS 1-1 SHALL BE BURNED BEFORE 2-2, ETC. NOT MORE THAN 4 STRANDS, SAY 5-5 AND 6-6, MAY BE BURNED AT ANY ONE SECTION BEFORE THESE SAME PAIRS OF STRANDS ARE BURNED AT BOTH ENDS OF THE BED AND BETWEEN EACH PAIR OF PILES IN THE BED.

PROPOSED DEVICES FOR LIFTING PILES, RECESS DETAILS, AND PATCHING MATERIAL SHALL BE DETAILED IN SHOP DRAWINGS. AFTER ATTACHMENTS HAVE BEEN REMOVED, OPENINGS SHALL BE REPAIRED SUCH THAT THE APPEARANCE OF THE PILE IS UNIFORM.

WHERE CAST-IN-PLACE LIFTING DEVICES ARE NOT USED, PICK-UP POINTS ARE TO BE INDICATED WITH A 2" WIDE BLACK MARK.

DRIVE PILES USING A METHOD APPROVED BY THE ENGINEER, WHEREBY THE HEAD OF THE PILE IS NOT DAMAGED.

DRIVING OF THE BUILT-UP PILE WILL NOT BE PERMITTED UNTIL THE CONCRETE HAS REACHED A COMPRESSIVE STRENGTH OF 5,000 PSI AND UNTIL A PERIOD OF SEVEN DAYS HAS ELAPSED SINCE CASTING OF THE BUILD-UP.

THE WATER/CEMENT RATIO FOR CONCRETE PILES SHALL NOT EXCEED 0.40.

THE CONCRETE IN THE PRESTRESSED CONCRETE PILES OF ALL BENTS SHALL CONTAIN SILICA FUME. SILICA FUME SHALL BE SUBSTITUTED FOR 5% OF THE PORTLAND CEMENT BY WEIGHT. IF THE OPTION OF ARTICLE 1024-1 OF THE STANDARD SPECIFICATIONS TO PARTIALLY SUBSTITUTE CLASS F FLY ASH FOR PORTLAND CEMENT IS EXERCISED, THEN THE RATE OF FLY ASH SUBSTITUTION SHALL BE REDUCED TO 1.0 LB OF FLY ASH PER 1.0 LB OF CEMENT. NO PAYMENT WILL BE MADE FOR THIS SUBSTITUTION AS IT IS CONSIDERED INCIDENTAL TO THE VARIOUS PAY ITEMS.

PRESTRESSSED CONCRETE PILES SHALL CONTAIN CALCIUM NITRITE CORROSION INHIBITOR. SEE STANDARD SPECIFICATIONS FOR CALCIUM NITRITE CORROSION INHIBITOR.

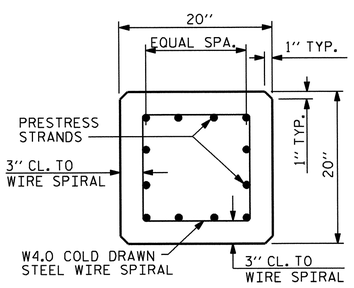

TYPICAL SECTION

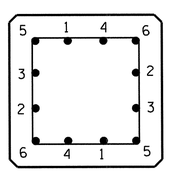

TYPICAL PATTERN FOR BURNING STRANDS

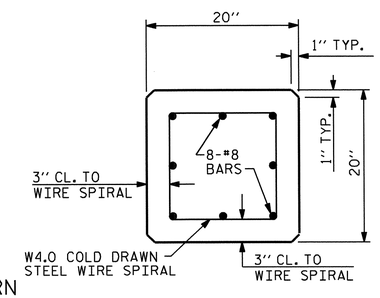

SECTION A-A

½" OR 0.6" Ø GRADE 270 L.R. PRESTRESS STRANDS

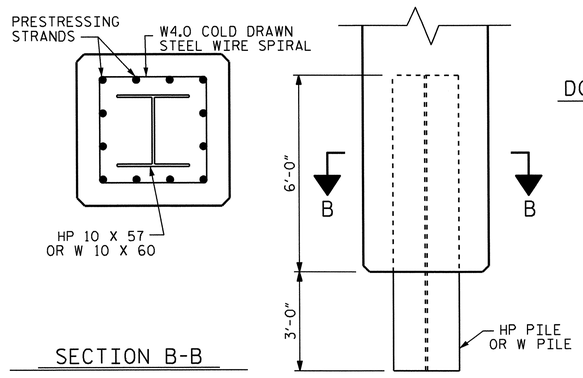

SECTION B-B

ELEVATION

PILE TIP DETAILS

(BENT 2 ONLY)

DOWEL INSTALLATION FOR OPTIONAL BUILD-UP

GROUT COMPRESSIVE STRENGTH: f'c= 5,000 PSI

BEFORE DRILLING DOWEL HOLES, REMOVE THE UPPER 3" OF CONCRETE FROM THE TOP OF THE PILE WITHOUT DAMAGE TO THE REINFORCING STEEL. THE REMOVAL PLANE SHOULD BE NORMAL TO THE EDGE OF THE PILE.

DOWEL HOLES SHALL BE POSITIONED TO MAINTAIN ½" CLEAR TO ALL EXISTING PRESTRESSING STRANDS IN THE CONCRETE PILE.

FIELD DRILLED HOLES SHALL BE CLEAN AND FREE OF ANY OBSTRUCTIONS BEFORE GROUTING OF DOWELS. DOWEL BARS SHALL BE INSTALLED AND GROUTED WITH AN APPROVED NON-SHRINK GROUT.

THE SPIRAL REINFORCING IN ALL BUILD-UPS SHALL BE W4.0 COLD DRAWN WIRE WHICH SHALL BE SECURED TO THE LONGITUDINAL REINFORCEMENT TO MAINTAIN PITCH.

THE SPIRAL REINFORCING IN THE BUILD-UP AND THE PRESTRESSED CONCRETE PILE SHALL BE SPLICED BY OVERLAPPING A MIN. OF ONE TURN.

NORTH CAROLINA PROFESSIONAL SEAL 14855 ENGINEER DOUGLAS W. CRUMPLER

PROJECT NO. R-3307

CARTERET COUNTY

STATION: 16+05.50 -Y2-

SHEET 2 OF 2

STATE OF NORTH CAROLINA
DEPARTMENT OF TRANSPORTATION
RALEIGH

STANDARD

20" PRESTRESSED CONCRETE PILE

REVISIONS						SHEET NO.
NO.	BY:	DATE:	NO.	BY:	DATE:	S-330
1			3			TOTAL SHEETS
2			4			333

STD. NO. PCP3

ASSEMBLED BY : A. SORSENGINH		DATE : 2/2012	
CHECKED BY : D.G. ELY		DATE : 2/2012	
DRAWN BY : WJH 1/89	REV. 5/1/06R	TLA/GM	
CHECKED BY : CRK 3/89	REV. 11/30/10	WMC/GM	
	REV. 10/1/11	MAA/GM	

10-SEP-2013 15:48
R:\Structures\Plans\SUBSTRUCTURE\R-3307_SD_CP.dgn
dely

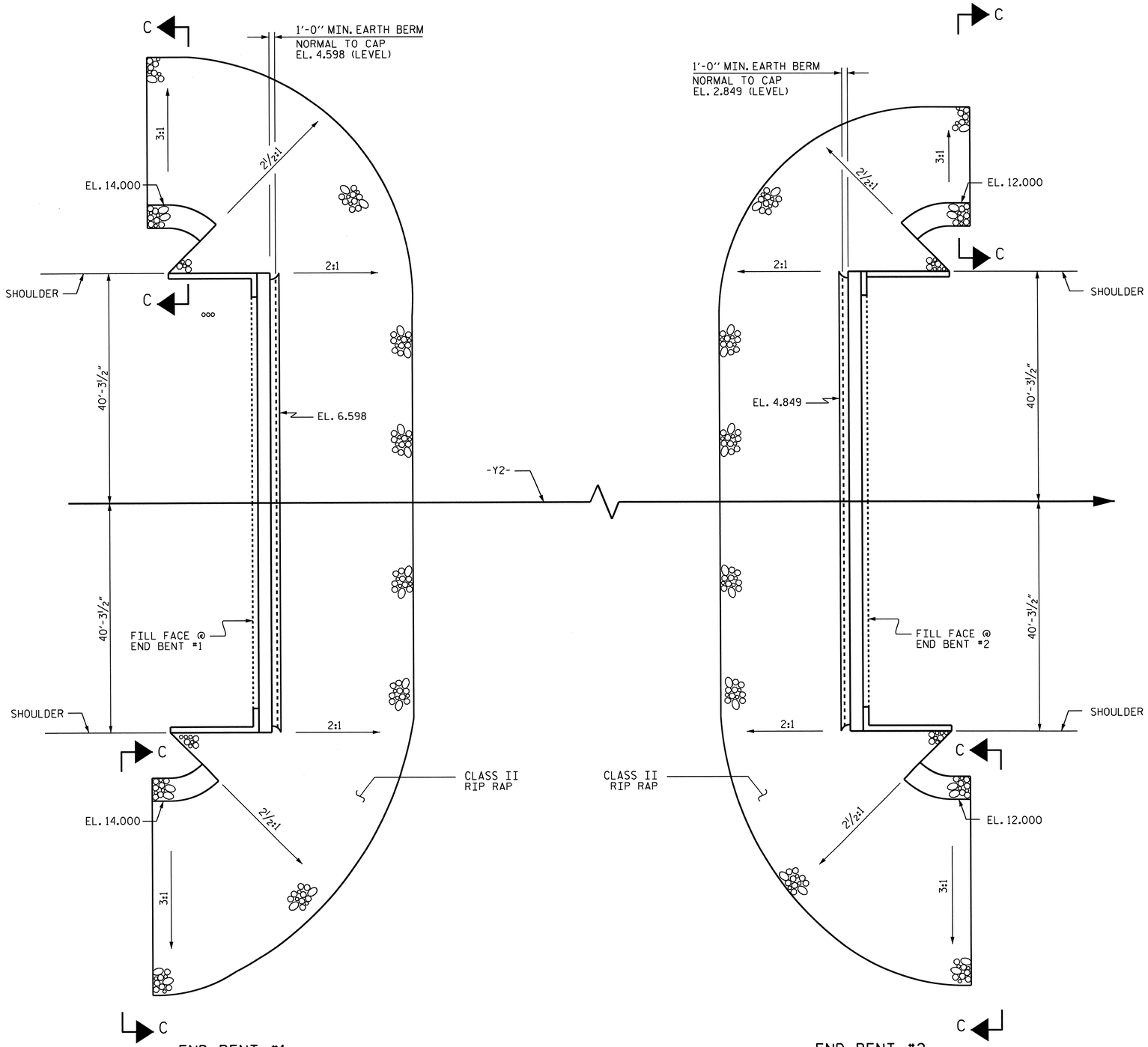

PLAN

ESTIMATED QUANTITIES		
BRIDGE @ STA. 16+05.50 -Y2-	RIP RAP CLASS II (2'-0" THICK)	GEOTEXTILE FOR DRAINAGE
	TONS	SQUARE YARDS
END BENT #1	320	352
END BENT #2	235	259

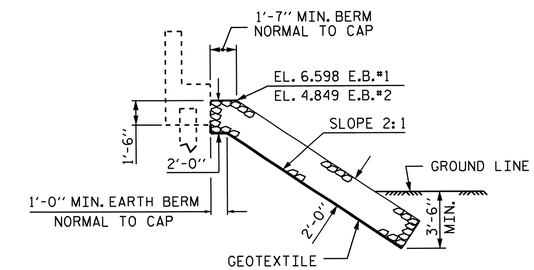

℄ SECTION BERM RIP RAPPED

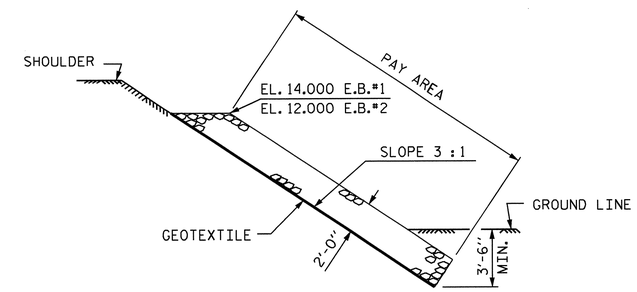

SECTION C-C

PROJECT NO. R-3307

CARTERET COUNTY

STATION: 16+05.50 -Y2-

STATE OF NORTH CAROLINA
DEPARTMENT OF TRANSPORTATION
RALEIGH

RIP RAP DETAILS

NORTH CAROLINA PROFESSIONAL SEAL 14855 ENGINEER DOUGLAS R. CALHOUN
10-22-13

REVISIONS								SHEET NO.
NO.	BY:	DATE:	NO.	BY:	DATE:			S-331
1			3					TOTAL SHEETS
2			4					333

ASSEMBLED BY : D. G. ELY		DATE : 02/2012
CHECKED BY : D. R. CALHOUN		DATE : 03/2012
DESIGN ENGINEER OF RECORD : D. R. CALHOUN		DATE : 09/2013
DRAWN BY : FCJ 2/88	REV. 8/16/99	RWW/LES
CHECKED BY : ARB 8/88	REV. 10/17/00	RWW/LES
	REV. 5/1/06	TLA/GM

10-SEP-2013 15:47
R:\Structures\Plans\MISCELLANEOUS\R3307_SD_RR.dgn
dely

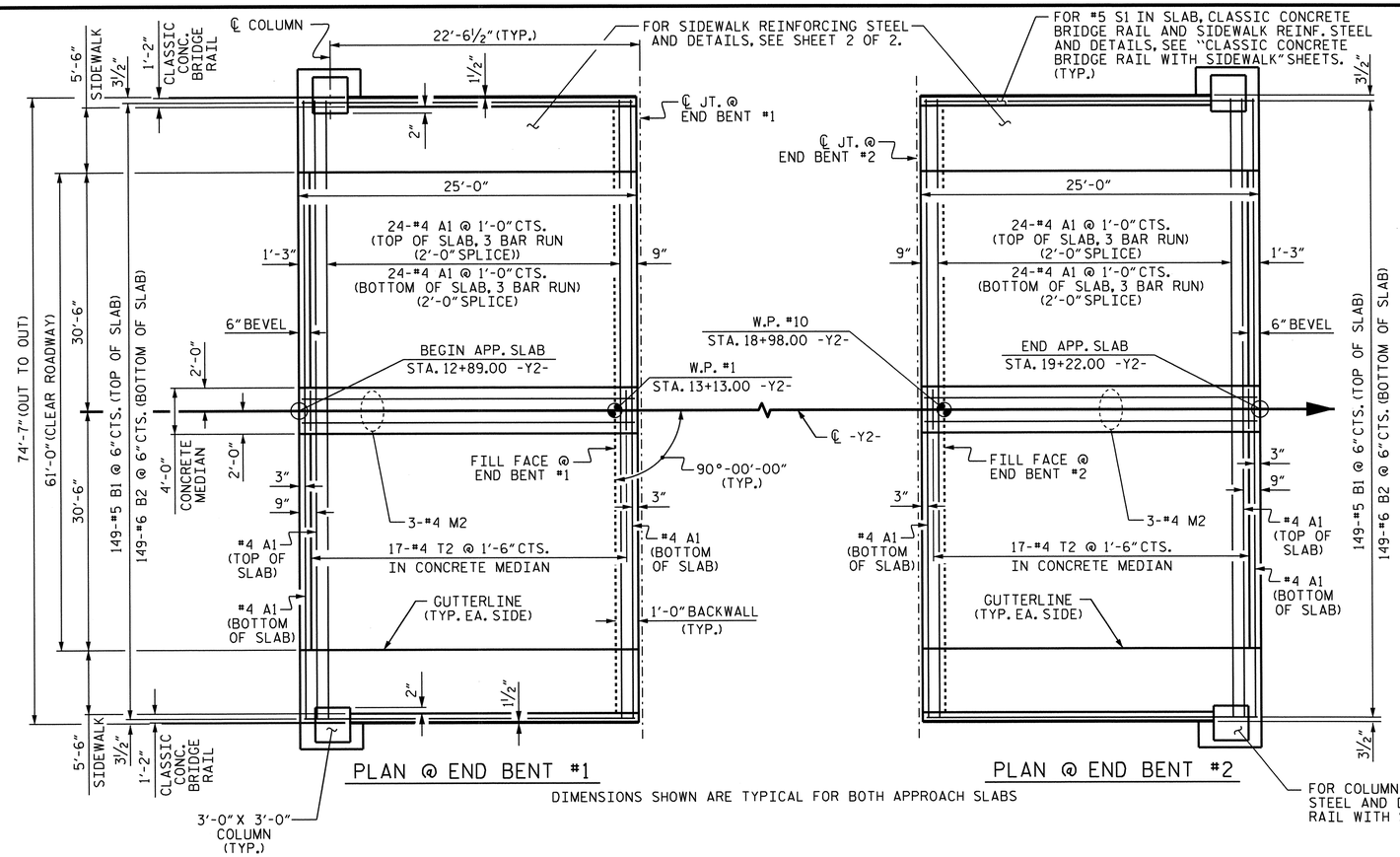

NOTES

APPROACH SLAB SHALL NOT BE CONSTRUCTED PRIOR TO COMPLETION OF THE BRIDGE DECK.

FOR REINFORCED BRIDGE APPROACH FILL INCLUDING GEOTEXTILE, IMPERMEABLE GEOMEMBRANE, 4" Ø DRAINAGE PIPE, #78M STONE, AND SELECT MATERIAL, SEE ROADWAY PLANS.

AREA BETWEEN THE WINGWALL AND APPROACH SLAB SHALL BE GRADED TO DRAIN THE WATER AWAY FROM THE FILL FACE OF THE BRIDGE AND SHALL BE PAVED. SEE ROADWAY PLANS.

THE JOINT SHALL BE SAWED PRIOR TO THE CASTING OF THE SIDEWALK, CLASSIC CONCRETE BRIDGE RAIL AND COLUMNS.

CONCRETE MEDIAN QUANTITIES ARE INCLUDED IN THE APPROACH SLABS BILL OF MATERIAL. FOR CONCRETE MEDIAN DETAILS, SEE "CONCRETE MEDIAN DETAILS" SHEET.

QUANTITIES FOR CONCRETE SIDEWALK ON THE APPROACH SLABS ARE INCLUDED IN THE APPROACH SLABS BILL OF MATERIAL. FOR SIDEWALK DETAILS, SEE SHEET 2 OF 2.

QUANTITIES FOR CLASSIC CONCRETE BRIDGE RAIL AND COLUMNS ON THE APPROACH SLABS ARE INCLUDED IN THE "CLASSIC CONCRETE BRIDGE RAIL WITH SIDEWALK" BILL OF MATERIAL. FOR CLASSIC CONCRETE BRIDGE RAIL DETAILS, SEE "CLASSIC CONCRETE BRIDGE RAIL WITH SIDEWALK SHEETS.

FOR FOAM JOINT SEALS, SEE SPECIAL PROVISIONS.

THE NOMINAL UNCOMPRESSED SEAL WIDTH OF THE FOAM JOINT SEAL SHALL BE 2½".

FOR ELASTOMERIC CONCRETE, SEE SPECIAL PROVISIONS.

ALL REINFORCING STEEL IN APPROACH SLABS SHALL BE EPOXY COATED.

SPLICE LENGTHS

BAR SIZE	EPOXY COATED	UNCOATED
#4	2'-0"	1'-9"
#5	2'-6"	2'-2"
#6	3'-10"	2'-7"

BILL OF MATERIAL

APPROACH SLAB AT EB #1

BAR	NO.	SIZE	TYPE	LENGTH	WEIGHT
* A1	153	#4	STR	26'-3"	2683
* B1	149	#5	STR	24'-0"	3730
* B2	149	#6	STR	24'-8"	5520
* B3	10	#4	STR	24'-8"	165
* G3	50	#4	STR	5'-0"	167
* M2	3	#4	STR	24'-6"	49
* T2	17	#4	STR	2'-10"	32
* U3	16	#4	1	3'-4"	36
* EPOXY COATED REINFORCING STEEL				LBS.	12,382

CLASS AA CONCRETE		
POUR #1 (SLAB)	C. Y.	83.8
POUR #2 (SIDEWALKS & MEDIAN)	C. Y.	7.6
TOTAL	C. Y.	91.4

APPROACH SLAB AT EB #2

BAR	NO.	SIZE	TYPE	LENGTH	WEIGHT
* A1	153	#4	STR	26'-3"	2683
* B1	149	#5	STR	24'-0"	3730
* B2	149	#6	STR	24'-8"	5520
* B3	10	#4	STR	24'-8"	165
* G3	50	#4	STR	5'-0"	167
* M2	3	#4	STR	24'-6"	49
* T2	17	#4	STR	2'-10"	32
* U3	16	#4	1	3'-4"	36
* EPOXY COATED REINFORCING STEEL				LBS.	12,382

CLASS AA CONCRETE		
POUR #1 (SLAB)	C. Y.	83.8
POUR #2 (SIDEWALKS & MEDIAN)	C. Y.	7.6
TOTAL	C. Y.	91.4

BAR TYPE

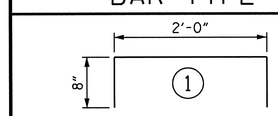

ALL BAR DIMENSIONS ARE OUT TO OUT.

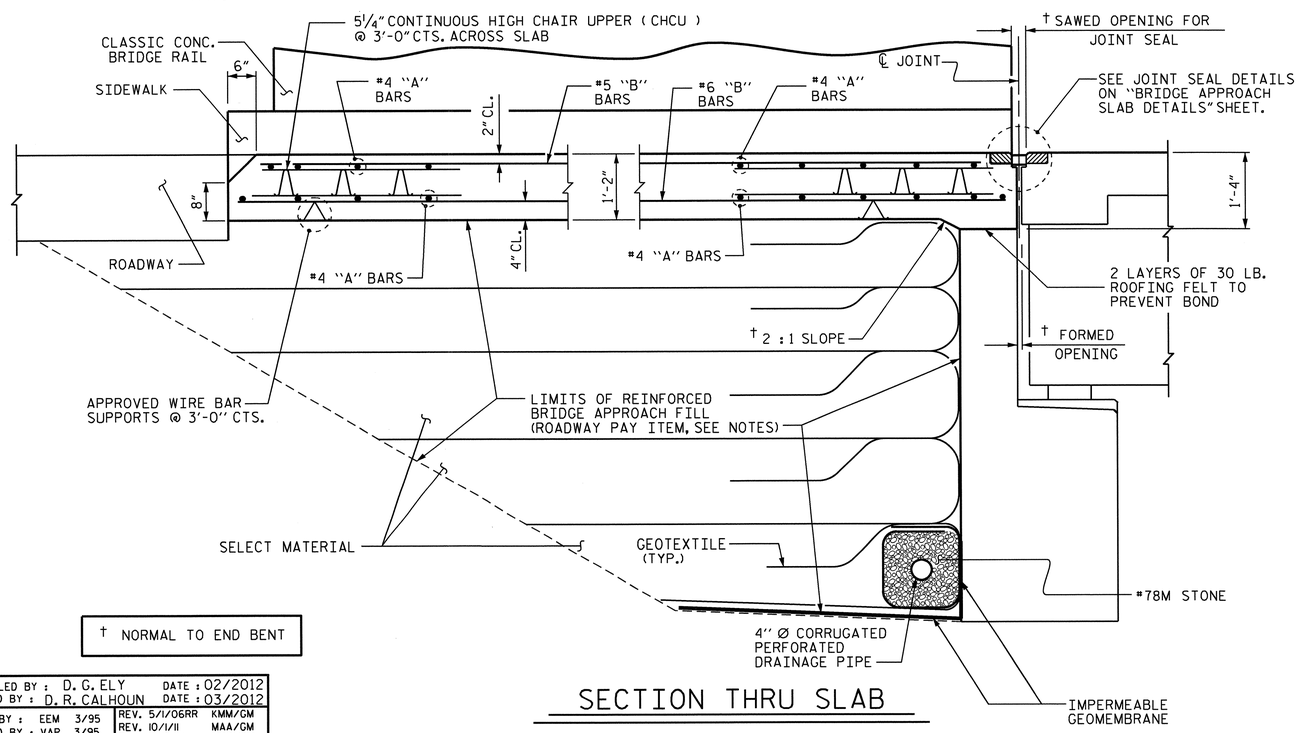

† NORMAL TO END BENT

SECTION THRU SLAB

PROJECT NO. R-3307

CARTERET COUNTY

STATION: 16+05.50 -Y2-

SHEET 1 OF 2

STATE OF NORTH CAROLINA
DEPARTMENT OF TRANSPORTATION
RALEIGH

STANDARD

BRIDGE APPROACH SLAB FOR FLEXIBLE PAVEMENT

NORTH CAROLINA PROFESSIONAL SEAL 14855 ENGINEER DOUGLAS R. CALHOUN 10-22-13

REVISIONS								SHEET NO.
NO.	BY:	DATE:	NO.	BY:	DATE:			S-332
1			3					TOTAL SHEETS
2			4					333

ASSEMBLED BY : D. G. ELY		DATE : 02/2012	
CHECKED BY : D. R. CALHOUN		DATE : 03/2012	
DRAWN BY : EEM 3/95	REV. 5/1/06RR	KMM/GM	
CHECKED BY : VAP 3/95	REV. 10/1/11	MAA/GM	
	REV. 12/21/11	MAA/GM	

21-OCT-2013 15:18
R:\Structures\Plans\MISCELLANEOUS\R3307_SD_AS.dgn
dely

STD. NO. BAS2 (SHT 2)

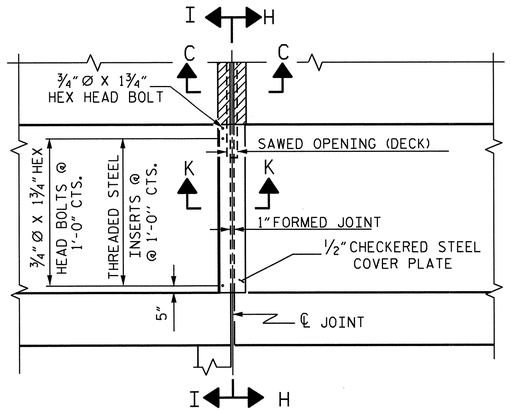

PLAN OF FOAM JOINT SEAL @ END BENT

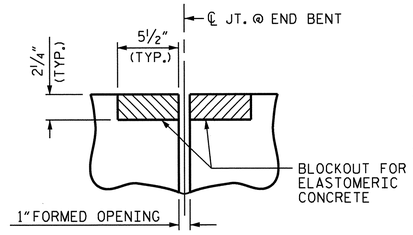

SECTION C-C

FOAM JOINT SEAL
(PRE-SAWED ELASTOMERIC CONCRETE DIMENSIONS)

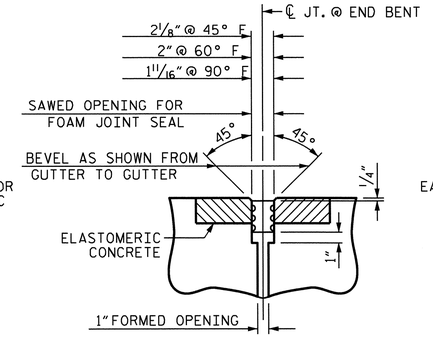

SECTION C-C

FOAM JOINT SEAL
(EXPANSION)

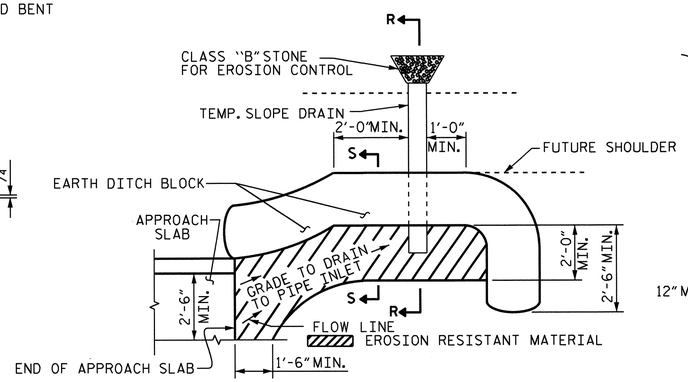

NOTE: IMMEDIATELY AFTER THE CONSTRUCTION OF THE APPROACH SLAB, THE CONTRACTOR SHALL PROVIDE TEMPORARY BERM AND SLOPE DRAIN. CONTRACTOR SHALL GRADE TO PIPE INLET AND PROVIDE EROSION RESISTANT MATERIAL AS SHOWN. THE EROSION RESISTANT MATERIAL SHALL BE EITHER 1) ASPHALT PLANT MIX, TYPE 1 OR TYPE 2, MIN. 2" DEPTH, 2) EROSION CONTROL MAT, OR 3) CONCRETE, AS DIRECTED BY THE ENGINEER. THE SLOPE DRAIN SHALL CONSIST OF A NON-PERFORATED TEMPORARY DRAINAGE PIPE, 12 INCHES IN DIAMETER.

PLAN VIEW

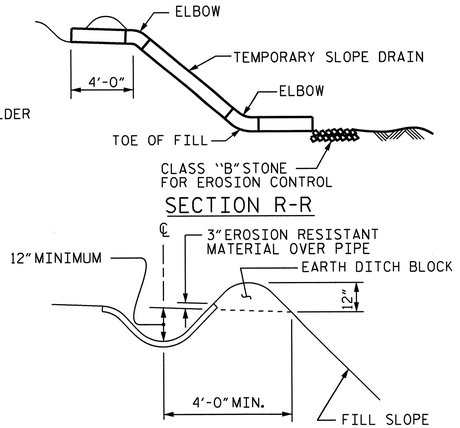

SECTION S-S

TEMPORARY BERM AND SLOPE DRAIN DETAILS

(TO BE USED WHEN SHOULDER BERM GUTTER IS REQUIRED)

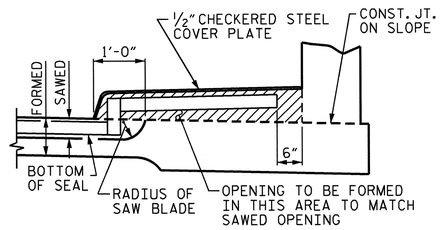

SECTION H-H

THE STEEL PLATES SHALL CONFORM TO AASHTO M270 GRADE 36 OR APPROVED EQUAL. AFTER FABRICATION, THE PLATES SHALL BE COMMERCIALLY BLAST CLEANED AND EITHER COATED WITH A MINIMUM THICKNESS OF 4 MILS (DRY) OF ZINC-RICH PAINT, GALVANIZED OR METALLIZED TO A MINIMUM THICKNESS OF 6 MILS IN ACCORDANCE WITH THE STANDARD SPECIFICATIONS. FOR THERMAL SPRAYED COATINGS (METALLIZATION), SEE SPECIAL PROVISIONS.

THE 3/4" DIAMETER HEX HEAD BOLTS SHALL CONFORM TO ASTM F593 ALLOY 304 STAINLESS STEEL.

NO SEPARATE PAYMENT WILL BE MADE FOR FURNISHING AND INSTALLING THE COVER PLATE. THE ENTIRE COST OF THIS WORK SHALL BE INCLUDED IN THE LUMP SUM PRICE FOR "FOAM JOINT SEALS".

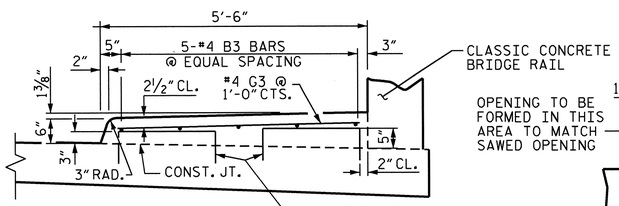

SECTION N-N

SIDEWALK DETAILS

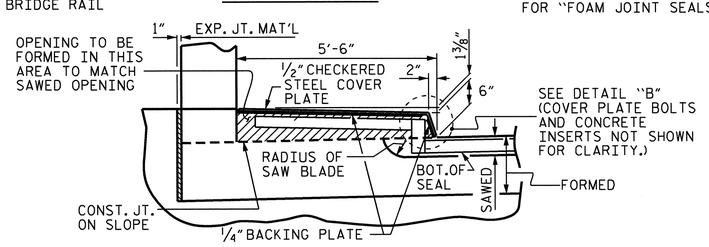

SECTION I-I

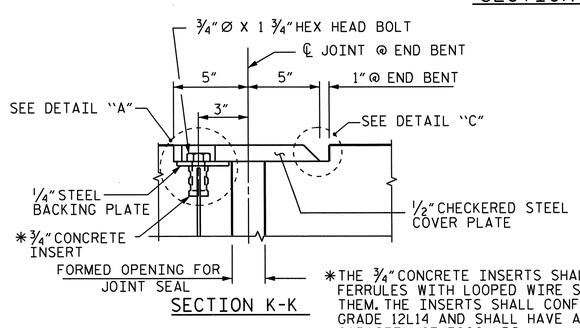

SECTION K-K

*THE 3/4" CONCRETE INSERTS SHALL BE CLOSED-END FERRULES WITH LOOPED WIRE STRUTS ATTACHED TO THEM. THE INSERTS SHALL CONFORM TO AASHTO M169, GRADE 12L14 AND SHALL HAVE A TENSILE WORKING LOAD CAPACITY OF 3000 LBS.

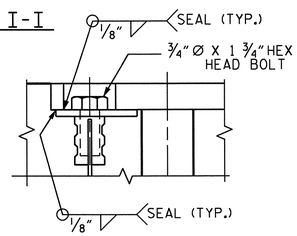

DETAIL "A"

ELASTOMERIC CONCRETE	
END BENT NO.	ELASTOMERIC CONCRETE * (CU. FT.)
1	10.5
2	10.5
TOTAL	21.0

* BASED ON THE MINIMUM BLOCKOUT SHOWN.

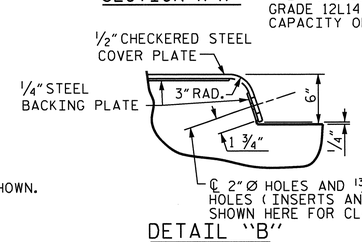

DETAIL "B"

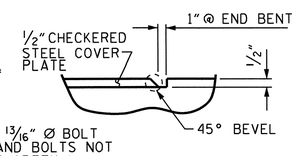

DETAIL "C"

JOINT SEAL DETAILS @ END BENT

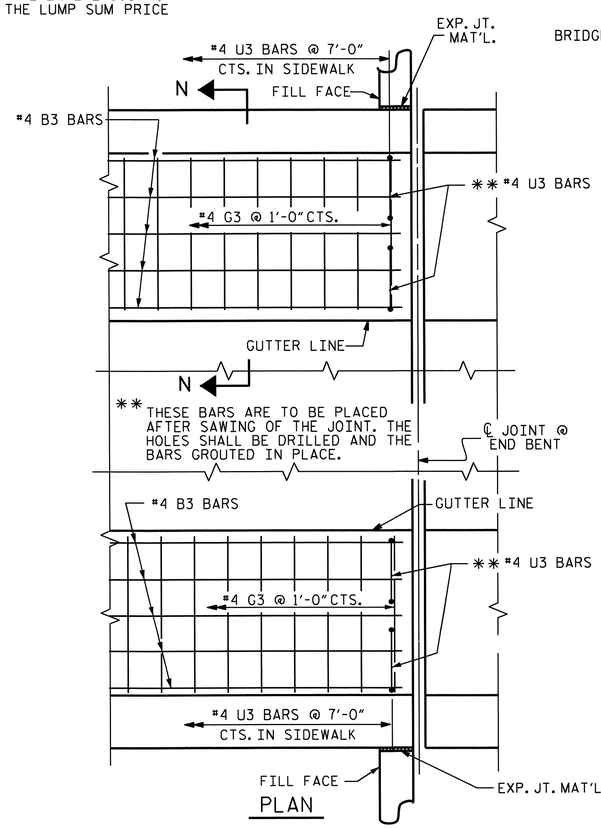

PLAN

DETAILS OF SIDEWALK ON APPROACH SLAB

END BENT #1 SHOWN, END BENT #2 SIMILAR

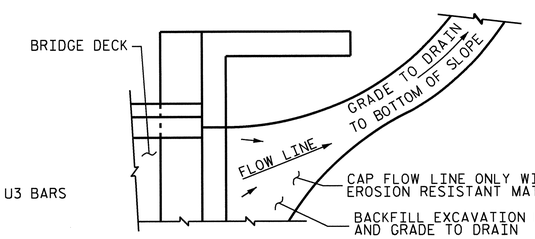

NOTE: IF THE APPROACH SLAB IS NOT CONSTRUCTED IMMEDIATELY AFTER THE BACKFILLING OF THE END BENT EXCAVATION, GRADE TO DRAIN TO THE BOTTOM OF THE SLOPE AND PROVIDE EROSION RESISTANT MATERIAL, SUCH AS FIBERGLASS ROVING OR AS DIRECTED BY THE ENGINEER TO PREVENT SOIL EROSION AND TO PROTECT THE AREA ADJACENT TO THE STRUCTURE. THE CONTRACTOR WILL BE REQUIRED TO REMOVE THESE MATERIALS PRIOR TO CONSTRUCTION OF THE APPROACH SLAB.

TEMPORARY DRAINAGE DETAIL

PROJECT NO. R-3307
CARTERET COUNTY
STATION: 16+05.50 -Y2-

SHEET 2 OF 2

STATE OF NORTH CAROLINA
DEPARTMENT OF TRANSPORTATION
RALEIGH

STANDARD

BRIDGE APPROACH SLAB DETAILS

NORTH CAROLINA PROFESSIONAL SEAL 14855 ENGINEER DOUGLAS R. CALHOUN
10-22-13

ASSEMBLED BY : D. G. ELY	DATE : 02/2012
CHECKED BY : D. R. CALHOUN	DATE : 03/2012

DRAWN BY : FCJ	11/88	REV. 10/1/11	MAA/GM
CHECKED BY : ARB	11/88	REV. 7/12	MAA/GM
		REV. 6/13	MAA/GM

REVISIONS								SHEET NO.
NO.	BY:	DATE:	NO.	BY:	DATE:			S-333
1			3					TOTAL SHEETS
2			4					333

STD. NO. BAS4 (SHT 2)

21-OCT-2013 15:17
R:\Structures\Plans\MISCELLANEOUS\R3307_SD_AS.dgn
dely

GEOTECHNICAL ENGINEER	ENGINEER
NORTH CAROLINA PROFESSIONAL SEAL 30943 ENGINEER THEIN TUN ZAN — SIGNATURE 9/26/13 DATE	SIGNATURE DATE

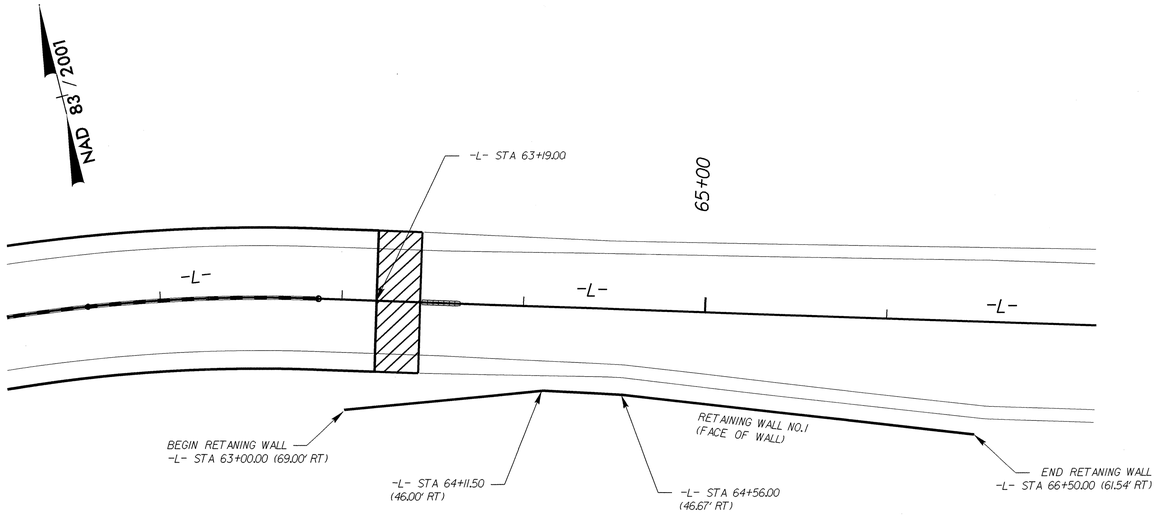

RETAINING WALL NO. 1 PLAN

N.T.S.

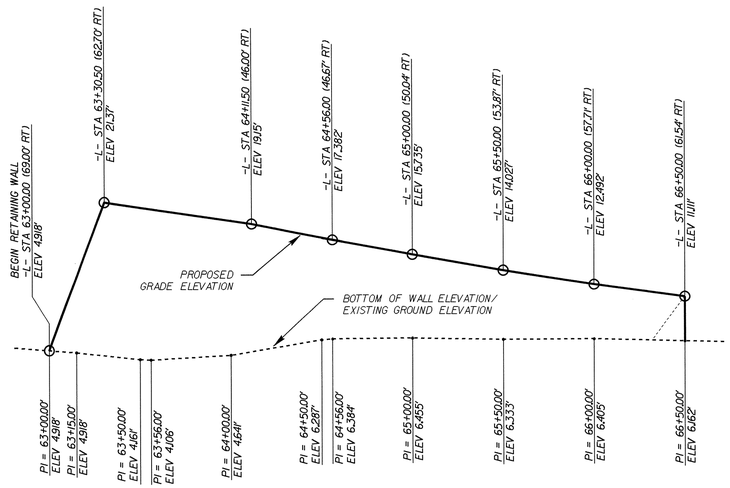

RETAINING WALL NO. 1 ELEVATION (EXPOSED WALL FACE ENVELOPE)

N.T.S.

MSE WALL ESTIMATED QUANTITY (SQUARE FEET)	
MSE RETAINING WALL NO. 1	3,850 SF

NOTES:

FOR MECHANICALLY STABILIZED EARTH (MSE) RETAINING WALLS, SEE MECHANICALLY STABILIZED EARTH RETAINING WALLS PROVISION.

FOR STEEL BEAM GUARDRAIL, SEE ROADWAY PLANS AND SECTION 862 OF THE STANDARD SPECIFICATIONS.

CAST-IN-PLACE REINFORCED CONCRETE COPING IS REQUIRED FOR RETAINING WALL NO 1. DO NOT CAST THE COPING UNTIL AFTER THE WAITING PERIOD ENDS. ADJUST THE COPING AS NECESSARY TO ACCOUNT FOR SETTLEMENT.

A DRAIN IS REQUIRED FOR RETAINING WALL NO. 1.

BEFORE BEGINNING MSE WALL DESIGN FOR RETAINING WALL NO. 1, SURVEY WALL LOCATION AND SUBMIT A REVISED WALL PROFILE VIEW (WALL ENVELOPE) FOR REVIEW. DO NOT START WALL DESIGN OR CONSTRUCTION UNTIL THE REVISED WALL ENVELOPE IS ACCEPTED.

DESIGN RETAINING WALL NO. 1 FOR THE FOLLOWING:
1) H = DESIGN HEIGHT + EMBEDMENT
2) DESIGN LIFE = 100 YEARS
3) MAX. FACTORED VERTICAL STRESS ON FOUNDATION MATERIALS = 3,800 PSF
4) MIN. REINFORCEMENT LENGTH = 1.2 X H

5) AGGREGATE PARAMETERS:

AGGREGATE TYPE*	UNIT WEIGHT (γ) LB/CF	FRICTION ANGLE (ϕ) DEGREES	COHESION (c) LB/SF
COARSE	110	38	0
*SEE MSE RETAINING WALLS PROVISION FOR COARSE AGGREGATE MATERIAL REQUIREMENTS.			

6) IN-SITU ASSUMED MATERIAL PARAMETERS:

MATERIAL TYPE	UNIT WEIGHT (γ) LB/CF	FRICTION ANGLE (ϕ) DEGREES	COHESION (c) LB/SF
BACKFILL	120	30	0
FOUNDATION	120	25	0

DESIGN RETAINING WALL NO. 1 FOR A LIVE LOAD (TRAFFIC) SURCHARGE.

EXISTING OR FUTURE OBSTRUCTIONS SUCH AS FOUNDATIONS, GUARDRAIL, FENCE OR HANDRAIL POSTS, PAVEMENTS, PIPES, INLETS OR UTILITIES MAY INTERFERE WITH REINFORCEMENT FOR RETAINING WALL NO. 1.

FOUNDATIONS FOR END BENT NO. 2 LOCATED AT STATION 63+19.00 -L- MAY INTERFERE WITH REINFORCEMENT FOR RETAINING WALL NO. 1. SEE "FOUNDATION LAYOUT" SHEET FOR FOUNDATION LOCATIONS.

DO NOT PLACE LEVELING PAD CONCRETE, AGGREGATE OR REINFORCEMENT FOR RETAINING WALL NO. 1 UNTIL EXCAVATION DIMENSIONS AND FOUNDATION MATERIAL ARE APPROVED.

FOR GEOTEXTILE FOR EMBANKMENT STABILIZATION BELOW RETAINING WALL NO. 1, SEE GEOTEXTILE FOR EMBANKMENT STABILIZATION FOR RETAINING WALL NO. 1 PLAN.

FOR EMBANKMENT MONITORING & INSTRUMENTATION, SEE EMBANKMENT MONITORING & INSTRUMENTATION PLAN.

CONSTRUCTION SEQUENCE

1. EXCAVATE AS NECESSARY FOR MSE WALLS.
2. INSTALL GEOTEXTILE FOR EMBANKMENT STABILIZATION AND EMBANKMENT MONITORING INSTRUMENTATION. SEE GEOTEXTILE FOR EMBANKMENT STABILIZATION FOR RETAINING WALL NO. 1 PLAN SHEET AND EMBANKMENT MONITORING & INSTRUMENTATION PLAN SHEET IN THE ROADWAY PLANS.
3. CONSTRUCT MSE RETAINING WALL AND THE EMBANKMENT UP TO ELEVATION 12 FT.
4. OBSERVE A 60 DAYS WAITING PERIOD.
5. CONSTRUCT MSE RETAINING WALL AND THE EMBANKMENT UP TO ELEVATION 17 FT.
4. OBSERVE A 60 DAYS WAITING PERIOD.
5. CONSTRUCT THE REMAINING MSE WALL AND THE EMBANKMENT.

PROJECT NO.: R-3307
CARTERET ***COUNTY***
STATION: 63+00.00 -L-
SHEET 1 OF 2

PREPARED BY: T.T. ZAN	DATE: 09/2013
REVIEWED BY: J.R. BATTS	DATE: 09/2013

GEOTECHNICAL ENGINEERING UNIT
☒ ***EASTERN REGIONAL OFFICE***
☐ ***WESTERN REGIONAL OFFICE***

STATE OF NORTH CAROLINA
DEPARTMENT OF TRANSPORTATION
RALEIGH

RETAINING WALL NO. 1
PLAN & PROFILE

REVISIONS						SHEET NO.
NO.	BY	DATE	NO.	BY	DATE	W-1
1			3			TOTAL SHEETS
2			4			2

GEOTECHNICAL ENGINEER	ENGINEER
NORTH CAROLINA PROFESSIONAL SEAL 30943 ENGINEER THEIN TUN ZAN — SIGNATURE 9/26/13 DATE	SIGNATURE DATE

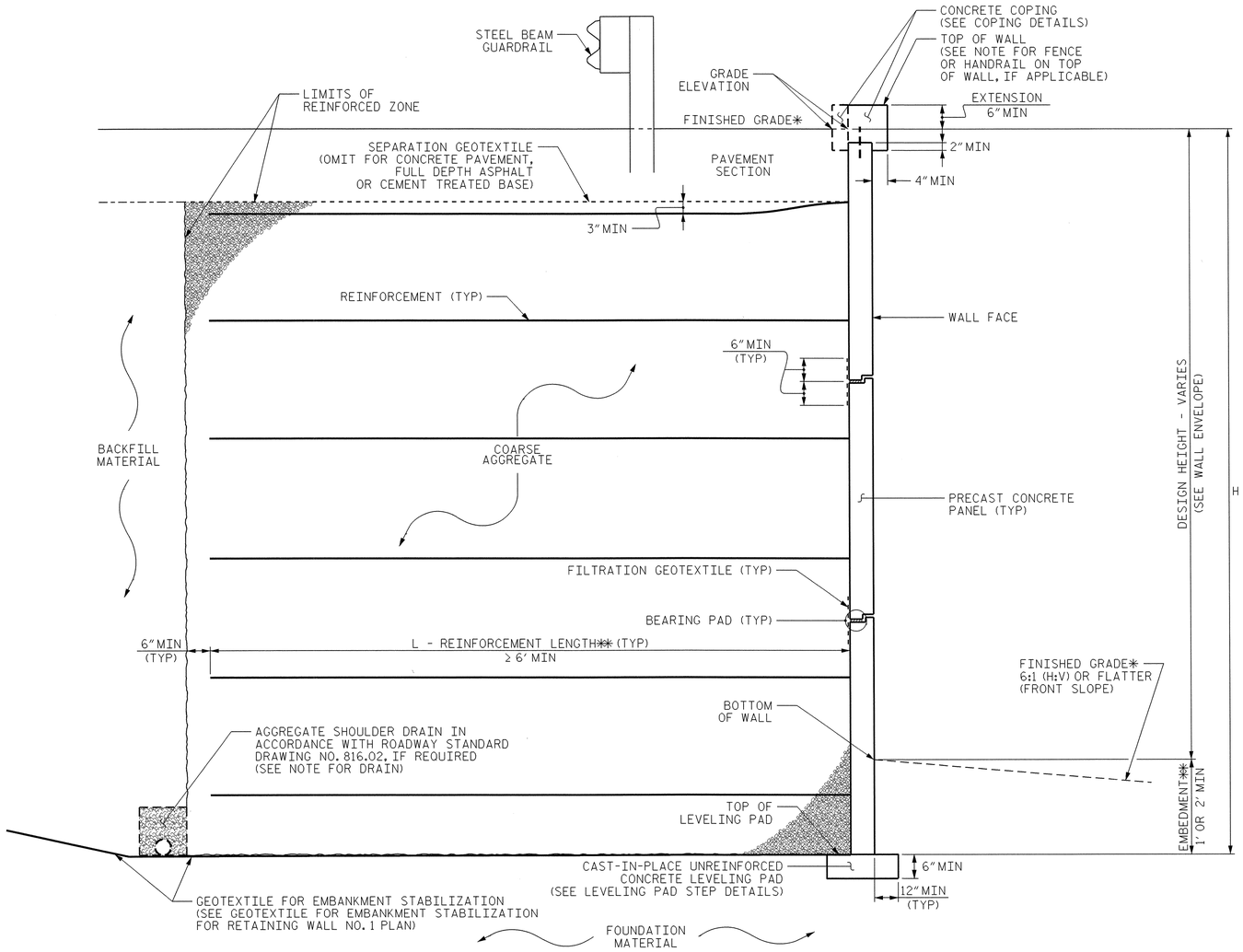

MSE WALL WITH PRECAST PANELS - TYPICAL SECTION

*SEE ROADWAY PLANS FOR FINISHED GRADE DETAILS.
**SEE MSE RETAINING WALLS PROVISION FOR EMBEDMENT AND REINFORCEMENT LENGTH REQUIREMENTS.

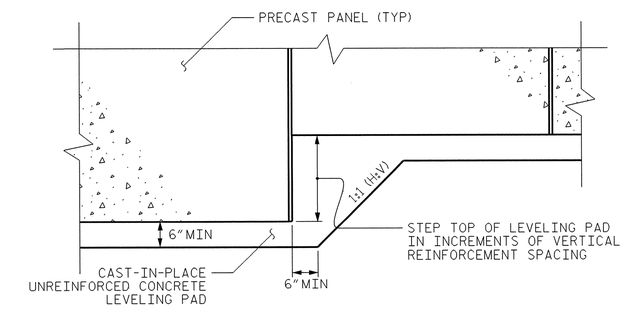

PRECAST CONCRETE PANELS

LEVELING PAD STEP DETAILS

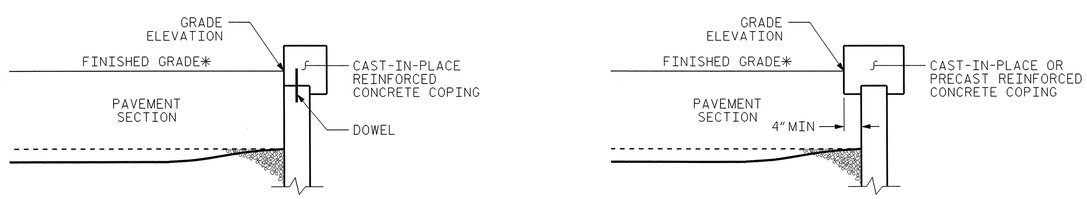

COPING DETAILS

AT THE CONTRACTOR'S OPTION, CONNECT COPING TO PANELS WITH DOWELS OR EXTEND COPING DOWN BACK OF PANELS.
*SEE ROADWAY PLANS FOR FINISHED GRADE DETAILS.

PREPARED BY: T.T. ZAN	DATE: 09/2013
REVIEWED BY: J.R. BATTS	DATE: 09/2013

PROJECT NO.: R-3307
CARTERET **COUNTY**
STATION: 63+00.00 -L-
SHEET 2 OF 2

GEOTECHNICAL ENGINEERING UNIT
☒ *EASTERN REGIONAL OFFICE*
☐ *WESTERN REGIONAL OFFICE*

STATE OF NORTH CAROLINA
DEPARTMENT OF TRANSPORTATION
RALEIGH

RETAINING WALL NO. 1
TYPICAL SECTION & DETAILS

REVISIONS						SHEET NO.
NO.	BY	DATE	NO.	BY	DATE	W-2
1			3			TOTAL SHEETS
2			4			2

GEJ266083 9/26/2013 R3307_GEO_RWALL_REV tzan RD-Oce860-34

GEOTECHNICAL ENGINEER	ENGINEER
NORTH CAROLINA PROFESSIONAL SEAL 30943 ENGINEER THIN TUN ZAN	
SIGNATURE 11/21/13 DATE	SIGNATURE DATE

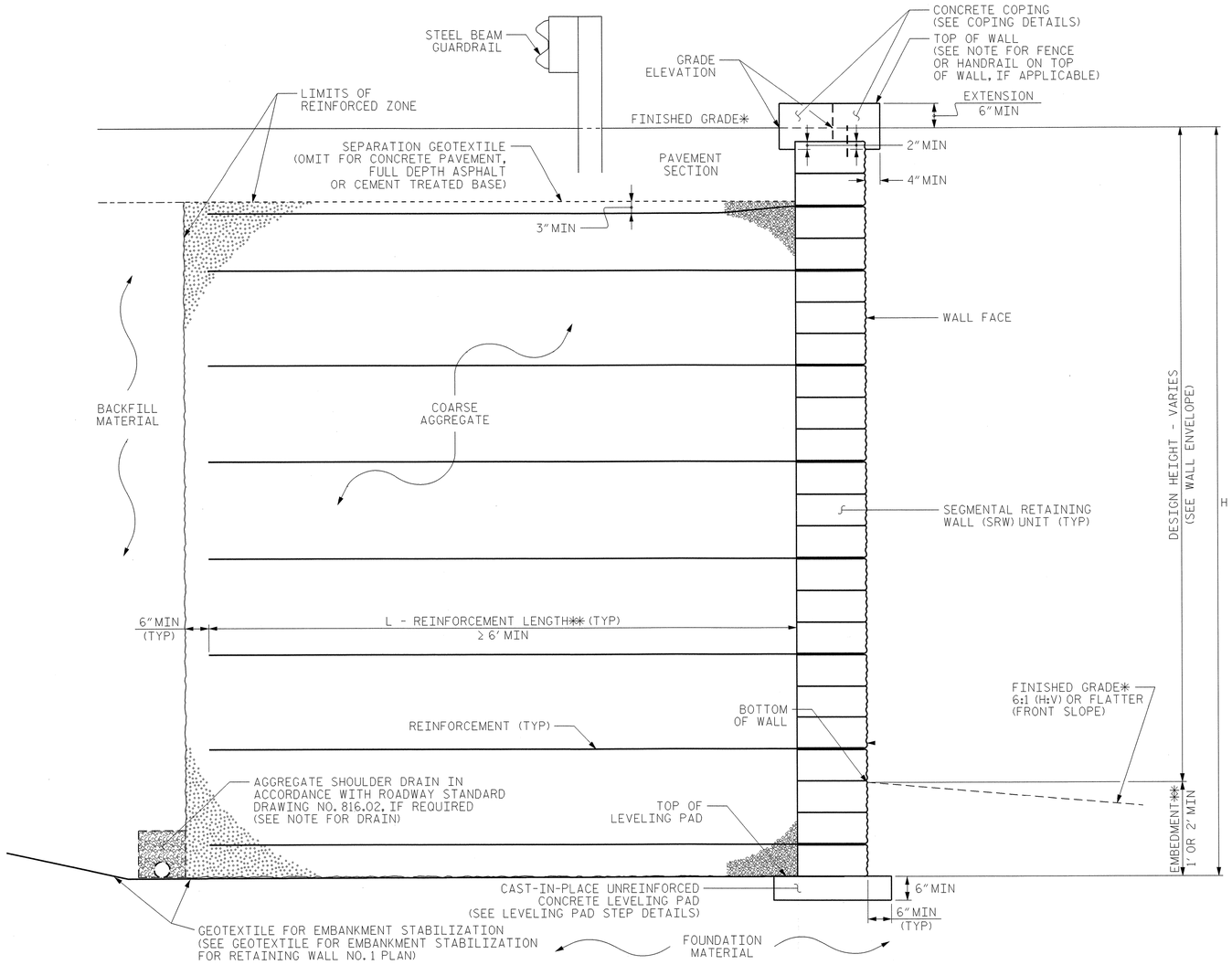

MSE WALL WITH SRW UNITS - TYPICAL SECTION

*SEE ROADWAY PLANS FOR FINISHED GRADE DETAILS.
**SEE MSE RETAINING WALLS PROVISION FOR EMBEDMENT AND REINFORCEMENT LENGTH REQUIREMENTS.

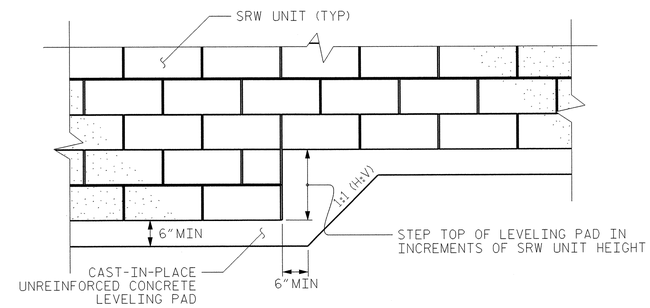

SEGMENTAL RETAINING WALL (SRW) UNITS

LEVELING PAD STEP DETAILS

COPING DETAILS

AT THE CONTRACTOR'S OPTION, CONNECT COPING TO SRW UNITS WITH DOWELS OR EXTEND COPING DOWN BACK OF SRW UNITS.
*SEE ROADWAY PLANS FOR FINISHED GRADE DETAILS.

PREPARED BY: T.T. ZAN	DATE: 11/2013
REVIEWED BY: J.R. BATTS	DATE: 11/2013

PROJECT NO.: R-3307
CARTERET **COUNTY**
STATION: 63+00.00 -L-

GEOTECHNICAL ENGINEERING UNIT
[X] *EASTERN REGIONAL OFFICE*
[ ] *WESTERN REGIONAL OFFICE*

STATE OF NORTH CAROLINA DEPARTMENT OF TRANSPORTATION

STATE OF NORTH CAROLINA
DEPARTMENT OF TRANSPORTATION
RALEIGH

RETAINING WALL NO. 1
TYPICAL SECTION & DETAILS
(MSE WALL WITH SRW UNITS)

REVISIONS						SHEET NO.
NO.	BY	DATE	NO.	BY	DATE	W-3
1			3			TOTAL SHEETS
2			4			

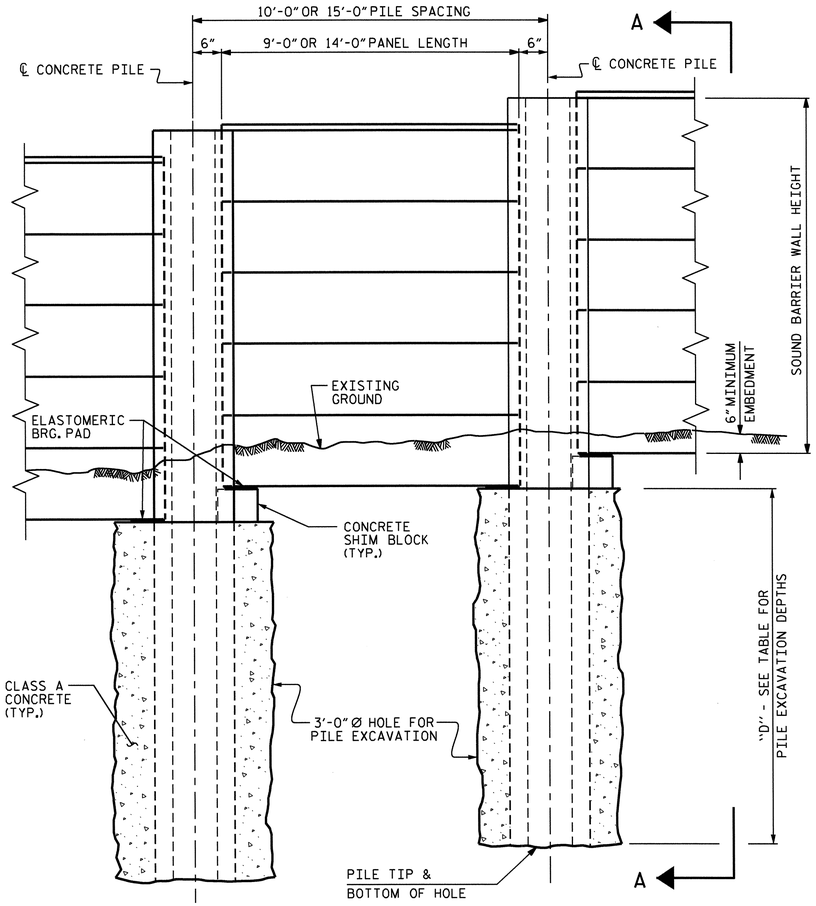

ELEVATION

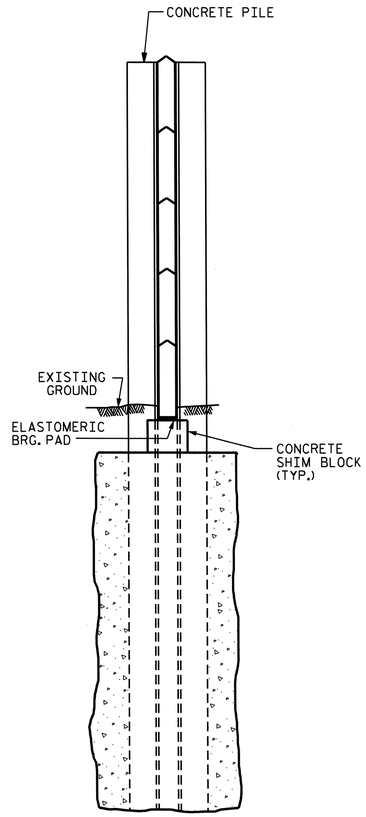

SECTION A-A

3'-0" Ø PILE EXCAVATION	
WALL #1	WALL STATIONS FROM : STA. 145+49.89 -L- TO : STA. 169+94.55 -L-
PILE SPACING	DEPTH "D"
10'-0"	14'-0"
15'-0"	16'-6"

NOTES

FOR SOUND BARRIER WALL, SEE SPECIAL PROVISIONS.

CONSTRUCT SOUND BARRIER WALL TO LINES AND GRADES SHOWN ON THE ROADWAY PLANS.

PROVIDE PANELS WITH A FLAT BOTTOM.

VERIFY THE LOCATION OF UNDERGROUND UTILITIES BEFORE DRILLING HOLES TO ENSURE SUFFICIENT CLEARANCE IS AVAILABLE.

ADJUST PILE EXCAVATION ELEVATIONS TO MAINTAIN 6" MINIMUM EMBEDMENT OF THE BOTTOM PANEL.

USE CLASS AA FOR PANELS AND CLASS A CONCRETE PILE EXCAVATION BACKFILL, IN ACCORDANCE WITH ARTICLE 1000-4 OF THE STANDARD SPECIFICATIONS.

AT THE CONTRACTOR'S OPTION, USE EITHER 10 FOOT OR 15 FOOT PILE SPACINGS.

FOR SOUND BARRIER WALL STATIONS, OFFSETS, AND WALL ENVELOPE, SEE ROADWAY PLANS.

PLACE 1" Ø BACKER RODS FULL HEIGHT ON EACH SIDE OF THE PRECAST PANELS. SET AND SEAL THE BACKER ROD IN PLACE WITH SEALANT THAT CONFORMS WITH ARTICLE 1028-3 OF THE STANDARD SPECIFICATIONS.

FOR SUBMITTAL OF WORKING DRAWINGS, SEE SPECIAL PROVISIONS.

FOR FALSEWORK AND FORMWORK, SEE SPECIAL PROVISIONS.

AT THE CONTRACTOR'S OPTION, USE CONTINUOUS FLIGHT AUGER PILES IN LIEU OF PILE EXCAVATION FOR SOUND BARRIER WALL FOUNDATIONS, SEE CONTINUOUS FLIGHT AUGER PILES FOR SOUND BARRIER WALLS SPECIAL PROVISION.

EXPOSURE CATEGORY D - PILE REINFORCING STEEL

DESIGN WIND PRESSURE = 62 PSF (0' < H ≤ 14')

PILE TYPE I				PILE TYPE III			
PILE SPACING	MAXIMUM WALL HEIGHT (H)	VERTICAL REINFORCING STEEL	TIES	PILE SPACING	MAXIMUM WALL HEIGHT (H)	VERTICAL REINFORCING STEEL	TIES
10'-0"	H ≤ 15'	4 - #6 EA. FACE	#3 @ 1'-4" CTS.	10'-0"	H ≤ 15'	3 - #7 SHORT FACE 4 - #7 LONG FACE	#3 @ 1'-4" CTS.
15'-0"	H ≤ 15'	4 - #7 EA. FACE	#3 @ 1'-4" CTS.	15'-0"	H ≤ 15'	3 - #8 SHORT FACE 4 - #8 LONG FACE	#3 @ 1'-4" CTS.

PILE TYPE II				PILE TYPE III ALT.			
PILE SPACING	MAXIMUM WALL HEIGHT (H)	VERTICAL REINFORCING STEEL	TIES	PILE SPACING	MAXIMUM WALL HEIGHT (H)	VERTICAL REINFORCING STEEL	TIES
10'-0"	H ≤ 15'	4 - #6 EA. FACE	#3 @ 1'-4" CTS.	10'-0"	H ≤ 15'	3 - #6 SHORT FACE 4 - #6 LONG FACE	#3 @ 1'-4" CTS.
15'-0"	H ≤ 15'	4 - #6 EA. FACE	#3 @ 1'-4" CTS.	15'-0"	H ≤ 15'	3 - #8 SHORT FACE 4 - #8 LONG FACE	#3 @ 1'-4" CTS.

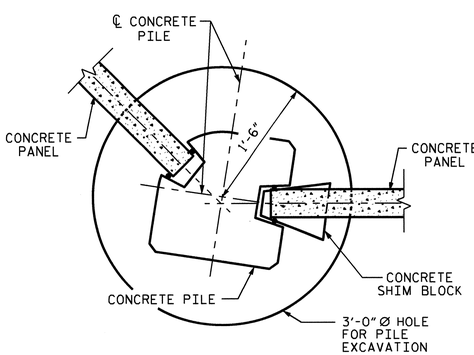

15° TO 45° TURNS
(PILE TYPE III)

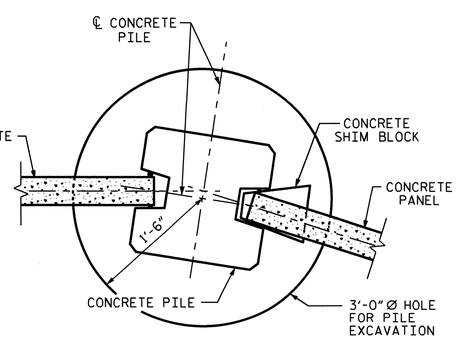

0° TO 15° TURNS
(PILE TYPE I)

TYPICAL WALL TURN DETAILS

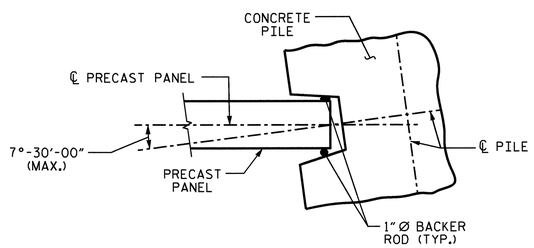

PILE ROTATION LIMIT FOR WALL TURN

(ROTATE THE CONCRETE PILE ±7°-30'-00" TO ACCOMODATE WALL TURN.)

BILL OF MATERIAL		
SOUND BARRIER WALL	S.F.	32695.0
QUANTITIES PROVIDED ARE APPROXIMATE AND ARE FOR BID PURPOSES ONLY.		

PROJECT NO. R-3307
CARTERET COUNTY
STATION: 145+49.89 -L-

SHEET 1 OF 3

STATE OF NORTH CAROLINA
DEPARTMENT OF TRANSPORTATION
RALEIGH

STANDARD

SOUND BARRIER WALL

NORTH CAROLINA PROFESSIONAL SEAL 14855 ENGINEER DOUGLAS R. CALHOUN
4-26-12

REVISIONS						SHEET NO.
NO.	BY:	DATE:	NO.	BY:	DATE:	NW-1
1			3			TOTAL SHEETS
2			4			3

STD. NO. SBW1

ASSEMBLED BY : K. P. SEDAI	DATE : 3/6/12
CHECKED BY : D. R. CALHOUN	DATE : 3/13/12
DRAWN BY : MAA 6/11	ADDED 10/1/11
CHECKED BY : GM 6/11	

26-APR-2012 08:25
R:\Structures\ksedai\Noise_Wall\r-3307_SBW.dgn
dely

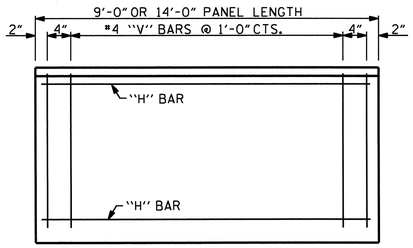

FRONT ELEVATION OF UPPER PRECAST PANELS

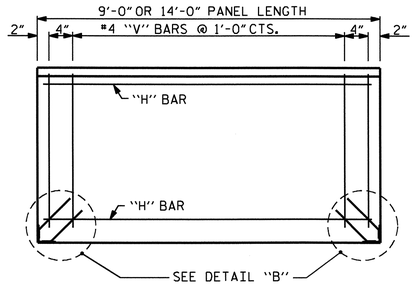

FRONT ELEVATION OF BOTTOM PRECAST PANEL

QUANTITIES FOR ONE PRECAST PANEL (FOR 10'-0" PILE SPACING)													
PANEL HEIGHT	CLASS AA CONCRETE	BAR TYPES											
		HORIZONTAL						VERTICAL					
	C.Y.	NO.	BAR	SIZE	TYPE	LENGTH	WEIGHT (lb)	NO.	BAR	SIZE	TYPE	LENGTH	WEIGHT (lb)
2'-0"	0.22	3	H1	#4	STR	8'-8"	17	11	V1	#4	STR	1'-8"	12
3'-0"	0.33	4	H2	#4	STR	8'-8"	23	11	V2	#4	STR	2'-8"	20
4'-0"	0.44	5	H3	#4	STR	8'-8"	29	11	V3	#4	STR	3'-8"	27

QUANTITIES FOR ONE PRECAST PANEL (FOR 15'-0" PILE SPACING)													
PANEL HEIGHT	CLASS AA CONCRETE	BAR TYPES											
		HORIZONTAL						VERTICAL					
	C.Y.	NO.	BAR	SIZE	TYPE	LENGTH	WEIGHT (lb)	NO.	BAR	SIZE	TYPE	LENGTH	WEIGHT (lb)
3'-0"	0.52	7	H1	#4	STR	13'-8"	64	16	V1	#4	STR	2'-8"	29
4'-0"	0.69	9	H2	#4	STR	13'-8"	82	16	V2	#4	STR	3'-8"	39
5'-0"	0.86	11	H3	#4	STR	13'-8"	100	16	V3	#4	STR	4'-8"	50
6'-0"	1.04	13	H4	#4	STR	13'-8"	119	16	V4	#4	STR	5'-8"	61

ADDITIONAL BARS FOR ONE BOTTOM PANEL					
NO.	BAR	SIZE	TYPE	LENGTH	WEIGHT (lb)
4	S1	#5	1	1'-6"	6

BAR TYPE

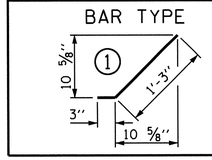

NOTES

L 6 X 6 X 5/16 ANGLES SHALL BE GALVANIZED IN ACCORDANCE WITH THE STANDARD SPECIFICATIONS.

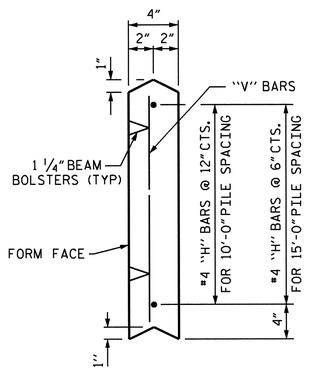

UPPER PANEL

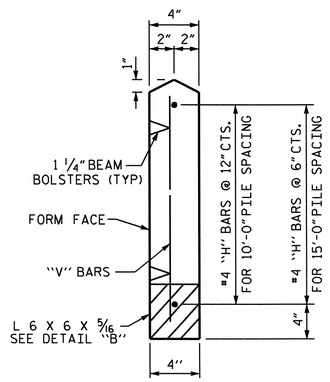

BOTTOM PANEL

SECTION THROUGH PRECAST PANELS

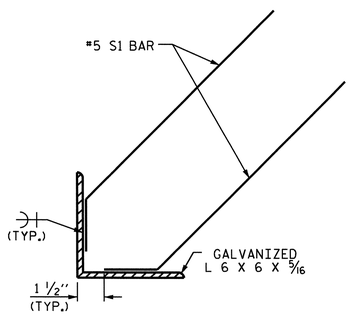

DETAIL "B"

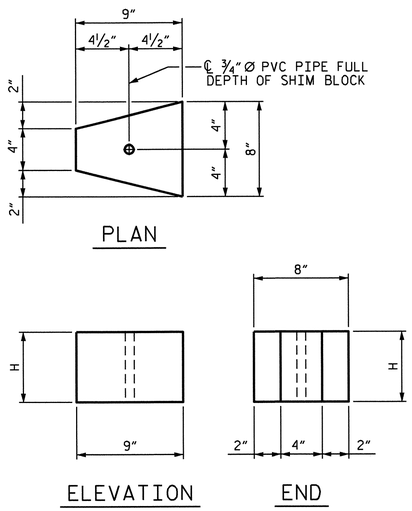

CONCRETE SHIM BLOCK

H = 3", 6" or 1'-0"

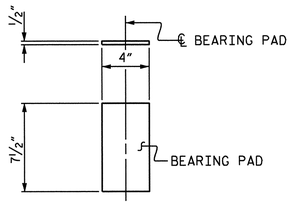

ELASTOMERIC BEARING DETAILS

ELASTOMER IN BEARINGS SHALL BE 50 DUROMETER HARDNESS.

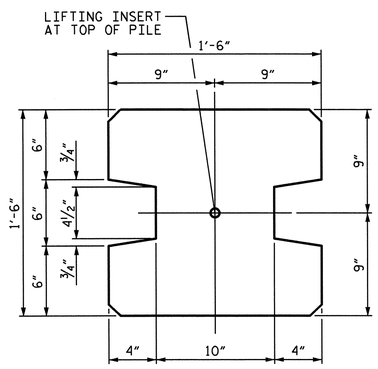

TYPE - I
(AREA = 1.9444 SQ. FT.)

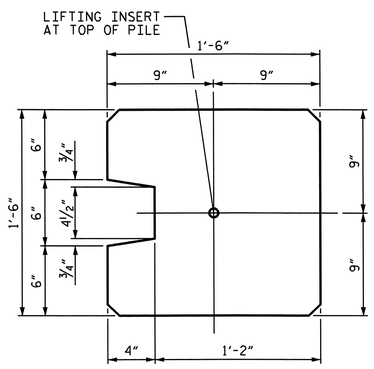

TYPE - II
(AREA = 2.0903 SQ. FT.)

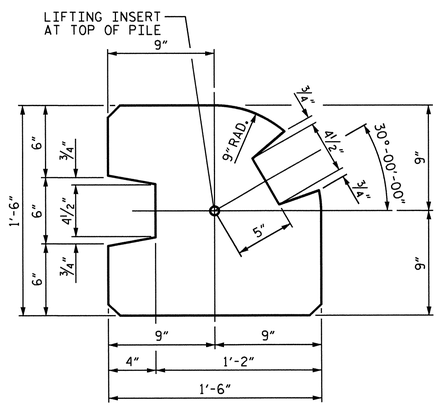

TYPE - III
(AREA = 1.8336 SQ. FT.)

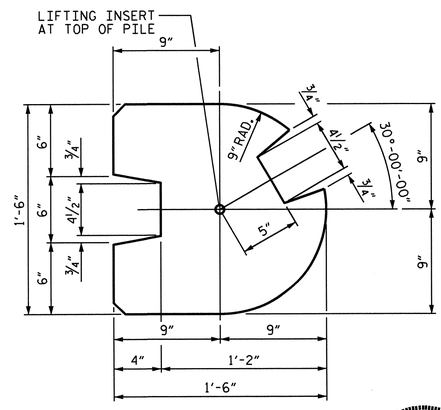

TYPE - III (ALT.)
(AREA = 1.7163 SQ. FT.)

PILE DETAIL

(ALL CORNERS TO BE CHAMFERED 1")

PROJECT NO. R-3307
CARTERET COUNTY
STATION: 145+49.89 -L-

SHEET 2 OF 3

STATE OF NORTH CAROLINA
DEPARTMENT OF TRANSPORTATION
RALEIGH

STANDARD

SOUND BARRIER WALL DETAILS

NORTH CAROLINA PROFESSIONAL SEAL 19856 ENGINEER DOUGLAS R. CALHOUN

REVISIONS						SHEET NO.
NO.	BY:	DATE:	NO.	BY:	DATE:	NW-2
1			3			TOTAL SHEETS
2			4			3

STD. NO. SBW2

ASSEMBLED BY : K. P. SEDAI	DATE : 3/6/12
CHECKED BY : D. R. CALHOUN	DATE : 3/13/12
DRAWN BY : MAA 6/11	ADDED 8/31/11
CHECKED BY : GM 6/11	

26-APR-2012 08:25
R:\Structures\ksedai\Noise_Wall\r-3307_SBW.dgn
dely

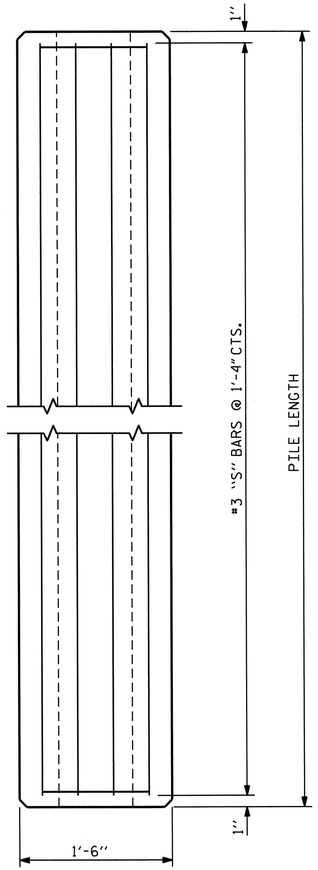

ELEVATION

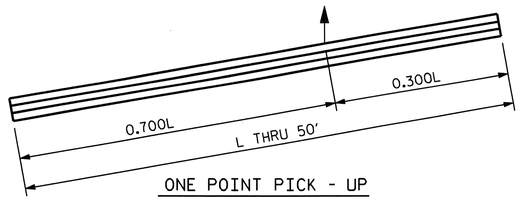

ONE POINT PICK - UP

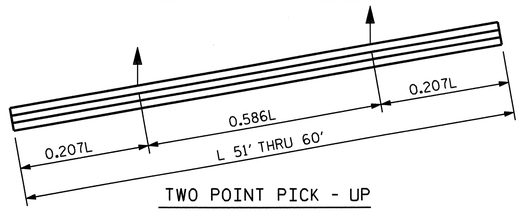

TWO POINT PICK - UP

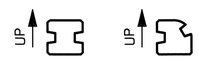

PICK - UP POINTS

NOTES

CONCRETE DESIGN DATA : f'c = 5,000 PSI

PROPOSED DEVICES FOR LIFTING PILES, RECESS DETAILS, AND PATCHING MATERIAL SHALL BE DETAILED IN SHOP DRAWINGS. AFTER ATTACHMENTS HAVE BEEN REMOVED, OPENINGS SHALL BE REPAIRED SUCH THAT THE APPEARANCE OF THE PILE IS UNIFORM.

WHERE CAST-IN-PLACE LIFTING DEVICES ARE NOT USED, PICK-UP POINTS TO BE INDICATED WITH A BLACK MARK 2" WIDE.

THE SLIP-FORM METHOD OF CASTING PILES WILL NOT BE PERMITTED.

ALL CORNERS TO BE CHAMFERED 1".

QUANTITIES FOR ONE PRECAST CONCRETE PILE

LENGTH	APPROX. PILE WT. TONS	ONE PICK-UP POINT		TWO PICK-UP POINT	
		0.300L	0.700L	0.207L	0.586L
10'-0"	1.56	3'-0"	7'-0"		
15'-0"	2.35	4'-6"	10'-6"		
20'-0"	3.14	6'-0"	14'-0"		
25'-0"	3.93	7'-6"	17'-6"		
30'-0"	4.70	9'-0"	21'-0"		
35'-0"	5.49	10'-6"	24'-6"		
40'-0"	6.28	12'-0"	28'-0"		
45'-0"	7.05	13'-6"	31'-6"		
50'-0"	7.84	15'-0"	35'-0"		
55'-0"	8.63			11'-4½"	32'-3"
60'-0"	9.42			12'-5"	35'-2"

BAR TYPES

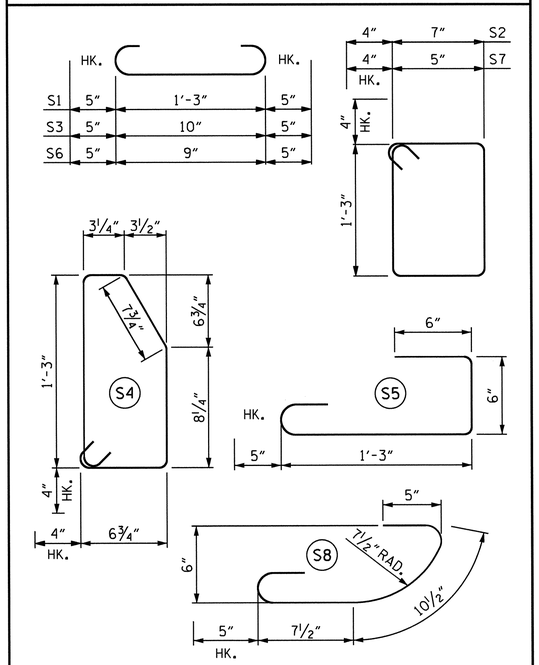

ALL BAR DIMENSIONS ARE OUT TO OUT.

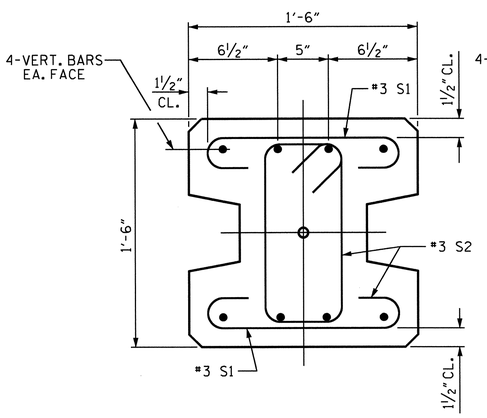

TYPE - I

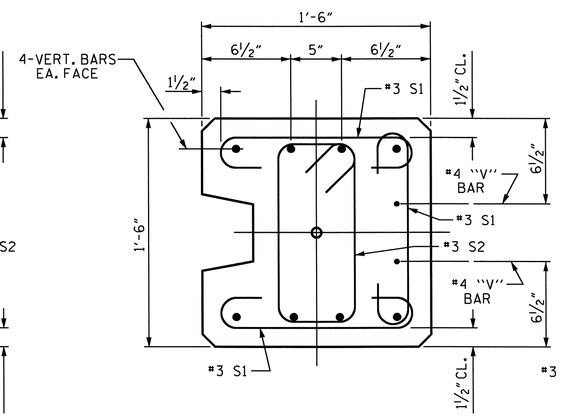

TYPE - II

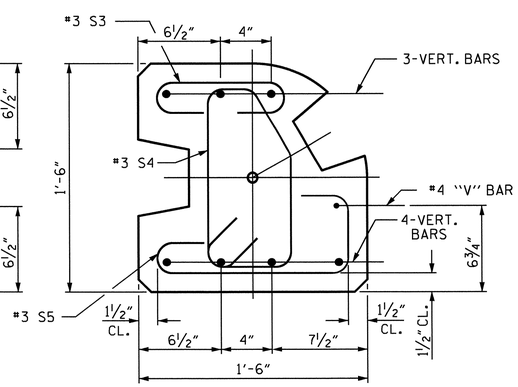

TYPE - III

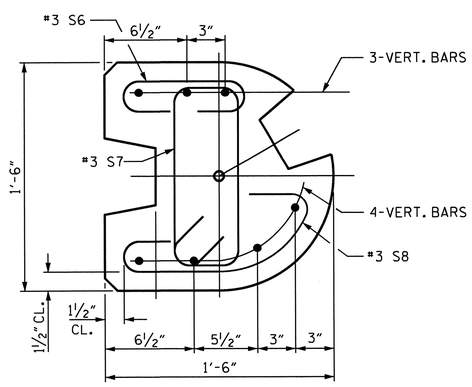

TYPE - III (ALT.)

PILE DETAIL

SEE EXPOSURE CATEGORY CHART FOR VERT. BAR PILE REINFORCING (SHEET 1 OF 3)

NORTH CAROLINA PROFESSIONAL SEAL 14855 ENGINEER DOUGLAS R. CALHOUN
4-26-12

PROJECT NO. R-3307
CARTERET COUNTY
STATION: 145+49.89 -L-

SHEET 3 OF 3

STATE OF NORTH CAROLINA
DEPARTMENT OF TRANSPORTATION
RALEIGH

STANDARD

SOUND BARRIER WALL DETAILS

REVISIONS						SHEET NO.
NO.	BY:	DATE:	NO.	BY:	DATE:	NW-3
1			3			TOTAL SHEETS
2			4			3

STD. NO. SBW3

ASSEMBLED BY : K. P. SEDAI	DATE : 3/6/12
CHECKED BY : D. R. CALHOUN	DATE : 3/13/12
DRAWN BY : MAA 6/11	ADDED 8/31/11
CHECKED BY : GM 6/11	

26-APR-2012 08:25
R:\Structures\ksedai\Noise_Wall\r-3307_SBW.dgn
daly

STANDARD NOTES

DESIGN DATA:

SPECIFICATIONS	A.A.S.H.T.O. (CURRENT)
LIVE LOAD	SEE PLANS
IMPACT ALLOWANCE	SEE A.A.S.H.T.O.
STRESS IN EXTREME FIBER OF	
STRUCTURAL STEEL - AASHTO M270 GRADE 36	20,000 LBS. PER SQ. IN.
- AASHTO M270 GRADE 50W	27,000 LBS. PER SQ. IN.
- AASHTO M270 GRADE 50	27,000 LBS. PER SQ. IN.
REINFORCING STEEL IN TENSION	
GRADE 60	24,000 LBS. PER SQ. IN.
CONCRETE IN COMPRESSION	1,200 LBS. PER SQ. IN.
CONCRETE IN SHEAR	SEE A.A.S.H.T.O.
STRUCTURAL TIMBER - TREATED OR	
UNTREATED - EXTREME FIBER STRESS	1,800 LBS. PER SQ. IN.
COMPRESSION PERPENDICULAR TO GRAIN OF TIMBER	375 LBS. PER SQ. IN.
EQUIVALENT FLUID PRESSURE OF EARTH	30 LBS. PER CU. FT. (MINIMUM)

MATERIAL AND WORKMANSHIP:

EXCEPT AS MAY OTHERWISE BE SPECIFIED ON PLANS OR IN THE SPECIAL PROVISIONS, ALL MATERIAL AND WORKMANSHIP SHALL BE IN ACCORDANCE WITH THE 2012 "STANDARD SPECIFICATIONS FOR ROADS AND STRUCTURES" OF THE N. C. DEPARTMENT OF TRANSPORTATION.

STEEL SHEET PILING FOR PERMANENT OR TEMPORARY APPLICATIONS SHALL BE HOT ROLLED.

CONCRETE:

UNLESS OTHERWISE REQUIRED ON PLANS, CLASS A CONCRETE SHALL BE USED FOR ALL PORTIONS OF ALL STRUCTURES WITH THE EXCEPTION THAT: CLASS AA CONCRETE SHALL BE USED IN BRIDGE SUPERSTRUCTURES, ABUTMENT BACKWALLS, AND APPROACH SLABS; AND CLASS B CONCRETE SHALL BE USED FOR SLOPE PROTECTION AND RIP RAP.

CONCRETE CHAMFERS:

UNLESS OTHERWISE NOTED ON THE PLANS, ALL EXPOSED CORNERS ON STRUCTURES SHALL BE CHAMFERED 3/4" WITH THE FOLLOWING EXCEPTIONS: TOP CORNERS OF CURBS MAY BE ROUNDED TO 1-1/2" RADIUS WHICH IS BUILT INTO CURB FORMS; CORNERS OF TRANSVERSE FLOOR EXPANSION JOINTS SHALL BE ROUNDED WITH A 1/4" FINISHING TOOL UNLESS OTHERWISE REQUIRED ON PLANS; AND CORNERS OF EXPANSION JOINTS IN THE ROADWAY FACES AND TOPS OF CURBS AND SIDEWALKS SHALL BE ROUNDED TO A 1/4" RADIUS WITH A FINISHING STONE OR TOOL UNLESS OTHERWISE REQUIRED ON PLANS.

DOWELS:

DOWELS WHEN INDICATED ON PLANS AS FOR CULVERT EXTENSIONS, SHALL BE EMBEDDED AT LEAST 12" INTO THE OLD CONCRETE AND GROUTED INTO PLACE WITH 1:2 CEMENT MORTAR.

ALLOWANCE FOR DEAD LOAD DEFLECTION, SETTLEMENT, ETC. IN CASTING SUPERSTRUCTURES:

BRIDGES SHALL BE BUILT ON THE GRADE OR VERTICAL CURVE SHOWN ON PLANS. SLABS, CURBS AND PARAPETS SHALL CONFORM TO THE GRADE OR CURVE.

ALL DIMENSIONS WHICH ARE GIVEN IN SECTION AND ARE AFFECTED BY DEAD LOAD DEFLECTIONS ARE DIMENSIONS AT CENTER LINE OF BEARING UNLESS OTHERWISE NOTED ON PLANS. IN SETTING FORMS FOR STEEL BEAM BRIDGES AND PRESTRESSED CONCRETE GIRDER BRIDGES, ADJUSTMENTS SHALL BE MADE DUE TO THE DEAD LOAD DEFLECTIONS FOR THE ELEVATIONS SHOWN. WHERE BLOCKS ARE SHOWN OVER BEAMS FOR BUILDING UP TO THE SLAB, THE VERTICAL DIMENSIONS OF THE BLOCKS SHALL BE ADJUSTED BETWEEN BEARINGS TO COMPENSATE FOR DEAD LOAD DEFLECTIONS, VERTICAL CURVE ORDINATE, AND ACTUAL BEAM CAMBER. WHERE BOTTOM OF SLAB IS IN LINE WITH BOTTOM OF TOP FLANGES, DEPTH OF SLAB BETWEEN BEARINGS SHALL BE ADJUSTED TO COMPENSATE FOR DEAD LOAD DEFLECTION, VERTICAL CURVE ORDINATE, AND ACTUAL BEAM CAMBER.

IN SETTING FALSEWORK AND FORMS FOR REINFORCED CONCRETE SPANS, AN ALLOWANCE SHALL BE MADE FOR DEAD LOAD DEFLECTIONS, SETTLEMENT OF FALSEWORK, AND PERMANENT CAMBER WHICH SHALL BE PROVIDED FOR IN ADDITION TO THE ELEVATIONS SHOWN. AFTER REMOVAL OF THE FALSEWORK, THE FINISHED STRUCTURES SHALL CONFORM TO THE PROFILE AND ELEVATIONS SHOWN ON THE PLANS AND CONSTRUCTION ELEVATIONS FURNISHED BY THE ENGINEER.

DETAILED DRAWINGS FOR FALSEWORK OR FORMS FOR BRIDGE SUPERSTRUCTURE AND ANY STRUCTURE OR PARTS OF A STRUCTURE AS NOTED ON THE PLANS SHALL BE SUBMITTED TO THE ENGINEER FOR APPROVAL BEFORE CONSTRUCTION OF THE FALSEWORK OR FORMS IS STARTED.

REINFORCING STEEL:

ALL REINFORCING STEEL SHALL BE DEFORMED. DIMENSIONS RELATIVE TO PLACEMENT OF REINFORCING ARE TO CENTERS OF BARS UNLESS OTHERWISE INDICATED IN THE PLANS. DIMENSIONS ON BAR DETAILS ARE TO CENTERS OF BARS OR ARE OUT TO OUT AS INDICATED ON PLANS.

WIRE BAR SUPPORTS SHALL BE PROVIDED FOR REINFORCING STEEL WHERE INDICATED ON THE PLANS. WHEN BAR SUPPORT PIECES ARE PLACED IN CONTINUOUS LINES, THEY SHALL BE SO PLACED THAT THE ENDS OF THE SUPPORTING WIRES SHALL BE LAPPED TO LOCK LEGS ON ADJOINING PIECES.

STRUCTURAL STEEL:

AT THE CONTRACTOR'S OPTION, HE MAY SUBSTITUTE 7/8" Ø SHEAR STUDS FOR THE 3/4" Ø STUDS SPECIFIED ON THE PLANS. THIS SUBSTITUTION SHALL BE MADE AT THE RATE OF 3 - 7/8" Ø STUDS FOR 4 - 3/4" Ø STUDS, AND STUD SPACING CHANGES SHALL BE MADE AS NECESSARY TO PROVIDE THE SAME EQUIVALENT NUMBER OF 7/8" Ø STUDS ALONG THE BEAM AS SHOWN FOR 3/4" Ø STUDS BASED ON THE RATIO OF 3 - 7/8" Ø STUDS FOR 4 - 3/4" Ø STUDS. STUDS OF THE LENGTH SPECIFIED ON THE PLANS MUST BE PROVIDED. THE MAXIMUM SPACING SHALL BE 2'-0".

EXCEPT AT THE INTERIOR SUPPORTS OF CONTINUOUS BEAMS WHERE THE COVER PLATE IS IN CONTACT WITH BEARING PLATE, THE CONTRACTOR MAY, AT HIS OPTION, SUBSTITUTE FOR THE COVER PLATES DESIGNATED ON THE PLANS COVER PLATES OF THE EQUIVALENT AREA PROVIDED THESE PLATES ARE AT LEAST 5/16" IN THICKNESS AND DO NOT EXCEED A WIDTH EQUAL TO THE FLANGE WIDTH LESS 2" OR A THICKNESS EQUAL TO 2 TIMES THE FLANGE THICKNESS. THE SIZE OF FILLET WELDS SHALL CONFORM TO THE REQUIREMENTS OF THE CURRENT ANSI/AASHTO/AWS "BRIDGE WELDING CODE". ELECTROSLAG WELDING WILL NOT BE PERMITTED.

WITH THE SOLE EXCEPTION OF EDGES AT SURFACES WHICH BEAR ON OTHER SURFACES, ALL SHARP EDGES AND ENDS OF SHAPES AND PLATES SHALL BE SLIGHTLY ROUNDED BY SUITABLE MEANS TO A RADIUS OF APPROXIMATELY 1/16 INCH OR EQUIVALENT FLAT SURFACE AT A SUITABLE ANGLE PRIOR TO PAINTING, GALVANIZING, OR METALLIZING.

HANDRAILS AND POSTS:

METAL STANDARDS AND FACES OF THE CONCRETE END POSTS FOR THE METAL RAIL SHALL BE SET NORMAL TO THE GRADE OF THE CURB, UNLESS OTHERWISE SHOWN ON PLANS. THE METAL RAIL AND TOPS OF CONCRETE POSTS USED WITH THE ALUMINUM RAIL SHALL BE BUILT PARALLEL TO THE GRADE OF THE CURB.

METAL HANDRAILS SHALL BE IN ACCORDANCE WITH THE PLANS. RAILS SHALL BE AS MANUFACTURED FOR BRIDGE RAILING. CASTINGS SHALL BE OF A UNIFORM APPEARANCE. FINS AND OTHER DEFORMATIONS RESULTING FROM CASTING OR OTHERWISE SHALL BE REMOVED IN A MANNER SO THAT A UNIFORM COLORING OF THE COMPLETED CASTING SHALL BE OBTAINED. CASTINGS WITH DISCOLORATIONS OR OF NON-UNIFORM COLORING WILL NOT BE ACCEPTED. CERTIFIED MILL REPORTS ARE REQUIRED FOR METAL RAILS AND POSTS.

SPECIAL NOTES:

GENERALLY, IN CASE OF DISCREPANCY, THIS STANDARD SHEET OF NOTES SHALL GOVERN OVER THE SPECIFICATIONS, BUT THE REMAINDER OF THE PLANS SHALL GOVERN OVER NOTES HEREON, AND SPECIAL PROVISIONS SHALL GOVERN OVER ALL. SEE SPECIFICATIONS ARTICLE 105-4.

ENGLISH

JANUARY, 1990