STATE OF NORTH CAROLINA
DIVISION OF HIGHWAYS

STATE	STATE PROJECT REFERENCE NO.		
N.C.	R-3307		

STATE PROJ. NO.	F.A. PROJ. NO.	DESCRIPTION
34528.1.1	STPNHF-70(43)	PE
34528.2.2	STPNHF-70(105)	R/W, UTIL.
34528.3.1	STPNHF-70(132)	CONST.

CARTERET COUNTY

LOCATION: US 70 FROM EXISTING FOUR LANES AT RADIO ISLAND TO US 70 NORTH OF SR 1429 (OLGA ROAD)

TYPE OF WORK: GRADING, PAVING, DRAINAGE, CURB & GUTTER SIGNALS, AND STRUCTURES

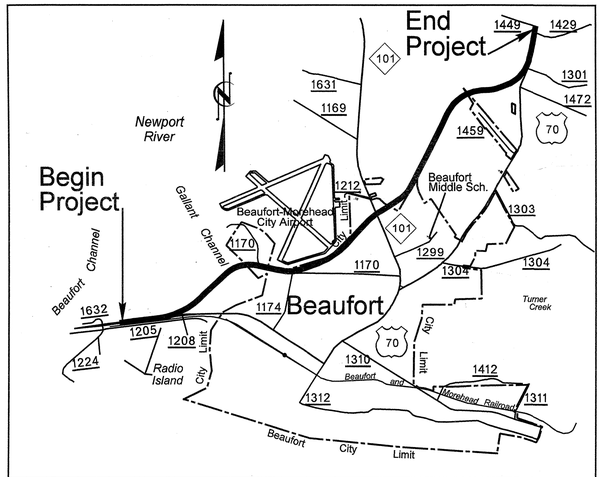

VICINITY MAP

NAD 83

STA. 10+00.00 -L- BEGIN TIP PROJECT R-3307

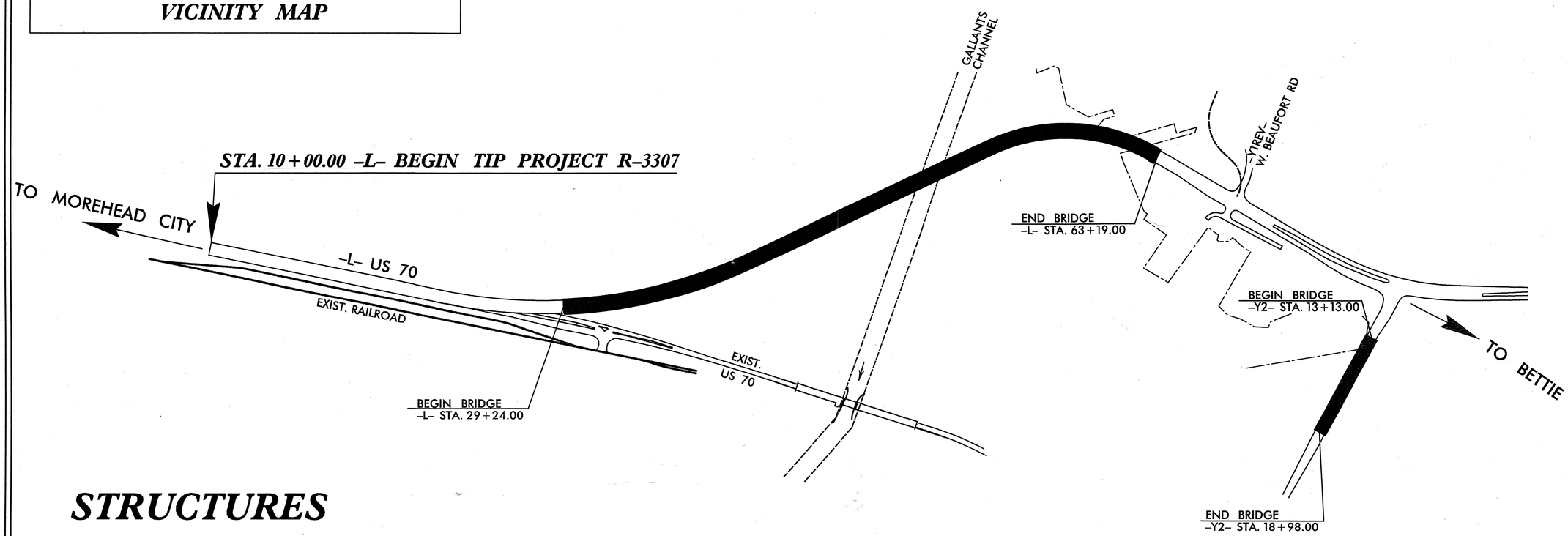

STRUCTURES

TIP PROJECT: R-3307

CONTRACT: C202848

DESIGN DATA

ADT 2011 = 27620
ADT 2031 = 39389
DHV = 11 %
D = 60 %
T = 5 % *
V (SHOULDER) = 60 MPH
V (CURB & GUTTER) = 50 MPH
* (TTST 1 % + DUAL 4) %
FUNC. CLASS = ARTERIAL
STATEWIDE TIER

PROJECT LENGTH

LENGTH ROADWAY TIP PROJECT R-3307 = 3.112 MI.
LENGTH STRUCTURE TIP PROJECT R-3307 = 0.643 MI.
TOTAL LENGTH OF TIP PROJECT R-3307 = 3.755 MI.

Prepared In the Office of:

THE LPA GROUP of North Carolina
TRANSPORTATION CONSULTANTS
THE LPA GROUP of North Carolina
8000 Regency Parkway, Suite 600
Cary, North Carolina 27518
NC License No. : F-1084

MI ENGINEERING
1011 SHAUB DRIVE, SUITE 100
(919) 851-6606
FIRM PE NUMBER : P-0671

2012 STANDARD SPECIFICATIONS

LETTING DATE:
DECEMBER 17, 2013

PLAN PREPARED IN THE OFFICE OF:

DIVISION OF HIGHWAYS
1000 BIRCH RIDGE DR., RALEIGH NC, 27610

J. M. BAILEY, P.E.
PROJECT ENGINEER

D. R. CALHOUN, P.E.
PROJECT DESIGN ENGINEER

DIVISION OF HIGHWAYS
STATE OF NORTH CAROLINA

P.E.
STATE HIGHWAY DESIGN ENGINEER

09/08/99
4/2/ 12:3 User: stin
Filename: Y:\Projects\NCDOT\R-3307\Dwgs\Final\R-3307_001_SD_COV.dgn

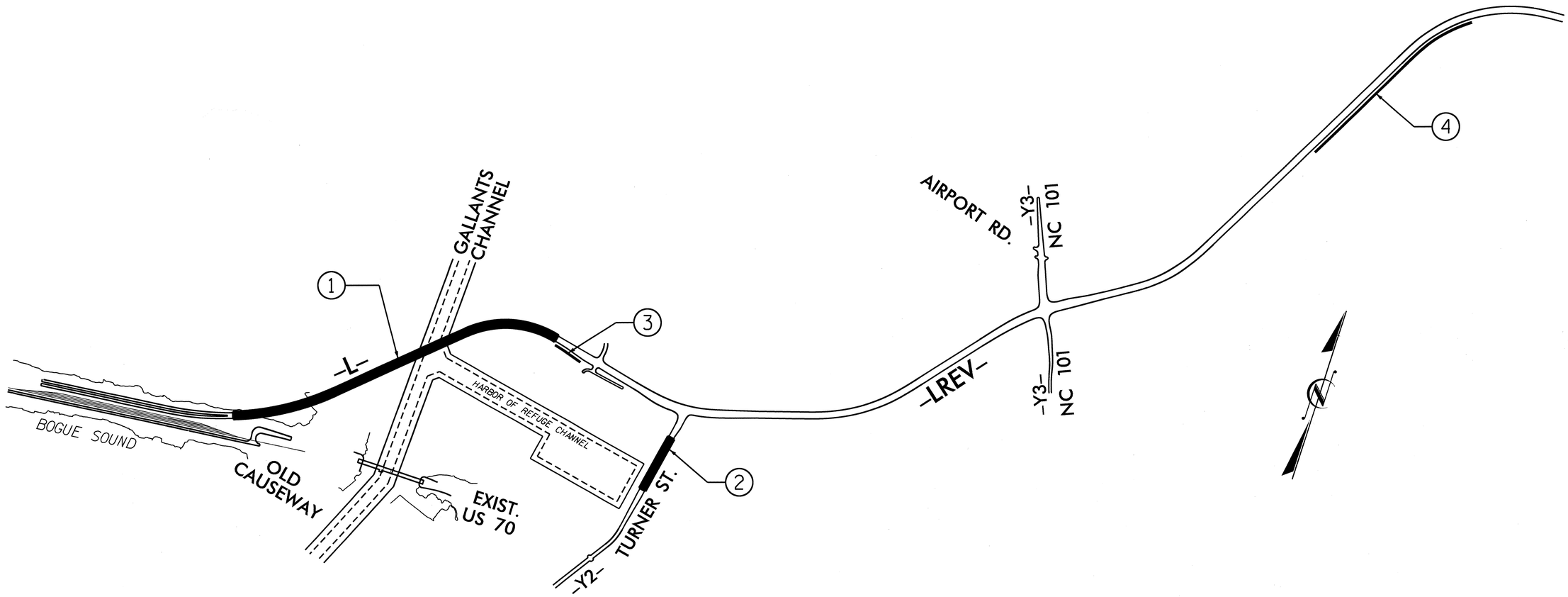

INDEX				
STR.	STATION	DESCRIPTION	SHEETS	
1	46+21.50 -L-	BRIDGE ON US-70 OVER GALLANTS CHANNEL (SUPERSTRUCTURE)	S-1 THRU S-204	PART 1
		BRIDGE ON US-70 OVER GALLANTS CHANNEL (SUBSTRUCTURE)	S-205 THRU S-282	PART 2
2	16+05.50 -Y2-	BRIDGE ON SR-1174 OVER TOWN CREEK	S-283 THRU S-333	PART 2
3	63+00.00 -L-	MSE RETAINING WALL	W1, W2	PART 2
4	145+49.89 -L-	SOUND BARRIER WALL	NW1 THRU NW3	PART 2

PROJECT NO. R-3307
CARTERET COUNTY
STATION:

STATE OF NORTH CAROLINA
DEPARTMENT OF TRANSPORTATION
RALEIGH

INDEX

REVISIONS					
NO.	BY:	DATE:	NO.	BY:	DATE:
1			3		
2			4		

PART 1 OF 2

23-OCT-2013 08:26
S:\PEF\Darrell\R3307_Index.dgn
dcrutcher

INDEX OF DRAWINGS

1 TITLE SHEET
2 INDEX OF DRAWINGS - SHEET 1 OF 2
3 INDEX OF DRAWINGS - SHEET 2 OF 2
4 GENERAL DRAWING - SHEET 1 OF 7
5 GENERAL DRAWING - SHEET 2 OF 7
6 GENERAL DRAWING - SHEET 3 OF 7
7 GENERAL DRAWING - SHEET 4 OF 7
8 GENERAL DRAWING - SHEET 5 OF 7
9 GENERAL DRAWING - SHEET 6 OF 7
10 GENERAL DRAWING - SHEET 7 OF 7
11 GENERAL DRAWING - FOUNDATION LAYOUT - SHEET 1 OF 4
12 GENERAL DRAWING - FOUNDATION LAYOUT - SHEET 2 OF 4
13 GENERAL DRAWING - FOUNDATION LAYOUT - SHEET 3 OF 4
14 GENERAL DRAWING - FOUNDATION LAYOUT - SHEET 4 OF 4
15 GENERAL DRAWING - LONG CHORD LAYOUT - SHEET 1 OF 11
16 GENERAL DRAWING - LONG CHORD LAYOUT - SHEET 2 OF 11
17 GENERAL DRAWING - LONG CHORD LAYOUT - SHEET 3 OF 11
18 GENERAL DRAWING - LONG CHORD LAYOUT - SHEET 4 OF 11
19 GENERAL DRAWING - LONG CHORD LAYOUT - SHEET 5 OF 11
20 GENERAL DRAWING - LONG CHORD LAYOUT - SHEET 6 OF 11
21 GENERAL DRAWING - LONG CHORD LAYOUT - SHEET 7 OF 11
22 GENERAL DRAWING - LONG CHORD LAYOUT - SHEET 8 OF 11
23 GENERAL DRAWING - LONG CHORD LAYOUT - SHEET 9 OF 11
24 GENERAL DRAWING - LONG CHORD LAYOUT - SHEET 10 OF 11
25 GENERAL DRAWING - LONG CHORD LAYOUT - SHEET 11 OF 11
26 GENERAL DRAWING - LOCATION SKETCH
27 GENERAL DRAWING - TOTAL BILL OF MATERIAL
28 GENERAL DRAWING - NOTES
29 LRFR SUMMARY - AASHTO TYPE IV GIRDERS - SHEET 1 OF 3
30 LRFR SUMMARY - 78" MODIFIED BULB TEE - SHEET 2 OF 3
31 LRFR SUMMARY - 78" PRESTRESSED POST-TENSIONED MODIFIED BULB TEE - SHEET 3 OF 3
32 ERECTION SEQUENCE FOR SPANS P, Q AND R - SHEET 1 OF 2
33 ERECTION SEQUENCE FOR SPANS P, Q AND R - SHEET 2 OF 2
34 SUPERSTRUCTURE - TYPICAL SECTION - SPANS A-E - SHEET 1 OF 10
35 SUPERSTRUCTURE - TYPICAL SECTION - SPANS F-N - SHEET 2 OF 10
36 SUPERSTRUCTURE - TYPICAL SECTION - SPANS F-M - SHEET 3 OF 10
37 SUPERSTRUCTURE - TYPICAL SECTION - SPAN O - SHEET 4 OF 10
38 SUPERSTRUCTURE - TYPICAL SECTION - SPANS P-R - SHEET 5 OF 10
39 SUPERSTRUCTURE - TYPICAL SECTION - SPANS P-R - SHEET 6 OF 10
40 SUPERSTRUCTURE - TYPICAL SECTION - SPANS S-CC - SHEET 7 OF 10
41 SUPERSTRUCTURE - TYPICAL SECTION DETAILS - SPANS A-E & SPANS S-CC - SHEET 8 OF 10
42 SUPERSTRUCTURE - TYPICAL SECTION DETAILS - SPANS A-E & SPANS S-CC - SHEET 9 OF 10
43 SUPERSTRUCTURE - TYPICAL SECTION DETAILS - SPANS P-R - SHEET 10 OF 10
44 SUPERSTRUCTURE - PRECAST PRESTRESSED CONCRETE DECK PANELS
45 SUPERSTRUCTURE - PLAN OF SPANS - UNIT 1 - SPANS A, B & C - SHEET 1 OF 24
46 SUPERSTRUCTURE - PLAN OF SPANS - UNIT 1 - SPANS A, B & C - SHEET 2 OF 24
47 SUPERSTRUCTURE - PLAN OF SPANS - UNIT 2 - SPANS D & E - SHEET 3 OF 24
48 SUPERSTRUCTURE - PLAN OF SPANS - UNIT 3 - SPANS F & G - SHEET 4 OF 24
49 SUPERSTRUCTURE - PLAN OF SPANS - UNIT 3 - SPAN G - SHEET 5 OF 24
50 SUPERSTRUCTURE - PLAN OF SPANS - UNIT 4 - SPANS H & I - SHEET 6 OF 24
51 SUPERSTRUCTURE - PLAN OF SPANS - UNIT 4 - SPAN I - SHEET 7 OF 24
52 SUPERSTRUCTURE - PLAN OF SPANS - UNIT 5 - SPANS J & K - SHEET 8 OF 24
53 SUPERSTRUCTURE - PLAN OF SPANS - UNIT 5 - SPAN K - SHEET 9 OF 24
54 SUPERSTRUCTURE - PLAN OF SPANS - UNIT 6 - SPANS L & M - SHEET 10 OF 24
55 SUPERSTRUCTURE - PLAN OF SPANS - UNIT 6 - SPAN M - SHEET 11 OF 24
56 SUPERSTRUCTURE - PLAN OF SPAN - UNIT 7 - SPAN N - SHEET 12 OF 24
57 SUPERSTRUCTURE - PLAN OF SPAN - UNIT 7A - SPAN O - SHEET 13 OF 24
58 SUPERSTRUCTURE - PLAN OF SPANS - UNIT 8 - SPAN P - SHEET 14 OF 24
59 SUPERSTRUCTURE - PLAN OF SPANS - UNIT 8 - SPANS P & Q - SHEET 15 OF 24
60 SUPERSTRUCTURE - PLAN OF SPANS - UNIT 8 - SPANS Q & R - SHEET 16 OF 24
61 SUPERSTRUCTURE - PLAN OF SPANS - UNIT 8 - SPAN R - SHEET 17 OF 24
62 SUPERSTRUCTURE - PLAN OF SPANS - UNIT 9 - SPANS S, T & U - SHEET 18 OF 24
63 SUPERSTRUCTURE - PLAN OF SPANS - UNIT 9 - SPANS S, T & U - SHEET 19 OF 24
64 SUPERSTRUCTURE - PLAN OF SPANS - UNIT 10 - SPANS V, W & X - SHEET 20 OF 24
65 SUPERSTRUCTURE - PLAN OF SPANS - UNIT 10 - SPANS V, W & X - SHEET 21 OF 24
66 SUPERSTRUCTURE - PLAN OF SPANS - UNIT 11 - SPANS Y, Z & AA - SHEET 22 OF 24
67 SUPERSTRUCTURE - PLAN OF SPANS - UNIT 11 - SPANS Y, Z & AA - SHEET 23 OF 24
68 SUPERSTRUCTURE - PLAN OF SPANS - UNIT 12 - SPANS BB & CC - SHEET 24 OF 24
69 SUPERSTRUCTURE - ARC OFFSETS - UNITS 1 AND 2 - SPANS A THRU E - SHEET 1 OF 3
70 SUPERSTRUCTURE - ARC OFFSETS - UNITS 3 THRU 5 - SPANS F THRU J - SHEET 2 OF 3
71 SUPERSTRUCTURE - ARC OFFSETS - UNITS 9 THRU 12 - SPANS S THRU CC - SHEET 3 OF 3
72 ~~STANDARD - OVERHANG FALSEWORK AASHTO GIRDER TYPES III AND IV - SHEET 1 OF 3~~ (SHEET REMOVED)
73 ~~STANDARD - OVERHANG FALSEWORK AASHTO GIRDER TYPES III AND IV - SHEET 2 OF 3~~ (SHEET REMOVED)
74 ~~STANDARD - OVERHANG FALSEWORK AASHTO GIRDER TYPES III AND IV - SHEET 3 OF 3~~ (SHEET REMOVED)
75 SUPERSTRUCTURE - PLAN OF DRAINAGE SYSTEM - SHEET 1 OF 2
76 SUPERSTRUCTURE - PLAN OF DRAINAGE SYSTEM - SHEET 2 OF 2
77 SUPERSTRUCTURE - DRAINAGE SYSTEM LOCATIONS
78 SUPERSTRUCTURE - ELEVATION OF DRAINAGE SYSTEM - SHEET 1 OF 7
79 SUPERSTRUCTURE - ELEVATION OF DRAINAGE SYSTEM - SHEET 2 OF 7
80 SUPERSTRUCTURE - ELEVATION OF DRAINAGE SYSTEM - SHEET 3 OF 7
81 SUPERSTRUCTURE - ELEVATION OF DRAINAGE SYSTEM - SHEET 4 OF 7
82 SUPERSTRUCTURE - ELEVATION OF DRAINAGE SYSTEM - SHEET 5 OF 7
83 SUPERSTRUCTURE - ELEVATION OF DRAINAGE SYSTEM - SHEET 6 OF 7
84 SUPERSTRUCTURE - ELEVATION OF DRAINAGE SYSTEM - SHEET 7 OF 7
85 SUPERSTRUCTURE - PLAN AND ELEVATION OF DRAINAGE SYSTEM - SPAN AA - CC
86 SUPERSTRUCTURE - DRAINAGE SYSTEM BENT ELEVATIONS
87 SUPERSTRUCTURE - DRAINAGE SYSTEM DETAILS - SHEET 1 OF 3
88 SUPERSTRUCTURE - DRAINAGE SYSTEM DETAILS - SHEET 2 OF 3
88A SUPERSTRUCTURE - DRAINAGE SYSTEM DETAILS - SHEET 3 OF 3
89 SUPERSTRUCTURE - FRAMING PLAN UNIT 1 - SPANS A THRU C - SHEET 1 OF 15
90 SUPERSTRUCTURE - FRAMING PLAN UNIT 2 - SPANS D & E - SHEET 2 OF 15
91 SUPERSTRUCTURE - FRAMING PLAN UNIT 3 - SPANS F & G - SHEET 3 OF 15
92 SUPERSTRUCTURE - FRAMING PLAN UNIT 4 - SPANS H & I - SHEET 4 OF 15
93 SUPERSTRUCTURE - FRAMING PLAN UNIT 5 - SPANS J & K - SHEET 5 OF 15
94 SUPERSTRUCTURE - FRAMING PLAN UNIT 6 - SPANS L & M - SHEET 6 OF 15
95 SUPERSTRUCTURE - FRAMING PLAN UNITS 7 & 7A - SPANS N & O - SHEET 7 OF 15
96 SUPERSTRUCTURE - FRAMING PLAN UNIT 8 - SPAN P - SHEET 8 OF 15
97 SUPERSTRUCTURE - FRAMING PLAN UNIT 8 - SPAN Q - SHEET 9 OF 15
98 SUPERSTRUCTURE - FRAMING PLAN UNIT 8 - SPAN R - SHEET 10 OF 15
99 SUPERSTRUCTURE - FRAMING PLAN UNIT 9 - SPANS S THRU U - SHEET 11 OF 15
100 SUPERSTRUCTURE - FRAMING PLAN UNIT 10 - SPANS V THRU X - SHEET 12 OF 15
101 SUPERSTRUCTURE - FRAMING PLAN UNIT 11 - SPANS Y THRU AA - SHEET 13 OF 15
102 SUPERSTRUCTURE - FRAMING PLAN UNIT 12 - SPANS BB AND CC - SHEET 14 OF 15
103 SUPERSTRUCTURE - FRAMING PLAN UNITS 9 THRU 12 - SPANS S THRU CC - SHEET 15 OF 15
104 SUPERSTRUCTURE - AASHTO TYPE IV PRESTRESSED CONCRETE GIRDER - END SPANS (EXP. - FIX) SPANS A & C-E - SHEET 1 OF 3
105 SUPERSTRUCTURE - AASHTO TYPE IV PRESTRESSED CONCRETE GIRDER - INTERIOR SPANS (FIX - FIX) SPAN B - SHEET 2 OF 3
106 SUPERSTRUCTURE - AASHTO TYPE IV PRESTRESSED CONCRETE GIRDER - DIMENSION CHARTS SPANS A-E - SHEET 3 OF 3
107 SUPERSTRUCTURE - 78" PRESTRESSED CONCRETE BULB TEE - PLAN & ELEVATION - SPAN F - GIRDERS FG1-FG9 - SHEET 1 OF 2
108 SUPERSTRUCTURE - 78" PRESTRESSED CONCRETE BULB TEE - SECTIONS & DETAILS - SPAN F - GIRDERS FG1-FG9 - SHEET 2 OF 2
109 SUPERSTRUCTURE - 78" PRESTRESSED CONCRETE BULB TEE - PLAN & ELEVATION - SPAN G - GIRDERS GG1-GG9 - SHEET 1 OF 2
110 SUPERSTRUCTURE - 78" PRESTRESSED CONCRETE BULB TEE - SECTIONS & DETAILS - SPAN G - GIRDERS GG1-GG9 - SHEET 2 OF 2
111 SUPERSTRUCTURE - 78" PRESTRESSED CONCRETE BULB TEE - PLAN & ELEVATION - SPAN H - GIRDERS HG1-HG9 - SHEET 1 OF 2
112 SUPERSTRUCTURE - 78" PRESTRESSED CONCRETE BULB TEE - SECTIONS & DETAILS - SPAN H - GIRDERS HG1-HG9 - SHEET 2 OF 2
113 SUPERSTRUCTURE - 78" PRESTRESSED CONCRETE BULB TEE - PLAN & ELEVATION - SPAN I - GIRDERS IG1-IG9 - SHEET 1 OF 2
114 SUPERSTRUCTURE - 78" PRESTRESSED CONCRETE BULB TEE - SECTIONS & DETAILS - SPAN I - GIRDERS IG1-IG9 - SHEET 2 OF 2
115 SUPERSTRUCTURE - 78" PRESTRESSED CONCRETE BULB TEE - PLAN & ELEVATION - SPAN J - GIRDERS JG1-JG9 - SHEET 1 OF 2
116 SUPERSTRUCTURE - 78" PRESTRESSED CONCRETE BULB TEE - SECTIONS & DETAILS - SPAN J - GIRDERS JG1-JG9 - SHEET 2 OF 2
117 SUPERSTRUCTURE - 78" PRESTRESSED CONCRETE BULB TEE - PLAN & ELEVATION - SPAN K - GIRDERS KG1-KG9 - SHEET 1 OF 2
118 SUPERSTRUCTURE - 78" PRESTRESSED CONCRETE BULB TEE - SECTIONS & DETAILS - SPAN K - GIRDERS KG1-KG9 - SHEET 2 OF 2
119 SUPERSTRUCTURE - 78" PRESTRESSED CONCRETE BULB TEE - PLAN & ELEVATION - SPAN L - GIRDERS LG1-LG9 - SHEET 1 OF 2
120 SUPERSTRUCTURE - 78" PRESTRESSED CONCRETE BULB TEE - SECTIONS & DETAILS - SPAN L - GIRDERS LG1-LG9 - SHEET 2 OF 2
121 SUPERSTRUCTURE - 78" PRESTRESSED CONCRETE BULB TEE - PLAN & ELEVATION - SPAN M - GIRDERS MG1-MG9 - SHEET 1 OF 2
122 SUPERSTRUCTURE - 78" PRESTRESSED CONCRETE BULB TEE - SECTIONS & DETAILS - SPAN M - GIRDERS MG1-MG9 - SHEET 2 OF 2

PROJECT NO. R-3307
CARTERET COUNTY
STATION: 46+21.50 -L-

SHEET 1 OF 2

STATE OF NORTH CAROLINA
DEPARTMENT OF TRANSPORTATION
RALEIGH

INDEX OF DRAWINGS

NORTH CAROLINA PROFESSIONAL SEAL 25911 11-7-2013 ENGINEER DWAIN G. HATHAWAY

NORTH CAROLINA PROFESSIONAL SEAL 033752 ENGINEER SETH A. DENNEY

THE LPA GROUP of North Carolina
TRANSPORTATION CONSULTANTS

THE LPA GROUP of North Carolina
8000 Regency Parkway, Suite 600
Cary, North Carolina 27518
NC License No.: F-1084

REVISIONS							SHEET NO.
NO.	BY:	DATE:	NO.	BY:	DATE:		S-1
1			3				TOTAL SHEETS
2			4				333

DRAWN BY : J. N. AUSTIN DATE : 1-8-12
CHECKED BY : N. B. SPEAKS DATE : 1-8-12

DWG. 2 OF 282

11/7/2013
3:38:32 PM
User: jaustin
Filename: Y:\Projects\NCDOT\R-3307\Dwgs\Final\R-3307_002_SD_Index_1.dgn

INDEX OF DRAWINGS

123 SUPERSTRUCTURE - 78" PRESTRESSED CONCRETE BULB TEE - PLAN & ELEVATION - SPAN N - GIRDERS NG1-NG9 - SHEET 1 OF 2
124 SUPERSTRUCTURE - 78" PRESTRESSED CONCRETE BULB TEE - SECTIONS & DETAILS - SPAN N - GIRDERS NG1-NG9 - SHEET 2 OF 2
125 SUPERSTRUCTURE - 78" PRESTRESSED CONCRETE BULB TEE - PLAN & ELEVATION - SPAN O - GIRDERS OG1-OG9 - SHEET 1 OF 2
126 SUPERSTRUCTURE - 78" PRESTRESSED CONCRETE BULB TEE - SECTIONS & DETAILS - SPAN O - GIRDERS OG1-OG9 - SHEET 2 OF 2
127 SUPERSTRUCTURE - END GIRDER SEGMENT DETAILS - MODIFIED 78" BULB TEE - SHEET 1 OF 5
128 SUPERSTRUCTURE - END GIRDER SEGMENT DETAILS - MODIFIED 78" BULB TEE - SHEET 2 OF 5
129 SUPERSTRUCTURE - END GIRDER SEGMENT DETAILS - MODIFIED 78" BULB TEE - SHEET 3 OF 5
130 SUPERSTRUCTURE - END GIRDER SEGMENT DETAILS - MODIFIED 78" BULB TEE - SHEET 4 OF 5
131 SUPERSTRUCTURE - END GIRDER SEGMENT DETAILS - MODIFIED 78" BULB TEE - SHEET 5 OF 5
132 SUPERSTRUCTURE - HAUNCHED GIRDER SEGMENT DETAILS - MODIFIED 78" BULB TEE - SHEET 1 OF 4
133 SUPERSTRUCTURE - HAUNCHED GIRDER SEGMENT DETAILS - MODIFIED 78" BULB TEE - SHEET 2 OF 4
134 SUPERSTRUCTURE - HAUNCHED GIRDER SEGMENT DETAILS - MODIFIED 78" BULB TEE - SHEET 3 OF 4
135 SUPERSTRUCTURE - HAUNCHED GIRDER SEGMENT DETAILS - MODIFIED 78" BULB TEE - SHEET 4 OF 4
136 SUPERSTRUCTURE - DROP-IN GIRDER SEGMENT DETAILS - MODIFIED 78" BULB TEE - SHEET 1 OF 3
137 SUPERSTRUCTURE - DROP-IN GIRDER SEGMENT DETAILS - MODIFIED 78" BULB TEE - SHEET 2 OF 3
138 SUPERSTRUCTURE - DROP-IN GIRDER SEGMENT DETAILS - MODIFIED 78" BULB TEE - SHEET 3 OF 3
139 SUPERSTRUCTURE - POST TENSIONSED GIRDER DETAILS - MODIFIED 78" BULB TEE
140 SUPERSTRUCTURE - BILL OF MATERIAL FOR POST-TENSIONED GIRDERS
141 SUPERSTRUCTURE - POST-TENSION GIRDER NOTES - SHEET 1 OF 2
142 SUPERSTRUCTURE - POST-TENSION GIRDER NOTES - SHEET 2 OF 2
143 SUPERSTRUCTURE - AASHTO TYPE IV PRESTRESSED CONCRETE GIRDER - END SPANS (EXP. - FIX) SPANS S,U,V,X,Y & AA-CC - SHEET 1 OF 4
144 SUPERSTRUCTURE - AASHTO TYPE IV PRESTRESSED CONCRETE GIRDER - INTERIOR SPANS (FIX - FIX) SPANS T,W & Z - SHEET 2 OF 4
145 SUPERSTRUCTURE - AASHTO TYPE IV PRESTRESSED CONCRETE GIRDER - DIMENSION CHARTS SPANS S-X - SHEET 3 OF 4
146 SUPERSTRUCTURE - AASHTO TYPE IV PRESTRESSED CONCRETE GIRDER - DIMENSION CHARTS SPANS Y-CC - SHEET 4 OF 4
147 SUPERSTRUCTURE - GIRDER DETAILS - AASHTO TYPE IV PRESTRESSED CONCRETE GIRDERS - SHEET 1 OF 2
148 SUPERSTRUCTURE - GIRDER DETAILS - 78" PRESTRESSED CONCRETE BULB TEE - SHEET 2 OF 2
149 SUPERSTRUCTURE - INTERMEDIATE STEEL DIAPHRAGMS - SPANS A-E & S-CC -SHEET 1 OF 3
150 SUPERSTRUCTURE - INTERMEDIATE STEEL DIAPHRAGMS - 78" MODIFIED BULB TEE GIRDERS - SHEET 2 OF 3
151 SUPERSTRUCTURE - INTERMEDIATE STEEL DIAPHRAGMS - 78" MODIFIED BULB TEE GIRDERS - SHEET 3 OF 3
152 SUPERSTRUCTURE - ELASTOMERIC BEARING DETAILS - AASHTO TYPE IV GIRDERS - SHEET 1 OF 4
153 SUPERSTRUCTURE - ELASTOMERIC BEARING DETAILS - BENTS 5-14 & 19-25 - SHEET 2 OF 4
154 SUPERSTRUCTURE - ELASTOMERIC BEARING DETAILS - BENTS 15 & 18 - SHEET 3 OF 4
155 SUPERSTRUCTURE - ELASTOMERIC BEARING DETAILS - BENTS 16 & 17 - SHEET 4 OF 4
156 SUPERSTRUCTURE - DEAD LOAD DEFLECTIONS UNITS 1 AND 2 - SPANS A THRU E - SHEET 1 OF 8
157 SUPERSTRUCTURE - DEAD LOAD DEFLECTIONS UNITS 3 THRU 7 - SHEET 2 OR 8
158 SUPERSTRUCTURE - DEAD LOAD DEFLECTIONS UNIT 8 - INTERIOR GIRDER SEGMENTS - SHEET 3 OF 8
159 SUPERSTRUCTURE - DEAD LOAD DEFLECTIONS UNIT 8 - INTERIOR GIRDER SEGMENTS - SHEET 4 OF 8
160 SUPERSTRUCTURE - DEAD LOAD DEFLECTIONS UNIT 8 - EXTERIOR GIRDER SEGMENTS - SHEET 5 OF 8
161 SUPERSTRUCTURE - DEAD LOAD DEFLECTIONS UNIT 8 - EXTERIOR GIRDER SEGMENTS - SHEET 6 OF 8
162 SUPERSTRUCTURE - DEAD LOAD DEFLECTIONS UNITS 9,10 AND 11 - SPANS S THRU AA - SHEET 7 OF 8
163 SUPERSTRUCTURE - DEAD LOAD DEFLECTIONS UNIT 12 - SPANS BB AND CC - SHEET 8 OF 8
164 SUPERSTRUCTURE - CONCRETE PARAPET & MEDIAN BARRIER - UNIT 1 - SHEET 1 OF 9
165 SUPERSTRUCTURE - CONCRETE PARAPET & MEDIAN BARRIER - UNIT 2 - SHEET 2 OF 9
166 SUPERSTRUCTURE - CONCRETE PARAPET & MEDIAN BARRIER - UNITS 3 & 4 - SHEET 3 OF 9
167 SUPERSTRUCTURE - CONCRETE PARAPET & MEDIAN BARRIER - UNIT 5 - SHEET 4 OF 9
168 SUPERSTRUCTURE - CONCRETE PARAPET & MEDIAN BARRIER - UNITS 6 & 7 - SHEET 5 OF 9
169 SUPERSTRUCTURE - CONCRETE PARAPET & MEDIAN BARRIER - UNIT 8 - SHEET 6 OF 9
170 SUPERSTRUCTURE - CONCRETE PARAPET & MEDIAN BARRIER - UNIT 8 - SHEET 7 OF 9
171 SUPERSTRUCTURE - CONCRETE PARAPET & MEDIAN BARRIER - UNITS 9,10 & 11 - SHEET 8 OF 9
172 SUPERSTRUCTURE - CONCRETE PARAPET & MEDIAN BARRIER - UNIT 12 - SHEET 9 OF 9
173 SUPERSTRUCTURE - MEDIAN BARRIER DETAILS
174 SUPERSTRUCTURE - CONCRETE PARAPET AND END POST DETAILS
175 SUPERSTRUCTURE - METAL RAIL POST SPACING - UNIT 1 - SHEET 1 OF 9
176 SUPERSTRUCTURE - METAL RAIL POST SPACING - UNIT 2 - SHEET 2 OF 9
177 SUPERSTRUCTURE - METAL RAIL POST SPACING - UNITS 3 & 4 - SHEET 3 OF 9
178 SUPERSTRUCTURE - METAL RAIL POST SPACING - UNIT 5 - SHEET 4 OF 9
179 SUPERSTRUCTURE - METAL RAIL POST SPACING - UNITS 6 & 7 - SHEET 5 OF 9
180 SUPERSTRUCTURE - METAL RAIL POST SPACING - UNIT 8 - SHEET 6 OF 9
181 SUPERSTRUCTURE - METAL RAIL POST SPACING - UNIT 8 - SHEET 7 OF 9
182 SUPERSTRUCTURE - METAL RAIL POST SPACING - UNITS 9,10 & 11 - SHEET 8 OF 9
183 SUPERSTRUCTURE - METAL RAIL POST SPACING - UNIT 12 - SHEET 9 OF 9
184 SUPERSTRUCTURE - END OF RAIL DETAILS
185 SUPERSTRUCTURE - 2 BAR METAL RAIL - SHEET 1 OF 2
186 SUPERSTRUCTURE - 2 BAR METAL RAIL - SHEET 2 OF 2
187 SUPERSTRUCTURE - GUARDRAIL ANCHORAGE DETAILS FOR METAL RAILS
188 SUPERSTRUCTURE - SOLAR ARRAY PLATFORM
189 SUPERSTRUCTURE - EXPANSION JOINT SEAL DETAILS - SHEET 1 OF 3
190 SUPERSTRUCTURE - EXPANSION JOINT SEAL DETAILS - SHEET 2 OF 3
191 SUPERSTRUCTURE - EXPANSION JOINT SEAL DETAILS - SHEET 3 OF 3
192 SUPERSTRUCTURE - MODULAR EXPANSION JOINT DETAILS
193 SUPERSTRUCTURE - JOINT COVER PLATE DETAILS
194 SUPERSTRUCTURE - BILL OF MATERIAL UNIT 1 - SPANS A, B & C - SHEET 1 OF 12
195 SUPERSTRUCTURE - BILL OF MATERIAL UNIT 2 - SPANS D & E - SHEET 2 OF 12
196 SUPERSTRUCTURE - BILL OF MATERIAL UNIT 3 - SPANS F & G -SHEET 3 OF 12
197 SUPERSTRUCTURE - BILL OF MATERIAL UNIT 4 - SPANS H & I - SHEET 4 OF 12
198 SUPERSTRUCTURE - BILL OF MATERIAL UNIT 5 - SPANS J & K - SHEET 5 OF 12
199 SUPERSTRUCTURE - BILL OF MATERIAL UNIT 6 - SPANS L & M - SHEET 6 OF 12
200 SUPERSTRUCTURE - BILL OF MATERIAL UNITS 7 & 7A - SPANS N & O - SHEET 7 OF 12
201 SUPERSTRUCTURE - BILL OF MATERIAL UNIT 8 - SPANS P, Q & R - SHEET 8 OF 12
202 SUPERSTRUCTURE - BILL OF MATERIAL UNIT 9 - SPANS S, T & U - SHEET 9 OF 12
203 SUPERSTRUCTURE - BILL OF MATERIAL UNIT 10 - SPANS V, W & X - SHEET 10 OF 12
204 SUPERSTRUCTURE - BILL OF MATERIAL UNIT 11 - SPANS Y, Z & AA - SHEET 11 OF 12
205 SUPERSTRUCTURE - BILL OF MATERIAL UNIT 12 - SPANS BB & CC- SHEET 12 OF 12
206 SUBSTRUCTURE - END BENT 1 - PLAN AND ELEVATION - SHEET 1 OF 3
207 SUBSTRUCTURE - END BENT 1 - WING DETAILS - SHEET 2 OF 3
208 SUBSTRUCTURE - END BENT 1 - SECTION AND DETAILS - SHEET 3 OF 3
209 SUBSTRUCTURE - BENT 1 THRU BENT 4 - PLAN AND ELEVATION - SHEET 1 OF 2
210 SUBSTRUCTURE - BENT 1 THRU BENT 4 - SECTION AND DETAILS - SHEET 2 OF 2
211 SUBSTRUCTURE - BENT 5 - PLAN AND ELEVATION - SHEET 1 OF 2
212 SUBSTRUCTURE - BENT 5 - SECTION AND DETAILS - SHEET 2 OF 2
213 SUBSTRUCTURE - BENT 6 THRU BENT 9 - PLAN AND ELEVATION - SHEET 1 OF 2
214 SUBSTRUCTURE - BENT 6 THRU BENT 9 - SECTION AND DETAILS - SHEET 2 OF 2
215 SUBSTRUCTURE - BENT 10 - PLAN AND ELEVATION - SHEET 1 OF 2
216 SUBSTRUCTURE - BENT 10 - SECTION AND DETAILS - SHEET 2 OF 2
217 SUBSTRUCTURE - BENT 11 - PLAN AND ELEVATION - SHEET 1 OF 3
218 SUBSTRUCTURE - BENT 11 - FOOTING AND SECTIONS - SHEET 2 OF 3
219 SUBSTRUCTURE - BENT 11 - BILL OF MATERIAL - SHEET 3 OF 3
220 SUBSTRUCTURE - BENT 12 - PLAN AND ELEVATION - SHEET 1 OF 3
221 SUBSTRUCTURE - BENT 12 - FOOTING AND SECTIONS - SHEET 2 OF 3
222 SUBSTRUCTURE - BENT 12 - BILL OF MATERIAL - SHEET 3 OF 3
223 SUBSTRUCTURE - BENT 13 - PLAN AND ELEVATION - SHEET 1 OF 3
224 SUBSTRUCTURE - BENT 13 - FOOTING AND SECTIONS - SHEET 2 OF 3
225 SUBSTRUCTURE - BENT 13 - BILL OF MATERIAL - SHEET 3 OF 3
226 SUBSTRUCTURE - BENT 14 - PLAN AND ELEVATION - SHEET 1 OF 4
227 SUBSTRUCTURE - BENT 14 - FOOTING AND SECTIONS - SHEET 2 OF 4
228 SUBSTRUCTURE - BENT 14 - PLAN OF FOOTING - SHEET 3 OF 4
229 SUBSTRUCTURE - BENT 14 - BILL OF MATERIAL - SHEET 4 OF 4
230 SUBSTRUCTURE - BENT 15 - PLAN AND ELEVATION - SHEET 1 OF 4
231 SUBSTRUCTURE - BENT 15 - FOOTING AND SECTIONS - SHEET 2 OF 4
232 SUBSTRUCTURE - BENT 15 - PLAN OF FOOTING - SHEET 3 OF 4
233 SUBSTRUCTURE - BENT 15 - BILL OF MATERIAL - SHEET 4 OF 4
234 SUBSTRUCTURE - BENT 16 - PLAN AND ELEVATION - SHEET 1 OF 4
235 SUBSTRUCTURE - BENT 16 - FOOTING AND SECTIONS - SHEET 2 OF 4
236 SUBSTRUCTURE - BENT 16 - PLAN OF FOOTING - SHEET 3 OF 4
237 SUBSTRUCTURE - BENT 16 - BILL OF MATERIAL - SHEET 4 OF 4
238 SUBSTRUCTURE - BENT 17 - PLAN AND ELEVATION - SHEET 1 OF 4
239 SUBSTRUCTURE - BENT 17 - FOOTING AND SECTIONS - SHEET 2 OF 4
240 SUBSTRUCTURE - BENT 17 - PLAN OF FOOTING - SHEET 3 OF 4
241 SUBSTRUCTURE - BENT 17 - BILL OF MATERIAL - SHEET 4 OF 4
242 SUBSTRUCTURE - BENT 18 - PLAN AND ELEVATION - SHEET 1 OF 4
243 SUBSTRUCTURE - BENT 18 - FOOTING AND SECTIONS - SHEET 2 OF 4
244 SUBSTRUCTURE - BENT 18 - PLAN OF FOOTING - SHEET 3 OF 4
245 SUBSTRUCTURE - BENT 18 - BILL OF MATERIAL - SHEET 4 OF 4
246 SUBSTRUCTURE - BENT 19 - PLAN AND ELEVATION - SHEET 1 OF 4
247 SUBSTRUCTURE - BENT 19 - FOOTING AND SECTIONS - SHEET 2 OF 4
248 SUBSTRUCTURE - BENT 19 - PLAN OF FOOTING - SHEET 3 OF 4
249 SUBSTRUCTURE - BENT 19 - BILL OF MATERIAL - SHEET 4 OF 4
250 SUBSTRUCTURE - BENT 20 - PLAN AND ELEVATION - SHEET 1 OF 4
251 SUBSTRUCTURE - BENT 20 - FOOTING AND SECTIONS - SHEET 2 OF 4
252 SUBSTRUCTURE - BENT 20 - PLAN OF FOOTING - SHEET 3 OF 4
253 SUBSTRUCTURE - BENT 20 - BILL OF MATERIAL- SHEET 4 OF 4
254 SUBSTRUCTURE - BENT 21 - PLAN AND ELEVATION - SHEET 1 OF 3
255 SUBSTRUCTURE - BENT 21 - FOOTING AND SECTIONS - SHEET 2 OF 3
256 SUBSTRUCTURE - BENT 21 - BILL OF MATERIAL - SHEET 3 OF 3
257 SUBSTRUCTURE - BENT 22 - PLAN AND ELEVATION - SHEET 1 OF 3
258 SUBSTRUCTURE - BENT 22 - FOOTING AND SECTIONS - SHEET 2 OF 3
259 SUBSTRUCTURE - BENT 22 - BILL OF MATERIAL - SHEET 3 OF 3
260 SUBSTRUCTURE - BENT 23 - PLAN AND ELEVATION - SHEET 1 OF 3
261 SUBSTRUCTURE - BENT 23 - FOOTING AND SECTIONS - SHEET 2 OF 3
262 SUBSTRUCTURE - BENT 23 - BILL OF MATERIAL - SHEET 3 OF 3
263 SUBSTRUCTURE - BENT 24 - PLAN AND ELEVATION - SHEET 1 OF 3
264 SUBSTRUCTURE - BENT 24 - FOOTING AND SECTIONS - SHEET 2 OF 3
265 SUBSTRUCTURE - BENT 24 - BILL OF MATERIAL - SHEET 3 OF 3
266 SUBSTRUCTURE - BENT 25 - PLAN AND ELEVATION - SHEET 1 OF 3
267 SUBSTRUCTURE - BENT 25 - FOOTING AND SECTIONS - SHEET 2 OF 3
268 SUBSTRUCTURE - BENT 25 - BILL OF MATERIAL - SHEET 3 OF 3
269 SUBSTRUCTURE - BENT 26 - PLAN AND ELEVATION - SHEET 1 OF 2
270 SUBSTRUCTURE - BENT 26 - SECTION AND DETAILS - SHEET 2 OF 2
271 SUBSTRUCTURE - BENT 27 & BENT 28 - PLAN AND ELEVATION - SHEET 1 OF 2
272 SUBSTRUCTURE - BENT 27 & BENT 28 - SECTION AND DETAILS - SHEET 2 OF 2
273 SUBSTRUCTURE - END BENT 2 - PLAN AND ELEVATION - SHEET 1 OF 3
274 SUBSTRUCTURE - END BENT 2 - WING DETAILS - SHEET 2 OF 3
275 SUBSTRUCTURE - END BENT 2 - SECTION AND DETAILS - SHEET 3 OF 3
276 STANDARD - 20" PRESTRESSED CONCRETE PILE
277 SUBSTRUCTURE - 30" PRESTRESSED CONCRETE PILE
277A EMBEDDED DATA COLLECTORS FOR 30" PRESTRESSED CONCRETE PILES
278 NAVIGATIONAL LIGHTING AND CONDUIT SYSTEM
279 TIMBER FENDER SYSTEM - BENTS 16 AND 17
280 SLOPE PROTECTION
281 BRIDGE APPROACH SLAB
282 BRIDGE APPROACH SLAB DETAILS

DRAWN BY : J. N. AUSTIN DATE : 1-8-12
CHECKED BY : N. B. SPEAKS DATE : 1-8-12

DWG. 3 OF 282

THE LPA GROUP of North Carolina TRANSPORTATION CONSULTANTS

THE LPA GROUP of North Carolina
8000 Regency Parkway, Suite 600
Cary, North Carolina 27518
NC License No.: F-1084

NORTH CAROLINA PROFESSIONAL SEAL 25911 ENGINEER DAWN G. HATHAWAY 11-7-2013

NORTH CAROLINA PROFESSIONAL SEAL 033752 ENGINEER SETH A. DENNICK 11/7/13

PROJECT NO. R-3307
CARTERET COUNTY
STATION: 46+21.50 -L-

SHEET 2 OF 2

STATE OF NORTH CAROLINA
DEPARTMENT OF TRANSPORTATION
RALEIGH

INDEX OF DRAWINGS

REVISIONS								SHEET NO.
NO.	BY:	DATE:	NO.	BY:	DATE:			S-2
1			3					TOTAL SHEETS
2			4					333

11/7/2013
3:38:32 PM
User: jaustin
Filename: Y:\Projects\NCDOT\R-3307\Dwgs\Final\R-3307_003_SD_Index_2.dgn

F.A. PROJECT NO.: STPNHF-70(132)

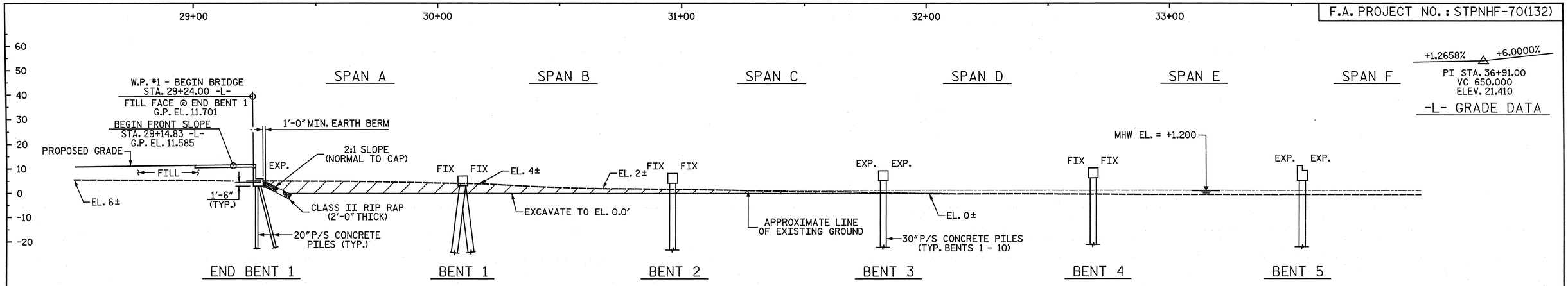

SECTION ALONG SURVEY -L-

BENTS ON SECTION AT RIGHT ANGLES TO BENTS

DENOTES UNCLASSIFIED STRUCTURE EXCAVATION

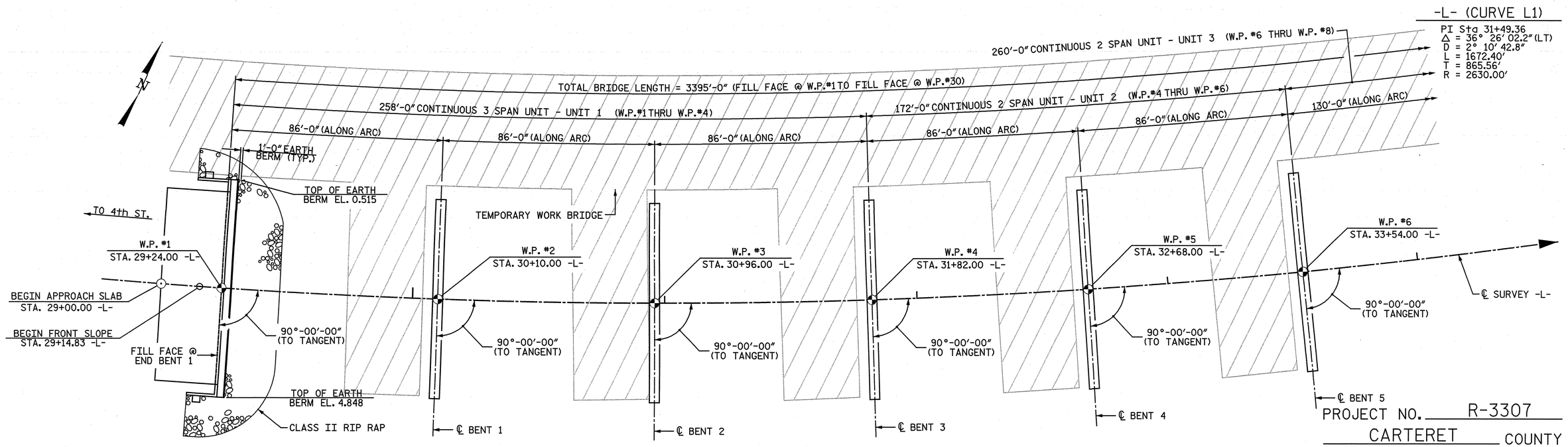

HYDRAULIC DATA

MEAN HIGH WATER EL. +1.200
MEAN TIDE LEVEL EL. -0.400
MEAN LOW WATER EL. -1.900

PLAN

(PILES NOT SHOWN FOR CLARITY)

PROJECT NO. R-3307

CARTERET COUNTY

STATION: 46+21.50 -L-

SHEET 1 OF 7 REPLACES BRIDGE NO. 29

STATE OF NORTH CAROLINA
DEPARTMENT OF TRANSPORTATION
RALEIGH

GENERAL DRAWING

FOR BRIDGE ON RELOCATED
US 70 OVER GALLANTS CHANNEL
BETWEEN RADIO ISLAND &
MICHAEL J. SMITH FIELD

NORTH CAROLINA PROFESSIONAL SEAL 25911 ENGINEER DWAIN G. HATHAWAY 4-3-2012

NORTH CAROLINA PROFESSIONAL SEAL 033752 ENGINEER JEFFREY A. DENNEY 4/3/12

THE LPA GROUP of North Carolina TRANSPORTATION CONSULTANTS

THE LPA GROUP of North Carolina
8000 Regency Parkway, Suite 600
Cary, North Carolina 27518
NC License No.: F-1084

REVISIONS						SHEET NO.
NO.	BY:	DATE:	NO.	BY:	DATE:	S-3
1			3			TOTAL SHEETS
2			4			333

DRAWN BY : N.B.S. / M.D.M. DATE : 4-5-11
CHECKED BY : J.N.A. / T.V.R. DATE : 6-6-11

DWG. 4 OF 282

4/2/2012
12:39:22 PM
User: jaustin
Filename: Y:\Projects\NCDOT\R-3307\Dwgs\Final\R-3307_004_SD_GD1.dgn

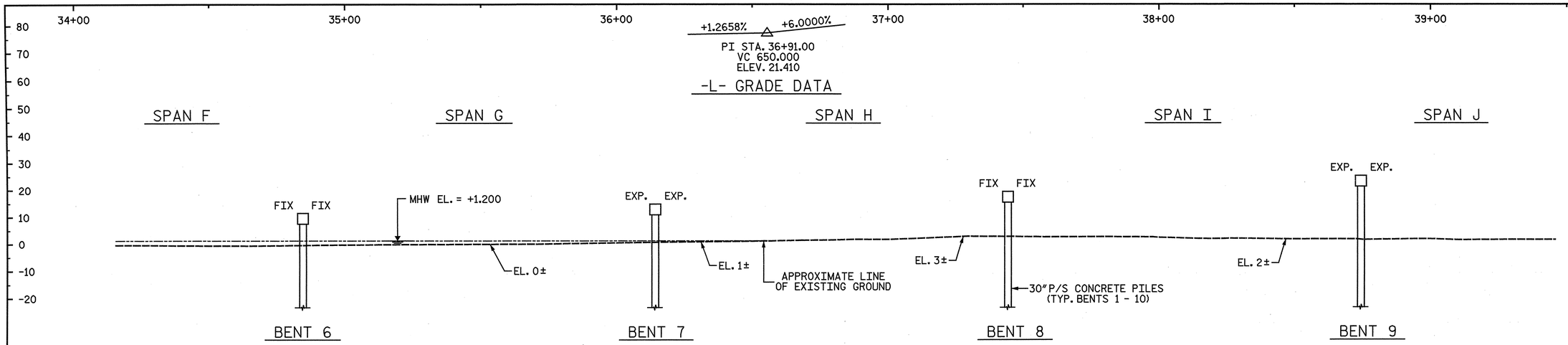

SECTION ALONG SURVEY -L-

BENTS ON SECTION AT RIGHT ANGLES TO BENTS

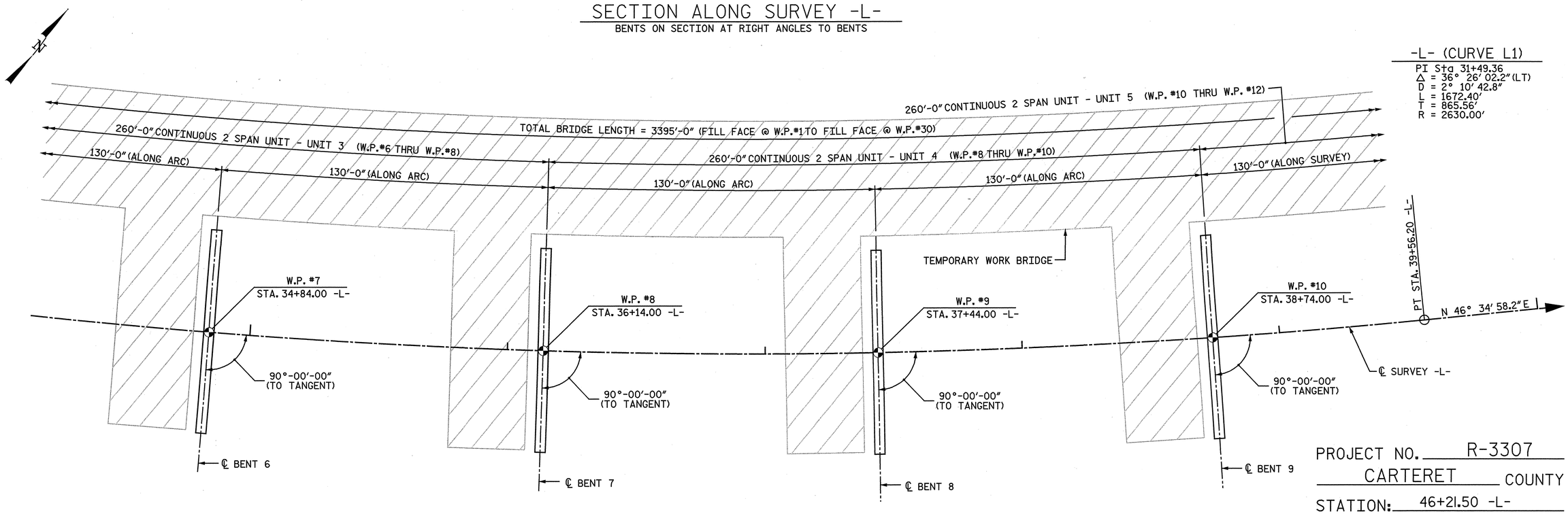

PLAN

(PILES NOT SHOWN FOR CLARITY)

PROJECT NO. R-3307

CARTERET COUNTY

STATION: 46+21.50 -L-

SHEET 2 OF 7

STATE OF NORTH CAROLINA
DEPARTMENT OF TRANSPORTATION
RALEIGH

GENERAL DRAWING

FOR BRIDGE ON RELOCATED US 70 OVER GALLANTS CHANNEL BETWEEN RADIO ISLAND & MICHAEL J. SMITH FIELD

NORTH CAROLINA PROFESSIONAL SEAL 25911 ENGINEER DWAIN G. HATHAWAY 4-3-2012

NORTH CAROLINA PROFESSIONAL SEAL 033752 ENGINEER SETH A. DENNEY 4/04/12

THE LPA GROUP of North Carolina TRANSPORTATION CONSULTANTS

THE LPA GROUP of North Carolina
8000 Regency Parkway, Suite 600
Cary, North Carolina 27518
NC License No.: F-1084

REVISIONS						SHEET NO.
NO.	BY:	DATE:	NO.	BY:	DATE:	S-4
1			3			TOTAL SHEETS
2			4			333

DRAWN BY : N.B.S. / M.D.M. DATE : 4-5-11
CHECKED BY : J.N.A. / T.V.R. DATE : 6-6-11

DWG. 5 OF 282

4/2/2012
12:39:24 PM
User: jaustin
Filename: Y:\Projects\NCDOT\R-3307\Dwgs\Final\R-3307_005_SD_G02.dgn

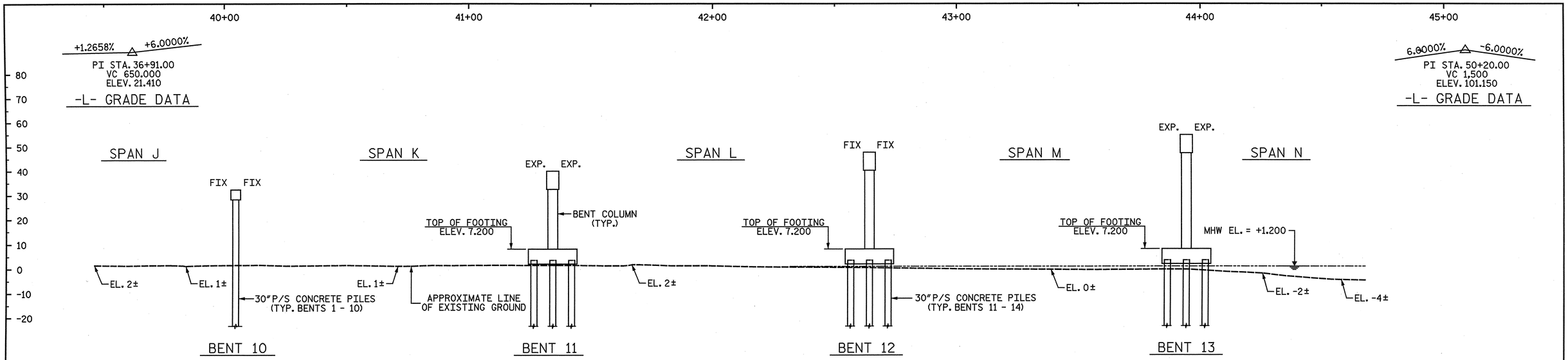

SECTION ALONG SURVEY -L-

BENTS ON SECTION AT RIGHT ANGLES TO BENTS

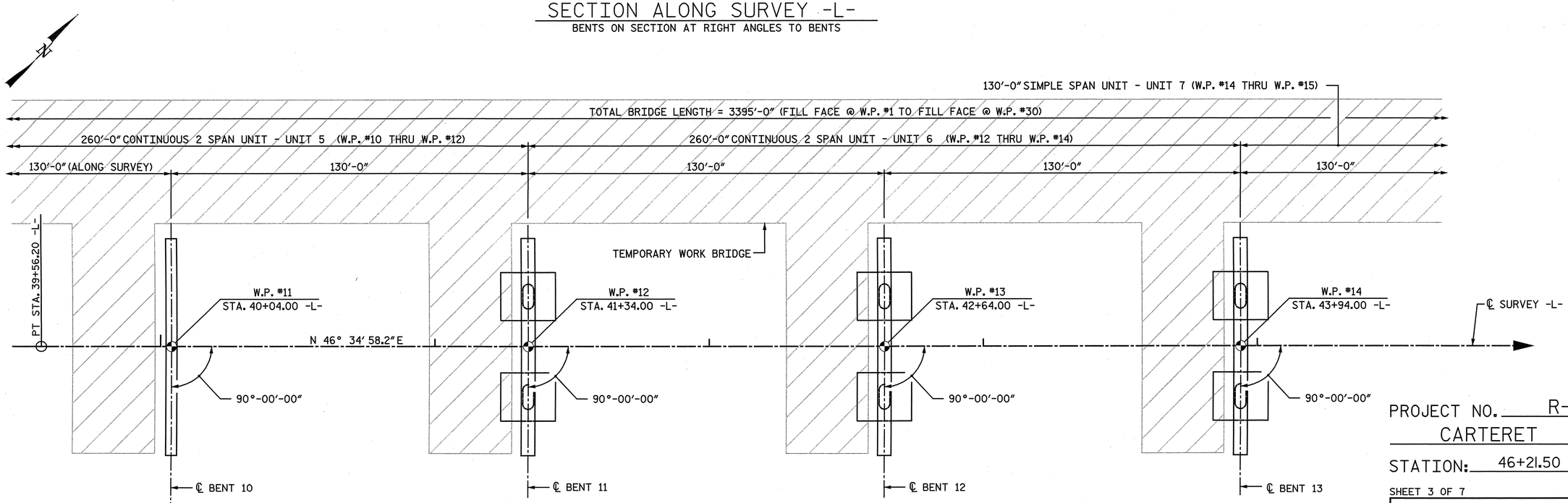

PLAN

(PILES NOT SHOWN FOR CLARITY)

PROJECT NO. R-3307

CARTERET COUNTY

STATION: 46+21.50 -L-

SHEET 3 OF 7

STATE OF NORTH CAROLINA
DEPARTMENT OF TRANSPORTATION
RALEIGH

GENERAL DRAWING

FOR BRIDGE ON RELOCATED US 70 OVER GALLANTS CHANNEL BETWEEN RADIO ISLAND & MICHAEL J. SMITH FIELD

NORTH CAROLINA PROFESSIONAL SEAL 25911 ENGINEER DWAIN G. HATHAWAY 4-3-2012

NORTH CAROLINA PROFESSIONAL SEAL 033752 ENGINEER SETH A. DENNEY 4/09/12

THE LPA GROUP of North Carolina TRANSPORTATION CONSULTANTS

THE LPA GROUP of North Carolina
8000 Regency Parkway, Suite 600
Cary, North Carolina 27518
NC License No.: F-1084

REVISIONS						SHEET NO.
NO.	BY:	DATE:	NO.	BY:	DATE:	S-5
1			3			TOTAL SHEETS
2			4			333

DRAWN BY : N.B.S. / M.D.M. DATE : 4-5-11
CHECKED BY : J.N.A. / T.V.R. DATE : 6-6-11

DWG. 6 OF 282

4/2/2012
12:39:25 PM
User: jaustin
Filename: Y:\Projects\NCDOT\R-3307\Dwgs\Final\R-3307_006_SD_GD3.dgn

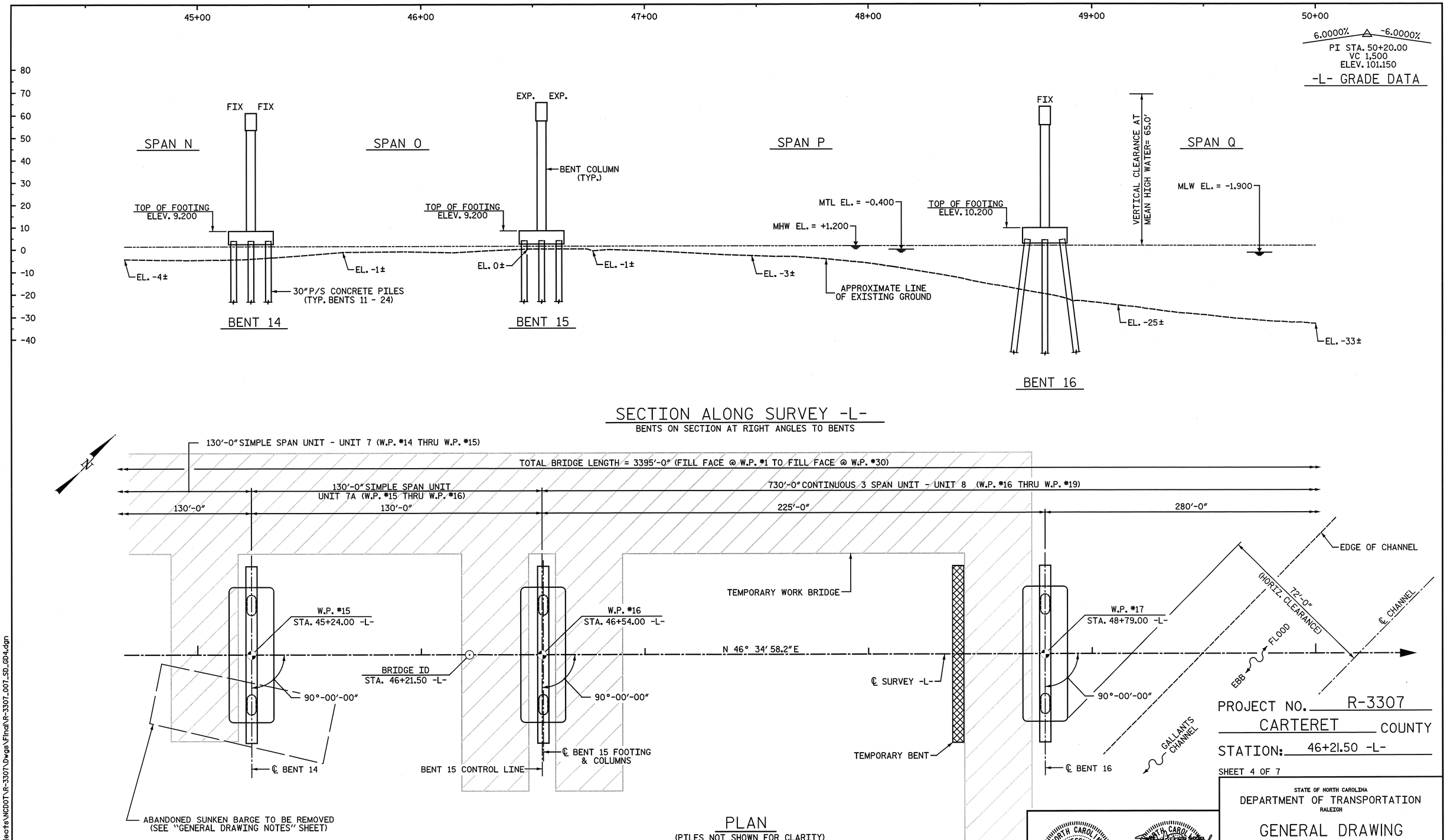

PROJECT NO. R-3307
CARTERET COUNTY
STATION: 46+21.50 -L-
SHEET 4 OF 7

STATE OF NORTH CAROLINA
DEPARTMENT OF TRANSPORTATION
RALEIGH

GENERAL DRAWING

FOR BRIDGE ON RELOCATED US 70 OVER GALLANTS CHANNEL BETWEEN RADIO ISLAND & MICHAEL J. SMITH FIELD

NORTH CAROLINA PROFESSIONAL SEAL 25911 ENGINEER DWIN G. HATHAWAY 1-9-2014

NORTH CAROLINA PROFESSIONAL SEAL 033752 ENGINEER SETH A. DENNEY 01/09/14

THE LPA GROUP of North Carolina TRANSPORTATION CONSULTANTS

THE LPA GROUP of North Carolina
8000 Regency Parkway, Suite 600
Cary, North Carolina 27518
NC License No.: F-1084

REVISIONS						SHEET NO.
NO.	BY:	DATE:	NO.	BY:	DATE:	S-6
1			3			TOTAL SHEETS
2			4			333

DRAWN BY : N.B.S. / M.D.M. DATE : 4-5-11
CHECKED BY : J.N.A. / T.V.R. DATE : 6-6-11

DWG. 7 OF 282

1/9/2014
11:24:02 AM
User: jaustin
Filename: Y:\Projects\NCDOT\R-3307\Dwgs\Final\R-3307_007_SD_GD4.dgn

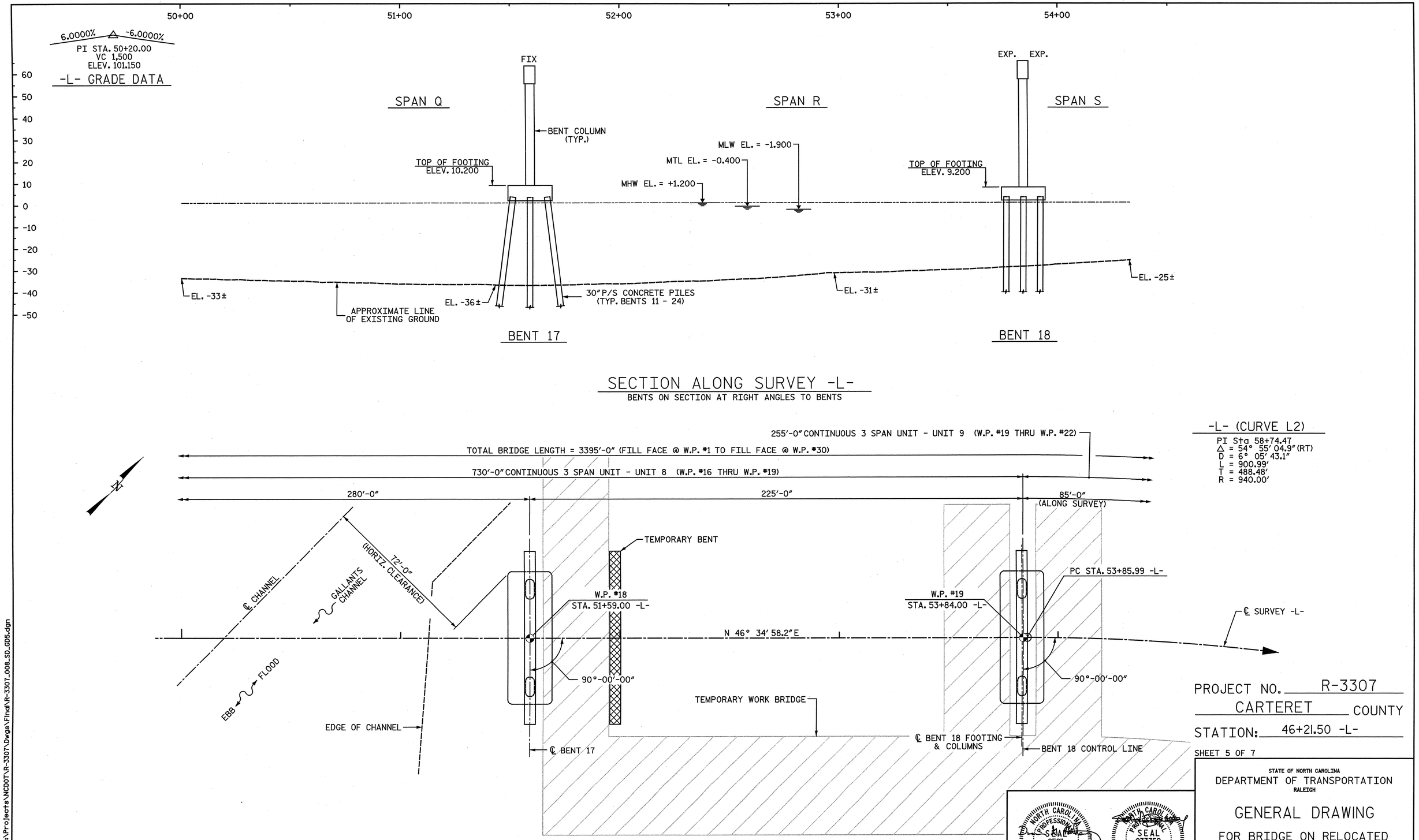

PROJECT NO. R-3307

CARTERET COUNTY

STATION: 46+21.50 -L-

SHEET 5 OF 7

STATE OF NORTH CAROLINA
DEPARTMENT OF TRANSPORTATION
RALEIGH

GENERAL DRAWING

FOR BRIDGE ON RELOCATED US 70 OVER GALLANTS CHANNEL BETWEEN RADIO ISLAND & MICHAEL J. SMITH FIELD

NORTH CAROLINA PROFESSIONAL SEAL 25911 ENGINEER DWAIN G. HATHAWAY 4-5-2011

NORTH CAROLINA PROFESSIONAL SEAL 033752 ENGINEER SETH A. DENNEY

THE LPA GROUP of North Carolina TRANSPORTATION CONSULTANTS

THE LPA GROUP of North Carolina
8000 Regency Parkway, Suite 600
Cary, North Carolina 27518
NC License No.: F-1084

REVISIONS							SHEET NO.
NO.	BY:	DATE:	NO.	BY:	DATE:		S-7
1			3				TOTAL SHEETS
2			4				333

DRAWN BY : N.B.S. / M.D.M. DATE : 4-5-11
CHECKED BY : J.N.A. / T.V.R. DATE : 6-6-11

DWG. 8 OF 282

4/2_ 12
12:39:28 PM
User: jaustin
Filename: Y:\Projects\NCDOT\R-3307\Dwgs\Final\R-3307_008_SD_GD5.dgn

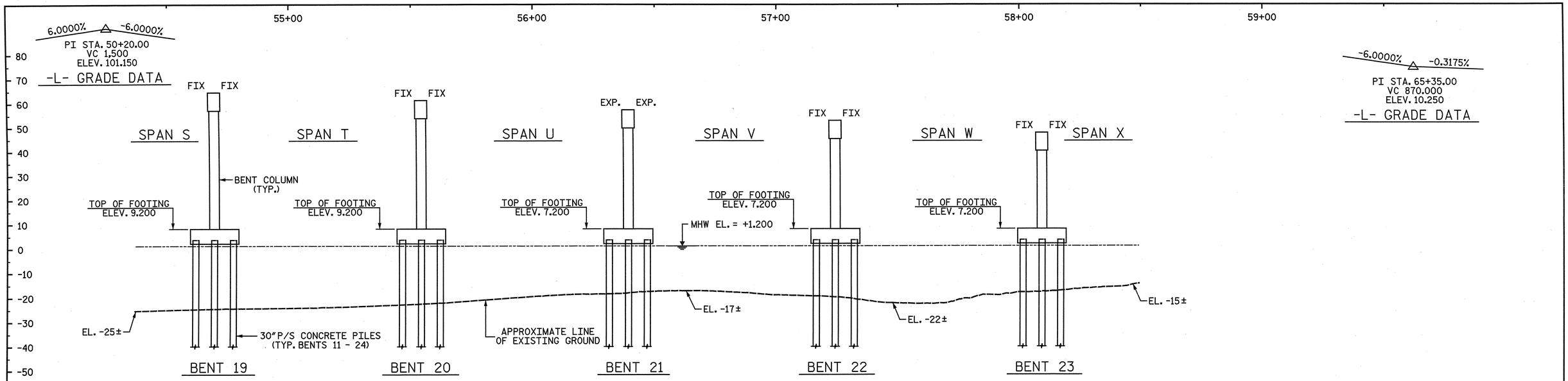

SECTION ALONG SURVEY -L-

BENTS ON SECTION AT RIGHT ANGLES TO BENTS

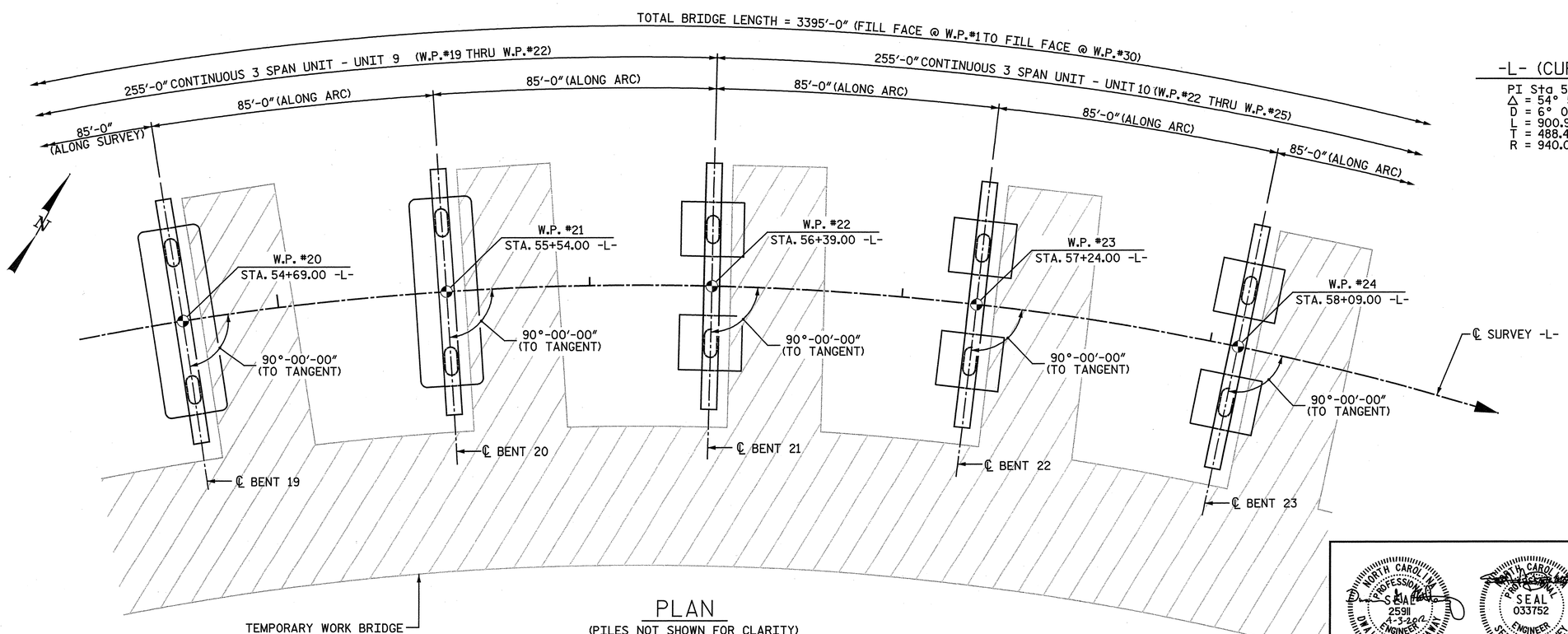

PLAN

(PILES NOT SHOWN FOR CLARITY)

-L- (CURVE L2)

PI Sta 58+74.47
Δ = 54° 55' 04.9" (RT)
D = 6° 05' 43.1"
L = 900.99'
T = 488.48'
R = 940.00'

PROJECT NO. R-3307
CARTERET COUNTY
STATION: 46+21.50 -L-

SHEET 6 OF 7

STATE OF NORTH CAROLINA
DEPARTMENT OF TRANSPORTATION
RALEIGH

GENERAL DRAWING

FOR BRIDGE ON RELOCATED US 70 OVER GALLANTS CHANNEL BETWEEN RADIO ISLAND & MICHAEL J. SMITH FIELD

NORTH CAROLINA PROFESSIONAL SEAL 25911 ENGINEER DAVID G. HATHAWAY
NORTH CAROLINA PROFESSIONAL SEAL 033752 ENGINEER SETH A. DENNIS

THE LPA GROUP of North Carolina
TRANSPORTATION CONSULTANTS

THE LPA GROUP of North Carolina
8000 Regency Parkway, Suite 600
Cary, North Carolina 27518
NC License No.: F-1084

REVISIONS								SHEET NO.
NO.	BY:	DATE:	NO.	BY:	DATE:			S-8
1			3					TOTAL SHEETS
2			4					333

DRAWN BY : N.B.S. / M.D.M. DATE : 4-5-11
CHECKED BY : J.N.A. / T.V.R. DATE : 6-6-11

DWG. 9 OF 282

4/2/ 12
12:39:30 PM
User: jaustin
Filename: Y:\Projects\NCDOT\R-3307\Dwgs\Final\R-3307_009_SD_GD6.dgn

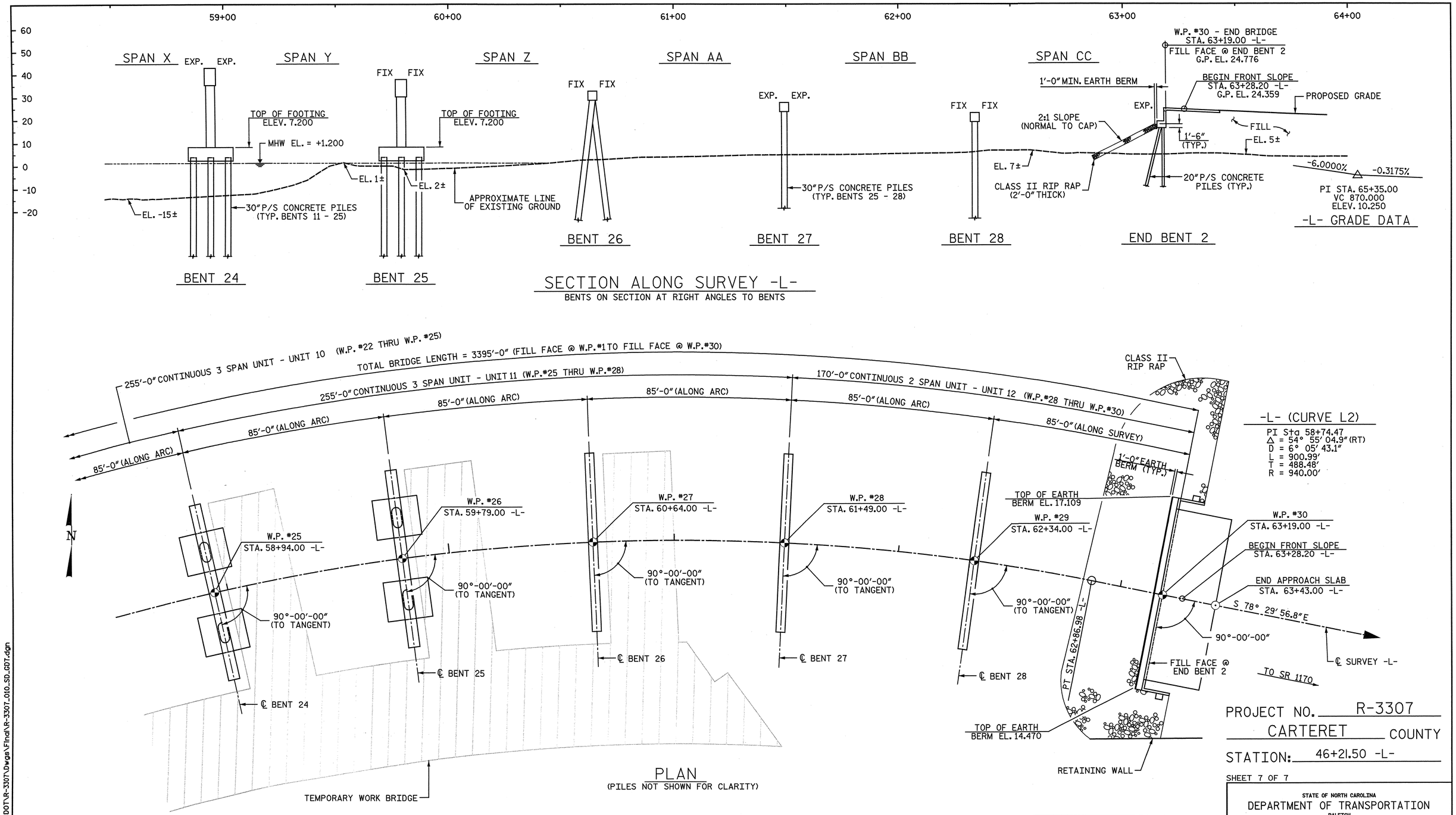

PROJECT NO. R-3307

CARTERET COUNTY

STATION: 46+21.50 -L-

SHEET 7 OF 7

STATE OF NORTH CAROLINA
DEPARTMENT OF TRANSPORTATION
RALEIGH

GENERAL DRAWING

FOR BRIDGE ON RELOCATED US 70 OVER GALLANTS CHANNEL BETWEEN RADIO ISLAND & MICHAEL J. SMITH FIELD

NORTH CAROLINA PROFESSIONAL SEAL 25911 ENGINEER DWAIN G. HATHAWAY 4-3-2012

NORTH CAROLINA PROFESSIONAL SEAL 033752 ENGINEER SETH A. DENNEY 4/04/12

THE LPA GROUP of North Carolina TRANSPORTATION CONSULTANTS

THE LPA GROUP of North Carolina
8000 Regency Parkway, Suite 600
Cary, North Carolina 27518
NC License No.: F-1084

REVISIONS							SHEET NO.
NO.	BY:	DATE:	NO.	BY:	DATE:		S-9
1			3				TOTAL SHEETS
2			4				333

DRAWN BY : N.B.S. / M.D.M. DATE : 4-5-11
CHECKED BY : J.N.A. / T.V.R. DATE : 6-6-11

DWG. 10 OF 282

4/2/2012
12:39:... PM
User: justin
Filename: Y:\Projects\NCDOT\R-3307\Dwgs\Final\R-3307_010_SD_GDT.dgn

NOTES:

20" PRESTRESSED CONCRETE PILES SHALL BE USED AT BOTH END BENTS.

30" PRESTRESSED CONCRETE PILES SHALL BE USED AT ALL INTERIOR BENTS.

▲ INDICATES BATTER DIRECTION FOR BATTERED PILES.

ALL BATTERED PILES SHALL BE BATTERED AT 1½:12 RATIO AT INTERIOR BENTS AND 3 :12 RATIO AT END BENTS.

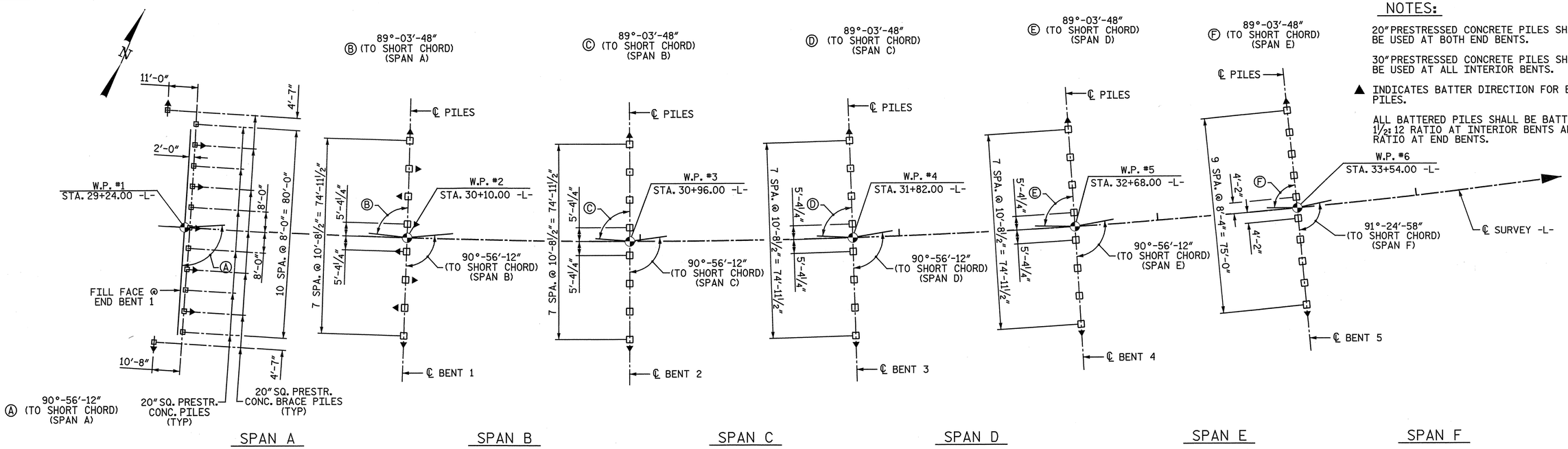

PLAN

PILES ARE DIMENSIONED FROM WORK POINT TO ℄ OF PILE AT BOTTOM OF CONCRETE CAP

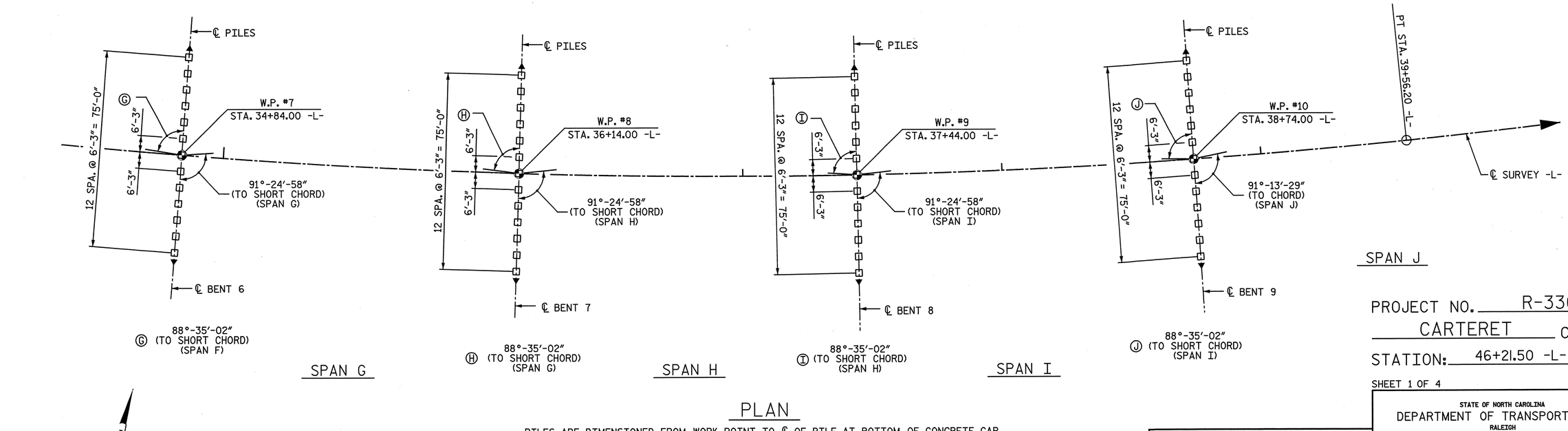

PLAN

PILES ARE DIMENSIONED FROM WORK POINT TO ℄ OF PILE AT BOTTOM OF CONCRETE CAP

PROJECT NO. R-3307

CARTERET COUNTY

STATION: 46+21.50 -L-

SHEET 1 OF 4

STATE OF NORTH CAROLINA
DEPARTMENT OF TRANSPORTATION
RALEIGH

GENERAL DRAWING

FOUNDATION LAYOUT

NORTH CAROLINA PROFESSIONAL SEAL 25911 ENGINEER DWAIN G. HATHWAY 4-5-2012

NORTH CAROLINA PROFESSIONAL SEAL 033752 ENGINEER SETH A. DENNEY 5/10/12

THE LPA GROUP of North Carolina TRANSPORTATION CONSULTANTS

THE LPA GROUP of North Carolina
8000 Regency Parkway, Suite 600
Cary, North Carolina 27518
NC License No.: F-1084

REVISIONS							SHEET NO.
NO.	BY:	DATE:	NO.	BY:	DATE:		S-10
1			3				TOTAL SHEETS
2			4				333

DRAWN BY : J. N. AUSTIN DATE : 1-9-12
CHECKED BY : S. A. DENNEY DATE : 1-12-12

DWG. 11 OF 282

4/2/2012
12:39:[illegible] PM
User: austin
Filename: Y:\Projects\NCDOT\R-3307\Dwgs\Find\R-3307_011_SD_FL1.dgn

NOTES:

30" PRESTRESSED CONCRETE PILES SHALL BE USED AT ALL INTERIOR BENTS.

▲ INDICATES BATTER DIRECTION FOR BATTERED PILES.

ALL BATTERED PILES AT INTERIOR BENTS SHALL BE BATTERED AT 1½:12 RATIO.

DIMENSIONS AT EACH BENT ARE TYPICAL FOR THAT BENT UNLESS OTHERWISE NOTED.

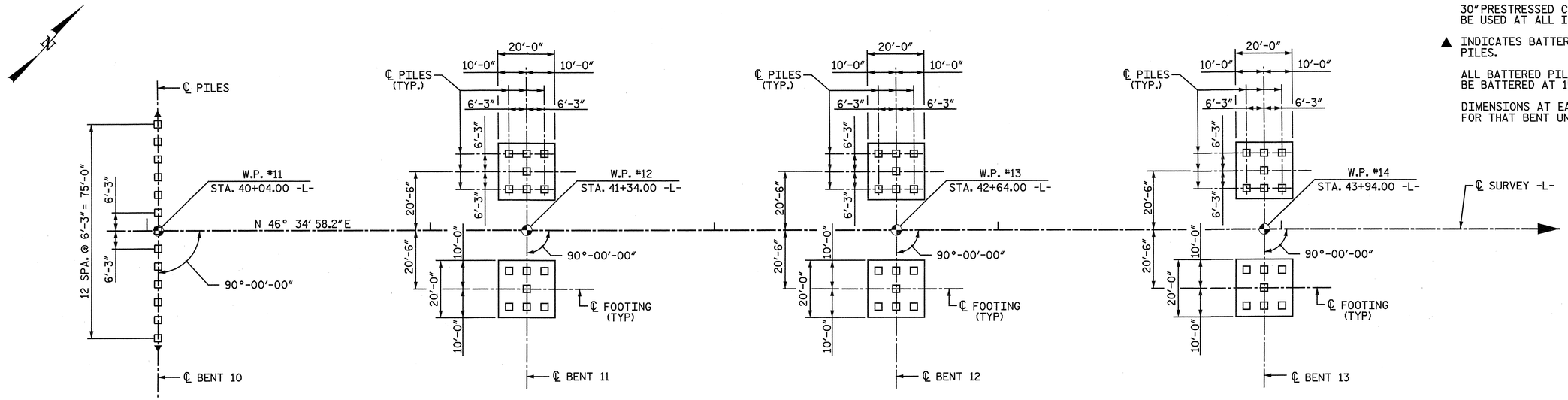

PLAN

PILES ARE DIMENSIONED FROM WORK POINT TO ℄ OF PILE AT BOTTOM OF CONCRETE CAP OR FOOTING.

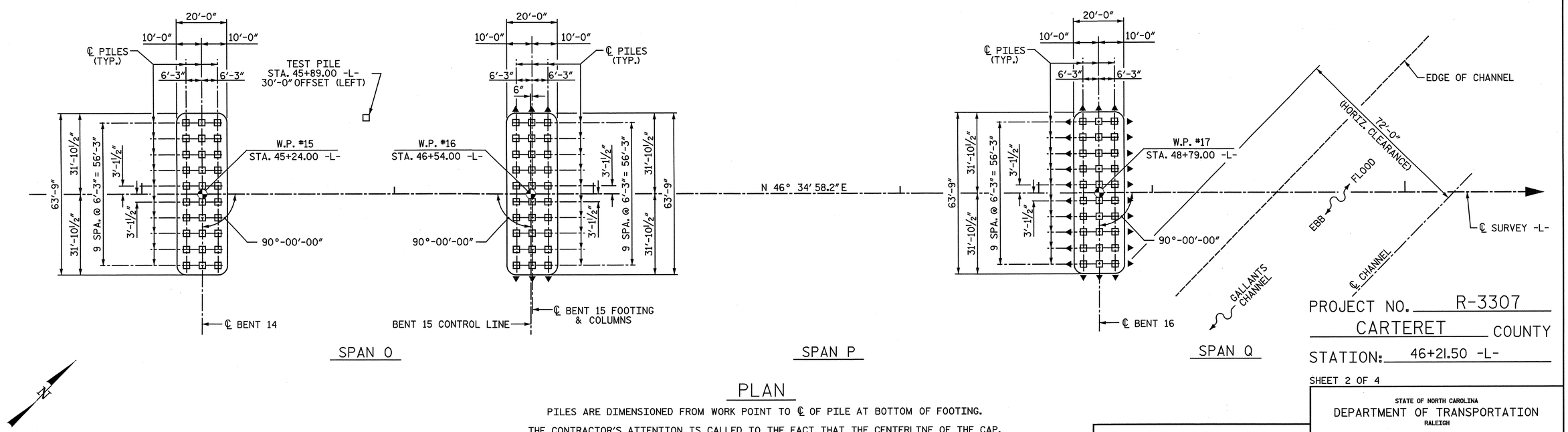

PLAN

PILES ARE DIMENSIONED FROM WORK POINT TO ℄ OF PILE AT BOTTOM OF FOOTING.

THE CONTRACTOR'S ATTENTION IS CALLED TO THE FACT THAT THE CENTERLINE OF THE CAP, COLUMNS, AND FOOTING IS OFFSET FROM THE CONTROL LINE OF BENT 15.

PROJECT NO. R-3307
CARTERET COUNTY
STATION: 46+21.50 -L-

SHEET 2 OF 4

STATE OF NORTH CAROLINA
DEPARTMENT OF TRANSPORTATION
RALEIGH

GENERAL DRAWING

FOUNDATION LAYOUT

NORTH CAROLINA PROFESSIONAL SEAL 25911 ENGINEER DWAIN G. HAYNMAN 4-3-2012

NORTH CAROLINA PROFESSIONAL SEAL 033752 ENGINEER SETH A. DENNEY 4/04/12

THE LPA GROUP of North Carolina TRANSPORTATION CONSULTANTS

THE LPA GROUP of North Carolina
8000 Regency Parkway, Suite 600
Cary, North Carolina 27518
NC License No.: F-1084

REVISIONS						SHEET NO.
NO.	BY:	DATE:	NO.	BY:	DATE:	S-11
1			3			TOTAL SHEETS
2			4			333

DRAWN BY : J. N. AUSTIN DATE : 1-10-12
CHECKED BY : S. A. DENNEY DATE : 1-12-12

DWG. 12 OF 282

4/2/2012
12:39: PM
User: jaustin
Filename: Y:\Projects\NCDOT\R-3307\Dwgs\Final\R-3307_012_S0_FL2.dgn

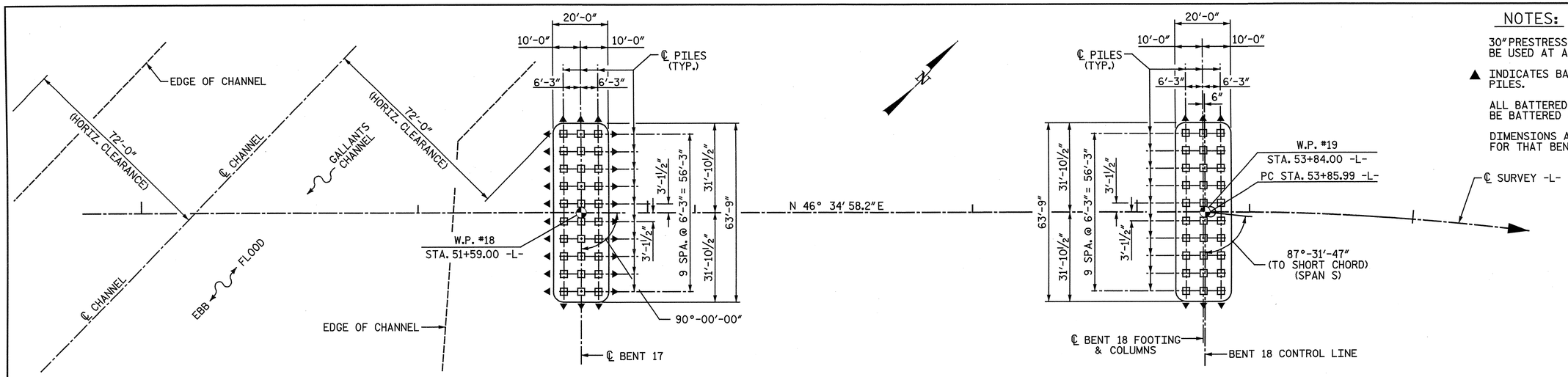

NOTES:

30" PRESTRESSED CONCRETE PILES SHALL BE USED AT ALL INTERIOR BENTS.

▲ INDICATES BATTER DIRECTION FOR BATTERED PILES.

ALL BATTERED PILES AT INTERIOR BENTS SHALL BE BATTERED AT 1½:12 RATIO.

DIMENSIONS AT EACH BENT ARE TYPICAL FOR THAT BENT UNLESS OTHERWISE NOTED.

PLAN

PILES ARE DIMENSIONED FROM WORK POINT TO ℄ OF PILE AT BOTTOM OF FOOTING.

THE CONTRACTOR'S ATTENTION IS CALLED TO THE FACT THAT THE CENTERLINE OF THE CAP, COLUMNS, AND FOOTING IS OFFSET FROM THE CONTROL LINE OF BENT 18.

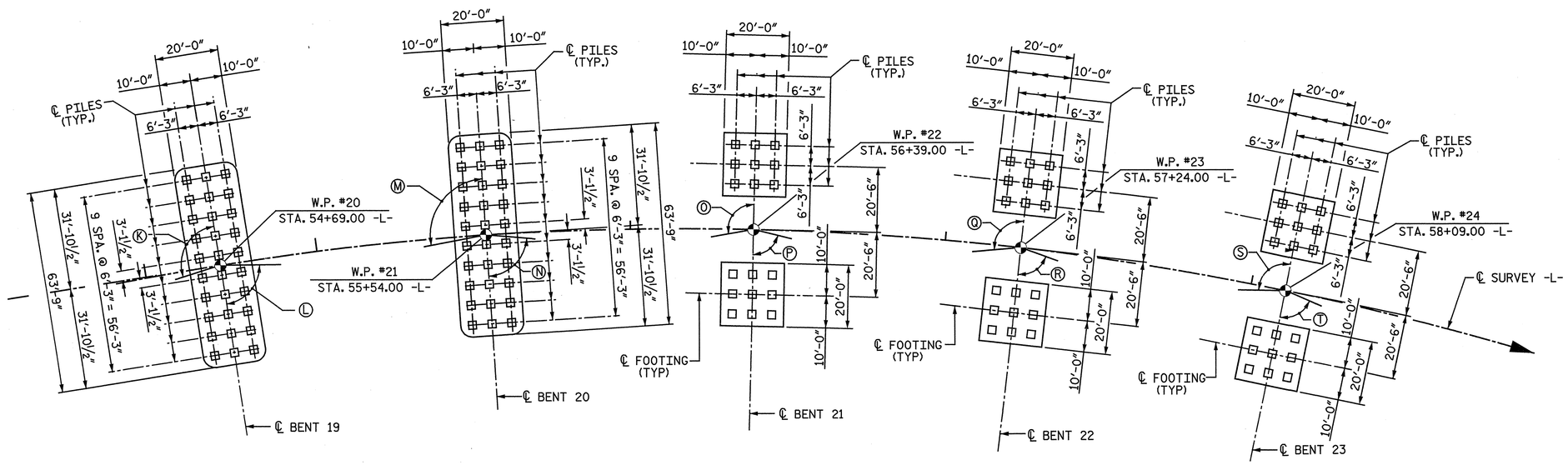

PLAN

PILES ARE DIMENSIONED FROM WORK POINT TO ℄ OF PILE AT BOTTOM OF FOOTING

ANGLES			
Ⓚ	92°-35'-21" (TO SHORT CHORD) (SPAN S)	Ⓟ	87°-24'-34" (TO SHORT CHORD) (SPAN V)
Ⓛ	87°-24'-34" (TO SHORT CHORD) (SPAN T)	Ⓠ	92°-35'-26" (TO SHORT CHORD) (SPAN V)
Ⓜ	92°-35'-26" (TO SHORT CHORD) (SPAN T)	Ⓡ	87°-24'-34" (TO SHORT CHORD) (SPAN W)
Ⓝ	87°-24'-34" (TO SHORT CHORD) (SPAN U)	Ⓢ	92°-35'-26" (TO SHORT CHORD) (SPAN W)
Ⓞ	92°-35'-26" (TO SHORT CHORD) (SPAN U)	Ⓣ	87°-24'-34" (TO SHORT CHORD) (SPAN X)

DRAWN BY : J. N. AUSTIN DATE : 1-11-12
CHECKED BY : S. A. DENNEY DATE : 1-12-12

PROJECT NO. R-3307
CARTERET COUNTY
STATION: 46+21.50 -L-

SHEET 3 OF 4

STATE OF NORTH CAROLINA
DEPARTMENT OF TRANSPORTATION
RALEIGH

GENERAL DRAWING

FOUNDATION LAYOUT

NORTH CAROLINA PROFESSIONAL SEAL 25911 ENGINEER DWAIN G. HATHAWAY 4-3-2012

NORTH CAROLINA PROFESSIONAL SEAL 033752 ENGINEER SETH A. DENNEY 4-10-12

THE LPA GROUP of North Carolina TRANSPORTATION CONSULTANTS

THE LPA GROUP of North Carolina
8000 Regency Parkway, Suite 600
Cary, North Carolina 27518
NC License No.: F-1084

REVISIONS							SHEET NO.
NO.	BY:	DATE:	NO.	BY:	DATE:		S-12
1			3				TOTAL SHEETS
2			4				333

DWG. 13 OF 282

4/2/2012 12:39:[illegible] PM
User: jaustin
Filename: Y:\Projects\NCDOT\R-3307\Dwgs\Final\R-3307_013_SD_FL3.dgn

NOTES:

20" PRESTRESSED CONCRETE PILES SHALL BE USED AT BOTH END BENTS.

30" PRESTRESSED CONCRETE PILES SHALL BE USED AT ALL INTERIOR BENTS.

▲ INDICATES BATTER DIRECTION FOR BATTERED PILES.

ALL BATTERED PILES SHALL BE BATTERED AT 1½:12 RATIO AT INTERIOR BENTS AND 3 : 12 RATIO AT END BENTS.

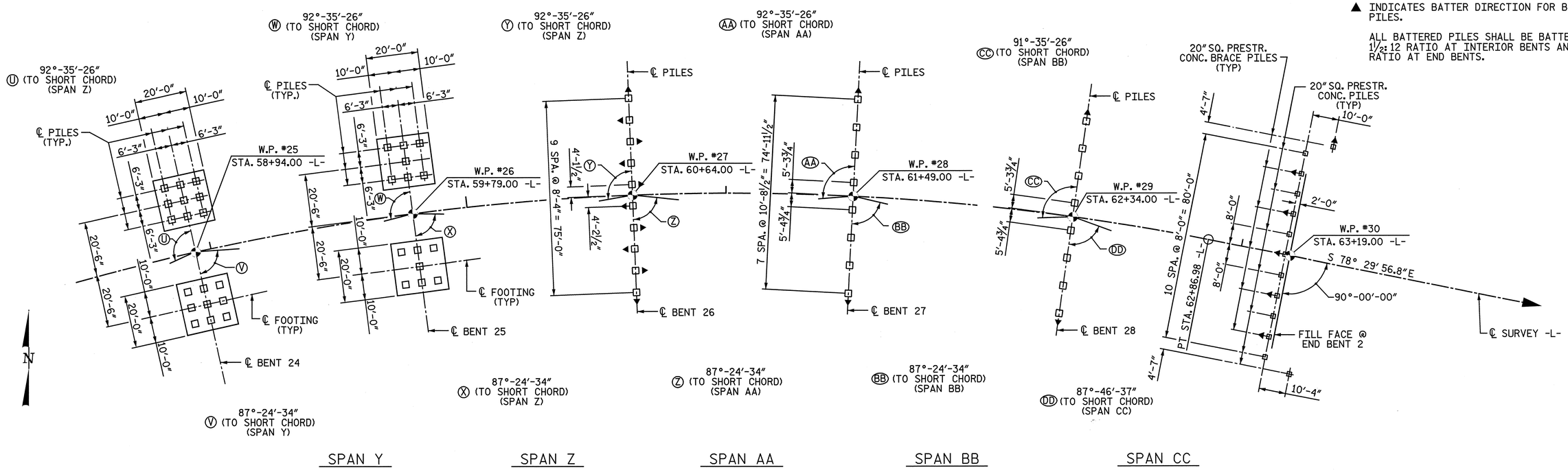

PLAN

PILES ARE DIMENSIONED FROM WORK POINT TO ℄ OF PILE AT BOTTOM OF CONCRETE CAP OR FOOTING.

FOUNDATION NOTES:

FOR PILES, SEE SECTION 450 OF THE STANDARD SPECIFICATIONS.

PILES AT END BENT NO. 1 AND END BENT NO. 2 ARE DESIGNED FOR A FACTORED RESISTANCE OF 155 TONS PER PILE.

PILES AT BENT NO. 1 THROUGH BENT NO. 28 ARE DESIGNED FOR A FACTORED RESISTANCE OF 320, 320, 295, 320, 310, 340, 310, 340, 310, 340, 300, 300, 300, 150, 190, 330, 415, 290, 180, 180, 240, 240, 240, 240, 260, 280, 285 AND 310 TONS, RESPECTIVELY PER PILE.

DRIVE PILES AT END BENT NO. 1 AND END BENT NO. 2 TO A REQUIRED DRIVING RESISTANCE OF 200 TONS PER PILE.

DRIVE PILES AT BENT NO. 1 THROUGH BENT NO. 28 TO A REQUIRED DRIVING RESISTANCE OF 440, 450, 415, 415, 405, 440, 405, 440, 405, 445, 385, 385, 385, 220, 260, 460, 565, 400, 255, 255, 325, 325, 325, 325, 410, 400, 395 AND 425 TONS, RESPECTIVELY PER PILE.

INSTALL PILES AT BENT NO. 1 THROUGH BENT NO. 28 TO A TIP ELEVATION NO HIGHER THAN -27.0, -49.0, -49.0, -49.0, -49.0, -49.0, -49.0, -44.0, -42.0, -42.0, -65.0, -65.0, -60.0, -75.0, -80.0, -90.0, -105.0, -110.0, -85.0, -85.0, -90.0, -90.0, -90.0, -90.0, -69.0, -44.0, -60.0 AND -60.0 FT, RESPECTIVELY.

THE SCOUR CRITICAL ELEVATIONS FOR BENT NO. 1 THROUGH BENT NO. 28 ARE ELEVATION -17.0, -14.0, -14.0, -16.0, -14.0, -13.0, -11.0, -7.0, -7.0, -7.0, -12.0, -12.0, -17.0, -20.0, -22.0, -42.0, -61.0, -51.0, -45.0, -45.0, -42.0, -42.0, -42.0, -40.0, -28.0, -23.0, -19.0 AND -18.0 FT, RESPECTIVELY. SCOUR CRITICAL ELEVATIONS ARE USED TO MONITOR POSSIBLE SCOUR PROBLEMS DURING THE LIFE OF THE STRUCTURE.

IT HAS BEEN ESTIMATED THAT A HAMMER WITH AN EQUIVALENT RATED ENERGY IN THE RANGE OF 110-220 FT-KIPS PER BLOW WILL BE REQUIRED TO DRIVE PILES AT BENT NO. 1 THROUGH BENT NO. 28. THIS ESTIMATED ENERGY RANGE DOES NOT RELEASE THE CONTRACTOR FROM PROVIDING DRIVING EQUIPMENT IN ACCORDANCE WITH SUBARTICLE 450-3(D)(2) OF THE STANDARD SPECIFICATIONS.

TESTING THE FIRST PRODUCTION PILES WITH THE PILE DRIVING ANALYZER (PDA) DURING DRIVING, RESTRIKING OR REDRIVING IS REQUIRED BETWEEN BENT NO. 1 - BENT NO. 2, BENT NO. 3 - BENT NO. 6, BENT NO. 7 - BENT NO. 10, BENT NO. 11 - BENT NO. 13, BENT NO. 14 - BENT NO. 15, BENT NO. 16 - BENT NO. 17, BENT NO. 18, BENT NO. 19 - BENT NO. 20, BENT NO. 21 - BENT NO. 25 AND BENT NO. 26 - BENT NO. 28. FOR PDA TESTING, SEE SECTION 450 OF THE STANDARD SPECIFICATIONS.

OBSERVE A 4 MONTH WAITING PERIOD AFTER CONSTRUCTING THE EMBANKMENT TO WITHIN 2 FT OF FINISHED GRADE BEFORE BEGINNING END BENT CONSTRUCTION AT END BENT NO. 2.

FOR EMBANKMENT MONITORING AT END BENT NO. 2, SEE ROADWAY PLANS.

STATIC AXIAL COMPRESSIVE LOAD TEST IS REQUIRED ON A NON-PRODUCTION PILE AT STA. 45+89.00± -L- 30 FT LEFT BETWEEN BENT NO. 14 AND BENT NO. 15. FOR STATIC AXIAL COMPRESSIVE LOAD TEST, SEE STATIC AXIAL COMPRESSIVE LOAD TEST SPECIAL PROVISION.

WHEN THE ENGINEER REQUIRES RESTRIKES OR REDRIVES, THE TIME TO WAIT WILL BE UP TO 72 HOURS.

PREDRILLING FOR PILES IS REQUIRED AT END BENT NO. 2. PREDRILL PILE LOCATIONS THROUGH THE FILL AND THE HIGH STRENGTH GEOTEXTILE TO ELEVATION 3.5 FT WITH EQUIPMENT THAT WILL RESULT IN A MAXIMUM PREDRILLING DIAMETER OF 20". FOR PREDRILLING FOR PILES, SEE SECTION 450 OF THE STANDARD SPECIFICATIONS.

PROJECT NO. R-3307
CARTERET COUNTY
STATION: 46+21.50 -L-

SHEET 4 OF 4

STATE OF NORTH CAROLINA
DEPARTMENT OF TRANSPORTATION
RALEIGH

GENERAL DRAWING

FOUNDATION LAYOUT

NORTH CAROLINA PROFESSIONAL SEAL 25911 ENGINEER DWAIN G. HATHAWAY 11-7-2013

NORTH CAROLINA PROFESSIONAL SEAL 033752 ENGINEER SETH A. DENNEY 11/07/13

THE LPA GROUP of North Carolina TRANSPORTATION CONSULTANTS

THE LPA GROUP of North Carolina
8000 Regency Parkway, Suite 600
Cary, North Carolina 27518
NC License No. : F-1084

REVISIONS								SHEET NO.
NO.	BY:	DATE:	NO.	BY:	DATE:			S-13
1			3					TOTAL SHEETS
2			4					333

DRAWN BY : J. N. AUSTIN DATE : 1-10-12
CHECKED BY : S. A. DENNEY DATE : 1-12-12

DWG. 14 OF 282

11/7/2013
3:38:40 PM
User: jaustin
Filename: Y:\Projects\NCDOT\R-3307\Dwgs\Final\R-3307_014_SD_FL4.dgn

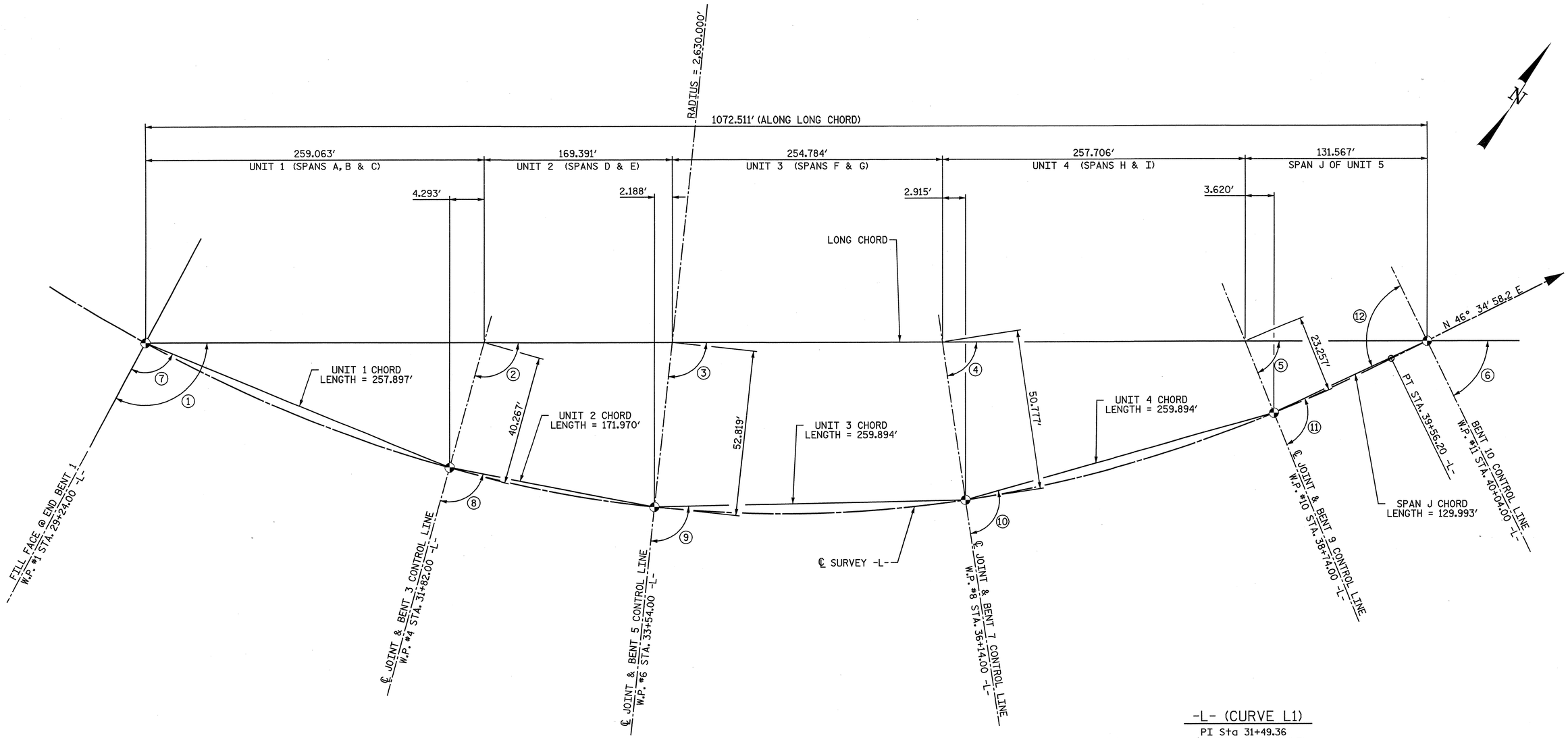

-L- (CURVE L1)

PI Sta 31+49.36
△ = 36° 26' 02.2" (LT)
D = 2° 10' 42.8"
L = 1672.40'
T = 865.56'
R = 2630.00'

LONG CHORD LAYOUT FOR UNITS 1 TO 5 (SPAN J)

ALL BENTS IN CURVE ARE RADIAL.
FOR UNIT CHORD LAYOUTS, SEE FOLLOWING SHEETS.

ANGLES					
1	101°-44'-29"	(TO LONG CHORD)	7	92°-48'-37"	(TO SHORT CHORD)
2	96°-07'-15"	(TO LONG CHORD)	8	91°-52'-25"	(TO SHORT CHORD)
3	92°-22'-25"	(TO LONG CHORD)	9	92°-49'-56"	(TO SHORT CHORD)
4	86°-42'-34"	(TO LONG CHORD)	10	92°-49'-56"	(TO SHORT CHORD)
5	81°-02'-43"	(TO LONG CHORD)	11	91°-13'-29"	(TO SHORT CHORD)
6	79°-15'-16"	(TO LONG CHORD)	12	89°-26'-02"	(TO SHORT CHORD)

COORDINATES		
WORK POINT	NORTH	EAST
#1	362,166.4302	2,698,673.2785
#11	362,745.3973	2,699,576.0947

PROJECT NO. R-3307
CARTERET COUNTY
STATION: 46+21.50 -L-

SHEET 1 OF 11

STATE OF NORTH CAROLINA
DEPARTMENT OF TRANSPORTATION
RALEIGH

GENERAL DRAWING

LONG CHORD LAYOUT

NORTH CAROLINA PROFESSIONAL SEAL 25911 ENGINEER IRWIN G. HATHMAN 4-5-2012

NORTH CAROLINA PROFESSIONAL SEAL 033752 ENGINEER SETH A. DENNEY 04/05/12

THE LPA GROUP of North Carolina TRANSPORTATION CONSULTANTS

THE LPA GROUP of North Carolina
8000 Regency Parkway, Suite 600
Cary, North Carolina 27518
NC License No.: F-1084

REVISIONS						SHEET NO.
NO.	BY:	DATE:	NO.	BY:	DATE:	S-14
1			3			TOTAL SHEETS
2			4			333

DWG. 15 OF 282

DRAWN BY : N. B. SPEAKS DATE : 5-2-11
CHECKED BY : M.D.M. / J.N.A. DATE : 6-8-11

4/2/2012
12:39: PM
User: jaustin
Filename: Y:\Projects\NCDOT\R-3307\Dwgs\Final\R-3307_015_SD_LC01.dgn

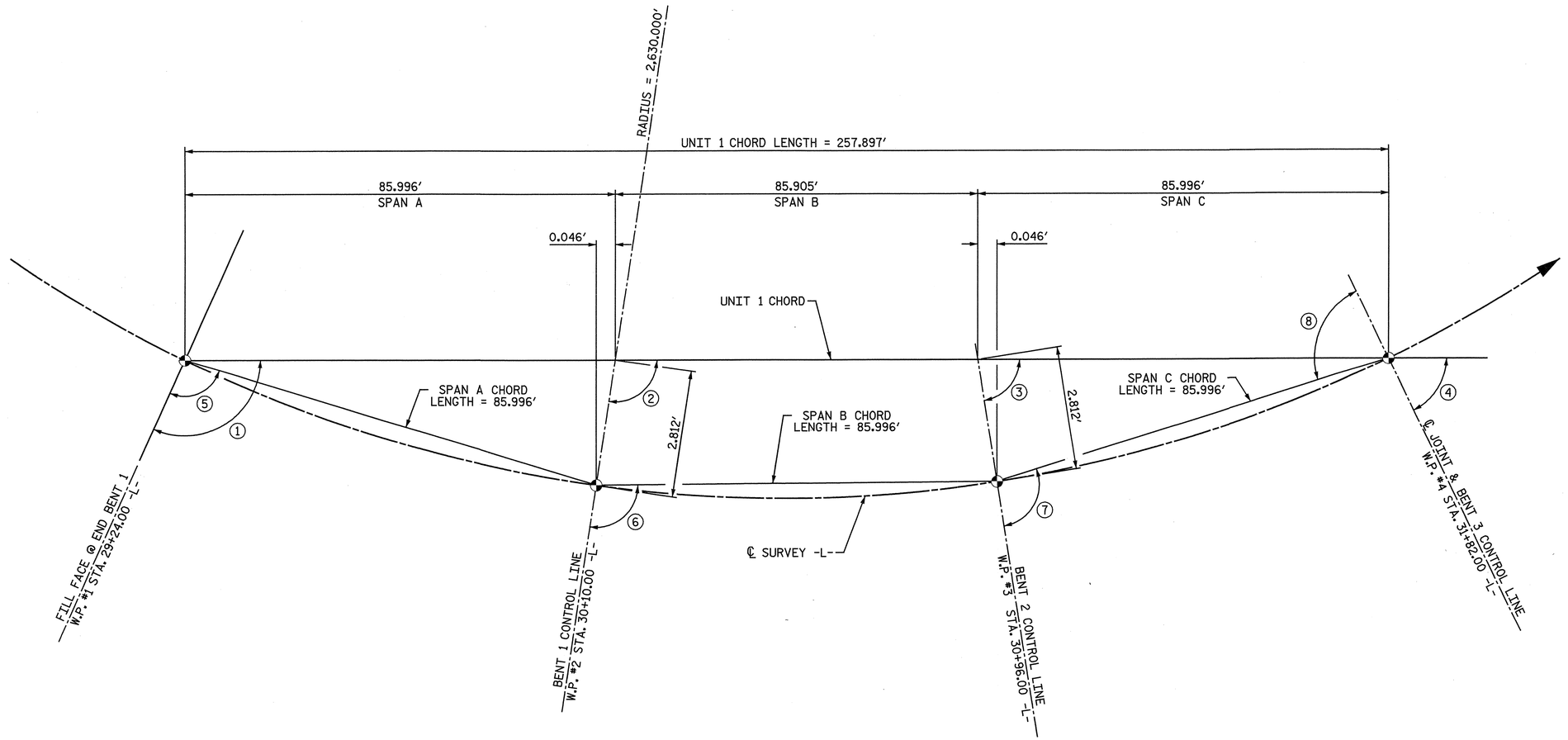

LONG CHORD LAYOUT FOR UNIT 1

ALL BENTS IN CURVE ARE RADIAL.

-L- (CURVE L1)

PI Sta 31+49.36
△ = 36° 26' 02.2" (LT)
D = 2° 10' 42.8"
L = 1672.40'
T = 865.56'
R = 2630.00'

ANGLES					
①	92°-48'-37"	(TO LONG CHORD)	⑤	90°-56'-12"	(TO SHORT CHORD)
②	90°-56'-12"	(TO LONG CHORD)	⑥	90°-56'-12"	(TO SHORT CHORD)
③	89°-03'-48"	(TO LONG CHORD)	⑦	90°-56'-12"	(TO SHORT CHORD)
④	87°-11'-23"	(TO LONG CHORD)	⑧	89°-03'-48"	(TO SHORT CHORD)

PROJECT NO. R-3307
CARTERET COUNTY
STATION: 46+21.50 -L-

SHEET 2 OF 11

STATE OF NORTH CAROLINA
DEPARTMENT OF TRANSPORTATION
RALEIGH

GENERAL DRAWING

LONG CHORD LAYOUT

NORTH CAROLINA PROFESSIONAL SEAL 25911 ENGINEER DUANE G. HATHAWAY 4-3-2012

NORTH CAROLINA PROFESSIONAL SEAL 033752 ENGINEER SETH A. DENNEY

THE LPA GROUP of North Carolina
TRANSPORTATION CONSULTANTS

THE LPA GROUP of North Carolina
8000 Regency Parkway, Suite 600
Cary, North Carolina 27518
NC License No.: F-1084

REVISIONS						SHEET NO.
NO.	BY:	DATE:	NO.	BY:	DATE:	S-15
1			3			TOTAL SHEETS
2			4			333

DRAWN BY : N. B. SPEAKS DATE : 5-2-11
CHECKED BY : M.D.M. / J.N.A. DATE : 6-8-11

DWG. 16 OF 282

4/2/2012
12:39: PM
User: jaustin
Filename: Y:\Projects\NCDOT\R-3307\Dwgs\Final\R-3307_016_SD_LC02.dgn

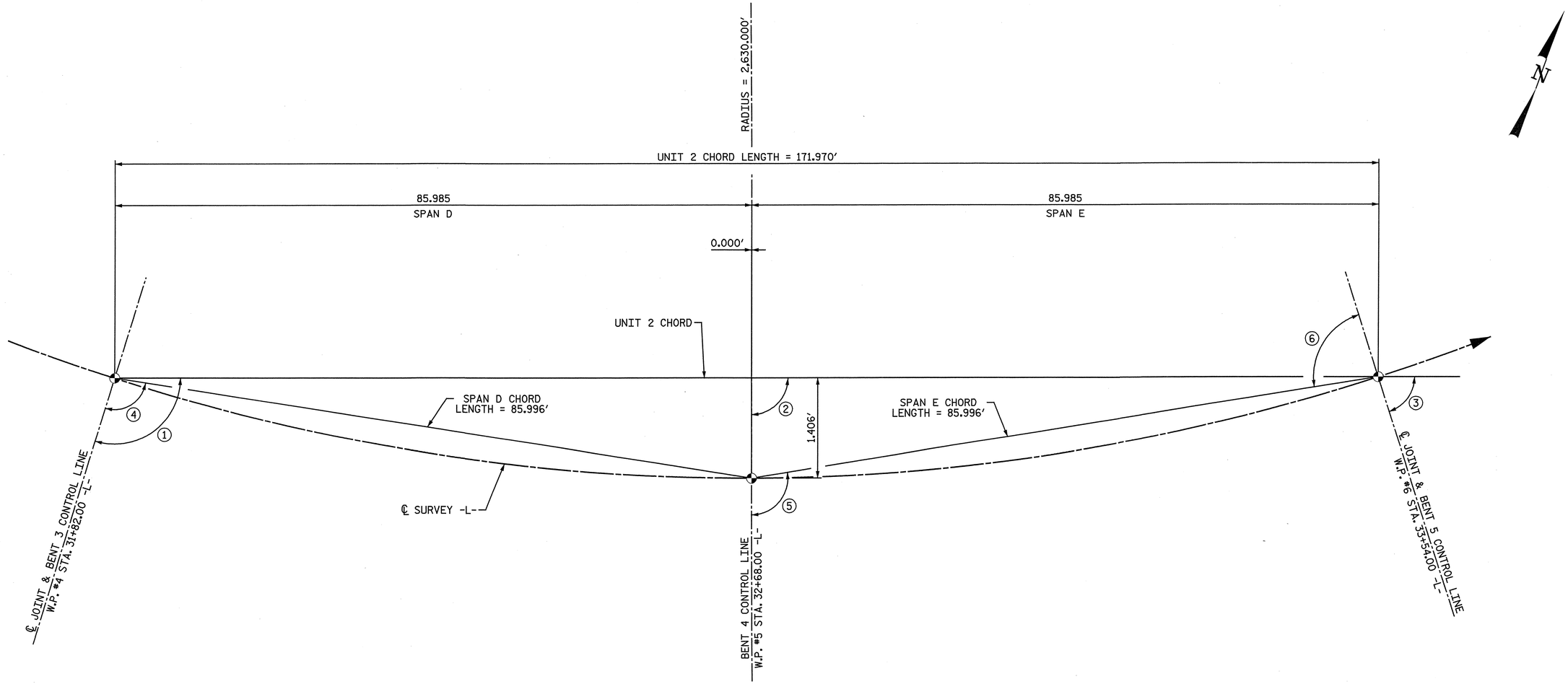

LONG CHORD LAYOUT FOR UNIT 2

ALL BENTS IN CURVE ARE RADIAL.

-L- (CURVE L1)

PI Sta 31+49.36
△ = 36° 26' 02.2" (LT)
D = 2° 10' 42.8"
L = 1672.40'
T = 865.56'
R = 2630.00'

ANGLES					
①	91°-52'-25"	(TO LONG CHORD)	④	90°-56'-12"	(TO SHORT CHORD)
②	90°-00'-00"	(TO LONG CHORD)	⑤	90°-56'-12"	(TO SHORT CHORD)
③	88°-07'-35"	(TO LONG CHORD)	⑥	89°-03'-48"	(TO SHORT CHORD)

PROJECT NO. R-3307
CARTERET COUNTY
STATION: 46+21.50 -L-

SHEET 3 OF 11

STATE OF NORTH CAROLINA
DEPARTMENT OF TRANSPORTATION
RALEIGH

GENERAL DRAWING

LONG CHORD LAYOUT

NORTH CAROLINA PROFESSIONAL SEAL 25911 ENGINEER DWAIN C. HATHAWAY 4-3-2012

NORTH CAROLINA PROFESSIONAL SEAL 033752 ENGINEER SETH A. DENNEY 4/06/12

THE LPA GROUP of North Carolina
TRANSPORTATION CONSULTANTS

THE LPA GROUP of North Carolina
8000 Regency Parkway, Suite 600
Cary, North Carolina 27518
NC License No.: F-1084

REVISIONS						SHEET NO.
NO.	BY:	DATE:	NO.	BY:	DATE:	S-16
1			3			TOTAL SHEETS
2			4			333

DRAWN BY : N. B. SPEAKS DATE : 5-2-11
CHECKED BY : M.D.M. / J.N.A. DATE : 6-8-11

DWG. 17 OF 282

4/2/2012
12:39: PM
User: jaustin
Filename: Y:\Projects\NCDOT\R-3307\Dwgs\Final\R-3307_017_SD_LC03.dgn

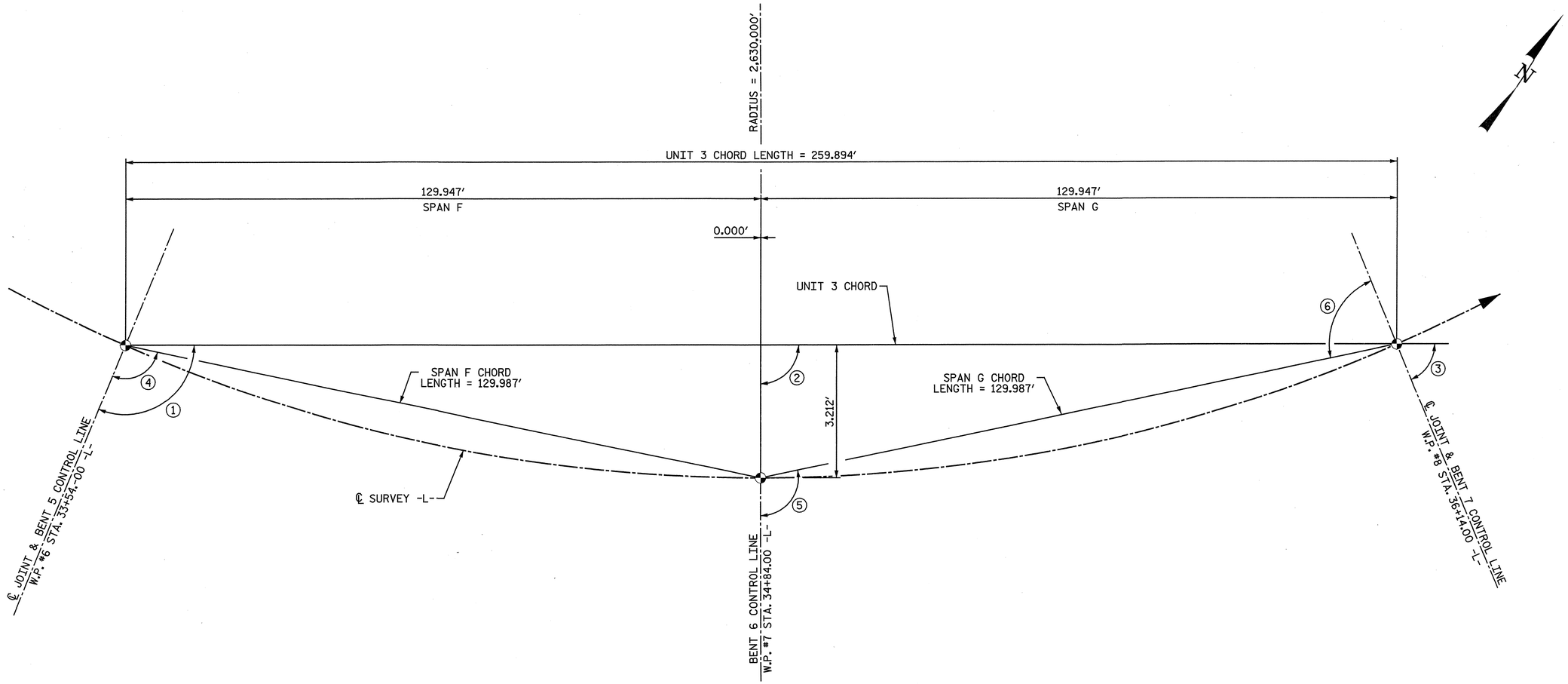

-L- (CURVE L1)

PI Sta 31+49.36
△ = 36° 26' 02.2" (LT)
D = 2° 10' 42.8"
L = 1672.40'
T = 865.56'
R = 2630.00'

LONG CHORD LAYOUT FOR UNIT 3

ALL BENTS IN CURVE ARE RADIAL.

ANGLES			
①	92°-49'-56" (TO LONG CHORD)	④	91°-24'-58" (TO SHORT CHORD)
②	90°-00'-00" (TO LONG CHORD)	⑤	91°-24'-58" (TO SHORT CHORD)
③	87°-10'-04" (TO LONG CHORD)	⑥	88°-35'-02" (TO SHORT CHORD)

PROJECT NO. R-3307
CARTERET COUNTY
STATION: 46+21.50 -L-

SHEET 4 OF 11

STATE OF NORTH CAROLINA
DEPARTMENT OF TRANSPORTATION
RALEIGH

GENERAL DRAWING

LONG CHORD LAYOUT

NORTH CAROLINA PROFESSIONAL SEAL 2591 ENGINEER DWIN C. WATHANEY 4-3-2012

NORTH CAROLINA PROFESSIONAL SEAL 033752 ENGINEER SETH A. DENNEY

THE LPA GROUP of North Carolina
TRANSPORTATION CONSULTANTS

THE LPA GROUP of North Carolina
8000 Regency Parkway, Suite 600
Cary, North Carolina 27518
NC License No.: F-1084

REVISIONS							SHEET NO.
NO.	BY:	DATE:	NO.	BY:	DATE:		S-17
1			3				TOTAL SHEETS
2			4				333

DRAWN BY : N. B. SPEAKS DATE : 5-2-11
CHECKED BY : M.D.M. / J.N.A. DATE : 6-8-11

DWG. 18 OF 282

4/2/2012
12:39:[illegible] PM
User: jaustin
Filename: Y:\Projects\NCDOT\R-3307\Dwge\Final\R-3307_018_SD_LC04.dgn

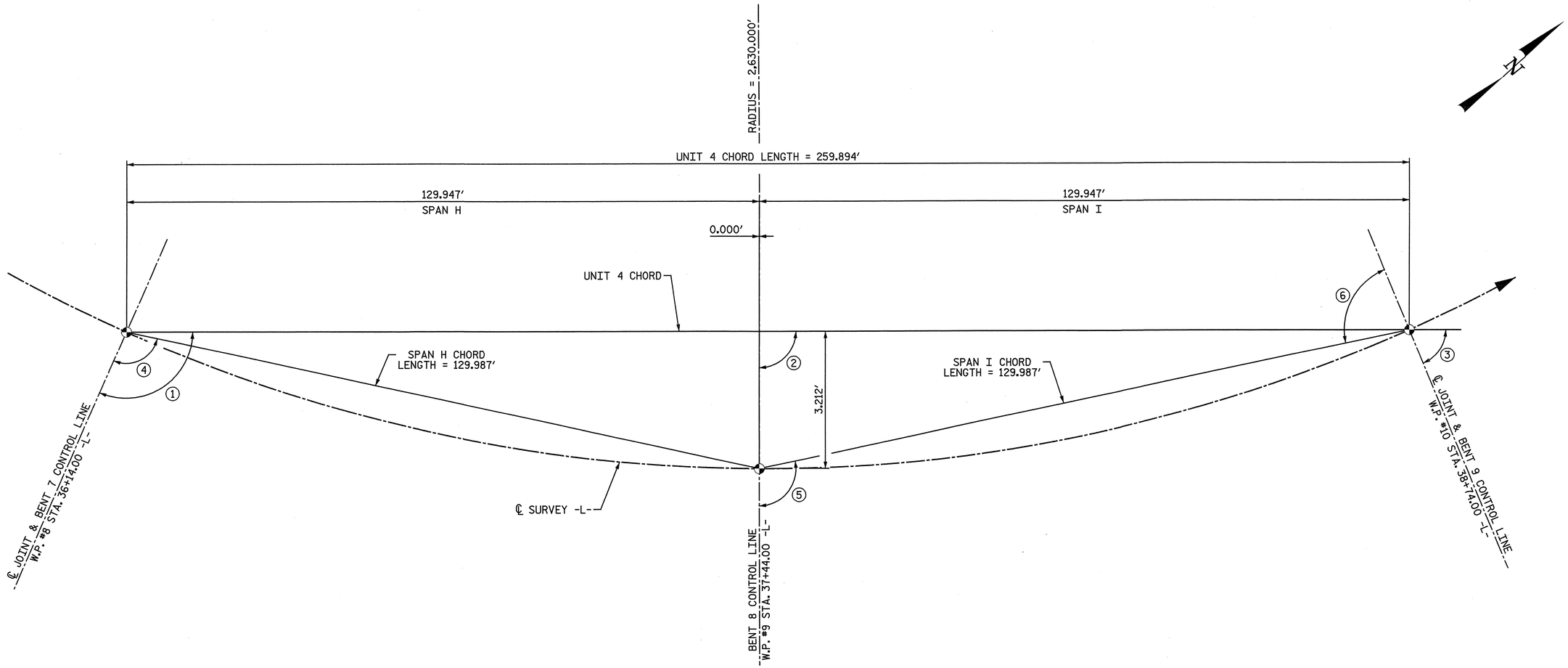

-L- (CURVE L1)

PI Sta 31+49.36
△ = 36° 26' 02.2" (LT)
D = 2° 10' 42.8"
L = 1672.40'
T = 865.56'
R = 2630.00'

LONG CHORD LAYOUT FOR UNIT 4

ALL BENTS IN CURVE ARE RADIAL.

ANGLES			
①	92°-49'-56" (TO LONG CHORD)	④	91°-24'-58" (TO SHORT CHORD)
②	90°-00'-00" (TO LONG CHORD)	⑤	91°-24'-58" (TO SHORT CHORD)
③	87°-10'-04" (TO LONG CHORD)	⑥	88°-35'-02" (TO SHORT CHORD)

PROJECT NO. R-3307
CARTERET COUNTY
STATION: 46+21.50 -L-

SHEET 5 OF 11

STATE OF NORTH CAROLINA
DEPARTMENT OF TRANSPORTATION
RALEIGH

GENERAL DRAWING

LONG CHORD LAYOUT

NORTH CAROLINA PROFESSIONAL SEAL 25911 ENGINEER DAVID G. HATHWAY 4-3-2012

NORTH CAROLINA PROFESSIONAL SEAL 033752 ENGINEER SETH A. DENNICK 04/05/12

THE LPA GROUP of North Carolina TRANSPORTATION CONSULTANTS

THE LPA GROUP of North Carolina
8000 Regency Parkway, Suite 600
Cary, North Carolina 27518
NC License No.: F-1084

REVISIONS						SHEET NO.
NO.	BY:	DATE:	NO.	BY:	DATE:	S-18
1			3			TOTAL SHEETS
2			4			333

DRAWN BY : N. B. SPEAKS DATE : 5-2-11
CHECKED BY : M.D.M. / J.N.A. DATE : 6-8-11

DWG. 19 OF 282

4/2/2012
12:39: PM
User: justin
Filename: Y:\Projects\NCDOT\R-3307\Dwgs\Final\R-3307_019_SD_LC05.dgn

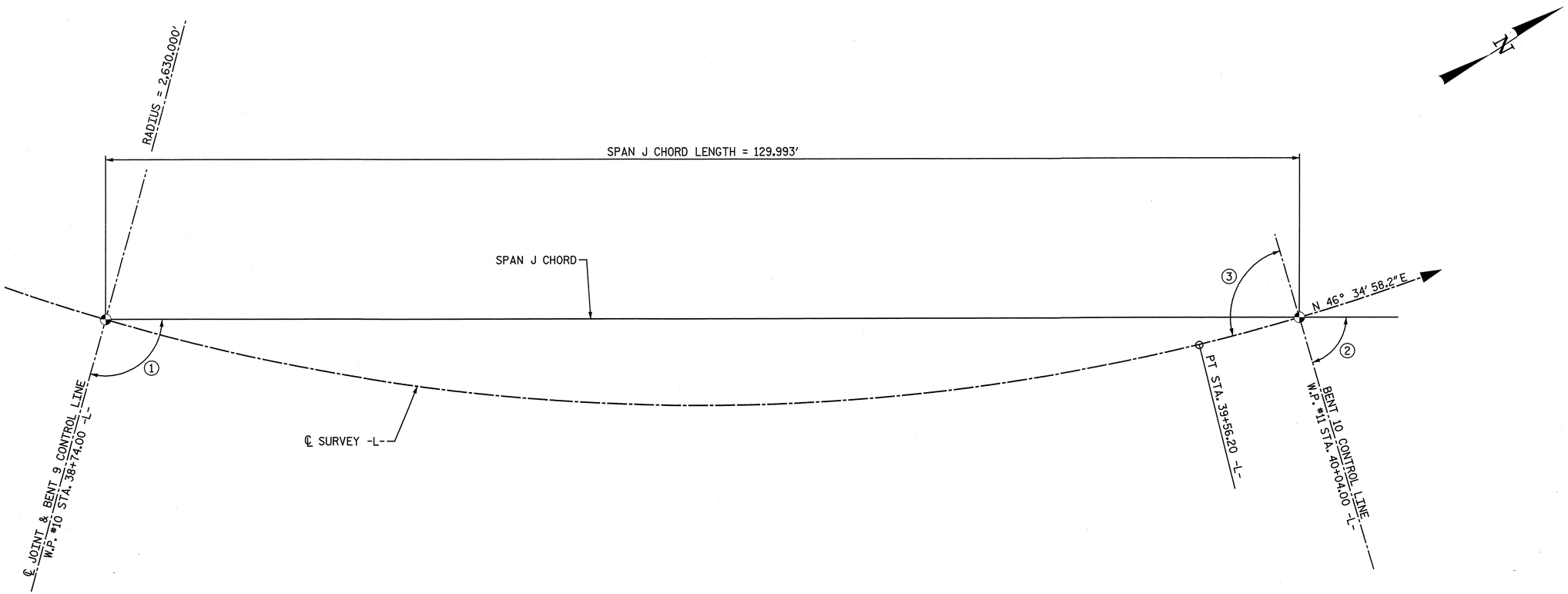

LONG CHORD LAYOUT FOR SPAN J

ALL BENTS IN CURVE ARE RADIAL.

ANGLES	
①	91°-13'-29" (TO SPAN J CHORD)
②	89°-26'-02" (TO SPAN J CHORD)
③	90°-00'-00"

-L- (CURVE L1)

PI Sta 31+49.36
△ = 36° 26' 02.2" (LT)
D = 2° 10' 42.8"
L = 1672.40'
T = 865.56'
R = 2630.00'

PROJECT NO. R-3307
CARTERET COUNTY
STATION: 46+21.50 -L-

SHEET 6 OF 11

STATE OF NORTH CAROLINA
DEPARTMENT OF TRANSPORTATION
RALEIGH

GENERAL DRAWING

LONG CHORD LAYOUT

NORTH CAROLINA PROFESSIONAL SEAL 25911 ENGINEER DWIN G. HATHAWAY 4-3-2012

NORTH CAROLINA PROFESSIONAL SEAL 033752 ENGINEER SETH A. DENNEY 04/03/12

THE LPA GROUP of North Carolina
TRANSPORTATION CONSULTANTS

THE LPA GROUP of North Carolina
8000 Regency Parkway, Suite 600
Cary, North Carolina 27518
NC License No.: F-1084

REVISIONS						SHEET NO.
NO.	BY:	DATE:	NO.	BY:	DATE:	S-19
1			3			TOTAL SHEETS
2			4			333

DRAWN BY : N. B. SPEAKS DATE : 5-2-11
CHECKED BY : M.D.M. / J.N.A. DATE : 6-8-11

DWG. 20 OF 282

4/2/2012
12:39:4 PM
User: jaustin
Filename: Y:\Projects\NCDOT\R-3307\Dwgs\Final\R-3307_020_SD_LC06.dgn

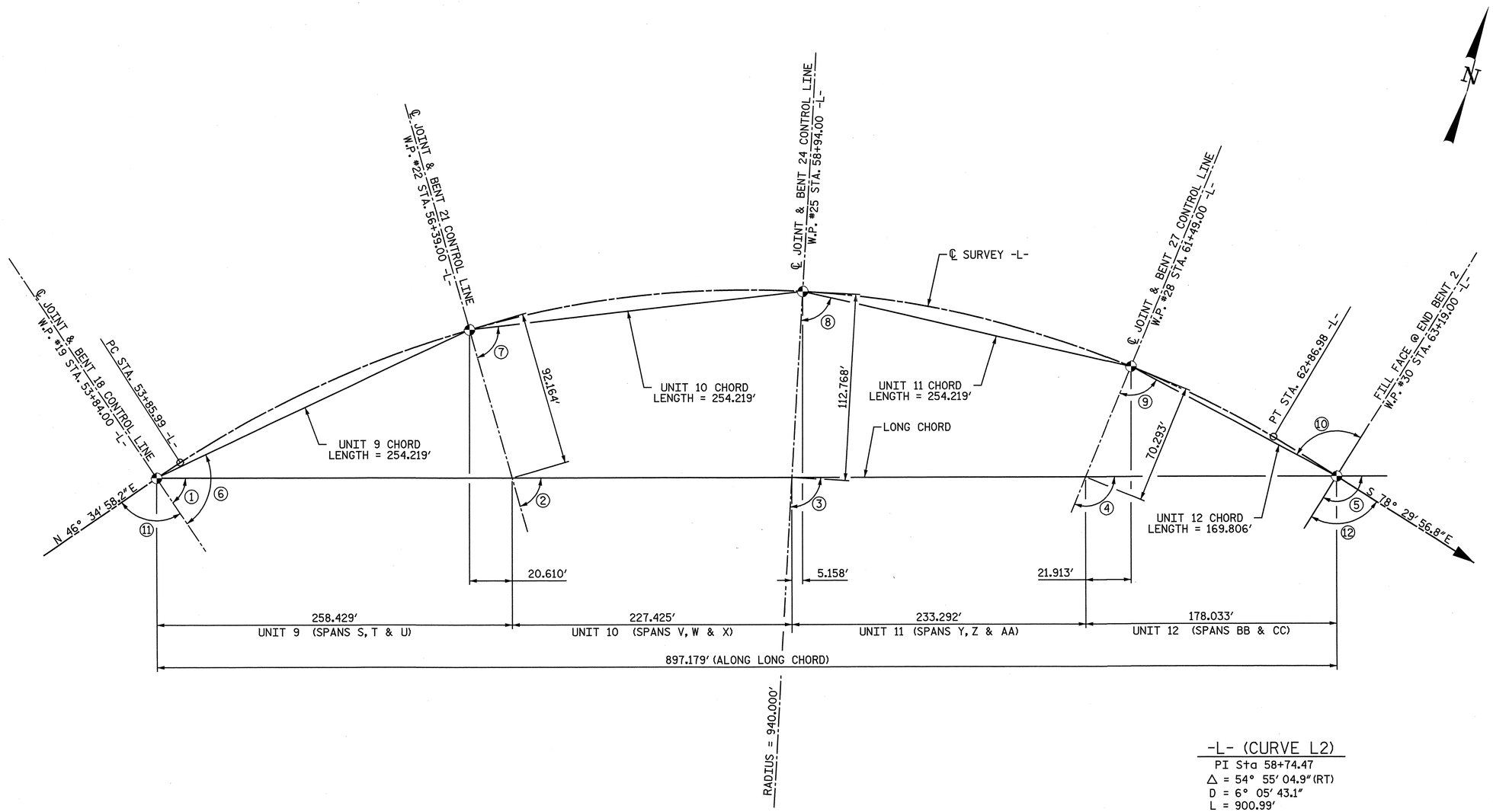

LONG CHORD LAYOUT FOR UNITS 9 TO 12

ALL BENTS IN CURVE ARE RADIAL.
FOR UNIT CHORD LAYOUTS, SEE FOLLOWING SHEETS.

-L- (CURVE L2)

PI Sta 58+74.47
Δ = 54° 55' 04.9" (RT)
D = 6° 05' 43.1"
L = 900.99'
T = 488.48'
R = 940.00'

ANGLES			
①	61°-39'-25" (TO LONG CHORD)	⑦	82°-13'-43" (TO SHORT CHORD)
②	77°-04'-02" (TO LONG CHORD)	⑧	82°-13'-43" (TO SHORT CHORD)
③	92°-37'-17" (TO LONG CHORD)	⑨	85°-00'-09" (TO SHORT CHORD)
④	108°-09'-52" (TO LONG CHORD)	⑩	93°-24'-47" (TO SHORT CHORD)
⑤	116°-34'-30" (TO LONG CHORD)	⑪	90°-00'-00"
⑥	82°-20'-59" (TO SHORT CHORD)	⑫	90°-00'-00"

COORDINATES		
WORK POINT	NORTH	EAST
#19	363,693.8784	2,700,578.4836
#30	363,927.2059	2,701,444.7912

PROJECT NO. R-3307
CARTERET COUNTY
STATION: 46+21.50 -L-

SHEET 7 OF 11

STATE OF NORTH CAROLINA
DEPARTMENT OF TRANSPORTATION
RALEIGH

GENERAL DRAWING

LONG CHORD LAYOUT

NORTH CAROLINA PROFESSIONAL SEAL 25911 ENGINEER DWAIN G. HATHWAY 7-3-2012

NORTH CAROLINA PROFESSIONAL SEAL 033752 ENGINEER KEITH A. DENNEY 8/30/12

THE LPA GROUP of North Carolina TRANSPORTATION CONSULTANTS

THE LPA GROUP of North Carolina
8000 Regency Parkway, Suite 600
Cary, North Carolina 27518
NC License No.: F-1084

REVISIONS						SHEET NO.
NO.	BY:	DATE:	NO.	BY:	DATE:	S-20
1			3			TOTAL SHEETS
2			4			333

DRAWN BY : N. B. SPEAKS DATE : 5-2-11
CHECKED BY : M.D.M. / J.N.A. DATE : 6-8-11

DWG. 21 OF 282

4/2/2012 12:39:[illegible] PM
User: jdustin
Filename: Y:\Projects\NCDOT\R-3307\Dwgs\Final\R-3307_021_SD_LC07.dgn

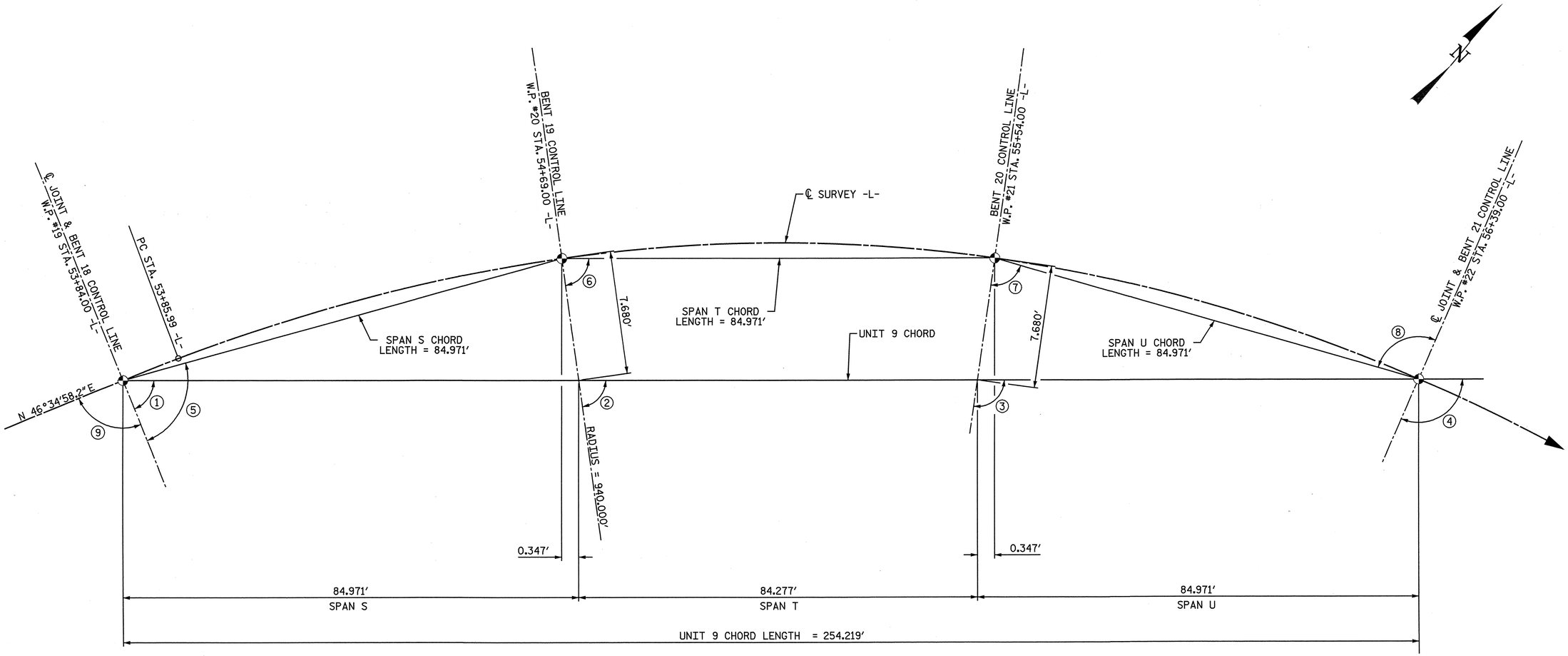

LONG CHORD LAYOUT FOR UNIT 9

ALL BENTS IN CURVE ARE RADIAL.

-L- (CURVE L2)

PI Sta 58+74.47
Δ = 54° 55' 04.9" (RT)
D = 6° 05' 43.1"
L = 900.99'
T = 488.48'
R = 940.00'

ANGLES			
①	82°-20'-59" (TO LONG CHORD)	⑥	87°-24'-34" (TO SHORT CHORD)
②	87°-24'-33" (TO LONG CHORD)	⑦	87°-24'-34" (TO SHORT CHORD)
③	92°-35'-24" (TO LONG CHORD)	⑧	92°-35'-26" (TO SHORT CHORD)
④	97°-46'-16" (TO LONG CHORD)	⑨	90°-00'-00"
⑤	87°-31'-47" (TO SHORT CHORD)		

PROJECT NO. R-3307
CARTERET COUNTY
STATION: 46+21.50 -L-

SHEET 8 OF 11

STATE OF NORTH CAROLINA
DEPARTMENT OF TRANSPORTATION
RALEIGH

GENERAL DRAWING

LONG CHORD LAYOUT

NORTH CAROLINA PROFESSIONAL SEAL 25911 ENGINEER DWAIN G. HATHWAY 4-3-2012

NORTH CAROLINA PROFESSIONAL SEAL 033752 ENGINEER SETH A. DENNEY 11/08/12

THE LPA GROUP of North Carolina
TRANSPORTATION CONSULTANTS

THE LPA GROUP of North Carolina
8000 Regency Parkway, Suite 600
Cary, North Carolina 27518
NC License No.: F-1084

REVISIONS						SHEET NO.
NO.	BY:	DATE:	NO.	BY:	DATE:	8-21
1			3			TOTAL SHEETS
2			4			333

DRAWN BY : N. B. SPEAKS DATE : 5-2-11
CHECKED BY : M.D.M. / J.N.A. DATE : 6-8-11

DWG. 22 OF 282

4/2/2012
12:39: PM
User: jaustin
Filename: Y:\Projects\NCDOT\R-3307\Dwgs\Final\R-3307_022_SD_LC08.dgn

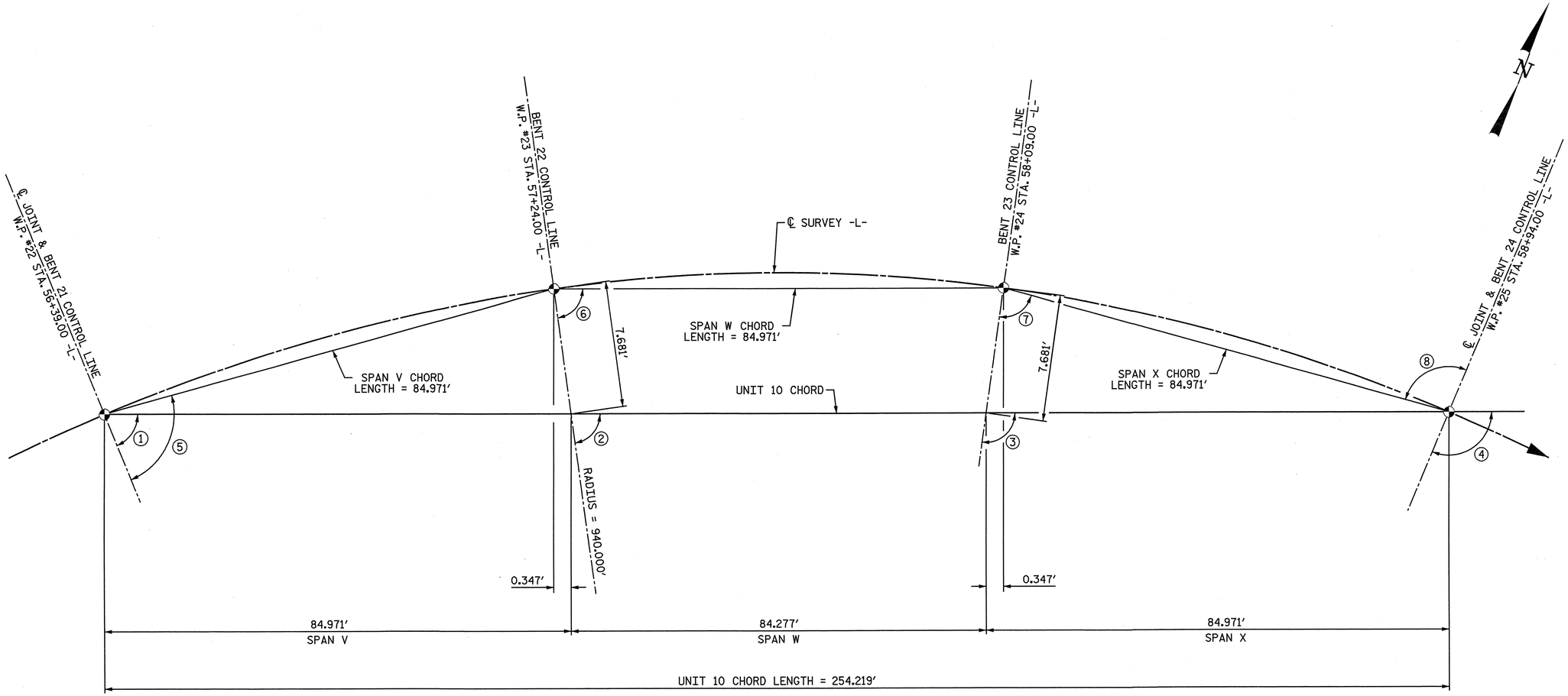

LONG CHORD LAYOUT FOR UNIT 10

ALL BENTS IN CURVE ARE RADIAL.

-L- (CURVE L2)

PI Sta 58+74.47
△ = 54° 55′ 04.9″ (RT)
D = 6° 05′ 43.1″
L = 900.99′
T = 488.48′
R = 940.00′

ANGLES					
①	82°-13′-43″	(TO LONG CHORD)	⑤	87°-24′-34″	(TO SHORT CHORD)
②	87°-24′-34″	(TO LONG CHORD)	⑥	87°-24′-34″	(TO SHORT CHORD)
③	92°-35′-26″	(TO LONG CHORD)	⑦	87°-24′-34″	(TO SHORT CHORD)
④	97°-46′-17″	(TO LONG CHORD)	⑧	92°-35′-26″	(TO SHORT CHORD)

PROJECT NO. R-3307
CARTERET COUNTY
STATION: 46+21.50 -L-

SHEET 9 OF 11

STATE OF NORTH CAROLINA
DEPARTMENT OF TRANSPORTATION
RALEIGH

GENERAL DRAWING

LONG CHORD LAYOUT

NORTH CAROLINA PROFESSIONAL SEAL 25911 ENGINEER DWAIN G. HATHAWAY 4-5-2012

NORTH CAROLINA PROFESSIONAL SEAL 033752 ENGINEER SETH A. DENNEY

THE LPA GROUP of North Carolina
TRANSPORTATION CONSULTANTS

THE LPA GROUP of North Carolina
8000 Regency Parkway, Suite 600
Cary, North Carolina 27518
NC License No.: F-1084

REVISIONS							SHEET NO.
NO.	BY:	DATE:	NO.	BY:	DATE:		S-22
1			3				TOTAL SHEETS
2			4				333

DRAWN BY : N. B. SPEAKS DATE : 5-2-11
CHECKED BY : M.D.M. / J.N.A. DATE : 6-8-11

DWG. 23 OF 282

4/2/2012
12:39: PM
User: jaustin
Filename: Y:\Projects\NCDOT\R-3307\Dwgs\Final\R-3307_023_SD_LC09.dgn

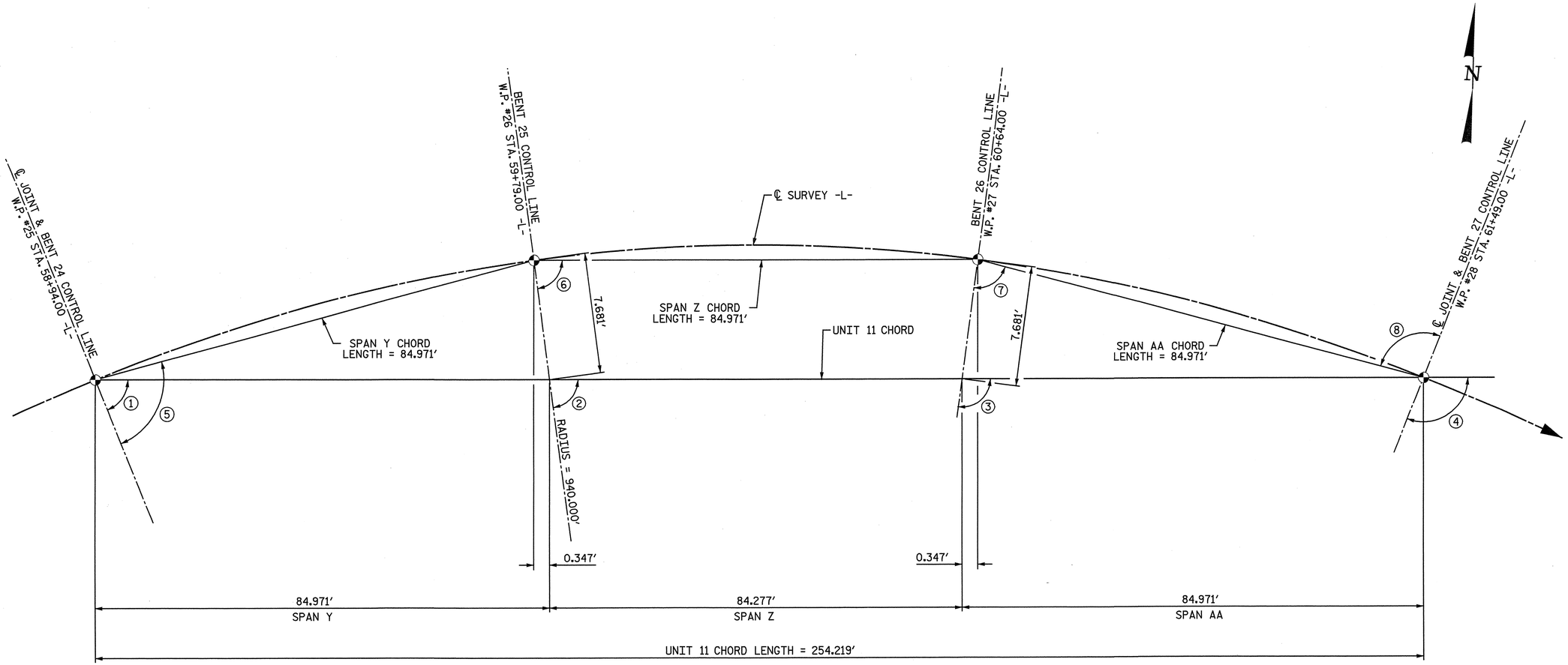

LONG CHORD LAYOUT FOR UNIT 11

ALL BENTS IN CURVE ARE RADIAL.

-L- (CURVE L2)

PI Sta 58+74.47
△ = 54° 55′ 04.9″ (RT)
D = 6° 05′ 43.1″
L = 900.99′
T = 488.48′
R = 940.00′

ANGLES					
①	82°-13′-43″	(TO LONG CHORD)	⑤	87°-24′-34″	(TO SHORT CHORD)
②	87°-24′-34″	(TO LONG CHORD)	⑥	87°-24′-34″	(TO SHORT CHORD)
③	92°-35′-26″	(TO LONG CHORD)	⑦	87°-24′-34″	(TO SHORT CHORD)
④	97°-46′-17″	(TO LONG CHORD)	⑧	92°-35′-26″	(TO SHORT CHORD)

PROJECT NO. R-3307
CARTERET COUNTY
STATION: 46+21.50 -L-

SHEET 10 OF 11

STATE OF NORTH CAROLINA
DEPARTMENT OF TRANSPORTATION
RALEIGH

GENERAL DRAWING

LONG CHORD LAYOUT

NORTH CAROLINA PROFESSIONAL SEAL 25911 ENGINEER DWAIN G. HATHWAY 4-3-2012

NORTH CAROLINA PROFESSIONAL SEAL 033752 ENGINEER SETH A. DENNEY

THE LPA GROUP of North Carolina TRANSPORTATION CONSULTANTS

THE LPA GROUP of North Carolina
8000 Regency Parkway, Suite 600
Cary, North Carolina 27518
NC License No.: F-1084

REVISIONS						SHEET NO.
NO.	BY:	DATE:	NO.	BY:	DATE:	S-23
1			3			TOTAL SHEETS
2			4			333

DRAWN BY : N. B. SPEAKS DATE : 5-2-11
CHECKED BY : M.D.M. / J.N.A. DATE : 6-8-11

DWG. 24 OF 282

4/2/2012
12:39:4 PM
User: jaustin
Filename: Y:\Projects\NCDOT\R-3307\Dwgs\Final\R-3307_024_SD_LC10.dgn

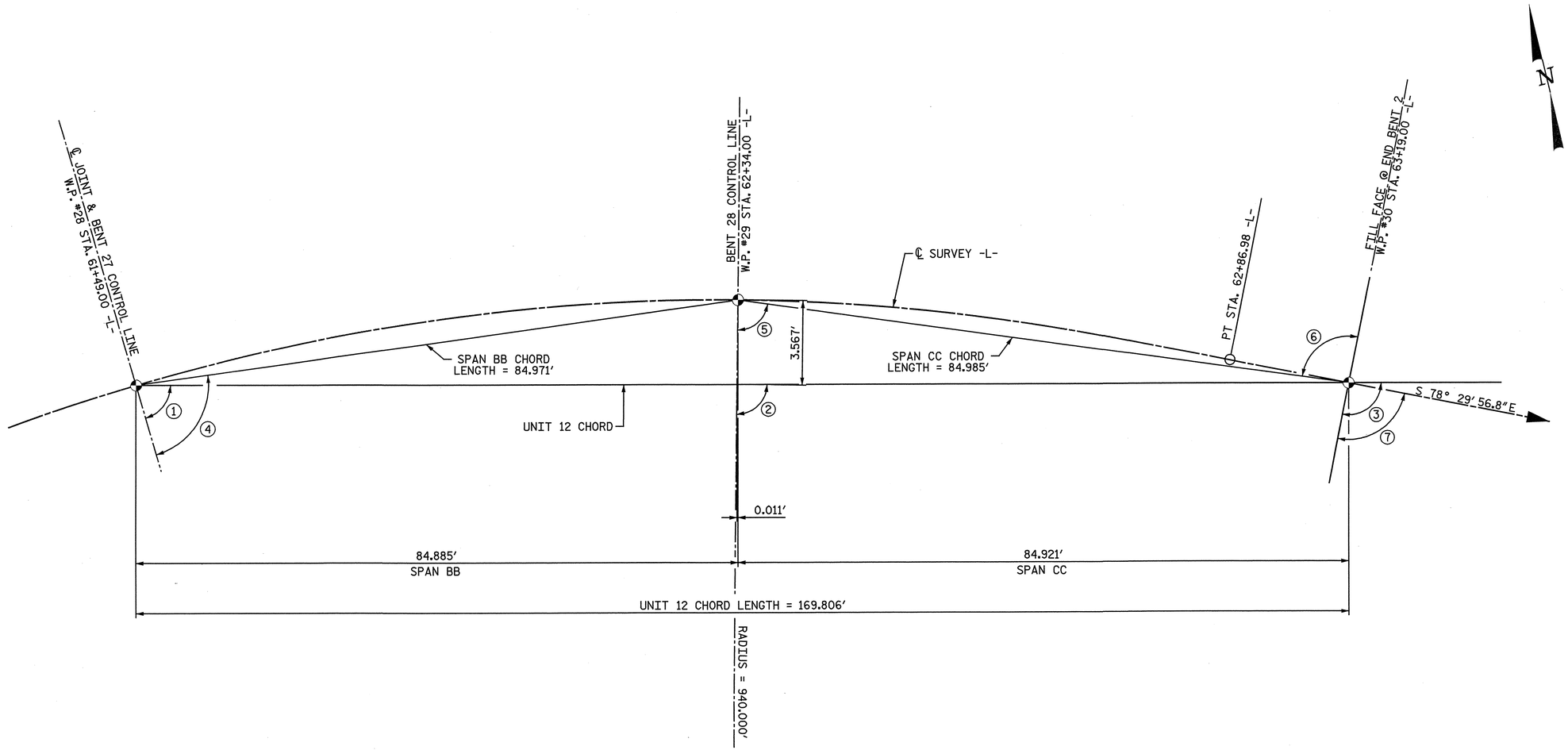

LONG CHORD LAYOUT FOR UNIT 12

ALL BENTS IN CURVE ARE RADIAL.

-L- (CURVE L2)

PI Sta 58+74.47
△ = 54° 55′ 04.9″(RT)
D = 6° 05′ 43.1″
L = 900.99′
T = 488.48′
R = 940.00′

ANGLES			
①	85°-00′-09″ (TO LONG CHORD)	⑤	87°-46′-37″ (TO SHORT CHORD)
②	90°-11′-01″ (TO LONG CHORD)	⑥	91°-00′-24″ (TO SHORT CHORD)
③	93°-24′-47″ (TO LONG CHORD)	⑦	90°-00′-00″
④	87°-24′-34″ (TO SHORT CHORD)		

PROJECT NO. R-3307
CARTERET COUNTY
STATION: 46+21.50 -L-

SHEET 11 OF 11

STATE OF NORTH CAROLINA
DEPARTMENT OF TRANSPORTATION
RALEIGH

GENERAL DRAWING

LONG CHORD LAYOUT

NORTH CAROLINA PROFESSIONAL SEAL 25911 ENGINEER DWAIN G. HATHAWAY 4-3-2012

NORTH CAROLINA PROFESSIONAL SEAL 033752 ENGINEER SETH A. DENNEY

THE LPA GROUP of North Carolina
TRANSPORTATION CONSULTANTS

THE LPA GROUP of North Carolina
8000 Regency Parkway, Suite 600
Cary, North Carolina 27518
NC License No.: F-1084

REVISIONS							SHEET NO.
NO.	BY:	DATE:	NO.	BY:	DATE:		S-24
1			3				TOTAL SHEETS
2			4				333

DRAWN BY : N. B. SPEAKS DATE : 5-2-11
CHECKED BY : M.D.M. / J.N.A. DATE : 6-8-11

DWG. 25 OF 282

4/2/2012
12:39: PM
User: jaustin
Filename: Y:\Projects\NCDOT\R-3307\Dwgs\Final\R-3307_025_SD_LC11.dgn

BM: NCDOT GPS R3307-2 -L- STA. 61+74.67, 107.73' RT., EL. 3.57'

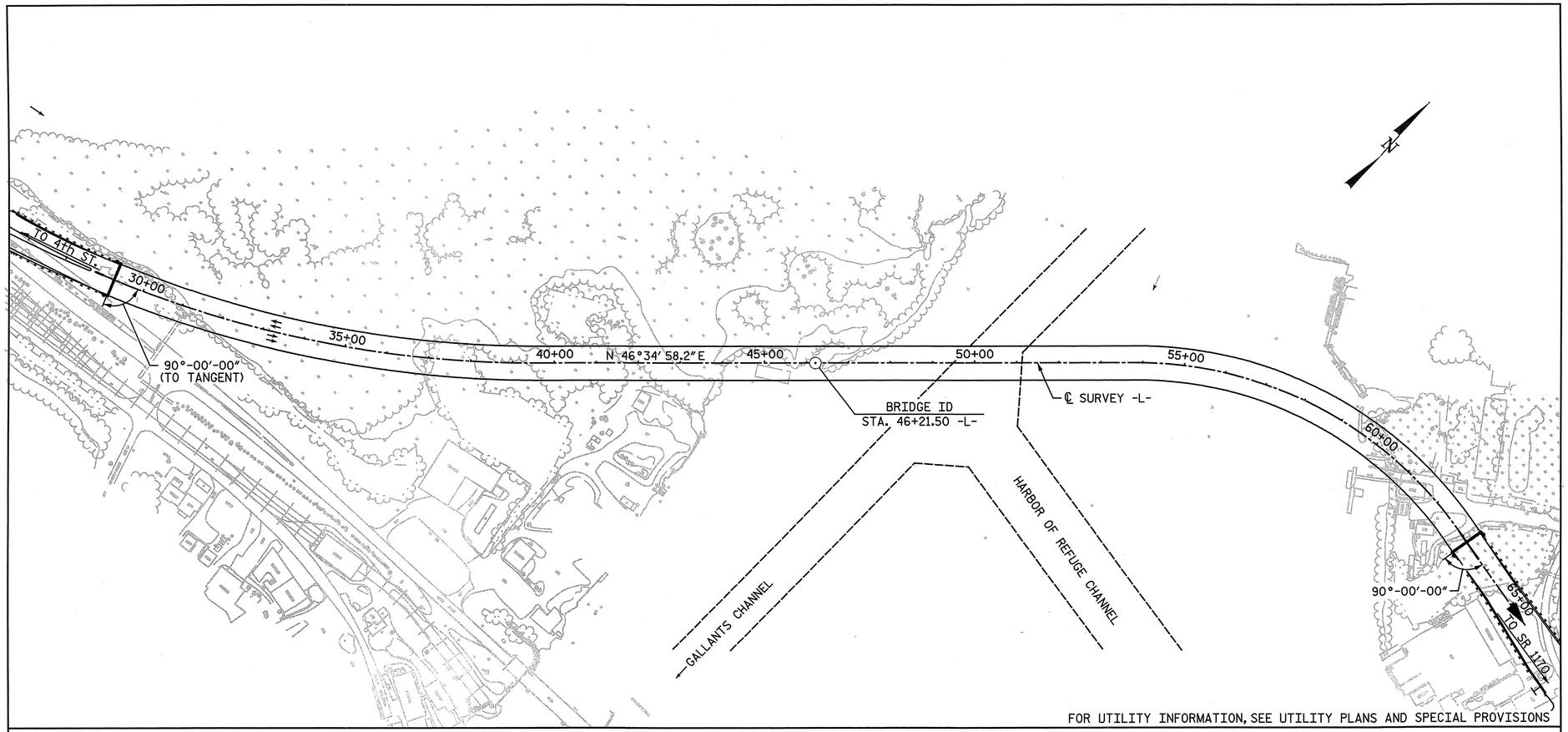

FOR UTILITY INFORMATION, SEE UTILITY PLANS AND SPECIAL PROVISIONS

LOCATION SKETCH

NOTES:

FOR GENERAL DRAWING NOTES, SEE "GENERAL DRAWING NOTES" SHEET.

HYDRAULIC DATA

DESIGN DISCHARGE	=	N/A
FREQUENCY OF DESIGN FLOOD	=	50 YR
DESIGN HIGH WATER ELEVATION	=	6.0
DRAINAGE AREA	=	N/A
BASIC DISCHARGE (Q100)	=	N/A
BASIC HIGH WATER ELEVATION	=	7.0

OVERTOPPING FLOOD DATA

OVERTOPPING DISCHARGE	=	N/A
FREQUENCY OF OVERTOPPING FLOOD	=	+100 YR
OVERTOPPING FLOOD ELEVATION	=	7.4 *

* 7.4' IS ELEVATION AT LOW POINT ON U.S. 70 AND OCCURS ON RADIO ISLAND AT STA. 17+00 -L-.

PROJECT NO. R-3307

CARTERET COUNTY

STATION: 46+21.50 -L-

STATE OF NORTH CAROLINA
DEPARTMENT OF TRANSPORTATION
RALEIGH

GENERAL DRAWING

LOCATION SKETCH

NORTH CAROLINA PROFESSIONAL SEAL 25911 ENGINEER DUANE G. HAYMAN 4-29-12

NORTH CAROLINA PROFESSIONAL SEAL 033752 ENGINEER SETH A. DENNETT 4/09/12

THE LPA GROUP of North Carolina
TRANSPORTATION CONSULTANTS

THE LPA GROUP of North Carolina
8000 Regency Parkway, Suite 600
Cary, North Carolina 27518
NC License No.: F-1064

REVISIONS							SHEET NO.
NO.	BY:	DATE:	NO.	BY:	DATE:		S-25
1			3				TOTAL SHEETS
2			4				333

DRAWN BY : M. D. MAYHEW DATE : 4-29-11
CHECKED BY : J.N.A. / T.V.R. DATE : 6-6-11

DWG. 26 OF 282

4/2/2012
12:39:[illegible] PM
User: jaustin
Filename: Y:\Projects\NCDOT\R-3307\Dwgs\Final\R-3307_026_SD_GD8_LS.dgn

TOTAL BILL OF MATERIAL

	CONSTRUCTION MAINTENANCE & REMOVAL OF TEMP. ACCESS AT STA. 46+21.50	REMOVAL OF EXISTING STRUCTURE AT STA. 46+21.50	REMOVAL OF EXISTING BARGE	PDA TESTING	UNCLASSIFIED STRUCTURE EXCAVATION AT STA. 46+21.50	REINFORCED CONCRETE DECK SLAB	REINFORCED CONCRETE DECK SLAB (SAND LIGHTWEIGHT CONCRETE)	GROOVING BRIDGE FLOORS	CLASS AA CONCRETE	BRIDGE APPROACH SLABS	EPOXY COATED REINFORCING STEEL	54" PRESTRESSED CONCRETE GIRDERS		78" PRESTRESSED CONCRETE GIRDERS		78" POST TENSIONED PRESTRESSED CONCRETE GIRDERS		POST TENSIONING TENDONS	20" PRESTRESSED CONCRETE PILES		30" PRESTRESSED CONCRETE PILES		PILE REDRIVES	PREDRILLING FOR PILES	TWO BAR METAL RAIL	CONCRETE MEDIAN BARRIER	1'-2" X 2'-6" CONCRETE PARAPET	RIP RAP CLASS II (2'-0" THICK)	GEOTEXTILE FOR DRAINAGE	ELASTOMERIC BEARINGS	EXPANSION JOINT SEALS	MODULAR EXPANSION JOINT SEALS	STRUCTURAL DRAINAGE SYSTEM AT STA. 46+21.50	SOLAR ARRAY SUPPORT PLATFORM	TIMBER FENDER BOARDS AT CHANNEL BENTS	STATIC AXIAL COMPRESSIVE LOAD TEST
	LUMP SUM	LUMP SUM	LUMP SUM	EA.	LUMP SUM	SQ. FT.	SQ. FT.	SQ. FT.	CU. YDS.	LUMP SUM	LBS.	NO.	LIN.FT.	NO.	LIN.FT.	NO.	LIN.FT.		NO.	LIN.FT.	NO.	LIN.FT.	EA.	LIN. FT.	LIN.FT.	LIN.FT.	LIN.FT.	SQ.YDS.	SQ. YDS.	LUMP SUM	LUMP SUM	LUMP SUM	LUMP SUM	LUMP SUM	LUMP SUM	LUMP SUM
SUPERSTRUCTURE	LUMP SUM	LUMP SUM	LUMP SUM		LUMP SUM	214,586	58,826	245,788		LUMP SUM		144	12,151.2	90	11,639.9	45	6,489.0	LUMP SUM							6,810.79	3,443.0	6,825.8			LUMP SUM	LUMP SUM	LUMP SUM	LUMP SUM	LUMP SUM	LUMP SUM	LUMP SUM
END BENT 1									57.5		9,961								13	520			7					304	337								
BENT 1				1					62.0		9,593										8	280	4														
BENT 2									62.0		9,593										8	640	4														
BENT 3				1					62.0		9,593										8	640	4														
BENT 4									62.0		9,593										8	640	4														
BENT 5									75.0		10,129										10	800	5														
BENT 6									60.0		10,435										13	1,040	7														
BENT 7									60.0		10,435										13	1,105	7														
BENT 8									60.0		10,435										13	1,170	7														
BENT 9									60.0		10,435										13	1,300	7														
BENT 10				1					61.0		10,970										13	1,365	7														
BENT 11									283.6		63,397										14	1,120	5														
BENT 12				1					303.2		66,430										14	1,190	5														
BENT 13									320.0		69,378										14	1,190	5														
BENT 14									505.3		142,986										30	2,550	7														
BENT 15				1					542.6		144,297										30	2,700	7														
BENT 16									608.3		191,491										30	3,600	7														
BENT 17				1					609.0		191,556										30	3,900	7														
BENT 18				1					553.8		147,213										30	3,600	7														
BENT 19									519.4		136,348										30	3,000	7														
BENT 20				1					511.5		134,893										30	3,000	7														
BENT 21									328.4		67,291										18	1,800	5														
BENT 22									318.4		65,506										18	1,800	5														
BENT 23				1					306.3		63,492										18	1,800	5														
BENT 24									294.0		61,481										18	1,800	5														
BENT 25									281.7		59,468										14	1,120	5														
BENT 26									62.0		9,531										10	1,050	5														
BENT 27									62.0		9,596										8	800	4														
BENT 28				1					62.0		9,596										8	800	4														
END BENT 2									56.2		9,842								13	1,105			7	167				736	818								
TOTAL	LUMP SUM	LUMP SUM	LUMP SUM	10	LUMP SUM	214,586	58,826	245,788	7,209.2	LUMP SUM	1,754,964	144	12,151.2	90	11,639.9	45	6,489.0	LUMP SUM	26	1,625	471	45,800	172	167	6,810.79	3,443.0	6,825.8	1,040	1,155	LUMP SUM	LUMP SUM	LUMP SUM	LUMP SUM	LUMP SUM	LUMP SUM	LUMP SUM

PROJECT NO. R-3307

CARTERET COUNTY

STATION: 46+21.50 -L-

STATE OF NORTH CAROLINA
DEPARTMENT OF TRANSPORTATION
RALEIGH

GENERAL DRAWING

TOTAL BILL OF MATERIAL

NORTH CAROLINA PROFESSIONAL SEAL 25911 ENGINEER DWAIN G. HATHAWAY 1-9-2014

NORTH CAROLINA PROFESSIONAL SEAL 033752 ENGINEER SETH A. DENNEY 01/07/14

THE LPA GROUP of North Carolina TRANSPORTATION CONSULTANTS

THE LPA GROUP of North Carolina
8000 Regency Parkway, Suite 600
Cary, North Carolina 27518
NC License No.: F-1084

REVISIONS						SHEET NO.
NO.	BY:	DATE:	NO.	BY:	DATE:	S-26
1			3			TOTAL SHEETS
2			4			333

DRAWN BY : M. D. MAYHEW DATE : 12-9-11
CHECKED BY : S. A. DENNEY DATE : 12-12-11

DWG. 27 OF 282

1/9/2014
2:08:29 PM
User: jaustin
Filename: Y:\Projects\NCDOT\R-3307\Dwgs\FInal\R-3307_027_SD_GD9_TBOM.dgn

GENERAL NOTES

ASSUMED LIVE LOAD= HL-93 OR ALTERNATE LOADING.

DESIGN WIND VELOCITY= 120 mph

THIS BRIDGE HAS BEEN DESIGNED IN ACCORDANCE WITH THE AASHTO LRFD BRIDGE DESIGN SPECIFICATIONS.

THIS BRIDGE HAS BEEN DESIGNED IN ACCORDANCE WITH HEC 18, "EVALUATING SCOUR AT BRIDGES", MAY 2001.

THIS BRIDGE HAS BEEN DESIGNED IN ACCORDANCE WITH AASHTO'S "GUIDE SPECIFICATION AND COMMENTARY FOR VESSEL COLLISION DESIGN OF HIGHWAY BRIDGES" USING CRITICAL IMPORTANCE CLASSIFICATION, METHOD II CRITERIA.

THIS BRIDGE IS LOCATED IN SEISMIC ZONE 1.

FOR SUBMITTAL OF WORKING DRAWINGS, SEE SPECIAL PROVISIONS.

FOR CRANE SAFETY, SEE SPECIAL PROVISIONS.

FOR OTHER DESIGN DATA AND GENERAL NOTES, SEE SHEET SN.

FOR EROSION CONTROL MEASURES, SEE EROSION CONTROL PLANS.

FOR SECURING OF VESSELS, SEE SPECIAL PROVISIONS.

FOR BRIDGE DECK RIDEABILITY AND GROOVING, SEE SPECIAL PROVISIONS.

FOR FALSEWORK AND FORMWORK, SEE SPECIAL PROVISIONS.

FOR MASS CONCRETE AT BENT NOS. 14 THRU 20, SEE SPECIAL PROVISIONS.

FOR CONSTRUCTION, MAINTENANCE AND REMOVAL OF TEMPORARY ACCESS, SEE SPECIAL PROVISIONS.

FOR GROUT FOR STRUCTURES, SEE SPECIAL PROVISIONS.

REMOVAL OF THE EXISTING BRIDGE SHALL BE PERFORMED SO AS NOT TO ALLOW DEBRIS TO FALL INTO THE WATER. THE CONTRACTOR SHALL REMOVE THE BRIDGE AND SUBMIT PLANS FOR DEMOLITION IN ACCORDANCE WITH ARTICLE 402-2 OF THE STANDARD SPECIFICATIONS. FOR REMOVAL OF EXISTING STRUCTURE, SEE SPECIAL PROVISIONS.

FOR REMOVAL OF EXISTING BARGE, SEE SPECIAL PROVISIONS.

FOR MAINTENANCE OF WATER TRAFFIC, SEE SPECIAL PROVISIONS.

FOR WORK IN, OVER, OR ADJACENT TO NAVIGABLE WATERS, SEE SPECIAL PROVISIONS.

FOR VERTICAL CLEARANCE GAGES, SEE SPECIAL PROVISIONS.

FOR EPOXY RESIN INJECTION, SEE SPECIAL PROVISIONS.

FOR GIRDER BRACING REQUIREMENTS FOR DECK SLAB PLACEMENT, SEE SPECIAL PROVISIONS.

NEEDLE BEAMS WILL NOT BE ALLOWED UNLESS OTHERWISE CALLED FOR ON THE PLANS OR APPROVED BY THE ENGINEER.

THE CONTRACTOR SHALL PROVIDE INDEPENDENT ASSURANCE SAMPLES OF REINFORCING STEEL AS FOLLOWS: FOR PROJECTS REQUIRING UP TO 400 TONS OF REINFORCING STEEL, ONE 30 INCH SAMPLE OF EACH SIZE BAR USED, AND FOR PROJECTS REQUIRING OVER 400 TONS OF REINFORCING STEEL, TWO 30 INCH SAMPLES OF EACH SIZE BAR USED. THE BARS FROM WHICH THE SAMPLES ARE TAKEN MUST THEN BE SPLICED WITH REPLACEMENT BARS OF THE SIZE AND LENGTH OF THE SAMPLE PLUS A MINIMUM LAP SPLICE OF THIRTY BAR DIAMETERS. PAYMENT FOR THE SAMPLES OF REINFORCING STEEL SHALL BE CONSIDERED INCIDENTAL TO VARIOUS PAY ITEMS.

THE COST OF THE MATERIALS, LABOR AND ANY INCIDENTAL ITEMS RELATED TO THE CONSTRUCTION, MAINTENANCE AND REMOVAL OF TEMPORARY SUPPORTS AND STRONG-BACKS SHALL BE INCLUDED IN THE PAY ITEM "CONSTRUCTION, MAINTENANCE AND REMOVAL OF TEMPORARY ACCESS".

THE DECK CONCRETE FOR SPANS A THRU O AND SPANS S THRU CC SHALL BE CLASS AA (NORMAL WEIGHT) CONCRETE.

REMOVABLE FORMS ARE TO BE USED IN SPANS P THRU R.

ALL FALSEWORK AND FORMS FOR THE CAST-IN-PLACE DECK SLAB CONTINUOUS UNIT SHALL REMAIN IN PLACE UNTIL THE ENTIRE UNIT IS CAST AND CURED.

FOR PLACING LOAD ON STRUCTURE MEMBERS, SEE SPECIAL PROVISIONS.

FOR NAVIGABLE CLEARANCE VERIFICATION AND WATERWAY INSPECTION, SEE SPECIAL PROVISIONS.

PRECAST PANELS SHALL BE DESIGNED FOR AN ALLOWABLE TENSILE STRESS OF 0 psi IN THE PRECOMPRESSED TENSILE ZONE UNDER ALL LOADING CONDITIONS.

THE DECK CONCRETE FOR SPANS P THRU R SHALL BE SAND LIGHTWEIGHT CONCRETE. FOR SAND LIGHTWEIGHT CONCRETE, SEE SPECIAL PROVISIONS.

CLASS AA (NORMAL WEIGHT) CONCRETE SHALL BE USED IN THE BENT DIAPHRAGMS AT BENT 16 AND BENT 17. THE COST OF THIS CONCRETE SHALL BE INCLUDED IN THE PAY ITEM "REINFORCED CONCRETE DECK SLAB" (SAND LIGHTWEIGHT CONCRETE).

CLASS PRESTRESS +6000 (NORMAL WEIGHT) CONCRETE SHALL BE USED IN ALL CLOSURE SPLICE DIAPHRAGMS. THE MINIMUM COMPRESSIVE STRENGTH OF THE CLASS PRESTRESS +6000 CONCRETE SHALL BE 6500 psi. THE COST OF THIS CONCRETE SHALL BE INCLUDED IN THE PAY ITEM "REINFORCED CONCRETE DECK SLAB" (SAND LIGHTWEIGHT CONCRETE).

PREVIOUSLY CAST CONCRETE IN A CONTINUOUS UNIT SHALL HAVE ATTAINED A MINIMUM COMPRESSIVE STRENGTH OF 3,000 PSI BEFORE ADDITIONAL CONCRETE IS CAST IN THE UNIT.

STRUCTURAL STEEL DIAPHRAGM ERECTION SHALL BE COMPLETED BEFORE FALSEWORK OR FORMS ARE PLACED ON THE GIRDERS.

THE EXACT LOCATION, AND COMPLETE DESCRIPTION OF ALL INSERTS SHALL BE SHOWN ON WORKING DRAWINGS AND SUBMITTED TO THE DEPARTMENT FOR APPROVAL PRIOR TO CASTING OF THE CONCRETE MEMBER.

THE INSTALLATION, STRESSING AND GROUTING OF POST-TENSIONING TENDONS SHALL BE SUPERVISED, PERFORMED AND INSPECTED BY PERSONNEL WITH QUALIFICATIONS AND EXPERIENCE AS DESCRIBED IN APPENDIX B OF THE "POST-TENSIONING TENDON INSTALLATION AND GROUTING MANUAL" PUBLISHED BY THE FEDERAL HIGHWAY ADMINSTRATION. DOCUMENTATION OF THE QUALIFICATIONS AND EXPERIENCE SHALL BE SUBMITTED TO THE ENGINEER FOR APPROVAL.

CORROSION PROTECTION NOTES

FOR CORROSION PROTECTION OF BRIDGE, SEE SPECIAL PROVISIONS.

THIS STRUCTURE CONTAINS THE NECESSARY CORROSION PROTECTION REQUIRED FOR A CORROSIVE SITE.

PRESTRESSED CONCRETE GIRDERS ARE DESIGNED FOR 0 PSI TENSION IN THE PRECOMPRESSED TENSILE ZONE UNDER ALL LOADING CONDITIONS.

ALL BAR SUPPORTS IN THE PARAPET, DECK, BENT DIAPHRAGMS, BENT CAPS, COLUMNS, AND FOOTINGS AND ALL INCIDENTAL REINFORCING STEEL SHALL BE EPOXY COATED IN ACCORDANCE WITH THE STANDARD SPECIFICATIONS.

ALL INSERTS AND MISCELLANEOUS REINFORCING STEEL EMBEDDED IN CAST-IN-PLACE CONCRETE SHALL BE CORROSION PROTECTED. INSERTS MAY BE HOT DIP GALVANIZED OR EPOXY COATED. REINFORCING STEEL SHALL BE EPOXY COATED. ELECTROPLATING WILL NOT BE ALLOWED.

PRESTRESSED CONCRETE (GIRDERS, PRECAST DECK PANELS, PILES) SHALL CONTAIN CALCIUM NITRITE CORROSION INHIBITOR.

CLASS AA CONCRETE SHALL BE USED IN ALL CAST-IN-PLACE COLUMNS, BENT CAPS, AND FOOTINGS, AND SHALL CONTAIN CALCIUM NITRITE CORROSION INHIBITOR.

ALL METALIZED SURFACES SHALL RECEIVE A SEAL COATING AS SPECIFIED IN THE SPECIAL PROVISION FOR THERMAL SPRAYED COATINGS (METALIZATION).

THE CLASS AA CONCRETE IN THE BRIDGE DECK SHALL CONTAIN FLY ASH OR GROUND GRANULATED BLAST FURNACE SLAG AT THE SUBSTITUTION RATE SPECIFIED IN ARTICLE 1024-1 AND IN ACCORDANCE WITH ARTICLES 1024-5 AND 1024-6 OF THE STANDARD SPECIFICATIONS. NO PAYMENT WILL BE MADE FOR THIS SUBSTITUTION AS IT IS CONSIDERED INCIDENTAL TO THE COST OF THE REINFORCED CONCRETE DECK SLAB.

THE CONCRETE IN THE COLUMNS, BENT CAPS, FOOTINGS, AND PILES OF ALL BENTS SHALL CONTAIN SILICA FUME. SILICA FUME SHALL BE SUBSTITUTED FOR 5% OF THE PORTLAND CEMENT BY WEIGHT. IF THE OPTION OF ARTICLE 1024-1 OF THE STANDARD SPECIFICATIONS TO PARTIALLY SUBSTITUTE CLASS F FLY ASH FOR PORTLAND CEMENT IS EXERCISED, THEN THE RATE OF FLY ASH SUBSTITUTION SHALL BE REDUCED TO 1.0 LB OF FLY ASH PER 1.0 LB OF CEMENT. NO PAYMENT WILL BE MADE FOR THIS SUBSTITUTION AS IT IS CONSIDERED INCIDENTAL TO THE VARIOUS PAY ITEMS.

PROJECT NO. R-3307
CARTERET COUNTY
STATION: 46+21.50 -L-

STATE OF NORTH CAROLINA
DEPARTMENT OF TRANSPORTATION
RALEIGH

GENERAL DRAWING

NOTES

NORTH CAROLINA PROFESSIONAL SEAL 25911 ENGINEER DWAIN G. WATHWAY 1-9-2014

NORTH CAROLINA PROFESSIONAL SEAL 033752 ENGINEER SETH A. DENNEY 01/09/14

THE LPA GROUP of North Carolina TRANSPORTATION CONSULTANTS

THE LPA GROUP of North Carolina
8000 Regency Parkway, Suite 600
Cary, North Carolina 27518
NC License No.: F-1084

REVISIONS								SHEET NO.
NO.	BY:	DATE:	NO.	BY:	DATE:			S-27
1			3					TOTAL SHEETS
2			4					333

DRAWN BY : N. B. SPEAKS DATE : 9-1-11
CHECKED BY : S. A. DENNEY DATE : 9-29-11

DWG. 28 OF 282

1/9/2014
11:24:10 AM
User: jaustin
Filename: Y:\Projects\NCDOT\R-3307\Dwgs\Final\R-3307_028_SD_GN.dgn

LOAD AND RESISTANCE FACTOR RATING (LRFR) SUMMARY FOR PRESTRESSED CONCRETE GIRDERS

LEVEL		VEHICLE	WEIGHT (W) (TONS)	CONTROLLING LOAD RATING (#)	MINIMUM RATING FACTORS (RF)	TONS = W × RF	STRENGTH I LIMIT STATE											SERVICE III LIMIT STATE						COMMENT NUMBER
								MOMENT					SHEAR						MOMENT					
							LIVE-LOAD FACTORS (γ_{LL})	DISTRIBUTION FACTORS (DF)	RATING FACTOR	SPAN	GIRDER LOCATION	DISTANCE FROM LEFT END OF SPAN (ft)	DISTRIBUTION FACTORS (DF)	RATING FACTOR	SPAN	GIRDER LOCATION	DISTANCE FROM LEFT END OF SPAN (ft)	LIVE-LOAD FACTORS (γ_{LL})	DISTRIBUTION FACTORS (DF)	RATING FACTOR	SPAN	GIRDER LOCATION	DISTANCE FROM LEFT END OF SPAN (ft)	
DESIGN LOAD RATING		HL-93 (INVENTORY)	N/A	1	1.57	--	1.75	0.776	2.62	V	I	34.106	0.922	1.99	V	I	59.685	0.80	0.776	1.57	V	I	34.106	
		HL-93 (OPERATING)	N/A		2.62	--	1.35	0.776	3.39	V	I	34.106	0.922	2.62	V	I	59.685	N/A	--	--	--	--	--	
		HS-20 (INVENTORY)	36.000	2	2.13	76.68	1.75	0.776	3.55	V	I	34.106	0.922	2.59	V	I	59.685	0.80	0.776	2.13	V	I	34.106	
		HS-20 (OPERATING)	36.000		3.40	122.40	1.35	0.776	4.60	V	I	34.106	0.922	3.40	V	I	59.685	N/A	--	--	--	--	--	
LEGAL LOAD RATING	SINGLE VEHICLE (SV)	SH	12.500		5.29	66.13	1.40	0.776	11.02	V	I	34.106	0.922	8.84	V	I	59.685	0.80	0.776	5.29	V	I	34.106	
		S3C	21.500		3.12	67.08	1.40	0.776	6.50	V	I	34.106	0.922	5.05	V	I	59.685	0.80	0.722	3.12	V	I	34.445	
		S3A	22.750		2.96	67.34	1.40	0.776	6.17	V	I	34.106	0.922	4.94	V	I	59.685	0.80	0.776	2.96	V	I	34.106	
		S4A	26.750		2.61	69.82	1.40	0.776	5.44	V	I	34.106	0.922	4.05	V	I	59.685	0.80	0.776	2.61	V	I	34.106	
		S5A	30.500		2.32	70.76	1.40	0.776	4.83	V	I	34.106	0.922	3.73	V	I	59.685	0.80	0.776	2.32	V	I	34.106	
		S6A	34.500		2.10	72.45	1.40	0.776	4.38	V	I	34.106	0.922	3.36	V	I	59.685	0.80	0.776	2.10	V	I	34.106	
		S7B	38.500		1.92	73.92	1.40	0.776	4.01	V	I	34.106	0.922	3.16	V	I	59.685	0.80	0.776	1.92	V	I	34.106	
		S7A	40.000	3	1.91	76.40	1.40	0.776	3.98	V	I	34.106	0.922	3.26	V	I	59.685	0.80	0.776	1.91	V	I	34.106	
	TRUCK TRACTOR SEMI-TRAILER (TTST)	T4A	28.250		2.57	72.60	1.40	0.776	5.37	V	I	34.106	0.922	4.20	V	I	59.685	0.80	0.776	2.57	V	I	34.106	
		T5B	32.000		2.28	72.96	1.40	0.776	4.76	V	I	34.106	0.922	3.75	V	I	59.685	0.80	0.776	2.28	V	I	34.106	
		T6A	36.000		2.10	75.60	1.40	0.776	4.38	V	I	34.106	0.922	3.47	V	I	59.685	0.80	0.776	2.10	V	I	34.106	
		T7A	40.000		1.96	78.40	1.40	0.776	4.09	V	I	34.106	0.922	3.26	V	I	59.685	0.80	0.776	1.96	V	I	34.106	
		T7B	40.000		2.05	82.00	1.40	0.776	4.28	V	I	34.106	0.922	3.04	V	I	59.685	0.80	0.776	2.05	V	I	34.106	

LOAD FACTORS:

DESIGN LOAD RATING FACTORS	LIMIT STATE	γ_{DC}	γ_{DW}
	STRENGTH I	1.25	1.50
	SERVICE III	1.00	1.00

NOTES:

MINIMUM RATING FACTORS ARE BASED ON THE STRENGTH I AND SERVICE III LIMIT STATES.

ALLOWABLE STRESSES FOR SERVICE III LIMIT STATE ARE AS REQUIRED FOR DESIGN.

RATINGS ARE FOR WORST CASE - UNIT 10 GIRDERS 1 AND 2.

COMMENTS:

1.
2.
3.
4.

(#) CONTROLLING LOAD RATING

(1) DESIGN LOAD RATING (HL-93)

(2) DESIGN LOAD RATING (HS-20)

(3) LEGAL LOAD RATING **

** SEE CHART FOR VEHICLE TYPE

GIRDER LOCATION

I - INTERIOR GIRDER
E - EXTERIOR GIRDER

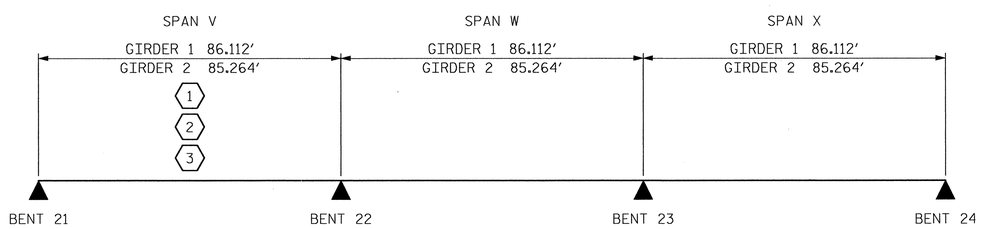

LRFR SUMMARY

SPAN LENGTHS ARE BEARING TO BEARING

PROJECT NO. R-3307

CARTERET COUNTY

STATION: 46+21.50 -L-

SHEET 1 OF 3

STATE OF NORTH CAROLINA
DEPARTMENT OF TRANSPORTATION
RALEIGH

LRFR SUMMARY

AASHTO TYPE IV GIRDERS

NORTH CAROLINA PROFESSIONAL SEAL 12323 ENGINEER MORRIS ISRAELNAM 3/30/2012

NORTH CAROLINA PROFESSIONAL SEAL 021799 ENGINEER ALLYSON K. ORR 3/30/2012

MI ENGINEERING
1011 SHAUB DRIVE, SUITE 100
RALEIGH, NC 27606
(919) 851-6606
FIRM PE NUMBER : P-0671

REVISIONS						SHEET NO.
NO.	BY:	DATE:	NO.	BY:	DATE:	S-28
1			3			TOTAL SHEETS
2			4			333

DRAWN BY : B.E. LANNING DATE : 1-12
CHECKED BY : A.K. ORR DATE : 1-12

DWG. 29 OF 282

3/26/2012
2:03:59 PM
User: blanning
Filename: P:\NC Projects\MI0005 - Gallants Channel\R-3307\Structures\R-3307_029_SD_LRFR.dgn

LOAD AND RESISTANCE FACTOR RATING (LRFR) SUMMARY FOR PRESTRESSED CONCRETE GIRDERS

LEVEL		VEHICLE	WEIGHT (W) (TONS)	CONTROLLING LOAD RATING (#)	MINIMUM RATING FACTOR (RF)	TON = W × RF	STRENGTH I LIMIT STATE											SERVICE III LIMIT STATE						COMMENT NUMBER
							LIVE-LOAD FACTORS (γ_{LL})	MOMENT					SHEAR					LIVE-LOAD FACTORS (γ_{LL})	MOMENT					
								DISTRIBUTION FACTOR (DF)	RATING FACTOR	SPAN	GIRDER LOCATION	DISTANCE FROM LEFT END OF SPAN (FT)	DISTRIBUTION FACTOR (DF)	RATING FACTOR	SPAN	GIRDER LOCATION	DISTANCE FROM LEFT END OF SPAN (FT)		DISTRIBUTION FACTOR (DF)	RATING FACTOR	SPAN	GIRDER LOCATION	DISTANCE FROM LEFT END OF SPAN (FT)	
DESIGN LOAD RATING		HL-93 (INVENTORY)	NA	1	1.17	NA	1.75	0.93	1.44	0	EL	64.00	1.00	1.17	I	ER	12.40	0.80	1.00	1.46	I	ER	64.80	1
DESIGN LOAD RATING		HL-93 (OPERATING)	NA		1.52	NA	1.35	0.93	1.87	0	EL	64.00	1.00	1.52	I	ER	12.40	NA	NA	NA	NA	NA	NA	1,2
DESIGN LOAD RATING		HS-20 (INVENTORY)	36.000	2	1.76	63.36	1.75	0.93	2.14	0	EL	64.00	1.00	1.76	I	ER	12.40	0.80	1.00	2.18	I	ER	64.80	1
DESIGN LOAD RATING		HS-20 (OPERATING)	36.000		2.28	82.08	1.35	0.93	2.78	0	EL	64.00	1.00	2.28	I	ER	12.40	NA	NA	NA	NA	NA	NA	1,2
LEGAL LOAD RATING	SINGLE VEHICLE (SV)	SH	12.500		5.76	72.00	1.40	0.93	7.08	0	EL	64.00	1.00	6.47	I	ER	12.40	0.80	1.00	5.76	I	ER	64.80	1
LEGAL LOAD RATING	SINGLE VEHICLE (SV)	S3C	21.500		3.36	72.24	1.40	0.93	4.13	0	EL	64.00	1.00	3.66	I	ER	12.40	0.80	1.00	3.36	I	ER	64.80	1
LEGAL LOAD RATING	SINGLE VEHICLE (SV)	S3A	22.750		3.18	72.35	1.40	0.93	3.91	0	EL	64.00	1.00	3.45	I	ER	12.40	0.80	1.00	3.18	I	ER	64.80	1
LEGAL LOAD RATING	SINGLE VEHICLE (SV)	S4A	26.750		2.77	74.10	1.40	0.93	3.40	0	EL	64.00	1.00	2.95	I	ER	12.40	0.80	1.00	2.77	I	ER	64.80	1
LEGAL LOAD RATING	SINGLE VEHICLE (SV)	S5A	30.500		2.44	74.42	1.40	0.93	3.00	0	EL	64.00	1.00	2.63	I	ER	12.40	0.80	1.00	2.44	I	ER	64.80	1
LEGAL LOAD RATING	SINGLE VEHICLE (SV)	S6A	34.500		2.19	75.56	1.40	0.93	2.70	0	EL	64.00	1.00	2.32	I	ER	12.40	0.80	1.00	2.19	I	ER	64.80	1
LEGAL LOAD RATING	SINGLE VEHICLE (SV)	S7B	38.500		1.98	76.23	1.40	0.93	2.44	0	EL	64.00	1.00	2.11	I	ER	12.40	0.80	1.00	1.98	I	ER	64.80	1
LEGAL LOAD RATING	SINGLE VEHICLE (SV)	S7A	40.000	3	1.94	77.60	1.40	0.93	2.39	0	EL	64.00	1.00	2.11	I	ER	12.40	0.80	1.00	1.94	I	ER	64.80	1
LEGAL LOAD RATING	TRUCK TRACTOR SEMI-TRAILER (TTST)	T4A	28.250		2.69	75.99	1.40	0.93	3.31	0	EL	64.00	1.00	2.82	I	ER	12.40	0.80	1.00	2.69	I	ER	64.80	1
LEGAL LOAD RATING	TRUCK TRACTOR SEMI-TRAILER (TTST)	T5B	32.000		2.37	75.84	1.40	0.93	2.91	0	EL	64.00	1.00	2.58	I	ER	12.40	0.80	1.00	2.37	I	ER	64.80	1
LEGAL LOAD RATING	TRUCK TRACTOR SEMI-TRAILER (TTST)	T6A	36.000		2.15	77.40	1.40	0.93	2.64	0	EL	64.00	1.00	2.31	I	ER	12.40	0.80	1.00	2.15	I	ER	64.80	1
LEGAL LOAD RATING	TRUCK TRACTOR SEMI-TRAILER (TTST)	T7A	40.000		1.97	78.80	1.40	0.93	2.42	0	EL	64.00	1.00	2.11	I	ER	12.40	0.80	1.00	1.97	I	ER	64.80	1
LEGAL LOAD RATING	TRUCK TRACTOR SEMI-TRAILER (TTST)	T7B	40.000		2.02	80.80	1.40	0.93	2.52	0	EL	64.00	1.00	2.02	I	ER	12.40	0.80	1.00	2.05	I	ER	64.80	1

LOAD FACTORS:

	LIMIT STATE	γ_{DC}	γ_{DW}
DESIGN LOAD RATING FACTORS	STRENGTH I	1.25	1.50
	SERVICE III	1.00	1.00

NOTES:

MINIMUM RATING FACTORS ARE BASED ON THE STRENGTH I AND SERVICE III LIMIT STATES.

ALLOWABLE STRESSES FOR SERVICE III LIMIT STATE ARE AS REQUIRED FOR DESIGN.

COMMENTS:

1. ALL DISTANCES ARE MEASURED FROM THE CENTERLINE BEARING AT THE LEFT END OF SPAN.
2. SERVICE III LIMIT STATE NOT APPLICABLE AT THE OPERATING LEVEL.

(#) CONTROLLING LOAD RATING

(1) DESIGN LOAD RATING (HL-93)

(2) DESIGN LOAD RATING (HS-20)

(3) LEGAL LOAD RATING **

** SEE CHART FOR VEHICLE TYPE

GIRDER LOCATION

I - INTERIOR GIRDER
EL - EXTERIOR LEFT GIRDER
ER - EXTERIOR RIGHT GIRDER

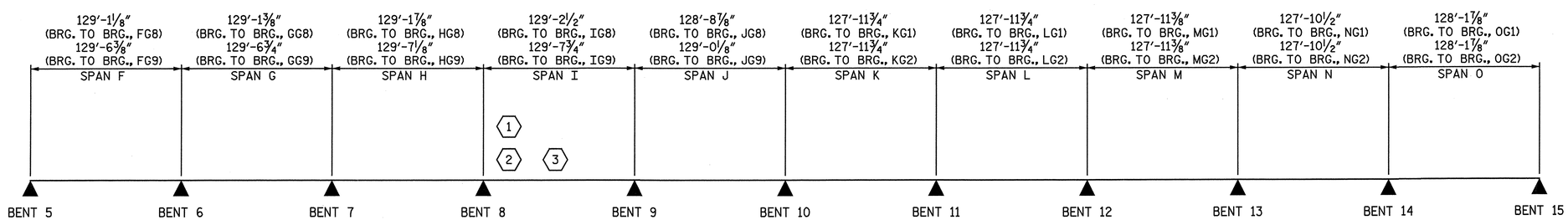

LRFR SUMMARY

PROJECT NO. R-3307
CARTERET COUNTY
STATION: 46+21.50 -L-

SHEET 2 OF 3

STATE OF NORTH CAROLINA
DEPARTMENT OF TRANSPORTATION
RALEIGH

LRFR SUMMARY

78" MODIFIED BULB TEE

NORTH CAROLINA PROFESSIONAL SEAL 25911 ENGINEER DWAIN G. HATHAWAY 4-3-2012

NORTH CAROLINA PROFESSIONAL SEAL 033752 ENGINEER SETH A. DENNEY 04/06/12

THE LPA GROUP of North Carolina TRANSPORTATION CONSULTANTS

THE LPA GROUP of North Carolina
8000 Regency Parkway, Suite 600
Cary, North Carolina 27518
NC License No.: F-1084

REVISIONS								SHEET NO.
NO.	BY:	DATE:	NO.	BY:	DATE:			S-29
1			3					TOTAL SHEETS
2			4					333

DRAWN BY : M. D. MAYHEW DATE : 12-9-11
CHECKED BY : A. L. PHILLIPS DATE : 1-4-12

DWG. 30 OF 282

4/2/2012
12:39:25 PM
User: jaustin
Filename: Y:\Projects\NCDOT\R-3307\Dwgs\Final\R-3307_030_SD_LRI.dgn

LOAD AND RESISTANCE FACTOR RATING (LRFR) SUMMARY FOR PRESTRESSED CONCRETE GIRDERS

LEVEL		VEHICLE	WEIGHT (W) (TONS)	CONTROLLING LOAD RATING (#)	MINIMUM RATING FACTOR (RF)	TON = W × RF	STRENGTH I LIMIT STATE											SERVICE III LIMIT STATE						COMMENT NUMBER
							LIVE-LOAD FACTORS (γ_{LL})	MOMENT					SHEAR					LIVE-LOAD FACTORS (γ_{LL})	MOMENT					
								DISTRIBUTION FACTOR (DF)	RATING FACTOR	SPAN	GIRDER LOCATION	DISTANCE FROM LEFT END OF SPAN (FT)	DISTRIBUTION FACTOR (DF)	RATING FACTOR	SPAN	GIRDER LOCATION	DISTANCE FROM LEFT END OF SPAN (FT)		DISTRIBUTION FACTOR (DF)	RATING FACTOR	SPAN	GIRDER LOCATION	DISTANCE FROM LEFT END OF SPAN (FT)	
DESIGN LOAD RATING		HL-93 (INVENTORY)	NA	1	1.13	NA	1.75	0.66	1.38	P	I	163.50	0.88	1.76	P	I	165.44	0.80	0.66	1.13	R	I	59.93	1
DESIGN LOAD RATING		HL-93 (OPERATING)	NA		1.79	NA	1.35	0.66	1.79	P	I	163.50	0.88	2.28	P	I	165.44	NA	NA	NA	NA	NA	NA	1,2
DESIGN LOAD RATING		HS-20 (INVENTORY)	36.000	2	1.61	57.96	1.75	0.66	1.67	P	I	163.50	0.88	2.68	P	I	165.44	0.80	0.66	1.61	R	I	59.93	1
DESIGN LOAD RATING		HS-20 (OPERATING)	36.000		2.16	77.76	1.35	0.66	2.16	P	I	163.50	0.88	3.47	P	I	165.44	NA	NA	NA	NA	NA	NA	1,2
LEGAL LOAD RATING	SINGLE VEHICLE (SV)	SH	12.500		8.57	107.13	1.40	0.66	8.57	P	I	163.50	0.88	11.23	P	I	165.44	0.80	0.66	11.88	R	I	68.02	1
LEGAL LOAD RATING	SINGLE VEHICLE (SV)	S3C	21.500		5.04	108.36	1.40	0.66	5.04	P	I	163.50	0.88	6.54	P	I	165.44	0.80	0.67	6.92	P	I	157.36	1
LEGAL LOAD RATING	SINGLE VEHICLE (SV)	S3A	22.750		4.80	109.20	1.40	0.66	4.80	P	I	163.50	0.88	6.20	P	I	165.44	0.80	0.66	6.55	R	I	68.02	1
LEGAL LOAD RATING	SINGLE VEHICLE (SV)	S4A	26.750		4.15	111.01	1.40	0.66	4.15	P	I	163.50	0.88	5.31	P	I	165.44	0.80	0.67	5.54	P	I	157.36	1
LEGAL LOAD RATING	SINGLE VEHICLE (SV)	S5A	30.500		3.66	111.63	1.40	0.66	3.66	P	I	163.50	0.88	4.72	P	I	165.44	0.80	0.67	4.97	P	I	157.36	1
LEGAL LOAD RATING	SINGLE VEHICLE (SV)	S6A	34.500		3.29	113.51	1.40	0.66	3.29	P	I	163.50	0.88	4.20	P	I	165.44	0.80	0.67	4.40	P	I	157.36	1
LEGAL LOAD RATING	SINGLE VEHICLE (SV)	S7B	38.500		2.99	115.12	1.40	0.66	2.99	P	I	163.50	0.88	3.81	P	I	165.44	0.80	0.67	3.88	P	I	157.36	1
LEGAL LOAD RATING	SINGLE VEHICLE (SV)	S7A	40.000	3	2.93	117.20	1.40	0.66	2.93	P	I	163.50	0.88	3.73	P	I	165.44	0.80	0.67	3.80	P	I	157.36	1
LEGAL LOAD RATING	TRUCK TRACTOR SEMI-TRAILER (TTST)	T4A	28.250		4.03	113.85	1.40	0.66	4.03	P	I	163.50	0.88	5.07	P	I	165.44	0.80	0.66	5.28	R	I	68.02	1
LEGAL LOAD RATING	TRUCK TRACTOR SEMI-TRAILER (TTST)	T5B	32.000		3.56	113.92	1.40	0.66	3.56	P	I	163.50	0.88	4.57	P	I	165.44	0.80	0.67	4.73	P	I	157.36	1
LEGAL LOAD RATING	TRUCK TRACTOR SEMI-TRAILER (TTST)	T6A	36.000		3.23	116.28	1.40	0.66	3.23	P	I	163.50	0.88	4.10	P	I	165.44	0.80	0.67	4.21	P	I	157.36	1
LEGAL LOAD RATING	TRUCK TRACTOR SEMI-TRAILER (TTST)	T7A	40.000		2.97	118.80	1.40	0.66	2.97	P	I	163.50	0.88	3.73	P	I	165.44	0.80	0.67	3.80	P	I	157.36	1
LEGAL LOAD RATING	TRUCK TRACTOR SEMI-TRAILER (TTST)	T7B	40.000		3.06	122.40	1.40	0.66	3.06	P	I	163.50	0.88	3.67	P	I	165.44	0.80	0.67	3.80	P	I	157.36	1

LOAD FACTORS:

DESIGN LOAD RATING FACTORS	LIMIT STATE	γ_{DC}	γ_{DW}
	STRENGTH I	1.25	1.50
	SERVICE III	1.00	1.00

NOTES:

MINIMUM RATING FACTORS ARE BASED ON THE STRENGTH I AND SERVICE III LIMIT STATES.

ALLOWABLE STRESSES FOR SERVICE III LIMIT STATE ARE AS REQUIRED FOR DESIGN.

COMMENTS:

1. ALL DISTANCES ARE MEASURED FROM THE CENTERLINE BEARING AT THE LEFT END OF SPAN.
2. SERVICE III LIMIT STATE NOT APPLICABLE AT THE OPERATING LEVEL.

(#) CONTROLLING LOAD RATING

(1) DESIGN LOAD RATING (HL-93)

(2) DESIGN LOAD RATING (HS-20)

(3) LEGAL LOAD RATING **

** SEE CHART FOR VEHICLE TYPE

GIRDER LOCATION

I - INTERIOR GIRDER
EL - EXTERIOR LEFT GIRDER
ER - EXTERIOR RIGHT GIRDER

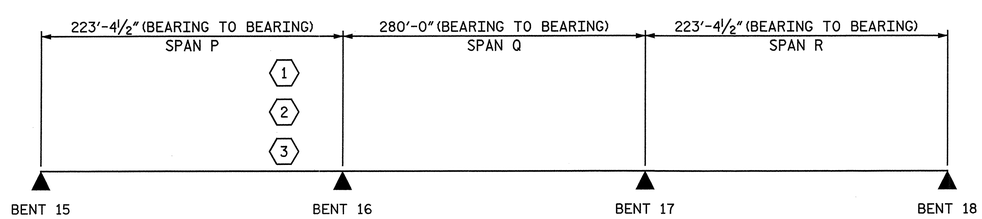

LRFR SUMMARY

PROJECT NO. R-3307
CARTERET COUNTY
STATION: 46+21.50 -L-

SHEET 3 OF 3

STATE OF NORTH CAROLINA
DEPARTMENT OF TRANSPORTATION
RALEIGH

LRFR SUMMARY

78" PRESTRESSED POST-TENSIONED MODIFIED BULB TEE

NORTH CAROLINA PROFESSIONAL SEAL 25911 ENGINEER DWAIN G. HATHWAY 4-5-2012

NORTH CAROLINA PROFESSIONAL SEAL 033752 ENGINEER JEFF A. DENNEY 4/05/12

THE LPA GROUP of North Carolina TRANSPORTATION CONSULTANTS

THE LPA GROUP of North Carolina
8000 Regency Parkway, Suite 600
Cary, North Carolina 27518
NC License No.: F-1084

REVISIONS								SHEET NO.
NO.	BY:	DATE:	NO.	BY:	DATE:			S-30
1			3					TOTAL SHEETS
2			4					333

DRAWN BY : M. D. MAYHEW DATE : 12-9-11
CHECKED BY : S. A. DENNEY DATE : 12-12-11

DWG. 31 OF 282

4/2/2012 12:39:[illegible] PM
User: jdustin
Filename: Y:\Projects\NCDOT\R-3307\Dwgs\Final\R-3307_031_SD_LR2.dgn

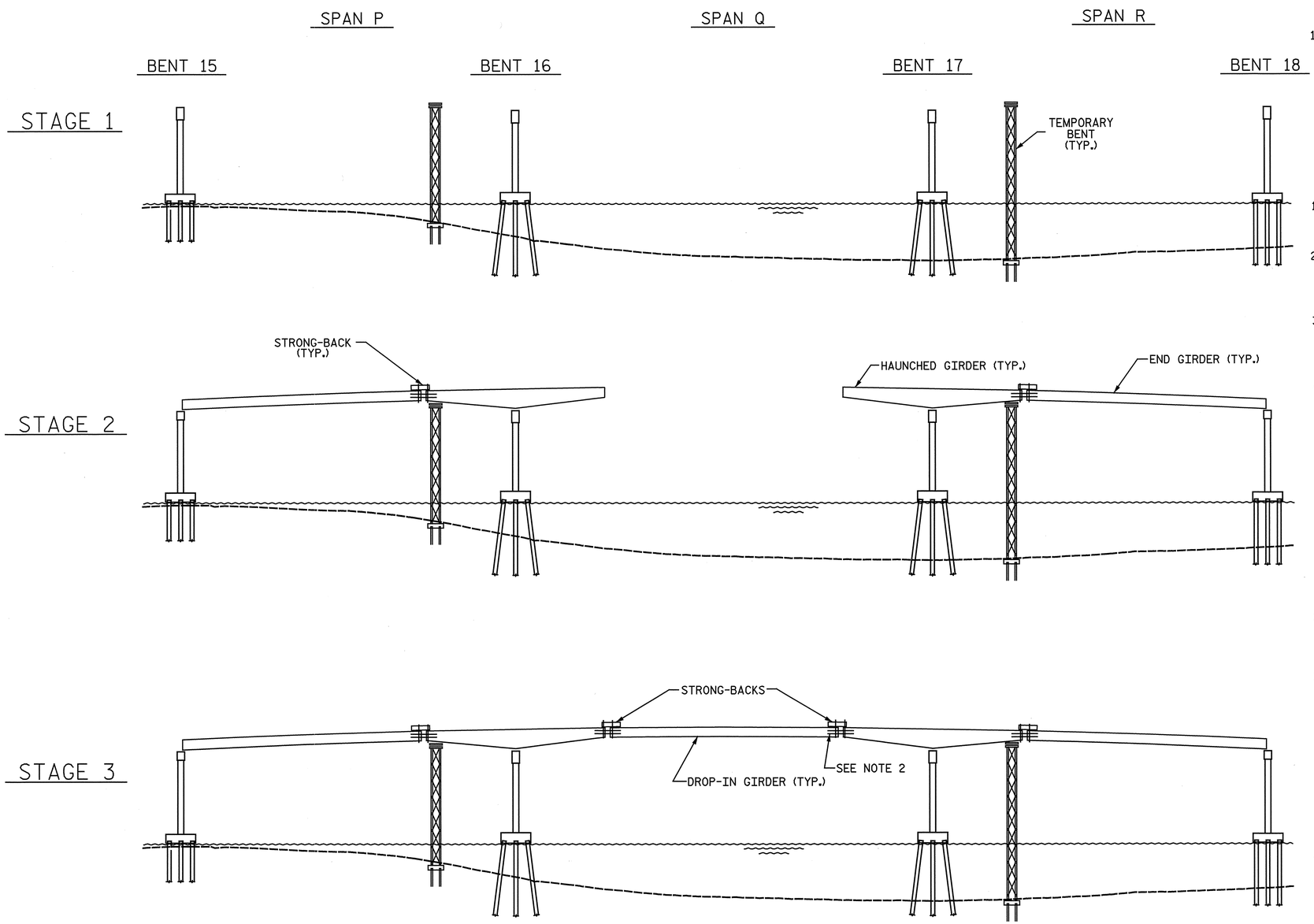

STAGE 1

1. CONSTRUCT BENTS 15 THRU 18 AND ERECT TEMPORARY BENTS IN SPANS P AND R.

GIRDERS IN SPANS O AND S SHALL NOT BE PLACED IN FINAL POSITION UNTIL SECOND STAGE POST-TENSIONING IS PERFORMED AND SECOND STAGE POST-TENSIONING DUCTS AND ANCHORAGE ARE GROUTED IN SPANS P, Q AND R.

STAGE 2

1. ERECT HAUNCHED GIRDERS AND SECURE TO TEMPORARY BENTS. SECURE HAUNCHED GIRDERS TO TEMPORARY BENTS AND BENTS 16 AND 17 TO TRANSMIT WIND FORCES ASSUMING THE BEARING PROVIDES NO TRANSVERSE SUPPORT.
2. ATTACH STRONG-BACKS TO THE PORTION OF THE END GIRDERS WHICH WILL BE SUPPORTED BY THE HAUNCHED GIRDERS. ERECT END GIRDERS AND SECURE TO HAUNCHED GIRDERS. SECURE END GIRDERS TO HAUNCHED GIRDERS AND BENTS 15 AND 18 TO TRANSMIT TRANSVERSE WIND FORCES ASSUMING THE BEARING PROVIDES NO TRANSVERSE SUPPORT.
3. THE HAUNCHED GIRDERS SHALL BE SECURED TO PREVENT UPLIFT DURING THE PLACEMENT OF THE DROP-IN GIRDERS DURING STAGE 3.

   AS A MINIMUM, GIRDER CONNECTIONS TO TEMPORARY BENT SHALL BE CAPABLE OF TRANSMITTING THE DEAD LOAD REACTIONS SHOWN IN STAGE 3.
4. STAGE 2 DEAD LOAD REACTIONS ON TEMPORARY BENTS, PER GIRDER (EXCLUDING CONSTRUCTION LOADS, WIND LOADS, ERECTION LOADS, IMPACT LOADS AND ANY OTHER MISCELLANEOUS LOAD):

   HAUNCHED GIRDER 0 Kip (UPWARD)

   DEAD LOAD REACTIONS ON STRONG-BACKS, PER GIRDER (EXCLUDING CONSTRUCTION LOADS, WIND LOADS, ERECTION LOADS, IMPACT LOADS AND ANY OTHER MISCELLANEOUS LOADS)

   END GIRDER 107 Kips (DOWNWARD)

   DEAD LOAD REACTIONS SHOWN SHALL BE ADJUSTED FOR ANY CONSTRUCTION LOADS, WIND LOADS, ERECTION LOADS, IMPACT LOADS AND ANY OTHER MISCELLANEOUS LOADS PROPOSED BY THE CONTRACTOR, INCLUDING THE WEIGHT OF THE STRONG-BACKS.

STAGE 3

1. CAST DIAPHRAGMS AT BENTS 16 AND 17 AND PLACE INTERMEDIATE DIAPHRAGMS.
2. ATTACH STRONG-BACKS TO EACH END OF THE DROP-IN-GIRDERS. ERECT DROP-IN-GIRDERS AND CONNECT STRONG-BACKS TO HAUNCHED GIRDERS. AS A MINIMUM, CONNECTIONS BETWEEN DROP-IN GIRDERS AND HAUNCHED GIRDERS SHALL BE CAPABLE OF RESISTING RELATIVE TWIST BETWEEN GIRDER SEGMENTS.
3. STAGE 3 DEAD LOAD REACTIONS ON TEMPORARY BENTS, PER GIRDER (EXCLUDING CONSTRUCTION LOADS, WIND LOADS, ERECTION LOADS, IMPACT LOADS AND ANY OTHER MISCELLANEOUS LOADS):

   HAUNCHED GIRDER 2 Kips (DOWNWARD)

   DEAD LOAD REACTIONS ON STRONG-BACKS, PER GIRDER (EXCLUDING CONSTRUCTION LOADS, WIND LOADS, ERECTION LOADS, IMPACT LOADS AND ANY OTHER MISCELLANEOUS LOADS)

   END GIRDER 107 Kips (DOWNWARD)
   DROP-IN GIRDER 107 Kips (DOWNWARD)

   DEAD LOAD REACTIONS SHOWN SHALL BE ADJUSTED FOR ANY CONSTRUCTION LOADS, WIND LOADS, ERECTION LOADS, IMPACT LOADS AND ANY OTHER MISCELLANEOUS LOADS PROPOSED BY THE CONTRACTOR, INCLUDING THE WEIGHT OF THE STRONG-BACKS.
4. PLACE REMAINING INTERMEDIATE DIAPHRAGMS.

NOTES

1. THIS BRIDGE IS DESIGNED FOR THE ERECTION SEQUENCE SHOWN. THE CONTRACTOR HAS THE OPTION TO DEVIATE FROM THE PROPOSED ERECTION SEQUENCE. IF THE CONTRACTOR CHOOSES TO DEVIATE FROM THE PROPOSED ERECTION SEQUENCE, HE WILL BE RESPONSIBLE FOR ANALYZING THE EFFECTS OF THE PROPOSED CHANGES TO THE PERMANENT STRUCTURE DURING THE CONSTRUCTION PHASE AND IN THE FINAL CONDITION. CALCULATIONS SHOWING REVISED EFFECTS MUST BE SUBMITTED FOR APPROVAL. ANY APPROVED CHANGES WILL BE REFLECTED IN REVISED CONTRACT PLANS FURNISHED BY THE CONTRACTOR. ALL ENGINEERING WORK FOR THE REVISION MUST BE PERFORMED BY A PROFESSIONAL ENGINEER REGISTERED IN NORTH CAROLINA. ANY WORK REQUIRED BY THE CONTRACTOR TO COMPLETE THE DEVIATION FROM THE PROPOSED ERECTION SEQUENCE SHALL BE PERFORMED AT NO ADDITIONAL COST TO THE DEPARTMENT.
2. THE CONTRACTOR IS RESPONSIBLE FOR DESIGNING THE TEMPORARY BENTS, STRONG-BACKS AND A CONNECTION THAT WILL PREVENT RELATIVE ROTATION BETWEEN THE DROP-IN GIRDERS AND HAUNCHED GIRDERS. THE DESIGNS SHALL FOLLOW THE AASHTO GUIDE DESIGN SPECIFICATIONS FOR BRIDGE TEMPORARY WORKS, 1995 WITH CURRENT INTERIMS AND SHALL BE COMPLETED BY A PROFESSIONAL ENGINEER REGISTERED IN NORTH CAROLINA. THE CONTRACTOR SHALL SUBMIT SIGNED AND SEALED WORKING DRAWINGS AND CALCULATIONS FOR APPROVAL BY THE ENGINEER.
3. THE CONTRACTOR SHALL ENSURE THAT BEARINGS ARE PROPERLY SEATED AND FUNCTIONING AFTER POST-TENSIONING IS COMPLETED.
4. BEAMS SHALL NOT BE MORE THAN 1/4" OUT OF VERTICAL OR TRANSVERSE ALIGNMENT AT SPLICE LOCATIONS.
5. FOR DETAILS OF POST-TENSIONING OPERATIONS, SEE SHEET TITLED "POST-TENSION GIRDER NOTES".
6. THE COST OF THE MATERIALS, LABOR AND ANY INCIDENTAL ITEMS RELATED TO THE CONSTRUCTION, MAINTENANCE AND REMOVAL OF TEMPORARY BENTS AND STRONG-BACKS SHALL BE INCLUDED IN THE PAY ITEM "CONSTRUCTION, MAINTENANCE AND REMOVAL OF TEMPORARY ACCESS".
7. FOR TEMPORARY BENTS, SEE SPECIAL PROVISIONS.
8. PROVIDE ERECTION DRAWINGS FOR ANY TEMPORARY DIAPHRAGMS USED BETWEEN SPLICED GIRDER SEGMENTS. THE CONTRACTOR SHALL TAKE CARE TO INSURE THAT THE TEMPORARY AND PERMANENT DIAPHRAGMS BETWEEN THE GIRDER SEGMENTS ARE INSTALLED IN THE PROPER POSITION AND ORIENTATION.
9. THE CONTRACTOR HAS THE OPTION TO MOVE THE TEMPORARY BENTS IF DESIRED. THE CONTRACTOR WILL BE RESPONSIBLE FOR CALCULATION OF ALL SUPPORT REACTIONS AND ANY OTHER MODIFICATIONS TO THE ERECTION SEQUENCE OR GIRDER SEGMENTS BASED ON THIS CHANGE.

PROJECT NO. R-3307
CARTERET COUNTY
STATION: 46+21.50 -L-

SHEET 1 OF 2

STATE OF NORTH CAROLINA
DEPARTMENT OF TRANSPORTATION
RALEIGH

ERECTION SEQUENCE FOR SPANS P, Q AND R

NORTH CAROLINA PROFESSIONAL SEAL 25911 ENGINEER DWAIN G. HATHAWAY 11-1-2013

NORTH CAROLINA PROFESSIONAL SEAL 033752 ENGINEER SETH A. DENNEY 11/01/13

THE LPA GROUP of North Carolina TRANSPORTATION CONSULTANTS

THE LPA GROUP of North Carolina
8000 Regency Parkway, Suite 600
Cary, North Carolina 27518
NC License No.: F-1084

REVISIONS								SHEET NO.
NO.	BY:	DATE:	NO.	BY:	DATE:			S-31
1			3					TOTAL SHEETS
2			4					333

DRAWN BY : M. D. MAYHEW DATE : 9-1-11
CHECKED BY : S. A. DENNEY DATE : 9-9-11

DWG. 32 OF 282

11/7/2013
3:38:41 PM
User: jaustin
Filename: Y:\Projects\NCDOT\R-3307\Dwgs\Final\R-3307_032_SD_ER_SEQ1.dgn

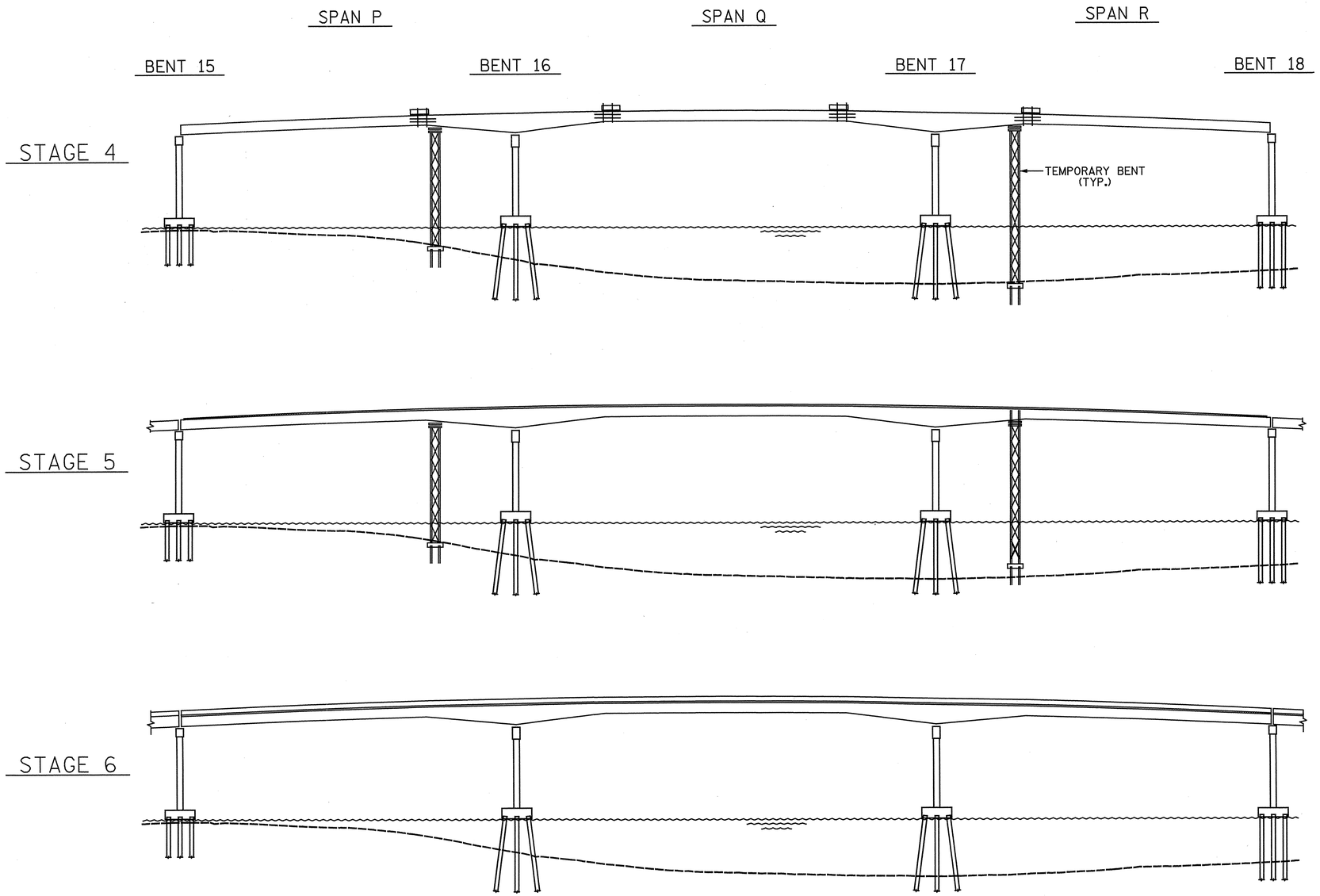

STAGE 4

STRUCTURAL STEEL DIAPHRAGM ERECTION SHALL BE COMPLETED BEFORE FALSEWORK OR FORMS ARE PLACED ON THE GIRDERS.

1. CAST CLOSURE SPLICE DIAPHRAGMS.

STAGE 5

DO NOT BEGIN THIS STAGE UNTIL CONCRETE STRENGTH FOR CLOSURE SPLICE REACHES 6500 psi.

1. LOOSEN BOLTS CONNECTING INTERMEDIATE DIAPHRAGMS TO GIRDERS.
2. FIRST STAGE POST-TENSIONING: AFTER CLOSURE SPLICE DIAPHRAGMS IN SPANS P THRU R HAVE ATTAINED REQUIRED STRENGTH OF 6500 psi, STRESS FIRST STAGE TENDONS (TENDONS 3 AND 4).
3. RELEASE GIRDERS FROM TEMPORARY BENTS.
4. GROUT FIRST STAGE TENDONS.

   ENCASE POST-TENSIONING ANCHORAGES FOR TENDONS 3 AND 4 WITH EPOXY GROUT POUR-BACK OR APPROVED EQUIVALENT.
5. RETIGHTEN BOLTS CONNECTING INTERMEDIATE DIAPHRAGMS TO GIRDERS.
6. REMOVE STRONG-BACKS.
7. ERECT DECK FORMS IN SPANS P THRU R. CAST DECK POURS 1 THRU 8 (SEE SUPERSTRUCTURE BILL OF MATERIAL PLANSHEET FOR POURING SEQUENCE)

STAGE 6

1. SECOND STAGE POST-TENSIONING: AFTER THE DECK CONCRETE IN SPANS P-R HAS ATTAINED REQUIRED STRENGTH, STRESS SECOND STAGE TENDONS (TENDON 1 AND 2).
2. GROUT SECOND STAGE TENDONS.

   ENCASE POST-TENSIONING ANCHORAGES FOR TENDONS 1 AND 2 WITH EPOXY GROUT POUR-BACK OR APPROVED EQUIVALENT.

   AFTER GROUTING THE SECOND STAGE POST-TENSIONING, SPAN O AND SPAN S GIRDERS MAY BE PLACED IN THEIR FINAL POSITION.
3. CAST DECK POUR 9 (SEE SUPERSTRUCTURE BILL OF MATERIAL PLANSHEET FOR POURING SEQUENCE). REMOVE TEMPORARY BENTS FOR SPANS P AND R.
4. CAST REMAINING CONCRETE (PARAPET, MEDIAN BARRIER, ETC.).

NOTE:

SEE SHEET 1 OF 2 FOR NOTES AND ADDITIONAL POST-TENSIONING NOTES.

ELEVATIONS OF BOTTOM OF GIRDERS AT TEMPORARY BENTS

GIRDER NO.	END GIRDER SPAN P	HAUNCHED GIRDER SPAN P	HAUNCHED GIRDER SPAN R	END GIRDER SPAN R
1	70.779	70.811	71.397	71.320
2	70.445	70.476	70.927	70.849
3	70.109	70.139	70.454	70.374
4	69.773	69.803	69.980	69.900
5	69.438	69.467	69.507	69.426
6	69.102	69.130	69.033	68.951
7	68.766	68.794	68.559	68.477
8	68.431	68.457	68.086	68.003
9	68.093	68.119	67.609	67.525

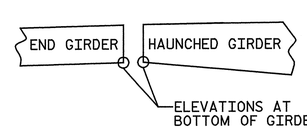

BOTTOM OF GIRDER DIAGRAM
(SHOWING ELEVATION LOCATIONS)

PROJECT NO. R-3307
CARTERET COUNTY
STATION: 46+21.50 -L-
SHEET 2 OF 2

STATE OF NORTH CAROLINA
DEPARTMENT OF TRANSPORTATION
RALEIGH

ERECTION SEQUENCE FOR SPANS P, Q AND R

NORTH CAROLINA PROFESSIONAL SEAL 25911 ENGINEER DWIN G. HATHWAY 4-3-2012

NORTH CAROLINA PROFESSIONAL SEAL 033752 ENGINEER SETH A. DENNEY 04/09/12

THE LPA GROUP of North Carolina TRANSPORTATION CONSULTANTS
THE LPA GROUP of North Carolina
8000 Regency Parkway, Suite 600
Cary, North Carolina 27518
NC License No.: F-1084

REVISIONS						SHEET NO.
NO.	BY:	DATE:	NO.	BY:	DATE:	S-32
1			3			TOTAL SHEETS
2			4			333

DRAWN BY : M. D. MAYHEW DATE : 9-1-11
CHECKED BY : S. A. DENNEY DATE : 9-9-11

DWG. 33 OF 282

4/2/2012
12:39:15 PM
User: jaustin
Filename: Y:\Projects\NCDOT\R-3307\Dwgs\Final\R-3307_033_SD_ER_SE02.dgn

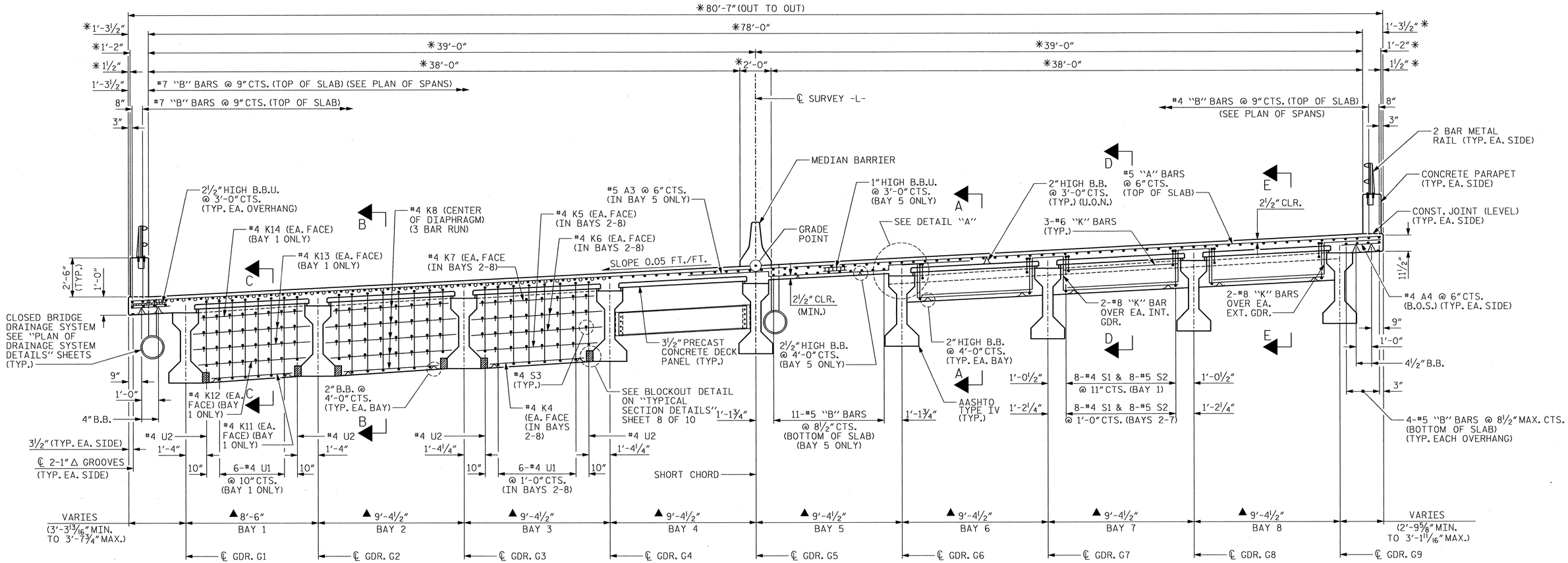

PARTIAL TYPICAL SECTION
SHOWING CONTINUOUS BENT DIAPHRAGMS AT BENTS 1,2 & 4

PARTIAL TYPICAL SECTION
SHOWING INTERMEDIATE DIAPHRAGMS

PARTIAL TYPICAL SECTION
SHOWING END DIAPHRAGMS AT END BENT 1, BENTS 3 & 5

TYPICAL SECTION - SPANS A-E

* RADIAL DIMENSION
▲ NORMAL TO SHORT CHORD

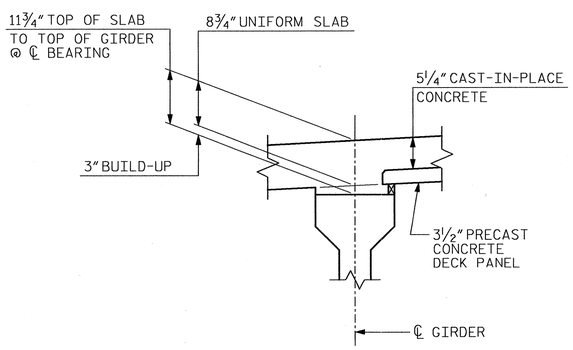

DETAIL "A"

NOTES:

WHEN USING REMOVABLE FORMS, PROVIDE BEAM BOLSTERS @ 4'-0" CTS. WITH A HEIGHT TO SUPPORT THE BOTTOM MAT OF "A" BARS A CLEAR DISTANCE OF 2½" ABOVE THE TOP OF THE REMOVABLE FORM.

LONGITUDINAL STEEL MAY BE SHIFTED SLIGHTLY, AS NECESSARY, TO AVOID INTERFERENCE WITH STIRRUPS IN PRESTRESSED CONCRETE GIRDERS AND BRIDGE DRAINS IN DECK SLAB.

PREVIOUSLY CAST CONCRETE IN A CONTINUOUS UNIT SHALL HAVE ATTAINED A MINIMUM COMPRESSIVE STRENGTH OF 3,000 PSI BEFORE ADDITIONAL CONCRETE IS CAST IN THE UNIT.

CONCRETE PARAPET AND CONCRETE MEDIAN BARRIER IN A CONTINUOUS UNIT SHALL NOT BE CAST UNTIL ALL SLAB CONCRETE IN THE UNIT HAS BEEN CAST AND HAS REACHED A MINIMUM COMPRESSIVE STRENGTH OF 3,000 PSI.

FOR BARS INDICATED AND NO MARKS SHOWN, SEE PLAN OF SPANS.

THERE WILL BE NO DIAPHRAGMS IN BAYS THAT CONTAIN THE BRIDGE DRAINAGE SYSTEM.

CLOSED BRIDGE DRAINAGE SYSTEM IS LOCATED IN SPANS C-E AND SPANS AA-CC. SEE "PLAN OF DRAINAGE SYSTEM" SHEETS FOR BRIDGE DRAIN LOCATIONS.

REMOVABLE FORMS ARE TO BE USED IN BAY 4 AND BAY 5 WHERE CLOSED DRAINAGE SYSTEM IS PRESENT.

FOR SECTIONS A-A, B-B, AND C-C SEE SHEET 8 OF 10. FOR SECTIONS D-D AND E-E SEE SHEET 9 OF 10.

PROJECT NO. R-3307
CARTERET COUNTY
STATION: 46+21.50 -L-

SHEET 1 OF 10

STATE OF NORTH CAROLINA
DEPARTMENT OF TRANSPORTATION
RALEIGH

SUPERSTRUCTURE
TYPICAL SECTION
SPANS A-E

NORTH CAROLINA PROFESSIONAL SEAL 12323 ENGINEER MORRIS ISRAELNAM 3/30/2012

NORTH CAROLINA PROFESSIONAL SEAL 027799 ENGINEER ALLYSON K. ORR 3/30/2012

MI ENGINEERING
1011 SHAUB DRIVE, SUITE 100
RALEIGH, NC 27606
(919) 851-6606
FIRM PE NUMBER : P-0671

REVISIONS						SHEET NO.
NO.	BY:	DATE:	NO.	BY:	DATE:	S-33
1			3			TOTAL SHEETS
2			4			333

DRAWN BY : B.E. LANNING DATE : 9-11
CHECKED BY : B.E. ATKINSON DATE : 9-11

DWG. 34 OF 282

3/29/2012 2:46:18 PM
User: blanning
Filename: P:\NC Projects\MI0005 - Gallants Channel\R-3307\Structures\R-3307_034_SD_TS1.dgn

NOTES:

LONGITUDINAL STEEL MAY BE SHIFTED SLIGHTLY, AS NECESSARY, TO AVOID INTERFERENCE WITH STIRRUPS IN PRESTRESSED CONCRETE GIRDERS.

CONCRETE IN BENT DIAPHRAGMS MAY BE CLASS A IN LIEU OF CLASS AA.

REINFORCING STEEL MAY BE SHIFTED SLIGHTLY AS NECESSARY TO AVOID INTERFERENCE WITH THE BLOCKOUT FOR EXPANSION JOINT SEAL.

FOR STRUCTURE DRAINAGE SYSTEM, SEE SPECIAL PROVISIONS.

FOR DECK DRAINS AND CLOSED DRAINAGE SYSTEM DETAILS, SEE "PLAN OF DRAINAGE SYSTEM" SHEETS.

STRUCTURAL STEEL ERECTION IN A CONTINUOUS UNIT SHALL BE COMPLETE BEFORE FALSEWORK OR FORMS ARE PLACED ON THE UNIT.

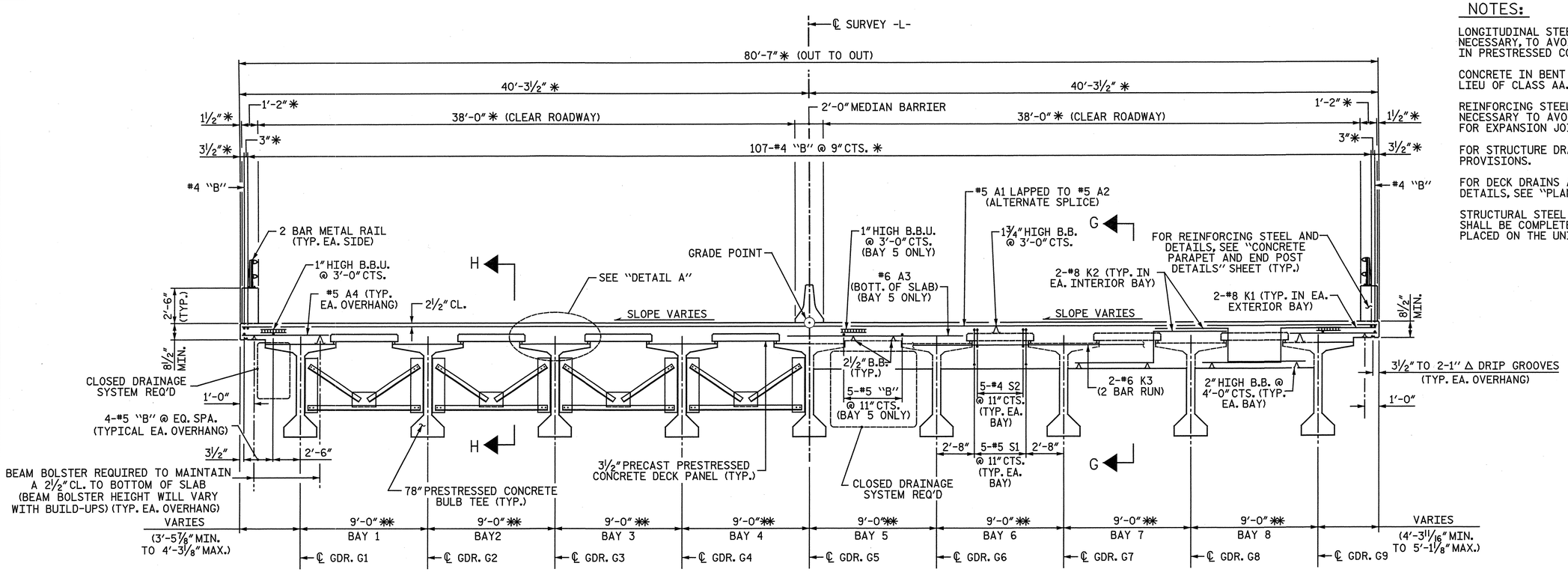

HALF-SECTION @ INTERMEDIATE DIAPHRAGM - SPANS F THRU N

HALF-SECTION @ BENTS 5 AHEAD, 7, 9, 11, 13 AND 14

TABLE A		
SPAN	BUILDUP	D
F-I	6½"	15"
J	7½"	16"
K-L	3¾"	12¼"
M-O	2½"	11"

✱ RADIAL DIMENSION
✱✱ NORMAL TO SHORT CHORD

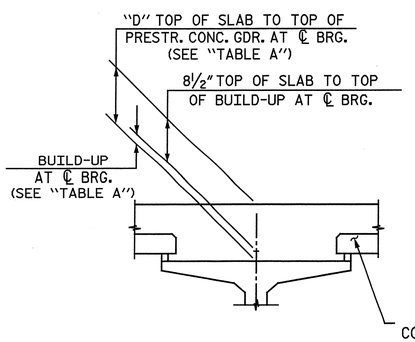

DETAIL A

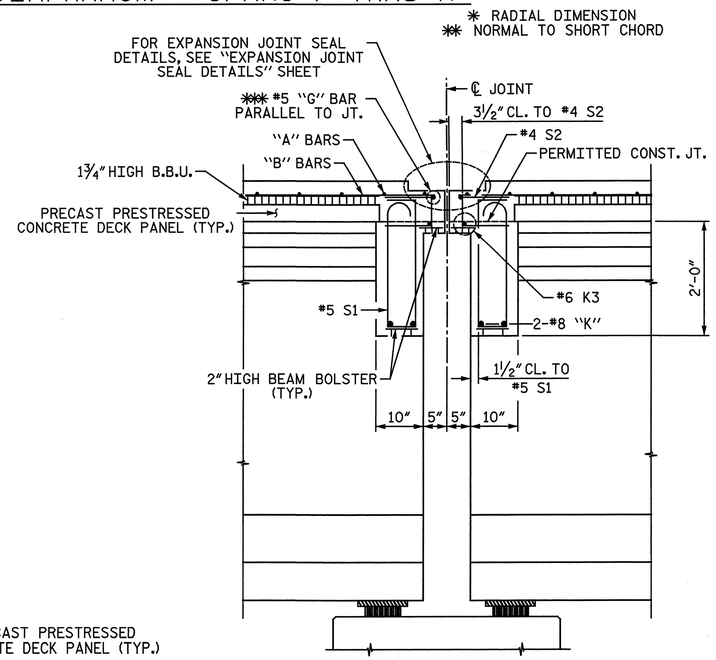

SECTION G-G

✱✱✱ #5 "G" BAR MAY BE SHIFTED SLIGHTLY AS NECESSARY, TO CLEAR REINFORCING STEEL AND STIRRUPS.

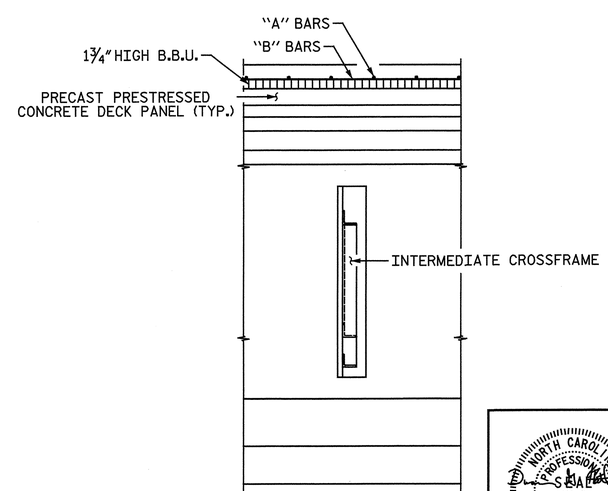

SECTION H-H

PROJECT NO. R-3307
CARTERET COUNTY
STATION: 46+21.50 -L-
SHEET 2 OF 10

STATE OF NORTH CAROLINA
DEPARTMENT OF TRANSPORTATION
RALEIGH

SUPERSTRUCTURE

TYPICAL SECTION AND DETAILS

SPANS F-N

NORTH CAROLINA PROFESSIONAL SEAL 25911 ENGINEER DWAIN C. HATHAWAY 4-3-2012

NORTH CAROLINA PROFESSIONAL SEAL 033752 ENGINEER SETH A. DENNETT

THE LPA GROUP of North Carolina
TRANSPORTATION CONSULTANTS

THE LPA GROUP of North Carolina
8000 Regency Parkway, Suite 600
Cary, North Carolina 27518
NC License No.: F-1084

REVISIONS								SHEET NO.
NO.	BY:	DATE:	NO.	BY:	DATE:			S-34
1			3					TOTAL SHEETS
2			4					333

DRAWN BY : M.D.M./N.B.S DATE : 7-13-11
CHECKED BY : R. F. DeCOLA DATE : 11-1-11

DWG. 35 OF 282

4/2/2012
12:39: PM
User: jaustin
Filename: Y:\Projects\NCDOT\R-3307\Dwgs\Final\R-3307_035_SD_TS1.dgn

NOTES:

FOR SUPERSTRUCTURE NOTES, SEE "TYPICAL SECTION AND DETAILS SPANS F-N", SHEET 2 OF 10.

FOR ADDITIONAL INFORMATION ON DECK SLAB REINFORCING, SEE "PLAN OF SPANS" SHEETS.

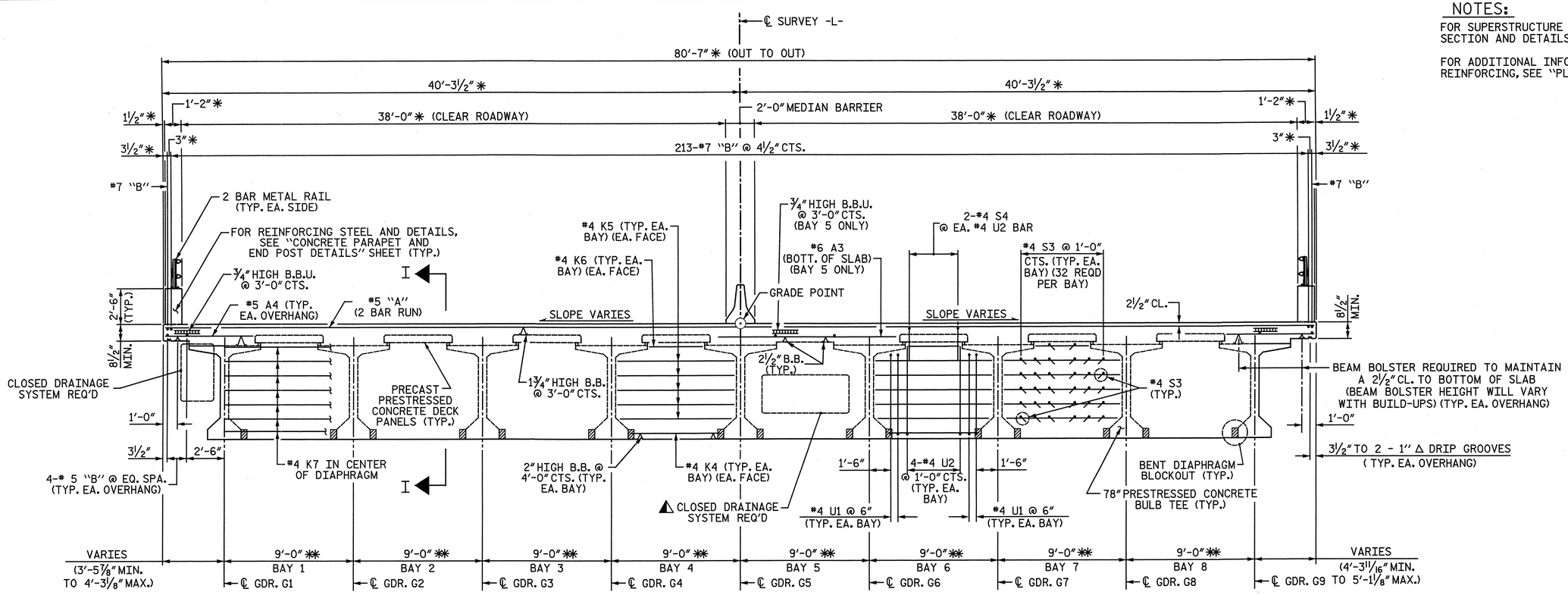

SECTION @ BENTS 6, 8, 10 AND 12

✱ RADIAL DIMENSION
✱✱ NORMAL TO SHORT CHORD

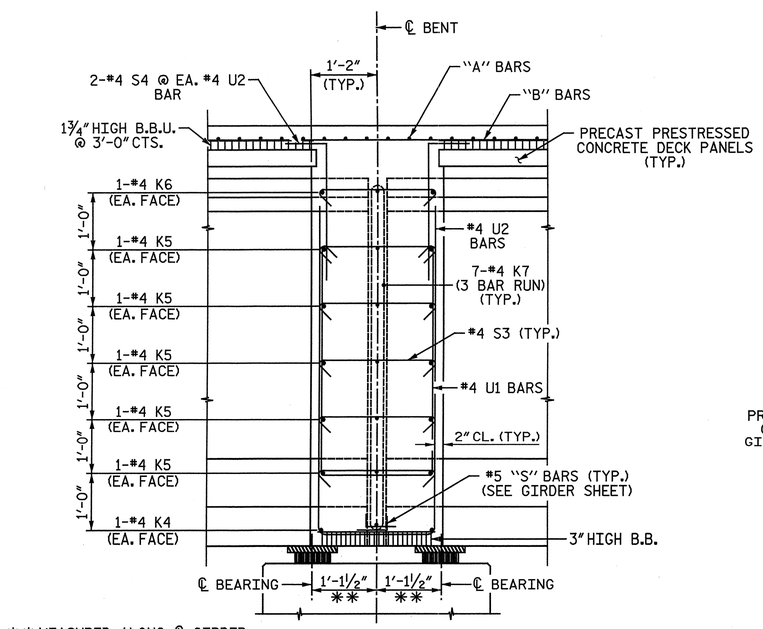

✱✱ MEASURED ALONG ℄ GIRDER

SECTION I-I

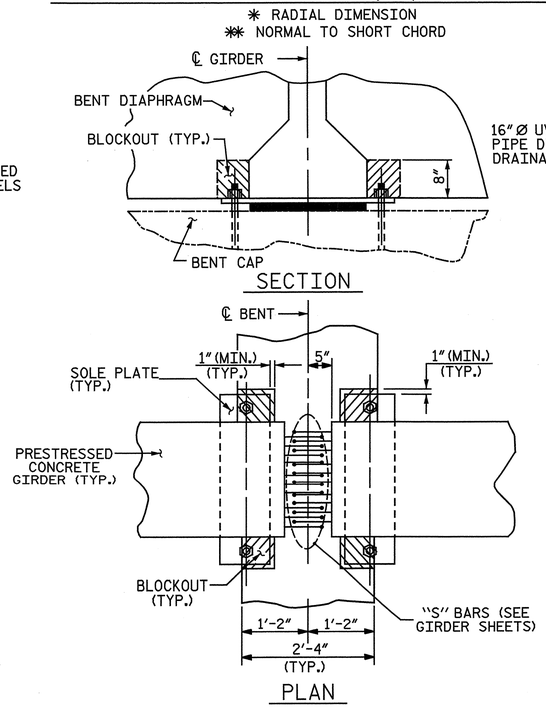

BENT DIAPHRAGM BLOCKOUT DETAIL

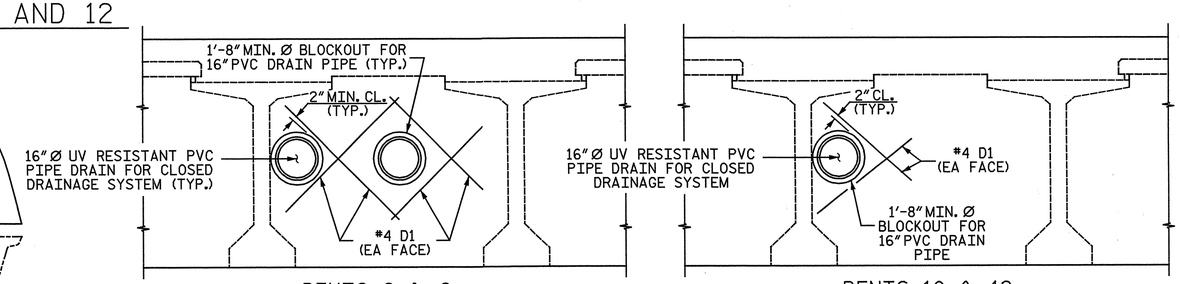

⚠ DRAINAGE BLOCKOUT AT CONTINUOUS BENT DIAPHRAGMS

PROJECT NO. R-3307
CARTERET COUNTY
STATION: 46+21.50 -L-

SHEET 3 OF 10

STATE OF NORTH CAROLINA
DEPARTMENT OF TRANSPORTATION
RALEIGH

SUPERSTRUCTURE

TYPICAL SECTION AND DETAILS

SPANS F-M

NORTH CAROLINA PROFESSIONAL SEAL 25911 ENGINEER DAVID G. HATHWAY 4-3-2012

NORTH CAROLINA PROFESSIONAL SEAL 033752 ENGINEER SETH A. DENNEY

THE LPA GROUP of North Carolina TRANSPORTATION CONSULTANTS

THE LPA GROUP of North Carolina
8000 Regency Parkway, Suite 600
Cary, North Carolina 27518
NC License No.: F-1084

REVISIONS							SHEET NO.
NO.	BY:	DATE:	NO.	BY:	DATE:		S-35
1			3				TOTAL SHEETS
2			4				333

DRAWN BY : M.D.M./N.B.S. DATE : 7-13-11
CHECKED BY : R. F. DeCOLA DATE : 11-1-11

DWG. 36 OF 282

4/2/2012 12:40: PM
User: jaustin
Filename: Y:\Projects\NCDOT\R-3307\Dwgs\Final\R-3307_036_SD_TS2.dgn

NOTES:

FOR SUPERSTRUCTURE NOTES, SEE "TYPICAL SECTION AND DETAILS SPANS F-N", SHEET 2 OF 10.

FOR ADDITIONAL INFORMATION ON DECK SLAB REINFORCING, SEE "PLAN OF SPANS" AND "PLAN OF SPAN DETAILS" SHEETS.

FOR "DETAIL A" AND "SECTION H-H", SEE "TYPICAL SECTION AND DETAILS SPANS F-N", SHEET 2 OF 10.

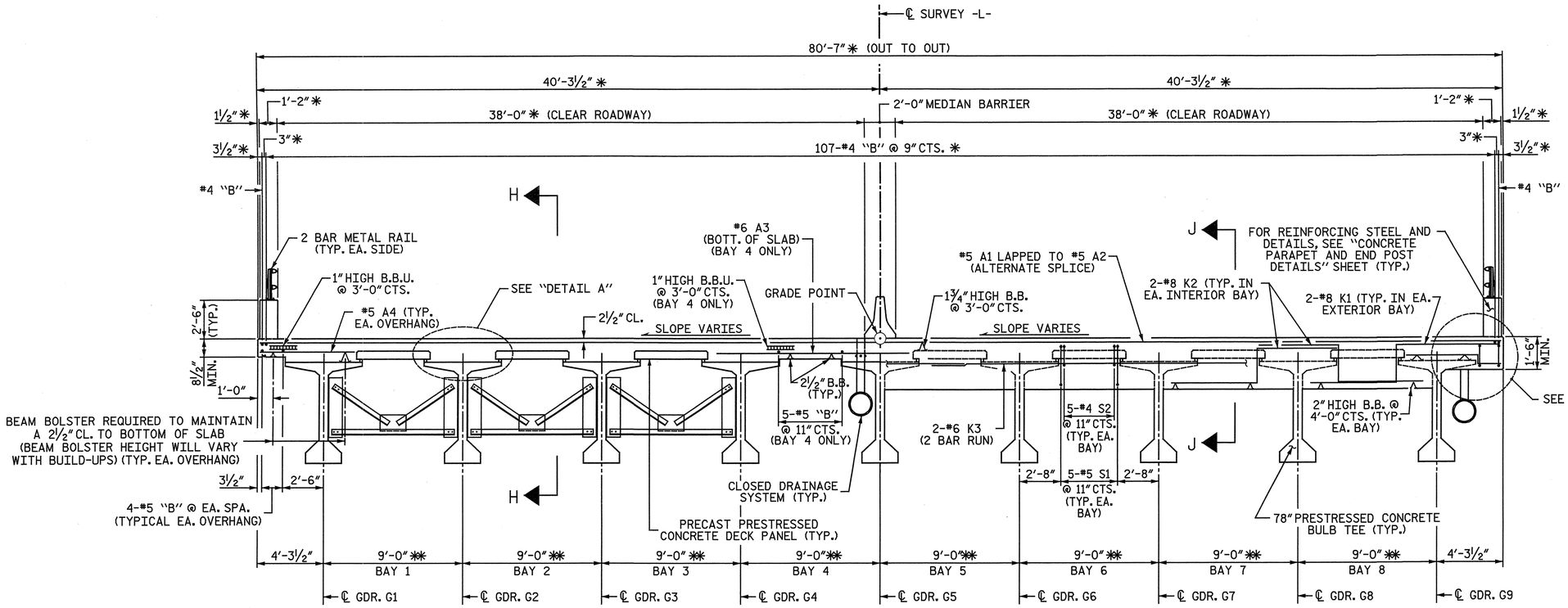

HALF-SECTION @ INTERMEDIATE DIAPHRAGM - SPAN O

✱ RADIAL DIMENSION
✱✱ NORMAL TO SHORT CHORD

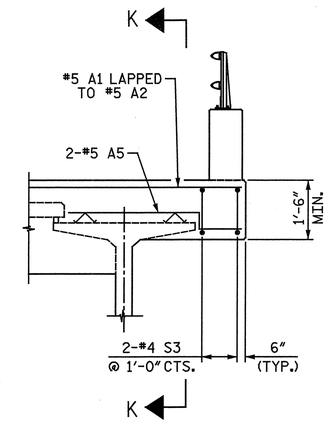

DETAIL B

HALF-SECTION @ BENT 15 BACK

✱ RADIAL DIMENSION
✱✱ NORMAL TO SHORT CHORD

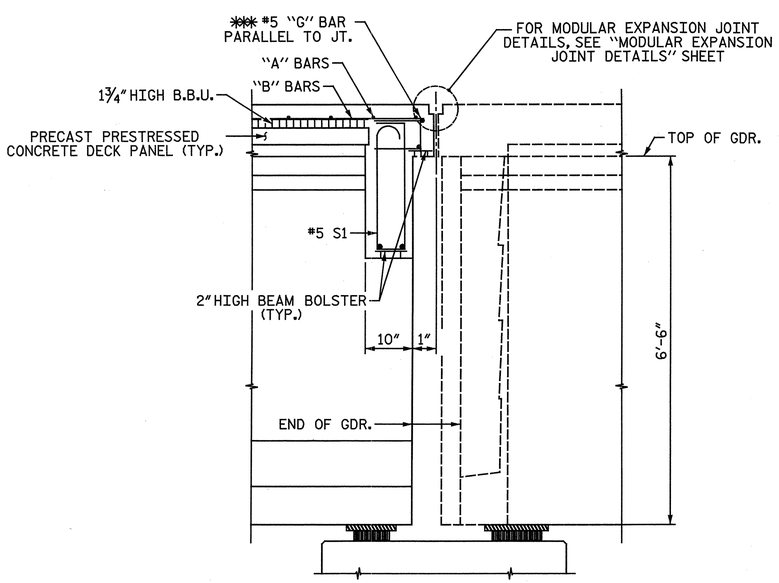

SECTION J-J

✱✱✱ #5 "G" BAR MAY BE SHIFTED SLIGHTLY AS NECESSARY, TO CLEAR REINFORCING STEEL AND STIRRUPS.

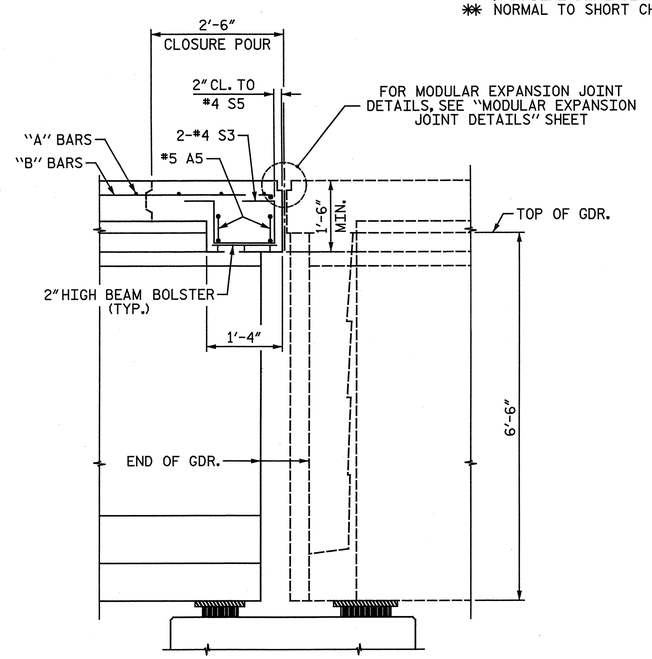

SECTION K-K

OVERHANG SLAB THICKENING FOR MODULAR JOINT AT BENT 15

THE "B" BARS IN THE DECK SLAB MAY BE CUT AS DIRECTED BY THE ENGINEER TO CLEAR THE MODULAR JOINT SUPPORT BOXES.

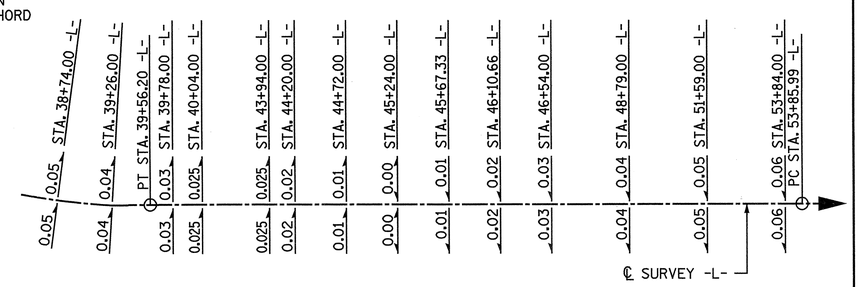

SUPERELEVATION TRANSITION

SPANS H THRU R

PROJECT NO. R-3307

CARTERET COUNTY

STATION: 46+21.50 -L-

SHEET 4 OF 10

STATE OF NORTH CAROLINA
DEPARTMENT OF TRANSPORTATION
RALEIGH

SUPERSTRUCTURE

TYPICAL SECTION AND DETAILS

SPAN O

NORTH CAROLINA PROFESSIONAL SEAL 25911 ENGINEER G. HAYNMAN 4-3-2012

NORTH CAROLINA PROFESSIONAL SEAL 033752 ENGINEER SETH A. DENNICK 04/03/12

THE LPA GROUP of North Carolina
THE LPA GROUP of North Carolina
8000 Regency Parkway, Suite 600
Cary, North Carolina 27518
NC License No.: F-1084

REVISIONS									SHEET NO.
NO.	BY:	DATE:	NO.	BY:	DATE:				S-36
1			3						TOTAL SHEETS
2			4						333

DRAWN BY : M.D.M./N.B.S DATE : 7-13-11
CHECKED BY : R. F. DeCOLA DATE : 11-1-11

DWG. 37 OF 282

4/2/2012 12:40:1 PM
User:jaustin
Filename: Y:\Projects\NCDOT\R-3307\Dwgs\Final\R-3307_037_SO_TS3.dgn

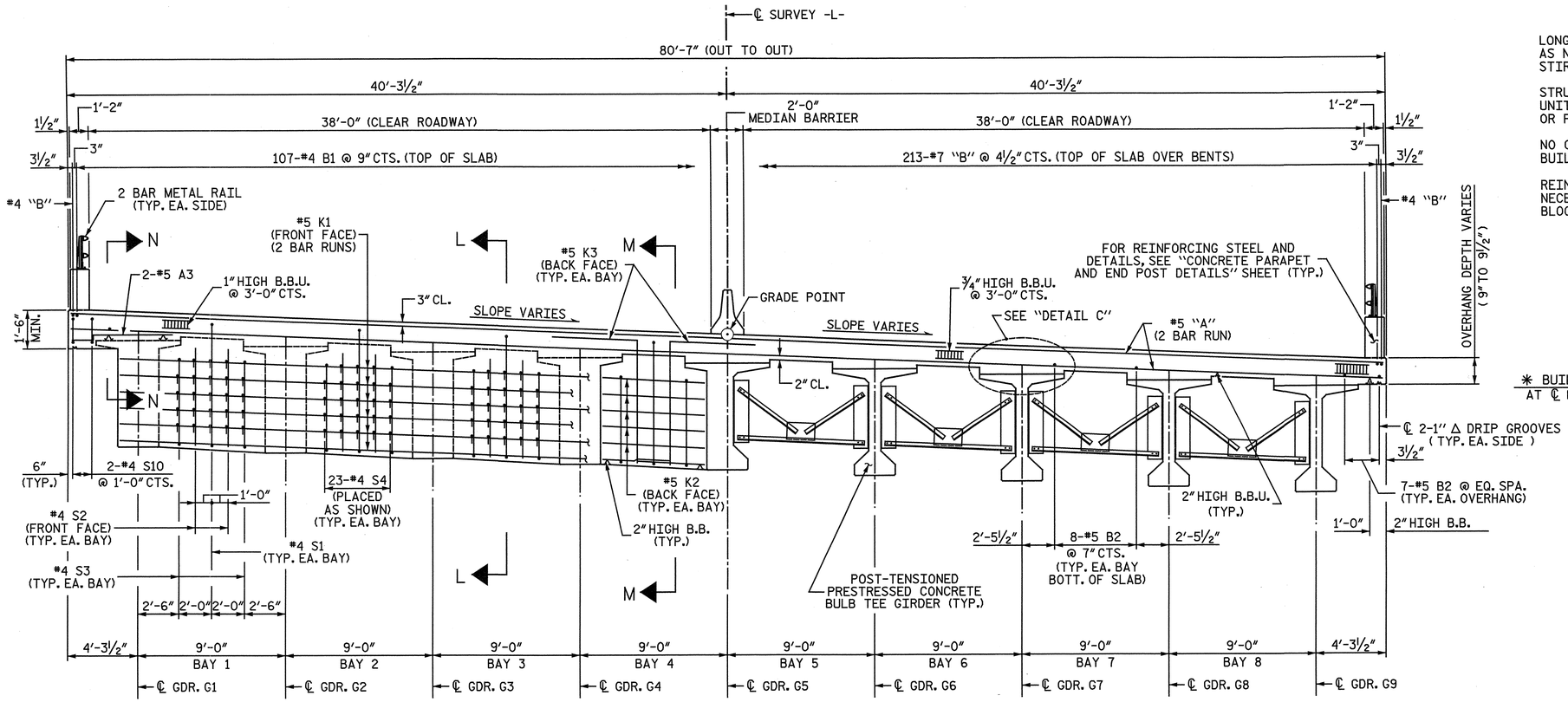

HALF-SECTION @ END DIAPHRAGM
BENTS 15 AHEAD & 18 BACK

HALF-SECTION @ INTERMEDIATE DIAPHRAGMS

NOTES

LONGITUDINAL STEEL MAY BE SHIFTED SLIGHTLY, AS NECESSARY, TO AVOID INTERFERENCE WITH STIRRUPS IN PRESTRESSED CONCRETE GIRDERS.

STRUCTURAL STEEL ERECTION IN A CONTINUOUS UNIT SHALL BE COMPLETE BEFORE FALSEWORK OR FORMS ARE PLACED ON THE UNIT.

NO CHAMFER IS REQUIRED ON CORNERS OF GIRDER BUILD-UPS.

REINFORCING STEEL MAY BE SHIFTED SLIGHTLY AS NECESSARY TO AVOID INTERFERENCE WITH THE BLOCKOUT FOR MODULAR EXPANSION JONT.

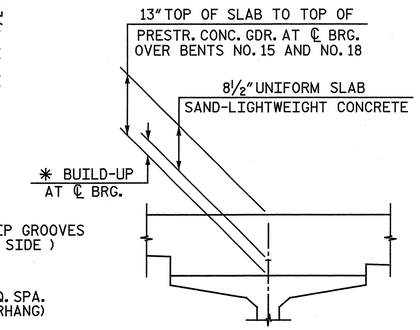

DETAIL C

✳ BUILD-UP VARIES ALONG GIRDER (SEE "DEAD LOAD DEFLECTIONS" SHEET)

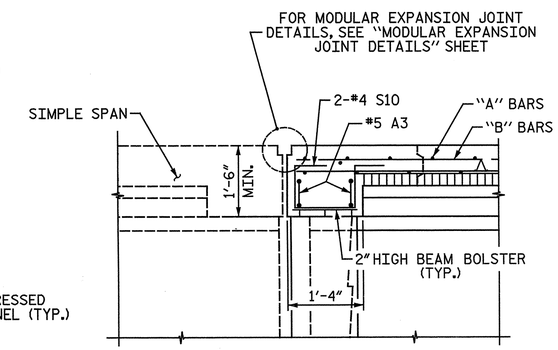

SECTION N-N

OVERHANG SLAB THICKENING FOR MODULAR JOINT AT BENT 18

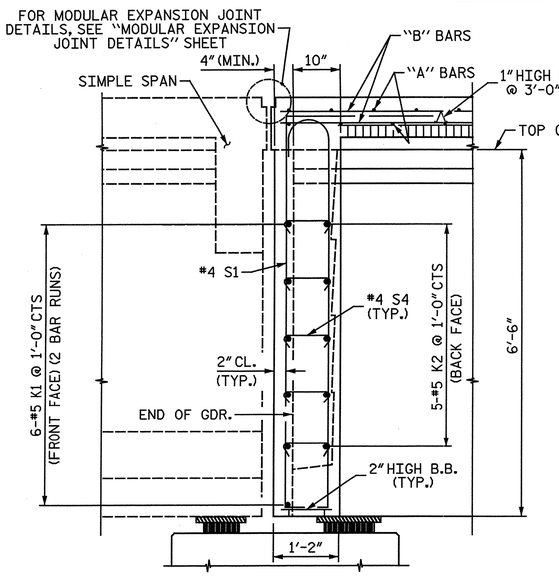

SECTION L-L

SHOWING PARTIAL REINFORCING STEEL @ BENT 15. BENT 18 SIMILAR. FOR ADDITIONAL TYPICAL REINFORCING STEEL, SEE "SECTION M-M".

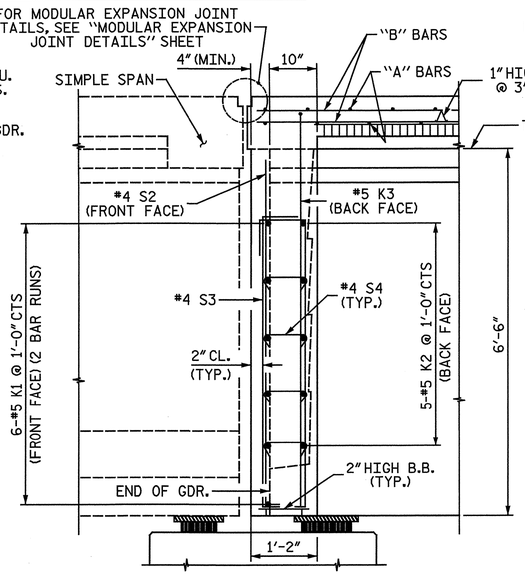

SECTION M-M

SHOWING PARTIAL REINFORCING STEEL @ BENT 15. BENT 18 SIMILAR. FOR ADDITIONAL TYPICAL REINFORCING STEEL, SEE "SECTION L-L".

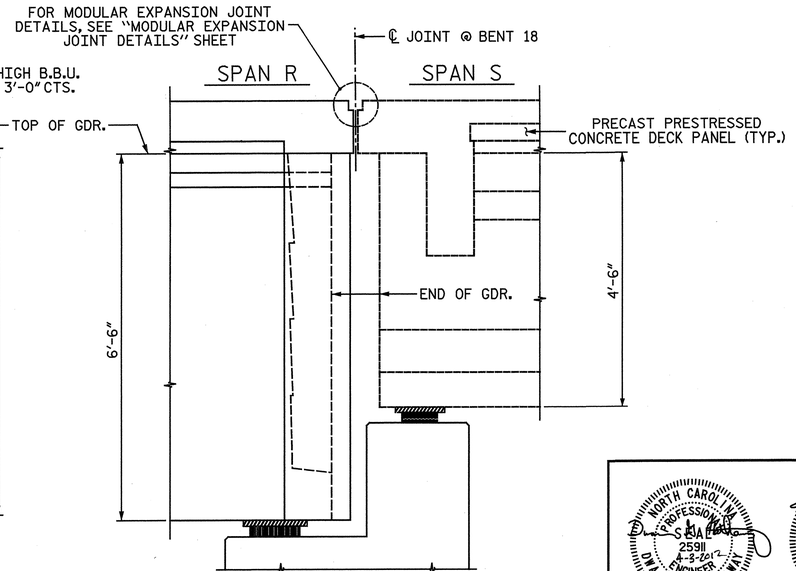

BENT 18 DIAPHRAGM

FOR ADDITIONAL TYPICAL REINFORCING STEEL, SEE "SECTION L-L" & "SECTION M-M".

PROJECT NO. R-3307
CARTERET COUNTY
STATION: 46+21.50 -L-

SHEET 5 OF 10

STATE OF NORTH CAROLINA
DEPARTMENT OF TRANSPORTATION
RALEIGH

SUPERSTRUCTURE

TYPICAL SECTION AND DETAILS

SPANS P-R

NORTH CAROLINA PROFESSIONAL SEAL 25911 ENGINEER DWAIN G. HATHMAN 4-3-2012

NORTH CAROLINA PROFESSIONAL SEAL 033752 ENGINEER SETH A. DENNEY

THE LPA GROUP of North Carolina TRANSPORTATION CONSULTANTS

THE LPA GROUP of North Carolina
8000 Regency Parkway, Suite 600
Cary, North Carolina 27518
NC License No.: F-1084

REVISIONS								SHEET NO.
NO.	BY:	DATE:	NO.	BY:	DATE:			5-37
1			3					TOTAL SHEETS
2			4					333

DRAWN BY : M. D. MAYHEW DATE : 7-19-11
CHECKED BY : S. A. DENNEY DATE : 9-9-11

THE "B" BARS IN THE DECK SLAB MAY BE CUT AS DIRECTED BY THE ENGINEER TO CLEAR THE MODULAR JOINT SUPPORT BOXES.

DWG. 38 OF 282

4/2/2012 12:40:01 PM
User: jaustin
Filename: Y:\Projects\NCDOT\R-3307\Dwgs\Final\R-3307_038_SD_TS4.dgn

NOTES

FOR "SECTION O-O", "SECTION P-P" AND "SECTION Q-Q", SEE "TYPICAL SECTION DETAILS SPANS P-R", SHEET 10 OF 10.

FOR SUPERSTRUCTURE NOTES, SEE "TYPICAL SECTION AND DETAILS SPANS P-R" SHEET 5 OF 10.

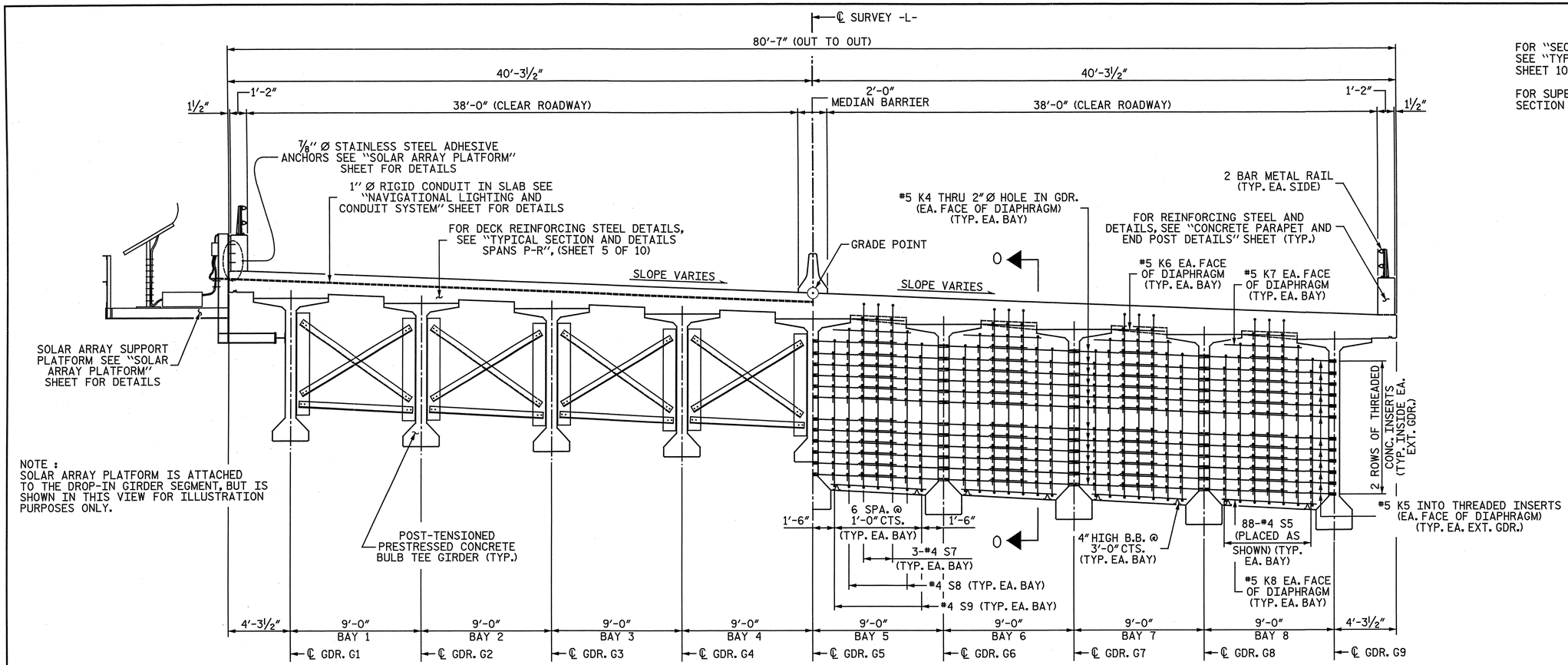

HALF-SECTION @ INTERMEDIATE DIAPHRAGM AT HAUNCH GIRDER

HALF-SECTION @ BENT DIAPHRAGM AT BENTS 16 AND 17

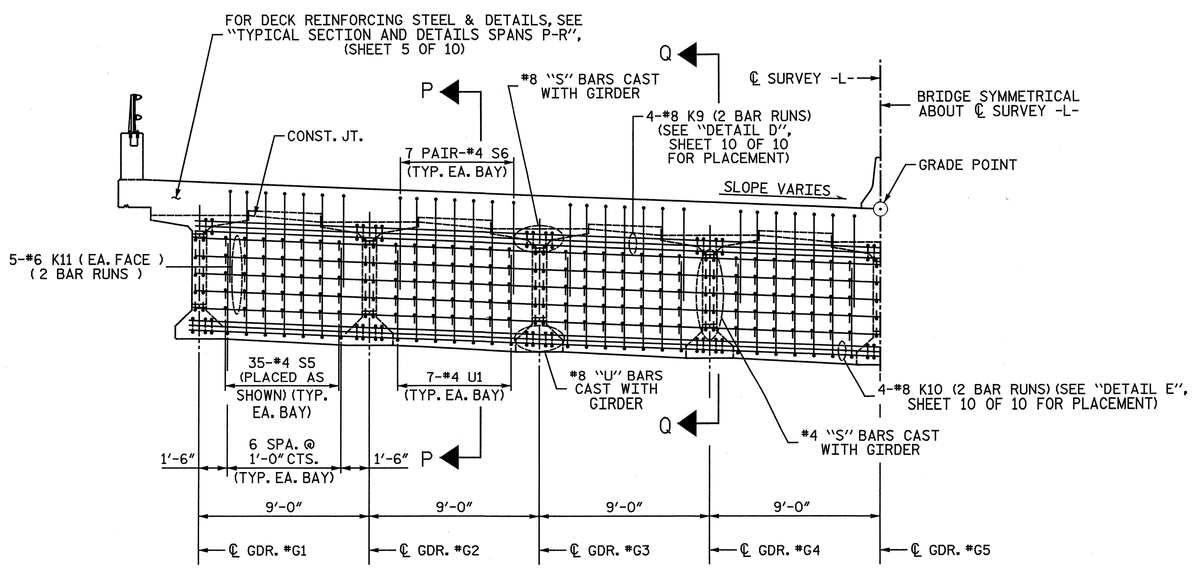

HALF-SECTION @ CLOSURE SPLICE DIAPHRAGM

PROJECT NO. R-3307

CARTERET COUNTY

STATION: 46+21.50 -L-

SHEET 6 OF 10

STATE OF NORTH CAROLINA
DEPARTMENT OF TRANSPORTATION
RALEIGH

SUPERSTRUCTURE

TYPICAL SECTION AND DETAILS

SPANS P-R

NORTH CAROLINA PROFESSIONAL SEAL 25911 ENGINEER DWAIN G. WATKINS 4-3-2012

NORTH CAROLINA PROFESSIONAL SEAL 033752 ENGINEER SETH A. DENNEY

THE LPA GROUP of North Carolina TRANSPORTATION CONSULTANTS

THE LPA GROUP of North Carolina
8000 Regency Parkway, Suite 600
Cary, North Carolina 27518
NC License No.: F-1084

REVISIONS						SHEET NO.
NO.	BY:	DATE:	NO.	BY:	DATE:	S-38
1			3			TOTAL SHEETS
2			4			333

DRAWN BY : M. D. MAYHEW DATE : 7-19-11
CHECKED BY : S.A. DENNEY DATE : 9-9-11

DWG. 39 OF 282

4/2/2012
12:40:0[illegible] PM
User: jaustin
Filename: Y:\Projects\NCDOT\R-3307\Dwgs\Final\R-3307_039_SD_TS5.dgn

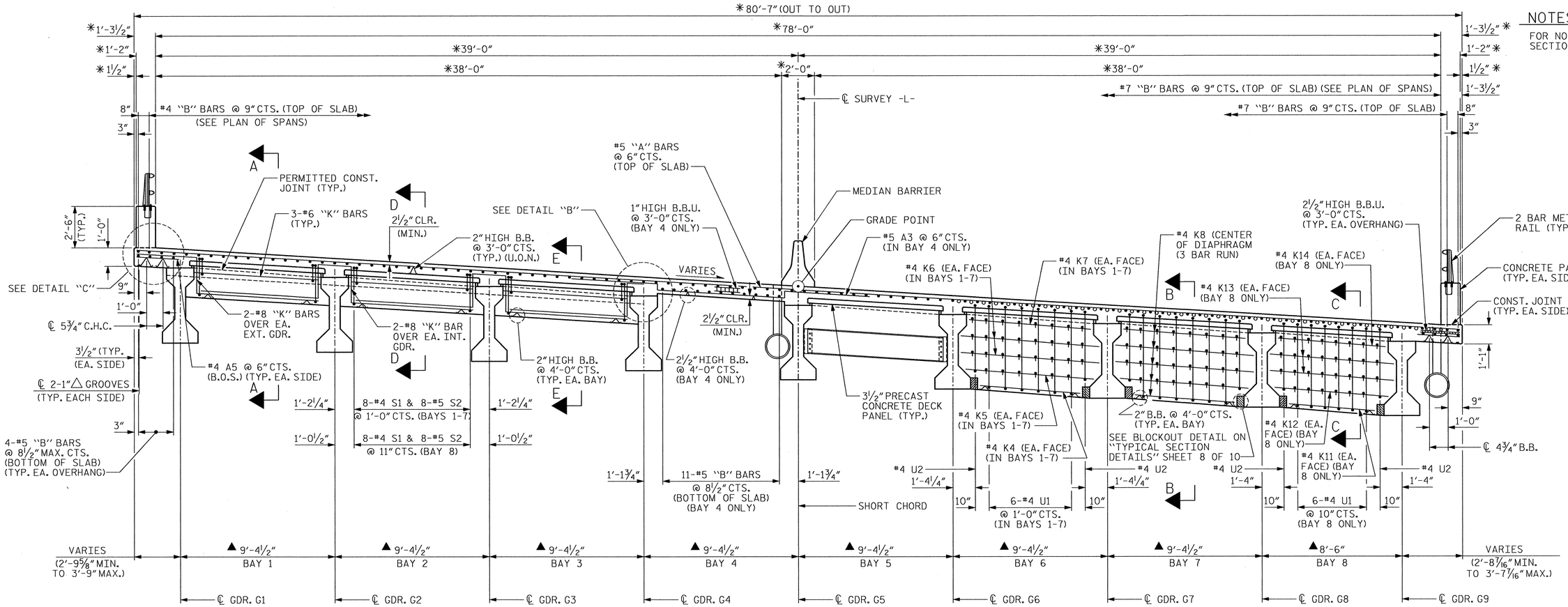

PARTIAL TYPICAL SECTION
SHOWING END DIAPHRAGMS
AT BENTS 18, 21, 24, 27 AND AT END BENT 2

PARTIAL TYPICAL SECTION
SHOWING INTERMEDIATE DIAPHRAGMS

PARTIAL TYPICAL SECTION
SHOWING CONTINUOUS BENT DIAPHRAGMS
AT BENTS 19, 20, 22, 23, 25, 26 & 28

NOTES:

FOR NOTES, SEE "TYPICAL SECTION, SPANS A-E" SHEET.

TYPICAL SECTION - SPANS S-CC

* RADIAL DIMENSION
▲ NORMAL TO SHORT CHORD

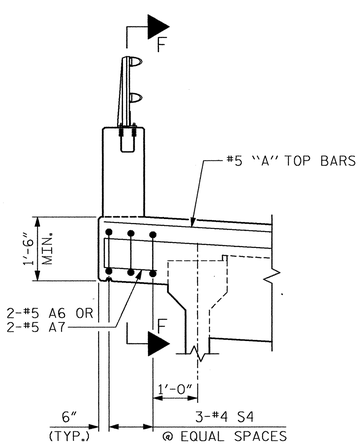

DETAIL "C"
FOR SECTION F-F, SEE SHEET 9 OF 10.

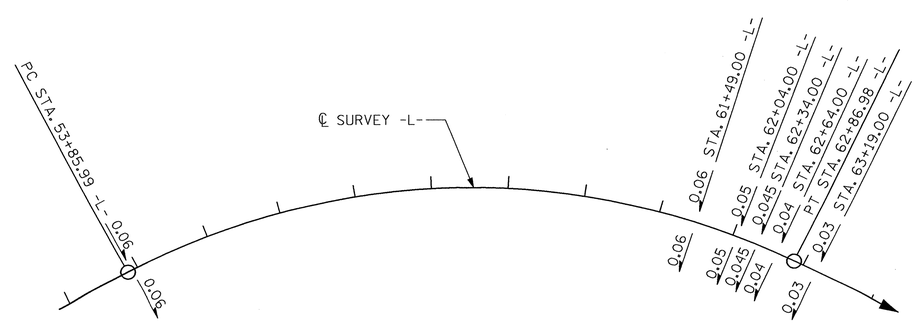

SUPERELEVATION TRANSITION - SPANS S THRU CC

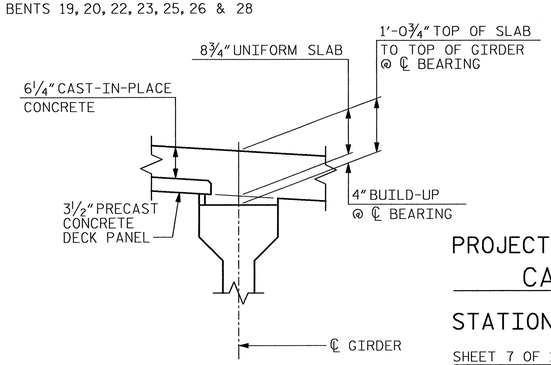

DETAIL "B"

PROJECT NO. R-3307
CARTERET COUNTY
STATION: 46+21.50 -L-
SHEET 7 OF 10

STATE OF NORTH CAROLINA
DEPARTMENT OF TRANSPORTATION
RALEIGH

SUPERSTRUCTURE
TYPICAL SECTION
SPANS S-CC

NORTH CAROLINA PROFESSIONAL SEAL 12323 ENGINEER MORRIS ISRAELNAM 3/30/2012

NORTH CAROLINA PROFESSIONAL SEAL 027799 ENGINEER ALLYSON K. ORR 3/30/2012

MI ENGINEERING
1011 SHAUB DRIVE, SUITE 100
RALEIGH, NC 27606
(919) 851-6606
FIRM PE NUMBER : P-0671

REVISIONS						SHEET NO.
NO.	BY:	DATE:	NO.	BY:	DATE:	S-39
1			3			TOTAL SHEETS
2			4			333

DRAWN BY : B.E. LANNING DATE : 9-11
CHECKED BY : B.E. ATKINSON DATE : 9-11

DWG. 40 OF 282

3/29/2012 2:46:33 PM
User: blanning
Filename: P:\NC Projects\M10005 - Gallants Channel\R-3307\Structures\R-3307_040_SD_TS2.dgn

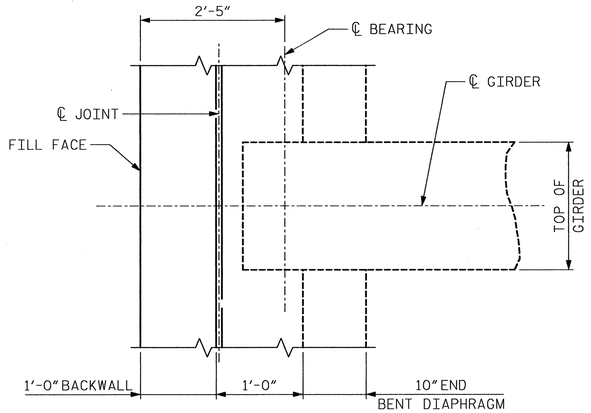

PLAN VIEW AT END BENT DIAPHRAGM

(END BENT 1 SHOWN, END BENT 2 SIMILAR)

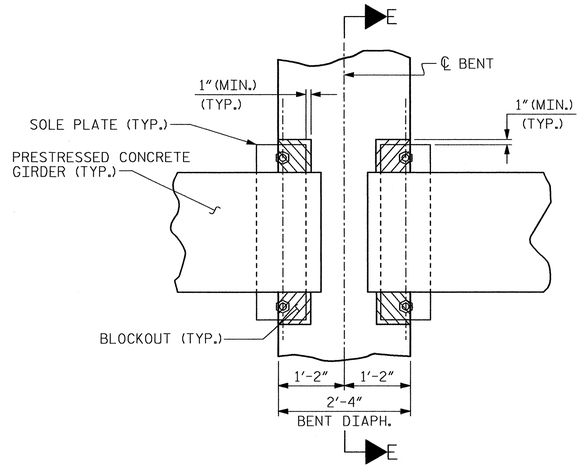

PLAN

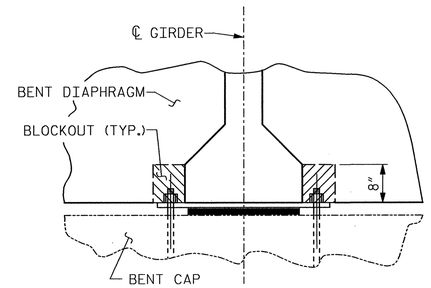

SECTION E-E

BENT DIAPHRAGM BLOCKOUT DETAIL

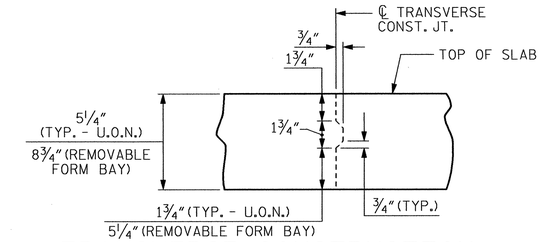

TRANSVERSE CONSTRUCTION JOINT IN DECK SLAB

NOTE: REINFORCING STEEL IN SLAB NOT SHOWN. LONGITUDINAL REINFORCING STEEL SHALL BE CONTINUOUS THRU JOINT.

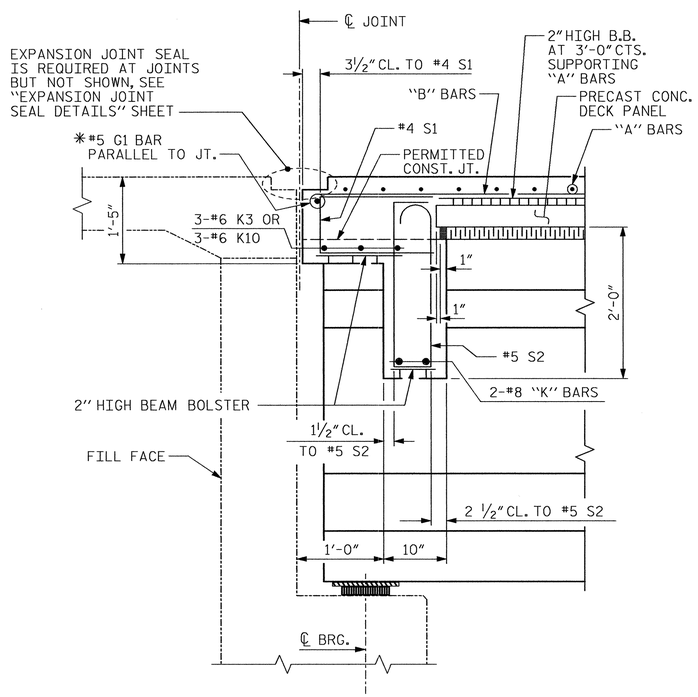

SECTION A-A

* #5 G1 BAR MAY BE SHIFTED SLIGHTLY, AS NECESSARY, TO CLEAR REINFORCING STEEL AND STIRRUPS.

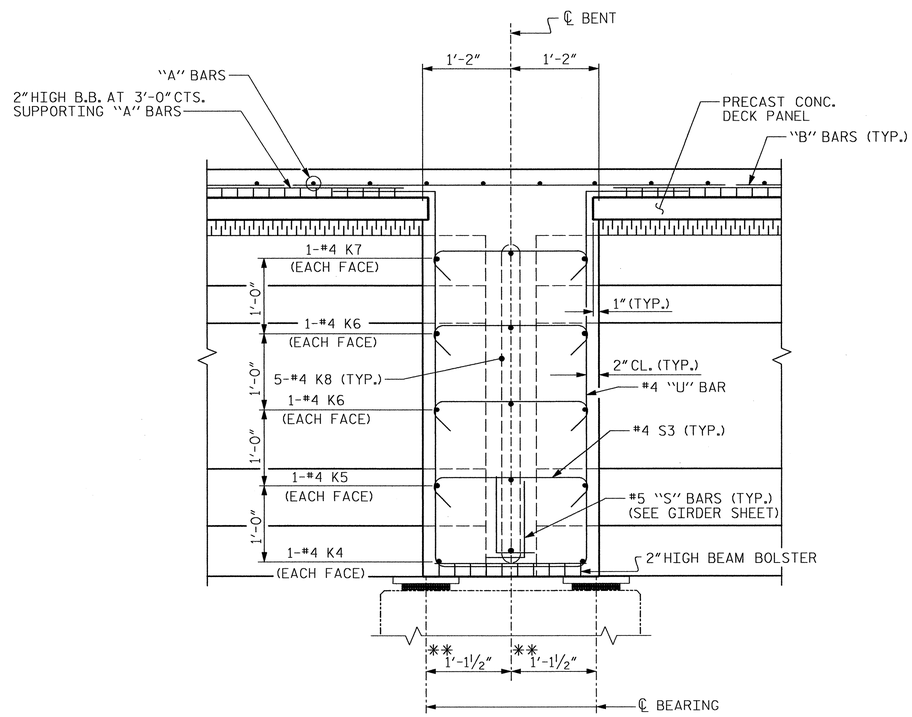

SECTION B-B

** MEASURED ALONG ℄ GIRDER

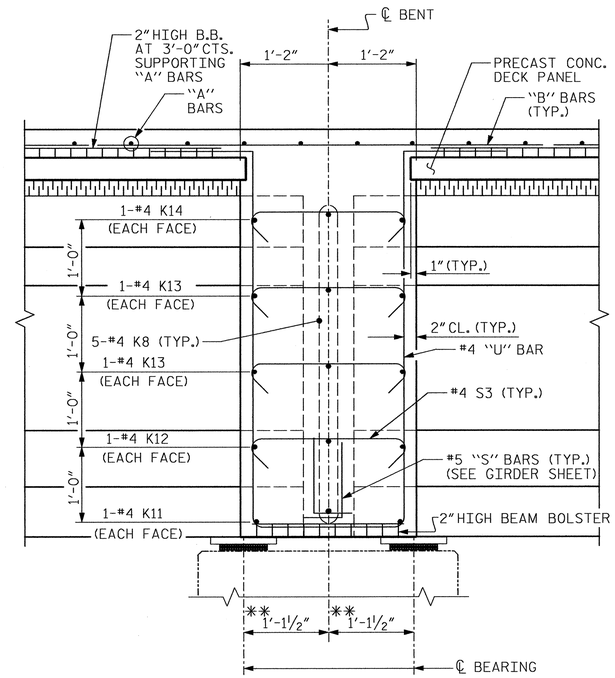

SECTION C-C

** MEASURED ALONG ℄ GIRDER

(APPLIES TO BAY 1, SPANS A-E & BAY 8, SPANS S-CC)

PROJECT NO. R-3307

CARTERET COUNTY

STATION: 46+21.50 -L-

SHEET 8 OF 10

STATE OF NORTH CAROLINA
DEPARTMENT OF TRANSPORTATION
RALEIGH

SUPERSTRUCTURE

TYPICAL SECTION DETAILS SPANS A-E & SPANS S-CC

NORTH CAROLINA PROFESSIONAL SEAL 12323 ENGINEER MORRIS ISRAELNAM 3/30/2012

NORTH CAROLINA PROFESSIONAL SEAL 027799 ENGINEER ALYSON K. ORR 3/30/2012

MI ENGINEERING
1011 SHAUB DRIVE, SUITE 100
RALEIGH, NC 27606
(919) 851-6606
FIRM PE NUMBER : P-0671

REVISIONS								SHEET NO.
NO.	BY:	DATE:	NO.	BY:	DATE:			S-40
1			3					TOTAL SHEETS
2			4					333

DRAWN BY : B.E. LANNING DATE : 8-11
CHECKED BY : B.E. ATKINSON DATE : 9-11

DWG. 41 OF 282

3/29/2012 2:46:59 PM
User: blanning
Filename: P:\NC Projects\MI0005 - Gallants Channel\R-3307\Structures\R-3307_041_SD_TS3.dgn

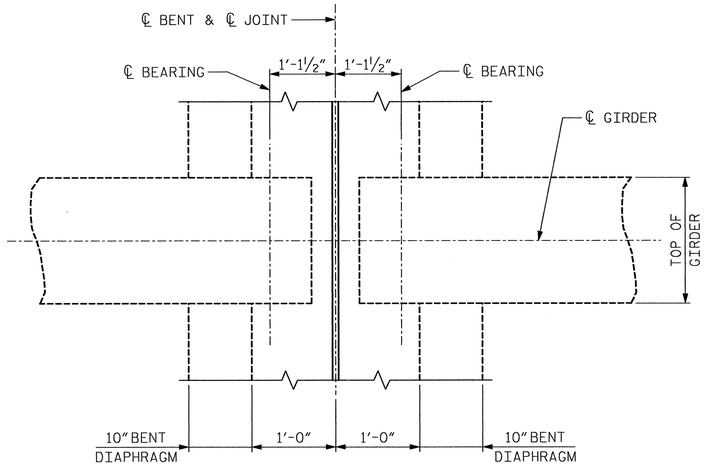

PLAN VIEW AT EXPANSION BENT DIAPHRAGM

(TYP. AT BENTS 3, 21, 24 & 27)

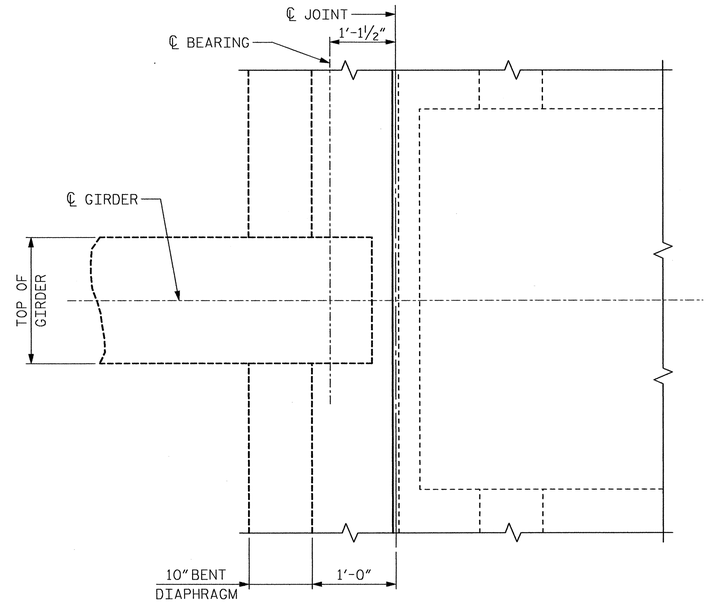

PLAN VIEW AT BENT DIAPHRAGM

(BENT 5 SHOWN)

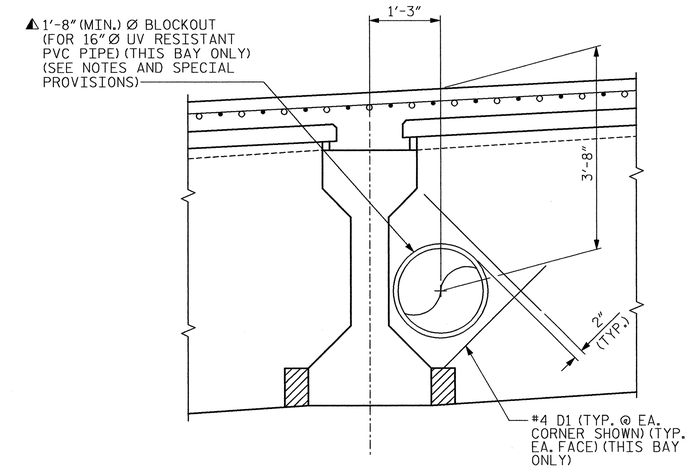

UTILITY BLOCKOUT AT CONTINUOUS BENT DIAPHRAGM

(SHOWING BLOCKOUT IN BAY 5 - OF BENT 4 FOR 16" UV RESISTANT PVC PIPE)
(BLOCKOUT AT BAY 4 - BENT 28 SIMILAR)

▲SLOPE BLOCKOUT TO MATCH SLOPE OF PIPE

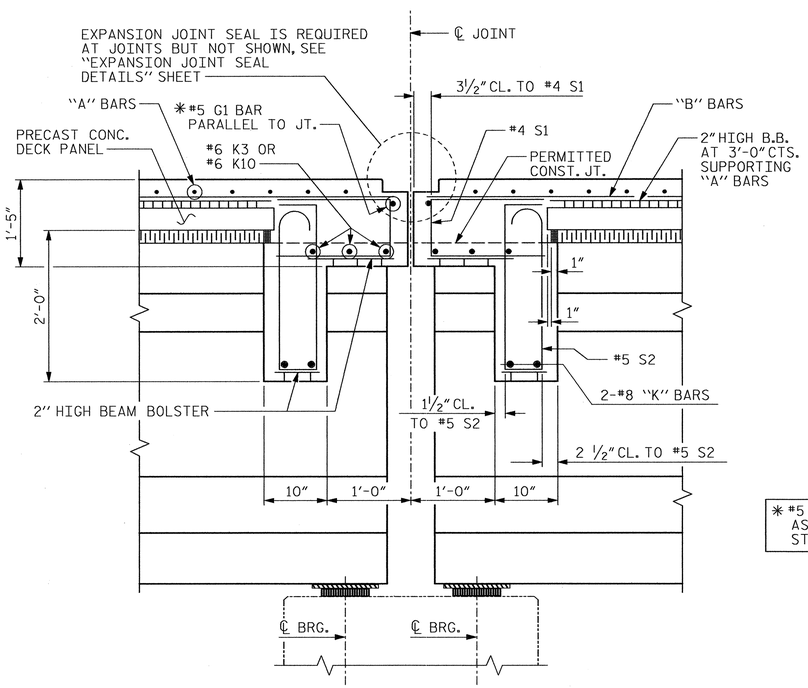

SECTION D-D

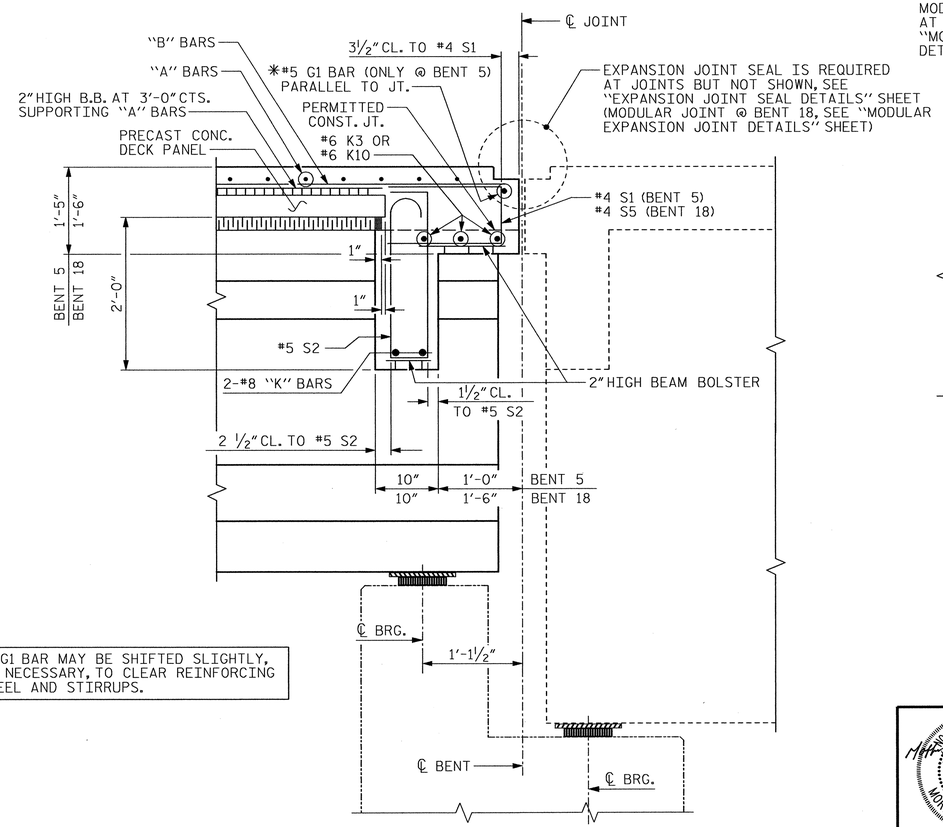

✱ #5 G1 BAR MAY BE SHIFTED SLIGHTLY, AS NECESSARY, TO CLEAR REINFORCING STEEL AND STIRRUPS.

SECTION E-E

AT BENT 5
BENT 18 SIMILAR. SEE SHEET 5 OF 10.

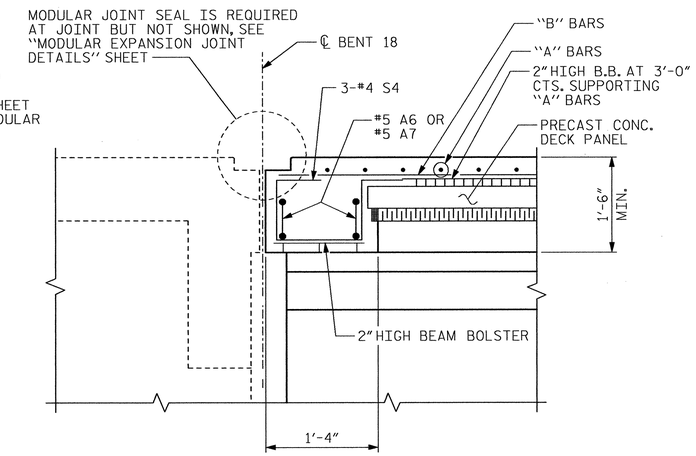

SECTION F-F

OVERHANG SLAB THICKENING FOR MODULAR JOINT AT BENT 18

PROJECT NO. R-3307

CARTERET COUNTY

STATION: 46+21.50 -L-

SHEET 9 OF 10

STATE OF NORTH CAROLINA
DEPARTMENT OF TRANSPORTATION
RALEIGH

SUPERSTRUCTURE

TYPICAL SECTION DETAILS SPANS A-E & SPANS S-CC

NORTH CAROLINA PROFESSIONAL SEAL 12323 ENGINEER MORRIS ISRAELMAN 3/30/2012

NORTH CAROLINA PROFESSIONAL SEAL 027799 ENGINEER ALLYSON K. ORR 3/30/2012

MI ENGINEERING
1011 SHAUB DRIVE, SUITE 100
RALEIGH, NC 27606
(919) 851-6606
FIRM PE NUMBER : P-0671

REVISIONS							SHEET NO.
NO.	BY:	DATE:	NO.	BY:	DATE:		S-41
1			3				TOTAL SHEETS
2			4				333

DRAWN BY : B.E. LANNING DATE : 8-11
CHECKED BY : B.E. ATKINSON DATE : 9-11

DWG. 42 OF 282

3/29/2012
2:47:17 PM
User: blanning
Filename: P:\NC Projects\MI0005 - Gallants Channel\R-3307\Structures\R-3307_042_SD_TS4.dgn

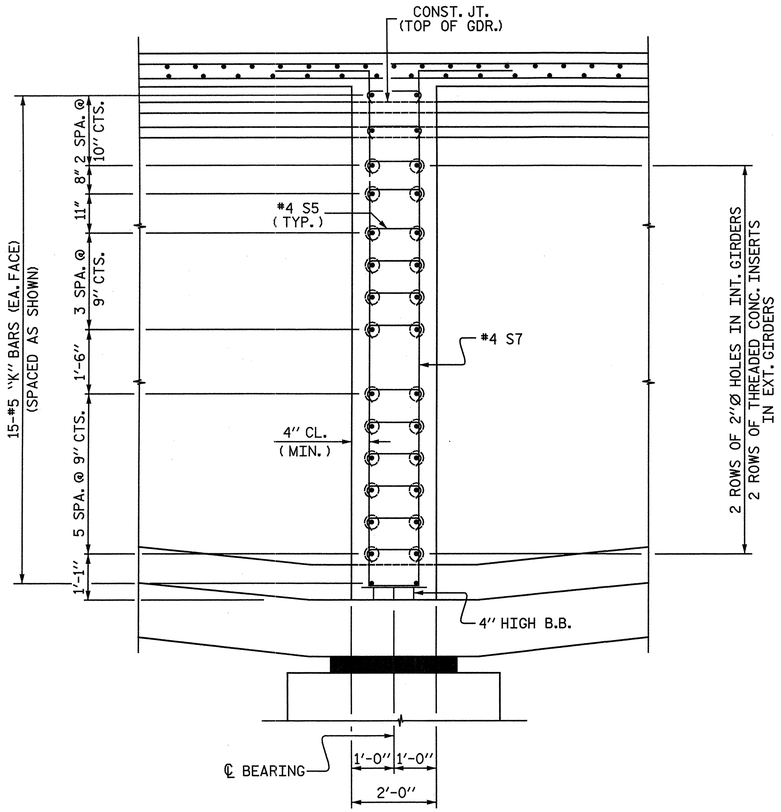

SECTION O-O

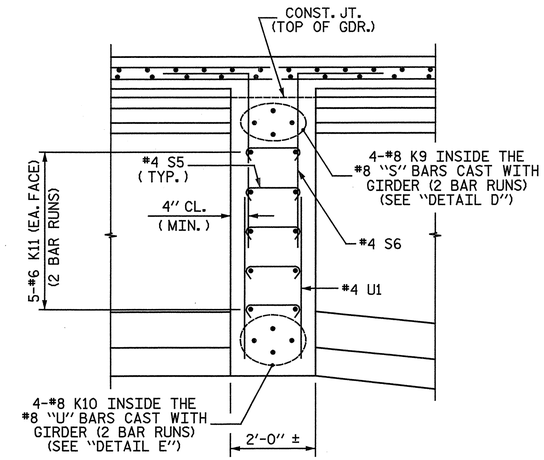

SECTION P-P

SHOWING CLOSURE SPLICE DIAPHRAGM
IN BAY BETWEEN GIRDERS

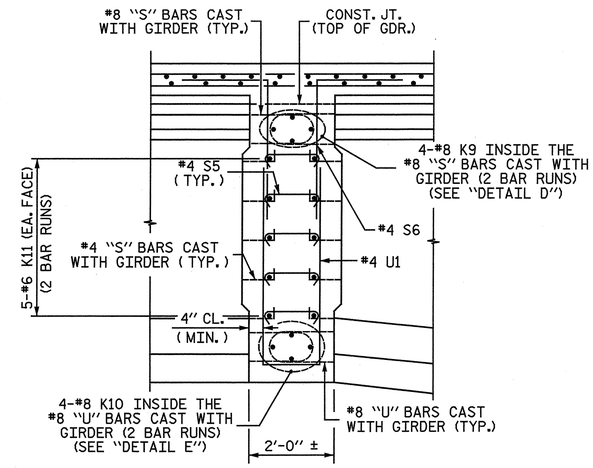

SECTION Q-Q

SHOWING CLOSURE SPLICE DIAPHRAGM
BETWEEN ENDS OF GIRDERS

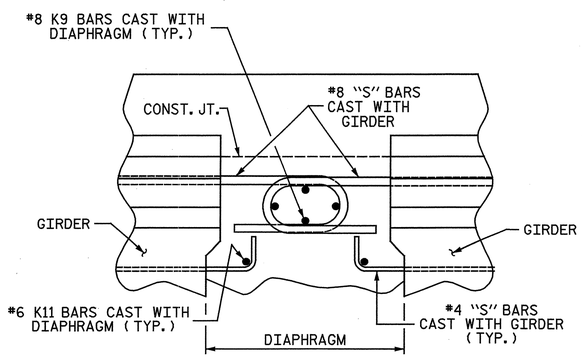

DETAIL D

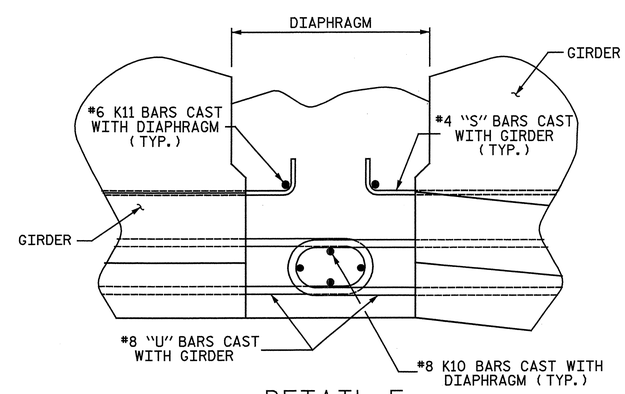

DETAIL E

PROJECT NO. R-3307
CARTERET COUNTY
STATION: 46+21.50 -L-

SHEET 10 OF 10

STATE OF NORTH CAROLINA
DEPARTMENT OF TRANSPORTATION
RALEIGH

SUPERSTRUCTURE

TYPICAL SECTION DETAILS

SPANS P-R

NORTH CAROLINA PROFESSIONAL SEAL 25911 ENGINEER SWAIN G. HATHAWAY 4-5-2012

NORTH CAROLINA PROFESSIONAL SEAL 033752 ENGINEER SETH A. DENNEY 7/09/12

THE LPA GROUP of North Carolina TRANSPORTATION CONSULTANTS

THE LPA GROUP of North Carolina
8000 Regency Parkway, Suite 600
Cary, North Carolina 27518
NC License No.: F-1084

REVISIONS						
NO.	BY:	DATE:	NO.	BY:	DATE:	
1			3			
2			4			

SHEET NO. S-42
TOTAL SHEETS 333

DRAWN BY : M. D. MAYHEW DATE : 7-20-11
CHECKED BY : S. A. DENNEY DATE : 9-9-11

DWG. 43 OF 282

4/2/2012
12:4C) PM
User: jqustin
Filename: Y:\Projects\NCDOT\R-3307\Dwgs\Final\R-3307_043_SD_TS6.dgn

DECK PANEL SUPPORTS

PRESTRESSED CONCRETE DECK PANELS SHALL BE SUPPORTED ON THE END BENT DIAPHRAGM BY LATERS OF 1/2" THICK BITUMINOUS TYPE MATERIAL. THE BITUMINOUS TYPE MATERIAL SHALL HAVE A MINIMUM WIDTH OF 1" AND A MAXIMUM WIDTH OF 1 1/2". THE DECK PANEL SHALL OVERHANG THE BITUMINOUS TYPE MATERIAL BY 1".

BITUMINOUS TYPE MATERIAL SHALL CONFORM TO THE REQUIREMENTS OF AASHTO M213.

THE CONTRACTOR SHALL PROVIDE THE DECK PANEL SUPPORT SYSTEMS SHOWN OR HE MAY SUBMIT A DECK PANEL SUPPORT SYSTEM OF HIS OWN DESIGN TO THE ENGINEER FOR APPROVAL.

POLYSTYRENE SUPPORT SYSTEM

1. ALL POLYSTYRENE SHALL BE DOW STYROFOAM 60 HIGH-LOAD, UC INDUSTRIES FOAMULAR 600 OR APPROVED EQUAL.
2. THE POLYSTYRENE SUPPORT SYSTEM SHALL CONSIST OF ONE LAYER WITH A MINIMUM WIDTH OF 1 1/2" AND A MAXIMUM WIDTH OF 2" FOR SPANS A-E & S-CC; FOR SPANS F-O, THE MINIMUM WIDTH SHALL BE 3" AND THE MAXIMUM WIDTH SHALL BE 4". THE POLYSTYRENE SHALL HAVE 1/2" X 1/2" WIDE SLOTS OR 1/2" DIAMETER HOLES AT 4'-0" CENTERS STAGGERED ALONG THE TOP AND BOTTOM.
3. THE POLYSTYRENE MAY BE CUT AND PLACED ON EDGE AS NECESSARY TO MATCH THE REQUIRED BUILDUP PROFILE ALONG THE GIRDER.
4. ADHESIVE, AS APPROVED BY THE ENGINEER, SHALL BE APPLIED TO THE TOP OF THE GIRDER IN A CONTINUOUS BEAD AND IN SUFFICIENT AMOUNT TO PREVENT THE POLYSTYRENE FROM BLOWING OUT AND TO PREVENT GAPS FROM FORMING BETWEEN THE POLYSTYRENE AND THE GIRDER. PRIOR TO PLACEMENT OF THE DECK PANELS, THE ADHESIVE SHALL ALSO BE APPLIED TO THE TOP OF THE POLYSTYRENE.
5. CONCRETE-FILLED BUCKETS, STACKS OF DECK PANELS, BUNDLED REINFORCING BARS OR OTHER HEAVY CONCENTRATED LOADS WILL NOT BE PERMITTED ON THE DECK PANEL ONCE THE PANEL HAS BEEN PLACED ON THE POLYSTYRENE SUPPORT SYSTEM.

GENERAL NOTES

1. THE DESIGN COMPRESSIVE STRENGTH (f'c) FOR THE CONCRETE IN PRESTRESSED PANELS SHALL BE 5000 PSI MINIMUM AT 28 DAYS. COMPRESSIVE STRENGTH OF CONCRETE AT TIME OF RELEASE OF STRANDS SHALL BE 4000 PSI MINIMUM.
2. THE PRECAST PRESTRESSED PANEL SHALL HAVE A THICKNESS OF 3 1/2" WITH THE PRESTRESSED STRANDS LOCATED AT HALF THE DEPTH OF THE PANEL.
3. FOR SKEWED SPANS, TRAPEZOIDAL CLOSURE PANELS SHALL HAVE A MINIMUM WIDTH OF 2 FEET ON THE SHORT SIDE.
4. ALL PRESTRESSING STRANDS SHALL EXTEND 2" BEYOND THE PANEL EDGES.
5. SHEAR REINFORCING OF 0.60 SQ. INCHES OF REINFORCING STEEL PER 10 SQ. FEET OF PANEL SURFACE SHALL BE PROVIDED IN THE PANEL TO ENSURE COMPOSITE ACTION BETWEEN PANEL AND THE CAST-IN-PLACE CONCRETE. SHEAR REINFORCEMENT SHALL BE MADE OF WELDED WIRE HAVING A MINIMUM YIELD STRENGTH OF 60 KSI.
6. SHEAR REINFORCEMENT AND LIFTING DEVICES SHALL BE CONSTRUCTED AND PLACED SO AS TO AVOID ANY INTERFERENCE WITH REINFORCING STEEL IN THE CAST-IN-PLACE DECK SLAB AND TO ALLOW FOR PROPER CONCRETE CONSOLIDATION IN THE DECK PANEL.
7. SHIFT LONGITUDINAL "B" BARS AS NECESSARY TO OBTAIN A MINIMUM CLEAR DISTANCE OF 2 1/2" TO THE RIGHT OR LEFT OF THE EDGE OF THE DECK PANEL. IF, IN SHIFTING TO OBTAIN THIS CLEARANCE, THE "B" BAR INTERFERES WITH THE STIRRUP IN THE TOP OF THE GIRDER THE "B" BAR MAY BE ELIMINATED.
8. WHEN CASTING THE DECK, PLACE CONCRETE FIRST OVER THE GIRDERS IN CONTINUOUS STRIPS A MINIMUM OF THREE PANEL LENGTHS AHEAD OF THE REST OF THE CONCRETE. CAREFULLY VIBRATE THE CONCRETE OVER THE GIRDERS SO THAT CONCRETE COMPLETELY FILLS THE AREA UNDER THE DECK PANEL OVERHANGS. THEN PLACE AND VIBRATE THE REMAINING DECK CONCRETE.
9. PRECAST PANELS SHALL BE DESIGNED FOR AN ALLOWABLE TENSILE STRENGTH OF 0 PSI IN THE PRECOMPRESSED TENSILE ZONE UNDER ALL LOADING CONDITIONS.
10. PRESTRESSED CONCRETE DECK PANELS SHALL CONTAIN CALCIUM NITRITE CORROSION INHIBITOR. SEE STANDARD SPECIFICATIONS FOR CALCIUM NITRITE CORROSION INHIBITOR.

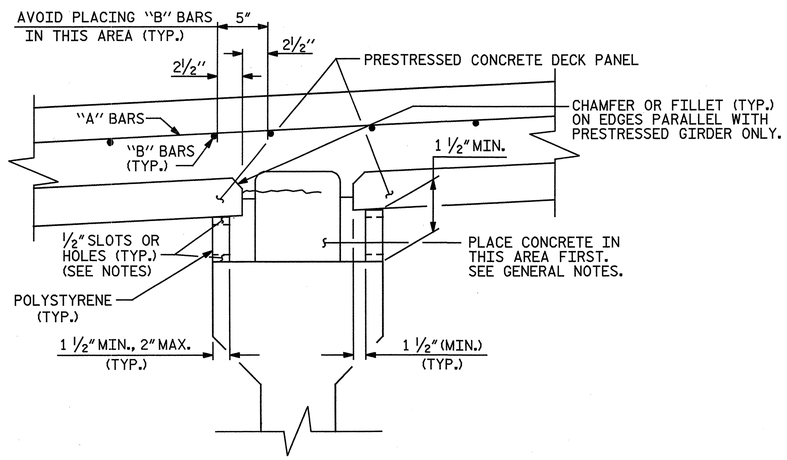

POLYSTYRENE SUPPORT

SPANS A - E

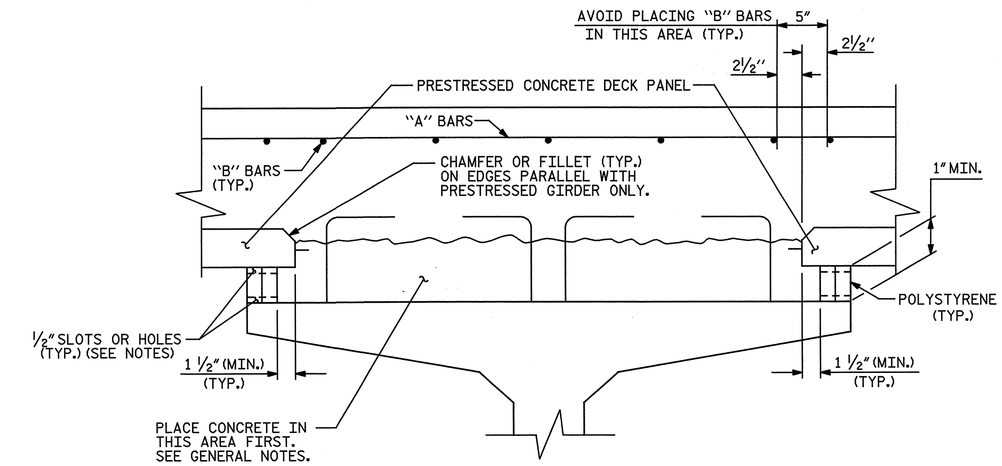

POLYSTYRENE SUPPORT

SPANS F - O

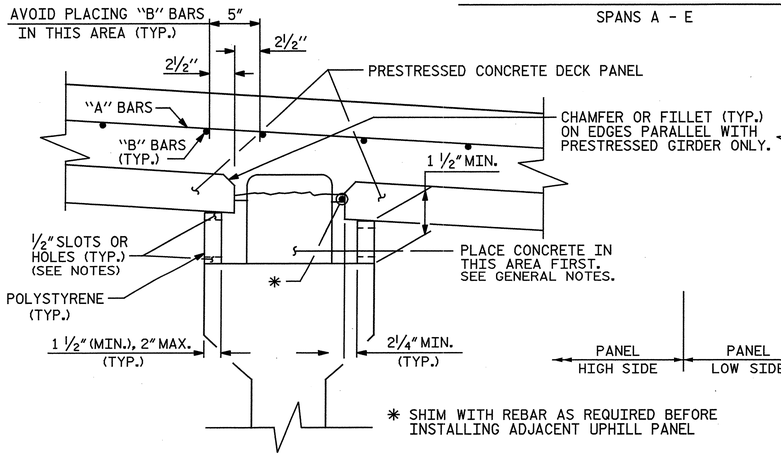

INTERIOR GIRDER

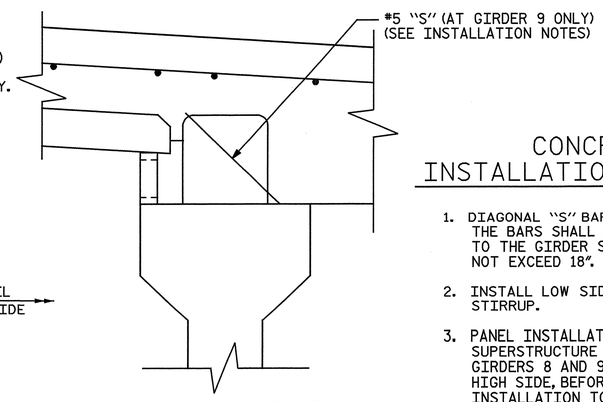

EXTERIOR GIRDER

POLYSTYRENE SUPPORT

SPANS S - CC

CONCRETE DECK PANEL INSTALLATION NOTES (SPANS S - CC)

1. DIAGONAL "S" BARS SHALL BE INSTALLED ON GIRDER 9 ONLY. THE BARS SHALL BE INSTALLED IN THE SHOP BY TACK WELDING TO THE GIRDER STIRRUPS. SPACING OF THE "S" BARS SHALL NOT EXCEED 18".
2. INSTALL LOW SIDE OF PANEL HARD AGAINST THE GIRDER STIRRUP.
3. PANEL INSTALLATION ACROSS THE WIDTH OF THE SUPERSTRUCTURE SHALL START AT THE LOW SIDE BETWEEN GIRDERS 8 AND 9 WITH THE PANEL SHIMMED AT THE HIGH SIDE, BEFORE PROCEEDING UPHILL WITH PANEL INSTALLATION TO THE OTHER GIRDER BAYS.
4. THE MINIMUM WIDTH OF THE PANELS AT EACH END OF GIRDER 9 SHALL BE 7'-6", (2 REQUIRED PER GIRDER).

PROJECT NO. R-3307

CARTERET COUNTY

STATION: 46+21.50 -L-

STATE OF NORTH CAROLINA
DEPARTMENT OF TRANSPORTATION
RALEIGH

SUPERSTRUCTURE

PRECAST PRESTRESSED CONCRETE DECK PANELS

NORTH CAROLINA PROFESSIONAL SEAL 25911 ENGINEER DWAIN G. HATHAWAY 4-12-2012

NORTH CAROLINA PROFESSIONAL SEAL 033752 ENGINEER SETH A. DENNEY

THE LPA GROUP of North Carolina TRANSPORTATION CONSULTANTS

THE LPA GROUP of North Carolina
8000 Regency Parkway, Suite 600
Cary, North Carolina 27518
NC License No.: F-1084

REVISIONS								SHEET NO.
NO.	BY:	DATE:	NO.	BY:	DATE:			S-43
1			3					TOTAL SHEETS
2			4					333

DRAWN BY : J. N. AUSTIN DATE : 1-13-12
CHECKED BY : S. A. DENNEY DATE : 1-15-12

DWG. 44 OF 282

4/2/2012
12:40:. PM
User: jaustin
Filename: Y:\Projects\NCDOT\R-3307\Dwgs\Final\R-3307_044_SD_PCD_Panels.dgn

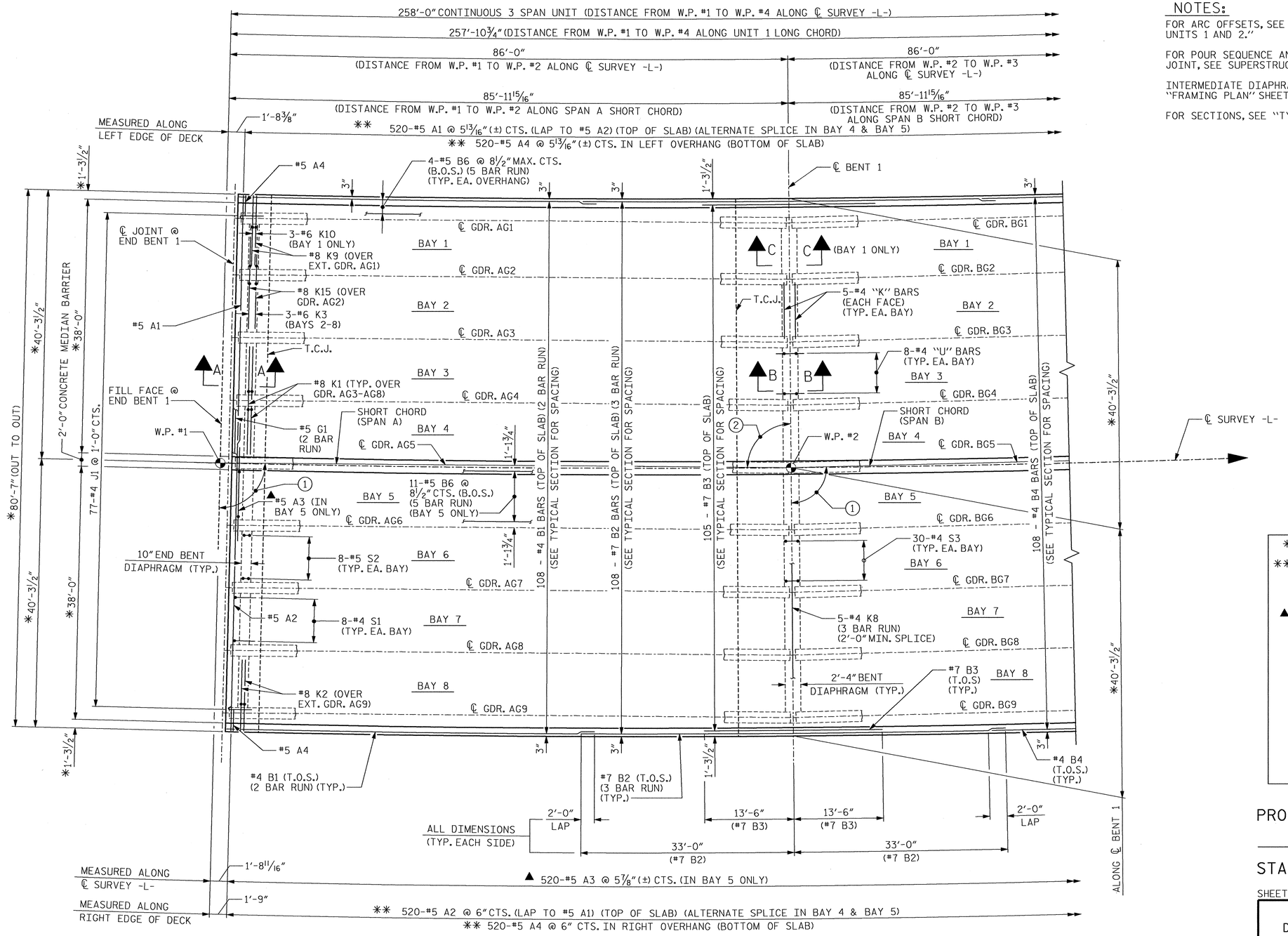

PART PLAN OF SPANS - UNIT 1

NOTES:

FOR ARC OFFSETS, SEE SUPERSTRUCTURE "ARC OFFSETS UNITS 1 AND 2."

FOR POUR SEQUENCE AND LOCATION OF CONSTRUCTION JOINT, SEE SUPERSTRUCTURE "BILL OF MATERIAL" SHEET.

INTERMEDIATE DIAPHRAGMS NOT SHOWN FOR CLARITY, SEE "FRAMING PLAN" SHEETS.

FOR SECTIONS, SEE "TYPICAL SECTION DETAILS" SHEETS.

*RADIAL DIMENSIONS

**"A" BARS TO BE PLACED RADIALLY. SPACING IS ALONG EDGE OF DECK AS SHOWN.

▲ #5 A3 BARS ARE TO BE PLACED RADIALLY. SPACING IS ALONG ℄ SURVEY -L- AS SHOWN.

T.O.S. - TOP OF SLAB

B.O.S. - BOTTOM OF SLAB

T.C.J. - TRANSVERSE CONSTRUCTION JOINT

① - 90°-56'-12" (TO SHORT CHORD)

② - 89°-03'-48" (TO SHORT CHORD)

PROJECT NO. R-3307

CARTERET COUNTY

STATION: 46+21.50 -L-

SHEET 1 OF 24

STATE OF NORTH CAROLINA
DEPARTMENT OF TRANSPORTATION
RALEIGH

SUPERSTRUCTURE

PLAN OF SPANS
UNIT 1

SPANS A, B & C

NORTH CAROLINA PROFESSIONAL SEAL 12323 ENGINEER MORRIS ISRAELNAIM 3/30/2012

NORTH CAROLINA PROFESSIONAL SEAL 027199 ENGINEER ALLYSON K. ORR 3/30/2012

MI ENGINEERING
1011 SHAUB DRIVE, SUITE 100
RALEIGH, NC 27606
(919) 851-6606
FIRM PE NUMBER : P-0671

REVISIONS								SHEET NO.
NO.	BY:	DATE:	NO.	BY:	DATE:			S-44
1			3					TOTAL SHEETS
2			4					333

DRAWN BY : B.E. LANNING DATE : 8-11
CHECKED BY : B.E. ATKINSON DATE : 9-11

DWG. 45 OF 282

3/29, 012
5:11:41 PM
User: blanning
Filename: P:\NC Projects\M10005 - Gallants Channel\R-3307\Structures\R-3307_045_SD_PS_AB.dgn

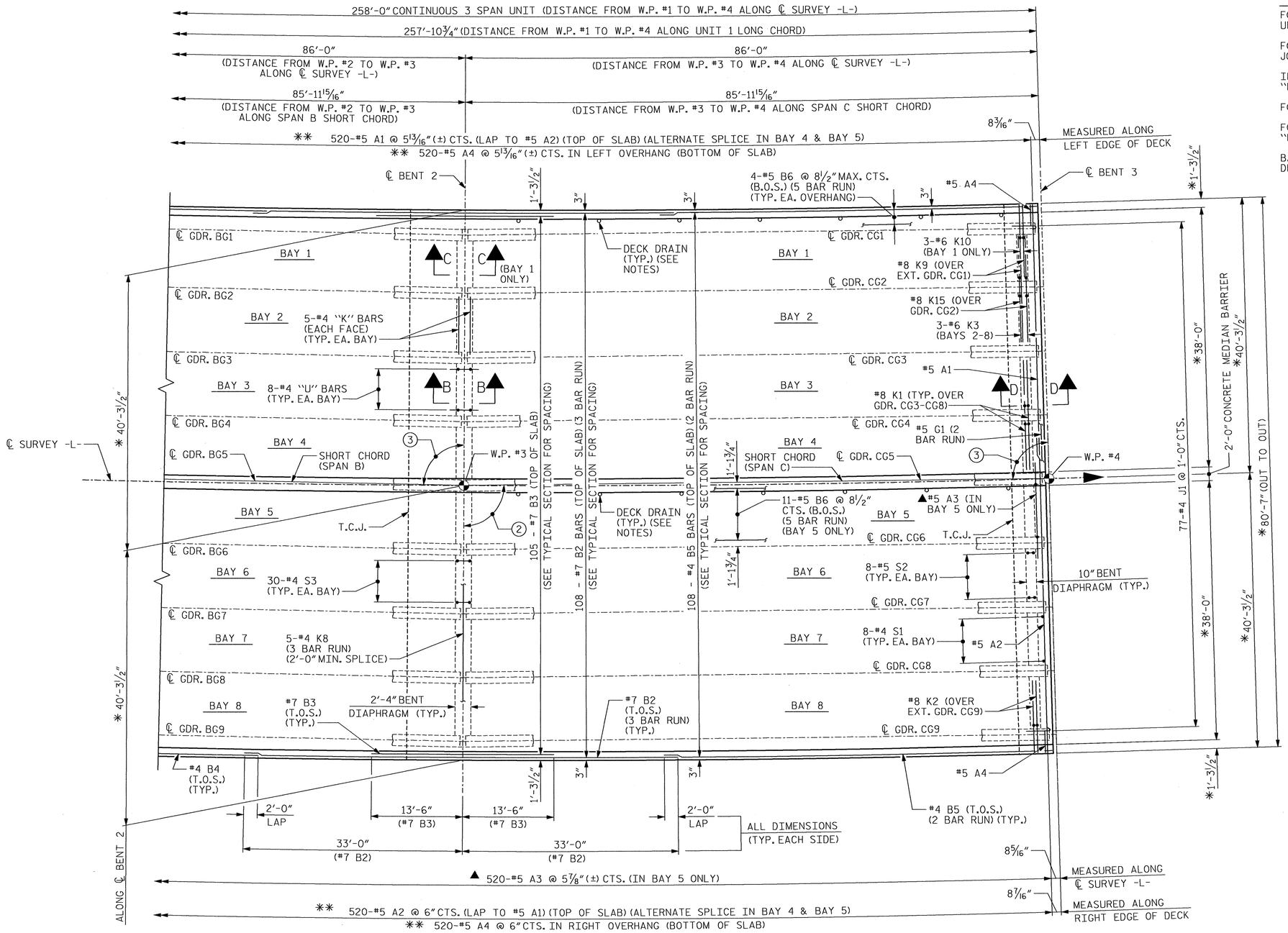

PART PLAN OF SPANS - UNIT 1

NOTES:

FOR ARC OFFSETS, SEE SUPERSTRUCTURE "ARC OFFSETS UNITS 1 AND 2."

FOR POUR SEQUENCE AND LOCATION OF CONSTRUCTION JOINT, SEE SUPERSTRUCTURE "BILL OF MATERIAL" SHEET.

INTERMEDIATE DIAPHRAGMS NOT SHOWN FOR CLARITY, SEE "FRAMING PLAN" SHEETS.

FOR SECTIONS, SEE "TYPICAL SECTION DETAILS" SHEETS.

FOR DECK DRAIN LOCATIONS AND DETAILS, SEE SUPERSTRUCTURE "PLAN OF DRAINAGE SYSTEM."

BARS MAY BE SHIFTED SLIGHTLY, AS NECESSARY, TO CLEAR DRAIN PIPES.

*RADIAL DIMENSIONS

**"A" BARS TO BE PLACED RADIALLY. SPACING IS ALONG EDGE OF DECK AS SHOWN.

▲ #5 A3 BARS ARE TO BE PLACED RADIALLY. SPACING IS ALONG ℄ SURVEY -L- AS SHOWN.

T.O.S. - TOP OF SLAB

B.O.S. - BOTTOM OF SLAB

T.C.J. - TRANSVERSE CONSTRUCTION JOINT

② - 90°-56'-12" (TO SHORT CHORD)

③ - 89°-03'-48" (TO SHORT CHORD)

PROJECT NO. R-3307

CARTERET COUNTY

STATION: 46+21.50 -L-

SHEET 2 OF 24

STATE OF NORTH CAROLINA
DEPARTMENT OF TRANSPORTATION
RALEIGH

SUPERSTRUCTURE

PLAN OF SPANS
UNIT 1

SPANS A, B & C

NORTH CAROLINA PROFESSIONAL SEAL 12323 ENGINEER MORRIS ISRAELNIAN 3/30/2012

NORTH CAROLINA PROFESSIONAL SEAL 027199 ENGINEER ALLYSON K. DARR 3/30/2012

MI ENGINEERING
1011 SHAUB DRIVE, SUITE 100
RALEIGH, NC 27606
(919) 851-6606
FIRM PE NUMBER : P-0671

REVISIONS								SHEET NO.
NO.	BY:	DATE:	NO.	BY:	DATE:			S-45
1			3					TOTAL SHEETS
2			4					333

DRAWN BY : B.E. LANNING DATE : 8-11
CHECKED BY : B.E. ATKINSON DATE : 9-11

DWG. 46 OF 282

3/29/2012
5:11:56 PM
User: planning
Filename: P:\NC Projects\M10005 - Gallants Channel\R-3307\Structures\R-3307_046_SD_PS_BC.dgn

NOTES:

FOR ARC OFFSETS, SEE SUPERSTRUCTURE "ARC OFFSETS UNITS 1 AND 2."

FOR POUR SEQUENCE AND LOCATION OF CONSTRUCTION JOINT, SEE SUPERSTRUCTURE "BILL OF MATERIAL" SHEET.

INTERMEDIATE DIAPHRAGMS NOT SHOWN FOR CLARITY, SEE "FRAMING PLAN" SHEETS.

FOR SECTIONS, SEE "TYPICAL SECTION DETAILS" SHEET.

FOR DECK DRAIN LOCATIONS AND DETAILS, SEE SUPERSTRUCTURE "PLAN OF DRAINAGE SYSTEM."

BARS MAY BE SHIFTED SLIGHTLY, AS NECESSARY, TO CLEAR DRAIN PIPES.

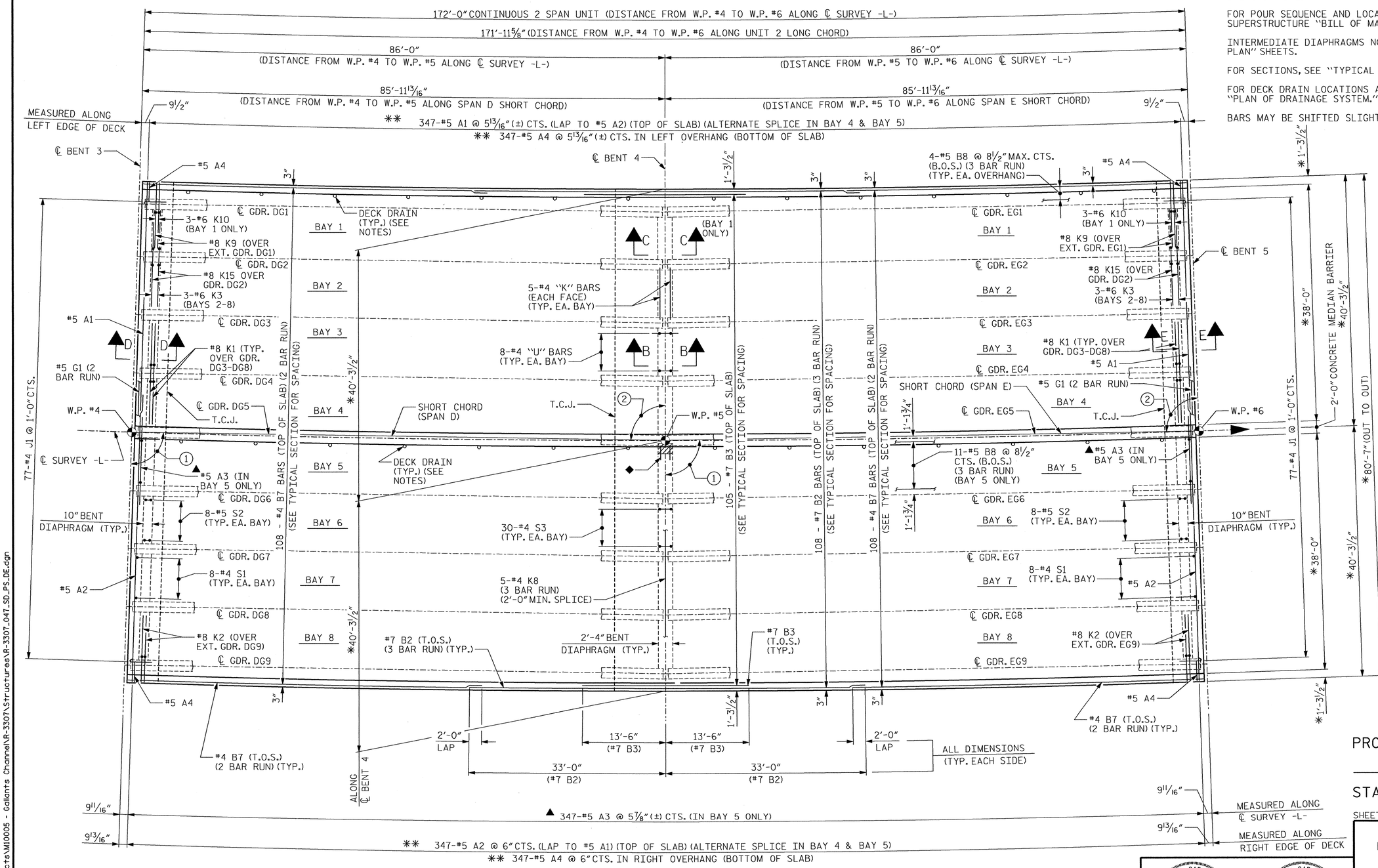

PART PLAN OF SPANS - UNIT 2

* RADIAL DIMENSIONS

** "A" BARS TO BE PLACED RADIALLY. SPACING IS ALONG EDGE OF DECK AS SHOWN.

▲ #5 A3 BARS ARE TO BE PLACED RADIALLY. SPACING IS ALONG ℄ SURVEY -L- AS SHOWN.

◆ 4-#4 D1 IN 1'-8" Ø BLOCKOUT SEE "TYPICAL SECTION DETAILS" SHEETS FOR UTILITY BLOCKOUT AT BENT DIAPHRAGM DETAILS.

T.O.S. - TOP OF SLAB

B.O.S. - BOTTOM OF SLAB

T.C.J. - TRANSVERSE CONSTRUCTION JOINT

① - 90°-56'-12" (TO SHORT CHORD)

② - 89°-03'-48" (TO SHORT CHORD)

PROJECT NO. R-3307

CARTERET COUNTY

STATION: 46+21.50 -L-

SHEET 3 OF 24

STATE OF NORTH CAROLINA
DEPARTMENT OF TRANSPORTATION
RALEIGH

SUPERSTRUCTURE

PLAN OF SPANS
UNIT 2

SPANS D & E

NORTH CAROLINA PROFESSIONAL SEAL 12323 ENGINEER MORRIS ISRAELNAM 3/30/2012

NORTH CAROLINA PROFESSIONAL SEAL 027199 ENGINEER ALLYSON K. ORR 3/30/2012

MI ENGINEERING
1011 SHAUB DRIVE, SUITE 100
RALEIGH, NC 27606
(919) 851-6606
FIRM PE NUMBER : P-0671

REVISIONS						SHEET NO.
NO.	BY:	DATE:	NO.	BY:	DATE:	S-46
1			3			TOTAL SHEETS
2			4			333

DRAWN BY : B.E. LANNING DATE : 8-11
CHECKED BY : B.E. ATKINSON DATE : 9-11

DWG. 47 OF 282

3/25/2012 5:12:20 PM
User: blanning
Filename: P:\NC Projects\M10005 - Gallants Channel\R-3307\Structures\R-3307_047_SD_PS_DE.dgn

NOTES:

✱✱ "A" BARS TO BE PLACED RADIALLY. SPACING IS ALONG EDGE OF DECK AS SHOWN.

FOR POUR SEQUENCE AND LOCATION OF CONSTRUCTION JOINT, SEE SUPERSTRUCTURE "BILL OF MATERIAL UNIT 3" SHEET.

FOR SECTION E-E, SEE "TYPICAL SECTION AND DETAILS SPANS A-E & SPANS S-CC", SHEET 9 OF 10.

FOR SECTION I-I, SEE "TYPICAL SECTION AND DETAILS SPANS F-M", SHEET 3 OF 10.

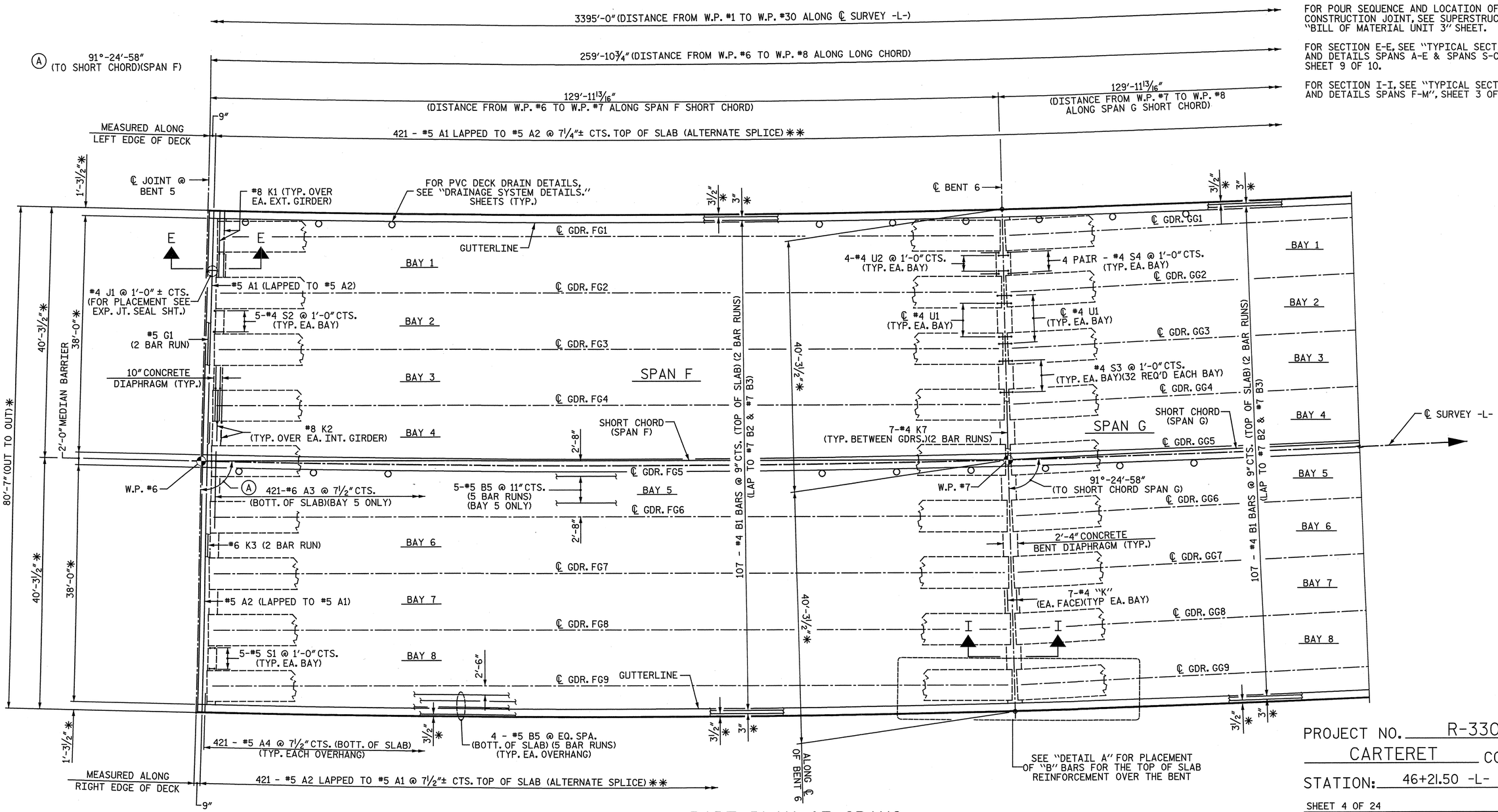

PART PLAN OF SPANS

✱ RADIAL DIMENSION

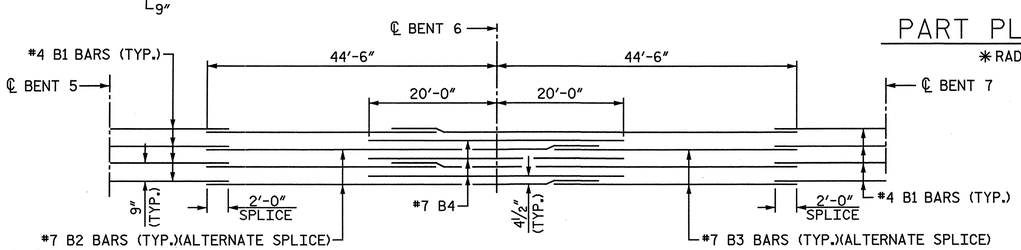

DETAIL A

PROJECT NO. R-3307

CARTERET COUNTY

STATION: 46+21.50 -L-

SHEET 4 OF 24

STATE OF NORTH CAROLINA
DEPARTMENT OF TRANSPORTATION
RALEIGH

SUPERSTRUCTURE

PLAN OF SPANS
UNIT 3

SPANS F & G

NORTH CAROLINA PROFESSIONAL SEAL 25911 ENGINEER DWIGHT G. HATHAWAY 8-3-2012

NORTH CAROLINA PROFESSIONAL SEAL 033752 ENGINEER SETH A. DENNEY

THE LPA GROUP of North Carolina TRANSPORTATION CONSULTANTS

THE LPA GROUP of North Carolina
8000 Regency Parkway, Suite 600
Cary, North Carolina 27518
NC License No.: F-1084

REVISIONS						SHEET NO.
NO.	BY:	DATE:	NO.	BY:	DATE:	8-47
1			3			TOTAL SHEETS
2			4			333

DRAWN BY : N. B. SPEAKS DATE : 7-20-11
CHECKED BY : R. F. DeCOLA DATE : 11-03-11

DWG. 48 OF 282

4/2/2012
12:40:_ PM
User: jaustin
Filename: Y:\Projects\NCDOT\R-3307\Dwgs\Final\R-3307_048_SD_S1.dgn

NOTES:

FOR ADDITIONAL NOTES, SEE SHEET 4 OF 24.

FOR TRANSVERSE CONSTRUCTION JOINT DETAIL, SEE "BILL OF MATERIAL UNIT 3" SHEET.

FOR SECTION G-G, SEE "TYPICAL SECTION AND DETAILS SPANS F-N", SHEET 2 OF 10.

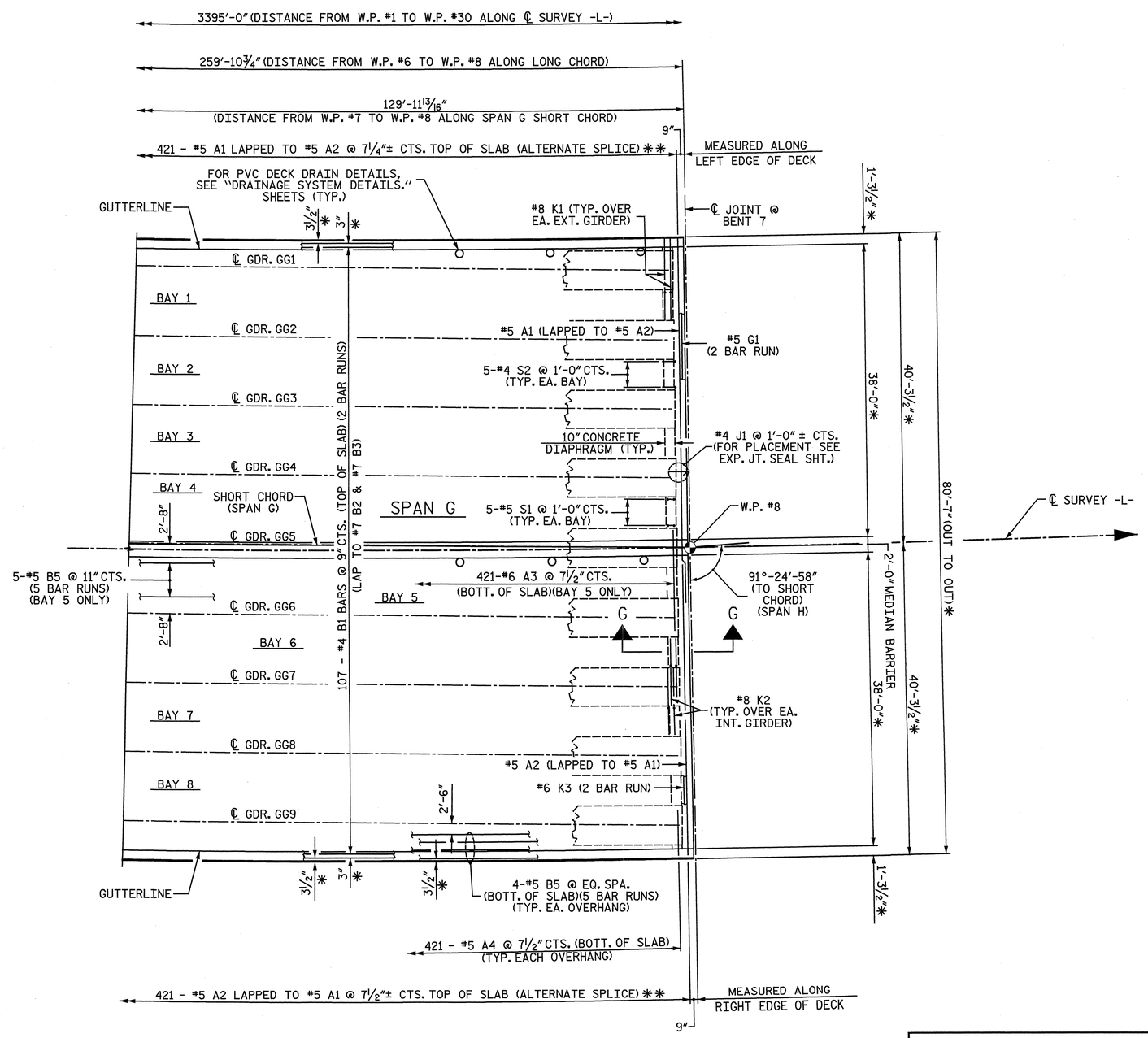

PART PLAN OF SPANS

✱ RADIAL DIMENSION

PROJECT NO. R-3307

CARTERET COUNTY

STATION: 46+21.50 -L-

SHEET 5 OF 24

STATE OF NORTH CAROLINA
DEPARTMENT OF TRANSPORTATION
RALEIGH

SUPERSTRUCTURE

PLAN OF SPANS
UNIT 3

SPAN G

NORTH CAROLINA PROFESSIONAL SEAL 25911 ENGINEER DWAIN G. HATHAWAY

NORTH CAROLINA PROFESSIONAL SEAL 033752 ENGINEER SETH A. DENNEY

THE LPA GROUP of North Carolina TRANSPORTATION CONSULTANTS

THE LPA GROUP of North Carolina
8000 Regency Parkway, Suite 600
Cary, North Carolina 27518
NC License No.: F-1084

REVISIONS						SHEET NO.
NO.	BY:	DATE:	NO.	BY:	DATE:	S-48
1			3			TOTAL SHEETS
2			4			333

DWG. 49 OF 282

DRAWN BY : N. B. SPEAKS DATE : 8-4-11
CHECKED BY : R. F. DeCOLA DATE : 11-03-11

4/2/2012
12:40:_ PM
User: jaustin
Filename: Y:\Projects\NCDOT\R-3307\Dwgs\Final\R-3307_049_SD_S2.dgn

NOTES:

FOR ADDITIONAL NOTES, SEE SHEET 4 OF 24.

FOR TRANSVERSE CONSTRUCTION JOINT DETAIL, SEE "BILL OF MATERIAL UNIT 4" SHEET.

FOR SECTION G-G, SEE "TYPICAL SECTION AND DETAILS SPANS F-N", SHEET 2 OF 10.

FOR SECTION I-I, SEE "TYPICAL SECTION AND DETAILS SPANS F-M", SHEET 3 OF 10.

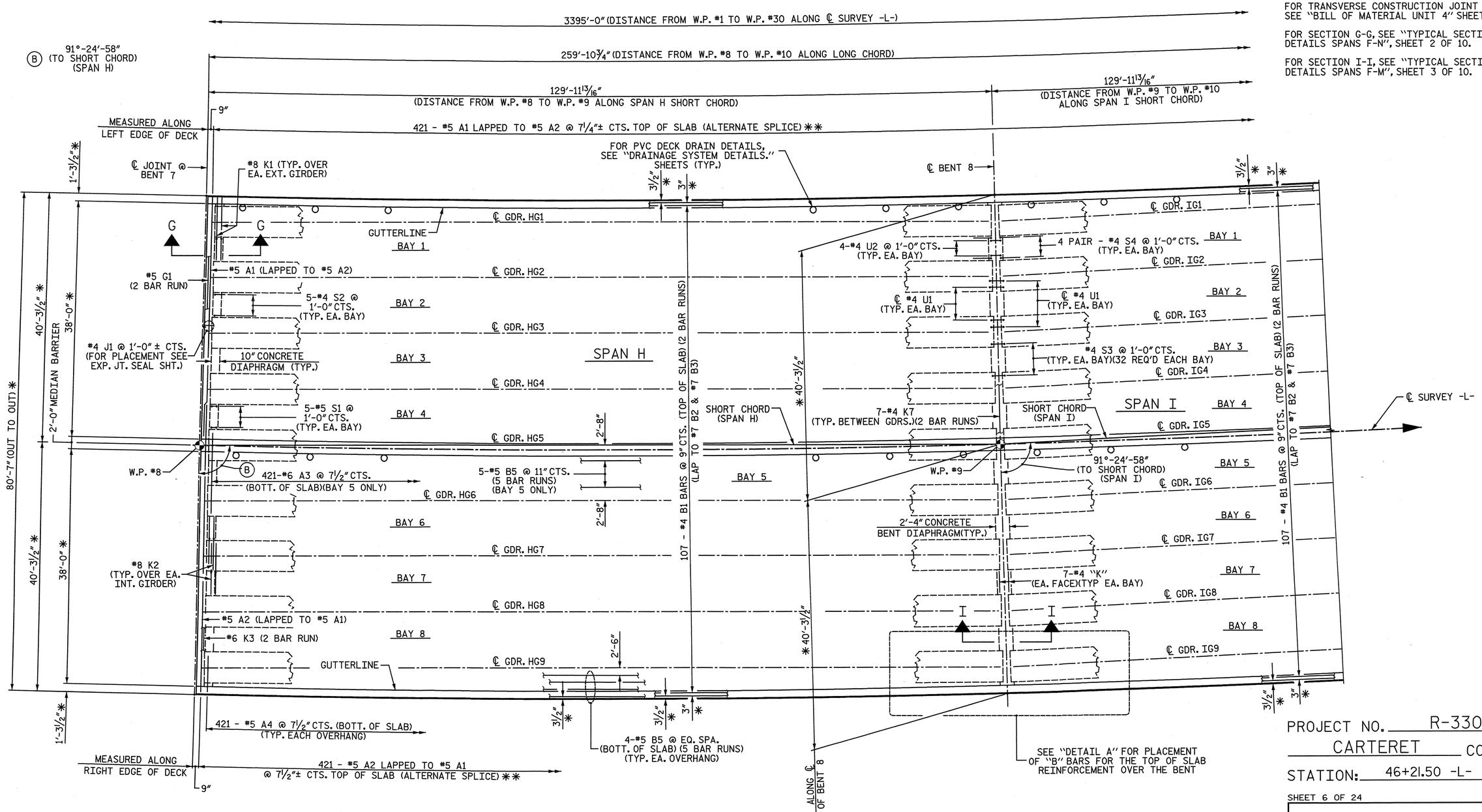

PART PLAN OF SPANS

*RADIAL DIMENSION

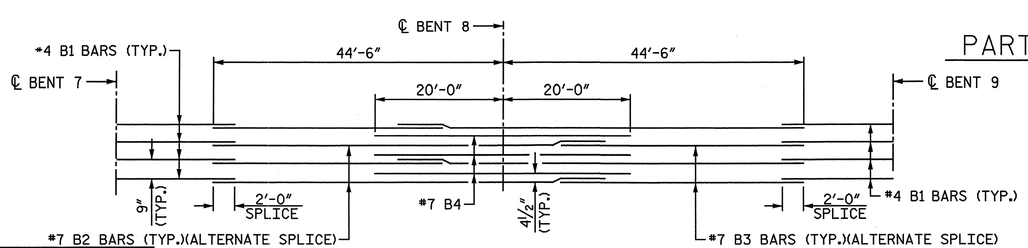

DETAIL A

PROJECT NO. R-3307

CARTERET COUNTY

STATION: 46+21.50 -L-

SHEET 6 OF 24

STATE OF NORTH CAROLINA
DEPARTMENT OF TRANSPORTATION
RALEIGH

SUPERSTRUCTURE

PLAN OF SPANS
UNIT 4

SPAN H & I

NORTH CAROLINA PROFESSIONAL SEAL 25911 ENGINEER DWAIN G. HAYNAY 4-3-2012

NORTH CAROLINA PROFESSIONAL SEAL 033752 ENGINEER SETH A. DENNEY

THE LPA GROUP of North Carolina TRANSPORTATION CONSULTANTS

THE LPA GROUP of North Carolina
8000 Regency Parkway, Suite 600
Cary, North Carolina 27518
NC License No.: F-1084

REVISIONS								SHEET NO.
NO.	BY:	DATE:	NO.	BY:	DATE:			S-49
1			3					TOTAL SHEETS
2			4					333

DRAWN BY : N. B. SPEAKS DATE : 8-8-11
CHECKED BY : R. F. DeCOLA DATE : 11-03-11

DWG. 50 OF 282

4/2/2012
12:40:_ PM
User: jaustin
Filename: Y:\Projects\NCDOT\R-3307\Dwgs\Final\R-3307_050_SD_S3.dgn

NOTES:

FOR ADDITIONAL NOTES, SEE SHEET 4 OF 24.

FOR TRANSVERSE CONSTRUCTION JOINT DETAIL, SEE "BILL OF MATERIAL UNIT 4" SHEET.

FOR SECTION G-G, SEE "TYPICAL SECTION AND DETAILS SPANS F-N", SHEET 2 OF 10.

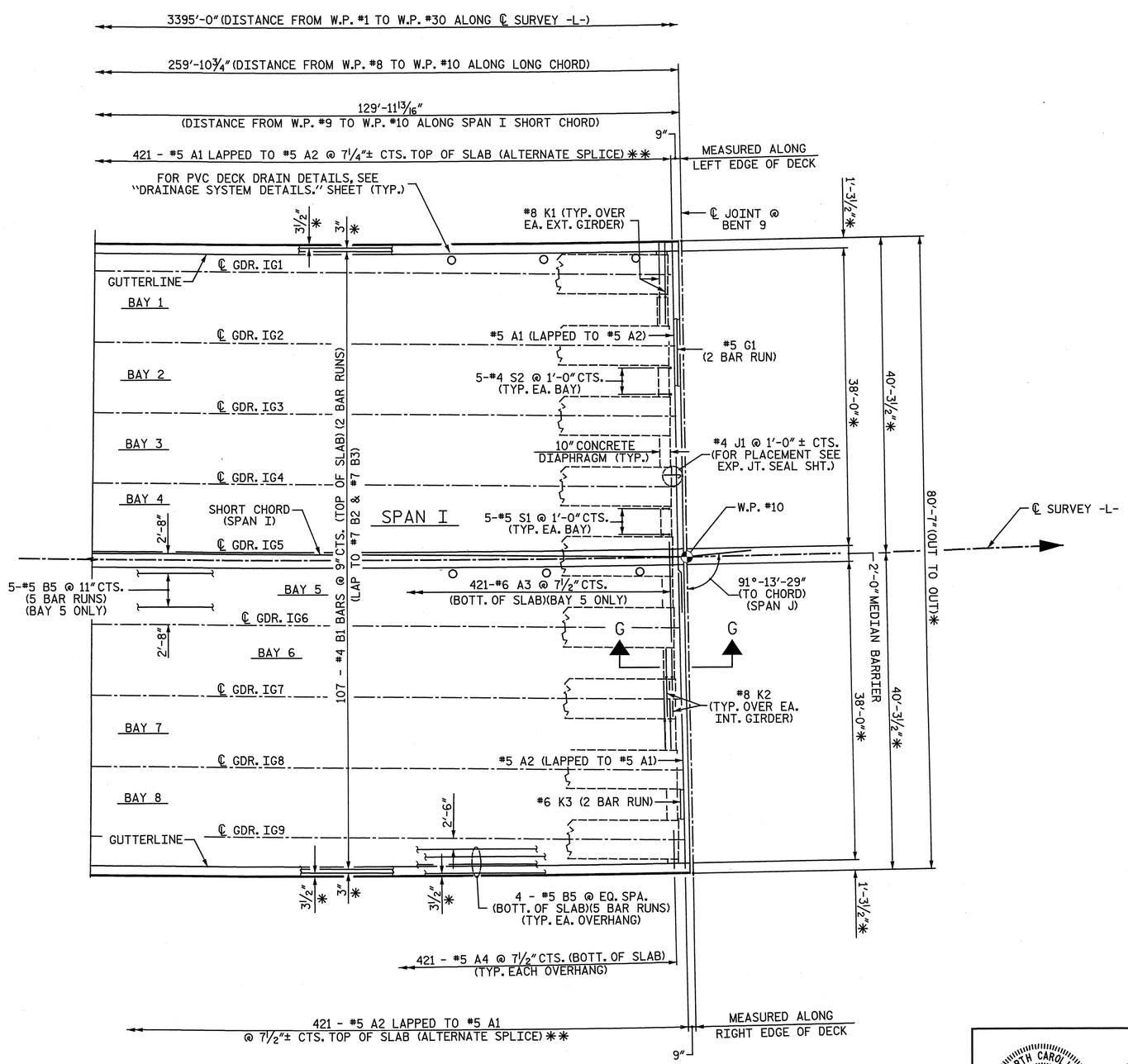

PART PLAN OF SPANS

✱ RADIAL DIMENSION

PROJECT NO. R-3307

CARTERET COUNTY

STATION: 46+21.50 -L-

SHEET 7 OF 24

STATE OF NORTH CAROLINA
DEPARTMENT OF TRANSPORTATION
RALEIGH

SUPERSTRUCTURE

PLAN OF SPANS
UNIT 4

SPAN I

NORTH CAROLINA PROFESSIONAL SEAL 25911 ENGINEER DWAIN G. HATHWAY 4-3-2012

NORTH CAROLINA PROFESSIONAL SEAL 033752 ENGINEER JOSEPH A. DENNEY 4/05/12

THE LPA GROUP of North Carolina TRANSPORTATION CONSULTANTS

THE LPA GROUP of North Carolina
8000 Regency Parkway, Suite 600
Cary, North Carolina 27518
NC License No.: F-1084

REVISIONS								SHEET NO.
NO.	BY:	DATE:	NO.	BY:	DATE:			S-50
1			3					TOTAL SHEETS
2			4					333

DRAWN BY: N. B. SPEAKS DATE: 8-9-11
CHECKED BY: R. F. DeCOLA DATE: 11-3-11

DWG. 51 OF 282

4/2/2012 12:40 PM
User: justin
Filename: Y:\Projects\NCDOT\R-3307\Dwgs\Final\R-3307_051_SD_S4.dgn

NOTES:

FOR ADDITIONAL NOTES, SEE SHEET 4 OF 24.

FOR TRANSVERSE CONSTRUCTION JOINT DETAIL, SEE "BILL OF MATERIAL UNIT 5" SHEET.

FOR SECTION G-G, SEE "TYPICAL SECTION AND DETAILS SPANS F-N", SHEET 2 OF 10.

FOR SECTION I-I, SEE "TYPICAL SECTION AND DETAILS SPANS F-M", SHEET 3 OF 10.

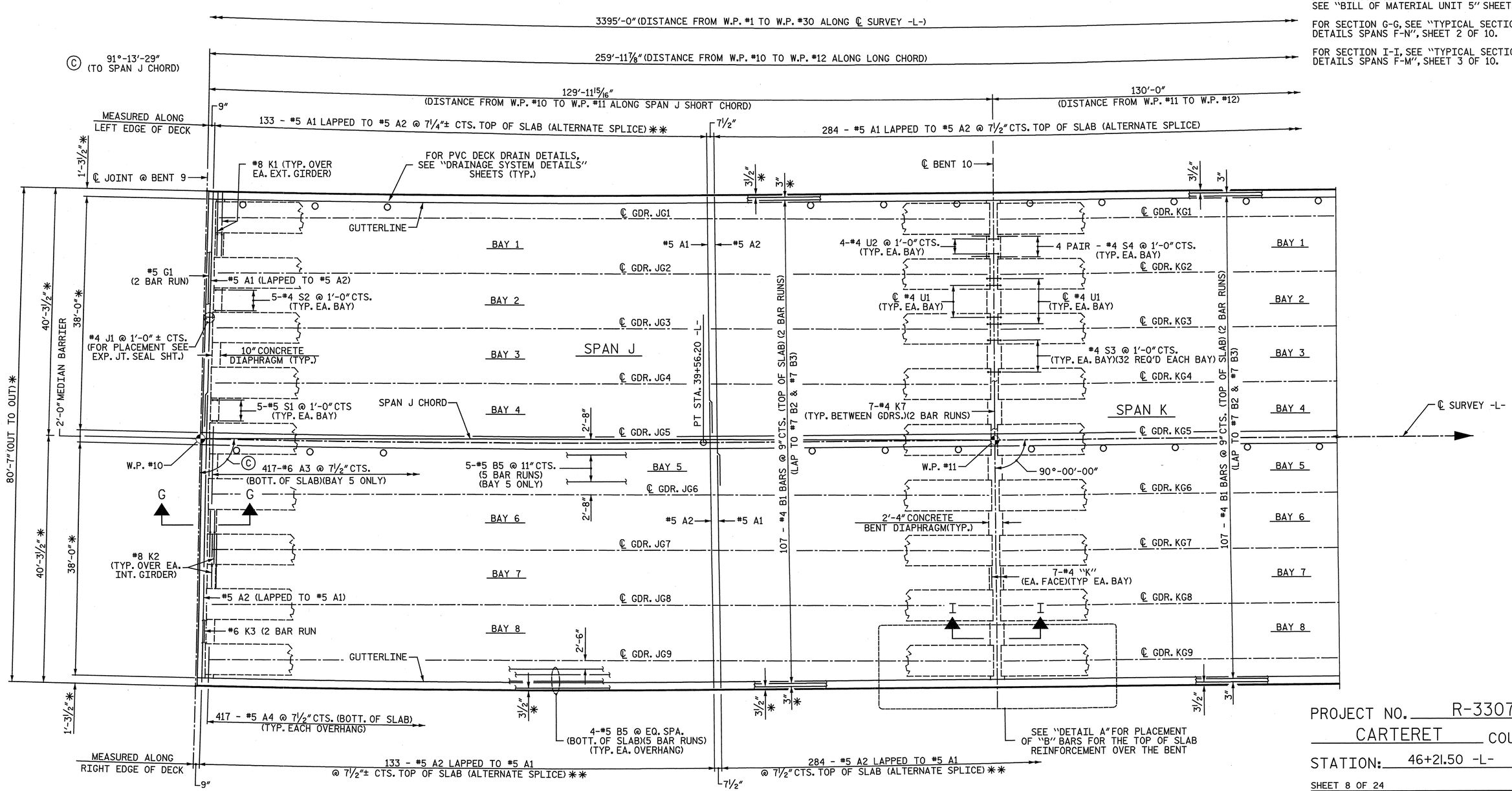

PART PLAN OF SPANS

*RADIAL DIMENSION

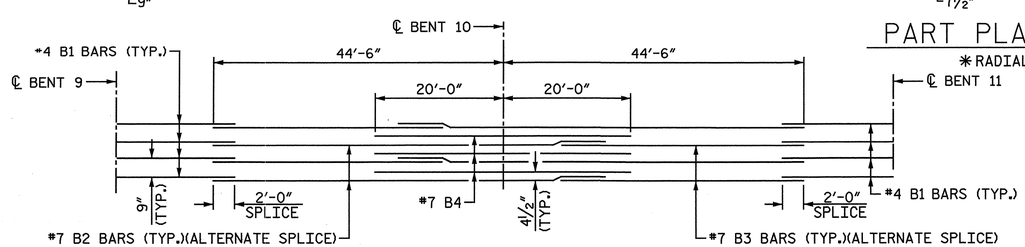

DETAIL A

PROJECT NO. R-3307

CARTERET COUNTY

STATION: 46+21.50 -L-

SHEET 8 OF 24

STATE OF NORTH CAROLINA
DEPARTMENT OF TRANSPORTATION
RALEIGH

SUPERSTRUCTURE

PLAN OF SPANS
UNIT 5

SPANS J & K

NORTH CAROLINA PROFESSIONAL SEAL 25911 ENGINEER DWAIN C. HATHWAY 4-3-2012

NORTH CAROLINA PROFESSIONAL SEAL 033752 ENGINEER SETH A. DENNEY 04/06/12

THE LPA GROUP of North Carolina
TRANSPORTATION CONSULTANTS

THE LPA GROUP of North Carolina
8000 Regency Parkway, Suite 600
Cary, North Carolina 27518
NC License No.: F-1084

REVISIONS						
NO.	BY:	DATE:	NO.	BY:	DATE:	
1			3			
2			4			

SHEET NO. S-51

TOTAL SHEETS 333

DRAWN BY : N. B. SPEAKS DATE : 8-10-11

CHECKED BY : R. F. DeCOLA DATE : 4-11-11

DWG. 52 OF 282

4/2/2012
12:40:
User: jaustin
Filename: Y:\Projects\NCDOT\R-3307\Dwgs\Final\R-3307_052_SD_S5.dgn

NOTES:

FOR ADDITIONAL NOTES, SEE SHEET 4 OF 24.

FOR TRANSVERSE CONSTRUCTION JOINT DETAIL, SEE "BILL OF MATERIAL UNIT 5" SHEET.

FOR SECTION G-G, SEE "TYPICAL SECTION AND DETAILS SPANS F-N", SHEET 2 OF 10.

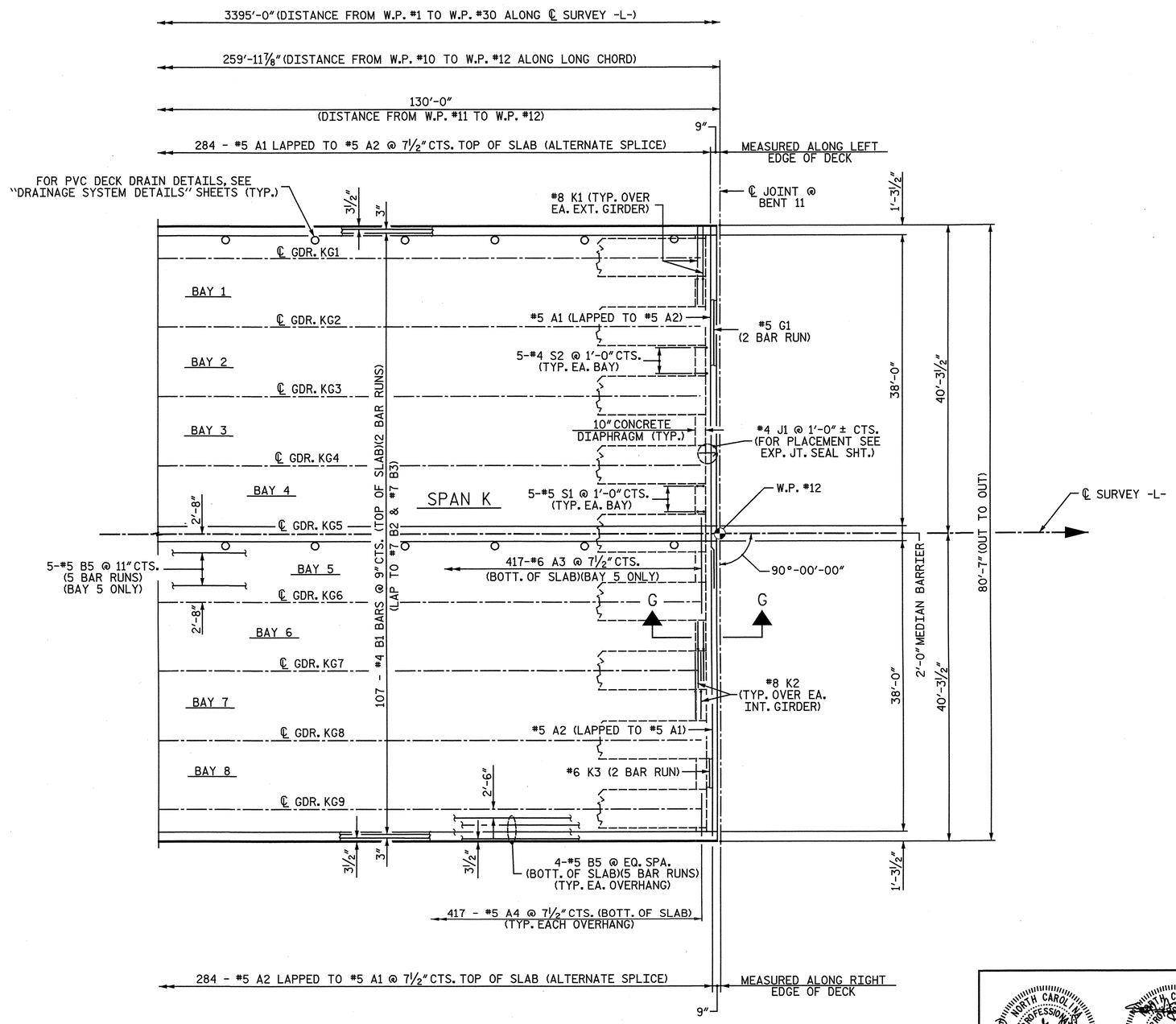

PART PLAN OF SPANS

PROJECT NO. R-3307

CARTERET COUNTY

STATION: 46+21.50 -L-

SHEET 9 OF 24

STATE OF NORTH CAROLINA
DEPARTMENT OF TRANSPORTATION
RALEIGH

SUPERSTRUCTURE

PLAN OF SPANS
UNIT 5

SPAN K

NORTH CAROLINA PROFESSIONAL SEAL 25911 4-3-2012 ENGINEER DAVID G. WATHAN

NORTH CAROLINA PROFESSIONAL SEAL 033752 ENGINEER SETH A. DENNEY

THE LPA GROUP of North Carolina TRANSPORTATION CONSULTANTS

THE LPA GROUP of North Carolina
8000 Regency Parkway, Suite 600
Cary, North Carolina 27518
NC License No.: F-1084

REVISIONS							
NO.	BY:	DATE:	NO.	BY:	DATE:	SHEET NO.	S-52
1			3			TOTAL SHEETS	333
2			4				

DRAWN BY : N. B. SPEAKS DATE : 8-11-11
CHECKED BY : R. F. DeCOLA DATE : 11-3-11

DWG. 53 OF 282

4/2/2012
12:40:_ PM
User: jaustin
Filename: Y:\Projects\NCDOT\R-3307\Dwgs\Final\R-3307_053_SD_S6.dgn

NOTES:

FOR ADDITIONAL NOTES, SEE SHEET 4 OF 24.

FOR TRANSVERSE CONSTRUCTION JOINT DETAIL, SEE "BILL OF MATERIAL UNIT 6" SHEET.

FOR SECTION G-G, SEE "TYPICAL SECTION AND DETAILS SPANS F-N", SHEET 2 OF 10.

FOR SECTION I-I, SEE "TYPICAL SECTION AND DETAILS SPANS F-M", SHEET 3 OF 10.

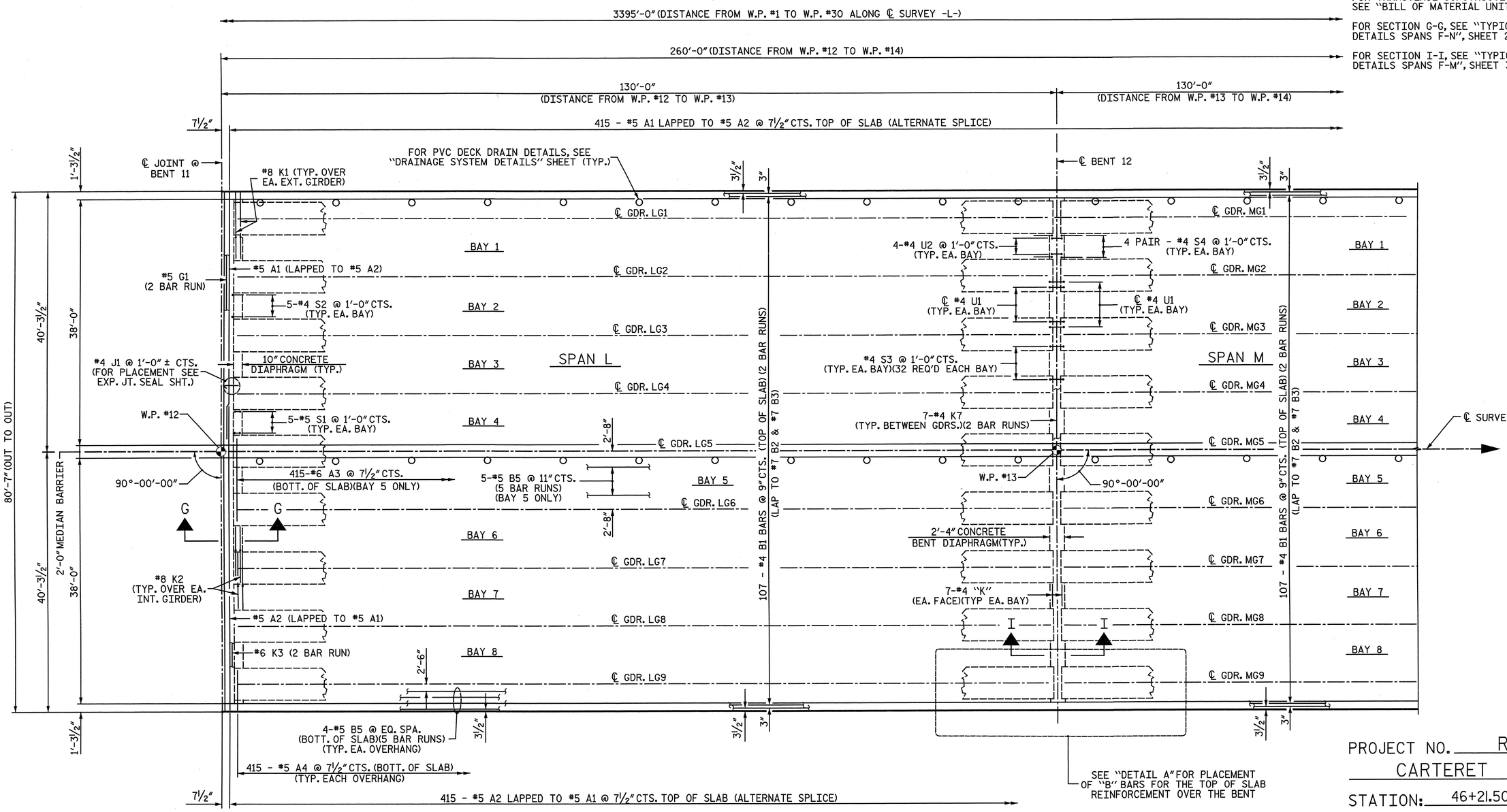

PART PLAN OF SPANS

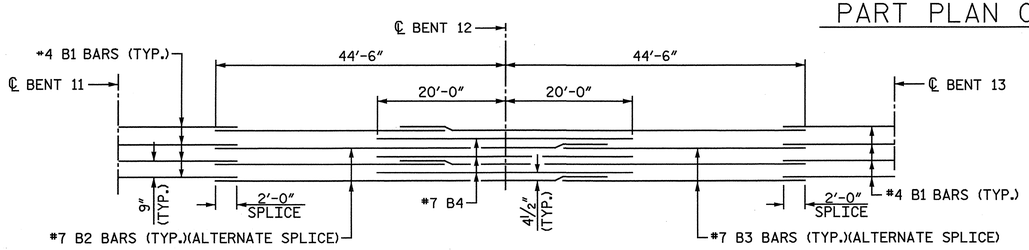

DETAIL A

PROJECT NO. R-3307

CARTERET COUNTY

STATION: 46+21.50 -L-

SHEET 10 OF 24

STATE OF NORTH CAROLINA
DEPARTMENT OF TRANSPORTATION
RALEIGH

SUPERSTRUCTURE

PLAN OF SPANS
UNIT 6

SPANS L & M

NORTH CAROLINA PROFESSIONAL SEAL 25911 ENGINEER DWAIN G. HATHAWAY 4-3-12

NORTH CAROLINA PROFESSIONAL SEAL 033752 ENGINEER SETH A. DENNEY

THE LPA GROUP of North Carolina TRANSPORTATION CONSULTANTS

THE LPA GROUP of North Carolina
8000 Regency Parkway, Suite 600
Cary, North Carolina 27518
NC License No.: F-1084

REVISIONS								SHEET NO.
NO.	BY:	DATE:	NO.	BY:	DATE:			S-53
1			3					TOTAL SHEETS
2			4					333

DRAWN BY: N. B. SPEAKS DATE: 8-11-11
CHECKED BY: R. F. DeCOLA DATE: 11-3-11

DWG. 54 OF 282

4/2/2012 12:40: PM
User: jaustin
Filename: Y:\Projects\NCDOT\R-3307\Dwgs\Final\R-3307_054_SD_S7.dgn

NOTES:

FOR ADDITIONAL NOTES, SEE SHEET 4 OF 24.

FOR TRANSVERSE CONSTRUCTION JOINT DETAIL, SEE "BILL OF MATERIAL UNIT 6" SHEET.

FOR SECTION G-G, SEE "TYPICAL SECTION AND DETAILS SPANS F-N", SHEET 2 OF 10.

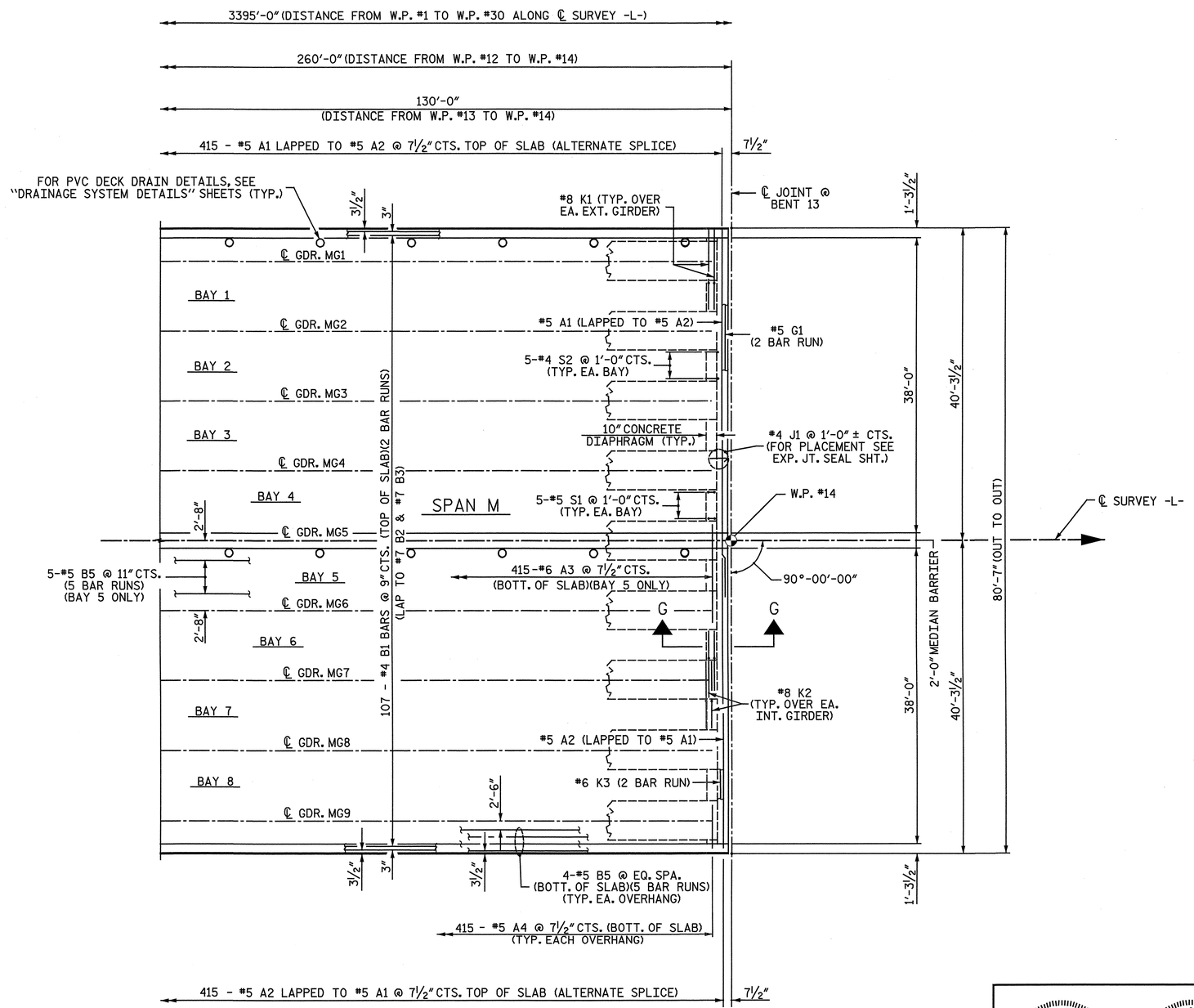

PART PLAN OF SPANS

PROJECT NO. R-3307

CARTERET COUNTY

STATION: 46+21.50 -L-

SHEET 11 OF 24

STATE OF NORTH CAROLINA
DEPARTMENT OF TRANSPORTATION
RALEIGH

SUPERSTRUCTURE

PLAN OF SPANS
UNIT 6

SPAN M

NORTH CAROLINA PROFESSIONAL SEAL 25911 ENGINEER DWAIN G. HATHAWAY 4-3-2012

NORTH CAROLINA PROFESSIONAL SEAL 033752 ENGINEER SETH A. DENNEY

THE LPA GROUP of North Carolina TRANSPORTATION CONSULTANTS

THE LPA GROUP of North Carolina
8000 Regency Parkway, Suite 600
Cary, North Carolina 27518
NC License No.: F-1084

REVISIONS								SHEET NO.
NO.	BY:	DATE:	NO.	BY:	DATE:			S-54
1			3					TOTAL SHEETS
2			4					333

DRAWN BY : N. B. SPEAKS DATE : 8-11-11
CHECKED BY : R. F. DeCOLA DATE : 11-3-11

DWG. 55 OF 282

4/2/2012
12:40: PM
User: jaustin
Filename: Y:\Projects\NCDOT\R-3307\Dwgs\Final\R-3307_055_SD_S8.dgn

NOTES:

FOR ADDITIONAL NOTES, SEE SHEET 4 OF 24.

FOR SECTION G-G, SEE "TYPICAL SECTION AND DETAILS SPANS F-N", SHEET 2 OF 10.

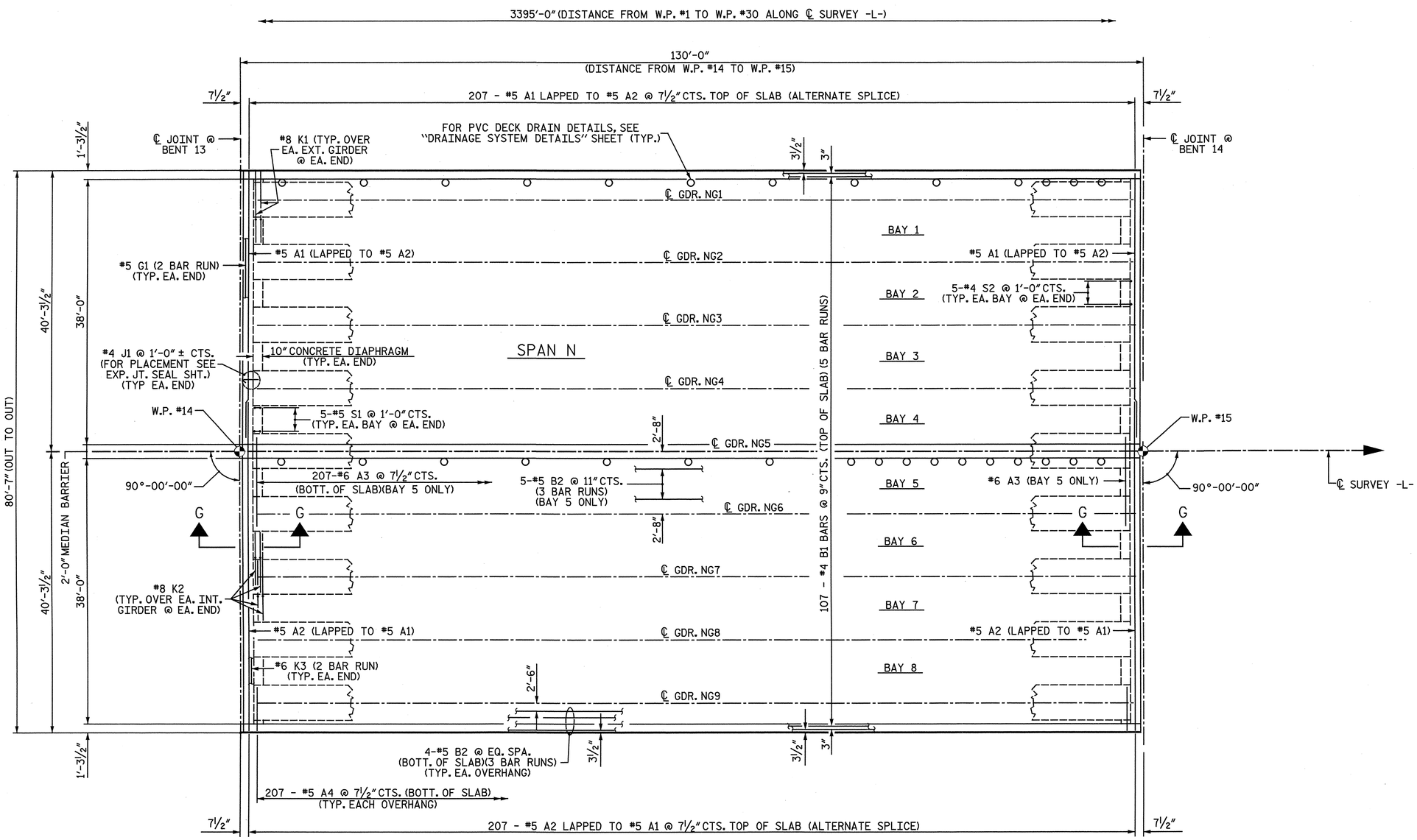

PLAN OF SPAN

PROJECT NO. R-3307

CARTERET COUNTY

STATION: 46+21.50 -L-

SHEET 12 OF 24

STATE OF NORTH CAROLINA
DEPARTMENT OF TRANSPORTATION
RALEIGH

SUPERSTRUCTURE

PLAN OF SPANS
UNIT 7

SPAN N

NORTH CAROLINA PROFESSIONAL SEAL 25911 ENGINEER DWAIN G. HATHAWAY 4-3-2012

NORTH CAROLINA PROFESSIONAL SEAL 033752 ENGINEER SETH A. DEHNERT

THE LPA GROUP of North Carolina TRANSPORTATION CONSULTANTS

THE LPA GROUP of North Carolina
8000 Regency Parkway, Suite 600
Cary, North Carolina 27518
NC License No.: F-1084

REVISIONS						SHEET NO.
NO.	BY:	DATE:	NO.	BY:	DATE:	S-55
1			3			TOTAL SHEETS
2			4			333

DRAWN BY : N. B. SPEAKS DATE : 8-11-11
CHECKED BY : R. F. DeCOLA DATE : 11-3-11

DWG. 56 OF 282

4/2/2012
12:40:_ PM
User: jaustin
Filename: Y:\Projects\NCDOT\R-3307\Dwgs\Final\R-3307_056_SD_S9.dgn

NOTES:

FOR ADDITIONAL NOTES, SEE SHEET 4 OF 24.

FOR SECTION G-G, SEE "TYPICAL SECTION AND DETAILS SPANS F-N", SHEET 2 OF 10.

FOR SECTION J-J, AND SECTION K-K, SEE "TYPICAL SECTION AND DETAILS SPAN O", SHEET 4 OF 10.

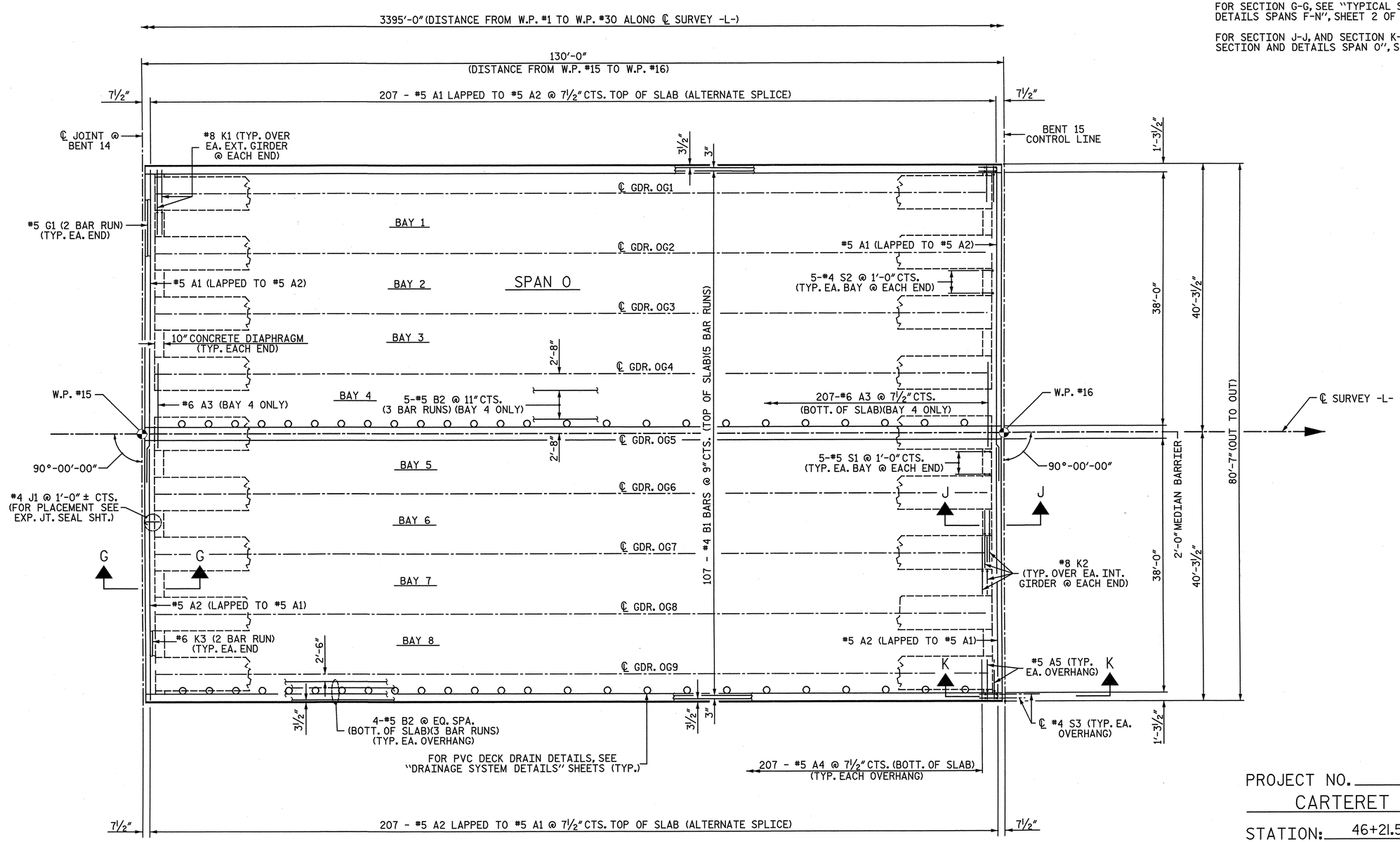

PLAN OF SPAN

PROJECT NO. R-3307

CARTERET COUNTY

STATION: 46+21.50 -L-

SHEET 13 OF 24

STATE OF NORTH CAROLINA
DEPARTMENT OF TRANSPORTATION
RALEIGH

PLAN OF SPANS
UNIT 7A

SPAN O

NORTH CAROLINA PROFESSIONAL SEAL 25911 ENGINEER DWAN G. HATHAWAY 4-3-2012

NORTH CAROLINA PROFESSIONAL SEAL 033752 ENGINEER SETH A. DENNEY

THE LPA GROUP of North Carolina
TRANSPORTATION CONSULTANTS

THE LPA GROUP of North Carolina
8000 Regency Parkway, Suite 600
Cary, North Carolina 27518
NC License No.: F-1084

REVISIONS								SHEET NO.
NO.	BY:	DATE:	NO.	BY:	DATE:			S-56
1			3					TOTAL SHEETS
2			4					383

DRAWN BY : N. B. SPEAKS DATE : 8-11-11
CHECKED BY : R. F. DeCOLA DATE : 11-3-11

DWG. 57 OF 282

4/2/2012
12:40: PM
User: jaustin
Filename: Y:\Projects\NCDOT\R-3307\Dwgs\Final\R-3307_057_SD_S10.dgn

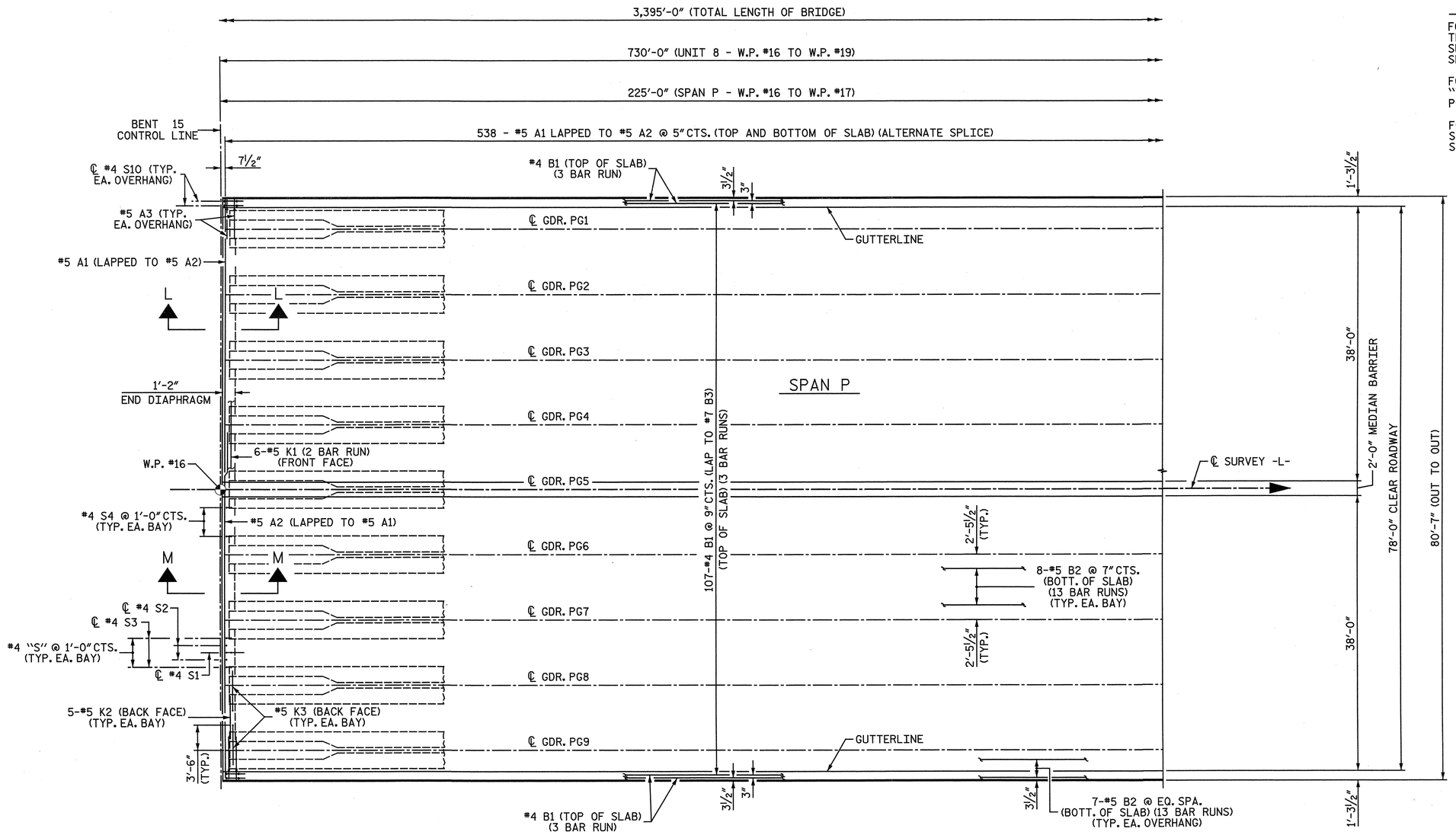

PART PLAN OF SPANS

NOTES:

FOR POUR SEQUENCE AND LOCATION OF TRANSVERSE CONSTRUCTION JOINT SEE SUPERSTRUCTURE "BILL OF MATERIAL" SHEET.

FOR REINFORCING IN DIAPHRAGMS, SEE "TYPICAL SECTION AND DETAILS SPANS P-R" SHEETS.

FOR SECTION L-L AND SECTION M-M, SEE "TYPICAL SECTION AND DETAILS SPANS P-R", SHEET 5 OF 10.

PROJECT NO. R-3307

CARTERET COUNTY

STATION: 46+21.50 -L-

SHEET 14 OF 24

STATE OF NORTH CAROLINA
DEPARTMENT OF TRANSPORTATION
RALEIGH

SUPERSTRUCTURE

PLAN OF SPANS
UNIT 8

SPAN P

NORTH CAROLINA PROFESSIONAL SEAL 25911 ENGINEER DWAIN C. HATHAWAY 4-3-2012

NORTH CAROLINA PROFESSIONAL SEAL 033752 ENGINEER SETH A. DENNEY 4/4/12

THE LPA GROUP of North Carolina TRANSPORTATION CONSULTANTS

THE LPA GROUP of North Carolina
8000 Regency Parkway, Suite 600
Cary, North Carolina 27518
NC License No.: F-1084

REVISIONS						SHEET NO.
NO.	BY:	DATE:	NO.	BY:	DATE:	S-57
1			3			TOTAL SHEETS
2			4			333

DRAWN BY : M. D. MAYHEW DATE : 8-19-11
CHECKED BY : S. A. DENNEY DATE : 9-9-11

DWG. 58 OF 282

4/2/2012 12:40: PM
User: jaustin
Filename: Y:\Projects\NCDOT\R-3307\Dwgs\Final\R-3307_058_SD_S11.dgn

NOTES:

FOR SOLAR ARRAY PLATFORM LOCATION AND DETAILS, SEE "SOLAR ARRAY PLATFORM" SHEET.

FOR LOCATION OF 1"Ø RIGID CONDUIT, SEE "NAVIGATIONAL LIGHTING AND CONDUIT SYSTEM" SHEETS.

FOR TRANSVERSE CONSTRUCTION JOINT DETAIL, SEE "BILL OF MATERIAL UNIT 8" SHEET.

FOR ADDITIONAL NOTES, SEE SHEET 14 OF 24.

FOR SECTION O-O, SECTION P-P AND SECTION Q-Q, SEE "TYPICAL SECTION AND DETAILS SPANS P-R", SHEET 10 OF 10.

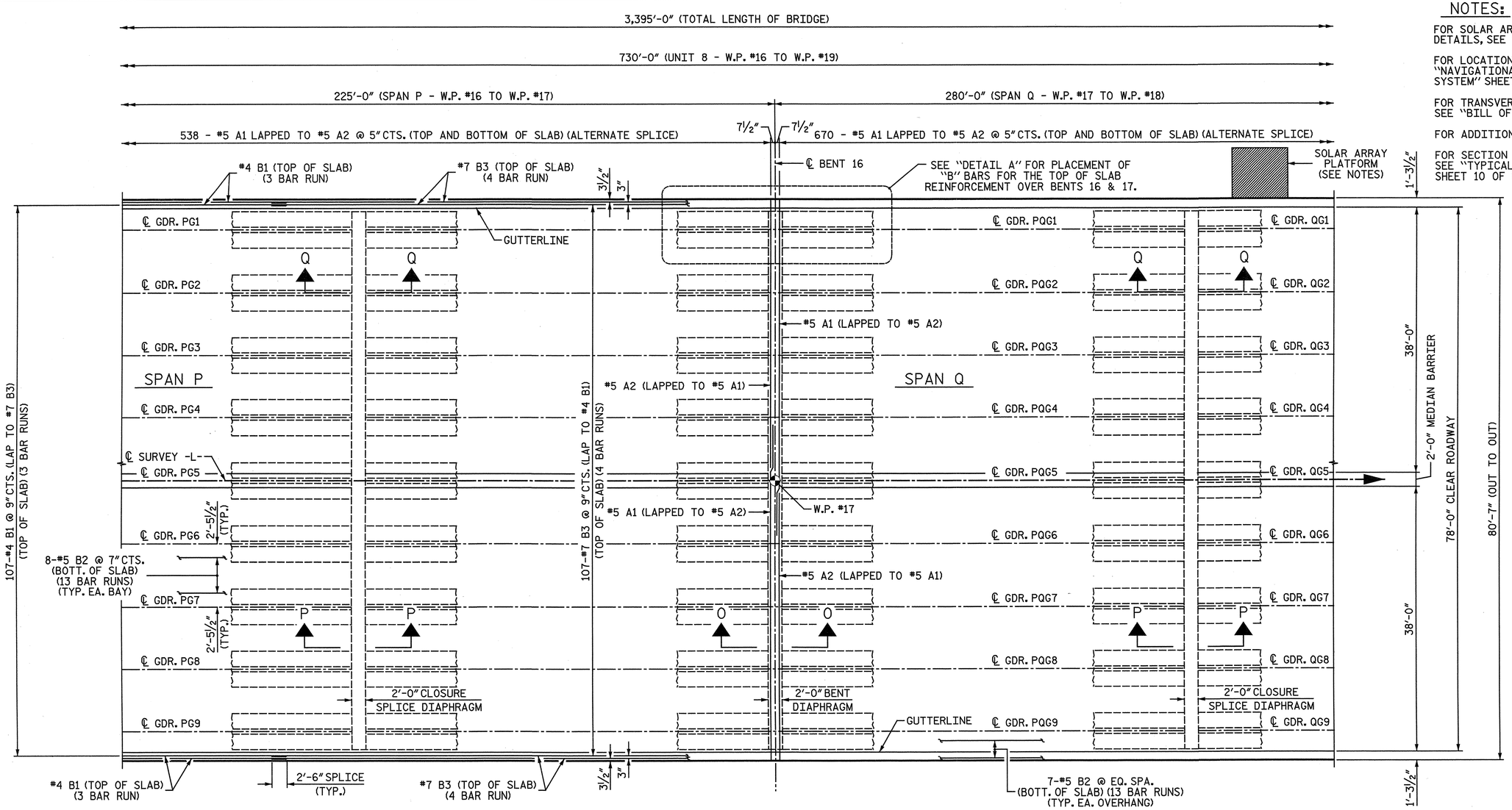

PART PLAN OF SPANS

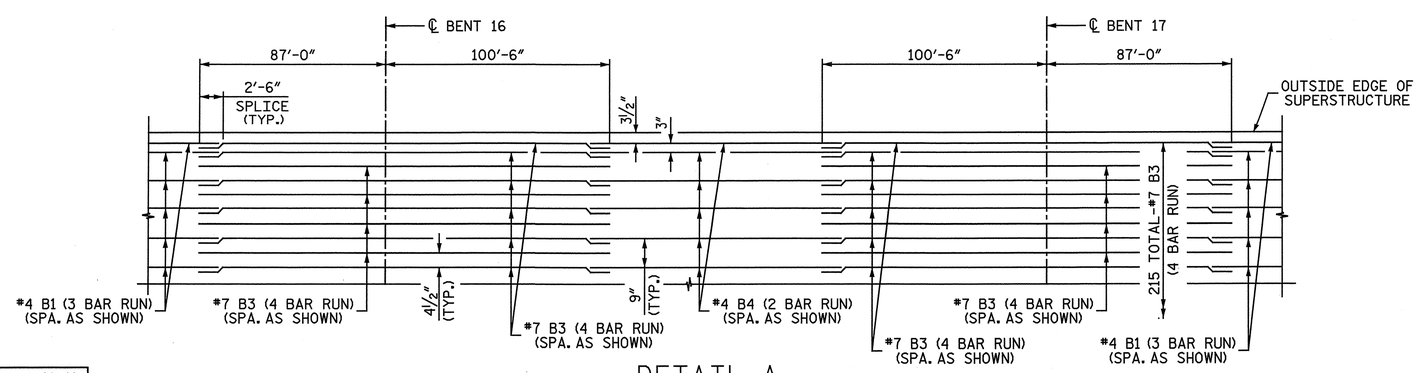

DETAIL A

PROJECT NO. R-3307

CARTERET COUNTY

STATION: 46+21.50 -L-

SHEET 15 OF 24

STATE OF NORTH CAROLINA
DEPARTMENT OF TRANSPORTATION
RALEIGH

SUPERSTRUCTURE

PLAN OF SPANS
UNIT 8

SPANS P & Q

NORTH CAROLINA PROFESSIONAL SEAL 25911 ENGINEER DWAIN G. HATHAWAY 4-3-2012

NORTH CAROLINA PROFESSIONAL SEAL 033752 ENGINEER SETH A. DENNEY

THE LPA GROUP of North Carolina TRANSPORTATION CONSULTANTS

THE LPA GROUP of North Carolina
8000 Regency Parkway, Suite 600
Cary, North Carolina 27518
NC License No.: F-1084

REVISIONS						SHEET NO.
NO.	BY:	DATE:	NO.	BY:	DATE:	S-58
1			3			TOTAL SHEETS
2			4			333

DRAWN BY: M. D. MAYHEW DATE: 8-19-11
CHECKED BY: S. A. DENNEY DATE: 9-9-11

DWG. 59 OF 282

4/2/2012 12:40: PM
User: jaustin
Filename: Y:\Projects\NCDOT\R-3307\Dwgs\Final\R-3307_059_SD_S12.dgn

NOTES:

FOR TRANSVERSE CONSTRUCTION JOINT DETAIL, SEE "BILL OF MATERIAL UNIT 8" SHEET.

FOR ADDITIONAL NOTES, SEE SHEET 14 OF 24.

FOR SECTION O-O, SECTION P-P AND SECTION Q-Q, SEE "TYPICAL SECTION AND DETAILS SPANS P-R", SHEET 10 OF 10.

FOR LOCATION OF 1"Ø RIGID CONDUIT, SEE "NAVIGATIONAL LIGHTING AND CONDUIT SYSTEM" SHEET.

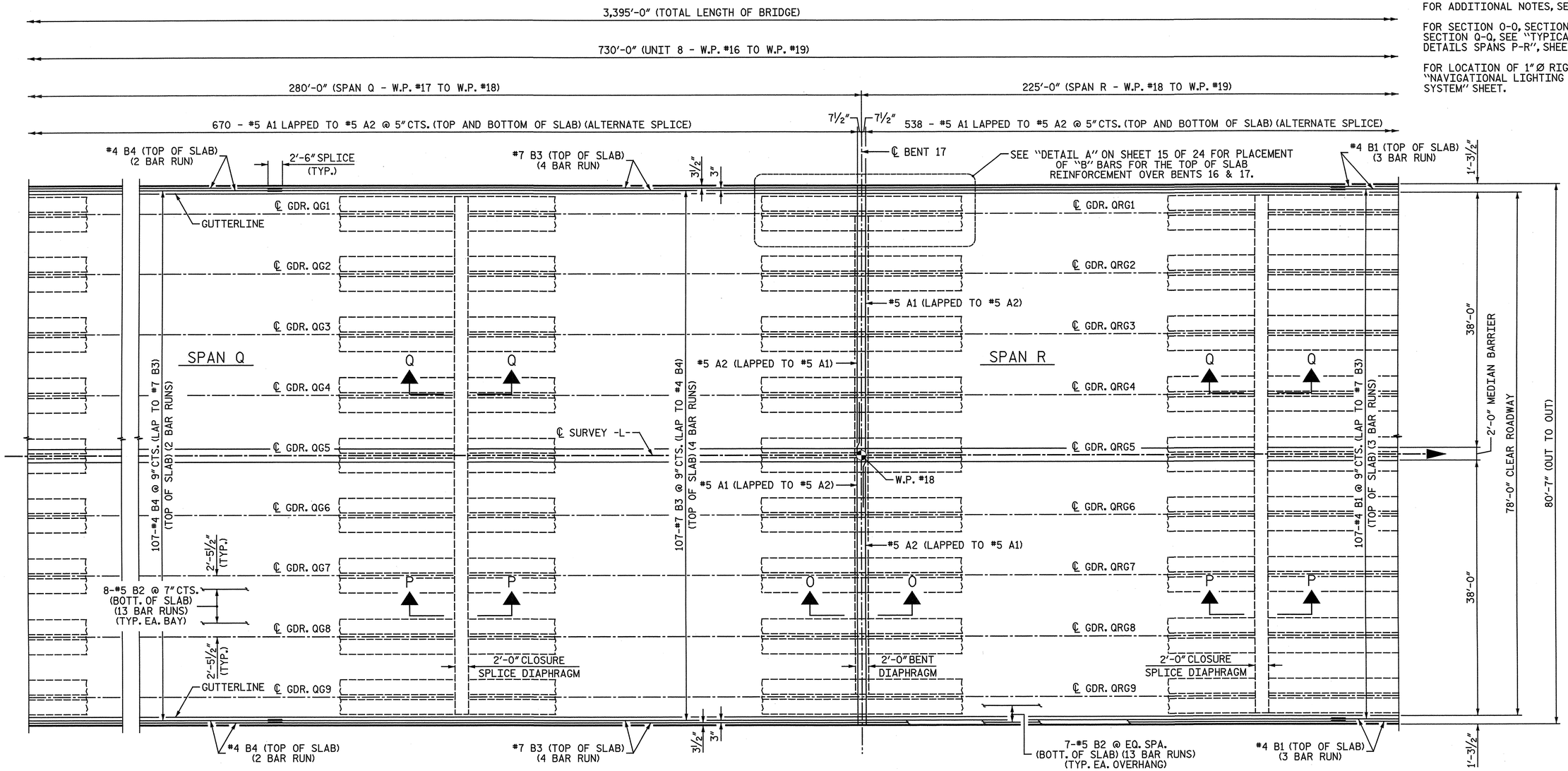

PART PLAN OF SPANS

PROJECT NO. R-3307

CARTERET COUNTY

STATION: 46+21.50 -L-

SHEET 16 OF 24

STATE OF NORTH CAROLINA
DEPARTMENT OF TRANSPORTATION
RALEIGH

SUPERSTRUCTURE

PLAN OF SPANS
UNIT 8

SPANS Q & R

NORTH CAROLINA PROFESSIONAL SEAL 25911 ENGINEER DWAIN G. HATHAWAY 4-3-2012

NORTH CAROLINA PROFESSIONAL SEAL 033752 ENGINEER SETH A. DENNEY

THE LPA GROUP of North Carolina TRANSPORTATION CONSULTANTS

THE LPA GROUP of North Carolina
8000 Regency Parkway, Suite 600
Cary, North Carolina 27518
NC License No.: F-1084

REVISIONS						SHEET NO.
NO.	BY:	DATE:	NO.	BY:	DATE:	S-59
1			3			TOTAL SHEETS
2			4			333

DRAWN BY : M. D. MAYHEW DATE : 8-23-11
CHECKED BY : S. A. DENNEY DATE : 9-9-11

DWG. 60 OF 282

4/2/2012
12:40: PM
User: jaustin
Filename: Y:\Projects\NCDOT\R-3307\Dwgs\Final\R-3307_060_SD_S13.dgn

NOTES:

FOR POUR SEQUENCE AND LOCATION OF TRANSVERSE CONSTRUCTION JOINT, SEE "BILL OF MATERIAL UNIT 8" SHEET.

FOR TRANSVERSE CONSTRUCTION JOINT DETAIL, SEE "BILL OF MATERIAL UNIT 8" SHEET.

FOR ADDITIONAL NOTES, SEE SHEET 14 OF 24.

FOR SECTION L-L AND SECTION M-M, SEE "TYPICAL SECTION AND DETAILS SPANS P-R", SHEET 5 OF 10.

FOR SECTION E-E, SEE "TYPICAL SECTION AND DETAILS SPANS A-E & SPANS S-CC", SHEET 9 OF 10.

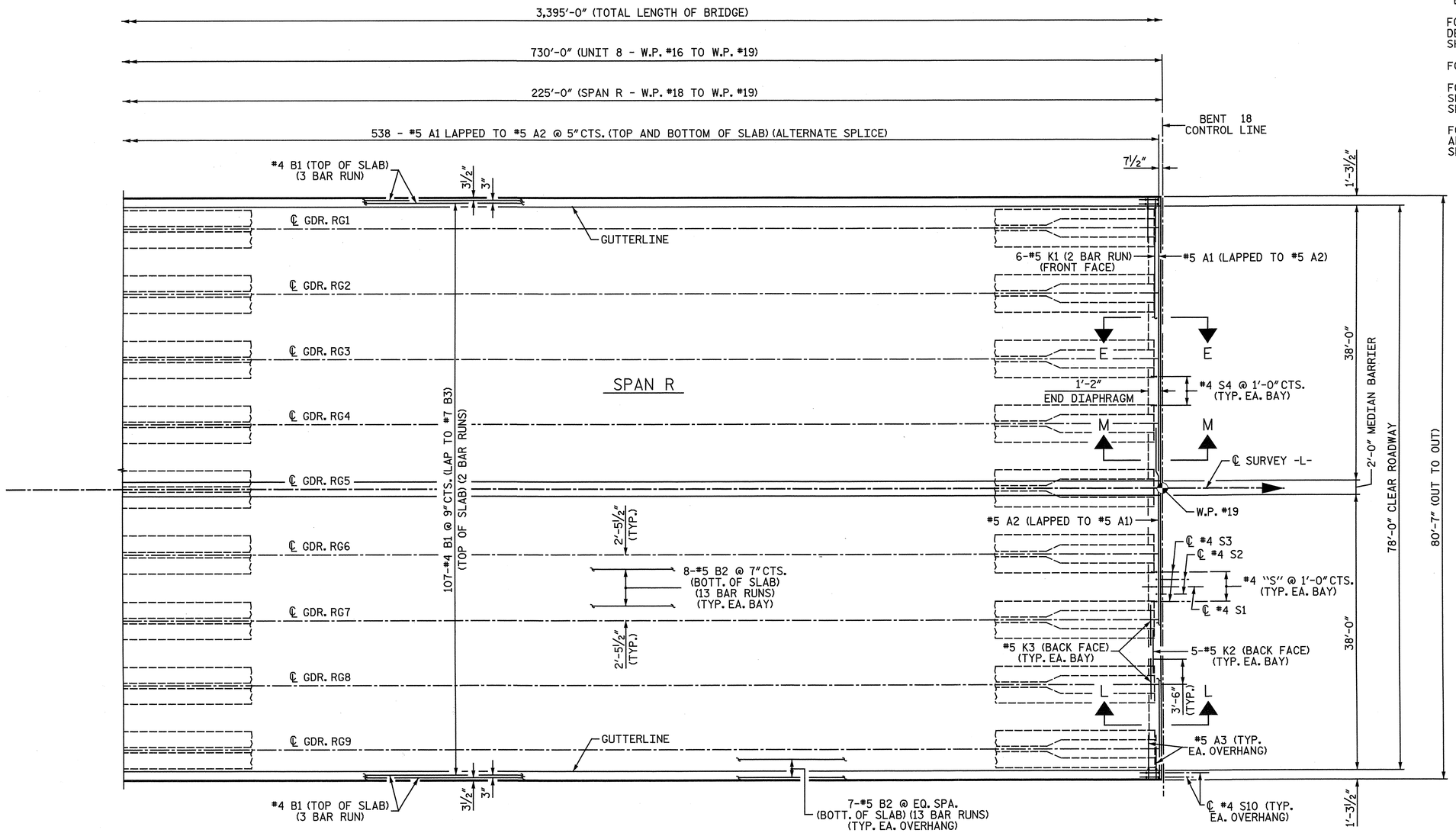

PART PLAN OF SPANS

PROJECT NO. R-3307

CARTERET COUNTY

STATION: 46+21.50 -L-

SHEET 17 OF 24

STATE OF NORTH CAROLINA
DEPARTMENT OF TRANSPORTATION
RALEIGH

SUPERSTRUCTURE

PLAN OF SPANS
UNIT 8

SPAN R

NORTH CAROLINA PROFESSIONAL SEAL 25911 ENGINEER DWAIN G. HAYNMAN 4-3-2012

NORTH CAROLINA PROFESSIONAL SEAL 033752 ENGINEER SETH A. DENNEY

THE LPA GROUP of North Carolina
TRANSPORTATION CONSULTANTS

THE LPA GROUP of North Carolina
8000 Regency Parkway, Suite 600
Cary, North Carolina 27518
NC License No.: F-1084

REVISIONS								SHEET NO.
NO.	BY:	DATE:	NO.	BY:	DATE:			S-60
1			3					TOTAL SHEETS
2			4					333

DRAWN BY : M. D. MAYHEW DATE : 8-23-11
CHECKED BY : S. A. DENNEY DATE : 9-12-11

DWG. 61 OF 282

4/2/2012
12:40 PM
User: Faustin
Filename: Y:\Projects\NCDOT\R-3307\Dwgs\Final\R-3307_061_SD_S14.dgn

NOTES:

FOR ARC OFFSETS, SEE SUPERSTRUCTURE "ARC OFFSETS UNITS 9 THRU 12."

FOR POUR SEQUENCE AND LOCATION OF CONSTRUCTION JOINT, SEE SUPERSTRUCTURE "BILL OF MATERIAL" SHEET.

INTERMEDIATE DIAPHRAGMS NOT SHOWN FOR CLARITY. SEE "FRAMING PLAN" SHEETS.

FOR SECTIONS, SEE "TYPICAL SECTION DETAILS" SHEETS.

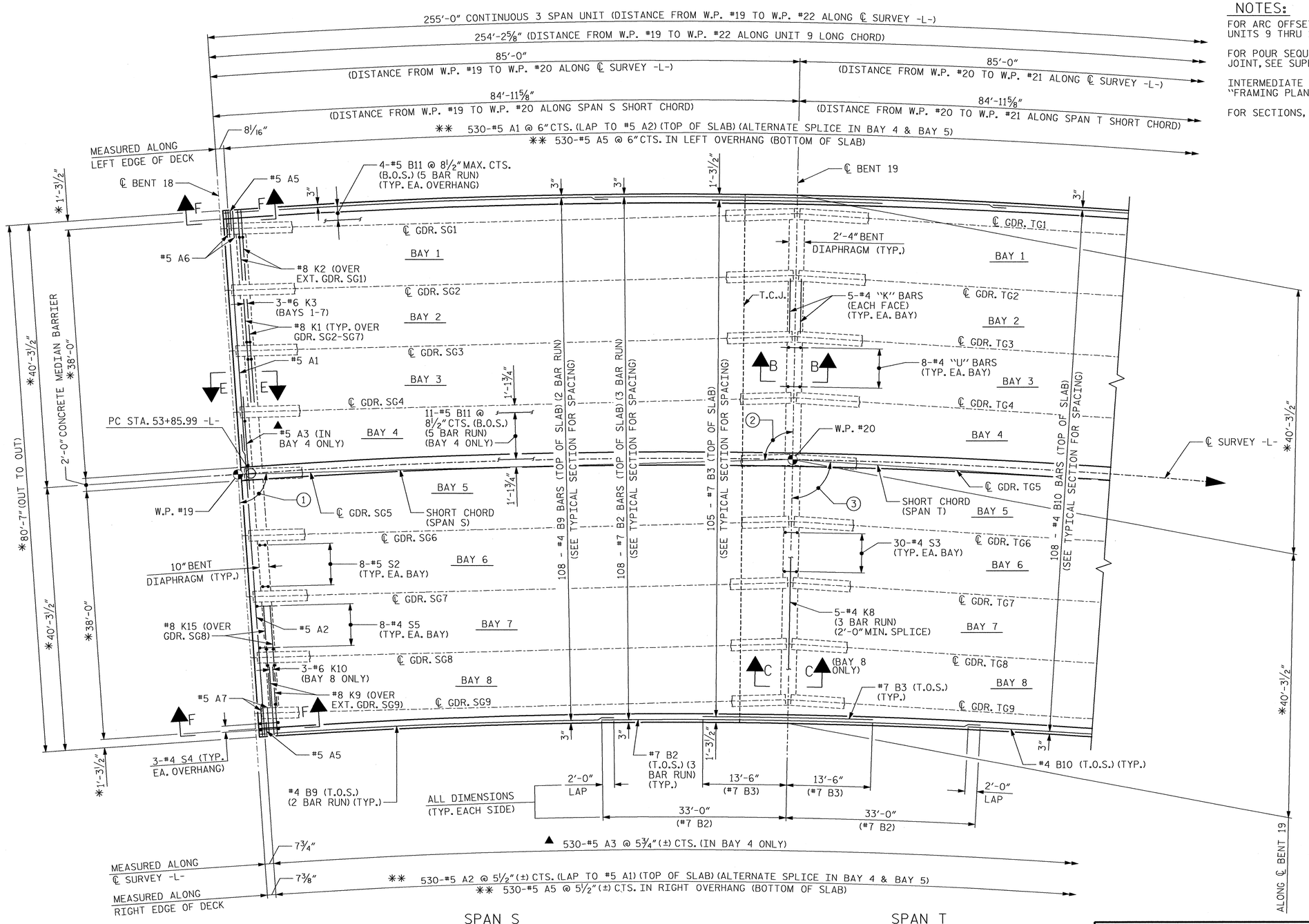

PART PLAN OF SPANS - UNIT 9

*RADIAL DIMENSIONS

**"A" BARS TO BE PLACED RADIALLY. SPACING IS ALONG EDGE OF DECK AS SHOWN.

▲ #5 A3 BARS ARE TO BE PLACED RADIALLY. SPACING IS ALONG ℄ SURVEY -L- AS SHOWN.

T.O.S. - TOP OF SLAB

B.O.S. - BOTTOM OF SLAB

T.C.J. - TRANSVERSE CONSTRUCTION JOINT

① - 87°-31'-47" (TO SHORT CHORD)

② - 92°-35'-21" (TO SHORT CHORD)

③ - 87°-24'-34" (TO SHORT CHORD)

PROJECT NO. R-3307

CARTERET COUNTY

STATION: 46+21.50 -L-

SHEET 18 OF 24

STATE OF NORTH CAROLINA
DEPARTMENT OF TRANSPORTATION
RALEIGH

SUPERSTRUCTURE

PLAN OF SPANS
UNIT 9

SPANS S, T & U

NORTH CAROLINA PROFESSIONAL SEAL 12323 ENGINEER MORRIS ISRAELNAIM
3/30/2012

NORTH CAROLINA PROFESSIONAL SEAL 027199 ENGINEER ALLYSON K. ORR
3/30/2012

MI ENGINEERING
1011 SHAUB DRIVE, SUITE 100
RALEIGH, NC 27606
(919) 851-6606
FIRM PE NUMBER : P-0671

REVISIONS								SHEET NO.
NO.	BY:	DATE:	NO.	BY:	DATE:			S-61
1			3					TOTAL SHEETS
2			4					333

DRAWN BY : B.E. LANNING DATE : 8-11
CHECKED BY : B.E. ATKINSON DATE : 9-11

DWG. 62 OF 282

3/29 12
5:12:39 PM
User: blanning
Filename: P:\NC Projects\M10005 - Gallants Channel\R-3307\Structures\R-3307_062_SD_PS_ST.dgn

NOTES:

FOR ARC OFFSETS, SEE SUPERSTRUCTURE "ARC OFFSETS UNITS 9 THRU 12."

FOR POUR SEQUENCE AND LOCATION OF CONSTRUCTION JOINT, SEE SUPERSTRUCTURE "BILL OF MATERIAL" SHEET.

INTERMEDIATE DIAPHRAGMS NOT SHOWN FOR CLARITY, SEE "FRAMING PLAN" SHEETS.

FOR SECTIONS, SEE "TYPICAL SECTION DETAILS" SHEETS.

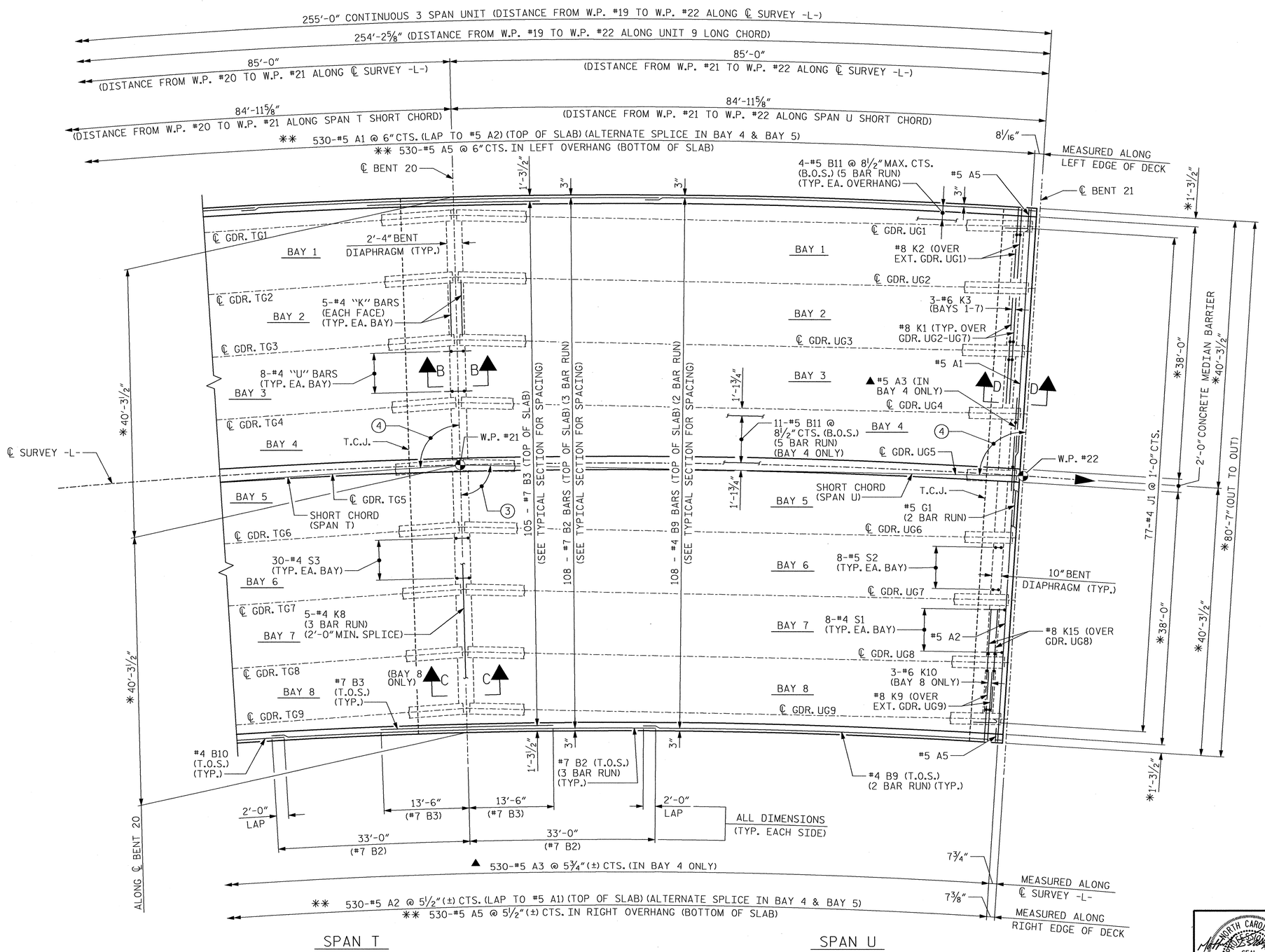

PART PLAN OF SPANS - UNIT 9

*RADIAL DIMENSIONS

**"A" BARS TO BE PLACED RADIALLY. SPACING IS ALONG EDGE OF DECK AS SHOWN.

▲ #5 A3 BARS ARE TO BE PLACED RADIALLY. SPACING IS ALONG ℄ SURVEY -L- AS SHOWN.

T.O.S. - TOP OF SLAB

B.O.S. - BOTTOM OF SLAB

T.C.J. - TRANSVERSE CONSTRUCTION JOINT

③ - 87°-24'-34" (TO SHORT CHORD)

④ - 92°-35'-26" (TO SHORT CHORD)

PROJECT NO. R-3307

CARTERET COUNTY

STATION: 46+21.50 -L-

SHEET 19 OF 24

STATE OF NORTH CAROLINA
DEPARTMENT OF TRANSPORTATION
RALEIGH

SUPERSTRUCTURE

PLAN OF SPANS
UNIT 9

SPANS S, T & U

NORTH CAROLINA PROFESSIONAL SEAL 12323 ENGINEER MORRIS ISRAELMAN 3/30/2012

NORTH CAROLINA PROFESSIONAL SEAL 027799 ENGINEER ALLYSON K. DRR 3/30/2012

MI ENGINEERING
1011 SHAUB DRIVE, SUITE 100
RALEIGH, NC 27606
(919) 851-6606
FIRM PE NUMBER : P-0671

REVISIONS						SHEET NO.
NO.	BY:	DATE:	NO.	BY:	DATE:	S-62
1			3			TOTAL SHEETS
2			4			333

DRAWN BY : B.E. LANNING DATE : 8-11
CHECKED BY : B.E. ATKINSON DATE : 9-11

DWG. 63 OF 282

3/29/2012
5:12:58 PM
User: blanning
Filename: P:\NC Projects\M10005 - Gallants Channel\R-3307\Structures\R-3307_063_SD_PS_TU.dgn

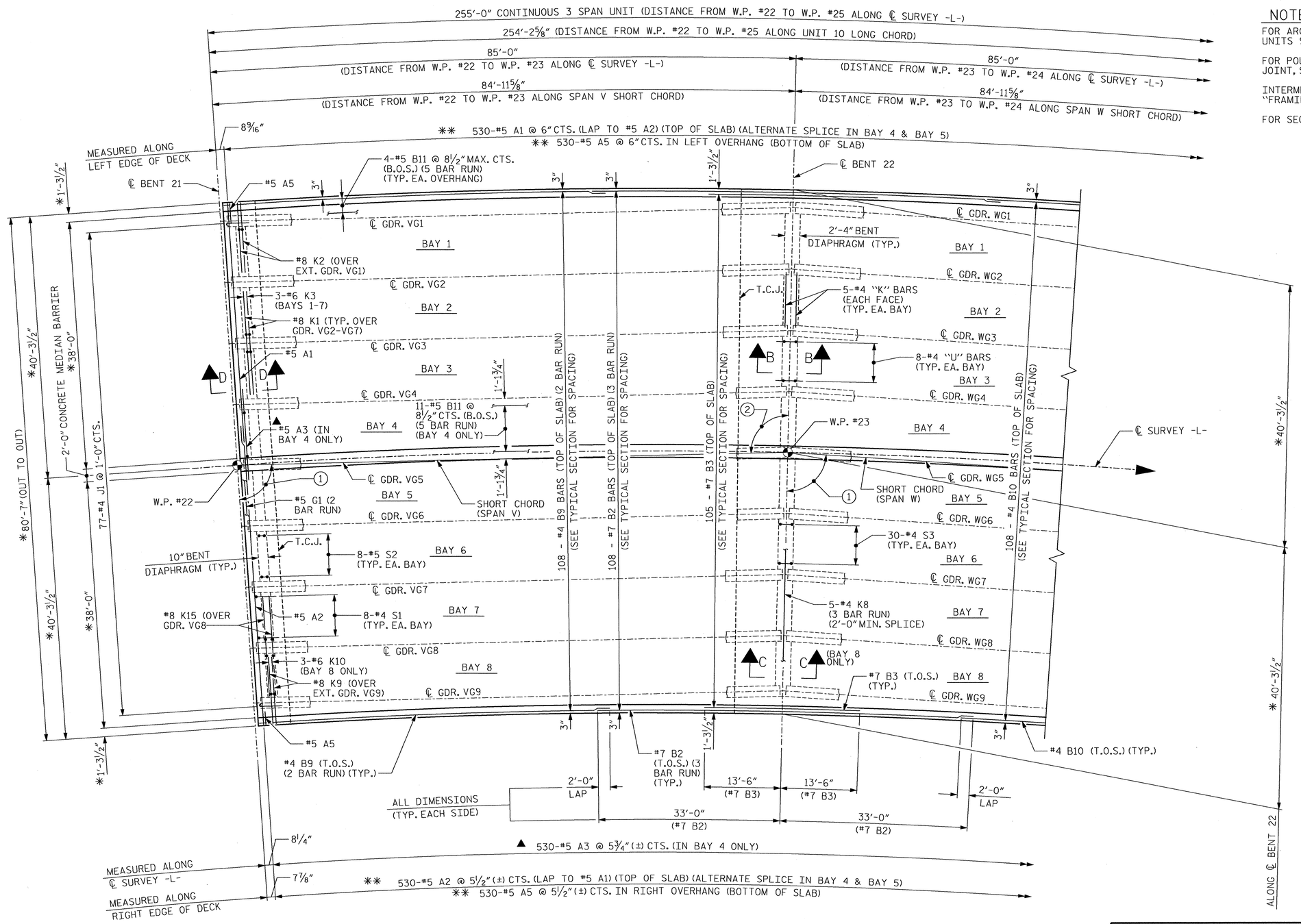

PART PLAN OF SPANS - UNIT 10

NOTES:

FOR ARC OFFSETS, SEE SUPERSTRUCTURE "ARC OFFSETS UNITS 9 THRU 12."

FOR POUR SEQUENCE AND LOCATION OF CONSTRUCTION JOINT, SEE SUPERSTRUCTURE "BILL OF MATERIAL" SHEET.

INTERMEDIATE DIAPHRAGMS NOT SHOWN FOR CLARITY, SEE "FRAMING PLAN" SHEETS.

FOR SECTIONS, SEE "TYPICAL SECTION DETAILS" SHEETS.

*RADIAL DIMENSIONS

**"A" BARS TO BE PLACED RADIALLY. SPACING IS ALONG EDGE OF DECK AS SHOWN.

▲ #5 A3 BARS ARE TO BE PLACED RADIALLY. SPACING IS ALONG ℄ SURVEY -L- AS SHOWN.

T.O.S. - TOP OF SLAB

B.O.S. - BOTTOM OF SLAB

T.C.J. - TRANSVERSE CONSTRUCTION JOINT

① - 87°-24'-34" (TO SHORT CHORD)

② - 92°-35'-26" (TO SHORT CHORD)

PROJECT NO. R-3307

CARTERET COUNTY

STATION: 46+21.50 -L-

SHEET 20 OF 24

STATE OF NORTH CAROLINA
DEPARTMENT OF TRANSPORTATION
RALEIGH

SUPERSTRUCTURE

PLAN OF SPANS
UNIT 10

SPANS V, W & X

NORTH CAROLINA PROFESSIONAL SEAL 12323 ENGINEER MORRIS ISRAELNAM 3/30/2012

NORTH CAROLINA PROFESSIONAL SEAL 027799 ENGINEER ALLYSON K. DRR 3/30/2012

MI ENGINEERING
1011 SHAUB DRIVE, SUITE 100
RALEIGH, NC 27606
(919) 851-6606
FIRM PE NUMBER : P-0671

REVISIONS							
NO.	BY:	DATE:	NO.	BY:	DATE:	SHEET NO.	S-63
1			3			TOTAL SHEETS	333
2			4				

DRAWN BY : B.E. LANNING DATE : 8-11
CHECKED BY : B.E. ATKINSON DATE : 9-11

DWG. 64 OF 282

3/29/2012 5:13:17 PM
User: blanning
Filename: P:\NC Projects\MI0005 - Gallants Channel\R-3307\Structures\R-3307_064_SD_PS_VW.dgn

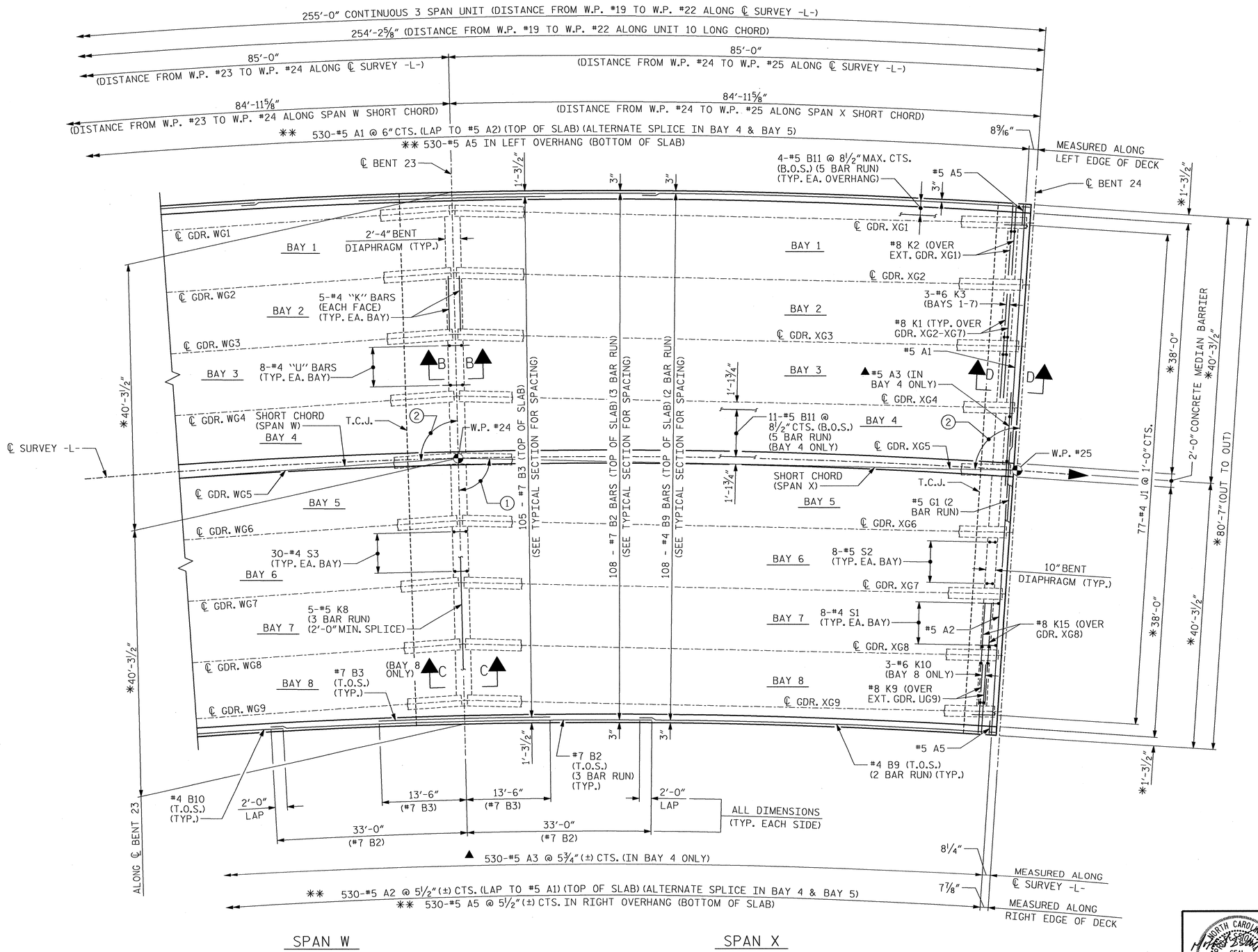

PART PLAN OF SPANS - UNIT 10

NOTES:

FOR ARC OFFSETS, SEE SUPERSTRUCTURE "ARC OFFSETS UNITS 9 THRU 12."

FOR POUR SEQUENCE AND LOCATION OF CONSTRUCTION JOINT, SEE SUPERSTRUCTURE "BILL OF MATERIAL" SHEET.

INTERMEDIATE DIAPHRAGMS NOT SHOWN FOR CLARITY, SEE "FRAMING PLAN" SHEETS.

FOR SECTIONS, SEE "TYPICAL SECTION DETAILS" SHEETS.

*RADIAL DIMENSIONS

**"A" BARS TO BE PLACED RADIALLY. SPACING IS ALONG EDGE OF DECK AS SHOWN.

▲ #5 A3 BARS ARE TO BE PLACED RADIALLY. SPACING IS ALONG ℄ SURVEY -L- AS SHOWN.

T.O.S. - TOP OF SLAB

B.O.S. - BOTTOM OF SLAB

T.C.J. - TRANSVERSE CONSTRUCTION JOINT

① - 87°-24'-34" (TO SHORT CHORD)

② - 92°-35'-26" (TO SHORT CHORD)

PROJECT NO. R-3307

CARTERET COUNTY

STATION: 46+21.50 -L-

SHEET 21 OF 24

STATE OF NORTH CAROLINA
DEPARTMENT OF TRANSPORTATION
RALEIGH

SUPERSTRUCTURE

PLAN OF SPANS
UNIT 10

SPANS V, W & X

NORTH CAROLINA PROFESSIONAL SEAL 12323 ENGINEER MORRIS ISRAELNIAM 3/30/2012

NORTH CAROLINA PROFESSIONAL SEAL 027199 ENGINEER ALLYSON K. ORR 3/30/2012

MI ENGINEERING
1011 SHAUB DRIVE, SUITE 100
RALEIGH, NC 27606
(919) 851-6606
FIRM PE NUMBER : P-0671

REVISIONS								SHEET NO.
NO.	BY:	DATE:	NO.	BY:	DATE:			S-C4
1			3					TOTAL SHEETS
2			4					333

DRAWN BY : B.E. LANNING DATE : 8-11
CHECKED BY : B.E. ATKINSON DATE : 9-11

DWG. 65 OF 282

3/29/2012
5:13:36 PM
User: blanning
Filename: P:\NC Projects\M10005 - Gallants Channel\R-3307\Structures\R-3307_065_SD_PS_WX.dgn

NOTES:

FOR ARC OFFSETS, SEE SUPERSTRUCTURE "ARC OFFSETS UNITS 9 THRU 12."

FOR POUR SEQUENCE AND LOCATION OF CONSTRUCTION JOINT, SEE SUPERSTRUCTURE "BILL OF MATERIAL" SHEET.

INTERMEDIATE DIAPHRAGMS NOT SHOWN FOR CLARITY, SEE "FRAMING PLAN" SHEETS.

FOR SECTIONS, AEE "TYPICAL SECTION DETAILS" SHEETS.

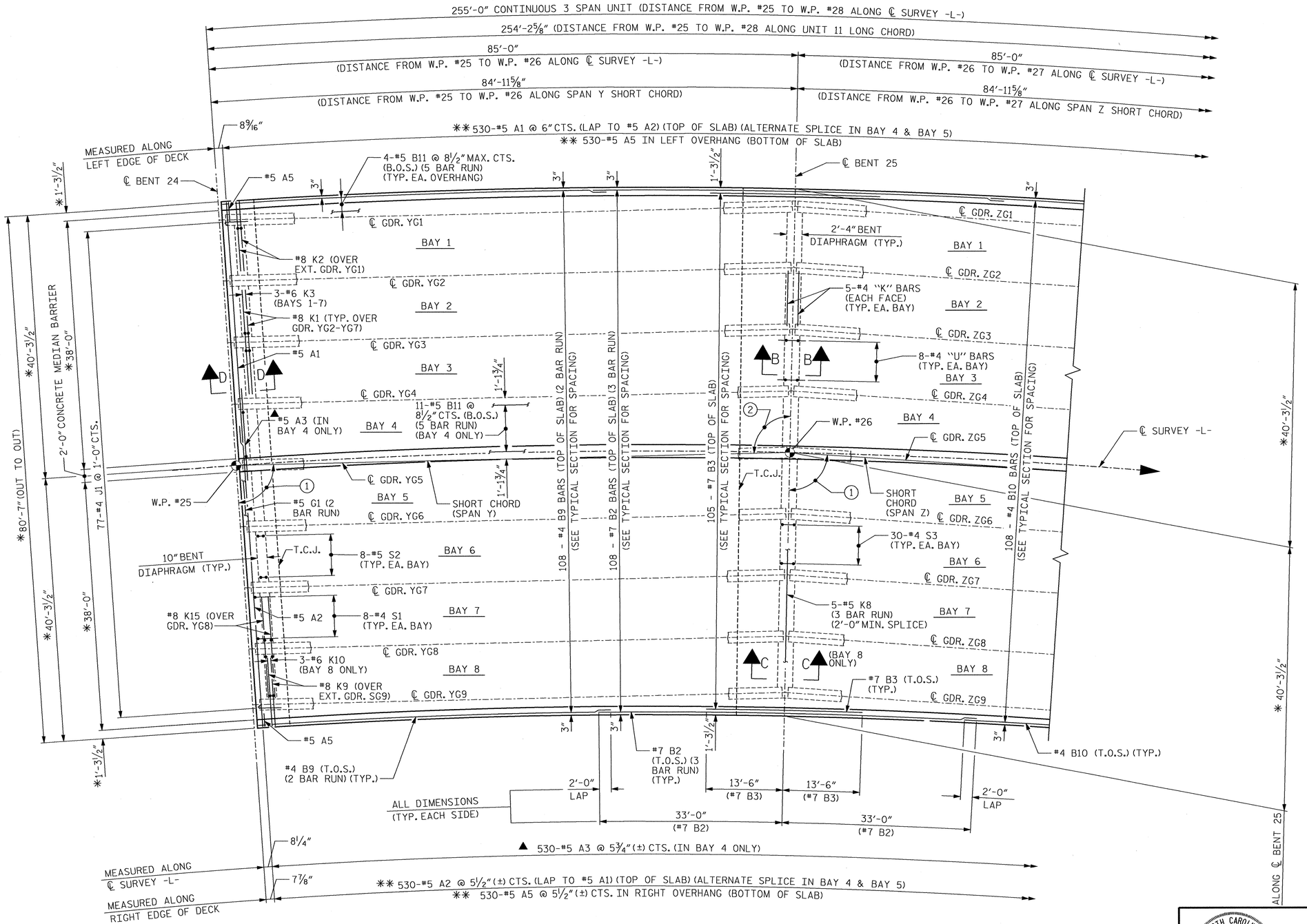

PART PLAN OF SPANS - UNIT 11

*RADIAL DIMENSIONS

**"A" BARS TO BE PLACED RADIALLY. SPACING IS ALONG EDGE OF DECK AS SHOWN.

▲ #5 A3 BARS ARE TO BE PLACED RADIALLY. SPACING IS ALONG ℄ SURVEY -L- AS SHOWN.

T.O.S. - TOP OF SLAB

B.O.S. - BOTTOM OF SLAB

T.C.J. - TRANSVERSE CONSTRUCTION JOINT

① - 87°-24'-34" (TO SHORT CHORD)

② - 92°-35'-26" (TO SHORT CHORD)

PROJECT NO. R-3307

CARTERET COUNTY

STATION: 46+21.50 -L-

SHEET 22 OF 24

STATE OF NORTH CAROLINA
DEPARTMENT OF TRANSPORTATION
RALEIGH

SUPERSTRUCTURE

PLAN OF SPANS
UNIT 11

SPANS Y, Z & AA

NORTH CAROLINA PROFESSIONAL SEAL 12323 ENGINEER MORRIS ISRAELNAIM 3/30/2012

NORTH CAROLINA PROFESSIONAL SEAL 027799 ENGINEER ALLYSON K. ORR 3/30/2012

MI ENGINEERING
1011 SHAUB DRIVE, SUITE 100
RALEIGH, NC 27606
(919) 851-6606
FIRM PE NUMBER : P-0671

REVISIONS								
NO.	BY:	DATE:	NO.	BY:	DATE:			
1			3					
2			4					

SHEET NO. S-65

TOTAL SHEETS 333

DRAWN BY : B.E. LANNING DATE : 8-11
CHECKED BY : B.E. ATKINSON DATE : 9-11

DWG. 66 OF 282

3/29/2012
5:13:53 PM
User: Planning
Filename: P:\NC Projects\M10005 - Gallants Channel\R-3307\Structures\R-3307_066_SD_PS_YZ.dgn

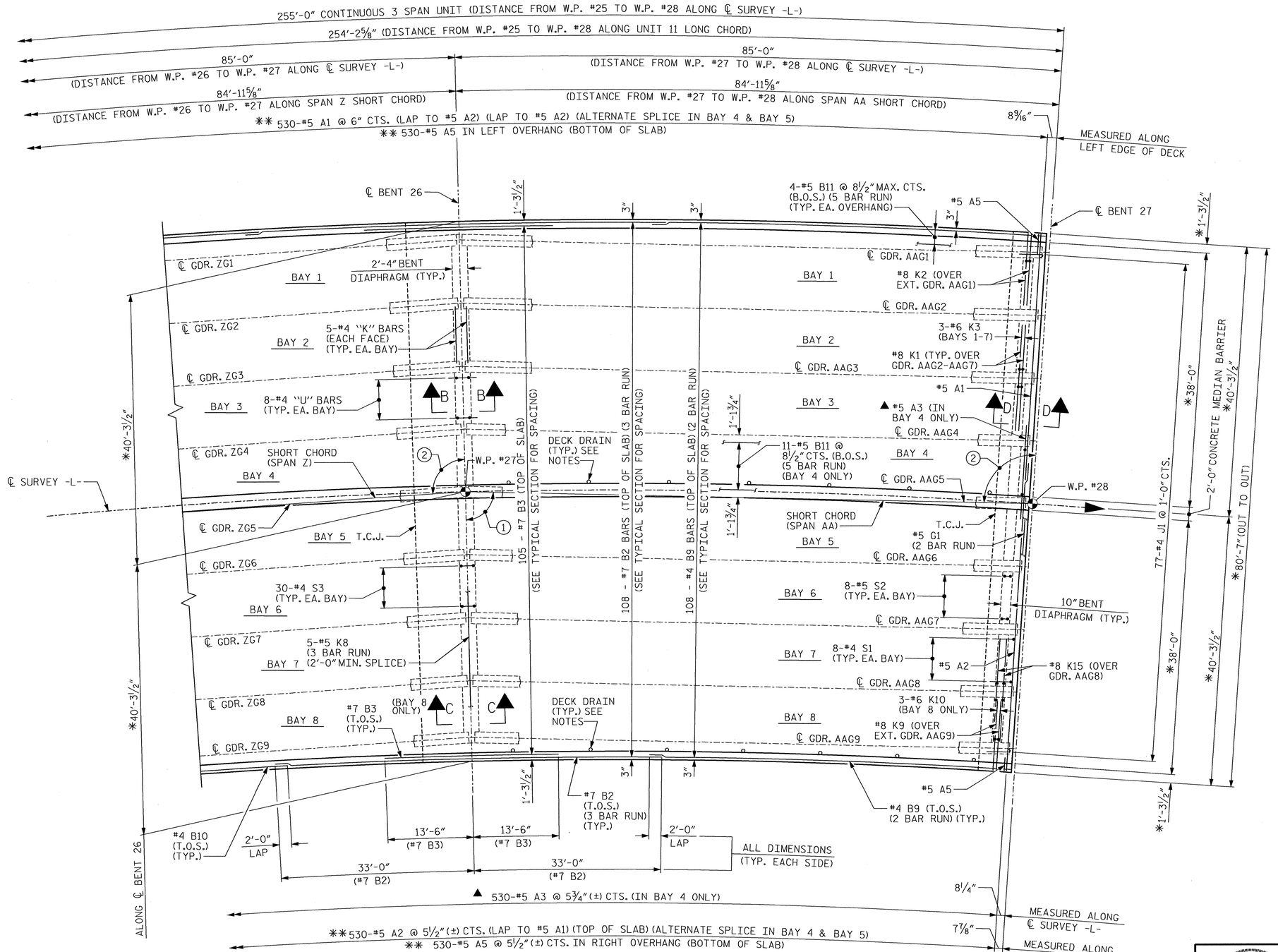

PART PLAN OF SPANS - UNIT 11

NOTES:

FOR ARC OFFSETS, SEE SUPERSTRUCTURE "ARC OFFSETS UNITS 9 THRU 12."

FOR POUR SEQUENCE AND LOCATION OF CONSTRUCTION JOINT, SEE SUPERSTRUCTURE "BILL OF MATERIAL" SHEET.

INTERMEDIATE DIAPHRAGMS NOT SHOWN FOR CLARITY, SEE "FRAMING PLAN" SHEETS.

FOR SECTIONS, SEE "TYPICAL SECTION DETAILS" SHEETS.

FOR DECK DRAIN LOCATIONS AND DETAILS, SEE SUPERSTRUCTURE "PLAN OF DRAINAGE SYSTEM."

BARS MAY BE SHIFTED SLIGHTLY, AS NECESSARY, TO CLEAR DRAIN PIPES.

*RADIAL DIMENSIONS

**"A" BARS TO BE PLACED RADIALLY. SPACING IS ALONG EDGE OF DECK AS SHOWN.

▲ #5 A3 BARS ARE TO BE PLACED RADIALLY. SPACING IS ALONG ℄ SURVEY -L- AS SHOWN.

T.O.S. - TOP OF SLAB

B.O.S. - BOTTOM OF SLAB

T.C.J. - TRANSVERSE CONSTRUCTION JOINT

(1) - 87°-24'-34" (TO SHORT CHORD)

(2) - 92°-35'-26" (TO SHORT CHORD)

PROJECT NO. R-3307

CARTERET COUNTY

STATION: 46+21.50 -L-

SHEET 23 OF 24

STATE OF NORTH CAROLINA
DEPARTMENT OF TRANSPORTATION
RALEIGH

SUPERSTRUCTURE

PLAN OF SPANS
UNIT 11

SPANS Y, Z & AA

NORTH CAROLINA PROFESSIONAL SEAL 12323 ENGINEER MORRIS ISRAELNAIM 3/30/2012

NORTH CAROLINA PROFESSIONAL SEAL 027799 ENGINEER ALLYSON K. ORR 3/30/2012

MI ENGINEERING
1011 SHAUB DRIVE, SUITE 100
RALEIGH, NC 27606
(919) 851-6606
FIRM PE NUMBER : P-0671

REVISIONS								SHEET NO.
NO.	BY:	DATE:	NO.	BY:	DATE:			S-66
1			3					TOTAL SHEETS
2			4					333

DRAWN BY : B.E. LANNING DATE : 8-11
CHECKED BY : B.E. ATKINSON DATE : 9-11

DWG. 67 OF 282

3/29/2012
5:14:09 PM
User: blanning
Filename: P:\NC Projects\M10005 - Gallants Channel\R-3307\Structures\R-3307_067_SD_PS_ZAA.dgn

NOTES:

FOR ARC OFFSETS, SEE SUPERSTRUCTURE "ARC OFFSETS UNITS 9 THRU 12."

FOR POUR SEQUENCE AND LOCATION OF CONSTRUCTION JOINT, SEE SUPERSTRUCTURE "BILL OF MATERIAL" SHEET.

INTERMEDIATE DIAPHRAGMS NOT SHOWN FOR CLARITY, SEE "FRAMING PLAN" SHEETS.

FOR SECTIONS, SEE "TYPICAL SECTION DETAILS" SHEETS.

FOR DECK DRAIN LOCATIONS AND DETAILS, SEE SUPERSTRUCTURE "PLAN OF DRAINAGE SYSTEM."

BAR MAY BE SHIFTED SLIGHTLY, AS NECESSARY, TO CLEAR DRAIN PIPES.

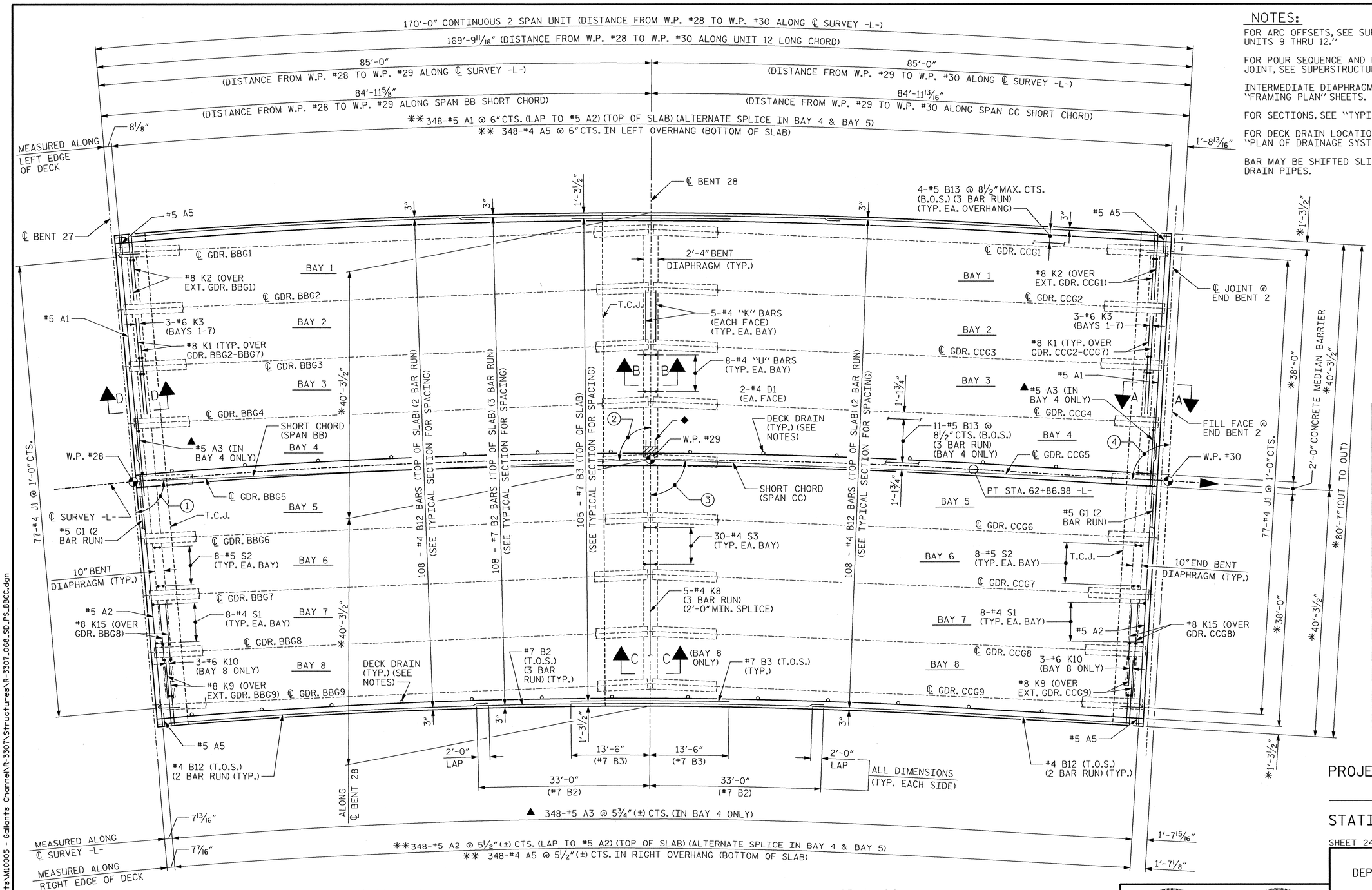

PART PLAN OF SPANS - UNIT 12

*RADIAL DIMENSIONS

**"A" BARS TO BE PLACED RADIALLY. SPACING IS ALONG EDGE OF DECK AS SHOWN.

▲ #5 A3 BARS ARE TO BE PLACED RADIALLY. SPACING IS ALONG ℄ SURVEY -L- AS SHOWN.

◆ 4-#4 D1 IN 1'-8" Ø BLOCKOUT. SEE "TYPICAL SECTION DETAILS" SHEETS FOR UTILITY BLOCKOUT AT BENT DIAPHRAGM DETAILS.

T.O.S. - TOP OF SLAB

B.O.S. - BOTTOM OF SLAB

T.C.J. - TRANSVERSE CONSTRUCTION JOINT

① - 87°-24'-34" (TO SHORT CHORD)

② - 92°-35'-26" (TO SHORT CHORD)

③ - 87°-46'-37" (TO SHORT CHORD)

④ - 91°-00'-24" (TO SHORT CHORD)

PROJECT NO. R-3307

CARTERET COUNTY

STATION: 46+21.50 -L-

SHEET 24 OF 24

STATE OF NORTH CAROLINA
DEPARTMENT OF TRANSPORTATION
RALEIGH

SUPERSTRUCTURE

PLAN OF SPANS
UNIT 12

SPANS BB & CC

NORTH CAROLINA PROFESSIONAL SEAL 12323 ENGINEER MORRIS ISRAELNAM 3/30/2012

NORTH CAROLINA PROFESSIONAL SEAL 027799 ENGINEER ALLYSON K. ORR 3/30/2012

MI ENGINEERING
1011 SHAUB DRIVE, SUITE 100
RALEIGH, NC 27606
(919) 851-6606
FIRM PE NUMBER : P-0671

REVISIONS								SHEET NO.
NO.	BY:	DATE:	NO.	BY:	DATE:			S-67
1			3					TOTAL SHEETS
2			4					333

DRAWN BY : B.E. LANNING DATE : 8-11
CHECKED BY : B.E. ATKINSON DATE : 9-11

DWG. 68 OF 282

3/29/12
5:14:28 PM
User: blanning
Filename: P:\NC Projects\M10005 - Gallants Channel\R-3307\Structures\R-3307_068_SD_PS_BBCC.dgn

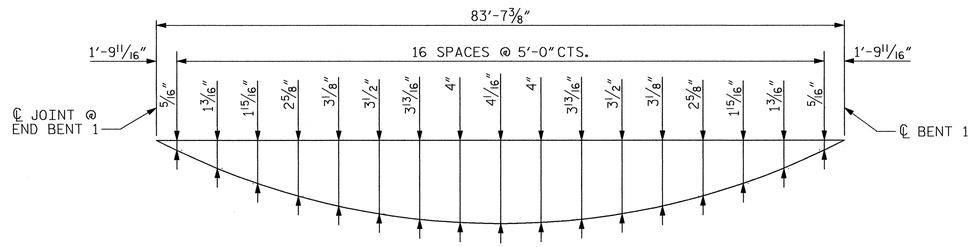

LEFT SIDE

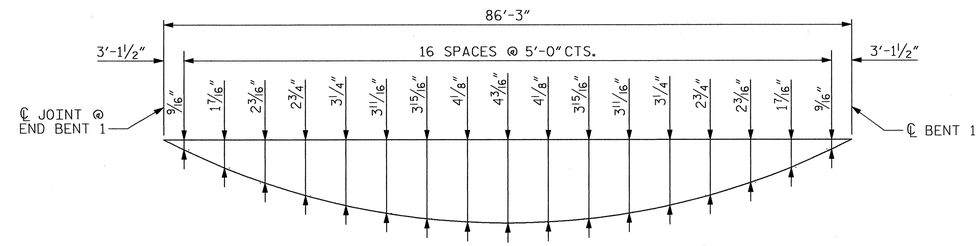

RIGHT SIDE

ARC OFFSETS - SPAN A

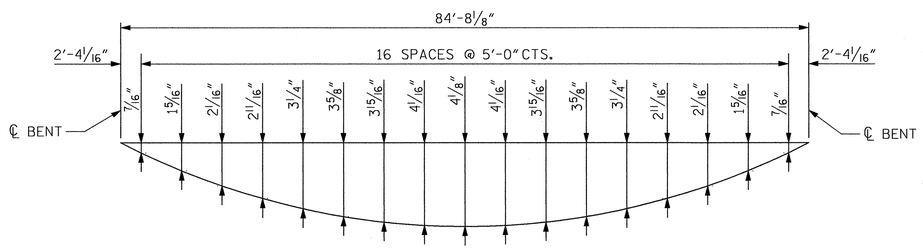

LEFT SIDE

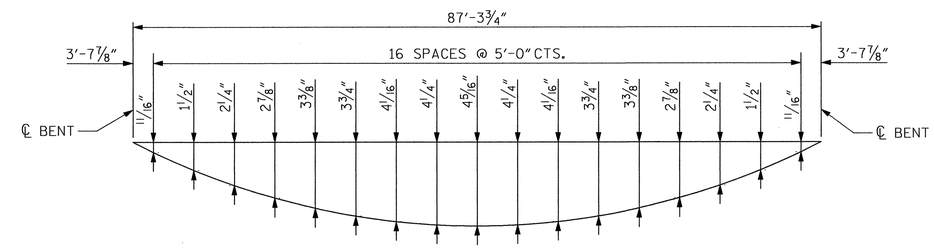

RIGHT SIDE

ARC OFFSETS - SPANS B THRU E

PROJECT NO. R-3307

CARTERET COUNTY

STATION: 46+21.50 -L-

SHEET 1 OF 3

STATE OF NORTH CAROLINA
DEPARTMENT OF TRANSPORTATION
RALEIGH

SUPERSTRUCTURE

ARC OFFSETS
UNITS 1 AND 2

SPANS A THRU E

NORTH CAROLINA PROFESSIONAL SEAL 12323 ENGINEER MORRIS ISRAELNAIN 3/30/2012

NORTH CAROLINA PROFESSIONAL SEAL 027799 ENGINEER ALLYSON K. ORR 3/30/2012

MI ENGINEERING
1011 SHAUB DRIVE, SUITE 100
RALEIGH, NC 27606
(919) 851-6606
FIRM PE NUMBER : P-0671

REVISIONS								
NO.	BY:	DATE:	NO.	BY:	DATE:			
1			3					
2			4					

SHEET NO. 8-68

TOTAL SHEETS 333

DRAWN BY : B.E. LANNING DATE : 8-11
CHECKED BY : B.E. ATKINSON DATE : 9-11

DWG. 69 OF 282

3/26/2012
2:06:29 PM
User: blanning
Filename: P:\NC Projects\MI0005 - Gallants Channel\R-3307\Structures\R-3307_069_SD_PS_ARCOFF_A-E.dgn

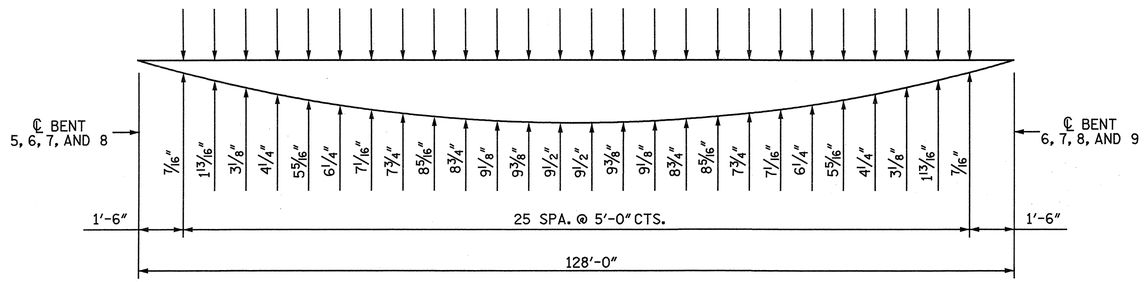

LEFT SIDE

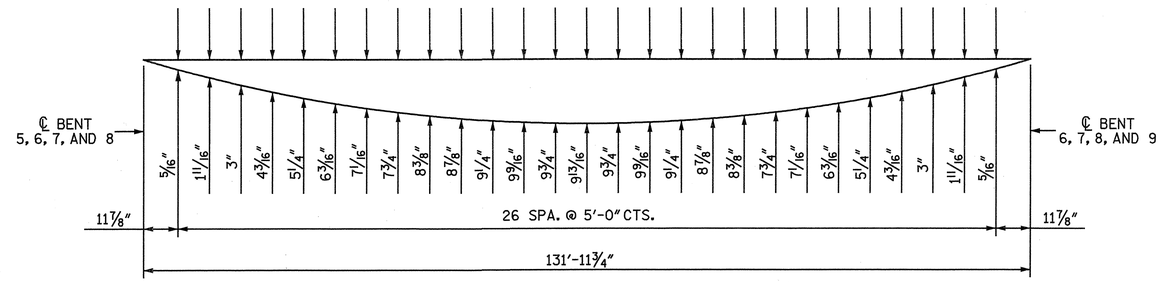

RIGHT SIDE

ARC OFFSETS - SPANS F-I

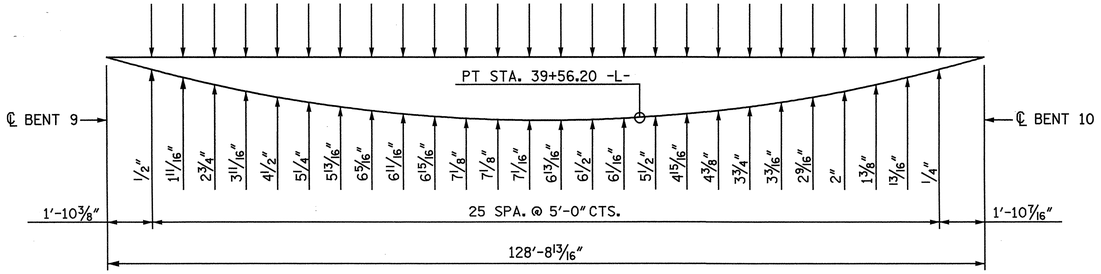

LEFT SIDE

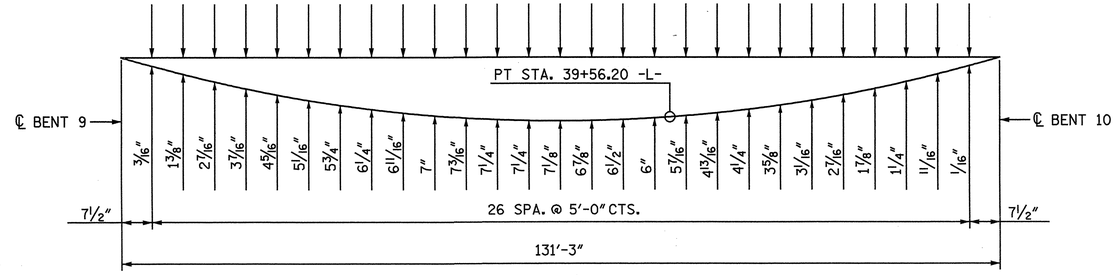

RIGHT SIDE

ARC OFFSETS - SPAN J

NOTE: ARC OFFSETS ARE TAKEN ALONG CHORD AT OUTSIDE EDGE OF SUPERSTRUCTURE.

PROJECT NO. R-3307

CARTERET COUNTY

STATION: 46+21.50 -L-

SHEET 2 OF 3

STATE OF NORTH CAROLINA
DEPARTMENT OF TRANSPORTATION
RALEIGH

SUPERSTRUCTURE

ARC OFFSETS
UNIT 3 THRU 5

SPANS F THRU J

NORTH CAROLINA PROFESSIONAL SEAL 25911 ENGINEER DWAIN G. HATHAWAY 4-3-2012

NORTH CAROLINA PROFESSIONAL SEAL 033752 ENGINEER SETH A. DENNETT

THE LPA GROUP of North Carolina TRANSPORTATION CONSULTANTS

THE LPA GROUP of North Carolina
8000 Regency Parkway, Suite 600
Cary, North Carolina 27518
NC License No.: F-1084

REVISIONS						SHEET NO.
NO.	BY:	DATE:	NO.	BY:	DATE:	S-69
1			3			TOTAL SHEETS
2			4			333

DRAWN BY : N. B. SPEAKS DATE : 8-30-11
CHECKED BY : R. F. DeCOLA DATE : 12-5-11

DWG. 70 OF 282

4/2/2012
12:40: PM
User: jaustin
Filename: Y:\Projects\NCDOT\R-3307\Dwgs\Final\R-3307_070_SD_A01.dgn

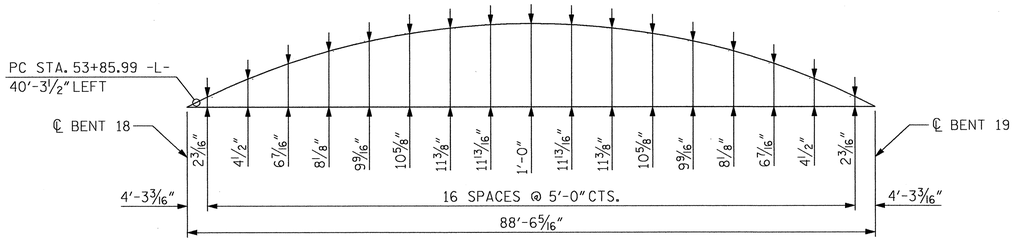

LEFT SIDE

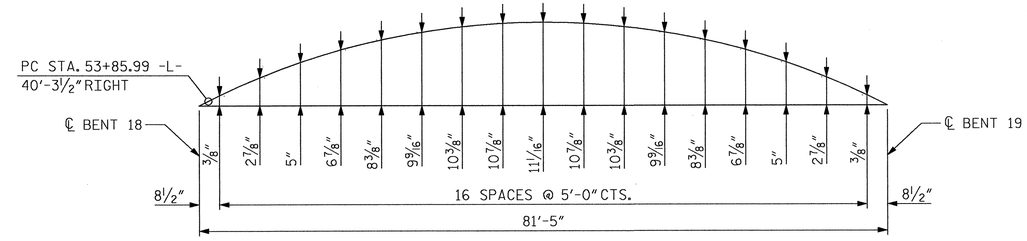

RIGHT SIDE

ARC OFFSETS - SPAN S

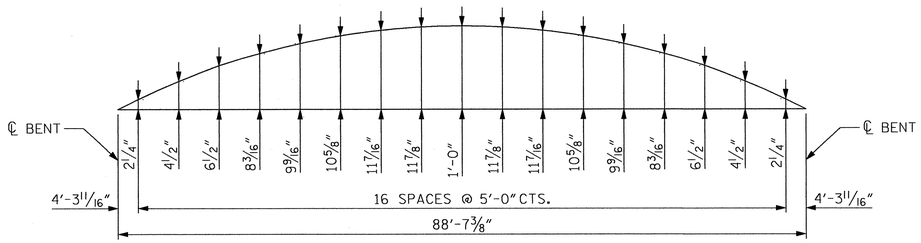

LEFT SIDE

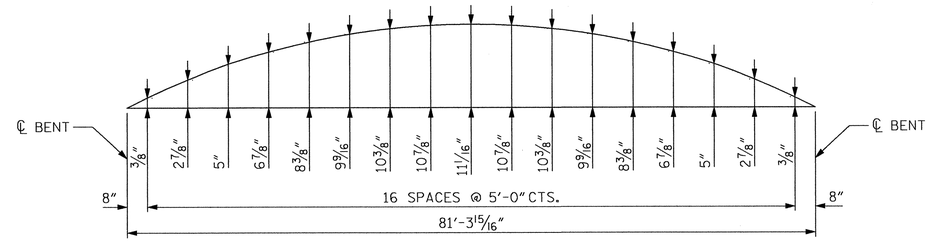

RIGHT SIDE

ARC OFFSETS - SPANS T THRU BB

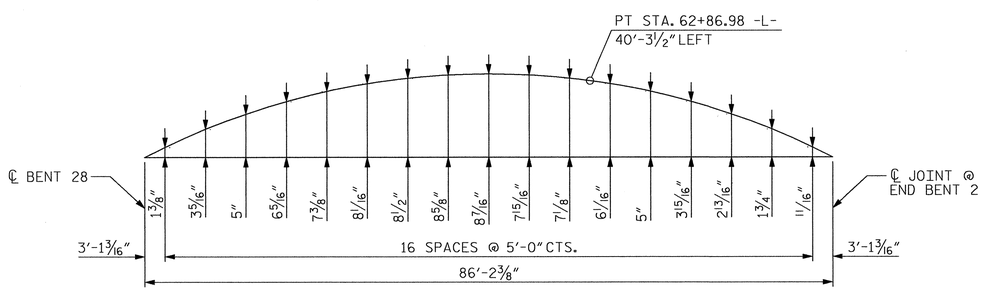

LEFT SIDE

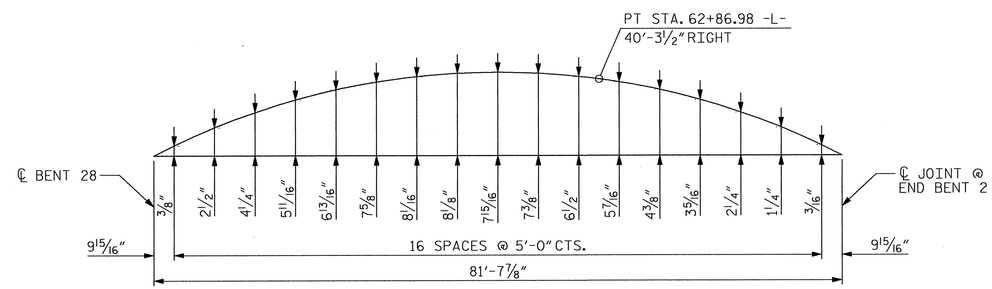

RIGHT SIDE

ARC OFFSETS - SPAN CC

PROJECT NO. R-3307

CARTERET COUNTY

STATION: 46+21.50 -L-

SHEET 3 OF 3

STATE OF NORTH CAROLINA
DEPARTMENT OF TRANSPORTATION
RALEIGH

SUPERSTRUCTURE

ARC OFFSETS
UNITS 9 THRU 12

SPANS S THRU CC

NORTH CAROLINA PROFESSIONAL SEAL 12325 ENGINEER MORRIS ISRAELMAN 3/30/2012

NORTH CAROLINA PROFESSIONAL SEAL 027799 ENGINEER ALLYSON K. DIRR 3/30/2012

MI ENGINEERING
1011 SHAUB DRIVE, SUITE 100
RALEIGH, NC 27606
(919) 851-6606
FIRM PE NUMBER : P-0671

REVISIONS									SHEET NO.
NO.	BY:	DATE:	NO.	BY:	DATE:				S-70
1			3						TOTAL SHEETS
2			4						333

DRAWN BY : B.E. LANNING DATE : 8-11
CHECKED BY : B.E. ATKINSON DATE : 9-11

DWG. 71 OF 282

3/26/2012
2:06:44 PM
User: planning
Filename: P:\NC Projects\MI0005 - Gallants Channel\R-3307\Structures\R-3307_071_SD_PS_ARCOFF_S-CC.dgn

OVERHANG BRACKET CALCULATION INSTRUCTIONS

AASHTO GIRDERS - TYPES III AND IV

1. RECORD KNOWN INFORMATION ON "BRIDGE OVERHANG BRACKET SUMMARY" ON SHEET 2
2. CALCULATE THE MAXIMUM SCREED LOAD PER BRACKET (SLPB) WITH AN ESTIMATED R = 1.5. SLPB = R X W. ROUND VALUE UP TO NEAREST SLPB VALUE INDICATED ON APPROPRIATE TABLE 1-1, 1-2, 1-3, OR 1-4.
3. WITH THE ESTIMATED SLPB, OVERHANG SLAB THICKNESS, "K" VALUE, AND 45 HANGER SAFE WORKING LOAD (SWL), ENTER THE APPROPRIATE TABLE 1-1, 1-2, 1-3, OR 1-4 (BASED ON OVERHANG DIMENSION) AND DETERMINE THE BRACKET SPACING, S.
4. CALCULATE S/D1 AND S/D2, ROUNDING UP TO NEAREST VALUE IN TABLE 2. ENTER TABLE 2 AND DETERMINE R VALUE.
5. CALCULATE REVISED SLPB. ROUND VALUE UP TO NEAREST SLPB VALUE INDICATED ON APPROPRIATE TABLE 1-1, 1-2, 1-3, OR 1-4.
6. WITH THE REVISED SLPB, OVERHANG SLAB THICKNESS, "K" VALUE AND 45° HANGER SAFE WORKING LOAD (SWL), ENTER THE APPROPRIATE TABLE 1-1, 1-2, 1-3 OR 1-4 (BASED ON OVERHANG DIMENSION) AND DETERMINE REVISED BRACKET SPACING, S.
7. CONTINUE ITERATIONS OF STEPS 4-6 UNTIL THE REVISED BRACKET SPACING, S, IS THE SAME AS THE PREVIOUS S VALUE.
8. CHECK LUMBER JOIST SPACING: WITH BRACKET SPACING VALUE, S, ROUND THIS VALUE UP TO THE NEAREST VALUE OF ALLOWABLE SPAN LENGTH OF JOIST OF TABLE 3. USING THIS VALUE, ALONG WITH THE AVERAGE OVERHANG SLAB THICKNESS AND THE LUMBER JOIST SIZE, DETERMINE JOIST SPACING FROM TABLE 3. IF NECESSARY, ADJUST LUMBER JOIST SIZE AND/OR JOIST SPACING TO MEET ALLOWABLE SPAN LENGTH OF JOIST.
9. CONVERSELY, IF THE DESIRED JOIST SPACING IS KNOWN, USE THIS ALONG WITH THE AVERAGE OVERHANG SLAB THICKNESS AND THE LUMBER JOIST SIZE TO DETERMINE IF ALLOWABLE SPAN LENGTH OF JOIST IS GREATER THAN THE BRACKET SPACING, S. IF NECESSARY, ADJUST LUMBER JOIST SIZE TO MEET REQUIREMENTS OF ALLOWABLE SPAN LENGTH OF JOIST AND JOIST SPACING.
10. RECORD REMAINING INFORMATION ON "BRIDGE OVERHANG BRACKET SUMMARY" FORM.
11. SUBMIT FORM AND CALCULATIONS FOR REVIEW AND APPROVAL.

TABLE 1-1

(FOR USE ON UP TO 2'-0" OVERHANG Ⓛ & 54" HORIZONTAL LEG LENGTH OF THE OVERHANG BRACKET)

AVG. SLAB THICKNESS Ⓣ (in)	BRACKET Ⓚ DIMENSION (in)	SCREED LOAD PER BRACKET									45° HANGER SWL (lbs)
		2500 lbs.	2250 lbs.	2000 lbs.	1750 lbs.	1500 lbs.	1250 lbs.	1000 lbs.	750 lbs.	0 lbs.	
		BRACKET SPACING									
10	30				2'-1"	2'-7"	3'-2"	3'-8"	4'-2"	5'-9"	4000
		3'-6"	4'-0"	4'-5"	4'-9"	5'-1"	5'-3"	5'-5"	5'-7"	6'-7"	6000
	40				2'-1"	2'-7"	3'-2"	3'-8"	4'-2"	5'-9"	4000
		3'-6"	4'-0"	4'-5"	4'-9"	5'-1"	5'-3"	5'-5"	5'-7"	6'-7"	6000
	50				2'-1"	2'-7"	3'-2"	3'-8"	4'-2"	5'-9"	4000
		3'-6"	4'-0"	4'-5"	4'-9"	5'-1"	5'-3"	5'-5"	5'-7"	6'-7"	6000
12	30					2'-4"	2'-10"	3'-4"	3'-9"	5'-2"	4000
		3'-2"	3'-7"	4'-1"	4'-7"	5'-0"	5'-2"	5'-4"	5'-7"	6'-5"	6000
	40					2'-4"	2'-10"	3'-4"	3'-9"	5'-2"	4000
		3'-2"	3'-7"	4'-1"	4'-7"	5'-0"	5'-2"	5'-4"	5'-7"	6'-5"	6000
	50					2'-4"	2'-10"	3'-4"	3'-9"	5'-2"	4000
		3'-2"	3'-7"	4'-1"	4'-7"	5'-0"	5'-2"	5'-4"	5'-7"	6'-5"	6000
14	30					2'-2"	2'-7"	3'-0"	3'-5"	4'-9"	4000
		2'-10"	3'-4"	3'-9"	4'-2"	4'-7"	5'-0"	5'-4"	5'-7"	6'-4"	6000
	40					2'-2"	2'-7"	3'-0"	3'-5"	4'-9"	4000
		2'-10"	3'-4"	3'-9"	4'-2"	4'-7"	5'-0"	5'-4"	5'-7"	6'-4"	6000
	50					2'-2"	2'-7"	3'-0"	3'-5"	4'-9"	4000
		2'-10"	3'-4"	3'-9"	4'-2"	4'-7"	5'-0"	5'-4"	5'-7"	6'-4"	6000
16	30					2'-0"	2'-4"	2'-9"	3'-2"	4'-4"	4000
		2'-8"	3'-0"	3'-5"	3'-10"	4'-3"	4'-7"	5'-0"	5'-5"	6'-3"	6000
	40					2'-0"	2'-4"	2'-9"	3'-2"	4'-4"	4000
		2'-8"	3'-0"	3'-5"	3'-10"	4'-3"	4'-7"	5'-0"	5'-5"	6'-3"	6000
	50					2'-0"	2'-4"	2'-9"	3'-2"	4'-4"	4000
		2'-8"	3'-0"	3'-5"	3'-10"	4'-3"	4'-7"	5'-0"	5'-5"	6'-3"	6000

TABLE 1-2

(FOR USE ON OVER 2'-0" TO 2'-6" OVERHANG Ⓛ & 54" HORIZONTAL LEG LENGTH OF THE OVERHANG BRACKET)

AVG. SLAB THICKNESS Ⓣ (in)	BRACKET Ⓚ DIMENSION (in)	SCREED LOAD PER BRACKET									45° HANGER SWL (lbs)
		2500 lbs.	2250 lbs.	2000 lbs.	1750 lbs.	1500 lbs.	1250 lbs.	1000 lbs.	750 lbs.	0 lbs.	
		BRACKET SPACING									
10	30					2'-4"	2'-9"	3'-3"	3'-8"	5'-1"	4000
		3'-1"	3'-6"	4'-0"	4'-5"	4'-11"	5'-3"	5'-5"	5'-7"	6'-7"	6000
	40					2'-4"	2'-9"	3'-3"	3'-8"	5'-1"	4000
		3'-1"	3'-6"	4'-0"	4'-5"	4'-11"	5'-3"	5'-5"	5'-7"	6'-7"	6000
	50					2'-4"	2'-9"	3'-3"	3'-8"	5'-1"	4000
		3'-1"	3'-6"	4'-0"	4'-5"	4'-11"	5'-3"	5'-5"	5'-7"	6'-7"	6000
12	30					2'-1"	2'-6"	2'-11"	3'-4"	4'-6"	4000
		2'-9"	3'-2"	3'-7"	4'-0"	4'-5"	4'-10"	5'-3"	5'-7"	6'-5"	6000
	40					2'-1"	2'-6"	2'-11"	3'-4"	4'-6"	4000
		2'-9"	3'-2"	3'-7"	4'-0"	4'-5"	4'-10"	5'-3"	5'-7"	6'-5"	6000
	50					2'-1"	2'-6"	2'-11"	3'-4"	4'-6"	4000
		2'-9"	3'-2"	3'-7"	4'-0"	4'-5"	4'-10"	5'-3"	5'-7"	6'-5"	6000
14	30					2'-3"	2'-7"	3'-0"	3'-5"	4'-1"	4000
		2'-6"	2'-10"	3'-3"	3'-7"	4'-0"	4'-4"	4'-9"	5'-1"	6'-3"	6000
	40					2'-3"	2'-7"	3'-0"	3'-5"	4'-1"	4000
		2'-6"	2'-10"	3'-3"	3'-7"	4'-0"	4'-4"	4'-9"	5'-1"	6'-3"	6000
	50					2'-3"	2'-7"	3'-0"	3'-5"	4'-1"	4000
		2'-6"	2'-10"	3'-3"	3'-7"	4'-0"	4'-4"	4'-9"	5'-1"	6'-3"	6000
16	30					2'-1"	2'-5"	2'-9"	3'-9"	4000
		2'-3"	2'-7"	2'-11"	3'-4"	3'-8"	4'-0"	4'-4"	4'-8"	5'-8"	6000
	40					2'-1"	2'-5"	2'-9"	3'-9"	4000
		2'-3"	2'-7"	2'-11"	3'-4"	3'-8"	4'-0"	4'-4"	4'-8"	5'-8"	6000
	50					2'-1"	2'-5"	2'-9"	3'-9"	4000
		2'-3"	2'-7"	2'-11"	3'-4"	3'-8"	4'-0"	4'-4"	4'-8"	5'-8"	6000

TABLE 1-3

(FOR USE ON OVER 2'-6" TO 3'-0" OVERHANG Ⓛ & 54" HORIZONTAL LEG LENGTH OF THE OVERHANG BRACKET)

AVG. SLAB THICKNESS Ⓣ (in)	BRACKET Ⓚ DIMENSION (in)	SCREED LOAD PER BRACKET									45° HANGER SWL (lbs)
		2500 lbs.	2250 lbs.	2000 lbs.	1750 lbs.	1500 lbs.	1250 lbs.	1000 lbs.	750 lbs.	0 lbs.	
		BRACKET SPACING									
10	30					2'-1"	2'-6"	2'-11"	3'-4"	4'-6"	4000
						4'-5"	4'-10"	5'-3"	5'-7"	6'-7"	6000
	40					2'-1"	2'-6"	2'-11"	3'-4"	4'-6"	4000
		2'-9"	3'-2"	3'-7"	4'-0"	4'-5"	4'-10"	5'-3"	5'-7"	6'-7"	6000
	50					2'-1'	2'-6"	2'-11"	3'-4"	4'-6"	4000
		2'-9"	3'-2"	3'-7"	4'-0"	4'-5"	4'-10"	5'-3"	5'-7"	6'-7"	6000
12	30						2'-2"	2'-7"	2'-11"	4'-0"	4000
						3'-11"	4'-3"	4'-8"	5'-0"	6'-1"	6000
	40						2'-2"	2'-7"	2'-11"	4'-0"	4000
		2'-5"	2'-10"	3'-2"	3'-6"	3'-11"	4'-3"	4'-8"	5'-0"	6'-1"	6000
	50						2'-2"	2'-7"	2'-11"	4'-0"	4000
		2'-5"	2'-10"	3'-2"	3'-6"	3'-11"	4'-3"	4'-8"	5'-0"	6'-1"	6000
14	30						2'-0"	2'-4"	2-8"	3'-8"	4000
					3'-2"	3'-6"	3'-10"	4'-2"	4'-6"	5'-6"	6000
	40						2'-0"	2'-4"	2'-8"	3'-8"	4000
		2'-2"	2'-6"	2'-10"	3'-2"	3'-6"	3'-10"	4'-2"	4'-6"	5'-6"	6000
	50						2'-0"	2'-4"	2'-8"	3'-8"	4000
		2'-2"	2'-6"	2'-10"	3'-2"	3'-6"	3'-10"	4'-2"	4'-6"	5'-6"	6000
16	30							2'-1"	2'-5"	3'-4"	4000
					2'-11"	3'-2"	3'-6"	3'-10"	4'-1"	5'-0"	6000
	40							2'-1"	2'-5"	3'-4"	4000
		2'-0"	2'-4"	2'-7"	2'-11"	3'-2"	3'-6"	3'-10"	4'-1"	5'-0"	6000
	50							2'-1"	2'-5"	3'-4"	4000
		2'-0"	2'-4"	2'-7"	2'-11"	3'-2"	3'-6"	3'-10"	4'-1"	5'-0"	6000

TABLE 1-4

(FOR USE ON OVER 3'-0" TO 3'-6" OVERHANG Ⓛ & 54" HORIZONTAL LEG LENGTH OF THE OVERHANG BRACKET)

AVG. SLAB THICKNESS Ⓣ (in)	BRACKET Ⓚ DIMENSION (in)	SCREED LOAD PER BRACKET									45° HANGER SWL (lbs)
		2500 lbs.	2250 lbs.	2000 lbs.	1750 lbs.	1500 lbs.	1250 lbs.	1000 lbs.	750 lbs.	0 lbs.	
		BRACKET SPACING									
10	30						2'-1"	2'-5"	2'-9"	3'-10"	4000
						2'-3"	2'-11"	3'-7"	4'-3"	5'-9"	6000
	40						2'-1"	2'-5"	2'-9"	3'-10"	4000
				2'-4"	3'-0"	3'-7"	4'-1"	4'-5"	4'-9"	5'-9"	6000
	50						2'-1"	2'-5"	2'-9"	3'-10"	4000
		2'-4"	2'-8"	3'-0"	3'-4"	3'-8"	4'-1"	4'-5"	4'-9"	5'-9"	6000
12	30							2'-2"	2'-6"	3-5"	4000
						2'-1"	2'-8"	3'-4"	3'-11"	5'-2"	6000
	40							2'-2"	2'-6"	3'-5"	4000
				2'-2"	2'-9"	3'-4"	3'-7"	3'-11"	4'-3"	5'-2"	6000
	50							2'-2"	2'-6"	3'-5"	4000
		2'-1"	2'-4"	2'-8"	3'-0"	3'-4"	3'-7"	3'-11"	4'-3"	5'-2"	6000
14	30								2-3"	3'-1"	4000
						2'-0"	2'-6"	3'-1"	3'-8"	4'-8"	6000
	40								2'-3"	3'-1"	4000
				2'-0"	2'-7"	3'-0"	3'-3"	3'-6"	3'-10"	4'-8"	6000
	50								2'-3"	3'-1"	4000
			2'-2"	2'-5"	2'-8"	3'-0"	3'-3"	3'-6"	3'-10"	4'-8"	6000
16	30								2'-0"	2'-9"	4000
							2'-4"	2'-10"	3'-5"	4'-3"	6000
	40								2'-0"	2'-9"	4000
					2'-5"	2'-8"	2'-11"	3'-3"	3'-6"	4'-3"	6000
	50								2'-0"	2'-9"	4000
				2'-2"	2'-5"	2'-8"	2'-11"	3'-3"	3'-6"	4'-3"	6000

DEFINITIONS

SLPB = SCREED LOAD PER BRACKET (R x W)
R = SCREED LOAD FACTOR, OBTAINED FROM TABLE 2
W = WHEEL LOAD
S = BRACKET SPACING
T = AVERAGE SLAB THICKNESS
SWL = SAFE WORKING LOAD
K = DIMENSION DEFINED ON "BRIDGE OVERHANG BRACKET SUMMARY" ON SHEET 2
L = OVERHANG MEASURED FROM EDGE OF TOP FLANGE TO EDGE OF SUPERSTRUCTURE

PROJECT NO. R-3307
CARTERET COUNTY
STATION: 46+21.50 -L-

SHEET 1 OF 3

STATE OF NORTH CAROLINA
DEPARTMENT OF TRANSPORTATION
RALEIGH
STANDARD

OVERHANG FALSEWORK
AASHTO GIRDER
TYPES III AND IV

NORTH CAROLINA PROFESSIONAL SEAL 12323 ENGINEER MORRIS ISRAELNAIM
3/30/2012

NORTH CAROLINA PROFESSIONAL SEAL 027799 ENGINEER ALLYSON K. ORR
3/30/2012

MI ENGINEERING
1011 SHAUB DRIVE, SUITE 100
RALEIGH, NC 27606
(919) 851-6606
FIRM PE NUMBER : P-0671

REVISIONS						SHEET NO.
NO.	BY:	DATE:	NO.	BY:	DATE:	S-71
1			3			TOTAL SHEETS
2			4			333

DWG. 72 OF 282

ASSEMBLED BY: J.S. ISRAELNAIM DATE: 7-11
CHECKED BY: B.E. ATKINSON DATE: 10-11
DRAWN BY: R.W.W 06/04
CHECKED BY: C.V.C 06/04
ADDED 5-6-10
REV. 10/1/11 MAA/GM

3/26/2012 2:07:02 PM
User: blanning
Filename: P:\NC Projects\MI0005 - Gallants Channel\R-3307\Structures\R-3307_072_SD_OF1.dgn

STD.NO. OF1

BRIDGE OVERHANG BRACKET SUMMARY

TOTAL SCREED WEIGHT = _____ LBS.
NUMBER OF SCREED WHEELS = _____
SCREED WHEEL LOAD (W) = _____ LBS.
SCREED LOAD PER BRACKET = _____ LBS.

PROJECT No. : _____
COUNTY : _____
STATION : _____
DESCRIPTION : _____

DATE : _____
DESIGN BY : _____
CHECK BY : _____

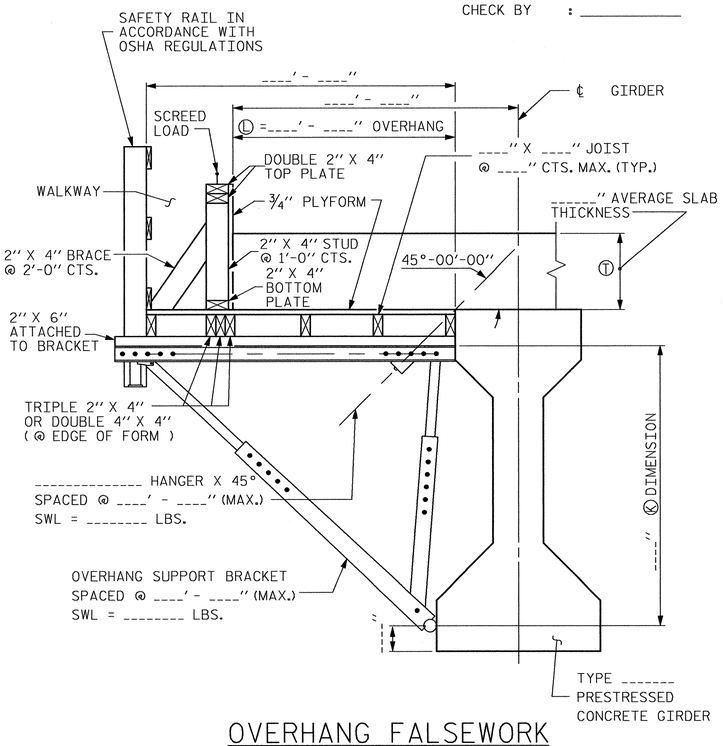

OVERHANG FALSEWORK

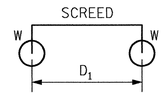

4-WHEEL MACHINE

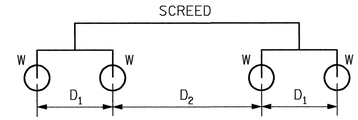

8-WHEEL MACHINE

4 WHEEL MACHINE	
S/D1	R
<= 1.0	1.00
1.1	1.09
1.2	1.17
1.3	1.23
1.4	1.29
1.5	1.33
1.6	1.38
1.7	1.41
1.8	1.44
1.9	1.47
2.0	1.50
2.2	1.55
2.4	1.58
2.6	1.62
2.8	1.64
3.0	1.67
3.5	1.71
4.0	1.75

TABLE 2: SCREED LOAD FACTOR "R"

		THE SCREED LOAD FACTOR R (FOR 8 WHEEL MACHINE)																	
		S/D_2																	
		<= 1.0	1.1	1.2	1.3	1.4	1.5	1.6	1.7	1.8	1.9	2.0	2.2	2.4	2.6	2.8	3.0	3.5	4.0
S/D_1	<= 1.0	1.00	1.09	1.17	1.23	1.29	1.33	1.38	1.41	1.44	1.47	1.50	1.55	1.58	1.62	1.64	1.67	1.71	1.75
	1.1	1.09	1.18	1.26	1.32	1.38	1.42	1.47	1.50	1.54	1.56	1.59	1.64	1.67	1.71	1.73	1.76	1.81	1.84
	1.2	1.17	1.26	1.33	1.40	1.45	1.50	1.54	1.58	1.61	1.64	1.67	1.71	1.75	1.78	1.81	1.83	1.88	1.92
	1.3	1.23	1.32	1.40	1.46	1.52	1.56	1.61	1.64	1.68	1.70	1.73	1.78	1.81	1.85	1.87	1.90	1.95	1.98
	1.4	1.29	1.38	1.45	1.52	1.57	1.62	1.66	1.70	1.73	1.76	1.79	1.83	1.87	1.90	1.93	1.95	2.00	2.07
	1.5	1.33	1.42	1.50	1.56	1.62	1.67	1.71	1.75	1.78	1.81	1.83	1.88	1.92	1.95	1.98	2.00	2.10	2.17
	1.6	1.38	1.47	1.54	1.61	1.66	1.71	1.75	1.79	1.82	1.85	1.88	1.92	1.96	1.99	2.04	2.08	2.18	2.25
	1.7	1.41	1.50	1.58	1.64	1.70	1.75	1.79	1.82	1.86	1.89	1.91	1.96	2.00	2.05	2.11	2.16	2.25	2.32
	1.8	1.44	1.54	1.61	1.68	1.73	1.78	1.82	1.86	1.89	1.92	1.94	1.99	2.06	2.12	2.17	2.22	2.32	2.39
	1.9	1.47	1.56	1.64	1.70	1.76	1.81	1.85	1.89	1.92	1.95	1.97	2.04	2.11	2.18	2.23	2.28	2.38	2.45
	2.0	1.50	1.59	1.67	1.73	1.79	1.83	1.88	1.91	1.94	1.97	2.00	2.09	2.17	2.23	2.29	2.33	2.43	2.50
	2.2	1.55	1.64	1.71	1.78	1.83	1.88	1.92	1.96	1.99	2.04	2.09	2.18	2.26	2.32	2.38	2.42	2.52	2.59
	2.4	1.58	1.67	1.75	1.81	1.87	1.92	1.96	2.00	2.06	2.11	2.17	2.26	2.33	2.40	2.45	2.50	2.60	2.67
	2.6	1.62	1.71	1.78	1.85	1.90	1.95	1.99	2.05	2.12	2.18	2.23	2.32	2.40	2.46	2.52	2.56	2.66	2.73
	2.8	1.64	1.73	1.81	1.87	1.93	1.98	2.04	2.11	2.17	2.23	2.29	2.38	2.45	2.52	2.57	2.62	2.71	2.79
	3.0	1.67	1.76	1.83	1.90	1.95	2.00	2.08	2.16	2.22	2.28	2.33	2.42	2.50	2.56	2.62	2.67	2.76	2.83
	3.5	1.71	1.81	1.88	1.95	2.00	2.10	2.18	2.25	2.32	2.38	2.43	2.52	2.60	2.66	2.71	2.76	2.86	2.93
	4.0	1.75	1.84	1.92	1.98	2.07	2.17	2.25	2.32	2.39	2.45	2.50	2.59	2.67	2.73	2.79	2.83	2.93	3.00

NOTES

DESIGN INCLUDES CONSTRUCTION LIVE LOAD 20 PSF ON THE AREA SUPPORTED AND 75 PLF AT THE OUTSIDE DECK OF OVERHANGS.

REQUIRED MINIMUM DIAGONAL LEG CAPACITY: 3600 LB WORKING LOAD

THE CONTRACTOR HAS THE OPTION OF SUBMITTING HIS OWN DESIGN FOR OVERHANG FALSEWORK IN ACCORDANCE WITH THE SPECIAL PROVISIONS.

SUBMITTALS UTILIZING THE INSTRUCTIONS AND PROCEDURES DESCRIBED ON SHEET 1 OF 3 SHALL BE IN ACCORDANCE WITH THE APPLICABLE SECTIONS OF THE SPECIFICATIONS AND SPECIAL PROVISIONS, EXCEPT THAT CALCULATIONS FOR OVERHANG FALSEWORK NEED NOT BE SEALED BY A REGISTERED ENGINEER.

FOR OVERHANG FALSEWORK BRACING DESIGN, SEE SHEET 3 OF 3.

TABLE 3: ALLOWABLE SPAN LENGTH OF JOISTS AND JOIST SPACINGS

AVG. SLAB THICKNESS Ⓣ (IN)	LUMBER JOIST SIZE (IN X IN)	JOIST SPACINGS			
		15 IN	12 IN	10 IN	8 IN
		THE ALLOWABLE SPAN LENGTH OF JOISTS			
10	2 X 4	———	4' - 6"	4' - 9"	5' - 0"
	4 X 4	5' - 9"	6' - 3"	6' - 6"	6' - 7"
12	2 X 4	———	4' - 3"	4' - 9"	5' - 0"
	4 X 4	5' - 3"	6' - 0"	6' - 3"	6' - 5"
14	2 X 4	———	4' - 0"	4' - 6"	5' - 0"
	4 X 4	———	5' - 6"	6' - 0"	6' - 4"
16	2 X 4	———	4' - 0"	4' - 3"	4' - 9"
	4 X 4	———	5' - 3"	5' - 9"	6' - 3"

PROJECT NO. R-3307
CARTERET COUNTY
STATION: 46+21.50 -L-

SHEET 2 OF 3

STATE OF NORTH CAROLINA
DEPARTMENT OF TRANSPORTATION
RALEIGH
STANDARD

OVERHANG FALSEWORK
AASHTO GIRDER
TYPES III AND IV

NORTH CAROLINA PROFESSIONAL SEAL 12323 ENGINEER MORRIS ISRAELNAIM 3/30/12

NORTH CAROLINA PROFESSIONAL SEAL 027799 ENGINEER ALLYSON K. ORR 3/30/2012

MI ENGINEERING
1011 SHAUB DRIVE, SUITE 100
RALEIGH, NC 27606
(919) 851-6606
FIRM PE NUMBER : P-0671

REVISIONS						SHEET NO.
NO.	BY:	DATE:	NO.	BY:	DATE:	S-72
1			3			TOTAL SHEETS
2			4			333

ASSEMBLED BY: J.S. ISRAELNAIM DATE: 7-11
CHECKED BY: B.E. ATKINSON DATE: 10-11

DRAWN BY: R.W.W 06/04
CHECKED BY: C.V.C 06/04

ADDED 5-6-10
REV. 10/1/11 MAA/GM

DWG. 73 OF 282

STD.NO. OF2

3/26/2012 2:07:17 PM
User: blanning
Filename: P:\NC Projects\M10005 - Gallants Channel\R-3307\Structures\R-3307_073_SD_OF2.dgn

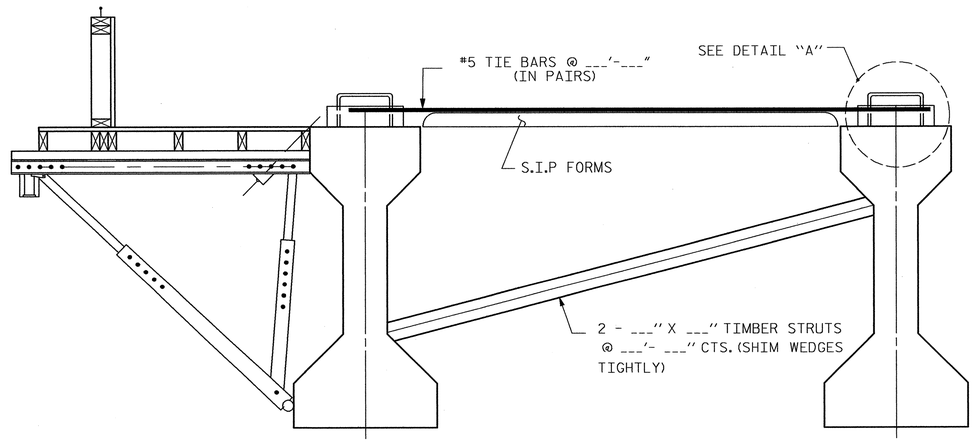

EXTERIOR GIRDER

INTERIOR GIRDER

DETAIL OF REQUIRED OVERHANG FALSEWORK BRACING SYSTEM

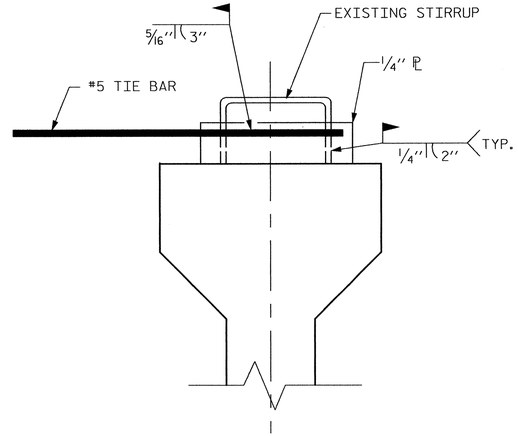

DETAIL "A"

NOTES:

EACH #5 TIE BAR SHALL BE WELDED TO ONE STIRRUP LOOP AS SHOWN IN DETAIL "A". #5 TIE BARS SHALL BE WELDED TO TWO ADJACENT STIRRUPS OF THE EXTERIOR GIRDER AND THE ADJACENT INTERIOR GIRDER BETWEEN PERMANENT DIAPHRAGMS. WELD STEEL PLATES IN BETWEEN THE TIE BARS AND THE STIRRUP LOOP. WELDING TWO TIE BARS TO THE SAME STIRRUP LOOP SHALL NOT BE PERMITTED.

#5 TIE BARS SHALL BE LOCATED OVER A TIMBER STRUT.

INSTALL TIE BARS AND TIMBER STRUTS PRIOR TO PLACEMENT OF CONCRETE OR SCREED WEIGHT ONTO THE OVERHANG FALSEWORK.

PROJECT NO. R-3307

CARTERET COUNTY

STATION: 46+21.50 -L-

SHEET 3 OF 3

STATE OF NORTH CAROLINA
DEPARTMENT OF TRANSPORTATION
RALEIGH

STANDARD

OVERHANG FALSEWORK
AASHTO GIRDER
TYPES III AND IV

NORTH CAROLINA PROFESSIONAL SEAL 12323 ENGINEER MORRIS ISRAELNAIM 3/30/2012

NORTH CAROLINA PROFESSIONAL SEAL 027799 ENGINEER ALLYSON K. ORR 3/30/2012

MI ENGINEERING
1011 SHAUB DRIVE, SUITE 100
RALEIGH, NC 27606
(919) 851-6606
FIRM PE NUMBER : P-0671

REVISIONS							SHEET NO.
NO.	BY:	DATE:	NO.	BY:	DATE:		S-73
1			3				TOTAL SHEETS
2			4				333

ASSEMBLED BY: J.S. ISRAELNAIM	DATE: 7-11
CHECKED BY: B.E. ATKINSON	DATE: 10-11
DRAWN BY: R.W.W 06/04	ADDED 5-6-10
CHECKED BY: C.V.C 06/04	REV. 10/1/11 MAA/GM

DWG. 74 OF 282

STD.NO. OF3

3/26/2012
2:07:38 PM
User: blanning
Filename: P:\NC Projects\MI0005 - Gallants Channel\R-3307\Structures\R-3307_074_SD_OF3.dgn

NOTE:

FOR NOTES, SEE "ELEVATION OF DRAINAGE SYSTEM" SHEET 7 OF 7.

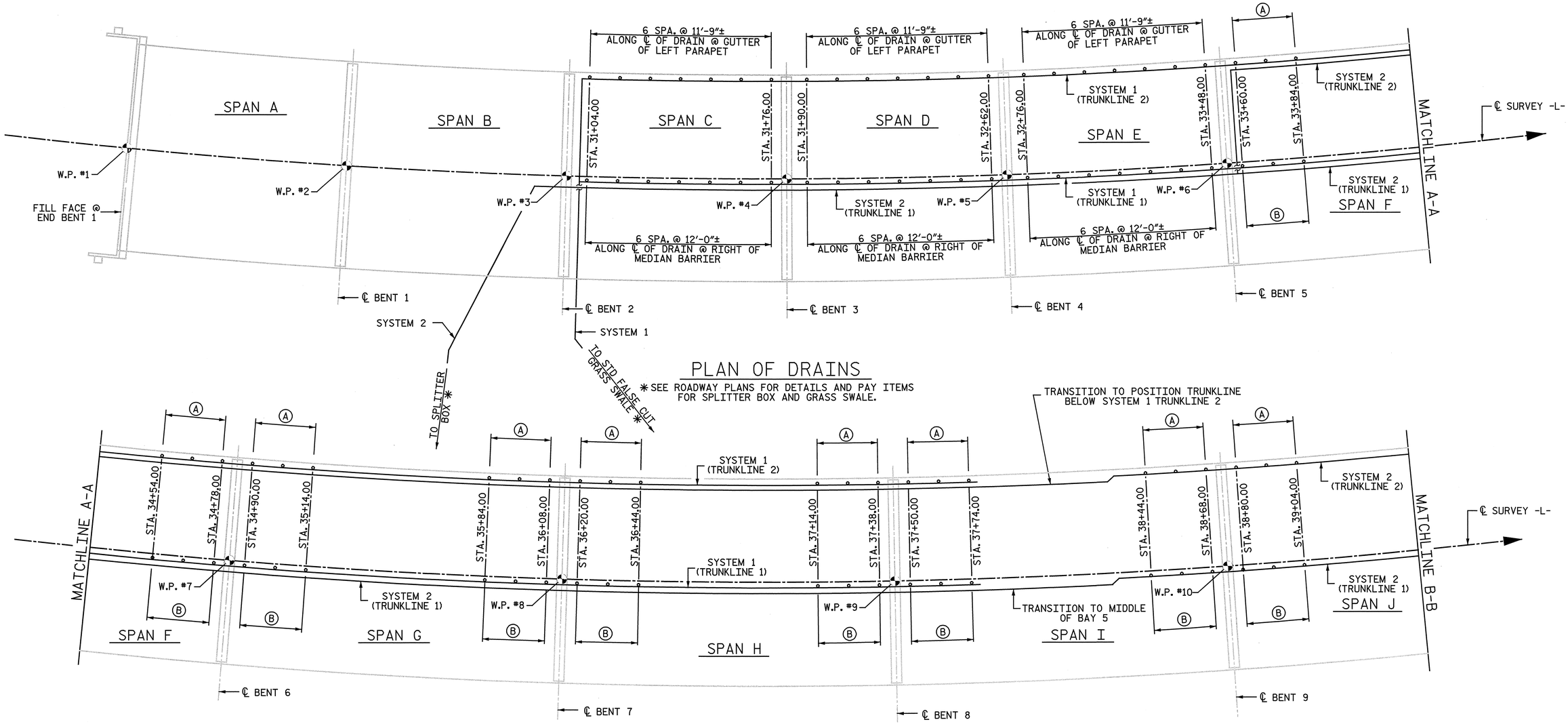

PLAN OF DRAINS

* SEE ROADWAY PLANS FOR DETAILS AND PAY ITEMS FOR SPLITTER BOX AND GRASS SWALE.

DRAIN SPACING	
Ⓐ	2 SPA. @ 11'-9"± ALONG ℄ OF DRAIN @ GUTTER OF LEFT PARAPET
Ⓑ	2 SPA. @ 12'-0"± ALONG ℄ OF DRAIN @ RIGHT OF MEDIAN BARRIER

PLAN OF DRAINS

PROJECT NO. R-3307

CARTERET COUNTY

STATION: 46+21.50 -L-

SHEET 1 OF 2

STATE OF NORTH CAROLINA
DEPARTMENT OF TRANSPORTATION
RALEIGH

SUPERSTRUCTURE

PLAN OF DRAINAGE SYSTEM

NORTH CAROLINA PROFESSIONAL SEAL 25911 ENGINEER DWAIN G. HATHAWAY 11-7-2013

NORTH CAROLINA PROFESSIONAL SEAL 033752 ENGINEER SETH A. DENNEY 11/7/13

THE LPA GROUP of North Carolina TRANSPORTATION CONSULTANTS

THE LPA GROUP of North Carolina
8000 Regency Parkway, Suite 600
Cary, North Carolina 27518
NC License No.: F-1084

REVISIONS						SHEET NO.
NO.	BY:	DATE:	NO.	BY:	DATE:	S-74
1			3			TOTAL SHEETS
2			4			333

DRAWN BY : J. N. AUSTIN DATE : 10-31-11
CHECKED BY : D. G. HATHAWAY DATE : 12-19-11

DWG. 75 OF 282

11/7/2013
3:38:42 PM
User: jaustin
Filename: Y:\Projects\NCDOT\R-3307\Dwge\Final\R-3307_075_SD_DRN_1.dgn

NOTE:

FOR NOTES, SEE "ELEVATION OF DRAINAGE SYSTEM" SHEET 7 OF 7.

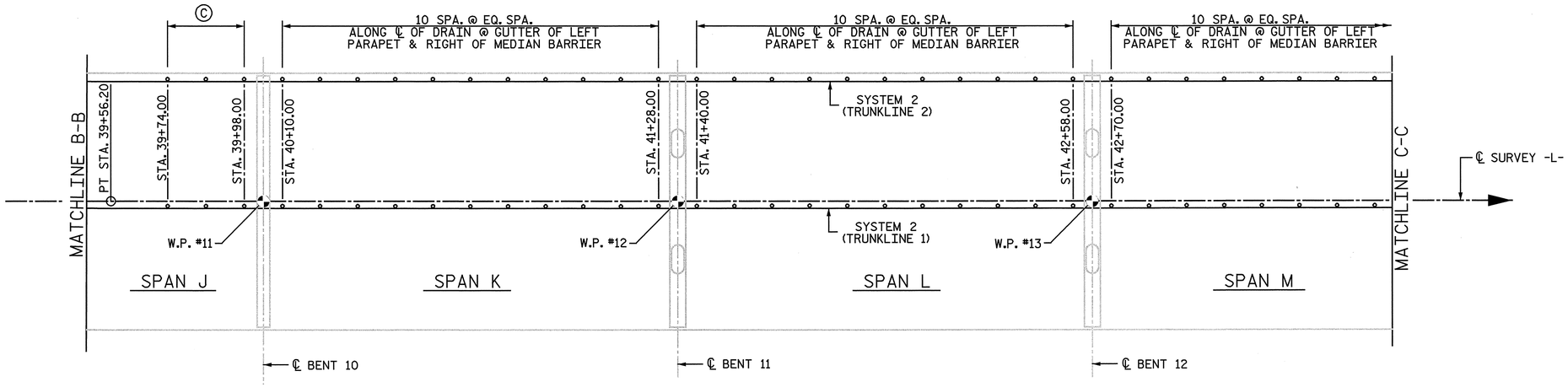

PLAN OF DRAINS

DRAIN SPACING	
Ⓒ	2 SPA. @ 12'-0" ALONG ℄ OF DRAIN @ GUTTER OF LEFT PARAPET & RIGHT OF MEDIAN BARRIER
Ⓓ	2 SPA. @ 4'-0" CTS. ALONG ℄ OF DRAIN @ GUTTER OF LEFT PARAPET
Ⓔ	8 SPA. @ 4'-0" ALONG ℄ OF DRAIN @ RIGHT OF MEDIAN BARRIER
Ⓕ	13 SPA. @ 4'-0" CTS. ALONG ℄ OF DRAIN @ GUTTER OF RIGHT PARAPET & LEFT OF MEDIAN BARRIER

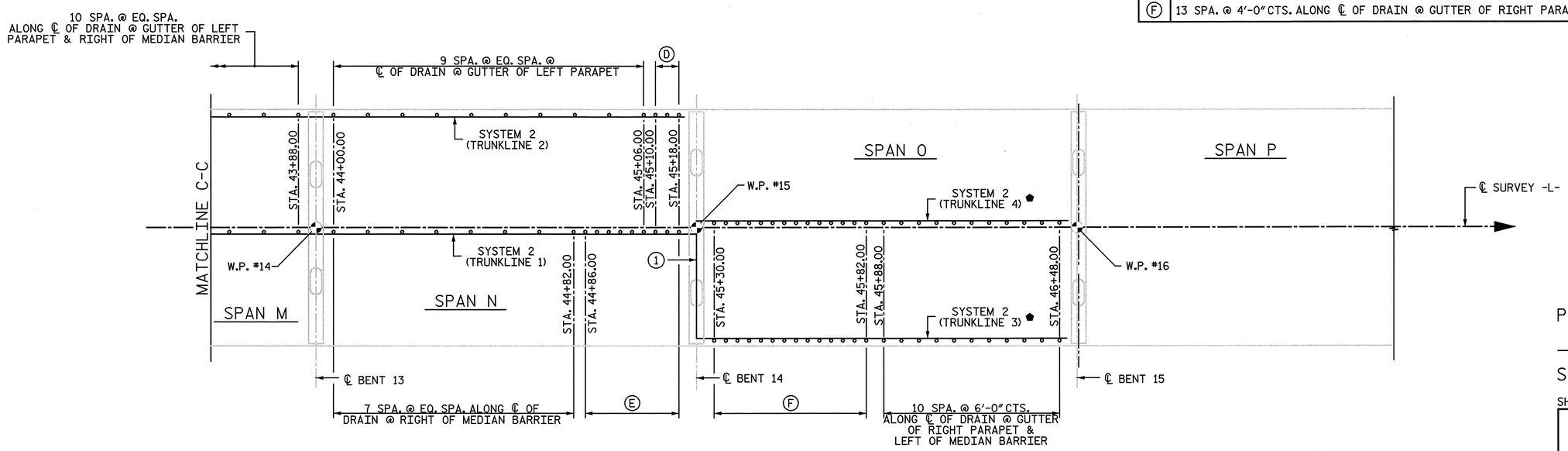

PLAN OF DRAINS

⬟ - DENOTES 10"Ø FRP COLLECTOR PIPE (TYP.)

① - 8"Ø FRP COLLECTOR PIPE TO BE PLACED BETWEEN GIRDERS AT BENT 14

PROJECT NO. R-3307

CARTERET COUNTY

STATION: 46+21.50 -L-

SHEET 2 OF 2

STATE OF NORTH CAROLINA
DEPARTMENT OF TRANSPORTATION
RALEIGH

SUPERSTRUCTURE

PLAN OF DRAINAGE SYSTEM

NORTH CAROLINA PROFESSIONAL SEAL 25911 ENGINEER DWIN G. HATHAWAY 11-7-2013

NORTH CAROLINA PROFESSIONAL SEAL 033752 ENGINEER SETH A. DENNEY

THE LPA GROUP of North Carolina TRANSPORTATION CONSULTANTS

THE LPA GROUP of North Carolina
8000 Regency Parkway, Suite 600
Cary, North Carolina 27518
NC License No.: F-1084

REVISIONS								SHEET NO.
NO.	BY:	DATE:	NO.	BY:	DATE:			S-75
1			3					TOTAL SHEETS
2			4					333

DRAWN BY : J. N. AUSTIN DATE : 10-31-11
CHECKED BY : D. G. HATHAWAY DATE : 12-19-11

DWG. 76 OF 282

11/7/2013
3:38:42 PM
User: jaustin
Filename: Y:\Projects\NCDOT\R-3307\Dwgs\Final\R-3307_076_SD_DRN_2.dgn

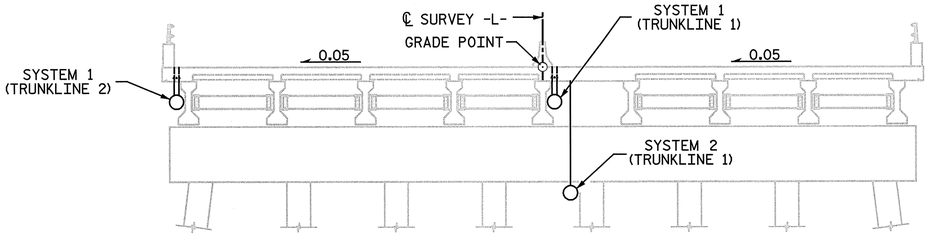

SPANS C THRU E
LOOKING UPSTATION

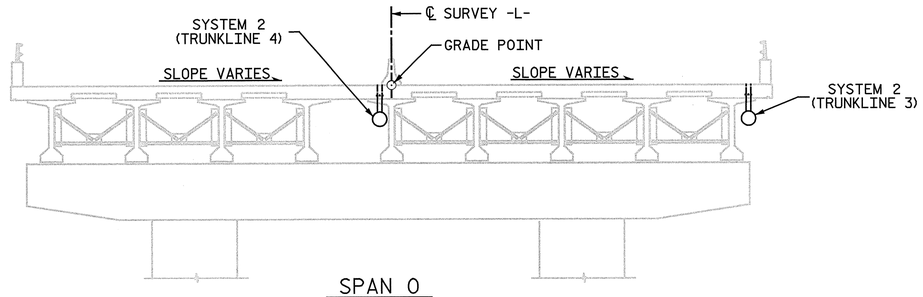

SPAN O
LOOKING UPSTATION

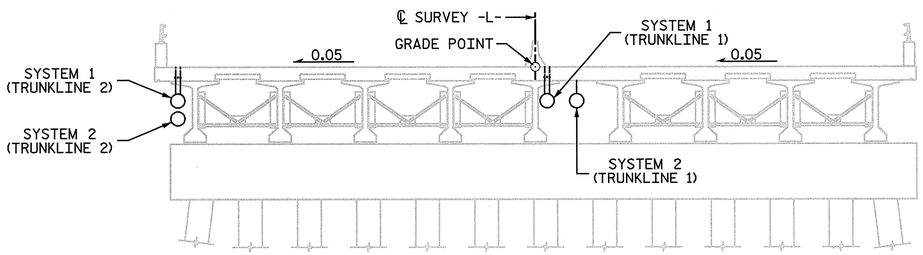

SPANS F THRU H
LOOKING UPSTATION

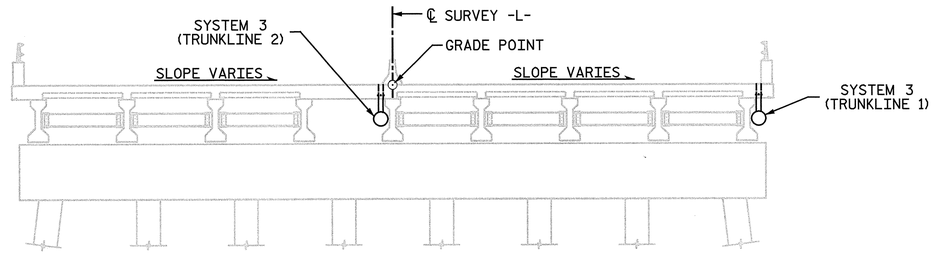

SPANS AA THRU BB
LOOKING UPSTATION

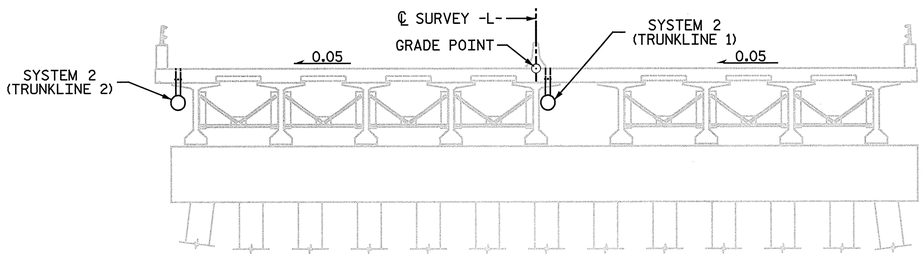

SPANS I THRU N
LOOKING UPSTATION

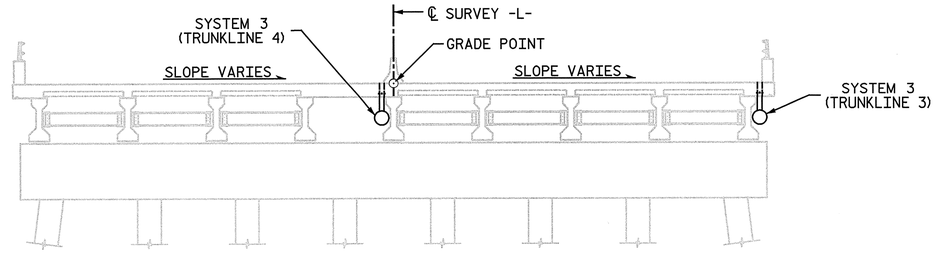

SPAN CC
LOOKING UPSTATION

PROJECT NO. R-3307
CARTERET COUNTY
STATION: 46+21.50 -L-

SPAN TYPICAL SECTIONS SHOWING DRAINAGE LOCATIONS

INTERMEDIATE DIAPHRAGMS ARE NOT REQUIRED IN BAYS CONTAINING DRAINAGE TRUNKLINES.

STATE OF NORTH CAROLINA
DEPARTMENT OF TRANSPORTATION
RALEIGH
SUPERSTRUCTURE

DRAINAGE SYSTEM LOCATIONS

NORTH CAROLINA PROFESSIONAL SEAL 25911 ENGINEER DWAIN G. HATHAWAY 11-1-2013

NORTH CAROLINA PROFESSIONAL SEAL 033752 ENGINEER SETH A. DENNEY 11/01/13

THE LPA GROUP of North Carolina TRANSPORTATION CONSULTANTS

THE LPA GROUP of North Carolina
8000 Regency Parkway, Suite 600
Cary, North Carolina 27518
NC License No.: F-1084

REVISIONS						SHEET NO.
NO.	BY:	DATE:	NO.	BY:	DATE:	S-76
1			3			TOTAL SHEETS
2			4			333

DRAWN BY : J. N. AUSTIN DATE : 11-8-11
CHECKED BY : D. G. HATHAWAY DATE : 12-19-11

DWG. 77 OF 282

11/7/2013
3:38:43 PM
User: jaustin
Filename: Y:\Projects\NCDOT\R-3307\Dwgs\Final\R-3307_077_SD_DRN_3.dgn

NOTE:

FOR NOTES, SEE "ELEVATION OF DRAINAGE SYSTEM" SHEET 7 OF 7.

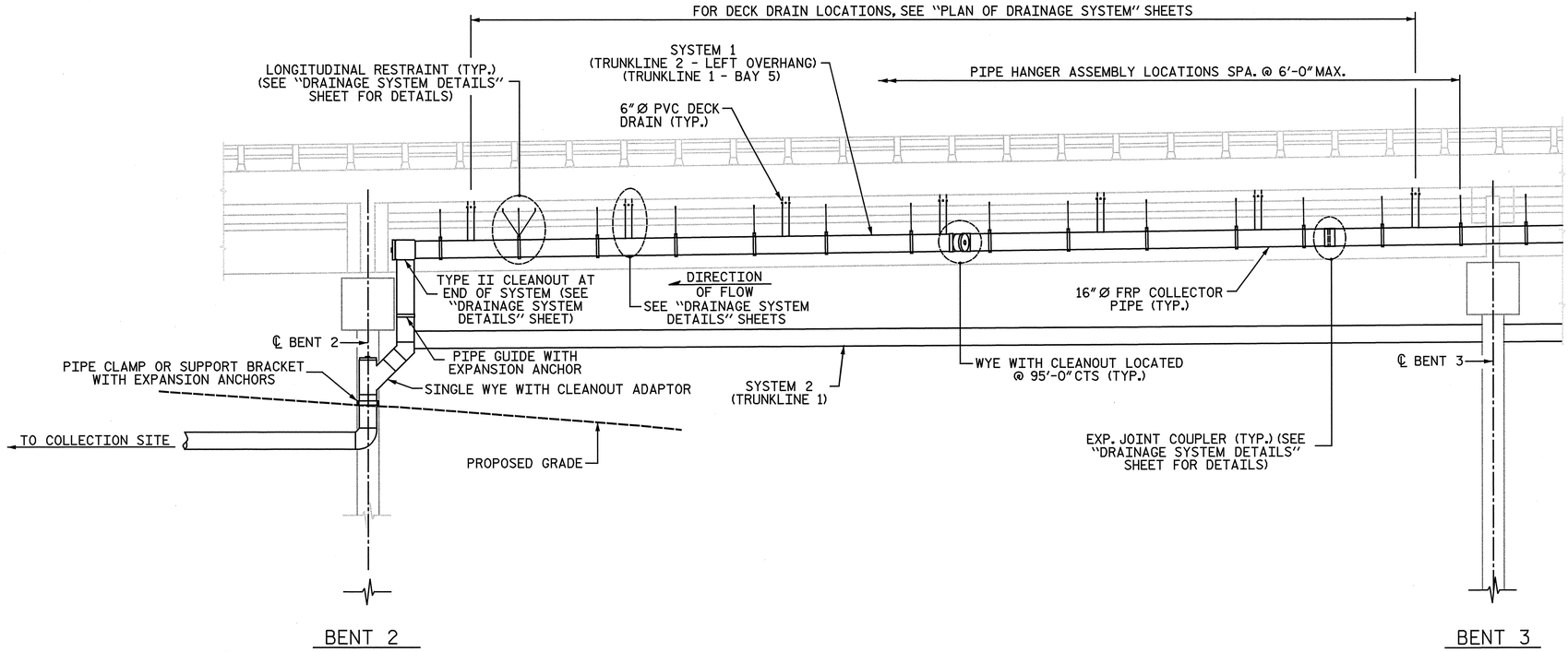

SPAN C - DRAINAGE ELEVATION

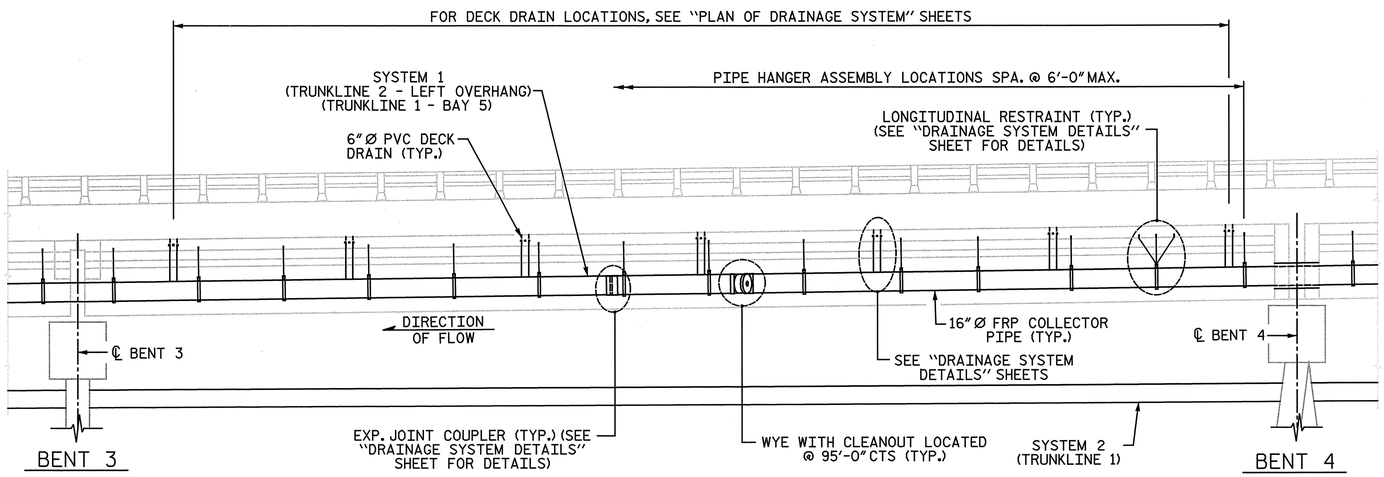

SPAN D - DRAINAGE ELEVATION

PROJECT NO. R-3307

CARTERET COUNTY

STATION: 46+21.50 -L-

SHEET 1 OF 7

STATE OF NORTH CAROLINA
DEPARTMENT OF TRANSPORTATION
RALEIGH

SUPERSTRUCTURE

ELEVATION OF DRAINAGE SYSTEM

NORTH CAROLINA PROFESSIONAL SEAL 2591 ENGINEER DWIN G. HATHAWAY 11-1-2013

NORTH CAROLINA PROFESSIONAL SEAL 033752 ENGINEER SETH A. DENNEY 11/01/13

THE LPA GROUP of North Carolina TRANSPORTATION CONSULTANTS

THE LPA GROUP of North Carolina
8000 Regency Parkway, Suite 600
Cary, North Carolina 27518
NC License No.: F-1084

REVISIONS							SHEET NO.
NO.	BY:	DATE:	NO.	BY:	DATE:		S-77
1			3				TOTAL SHEETS
2			4				333

DRAWN BY : J. N. AUSTIN DATE : 9-22-11
CHECKED BY : D. G. HATHAWAY DATE : 12-19-11

DWG. 78 OF 282

11/7/2013
3:38:43 PM
User: austin
Filename: Y:\Projects\NCDOT\R-3307\Dwgs\Final\R-3307_078_SD_DRN_4.dgn

NOTE:

FOR NOTES, SEE "ELEVATION OF DRAINAGE SYSTEM" SHEET 7 OF 7.

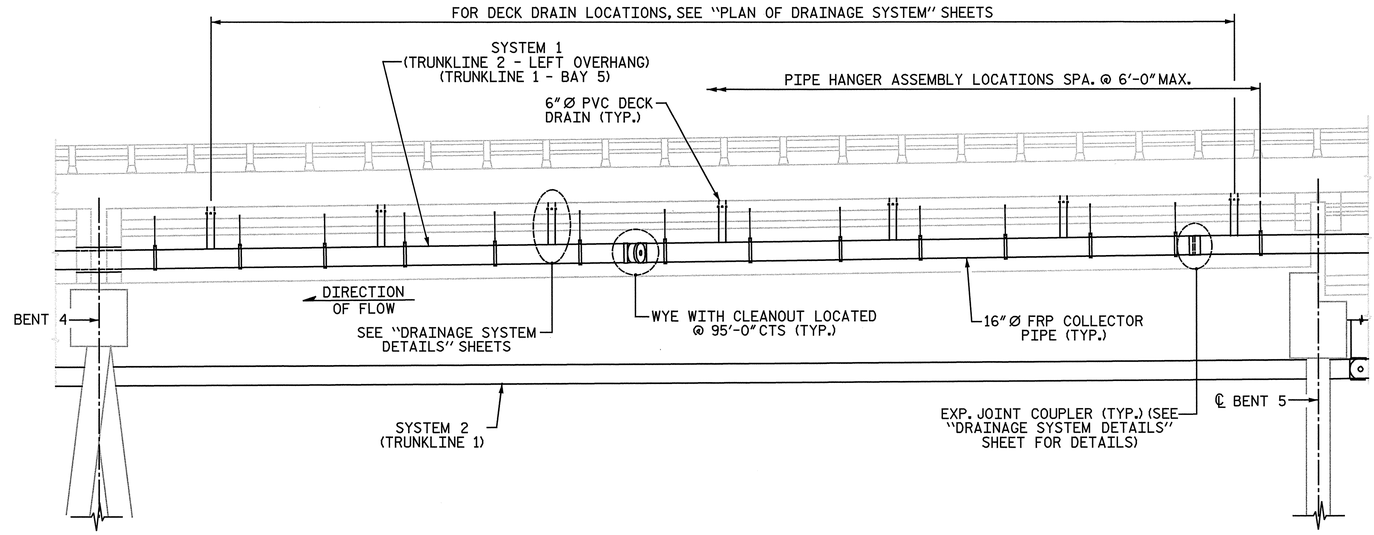

SPAN E - DRAINAGE ELEVATION

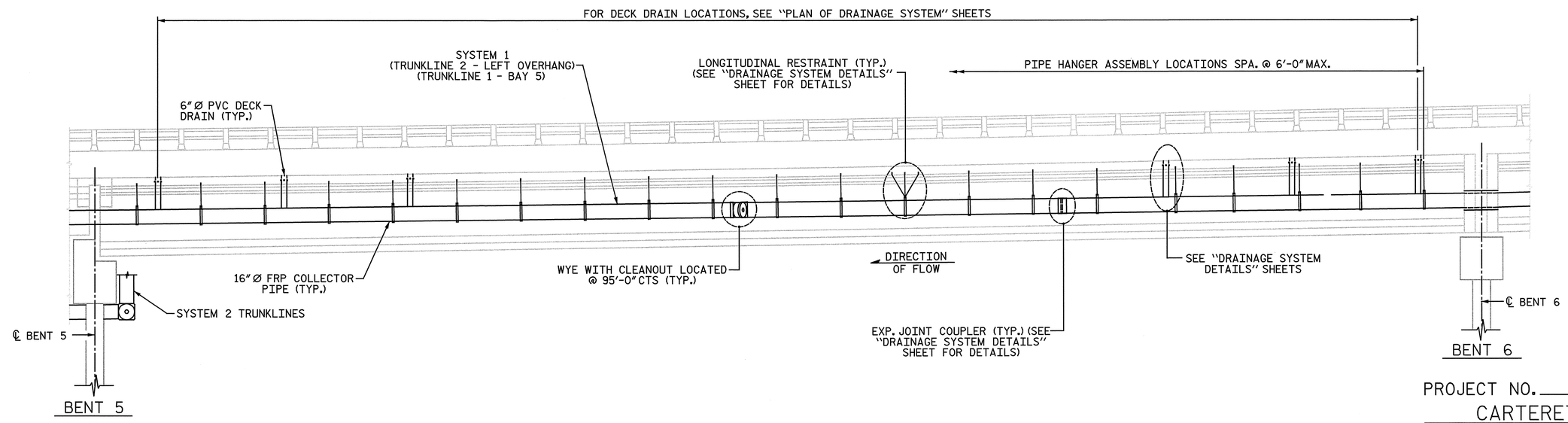

SPAN F - DRAINAGE ELEVATION

SYSTEM 2 (TRUNKLINE 1 - BAY 5) & (TRUNKLINE 2 - LEFT OVERHANG) NOT SHOWN FOR CLARITY.

PROJECT NO. R-3307

CARTERET COUNTY

STATION: 46+21.50 -L-

SHEET 2 OF 7

STATE OF NORTH CAROLINA
DEPARTMENT OF TRANSPORTATION
RALEIGH

SUPERSTRUCTURE

ELEVATION OF DRAINAGE SYSTEM

NORTH CAROLINA PROFESSIONAL SEAL 25911 ENGINEER DWAIN G. HATHAWAY 11-7-2013

NORTH CAROLINA PROFESSIONAL SEAL 033752 ENGINEER SETH A. DENNEY

THE LPA GROUP of North Carolina TRANSPORTATION CONSULTANTS

THE LPA GROUP of North Carolina
8000 Regency Parkway, Suite 600
Cary, North Carolina 27518
NC License No.: F-1084

REVISIONS							SHEET NO.
NO.	BY:	DATE:	NO.	BY:	DATE:		S-78
1			3				TOTAL SHEETS
2			4				333

DRAWN BY : J. N. AUSTIN DATE : 9-22-11
CHECKED BY : D. G. HATHAWAY DATE : 12-19-11

DWG. 79 OF 282

11/7/2013
3:38:44 PM
User: jaustin
Filename: Y:\Projects\NCDOT\R-3307\Dwgs\Final\R-3307_079_SD_DRN_5.dgn

NOTE:

FOR NOTES, SEE "ELEVATION OF DRAINAGE SYSTEM" SHEET 7 OF 7.

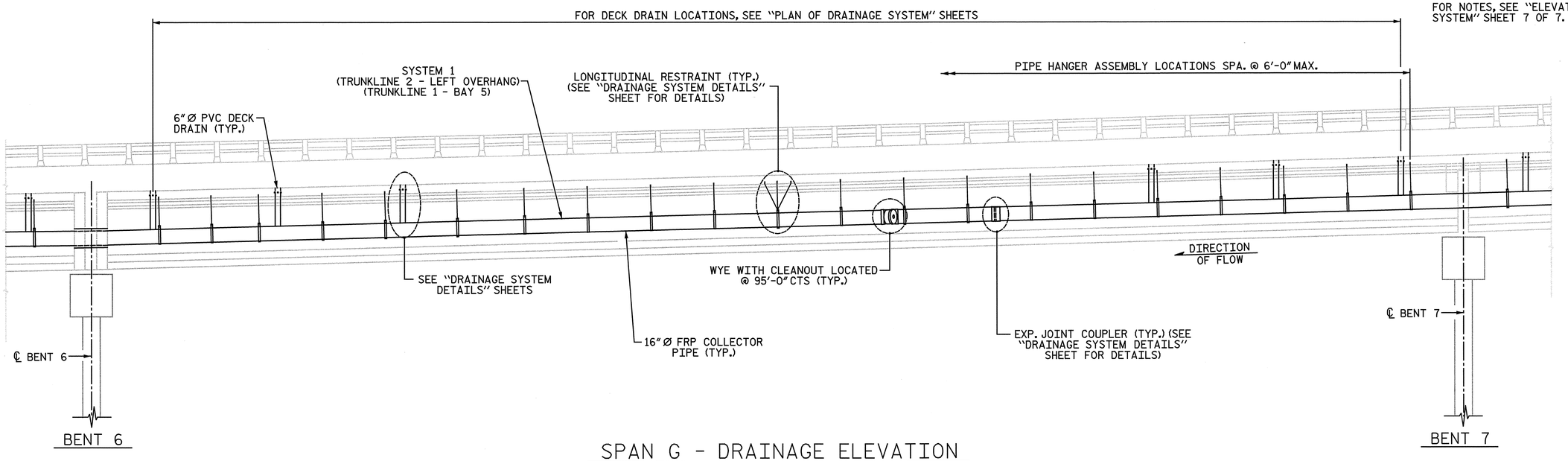

SPAN G - DRAINAGE ELEVATION

SYSTEM 2 (TRUNKLINE 1 - BAY 5) & (TRUNKLINE 2 - LEFT OVERHANG)
NOT SHOWN FOR CLARITY.

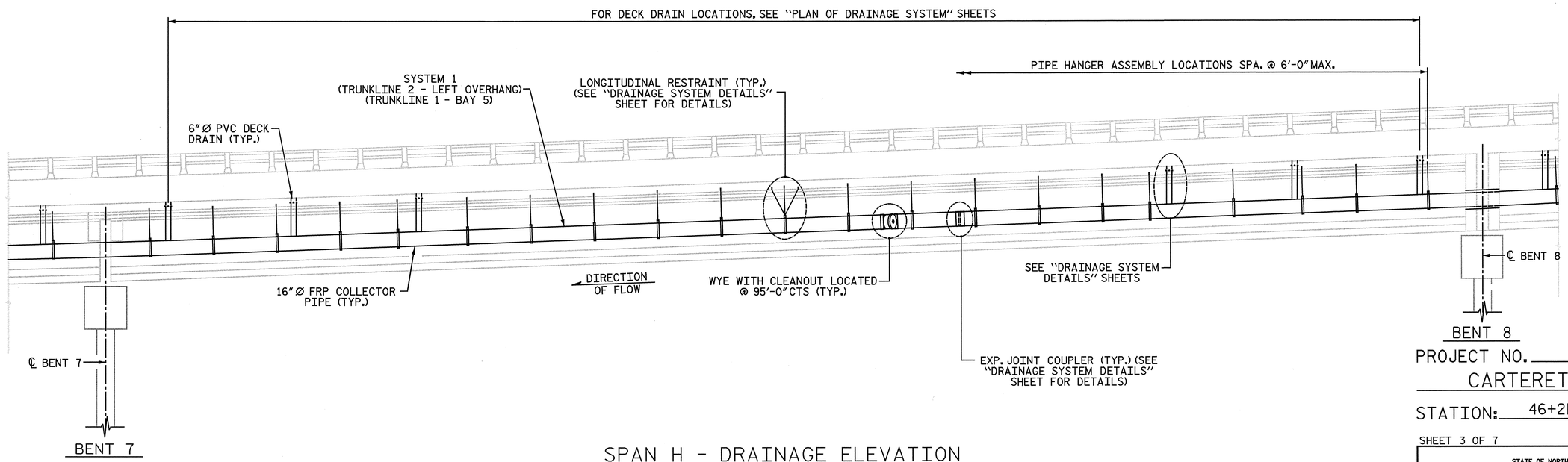

SPAN H - DRAINAGE ELEVATION

SYSTEM 2 (TRUNKLINE 1 - BAY 5) & (TRUNKLINE 2 - LEFT OVERHANG)
NOT SHOWN FOR CLARITY.

PROJECT NO. R-3307

CARTERET COUNTY

STATION: 46+21.50 -L-

SHEET 3 OF 7

STATE OF NORTH CAROLINA
DEPARTMENT OF TRANSPORTATION
RALEIGH

SUPERSTRUCTURE

ELEVATION OF DRAINAGE SYSTEM

NORTH CAROLINA PROFESSIONAL SEAL 25911 ENGINEER D. G. HATHAWAY 11-7-2013

NORTH CAROLINA PROFESSIONAL SEAL 033752 ENGINEER SETH A. DENNEY

THE LPA GROUP of North Carolina TRANSPORTATION CONSULTANTS

THE LPA GROUP of North Carolina
8000 Regency Parkway, Suite 600
Cary, North Carolina 27518
NC License No.: F-1084

REVISIONS							SHEET NO.
NO.	BY:	DATE:	NO.	BY:	DATE:		S-79
1			3				TOTAL SHEETS
2			4				333

DRAWN BY : J. N. AUSTIN DATE : 10-31-11
CHECKED BY : D. G. HATHAWAY DATE : 12-19-11

DWG. 80 OF 282

11/7/2013
3:38:44 PM
User: jaustin
Filename: Y:\Projects\NCDOT\R-3307\Dwgs\Final\R-3307_080_SD_DRN_6.dgn

NOTE:

FOR NOTES, SEE "ELEVATION OF DRAINAGE SYSTEM" SHEET 7 OF 7.

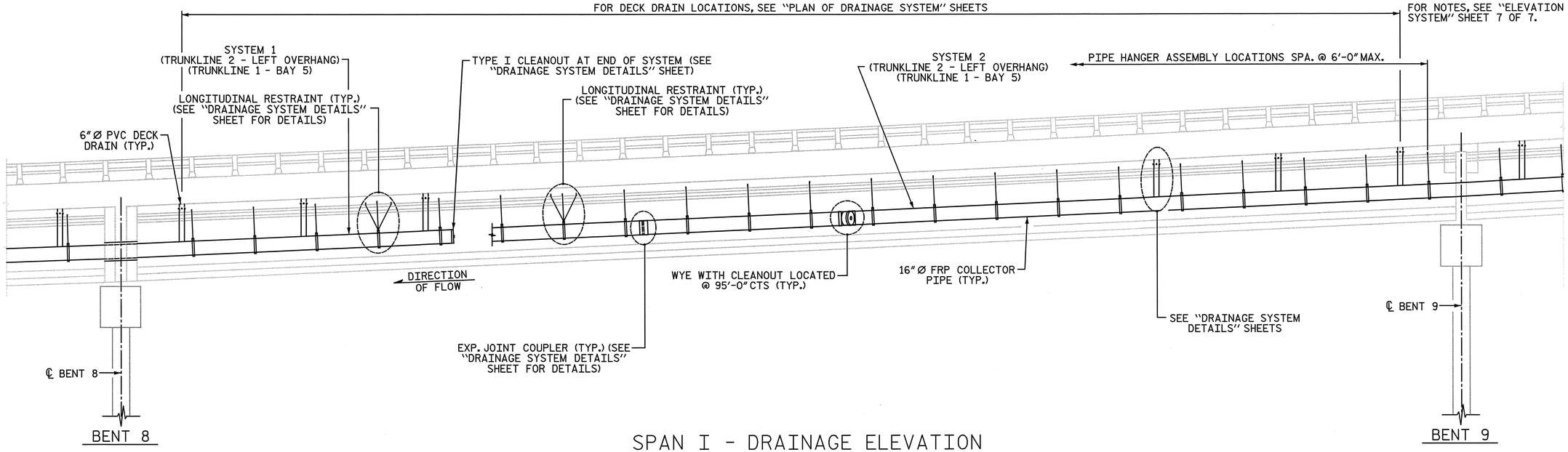

SPAN I - DRAINAGE ELEVATION

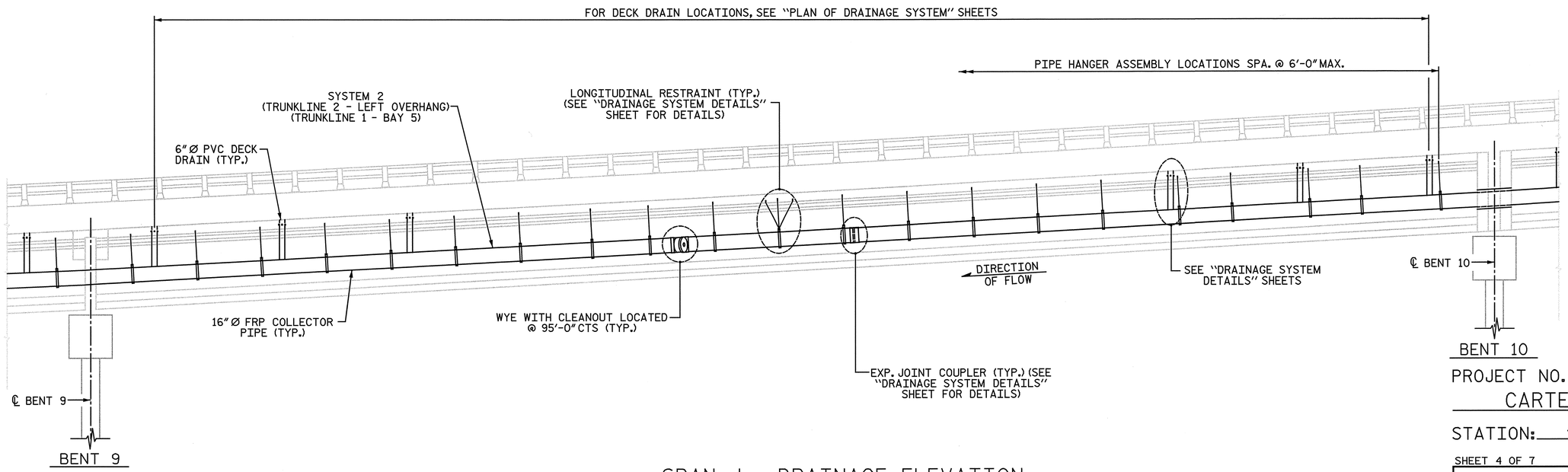

SPAN J - DRAINAGE ELEVATION

PROJECT NO. R-3307

CARTERET COUNTY

STATION: 46+21.50 -L-

SHEET 4 OF 7

STATE OF NORTH CAROLINA
DEPARTMENT OF TRANSPORTATION
RALEIGH

SUPERSTRUCTURE

ELEVATION OF DRAINAGE SYSTEM

NORTH CAROLINA PROFESSIONAL SEAL 25911 ENGINEER DWAIN G. HATHAWAY 11-7-2013

NORTH CAROLINA PROFESSIONAL SEAL 033752 ENGINEER SETH A. DENNEY

THE LPA GROUP of North Carolina TRANSPORTATION CONSULTANTS

THE LPA GROUP of North Carolina
8000 Regency Parkway, Suite 600
Cary, North Carolina 27518
NC License No.: F-1084

REVISIONS								SHEET NO.
NO.	BY:	DATE:	NO.	BY:	DATE:			S-80
1			3					TOTAL SHEETS
2			4					333

DRAWN BY : J. N. AUSTIN DATE : 10-31-11
CHECKED BY : D. G. HATHAWAY DATE : 12-19-11

DWG. 81 OF 282

11/7/2013
3:58:45 PM
User: jaustin
Filename: Y:\Projects\NCDOT\R-3307\Dwgs\Final\R-3307_081_SD_DRN_7.dgn

NOTE:

FOR NOTES, SEE "ELEVATION OF DRAINAGE SYSTEM" SHEET 7 OF 7.

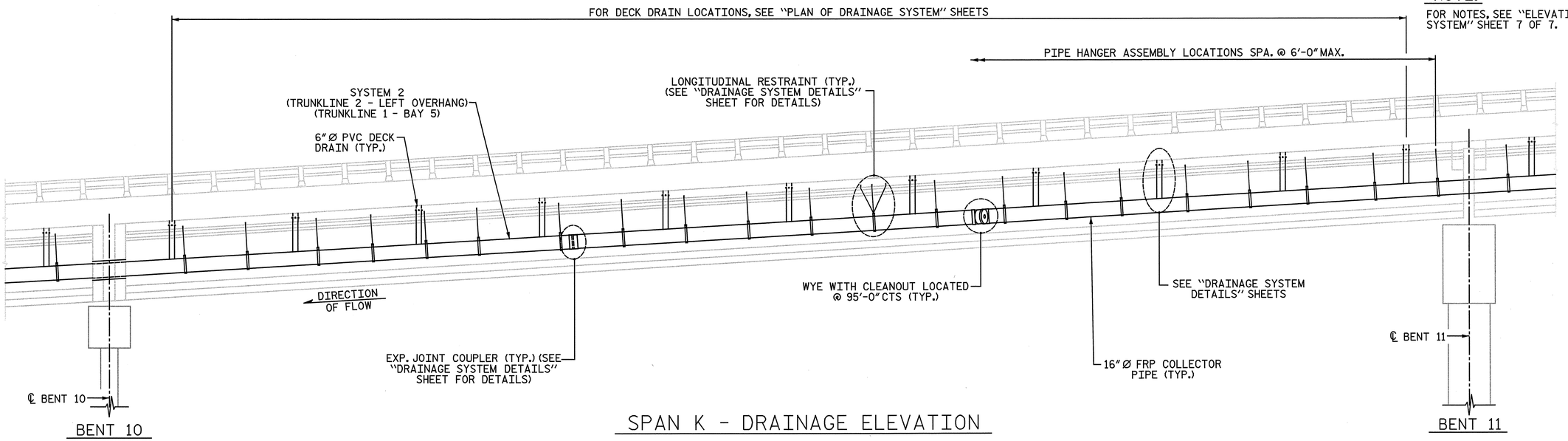

SPAN K - DRAINAGE ELEVATION

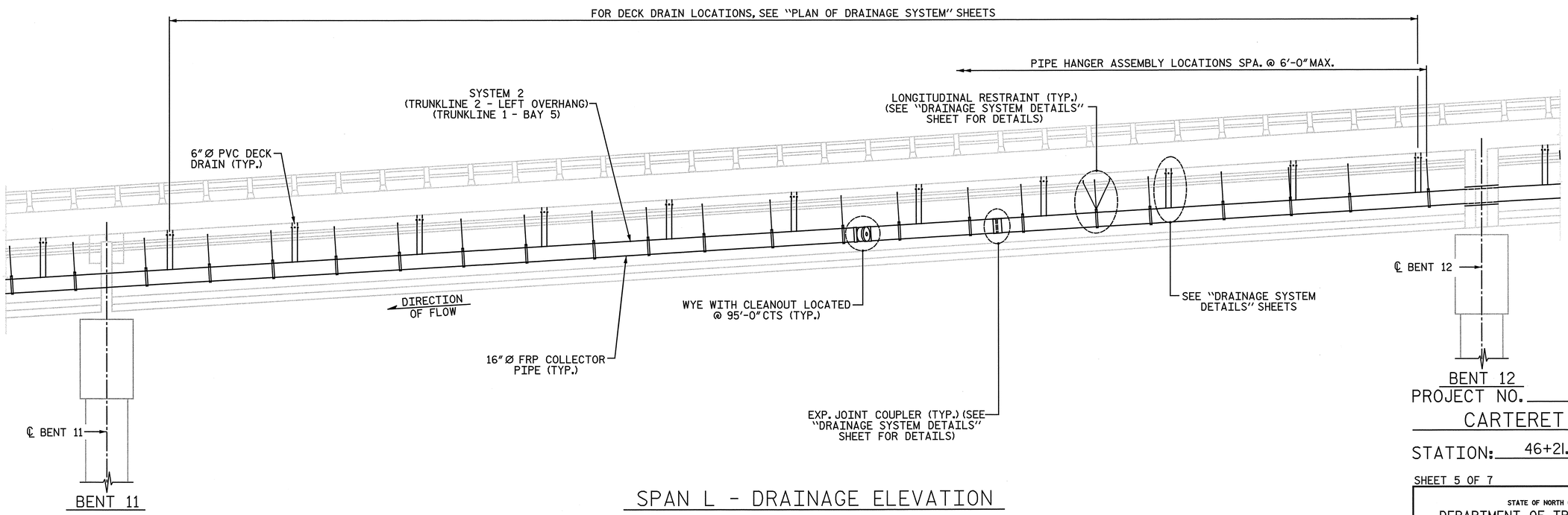

SPAN L - DRAINAGE ELEVATION

PROJECT NO. R-3307

CARTERET COUNTY

STATION: 46+21.50 -L-

SHEET 5 OF 7

STATE OF NORTH CAROLINA
DEPARTMENT OF TRANSPORTATION
RALEIGH

SUPERSTRUCTURE

ELEVATION OF DRAINAGE SYSTEM

NORTH CAROLINA PROFESSIONAL SEAL 25911 ENGINEER D. G. HATHAWAY 11-7-2013

NORTH CAROLINA PROFESSIONAL SEAL 033752 ENGINEER SETH A. DENNEY 11/7/2013

THE LPA GROUP of North Carolina TRANSPORTATION CONSULTANTS

THE LPA GROUP of North Carolina
8000 Regency Parkway, Suite 600
Cary, North Carolina 27518
NC License No.: F-1084

REVISIONS								SHEET NO.
NO.	BY:	DATE:	NO.	BY:	DATE:			5-81
1			3					TOTAL SHEETS
2			4					333

DRAWN BY : J. N. AUSTIN DATE : 10-31-11
CHECKED BY : D. G. HATHAWAY DATE : 12-19-11

DWG. 82 OF 282

11/7/2013
3:38:46 PM
User: jaustin
Filename: Y:\Projects\NCDOT\R-3307\Dwgs\Final\R-3307_082_SD_DRN_8.dgn

NOTE:

FOR NOTES, SEE "ELEVATION OF DRAINAGE SYSTEM" SHEET 7 OF 7.

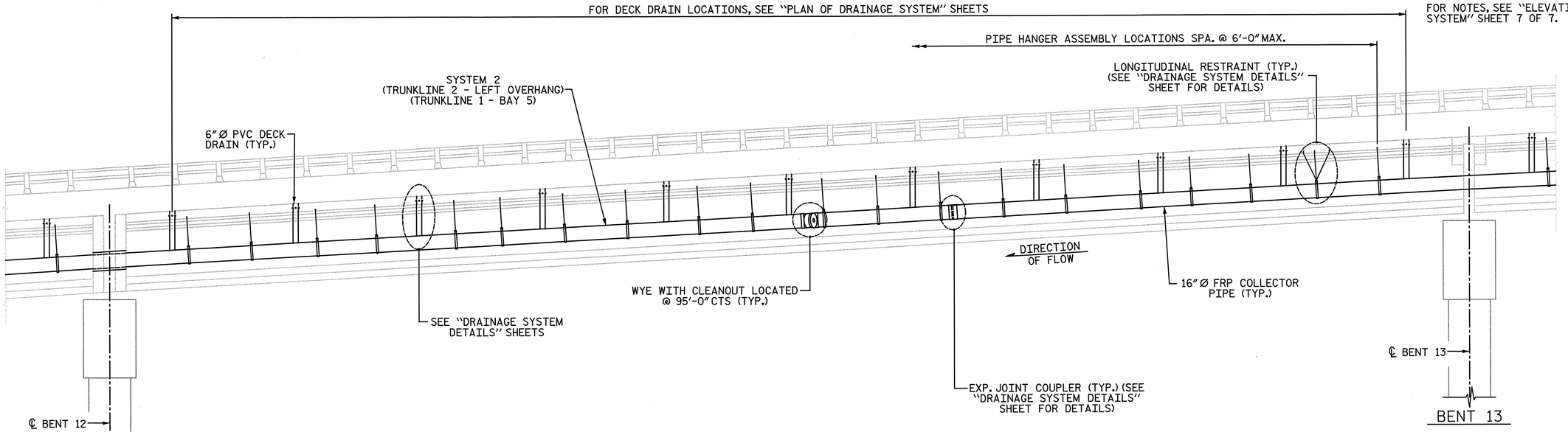

SPAN M - DRAINAGE ELEVATION

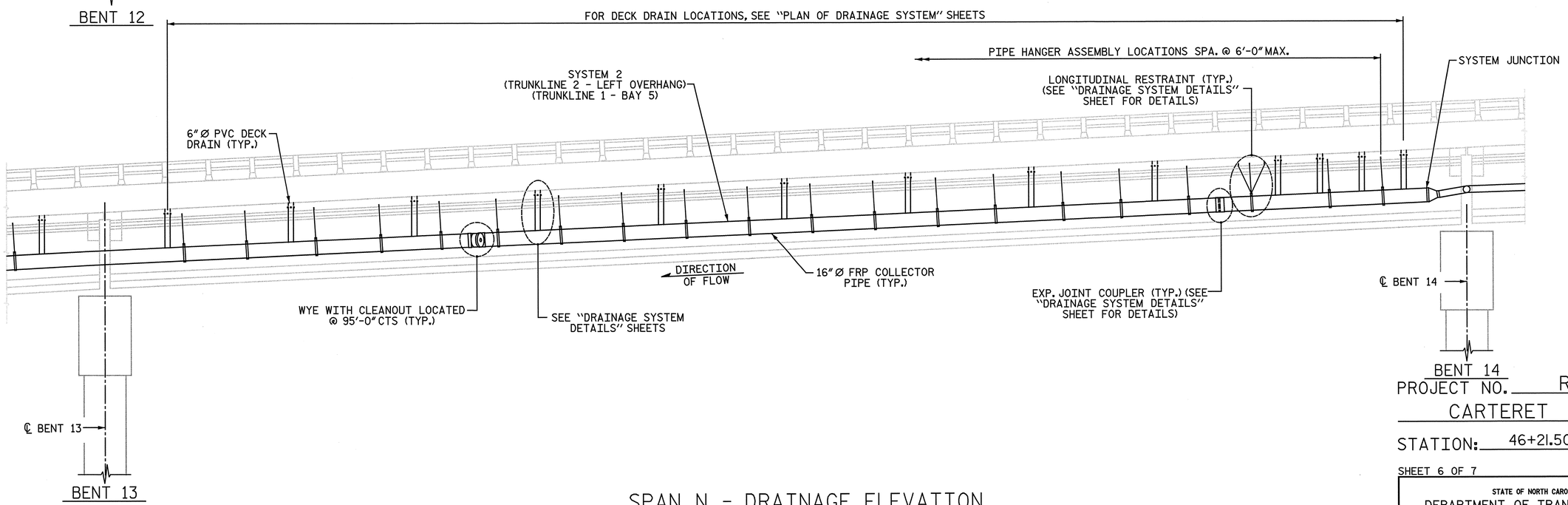

SPAN N - DRAINAGE ELEVATION

PROJECT NO. R-3307

CARTERET COUNTY

STATION: 46+21.50 -L-

SHEET 6 OF 7

STATE OF NORTH CAROLINA
DEPARTMENT OF TRANSPORTATION
RALEIGH

SUPERSTRUCTURE

ELEVATION OF DRAINAGE SYSTEM

NORTH CAROLINA PROFESSIONAL SEAL 25911 ENGINEER D. G. HATHAWAY

NORTH CAROLINA PROFESSIONAL SEAL 033752 ENGINEER SETH A. DENNEY

THE LPA GROUP of North Carolina TRANSPORTATION CONSULTANTS

THE LPA GROUP of North Carolina
8000 Regency Parkway, Suite 600
Cary, North Carolina 27518
NC License No.: F-1084

REVISIONS								SHEET NO.
NO.	BY:	DATE:	NO.	BY:	DATE:			S-82
1			3					TOTAL SHEETS
2			4					333

DRAWN BY : J. N. AUSTIN DATE : 10-31-11
CHECKED BY : D. G. HATHAWAY DATE : 12-19-11

DWG. 83 OF 282

11/7/2013
3:38:46 PM
User: jaustin
Filename: Y:\Projects\NCDOT\R-3307\Dwgs\Final\R-3307_083_SD_DRN_9.dgn

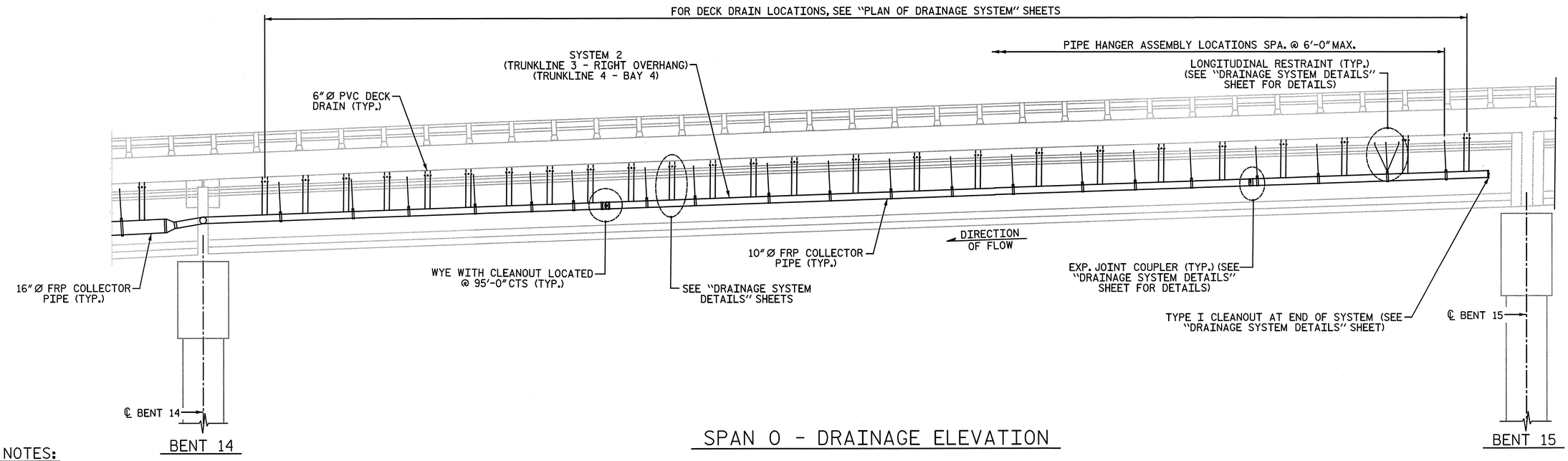

SPAN 0 - DRAINAGE ELEVATION

NOTES:

THE ENTIRE COST FOR THE LABOR AND MATERIALS NECESSARY TO FABRICATE AND INSTALL FRP PIPE, PIPE SUPPORT AND PIPE ANCHOR ASSEMBLIES SHALL BE INCLUDED IN THE LUMP SUM PRICE BID FOR THE "STRUCTURE DRAINAGE SYSTEM." SEE SPECIAL PROVISIONS FOR STRUCTURE DRAINAGE SYSTEM.

ALL COLLECTOR PIPES, ELBOWS, COUPLERS, AND TEES SHALL BE FIBERGLASS REINFORCED PLASTIC PIPE MEETING THE SPECIFICATIONS OF ASTM D2996 AND THE ACCELERATED UV WEATHERING PERFORMANCE REQUIREMENTS OF ASTM D4329-05 PER PROCEDURE ASTM G154.

EACH PIPE SECTION SHALL HAVE A MINIMUM OF TWO HANGERS.

COLLECTOR PIPE SHALL BE SUPPORTED FROM THE CONCRETE DECK SLAB. ATTACHMENT THROUGH THE GIRDERS WILL ONLY BE PERMITTED WHERE DECK DRAINS PENETRATE GIRDER FLANGES. ALL OTHER ATTACHMENTS SHALL BE MADE TO THE CONCRETE DECK SLAB.

CONTRACTOR SHALL PROVIDE FRP COUPLINGS CAPABLE OF HANDLING THE ANTICIPATED MOVEMENTS. ADDITIONALLY FRP COUPLINGS SHALL PROVIDE HORIZONTAL ALIGNMENT TOLERANCES SUCH THAT THE 16"Ø OR 10"Ø FRP COLLECTOR PIPE AND COUPLINGS CAN CLOSELY FOLLOW THE VERTICAL CURVE OF THE STRUCTURE.

THE CONTRACTOR SHALL BE RESPONSIBLE FOR DETERMINING THE HORIZONTAL AND VERTICAL ALIGNMENT OF THE DRAINAGE SYSTEM USING NECESSARY FITTINGS, TEES, AND WYES TO PROVIDE A CONTINUOUS DRAINAGE SYSTEM.

CONCRETE INSERTS SHALL HAVE A MINIMUM WORKING LOAD TENSION CAPACITY OF 4.5 KIPS.

CONTRACTOR SHALL VERIFY LOCATION OF CONCRETE INSERTS IN REGARD TO ADJACENT INSERTS AND DECK DRAINS. IF SPACING/LOCATION OF INSERTS RESULTS IN REDUCED INSERT CAPACITY, CONTRACTOR SHALL SUBMIT INSERT SYSTEM WITH APPROPRIATE CAPACITY, GIVEN CONSTRAINTS, OR PROVIDED ALTERNATE CONNECTION/SUPPORT DETAIL FOR REVIEW AND APPROVAL OF THE ENGINEER PRIOR TO INSTALLATION.

DECK DRAIN PIPE SHALL BE ASTM D1785, SCHEDULE 40. ALL PVC FITTINGS SHALL BE MINIMUM ASTM D2665, SCHEDULE 40.

EXPANSION JOINT COUPLERS IN THE COLLECTOR PIPE SHALL HAVE A MINIMUM CAPACITY TO ACCOMMODATE 6-INCHES OF TOTAL MOVEMENT (3-INCHES EXPANSION/3-INCHES CONTRACTION).

AN OPTIONAL DETAIL FOR THE LONGITUDINAL RESTRAINTS AND THE LATERAL GUIDE MAY BE SUBMITTED FOR APPROVAL.

COLLECTOR PIPE SUPPORTS SHALL BE LOCATED WITHIN 12-INCHES, ± 4-INCHES, OF A COLLECTOR PIPE JOINT.

DECK DOWN-DRAIN PIPES SHALL BE CENTERED IN SLOTTED OPENING IN COLLECTOR PIPE REGARDLESS OF TEMPERATURE AT TIME OF INSTALLATION.

HANGER RODS SHALL BE ASTM A193, GRADE B7 OR CARBON STEEL ALL-THREAD HANGER RODS.

NUTS SHALL BE ASTM A194, GRADE 2H, HEAVY HEX NUTS.

THE DETAILS OF ALL PIPING, HARDWARE, OR OTHER MATERIAL SHALL BE PROVIDED BY THE CONTRACTOR AND IS SUBJECT TO THE APPROVAL OF THE ENGINEER.

WORKING DRAWINGS FOR THE DRAINAGE SYSTEM AND LAYOUT PLANS INCLUDING, BUT NOT LIMITED TO, PIPE SUPPORT BRACKETS, PIPE ALIGNMENT, PIPE LENGTHS, AND ALL NECESSARY FITTINGS, ELBOWS, WYES, ADAPTERS, GUIDES, RESTRAINTS, WEAR PADS, COUPLERS AND JOINTS SHALL BE DESIGNED AND SEALED BY A PROFESSIONAL ENGINEER LICENSED IN NORTH CAROLINA AND SUBMITTED FOR APPROVAL PRIOR TO ORDERING MATERIALS.

PIPE MANUFACTURER SHALL ENSURE THE PIPE AND THE PIPE SUPPORT BEARING AREA IS DESIGNED IN ACCORDANCE WITH THE HANGER SPACING PROVIDED IN THESE PLANS.

PIPE DESIGN MUST ALLOW VERTICAL FLEXURE FROM THE SUPERSTRUCTURE.

THE COLLECTOR PIPE SHALL CLOSELY FOLLOW THE LONGITUDINAL GRADE OF THE STRUCTURE WHILE MAINTAINING A MINIMUM OF 0.5% SLOPE AT ALL TIMES.

COUPLERS SHALL BE DESIGNED TO ACCOMMODATE A TURN AT EACH BENT IN ORDER TO FOLLOW THE HORIZONTAL AND VERTICAL CURVATURE OF THE BRIDGE OVERHANG.

THE PIPE MANUFACTURER SHALL ENSURE THE FRICTIONAL FORCE REQUIRED TO ACTIVATE THE EXPANSION COUPLERS DOES NOT OVERSTRESS THE COUPLER WALL BUILD-UP, DRAINAGE SYSTEM BRACKETS SUPPORTS OR LATERAL RESTRAINTS.

WASHERS SHALL BE ASTM F436 OR APPROVED EQUIVALENT.

BOLTS, NUTS, AND WASHERS SHALL BE GALVANIZED IN ACCORDANCE WITH THE STANDARD SPECIFICATIONS.

BOLT THREADS SHALL BE BURRED TO PREVENT LOOSENING.

PVC PIPE SHALL BE PAINTED TO MATCH THE FINAL SURFACE FINISH OF THE STRUCTURE WITH TWO COATS OF AN ACRYLIC OR LATEX PAINT THAT IS CHEMICALLY COMPATIBLE WITH PVC PRODUCTS AND MEETS THE REQUIREMENTS OF ARTICLE 1080-12 OF THE STANDARD SPECIFICATIONS. EACH COAT SHALL BE 2 DRY MILS THICK. DECK DRAINS SHALL BE ROUGHENED PRIOR TO PAINTING.

ALL METALLIC COMPONENTS IN THE DRAINAGE SYSTEM, EXCEPT STAINLESS STEEL AND MALLEABLE IRON PARTS, ARE REQUIRED TO BE HOT-DIPPED GALVANIZED PER NCDOT STANDARD SPECIFICATIONS. ELECTRO-PLATE COATING ON STEEL RODS, STEEL YOKE TYPE PIPE ROLLS, BRACKETS, OTHER STEEL HARDWARE IS CONSIDERED BY NCDOT AS TOO THIN FOR OUTDOOR APPLICATIONS.

ALL FRP AND PVC PIPE SHALL BE INSTALLED PER MANUFACTURER'S RECOMMENDATIONS.

ALL STRUCTURAL STEEL SHALL BE ASTM A36 OR APPROVED EQUAL UNLESS NOTED OTHERWISE.

THE GALVANIZED SURFACE SHALL BE CLEANED TO (SSPC SP-1) PRIOR TO COATING.

ALL FABRICATION SHALL CONFORM TO THE APPLICABLE SECTION OF THE NORTH CAROLINA DEPARTMENT OF TRANSPORTATION STANDARD SPECIFICATIONS FOR ROADS AND STRUCTURES.

ALL FRP SHALL BE PIGMENTED TO MATCH THE FINAL SURFACE FINISH OF THE STRUCTURE.

ALL FRP PIPE SIZES ARE SHOWN AS INSIDE DIAMETER SIZES.

FRP = FIBERGLASS REINFORCED PLASTIC

FOR DECK DRAIN LOCATIONS AND ADDITIONAL INFORMATION, SEE "PLAN OF DRAINAGE SYSTEM" SHEETS.

THE DRAINAGE SYSTEM DETAILS ARE SCHEMATIC DRAWINGS ONLY AND IS A REPRESENTATION OF THE DRAINAGE SYSTEM THAT IS REQUIRED FOR THE BRIDGE. ALL ELEMENTS ARE NOT SHOWN AS MULTIPLE DRAINS AND TRUNK-LINES MAY BE REQUIRED IN A SPAN. SEE "PLAN OF DRAINAGE SYSTEM" AND "DRAINAGE SYSTEM BENT ELEVATIONS" SHEETS FOR REQUIRED ELEMENTS.

DISTANCE BETWEEN THE LONGITUDINAL RESTRAINT AND EXPANSION COUPLER SHALL NOT EXCEED 120 FEET.

PROVIDE LONGITUDINAL RESTRAINTS IN DRAINAGE SYSTEM PIPE AT A MAXIMUM SPACING OF 200 FEET.

TOP OF DECK DRAINS TO BE SET 3/8" BELOW SURFACE OF SLAB.

ADDITIONAL REINFORCING STEEL REQUIRED FOR BENT DIAPHRAGM PENETRATIONS SHALL BE CONSIDERED INCIDENTAL AND SHALL BE INCLUDED IN THE "STRUCTURE DRAINAGE SYSTEM" LUMP SUM PRICE BID.

THE CONTRACTOR'S ATTENTION IS CALLED TO THE FACT THAT, IN SEVERAL LOCATIONS, DRAINAGE SYSTEM HANGERS WILL BE REQUIRED THROUGH GIRDER FLANGES.

PROJECT NO. R-3307
CARTERET COUNTY
STATION: 46+21.50 -L-

SHEET 7 OF 7

STATE OF NORTH CAROLINA
DEPARTMENT OF TRANSPORTATION
RALEIGH
SUPERSTRUCTURE

ELEVATION OF DRAINAGE SYSTEM

NORTH CAROLINA PROFESSIONAL SEAL 25911 ENGINEER DARIN G. HATHAWAY 1-9-2014

NORTH CAROLINA PROFESSIONAL SEAL 033752 ENGINEER SETH A. DENNEY 2/09/14

THE LPA GROUP of North Carolina
TRANSPORTATION CONSULTANTS

THE LPA GROUP of North Carolina
8000 Regency Parkway, Suite 600
Cary, North Carolina 27518
NC License No.: F-1084

REVISIONS								SHEET NO.
NO.	BY:	DATE:	NO.	BY:	DATE:			S-83
1			3					TOTAL SHEETS
2			4					333

DRAWN BY : J. N. AUSTIN DATE : 10-31-11
CHECKED BY : D. G. HATHAWAY DATE : 12-19-11

DWG. 84 OF 282

1/9/2014
11:24:11 AM
User: jaustin
Filename: Y:\Projects\NCDOT\R-3307\Dwgs\Final\R-3307_084_SD_DRN_10.dgn

NOTE:

FOR NOTES, SEE "ELEVATION OF DRAINAGE SYSTEM" SHEET 7 OF 7.

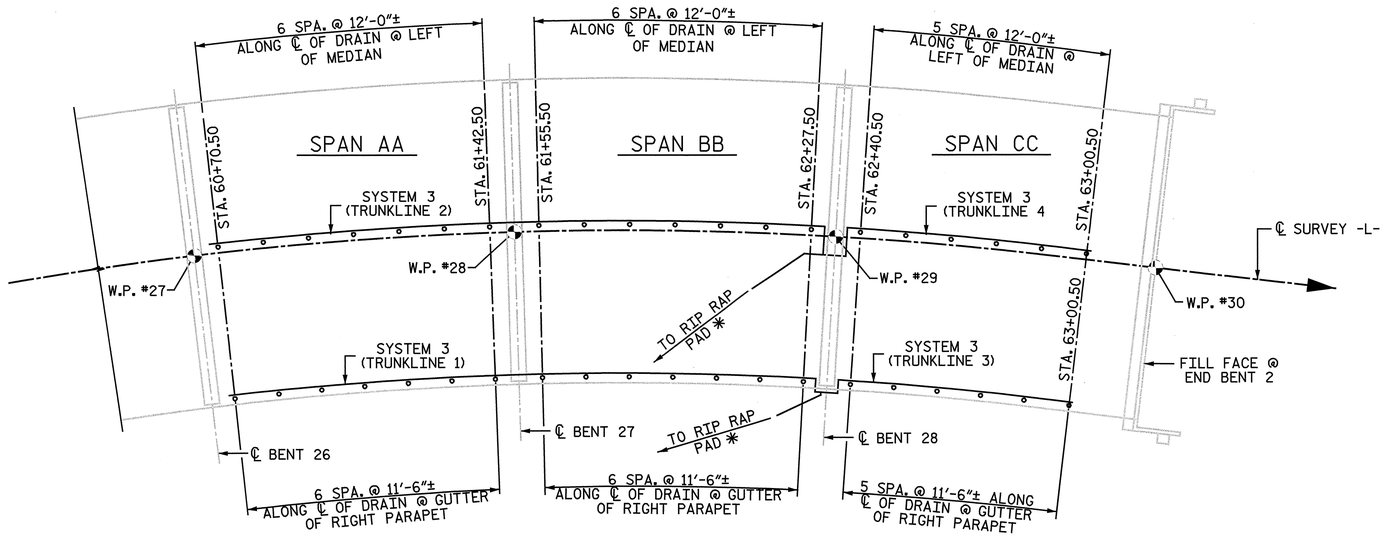

SPAN AA THRU CC - PLAN OF DRAINAGE SYSTEM

*SEE ROADWAY PLANS FOR DETAILS AND PAY ITEMS FOR RIP RAP & GRASS SWALES.

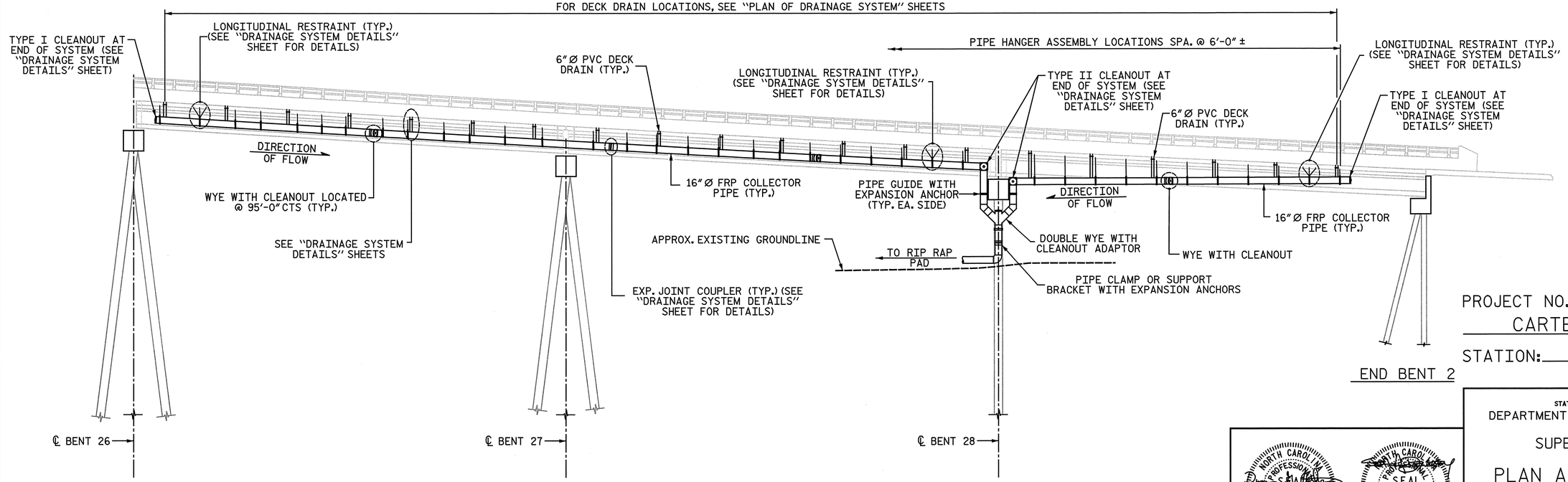

SPAN AA THRU CC - DRAINAGE ELEVATION

PROJECT NO. R-3307

CARTERET COUNTY

STATION: 46+21.50 -L-

STATE OF NORTH CAROLINA
DEPARTMENT OF TRANSPORTATION
RALEIGH

SUPERSTRUCTURE

PLAN AND ELEVATION OF DRAINAGE SYATEM

SPANS AA - CC

NORTH CAROLINA PROFESSIONAL SEAL 25911 ENGINEER DWAIN G. HATHAWAY 11-7-2013

NORTH CAROLINA PROFESSIONAL SEAL 033752 ENGINEER SETH A. DENNEY

THE LPA GROUP of North Carolina TRANSPORTATION CONSULTANTS

THE LPA GROUP of North Carolina
8000 Regency Parkway, Suite 600
Cary, North Carolina 27518
NC License No.: F-1084

REVISIONS						SHEET NO.
NO.	BY:	DATE:	NO.	BY:	DATE:	S-84
1			3			TOTAL SHEETS
2			4			333

DRAWN BY : J. N. AUSTIN DATE : 10-31-11
CHECKED BY : D. G. HATHAWAY DATE : 12-19-11

DWG. 85 OF 282

11/7/2013
3:38:48 PM
User: jaustin
Filename: Y:\Projects\NCDOT\R-3307\Dwgs\Final\R-3307_085_SD_DRN_11.dgn

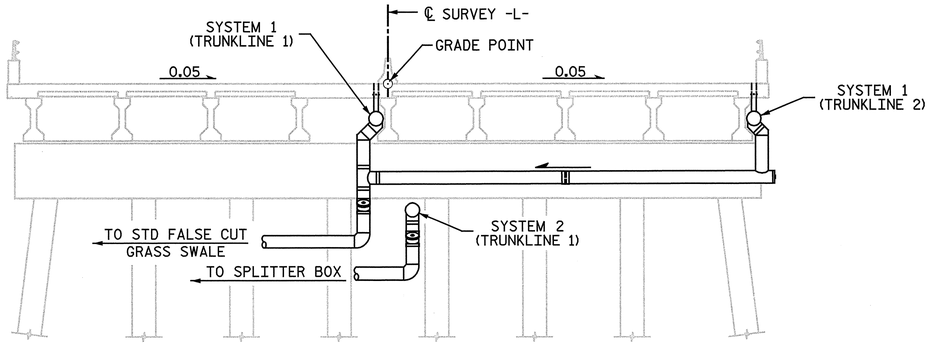

BENT 2
LOOKING DOWNSTATION

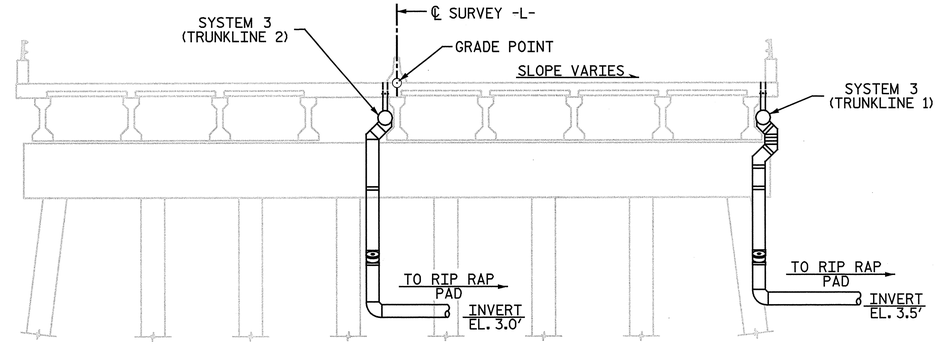

BENT 28
LOOKING UPSTATION

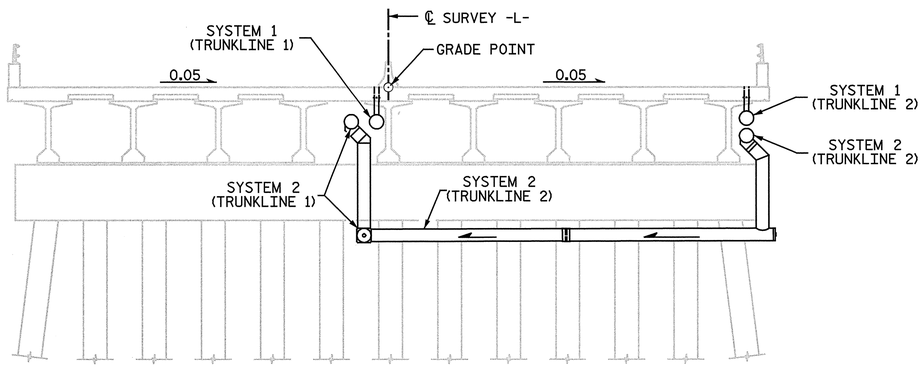

BENT 5
LOOKING DOWNSTATION

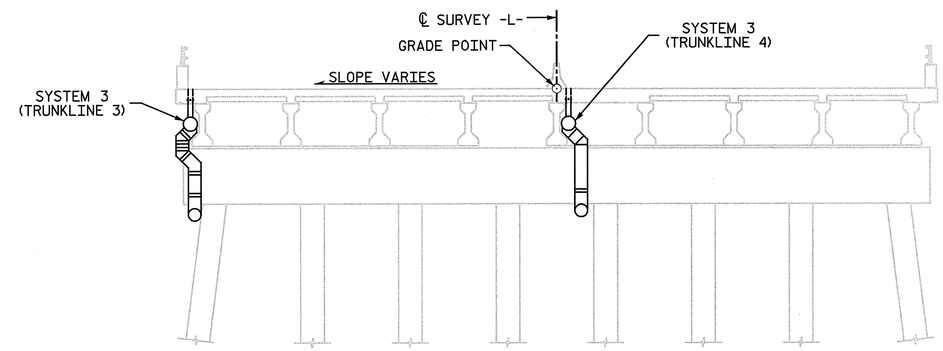

BENT 28
LOOKING DOWNSTATION

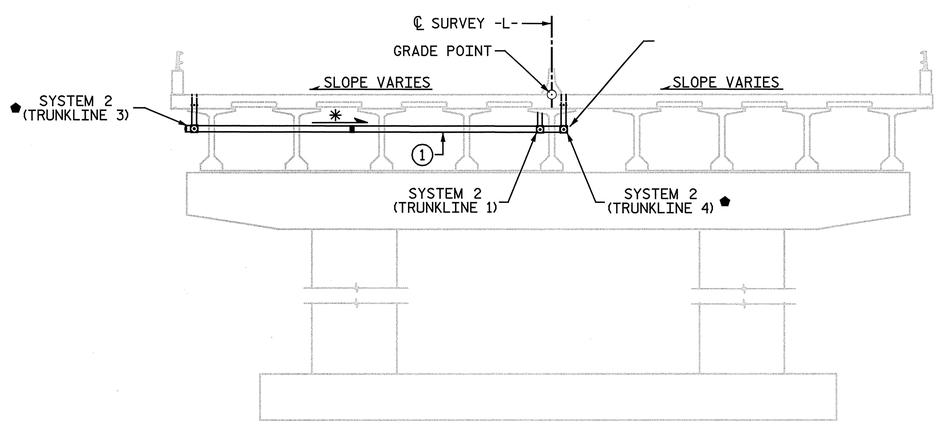

BENT 14
LOOKING DOWNSTATION

⬟ - DENOTES 10"Ø FRP COLLECTOR PIPE (TYP.)

(1) - 8"Ø FRP COLLECTOR PIPE TO BE PLACED BETWEEN GIRDERS AT BENT 14

✳ - 0.005 MINIMUM SLOPE

BENT ELEVATIONS SHOWING DRAINAGE DETAILS

PROJECT NO. R-3307
CARTERET COUNTY
STATION: 46+21.50 -L-

STATE OF NORTH CAROLINA
DEPARTMENT OF TRANSPORTATION
RALEIGH
SUPERSTRUCTURE

DRAINAGE SYSTEM
BENT ELEVATIONS

NORTH CAROLINA PROFESSIONAL SEAL 25911 ENGINEER DWAIN G. HATHAWAY 11-7-2013

NORTH CAROLINA PROFESSIONAL SEAL 033752 ENGINEER SETH A. DENNEY 11/07/13

THE LPA GROUP of North Carolina TRANSPORTATION CONSULTANTS

THE LPA GROUP of North Carolina
8000 Regency Parkway, Suite 600
Cary, North Carolina 27518
NC License No. : F-1084

REVISIONS						
NO.	BY:	DATE:	NO.	BY:	DATE:	
1			3			
2			4			

SHEET NO. S-85
TOTAL SHEETS 333

DRAWN BY : J. N. AUSTIN DATE : 11-8-11
CHECKED BY : D. G. HATHAWAY DATE : 12-19-11

DWG. 86 OF 282

11/7/2013
3:38:48 PM
User: jaustin
Filename: Y:\Projects\NCDOT\R-3307\Dwgs\Final\R-3307_086_SD_DRN_12.dgn

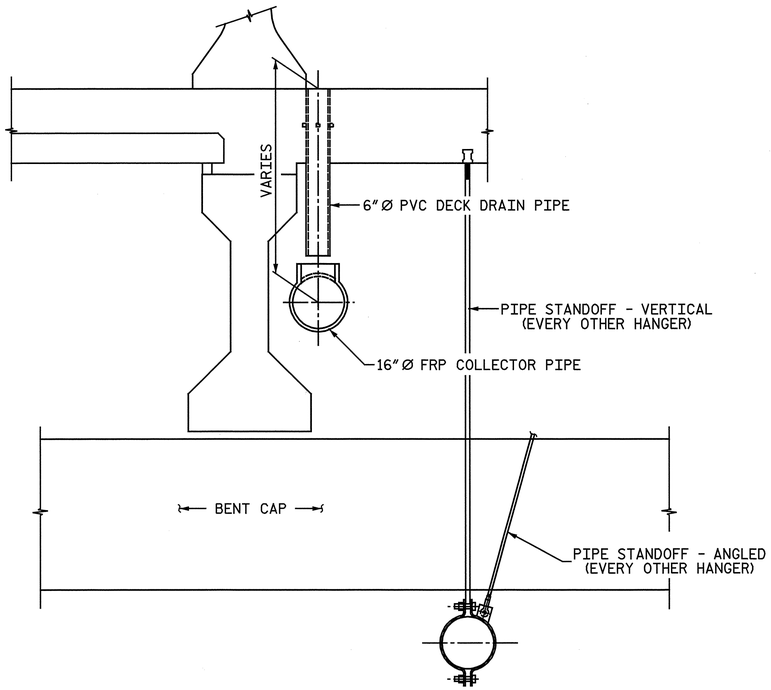

AT MEDIAN BARRIER WITH AASHTO TYPE IV GIRDER

(SPANS C-E SHOWN)

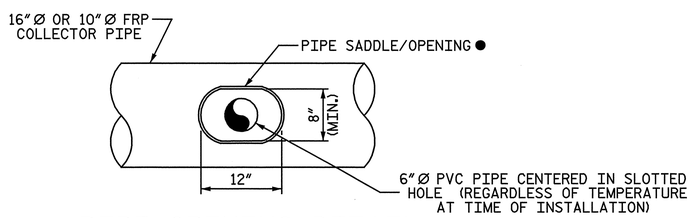

PIPE OPENING DETAIL

● FABRICATOR SHALL DETERMINE PIPE SADDLE/REINFORCEMENT FOR OPENING SIZE INDICATED. FABRICATOR SHALL SUBMIT SHOP DRAWINGS OF PIPE SADDLE/OPENING FOR REVIEW PRIOR TO BEGINNING FABRICATION.

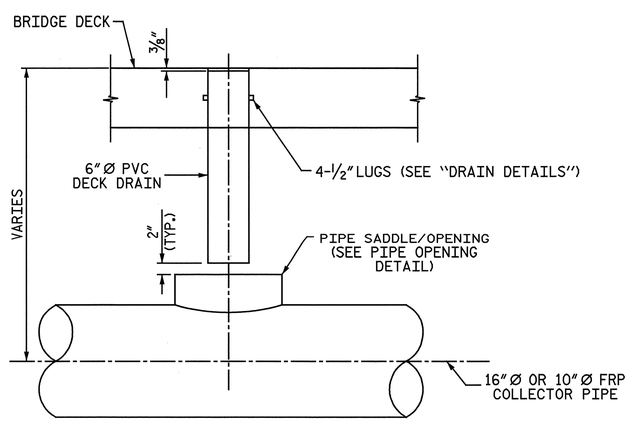

DRAIN OUTLET & PIPE CONNECTION

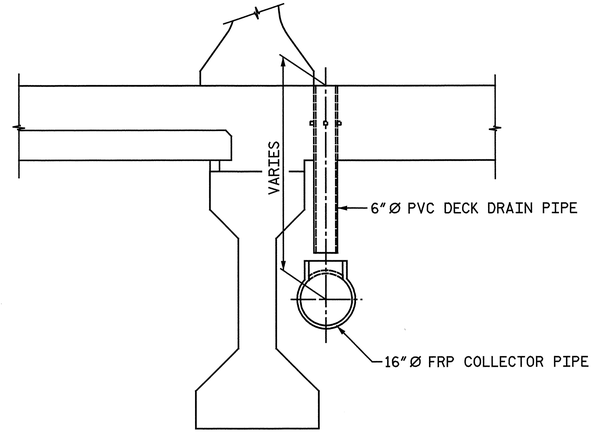

AT MEDIAN BARRIER WITH AASHTO TYPE IV GIRDER

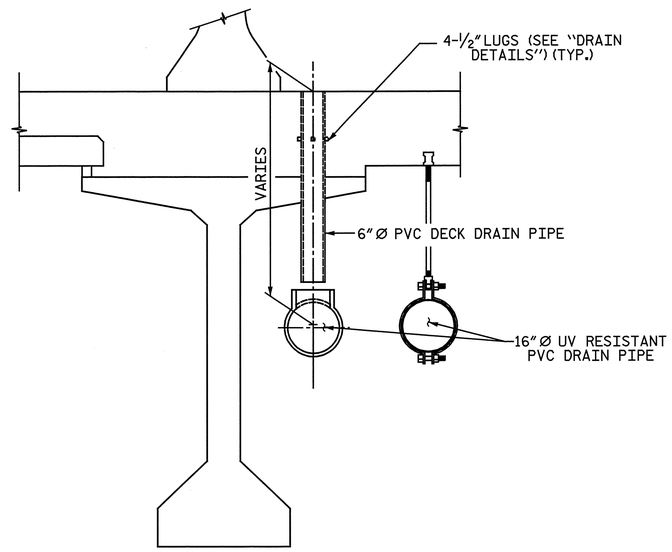

AT MEDIAN BARRIER WITH BULB TEE GIRDER

SHOWING TWO TRUNKLINES IN BAY 5

SECTIONS SHOWING DRAIN OUTLET DETAILS

NOTE:

FOR NOTES, SEE "ELEVATION OF DRAINAGE SYSTEM" SHEET 7 OF 7.

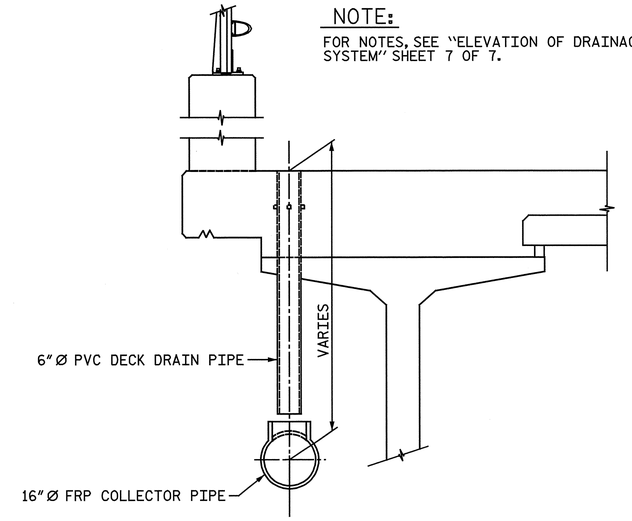

THRU OVERHANG WITH BULB TEE GIRDERS

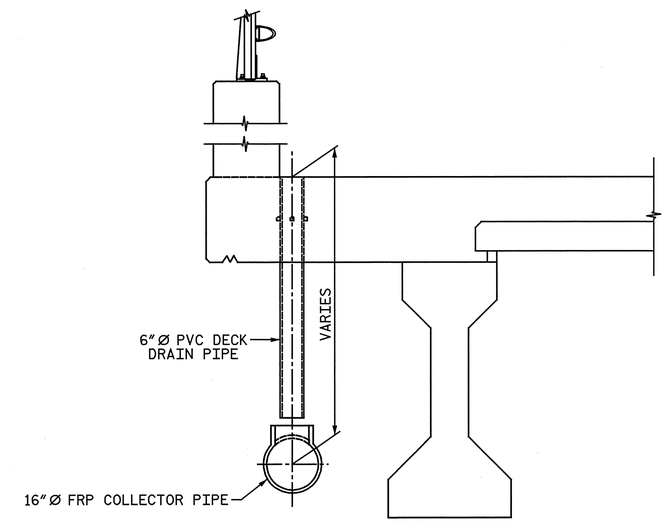

THRU OVERHANG WITH AASHTO TYPE IV GIRDER

PROJECT NO. R-3307

CARTERET COUNTY

STATION: 46+21.50 -L-

SHEET 1 OF 3

STATE OF NORTH CAROLINA
DEPARTMENT OF TRANSPORTATION
RALEIGH

SUPERSTRUCTURE

DRAINAGE SYSTEM DETAILS

NORTH CAROLINA PROFESSIONAL SEAL 25911 ENGINEER DWIN G. HATHAWAY 11-7-2013

NORTH CAROLINA PROFESSIONAL SEAL 033752 ENGINEER SETH A. DENNEY 11/07/13

THE LPA GROUP of North Carolina TRANSPORTATION CONSULTANTS

THE LPA GROUP of North Carolina
8000 Regency Parkway, Suite 600
Cary, North Carolina 27518
NC License No.: F-1084

REVISIONS							SHEET NO.
NO.	BY:	DATE:	NO.	BY:	DATE:		S-86
1			3				TOTAL SHEETS
2			4				333

DRAWN BY : J. N. AUSTIN DATE : 12-7-11

CHECKED BY : D. G. HATHAWAY DATE : 12-19-11

DWG. 87 OF 282

11/7/2013
3:58:49 PM
User: jaustin
Filename: Y:\Projects\NCDOT\R-3307\Dwgs\Final\R-3307_087_SD_DRN_13.dgn

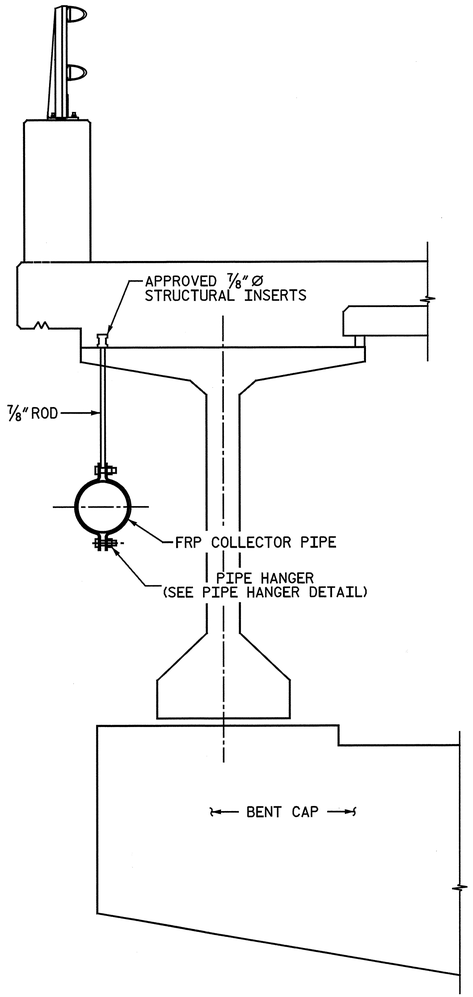

SINGLE TRUNKLINE IN OVERHANG

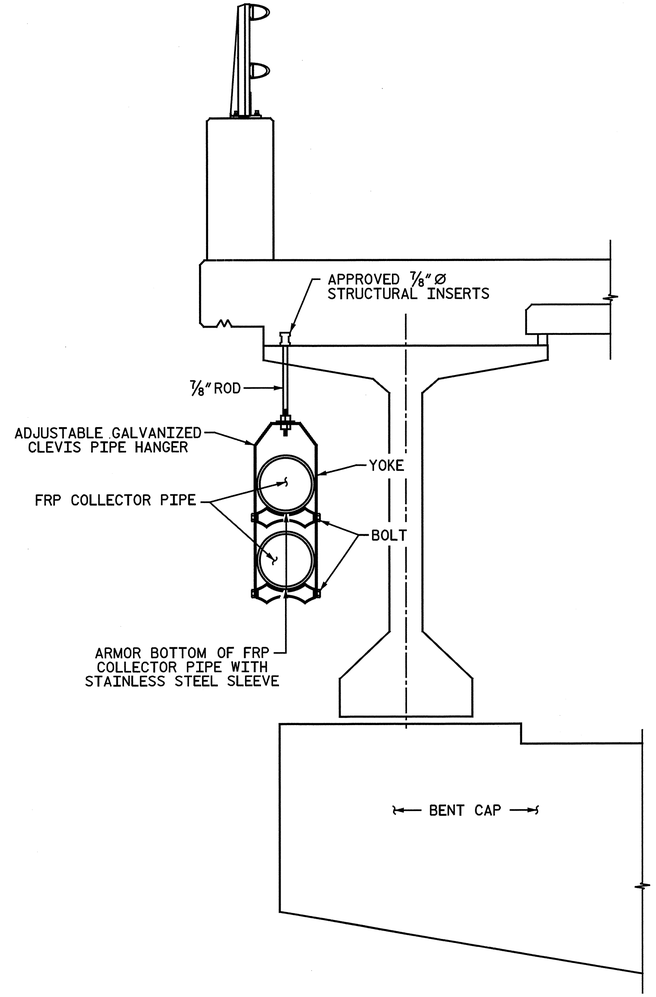

DOUBLE TRUNKLINE IN OVERHANG

ADJUSTABLE GALVANIZED CLEVIS PIPE HANGERS ONLY REQUIRED IN AREAS OF DOUBLE TRUNK LINES

SECTION SHOWING PIPE STANDOFF DETAILS

ALL COMPONENTS SHALL BE GALVANIZED AFTER FABRICATION.

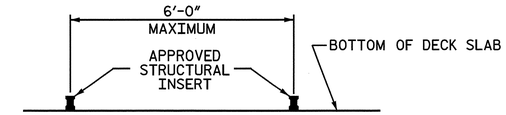

LOCATION OF INSERTS FOR HANGERS

EXACT SPACING MAY VARY SLIGHTLY TO ENSURE THAT INSERTS AVOID DECK DRAINS AND DRAINAGE ELEMENTS THAT PREVENT PROPER FIT UP OF HANGERS

STRUCTURE DRAINAGE SYSTEM DETAILS

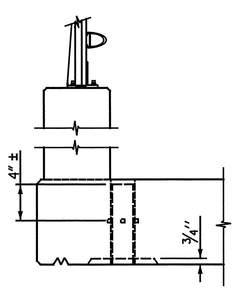

ELEVATION

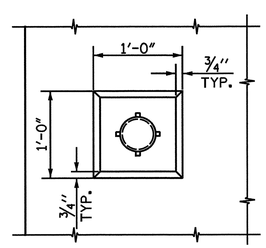

PLAN OF RECESS

DRAIN DETAILS

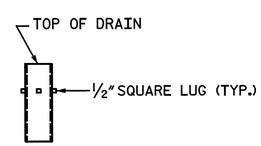

PIPE DETAIL

4 - 1/2" SQUARE LUGS TO BE GLUED TO THE PVC PLASTIC PIPE AT EQUAL SPACES AROUND THE PIPE DRAIN APPROXIMATELY 4" FROM THE TOP OF THE PIPE.

PROJECT NO. R-3307

CARTERET COUNTY

STATION: 46+21.50 -L-

SHEET 2 OF 3

STATE OF NORTH CAROLINA
DEPARTMENT OF TRANSPORTATION
RALEIGH

SUPERSTRUCTURE

DRAINAGE SYSTEM DETAILS

NORTH CAROLINA PROFESSIONAL SEAL 25911 ENGINEER DWAIN G. HATHAWAY 12-19-2014

NORTH CAROLINA PROFESSIONAL SEAL 033752 ENGINEER SETH A. DENNEY 12/09/14

THE LPA GROUP of North Carolina TRANSPORTATION CONSULTANTS

THE LPA GROUP of North Carolina
8000 Regency Parkway, Suite 600
Cary, North Carolina 27518
NC License No.: F-1084

REVISIONS						SHEET NO.
NO.	BY:	DATE:	NO.	BY:	DATE:	S-87
1			3			TOTAL SHEETS
2			4			333

DRAWN BY : J. N. AUSTIN DATE : 12-7-11
CHECKED BY : D. G. HATHAWAY DATE : 12-19-11

DWG. 88 OF 282

1/9/2014
11:24:11 AM
User: austin
Filename: Y:\Projects\NCDOT\R-3307\Dwgs\Final\R-3307_088_SD_DRN_14.dgn

NOTE:

FOR NOTES, SEE "ELEVATION OF DRAINAGE SYSTEM" SHEET 7 OF 7.

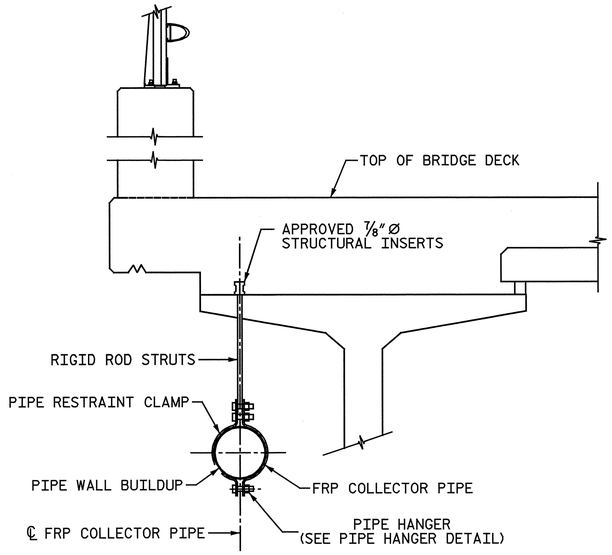

SECTION A-A

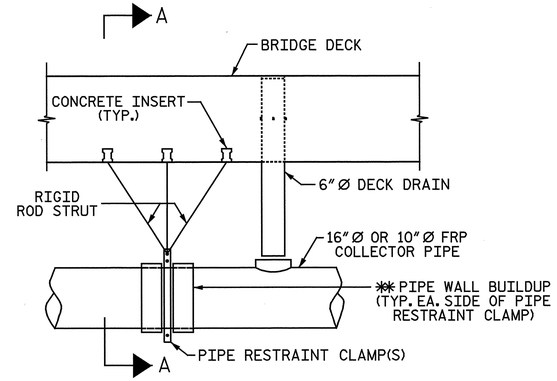

ELEVATION VIEW

LONGITUDINAL RESTRAINT DETAIL

STANDOFF NOT REQUIRED AT LONGITUDINAL RESTRAINT

✱✱ CONTRACTOR SHALL ENSURE PIPE WALL BUILDUP IS SUFFICIENT TO ENGAGE PIPE RESTRAINT CLAMP AT LONGITUDINAL RESTRAINT LOCATIONS.

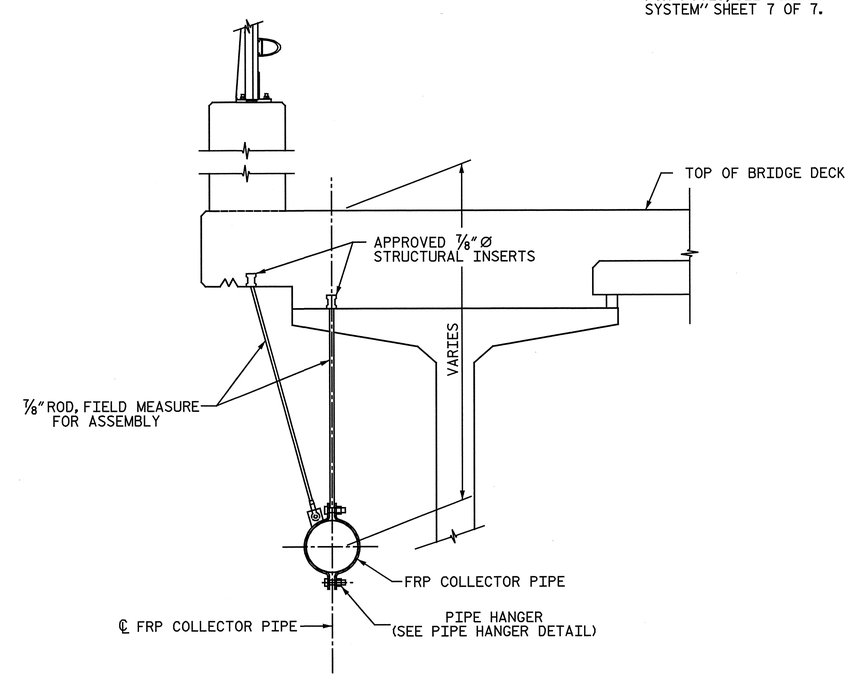

PIPE STANDOFF & HANGER

ALL COMPONENTS SHALL BE GALVANIZED AFTER FABRICATION.

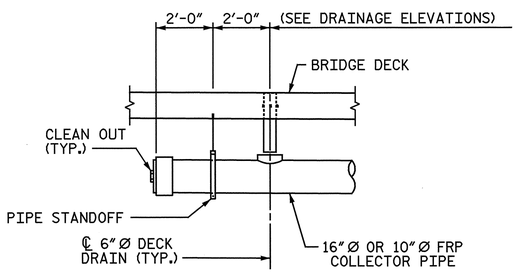

TYPE I

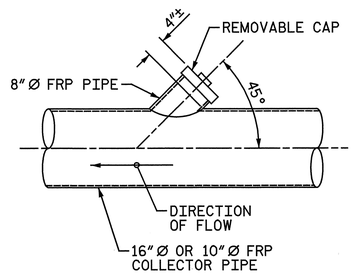

CLEANOUT DETAIL

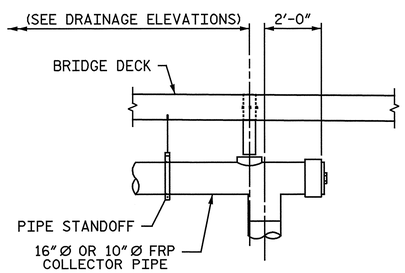

TYPE II

SYSTEM ENDS DETAIL

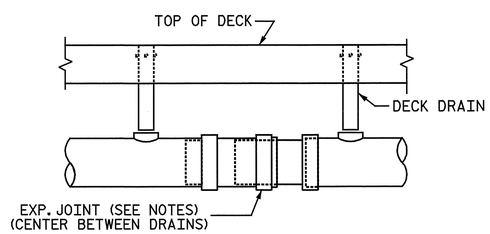

EXPANSION COUPLER

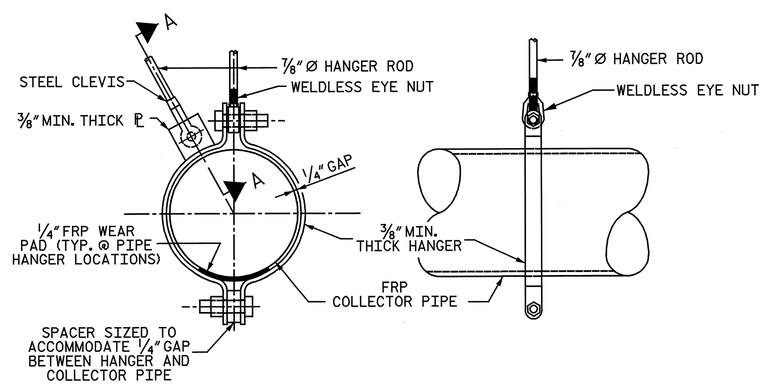

PIPE HANGER DETAIL

ALL COMPONENTS SHALL BE GALVANIZED AFTER FABRICATION

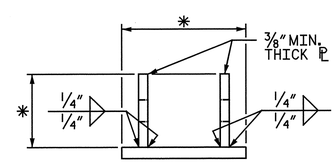

SECTION A-A

(STEEL CLEVIS & 7/8"Ø HANGER ROD NOT SHOWN FOR CLARITY)

✱ DIMENSIONS TO BE DETERMINED BY MANUFACTURER.

PROJECT NO. R-3307

CARTERET COUNTY

STATION: 46+21.50 -L-

SHEET 3 OF 3

STATE OF NORTH CAROLINA
DEPARTMENT OF TRANSPORTATION
RALEIGH

SUPERSTRUCTURE

DRAINAGE SYSTEM DETAILS

NORTH CAROLINA PROFESSIONAL SEAL 25911 ENGINEER DWAIN G. HATHAWAY 11-7-2013

NORTH CAROLINA PROFESSIONAL SEAL 033752 ENGINEER SETH A. DENNEY 11/06/13

THE LPA GROUP of North Carolina TRANSPORTATION CONSULTANTS

THE LPA GROUP of North Carolina
8000 Regency Parkway, Suite 600
Cary, North Carolina 27518
NC License No.: F-1084

REVISIONS									
NO.	BY:	DATE:	NO.	BY:	DATE:	NO.	BY:	DATE:	
1			3						
2			4						

SHEET NO. S-87A

TOTAL SHEETS 333

DWG. 88A OF 282

DRAWN BY: J. N. AUSTIN DATE: 12-7-11
CHECKED BY: D. G. HATHAWAY DATE: 12-19-11

11/7/2013
3:38:50 PM
User: jaustin
Filename: Y:\Projects\NCDOT\R-3307\Dwgs\Final\R-3307_088A_SD_DRN_15.dgn

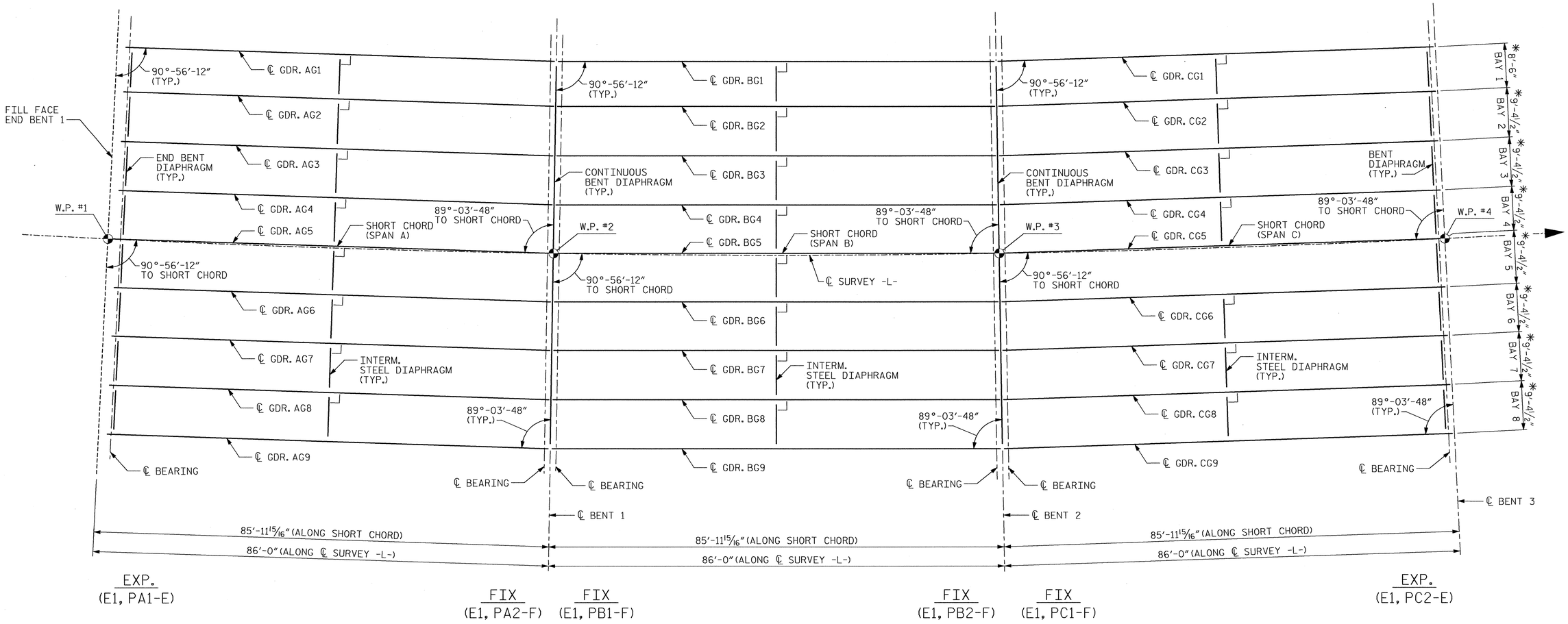

FRAMING PLAN - UNIT 1

✳ NORMAL TO SHORT CHORD (TYPICAL EACH SPAN)

NOTE: NO INTERMEDIATE DIAPHRAGM REQUIRED IN BAY 5 AT DRAINAGE LOCATIONS.

DIM. "A"					
SPAN A		SPAN B		SPAN C	
AG1	41'-4 1/16"	BG1	41'-11 13/16"	CG1	41'-11 13/16"
AG2	41'-5 11/16"	BG2	42'-1 7/16"	CG2	42'-1 7/16"
AG3	41'-7 9/16"	BG3	42'-3 5/16"	CG3	42'-3 5/16"
AG4	41'-9 3/8"	BG4	42'-5 1/8"	CG4	42'-5 1/8"
AG5	41'-11 1/4"	BG5	42'-7"	CG5	42'-7"
AG6	42'-1 1/16"	BG6	42'-8 13/16"	CG6	42'-8 13/16"
AG7	42'-2 7/8"	BG7	42'-10 5/8"	CG7	42'-10 5/8"
AG8	42'-4 3/4"	BG8	43'-0 1/2"	CG8	43'-0 1/2"
AG9	42'-6 9/16"	BG9	43'-2 5/16"	CG9	43'-2 5/16"

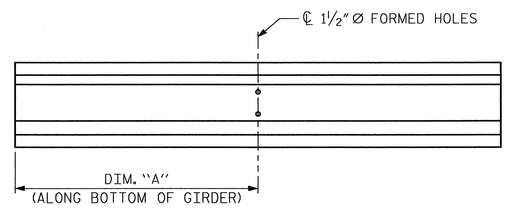

GIRDER ELEVATION

PROJECT NO. R-3307
CARTERET COUNTY
STATION: 46+21.50 -L-

SHEET 1 OF 15

STATE OF NORTH CAROLINA
DEPARTMENT OF TRANSPORTATION
RALEIGH

SUPERSTRUCTURE
FRAMING PLAN
UNIT 1

SPANS A THRU C

NORTH CAROLINA PROFESSIONAL SEAL 12323 ENGINEER MORRIS ISRAELNAIM 3/30/2012

NORTH CAROLINA PROFESSIONAL SEAL 027799 ENGINEER ALLYSON K. ORR 3/30/2012

MI ENGINEERING
1011 SHAUB DRIVE, SUITE 100
RALEIGH, NC 27606
(919) 851-6606
FIRM PE NUMBER : P-0671

REVISIONS								SHEET NO.
NO.	BY:	DATE:	NO.	BY:	DATE:			S-88
1			3					TOTAL SHEETS
2			4					333

DRAWN BY : J.S. ISRAELNAIM DATE : 7-11
CHECKED BY : A.K. ORR DATE : 10-11

DWG. 89 OF 282

3/26/2012
2:07:55 PM
User: blanning
Filename: P:\NC Projects\MI0005 - Gallants Channel\R-3307\Structures\R-3307_089_SD_FP1.dgn

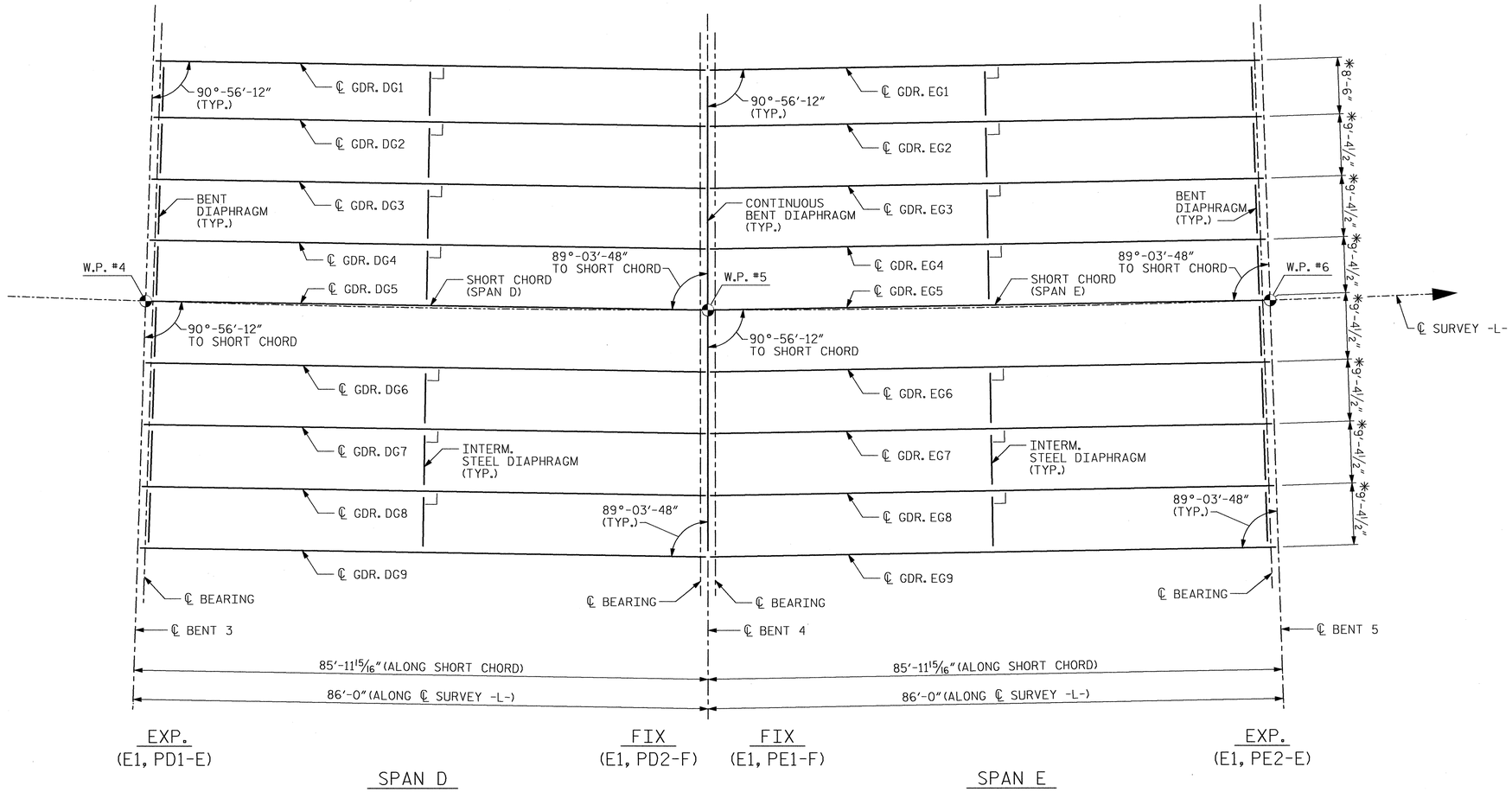

FRAMING PLAN - UNIT 2

* NORMAL TO SHORT CHORD (TYPICAL EACH SPAN)

NOTE: NO INTERMEDIATE DIAPHRAGM REQUIRED IN BAY 5 AT DRAINAGE LOCATIONS.

DIM. "A"			
SPAN D		SPAN E	
DG1	41'-11 13/16"	EG1	41'-11 13/16"
DG2	42'-1 7/16"	EG2	42'-1 7/16"
DG3	42'-3 5/16"	EG3	42'-3 5/16"
DG4	42'-5 1/8"	EG4	42'-5 1/8"
DG5	42'-7"	EG5	42'-7"
DG6	42'-8 13/16"	EG6	42'-8 13/16"
DG7	42'-10 5/8"	EG7	42'-10 5/8"
DG8	43'-0 1/2"	EG8	43'-0 1/2"
DG9	43'-2 5/16"	EG9	43'-2 5/16"

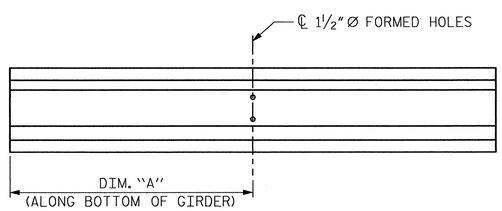

GIRDER ELEVATION

PROJECT NO. R-3307

CARTERET COUNTY

STATION: 46+21.50 -L-

SHEET 2 OF 15

STATE OF NORTH CAROLINA
DEPARTMENT OF TRANSPORTATION
RALEIGH

SUPERSTRUCTURE

FRAMING PLAN
UNIT 2

SPANS D & E

NORTH CAROLINA PROFESSIONAL SEAL 12323 ENGINEER MORRIS ISRAELNAIM
3/30/2012

NORTH CAROLINA PROFESSIONAL SEAL 027799 ENGINEER ALLYSON K. ORR
3/30/2012

MI ENGINEERING
1011 SHAUB DRIVE, SUITE 100
RALEIGH, NC 27606
(919) 851-6606
FIRM PE NUMBER : P-0671

REVISIONS						SHEET NO.
NO.	BY:	DATE:	NO.	BY:	DATE:	S-89
1			3			TOTAL SHEETS
2			4			333

DRAWN BY : J.S. ISRAELNAIM DATE : 7-11
CHECKED BY : A.K. ORR DATE : 10-11

DWG. 90 OF 282

3/26/2012
2:08:14 PM
User: planning
Filename: P:\NC Projects\MI0005 - Gallants Channel\R-3307\Structures\R-3307_090_SD_FP2.dgn

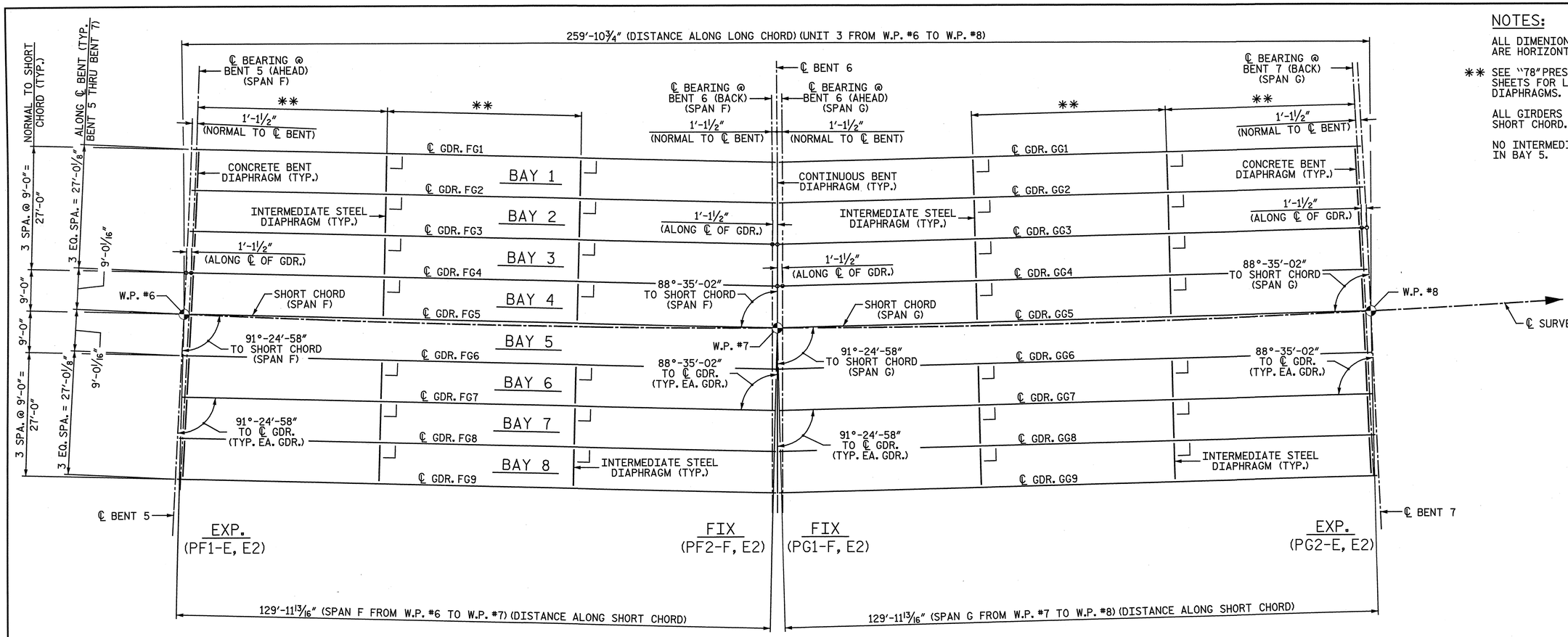

FRAMING PLAN - UNIT 3

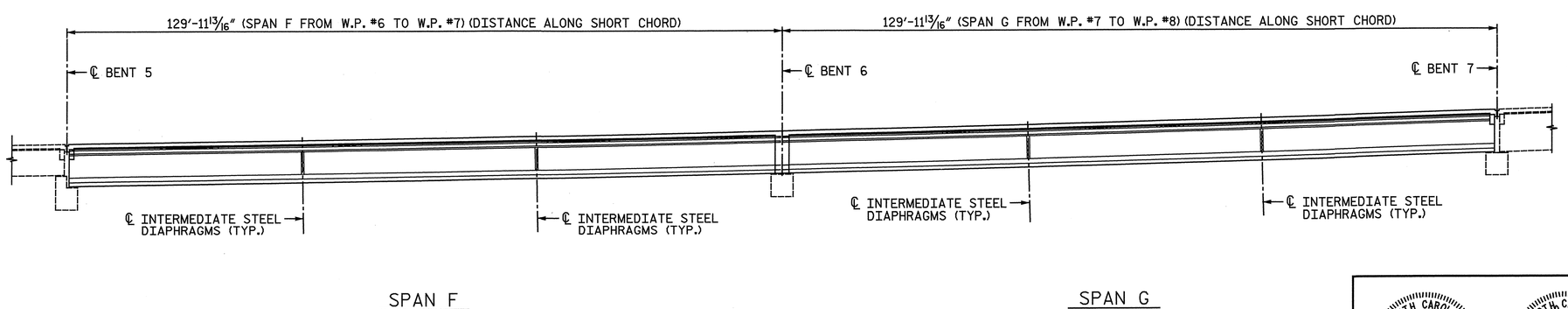

FRAMING PROFILE

NOTES:

ALL DIMENIONS GIVEN ON THE FRAMING PLAN ARE HORIZONTAL UNLESS OTHERWISE NOTED.

** SEE "78" PRESTRESSED CONCRETE BULB TEE" SHEETS FOR LOCATION OF INTERMEDIATE DIAPHRAGMS.

ALL GIRDERS ARE PLACED PARALLEL TO SPAN SHORT CHORD.

NO INTERMEDIATE DIAPHRAGMS ARE REQUIRED IN BAY 5.

PROJECT NO. R-3307
CARTERET COUNTY
STATION: 46+21.50 -L-

SHEET 3 OF 15

STATE OF NORTH CAROLINA
DEPARTMENT OF TRANSPORTATION
RALEIGH

SUPERSTRUCTURE

FRAMING PLAN
UNIT 3

SPANS F & G

NORTH CAROLINA PROFESSIONAL SEAL 25911 ENGINEER DWAIN C. HATHAWAY 4-3-2012

NORTH CAROLINA PROFESSIONAL SEAL 033752 ENGINEER SETH A. DENNEY 4/4/12

THE LPA GROUP of North Carolina TRANSPORTATION CONSULTANTS

THE LPA GROUP of North Carolina
8000 Regency Parkway, Suite 600
Cary, North Carolina 27518
NC License No.: F-1084

REVISIONS							
NO.	BY:	DATE:	NO.	BY:	DATE:	SHEET NO.	
1			3			S-90	
2			4			TOTAL SHEETS	
						333	

DRAWN BY : M. D. MAYHEW DATE : 6-28-11
CHECKED BY : R. F. DeCOLA DATE : 10-31-11

DWG. 91 OF 282

4/3/2012 10:03:[illegible] AM
User: jaustin
Filename: Y:\Projects\NCDOT\R-3307\Dwgs\Final\R-3307_091_SD_FP1.dgn

NOTES:

ALL DIMENIONS GIVEN ON THE FRAMING PLAN ARE HORIZONTAL UNLESS OTHERWISE NOTED.

** SEE "78" PRESTRESSED CONCRETE BULB TEE" SHEETS FOR LOCATION OF INTERMEDIATE DIAPHRAGMS.

ALL GIRDERS ARE PLACED PARALLEL TO SPAN SHORT CHORD.

NO INTERMEDIATE DIAPHRAGMS ARE REQUIRED IN BAY 5.

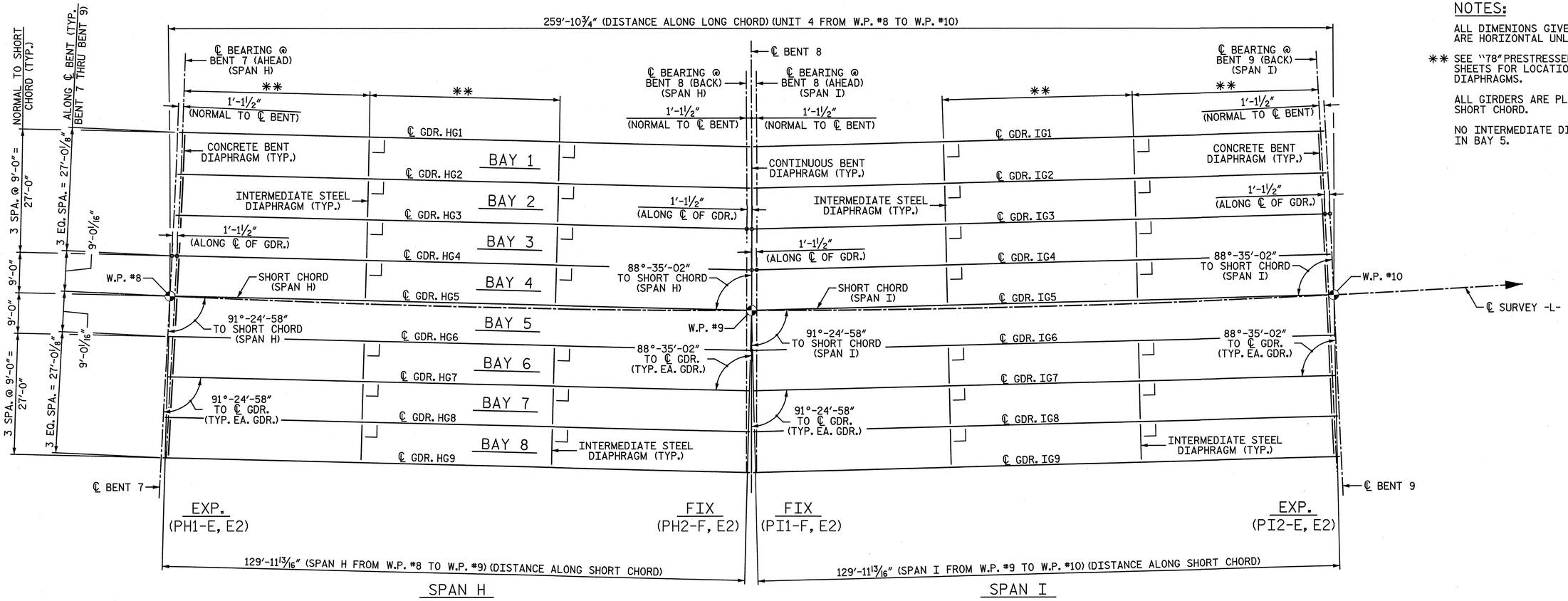

FRAMING PLAN - UNIT 4

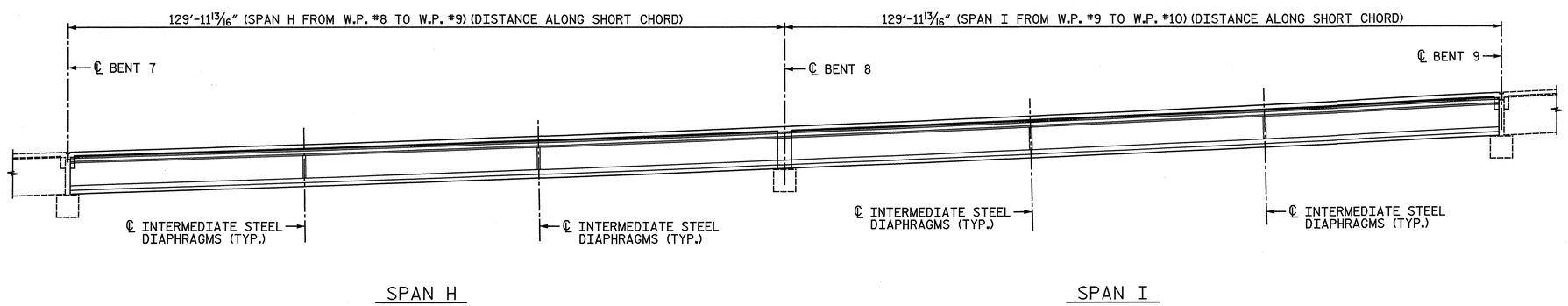

FRAMING PROFILE

PROJECT NO. R-3307

CARTERET COUNTY

STATION: 46+21.50 -L-

SHEET 4 OF 15

STATE OF NORTH CAROLINA
DEPARTMENT OF TRANSPORTATION
RALEIGH

SUPERSTRUCTURE

FRAMING PLAN
UNIT 4

SPANS H & I

NORTH CAROLINA PROFESSIONAL SEAL 25911 ENGINEER DWIN G. HATHAWAY 4-3-2012

NORTH CAROLINA PROFESSIONAL SEAL 033752 ENGINEER SETH A. DENNEY 4/04/12

THE LPA GROUP of North Carolina TRANSPORTATION CONSULTANTS

THE LPA GROUP of North Carolina
8000 Regency Parkway, Suite 600
Cary, North Carolina 27518
NC License No.: F-1084

REVISIONS								SHEET NO.
NO.	BY:	DATE:	NO.	BY:	DATE:			S-91
1			3					TOTAL SHEETS
2			4					333

DRAWN BY : M. D. MAYHEW DATE : 6-28-11
CHECKED BY : R. F. DeCOLA DATE : 10-31-11

DWG. 92 OF 282

4/2/2012
12:41:2... PM
User: jaustin
Filename: Y:\Projects\NCDOT\R-3307\Dwgs\Final\R-3307_092_SD_FP2.dgn

NOTES:

ALL DIMENIONS GIVEN ON THE FRAMING PLAN ARE HORIZONTAL UNLESS OTHERWISE NOTED.

** SEE "78" PRESTRESSED CONCRETE BULB TEE" SHEETS FOR LOCATION OF INTERMEDIATE DIAPHRAGMS.

ALL GIRDERS ARE PLACED PARALLEL TO SPAN SHORT CHORD (SPAN J) AND ℄ SURVEY -L- (SPAN K) AS SHOWN.

NO INTERMEDIATE DIAPHRAGMS ARE REQUIRED IN BAY 5.

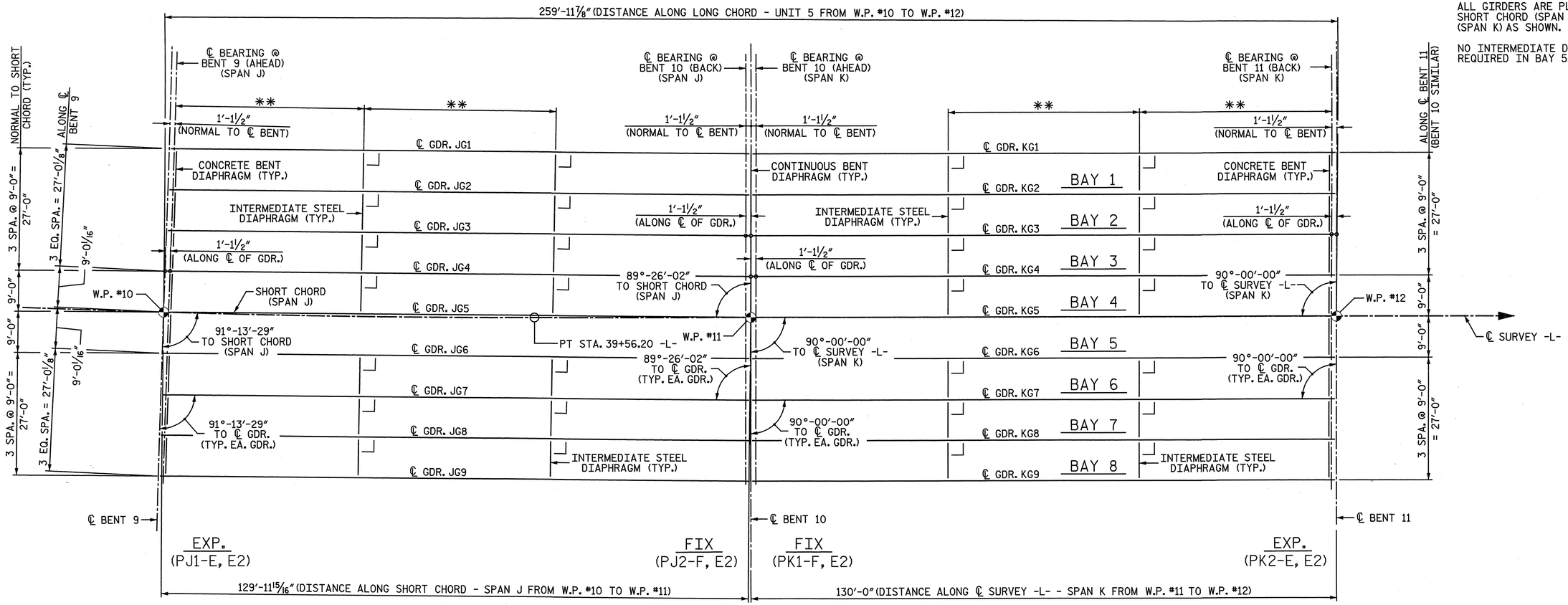

FRAMING PLAN - UNIT 5

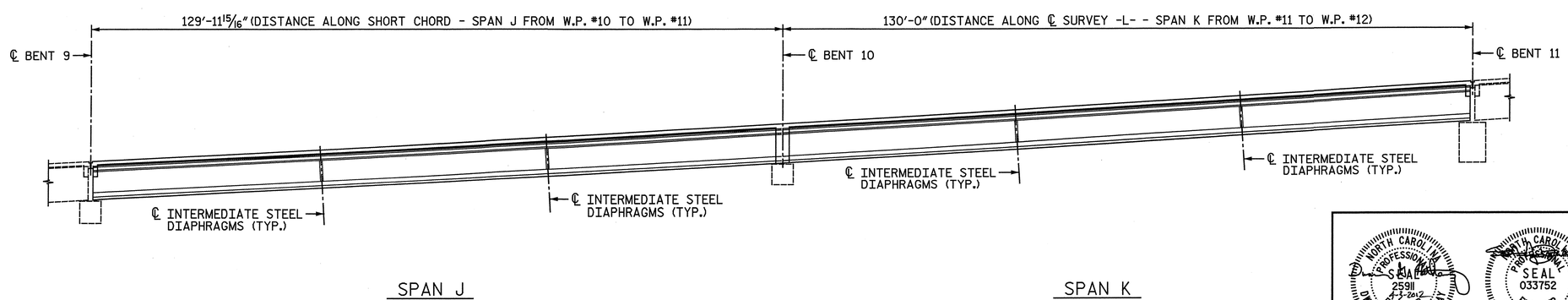

FRAMING PROFILE

PROJECT NO. R-3307

CARTERET COUNTY

STATION: 46+21.50 -L-

SHEET 5 OF 15

STATE OF NORTH CAROLINA
DEPARTMENT OF TRANSPORTATION
RALEIGH

SUPERSTRUCTURE

FRAMING PLAN
UNIT 5

SPANS J & K

REVISIONS								SHEET NO.
NO.	BY:	DATE:	NO.	BY:	DATE:			S-92
1			3					TOTAL SHEETS
2			4					333

THE LPA GROUP of North Carolina TRANSPORTATION CONSULTANTS

THE LPA GROUP of North Carolina
8000 Regency Parkway, Suite 600
Cary, North Carolina 27518
NC License No.: F-1084

NORTH CAROLINA PROFESSIONAL SEAL 25911 ENGINEER DWAIN G. HATHAWAY 7-3-2012

NORTH CAROLINA PROFESSIONAL SEAL 033752 ENGINEER SETH A. DENNIS

DRAWN BY: M. D. MAYHEW DATE: 6-29-11
CHECKED BY: R. F. DeCOLA DATE: 10-31-11

DWG. 93 OF 282

4/2/2011 12:41:25 PM
User: jaustin
Filename: Y:\Projects\NCDOT\R-3307\Dwgs\Final\R-3307_093_SD_FP3.dgn

NOTES:

ALL DIMENIONS GIVEN ON THE FRAMING PLAN ARE HORIZONTAL UNLESS OTHERWISE NOTED.

** SEE "78" PRESTRESSED CONCRETE BULB TEE" SHEETS FOR LOCATION OF INTERMEDIATE DIAPHRAGMS.

ALL GIRDERS ARE PLACED PARALLEL TO ℄ SURVEY -L-.

NO INTERMEDIATE DIAPHRAGMS ARE REQUIRED IN BAY 5.

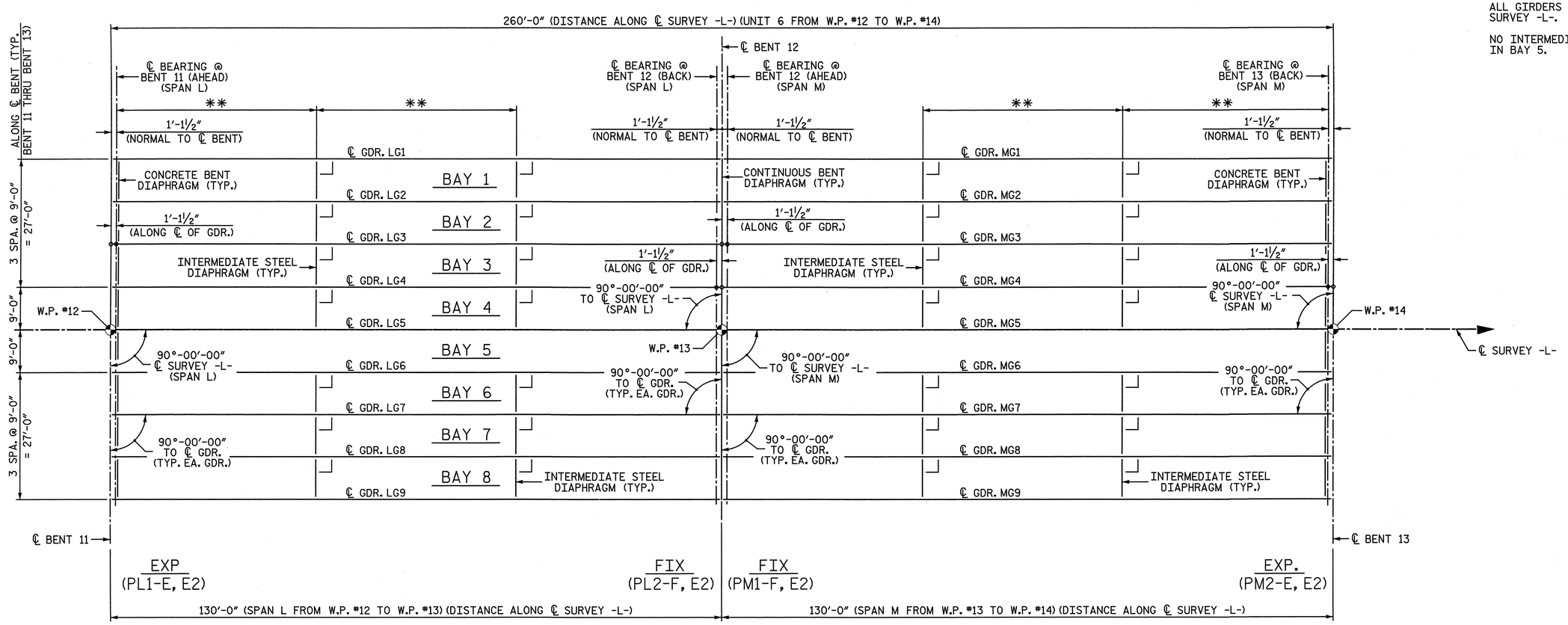

FRAMING PLAN - UNIT 6

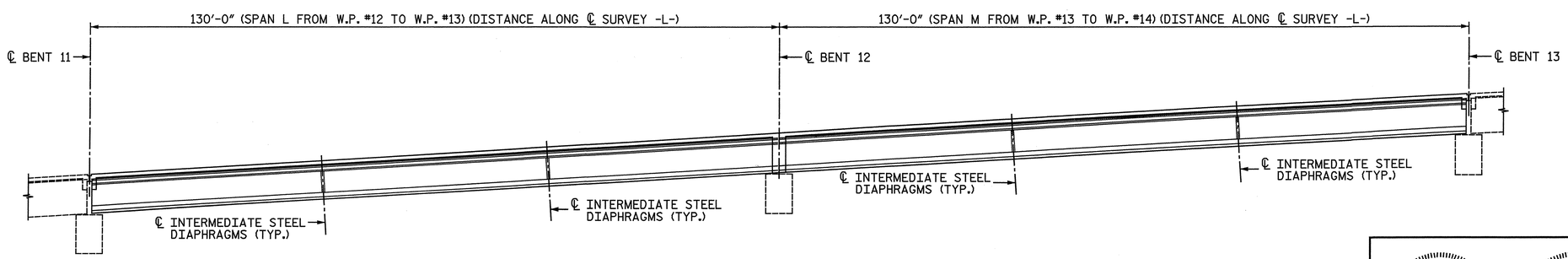

FRAMING PROFILE

PROJECT NO. R-3307

CARTERET COUNTY

STATION: 46+21.50 -L-

SHEET 6 OF 15

STATE OF NORTH CAROLINA
DEPARTMENT OF TRANSPORTATION
RALEIGH

SUPERSTRUCTURE

FRAMING PLAN
UNIT 6

SPANS L & M

NORTH CAROLINA PROFESSIONAL SEAL 25911 ENGINEER DARIN G. HATHAWAY 4-3-2012

NORTH CAROLINA PROFESSIONAL SEAL 033752 ENGINEER SETH A. DENNEY

THE LPA GROUP of North Carolina TRANSPORTATION CONSULTANTS

THE LPA GROUP of North Carolina
8000 Regency Parkway, Suite 600
Cary, North Carolina 27518
NC License No.: F-1084

REVISIONS						SHEET NO.
NO.	BY:	DATE:	NO.	BY:	DATE:	S-93
1			3			TOTAL SHEETS
2			4			333

DRAWN BY : M. D. MAYHEW DATE : 6-30-11
CHECKED BY : R. F. DeCOLA DATE : 11-17-11

DWG. 94 OF 282

4/2/2012
12:41:2.. PM
User: jaustin
Filename: Y:\Projects\NCDOT\R-3307\Dwgs\Final\R-3307_094_SD_FP4.dgn

NOTES:

ALL DIMENIONS GIVEN ON THE FRAMING PLAN ARE HORIZONTAL UNLESS OTHERWISE NOTED.

** SEE "78" PRESTRESSED CONCRETE BULB TEE" SHEETS FOR LOCATION OF INTERMEDIATE DIAPHRAGMS.

ALL GIRDERS ARE PLACED PARALLEL TO ℄ SURVEY -L-.

NO INTERMEDIATE DIAPHRAGMS ARE REQUIRED IN BAY 5 IN SPAN N OR BAY 4 IN SPAN O.

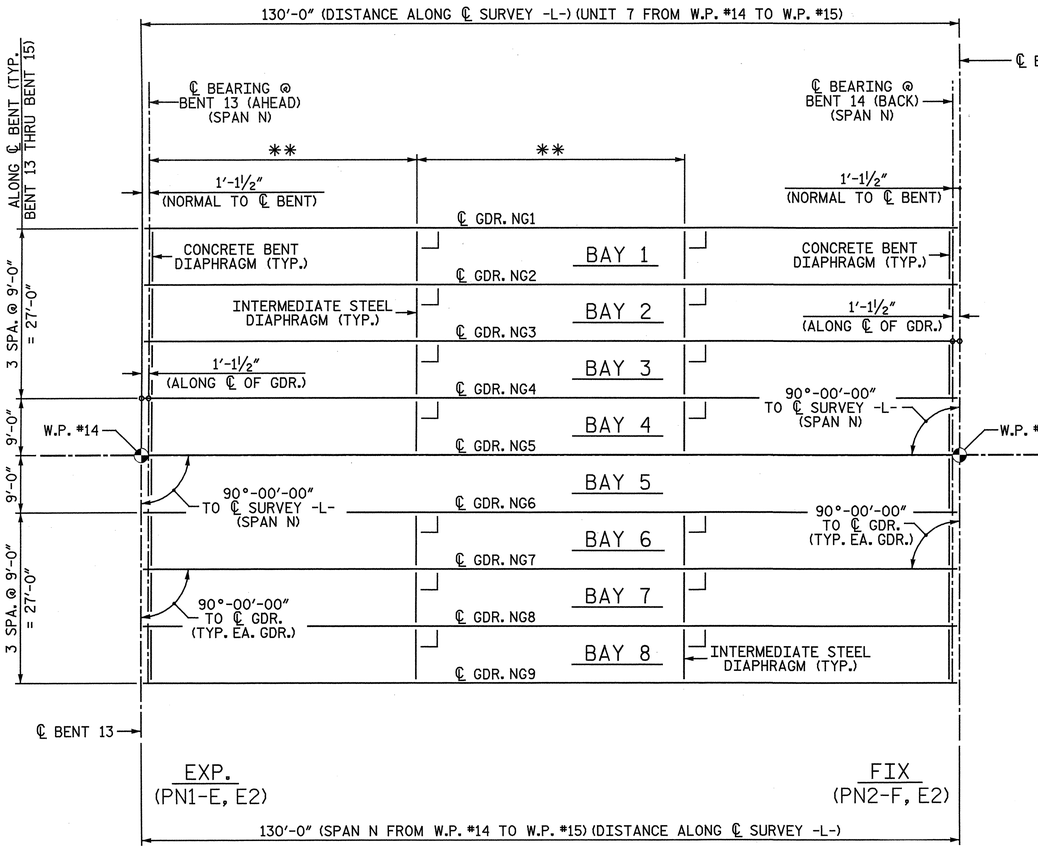

FRAMING PLAN - UNIT 7

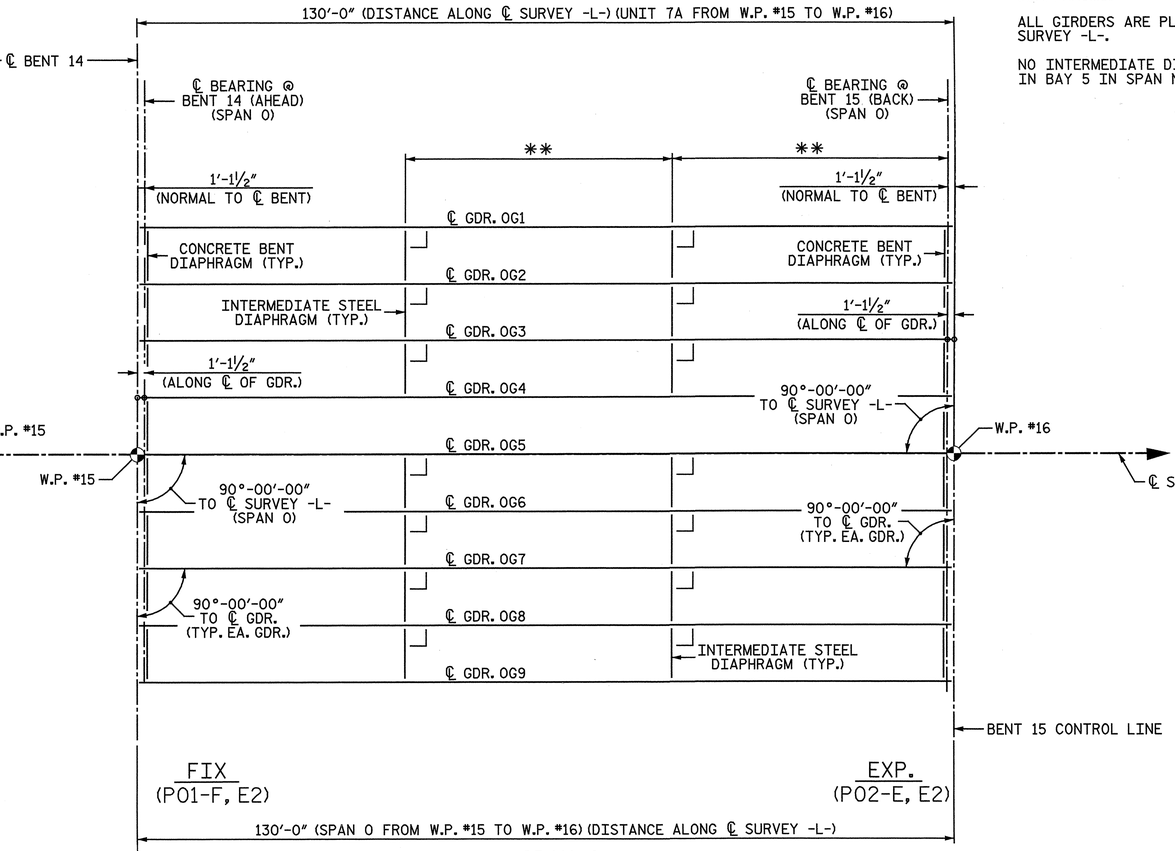

FRAMING PLAN - UNIT 7A

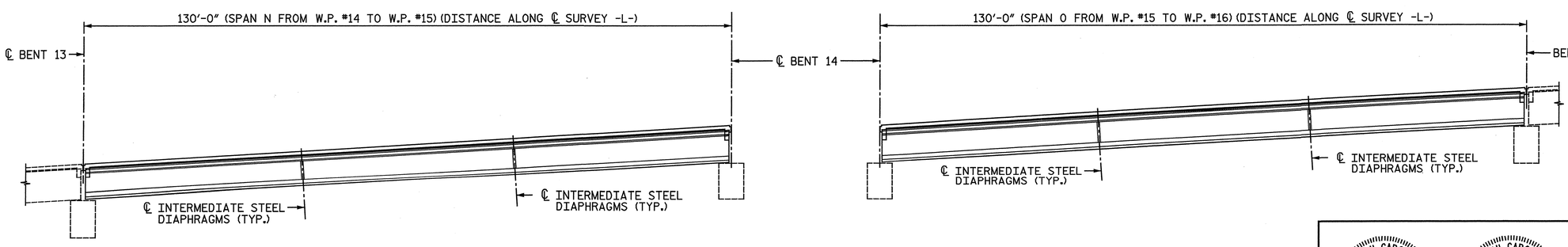

FRAMING PROFILE

PROJECT NO. R-3307

CARTERET COUNTY

STATION: 46+21.50 -L-

SHEET 7 OF 15

STATE OF NORTH CAROLINA
DEPARTMENT OF TRANSPORTATION
RALEIGH

SUPERSTRUCTURE

FRAMING PLAN
UNITS 7 & 7A

SPANS N & O

THE LPA GROUP of North Carolina TRANSPORTATION CONSULTANTS

THE LPA GROUP of North Carolina
8000 Regency Parkway, Suite 600
Cary, North Carolina 27518
NC License No.: F-1084

REVISIONS						SHEET NO.
NO.	BY:	DATE:	NO.	BY:	DATE:	S-94
1			3			TOTAL SHEETS
2			4			333

DRAWN BY : M. D. MAYHEW DATE : 6-30-11
CHECKED BY : R. F. DeCOLA DATE : 11-17-11

DWG. 95 OF 282

4/2/2012
12:41:2 PM
User: jaustin
Filename: Y:\Projects\NCDOT\R-3307\Dwgs\Final\R-3307_095_SD_FP5.dgn

NOTES:

ALL DIMENIONS GIVEN ON THE FRAMING PLAN ARE HORIZONTAL UNLESS OTHERWISE NOTED.

ALL GIRDERS ARE PLACED PARALLEL TO ℄ SURVEY -L-.

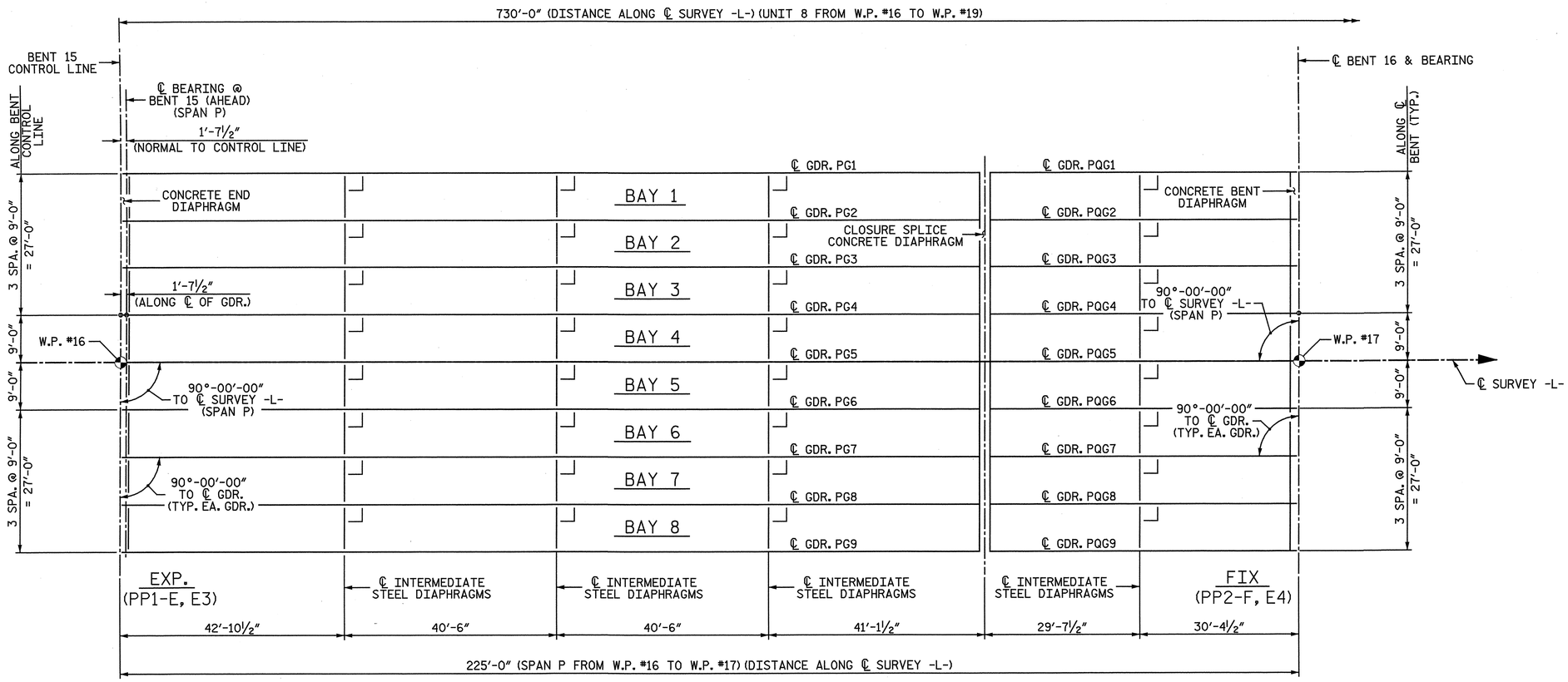

SPAN P

FRAMING PLAN - UNIT 8

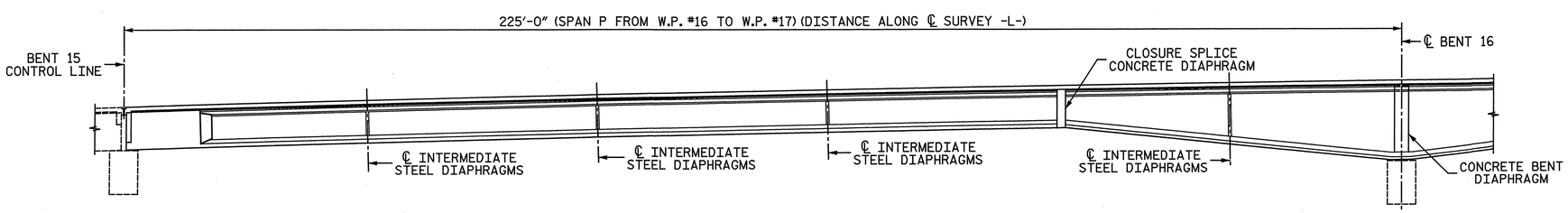

SPAN P

FRAMING PROFILE

PROJECT NO. R-3307

CARTERET COUNTY

STATION: 46+21.50 -L-

SHEET 8 OF 15

STATE OF NORTH CAROLINA
DEPARTMENT OF TRANSPORTATION
RALEIGH

SUPERSTRUCTURE

FRAMING PLAN
UNIT 8

SPAN P

NORTH CAROLINA PROFESSIONAL SEAL 25911 ENGINEER DWAIN G. HATHAWAY 7-13-2012

NORTH CAROLINA PROFESSIONAL SEAL 033752 ENGINEER SETH A. DENNEY 07/03/12

THE LPA GROUP of North Carolina TRANSPORTATION CONSULTANTS

THE LPA GROUP of North Carolina
8000 Regency Parkway, Suite 600
Cary, North Carolina 27518
NC License No.: F-1084

REVISIONS						SHEET NO.
NO.	BY:	DATE:	NO.	BY:	DATE:	S-95
1			3			TOTAL SHEETS
2			4			333

DRAWN BY : M. D. MAYHEW DATE : 7-11-11
CHECKED BY : S. A. DENNEY DATE : 9-12-11

DWG. 96 OF 282

4/2/2^^2
12:41:2, PM
User: jaustin
Filename: Y:\Projects\NCDOT\R-3307\Dwgs\Final\R-3307_096_SD_FP6.dgn

NOTES:

ALL DIMENIONS GIVEN ON THE FRAMING PLAN ARE HORIZONTAL UNLESS OTHERWISE NOTED.

ALL GIRDERS ARE PLACED PARALLEL TO ℄ SURVEY -L-.

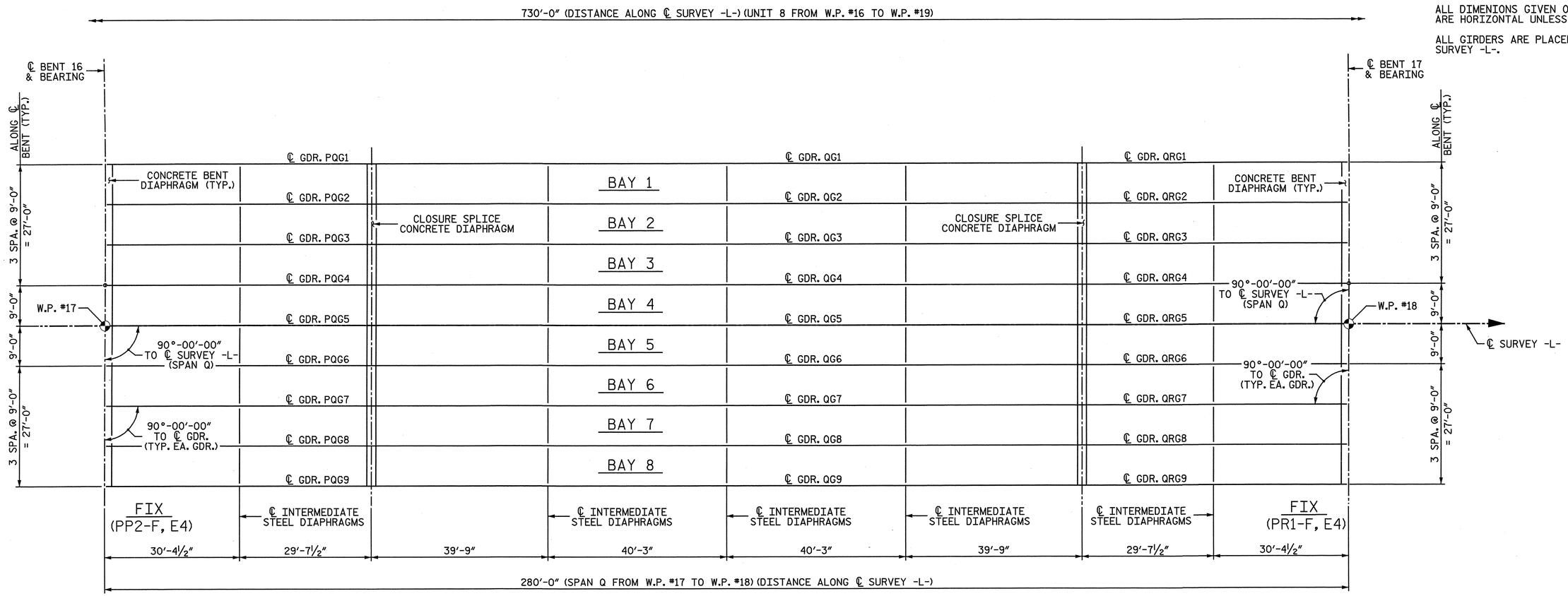

SPAN Q

FRAMING PLAN - UNIT 8

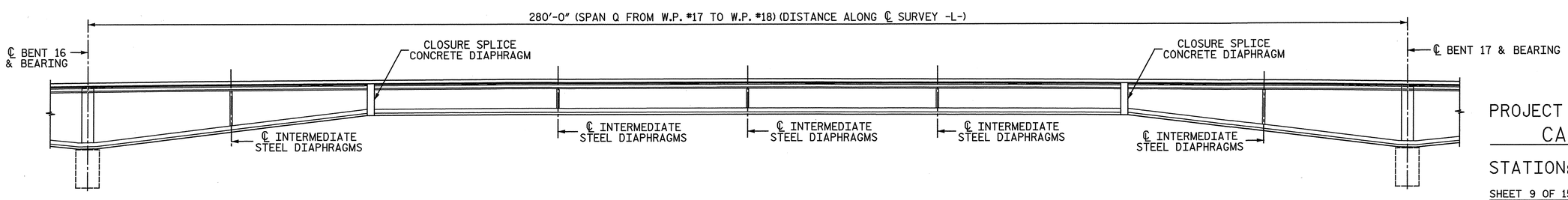

SPAN Q

FRAMING PROFILE

PROJECT NO. R-3307

CARTERET COUNTY

STATION: 46+21.50 -L-

SHEET 9 OF 15

STATE OF NORTH CAROLINA
DEPARTMENT OF TRANSPORTATION
RALEIGH

SUPERSTRUCTURE

FRAMING PLAN
UNIT 8

SPAN Q

NORTH CAROLINA PROFESSIONAL SEAL 25911 ENGINEER DWAIN G. HATHAWAY 4-3-2012

NORTH CAROLINA PROFESSIONAL SEAL 033752 ENGINEER SETH A. DENNEY 9/12/11

THE LPA GROUP of North Carolina TRANSPORTATION CONSULTANTS

THE LPA GROUP of North Carolina
8000 Regency Parkway, Suite 600
Cary, North Carolina 27518
NC License No.: F-1084

REVISIONS						SHEET NO.
NO.	BY:	DATE:	NO.	BY:	DATE:	S-96
1			3			TOTAL SHEETS
2			4			333

DRAWN BY : M. D. MAYHEW DATE : 7-12-11
CHECKED BY : S. A. DENNEY DATE : 9-12-11

DWG. 97 OF 282

4/2/2012
12:41:26 PM
User: jaustin
Filename: Y:\Projects\NCDOT\R-3307\Dwgs\Final\R-3307_097_SD_FP7.dgn

NOTES:

ALL DIMENIONS GIVEN ON THE FRAMING PLAN ARE HORIZONTAL UNLESS OTHERWISE NOTED.

ALL GIRDERS ARE PLACED PARALLEL TO ℄ SURVEY -L-.

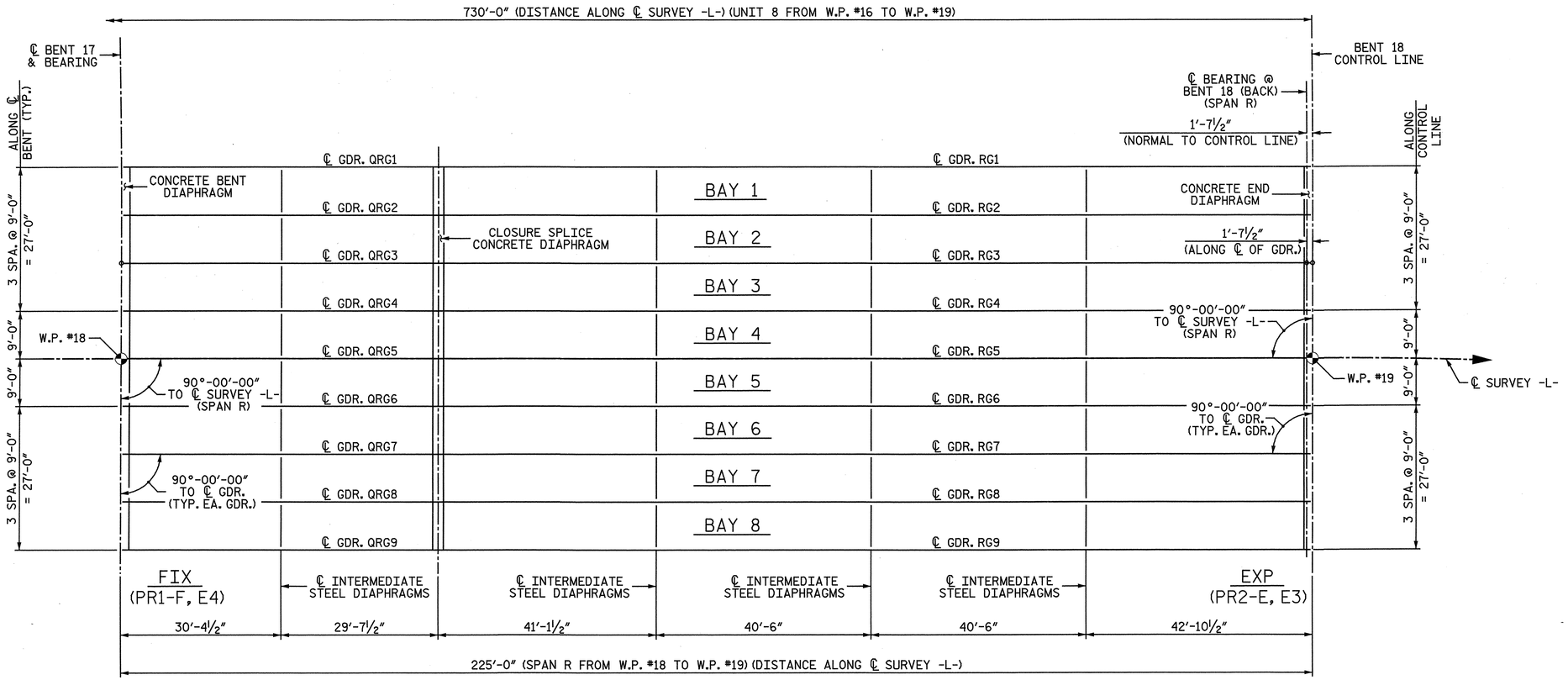

SPAN R

FRAMING PLAN - UNIT 8

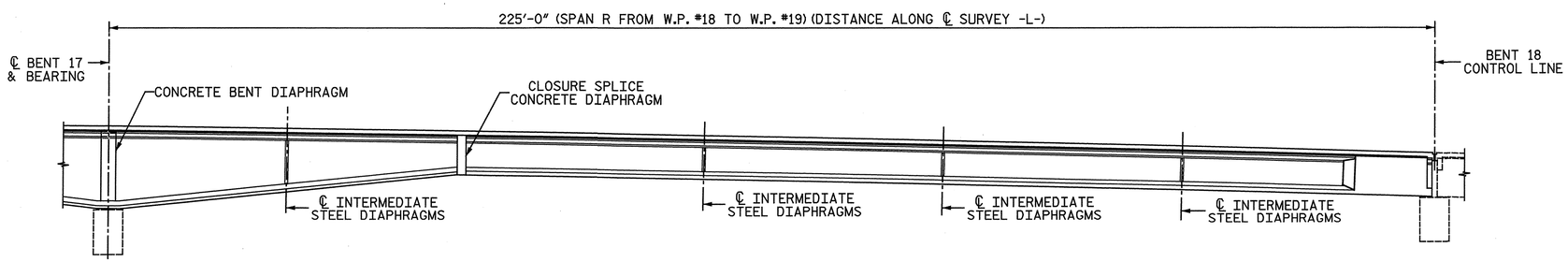

SPAN R

FRAMING PROFILE

PROJECT NO. R-3307

CARTERET COUNTY

STATION: 46+21.50 -L-

SHEET 10 OF 15

STATE OF NORTH CAROLINA
DEPARTMENT OF TRANSPORTATION
RALEIGH

SUPERSTRUCTURE

FRAMING PLAN
UNIT 8

SPAN R

NORTH CAROLINA PROFESSIONAL SEAL 25911 ENGINEER DWAIN G. HATHAWAY 4-3-2012

NORTH CAROLINA PROFESSIONAL SEAL 033752 ENGINEER SETH A. DENNEY 9/12/12

THE LPA GROUP of North Carolina TRANSPORTATION CONSULTANTS

THE LPA GROUP of North Carolina
8000 Regency Parkway, Suite 600
Cary, North Carolina 27518
NC License No.: F-1084

REVISIONS						SHEET NO.
NO.	BY:	DATE:	NO.	BY:	DATE:	S-97
1			3			TOTAL SHEETS
2			4			333

DRAWN BY : M. D. MAYHEW DATE : 7-12-11
CHECKED BY : S. A. DENNEY DATE : 9-12-11

DWG. 98 OF 282

4/2/2012 12:41:25 PM
User: austin
Filename: Y:\Projects\NCDOT\R-3307\Dwgs\Final\R-3307_098_SD_FP8.dgn

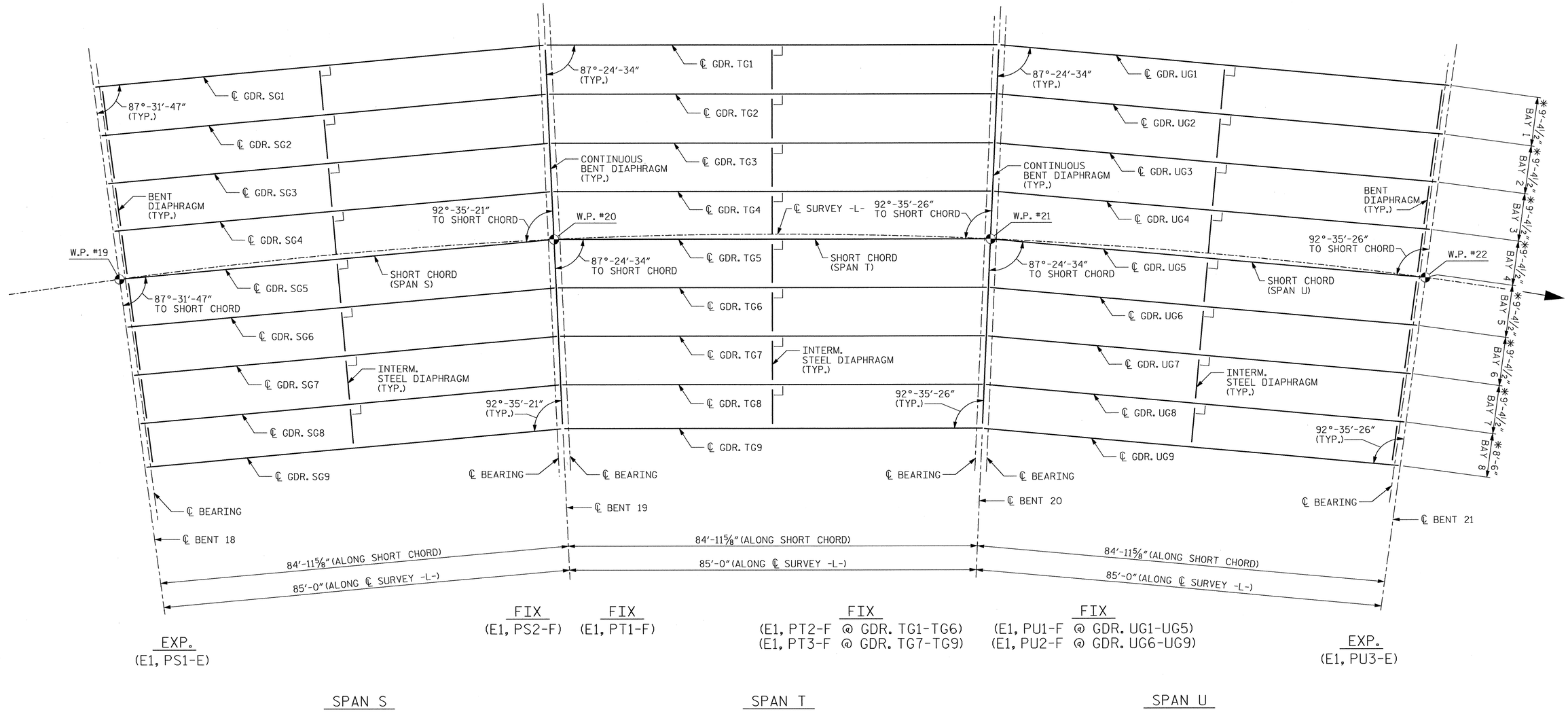

FRAMING PLAN - UNIT 9

* NORMAL TO SHORT CHORD (TYPICAL EACH SPAN)

NOTE: SEE SHEET 15 OF 15 FOR GIRDER ELEVATION.

PROJECT NO. R-3307

CARTERET COUNTY

STATION: 46+21.50 -L-

SHEET 11 OF 15

STATE OF NORTH CAROLINA
DEPARTMENT OF TRANSPORTATION
RALEIGH

SUPERSTRUCTURE

FRAMING PLAN
UNIT 9

SPANS S THRU U

NORTH CAROLINA PROFESSIONAL SEAL 12323 ENGINEER MORRIS ISRAELNAIM 3/30/2012

NORTH CAROLINA PROFESSIONAL SEAL 027799 ENGINEER ALLYSON K. ORR 3/30/2012

MI ENGINEERING
1011 SHAUB DRIVE, SUITE 100
RALEIGH, NC 27606
(919) 851-6606
FIRM PE NUMBER : P-0671

REVISIONS						
NO.	BY:	DATE:	NO.	BY:	DATE:	
1			3			
2			4			

SHEET NO. S-98

TOTAL SHEETS 333

DRAWN BY : J.S. ISRAELNAIM DATE : 7-11
CHECKED BY : A.K. ORR DATE : 10-11

DWG. 99 OF 282

3/26/2012
2:08:32 PM
User:blanning
Filename: P:\NC Projects\M10005 - Gallants Channel\R-3307\Structures\R-3307_099_SD_FP9.dgn

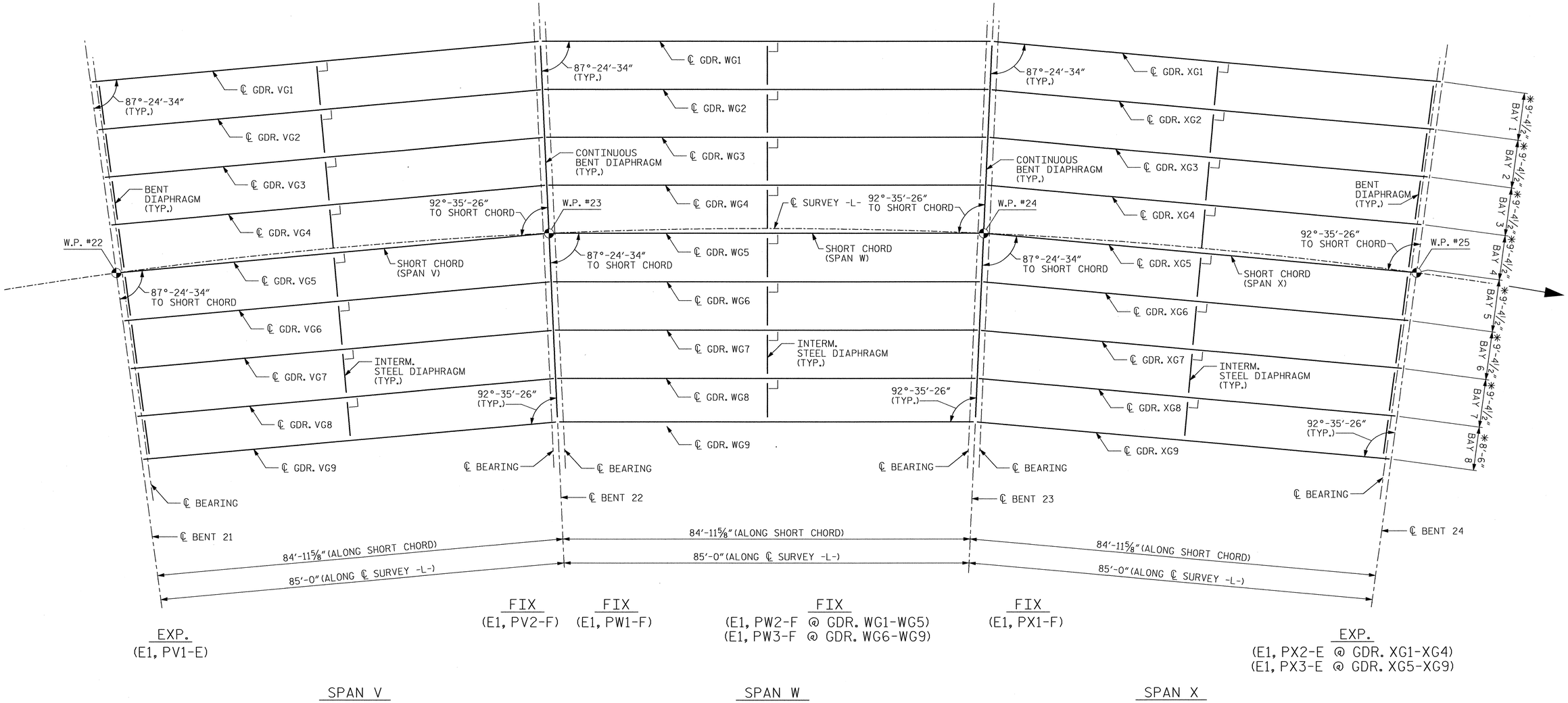

FRAMING PLAN - UNIT 10

* NORMAL TO SHORT CHORD (TYPICAL EACH SPAN)

NOTE: SEE SHEET 15 OF 15 FOR GIRDER ELEVATION.

PROJECT NO. R-3307

CARTERET COUNTY

STATION: 46+21.50 -L-

SHEET 12 OF 15

STATE OF NORTH CAROLINA
DEPARTMENT OF TRANSPORTATION
RALEIGH

SUPERSTRUCTURE

FRAMING PLAN
UNIT 10

SPANS V THRU X

NORTH CAROLINA PROFESSIONAL SEAL 12323 ENGINEER MORRIS ISRAELNAIM 3/30/2012

NORTH CAROLINA PROFESSIONAL SEAL 027199 ENGINEER ALLYSON K. ORR 3/30/2012

MI ENGINEERING
1011 SHAUB DRIVE, SUITE 100
RALEIGH, NC 27606
(919) 851-6606
FIRM PE NUMBER : P-0671

REVISIONS						SHEET NO.
NO.	BY:	DATE:	NO.	BY:	DATE:	S-99
1			3			TOTAL SHEETS
2			4			333

DRAWN BY : J.S. ISRAELNAIM DATE : 7-11
CHECKED BY : A.K. ORR DATE : 10-11

DWG. 100 OF 282

3/26/2012
2:08:49 PM
User: blanning
Filename: P:\NC Projects\M10005 - Gallants Channel\R-3307\Structures\R-3307_100_SD_FP10.dgn

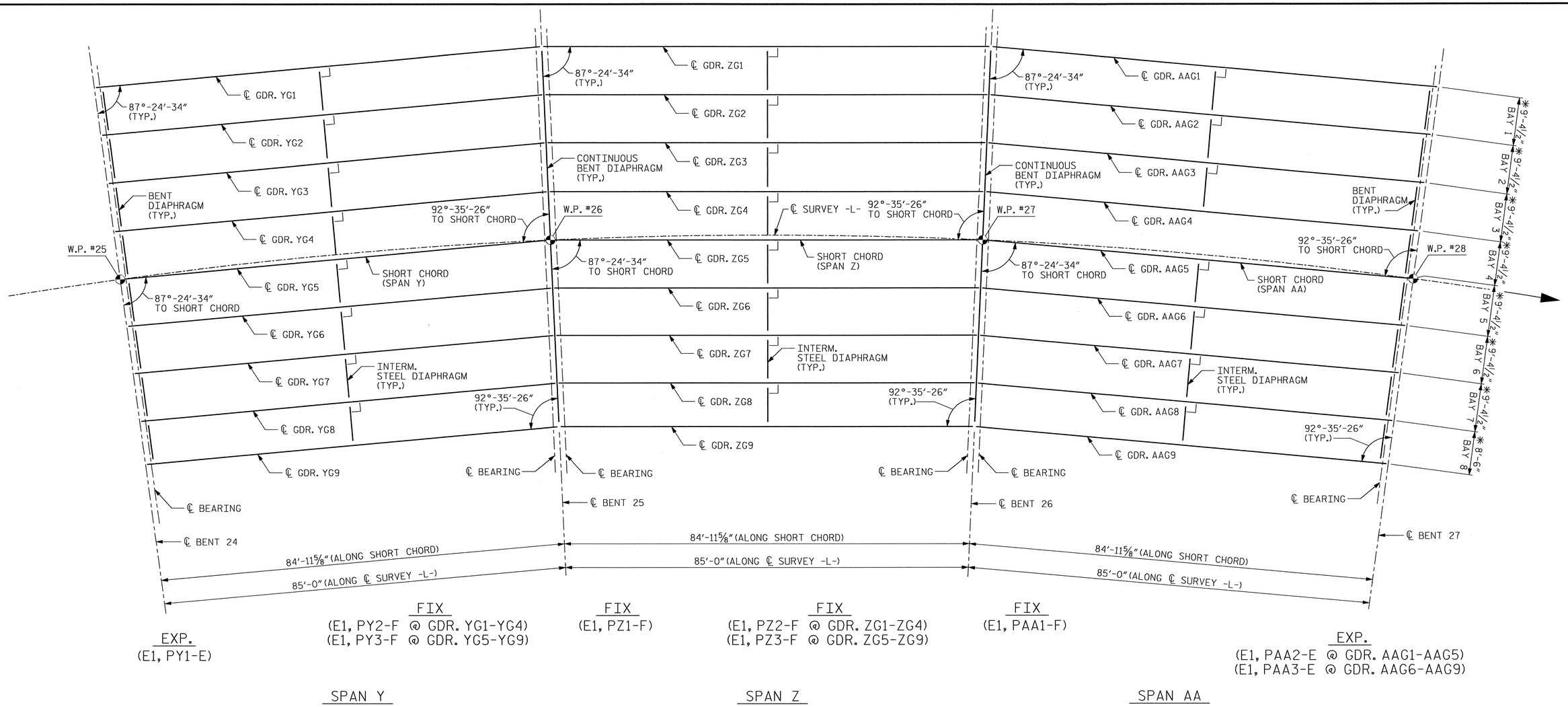

FRAMING PLAN - UNIT 11

✱ NORMAL TO SHORT CHORD (TYPICAL EACH SPAN)

NOTES: NO INTERMEDIATE DIAPHRAGM REQUIRED IN BAY 4 AT DRAINAGE LOCATIONS.

SEE SHEET 15 OF 15 FOR GIRDER ELEVATION.

PROJECT NO. R-3307

CARTERET COUNTY

STATION: 46+21.50 -L-

SHEET 13 OF 15

STATE OF NORTH CAROLINA
DEPARTMENT OF TRANSPORTATION
RALEIGH

SUPERSTRUCTURE

FRAMING PLAN
UNIT 11

SPANS Y THRU AA

NORTH CAROLINA PROFESSIONAL SEAL 12323 ENGINEER MORRIS ISRAELNAIM 3/30/2012

NORTH CAROLINA PROFESSIONAL SEAL 027799 ENGINEER ALLYSON K. ORR 3/30/2012

MI ENGINEERING
1011 SHAUB DRIVE, SUITE 100
RALEIGH, NC 27606
(919) 851-6606
FIRM PE NUMBER : P-0671

REVISIONS						SHEET NO.
NO.	BY:	DATE:	NO.	BY:	DATE:	S-100
1			3			TOTAL SHEETS
2			4			333

DRAWN BY : J.S. ISRAELNAIM DATE : 7-11
CHECKED BY : A.K. ORR DATE : 10-11

DWG. 101 OF 282

3/26/2012 2:09:07 PM
User: blanning
Filename: P:\NC Projects\M10005 - Gallants Channel\R-3307\Structures\R-3307_I01_SD_FP11.dgn

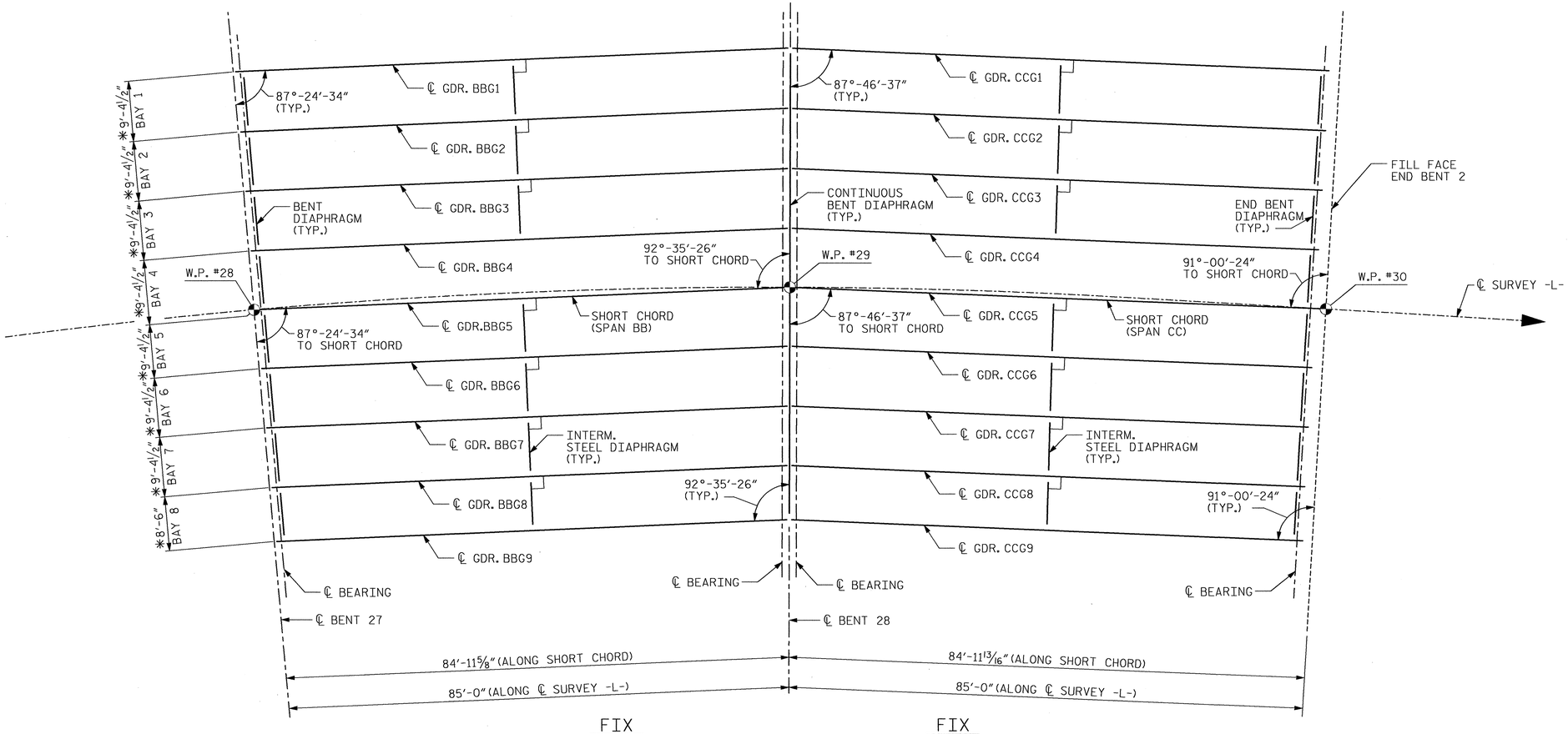

EXP.
(E1, PBB1-E @ GDR. BBG1-BBG5)
(E1, PBB2-E @ GDR. BBG6-BBG9)

FIX
(E1, PBB3-F @ GDR. BBG1-BBG3)
(E1, PBB4-F @ GDR. BBG4-BBG7)
(E1, PBB5-F @ GDR. BBG8-BBG9)

FIX
(E1, PCC1-F @ GDR. CCG1-CCG6)
(E1, PCC2-F @ GDR. CCG7-CCG9)

EXP.
(E1, PCC3-E @ GDR. CCG1-CCG3)
(E1, PCC4-E @ GDR. CCG4-CCG9)

SPAN BB

SPAN CC

FRAMING PLAN - UNIT 12

* NORMAL TO SHORT CHORD (TYPICAL EACH SPAN)

NOTES: NO INTERMEDIATE DIAPHRAGM REQUIRED IN BAY 4 AT DRAINAGE LOCATIONS.

SEE SHEET 15 OF 15 FOR GIRDER ELEVATION.

PROJECT NO. R-3307
CARTERET COUNTY
STATION: 46+21.50 -L-

SHEET 14 OF 15

STATE OF NORTH CAROLINA
DEPARTMENT OF TRANSPORTATION
RALEIGH

SUPERSTRUCTURE
FRAMING PLAN
UNIT 12

SPANS BB AND CC

NORTH CAROLINA PROFESSIONAL SEAL 12323 ENGINEER MORRIS ISRAELNAIM 3/30/2012

NORTH CAROLINA PROFESSIONAL SEAL 027799 ENGINEER ALLYSON K. ORR 3/30/2012

MI ENGINEERING
1011 SHAUB DRIVE, SUITE 100
RALEIGH, NC 27606
(919) 851-6606
FIRM PE NUMBER : P-0671

REVISIONS						
NO.	BY:	DATE:	NO.	BY:	DATE:	
1			3			
2			4			

SHEET NO. S-101
TOTAL SHEETS 333

DRAWN BY : J.S. ISRAELNAIM DATE : 7-11
CHECKED BY : A.K. ORR DATE : 10-11

DWG. 102 OF 282

3/26/2012
2:09:23 PM
User: blanning
Filename: P:\NC Projects\M10005 - Gallants Channel\R-3307\Structures\R-3307_102_SD_FP12.dgn

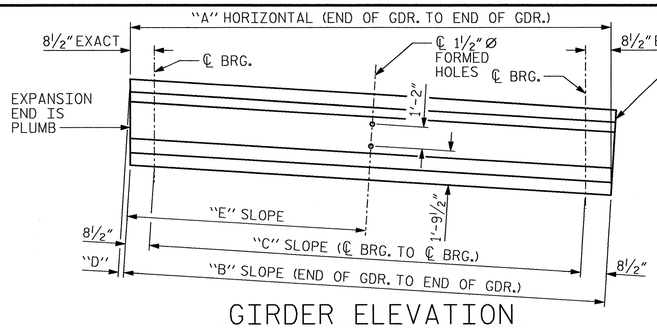

GIRDER ELEVATION

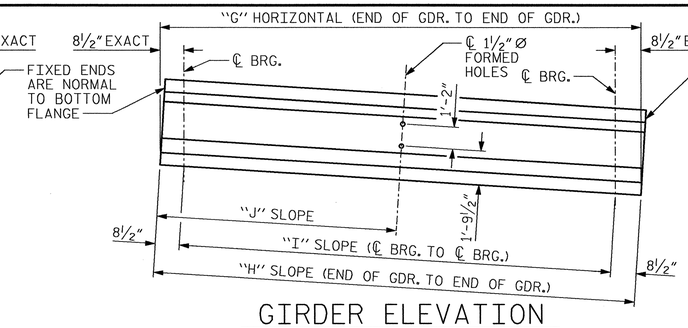

GIRDER ELEVATION

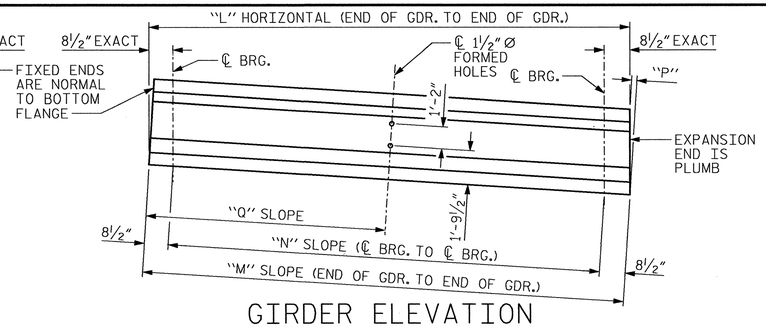

GIRDER ELEVATION

GIRDER DIMENSIONS - SPAN S					
GIRDER	"A"	"B"	"C"	"D"	"E"
SG1	87'-6 3/8"	87'-6 3/8"	86'-1 3/8"	1 9/16"	43'-9 3/16"
SG2	86'-8 7/16"	86'-8 7/16"	85'-3 7/16"	1 9/16"	43'-4 1/4"
SG3	85'-10 1/2"	85'-10 1/2"	84'-5 1/2"	1 9/16"	42'-11 1/4"
SG4	85'-0 9/16"	85'-0 9/16"	83'-7 9/16"	1 9/16"	42'-6 5/16"
SG5	84'-2 5/8"	84'-2 5/8"	82'-9 5/8"	1 5/8"	42'-1 5/16"
SG6	83'-4 11/16"	83'-4 11/16"	81'-11 11/16"	1 5/8"	41'-8 5/16"
SG7	82'-6 3/4"	82'-6 3/4"	81'-1 3/4"	1 5/8"	41'-3 3/8"
SG8	81'-8 13/16"	81'-8 13/16"	80'-3 13/16"	1 5/8"	40'-10 3/8"
SG9	80'-11 13/16"	80'-11 13/16"	79'-6 13/16"	1 5/8"	40'-5 7/8"

GIRDER DIMENSIONS - SPAN V					
GIRDER	"A"	"B"	"C"	"D"	"E"
VG1	87'-6 3/8"	87'-7 11/16"	86'-2 11/16"	2 5/8"	43'-9 13/16"
VG2	86'-8 3/16"	86'-9 1/2"	85'-4 1/2"	2 5/8"	43'-4 3/4"
VG3	85'-10"	85'-11 3/8"	84'-6 3/8"	2 11/16"	42'-11 11/16"
VG4	84'-11 13/16"	85'-1 3/16"	83'-8 3/16"	2 11/16"	42'-6 9/16"
VG5	84'-1 5/8"	84'-3"	82'-10"	2 11/16"	42'-1 1/2"
VG6	83'-3 7/16"	83'-4 7/8"	81'-11 7/8"	2 3/4"	41'-8 7/16"
VG7	82'-5 1/4"	82'-6 11/16"	81'-1 11/16"	2 3/4"	41'-3 5/16"
VG8	81'-7 1/16"	81'-8 1/2"	80'-3 1/2"	2 3/4"	40'-10 1/4"
VG9	80'-9 7/8"	80'-11 5/16"	79'-6 5/16"	2 13/16"	40'-5 5/8"

GIRDER DIMENSIONS - SPAN Y					
GIRDER	"A"	"B"	"C"	"D"	"E"
YG1	87'-6 3/8"	87'-8 1/16"	86'-3 1/16"	3"	43'-10 1/16"
YG2	86'-8 3/16"	86'-9 7/8"	85'-4 7/8"	3"	43'-4 15/16"
YG3	85'-10"	85'-11 3/4"	84'-6 3/4"	3 1/16"	42'-11 7/8"
YG4	84'-11 13/16"	85'-1 9/16"	83'-8 9/16"	3 1/16"	42'-6 13/16"
YG5	84'-1 5/8"	84'-3 7/16"	82'-10 7/16"	3 1/16"	42'-1 11/16"
YG6	83'-3 7/16"	83'-5 1/4"	82'-0 1/4"	3 1/8"	41'-8 5/8"
YG7	82'-5 1/4"	82'-7 1/16"	81'-2 1/16"	3 1/8"	41'-3 9/16"
YG8	81'-7 1/16"	81'-8 15/16"	80'-3 15/16"	3 3/16"	40'-10 7/16"
YG9	80'-9 7/8"	80'-11 11/16"	79'-6 11/16"	3 3/16"	40'-5 7/8"

GIRDER DIMENSIONS - SPAN BB					
GIRDER	"A"	"B"	"C"	"D"	"E"
BBG1	87'-6 3/8"	87'-8 1/8"	86'-3 1/8"	3"	43'-10 1/16"
BBG2	86'-8 3/16"	86'-9 13/16"	85'-4 13/16"	2 15/16"	43'-4 15/16"
BBG3	85'-10"	85'-11 9/16"	84'-6 9/16"	2 7/8"	42'-11 13/16"
BBG4	84'-11 13/16"	85'-1 5/16"	83'-8 5/16"	2 13/16"	42'-6 11/16"
BBG5	84'-1 5/8"	84'-3 1/16"	82'-10 1/16"	2 3/4"	42'-1 9/16"
BBG6	83'-3 7/16"	83'-4 13/16"	81'-11 13/16"	2 11/16"	41'-8 7/16"
BBG7	82'-5 1/4"	82'-6 3/16"	81'-1 9/16"	2 5/8"	41'-3 5/16"
BBG8	81'-7 1/16"	81'-8 5/16"	80'-3 5/16"	2 9/16"	40'-10 3/16"
BBG9	80'-9 7/8"	80'-11"	79'-6"	2 1/2"	40'-5 1/2"

GIRDER DIMENSIONS - SPAN T				
GIRDER	"G"	"H"	"I"	"J"
TG1	87'-6 3/8"	87'-7 1/16"	86'-2 1/16"	43'-9 9/16"
TG2	86'-8 3/16"	86'-8 15/16"	85'-3 15/16"	43'-4 7/16"
TG3	85'-10"	85'-10 3/4"	84'-5 3/4"	42'-11 3/8"
TG4	84'-11 13/16"	85'-0 9/16"	83'-7 9/16"	42'-6 5/16"
TG5	84'-1 5/8"	84'-2 5/8"	82'-9 3/8"	42'-1 3/16"
TG6	83'-3 7/16"	83'-4 1/4"	81'-11 1/4"	41'-8 1/8"
TG7	82'-5 1/4"	82'-6 1/16"	81'-1 1/16"	41'-3"
TG8	81'-7 1/16"	81'-7 7/8"	80'-2 7/8"	40'-9 15/16"
TG9	80'-9 7/8"	80'-10 11/16"	79'-5 11/16"	40'-5 5/16"

GIRDER DIMENSIONS - SPAN W				
GIRDER	"G"	"H"	"I"	"J"
WG1	87'-6 3/8"	87'-8"	86'-3"	43'-10"
WG2	86'-8 3/16"	86'-9 7/8"	85'-4 7/8"	43'-4 15/16"
WG3	85'-10"	85'-11 11/16"	84'-6 11/16"	42'-11 13/16"
WG4	84'-11 13/16"	85'-1 1/2"	83'-8 1/2"	42'-6 3/4"
WG5	84'-1 5/8"	84'-3 3/8"	82'-10 3/8"	42'-1 11/16"
WG6	83'-3 7/16"	83'-5 3/16"	82'-0 3/16"	41'-8 5/8"
WG7	82'-5 1/4"	82'-7"	81'-2"	41'-3 1/2"
WG8	81'-7 1/16"	81'-8 7/8"	80'-3 7/8"	40'-10 7/16"
WG9	80'-9 7/8"	80'-11 11/16"	79'-6 11/16"	40'-5 13/16"

GIRDER DIMENSIONS - SPAN Z				
GIRDER	"G"	"H"	"I"	"J"
ZG1	87'-6 3/8"	87'-8 1/16"	86'-3 1/16"	43'-10 1/16"
ZG2	86'-8 3/16"	86'-9 7/8"	85'-4 7/8"	43'-4 15/16"
ZG3	85'-10"	85'-11 3/4"	84'-6 3/4"	42'-11 7/8"
ZG4	84'-11 13/16"	85'-1 9/16"	83'-8 9/16"	42'-6 13/16"
ZG5	84'-1 5/8"	84'-3 7/16"	82'-10 7/16"	42'-1 11/16"
ZG6	83'-3 7/16"	83'-5 1/4"	82'-0 1/4"	41'-8 5/8"
ZG7	82'-5 1/4"	82'-7 1/16"	81'-2 1/16"	41'-3 9/16"
ZG8	81'-7 1/16"	81'-8 15/16"	80'-3 15/16"	40'-10 7/16"
ZG9	80'-9 7/8"	80'-11 11/16"	79'-6 11/16"	40'-5 7/8"

NOTES: 1½" Ø FORMED HOLES FOR STEEL INTERMEDIATE DIAPHRAGMS ARE ORIENTED PERPENDICULAR TO THE BOTTOM FLANGE.

GIRDER DIMENSIONS - SPAN U					
GIRDER	"L"	"M"	"N"	"P"	"Q"
UG1	87'-6 3/8"	87'-7 3/8"	86'-2 3/8"	2 1/2"	43'-9 11/16"
UG2	86'-8 3/16"	86'-9 3/16"	85'-4 3/16"	2 9/16"	43'-4 5/8"
UG3	85'-10"	85'-11"	84'-6"	2 9/16"	42'-11 1/2"
UG4	84'-11 13/16"	85'-0 7/8"	83'-7 7/8"	2 5/8"	42'-6 7/16"
UG5	84'-1 5/8"	84'-2 11/16"	82'-9 11/16"	2 5/8"	42'-1 5/16"
UG6	83'-3 7/16"	83'-4 1/2"	81'-11 1/2"	2 11/16"	41'-8 1/4"
UG7	82'-5 1/4"	82'-6 5/16"	81'-1 5/16"	2 11/16"	41'-3 3/16"
UG8	81'-7 1/16"	81'-8 3/16"	80'-3 3/16"	2 3/4"	40'-10 1/16"
UG9	80'-9 7/8"	80'-10 15/16"	79'-5 15/16"	2 3/4"	40'-5 1/2"

GIRDER DIMENSIONS - SPAN X					
GIRDER	"L"	"M"	"N"	"P"	"Q"
XG1	87'-6 3/8"	87'-8 1/16"	86'-3 1/16"	3 1/4"	43'-10 1/16"
XG2	86'-8 3/16"	86'-9 7/8"	85'-4 7/8"	3 5/16"	43'-4 15/16"
XG3	85'-10"	85'-11 3/4"	84'-6 3/4"	3 5/16"	42'-11 7/8"
XG4	84'-11 13/16"	85'-1 9/16"	83'-8 9/16"	3 3/8"	42'-6 13/16"
XG5	84'-1 5/8"	84'-3 7/16"	82'-10 7/16"	3 3/8"	42'-1 11/16"
XG6	83'-3 7/16"	83'-5 1/4"	82'-0 1/4"	3 7/16"	41'-8 5/8"
XG7	82'-5 1/4"	82'-7 1/16"	81'-2 1/16"	3 1/2"	41'-3 9/16"
XG8	81'-7 1/16"	81'-8 15/16"	80'-3 15/16"	3 1/2"	40'-10 7/16"
XG9	80'-9 7/8"	80'-11 11/16"	79'-6 11/16"	3 9/16"	40'-5 7/8"

GIRDER DIMENSIONS - SPAN AA					
GIRDER	"L"	"M"	"N"	"P"	"Q"
AAG1	87'-6 3/8"	87'-8"	86'-3"	3 3/16"	43'-10"
AAG2	86'-8 3/16"	86'-9 7/8"	85'-4 7/8"	3 1/4"	43'-4 15/16"
AAG3	85'-10"	85'-11 11/16"	84'-6 11/16"	3 1/4"	42'-11 13/16"
AAG4	84'-11 13/16"	85'-1 1/2"	83'-8 1/2"	3 5/16"	42'-6 3/4"
AAG5	84'-1 5/8"	84'-3 3/8"	82'-10 3/8"	3 3/8"	42'-1 11/16"
AAG6	83'-3 7/16"	83'-5 3/16"	82'-0 3/16"	3 3/8"	41'-8 5/8"
AAG7	82'-5 1/4"	82'-7 1/16"	81'-2 1/16"	3 7/16"	41'-3 1/2"
AAG8	81'-7 1/16"	81'-8 7/8"	80'-3 7/8"	3 1/2"	40'-10 7/16"
AAG9	80'-9 7/8"	80'-11 11/16"	79'-6 11/16"	3 1/2"	40'-5 13/16"

GIRDER DIMENSIONS - SPAN CC					
GIRDER	"L"	"M"	"N"	"P"	"Q"
CCG1	84'-11 11/16"	85'-1 1/8"	83'-8 1/8"	3 1/16"	42'-6 9/16"
CCG2	84'-5 5/16"	84'-6 11/16"	83'-1 11/16"	3"	42'-3 3/8"
CCG3	83'-11"	84'-0 5/16"	82'-7 5/16"	2 15/16"	42'-0 1/8"
CCG4	83'-4 5/8"	83'-5 7/8"	82'-0 7/8"	2 7/8"	41'-8 15/16"
CCG5	82'-10 5/16"	82'-11 7/16"	81'-6 7/16"	2 13/16"	41'-5 3/4"
CCG6	82'-3 15/16"	82'-5 1/16"	81'-0 1/16"	2 3/4"	41'-2 1/2"
CCG7	81'-9 5/8"	81'-10 5/8"	80'-5 5/8"	2 5/8"	40'-11 5/16"
CCG8	81'-3 1/4"	81'-4 3/16"	79'-11 3/16"	2 9/16"	40'-8 1/8"
CCG9	80'-9 1/2"	80'-10 7/16"	79'-5 7/16"	2 1/2"	40'-5 3/16"

PROJECT NO. R-3307

CARTERET COUNTY

STATION: 46+21.50 -L-

SHEET 15 OF 15

NORTH CAROLINA PROFESSIONAL SEAL 12323 ENGINEER MORRIS ISRAELNAIM 3/30/2012

NORTH CAROLINA PROFESSIONAL SEAL 027799 ENGINEER ALLYSON K. ORR 3/30/2012

MI ENGINEERING
1011 SHAUB DRIVE, SUITE 100
RALEIGH, NC 27606
(919) 851-6606
FIRM PE NUMBER : P-0671

STATE OF NORTH CAROLINA
DEPARTMENT OF TRANSPORTATION
RALEIGH

SUPERSTRUCTURE

FRAMING PLAN UNITS 9 THRU 12

SPANS S THRU CC

REVISIONS						SHEET NO.
NO.	BY:	DATE:	NO.	BY:	DATE:	S-102
1			3			TOTAL SHEETS
2			4			333

DRAWN BY : B.E. LANNING DATE : 10-11
CHECKED BY : A.K. ORR DATE : 10-11

DWG. 103 OF 282

3/26/2012 2:09:38 PM
User: blanning
Filename: P:\NC Projects\MI0005 - Gallants Channel\R-3307\Structures\R-3307_103_SD_FP9THRU12.dgn

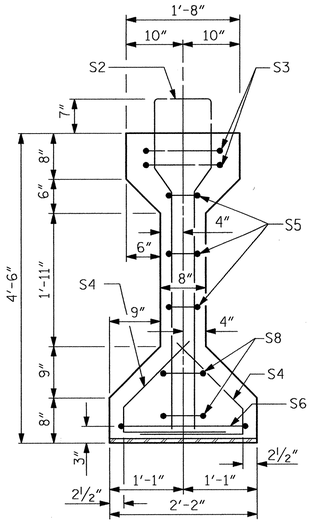

SECTION A-A

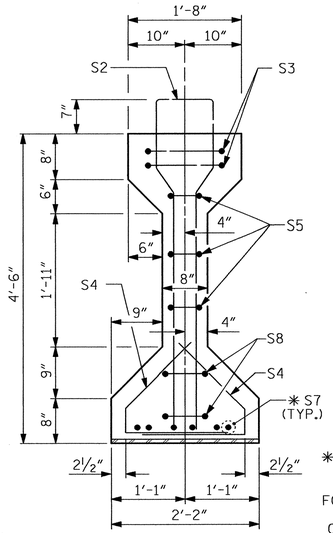

SECTION B-B

✱ FOR S7 BARS, SEE DETAIL "A" ON "GIRDER DETAILS FOR AASHTO TYPE IV PRESTRESSED CONCRETE GIRDERS" SHEET 1 OF 2.

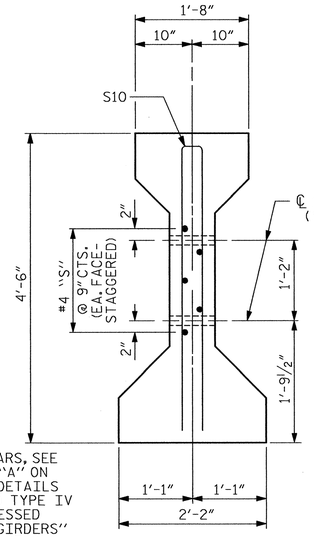

SECTION C-C

(S1 BARS NOT SHOWN)

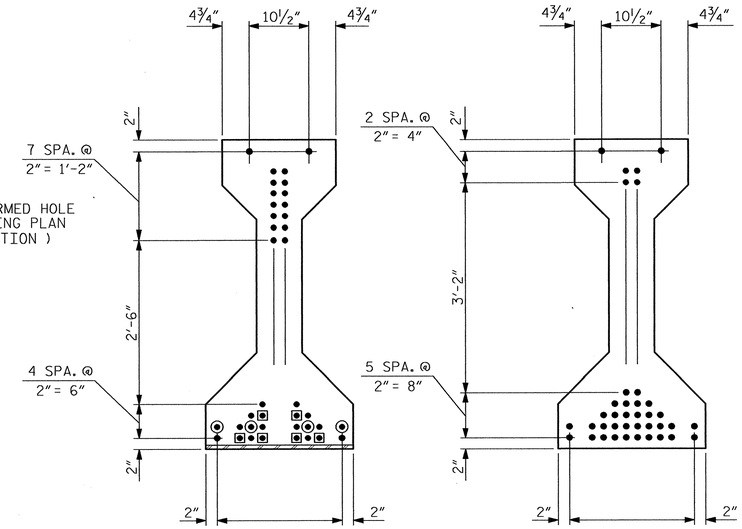

AT END OF GIRDER

AT ℄ OF GIRDER

0.6" Ø LOW RELAXATION STRAND LAYOUT

DEBONDING LEGEND

SEE STANDARD SPECIFICATIONS ARTICLE 1078-13.

- ● FULLY BONDED STRAND
- ⊙ STRANDS DEBONDED FOR 4'-0" FROM END OF GIRDER
- ▣ STRANDS DEBONDED FOR 2'-0" FROM END OF GIRDER

NOTE: FOR DIMENSIONS A,B,C,D, S1 BAR SPACING AND QUANTITIES, AND TOTAL BILL OF MATERIALS, SEE SHEET 3 OF 3.

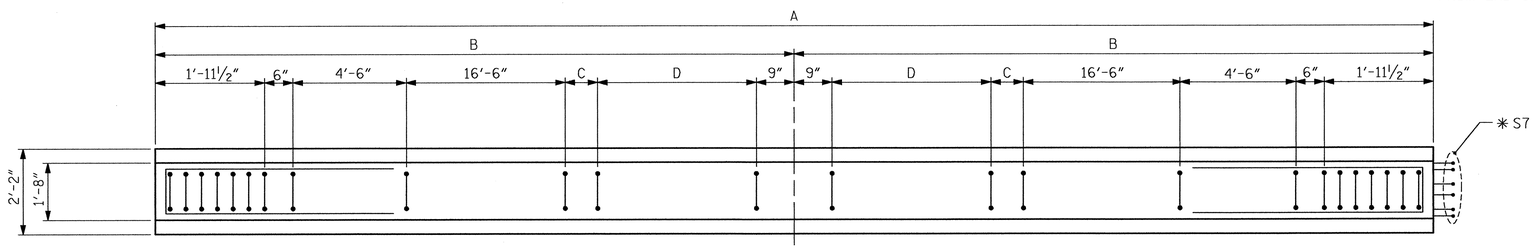

PLAN OF GIRDER

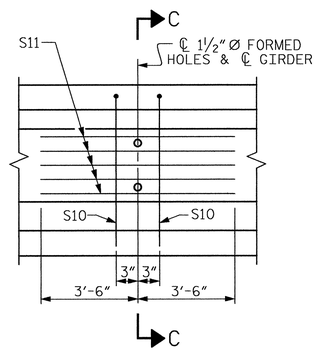

PARTIAL ELEVATION

SHOWING INTERMEDIATE DIAPHRAGM REINFORCING STEEL

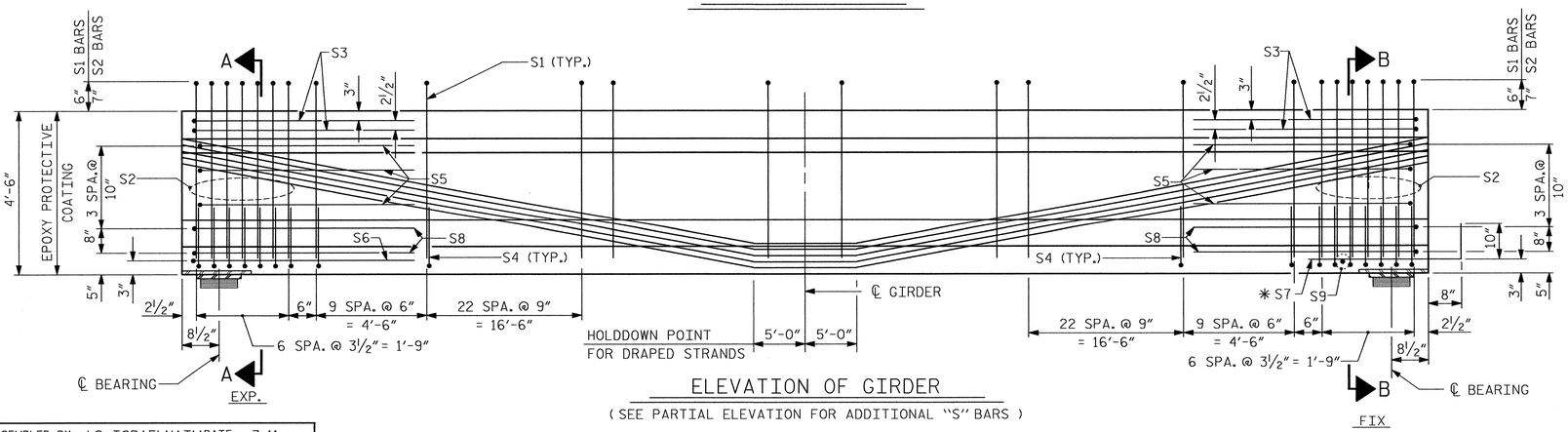

ELEVATION OF GIRDER

(SEE PARTIAL ELEVATION FOR ADDITIONAL "S" BARS)

NOTE: THE UPLIFT FORCE DUE TO DRAPED STRANDS IS 37.5 k.

0.6" Ø L. R. GRADE 270 STRANDS

AREA (SQUARE INCHES)	ULTIMATE STRENGTH (LBS. PER STRAND)	APPLIED PRESTRESS (LBS. PER STRAND)
0.217	58,600	43,950

REINFORCING STEEL FOR ONE GIRDER

BAR	NUMBER	SIZE	TYPE	LENGTH	WEIGHT
S1	✱✱	#4	1	10'-8"	✱✱
S2	14	#6	1	10'-8"	224
S3	4	#4	2	9'-1"	24
S4	68	#4	3	3'-5"	155
S5	6	#4	2	8'-5"	34
S6	1	#4	2	9'-11"	7
✱ S7	6	#5	STR	3'-8"	23
S8	4	#4	2	8'-7"	23
S9	1	#3	STR	1'-10"	1
S10	2	#5	2	8'-8"	18
S11	5	#4	STR	7'-0"	23

✱ NOTE: S7 BARS SHALL BE BENT BEFORE SHIPMENT. HEAT BENDING SHALL NOT BE ALLOWED.

✱✱ SEE BILL OF MATERIALS CHART

BAR TYPES

ALL BAR DIMENSIONS ARE OUT-TO-OUT

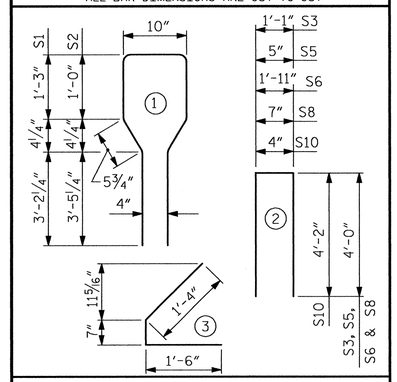

QUANTITIES FOR ONE GIRDER

	REINFORCING STEEL LB.	8000 PSI CONCRETE C.Y.	0.6" Ø L. R. STRANDS No.
	SEE BILL OF MATERIALS CHART.		

GIRDERS REQUIRED

NUMBER	LENGTH	TOTAL LENGTH
SEE BILL OF MATERIALS CHART.		

PROJECT NO. R-3307

CARTERET COUNTY

STATION: 46+21.50 -L-

SHEET 1 OF 3

STATE OF NORTH CAROLINA
DEPARTMENT OF TRANSPORTATION
RALEIGH

SUPERSTRUCTURE

AASHTO TYPE IV PRESTRESSED CONCRETE GIRDER

END SPANS (EXP. - FIX)
SPANS A & C-E

NORTH CAROLINA PROFESSIONAL SEAL 12323 ENGINEER MORRIS ISRAELNAIM
3/30/2012

MI ENGINEERING
1011 SHAUB DRIVE, SUITE 100
RALEIGH, NC 27606
(919) 851-6606
FIRM PE NUMBER : P-0671

REVISIONS						
NO.	BY:	DATE:	NO.	BY:	DATE:	
1			3			
2			4			

SHEET NO. S-163

TOTAL SHEETS 333

STD. NO. PCG6

ASSEMBLED BY : J.S. ISRAELNAIM DATE : 7-11
CHECKED BY : A.K. ORR DATE : 10-11

DRAWN BY : ELR 8/91
CHECKED BY : GRP 8/91

REV. 10/17/00R RWW/LES
REV. 5/1/06R TLA/GM
REV. 10/1/11 MAA/GM

DWG. 104 OF 282

3/30/2012 5:07:24 PM
User: blanning
Filename: P:\NC Projects\MI0005 - Gallants Channel\R-3307\Structures\R-3307_I04_SD_PCG1.dgn

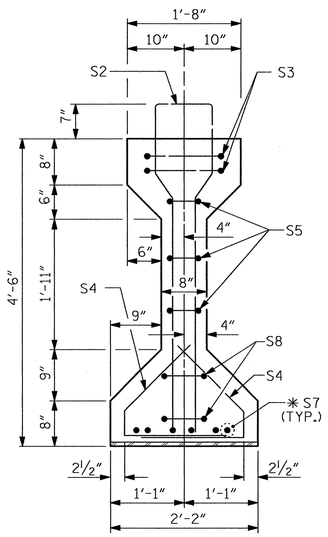

SECTION B-B

✱FOR S7 BARS, SEE DETAIL "A" ON "GIRDER DETAILS FOR AASHTO TYPE IV PRESTRESSED CONCRETE GIRDERS" SHEET 1 OF 2.

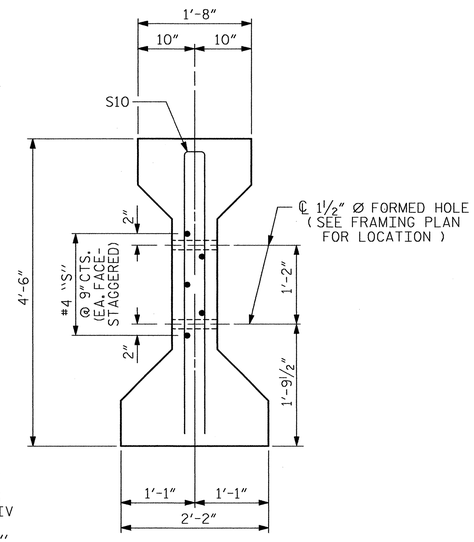

SECTION C-C

(S1 BARS NOT SHOWN)

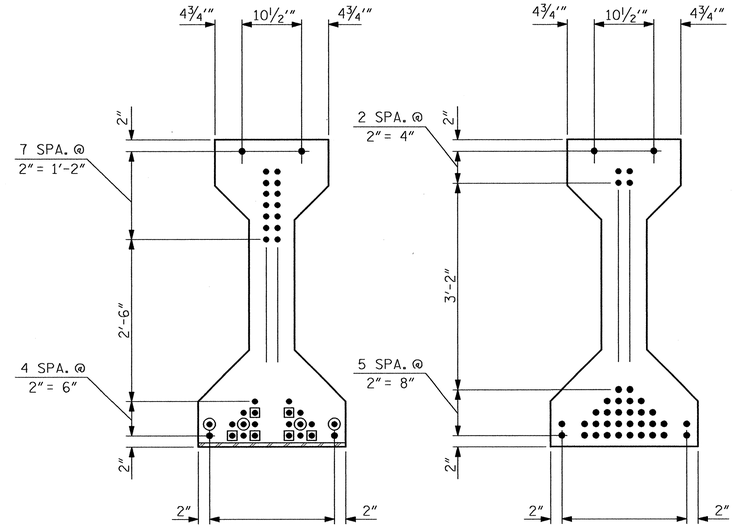

AT END OF GIRDER

AT ℄ OF GIRDER

0.6" Ø LOW RELAXATION STRAND LAYOUT

DEBONDING LEGEND

SEE STANDARD SPECIFICATIONS ARTICLE 1078-13.

- ● FULLY BONDED STRAND
- ⊙ STRANDS DEBONDED FOR 4'-0" FROM END OF GIRDER
- ▣ STRANDS DEBONDED FOR 2'-0" FROM END OF GIRDER

NOTE: FOR DIMENSIONS E,F,G,H, S1 BAR SPACING AND QUANTITIES, AND TOTAL BILL OF MATERIALS, SEE SHEET 3 OF 3.

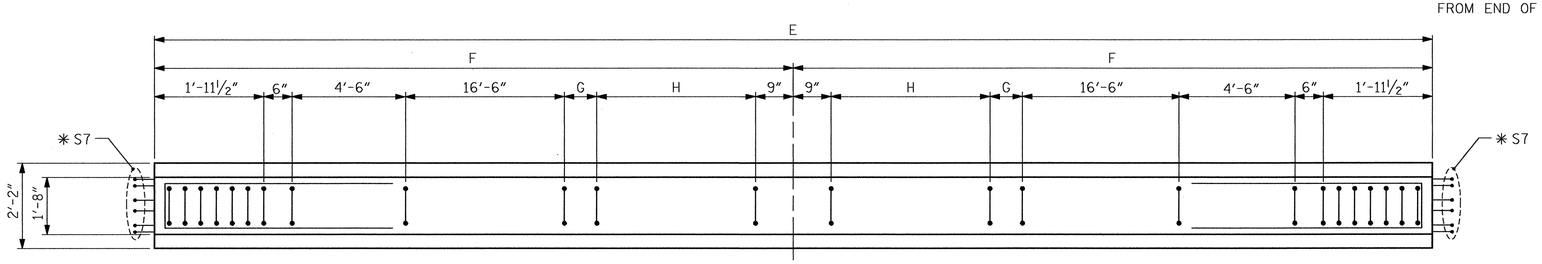

PLAN OF GIRDER

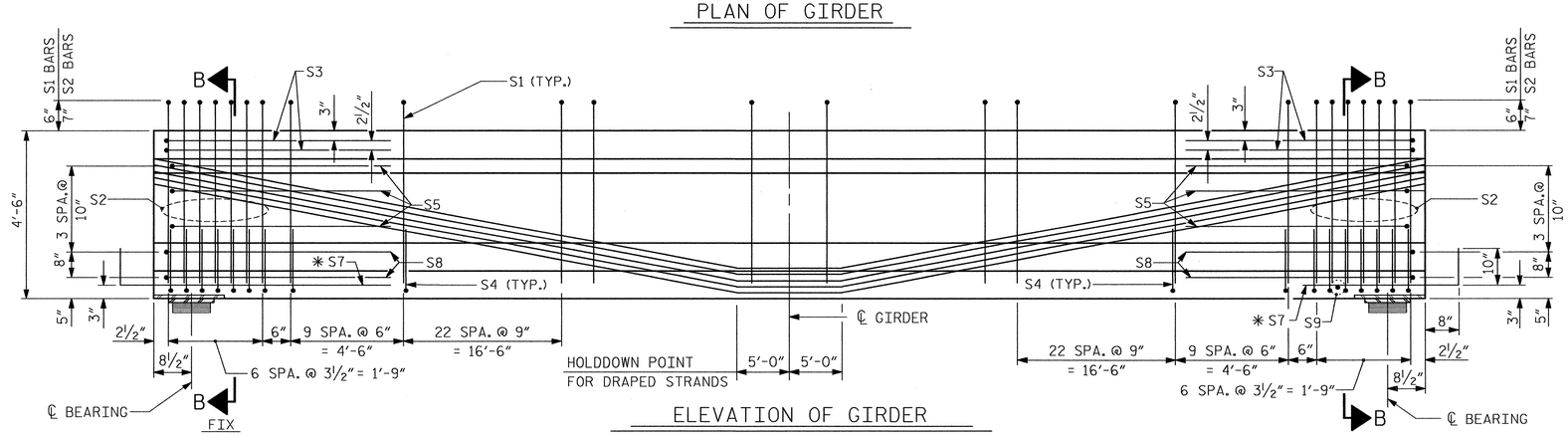

ELEVATION OF GIRDER

(SEE PARTIAL ELEVATION FOR ADDITIONAL "S" BARS)

NOTE: THE UPLIFT FORCE DUE TO DRAPED STRANDS IS 37.5 k.

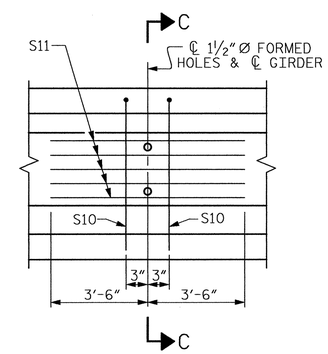

PARTIAL ELEVATION

SHOWING INTERMEDIATE DIAPHRAGM REINFORCING STEEL

0.6" Ø L. R. GRADE 270 STRANDS

AREA (SQUARE INCHES)	ULTIMATE STRENGTH (LBS. PER STRAND)	APPLIED PRESTRESS (LBS. PER STRAND)
0.217	58,600	43,950

REINFORCING STEEL FOR ONE GIRDER

BAR	NUMBER	SIZE	TYPE	LENGTH	WEIGHT
S1	✱✱	#4	1	10'-8"	✱✱
S2	14	#6	1	10'-8"	224
S3	4	#4	2	9'-1"	24
S4	68	#4	3	3'-5"	155
S5	6	#4	2	8'-5"	34
✱ S7	12	#5	STR	3'-8"	46
S8	4	#4	2	8'-7"	23
S9	1	#3	STR	1'-10"	1
S10	2	#5	2	8'-8"	18
S11	5	#4	STR	7'-0"	23

✱ NOTE: S7 BARS SHALL BE BENT BEFORE SHIPMENT. HEAT BENDING SHALL NOT BE ALLOWED.

✱✱ SEE BILL OF MATERIALS CHART

BAR TYPES

ALL BAR DIMENSIONS ARE OUT-TO-OUT

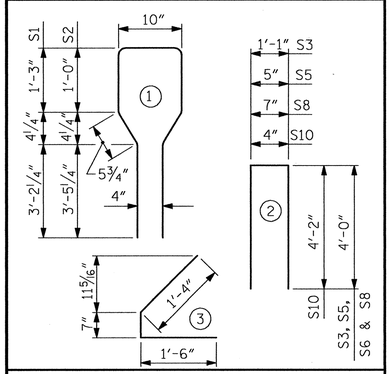

QUANTITIES FOR ONE GIRDER

	REINFORCING STEEL LB.	8000 PSI CONCRETE C.Y.	0.6" Ø L.R. STRANDS No.
	SEE BILL OF MATERIALS CHART.		

GIRDERS REQUIRED

NUMBER	LENGTH	TOTAL LENGTH
SEE BILL OF MATERIALS CHART.		

PROJECT NO. R-3307

CARTERET COUNTY

STATION: 46+21.50 -L-

SHEET 2 OF 3

STATE OF NORTH CAROLINA
DEPARTMENT OF TRANSPORTATION
RALEIGH

SUPERSTRUCTURE

AASHTO TYPE IV PRESTRESSED CONCRETE GIRDER

INTERIOR SPANS (FIX - FIX)
SPAN B

NORTH CAROLINA PROFESSIONAL SEAL 12323 ENGINEER MORRIS ISRAELNAIM 3/30/2012

NORTH CAROLINA PROFESSIONAL SEAL 027199 ENGINEER ALLYSON K. ORR 3/30/2012

MI ENGINEERING
1011 SHAUB DRIVE, SUITE 100
RALEIGH, NC 27606
(919) 851-6606
FIRM PE NUMBER : P-0671

REVISIONS							SHEET NO.
NO.	BY:	DATE:	NO.	BY:	DATE:		S-104
1			3				TOTAL SHEETS
2			4				333

ASSEMBLED BY : J.S. ISRAELNAIM DATE : 7-11
CHECKED BY : A.K. ORR DATE : 10-11

DRAWN BY : ELR 8/91
CHECKED BY : GRP 8/91

REV. 10/17/00R RWW/LES
REV. 5/1/06R TLA/GM
REV. 10/1/11 MAA/GM

DWG. 105 OF 282

STD. NO. PCG6

3/26, 12
2:21:59 PM
User: blanning
Filename: P:\NC Projects\M10005 - Gallants Channel\R-3307\Structures\R-3307_105_SD_PCG2.dgn

VARIABLE DIMENSIONS - UNIT 1 SPAN A					BILL OF MATERIALS (EACH GIRDER) - UNIT 1 SPAN A						
					S1 BARS						
GIRDER	A	B	C	D	NUMBER	WEIGHT (LBS.)	TOTAL REINF. (LBS.)	8000 PSI CONC. (C.Y.)	0.6"Ø L.R. STRANDS	NO. OF GIRDERS REQ'D.	GIRDER LENGTH (FT.)
AG1	82'-8 1/16"	41'-4 1/16"	7 9/16"	11 SPA. @ 1'-6" = 16'-6"	88	627	1159	16.78	38	1	82.67
AG2	82'-11 7/16"	41'-5 11/16"	9 3/16"	11 SPA. @ 1'-6" = 16'-6"	88	627	1159	16.83	38	1	82.95
AG3	83'-3 1/16"	41'-7 9/16"	11 1/16"	11 SPA. @ 1'-6" = 16'-6"	88	627	1159	16.90	38	1	83.26
AG4	83'-6 3/4"	41'-9 3/8"	1'-0 7/8"	11 SPA. @ 1'-6" = 16'-6"	88	627	1159	16.96	38	1	83.56
AG5	83'-10 7/16"	41'-11 1/4"	1'-2 3/4"	11 SPA. @ 1'-6" = 16'-6"	88	627	1159	17.02	38	1	83.87
AG6	84'-2 1/8"	42'-1 1/16"	1'-4 9/16"	11 SPA. @ 1'-6" = 16'-6"	88	627	1159	17.08	38	1	84.18
AG7	84'-5 13/16"	42'-2 7/8"	1'-6 3/8"	11 SPA. @ 1'-6" = 16'-6"	88	627	1159	17.14	38	1	84.48
AG8	84'-9 1/2"	42'-4 3/4"	1'-8 1/4"	11 SPA. @ 1'-6" = 16'-6"	88	627	1159	17.21	38	1	84.79
AG9	85'-1 3/16"	42'-6 9/16"	1'-10 1/16"	11 SPA. @ 1'-6" = 16'-6"	88	627	1159	17.27	38	1	85.10
					TOTAL FOR SPAN A		10431	153.19		9	754.86

VARIABLE DIMENSIONS - UNIT 2 SPAN D					BILL OF MATERIALS (EACH GIRDER) - UNIT 2 SPAN D						
					S1 BARS						
GIRDER	A	B	C	D	NUMBER	WEIGHT (LBS.)	TOTAL REINF. (LBS.)	8000 PSI CONC. (C.Y.)	0.6"Ø L.R. STRANDS	NO. OF GIRDERS REQ'D.	GIRDER LENGTH (FT.)
DG1	83'-11 9/16"	41'-11 13/16"	1'-3 5/16"	11 SPA. @ 1'-6" = 16'-6"	88	627	1159	17.04	38	1	83.96
DG2	84'-2 15/16"	42'-1 7/16"	1'-4 15/16"	11 SPA. @ 1'-6" = 16'-6"	88	627	1159	17.10	38	1	84.24
DG3	84'-6 9/16"	42'-3 5/16"	1'-6 13/16"	11 SPA. @ 1'-6" = 16'-6"	88	627	1159	17.16	38	1	84.55
DG4	84'-10 1/4"	42'-5 1/8"	1'-8 5/8"	11 SPA. @ 1'-6" = 16'-6"	88	627	1159	17.22	38	1	84.86
DG5	85'-1 15/16"	42'-7"	1'-10 1/2"	11 SPA. @ 1'-6" = 16'-6"	88	627	1159	17.28	38	1	85.16
DG6	85'-5 5/8"	42'-8 13/16"	6 5/16"	12 SPA. @ 1'-6" = 18'-0"	90	641	1173	17.34	38	1	85.47
DG7	85'-9 5/16"	42'-10 5/8"	8 3/16"	12 SPA. @ 1'-6" = 18'-0"	90	641	1173	17.41	38	1	85.78
DG8	86'-1"	43'-0 1/2"	10"	12 SPA. @ 1'-6" = 18'-0"	90	641	1173	17.47	38	1	86.08
DG9	86'-4 11/16"	43'-2 5/16"	11 13/16"	12 SPA. @ 1'-6" = 18'-0"	90	641	1173	17.53	38	1	86.39
					TOTAL FOR SPAN D		10487	155.55		9	766.49

VARIABLE DIMENSIONS - UNIT 1 SPAN B					BILL OF MATERIALS (EACH GIRDER) - UNIT 1 SPAN B						
					S1 BARS						
GIRDER	E	F	G	H	NUMBER	WEIGHT (LBS.)	TOTAL REINF. (LBS.)	8000 PSI CONC. (C.Y.)	0.6"Ø L.R. STRANDS	NO. OF GIRDERS REQ'D.	GIRDER LENGTH (FT.)
BG1	83'-11 9/16"	41'-11 13/16"	1'-3 5/16"	11 SPA. @ 1'-6" = 16'-6"	88	627	1175	17.04	38	1	83.96
BG2	84'-2 15/16"	42'-1 7/16"	1'-4 15/16"	11 SPA. @ 1'-6" = 16'-6"	88	627	1175	17.10	38	1	84.24
BG3	84'-6 9/16"	42'-3 5/16"	1'-6 13/16"	11 SPA. @ 1'-6" = 16'-6"	88	627	1175	17.16	38	1	84.55
BG4	84'-10 1/4"	42'-5 1/8"	1'-8 5/8"	11 SPA. @ 1'-6" = 16'-6"	88	627	1175	17.22	38	1	84.86
BG5	85'-1 15/16"	42'-7"	1'-10 1/2"	11 SPA. @ 1'-6" = 16'-6"	88	627	1175	17.28	38	1	85.16
BG6	85'-5 5/8"	42'-8 13/16"	6 5/16"	12 SPA. @ 1'-6" = 18'-0"	90	641	1189	17.34	38	1	85.47
BG7	85'-9 5/16"	42'-10 5/8"	8 3/16"	12 SPA. @ 1'-6" = 18'-0"	90	641	1189	17.41	38	1	85.78
BG8	86'-1"	43'-0 1/2"	10"	12 SPA. @ 1'-6" = 18'-0"	90	641	1189	17.47	38	1	86.08
BG9	86'-4 11/16"	43'-2 5/16"	11 13/16"	12 SPA. @ 1'-6" = 18'-0"	90	641	1189	17.53	38	1	86.39
					TOTAL FOR SPAN B		10631	155.55		9	766.49

VARIABLE DIMENSIONS - UNIT 2 SPAN E					BILL OF MATERIALS (EACH GIRDER) - UNIT 2 SPAN E						
					S1 BARS						
GIRDER	A	B	C	D	NUMBER	WEIGHT (LBS.)	TOTAL REINF. (LBS.)	8000 PSI CONC. (C.Y.)	0.6"Ø L.R. STRANDS	NO. OF GIRDERS REQ'D.	GIRDER LENGTH (FT.)
EG1	83'-11 9/16"	41'-11 13/16"	1'-3 5/16"	11 SPA. @ 1'-6" = 16'-6"	88	627	1159	17.04	38	1	83.96
EG2	84'-2 15/16"	42'-1 7/16"	1'-4 15/16"	11 SPA. @ 1'-6" = 16'-6"	88	627	1159	17.10	38	1	84.24
EG3	84'-6 9/16"	42'-3 5/16"	1'-6 13/16"	11 SPA. @ 1'-6" = 16'-6"	88	627	1159	17.16	38	1	84.55
EG4	84'-10 1/4"	42'-5 1/8"	1'-8 5/8"	11 SPA. @ 1'-6" = 16'-6"	88	627	1159	17.22	38	1	84.86
EG5	85'-1 15/16"	42'-7"	1'-10 1/2"	11 SPA. @ 1'-6" = 16'-6"	88	627	1159	17.28	38	1	85.16
EG6	85'-5 5/8"	42'-8 13/16"	6 5/16"	12 SPA. @ 1'-6" = 18'-0"	90	641	1173	17.34	38	1	85.47
EG7	85'-9 5/16"	42'-10 5/8"	8 3/16"	12 SPA. @ 1'-6" = 18'-0"	90	641	1173	17.41	38	1	85.78
EG8	86'-1"	43'-0 1/2"	10"	12 SPA. @ 1'-6" = 18'-0"	90	641	1173	17.47	38	1	86.08
EG9	86'-4 11/16"	43'-2 5/16"	11 13/16"	12 SPA. @ 1'-6" = 18'-0"	90	641	1173	17.53	38	1	86.39
					TOTAL FOR SPAN E		10487	155.55		9	766.49

VARIABLE DIMENSIONS - UNIT 1 SPAN C					BILL OF MATERIALS (EACH GIRDER) - UNIT 1 SPAN C						
					S1 BARS						
GIRDER	A	B	C	D	NUMBER	WEIGHT (LBS.)	TOTAL REINF. (LBS.)	8000 PSI CONC. (C.Y.)	0.6"Ø L.R. STRANDS	NO. OF GIRDERS REQ'D.	GIRDER LENGTH (FT.)
CG1	83'-11 9/16"	41'-11 13/16"	1'-3 5/16"	11 SPA. @ 1'-6" = 16'-6"	88	627	1159	17.04	38	1	83.96
CG2	84'-2 15/16"	42'-1 7/16"	1'-4 15/16"	11 SPA. @ 1'-6" = 16'-6"	88	627	1159	17.10	38	1	84.24
CG3	84'-6 9/16"	42'-3 5/16"	1'-6 13/16"	11 SPA. @ 1'-6" = 16'-6"	88	627	1159	17.16	38	1	84.55
CG4	84'-10 1/4"	42'-5 1/8"	1'-8 5/8"	11 SPA. @ 1'-6" = 16'-6"	88	627	1159	17.22	38	1	84.86
CG5	85'-1 15/16"	42'-7"	1'-10 1/2"	11 SPA. @ 1'-6" = 16'-6"	88	627	1159	17.28	38	1	85.16
CG6	85'-5 5/8"	42'-8 13/16"	6 5/16"	12 SPA. @ 1'-6" = 18'-0"	90	641	1173	17.34	38	1	85.47
CG7	85'-9 5/16"	42'-10 5/8"	8 3/16"	12 SPA. @ 1'-6" = 18'-0"	90	641	1173	17.41	38	1	85.78
CG8	86'-1"	43'-0 1/2"	10"	12 SPA. @ 1'-6" = 18'-0"	90	641	1173	17.47	38	1	86.08
CG9	86'-4 11/16"	43'-2 5/16"	11 13/16"	12 SPA. @ 1'-6" = 18'-0"	90	641	1173	17.53	38	1	86.39
					TOTAL FOR SPAN C		10487	155.55		9	766.49

PROJECT NO. R-3307

CARTERET COUNTY

STATION: 46+21.50 -L-

SHEET 3 OF 3

STATE OF NORTH CAROLINA
DEPARTMENT OF TRANSPORTATION
RALEIGH

SUPERSTRUCTURE

AASHTO TYPE IV PRESTRESSED CONCRETE GIRDER

DIMENSION CHARTS
SPANS A-E

NORTH CAROLINA PROFESSIONAL SEAL 12323 ENGINEER MORRIS ISRAELNAM
3/30/2012

NORTH CAROLINA PROFESSIONAL SEAL 027799 ENGINEER ALLYSON K. ORR
3/30/2012

MI ENGINEERING
1011 SHAUB DRIVE, SUITE 100
RALEIGH, NC 27606
(919) 851-6606
FIRM PE NUMBER : P-0671

REVISIONS						
NO.	BY:	DATE:	NO.	BY:	DATE:	
1			3			
2			4			

SHEET NO. S-105

TOTAL SHEETS 333

DWG. 106 OF 282

DRAWN BY : B.E. LANNING DATE : 10-11
CHECKED BY : A.K. ORR DATE : 10-11

3/26/2012
2:22:14 PM
User: blanning
Filename: P:\NC Projects\M10005 - Gallants Channel\R-3307\Structures\R-3307_106_SD_PCG3.dgn

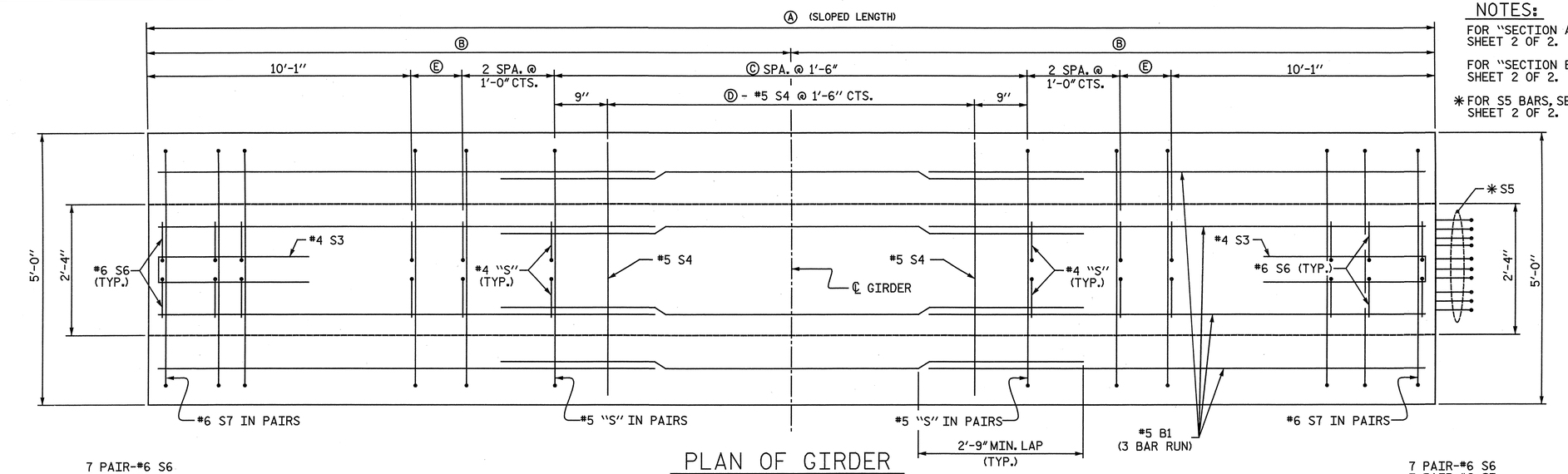

PLAN OF GIRDER

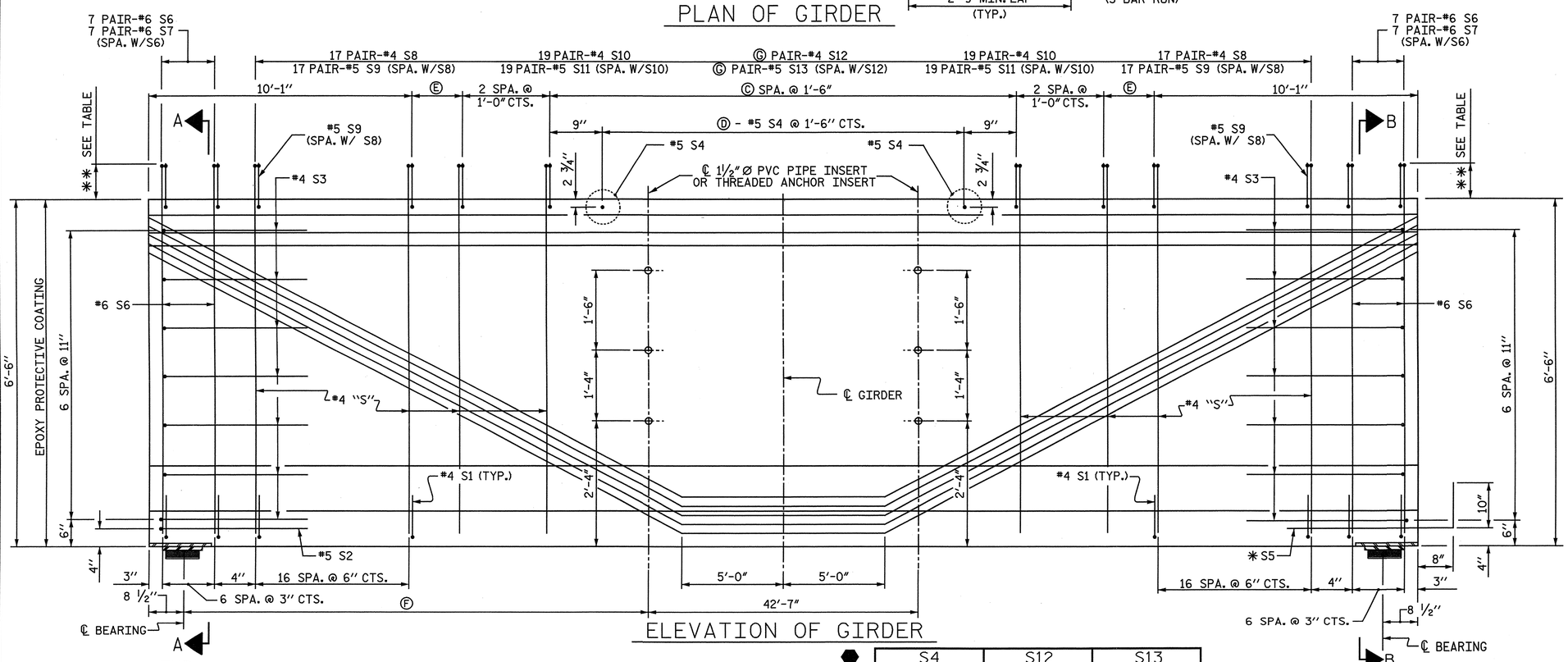

ELEVATION OF GIRDER

NOTES:

FOR "SECTION A-A", SEE SHEET 2 OF 2.

FOR "SECTION B-B", SEE SHEET 2 OF 2.

✱ FOR S5 BARS, SEE "DETAIL C" ON SHEET 2 OF 2.

TABLE	
BAR TYPE	✱✱
S6 & S7	9"
S8 & S9	8"
S10 & S11	6"
S12 & S13	5"

0.6" Ø L. R. GRADE 270 STRANDS		
AREA (SQUARE INCHES)	ULTIMATE STRENGTH (LBS. PER STRAND)	APPLIED PRESTRESS (LBS. PER STRAND)
0.217	58,600	43,950

REINFORCING STEEL FOR ONE GIRDER

BAR	NUMBER	SIZE	TYPE	LENGTH	WEIGHT
B1	12	#5	STR	45'-4"	567
S1	96	#4	3	3'-8"	235
S2	1	#5	2	10'-7"	11
S3	14	#4	2	9'-1"	85
S4	⬢	#5	STR	4'-6"	⬢
✱S5	10	#5	STR	3'-8"	38
S6	28	#6	1	7'-8"	322
S7	28	#6	4	4'-11"	207
S8	68	#4	1	7'-6"	341
S9	68	#5	4	4'-10"	343
S10	76	#4	1	7'-4"	372
S11	76	#5	4	4'-8"	370
S12	⬢	#4	1	7'-3"	⬢
S13	⬢	#5	4	4'-7"	⬢

✱ NOTE: S5 BARS SHALL BE BENT BEFORE SHIPMENT. HEAT BENDING SHALL NOT BE ALLOWED.

BAR TYPES

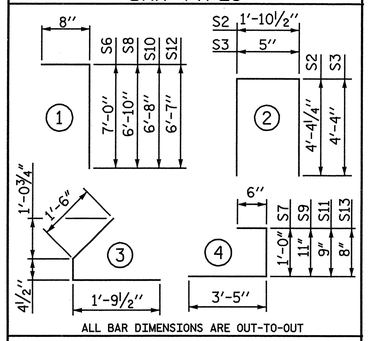

QUANTITIES FOR EACH GIRDER

	EPOXY COATED REINFORCING STEEL	7,500 PSI CONCRETE	0.6" Ø L.R. STRANDS
	LB.	C.Y.	No.
FG1	3884	36.2	54
FG2	3884	36.3	54
FG3	3908	36.5	54
FG4	3908	36.6	54
FG5	3932	36.7	54
FG6	3908	36.8	54
FG7	3932	37.0	54
FG8	3932	37.1	54
FG9	3932	37.2	54

GIRDERS REQUIRED

NUMBER	LENGTH	TOTAL LENGTH
9	VARIES	1162'-6½"

GIRDER	Ⓐ	Ⓑ	Ⓒ	Ⓓ	Ⓔ	Ⓕ	Ⓖ
FG1	127'-4¾"	63'-8⅜"	68	68	7⅜"	41'-8¼"	35
FG2	127'-10"	63'-11"	68	68	10"	41'-10 15/16"	35
FG3	128'-3⅜"	64'-1 11/16"	69	69	3 11/16"	42'-1⅝"	36
FG4	128'-8¾"	64'-4⅜"	69	69	6⅜"	42'-4¼"	36
FG5	129'-2"	64'-7"	70	70	0"	42'-6 15/16"	37
FG6	129'-7⅜"	64'-9 11/16"	69	69	11 11/16"	42'-9⅝"	36
FG7	130'-0¾"	65'-0⅜"	70	70	5⅜"	43'-0 5/16"	37
FG8	130'-6⅛"	65'-3 1/16"	70	70	8 1/16"	43'-2 15/16"	37
FG9	130'-11⅜"	65'-5 11/16"	70	70	10 11/16"	43'-5⅝"	37

⬢	S4		S12		S13	
GIRDER	NO.	WT.	NO.	WT.	NO.	WT.
FG1	68	319	70	339	70	335
FG2	68	319	70	339	70	335
FG3	69	324	72	349	72	344
FG4	69	324	72	349	72	344
FG5	70	329	74	358	74	354
FG6	69	324	72	349	72	344
FG7	70	329	74	358	74	354
FG8	70	329	74	358	74	354
FG9	70	329	74	358	74	354

PROJECT NO. R-3307

CARTERET COUNTY

STATION: 46+21.50 -L-

SHEET 1 OF 2

STATE OF NORTH CAROLINA
DEPARTMENT OF TRANSPORTATION
RALEIGH

SUPERSTRUCTURE

78" PRESTRESSED CONCRETE BULB TEE

PLAN & ELEVATION

SPAN F - GIRDERS FGI-FG9

NORTH CAROLINA PROFESSIONAL SEAL 25911 ENGINEER IWAIN G. HATHWAY 4-3-2012

NORTH CAROLINA PROFESSIONAL SEAL 033752 ENGINEER SETH A. DENNEY

THE LPA GROUP of North Carolina
TRANSPORTATION CONSULTANTS

THE LPA GROUP of North Carolina
8000 Regency Parkway, Suite 600
Cary, North Carolina 27518
NC License No.: F-1084

REVISIONS							SHEET NO.
NO.	BY:	DATE:	NO.	BY:	DATE:		S-106
1			3				TOTAL SHEETS
2			4				333

DWG. 107 OF 282

DRAWN BY : N. B. SPEAKS DATE : 6-28-11
CHECKED BY : R. F. DeCOLA DATE : 11-10-11

4/2/2012 12:41:2 PM
User: jaustin
Filename: Y:\Projects\NCDOT\R-3307\Dwgs\Final\R-3307_107_SD_GDR1.dgn

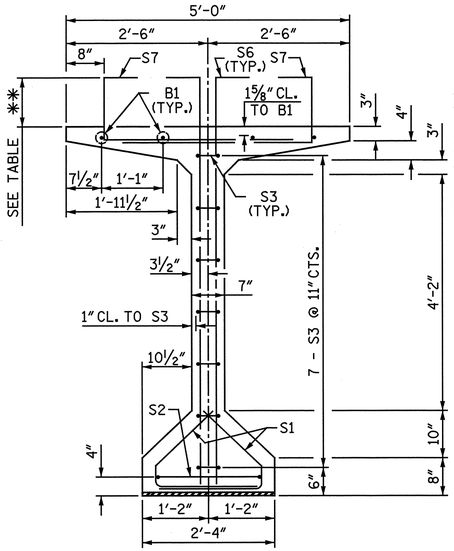

SECTION A-A

✱✱ SEE TABLE, SHEET 1 OF 2

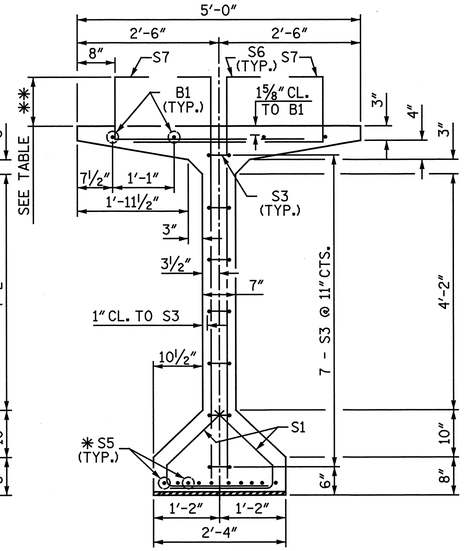

SECTION B-B

✱ FOR S5 BARS, SEE "DETAIL C"

✱✱ SEE TABLE, SHEET 1 OF 2

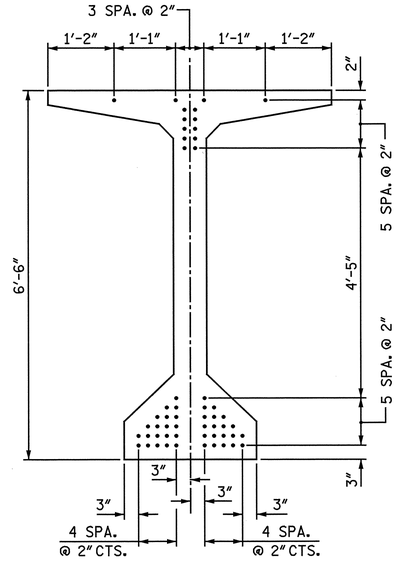

AT END OF GIRDER

54 STRANDS

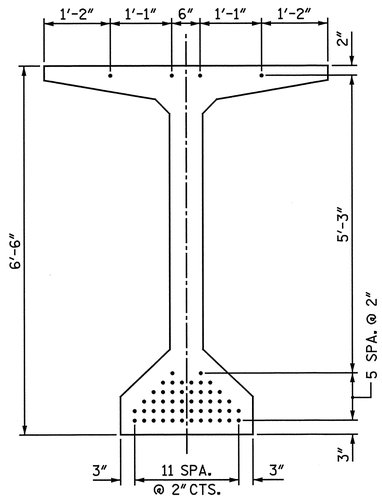

AT ℄ OF GIRDER

54 STRANDS

0.6" Ø LOW RELAXATION STRAND LAYOUT

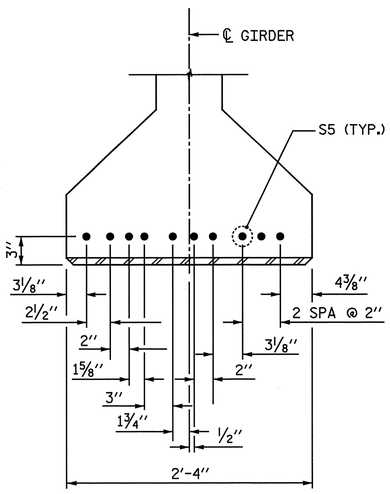

DETAIL C

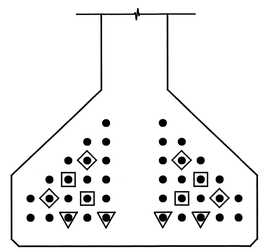

DEBONDING DETAIL

BOND SHALL BE BROKEN ON STRANDS AS SHOWN FOR THE SPECIFIED LENGTH FROM EACH END OF THE GIRDER. SEE STANDARD SPECIFICATIONS ARTICLE 1078-13.

DEBONDING LEGEND

- 4'-0"
- 6'-0"
- 8'-0"
- FULLY BONDED STRANDS

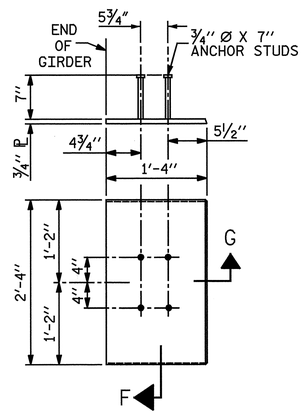

EMBEDDED PLATE "B-2" DETAILS

(2 REQ'D PER GIRDER)

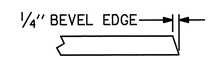

SECTION G

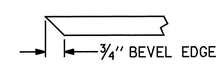

SECTION F

(SEE NOTES)

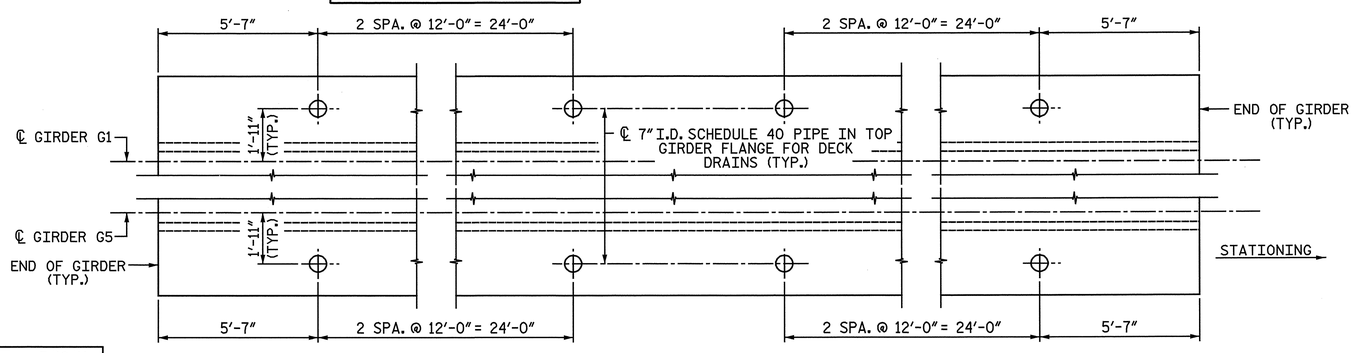

PENETRATIONS IN GIRDER FLANGE FOR DECK DRAINS

NOTES:

ALL PRESTRESSING STRANDS SHALL BE 7-WIRE LOW-RELAXATION GRADE 270 STRANDS AND SHALL CONFORM TO AASHTO M203 EXCEPT FOR SAMPLING REQUIREMENTS WHICH SHALL BE IN ACCORDANCE WITH THE STANDARD SPECIFICATIONS.

ALL REINFORCING STEEL SHALL BE GRADE 60 AND SHALL BE EPOXY COATED.

APPLY EPOXY PROTECTIVE COATING TO END OF GIRDER SURFACES INDICATED IN ELEVATION VIEW.

EMBEDDED PLATE "B-2" SHALL BE GALVANIZED IN ACCORDANCE WITH THE STANDARD SPECIFICATIONS. BEVEL EDGES OF PLATE "B-2" TO GIVE CLOSE FIT BUT NOT TIGHT FIT TO STEEL CASTING FORM.

ANCHOR STUDS SHALL CONFORM TO AASHTO M169 GRADES 1010 THROUGH 1020 OR APPROVED EQUAL, AND SHALL MEET THE TYPE "B" REQUIREMENTS OF SUBSECTION 7.3 OF THE ANSI/AASHTO/AWS D1.5 BRIDGE WELDING CODE.

AT ENDS OF GIRDERS TO BE EMBEDDED IN CONCRETE DIAPHRAGMS OR END WALLS, PRESTRESSING STRANDS MAY EXTEND A MAXIMUM OF 2" BEYOND THE GIRDER ENDS. OTHERWISE, PRESTRESSING STRANDS SHALL BE CUT FLUSH WITH THE GIRDER ENDS.

THE TRANSFER OF LOAD FROM THE ANCHORAGES TO THE GIRDER SHALL BE DONE WHEN CONCRETE HAS REACHED A COMPRESSIVE STRENGTH OF NOT LESS THAN 6000 PSI.

DEPENDING ON THE TYPE OF SYSTEM USED TO SUPPORT THE DECK SLAB FORMS, PRESET ANCHORS MAY BE NECESSARY IN THE PRESTRESSED CONCRETE GIRDER.

THE TOP SURFACE OF THE GIRDER, EXCLUDING THE OUTSIDE 4", SHALL BE RAKED TO A DEPTH OF ¼".

WHEN DRAPED STRANDS ARE DETAILED, THE LONGITUDINAL LOCATION OF THE HOLD DOWN DEVICES SHALL BE WITHIN 6" OF THE LOCATION SHOWN AND THE CENTER OF GRAVITY OF THE GROUP OF DRAPED STRANDS SHALL BE LOCATED WITHIN ½" OF THE THEORETICAL LOCATION SHOWN.

PRESTRESSED CONCRETE GIRDERS ARE DESIGNED FOR 0 PSI TENSION IN THE PRECOMPRESSED TENSILE ZONE UNDER ALL LOADING CONDITIONS.

PRESTRESSED CONCRETE GIRDERS SHALL CONTAIN CALCIUM NITRITE CORROSION INHIBITOR. SEE STANDARD SPECIFICATIONS FOR CALCIUM NITRITE CORROSION INHIBITOR.

THE COST OF ALL CONCRETE, REINFORCING STEEL, PRESTRESSED STRANDS, INSERTS EMBEDDED IN THE CONCRETE, EMBEDDED PLATES, TEMPORARY BRACING AND INCIDENTAL ITEMS SHALL BE INCLUDED IN THE CONTRACT UNIT PRICE FOR "78" PRESTRESSED CONCRETE GIRDERS".

THE CONTRACTOR IS RESPONSIBLE FOR THE INTEGRITY AND STABILITY OF THE GIRDERS. IN HANDLING THE 78" PRESTRESSED CONCRETE GIRDERS, THEY SHALL BE MAINTAINED IN AN UPRIGHT POSITION AT ALL TIMES AND THE PROPOSED METHOD FOR ERECTING, STORING AND TRANSPORTING THE GIRDERS SHALL BE SUBMITTED TO THE ENGINEER FOR APPROVAL. THE SUBMITTAL SHALL INCLUDE DESIGN CALCULATIONS FOR LOCATIONS OF PICK-UP POINTS AND SUPPORT POINTS AS NEEDED TO MAINTAIN THE GIRDERS STABILITY DURING ERECTION, STORAGE AND TRANSPORTATION.

PRIOR TO CASTING THE GIRDERS, THE CONTRACTOR SHALL SUBMIT COMPLETE WORKING DRAWINGS WITH THE EXACT LOCATION, AND A COMPLETE DESCRIPTION OF ALL INSERTS CAST IN THE GIRDERS, TO THE DEPARTMENT FOR APPROVAL. SUCH INSERTS INCLUDE, BUT ARE NOT LIMITED TO, INSERTS FOR SUPPORTING FALSEWORK AND FORMWORK, INSERTS FOR ATTACHING DIAPHRAGMS, INSERTS FOR CONNECTING TEMPORARY BRACING, AND LIFTING INSERTS.

FOR REINFORCING STEEL AROUND 1½" Ø PVC PIPE INSERT, SEE "GIRDER DETAILS - 78" PRESTRESSED CONCRETE BULB TEE" SHEET.

USE THREADED INSERTS ON EXTERIOR GIRDERS AND PVC PIPE INSERTS ON INTERIOR GIRDERS. FOR THREADED INSERT DETAILS, SEE "GIRDER DETAILS - 78" PRESTRESSED CONCRETE BULB TEE" SHEET.

REINFORCING STEEL IN THE TOP FLANGE OF GIRDERS WITH DECK DRAIN PENETRATIONS MAY BE SHIFTED SLIGHTLY AS NECESSARY TO AVOID INTERFERENCE WITH THOSE DECK DRAIN PENETRATIONS IN THE GIRDER TOP FLANGE.

7" I.D. SCHEDULE 40 PIPE SHALL BE GALVANIZED IN ACCORDANCE WITH THE STANDARD SPECIFICATIONS.

FOR 78" PRESTRESSED CONCRETE GIRDERS, SEE SPECIAL PROVISIONS.

PROJECT NO. R-3307

CARTERET COUNTY

STATION: 46+21.50 -L-

SHEET 2 OF 2

STATE OF NORTH CAROLINA
DEPARTMENT OF TRANSPORTATION
RALEIGH

SUPERSTRUCTURE

78" PRESTRESSED CONCRETE BULB TEE

SECTIONS & DETAILS

SPAN F - GIRDERS FGI-FG9

NORTH CAROLINA PROFESSIONAL SEAL 25911 ENGINEER DARYL G. HATHAWAY 11-7-2013

NORTH CAROLINA PROFESSIONAL SEAL 033752 ENGINEER SETH A. DENNIS 11/7/13

THE LPA GROUP of North Carolina TRANSPORTATION CONSULTANTS

THE LPA GROUP of North Carolina
8000 Regency Parkway, Suite 600
Cary, North Carolina 27518
NC License No.: F-1084

REVISIONS								SHEET NO.
NO.	BY:	DATE:	NO.	BY:	DATE:			S-107
1			3					TOTAL SHEETS
2			4					333

DRAWN BY : N. B. SPEAKS DATE : 7-12-11

CHECKED BY : R. F. DeCOLA DATE : 11-28-11

DWG. 108 OF 282

11/7/2013
3:38:50 PM
User: jaustin
Filename: Y:\Projects\NCDOT\R-3307\Dwgs\Final\R-3307_108_SD_GDR2.dgn

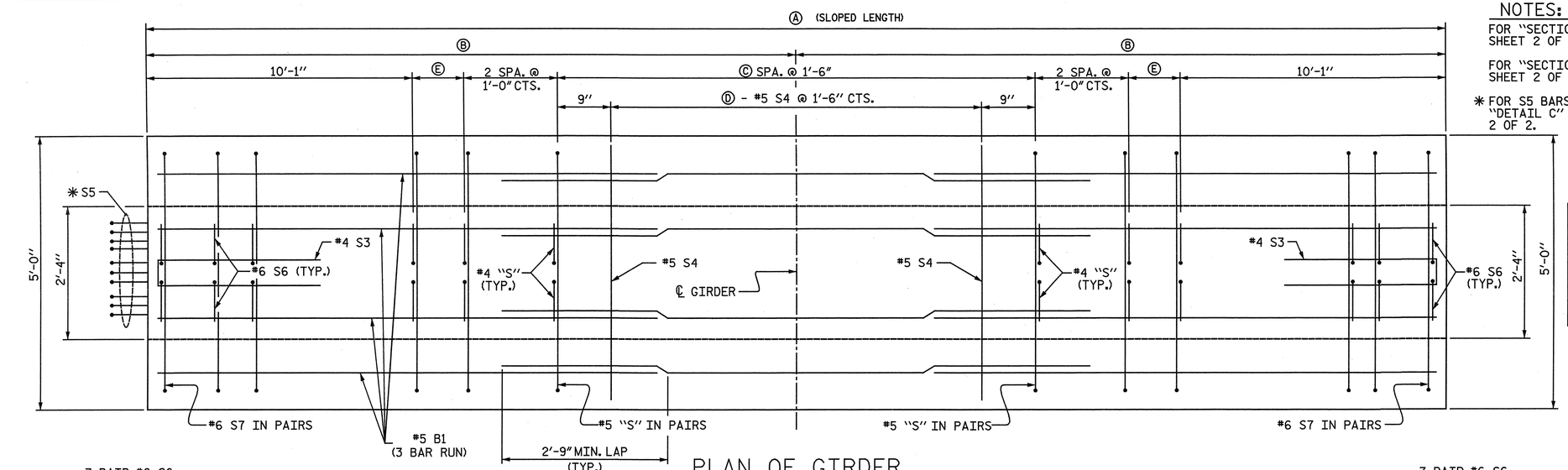

PLAN OF GIRDER

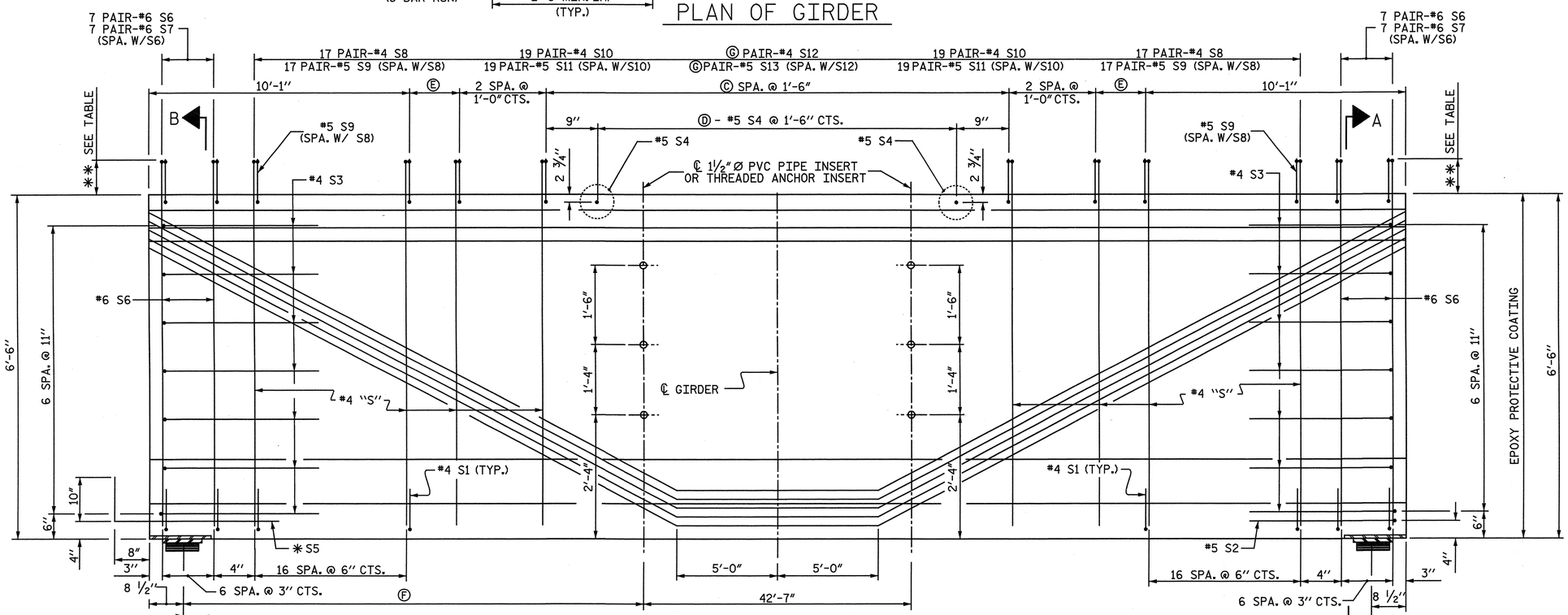

ELEVATION OF GIRDER

GIRDER	Ⓐ	Ⓑ	Ⓒ	Ⓓ	Ⓔ	Ⓕ	Ⓖ
GG1	127'-5"	63'-8 1/2"	68	68	7 1/2"	41'-8 3/4"	35
GG2	127'-10 3/8"	63'-11 3/16"	68	68	10 3/16"	41'-10 15/16"	35
GG3	128'-3 3/4"	64'-1 7/8"	68	68	12 7/8"	42'-1 5/8"	35
GG4	128'-9"	64'-4 1/2"	69	69	6 1/2"	42'-4 1/4"	36
GG5	129'-2 3/8"	64'-7 3/16"	69	69	9 3/16"	42'-6 15/16"	36
GG6	129'-7 3/4"	64'-9 7/8"	69	69	11 7/8"	42'-9 5/8"	36
GG7	130'-1"	65'-0 1/2"	70	70	5 1/2"	43'-0 5/16"	37
GG8	130'-6 3/8"	65'-3 3/16"	70	70	8 3/16"	43'-2 15/16"	37
GG9	130'-11 3/4"	65'-5 7/8"	70	70	9 7/8"	43'-5 5/8"	37

⬢	S4		S12		S13	
GIRDER	NO.	WT.	NO.	WT.	NO.	WT.
GG1	68	319	70	339	70	335
GG2	68	319	70	339	70	335
GG3	68	319	70	339	70	335
GG4	69	324	72	349	72	344
GG5	69	324	72	349	72	344
GG6	69	324	72	349	72	344
GG7	70	329	74	358	74	354
GG8	70	329	74	358	74	354
GG9	70	329	74	358	74	354

NOTES:

FOR "SECTION A-A", SEE SHEET 2 OF 2.

FOR "SECTION B-B", SEE SHEET 2 OF 2.

✱ FOR S5 BARS, SEE "DETAIL C" ON SHEET 2 OF 2.

TABLE	
BAR TYPE	✱✱
S6 & S7	9"
S8 & S9	8"
S10 & S11	6"
S12 & S13	5"

0.6" Ø L. R. GRADE 270 STRANDS		
AREA (SQUARE INCHES)	ULTIMATE STRENGTH (LBS. PER STRAND)	APPLIED PRESTRESS (LBS. PER STRAND)
0.217	58,600	43,950

REINFORCING STEEL FOR ONE GIRDER

BAR	NUMBER	SIZE	TYPE	LENGTH	WEIGHT
B1	12	#5	STR	45'-4"	567
S1	96	#4	3	3'-8"	235
S2	1	#5	2	10'-7"	11
S3	14	#4	2	9'-1"	85
S4	⬢	#5	STR	4'-6"	⬢
✱S5	10	#5	STR	3'-8"	38
S6	28	#6	1	7'-8"	322
S7	28	#6	4	4'-11"	207
S8	68	#4	1	7'-6"	341
S9	68	#5	4	4'-10"	343
S10	76	#4	1	7-4"	372
S11	76	#5	4	4'-8"	370
S12	⬢	#4	1	7'-3"	⬢
S13	⬢	#5	4	4'-7"	⬢

✱NOTE: S5 BARS SHALL BE BENT BEFORE SHIPMENT. HEAT BENDING SHALL NOT BE ALLOWED.

BAR TYPES

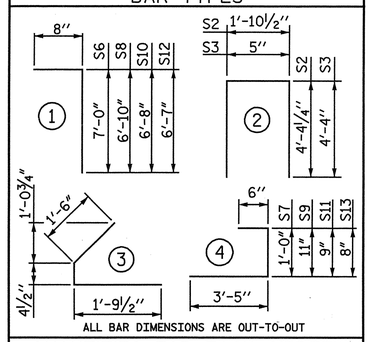

ALL BAR DIMENSIONS ARE OUT-TO-OUT

QUANTITIES FOR EACH GIRDER

	EPOXY COATING REINFORCING STEEL	7,500 PSI CONCRETE	0.6" Ø L.R. STRANDS
	LB.	C.Y.	No.
GG1	3884	36.2	54
GG2	3884	36.3	54
GG3	3884	36.5	54
GG4	3908	36.6	54
GG5	3908	36.7	54
GG6	3908	36.8	54
GG7	3932	37.0	54
GG8	3932	37.1	54
GG9	3932	37.2	54

GIRDERS REQUIRED

NUMBER	LENGTH	TOTAL LENGTH
9	VARIES	1162'-9 3/8"

PROJECT NO. R-3307

CARTERET COUNTY

STATION: 46+21.50 -L-

SHEET 1 OF 2

STATE OF NORTH CAROLINA
DEPARTMENT OF TRANSPORTATION
RALEIGH

SUPERSTRUCTURE

78" PRESTRESSED CONCRETE BULB TEE

PLAN & ELEVATION

SPAN G - GIRDERS GGI-GG9

NORTH CAROLINA PROFESSIONAL SEAL 25911 ENGINEER DWIN G. HATHAWAY 4-3-2012

NORTH CAROLINA PROFESSIONAL SEAL 033752 ENGINEER SETH A. DEHNERT

THE LPA GROUP of North Carolina TRANSPORTATION CONSULTANTS

THE LPA GROUP of North Carolina
8000 Regency Parkway, Suite 600
Cary, North Carolina 27518
NC License No.: F-1084

REVISIONS								SHEET NO.
NO.	BY:	DATE:	NO.	BY:	DATE:			S-108
1			3					TOTAL SHEETS
2			4					333

DRAWN BY : N. B. SPEAKS DATE : 6-28-11
CHECKED BY : R. F. DeCOLA DATE : 11-10-11

DWG. 109 OF 282

4/2/2012 12:41:... PM
User: jaustin
Filename: Y:\Projects\NCDOT\R-3307\Dwgs\Final\R-3307_109_SD_GDR3.dgn

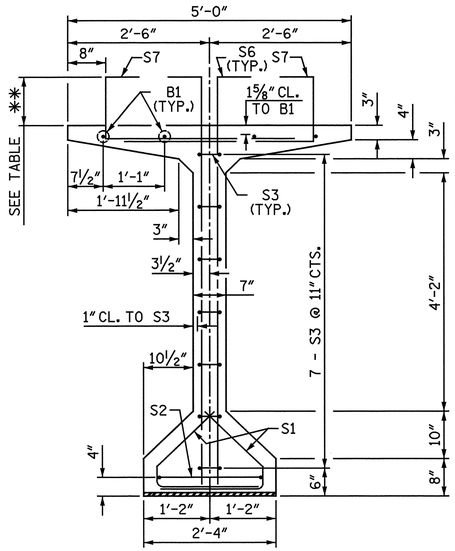

SECTION A-A

✱✱ SEE TABLE, SHEET 1 OF 2

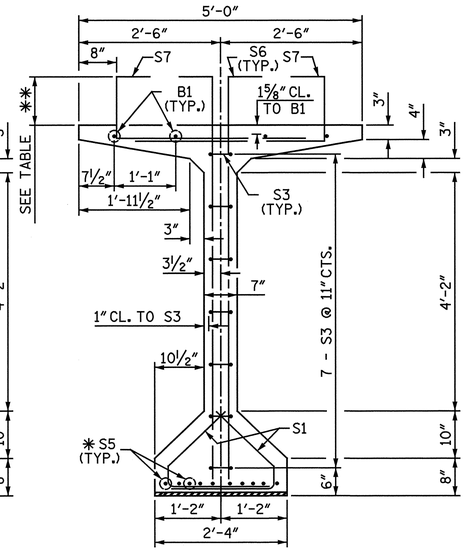

SECTION B-B

✱ FOR S5 BARS, SEE "DETAIL C"

✱✱ SEE TABLE, SHEET 1 OF 2

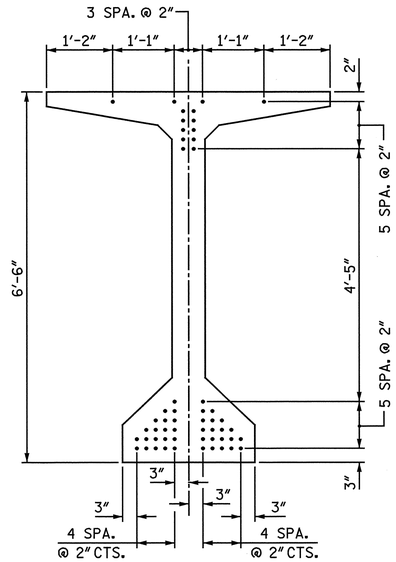

AT END OF GIRDER

54 STRANDS

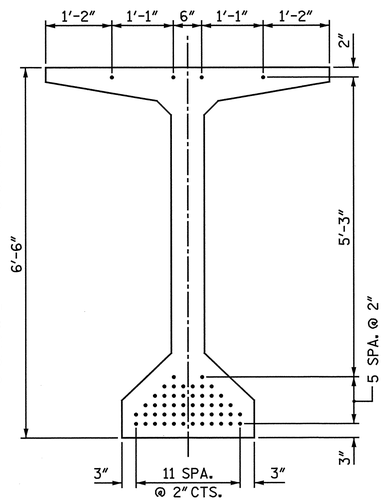

AT ℄ OF GIRDER

54 STRANDS

0.6" Ø LOW RELAXATION STRAND LAYOUT

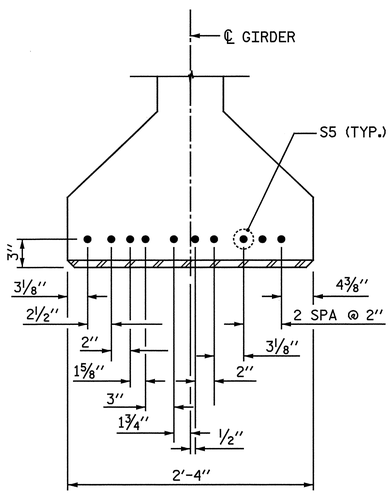

DETAIL C

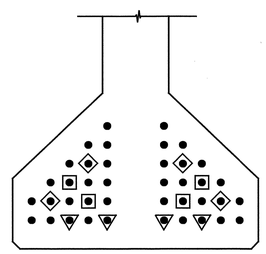

DEBONDING DETAIL

BOND SHALL BE BROKEN ON STRANDS AS SHOWN FOR THE SPECIFIED LENGTH FROM EACH END OF THE GIRDER. SEE STANDARD SPECIFICATIONS ARTICLE 1078-13.

DEBONDING LEGEND	
▽ 4'-0"	▣ 8'-0"
◇ 6'-0"	
● FULLY BONDED STRANDS	

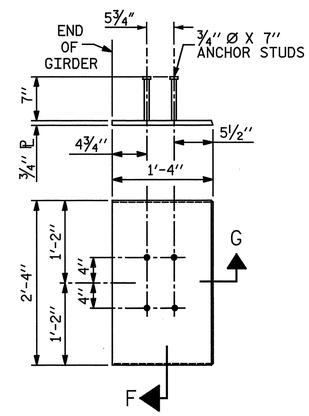

EMBEDDED PLATE "B-2" DETAILS

(2 REQ'D PER GIRDER)

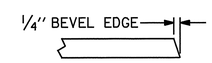

SECTION G

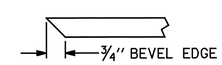

SECTION F

(SEE NOTES)

NOTES:

ALL PRESTRESSING STRANDS SHALL BE 7-WIRE LOW-RELAXATION GRADE 270 STRANDS AND SHALL CONFORM TO AASHTO M203 EXCEPT FOR SAMPLING REQUIREMENTS WHICH SHALL BE IN ACCORDANCE WITH THE STANDARD SPECIFICATIONS.

ALL REINFORCING STEEL SHALL BE GRADE 60 AND SHALL BE EPOXY COATED.

APPLY EPOXY PROTECTIVE COATING TO END OF GIRDER SURFACES INDICATED IN ELEVATION VIEW.

EMBEDDED PLATE "B-2" SHALL BE GALVANIZED IN ACCORDANCE WITH THE STANDARD SPECIFICATIONS. BEVEL EDGES OF PLATE "B-2" TO GIVE CLOSE FIT BUT NOT TIGHT FIT TO STEEL CASTING FORM.

ANCHOR STUDS SHALL CONFORM TO AASHTO M169 GRADES 1010 THROUGH 1020 OR APPROVED EQUAL, AND SHALL MEET THE TYPE "B" REQUIREMENTS OF SUBSECTION 7.3 OF THE ANSI/AASHTO/AWS D1.5 BRIDGE WELDING CODE.

AT ENDS OF GIRDERS TO BE EMBEDDED IN CONCRETE DIAPHRAGMS OR END WALLS, PRESTRESSING STRANDS MAY EXTEND A MAXIMUM OF 2" BEYOND THE GIRDER ENDS. OTHERWISE, PRESTRESSING STRANDS SHALL BE CUT FLUSH WITH THE GIRDER ENDS.

THE TRANSFER OF LOAD FROM THE ANCHORAGES TO THE GIRDER SHALL BE DONE WHEN CONCRETE HAS REACHED A COMPRESSIVE STRENGTH OF NOT LESS THAN 6000 PSI.

DEPENDING ON THE TYPE OF SYSTEM USED TO SUPPORT THE DECK SLAB FORMS, PRESET ANCHORS MAY BE NECESSARY IN THE PRESTRESSED CONCRETE GIRDER.

THE TOP SURFACE OF THE GIRDER, EXCLUDING THE OUTSIDE 4", SHALL BE RAKED TO A DEPTH OF 1/4".

WHEN DRAPED STRANDS ARE DETAILED, THE LONGITUDINAL LOCATION OF THE HOLD DOWN DEVICES SHALL BE WITHIN 6" OF THE LOCATION SHOWN AND THE CENTER OF GRAVITY OF THE GROUP OF DRAPED STRANDS SHALL BE LOCATED WITHIN 1/2" OF THE THEORETICAL LOCATION SHOWN.

PRESTRESSED CONCRETE GIRDERS ARE DESIGNED FOR 0 PSI TENSION IN THE PRECOMPRESSED TENSILE ZONE UNDER ALL LOADING CONDITIONS.

PRESTRESSED CONCRETE GIRDERS SHALL CONTAIN CALCIUM NITRITE CORROSION INHIBITOR. SEE STANDARD SPECIFICATIONS FOR CALCIUM NITRITE CORROSION INHIBITOR.

THE COST OF ALL CONCRETE, REINFORCING STEEL, PRESTRESSED STRANDS, INSERTS EMBEDDED IN THE CONCRETE, EMBEDDED PLATES, TEMPORARY BRACING AND INCIDENTAL ITEMS SHALL BE INCLUDED IN THE CONTRACT UNIT PRICE FOR "78" PRESTRESSED CONCRETE GIRDERS".

THE CONTRACTOR IS RESPONSIBLE FOR THE INTEGRITY AND STABILITY OF THE GIRDERS. IN HANDLING THE 78" PRESTRESSED CONCRETE GIRDERS, THEY SHALL BE MAINTAINED IN AN UPRIGHT POSITION AT ALL TIMES AND THE PROPOSED METHOD FOR ERECTING, STORING AND TRANSPORTING THE GIRDERS SHALL BE SUBMITTED TO THE ENGINEER FOR APPROVAL. THE SUBMITTAL SHALL INCLUDE DESIGN CALCULATIONS FOR LOCATIONS OF PICK-UP POINTS AND SUPPORT POINTS AS NEEDED TO MAINTAIN THE GIRDERS STABILITY DURING ERECTION, STORAGE AND TRANSPORTATION.

PRIOR TO CASTING THE GIRDERS, THE CONTRACTOR SHALL SUBMIT COMPLETE WORKING DRAWINGS WITH THE EXACT LOCATION, AND A COMPLETE DESCRIPTION OF ALL INSERTS CAST IN THE GIRDERS, TO THE DEPARTMENT FOR APPROVAL. SUCH INSERTS INCLUDE, BUT ARE NOT LIMITED TO, INSERTS FOR SUPPORTING FALSEWORK AND FORMWORK, INSERTS FOR ATTACHING DIAPHRAGMS, INSERTS FOR CONNECTING TEMPORARY BRACING, AND LIFTING INSERTS.

FOR REINFORCING STEEL AROUND 1 1/2" Ø PVC PIPE INSERT, SEE "GIRDER DETAILS - 78" PRESTRESSED CONCRETE BULB TEE" SHEET.

USE THREADED INSERTS ON EXTERIOR GIRDERS AND PVC PIPE INSERTS ON INTERIOR GIRDERS. FOR THREADED INSERT DETAILS, SEE "GIRDER DETAILS - 78" PRESTRESSED CONCRETE BULB TEE" SHEET.

REINFORCING STEEL IN THE TOP FLANGE OF GIRDERS WITH DECK DRAIN PENETRATIONS MAY BE SHIFTED SLIGHTLY AS NECESSARY TO AVOID INTERFERENCE WITH THOSE DECK DRAIN PENETRATIONS IN THE GIRDER TOP FLANGE.

7" I.D. SCHEDULE 40 PIPE SHALL BE GALVANIZED IN ACCORDANCE WITH THE STANDARD SPECIFICATIONS.

FOR 78" PRESTRESSED CONCRETE GIRDERS, SEE SPECIAL PROVISIONS.

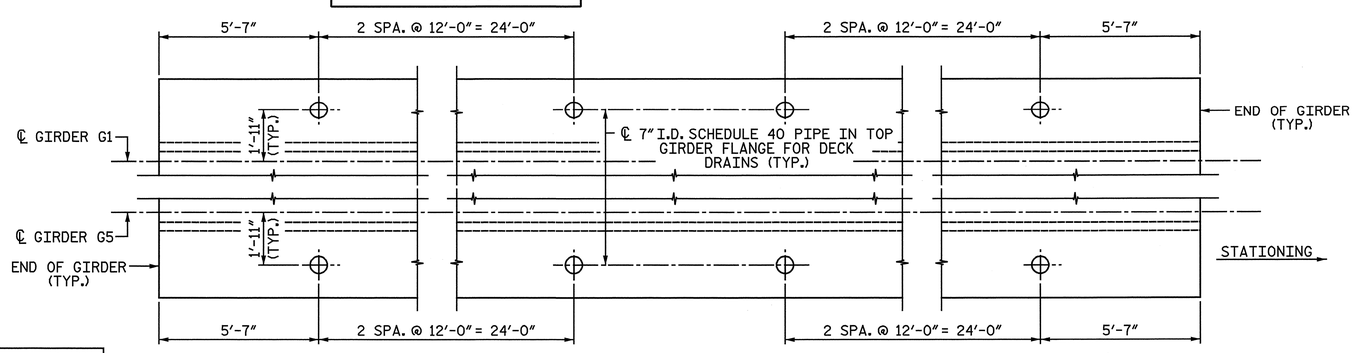

PENETRATIONS IN GIRDER FLANGE FOR DECK DRAINS

PROJECT NO. R-3307

CARTERET COUNTY

STATION: 46+21.50 -L-

SHEET 2 OF 2

STATE OF NORTH CAROLINA
DEPARTMENT OF TRANSPORTATION
RALEIGH

SUPERSTRUCTURE

78" PRESTRESSED CONCRETE BULB TEE

SECTIONS & DETAILS

SPAN G - GIRDERS GGI-GG9

NORTH CAROLINA PROFESSIONAL SEAL 25911 11-1-2013 ENGINEER DAVID G. HATHAWAY

NORTH CAROLINA PROFESSIONAL SEAL 033752 ENGINEER SETH A. DENNIS

THE LPA GROUP of North Carolina TRANSPORTATION CONSULTANTS

THE LPA GROUP of North Carolina
8000 Regency Parkway, Suite 600
Cary, North Carolina 27518
NC License No.: F-1084

REVISIONS								SHEET NO.
NO.	BY:	DATE:	NO.	BY:	DATE:			S-109
1			3					TOTAL SHEETS
2			4					333

DRAWN BY : N. B. SPEAKS DATE : 7-12-11

CHECKED BY : R. F. DeCOLA DATE : 11-28-11

DWG. 110 OF 282

11/7/2013
3:38:51 PM
User: jaustin
Filename: Y:\Projects\NCDOT\R-3307\Dwgs\Final\R-3307_110_SD_GDR4.dgn

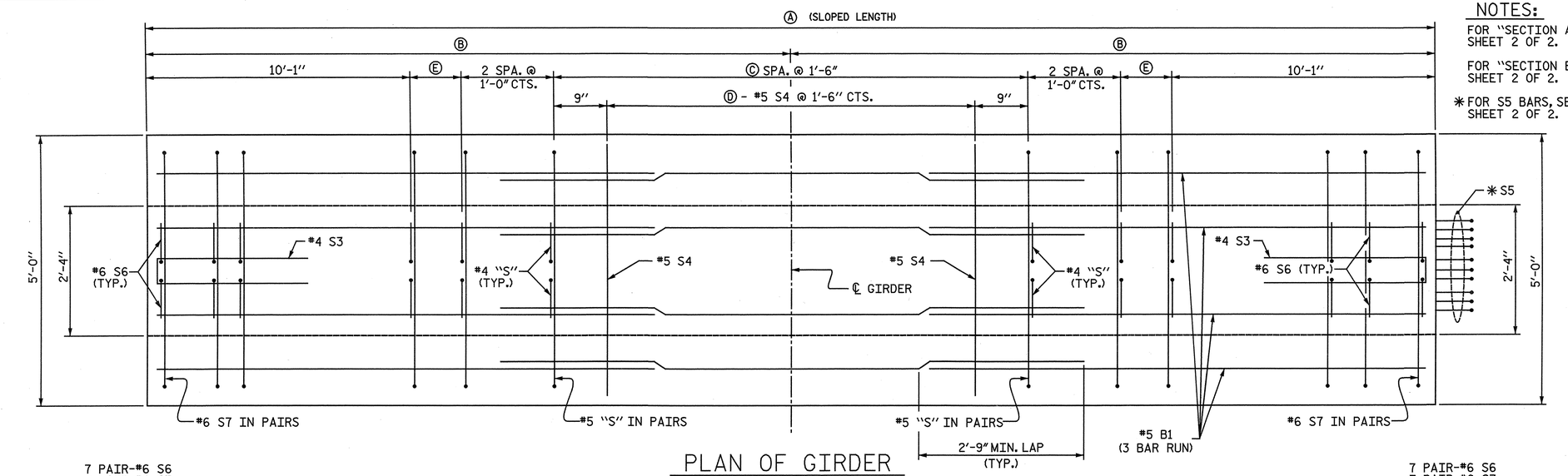

PLAN OF GIRDER

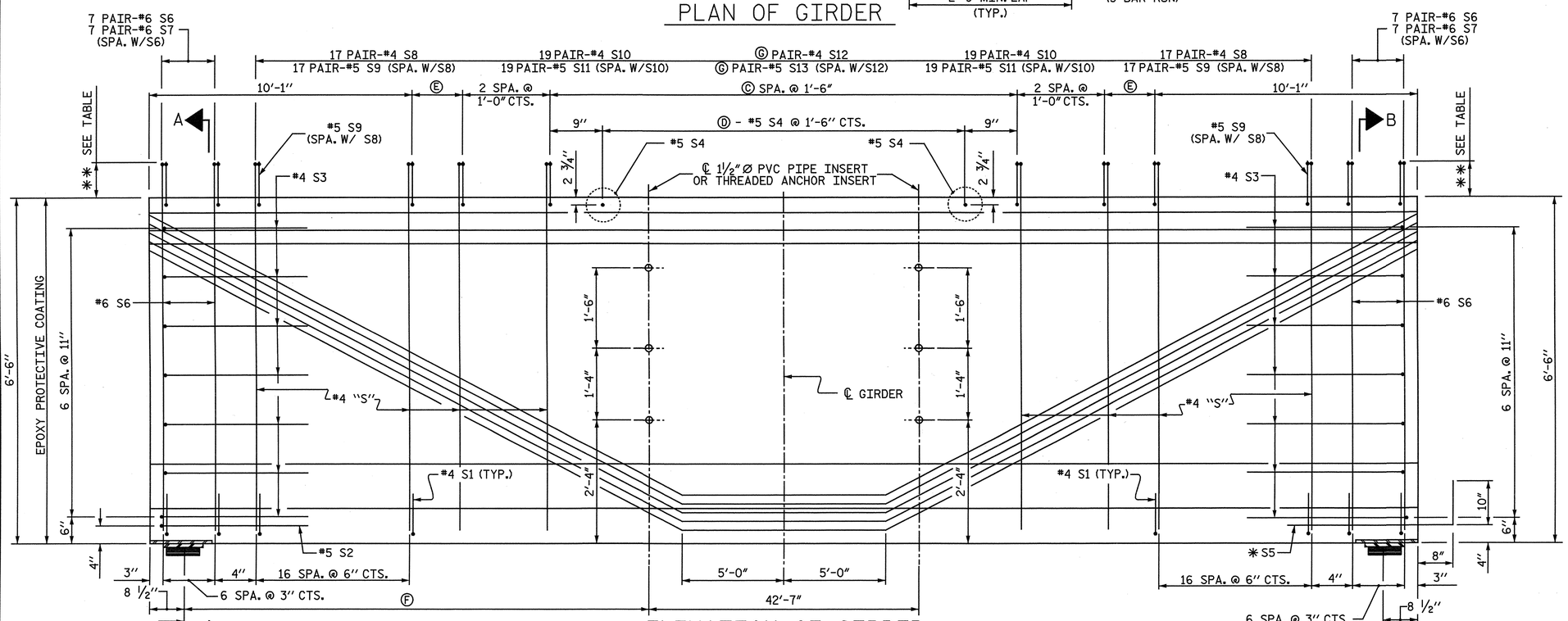

ELEVATION OF GIRDER

GIRDER	Ⓐ	Ⓑ	Ⓒ	Ⓓ	Ⓔ	Ⓕ	Ⓖ
HG1	127'-5 1/2"	63'-8 3/4"	68	68	7 3/4"	41'-8 3/4"	35
HG2	127'-10 7/8"	63'-11 7/16"	68	68	10 7/16"	41'-10 15/16"	35
HG3	128'-4 1/8"	64'-2 1/16"	69	69	4 1/16"	42'-1 5/8"	36
HG4	128'-9 1/2"	64'-4 3/4"	69	69	6 3/4"	42'-4 1/4"	36
HG5	129'-2 7/8"	64'-7 1/16"	69	69	9 7/16"	42'-6 15/16"	36
HG6	129'-8 1/8"	64'-10 1/16"	70	70	3 1/16"	42'-9 5/8"	37
HG7	130'-1 1/2"	65'-0 3/4"	70	70	5 3/4"	43'-0 5/16"	37
HG8	130'-6 7/8"	65'-3 7/16"	70	70	8 7/16"	43'-2 15/16"	37
HG9	131'-0 1/8"	65'-6 1/16"	70	70	11 1/16"	43'-5 5/8"	37

⬢	S4		S12		S13	
GIRDER	NO.	WT.	NO.	WT.	NO.	WT.
HG1	68	319	70	339	70	335
HG2	68	319	70	339	70	335
HG3	69	324	72	349	72	344
HG4	69	324	72	349	72	344
HG5	69	324	72	349	72	344
HG6	70	329	74	358	74	354
HG7	70	329	74	358	74	354
HG8	70	329	74	358	74	354
HG9	70	329	74	358	74	354

NOTES:

FOR "SECTION A-A", SEE SHEET 2 OF 2.

FOR "SECTION B-B", SEE SHEET 2 OF 2.

✱FOR S5 BARS, SEE "DETAIL C" ON SHEET 2 OF 2.

TABLE	
BAR TYPE	✱✱
S6 & S7	9"
S8 & S9	8"
S10 & S11	6"
S12 & S13	5"

0.6" Ø L. R. GRADE 270 STRANDS

AREA (SQUARE INCHES)	ULTIMATE STRENGTH (LBS. PER STRAND)	APPLIED PRESTRESS (LBS. PER STRAND)
0.217	58,600	43,950

REINFORCING STEEL FOR ONE GIRDER

BAR	NUMBER	SIZE	TYPE	LENGTH	WEIGHT
B1	12	#5	STR	45'-4"	567
S1	96	#4	3	3'-8"	235
S2	1	#5	2	10'-7"	11
S3	14	#4	2	9'-1"	85
S4	⬢	#5	STR	4'-6"	⬢
✱S5	10	#5	STR	3'-8"	38
S6	28	#6	1	7'-8"	322
S7	28	#6	4	4'-11"	207
S8	68	#4	1	7'-6"	341
S9	68	#5	4	4'-10"	343
S10	76	#4	1	7'-4"	372
S11	76	#5	4	4'-8"	370
S12	⬢	#4	1	7'-3"	⬢
S13	⬢	#5	4	4'-7"	⬢

✱NOTE: S5 BARS SHALL BE BENT BEFORE SHIPMENT. HEAT BENDING SHALL NOT BE ALLOWED.

BAR TYPES

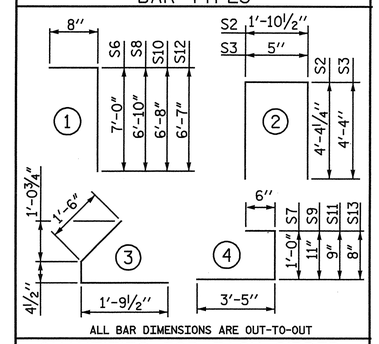

QUANTITIES FOR EACH GIRDER

	EPOXY COATED REINFORCING STEEL	7,500 PSI CONCRETE	0.6" Ø L.R. STRANDS
	LB.	C.Y.	No.
HG1	3884	36.2	54
HG2	3884	36.4	54
HG3	3908	36.5	54
HG4	3908	36.6	54
HG5	3908	36.7	54
HG6	3932	36.9	54
HG7	3932	37.0	54
HG8	3932	37.1	54
HG9	3932	37.3	54

GIRDERS REQUIRED

NUMBER	LENGTH	TOTAL LENGTH
9	VARIES	1163'-1 1/2"

PROJECT NO. R-3307

CARTERET COUNTY

STATION: 46+21.50 -L-

SHEET 1 OF 2

STATE OF NORTH CAROLINA
DEPARTMENT OF TRANSPORTATION
RALEIGH
SUPERSTRUCTURE

78" PRESTRESSED CONCRETE BULB TEE

PLAN & ELEVATION

SPAN H - GIRDERS HG1-HG9

NORTH CAROLINA PROFESSIONAL SEAL 25911 ENGINEER DWAIN G. WATMAUGH 4-3-2012

NORTH CAROLINA PROFESSIONAL SEAL 033752 ENGINEER SETH A. DENNIS 4/04/12

THE LPA GROUP of North Carolina
TRANSPORTATION CONSULTANTS

THE LPA GROUP of North Carolina
8000 Regency Parkway, Suite 600
Cary, North Carolina 27518
NC License No.: F-1084

REVISIONS						SHEET NO.
NO.	BY:	DATE:	NO.	BY:	DATE:	S-110
1			3			TOTAL SHEETS
2			4			333

DRAWN BY : N. B. SPEAKS DATE : 6-28-11
CHECKED BY : R. F. DeCOLA DATE : 11-28-11

DWG. 111 OF 282

4/2/2012 12:41:[illegible] PM
User:jdustin
Filename: Y:\Projects\NCDOT\R-3307\Dwgs\Final\R-3307_111_SD_GDR5.dgn

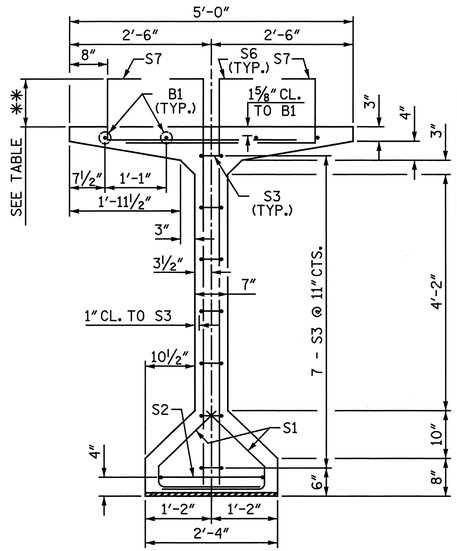

SECTION A-A

✱✱ SEE TABLE, SHEET 1 OF 2

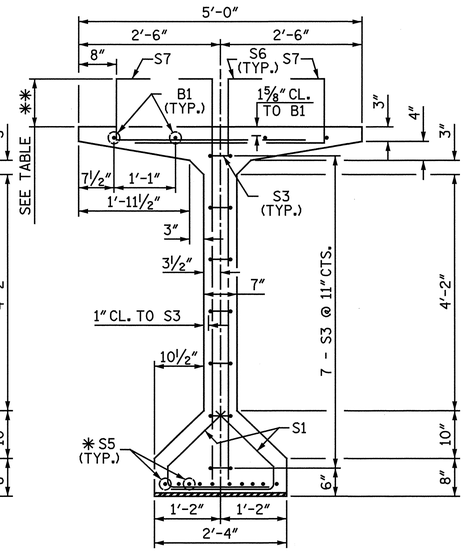

SECTION B-B

✱ FOR S5 BARS, SEE "DETAIL C"

✱✱ SEE TABLE, SHEET 1 OF 2

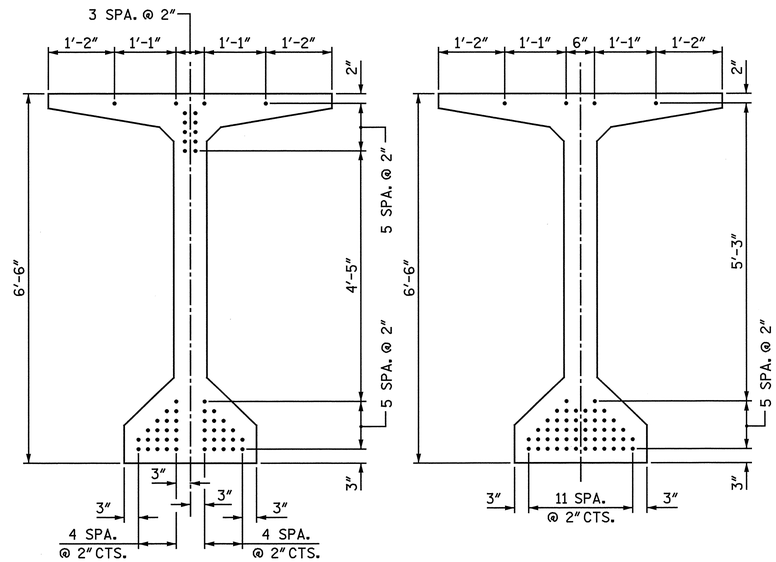

AT END OF GIRDER

54 STRANDS

AT ℄ OF GIRDER

54 STRANDS

0.6" Ø LOW RELAXATION STRAND LAYOUT

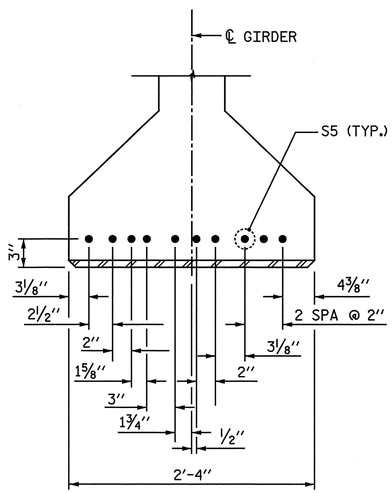

DETAIL C

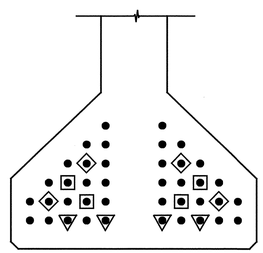

DEBONDING DETAIL

BOND SHALL BE BROKEN ON STRANDS AS SHOWN FOR THE SPECIFIED LENGTH FROM EACH END OF THE GIRDER. SEE STANDARD SPECIFICATIONS ARTICLE 1078-13.

DEBONDING LEGEND	
▼ 4'-0"	▣ 8'-0"
◆ 6'-0"	
● FULLY BONDED STRANDS	

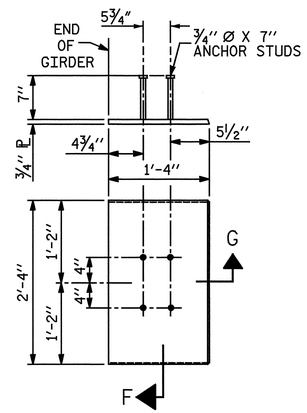

EMBEDDED PLATE "B-2" DETAILS

(2 REQ'D PER GIRDER)

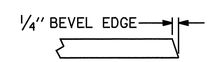

SECTION G

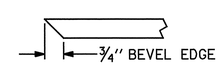

SECTION F

(SEE NOTES)

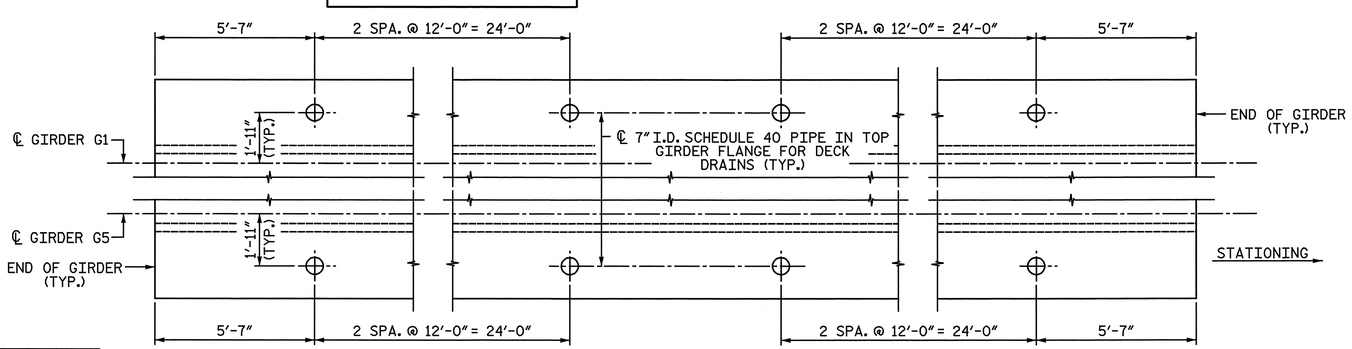

PENETRATIONS IN GIRDER FLANGE FOR DECK DRAINS

NOTES:

ALL PRESTRESSING STRANDS SHALL BE 7-WIRE LOW-RELAXATION GRADE 270 STRANDS AND SHALL CONFORM TO AASHTO M203 EXCEPT FOR SAMPLING REQUIREMENTS WHICH SHALL BE IN ACCORDANCE WITH THE STANDARD SPECIFICATIONS.

ALL REINFORCING STEEL SHALL BE GRADE 60 AND SHALL BE EPOXY COATED.

APPLY EPOXY PROTECTIVE COATING TO END OF GIRDER SURFACES INDICATED IN ELEVATION VIEW.

EMBEDDED PLATE "B-2" SHALL BE GALVANIZED IN ACCORDANCE WITH THE STANDARD SPECIFICATIONS. BEVEL EDGES OF PLATE "B-2" TO GIVE CLOSE FIT BUT NOT TIGHT FIT TO STEEL CASTING FORM.

ANCHOR STUDS SHALL CONFORM TO AASHTO M169 GRADES 1010 THROUGH 1020 OR APPROVED EQUAL, AND SHALL MEET THE TYPE "B" REQUIREMENTS OF SUBSECTION 7.3 OF THE ANSI/AASHTO/AWS D1.5 BRIDGE WELDING CODE.

AT ENDS OF GIRDERS TO BE EMBEDDED IN CONCRETE DIAPHRAGMS OR END WALLS, PRESTRESSING STRANDS MAY EXTEND A MAXIMUM OF 2" BEYOND THE GIRDER ENDS. OTHERWISE, PRESTRESSING STRANDS SHALL BE CUT FLUSH WITH THE GIRDER ENDS.

THE TRANSFER OF LOAD FROM THE ANCHORAGES TO THE GIRDER SHALL BE DONE WHEN CONCRETE HAS REACHED A COMPRESSIVE STRENGTH OF NOT LESS THAN 6000 PSI.

DEPENDING ON THE TYPE OF SYSTEM USED TO SUPPORT THE DECK SLAB FORMS, PRESET ANCHORS MAY BE NECESSARY IN THE PRESTRESSED CONCRETE GIRDER.

THE TOP SURFACE OF THE GIRDER, EXCLUDING THE OUTSIDE 4", SHALL BE RAKED TO A DEPTH OF 1/4".

WHEN DRAPED STRANDS ARE DETAILED, THE LONGITUDINAL LOCATION OF THE HOLD DOWN DEVICES SHALL BE WITHIN 6" OF THE LOCATION SHOWN AND THE CENTER OF GRAVITY OF THE GROUP OF DRAPED STRANDS SHALL BE LOCATED WITHIN 1/2" OF THE THEORETICAL LOCATION SHOWN.

PRESTRESSED CONCRETE GIRDERS ARE DESIGNED FOR 0 PSI TENSION IN THE PRECOMPRESSED TENSILE ZONE UNDER ALL LOADING CONDITIONS.

PRESTRESSED CONCRETE GIRDERS SHALL CONTAIN CALCIUM NITRITE CORROSION INHIBITOR. SEE STANDARD SPECIFICATIONS FOR CALCIUM NITRITE CORROSION INHIBITOR.

THE COST OF ALL CONCRETE, REINFORCING STEEL, PRESTRESSED STRANDS, INSERTS EMBEDDED IN THE CONCRETE, EMBEDDED PLATES, TEMPORARY BRACING AND INCIDENTAL ITEMS SHALL BE INCLUDED IN THE CONTRACT UNIT PRICE FOR "78" PRESTRESSED CONCRETE GIRDERS".

THE CONTRACTOR IS RESPONSIBLE FOR THE INTEGRITY AND STABILITY OF THE GIRDERS. IN HANDLING THE 78" PRESTRESSED CONCRETE GIRDERS, THEY SHALL BE MAINTAINED IN AN UPRIGHT POSITION AT ALL TIMES AND THE PROPOSED METHOD FOR ERECTING, STORING AND TRANSPORTING THE GIRDERS SHALL BE SUBMITTED TO THE ENGINEER FOR APPROVAL. THE SUBMITTAL SHALL INCLUDE DESIGN CALCULATIONS FOR LOCATIONS OF PICK-UP POINTS AND SUPPORT POINTS AS NEEDED TO MAINTAIN THE GIRDERS STABILITY DURING ERECTION, STORAGE AND TRANSPORTATION.

PRIOR TO CASTING THE GIRDERS, THE CONTRACTOR SHALL SUBMIT COMPLETE WORKING DRAWINGS WITH THE EXACT LOCATION, AND A COMPLETE DESCRIPTION OF ALL INSERTS CAST IN THE GIRDERS, TO THE DEPARTMENT FOR APPROVAL. SUCH INSERTS INCLUDE, BUT ARE NOT LIMITED TO, INSERTS FOR SUPPORTING FALSEWORK AND FORMWORK, INSERTS FOR ATTACHING DIAPHRAGMS, INSERTS FOR CONNECTING TEMPORARY BRACING, AND LIFTING INSERTS.

FOR REINFORCING STEEL AROUND 1 1/2" Ø PVC PIPE INSERT, SEE "GIRDER DETAILS - 78" PRESTRESSED CONCRETE BULB TEE" SHEET.

USE THREADED INSERTS ON EXTERIOR GIRDERS AND PVC PIPE INSERTS ON INTERIOR GIRDERS. FOR THREADED INSERT DETAILS, SEE "GIRDER DETAILS - 78" PRESTRESSED CONCRETE BULB TEE" SHEET.

REINFORCING STEEL IN THE TOP FLANGE OF GIRDERS WITH DECK DRAIN PENETRATIONS MAY BE SHIFTED SLIGHTLY AS NECESSARY TO AVOID INTERFERENCE WITH THOSE DECK DRAIN PENETRATIONS IN THE GIRDER TOP FLANGE.

7" I.D. SCHEDULE 40 PIPE SHALL BE GALVANIZED IN ACCORDANCE WITH THE STANDARD SPECIFICATIONS.

FOR 78" PRESTRESSED CONCRETE GIRDERS, SEE SPECIAL PROVISIONS.

PROJECT NO. R-3307

CARTERET COUNTY

STATION: 46+21.50 -L-

SHEET 2 OF 2

STATE OF NORTH CAROLINA
DEPARTMENT OF TRANSPORTATION
RALEIGH

SUPERSTRUCTURE

78" PRESTRESSED CONCRETE BULB TEE

SECTIONS & DETAILS

SPAN H - GIRDERS HG1-HG9

NORTH CAROLINA PROFESSIONAL SEAL 25911 ENGINEER DRAIN G. HATHAWAY 11-7-2013

NORTH CAROLINA PROFESSIONAL SEAL 033752 ENGINEER SETH A. DENNIS 11/7/13

THE LPA GROUP of North Carolina TRANSPORTATION CONSULTANTS

THE LPA GROUP of North Carolina
8000 Regency Parkway, Suite 600
Cary, North Carolina 27518
NC License No.: F-1084

REVISIONS								SHEET NO.
NO.	BY:	DATE:	NO.	BY:	DATE:			S-111
1			3					TOTAL SHEETS
2			4					333

DRAWN BY : N. B. SPEAKS DATE : 7-12-11

CHECKED BY : R. F. DeCOLA DATE : 11-28-11

DWG. 112 OF 282

11/7/2013
3:38:51 PM
User: jaustin
Filename: Y:\Projects\NCDOT\R-3307\Dwgs\Final\R-3307_112_SD_GDR6.dgn

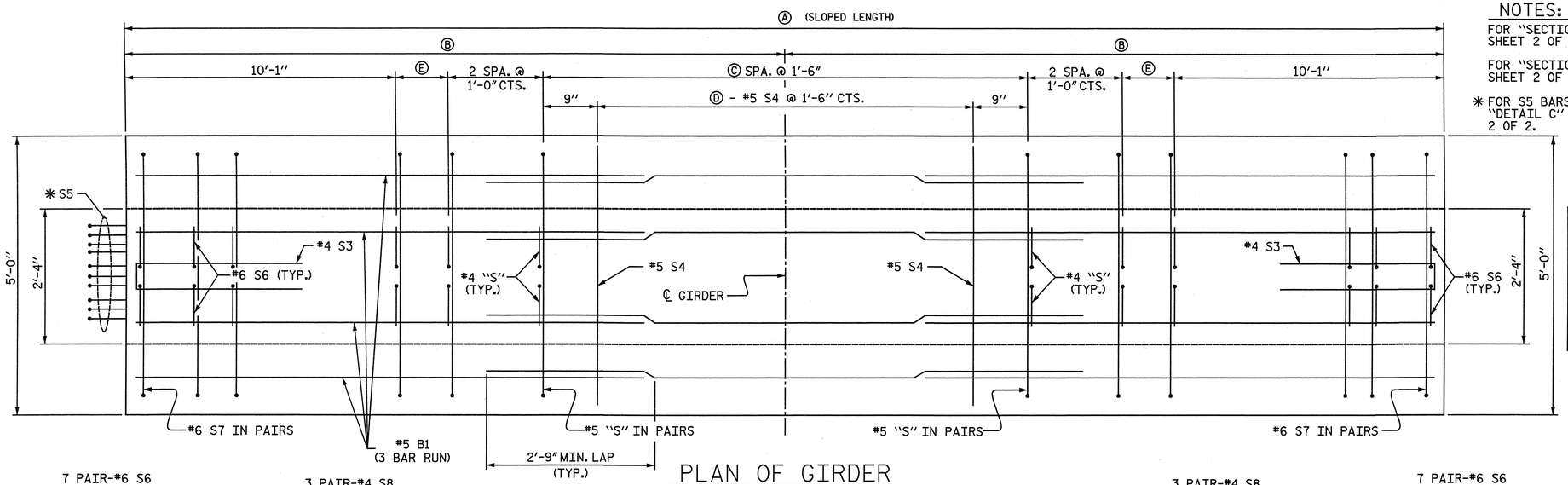

PLAN OF GIRDER

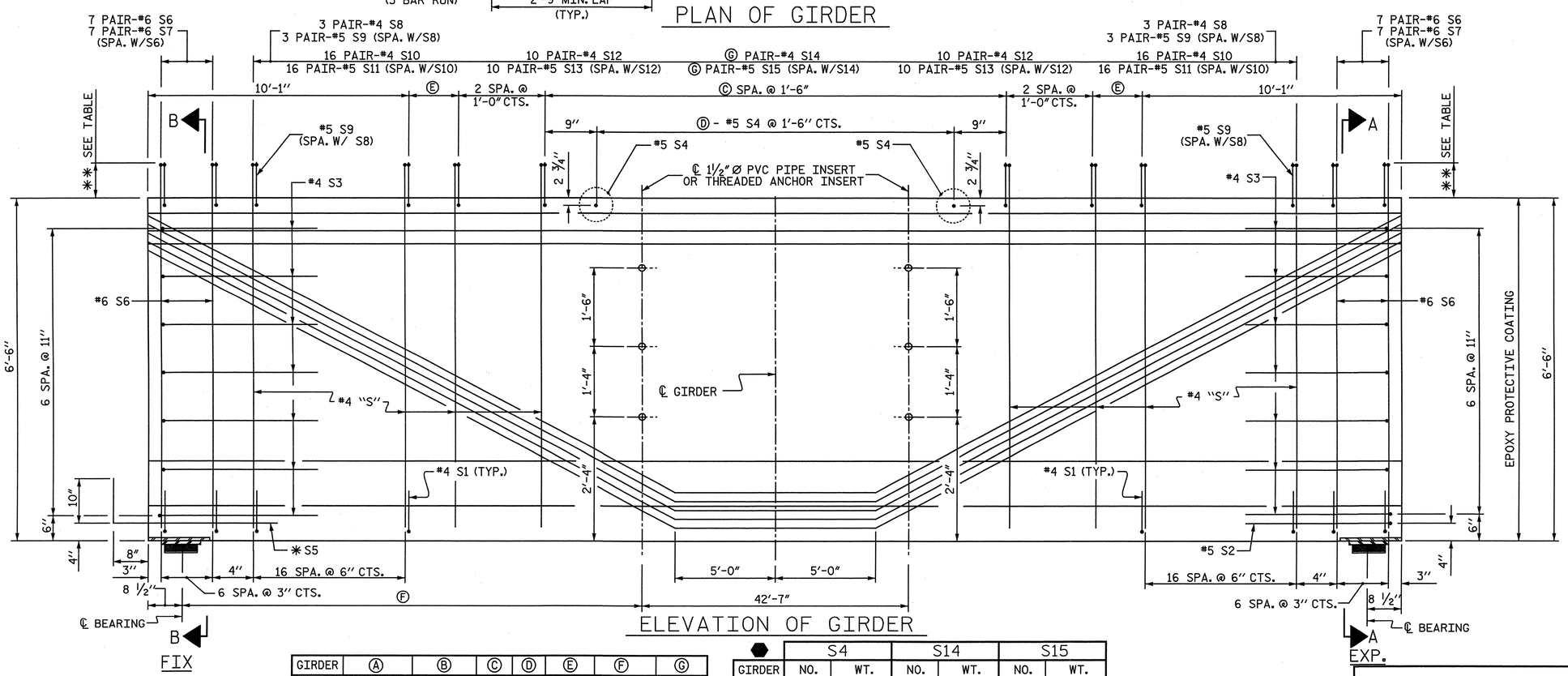

ELEVATION OF GIRDER

GIRDER	Ⓐ	Ⓑ	Ⓒ	Ⓓ	Ⓔ	Ⓕ	Ⓖ
IG1	127'-6 1/8"	63'-9 1/16"	68	68	8 1/16"	41'-8 1/4"	49
IG2	127'-11 3/8"	63'-11 11/16"	68	68	10 11/16"	41'-10 15/16"	49
IG3	128'-4 3/4"	64'-2 3/8"	69	69	4 3/8"	42'-1 5/8"	50
IG4	128'-10 1/8"	64'-5 1/16"	69	69	7 1/16"	42'-4 1/4"	50
IG5	129'-3 1/2"	64'-7 3/4"	69	69	9 3/4"	42'-6 15/16"	50
IG6	129'-8 3/4"	64'-10 3/8"	70	70	3 3/8"	42'-9 5/8"	51
IG7	130'-2 1/8"	65'-1 1/16"	70	70	6 1/16"	43'-0 5/16"	51
IG8	130'-7 1/2"	65'-3 3/4"	70	70	8 3/4"	43'-2 15/16"	51
IG9	131'-0 3/4"	65'-6 3/8"	70	70	11 3/8"	43'-5 5/8"	51

⬢	S4		S14		S15	
GIRDER	NO.	WT.	NO.	WT.	NO.	WT.
IG1	68	319	70	339	70	335
IG2	68	319	70	339	70	335
IG3	69	324	72	349	72	344
IG4	69	324	72	349	72	344
IG5	69	324	72	349	72	344
IG6	70	329	74	358	74	354
IG7	70	329	74	358	74	354
IG8	70	329	74	358	74	354
IG9	70	329	74	358	74	354

NOTES:

FOR "SECTION A-A", SEE SHEET 2 OF 2.

FOR "SECTION B-B", SEE SHEET 2 OF 2.

✱ FOR S5 BARS, SEE "DETAIL C" ON SHEET 2 OF 2.

TABLE	
BAR TYPE	✱✱
S6 & S7	9"
S8 & S9	9"
S10 & S11	8"
S12 & S13	6"
S14 & S15	5"

0.6" Ø L. R. GRADE 270 STRANDS		
AREA (SQUARE INCHES)	ULTIMATE STRENGTH (LBS. PER STRAND)	APPLIED PRESTRESS (LBS. PER STRAND)
0.217	58,600	43,950

REINFORCING STEEL FOR ONE GIRDER

BAR	NUMBER	SIZE	TYPE	LENGTH	WEIGHT
B1	12	#5	STR	45'-4"	567
S1	96	#4	3	3'-8"	235
S2	1	#5	2	10'-7"	11
S3	14	#4	2	9'-1"	85
S4	⬢	#5	STR	4'-6"	⬢
✱S5	10	#5	STR	3'-8"	38
S6	28	#6	1	7'-8"	322
S7	28	#6	4	4'-11"	207
S8	12	#4	1	7'-7"	61
S9	12	#5	4	4'-11"	62
S10	64	#4	1	7'-6"	321
S11	64	#5	4	4'-10"	323
S12	40	#4	1	7'-4"	196
S13	40	#5	4	4'-8"	195
S14	⬢	#4	1	7'-3"	⬢
S15	⬢	#5	4	4'-7"	⬢

✱ NOTE: S5 BARS SHALL BE BENT BEFORE SHIPMENT. HEAT BENDING SHALL NOT BE ALLOWED.

BAR TYPES

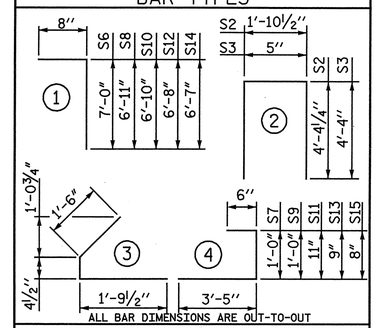

QUANTITIES FOR EACH GIRDER

	EPOXY COATED REINFORCING STEEL	7,500 PSI CONCRETE	0.6" Ø L.R. STRANDS
	LB.	C.Y.	No.
IG1	3616	36.2	54
IG2	3616	36.4	54
IG3	3640	36.5	54
IG4	3640	36.6	54
IG5	3660	36.7	54
IG6	3644	36.9	54
IG7	3664	37.0	54
IG8	3664	37.1	54
IG9	3664	37.3	54

GIRDERS REQUIRED

NUMBER	LENGTH	TOTAL LENGTH
9	VARIES	1163'-7"

PROJECT NO. R-3307

CARTERET COUNTY

STATION: 46+21.50 -L-

SHEET 1 OF 2

STATE OF NORTH CAROLINA
DEPARTMENT OF TRANSPORTATION
RALEIGH

SUPERSTRUCTURE

78" PRESTRESSED CONCRETE BULB TEE

PLAN & ELEVATION

SPAN I- GIRDERS IGI-IG9

NORTH CAROLINA PROFESSIONAL SEAL 25911 ENGINEER DWAIN G. HATHAWAY 4-3-2012

NORTH CAROLINA PROFESSIONAL SEAL 033752 ENGINEER SETH A. DENNEY 4/05/12

THE LPA GROUP of North Carolina TRANSPORTATION CONSULTANTS

THE LPA GROUP of North Carolina
8000 Regency Parkway, Suite 600
Cary, North Carolina 27518
NC License No.: F-1084

REVISIONS						SHEET NO.
NO.	BY:	DATE:	NO.	BY:	DATE:	S-112
1			3			TOTAL SHEETS
2			4			333

DRAWN BY : N. B. SPEAKS DATE : 6-28-11
CHECKED BY : R. F. DeCOLA DATE : 11-1-11

DWG. 113 OF 282

4/2/2012
12:41:1 PM
User:jaustin
Filename: Y:\Projects\NCDOT\R-3307\Dwgs\Final\R-3307_113_SD_GDRT.dgn

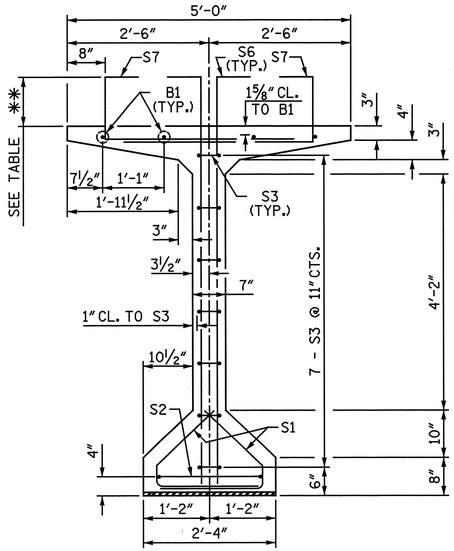

SECTION A-A

✱✱ SEE TABLE, SHEET 1 OF 2

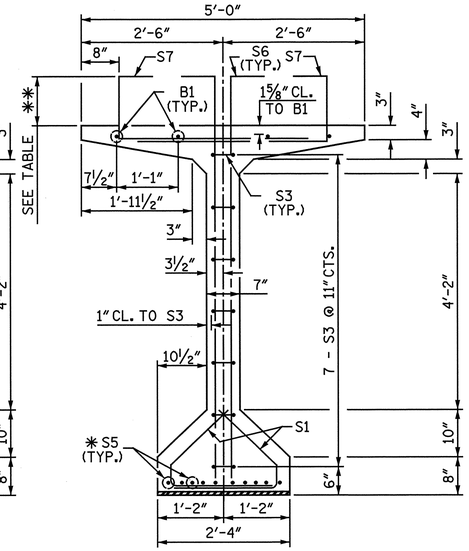

SECTION B-B

✱ FOR S5 BARS, SEE "DETAIL C"

✱✱ SEE TABLE, SHEET 1 OF 2

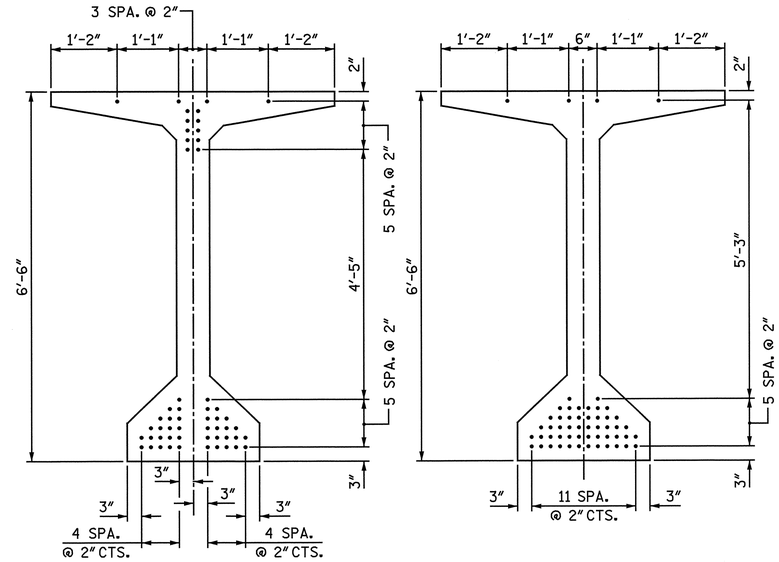

AT END OF GIRDER

54 STRANDS

AT ℄ OF GIRDER

54 STRANDS

0.6" Ø LOW RELAXATION STRAND LAYOUT

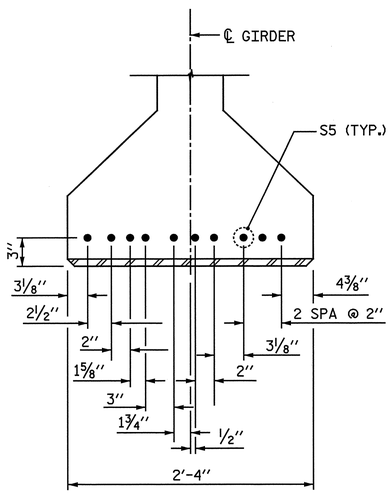

DETAIL C

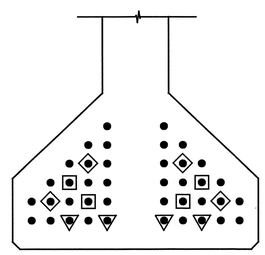

DEBONDING DETAIL

BOND SHALL BE BROKEN ON STRANDS AS SHOWN FOR THE SPECIFIED LENGTH FROM EACH END OF THE GIRDER. SEE STANDARD SPECIFICATIONS ARTICLE 1078-13.

DEBONDING LEGEND	
▼ 4'-0"	■ 8'-0"
◆ 6'-0"	
● FULLY BONDED STRANDS	

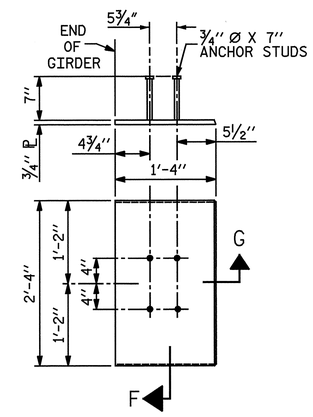

EMBEDDED PLATE "B-2" DETAILS

(2 REQ'D PER GIRDER)

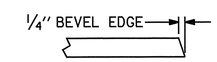

SECTION G

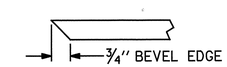

SECTION F

(SEE NOTES)

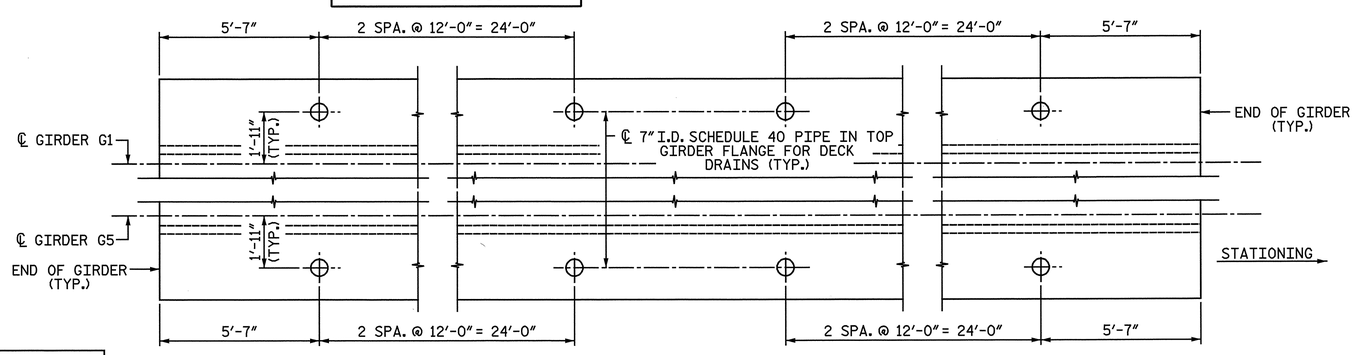

PENETRATIONS IN GIRDER FLANGE FOR DECK DRAINS

NOTES:

ALL PRESTRESSING STRANDS SHALL BE 7-WIRE LOW-RELAXATION GRADE 270 STRANDS AND SHALL CONFORM TO AASHTO M203 EXCEPT FOR SAMPLING REQUIREMENTS WHICH SHALL BE IN ACCORDANCE WITH THE STANDARD SPECIFICATIONS.

ALL REINFORCING STEEL SHALL BE GRADE 60 AND SHALL BE EPOXY COATED.

APPLY EPOXY PROTECTIVE COATING TO END OF GIRDER SURFACES INDICATED IN ELEVATION VIEW.

EMBEDDED PLATE "B-2" SHALL BE GALVANIZED IN ACCORDANCE WITH THE STANDARD SPECIFICATIONS. BEVEL EDGES OF PLATE "B-2" TO GIVE CLOSE FIT BUT NOT TIGHT FIT TO STEEL CASTING FORM.

ANCHOR STUDS SHALL CONFORM TO AASHTO M169 GRADES 1010 THROUGH 1020 OR APPROVED EQUAL, AND SHALL MEET THE TYPE "B" REQUIREMENTS OF SUBSECTION 7.3 OF THE ANSI/AASHTO/AWS D1.5 BRIDGE WELDING CODE.

AT ENDS OF GIRDERS TO BE EMBEDDED IN CONCRETE DIAPHRAGMS OR END WALLS, PRESTRESSING STRANDS MAY EXTEND A MAXIMUM OF 2" BEYOND THE GIRDER ENDS. OTHERWISE, PRESTRESSING STRANDS SHALL BE CUT FLUSH WITH THE GIRDER ENDS.

THE TRANSFER OF LOAD FROM THE ANCHORAGES TO THE GIRDER SHALL BE DONE WHEN CONCRETE HAS REACHED A COMPRESSIVE STRENGTH OF NOT LESS THAN 6000 PSI.

DEPENDING ON THE TYPE OF SYSTEM USED TO SUPPORT THE DECK SLAB FORMS, PRESET ANCHORS MAY BE NECESSARY IN THE PRESTRESSED CONCRETE GIRDER.

THE TOP SURFACE OF THE GIRDER, EXCLUDING THE OUTSIDE 4", SHALL BE RAKED TO A DEPTH OF 1/4".

WHEN DRAPED STRANDS ARE DETAILED, THE LONGITUDINAL LOCATION OF THE HOLD DOWN DEVICES SHALL BE WITHIN 6" OF THE LOCATION SHOWN AND THE CENTER OF GRAVITY OF THE GROUP OF DRAPED STRANDS SHALL BE LOCATED WITHIN 1/2" OF THE THEORETICAL LOCATION SHOWN.

PRESTRESSED CONCRETE GIRDERS ARE DESIGNED FOR 0 PSI TENSION IN THE PRECOMPRESSED TENSILE ZONE UNDER ALL LOADING CONDITIONS.

PRESTRESSED CONCRETE GIRDERS SHALL CONTAIN CALCIUM NITRITE CORROSION INHIBITOR. SEE STANDARD SPECIFICATIONS FOR CALCIUM NITRITE CORROSION INHIBITOR.

THE COST OF ALL CONCRETE, REINFORCING STEEL, PRESTRESSED STRANDS, INSERTS EMBEDDED IN THE CONCRETE, EMBEDDED PLATES, TEMPORARY BRACING AND INCIDENTAL ITEMS SHALL BE INCLUDED IN THE CONTRACT UNIT PRICE FOR "78" PRESTRESSED CONCRETE GIRDERS".

THE CONTRACTOR IS RESPONSIBLE FOR THE INTEGRITY AND STABILITY OF THE GIRDERS. IN HANDLING THE 78" PRESTRESSED CONCRETE GIRDERS, THEY SHALL BE MAINTAINED IN AN UPRIGHT POSITION AT ALL TIMES AND THE PROPOSED METHOD FOR ERECTING, STORING AND TRANSPORTING THE GIRDERS SHALL BE SUBMITTED TO THE ENGINEER FOR APPROVAL. THE SUBMITTAL SHALL INCLUDE DESIGN CALCULATIONS FOR LOCATIONS OF PICK-UP POINTS AND SUPPORT POINTS AS NEEDED TO MAINTAIN THE GIRDERS STABILITY DURING ERECTION, STORAGE AND TRANSPORTATION.

PRIOR TO CASTING THE GIRDERS, THE CONTRACTOR SHALL SUBMIT COMPLETE WORKING DRAWINGS WITH THE EXACT LOCATION, AND A COMPLETE DESCRIPTION OF ALL INSERTS CAST IN THE GIRDERS, TO THE DEPARTMENT FOR APPROVAL. SUCH INSERTS INCLUDE, BUT ARE NOT LIMITED TO, INSERTS FOR SUPPORTING FALSEWORK AND FORMWORK, INSERTS FOR ATTACHING DIAPHRAGMS, INSERTS FOR CONNECTING TEMPORARY BRACING, AND LIFTING INSERTS.

FOR REINFORCING STEEL AROUND 1 1/2" Ø PVC PIPE INSERT, SEE "GIRDER DETAILS - 78" PRESTRESSED CONCRETE BULB TEE" SHEET.

USE THREADED INSERTS ON EXTERIOR GIRDERS AND PVC PIPE INSERTS ON INTERIOR GIRDERS. FOR THREADED INSERT DETAILS, SEE "GIRDER DETAILS - 78" PRESTRESSED CONCRETE BULB TEE" SHEET.

REINFORCING STEEL IN THE TOP FLANGE OF GIRDERS WITH DECK DRAIN PENETRATIONS MAY BE SHIFTED SLIGHTLY AS NECESSARY TO AVOID INTERFERENCE WITH THOSE DECK DRAIN PENETRATIONS IN THE GIRDER TOP FLANGE.

7" I.D. SCHEDULE 40 PIPE SHALL BE GALVANIZED IN ACCORDANCE WITH THE STANDARD SPECIFICATIONS.

FOR 78" PRESTRESSED CONCRETE GIRDERS, SEE SPECIAL PROVISIONS.

PROJECT NO. R-3307

CARTERET COUNTY

STATION: 46+21.50 -L-

SHEET 2 OF 2

STATE OF NORTH CAROLINA
DEPARTMENT OF TRANSPORTATION
RALEIGH

SUPERSTRUCTURE

78" PRESTRESSED CONCRETE BULB TEE

SECTIONS & DETAILS

SPAN 1- GIRDERS IG1-IG9

NORTH CAROLINA PROFESSIONAL SEAL 25911 ENGINEER DRAIN G. HATHWAY 11-7-2013

NORTH CAROLINA PROFESSIONAL SEAL 033752 ENGINEER SETH A. DENNEY 11/07/13

THE LPA GROUP of North Carolina TRANSPORTATION CONSULTANTS

THE LPA GROUP of North Carolina
8000 Regency Parkway, Suite 600
Cary, North Carolina 27518
NC License No.: F-1084

REVISIONS								SHEET NO.
NO.	BY:	DATE:	NO.	BY:	DATE:			S-113
1			3					TOTAL SHEETS
2			4					333

DRAWN BY : N. B. SPEAKS DATE : 7-12-11

CHECKED BY : R. F. DeCOLA DATE : 11-28-11

DWG. 114 OF 282

11/7/2013
3:38:52 PM
User: jaustin
Filename: Y:\Projects\NCDOT\R-3307\Dwgs\Final\R-3307_114_SD_GDR8.dgn

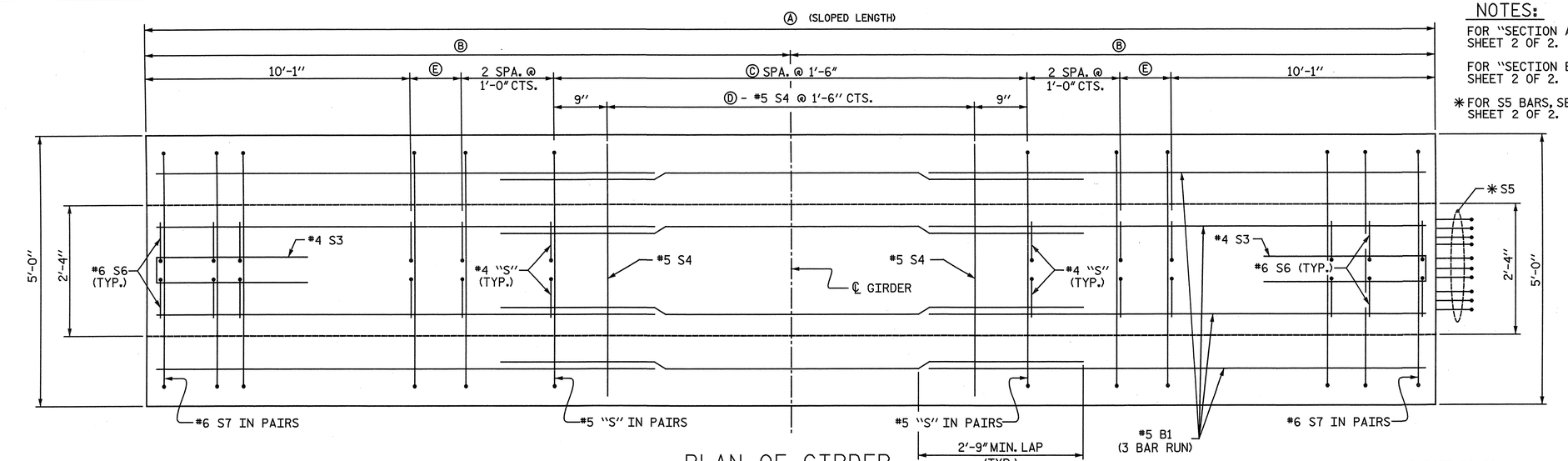

PLAN OF GIRDER

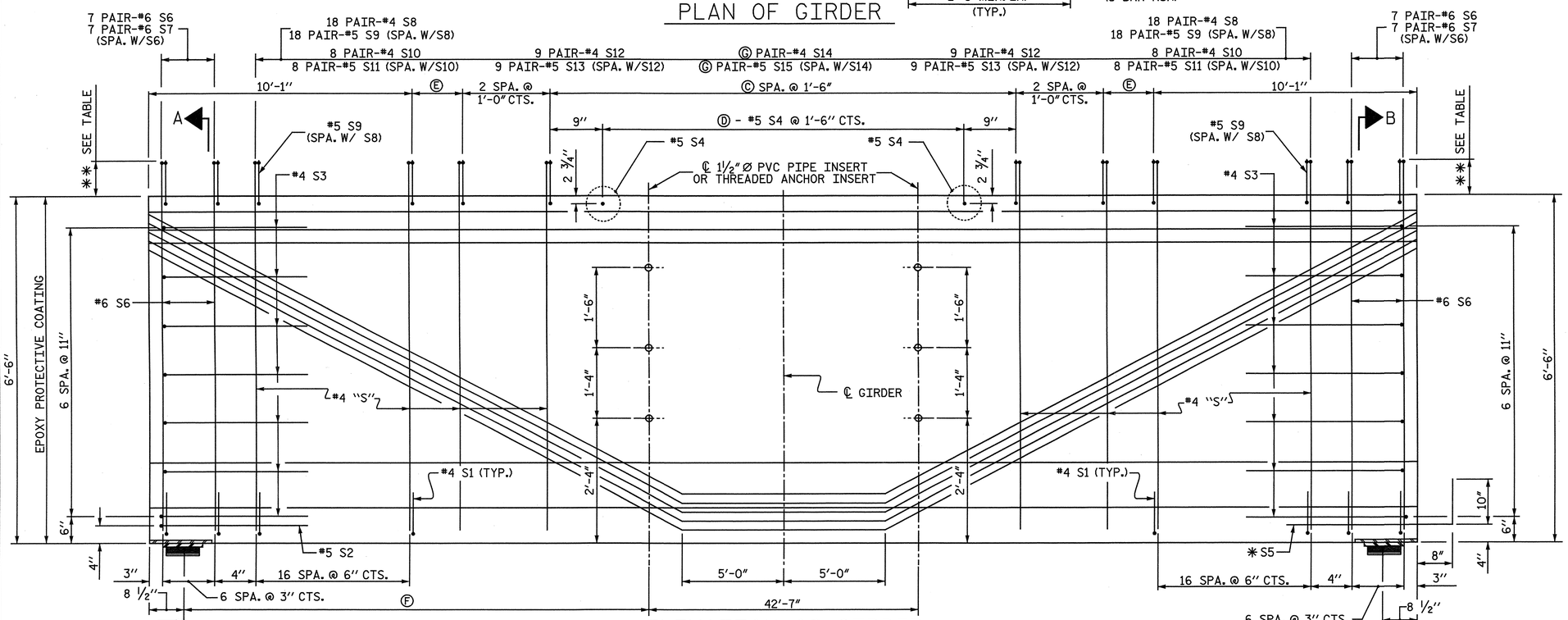

ELEVATION OF GIRDER

GIRDER	Ⓐ	Ⓑ	Ⓒ	Ⓓ	Ⓔ	Ⓕ	Ⓖ
JG1	128'-3 3/8"	64'-1 11/16"	69	69	3 11/16"	41'-8 1/4"	38
JG2	128'-6 1/2"	64'-3 1/4"	69	69	5 1/4"	41'-10 15/16"	38
JG3	128'-9 3/4"	64'-4 7/8"	69	69	6 7/8"	42'-1 5/8"	38
JG4	129'-1"	64'-6 1/2"	69	69	8 1/2"	42'-4 1/4"	38
JG5	129'-4 1/4"	64'-8 1/8"	69	69	10 1/8"	42'-6 15/16"	38
JG6	129'-7 3/8"	64'-9 11/16"	69	69	11 11/16"	42'-9 5/8"	38
JG7	129'-10 5/8"	64'-11 5/16"	70	70	4 5/16"	43'-0 5/16"	39
JG8	130'-7 7/8"	65'-0 15/16"	70	70	5 15/16"	43'-2 5/16"	39
JG9	130'-5 1/8"	65'-2 9/16"	70	70	7 9/16"	43'-5 5/8"	39

⬢	S4		S14		S15	
GIRDER	NO.	WT.	NO.	WT.	NO.	WT.
JG1	69	324	76	372	76	370
JG2	69	324	76	372	76	370
JG3	69	324	76	372	76	370
JG4	69	324	76	372	76	370
JG5	69	324	76	372	76	370
JG6	69	324	76	372	76	370
JG7	70	329	78	382	78	380
JG8	70	329	78	382	78	380
JG9	70	329	78	382	78	380

NOTES:

FOR "SECTION A-A", SEE SHEET 2 OF 2.

FOR "SECTION B-B", SEE SHEET 2 OF 2.

✱FOR S5 BARS, SEE "DETAIL C" ON SHEET 2 OF 2.

TABLE	
BAR TYPE	✱✱
S6 & S7	9"
S8 & S9	9"
S10 & S11	8"
S12 & S13	7"
S14 & S15	6"

0.6" Ø L. R. GRADE 270 STRANDS

AREA (SQUARE INCHES)	ULTIMATE STRENGTH (LBS. PER STRAND)	APPLIED PRESTRESS (LBS. PER STRAND)
0.217	58,600	43,950

REINFORCING STEEL FOR ONE GIRDER

BAR	NUMBER	SIZE	TYPE	LENGTH	WEIGHT
B1	12	#5	STR	45'-4"	567
S1	96	#4	3	3'-8"	235
S2	1	#5	2	10'-7"	11
S3	14	#4	2	9'-1"	85
S4	⬢	#5	STR	4'-6"	⬢
✱S5	10	#5	STR	3'-8"	38
S6	28	#6	1	7'-8"	322
S7	28	#6	4	4'-11"	207
S8	72	#4	1	7'-7"	365
S9	72	#5	4	4'-11"	369
S10	32	#4	1	7'-6"	160
S11	32	#5	4	4'-10"	161
S12	36	#4	1	7'-5"	178
S13	36	#5	4	4'-9"	178
S14	⬢	#4	1	7'-4"	⬢
S15	⬢	#5	4	4'-8"	⬢

✱NOTE: S5 BARS SHALL BE BENT BEFORE SHIPMENT. HEAT BENDING SHALL NOT BE ALLOWED.

BAR TYPES

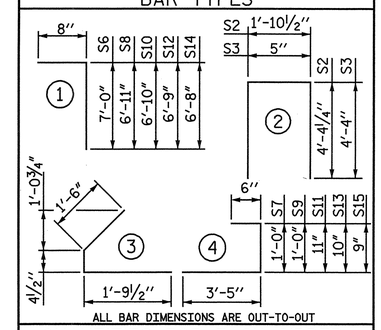

ALL BAR DIMENSIONS ARE OUT-TO-OUT

QUANTITIES FOR EACH GIRDER

	EPOXY COATED REINFORCING STEEL	7,500 PSI CONCRETE	0.6" Ø L.R. STRANDS
	LB.	C.Y.	No.
JG1	3942	36.5	54
JG2	3942	36.5	54
JG3	3942	36.6	54
JG4	3942	36.7	54
JG5	3942	36.8	54
JG6	3942	36.8	54
JG7	3967	36.9	54
JG8	3967	37.2	54
JG9	3967	37.1	54

GIRDERS REQUIRED

NUMBER	LENGTH	TOTAL LENGTH
9	VARIES	1164'-7 7/8"

PROJECT NO. R-3307

CARTERET COUNTY

STATION: 46+21.50 -L-

SHEET 1 OF 2

STATE OF NORTH CAROLINA
DEPARTMENT OF TRANSPORTATION
RALEIGH

SUPERSTRUCTURE

78" PRESTRESSED CONCRETE BULB TEE

PLAN & ELEVATION

SPAN J - GIRDERS JG1-JG9

NORTH CAROLINA PROFESSIONAL SEAL 25911 ENGINEER DWAIN G. WATHWAY 4-3-2012

NORTH CAROLINA PROFESSIONAL SEAL 033752 ENGINEER JEFFREY A. DENNEY 04/03/12

THE LPA GROUP of North Carolina
TRANSPORTATION CONSULTANTS

THE LPA GROUP of North Carolina
8000 Regency Parkway, Suite 600
Cary, North Carolina 27518
NC License No.: F-1084

REVISIONS							SHEET NO.
NO.	BY:	DATE:	NO.	BY:	DATE:		S-114
1			3				TOTAL SHEETS
2			4				333

DRAWN BY : N. B. SPEAKS DATE : 6-28-11
CHECKED BY : R. F. DeCOLA DATE : 11-30-11

DWG. 115 OF 282

4/2/2012 12:41 PM
User: jaustin
Filename: I:\Projects\NCDOT\R-3307\Dwgs\Final\R-3307_115_SD_GDR9.dgn

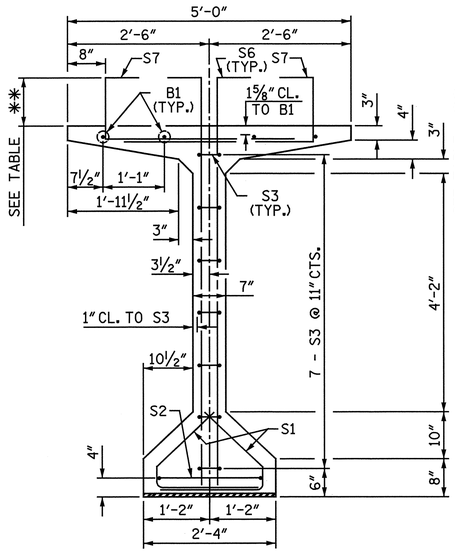

SECTION A-A

✱✱ SEE TABLE, SHEET 1 OF 2

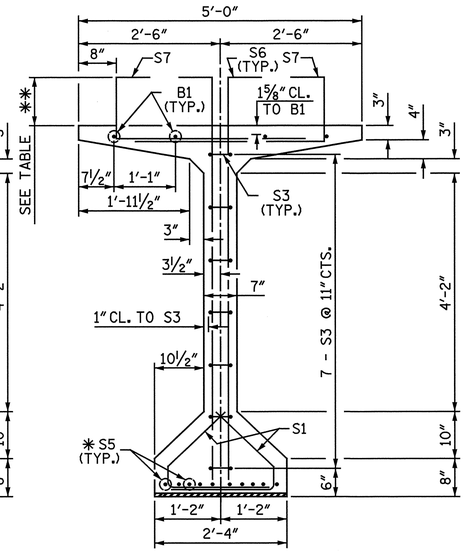

SECTION B-B

✱ FOR S5 BARS, SEE "DETAIL C"

✱✱ SEE TABLE, SHEET 1 OF 2

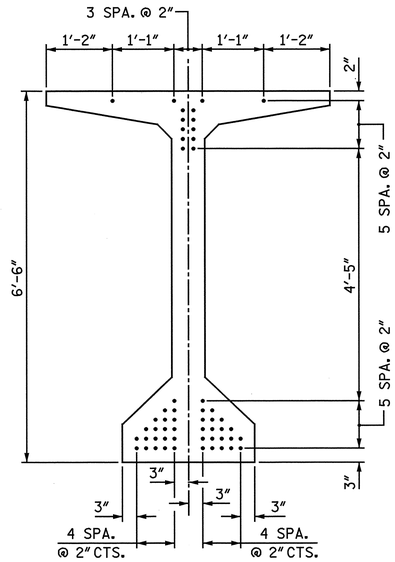

AT END OF GIRDER

54 STRANDS

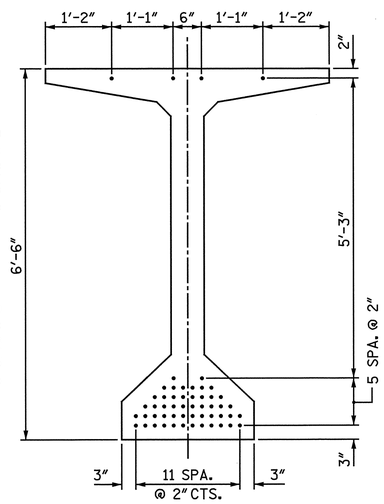

AT ℄ OF GIRDER

54 STRANDS

0.6" Ø LOW RELAXATION STRAND LAYOUT

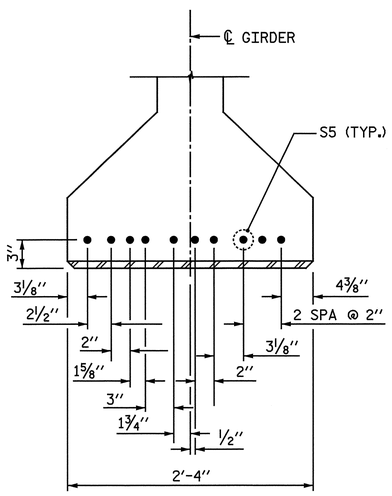

DETAIL C

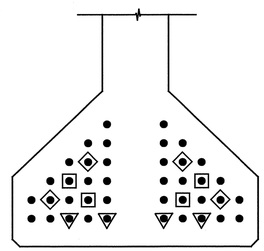

DEBONDING DETAIL

BOND SHALL BE BROKEN ON STRANDS AS SHOWN FOR THE SPECIFIED LENGTH FROM EACH END OF THE GIRDER. SEE STANDARD SPECIFICATIONS ARTICLE 1078-13.

DEBONDING LEGEND

- 4'-0"
- 6'-0"
- 8'-0"
- FULLY BONDED STRANDS

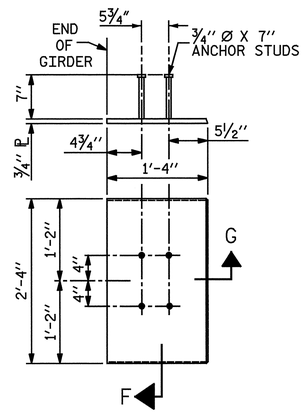

EMBEDDED PLATE "B-2" DETAILS

(2 REQ'D PER GIRDER)

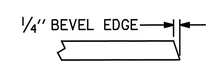

SECTION G

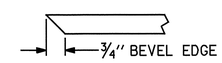

SECTION F

(SEE NOTES)

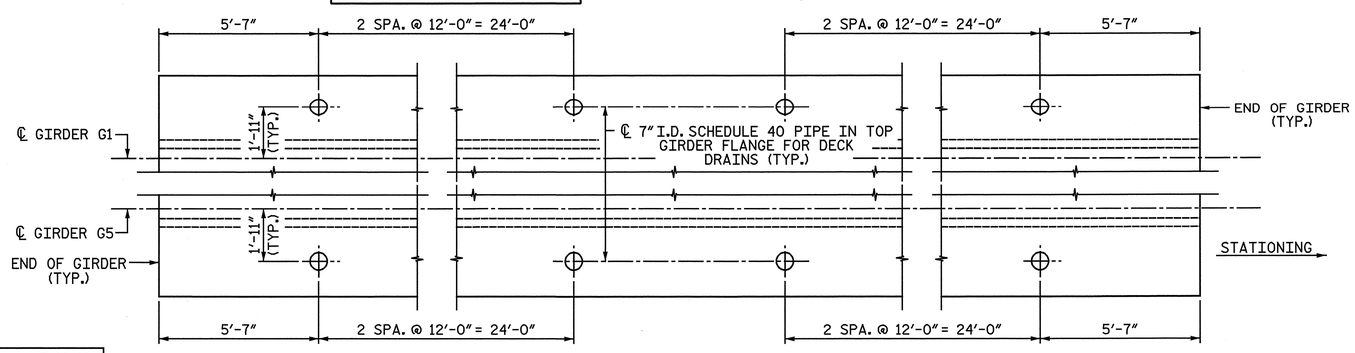

PENETRATIONS IN GIRDER FLANGE FOR DECK DRAINS

NOTES:

ALL PRESTRESSING STRANDS SHALL BE 7-WIRE LOW-RELAXATION GRADE 270 STRANDS AND SHALL CONFORM TO AASHTO M203 EXCEPT FOR SAMPLING REQUIREMENTS WHICH SHALL BE IN ACCORDANCE WITH THE STANDARD SPECIFICATIONS.

ALL REINFORCING STEEL SHALL BE GRADE 60 AND SHALL BE EPOXY COATED.

APPLY EPOXY PROTECTIVE COATING TO END OF GIRDER SURFACES INDICATED IN ELEVATION VIEW.

EMBEDDED PLATE "B-2" SHALL BE GALVANIZED IN ACCORDANCE WITH THE STANDARD SPECIFICATIONS. BEVEL EDGES OF PLATE "B-2" TO GIVE CLOSE FIT BUT NOT TIGHT FIT TO STEEL CASTING FORM.

ANCHOR STUDS SHALL CONFORM TO AASHTO M169 GRADES 1010 THROUGH 1020 OR APPROVED EQUAL, AND SHALL MEET THE TYPE "B" REQUIREMENTS OF SUBSECTION 7.3 OF THE ANSI/AASHTO/AWS D1.5 BRIDGE WELDING CODE.

AT ENDS OF GIRDERS TO BE EMBEDDED IN CONCRETE DIAPHRAGMS OR END WALLS, PRESTRESSING STRANDS MAY EXTEND A MAXIMUM OF 2" BEYOND THE GIRDER ENDS. OTHERWISE, PRESTRESSING STRANDS SHALL BE CUT FLUSH WITH THE GIRDER ENDS.

THE TRANSFER OF LOAD FROM THE ANCHORAGES TO THE GIRDER SHALL BE DONE WHEN CONCRETE HAS REACHED A COMPRESSIVE STRENGTH OF NOT LESS THAN 6000 PSI.

DEPENDING ON THE TYPE OF SYSTEM USED TO SUPPORT THE DECK SLAB FORMS, PRESET ANCHORS MAY BE NECESSARY IN THE PRESTRESSED CONCRETE GIRDER.

THE TOP SURFACE OF THE GIRDER, EXCLUDING THE OUTSIDE 4", SHALL BE RAKED TO A DEPTH OF 1/4".

WHEN DRAPED STRANDS ARE DETAILED, THE LONGITUDINAL LOCATION OF THE HOLD DOWN DEVICES SHALL BE WITHIN 6" OF THE LOCATION SHOWN AND THE CENTER OF GRAVITY OF THE GROUP OF DRAPED STRANDS SHALL BE LOCATED WITHIN 1/2" OF THE THEORETICAL LOCATION SHOWN.

PRESTRESSED CONCRETE GIRDERS ARE DESIGNED FOR 0 PSI TENSION IN THE PRECOMPRESSED TENSILE ZONE UNDER ALL LOADING CONDITIONS.

PRESTRESSED CONCRETE GIRDERS SHALL CONTAIN CALCIUM NITRITE CORROSION INHIBITOR. SEE STANDARD SPECIFICATIONS FOR CALCIUM NITRITE CORROSION INHIBITOR.

THE COST OF ALL CONCRETE, REINFORCING STEEL, PRESTRESSED STRANDS, INSERTS EMBEDDED IN THE CONCRETE, EMBEDDED PLATES, TEMPORARY BRACING AND INCIDENTAL ITEMS SHALL BE INCLUDED IN THE CONTRACT UNIT PRICE FOR "78" PRESTRESSED CONCRETE GIRDERS".

THE CONTRACTOR IS RESPONSIBLE FOR THE INTEGRITY AND STABILITY OF THE GIRDERS. IN HANDLING THE 78" PRESTRESSED CONCRETE GIRDERS, THEY SHALL BE MAINTAINED IN AN UPRIGHT POSITION AT ALL TIMES AND THE PROPOSED METHOD FOR ERECTING, STORING AND TRANSPORTING THE GIRDERS SHALL BE SUBMITTED TO THE ENGINEER FOR APPROVAL. THE SUBMITTAL SHALL INCLUDE DESIGN CALCULATIONS FOR LOCATIONS OF PICK-UP POINTS AND SUPPORT POINTS AS NEEDED TO MAINTAIN THE GIRDERS STABILITY DURING ERECTION, STORAGE AND TRANSPORTATION.

PRIOR TO CASTING THE GIRDERS, THE CONTRACTOR SHALL SUBMIT COMPLETE WORKING DRAWINGS WITH THE EXACT LOCATION, AND A COMPLETE DESCRIPTION OF ALL INSERTS CAST IN THE GIRDERS, TO THE DEPARTMENT FOR APPROVAL. SUCH INSERTS INCLUDE, BUT ARE NOT LIMITED TO, INSERTS FOR SUPPORTING FALSEWORK AND FORMWORK, INSERTS FOR ATTACHING DIAPHRAGMS, INSERTS FOR CONNECTING TEMPORARY BRACING, AND LIFTING INSERTS.

FOR REINFORCING STEEL AROUND 1 1/2" Ø PVC PIPE INSERT, SEE "GIRDER DETAILS - 78" PRESTRESSED CONCRETE BULB TEE" SHEET.

USE THREADED INSERTS ON EXTERIOR GIRDERS AND PVC PIPE INSERTS ON INTERIOR GIRDERS. FOR THREADED INSERT DETAILS, SEE "GIRDER DETAILS - 78" PRESTRESSED CONCRETE BULB TEE" SHEET.

REINFORCING STEEL IN THE TOP FLANGE OF GIRDERS WITH DECK DRAIN PENETRATIONS MAY BE SHIFTED SLIGHTLY AS NECESSARY TO AVOID INTERFERENCE WITH THOSE DECK DRAIN PENETRATIONS IN THE GIRDER TOP FLANGE.

7" I.D. SCHEDULE 40 PIPE SHALL BE GALVANIZED IN ACCORDANCE WITH THE STANDARD SPECIFICATIONS.

FOR 78" PRESTRESSED CONCRETE GIRDERS, SEE SPECIAL PROVISIONS.

PROJECT NO. R-3307

CARTERET COUNTY

STATION: 46+21.50 -L-

SHEET 2 OF 2

STATE OF NORTH CAROLINA
DEPARTMENT OF TRANSPORTATION
RALEIGH

SUPERSTRUCTURE

78" PRESTRESSED CONCRETE BULB TEE SECTIONS & DETAILS

SPAN J - GIRDERS JGI-JG9

NORTH CAROLINA PROFESSIONAL SEAL 25911 ENGINEER DWAIN G. HATHAWAY 11-7-2013

NORTH CAROLINA PROFESSIONAL SEAL 033752 ENGINEER SETH A. DENNEY 11/7/13

THE LPA GROUP of North Carolina TRANSPORTATION CONSULTANTS

THE LPA GROUP of North Carolina
8000 Regency Parkway, Suite 600
Cary, North Carolina 27518
NC License No.: F-1084

REVISIONS							SHEET NO.
NO.	BY:	DATE:	NO.	BY:	DATE:		S-115
1			3				TOTAL SHEETS
2			4				333

DRAWN BY : N. B. SPEAKS DATE : 7-12-11

CHECKED BY : R. F. DeCOLA DATE : 11-30-11

DWG. 116 OF 282

11/7/2013
3:38:52 PM
User: jaustin
Filename: Y:\Projects\NCDOT\R-3307\Dwgs\Final\R-3307_I16_SD_GDR10.dgn

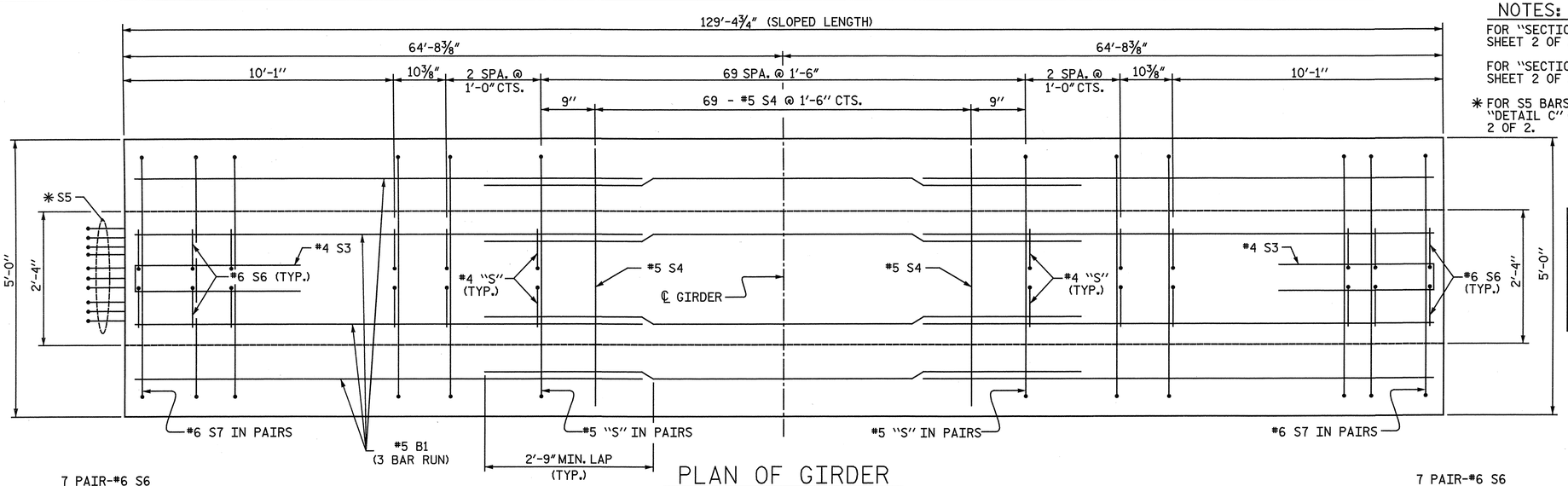

PLAN OF GIRDER

NOTES:

FOR "SECTION A-A", SEE SHEET 2 OF 2.

FOR "SECTION B-B", SEE SHEET 2 OF 2.

✱ FOR S5 BARS, SEE "DETAIL C" ON SHEET 2 OF 2.

TABLE	
BAR TYPE	✱✱
S6 & S7	7"
S8 & S9	7"
S10 & S11	6"
S12 & S13	5"

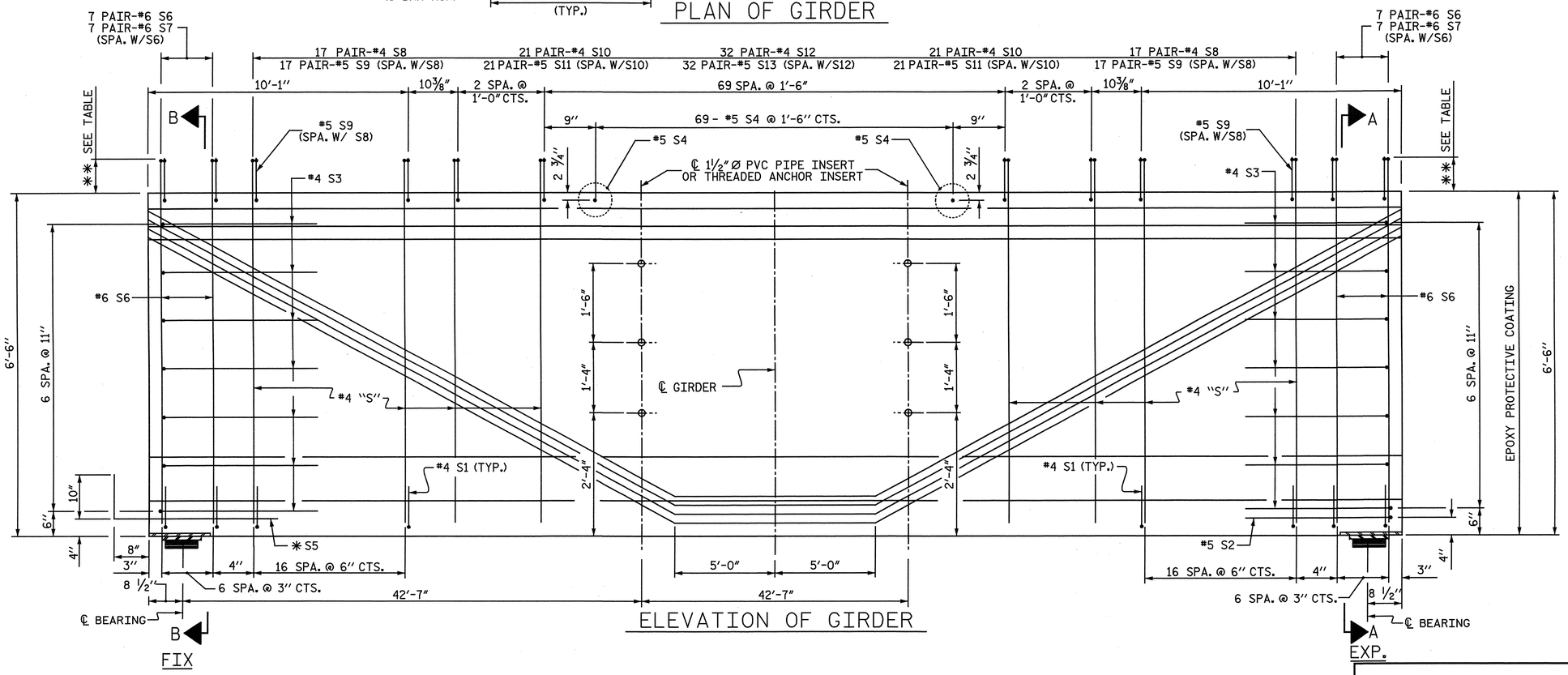

ELEVATION OF GIRDER

0.6" Ø L. R. GRADE 270 STRANDS		
AREA (SQUARE INCHES)	ULTIMATE STRENGTH (LBS. PER STRAND)	APPLIED PRESTRESS (LBS. PER STRAND)
0.217	58,600	43,950

REINFORCING STEEL FOR ONE GIRDER

BAR	NUMBER	SIZE	TYPE	LENGTH	WEIGHT
B1	12	#5	STR	45'-4"	567
S1	96	#4	3	3'-8"	235
S2	1	#5	2	10'-7"	11
S3	14	#4	2	9'-1"	85
S4	69	#5	STR	4'-6"	324
✱S5	10	#5	STR	3'-8"	38
S6	28	#6	1	7'-6"	315
S7	28	#6	4	4'-9"	200
S8	68	#4	1	7'-5"	337
S9	68	#5	4	4'-9"	337
S10	84	#4	1	7'-4"	411
S11	84	#5	4	4'-8"	409
S12	128	#4	1	7'-3"	620
S13	128	#5	4	4'-7"	612

✱NOTE: S5 BARS SHALL BE BENT BEFORE SHIPMENT. HEAT BENDING SHALL NOT BE ALLOWED.

BAR TYPES

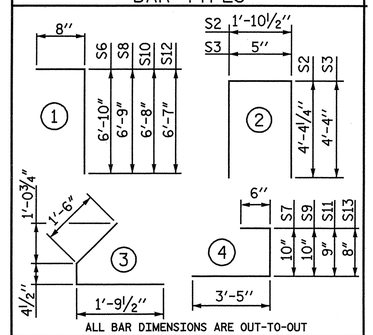

ALL BAR DIMENSIONS ARE OUT-TO-OUT

QUANTITIES FOR ONE GIRDER

	EPOXY COATED REINFORCING STEEL	7,500 PSI CONCRETE	0.6" Ø L.R. STRANDS
	LB.	C.Y.	No.
KG1 - KG9	4501	36.8	46

GIRDERS REQUIRED

NUMBER	LENGTH	TOTAL LENGTH
9	129'-4¾"	1164'-6¾"

PROJECT NO. R-3307

CARTERET COUNTY

STATION: 46+21.50 -L-

SHEET 1 OF 2

STATE OF NORTH CAROLINA
DEPARTMENT OF TRANSPORTATION
RALEIGH

SUPERSTRUCTURE

78" PRESTRESSED CONCRETE BULB TEE

PLAN & ELEVATION

SPAN K - GIRDERS KGI-KG9

NORTH CAROLINA PROFESSIONAL SEAL 25911 ENGINEER DWAIN G. HATHAWAY 4-3-12

NORTH CAROLINA PROFESSIONAL SEAL 033752 ENGINEER SETH A. DENNEY 4/6/12

THE LPA GROUP of North Carolina TRANSPORTATION CONSULTANTS

THE LPA GROUP of North Carolina
8000 Regency Parkway, Suite 600
Cary, North Carolina 27518
NC License No.: F-1084

REVISIONS								SHEET NO.
NO.	BY:	DATE:	NO.	BY:	DATE:			S-116
1			3					TOTAL SHEETS
2			4					333

DRAWN BY : N. B. SPEAKS DATE : 6-28-11
CHECKED BY : R. F. DeCOLA DATE : 12-1-11

DWG. 117 OF 282

4/2/2012
12:41:[illegible] PM
User: jaustin
Filename: Y:\Projects\NCDOT\R-3307\Dwgs\Final\R-3307_117_SD_GDR11.dgn

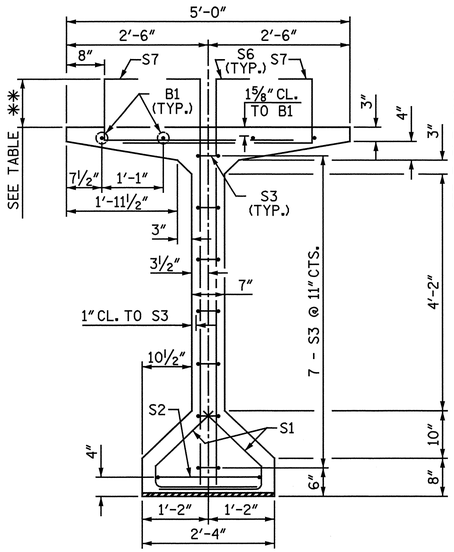

SECTION A-A

✱✱ SEE TABLE, SHEET 1 OF 2

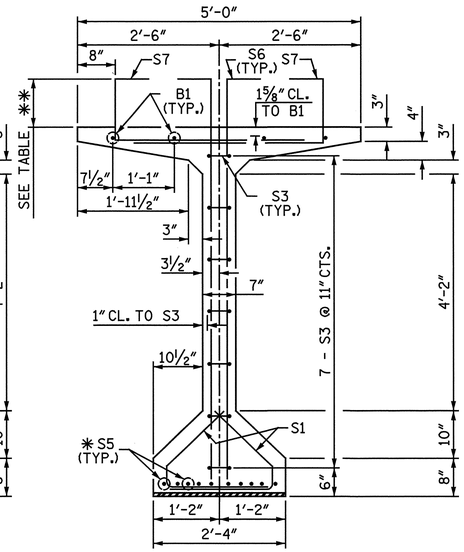

SECTION B-B

✱ FOR S5 BARS, SEE "DETAIL C"

✱✱ SEE TABLE, SHEET 1 OF 2

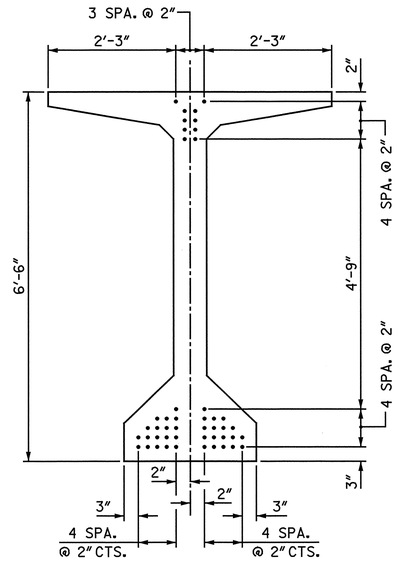

AT END OF GIRDER

46 STRANDS

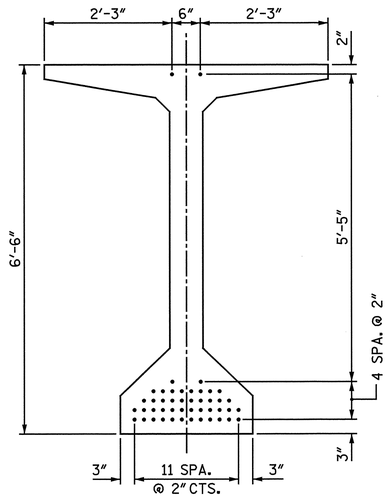

AT ℄ OF GIRDER

46 STRANDS

0.6" Ø LOW RELAXATION STRAND LAYOUT

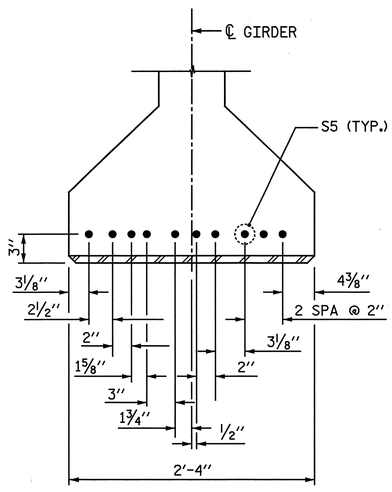

DETAIL C

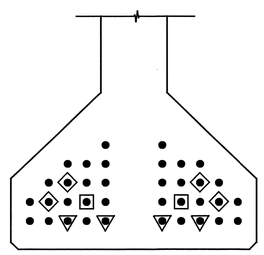

DEBONDING DETAIL

BOND SHALL BE BROKEN ON STRANDS AS SHOWN FOR THE SPECIFIED LENGTH FROM EACH END OF THE GIRDER. SEE STANDARD SPECIFICATIONS ARTICLE 1078-13.

DEBONDING LEGEND	
▽ 4'-0"	▣ 8'-0"
◇ 6'-0"	
● FULLY BONDED STRANDS	

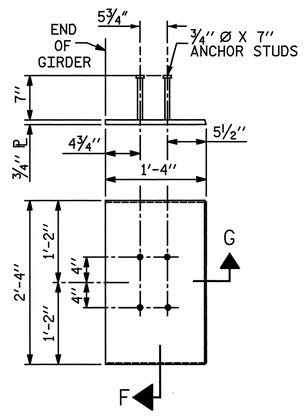

EMBEDDED PLATE "B-2" DETAILS

(2 REQ'D PER GIRDER)

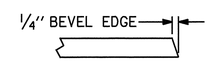

SECTION G

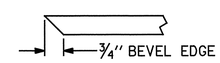

SECTION F

(SEE NOTES)

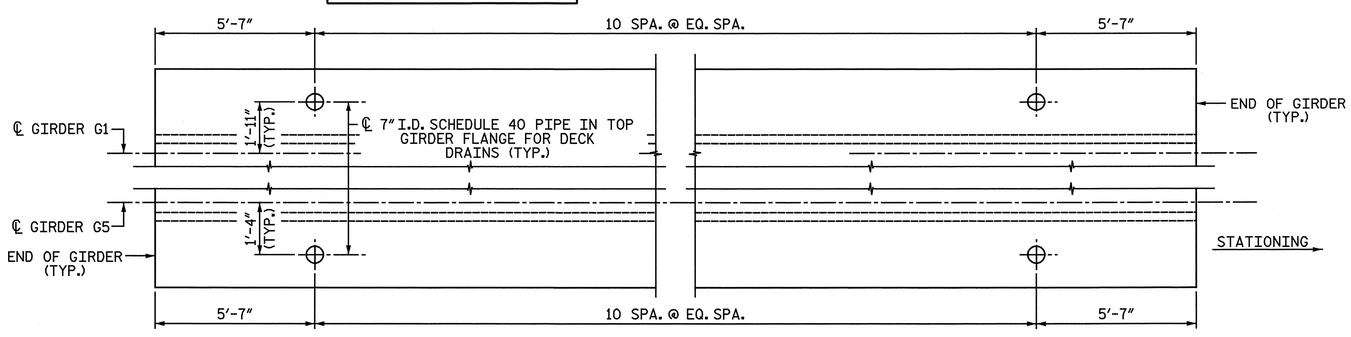

PENETRATIONS IN GIRDER FLANGE FOR DECK DRAINS

NOTES:

ALL PRESTRESSING STRANDS SHALL BE 7-WIRE LOW-RELAXATION GRADE 270 STRANDS AND SHALL CONFORM TO AASHTO M203 EXCEPT FOR SAMPLING REQUIREMENTS WHICH SHALL BE IN ACCORDANCE WITH THE STANDARD SPECIFICATIONS.

ALL REINFORCING STEEL SHALL BE GRADE 60 AND SHALL BE EPOXY COATED.

APPLY EPOXY PROTECTIVE COATING TO END OF GIRDER SURFACES INDICATED IN ELEVATION VIEW.

EMBEDDED PLATE "B-2" SHALL BE GALVANIZED IN ACCORDANCE WITH THE STANDARD SPECIFICATIONS. BEVEL EDGES OF PLATE "B-2" TO GIVE CLOSE FIT BUT NOT TIGHT FIT TO STEEL CASTING FORM.

ANCHOR STUDS SHALL CONFORM TO AASHTO M169 GRADES 1010 THROUGH 1020 OR APPROVED EQUAL, AND SHALL MEET THE TYPE "B" REQUIREMENTS OF SUBSECTION 7.3 OF THE ANSI/AASHTO/AWS D1.5 BRIDGE WELDING CODE.

AT ENDS OF GIRDERS TO BE EMBEDDED IN CONCRETE DIAPHRAGMS OR END WALLS, PRESTRESSING STRANDS MAY EXTEND A MAXIMUM OF 2" BEYOND THE GIRDER ENDS. OTHERWISE, PRESTRESSING STRANDS SHALL BE CUT FLUSH WITH THE GIRDER ENDS.

THE TRANSFER OF LOAD FROM THE ANCHORAGES TO THE GIRDER SHALL BE DONE WHEN CONCRETE HAS REACHED A COMPRESSIVE STRENGTH OF NOT LESS THAN 6000 PSI.

DEPENDING ON THE TYPE OF SYSTEM USED TO SUPPORT THE DECK SLAB FORMS, PRESET ANCHORS MAY BE NECESSARY IN THE PRESTRESSED CONCRETE GIRDER.

THE TOP SURFACE OF THE GIRDER, EXCLUDING THE OUTSIDE 4", SHALL BE RAKED TO A DEPTH OF ¼".

WHEN DRAPED STRANDS ARE DETAILED, THE LONGITUDINAL LOCATION OF THE HOLD DOWN DEVICES SHALL BE WITHIN 6" OF THE LOCATION SHOWN AND THE CENTER OF GRAVITY OF THE GROUP OF DRAPED STRANDS SHALL BE LOCATED WITHIN ½" OF THE THEORETICAL LOCATION SHOWN.

THE CONTRACTOR HAS THE OPTION TO PROVIDE, AT NO ADDITIONAL COST TO THE DEPARTMENT, 2 ADDITIONAL STRANDS AT THE TOP OF THE GIRDER TO FACILITATE TYING OF THE REINFORCING STEEL. THESE STRANDS SHALL BE PULLED TO A LOAD OF 4500 lbs.

PRESTRESSED CONCRETE GIRDERS ARE DESIGNED FOR 0 PSI TENSION IN THE PRECOMPRESSED TENSILE ZONE UNDER ALL LOADING CONDITIONS.

PRESTRESSED CONCRETE GIRDERS SHALL CONTAIN CALCIUM NITRITE CORROSION INHIBITOR. SEE STANDARD SPECIFICATIONS FOR CALCIUM NITRITE CORROSION INHIBITOR.

THE COST OF ALL CONCRETE, REINFORCING STEEL, PRESTRESSED STRANDS, INSERTS EMBEDDED IN THE CONCRETE, EMBEDDED PLATES, TEMPORARY BRACING AND INCIDENTAL ITEMS SHALL BE INCLUDED IN THE CONTRACT UNIT PRICE FOR "78" PRESTRESSED CONCRETE GIRDERS".

THE CONTRACTOR IS RESPONSIBLE FOR THE INTEGRITY AND STABILITY OF THE GIRDERS. IN HANDLING THE 78" PRESTRESSED CONCRETE GIRDERS, THEY SHALL BE MAINTAINED IN AN UPRIGHT POSITION AT ALL TIMES AND THE PROPOSED METHOD FOR ERECTING, STORING AND TRANSPORTING THE GIRDERS SHALL BE SUBMITTED TO THE ENGINEER FOR APPROVAL. THE SUBMITTAL SHALL INCLUDE DESIGN CALCULATIONS FOR LOCATIONS OF PICK-UP POINTS AND SUPPORT POINTS AS NEEDED TO MAINTAIN THE GIRDERS STABILITY DURING ERECTION, STORAGE AND TRANSPORTATION.

PRIOR TO CASTING THE GIRDERS, THE CONTRACTOR SHALL SUBMIT COMPLETE WORKING DRAWINGS WITH THE EXACT LOCATION, AND A COMPLETE DESCRIPTION OF ALL INSERTS CAST IN THE GIRDERS, TO THE DEPARTMENT FOR APPROVAL. SUCH INSERTS INCLUDE, BUT ARE NOT LIMITED TO, INSERTS FOR SUPPORTING FALSEWORK AND FORMWORK, INSERTS FOR ATTACHING DIAPHRAGMS, INSERTS FOR CONNECTING TEMPORARY BRACING, AND LIFTING INSERTS.

FOR REINFORCING STEEL AROUND 1½" Ø PVC PIPE INSERT, SEE "GIRDER DETAILS - 78" PRESTRESSED CONCRETE BULB TEE" SHEET.

USE THREADED INSERTS ON EXTERIOR GIRDERS AND PVC PIPE INSERTS ON INTERIOR GIRDERS. FOR THREADED INSERT DETAILS, SEE "GIRDER DETAILS - 78" PRESTRESSED CONCRETE BULB TEE" SHEET.

REINFORCING STEEL IN THE TOP FLANGE OF GIRDERS WITH DECK DRAIN PENETRATIONS MAY BE SHIFTED SLIGHTLY AS NECESSARY TO AVOID INTERFERENCE WITH THOSE DECK DRAIN PENETRATIONS IN THE GIRDER TOP FLANGE.

7" I.D. SCHEDULE 40 PIPE SHALL BE GALVANIZED IN ACCORDANCE WITH THE STANDARD SPECIFICATIONS.

FOR 78" PRESTRESSED CONCRETE GIRDERS, SEE SPECIAL PROVISIONS.

PROJECT NO. R-3307

CARTERET COUNTY

STATION: 46+21.50 -L-

SHEET 2 OF 2

STATE OF NORTH CAROLINA
DEPARTMENT OF TRANSPORTATION
RALEIGH

SUPERSTRUCTURE

78" PRESTRESSED CONCRETE BULB TEE SECTIONS & DETAILS

SPAN K - GIRDERS KG1-KG9

NORTH CAROLINA PROFESSIONAL SEAL 25911 ENGINEER DAVID G. HATHAWAY 11-7-2013

NORTH CAROLINA PROFESSIONAL SEAL 033752 ENGINEER SETH A. DENNIS 11/07/13

THE LPA GROUP of North Carolina TRANSPORTATION CONSULTANTS

THE LPA GROUP of North Carolina
8000 Regency Parkway, Suite 600
Cary, North Carolina 27518
NC License No.: F-1084

REVISIONS								SHEET NO.
NO.	BY:	DATE:	NO.	BY:	DATE:			S-117
1			3					TOTAL SHEETS
2			4					333

DRAWN BY : N. B. SPEAKS DATE : 7-12-11

CHECKED BY : R. F. DeCOLA DATE : 12-1-11

DWG. 118 OF 282

11/7/2013
3:38:53 PM
User: jaustin
Filename: Y:\Projects\NCDOT\R-3307\Dwgs\Final\R-3307_I18_SD_GDR12.dgn

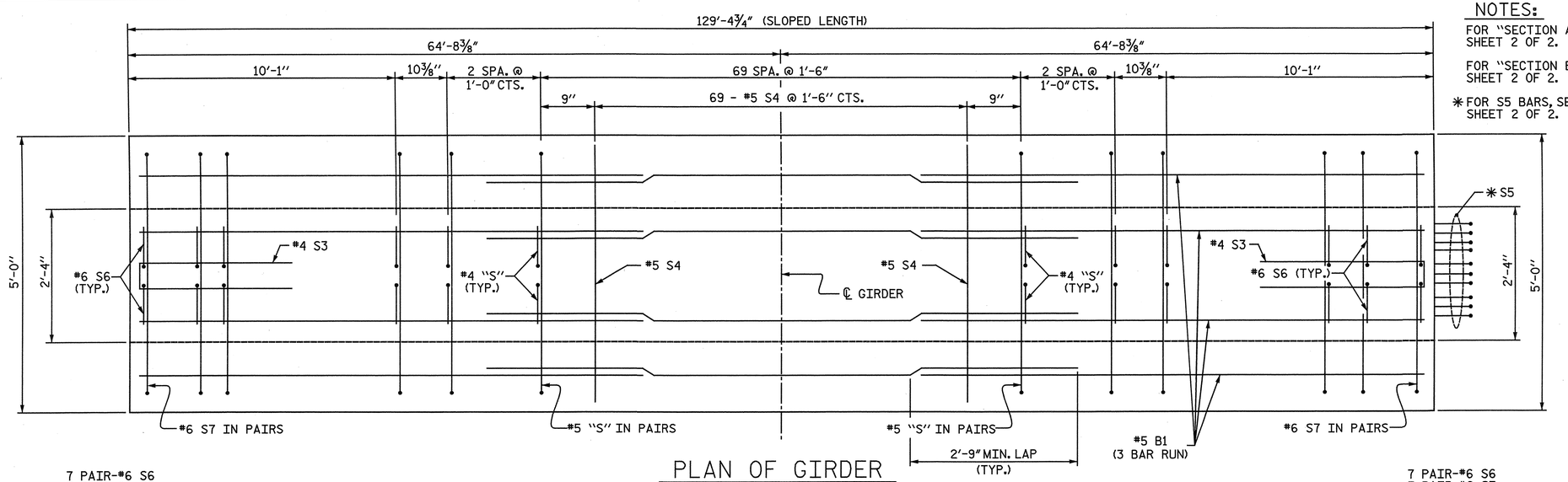

PLAN OF GIRDER

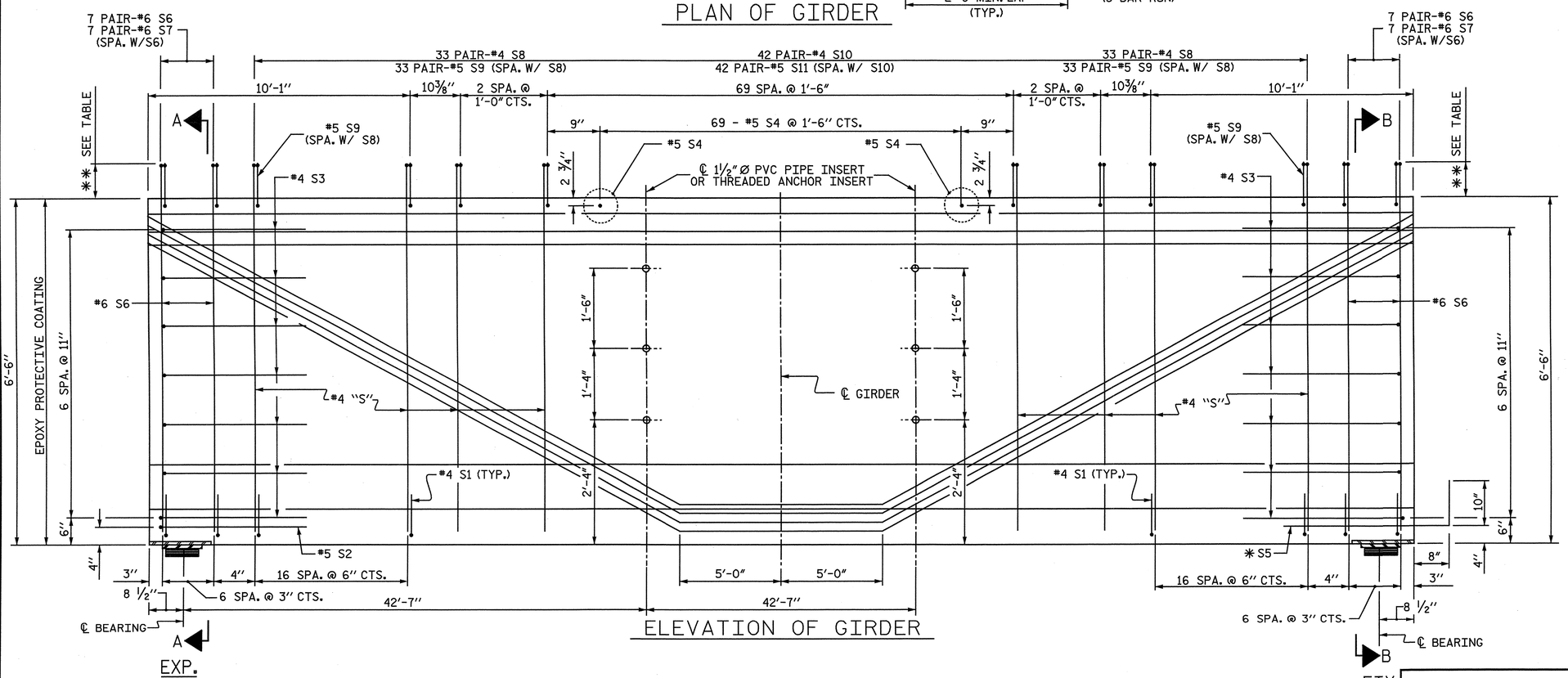

ELEVATION OF GIRDER

NOTES:

FOR "SECTION A-A", SEE SHEET 2 OF 2.

FOR "SECTION B-B", SEE SHEET 2 OF 2.

✱ FOR S5 BARS, SEE "DETAIL C" ON SHEET 2 OF 2.

TABLE	
BAR TYPE	✱✱
S6 & S7	7"
S8 & S9	6"
S10 & S11	5"

0.6" Ø L. R. GRADE 270 STRANDS		
AREA (SQUARE INCHES)	ULTIMATE STRENGTH (LBS. PER STRAND)	APPLIED PRESTRESS (LBS. PER STRAND)
0.217	58,600	43,950

REINFORCING STEEL FOR ONE GIRDER

BAR	NUMBER	SIZE	TYPE	LENGTH	WEIGHT
B1	12	#5	STR	45'-4"	567
S1	96	#4	3	3'-8"	235
S2	1	#5	2	10'-7"	11
S3	14	#4	2	9'-1"	85
S4	69	#5	STR	4'-6"	324
✱ S5	10	#5	STR	3'-8"	38
S6	28	#6	1	7'-6"	315
S7	28	#6	4	4'-9"	200
S8	132	#4	1	7'-4"	647
S9	132	#5	4	4'-8"	642
S10	84	#4	1	7'-3"	407
S11	84	#5	4	4'-7"	402

✱ NOTE: S5 BARS SHALL BE BENT BEFORE SHIPMENT. HEAT BENDING SHALL NOT BE ALLOWED.

BAR TYPES

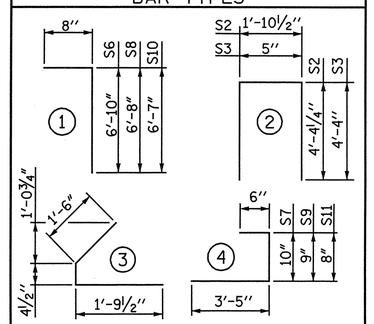

ALL BAR DIMENSIONS ARE OUT-TO-OUT

QUANTITIES FOR ONE GIRDER

	EPOXY COATING REINFORCING STEEL	7,500 PSI CONCRETE	0.6" Ø L.R. STRANDS
	LB.	C.Y.	No.
LG1 - LG9	3873	36.8	46

GIRDERS REQUIRED

NUMBER	LENGTH	TOTAL LENGTH
9	129'-4¾"	1164'-6¾"

PROJECT NO. R-3307

CARTERET COUNTY

STATION: 46+21.50 -L-

SHEET 1 OF 2

STATE OF NORTH CAROLINA
DEPARTMENT OF TRANSPORTATION
RALEIGH

SUPERSTRUCTURE

78" PRESTRESSED CONCRETE BULB TEE

PLAN & ELEVATION

SPAN L - GIRDERS LG1-LG9

NORTH CAROLINA PROFESSIONAL SEAL 25911 ENGINEER DWAIN G. HATHAWAY 4-3-2012

NORTH CAROLINA PROFESSIONAL SEAL 033752 ENGINEER SETH A. DENNEY 4/03/12

THE LPA GROUP of North Carolina
TRANSPORTATION CONSULTANTS

THE LPA GROUP of North Carolina
8000 Regency Parkway, Suite 600
Cary, North Carolina 27518
NC License No.: F-1084

REVISIONS								SHEET NO.
NO.	BY:	DATE:	NO.	BY:	DATE:			S-118
1			3					TOTAL SHEETS
2			4					333

DRAWN BY : N. B. SPEAKS DATE : 6-28-11
CHECKED BY : R. F. DeCOLA DATE : 12-1-11

DWG. 119 OF 282

4/2/2012
12:41: PM
User: jaustin
Filename: Y:\Projects\NCDOT\R-3307\Dwgs\Final\R-3307_119_SD_GDR13.dgn

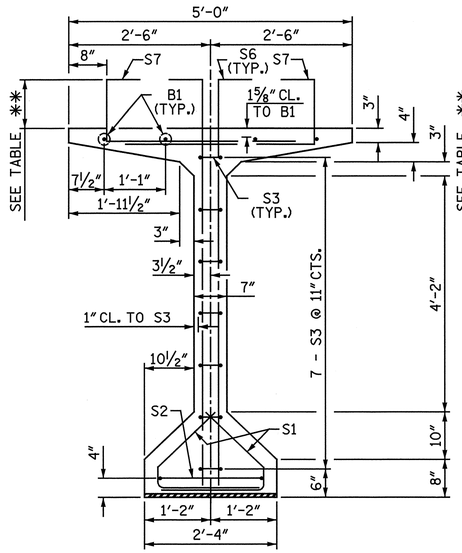

SECTION A-A

** SEE TABLE, SHEET 1 OF 2

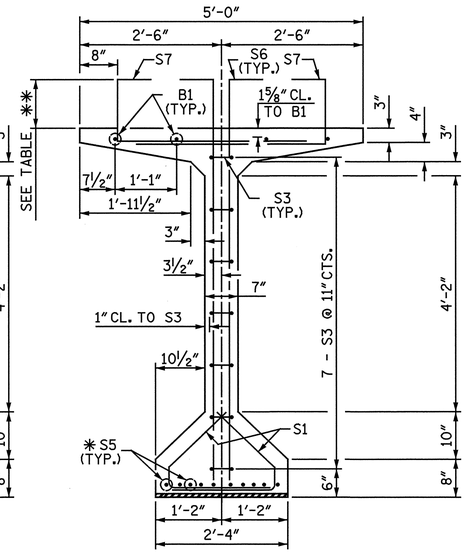

SECTION B-B

* FOR S5 BARS, SEE "DETAIL C"

** SEE TABLE, SHEET 1 OF 2

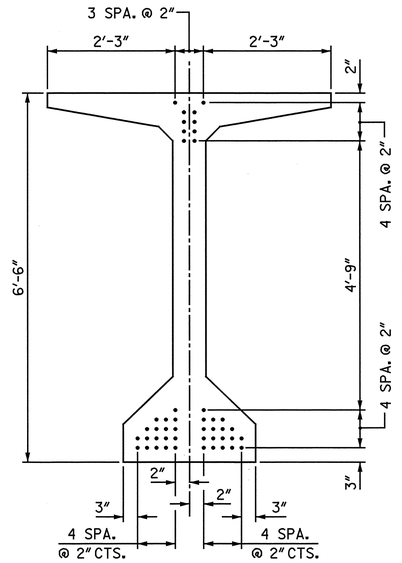

AT END OF GIRDER

46 STRANDS

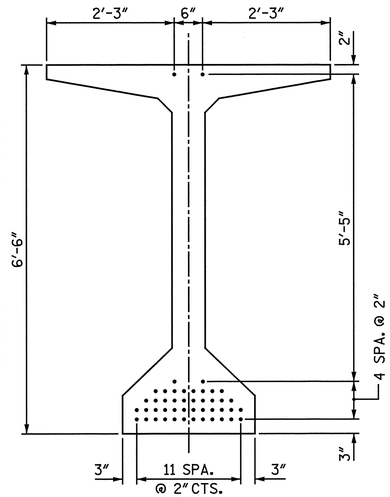

AT ℄ OF GIRDER

46 STRANDS

0.6" Ø LOW RELAXATION STRAND LAYOUT

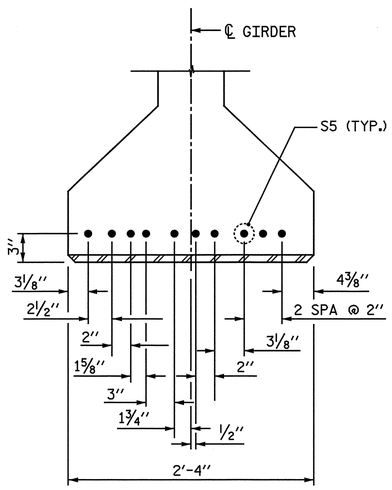

DETAIL C

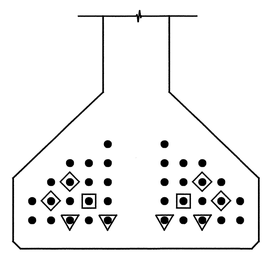

DEBONDING DETAIL

BOND SHALL BE BROKEN ON STRANDS AS SHOWN FOR THE SPECIFIED LENGTH FROM EACH END OF THE GIRDER. SEE STANDARD SPECIFICATIONS ARTICLE 1078-13.

DEBONDING LEGEND	
▽ 4'-0"	▣ 8'-0"
◇ 6'-0"	
● FULLY BONDED STRANDS	

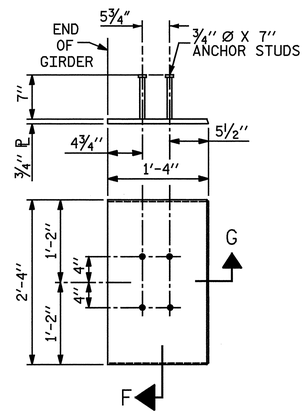

EMBEDDED PLATE "B-2" DETAILS

(2 REQ'D PER GIRDER)

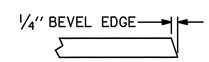

SECTION G

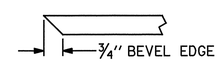

SECTION F

(SEE NOTES)

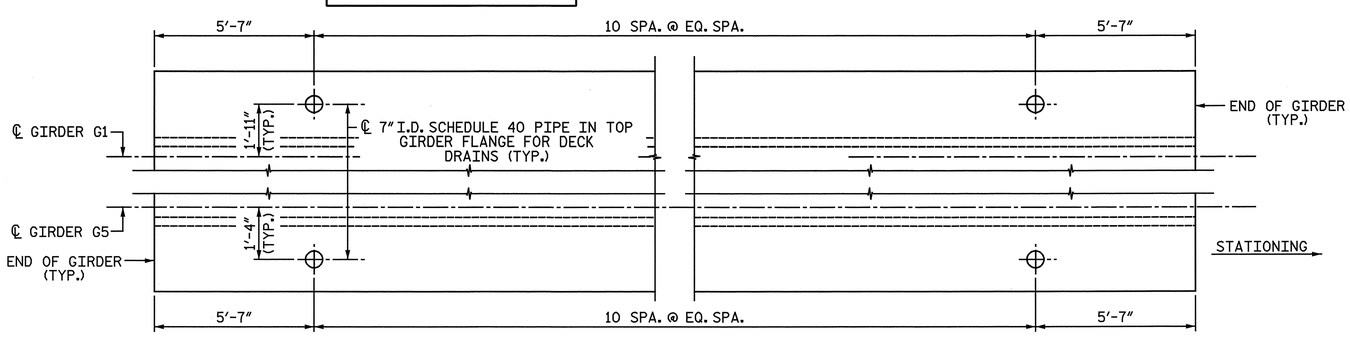

PENETRATIONS IN GIRDER FLANGE FOR DECK DRAINS

NOTES:

ALL PRESTRESSING STRANDS SHALL BE 7-WIRE LOW-RELAXATION GRADE 270 STRANDS AND SHALL CONFORM TO AASHTO M203 EXCEPT FOR SAMPLING REQUIREMENTS WHICH SHALL BE IN ACCORDANCE WITH THE STANDARD SPECIFICATIONS.

ALL REINFORCING STEEL SHALL BE GRADE 60 AND SHALL BE EPOXY COATED.

APPLY EPOXY PROTECTIVE COATING TO END OF GIRDER SURFACES INDICATED IN ELEVATION VIEW.

EMBEDDED PLATE "B-2" SHALL BE GALVANIZED IN ACCORDANCE WITH THE STANDARD SPECIFICATIONS. BEVEL EDGES OF PLATE "B-2" TO GIVE CLOSE FIT BUT NOT TIGHT FIT TO STEEL CASTING FORM.

ANCHOR STUDS SHALL CONFORM TO AASHTO M169 GRADES 1010 THROUGH 1020 OR APPROVED EQUAL, AND SHALL MEET THE TYPE "B" REQUIREMENTS OF SUBSECTION 7.3 OF THE ANSI/AASHTO/AWS D1.5 BRIDGE WELDING CODE.

AT ENDS OF GIRDERS TO BE EMBEDDED IN CONCRETE DIAPHRAGMS OR END WALLS, PRESTRESSING STRANDS MAY EXTEND A MAXIMUM OF 2" BEYOND THE GIRDER ENDS. OTHERWISE, PRESTRESSING STRANDS SHALL BE CUT FLUSH WITH THE GIRDER ENDS.

THE TRANSFER OF LOAD FROM THE ANCHORAGES TO THE GIRDER SHALL BE DONE WHEN CONCRETE HAS REACHED A COMPRESSIVE STRENGTH OF NOT LESS THAN 6000 PSI.

DEPENDING ON THE TYPE OF SYSTEM USED TO SUPPORT THE DECK SLAB FORMS, PRESET ANCHORS MAY BE NECESSARY IN THE PRESTRESSED CONCRETE GIRDER.

THE TOP SURFACE OF THE GIRDER, EXCLUDING THE OUTSIDE 4", SHALL BE RAKED TO A DEPTH OF 1/4".

WHEN DRAPED STRANDS ARE DETAILED, THE LONGITUDINAL LOCATION OF THE HOLD DOWN DEVICES SHALL BE WITHIN 6" OF THE LOCATION SHOWN AND THE CENTER OF GRAVITY OF THE GROUP OF DRAPED STRANDS SHALL BE LOCATED WITHIN 1/2" OF THE THEORETICAL LOCATION SHOWN.

THE CONTRACTOR HAS THE OPTION TO PROVIDE, AT NO ADDITIONAL COST TO THE DEPARTMENT, 2 ADDITIONAL STRANDS AT THE TOP OF THE GIRDER TO FACILITATE TYING OF THE REINFORCING STEEL. THESE STRANDS SHALL BE PULLED TO A LOAD OF 4500 lbs.

PRESTRESSED CONCRETE GIRDERS ARE DESIGNED FOR 0 PSI TENSION IN THE PRECOMPRESSED TENSILE ZONE UNDER ALL LOADING CONDITIONS.

PRESTRESSED CONCRETE GIRDERS SHALL CONTAIN CALCIUM NITRITE CORROSION INHIBITOR. SEE STANDARD SPECIFICATIONS FOR CALCIUM NITRITE CORROSION INHIBITOR.

THE COST OF ALL CONCRETE, REINFORCING STEEL, PRESTRESSED STRANDS, INSERTS EMBEDDED IN THE CONCRETE, EMBEDDED PLATES, TEMPORARY BRACING AND INCIDENTAL ITEMS SHALL BE INCLUDED IN THE CONTRACT UNIT PRICE FOR "78" PRESTRESSED CONCRETE GIRDERS".

THE CONTRACTOR IS RESPONSIBLE FOR THE INTEGRITY AND STABILITY OF THE GIRDERS. IN HANDLING THE 78" PRESTRESSED CONCRETE GIRDERS, THEY SHALL BE MAINTAINED IN AN UPRIGHT POSITION AT ALL TIMES AND THE PROPOSED METHOD FOR ERECTING, STORING AND TRANSPORTING THE GIRDERS SHALL BE SUBMITTED TO THE ENGINEER FOR APPROVAL. THE SUBMITTAL SHALL INCLUDE DESIGN CALCULATIONS FOR LOCATIONS OF PICK-UP POINTS AND SUPPORT POINTS AS NEEDED TO MAINTAIN THE GIRDERS STABILITY DURING ERECTION, STORAGE AND TRANSPORTATION.

PRIOR TO CASTING THE GIRDERS, THE CONTRACTOR SHALL SUBMIT COMPLETE WORKING DRAWINGS WITH THE EXACT LOCATION, AND A COMPLETE DESCRIPTION OF ALL INSERTS CAST IN THE GIRDERS, TO THE DEPARTMENT FOR APPROVAL. SUCH INSERTS INCLUDE, BUT ARE NOT LIMITED TO, INSERTS FOR SUPPORTING FALSEWORK AND FORMWORK, INSERTS FOR ATTACHING DIAPHRAGMS, INSERTS FOR CONNECTING TEMPORARY BRACING, AND LIFTING INSERTS.

FOR REINFORCING STEEL AROUND 1 1/2" Ø PVC PIPE INSERT, SEE "GIRDER DETAILS - 78" PRESTRESSED CONCRETE BULB TEE" SHEET.

USE THREADED INSERTS ON EXTERIOR GIRDERS AND PVC PIPE INSERTS ON INTERIOR GIRDERS. FOR THREADED INSERT DETAILS, SEE "GIRDER DETAILS - 78" PRESTRESSED CONCRETE BULB TEE" SHEET.

REINFORCING STEEL IN THE TOP FLANGE OF GIRDERS WITH DECK DRAIN PENETRATIONS MAY BE SHIFTED SLIGHTLY AS NECESSARY TO AVOID INTERFERENCE WITH THOSE DECK DRAIN PENETRATIONS IN THE GIRDER TOP FLANGE.

7" I.D. SCHEDULE 40 PIPE SHALL BE GALVANIZED IN ACCORDANCE WITH THE STANDARD SPECIFICATIONS.

FOR 78" PRESTRESSED CONCRETE GIRDERS, SEE SPECIAL PROVISIONS.

PROJECT NO. R-3307

CARTERET COUNTY

STATION: 46+21.50 -L-

SHEET 2 OF 2

STATE OF NORTH CAROLINA
DEPARTMENT OF TRANSPORTATION
RALEIGH

SUPERSTRUCTURE

78" PRESTRESSED CONCRETE BULB TEE

SECTIONS & DETAILS

SPAN L - GIRDERS LG1-LG9

NORTH CAROLINA PROFESSIONAL SEAL 25911 ENGINEER DAVID G. HATHAWAY (1-7-2013)

NORTH CAROLINA PROFESSIONAL SEAL 033752 ENGINEER SETH A. DENNIS (1-7-2013)

THE LPA GROUP of North Carolina
TRANSPORTATION CONSULTANTS

THE LPA GROUP of North Carolina
8000 Regency Parkway, Suite 600
Cary, North Carolina 27518
NC License No.: F-1084

REVISIONS								SHEET NO.
NO.	BY:	DATE:	NO.	BY:	DATE:			S-119
1			3					TOTAL SHEETS
2			4					333

DRAWN BY : N. B. SPEAKS DATE : 7-12-11

CHECKED BY : R. F. DeCOLA DATE : 12-1-11

DWG. 120 OF 282

11/7/2013
3:38:53 PM
User: Jaustin
Filename: Y:\Projects\NCDOT\R-3307\Dwgs\Final\R-3307_120_SD_GDR14.dgn

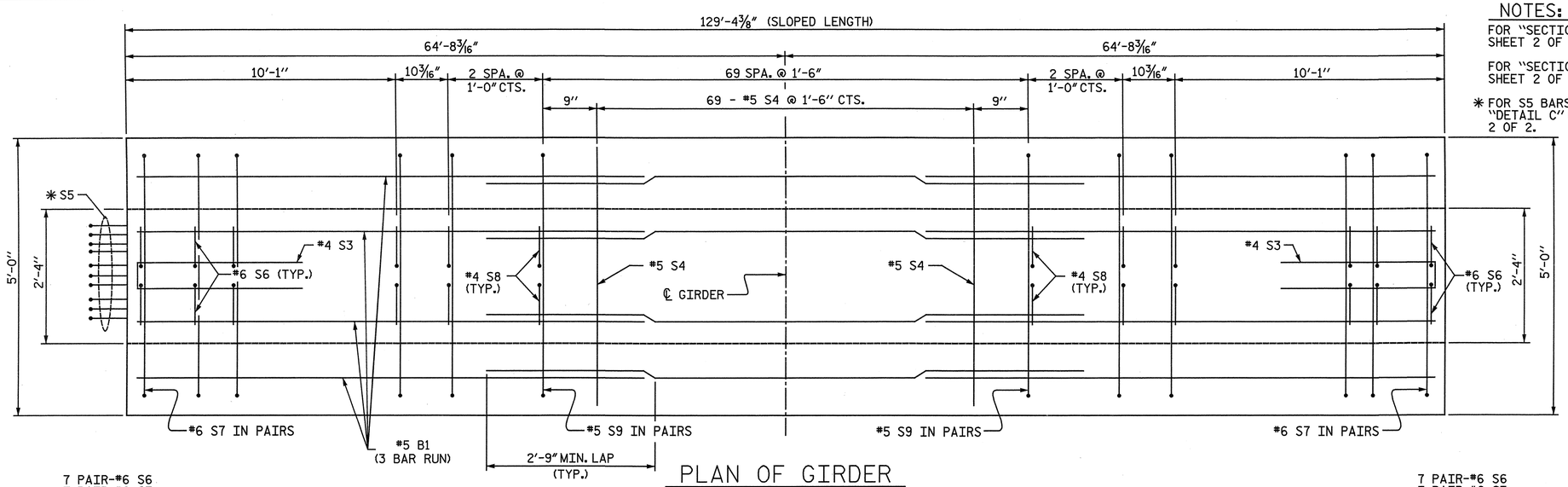

PLAN OF GIRDER

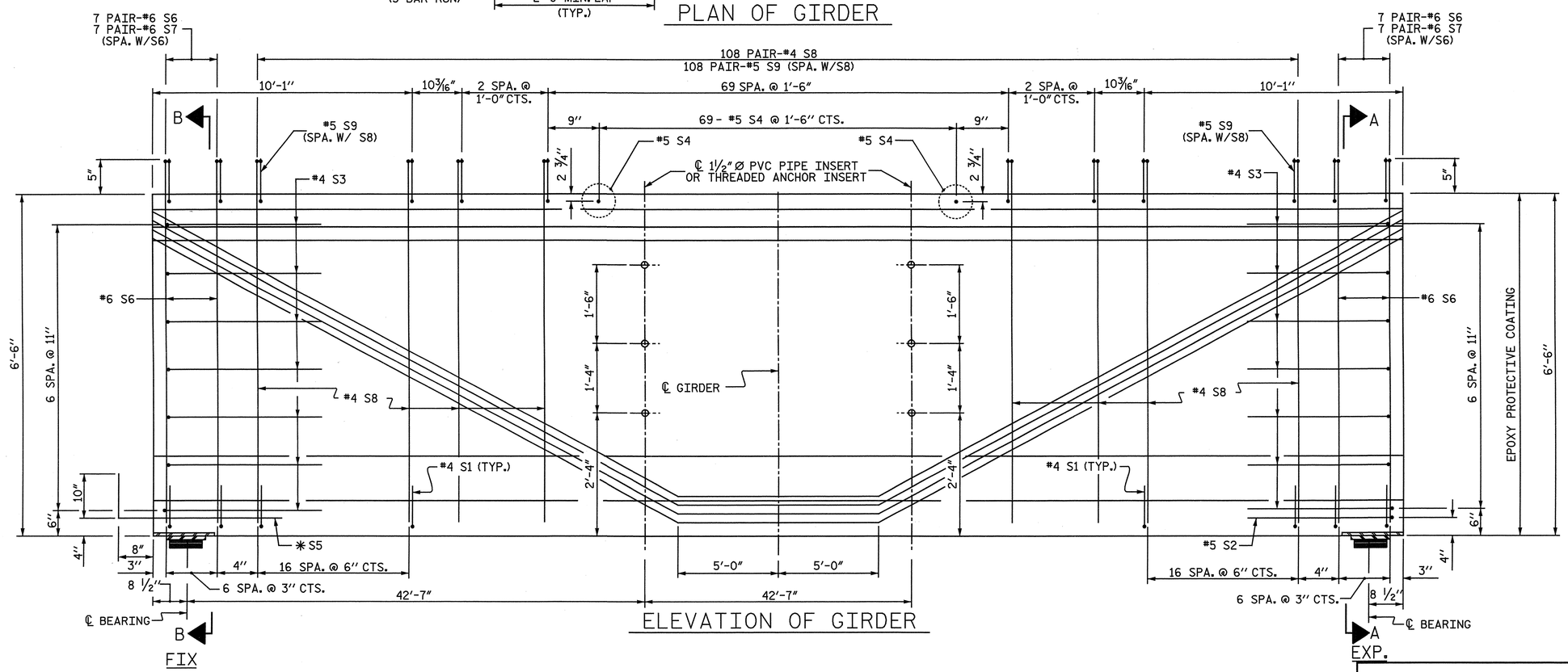

ELEVATION OF GIRDER

NOTES:

FOR "SECTION A-A", SEE SHEET 2 OF 2.

FOR "SECTION B-B", SEE SHEET 2 OF 2.

✱ FOR S5 BARS, SEE "DETAIL C" ON SHEET 2 OF 2.

0.6" Ø L. R. GRADE 270 STRANDS		
AREA (SQUARE INCHES)	ULTIMATE STRENGTH (LBS. PER STRAND)	APPLIED PRESTRESS (LBS. PER STRAND)
0.217	58,600	43,950

REINFORCING STEEL FOR ONE GIRDER

BAR	NUMBER	SIZE	TYPE	LENGTH	WEIGHT
B1	12	#5	STR	45'-4"	567
S1	96	#4	3	3'-8"	235
S2	1	#5	2	10'-7"	11
S3	14	#4	2	9'-1"	85
S4	69	#5	STR	4'-6"	324
✱S5	10	#5	STR	3'-8"	38
S6	28	#6	1	7'-4"	308
S7	28	#6	4	4'-7"	193
S8	216	#4	1	7'-3"	1046
S9	216	#5	4	4'-7"	1033

✱ NOTE: S5 BARS SHALL BE BENT BEFORE SHIPMENT. HEAT BENDING SHALL NOT BE ALLOWED.

BAR TYPES

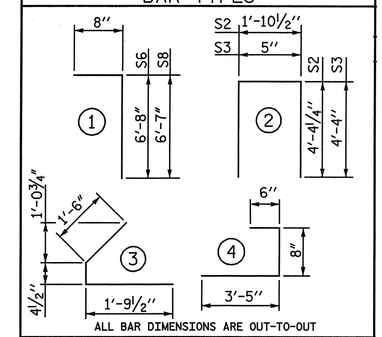

QUANTITIES FOR ONE GIRDER

	EPOXY COATED REINFORCING STEEL	7,500 PSI CONCRETE	0.6" Ø L.R. STRANDS
	LB.	C.Y.	No.
MG1 - MG9	3840	36.8	46

GIRDERS REQUIRED

NUMBER	LENGTH	TOTAL LENGTH
9	129'-4 3/8"	1164'-3 3/8"

PROJECT NO. R-3307

CARTERET COUNTY

STATION: 46+21.50 -L-

SHEET 1 OF 2

STATE OF NORTH CAROLINA
DEPARTMENT OF TRANSPORTATION
RALEIGH

SUPERSTRUCTURE

78" PRESTRESSED CONCRETE BULB TEE

PLAN & ELEVATION

SPAN M - GIRDERS MG1-MG9

NORTH CAROLINA PROFESSIONAL SEAL 25911 ENGINEER DWIN G. HATHAWAY 4-2-2012

NORTH CAROLINA PROFESSIONAL SEAL 033752 ENGINEER SETH A. DENNEY 04/05/12

THE LPA GROUP of North Carolina
TRANSPORTATION CONSULTANTS

THE LPA GROUP of North Carolina
8000 Regency Parkway, Suite 600
Cary, North Carolina 27518
NC License No.: F-1084

REVISIONS

NO.	BY:	DATE:	NO.	BY:	DATE:
1			3		
2			4		

SHEET NO. S-120

TOTAL SHEETS 333

DRAWN BY : N. B. SPEAKS DATE : 6-28-11

CHECKED BY : R. F. DeCOLA DATE : 12-1-11

DWG. 121 OF 282

4/2/2012
3:12:4 PM
User: austin
Filename: Y:\Projects\NCDOT\R-3307\Dwgs\Final\R-3307_121_SD_GDR15.dgn

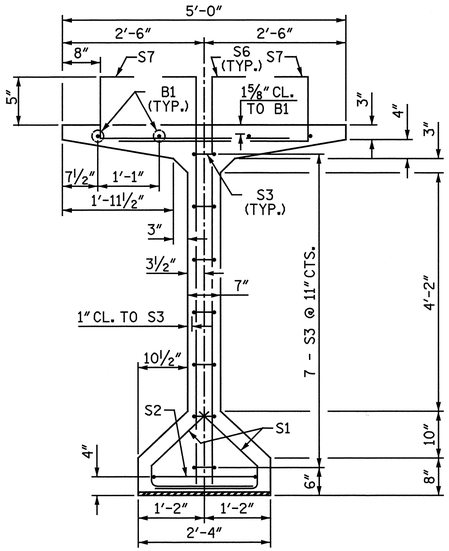

SECTION A-A

✱✱ SEE TABLE, SHEET 1 OF 2

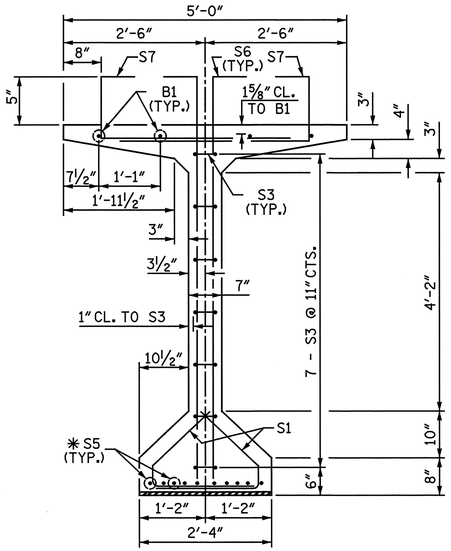

SECTION B-B

✱ FOR S5 BARS, SEE "DETAIL C"

✱✱ SEE TABLE, SHEET 1 OF 2

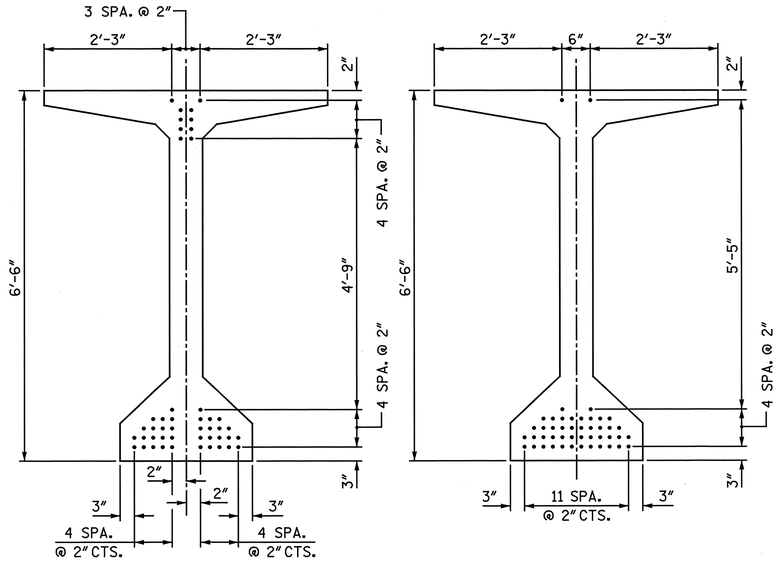

AT END OF GIRDER

46 STRANDS

AT ℄ OF GIRDER

46 STRANDS

0.6" Ø LOW RELAXATION STRAND LAYOUT

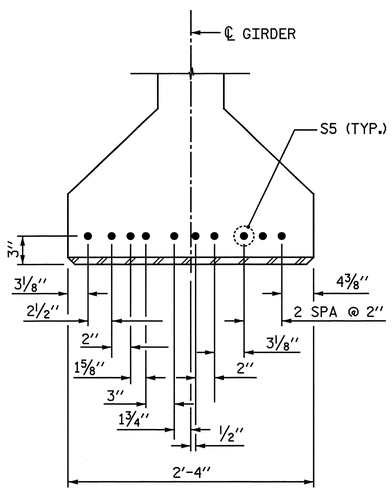

DETAIL C

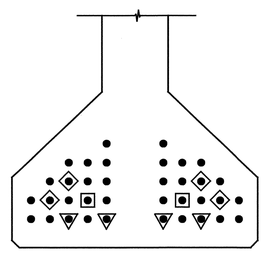

DEBONDING DETAIL

BOND SHALL BE BROKEN ON STRANDS AS SHOWN FOR THE SPECIFIED LENGTH FROM EACH END OF THE GIRDER. SEE STANDARD SPECIFICATIONS ARTICLE 1078-13.

DEBONDING LEGEND	
▼ 4'-0"	▣ 8'-0"
◆ 6'-0"	
● FULLY BONDED STRANDS	

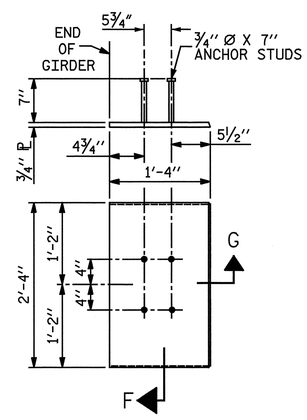

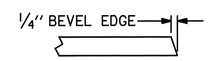

SECTION G

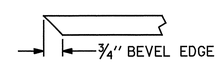

SECTION F

(SEE NOTES)

EMBEDDED PLATE "B-2" DETAILS

(2 REQ'D PER GIRDER)

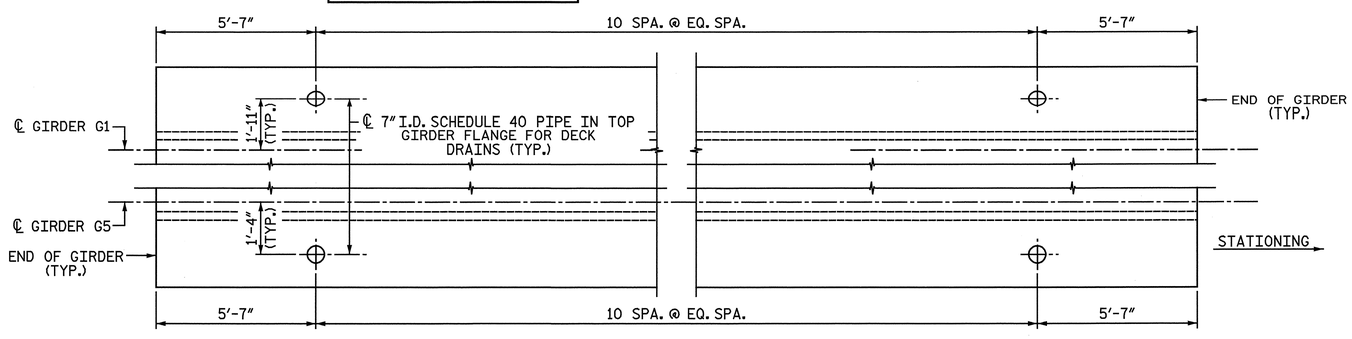

PENETRATIONS IN GIRDER FLANGE FOR DECK DRAINS

NOTES:

ALL PRESTRESSING STRANDS SHALL BE 7-WIRE LOW-RELAXATION GRADE 270 STRANDS AND SHALL CONFORM TO AASHTO M203 EXCEPT FOR SAMPLING REQUIREMENTS WHICH SHALL BE IN ACCORDANCE WITH THE STANDARD SPECIFICATIONS.

ALL REINFORCING STEEL SHALL BE GRADE 60 AND SHALL BE EPOXY COATED.

APPLY EPOXY PROTECTIVE COATING TO END OF GIRDER SURFACES INDICATED IN ELEVATION VIEW.

EMBEDDED PLATE "B-2" SHALL BE GALVANIZED IN ACCORDANCE WITH THE STANDARD SPECIFICATIONS. BEVEL EDGES OF PLATE "B-2" TO GIVE CLOSE FIT BUT NOT TIGHT FIT TO STEEL CASTING FORM.

ANCHOR STUDS SHALL CONFORM TO AASHTO M169 GRADES 1010 THROUGH 1020 OR APPROVED EQUAL, AND SHALL MEET THE TYPE "B" REQUIREMENTS OF SUBSECTION 7.3 OF THE ANSI/AASHTO/AWS D1.5 BRIDGE WELDING CODE.

AT ENDS OF GIRDERS TO BE EMBEDDED IN CONCRETE DIAPHRAGMS OR END WALLS, PRESTRESSING STRANDS MAY EXTEND A MAXIMUM OF 2" BEYOND THE GIRDER ENDS. OTHERWISE, PRESTRESSING STRANDS SHALL BE CUT FLUSH WITH THE GIRDER ENDS.

THE TRANSFER OF LOAD FROM THE ANCHORAGES TO THE GIRDER SHALL BE DONE WHEN CONCRETE HAS REACHED A COMPRESSIVE STRENGTH OF NOT LESS THAN 6000 PSI.

DEPENDING ON THE TYPE OF SYSTEM USED TO SUPPORT THE DECK SLAB FORMS, PRESET ANCHORS MAY BE NECESSARY IN THE PRESTRESSED CONCRETE GIRDER.

THE TOP SURFACE OF THE GIRDER, EXCLUDING THE OUTSIDE 4", SHALL BE RAKED TO A DEPTH OF 1/4".

WHEN DRAPED STRANDS ARE DETAILED, THE LONGITUDINAL LOCATION OF THE HOLD DOWN DEVICES SHALL BE WITHIN 6" OF THE LOCATION SHOWN AND THE CENTER OF GRAVITY OF THE GROUP OF DRAPED STRANDS SHALL BE LOCATED WITHIN 1/2" OF THE THEORETICAL LOCATION SHOWN.

THE CONTRACTOR HAS THE OPTION TO PROVIDE, AT NO ADDITIONAL COST TO THE DEPARTMENT, 2 ADDITIONAL STRANDS AT THE TOP OF THE GIRDER TO FACILITATE TYING OF THE REINFORCING STEEL. THESE STRANDS SHALL BE PULLED TO A LOAD OF 4500 lbs.

PRESTRESSED CONCRETE GIRDERS ARE DESIGNED FOR 0 PSI TENSION IN THE PRECOMPRESSED TENSILE ZONE UNDER ALL LOADING CONDITIONS.

PRESTRESSED CONCRETE GIRDERS SHALL CONTAIN CALCIUM NITRITE CORROSION INHIBITOR. SEE STANDARD SPECIFICATIONS FOR CALCIUM NITRITE CORROSION INHIBITOR.

THE COST OF ALL CONCRETE, REINFORCING STEEL, PRESTRESSED STRANDS, INSERTS EMBEDDED IN THE CONCRETE, EMBEDDED PLATES, TEMPORARY BRACING AND INCIDENTAL ITEMS SHALL BE INCLUDED IN THE CONTRACT UNIT PRICE FOR "78" PRESTRESSED CONCRETE GIRDERS".

THE CONTRACTOR IS RESPONSIBLE FOR THE INTEGRITY AND STABILITY OF THE GIRDERS. IN HANDLING THE 78" PRESTRESSED CONCRETE GIRDERS, THEY SHALL BE MAINTAINED IN AN UPRIGHT POSITION AT ALL TIMES AND THE PROPOSED METHOD FOR ERECTING, STORING AND TRANSPORTING THE GIRDERS SHALL BE SUBMITTED TO THE ENGINEER FOR APPROVAL. THE SUBMITTAL SHALL INCLUDE DESIGN CALCULATIONS FOR LOCATIONS OF PICK-UP POINTS AND SUPPORT POINTS AS NEEDED TO MAINTAIN THE GIRDERS STABILITY DURING ERECTION, STORAGE AND TRANSPORTATION.

PRIOR TO CASTING THE GIRDERS, THE CONTRACTOR SHALL SUBMIT COMPLETE WORKING DRAWINGS WITH THE EXACT LOCATION, AND A COMPLETE DESCRIPTION OF ALL INSERTS CAST IN THE GIRDERS, TO THE DEPARTMENT FOR APPROVAL. SUCH INSERTS INCLUDE, BUT ARE NOT LIMITED TO, INSERTS FOR SUPPORTING FALSEWORK AND FORMWORK, INSERTS FOR ATTACHING DIAPHRAGMS, INSERTS FOR CONNECTING TEMPORARY BRACING, AND LIFTING INSERTS.

FOR REINFORCING STEEL AROUND 1 1/2" Ø PVC PIPE INSERT, SEE "GIRDER DETAILS - 78" PRESTRESSED CONCRETE BULB TEE" SHEET.

USE THREADED INSERTS ON EXTERIOR GIRDERS AND PVC PIPE INSERTS ON INTERIOR GIRDERS. FOR THREADED INSERT DETAILS, SEE "GIRDER DETAILS - 78" PRESTRESSED CONCRETE BULB TEE" SHEET.

REINFORCING STEEL IN THE TOP FLANGE OF GIRDERS WITH DECK DRAIN PENETRATIONS MAY BE SHIFTED SLIGHTLY AS NECESSARY TO AVOID INTERFERENCE WITH THOSE DECK DRAIN PENETRATIONS IN THE GIRDER TOP FLANGE.

7" I.D. SCHEDULE 40 PIPE SHALL BE GALVANIZED IN ACCORDANCE WITH THE STANDARD SPECIFICATIONS.

FOR 78" PRESTRESSED CONCRETE GIRDERS, SEE SPECIAL PROVISIONS.

PROJECT NO. R-3307

CARTERET COUNTY

STATION: 46+21.50 -L-

SHEET 2 OF 2

STATE OF NORTH CAROLINA
DEPARTMENT OF TRANSPORTATION
RALEIGH

SUPERSTRUCTURE

78" PRESTRESSED CONCRETE BULB TEE SECTIONS & DETAILS

SPAN M - GIRDERS MGI-MG9

NORTH CAROLINA PROFESSIONAL SEAL 25911 ENGINEER DWAIN G. HATHAWAY 11-7-2013

NORTH CAROLINA PROFESSIONAL SEAL 033752 ENGINEER SETH A. DENNIS 11/07/13

THE LPA GROUP of North Carolina TRANSPORTATION CONSULTANTS

THE LPA GROUP of North Carolina
8000 Regency Parkway, Suite 600
Cary, North Carolina 27518
NC License No.: F-1084

REVISIONS								SHEET NO.
NO.	BY:	DATE:	NO.	BY:	DATE:			S-121
1			3					TOTAL SHEETS
2			4					333

DRAWN BY: N. B. SPEAKS DATE: 7-12-11

CHECKED BY: R. F. DeCOLA DATE: 12-1-11

DWG. 122 OF 282

11/7/2013
3:38:54 PM
User: jaustin
Filename: Y:\Projects\NCDOT\R-3307\Dwgs\Final\R-3307_I22_SD_GDR16.dgn

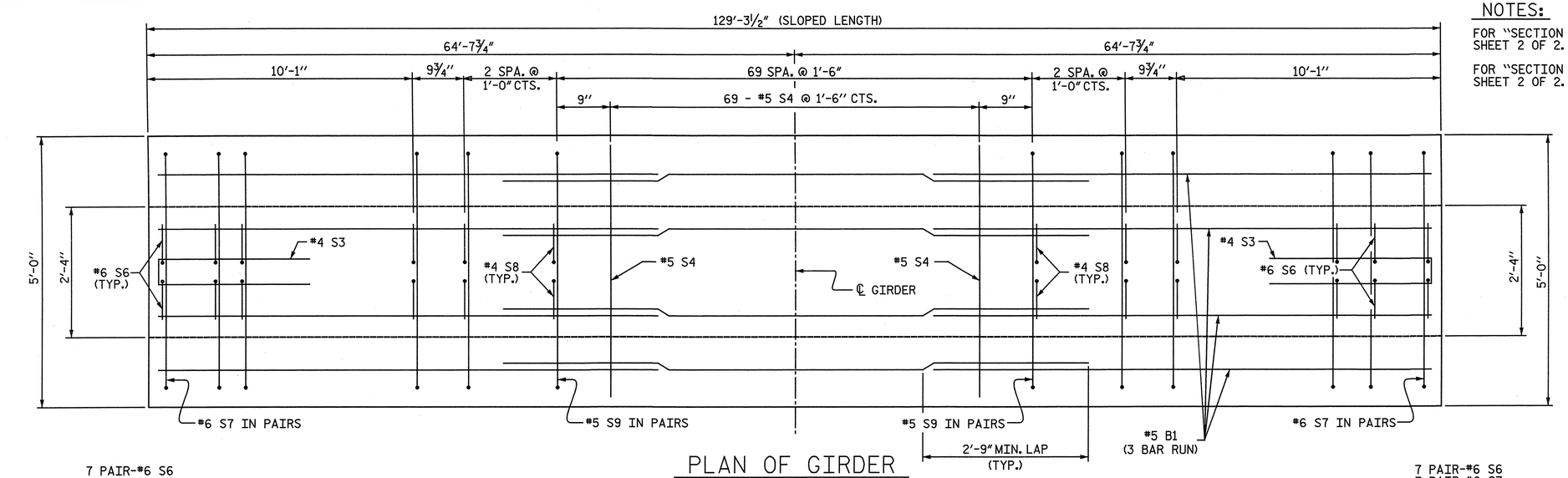

PLAN OF GIRDER

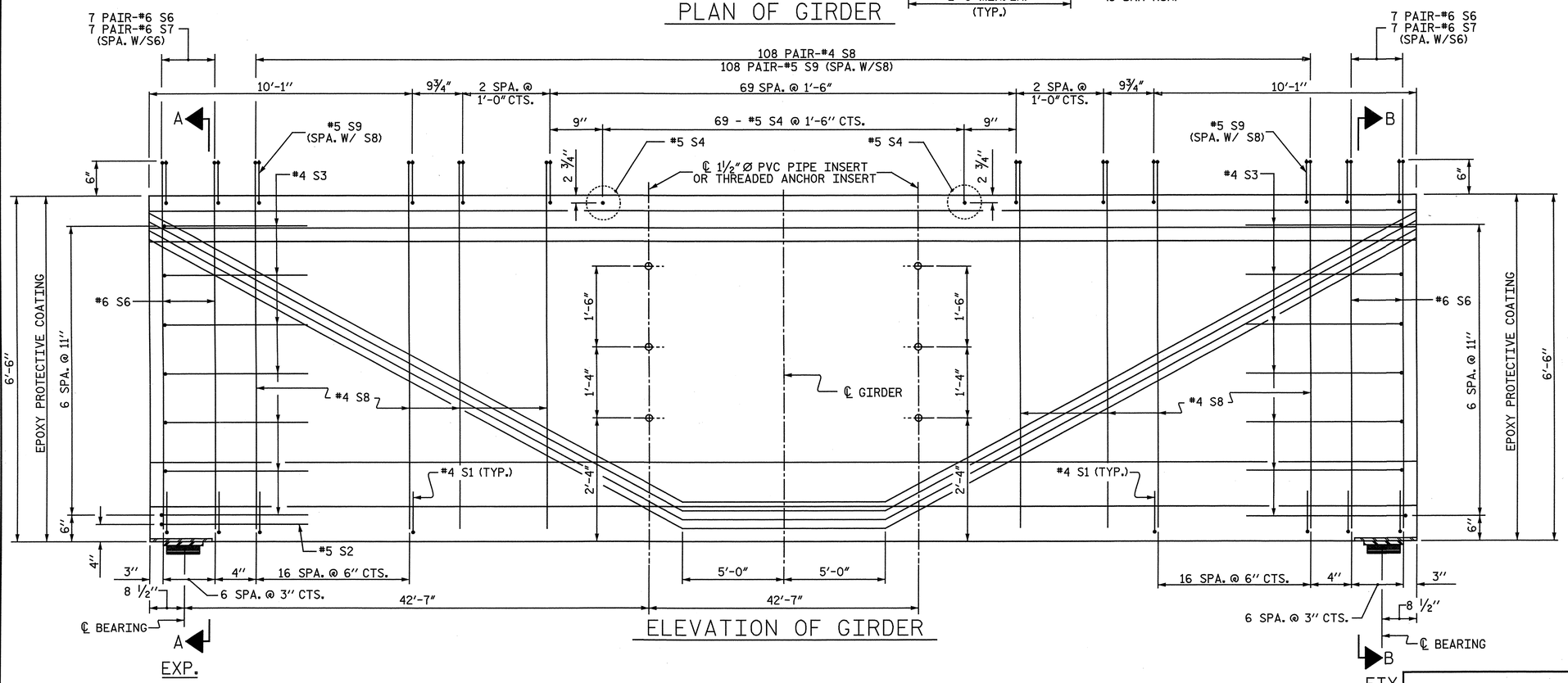

ELEVATION OF GIRDER

NOTES:

FOR "SECTION A-A", SEE SHEET 2 OF 2.

FOR "SECTION B-B", SEE SHEET 2 OF 2.

0.6" Ø L. R. GRADE 270 STRANDS

AREA (SQUARE INCHES)	ULTIMATE STRENGTH (LBS. PER STRAND)	APPLIED PRESTRESS (LBS. PER STRAND)
0.217	58,600	43,950

REINFORCING STEEL FOR ONE GIRDER

BAR	NUMBER	SIZE	TYPE	LENGTH	WEIGHT
B1	12	#5	STR	45'-4"	567
S1	96	#4	3	3'-8"	235
S2	1	#5	2	10'-7"	11
S3	14	#4	2	9'-1"	85
S4	69	#5	STR	4'-6"	324
S6	28	#6	1	7'-5"	312
S7	28	#6	4	4'-8"	196
S8	216	#4	1	7'-4"	1058
S9	216	#5	4	4'-8"	1051

BAR TYPES

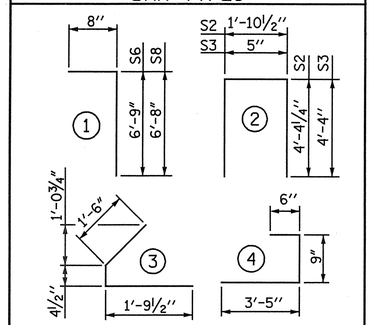

ALL BAR DIMENSIONS ARE OUT-TO-OUT

QUANTITIES FOR ONE GIRDER

	EPOXY COATED REINFORCING STEEL	7,500 PSI CONCRETE	0.6" Ø L.R. STRANDS
	LB.	C.Y.	No.
NG1 - NG9	3839	36.7	46

GIRDERS REQUIRED

NUMBER	LENGTH	TOTAL LENGTH
9	129'-3½"	1163'-7½"

PROJECT NO. R-3307

CARTERET COUNTY

STATION: 46+21.50 -L-

SHEET 1 OF 2

STATE OF NORTH CAROLINA
DEPARTMENT OF TRANSPORTATION
RALEIGH

SUPERSTRUCTURE

78" PRESTRESSED CONCRETE BULB TEE

PLAN & ELEVATION

SPAN N - GIRDERS NGI-NG9

NORTH CAROLINA PROFESSIONAL SEAL 25911 ENGINEER DWAIN C. HATHAWAY 4-3-2012

NORTH CAROLINA PROFESSIONAL SEAL 033752 ENGINEER SETH A. DENNEY 4/03/12

THE LPA GROUP of North Carolina TRANSPORTATION CONSULTANTS

THE LPA GROUP of North Carolina
8000 Regency Parkway, Suite 600
Cary, North Carolina 27518
NC License No.: F-1084

REVISIONS						
NO.	BY:	DATE:	NO.	BY:	DATE:	
1			3			
2			4			

SHEET NO. S-122

TOTAL SHEETS 333

DRAWN BY : N. B. SPEAKS DATE : 6-28-11

CHECKED BY : R. F. DeCOLA DATE : 12-1-11

DWG. 123 OF 282

4/2/2012
12:42 PM
User: jaustin
Filename: Y:\Projects\NCDOT\R-3307\Dwgs\Final\R-3307_123_SD_GDR17.dgn

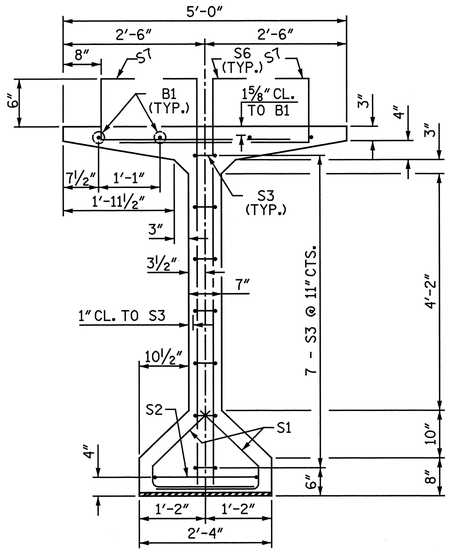

SECTION A-A

✱✱ SEE TABLE, SHEET 1 OF 2

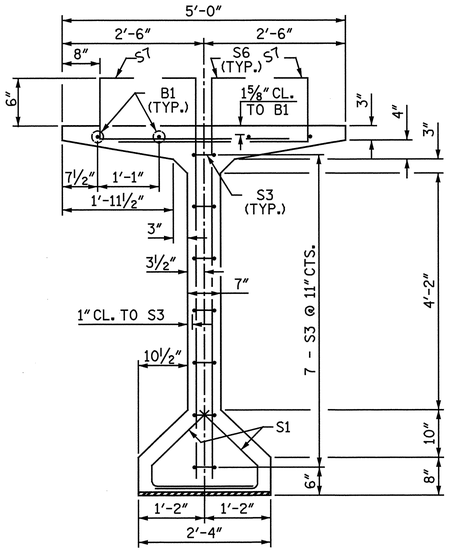

SECTION B-B

✱✱ SEE TABLE, SHEET 1 OF 2

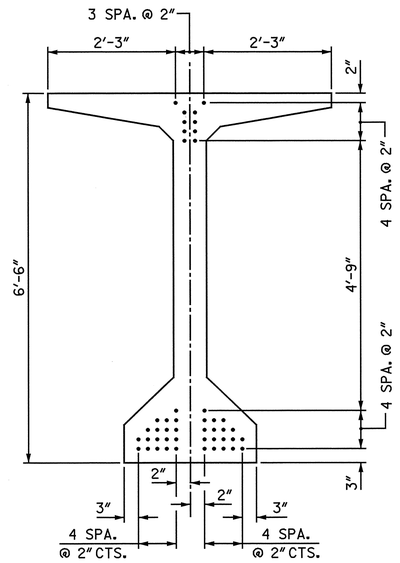

AT END OF GIRDER

46 STRANDS

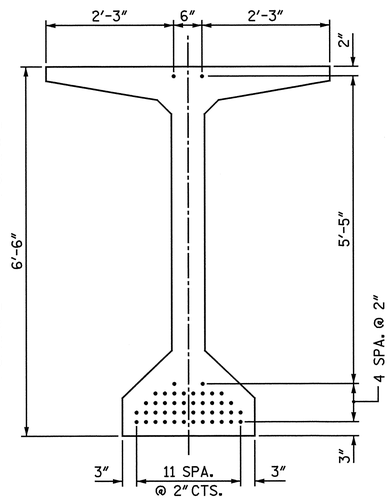

AT ℄ OF GIRDER

46 STRANDS

0.6" Ø LOW RELAXATION STRAND LAYOUT

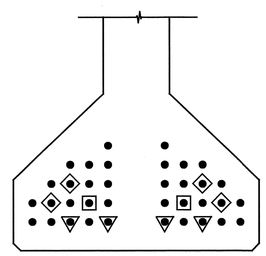

DEBONDING DETAIL

BOND SHALL BE BROKEN ON STRANDS AS SHOWN FOR THE SPECIFIED LENGTH FROM EACH END OF THE GIRDER. SEE STANDARD SPECIFICATIONS ARTICLE 1078-13.

DEBONDING LEGEND

- 4'-0"
- 6'-0"
- 8'-0"
- FULLY BONDED STRANDS

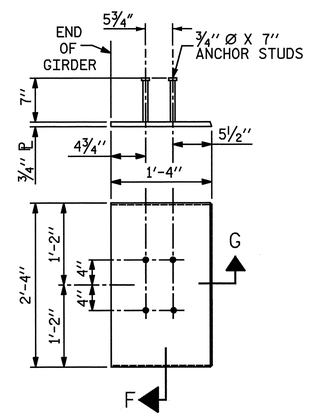

EMBEDDED PLATE "B-2" DETAILS

(2 REQ'D PER GIRDER)

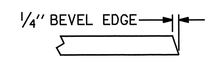

SECTION G

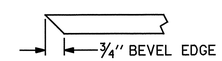

SECTION F

(SEE NOTES)

NOTES:

ALL PRESTRESSING STRANDS SHALL BE 7-WIRE LOW-RELAXATION GRADE 270 STRANDS AND SHALL CONFORM TO AASHTO M203 EXCEPT FOR SAMPLING REQUIREMENTS WHICH SHALL BE IN ACCORDANCE WITH THE STANDARD SPECIFICATIONS.

ALL REINFORCING STEEL SHALL BE GRADE 60 AND SHALL BE EPOXY COATED.

APPLY EPOXY PROTECTIVE COATING TO END OF GIRDER SURFACES INDICATED IN ELEVATION VIEW.

EMBEDDED PLATE "B-2" SHALL BE GALVANIZED IN ACCORDANCE WITH THE STANDARD SPECIFICATIONS. BEVEL EDGES OF PLATE "B-2" TO GIVE CLOSE FIT BUT NOT TIGHT FIT TO STEEL CASTING FORM.

ANCHOR STUDS SHALL CONFORM TO AASHTO M169 GRADES 1010 THROUGH 1020 OR APPROVED EQUAL, AND SHALL MEET THE TYPE "B" REQUIREMENTS OF SUBSECTION 7.3 OF THE ANSI/AASHTO/AWS D1.5 BRIDGE WELDING CODE.

PRESTRESSING STRANDS SHALL BE CUT FLUSH WITH THE GIRDER ENDS.

THE TRANSFER OF LOAD FROM THE ANCHORAGES TO THE GIRDER SHALL BE DONE WHEN CONCRETE HAS REACHED A COMPRESSIVE STRENGTH OF NOT LESS THAN 6000 PSI.

DEPENDING ON THE TYPE OF SYSTEM USED TO SUPPORT THE DECK SLAB FORMS, PRESET ANCHORS MAY BE NECESSARY IN THE PRESTRESSED CONCRETE GIRDER.

THE TOP SURFACE OF THE GIRDER, EXCLUDING THE OUTSIDE 4", SHALL BE RAKED TO A DEPTH OF 1/4".

WHEN DRAPED STRANDS ARE DETAILED, THE LONGITUDINAL LOCATION OF THE HOLD DOWN DEVICES SHALL BE WITHIN 6" OF THE LOCATION SHOWN AND THE CENTER OF GRAVITY OF THE GROUP OF DRAPED STRANDS SHALL BE LOCATED WITHIN 1/2" OF THE THEORETICAL LOCATION SHOWN.

THE CONTRACTOR HAS THE OPTION TO PROVIDE, AT NO ADDITIONAL COST TO THE DEPARTMENT, 2 ADDITIONAL STRANDS AT THE TOP OF THE GIRDER TO FACILITATE TYING OF THE REINFORCING STEEL. THESE STRANDS SHALL BE PULLED TO A LOAD OF 4500 lbs.

PRESTRESSED CONCRETE GIRDERS ARE DESIGNED FOR 0 PSI TENSION IN THE PRECOMPRESSED TENSILE ZONE UNDER ALL LOADING CONDITIONS.

PRESTRESSED CONCRETE GIRDERS SHALL CONTAIN CALCIUM NITRITE CORROSION INHIBITOR. SEE STANDARD SPECIFICATIONS FOR CALCIUM NITRITE CORROSION INHIBITOR.

THE COST OF ALL CONCRETE, REINFORCING STEEL, PRESTRESSED STRANDS, INSERTS EMBEDDED IN THE CONCRETE, EMBEDDED PLATES, TEMPORARY BRACING AND INCIDENTAL ITEMS SHALL BE INCLUDED IN THE CONTRACT UNIT PRICE FOR "78" PRESTRESSED CONCRETE GIRDERS".

THE CONTRACTOR IS RESPONSIBLE FOR THE INTEGRITY AND STABILITY OF THE GIRDERS. IN HANDLING THE 78" PRESTRESSED CONCRETE GIRDERS, THEY SHALL BE MAINTAINED IN AN UPRIGHT POSITION AT ALL TIMES AND THE PROPOSED METHOD FOR ERECTING, STORING AND TRANSPORTING THE GIRDERS SHALL BE SUBMITTED TO THE ENGINEER FOR APPROVAL. THE SUBMITTAL SHALL INCLUDE DESIGN CALCULATIONS FOR LOCATIONS OF PICK-UP POINTS AND SUPPORT POINTS AS NEEDED TO MAINTAIN THE GIRDERS STABILITY DURING ERECTION, STORAGE AND TRANSPORTATION.

PRIOR TO CASTING THE GIRDERS, THE CONTRACTOR SHALL SUBMIT COMPLETE WORKING DRAWINGS WITH THE EXACT LOCATION, AND A COMPLETE DESCRIPTION OF ALL INSERTS CAST IN THE GIRDERS, TO THE DEPARTMENT FOR APPROVAL. SUCH INSERTS INCLUDE, BUT ARE NOT LIMITED TO, INSERTS FOR SUPPORTING FALSEWORK AND FORMWORK, INSERTS FOR ATTACHING DIAPHRAGMS, INSERTS FOR CONNECTING TEMPORARY BRACING, AND LIFTING INSERTS.

FOR REINFORCING STEEL AROUND 1 1/2" Ø PVC PIPE INSERT, SEE "GIRDER DETAILS - 78" PRESTRESSED CONCRETE BULB TEE" SHEET.

USE THREADED INSERTS ON EXTERIOR GIRDERS AND PVC PIPE INSERTS ON INTERIOR GIRDERS. FOR THREADED INSERT DETAILS, SEE "GIRDER DETAILS - 78" PRESTRESSED CONCRETE BULB TEE" SHEET.

REINFORCING STEEL IN THE TOP FLANGE OF GIRDERS WITH DECK DRAIN PENETRATIONS MAY BE SHIFTED SLIGHTLY AS NECESSARY TO AVOID INTERFERENCE WITH THOSE DECK DRAIN PENETRATIONS IN THE GIRDER TOP FLANGE.

7" I.D. SCHEDULE 40 PIPE SHALL BE GALVANIZED IN ACCORDANCE WITH THE STANDARD SPECIFICATIONS.

FOR 78" PRESTRESSED CONCRETE GIRDERS, SEE SPECIAL PROVISIONS.

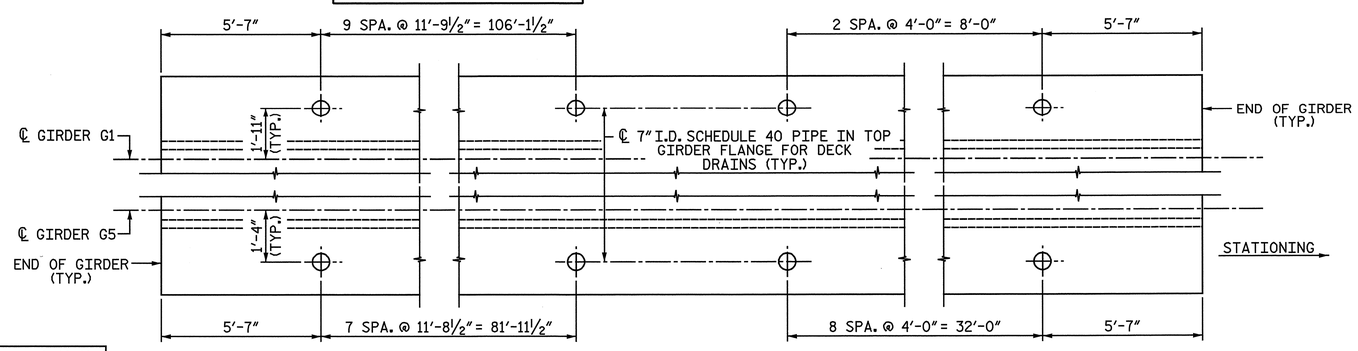

PENETRATIONS IN GIRDER FLANGE FOR DECK DRAINS

PROJECT NO. R-3307

CARTERET COUNTY

STATION: 46+21.50 -L-

SHEET 2 OF 2

STATE OF NORTH CAROLINA
DEPARTMENT OF TRANSPORTATION
RALEIGH

SUPERSTRUCTURE

78" PRESTRESSED CONCRETE BULB TEE SECTIONS & DETAILS

SPAN N - GIRDERS NG1-NG9

NORTH CAROLINA PROFESSIONAL SEAL 25911 ENGINEER DRAIN G. HATHAWAY 11-7-2013

NORTH CAROLINA PROFESSIONAL SEAL 033752 ENGINEER SETH A. DENNEY 11/07/13

THE LPA GROUP of North Carolina TRANSPORTATION CONSULTANTS

THE LPA GROUP of North Carolina
8000 Regency Parkway, Suite 600
Cary, North Carolina 27518
NC License No.: F-1084

REVISIONS								SHEET NO.
NO.	BY:	DATE:	NO.	BY:	DATE:			S-123
1			3					TOTAL SHEETS
2			4					333

DRAWN BY : N. B. SPEAKS DATE : 7-12-11

CHECKED BY : R. F. DeCOLA DATE : 12-1-11

DWG. 124 OF 282

11/7/2013
3:38:55 PM
User: jaustin
Filename: Y:\Projects\NCDOT\R-3307\Dwgs\Final\R-3307_124_SD_GDR18.dgn

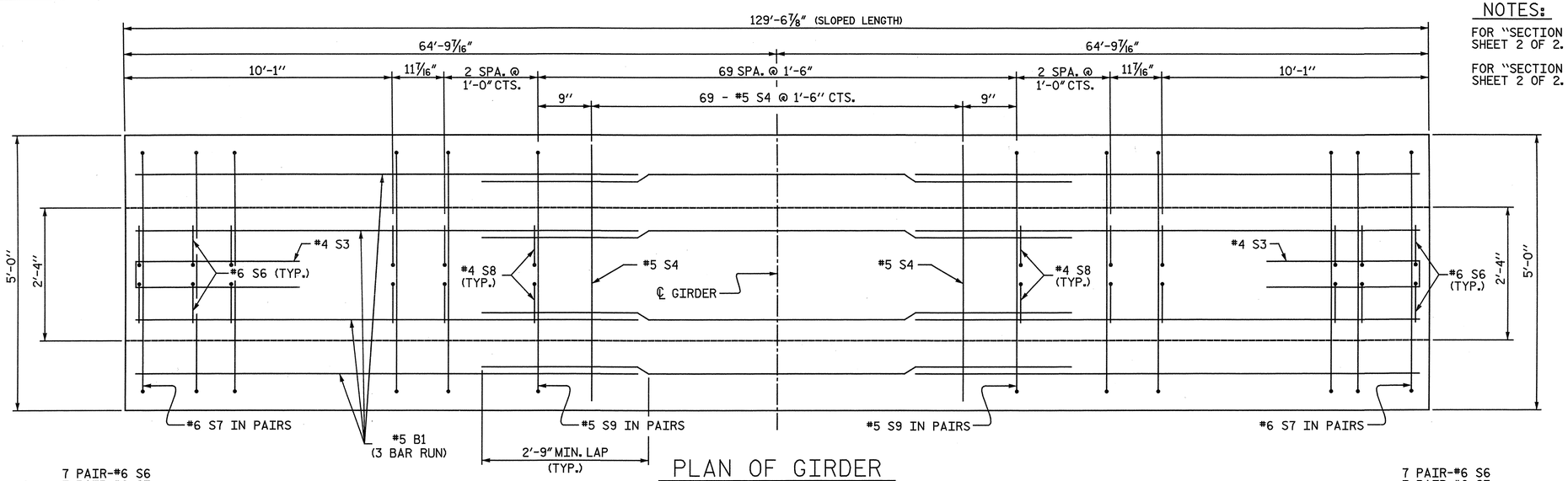

PLAN OF GIRDER

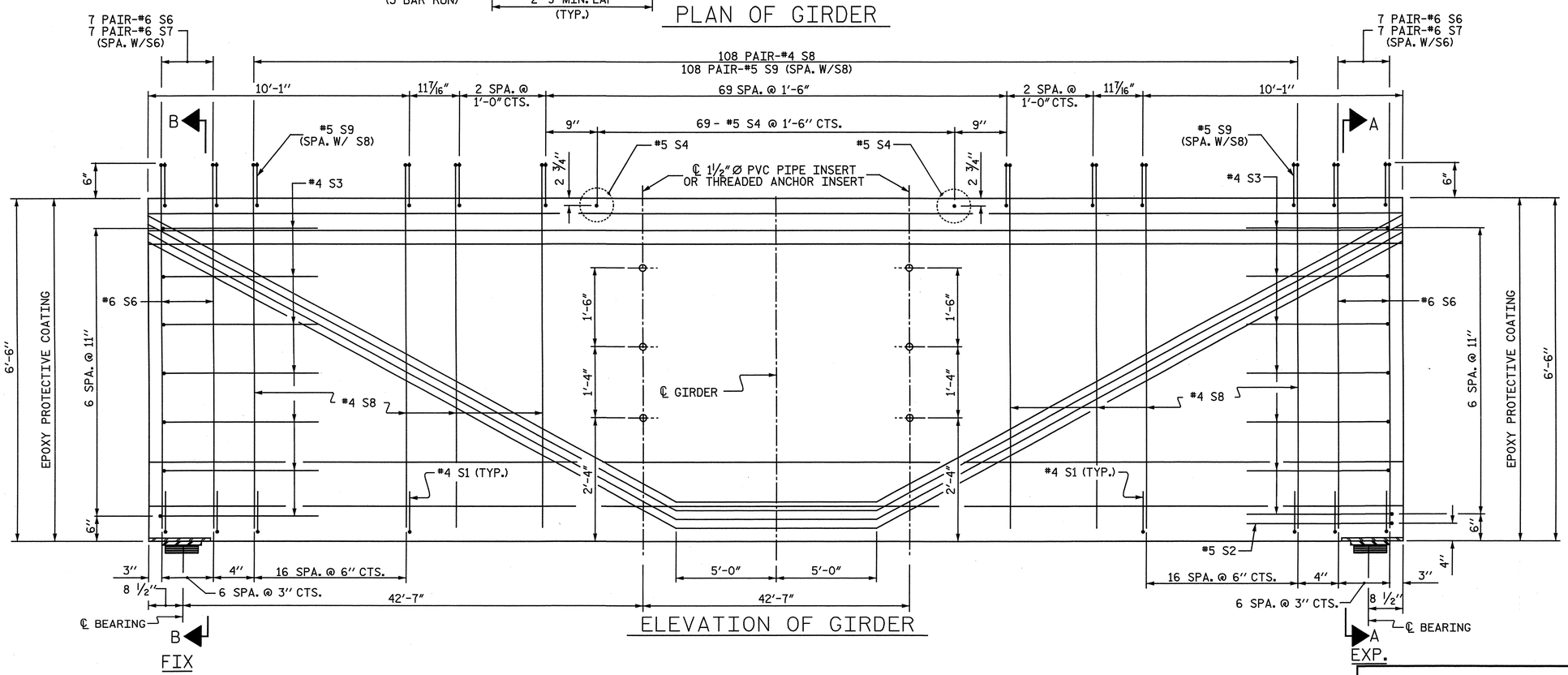

ELEVATION OF GIRDER

NOTES:

FOR "SECTION A-A", SEE SHEET 2 OF 2.

FOR "SECTION B-B", SEE SHEET 2 OF 2.

0.6" Ø L. R. GRADE 270 STRANDS

AREA (SQUARE INCHES)	ULTIMATE STRENGTH (LBS. PER STRAND)	APPLIED PRESTRESS (LBS. PER STRAND)
0.217	58,600	43,950

REINFORCING STEEL FOR ONE GIRDER

BAR	NUMBER	SIZE	TYPE	LENGTH	WEIGHT
B1	12	#5	STR	45'-4"	567
S1	96	#4	3	3'-8"	235
S2	1	#5	2	10'-7"	11
S3	14	#4	2	9'-1"	85
S4	69	#5	STR	4'-6"	324
S6	28	#6	1	7'-5"	312
S7	28	#6	4	4'-8"	196
S8	216	#4	1	7'-4"	1058
S9	216	#5	4	4'-8"	1051

BAR TYPES

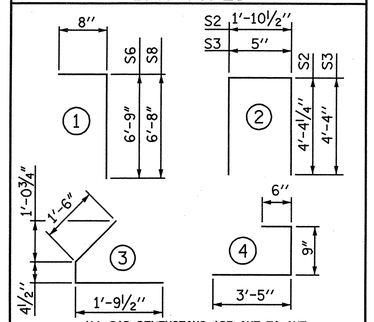

ALL BAR DIMENSIONS ARE OUT-TO-OUT

QUANTITIES FOR ONE GIRDER

	EPOXY COATED REINFORCING STEEL	7,500 PSI CONCRETE	0.6" Ø L.R. STRANDS
	LB.	C.Y.	No.
OG1 - OG9	3839	36.8	46

GIRDERS REQUIRED

NUMBER	LENGTH	TOTAL LENGTH
9	129'-6 7/8"	1166'-1 7/8"

PROJECT NO. R-3307

CARTERET COUNTY

STATION: 46+21.50 -L-

SHEET 1 OF 2

STATE OF NORTH CAROLINA
DEPARTMENT OF TRANSPORTATION
RALEIGH

SUPERSTRUCTURE

78" PRESTRESSED CONCRETE BULB TEE

PLAN & ELEVATION

SPAN O - GIRDERS OGI-OG9

NORTH CAROLINA PROFESSIONAL SEAL 25911 ENGINEER DWAIN G. HATHAWAY 4-3-2012

NORTH CAROLINA PROFESSIONAL SEAL 033752 ENGINEER SETH A. DENNEY 4/03/12

THE LPA GROUP of North Carolina TRANSPORTATION CONSULTANTS

THE LPA GROUP of North Carolina
8000 Regency Parkway, Suite 600
Cary, North Carolina 27518
NC License No.: F-1084

REVISIONS							SHEET NO.
NO.	BY:	DATE:	NO.	BY:	DATE:		S-124
1			3				TOTAL SHEETS
2			4				333

DRAWN BY : N. B. SPEAKS DATE : 6-28-11
CHECKED BY : R. F. DeCOLA DATE : 12-1-11

DWG. 125 OF 282

4/2/2012
12:42: PM
User: jaustin
Filename: Y:\Projects\NCDOT\R-3307\Dwgs\Final\R-3307_125_SD_GDR19.dgn

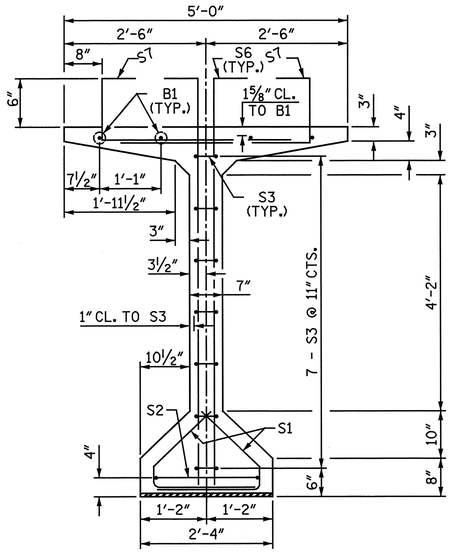

SECTION A-A

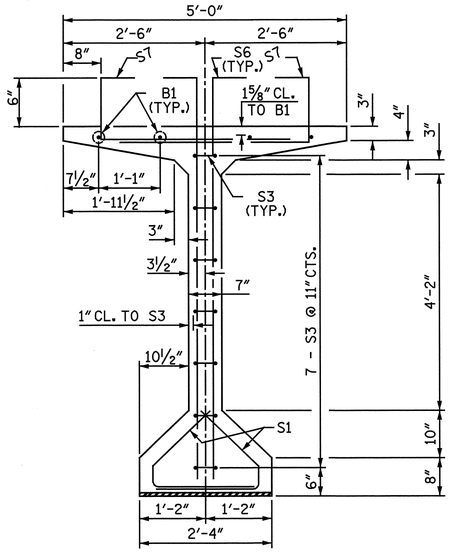

SECTION B-B

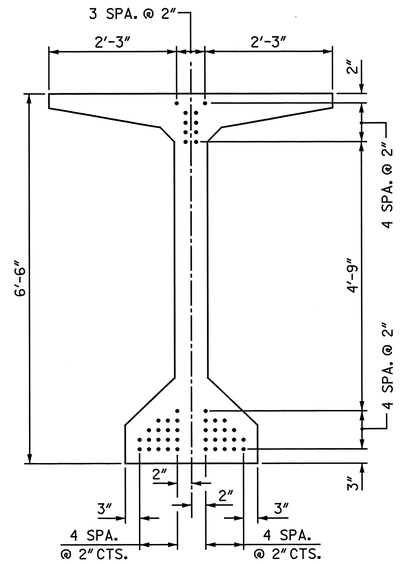

AT END OF GIRDER
46 STRANDS

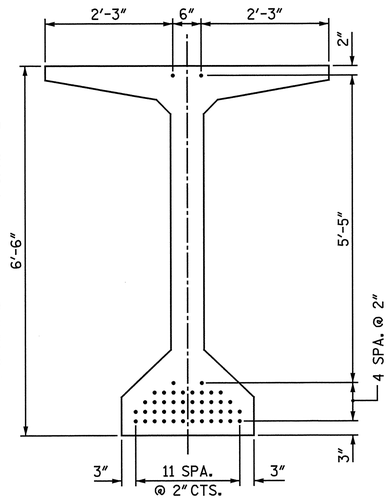

AT ℄ OF GIRDER
46 STRANDS

0.6" Ø LOW RELAXATION STRAND LAYOUT

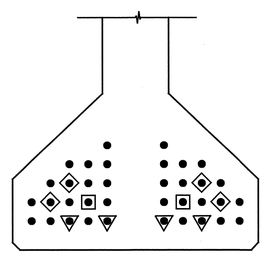

DEBONDING DETAIL

BOND SHALL BE BROKEN ON STRANDS AS SHOWN FOR THE SPECIFIED LENGTH FROM EACH END OF THE GIRDER. SEE STANDARD SPECIFICATIONS ARTICLE 1078-13.

DEBONDING LEGEND

- 4'-0"
- 6'-0"
- 8'-0"
- ● FULLY BONDED STRANDS

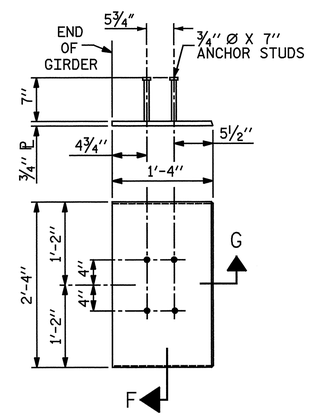

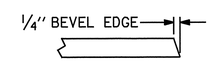

SECTION G

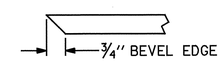

SECTION F
(SEE NOTES)

EMBEDDED PLATE "B-2" DETAILS

(2 REQ'D PER GIRDER)

NOTES:

ALL PRESTRESSING STRANDS SHALL BE 7-WIRE LOW-RELAXATION GRADE 270 STRANDS AND SHALL CONFORM TO AASHTO M203 EXCEPT FOR SAMPLING REQUIREMENTS WHICH SHALL BE IN ACCORDANCE WITH THE STANDARD SPECIFICATIONS.

ALL REINFORCING STEEL SHALL BE GRADE 60 AND SHALL BE EPOXY COATED.

APPLY EPOXY PROTECTIVE COATING TO END OF GIRDER SURFACES INDICATED IN ELEVATION VIEW.

EMBEDDED PLATE "B-2" SHALL BE GALVANIZED IN ACCORDANCE WITH THE STANDARD SPECIFICATIONS. BEVEL EDGES OF PLATE "B-2" TO GIVE CLOSE FIT BUT NOT TIGHT FIT TO STEEL CASTING FORM.

ANCHOR STUDS SHALL CONFORM TO AASHTO M169 GRADES 1010 THROUGH 1020 OR APPROVED EQUAL, AND SHALL MEET THE TYPE "B" REQUIREMENTS OF SUBSECTION 7.3 OF THE ANSI/AASHTO/AWS D1.5 BRIDGE WELDING CODE.

PRESTRESSING STRANDS SHALL BE CUT FLUSH WITH THE GIRDER ENDS.

THE TRANSFER OF LOAD FROM THE ANCHORAGES TO THE GIRDER SHALL BE DONE WHEN CONCRETE HAS REACHED A COMPRESSIVE STRENGTH OF NOT LESS THAN 6000 PSI.

DEPENDING ON THE TYPE OF SYSTEM USED TO SUPPORT THE DECK SLAB FORMS, PRESET ANCHORS MAY BE NECESSARY IN THE PRESTRESSED CONCRETE GIRDER.

THE TOP SURFACE OF THE GIRDER, EXCLUDING THE OUTSIDE 4", SHALL BE RAKED TO A DEPTH OF 1/4".

WHEN DRAPED STRANDS ARE DETAILED, THE LONGITUDINAL LOCATION OF THE HOLD DOWN DEVICES SHALL BE WITHIN 6" OF THE LOCATION SHOWN AND THE CENTER OF GRAVITY OF THE GROUP OF DRAPED STRANDS SHALL BE LOCATED WITHIN 1/2" OF THE THEORETICAL LOCATION SHOWN.

THE CONTRACTOR HAS THE OPTION TO PROVIDE, AT NO ADDITIONAL COST TO THE DEPARTMENT, 2 ADDITIONAL STRANDS AT THE TOP OF THE GIRDER TO FACILITATE TYING OF THE REINFORCING STEEL. THESE STRANDS SHALL BE PULLED TO A LOAD OF 4500 lbs.

PRESTRESSED CONCRETE GIRDERS ARE DESIGNED FOR 0 PSI TENSION IN THE PRECOMPRESSED TENSILE ZONE UNDER ALL LOADING CONDITIONS.

PRESTRESSED CONCRETE GIRDERS SHALL CONTAIN CALCIUM NITRITE CORROSION INHIBITOR. SEE STANDARD SPECIFICATIONS FOR CALCIUM NITRITE CORROSION INHIBITOR.

THE COST OF ALL CONCRETE, REINFORCING STEEL, PRESTRESSED STRANDS, INSERTS EMBEDDED IN THE CONCRETE, EMBEDDED PLATES, TEMPORARY BRACING AND INCIDENTAL ITEMS SHALL BE INCLUDED IN THE CONTRACT UNIT PRICE FOR "78" PRESTRESSED CONCRETE GIRDERS".

THE CONTRACTOR IS RESPONSIBLE FOR THE INTEGRITY AND STABILITY OF THE GIRDERS. IN HANDLING THE 78" PRESTRESSED CONCRETE GIRDERS, THEY SHALL BE MAINTAINED IN AN UPRIGHT POSITION AT ALL TIMES AND THE PROPOSED METHOD FOR ERECTING, STORING AND TRANSPORTING THE GIRDERS SHALL BE SUBMITTED TO THE ENGINEER FOR APPROVAL. THE SUBMITTAL SHALL INCLUDE DESIGN CALCULATIONS FOR LOCATIONS OF PICK-UP POINTS AND SUPPORT POINTS AS NEEDED TO MAINTAIN THE GIRDERS STABILITY DURING ERECTION, STORAGE AND TRANSPORTATION.

PRIOR TO CASTING THE GIRDERS, THE CONTRACTOR SHALL SUBMIT COMPLETE WORKING DRAWINGS WITH THE EXACT LOCATION, AND A COMPLETE DESCRIPTION OF ALL INSERTS CAST IN THE GIRDERS, TO THE DEPARTMENT FOR APPROVAL. SUCH INSERTS INCLUDE, BUT ARE NOT LIMITED TO, INSERTS FOR SUPPORTING FALSEWORK AND FORMWORK, INSERTS FOR ATTACHING DIAPHRAGMS, INSERTS FOR CONNECTING TEMPORARY BRACING, AND LIFTING INSERTS.

FOR REINFORCING STEEL AROUND 1 1/2" Ø PVC PIPE INSERT, SEE "GIRDER DETAILS - 78" PRESTRESSED CONCRETE BULB TEE" SHEET.

USE THREADED INSERTS ON EXTERIOR GIRDERS AND PVC PIPE INSERTS ON INTERIOR GIRDERS. FOR THREADED INSERT DETAILS, SEE "GIRDER DETAILS - 78" PRESTRESSED CONCRETE BULB TEE" SHEET.

REINFORCING STEEL IN THE TOP FLANGE OF GIRDERS WITH DECK DRAIN PENETRATIONS MAY BE SHIFTED SLIGHTLY AS NECESSARY TO AVOID INTERFERENCE WITH THOSE DECK DRAIN PENETRATIONS IN THE GIRDER TOP FLANGE.

7" I.D. SCHEDULE 40 PIPE SHALL BE GALVANIZED IN ACCORDANCE WITH THE STANDARD SPECIFICATIONS.

FOR 78" PRESTRESSED CONCRETE GIRDERS, SEE SPECIAL PROVISIONS.

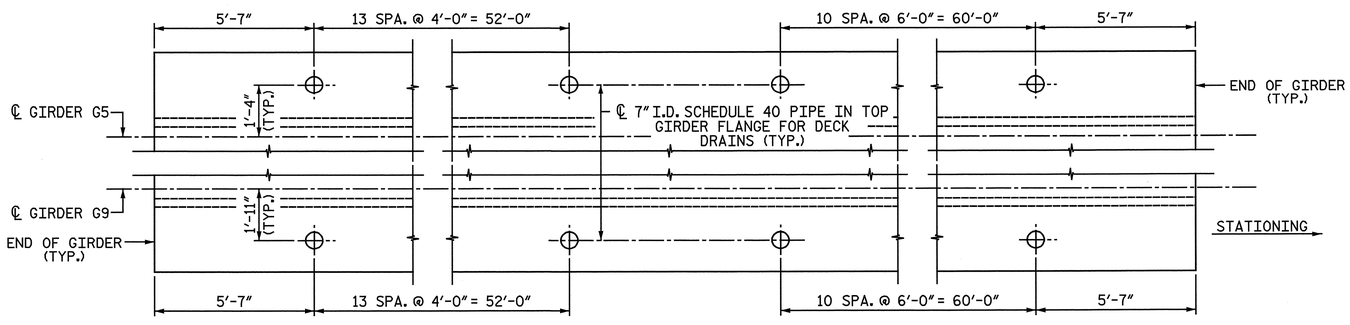

PENETRATIONS IN GIRDER FLANGE FOR DECK DRAINS

PROJECT NO. R-3307
CARTERET COUNTY
STATION: 46+21.50 -L-

SHEET 2 OF 2

STATE OF NORTH CAROLINA
DEPARTMENT OF TRANSPORTATION
RALEIGH

SUPERSTRUCTURE

78" PRESTRESSED CONCRETE BULB TEE

SECTIONS & DETAILS

SPAN 0 - GIRDERS OG1-OG9

NORTH CAROLINA PROFESSIONAL SEAL 25911 ENGINEER DWAIN G. HATHAWAY 11-7-2013

NORTH CAROLINA PROFESSIONAL SEAL 033752 ENGINEER SETH A. DENNEY 11/12/13

THE LPA GROUP of North Carolina
TRANSPORTATION CONSULTANTS

THE LPA GROUP of North Carolina
8000 Regency Parkway, Suite 600
Cary, North Carolina 27518
NC License No.: F-1084

REVISIONS								SHEET NO.
NO.	BY:	DATE:	NO.	BY:	DATE:			S-125
1			3					TOTAL SHEETS
2			4					333

DRAWN BY : N. B. SPEAKS DATE : 7-12-11
CHECKED BY : R. F. DeCOLA DATE : 12-1-11

DWG. 126 OF 282

11/7/2013
3:38:55 PM
User: jaustin
Filename: Y:\Projects\NCDOT\R-3307\Dwgs\Final\R-3307_126_SD_GDR20.dgn

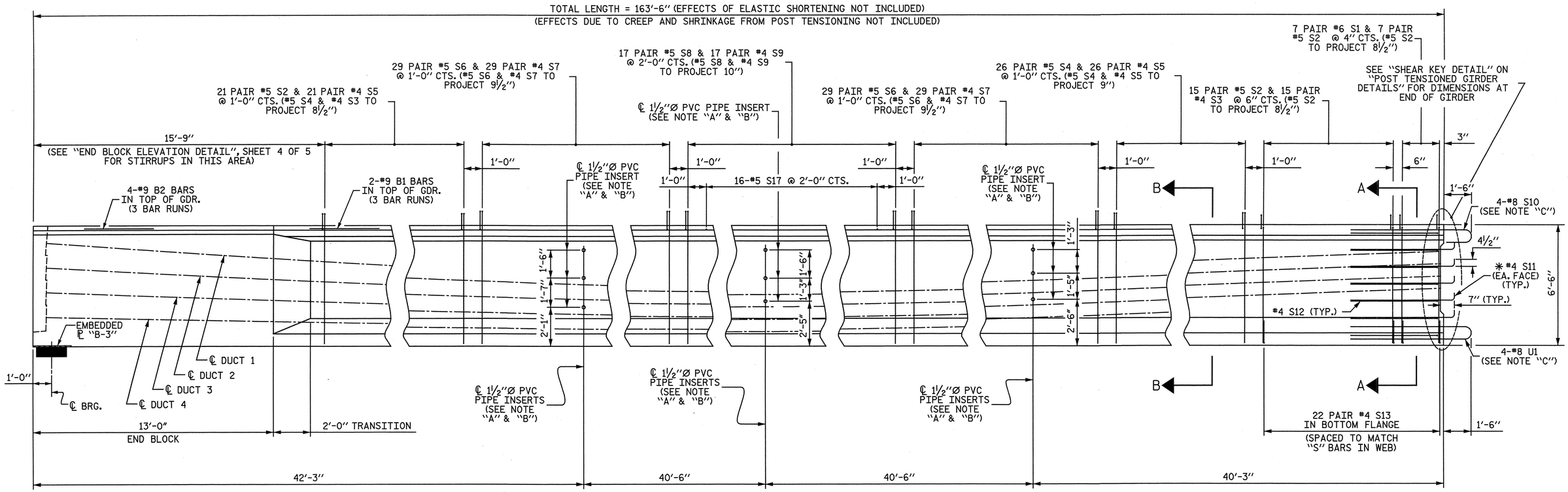

ELEVATION OF END GIRDER SEGMENT

SHOWING REINFORCING STEEL & DIAPHRAGM HOLE PLACEMENT
FOR REINFORCING STEEL DETAILS, SEE "BILL OF MATERIAL FOR POST TENSIONED GIRDERS" SHEET

NOTE "A"
USE THREADED INSERTS ON EXTERIOR GIRDERS INSTEAD OF PVC PIPE INSERTS (SEE "GIRDER DETAILS" SHEET)

NOTE "B"
FOR REINFORCING AROUND THE PVC PIPE INSERTS, SEE "GIRDER DETAILS" SHEET

NOTE "C"
OMIT 2-#8 S10 & 2-#8 U1 BARS ON EXTERIOR SIDE OF EXTERIOR GIRDERS

✱ #4 S11 BARS SHALL BE BENT AFTER GIRDER FABRICATION AND BEFORE SHIPMENT. HEAT BENDING SHALL NOT BE ALLOWED.

FOR SECTIONS A-A & B-B SEE "END GIRDER SEGMENT DETAILS", SHEET 2 OF 5

PROJECT NO. R-3307
CARTERET COUNTY
STATION: 46+21.50 -L-

SHEET 1 OF 5

STATE OF NORTH CAROLINA
DEPARTMENT OF TRANSPORTATION
RALEIGH

SUPERSTRUCTURE

END GIRDER SEGMENT DETAILS

MODIFIED 78" BULB TEE

NORTH CAROLINA PROFESSIONAL SEAL 2591 ENGINEER DWAIN C. HATNAWAY 4-3-2012

NORTH CAROLINA PROFESSIONAL SEAL 033752 ENGINEER SETH A. DENNEY 4/03/12

THE LPA GROUP of North Carolina
TRANSPORTATION CONSULTANTS

THE LPA GROUP of North Carolina
8000 Regency Parkway, Suite 600
Cary, North Carolina 27518
NC License No.: F-1084

REVISIONS						
NO.	BY:	DATE:	NO.	BY:	DATE:	
1			3			
2			4			

SHEET NO. S-126
TOTAL SHEETS 333

DRAWN BY : M. D. MAYHEW DATE : 8-29-11
CHECKED BY : S. A. DENNEY DATE : 9-12-11

DWG. 127 OF 282

4/2/2012 12:42: PM
User: jaustin
Filename: Y:\Projects\NCDOT\R-3307\Dwgs\Final\R-3307_127_SD_END_G1.dgn

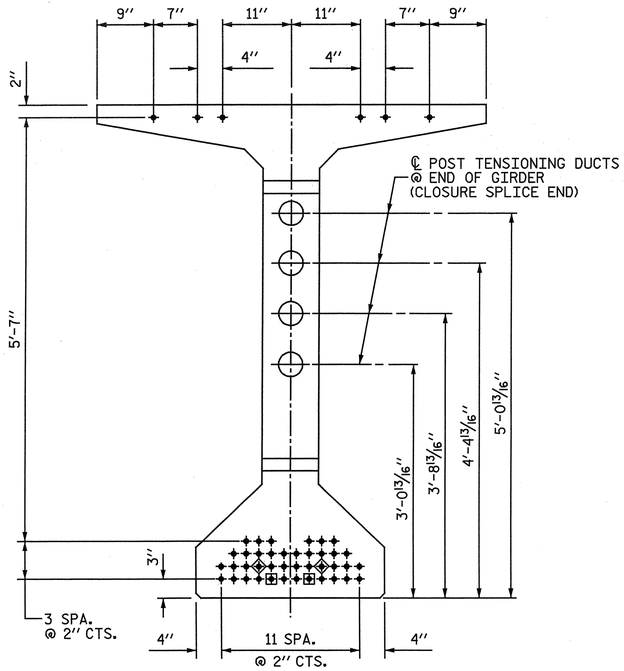

0.6″ Ø LOW RELAXATION STRAND LAYOUT

46 STRANDS, ALL STRAIGHT
(4 DEBONDED AS SHOWN)

- ● FULLY BONDED STRANDS
- ▣ STRANDS DEBONDED FOR 24′-0″ FROM END OF GIRDER
- ◈ STRANDS DEBONDED FOR 26′-0″ FROM END OF GIRDER

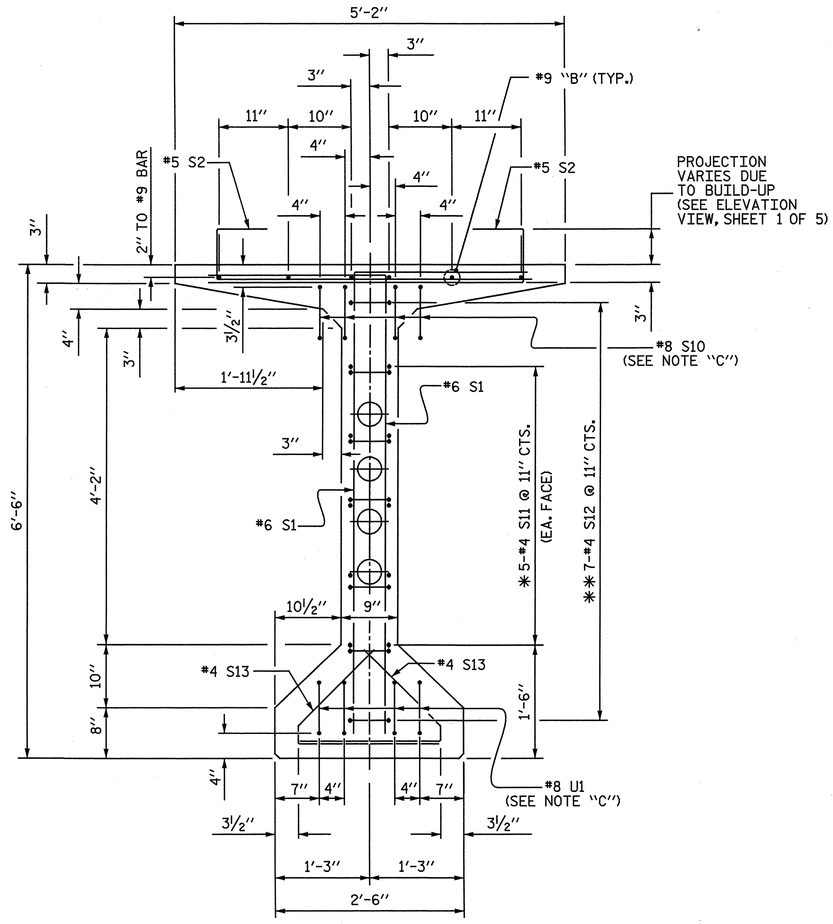

SECTION A-A

SEE STRAND LAYOUT DETAIL FOR STRAND LOCATIONS

NOTE "C"
OMIT 2-#8 S10 & 2-#8 U1 BARS ON EXTERIOR SIDE OF EXTERIOR GIRDERS

∗ #4 S11 BARS SHALL BE BENT AFTER GIRDER FABRICATION AND BEFORE SHIPMENT. HEAT BENDING SHALL NOT BE ALLOWED.

∗∗ #4 S12 MAY BE SHIFTED SLIGHTLY IN ORDER TO AVOID THE POST TENSIONING DUCTS.

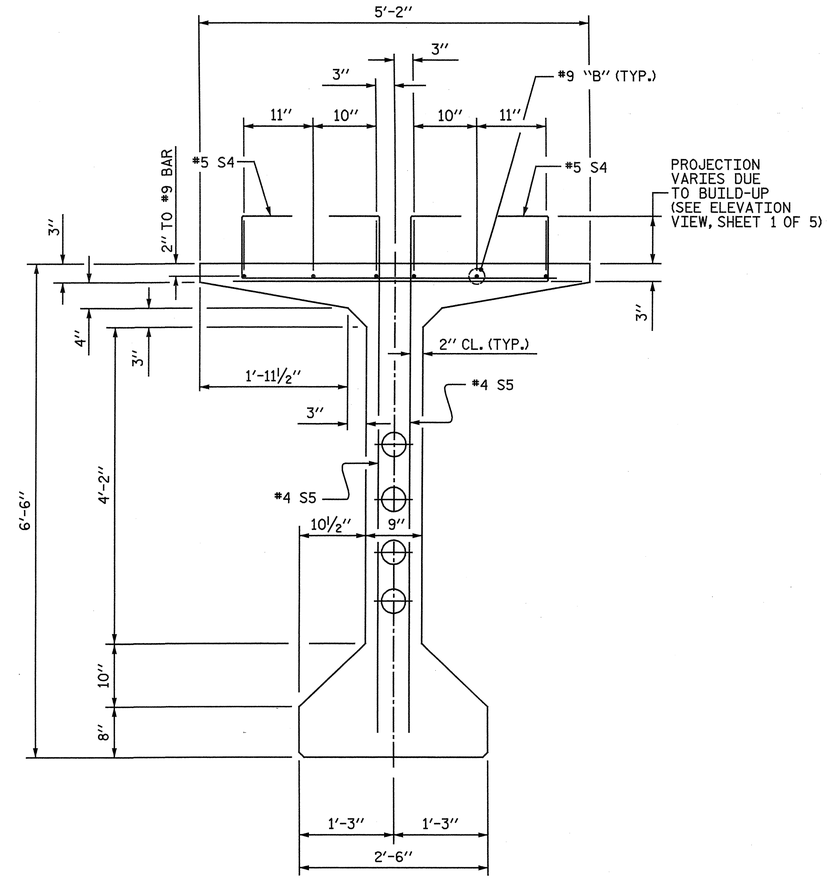

SECTION B-B

SEE STRAND LAYOUT DETAIL FOR STRAND LOCATIONS

PROJECT NO. R-3307
CARTERET COUNTY
STATION: 46+21.50 -L-

SHEET 2 OF 5

STATE OF NORTH CAROLINA
DEPARTMENT OF TRANSPORTATION
RALEIGH

SUPERSTRUCTURE

END GIRDER SEGMENT DETAILS

MODIFIED 78" BULB TEE

NORTH CAROLINA PROFESSIONAL SEAL 25911 ENGINEER DWAIN G. HATHAWAY 4-3-2012

NORTH CAROLINA PROFESSIONAL SEAL 033752 ENGINEER SETH A. DENNEY 2/10/12

THE LPA GROUP of North Carolina TRANSPORTATION CONSULTANTS

THE LPA GROUP of North Carolina
8000 Regency Parkway, Suite 600
Cary, North Carolina 27518
NC License No.: F-1084

REVISIONS						SHEET NO.
NO.	BY:	DATE:	NO.	BY:	DATE:	S-127
1			3			TOTAL SHEETS
2			4			333

DRAWN BY : M. D. MAYHEW DATE : 8-29-11
CHECKED BY : S. A. DENNEY DATE : 9-12-11

DWG. 128 OF 282

4/2/2012
12:42: PM
User: jaustin
Filename: Y:\Projects\NCDOT\R-3307\Dwgs\Final\R-3307_128_SD_END_G2.dgn

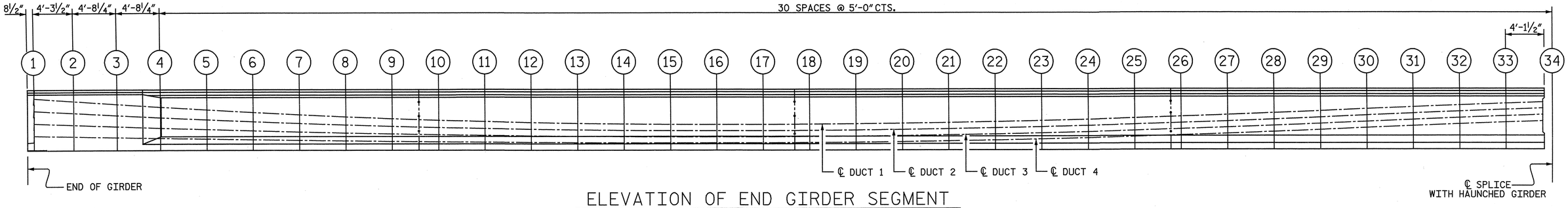

ELEVATION OF END GIRDER SEGMENT

SHOWING POST TENSIONING DUCT PROFILE

END GIRDER SEGMENT POST TENSIONING DUCT PROFILE TABLE

POINT	1	2	3	4	5	6	7	8	9	10	11	12	13	14	15	16	17	18	19	20	21	22	23	24	25	26	27	28	29	30	31	32	33	34
℄ DUCT 1	5'-7"	5'-3 3/16"	4'-11 5/16"	4'-7 3/4"	4'-4 3/16"	4'-0 15/16	3'-10"	3'-7 5/16"	3'-5"	3'-3"	3'-1 1/4"	2'-11 7/8"	2'-10 3/4"	2'-9 15/16	2'-9 7/16"	2'-9 1/4"	2'-9 5/16"	2'-9 5/8"	2'-10 1/16	2'-10 3/4"	2'-11 9/16"	3'-0 5/8"	3'-1 15/16"	3'-3 3/8"	3'-5"	3'-6 7/8"	3'-8 7/8"	3'-11 1/8"	4'-1 9/16"	4'-4 3/16"	4'-6 11/16	4'-9"	4'-11 3/16"	5'-1 3/16"
℄ DUCT 2	4'-3"	4'-0 1/8"	3'-9 1/8"	3'-6 3/8"	3'-3 11/16	3'-1 3/16"	2'-10 15/16"	2'-8 15/16	2'-7 3/16"	2'-5 5/8"	2'-4 5/16"	2'-3 1/4"	2'-2 3/8"	2'-1 3/4"	2'-1 3/8"	2'-1 1/4"	2'-1 5/16"	2'-1 5/8"	2'-2 1/16"	2'-2 3/4"	2'-3 9/16"	2'-4 5/8"	2'-5 15/16	2'-7 3/8"	2'-9"	2'-10 7/8"	3'-0 7/8"	3'-3 1/8"	3'-5 9/16"	3'-8 3/16"	3'-10 11/16"	4'-1"	4'-3 3/16"	4'-5 3/16"
℄ DUCT 3	2'-11"	2'-9"	2'-6 15/16	2'-5 1/16"	2'-3 3/16"	2'-1 1/2"	1'-11 15/16	1'-10 9/16	1'-9 5/16"	1'-8 1/4"	1'-7 3/8"	1'-6 5/8"	1'-6 1/16"	1'-5 5/8"	1'-5 3/8"	1'-5 1/4"	1'-5 5/16"	1'-5 5/8"	1'-6 1/16"	1'-6 3/4"	1'-7 9/16"	1'-8 5/8"	1'-9 15/16	1'-11 3/8"	2'-1"	2'-2 7/8"	2'-4 7/8"	2'-7 1/8"	2'-9 9/16"	3'-0 3/16"	3'-2 11/16	3'-5"	3'-7 3/16"	3'-9 3/16"
℄ DUCT 4	1'-7"	1'-5 7/8"	1'-4 13/16	1'-3 3/4"	1'-2 11/16"	1'-1 3/4"	1'-0 15/16	1'-0 3/16"	11 1/2"	10 15/16	10 7/16	10"	9 11/16	9 7/16"	9 5/16"	9 1/4"	9 5/16"	9 5/8"	10 1/16"	10 3/4"	11 9/16"	1'-0 5/8"	1'-1 15/16"	1'-3 3/8"	1'-5"	1'-6 7/8"	1'-8 7/8"	1'-11 1/8"	2'-1 9/16"	2'-4 3/16"	2'-6 11/16	2'-9"	2'-11 3/16"	3'-1 3/16"

NOTES :
DIMENSIONS ARE MEASURED FROM THE BOTTOM OF GIRDER.
DUCT PROFILES SHOWN INCLUDE A MAXIMUM ADJUSTMENT OF ± ¾" BETWEEN TENDON & DUCT PROFILES.

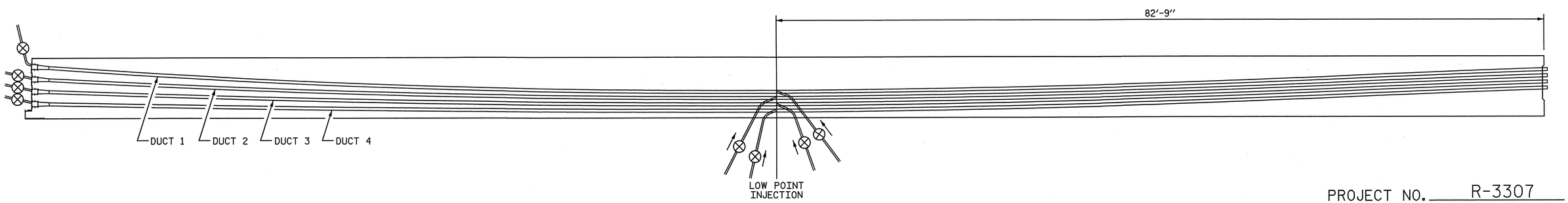

PROPOSED GROUT VENT LOCATION SKETCH

-- INDICATES GROUT VENT

PROJECT NO. R-3307
CARTERET COUNTY
STATION: 46+21.50 -L-

SHEET 3 OF 5

STATE OF NORTH CAROLINA
DEPARTMENT OF TRANSPORTATION
RALEIGH

SUPERSTRUCTURE

END GIRDER
SEGMENT DETAILS

MODIFIED 78" BULB TEE

NORTH CAROLINA PROFESSIONAL SEAL 25911 ENGINEER DWAIN G. WATKINS 4-3-2012

NORTH CAROLINA PROFESSIONAL SEAL 033752 ENGINEER SETH A. DENNEY 04/03/12

THE LPA GROUP of North Carolina
TRANSPORTATION CONSULTANTS

THE LPA GROUP of North Carolina
8000 Regency Parkway, Suite 600
Cary, North Carolina 27518
NC License No.: F-1084

REVISIONS								SHEET NO.
NO.	BY:	DATE:	NO.	BY:	DATE:			S-128
1			3					TOTAL SHEETS
2			4					333

DRAWN BY : M. D. MAYHEW DATE : 8-29-11
CHECKED BY : S. A. DENNEY DATE : 9-12-11

DWG. 129 OF 282

4/2/2012
12:42:_PM
User:jaustin
Filename: Y:\Projects\NCDOT\R-3307\Dwgs\Final\R-3307_129_SD_END_G3.dgn

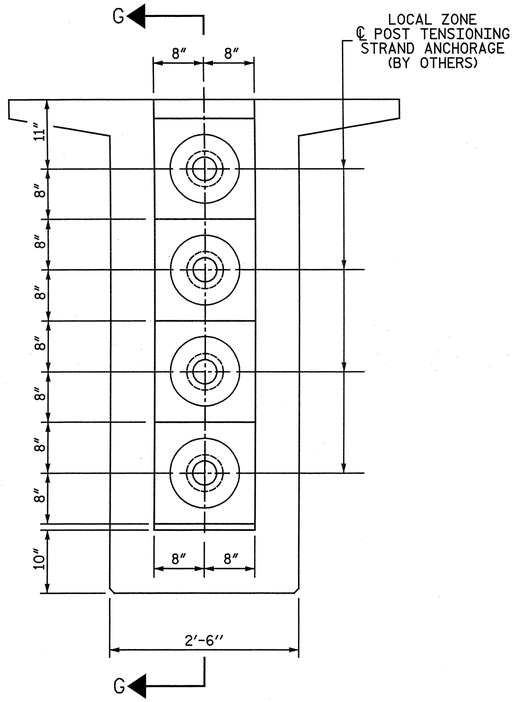

END VIEW

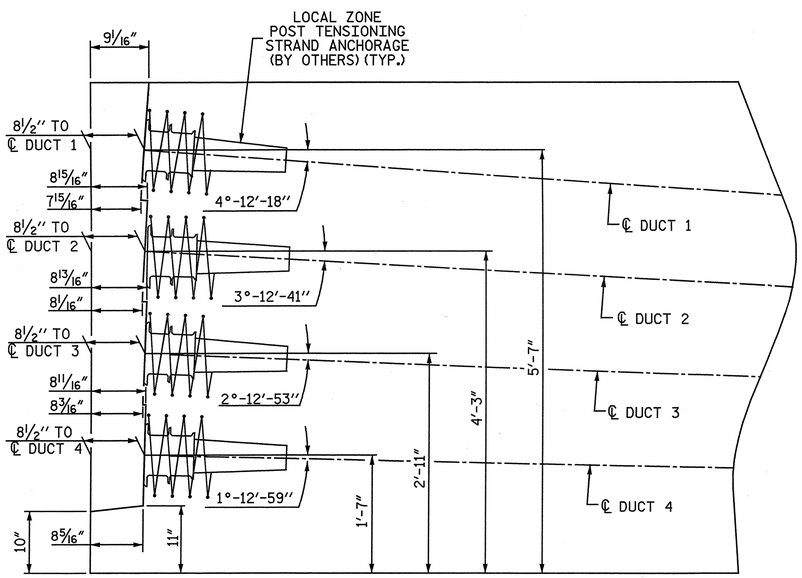

SECTION G-G

END BLOCK RECESS DETAILS

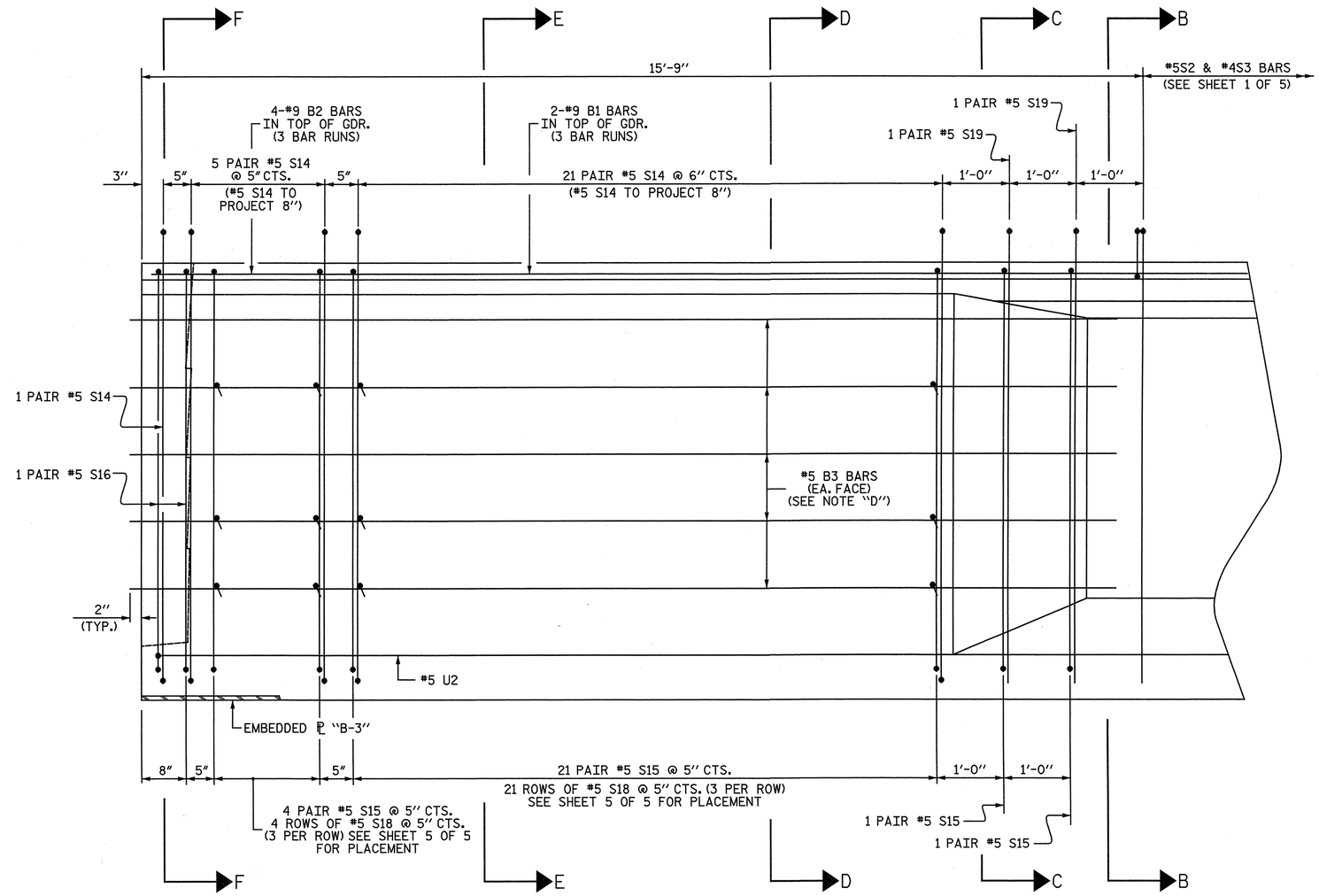

END BLOCK ELEVATION DETAIL

FOR SECTION B-B, SEE SHEET 2 OF 5
FOR SECTIONS C-C THRU F-F, SEE SHEET 5 OF 5

NOTE "D"
#5 B3 BARS SHALL EXTEND 2″ FROM END OF GIRDER AND SHALL BE FIELD BENT ALONG FACE OF TRANSITION

PROJECT NO. R-3307
CARTERET COUNTY
STATION: 46+21.50 -L-

SHEET 4 OF 5

STATE OF NORTH CAROLINA
DEPARTMENT OF TRANSPORTATION
RALEIGH

SUPERSTRUCTURE

END GIRDER
SEGMENT DETAILS

MODIFIED 78" BULB TEE

NORTH CAROLINA PROFESSIONAL SEAL 25911 ENGINEER DUANE G. HATHAWAY 7-3-2012

NORTH CAROLINA PROFESSIONAL SEAL 033752 ENGINEER SETH A. DENNEY 8/28/12

THE LPA GROUP of North Carolina TRANSPORTATION CONSULTANTS

THE LPA GROUP of North Carolina
8000 Regency Parkway, Suite 600
Cary, North Carolina 27518
NC License No.: F-1084

REVISIONS						
NO.	BY:	DATE:	NO.	BY:	DATE:	
1			3			
2			4			

SHEET NO. S-129
TOTAL SHEETS 333

DRAWN BY : M. D. MAYHEW DATE : 8-29-11
CHECKED BY : S. A. DENNEY DATE : 9-12-11

DWG. 130 OF 282

4/2/2012 12:42:2 PM
User: jaustin
Filename: Y:\Projects\NCDOT\R-3307\Dwgs\Final\R-3307_130_SD_END_04.dgn

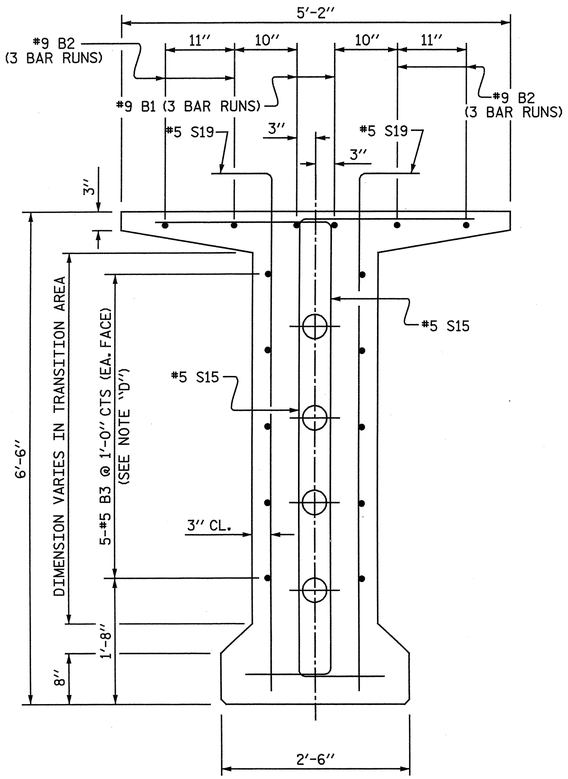

SECTION C-C

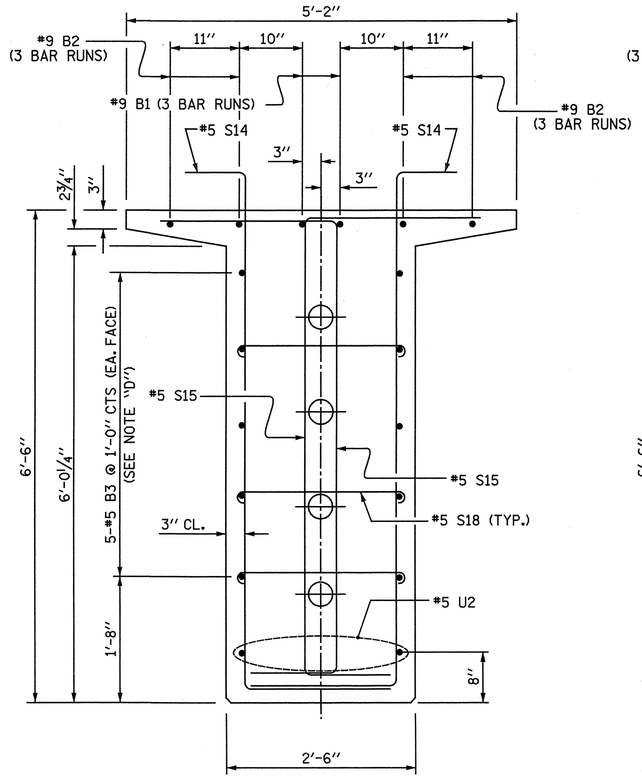

SECTION D-D

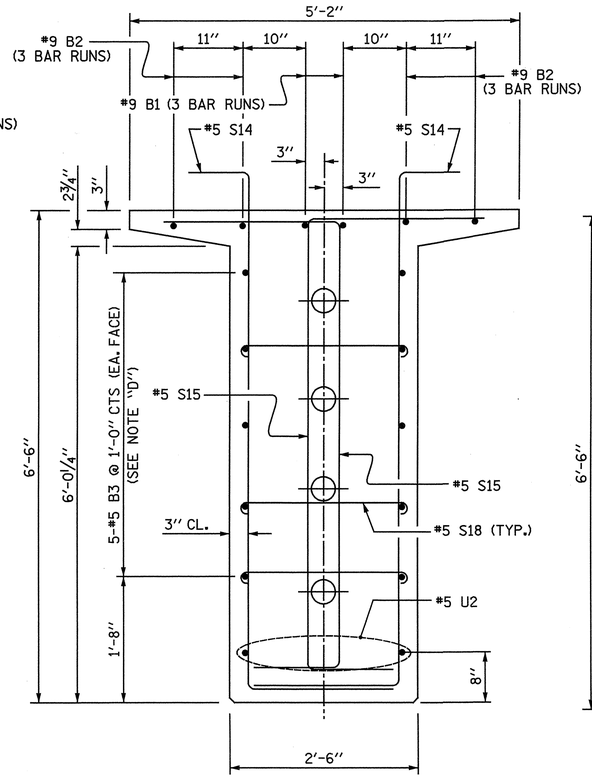

SECTION E-E

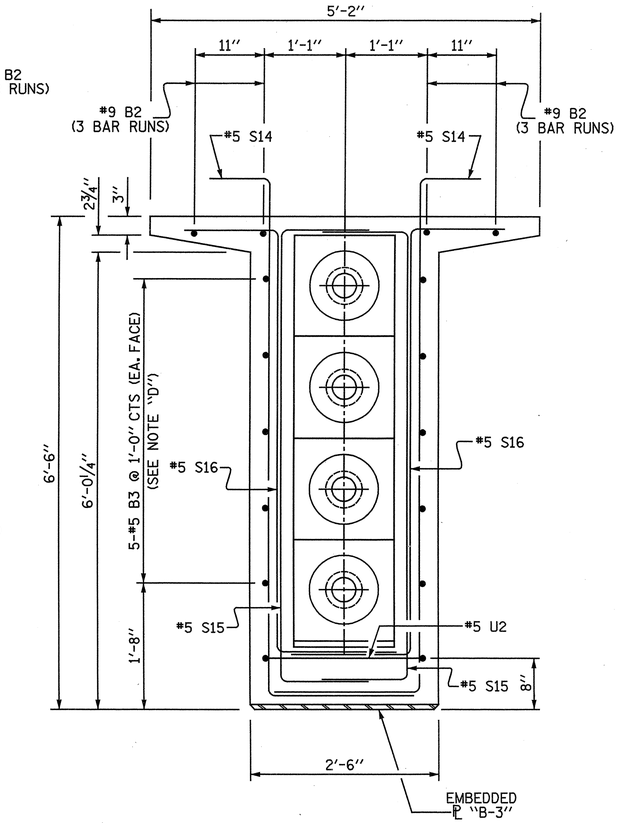

SECTION F-F

NOTE "D"
#5 B3 BARS SHALL EXTEND 2" FROM END OF GIRDER AND SHALL BE FIELD BENT ALONG FACE OF TRANSITION

PROJECT NO. R-3307
CARTERET COUNTY
STATION: 46+21.50 -L-

SHEET 5 OF 5

STATE OF NORTH CAROLINA
DEPARTMENT OF TRANSPORTATION
RALEIGH

SUPERSTRUCTURE

END GIRDER SEGMENT DETAILS

MODIFIED 78" BULB TEE

NORTH CAROLINA PROFESSIONAL SEAL 25911 ENGINEER DWAIN C. HATHAWAY 4-3-2012

NORTH CAROLINA PROFESSIONAL SEAL 033752 ENGINEER SETH A. DENNEY 4/4/12

THE LPA GROUP of North Carolina
TRANSPORTATION CONSULTANTS

THE LPA GROUP of North Carolina
8000 Regency Parkway, Suite 600
Cary, North Carolina 27518
NC License No.: F-1084

REVISIONS							
NO.	BY:	DATE:	NO.	BY:	DATE:	SHEET NO.	
1			3			S-130	
2			4			TOTAL SHEETS	
						333	

DRAWN BY : M. D. MAYHEW DATE : 8-30-11
CHECKED BY : S. A. DENNEY DATE : 9-12-11

DWG. 131 OF 282

4/2/2012
12:42 PM
User: jdustin
Filename: Y:\Projects\NCDOT\R-3307\Dwgs\Final\R-3307_131_SD_END_05.dgn

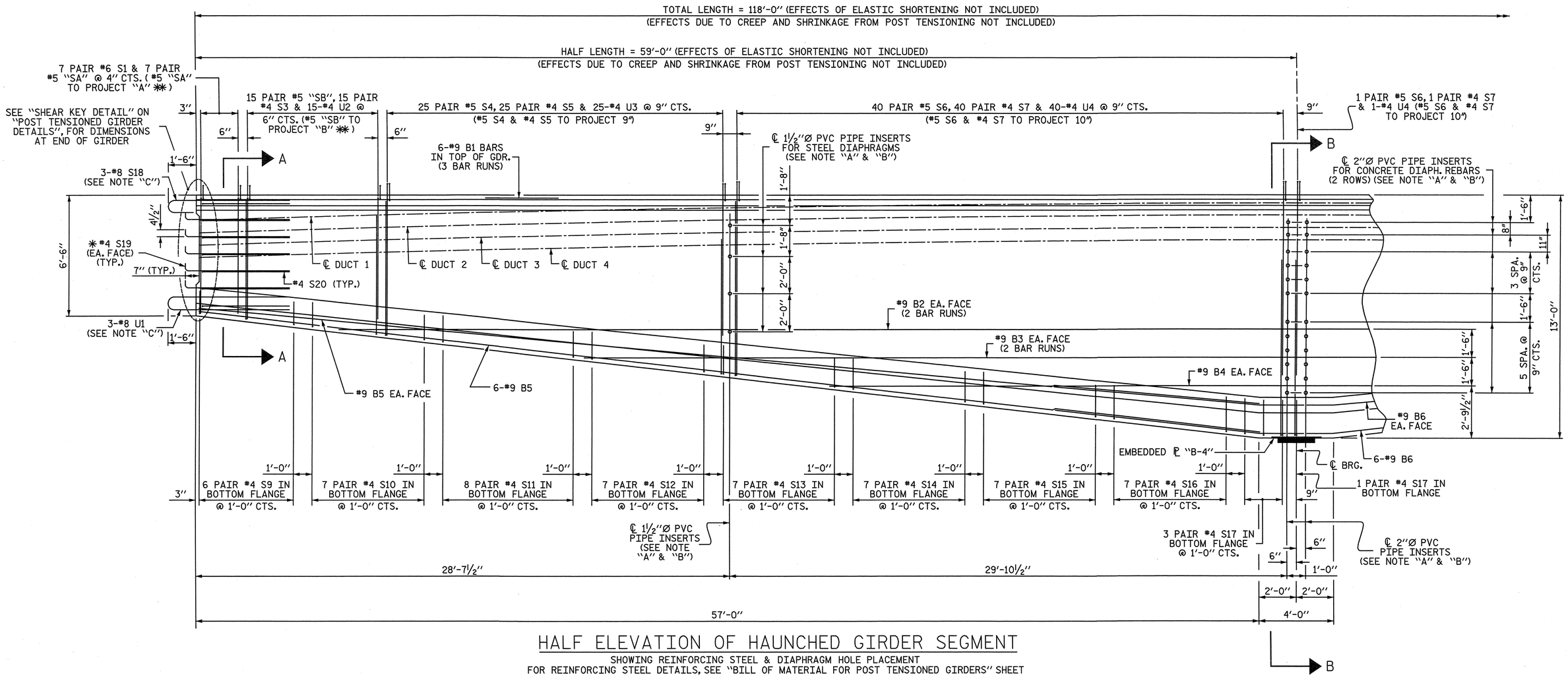

HALF ELEVATION OF HAUNCHED GIRDER SEGMENT

SHOWING REINFORCING STEEL & DIAPHRAGM HOLE PLACEMENT
FOR REINFORCING STEEL DETAILS, SEE "BILL OF MATERIAL FOR POST TENSIONED GIRDERS" SHEET

NOTE "A"
USE THREADED INSERTS ON EXTERIOR GIRDERS INSTEAD OF PVC PIPE INSERTS (SEE "GIRDER DETAILS" SHEET)

NOTE "B"
FOR REINFORCING AROUND THE PVC PIPE INSERTS, SEE "GIRDER DETAILS" SHEET.

NOTE "C"
OMIT 1-#8 S18 & 1-#8 U1 BAR ON EXTERIOR SIDE OF EXTERIOR GIRDERS

✱ #4 S19 BARS SHALL BE BENT AFTER GIRDER FABRICATION AND BEFORE SHIPMENT. HEAT BENDING SHALL NOT BE ALLOWED.

✱✱ SEE "STIRRUP PROJECTION TABLE" ON SHEET 1 OF 4.

STIRRUP PROJECTION TABLE

GIRDER	"SA"	"A"	"SB"	"B"	"SC"	"C"	"SD"	"D"
PQG1-PQG9	S2	8"	S2	8"	S4	9"	S8	7"
QRG1-QRG9	S8	7"	S4	9"	S2	8"	S2	8"

PROJECT NO. R-3307
CARTERET COUNTY
STATION: 46+21.50 -L-

SHEET 1 OF 4

STATE OF NORTH CAROLINA
DEPARTMENT OF TRANSPORTATION
RALEIGH
SUPERSTRUCTURE
HAUNCHED GIRDER SEGMENT DETAILS
MODIFIED 78" BULB TEE

NORTH CAROLINA PROFESSIONAL SEAL 25911 ENGINEER D. L. HATHAWAY 4-30-12
NORTH CAROLINA PROFESSIONAL SEAL 033752 ENGINEER SETH A. DENNEY 4/03/12

THE LPA GROUP of North Carolina TRANSPORTATION CONSULTANTS
THE LPA GROUP of North Carolina, 8000 Regency Parkway, Suite 600, Cary, North Carolina 27518, NC License No.: F-1084

REVISIONS								SHEET NO.
NO.	BY:	DATE:	NO.	BY:	DATE:			S-131
1			3					TOTAL SHEETS
2			4					333

DRAWN BY : M. D. MAYHEW DATE : 8-30-11
CHECKED BY : S. A. DENNEY DATE : 9-12-11

DWG. 132 OF 282

4/2/2012
12:46 PM
User: jaustin
Filename: Y:\Projects\NCDOT\R-3307\Dwgs\Final\R-3307_132_SD_HAUNCH_G1.dgn

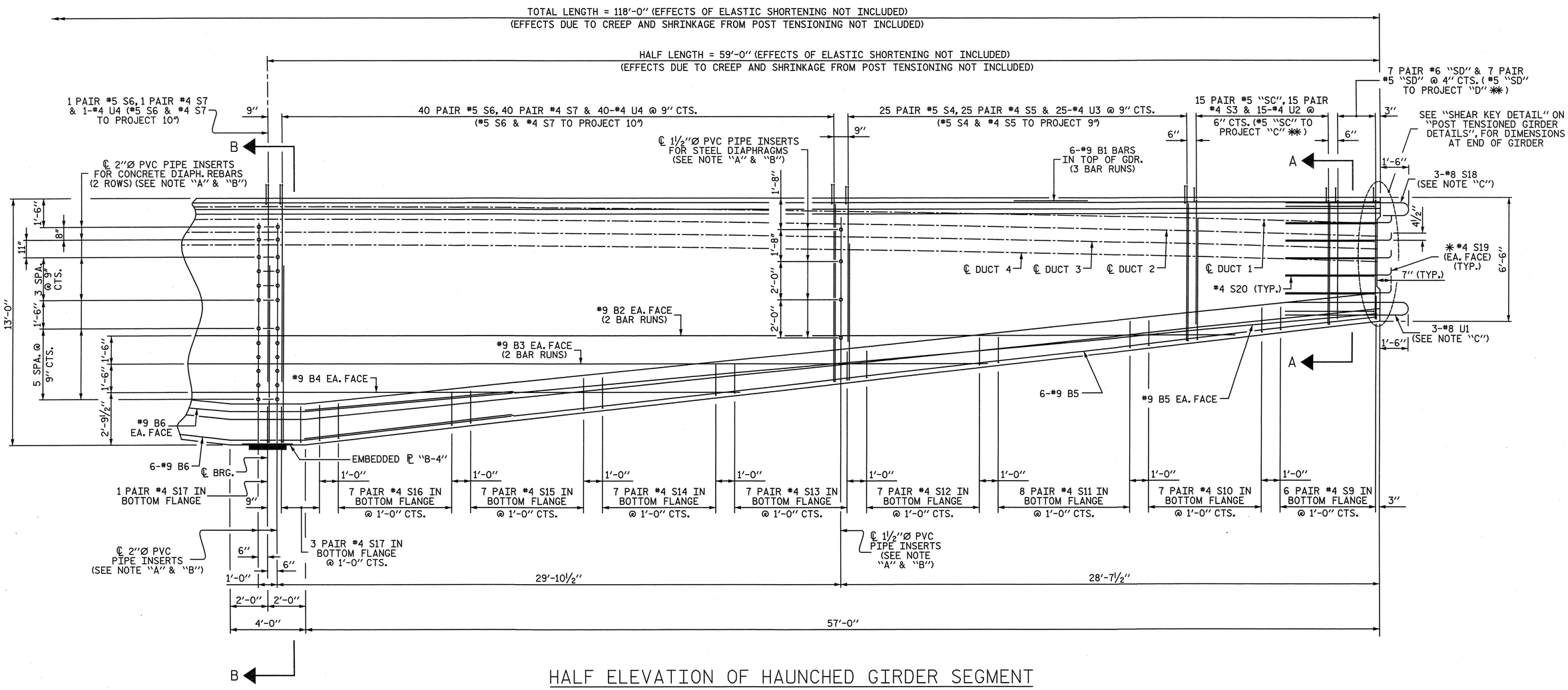

HALF ELEVATION OF HAUNCHED GIRDER SEGMENT

NOTES :

SHOWING REINFORCING STEEL & DIAPHRAGM HOLE PLACEMENT

FOR REINFORCING STEEL DETAILS, SEE "BILL OF MATERIAL FOR POST TENSIONED GIRDERS" SHEET

FOR NOTES SEE "HAUNCHED GIRDER SEGMENT DETAILS", SHEET 1 OF 4.

✳✳ SEE "STIRRUP PROJECTION TABLE" ON SHEET 1 OF 4.

PROJECT NO. R-3307

CARTERET COUNTY

STATION: 46+21.50 -L-

SHEET 2 OF 4

STATE OF NORTH CAROLINA
DEPARTMENT OF TRANSPORTATION
RALEIGH

SUPERSTRUCTURE

HAUNCHED GIRDER SEGMENT DETAILS

MODIFIED 78" BULB TEE

NORTH CAROLINA PROFESSIONAL SEAL 25911 ENGINEER DWAIN G. HAYMAN 4-3-2012

NORTH CAROLINA PROFESSIONAL SEAL 033752 ENGINEER SETH A. DENNEY

THE LPA GROUP of North Carolina TRANSPORTATION CONSULTANTS

THE LPA GROUP of North Carolina
8000 Regency Parkway, Suite 600
Cary, North Carolina 27518
NC License No.: F-1084

REVISIONS						SHEET NO.
NO.	BY:	DATE:	NO.	BY:	DATE:	S-132
1			3			TOTAL SHEETS
2			4			333

DRAWN BY : M. D. MAYHEW DATE : 12-5-11
CHECKED BY : S. A. DENNEY DATE : 12-12-11

DWG. 133 OF 282

4/2/2012
12:42 PM
User: jaustin
Filename: Y:\Projects\NCDOT\R-3307\Dwgs\Final\R-3307_133_SD_HAUNCH_G2.dgn

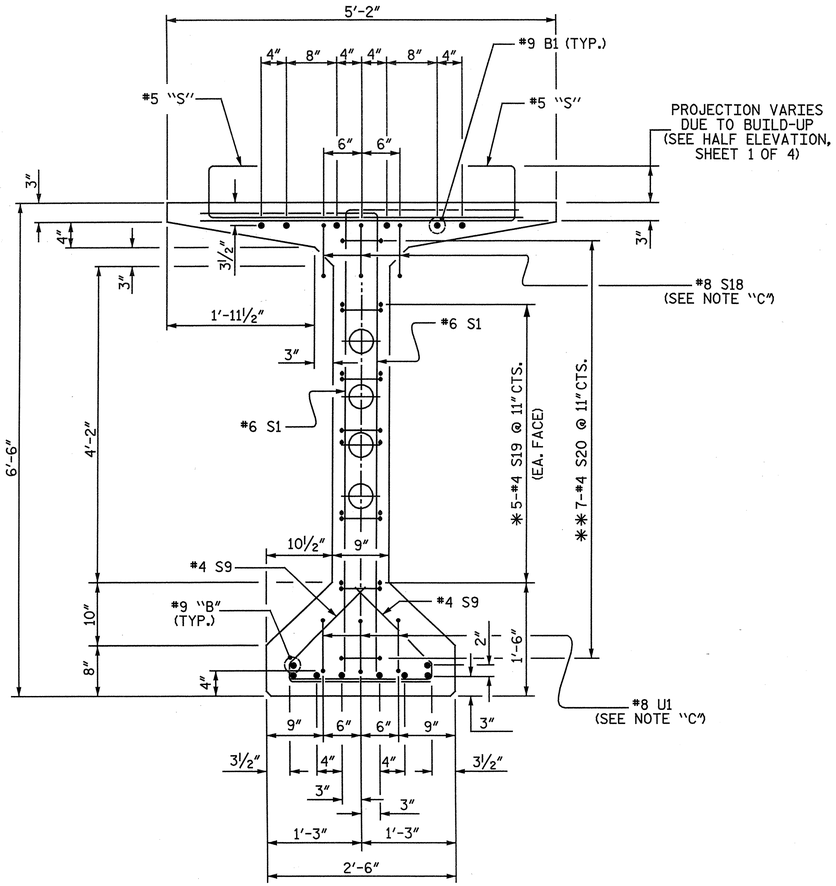

SECTION A-A

SEE STRAND LAYOUT DETAIL FOR STRAND LOCATIONS

NOTE "C"
OMIT 1-#8 S18 & 1-#8 U1 BARS ON EXTERIOR SIDE OF EXTERIOR GIRDERS

✱ NOTE :
#4 S19 BARS SHALL BE BENT AFTER GIRDER FABRICATION AND BEFORE SHIPMENT. HEAT BENDING SHALL NOT BE ALLOWED.

✱✱ NOTE :
#4 S20 MAY BE SHIFTED SLIGHTLY IN ORDER TO AVOID THE POST TENSIONING DUCTS.

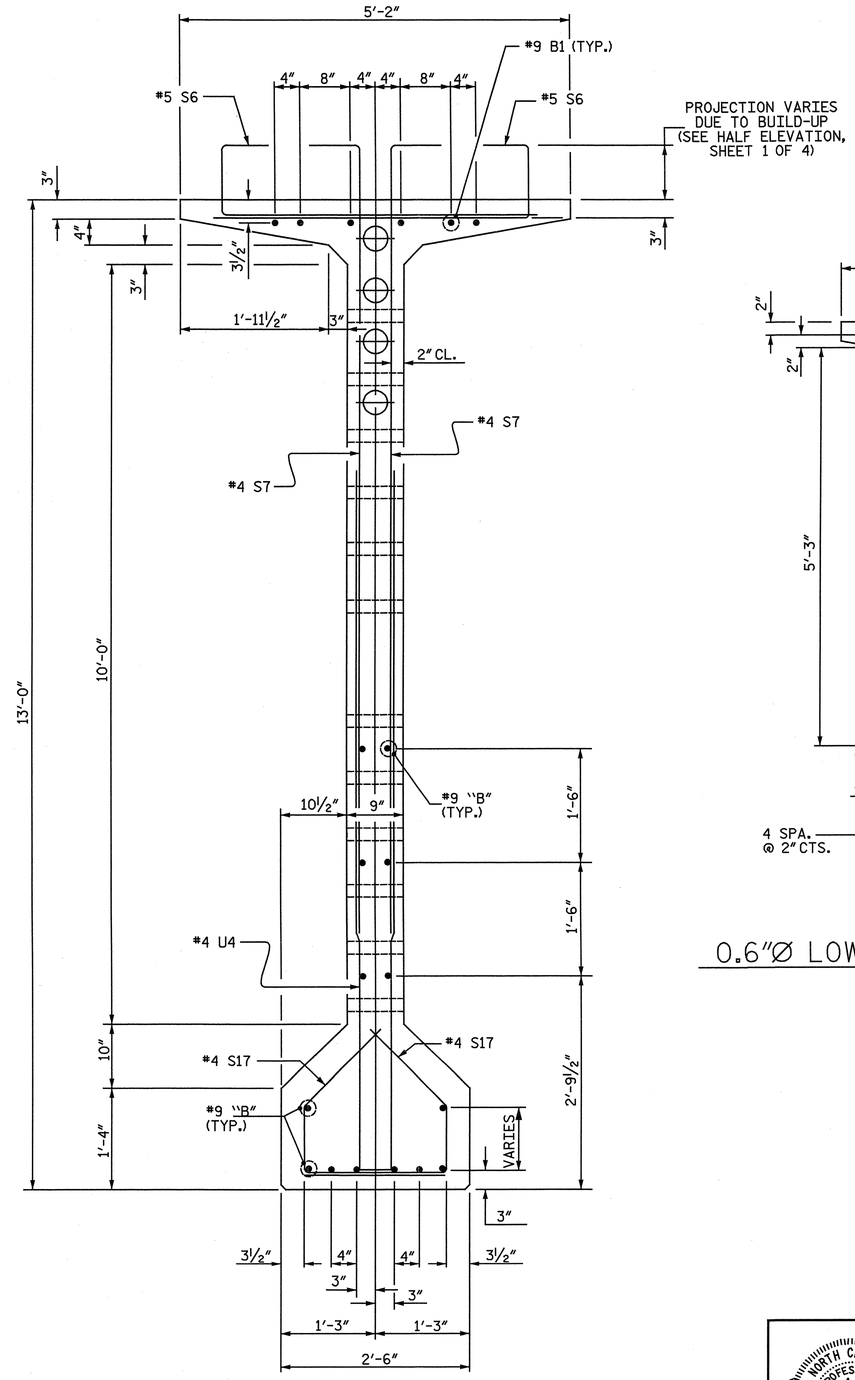

SECTION B-B

SEE STRAND LAYOUT DETAIL FOR STRAND LOCATIONS

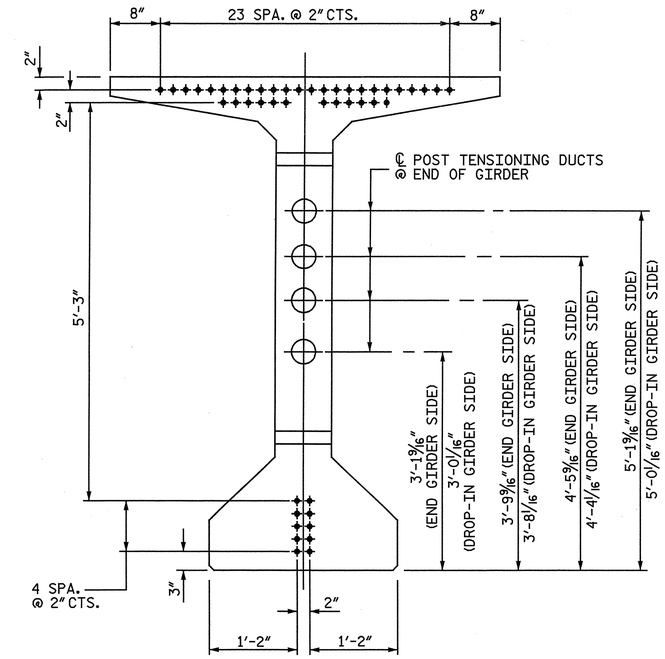

0.6"Ø LOW RELAXATION STRAND LAYOUT

46 STRANDS, ALL STRAIGHT
• FULLY BONDED STRANDS

PROJECT NO. R-3307
CARTERET COUNTY
STATION: 46+21.50 -L-

SHEET 3 OF 4

STATE OF NORTH CAROLINA
DEPARTMENT OF TRANSPORTATION
RALEIGH

SUPERSTRUCTURE

HAUNCHED GIRDER SEGMENT DETAILS

MODIFIED 78" BULB TEE

NORTH CAROLINA PROFESSIONAL SEAL 25911 ENGINEER DWAIN G. HATHAWAY 4-3-2012

NORTH CAROLINA PROFESSIONAL SEAL 033752 ENGINEER SETH A. DENNEY

THE LPA GROUP of North Carolina TRANSPORTATION CONSULTANTS

THE LPA GROUP of North Carolina
8000 Regency Parkway, Suite 600
Cary, North Carolina 27518
NC License No.: F-1084

REVISIONS							SHEET NO.
NO.	BY:	DATE:	NO.	BY:	DATE:		S-133
1			3				TOTAL SHEETS
2			4				333

DRAWN BY : M. D. MAYHEW DATE : 8-30-11
CHECKED BY : S. A. DENNEY DATE : 9-12-11

DWG. 134 OF 282

4/2/2012
12:42:_ PM
User: jaustin
Filename: Y:\Projects\NCDOT\R-3307\Dwgs\Final\R-3307_134_SD_HAUNCH_G3.dgn

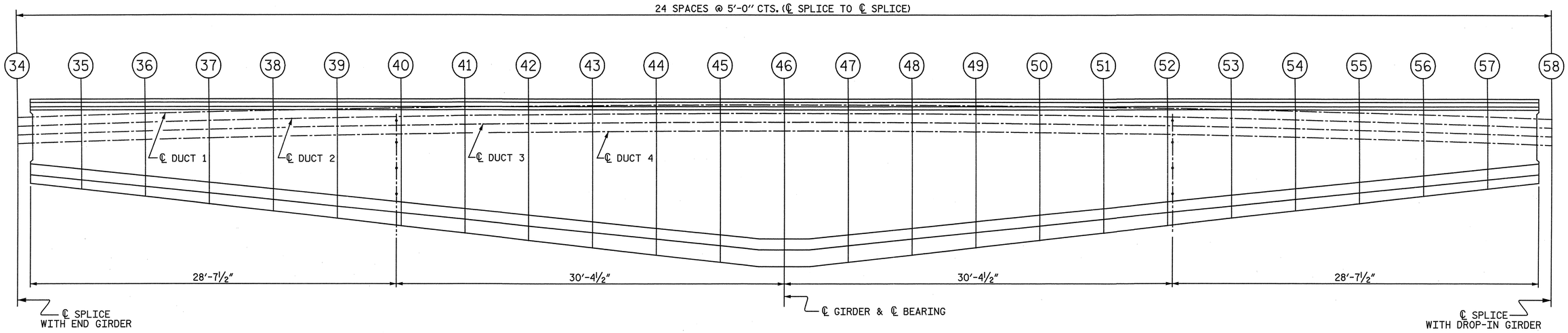

ELEVATION OF HAUNCHED GIRDER SEGMENT

SHOWING POST TENSIONING DUCT PROFILE

HAUNCHED GIRDER SEGMENT POST TENSIONING DUCT PROFILE TABLE

POINT	34	35	36	37	38	39	40	41	42	43	44	45	46	47	48	49	50	51	52	53	54	55	56	57	58
℄ DUCT 1	1'-4 13/16"	1'-3"	1'-1 5/16"	11 3/4"	10 3/8"	9 3/16"	8 1/8"	7 1/4"	6 9/16"	6"	5 9/16"	5 5/16"	5 1/4"	5 5/16"	5 5/8"	6 1/16"	6 11/16	7 1/2"	8 1/2"	9 11/16	11 1/16"	1'-0 5/8"	1'-2 3/8"	1'-4 1/4"	1'-6 3/8"
℄ DUCT 2	2'-0 13/16	1'-11"	1'-9 5/16"	1'-7 3/4"	1'-6 3/8"	1'-5 3/16"	1'-4 1/8"	1'-3 1/4"	1'-2 9/16"	1'-2"	1'-1 9/16"	1'-1 5/16"	1'-1 1/4"	1'-1 5/16"	1'-1 5/8"	1'-2 1/16"	1'-2 11/16"	1'-3 1/2"	1'-4 1/2"	1'-5 11/16"	1'-7 1/16"	1'-8 5/8"	1'-10 3/8"	2'-0 1/4"	2'-2 3/8"
℄ DUCT 3	2'-8 13/16	2'-7"	2'-5 5/16"	2'-3 3/4"	2'-2 3/8"	2'-1 3/16"	2'-0 1/8"	1'-11 1/4"	1'-10 9/16	1'-10"	1'-9 9/16"	1'-9 5/16"	1'-9 1/4"	1'-9 5/16"	1'-9 5/8"	1'-10 1/16"	1'-10 11/16	1'-11 1/2"	2'-0 1/2"	2'-1 11/16"	2'-3 1/16"	2'-4 5/8"	2'-6 3/8"	2'-8 1/4"	2'-10 3/8"
℄ DUCT 4	3'-4 13/16	3'-3"	3'-1 5/16"	2'-11 3/4"	2'-10 3/8"	2'-9 3/16"	2'-8 1/8"	2'-7 1/4"	2'-6 9/16"	2'-6"	2'-5 9/16"	2'-5 5/16"	2'-5 1/4"	2'-5 5/16"	2'-5 5/8"	2'-6 1/16"	2'-6 11/16	2'-7 1/2"	2'-8 1/2"	2'-9 11/16	2'-11 1/16"	3'-0 5/8"	3'-2 3/8"	3'-4 1/4"	3'-6 3/8"

NOTES :
DIMENSIONS ARE MEASURED FROM THE TOP OF GIRDER.
DUCT PROFILES SHOWN INCLUDE A MAXIMUM ADJUSTMENT OF ± ¾" BETWEEN TENDON & DUCT PROFILES.

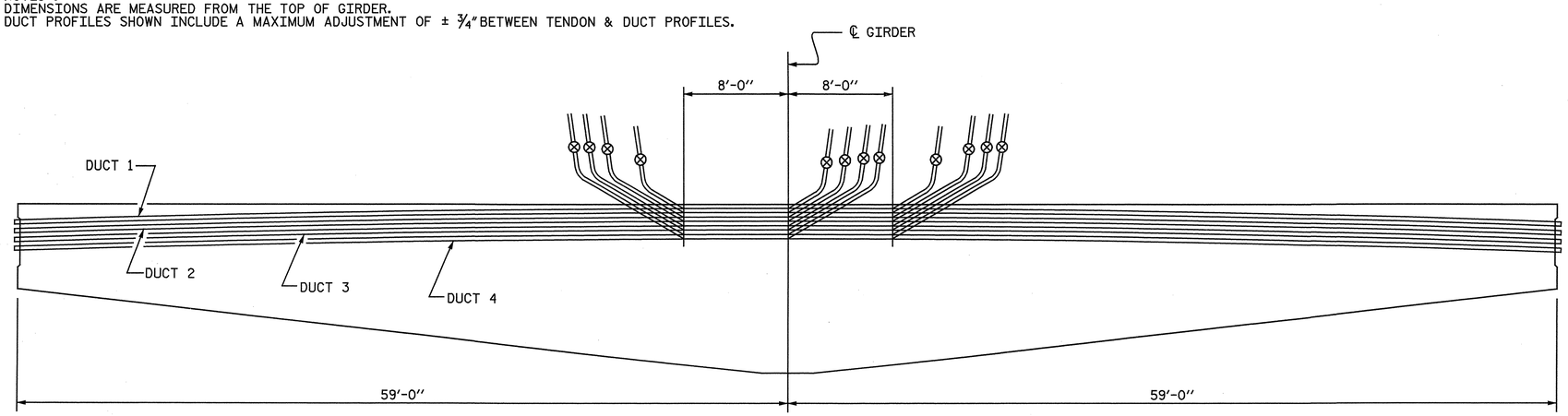

PROPOSED GROUT VENT LOCATION SKETCH

-- INDICATES GROUT VENT

PROJECT NO. R-3307
CARTERET COUNTY
STATION: 46+21.50 -L-

SHEET 4 OF 4

STATE OF NORTH CAROLINA
DEPARTMENT OF TRANSPORTATION
RALEIGH

SUPERSTRUCTURE

HAUNCHED GIRDER SEGMENT DETAILS

MODIFIED 78" BULB TEE

NORTH CAROLINA PROFESSIONAL SEAL 25911 ENGINEER DWAIN G. HATHAWAY 4-3-2012

NORTH CAROLINA PROFESSIONAL SEAL 033752 ENGINEER SETH A. DENNEY 4/20/12

THE LPA GROUP of North Carolina TRANSPORTATION CONSULTANTS

THE LPA GROUP of North Carolina
8000 Regency Parkway, Suite 600
Cary, North Carolina 27518
NC License No. : F-1084

REVISIONS								
NO.	BY:	DATE:	NO.	BY:	DATE:			
1			3					
2			4					

SHEET NO. S-134
TOTAL SHEETS 333

DRAWN BY : M. D. MAYHEW DATE : 8-30-11
CHECKED BY : S. A. DENNEY DATE : 9-12-11

DWG. 135 OF 282

4/2/2012
12:42:_ PM
User: jaustin
Filename: Y:\Projects\NCDOT\R-3307\Dwgs\Final\R-3307_135_SD_HAUNCH_G4.dgn

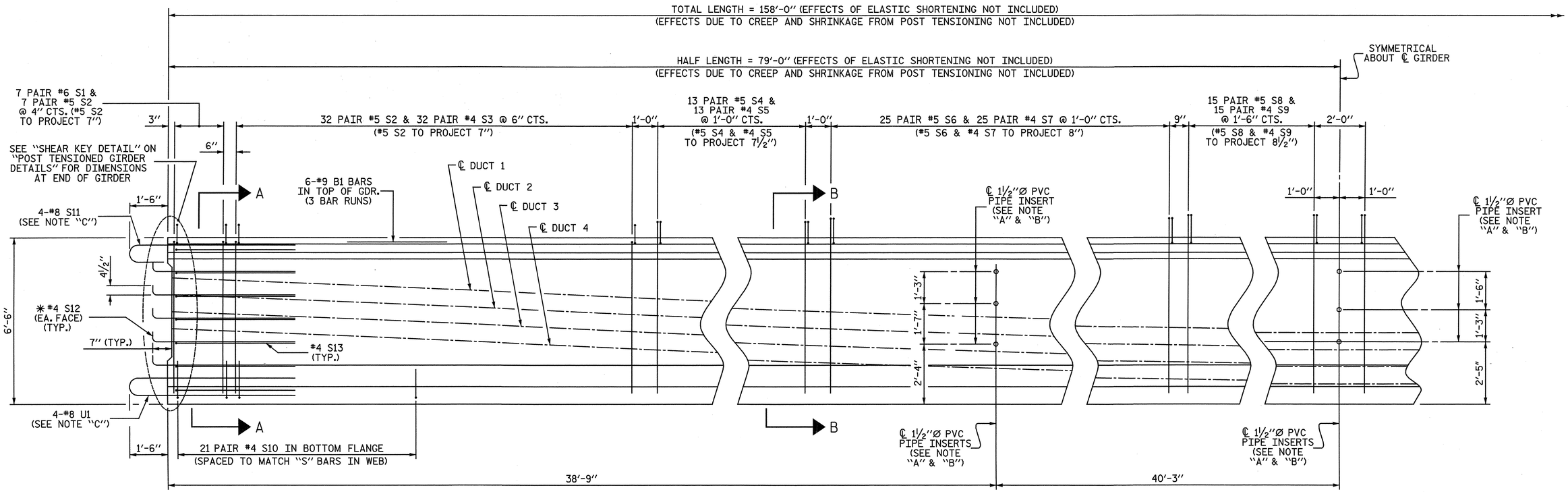

HALF ELEVATION OF DROP-IN GIRDER SEGMENT

SHOWING REINFORCING STEEL & DIAPHRAGM HOLE PLACEMENT
FOR REINFORCING STEEL DETAILS, SEE "BILL OF MATERIAL FOR POST TENSIONED GIRDERS" SHEET

NOTE "A"
USE THREADED INSERTS ON EXTERIOR GIRDERS INSTEAD OF PVC PIPE INSERTS (SEE "GIRDER DETAILS" SHEET)

NOTE "B"
FOR REINFORCING AROUND THE PVC PIPE INSERTS, SEE "GIRDER DETAILS" SHEET

NOTE "C"
OMIT 2-#8 S11 & 2-#8 U1 BARS ON EXTERIOR SIDE OF EXTERIOR GIRDERS

✱ #4 S12 BARS SHALL BE BENT AFTER GIRDER FABRICATION AND BEFORE SHIPMENT. HEAT BENDING SHALL NOT BE ALLOWED.

FOR SECTIONS A-A & B-B SEE "DROP-IN GIRDER SEGMENT DETAILS", SHEET 2 OF 3

PROJECT NO. R-3307
CARTERET COUNTY
STATION: 46+21.50 -L-

SHEET 1 OF 3

STATE OF NORTH CAROLINA
DEPARTMENT OF TRANSPORTATION
RALEIGH

SUPERSTRUCTURE

DROP-IN GIRDER SEGMENT DETAILS

MODIFIED 78" BULB TEE

NORTH CAROLINA PROFESSIONAL SEAL 25911 ENGINEER DWAIN G. HATHAWAY 4-3-2012

NORTH CAROLINA PROFESSIONAL SEAL 033752 ENGINEER SETH A. DENNEY 4/13/12

THE LPA GROUP of North Carolina TRANSPORTATION CONSULTANTS

THE LPA GROUP of North Carolina
8000 Regency Parkway, Suite 600
Cary, North Carolina 27518
NC License No.: F-1084

REVISIONS							SHEET NO.
NO.	BY:	DATE:	NO.	BY:	DATE:		S-135
1			3				TOTAL SHEETS
2			4				333

DRAWN BY: M. D. MAYHEW DATE: 8-31-11
CHECKED BY: S. A. DENNEY DATE: 9-12-11

DWG. 136 OF 282

4/2/2012
12:42: PM
User: jaustin
Filename: Y:\Projects\NCDOT\R-3307\Dwgs\Final\R-3307_136_SD_DROP-IN_01.dgn

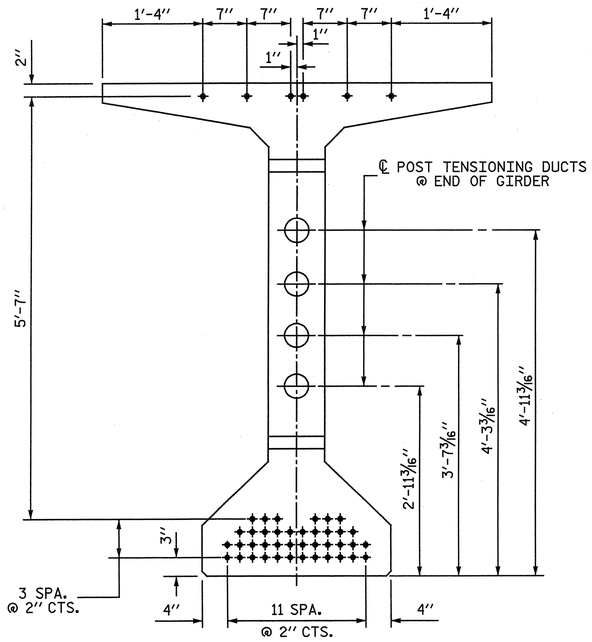

0.6" Ø LOW RELAXATION STRAND LAYOUT

46 STRANDS, ALL STRAIGHT

• FULLY BONDED STRANDS

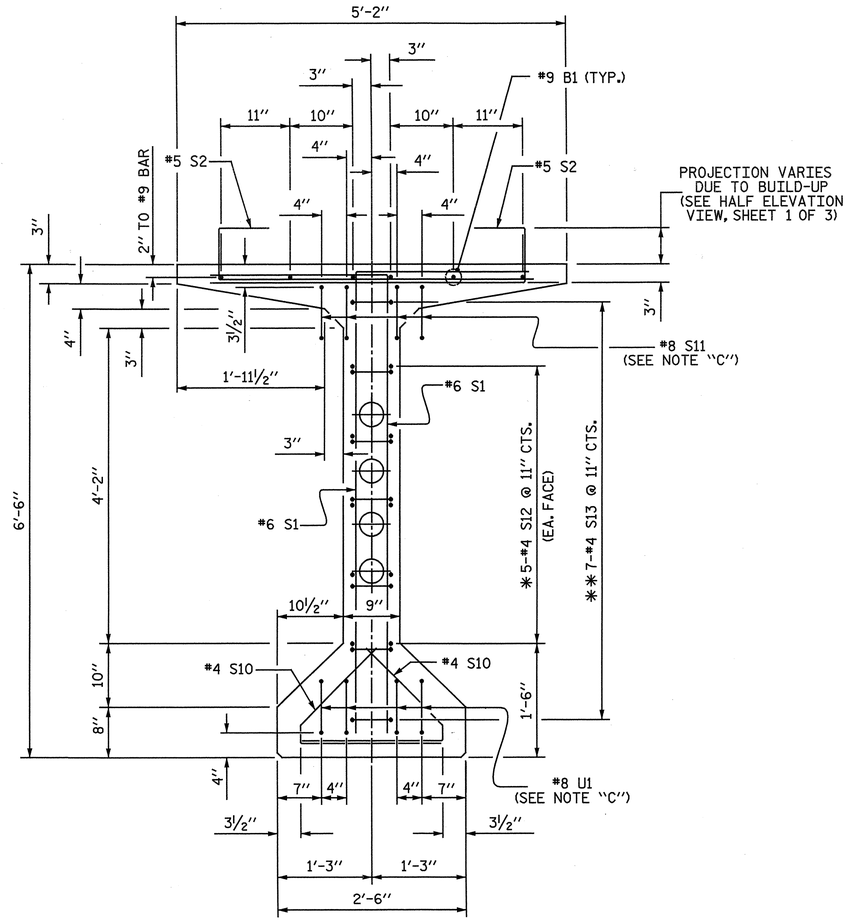

SECTION A-A

SEE STRAND LAYOUT DETAIL FOR STRAND LOCATIONS

NOTE "C"
OMIT 2-#8 S11 & 2-#8 U1
BARS ON EXTERIOR SIDE
OF EXTERIOR GIRDERS

* NOTE :
#4 S12 BARS SHALL BE BENT
AFTER GIRDER FABRICATION
AND BEFORE SHIPMENT.
HEAT BENDING SHALL NOT
BE ALLOWED.

** NOTE :
#4 S13 MAY BE SHIFTED SLIGHTLY
IN ORDER TO AVOID THE POST
TENSIONING DUCTS.

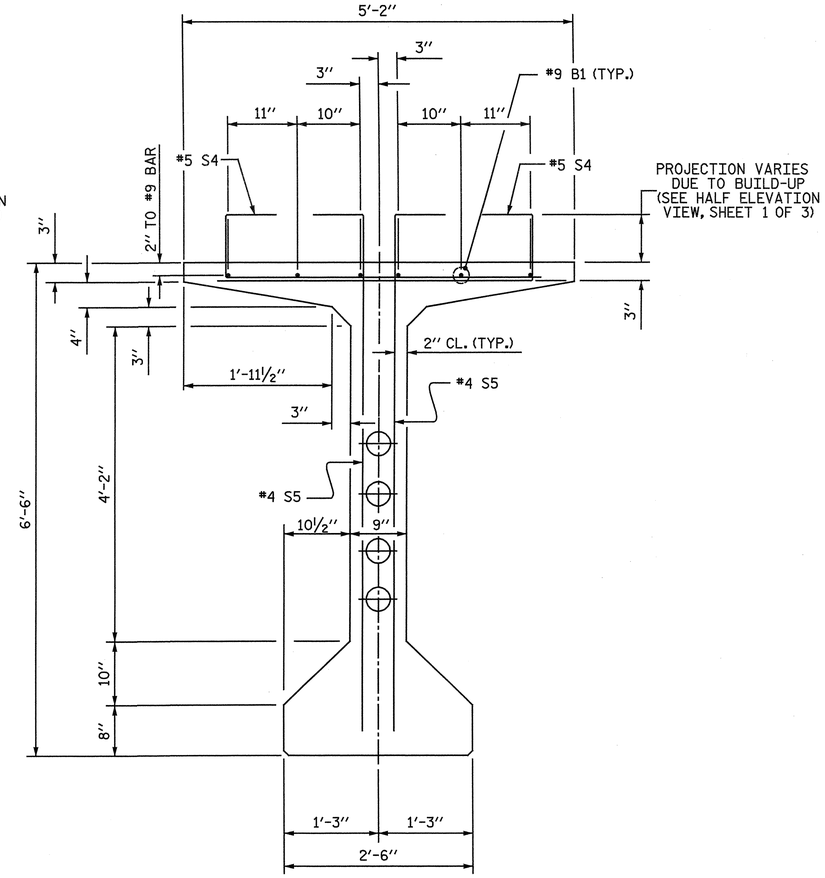

SECTION B-B

SEE STRAND LAYOUT DETAIL FOR STRAND LOCATIONS

PROJECT NO. R-3307
CARTERET COUNTY
STATION: 46+21.50 -L-

SHEET 2 OF 3

STATE OF NORTH CAROLINA
DEPARTMENT OF TRANSPORTATION
RALEIGH

SUPERSTRUCTURE

DROP-IN GIRDER
SEGMENT DETAILS

MODIFIED 78" BULB TEE

NORTH CAROLINA PROFESSIONAL SEAL 25911 ENGINEER DWAIN G. HATHAWAY 4-3-2012

NORTH CAROLINA PROFESSIONAL SEAL 033752 ENGINEER SETH A. DENNEY

THE LPA GROUP of North Carolina
TRANSPORTATION CONSULTANTS

THE LPA GROUP of North Carolina
8000 Regency Parkway, Suite 600
Cary, North Carolina 27518
NC License No.: F-1084

REVISIONS						SHEET NO.
NO.	BY:	DATE:	NO.	BY:	DATE:	S-136
1			3			TOTAL SHEETS
2			4			333

DRAWN BY : M. D. MAYHEW DATE : 8-31-11
CHECKED BY : S. A. DENNEY DATE : 9-12-11

DWG. 137 OF 282

4/2/2012
12:42: PM
User: jaustin
Filename: Y:\Projects\NCDOT\R-3307\Dwgs\Final\R-3307_137_SD_DROP-IN_02.dgn

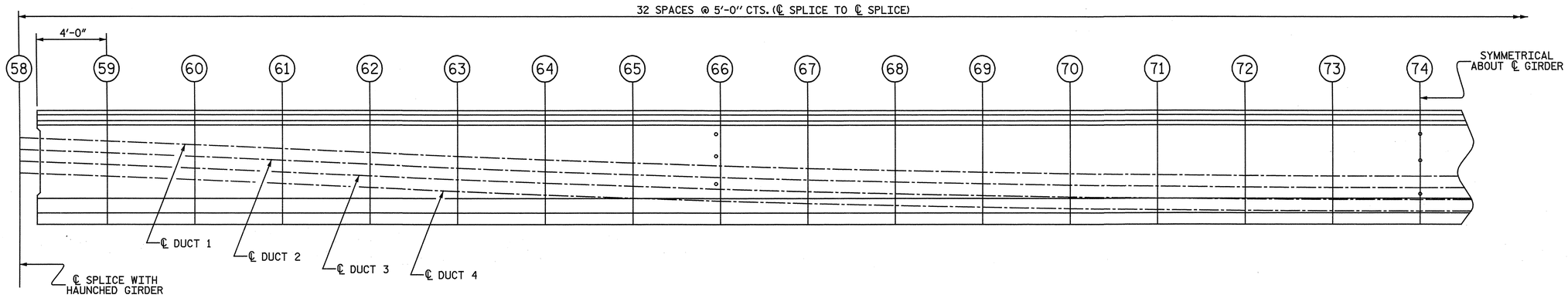

HALF ELEVATION OF DROP-IN GIRDER SEGMENT

SHOWING POST TENSIONING DUCT PROFILE

DROP-IN GIRDER SEGMENT POST TENSIONING DUCT PROFILE TABLE

POINT	58	59	60	61	62	63	64	65	66	67	68	69	70	71	72	73	74
℄ DUCT 1	4'-11 5/8"	4'-9 3/8"	4'-6 7/8"	4'-4 1/4"	4'-1 1/2"	3'-10 7/8"	3'-8 1/2"	3'-6 3/8"	3'-4 7/16"	3'-2 3/4"	3'-1 5/16"	3'-0 1/16"	2'-11 1/16"	2'-10 1/4"	2'-9 11/16	2'-9 3/8"	2'-9 1/4"
℄ DUCT 2	4'-3 5/8"	4'-1 3/8"	3'-10 7/8"	3'-8 1/4"	3'-5 1/2"	3'-2 7/8"	3'-0 1/2"	2'-10 3/8"	2'-8 7/16"	2'-6 3/4"	2'-5 5/16"	2'-4 1/16"	2'-3 1/16"	2'-2 1/4"	2'-1 11/16"	2'-1 3/8"	2'-1 1/4"
℄ DUCT 3	3'-7 5/8"	3'-5 3/8"	3'-2 7/8"	3'-0 1/4"	2'-9 1/2"	2'-6 7/8"	2'-4 1/2"	2'-2 3/8"	2'-0 7/16"	1'-10 3/4"	1'-9 5/16"	1'-8 1/16"	1'-7 1/16"	1'-6 1/4"	1'-5 11/16"	1'-5 3/8"	1'-5 1/4"
℄ DUCT 4	2'-11 5/8"	2'-9 3/8"	2'-6 7/8"	2'-4 1/4"	2'-1 1/2"	1'-10 7/8"	1'-8 1/2"	1'-6 3/8"	1'-4 7/16"	1'-2 3/4"	1'-1 5/16"	1'-0 1/16"	11 1/16"	10 1/4"	9 11/16	9 3/8"	9 1/4"

NOTES :
DIMENSIONS ARE MEASURED FROM THE BOTTOM OF GIRDER & ARE SYMMETRICAL ABOUT THE CENTERLINE OF GIRDER.
DUCT PROFILES SHOWN INCLUDE A MAXIMUM ADJUSTMENT OF ± 3/4" BETWEEN TENDON & DUCT PROFILES.

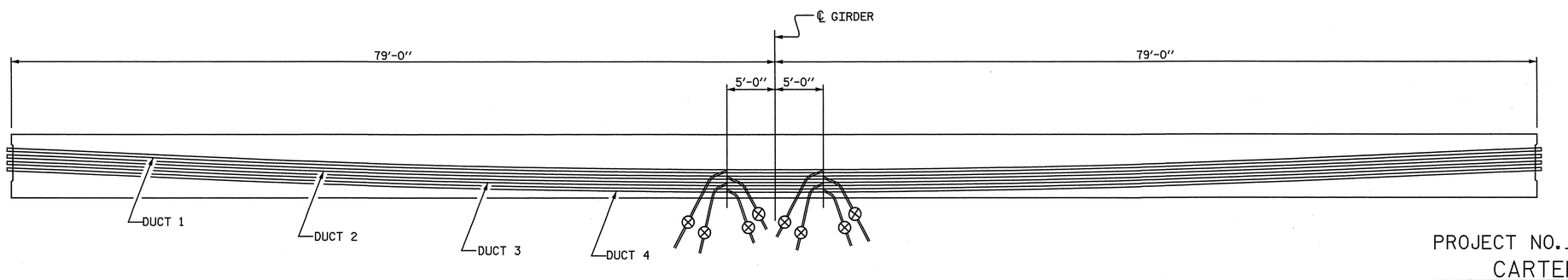

PROPOSED GROUT VENT LOCATION SKETCH

-- INDICATES GROUT VENT

PROJECT NO. R-3307

CARTERET COUNTY

STATION: 46+21.50 -L-

SHEET 3 OF 3

STATE OF NORTH CAROLINA
DEPARTMENT OF TRANSPORTATION
RALEIGH

SUPERSTRUCTURE

DROP-IN GIRDER SEGMENT DETAILS

MODIFIED 78" BULB TEE

NORTH CAROLINA PROFESSIONAL SEAL 25911 ENGINEER DWAIN G. HATHAWAY 4-3-2012

NORTH CAROLINA PROFESSIONAL SEAL 033752 ENGINEER SETH A. DENNEY 9/09/12

THE LPA GROUP of North Carolina TRANSPORTATION CONSULTANTS

THE LPA GROUP of North Carolina
8000 Regency Parkway, Suite 600
Cary, North Carolina 27518
NC License No.: F-1084

REVISIONS								SHEET NO.
NO.	BY:	DATE:	NO.	BY:	DATE:			S-137
1			3					TOTAL SHEETS
2			4					333

DRAWN BY : M. D. MAYHEW DATE : 8-31-11
CHECKED BY : S. A. DENNEY DATE : 9-12-11

DWG. 138 OF 282

4/2/2012
12:41 3 PM
User: jaustin
Filename: Y:\Projects\NCDOT\R-3307\Dwgs\Final\R-3307_138_SD_DROP-IN_G3.dgn

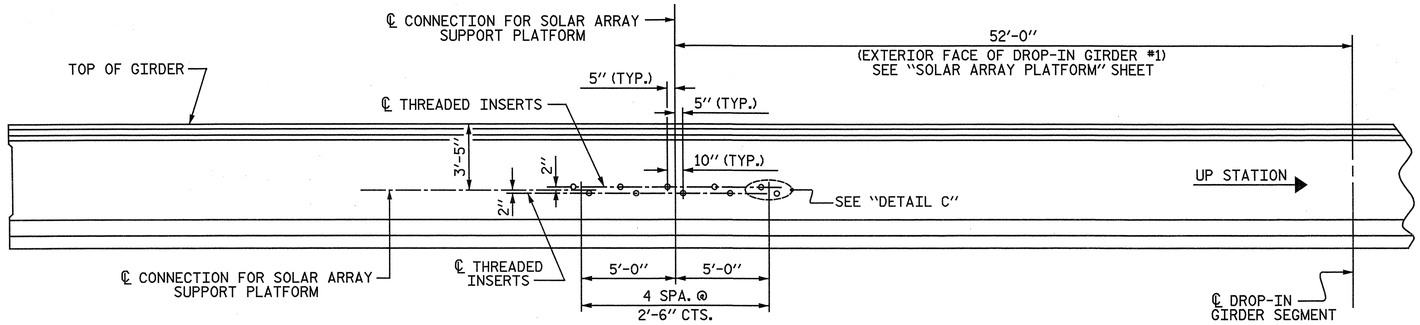

LOCATION OF THREADED INSERTS FOR SOLAR ARRAY PLATFORM

NOTE : THREADED INSERTS FOR SOLAR ARRAY PLATFORM ARE TO BE PLACED ON EXTERIOR SIDE OF DROP-IN GIRDER #1. FABRICATOR SHALL VERIFY LOCATIONS BEFORE CASTING OF THE GIRDER.

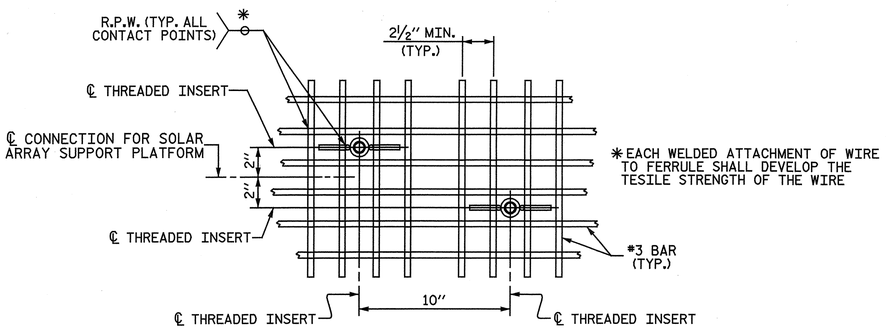

DETAIL C

SOLAR ARRAY CONCRETE INSERT NOTES:

FOR STRUCTURAL CONCRETE INSERT FOR SOLAR ARRAY PLATFORM

THE STRUCTURAL CONCRETE INSERT ASSEMBLY FOR SOLAR ARRAY PLATFORM SHALL CONSIST OF THE FOLLOWING :

A. FERRULES SHALL BE MADE FROM STEEL MEETING THE REQUIREMENTS OF AASHTO M169, GRADE 12L14 AND SHALL HAVE A MINIMUM LENGTH OF THREADS OF 1½".

B. 1-⅞"Ø x 1⅝" WITH WASHER. BOLT SHALL CONFORM TO THE REQUIREMENTS OF ASTM A307. BOLT AND WASHER SHALL BE METALLIZED.

C. WIRE STRUT SHOWN IN THE CONCRETE INSERT ASSEMBLY DETAIL IS THE MINIMUM ALLOWABLE SIZE AND SHALL HAVE A MINIMUM TENSILE STRENGTH OF 100,000 PSI. AS AN OPTION, A 7/16"Ø WIRE STRUT WITH A MINIMUM TENSILE STRENGTH OF 90,000 PSI IS ACCEPTABLE.

D. IT IS THE CONTRACTOR'S RESPONSIBLITY TO ENSURE HIGH STRENGTH BOLTS AND FERRULES HAVE MATCHING THREAD TYPES AND PROVIDE A PROPER FIT UP.

E. THE COST OF THE THREADED INSERTS SHALL BE INCLUDED IN THE VARIOUS PAY ITEMS.

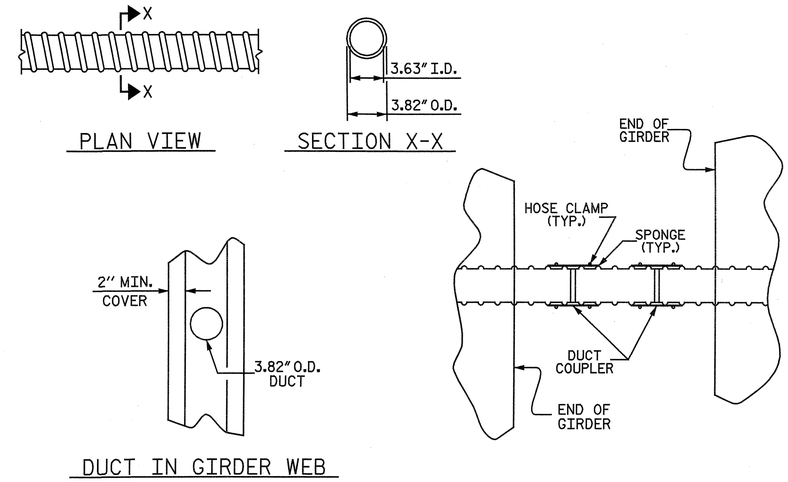

POST-TENSIONING CLOSURE SPLICE DUCT DETAILS

(TO BE INCLUDED IN THE UNIT PRICE BID FOR "POST-TENSIONING TENDONS")

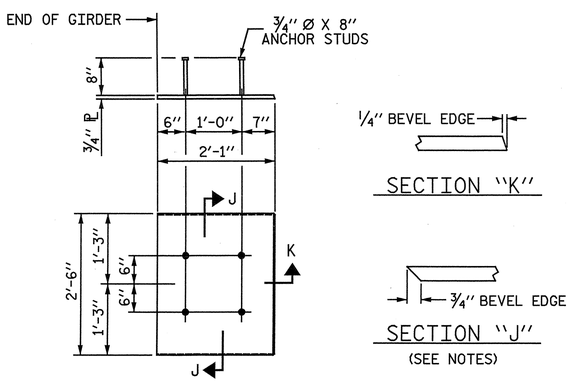

EMBEDDED PLATE "B-3" DETAILS

(1 REQ'D PER END GIRDER SEGMENT)

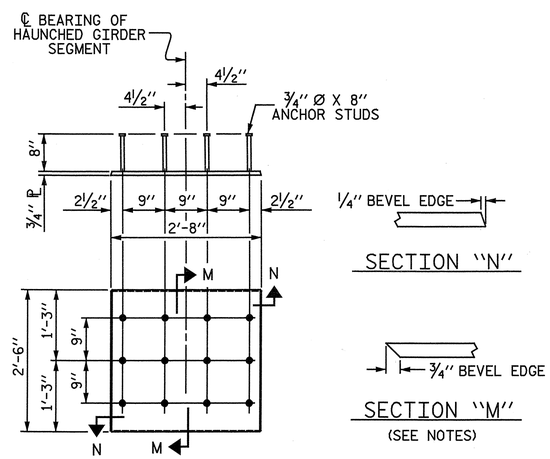

EMBEDDED PLATE "B-4" DETAILS

(1 REQ'D PER HAUNCHED GIRDER SEGMENT)

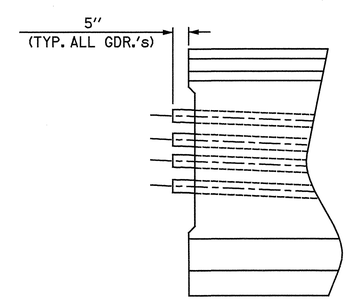

DUCT PROJECTION DETAIL

TYPICAL AT EACH SPLICE LOCATION

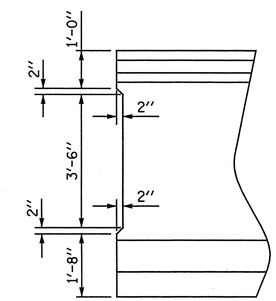

SHEAR KEY DETAIL

EMBEDDED PLATE NOTES:

EMBEDDED PLATE "B-3" AND "B-4" SHALL BE GALVANIZED IN ACCORDANCE WITH THE STANDARD SPECIFICATIONS. BEVEL EDGES OF PLATE "B-3" AND "B-4" TO GIVE CLOSE FIT BUT NOT TIGHT FIT TO STEEL CASTING FORM.

ANCHOR STUDS SHALL CONFORM TO AASHTO M169 GRADES 1010 THROUGH 1020 OR APPROVED EQUAL, AND SHALL MEET THE TYPE "B" REQUIREMENTS OF SUBSECTION 7.3 OF THE ANSI/AASHTO/AWS D1.5 BRIDGE WELDING CODE.

EMBEDDED PLATES TO BE INCLUDED IN THE UNIT PRICE BID FOR "78" POST-TENSIONED CONCRETE GIRDERS"

PROJECT NO. R-3307
CARTERET COUNTY
STATION: 46+21.50 -L-

STATE OF NORTH CAROLINA
DEPARTMENT OF TRANSPORTATION
RALEIGH

SUPERSTRUCTURE

POST TENSIONED GIRDER DETAILS

MODIFIED 78" BULB TEE

NORTH CAROLINA PROFESSIONAL SEAL 25911 ENGINEER DWAIN C. WATHWAY 4-3-2012

NORTH CAROLINA PROFESSIONAL SEAL 033752 ENGINEER SETH A. DENNEY 4/03/12

THE LPA GROUP of North Carolina TRANSPORTATION CONSULTANTS

THE LPA GROUP of North Carolina
8000 Regency Parkway, Suite 600
Cary, North Carolina 27518
NC License No.: F-1084

REVISIONS						SHEET NO.
NO.	BY:	DATE:	NO.	BY:	DATE:	S-138
1			3			TOTAL SHEETS
2			4			333

DRAWN BY : M. D. MAYHEW DATE : 9-1-11
CHECKED BY : S. A. DENNEY DATE : 9-13-11

DWG. 139 OF 282

4/2/2012
12:42 PM
User: jaustin
Filename: Y:\Projects\NCDOT\R-3307\Dwgs\Final\R-3307_139_SD_PT_G1.dgn

END GIRDER BILL OF MATERIAL

0.6'' Ø L. R. GRADE 270 STRANDS

AREA (SQUARE INCHES)	ULTIMATE STRENGTH (LBS. PER STRAND)	APPLIED PRESTRESS (LBS. PER STRAND)
0.217	58,600	43,950

REINFORCING STEEL FOR ONE END GIRDER

BAR	NO.	SIZE	TYPE	LENGTH	WEIGHT
B1	6	9	STR	57' - 9"	1,178
B2	12	9	STR	58' - 0"	2,366
B3	10	5	STR	15' - 7"	163
S1	14	6	1	8' - 5"	177
S2	86	5	2	5' - 10"	523
S3	30	4	1	8' - 5"	169
S4	52	5	2	5' - 10"	316
S5	52	4	1	7' - 8"	266
S6	116	5	2	5' - 11"	716
S7	116	4	1	7' - 8"	594
S8	34	5	2	5' - 11"	210
S9	34	4	1	7' - 9"	176
S10	4	8	5	8' - 2"	87
* S11	10	4	STR	6' - 0"	40
S12	7	4	4	9' - 11"	46
S13	44	4	3	3' - 7"	105
S14	54	5	7	9' - 7"	540
S15	54	5	4	9' - 2"	516
S16	2	5	7	8' - 10"	18
S17	16	5	STR	4' - 2"	70
S18	75	5	9	3' - 0"	235
S19	4	5	8	7' - 8"	32
U1	4	8	6	13' - 4"	142
U2	1	5	4	28' - 1"	29
EPOXY COATED REINFORCING STEEL				LBS.	8,714

* NOTE: S11 BARS SHALL BE BENT AFTER GIRDER FABRICATION AND BEFORE SHIPMENT. HEAT BENDING SHALL NOT BE ALLOWED.

BAR TYPES

ALL BAR DIMENSIONS ARE OUT-TO-OUT

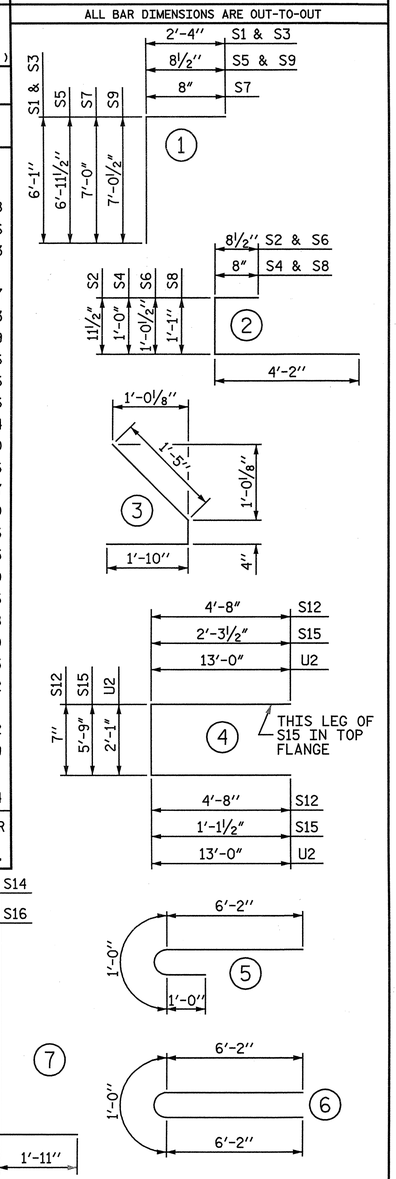

QUANTITIES FOR ONE END GIRDER

REINFORCING STEEL	9,000 PSI CONCRETE	0.6'' Ø L.R. STRANDS
LBS.	C.Y.	No.
8,714	57.2	46

END GIRDERS REQUIRED

GIRDERS REQ'D	LENGTH	TOTAL LENGTH
18	163'-6''	2,943.00'

HAUNCHED GIRDER BILL OF MATERIAL

0.6'' Ø L. R. GRADE 270 STRANDS

AREA (SQUARE INCHES)	ULTIMATE STRENGTH (LBS. PER STRAND)	APPLIED PRESTRESS (LBS. PER STRAND)
0.217	58,600	43,950

REINFORCING STEEL FOR ONE HAUNCHED GIRDER

BAR	NO.	SIZE	TYPE	LENGTH	WEIGHT
B1	18	9	STR	42' - 10"	2,621
B2	4	9	STR	54' - 10"	746
B3	4	9	STR	40' - 11"	556
B4	2	9	STR	50' - 0"	340
B5	16	9	STR	51' - 8"	2,811
B6	8	9	7	26' - 0"	707
S1	28	6	1	8' - 5"	354
S2	44	5	2	5' - 9"	264
S3	30	4	1	8' - 5"	169
S4	130	5	2	5' - 10"	791
S5	100	4	1	8' - 11"	596
S6	162	5	2	5' - 11"	1,000
S7	162	4	1	11' - 2"	1,208
S8	14	5	2	5' - 8"	83
S9	24	4	3	3' - 5"	55
S10	28	4	3	3' - 6"	65
S11	32	4	3	3' - 7"	77
S12	28	4	3	3' - 8"	69
S13	28	4	3	3' - 9"	70
S14	28	4	3	3' - 10"	72
S15	28	4	3	3' - 11"	73
S16	28	4	3	4' - 0"	75
S17	14	4	3	4' - 1"	38
S18	6	8	5	8' - 2"	131
* S19	20	4	STR	6' - 0"	80
S20	14	4	4	9' - 11"	93
U1	6	8	6	13' - 4"	214
U2	30	4	4	13' - 1"	262
U3	50	4	4	14' - 11"	498
U4	81	4	4	19' - 1"	1,033
EPOXY COATED REINFORCING STEEL				LBS.	15,151

* NOTE: S19 BARS SHALL BE BENT AFTER GIRDER FABRICATION AND BEFORE SHIPMENT. HEAT BENDING SHALL NOT BE ALLOWED.

BAR TYPES

ALL BAR DIMENSIONS ARE OUT-TO-OUT

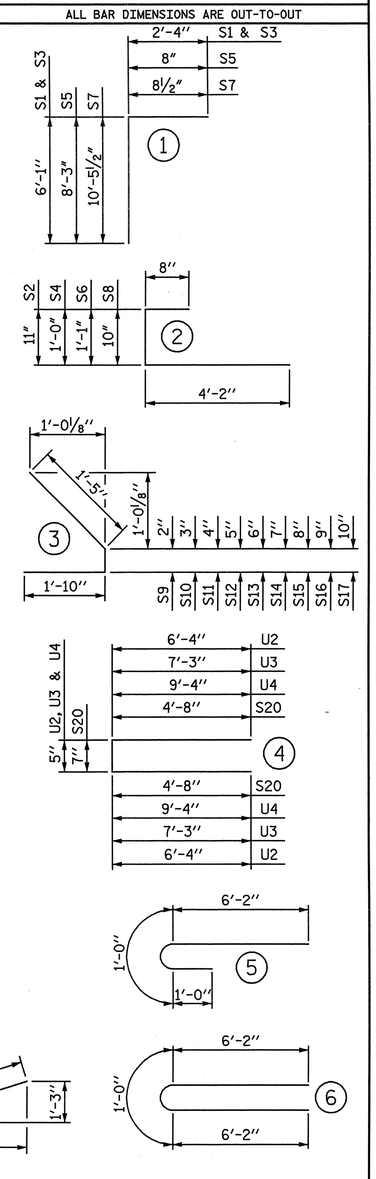

QUANTITIES FOR ONE HAUNCHED GIRDER

REINFORCING STEEL	9,000 PSI CONCRETE	0.6'' Ø L.R. STRANDS
LBS.	C.Y.	No.
15,151	51.9	46

HAUNCHED GIRDERS REQUIRED

GIRDERS REQ'D	LENGTH	TOTAL LENGTH
18	118'-0''	2,124.00'

DROP-IN GIRDER BILL OF MATERIAL

0.6'' Ø L. R. GRADE 270 STRANDS

AREA (SQUARE INCHES)	ULTIMATE STRENGTH (LBS. PER STRAND)	APPLIED PRESTRESS (LBS. PER STRAND)
0.217	58,600	43,950

REINFORCING STEEL FOR ONE DROP-IN GIRDER

BAR	NO.	SIZE	TYPE	LENGTH	WEIGHT
B1	18	9	STR	56' - 2"	3,437
S1	28	6	1	8' - 5"	354
S2	156	5	2	5' - 8"	922
S3	128	4	1	8' - 5"	720
S4	52	5	2	5' - 9"	312
S5	52	4	1	7' - 6"	261
S6	100	5	2	5' - 9"	600
S7	100	4	1	7' - 6"	501
S8	60	5	2	5' - 10"	365
S9	60	4	1	7' - 7"	304
S10	84	4	3	3' - 7"	201
S11	8	8	5	8' - 2"	174
* S12	20	4	STR	6' - 0"	80
S13	14	4	4	9' - 11"	93
U1	8	8	6	13' - 4"	285
EPOXY COATED REINFORCING STEEL				LBS.	8,609

* NOTE: S12 BARS SHALL BE BENT AFTER GIRDER FABRICATION AND BEFORE SHIPMENT. HEAT BENDING SHALL NOT BE ALLOWED.

BAR TYPES

ALL BAR DIMENSIONS ARE OUT-TO-OUT

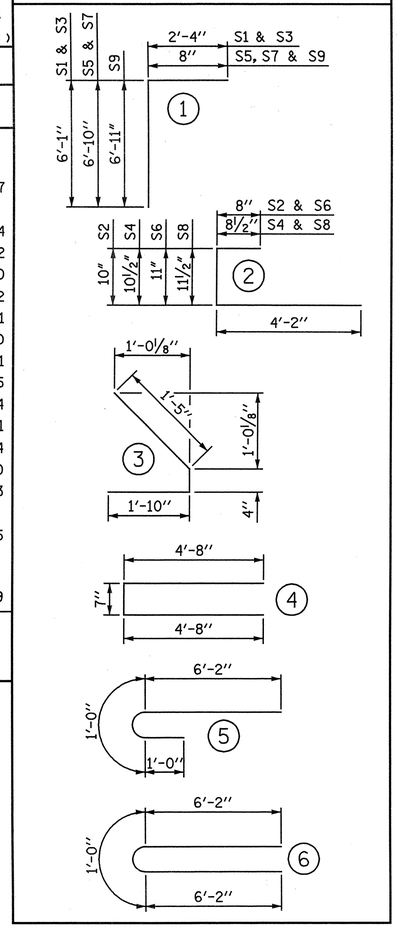

QUANTITIES FOR ONE DROP-IN GIRDER

REINFORCING STEEL	9,000 PSI CONCRETE	0.6'' Ø L.R. STRANDS
LBS.	C.Y.	No.
8,609	51.2	46

DROP-IN GIRDERS REQUIRED

GIRDERS REQ'D	LENGTH	TOTAL LENGTH
9	158'-0''	1,422.00'

PROJECT NO. R-3307

CARTERET COUNTY

STATION: 46+21.50 -L-

STATE OF NORTH CAROLINA
DEPARTMENT OF TRANSPORTATION
RALEIGH

SUPERSTRUCTURE

BILL OF MATERIAL FOR POST-TENSIONED GIRDERS

NORTH CAROLINA PROFESSIONAL SEAL 25911 ENGINEER DWAIN G. HATHAWAY

NORTH CAROLINA PROFESSIONAL SEAL 033752 ENGINEER SETH A. DENNEY

THE LPA GROUP of North Carolina TRANSPORTATION CONSULTANTS

THE LPA GROUP of North Carolina
8000 Regency Parkway, Suite 600
Cary, North Carolina 27518
NC License No.: F-1084

REVISIONS							SHEET NO.
NO.	BY:	DATE:	NO.	BY:	DATE:		S-139
1			3				TOTAL SHEETS
2			4				333

DRAWN BY : M. D. MAYHEW DATE : 9-2-11
CHECKED BY : S. A. DENNEY DATE : 9-12-11

DWG. 140 OF 282

4/2/2012 12:42: PM
User: jaustin
Filename: Y:\Projects\NCDOT\R-3307\Dwgs\Find\R-3307_140_SD_PT_BM.dgn

MATERIAL PROPERTIES

CONCRETE :

FOR CORROSION PROTECTION OF BRIDGE, SEE SPECIAL PROVISIONS.

THE TRANSFER OF LOAD FROM THE ANCHORAGES TO THE GIRDER SHALL BE DONE WHEN CONCRETE HAS REACH A COMPRESSIVE STRENGTH OF NOT LESS THAN 5500 psi.

THE CONCRETE IN THE GIRDER CLOSURE SPLICE DIAPHRAGMS SHALL BE CLASS PRESTRESS +6000 (NORMAL WEIGHT) WITH A MINIMUM CONCRETE COMPRESSIVE STRENGTH AT 28 DAYS OF 6500 psi.

THE CONCRETE IN THE DIAPHRAGMS OVER BENT 16 AND BENT 17 SHALL BE CLASS AA CONCRETE (NORMAL WEIGHT).

DECK SLAB CONCRETE SHALL ATTAIN A MINIMUM CONCRETE COMPRESSIVE STRENGTH OF 3000 psi PRIOR TO STRESSING OF STAGE 2 POST-TENSIONING TENDONS.

CONCRETE IN PRESTRESSED CONCRETE GIRDERS SHALL BE AT LEAST 60 DAYS OLD PRIOR TO STRESSING OF POST TENSIONING TENDONS.

ALL CONCRETE BEING STRESSED SHALL BE AT LEAST 10 DAYS OLD PRIOR TO STRESSING OF POST-TENSIONING TENDONS.

DEPENDING ON THE TYPE OF SYSTEM USED TO SUPPORT THE DECK SLAB FORMS, PRESET ANCHORS MAY BE NECESSARY IN THE PRESTRESSED CONCRETE GIRDER.

THE TOP SURFACE OF THE GIRDER, EXCLUDING THE OUTSIDE 4", SHALL BE RAKED TO A DEPTH OF 1/4".

PRESTRESSED CONCRETE GIRDERS ARE DESIGNED FOR 0 PSI TENSION IN THE PRECOMPRESSED TENSILE ZONE UNDER ALL LOADING CONDITIONS.

PRESTRESSED CONCRETE GIRDERS SHALL CONTAIN CALCIUM NITRITE CORROSION INHIBITOR. SEE STANDARD SPECIFICATIONS FOR CALCIUM NITRITE CORROSION INHIBITOR.

THE CONTRACTOR IS RESPONSIBLE FOR THE INTEGRITY AND STABILITY OF THE GIRDERS. IN HANDLING THE 78" POST-TENSIONED PRESTRESSED GIRDERS, THEY SHALL BE MAINTAINED IN AN UPRIGHT POSITION AT ALL TIMES AND THE PROPOSED METHOD FOR ERECTING, STORING AND TRANSPORTING THE GIRDERS SHALL BE SUBMITTED TO THE ENGINEER FOR APPROVAL. THE SUBMITTAL SHALL INCLUDE DESIGN CALCULATIONS FOR LOCATIONS OF PICK-UP POINTS AND SUPPORT POINTS AS NEEDED TO MAINTAIN THE GIRDERS STABLITY DURING ERECTION, STORAGE AND TRANSPORTATION.

PRESTRESSING STEEL :

ALL PRESTRESSING STRANDS SHALL BE 7-WIRE LOW-RELAXATION GRADE 270 STRANDS AND SHALL CONFORM TO AASHTO M203 EXCEPT FOR SAMPLING REQUIREMENTS WHICH SHALL BE IN ACCORDANCE WITH THE STANDARD SPECIFICATIONS.

AT ENDS OF GIRDERS TO BE EMBEDDED IN CONCRETE DIAPHRAGMS OR END WALLS, PRESTRESSING STRANDS MAY EXTEND A MAXIMUM OF 2" BEYOND THE GIRDER ENDS. OTHERWISE, PRESTRESSING STRANDS SHALL BE CUT FLUSH WITH THE GIRDER ENDS.

REINFORCING STEEL :

ALL REINFORCING STEEL SHALL BE GRADE 60.

DESIGN ASSUMPTIONS

CONSTRUCTION SEQUENCE

SEE "ERECTION SEQUENCE FOR SPANS P, Q, AND R" PLAN SHEETS FOR NOTES AND DETAILS.

THE DESIGN SHOWN IN THESE PLANS IS BASED ON A CONSTRUCTION SEQUENCE FOR WHICH THE GIRDERS WERE ASSUMED TO BE FROM 60 TO 365 DAYS OLD WHEN ERECTED.

COEFFICIENTS FOR PRESTRESSING STEEL AND PRESTRESS LOSSES :

MODULUS OF ELASTICITY = 28,500,000 psi
ANCHOR SET = 0.375 INCHES **
FRICTION COEFFICIENT (GALVANIZED DUCT) = 0.25
WOBBLE COEFFICIENT = 0.0002
CONSPLICE® BY LEAP SOFTWARE, INC. AND ACI-209R-92 CODES WERE USED IN PERFORMING THE TIME-DEPENDENT ANALYSIS ON THE POST-TENSIONED PRESTRESSED CONCRETE MEMBERS

** - ACTUAL ANCHOR SET LOSSES SHALL BE DETERMINED DURING CONSTRUCTION. THE CONTRACTOR MAY REQUIRE ADJUSTMENT OF JACKING FORCES TO COMPENSATE FOR DIFFERENT AMOUNTS OF SET.

POST-TENSIONING TENDONS :

FOUR POST-TENSIONING TENDONS CONSISTING OF 15 - 0.6 INCH DIAMETER LOW-RELAXATION PRESTRESSING STRANDS ARE USED.

TENDONS ARE STRESSED IN TWO STAGES :
FIRST STAGE POST-TENSIONING TENDONS (TENDONS 3 AND 4) ARE STRESSED AFTER GIRDERS ARE SPLICED BUT BEFORE COMPOSITE DECK SLAB IS PLACED.

SECOND STAGE POST-TENSIONING TENDON (TENDONS 1 AND 2) ARE STRESSED AFTER THE COMPOSITE DECK SLAB IS PLACED.

ALL POST-TENSIONING TENDONS ARE STRESSED FROM BOTH ENDS.

POST-TENSIONING STRESS LIMITS AND DESIGN JACKING STRESSES :

MAXIMUM JACKING STRESS = 0.80 Fpu (216.0 ksi)
DESIGN JACKING STRESS = 0.75 Fpu (202.5 ksi) FOR TENDONS 1, 2, 3, AND 4

MAXIMUM STRESSES AFTER ANCHORING TENDONS :
AT END OF SEATING ZONE = 0.75 Fpu (202.5 ksi)
AT ANCHOR = 0.70 Fpu (189.0 ksi)

WORKING DRAWINGS

1. THE CONTRACTOR SHALL SUBMIT WORKING DRAWINGS SHOWING COMPLETE DETAILS OF THE POST-TENSIONING SYSTEM TO THE ENGINEER FOR APPROVAL.

2. THE CONTRACTOR SHALL SUBMIT WORKING DRAWINGS SHOWING COMPLETE DETAILS OF THE DUCT AND DUCT SPLICE FOR APPROVAL BY THE ENGINEER. THESE WORKING DRAWINGS SHALL SHOW COMPLETE DIMENSIONS OF THE DUCT AND DUCT SPLICE, A THOROUGH SEQUENCE OF INSTALLATION OF THE DUCT SPLICE, DETAILS FOR SUPPORT OF THE DUCT, DETAILS OF GROUT VENTS AND THEIR CONNECTION TO THE DUCT, LOCATION OF GROUT VENTS AND OTHER RELATED DETAILS. THE DUCT SHALL NOT BE SHIPPED TO THE PRECASTER UNTIL THIS SUBMITTAL IS APPROVED BY THE ENGINEER.

3. THE CONTRACTOR SHALL SUBMIT INTEGRATED WORKING DRAWINGS IN AREAS OF POST-TENSIONING ANCHORAGES DUE TO CONGESTION WITH REINFORCING STEEL. THESE WORKING DRAWINGS WILL SHOW COMPLETE DETAILS OF THE ANCHORAGE SYSTEM, INCLUDING ANCHORAGE PROTECTION DETAILS, AND RECESSES REQUIRED TO ACCOMMODATE STRESSING EQUIPMENT. LOCAL ANCHORAGE ZONE REINFORCEMENT SHALL BE DESIGNED BY THE POST-TENSIONING SUPPLIER AND SHOWN ON THE WORKING DRAWINGS. THE CONTRACTOR SHALL BE RESPONSIBLE FOR RESOLVING CONFLICTS OF LOCAL ANCHORAGE ZONE REINFORCEMENT AND ANCHORAGE WITH OTHER REINFORCEMENT. ANY SHIFTING OF REINFORCING STEEL TO ACCOMODATE PLACEMENT OF LOCAL ANCHORAGE ZONE REINFORCEMENT SHALL BE APPROVED BY THE ENGINEER.

4. PRIOR TO CASTING THE GIRDERS, THE CONTRACTOR SHALL SUBMIT COMPLETE WORKING DRAWINGS WITH THE EXACT LOCATION AND A COMPLETE DESCRIPTION OF ALL INSERTS CAST IN THE GIRDERS TO THE DEPARTMENT FOR APPROVAL. SUCH INSERTS INCLUDE, BUT ARE NOT LIMITED TO, INSERTS FOR SUPPORTING FALSEWORK AND FORMWORK, INSERTS FOR ATTACHING DIAPHRAGMS, INSERTS FOR CONNECTING STRONGBACKS, INSERTS FOR CONNECTING TEMPORARY TOWERS, INSERTS FOR CONNECTING TEMPORARY BRACING, AND LIFTING INSERTS.

5. THE CONTRACTOR SHALL SUBMIT WORKING DRAWINGS AND CALCULATIONS SHOWING COMPLETE DETAILS OF TENDON STRESSING FOR APPROVAL BY THE ENGINEER. THESE DETAILS SHALL INDICATE JACKING FORCES, THE SEQUENCE OF STRESSING, CALCULATED TENDON ELONGATIONS, GAUGE PRESSURES, JACK CALIBRATIONS, FRICTION COEFFICIENT, WOBBLE COEFFICIENT AND ANCHOR SET LOSS.

6. THE CONTRACTOR SHALL SUBMIT COMPLETE DETAILS OF TENDON GROUTING MATERIALS AND PROCEDURES FOR APPROVAL BY THE ENGINEER.

DUCTS

1. DUCTS FOR POST-TENSION TENDONS SHALL BE GALVANIZED CORRUGATED METAL SHEATHING WITH AN INSIDE CLEAR DIAMETER OF 3.63" AND AN OUTSIDE DIAMETER OF 3.82". THE CONTRACTOR HAS THE OPTION OF USING AN ALTERNATE DUCT SIZE AS LONG AS THE ALTERNATE DUCT DOES NOT DECREASE THE 2" OF COVER REQUIRED FOR THE STIRRUPS.

2. DUCTS SHALL BE SECURELY TIED TO STIRRUPS AT A MAXIMUM INTERVAL OF 1'-6" CTS. TO PREVENT DISPLACEMENT OF DUCTS DURING CONCRETE PLACEMENT.

3. DURING STORAGE AND AFTER INSTALLATION, DUCTS AND GROUT VENTS SHALL BE SEALED AT ALL TIMES TO PREVENT ENTRANCE OF WATER AND DEBRIS. DUCTS SHALL BE PROTECTED AND HANDLED WITH CARE TO PREVENT DAMAGE OR UNINTENDED BENDING, CRIMPING OR FLATTENING DURING STORAGE, INSTALLATION, AND PLACEMENT OF GIRDER CONCRETE.

4. THE GIRDER SIDE FORMS SHALL NOT BE SET IN PLACE UNTIL THE ENGINEER HAS VISUALLY INSPECTED AND APPROVED THE DUCT PROFILE, ANCHORAGE DETAILS, REINFORCING CAGE AND OTHER GIRDER FABRICATION DETAILS. THE DUCTS SHALL ALSO BE PRESSURE TESTED FOR POSSIBLE LEAKS BEFORE SIDE FORMS ARE PLACED.

5. THE CONTRACTOR SHALL BE RESPONSIBLE FOR THE DETAILED DESIGN OF THE DUCT AND THE DUCT SPLICE. A SUGGESTED CONCEPTUAL DESIGN OF THE DUCT SPLICE IS GIVEN ON THE SHEET TITLED "POST-TENSIONED GIRDER DETAILS".

6. DUCTS SHALL HAVE GROUT VENTS AT EACH INTERIOR SUPPORT (HIGH POINT) AND AT EACH LOW POINT ALONG THE TENDON PROFILE, AND AT OTHER LOCATIONS. SEE PROPOSED GROUT VENT LOCATION SKETCHES ON THE "MODIFIED 78" BULB TEE" PLAN SHEETS.

7. DUCT SPLICES SHALL BE WATERTIGHT AND PROVIDE A SMOOTH INTERIOR ALIGNMENT WITH NO LIPS OR KINKS. THEY SHALL BE INSTALLED TO THE SAME PLACEMENT TOLERANCE AS CONTINUOUS RUNS OF THE DUCT. STIRRUP SPACING AT DUCT SPLICES MAY BE ADJUSTED UP TO 4 INCHES PROVIDED THE TOTAL NUMBER OF STIRRUPS WITHIN 3 FEET ON EITHER SIDE OF THE SPLICE IS THE SAME AS REQUIRED BY THE PLANS.

8. FOLLOWING COMPLETION OF CONCRETE PLACEMENT IN GIRDERS AND BEFORE TRANSPORTING GIRDERS TO THE JOB SITE, DUCTS SHALL BE TESTED FOR OBSTRUCTIONS BY RUNNING A ROUND TORPEDO THROUGH THE DUCT. SEE NOTE 12.

9. DUCT SPLICES IN CLOSURE SPLICE DIAPHRAGMS SHALL BE PRESSURE TESTED FOR ANY LEAKS THAT MAY ALLOW GROUT TO ENTER DUCT BEFORE CONCRETE PLACEMENT.

10. FOLLOWING COMPLETION OF CONCRETE PLACEMENT FOR EACH CLOSURE SPLICE DIAPHRAGM, THE DUCTS SHALL BE TESTED FOR OBSTRUCTIONS BY RUNNING A ROUND TORPEDO THROUGH THE DUCT. SEE NOTE 12. THIS STEP SHALL BE PERFORMED BEFORE CONCRETE HAS TAKEN ITS INITIAL SET.

11. FOLLOWING COMPLETION OF GROUTING DUCTS 3 AND 4, DUCTS 1 AND 2 SHALL BE TESTED FOR OBSTRUCTIONS BY RUNNING A ROUND TORPEDO THROUGH THE DUCT. SEE NOTE 12.

12. TO DEMONSTRATE THAT THE DUCTS ARE NOT BLOCKED, THE CONTRACTOR SHALL PASS A TORPEDO THROUGH THE DUCTS. THE TORPEDO SHALL HAVE DIMENSIONS NOT LESS THAN 1/4" SMALLER THAN THE INSIDE DIAMETER OF THE DUCT.

13. RECESSES FOR POST-TENSIONING ANCHORAGE IN THE TOP OF GIRDERS SHALL BE PROVIDED WITH SUITABLE DRAIN PIPES TO PREVENT STANDING WATER. DRAIN PIPES SHALL BE MAINTAINED FREE OF OBSTRUCTIONS AT ALL TIMES UNTIL EPOXY GROUT POUR-BACKS ARE INSTALLED AFTER POST-TENSIONING TENDONS HAVE BEEN STRESSED AND GROUTED.

14. DUCT PLACEMENT TOLERANCE SHALL BE 1/4" ± IN THE HORIZONTAL DIRECTION AND 1/2" ± IN THE VERTICAL DIRECTION.

GENERAL NOTES

FOR POST-TENSIONING TENDONS, SEE SPECIAL PROVISIONS.

IN ADDITION TO THE "POST-TENSIONING TENDONS" SPECIAL PROVISION, THE CONTRACTOR SHALL ADHERE TO THE GUIDELINES FOR TENDON INSTALLATION AND GROUTING AS DESCRIBED IN THE FEDERAL HIGHWAY ADMINISTRATION'S PUBLICATION "POST-TENSIONING TENDON INSTALLATION AND GROUTING MANUAL".

FOR 78" POST-TENSIONED PRESTRESSED CONCRETE GIRDERS, SEE SPECIAL PROVISIONS.

PROJECT NO. R-3307
CARTERET COUNTY
STATION: 46+21.50 -L-

SHEET 1 OF 2

STATE OF NORTH CAROLINA
DEPARTMENT OF TRANSPORTATION
RALEIGH

SUPERSTRUCTURE

POST-TENSION GIRDER NOTES

NORTH CAROLINA PROFESSIONAL SEAL 25911 ENGINEER DWAIN G. HATHWAY 4-3-12

NORTH CAROLINA PROFESSIONAL SEAL 033752 ENGINEER SETH A. DENNEY 4/4/12

THE LPA GROUP of North Carolina TRANSPORTATION CONSULTANTS

THE LPA GROUP of North Carolina
8000 Regency Parkway, Suite 600
Cary, North Carolina 27518
NC License No.: F-1084

REVISIONS								SHEET NO.
NO.	BY:	DATE:	NO.	BY:	DATE:			S-140
1			3					TOTAL SHEETS
2			4					333

DRAWN BY : M. D. MAYHEW DATE : 9-1-11
CHECKED BY : S. A. DENNEY DATE : 9-13-11

DWG. 141 OF 282

4/2/2012 12:42:23 PM
User: jaustin
Filename: Y:\Projects\NCDOT\R-3307\Dwgs\Final\R-3307_141_S0_PT_NT1.dgn

POST-TENSIONING OPERATIONS

1. THE POST-TENSIONING OPERATION SHALL BE PERFORMED ACCORDING TO THE REQUIREMENTS OF THE POST-TENSIONING TENDONS SPECIAL PROVISION AND TO THE "POST-TENSIONING TENDON INSTALLATION AND GROUTING MANUAL" PUBLISHED BY THE FEDERAL HIGHWAY ADMINISTRATION.

2. THE PERSON IN RESPONSIBLE CHARGE OF THE POST-TENSIONING OPERATION SHALL MEET THE QUALIFICATIONS DESCRIBED IN THE "POST-TENSIONING TENDON INSTALLATION AND GROUTING MANUAL" PUBLISHED BY THE FEDERAL HIGHWAY ADMINISTRATION. DOCUMENTATION OF THIS EXPERIENCE SHALL BE SUBMITTED TO THE ENGINEER FOR APPROVAL.

3. A MEETING BETWEEN THE CONTRACTOR, POST-TENSIONING SUPPLIER, NCDOT REPRESENTATIVES AND THE ENGINEER OF RECORD SHALL BE SCHEDULED AT LEAST (30) DAYS PRIOR TO POST-TENSIONING OPERATIONS TO REVIEW THE MEANS AND METHODS OF POST-TENSIONING, DUCT SPLICING AND TESTING TENDON GROUTING AND ALL ASSOCIATED FIELD ACTIVITIES. COMPLETE DETAILS OF THE POST-TENSIONING SYSTEM, TENDON STRESSING DETAILS, STRESSING SEQUENCES, CALCULATED EXTENSIONS OF EACH JACK, FRICTION COEFFICIENT, AND ANCHOR SET LOSSES SHALL BE REVIEWED. TEMPORARY SUPPORT PLATFORM REQUIREMENTS AND DETAILS SHALL BE REVIEWED AT THIS TIME.

4. THE CONTRACTOR SHALL NOT STRESS ANY POST-TENSIONING TENDONS UNTIL THE ENGINEER IS SATISFIED THAT THE REQUIREMENTS STATED IN THE SPECIAL PROVISIONS AND THE GUIDELINES OF THE "POST-TENSION TENDON INSTALLATION AND GROUTING MANUAL" HAVE BEEN MET.

5. STRESSING OF POST-TENSIONING TENDONS FOR SPAN P-R SHALL BE ACCOMPLISHED FOR EACH TENDON USING AN ALTERNATING SYMMETRICAL PATTERN ACROSS THE ROADWAY, BEGINNING AT THE CENTER GIRDER AND WORKING OUTWARD ALTERNATING SIDES.

6. FOR FIRST STAGE POST-TENSIONING, TENDON 4 SHALL BE STRESSED IN ALL GIRDERS ACROSS THE WIDTH OF THE BRIDGE AT BOTH ENDS PRIOR TO STRESSING TENDON 3 IN EACH GIRDER. FOR SECOND STAGE POST-TENSIONING, TENDON 2 SHALL BE STRESSED IN ALL GIRDERS ACROSS THE WIDTH OF THE BRIDGE AT BOTH ENDS PRIOR TO STRESSING TENDON 1 IN EACH GIRDER.

7. ALL TENDONS SHALL BE STRESSED FROM BOTH ENDS.

8. IT IS THE CONTRACTOR'S RESPONSIBLITY TO MAINTAIN THE INTEGRITY OF THE POST-TENSIONING STRANDS. STRANDS SHALL BE PROTECTED AND HANDLED WITH CARE TO PREVENT DAMAGE OR RUST DURING STORAGE, INSTALLATION, AND PLACEMENT OF GROUT.

TENDON GROUTING

1. GROUTING OF POST-TENSIONING TENDONS SHALL BE PERFORMED ACCORDING TO THE REQUIREMENTS OF THE POST-TENSIONING TENDONS SPECIAL PROVISION AND TO THE "POST-TENSIONING TENDON INSTALLATION AND GROUTING MANUAL " PUBLISHED BY THE FEDERAL HIGHWAY ADMINISTRATION.

2. THE PERSON IN RESPONSIBLE CHARGE OF THE GROUTING OPERATION SHALL MEET THE QUALIFICATIONS DESCRIBED IN THE "POST-TENSIONING TENDON INSTALLATION AND GROUTING MANUAL " PUBLISHED BY THE FEDERAL HIGHWAY ADMINISTRATION. DOCUMENTATION OF EXPERIENCE SHALL BE SUBMITTED TO THE ENGINEER FOR APPROVAL.

3. A MEETING BETWEEN THE CONTRACTOR, POST-TENSION SUPPLIER, NCDOT REPRESENTATIVES AND THE ENGINEER OF RECORD SHALL BE SCHEDULED AT LEAST THIRTY (30) DAYS PRIOR TO THE FIRST GROUTING OPERATIONS. AT THE MEETING, THE GROUTING OPERATION, REQUIRED TESTING, CORRECTIVE PROCEDURES AND ANY OTHER RELEVANT ISSUES SHALL BE DISCUSSED.

4. AFTER TENDONS HAVE BEEN STRESSED, DUCTS SHALL BE GROUTED. GROUTING OF POST-TENSIONING TENDONS SHALL BE COMPLETED AS SOON AS POSSIBLE AFTER TENSIONING, SEE POST-TENSIONING TENDON SPECIAL PROVISION.

5. TO THE MAXIMUM EXTENT POSSIBLE, GROUT SHALL BE PUMPED FROM THE LOW POINTS IN THE TENDON PROFILE AND VENTED AT THE HIGH POINTS IN THE TENDON PROFILE.

6. AFTER TENDONS ARE GROUTED, ANCHORAGES AND DUCTS SHALL BE INSPECTED TO DETERMINE IF THEY HAVE BEEN COMPLETELY FILLED WITH GROUT.

APPROXIMATE GROUT QUANTITIES:

DUCT 1:	35.8 FT3
DUCT 2:	35.8 FT3
DUCT 3:	35.8 FT3
DUCT 4:	35.8 FT3

QUANTITIES SHOWN ARE BASED ON DUCTS WITH LENGTHS OF 727'-8 1/8", 727'-7 3/8", 727'-6 7/8", AND 727'-6 9/16", RESPECTIVELY, HAVING AN INSIDE DIAMETER OF 3.63" AND EACH TENDON CONTAINING 15-0.6"Ø STRANDS.

THE QUANTITIES SHOWN ARE INTENDED TO ASSIST THE CONTRACTOR AND ENGINEER IN DETERMINING THE AMOUNT OF GROUT NEEDED TO COMPLETELY FILL THE POST-TENSIONING DUCT.

PAYMENT

THE COST OF MATERIALS AND INSTALLATION OF POST-TENSIONING TENDONS, WEDGES, ANCHOR DEVICES GROUTING OF TENDONS, EPOXY GROUT POUR-BACKS, AND INCIDENTAL ITEMS RELATED TO POST-TENSIONING SHALL BE INCLUDED IN THE LUMP SUM PRICE BID FOR "POST-TENSIONING TENDONS".

THE COST OF ALL CONCRETE, REINFORCING STEEL, PRESTRESSING STRANDS, POST-TENSION MATERIALS EMBEDDED IN THE CONCRETE, INSERTS EMBEDDED IN THE CONCRETE, BEARING PLATE ASSEMBLIES, ANCHOR DEVICES, TEMPORARY BRACING AND INCIDENTAL ITEMS SHALL BE INCLUDED IN THE CONTRACT UNIT PRICE FOR "78" POST-TENSIONED CONCRETE GIRDERS".

EPOXY GROUT POUR-BACK FOR POST-TENSIONING ANCHORAGES

AFTER TENDONS HAVE BEEN STRESSED, GROUTED AND INSPECTED, POST-TENSIONING ANCHORAGES SHALL BE ENCAPSULATED IN AN EPOXY GROUT POUR-BACK USING THE FOLLOWING PROCEDURE:

1. CONCRETE SURFACES OF RECESSES AT POST-TENSIONING ANCHORAGES SHALL BE CLEANED AND ROUGHENED PRIOR TO CASTING POUR-BACKS.

2. ENCAPSULATE ANCHORAGE AND PERMANENT GROUT CAP WITH A POUR-BACK OF AN APPROVED, HIGH-STRENGTH, HIGH-BOND, LOW-SHRINKAGE, SAND-FILLED EPOXY GROUT. SEE POST-TENSIONING TENDON SPECIAL PROVISION. FILL ANCHORAGE RECESS TO MATCH ADJACENT SURFACES OF CONCRETE GIRDER, PROVIDING A MINIMUM COVER OF 1.5 INCHES OVER ANCHORAGE AND PERMANENT GROUT CAPS.

3. FILL DRAIN PIPES FOR ANCHORAGE RECESSES IN TOP OF GIRDERS USING EPOXY GROUT.

4. COMPLETELY ENCASE TENDONS 1 THROUGH 4 BY PLACING END DIAPHRAGM CONCRETE.

5. THE PAYMENT OF EPOXY GROUT POUR-BACK SHALL BE INCLUDED IN THE LUMP SUM PRICE BID FOR "POST-TENSIONING TENDONS".

PROJECT NO. R-3307
CARTERET COUNTY
STATION: 46+21.50 -L-

SHEET 2 OF 2

STATE OF NORTH CAROLINA
DEPARTMENT OF TRANSPORTATION
RALEIGH
SUPERSTRUCTURE

POST-TENSION
GIRDER NOTES

NORTH CAROLINA PROFESSIONAL SEAL 25911 ENGINEER DWAIN G. HATHAWAY 4-3-2012

NORTH CAROLINA PROFESSIONAL SEAL 033752 ENGINEER SETH A. DENNEY 4/06/12

THE LPA GROUP of North Carolina TRANSPORTATION CONSULTANTS

THE LPA GROUP of North Carolina
8000 Regency Parkway, Suite 600
Cary, North Carolina 27518
NC License No.: F-1084

REVISIONS								SHEET NO.
NO.	BY:	DATE:	NO.	BY:	DATE:			S-141
1			3					TOTAL SHEETS
2			4					333

DRAWN BY : M. D. MAYHEW DATE : 9-1-11
CHECKED BY : S. A. DENNEY DATE : 9-13-11

DWG. 142 OF 282

4/2/2012
12:42:[illegible] PM
User: jaustin
Filename: Y:\Projects\NCDOT\R-3307\Dwgs\Final\R-3307_142_SD_PT_NT2.dgn

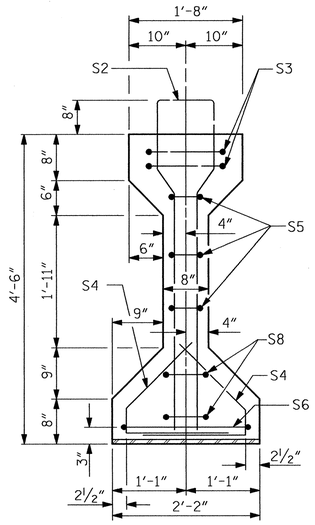

SECTION A-A

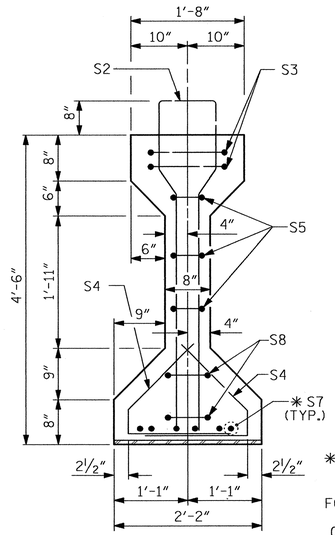

SECTION B-B

✱FOR S7 BARS, SEE DETAIL "A" ON "GIRDER DETAILS FOR AASHTO TYPE IV PRESTRESSED CONCRETE GIRDERS" SHEET 1 OF 2.

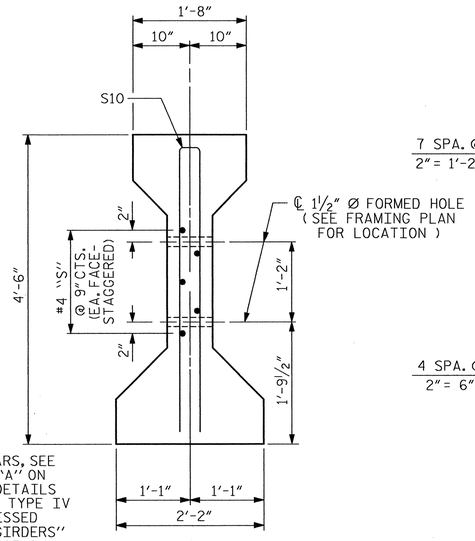

SECTION C-C

(S1 BARS NOT SHOWN)

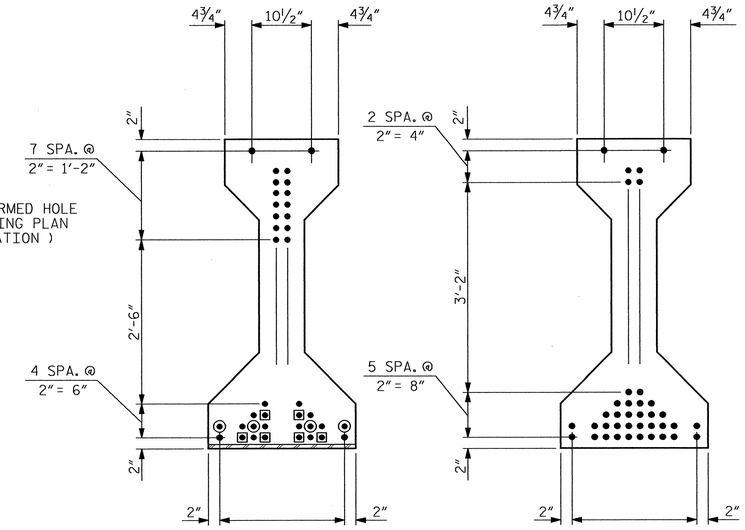

AT END OF GIRDER

AT ℄ OF GIRDER

0.6" Ø LOW RELAXATION STRAND LAYOUT

NOTE: EXPANSION END MAY BE BEVELED. SEE FRAMING PLAN SHEET 15 OF 15.

PLACE S2 BARS PARALLEL TO BEAM ENDS IF BEVELED.

NOTE: FOR DIMENSIONS A,B,C,D, S1 BAR SPACING AND QUANTITIES, AND TOTAL BILL OF MATERIALS, SEE SHEET 3 OF 4 AND 4 OF 4.

DEBONDING LEGEND

SEE STANDARD SPECIFICATIONS ARTICLE 1078-13.

- ● FULLY BONDED STRAND
- ⊙ STRANDS DEBONDED FOR 4'-0" FROM END OF GIRDER
- ▣ STRANDS DEBONDED FOR 2'-0" FROM END OF GIRDER

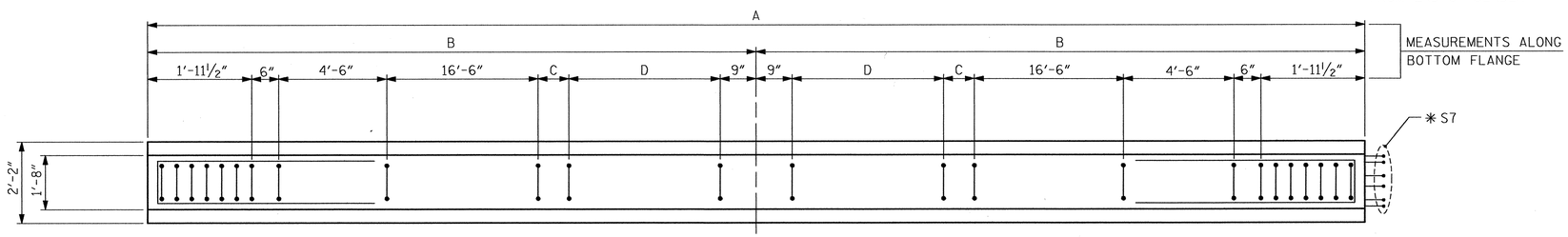

PLAN OF GIRDER

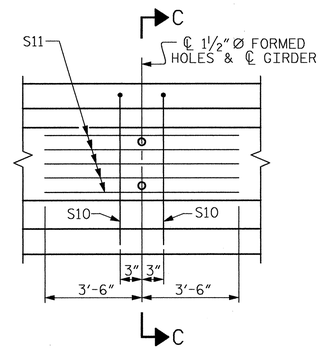

PARTIAL ELEVATION

SHOWING INTERMEDIATE DIAPHRAGM REINFORCING STEEL

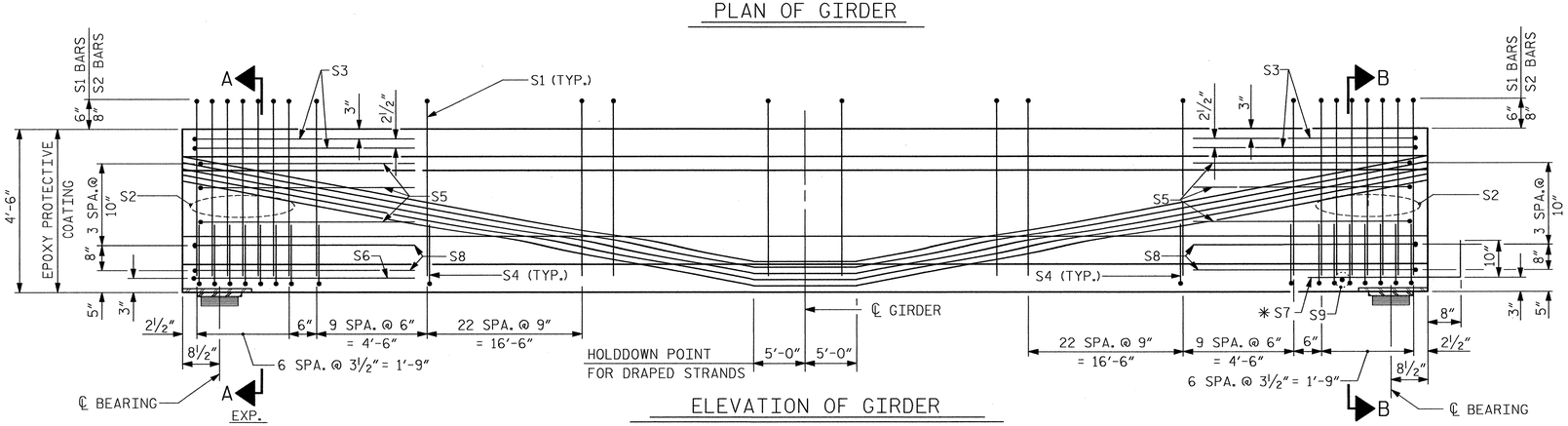

ELEVATION OF GIRDER

(SEE PARTIAL ELEVATION FOR ADDITIONAL "S" BARS)

NOTE: THE UPLIFT FORCE DUE TO DRAPED STRANDS IS 37.5 k.

0.6" Ø L. R. GRADE 270 STRANDS

AREA (SQUARE INCHES)	ULTIMATE STRENGTH (LBS. PER STRAND)	APPLIED PRESTRESS (LBS. PER STRAND)
0.217	58,600	43,950

REINFORCING STEEL FOR ONE GIRDER

BAR	NUMBER	SIZE	TYPE	LENGTH	WEIGHT
S1	✱✱	#4	1	10'-8"	✱✱
S2	14	#6	1	10'-8"	224
S3	4	#4	2	9'-1"	24
S4	68	#4	3	3'-5"	155
S5	6	#4	2	8'-5"	34
S6	1	#4	2	9'-11"	7
✱ S7	6	#5	STR	3'-8"	23
S8	4	#4	2	8'-7"	23
S9	1	#3	STR	1'-10"	1
S10	2	#5	2	8'-8"	18
S11	5	#4	STR	7'-0"	23

✱NOTE: S7 BARS SHALL BE BENT BEFORE SHIPMENT. HEAT BENDING SHALL NOT BE ALLOWED.

✱✱ SEE BILL OF MATERIALS CHART

BAR TYPES

ALL BAR DIMENSIONS ARE OUT-TO-OUT

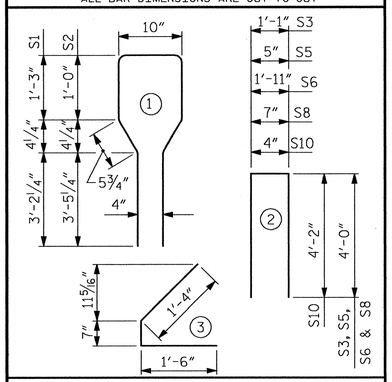

QUANTITIES FOR ONE GIRDER

	REINFORCING STEEL LB.	8000 PSI CONCRETE C.Y.	0.6" Ø L.R. STRANDS No.
	SEE BILL OF MATERIALS CHART.		

GIRDERS REQUIRED

NUMBER	LENGTH	TOTAL LENGTH
SEE BILL OF MATERIALS CHART.		

PROJECT NO. R-3307

CARTERET COUNTY

STATION: 46+21.50 -L-

SHEET 1 OF 4

STATE OF NORTH CAROLINA
DEPARTMENT OF TRANSPORTATION
RALEIGH

SUPERSTRUCTURE

AASHTO TYPE IV PRESTRESSED CONCRETE GIRDER

END SPANS (EXP. - FIX)
SPANS S,U,V,X,Y & AA-CC

NORTH CAROLINA PROFESSIONAL SEAL 12323 ENGINEER MORRIS ISRAELNAIM 3/30/2012

NORTH CAROLINA PROFESSIONAL SEAL 027799 ENGINEER ALLYSON K. ORR 3/30/2012

MI ENGINEERING
1011 SHAUB DRIVE, SUITE 100
RALEIGH, NC 27606
(919) 851-6606
FIRM PE NUMBER : P-0671

REVISIONS						
NO.	BY:	DATE:	NO.	BY:	DATE:	
1			3			
2			4			

SHEET NO. S-142

TOTAL SHEETS 333

ASSEMBLED BY : J.S. ISRAELNAIM DATE : 7-11
CHECKED BY : A.K. ORR DATE : 10-11

DRAWN BY : ELR 8/91
CHECKED BY : GRP 8/91

REV. 10/17/00R RWW/LES
REV. 5/1/06R TLA/GM
REV. 10/1/11 MAA/GM

DWG. 143 OF 282

STD. NO. PCG6

3/26/2012 2:22:33 PM
User: blanning
Filename: P:\NC Projects\MI0005 - Gallants Channel\R-3307\Structures\R-3307_143_SD_PCG4.dgn

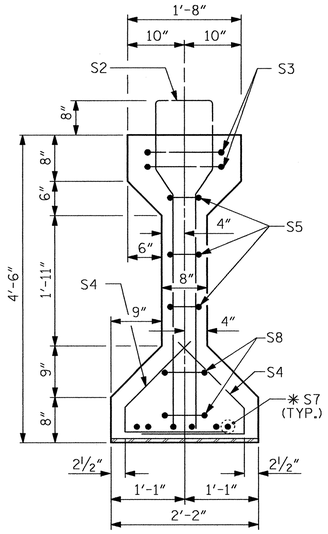

SECTION B-B

✱FOR S7 BARS, SEE DETAIL "A" ON "GIRDER DETAILS FOR AASHTO TYPE IV PRESTRESSED CONCRETE GIRDERS" SHEET 1 OF 2.

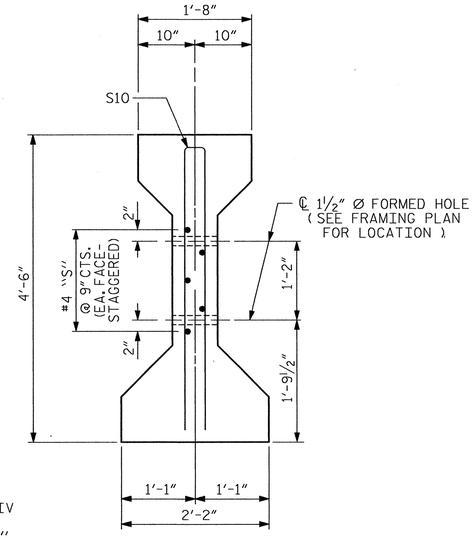

SECTION C-C

(S1 BARS NOT SHOWN)

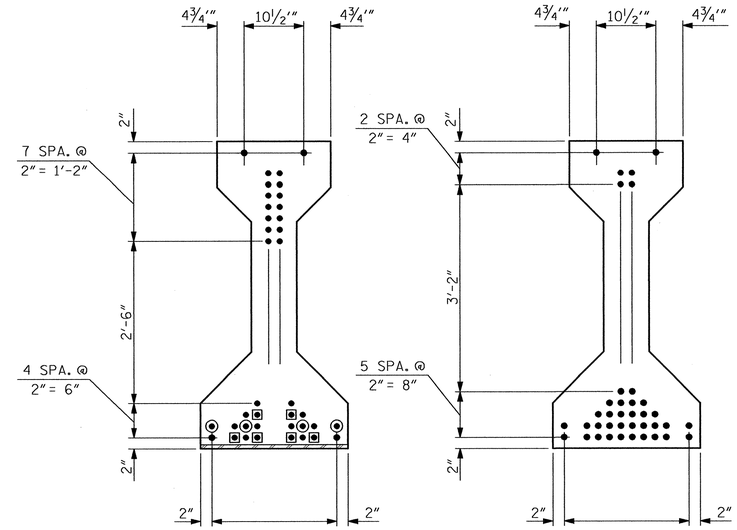

AT END OF GIRDER

AT ℄ OF GIRDER

0.6" Ø LOW RELAXATION STRAND LAYOUT

DEBONDING LEGEND

SEE STANDARD SPECIFICATIONS ARTICLE 1078-13.

- ● FULLY BONDED STRAND
- ◉ STRANDS DEBONDED FOR 4'-0" FROM END OF GIRDER
- ▣ STRANDS DEBONDED FOR 2'-0" FROM END OF GIRDER

NOTE: FOR DIMENSIONS E,F,G,H, S1 BAR SPACING AND QUANTITIES, AND TOTAL BILL OF MATERIALS, SEE SHEET 3 OF 4 AND AND 4 OF 4.

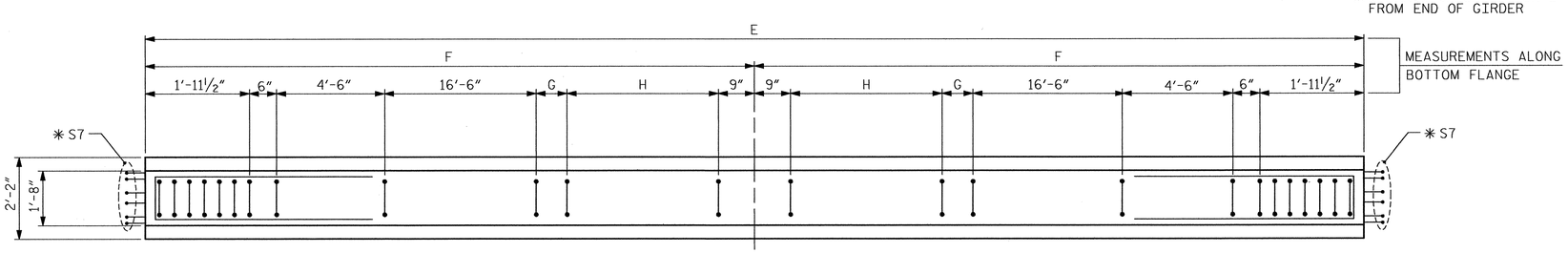

PLAN OF GIRDER

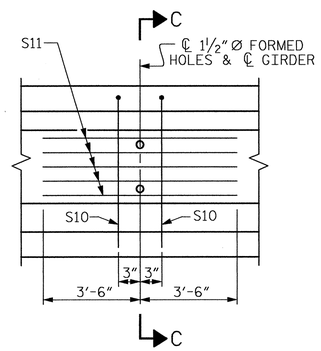

PARTIAL ELEVATION

SHOWING INTERMEDIATE DIAPHRAGM REINFORCING STEEL

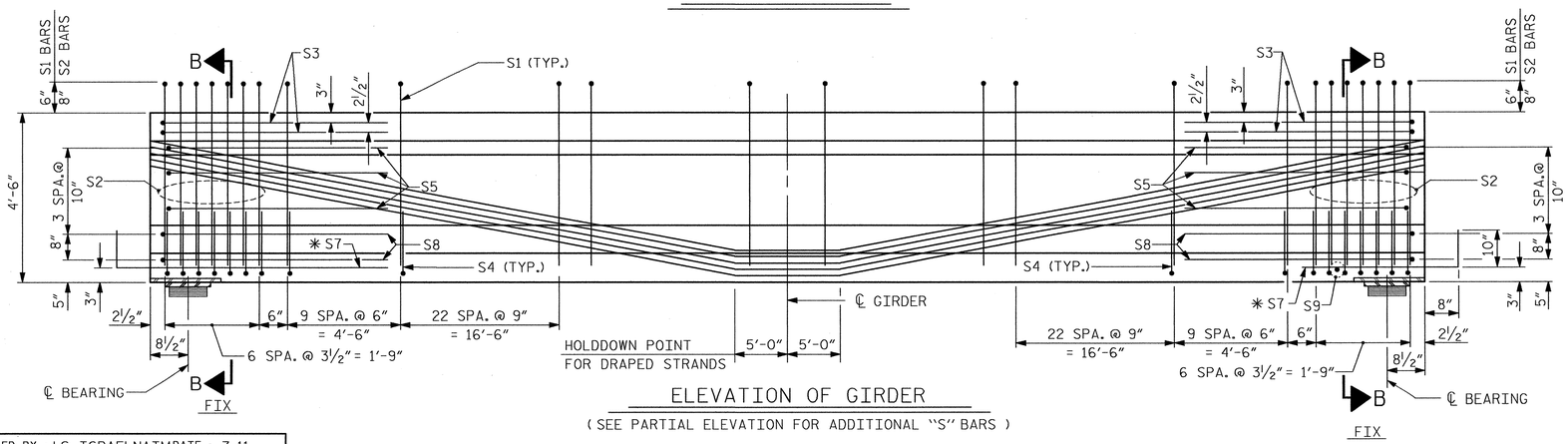

ELEVATION OF GIRDER

(SEE PARTIAL ELEVATION FOR ADDITIONAL "S" BARS)

NOTE: THE UPLIFT FORCE DUE TO DRAPED STRANDS IS 37.5 k.

0.6" Ø L. R. GRADE 270 STRANDS

AREA (SQUARE INCHES)	ULTIMATE STRENGTH (LBS. PER STRAND)	APPLIED PRESTRESS (LBS. PER STRAND)
0.217	58,600	43,950

REINFORCING STEEL FOR ONE GIRDER

BAR	NUMBER	SIZE	TYPE	LENGTH	WEIGHT
S1	✱✱	#4	1	10'-8"	✱✱
S2	14	#6	1	10'-8"	224
S3	4	#4	2	9'-1"	24
S4	68	#4	3	3'-5"	155
S5	6	#4	2	8'-5"	34
✱ S7	12	#5	STR	3'-8"	46
S8	4	#4	2	8'-7"	23
S9	1	#3	STR	1'-10"	1
S10	2	#5	2	8'-8"	18
S11	5	#4	STR	7'-0"	23

✱ NOTE: S7 BARS SHALL BE BENT BEFORE SHIPMENT. HEAT BENDING SHALL NOT BE ALLOWED.

✱✱ SEE BILL OF MATERIALS CHART

BAR TYPES

ALL BAR DIMENSIONS ARE OUT-TO-OUT

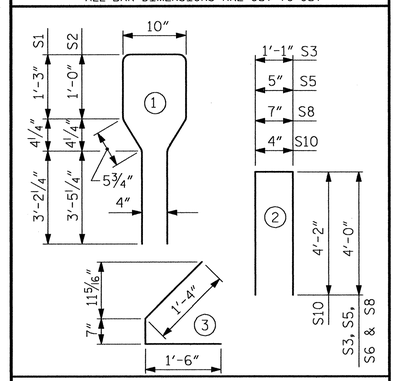

QUANTITIES FOR ONE GIRDER

	REINFORCING STEEL LB.	8000 PSI CONCRETE C.Y.	0.6" Ø L. R. STRANDS No.
	SEE BILL OF MATERIALS CHART.		

GIRDERS REQUIRED

NUMBER	LENGTH	TOTAL LENGTH
SEE BILL OF MATERIALS CHART.		

PROJECT NO. R-3307

CARTERET COUNTY

STATION: 46+21.50 -L-

SHEET 2 OF 4

STATE OF NORTH CAROLINA
DEPARTMENT OF TRANSPORTATION
RALEIGH

SUPERSTRUCTURE

AASHTO TYPE IV PRESTRESSED CONCRETE GIRDER

INTERIOR SPANS (FIX - FIX) SPANS T,W & Z

NORTH CAROLINA PROFESSIONAL SEAL 12323 ENGINEER MORRIS ISRAELNAIM 3/30/2012

NORTH CAROLINA PROFESSIONAL SEAL 027799 ENGINEER ALLYSON K. ORR 3/30/2012

MI ENGINEERING
1011 SHAUB DRIVE, SUITE 100
RALEIGH, NC 27606
(919) 851-6606
FIRM PE NUMBER : P-0671

REVISIONS						
NO.	BY:	DATE:	NO.	BY:	DATE:	
1			3			
2			4			

SHEET NO. S-143

TOTAL SHEETS 333

ASSEMBLED BY : J.S. ISRAELNAIM DATE : 7-11
CHECKED BY : A.K. ORR DATE : 10-11

DRAWN BY : ELR 8/91
CHECKED BY : GRP 8/91

REV. 10/17/00R RWW/LES
REV. 5/1/06R TLA/GM
REV. 10/1/11 MAA/GM

DWG. 144 OF 282

STD. NO. PCG6

3/26/2012 2:22:48 PM
User: blanning
Filename: P:\NC Projects\M10005 - Gallants Channel\R-3307\Structures\R-3307_144_SD_PCG5.dgn

VARIABLE DIMENSIONS - UNIT 9 SPAN S					BILL OF MATERIALS (EACH GIRDER) - UNIT 9 SPAN S						
					S1 BARS						
GIRDER	A	B	C	D	NUMBER	WEIGHT (LBS.)	TOTAL REINF. (LBS.)	8000 PSI CONC. (C.Y.)	0.6"Ø L.R. STRANDS	NO. OF GIRDERS REQ'D.	GIRDER LENGTH (FT.)
SG1	87'-6 3/8"	43'-9 3/16"	1'-6 11/16"	12 SPA. @ 1'-6" = 18'-0"	90	641	1173	17.76	38	1	87.53
SG2	86'-8 7/16"	43'-4 1/4"	1'-1 3/4"	12 SPA. @ 1'-6" = 18'-0"	90	641	1173	17.60	38	1	86.70
SG3	85'-10 1/2"	42'-11 1/4"	8 3/4"	12 SPA. @ 1'-6" = 18'-0"	90	641	1173	17.43	38	1	85.88
SG4	85'-0 9/16"	42'-6 5/16"	1'-9 13/16"	11 SPA. @ 1'-6" = 16'-6"	88	627	1159	17.26	38	1	85.05
SG5	84'-2 5/8"	42'-1 5/16"	1'-4 13/16"	11 SPA. @ 1'-6" = 16'-6"	88	627	1159	17.09	38	1	84.22
SG6	83'-4 11/16"	41'-8 5/16"	11 13/16"	11 SPA. @ 1'-6" = 16'-6"	88	627	1159	16.92	38	1	83.39
SG7	82'-6 3/4"	41'-3 3/8"	6 7/8"	11 SPA. @ 1'-6" = 16'-6"	88	627	1159	16.75	38	1	82.56
SG8	81'-8 13/16"	40'-10 3/8"	1'-7 7/8"	10 SPA. @ 1'-6" = 15'-0"	86	612	1144	16.59	38	1	81.73
SG9	80'-11 13/16"	40'-5 7/8"	1'-3 3/8"	10 SPA. @ 1'-6" = 15'-0"	86	612	1144	16.43	38	1	80.98
					TOTAL FOR SPAN S		10443	153.83		9	758.04

VARIABLE DIMENSIONS - UNIT 9 SPAN T					BILL OF MATERIALS (EACH GIRDER) - UNIT 9 SPAN T						
					S1 BARS						
GIRDER	E	F	G	H	NUMBER	WEIGHT (LBS.)	TOTAL REINF. (LBS.)	8000 PSI CONC. (C.Y.)	0.6"Ø L.R. STRANDS	NO. OF GIRDERS REQ'D.	GIRDER LENGTH (FT.)
TG1	87'-7 1/16"	43'-9 9/16"	1'-7 1/16"	12 SPA. @ 1'-6" = 18'-0"	90	641	1189	17.77	38	1	87.59
TG2	86'-8 15/16"	43'-4 7/16"	1'-1 15/16"	12 SPA. @ 1'-6" = 18'-0"	90	641	1189	17.60	38	1	86.74
TG3	85'-10 3/4"	42'-11 3/8"	8 7/8"	12 SPA. @ 1'-6" = 18'-0"	90	641	1189	17.43	38	1	85.89
TG4	85'-0 9/16"	42'-6 5/16"	1'-9 13/16"	11 SPA. @ 1'-6" = 16'-6"	88	627	1175	17.26	38	1	85.05
TG5	84'-2 3/8"	42'-1 3/16"	1'-4 11/16"	11 SPA. @ 1'-6" = 16'-6"	88	627	1175	17.09	38	1	84.20
TG6	83'-4 1/4"	41'-8 1/8"	11 5/8"	11 SPA. @ 1'-6" = 16'-6"	88	627	1175	16.91	38	1	83.35
TG7	82'-6 1/16"	41'-3"	6 1/2"	11 SPA. @ 1'-6" = 16'-6"	88	627	1175	16.74	38	1	82.50
TG8	81'-7 7/8"	40'-9 15/16"	1'-7 7/16"	10 SPA. @ 1'-6" = 15'-0"	86	612	1160	16.57	38	1	81.66
TG9	80'-10 11/16"	40'-5 9/16"	1'-2 13/16"	10 SPA. @ 1'-6" = 15'-0"	86	612	1160	16.41	38	1	80.89
					TOTAL FOR SPAN T		10587	153.80		9	757.87

VARIABLE DIMENSIONS - UNIT 9 SPAN U					BILL OF MATERIALS (EACH GIRDER) - UNIT 9 SPAN U						
					S1 BARS						
GIRDER	A	B	C	D	NUMBER	WEIGHT (LBS.)	TOTAL REINF. (LBS.)	8000 PSI CONC. (C.Y.)	0.6"Ø L.R. STRANDS	NO. OF GIRDERS REQ'D.	GIRDER LENGTH (FT.)
UG1	87'-7 3/8"	43'-9 11/16"	1'-7 3/16"	12 SPA. @ 1'-6" = 18'-0"	90	641	1173	17.78	38	1	87.61
UG2	86'-9 3/16"	43'-4 5/8"	1'-2 1/8"	12 SPA. @ 1'-6" = 18'-0"	90	641	1173	17.61	38	1	86.77
UG3	85'-11"	42'-11 1/2"	9"	12 SPA. @ 1'-6" = 18'-0"	90	641	1173	17.44	38	1	85.92
UG4	85'-0 7/8"	42'-6 7/16"	1'-9 15/16"	11 SPA. @ 1'-6" = 16'-6"	88	627	1159	17.26	38	1	85.07
UG5	84'-2 11/16"	42'-1 5/16"	1'-4 13/16"	11 SPA. @ 1'-6" = 16'-6"	88	627	1159	17.09	38	1	84.22
UG6	83'-4 1/2"	41'-8 1/4"	11 3/4"	11 SPA. @ 1'-6" = 16'-6"	88	627	1159	16.92	38	1	83.38
UG7	82'-6 5/16"	41'-3 3/16"	6 11/16"	11 SPA. @ 1'-6" = 16'-6"	88	627	1159	16.75	38	1	82.53
UG8	81'-8 3/16"	40'-10 1/16"	1'-7 9/16"	10 SPA. @ 1'-6" = 15'-0"	86	612	1144	16.58	38	1	81.68
UG9	80'-10 15/16"	40'-5 1/2"	1'-3"	10 SPA. @ 1'-6" = 15'-0"	86	612	1144	16.42	38	1	80.91
					TOTAL FOR SPAN U		10443	153.84		9	758.09

VARIABLE DIMENSIONS - UNIT 10 SPAN V					BILL OF MATERIALS (EACH GIRDER) - UNIT 10 SPAN V						
					S1 BARS						
GIRDER	A	B	C	D	NUMBER	WEIGHT (LBS.)	TOTAL REINF. (LBS.)	8000 PSI CONC. (C.Y.)	0.6"Ø L.R. STRANDS	NO. OF GIRDERS REQ'D.	GIRDER LENGTH (FT.)
VG1	87'-7 11/16"	43'-9 13/16"	1'-7 5/16"	12 SPA. @ 1'-6" = 18'-0"	90	641	1173	17.79	38	1	87.64
VG2	86'-9 1/2"	43'-4 3/4"	1'-2 1/4"	12 SPA. @ 1'-6" = 18'-0"	90	641	1173	17.61	38	1	86.79
VG3	85'-11 3/8"	42'-11 11/16"	9 3/16"	12 SPA. @ 1'-6" = 18'-0"	90	641	1173	17.44	38	1	85.95
VG4	85'-1 3/16"	42'-6 9/16"	1'-10 1/16"	11 SPA. @ 1'-6" = 16'-6"	88	627	1159	17.27	38	1	85.10
VG5	84'-3"	42'-1 1/2"	1'-5"	11 SPA. @ 1'-6" = 16'-6"	88	627	1159	17.10	38	1	84.25
VG6	83'-4 7/8"	41'-8 7/16"	11 15/16"	11 SPA. @ 1'-6" = 16'-6"	88	627	1159	16.93	38	1	83.40
VG7	82'-6 11/16"	41'-3 5/16"	6 13/16"	11 SPA. @ 1'-6" = 16'-6"	88	627	1159	16.75	38	1	82.56
VG8	81'-8 1/2"	40'-10 1/4"	1'-7 3/4"	10 SPA. @ 1'-6" = 15'-0"	86	612	1144	16.58	38	1	81.71
VG9	80'-11 5/16"	40'-5 5/8"	1'-3 1/8"	10 SPA. @ 1'-6" = 15'-0"	86	612	1144	16.43	38	1	80.94
					TOTAL FOR SPAN V		10443	153.89		9	758.34

VARIABLE DIMENSIONS - UNIT 10 SPAN W					BILL OF MATERIALS (EACH GIRDER) - UNIT 10 SPAN W						
					S1 BARS						
GIRDER	E	F	G	H	NUMBER	WEIGHT (LBS.)	TOTAL REINF. (LBS.)	8000 PSI CONC. (C.Y.)	0.6"Ø L.R. STRANDS	NO. OF GIRDERS REQ'D.	GIRDER LENGTH (FT.)
WG1	87'-8"	43'-10"	1'-7 1/2"	12 SPA. @ 1'-6" = 18'-0"	90	641	1189	17.79	38	1	87.67
WG2	86'-9 7/8"	43'-4 15/16"	1'-2 7/16"	12 SPA. @ 1'-6" = 18'-0"	90	641	1189	17.62	38	1	86.82
WG3	85'-11 11/16"	42'-11 13/16"	9 5/16"	12 SPA. @ 1'-6" = 18'-0"	90	641	1189	17.45	38	1	85.97
WG4	85'-1 1/2"	42'-6 3/4"	1'-10 1/4"	11 SPA. @ 1'-6" = 16'-6"	88	627	1175	17.27	38	1	85.13
WG5	84'-3 3/8"	42'-1 11/16"	1'-5 3/16"	11 SPA. @ 1'-6" = 16'-6"	88	627	1175	17.10	38	1	84.28
WG6	83'-5 3/16"	41'-8 5/8"	1'-0 1/8"	11 SPA. @ 1'-6" = 16'-6"	88	627	1175	16.93	38	1	83.43
WG7	82'-7"	41'-3 1/2"	7"	11 SPA. @ 1'-6" = 16'-6"	88	627	1175	16.76	38	1	82.59
WG8	81'-8 7/8"	40'-10 7/16"	1'-7 15/16"	10 SPA. @ 1'-6" = 15'-0"	86	612	1160	16.59	38	1	81.74
WG9	80'-11 11/16"	40'-5 13/16"	1'-3 5/16"	10 SPA. @ 1'-6" = 15'-0"	86	612	1160	16.43	38	1	80.97
					TOTAL FOR SPAN W		10587	153.94		9	758.60

VARIABLE DIMENSIONS - UNIT 10 SPAN X					BILL OF MATERIALS (EACH GIRDER) - UNIT 10 SPAN X						
					S1 BARS						
GIRDER	A	B	C	D	NUMBER	WEIGHT (LBS.)	TOTAL REINF. (LBS.)	8000 PSI CONC. (C.Y.)	0.6"Ø L.R. STRANDS	NO. OF GIRDERS REQ'D.	GIRDER LENGTH (FT.)
XG1	87'-8 1/16"	43'-10 1/16"	1'-7 9/16"	12 SPA. @ 1'-6" = 18'-0"	90	641	1173	17.79	38	1	87.67
XG2	86'-9 7/8"	43'-4 15/16"	1'-2 7/16"	12 SPA. @ 1'-6" = 18'-0"	90	641	1173	17.62	38	1	86.83
XG3	85'-11 3/4"	42'-11 7/8"	9 3/8"	12 SPA. @ 1'-6" = 18'-0"	90	641	1173	17.45	38	1	85.98
XG4	85'-1 9/16"	42'-6 13/16"	1'-10 5/16"	11 SPA. @ 1'-6" = 16'-6"	88	627	1159	17.28	38	1	85.13
XG5	84'-3 7/16"	42'-1 11/16"	1'-5 3/16"	11 SPA. @ 1'-6" = 16'-6"	88	627	1159	17.10	38	1	84.28
XG6	83'-5 1/4"	41'-8 5/8"	1'-0 1/8"	11 SPA. @ 1'-6" = 16'-6"	88	627	1159	16.93	38	1	83.44
XG7	82'-7 1/16"	41'-3 9/16"	7 1/16"	11 SPA. @ 1'-6" = 16'-6"	88	627	1159	16.76	38	1	82.59
XG8	81'-8 15/16"	40'-10 7/16"	1'-7 15/16"	10 SPA. @ 1'-6" = 15'-0"	86	612	1144	16.59	38	1	81.74
XG9	80'-11 11/16"	40'-5 7/8"	1'-3 3/8"	10 SPA. @ 1'-6" = 15'-0"	86	612	1144	16.43	38	1	80.98
					TOTAL FOR SPAN X		10443	153.95		9	758.64

PROJECT NO. R-3307

CARTERET COUNTY

STATION: 46+21.50 -L-

SHEET 3 OF 4

STATE OF NORTH CAROLINA
DEPARTMENT OF TRANSPORTATION
RALEIGH

SUPERSTRUCTURE

AASHTO TYPE IV PRESTRESSED CONCRETE GIRDER

DIMENSION CHARTS
SPANS S-X

NORTH CAROLINA PROFESSIONAL SEAL 12323 ENGINEER MORRIS ISRAELNAM
3/29/2012

NORTH CAROLINA PROFESSIONAL SEAL 027799 ENGINEER ALLYSON K. ORR
3/30/2012

MI ENGINEERING
1011 SHAUB DRIVE, SUITE 100
RALEIGH, NC 27606
(919) 851-6606
FIRM PE NUMBER : P-0671

REVISIONS								
NO.	BY:	DATE:	NO.	BY:	DATE:			
1			3					
2			4					

SHEET NO. S-144

TOTAL SHEETS 333

DRAWN BY : B.E. LANNING DATE : 10-11
CHECKED BY : A.K. ORR DATE : 10-11

DWG. 145 OF 282

3/26/2012
2:23:03 PM
User: planning
Filename: P:\NC Projects\MI0005 - Gallants Channel\R-3307\Structures\R-3307_I45_SD_PCG6.dgn

VARIABLE DIMENSIONS - UNIT 11 SPAN Y					BILL OF MATERIALS (EACH GIRDER) - UNIT 11 SPAN Y						
					S1 BARS						
GIRDER	A	B	C	D	NUMBER	WEIGHT (LBS.)	TOTAL REINF. (LBS.)	8000 PSI CONC. (C.Y.)	0.6"Ø L.R. STRANDS	NO. OF GIRDERS REQ'D.	GIRDER LENGTH (FT.)
YG1	87'-8 1/16"	43'-10 1/16"	1'-7 9/16"	12 SPA. @ 1'-6" = 18'-0"	90	641	1173	17.79	38	1	87.67
YG2	86'-9 7/8"	43'-4 15/16"	1'-2 7/16"	12 SPA. @ 1'-6" = 18'-0"	90	641	1173	17.62	38	1	86.83
YG3	85'-11 3/4"	42'-11 7/8"	9 3/8"	12 SPA. @ 1'-6" = 18'-0"	90	641	1173	17.45	38	1	85.98
YG4	85'-1 9/16"	42'-6 13/16"	1'-10 5/16"	11 SPA. @ 1'-6" = 16'-6"	88	627	1159	17.28	38	1	85.13
YG5	84'-3 7/16"	42'-1 11/16"	1'-5 3/16"	11 SPA. @ 1'-6" = 16'-6"	88	627	1159	17.10	38	1	84.28
YG6	83'-5 1/4"	41'-8 5/8"	1'-0 1/8"	11 SPA. @ 1'-6" = 16'-6"	88	627	1159	16.93	38	1	83.44
YG7	82'-7 1/16"	41'-3 9/16"	7 1/16"	11 SPA. @ 1'-6" = 16'-6"	88	627	1159	16.76	38	1	82.59
YG8	81'-8 15/16"	40'-10 7/16"	1'-7 15/16"	10 SPA. @ 1'-6" = 15'-0"	86	612	1144	16.59	38	1	81.74
YG9	80'-11 11/16"	40'-5 7/8"	1'-3 3/8"	10 SPA. @ 1'-6" = 15'-0"	86	612	1144	16.43	38	1	80.98
					TOTAL FOR SPAN Y		10443	153.95		9	758.64

VARIABLE DIMENSIONS - UNIT 11 SPAN Z					BILL OF MATERIALS (EACH GIRDER) - UNIT 11 SPAN Z						
					S1 BARS						
GIRDER	E	F	G	H	NUMBER	WEIGHT (LBS.)	TOTAL REINF. (LBS.)	8000 PSI CONC. (C.Y.)	0.6"Ø L.R. STRANDS	NO. OF GIRDERS REQ'D.	GIRDER LENGTH (FT.)
ZG1	87'-8 1/16"	43'-10 1/16"	1'-7 9/16"	12 SPA. @ 1'-6" = 18'-0"	90	641	1189	17.79	38	1	87.67
ZG2	86'-9 7/8"	43'-4 15/16"	1'-2 7/16"	12 SPA. @ 1'-6" = 18'-0"	90	641	1189	17.62	38	1	86.83
ZG3	85'-11 3/4"	42'-11 7/8"	9 3/8"	12 SPA. @ 1'-6" = 18'-0"	90	641	1189	17.45	38	1	85.98
ZG4	85'-1 9/16"	42'-6 13/16"	1'-10 5/16"	11 SPA. @ 1'-6" = 16'-6"	88	627	1175	17.28	38	1	85.13
ZG5	84'-3 7/16"	42'-1 11/16"	1'-5 3/16"	11 SPA. @ 1'-6" = 16'-6"	88	627	1175	17.10	38	1	84.28
ZG6	83'-5 1/4"	41'-8 5/8"	1'-0 1/8"	11 SPA. @ 1'-6" = 16'-6"	88	627	1175	16.93	38	1	83.44
ZG7	82'-7 1/16"	41'-3 9/16"	7 1/16"	11 SPA. @ 1'-6" = 16'-6"	88	627	1175	16.76	38	1	82.59
ZG8	81'-8 15/16"	40'-10 7/16"	1'-7 15/16"	10 SPA. @ 1'-6" = 15'-0"	86	612	1160	16.59	38	1	81.74
ZG9	80'-11 11/16"	40'-5 7/8"	1'-3 3/8"	10 SPA. @ 1'-6" = 15'-0"	86	612	1160	16.43	38	1	80.98
					TOTAL FOR SPAN Z		10587	153.95		9	758.64

VARIABLE DIMENSIONS - UNIT 11 SPAN AA					BILL OF MATERIALS (EACH GIRDER) - UNIT 11 SPAN AA						
					S1 BARS						
GIRDER	A	B	C	D	NUMBER	WEIGHT (LBS.)	TOTAL REINF. (LBS.)	8000 PSI CONC. (C.Y.)	0.6"Ø L.R. STRANDS	NO. OF GIRDERS REQ'D.	GIRDER LENGTH (FT.)
AAG1	87'-8"	43'-10"	1'-7 1/2"	12 SPA. @ 1'-6" = 18'-0"	90	641	1173	17.79	38	1	87.67
AAG2	86'-9 7/8"	43'-4 15/16"	1'-2 7/16"	12 SPA. @ 1'-6" = 18'-0"	90	641	1173	17.62	38	1	86.82
AAG3	85'-11 11/16"	42'-11 13/16"	9 5/16"	12 SPA. @ 1'-6" = 18'-0"	90	641	1173	17.45	38	1	85.97
AAG4	85'-1 1/2"	42'-6 3/4"	1'-10 1/4"	11 SPA. @ 1'-6" = 16'-6"	88	627	1159	17.27	38	1	85.13
AAG5	84'-3 3/8"	42'-1 11/16"	1'-5 3/16"	11 SPA. @ 1'-6" = 16'-6"	88	627	1159	17.10	38	1	84.28
AAG6	83'-5 3/16"	41'-8 5/8"	1'-0 1/8"	11 SPA. @ 1'-6" = 16'-6"	88	627	1159	16.93	38	1	83.43
AAG7	82'-7 1/16"	41'-3 1/2"	7"	11 SPA. @ 1'-6" = 16'-6"	88	627	1159	16.76	38	1	82.59
AAG8	81'-8 7/8"	40'-10 7/16"	1'-7 15/16"	10 SPA. @ 1'-6" = 15'-0"	86	612	1144	16.59	38	1	81.74
AAG9	80'-11 11/16"	40'-5 13/16"	1'-3 5/16"	10 SPA. @ 1'-6" = 15'-0"	86	612	1144	16.43	38	1	80.97
					TOTAL FOR SPAN AA		10443	153.94		9	758.60

VARIABLE DIMENSIONS - UNIT 12 SPAN BB					BILL OF MATERIALS (EACH GIRDER) - UNIT 12 SPAN BB						
					S1 BARS						
GIRDER	A	B	C	D	NUMBER	WEIGHT (LBS.)	TOTAL REINF. (LBS.)	8000 PSI CONC. (C.Y.)	0.6"Ø L.R. STRANDS	NO. OF GIRDERS REQ'D.	GIRDER LENGTH (FT.)
BBG1	87'-8 1/8"	43'-10 1/16"	1'-7 9/16"	12 SPA. @ 1'-6" = 18'-0"	90	641	1173	17.79	38	1	87.68
BBG2	86'-9 13/16"	43'-4 15/16"	1'-2 7/16"	12 SPA. @ 1'-6" = 18'-0"	90	641	1173	17.62	38	1	86.82
BBG3	85'-11 9/16"	42'-11 13/16"	9 5/16"	12 SPA. @ 1'-6" = 18'-0"	90	641	1173	17.45	38	1	85.97
BBG4	85'-1 5/16"	42'-6 11/16"	1'-10 3/16"	11 SPA. @ 1'-6" = 16'-6"	88	627	1159	17.27	38	1	85.11
BBG5	84'-3 1/16"	42'-1 9/16"	1'-5 1/16"	11 SPA. @ 1'-6" = 16'-6"	88	627	1159	17.10	38	1	84.26
BBG6	83'-4 13/16"	41'-8 7/16"	11 5/16"	11 SPA. @ 1'-6" = 16'-6"	88	627	1159	16.92	38	1	83.40
BBG7	82'-6 9/16"	41'-3 5/16"	6 13/16"	11 SPA. @ 1'-6" = 16'-6"	88	627	1159	16.75	38	1	82.55
BBG8	81'-8 5/16"	40'-10 3/16"	1'-7 11/16"	10 SPA. @ 1'-6" = 15'-0"	86	612	1144	16.58	38	1	81.69
BBG9	80'-10 1/16"	40'-5 1/16"	1'-2 9/16"	10 SPA. @ 1'-6" = 15'-0"	86	612	1144	16.42	38	1	80.92
					TOTAL FOR SPAN BB		10443	153.90		9	758.40

VARIABLE DIMENSIONS - UNIT 12 SPAN CC					BILL OF MATERIALS (EACH GIRDER) - UNIT 12 SPAN CC						
					S1 BARS						
GIRDER	A	B	C	D	NUMBER	WEIGHT (LBS.)	TOTAL REINF. (LBS.)	8000 PSI CONC. (C.Y.)	0.6"Ø L.R. STRANDS	NO. OF GIRDERS REQ'D.	GIRDER LENGTH (FT.)
CCG1	85'-1 1/8"	42'-6 9/16"	1'-10 1/16"	11 SPA. @ 1'-6" = 16'-6"	88	627	1159	17.27	38	1	85.09
CCG2	84'-6 11/16"	42'-3 3/8"	1'-6 7/8"	11 SPA. @ 1'-6" = 16'-6"	88	627	1159	17.16	38	1	84.56
CCG3	84'-0 5/16"	42'-0 1/8"	1'-3 5/8"	11 SPA. @ 1'-6" = 16'-6"	88	627	1159	17.05	38	1	84.02
CCG4	83'-5 7/8"	41'-8 15/16"	1'-0 7/16"	11 SPA. @ 1'-6" = 16'-6"	88	627	1159	16.94	38	1	83.49
CCG5	82'-11 7/16"	41'-5 3/4"	9 1/4"	11 SPA. @ 1'-6" = 16'-6"	88	627	1159	16.83	38	1	82.95
CCG6	82'-5 1/16"	41'-2 1/2"	6"	11 SPA. @ 1'-6" = 16'-6"	88	627	1159	16.73	38	1	82.42
CCG7	81'-10 5/8"	40'-11 5/16"	1'-8 13/16"	10 SPA. @ 1'-6" = 15'-0"	86	612	1144	16.62	38	1	81.89
CCG8	81'-4 3/16"	40'-8 1/8"	1'-5 5/8"	10 SPA. @ 1'-6" = 15'-0"	86	612	1144	16.51	38	1	81.35
CCG9	80'-9 13/16"	40'-4 7/8"	1'-2 3/8"	10 SPA. @ 1'-6" = 15'-0"	86	612	1144	16.41	38	1	80.87
					TOTAL FOR SPAN CC		10386	151.52		9	746.64

PROJECT NO. R-3307

CARTERET COUNTY

STATION: 46+21.50 -L-

SHEET 4 OF 4

STATE OF NORTH CAROLINA
DEPARTMENT OF TRANSPORTATION
RALEIGH

SUPERSTRUCTURE

AASHTO TYPE IV PRESTRESSED CONCRETE GIRDER

DIMENSION CHARTS
SPANS Y-CC

NORTH CAROLINA PROFESSIONAL SEAL 12323 ENGINEER MORRIS ISRAELNAIM
3/30/2012

NORTH CAROLINA PROFESSIONAL SEAL 027799 ENGINEER ALLYSON K. ORR
3/30/2012

MI ENGINEERING
1011 SHAUB DRIVE, SUITE 100
RALEIGH, NC 27606
(919) 851-6606
FIRM PE NUMBER : P-0671

REVISIONS						
NO.	BY:	DATE:	NO.	BY:	DATE:	
1			3			
2			4			

SHEET NO. 8-145

TOTAL SHEETS 333

DRAWN BY : B.E. LANNING DATE : 10-11
CHECKED BY : A.K. ORR DATE : 10-11

DWG. 146 OF 282

3/26/2012 12:23:29 PM
User:blanning
Filename: P:\NC Projects\M10005 - Gallants Channel\R-3307\Structures\R-3307_146_SD_PCG7.dgn

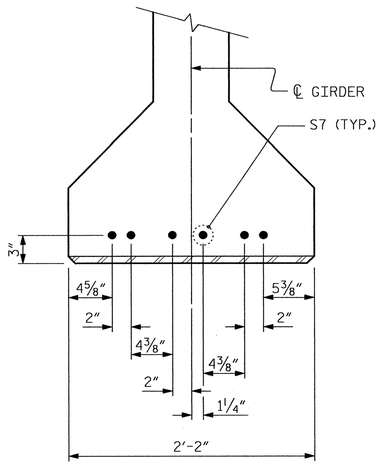

DETAIL "A"

(FOR AASHTO TYPE IV GIRDERS)

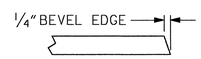

SECTION "G"

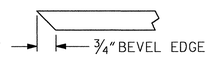

SECTION "F"

(SEE NOTES)

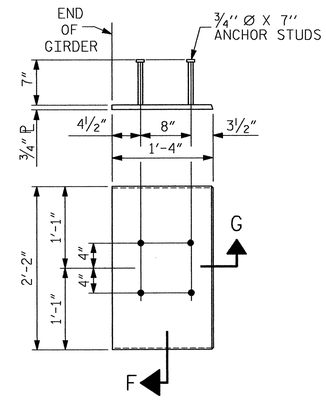

EMBEDDED PLATE "B-1" DETAILS FOR AASHTO TYPE IV GIRDER

(2 REQ'D. PER GIRDER)

NOTES

ALL PRESTRESSING STRANDS SHALL BE 7-WIRE LOW-RELAXATION GRADE 270 STRANDS AND SHALL CONFORM TO AASHTO M203 EXCEPT FOR SAMPLING REQUIREMENTS WHICH SHALL BE IN ACCORDANCE WITH THE STANDARD SPECIFICATIONS.

ALL REINFORCING STEEL SHALL BE GRADE 60.

APPLY EPOXY PROTECTIVE COATING TO END OF GIRDER SURFACES INDICATED IN ELEVATION VIEW.

EMBEDDED PLATE "B-1" SHALL BE GALVANIZED IN ACCORDANCE WITH THE STANDARD SPECIFICATIONS. BEVEL EDGES OF PLATE "B-1" TO GIVE CLOSE FIT BUT NOT TIGHT FIT TO STEEL CASTING FORM.

ANCHOR STUDS SHALL CONFORM TO AASHTO M169 GRADES 1010 THROUGH 1020 OR APPROVED EQUAL, AND SHALL MEET THE TYPE "B" REQUIREMENTS OF SUBSECTION 7.3 OF THE ANSI/AASHTO/AWS D1.5 BRIDGE WELDING CODE.

AT ENDS OF GIRDERS TO BE EMBEDDED IN CONCRETE DIAPHRAGMS OR END WALLS, PRESTRESSING STRANDS MAY EXTEND A MAXIMUM OF 2" BEYOND THE GIRDER ENDS. OTHERWISE, PRESTRESSING STRANDS SHALL BE CUT FLUSH WITH THE GIRDER ENDS.

THE TRANSFER OF LOAD FROM THE ANCHORAGES TO THE GIRDER SHALL BE DONE WHEN CONCRETE HAS REACHED A COMPRESSIVE STRENGTH OF NOT LESS THAN 6000 PSI.

DEPENDING ON THE TYPE OF SYSTEM USED TO SUPPORT THE DECK SLAB FORMS, PRESET ANCHORS MAY BE NECESSARY IN THE PRESTRESSED CONCRETE GIRDER.

THE TOP SURFACE OF THE GIRDER, EXCLUDING THE OUTSIDE 4", SHALL BE RAKED TO A DEPTH OF 1/4".

WHEN DRAPED STRANDS ARE DETAILED, THE LONGITUDINAL LOCATION OF THE HOLD DOWN DEVICES SHALL BE WITHIN 6" OF THE LOCATION SHOWN AND THE CENTER OF GRAVITY OF THE GROUP OF DRAPED STRANDS SHALL BE LOCATED WITHIN 1/2" OF THE THEORETICAL LOCATION SHOWN.

THE CONTRACTOR HAS THE OPTION TO PROVIDE, AT NO ADDITIONAL COST TO THE DEPARTMENT, 2 ADDITIONAL STRANDS AT THE TOP OF THE GIRDER TO FACILITATE TYING OF THE REINFORCING STEEL. THESE STRANDS SHALL BE PULLED TO A LOAD OF 4500 lbs.

PRESTRESSED CONCRETE GIRDERS ARE DESIGNED FOR 0 PSI TENSION IN THE PRECOMPRESSED TENSILE ZONE UNDER ALL LOADING CONDITIONS.

PRESTRESSED CONCRETE GIRDERS SHALL CONTAIN CALCIUM NITRATE CORROSION INHIBITOR.

THE COST OF ALL CONCRETE, REINFORCING STEEL, PRESTRESSED STRANDS, INSERTS EMBEDDED IN THE CONCRETE, EMBEDDED PLATES, TEMPORARY BRACING AND INCIDENTIAL ITEMS SHALL BE INCLUDED IN THE CONTRACT UNIT PRICE FOR PRESTRESSED CONCRETE GIRDERS.

PRIOR TO CASTING THE GIRDERS, THE CONTRACTOR SHALL SUBMIT COMPLETE WORKING DRAWINGS WITH THE EXACT LOCATION, AND COMPLETE DESCRIPTION OF ALL INSERTS CAST IN THE GIRDERS, TO THE DEPARTMENT FOR APPROVAL. SUCH INSERTS INCLUDE BUT ARE NOT LIMITED TO, INSERTS FOR SUPPORTING FALSEWORK AND FORMWORK, INSERTS FOR ATTACHING DIAPHRAGMS, INSERTS FOR CONNECTING TEMPORARY BRACING, AND LIFTING INSERTS.

PROJECT NO. R-3307

CARTERET COUNTY

STATION: 46+21.50 -L-

SHEET 1 OF 2

STATE OF NORTH CAROLINA
DEPARTMENT OF TRANSPORTATION
RALEIGH

SUPERSTRUCTURE

GIRDER DETAILS

AASHTO TYPE IV
PRESTRESSED CONCRETE GIRDERS

NORTH CAROLINA PROFESSIONAL SEAL 12323 ENGINEER MORRIS ISRAELNAIM 3/30/2012

NORTH CAROLINA PROFESSIONAL SEAL 027799 ENGINEER ALLYSON K. ORR 3/30/2012

MI ENGINEERING
1011 SHAUB DRIVE, SUITE 100
RALEIGH, NC 27606
(919) 851-6606
FIRM PE NUMBER : P-0671

REVISIONS								SHEET NO.
NO.	BY:	DATE:	NO.	BY:	DATE:			S-14c
1			3					TOTAL SHEETS
2			4					333

DRAWN BY : B.E. LANNING DATE : 10-11
CHECKED BY : A.K. ORR DATE : 10-11

DWG. 147 OF 282

3/26/2012
2:23:48 PM
User: blanning
Filename: P:\NC Projects\MI0005 - Gallants Channel\R-3307\Structures\R-3307_147_SD_PCGB.dgn

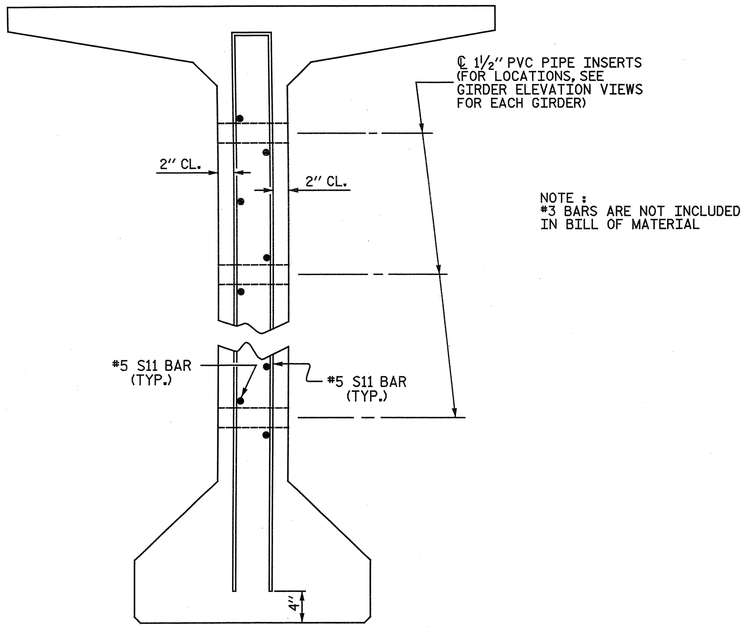

NOTE :
#3 BARS ARE NOT INCLUDED
IN BILL OF MATERIAL

INTERIOR GIRDER ONLY

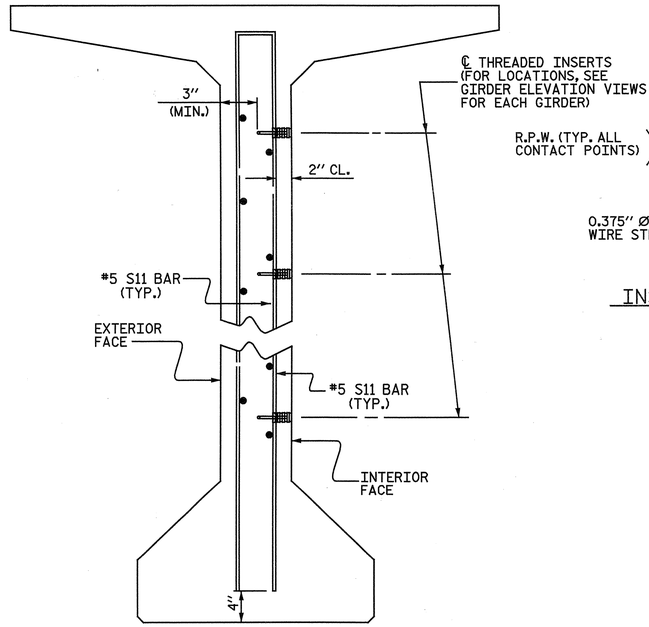

EXTERIOR GIRDER ONLY

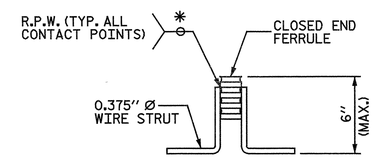

INSERT ELEVATION

NOTES

FOR STRUCTURAL CONCRETE INSERT FOR STEEL DIAPHRAGMS

THE STRUCTURAL CONCRETE INSERT ASSEMBLY FOR STEEL DIAPHRAGMS SHALL CONSIST OF THE FOLLOWING :

A. FERRULES SHALL BE MADE FROM STEEL MEETING THE REQUIREMENTS OF AASHTO M169, GRADE 12L14 AND SHALL HAVE A MINIMUM LENGTH OF THREADS OF 1½".

B. 1-⅞"Ø × 1⅝" OR 1- 1"Ø × 2¼" BOLT WITH WASHER. BOLT SHALL CONFORM TO THE REQUIREMENTS OF ASTM A307. BOLT AND WASHER SHALL BE GALVANIZED.

C. WIRE STRUT SHOWN IN THE CONCRETE INSERT ASSEMBLY DETAIL IS THE MINIMUM ALLOWABLE SIZE AND SHALL HAVE A MINIMUM TENSILE STRENGTH OF 100,000 PSI. AS AN OPTION, A 7/16"Ø WIRE STRUT WITH A MINIMUM TENSILE STRENGTH OF 90,000 PSI IS ACCEPTABLE.

D. IT IS THE CONTRACTOR'S RESPONSIBLITY TO ENSURE HIGH STRENGTH BOLTS AND FERRULES HAVE MATCHING THREAD TYPES AND PROVIDE A PROPER FIT UP.

NOTES

FOR STRUCTURAL CONCRETE INSERT FOR CONCRETE DIAPHRAGM REBARS

THE STRUCTURAL CONCRETE INSERT ASSEMBLY FOR CONCRETE DIAPHRAGM REBARS SHALL CONSIST OF THE FOLLOWING :

A. FERRULES SHALL BE MADE FROM STEEL MEETING THE REQUIREMENTS OF AASHTO M169, GRADE 12L14 AND SHALL HAVE A MINIMUM LENGTH OF THREADS OF 1½".

B. WIRE STRUT SHOWN IN THE CONCRETE INSERT ASSEMBLY DETAIL IS THE MINIMUM ALLOWABLE SIZE AND SHALL HAVE A MINIMUM TENSILE STRENGTH OF 100,000 PSI. AS AN OPTION, A 7/16"Ø WIRE STRUT WITH A MINIMUM TENSILE STRENGTH OF 90,000 PSI IS ACCEPTABLE.

C. ALL MECHANICAL SPLICERS SHALL BE POSITIVE LOCKING TAPER TYPE WITH A MINIMUM TENSILE STRENGTH OF 125 PERCENT OF SPECIFIED YIELD OF REINFORCEMENT STEEL CONFORMING TO ASTM A-615M GRADE 50.

D. REBAR ENDS SHALL BE MACHINED USING THE MANUFACTURERS BAR THREADER TO ENSURE PROPER THREADING. THE BARS SHALL BE TIGHTENED TO THE MANUFACTURERS RECOMMENDED WRENCH SETTING.

E. DETAILS SHOWING MECHANICAL SPLICERS AND THEIR LOCATIONS SHALL BE SHOWN ON THE SHOP DRAWINGS AND SHALL BE APPROVED BY THE ENGINEER PRIOR TO CASTING THE GIRDER.

THE COST OF THE THREADED INSERTS AND PVC PIPE INSERTS SHALL BE INCLUDED IN THE VARIOUS PAY ITEMS.

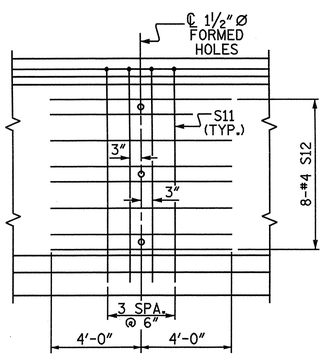

PARTIAL ELEVATION

SHOWING INTERMEDIATE STEEL DIAPHRAGM
REINFORCING STEEL FOR GIRDER Nos. 2 THRU 8

PVC PIPE INSERT DETAILS

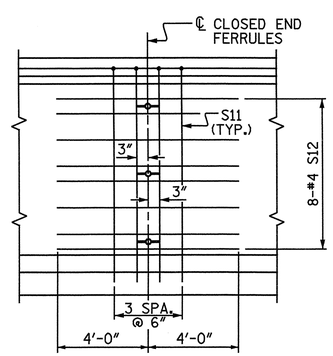

PARTIAL ELEVATION

SHOWING INTERMEDIATE STEEL DIAPHRAGM
REINFORCING STEEL FOR GIRDER Nos. 1 & 9

THREADED INSERT DETAILS

PROJECT NO. R-3307
CARTERET COUNTY
STATION: 46+21.50 -L-

SHEET 2 OF 2

STATE OF NORTH CAROLINA
DEPARTMENT OF TRANSPORTATION
RALEIGH

SUPERSTRUCTURE

GIRDER DETAILS

78" PRESTRESSED CONCRETE
BULB TEE

NORTH CAROLINA PROFESSIONAL SEAL 25911 ENGINEER DWAIN C. HATHWAY 4-3-2012

NORTH CAROLINA PROFESSIONAL SEAL 033752 ENGINEER SETH A. DENNEY 4/03/12

THE LPA GROUP of North Carolina
TRANSPORTATION CONSULTANTS

THE LPA GROUP of North Carolina
8000 Regency Parkway, Suite 600
Cary, North Carolina 27518
NC License No.: F-1084

REVISIONS							
NO.	BY:	DATE:	NO.	BY:	DATE:	SHEET NO.	S-147
1			3			TOTAL SHEETS	333
2			4				

DRAWN BY : M. D. MAYHEW DATE : 9-1-11
CHECKED BY : S. A. DENNEY DATE : 9-13-11

DWG. 148 OF 282

4/2/2012
12:42:
PM
User: jaustin
Filename: Y:\Projects\NCDOT\R-3307\Dwgs\Final\R-3307_148_SD_MBT_Det.dgn

TABLE

GIRDER TYPE	CHANNEL SIZE	DIM "A"	DIM "B"	DIM "L"
IV	MC 18 x 42.7	1'-9½"	1'-2"	1'-6"

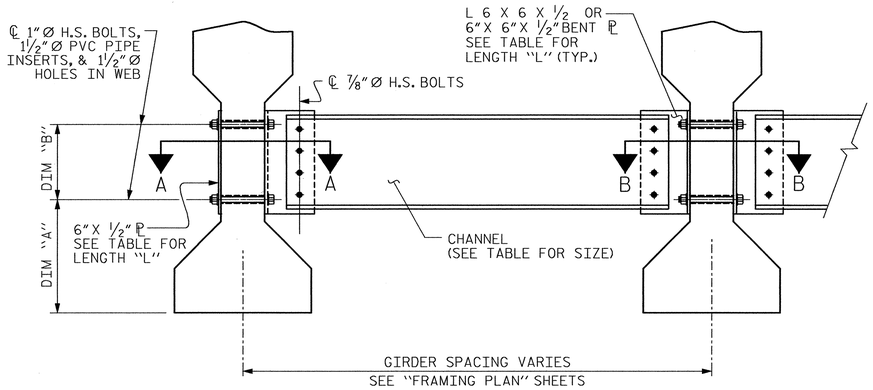

EXTERIOR GIRDER INTERIOR GIRDER

PART SECTION AT INTERMEDIATE DIAPHRAGM

(TYPICAL - UNLESS OTHERWISE NOTED)
(NO INTERMEDIATE DIAPHRAGM REQUIRED IN BAY 5 OF SPANS A-E AND IN BAY 4 OF SPANS S-CC)

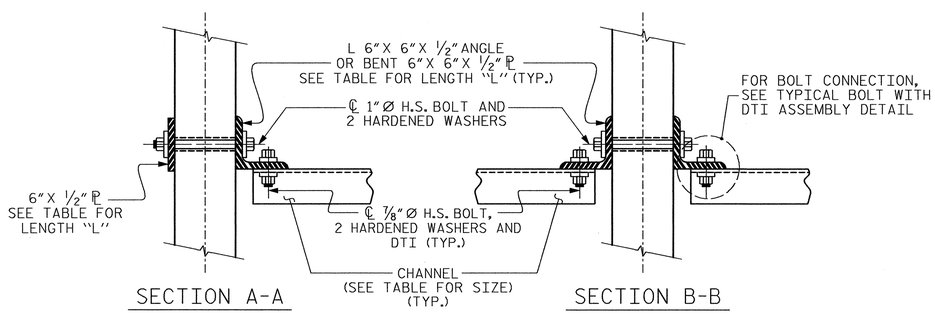

SECTION A-A SECTION B-B

CONNECTION DETAILS

(FOR LOCATION OF INTERMEDIATE DIAPHRAGMS, SEE "FRAMING PLAN" SHEETS.)

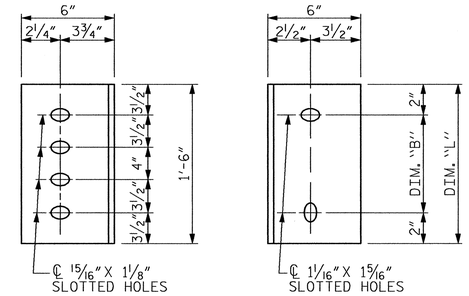

DIAPHRAGM FACE WEB FACE

CONNECTOR PLATE DETAILS

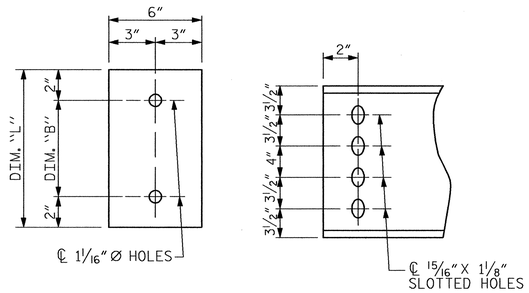

PLATE DETAILS CHANNEL END

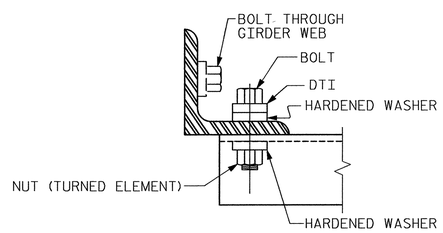

BOLT WITH DTI ASSEMBLY DETAIL

STRUCTURAL STEEL NOTES

ALL INTERMEDIATE DIAPHRAGM STEEL AND CONNECTOR PLATES SHALL BE AASHTO M270 GRADE 50 OR APPROVED EQUAL.

TENSION ON THE ASTM A325 BOLTS THROUGH THE CHANNEL MEMBER SHALL BE CALIBRATED USING DIRECT TENSION INDICATOR WASHERS IN ACCORDANCE WITH THE STANDARD SPECIFICATIONS.

TENSION ON THE ASTM A449 BOLTS THROUGH THE GIRDER WEB SHALL BE SNUG TIGHTENED FOLLOWED BY AN ADDITIONAL ¼ TURN.

THE PLATES, BENT PLATES, CHANNELS, AND ANGLES SHALL BE GALVANIZED OR METALLIZED IN ACCORDANCE WITH THE STANDARD SPECIFICATIONS. FOR THERMAL SPRAYED COATINGS (METALLIZATION), SEE SPECIAL PROVISIONS.

GALVANIZE THE HIGH STRENGTH BOLTS, NUTS, WASHERS AND DIRECT TENSION INDICATORS IN ACCORDANCE WITH THE STANDARD SPECIFICATIONS.

USE AN ASTM F436 HARDENED WASHER WITH STANDARD AND SLOTTED HOLES UNDER EACH BOLT HEAD AND NUT.

FOR BOLTS THROUGH THE GIRDER WEB, PROVIDE SUFFICIENT LENGTH OF THREADS ON ALL BOLTS TO ACCOMMODATE WASHERS AND THE THICKNESS OF CONNECTING MEMBER PLUS AT LEAST ¼" PROJECTION BEYOND THE NUT.

INTERMEDIATE DIAPHRAGM ASSEMBLY SHALL COMPLY WITH SECTION 1072 OF THE STANDARD SPECIFICATIONS.

SUBMIT TWO SETS OF WORKING DRAWINGS FOR THE INTERMEDIATE DIAPHRAGM ASSEMBLY FOR REVIEW, COMMENTS AND ACCEPTANCE. AFTER REVIEW, COMMENTS, AND ACCEPTANCE, SUBMIT SEVEN SETS FOR DISTRIBUTION.

IN THE EXTERIOR BAYS, PLACE TEMPORARY STRUTS BETWEEN PRESTRESSED GIRDERS ADJACENT TO THE STEEL DIAPHRAGMS. STRUTS SHALL REMAIN IN PLACE 3 DAYS AFTER CONCRETE IS PLACED.

THE COST OF THE STEEL DIAPHRAGMS AND ASSEMBLIES SHALL BE INCLUDED IN THE UNIT PRICE BID FOR PRESTRESSED CONCRETE GIRDERS.

FOR METALLIZATION, APPLY AN 8 MIL THICK 99.50 PERCENT 1350 ALUMINUM (W-A1-1350) THERMAL SPRAYED COATING WITH 0.5 MIL THICK SEAL COAT TO ALL PLATES, BENT PLATES, CHANNELS, ANGLES, AND PLATE WASHERS IN ACCORDANCE WITH THE THERMAL SPRAYED COATINGS SPECIAL PROVISIONS AND SECTION 442 OF THE STANDARD SPECIFICATIONS.

APPLY 1 COAT EACH OF 1080-12 BROWN AND 1080-12 GRAY PAINT ON THE EDGES AND THE WEB FACE OF THE CONNECTOR PLATE WHICH COMES IN CONTACT WITH THE CONCRETE GIRDER IN ACCORDANCE WITH SECTION 442 OF THE STANDARD SPECIFICATIONS.

PROJECT NO. R-3307
CARTERET COUNTY
STATION: 46+21.50 -L-

SHEET 1 OF 3

STATE OF NORTH CAROLINA
DEPARTMENT OF TRANSPORTATION
RALEIGH
SUPERSTRUCTURE

INTERMEDIATE STEEL DIAPHRAGMS

SPANS A-E & S-CC

NORTH CAROLINA PROFESSIONAL SEAL 12323 ENGINEER MORRIS ISRAELNAIM 3/30/2012

NORTH CAROLINA PROFESSIONAL SEAL 027799 ENGINEER ALLYSON K. ORR 3/30/2012

MI ENGINEERING
1011 SHAUB DRIVE, SUITE 100
RALEIGH, NC 27606
(919) 851-6606
FIRM PE NUMBER : P-0671

REVISIONS							
NO.	BY:	DATE:	NO.	BY:	DATE:		
1			3				
2			4				

SHEET NO. S-148
TOTAL SHEETS 333

DWG. 149 OF 282

STD. NO. PCG12

ASSEMBLED BY : J.S. ISRAELNAIM	DATE : 8-11
CHECKED BY : B.E. ATKINSON	DATE : 9-11
DRAWN BY : TLA 6/05	ADDED 10/21/05
CHECKED BY : VC 6/05	REV. 5/1/06RRR KMM/GM
	REV. 10/1/11 MAA/GM

3/30/2012
11:28:44 AM
User: blanning
Filename: P:\NC Projects\MI0005 - Gallants Channel\R-3307\Structures\R-3307_149_SD_PCG0x.dgn

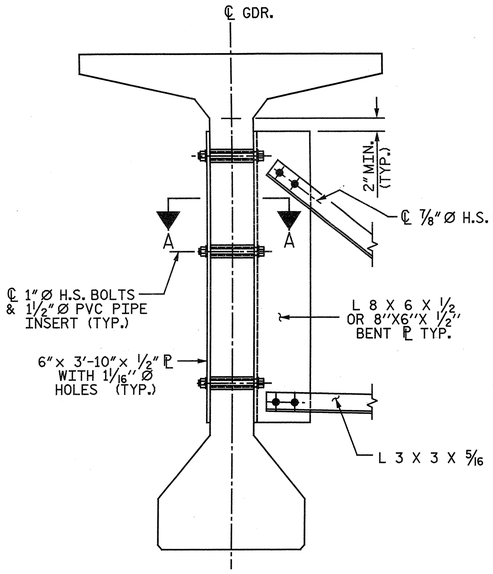

INTERIOR GIRDER

GIRDER SHOWN IS LOCATED IN BAYS WHERE INTERMEDIATE DIAPHRAGMS ARE NOT REQUIRED DUE TO CONFLICT WITH CLOSED DRAINAGE SYSTEM

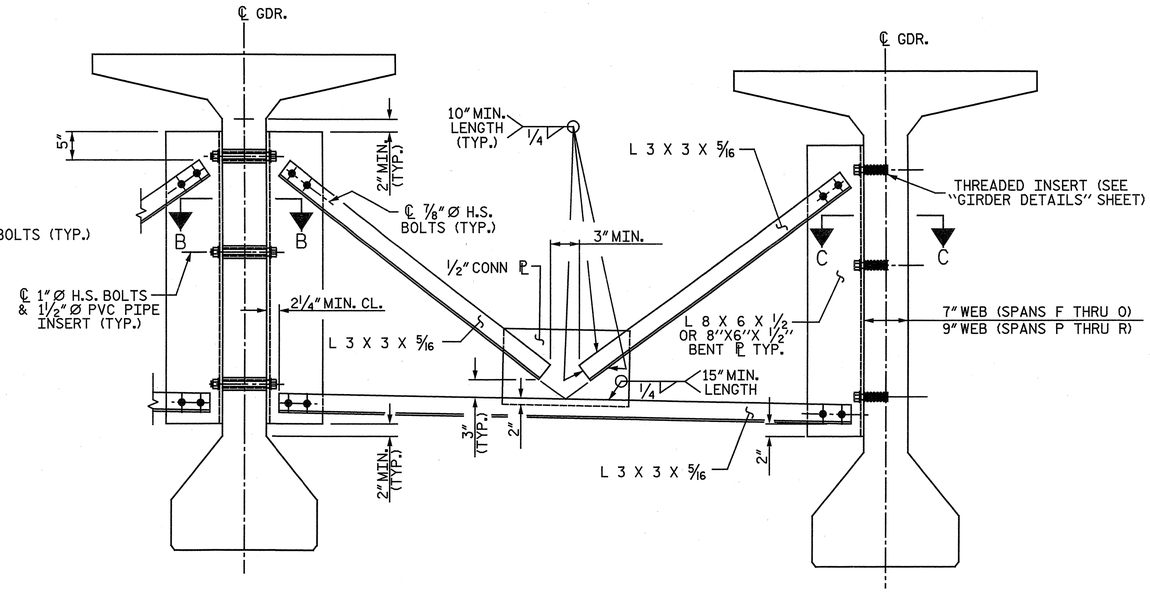

INTERIOR GIRDER

EXTERIOR GIRDER

PART SECTION AT INTERMEDIATE DIAPHRAGM

FOR 78" BULB TEE (SPANS F THRU O) AND MODIFIED 78" BULB TEE END GIRDER & DROP-IN GIRDER SEGMENTS

STRUCTURAL STEEL NOTES

ALL INTERMEDIATE DIAPHRAGM STEEL AND CONNECTOR PLATES SHALL BE AASHTO M270 GRADE 50 OR APPROVED EQUAL.

TENSION ON THE ASTM A325 BOLTS THROUGH THE ANGLE MEMBER SHALL BE CALIBRATED USING DIRECT TENSION INDICATOR WASHERS IN ACCORDANCE WITH THE STANDARD SPECIFICATIONS.

TENSION ON THE ASTM A449 BOLTS THROUGH THE GIRDER WEB SHALL BE SNUG TIGHTENED FOLLOWED BY AN ADDITIONAL 1/4 TURN.

THE PLATES, BENT PLATES, AND ANGLES SHALL BE METALLIZED IN ACCORDANCE WITH THE STANDARD SPECIFICATIONS. FOR THERMAL SPRAYED COATINGS (METALLIZATION), SEE SPECIAL PROVISIONS.

FOR METALLIZATION, APPLY AN 8 MIL THICK 99.50 PERCENT ALUMINUM THERMAL SPRAYED COATING WITH A 0.5 MIL THICK SEAL COAT TO ALL PLATES, BENT PLATES, CHANNELS, ANGLES AND PLATE WASHERS IN ACCORDANCE WITH THE THERMAL SPRAYED COATINGS SPECIAL PROVISION AND SECTION 442 OF THE STANDARD SPECIFICATIONS.

GALVANIZE THE HIGH STRENGTH BOLTS, NUTS, WASHERS AND DIRECT TENSION INDICATORS IN ACCORDANCE WITH THE STANDARD SPECIFICATIONS.

USE AN ASTM F436 HARDENED WASHER WITH STANDARD AND SLOTTED HOLES UNDER EACH BOLT HEAD AND NUT.

FOR BOLTS THROUGH THE GIRDER WEB, PROVIDE SUFFICIENT LENGTH OF THREADS ON ALL BOLTS TO ACCOMMODATE WASHERS AND THE THICKNESS OF CONNECTING MEMBER PLUS AT LEAST 1/4" PROJECTION BEYOND THE NUT.

INTERMEDIATE DIAPHRAGM ASSEMBLY SHALL COMPLY WITH SECTION 1072 OF THE STANDARD SPECIFICATIONS.

SUBMIT TWO SETS OF WORKING DRAWINGS FOR THE INTERMEDIATE DIAPHRAGM ASSEMBLY FOR REVIEW, COMMENTS AND ACCEPTANCE. AFTER REVIEW, COMMENTS, AND ACCEPTANCE, SUBMIT SEVEN SETS FOR DISTRIBUTION.

IN THE EXTERIOR BAYS, PLACE TEMPORARY STRUTS BETWEEN PRESTRESSED GIRDERS ADJACENT TO THE STEEL DIAPHRAGMS. STRUTS SHALL REMAIN IN PLACE 3 DAYS AFTER CONCRETE IS PLACED.

THE COST OF THE STEEL DIAPHRAGMS AND ASSEMBLIES SHALL BE INCLUDED IN THE UNIT PRICE BID FOR PRESTRESSED CONCRETE GIRDERS.

ALL DIMENSIONS SHOWN ARE HORIZONTAL OR VERTICAL UNLESS OTHERWISE NOTED.

APPLY ONE COAT EACH OF 1080-12 BROWN AND 1080-12 GRAY PAINT ON THE EDGES AND THE WEB FACE OF THE CONNECTOR PLATE WHICH COMES IN CONTACT WITH THE CONCRETE GIRDER IN ACCORDANCE WITH SECTION 442 OF THE STANDARD SPECIFICATIONS.

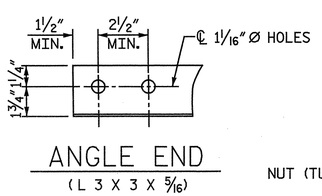

ANGLE END

(L 3 X 3 X 5/16)

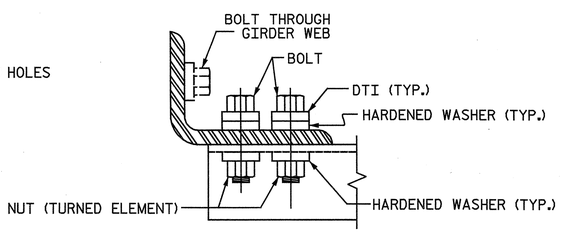

BOLT WITH DTI ASSEMBLY DETAIL

GIRDER	DIM "B"	DIM "C"
78" MBT	1'-4"	1'-6"
78" MBT END SEGMENT	SEE "END GIRDER SEGMENT DETAILS", SHEET 1 OF 5.	
78" MBT DROP IN SEGMENT	SEE "DROP-IN GIRDER SEGMENT DETAILS", SHEET 1 OF 3.	

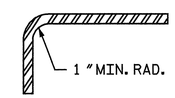

SECTION Y-Y

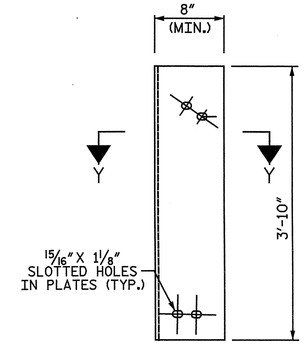

DIAPHRAGM FACE

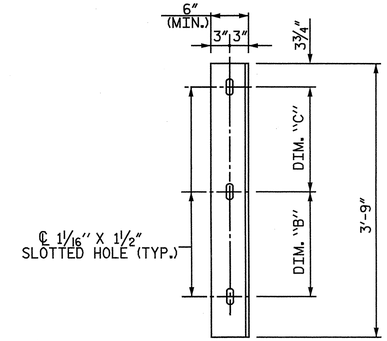

WEB FACE

CONNECTOR PLATE DETAILS

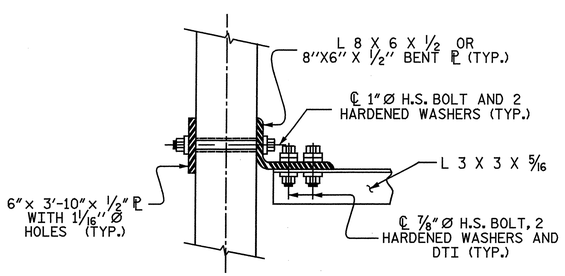

SECTION A-A

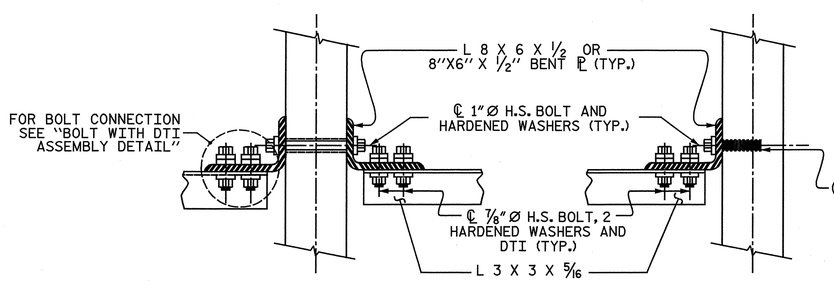

SECTION B-B

SECTION C-C

CONNECTION DETAILS

PROJECT NO. R-3307

CARTERET COUNTY

STATION: 46+21.50 -L-

SHEET 2 OF 3

STATE OF NORTH CAROLINA
DEPARTMENT OF TRANSPORTATION
RALEIGH

SUPERSTRUCTURE

INTERMEDIATE STEEL DIAPHRAGMS

78" MODIFIED BULB TEE GIRDER

NORTH CAROLINA PROFESSIONAL SEAL 25911 ENGINEER DRAIN C. HATHAWAY 1-3-2012

NORTH CAROLINA PROFESSIONAL SEAL 033752 ENGINEER SETH A. DENNEY 9/13/12

THE LPA GROUP of North Carolina TRANSPORTATION CONSULTANTS

THE LPA GROUP of North Carolina
8000 Regency Parkway, Suite 600
Cary, North Carolina 27518
NC License No.: F-1084

REVISIONS							SHEET NO.
NO.	BY:	DATE:	NO.	BY:	DATE:		S-149
1			3				TOTAL SHEETS
2			4				333

DRAWN BY : N. B. SPEAKS DATE : 9-1-11
CHECKED BY : S. A. DENNEY DATE : 9-13-11

DWG. 150 OF 282

4/2/2012
12:46:0 PM
User: jaustin
Filename: Y:\Projects\NCDOT\R-3307\Dwgs\Final\R-3307_150_SD_ID1.dgn

NOTE:
FOR INTERMEDIATE STEEL DIAPHRAGM NOTES, SEE SHEET 2 OF 3.

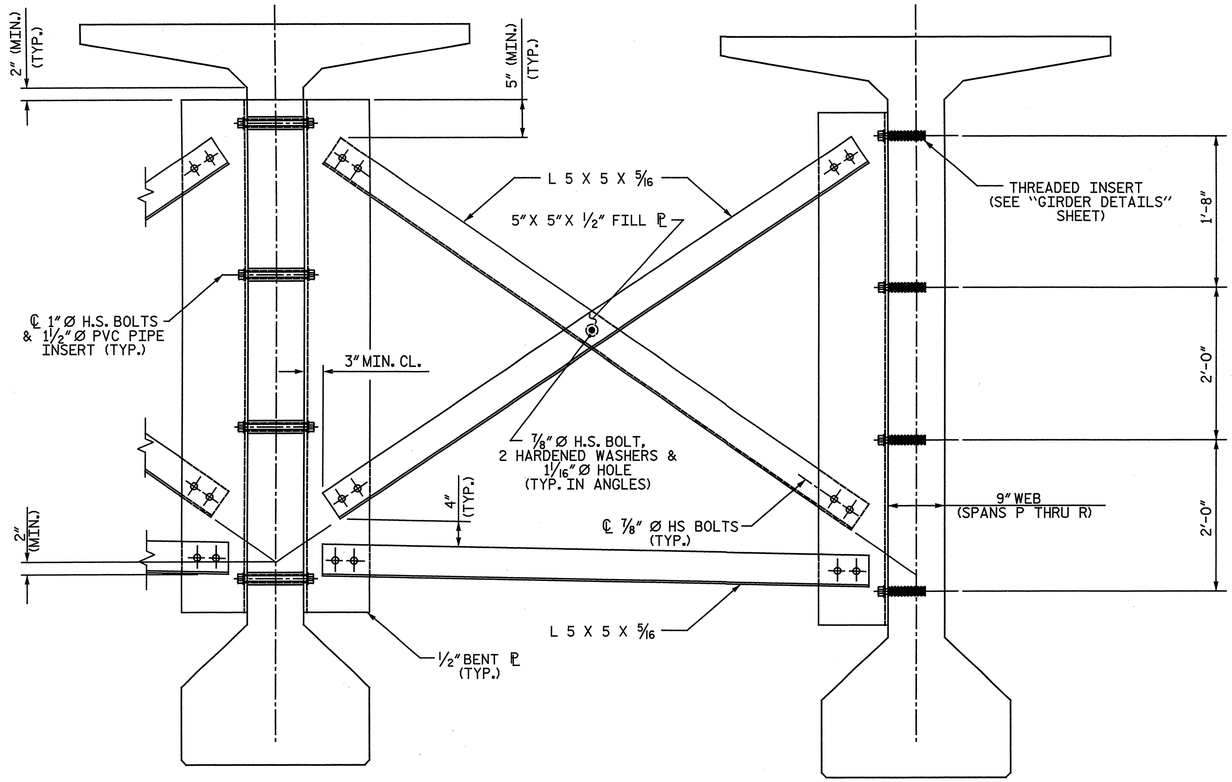

INTERIOR GIRDER

EXTERIOR GIRDER

PART SECTION AT INTERMEDIATE DIAPHRAGM

FOR MODIFIED 78" BULB TEE HAUNCHED GIRDER SEGMENTS

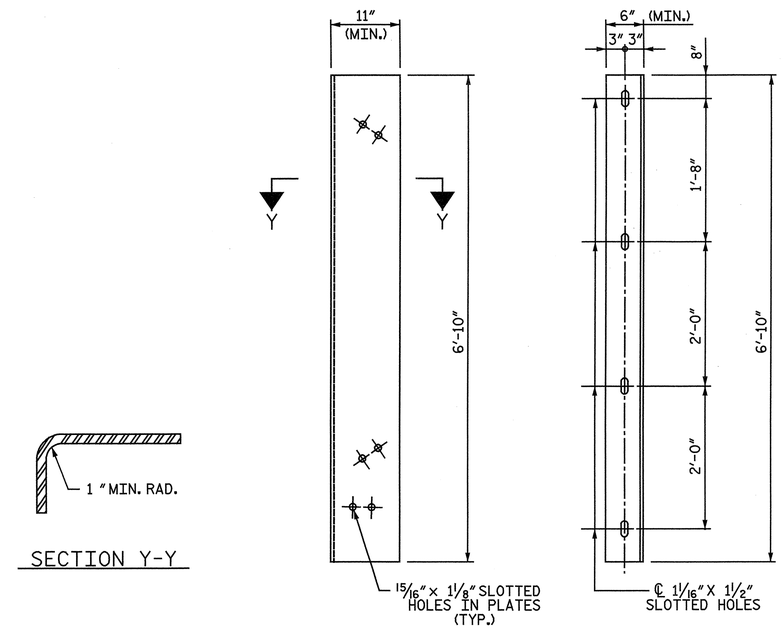

DIAPHRAGM FACE

WEB FACE

CONNECTOR PLATE DETAILS

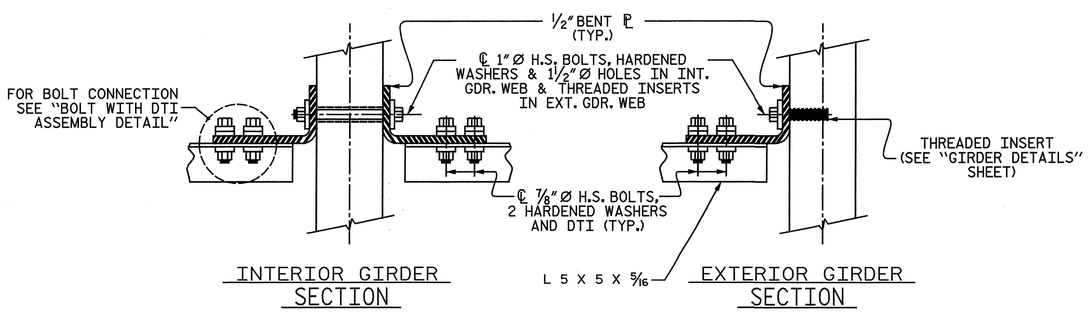

INTERIOR GIRDER SECTION

EXTERIOR GIRDER SECTION

CONNECTION DETAILS

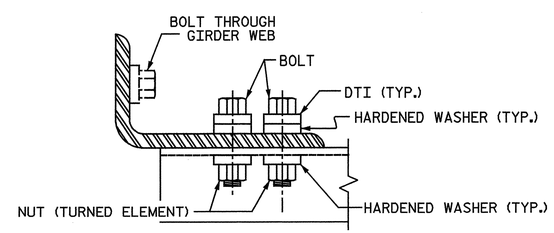

BOLT WITH DTI ASSEMBLY DETAIL

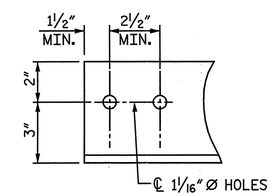

ANGLE END

(L 5 X 5 X 5/16)

PROJECT NO. R-3307

CARTERET COUNTY

STATION: 46+21.50 -L-

SHEET 3 OF 3

STATE OF NORTH CAROLINA
DEPARTMENT OF TRANSPORTATION
RALEIGH

SUPERSTRUCTURE

INTERMEDIATE STEEL DIAPHRAGMS

78" MODIFIED BULB TEE GIRDER

NORTH CAROLINA PROFESSIONAL SEAL 25911 ENGINEER DWIGHT G. HATHAWAY 4-3-2012

NORTH CAROLINA PROFESSIONAL SEAL 033752 ENGINEER SETH A. DENNEY 4/06/12

THE LPA GROUP of North Carolina TRANSPORTATION CONSULTANTS

THE LPA GROUP of North Carolina
8000 Regency Parkway, Suite 600
Cary, North Carolina 27518
NC License No.: F-1084

REVISIONS								SHEET NO.
NO.	BY:	DATE:	NO.	BY:	DATE:			S-150
1			3					TOTAL SHEETS
2			4					333

DRAWN BY : M. D. MAYHEW DATE : 9-1-11
CHECKED BY : S. A. DENNEY DATE : 9-13-11

DWG. 151 OF 282

4/17/2012
10:50:54 AM
User: jaustin
Filename: Y:\Projects\NCDOT\R-3307\Dwgs\Final\R-3307_151_SD_ID2.dgn

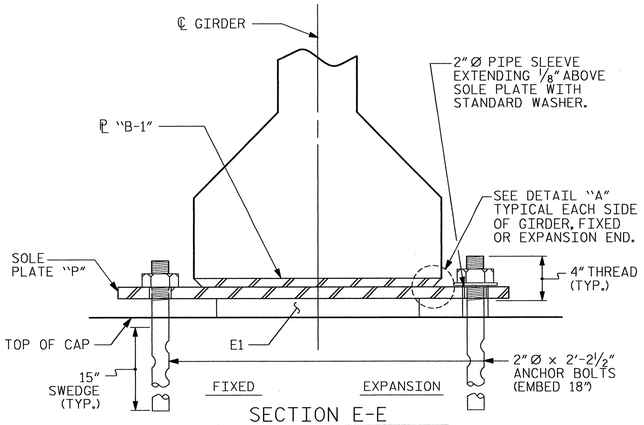

SECTION E-E

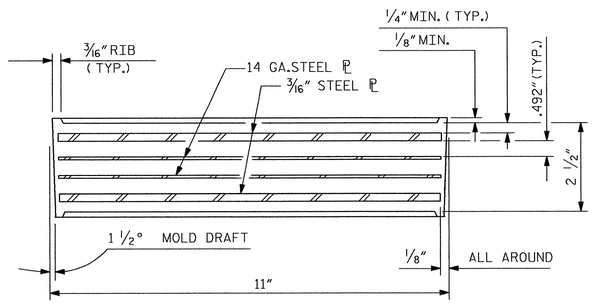

TYPICAL SECTION OF ELASTOMERIC BEARINGS

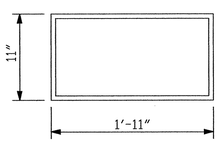

E1 (288 REQ'D.)

PLAN VIEW OF ELASTOMERIC BEARING

TYPE VI

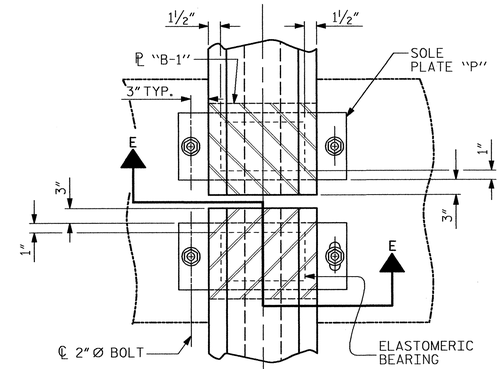

TYPICAL HALF-PLAN (SHOWING CONTINUOUS BENT)

TYPICAL HALF-PLAN (SHOWING SIMPLE SPAN BENT)

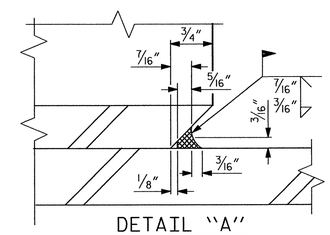

DETAIL "A"

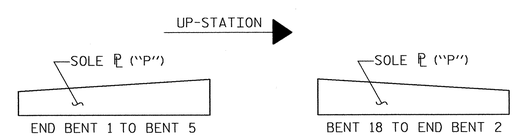

SOLE ℙ PLACEMENT DETAIL

NOTES

AT ALL FIXED POINTS OF SUPPORT, NUTS FOR ANCHOR BOLTS ARE TO BE TIGHTENED FINGER TIGHT AND THEN BACKED OFF 1/2 TURN. THE THREAD OF THE NUT AND BOLT SHALL THEN BE BURRED WITH A SHARP POINTED TOOL.

THE 2" Ø PIPE SLEEVE SHALL BE CUT FROM SCHEDULE 40 PVC PLASTIC PIPE. THE PVC PLASTIC PIPE SHALL MEET THE REQUIREMENTS OF ASTM D1785.

STEEL SOLE PLATES, ANCHOR BOLTS, NUTS, AND WASHERS SHALL BE GALVANIZED IN ACCORDANCE WITH THE STANDARD SPECIFICATIONS.

PRIOR TO WELDING, GRIND THE GALVANIZED SURFACE OF THE PORTION OF THE EMBEDDED PLATE AND SOLE PLATE THAT ARE TO BE WELDED. AFTER WELDING, DAMAGED GALVANIZED SURFACES SHALL BE REPAIRED IN ACCORDANCE WITH THE STANDARD SPECIFICATIONS.

WHEN WELDING THE SOLE PLATE TO THE EMBEDDED PLATE IN THE GIRDER, USE TEMPERATURE INDICATING WAX PENS, OR OTHER SUITABLE MEANS, TO ENSURE THAT THE TEMPERATURE OF THE SOLE PLATE DOES NOT EXCEED 300°F. TEMPERATURES ABOVE THIS MAY DAMAGE THE ELASTOMER.

SOLE PLATE "P", BOLTS, NUTS, WASHERS, AND PIPE SLEEVE SHALL BE INCLUDED IN THE PAY ITEM FOR PRESTRESSED CONCRETE GIRDERS.

ANCHOR BOLTS SHALL MEET THE REQUIREMENTS OF ASTM A449. NUTS SHALL MEET THE REQUIREMENTS OF AASHTO M291-DH OR AASHTO M292-2H. WASHERS SHALL MEET THE REQUIREMENTS OF AASHTO M293. NO SHOP DRAWINGS ARE REQUIRED FOR ANCHOR BOLTS, NUTS AND WASHERS. SHOP INSPECTION IS REQUIRED.

ALL SURFACES OF BEARING PLATES SHALL BE SMOOTH AND STRAIGHT.

SOLE PLATE SCHEDULE (FIXED)			
MARK	T1 (IN.)	T2 (IN.)	# REQ'D.
PA2-F	1 11/16	1 13/16	9
PB1-F	2	2 1/4	9
PB2-F	1 11/16	1 13/16	9
PC1-F	2	2 1/4	9
PD2-F	1 11/16	1 13/16	9
PE1-F	2	2 1/4	9
PS2-F	3	2 1/2	9
PT1-F	2	1 1/2	9
PT2-F	3 1/8	2 5/8	6
PT3-F	3 3/16	2 9/16	3
PU1-F	2	1 1/2	5
PU2-F	2 1/16	1 7/16	4
PV2-F	3 5/8	2 7/8	9
PW1-F	2 1/8	1 3/8	9
PW2-F	3 3/4	3	5
PW3-F	3 13/16	2 15/16	4
PX1-F	2 1/8	1 3/8	9
PY2-F	3 3/4	3	4
PY3-F	3 13/16	2 15/16	5
PZ1-F	2 1/8	1 3/8	9
PZ2-F	3 3/4	3	4
PZ3-F	3 13/16	2 15/16	5
PAA1-F	2 1/8	1 3/8	9
PBB3-F	3 5/8	2 7/8	3
PBB4-F	3 1/2	2 3/4	4
PBB5-F	3 3/8	2 5/8	2
PCC1-F	2 1/16	1 7/16	6
PCC2-F	2	1 1/2	3

SOLE PLATE SCHEDULE (EXPANSION)				
MARK	L (IN.)	T1 (IN.)	T2 (IN.)	# REQ'D.
PA1-E	5	1 5/8	1 7/8	9
PC2-E	7	1 11/16	1 13/16	9
PD1-E	5	2	2 1/4	9
PE2-E	5	1 11/16	1 13/16	9
PS1-E	6	1 15/16	1 9/16	9
PU3-E	6	3 3/8	2 3/4	9
PV1-E	6	2 1/16	1 7/16	9
PX2-E	6	3 3/4	3	4
PX3-E	6	3 13/16	2 15/16	5
PY1-E	6	2 1/8	1 3/8	9
PAA2-E	6	3 11/16	2 15/16	5
PAA3-E	6	3 3/4	2 7/8	4
PBB1-E	5	2 1/8	1 3/8	3
PBB2-E	5	2 1/16	1 7/16	6
PCC3-E	5	2 1/8	1 3/8	3
PCC4-E	5	2 1/16	1 7/16	6

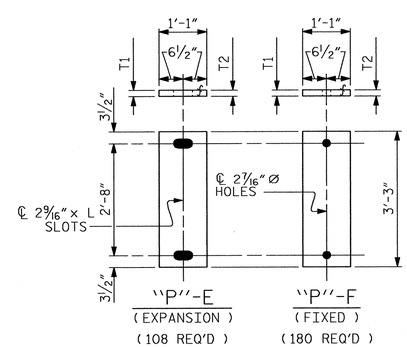

SOLE PLATE DETAILS ("P")

— LOAD RATINGS —	
	MAX.D.L.+ L.L.
TYPE VI	211 K

PROJECT NO. R-3307

CARTERET COUNTY

STATION: 46+21.50 -L-

SHEET 1 OF 4

STATE OF NORTH CAROLINA
DEPARTMENT OF TRANSPORTATION
RALEIGH

SUPERSTRUCTURE

ELASTOMERIC BEARING DETAILS

AASHTO TYPE IV GIRDERS

NORTH CAROLINA PROFESSIONAL SEAL 12323 ENGINEER MORRIS ISRAELNAIM 3/30/2012

NORTH CAROLINA PROFESSIONAL SEAL 027799 ENGINEER ALLYSON K. ORR 3/30/2012

MI ENGINEERING
1011 SHAUB DRIVE, SUITE 100
RALEIGH, NC 27606
(919) 851-6606
FIRM PE NUMBER : P-0671

REVISIONS								SHEET NO.
NO.	BY:	DATE:	NO.	BY:	DATE:			S-151
1			3					TOTAL SHEETS
2			4					333

ASSEMBLED BY : J.S. ISRAELNAIM DATE : 7-11
CHECKED BY : A.K. ORR DATE : 10-11

CHECKED BY : VAP 2/97

REV.	10/17/00	RWW/LES
REV.	5/1/06	TLA/GM
REV.	10/1/11	MAA/GM

DWG. 152 OF 282

STD. NO. EB4

3/26/2012 2:24:24 PM
User: blanning
Filename: P:\NC Projects\MI0005 - Gallants Channel\R-3307\Structures\R-3307_152_SD_EB1.dgn

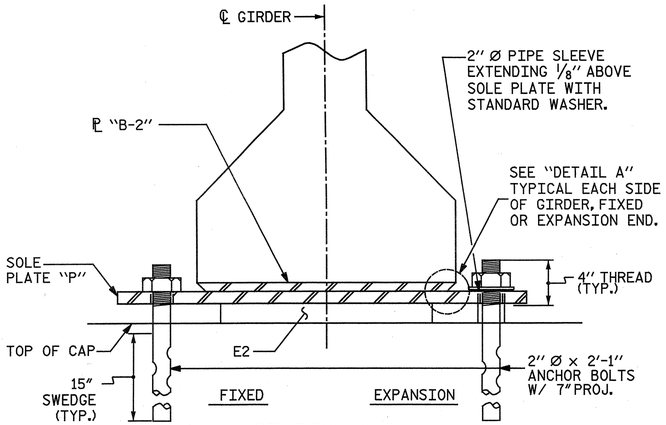

SECTION E-E

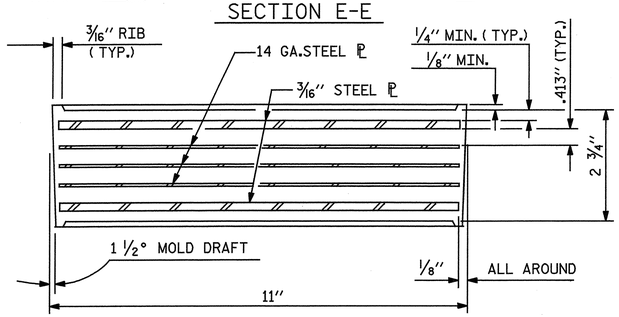

TYPICAL SECTION OF ELASTOMERIC BEARINGS

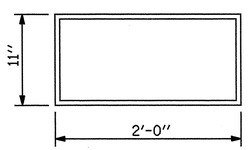

E2 (180 REQ'D)

PLAN VIEW OF ELASTOMERIC BEARING

TYPE VII

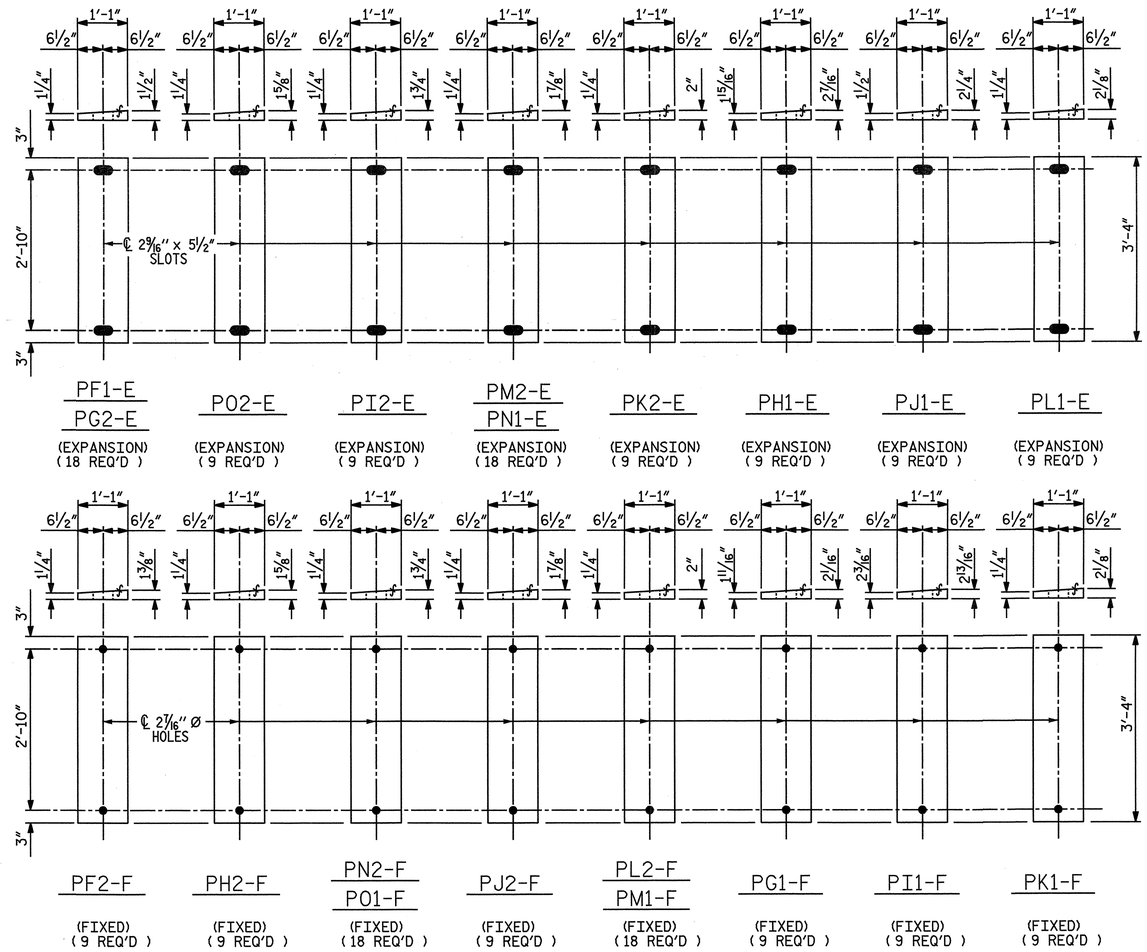

SOLE PLATE DETAILS ("P")

NOTES

AT ALL FIXED POINTS OF SUPPORT, NUTS FOR ANCHOR BOLTS ARE TO BE TIGHTENED FINGER TIGHT AND THEN BACKED OFF 1/2 TURN. THE THREAD OF THE NUT AND BOLT SHALL THEN BE BURRED WITH A SHARP POINTED TOOL.

THE 2" Ø PIPE SLEEVE SHALL BE CUT FROM SCHEDULE 40 PVC PLASTIC PIPE. THE PVC PLASTIC PIPE SHALL MEET THE REQUIREMENTS OF ASTM D1785.

STEEL SOLE PLATES, ANCHOR BOLTS, NUTS, AND WASHERS SHALL BE GALVANIZED IN ACCORDANCE WITH THE STANDARD SPECIFICATIONS.

PRIOR TO WELDING, GRIND THE GALVANIZED SURFACE OF THE PORTION OF THE EMBEDDED PLATE AND SOLE PLATE THAT ARE TO BE WELDED. AFTER WELDING, DAMAGED GALVANIZED SURFACES SHALL BE REPAIRED IN ACCORDANCE WITH THE STANDARD SPECIFICATIONS.

WHEN WELDING THE SOLE PLATE TO THE EMBEDDED PLATE IN THE GIRDER, USE TEMPERATURE INDICATING WAX PENS, OR OTHER SUITABLE MEANS, TO ENSURE THAT THE TEMPERATURE OF THE SOLE PLATE DOES NOT EXCEED 300°F. TEMPERATURES ABOVE THIS MAY DAMAGE THE ELASTOMER.

SOLE PLATE "P", BOLTS, NUTS, WASHERS, AND PIPE SLEEVE SHALL BE INCLUDED IN THE PAY ITEM FOR PRESTRESSED CONCRETE GIRDERS.

ANCHOR BOLTS SHALL MEET THE REQUIREMENTS OF ASTM A449. NUTS SHALL MEET THE REQUIREMENTS OF AASHTO M291-DH OR AASHTO M292-2H. WASHERS SHALL MEET THE REQUIREMENTS OF AASHTO M293. NO SHOP DRAWINGS ARE REQUIRED FOR ANCHOR BOLTS, NUTS AND WASHERS. SHOP INSPECTION IS REQUIRED.

ALL SURFACES OF BEARING PLATES SHALL BE SMOOTH AND STRAIGHT.

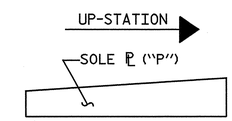

SOLE ℗ PLACEMENT DETAIL

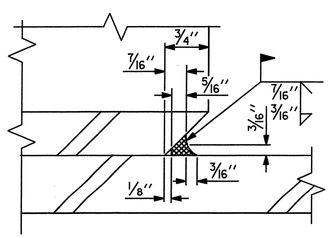

DETAIL A

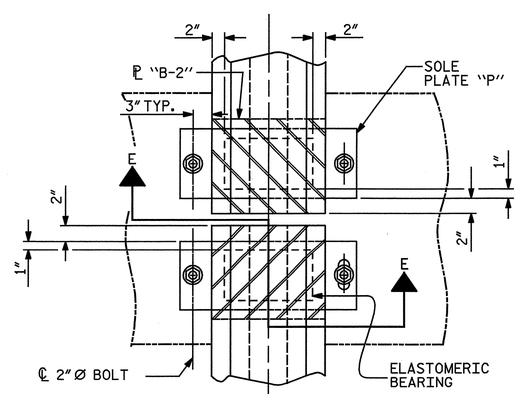

TYPICAL HALF-PLAN (SHOWING CONTINUOUS BENT)

TYPICAL HALF-PLAN (SHOWING SIMPLE SPAN BENT)

PROJECT NO. R-3307

CARTERET COUNTY

STATION: 46+21.50 -L-

SHEET 2 OF 4

STATE OF NORTH CAROLINA
DEPARTMENT OF TRANSPORTATION
RALEIGH

SUPERSTRUCTURE

ELASTOMERIC BEARING DETAILS

78" PRESTRESSED CONCRETE BULB TEE GIRDERS

NORTH CAROLINA PROFESSIONAL SEAL 25911 ENGINEER DWAIN G. HATHAWAY 1-3-2012

NORTH CAROLINA PROFESSIONAL SEAL 033752 ENGINEER SETH A. DENNEY 1/12/12

THE LPA GROUP of North Carolina
THE LPA GROUP of North Carolina
8000 Regency Parkway, Suite 600
Cary, North Carolina 27518
NC License No.: F-1084
TRANSPORTATION CONSULTANTS

REVISIONS							SHEET NO.
NO.	BY:	DATE:	NO.	BY:	DATE:		S-152
1			3				TOTAL SHEETS
2			4				333

DRAWN BY : J. N. AUSTIN DATE : 1-11-12
CHECKED BY : S. A. DENNEY DATE : 1-12-12

DWG. 153 OF 282

4/2/2012 12:42:[illegible] PM
User: jaustin
Filename: Y:\Projects\NCDOT\R-3307\Dwgs\Final\R-3307_153_SD_B61.dgn

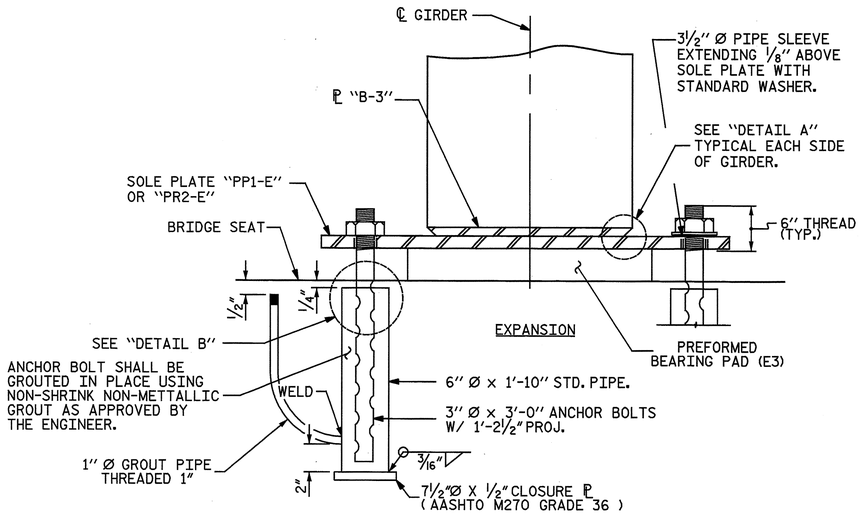

SECTION VIEW

(OVER BENTS 15 AND 18 SPANS P & R GIRDERS)

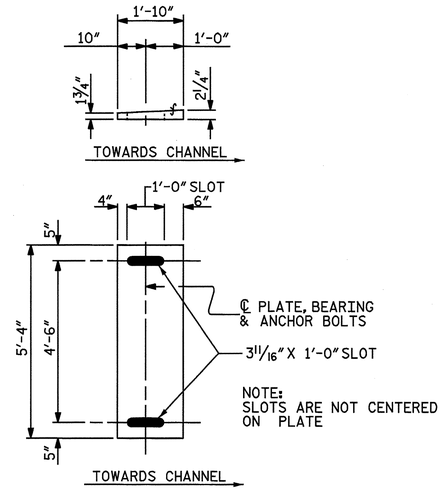

PP1-E OR PR2-E

(EXPANSION)

(18 REQ'D)

SOLE PLATE DETAILS "PP1-E" OR "PR2-E"

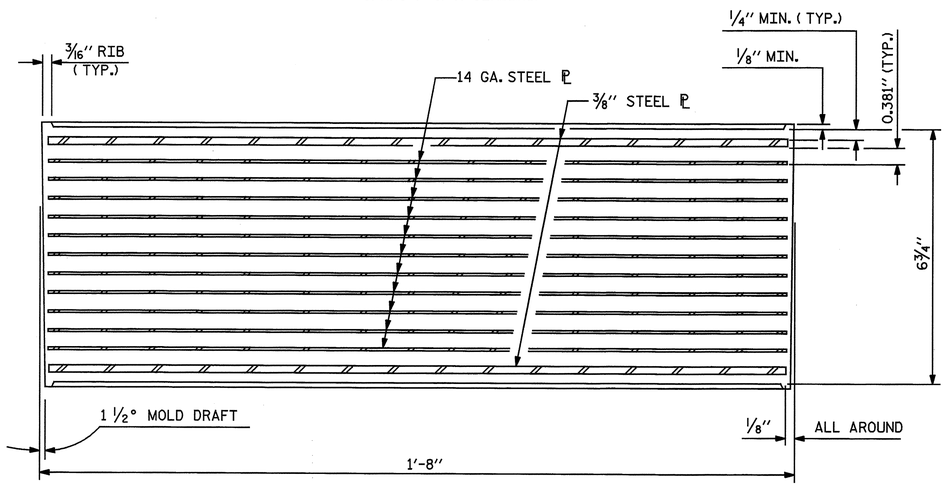

TYPICAL SECTION OF ELASTOMERIC BEARINGS

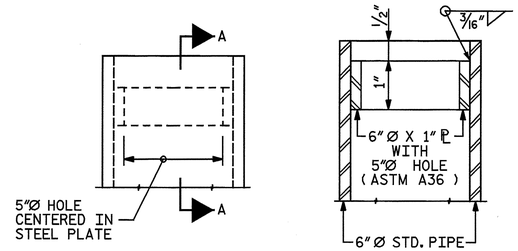

SECTION A-A

DETAIL B

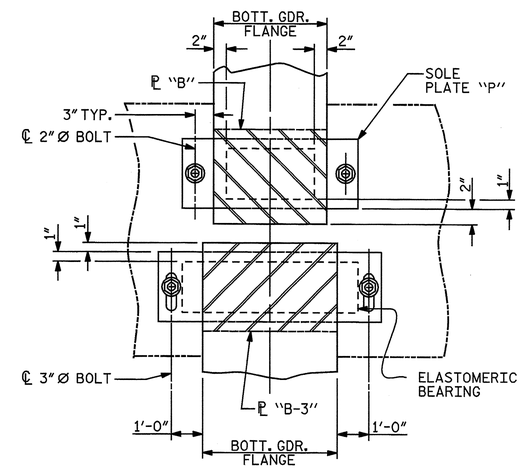

TYPICAL PLAN

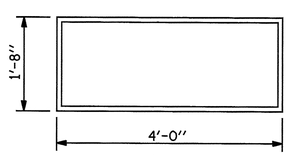

E3 (18 REQ'D)

PLAN VIEW OF ELASTOMERIC BEARING

TYPE VIII

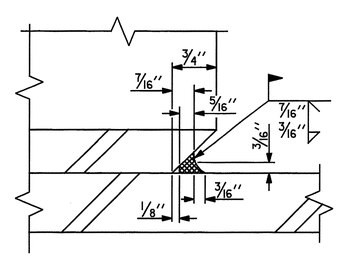

DETAIL A

PROJECT NO. R-3307

CARTERET COUNTY

STATION: 46+21.50 -L-

SHEET 3 OF 4

STATE OF NORTH CAROLINA
DEPARTMENT OF TRANSPORTATION
RALEIGH

SUPERSTRUCTURE

ELASTOMERIC BEARING DETAILS

BENTS 15 AND 18

NORTH CAROLINA PROFESSIONAL SEAL 25911 ENGINEER DWAIN G. HAYNAM 4-3-2012

NORTH CAROLINA PROFESSIONAL SEAL 033752 ENGINEER SETH A. DENNEY 4/03/12

THE LPA GROUP of North Carolina TRANSPORTATION CONSULTANTS

THE LPA GROUP of North Carolina
8000 Regency Parkway, Suite 600
Cary, North Carolina 27518
NC License No.: F-1084

REVISIONS								SHEET NO.
NO.	BY:	DATE:	NO.	BY:	DATE:			S-153
1			3					TOTAL SHEETS
2			4					333

DRAWN BY : C. E. MAYHEW DATE : 12-8-11

CHECKED BY : S. A. DENNEY DATE : 12-8-11

DWG. 154 OF 282

4/5/2012
8:29:00 AM
User: NBSpeaks
Filename: Y:\Projects\NCDOT\R-3307\Dwgs\Final\R-3307_154_SD_B02.dgn

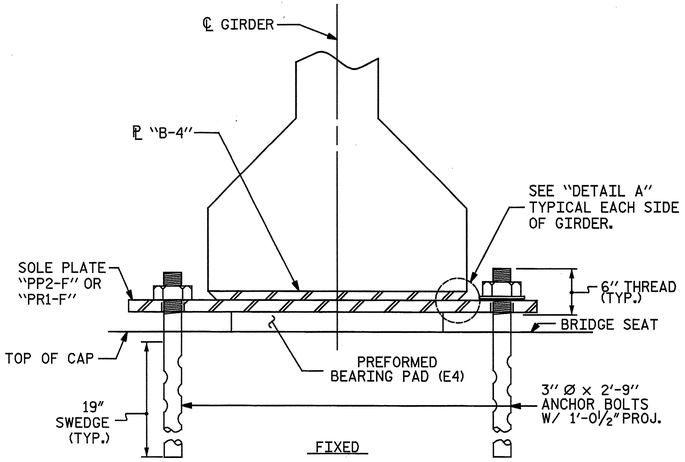

SECTION VIEW
(OVER BENTS 16 AND 17)

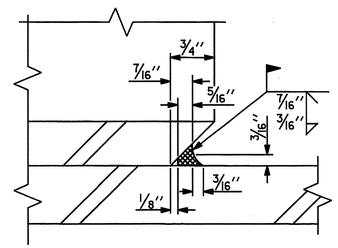

DETAIL "A"

NOTES

AT ALL FIXED POINTS OF SUPPORT, NUTS FOR ANCHOR BOLTS ARE TO BE TIGHTENED FINGER TIGHT AND THEN BACKED OFF ½TURN. THE THREAD OF THE NUT AND BOLT SHALL THEN BE BURRED WITH A SHARP POINTED TOOL.

THE 2"Ø AND 3½"Ø PIPE SLEEVE SHALL BE CUT FROM SCHEDULE 40 PVC PLASTIC PIPE. THE PVC PLASTIC PIPE SHALL MEET THE REQUIREMENTS OF ASTM D1785.

STEEL SOLE PLATES, ANCHOR BOLTS, NUTS, AND WASHERS SHALL BE GALVANIZED IN ACCORDANCE WITH THE STANDARD SPECIFICATIONS.

PRIOR TO WELDING, GRIND THE GALVANIZED SURFACE OF THE PORTION OF THE EMBEDDED PLATE AND SOLE PLATE THAT ARE TO BE WELDED. AFTER WELDING, DAMAGED GALVANIZED SURFACES SHALL BE REPAIRED IN ACCORDANCE WITH THE STANDARD SPECIFICATIONS.

WHEN WELDING THE SOLE PLATE TO THE EMBEDDED PLATE IN THE GIRDER, USE TEMPERATURE INDICATING WAX PENS, OR OTHER SUITABLE MEANS, TO ENSURE THAT THE TEMPERATURE OF THE SOLE PLATE DOES NOT EXCEED 300° F. TEMPERATURES ABOVE THIS MAY DAMAGE THE ELASTOMER.

SOLE PLATE "P", BOLTS, NUTS, WASHERS, AND PIPE SLEEVE SHALL BE INCLUDED IN THE LUMP SUM PRICE BID FOR ELASTOMERIC BEARINGS.

ANCHOR BOLTS SHALL MEET THE REQUIREMENTS OF ASTM A449. NUTS SHALL MEET THE REQUIREMENTS OF AASHTO M291-DH OR AASHTO M292-2H. WASHERS SHALL MEET THE REQUIREMENTS OF AASHTO M293. NO SHOP DRAWINGS ARE REQUIRED FOR ANCHOR BOLTS, NUTS AND WASHERS. SHOP INSPECTION IS REQUIRED.

ALL SURFACES OF BEARING PLATES SHALL BE SMOOTH AND STRAIGHT.

BEFORE POURING THE FINAL 7'-0" OF SPAN P AND SPAN R, THE GIRDERS SHALL BE JACKED AND THE ANCHOR BOLTS, SOLE PLATE, AND ELASTOMERIC BEARING SHALL BE CENTERED AS NEARLY AS PRACTICAL ABOUT THE EMBEDDED PLATE "B-3". THIS OPERATION SHALL BE PERFORMED AT APPROXIMATELY 60° F.

AFTER BEARING ASSEMBLY IS IN PLACE AND ANCHOR BOLTS HAVE FINALLY BEEN POSITIONED, THEY SHALL BE GROUTED IN PLACE AS SHOWN.

THE CONTRACTOR MAY PROPOSE ALTERNATE METHODS FOR ADJUSTING THE BEARING ASSEMBLY PROVIDED DETAILS ARE SUBMITTED TO THE ENGINEER FOR REVIEW AND APPROVAL.

THE CLOSURE PLATE, GROUT PIPE AND STANDARD PIPE FOR THIS ASSEMBLY SHALL BE GALVANIZED IN ACCORDANCE WITH STANDARD SPECIFICATIONS.

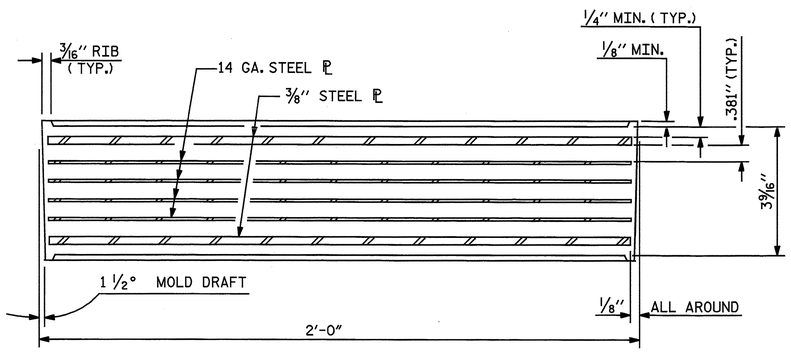

TYPICAL SECTION OF ELASTOMERIC BEARINGS

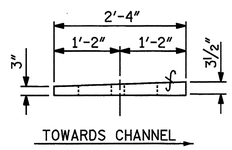

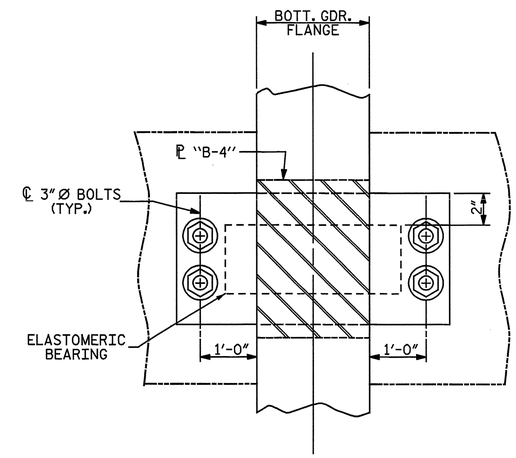

TYPICAL PLAN
(SHOWING BENTS #16 AND #17)

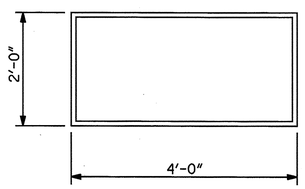

E4 (18 REQ'D)

PLAN VIEW OF ELASTOMERIC BEARING

TYPE IX

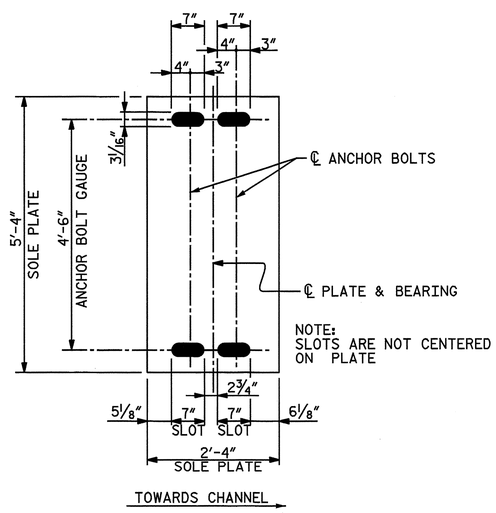

PP2-F OR PR1-F
(FIXED)
(18 REQ'D)

SOLE PLATE DETAILS "PP2-F" OR "PR1-F"

— LOAD RATINGS —	
	MAX.D.L.+ L.L.
TYPE VIII	393 K
TYPE IX	1187 K

PROJECT NO. R-3307
CARTERET COUNTY
STATION: 46+21.50 -L-

SHEET 4 OF 4

STATE OF NORTH CAROLINA
DEPARTMENT OF TRANSPORTATION
RALEIGH
SUPERSTRUCTURE

ELASTOMERIC BEARING DETAILS

BENTS 16 AND 17

NORTH CAROLINA PROFESSIONAL SEAL 25911 ENGINEER DWIN G. HATHAWAY 4-3-2012

NORTH CAROLINA PROFESSIONAL SEAL 033752 ENGINEER SETH A. DENNEY 12/08/12

THE LPA GROUP of North Carolina TRANSPORTATION CONSULTANTS

THE LPA GROUP of North Carolina
8000 Regency Parkway, Suite 600
Cary, North Carolina 27518
NC License No.: F-1084

REVISIONS								SHEET NO.
NO.	BY:	DATE:	NO.	BY:	DATE:			S-154
1			3					TOTAL SHEETS
2			4					333

DRAWN BY: C. E. MAYHEW DATE: 12-8-11
CHECKED BY: S. A. DENNEY DATE: 12-8-11

DWG. 155 OF 282

4/5/2012
8:29:02 AM
User: NBSpeaks
Filename: Y:\Projects\NCDOT\R-3307\Dwgs\Final\R-3307_155_SD_BG3.dgn

DEAD LOAD DEFLECTION AND CAMBER TABLE FOR GIRDERS IN UNIT 1

		SPAN A											SPAN B											SPAN C										
	TENTH POINTS	℄ BRG.	.1	.2	.3	.4	.5	.6	.7	.8	.9	℄ BRG.	℄ BRG.	.1	.2	.3	.4	.5	.6	.7	.8	.9	℄ BRG.	℄ BRG.	.1	.2	.3	.4	.5	.6	.7	.8	.9	℄ BRG.
GIRDER 1	CAMBER (GIRDER ALONE IN PLACE) ↑	0	0.045	0.083	0.114	0.133	0.140	0.133	0.114	0.083	0.045	0	0	0.046	0.084	0.114	0.134	0.141	0.134	0.114	0.084	0.046	0	0	0.046	0.084	0.114	0.134	0.141	0.134	0.114	0.084	0.046	0
	✳ DEFLECTION DUE TO SUPERIMPOSED D.L. ↓	0	0.019	0.036	0.049	0.057	0.059	0.056	0.048	0.034	0.018	0	0	0.019	0.036	0.050	0.058	0.061	0.058	0.050	0.036	0.019	0	0	0.019	0.037	0.051	0.060	0.063	0.061	0.052	0.038	0.020	0
	FINAL CAMBER ↑	0	5/16"	9/16"	3/4"	15/16"	1"	15/16"	13/16"	9/16"	5/16"	0	0	5/16"	9/16"	3/4"	15/16"	15/16"	15/16"	3/4"	9/16"	5/16"	0	0	5/16"	9/16"	3/4"	7/8"	15/16"	7/8"	3/4"	9/16"	5/16"	0

		SPAN A											SPAN B											SPAN C										
	TENTH POINTS	℄ BRG.	.1	.2	.3	.4	.5	.6	.7	.8	.9	℄ BRG.	℄ BRG.	.1	.2	.3	.4	.5	.6	.7	.8	.9	℄ BRG.	℄ BRG.	.1	.2	.3	.4	.5	.6	.7	.8	.9	℄ BRG.
GIRDERS 2-8	CAMBER (GIRDER ALONE IN PLACE) ↑	0	0.045	0.084	0.114	0.134	0.141	0.134	0.114	0.084	0.045	0	0	0.046	0.085	0.115	0.135	0.142	0.135	0.115	0.085	0.046	0	0	0.046	0.085	0.115	0.135	0.142	0.135	0.115	0.085	0.046	0
	✳ DEFLECTION DUE TO SUPERIMPOSED D.L. ↓	0	0.021	0.039	0.054	0.063	0.066	0.062	0.053	0.038	0.020	0	0	0.021	0.040	0.055	0.065	0.068	0.065	0.055	0.040	0.021	0	0	0.021	0.041	0.056	0.066	0.070	0.067	0.057	0.042	0.022	0
	FINAL CAMBER ↑	0	5/16"	9/16"	3/4"	7/8"	7/8"	7/8"	3/4"	9/16"	5/16"	0	0	5/16"	9/16"	11/16"	13/16"	7/8"	13/16"	11/16"	9/16"	5/16"	0	0	5/16"	1/2"	11/16"	13/16"	7/8"	13/16"	11/16"	1/2"	5/16"	0

		SPAN A											SPAN B											SPAN C										
	TENTH POINTS	℄ BRG.	.1	.2	.3	.4	.5	.6	.7	.8	.9	℄ BRG.	℄ BRG.	.1	.2	.3	.4	.5	.6	.7	.8	.9	℄ BRG.	℄ BRG.	.1	.2	.3	.4	.5	.6	.7	.8	.9	℄ BRG.
GIRDER 9	CAMBER (GIRDER ALONE IN PLACE) ↑	0	0.046	0.085	0.115	0.135	0.142	0.135	0.115	0.085	0.046	0	0	0.046	0.085	0.116	0.136	0.143	0.136	0.116	0.085	0.046	0	0	0.046	0.085	0.116	0.136	0.143	0.136	0.116	0.085	0.046	0
	✳ DEFLECTION DUE TO SUPERIMPOSED D.L. ↓	0	0.020	0.038	0.052	0.061	0.064	0.060	0.051	0.037	0.019	0	0	0.020	0.039	0.053	0.063	0.066	0.063	0.053	0.039	0.020	0	0	0.020	0.039	0.054	0.064	0.068	0.065	0.056	0.041	0.022	0
	FINAL CAMBER ↑	0	5/16"	9/16"	3/4"	7/8"	15/16"	7/8"	3/4"	9/16"	5/16"	0	0	5/16"	9/16"	3/4"	7/8"	15/16"	7/8"	3/4"	9/16"	5/16"	0	0	5/16"	9/16"	3/4"	7/8"	7/8"	7/8"	11/16"	1/2"	5/16"	0

DEAD LOAD DEFLECTION AND CAMBER TABLE FOR GIRDERS IN UNIT 2

		SPAN D											SPAN E										
	TENTH POINTS	℄ BRG.	.1	.2	.3	.4	.5	.6	.7	.8	.9	℄ BRG.	℄ BRG.	.1	.2	.3	.4	.5	.6	.7	.8	.9	℄ BRG.
GIRDER 1	CAMBER (GIRDER ALONE IN PLACE) ↑	0	0.046	0.084	0.114	0.134	0.141	0.134	0.114	0.084	0.046	0	0	0.046	0.084	0.114	0.134	0.141	0.134	0.114	0.084	0.046	0
	✳ DEFLECTION DUE TO SUPERIMPOSED D.L. ↓	0	0.020	0.038	0.052	0.061	0.063	0.060	0.051	0.037	0.019	0	0	0.019	0.037	0.051	0.060	0.063	0.061	0.052	0.038	0.020	0
	FINAL CAMBER ↑	0	5/16"	9/16"	3/4"	7/8"	15/16"	7/8"	3/4"	9/16"	5/16"	0	0	5/16"	9/16"	3/4"	7/8"	15/16"	7/8"	3/4"	9/16"	5/16"	0

		SPAN D											SPAN E										
	TENTH POINTS	℄ BRG.	.1	.2	.3	.4	.5	.6	.7	.8	.9	℄ BRG.	℄ BRG.	.1	.2	.3	.4	.5	.6	.7	.8	.9	℄ BRG.
GIRDERS 2-8	CAMBER (GIRDER ALONE IN PLACE) ↑	0	0.046	0.085	0.115	0.135	0.142	0.135	0.115	0.085	0.046	0	0	0.046	0.085	0.115	0.135	0.142	0.135	0.115	0.085	0.046	0
	✳ DEFLECTION DUE TO SUPERIMPOSED D.L. ↓	0	0.022	0.042	0.057	0.067	0.070	0.066	0.056	0.041	0.021	0	0	0.021	0.041	0.056	0.066	0.070	0.067	0.057	0.042	0.022	0
	FINAL CAMBER ↑	0	5/16"	1/2"	11/16"	13/16"	7/8"	13/16"	11/16"	1/2"	5/16"	0	0	5/16"	1/2"	11/16"	13/16"	7/8"	13/16"	11/16"	1/2"	5/16"	0

		SPAN D											SPAN E										
	TENTH POINTS	℄ BRG.	.1	.2	.3	.4	.5	.6	.7	.8	.9	℄ BRG.	℄ BRG.	.1	.2	.3	.4	.5	.6	.7	.8	.9	℄ BRG.
GIRDER 9	CAMBER (GIRDER ALONE IN PLACE) ↑	0	0.046	0.085	0.116	0.136	0.143	0.136	0.116	0.085	0.046	0	0	0.046	0.085	0.116	0.136	0.143	0.136	0.116	0.085	0.046	0
	✳ DEFLECTION DUE TO SUPERIMPOSED D.L. ↓	0	0.022	0.041	0.056	0.065	0.068	0.064	0.054	0.039	0.020	0	0	0.020	0.039	0.054	0.064	0.068	0.065	0.056	0.041	0.022	0
	FINAL CAMBER ↑	0	5/16"	1/2"	11/16"	7/8"	7/8"	7/8"	3/4"	9/16"	5/16"	0	0	5/16"	9/16"	3/4"	7/8"	7/8"	7/8"	11/16"	1/2"	5/16"	0

✳ INCLUDES FUTURE WEARING SURFACE

ALL VALUES ARE SHOWN IN FEET (DECIMAL FORM), EXCEPT "FINAL CAMBER", WHICH IS GIVEN IN INCHES (FRACTION FORM).

PROJECT NO. R-3307

CARTERET COUNTY

STATION: 46+21.50 -L-

SHEET 1 OF 8

STATE OF NORTH CAROLINA
DEPARTMENT OF TRANSPORTATION
RALEIGH

SUPERSTRUCTURE

DEAD LOAD DEFLECTIONS UNITS 1 AND 2 SPANS A THRU E

NORTH CAROLINA PROFESSIONAL ENGINEER SEAL 12323 MORRIS ISRAELNIAN 3/30/2012

NORTH CAROLINA PROFESSIONAL ENGINEER SEAL 027199 ALLYSON K. ORR 3/30/2012

MI ENGINEERING
1011 SHAUB DRIVE, SUITE 100
RALEIGH, NC 27606
(919) 851-6606
FIRM PE NUMBER : P-0671

REVISIONS						SHEET NO.
NO.	BY:	DATE:	NO.	BY:	DATE:	S-155
1			3			TOTAL SHEETS
2			4			333

DRAWN BY : B.E. LANNING DATE : 10-11
CHECKED BY : A.K. ORR DATE : 10-11

DWG. 156 OF 282

3/26/2012
2:24:43 PM
User: planning
Filename: P:\NC Projects\MI0005 - Gallants Channel\R-3307\Structures\R-3307_156_SD_DL_A_THRU_E.dgn

DEAD LOAD DEFLECTION TABLE FOR GIRDERS- SPAN F-J

0.6"Ø LOW RELAXATION	GIRDER NO. 1										
TENTH POINTS BETWEEN BEARINGS	0.0	0.1	0.2	0.3	0.4	0.5	0.6	0.7	0.8	0.9	1.0
CAMBER (GIRDER ALONE IN PLACE) (FT.) ↑	0.000	0.117	0.204	0.265	0.300	0.310	0.300	0.265	0.204	0.117	0.000
✱ DEFLECTION DUE TO SUPERIMPOSED D.L. (FT.) ↓	0.000	0.042	0.081	0.111	0.130	0.136	0.130	0.111	0.081	0.042	0.000
FINAL CAMBER (IN.) ↑	0"	7/8"	1 1/2"	1 13/16"	2 1/16"	2 1/16"	2 1/16"	1 13/16"	1 1/2"	7/8"	0"

DEAD LOAD DEFLECTION TABLE FOR GIRDERS- SPAN F-J

0.6"Ø LOW RELAXATION	GIRDERS NO. 2 - 4										
TENTH POINTS BETWEEN BEARINGS	0.0	0.1	0.2	0.3	0.4	0.5	0.6	0.7	0.8	0.9	1.0
CAMBER (GIRDER ALONE IN PLACE) (FT.) ↑	0.000	0.117	0.204	0.265	0.300	0.310	0.300	0.265	0.204	0.117	0.000
✱ DEFLECTION DUE TO SUPERIMPOSED D.L. (FT.) ↓	0.000	0.043	0.083	0.113	0.132	0.138	0.132	0.113	0.083	0.043	0.000
FINAL CAMBER (IN.) ↑	0"	7/8"	1 7/16"	1 13/16"	2"	2 1/16"	2"	1 13/16"	1 7/16"	7/8"	0"

DEAD LOAD DEFLECTION TABLE FOR GIRDERS- SPAN F-J

0.6"Ø LOW RELAXATION	GIRDERS NO. 5 - 8										
TENTH POINTS BETWEEN BEARINGS	0.0	0.1	0.2	0.3	0.4	0.5	0.6	0.7	0.8	0.9	1.0
CAMBER (GIRDER ALONE IN PLACE) (FT.) ↑	0.000	0.119	0.208	0.269	0.304	0.314	0.304	0.269	0.208	0.119	0.000
✱ DEFLECTION DUE TO SUPERIMPOSED D.L. (FT.) ↓	0.000	0.048	0.093	0.127	0.149	0.155	0.149	0.127	0.093	0.048	0.000
FINAL CAMBER (IN.) ↑	0"	7/8"	1 3/8"	1 11/16"	1 7/8"	1 7/8"	1 7/8"	1 11/16"	1 3/8"	7/8"	0"

DEAD LOAD DEFLECTION TABLE FOR GIRDERS- SPAN F-J

0.6"Ø LOW RELAXATION	GIRDER NO. 9										
TENTH POINTS BETWEEN BEARINGS	0.0	0.1	0.2	0.3	0.4	0.5	0.6	0.7	0.8	0.9	1.0
CAMBER (GIRDER ALONE IN PLACE) (FT.) ↑	0.000	0.119	0.208	0.269	0.304	0.314	0.304	0.269	0.208	0.119	0.000
✱ DEFLECTION DUE TO SUPERIMPOSED D.L. (FT.) ↓	0.000	0.049	0.094	0.129	0.151	0.158	0.151	0.129	0.094	0.049	0.000
FINAL CAMBER (IN.) ↑	0"	7/8"	1 3/8"	1 11/16"	1 13/16"	1 7/8"	1 13/16"	1 11/16"	1 3/8"	7/8"	0"

DEAD LOAD DEFLECTION TABLE FOR GIRDERS- SPAN K-O

0.6"Ø LOW RELAXATION	GIRDERS NO. 1 & 9										
TENTH POINTS BETWEEN BEARINGS	0.0	0.1	0.2	0.3	0.4	0.5	0.6	0.7	0.8	0.9	1.0
CAMBER (GIRDER ALONE IN PLACE) (FT.) ↑	0.000	0.110	0.191	0.247	0.279	0.288	0.279	0.247	0.191	0.110	0.000
✱ DEFLECTION DUE TO SUPERIMPOSED D.L. (FT.) ↓	0.000	0.042	0.081	0.111	0.129	0.135	0.129	0.111	0.081	0.042	0.000
FINAL CAMBER (IN.) ↑	0"	13/16"	1 5/16"	1 5/8"	1 13/16"	1 13/16"	1 13/16"	1 5/8"	1 5/16"	13/16"	0"

DEAD LOAD DEFLECTION TABLE FOR GIRDERS- SPAN K-O

0.6"Ø LOW RELAXATION	GIRDERS NO. 2 - 8										
TENTH POINTS BETWEEN BEARINGS	0.0	0.1	0.2	0.3	0.4	0.5	0.6	0.7	0.8	0.9	1.0
CAMBER (GIRDER ALONE IN PLACE) (FT.) ↑	0.000	0.110	0.191	0.247	0.279	0.288	0.279	0.247	0.191	0.110	0.000
✱ DEFLECTION DUE TO SUPERIMPOSED D.L. (FT.) ↓	0.000	0.043	0.082	0.113	0.132	0.138	0.132	0.113	0.082	0.043	0.000
FINAL CAMBER (IN.) ↑	0"	13/16"	1 5/16"	1 5/8"	1 3/4"	1 13/16"	1 3/4"	1 5/8"	1 5/16"	13/16"	0"

✱ INCLUDES FUTURE WEARING SURFACE

ALL VALUES ARE SHOWN IN FEET (DECIMAL FORM), EXCEPT "FINAL CAMBER", WHICH IS GIVEN IN INCHES (FRACTIONAL FORM).

PROJECT NO. R-3307
CARTERET COUNTY
STATION: 46+21.50 -L-

SHEET 2 OF 8

STATE OF NORTH CAROLINA
DEPARTMENT OF TRANSPORTATION
RALEIGH

SUPERSTRUCTURE

DEAD LOAD DEFLECTIONS
UNITS 3 THRU 7

NORTH CAROLINA PROFESSIONAL SEAL 25911 ENGINEER DWAIN G. HATHAWAY 4-3-2012

NORTH CAROLINA PROFESSIONAL SEAL 033752 ENGINEER SETH A. DENNEY

THE LPA GROUP of North Carolina
TRANSPORTATION CONSULTANTS

THE LPA GROUP of North Carolina
8000 Regency Parkway, Suite 600
Cary, North Carolina 27518
NC License No.: F-1084

REVISIONS								SHEET NO.
NO.	BY:	DATE:	NO.	BY:	DATE:			S-156
1			3					TOTAL SHEETS
2			4					333

DRAWN BY : M. D. MAYHEW DATE : 12-9-11
CHECKED BY : A. L. PHILLIPS DATE : 12-13-11

DWG. 157 OF 282

4/2/2012
12:42: PM
Users:jaustin
Filename: Y:\Projects\NCDOT\R-3307\Dwgs\Final\R-3307_157_SD_DL.dgn

DEAD LOAD DEFLECTION TABLE FOR INTERIOR END GIRDER SEGMENTS - SPAN P

	TWENTIETH POINTS	℄ BEARING	.05	.10	.15	.20	.25	.30	.35	.40	.45	.50	.55	.60	.65	.70	.75	.80	.85	.90	.95	℄ SPLICE
A	GIRDER AND STAGE #1 PT DEFLECTION ↑	0.000	0.037	0.074	0.107	0.128	0.149	0.164	0.174	0.183	0.186	0.188	0.189	0.184	0.178	0.170	0.157	0.144	0.125	0.102	0.079	0.057
B	DECK POUR DEFLECTION ↓	0.000	-0.034	-0.069	-0.102	-0.130	-0.158	-0.181	-0.199	-0.216	-0.224	-0.230	-0.235	-0.228	-0.221	-0.211	-0.195	-0.179	-0.160	-0.139	-0.118	-0.097
C	STAGE #2 PT DEFLECTION ↑	0.000	0.025	0.049	0.073	0.092	0.112	0.127	0.139	0.150	0.155	0.157	0.160	0.153	0.148	0.140	0.128	0.116	0.102	0.087	0.072	0.058
D	RAIL DEFLECTION ↓	0.000	-0.004	-0.008	-0.012	-0.016	-0.019	-0.022	-0.024	-0.027	-0.028	-0.029	-0.030	-0.029	-0.028	-0.026	-0.022	-0.017	-0.015	-0.015	-0.015	-0.012
E	FINAL DEFLECTION	0.000	0.023	0.046	0.065	0.075	0.084	0.088	0.089	0.090	0.089	0.087	0.085	0.081	0.077	0.072	0.064	0.057	0.046	0.032	0.018	0.005
F	VERTICAL CURVE ORDINATE ↑	0.000	0.046	0.092	0.134	0.166	0.197	0.221	0.238	0.255	0.260	0.262	0.265	0.251	0.239	0.222	0.195	0.168	0.133	0.091	0.050	0.000
BU	BUILD-UP REQUIRED	4 1/2"	4 3/4"	5 1/16"	5 5/16"	5 5/8"	5 7/8"	6 1/16"	6 5/16"	6 1/2"	6 9/16"	6 5/8"	6 11/16"	6 9/16"	6 7/16"	6 5/16"	6 1/16"	5 13/16"	5 9/16"	5 3/16"	4 7/8"	4 7/16"

ALL VALUES ARE SHOWN IN FEET (DECIMAL FORM), EXCEPT "BUILD-UP REQUIRED", WHICH IS GIVEN IN INCHES (FRACTION FORM).

DEAD LOAD DEFLECTION TABLE FOR INTERIOR HAUNCHED GIRDER SEGMENTS - SPANS P & Q

	TWENTIETH POINTS	℄ SPLICE	.05	.10	.15	.20	.25	.30	.35	.40	.45	℄ BEARING	.55	.60	.65	.70	.75	.80	.85	.90	.95	℄ SPLICE
A	GIRDER AND STAGE #1 PT DEFLECTION ↑	0.057	0.044	0.031	0.021	0.014	0.007	0.000	-0.001	-0.001	0.000	0.000	0.007	0.015	0.022	0.029	0.040	0.058	0.076	0.094	0.112	0.130
B	DECK POUR DEFLECTION ↓	-0.097	-0.084	-0.071	-0.059	-0.048	-0.038	-0.027	-0.020	-0.013	-0.007	0.000	0.001	0.003	0.004	0.005	0.005	0.001	-0.003	-0.007	-0.011	-0.017
C	STAGE #2 PT DEFLECTION ↑	0.058	0.049	0.039	0.031	0.025	0.019	0.012	0.009	0.006	0.003	0.000	0.001	0.002	0.004	0.005	0.008	0.014	0.020	0.026	0.031	0.039
D	RAIL DEFLECTION ↓	-0.012	-0.009	-0.007	-0.005	-0.004	-0.003	-0.001	-0.001	-0.001	0.000	0.000	-0.001	-0.002	-0.003	-0.004	-0.006	-0.008	-0.010	-0.013	-0.015	-0.018
E	FINAL DEFLECTION	0.005	-0.001	-0.007	-0.011	-0.013	-0.014	-0.016	-0.013	-0.009	-0.004	0.000	0.009	0.017	0.026	0.035	0.047	0.064	0.082	0.099	0.117	0.134
F	VERTICAL CURVE ORDINATE ↑	0.000	0.025	0.050	0.071	0.087	0.104	0.120	0.128	0.133	0.139	0.144	0.137	0.131	0.124	0.117	0.106	0.086	0.066	0.045	0.025	0.000
BU	BUILD-UP REQUIRED	4 7/16"	4 13/16"	5 3/16"	5 1/2"	5 11/16"	5 15/16"	6 1/8"	6 3/16"	6 3/16"	6 3/16"	6 1/4"	6 1/16"	5 7/8"	5 11/16"	5 1/2"	5 3/16"	4 3/4"	4 5/16"	3 7/8"	3 3/8"	2 7/8"

ALL VALUES ARE SHOWN IN FEET (DECIMAL FORM), EXCEPT "BUILD-UP REQUIRED", WHICH IS GIVEN IN INCHES (FRACTION FORM).

DEAD LOAD DEFLECTION TABLE FOR INTERIOR DROP-IN GIRDER SEGMENTS - SPAN Q

	TWENTIETH POINTS	℄ SPLICE	.05	.10	.15	.20	.25	.30	.35	.40	.45	.50	.55	.60	.65	.70	.75	.80	.85	.90	.95	℄ SPLICE
A	GIRDER AND STAGE #1 PT DEFLECTION ↑	0.130	0.153	0.176	0.176	0.211	0.223	0.235	0.243	0.246	0.250	0.250	0.250	0.246	0.243	0.235	0.223	0.210	0.210	0.175	0.152	0.129
B	DECK POUR DEFLECTION ↓	-0.017	-0.029	-0.042	-0.042	-0.065	-0.077	-0.088	-0.096	-0.101	-0.105	-0.105	-0.105	-0.101	-0.096	-0.088	-0.077	-0.066	-0.066	-0.043	-0.031	-0.019
C	STAGE #2 PT DEFLECTION ↑	0.039	0.051	0.064	0.064	0.086	0.097	0.107	0.114	0.118	0.122	0.122	0.121	0.117	0.113	0.106	0.095	0.085	0.085	0.062	0.050	0.038
D	RAIL DEFLECTION ↓	-0.018	-0.021	-0.024	-0.024	-0.030	-0.033	-0.035	-0.037	-0.038	-0.039	-0.039	-0.040	-0.039	-0.039	-0.037	-0.035	-0.034	-0.034	-0.029	-0.026	-0.023
E	FINAL DEFLECTION	0.134	0.154	0.174	0.174	0.202	0.210	0.219	0.224	0.225	0.227	0.227	0.226	0.223	0.221	0.215	0.205	0.196	0.196	0.166	0.145	0.125
F	VERTICAL CURVE ORDINATE ↑	0.000	0.044	0.087	0.087	0.157	0.184	0.211	0.229	0.238	0.247	0.247	0.247	0.238	0.229	0.211	0.184	0.157	0.157	0.087	0.044	0.000
BU	BUILD-UP REQUIRED	2 7/8"	3 3/16"	3 7/16"	3 7/16"	3 15/16"	4 3/16"	4 7/16"	4 9/16"	4 5/8"	4 3/4"	4 3/4"	4 3/4"	4 11/16"	4 5/8"	4 7/16"	4 1/4"	4 1/16"	4 1/16"	3 9/16"	3 1/4"	3"

ALL VALUES ARE SHOWN IN FEET (DECIMAL FORM), EXCEPT "BUILD-UP REQUIRED", WHICH IS GIVEN IN INCHES (FRACTION FORM).

NOTES

ITEMS A, B, C AND D ARE INTENDED TO ASSIST THE CONTRACTOR AND ENGINEER IN DETECTING ANY UNINTENDED DEFLECTIONS THAT MAY OCCUR DURING CONSTRUCTION.

THE GIRDER BUILD-UPS ARE USED FOR ESTIMATING QUANTITIES AND PLATFORM SETTING. THEY ARE NOT INTENDED TO BE USED AS A GRADE SETTING TOOL.

PRIOR TO CASTING THE DECK, THE CONTRACTOR SHALL SUBMIT TO THE ENGINEER FOR APPROVAL, THE CALCULATIONS USED FOR DETERMINING THE BUILD-UP.

THE CONTRACTOR SHALL CAST THE DECK OF SPANS P-R WITHIN 30 DAYS OF DETERMINING THE REQUIRED BUILD-UPS. THE WORK TO BE DONE WITHIN THE 30 DAYS DOES NOT INCLUDE STAGE 2 POST TENSIONING.

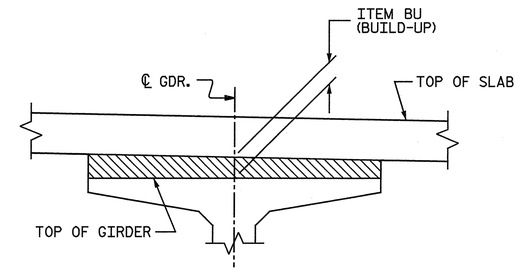

DETAIL SHOWING BUILD-UP OVER GIRDER

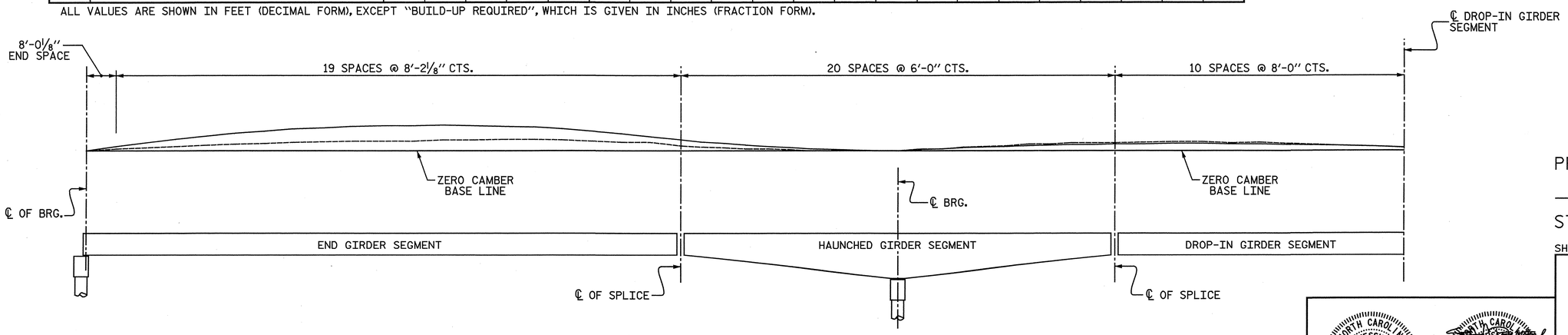

DENOTES GIRDER AND STAGE #1 PT DEFLECTION (DEFLECTION A)

DENOTES FINAL DEFLECTION (DEFLECTION E)

CAMBER DIAGRAM

PROJECT NO. R-3307
CARTERET COUNTY
STATION: 46+21.50 -L-

SHEET 3 OF 8

STATE OF NORTH CAROLINA
DEPARTMENT OF TRANSPORTATION
RALEIGH

SUPERSTRUCTURE

DEAD LOAD DEFLECTIONS
UNIT 8

INTERIOR GIRDER SEGMENTS

NORTH CAROLINA PROFESSIONAL SEAL 25911 ENGINEER DWAIN G. HATHAWAY 4-3-2012

NORTH CAROLINA PROFESSIONAL SEAL 033752 ENGINEER SETH A. DENNEY 4/03/12

THE LPA GROUP of North Carolina TRANSPORTATION CONSULTANTS

THE LPA GROUP of North Carolina
8000 Regency Parkway, Suite 600
Cary, North Carolina 27518
NC License No.: F-1084

REVISIONS										SHEET NO.
NO.	BY:	DATE:	NO.	BY:	DATE:					S-157
1			3							TOTAL SHEETS
2			4							333

DRAWN BY : M. D. MAYHEW DATE : 9-2-11
CHECKED BY : S. A. DENNEY DATE : 9-13-11

DWG. 158 OF 282

4/2/2012
12:42: PM
User: jaustin
Filename: Y:\Projects\NCDOT\R-3307\Dwgs\Final\R-3307_158_SD_PT_DL1.dgn

NOTE:
FOR NOTES, SEE SHEET 3 OF 8.

DEAD LOAD DEFLECTION TABLE FOR INTERIOR HAUNCHED GIRDER SEGMENTS - SPANS Q & R

	TWENTIETH POINTS	℄ SPLICE	.05	.10	.15	.20	.25	.30	.35	.40	.45	℄ BEARING	.55	.60	.65	.70	.75	.80	.85	.90	.95	℄ SPLICE
A	GIRDER AND STAGE #1 PT DEFLECTION ↑	0.129	0.111	0.093	0.075	0.057	0.039	0.029	0.022	0.014	0.007	0.000	0.000	-0.001	-0.001	0.000	0.008	0.015	0.022	0.032	0.045	0.058
B	DECK POUR DEFLECTION ↓	-0.019	-0.017	-0.012	-0.007	-0.002	0.004	0.005	0.003	0.002	0.001	0.000	-0.006	-0.013	-0.019	-0.027	-0.037	-0.047	-0.057	-0.069	-0.083	-0.096
C	STAGE #2 PT DEFLECTION ↑	0.038	0.035	0.029	0.022	0.015	0.008	0.005	0.004	0.002	0.001	0.000	0.003	0.006	0.009	0.013	0.019	0.026	0.032	0.041	0.050	0.059
D	RAIL DEFLECTION ↓	-0.023	-0.022	-0.018	-0.015	-0.012	-0.008	-0.006	-0.005	-0.003	-0.002	0.000	0.000	0.000	0.000	0.000	-0.001	-0.002	-0.003	-0.004	-0.006	-0.008
E	FINAL DEFLECTION	0.125	0.119	0.100	0.081	0.062	0.044	0.032	0.024	0.016	0.008	0.000	-0.004	-0.007	-0.011	-0.013	-0.011	-0.008	-0.006	-0.001	0.006	0.013
F	VERTICAL CURVE ORDINATE ↑	0.000	0.025	0.045	0.066	0.086	0.106	0.117	0.124	0.131	0.137	0.144	0.139	0.133	0.128	0.120	0.104	0.087	0.071	0.050	0.025	0.000
BU	BUILD-UP REQUIRED	3"	3 1/2"	3 15/16"	4 3/8"	4 13/16"	5 1/4"	5 1/2"	5 11/16"	5 7/8"	6 1/16"	6 1/4"	6 3/16"	6 3/16"	6 3/16"	6 1/8"	5 7/8"	5 5/8"	5 7/16"	5 1/8"	4 3/4"	4 5/16"

ALL VALUES ARE SHOWN IN FEET (DECIMAL FORM), EXCEPT "BUILD-UP REQUIRED", WHICH IS GIVEN IN INCHES (FRACTION FORM).

DEAD LOAD DEFLECTION TABLE FOR INTERIOR END GIRDER SEGMENTS - SPAN R

	TWENTIETH POINTS	℄ SPLICE	.05	.10	.15	.20	.25	.30	.35	.40	.45	.50	.55	.60	.65	.70	.75	.80	.85	.90	.95	℄ BEARING
A	GIRDER AND STAGE #1 PT DEFLECTION ↑	0.058	0.081	0.104	0.127	0.146	0.160	0.173	0.181	0.186	0.186	0.190	0.189	0.186	0.176	0.166	0.151	0.129	0.108	0.075	0.037	0.000
B	DECK POUR DEFLECTION ↓	-0.096	-0.117	-0.138	-0.159	-0.178	-0.194	-0.211	-0.220	-0.227	-0.227	-0.229	-0.224	-0.216	-0.198	-0.181	-0.158	-0.130	-0.101	-0.069	-0.034	0.000
C	STAGE #2 PT DEFLECTION ↑	0.059	0.074	0.089	0.104	0.118	0.130	0.142	0.150	0.156	0.156	0.159	0.157	0.152	0.140	0.129	0.113	0.093	0.073	0.050	0.025	0.000
D	RAIL DEFLECTION ↓	-0.008	-0.011	-0.014	-0.017	-0.019	-0.021	-0.023	-0.024	-0.025	-0.025	-0.025	-0.025	-0.024	-0.022	-0.020	-0.018	-0.014	-0.011	-0.008	-0.004	0.000
E	FINAL DEFLECTION	0.013	0.027	0.041	0.056	0.067	0.074	0.081	0.086	0.090	0.090	0.095	0.097	0.098	0.096	0.094	0.088	0.078	0.068	0.048	0.024	0.000
F	VERTICAL CURVE ORDINATE ↑	0.000	0.050	0.091	0.133	0.168	0.195	0.222	0.239	0.251	0.251	0.262	0.260	0.255	0.238	0.221	0.197	0.166	0.134	0.092	0.046	0.000
BU	BUILD-UP REQUIRED	4 5/16"	4 3/4"	5 1/8"	5 7/16"	5 11/16"	5 15/16"	6 3/16"	6 5/16"	6 7/16"	6 7/16"	6 1/2"	6 7/16"	6 3/8"	6 3/16"	6"	5 13/16"	5 9/16"	5 5/16"	5"	4 3/4"	4 1/2"

ALL VALUES ARE SHOWN IN FEET (DECIMAL FORM), EXCEPT "BUILD-UP REQUIRED", WHICH IS GIVEN IN INCHES (FRACTION FORM).

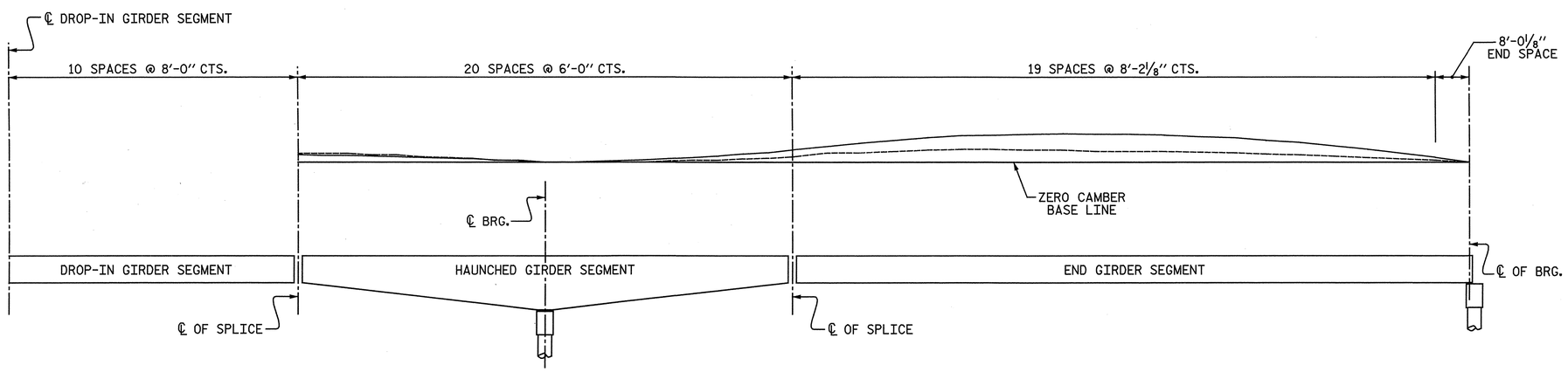

DENOTES GIRDER AND STAGE #1 PT DEFLECTION (DEFLECTION A)

DENOTES FINAL DEFLECTION (DEFLECTION E)

CAMBER DIAGRAM

PROJECT NO. R-3307
CARTERET COUNTY
STATION: 46+21.50 -L-

SHEET 4 OF 8

STATE OF NORTH CAROLINA
DEPARTMENT OF TRANSPORTATION
RALEIGH
SUPERSTRUCTURE

DEAD LOAD DEFLECTIONS
UNIT 8

INTERIOR GIRDER SEGMENTS

NORTH CAROLINA PROFESSIONAL SEAL 25911 ENGINEER DWAIN G. WATHMAN 4-3-2012

NORTH CAROLINA PROFESSIONAL SEAL 033752 ENGINEER SETH A. DENNEY 4/13/12

THE LPA GROUP of North Carolina TRANSPORTATION CONSULTANTS

THE LPA GROUP of North Carolina
8000 Regency Parkway, Suite 600
Cary, North Carolina 27518
NC License No.: F-1084

REVISIONS						SHEET NO.
NO.	BY:	DATE:	NO.	BY:	DATE:	S-158
1			3			TOTAL SHEETS
2			4			333

DRAWN BY : M. D. MAYHEW DATE : 9-2-11
CHECKED BY : S. A. DENNEY DATE : 9-13-11

DWG. 159 OF 282

4/2/2012
12:42: PM
User: jaustin
Filename: Y:\Projects\NCDOT\R-3307\Dwgs\Find\R-3307_159_SD_PT_DL2.dgn

NOTE:
FOR NOTES, SEE SHEET 3 OF 8.

DEAD LOAD DEFLECTION TABLE FOR EXTERIOR END GIRDER SEGMENTS - SPAN P

	TWENTIETH POINTS	℄ BEARING	.05	.10	.15	.20	.25	.30	.35	.40	.45	.50	.55	.60	.65	.70	.75	.80	.85	.90	.95	℄ SPLICE
A	GIRDER AND STAGE #1 PT DEFLECTION ↑	0.000	0.037	0.074	0.107	0.128	0.149	0.164	0.174	0.183	0.186	0.188	0.189	0.184	0.178	0.170	0.157	0.144	0.125	0.102	0.079	0.057
B	DECK POUR DEFLECTION ↓	0.000	-0.036	-0.071	-0.105	-0.134	-0.163	-0.187	-0.205	-0.223	-0.232	-0.237	-0.243	-0.235	-0.228	-0.218	-0.202	-0.185	-0.165	-0.144	-0.122	-0.101
C	STAGE #2 PT DEFLECTION ↑	0.000	0.025	0.049	0.073	0.092	0.112	0.127	0.139	0.150	0.154	0.157	0.159	0.153	0.147	0.140	0.127	0.115	0.102	0.087	0.072	0.058
D	RAIL DEFLECTION ↓	0.000	-0.003	-0.007	-0.010	-0.013	-0.016	-0.018	-0.020	-0.022	-0.023	-0.024	-0.024	-0.024	-0.023	-0.022	-0.018	-0.014	-0.013	-0.013	-0.013	-0.010
E	FINAL DEFLECTION	0.000	0.023	0.045	0.064	0.073	0.082	0.086	0.087	0.088	0.086	0.084	0.082	0.078	0.074	0.069	0.062	0.055	0.044	0.030	0.016	0.004
F	VERTICAL CURVE ORDINATE ↑	0.000	0.046	0.092	0.134	0.166	0.197	0.221	0.238	0.255	0.260	0.262	0.265	0.251	0.239	0.222	0.195	0.168	0.133	0.091	0.050	0.000
BU	BUILD-UP REQUIRED	4 1/2"	4 13/16"	5 1/16"	5 3/8"	5 5/8"	5 7/8"	6 1/8"	6 5/16"	6 1/2"	6 9/16"	6 5/8"	6 11/16"	6 9/16"	6 1/2"	6 5/16"	6 1/8"	5 7/8"	5 9/16"	5 1/4"	4 7/8"	4 7/16"

ALL VALUES ARE SHOWN IN FEET (DECIMAL FORM), EXCEPT "BUILD-UP REQUIRED", WHICH IS GIVEN IN INCHES (FRACTION FORM).

DEAD LOAD DEFLECTION TABLE FOR EXTERIOR HAUNCHED GIRDER SEGMENTS - SPANS P & Q

	TWENTIETH POINTS	℄ SPLICE	.05	.10	.15	.20	.25	.30	.35	.40	.45	℄ BEARING	.55	.60	.65	.70	.75	.80	.85	.90	.95	℄ SPLICE
A	GIRDER AND STAGE #1 PT DEFLECTION ↑	0.057	0.044	0.031	0.021	0.014	0.007	0.000	-0.001	-0.001	0.000	0.000	0.007	0.015	0.022	0.029	0.040	0.058	0.076	0.094	0.112	0.130
B	DECK POUR DEFLECTION ↓	-0.101	-0.087	-0.073	-0.060	-0.050	-0.039	-0.028	-0.020	-0.013	-0.007	0.000	0.001	0.003	0.004	0.005	0.005	0.001	-0.003	-0.008	-0.012	-0.018
C	STAGE #2 PT DEFLECTION ↑	0.058	0.048	0.039	0.031	0.025	0.019	0.012	0.008	0.006	0.003	0.000	0.001	0.003	0.004	0.005	0.008	0.014	0.020	0.026	0.032	0.039
D	RAIL DEFLECTION ↓	-0.010	-0.008	-0.006	-0.005	-0.004	-0.003	-0.002	-0.001	-0.001	0.000	0.000	-0.001	-0.001	-0.002	-0.003	-0.004	-0.005	-0.007	-0.008	-0.010	-0.012
E	FINAL DEFLECTION	0.004	-0.003	-0.009	-0.013	-0.014	-0.016	-0.017	-0.014	-0.009	-0.005	0.000	0.009	0.018	0.028	0.037	0.049	0.067	0.085	0.104	0.122	0.140
F	VERTICAL CURVE ORDINATE ↑	0.000	0.025	0.050	0.071	0.087	0.104	0.120	0.128	0.133	0.139	0.144	0.137	0.131	0.124	0.117	0.106	0.086	0.066	0.045	0.025	0.000
BU	BUILD-UP REQUIRED	4 7/16"	4 13/16"	5 3/16"	5 1/2"	5 3/4"	5 15/16"	6 1/8"	6 3/16"	6 3/16"	6 1/4"	6 1/4"	6 1/16"	5 7/8"	5 5/8"	5 7/16"	5 3/16"	4 3/4"	4 1/4"	3 13/16"	3 5/16"	2 13/16"

ALL VALUES ARE SHOWN IN FEET (DECIMAL FORM), EXCEPT "BUILD-UP REQUIRED", WHICH IS GIVEN IN INCHES (FRACTION FORM).

DEAD LOAD DEFLECTION TABLE FOR EXTERIOR DROP-IN GIRDER SEGMENTS - SPAN Q

	TWENTIETH POINTS	℄ SPLICE	.05	.10	.15	.20	.25	.30	.35	.40	.45	.50	.55	.60	.65	.70	.75	.80	.85	.90	.95	℄ SPLICE
A	GIRDER AND STAGE #1 PT DEFLECTION ↑	0.130	0.153	0.176	0.176	0.211	0.223	0.235	0.243	0.246	0.250	0.250	0.250	0.246	0.243	0.235	0.223	0.210	0.210	0.175	0.152	0.129
B	DECK POUR DEFLECTION ↓	-0.018	-0.030	-0.043	-0.043	-0.067	-0.079	-0.090	-0.099	-0.103	-0.108	-0.108	-0.108	-0.104	-0.099	-0.091	-0.079	-0.068	-0.068	-0.044	-0.031	-0.019
C	STAGE #2 PT DEFLECTION ↑	0.039	0.052	0.064	0.064	0.087	0.097	0.107	0.115	0.118	0.122	0.122	0.122	0.118	0.114	0.107	0.096	0.086	0.086	0.063	0.050	0.038
D	RAIL DEFLECTION ↓	-0.012	-0.014	-0.016	-0.016	-0.021	-0.022	-0.024	-0.025	-0.026	-0.027	-0.027	-0.027	-0.027	-0.026	-0.025	-0.024	-0.022	-0.022	-0.019	-0.017	-0.015
E	FINAL DEFLECTION	0.140	0.160	0.181	0.181	0.211	0.219	0.228	0.234	0.235	0.237	0.237	0.236	0.234	0.232	0.225	0.216	0.206	0.206	0.175	0.154	0.133
F	VERTICAL CURVE ORDINATE ↑	0.000	0.044	0.087	0.087	0.157	0.184	0.211	0.229	0.238	0.247	0.247	0.247	0.238	0.229	0.211	0.184	0.157	0.157	0.087	0.044	0.000
BU	BUILD-UP REQUIRED	2 13/16"	3 1/8"	3 3/8"	3 3/8"	3 7/8"	4 1/16"	4 5/16"	4 7/16"	4 9/16"	4 5/8"	4 5/8"	4 5/8"	4 9/16"	4 1/2"	4 5/16"	4 1/8"	3 15/16"	3 15/16"	3 7/16"	3 3/16"	2 7/8"

ALL VALUES ARE SHOWN IN FEET (DECIMAL FORM), EXCEPT "BUILD-UP REQUIRED", WHICH IS GIVEN IN INCHES (FRACTION FORM).

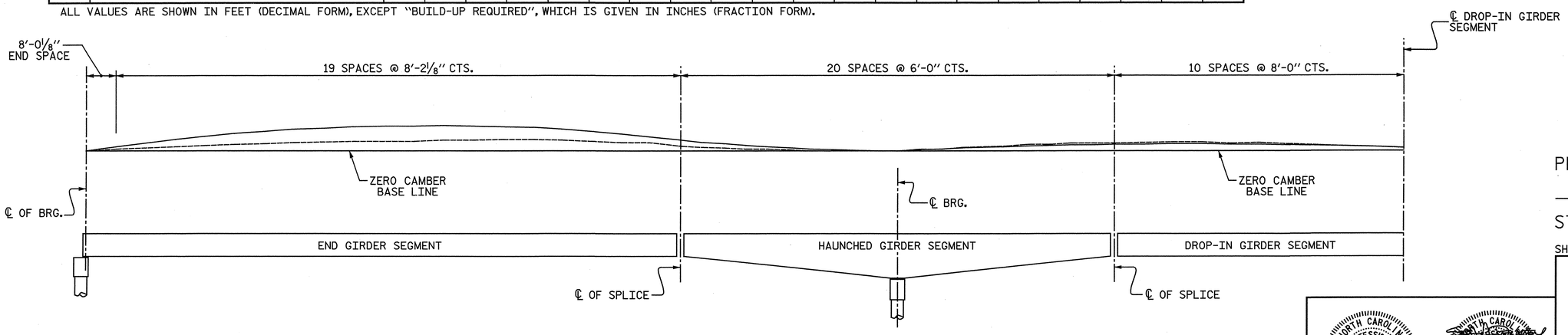

DENOTES GIRDER AND STAGE #1 PT DEFLECTION (DEFLECTION A)

DENOTES FINAL DEFLECTION (DEFLECTION E)

CAMBER DIAGRAM

PROJECT NO. R-3307
CARTERET COUNTY
STATION: 46+21.50 -L-

SHEET 5 OF 8

STATE OF NORTH CAROLINA
DEPARTMENT OF TRANSPORTATION
RALEIGH

SUPERSTRUCTURE

DEAD LOAD DEFLECTIONS
UNIT 8

EXTERIOR GIRDER SEGMENTS

NORTH CAROLINA PROFESSIONAL SEAL 25911 ENGINEER EDWIN G. HATHWAY 4-3-2012

NORTH CAROLINA PROFESSIONAL SEAL 033752 ENGINEER SETH A. DENNEY 4/03/12

THE LPA GROUP of North Carolina
TRANSPORTATION CONSULTANTS

THE LPA GROUP of North Carolina
8000 Regency Parkway, Suite 600
Cary, North Carolina 27518
NC License No.: F-1084

REVISIONS									SHEET NO.
NO.	BY:	DATE:	NO.	BY:	DATE:				S-159
1			3						TOTAL SHEETS
2			4						333

DRAWN BY : M. D. MAYHEW DATE : 9-2-11
CHECKED BY : S. A. DENNEY DATE : 9-13-11

DWG. 160 OF 282

4/2/2012 12:42:_ PM
User: jaustin
Filename: Y:\Projects\NCDOT\R-3307\Dwgs\Final\R-3307_160_SD_PT_DL3.dgn

NOTE:
FOR NOTES, SEE SHEET 3 OF 8.

DEAD LOAD DEFLECTION TABLE FOR EXTERIOR HAUNCHED GIRDER SEGMENTS - SPANS Q & R

	TWENTIETH POINTS	℄ SPLICE	.05	.10	.15	.20	.25	.30	.35	.40	.45	℄ BEARING	.55	.60	.65	.70	.75	.80	.85	.90	.95	℄ SPLICE
A	GIRDER AND STAGE #1 PT DEFLECTION ↑	0.129	0.111	0.093	0.075	0.057	0.039	0.029	0.022	0.014	0.007	0.000	0.000	-0.001	-0.001	0.000	0.008	0.015	0.022	0.032	0.045	0.058
B	DECK POUR DEFLECTION ↓	-0.019	-0.017	-0.012	-0.007	-0.002	0.004	0.005	0.004	0.002	0.001	0.000	-0.007	-0.013	-0.020	-0.027	-0.038	-0.049	-0.059	-0.072	-0.086	-0.099
C	STAGE #2 PT DEFLECTION ↑	0.038	0.036	0.029	0.022	0.015	0.008	0.005	0.004	0.002	0.001	0.000	0.003	0.006	0.009	0.013	0.019	0.026	0.032	0.040	0.050	0.059
D	RAIL DEFLECTION ↓	-0.015	-0.014	-0.012	-0.009	-0.007	-0.005	-0.004	-0.003	-0.002	-0.001	0.000	0.000	0.000	0.000	-0.001	-0.002	-0.003	-0.004	-0.005	-0.006	-0.008
E	FINAL DEFLECTION	0.133	0.127	0.107	0.087	0.067	0.047	0.035	0.026	0.017	0.009	0.000	-0.004	-0.008	-0.013	-0.015	-0.013	-0.011	-0.009	-0.004	0.003	0.010
F	VERTICAL CURVE ORDINATE ↑	0.000	0.025	0.045	0.066	0.086	0.106	0.117	0.124	0.131	0.137	0.144	0.139	0.133	0.128	0.120	0.104	0.087	0.071	0.050	0.025	0.000
BU	BUILD-UP REQUIRED	2 7/8"	3 3/8"	3 7/8"	4 5/16"	4 3/4"	5 3/16"	5 1/2"	5 11/16"	5 7/8"	6 1/16"	6 1/4"	6 3/16"	6 3/16"	6 3/16"	6 1/8"	5 7/8"	5 11/16"	5 7/16"	5 1/8"	4 3/4"	4 3/8"

ALL VALUES ARE SHOWN IN FEET (DECIMAL FORM), EXCEPT "BUILD-UP REQUIRED", WHICH IS GIVEN IN INCHES (FRACTION FORM).

DEAD LOAD DEFLECTION TABLE FOR EXTERIOR END GIRDER SEGMENTS - SPAN R

	TWENTIETH POINTS	℄ SPLICE	.05	.10	.15	.20	.25	.30	.35	.40	.45	.50	.55	.60	.65	.70	.75	.80	.85	.90	.95	℄ BEARING
A	GIRDER AND STAGE #1 PT DEFLECTION ↑	0.058	0.081	0.104	0.127	0.146	0.160	0.173	0.181	0.186	0.186	0.190	0.189	0.186	0.176	0.166	0.151	0.129	0.108	0.075	0.037	0.000
B	DECK POUR DEFLECTION ↓	-0.099	-0.121	-0.142	-0.164	-0.184	-0.201	-0.217	-0.228	-0.235	-0.235	-0.237	-0.231	-0.223	-0.205	-0.187	-0.163	-0.134	-0.105	-0.071	-0.036	0.000
C	STAGE #2 PT DEFLECTION ↑	0.059	0.074	0.089	0.104	0.118	0.130	0.142	0.150	0.156	0.156	0.159	0.157	0.152	0.140	0.129	0.113	0.093	0.073	0.050	0.025	0.000
D	RAIL DEFLECTION ↓	-0.008	-0.010	-0.013	-0.015	-0.017	-0.019	-0.020	-0.021	-0.022	-0.022	-0.022	-0.022	-0.021	-0.019	-0.017	-0.015	-0.013	-0.010	-0.007	-0.003	0.000
E	FINAL DEFLECTION	0.010	0.023	0.038	0.052	0.063	0.070	0.077	0.082	0.085	0.085	0.091	0.093	0.094	0.092	0.091	0.085	0.076	0.066	0.047	0.023	0.000
F	VERTICAL CURVE ORDINATE ↑	0.000	0.050	0.091	0.133	0.168	0.195	0.222	0.239	0.251	0.251	0.262	0.260	0.255	0.238	0.221	0.197	0.166	0.134	0.092	0.046	0.000
BU	BUILD-UP REQUIRED	4 3/8"	4 13/16"	5 1/8"	5 1/2"	5 3/4"	6"	6 1/4"	6 3/8"	6 1/2"	6 1/2"	6 9/16"	6 1/2"	6 7/16"	6 1/4"	6 1/16"	5 13/16"	5 9/16"	5 5/16"	5 1/16"	4 3/4"	4 1/2"

ALL VALUES ARE SHOWN IN FEET (DECIMAL FORM), EXCEPT "BUILD-UP REQUIRED", WHICH IS GIVEN IN INCHES (FRACTION FORM).

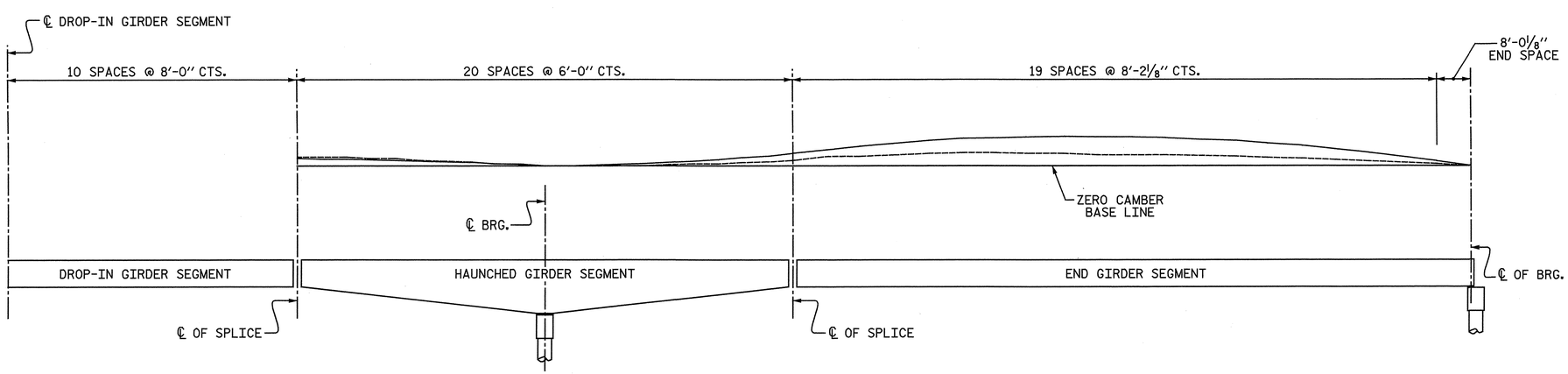

_____ DENOTES GIRDER AND STAGE #1 PT DEFLECTION (DEFLECTION A)

- - - - - DENOTES FINAL DEFLECTION (DEFLECTION E)

CAMBER DIAGRAM

PROJECT NO. R-3307
CARTERET COUNTY
STATION: 46+21.50 -L-

SHEET 6 OF 8

STATE OF NORTH CAROLINA
DEPARTMENT OF TRANSPORTATION
RALEIGH
SUPERSTRUCTURE

DEAD LOAD DEFLECTIONS UNIT 8

EXTERIOR GIRDER SEGMENTS

NORTH CAROLINA PROFESSIONAL SEAL 25911 ENGINEER DWAIN G. HATHWAY 4-3-2012

NORTH CAROLINA PROFESSIONAL SEAL 033752 ENGINEER SETH A. DENNEY

THE LPA GROUP of North Carolina TRANSPORTATION CONSULTANTS
THE LPA GROUP of North Carolina
8000 Regency Parkway, Suite 600
Cary, North Carolina 27518
NC License No.: F-1084

REVISIONS						SHEET NO.
NO.	BY:	DATE:	NO.	BY:	DATE:	S-160
1			3			TOTAL SHEETS
2			4			333

DRAWN BY : M. D. MAYHEW DATE : 9-2-11
CHECKED BY : S. A. DENNEY DATE : 9-13-11

DWG. 161 OF 282

4/2/2012 12:42:[illegible] PM
User: jaustin
Filename: Y:\Projects\NCDOT\R-3307\Dwgs\Final\R-3307_161_SD_PT_DL4.dgn

DEAD LOAD DEFLECTION AND CAMBER TABLE FOR GIRDERS IN UNITS 9, 10 AND 11

		SPANS S, V AND Y											SPANS T, W AND Z											SPANS U, X AND AA										
	TENTH POINTS	℄ BRG.	.1	.2	.3	.4	.5	.6	.7	.8	.9	℄ BRG.	℄ BRG.	.1	.2	.3	.4	.5	.6	.7	.8	.9	℄ BRG.	℄ BRG.	.1	.2	.3	.4	.5	.6	.7	.8	.9	℄ BRG.
GIRDER 1	CAMBER (GIRDER ALONE IN PLACE) ↑	0	0.046	0.085	0.116	0.136	0.143	0.136	0.116	0.085	0.046	0	0	0.046	0.085	0.116	0.136	0.143	0.136	0.116	0.085	0.046	0	0	0.046	0.085	0.116	0.136	0.143	0.136	0.116	0.085	0.046	0
	✱ DEFLECTION DUE TO SUPERIMPOSED D.L. ↓	0	0.025	0.048	0.065	0.076	0.079	0.075	0.064	0.046	0.024	0	0	0.024	0.045	0.063	0.073	0.077	0.073	0.063	0.045	0.024	0	0	0.024	0.046	0.064	0.075	0.079	0.076	0.065	0.048	0.025	0
	FINAL CAMBER ↑	0	1/4"	7/16"	5/8"	3/4"	3/4"	3/4"	5/8"	1/2"	1/4"	0	0	1/4"	1/2"	5/8"	3/4"	13/16"	3/4"	5/8"	1/2"	1/4"	0	0	1/4"	1/2"	5/8"	3/4"	3/4"	3/4"	5/8"	7/16"	1/4"	0

		SPANS S, V AND Y											SPANS T, W AND Z											SPANS U, X AND AA										
	TENTH POINTS	℄ BRG.	.1	.2	.3	.4	.5	.6	.7	.8	.9	℄ BRG.	℄ BRG.	.1	.2	.3	.4	.5	.6	.7	.8	.9	℄ BRG.	℄ BRG.	.1	.2	.3	.4	.5	.6	.7	.8	.9	℄ BRG.
GIRDERS 2-3	CAMBER (GIRDER ALONE IN PLACE) ↑	0	0.046	0.085	0.115	0.136	0.143	0.136	0.115	0.085	0.046	0	0	0.046	0.085	0.115	0.136	0.143	0.136	0.115	0.085	0.046	0	0	0.046	0.085	0.115	0.136	0.143	0.136	0.115	0.085	0.046	0
	✱ DEFLECTION DUE TO SUPERIMPOSED D.L. ↓	0	0.024	0.045	0.062	0.072	0.075	0.071	0.061	0.044	0.023	0	0	0.023	0.043	0.060	0.070	0.074	0.070	0.060	0.043	0.023	0	0	0.023	0.044	0.061	0.071	0.075	0.072	0.062	0.045	0.024	0
	FINAL CAMBER ↑	0	1/4"	1/2"	5/8"	3/4"	13/16"	3/4"	11/16"	1/2"	1/4"	0	0	1/4"	1/2"	11/16"	13/16"	13/16"	13/16"	11/16"	1/2"	1/4"	0	0	1/4"	1/2"	11/16"	3/4"	13/16"	3/4"	5/8"	1/2"	1/4"	0

		SPANS S, V AND Y											SPANS T, W AND Z											SPANS U, X AND AA										
	TENTH POINTS	℄ BRG.	.1	.2	.3	.4	.5	.6	.7	.8	.9	℄ BRG.	℄ BRG.	.1	.2	.3	.4	.5	.6	.7	.8	.9	℄ BRG.	℄ BRG.	.1	.2	.3	.4	.5	.6	.7	.8	.9	℄ BRG.
GIRDERS 4-6	CAMBER (GIRDER ALONE IN PLACE) ↑	0	0.046	0.084	0.114	0.134	0.141	0.134	0.114	0.084	0.046	0	0	0.046	0.084	0.114	0.134	0.141	0.134	0.114	0.084	0.046	0	0	0.046	0.084	0.114	0.134	0.141	0.134	0.114	0.084	0.046	0
	✱ DEFLECTION DUE TO SUPERIMPOSED D.L. ↓	0	0.022	0.041	0.056	0.065	0.068	0.065	0.055	0.040	0.021	0	0	0.021	0.039	0.054	0.063	0.067	0.063	0.054	0.039	0.021	0	0	0.021	0.040	0.055	0.065	0.068	0.065	0.056	0.041	0.022	0
	FINAL CAMBER ↑	0	5/16"	1/2"	11/16"	13/16"	7/8"	13/16"	11/16"	9/16"	5/16"	0	0	5/16"	9/16"	3/4"	7/8"	7/8"	7/8"	3/4"	9/16"	5/16"	0	0	5/16"	9/16"	11/16"	13/16"	7/8"	13/16"	11/16"	1/2"	5/16"	0

		SPANS S, V AND Y											SPANS T, W AND Z											SPANS U, X AND AA										
	TENTH POINTS	℄ BRG.	.1	.2	.3	.4	.5	.6	.7	.8	.9	℄ BRG.	℄ BRG.	.1	.2	.3	.4	.5	.6	.7	.8	.9	℄ BRG.	℄ BRG.	.1	.2	.3	.4	.5	.6	.7	.8	.9	℄ BRG.
GIRDERS 7-8	CAMBER (GIRDER ALONE IN PLACE) ↑	0	0.045	0.083	0.113	0.133	0.140	0.133	0.113	0.083	0.045	0	0	0.045	0.083	0.113	0.133	0.140	0.133	0.113	0.083	0.045	0	0	0.045	0.083	0.113	0.133	0.140	0.133	0.113	0.083	0.045	0
	✱ DEFLECTION DUE TO SUPERIMPOSED D.L. ↓	0	0.019	0.036	0.049	0.058	0.060	0.057	0.048	0.035	0.018	0	0	0.018	0.035	0.048	0.056	0.059	0.056	0.048	0.035	0.018	0	0	0.018	0.035	0.048	0.057	0.060	0.058	0.049	0.036	0.019	0
	FINAL CAMBER ↑	0	5/16"	9/16"	3/4"	7/8"	15/16"	15/16"	3/4"	9/16"	5/16"	0	0	5/16"	9/16"	13/16"	15/16"	1"	15/16"	13/16"	9/16"	5/16"	0	0	5/16"	9/16"	3/4"	15/16"	15/16"	7/8"	3/4"	9/16"	5/16"	0

		SPANS S, V AND Y											SPANS T, W AND Z											SPANS U, X AND AA										
	TENTH POINTS	℄ BRG.	.1	.2	.3	.4	.5	.6	.7	.8	.9	℄ BRG.	℄ BRG.	.1	.2	.3	.4	.5	.6	.7	.8	.9	℄ BRG.	℄ BRG.	.1	.2	.3	.4	.5	.6	.7	.8	.9	℄ BRG.
GIRDER 9	CAMBER (GIRDER ALONE IN PLACE) ↑	0	0.045	0.082	0.112	0.132	0.138	0.132	0.112	0.082	0.045	0	0	0.045	0.082	0.112	0.132	0.138	0.132	0.112	0.082	0.045	0	0	0.045	0.082	0.112	0.132	0.138	0.132	0.112	0.082	0.045	0
	✱ DEFLECTION DUE TO SUPERIMPOSED D.L. ↓	0	0.017	0.032	0.044	0.051	0.054	0.051	0.043	0.031	0.016	0	0	0.016	0.031	0.042	0.050	0.052	0.050	0.042	0.031	0.016	0	0	0.016	0.031	0.043	0.051	0.054	0.051	0.044	0.032	0.017	0
	FINAL CAMBER ↑	0	5/16"	5/8"	13/16"	15/16"	1"	1"	13/16"	5/8"	5/16"	0	0	5/16"	5/8"	13/16"	1"	1 1/16"	1"	13/16"	5/8"	5/16"	0	0	5/16"	5/8"	13/16"	1"	1"	15/16"	13/16"	5/8"	5/16"	0

✱ INCLUDES FUTURE WEARING SURFACE

ALL VALUES ARE SHOWN IN FEET (DECIMAL FORM), EXCEPT "FINAL CAMBER", WHICH IS GIVEN IN INCHES (FRACTION FORM).

PROJECT NO. R-3307

CARTERET COUNTY

STATION: 46+21.50 -L-

SHEET 7 OF 8

STATE OF NORTH CAROLINA
DEPARTMENT OF TRANSPORTATION
RALEIGH

SUPERSTRUCTURE

DEAD LOAD DEFLECTIONS UNITS 9, 10 AND 11

SPANS S THRU AA

NORTH CAROLINA PROFESSIONAL SEAL 12323 ENGINEER MORRIS J. SRAELNAM 3/20/2012

NORTH CAROLINA PROFESSIONAL SEAL 027799 ENGINEER ALLYSON K. ORR 3/20/2012

MI ENGINEERING
1011 SHAUB DRIVE, SUITE 100
RALEIGH, NC 27606
(919) 851-6606
FIRM PE NUMBER : P-0671

REVISIONS						SHEET NO.
NO.	BY:	DATE:	NO.	BY:	DATE:	S-161
1			3			TOTAL SHEETS
2			4			333

DRAWN BY : B.E. LANNING DATE : 10-11
CHECKED BY : A.K. ORR DATE : 10-11

DWG. 162 OF 282

3/26/2012
2:25:01 PM
User: planning
Filename: P:\NC Projects\MI0005 - Gallants Channel\R-3307\Structures\R-3307_162_SD_DL_S_THRU_AA.dgn

DEAD LOAD DEFLECTION AND CAMBER TABLE FOR GIRDERS IN UNIT 12

		SPAN BB											SPAN CC										
	TENTH POINTS	℄ BRG.	.1	.2	.3	.4	.5	.6	.7	.8	.9	℄ BRG.	℄ BRG.	.1	.2	.3	.4	.5	.6	.7	.8	.9	℄ BRG.
GIRDER 1	CAMBER (GIRDER ALONE IN PLACE) ↑	0	0.046	0.085	0.116	0.136	0.143	0.136	0.116	0.085	0.046	0	0	0.046	0.084	0.115	0.135	0.142	0.135	0.115	0.084	0.046	0
	✱ DEFLECTION DUE TO SUPERIMPOSED D.L. ↓	0	0.025	0.048	0.065	0.076	0.079	0.075	0.064	0.046	0.024	0	0	0.021	0.041	0.056	0.067	0.070	0.067	0.058	0.042	0.022	0
	FINAL CAMBER ↑	0	1/4"	7/16"	5/8"	3/4"	3/4"	3/4"	5/8"	1/2"	1/4"	0	0	5/16"	1/2"	11/16"	13/16"	7/8"	13/16"	11/16"	1/2"	1/4"	0

		SPAN BB											SPAN CC										
	TENTH POINTS	℄ BRG.	.1	.2	.3	.4	.5	.6	.7	.8	.9	℄ BRG.	℄ BRG.	.1	.2	.3	.4	.5	.6	.7	.8	.9	℄ BRG.
GIRDERS 2-3	CAMBER (GIRDER ALONE IN PLACE) ↑	0	0.046	0.085	0.115	0.136	0.143	0.136	0.115	0.085	0.046	0	0	0.046	0.084	0.114	0.135	0.141	0.135	0.114	0.084	0.046	0
	✱ DEFLECTION DUE TO SUPERIMPOSED D.L. ↓	0	0.024	0.045	0.062	0.072	0.075	0.071	0.061	0.044	0.023	0	0	0.021	0.040	0.055	0.065	0.068	0.065	0.056	0.041	0.022	0
	FINAL CAMBER ↑	0	1/4"	1/2"	5/8"	3/4"	13/16"	3/4"	11/16"	1/2"	1/4"	0	0	5/16"	9/16"	11/16"	13/16"	7/8"	13/16"	11/16"	1/2"	5/16"	0

		SPAN BB											SPAN CC										
	TENTH POINTS	℄ BRG.	.1	.2	.3	.4	.5	.6	.7	.8	.9	℄ BRG.	℄ BRG.	.1	.2	.3	.4	.5	.6	.7	.8	.9	℄ BRG.
GIRDERS 4-6	CAMBER (GIRDER ALONE IN PLACE) ↑	0	0.046	0.084	0.114	0.134	0.141	0.134	0.114	0.084	0.046	0	0	0.045	0.084	0.114	0.134	0.140	0.134	0.114	0.084	0.045	0
	✱ DEFLECTION DUE TO SUPERIMPOSED D.L. ↓	0	0.022	0.041	0.056	0.065	0.068	0.065	0.055	0.040	0.021	0	0	0.019	0.037	0.051	0.061	0.064	0.061	0.053	0.038	0.020	0
	FINAL CAMBER ↑	0	5/16"	1/2"	11/16"	13/16"	7/8"	13/16"	11/16'	9/16"	5/16"	0	0	5/16"	9/16"	3/4"	7/8"	15/16"	7/8"	3/4"	9/16"	5/16"	0

		SPAN BB											SPAN CC										
	TENTH POINTS	℄ BRG.	.1	.2	.3	.4	.5	.6	.7	.8	.9	℄ BRG.	℄ BRG.	.1	.2	.3	.4	.5	.6	.7	.8	.9	℄ BRG.
GIRDERS 7-8	CAMBER (GIRDER ALONE IN PLACE) ↑	0	0.045	0.083	0.113	0.133	0.140	0.133	0.113	0.083	0.045	0	0	0.045	0.083	0.113	0.132	0.139	0.132	0.113	0.083	0.045	0
	✱ DEFLECTION DUE TO SUPERIMPOSED D.L. ↓	0	0.019	0.036	0.049	0.058	0.060	0.057	0.048	0.035	0.018	0	0	0.018	0.034	0.047	0.056	0.059	0.056	0.048	0.035	0.019	0
	FINAL CAMBER ↑	0	5/16"	9/16"	3/4"	7/8"	15/16"	15/16"	3/4"	9/16"	5/16"	0	0	5/16"	9/16"	13/16"	15/16"	15/16"	15/16"	3/4"	9/16"	5/16"	0

		SPAN BB											SPAN CC										
	TENTH POINTS	℄ BRG.	.1	.2	.3	.4	.5	.6	.7	.8	.9	℄ BRG.	℄ BRG.	.1	.2	.3	.4	.5	.6	.7	.8	.9	℄ BRG.
GIRDER 9	CAMBER (GIRDER ALONE IN PLACE) ↑	0	0.045	0.082	0.112	0.132	0.138	0.132	0.112	0.082	0.045	0	0	0.045	0.082	0.112	0.132	0.138	0.132	0.112	0.082	0.045	0
	✱ DEFLECTION DUE TO SUPERIMPOSED D.L. ↓	0	0.017	0.032	0.044	0.051	0.054	0.051	0.043	0.031	0.016	0	0	0.016	0.031	0.043	0.051	0.054	0.051	0.044	0.032	0.017	0
	FINAL CAMBER ↑	0	5/16"	5/8"	13/16"	15/16"	1"	1"	13/16"	5/8"	5/16"	0	0	5/16"	5/8"	13/16"	1"	1"	15/16"	13/16"	5/8"	5/16"	0

✱ INCLUDES FUTURE WEARING SURFACE

ALL VALUES ARE SHOWN IN FEET (DECIMAL FORM), EXCEPT "FINAL CAMBER", WHICH IS GIVEN IN INCHES (FRACTION FORM).

PROJECT NO. R-3307

CARTERET COUNTY

STATION: 46+21.50 -L-

SHEET 8 OF 8

STATE OF NORTH CAROLINA
DEPARTMENT OF TRANSPORTATION
RALEIGH

SUPERSTRUCTURE

DEAD LOAD DEFLECTIONS UNIT 12

SPANS BB AND CC

NORTH CAROLINA PROFESSIONAL SEAL 12323 ENGINEER MORRIS ISRAEL NAIM 3/30/2012

NORTH CAROLINA PROFESSIONAL SEAL 027799 ENGINEER ALLYSON K. ORR 3/30/2012

MI ENGINEERING
1011 SHAUB DRIVE, SUITE 100
RALEIGH, NC 27606
(919) 851-6606
FIRM PE NUMBER : P-0671

REVISIONS						SHEET NO.
NO.	BY:	DATE:	NO.	BY:	DATE:	S-162
1			3			TOTAL SHEETS
2			4			333

DRAWN BY : B.E. LANNING DATE : 10-11
CHECKED BY : A.K. ORR DATE : 10-11

DWG. 163 OF 282

3/26/2012
2:25:18 PM
User: blanning
Filename: P:\NC Projects\M10005 - Gallants Channel\R-3307\Structures\R-3307_163_SD_DL_BB_THRU_CC.dgn

NOTE:

SEE "BRIDGE APPROACH SLAB" SHEETS FOR ADDITIONAL DETAILS.

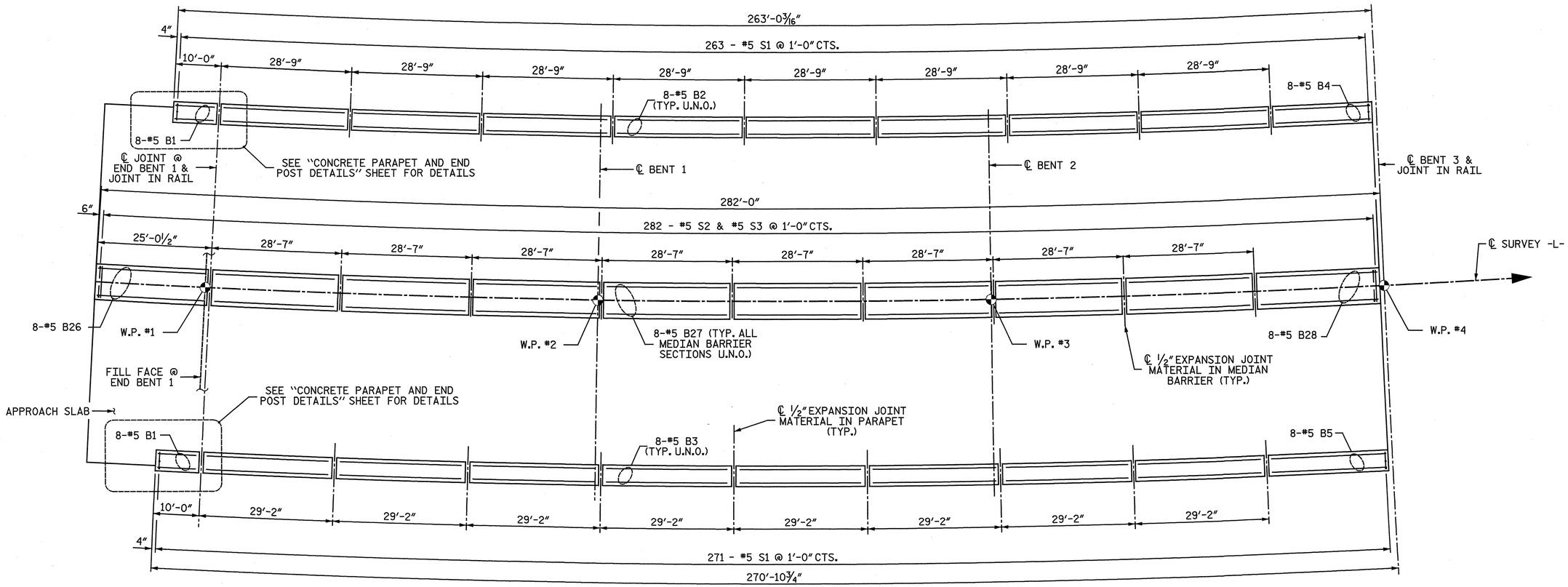

PLAN OF CONCRETE PARAPET & MEDIAN BARRIER - UNIT 1

U.N.O. DENOTES "UNLESS NOTED OTHERWISE"
ALL DIMENSIONS ARE MEASURED ALONG THE OUTSIDE EDGE OF THE SUPERSTRUCTURE.

PROJECT NO. R-3307
CARTERET COUNTY
STATION: 46+21.50 -L-

SHEET 1 OF 9

STATE OF NORTH CAROLINA
DEPARTMENT OF TRANSPORTATION
RALEIGH

SUPERSTRUCTURE

CONCRETE PARAPET & MEDIAN BARRIER

UNIT 1

NORTH CAROLINA PROFESSIONAL SEAL 25911 ENGINEER DWAIN G. WATHWAY 4-3-2012

NORTH CAROLINA PROFESSIONAL SEAL 033752 ENGINEER SETH A. DENNEY 2/28/12

THE LPA GROUP of North Carolina TRANSPORTATION CONSULTANTS

THE LPA GROUP of North Carolina
8000 Regency Parkway, Suite 600
Cary, North Carolina 27518
NC License No.: F-1084

REVISIONS						SHEET NO.
NO.	BY:	DATE:	NO.	BY:	DATE:	S-163
1			3			TOTAL SHEETS
2			4			333

DRAWN BY : C. E. MAYHEW DATE : 6-22-11
CHECKED BY : R. F. DeCOLA DATE : 11-10-11

DWG. 164 OF 282

4/2/2012
12:42:... PM
User: jaustin
Filename: Y:\Projects\NCDOT\R-3307\Dwgs\Final\R-3307_164_SD_BR01.dgn

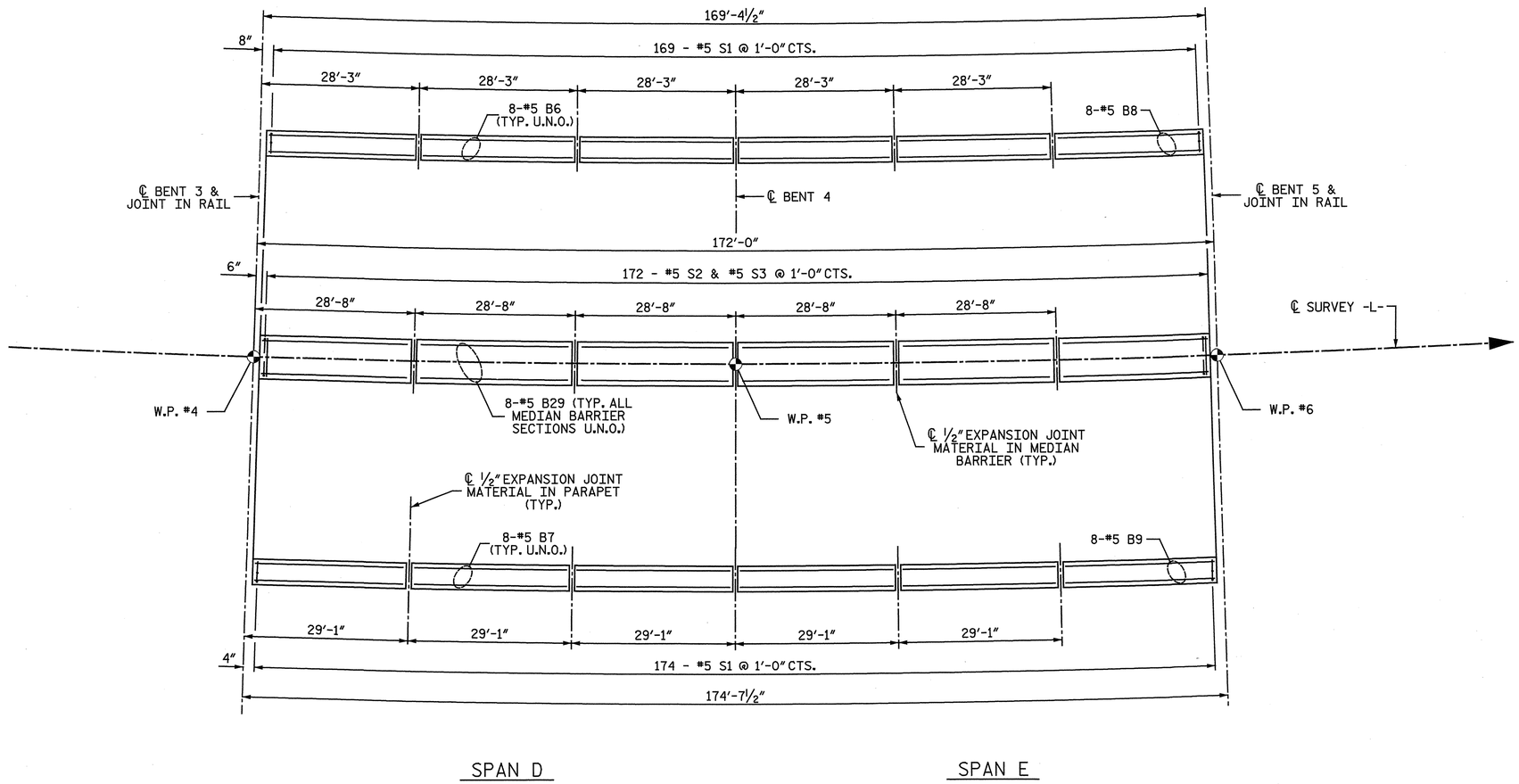

PLAN OF CONCRETE PARAPET & MEDIAN BARRIER - UNIT 2

U.N.O. DENOTES "UNLESS NOTED OTHERWISE"
ALL DIMENSIONS ARE MEASURED ALONG THE OUTSIDE EDGE OF THE SUPERSTRUCTURE.

PROJECT NO. R-3307
CARTERET COUNTY
STATION: 46+21.50 -L-

SHEET 2 OF 9

STATE OF NORTH CAROLINA
DEPARTMENT OF TRANSPORTATION
RALEIGH

SUPERSTRUCTURE

CONCRETE PARAPET & MEDIAN BARRIER

UNIT 2

NORTH CAROLINA PROFESSIONAL SEAL 25911 ENGINEER DWAIN G. HAYMAN 4-3-2012

NORTH CAROLINA PROFESSIONAL SEAL 033752 ENGINEER SETH A. DENNETT 04/05/12

THE LPA GROUP of North Carolina
THE LPA GROUP of North Carolina
8000 Regency Parkway, Suite 600
Cary, North Carolina 27518
NC License No.: F-1084

REVISIONS							SHEET NO.
NO.	BY:	DATE:	NO.	BY:	DATE:		S-14
1			3				TOTAL SHEETS
2			4				333

DRAWN BY : C. E. MAYHEW DATE : 6-22-11
CHECKED BY : R. F. DeCOLA DATE : 11-10-11

DWG. 165 OF 282

4/2/2012
12:42:07 PM
User: jaustin
Filename: Y:\Projects\NCDOT\R-3307\Dwgs\Final\R-3307_165_SD_BR02.dgn

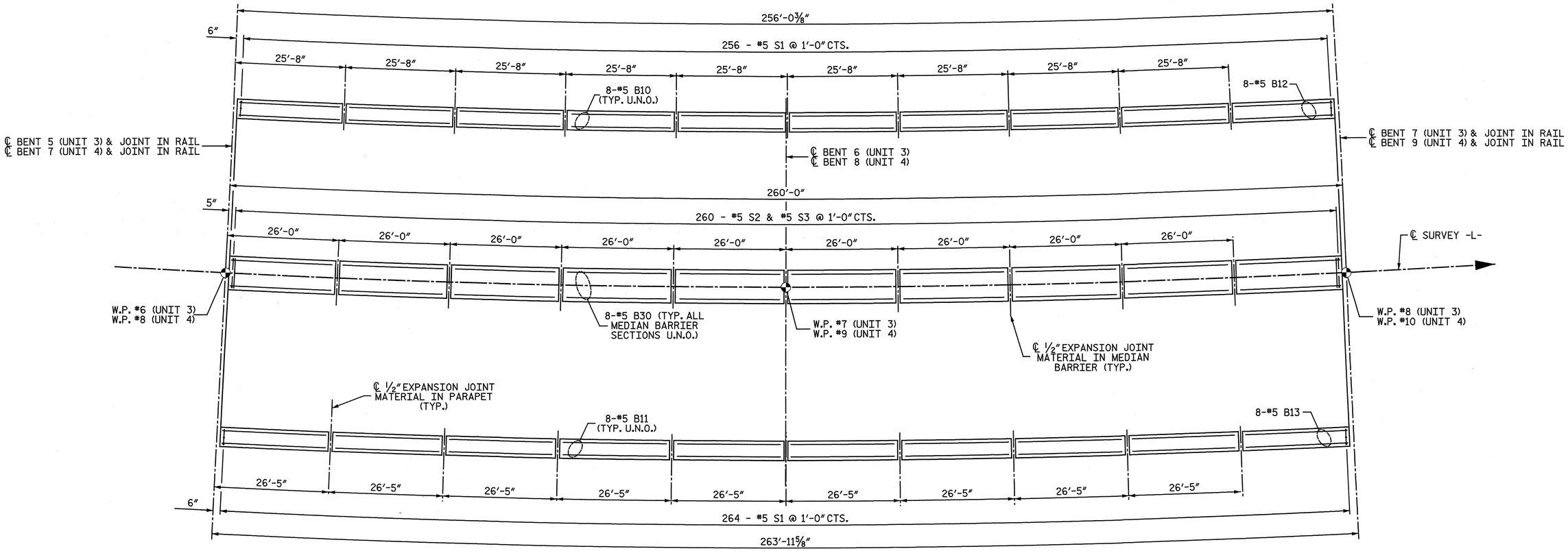

SPAN F

SPAN H SIMILAR

SPAN G

SPAN I SIMILAR

PLAN OF CONCRETE PARAPET & MEDIAN BARRIER - UNITS 3 & 4

U.N.O. DENOTES "UNLESS NOTED OTHERWISE"

ALL DIMENSIONS ARE MEASURED ALONG THE OUTSIDE EDGE OF THE SUPERSTRUCTURE.

PROJECT NO. R-3307

CARTERET COUNTY

STATION: 46+21.50 -L-

SHEET 3 OF 9

STATE OF NORTH CAROLINA
DEPARTMENT OF TRANSPORTATION
RALEIGH

SUPERSTRUCTURE

CONCRETE PARAPET & MEDIAN BARRIER

UNITS 3 & 4

NORTH CAROLINA PROFESSIONAL SEAL 25911 ENGINEER DWAIN C. HATHAWAY 4-3-2012

NORTH CAROLINA PROFESSIONAL SEAL 033752 ENGINEER SETH A. DENNEY 4/09/12

THE LPA GROUP of North Carolina TRANSPORTATION CONSULTANTS

THE LPA GROUP of North Carolina
8000 Regency Parkway, Suite 600
Cary, North Carolina 27518
NC License No.: F-1084

REVISIONS						SHEET NO.
NO.	BY:	DATE:	NO.	BY:	DATE:	S-165
1			3			TOTAL SHEETS
2			4			333

DRAWN BY : C. E. MAYHEW DATE : 6-22-11

CHECKED BY : R. F. DeCOLA DATE : 11-10-11

DWG. 166 OF 282

4/2/2012 12:43:00 PM
User: jaustin
Filename: Y:\Projects\NCDOT\R-3307\Dwgs\Final\R-3307_166_SD_BR03.dgn

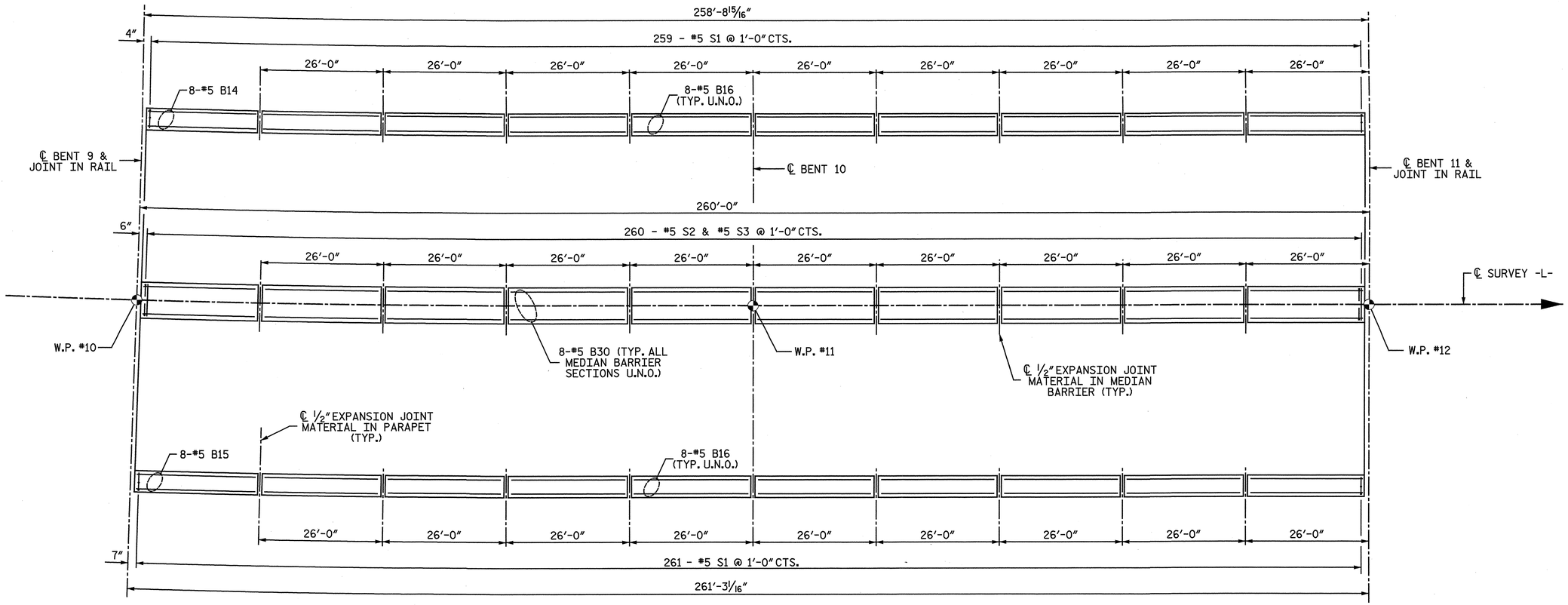

SPAN J

SPAN K

PLAN OF CONCRETE PARAPET & MEDIAN BARRIER - UNIT 5

U.N.O. DENOTES "UNLESS NOTED OTHERWISE"
ALL DIMENSIONS ARE MEASURED ALONG THE OUTSIDE EDGE OF THE SUPERSTRUCTURE.

PROJECT NO. R-3307
CARTERET COUNTY
STATION: 46+21.50 -L-

SHEET 4 OF 9

STATE OF NORTH CAROLINA
DEPARTMENT OF TRANSPORTATION
RALEIGH

SUPERSTRUCTURE

CONCRETE PARAPET & MEDIAN BARRIER

UNIT 5

NORTH CAROLINA PROFESSIONAL SEAL 25911 ENGINEER DWAIN G. HATHWAY 4-4-12

NORTH CAROLINA PROFESSIONAL SEAL 033752 ENGINEER SETH A. DENNEY 3/30/12

THE LPA GROUP of North Carolina TRANSPORTATION CONSULTANTS

THE LPA GROUP of North Carolina
8000 Regency Parkway, Suite 600
Cary, North Carolina 27518
NC License No.: F-1084

REVISIONS						SHEET NO.
NO.	BY:	DATE:	NO.	BY:	DATE:	S-166
1			3			TOTAL SHEETS
2			4			333

DRAWN BY : C. E. MAYHEW DATE : 6-22-11
CHECKED BY : R. F. DeCOLA DATE : 11-10-11

DWG. 167 OF 282

4/2/2012
12:43:_PM
User: jaustin
Filename: Y:\Projects\NCDOT\R-3307\Dwgs\FInal\R-3307_167_SD_BR04.dgn

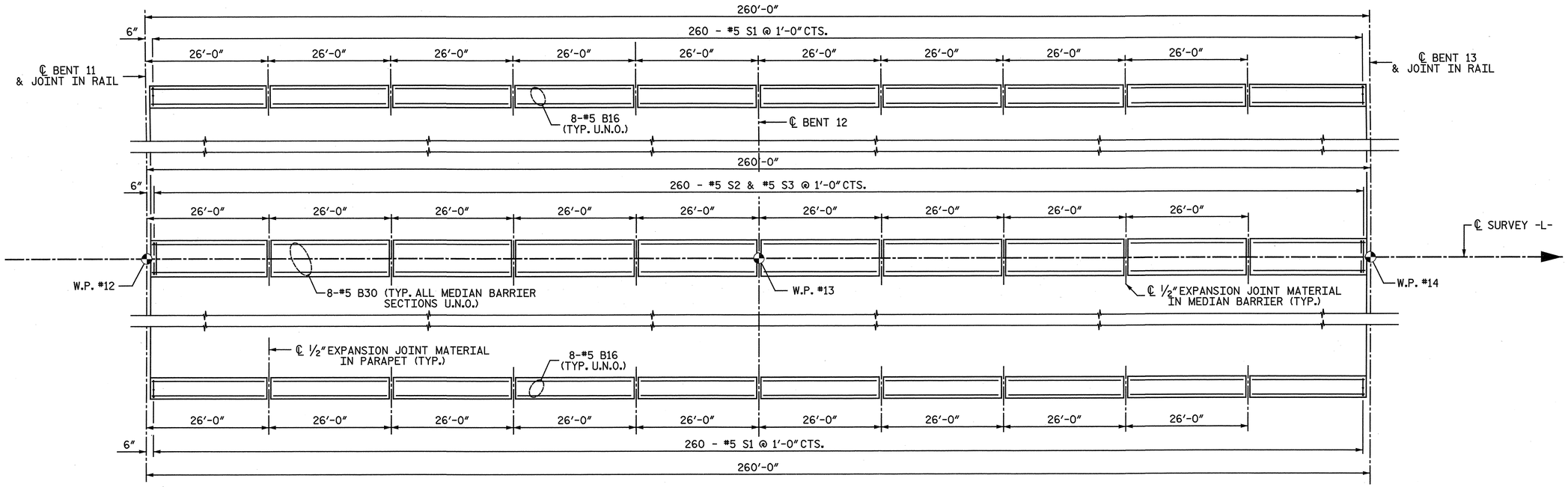

SPAN L

SPAN M

PLAN OF CONCRETE PARAPET & MEDIAN BARRIER - UNIT 6

U.N.O. DENOTES "UNLESS NOTED OTHERWISE"
ALL DIMENSIONS ARE MEASURED ALONG THE OUTSIDE EDGE OF THE SUPERSTRUCTURE.

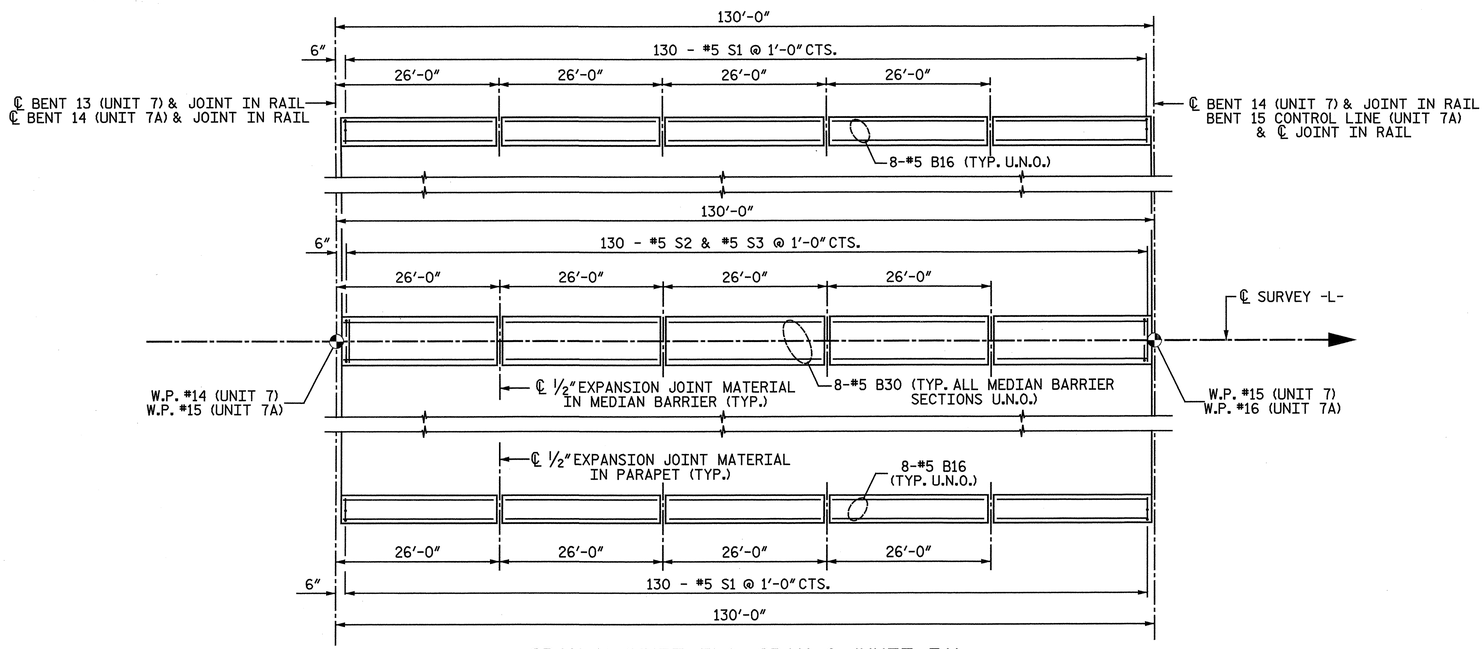

SPAN N (UNIT 7) & SPAN O (UNIT 7A)

PLAN OF CONCRETE PARAPET & MEDIAN BARRIER - UNITS 7 & 7A

U.N.O. DENOTES "UNLESS NOTED OTHERWISE"
ALL DIMENSIONS ARE MEASURED ALONG THE OUTSIDE EDGE OF THE SUPERSTRUCTURE.

PROJECT NO. R-3307
CARTERET COUNTY
STATION: 46+21.50 -L-

SHEET 5 OF 9

STATE OF NORTH CAROLINA
DEPARTMENT OF TRANSPORTATION
RALEIGH
SUPERSTRUCTURE

CONCRETE PARAPET & MEDIAN BARRIER

UNITS 6 & 7

NORTH CAROLINA PROFESSIONAL SEAL 25911 ENGINEER DRAIN G. HATHAWAY
NORTH CAROLINA PROFESSIONAL SEAL 033752 ENGINEER SETH A. DENNIS

THE LPA GROUP of North Carolina TRANSPORTATION CONSULTANTS
THE LPA GROUP of North Carolina
8000 Regency Parkway, Suite 600
Cary, North Carolina 27518
NC License No.: F-1084

REVISIONS						SHEET NO.
NO.	BY:	DATE:	NO.	BY:	DATE:	S-167
1			3			TOTAL SHEETS
2			4			333

DRAWN BY : C. E. MAYHEW DATE : 6-22-11
CHECKED BY : R. F. DeCOLA DATE : 11-10-11

DWG. 168 OF 282

4/3/2012
12:06:_ PM
User: jaustin
Filename: Y:\Projects\NCDOT\R-3307\Dwgs\Final\R-3307_168_SD_BR05.dgn

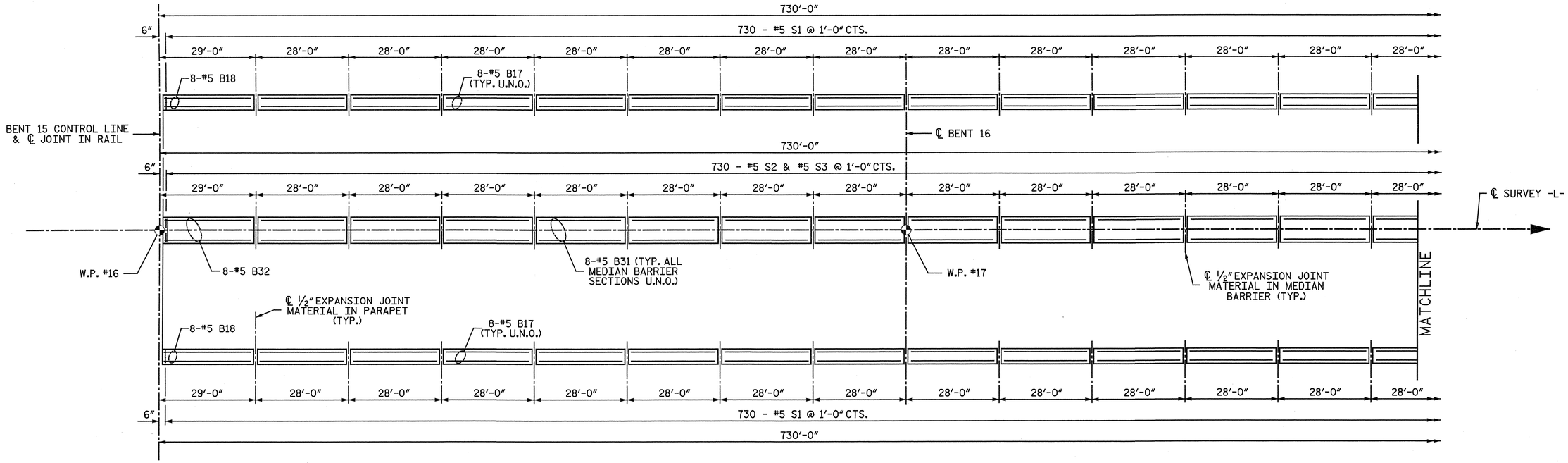

PLAN OF CONCRETE PARAPET & MEDIAN BARRIER - UNIT 8

U.N.O. DENOTES "UNLESS NOTED OTHERWISE"
ALL DIMENSIONS ARE MEASURED ALONG THE OUTSIDE EDGE OF THE SUPERSTRUCTURE.

PROJECT NO. R-3307
CARTERET COUNTY
STATION: 46+21.50 -L-

SHEET 6 OF 9

STATE OF NORTH CAROLINA
DEPARTMENT OF TRANSPORTATION
RALEIGH
SUPERSTRUCTURE

CONCRETE PARAPET & MEDIAN BARRIER

UNIT 8

NORTH CAROLINA PROFESSIONAL SEAL 25911 ENGINEER DWAIN G. HATHAWAY 4-3-2012

NORTH CAROLINA PROFESSIONAL SEAL 033752 ENGINEER SETH A. DENNEY 04/03/12

THE LPA GROUP of North Carolina TRANSPORTATION CONSULTANTS

THE LPA GROUP of North Carolina
8000 Regency Parkway, Suite 600
Cary, North Carolina 27518
NC License No.: F-1084

REVISIONS						SHEET NO.
NO.	BY:	DATE:	NO.	BY:	DATE:	S-168
1			3			TOTAL SHEETS
2			4			333

DWG. 169 OF 282

DRAWN BY : C. E. MAYHEW DATE : 6-22-11
CHECKED BY : R. F. DeCOLA DATE : 11-10-11

4/2/2012
12:43:_ PM
User: jaustin
Filename: Y:\Projects\NCDOT\R-3307\Dwgs\Final\R-3307_169_SD_BR06.dgn

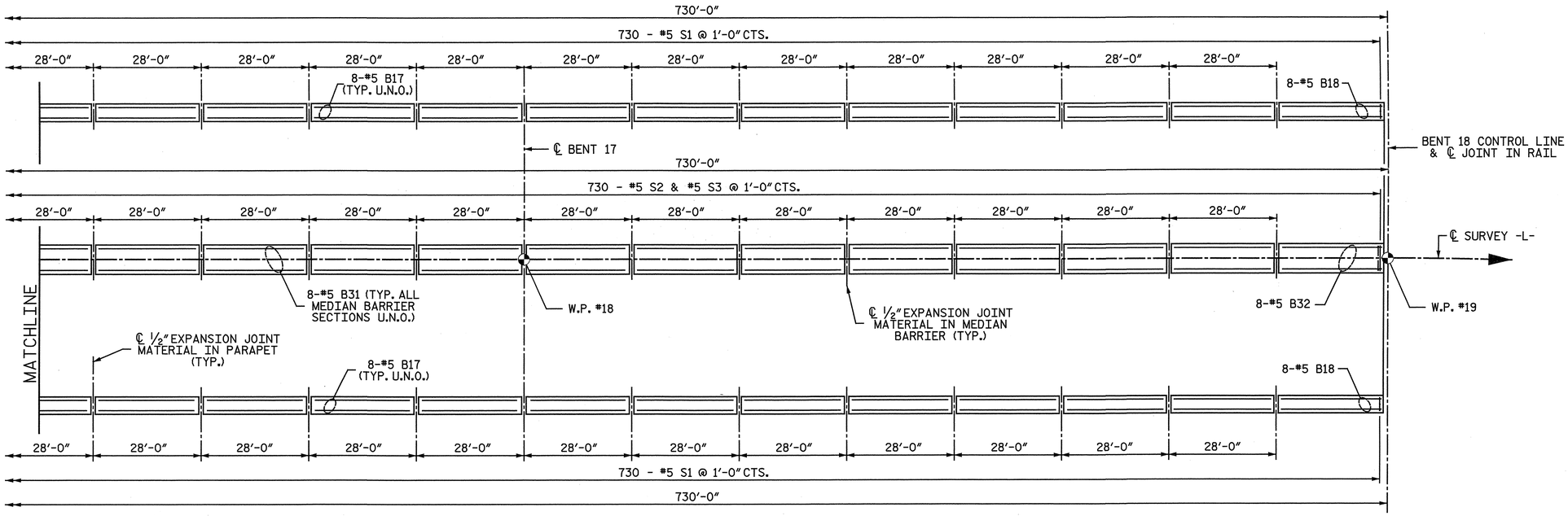

SPAN Q

SPAN R

PLAN OF CONCRETE PARAPET & MEDIAN BARRIER - UNIT 8

U.N.O. DENOTES "UNLESS NOTED OTHERWISE"

ALL DIMENSIONS ARE MEASURED ALONG THE OUTSIDE EDGE OF THE SUPERSTRUCTURE.

PROJECT NO. R-3307

CARTERET COUNTY

STATION: 46+21.50 -L-

SHEET 7 OF 9

STATE OF NORTH CAROLINA
DEPARTMENT OF TRANSPORTATION
RALEIGH

SUPERSTRUCTURE

CONCRETE PARAPET & MEDIAN BARRIER

UNIT 8

NORTH CAROLINA PROFESSIONAL SEAL 25911 ENGINEER DWAIN G. HATHAWAY 4-23-2012

NORTH CAROLINA PROFESSIONAL SEAL 033752 ENGINEER SETH A. DENNEY 04/23/12

THE LPA GROUP of North Carolina TRANSPORTATION CONSULTANTS

THE LPA GROUP of North Carolina
8000 Regency Parkway, Suite 600
Cary, North Carolina 27518
NC License No.: F-1084

REVISIONS									SHEET NO.
NO.	BY:	DATE:	NO.	BY:	DATE:				S-169
1			3						TOTAL SHEETS
2			4						333

DRAWN BY : C. E. MAYHEW DATE : 6-22-11

CHECKED BY : R. F. DeCOLA DATE : 11-10-11

DWG. 170 OF 282

4/2/2012
12:43:L, PM
User: jaustin
Filename: Y:\Projects\NCDOT\R-3307\Dwgs\Final\R-3307_170_SD_BR07.dgn

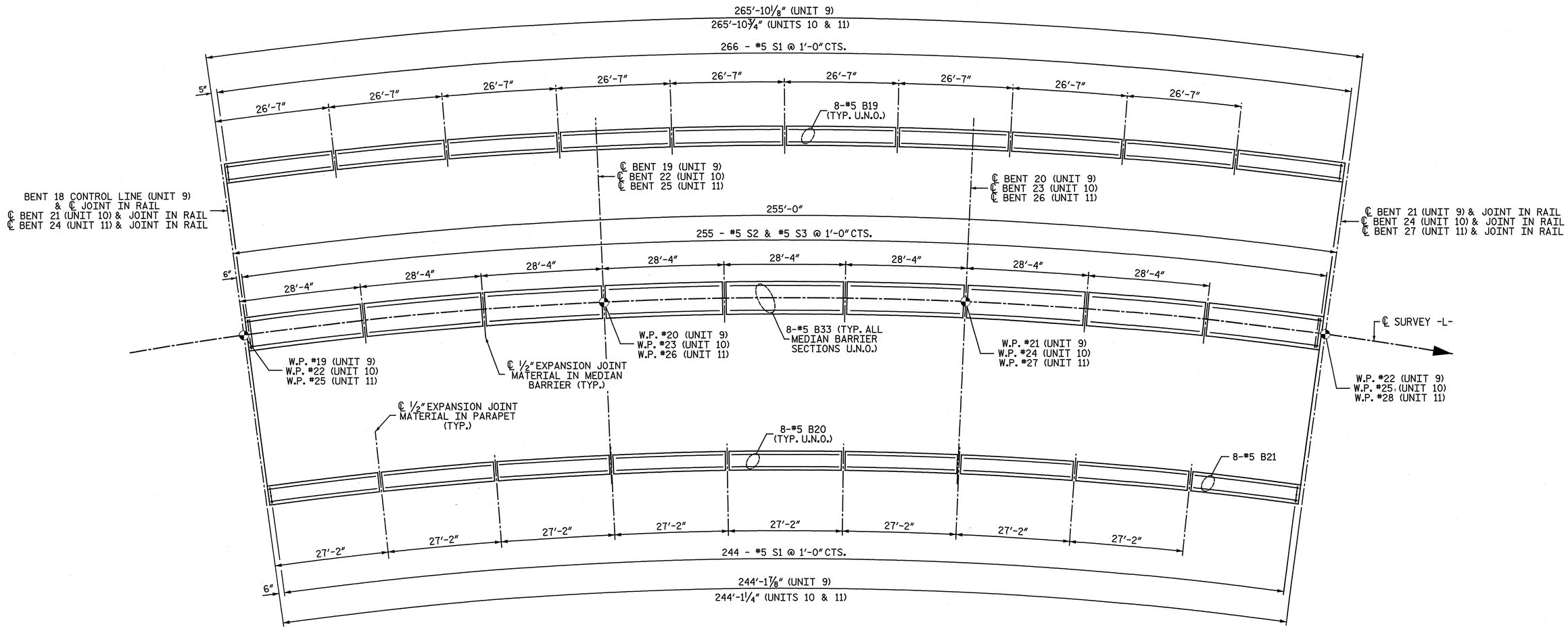

SPAN S

SPAN V & Y SIMILAR

SPAN T

SPAN W & Z SIMILAR

SPAN U

SPAN X & AA SIMILAR

PLAN OF CONCRETE PARAPET & MEDIAN BARRIER - UNITS 9, 10, & 11

U.N.O. DENOTES "UNLESS NOTED OTHERWISE"

ALL DIMENSIONS ARE MEASURED ALONG THE OUTSIDE EDGE OF THE SUPERSTRUCTURE.

PROJECT NO. R-3307

CARTERET COUNTY

STATION: 46+21.50 -L-

SHEET 8 OF 9

STATE OF NORTH CAROLINA
DEPARTMENT OF TRANSPORTATION
RALEIGH

SUPERSTRUCTURE

CONCRETE PARAPET & MEDIAN BARRIER

UNITS 9, 10, & 11

NORTH CAROLINA PROFESSIONAL SEAL 25911 ENGINEER DWAIN G. HATHAWAY 4-3-2012

NORTH CAROLINA PROFESSIONAL SEAL 033752 ENGINEER SETH A. DENNEY

THE LPA GROUP of North Carolina TRANSPORTATION CONSULTANTS

THE LPA GROUP of North Carolina
8000 Regency Parkway, Suite 600
Cary, North Carolina 27518
NC License No.: F-1084

REVISIONS						SHEET NO.
NO.	BY:	DATE:	NO.	BY:	DATE:	S-170
1			3			TOTAL SHEETS
2			4			333

DRAWN BY : C. E. MAYHEW DATE : 6-22-11

CHECKED BY : R. F. DeCOLA DATE : 11-10-11

DWG. 171 OF 282

4/2/2012
12:43:[illegible] PM
User: jaustin
Filename: Y:\Projects\NCDOT\R-3307\Dwgs\Final\R-3307_171_SD_BR08.dgn

NOTE:

SEE "BRIDGE APPROACH SLAB" SHEETS FOR ADDITIONAL DETAILS.

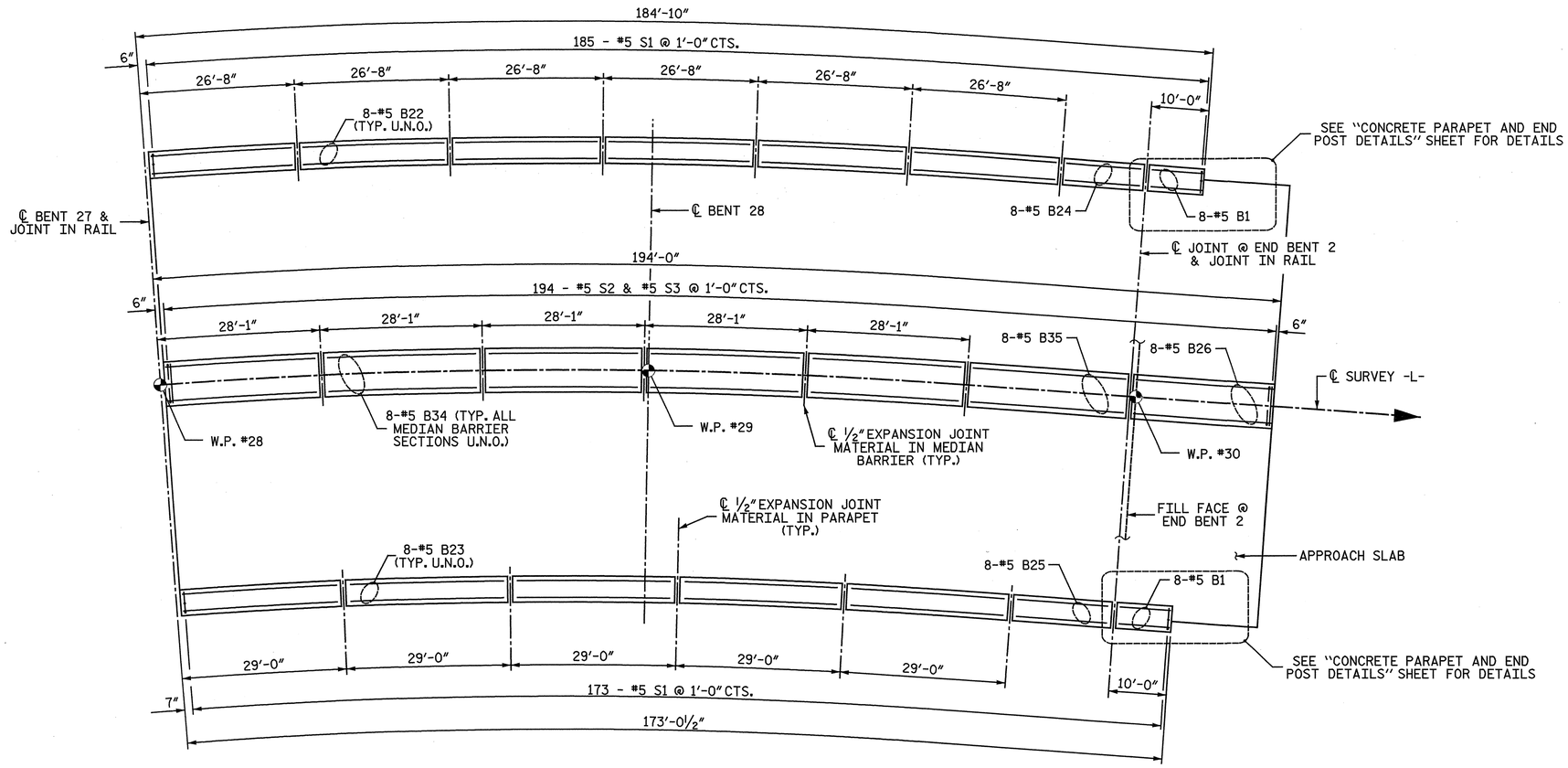

SPAN BB

SPAN CC

PLAN OF CONCRETE PARAPET & MEDIAN BARRIER - UNIT 12

U.N.O. DENOTES "UNLESS NOTED OTHERWISE"
ALL DIMENSIONS ARE MEASURED ALONG THE OUTSIDE EDGE OF THE SUPERSTRUCTURE.

PROJECT NO. R-3307
CARTERET COUNTY
STATION: 46+21.50 -L-

SHEET 9 OF 9

STATE OF NORTH CAROLINA
DEPARTMENT OF TRANSPORTATION
RALEIGH

SUPERSTRUCTURE

CONCRETE PARAPET & MEDIAN BARRIER

UNIT 12

NORTH CAROLINA PROFESSIONAL SEAL 25911 ENGINEER DWAIN G. HATHAWAY 4-3-2012

NORTH CAROLINA PROFESSIONAL SEAL 033752 ENGINEER SETH A. DENNEY 4/03/12

THE LPA GROUP of North Carolina TRANSPORTATION CONSULTANTS

THE LPA GROUP of North Carolina
8000 Regency Parkway, Suite 600
Cary, North Carolina 27518
NC License No.: F-1084

REVISIONS						SHEET NO.
NO.	BY:	DATE:	NO.	BY:	DATE:	S-171
1			3			TOTAL SHEETS
2			4			333

DRAWN BY : C. E. MAYHEW DATE : 6-22-11
CHECKED BY : R. F. DeCOLA DATE : 11-10-11

DWG. 172 OF 282

4/2/2012
12:43:00 PM
User: jaustin
Filename: Y:\Projects\NCDOT\R-3307\Dwgs\FInal\R-3307_172_SD_BR09.dgn

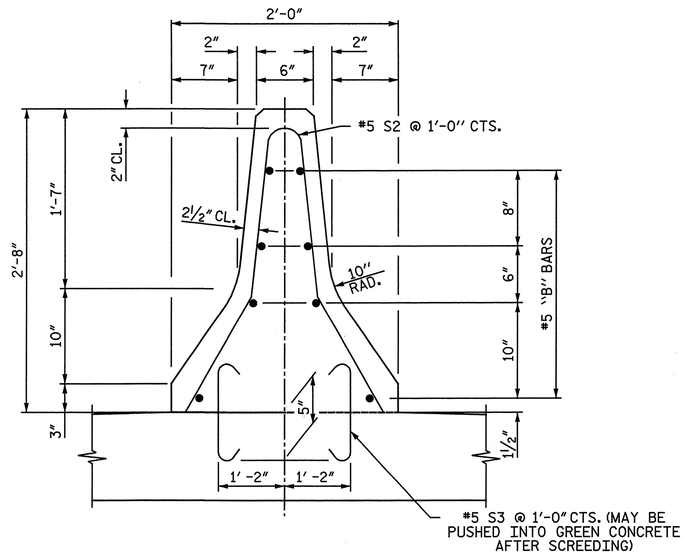

SECTION THRU MEDIAN BARRIER

BAR TYPES

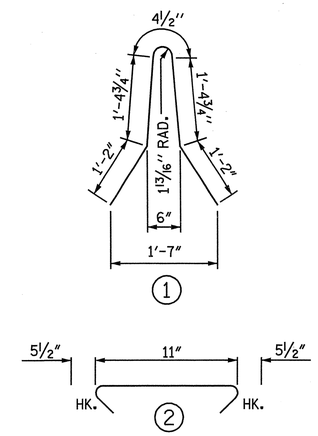

ALL BAR DIMENSIONS ARE OUT TO OUT

BILL OF MATERIAL

BAR	NO.	SIZE	TYPE	LENGTH	WEIGHT
B26	16	5	STR	24' - 8"	412
B27	64	5	STR	28' - 3"	1,886
B28	8	5	STR	27' - 11"	233
B29	48	5	STR	28' - 4"	1,418
B30	400	5	STR	25' - 8"	10,708
B31	192	5	STR	27' - 8"	5,540
B32	16	5	STR	28' - 8"	478
B33	216	5	STR	28' - 0"	6,308
B34	40	5	STR	27' - 9"	1,158
B35	8	5	STR	28' - 3"	236
S2	3443	5	1	5' - 6"	19,751
S3	6886	5	2	1' - 10"	13,167

EPOXY COATED REINFORCING STEEL	LBS.	61,295
CLASS AA CONCRETE	C.Y.	348.2
CONCRETE MEDIAN BARRIER RAIL	LIN. FT.	3443.0

NOTES:

THE MEDIAN BARRIER RAIL SHALL NOT BE CAST UNTIL ALL SLAB CONCRETE FOR THAT UNIT SLAB HAS BEEN CAST AND HAS REACHED A MINIMUM COMPRESSIVE STRENGTH OF 3,000 PSI.

ALL REINFORCING STEEL IN MEDIAN BARRIER RAIL SHALL BE EPOXY COATED.

VERTICAL GROOVED CONTRACTION JOINTS, ½" IN DEPTH, SHALL BE TOOLED IN ALL EXPOSED FACES OF THE CONCRETE MEDIAN BARRIER AND IN ACCORDANCE WITH ARTICLE 825-10(B) OF THE STANDARD SPECIFICATIONS. THE CONTRACTION JOINT SHALL BE LOCATED AT THIRD POINTS BETWEEN EXPANSION JOINTS. NO CONTRACTION JOINTS WILL BE REQUIRED FOR SEGMENTS LESS THAN 10 FEET IN LENGTH.

REINFORCING STEEL SPLICE LENGTHS

BAR SIZE	PARAPET AND BARRIER RAIL
	EPOXY COATED
#4	2'-9"
#5	3'-5"
#6	4'-4"

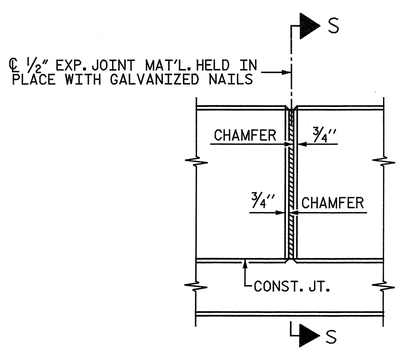

ELEVATION AT EXPANSION JOINTS

(NOTE: OMIT EXP. JOINT MAT'L. WHEN SLIP FORM IS USED)

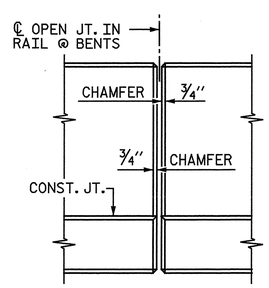

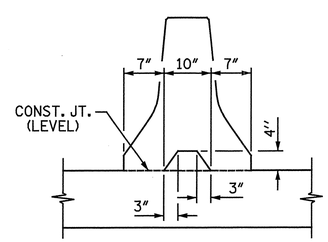

SECTION S-S

AT DAM IN OPEN JOINT
(THIS IS TO BE USED ONLY WHEN SLIP FORM IS USED)

MEDIAN BARRIER DETAILS

PROJECT NO. R-3307

CARTERET COUNTY

STATION: 46+21.50 -L-

STATE OF NORTH CAROLINA
DEPARTMENT OF TRANSPORTATION
RALEIGH

SUPERSTRUCTURE

MEDIAN BARRIER DETAILS

NORTH CAROLINA PROFESSIONAL SEAL 25911 ENGINEER DWAIN G. WATHMAN

NORTH CAROLINA PROFESSIONAL SEAL 033752 ENGINEER SETH A. DENNEY

THE LPA GROUP of North Carolina
TRANSPORTATION CONSULTANTS

THE LPA GROUP of North Carolina
8000 Regency Parkway, Suite 600
Cary, North Carolina 27518
NC License No.: F-1084

REVISIONS							SHEET NO.
NO.	BY:	DATE:	NO.	BY:	DATE:		S-172
1			3				TOTAL SHEETS
2			4				333

DRAWN BY : J. N. AUSTIN DATE : 2-8-12
CHECKED BY : S. A. DENNEY DATE : 2-8-12

DWG. 173 OF 282

4/2/2012
12:43:0. PM
User: jaustin
Filename: Y:\Projects\NCDOT\R-3307\Dwgs\Final\R-3307_173_SD_BR10.dgn

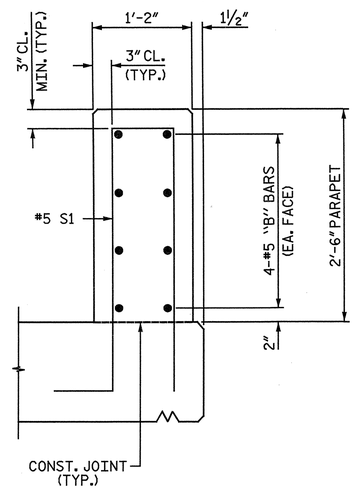

SECTION THRU PARAPET

NOTES:

THE CONCRETE PARAPET SHALL NOT BE CAST UNTIL ALL SLAB CONCRETE FOR THAT UNIT SLAB HAS BEEN CAST AND HAS REACHED A MINIMUM COMPRESSIVE STRENGTH OF 3,000 PSI.

ALL REINFORCING STEEL IN CONCRETE PARAPET AND END POSTS SHALL BE EPOXY COATED.

VERTICAL GROOVED CONTRACTION JOINTS, ½" IN DEPTH, SHALL BE TOOLED IN ALL EXPOSED FACES OF THE CONCRETE PARAPET AND IN ACCORDANCE WITH ARTICLE 825-10(B) OF THE STANDARD SPECIFICATIONS. THE CONTRACTION JOINT SHALL BE LOCATED AT THIRD POINTS BETWEEN EXPANSION JOINTS. NO CONTRACTION JOINTS WILL BE REQUIRED FOR SEGMENTS LESS THAN 10 FEET IN LENGTH.

FOR DETAILS OF CONCRETE INSERTS, SEE "END OF RAIL DETAILS" SHEET.

FOR GUARDRAIL ANCHOR ASSEMBLY, SEE "GUARDRAIL ANCHORAGE DETAILS FOR METAL RAILS" SHEET.

BAR TYPES

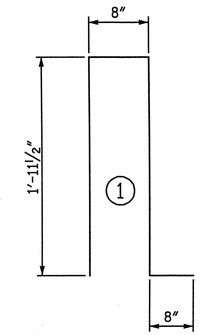

ALL BAR DIMENSIONS ARE OUT TO OUT

BILL OF MATERIAL

BAR	NO.	SIZE	TYPE	LENGTH	WEIGHT
B1	32	5	STR	9' - 8"	323
B2	64	5	STR	28' - 5"	1,897
B3	64	5	STR	28' - 10"	1,925
B4	8	5	STR	22' - 8"	189
B5	8	5	STR	27' - 3"	227
B6	40	5	STR	27' - 11"	1,165
B7	40	5	STR	28' - 9"	1,199
B8	8	5	STR	27' - 9"	232
B9	8	5	STR	28' - 10"	241
B10	144	5	STR	25' - 4"	3,805
B11	144	5	STR	26' - 1"	3,918
B12	16	5	STR	24' - 8"	412
B13	16	5	STR	25' - 10"	431
B14	8	5	STR	24' - 5"	204
B15	8	5	STR	26' - 11"	225
B16	464	5	STR	25' - 8"	12,421
B17	384	5	STR	27' - 8"	11,081
B18	32	5	STR	28' - 8"	957
B19	240	5	STR	26' - 3"	6,571
B20	192	5	STR	26' - 10"	5,374
B21	8	5	STR	26' - 5"	220
B22	48	5	STR	26' - 4"	1,318
B23	40	5	STR	28' - 8"	1,196
B24	8	5	STR	14' - 6"	121
B25	8	5	STR	17' - 8"	147
E1	8	7	STR	2' - 6"	41
E2	8	7	STR	3' - 0"	49
E3	8	7	STR	3' - 6"	57
E4	8	7	STR	4' - 0"	65
E5	8	7	STR	4' - 6"	74
F1	8	6	STR	1' - 10"	22
F2	8	6	STR	3' - 0"	36
F3	8	6	STR	3' - 7"	43
S1	6825	5	1	5' - 3"	37,372

EPOXY COATED REINFORCING STEEL LBS. 93,558

CLASS "AA" CONCRETE C.Y. 738.2

1'-2" x 2'-6" CONCRETE PARAPET LIN. FT. 6825.8

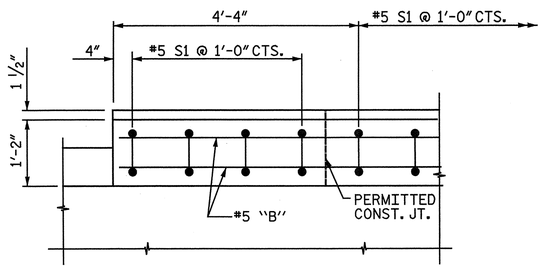

PLAN OF PARAPET

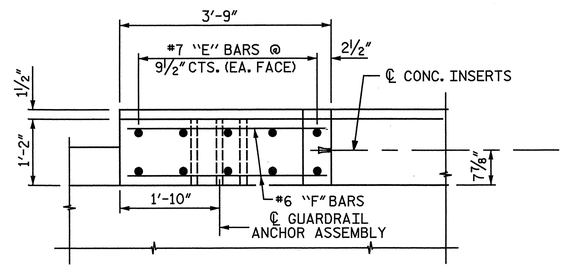

PLAN OF END POST

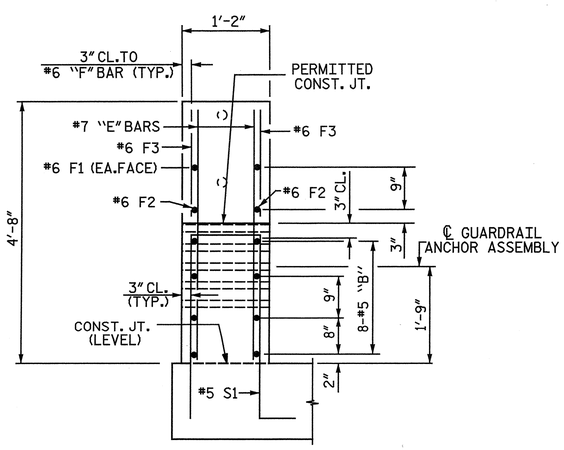

END VIEW

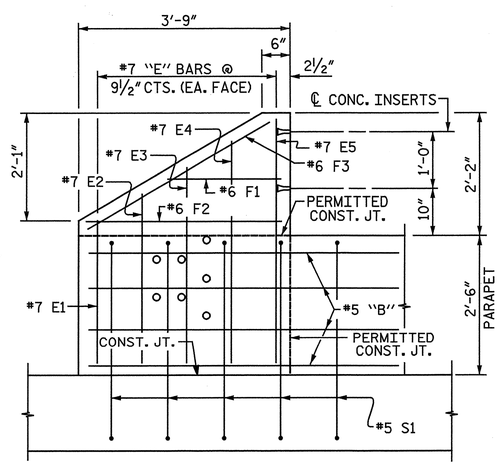

ELEVATION

PARAPET AND END POST FOR TWO BAR RAIL

REINFORCING STEEL SPLICE LENGTHS

BAR SIZE	PARAPET AND BARRIER RAIL
	EPOXY COATED
#4	2'-9"
#5	3'-5"
#6	4'-4"

PROJECT NO. R-3307

CARTERET COUNTY

STATION: 46+21.50 -L-

STATE OF NORTH CAROLINA
DEPARTMENT OF TRANSPORTATION
RALEIGH

CONCRETE PARAPET AND END POST DETAILS

NORTH CAROLINA PROFESSIONAL SEAL 25911 ENGINEER DWAIN G. HATHAWAY

NORTH CAROLINA PROFESSIONAL SEAL 033752 ENGINEER SETH A. DENNEY

THE LPA GROUP of North Carolina
TRANSPORTATION CONSULTANTS

THE LPA GROUP of North Carolina
8000 Regency Parkway, Suite 600
Cary, North Carolina 27518
NC License No.: F-1084

REVISIONS						SHEET NO.
NO.	BY:	DATE:	NO.	BY:	DATE:	S-173
1			3			TOTAL SHEETS
2			4			333

DRAWN BY : J. N. AUSTIN DATE : 1-8-12
CHECKED BY : S. A. DENNEY DATE : 1-9-12

DWG. 174 OF 282

4/2/2012
12:43:00 PM
User: austin
Filename: Y:\Projects\NCDOT\R-3307\Dwgs\Final\R-3307_174_SD_BR11.dgn

NOTES:

ALL DIMENSIONS ARE MEASURED ALONG OUTSIDE EDGE OF SUPERSTRUCTURE.

METAL POSTS MAY BE SHIFTED SLIGHTLY AS NECESSARY TO AVOID JOINTS IN PARAPET.

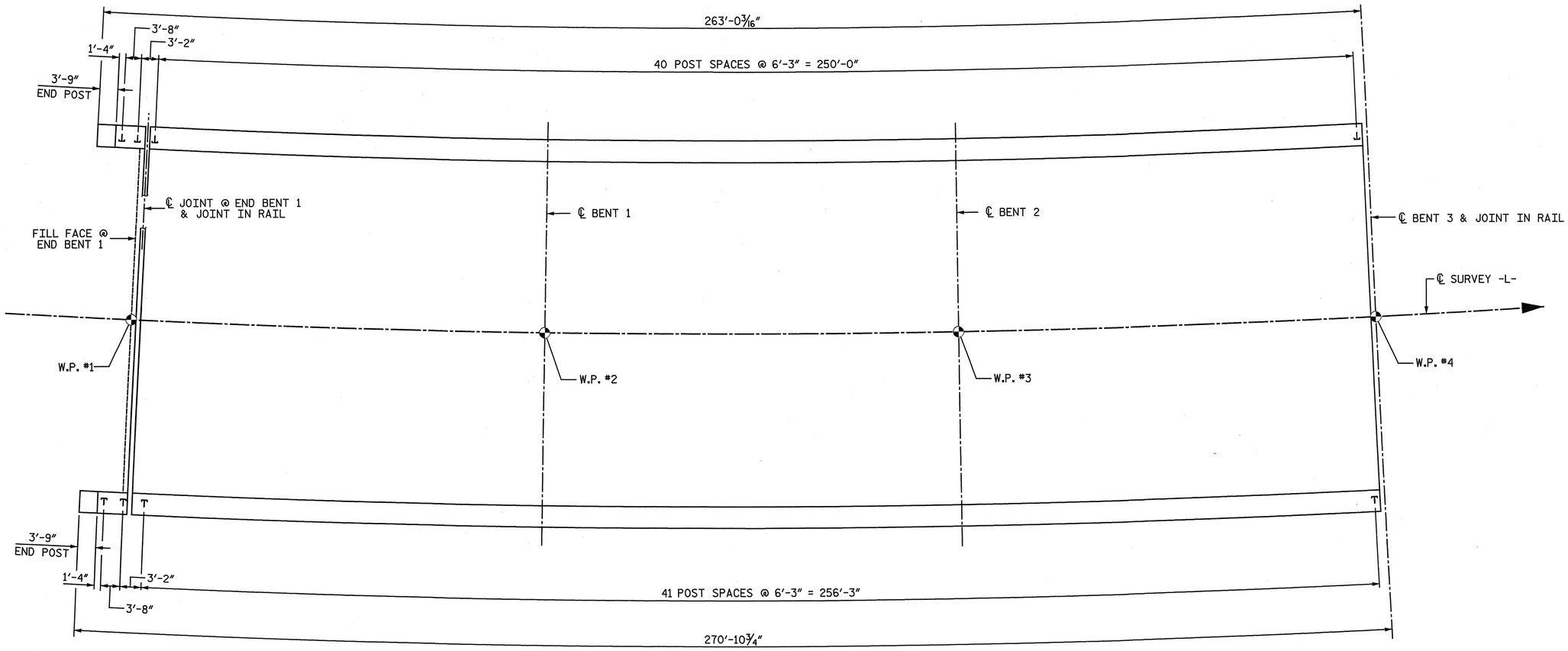

SPAN A

SPAN B

SPAN C

PLAN OF METAL RAIL POST SPACING - UNIT 1

PROJECT NO. R-3307

CARTERET COUNTY

STATION: 46+21.50 -L-

SHEET 1 OF 9

STATE OF NORTH CAROLINA
DEPARTMENT OF TRANSPORTATION
RALEIGH

SUPERSTRUCTURE

METAL RAIL POST SPACING

UNIT 1

NORTH CAROLINA PROFESSIONAL SEAL 25911 ENGINEER DWAIN G. HATHAWAY 2-3-2012

NORTH CAROLINA PROFESSIONAL SEAL 033752 ENGINEER SETH A. DENNEY 3/06/12

THE LPA GROUP of North Carolina TRANSPORTATION CONSULTANTS

THE LPA GROUP of North Carolina
8000 Regency Parkway, Suite 600
Cary, North Carolina 27518
NC License No.: F-1084

REVISIONS						SHEET NO.
NO.	BY:	DATE:	NO.	BY:	DATE:	S-174
1			3			TOTAL SHEETS
2			4			333

DRAWN BY : C. E. MAYHEW DATE : 6-22-11
CHECKED BY : J. N. AUSTIN DATE : 1-3-12

DWG. 175 OF 282

4/2/7 '2
12:43:09 PM
User: jaustin
Filename: Y:\Projects\NCDOT\R-3307\Dwgs\Final\R-3307_175_SD_2MR_1.dgn

NOTES:

ALL DIMENSIONS ARE MEASURED ALONG OUTSIDE EDGE OF SUPERSTRUCTURE.

METAL POSTS MAY BE SHIFTED SLIGHTLY AS NECESSARY TO AVOID JOINTS IN PARAPET.

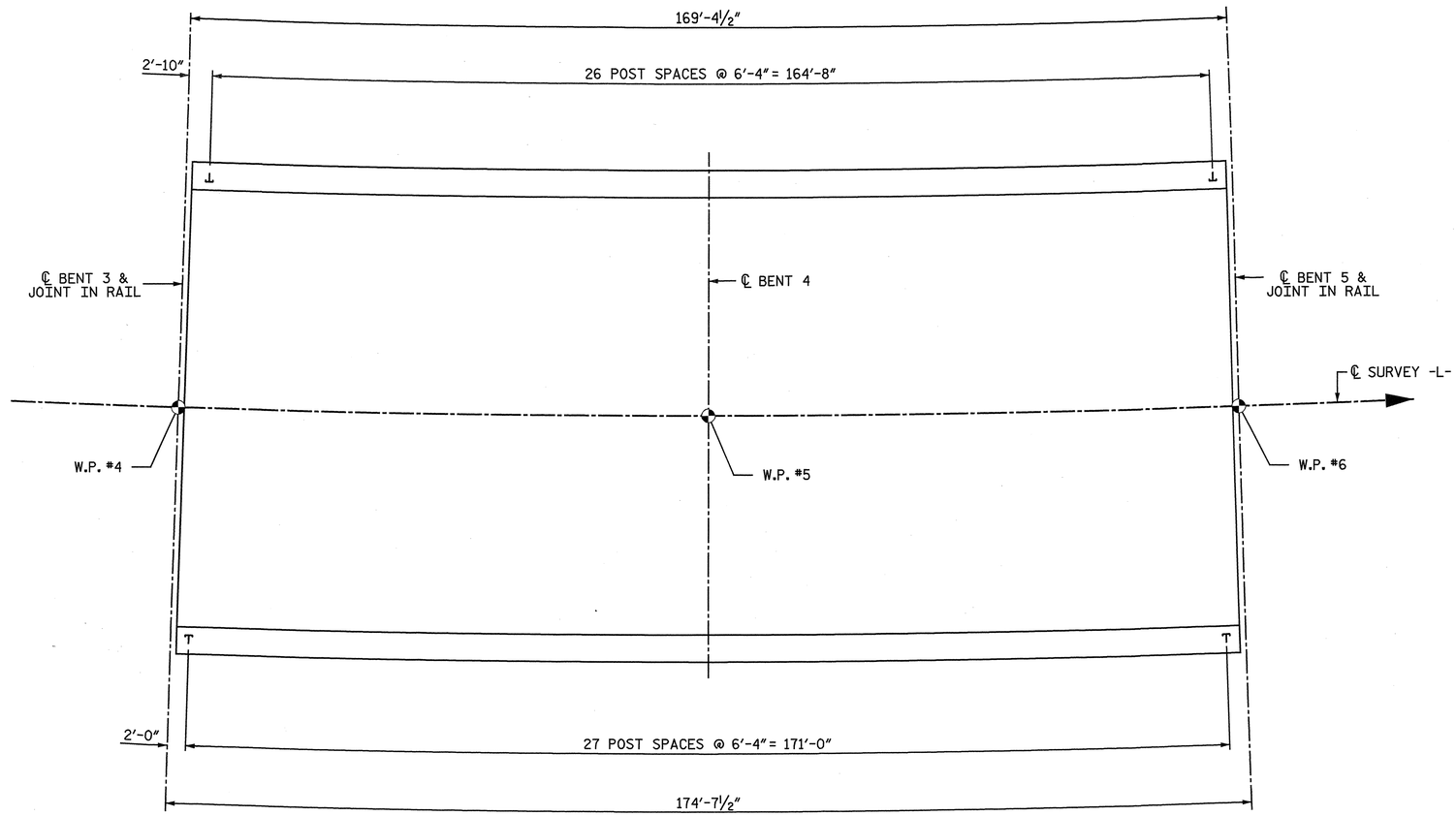

SPAN D

SPAN E

PLAN OF METAL RAIL POST SPACING - UNIT 2

PROJECT NO. R-3307

CARTERET COUNTY

STATION: 46+21.50 -L-

SHEET 2 OF 9

STATE OF NORTH CAROLINA
DEPARTMENT OF TRANSPORTATION
RALEIGH

SUPERSTRUCTURE

METAL RAIL POST SPACING

UNIT 2

NORTH CAROLINA PROFESSIONAL SEAL 25911 ENGINEER DWAIN G. HATHAWAY 4-3-2012

NORTH CAROLINA PROFESSIONAL SEAL 033752 ENGINEER SETH A. DENNEY 04/04/12

THE LPA GROUP of North Carolina TRANSPORTATION CONSULTANTS

THE LPA GROUP of North Carolina
8000 Regency Parkway, Suite 600
Cary, North Carolina 27518
NC License No.: F-1084

REVISIONS						
NO.	BY:	DATE:	NO.	BY:	DATE:	
1			3			
2			4			

SHEET NO. S-175

TOTAL SHEETS 333

DRAWN BY : C. E. MAYHEW DATE :

CHECKED BY : DATE :

DWG. 176 OF 282

4/2/2012
12:43 PM
User: Justin
Filename: Y:\Projects\NCDOT\R-3307\Dwgs\Final\R-3307_176_SD_2MR_2.dgn

NOTES:

ALL DIMENSIONS ARE MEASURED ALONG OUTSIDE EDGE OF SUPERSTRUCTURE.

METAL POSTS MAY BE SHIFTED SLIGHTLY AS NECESSARY TO AVOID JOINTS IN PARAPET.

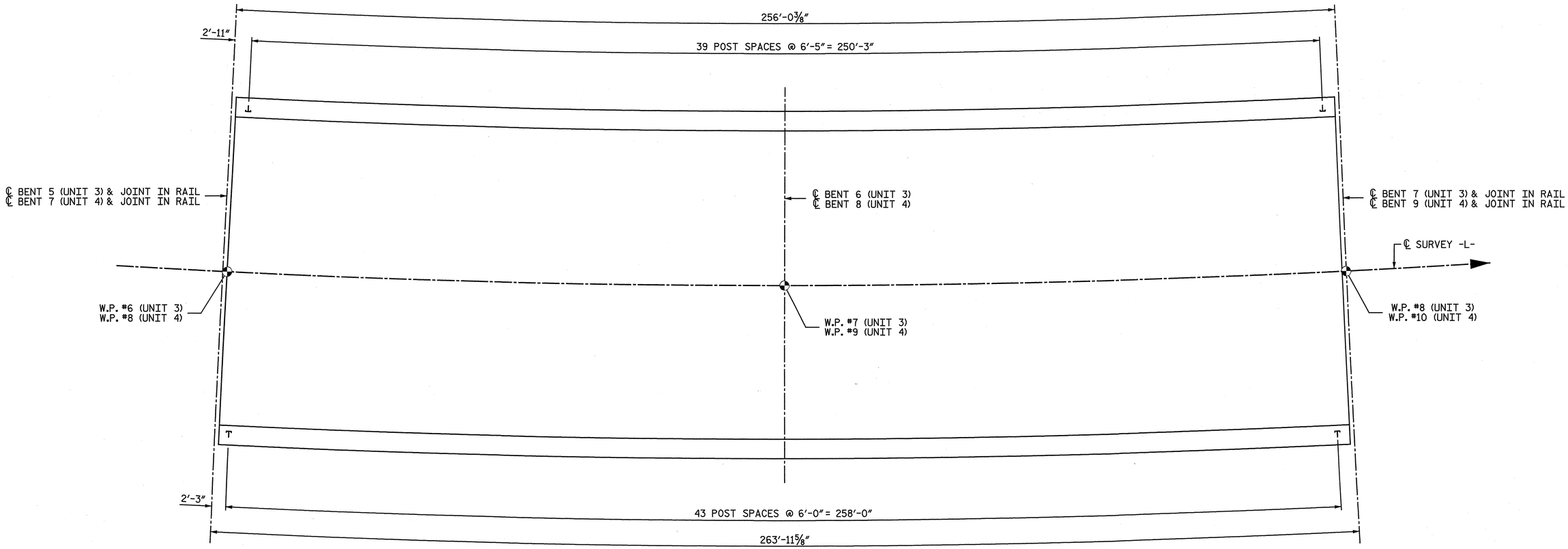

SPAN F

SPAN H SIMILAR

SPAN G

SPAN I SIMILAR

PLAN OF METAL RAIL POST SPACING - UNITS 3 & 4

PROJECT NO. R-3307

CARTERET COUNTY

STATION: 46+21.50 -L-

SHEET 3 OF 9

STATE OF NORTH CAROLINA
DEPARTMENT OF TRANSPORTATION
RALEIGH

SUPERSTRUCTURE

METAL RAIL POST SPACING

UNITS 3 & 4

NORTH CAROLINA PROFESSIONAL SEAL 25911 ENGINEER DWAIN G. HATHAWAY 4-2-2012

NORTH CAROLINA PROFESSIONAL SEAL 033752 ENGINEER SETH A. DENNEY

THE LPA GROUP of North Carolina TRANSPORTATION CONSULTANTS

THE LPA GROUP of North Carolina
8000 Regency Parkway, Suite 600
Cary, North Carolina 27518
NC License No.: F-1084

REVISIONS						SHEET NO.
NO.	BY:	DATE:	NO.	BY:	DATE:	S-176
1			3			TOTAL SHEETS
2			4			333

DRAWN BY : C. E. MAYHEW DATE : 6-22-11
CHECKED BY : J. N. AUSTIN DATE : 1-3-12

DWG. 177 OF 282

4/2/2012
12:43: PM
User: jaustin
Filename: Y:\Projects\NCDOT\R-3307\Dwgs\Final\R-3307_177_SD_2MR_3.dgn

NOTES:

ALL DIMENSIONS ARE MEASURED ALONG OUTSIDE EDGE OF SUPERSTRUCTURE.

METAL POSTS MAY BE SHIFTED SLIGHTLY AS NECESSARY TO AVOID JOINTS IN PARAPET.

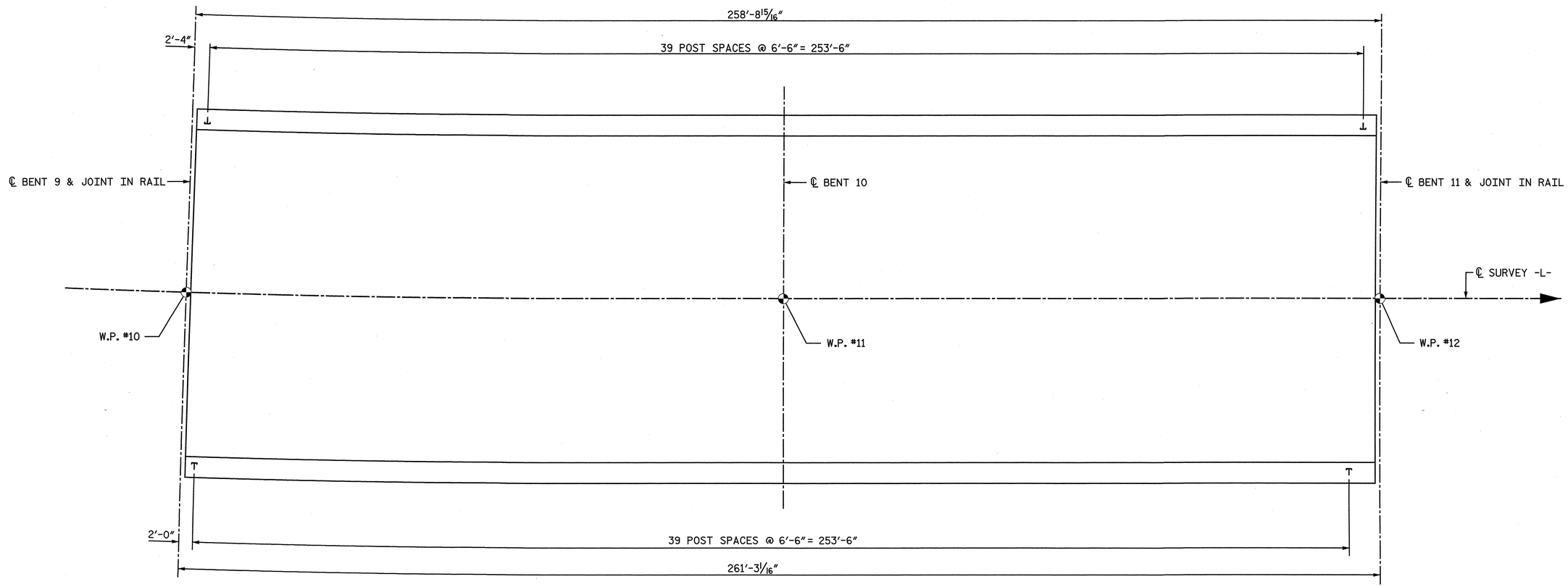

SPAN J

SPAN K

PLAN OF METAL RAIL POST SPACING - UNIT 5

PROJECT NO. R-3307

CARTERET COUNTY

STATION: 46+21.50 -L-

SHEET 4 OF 9

STATE OF NORTH CAROLINA
DEPARTMENT OF TRANSPORTATION
RALEIGH

SUPERSTRUCTURE

METAL RAIL POST SPACING

UNIT 5

NORTH CAROLINA PROFESSIONAL SEAL 25911 ENGINEER DUNCAN G. HATHAWAY 4-3-2012

NORTH CAROLINA PROFESSIONAL SEAL 033752 ENGINEER JEFF A. DENNICK 4/3/12

THE LPA GROUP of North Carolina TRANSPORTATION CONSULTANTS

THE LPA GROUP of North Carolina
8000 Regency Parkway, Suite 600
Cary, North Carolina 27518
NC License No.: F-1084

REVISIONS						
NO.	BY:	DATE:	NO.	BY:	DATE:	
1			3			
2			4			

SHEET NO. S-177

TOTAL SHEETS 333

DRAWN BY : C. E. MAYHEW DATE : 6-22-11
CHECKED BY : J. N. AUSTIN DATE : 1-3-12

DWG. 178 OF 282

4/2/2012
12:43:_ PM
User: austin
Filename: Y:\Projects\NCDOT\R-3307\Dwgs\Final\R-3307_178_SD_2MR_4.dgn

NOTES:

ALL DIMENSIONS ARE MEASURED ALONG OUTSIDE EDGE OF SUPERSTRUCTURE.

METAL POSTS MAY BE SHIFTED SLIGHTLY AS NECESSARY TO AVOID JOINTS IN PARAPET.

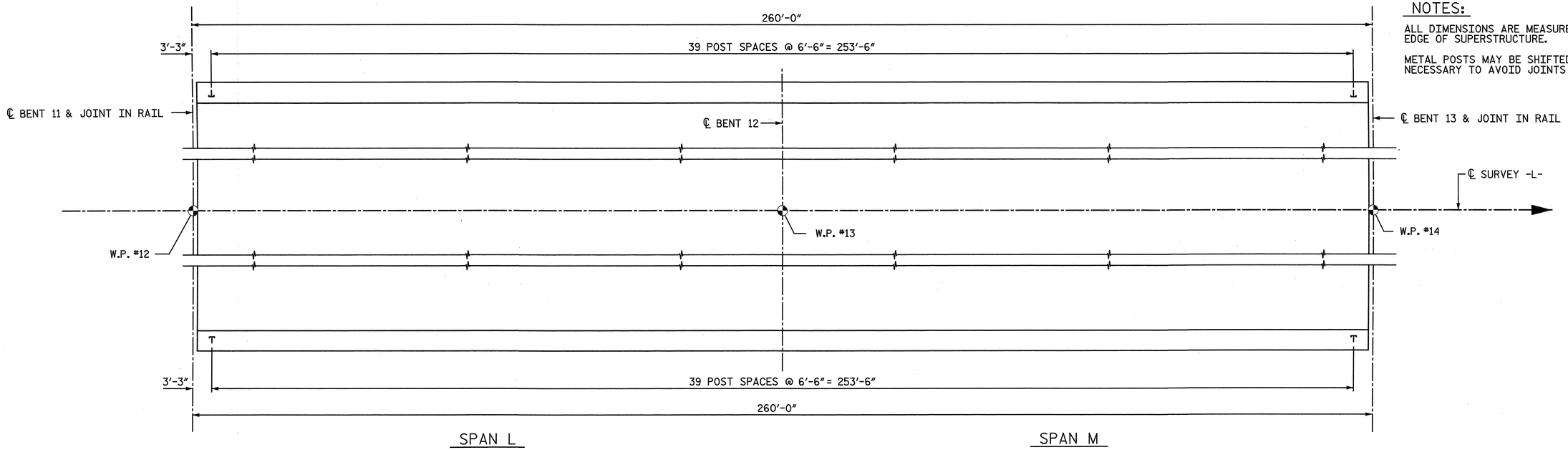

PLAN OF METAL RAIL POST SPACING - UNIT 6

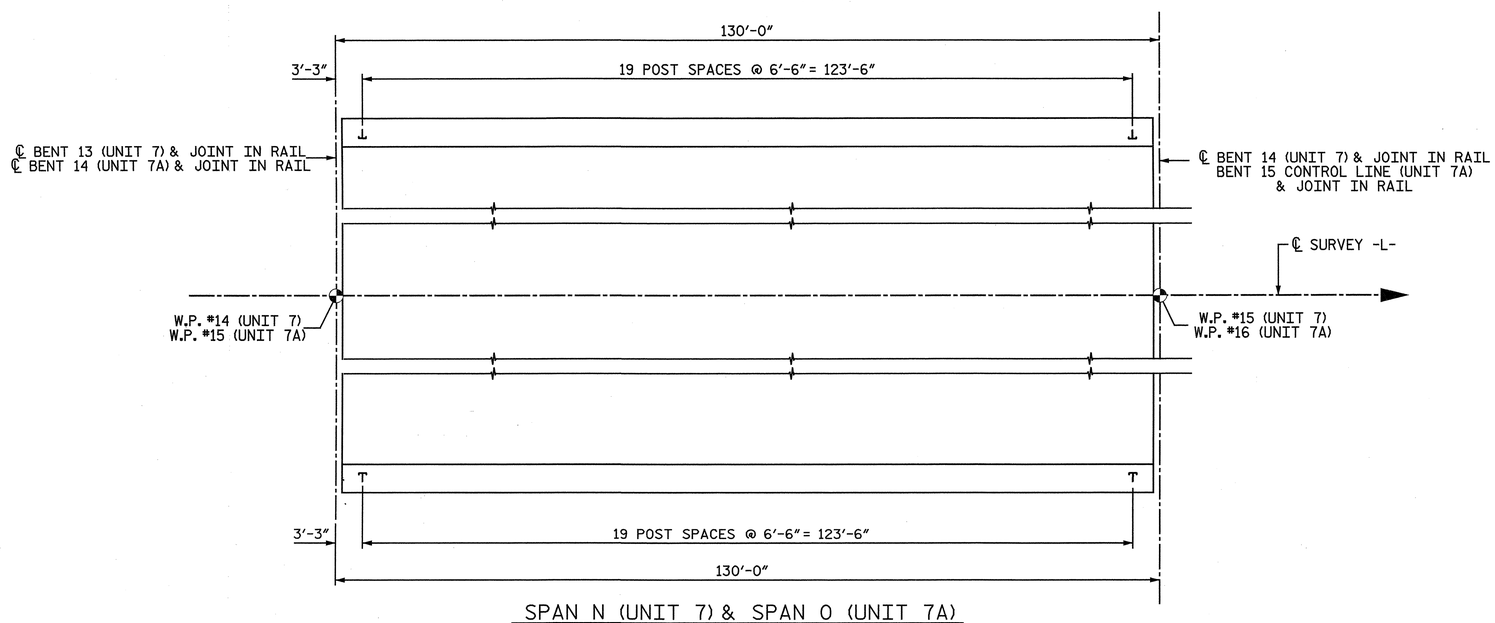

PLAN OF METAL RAIL POST SPACING - UNITS 7 & 7A

PROJECT NO. R-3307

CARTERET COUNTY

STATION: 46+21.50 -L-

SHEET 5 OF 9

STATE OF NORTH CAROLINA
DEPARTMENT OF TRANSPORTATION
RALEIGH

SUPERSTRUCTURE

METAL RAIL POST SPACING

UNITS 6 & 7

NORTH CAROLINA PROFESSIONAL SEAL 25911 ENGINEER DAVID G. HATHWAY 4-3-2012

NORTH CAROLINA PROFESSIONAL SEAL 033752 ENGINEER SETH A. DENNEY

THE LPA GROUP of North Carolina TRANSPORTATION CONSULTANTS

THE LPA GROUP of North Carolina
8000 Regency Parkway, Suite 600
Cary, North Carolina 27518
NC License No.: F-1084

REVISIONS						SHEET NO.
NO.	BY:	DATE:	NO.	BY:	DATE:	S-178
1			3			TOTAL SHEETS
2			4			333

DRAWN BY : C. E. MAYHEW DATE : 6-22-11
CHECKED BY : J. N. AUSTIN DATE : 1-3-12

DWG. 179 OF 282

4/3/2012
12:06 2 PM
User: jaustin
Filename: T:\Projects\NCDOT\R-3307\Dwgs\Final\R-3307_179_SD_2MR_5.dgn

NOTES:

ALL DIMENSIONS ARE MEASURED ALONG OUTSIDE EDGE OF SUPERSTRUCTURE.

METAL POSTS MAY BE SHIFTED SLIGHTLY AS NECESSARY TO AVOID JOINTS IN PARAPET.

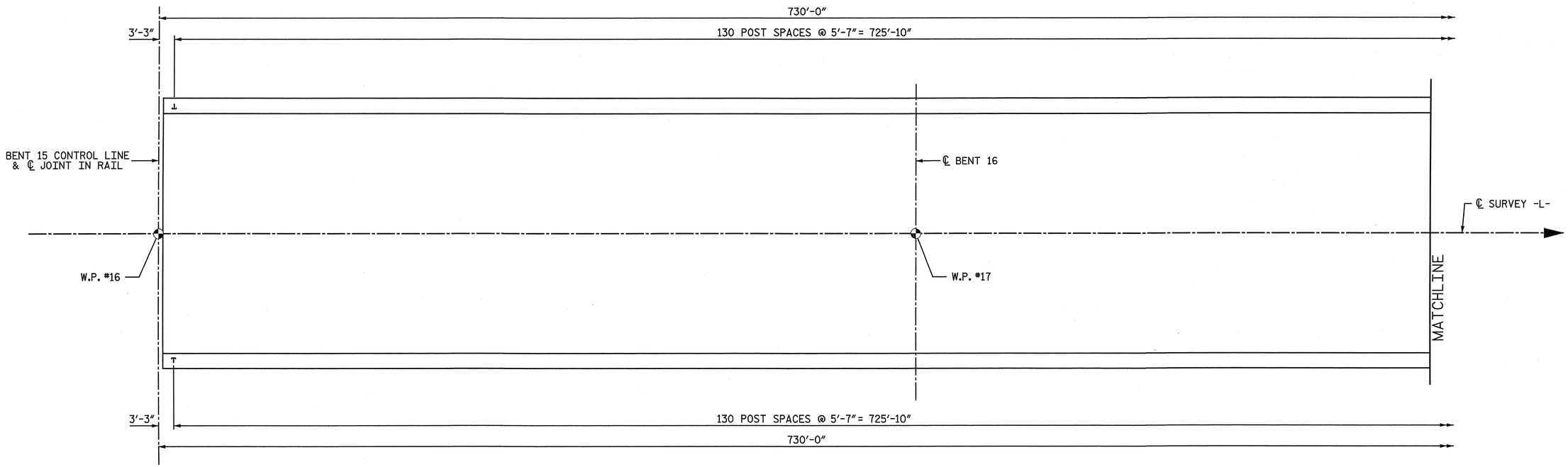

SPAN P

SPAN Q

PLAN OF METAL RAIL POST SPACING - UNIT 8

PROJECT NO. R-3307

CARTERET COUNTY

STATION: 46+21.50 -L-

SHEET 6 OF 9

STATE OF NORTH CAROLINA
DEPARTMENT OF TRANSPORTATION
RALEIGH

SUPERSTRUCTURE

METAL RAIL POST SPACING

UNIT 8

NORTH CAROLINA PROFESSIONAL SEAL 25911 ENGINEER DWAIN C. HATHAWAY 4-3-2012

NORTH CAROLINA PROFESSIONAL SEAL 033752 ENGINEER SETH A. DENNEY 2/02/12

THE LPA GROUP of North Carolina TRANSPORTATION CONSULTANTS

THE LPA GROUP of North Carolina
8000 Regency Parkway, Suite 600
Cary, North Carolina 27518
NC License No.: F-1084

REVISIONS							SHEET NO.
NO.	BY:	DATE:	NO.	BY:	DATE:		S-179
1			3				TOTAL SHEETS
2			4				333

DRAWN BY : C. E. MAYHEW DATE : 6-22-11
CHECKED BY : J. N. AUSTIN DATE : 1-3-12

DWG. 180 OF 282

4/2/2012
12:43:_PM
User: jaustin
Filename: Y:\Projects\NCDOT\R-3307\Dwgs\Final\R-3307_180_SD_2MR_6.dgn

NOTES:

ALL DIMENSIONS ARE MEASURED ALONG OUTSIDE EDGE OF SUPERSTRUCTURE.

METAL POSTS MAY BE SHIFTED SLIGHTLY AS NECESSARY TO AVOID JOINTS IN PARAPET.

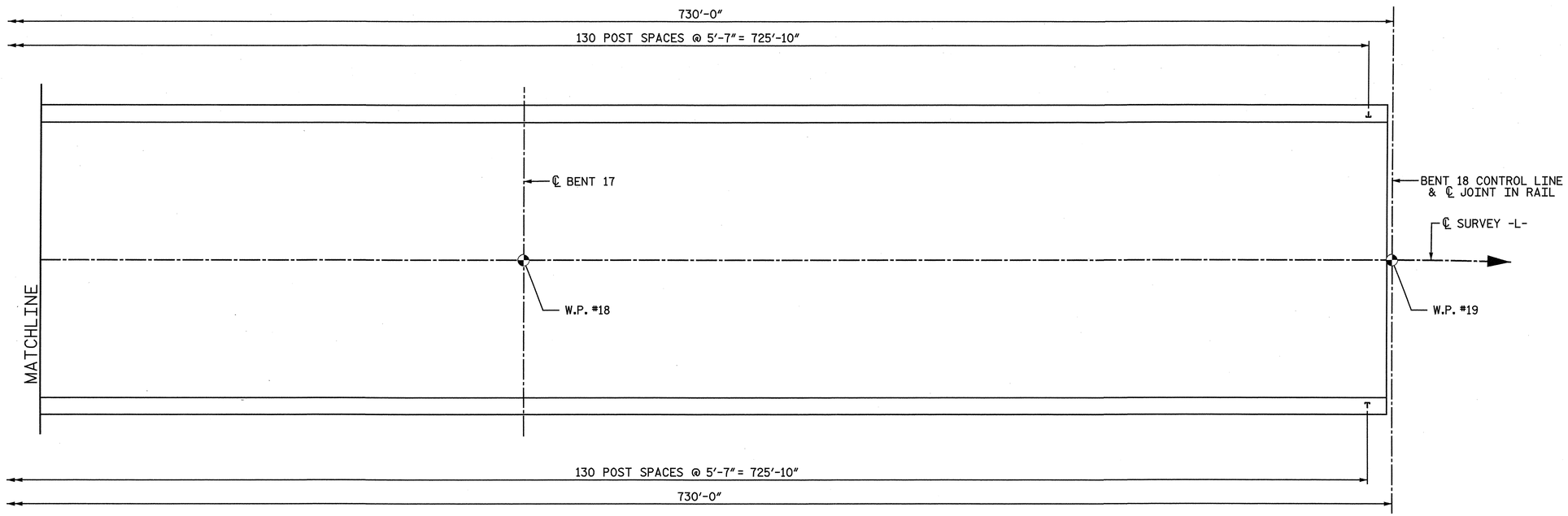

SPAN Q

SPAN R

PLAN OF METAL RAIL POST SPACING - UNIT 8

PROJECT NO. R-3307

CARTERET COUNTY

STATION: 46+21.50 -L-

SHEET 7 OF 9

STATE OF NORTH CAROLINA
DEPARTMENT OF TRANSPORTATION
RALEIGH

SUPERSTRUCTURE

METAL RAIL POST SPACING

UNIT 8

NORTH CAROLINA PROFESSIONAL SEAL 25911 ENGINEER DWAIN G. HATHAWAY 4-3-12

NORTH CAROLINA PROFESSIONAL SEAL 033752 ENGINEER SETH A. DENNEY 4/3/12

THE LPA GROUP of North Carolina TRANSPORTATION CONSULTANTS

THE LPA GROUP of North Carolina
8000 Regency Parkway, Suite 600
Cary, North Carolina 27518
NC License No.: F-1084

REVISIONS						
NO.	BY:	DATE:	NO.	BY:	DATE:	
1			3			
2			4			

SHEET NO. S-180

TOTAL SHEETS 333

DRAWN BY : C. E. MAYHEW DATE : 6-22-11

CHECKED BY : J. N. AUSTIN DATE : 1-3-12

DWG. 181 OF 282

4/2/2012
12:43:__PM
User: jaustin
Filename: Y:\Projects\NCDOT\R-3307\Dwgs\Final\R-3307_181_SD_2MR_7.dgn

NOTES:

ALL DIMENSIONS ARE MEASURED ALONG OUTSIDE EDGE OF SUPERSTRUCTURE.

METAL POSTS MAY BE SHIFTED SLIGHTLY AS NECESSARY TO AVOID JOINTS IN PARAPET.

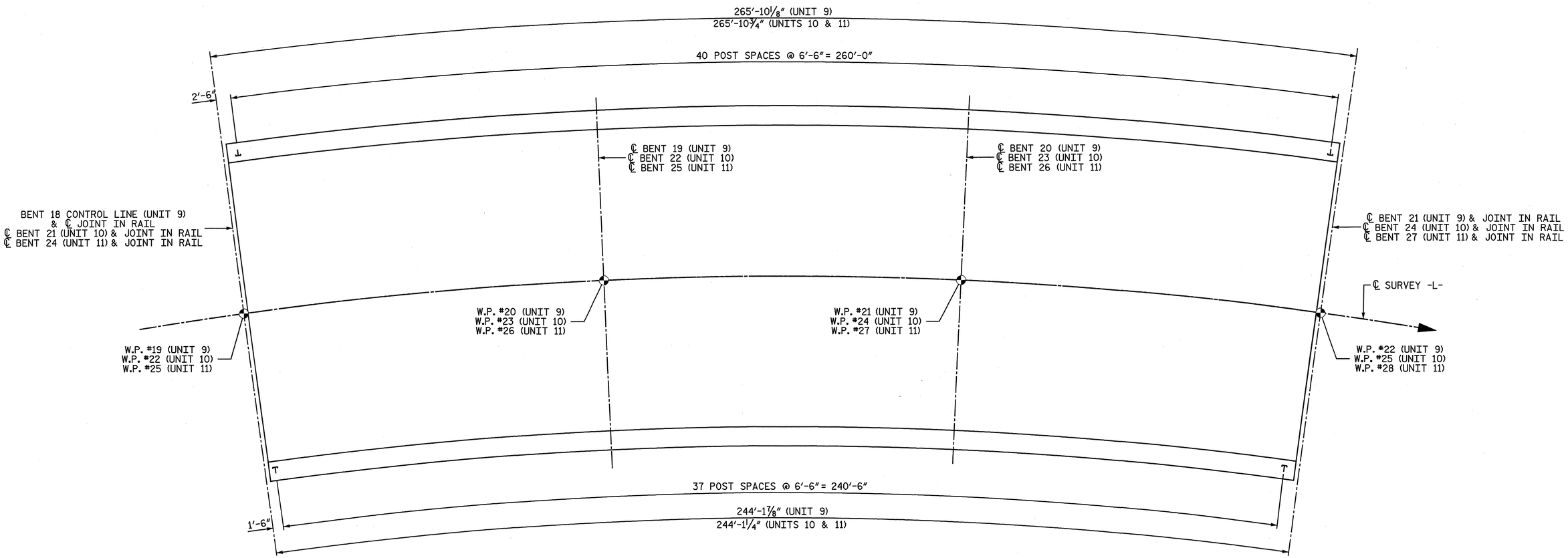

SPAN S

SPAN V & Y SIMILAR

SPAN T

SPAN W & Z SIMILAR

SPAN U

SPAN X & AA SIMILAR

PLAN OF METAL RAIL POST SPACING - UNITS 9, 10, & 11

PROJECT NO. R-3307

CARTERET COUNTY

STATION: 46+21.50 -L-

SHEET 8 OF 9

STATE OF NORTH CAROLINA
DEPARTMENT OF TRANSPORTATION
RALEIGH

SUPERSTRUCTURE

METAL RAIL POST SPACING

UNITS 9, 10, & 11

NORTH CAROLINA PROFESSIONAL SEAL 25911 ENGINEER DWAIN G. HATHWAY 4-3-2012

NORTH CAROLINA PROFESSIONAL SEAL 033752 ENGINEER SETH A. DENNEY 4/03/12

THE LPA GROUP of North Carolina TRANSPORTATION CONSULTANTS

THE LPA GROUP of North Carolina
8000 Regency Parkway, Suite 600
Cary, North Carolina 27518
NC License No.: F-1084

REVISIONS								SHEET NO.
NO.	BY:	DATE:	NO.	BY:	DATE:			S-181
1			3					TOTAL SHEETS
2			4					333

DRAWN BY : C. E. MAYHEW DATE : 6-22-11
CHECKED BY : J. N. AUSTIN DATE : 1-3-12

DWG. 182 OF 282

4/2/2012
12:43:1 PM
User:jaustin
Filename: Y:\Projects\NCDOT\R-3307\Dwgs\Final\R-3307_182_SD_2MR_8.dgn

NOTES:

ALL DIMENSIONS ARE MEASURED ALONG OUTSIDE EDGE OF SUPERSTRUCTURE.

METAL POSTS MAY BE SHIFTED SLIGHTLY AS NECESSARY TO AVOID JOINTS IN PARAPET.

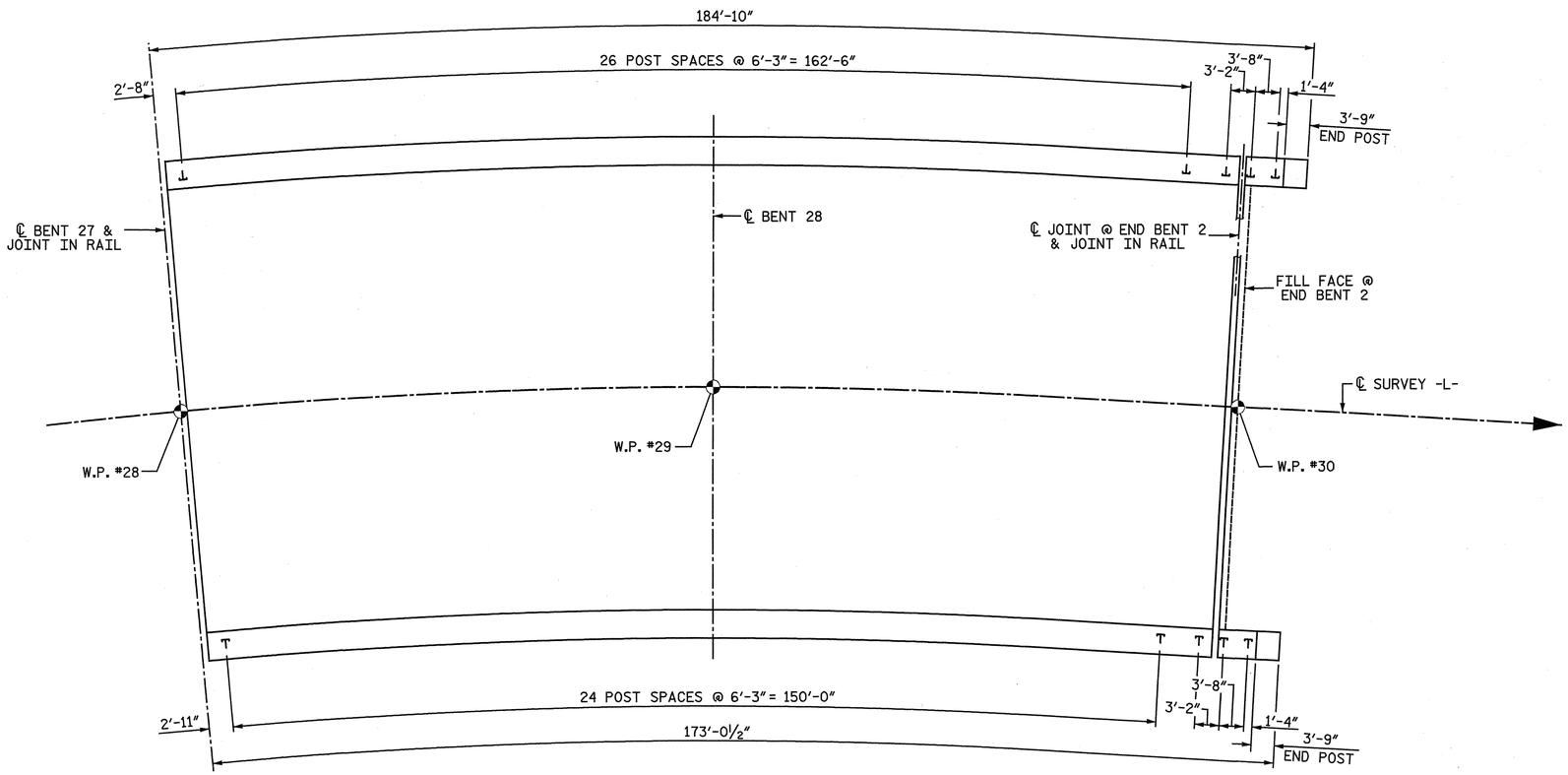

SPAN BB

SPAN CC

PLAN OF METAL RAIL POST SPACING - UNIT 12

PROJECT NO. R-3307

CARTERET COUNTY

STATION: 46+21.50 -L-

SHEET 9 OF 9

STATE OF NORTH CAROLINA
DEPARTMENT OF TRANSPORTATION
RALEIGH

SUPERSTRUCTURE

METAL RAIL POST SPACING

UNIT 12

NORTH CAROLINA PROFESSIONAL SEAL 25911 ENGINEER DWAIN G. HAYMAN 4-3-2012

NORTH CAROLINA PROFESSIONAL SEAL 033752 ENGINEER SETH A. DENNETT 4/03/12

THE LPA GROUP of North Carolina TRANSPORTATION CONSULTANTS

THE LPA GROUP of North Carolina
8000 Regency Parkway, Suite 600
Cary, North Carolina 27518
NC License No.: F-1084

REVISIONS						SHEET NO.
NO.	BY:	DATE:	NO.	BY:	DATE:	S-182
1			3			TOTAL SHEETS
2			4			333

DRAWN BY : C. E. MAYHEW DATE : 6-22-11
CHECKED BY : J. N. AUSTIN DATE : 1-3-12

DWG. 183 OF 282

4/2/2012
12:43:_ PM
User: jaustin
Filename: Y:\Projects\NCDOT\R-3307\Dwgs\Final\R-3307_183_SD_2MR_9.dgn

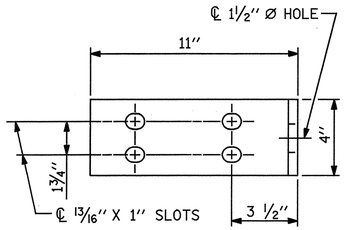

ELEVATION

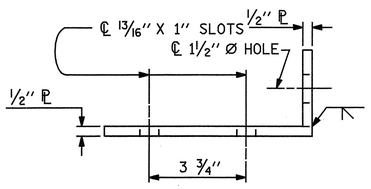

TOP VIEW

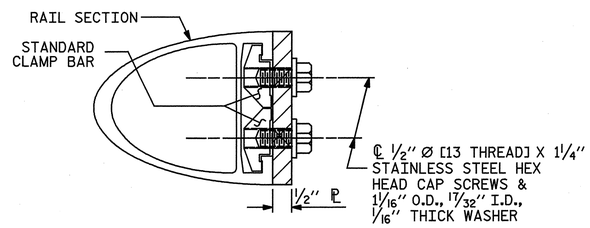

SECTION H-H (FIX)

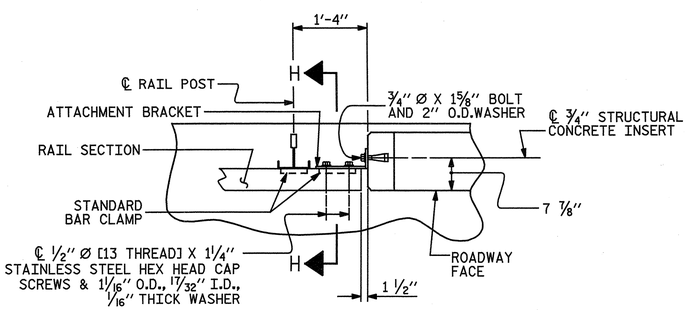

PLAN - RAIL AND END POST

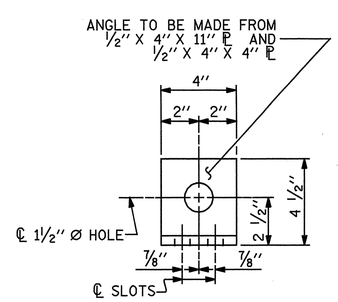

END VIEW

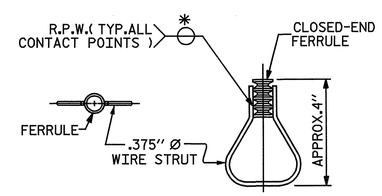

PLAN ELEVATION

STRUCTURAL CONCRETE INSERT

*EACH WELDED ATTACHMENT OF WIRE TO FERRULE SHALL DEVELOP THE TENSILE STRENGTH OF THE WIRE.

NOTES

STRUCTURAL CONCRETE INSERT

THE STRUCTURAL CONCRETE INSERT ASSEMBLY SHALL CONSIST OF THE FOLLOWING COMPONENTS:

A. FERRULES SHALL BE MADE FROM STEEL MEETING THE REQUIREMENTS OF AASHTO M169, GRADE 12L14 AND SHALL HAVE A MINIMUM LENGTH OF THREADS OF 1½″.

B. 1 - ¾″ Ø X 1⅝″ BOLT WITH WASHER. BOLT SHALL CONFORM TO THE REQUIREMENTS OF ASTM A307. BOLT AND WASHER SHALL BE GALVANIZED. (AT THE CONTRACTOR'S OPTION, STAINLESS STEEL BOLT AND WASHER MAY BE USED AS AN ALTERNATE FOR THE ¾″ Ø X 1⅝″ GALVANIZED BOLT AND WASHER. THEY SHALL CONFORM TO OR EXCEED THE MECHANICAL REQUIREMENTS OF ASTM A307. THE USE OF THIS ALTERNATE SHALL BE APPROVED BY THE ENGINEER.)

C. WIRE STRUT SHOWN IN THE CONCRETE INSERT ASSEMBLY DETAIL IS THE MINIMUM ALLOWABLE SIZE AND SHALL HAVE A MINIMUM TENSILE STRENGTH OF 100,000 PSI. AS AN OPTION, A 7/16″ Ø WIRE STRUT WITH A MINIMUM TENSILE STRENGTH OF 90,000 PSI IS ACCEPTABLE.

NOTES

METAL RAIL TO END POST CONNECTION

THE METAL RAIL TO END POST CONNECTION SHALL CONSIST OF THE FOLLOWING COMPONENTS:

A. ½″ PLATES SHALL CONFORM TO AASHTO M270 GRADE 36 AND SHALL BE GALVANIZED AFTER FABRICATION.

B. ¾″ STRUCTURAL CONCRETE INSERT SHALL HAVE A WORKING LOAD SHEAR CAPACITY OF 4800 LBS. THE FERRULES SHALL ENGAGE A ¾″Ø X 1⅝″ BOLT WITH 2″ O.D. WASHER IN PLACE. THE ¾″Ø X 1⅝″ BOLT SHALL HAVE N. C. THREADS.

C. CAP SCREWS FOR RAIL ATTACHMENT TO ANGLE SHALL CONFORM TO THE REQUIREMENTS OF ASTM F593 ALLOY 305 STAINLESS STEEL. CAP SCREWS TO BE CENTERED IN SLOTS AT 60°F.

D. STANDARD CLAMP BARS (SEE METAL RAIL SHEET).

E. ½″ Ø PIPE SLEEVES (IF REQUIRED) TO BE GALVANIZED.

THE COST OF THE STANDARD CLAMP BARS AND CAP SCREWS USED IN THE METAL RAIL TO END POST CONNECTION SHALL BE INCLUDED IN THE UNIT CONTRACT PRICE BID FOR LINEAR FEET OF 2 BAR METAL RAIL.

THE ¾″ STRUCTURAL CONCRETE INSERT WITH BOLT SHALL BE ASSEMBLED IN THE SHOP.

THE COST OF THE ¾″ STRUCTURAL CONCRETE INSERT ASSEMBLY, AND THE ½″ PLATES COMPLETE IN PLACE SHALL BE INCLUDED IN THE VARIOUS PAY ITEMS.

THE CONTRACTOR, AT HIS OPTION, MAY USE AN ADHESIVE BONDING SYSTEM IN LIEU OF THE STRUCTURAL CONCRETE INSERT EMBEDDED IN THE END POST. IF THE ADHESIVE BONDING SYSTEM IS USED, THE ¾″ Ø X 1⅝″ BOLT WITH WASHER SHALL BE REPLACED WITH A ¾″Ø X 6½″ BOLT AND 2″ O.D. WASHER. ALL SPECIFICATIONS THAT APPLY TO THE ¾″ Ø X 1⅝″ BOLT SHALL APPLY TO THE ¾″Ø X 6 ½″ BOLT. FIELD TESTING OF THE ADHESIVE BONDING SYSTEM IS NOT REQUIRED.

DETAILS FOR ATTACHING METAL RAIL TO END POST

PROJECT NO. R-3307

CARTERET COUNTY

STATION: 46+21.50 -L-

STATE OF NORTH CAROLINA
DEPARTMENT OF TRANSPORTATION
RALEIGH

SUPERSTRUCTURE

END OF RAIL DETAILS

NORTH CAROLINA PROFESSIONAL SEAL 25911 ENGINEER DWAIN G. WATHWAY 4-3-2012

NORTH CAROLINA PROFESSIONAL SEAL 033752 ENGINEER SETH A. DENNEY 10/3/12

THE LPA GROUP of North Carolina TRANSPORTATION CONSULTANTS

THE LPA GROUP of North Carolina
8000 Regency Parkway, Suite 600
Cary, North Carolina 27518
NC License No.: F-1084

REVISIONS						SHEET NO.
NO.	BY:	DATE:	NO.	BY:	DATE:	S-183
1			3			TOTAL SHEETS
2			4			333

DRAWN BY : C. E. MAYHEW DATE : 10-6-11
CHECKED BY : R. F. DeCOLA DATE : 11-9-11

DWG. 184 OF 282

4/2/2012
12:43:_ PM
User: jaustin
Filename: Y:\Projects\NCDOT\R-3307\Dwgs\Final\R-3307_184_SD_2MR_10.dgn

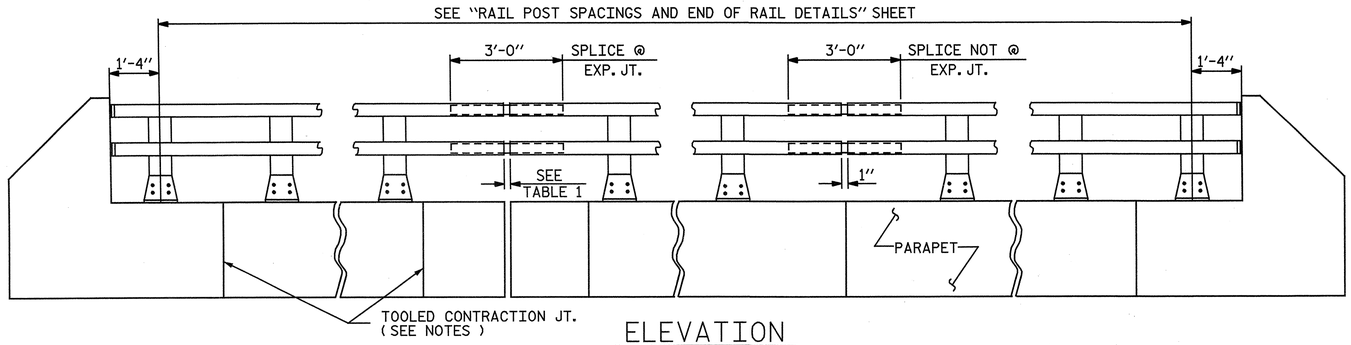

ELEVATION

NOTE : FOR ATTACHMENT OF METAL RAIL TO END POST, SEE "END OF RAIL DETAILS" SHEET.

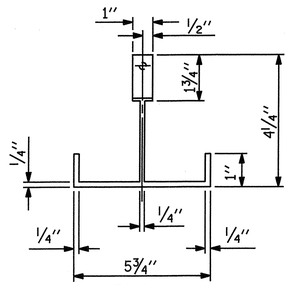

PLAN

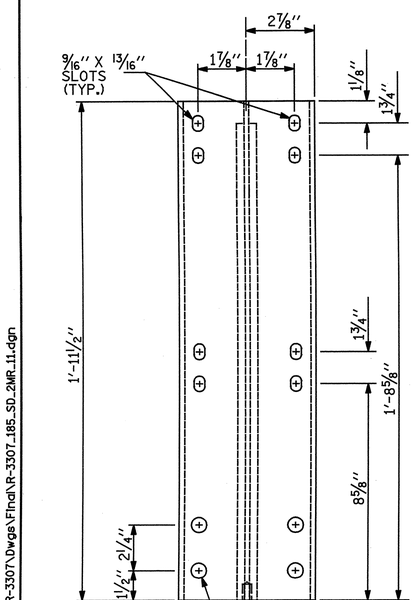

FRONT ELEVATION

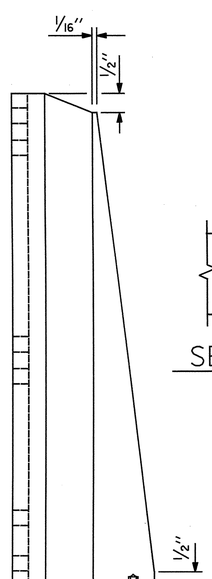

SIDE ELEVATION

DETAILS OF POST

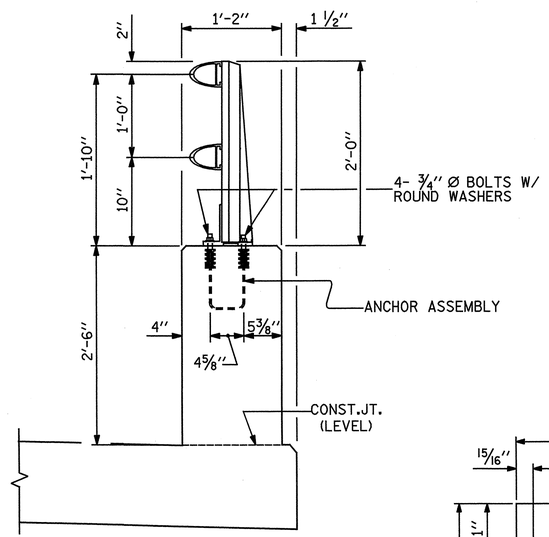

SECTION THRU PARAPET AND RAIL

TABLE 1	
℄ EXP. JT. @	RAIL OPENING
END BENT 1	1 9/16"
BENT 3	1 15/16"
BENT 5	1 15/16"
BENT 7	2 1/8"
BENT 9	2 1/8"
BENT 11	2 1/8"
BENT 13	1 7/8"
BENT 14	1 9/16"
BENT 15	3 5/8"
BENT 18	3 9/16"
BENT 21	2 1/8"
BENT 24	2 1/8"
BENT 27	1 15/16"
END BENT 2	1 3/8"

NOTES

ALUMINUM RAILS

MATERIAL FOR POSTS, BASES AND RAILS, EXPANSION BARS AND CLAMP BARS SHALL BE ASTM B-221 ALLOY 6061-T6.

MATERIAL FOR RIVETS SHALL BE ASTM B316 ALLOY 6061-T6. RIVETS SHALL BE STANDARD BUTTON HEAD AND CONE POINT COLD DRIVEN AS PER DRAWING.

THE BASE OF RAIL POSTS, OR ANY OTHER ALUMINUM SURFACE IN CONTACT WITH CONCRETE SHALL BE THOROUGHLY COATED WITH AN ALUMINUM IMPREGNATED CAULKING COMPOUND OF APPROVED QUALITY.

MATERIAL FOR SHIMS TO BE ASTM B209 ALLOY 6061-T6.

GENERAL NOTES

RAILING SHALL BE CONTINUOUS FROM END POST TO END POST OF BRIDGE. EACH JOINT IN RAIL LENGTH SHALL BE SPLICED AS DETAILED. PANEL LENGTHS OF RAIL SHALL BE ATTACHED TO A MINIMUM OF THREE POSTS.

FOR END OF RAIL TO CLEAR FACE OF CONCRETE END POST DIMENSION, SEE "END OF RAIL DETAILS" SHEET.

CAP SCREWS SHALL BE ASTM F593 ALLOY 305 STAINLESS STEEL. WASHERS SHALL MEET THE REQUIREMENTS OF ASTM F844 EXCEPT THEY SHALL BE MADE FROM ALLOY 304 STAINLESS STEEL.

CERTIFIED MILL REPORTS ARE REQUIRED FOR RAILS AND POSTS. SHOP INSPECTION IS NOT REQUIRED.

METAL RAIL POSTS SHALL BE SET NORMAL TO CURB GRADE.

METHOD OF MEASUREMENT FOR METAL RAILS: FOR LENGTH OF METAL RAILS TO BE PAID FOR, SEE THE STANDARD SPECIFICATIONS.

CURVED RAIL USAGE: WHERE RAILS ARE TO BE USED ON BRIDGES ON HORIZONTAL AND/OR VERTICAL CURVATURE THE CONTRACTOR MAY, AT HIS OPTION, HAVE THE REQUIRED CURVATURE IN THE RAIL FORMED IN THE SHOP OR IN THE FIELD. IN EITHER EVENT, THE RAIL SHALL CONFORM WITHOUT BUCKLING OR KINKING TO THE REQUIRED CURVATURE IN A UNIFORM MANNER ACCEPTABLE TO THE ENGINEER.

TO INSURE FUTURE IDENTIFICATION OF THE FABRICATOR, A PERMANENT IDENTIFYING MARK SHALL BE PLACED ON EACH POST. THE METHOD OF MARKING AND LOCATION SHALL BE SUCH THAT IT DOES NOT DETRACT FROM THE APPEARANCE OF THE POST, BUT REMAINS VISIBLE AFTER RAIL PLACEMENT.

SHIMS SHALL BE USED AS NECESSARY FOR POST ALIGNMENT.

ALLOY 6351-T5 MAY BE SUBSTITUTED FOR ALLOY 6061-T6 WHERE APPLICABLE.

MINOR VARIATIONS IN DETAILS OF METAL RAIL WILL BE CONSIDERED. DETAILS OF SUCH VARIATIONS, IF DESIRED, SHALL BE SUBMITTED FOR APPROVAL.

GROOVED CONTRACTION JOINTS, 1/2" IN DEPTH, SHALL BE TOOLED IN ALL EXPOSED FACES OF THE PARAPET AND IN ACCORDANCE WITH ARTICLE 825-10(B) OF THE STANDARD SPECIFICATIONS. A CONTRACTION JOINT SHALL BE LOCATED AT EACH THIRD POINT BETWEEN PARAPET EXPANSION JOINTS. ONLY ONE CONTRACTION JOINT IS REQUIRED AT MIDPOINT OF PARAPET SEGMENTS LESS THAN 20 FEET IN LENGTH AND NO CONTRACTION JOINTS ARE REQUIRED FOR THOSE SEGMENTS LESS THAN 10 FEET IN LENGTH.

PAY LENGTH = 6,810.79 LIN. FT.

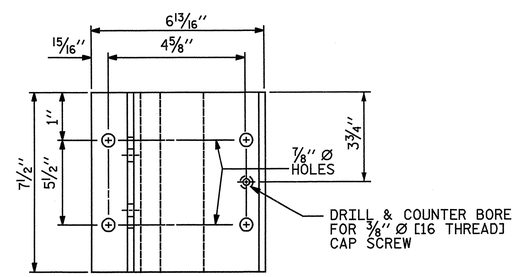

PLAN

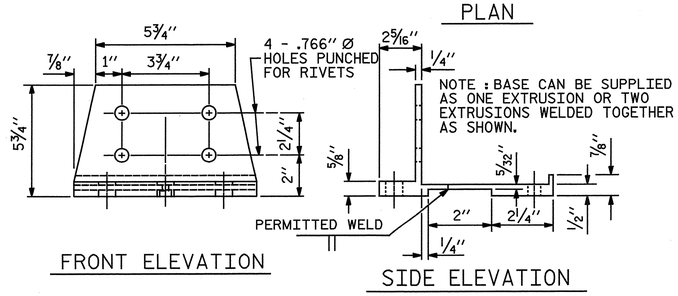

FRONT ELEVATION

SIDE ELEVATION

POST BASE DETAILS

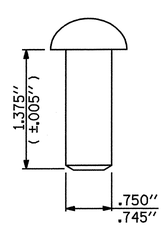

RIVET DETAIL

PROJECT NO. R-3307

CARTERET COUNTY

STATION: 46+21.50 -L-

SHEET 1 OF 2

STATE OF NORTH CAROLINA
DEPARTMENT OF TRANSPORTATION
RALEIGH

SUPERSTRUCTURE

2 BAR METAL RAIL

NORTH CAROLINA PROFESSIONAL SEAL 25911 ENGINEER DWAIN G. HATHAWAY 4-3-2012

NORTH CAROLINA PROFESSIONAL SEAL 033752 ENGINEER SETH A. DENNEY 1/09/12

THE LPA GROUP of North Carolina TRANSPORTATION CONSULTANTS

THE LPA GROUP of North Carolina
8000 Regency Parkway, Suite 600
Cary, North Carolina 27518
NC License No.: F-1084

REVISIONS									SHEET NO.
NO.	BY:	DATE:	NO.	BY:	DATE:				S-184
1			3						TOTAL SHEETS
2			4						333

DRAWN BY : C. E. MAYHEW DATE : 10-10-11
CHECKED BY : J. N. AUSTIN DATE : 11-10-11

DWG. 185 OF 282

4/2/2012
12:43:4 PM
User:jaustin
Filename: Y:\Projects\NCDOT\R-3307\Dwgs\Final\R-3307_185_SD_2MR_11.dgn

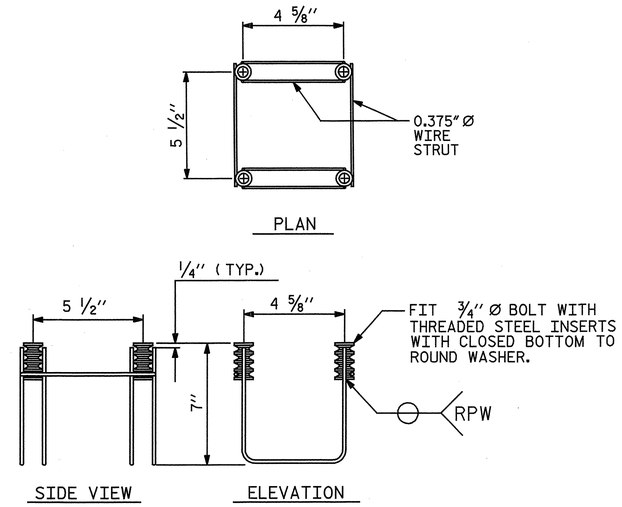

MINIMUM LENGTH OF THREADS IN INSERT (FERRULE): 1 3/4"

4-BOLT METAL RAIL ANCHOR ASSEMBLY

(1,107 ASSEMBLIES REQUIRED)

NOTES

STRUCTURAL CONCRETE ANCHOR ASSEMBLY

THE STRUCTURAL CONCRETE ANCHOR ASSEMBLY SHALL CONSIST OF THE FOLLOWING COMPONENTS :

A. FERRULES SHALL BE MADE FROM STEEL MEETING THE REQUIREMENTS OF AASHTO M169, GRADE 12L14 AND SHALL HAVE A MINIMUM LENGTH OF THREADS OF 2" FOR 3/4" FERRULES.

B. 4 - 3/4" Ø X 2 1/2" BOLTS WITH WASHERS. BOLTS SHALL CONFORM TO THE REQUIREMENTS OF ASTM A307. BOLTS AND WASHERS SHALL BE GALVANIZED. AT THE CONTRACTOR'S OPTION, STAINLESS STEEL BOLTS AND WASHERS MAY BE USED AS AN ALTERNATE FOR THE 3/4" Ø X 2 1/2" GALVANIZED BOLTS AND WASHERS. THEY SHALL CONFORM TO OR EXCEED THE MECHANICAL REQUIREMENTS OF ASTM A307. THE USE OF THIS ALTERNATE SHALL BE APPROVED BY THE ENGINEER.

C. WIRE STRUT SHOWN IN THE CONCRETE ANCHOR ASSEMBLY DETAIL IS THE MINIMUM ALLOWABLE SIZE AND SHALL HAVE A MINIMUM TENSILE STRENGTH OF 100,000 PSI. AS AN OPTION, A 7/16" Ø WIRE STRUT WITH A MINIMUM TENSILE STRENGTH OF 90,000 PSI IS ACCEPTABLE.

D. THE METAL RAIL ANCHOR ASSEMBLIES TO BE HOT DIPPED GALVANIZED TO CONFORM TO REQUIREMENTS OF AASHTO M111.

E. THE COST OF THE METAL RAIL ANCHOR ASSEMBLY WITH BOLTS AND WASHERS COMPLETE IN PLACE SHALL BE INCLUDED IN THE PRICE BID FOR LINEAR FEET OF METAL RAIL.

F. BOLTS TO BE TIGHTENED ONE-HALF TURN WITH A WRENCH FROM A FINGER-TIGHT POSITION.

THE CONTRACTOR MAY USE ADHESIVELY ANCHORED ANCHOR BOLTS IN PLACE OF THE METAL RAIL ANCHOR ASSEMBLY. LEVEL ONE FIELD TESTING IS REQUIRED, AND THE YIELD LOAD OF THE 3/4" Ø BOLT IS 10 KIPS. FOR ADHESIVELY ANCHORED ANCHOR BOLTS OR DOWELS, SEE STANDARD SPECIFICATIONS.

WHEN ADHESIVELY ANCHORED ANCHOR BOLTS ARE USED, BOLTS SHALL MEET THE REQUIREMENTS OF ASTM F593 ALLOY 304 STAINLESS STEEL WITH MINIMUM 75,000 PSI ULTIMATE STRENGTH. NUTS SHALL MEET THE REQUIREMENTS OF ASTM F594 ALLOY 304 STAINLESS STEEL AND WASHERS SHALL MEET THE REQUIREMENTS OF ASTM F844 EXCEPT THEY SHALL BE MADE FROM ALLOY 304 STAINLESS STEEL.

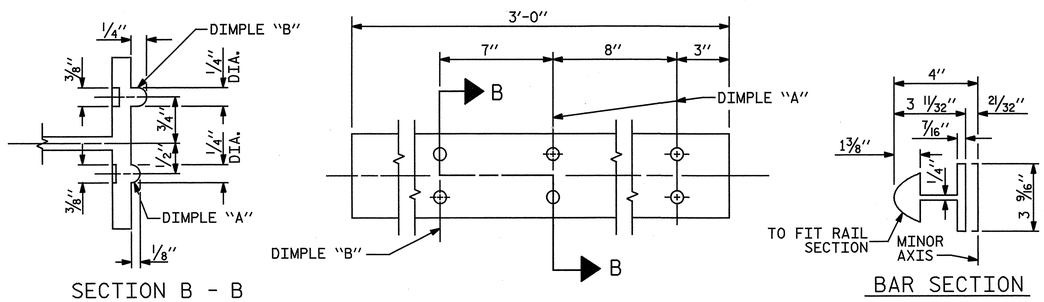

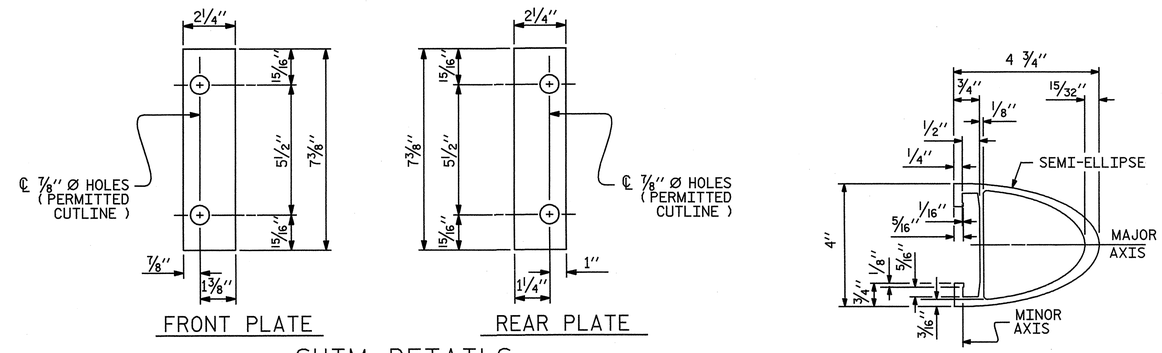

SHIM DETAILS

NOTE :
SHIMS MAY BE CUT ALONG PERMITTED CUTLINE OR SLOTTED TO EDGE OF PLATE TO FACILITATE PLACEMENT.

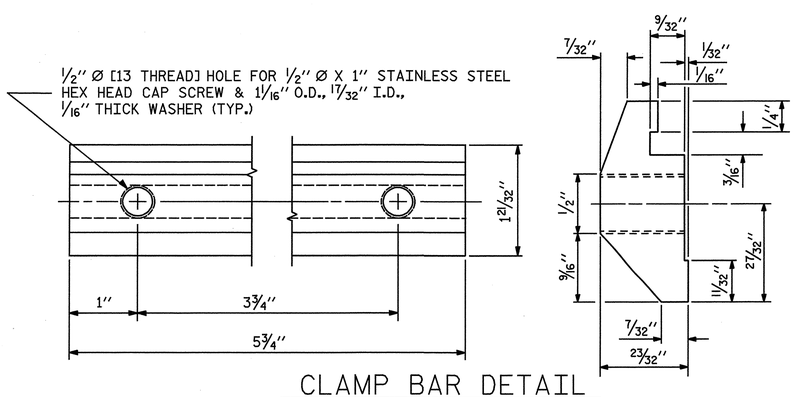

CLAMP BAR DETAIL

(4 REQUIRED PER POST)

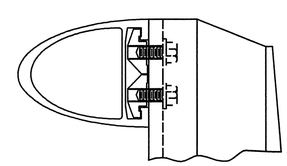

CLAMP ASSEMBLY

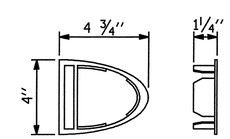

RAIL CAP

PROJECT NO. R-3307

CARTERET COUNTY

STATION: 46+21.50 -L-

SHEET 2 OF 2

STATE OF NORTH CAROLINA
DEPARTMENT OF TRANSPORTATION
RALEIGH

SUPERSTRUCTURE

2 BAR METAL RAIL

NORTH CAROLINA PROFESSIONAL SEAL 25911 ENGINEER DWAIN C. HATHWAY 4-3-2012

NORTH CAROLINA PROFESSIONAL SEAL 033752 ENGINEER SETH A. DENNELL 04/03/12

THE LPA GROUP of North Carolina
TRANSPORTATION CONSULTANTS

THE LPA GROUP of North Carolina
8000 Regency Parkway, Suite 600
Cary, North Carolina 27518
NC License No.: F-1084

REVISIONS							
NO.	BY:	DATE:	NO.	BY:	DATE:		
1			3				
2			4				

SHEET NO. S-185

TOTAL SHEETS 333

DRAWN BY : C. E. MAYHEW DATE : 11-28-11
CHECKED BY : R. F. DeCOLA DATE : 12-5-11

DWG. 186 OF 282

4/2/2012
12:43:0 PM
User:jaustin
Filename: Y:\Projects\NCDOT\R-3307\Dwgs\Final\R-3307_186_SD_2MR_12.dgn

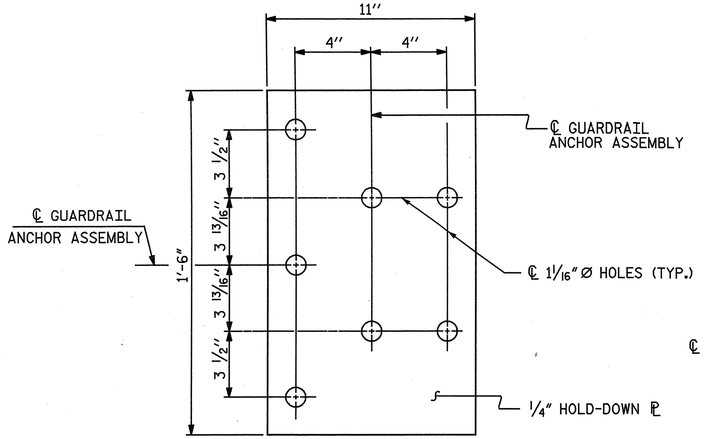

PLAN

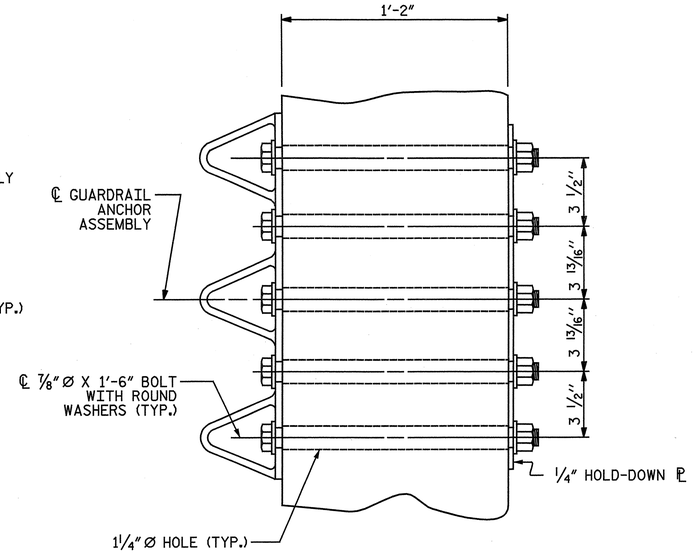

END VIEW

GUARDRAIL ANCHOR ASSEMBLY DETAILS

NOTES

THE GUARDRAIL ANCHOR ASSEMBLY SHALL CONSIST OF A 1/4" HOLD DOWN PLATE AND 7 - 7/8" Ø BOLTS WITH NUTS AND WASHERS.

THE HOLD-DOWN PLATE SHALL CONFORM TO AASHTO M270 GRADE 36. AFTER FABRICATION, THE HOLD-DOWN PLATE SHALL BE HOT-DIP GALVANIZED IN ACCORDANCE WITH AASHTO M111.

BOLTS SHALL CONFORM TO THE REQUIREMENTS OF ASTM A307 AND NUTS SHALL CONFORM TO THE REQUIREMENTS OF AASHTO M291. BOLTS, NUTS AND WASHERS SHALL BE GALVANIZED. AT THE CONTRACTOR'S OPTION, STAINLESS STEEL BOLTS, NUTS AND WASHERS MAY BE USED AS AN ALTERNATE FOR THE 7/8" Ø GALVANIZED BOLTS, NUTS AND WASHERS. THEY SHALL CONFORM TO OR EXCEED THE MECHANICAL REQUIREMENTS OF ASTM A307. THE USE OF THIS ALTERNATE SHALL BE APPROVED BY THE ENGINEER.

AFTER INSTALLATION, THE EXPOSED THREAD OF THE BOLT SHALL BE BURRED WITH A SHARP POINTED TOOL.

THE COST OF THE GUARDRAIL ANCHOR ASSEMBLIES WITH BOLTS, NUTS AND WASHERS COMPLETE IN PLACE, SHALL BE INCLUDED IN THE VARIOUS PAY ITEMS.

THE VERTICAL REINFORCING BARS MAY BE SHIFTED SLIGHTLY IN THE END POST TO CLEAR ASSEMBLY BOLTS.

THE 1 1/4" Ø HOLES SHALL BE FORMED OR DRILLED WITH A CORE BIT. IMPACT TOOLS WILL NOT BE PERMITTED. ANY CONCRETE DAMAGED BY THIS WORK SHALL BE REPAIRED TO THE SATISFACTION OF THE ENGINEER.

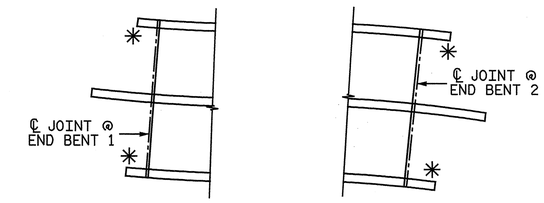

SKETCH SHOWING POINTS OF ATTACHMENT

✱ LOCATION OF GUARDRAIL ATTACHMENT

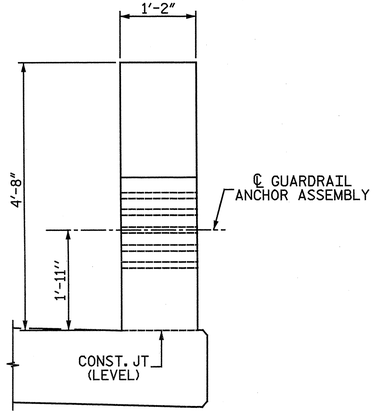

END VIEW

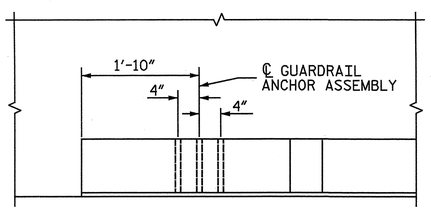

PLAN

RIGHT SIDE - END BENT 1 SHOWN
(END BENT 2 SIMILAR)

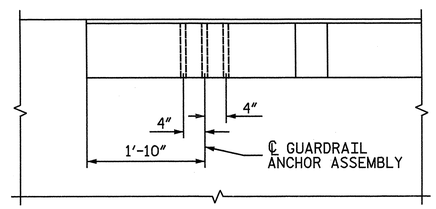

PLAN

LEFT SIDE - END BENT 2 SHOWN
(END BENT 1 SIMILAR)

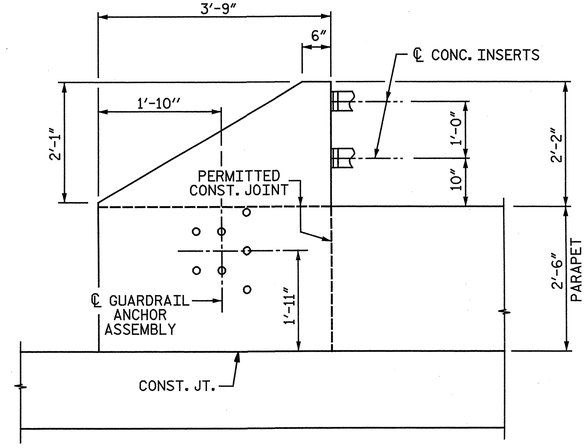

ELEVATION

LOCATION OF GUARDRAIL ANCHOR AT END POST

PROJECT NO. R-3307

CARTERET COUNTY

STATION: 46+21.50 -L-

STATE OF NORTH CAROLINA
DEPARTMENT OF TRANSPORTATION
RALEIGH

SUPERSTRUCTURE

GUARDRAIL ANCHORAGE DETAILS FOR METAL RAILS

NORTH CAROLINA PROFESSIONAL SEAL 25911 ENGINEER TWAIN G. HATHAWAY 4-12-12

NORTH CAROLINA PROFESSIONAL SEAL 033752 ENGINEER SETH A. DENNEY 04/12/12

THE LPA GROUP of North Carolina
TRANSPORTATION CONSULTANTS

THE LPA GROUP of North Carolina
8000 Regency Parkway, Suite 600
Cary, North Carolina 27518
NC License No.: F-1084

REVISIONS								SHEET NO.
NO.	BY:	DATE:	NO.	BY:	DATE:			S-186
1			3					TOTAL SHEETS
2			4					333

DRAWN BY : C. E. MAYHEW DATE : 10-10-11
CHECKED BY : J. N. AUSTIN DATE : 11-10-11

DWG. 187 OF 282

4/2/2012
12:43:L PM
User:jaustin
Filename: Y:\Projects\NCDOT\R-3307\Dwgs\Final\R-3307_187_SD_GRA_1.dgn

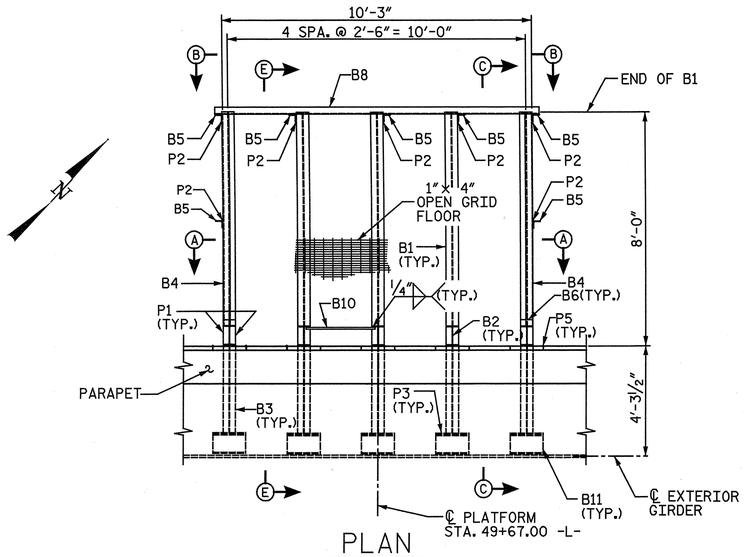

PLAN

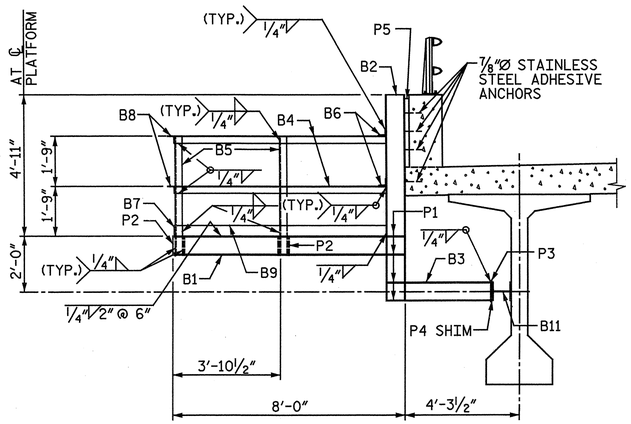

SECTION E-E

NOTES:

ALL STRUCTURAL STEEL SHALL BE AASHTO M270 GRADE 50.

ALL FABRICATION SHALL CONFORM TO THE APPLICABLE SECTION OF THE NORTH CAROLINA DEPARTMENT OF TRANSPORTATION STANDARD SPECIFICATIONS FOR ROADS AND STRUCTURES.

BAND ALL EDGES OF OPEN GRID FLOOR.

OPEN GRID FLOOR SHALL BE ATTACHED TO EACH HORIZONTAL FLOOR MEMBER USING AN APPROVED FASTENER.

ALL FIELD CONNECTIONS TO BE ⅞"Ø HIGH STRENGTH BOLTS UNLESS OTHERWISE NOTED.

⅞"Ø ADHESIVE ANCHORS SHALL BE STAINLESS STEEL.

ADHESIVE ANCHOR SYSTEM SHALL HAVE A MINIMUM PULLOUT STRENGTH OF 50% OF THE YIELD LOAD. A MINIMUM OF EIGHT (8) ANCHORS SHALL BE TESTED. IF ANY ANCHOR FAILS THE CONTRACTOR SHALL AT HIS EXPENSE TEST ALL ANCHORS UNLESS DIRECTED OTHERWISE BY THE ENGINEER.

FOR SOLAR ARRAY SUPPORT PLATFORM, SEE SPECIAL PROVISIONS.

FOR DETAILS OF NAVIGATIONAL LIGHTING, SEE NAVIGATIONAL LIGHTING AND CONDUIT SYSTEM PLAN SHEET.

BILL OF MATERIAL

ITEM	NUMBER	DESCRIPTION
B1	5	W8 x 18
B2	5	W8 x 18
B3	5	W8 x 18
B4	4	L3 x 3 x ¼
B5	7	L3 x 3 x ¼
B6	4	L3 x 3 x ¼
B7	1	PL ¼ x 5
B8	2	L3 x 3 x ¼
B9	2	PL ¼ x 5
B10	5	¾"Ø RUNG
B11	5	W8 x 31
P1	40	PL 5/16 x 2½ x 7½
P2	7	PL ¼ x 5 x 8
P3	5	PL ½ x 9 x 14
P4	AS REQ'D	PL 3/16 x 8 x 14
P5	5	PL 1¾ x 14 x 24
1"x4" OPEN GRID FLOOR W/ 3/16"x¾" BRG. BARS		
⅞"Ø STAINLESS STEEL ADHESIVE ANCHORS (40 REQ'D.)		
⅞"Ø H.S. BOLT W/ WASHER (20 REQ'D.)		

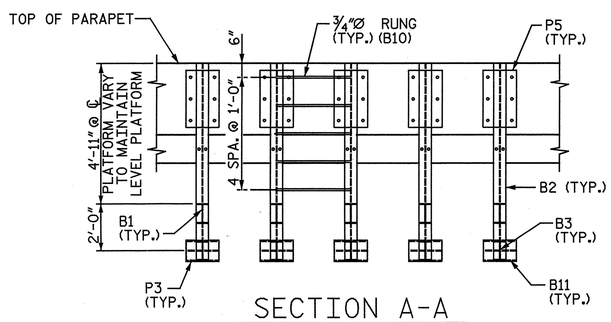

SECTION A-A

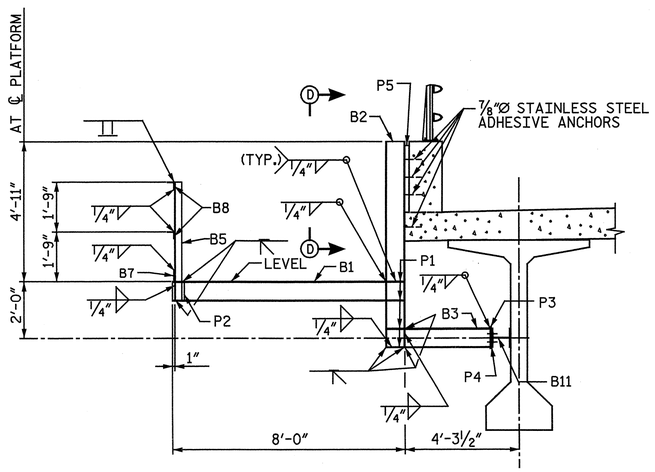

SECTION C-C

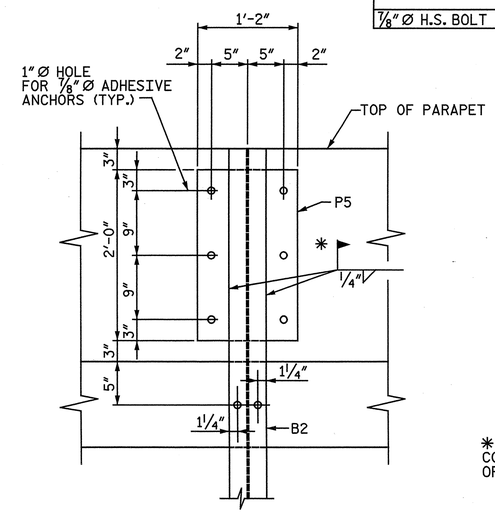

SECTION D-D

* CONTRACTOR HAS THE OPTION TO SHOP WELD

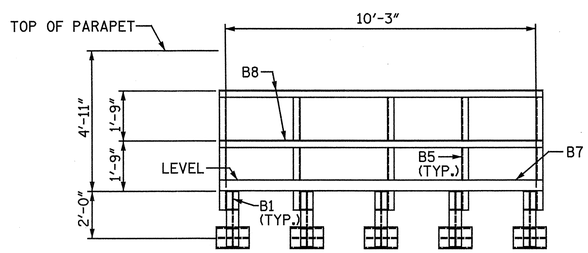

SECTION B-B

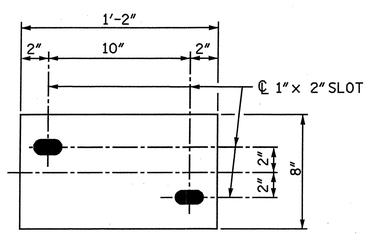

PLATE P4 SHIM DETAIL

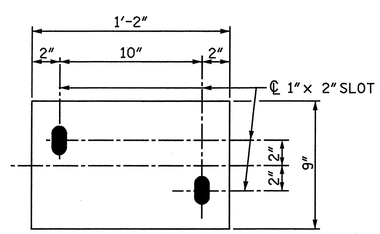

PLATE P3 DETAIL

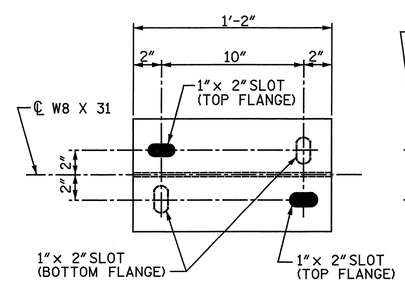

ELEVATION

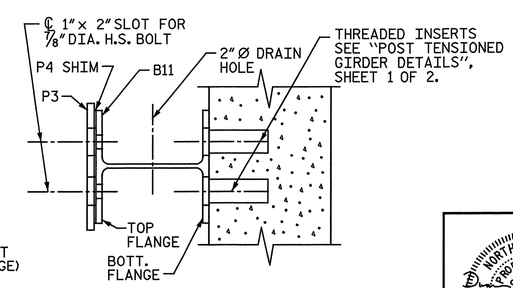

END VIEW

B11 DETAIL

PROJECT NO. R-3307

CARTERET COUNTY

STATION: 46+21.50 -L-

STATE OF NORTH CAROLINA
DEPARTMENT OF TRANSPORTATION
RALEIGH

SUPERSTRUCTURE

SOLAR ARRAY PLATFORM

NORTH CAROLINA PROFESSIONAL SEAL 25911 ENGINEER DWAIN G. HATHAWAY 4-3-2012

NORTH CAROLINA PROFESSIONAL SEAL 033752 ENGINEER SETH A. DENNEY 04/03/12

THE LPA GROUP of North Carolina TRANSPORTATION CONSULTANTS

THE LPA GROUP of North Carolina
8000 Regency Parkway, Suite 600
Cary, North Carolina 27518
NC License No.: F-1084

REVISIONS								SHEET NO.
NO.	BY:	DATE:	NO.	BY:	DATE:			S-187
1			3					TOTAL SHEETS
2			4					333

DRAWN BY : M. D. MAYHEW DATE : 9-2-11
CHECKED BY : S. A. DENNEY DATE : 9-13-11

DWG. 188 OF 282

4/2/2012 12:43:22 PM
User: Justin
Filename: Y:\Projects\NCDOT\R-3307\Dwgs\Final\R-3307_188_SD_SOLAR.dgn

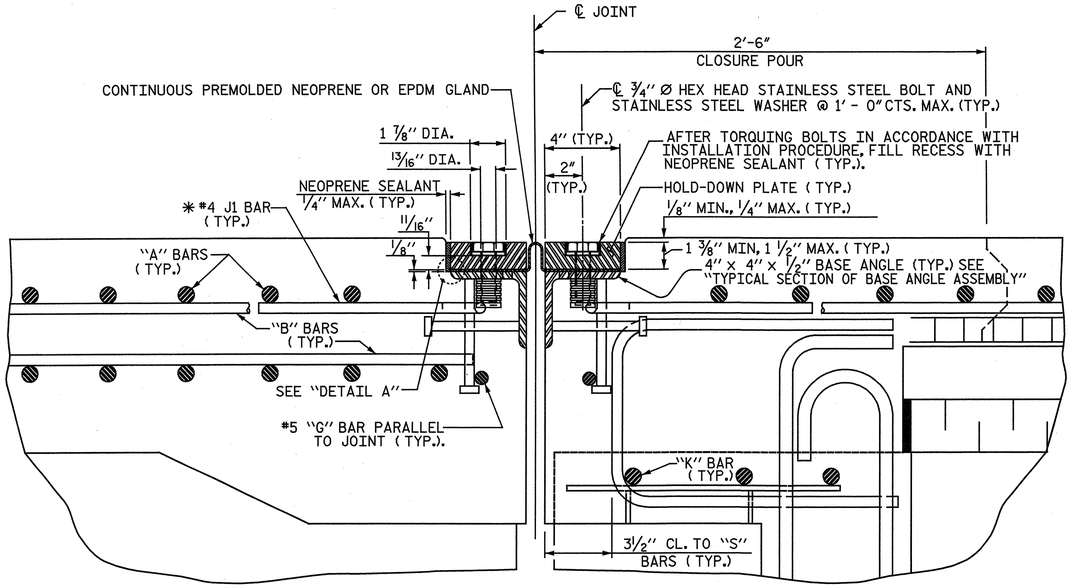

EXPANSION JOINT @ END BENT DETAILS

SECTION NORMAL TO JOINT -- PRESTRESSED GIRDER SUPERSTRUCTURE

✱ THE QUANTITY OF #4 J1 BARS ON THE BILL OF MATERIAL IS BASED ON 1'-0" CENTERS. J1 BARS SHALL BE PLACED AT EACH VERTICAL STUD ANCHOR BOLT. IN THE EVENT THAT THE NUMBER OF VERTICAL STUD ANCHORS EXCEEDS THE NUMBER OF J1 BARS SPECIFIED, ADDITIONAL J1 BARS WILL NOT BE REQUIRED.

INSTALLATION PROCEDURE

1. A TEMPLATE OR OTHER SUITABLE DEVICE SHALL BE USED TO FORM THE TOP OF THE EXPANSION JOINT SEAL BLOCKOUT TO THE PROPER DEPTH AND WIDTH. THE TEMPLATE SHALL BE 4⅛" TO 4¼" WIDE AND OF SUCH THICKNESS AS TO PROVIDE FOR CORRECT FINAL ELEVATION OF TOP OF HOLD-DOWN PLATES. THE TEMPLATE SHALL BE ATTACHED TO THE BASE ANGLE ASSEMBLY WITH THE ¾" Ø HEX HEAD BOLTS PROVIDED FOR THE HOLD-DOWN PLATES. A 1" Ø HOLE SHALL BE PROVIDED IN THE TEMPLATE CENTERED OVER EACH WEEP HOLE IN THE 4" X 4" X ½" BASE ANGLE. OTHER METHODS OF INSURING DRAINAGE THROUGH WEEP HOLES MAY BE EMPLOYED SUBJECT TO ENGINEER'S APPROVAL.
2. AFTER THE CONCRETE HAS BEEN CAST ON BOTH SIDES OF THE JOINT, REMOVE THE TEMPLATE. THOROUGHLY CLEAN THE BOLT HOLES AND THE ANGLE PLATE. REMOVE ANY EXCESS CONCRETE THAT COMES OUT OF THE WEEP HOLES. ANY DAMAGED STEEL SHALL BE COATED WITH A MINIMUM THICKNESS OF 4 DRY MILS OF ZINC-RICH PAINT IN ACCORDANCE WITH THE STANDARD SPECIFICATIONS.
3. LAY THE GLAND ON THE BASE ANGLE AND FIELD MARK THE GLAND FOR THE BOLT HOLES. HOLES IN THE GLAND SHALL BE PUNCHED ⅞" IN DIAMETER WITH A HAND PUNCH.
4. IN ORDER TO CHECK FOR PROPER ALIGNMENT, PLACE THE GLAND AND HOLD-DOWN PLATES ON THE BASE ANGLE. DO NOT APPLY NEOPRENE SEALANT. BOLT THE HOLD-DOWN PLATES TO THE BASE ANGLE BUT DO NOT TIGHTEN. THE ENGINEER SHALL INSPECT THE JOINT SEAL DEVICE FOR PROPER ALIGNMENT.
5. AFTER INSPECTION, REMOVE THE HOLD-DOWN PLATES AND GLAND. APPLY NEOPRENE SEALANT TO THE BASE ANGLE IN ACCORDANCE WITH THE "INSTALLATION SKETCH". PLACE GLAND AND HOLD-DOWN PLATES ON THE BASE ANGLE. BOLT THE HOLD-DOWN PLATES TO THE BASE ANGLE ASSEMBLY AND TORQUE THE BOLTS TO 88 FT-LBS WITH A TORQUE WRENCH. THE TORQUE WRENCH SHALL BE CALIBRATED IN ACCORDANCE WITH SECTION 440-10 (D) OF THE STANDARD SPECIFICATIONS. CHECK THE TORQUE AFTER THREE (3) HOURS AND, IF NECESSARY, RETIGHTEN TO 88 FT-LBS. A FINAL CHECK SHALL BE MADE AT SEVEN (7) DAYS. TORQUE SHALL NOT BE LESS THAN 80 FT-LBS AFTER SEVEN (7) DAYS.
6. AFTER PROPER TORQUING, CLEAN THE BOLT HOLE RECESSES AND THE RECESS BETWEEN THE JOINT SEAL DEVICE AND CONCRETE, COMPLETELY FILL THESE RECESSES WITH NEOPRENE SEALANT.

GENERAL NOTES

1. FOR EXPANSION JOINT SEALS, SEE SPECIAL PROVISIONS.
2. ALL PLATES AND ANGLES SHALL CONFORM TO AASHTO M270 GRADE 36 STEEL OR APPROVED EQUAL. ALL HOLD-DOWN BOLTS SHALL CONFORM TO ASTM F593 ALLOY 304 STAINLESS STEEL AND WASHERS SHALL CONFORM TO ASTM F844 EXCEPT THEY SHALL BE MADE FROM ALLOY 304 STAINLESS STEEL. ALL STUD ANCHORS SHALL CONFORM TO AASHTO M169, GRADES 1010 THRU 1020 OR APPROVED EQUAL. ALL CONCRETE INSERTS SHALL BE CLOSED END AND SHALL CONFORM TO AASHTO M169, GRADE 12L14. TENSILE CAPACITY SHALL BE 3000 LBS. MIN.
3. A PREMOLDED CORRUGATED OR NON-CORRUGATED GLAND SHALL BE USED FOR JOINTS SKEWED BETWEEN 50° THRU 130°. FOR JOINTS SKEWED LESS THAN 50° OR MORE THAN 130°, ONLY A CORRUGATED GLAND SHALL BE USED.
4. CLOSED END FERRULES AND STUD ANCHORS SHALL BE SHOP WELDED AND ALL HOLES SHALL BE SHOP DRILLED AS SHOWN ON PLANS. STUD ANCHORS SHALL BE ELECTRIC ARC END WELDED WITH COMPLETE FUSION.
5. SURFACES COMING IN CONTACT WITH NEOPRENE SHALL BE GROUND SMOOTH PRIOR TO METALLIZING.
6. UPON COMPLETION OF SHOP FABRICATION, THE HOLD DOWN PLATE AND BASE ANGLE ASSEMBLY, AS SHOWN IN THE "TYPICAL SECTION OF BASE ANGLE ASSEMBLY", SHALL BE METALLIZED. SEE SPECIAL PROVISION FOR THERMAL SPRAYED COATINGS (METALLIZATION).
7. BASE ANGLE ASSEMBLY SHALL BE CONTINUOUS FOR THE LENGTH OF THE JOINT. AT CROWN BREAKS, THE ENDS OF THE BASE ANGLE ASSEMBLY SHALL BE CUT PARALLEL TO THE BRIDGE CENTERLINE FOR SKEWS LESS THAN 80° AND GREATER THAN 100°. FINISHED WELD SHALL BE GROUND SMOOTH AND COATED WITH A MINIMUM THICKNESS OF 4 DRY MILS OF ZINC-RICH PAINT IN ACCORDANCE WITH THE STANDARD SPECIFICATIONS.
8. FIELD SPLICES OF HOLD-DOWN PLATES SHALL BE KEPT TO A MINIMUM. CONTRACTOR SHALL FURNISH DETAILED PLANS SHOWING PROPOSED SPLICE LOCATIONS FOR APPROVAL. HOLD-DOWN PLATES SHALL NOT EXCEED 20' LENGTHS UNLESS APPROVED BY THE ENGINEER.
9. NO ALTERNATE JOINT DETAILS SHALL BE PERMITTED IN LIEU OF THOSE SHOWN ON THESE PLANS.
10. THE CONTRACTOR MAY, AT HIS OPTION, USE ADHESIVELY ANCHORED ANCHOR BOLTS IN PLACE OF CONCRETE INSERTS FOR COVER PLATES. THE YIELD LOAD OF THE ¾" Ø BOLT IS 10 KIPS. FIELD TESTING OF THE ADHESIVE BONDING SYSTEM IS NOT REQUIRED.

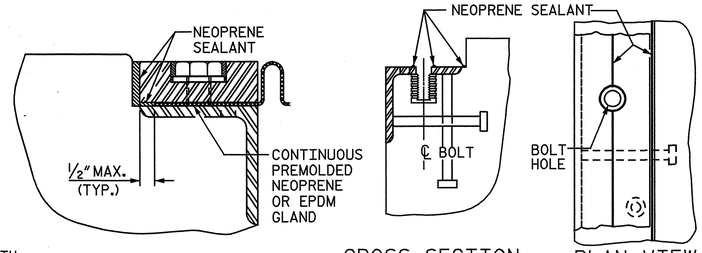

DETAIL A

CROSS SECTION

PLAN VIEW

INSTALLATION SKETCH

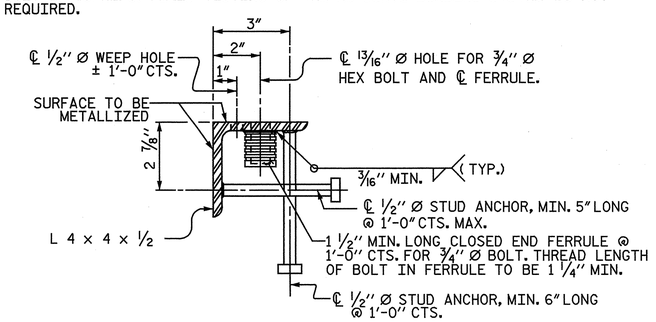

TYPICAL SECTION OF BASE ANGLE ASSEMBLY

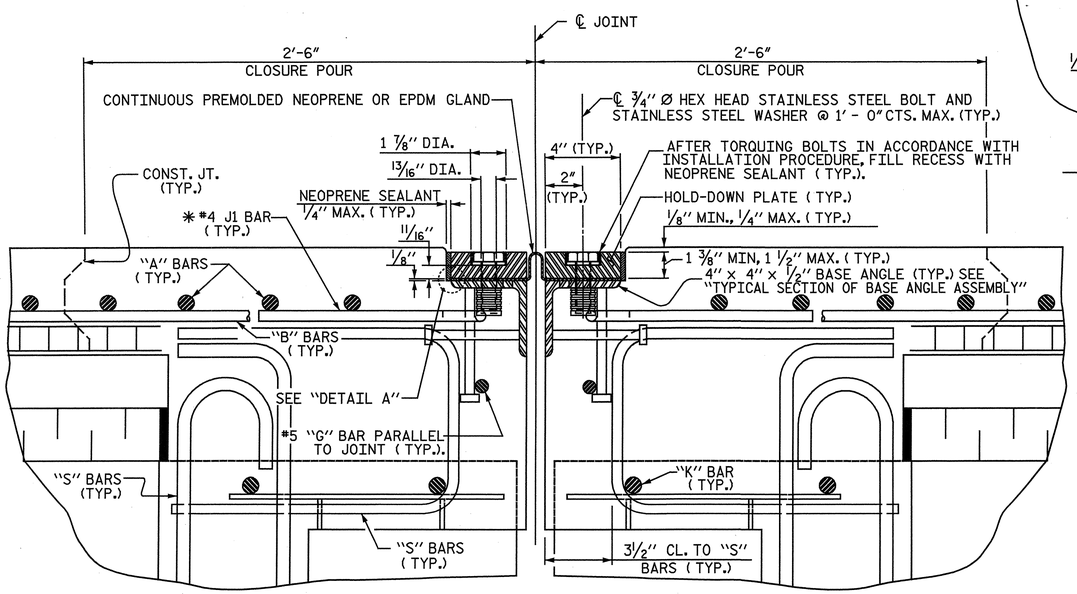

EXPANSION JOINT DETAILS

SECTION NORMAL TO JOINT -- PRESTRESSED GIRDER SUPERSTRUCTURE

✱ THE QUANTITY OF #4 J1 BARS ON THE BILL OF MATERIAL IS BASED ON 1'-0" CENTERS. J1 BARS SHALL BE PLACED AT EACH VERTICAL STUD ANCHOR BOLT. IN THE EVENT THAT THE NUMBER OF VERTICAL STUD ANCHORS EXCEEDS THE NUMBER OF J1 BARS SPECIFIED, ADDITIONAL J1 BARS WILL NOT BE REQUIRED.

MOVEMENT AND SETTING AT JOINT					
BENT NO.	SKEW ANGLE	TOTAL MOVEMENT (ALONG ℄ RDWY)	PERPENDICULAR JOINT OPENING AT 45° F	PERPENDICULAR JOINT OPENING AT 60° F	PERPENDICULAR JOINT OPENING AT 90° F
END BENT 1	90°-00'-00"	1 1/16"	1¾"	1 9/16"	1 7/16"
BENT 3	90°-00'-00"	1 13/16"	2¼"	1 15/16"	1 5/16"
BENT 5	90°-00'-00"	1 13/16"	2¼"	1 15/16"	1 5/16"
BENTS 7,9,11	90°-00'-00"	2⅛"	2½"	2⅛"	1⅜"
BENT 13	90°-00'-00"	1⅝"	2⅛"	1⅛"	1 5/16"
BENT 14	90°-00'-00"	1 1/16"	1¾"	1 9/16"	1 7/16"
BENT 21	90°-00'-00"	2⅛"	2½"	2⅛"	1⅜"
BENT 24	90°-00'-00"	2⅛"	2½"	2⅛"	1⅜"
BENT 27	90°-00'-00"	1¾"	2¼"	1 15/16"	1 5/16"
END BENT 2	90°-00'-00"	11/16"	1½"	1⅜"	1⅛"

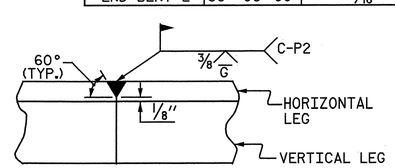

DETAIL- FIELD WELD SPLICE OF BASE ANGLE

PROJECT NO. R-3307

CARTERET COUNTY

STATION: 46+21.50 -L-

SHEET 1 OF 3

STATE OF NORTH CAROLINA
DEPARTMENT OF TRANSPORTATION
RALEIGH

SUPERSTRUCTURE

EXPANSION JOINT SEAL DETAILS

NORTH CAROLINA PROFESSIONAL SEAL 25911 ENGINEER IRWIN G. HATHMAN 4-17-2012

NORTH CAROLINA PROFESSIONAL SEAL 033752 ENGINEER SETH A. DENNEY 04/05/12

THE LPA GROUP of North Carolina TRANSPORTATION CONSULTANTS

THE LPA GROUP of North Carolina
8000 Regency Parkway, Suite 600
Cary, North Carolina 27518
NC License No.: F-1084

REVISIONS							SHEET NO.
NO.	BY:	DATE:	NO.	BY:	DATE:		S-188
1			3				TOTAL SHEETS
2			4				333

DRAWN BY : N. B. SPEAKS DATE : 8-15-11
CHECKED BY : R. F. DeCOLA DATE : 11-9-11

DWG. 189 OF 282

4/2/2012
12:43:L PM
User: jaustin
Filename: Y:\Projects\NCDOT\R-3307\Dwgs\Final\R-3307_189_SD_JT_EXP_1.dgn

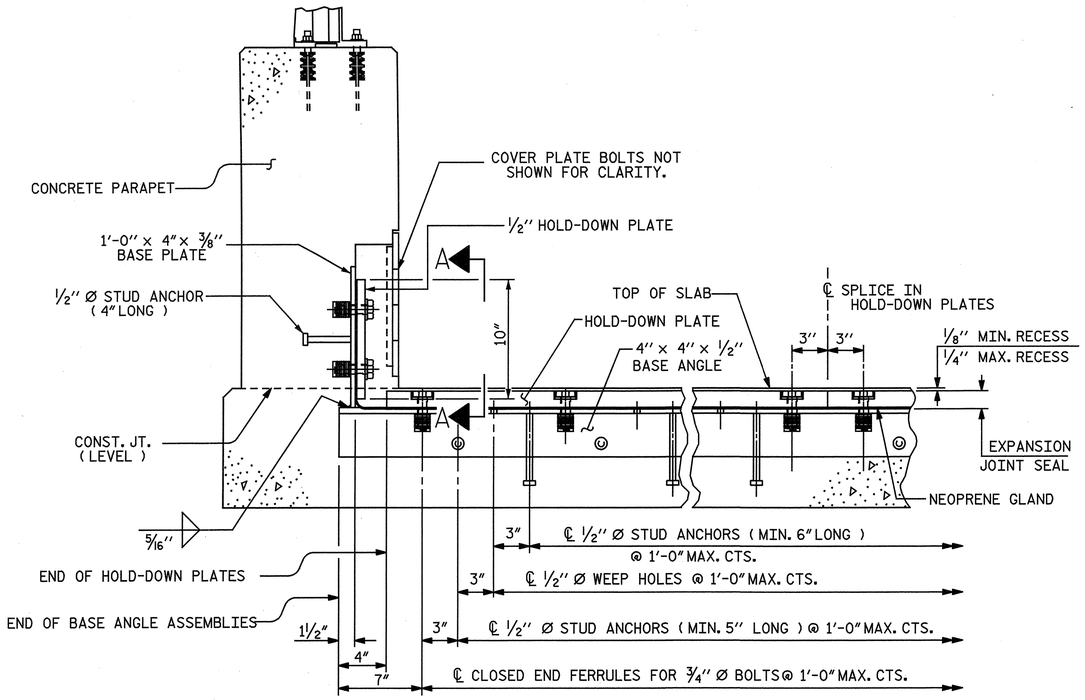

SECTION THRU PARAPET NORMAL TO JOINT

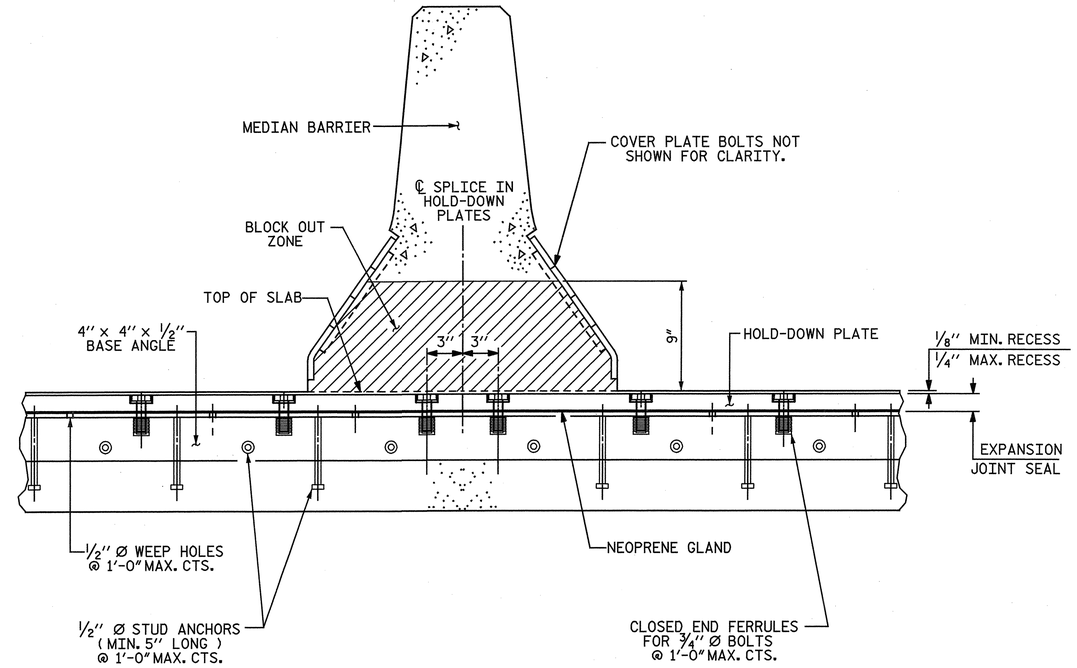

SECTION THRU MEDIAN BARRIER NORMAL TO JOINT

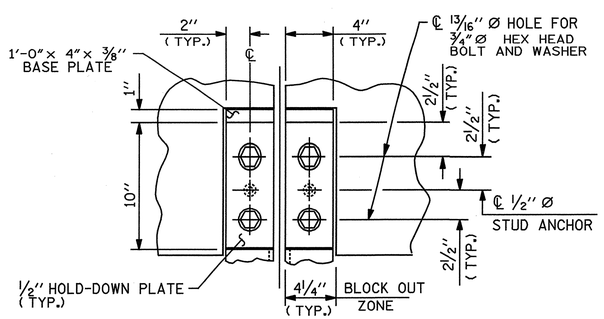

SECTION A-A

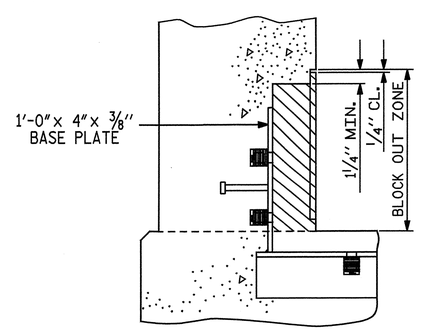

PARAPET BLOCK OUT DETAIL

SEE "SECTION A-A" FOR OTHER DETAILS.

PROJECT NO. R-3307

CARTERET COUNTY

STATION: 46+21.50 -L-

SHEET 2 OF 3

STATE OF NORTH CAROLINA
DEPARTMENT OF TRANSPORTATION
RALEIGH

SUPERSTRUCTURE

EXPANSION JOINT SEAL DETAILS

NORTH CAROLINA PROFESSIONAL SEAL 25911 ENGINEER DRAIN G. HATHMAN 4-3-2012

NORTH CAROLINA PROFESSIONAL SEAL 033752 ENGINEER SETH A. DENNEY 4/3/12

THE LPA GROUP of North Carolina TRANSPORTATION CONSULTANTS

THE LPA GROUP of North Carolina
8000 Regency Parkway, Suite 600
Cary, North Carolina 27518
NC License No.: F-1084

REVISIONS								SHEET NO.
NO.	BY:	DATE:	NO.	BY:	DATE:			S-189
1			3					TOTAL SHEETS
2			4					333

DRAWN BY : J. N. AUSTIN DATE : 1-11-12
CHECKED BY : S. A. DENNEY DATE : 1-12-12

DWG. 190 OF 282

4/2/2012
12:43:2_ PM
User: austin
Filename: Y:\Projects\NCDOT\R-3307\Dwgs\Final\R-3307_190_SD_JT_EXP_2.dgn

NOTE:

FOR "PAVEMENT MARKING ALIGNMENT" DETAIL, SEE "MODULAR EXPANSION JOINT DETAILS" SHEET.

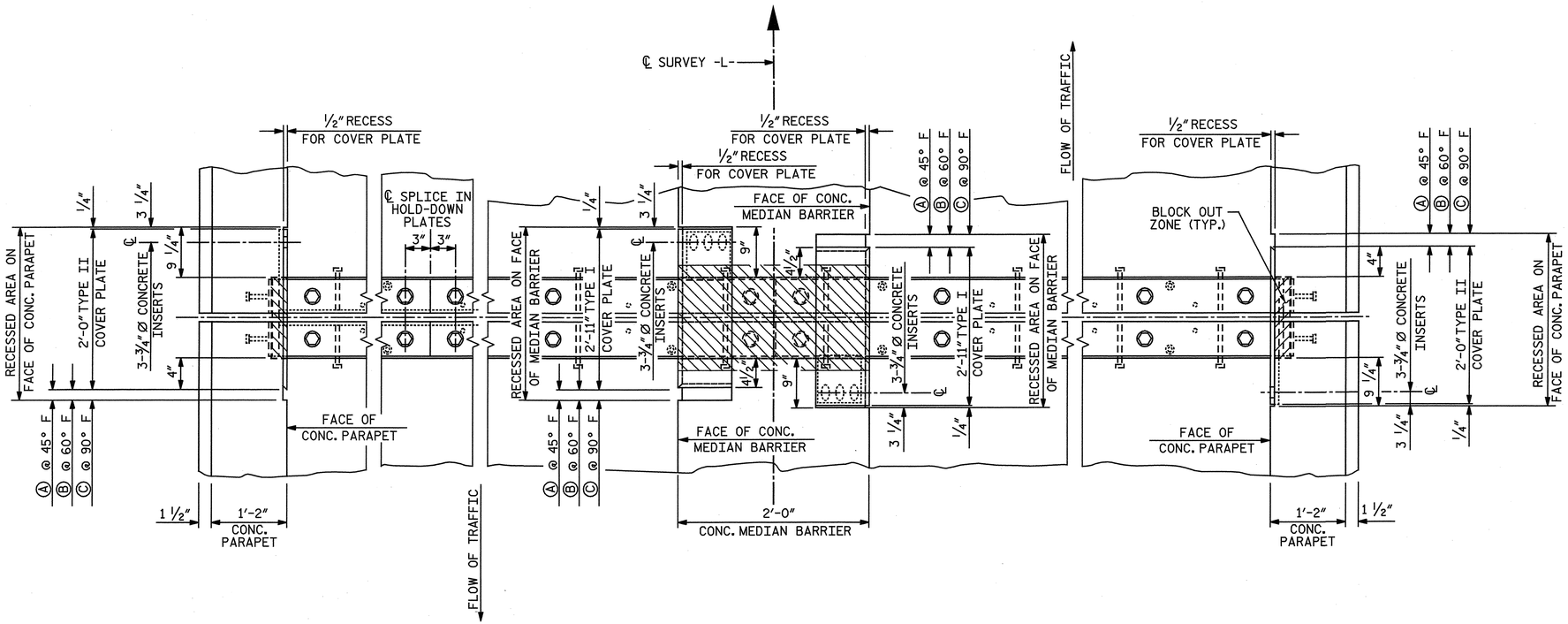

CONCRETE PARAPET- LEFT SIDE

MEDIAN BARRIER

CONCRETE PARAPET- RIGHT SIDE

PLAN OF EXPANSION JOINT SEAL

TABLE OF JOINT OPENINGS			
	Ⓐ	Ⓑ	Ⓒ
END BENT 1	1¾"	1 9/16"	1 3/16"
BENT 3	2¼"	1 15/16"	1 5/16"
BENT 5	2¼"	1 15/16"	1 5/16"
BENT 7	2½"	2⅛"	1⅜"
BENT 9	2½"	2⅛"	1⅜"
BENT 11	2½"	2⅛"	1⅜"
BENT 13	2⅛"	1⅞"	1 5/16"
BENT 14	1¾"	1 9/16"	1 3/16"
BENT 21	2½"	2⅛"	1⅜"
BENT 24	2½"	2⅛"	1⅜"
BENT 27	2¼"	1 15/16"	1 5/16"
END BENT 2	1½"	1⅜"	1⅛"

PROJECT NO. R-3307

CARTERET COUNTY

STATION: 46+21.50 -L-

SHEET 3 OF 3

STATE OF NORTH CAROLINA
DEPARTMENT OF TRANSPORTATION
RALEIGH

SUPERSTRUCTURE

EXPANSION JOINT SEAL DETAILS

NORTH CAROLINA PROFESSIONAL SEAL 25911 ENGINEER DWAIN G. HATHAWAY 4-3-2012

NORTH CAROLINA PROFESSIONAL SEAL 033752 ENGINEER SETH A. DENNEY 2/09/12

THE LPA GROUP of North Carolina TRANSPORTATION CONSULTANTS

THE LPA GROUP of North Carolina
8000 Regency Parkway, Suite 600
Cary, North Carolina 27518
NC License No.: F-1084

REVISIONS						SHEET NO.
NO.	BY:	DATE:	NO.	BY:	DATE:	S-190
1			3			TOTAL SHEETS
2			4			333

DRAWN BY : C.E.M./N. B. S. DATE : 9-15-11
CHECKED BY : J. N. AUSTIN DATE : 9-29-11

DWG. 191 OF 282

4/2/2012 12:43:39 PM
User: jaustin
Filename: Y:\Projects\NCDOT\R-3307\Dwgs\Final\R-3307_191_SD_JT_EXP_3.dgn

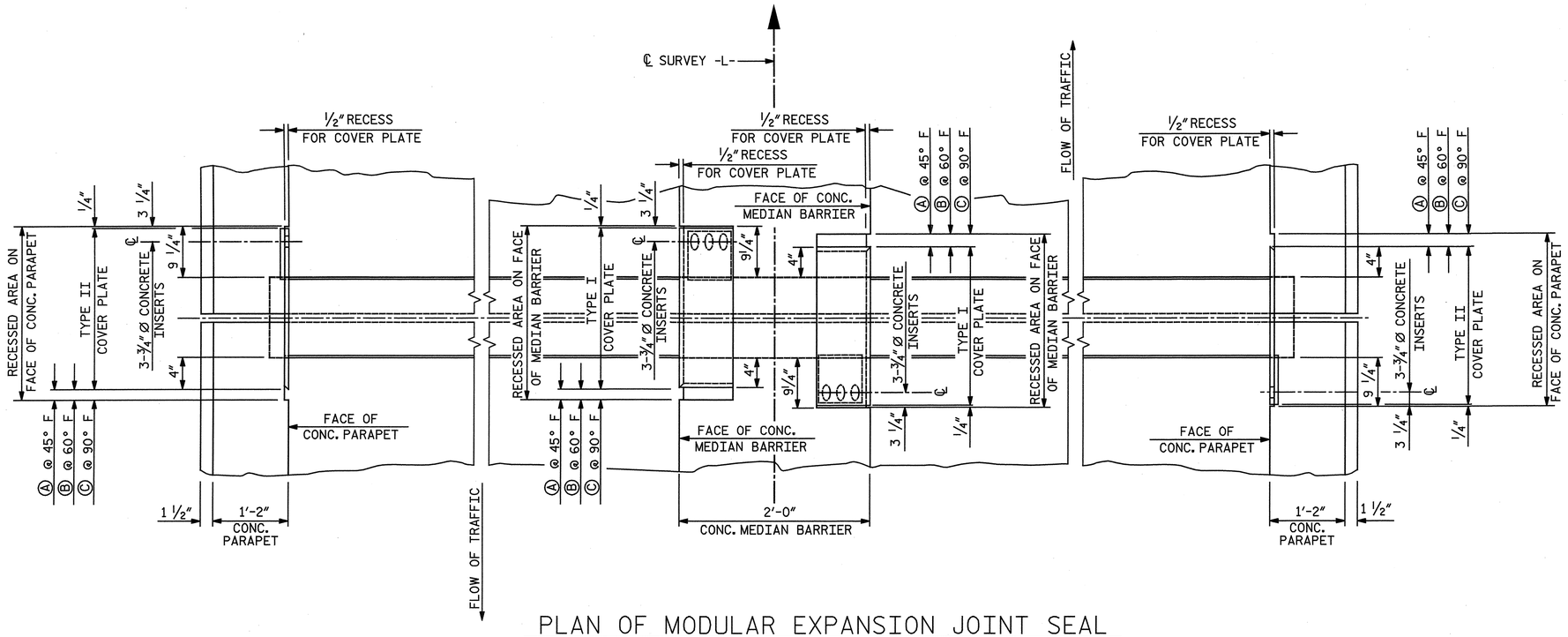

PLAN OF MODULAR EXPANSION JOINT SEAL

NOTES

FOR MODULAR EXPANSION JOINT SEALS, SEE SPECIAL PROVISIONS.

THE STEEL PLATES SHALL CONFORM TO AASHTO M270 GRADE 36 OR APPROVED EQUAL AND BE PAINTED IN ACCORDANCE WITH THE STANDARD SPECIFICATIONS. AT THE CONTRACTOR'S OPTION, THE PLATES MAY BE METALLIZED AFTER FABRICATION. SEE SPECIAL PROVISIONS FOR THERMAL SPRAYED COATINGS (METALLIZATION).

THE ¾" Ø HEX HEAD BOLTS SHALL CONFORM TO ASTM F593 ALLOY 304 STAINLESS STEEL.

THE ¾" CONCRETE INSERTS SHALL BE CLOSED-END FERRULES WITH LOOPED WIRE STRUTS ATTACHED TO THEM. THE INSERTS SHALL CONFORM TO AASHTO M169, GRADE 12L14 AND SHALL HAVE A TENSILE WORKING LOAD CAPACITY OF 3000 LBS.

NO SEPARATE PAYMENT WILL BE MADE FOR FURNISHING AND INSTALLING THE COVER PLATE. THE ENTIRE COST OF THIS WORK SHALL BE INCLUDED IN THE LUMP SUM PRICE FOR "MODULAR EXPANSION JOINT SEALS".

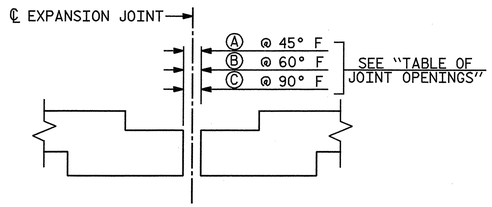

SECTION THRU SLAB

NORMAL TO JOINT

NOTE: MODULAR EXPANSION JOINT SEAL IS REQUIRED AT THIS JOINT BUT NOT SHOWN, SEE SKETCH SHOWING LIMITS OF MODULAR EXPANSION JOINT SEAL.

TABLE OF JOINT OPENINGS

	SKEW ANGLE	TOTAL MOVEMENT ALONG ℄ ROADWAY	Ⓐ	Ⓑ	Ⓒ
BENT 15	90°-00'-00"	5 7/16"	4 3/16"	3 5/8"	2 3/8"
BENT 18	90°-00'-00"	5 7/16"	4 3/16"	3 9/16"	2 3/8"

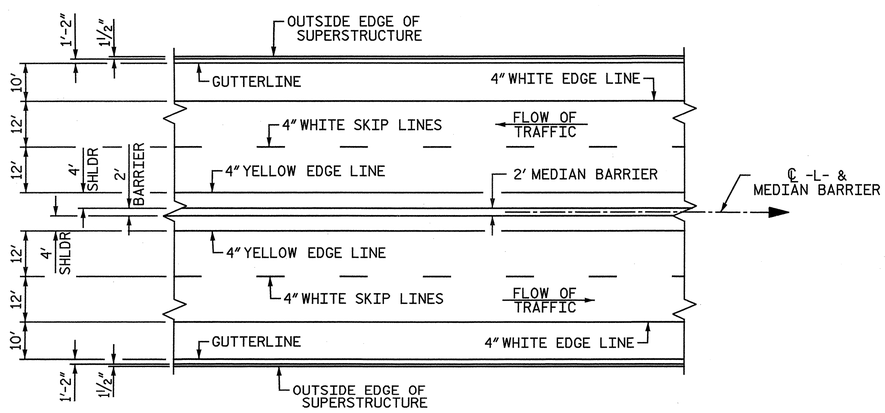

PAVEMENT MARKING ALIGNMENT

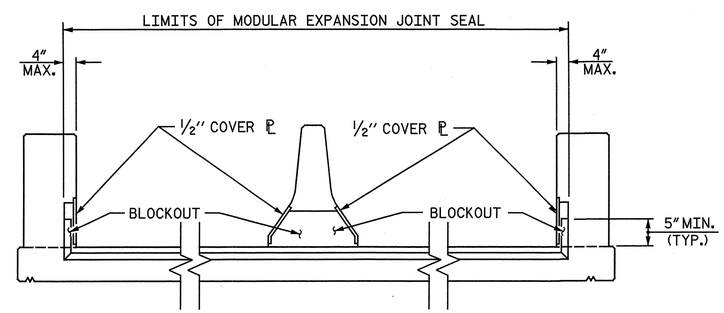

SKETCH SHOWING LIMITS OF MODULAR EXPANSION JOINT SEAL

PROJECT NO. R-3307

CARTERET COUNTY

STATION: 46+21.50 -L-

STATE OF NORTH CAROLINA
DEPARTMENT OF TRANSPORTATION
RALEIGH

SUPERSTRUCTURE

MODULAR EXPANSION JOINT DETAILS

NORTH CAROLINA PROFESSIONAL SEAL 25911 ENGINEER DWAIN G. WATHAM 4-3-2012

NORTH CAROLINA PROFESSIONAL SEAL 033752 ENGINEER SETH A. DENNEY 4/03/12

THE LPA GROUP of North Carolina TRANSPORTATION CONSULTANTS

THE LPA GROUP of North Carolina
8000 Regency Parkway, Suite 600
Cary, North Carolina 27518
NC License No.: F-1084

REVISIONS								SHEET NO.
NO.	BY:	DATE:	NO.	BY:	DATE:			S-191
1			3					TOTAL SHEETS
2			4					333

DRAWN BY : C.E.M./N. B. S. DATE : 9-15-11
CHECKED BY : J. N. AUSTIN DATE : 9-29-11

DWG. 192 OF 282

4/2/2012
12:43:... PM
User: jaustin
Filename: Y:\Projects\NCDOT\R-3307\Dwgs\Final\R-3307_192_SD_JT_MOD.dgn

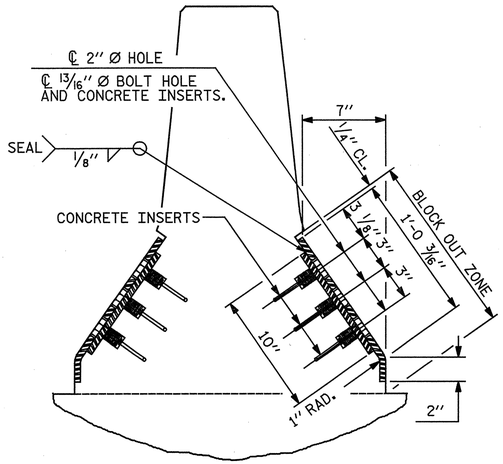

END VIEW

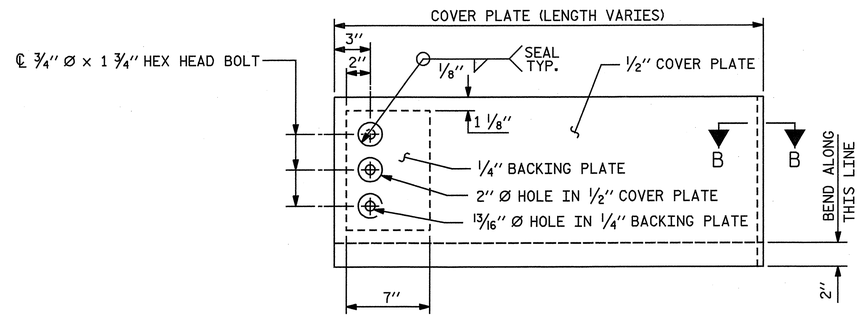

TYPE I - ELEVATION VIEW

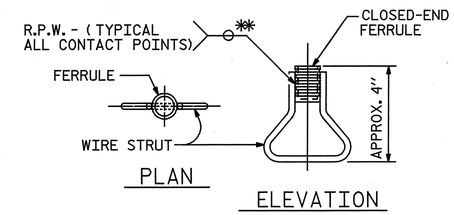

CONCRETE INSERT

** EACH WELDED ATTACHMENT OF WIRE TO FERRULE SHALL DEVELOP THE TENSILE STRENGTH OF THE WIRE.

MEDIAN BARRIER

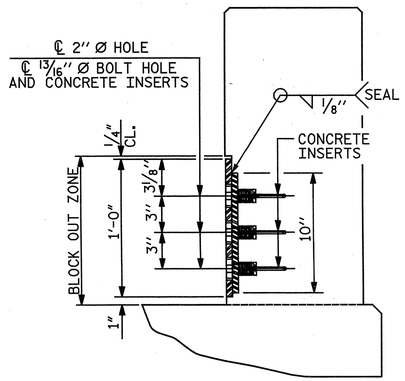

END VIEW

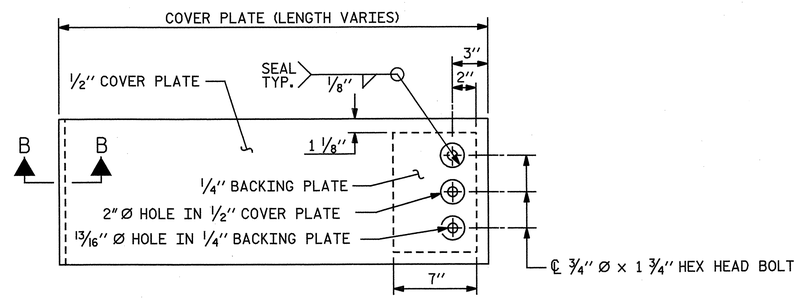

TYPE II - ELEVATION VIEW

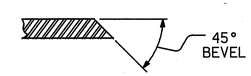

SECTION B-B

PARAPET

COVER PLATE DETAILS

PROJECT NO. R-3307

CARTERET COUNTY

STATION: 46+21.50 -L-

STATE OF NORTH CAROLINA
DEPARTMENT OF TRANSPORTATION
RALEIGH

SUPERSTRUCTURE

JOINT COVER PLATE DETAILS

NORTH CAROLINA PROFESSIONAL SEAL 25911 ENGINEER DWAIN C. HATHAWAY 4-3-2012

NORTH CAROLINA PROFESSIONAL SEAL 033752 ENGINEER SETH A. DENNEY 04/04/12

THE LPA GROUP of North Carolina TRANSPORTATION CONSULTANTS

THE LPA GROUP of North Carolina
8000 Regency Parkway, Suite 600
Cary, North Carolina 27518
NC License No.: F-1084

REVISIONS						SHEET NO.
NO.	BY:	DATE:	NO.	BY:	DATE:	S-192
1			3			TOTAL SHEETS
2			4			333

DRAWN BY : C.E.M./N. B. S. DATE : 9-15-11
CHECKED BY : J. N. AUSTIN DATE : 9-29-11

DWG. 193 OF 282

4/2/2012
12:43:... PM
User: jaustin
Filename: Y:\Projects\NCDOT\R-3307\Dwgs\Final\R-3307_193_SD_JT_COV_PLATE.dgn

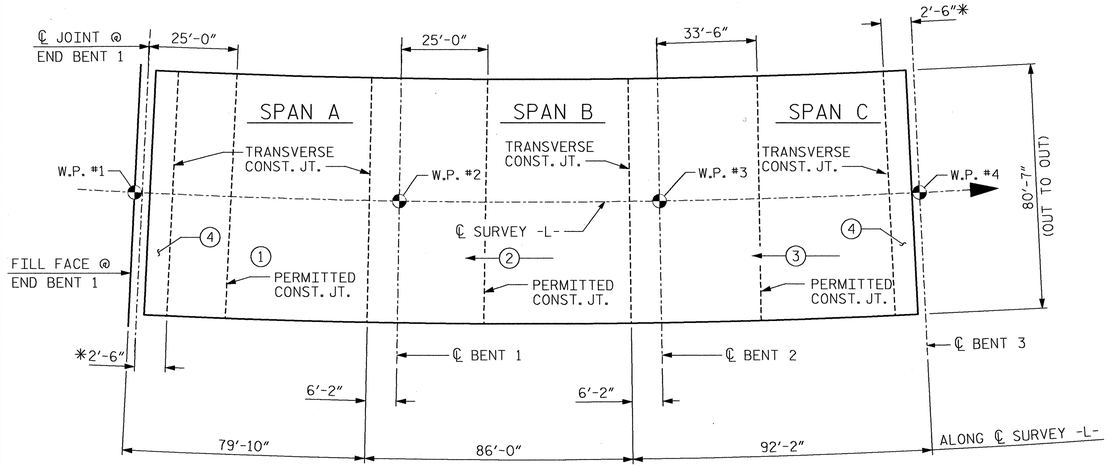

POURING SEQUENCE FOR SPANS A, B & C

(#) INDICATES POUR NUMBER AND POUR DIRECTION

*EXPANSION JOINT SEAL CLOSURE POUR

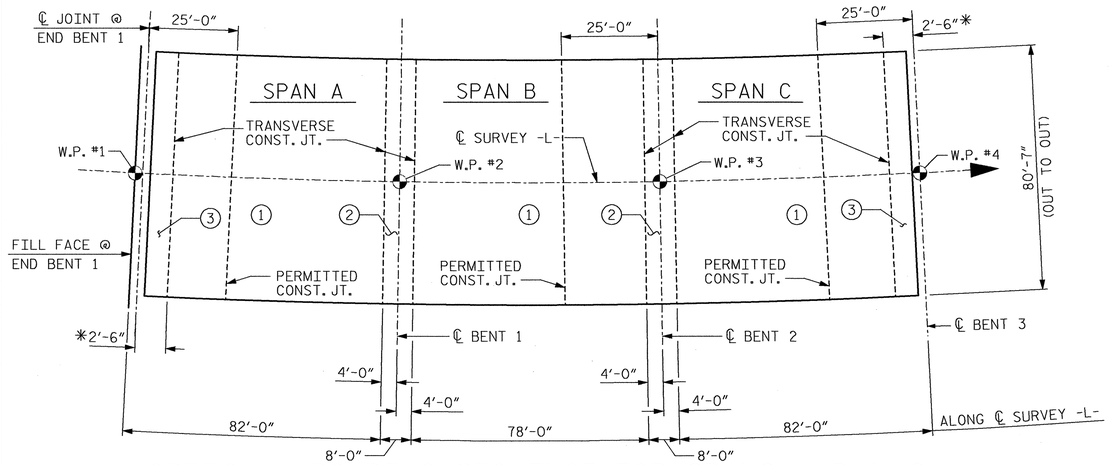

OPTIONAL POURING SEQUENCE FOR SPANS A, B & C

POUR (2) CANNOT BE STARTED UNTIL BOTH ADJACENT POURS (1) REACHED A MINIMUM OF 3000 PSI.

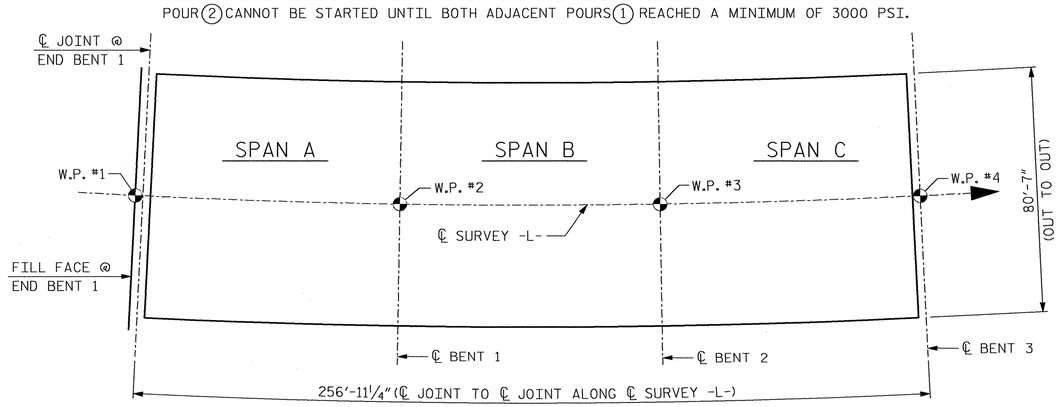

LAYOUT FOR COMPUTING AREA
REINFORCED CONCRETE DECK SLAB
(SQ. FT. = 20,705)

REINFORCING BAR SCHEDULE

BAR	NO.	SIZE	TYPE	LENGTH	WEIGHT
A1	520	#5	STR	36'-9"	19932
A2	520	#5	STR	46'-1"	24994
A3	520	#5	2	15'-1"	8181
A4	1040	#5	STR	3'-6"	3797
B1	216	#4	STR	28'-7"	4124
B2	648	#7	STR	25'-6"	33775
B3	210	#7	STR	27'-0"	11589
B4	108	#4	STR	25'-4"	1828
B5	216	#4	STR	29'-1"	4196
B6	95	#5	STR	54'-1"	5359
G1	4	#5	STR	41'-5"	173
J1	154	#4	4	1'-5"	146
K1	24	#8	2	21'-8"	1388
K2	4	#8	1	13'-5"	143
K3	42	#6	STR	7'-4"	463
K4	28	#4	STR	5'-11"	111
K5	28	#4	STR	7'-8"	143
K6	56	#4	STR	8'-4"	312
K7	28	#4	STR	7'-4"	137
K8	30	#4	STR	26'-2"	524
K9	4	#8	1	13'-1"	140
K10	6	#6	STR	6'-6"	59
K11	4	#4	STR	5'-1"	14
K12	4	#4	STR	6'-10"	18
K13	8	#4	STR	7'-6"	40
K14	4	#4	STR	6'-6"	17
K15	4	#8	2	20'-10"	223
S1	128	#4	6	3'-5"	292
S2	128	#5	3	6'-7"	879
S3	480	#4	5	2'-9"	882
U1	96	#4	2	12'-10"	823
U2	32	#4	2	11'-6"	246

BAR TYPES

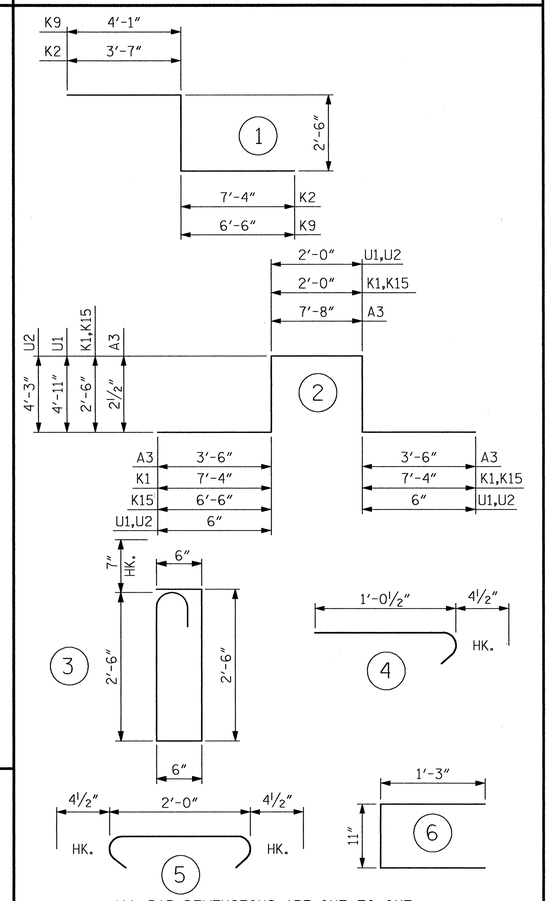

ALL BAR DIMENSIONS ARE OUT TO OUT.

GROOVING BRIDGE FLOORS

APPROACH SLAB @ END BENT 1	1,667	SQ.FT.
BRIDGE DECK	17,910	SQ.FT.
TOTAL (UNIT 1)	19,577	SQ.FT.

SUPERSTRUCTURE BILL OF MATERIAL

	CLASS AA CONCRETE	EPOXY COATED REINFORCING STEEL
	(CU. YDS.)	(LBS.)
POUR 1	130.5	
POUR 2	177.4	
POUR 3	183.4	
POUR 4	22.4	
TOTALS**	513.7	124,948

**QUANTITIES FOR CONCRETE PARAPET AND MEDIAN BARRIER ARE NOT INCLUDED

SUPERSTRUCTURE REINFORCING STEEL LENGTHS ARE BASED ON THE FOLLOWING MINIMUM SPLICE LENGTHS

BAR SIZE	SUPERSTRUCTURE EXCEPT APPROACH SLABS, PARAPET, AND BARRIER RAIL		APPROACH SLABS		PARAPET AND BARRIER RAIL
	EPOXY COATED	UNCOATED	EPOXY COATED	UNCOATED	
#4	2'-0"	1'-9"	2'-0"	1'-9"	2'-9"
#5	2'-6"	2'-2"	2'-6"	2'-2"	3'-5"
#6	3'-0"	2'-7"	3'-10"	2'-7"	4'-4"
#7	5'-3"	3'-6"			
#8	6'-10"	4'-7"			

PROJECT NO. R-3307
CARTERET COUNTY
STATION: 46+21.50 -L-

SHEET 1 OF 12

STATE OF NORTH CAROLINA
DEPARTMENT OF TRANSPORTATION
RALEIGH

SUPERSTRUCTURE
BILL OF MATERIAL
UNIT 1

SPANS A, B & C

NORTH CAROLINA PROFESSIONAL SEAL 12323 ENGINEER MORRIS ISRAELNIM 3/30/2012

NORTH CAROLINA PROFESSIONAL SEAL 027799 ENGINEER ALYSON K. ORR 3/30/2012

MI ENGINEERING
1011 SHAUB DRIVE, SUITE 100
RALEIGH, NC 27606
(919) 851-6606
FIRM PE NUMBER : P-0671

REVISIONS							
NO.	BY:	DATE:	NO.	BY:	DATE:		
1			3				
2			4				

SHEET NO. S-193
TOTAL SHEETS 333

DRAWN BY : B.E. LANNING DATE : 10-11
CHECKED BY : A.K. ORR DATE : 1-12

DWG. 194 OF 282

3/29/2012
5:14:44 PM
User: blanning
Filename: P:\NC Projects\M10005 - Gallants Channel\R-3307\Structures\R-3307_194_SD_BOM1.dgn

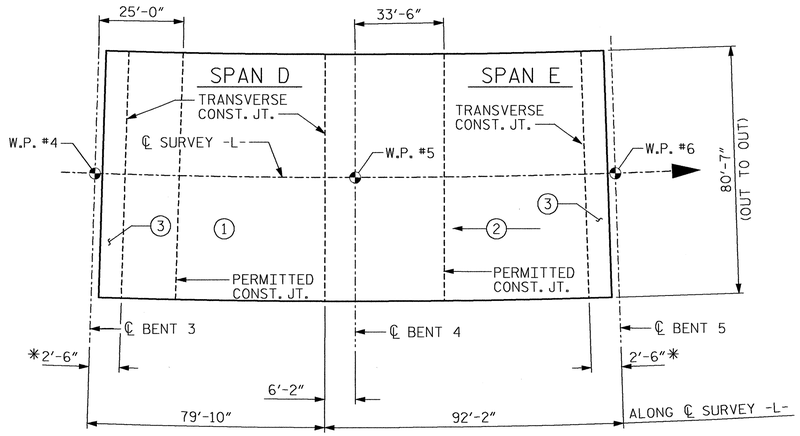

POURING SEQUENCE FOR SPANS D & E

(#) INDICATES POUR NUMBER AND POUR DIRECTION

*EXPANSION JOINT SEAL CLOSURE POUR

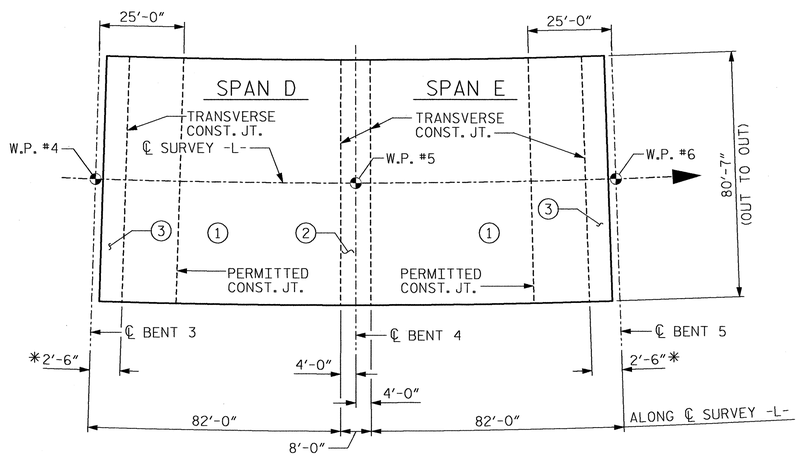

OPTIONAL POURING SEQUENCE FOR SPANS D & E

POUR (2) CANNOT BE STARTED UNTIL BOTH ADJACENT POURS (1) REACHED A MINIMUM OF 3000 PSI.

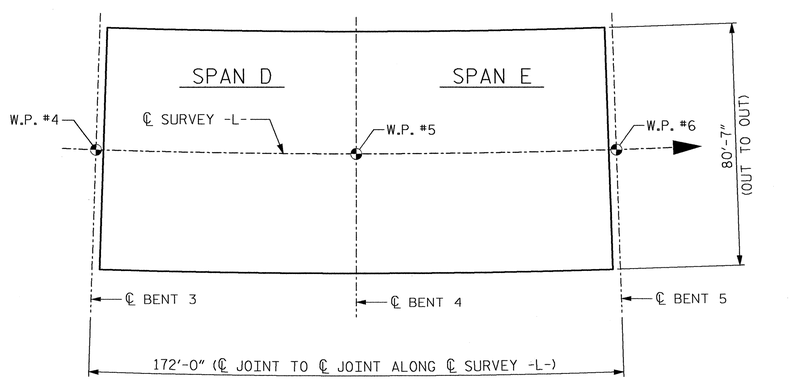

LAYOUT FOR COMPUTING AREA REINFORCED CONCRETE DECK SLAB

(SQ. FT. = 13,860)

REINFORCING BAR SCHEDULE

BAR	NO.	SIZE	TYPE	LENGTH	WEIGHT
A1	347	#5	STR	36'-9"	13301
A2	347	#5	STR	46'-1"	16679
A3	347	#5	2	15'-1"	5459
A4	694	#5	STR	3'-6"	2533
B2	324	#7	STR	25'-6"	16888
B3	105	#7	STR	27'-0"	5795
B7	432	#4	STR	29'-1"	8393
B8	57	#5	STR	59'-9"	3552
D1	4	#4	STR	2'-6"	7
G1	4	#5	STR	41'-5"	173
J1	154	#4	4	1'-5"	146
K1	24	#8	2	21'-8"	1388
K2	4	#8	1	13'-5"	143
K3	42	#6	STR	7'-4"	463
K4	14	#4	STR	5'-11"	55
K5	14	#4	STR	7'-8"	72
K6	28	#4	STR	8'-4"	156
K7	14	#4	STR	7'-4"	69
K8	15	#4	STR	26'-2"	262
K9	4	#8	1	13'-1''	140
K10	6	#6	STR	6'-6"	59
K11	2	#4	STR	5'-1"	7
K12	2	#4	STR	6'-10"	9
K13	4	#4	STR	7'-6"	20
K14	2	#4	STR	6'-6"	9
K15	4	#8	2	20'-10"	223
S1	128	#4	6	3'-5"	292
S2	128	#5	3	6'-7"	879
S3	240	#4	5	2'-9"	441
U1	48	#4	2	12'-10"	411
U2	16	#4	2	11'-6"	123

BAR TYPES

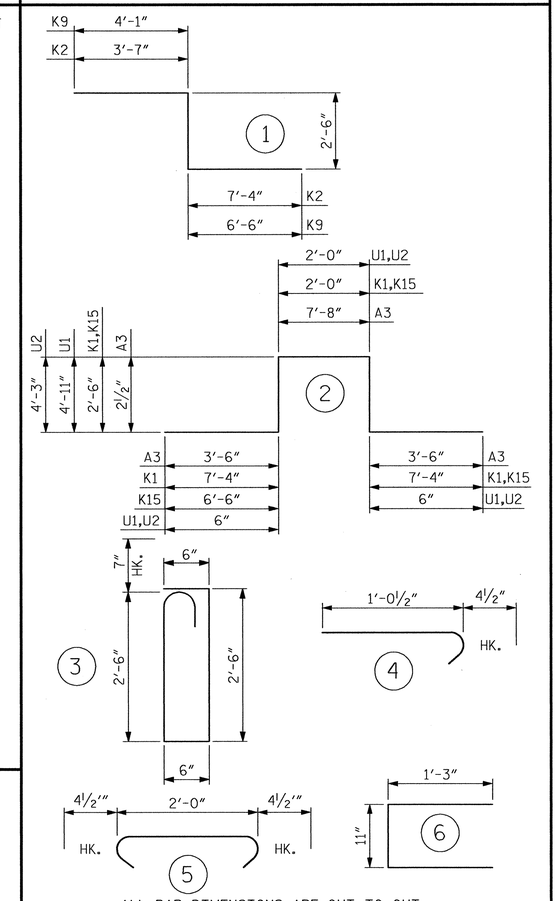

ALL BAR DIMENSIONS ARE OUT TO OUT.

GROOVING BRIDGE FLOORS

TOTAL (UNIT 2)	11,965 SQ.FT.

SUPERSTRUCTURE BILL OF MATERIAL

	CLASS AA CONCRETE	EPOXY COATED REINFORCING STEEL
	(CU. YDS.)	(LBS.)
POUR 1	132.3	
POUR 2	183.5	
POUR 2	22.4	
TOTALS**	338.2	78,147

**QUANTITIES FOR CONCRETE PARAPET AND MEDIAN BARRIER ARE NOT INCLUDED

PROJECT NO. R-3307

CARTERET COUNTY

STATION: 46+21.50 -L-

SHEET 2 OF 12

STATE OF NORTH CAROLINA
DEPARTMENT OF TRANSPORTATION
RALEIGH

SUPERSTRUCTURE
BILL OF MATERIAL
UNIT 2

SPANS D & E

NORTH CAROLINA PROFESSIONAL SEAL 12323 ENGINEER MORRIS ISRAELNAIN 3/30/2012

NORTH CAROLINA PROFESSIONAL SEAL 027799 ENGINEER ALLYSON K. ORR 3/30/2012

MI ENGINEERING
1011 SHAUB DRIVE, SUITE 100
RALEIGH, NC 27606
(919) 851-6606
FIRM PE NUMBER : P-0671

REVISIONS							SHEET NO.
NO.	BY:	DATE:	NO.	BY:	DATE:		S-194
1			3				TOTAL SHEETS
2			4				333

DRAWN BY : B.E. LANNING DATE : 10-11
CHECKED BY : A.K. ORR DATE : 1-12

DWG. 195 OF 282

3/29/2012
5:14:59 PM
User: blanning
Filename: P:\NC Projects\MI0005 - Gallants Channel\R-3307\Structures\R-3307_195_SD_BOM2.dgn

REINFORCING STEEL SCHEDULE

BAR	NO.	SIZE	TYPE	LENGTH	WEIGHT
A1	421	5	STR	22′ - 9″	9,990
A2	421	5	STR	60′ - 0″	26,346
A3	421	6	STR	11′ - 0″	6,956
A4	842	5	STR	4′ - 10″	4,245
B1	436	4	STR	45′ - 8″	13,300
B2	109	7	STR	60′ - 0″	13,368
B3	109	7	STR	34′ - 3″	7,631
B4	106	7	STR	40′ - 0″	8,667
B5	65	5	STR	54′ - 9″	3,712
G1	4	5	STR	41′ - 5″	173
J1	162	4	7	1′ - 5″	153
K1	8	8	1	13′ - 10″	295
K2	56	8	1	12′ - 11″	1,931
K3	4	6	STR	37′ - 1″	223
K4	16	4	STR	6′ - 4″	68
K5	80	4	STR	8′ - 1″	432
K6	16	4	STR	3′ - 8″	39
K7	14	4	STR	37′ - 5″	350
S1	80	5	2	5′ - 9″	480
S2	80	4	4	2′ - 5″	129
S3	256	4	5	2′ - 9″	470
S4	64	4	6	4′ - 9″	203
U1	32	4	3	13′ - 11″	297
U2	32	4	4	14′ - 4″	306

EPOXY COATED
REINFORCING STEEL LBS. 99,764

CLASS "AA" CONCRETE

POUR #1	(C.Y.)	271.2
POUR #2	(C.Y.)	354.2
POUR #3	(C.Y.)	18.6
TOTAL	(C.Y.)	644.0

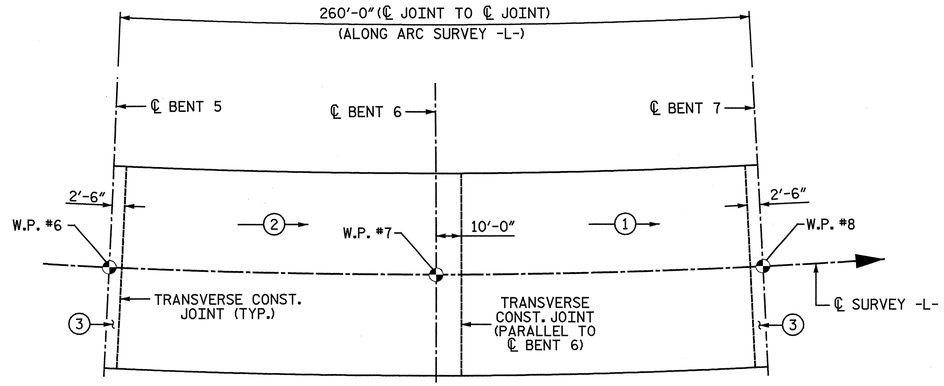

POUR SEQUENCE

(#) DENOTES POUR NUMBER AND DIRECTION.

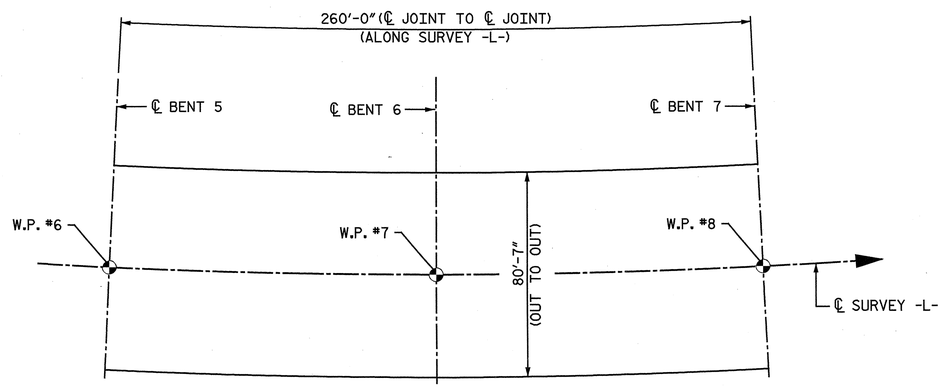

LAYOUT FOR COMPUTING AREA REINFORCED CONCRETE DECK SLAB

(SQ. FT. = 20,952)

BAR TYPES

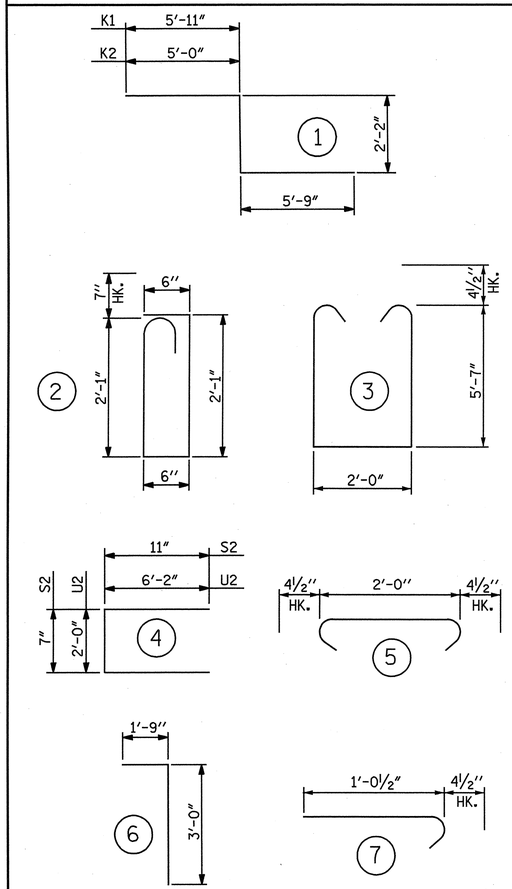

ALL BAR DIMENSIONS ARE OUT TO OUT

SUPERSTRUCTURE BILL OF MATERIAL

	CLASS "AA" CONCRETE	EPOXY COATED REINFORCING STEEL
	(CU. YDS.)	(LBS.)
TOTALS**	644.0	99,764

** QUANTITIES FOR CONCRETE PARAPET AND MEDIAN BARRIER ARE NOT INCLUDED

REINFORCING STEEL SPLICE LENGTHS

BAR SIZE	SUPERSTRUCTURE EXCEPT APPROACH SLABS, PARAPET, AND BARRIER RAIL
	EPOXY COATED
#4	2′-0″
#5	2′-6″
#6	3′-0″
#7	5′-3″
#8	6′-10″

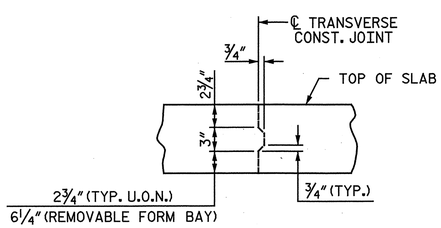

TRANSVERSE CONSTRUCTION JOINT DETAIL

NOTE: REINFORCING STEEL IN SLAB NOT SHOWN. LONGITUDINAL REINFORCING STEEL SHALL BE CONTINUOUS THRU JOINT.

GROOVING BRIDGE FLOORS

BRIDGE DECK	19,416	SQ.FT.
TOTAL	19,416	SQ.FT.

PROJECT NO. R-3307
CARTERET COUNTY
STATION: 46+21.50 -L-

SHEET 3 OF 12

STATE OF NORTH CAROLINA
DEPARTMENT OF TRANSPORTATION
RALEIGH

SUPERSTRUCTURE

BILL OF MATERIAL
UNIT 3

SPANS F & G

NORTH CAROLINA PROFESSIONAL SEAL 25911 ENGINEER G. HATHAWAY
NORTH CAROLINA PROFESSIONAL SEAL 033752 ENGINEER SETH A. DENNEY

THE LPA GROUP of North Carolina TRANSPORTATION CONSULTANTS

THE LPA GROUP of North Carolina
8000 Regency Parkway, Suite 600
Cary, North Carolina 27518
NC License No.: F-1084

REVISIONS								SHEET NO.
NO.	BY:	DATE:	NO.	BY:	DATE:			S-95
1			3					TOTAL SHEETS
2			4					333

DRAWN BY : NBS / MDM DATE : 1-9-12
CHECKED BY : S. A. DENNEY DATE : 1-12-12

DWG. 196 OF 282

4/2/2012 12:43:... PM
User: jaustin
Filename: Y:\Projects\NCDOT\R-3307\Dwgs\Final\R-3307_196_SD_BOM1.dgn

REINFORCING STEEL SCHEDULE

BAR	NO.	SIZE	TYPE	LENGTH	WEIGHT
A1	421	5	STR	22′ - 9″	9,990
A2	421	5	STR	60′ - 0″	26,346
A3	421	6	STR	11′ - 0″	6,956
A4	842	5	STR	4′ - 10″	4,245
B1	436	4	STR	45′ - 8″	13,300
B2	109	7	STR	60′ - 0″	13,368
B3	109	7	STR	34′ - 3″	7,631
B4	106	7	STR	40′ - 0″	8,667
B5	65	5	STR	54′ - 9″	3,712
G1	4	5	STR	41′ - 5″	173
J1	162	4	7	1′ - 5″	153
K1	8	8	1	13′ - 10″	295
K2	56	8	1	12′ - 11″	1,931
K3	4	6	STR	37′ - 1″	223
K4	16	4	STR	6′ - 4″	68
K5	80	4	STR	8′ - 1″	432
K6	16	4	STR	3′ - 8″	39
K7	14	4	STR	37′ - 5″	350
S1	80	5	2	5′ - 9″	480
S2	80	4	4	2′ - 5″	129
S3	256	4	5	2′ - 9″	470
S4	64	4	6	4′ - 9″	203
U1	32	4	3	13′ - 11″	297
U2	32	4	4	14′ - 4″	306

EPOXY COATED
REINFORCING STEEL LBS. 99,764

CLASS "AA" CONCRETE

POUR #1	(C.Y.)	271.5
POUR #2	(C.Y.)	355.0
POUR #3	(C.Y.)	18.6
TOTAL	(C.Y.)	645.1

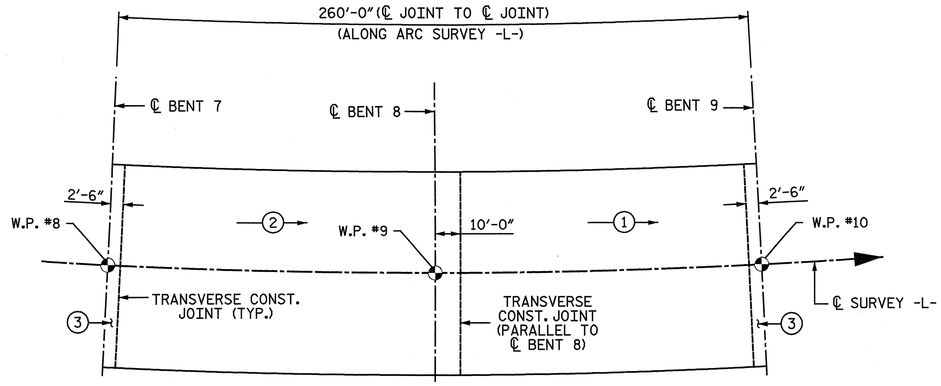

POUR SEQUENCE

(#) DENOTES POUR NUMBER AND DIRECTION.

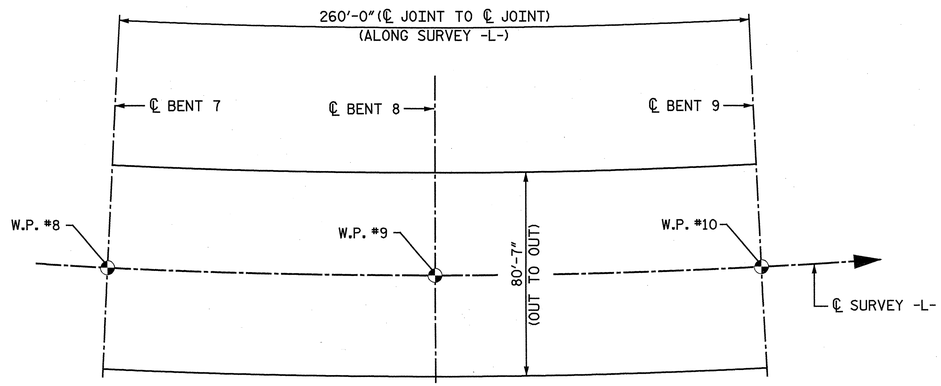

LAYOUT FOR COMPUTING AREA REINFORCED CONCRETE DECK SLAB

(SQ. FT. = 20,952)

BAR TYPES

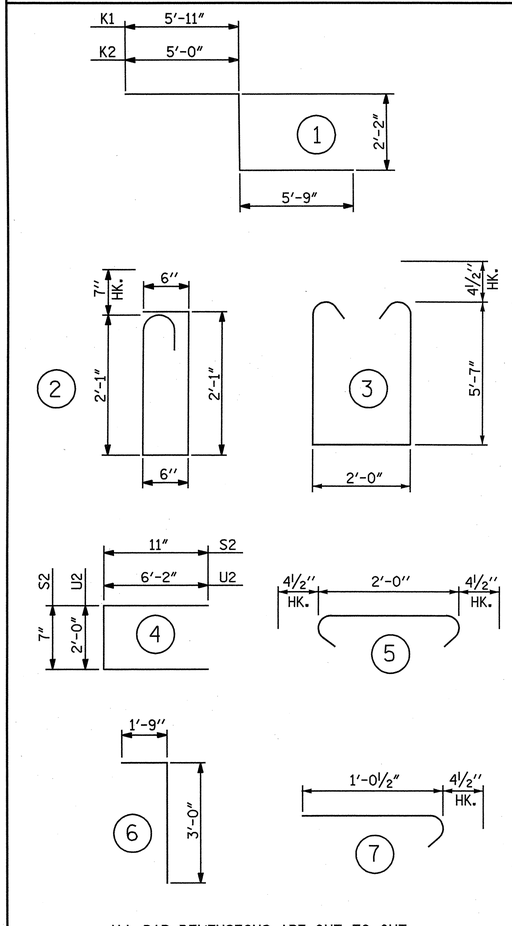

ALL BAR DIMENSIONS ARE OUT TO OUT

SUPERSTRUCTURE BILL OF MATERIAL

	CLASS "AA" CONCRETE	EPOXY COATED REINFORCING STEEL
	(CU. YDS.)	(LBS.)
TOTALS**	645.1	99,764

**QUANTITIES FOR CONCRETE PARAPET AND MEDIAN BARRIER ARE NOT INCLUDED

REINFORCING STEEL SPLICE LENGTHS

BAR SIZE	SUPERSTRUCTURE EXCEPT APPROACH SLABS, PARAPET, AND BARRIER RAIL
	EPOXY COATED
#4	2′-0″
#5	2′-6″
#6	3′-0″
#7	5′-3″
#8	6′-10″

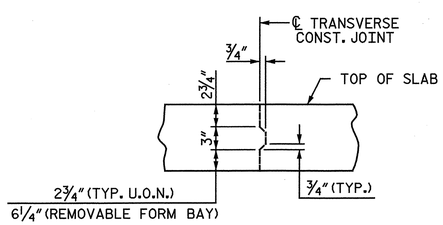

TRANSVERSE CONSTRUCTION JOINT DETAIL

NOTE: REINFORCING STEEL IN SLAB NOT SHOWN. LONGITUDINAL REINFORCING STEEL SHALL BE CONTINUOUS THRU JOINT.

GROOVING BRIDGE FLOORS

BRIDGE DECK	19,416	SQ.FT.
TOTAL	19,416	SQ.FT.

PROJECT NO. R-3307
CARTERET COUNTY
STATION: 46+21.50 -L-

SHEET 4 OF 12

STATE OF NORTH CAROLINA
DEPARTMENT OF TRANSPORTATION
RALEIGH

SUPERSTRUCTURE

BILL OF MATERIAL
UNIT 4

SPANS H & I

NORTH CAROLINA PROFESSIONAL SEAL 25911 ENGINEER DRAIN G. HATHWAY 4-3-2012

NORTH CAROLINA PROFESSIONAL SEAL 033752 ENGINEER SETH A. DENNEY 4/9/12

THE LPA GROUP of North Carolina TRANSPORTATION CONSULTANTS

THE LPA GROUP of North Carolina
8000 Regency Parkway, Suite 600
Cary, North Carolina 27518
NC License No.: F-1084

REVISIONS								SHEET NO.
NO.	BY:	DATE:	NO.	BY:	DATE:			S-196
1			3					TOTAL SHEETS
2			4					333

DRAWN BY : NBS / MDM DATE : 1-9-12
CHECKED BY : S. A. DENNEY DATE : 1-12-12

DWG. 197 OF 282

4/2/2012
12:43:_PM
User: jaustin
Filename: Y:\Projects\NCDOT\R-3307\Dwgs\Final\R-3307_197_SD_BOM2.dgn

REINFORCING STEEL SCHEDULE

BAR	NO.	SIZE	TYPE	LENGTH	WEIGHT
A1	417	5	STR	22′ - 9″	9,895
A2	417	5	STR	60′ - 0″	26,096
A3	417	6	STR	11′ - 0″	6,890
A4	834	5	STR	4′ - 10″	4,204
B1	436	4	STR	45′ - 0″	13,106
B2	109	7	STR	60′ - 0″	13,368
B3	109	7	STR	34′ - 3″	7,631
B4	106	7	STR	40′ - 0″	8,667
B5	65	5	STR	54′ - 3″	3,678
G1	4	5	STR	41′ - 5″	173
J1	162	4	7	1′ - 5″	153
K1	8	8	1	13′ - 10″	295
K2	56	8	1	12′ - 11″	1,931
K3	4	6	STR	37′ - 1″	223
K4	16	4	STR	6′ - 4″	68
K5	80	4	STR	8′ - 1″	432
K6	16	4	STR	3′ - 8″	39
K7	14	4	STR	37′ - 5″	350
S1	80	5	2	5′ - 9″	480
S2	80	4	4	2′ - 5″	129
S3	256	4	5	2′ - 9″	470
S4	64	4	6	4′ - 9″	203
U1	32	4	3	13′ - 11″	297
U2	32	4	4	14′ - 4″	306

EPOXY COATED
REINFORCING STEEL LBS. 99,084

CLASS "AA" CONCRETE

POUR #1	(C.Y.)	248.3
POUR #2	(C.Y.)	375.1
POUR #3	(C.Y.)	18.6
TOTAL	(C.Y.)	642.0

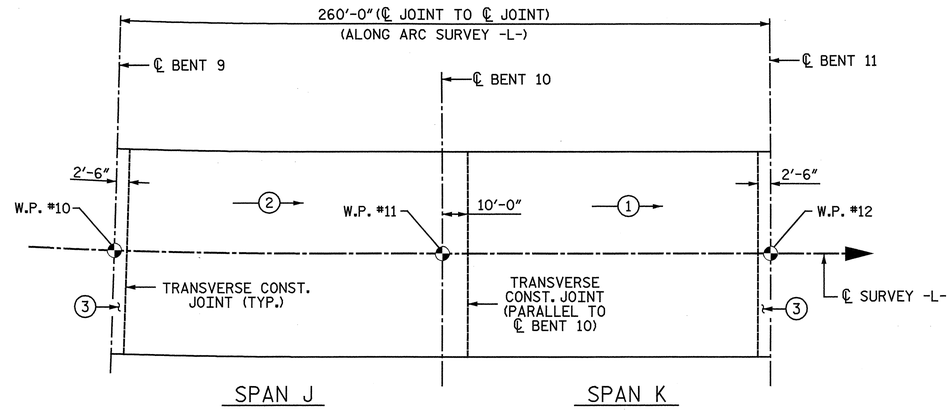

POUR SEQUENCE

(#) DENOTES POUR NUMBER AND DIRECTION.

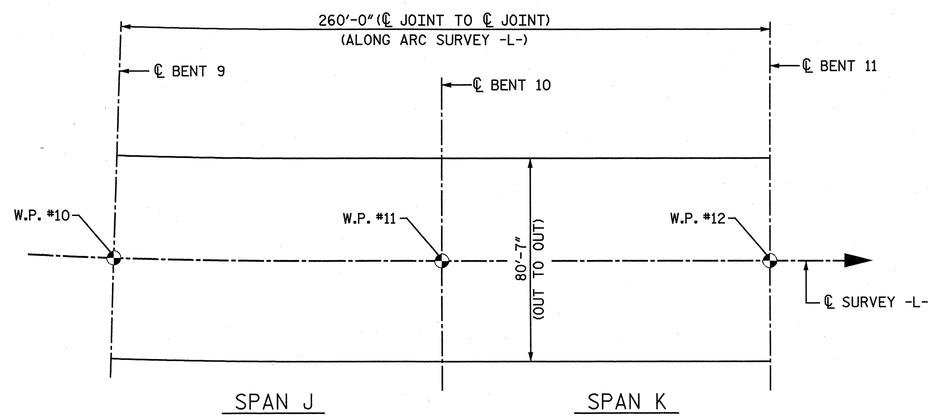

LAYOUT FOR COMPUTING AREA
REINFORCED CONCRETE DECK SLAB

(SQ. FT. = 20,952)

BAR TYPES

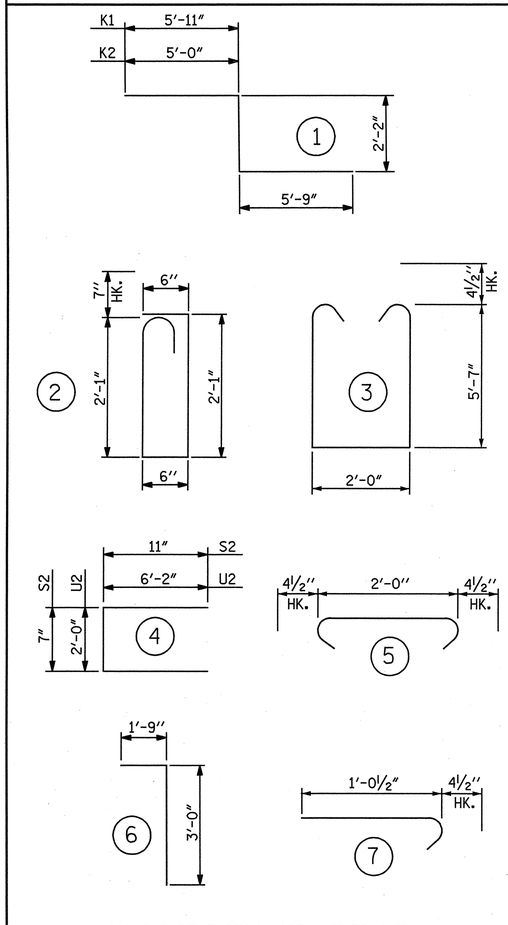

ALL BAR DIMENSIONS ARE OUT TO OUT

SUPERSTRUCTURE BILL OF MATERIAL

	CLASS "AA" CONCRETE	EPOXY COATED REINFORCING STEEL
	(CU. YDS.)	(LBS.)
TOTALS**	642.0	99,084

**QUANTITIES FOR CONCRETE PARAPET AND MEDIAN BARRIER ARE NOT INCLUDED

REINFORCING STEEL SPLICE LENGTHS

BAR SIZE	SUPERSTRUCTURE EXCEPT APPROACH SLABS, PARAPET, AND BARRIER RAIL
	EPOXY COATED
#4	2′-0″
#5	2′-6″
#6	3′-0″
#7	5′-3″
#8	6′-10″

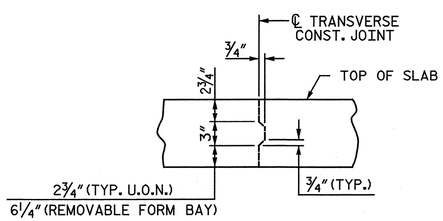

TRANSVERSE CONSTRUCTION JOINT DETAIL

NOTE: REINFORCING STEEL IN SLAB NOT SHOWN. LONGITUDINAL REINFORCING STEEL SHALL BE CONTINUOUS THRU JOINT.

GROOVING BRIDGE FLOORS		
BRIDGE DECK	19,416	SQ.FT.
TOTAL	19,416	SQ.FT.

PROJECT NO. R-3307
CARTERET COUNTY
STATION: 46+21.50 -L-

SHEET 5 OF 12

STATE OF NORTH CAROLINA
DEPARTMENT OF TRANSPORTATION
RALEIGH

SUPERSTRUCTURE

BILL OF MATERIAL
UNIT 5

SPANS J & K

NORTH CAROLINA PROFESSIONAL SEAL 25911 ENGINEER DWAIN G. HATHAWAY 7-3-2012

NORTH CAROLINA PROFESSIONAL SEAL 033752 ENGINEER SETH A. DENNEY 7-10-12

THE LPA GROUP of North Carolina TRANSPORTATION CONSULTANTS

THE LPA GROUP of North Carolina
8000 Regency Parkway, Suite 600
Cary, North Carolina 27518
NC License No.: F-1084

REVISIONS								SHEET NO.
NO.	BY:	DATE:	NO.	BY:	DATE:			S-197
1			3					TOTAL SHEETS
2			4					333

DWG. 198 OF 282

DRAWN BY : NBS / MDM DATE : 1-9-12
CHECKED BY : S. A. DENNEY DATE : 1-12-12

4/2/2012
12:43:.. PM
User: jaustin
Filename: Y:\Projects\NCDOT\R-3307\Dwgs\Final\R-3307_198_SD_BOM3.dgn

REINFORCING STEEL SCHEDULE

BAR	NO.	SIZE	TYPE	LENGTH	WEIGHT
A1	415	5	STR	22′ - 9″	9,847
A2	415	5	STR	60′ - 0″	25,971
A3	415	6	STR	11′ - 0″	6,857
A4	830	5	STR	4′ - 10″	4,184
B1	436	4	STR	44′ - 8″	13,009
B2	109	7	STR	60′ - 0″	13,368
B3	109	7	STR	34′ - 3″	7,631
B4	106	7	STR	40′ - 0″	8,667
B5	65	5	STR	54′ - 0″	3,661
G1	4	5	STR	41′ - 5″	173
J1	162	4	7	1′ - 5″	153
K1	8	8	1	13′ - 10″	295
K2	56	8	1	12′ - 11″	1,931
K3	4	6	STR	37′ - 1″	223
K4	16	4	STR	6′ - 4″	68
K5	80	4	STR	8′ - 1″	432
K6	16	4	STR	3′ - 8″	39
K7	14	4	STR	37′ - 5″	350
S1	80	5	2	5′ - 9″	480
S2	80	4	4	2′ - 5″	129
S3	256	4	5	2′ - 9″	470
S4	64	4	6	4′ - 9″	203
U1	32	4	3	13′ - 11″	297
U2	32	4	4	14′ - 4″	306

EPOXY COATED
REINFORCING STEEL LBS. 98,744

CLASS "AA" CONCRETE

POUR #1	(C.Y.)	238.9
POUR #2	(C.Y.)	326.5
POUR #3	(C.Y.)	18.6
TOTAL	(C.Y.)	584.0

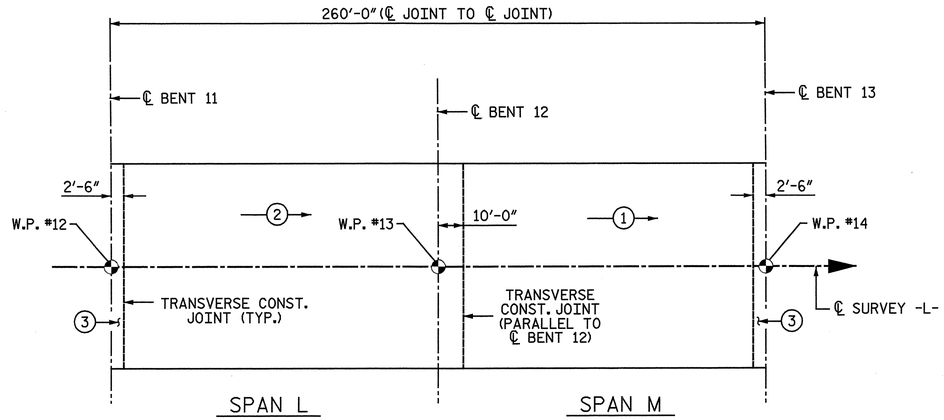

POUR SEQUENCE

(#) DENOTES POUR NUMBER AND DIRECTION.

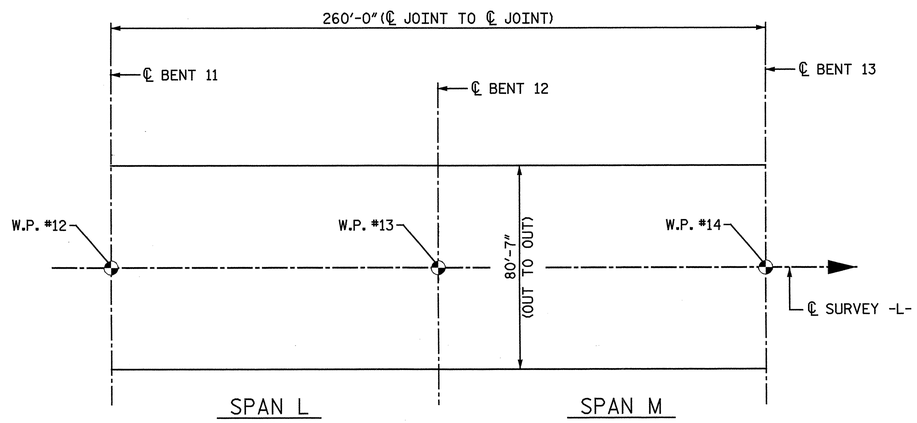

LAYOUT FOR COMPUTING AREA REINFORCED CONCRETE DECK SLAB

(SQ. FT. = 20,952)

BAR TYPES

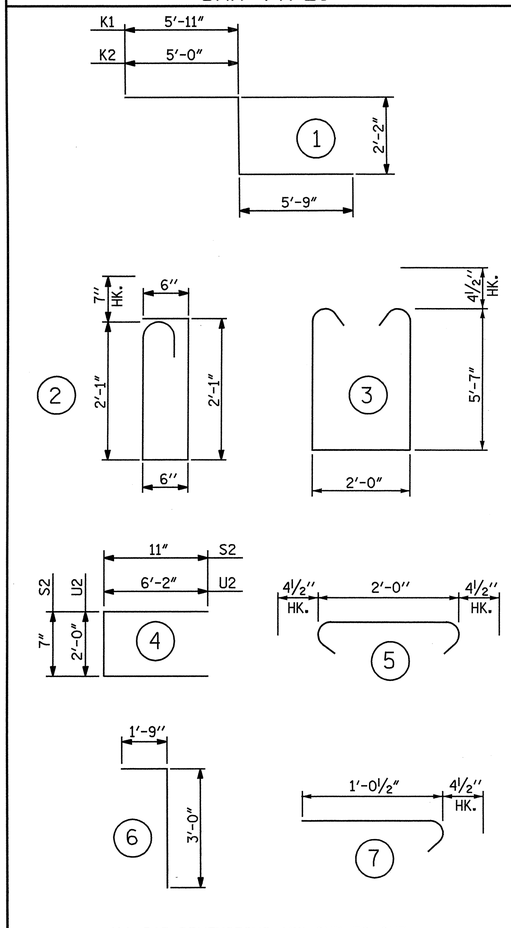

ALL BAR DIMENSIONS ARE OUT TO OUT

SUPERSTRUCTURE BILL OF MATERIAL

	CLASS "AA" CONCRETE	EPOXY COATED REINFORCING STEEL
	(CU. YDS.)	(LBS.)
TOTALS**	584.0	98,744

**QUANTITIES FOR CONCRETE PARAPET AND MEDIAN BARRIER ARE NOT INCLUDED

REINFORCING STEEL SPLICE LENGTHS

BAR SIZE	SUPERSTRUCTURE EXCEPT APPROACH SLABS, PARAPET, AND BARRIER RAIL
	EPOXY COATED
#4	2′-0″
#5	2′-6″
#6	3′-0″
#7	5′-3″
#8	6′-10″

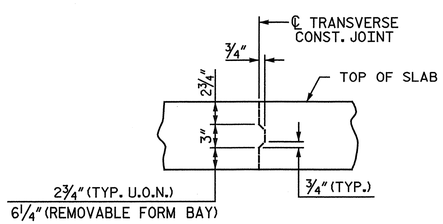

TRANSVERSE CONSTRUCTION JOINT DETAIL

NOTE: REINFORCING STEEL IN SLAB NOT SHOWN. LONGITUDINAL REINFORCING STEEL SHALL BE CONTINUOUS THRU JOINT.

GROOVING BRIDGE FLOORS

BRIDGE DECK	19,416	SQ.FT.
TOTAL	19,416	SQ.FT.

PROJECT NO. R-3307
CARTERET COUNTY
STATION: 46+21.50 -L-

SHEET 6 OF 12

STATE OF NORTH CAROLINA
DEPARTMENT OF TRANSPORTATION
RALEIGH
SUPERSTRUCTURE

BILL OF MATERIAL
UNIT 6

SPANS L & M

NORTH CAROLINA PROFESSIONAL SEAL 25911 ENGINEER C. NATHAN DAY 4-3-2012

NORTH CAROLINA PROFESSIONAL SEAL 033752 ENGINEER SETH A. DENNEY 4/4/12

THE LPA GROUP of North Carolina TRANSPORTATION CONSULTANTS

THE LPA GROUP of North Carolina
8000 Regency Parkway, Suite 600
Cary, North Carolina 27518
NC License No.: F-1084

REVISIONS								SHEET NO.
NO.	BY:	DATE:	NO.	BY:	DATE:			S-198
1			3					TOTAL SHEETS
2			4					333

DRAWN BY : NBS / MDM DATE : 1-9-12
CHECKED BY : S. A. DENNEY DATE : 1-12-12

DWG. 199 OF 282

4/2/2012
12:43:[illegible] PM
User: jaustin
Filename: Y:\Projects\NCDOT\R-3307\Dwgs\Final\R-3307_199_SD_BOM4.dgn

REINFORCING STEEL SCHEDULE

UNIT 7

BAR	NO.	SIZE	TYPE	LENGTH	WEIGHT
A1	207	5	STR	22′ - 9″	4,912
A2	207	5	STR	60′ - 0″	12,954
A3	207	6	STR	11′ - 0″	3,420
A4	414	5	STR	4′ - 10″	2,087
B1	545	4	STR	27′ - 7″	10,042
B2	39	5	STR	44′ - 11″	1,827
G1	8	5	STR	41′ - 5″	346
J1	162	4	4	1′ - 5″	153
K1	8	8	1	13′ - 10″	295
K2	56	8	1	12′ - 11″	1,931
K3	4	6	STR	37′ - 1″	223
S1	80	5	2	5′ - 9″	480
S2	80	4	3	2′ - 5″	129

EPOXY COATED REINFORCING STEEL LBS. 38,799

CLASS "AA" CONCRETE

POUR #1 (C.Y.) 262.8
POUR #2 (C.Y.) 14.6

TOTAL (C.Y.) 277.4

UNIT 7A

BAR	NO.	SIZE	TYPE	LENGTH	WEIGHT
A1	207	5	STR	22′ - 9″	4,912
A2	207	5	STR	60′ - 0″	12,954
A3	207	6	STR	11′ - 0″	3,420
A4	414	5	STR	4′ - 10″	2,087
A5	4	5	1	6′ - 7″	27
B1	545	4	STR	27′ - 7″	10,042
B2	39	5	STR	44′ - 11″	1,827
G1	8	5	STR	41′ - 5″	346
J1	81	4	4	1′ - 5″	77
K1	8	8	1	13′ - 10″	295
K2	56	8	1	12′ - 11″	1,931
K3	4	6	STR	37′ - 1″	223
S1	80	5	2	5′ - 9″	480
S2	80	4	3	2′ - 5″	129
S3	4	4	5	3′ - 4″	9

EPOXY COATED REINFORCING STEEL LBS. 38,750

CLASS "AA" CONCRETE

POUR #1 (C.Y.) 267.1
POUR #2 (C.Y.) 9.1

TOTAL (C.Y.) 276.2

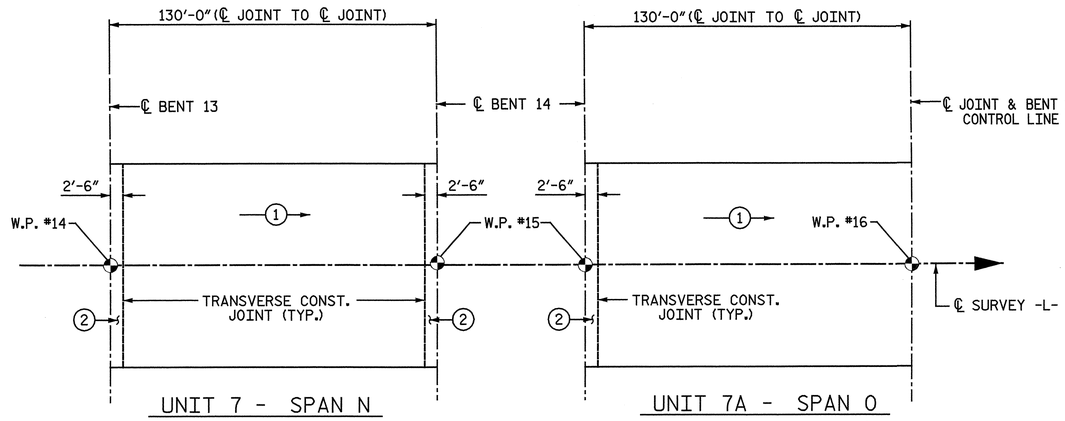

POUR SEQUENCE

(#) DENOTES POUR NUMBER AND DIRECTION.

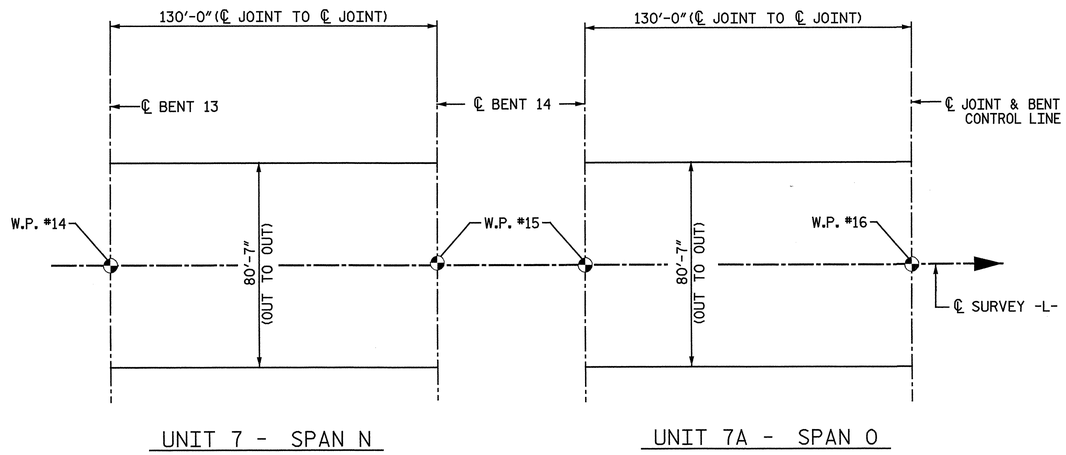

LAYOUT FOR COMPUTING AREA REINFORCED CONCRETE DECK SLAB

(UNIT 7 - SQ. FT. = 10,476) (UNIT 7A - SQ. FT. = 10,476)

BAR TYPES

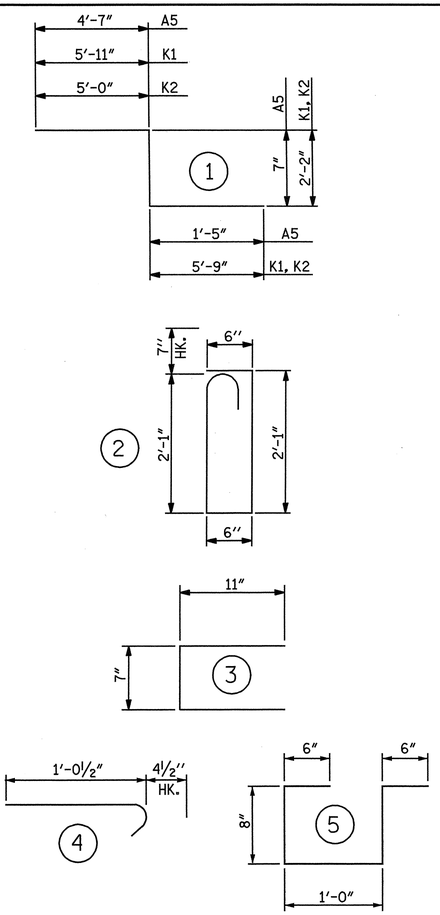

ALL BAR DIMENSIONS ARE OUT TO OUT

SUPERSTRUCTURE BILL OF MATERIAL

	CLASS "AA" CONCRETE	EPOXY COATED REINFORCING STEEL
	(CU. YDS.)	(LBS.)
UNIT 7 TOTALS **	277.4	38,799
UNIT 7A TOTALS **	276.2	38,750

** QUANTITIES FOR CONCRETE PARAPET AND MEDIAN BARRIER ARE NOT INCLUDED

REINFORCING STEEL SPLICE LENGTHS

BAR SIZE	SUPERSTRUCTURE EXCEPT APPROACH SLABS, PARAPET, AND BARRIER RAIL
	EPOXY COATED
#4	2′-0″
#5	2′-6″
#6	3′-0″
#7	5′-3″
#8	6′-10″

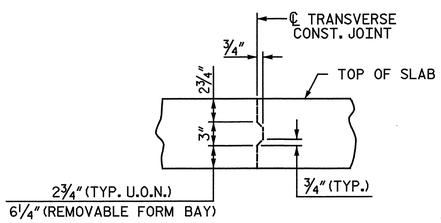

TRANSVERSE CONSTRUCTION JOINT DETAIL

NOTE: REINFORCING STEEL IN SLAB NOT SHOWN. LONGITUDINAL REINFORCING STEEL SHALL BE CONTINUOUS THRU JOINT.

GROOVING BRIDGE FLOORS

BRIDGE DECK - UNIT 7	9,708	SQ.FT.
BRIDGE DECK - UNIT 7A	9,708	SQ.FT.
TOTAL	19,416	SQ.FT.

PROJECT NO. R-3307
CARTERET COUNTY
STATION: 46+21.50 -L-

SHEET 7 OF 12

STATE OF NORTH CAROLINA
DEPARTMENT OF TRANSPORTATION
RALEIGH

SUPERSTRUCTURE

BILL OF MATERIAL
UNITS 7 & 7A

SPANS N & O

NORTH CAROLINA PROFESSIONAL SEAL 25911 ENGINEER DAVID G. HATHWAY 4-3-2012

NORTH CAROLINA PROFESSIONAL SEAL 033752 ENGINEER SETH A. DENNEY 4/03/12

THE LPA GROUP of North Carolina TRANSPORTATION CONSULTANTS

THE LPA GROUP of North Carolina
8000 Regency Parkway, Suite 600
Cary, North Carolina 27518
NC License No.: F-1084

REVISIONS								SHEET NO.
NO.	BY:	DATE:	NO.	BY:	DATE:			S-193
1			3					TOTAL SHEETS
2			4					333

DRAWN BY : NBS / MDM DATE : 1-9-12
CHECKED BY : S. A. DENNEY DATE : 1-12-12

DWG. 200 OF 282

4/2/2012
3:32:3 PM
User: jaustin
Filename: Y:\Projects\NCDOT\R-3307\Dwgs\Final\R-3307_200_SD_BOM5.dgn

REINFORCING STEEL SCHEDULE

SPANS P, Q & R

BAR	NO.	SIZE	TYPE	LENGTH	WEIGHT
A1	3492	5	STR	23′ - 4″	84,982
A2	3492	5	STR	60′ - 0″	218,529
A3	8	5	1	6′ - 5″	54
B1	654	4	STR	48′ - 6″	21,188
B2	1014	5	STR	59′ - 0″	62,399
B3	1720	7	STR	50′ - 3″	176,663
B4	218	4	STR	43′ - 3″	6,298
K1	24	5	STR	38′ - 9″	970
K2	80	5	STR	6′ - 3″	522
K3	32	5	1	16′ - 3″	542
K4	336	5	STR	12′ - 2″	4,264
K5	96	5	STR	6′ - 1″	609
K6	32	5	STR	3′ - 6″	117
K7	32	5	STR	6′ - 9″	225
K8	32	5	STR	6′ - 2″	206
K9	32	8	STR	39′ - 2″	3,346
K10	32	8	STR	39′ - 5″	3,368
K11	80	6	STR	38′ - 2″	4,586
S1	16	4	3	17′ - 11″	191
S2	32	4	STR	6′ - 8″	143
S3	32	4	4	13′ - 8″	292
S4	368	4	6	1′ - 7″	389
S5	2528	4	6	2′ - 1″	3,518
S6	448	4	2	6′ - 10″	2,045
S7	48	4	7	29′ - 8″	951
S8	32	4	4	26′ - 0″	556
S9	32	4	4	24′ - 0″	513
S10	8	4	8	3′ - 4″	18
U1	224	4	5	11′ - 0″	1,646

EPOXY COATED REINFORCING STEEL	LBS.	599,130
SAND LIGHT-WEIGHT CONCRETE		
POUR #1	(C.Y.)	259.9
POUR #2	(C.Y.)	259.9
POUR #3	(C.Y.)	264.5
POUR #4	(C.Y.)	264.5
POUR #5	(C.Y.)	259.9
POUR #6	(C.Y.)	259.9
POUR #7	(C.Y.)	264.5
POUR #8	(C.Y.)	264.5
POUR #9	(C.Y.)	30.3
TOTAL	(C.Y.)	2,128
PRESTRESS +6000 CONCRETE (CLOSURE SPLICE DIAPHRAGMS)	(C.Y.)	146.8
CLASS "AA" CONCRETE (BENT DIAPHRAGMS)	(C.Y.)	145.7

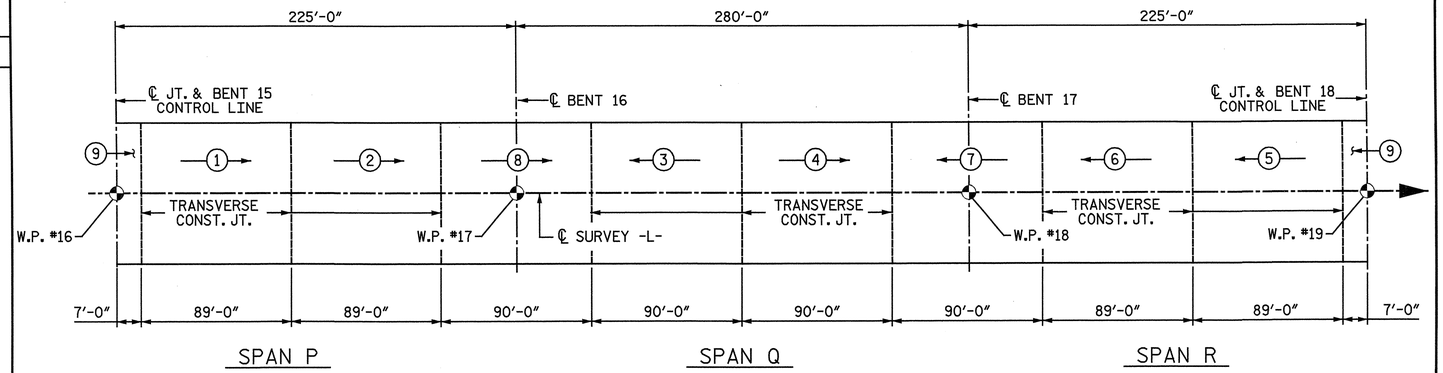

POUR SEQUENCE

(#) DENOTES POUR NUMBER AND DIRECTION.

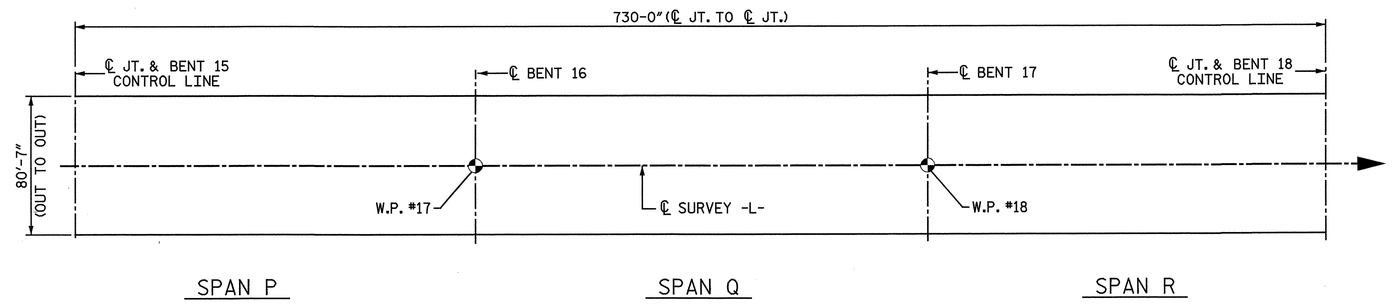

LAYOUT FOR COMPUTING AREA
REINFORCED CONCRETE DECK SLAB

58,826 SQ. FT. - REINFORCED CONCRETE DECK SLAB (SAND-LIGHTWEIGHT CONCRETE)

BAR TYPES

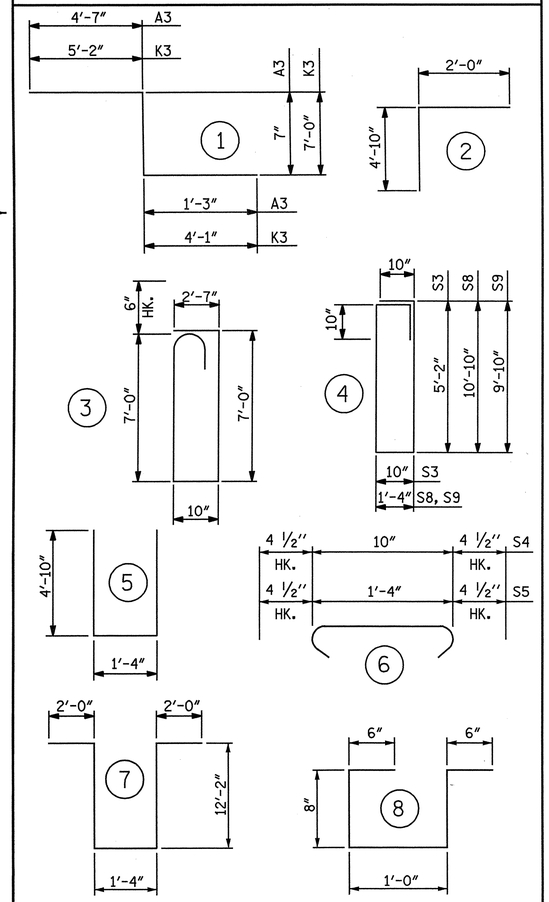

ALL BAR DIMENSIONS ARE OUT TO OUT

SUPERSTRUCTURE BILL OF MATERIAL

	PRESTRESS +6000 CONCRETE	SAND-LIGHTWEIGHT CONCRETE	CLASS "AA" CONCRETE	EPOXY COATED REINFORCING STEEL
	(CU. YDS.)	(CU. YDS.)	(CU. YDS.)	(LBS.)
TOTALS**	146.8	2,128	145.7	599,130

**QUANTITIES FOR CONCRETE PARAPET AND MEDIAN BARRIER ARE NOT INCLUDED.

REINFORCING STEEL SPLICE LENGTHS

BAR SIZE	SUPERSTRUCTURE EXCEPT APPROACH SLABS, PARAPET, AND BARRIER RAIL
	EPOXY COATED
#4	2′-6″
#5	3′-1″
#6	3′-9″
#7	4′-5″
#8	5′-8″

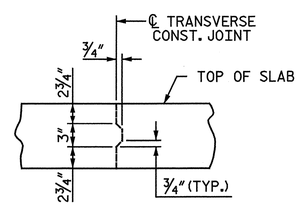

TRANSVERSE CONSTRUCTION JOINT DETAIL

NOTE: REINFORCING STEEL IN SLAB NOT SHOWN. LONGITUDINAL REINFORCING STEEL SHALL BE CONTINUOUS THRU JOINT

GROOVING BRIDGE FLOORS

BRIDGE DECK	51,045	SQ.FT.
TOTAL	51,045	SQ.FT.

PROJECT NO. R-3307
CARTERET COUNTY
STATION: 46+21.50 -L-

SHEET 8 OF 12

STATE OF NORTH CAROLINA
DEPARTMENT OF TRANSPORTATION
RALEIGH

SUPERSTRUCTURE

BILL OF MATERIAL
UNIT 8

SPANS P, Q & R

NORTH CAROLINA PROFESSIONAL SEAL 25911 ENGINEER DAVID C. HATHWAY 4-3-2012

NORTH CAROLINA PROFESSIONAL SEAL 033752 ENGINEER SETH A. DENNEY 4/03/12

THE LPA GROUP of North Carolina
TRANSPORTATION CONSULTANTS

THE LPA GROUP of North Carolina
8000 Regency Parkway, Suite 600
Cary, North Carolina 27518
NC License No.: F-1084

REVISIONS							SHEET NO.
NO.	BY:	DATE:	NO.	BY:	DATE:		S-200
1			3				TOTAL SHEETS
2			4				333

DRAWN BY : M. D. MAYHEW DATE : 12-13-11
CHECKED BY : S. A. DENNEY DATE : 12-19-11

DWG. 201 OF 282

4/2/2012
12:43:[illegible] PM
User: jdustin
Filename: T:\Projects\NCDOT\R-3307\Dwgs\Final\R-3307_201_SD_BOM6.dgn

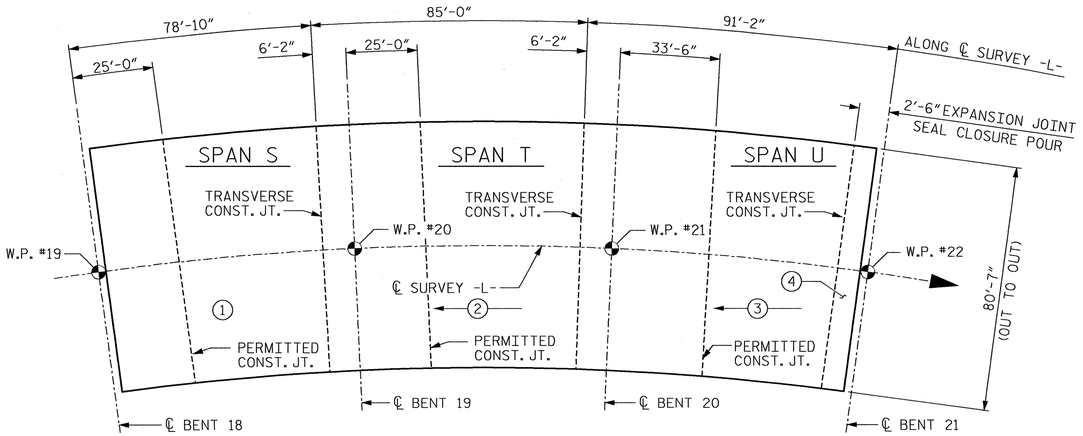

POURING SEQUENCE FOR SPANS S, T & U

(#) INDICATES POUR NUMBER AND POUR DIRECTION

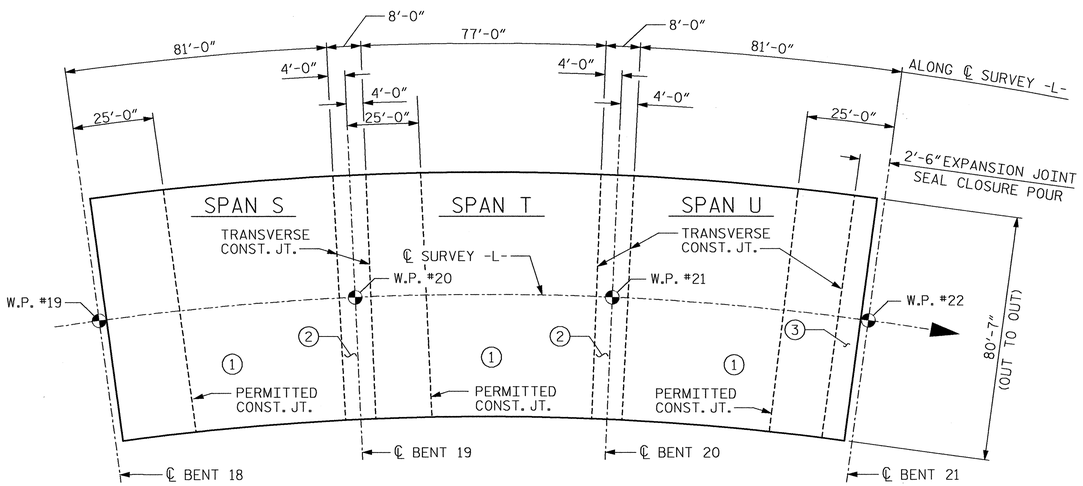

OPTIONAL POURING SEQUENCE FOR SPANS S, T & U

POUR (2) CANNOT BE STARTED UNTIL BOTH ADJACENT POURS (1) REACHED A MINIMUM OF 3000 PSI.

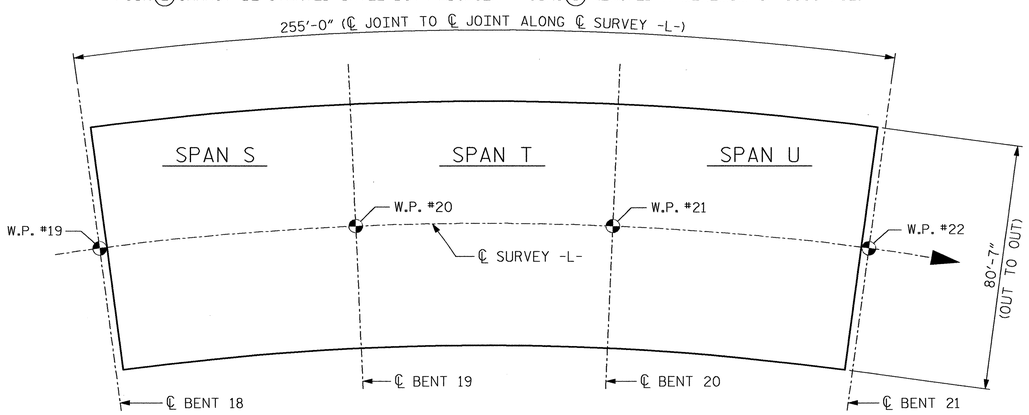

LAYOUT FOR COMPUTING AREA REINFORCED CONCRETE DECK SLAB

(SQ. FT. = 20,549)

REINFORCING BAR SCHEDULE

BAR	NO.	SIZE	TYPE	LENGTH	WEIGHT
A1	530	#5	STR	36'-9"	20315
A2	530	#5	STR	46'-1"	25474
A3	530	#5	2	15'-1"	8338
A5	1060	#5	STR	3'-6"	3870
A6	2	#5	7	5'-10"	12
A7	2	#5	7	7'-4"	15
B2	648	#7	STR	25'-5"	33665
B3	210	#7	STR	27'-0"	11589
B9	432	#4	STR	29'-9"	8585
B10	108	#4	STR	26'-8"	1924
B11	95	#5	STR	55'-1"	5458
G1	2	#5	STR	41'-5"	86
J1	77	#4	4	1'-5"	73
K1	24	#8	2	21'-10"	1399
K2	4	#8	1	13'-6"	144
K3	42	#6	STR	7'-4"	463
K4	28	#4	STR	5'-11"	111
K5	28	#4	STR	7'-8"	143
K6	56	#4	STR	8'-4"	312
K7	28	#4	STR	7'-4"	137
K8	30	#4	STR	26'-2"	524
K9	4	#8	1	13'-2"	141
K10	6	#6	STR	6'-6"	59
K11	4	#4	STR	5'-1"	14
K12	4	#4	STR	6'-10"	18
K13	8	#4	STR	7'-6"	40
K14	4	#4	STR	6'-6"	17
K15	4	#8	2	21'-0"	224
S1	64	#4	6	3'-5"	146
S2	128	#5	3	6'-9"	901
S3	480	#4	5	2'-9"	882
S4	6	#4	8	4'-0"	16
S5	64	#4	6	4'-6"	192
U1	96	#4	2	13'-0"	834
U2	32	#4	2	11'-8"	249

GROOVING BRIDGE FLOORS

TOTAL (UNIT 9)	17,775	SQ.FT.

BAR TYPES

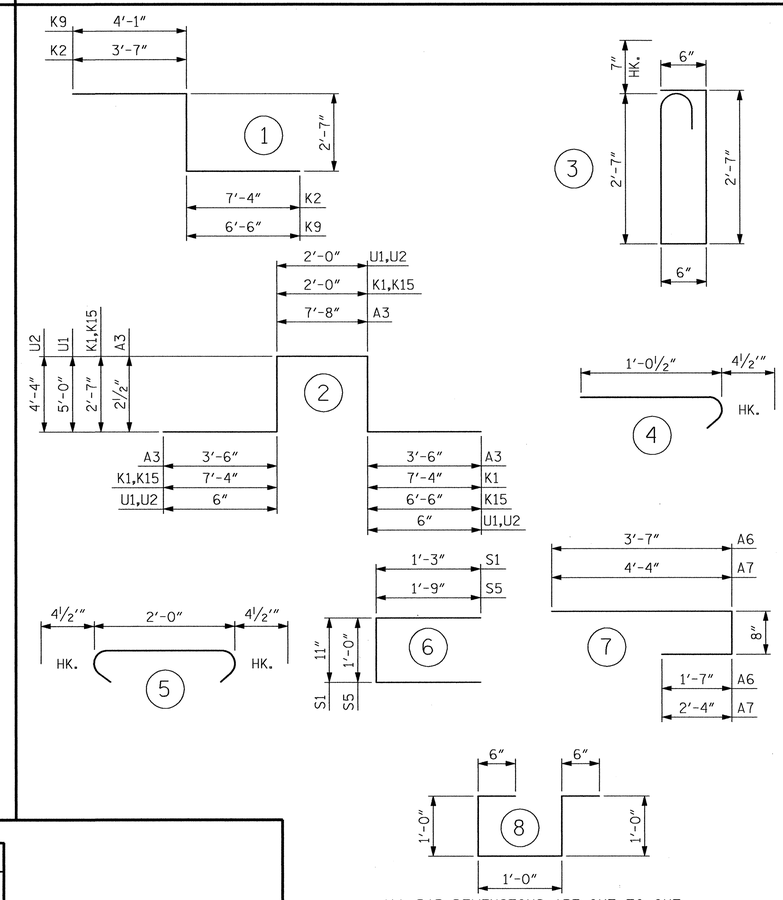

ALL BAR DIMENSIONS ARE OUT TO OUT.

SUPERSTRUCTURE BILL OF MATERIAL

	CLASS AA CONCRETE	EPOXY COATED REINFORCING STEEL
	(CU. YDS.)	(LBS.)
POUR 1	147.9	
POUR 2	182.3	
POUR 3	188.7	
POUR 4	11.4	
TOTALS**	530.3	126,370

**QUANTITIES FOR CONCRETE PARAPET AND MEDIAN BARRIER ARE NOT INCLUDED

PROJECT NO. R-3307

CARTERET COUNTY

STATION: 46+21.50 -L-

SHEET 9 OF 12

STATE OF NORTH CAROLINA
DEPARTMENT OF TRANSPORTATION
RALEIGH

SUPERSTRUCTURE

BILL OF MATERIAL
UNIT 9

SPANS S, T & U

NORTH CAROLINA PROFESSIONAL SEAL 12323 ENGINEER MORRIS ISRAELNAM 3/30/2012

NORTH CAROLINA PROFESSIONAL SEAL 027799 ENGINEER ALLYSON K. ORR 3/30/2012

MI ENGINEERING
1011 SHAUB DRIVE, SUITE 100
RALEIGH, NC 27606
(919) 851-6606
FIRM PE NUMBER : P-0671

REVISIONS							
NO.	BY:	DATE:	NO.	BY:	DATE:	SHEET NO.	S-201
1			3			TOTAL SHEETS	333
2			4				

DRAWN BY : B.E. LANNING DATE : 10-11
CHECKED BY : A.K. ORR DATE : 1-12

DWG. 202 OF 282

3/29/2012
5:15:23 PM
User: blanning
Filename: P:\NC Projects\M10005 - Gallants Channel\R-3307\Structures\R-3307_202_SD_BOM9.dgn

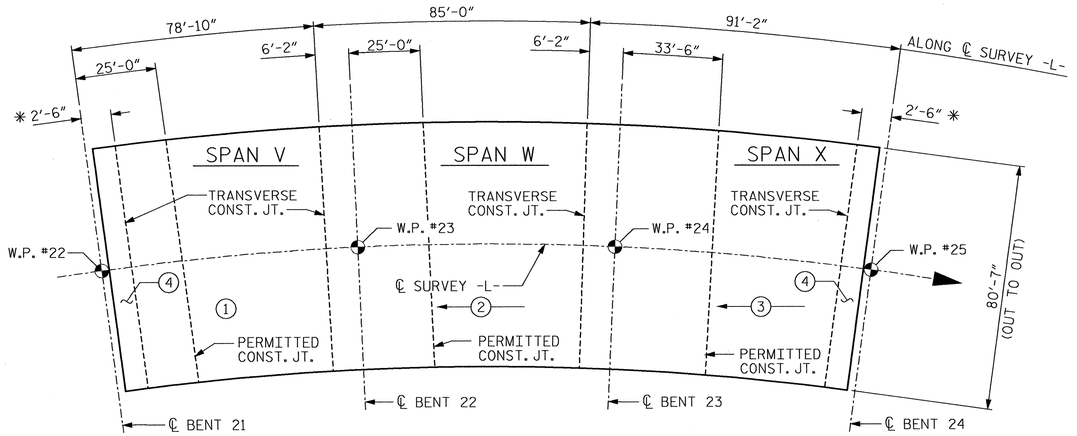

POURING SEQUENCE FOR SPANS V, W & X

← (#) — INDICATES POUR NUMBER AND POUR DIRECTION

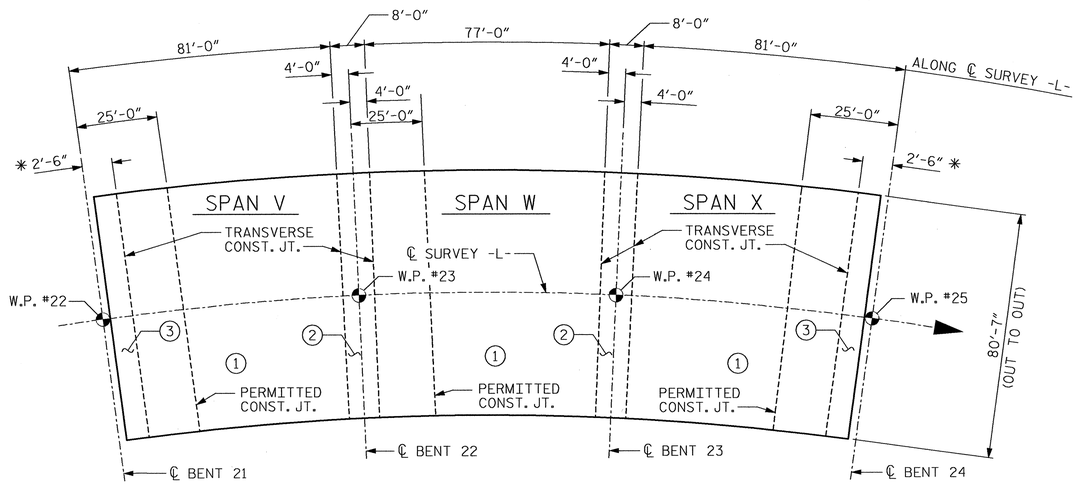

OPTIONAL POURING SEQUENCE FOR SPANS V, W & X

POUR (2) CANNOT BE STARTED UNTIL BOTH ADJACENT POURS (1) REACHED A MINIMUM OF 3000 PSI.

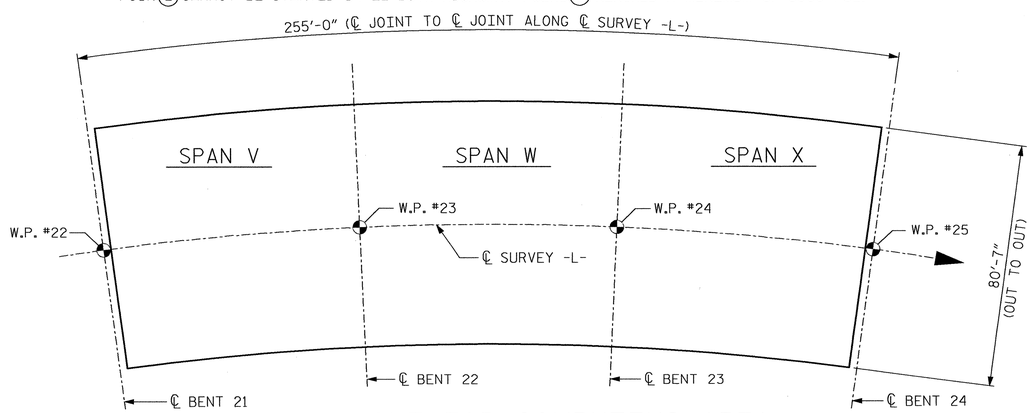

LAYOUT FOR COMPUTING AREA REINFORCED CONCRETE DECK SLAB

(SQ. FT. = 20,549)

✱ EXPANSION JOINT SEAL CLOSURE POUR

REINFORCING BAR SCHEDULE

BAR	NO.	SIZE	TYPE	LENGTH	WEIGHT
A1	530	#5	STR	36'-9"	20315
A2	530	#5	STR	46'-1"	25474
A3	530	#5	2	15'-5"	8522
A5	1060	#5	STR	3'-0"	3317
B2	648	#7	STR	25'-5"	33665
B3	210	#7	STR	27'-0"	11589
B9	432	#4	STR	29'-9"	8585
B10	108	#4	STR	26'-8"	1924
B11	95	#5	STR	55'-1"	5458
G1	4	#5	STR	41'-5"	173
J1	154	#4	4	1'-5"	146
K1	24	#8	2	21'-10"	1399
K2	4	#8	1	13'-6"	144
K3	42	#6	STR	7'-4"	463
K4	28	#4	STR	5'-11"	111
K5	28	#4	STR	7'-8"	143
K6	56	#4	STR	8'-4"	312
K7	28	#4	STR	7'-4"	137
K8	30	#4	STR	26'-2"	524
K9	4	#8	1	13'-2"	141
K10	6	#6	STR	6'-6"	59
K11	4	#4	STR	5'-1"	14
K12	4	#4	STR	6'-10"	18
K13	8	#4	STR	7'-6"	40
K14	4	#4	STR	6'-6"	17
K15	4	#8	2	21'-0"	224
S1	128	#4	6	3'-5"	292
S2	128	#5	3	6'-9"	901
S3	480	#4	5	2'-9"	882
U1	96	#4	2	13'-0"	834
U2	32	#4	2	11'-8"	249

GROOVING BRIDGE FLOORS

TOTAL (UNIT 10)	17,775	SQ.FT.

BAR TYPES

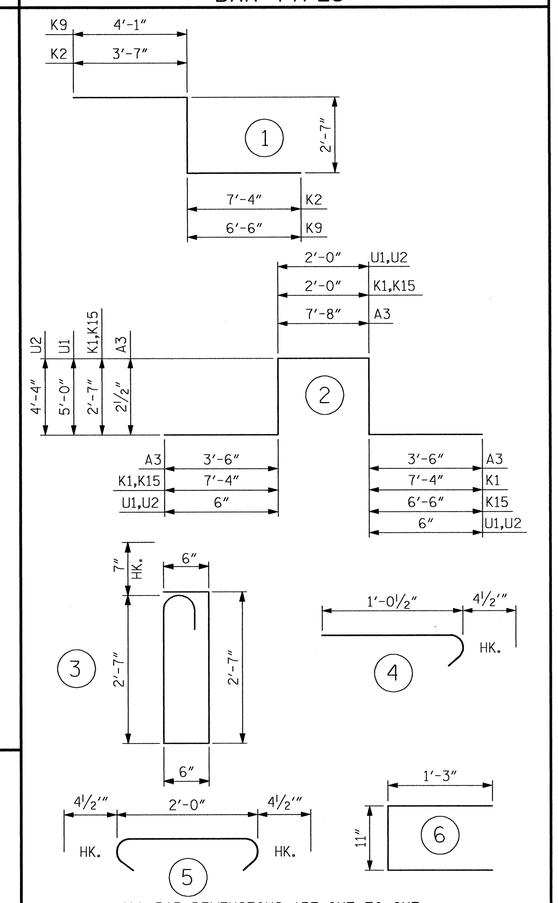

ALL BAR DIMENSIONS ARE OUT TO OUT.

SUPERSTRUCTURE BILL OF MATERIAL

	CLASS AA CONCRETE	EPOXY COATED REINFORCING STEEL
	(CU. YDS.)	(LBS.)
POUR 1	136.3	
POUR 2	181.4	
POUR 3	186.4	
POUR 4	22.8	
TOTALS✱✱	526.9	126,072

✱✱ QUANTITIES FOR CONCRETE PARAPET AND MEDIAN BARRIER ARE NOT INCLUDED

PROJECT NO. R-3307

CARTERET COUNTY

STATION: 46+21.50 -L-

SHEET 10 OF 12

STATE OF NORTH CAROLINA
DEPARTMENT OF TRANSPORTATION
RALEIGH

SUPERSTRUCTURE

BILL OF MATERIAL
UNIT 10

SPANS V, W & X

NORTH CAROLINA PROFESSIONAL SEAL 12323 ENGINEER MORRIS ISRAELNAIM 5/30/2012

NORTH CAROLINA PROFESSIONAL SEAL 027799 ENGINEER ALLYSON K. ORR 5/30/2012

MI ENGINEERING
1011 SHAUB DRIVE, SUITE 100
RALEIGH, NC 27606
(919) 851-6606
FIRM PE NUMBER : P-0671

REVISIONS								SHEET NO.
NO.	BY:	DATE:	NO.	BY:	DATE:			S-202
1			3					TOTAL SHEETS
2			4					333

DRAWN BY : B.E. LANNING DATE : 10-11
CHECKED BY : A.K. ORR DATE : 1-12

DWG. 203 OF 282

3/30/ 12
8:35:44 AM
User:blanning
Filename: P:\NC Projects\M10005 - Gallants Channel\R-3307\Structures\R-3307_203_SD_BOM10.dgn

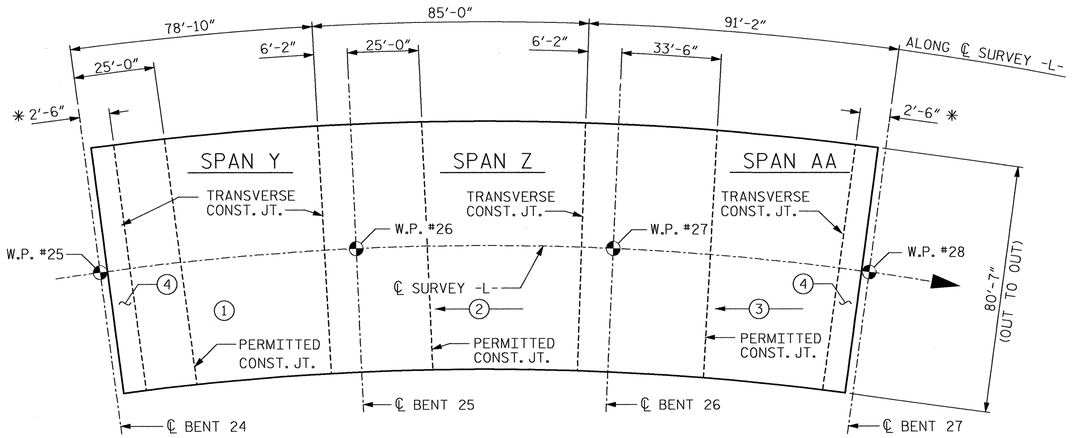

POURING SEQUENCE FOR SPANS Y, Z & AA

(#) INDICATES POUR NUMBER AND POUR DIRECTION

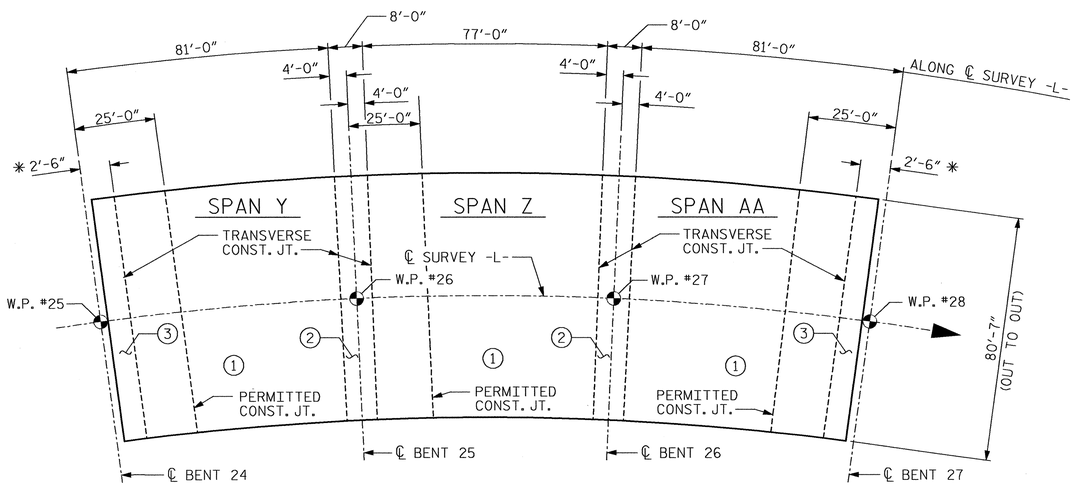

OPTIONAL POURING SEQUENCE FOR SPANS Y, Z & AA

POUR (2) CANNOT BE STARTED UNTIL BOTH ADJACENT POURS (1) REACHED A MINIMUM OF 3000 PSI.

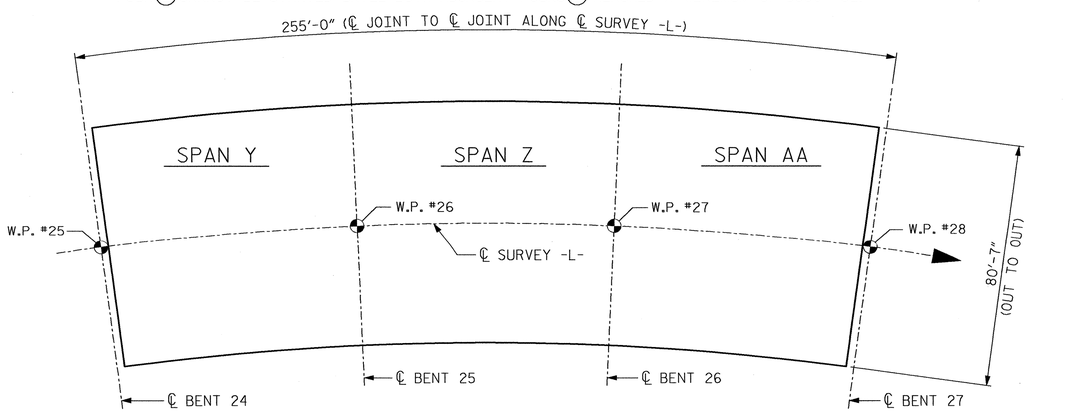

LAYOUT FOR COMPUTING AREA REINFORCED CONCRETE DECK SLAB

(SQ. FT. = 20,549)

✱ EXPANSION JOINT SEAL CLOSURE POUR

REINFORCING BAR SCHEDULE

BAR	NO.	SIZE	TYPE	LENGTH	WEIGHT
A1	530	#5	STR	36'-9"	20315
A2	530	#5	STR	46'-1"	25474
A3	530	#5	2	15'-5"	8522
A5	1060	#5	STR	3'-0"	3317
B2	648	#7	STR	25'-5"	33665
B3	210	#7	STR	27'-0"	11589
B9	432	#4	STR	29'-9"	8585
B10	108	#4	STR	26'-8"	1924
B11	95	#5	STR	55'-1"	5458
G1	4	#5	STR	41'-5"	173
J1	154	#4	4	1'-5"	146
K1	24	#8	2	21'-10"	1399
K2	4	#8	1	13'-6"	144
K3	42	#6	STR	7'-4"	463
K4	28	#4	STR	5'-11"	111
K5	28	#4	STR	7'-8"	143
K6	56	#4	STR	8'-4"	312
K7	28	#4	STR	7'-4"	137
K8	30	#4	STR	26'-2"	524
K9	4	#8	1	13'-2"	141
K10	6	#6	STR	6'-6"	59
K11	4	#4	STR	5'-1"	14
K12	4	#4	STR	6'-10"	18
K13	8	#4	STR	7'-6"	40
K14	4	#4	STR	6'-6"	17
K15	4	#8	2	21'-0"	224
S1	128	#4	6	3'-5"	292
S2	128	#5	3	6'-9"	901
S3	480	#4	5	2'-9"	882
U1	96	#4	2	13'-0"	834
U2	32	#4	2	11'-8"	249

BAR TYPES

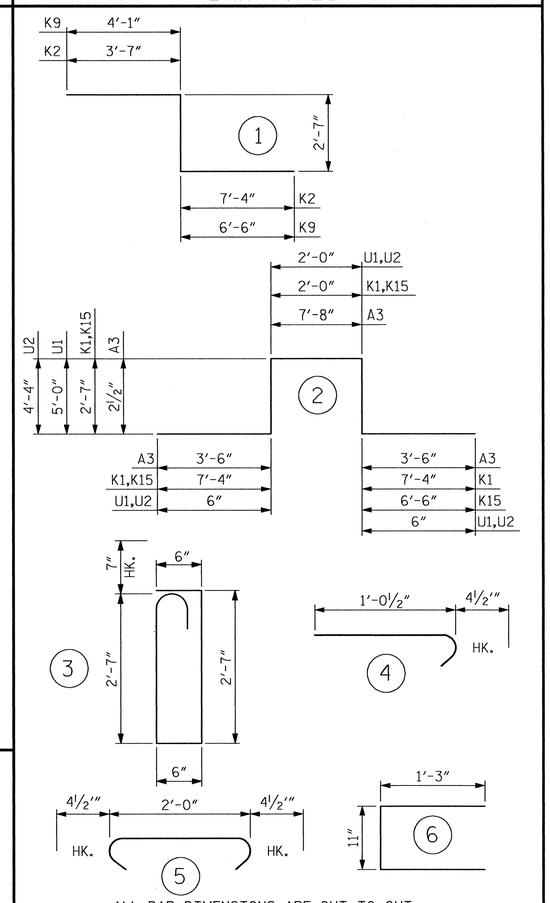

ALL BAR DIMENSIONS ARE OUT TO OUT.

SUPERSTRUCTURE BILL OF MATERIAL

	CLASS AA CONCRETE	EPOXY COATED REINFORCING STEEL
	(CU. YDS.)	(LBS.)
POUR 1	134.3	
POUR 2	180.1	
POUR 3	185.2	
POUR 4	22.8	
TOTALS✱✱	522.4	126,072

✱✱ QUANTITIES FOR CONCRETE PARAPET AND MEDIAN BARRIER ARE NOT INCLUDED

GROOVING BRIDGE FLOORS

TOTAL (UNIT 11) 17,775 SQ.FT.

PROJECT NO. R-3307

CARTERET COUNTY

STATION: 46+21.50 -L-

SHEET 11 OF 12

STATE OF NORTH CAROLINA
DEPARTMENT OF TRANSPORTATION
RALEIGH

SUPERSTRUCTURE

BILL OF MATERIAL UNIT II

SPANS Y, Z & AA

NORTH CAROLINA PROFESSIONAL SEAL 12323 ENGINEER MORRIS ISRAELNAM 3/30/2012

NORTH CAROLINA PROFESSIONAL SEAL 027799 ENGINEER ALLYSON K. ORR 3/30/2012

MI ENGINEERING
1011 SHAUB DRIVE, SUITE 100
RALEIGH, NC 27606
(919) 851-6606
FIRM PE NUMBER : P-0671

REVISIONS								SHEET NO.
NO.	BY:	DATE:	NO.	BY:	DATE:			S-203
1			3					TOTAL SHEETS
2			4					333

DRAWN BY : B.E. LANNING DATE : 10-11
CHECKED BY : A.K. ORR DATE : 1-12

DWG. 204 OF 282

3/30/2012
8:36:44 AM
User: blanning
Filename: P:\NC Projects\MI0005 - Gallants Channel\R-3307\Structures\R-3307_204_SD_BOM11.dgn

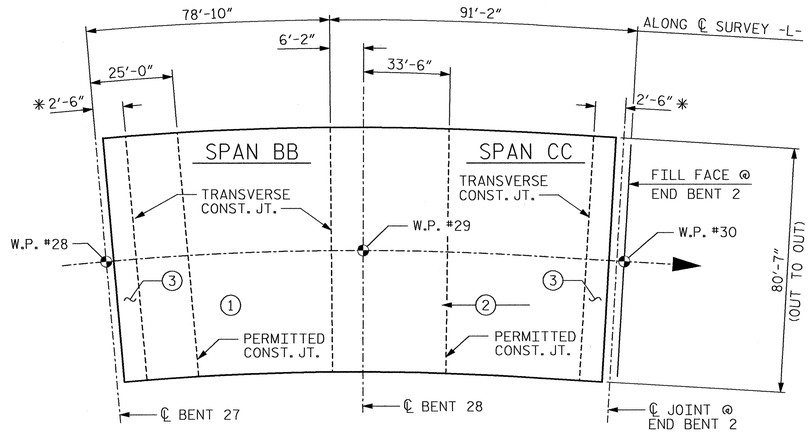

✱EXPANSION JOINT SEAL CLOSURE POUR

POURING SEQUENCE FOR SPANS BB & CC

(#) INDICATES POUR NUMBER AND POUR DIRECTION

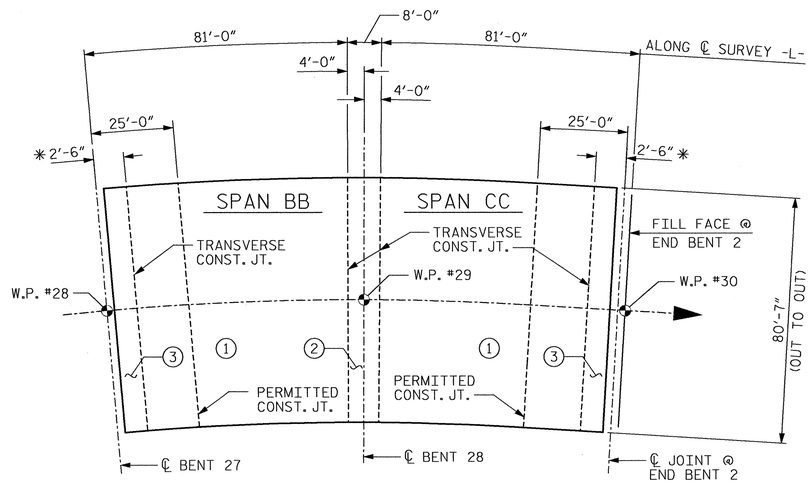

OPTIONAL POURING SEQUENCE FOR SPANS BB & CC

POUR (2) CANNOT BE STARTED UNTIL BOTH ADJACENT POURS (1) REACHED A MINIMUM OF 3000 PSI.

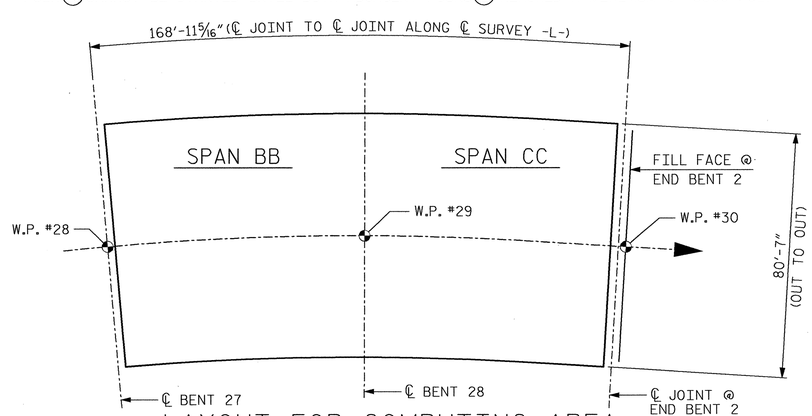

LAYOUT FOR COMPUTING AREA REINFORCED CONCRETE DECK SLAB

(SQ. FT. = 13,614)

REINFORCING BAR SCHEDULE

BAR	NO.	SIZE	TYPE	LENGTH	WEIGHT
A1	348	#5	STR	36'-9"	13339
A2	348	#5	STR	46'-1"	16727
A3	348	#5	2	15'-1"	5475
A5	696	#5	STR	3'-6"	2541
B2	324	#7	STR	25'-5"	16832
B3	105	#7	STR	27'-0"	5795
B12	432	#4	STR	29'-9"	8585
B13	57	#5	STR	59'-10"	3557
D1	4	#4	STR	2'-6"	7
G1	4	#5	STR	41'-5"	173
J1	154	#4	4	1'-5"	146
K1	24	#8	2	21'-10"	1399
K2	4	#8	1	13'-6"	144
K3	42	#6	STR	7'-4"	463
K4	14	#4	STR	5'-11"	55
K5	14	#4	STR	7'-8"	72
K6	28	#4	STR	8'-4"	156
K7	14	#4	STR	7'-4"	69
K8	15	#4	STR	26'-2"	262
K9	4	#8	1	13'-2"	141
K10	6	#6	STR	6'-6"	59
K11	2	#4	STR	5'-1"	7
K12	2	#4	STR	6'-10"	9
K13	4	#4	STR	7'-6"	20
K14	2	#4	STR	6'-6"	9
K15	4	#8	2	21'-0"	224
S1	128	#4	6	3'-5"	292
S2	128	#5	3	6'-1"	812
S3	240	#4	5	2'-9"	441
U1	48	#4	2	13'-0"	417
U2	16	#4	2	11'-8"	125

BAR TYPES

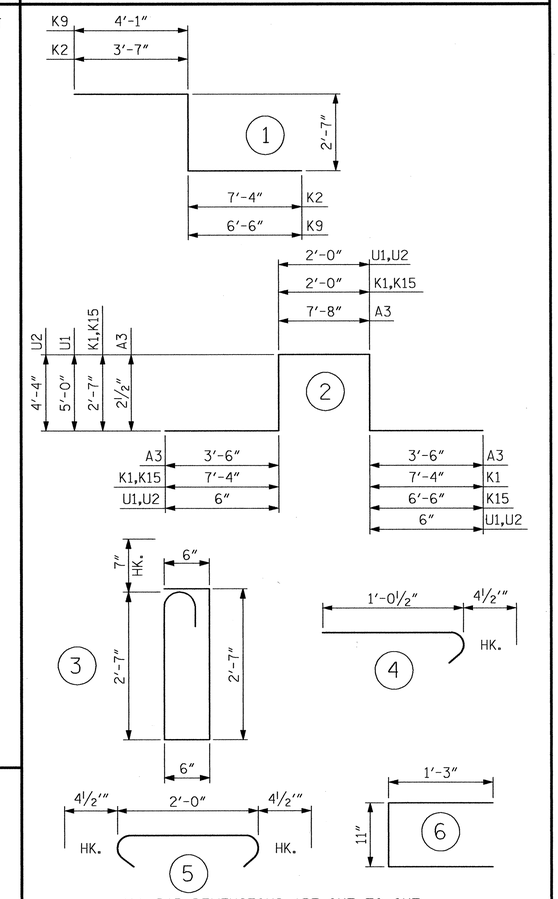

ALL BAR DIMENSIONS ARE OUT TO OUT.

GROOVING BRIDGE FLOORS

APPROACH SLAB @ END BENT 2	1,667	SQ.FT.
BRIDGE DECK	11,751	SQ.FT.
TOTAL (UNIT 12)	13,418	SQ.FT.

SUPERSTRUCTURE BILL OF MATERIAL

	CLASS AA CONCRETE	EPOXY COATED REINFORCING STEEL
	(CU. YDS.)	(LBS.)
POUR 1	133.1	
POUR 2	182.2	
POUR 3	22.8	
TOTALS✱✱	338.1	78,353

✱✱QUANTITIES FOR CONCRETE PARAPET AND MEDIAN BARRIER ARE NOT INCLUDED

PROJECT NO. R-3307

CARTERET COUNTY

STATION: 46+21.50 -L-

SHEET 12 OF 12

NORTH CAROLINA PROFESSIONAL SEAL 12323 ENGINEER MORRIS ISRAELNAM 3/30/2012

NORTH CAROLINA PROFESSIONAL SEAL 027799 ENGINEER ALLYSON K. ORR 3/30/2012

MI ENGINEERING
1011 SHAUB DRIVE, SUITE 100
RALEIGH, NC 27606
(919) 851-6606
FIRM PE NUMBER : P-0671

STATE OF NORTH CAROLINA
DEPARTMENT OF TRANSPORTATION
RALEIGH

SUPERSTRUCTURE

BILL OF MATERIAL UNIT 12

SPANS BB & CC

REVISIONS						
NO.	BY:	DATE:	NO.	BY:	DATE:	
1			3			
2			4			

SHEET NO. S-204

TOTAL SHEETS 333

DRAWN BY : B.E. LANNING DATE : 10-11
CHECKED BY : A.K. ORR DATE : 1-12

DWG. 205 OF 282

3/30/2012
8:37:46 AM
User: blanning
Filename: P:\NC Projects\M10005 - Gallants Channel\R-3307\Structures\R-3307_205_SD_BOM12.dgn