09/08/99

TIP PROJECT: I-5501

CONTRACT: C203483

See Sheet 1-A For Index of Sheets
See Sheet 1-B For Conventional Symbols

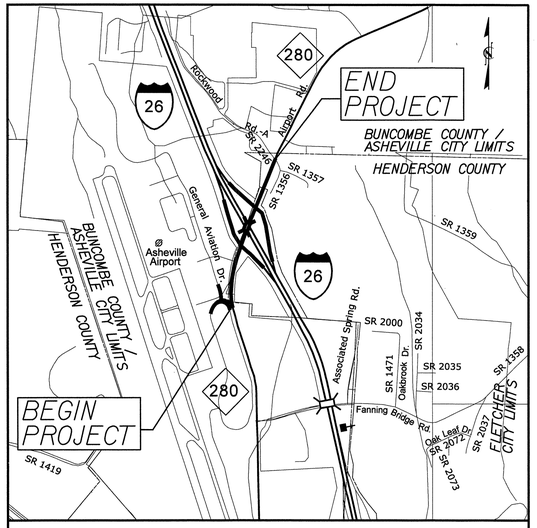

VICINITY MAP

STATE OF NORTH CAROLINA
DIVISION OF HIGHWAYS

BUNCOMBE & HENDERSON COUNTIES

STATE	STATE PROJECT REFERENCE NO.	SHEET NO.	TOTAL SHEETS
N.C.	I-5501	1	

STATE PROJ. NO.	F.A. PROJ. NO.	DESCRIPTION
46292.1.1	IMF-026-1(190)40	P.E.
46292.2.1	IMF-026-1(190)40	ROW/UTIL
46292.3.FS1	IMF-026-1(190)40	CONST

LOCATION: I-26 /NC 280 INTERCHANGE IN ASHEVILLE

TYPE OF WORK: GRADING, PAVING, DRAINAGE, SIGNALS AND STRUCTURES

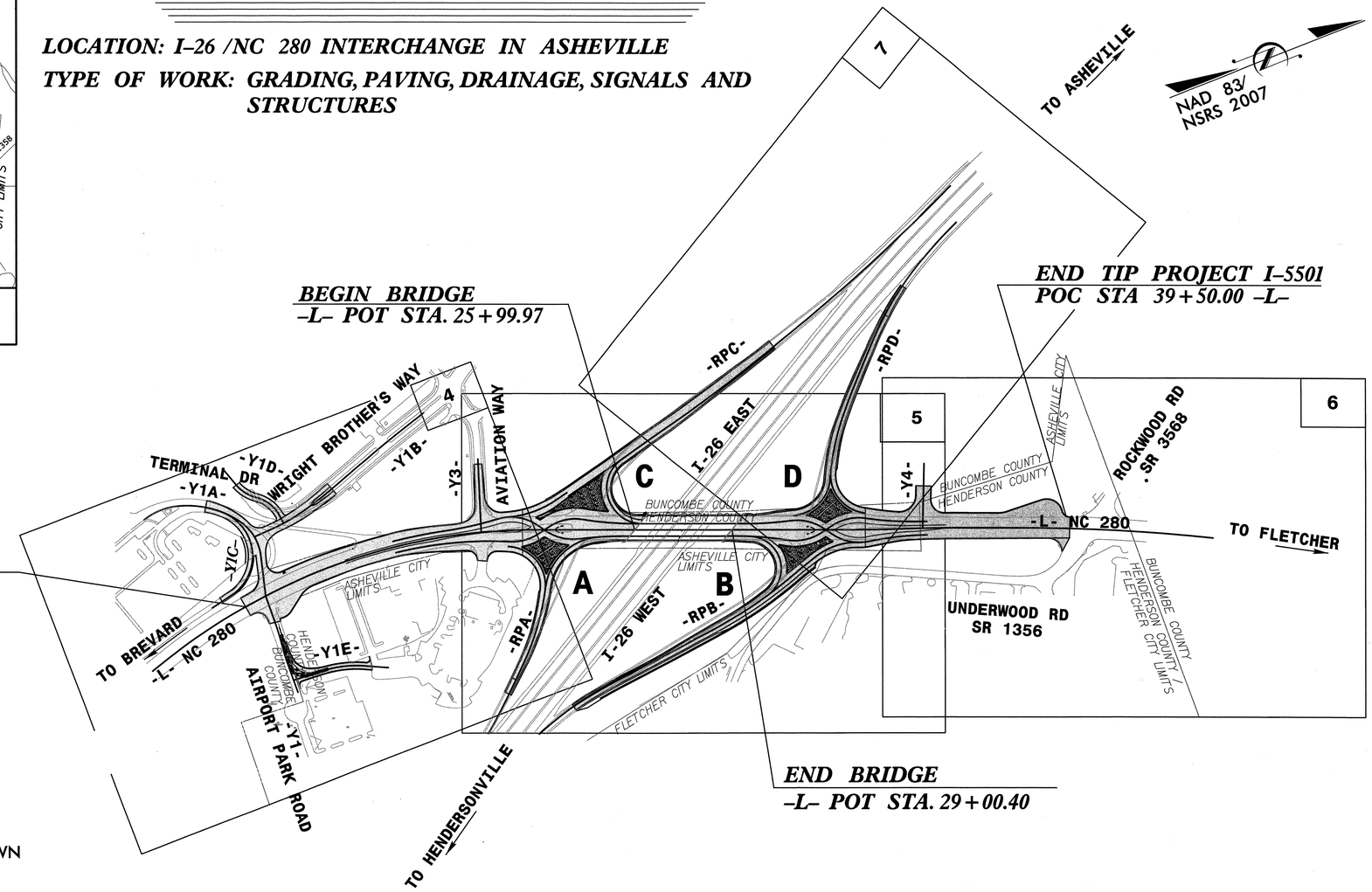

NOTES:

THIS IS A PARTIAL CONTROLLED ACCESS PROJECT WITH ACCESS BEING LIMITED TO POINTS AS SHOWN ON THE PLANS.

GRAPHIC SCALES

50 25 0 50 100
PLANS

50 25 0 50 100
PROFILE (HORIZONTAL)

10 5 0 10 20
PROFILE (VERTICAL)

DESIGN DATA

ADT 2013 = 33,260
ADT 2033 = 36,845
DHV = 10 %
D = 55 %
T = 5 % *
V = 30 MPH
* TTST =2% DUAL 3%
FUNC CLASS= URBAN ARTERIAL
STATEWIDE TIER

PROJECT LENGTH

LENGTH ROADWAY TIP PROJECT I-5501 = 0.435 MILE
LENGTH STRUCTURE TIP PROJECT I-5501 = 0.057 MILE
TOTAL LENGTH TIP PROJECT I-5501 = 0.492 MILE

Prepared for the North Carolina Department of Transportation In the office of:

Florence & Hutcheson
An ICF Company
5121 Kingdom Way
Suite 100
Raleigh NC 27607
License No. F-0258
Bus: 919-851-6066
Fax: 919-851-6846

2012 STANDARD SPECIFICATIONS

RIGHT OF WAY DATE: March 15, 2013

LETTING DATE: JANUARY 21, 2014

DAVID C. WALLER, PE
PROJECT ENGINEER

NCDOT CONTACT: BRENDA L. MOORE, PE
ROADWAY DESIGN: ENGINEERING COORDINATION SECTION ENGINEER

HYDRAULICS ENGINEER
NORTH CAROLINA PROFESSIONAL SEAL 24451 ENGINEER STACEY H. BAILEY
SIGNATURE: 6-28-13 P.E.

ROADWAY DESIGN ENGINEER
NORTH CAROLINA PROFESSIONAL SEAL 22606 ENGINEER DAVID C. WALLER
SIGNATURE: 6-27-13 P.E.

STATE OF NORTH CAROLINA DEPARTMENT OF TRANSPORTATION

6/27/2013
P:\TIP\I550\Roadway\Proj\I-550I_Rdy_tsh.dgn
Florence & Hutcheson, Inc.

PROJECT REFERENCE NO.	SHEET NO.
I-5501	I-A

ROADWAY DESIGN ENGINEER

NORTH CAROLINA PROFESSIONAL SEAL 22606 ENGINEER DAVID C. WALLER
1-22-13

INDEX OF SHEETS

SHEET NUMBER	DESCRIPTION
1	Title Sheet
1-A	Index of Sheets, General Notes, List of Standards
1-B	Conventional Symbols
1-C thru 1-D	Survey Control Sheets
2 thru 2-C	Typical Sections and Pavement Schedule
2-D	Ditch Details
2-E	Detail of Diverging Diamond Interchange
2-F	Curve Data
2-G	Cross Section / Shear Point Layout
2-H	Detail of DDI Barrier Rail
2-I	Intersection Details
2-J	Bicycle Safe Steel Grate and Frame
2-K	Detail of Temporary 1" Steel Cover over Drainage structure
2-L	Detail for Guardrail Anchor Unit Type B-77 Shop Curve
2-M	Detail to Convert Existing Drop Inlet or Catch Basin to Junction Box
2-N	Detail for Special Catch Basin
~~3~~	~~Summary of Quantities~~
3-A thru 3-D	Drainage Summary Sheets
3-E	Summary of Earthwork, Pavement Removal, Shoulder Berm Gutter & Expressway Gutter
3-F	Guardrail Summary
3-G	Parcel Index Sheets
4 thru 7	Plan Sheets
8 thru 15	Profile Sheets
TMP-1 thru TMP-10	Transportation Management Plans
PMP-1 thru PMP-5	Pavement Marking Plans
E-1 thru E-2	Electrical Plans
EC-1 thru EC-11	Erosion Control Plans
SIGN-1 thru SIGN-8	Signing Plans
SIG-1 thru SIG-44	Signal Plans
UC-1 thru UC-10	Utility Plans
UO-1 thru UO-4	Utility Plans by Others
X-1A	Cross-Section Summary
X-1 thru X-49	Cross-Sections
S-1 thru S-7	Structure Plans
W-1 thru W-2	Retaining Wall No. 1 Plans

EFF. 01-17-2012
REV. 10-30-2012

2012 ROADWAY ENGLISH STANDARD DRAWINGS

The following Roadway Standards as appear in "Roadway Standard Drawings" Highway Design Branch - N. C. Department of Transportation - Raleigh, N. C., Dated January, 2012 are applicable to this project and by reference hereby are considered a part of these plans:

STD.NO.	TITLE
DIVISION 2 - EARTHWORK	
200.02	Method of Clearing - Method II
225.01	Guide for Grading Subgrade - Interstate and Freeway
225.02	Guide for Grading Subgrade - Secondary and Local
225.04	Method of Obtaining Superelevation - Two Lane Pavement
DIVISION 3 - PIPE CULVERTS	
300.01	Method of Pipe Installation
DIVISION 5 - SUBGRADE, BASES AND SHOULDERS	
560.01	Method of Shoulder Construction - High Side of Superelevated Curve - Method I
560.02	Method of Shoulder Construction - High Side of Superelevated Curve - Method II (Sheet 2 of 3 is no longer applicable)
DIVISION 6 - ASPHALT BASES AND PAVEMENTS	
654.01	Pavement Repairs
DIVISION 8 - INCIDENTALS	
806.01	Concrete Right-of-Way Marker
806.02	Granite Right-of-Way Marker
840.01	Brick Catch Basin - 12" thru 54" Pipe
840.02	Concrete Catch Basin - 12" thru 54" Pipe
840.03	Frame, Grates and Hood - for Use on Standard Catch Basin
840.14	Concrete Drop Inlet - 12" thru 30" Pipe
840.15	Brick Drop Inlet - 12" thru 30" Pipe
840.16	Drop Inlet Frame and Grates - for use with Std. Dwg 840.14 and 840.15
840.17	Concrete Grated Drop Inlet Type 'A' - 12" thru 72" Pipe
840.18	Concrete Grated Drop Inlet Type 'B' - 12" thru 36" Pipe
840.19	Concrete Grated Drop Inlet Type 'D' - 12" thru 36" Pipe
840.20	Frames and Wide Slot Flat Grates
840.22	Frames and Wide Slot Sag Grates
840.24	Frames and Narrow Slot Sag Grates
840.25	Anchorage for Frames - Brick or Concrete or Precast
840.26	Brick Grated Drop Inlet Type 'A' - 12" thru 72" Pipe
840.27	Brick Grated Drop Inlet Type 'B' - 12" thru 36" Pipe
840.28	Brick Grated Drop Inlet Type 'D' - 12" thru 36" Pipe
840.29	Frames and Narrow Slot Flat Grates
840.31	Concrete Junction Box - 12" thru 66" Pipe
840.32	Brick Junction Box - 12" thru 66" Pipe
840.33	Angled Vane Grates and Frames
840.34	Traffic Bearing Junction Box - for Use with Pipes 42" and Under
840.35	Traffic Bearing Grated Drop Inlet - for Cast Iron Double Frame and Grates
840.36	Traffic Bearing Grated Drop Inlet - for Steel (840.37) Double Frame and Grates
840.37	Steel Grate and Frame
840.45	Precast Drainage Structure
840.46	Traffic Bearing Precast Drainage Structure
840.54	Manhole Frame and Cover
840.66	Drainage Structure Steps
840.71	Concrete and Brick Pipe Plug
840.72	Pipe Collar
846.01	Concrete Curb, Gutter and Curb & Gutter
846.02	Drop Inlet Installation in Expressway Gutter
846.04	Drop Inlet Installation in Shoulder Berm Gutter
848.01	Concrete Sidewalk
848.02	Driveway Turnout - Radius Type
848.04	Street Turnout
848.05	Curb Ramp - Proposed Curb & Gutter
852.01	Concrete Islands
852.06	Method for Placement of Drop Inlets in Concrete Islands
854.01	Double Faced Concrete Barrier - Types I, II, III and IV
862.01	Guardrail Placement
862.02	Guardrail Installation
862.03	Structure Anchor Units (Details in Lieu of Standard Drawing as March 2013 Letting)
862.04	Anchoring End of Guardrail - B-77 and B-83 Anchor Units
866.02	Woven Wire Fence - with Wood Post
876.02	Guide for Rip Rap at Pipe Outlets

GENERAL NOTES:

2012 SPECIFICATIONS
EFFECTIVE: 01-17-2012
REVISED: 07-30-2012

GRADING AND SURFACING OR RESURFACING AND WIDENING:

THE GRADE LINES SHOWN DENOTE THE FINISHED ELEVATION OF THE PROPOSED SURFACING AT GRADE POINTS SHOWN ON THE TYPICAL SECTIONS. WHERE NO GRADE LINES ARE SHOWN, THE PROFILES SHOWN DENOTE THE TOP ELEVATION OF THE EXISTING PAVEMENT ALONG THE CENTER LINE OF SURVEY ON WHICH THE PROPOSED RESURFACING WILL BE PLACED. GRADE LINES MAY BE ADJUSTED BY THE ENGINEER IN ORDER TO SECURE A PROPER TIE-IN.

CLEARING:

CLEARING ON THIS PROJECT SHALL BE PERFORMED TO THE LIMITS ESTABLISHED BY METHOD II.

SUPERELEVATION:

ALL CURVES ON THIS PROJECT SHALL BE SUPERELEVATED IN ACCORDANCE WITH STD. NO. 225.04
SUPERELEVATION IS TO BE REVOLVED ABOUT THE GRADE POINTS SHOWN ON THE TYPICAL SECTIONS.

SHOULDER CONSTRUCTION:

ASPHALT, EARTH, AND CONCRETE SHOULDER CONSTRUCTION ON THE HIGH SIDE OF SUPERELEVATED CURVES SHALL BE IN ACCORDANCE WITH STD. 560.01 AND 560.02.

SIDE ROADS:

THE CONTRACTOR WILL BE REQUIRED TO DO ALL NECESSARY WORK TO PROVIDE SUITABLE CONNECTIONS WITH ALL ROADS, STREETS, AND DRIVES ENTERING THIS PROJECT. THIS WORK WILL BE PAID FOR AT THE CONTRACT UNIT PRICE FOR THE PARTICULAR ITEMS INVOLVED.

UNDERDRAINS:

UNDERDRAINS SHALL BE CONSTRUCTED IN ACCORDANCE WITH STD. NO. 815.03 AT LOCATIONS DIRECTED BY THE ENGINEER.

DRIVEWAYS:

DRIVEWAYS SHALL BE CONSTRUCTED IN ACCORDANCE WITH STD. 848.02 USING 3' RADII OR RADII AS SHOWN ON THE PLANS. LOCATIONS OF DRIVES WILL BE AS SHOWN ON THE PLANS OR AS DIRECTED BY THE ENGINEER.

STREET TURNOUT:

STREET RETURNS SHALL BE CONSTRUCTED IN ACCORDANCE WITH STD. NO. 848.04 USING THE RADII NOTED ON PLANS.

GUARDRAIL:

THE GUARDRAIL LOCATIONS SHOWN ON THE PLANS MAY BE ADJUSTED DURING CONSTRUCTION AS DIRECTED BY THE ENGINEER. THE CONTRACTOR SHOULD CONSULT WITH THE ENGINEER PRIOR TO ORDERING GUARDRAIL MATERIAL.

TEMPORARY SHORING:

SHORING REQUIRED FOR THE MAINTENANCE OF TRAFFIC WILL BE PAID FOR AS "EXTRA WORK" IN ACCORDANCE WITH SECTION 104-7.

SUBSURFACE PLANS:

NO SUBSURFACE PLANS ARE AVAILABLE ON THIS PROJECT. THE CONTRACTOR SHOULD MAKE HIS OWN INVESTIGATION AS TO THE SUBSURFACE CONDITIONS.

UTILITIES:

UTILITY OWNERS ON THIS PROJECT ARE PROGRESS ENERGY, AT&T, PSNC ENERGY, & CHARTER COMMUNICATIONS.

ANY RELOCATION OF EXISTING UTILITIES WILL BE ACCOMPLISHED BY OTHERS, EXCEPT AS SHOWN ON THE PLANS.

RIGHT-OF-WAY MARKERS:

ALL RIGHT-OF-WAY MARKERS ON THIS PROJECT SHALL BE PLACED BY CONTRACT.

CURB RAMPS

CURB RAMPS ARE SHOWN ON THE PLANS AT APPROXIMATE LOCATIONS.
CONSTRUCT ALL CURB RAMPS ACCORDANCE WITH STD 848.05 and/or 848.06.

8/17/99
7/18/2013
P:\TIP\I5501\Roadway\Proj\5501_rdy_sheet1a.dgn
Florence & Hutcheson, Inc.

PROJECT REFERENCE NO.	SHEET NO.
I-5501	I-B

04/16/11

Note: Not to Scale

****S.U.E. = Subsurface Utility Engineering***

STATE OF NORTH CAROLINA
DIVISION OF HIGHWAYS

CONVENTIONAL PLAN SHEET SYMBOLS

BOUNDARIES AND PROPERTY:

- State Line
- County Line
- Township Line
- City Line
- Reservation Line
- Property Line
- Existing Iron Pin — EIP
- Property Corner
- Property Monument — ECM
- Parcel/Sequence Number — 123
- Existing Fence Line
- Proposed Woven Wire Fence
- Proposed Chain Link Fence
- Proposed Barbed Wire Fence
- Existing Wetland Boundary — WLB
- Proposed Wetland Boundary — WLB
- Existing Endangered Animal Boundary — EAB
- Existing Endangered Plant Boundary — EPB
- Known Soil Contamination: Area or Site
- Potential Soil Contamination: Area or Site

BUILDINGS AND OTHER CULTURE:

- Gas Pump Vent or U/G Tank Cap
- Sign — S
- Well — W
- Small Mine
- Foundation
- Area Outline
- Cemetery
- Building
- School
- Church
- Dam

HYDROLOGY:

- Stream or Body of Water
- Hydro, Pool or Reservoir
- Jurisdictional Stream — JS
- Buffer Zone 1 — BZ 1
- Buffer Zone 2 — BZ 2
- Flow Arrow
- Disappearing Stream
- Spring
- Wetland
- Proposed Lateral, Tail, Head Ditch — FLOW
- False Sump

RAILROADS:

- Standard Gauge — CSX TRANSPORTATION
- RR Signal Milepost — MILEPOST 35
- Switch — SWITCH
- RR Abandoned
- RR Dismantled

RIGHT OF WAY:

- Baseline Control Point
- Existing Right of Way Marker
- Existing Right of Way Line
- Proposed Right of Way Line — RW
- Proposed Right of Way Line with Iron Pin and Cap Marker — RW
- Proposed Right of Way Line with Concrete or Granite R/W Marker — RW
- Proposed Control of Access Line with Concrete C/A Marker — CA
- Existing Control of Access — CA
- Proposed Control of Access — CA
- Existing Easement Line — E
- Proposed Temporary Construction Easement — E
- Proposed Temporary Drainage Easement — TDE
- Proposed Permanent Drainage Easement — PDE
- Proposed Permanent Drainage / Utility Easement — DUE
- Proposed Permanent Utility Easement — PUE
- Proposed Temporary Utility Easement — TUE
- Proposed Aerial Utility Easement — AUE
- Proposed Permanent Easement with Iron Pin and Cap Marker

ROADS AND RELATED FEATURES:

- Existing Edge of Pavement
- Existing Curb
- Proposed Slope Stakes Cut — C
- Proposed Slope Stakes Fill — F
- Proposed Curb Ramp — CR
- Existing Metal Guardrail
- Proposed Guardrail
- Existing Cable Guiderail
- Proposed Cable Guiderail
- Equality Symbol
- Pavement Removal

VEGETATION:

- Single Tree
- Single Shrub
- Hedge
- Woods Line
- Orchard
- Vineyard — Vineyard

EXISTING STRUCTURES:

MAJOR:

- Bridge, Tunnel or Box Culvert — CONC
- Bridge Wing Wall, Head Wall and End Wall — CONC WW

MINOR:

- Head and End Wall — CONC HW
- Pipe Culvert
- Footbridge
- Drainage Box: Catch Basin, DI or JB — CB
- Paved Ditch Gutter
- Storm Sewer Manhole — S
- Storm Sewer — S

UTILITIES:

POWER:

- Existing Power Pole
- Proposed Power Pole
- Existing Joint Use Pole
- Proposed Joint Use Pole
- Power Manhole — P
- Power Line Tower
- Power Transformer
- U/G Power Cable Hand Hole
- H-Frame Pole
- Recorded U/G Power Line — P
- Designated U/G Power Line (S.U.E.*) — P

TELEPHONE:

- Existing Telephone Pole
- Proposed Telephone Pole
- Telephone Manhole — T
- Telephone Booth
- Telephone Pedestal — T
- Telephone Cell Tower
- U/G Telephone Cable Hand Hole
- Recorded U/G Telephone Cable — T
- Designated U/G Telephone Cable (S.U.E.*) — T
- Recorded U/G Telephone Conduit — TC
- Designated U/G Telephone Conduit (S.U.E.*) — TC
- Recorded U/G Fiber Optics Cable — T FO
- Designated U/G Fiber Optics Cable (S.U.E.*) — T FO

WATER:

- Water Manhole — W
- Water Meter
- Water Valve
- Water Hydrant
- Recorded U/G Water Line — W
- Designated U/G Water Line (S.U.E.*) — W
- Above Ground Water Line — A/G Water

TV:

- TV Satellite Dish
- TV Pedestal — C
- TV Tower
- U/G TV Cable Hand Hole — HH
- Recorded U/G TV Cable — TV
- Designated U/G TV Cable (S.U.E.*) — TV
- Recorded U/G Fiber Optic Cable — TV FO
- Designated U/G Fiber Optic Cable (S.U.E.*) — TV FO

GAS:

- Gas Valve
- Gas Meter
- Recorded U/G Gas Line — G
- Designated U/G Gas Line (S.U.E.*) — G
- Above Ground Gas Line — A/G Gas

SANITARY SEWER:

- Sanitary Sewer Manhole
- Sanitary Sewer Cleanout
- U/G Sanitary Sewer Line — SS
- Above Ground Sanitary Sewer — A/G Sanitary Sewer
- Recorded SS Forced Main Line — FSS
- Designated SS Forced Main Line (S.U.E.*) — FSS

MISCELLANEOUS:

- Utility Pole
- Utility Pole with Base
- Utility Located Object
- Utility Traffic Signal Box — S
- Utility Unknown U/G Line — ?UTL
- U/G Tank; Water, Gas, Oil
- Underground Storage Tank, Approx. Loc.
- A/G Tank; Water, Gas, Oil
- Geoenvironmental Boring
- U/G Test Hole (S.U.E.*)
- Abandoned According to Utility Records — AATUR
- End of Information — E.O.I.

PROJECT REFERENCE NO.	SHEET NO.
46292.1.1	1C
Location and Surveys	

SURVEY CONTROL SHEET I-5501
-PRELIMINARY-

BY6

POINT	DESC.	NORTH	EAST	ELEVATION	L STATION	OFFSET
1	BY6-1	632640.2333	946785.9339	2155.14	13+75.08	37.80 LT
2	BY6-2	633118.8935	946772.3942	2170.21	18+43.78	51.57 LT
3	BY6-3	633870.1347	947008.7859	2201.06	26+21.32	49.96 LT
4	BY6-4	634281.3211	947172.0552	2218.94	30+63.73	48.49 LT
5	BY6-5	634742.3569	947352.8706	2230.01	35+59.43	43.24 LT
6	BY6-6	635135.7615	947510.3118	2233.18	39+81.39	43.46 LT

BY6A

POINT	DESC.	NORTH	EAST	ELEVATION	L STATION	OFFSET
7	BY6A-7	635354.3968	947444.3588	2219.93	41+50.40	193.12 LT
16	BY6-6	635135.7615	947510.3118	2233.18	39+81.39	43.46 LT
8	BY6A-8	634974.4426	947700.3484	2229.06	39+05.88	194.43 RT

BY6B

POINT	DESC.	NORTH	EAST	ELEVATION	Y6B1 STATION	OFFSET
18	BY6A-8	634974.4426	947700.3484	2229.06	12+06.27	50.21 LT
9	BY6B-9	634607.6878	947475.7462	2230.76	16+13.24	20.00 RT
10	BY6B-10	634311.7089	947365.7382	2219.54	19+22.28	20.32 RT
11	BY6B-11	634079.7893	947471.8782	2208.82	21+70.78	18.43 RT

BM1 ELEVATION = 2159.27
N 632770 E 946772
L STATION 15+03.00 40 LEFT
NCGS MONUMENT "AIRPORT"

BM2 ELEVATION = 2201.94
N 633881 E 947013
L STATION 26+33.00 50 LEFT
BOLT IN CONCRETE, SW END OF BRIDGE OVER I-26

BM3 ELEVATION = 2229.57
N 634762 E 947313
L STATION 35+63.00 88 LEFT
8 INCH SPIKE IN ROOT OF 18 INCH ASH TREE

BM4 ELEVATION = 2226.30
N 635366 E 947486
BY6A STATION 5+01.00 43 LEFT
8 INCH SPIKE IN ROOT OF 18 INCH POPLAR TREE

BM5 ELEVATION = 2207.64
N 633948 E 947558
BY6B STATION 15+00.88
S 33°13'46.80" E DIST 157.04'
NAIL AND CAP SET IN NE END OF CONCRETE WALK

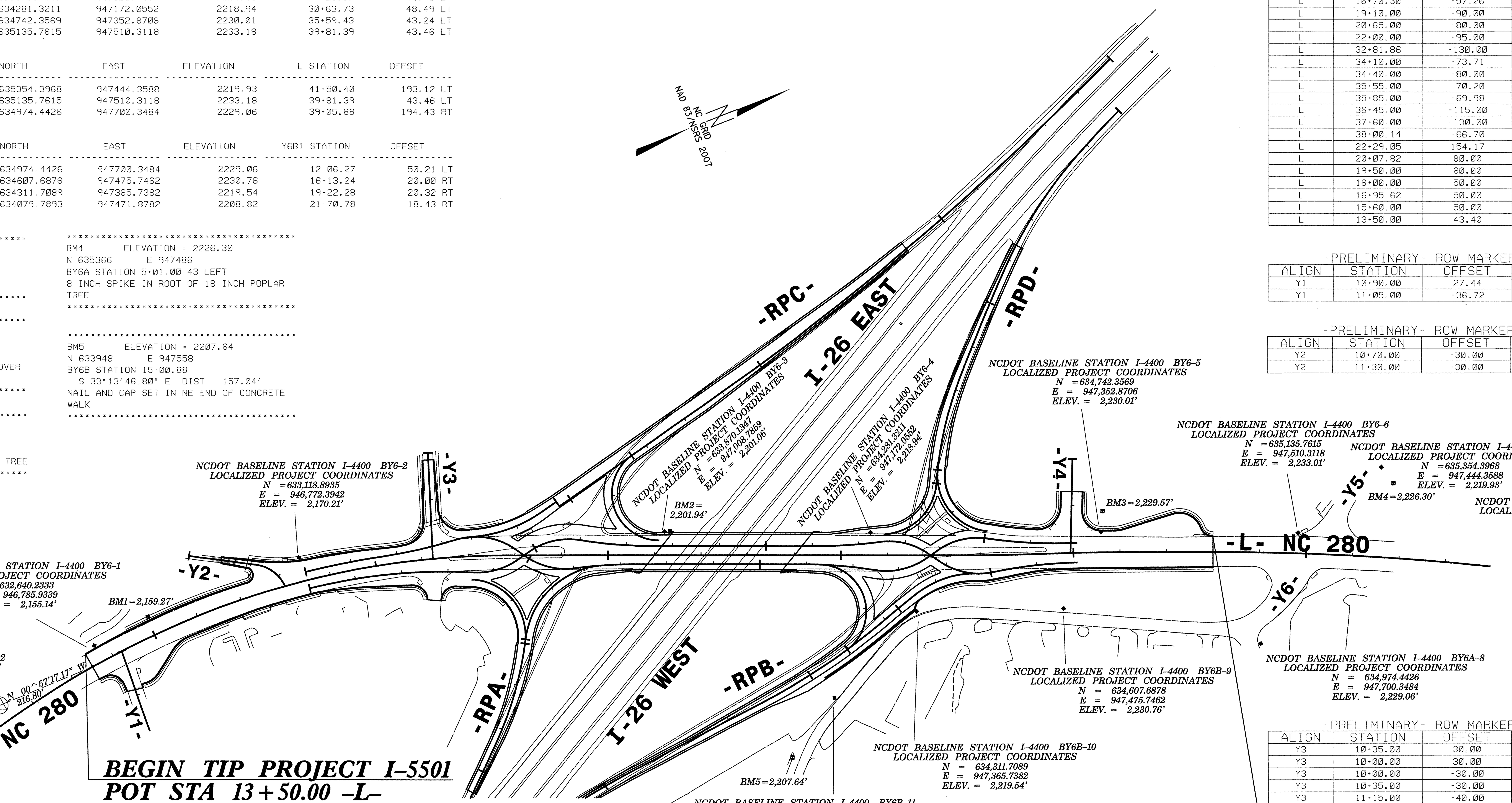

NCDOT GPS STATION I-4400 GPS-101
LOCALIZED PROJECT COORDINATES
N = 632,082.7250
E = 946,931.6320
ELEV. = 2,134.08'

-PRELIMINARY- ROW MARKER IRON PIN AND CAP-E

ALIGN	STATION	OFFSET	NORTH	EAST
L	16+70.30	-57.26	632941.2878	946752.6692
L	19+10.00	-90.00	633192.5546	946744.3387
L	20+65.00	-80.00	633349.3171	946787.4275
L	22+00.00	-95.00	633489.2928	946813.1578
L	32+81.86	-130.00	634513.6861	947175.8078
L	34+10.00	-73.71	634611.5388	947272.5037
L	34+40.00	-80.00	634641.6396	947276.5525
L	35+55.00	-70.20	634747.7882	947326.0820
L	35+85.00	-69.98	634776.1004	947337.2118
L	36+45.00	-115.00	634848.7139	947317.3390
L	37+60.00	-130.00	634961.2258	947345.4647
L	38+00.14	-66.70	634975.4517	947419.0782
L	22+29.05	154.17	633434.8797	947057.9786
L	20+07.82	80.00	633256.6134	946929.7965
L	19+50.00	80.00	633202.4893	946918.7135
L	18+00.00	50.00	633063.7579	946868.2727
L	16+95.62	50.00	632962.5705	946860.8127
L	15+60.00	50.00	632830.5299	946859.6121
L	13+50.00	43.40	632625.9101	946869.6915

-PRELIMINARY- ROW MARKER IRON PIN AND CAP-E

ALIGN	STATION	OFFSET	NORTH	EAST
Y1	10+90.00	27.44	632659.6929	946907.2142
Y1	11+05.00	-36.72	632723.2242	946924.6861

-PRELIMINARY- ROW MARKER IRON PIN AND CAP-E

ALIGN	STATION	OFFSET	NORTH	EAST
Y2	10+70.00	-30.00	632975.7358	946690.5311
Y2	11+30.00	-30.00	633028.2100	946719.6249

-PRELIMINARY- ROW MARKER IRON PIN AND CAP-E

ALIGN	STATION	OFFSET	NORTH	EAST
Y3	10+35.00	30.00	633419.6379	946688.3979
Y3	10+00.00	30.00	633430.9725	946655.2840
Y3	10+00.00	-30.00	633487.7391	946674.7148
Y3	10+35.00	-30.00	633476.4045	946707.8287
Y3	11+15.00	-40.00	633459.9579	946786.7559

-PRELIMINARY- ROW MARKER IRON PIN AND CAP-E

ALIGN	STATION	OFFSET	NORTH	EAST
Y4	10+70.00	40.00	634679.1370	947233.5561
Y4	10+70.00	-40.00	634752.9238	947264.4675

-PRELIMINARY- ROW MARKER IRON PIN AND CAP-E

ALIGN	STATION	OFFSET	NORTH	EAST
RPA	17+60.00	-62.26	633435.1244	947114.4011

-PRELIMINARY- ROW MARKER IRON PIN AND CAP-E

ALIGN	STATION	OFFSET	NORTH	EAST
RPC	25+28.26	65.00	633664.7882	946812.2431
RPC	23+91.42	65.00	633797.8115	946780.1321

PRELIMINARY -L-

TYPE	STATION	NORTH	EAST
PC	10+00.00	632279.5447	946905.6942
PCC	16+95.62	632964.7997	946810.8624
PT	22+89.74	633543.2740	946933.9363
PC	32+62.31	634448.3752	947289.8552
PRC	34+34.51	634609.6838	947350.1017
PT	36+06.71	634770.9925	947410.3482
PC	37+96.83	634947.9294	947479.9262
PT	43+95.47	635492.5940	947727.6824

DATUM DESCRIPTION

THE LOCALIZED COORDINATE SYSTEM DEVELOPED FOR THIS PROJECT IS BASED ON THE STATE PLANE COORDINATES ESTABLISHED BY NCDOT FOR MONUMENT "I4400 GPS-102"
WITH NAD 83/NSRS 2007 STATE PLANE GRID COORDINATES OF NORTHING: 632403.2420(ft) EASTING: 946830.3070(ft)
ELEVATION: 2146.68(ft)
THE AVERAGE COMBINED GRID FACTOR USED ON THIS PROJECT (GROUND TO GRID) IS: 0.999777801
THE N.C. LAMBERT GRID BEARING AND LOCALIZED HORIZONTAL GROUND DISTANCE FROM "I4400 GPS-102" TO -L- STATION 13+50.00 IS N 00°57'17.17" W 216.80 FT.
ALL LINEAR DIMENSIONS ARE LOCALIZED HORIZONTAL DISTANCES
VERTICAL DATUM USED IS NAVD 88

PRELIMINARY -Y1-

TYPE	STATION	NORTH	EAST
POT	10+00.00	632690.5956	946818.3436
POT	11+80.28	632683.6183	946998.4856

PRELIMINARY -Y2-

TYPE	STATION	NORTH	EAST
POT	10+00.00	632899.9689	946682.8254
PC	11+45.75	633027.4366	946753.4986
PT	12+25.94	633068.4903	946818.4957

PRELIMINARY -Y3-

TYPE	STATION	NORTH	EAST
POT	10+00.00	633459.3558	946664.9994
POT	12+27.50	633385.6811	946880.2387

PRELIMINARY -Y4-

TYPE	STATION	NORTH	EAST
POT	10+00.00	634743.0779	947184.4484
POT	12+01.34	634665.2809	947370.1529

PRELIMINARY -RPA-

TYPE	STATION	NORTH	EAST
TS	10+00.00	632914.5877	947634.5754
SC	12+00.00	633086.3260	947532.1614
CS	13+56.30	633211.7400	947439.0144
ST	15+56.30	633359.4118	947304.1970
PC	15+66.22	633366.5835	947297.3369
PT	19+79.43	633574.9332	946946.3859

PRELIMINARY -RPB-

TYPE	STATION	NORTH	EAST
TS	10+00.00	633087.6905	947642.4134
SC	12+00.00	633264.7895	947549.6600
CS	14+20.96	633474.6602	947481.8755
ST	16+20.96	633672.5561	947453.5122
TS	18+36.86	633887.1463	947429.7335
SC	19+61.86	634011.1387	947413.9941
CS	20+94.35	634140.6949	947386.5649
ST	22+19.35	634260.4271	947350.7036
PC	22+37.08	634277.3297	947345.3467
PT	23+73.55	634384.0311	947264.5528

PRELIMINARY -RPD-

TYPE	STATION	NORTH	EAST
CS	10+00.00	635109.8772	946526.8234
SC	12+00.00	634931.6801	946617.3454
CS	13+45.25	634813.7258	946701.8664
ST	15+45.25	634669.8831	946840.6839
TS	15+59.50	634659.9807	946850.9314
SC	17+59.50	634527.5427	947000.5932
PT	18+95.73	634456.7733	947116.7840
POT	20+60.43	634384.0311	947264.5528

PRELIMINARY -RPC-

TYPE	STATION	NORTH	EAST
POT	10+00.00	635134.2487	946415.3699
PC	11+05.97	635037.1338	946457.7649
CS	20+07.26	634186.2179	946752.0433
ST	22+07.26	633992.0810	946800.1036
PC	25+28.26	633680.0407	946875.4283
PT	26+59.96	633570.8863	946944.7945

GEOIDAL MODEL: G09NC
NOTE: DRAWING NOT TO SCALE

NOTES:

1. *THE CONTROL DATA FOR THIS PROJECT CAN BE FOUND ELECTRONICALLY BY SELECTING PROJECT CONTROL DATA AT:*
   HTTP:/WWW.NCDOT.ORG/DOH/PRECONSTRUCT/HIGHWAY/LOCATION/PROJECT/

   THE FILES TO BE FOUND ARE AS FOLLOWS:
   I-5501_LS_CONTROL.TXT

   SITE CALIBRATION INFORMATION HAS NOT BEEN PROVIDED FOR THIS PROJECT. IF FURTHER INFORMATION IS NEEDED, PLEASE CONTACT THE LOCATION AND SURVEYS UNIT.

△ *INDICATES GEODETIC CONTROL MONUMENTS USED OR SET FOR HORIZONTAL PROJECT CONTROL BY THE NCDOT LOCATION AND SURVEYS UNIT.*
PROJECT CONTROL ESTABLISHED USING GLOBAL POSITIONING SYSTEM.

6/2/99

5/13/2013
R:\Roadway\Proj\i5501_ls_1c.dgn
Florence & Hutcheson, Inc.

PROJECT REFERENCE NO.	SHEET NO.
I-5501	1-D
Location and Surveys	

SURVEY CONTROL SHEET I-5501

FINAL

(DESIGN ALIGNMENTS)

L

TYPE	STATION	NORTH	EAST
PC	10+00.00	632279.5447	946905.6942
PCC	16+95.62	632964.7997	946810.8624
PT	22+89.74	633543.2740	946933.9363
PC	32+62.31	634448.3752	947289.8552
PRC	34+34.51	634609.6838	947350.1017
PT	36+06.71	634770.9925	947410.3482
PC	37+96.83	634947.9294	947479.9262
PT	43+95.47	635492.5940	947727.6824

Y1

TYPE	STATION	NORTH	EAST
POT	10+00.00	632690.5956	946818.3436
PC	11+03.85	632686.5761	946922.1206
PRC	11+60.17	632681.7609	946978.2079
PT	12+10.07	632677.6421	947027.9167
POT	13+13.93	632674.2390	947131.7265

Y3

TYPE	STATION	NORTH	EAST
POT	10+00.00	633459.3558	946664.9994
POT	12+27.50	633385.6811	946880.2387

Y1A

TYPE	STATION	NORTH	EAST
PC	10+00.00	632426.3559	946461.7044
PCC	11+11.06	632535.9895	946460.6060
PCC	13+07.42	632695.9987	946568.3745
PT	14+43.46	632722.0443	946697.1964
POT	15+68.62	632690.5956	946818.3436

Y1B

TYPE	STATION	NORTH	EAST
POT	10+00.00	632725.0009	946635.9865
PC	10+53.77	632778.7081	946633.4397
PT	12+57.44	632977.9025	946594.5382
PC	14+02.25	633114.5002	946546.4722
PT	15+14.75	633221.3446	946511.2714
POT	16+54.25	633354.6856	946470.2914

Y1C

TYPE	STATION	NORTH	EAST
PC	10+00.00	632662.4585	946531.3308
PT	13+14.83	632593.1168	946777.5222
POT	13+86.10	632523.3192	946791.8944

Y1D

TYPE	STATION	NORTH	EAST
POT	10+00.00	632710.8712	946403.4823
PC	10+66.01	632731.6546	946466.1386
PRC	11+39.80	632774.3100	946524.9220
PT	12+38.41	632822.2967	946607.9032
POT	12+60.37	632824.7828	946629.7270

Y1E

TYPE	STATION	NORTH	EAST
POT	10+00.00	632675.5265	947092.4524
PC	10+89.53	632764.9174	947097.4516
PT	12+25.98	632896.2671	947131.1028
POT	13+00.00	632963.0528	947163.0135

RPA

TYPE	STATION	NORTH	EAST
TS	10+00.00	632914.5877	947634.5754
SC	12+00.00	633086.3260	947532.1614
CS	13+56.30	633211.7400	947439.0144
ST	15+56.30	633359.4118	947304.1970
PC	15+66.22	633366.5835	947297.3369
PT	19+79.43	633574.9332	946946.3859

(DESIGN ALIGNMENTS)

RPB

TYPE	STATION	NORTH	EAST
TS	10+00.00	633087.6905	947642.4134
SC	12+00.00	633264.7895	947549.6600
CS	14+20.96	633474.6602	947481.8755
ST	16+20.96	633672.5561	947453.5122
TS	18+36.86	633887.1463	947429.7335
SC	19+61.86	634011.1387	947413.9941
CS	20+94.35	634140.6949	947386.5649
ST	22+19.35	634260.4271	947350.7036
PC	22+37.08	634277.3297	947345.3467
PT	23+73.55	634384.0311	947264.5528

RPC

TYPE	STATION	NORTH	EAST
POT	10+00.00	635134.2487	946415.3699
PC	11+05.97	635037.1338	946457.7649
CS	20+07.26	634186.2179	946752.0433
ST	22+07.26	633992.0810	946800.1036
PC	25+28.26	633680.0407	946875.4283
PT	26+59.96	633570.8863	946944.7945

RPD

TYPE	STATION	NORTH	EAST
CS	10+00.00	635109.8772	946526.8234
SC	12+00.00	634931.6801	946617.3454
CS	13+45.25	634813.7258	946701.8664
ST	15+45.25	634669.8831	946840.6839
TS	15+59.50	634659.9807	946850.9314
SC	17+59.50	634527.5427	947000.5932
PT	18+95.73	634456.7733	947116.7840
POT	20+60.43	634384.0311	947264.5528

ROW MARKERS

ROW MARKER CONCRETE OR GRANITE-E

ALIGN	STATION	OFFSET	NORTH	EAST
L	13+50.00	43.40	632625.9103	946869.6932
L	14+15.00	-75.00	632676.8826	946744.3477
L	14+15.00	-56.46	632678.7770	946762.7941
L	15+60.00	50.00	632830.5299	946859.6121
L	16+00.00	-56.82	632868.8927	946752.1685
L	16+00.00	-75.00	632868.7932	946733.9930
L	16+95.62	50.00	632962.5705	946860.8127
L	18+00.00	50.00	633063.7579	946868.2727
L	19+45.00	52.95	633202.7187	946891.2400
L	20+65.00	-80.00	633349.3171	946787.4275
L	20+65.00	-64.95	633345.5970	946802.0086
L	21+65.59	136.12	633385.2994	947022.3333
L	21+80.00	-105.00	633472.3870	946797.0374
L	22+30.00	-105.00	633522.4881	946814.0632
L	32+81.86	-130.00	634513.6861	947175.8078
L	34+10.00	-85.00	634615.3584	947261.8794
L	34+45.00	-90.00	634649.7824	947268.8355
L	35+54.57	-71.73	634747.9215	947324.4963
L	37+05.00	-69.10	634887.7535	947382.0144
L	38+20.00	-125.00	635015.6867	947372.3049
L	39+24.98	-145.00	635122.7243	947394.4326
L	39+51.98	-61.63	635115.6290	947481.9247

ROW MARKER CONCRETE OR GRANITE-E

ALIGN	STATION	OFFSET	NORTH	EAST
Y1	10+89.33	-60.51	632747.6056	946909.9527
Y1	11+10.00	50.00	632636.3667	946925.8131
Y1	11+10.00	26.20	632660.1419	946926.9779
Y1	12+25.33	-66.13	632743.2335	947045.3411
Y1	12+98.87	19.59	632655.1555	947116.0293
Y1	13+02.35	-30.44	632705.0422	947121.1456

ROW MARKERS

ROW MARKER CONCRETE OR GRANITE-E

ALIGN	STATION	OFFSET	NORTH	EAST
Y1E	11+72.09	-30.47	632854.8125	947082.5144
Y1E	11+86.66	21.46	632852.8814	947136.4514

ROW MARKER CONCRETE OR GRANITE-E

ALIGN	STATION	OFFSET	NORTH	EAST
Y4	10+70.00	40.00	634679.1370	947233.5561
Y4	10+70.00	-40.00	634752.9238	947264.4675

PERMANENT EASEMENTS

ROW MARKER PERMANENT EASEMENT-E

ALIGN	STATION	OFFSET	NORTH	EAST
L	14+87.00	-83.00	632750.9283	946730.1249
L	14+89.39	-75.00	632753.9238	946737.9493
L	15+06.00	-89.00	632770.3907	946722.9517
L	15+10.00	-75.00	632775.3070	946736.7079
L	15+32.48	65.00	632804.3536	946875.5011
L	15+59.10	-75.00	632826.2935	946734.6807
L	15+64.00	-93.00	632830.9465	946716.5556
L	15+89.20	-75.00	632857.5695	946734.0862
L	15+92.00	-85.00	632860.3827	946724.0564
L	16+05.00	65.00	632874.3889	946873.9708
L	16+05.00	50.00	632874.3461	946858.9709
L	16+74.00	-75.00	632945.6870	946735.0621
L	16+74.00	-82.00	632945.9199	946728.0660
L	16+95.62	-82.00	632968.4555	946728.9439
L	16+95.62	-75.00	632968.1434	946735.9370
L	18+00.00	-75.00	633076.5585	946743.9299
L	18+00.00	-58.68	633074.8874	946760.1631
L	18+20.00	-92.00	633099.1987	946729.2881
L	18+42.00	-59.37	633118.0596	946764.4219
L	18+50.00	-91.00	633130.3672	946734.1181
L	19+10.00	-90.00	633192.5546	946744.3387
L	20+30.00	-81.00	633314.0390	946777.7617
L	20+30.00	-63.86	633310.1263	946794.4448
L	22+13.00	-115.00	633508.7667	946798.6645
L	22+13.00	-104.84	633505.4533	946808.2742
L	22+33.00	-106.18	633525.8751	946814.0198
L	22+33.00	-116.00	633529.1798	946804.7702

NOTES:

1. *THE CONTROL DATA FOR THIS PROJECT CAN BE FOUND ELECTRONICALLY BY SELECTING PROJECT CONTROL DATA AT:*
   HTTP://WWW.NCDOT.ORG/DOH/PRECONSTRUCT/HIGHWAY/LOCATION/PROJECT/

   THE FILES TO BE FOUND ARE AS FOLLOWS:
   I-5501_LS_CONTROL.TXT

   SITE CALIBRATION INFORMATION HAS NOT BEEN PROVIDED FOR THIS PROJECT. IF FURTHER INFORMATION IS NEEDED, PLEASE CONTACT THE LOCATION AND SURVEYS UNIT.

△ *INDICATES GEODETIC CONTROL MONUMENTS USED OR SET FOR HORIZONTAL PROJECT CONTROL BY THE NCDOT LOCATION AND SURVEYS UNIT.*
PROJECT CONTROL ESTABLISHED USING GLOBAL POSITIONING SYSTEM.

DATUM DESCRIPTION

THE LOCALIZED COORDINATE SYSTEM DEVELOPED FOR THIS PROJECT IS BASED ON THE STATE PLANE COORDINATES ESTABLISHED BY NCGS FOR MONUMENT "I4400 GPS 102"
WITH NAD 83 (NSRS2007) STATE PLANE GRID COORDINATES OF
NORTHING: 632403.242(ft) EASTING: 946830.307(ft)
ELEVATION: 2146.68(ft)
THE AVERAGE COMBINED GRID FACTOR USED ON THIS PROJECT (GROUND TO GRID) IS: 0.999777801
THE N.C. LAMBERT GRID BEARING AND
LOCALIZED HORIZONTAL GROUND DISTANCE FROM
"I4400 GPS 102" TO -L- STATION 13+50.00 IS
N 00 57 17 W 216.7981'
ALL LINEAR DIMENSIONS ARE LOCALIZED HORIZONTAL DISTANCES
VERTICAL DATUM USED IS NAVD 88

NOTE: DRAWING NOT TO SCALE

6/2/99
7/8/2013
I:\I5501\Roadway\Proj\I5501_ls_ldl.dgn
Pierce, Williams, Pope

6/2/99

PROJECT REFERENCE NO.	SHEET NO.
I-5501	2

Florence & Hutcheson
An ICF Company
5121 Kingdom Way, Suite 100 Raleigh, NC 27607
NC License No. F-0260

PLANS PREPARED BY :
PARSONS
RALEIGH, NORTH CAROLINA, (919) 854-1345
NC LICENSE NO. F-0246
FOR NORTH CAROLINA DEPT. OF TRANSPORTATION

ROADWAY DESIGN ENGINEER
NORTH CAROLINA PROFESSIONAL SEAL 22606 ENGINEER DAVID C. WALLER
7-23-13

PAVEMENT DESIGN ENGINEER
NORTH CAROLINA PROFESSIONAL SEAL 13368 ENGINEER DON-CHI CHEN
7/25/13

PRELIMINARY PAVEMENT SCHEDULE

C1	PROP. APPROX 1.5" ASPHALT CONCRETE SURFACE COURSE, TYPE S9.5B, AT AN AVERAGE RATE OF 168 LBS. PER SQ. YD.
C2	PROP. APPROX. 3" ASPHALT CONCRETE SURFACE COURSE, TYPE S9.5B, AT AN AVERAGE RATE OF 168 LBS. PER SQ. YD. IN EACH OF TWO LAYERS.
C3	PROP. VAR. DEPTH ASPHALT CONCRETE SURFACE COURSE, TYPE S9.5B, AT AN AVERAGE RATE OF 112 LBS. PER SQ. YD. PER 1" DEPTH. TO BE PLACED IN LAYERS NOT TO EXCEED 2" IN DEPTH.
C4	PROP. APPROX 1.5" ASPHALT CONCRETE SURFACE COURSE, TYPE S9.5C, AT AN AVERAGE RATE OF 168 LBS. PER SQ. YD.
C5	PROP. APPROX. 3" ASPHALT CONCRETE SURFACE COURSE, TYPE S9.5C, AT AN AVERAGE RATE OF 168 LBS. PER SQ. YD. IN EACH OF TWO LAYERS.
C6	PROP. VAR. DEPTH ASPHALT CONCRETE SURFACE COURSE, TYPE S9.5C, AT AN AVERAGE RATE OF 112 LBS. PER SQ. YD. PER 1" DEPTH. TO BE PLACED IN LAYERS NOT TO EXCEED 2" IN DEPTH.
D1	PROP. APPROX. 4" ASPHALT CONCRETE INTERMEDIATE COURSE, TYPE I19.0B, AT AN AVERAGE RATE OF 456 LBS. PER SQ. YD.
D2	PROP. VAR. DEPTH ASPHALT CONCRETE INTERMEDIATE COURSE, TYPE I19.0B, AT AN AVERAGE RATE OF 114 LBS. PER SQ. YD. PER 1" DEPTH, TO BE PLACED IN LAYERS NOT LESS THAN 2 1/2" IN DEPTH OR GREATER THAN 4" IN DEPTH.
D3	PROP. APPROX. 4" ASPHALT CONCRETE INTERMEDIATE COURSE, TYPE I19.0C, AT AN AVERAGE RATE OF 456 LBS. PER SQ. YD.
D4	PROP. VAR. DEPTH ASPHALT CONCRETE INTERMEDIATE COURSE, TYPE I19.0C, AT AN AVERAGE RATE OF 114 LBS. PER SQ. YD. PER 1" DEPTH, TO BE PLACED IN LAYERS NOT LESS THAN 2 1/2" IN DEPTH OR GREATER THAN 4" IN DEPTH.
E1	PROP. APPROX. 4" ASPHALT CONCRETE BASE COURSE, TYPE B25.0B, AT AN AVERAGE RATE OF 456 LBS. PER SQ. YD.
E2	PROP. APPROX. 5.5" ASPHALT CONCRETE BASE COURSE, TYPE B25.0B, AT AN AVERAGE RATE OF 627 LBS. PER SQ. YD.
E3	PROP. VAR. DEPTH ASPHALT CONCRETE BASE COURSE, TYPE B25.0B, AT AN AVERAGE RATE OF 114 LBS. PER SQ. YD. PER 1" DEPTH. TO BE PLACED IN LAYERS NOT LESS THAN 3" IN DEPTH OR GREATER THAN 5 1/2" IN DEPTH.
E4	PROP. APPROX. 5.5" ASPHALT CONCRETE BASE COURSE, TYPE B25.0C, AT AN AVERAGE RATE OF 627 LBS. PER SQ. YD.
E5	PROP. VAR. DEPTH ASPHALT CONCRETE BASE COURSE, TYPE B25.0C, AT AN AVERAGE RATE OF 114 LBS. PER SQ. YD. PER 1" DEPTH. TO BE PLACED IN LAYERS NOT LESS THAN 3" IN DEPTH OR GREATER THAN 5 1/2" IN DEPTH.
R1	2'-6" CONCRETE CURB AND GUTTER
R2	EXPRESSWAY GUTTER
R3	18" CONCRETE CURB AND GUTTER (SEE DETAIL E, SHEET 2-B)
R4	4" CONCRETE COVER
S	4" CONCRETE SIDEWALK
T	EARTH MATERIAL
U	EXISTING PAVEMENT
W	VARIABLE DEPTH ASPHALT PAVEMENT (SEE STANDARD WEDGING DETAIL ON THIS PAGE.)

NOTE: PAVEMENT EDGE SLOPES ARE 1:1 UNLESS SHOWN OTHERWISE. FOR CROSSOVER AREAS, PLEASE SEE PLANS.

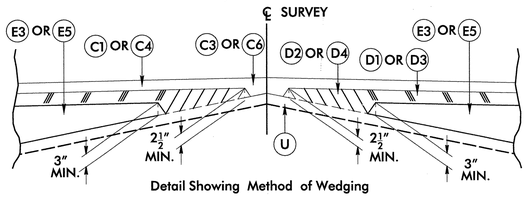

Detail Showing Method of Wedging

NOTE: -Y1A-, -Y1B- & -Y1C- HAS NO D2 OR D4 AND D1 OR D3

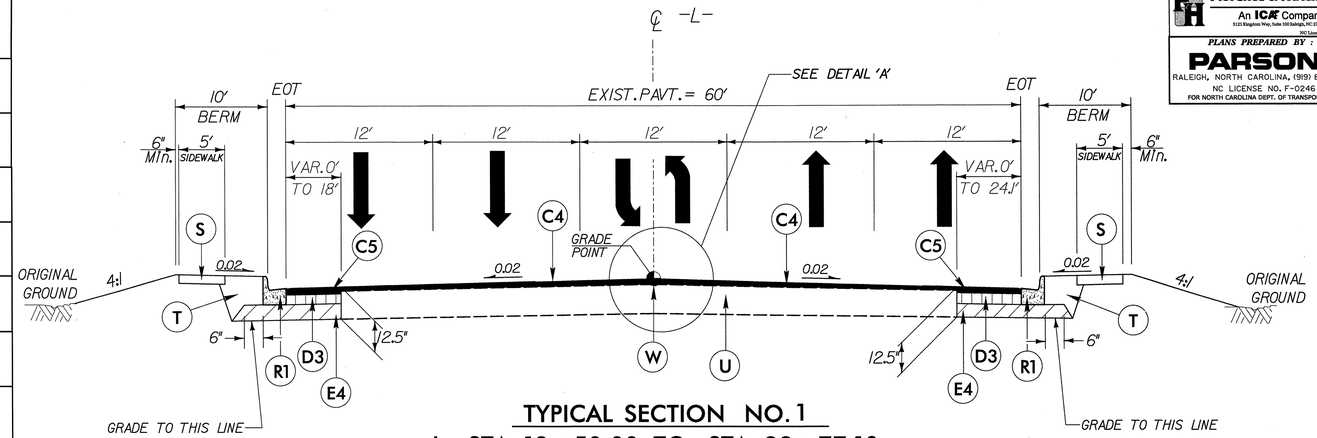

TYPICAL SECTION NO. 1

-L- STA. 13+50.00 TO STA. 23+77.10
-L- STA. 31+35.36 TO STA. 39+50.00

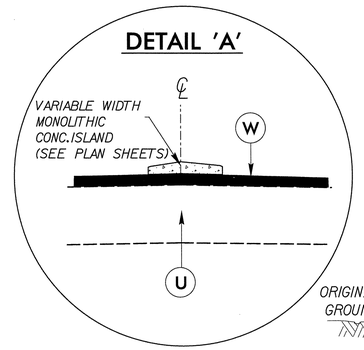

USE DETAIL 'A' IN CONJUNCTION WITH TYPICAL SECTIONS NO. 1 & 2

-L- STA. 14+55.00 TO STA. 22+75.48
-L- STA. 23+58.95 TO STA. 31+53.43
-L- STA. 32+21.94 TO STA. 38+64.25

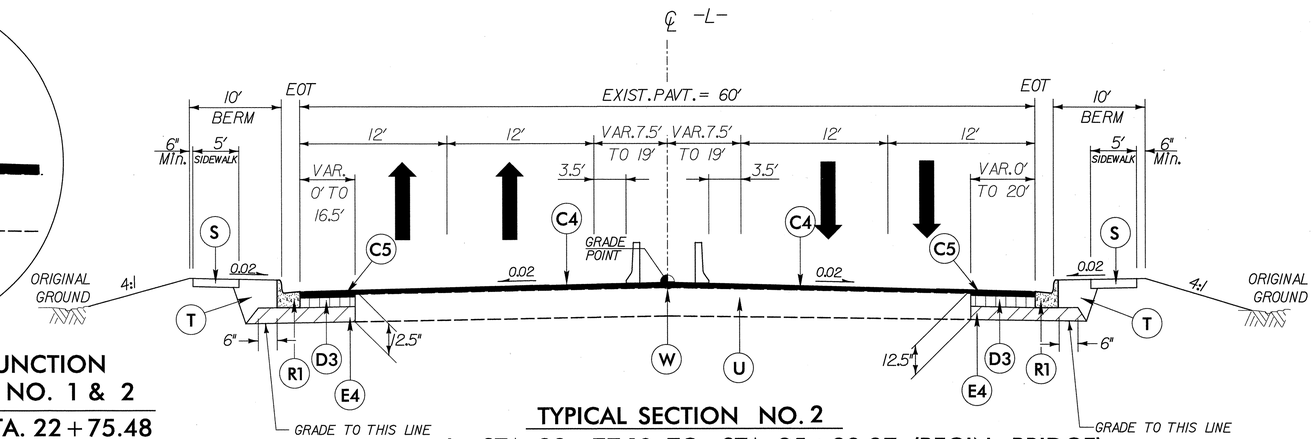

TYPICAL SECTION NO. 2

-L- STA. 23+77.10 TO STA. 25+99.97 (BEGIN BRIDGE)
-L- STA. 29+00.40 (END BRIDGE) TO STA. 31+35.36

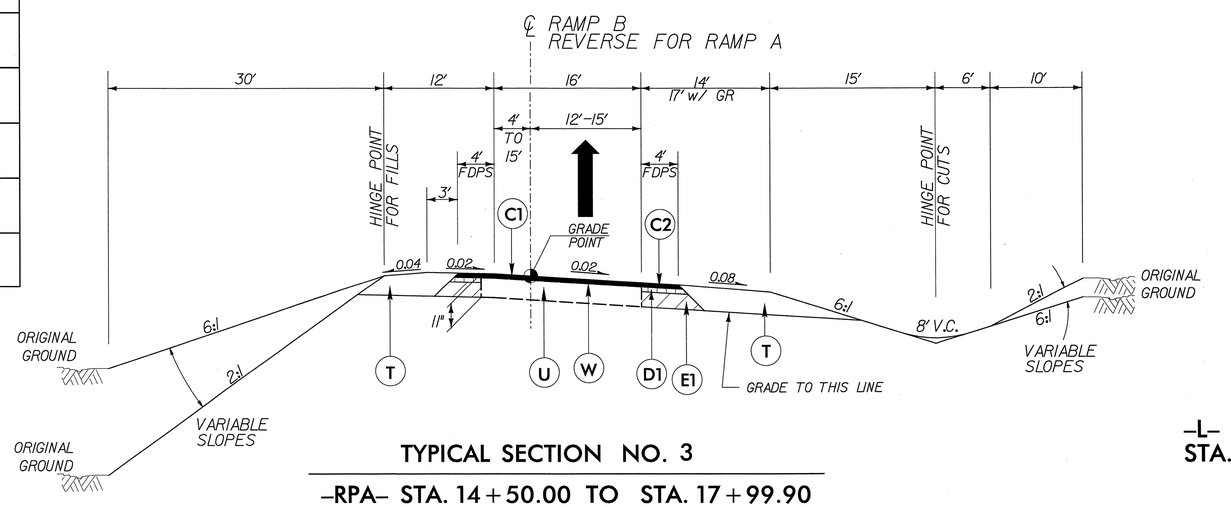

TYPICAL SECTION NO. 3

-RPA- STA. 14+50.00 TO STA. 17+99.90
-RPB- STA. 14+00.00 TO STA. 22+37.08

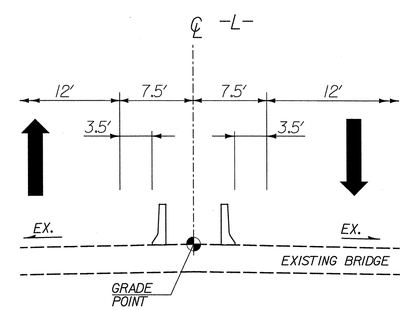

TYPICAL SECTION NO. 2A

-L- STA. 25+99.97 (BEGIN BRIDGE) TO STA. 29+00.40 (END BRIDGE)

7/23/2013
H:\Roadway\Proj\I-5501_Rdy_typ.dgn
florence_hutcheson_inc

C1	1.5" S9.5B
C2	3" S9.5B
C3	VAR S9.5B
D1	4" I19.0B
D2	VAR I19.0B
E1	4" B25.0B
E2	5.5" B25.0B
E3	VAR B25.0B
R1	2'-6" C&G
R2	EXPRESSWAY C&G
R4	4" CONC. COVER
T	EARTH MATERIAL
U	EXIST. PAVEMENT
W	VAR WEDGING

Florence & Hutcheson
An ICA Company
5121 Kingdom Way, Suite 100 Raleigh, NC 27607
NC License No. F-0208

PLANS PREPARED BY :
PARSONS
RALEIGH, NORTH CAROLINA, (919) 854-1345
NC LICENSE NO. F-0246
FOR NORTH CAROLINA DEPT. OF TRANSPORTATION

PROJECT REFERENCE NO.	SHEET NO.
I-5501	2-A

ROADWAY DESIGN ENGINEER
NORTH CAROLINA PROFESSIONAL SEAL 22606 ENGINEER DAVID C. WALKER
6-25-13

PAVEMENT DESIGN ENGINEER
NORTH CAROLINA PROFESSIONAL SEAL 13368 ENGINEER DAN-CHI CHEN
7/25/13

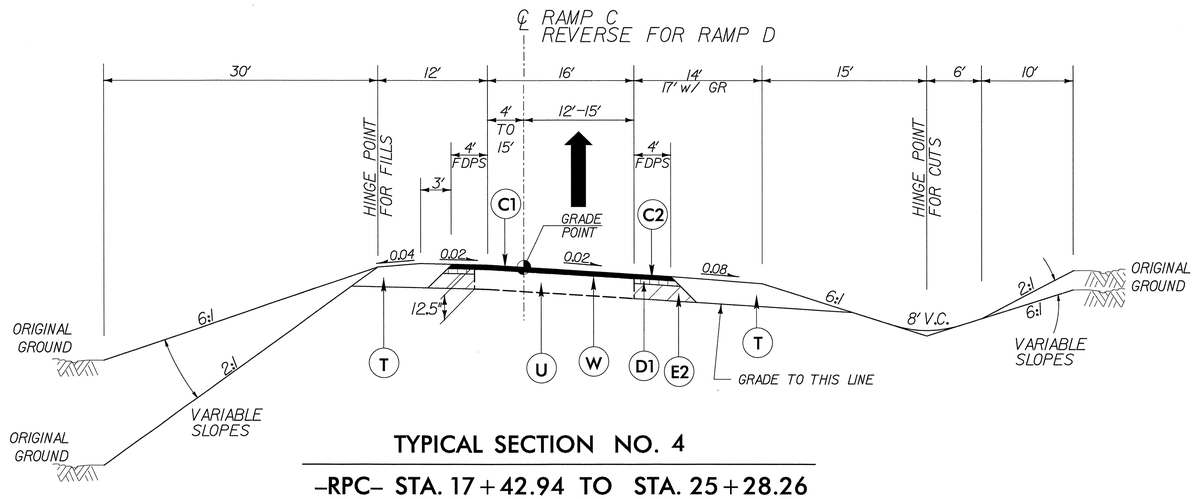

TYPICAL SECTION NO. 4

-RPC- STA. 17+42.94 TO STA. 25+28.26
-RPD- STA. 12+60.00 TO STA. 19+05.91

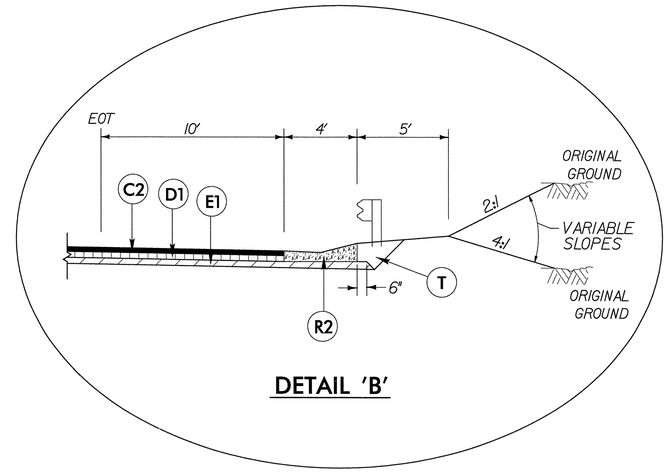

DETAIL 'B'

-RPB- STA. 14+00.00 RT. TO STA. 21+25.00 RT.

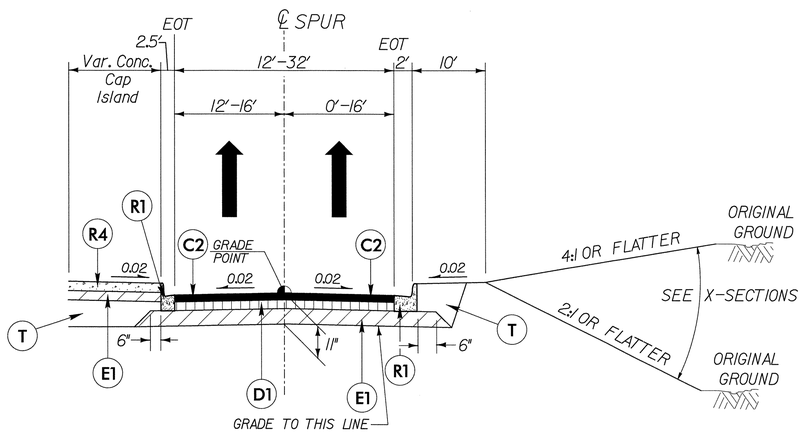

TYPICAL SECTION NO. 5

-RPA SPUR LT- STA. 10+00.00 TO STA. 11+98.96
-RPA SPUR RT- STA. 10+00.00 TO STA. 11+68.61
-RPB SPUR LT- STA. 10+00.00 TO STA. 11+87.86
-RPB SPUR RT- STA. 10+00.00 TO STA. 11+37.98

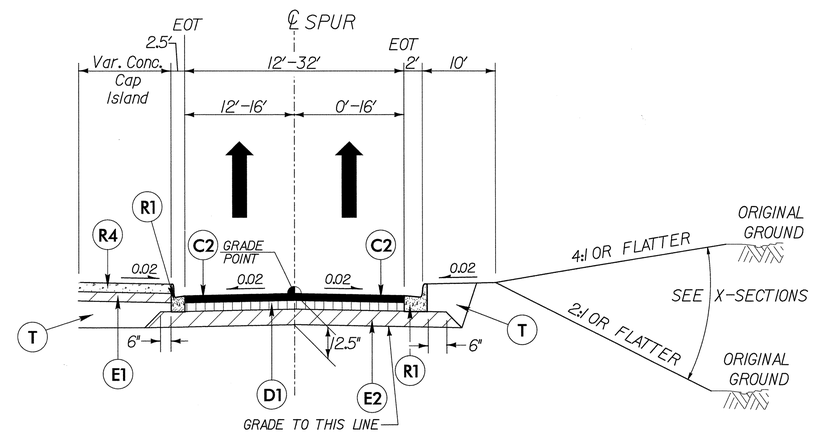

TYPICAL SECTION NO. 6

-RPC SPUR LT- STA. 10+00.00 TO STA. 12+00.10
-RPC SPUR RT- STA. 10+00.00 TO STA. 11+44.72
-RPD SPUR LT- STA. 10+00.00 TO STA. 11+86.86
-RPD SPUR RT- STA. 10+00.00 TO STA. 11+71.21

6/2/99

6/24/2013
H:\Roadway\Proj\I-5501_Rdy_typ.dgn
florence3 hfcmasson.bnc

C1	1.5" S9.5B
C2	3" S9.5B
C3	VAR S9.5B
E1	4" B25.0B
E3	VAR B25.0B
R3	18" C&G
S	4" SIDEWALK
T	EARTH MATERIAL
U	EXIST. PAVEMENT
W	VAR WEDGING

Florence & Hutcheson
An ICA Company
3125 Kingdom Way, Suite 100 Raleigh, NC 27607
NC License No: P-0058

PLANS PREPARED BY :
PARSONS
RALEIGH, NORTH CAROLINA, (919) 854-1345
NC LICENSE NO. F-0246
FOR NORTH CAROLINA DEPT. OF TRANSPORTATION

PROJECT REFERENCE NO.	SHEET NO.
I-5501	2-B

ROADWAY DESIGN ENGINEER
NORTH CAROLINA PROFESSIONAL SEAL 22606 ENGINEER DAVID C. WALKER
6-25-13

PAVEMENT DESIGN ENGINEER
NORTH CAROLINA PROFESSIONAL SEAL 13368 ENGINEER DON-CHI CHEN
7/25/13

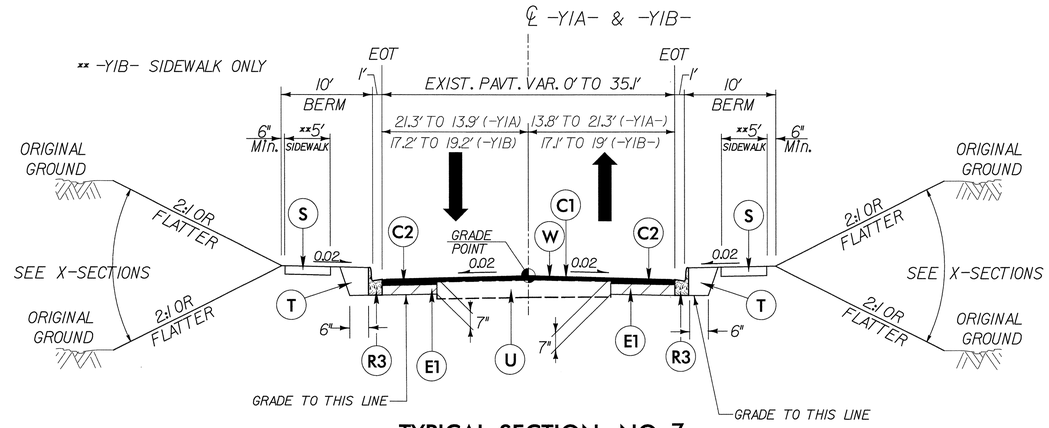

TYPICAL SECTION NO. 7

-Y1A- STA. 12+00.00 TO STA. 13+27.47
-Y1B- STA. 11+27.43 TO STA. 12+02.91

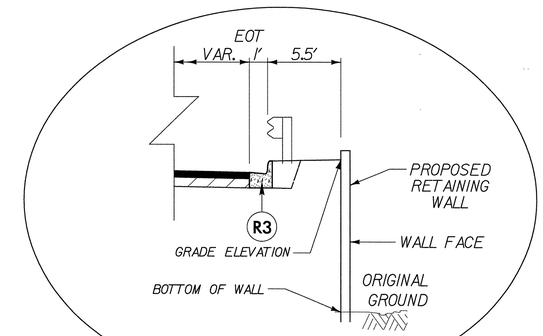

DETAIL "C"

-Y1A- STA. 12+79.32 RT. TO STA. 15+17.10 RT.

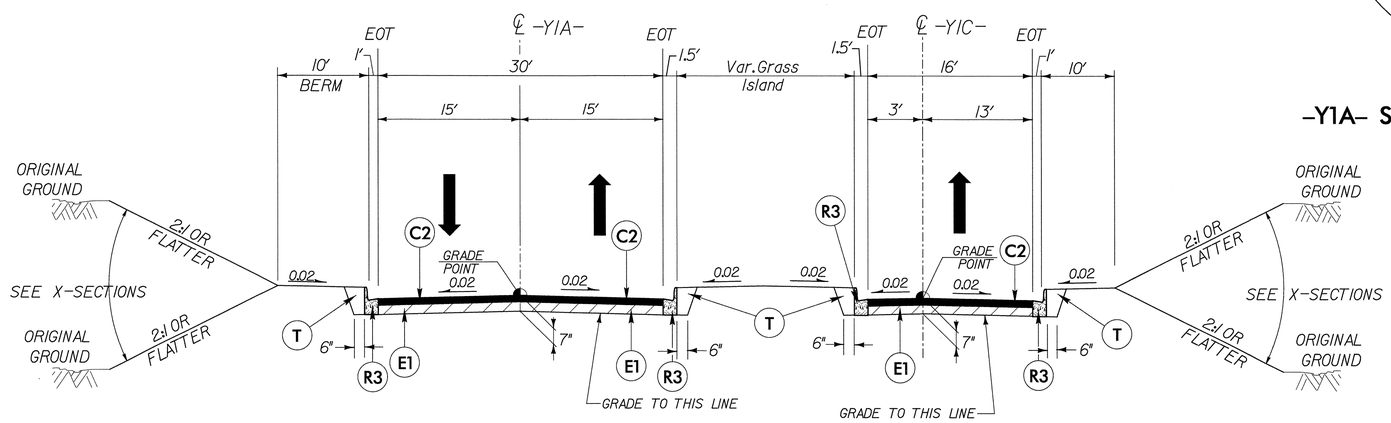

TYPICAL SECTION NO. 8

-Y1A- STA. 14+39.91 TO STA. 15+34.93
-Y1C- STA. 11+69.70 TO STA. 12+77.52

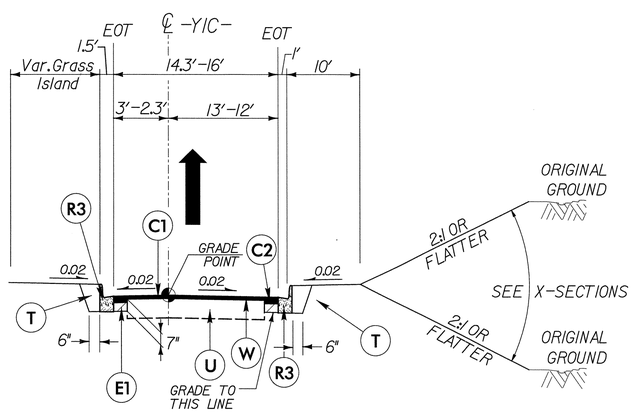

TYPICAL SECTION NO. 9

-Y1C- STA. 12+77.52 TO STA. 13+50.00

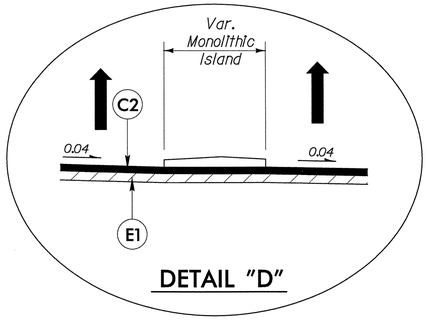

DETAIL "D"

-Y1A- STA. 13+27.47 TO STA. 14+39.91

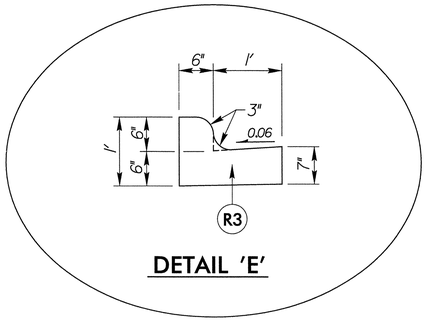

DETAIL 'E'

18" CONCRETE CURB AND GUTTER
(SEE GENERAL NOTES STD. 846.01)

6/2/99

6/24/2013
H:\Roadway\Proj\I-5501_Rdy_typ.dgn
Florence & Hutcheson, Inc.

C1	1.5" S9.5B
C2	3" S9.5B
C3	VAR S9.5B
E1	4" B25.0B
E3	VAR B25.0B
R1	2'-6" C&G
R3	18" C&G
S	4" SIDEWALK
T	EARTH MATERIAL
U	EXIST. PAVEMENT
W	VAR WEDGING

Florence & Hutcheson
An ICA Company
3121 Hillsborough Valley Suite 150 Raleigh, NC 27607
NC License No: F-0246
PLANS PREPARED BY :
PARSONS
RALEIGH, NORTH CAROLINA, (919) 854-1345
NC LICENSE NO. F-0246
FOR NORTH CAROLINA DEPT. OF TRANSPORTATION

PROJECT REFERENCE NO.	SHEET NO.
I-5501	2-C

ROADWAY DESIGN ENGINEER
NORTH CAROLINA PROFESSIONAL SEAL 22606 ENGINEER DAVID C. WALER
6-25-13

PAVEMENT DESIGN ENGINEER
NORTH CAROLINA PROFESSIONAL SEAL 13398 ENGINEER JASON CHI CHEN
7/25/13

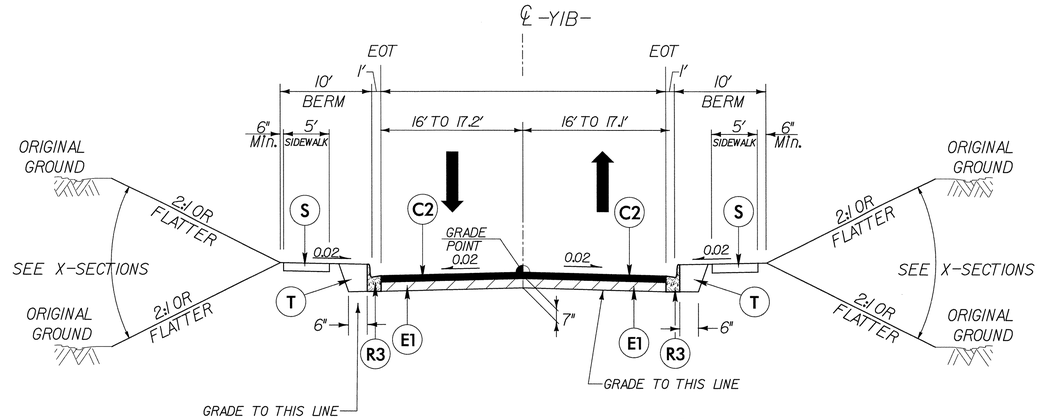

TYPICAL SECTION NO. 10

-Y1B- STA. 10+13.77 TO STA. 11+27.43

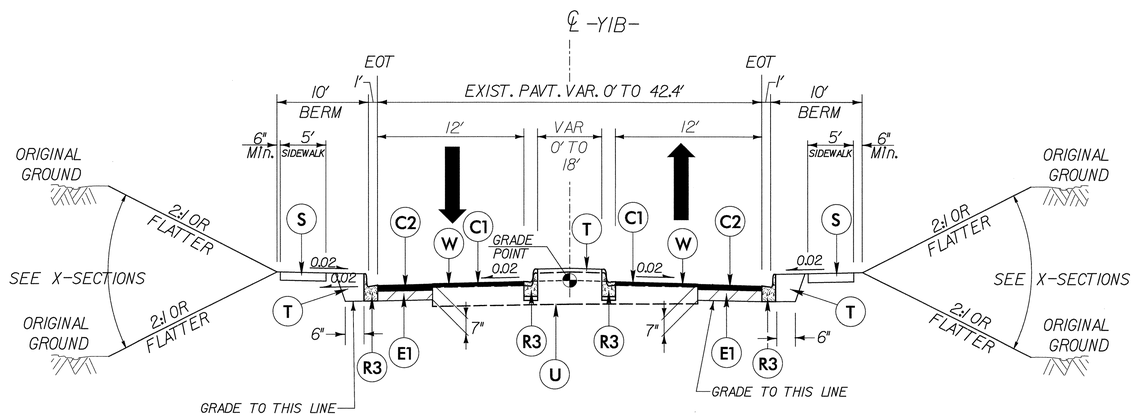

TYPICAL SECTION NO. 11

-Y1B- STA. 12+02.91 TO STA. 12+84.30

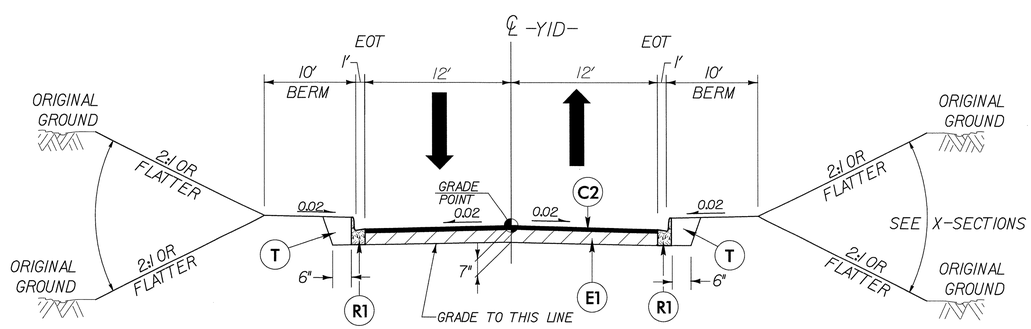

TYPICAL SECTION NO. 12

-Y1D- STA. 10+66.01 TO STA. 12+60.37

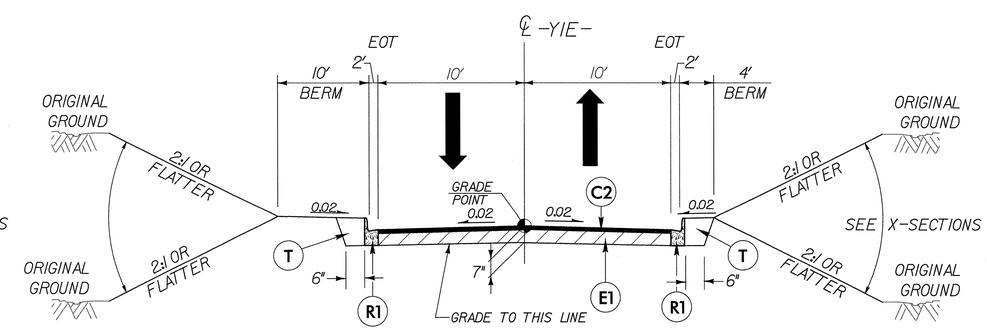

TYPICAL SECTION NO. 13

-Y1E- STA. 10+11.62 TO STA. 12+50.00

6/2/99
6/24/2013
d:\Roadway\Proj\I-5501_Rdy_typ.dgn
Florence & Hutcheson, Inc.

8/17/99

Florence & Hutcheson
An ICA Company
5121 Kingdom Way, Suite 100 Raleigh, NC 27607
NC License No: F-0258

PROJECT REFERENCE NO.	SHEET NO.
I-5501	2-D
R/W SHEET NO.	

ROADWAY DESIGN ENGINEER
NORTH CAROLINA PROFESSIONAL SEAL 22606 ENGINEER DAVID C. WALLER
6-4-13

HYDRAULICS ENGINEER
NORTH CAROLINA PROFESSIONAL SEAL 24451 ENGINEER STACEY H. BAILEY
6/4/2013

DETAIL A
SPECIAL BACK OF CURB CUT DITCH
(NOT TO SCALE)

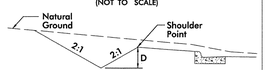

FROM STA. 14+40 TO STA. 15+40 -L- RT

DETAIL B
SPECIAL LATERAL 'V' DITCH
(Not to Scale)

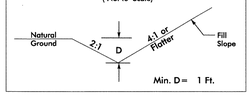

FROM STA. 15+00 TO STA. 17+50 -L- LT
FROM STA. 18+36 TO STA. 20+50 -L- LT
FROM STA. 10+35 TO STA. 11+40 -RPB_SPUR_RT- RT
FROM STA. 21+00 TO STA. 23+00 -RPC-- RT
FROM STA. 20+50 TO STA. 21+00 -RPC-- RT
FROM STA. 10+54 TO STA. 11+50 -Y1B- RT

DETAIL C
TOE PROTECTION
(Not to Scale)

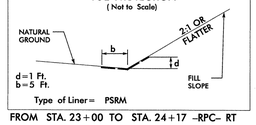

FROM STA. 23+00 TO STA. 24+17 -RPC- RT

DETAIL D
SPECIAL CUT DITCH w/HINGE
(Not to Scale)

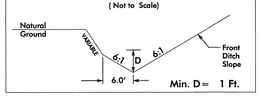

FROM STA. 12+81 TO STA. 13+65 -RPD- LT

DETAIL E
TAIL 'V' DITCH
(Not to Scale)

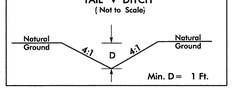

STA. 10+50 -Y1E- LT

DETAIL I
FALSE SUMP
(Not to Scale)

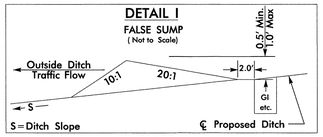

STA. 18+25 -L- LT
STA. 14+20 -RPB- RT
STA. 17+65 -RPD- LT

DETAIL III
FALSE SUMP
(Not to Scale)

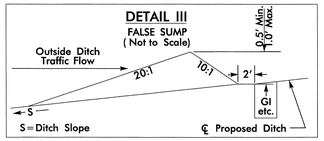

STA. 24+14 -RPC- RT

6/4/2013
R:\Drainage\I5501_hyd_drn_det.dgn
Florence & Hutcheson, Inc.

DDI DETAIL SHEET

Florence & Hutcheson
An ICA Company
5121 Kingsdown Way, Suite 100 Raleigh, NC 27607
NC License No: F-0258

PROJECT REFERENCE NO.	SHEET NO.
I-5501	2-E
R/W SHEET NO.	

ROADWAY DESIGN ENGINEER: NORTH CAROLINA PROFESSIONAL SEAL 22606 ENGINEER DAVID C. WALLER 6-25-13

HYDRAULICS ENGINEER: NORTH CAROLINA PROFESSIONAL SEAL 24451 ENGINEER STACEY H. BAILEY 6-25-13

FOR -DDI- PLAN, SEE SHEET 5

NAD 83/NSRS 2007

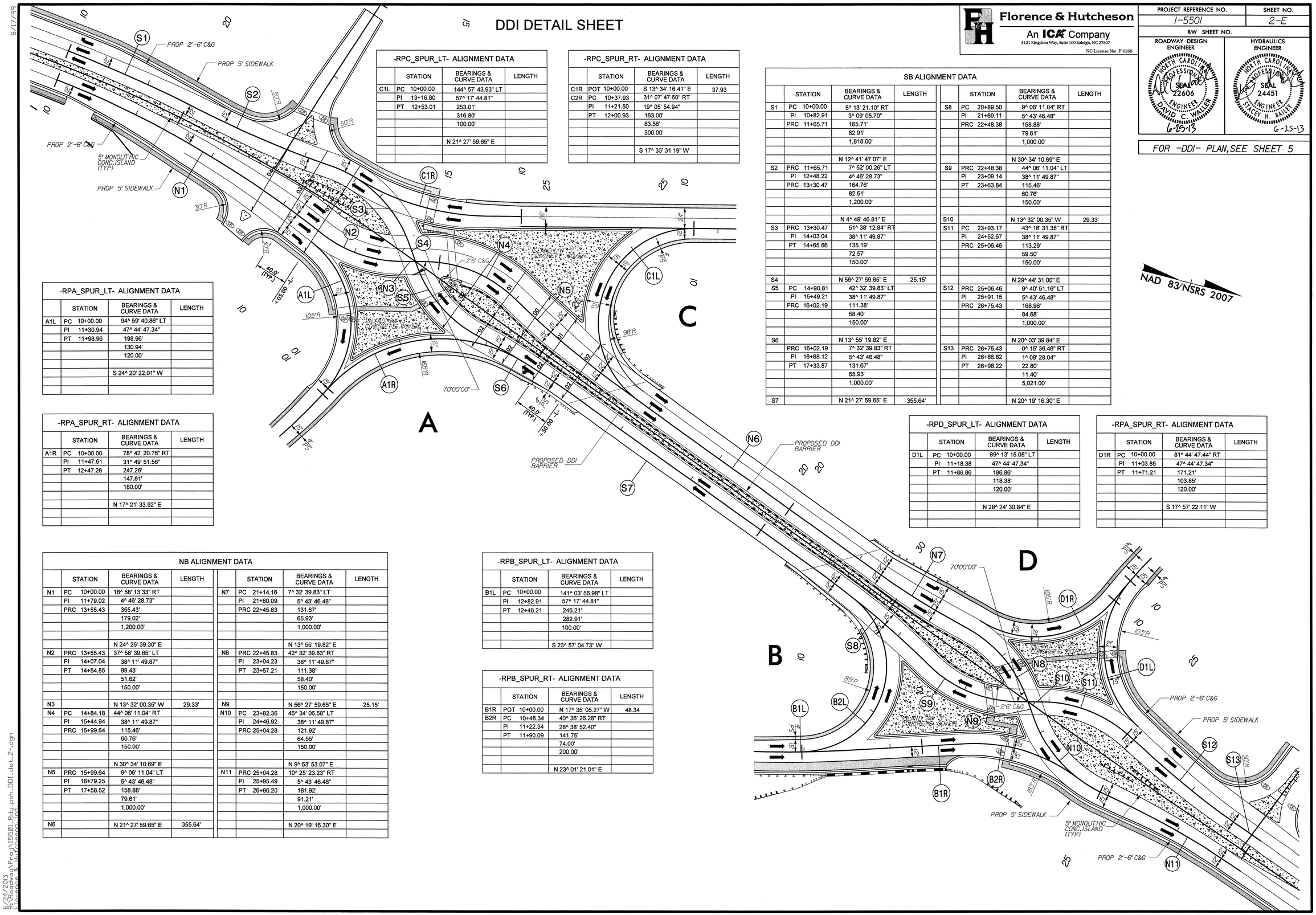

-RPC_SPUR_LT- ALIGNMENT DATA			
	STATION	BEARINGS & CURVE DATA	LENGTH
C1L	PC 10+00.00	144^ 57' 43.93" LT	
	PI 13+16.80	57^ 17' 44.81"	
	PT 12+53.01	253.01'	
		316.80'	
		100.00'	
		N 21^ 27' 59.65" E	

-RPC_SPUR_RT- ALIGNMENT DATA			
	STATION	BEARINGS & CURVE DATA	LENGTH
C1R	POT 10+00.00	S 13^ 34' 16.41" E	37.93
C2R	PC 10+37.93	31^ 07' 47.60" RT	
	PI 11+21.50	19^ 05' 54.94"	
	PT 12+00.93	163.00'	
		83.56'	
		300.00'	
		S 17^ 33' 31.19" W	

SB ALIGNMENT DATA							
	STATION	BEARINGS & CURVE DATA	LENGTH		STATION	BEARINGS & CURVE DATA	LENGTH
S1	PC 10+00.00	5^ 13' 21.10" RT		S8	PC 20+89.50	9^ 06' 11.04" RT	
	PI 10+82.91	3^ 09' 05.70"			PI 21+69.11	5^ 43' 46.48"	
	PRC 11+65.71	165.71'			PRC 22+48.38	158.88'	
		82.91'				79.61'	
		1,818.00'				1,000.00'	
		N 12^ 41' 47.07" E				N 30^ 34' 10.69" E	
S2	PRC 11+65.71	7^ 52' 00.26" LT		S9	PRC 22+48.38	44^ 06' 11.04" LT	
	PI 12+48.22	4^ 46' 28.73"			PI 23+09.14	38^ 11' 49.87"	
	PRC 13+30.47	164.76'			PT 23+63.84	115.46'	
		82.51'				60.76'	
		1,200.00'				150.00'	
		N 4^ 49' 46.81" E		S10		N 13^ 32' 00.35" W	29.33'
S3	PRC 13+30.47	51^ 38' 12.84" RT		S11	PC 23+93.17	43^ 16' 31.35" RT	
	PI 14+03.04	38^ 11' 49.87"			PI 24+52.67	38^ 11' 49.87"	
	PT 14+65.66	135.19'			PRC 25+06.46	113.29'	
		72.57'				59.50'	
		150.00'				150.00'	
S4		N 56^ 27' 59.65" E	25.15'			N 29^ 44' 31.00" E	
S5	PC 14+90.81	42^ 32' 39.83" LT		S12	PRC 25+06.46	9^ 40' 51.16" LT	
	PI 15+49.21	38^ 11' 49.87"			PI 25+91.15	5^ 43' 46.48"	
	PRC 16+02.19	111.38'			PRC 26+75.43	168.96'	
		58.40'				84.68'	
		150.00'				1,000.00'	
S6		N 13^ 55' 19.82" E				N 20^ 03' 39.84" E	
	PRC 16+02.19	7^ 32' 39.83" RT		S13	PRC 26+75.43	0^ 15' 36.46" RT	
	PI 16+68.12	5^ 43' 46.48"			PI 26+86.82	1^ 08' 28.04"	
	PT 17+33.87	131.67'			PT 26+98.22	22.80'	
		65.93'				11.40'	
		1,000.00'				5,021.00'	
S7		N 21^ 27' 59.65" E	355.64'			N 20^ 19' 16.30" E	

-RPA_SPUR_LT- ALIGNMENT DATA			
	STATION	BEARINGS & CURVE DATA	LENGTH
A1L	PC 10+00.00	94^ 59' 40.86" LT	
	PI 11+30.94	47^ 44' 47.34"	
	PT 11+98.96	198.96'	
		130.94'	
		120.00'	
		S 24^ 20' 22.01" W	

-RPA_SPUR_RT- ALIGNMENT DATA			
	STATION	BEARINGS & CURVE DATA	LENGTH
A1R	PC 10+00.00	78^ 42' 20.76" RT	
	PI 11+47.61	31^ 49' 51.56"	
	PT 12+47.26	247.26'	
		147.61'	
		180.00'	
		N 17^ 21' 33.92" E	

-RPD_SPUR_LT- ALIGNMENT DATA			
	STATION	BEARINGS & CURVE DATA	LENGTH
D1L	PC 10+00.00	89^ 13' 15.05" LT	
	PI 11+18.38	47^ 44' 47.34"	
	PT 11+86.86	186.86'	
		118.38'	
		120.00'	
		N 28^ 24' 30.84" E	

-RPA_SPUR_RT- ALIGNMENT DATA			
	STATION	BEARINGS & CURVE DATA	LENGTH
D1R	PC 10+00.00	81^ 44' 47.44" RT	
	PI 11+03.85	47^ 44' 47.34"	
	PT 11+71.21	171.21'	
		103.85'	
		120.00'	
		S 17^ 57' 22.11" W	

NB ALIGNMENT DATA							
	STATION	BEARINGS & CURVE DATA	LENGTH		STATION	BEARINGS & CURVE DATA	LENGTH
N1	PC 10+00.00	16^ 58' 13.33" RT		N7	PC 21+14.16	7^ 32' 39.83" LT	
	PI 11+79.02	4^ 46' 28.73"			PI 21+80.09	5^ 43' 46.48"	
	PRC 13+55.43	355.43'			PRC 22+45.83	131.67'	
		179.02'				65.93'	
		1,200.00'				1,000.00'	
		N 24^ 26' 39.30" E				N 13^ 55' 19.82" E	
N2	PRC 13+55.43	37^ 58' 39.65" LT		N8	PRC 22+45.83	42^ 32' 39.83" RT	
	PI 14+07.04	38^ 11' 49.87"			PI 23+04.23	38^ 11' 49.87"	
	PT 14+54.85	99.43'			PT 23+57.21	111.38'	
		51.62'				58.40'	
		150.00'				150.00'	
N3		N 13^ 32' 00.35" W	29.33'	N9		N 56^ 27' 59.65" E	25.15'
N4	PC 14+84.18	44^ 06' 11.04" RT		N10	PC 23+82.36	46^ 34' 06.58" LT	
	PI 15+44.94	38^ 11' 49.87"			PI 24+46.92	38^ 11' 49.87"	
	PRC 15+99.64	115.46'			PRC 25+04.28	121.92'	
		60.76'				64.55'	
		150.00'				150.00'	
		N 30^ 34' 10.69" E				N 9^ 53' 53.07" E	
N5	PRC 15+99.64	9^ 06' 11.04" LT		N11	PRC 25+04.28	10^ 25' 23.23" RT	
	PI 16+79.25	5^ 43' 46.48"			PI 25+95.49	5^ 43' 46.48"	
	PT 17+58.52	158.88'			PT 26+86.20	181.92'	
		79.61'				91.21'	
		1,000.00'				1,000.00'	
N6		N 21^ 27' 59.65" E	355.64'			N 20^ 19' 16.30" E	

-RPB_SPUR_LT- ALIGNMENT DATA			
	STATION	BEARINGS & CURVE DATA	LENGTH
B1L	PC 10+00.00	141^ 03' 56.98" LT	
	PI 12+82.91	57^ 17' 44.81"	
	PT 12+46.21	246.21'	
		282.91'	
		100.00'	
		S 23^ 57' 04.73" W	

-RPB_SPUR_RT- ALIGNMENT DATA			
	STATION	BEARINGS & CURVE DATA	LENGTH
B1R	POT 10+00.00	N 17^ 35' 05.27" W	48.34
B2R	PC 10+48.34	40^ 36' 26.28" RT	
	PI 11+22.34	28^ 38' 52.40"	
	PT 11+90.09	141.75'	
		74.00'	
		200.00'	
		N 23^ 01' 21.01" E	

8/17/99

6/24/2013
H:\Roadway\Proj\15501_Rdy_psh_DDI_det_2-.dgn
Florence & Hutcheson, Inc.

8/17/99

REVISIONS

CURVE DATA

Florence & Hutcheson
An ICA Company
5121 Kingdom Way, Suite 100 Raleigh, NC 27607
NC License No: F-0258

PROJECT REFERENCE NO.	SHEET NO.
I-5501	2-F
R/W SHEET NO.	
ROADWAY DESIGN ENGINEER	HYDRAULICS ENGINEER
NORTH CAROLINA PROFESSIONAL SEAL 22606 ENGINEER DAVID C. WALLER 6-4-13	NORTH CAROLINA PROFESSIONAL SEAL 24451 ENGINEER STACEY H. BAILEY 6/4/2013

-L- ALIGNMENT DATA

	STATION	BEARINGS & CURVE DATA	LENGTH
L1	PC 10+00.00	20^ 52' 07.44" RT	
	PI 13+51.71	3^ 00' 00.00"	
	PCC 16+95.62	695.62'	
		351.71'	
		1,909.86'	
		N 2^ 33' 19.09" E	
L2	PCC 16+95.62	18^ 54' 40.56" RT	
	PI 19+95.41	3^ 10' 59.16"	
	PT 22+89.74	594.12'	
		299.78'	
		1,800.00'	
		N 21^ 27' 59.65" E	972.57'
L3	PC 32+62.31	1^ 58' 23.79" LT	
	PI 33+48.42	1^ 08' 45.30"	
	PRC 34+34.51	172.20'	
		86.11'	
		5,000.00'	
		N 19^ 29' 35.86" E	
L4	PRC 34+34.51	1^ 58' 23.79" RT	
	PI 35+20.62	1^ 08' 45.30"	
	PT 36+06.71	172.20'	
		86.11'	
		5,000.00'	
L5		N 21^ 27' 59.65" E	190.13'
	PC 37+96.83	5^ 59' 11.00" RT	
	PI 40+96.43	1^ 00' 00.00"	
	PT 43+95.47	598.64'	
		299.59'	
		5,729.58'	

NB ALIGNMENT DATA

	STATION	BEARINGS & CURVE DATA	LENGTH		STATION	BEARINGS & CURVE DATA	LENGTH
N1	PC 10+00.00	16^ 58' 13.33" RT		N7	PC 21+14.16	7^ 32' 39.83" LT	
	PI 11+79.02	4^ 46' 28.73"			PI 21+80.09	5^ 43' 46.48"	
	PRC 13+55.43	355.43'			PRC 22+45.83	131.67'	
		179.02'				65.93'	
		1,200.00'				1,000.00'	
		N 24^ 26' 39.30" E				N 13^ 55' 19.82" E	
N2	PRC 13+55.43	37^ 58' 39.65" LT		N8	PRC 22+45.83	42^ 32' 39.83" RT	
	PI 14+07.04	38^ 11' 49.87"			PI 23+04.23	38^ 11' 49.87"	
	PT 14+54.85	99.43'			PT 23+57.21	111.38'	
		51.62'				58.40'	
		150.00'				150.00'	
N3		N 13^ 32' 00.35" W	29.33'	N9		N 56^ 27' 59.65" E	25.15'
N4	PC 14+84.18	44^ 06' 11.04" RT		N10	PC 23+82.36	46^ 34' 06.58" LT	
	PI 15+44.94	38^ 11' 49.87"			PI 24+46.92	38^ 11' 49.87"	
	PRC 15+99.64	115.46'			PRC 25+04.28	121.92'	
		60.76'				64.55'	
		150.00'				150.00'	
		N 30^ 34' 10.69" E				N 9^ 53' 53.07" E	
N5	PRC 15+99.64	9^ 06' 11.04" LT		N11	PRC 25+04.28	10^ 25' 23.23" RT	
	PI 16+79.25	5^ 43' 46.48"			PI 25+95.49	5^ 43' 46.48"	
	PT 17+58.52	158.88'			PT 26+86.20	181.92'	
		79.61'				91.21'	
		1,000.00'				1,000.00'	
N6		N 21^ 27' 59.65" E	355.64'			N 20^ 19' 16.30" E	

SB ALIGNMENT DATA

	STATION	BEARINGS & CURVE DATA	LENGTH		STATION	BEARINGS & CURVE DATA	LENGTH
S1	PC 10+00.00	5^ 13' 21.10" RT		S8	PC 20+89.50	9^ 06' 11.04" RT	
	PI 10+82.91	3^ 09' 05.70"			PI 21+69.11	5^ 43' 46.48"	
	PRC 11+65.71	165.71'			PRC 22+48.38	158.88'	
		82.91'				79.61'	
		1,818.00'				1,000.00'	
		N 12^ 41' 47.07" E				N 30^ 34' 10.69" E	
S2	PRC 11+65.71	7^ 52' 00.26" LT		S9	PRC 22+48.38	44^ 06' 11.04" LT	
	PI 12+48.22	4^ 46' 28.73"			PI 23+09.14	38^ 11' 49.87"	
	PRC 13+30.47	164.76'			PT 23+63.84	115.46'	
		82.51'				60.76'	
		1,200.00'				150.00'	
		N 4^ 49' 46.81" E		S10		N 13^ 32' 00.35" W	29.33'
S3	PRC 13+30.47	51^ 38' 12.84" RT		S11	PC 23+93.17	43^ 16' 31.35" RT	
	PI 14+03.04	38^ 11' 49.87"			PI 24+52.67	38^ 11' 49.87"	
	PT 14+65.66	135.19'			PRC 25+06.46	113.29'	
		72.57'				59.50'	
		150.00'				150.00'	
S4		N 56^ 27' 59.65" E	25.15'			N 29^ 44' 31.00" E	
S5	PC 14+90.81	42^ 32' 39.83" LT		S12	PRC 25+06.46	9^ 40' 51.16" LT	
	PI 15+49.21	38^ 11' 49.87"			PI 25+91.15	5^ 43' 46.48"	
	PRC 16+02.19	111.38'			PRC 26+75.43	168.96'	
		58.40'				84.68'	
		150.00'				1,000.00'	
S6		N 13^ 55' 19.82" E				N 20^ 03' 39.84" E	
	PRC 16+02.19	7^ 32' 39.83" RT		S13	PRC 26+75.43	0^ 15' 36.46" RT	
	PI 16+68.12	5^ 43' 46.48"			PI 26+86.83	1^ 08' 28.04"	
	PT 17+33.87	131.67'			PT 26+98.22	22.80'	
		65.93'				11.40'	
		1,000.00'				5,021.00'	
S7		N 21^ 27' 59.65" E	355.64'			N 20^ 19' 16.30" E	

-RPD- ALIGNMENT DATA

	STATION	BEARINGS & CURVE DATA	LENGTH
D1	TS 10+00.00	1^ 00' 29.14"	
	PIS 11+23.86	6^ 00' 00.00"	
	SC 12+00.00	200.00'	
		123.86'	
		76.36'	
		S 31^ 15' 58.56" E	
D2	SC 12+00.00	8^ 42' 54.06" LT	
	PI 12+72.77	6^ 00' 00.00"	
	CS 13+45.25	145.25'	
		72.77'	
		954.93'	
		S 39^ 58' 52.62" E	
D3	CS 13+45.25	6^ 00' 00.00" LT	
	PIS 14+11.99	200.00'	
	ST 15+45.25	133.41'	
		66.74'	
		S 45^ 58' 52.62" E	14.25'
D4	TS 15+59.50	7^ 32' 20.11" LT	
	PIS 16+92.95	200.00'	
	SC 17+59.50	133.45'	
		66.78'	
		S 53^ 31' 12.72" E	
D5	SC 17+59.50	10^ 16' 12.60" LT	
	PI 18+27.80	7^ 32' 20.11"	
	PT 18+95.73	136.23'	
		68.30'	
		760.00'	
	POT 20+60.43	S 63^ 47' 25.33" E	164.70'

-Y1B- ALIGNMENT DATA

	STATION	BEARINGS & CURVE DATA	LENGTH
	POT 10+00.00	N 2^ 42' 53.73" W	53.77'
1B1	PC 10+53.77	16^ 40' 15.75" LT	
	PI 11+56.33	8^ 11' 06.40"	
	PT 12+57.44	203.68'	
		102.56'	
		700.00'	
		N 19^ 23' 09.48" W	144.81'
1B2	PC 14+02.25	2^ 18' 07.52" RT	
	PI 14+58.51	2^ 02' 46.60"	
	PT 15+14.75	112.50'	
		56.26'	
		2,800.00'	
		N 17^ 05' 01.96" W	139.50'

-Y1C- ALIGNMENT DATA

	STATION	BEARINGS & CURVE DATA	LENGTH
1C1	PC 10+00.00	125^ 16' 07.65" RT	
	PI 12+78.21	39^ 47' 19.45"	
	PT 13+14.83	314.83'	
		278.21'	
		144.00'	
		S 11^ 38' 07.16" E	71.26'

-Y1- ALIGNMENT DATA

	STATION	BEARINGS & CURVE DATA	LENGTH
		S 87^ 46' 54.89" E	103.85'
Y1-1			
	PC 11+03.85	5^ 22' 39.41" RT	
	PI 11+32.03	9^ 32' 57.47"	
	PCC 11+60.17	56.31'	
		28.18'	
		600.00'	
Y1-2			
		S 82^ 24' 15.48" E	
	PCC 11+60.17	5^ 43' 05.18" LT	
	PI 11+85.14	11^ 27' 32.96"	
	PT 12+10.07	49.90'	
		24.97'	
		500.00'	
		S 88^ 07' 20.67" E	103.87'

-Y1D- ALIGNMENT DATA

	STATION	BEARINGS & CURVE DATA	LENGTH
		N 71^ 38' 56.64" E	66.01'
Y1D-1			
	PC 10+66.01	35^ 13' 48.63" LT	
	PI 11+04.11	47^ 44' 47.34"	
	PCC 11+39.80	73.79'	
		38.10'	
		120.00'	
Y1D-2			
		N 36^ 25' 08.01" E	
	PCC 11+39.80	47^ 04' 55.21" RT	
	PI 11+92.08	47^ 44' 47.34"	
	PT 12+38.41	98.61'	
		52.28'	
		120.00'	
		N 83^ 30' 03.23" E	21.96'

-RPA- ALIGNMENT DATA

	STATION	BEARINGS & CURVE DATA	LENGTH
A1	TS 10+00.00	4^ 00' 00.00" LT	
	PIS 11+33.37	200.00'	
	SC 12+00.00	133.37'	
		66.70'	
		N 33^ 28' 33.35" W	
A2	SC 12+00.00	6^ 15' 07.00" LT	
	PI 12+78.23	4^ 00' 00.00"	
	CS 13+56.30	156.30'	
		78.23'	
		1,432.39'	
		N 39^ 43' 40.35" W	
A3	CS 13+56.30	4^ 00' 00.00" LT	
	PIS 14+23.00	200.00'	
	ST 15+56.30	133.37'	
		66.70'	
		N 43^ 43' 40.35" W	9.92'
A4	PC 15+66.22	31^ 09' 05.14" LT	
	PI 17+78.07	7^ 32' 20.11"	
	PT 19+79.43	413.21'	
		211.85'	
		760.00'	
		N 74^ 52' 45.49" W	

-RPA_SPUR_LT- ALIGNMENT DATA

	STATION	BEARINGS & CURVE DATA	LENGTH
A1L	PC 10+00.00	94^ 59' 40.86" LT	
	PI 11+30.94	47^ 44' 47.34"	
	PT 11+98.96	198.96'	
		130.94'	
		120.00'	
		S 24^ 20' 22.01" W	

-RPA_SPUR_RT- ALIGNMENT DATA

	STATION	BEARINGS & CURVE DATA	LENGTH
A1R	PC 10+00.00	78^ 42' 20.76" RT	
	PI 11+47.61	31^ 49' 51.56"	
	PT 12+47.26	247.26'	
		147.61'	
		180.00'	
		N 17^ 21' 33.92" E	

-RPB_SPUR_LT- ALIGNMENT DATA

	STATION	BEARINGS & CURVE DATA	LENGTH
B1L	PC 10+00.00	141^ 03' 56.98" LT	
	PI 12+82.91	57^ 17' 44.81"	
	PT 12+46.21	246.21'	
		282.91'	
		100.00'	
		S 23^ 57' 04.73" W	

-RPB_SPUR_RT- ALIGNMENT DATA

	STATION	BEARINGS & CURVE DATA	LENGTH
B1R	POT 10+00.00	N 17^ 35' 05.27" W	48.34'
B2R	PC 10+48.34	40^ 36' 26.28" RT	
	PI 11+22.34	28^ 38' 52.40"	
	PT 11+90.09	141.75'	
		74.00'	
		200.00'	
		N 23^ 01' 21.01" E	

-RPB- ALIGNMENT DATA

	STATION	BEARINGS & CURVE DATA	LENGTH
B1	TS 10+00.00	5^ 30' 00.00" RT	
	PIS 11+33.40	200.00'	
	SC 12+00.00	133.40'	
		66.73'	
		N 23^ 58' 33.35" W	
B2	SC 12+00.00	12^ 09' 10.04" RT	
	PI 13+10.90	5^ 30' 00.00"	
	CS 14+20.96	220.96'	
		110.90'	
		1,041.74'	
		N 11^ 49' 23.31" W	
B3	CS 14+20.96	5^ 30' 00.00" RT	
	PIS 14+87.69	200.00'	
	ST 16+20.96	133.40'	
		66.73'	
		N 6^ 19' 23.31" W	215.90'
B4	TS 18+36.86	2^ 44' 00.88" LT	
	PIS 19+20.21	125.00'	
	SC 19+61.86	83.34'	
		41.68'	
		N 9^ 03' 24.18" W	
B5	SC 19+61.86	5^ 47' 40.21" LT	
	PI 20+28.16	4^ 22' 25.41"	
	CS 20+94.35	132.48'	
		66.30'	
		1,310.00'	
		N 14^ 51' 04.40" W	
B6	CS 20+94.35	2^ 44' 00.88" LT	
	PIS 21+36.02	125.00'	
	ST 22+19.35	83.34'	
		41.68'	
		N 17^ 35' 05.27" W	17.73'
B7	PC 22+37.08	39^ 05' 45.94" LT	
	PI 23+08.09	28^ 38' 52.40"	
	PT 23+73.55	136.47'	
		71.01'	
		200.00'	
		N 56^ 40' 51.21" W	

-RPC_SPUR_LT- ALIGNMENT DATA

	STATION	BEARINGS & CURVE DATA	LENGTH
C1L	PC 10+00.00	144^ 57' 43.93" LT	
	PI 13+48.47	52^ 05' 13.46"	
	PT 12+78.31	278.31'	
		348.47'	
		110.00'	
		N 21^ 27' 59.65" E	

-RPC_SPUR_RT- ALIGNMENT DATA

	STATION	BEARINGS & CURVE DATA	LENGTH
C1R	POT 10+00.00	S 13^ 34' 16.41" E	37.93'
C2R	PC 10+37.93	31^ 07' 47.60" RT	
	PI 11+21.50	19^ 05' 54.94"	
	PT 12+00.93	163.00'	
		83.56'	
		300.00'	
		S 17^ 33' 31.19" W	

-RPD_SPUR_LT- ALIGNMENT DATA

	STATION	BEARINGS & CURVE DATA	LENGTH
D1L	PC 10+00.00	89^ 13' 15.05" LT	
	PI 11+18.38	47^ 44' 47.34"	
	PT 11+86.86	186.86'	
		118.38'	
		120.00'	
		N 28^ 24' 30.84" E	

-RPC- ALIGNMENT DATA

	STATION	BEARINGS & CURVE DATA	LENGTH
	POT 10+00.00	S 23^ 35' 00.35" E	105.97'
C1	PC 11+05.97	9^ 00' 44.20" RT	
	PI 15+57.54	0^ 59' 59.73"	
	PT 20+07.26	901.29'	
		451.58'	
		5,730.00'	
		S 14^ 34' 16.15" E	
C2	CS 20+07.26	0^ 59' 59.73"	
	PIS 20+73.93	200.00'	
	ST 22+07.26	133.34'	
		66.67'	
		S 13^ 34' 16.41" E	321.00'
C3	PC 25+28.26	37^ 43' 42.20" LT	
	PI 25+96.60	28^ 38' 52.40"	
	PT 26+59.96	131.70'	
		68.34'	
		200.00'	
		S 51^ 17' 58.61" E	

-RPD_SPUR_RT- ALIGNMENT DATA

	STATION	BEARINGS & CURVE DATA	LENGTH
D1R	PC 10+00.00	81^ 44' 47.44" RT	
	PI 11+03.85	47^ 44' 47.34"	
	PT 11+71.21	171.21'	
		103.85'	
		120.00'	
		S 17^ 57' 22.11" W	

-Y1A- ALIGNMENT DATA

	STATION	BEARINGS & CURVE DATA	LENGTH
1A1	PC 10+00.00	31^ 48' 59.50" RT	
	PI 10+57.00	28^ 38' 52.40"	
	PCC 11+11.06	111.06'	
		57.00'	
		200.00'	
		N 15^ 20' 03.35" E	
1A2	PCC 11+11.06	37^ 15' 11.39" RT	
	PI 12+12.85	18^ 58' 19.60"	
	PCC 13+07.42	196.36'	
		101.79'	
		302.00'	
		N 52^ 35' 14.74" E	972.57'
1A3	PCC 13+07.42	51^ 57' 53.38" RT	
	PI 13+80.52	38^ 11' 49.87"	
	PT 14+43.46	136.04'	
		73.10'	
		150.00'	
		S 75^ 26' 51.88" E	125.16'

-Y1E- ALIGNMENT DATA

	STATION	BEARINGS & CURVE DATA	LENGTH
		N 3^ 12' 03.36" E	89.53'
1E-1	PC 10+89.53	22^ 20' 16.37" RT	
	PI 11+58.64	16^ 22' 12.80"	
	PT 12+25.99	136.45'	
		69.10'	
		350.00'	
		N 25^ 32' 19.73" E	47.81'

6/4/2013
R:\Roadway\Proj\I5501_Rdy_psh_Curve_Data_det_2-.dgn
Florence & Hutcheson, Inc.

Florence & Hutcheson
An ICA Company
5121 Kingdom Way, Suite 100 Raleigh, NC 27607
NC License No: F-0258

PROJECT REFERENCE NO.	SHEET NO.
I-5501	2-G
R/W SHEET NO.	

ROADWAY DESIGN ENGINEER
NORTH CAROLINA PROFESSIONAL SEAL 22606 ENGINEER DAVID C. WALLACE
6-4-13

HYDRAULICS ENGINEER
NORTH CAROLINA PROFESSIONAL SEAL 24451 ENGINEER TACEY H. BAILEY
6/4/2013

CROSS-SECTION /SHEAR POINT LAYOUT

NAD 83/NSRS 2007

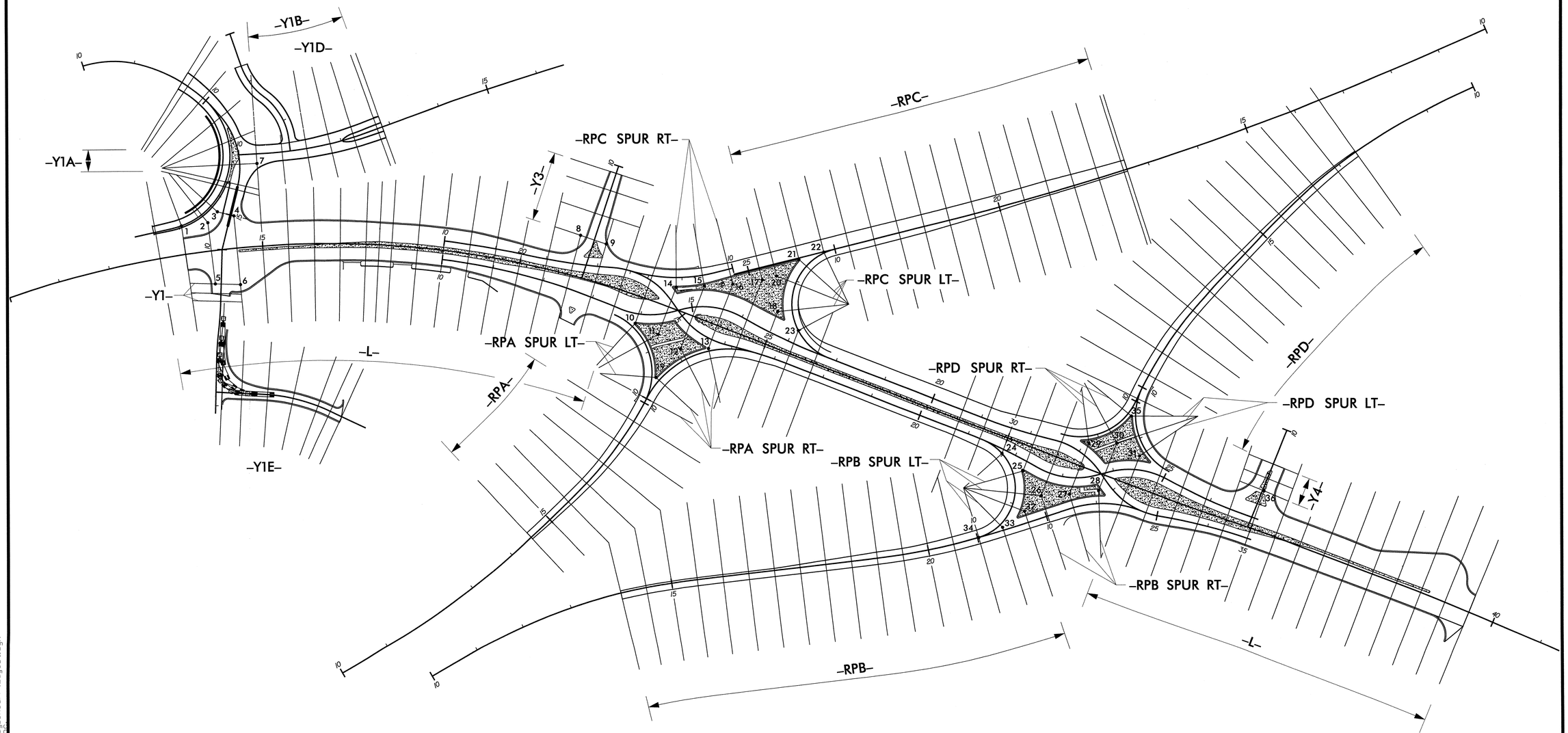

REVISIONS

8/17/99

6/4/2013
R:\Roadway\Proj\I5501_Rdy_ShearPtLayout.dgn
Florence & Hutcheson, Inc.

PROJECT REFERENCE NO.	SHEET NO.
I-5501	2-H

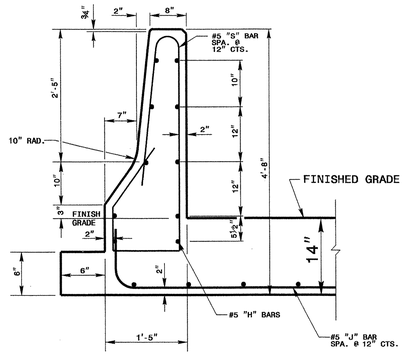

DETAIL X-X

CROSS SECTIONAL VIEW

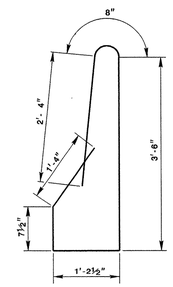

S - BARS

#5 BAR

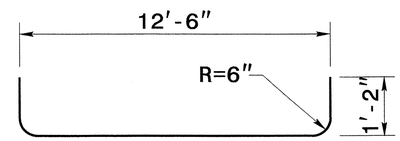

J - BARS

#5 BAR

GENERAL NOTES:

-CLASS 'B' CONCRETE TO BE USED THROUGHOUT.

-REINFORCING STEEL TO BE CUT, BENT OR RELOCATED TO POSITION PIPE AS DIRECTED BY THE ENGINEER.

-ALL EXPOSED CORNERS TO BE CHAMFERED 1".

-MAINTAIN 2" MINIMUM CONCRETE COVERAGE ON ALL STEEL.

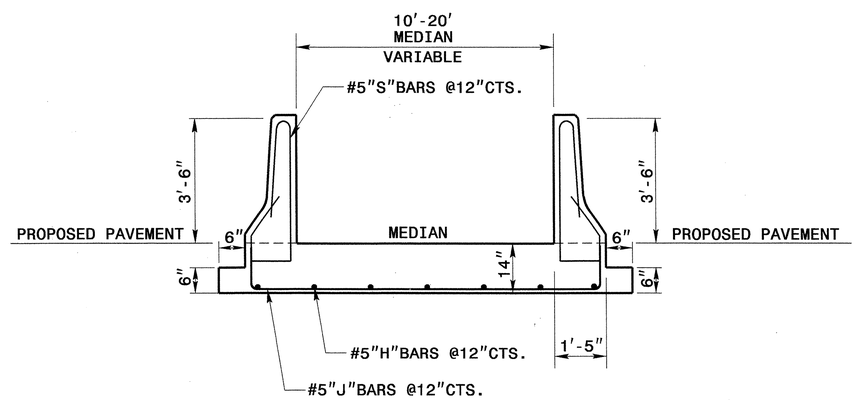

CROSS SECTIONAL VIEW

BILL OF MATERIAL

CODE	BAR#	LENGTH	LBS/FT.	QTY.	LBS
H	5	19'-8"	1.043	968	19,856
J	5	14'-6"	1.043	924	13,974
S	5	9'-8"	1.043	924	9,317
		TOTAL WEIGHT STEEL			43,147

MASONARY QUANTITIES

CLASS "B" CONCRETE SINGLE FACE BARRIER AND MEDIAN	695 CU.YDS.
TOTAL CLASS "B" CONCRETE	695 CU.YDS.

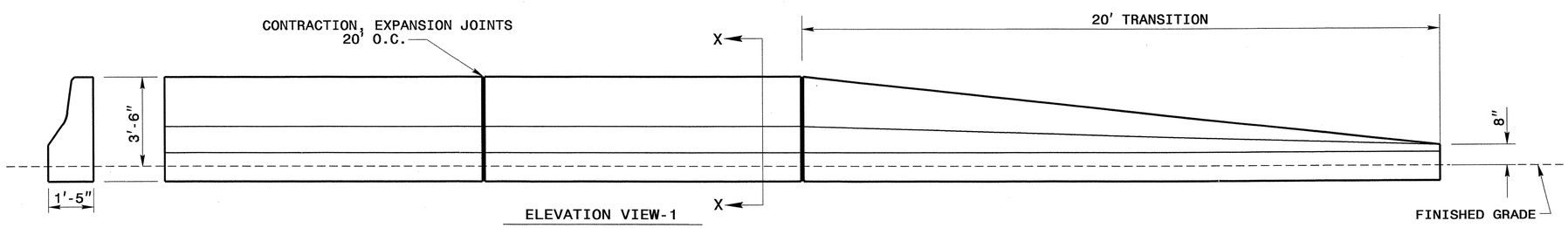

ELEVATION VIEW-1

NORTH CAROLINA PROFESSIONAL SEAL 022966 ENGINEER

7/12/13

CONTRACT STANDARDS
STANDARDS AND SPECIAL DESIGN
Office 919-250-4128 FAX 919-250-4119

DDI BARRIER

ORIGINAL BY: DATE:
MODIFIED BY: nbritt DATE: 4-26-13
CHECKED BY: DATE: 4/30/13
FILE SPEC.: details\nbritt\english\interstate\i5501 bridge barrier.dgn

5/14/99

$$$$$$SYSTIME$$$$$$
$$$$$$DATE$$$$$$
$$$$$$USERNAME$$$$$$
$$$$$$DGN$$$$$$

8/17/99

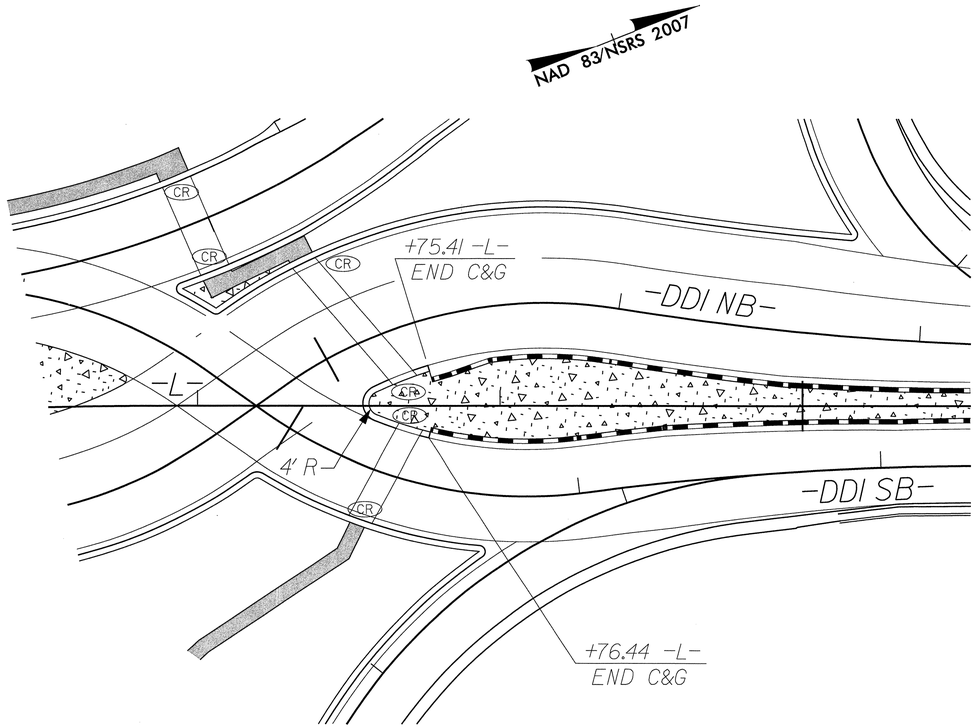

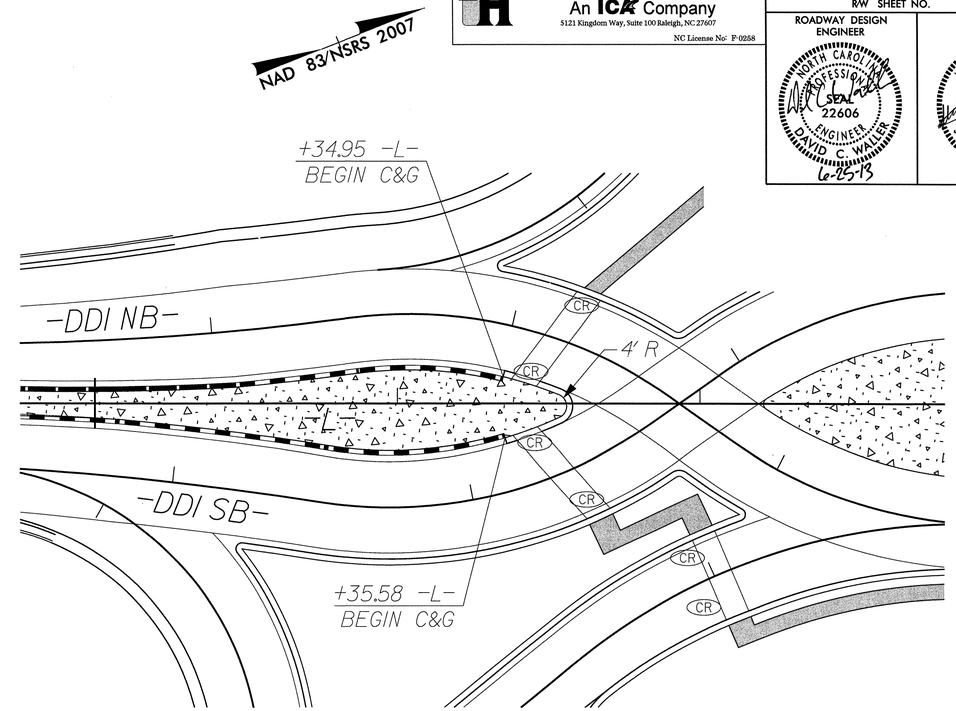

Florence & Hutcheson
An ICA Company
5121 Kingdom Way, Suite 100 Raleigh, NC 27607
NC License No: F-0258

PROJECT REFERENCE NO.	SHEET NO.
I-5501	2-I
R/W SHEET NO.	

ROADWAY DESIGN ENGINEER	HYDRAULICS ENGINEER
NORTH CAROLINA PROFESSIONAL SEAL 22606 ENGINEER DAVID C. WALLER 6-25-13	NORTH CAROLINA PROFESSIONAL SEAL 24451 ENGINEER STACEY H. BAILEY 6-25-13

INTERSECTION DETAILS

6/25/2013
R:\Roadway\Proj\I-5501_Rdy_intersection_det_2i.dgn
Florence & Hutcheson, Inc.

PROJECT REFERENCE NO.	SHEET NO.
I-5501	2-J

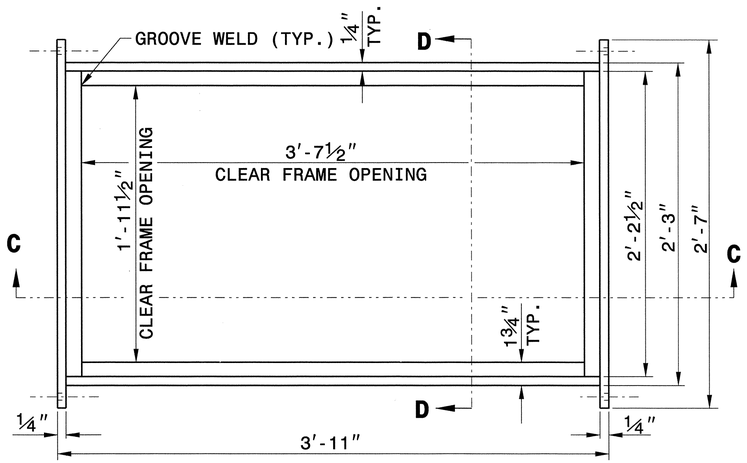

PLAN VIEW

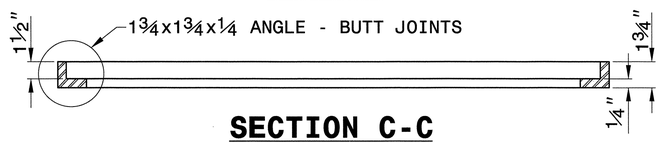

SECTION C-C
FRAME

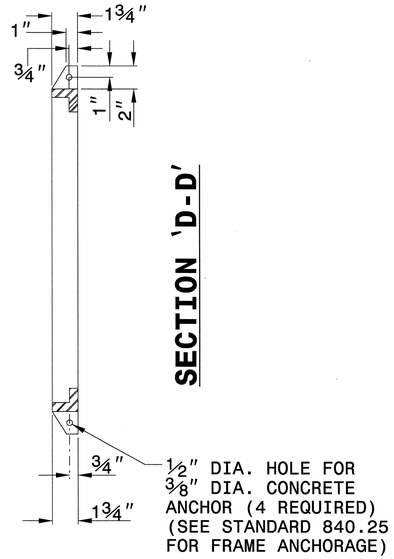

SECTION 'D-D'

NOTES:

1. HOT DIP GALVANIZE FRAME AND GRATE IN ACCORDANCE WITH ASTM DESIGNATION A-123 AND AASHTO M-111.
2. GRATE SHOULD MEET HS-20 LOADING.
3. PROVIDE STEEL CONFORMING TO THE REQUIREMENTS OF A.S.T.M. DESIGNATION A-36.
4. WELD IN ACCORDANCE WITH THE ANSI/AASHTO/AWS D1.5 WELDING CODE. SEAL WELD ALL CONNECTIONS ALONG TOP AND BOTTOM HORIZONTAL SEAMS OF CONNECTIONS IN ADDITION TO ANY REQUIRED STRUCTURAL WELDS.
5. SEE DETAIL DRAWING 840D25 FOR FRAME ANCHORAGE.

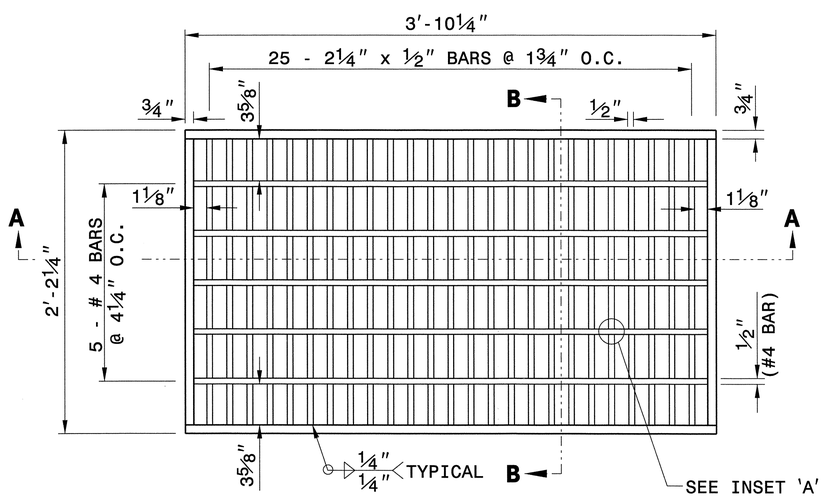

PLAN VIEW

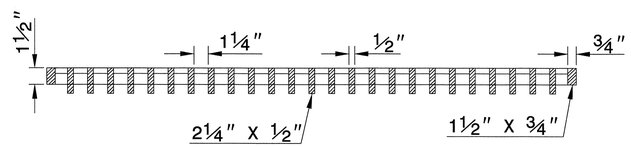

SECTION A-A
GRATE

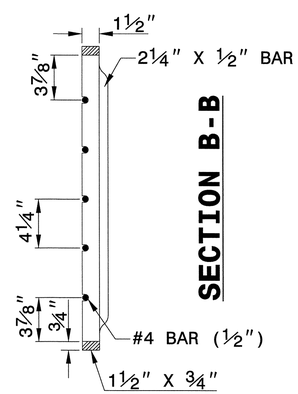

SECTION B-B

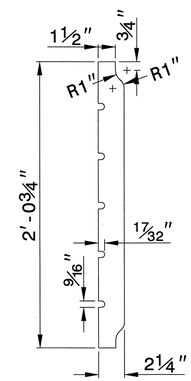

DETAIL OF BEARING BAR

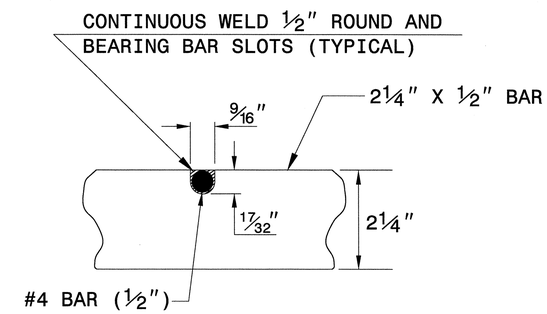

INSET 'A'

(17/32" X 9/16" NOTCH IN 2 1/4" X 1/2" BAR)

REVISED 10-10-02
FOR HS-20 LOADING

NORTH CAROLINA PROFESSIONAL SEAL 022966 ENGINEER JOHN F. HOUNEHAN
7/12/13

CONTRACT STANDARDS AND DEVELOPMENT UNIT
Office 919-707-6950 FAX 919-250-4119

BICYCLE SAFE STEEL GRATE AND FRAME

ORIGINAL BY: E.E. WARD DATE: 11-12-98
MODIFIED BY: E.E. WARD DATE: 10-10-02
CHECKED BY: DATE:
FILE SPEC.: /usr/stand/details/bicyclesafe.dgn

$$$$$$SYSTIME$$$$$$
$$$$$$$$$$$$$$$$$$$$$$$$$$$$$$$$
$$$$$$USERNAME$$$$$$

PROJECT REFERENCE NO.	SHEET NO.
I-5501	2-K

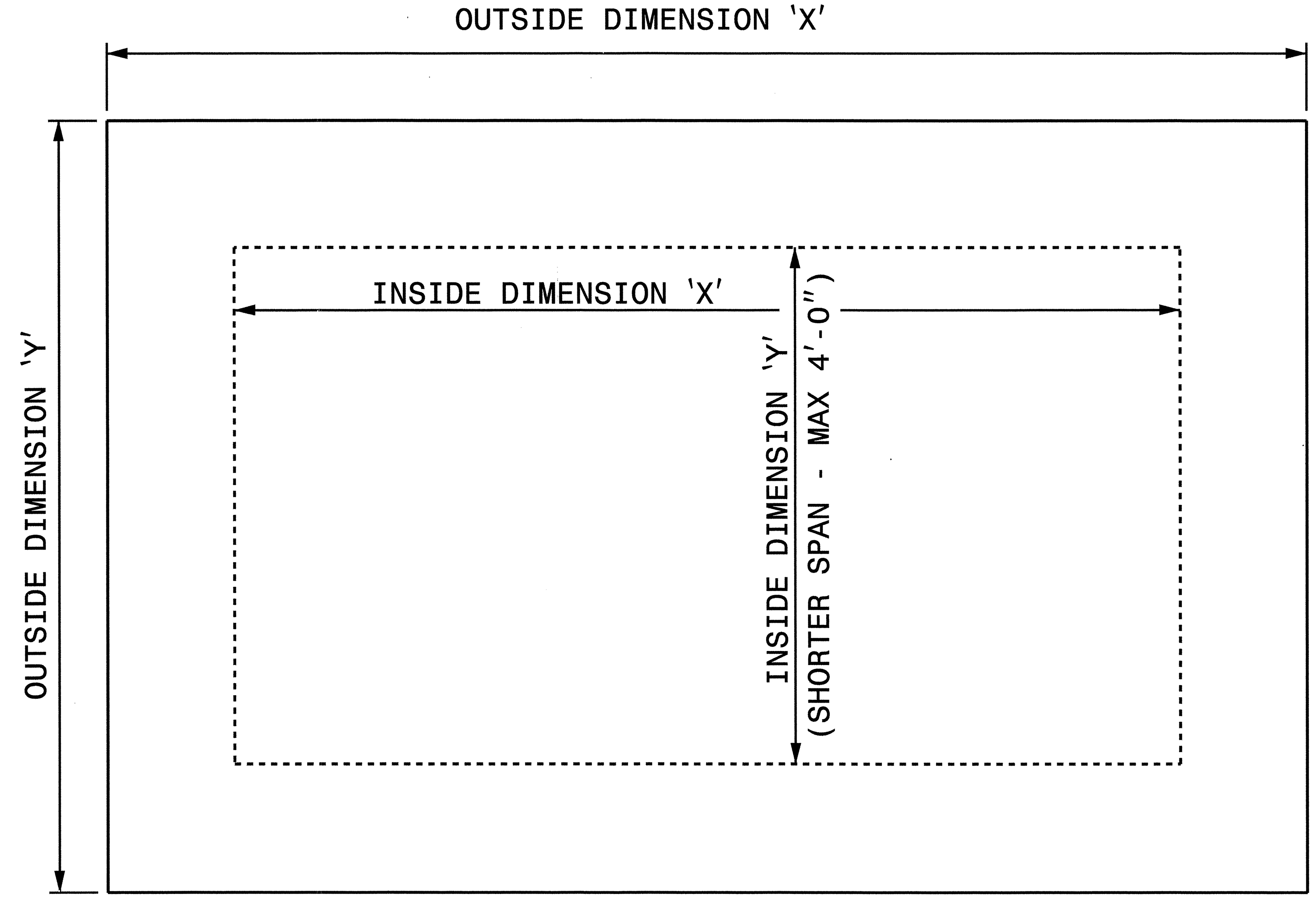

PLAN VIEWS

GENERAL NOTES:

-USE GRADE A36 STEEL
-STEEL COVERS ARE FOR TEMPORARY USE DURING PHASE CONSTRUCTION.
-FILL SHALL BE PLACED DIRECTLY OVER THE STEEL PLATES.
-SEE ROADWAY PLANS AND PROVISIONS FOR LOCATIONS
-QUANTITES TO BE PAID FOR AT THE UNIT PRICE BID PER EACH.

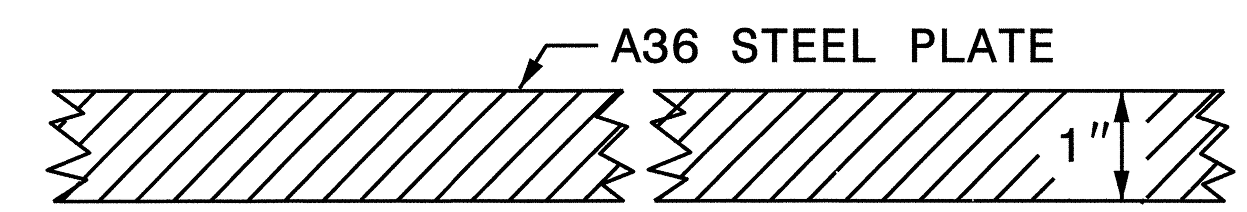

SECTION VIEW OF STEEL TOP PLATE

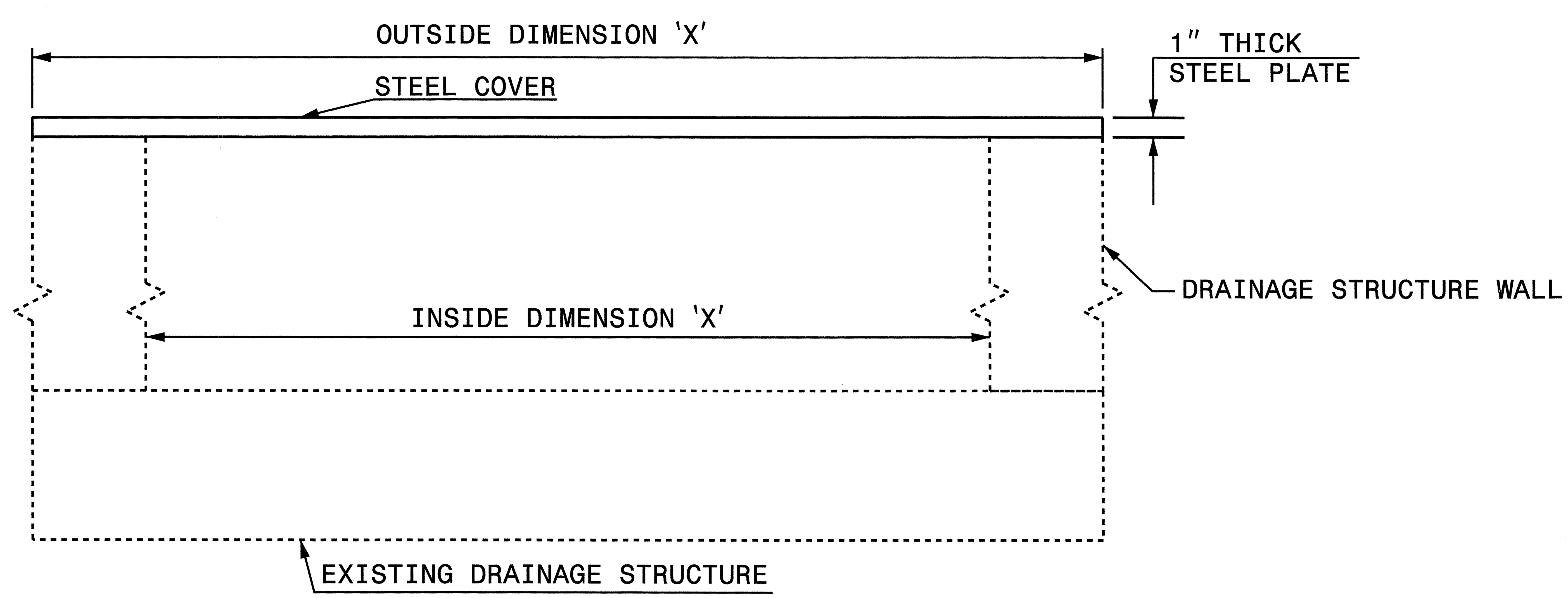

ELEVATION VIEWS

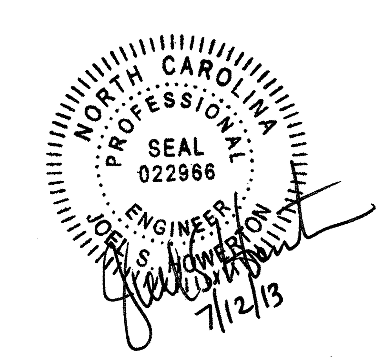

$$$$SYSTIME$$$$
$$$$$$$$$$DGN$$$$$$$$$$$$$$$$$$$$
$$$$USERNAME$$$$

CONTRACT STANDARDS
AND DEVELOPMENT UNIT
Office 919-707-6950 FAX 919-250-4119

DETAIL OF TEMPORARY
1" STEEL COVER
OVER DRAINAGE STRUCTURE

ORIGINAL BY: E.E. WARD DATE: 2-2-98
MODIFIED BY: DATE:
CHECKED BY: DATE:
FILE SPEC.: eric:/usr/details/metric/stand/stlcvr2.dgn

STATE OF NORTH CAROLINA
DEPT. OF TRANSPORTATION
DIVISION OF HIGHWAYS
RALEIGH, N.C.

ENGLISH DETAIL DRAWING FOR
GUARDRAIL ANCHOR UNIT TYPE B-77 SHOP CURVED

SHEET 1 OF 2
B-77SC

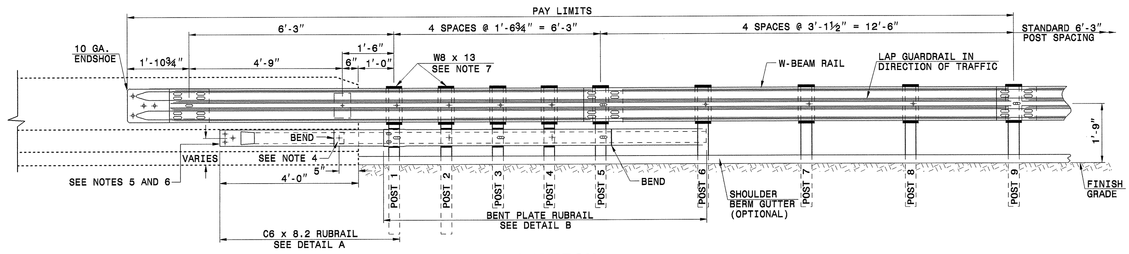

ELEVATION

GENERAL NOTES:
1) POSTS 1 THROUGH 5 REQUIRE AN ADDITIONAL HOLE TO ATTACH LOWER BLOCKOUTS AND/OR RUBRAIL.
2) RUBRAIL BLOCKOUTS LOCATED ON POSTS 1 THROUGH 4 ARE OFFSET DRILLED AND SECURED WITH ⅝" BUTTONHEAD BOLTS (SEE CHART FOR BOLT LENGTHS). SECURE BLOCKS ONLY TO POSTS 2 AND 4. SECURE RUBRAIL AND BLOCKOUTS TO POSTS 1 AND 3. RUBRAIL IS SECURED TO POST 5 WITH A ⅝" x 4½" BUTTONHEAD BOLT. RUBRAIL IS FLARED TO BACK OF POST 6 AND NOT SECURED.
3) STEEL SPACER TUBE IS A SCHEDULE 40 GALVANIZED PIPE 6" INSIDE DIAMETER x 9" LONG. ATTACH TUBE TO GUARDRAIL ONLY WITH ⅝" x 1¼" LONG BUTTONHEAD BOLT AND RECTANGULAR PLATE WASHER.
4) SEE DETAIL D FOR SLOPED RUBRAIL BLOCKOUT. BLOCKOUT IS ATTACHED TO RAIL ELEMENT ONLY. USE ⅜" x 3" LAG BOLT WITH FLAT WASHER.
5) SHOP FABRICATE THE C6 x 8.2 RUBRAIL END TO BE CONSISTENT WITH THE SLOPE OF THE JERSEY SHAPE AND ATTACH FLUSH WITH THE SLOPED TOE OF THE BARRIER OR BRIDGE RAIL.
6) ANCHORAGE:
   (a) AT EXISTING BRIDGE RAIL AND NEW OR EXISTING BARRIERS, RUBRAIL SHALL BE ANCHORED USING THREE ⅝" x 6" CHEMICALLY ANCHORED BOLTS WITH WASHERS. MAXIMUM PROJECTION FOR BOLTS SHALL BE ½".
   (b) AT EXISTING BRIDGE RAIL AND NEW OR EXISTING BARRIERS, THE W-BEAM END SHOE SHALL BE ANCHORED USING A 4 BOLT HOLD DOWN PLATE. A 4 BOLT INSERT ASSEMBLY IS ALLOWED ON PRECAST REINFORCED CONCRETE BARRIER (SEE STANDARD 862.04). THE W-BEAM END SHOE SHALL BE INSTALLED BEHIND THE NESTED W-BEAM ELEMENTS.
   (c) AT NEW BRIDGE RAIL, THE W-BEAM END SHOE AND RUBRAIL SHALL BE ANCHORED AS DETAILED ON THE STRUCTURE PLANS.
7) POSTS 1 AND 2 ARE W8 x 13, 7'-6" LONG. ALL OTHER POSTS IN THE ANCHOR UNIT ARE W6 x 8.5.

SEE ROADWAY PLANS FOR END TREATMENT

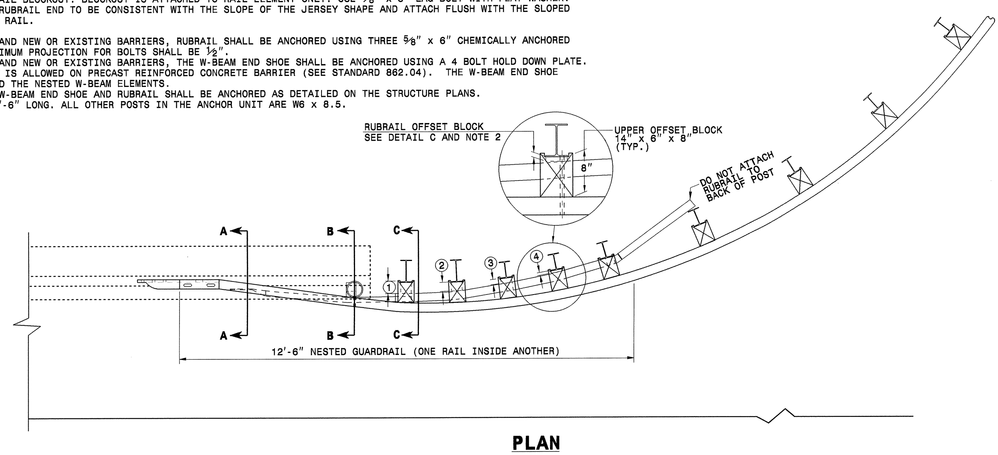

PLAN

GUARDRAIL ANCHOR UNIT TYPE B-77

STATE OF NORTH CAROLINA
DEPT. OF TRANSPORTATION
DIVISION OF HIGHWAYS
RALEIGH, N.C.

ENGLISH DETAIL DRAWING FOR
GUARDRAIL ANCHOR UNIT TYPE B-77 SHOP CURVED

SHEET 1 OF 2
B-77SC

STATE OF NORTH CAROLINA
DEPT. OF TRANSPORTATION
DIVISION OF HIGHWAYS
RALEIGH, N.C.

ENGLISH DETAIL DRAWING FOR
GUARDRAIL ANCHOR UNIT TYPE B-77 SHOP CURVED

SHEET 2 OF 2
B-77SC

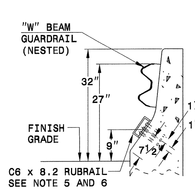

SECTION A-A

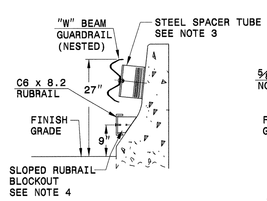

SECTION B-B

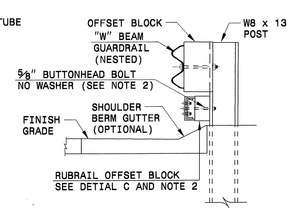

SECTION C-C

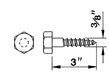

DETAIL E
LAG BOLT

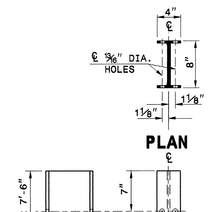

DETAIL F STEEL POST
"W8 X 13 X 7'-6"

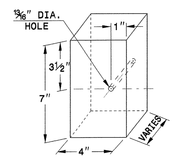

DETAIL C
RUBRAIL BLOCKOUT

RUBRAIL BLOCKS 7" HIGH x 4" WIDE		
POST	THICKNESS	BOLT LENGTH
1	4¼"	9"
2	3¼"	5" *
3	2"	6"
4	1"	3" *

* BOLTS FOR POSTS 2 AND 4 ARE USED TO ATTACH BLOCK TO POST. RUBRAIL NOT ATTACHED TO BLOCK.

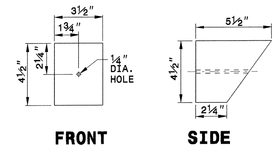

DETAIL D
SLOPED RUBRAIL BLOCKOUT

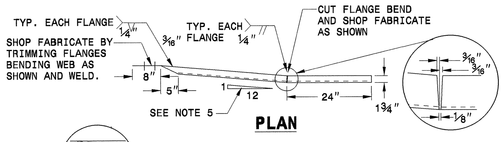

PLAN

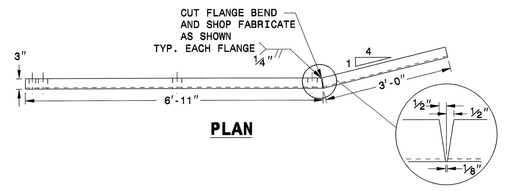

PLAN

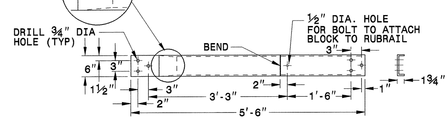

ELEVATION
DETAIL A
C6 x 8.2 RUBRAIL

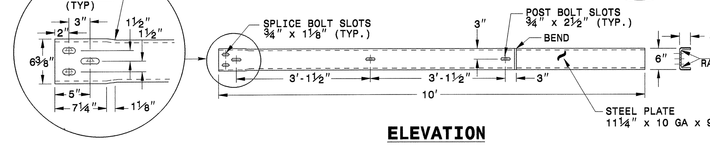

ELEVATION
DETAIL B
BENT PLATE RUBRAIL

GUARDRAIL ANCHOR UNIT TYPE B-77

STATE OF NORTH CAROLINA
DEPT. OF TRANSPORTATION
DIVISION OF HIGHWAYS
RALEIGH, N.C.

ENGLISH DETAIL DRAWING FOR
GUARDRAIL ANCHOR UNIT TYPE B-77 SHOP CURVED

SHEET 2 OF 2
B-77SC

CONTRACT STANDARDS AND DEVELOPMENT UNIT
Office 919-707-6950 FAX 919-250-4119

SEE PLATE FOR TITLE

ORIGINAL BY: E.E. WARD DATE: 06-04-04
MODIFIED BY: DATE:
CHECKED BY: DATE: 4/20/13
FILE SPEC.: ...\b77sguardrail\NCHRP350approved\B-77.dgn

NORTH CAROLINA PROFESSIONAL SEAL 022896 ENGINEER

PROJECT REFERENCE NO. I-5501
SHEET NO. 2-L

PROJECT REFERENCE NO.	SHEET NO.
I-5501	2-M

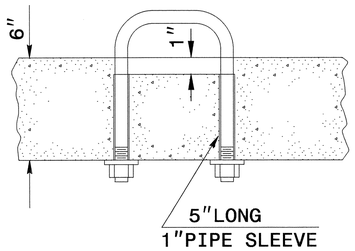

PARTIAL SECTION

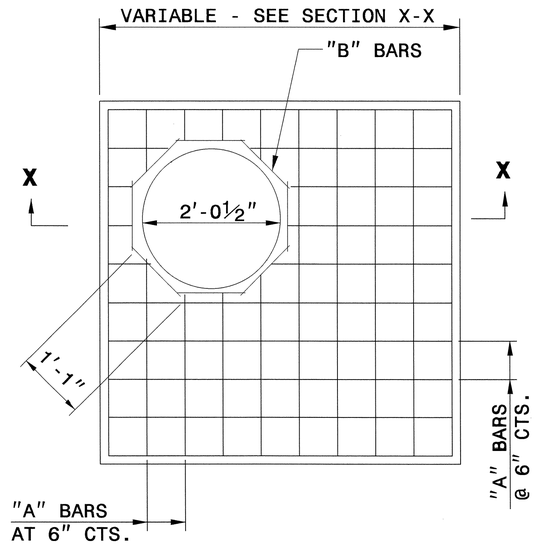

PLAN

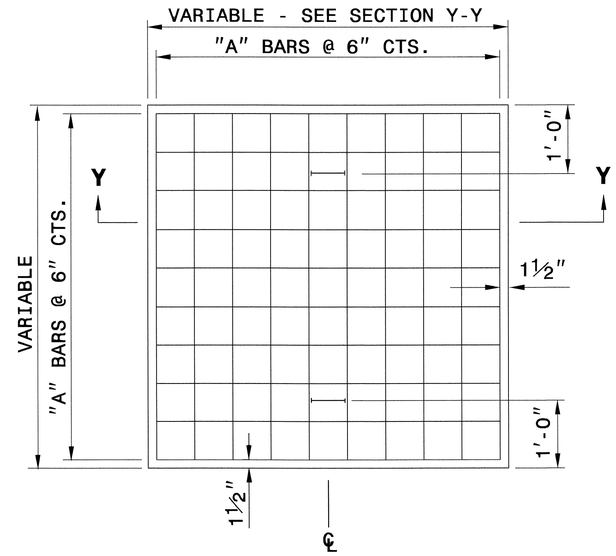

PLAN

GENERAL NOTES:

CONSTRUCT IN ACCORDANCE WITH SECTION 859 OF THE STANDARD SPECIFICATIONS.

THE DIMENSIONS FOR THE EXISTING BOXES ARE APPROXIMATE AND MAY VARY SLIGHTLY.

DETAIL INTENDED FOR NON-TRAFFIC BEARING DRAINAGE STRUCTURES.

BILL OF MATERIALS

REINFORCING STEEL				
CODE	SIZE	QTY.	LENGTH	REINF. STEEL LBS.
A	#4	20	4'-6"	60.12
B	#4	8	1'-1"	5.79
TOTAL				65.91 *

MASONRY	CU YDS
TOP SLAB CONCRETE CLASS "B"	.4326 *
BRICK MASONRY PER FT HT (MIN)	.4111

* NOTE:
QUANTITIES BASED ON 3'-6" X 3'-6" DRAINAGE STRUCTURE. ADJUST QUANTITIES FOR LARGER STRUCTURES AND MANHOLE CONSTRUCTION.

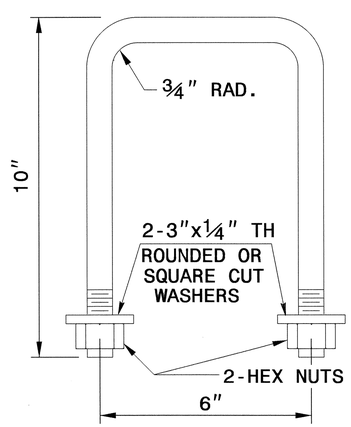

DETAIL OF HANDLE

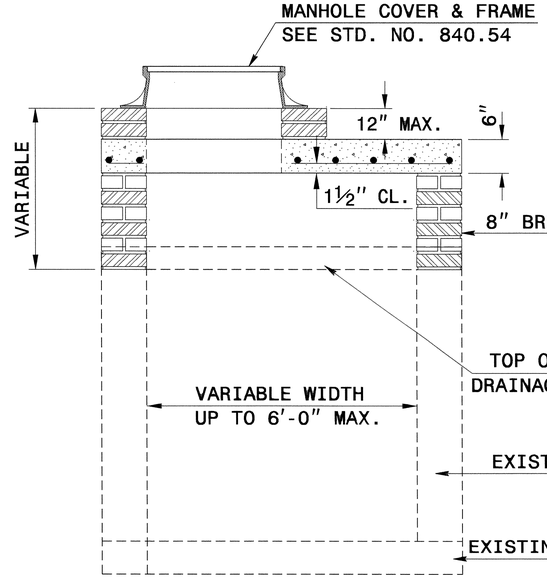

SECTION X-X

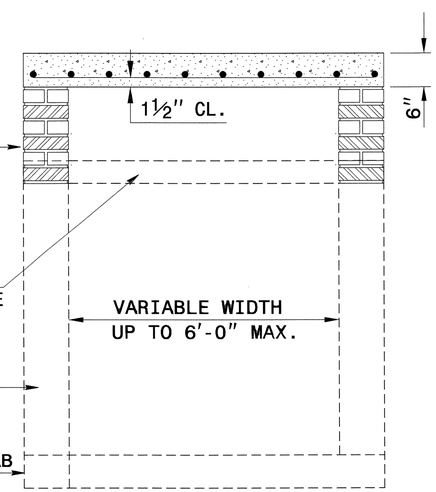

SECTION Y-Y

NORTH CAROLINA PROFESSIONAL SEAL 022966 ENGINEER
7/12/13

CONTRACT STANDARDS AND DEVELOPMENT UNIT
Office 919-707-6950 FAX 919-250-4119

DETAIL TO CONVERT EXISTING DROP INLET OR CATCH BASIN TO JUNCTION BOX (MANHOLE OPTIONAL)

ORIGINAL BY: T.S.S. DATE: NOV.1997
MODIFIED BY: T.S.S. DATE: FEB.2000
CHECKED BY: [signature] DATE: 6/20/13
FILE SPEC.: d174:/usr/details/stand/boxtojbe.dgn

$$$$SYSTIME$$$$
$$$$USERNAME$$$$

PROJECT REFERENCE NO.	SHEET NO.
I-5501	2-N

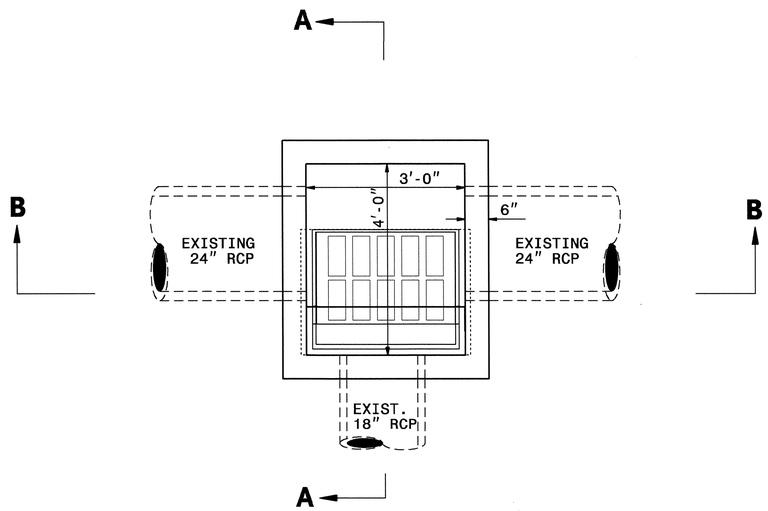

PLAN

GENERAL NOTES:

1. USE CLASS "B" CONCRETE THROUGHOUT.
2. CONSTRUCT CONCRETE BOX IN ACCORDANCE WITH SECTION 825 OF THE STANDARD SPECIFICATIONS.
3. USE FORMS TOR CONSTRUCT THE BOTTOM SLAB.
4. ADJUST LENGTH OF STEEL BARS AS NEEDED TO COMPENSATE FOR PIPES AND FRAME AND GRATE OPENINGS.
5. REINFORCING STEEL SHALL CONFORM TO ASTM A 615, GRADE 400.
6. CUT OR BEND STEEL BARS AS NEEDED TO PROVIDE 2" CLEARANCE.
7. LOCATE FRAME AND GRATE AS FIELD CONDITIONS DICTATE AND AS DIRECTED BY THE ENGINEER.
8. DIMENSIONS OF CATCH BASIN MAY BE ADSUSTED AS DIRECTED BY THE ENGINEER.
9. INSTALL STEPS FOR ALL STRUCTURES OVER 3' IN HEIGHT. SEE STANDARD. 840.66

BILL OF MATERIALS

BAR	QTY	SIZE	LENGTH	WEIGHT
A	15	#5	3'-8"	57
B	8	#5	4'-8"	39
C	8	#5	2'-0"	17
TOTAL REINF. STEEL (lbs.)				113
TOTAL CONC. CU. YDS.				1.7

NO DEDUCTIONS HAVE BEEN MADE TO ACCOMMODATE PIPES OR CATCH BASIN OPENING.

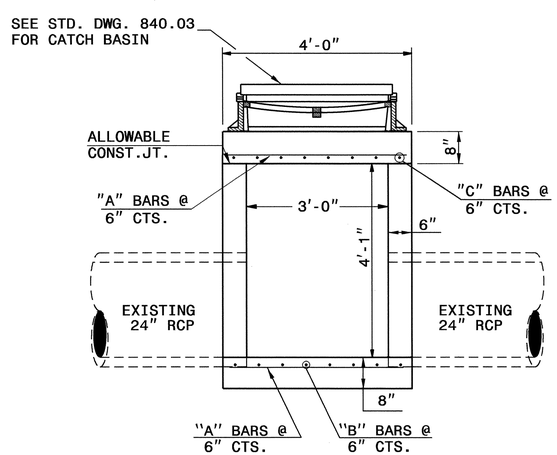

SECTION B-B

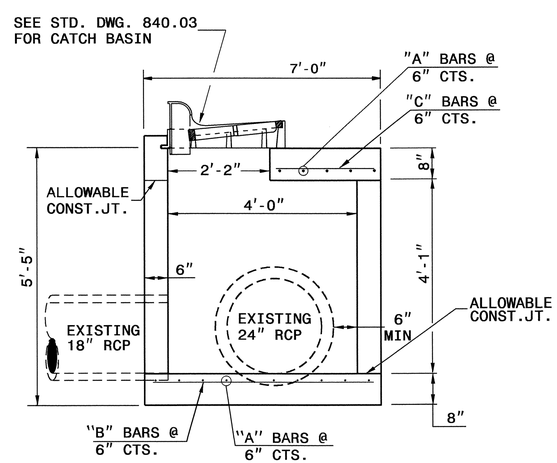

SECTION A-A

NORTH CAROLINA PROFESSIONAL SEAL 022986 ENGINEER JOHN E. HOWERTON
7/12/13

CONTRACTS STANDARDS AND DEVELOPMENT UNIT
Office 919-707-6950 FAX 919-250-4119

DETAIL OF SPECIAL CATCH BASIN

ORIGINAL BY: T.S.SPELL DATE: MAY 22,2008
MODIFIED BY: K.A.KEMPF DATE: MAY 15,2012
CHECKED BY: DATE: 6/26/13
FILE SPEC.: s/details/kkempf/english/cb36rcpoffset.dgn

26-JUN-2013 14:28
S:\Contracts\Contracts\Special Details\kkempf\english\cb36rcpoffset.dgn
$$$$USERNAME$$$$

NC10404

COMPUTED BY: DBG DATE: 5/10/2013

CHECKED BY: JMP DATE: 5/10/2013

NORTH CAROLINA DEPARTMENT OF TRANSPORTATION
DIVISION OF HIGHWAYS

PROJECT NO.	SHEET NO.
I-5501	3-A

Note: Invert Elevations indicated are for Bid Purposes only and shall not be used for project construction stakeout.

LIST OF PIPES, ENDWALLS, ETC. (FOR PIPES 48 INCHES & UNDER)

STATION / SIZE / THICKNESS OR GAUGE	LOCATION (LT, RT, OR CL)	STRUCTURE NO. FROM	STRUCTURE NO. TO	TOP ELEVATION	INVERT ELEVATION	INVERT ELEVATION	SLOPE CRITICAL	SIDE DRAIN PIPE (RCP, CSP, CAAP, HDPE, or PVC) 12"	15"	18"	24"	30"	36"	42"	48"	DO NOT USE RCP	DO NOT USE CSP	DO NOT USE CAAP	DO NOT USE HDPE
Y1 10+95	LT	0401		2153.2															
		0401	0402		2150.4	2150.1													
Y1 10+67	LT	0402		2153.3															
		0402	0403		2150.1	2148.5													
Y1 10+67	RT	0403		2151.8															
		0403	0404		2148.5	2147.3													
Y1 10+87	RT	0404		2152.8															
L 19+93	RT	0405																	
L 19+40	RT	0406		2170.6															
		0406	0407		2163.9	2163.8													
L 19+28	RT	0407		2170.7															
L 18+09	RT	0408		2165.4															
L 18+36	LT	0409		2164.5															
		0409	0410		2161.5	2161.2													
L 18+34	LT	0410		2161.7															
L 18+19	CL	0411		2168.2	2160.7														
L 18+11	RT	0412		2160.4															
L 17+04	RT	0413																	
L 17+11	RT	0414		2163.0															
Y1E 12+74	LT	0458		2166.5															
		0458	0415		2160.4	2159.0													
Y1E 12+00	LT	0415		2164.0															
L 16+11	RT	0416																	
L 16+13	RT	0417		2159.8	2154.8														
L 17+26	LT	0419	0420		2156.2	2155.3													
L 15+62	LT	0420		2156.6															
L 15+39	RT	0421		2157.2															
		0421	0422		2154.0	2153.6													
L 15+39	RT	0422		2157.8															
L 15+00	CL	0423		2157.6															
		0423	0424		2154.4	2153.2													
L 14+65	CL	0424		2156.6															
		0424	0425		2153.2	2151.0													
L 14+65	RT	0425		2154.2															
L 13+35	RT	0426		2150.8															
Y3 11+73	LT	0427		2175.4															
		0427	0428		2174.2	2172.8													
		0434	0435		2157.5	2154.3													
Y1B 10+48	LT	0435		2157.8															
		0435	0438		2154.3	2152.4				12									
Y1B 11+27	LT	0436		2158.9															
	LT	0436	0437		2157.4	2156.0													
Y1D 12+14	RT	0437		2159.8															
Y1B 10+48		0438		2156.5															
Y1A 13+49	LT	0439		2153.6															
		0439	0441		2153.6	2151.5													
Y3 13+98	CL	0440		2156.4															
		0440	0441		2153.1	2152.2													
Y3 13+47	CL	0441		2155.5															
		0441	0442		2151.5	2150.6													
	CL	0442		2155.2															
Y1A 12+04	RT	0443		2149.4															
SHEET TOTALS										12									

STATION	FROM	TO	C.S. PIPE 12" .064	15" .064	18" .064	24" .064	30" .079	36" .079	42" .109	48" .109	R.C. PIPE CLASS III 12"	15"	18"	24"	30"	36"	42"	48"	R.C. PIPE CLASS IV 12"	15"	18"	24"	30"	36"	42"	48"
Y1 10+95	0401																									
	0401	0402																		32						
Y1 10+67	0402																									
	0402	0403																		48						
Y1 10+67	0403																									
	0403	0404																		20						
Y1 10+87	0404																									
L 19+93	0405																									
L 19+40	0406																									
	0406	0407																			12					
L 19+28	0407																									
L 18+09	0408																									
L 18+36	0409																									
	0409	0410											12													
L 18+34	0410																									
L 18+19	0411																									
L 18+11	0412																									
L 17+04	0413																									
L 17+11	0414																									
Y1E 12+74	0458																									
	0458	0415																				76				
Y1E 12+00	0415																									
L 16+11	0416																									
L 16+13	0417																									
L 17+26	0419	0420										32														
L 15+62	0420																									
L 15+39	0421																									
	0421	0422																		8						
L 15+39	0422																									
L 15+00	0423																									
	0423	0424																		36						
L 14+65	0424																									
	0424	0425																		28						
L 14+65	0425																									
L 13+35	0426																									
Y3 11+73	0427																									
	0427	0428										40														
	0434	0435																			60					
Y1B 10+48	0435																									
	0435	0438																								
Y1B 11+27	0436																									
	0436	0437																			42					
Y1D 12+14	0437																									
Y1B 10+48	0438																									
Y1A 13+49	0439																									
	0439	0441																		8						
Y3 13+98	0440																									
	0440	0441																		48						
Y3 13+47	0441																									
	0441	0442																				12				
	0442																									
Y1A 12+04	0443																									
SHEET TOTALS												72	12							228	114	88				

STATION	FROM	TO	24" WELDED STEEL PIPE, 0.50" THICK, GRADE B, IN SOIL	24" WELDED STEEL PIPE, 0.50" THICK, GRADE B, NOT IN SOIL	24" WELDED STEEL PIPE, 0.50" THICK, GRADE B, OPEN CUT	15" SIDE DRAIN PIPE	18" SIDE DRAIN PIPE	ENDWALLS STD. 838.01 838.11 OR STD. 838.80 (UNLESS NOTED OTHERWISE) CU. YARDS R.C.P.	C.S.P.	QUANTITIES FOR DRAINAGE STRUCTURES PER EACH (0' THRU 5.0')	*TOTAL L.F. FOR PAY QUANTITY SHALL BE COL. 'A' + (1.3 X COL.'B') LIN. FT. A 5.0' THRU 10.0'	B 10.0' AND ABOVE	C.B. STD. 840.01 OR STD. 840.02	FRAME, GRATES, AND HOOD STANDARD 840.03 TYPE OF GRATE E	F	G	CONCRETE TRANSITIONAL SECTION DROP INLET	CATCH BASIN
Y1 10+95	0401									1								
	0401	0402																
Y1 10+67	0402									1								
	0402	0403																
Y1 10+67	0403									1			1	1				
	0403	0404																
Y1 10+87	0404									1			1			1		
L 19+93	0405																	
L 19+40	0406									1	1.67		1			1		
	0406	0407																
L 19+28	0407									1	1.86							
L 18+09	0408																	
L 18+36	0409									1								
	0409	0410																
L 18+34	0410																	
L 18+19	0411									1	2.57						1	
L 18+11	0412																	
L 17+04	0413																	
L 17+11	0414																	
Y1E 12+74	0458									1	1.6							
	0458	0415																
Y1E 12+00	0415									1	1.11		1		1			
L 16+11	0416																	
L 16+13	0417									1	0.15					1		
L 17+26	0419	0420																
L 15+62	0420																	
L 15+39	0421									1			1			1		
	0421	0422																
L 15+39	0422									1								
L 15+00	0423									1							1	
	0423	0424																
L 14+65	0424									1							1	
	0424	0425																
L 14+65	0425									1								
L 13+35	0426																	
Y3 11+73	0427																	
	0427	0428																
	0434	0435																
Y1B 10+48	0435									1			1		1			
	0435	0438																
Y1B 11+27	0436																	
	0436	0437																
Y1D 12+14	0437									1			1		1			
Y1B 10+48	0438									1								
Y1A 13+49	0439																	
	0439	0441																
Y3 13+98	0440									1							1	
	0440	0441																
Y3 13+47	0441									1							1	
	0441	0442																
	0442									1							1	
Y1A 12+04	0443																	
SHEET TOTALS										22	8.96		7	1	3	4	6	

STATION	FROM	TO	D.I. STD. 840.14 OR STD. 840.15	D.I. FRAME AND GRATE STD. 840.16	G.D.I. TYPE "A" STD. 840.17 OR 840.26	G.D.I. TYPE "B" STD. 840.18 OR 840.27	G.D.I. TYPE "D" STD. 840.19 OR 840.28	ADJUSTMENT OF C.B.	T.B.D.I. FRAME WITH TWO GRATES STD. 840.33	G.D.I. FRAME WITH TWO GRATE STD. 840.20	G.D.I. FRAME WITH TWO GRATES STD. 840.22	G.D.I. (N.S.) FRAME WITH TWO GRATE STD. 840.24	G.D.I. (N.S.) FRAME WITH TWO GRATES STD. 840.29	J.B. STD. 840.31 OR 840.32	T.B.D.I. TRAFFIC BEARING GRATED DROP INLET STD. 840.35	T.B.D.I. STD. 840.36	STEEL GRATE AND FRAME STD. 840.37	T.B.J.B. STD. 840.34	M.H. FRAME & COVER STD. 840.54	CONVERT C.B. TO J.B. (SEE DETAIL 2-M)	BICYCLE SAFE STEEL GRATE AND FRAME (SEE DETAIL 2-J)
Y1 10+95	0401					1						1									
	0401	0402																			
Y1 10+67	0402															1	1				
	0402	0403																			
Y1 10+67	0403																				
	0403	0404																			
Y1 10+87	0404																				
L 19+93	0405																				
L 19+40	0406																				
	0406	0407																			
L 19+28	0407																	1	1		
L 18+09	0408																				
L 18+36	0409					1						1									
	0409	0410																			
L 18+34	0410																				
L 18+19	0411															1	1				
L 18+11	0412							1													
L 17+04	0413																				
L 17+11	0414							1													
Y1E 12+74	0458																	1	1		
	0458	0415																			
Y1E 12+00	0415																				
L 16+11	0416																				
L 16+13	0417																				
L 17+26	0419	0420																			
L 15+62	0420																				
L 15+39	0421																				
	0421	0422																			
L 15+39	0422																	1	1		
L 15+00	0423															1	1				
	0423	0424																			
L 14+65	0424															1	1				
	0424	0425																			
L 14+65	0425																	1	1		
L 13+35	0426																				
Y3 11+73	0427																				
	0427	0428																			
	0434	0435																			
Y1B 10+48	0435																				
	0435	0438																			
Y1B 11+27	0436																				
	0436	0437																			
Y1D 12+14	0437																				
Y1B 10+48	0438		1	1																	
Y1A 13+49	0439																				
	0439	0441																			
Y3 13+98	0440		1	1																	
	0440	0441																			
Y3 13+47	0441		1	1																	
	0441	0442																			
	0442		1	1																	
Y1A 12+04	0443							1													
SHEET TOTALS			4	4		2		3				2				4	4	4	4		

STATION	FROM	TO	SIDE DRAIN PIPE ELBOWS NO. & SIZE	CONC. & BRICK PIPE PLUG, C.Y. STD. 840.71	CONC. COLLARS CL. "B" C.Y. STD. 840.72	PIPE REMOVAL LIN. FT.	REMARKS
Y1 10+95	0401						RETAIN 30" CMP
	0401	0402					
Y1 10+67	0402						
	0402	0403					
Y1 10+67	0403						
	0403	0404					
Y1 10+87	0404						RETAIN 30" CMP
L 19+93	0405						RETAIN MH, 15" CMP & 18" RCP
L 19+40	0406						
	0406	0407					
L 19+28	0407						RETAIN 18" RCP
L 18+09	0408						RETAIN DI, 15" RCP
L 18+36	0409						
	0409	0410					
L 18+34	0410				0.4465		REMOVE DI
L 18+19	0411						
L 18+11	0412						ADJUST CB, RETAIN 24" RCP
L 17+04	0413						RETAIN DI, 15" RCP
L 17+11	0414						ADJUST CB, RETAIN 24" RCP
Y1E 12+74	0458					72	TIE EXIST 24" HDPE TO TBJB w/MH
	0458	0415					REMOVE CB
Y1E 12+00	0415					8	TIE EXIST 24" HDPE TO CB
L 16+11	0416						RETAIN DI, 18" RCP
L 16+13	0417						SPECIAL CB, SEE DETAIL SHEET 2-N
L 17+26	0419	0420					
L 15+62	0420				0.399	196	REMOVE DI & CB
L 15+39	0421						
	0421	0422					
L 15+39	0422						RETAIN 24" RCP &
L 15+00	0423						
	0423	0424					
L 14+65	0424						
	0424	0425					
L 14+65	0425						REMOVE CB, RETAIN 24" RCP
L 13+35	0426						RETAIN CB
Y3 11+73	0427				0.399		REMOVE 2 CB'S, RETAIN 15" RCP
	0427	0428					
	0434	0435					
Y1B 10+48	0435						
	0435	0438					
Y1B 11+27	0436					28	REMOVE MH
	0436	0437					
Y1D 12+14	0437						
Y1B 10+48	0438						
Y1A 13+49	0439				0.399		COLLAR AND RETAIN 24" RCP
	0439	0441					
Y3 13+98	0440						
	0440	0441					
Y3 13+47	0441						
	0441	0442					
	0442						
Y1A 12+04	0443						ADJUST CB
SHEET TOTALS					1.6435	304	

ABBREVIATIONS

C.B.	CATCH BASIN
N.D.I.	NARROW DROP INLET
D.I.	DROP INLET
G.D.I.	GRATED DROP INLET
G.D.I.(N.S.)	(NARROW SLOT)
J.B.	JUNCTION BOX
M.H.	MANHOLE
T.B.D.I.	TRAFFIC BEARING DROP INLET
T.B.J.B.	TRAFFIC BEARING JUNCTION BOX

COMPUTED BY: DBG DATE: 5/10/2013

CHECKED BY: JMP DATE: 5/10/2013

PROJECT NO.	SHEET NO.
I-5501	3-B

NORTH CAROLINA DEPARTMENT OF TRANSPORTATION
DIVISION OF HIGHWAYS

NC10404

Note: Invert Elevations indicated are for Bid Purposes only and shall not be used for project construction stakeout.

LIST OF PIPES, ENDWALLS, ETC. (FOR PIPES 48 INCHES & UNDER)

ABBREVIATIONS

- C.B. — CATCH BASIN
- N.D.I. — NARROW DROP INLET
- D.I. — DROP INLET
- G.D.I. — GRATED DROP INLET
- G.D.I.(N.S.) — (NARROW SLOT)
- J.B. — JUNCTION BOX
- M.H. — MANHOLE
- T.B.D.I. — TRAFFIC BEARING DROP INLET
- T.B.J.B. — TRAFFIC BEARING JUNCTION BOX

STATION / SIZE / THICKNESS OR GAUGE	LOCATION (LT, RT, OR CL)'	STRUCTURE NO. FROM	STRUCTURE NO. TO	TOP ELEVATION	INVERT ELEVATION	INVERT ELEVATION	SLOPE CRITICAL	SIDE DRAIN PIPE (RCP, CSP, CAAP, HDPE, or PVC) 12"	15"	18"	24"	30"	36"	42"	48"	DO NOT USE RCP	DO NOT USE CSP	DO NOT USE CAAP	DO NOT USE HDPE	C.S. PIPE 12" .064	15" .064	18" .064	24" .064	30" .079	36" .079	42" .109	48" .109	R.C. PIPE CLASS III 12"	15"	18"	24"	30"	36"	42"	48"	R.C. PIPE CLASS IV 12"	15"	18"	24"	30"	36"	42"	48"	24" WELDED STEEL PIPE, 0.50" THICK, GRADE B, IN SOIL	24" WELDED STEEL PIPE, 0.50" THICK, GRADE B, NOT IN SOIL	24" WELDED STEEL PIPE, 0.50" THICK, GRADE B, OPEN CUT	15" SIDE DRAIN PIPE	18" SIDE DRAIN PIPE	ENDWALLS STD. 838.01 838.11 OR STD. 838.80 (UNLESS NOTED OTHERWISE) CU. YARDS R.C.P.	C.S.P.	QUANTITIES FOR DRAINAGE STRUCTURES PER EACH (0' THRU 5.0')	*TOTAL L.F. FOR PAY QUANTITY SHALL BE COL. 'A' + (1.3 X COL.'B') LIN. FT. A 5.0' THRU 10.0'	B 10.0' AND ABOVE	C.B. STD. 840.01 OR STD. 840.02	FRAME, GRATES, AND HOOD STANDARD 840.03 TYPE OF GRATE E	F	G	CONCRETE TRANSITIONAL SECTION DROP INLET	CATCH BASIN	D.I. STD. 840.14 OR STD. 840.15	D.I. FRAME AND GRATE STD. 840.16	G.D.I. TYPE "A" STD. 840.17 OR 840.26	G.D.I. TYPE "B" STD. 840.18 OR 840.27	G.D.I. TYPE "D" STD. 840.19 OR 840.28	ADJUSTMENT OF C.B.	T.B.D.I. FRAME WITH TWO GRATES STD. 840.33	G.D.I. FRAME WITH TWO GRATE STD. 840.20	G.D.I. FRAME WITH TWO GRATES STD. 840.22	G.D.I. (N.S.) FRAME WITH TWO GRATE STD. 840.24	G.D.I. (N.S.) FRAME WITH TWO GRATES STD. 840.29	J.B. STD. 840.31 OR 840.32	T.B.D.I. TRAFFIC BEARING GRATED DROP INLET STD. 840.35	T.B.D.I. STD. 840.36	STEEL GRATE AND FRAME STD. 840.37	T.B.J.B. STD. 840.34	M.H. FRAME & COVER STD. 840.54	CONVERT C.B. TO J.B. (SEE DETAIL 2-M)	BICYCLE SAFE STEEL GRATE AND FRAME (SEE DETAIL 2-J)	SIDE DRAIN PIPE ELBOWS NO. & SIZE	CONC. & BRICK PIPE PLUG, C.Y. STD. 840.71	CONC. COLLARS CL. "B" C.Y. STD. 840.72	PIPE REMOVAL LIN. FT.	REMARKS
Y1A 10+74	RT	0444																																																																																RETAIN REMAINDER OF SYSTEM
Y1B 12+42	RT	0445		2154.1																																																																												0.399		
		0445	0446		2152.8	2152.7																															32																																													
Y1B 12+13	RT	0446		2163.6																																															1			1			1																										
		0446	0447		2152.7	2152.5																															44																																													
Y1B 12+15	LT	0447		2163.4																																															1	5	0.97	1		1																									176	REMOVE 2 CBS AND 18" RCP
		0447	0464		2152.5	2152.0																															88																																													
Y1B 11+25	LT	0464		2160.9																																															1	4.89		1		1																										
		0464	0448		2152.0	2149.5																															52																																													
Y1B 10+73		0448		2161.0																																															1	5	1.8																	1					1						32	
Y1A 13+37	LT	0449		2155.1																																															1									1	1																							
		0449	0442		2152.5	2151.4																															28																																													
Y1A 13+07	LT	0450		2159.8																																																																									1					24	REMOVE 1 CB
Y1E 11+02	RT	0459		2161.1																																															1			1			1																										
		0459	0460	2157.8	2157.7																																24																																													
Y1E 11+02	LT	0460		2161.0																																															1			1			1																										
		0460	0461	2157.7	2156.6																																56																																													
Y1E 10+50	LT	0461		2159.8																																															1			1			1																										
		0461	0462	2156.6	2156.5				24																																																																										
Y1A 15+14	CL	0451		2157.1																																															1																						1	1										REMOVE 15" RCP AND CB
		0451	0452	2153.8	2152.9																																20																																													
Y1A 15+14	RT	0452		2156.2																																															1			1		1																											
		0452	0453	2152.9	2148.2																																112																																													
Y1C 13+29	RT	0453		2151.5																																															1			1		1																											
		0453	0454	2148.2	2139.6				56																																																																										
Y1C 13+78	RT	0454		2142.4																																															1			1			1																										RETAIN REMAINDER OF SYSTEM
Y3 11+29	LT	0501		2180.3																																															1									1	1																							
		0501	0502		2178.0	2177.5			32																																																																										
Y3 11+60	LT	0502		2183.6																																															1	1.17		1			1																									5	REMOVE DI
RPC 23+00		0503	0504		2181.5	2181.0			116																																																																										
RPC 24+16	RT	0504		2185.8																																															1												1					1																	
		0504	0506		2181.0	2179.2																																72																																											
RPC 23+06	LT	0505																																																																																			
RPC 24+57	LT	0506		2192.3																																															1	5	3.06	1		1																									321	REMOVE 2 MH
		0506	0514		2179.2	2177.7																																							150	150																																								TRENCHLESS INSTILLATION
L 23+79	CL	0509		2191.9																																															1							1														1	1										
		0509	0556		2188.7	2188.5																															16																																													
L 23+80	CL	0556		2191.9																																															1																						1						1					
		0556	0510		2188.5	2185.7																															52																																													
L 23+35	RT	0510		2188.9																																															1			1			1																										
		0510	0511		2185.7	2182.0																															76																																													
L 22+59	RT	0511		2185.2																																															1			1			1																										
		0511	0513		2182.0	2181.0																															32																																													
L 21+76	RT	0512		2180.7																																															1			1			1																										
		0512	0513		2177.4	2177.1			68																																																																										
L 22+45	RT	0513		2184.3																																															1	2.16		1			1																										
		0513	0515		2177.1	2176.7			76																																																																											
RPA 18+51	LT	0514		2184.4																																															1	1.74		1		1																											
		0514	0515		2177.7	2176.0																							32																																																							
RPA 18+44	LT	0515		2184.0																																															1	3.49		1		1																											
		0515	0516		2175.5	2175.3																																			42																																												
RPA 18+02	LT	0516		2181.1																																															1	0.89		1		1																											
		0516	0517		2175.3	2170.8							156																																																																						
SHEET TOTALS									372				156																			32						632	72			42				150	150						25	29.34	5.83	18		8	10	1		2	2		1					1			1	1	2	2		1	1	1			0.399	558	

COMPUTED BY: DBG DATE: 5/10/2013

CHECKED BY: JMP DATE: 5/10/2013

NC10404

NORTH CAROLINA DEPARTMENT OF TRANSPORTATION
DIVISION OF HIGHWAYS

PROJECT NO.	SHEET NO.
I-5501	3-C

Note: Invert Elevations indicated are for Bid Purposes only and shall not be used for project construction stakeout.

LIST OF PIPES, ENDWALLS, ETC. (FOR PIPES 48 INCHES & UNDER)

STATION	LOCATION (LT, RT, OR CL')	STRUCTURE NO. FROM	STRUCTURE NO. TO	TOP ELEVATION	INVERT ELEVATION	INVERT ELEVATION	SLOPE CRITICAL	SIDE DRAIN PIPE (RCP, CSP, CAAP, HDPE, or PVC) 12"	15"	18"	24"	30"	36"	42"	48"	DO NOT USE RCP	DO NOT USE CSP	DO NOT USE CAAP	DO NOT USE HDPE
L 25+12	RT	0518		2196.2															
		0518	0519		2192.9	2192.9													
L 25+25	RT	0519		2196.5															
		0519	0520		2192.9	2178.3													
L 25+81	LT	0521		2198.1															
		0521	0522		2194.8	2194.7													
L 26+10	LT	0522		2200.0															
		0522	0523		2194.7	2185.0													
L 29+00	RT	0524		2213.3															
		0524	0525		2210.0	2180.0													
L 29+65	LT	0526		2215.5															
		0526	0527		2212.3	2180.4													
L 28+89	LT	0527		2182.3															
		0527	0528																
L 27+86		0528	0529																
L 27+10		0529	0530																
L 24+92		0530																	
L 33+78	RT	0531		2227.2															
		0531	0533		2223.9	2216.0													
RPB 22+89	RT	0532		2218.9															
		0532	0533		2216.1	2216.0			24										
RPB 22+97	RT	0533		2221.6															
		0533	0535		2216.0	2214.1			80										
L 30+57	RT	0534		2218.7															
		0534	0535		2215.5	2214.1													
RPB 22+24	RT	0535		2217.4															
		0535	0537		2214.1	2196.9													
RPB 19+56	RT	0536		2208.1															
		0536	0537		2204.0	2196.6				60									
RPB 19+49	RT	0537		2200.1															
		0537	0538		2196.6	2174.6													
RPB 16+00	RT	0538		2178.9															
		0538	0539		2174.1	2166.4													
RPB 14+90	RT	0539		2171.1															
		0539	0553		2166.4	2166.3													
RPB 14+91		0553		2174.0															
		0553	0550		2166.3	2165.3													
RPB 14+00		0540																	
RPB 13+39		0541																	
RPA 14+47		0542																	
RPA 14+13	LT	0543																	
L 32+01	LT	0545		2223.7															
		0545	0544		2220.4	2218.5			60										
L 31+43	LT	0544		2221.7															
		0544	0526		2218.5	2212.3													
RPD 19+26	LT	0547		2218.9															
		0547	0548		2215.7	2211.8													
RPD 18+80	LT	0548		2215.1															
		0548	0701		2211.8	2203.0			112										
RPB 19+56		0549																	
RPB 12+60	RT	0550		2170.0															
		0550	0551		2165.3	2162.9													
L 25+25	LT	0554		2197.6															
		0554	0555		2194.4	2194.3													
L 25+25	RT	0555		2167.6															
SHEET TOTALS									276	60									

STATION	FROM	TO	C.S. PIPE 12" .064	15" .064	18" .064	24" .064	30" .079	36" .079	42" .109	48" .109	R.C. PIPE CLASS III 12"	15"	18"	24"	30"	36"	42"	48"	R.C. PIPE CLASS IV 12"	15"	18"	24"	30"	36"	42"	48"
L 25+12	0518																									
	0518	0519																		8						
L 25+25	0519																									
	0519	0520		88																						
L 25+81	0521																									
	0521	0522																		28						
L 26+10	0522																									
	0522	0523		92																						
L 29+00	0524																									
	0524	0525		180																						
L 29+65	0526																									
	0526	0527		80																						
L 28+89	0527																									
	0527	0528																								
L 27+86	0528	0529																								
L 27+10	0529	0530																								
L 24+92	0530																									
L 33+78	0531																									
	0531	0533																		204						
RPB 22+89	0532																									
	0532	0533																								
RPB 22+97	0533																									
	0533	0535																								
L 30+57	0534																									
	0534	0535																		116						
RPB 22+24	0535																									
	0535	0537																		280						
RPB 19+56	0536																									
	0536	0537																								
RPB 19+49	0537																									
	0537	0538																			352					
RPB 16+00	0538																									
	0538	0539																				112				
RPB 14+90	0539																									
	0539	0553																				12				
RPB 14+91	0553																									
	0553	0550																				68				
RPB 14+00	0540																									
RPB 13+39	0541																									
RPA 14+47	0542																									
RPA 14+13	0543																									
L 32+01	0545																									
	0545	0544																								
L 31+43	0544																									
	0544	0526																		180						
RPD 19+26	0547																									
	0547	0548																		52						
RPD 18+80	0548																									
	0548	0701																								
RPB 19+56	0549																									
RPB 12+60	0550																									
	0550	0551																								
L 25+25	0554																									
	0554	0555																		8						
L 25+25	0555																									
SHEET TOTALS				440																876	352	192				

STATION	FROM	TO	24" WELDED STEEL PIPE, 0.50" THICK, GRADE B, IN SOIL	24" WELDED STEEL PIPE, 0.50" THICK, GRADE B, NOT IN SOIL	24" WELDED STEEL PIPE, 0.50" THICK, GRADE B, OPEN CUT	15" SIDE DRAIN PIPE	18" SIDE DRAIN PIPE	ENDWALLS STD. 838.01 838.11 OR STD. 838.80 (UNLESS NOTED OTHERWISE) CU. YARDS R.C.P.	C.S.P.	QUANTITIES FOR DRAINAGE STRUCTURES PER EACH (0' THRU 5.0')	*TOTAL L.F. FOR PAY QUANTITY SHALL BE COL. 'A' + (1.3 X COL.'B') LIN. FT. A 5.0' THRU 10.0'	B 10.0' AND ABOVE	C.B. STD. 840.01 OR STD. 840.02	FRAME, GRATES, AND HOOD STANDARD 840.03 TYPE OF GRATE E	F	G	CONCRETE TRANSITIONAL SECTION DROP INLET	CATCH BASIN
L 25+12	0518									1								
	0518	0519																
L 25+25	0519									1								
	0519	0520																
L 25+81	0521									1								
	0521	0522																
L 26+10	0522									1	0.32							
	0522	0523																
L 29+00	0524									1								
	0524	0525																
L 29+65	0526									1								
	0526	0527																
L 28+89	0527									1								
	0527	0528																
L 27+86	0528	0529																
L 27+10	0529	0530																
L 24+92	0530																	
L 33+78	0531									1			1			1		
	0531	0533																
RPB 22+89	0532									1								
	0532	0533																
RPB 22+97	0533									1	0.56		1			1		
	0533	0535																
L 30+57	0534									1			1			1		
	0534	0535																
RPB 22+24	0535									1								
	0535	0537																
RPB 19+56	0536									1								
	0536	0537																
RPB 19+49	0537									1								
	0537	0538																
RPB 16+00	0538									1								
	0538	0539																
RPB 14+90	0539									1								
	0539	0553																
RPB 14+91	0553									1	1.92							
	0553	0550																
RPB 14+00	0540																	
RPB 13+39	0541																	
RPA 14+47	0542																	
RPA 14+13	0543																	
L 32+01	0545									1			1		1			
	0545	0544																
L 31+43	0544									1			1		1			
	0544	0526																
RPD 19+26	0547									1			1		1			
	0547	0548																
RPD 18+80	0548									1			1		1			
	0548	0701																
RPB 19+56	0549																	
RPB 12+60	0550									1								
	0550	0551	134	134	20													
L 25+25	0554									1								
	0554	0555																
L 25+25	0555									1								
SHEET TOTALS			134	134	20					24	2.8		7		4	3		

STATION	FROM	TO	D.I. STD. 840.14 OR STD. 840.15	D.I. FRAME AND GRATE STD. 840.16	G.D.I. TYPE "A" STD. 840.17 OR 840.26	G.D.I. TYPE "B" STD. 840.18 OR 840.27	G.D.I. TYPE "D" STD. 840.19 OR 840.28	ADJUSTMENT OF C.B.	T.B.D.I. FRAME WITH TWO GRATES STD. 840.33	G.D.I. FRAME WITH TWO GRATE STD. 840.20	G.D.I. FRAME WITH TWO GRATES STD. 840.22	G.D.I. (N.S.) FRAME WITH TWO GRATE STD. 840.24	G.D.I. (N.S.) FRAME WITH TWO GRATES STD. 840.29	J.B. STD. 840.31 OR 840.32	T.B.D.I. TRAFFIC BEARING GRATED DROP INLET STD. 840.35	T.B.D.I. STD. 840.36	STEEL GRATE AND FRAME STD. 840.37	T.B.J.B. STD. 840.34	M.H. FRAME & COVER STD. 840.54	CONVERT C.B. TO J.B. (SEE DETAIL 2-M)	BICYCLE SAFE STEEL GRATE AND FRAME (SEE DETAIL 2-J)
L 25+12	0518					1							1								
	0518	0519																			
L 25+25	0519					1							1								
	0519	0520																			
L 25+81	0521												1		1						
	0521	0522																			
L 26+10	0522								1						1						
	0522	0523																			
L 29+00	0524					1							1								
	0524	0525																			
L 29+65	0526												1		1						
	0526	0527																			
L 28+89	0527						1				1										
	0527	0528																			
L 27+86	0528	0529																			
L 27+10	0529	0530																			
L 24+92	0530																				
L 33+78	0531																				
	0531	0533																			
RPB 22+89	0532					1						1									
	0532	0533																			
RPB 22+97	0533																				
	0533	0535																			
L 30+57	0534																				
	0534	0535																			
RPB 22+24	0535					1				1											
	0535	0537																			
RPB 19+56	0536		1	1																	
	0536	0537																			
RPB 19+49	0537					1				1											
	0537	0538																			
RPB 16+00	0538				1					1											
	0538	0539																			
RPB 14+90	0539				1					1											
	0539	0553																			
RPB 14+91	0553													1					1		
	0553	0550																			
RPB 14+00	0540																				
RPB 13+39	0541																				
RPA 14+47	0542																				
RPA 14+13	0543																				
L 32+01	0545																				
	0545	0544																			
L 31+43	0544																				
	0544	0526																			
RPD 19+26	0547																				
	0547	0548																			
RPD 18+80	0548																				
	0548	0701																			
RPB 19+56	0549																				
RPB 12+60	0550				1					1											
	0550	0551																			
L 25+25	0554														1						1
	0554	0555																			
L 25+25	0555														1						1
SHEET TOTALS			1	1	3	6	1		1	5	1	1	5	1	5				1		2

STATION	FROM	TO	SIDE DRAIN PIPE ELBOWS NO. & SIZE	CONC. & BRICK PIPE PLUG, C.Y. STD. 840.71	CONC. COLLARS CL. "B" C.Y. STD. 840.72	PIPE REMOVAL LIN. FT.	REMARKS
L 25+12	0518						
	0518	0519					
L 25+25	0519						
	0519	0520	2 @ 15"			100	ROD & LUG CONNECTORS
L 25+81	0521						
	0521	0522					
L 26+10	0522						
	0522	0523	2 @ 15"				ROD & LUG CONNECTORS
L 29+00	0524						
	0524	0525	2 @ 15"				ROD & LUG CONNECTORS
L 29+65	0526						
	0526	0527	2 @ 15"				
L 28+89	0527						
	0527	0528					RETAIN 18" RCP
L 27+86	0528	0529					RETAIN DI & 18" RCP
L 27+10	0529	0530					RETAIN DI & 24" RCP
L 24+92	0530						RETAIN DI
L 33+78	0531						
	0531	0533					
RPB 22+89	0532						
	0532	0533					
RPB 22+97	0533					50	REMOVE 15" RCP
	0533	0535					
L 30+57	0534						
	0534	0535					
RPB 22+24	0535						
	0535	0537					
RPB 19+56	0536					78	REMOVE DI, RETAIN 18" CMP
	0536	0537					
RPB 19+49	0537						
	0537	0538					
RPB 16+00	0538						
	0538	0539					
RPB 14+90	0539						REMOVE DI
	0539	0553					
RPB 14+91	0553						
	0553	0550					
RPB 14+00	0540			0.065		98	RETAIN DI & 18" RCP, REPLACE GRATE
RPB 13+39	0541						RETAIN DI & 24" RCP
RPA 14+47	0542						RETAIN DI & 24" RCP
RPA 14+13	0543						EX. 24" RCP PIPE CLEAN OUT
L 32+01	0545						
	0545	0544					
L 31+43	0544						
	0544	0526					
RPD 19+26	0547					126	REMOVE CB
	0547	0548					
RPD 18+80	0548						
	0548	0701					
RPB 19+56	0549						RETAIN 18" CMP
RPB 12+60	0550						
	0550	0551					TRENCHLESS INSTAL. 24" WELDED STEEL
L 25+25	0554						
	0554	0555					
L 25+25	0555						
SHEET TOTALS			8 @ 15"	0.065		452	

ABBREVIATIONS

C.B.	CATCH BASIN
N.D.I.	NARROW DROP INLET
D.I.	DROP INLET
G.D.I.	GRATED DROP INLET
G.D.I.(N.S.)	(NARROW SLOT)
J.B.	JUNCTION BOX
M.H.	MANHOLE
T.B.D.I.	TRAFFIC BEARING DROP INLET
T.B.J.B.	TRAFFIC BEARING JUNCTION BOX

NC10404

COMPUTED BY: DBG DATE: 5/10/2013

CHECKED BY: JMP DATE: 5/10/2013

NORTH CAROLINA DEPARTMENT OF TRANSPORTATION
DIVISION OF HIGHWAYS

PROJECT NO.	SHEET NO.
I-5501	3-D

Note: Invert Elevations indicated are for Bid Purposes only and shall not be used for project construction stakeout.

LIST OF PIPES, ENDWALLS, ETC. (FOR PIPES 48 INCHES & UNDER)

STATION	LOCATION (LT, RT, OR CL)'	STRUCTURE NO. FROM	STRUCTURE NO. TO	TOP ELEVATION	INVERT ELEVATION	INVERT ELEVATION	SLOPE CRITICAL	SIDE DRAIN PIPE (RCP, CSP, CAAP, HDPE, or PVC) 12"	15"	18"	24"	30"	36"	42"	48"	DO NOT USE RCP	DO NOT USE CSP	DO NOT USE CAAP	DO NOT USE HDPE	C.S. PIPE 12" (.064)	15" (.064)	18" (.064)	24" (.064)	30" (.079)	36" (.079)	42" (.109)	48" (.109)
		0555	0519		2194.3	2192.9																					
L 37+36	LT	0601		2231.8																							
		0601	0603		2228.5	2228.3																					
L 37+78	CL	0603		2232.3																							
		0603	0602		2229.0	2228.3																					
L 38+54	CL	0602		2232.2																							
		0603	0604		2228.3	2228.1																					
L 37+77	RT	0604		2231.4																							
		0604	0606		2228.1	2226.5																					
L 35+79	LT	0605		2230.1																							
		0605	0606		2226.9	2226.5																					
L 35+78	RT	0606		2230.3																							
		0606	0531		2226.5	2223.9																					
RPD 17+65	LT	0701		2205.8																							
		0701	0702		2202.8	2194.7																					
RPD 17+12	RT	0702		2196.2																							
RPD 16+57		0703																									
RPC 17+14		0704																									
RPC 13+88		0705																									
SHEET 3-D TOTAL																											
SHEET 3-A TOTAL										12																	
SHEET 3-B TOTAL									372			156															
SHEET 3-C TOTAL									276	60											440						
GRAND TOTALS									648	72		156									440						

STATION	STRUCTURE NO. FROM	STRUCTURE NO. TO	R.C. PIPE CLASS III 12"	15"	18"	24"	30"	36"	42"	48"	R.C. PIPE CLASS IV 12"	15"	18"	24"	30"	36"	42"	48"	24" WELDED STEEL PIPE, 0.50" THICK, GRADE B, IN SOIL	24" WELDED STEEL PIPE, 0.50" THICK, GRADE B, NOT IN SOIL	24" WELDED STEEL PIPE, 0.50" THICK, GRADE B, OPEN CUT	15" SIDE DRAIN PIPE	18" SIDE DRAIN PIPE	ENDWALLS STD. 838.01 838.11 OR STD. 838.80 (UNLESS NOTED OTHERWISE) CU. YARDS R.C.P.	C.S.P.
	0555	0519										32													
L 37+36	0601																								
	0601	0603										52													
L 37+78	0603																								
	0603	0602										76													
L 38+54	0602																								
	0603	0604										40													
L 37+77	0604																								
	0604	0606										200													
L 35+79	0605																								
	0605	0606										80													
L 35+78	0606																								
	0606	0531										200													
RPD 17+65	0701																								
	0701	0702			84																				
RPD 17+12	0702																								
RPD 16+57	0703																								
RPC 17+14	0704																								
RPC 13+88	0705																								
SHEET 3-D TOTAL					84							680													
SHEET 3-A TOTAL				72	12							228	114	88											
SHEET 3-B TOTAL						32						632	72		42				150	150					
SHEET 3-C TOTAL												876	352	192					134	134	20				
GRAND TOTALS				72	96	32						2416	538	280	42				284	284	20				

STATION	STRUCTURE NO. FROM	STRUCTURE NO. TO	QUANTITIES FOR DRAINAGE STRUCTURES PER EACH (0' THRU 5.0')	*TOTAL L.F. FOR PAY QUANTITY SHALL BE COL. 'A' + (1.3 X COL.'B') LIN. FT. A 5.0' THRU 10.0'	B 10.0' AND ABOVE	C.B. STD. 840.01 OR STD. 840.02	FRAME, GRATES, AND HOOD STANDARD 840.03 TYPE OF GRATE E	F	G	CONCRETE TRANSITIONAL SECTION DROP INLET	CATCH BASIN
	0555	0519									
L 37+36	0601		1			1	1				
	0601	0603									
L 37+78	0603		1								
	0603	0602									
L 38+54	0602		1								
	0603	0604									
L 37+77	0604		1			1			1		
	0604	0606									
L 35+79	0605		1			1		1			
	0605	0606									
L 35+78	0606		1			1			1		
	0606	0531									
RPD 17+65	0701		1								
	0701	0702									
RPD 17+12	0702										
RPD 16+57	0703										
RPC 17+14	0704										
RPC 13+88	0705										
SHEET 3-D TOTAL			7			4	1	1	2		
SHEET 3-A TOTAL			22	8.96		7	1	3	4	6	
SHEET 3-B TOTAL			25	29.34	5.83	18		8	10	1	
SHEET 3-C TOTAL			24	2.8		7		4	3		
GRAND TOTALS			78	41.10	5.83	36	2	16	19	7	

48.68
SAY 60

STATION	STRUCTURE NO. FROM	STRUCTURE NO. TO	D.I. STD. 840.14 OR STD. 840.15	D.I. FRAME AND GRATE STD. 840.16	G.D.I. TYPE "A" STD. 840.17 OR 840.26	G.D.I. TYPE "B" STD. 840.18 OR 840.27	G.D.I. TYPE "D" STD. 840.19 OR 840.28	ADJUSTMENT OF C.B.	T.B.D.I. FRAME WITH TWO GRATES STD. 840.33	G.D.I. FRAME WITH TWO GRATE STD. 840.20	G.D.I. FRAME WITH TWO GRATES STD. 840.22	G.D.I. (N.S.) FRAME WITH TWO GRATE STD. 840.24	G.D.I. (N.S.) FRAME WITH TWO GRATES STD. 840.29	J.B. STD. 840.31 OR 840.32	T.B.D.I. TRAFFIC BEARING GRATED DROP INLET STD. 840.35	T.B.D.I. STD. 840.36	STEEL GRATE AND FRAME STD. 840.37	T.B.J.B. STD. 840.34	M.H. FRAME & COVER STD. 840.54	CONVERT C.B. TO J.B. (SEE DETAIL 2-M)	BICYCLE SAFE STEEL GRATE AND FRAME (SEE DETAIL 2-J)	SIDE DRAIN PIPE ELBOWS NO. & SIZE	CONC. & BRICK PIPE PLUG, C.Y. STD. 840.71	CONC. COLLARS CL. "B" C.Y. STD. 840.72	PIPE REMOVAL LIN. FT.	REMARKS
	0555	0519																								
L 37+36	0601																									
	0601	0603																								
L 37+78	0603															1	1									
	0603	0602																								
L 38+54	0602															1	1									
	0603	0604																								
L 37+77	0604																									
	0604	0606																								
L 35+79	0605																								310	REMOVE 2 CB's
	0605	0606																								
L 35+78	0606																									
	0606	0531																								
RPD 17+65	0701					1					1															
	0701	0702																								
RPD 17+12	0702																							0.4465		RETAIN 18" RCP
RPD 16+57	0703																									RETAIN DI & 18" RCP
RPC 17+14	0704																									RETAIN DI
RPC 13+88	0705																									RETAIN 18" RCP
SHEET 3-D TOTAL						1					1					2	2							0.4465	310	
SHEET 3-A TOTAL			4	4		2		3				2				4	4	4	4					1.6435	304	
SHEET 3-B TOTAL			2	2		1					1			1	1	2	2		1	1	1			0.399	558	
SHEET 3-C TOTAL			1	1	3	6	1		1	5	1	1	5	1	5				1		2	8 @ 15"	0.065		452	
GRAND TOTALS			7	7	3	10	1	3	1	5	3	3	5	2	6	8	8	4	6	1	3	8 @ 15"	0.07	2.49	1624	

ABBREVIATIONS

C.B.	CATCH BASIN
N.D.I.	NARROW DROP INLET
D.I.	DROP INLET
G.D.I.	GRATED DROP INLET
G.D.I.(N.S.)	(NARROW SLOT)
J.B.	JUNCTION BOX
M.H.	MANHOLE
T.B.D.I.	TRAFFIC BEARING DROP INLET
T.B.J.B.	TRAFFIC BEARING JUNCTION BOX

COMPUTED BY: HWB DATE: 3-07-2013
CHECKED BY: DCW DATE: 3-08-2013

STATE OF NORTH CAROLINA
DIVISION OF HIGHWAYS

PROJECT REFERENCE NO.	SHEET NO.
I-5501	3-E

Earthwork quantities are calculated by the Roadway Design Unit. These earthwork quantities are based in part on subsurface data provided by the Geotechnical Engineering Unit.

SUMMARY OF EARTHWORK

IN CUBIC YARDS

LOCATION	UNCLASSIFIED EXCAVATION	UNDERCUT	EMBT+%	BORROW	WASTE
SUMMARY NO. 1					
-L- 13+50.00 TO -L- 26+00.00	1111		2808	1697	
-Y1- 10+66.92 TO -Y1- 10+85.00	21		0		21
-Y1A- 12+00.00 TO -Y1A- 15+00.00	219		1143	924	
-Y1B- 10+34.01 TO -Y1B- 12+84.30	197		335	138	
-Y1C- 11+67.72 TO -Y1C- 13+50.00	48		483	435	
-Y1D- 10+66.01 TO -Y1D- 12+25.00	210		58		153
-Y1E- 10+11.62 TO -Y1E- 12+73.79	275		58		218
-Y3- 10+15.00 TO -Y3- 11+50.00	47		138	91	
-RPA- 15+00.00 TO -RPA- 17+50.00	79		430	351	
-RPA_SPUR_LT- 10+51.02 TO -RPA_SPUR_LT- 11+58.17	0		1915	1915	
-RPA_SPUR_RT- 10+00.00 TO -RPA_SPUR_RT- 11+56.09	2		715	713	
-RPC- 18+00.00 TO -RPC- 24+78.49	333		1887	1554	
-RPC_SPUR_RT- 10+07.36 TO -RPC_SPUR_RT- 11+11.06	6		1262	1256	
-RPC_SPUR_LT- 10+21.98 TO -RPC_SPUR_LT- 11+57.40	2		223	221	
TOTAL SUMMARY NO. 1	2550		11,454	9295	391
SUMMARY NO. 2					
-L- 29+00.00 TO -L- 39+50.00	1372		1984	612	
-RPB- 14+50.00 TO -RPA- 22+00.00	1492		935		557
-RPB_SPUR_LT- 10+02.60 TO -RPB_SPUR_LT- 11+57.95	0		1525	1525	
-RPB_SPUR_RT- 10+02.88 TO -RPB_SPUR_RT- 11+05.00	89		261	172	
-RPD- 12+60.00 TO -RPD- 19+00.00	1418		534		884
-RPD_SPUR_RT- 10+27.48 TO -RPD_SPUR_RT- 11+19.00	30		54	24	
-RPD_SPUR_LT- 10+56.36 TO -RPD_SPUR_LT- 11+28.00	319		36		283
-Y4- 10+70.00 TO -Y4- 11+25.00	19		15		4
TOTAL SUMMARY NO. 2	4739		5343	2333	1729
SUB-TOTAL SUMMARY NOS. 1 thru 2	7289		16,797	11,628	2120
LOSS DUE TO CLEARING AND GRUBBING	-750			750	
SHOULDER CONSTRUCTION			2473	2473	
WASTE IN LIEU OF BORROW				-2120	-2120
PROJECT TOTALS	6539		19,269	12,730	0
EST. 5% TO REPLACE TOP SOIL ON BORROW PIT				637	
GRAND TOTALS	6539		19,269	13,367	
SAY	6550			13,400	

SUMMARY OF EXISTING ASPHALT PAVEMENT REMOVAL SUMMARY

SURVEY LINE	STATION	STATION	LOCATION LT/RT/CL	YD²
-RPA-	17+71	19+17	RT.	460.11
-RPB-	16+90	19+71	LT.	91.33
-RPB-	20+00	20+42	LT.	19.44
-RPC-	23+24	23+74	LT.	15.67
-RPD_SPUR_LT-	10+69	10+82	LT.	428.56
-Y1A-	12+00	14+66	LT.	780.56
-Y1B-	10+34	11+54	LT./RT.	168.89
-Y1C-	12+29	13+15	LT.	173.33
-Y1D-	10+66	12+44	RT.	442.56
-L-	16+03	18+50	LT.	350.56
			TOTAL:	2941.00
			SAY:	2950

SUMMARY OF EXISTING CONCRETE PAVEMENT REMOVAL

SURVEY LINE	STATION	STATION	LOCATION LT/RT/CL	YD²
-RPA-	17+01	17+55	LT.	28.67
-RPB-	20+00	20+42	LT.	51.00
			TOTAL:	79.67
			SAY:	80

SUMMARY OF SUBSURFACE DRAINAGE

SURVEY LINE	STATION	STATION	LOCATION LT/RT/CL	DRAIN TYPE UD/BD/SD	LF
CONTINGENCY				UD	1500
				TOTAL LF:	1500

SUMMARY OF BREAKING EXISTING ASPHALT PAVEMENT

SURVEY LINE	STATION	STATION	LOCATION LT/RT/CL	YD²
-RPB-	20+42	23+47	LT.	779.56
-RPC-	24+06	25+25	LT.	1098.78
-Y1A-	14+76	15+20	LT./RT.	85.56
			TOTAL:	1963.89
			SAY:	1970

SHOULDER BERM GUTTER SUMMARY

SURVEY LINE	STATION	STATION	LENGTH
-L-	25+20.00	25+71.00	51.00
-L-	25+78.00	26+38.00	60.00
-L-	28+72.00	29+87.00	115.00
-L-	29+39.00	30+26.00	87.00
		TOTAL:	313.00
		SAY:	320

SUMMARY OF BREAKING EXISTING CONCRETE PAVEMENT

SURVEY LINE	STATION	STATION	LOCATION LT/RT/CL	YD²
-RPB-	20+42	20+95	LT.	91.67
			TOTAL:	91.67
			SAY:	100

EXPRESSWAY GUTTER SUMMARY

SURVEY LINE	STATION	STATION	LENGTH
-RPB-	14+85.00	22+37.08	752.08
-RPB_SPUR_RT-	10+00.00	10+26.63	26.63
		TOTAL:	778.71
		SAY:	780

UNDERCUT = 1300 CY PER GEOTECHNICAL RECOMM. DATED 9/18/2012
SHALLOW UNDERCUT = 440 CY PER GEOTECHNICAL RECOMM. DATED 9/18/2012
SELECT GRANULAR MATERIAL = 2000 CY PER GEOTECHNICAL RECOMM. DATED 9/18/2012
CLASS IV SUBGRADE STABILIZATION = 832 TONS PER GEOTECHNICAL RECOMM. DATED 9/18/2012

Note: Approximate quantities only. Unclassified Excavation, Borrow Excavation, Fine Grading, Clearing and Grubbing, Breaking of Existing Pavement and Removal of Existing Pavement will be paid for at the contract lump sum price for "Grading."

12/06/07

25-JUL-2013 09:22
jlucas21 jlucas21 c:\pwworkin\Documents\I5501_Rdy_sum.dgn
$$$$USERNAME$$$$

COMPUTED BY: _____ DATE: _____
CHECKED BY: _____ DATE: _____

PROJECT REFERENCE NO.	SHEET NO.
1-5501	3-F

"N" = DISTANCE FROM EDGE OF LANE TO FACE OF GUARDRAIL.
TOTAL SHOULDER WIDTH = DISTANCE FROM EDGE OF TRAVEL LANE TO SHOULDER BREAK POINT.
FLARE LENGTH = DISTANCE FROM LAST SECTION OF PARALLEL GUARDRAIL TO END OF GUARDRAIL.
W = TOTAL WIDTH OF FLARE FROM BEGINNING OF TAPER TO END OF GUARDRAIL.
G = GATING IMPACT ATTENUATOR TYPE 350
NG = NON-GATING IMPACT ATTENUATOR TYPE 350

STATE OF NORTH CAROLINA
DIVISION OF HIGHWAYS

GUARDRAIL SUMMARY

SURVEY LINE	BEG. STA.	END STA.	LOCATION	LENGTH			WARRANT POINT		"N" DIST. FROM E.O.L.	TOTAL SHOULDER WIDTH	FLARE LENGTH		W		ANCHORS								IMPACT ATTENUATOR TYPE 350			SINGLE FACED GUARDRAIL	REMOVE EXISTING GUARDRAIL	REMOVE AND STOCKPILE EXISTING GUARDRAIL	REMARKS
				STRAIGHT	SHOP CURVED	DOUBLE FACED	APPROACH END	TRAILING END			APPROACH END	TRAILING END	APPROACH END	TRAILING END		M-350	GRAU 350	B-83	B-77	CAT-1	GRAU 350 TL-2	SHOP CURVED B-77		NO.	PERMITTED G	PERMITTED NG				
-RPC_SPUR_LT-/-DDI_NB-	11+53.06	18+00.00	LT/LT	81.25	31.05		18+00.00		4	12	50		1				1		1										
-DDI_NB-	21+00.00	22+35.21	LT	125.00				21+00.00	4	12									1	1									
-DDI_SB-	16+71.06	17+46.06	RT	75.00					4	12									1	1									
-DDI_SB-/-RPB_SPUR_LT-	20+46.67	11+46.21	RT/LT	131.25	32.42		20+46.67		4	12	50		1				1		1										
-RPB-	14+31.25	21+25.00	RT	693.75			14+85.00	21+25.00	14	19	50		1				1		1										
-DDI_SB-	16+51.76	17+46.38	RT																								94		
-DDI_NB-	20+99.54	22+67.55	LT																								169		
-L-	13+31.00	13+81.00	LT	50.00													1										228		TIE TO EXISTING
-Y1A-	12+05.80	15+51.56	RT	393.75					1	11	25		0.5							1	1								
-L-	21+50.35	22+36.15	LT	87.50			22+00.00									2													
-L-	21+64.22	22+42.26	LT	87.50			22+00.00									2													
-L-	33+03.81	33+45.21	RT	43.75			33+40.00									1				1									
-L-	33+34.75	33+76.37	LT	43.75			33+40.00									1				1									
-RPB-	20+25.71	21+25.00	RT	93.75													1					1							
-RPB_SPUR_RT-	10+26.54	11+42.14	RT	106.25													1					1							
		TOTALS		2012.50	63.47											6	6		5	5	1	2					491		
DEDUCT FOR ANCHOR UNITS		GRAU-350, 6 @ 50' =		-300.00																									
		B-77, 5 @ 18.75' =		-93.75																									
		SHOP CURVED B-77, 2 @ 18.75' =		-37.50																									
		GRAU-350 TL-2, 1 @ 25.00' =		-25.00																									
		CAT-1, 5 @ 6.25' =		-31.25																									
		M-350, 6 @ 37.5' =		-225.00																									
				1300.00	63.47																								
				SAY 1312.50			5 EA. ADDITIONAL GUARDRAIL POSTS																						

6/16/99

6/24/2013
R:\Roadway\Proj\1-5501_Rdy_sum.dgn
pmccrae Hydraulics_Ops

PROJ. REFERENCE NO.	SHEET NO.
I-5501	3-G

STATE OF NORTH CAROLINA
DIVISION OF HIGHWAYS

PARCEL INDEX SHEET

PARCEL No.	SHEET No.	PROPERTY OWNER NAME
1	4,5,7	CITY OF ASHEVILLE
2	4	MURPHY WILSON INVESTMENT CO.
3	4,5	YOUNGBLOOD OIL COMPANY
4	5,6,7	CITY OF ASHEVILLE
5	6	W & K HOTELS, LLC

PARCEL No.	SHEET No.	PROPERTY OWNER NAME

8/17/99

Florence & Hutcheson
An ICA Company
5121 Kingdom Way, Suite 100 Raleigh, NC 27607
NC License No: F-0258

PROJECT REFERENCE NO.	SHEET NO.
I-5501	4
R/W SHEET NO.	

ROADWAY DESIGN ENGINEER — NORTH CAROLINA PROFESSIONAL SEAL 22606 ENGINEER DAVID C. WALLER — 7-8-13

HYDRAULICS ENGINEER — NORTH CAROLINA PROFESSIONAL SEAL 24451 ENGINEER TRACEY H. BAILEY — 7-8-13

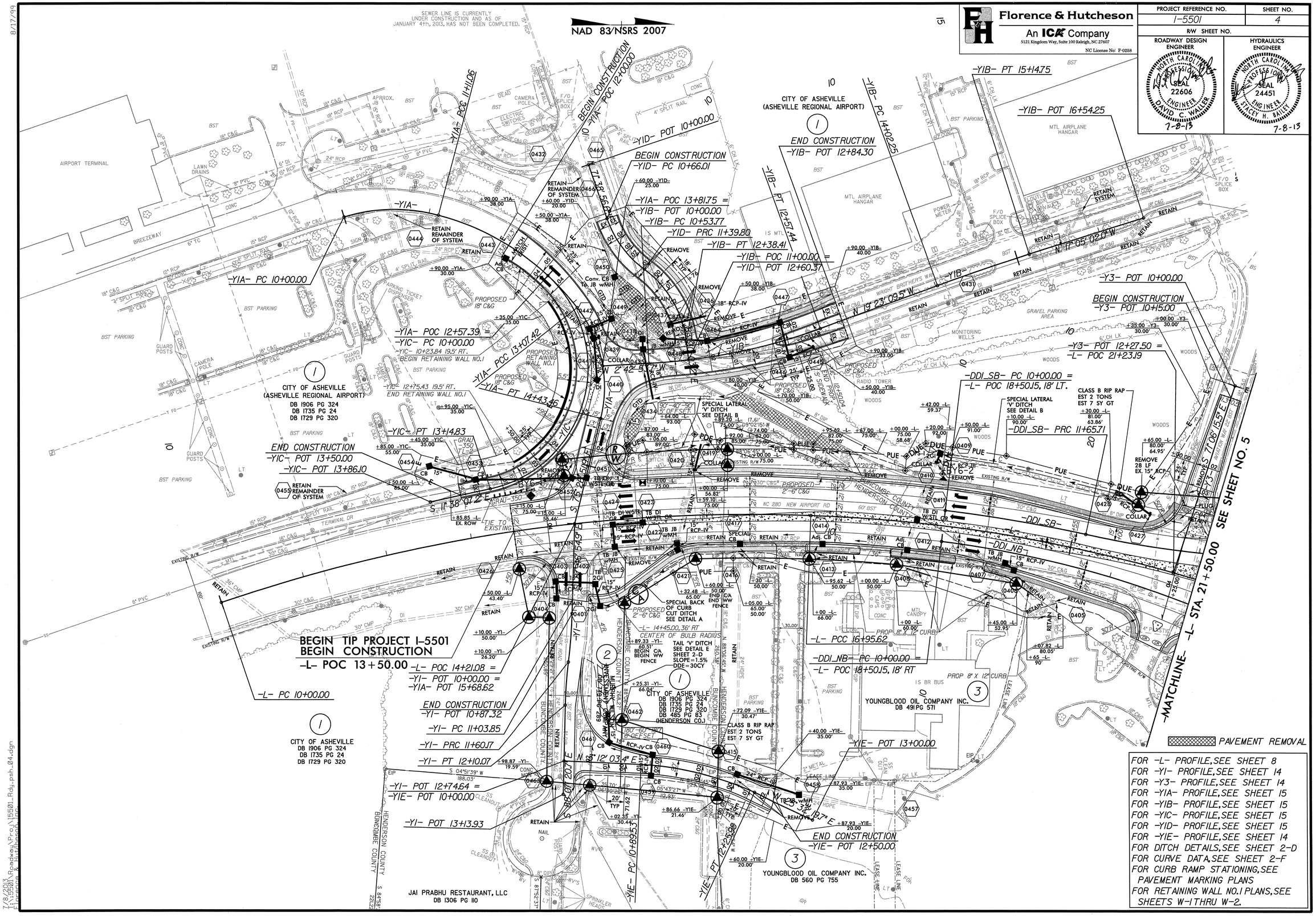

7/8/2013
I:\I5501\Roadway\Proj\I5501_Rdy_psh_04.dgn
Florence & Hutcheson, Inc.

8/17/99

Florence & Hutcheson
An ICA Company
5121 Kingsdom Way, Suite 100 Raleigh, NC 27607
NC License No: F-0258

PROJECT REFERENCE NO.	SHEET NO.
I-5501	5
R/W SHEET NO.	

ROADWAY DESIGN ENGINEER — NORTH CAROLINA PROFESSIONAL SEAL 22606 ENGINEER DAVID C. WALLER — 7-25-13

HYDRAULICS ENGINEER — NORTH CAROLINA PROFESSIONAL SEAL 24451 ENGINEER STACEY H. BAILEY — 7-25-13

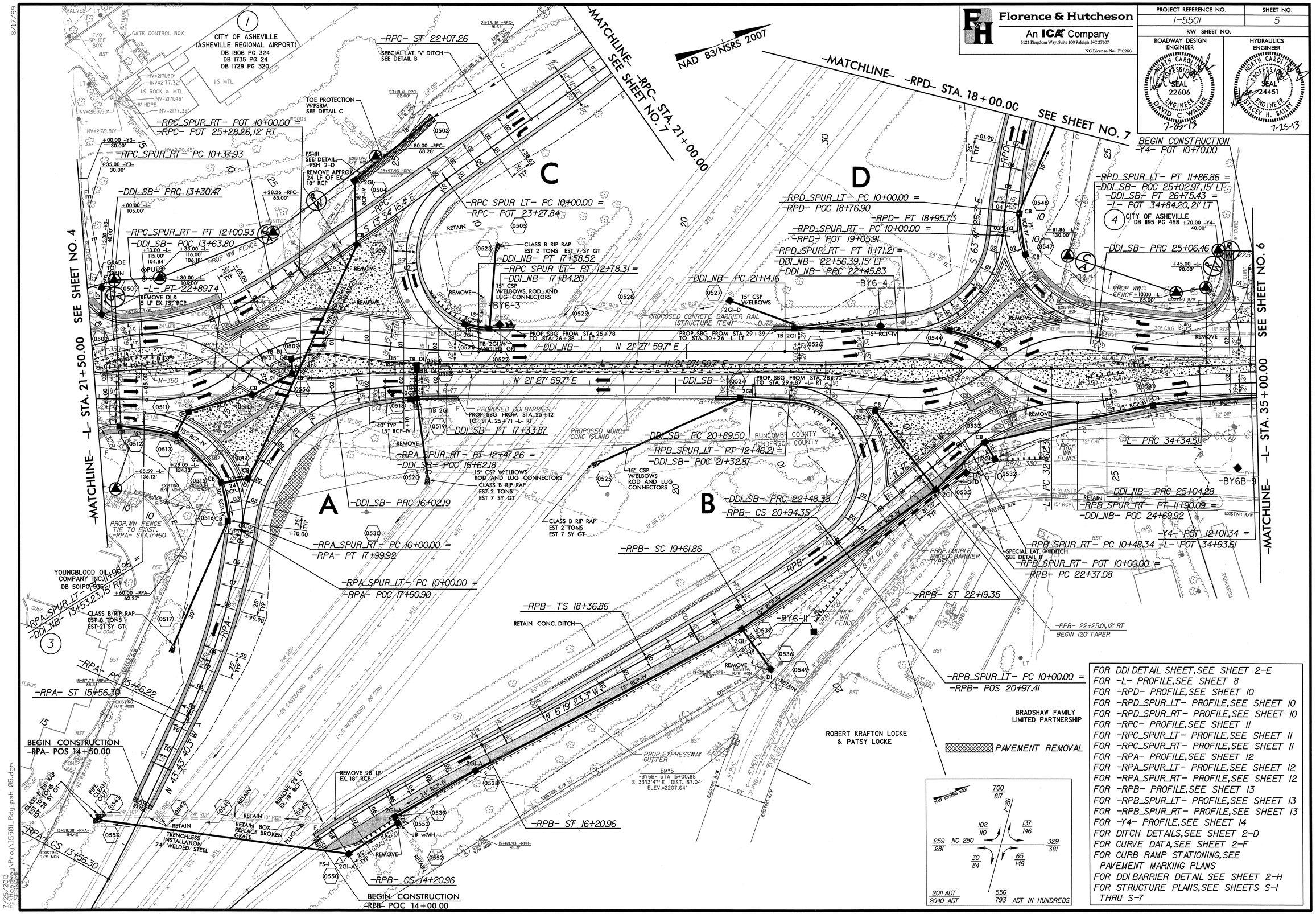

7/25/2013
R:\Roadway\Proj\I5501_Rdy_psh_05.dgn

Florence & Hutcheson
An ICA Company
5121 Kingdom Way, Suite 100 Raleigh, NC 27607
NC License No: F-0258

PROJECT REFERENCE NO.	SHEET NO.
I-5501	6
R/W SHEET NO.	

ROADWAY DESIGN ENGINEER
NORTH CAROLINA PROFESSIONAL SEAL 22606 ENGINEER DAVID C. WALKER
7-8-13

HYDRAULICS ENGINEER
NORTH CAROLINA PROFESSIONAL SEAL 24451 ENGINEER STACEY H. BAILEY
7-8-13

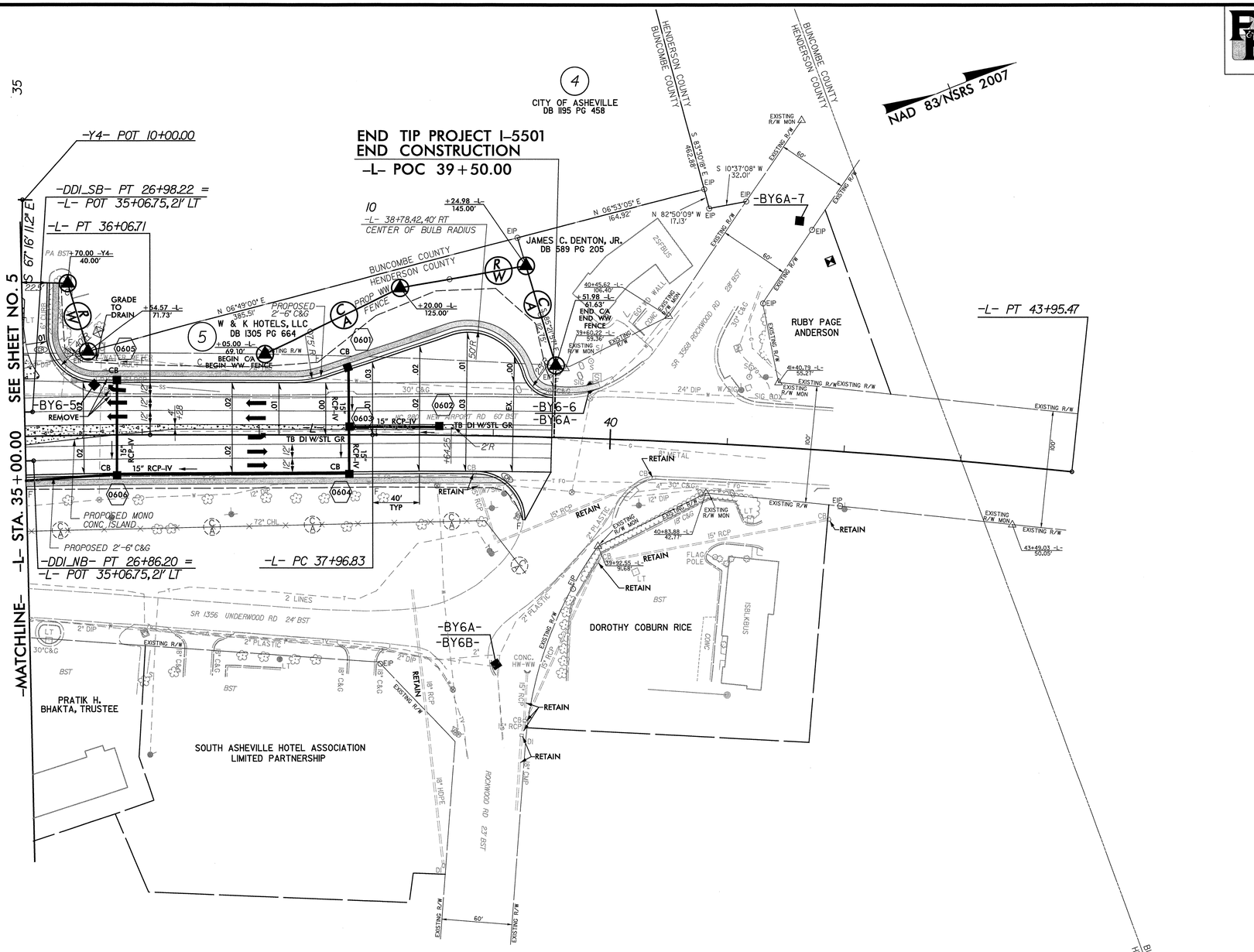

REVISIONS

8/17/99

FOR -L- PROFILE, SEE SHEET 9
FOR -Y4- PROFILE, SEE SHEET 14
FOR -RPA- PROFILE, SEE SHEET 12
FOR -RPB- PROFILE, SEE SHEET 13
FOR DITCH DETAILS, SEE SHEET 2-D
FOR CURVE DATA, SEE SHEET 2-F
FOR CURB RAMP STATIONING, SEE PAVEMENT MARKING PLANS

7/8/2013
I:\5501\Roadway\Proj\I5501_Rdy_psh_06.dgn
Florence & Hutcheson, Inc.

8/17/99

Florence & Hutcheson
An ICA Company
5121 Kingdom Way, Suite 100 Raleigh, NC 27607
NC License No: F-0258

PROJECT REFERENCE NO.	SHEET NO.
I-5501	7
R/W SHEET NO.	

ROADWAY DESIGN ENGINEER
NORTH CAROLINA PROFESSIONAL SEAL 22606 ENGINEER DAVID C. WALLER
6-4-13

HYDRAULICS ENGINEER
NORTH CAROLINA PROFESSIONAL SEAL 024451 ENGINEER STACEY H. BAILEY
6/4/2013

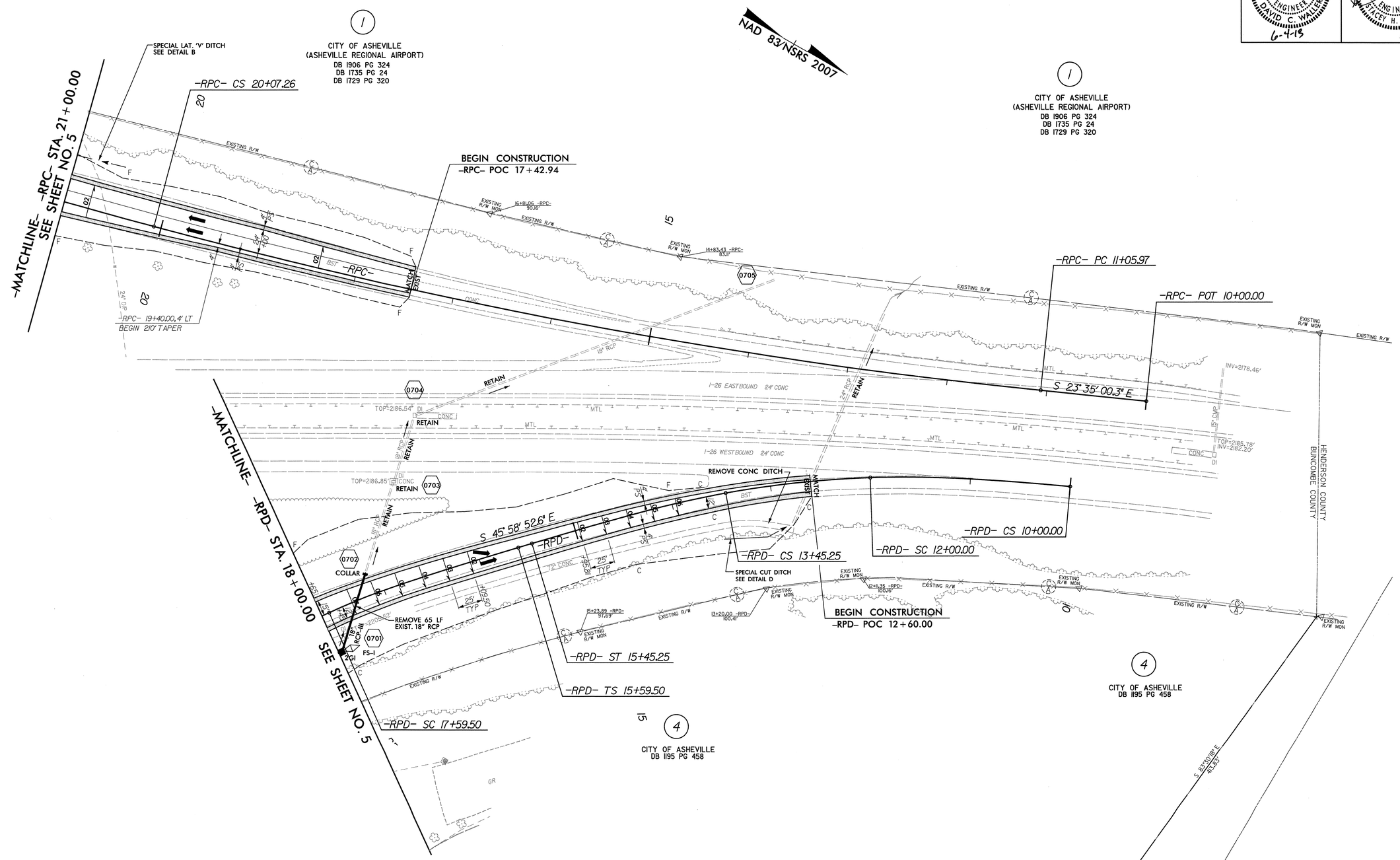

FOR -RPD- PROFILE, SEE SHEET 10
FOR -RPC- PROFILE, SEE SHEET 11
FOR DITCH DETAILS, SEE SHEET 2-D
FOR CURVE DATA SEE SHEET 2-F

6/4/2013
I:\Roadway\Proj\I5501_Rdy_psh_07.dgn

5/28/99

Florence & Hutcheson
An ICA Company
5121 Kingdom Way, Suite 100 Raleigh, NC 27607
NC License No: F-0258

PROJECT REFERENCE NO.	SHEET NO.
I-5501	8

ROADWAY DESIGN ENGINEER
NORTH CAROLINA PROFESSIONAL SEAL 22606 ENGINEER DAVID C. WALLER
6-4-13

HYDRAULICS ENGINEER
NORTH CAROLINA PROFESSIONAL SEAL 24451 ENGINEER STACEY H. BAILEY
6/4/2013

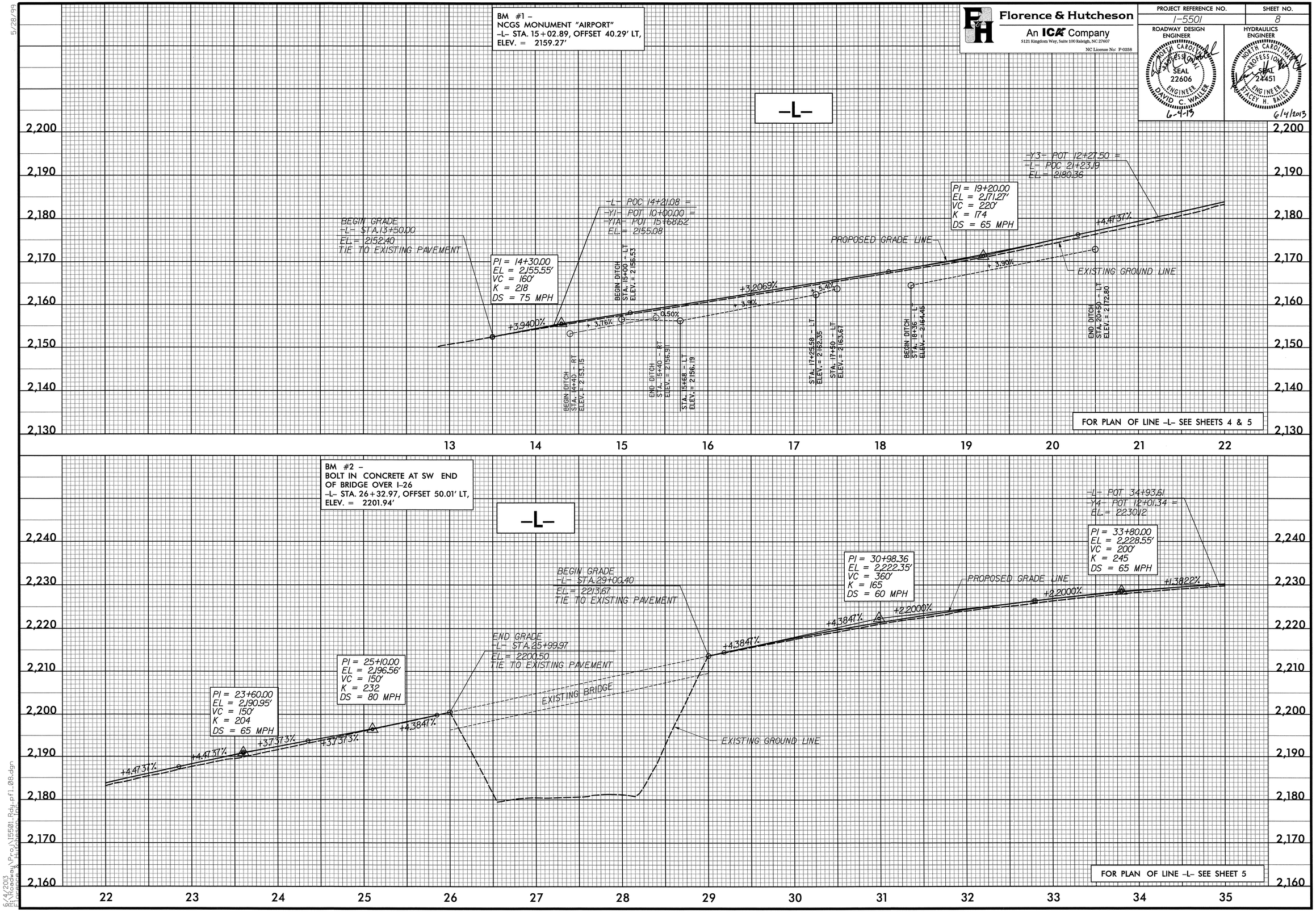

6/4/2013
R:\Roadway\Proj\I5501_Rdy_prf1_08.dgn
pcopeland hufcesson.com

5/28/99

BM #3 –
8" SPIKE SET IN ROOT OF
18" ASH TREE
–L– STA. 35+63.47, OFFSET 87.49' LT,
ELEV. = 2229.59'

BM #4 –
8" SPIKE SET IN ROOT OF
18" POPLAR TREE
–L– STA. 41+77.75, OFFSET 160.36' LT,
ELEV. = 2226.30'

Florence & Hutcheson
An ICA Company
5121 Kingdom Way, Suite 100 Raleigh, NC 27607
NC License No: F-0258

PROJECT REFERENCE NO.	SHEET NO.
I-5501	9

ROADWAY DESIGN ENGINEER
NORTH CAROLINA PROFESSIONAL SEAL 22606 ENGINEER DAVID C. WALLER
6-4-13

HYDRAULICS ENGINEER
NORTH CAROLINA PROFESSIONAL SEAL 24451 ENGINEER STACEY H. BAILEY
6/4/2013

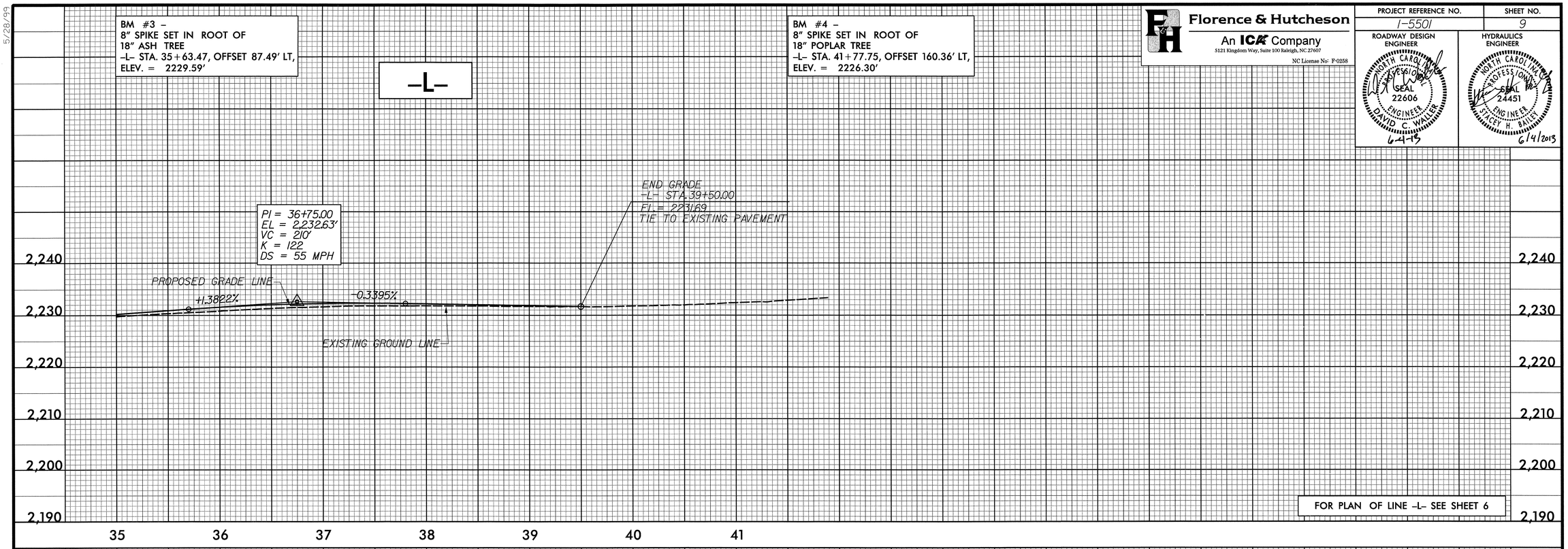

FOR PLAN OF LINE –L– SEE SHEET 6

6/4/2013
H:\Roadway\Proj\I5501_Rdy_pfl_09.dgn
Florence & Hutcheson, Inc.

5/28/99

Florence & Hutcheson
An ICA Company
5121 Kingdom Way, Suite 100 Raleigh, NC 27607
NC License No: F-0258

PROJECT REFERENCE NO.	SHEET NO.
I-5501	10

ROADWAY DESIGN ENGINEER
NORTH CAROLINA PROFESSIONAL SEAL 22606 ENGINEER DAVID C. WALLER
6-4-13

HYDRAULICS ENGINEER
NORTH CAROLINA PROFESSIONAL SEAL 24451 ENGINEER STACEY H. BAILEY
6/4/2013

-RPD-

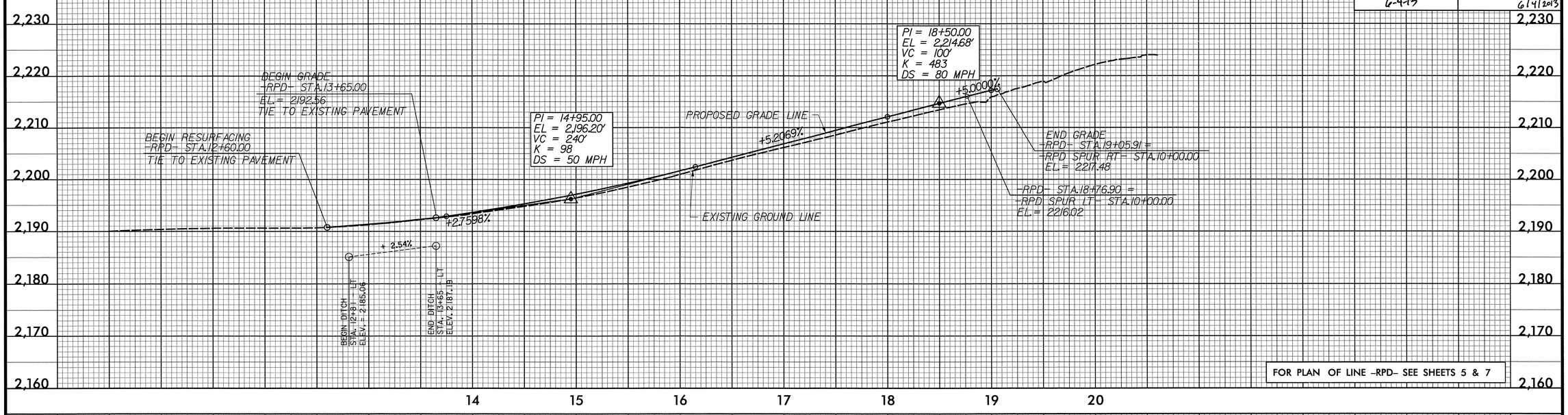

FOR PLAN OF LINE -RPD- SEE SHEETS 5 & 7

-RPD_SPUR_LT-

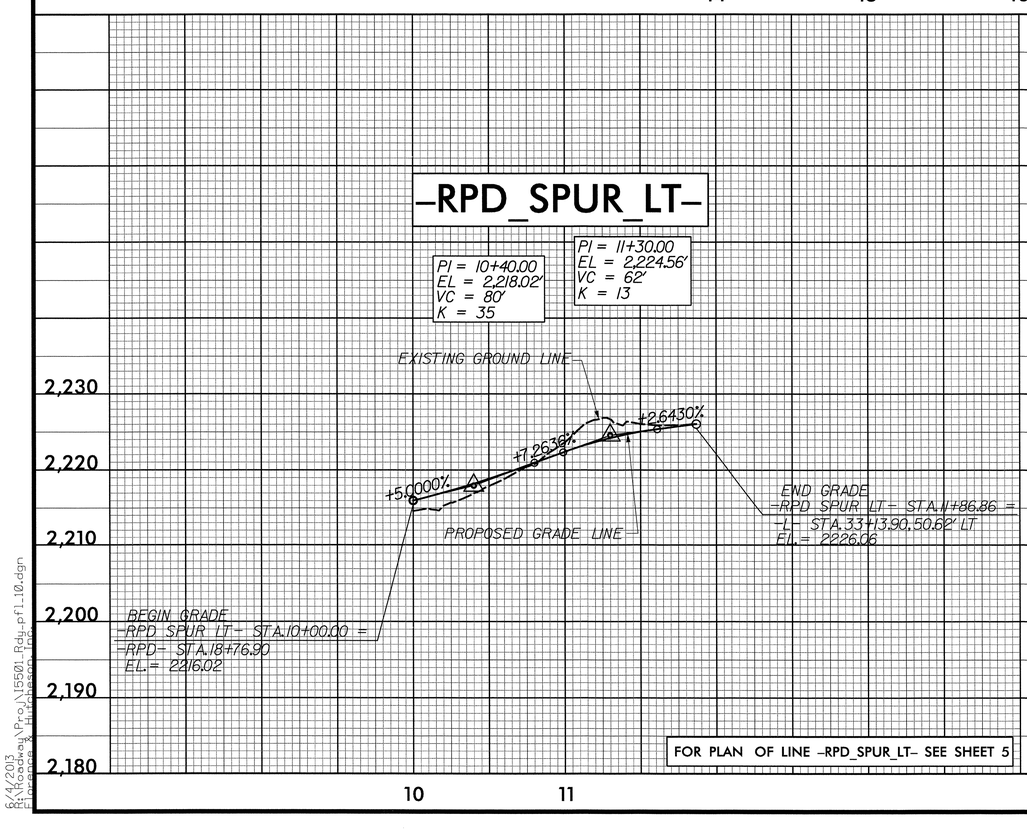

FOR PLAN OF LINE -RPD_SPUR_LT- SEE SHEET 5

-RPD_SPUR_RT-

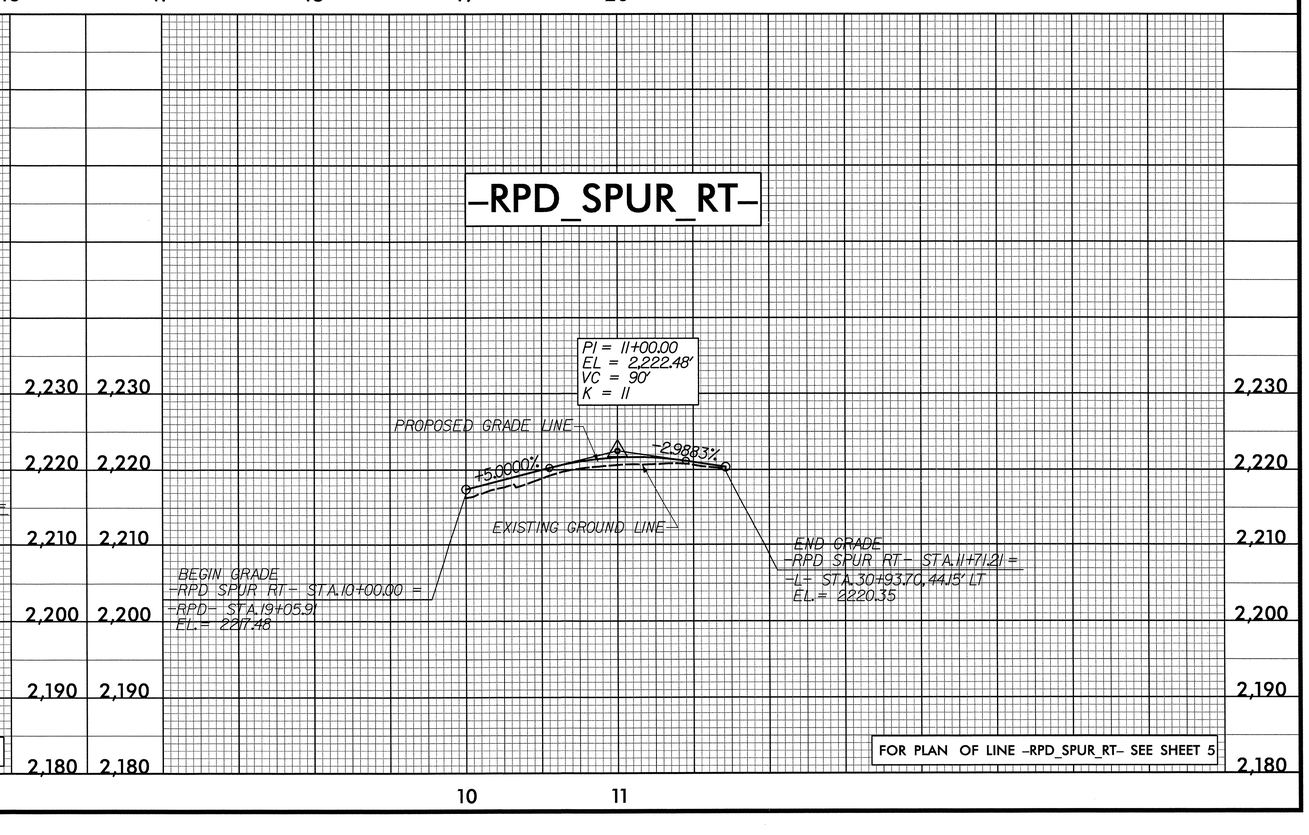

FOR PLAN OF LINE -RPD_SPUR_RT- SEE SHEET 5

6/4/2013
F:\Roadway\Proj\I5501_Rdy_pfl_10.dgn
Florence & Hutcheson

Florence & Hutcheson
An ICA Company
5121 Kingdom Way, Suite 100 Raleigh, NC 27607
NC License No: F-0258

PROJECT REFERENCE NO.	SHEET NO.
I-5501	11

ROADWAY DESIGN ENGINEER
NORTH CAROLINA PROFESSIONAL SEAL 22606 ENGINEER DAVID C. WALLER
6-4-13

HYDRAULICS ENGINEER
NORTH CAROLINA PROFESSIONAL SEAL 24451 ENGINEER STACEY H. BAILEY
6/4/2013

5/28/99

-RPC-

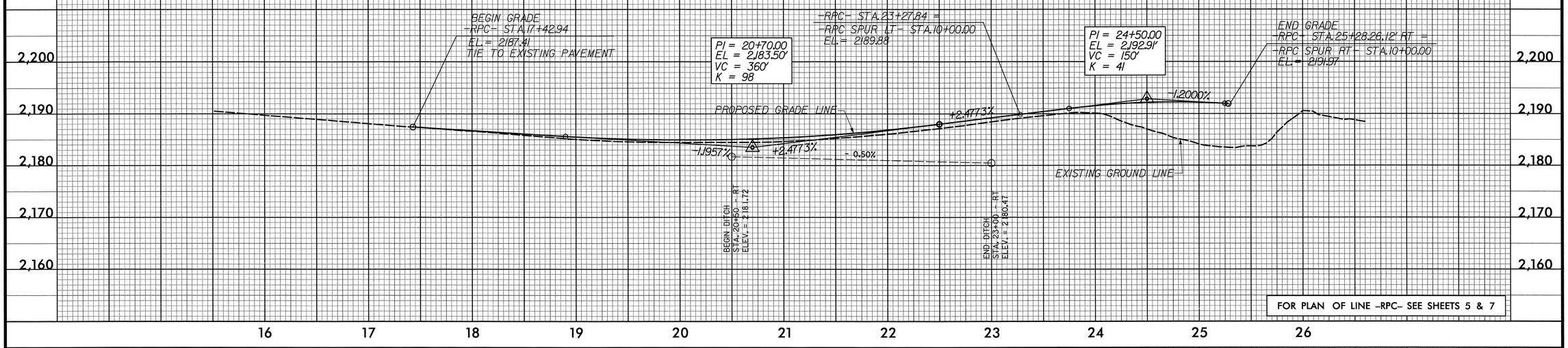

FOR PLAN OF LINE -RPC- SEE SHEETS 5 & 7

-RPC_SPUR_LT-

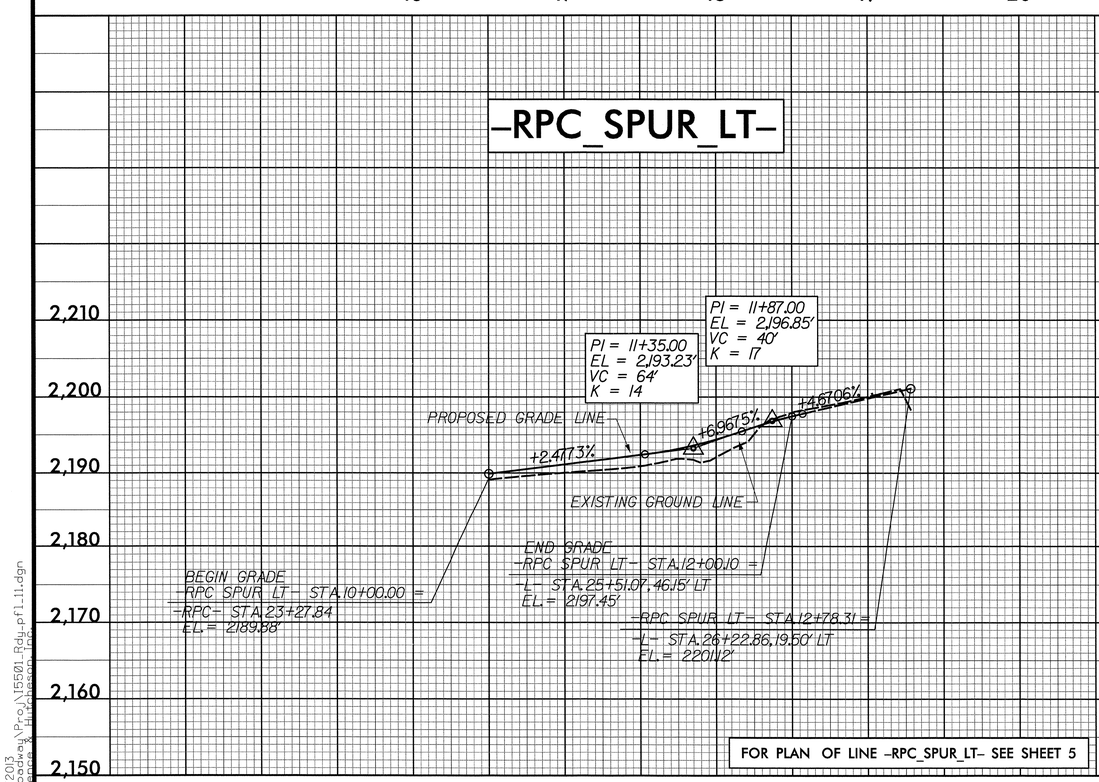

FOR PLAN OF LINE -RPC_SPUR_LT- SEE SHEET 5

-RPC_SPUR_RT-

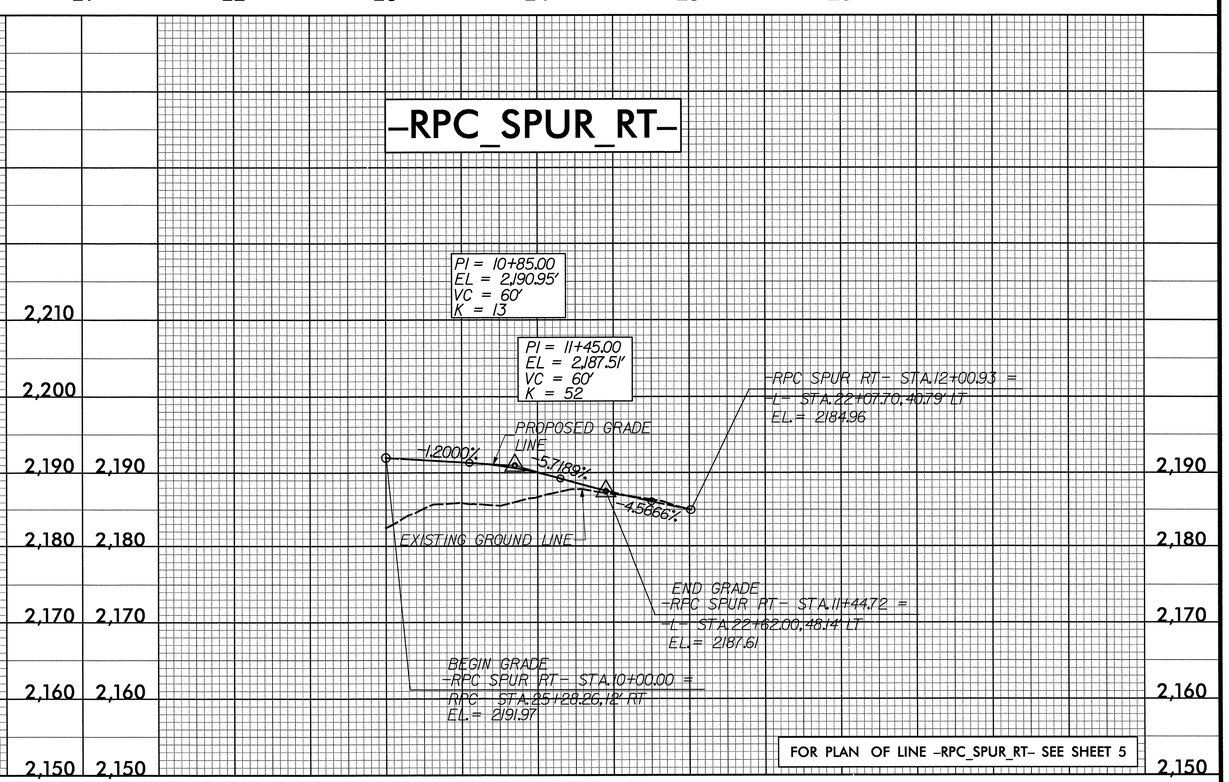

FOR PLAN OF LINE -RPC_SPUR_RT- SEE SHEET 5

6/4/2013
R:\Roadway\Proj\I5501_Rdy_pf1_11.dgn
Florence & Hutcheson

5/28/99

Florence & Hutcheson
An ICA Company
5121 Kingdom Way, Suite 100 Raleigh, NC 27607
NC License No: F-0258

PROJECT REFERENCE NO.	SHEET NO.
I-5501	12

ROADWAY DESIGN ENGINEER
NORTH CAROLINA PROFESSIONAL SEAL 22606 ENGINEER DAVID C. WALLER
6-4-13

HYDRAULICS ENGINEER
NORTH CAROLINA PROFESSIONAL SEAL 24451 ENGINEER STACEY H. BAILEY
6/4/2013

-RPA-

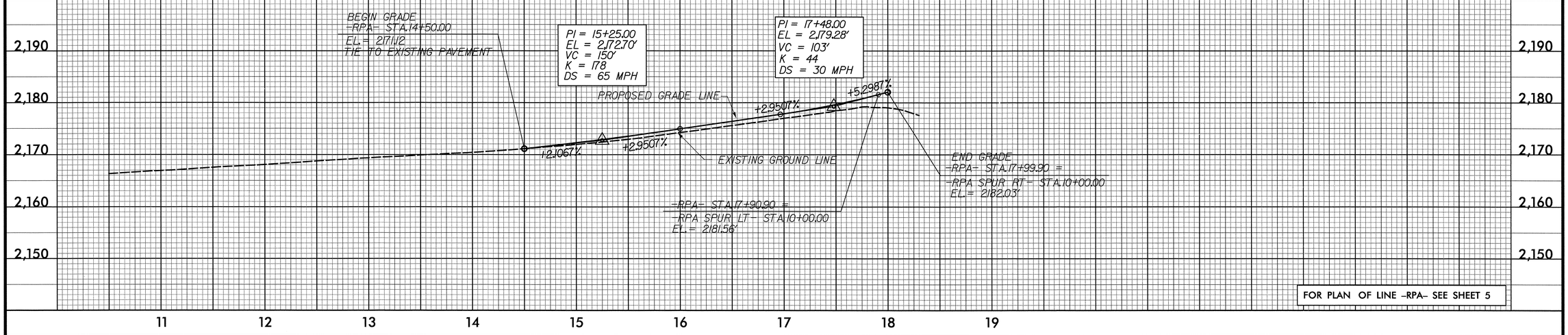

FOR PLAN OF LINE -RPA- SEE SHEET 5

-RPA_SPUR_LT-

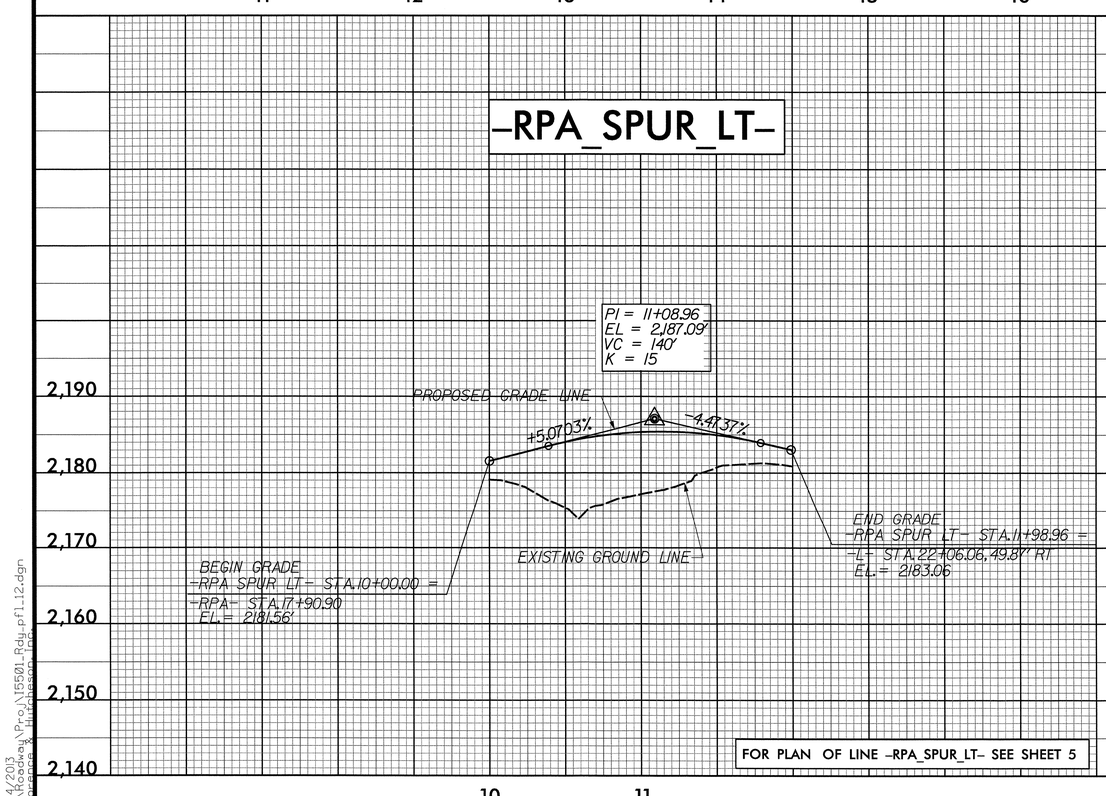

FOR PLAN OF LINE -RPA_SPUR_LT- SEE SHEET 5

-RPA_SPUR_RT-

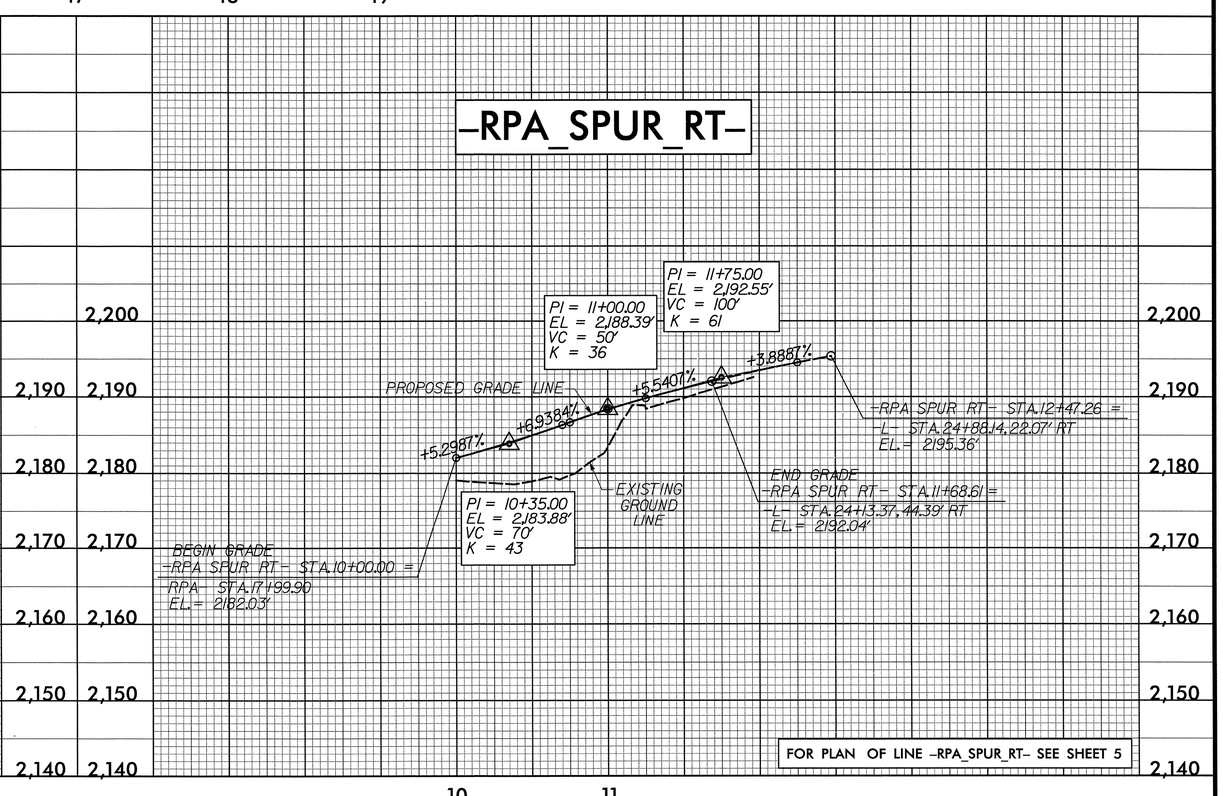

FOR PLAN OF LINE -RPA_SPUR_RT- SEE SHEET 5

6/4/2013
H:\Roadway\Proj\I5501_Rdy_pfl_12.dgn
Florence & Hutcheson, Inc.

5/28/99

Florence & Hutcheson
An ICA Company
5121 Kingdom Way, Suite 100 Raleigh, NC 27607
NC License No: F-0258

PROJECT REFERENCE NO.	SHEET NO.
I-5501	13

ROADWAY DESIGN ENGINEER
NORTH CAROLINA PROFESSIONAL SEAL 22606 ENGINEER DAVID C. WALLER
6-4-13

HYDRAULICS ENGINEER
NORTH CAROLINA PROFESSIONAL SEAL 24451 ENGINEER STACEY H. BAILEY
6/4/2013

BM #5 –
NAIL AND CAP SET IN NE END
OF CONCRETE WALK
–RPB– STA. 18+82.37, OFFSET 134.29' RT,
ELEV. = 2207.64'

–RPB–

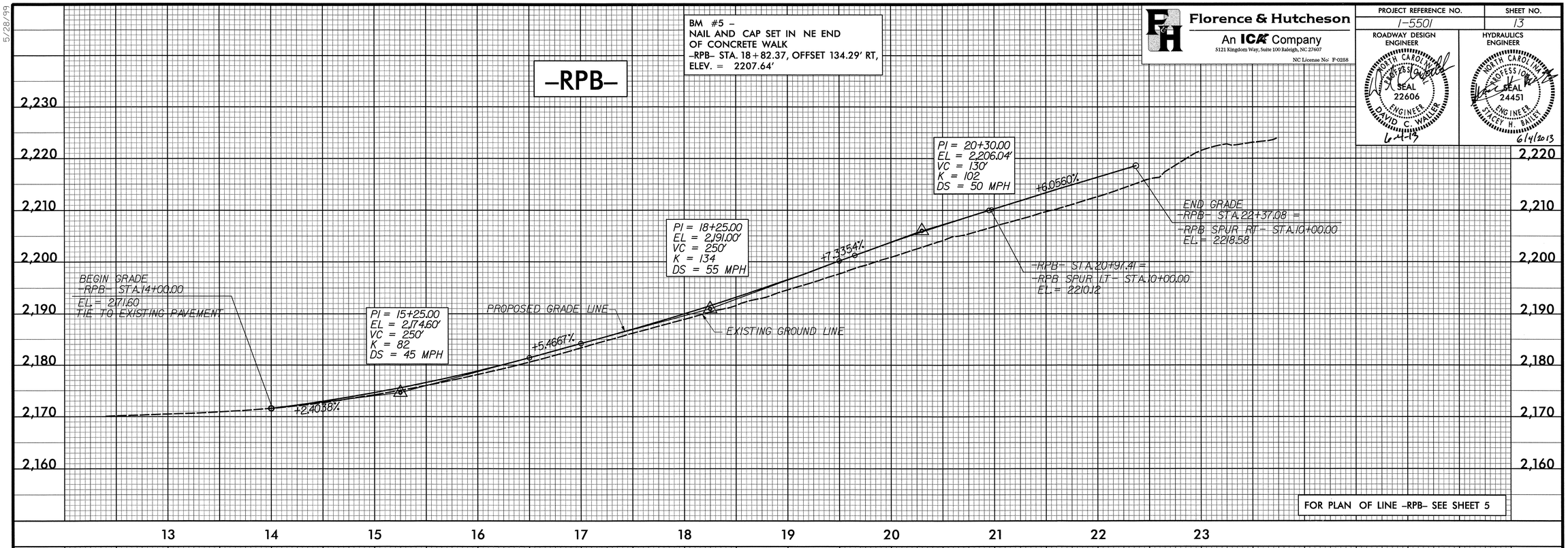

FOR PLAN OF LINE –RPB– SEE SHEET 5

–RPB_SPUR_LT–

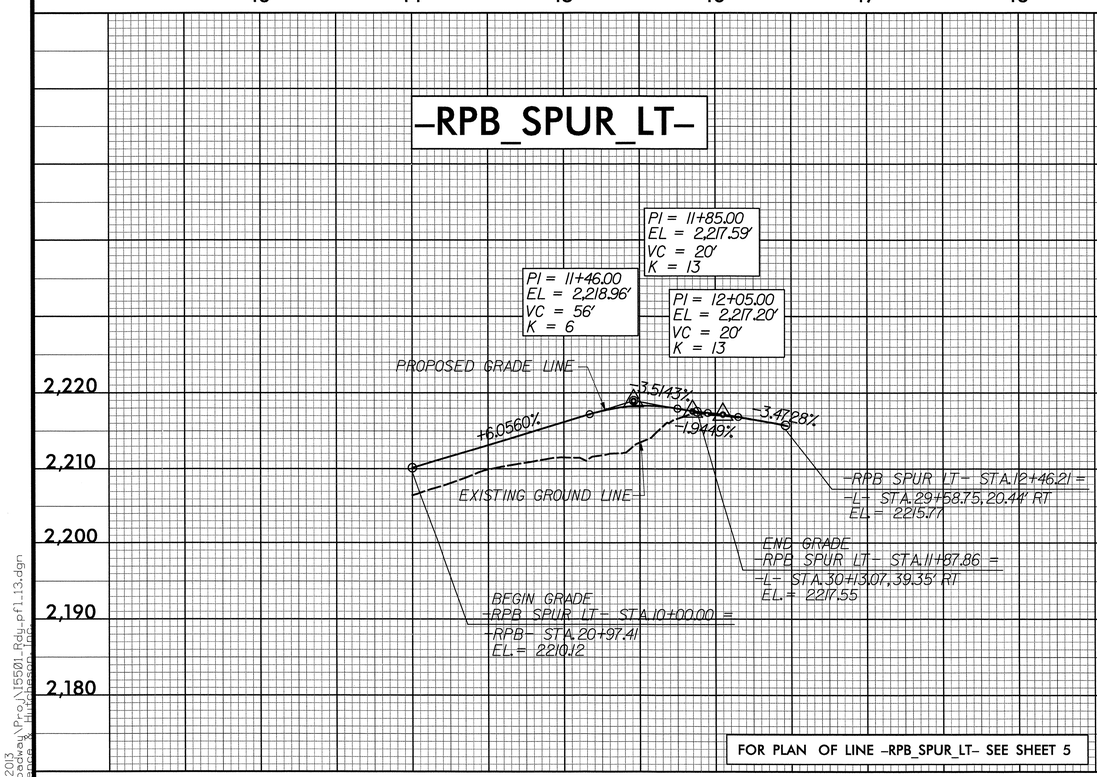

FOR PLAN OF LINE –RPB_SPUR_LT– SEE SHEET 5

–RPB_SPUR_RT–

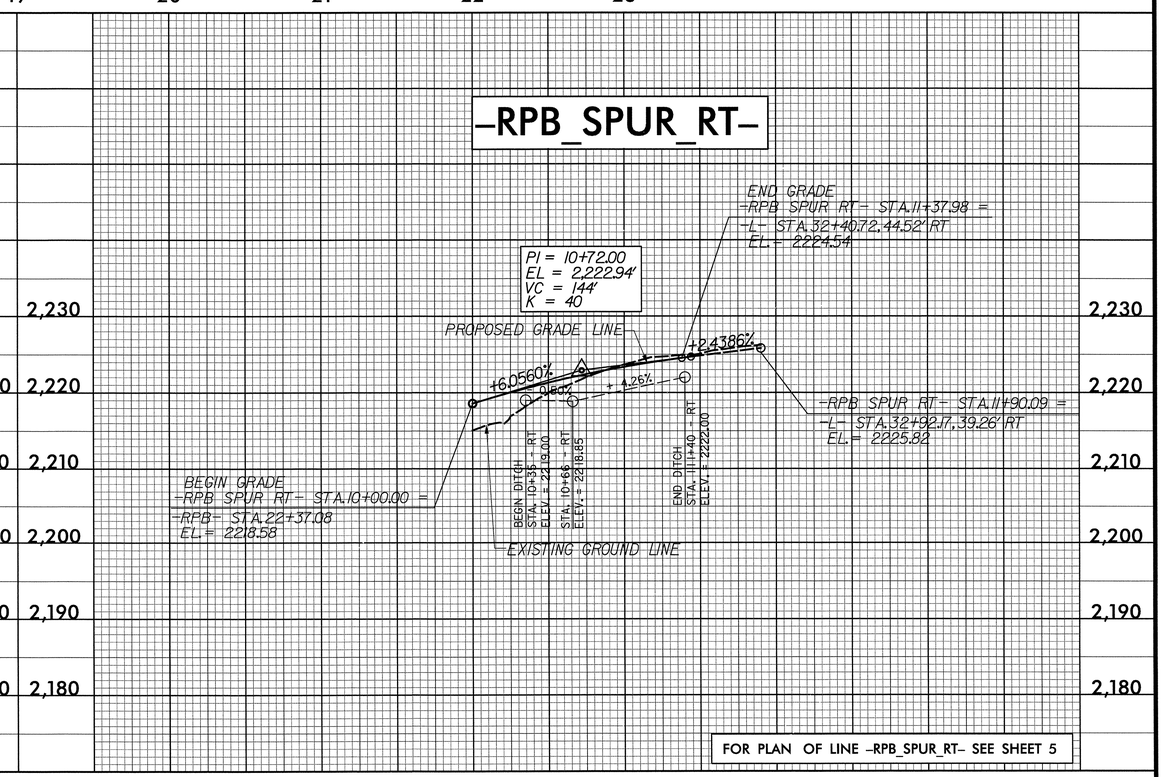

FOR PLAN OF LINE –RPB_SPUR_RT– SEE SHEET 5

6/4/2013
R:\Roadway\Proj\I5501_Rdy_pfl_13.dgn
Florence & Hutcheson, Inc.

5/28/99

Florence & Hutcheson
An ICA Company
5121 Kingdom Way, Suite 100 Raleigh, NC 27607
NC License No: F-0258

PROJECT REFERENCE NO.	SHEET NO.
I-5501	14

ROADWAY DESIGN ENGINEER
NORTH CAROLINA PROFESSIONAL SEAL 22606 ENGINEER DAVID C. WALLER
6-4-13

HYDRAULICS ENGINEER
NORTH CAROLINA PROFESSIONAL SEAL 24451 ENGINEER STACEY H. BAILEY
6/4/2013

-Y1-

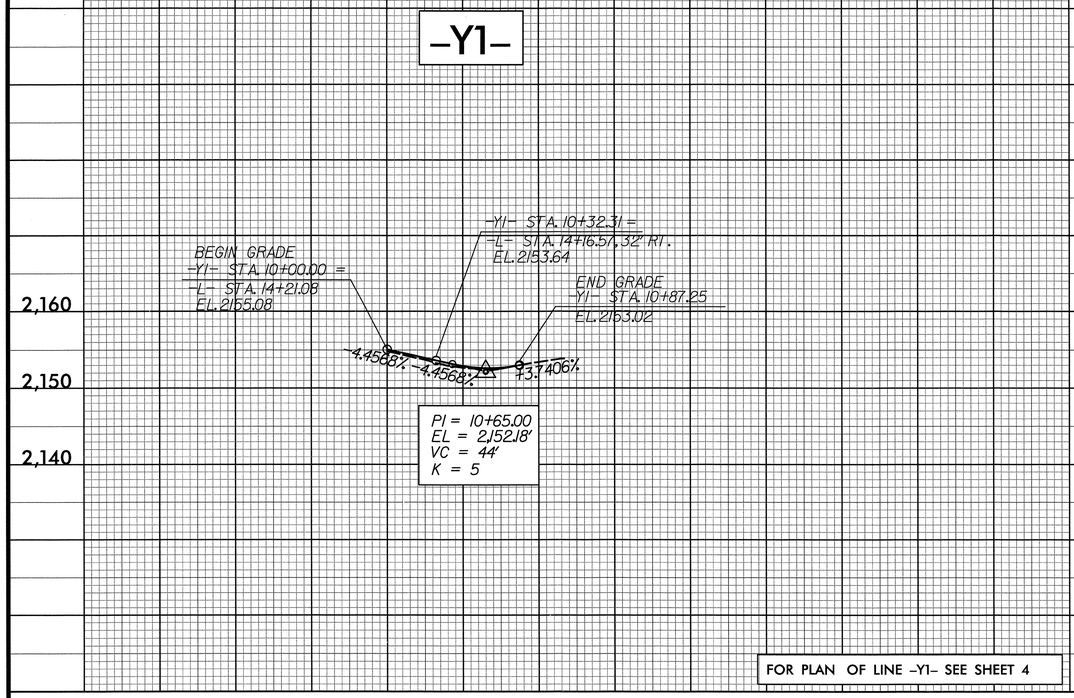

-Y1E-

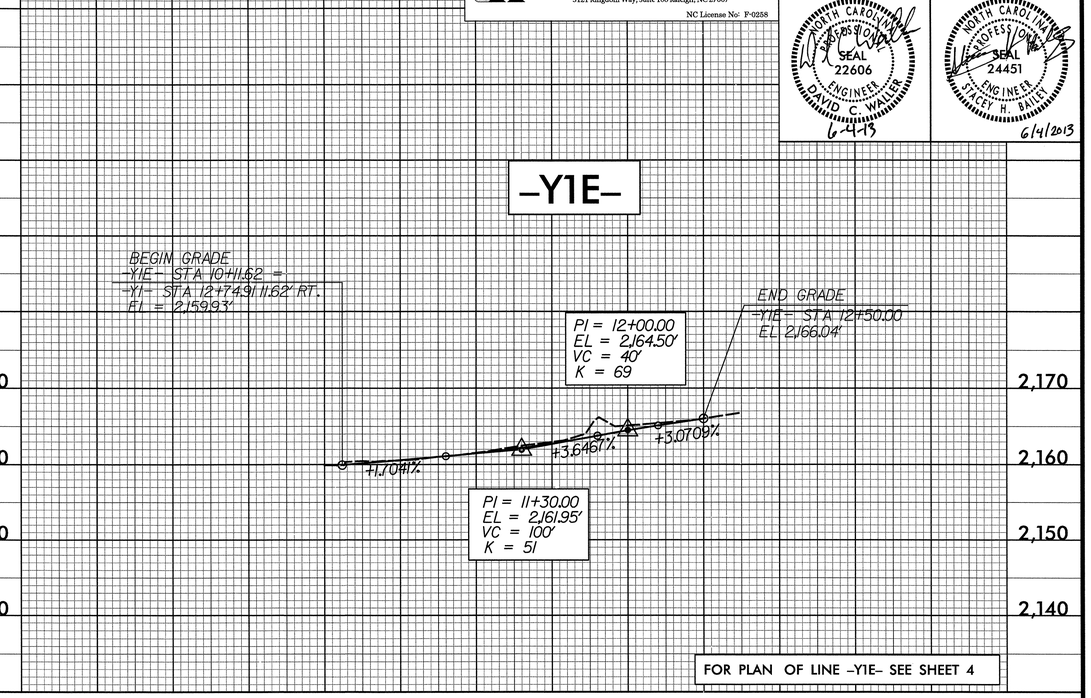

-Y3-

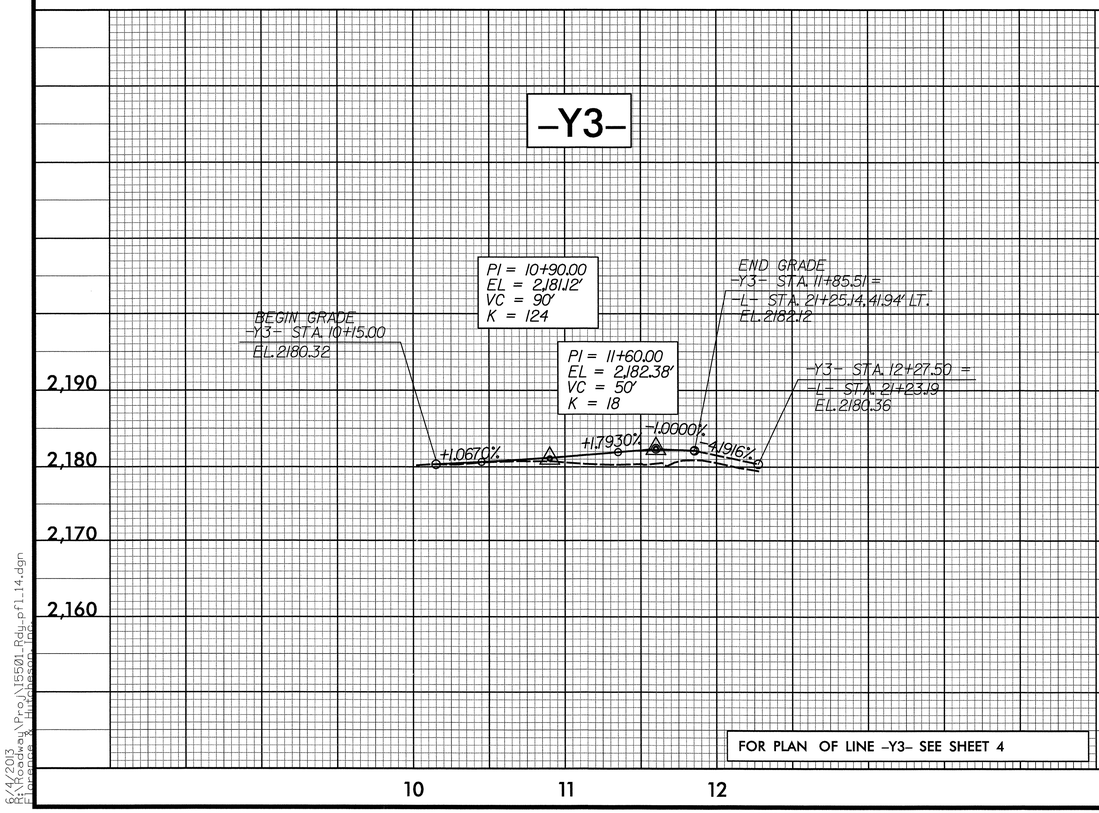

-Y4-

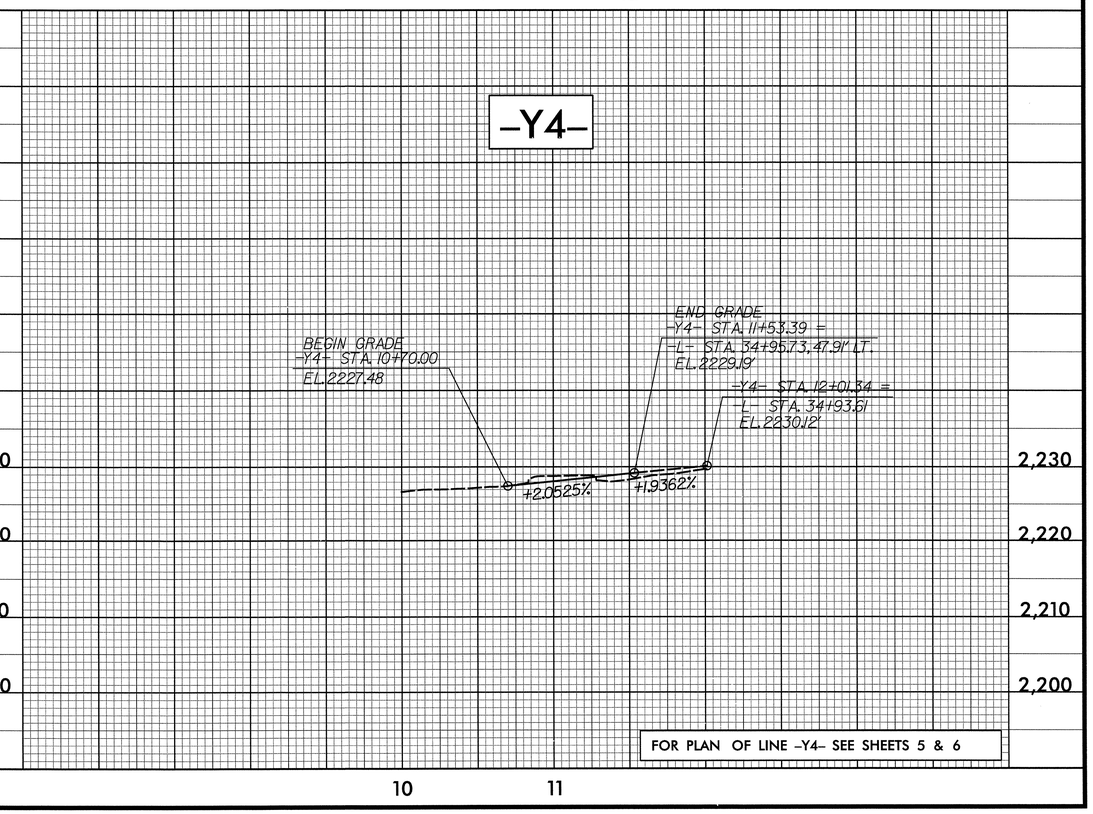

6/4/2013
F:\Roadway\Proj\I5501_Rdy_pfl_14.dgn
Florence & Hutcheson, Inc.

5/28/99

Florence & Hutcheson
An ICA Company
5121 Kingdom Way, Suite 100 Raleigh, NC 27607
NC License No: F-0258

PROJECT REFERENCE NO.	SHEET NO.
I-5501	15

ROADWAY DESIGN ENGINEER
NORTH CAROLINA PROFESSIONAL SEAL 22606 ENGINEER DAVID C. WALKER
6-4-13

HYDRAULICS ENGINEER
NORTH CAROLINA PROFESSIONAL SEAL 24451 ENGINEER STACEY H. BAILEY
6/4/2013

-Y1A-

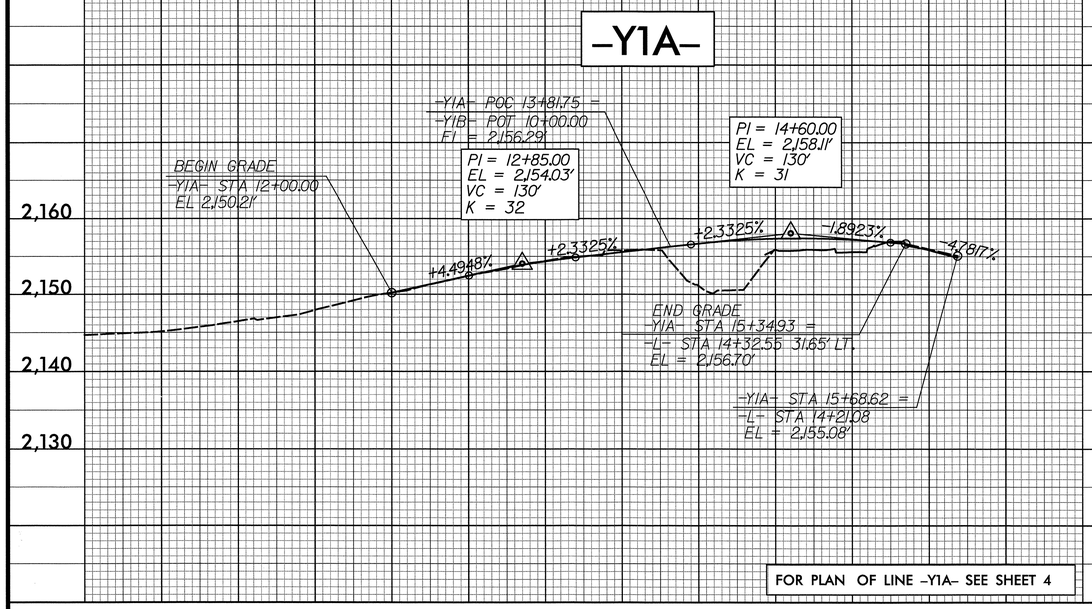

FOR PLAN OF LINE -Y1A- SEE SHEET 4

-Y1B-

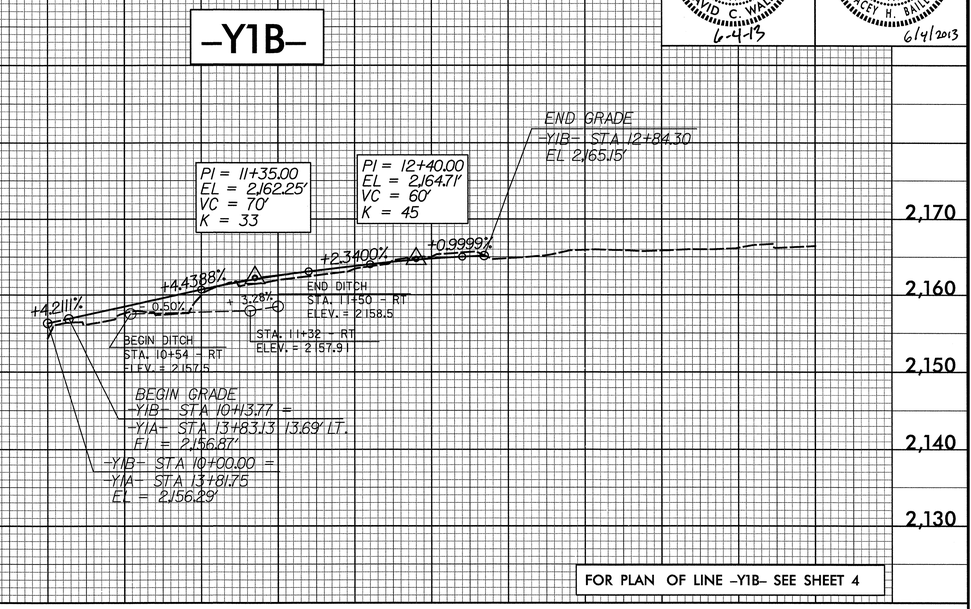

FOR PLAN OF LINE -Y1B- SEE SHEET 4

-Y1C-

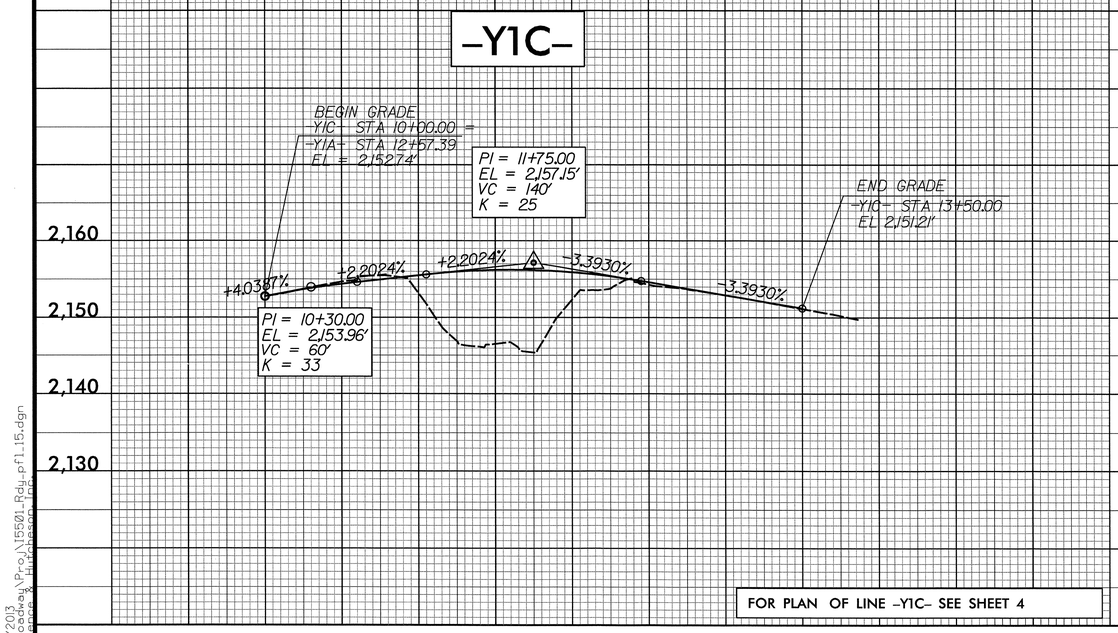

FOR PLAN OF LINE -Y1C- SEE SHEET 4

-Y1D-

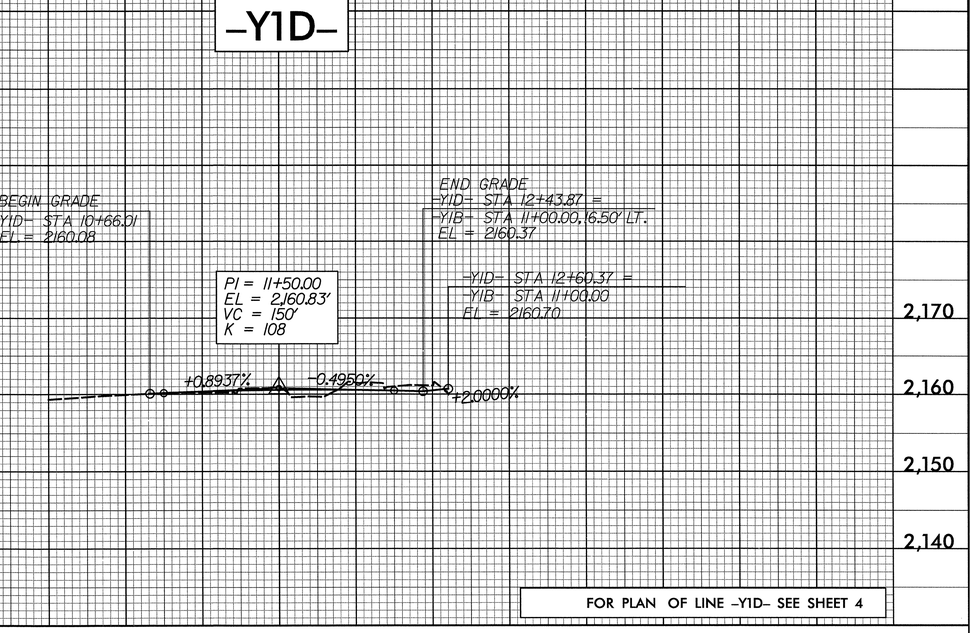

FOR PLAN OF LINE -Y1D- SEE SHEET 4

6/4/2013
R:\Roadway\Proj\I5501_Rdy_prfl_15.dgn
Florence & Hutcheson, Inc.