09/08/99

TIP PROJECT: R-3101

CONTRACT: C203386

STATE	STATE PROJECT REFERENCE NO.	SHEET NO.	TOTAL SHEETS
N.C.	R-3101		

STATE PROJ. NO.	F. A. PROJ. NO.	DESCRIPTION
37044.1.1	STP – 21(11)	PE
37044.2.1	STP-0021(11)	R/W
37044.3.1	STP-0021(14)	CONST.

STATE OF NORTH CAROLINA
DIVISION OF HIGHWAYS

ALLEGHANY COUNTY

LOCATION: US 21 FROM SR 1100 (OKLAHOMA RD.) TO SR 1121 (PINE SWAMP RD.)

TYPE OF WORK: GRADING, DRAINAGE, WIDENING, PAVING, RESURFACING AND STRUCTURES

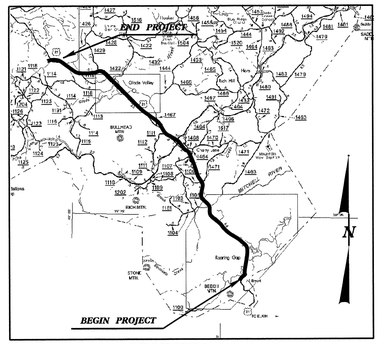

VICINITY MAP

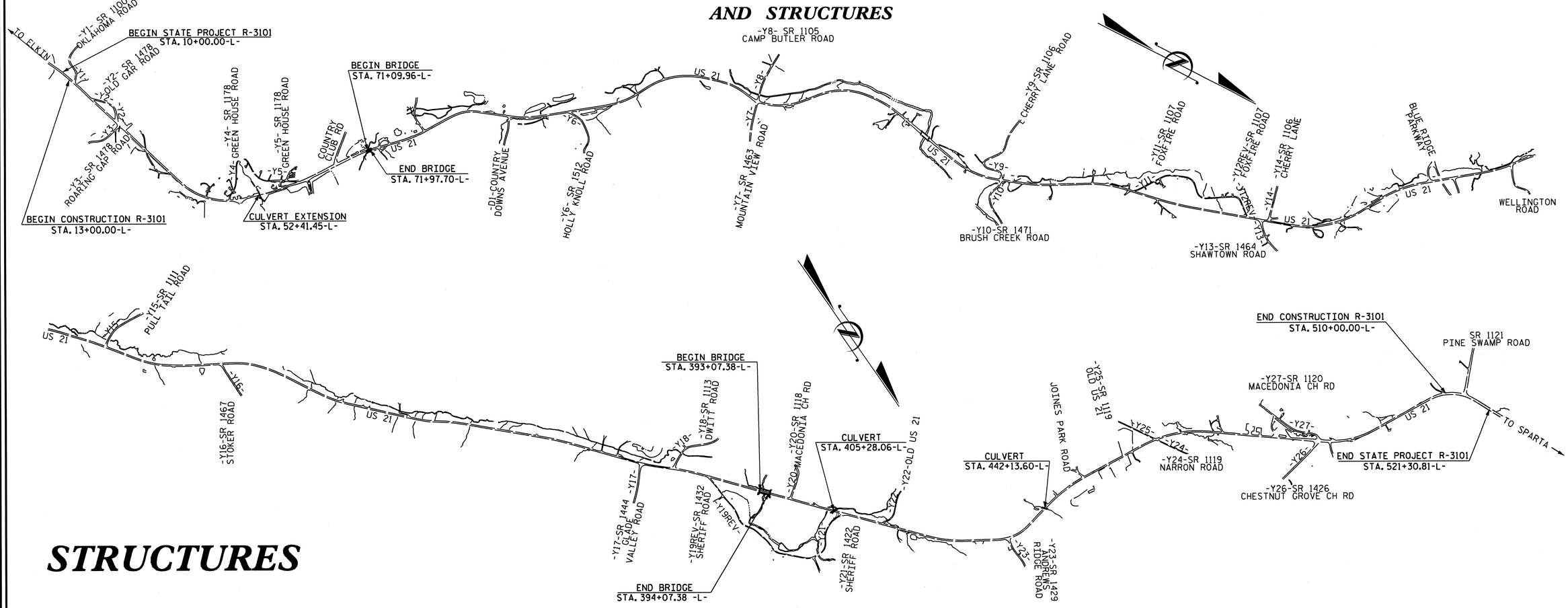

STRUCTURES

DESIGN DATA
REGIONAL TIER DESIGN

ADT 2004	=	8300
ADT 2030	=	17000
DHV	=	11 %
D	=	60 %
T	=	10 % *
V	=	55 MPH

* TTST 5% DUAL 5%

PROJECT LENGTH

ROADWAY LENGTH TIP PROJECT R-3101 = 9.656 MI
STRUCTURE LENGTH TIP PROJECT R-3101 = 0.028 MI
TOTAL LENGTH TIP PROJECT R-3101 = 9.684 MI

Prepared In the Office of:
DIVISION OF HIGHWAYS
1000 Birch Ridge Dr., Raleigh NC, 27610

2012 STANDARD SPECIFICATIONS

LETTING DATE:
January 21, 2014

QUANG NGUYEN, P.E.
PROJECT ENGINEER

B. D. KLAPPENBACH, PE
ROADWAY DESIGN ENGINEER

STRUCTURE MANAGEMENT UNIT

DIVISION OF HIGHWAYS
STATE OF NORTH CAROLINA

P.E.
STATE DESIGN ENGINEER

DEPARTMENT OF TRANSPORTATION
FEDERAL HIGHWAY ADMINISTRATION

APPROVED
DIVISION ADMINISTRATOR *DATE*

10-JUN-2013 16:49
$$$$$$$$$$$$$$$$DGN$$$$$$$$$$$$$$$$$$$$
bklappenbach

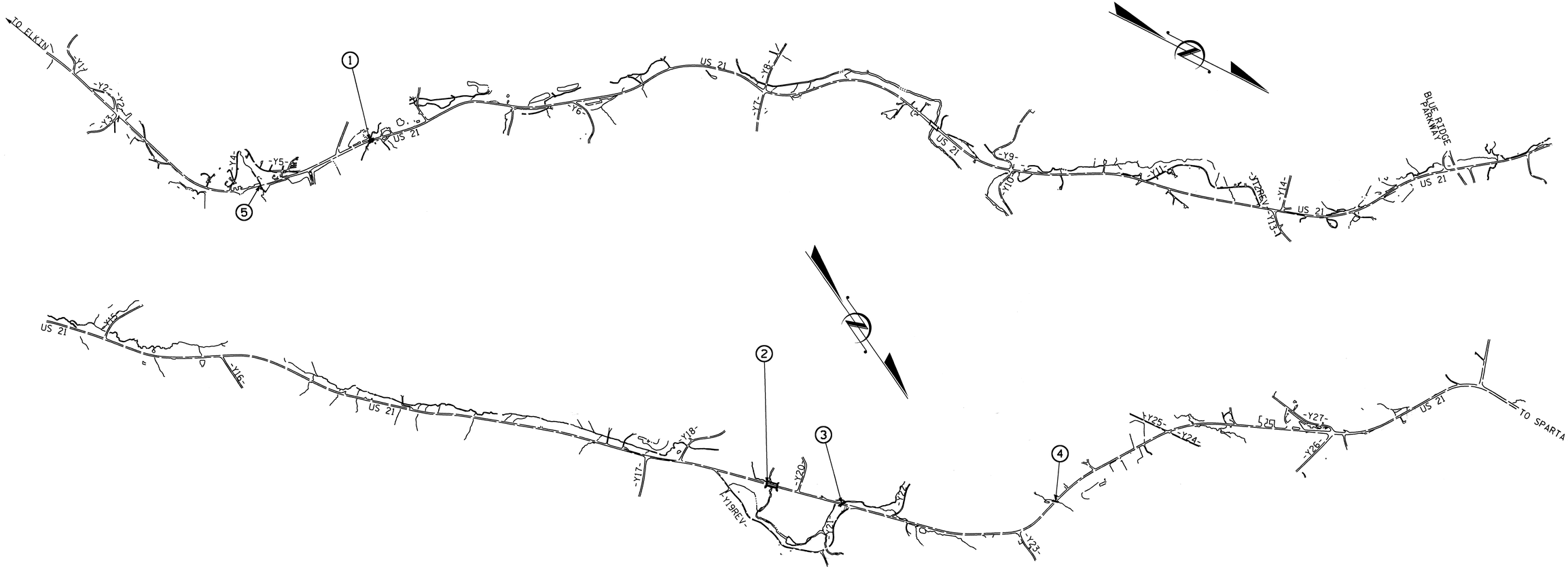

INDEX

STR. No.	STATION	DESCRIPTION	SHEETS
1	71+53.83-L-	BRIDGE ON US 21 OVER LAUREL BRANCH	S-1 THRU S-31
2	393+57.38-L-	BRIDGE ON US 21 OVER GLADE CREEK	S-32 THRU S-65
3	405+28.06-L-	DOUBLE 7 FT. X 7 FT. RCBC	C-1 THRU C-9
4	422+13.60-L-	SINGLE 6 FT. X 7 FT. RCBC	C-10 THRU C-16
5	52+41.45-L-	SINGLE 4 FT. X 9 FT. RCBC	C-17 THRU C-22
N/A	VARIES		W-1 THRU W-4

PROJECT NO. R-3101

ALLEGHANY COUNTY

STATION: -

STATE OF NORTH CAROLINA
DEPARTMENT OF TRANSPORTATION
RALEIGH

INDEX

REVISIONS					
NO.	BY:	DATE:	NO.	BY:	DATE:
1			3		
2			4		

DRAWN BY : H. T. BARBOUR DATE : 5-21-13
CHECKED BY : B.D. KLAPPENBACH DATE : 6-10-13
DESIGN ENGINEER OF RECORD: - DATE : -

24-JUL-2013 14:29
O:\Structures\Str1\Plans\tbarbour\Microstation\R3101_SD_TSH.dgn
tbarbour

F.A. PROTECT NO. STP-0021(14)

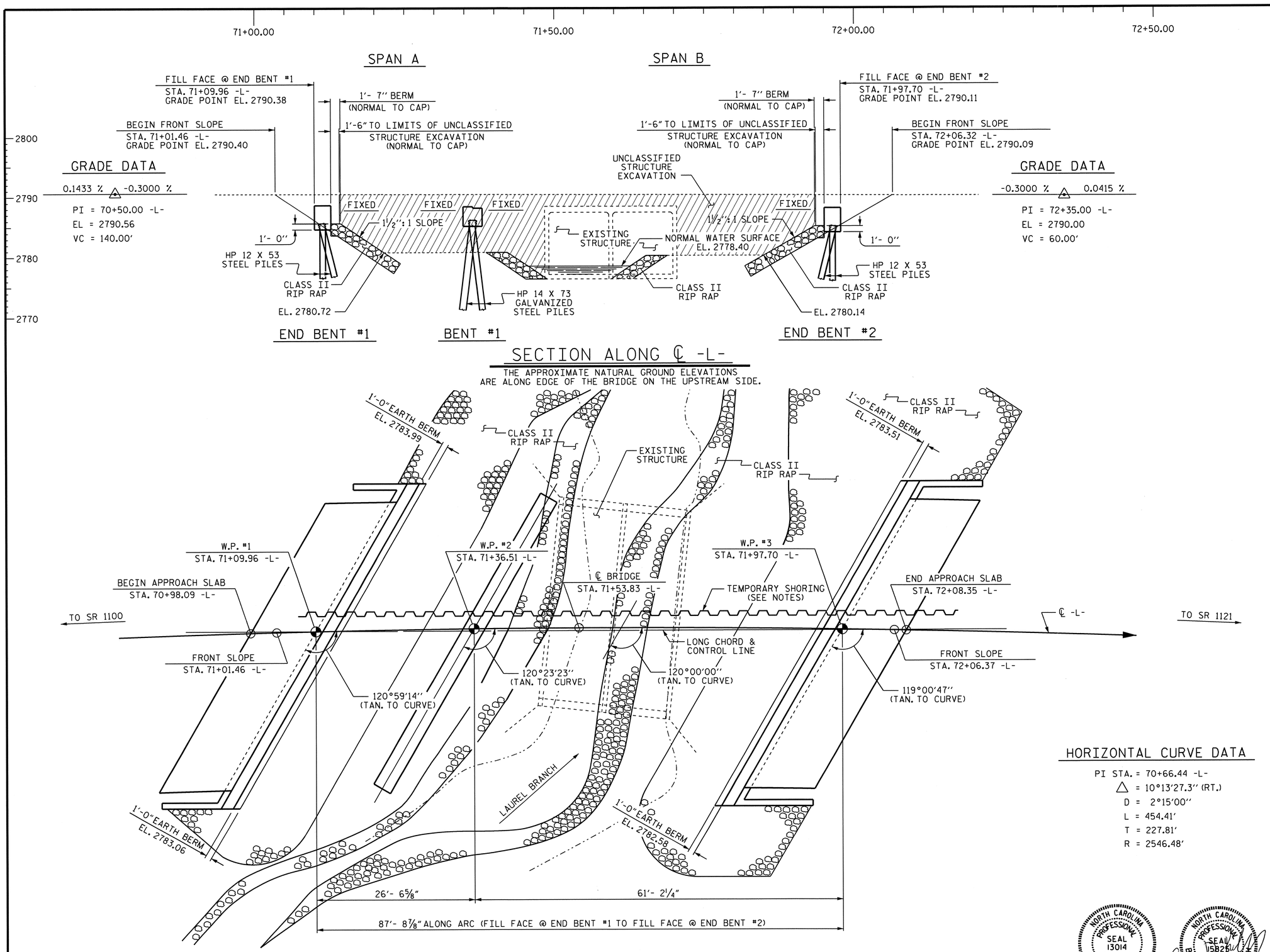

HORIZONTAL CURVE DATA

PI STA. = 70+66.44 -L-
△ = 10°13'27.3" (RT.)
D = 2°15'00"
L = 454.41'
T = 227.81'
R = 2546.48'

PROJECT NO. R-3101
ALLEGHANY COUNTY
STATION: 71+53.83 -L-

SHEET 1 OF 4 BRIDGE NO. 3

STATE OF NORTH CAROLINA
DEPARTMENT OF TRANSPORTATION
RALEIGH

GENERAL DRAWING

BRIDGE ON US 21 OVER
LAUREL BRANCH BETWEEN
SR 1100 & SR 1121

NORTH CAROLINA PROFESSIONAL SEAL 13014 ENGINEER QUANG H. NGUYEN
Quang H. Nguyen 7-26-13

NORTH CAROLINA PROFESSIONAL SEAL 15825 ENGINEER BRUCE D. KLAPPENBACH
7-26-2013

REVISIONS						SHEET NO.
NO.	BY:	DATE:	NO.	BY:	DATE:	S-1
1			3			TOTAL SHEETS
2			4			65

STR. #1

DRAWN BY : D. A. GLADDEN DATE : 9-4-12
CHECKED BY : B. KLAPPENBACH DATE : 6-11-13

24-JUL-2013 15:03
O:\Structures\Str1\Plans\dgladden\Microstation\R3101_SD_GD.dgn

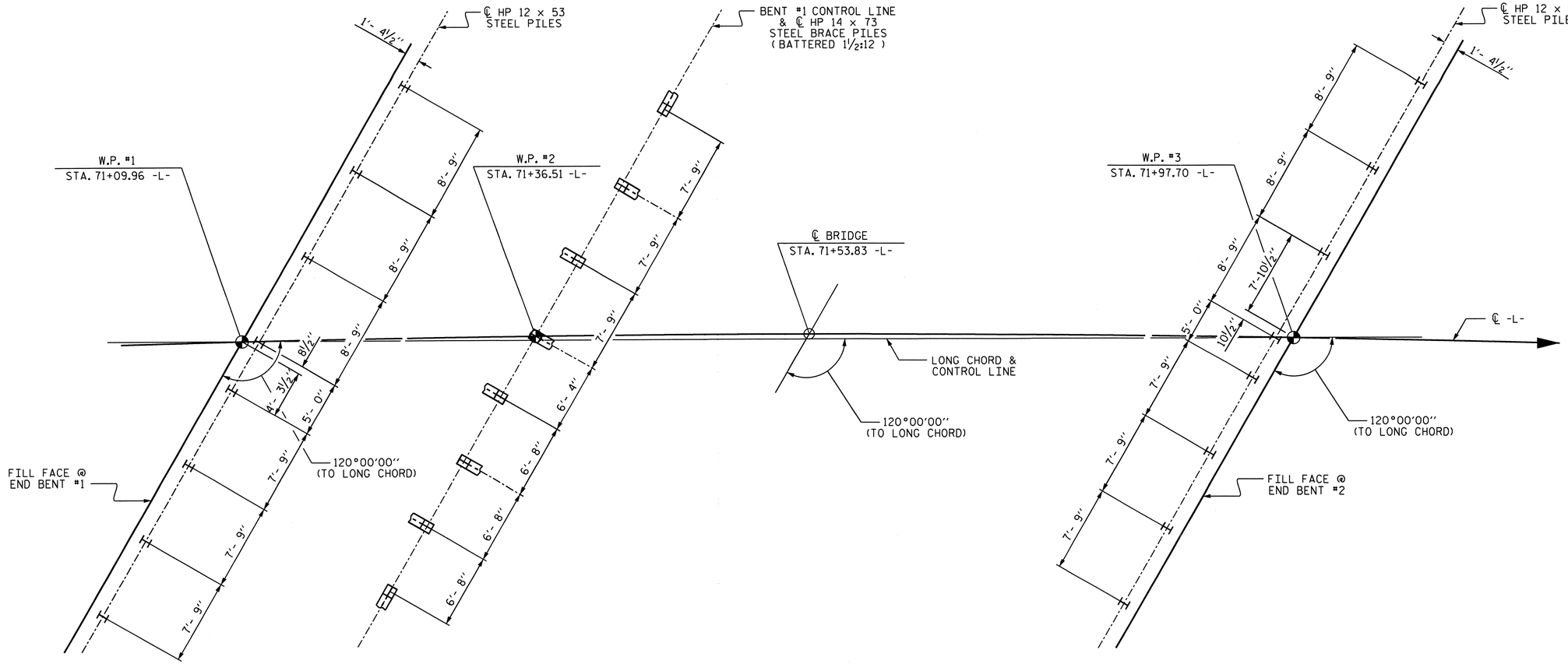

END BENT #1 BENT #1 END BENT #2

FOUNDATION LAYOUT

(DIMENSIONS LOCATING PILES ARE SHOWN TO THE PILE CENTERLINE.)

NOTES

FOR PILES, SEE SECTION 450 OF THE STANDARD SPECIFICATIONS.

PILES AT END BENT NO. 1 ARE DESIGNED FOR A FACTORED RESISTANCE OF 55 TONS PER PILE.

DRIVE PILES AT END BENT NO. 1 TO A REQUIRED DRIVING RESISTANCE OF 95 TONS PER PILE.

PILES AT END BENT NO. 2 ARE DESIGNED FOR A FACTORED RESISTANCE OF 90 TONS PER PILE.

DRIVE PILES AT END BENT NO. 2 TO A REQUIRED DRIVING RESISTANCE OF 150 TONS PER PILE.

PILES AT BENT NO. 1 ARE DESIGNED FOR A FACTORED RESISTANCE OF 145 TONS PER PILE.

DRIVE PILES AT BENT NO. 1 TO A REQUIRED DRIVING RESISTANCE OF 245 TONS PER PILE.

THE SCOUR CRITICAL ELEVATION FOR BENT NO. 1 IS ELEVATION 2771 FT. SCOUR CRITICAL ELEVATIONS ARE USED TO MONITOR POSSIBLE SCOUR PROBLEMS DURING THE LIFE OF THE STRUCTURE.

STEEL H-PILE POINTS ARE REQUIRED FOR STEEL H-PILES AT END BENT NO. 1, BENT NO. 1 AND END BENT NO. 2. FOR STEEL PILE POINTS, SEE SECTION 450 OF THE STANDARD SPECIFICATIONS.

TESTING THE FIRST PRODUCTION PILE WITH THE PDA DURING DRIVING, RESTRIKING OR REDRIVING IS REQUIRED AT BENT NO. 1. FOR PDA TESTING, SEE SECTION 450 OF THE STANDARD SPECIFICATIONS AND FOR PILE DRIVING CRITERIA, SEE PILE DRIVING CRITERIA PROVISION.

NORTH CAROLINA PROFESSIONAL SEAL 15825 ENGINEER BRADLEY D. KLAPPENBACH
7-26-2013

PROJECT NO. R-3101
ALLEGHANY COUNTY
STATION: 71+53.83 -L-

SHEET 2 OF 4

STATE OF NORTH CAROLINA
DEPARTMENT OF TRANSPORTATION
RALEIGH

GENERAL DRAWING

BRIDGE ON US 21 OVER LAUREL BRANCH BETWEEN SR 1100 & SR 1121

REVISIONS						SHEET NO.
NO.	BY:	DATE:	NO.	BY:	DATE:	S-2
1			3			TOTAL SHEETS
2			4			65

STR. #1

DRAWN BY : D. A. GLADDEN DATE : 5-23-13
CHECKED BY : B. KLAPPENBACH DATE : 6-07-13
DESIGN ENGINEER OF RECORD: S. T. CHAMPION DATE : 6-11-13

11-JUN-2013 18:56
R:\Structures\Str1\Plans\dgladden\Microstation\R3101_SD_GD.dgn
tbarbour

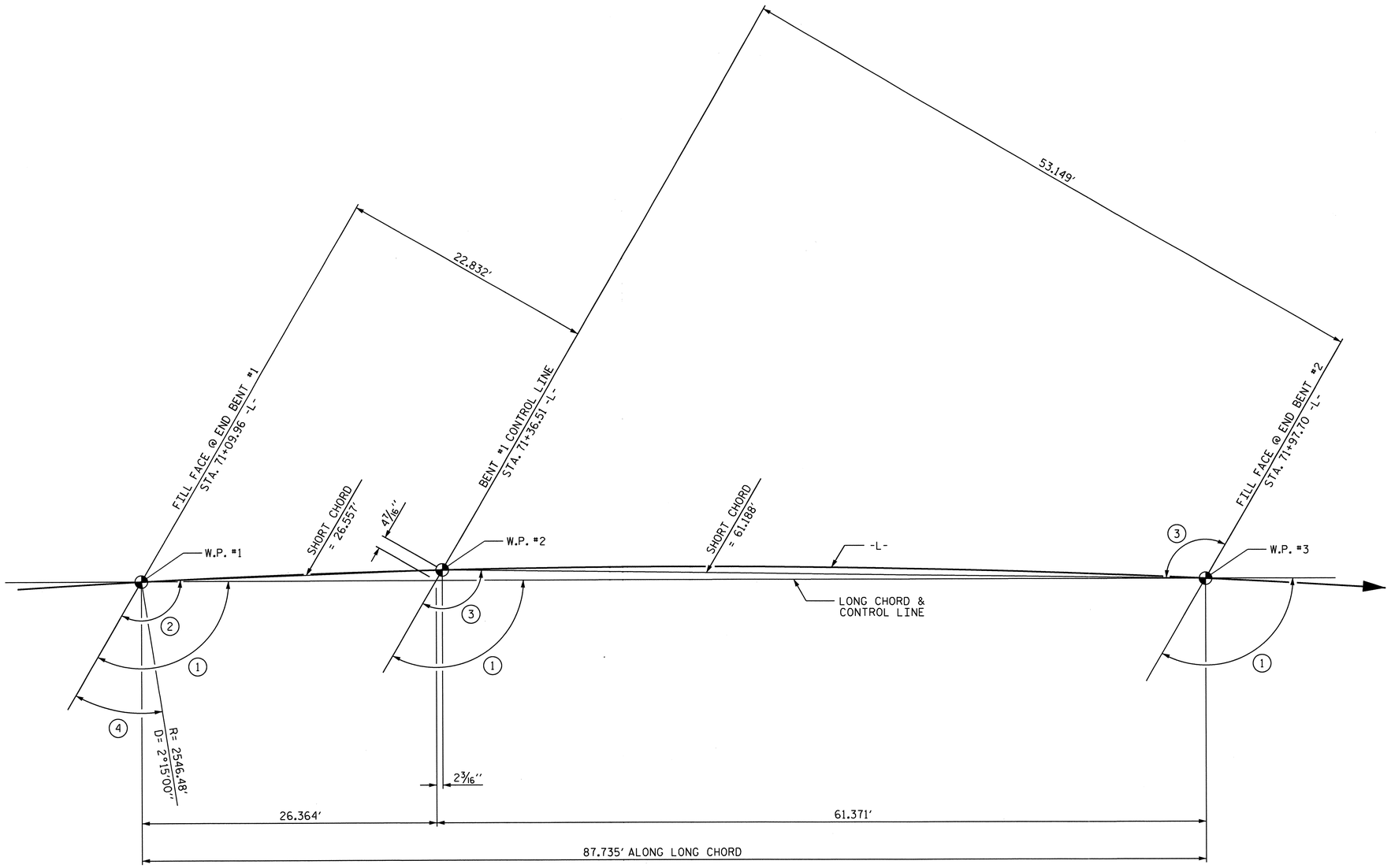

LONG CHORD LAYOUT

(ALL END BENTS AND BENT ARE PARALLEL)

ANGLES

	DEG MIN. SEC.
1	120°00'00"
2	120°41'18"
3	119°42'04"
4	30°59'14"

PROJECT NO. R-3101

ALLEGHANY COUNTY

STATION: 71+53.83 -L-

SHEET 3 OF 4

STATE OF NORTH CAROLINA
DEPARTMENT OF TRANSPORTATION
RALEIGH

GENERAL DRAWING

BRIDGE ON US 21 OVER
LAUREL BRANCH BETWEEN
SR 1100 & SR 1121

NORTH CAROLINA PROFESSIONAL SEAL 15826 ENGINEER BRYCE D. KLAPPENBACH
7-26-2013

REVISIONS						SHEET NO.
NO.	BY:	DATE:	NO.	BY:	DATE:	S-3
1			3			TOTAL SHEETS
2			4			65

DRAWN BY : D. A. GLADDEN DATE : 5-23-13
CHECKED BY : B. KLAPPENBACH DATE : 6-07-13
DESIGN ENGINEER OF RECORD: S. T. CHAMPION DATE : 6-11-13

11-JUN-2013 18:56
R:\Structures\Str\Plans\dgladden\Microstation\R3101_SD_GD.dgn
tbarbour

STR. #1

BENCH MARK: -T-T11 12" SPIKE, 8.64' RIGHT OF STA. 65+43.48 -BL-, EL. 2788.78.

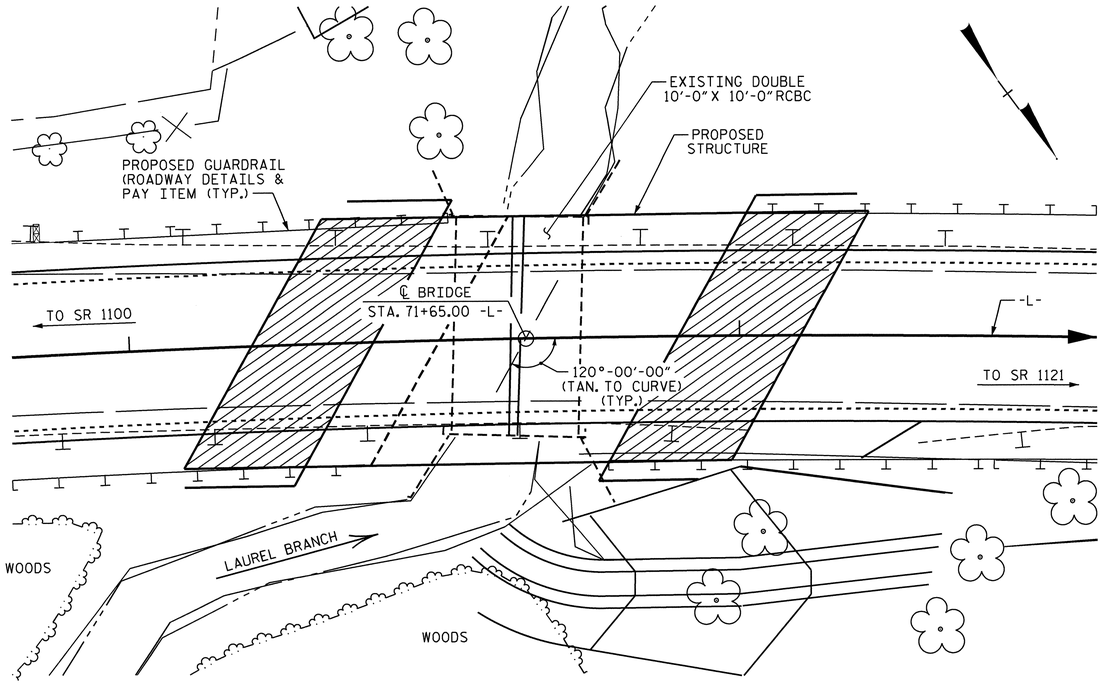

HYDRAULIC DATA

DESIGN DISCHARGE	= 640 CFS.
FREQUENCY OF DESIGN FLOOD	= 50 YEARS
DESIGN HIGH WATER ELEVATION	= 2783.70
DRAINAGE AREA	= 1.5 SQ. MI.
BASE DISCHARGE (Q100)	= 768 CFS.
BASE HIGH WATER ELEVATION	= 2783.96

OVERTOPPING FLOOD DATA

OVERTOPPING DISCHARGE	= 5550 CFS.
FREQUENCY OF OVERTOPPING FLOOD	= > 500 YRS.
OVERTOPPING FLOOD ELEVATION	= 2790.00

FOR UTILITY INFORMATION, SEE UTILITY PLANS AND SPECIAL PROVISIONS.

LOCATION SKETCH

NOTES

ASSUMED LIVE LOAD = HL-93 OR ALTERNATE LOADING.

THIS BRIDGE HAS BEEN DESIGNED IN ACCORDANCE WITH THE AASHTO LRFD BRIDGE DESIGN SPECIFICATIONS.

THIS BRIDGE IS LOCATED IN SEISMIC ZONE 1.

FOR OTHER DESIGN DATA AND GENERAL NOTES, SEE SHEET

FOR GROUT FOR STRUCTURES, SEE SPECIAL PROVISIONS.

FOR SUBMITTAL OF WORKING DRAWINGS, SEE SPECIAL PROVISIONS.

FOR FALSEWORK AND FORMWORK, SEE SPECIAL PROVISIONS.

FOR CRANE SAFETY, SEE SPECIAL PROVISIONS.

THE CONTRACTOR SHALL PROVIDE INDEPENDENT ASSURANCE SAMPLES OF REINFORCING STEEL AS FOLLOWS: FOR PROJECTS REQUIRING UP TO 400 TONS OF REINFORCING STEEL, ONE 30 INCH SAMPLE OF EACH SIZE BAR USED, AND FOR PROJECTS REQUIRING OVER 400 TONS OF REINFORCING STEEL, TWO 30 INCH SAMPLES OF EACH SIZE BAR USED. THE BARS FROM WHICH THE SAMPLES ARE TAKEN MUST THEN BE SPLICED WITH REPLACEMENT BARS OF THE SIZE AND LENGTH OF THE SAMPLE, PLUS A MINIMUM LAP SPLICE OF THIRTY BAR DIAMETERS. PAYMENT FOR THE SAMPLES OF REINFORCING STEEL SHALL BE CONSIDERED INCIDENTAL TO VARIOUS PAY ITEMS.

THE MATERIAL SHOWN IN THE CROSS-HATCHED AREA SHALL BE EXCAVATED FOR A DISTANCE OF 30 FT. EACH SIDE OF CENTERLINE ROADWAY AS DIRECTED BY THE ENGINEER. THIS WORK WILL BE PAID FOR AT THE CONTRACT LUMP SUM PRICE FOR UNCLASSIFIED STRUCTURE EXCAVATION. SEE SECTION 412 OF THE STANDARD SPECIFICATIONS.

FOR LIMITS OF TEMPORARY SHORING FOR MAINTENANCE OF TRAFFIC, SEE TRAFFIC CONTROL PLANS. FOR PAY ITEM FOR TEMPORARY SHORING FOR MAINTENANCE OF TRAFFIC, SEE ROADWAY PLANS.

THE EXISTING STRUCTURE CONSISTING OF A 10 FT. X 10 FT. DOUBLE BARREL REINFORCED CONCRETE BOX CULVERT WITH AN APPROXIMATE LENGTH OF 35'-9" AT THE PROPOSED SITE SHALL BE REMOVED.

FOR EROSION CONTROL MEASURES, SEE EROSION CONTROL PLANS.

THIS STRUCTURE HAS BEEN DESIGNED IN ACCORDANCE WITH "HEC 18-EVALUATING SCOUR AT BRIDGES."

FOR INTERIOR BENT NO. 1, ONLY PARTIAL GALANIZING OF THE PILES IS REQUIRED. SEE INTERIOR BENT SHEET FOR REQUIRED GALVANIZED LENGTHS. PAYMENT FOR PARTIALLY GALVANIZED PILES WILL BE MADE UNDER THE CONTRACT UNIT PRICE FOR GALVANIZED STEEL PILES.

FOR PLACING LOAD ON STRUCTURE MEMBERS, SEE SPECIAL PROVISIONS.

NORTH CAROLINA PROFESSIONAL SEAL 19825 ENGINEER BRIAN D. KLAPPENBACH
7-26-2013

TOTAL BILL OF MATERIAL

	REMOVAL OF EXISTING STRUCTURE	PDA TESTING	UNCLASSIFIED STRUCTURE EXCAVATION	CONCRETE WEARING SURFACE	GROOVING BRIDGE FLOORS	CLASS A CONCRETE	BRIDGE APPROACH SLABS	REINFORCING STEEL	HP 12 X 53 STEEL PILES		HP 14 X 73 GALVANIZED STEEL PILES		STEEL PILE POINTS	VERTICAL CONCRETE BARRIER RAIL	RIP RAP CLASS II (2'- 0" THICK)	GEOTEXILE FOR DRAINAGE	3'- 0" X 1'- 9" PRESTRESSED CONCRETE CORED SLABS		3'- 0" X 2'- 0" PRESTRESSED CONCRETE CORED SLABS		ELASTOMERIC BEARINGS
	LUMP SUM	EACH	LUMP SUM	SQ. FT.	SQ. FT.	CU. YDS.	LUMP SUM	LBS.	NO.	LIN. FT.	NO.	LIN. FT.	NO.	LIN. FT.	TONS	SQ. YARD	NO.	LIN. FT.	NO.	LIN. FT.	LUMP SUM
SUPERSTRUCTURE				3647	4551		LUMP SUM							170.28			15	375.00	15	900.00	LUMP SUM
END BENT NO. 1						29.0		3357	8	320			8		160	180					
BENT NO. 1						17.9		3245			8	320	8								
END BENT NO. 2						29.0		3364	8	300			8		230	260					
TOTAL	LUMP SUM	1	LUMP SUM	3647	4551	75.9	LUMP SUM	9966	16	620	8	320	24	170.28	390	440	15	375.00	15	900.00	LUMP SUM

PROJECT NO. R-3101

ALLEGHANY COUNTY

STATION: 71+53.83 -L-

SHEET 4 OF 4

STATE OF NORTH CAROLINA
DEPARTMENT OF TRANSPORTATION
RALEIGH

GENERAL DRAWING

BRIDGE ON US 21 OVER LAUREL BRANCH BETWEEN SR 1100 & SR 1121

REVISIONS						SHEET NO.
NO.	BY:	DATE:	NO.	BY:	DATE:	S-4
1			3			TOTAL SHEETS
2			4			65

DRAWN BY : D. A. GLADDEN DATE : 9-4-12
CHECKED BY : B. KLAPPENBACH DATE : 6-11-13

25-JUL-2013 12:03
O:\Structures\Str1\Plans\dgladden\Microstation\R3101_SD_GD.dgn
tbarbour

STR. #1

LOAD AND RESISTANCE FACTOR RATING (LRFR) SUMMARY FOR PRESTRESSED CONCRETE GIRDERS

LEVEL		VEHICLE	WEIGHT (W) (TONS)	CONTROLLING LOAD RATING (#)	MINIMUM RATING FACTORS (RF)	TONS = W X RF	STRENGTH I LIMIT STATE											SERVICE III LIMIT STATE						COMMENT NUMBER
								MOMENT					SHEAR						MOMENT						
							LIVELOAD FACTORS	DISTRIBUTION FACTORS (DF)	RATING FACTOR	SPAN	GIRDER LOCATION	DISTANCE FROM LEFT END OF SPAN (ft)	DISTRIBUTION FACTORS (DF)	RATING FACTOR	SPAN	GIRDER LOCATION	DISTANCE FROM LEFT END OF SPAN (ft)	LIVELOAD FACTORS	DISTRIBUTION FACTORS (DF)	RATING FACTOR	SPAN	GIRDER LOCATION	DISTANCE FROM LEFT END OF SPAN (ft)	
DESIGN LOAD RATING		HL-93(Inv)	N/A	1	1.02	--	1.75	0.251	1.31	B	EL	29.422	0.649	1.02	B	EL	5.884	0.80	0.251	1.12	B	EL	29.422	
		HL-93(Opr)	N/A	--	1.32	--	1.35	0.251	1.7	B	EL	29.422	0.649	1.32	B	EL	5.884	N/A	--	--	--	--	--	
		HS-20(Inv)	36.000	2	1.22	44.096	1.75	0.251	1.66	B	EL	29.422	0.649	1.22	B	EL	5.884	0.80	0.251	1.42	B	EL	29.422	
		HS-20(Opr)	36.000	--	1.59	57.161	1.35	0.251	2.16	B	EL	29.422	0.649	1.59	B	EL	5.884	N/A	--	--	--	--	--	
LEGAL LOAD RATING	SV	SNSH	13.500	--	3.04	41.097	1.4	0.251	4.48	B	EL	29.422	0.649	3.54	B	EL	5.884	0.80	0.251	3.04	B	EL	29.422	
		SNGARBS2	20.000	--	2.33	46.627	1.4	0.251	3.43	B	EL	29.422	0.649	2.55	B	EL	5.884	0.80	0.251	2.33	B	EL	29.422	
		SNAGRIS2	22.000	--	2.24	49.175	1.4	0.251	3.29	B	EL	29.422	0.649	2.38	B	EL	5.884	0.80	0.251	2.24	B	EL	29.422	
		SNCOTTS3	27.250	--	1.52	41.328	1.4	0.251	2.23	B	EL	29.422	0.649	1.77	B	EL	5.884	0.80	0.251	1.52	B	EL	29.422	
		SNAGGRS4	34.925	--	1.29	45.099	1.4	0.251	1.9	B	EL	29.422	0.649	1.49	B	EL	5.884	0.80	0.251	1.29	B	EL	29.422	
		SNS5A	35.550	--	1.26	44.833	1.4	0.251	1.85	B	EL	29.422	0.649	1.52	B	EL	5.884	0.80	0.251	1.26	B	EL	29.422	
		SNS6A	39.950	--	1.17	46.634	1.4	0.251	1.72	B	EL	29.422	0.649	1.4	B	EL	5.884	0.80	0.251	1.17	B	EL	29.422	
		SNS7B	42.000	--	1.11	46.705	1.4	0.251	1.63	B	EL	29.422	0.649	1.39	B	EL	5.884	0.80	0.251	1.11	B	EL	29.422	
	TTST	TNAGRIT3	33.000	--	1.43	47.075	1.4	0.251	2.1	B	EL	29.422	0.649	1.66	B	EL	5.884	0.80	0.251	1.43	B	EL	29.422	
		TNT4A	33.075	--	1.44	47.484	1.4	0.251	2.11	B	EL	29.422	0.649	1.61	B	EL	5.884	0.80	0.251	1.44	B	EL	29.422	
		TNT6A	41.600	--	1.18	49.249	1.4	0.251	1.74	B	EL	29.422	0.649	1.5	B	EL	5.884	0.80	0.251	1.18	B	EL	29.422	
		TNT7A	42.000	--	1.2	50.198	1.4	0.251	1.76	B	EL	29.422	0.649	1.43	B	EL	5.884	0.80	0.251	1.20	B	EL	29.422	
		TNT7B	42.000	--	1.25	52.433	1.4	0.251	1.84	B	EL	29.422	0.649	1.35	B	EL	5.884	0.80	0.251	1.25	B	EL	29.422	
		TNAGRIT4	43.000	--	1.18	50.700	1.4	0.251	1.73	B	EL	29.422	0.649	1.3	B	EL	5.884	0.80	0.251	1.18	B	EL	29.422	
		TNAGT5A	45.000	--	1.11	49.817	1.4	0.251	1.63	B	EL	29.422	0.649	1.31	B	EL	5.884	0.80	0.251	1.11	B	EL	29.422	
		TNAGT5B	45.000	3	1.09	49.029	1.4	0.251	1.6	B	EL	29.422	0.649	1.23	B	EL	5.884	0.80	0.251	1.09	B	EL	29.422	

LOAD FACTORS:

DESIGN LOAD RATING FACTORS	LIMIT STATE	γ_{DC}	γ_{DW}
	STRENGTH I	1.25	1.50
	SERVICE III	1.00	1.00

NOTES:

MINIMUM RATING FACTORS ARE BASED ON THE STRENGTH I AND SERVICE III LIMIT STATES.

ALLOWABLE STRESSES FOR SERVICE III LIMIT STATE ARE AS REQUIRED FOR DESIGN.

COMMENTS:

1.
2.
3.
4.

(#) CONTROLLING LOAD RATING
(1) DESIGN LOAD RATING (HL-93)
(2) DESIGN LOAD RATING (HS-20)
(3) LEGAL LOAD RATING **
** SEE CHART FOR VEHICLE TYPE

GIRDER LOCATION
I - INTERIOR GIRDER
EL - EXTERIOR LEFT GIRDER
ER - EXTERIOR RIGHT GIRDER

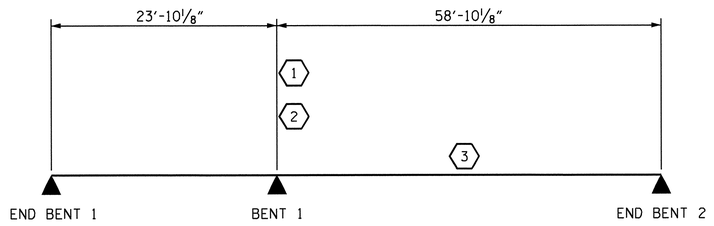

LRFR SUMMARY

PROJECT NO. R-3101

ALLEGHANY COUNTY

STATION: 71+53.83 -L-

STATE OF NORTH CAROLINA
DEPARTMENT OF TRANSPORTATION
RALEIGH

STANDARD

LRFR SUMMARY FOR PRESTRESSED CONCRETE GIRDERS (NON-INTERSTATE TRAFFIC)

NORTH CAROLINA PROFESSIONAL SEAL 15825 ENGINEER BRUCE D. KLAPPENBACH 7-26-2013

REVISIONS					
NO.	BY:	DATE:	NO.	BY:	DATE:
1			3		
2			4		

SHEET NO. S-5

TOTAL SHEETS 65

STD. NO. LRFR1

STR. #1

ASSEMBLED BY : S.T. CHAMPION DATE : 6-7-13
CHECKED BY : H.P. KIM DATE : 6-10-13

DRAWN BY : MAA 1/08
CHECKED BY : GM/DI 2/08

REV. 11/12/08RR MAA/GM
REV. 10/1/11 MAA/GM

24-JUL-2013 15:01
O:\Structures\Str1\Plans\R3101_SD_LRFR.dgn
tbarbour

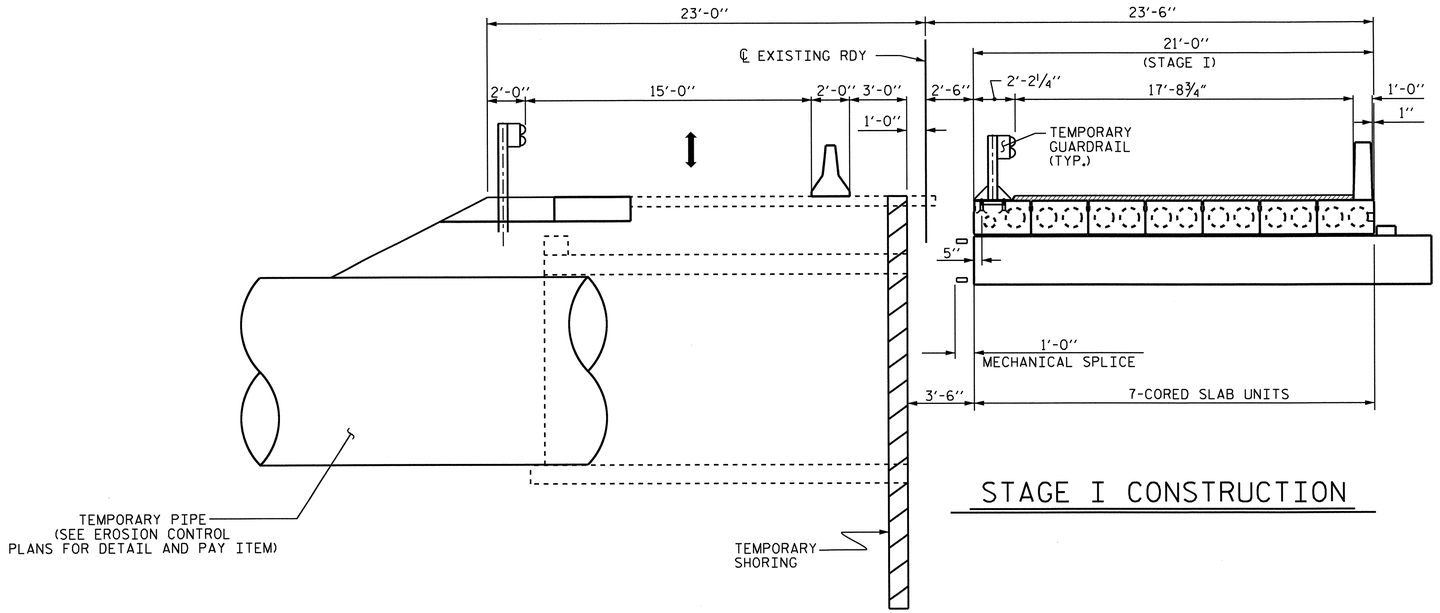

STAGE I CONSTRUCTION

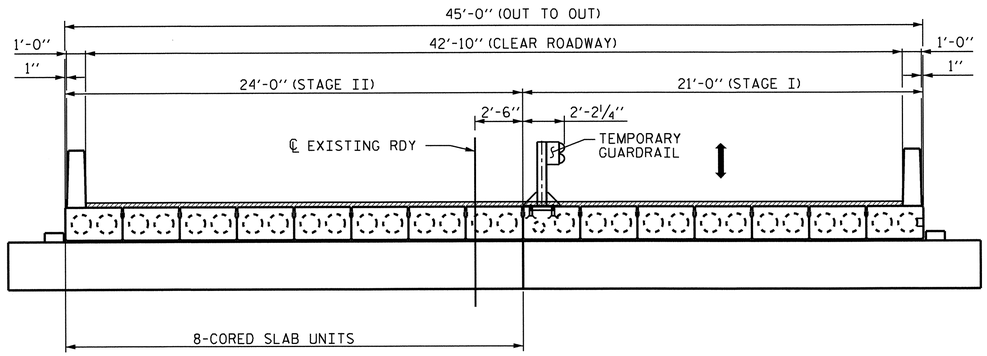

STAGE II CONSTRUCTION

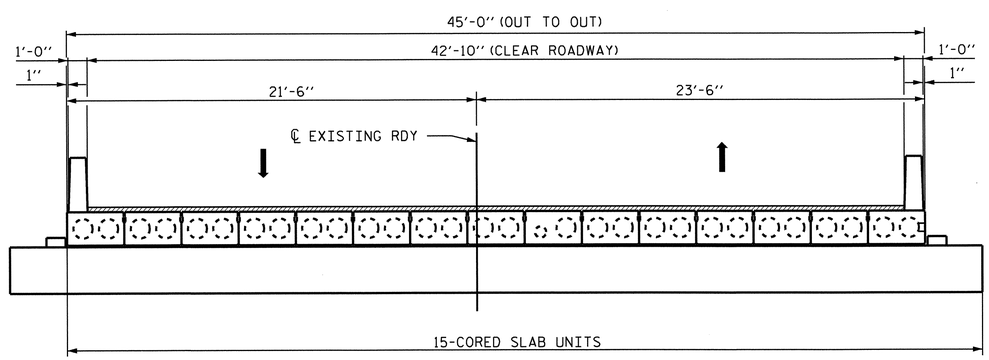

FINAL TYPICAL SECTION

NOTES

FOR TEMPORARY GUARDRAIL DETAILS AND PAY ITEM, SEE ROADWAY PLANS.

PROJECT NO. R-3101

ALLEGHANY COUNTY

STATION: 71+63.83 -L-

STATE OF NORTH CAROLINA
DEPARTMENT OF TRANSPORTATION
RALEIGH

SUPERSTRUCTURE

STAGING SEQUENCE

NORTH CAROLINA PROFESSIONAL SEAL 15825 ENGINEER D. KLAPPENBACH
7-26-2013

REVISIONS						SHEET NO.
NO.	BY:	DATE:	NO.	BY:	DATE:	S-6
1			3			TOTAL SHEETS
2			4			65

DRAWN BY : V.X. NGUYEN DATE : 4/11/13
CHECKED BY : B.D. KLAPPENBACH DATE : 6/6/13
DESIGN ENGINEER OF RECORD: _____ DATE : _____

25-JUL-2013 12:11
O:\Structures\Str1\Plans\vnguyen\R-3101_SD_PC.dgn
tbarbour

STR. #1

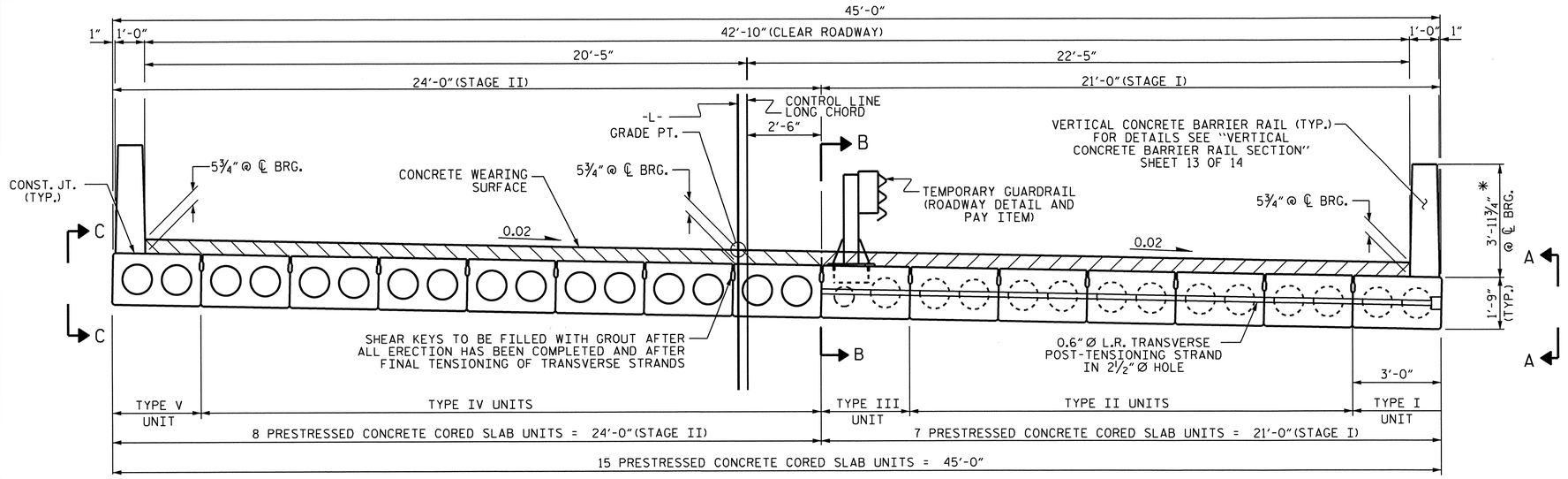

SECTION THROUGH VOIDS

SECTION AT INTERMEDIATE DIAPHRAGMS

TYPICAL SECTION

* THE MAXIMUM BARRIER RAIL HEIGHT AND CONCRETE WEARING SURFACE IS SHOWN. THE HEIGHT OF THE BARRIER RAIL AND CONCRETE WEARING SURFACE THICKNESS VARIES WHILE THE TOP OF THE BARRIER RAIL FOLLOWS THE PROFILE OF THE GUTTERLINE. FOR RAIL HEIGHT DETAILS AND CONCRETE WEARING SURFACE THICKNESS, SEE THE "VERTICAL CONCRETE BARRIER RAIL SECTION" DETAIL.

FOR VIEW A, B AND C SEE SHEET 5 OF 14.

** A 1½" DEEP CONTRACTION JOINT AT EACH END BENT AND AT THE BENT CONTROL LINE, SHALL BE SAWN WITHIN 24 HOURS OF POURING THE DECK. THE JOINT SHALL BE FILLED WITH JOINT SEALER MATERIAL. THE JOINT SEALER MATERIAL SHALL CONFORM TO THE REQUIREMENTS OF TYPE B LOW MODULUS SILICONE SEALANT. SEE SECTION 1028 OF THE STANDARD SPECIFICATIONS.

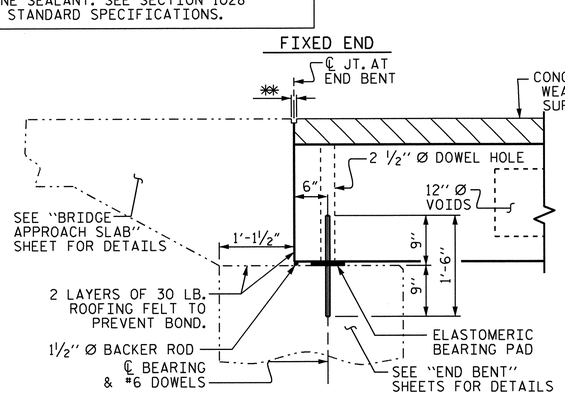

SECTION AT END BENT No. 1

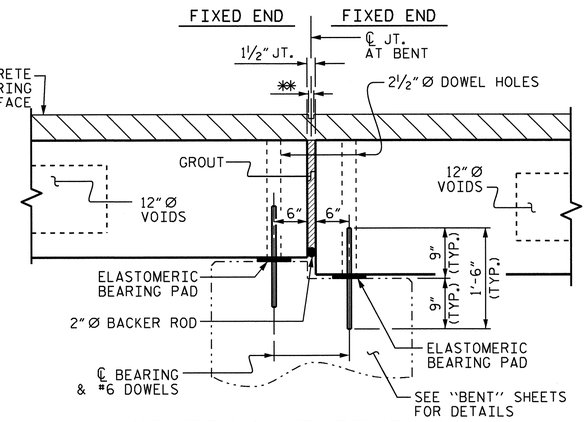

SECTION AT BENT No. 1

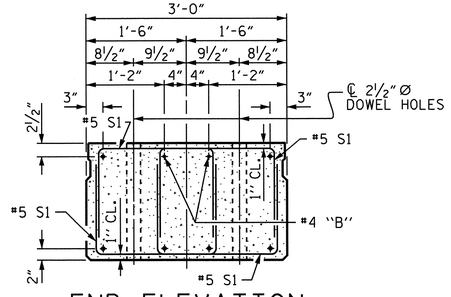

END ELEVATION

SHOWING PLACEMENT OF DOUBLE STIRRUPS AND LOCATION OF DOWEL HOLES. (STRAND LAYOUT NOT SHOWN.) INTERIOR SLAB UNIT SHOWN-EXTERIOR SLAB UNIT SIMILAR EXCEPT SHEAR KEY LOCATION.

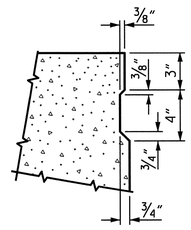

SHEAR KEY DETAIL

NOTE: OMIT SHEAR KEY ON OUTSIDE FACE OF EXTERIOR CORED SLABS.

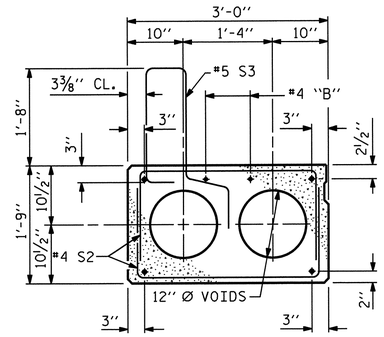

TYPE I & TYPE V SLAB SECTION

(FOR PRESTRESSED STRAND LAYOUT, SEE "TYPE II & TYPE IV SLAB SECTION".)

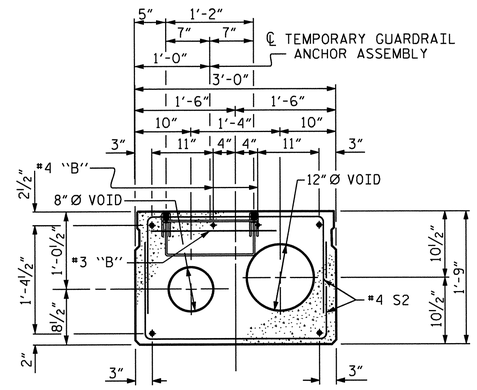

TYPE III SLAB SECTION

(FOR PRESTRESSED STRAND LAYOUT, SEE "TYPE II & IV SLAB SECTION") FOR TEMPORARY GUARDRAIL ANCHOR ASSEMBLY LOCATION, SEE SECTION OF ANCHOR ASSEMBLY LOCATION ON SHEET 3 OF 14

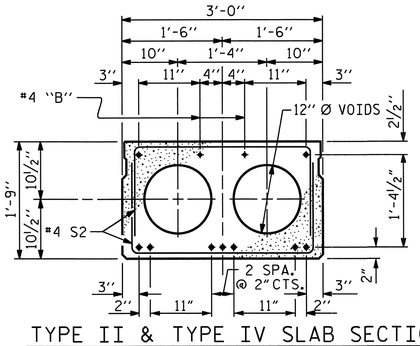

TYPE II & TYPE IV SLAB SECTION

(9 STRANDS REQUIRED)

0.6" Ø LOW RELAXATION STRAND LAYOUT

PROJECT NO. R-3101

ALLEGHANY COUNTY

STATION: 71+53.83-L-

SHEET 1 OF 14

STATE OF NORTH CAROLINA
DEPARTMENT OF TRANSPORTATION
RALEIGH

3'-0" X 1'-9" PRESTRESSED CONCRETE CORED SLAB UNIT (SPAN A) 120°-00'-00" SKEW

REVISIONS						SHEET NO.
NO.	BY:	DATE:	NO.	BY:	DATE:	S-7
1			3			TOTAL SHEETS
2			4			65

NORTH CAROLINA PROFESSIONAL SEAL 15828 ENGINEER BRUCE D. KLAPPENBACH
7-26-2013

DRAWN BY :	H. T. BARBOUR	DATE :	4-3-13
CHECKED BY :	D. HODGE	DATE :	5-13
DESIGN ENGINEER OF RECORD:	S. T. CHAMPION	DATE :	6-13

24-JUL-2013 15:11
O:\Structures\Strl\Plans\tbarbour\Microstation\R3101_SD_TS.dgn
tbarbour

STD. NO. 21"PCS2_39_120S

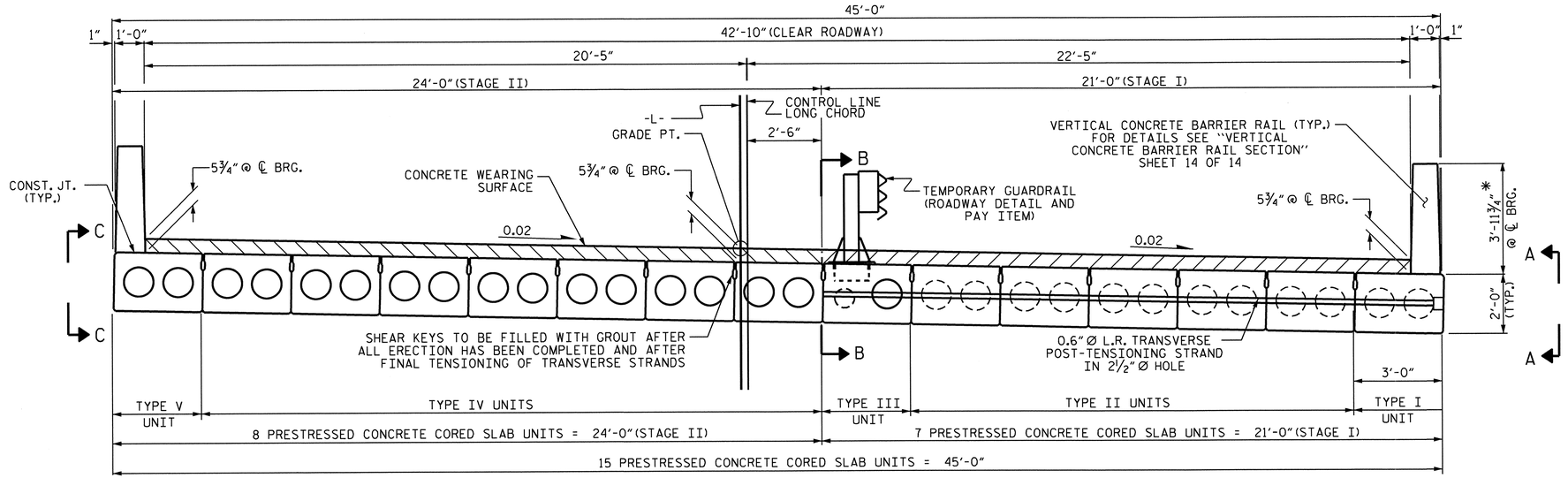

** A 1½" DEEP CONTRACTION JOINT AT EACH END BENT AND AT THE BENT CONTROL LINE, SHALL BE SAWN WITHIN 24 HOURS OF POURING THE DECK. THE JOINT SHALL BE FILLED WITH JOINT SEALER MATERIAL. THE JOINT SEALER MATERIAL SHALL CONFORM TO THE REQUIREMENTS OF TYPE B LOW MODULUS SILICONE SEALANT. SEE SECTION 1028 OF THE STANDARD SPECIFICATIONS.

SECTION THROUGH VOIDS — SECTION AT INTERMEDIATE DIAPHRAGMS

TYPICAL SECTION

* THE MAXIMUM BARRIER RAIL HEIGHT AND CONCRETE WEARING SURFACE IS SHOWN. THE HEIGHT OF THE BARRIER RAIL AND CONCRETE WEARING SURFACE THICKNESS VARIES WHILE THE TOP OF THE BARRIER RAIL FOLLOWS THE PROFILE OF THE GUTTERLINE. FOR RAIL HEIGHT DETAILS AND CONCRETE WEARING SURFACE THICKNESS, SEE THE "VERTICAL CONCRETE BARRIER RAIL SECTION" DETAIL.

FOR VIEW A, B AND C SEE SHEET 5 OF 14.

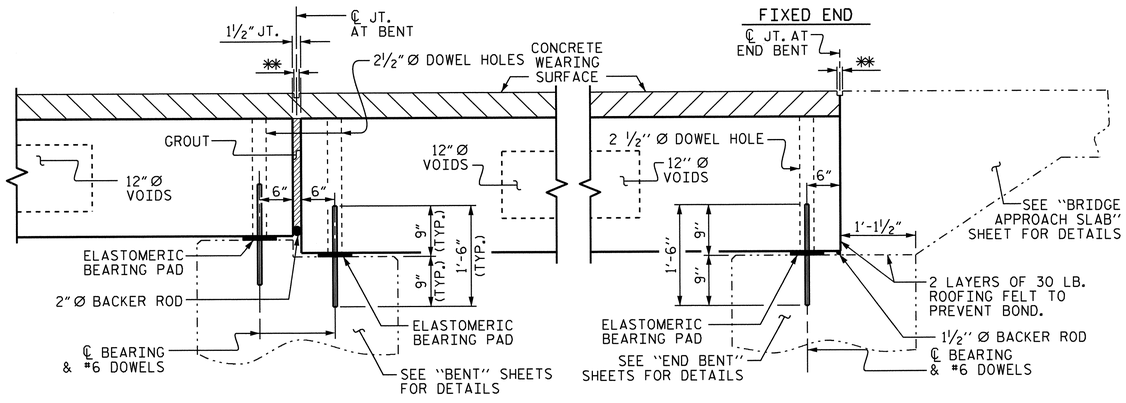

SECTION AT BENT No. 1

SECTION AT END BENT No. 2

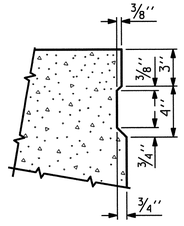

SHEAR KEY DETAIL

NOTE: OMIT SHEAR KEY ON OUTSIDE FACE OF EXTERIOR CORED SLABS.

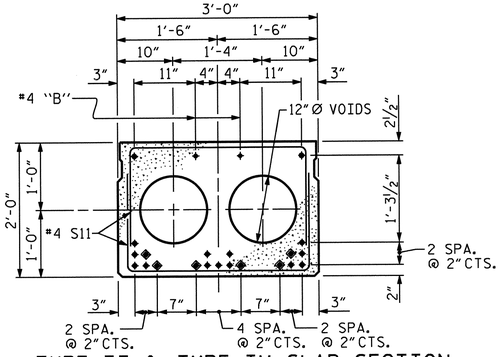

TYPE II & TYPE IV SLAB SECTION

(21 STRANDS REQUIRED)

0.6" Ø LOW RELAXATION STRAND LAYOUT

◈ BOND SHALL BE BROKEN ON THESE STRANDS FOR A DISTANCE OF 12'-0" FROM END OF CORED SLAB UNIT. SEE STANDARD SPECIFICATIONS, ARTICLE 1078-7.

DEBONDING LEGEND

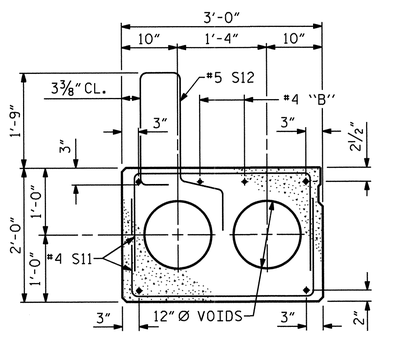

TYPE I & TYPE V SLAB SECTION

(FOR PRESTRESSED STRAND LAYOUT, SEE "TYPE II & TYPE IV SLAB SECTION".)

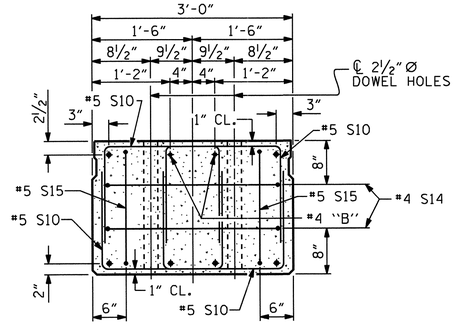

END ELEVATION

SHOWING PLACEMENT OF DOUBLE STIRRUPS AND LOCATION OF DOWEL HOLES. (STRAND LAYOUT NOT SHOWN.) INTERIOR SLAB UNIT SHOWN-EXTERIOR SLAB UNIT SIMILAR EXCEPT SHEAR KEY LOCATION.

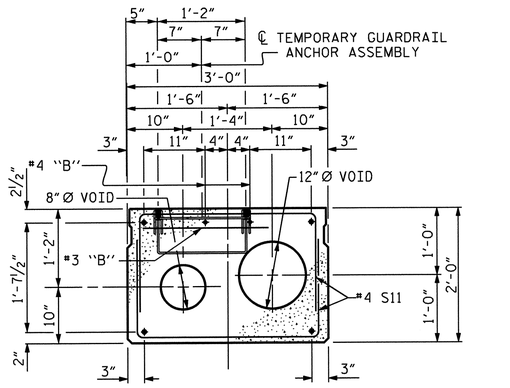

TYPE III SLAB SECTION

(FOR PRESTRESSED STRAND LAYOUT, SEE "TYPE II & IV SLAB SECTION")

FOR TEMPORARY GUARDRAIL ANCHOR ASSEMBLY LOCATION, SEE SECTION OF ANCHOR ASSEMBLY LOCATION ON SHEET 3 OF 14

PROJECT NO. R-3101

ALLEGHANY COUNTY

STATION: 71+53.83-L-

SHEET 2 OF 14

STATE OF NORTH CAROLINA
DEPARTMENT OF TRANSPORTATION
RALEIGH

3'-0" X 2'-0" PRESTRESSED CONCRETE CORED SLAB UNIT (SPAN B) 120°-00'-00" SKEW

REVISIONS						SHEET NO.
NO.	BY:	DATE:	NO.	BY:	DATE:	S-8
1			3			TOTAL SHEETS
2			4			65

NORTH CAROLINA PROFESSIONAL SEAL 19825 ENGINEER STUART L. KLAPPENBACH 7-22-2013

DRAWN BY :	H. T. BARBOUR	DATE : 4-3-13
CHECKED BY :	D. HODGE	DATE : 5-13
DESIGN ENGINEER OF RECORD:	S. T. CHAMPION	DATE : 6-13

24-JUL-2013 15:12
O:\Structures\Str1\Plans\tbarbour\Microstation\R3101_SD_TS.dgn
tbarbour

STD. NO. 24PCS4_39_120S

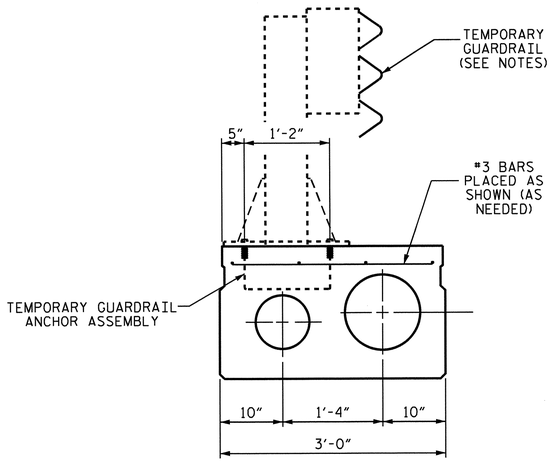

SECTION OF ANCHOR ASSEMBLY LOCATION

(TYPE III UNIT OF STAGE I)
THE #3 BARS ARE INCIDENTAL AND THEIR COST SHALL BE INCLUDED IN THE PRICE BID FOR THE PRESTRESSED CONCRETE CORED SLABS.

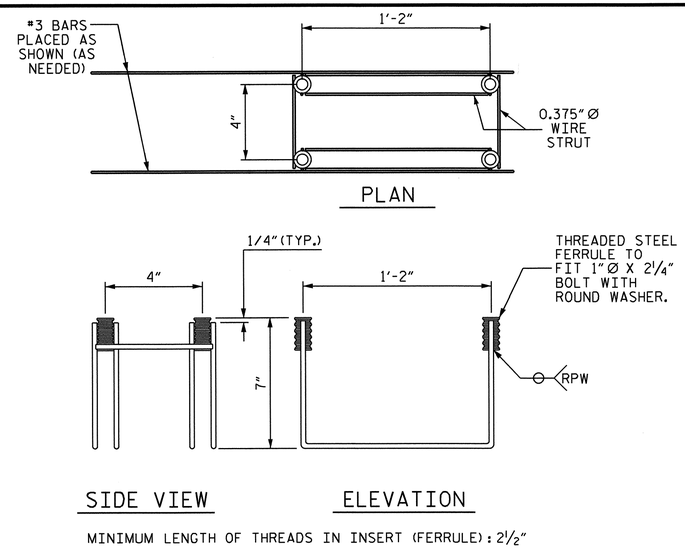

MINIMUM LENGTH OF THREADS IN INSERT (FERRULE): 2½"

TEMPORARY GUARDRAIL ANCHOR ASSEMBLY

(17 ASSEMBLIES REQUIRED IN THE TYPE III CORED SLAB UNITS)
(4 ASSEMBLIES REQUIRED IN EACH APPROACH SLAB)

NOTES

THE TEMPORARY GUARDRAIL ANCHOR ASSEMBLY SHALL CONSIST OF THE FOLLOWING COMPONENTS:

A. A. FERRULES SHALL BE MADE FROM STEEL MEETING THE REQUIREMENTS OF AASHTO M169, GRADE 12L14 AND SHALL HAVE A MINIMUM LENGTH OF THREADS OF 2½".

B. 4 - 1" Ø X 2¼" BOLTS WITH WASHERS. BOLTS SHALL CONFORM TO THE REQUIREMENTS OF ASTM A307. BOLTS AND WASHERS SHALL BE GALVANIZED. (AT THE CONTRACTOR'S OPTION, STAINLESS STEEL BOLTS AND WASHERS MAY BE USED AS AN ALTERNATE FOR THE 1" Ø X 2¼" GALVANIZED BOLTS AND WASHERS. THEY SHALL CONFORM TO OR EXCEED THE MECHANICAL REQUIREMENTS OF ASTM A307. THE USE OF THIS ALTERNATE SHALL BE APPROVED BY THE ENGINEER.

C. WIRE STRUTS SHOWN IN THE TEMPORARY GUARDRAIL ANCHOR ASSEMBLY DETAIL ARE THE MINIMUM ALLOWABLE SIZE AND SHALL HAVE A MINIMUM TENSILE STRENGTH OF 100,000 PSI.

TEMPORARY GUARDRAIL ANCHOR ASSEMBLY WITH BOLTS SHALL BE ASSEMBLED IN THE SHOP. BOLT THREADS MAY BE RECUT AS NECESSARY TO INSURE FIT.

THE COST OF THE TEMORARY GUARDRAIL ANCHOR ASSEMBLY COMPLETE IN PLACE, SHALL BE INCLUDED, AS APPLICABLE, IN THE UNIT CONTRACT PRICE BID FOR PRESTRESSED CONCRETE CORED SLAB OR LUMP SUMP PRICE BID FOR APPROACH SLABS.

FERRULES TO BE PLUGGED DURING CASTING OF THE CORED SLAB UNITS OR POURING OF APPROACH SLAB AS RECOMMENDED BY THE MANUFACTURER.

AT THE CONTRACTOR'S OPTION, FERRULES WITH OPEN OR CLOSED ENDS MAY BE USED.

PAYMENT FOR TEMPORARY GUARDRAIL IS INCLUDED IN ROADWAY PAY ITEMS.

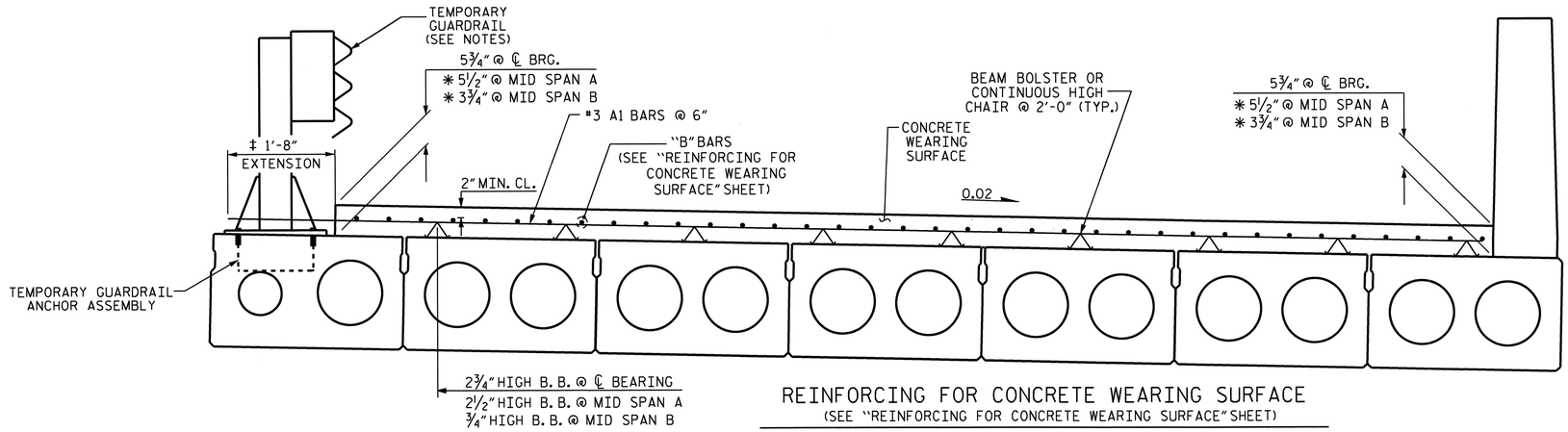

REINFORCING FOR CONCRETE WEARING SURFACE

(SEE "REINFORCING FOR CONCRETE WEARING SURFACE" SHEET)

(STAGE I TYPICAL SECTION)

‡ NOTE: THE #3A BARS MAY BE FIELD BENT TO AVOID THE TEMPORARY RAIL POST WHILE POURING STAGE I CONCRETE OVERLAY. THE BARS THAT ARE BENT MUST BE STRAIGHTENED TO SPLICE WITH THE #3 "A" BARS IN STAGE II CONCRETE OVERLAY

* BASED ON PREDICTED FINAL CAMBER AND THEORETICAL GRADE LINE ELEVATIONS

PROJECT NO. R-3101
ALLEGHANY COUNTY
STATION: 71+53.83-L-

SHEET 3 OF 14

STATE OF NORTH CAROLINA
DEPARTMENT OF TRANSPORTATION
RALEIGH

PRESTRESSED CONCRETE CORED SLAB UNIT (STAGE I)

REVISIONS						SHEET NO.
NO.	BY:	DATE:	NO.	BY:	DATE:	S-9
1			3			TOTAL SHEETS 65
2			4			

NORTH CAROLINA PROFESSIONAL SEAL 15825 ENGINEER BRUCE O. KLAPPENBACH
7-26-2013

DRAWN BY : H. T. BARBOUR DATE : 4-3-13
CHECKED BY : D. HODGE DATE : 5-13
DESIGN ENGINEER OF RECORD: S. T. CHAMPION DATE : 6-13

11-JUN-2013 08:01
R:\Structures\Str1\Plans\tbarbour\Microstation\R3101_SD_TS.dgn
tbarbour

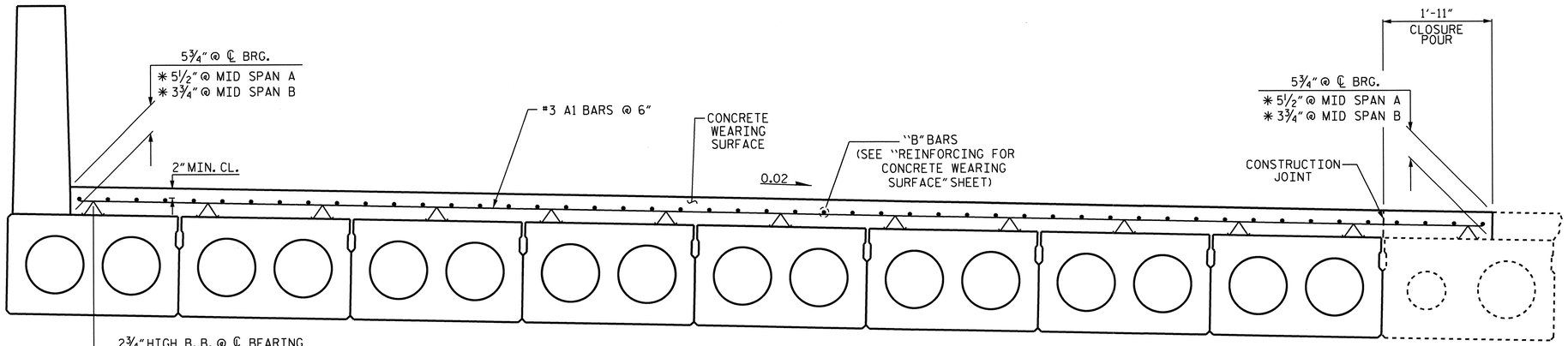

REINFORCING FOR CONCRETE WEARING SURFACE
(SEE "REINFORCING FOR CONCRETE WEARING SURFACE" SHEET)

(STAGE II TYPICAL SECTION)

* BASED ON PREDICTED FINAL CAMBER AND THEORETICAL GRADE LINE ELEVATIONS

PROJECT NO. R-3101

ALLEGHANY COUNTY

STATION: 71+53.83-L-

SHEET 4 OF 14

STATE OF NORTH CAROLINA
DEPARTMENT OF TRANSPORTATION
RALEIGH

PRESTRESSED CONCRETE CORED SLAB UNIT (STAGE II)

NORTH CAROLINA PROFESSIONAL SEAL 19825 ENGINEER BRUCE D. KLAPPENBACH
7-26-2013

REVISIONS						SHEET NO.
NO.	BY:	DATE:	NO.	BY:	DATE:	S-10
1			3			TOTAL SHEETS
2			4			65

DRAWN BY : H. T. BARBOUR DATE : 4-3-13
CHECKED BY : D. HODGE DATE : 5-13
DESIGN ENGINEER OF RECORD: S. T. CHAMPION DATE : 6-13

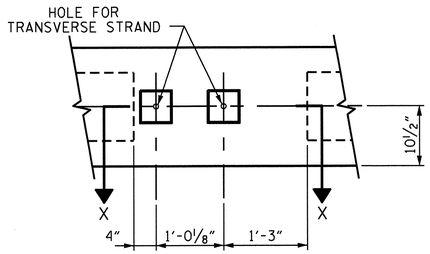

VIEW A-A

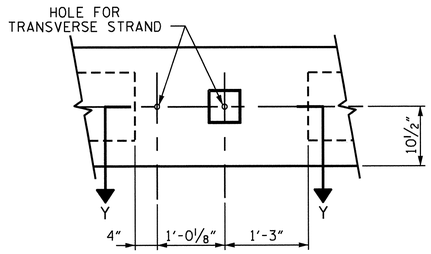

VIEW B-B

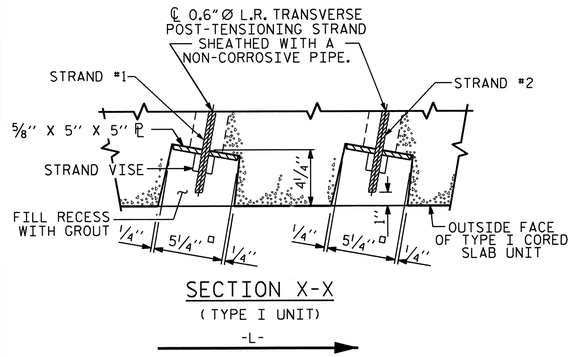

SECTION X-X

(TYPE I UNIT)

-L-

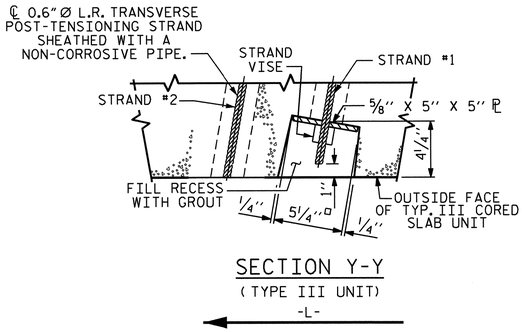

SECTION Y-Y

(TYPE III UNIT)

-L-

GROUTED RECESS AT END OF POST-TENSIONED STRAND OF CORED SLABS (SPAN A, STAGE I)

STRAND #2 GOES THRU ALL 15 CORED SLAB UNITS DURING STAGE II CONSTRUCTION

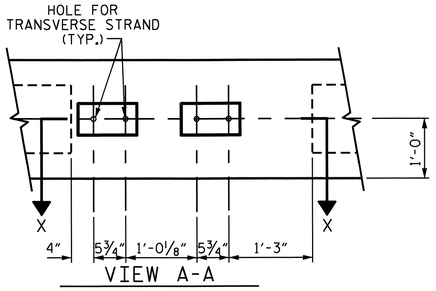

VIEW A-A

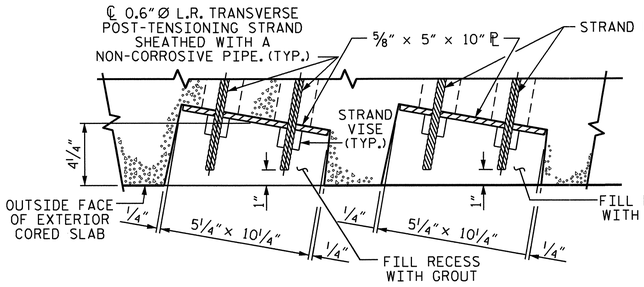

SECTION X-X

-L-

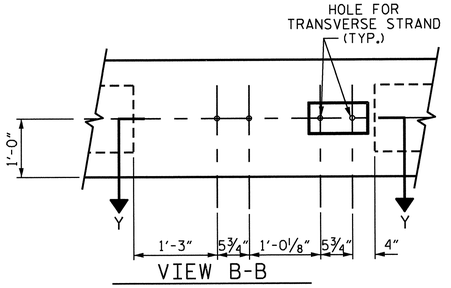

VIEW B-B

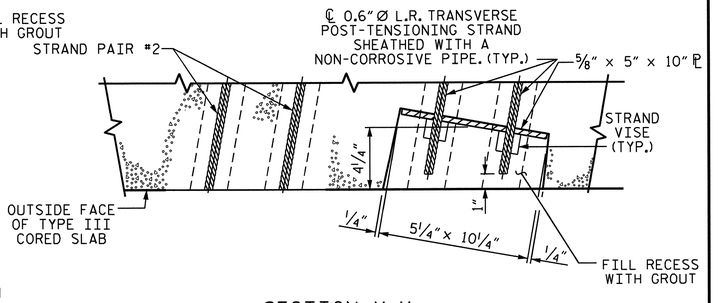

SECTION Y-Y

-L-

GROUTED RECESS AT END OF POST-TENSIONED STRAND CORED SLABS (SPAN B, STAGE I)

STRAND PAIR #2 GOES THRU ALL 15 CORED SLAB UNITS DURING STAGE II CONSTRUCTION

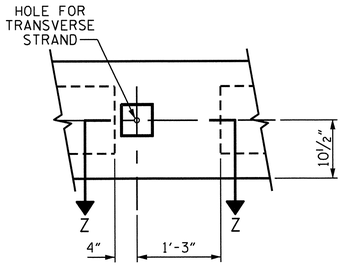

VIEW C-C

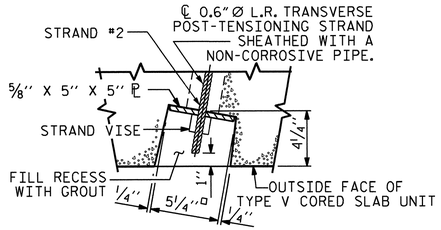

SECTION Z-Z

(TYPE V UNIT)

-L-

GROUTED RECESS AT END OF POST-TENSIONED STRAND OF CORED SLABS (SPAN A, STAGE II)

STRAND #2 GOES THRU ALL 15 CORED SLAB UNITS DURING STAGE II CONSTRUCTION

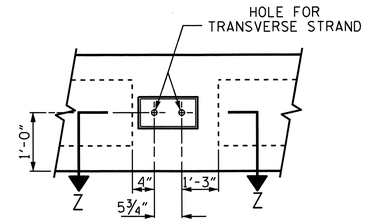

VIEW C-C

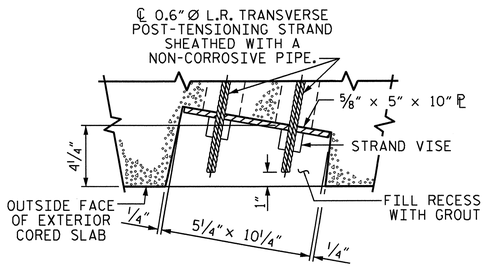

SECTION Z-Z

-L-

GROUTED RECESS AT END OF POST-TENSIONED STRAND CORED SLABS (SPAN B, STAGE II)

GROUTED RECESS AT END OF POST-TENSIONED STRAND CORED SLABS (SPAN B, STAGE I)

STRAND PAIR #2 GOES THRU ALL 15 CORED SLAB UNITS DURING STAGE II CONSTRUCTION

PROJECT NO. R-3101

ALLEGHANY COUNTY

STATION: 71+53.83-L-

SHEET 5 OF 14

STATE OF NORTH CAROLINA
DEPARTMENT OF TRANSPORTATION
RALEIGH

GROUTED RECESSES DETAILS

REVISIONS						SHEET NO.
NO.	BY:	DATE:	NO.	BY:	DATE:	S-11
1			3			TOTAL SHEETS
2			4			65

NORTH CAROLINA PROFESSIONAL SEAL 15825 ENGINEER BRUCE O. KLAPPENBACH 7-26-2013

DRAWN BY : H. T. BARBOUR DATE : 6-3-13
CHECKED BY : D. HODGE DATE : 5-13
DESIGN ENGINEER OF RECORD: S. T. CHAMPION DATE : 6-13

24-JUL-2013 15:14
O:\Structures\Strl\Plans\tbarbour\Microstation\R3101_SD_TS.dgn
tbarbour

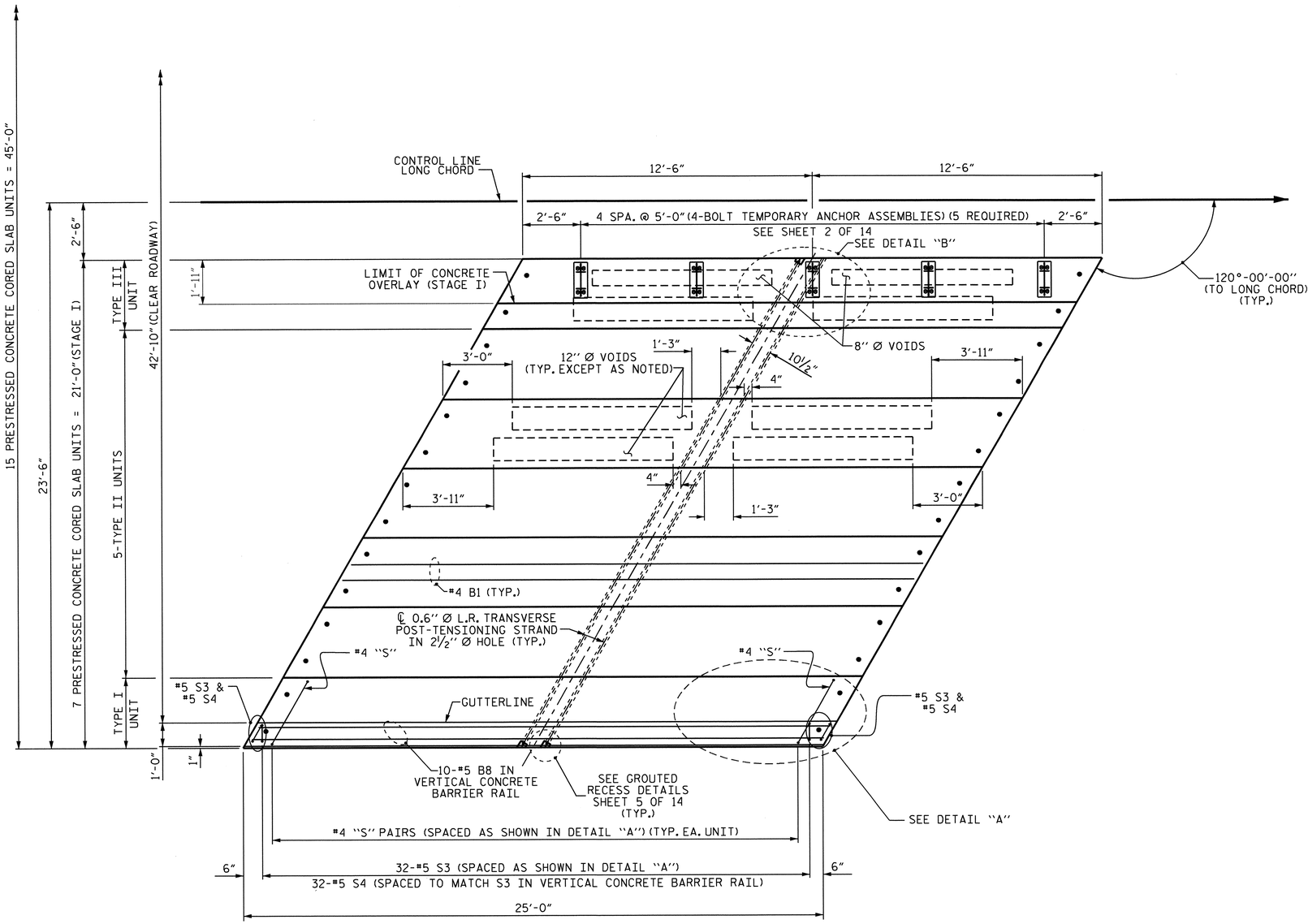

PLAN OF SPAN A
(STAGE I)

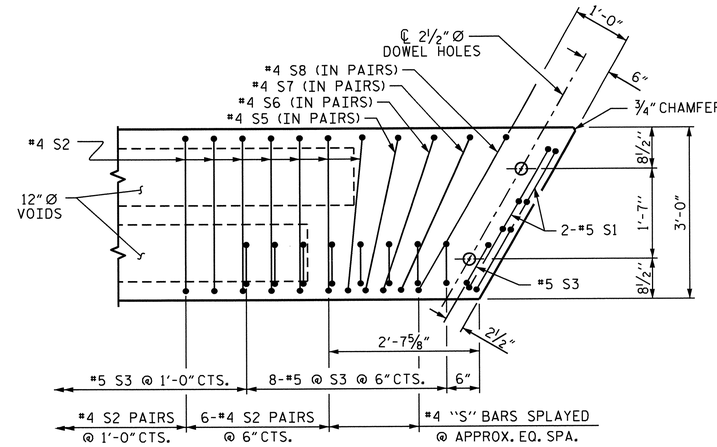

DETAIL "A"

NOTE: TYPE I UNIT SHOWN - TYPE II & TYPE III UNITS SIMILAR EXCEPT OMIT #5 S3 BARS.

DETAIL "B"

NOTE: TYPE III UNIT SHOWN. #4 S2 BARS MAY BE SHIFTED AS NECESSARY TO MAINTAIN 1" CLEAR TO GROUTED RECESS AND 2½" Ø TRANSVERSE POST-TENSIONING STRAND HOLES.

PROJECT NO. R-3101

ALLEGHANY COUNTY

STATION: 71+53.83-L-

SHEET 6 OF 14

STATE OF NORTH CAROLINA
DEPARTMENT OF TRANSPORTATION
RALEIGH

PLAN OF 25' UNIT 120°-00'-00" SKEW SPAN A (STAGE I)

REVISIONS						SHEET NO.
NO.	BY:	DATE:	NO.	BY:	DATE:	S-12
1			3			TOTAL SHEETS
2			4			65

NORTH CAROLINA PROFESSIONAL SEAL 15825 ENGINEER BRUCE D. KLAPPENBACH
7-26-2013

DRAWN BY :	H. T. BARBOUR	DATE :	4-3-13
CHECKED BY :	D. HODGE	DATE :	5-13
DESIGN ENGINEER OF RECORD:	S. T. CHAMPION	DATE :	6-13

24-JUL-2013 15:19
O:\Structures\Strl\Plans\tbarbour\Microstation\R3101_SD_TS.dgn
tbarbour

STD. NO. 21"PCS_39_120S_25L

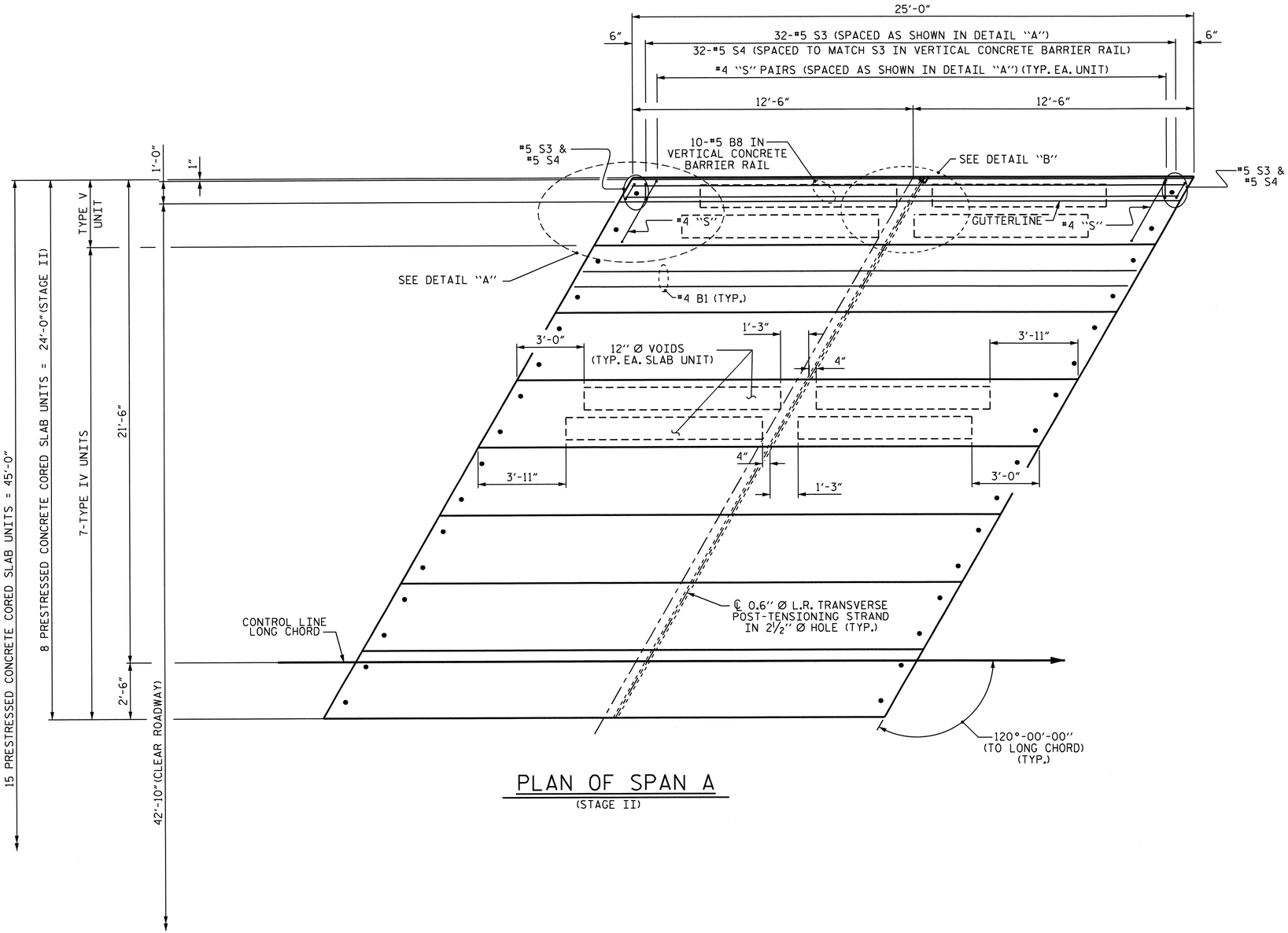

PLAN OF SPAN A
(STAGE II)

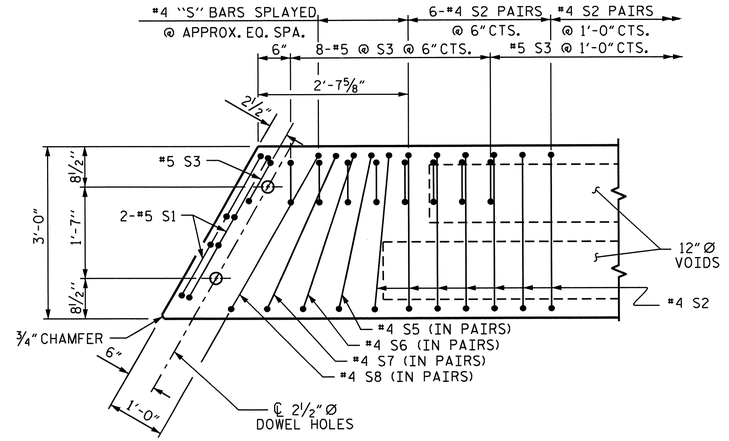

DETAIL "A"

NOTE: TYPE V UNIT SHOWN - TYPE IV UNIT SIMILAR EXCEPT OMIT #5 S3 BARS.

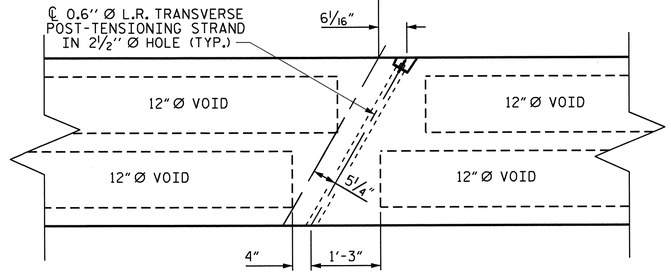

DETAIL "B"

NOTE: TYPE V UNIT SHOWN, #4 S3 BARS MAY BE SHIFTED AS NECESSARY TO MAINTAIN 1" CLEAR TO GROUTED RECESS AND 2½" Ø TRANSVERSE POST-TENSIONING STRAND HOLES.

PROJECT NO. R-3101

ALLEGHANY COUNTY

STATION: 71+53.83-L-

SHEET 7 OF 14

STATE OF NORTH CAROLINA
DEPARTMENT OF TRANSPORTATION
RALEIGH

PLAN OF 25' UNIT 120°-00'-00" SKEW SPAN A (STAGE II)

NORTH CAROLINA PROFESSIONAL SEAL 15826 ENGINEER D. KLAPPENBACH 7-26-2013

REVISIONS						SHEET NO.
NO.	BY:	DATE:	NO.	BY:	DATE:	S-13
1			3			TOTAL SHEETS
2			4			65

DRAWN BY : H. T. BARBOUR DATE : 4-3-13
CHECKED BY : D. HODGE DATE : 5-13
DESIGN ENGINEER OF RECORD: S. T. CHAMPION DATE : 6-13

11-JUN-2013 07:59
R:\Structures\Strl\Plans\tbarbour\Microstation\R3101_SD_TS.dgn
tbarbour

STD. NO. 21"PCS_39_120S_25L

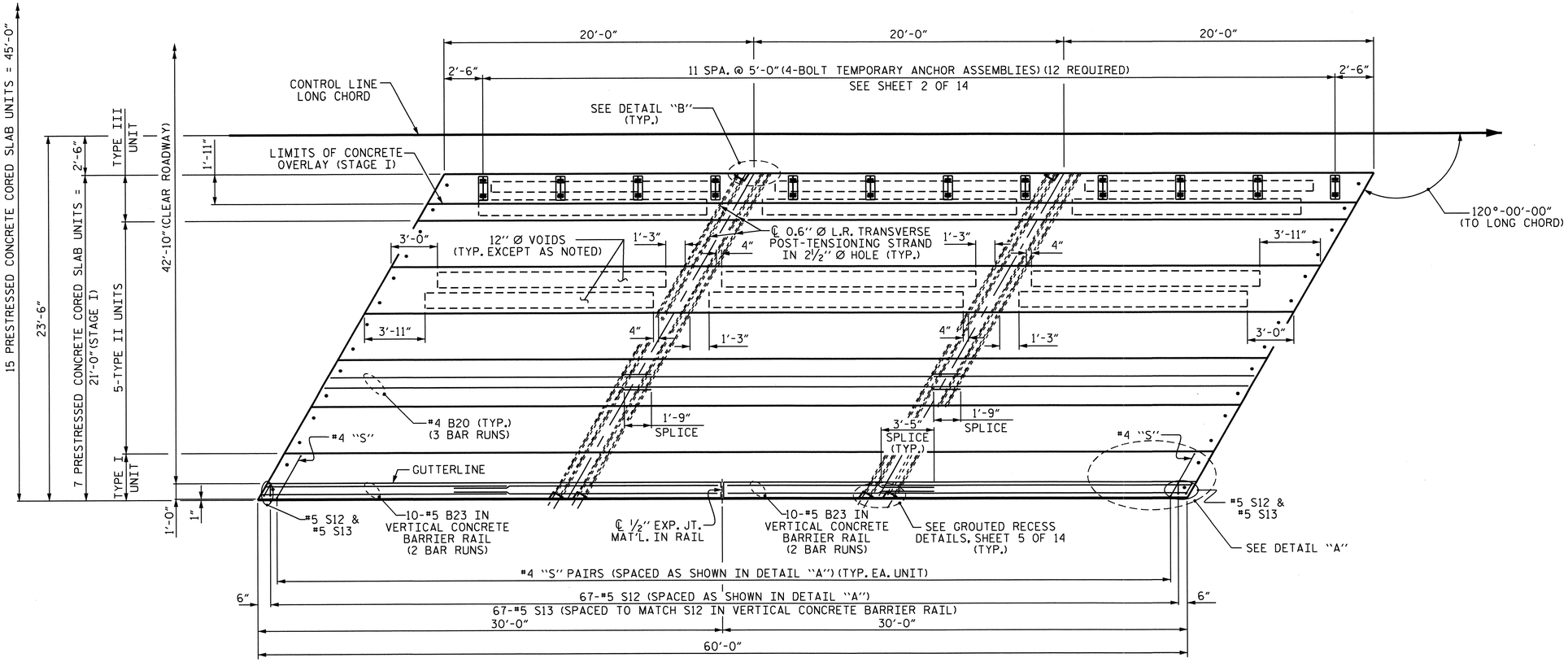

PLAN OF SPAN B
(STAGE I)

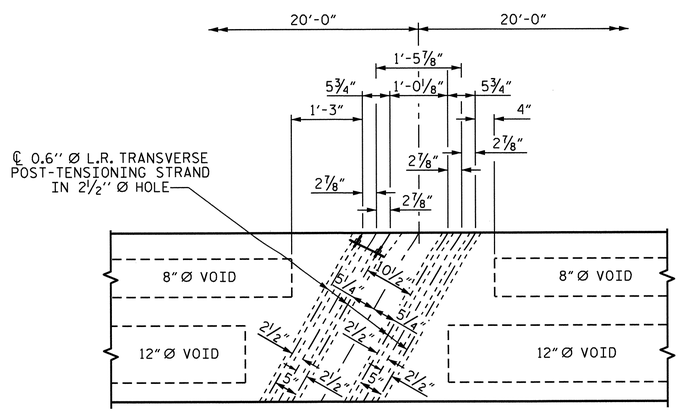

DETAIL "B"

#4 S11 BARS MAY BE SHIFTED AS NECESSARY TO MAINTAIN 1" CLEAR TO GROUTED RECESS AND 2½" Ø TRANSVERSE POST-TENSIONING STRAND HOLES

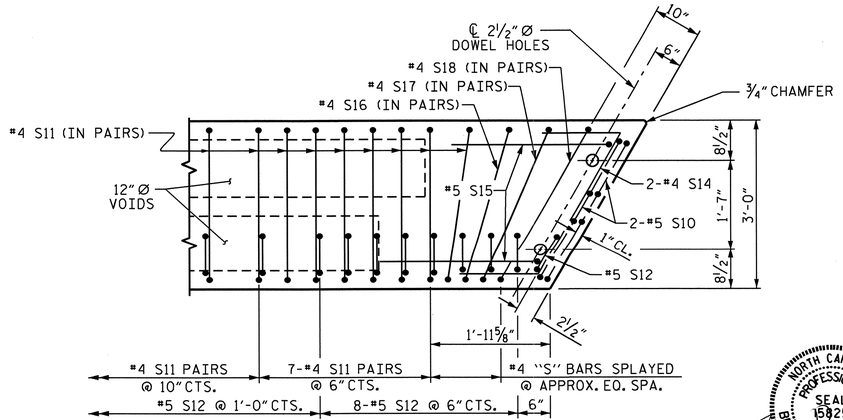

DETAIL "A"

NOTE: TYPE I UNIT SHOWN - TYPE II & TYPE III UNIT SIMILAR EXCEPT OMIT #5 S12 BARS.

NORTH CAROLINA PROFESSIONAL SEAL 15825 ENGINEER D. KLAPPENBACH
7-26-2013

PROJECT NO. R-3101
ALLEGHANY COUNTY
STATION: 71+53.83-L-

SHEET 8 OF 14

STATE OF NORTH CAROLINA
DEPARTMENT OF TRANSPORTATION
RALEIGH

PLAN OF 60' UNIT 120°-00'-00" SKEW SPAN B (STAGE I)

REVISIONS						SHEET NO.
NO.	BY:	DATE:	NO.	BY:	DATE:	S-14
1			3			TOTAL SHEETS
2			4			65

DRAWN BY : H. T. BARBOUR DATE : 4-5-13
CHECKED BY : D. HODGE DATE : 5-13
DESIGN ENGINEER OF RECORD: S. T. CHAMPION DATE : 6-13

11-JUN-2013 07:59
R:\Structures\Str1\Plans\tbarbour\Microstation\R3101_SD_TS.dgn
tbarbour

STD. NO. 24PCS_39_120S_60L

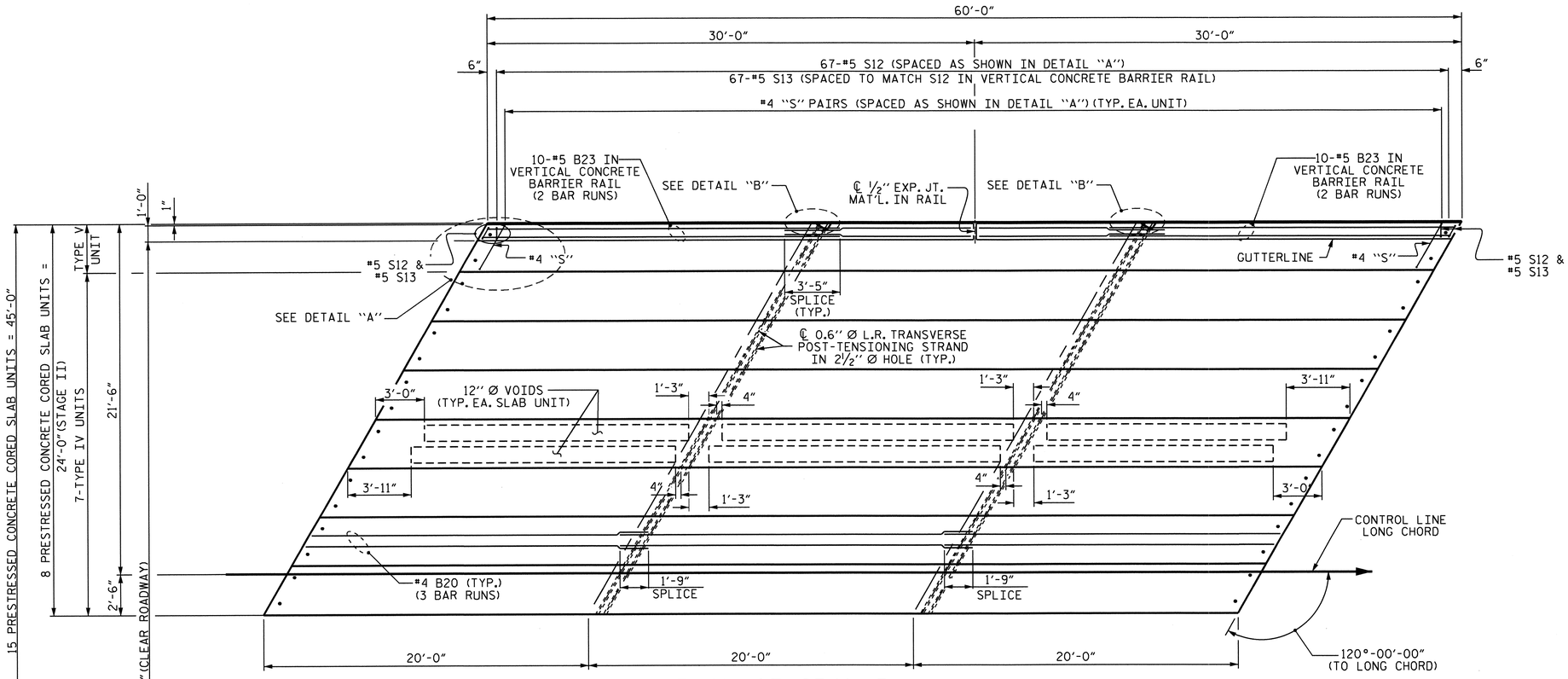

PLAN OF SPAN B
(STAGE II)

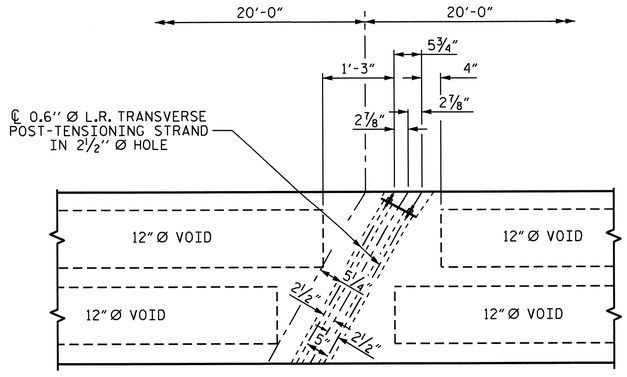

DETAIL "B"

#4 S11 BARS MAY BE SHIFTED AS NECESSARY TO MAINTAIN 1" CLEAR TO GROUTED RECESS AND 2 1/2" Ø TRANSVERSE POST-TENSIONING STRAND HOLES

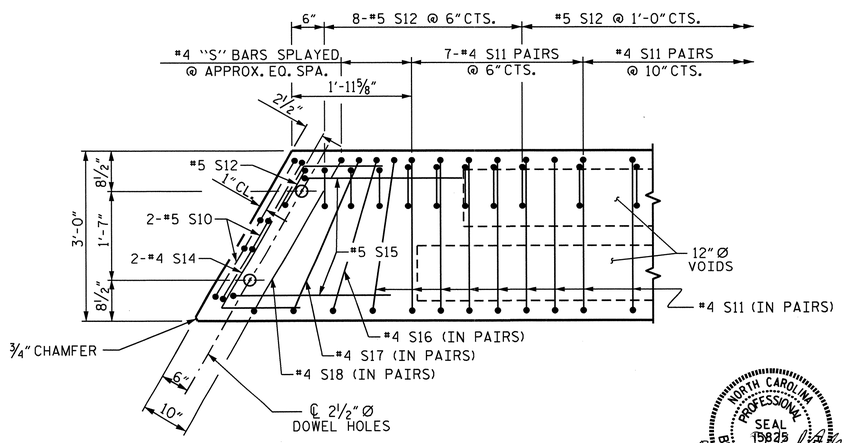

DETAIL "A"

NOTE: EXTERIOR UNIT SHOWN - INTERIOR UNIT SIMILAR EXCEPT OMIT #5 S12 BARS.

NORTH CAROLINA PROFESSIONAL SEAL 19825 ENGINEER D. KLAPPENBACH
7-24-2013

PROJECT NO. R-3101
ALLEGHANY COUNTY
STATION: 71+53.83-L-

SHEET 9 OF 14

STATE OF NORTH CAROLINA
DEPARTMENT OF TRANSPORTATION
RALEIGH

PLAN OF 60' UNIT 120°-00'-00" SKEW SPAN B (STAGE II)

REVISIONS						SHEET NO.
NO.	BY:	DATE:	NO.	BY:	DATE:	S-15
1			3			TOTAL SHEETS
2			4			65

DRAWN BY : H. T. BARBOUR DATE : 4-5-13
CHECKED BY : D. HODGE DATE : 5-13
DESIGN ENGINEER OF RECORD: S. T. CHAMPION DATE : 6-13

11-JUN-2013 07:59
R:\Structures\Strl\Plans\tbarbour\Microstation\R3101_SD_TS.dgn
tbarbour

STD. NO. 24PCS_39_120S_60L

BILL OF MATERIAL
STAGE I

BAR	NUMBER	SIZE	TYPE	LENGTH	WEIGHT
✳ A1	170	#3	STR	22'-3"	1422
✳ B1	108	#3	STR	29'-3"	1188
✳ B2	35	#4	STR	20'-0"	468
✳EPOXY COATED REINFORCING STEEL				LBS.	3078
CONCRETE WEARING SURFACE				SQ.FT.	1533

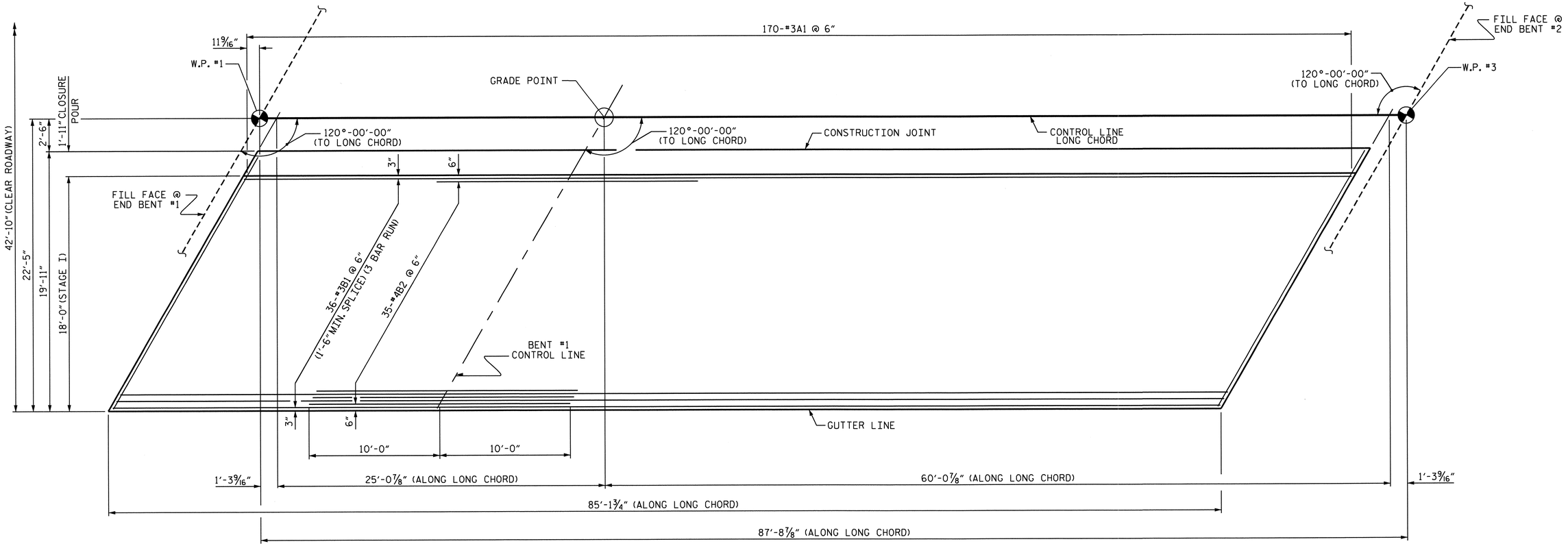

PLAN OF REINFORCING FOR CONCRETE WEARING SURFACE

(STAGE I)

PLACEMENT OF CONCRETE WEARING SURFACE SHALL OCCUR AFTER CASTING THE CONCRETE RAIL. THE COST OF THE #3 BARS CAST WITH THE CONCRETE WEARING SURFACE SHALL BE INCLUDED IN THE UNIT BID PRICE FOR CONCRETE WEARING SURFACE. FOR CONCRETE WEARING SURFACE, SEE SPECIAL PROVISIONS.

PROJECT NO. R-3101

ALLEGHANY COUNTY

STATION: 71+53.83-L-

SHEET 10 OF 14

STATE OF NORTH CAROLINA
DEPARTMENT OF TRANSPORTATION
RALEIGH

REINFORCING FOR CONCRETE WEARING SURFACE STAGE I

NORTH CAROLINA PROFESSIONAL SEAL 15825 ENGINEER BRUCE O. KLAPPENBACH
7-26-2013

REVISIONS						SHEET NO.
NO.	BY:	DATE:	NO.	BY:	DATE:	S-16
1			3			TOTAL SHEETS
2			4			65

DRAWN BY : H. T. BARBOUR DATE : 4-17-13
CHECKED BY : D. HODGE DATE : 5-13
DESIGN ENGINEER OF RECORD: S. T. CHAMPION DATE : 6-13

24-JUL-2013 15:23
Q:\Structures\Str1\Plans\tbarbour\Microstation\R3101_SD_TS.dgn
tbarbour

BILL OF MATERIAL
STAGE II

BAR	NUMBER	SIZE	TYPE	LENGTH	WEIGHT
✳ A2	170	#3	STR	28'-3"	1806
✳ B1	150	#3	STR	29'-3"	1650
✳ B2	49	#4	STR	20'-0"	655
✳ EPOXY COATED REINFORCING STEEL				LBS.	4111
CONCRETE WEARING SURFACE				SQ. FT.	2114

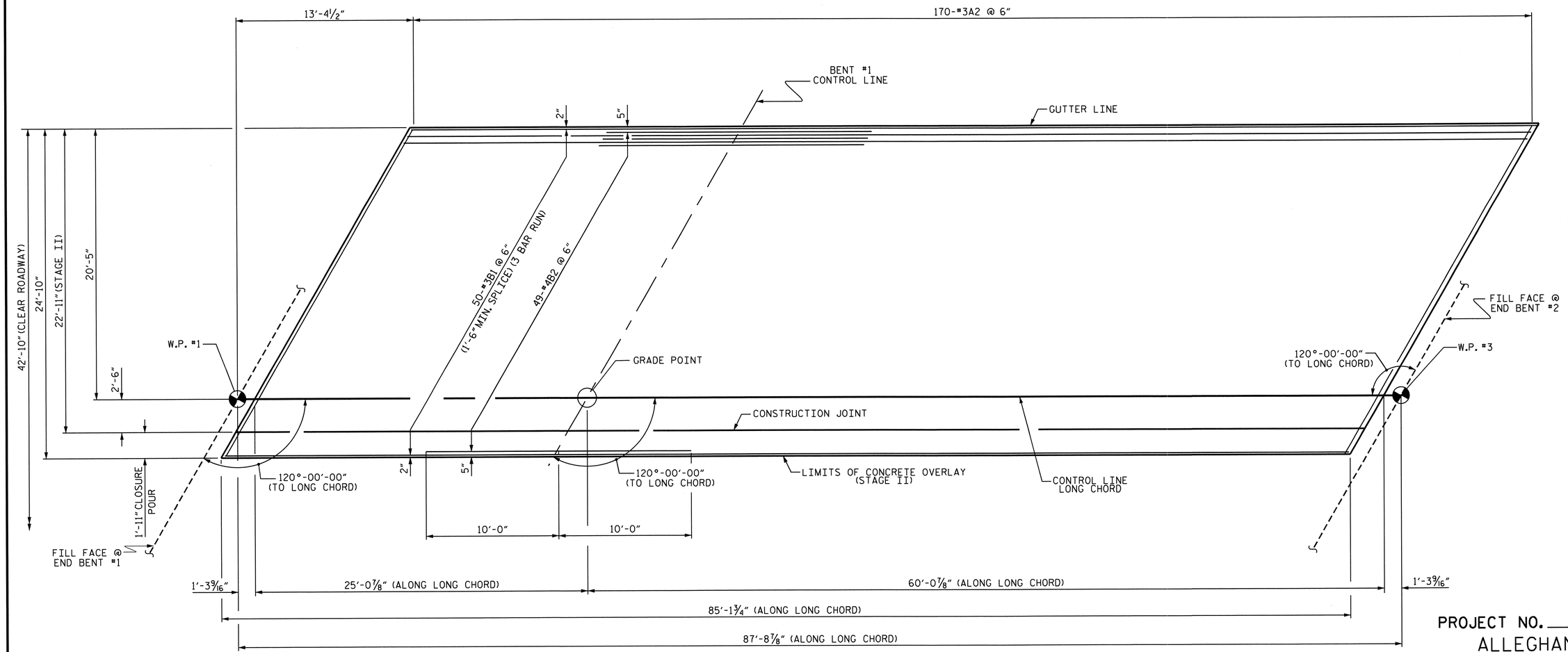

PLAN OF REINFORCING FOR CONCRETE WEARING SURFACE

(STAGE II)

PLACEMENT OF CONCRETE WEARING SURFACE SHALL OCCUR AFTER CASTING THE CONCRETE RAIL. THE COST OF THE #3 BARS CAST WITH THE CONCRETE WEARING SURFACE SHALL BE INCLUDED IN THE UNIT BID PRICE FOR CONCRETE WEARING SURFACE. FOR CONCRETE WEARING SURFACE, SEE SPECIAL PROVISIONS.

NORTH CAROLINA PROFESSIONAL SEAL 15825 ENGINEER BRUCE D. KLAPPENBACH
7-26-2013

PROJECT NO. R-3101
ALLEGHANY COUNTY
STATION: 71+53.83-L-

SHEET 11 OF 14

STATE OF NORTH CAROLINA
DEPARTMENT OF TRANSPORTATION
RALEIGH

REINFORCING FOR CONCRETE WEARING SURFACE STAGE II

REVISIONS						SHEET NO.
NO.	BY:	DATE:	NO.	BY:	DATE:	S-17
1			3			TOTAL SHEETS
2			4			65

DRAWN BY : H. T. BARBOUR DATE : 4-17-13
CHECKED BY : D. HODGE DATE : 5-13
DESIGN ENGINEER OF RECORD: S. T. CHAMPION DATE : 6-13

24-JUL-2013 15:23
O:\Structures\Str1\Plans\tbarbour\Microstation\R3101_SD_TS.dgn
tbarbour

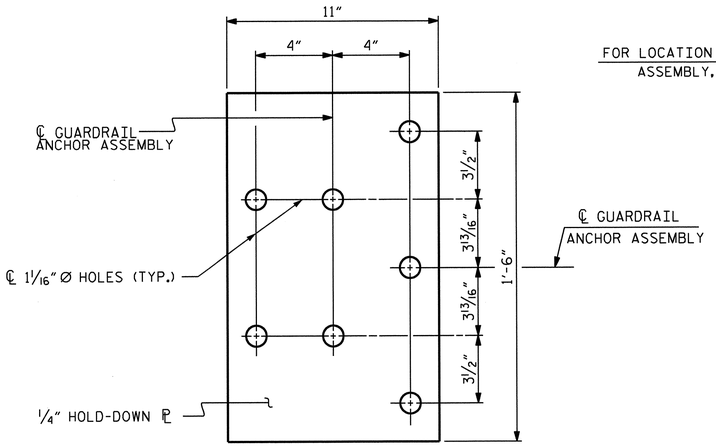

PLAN

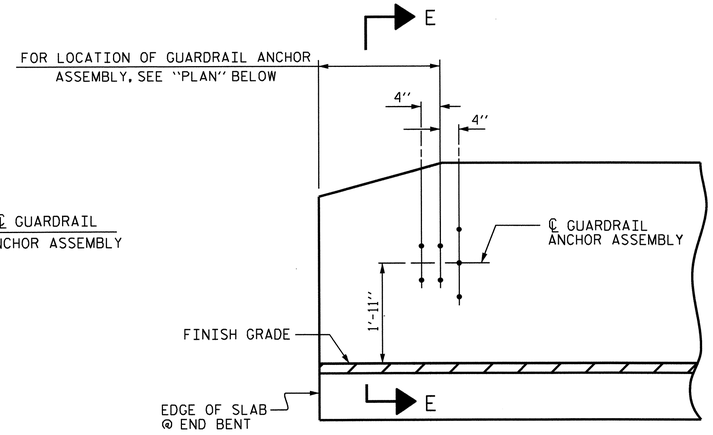

ELEVATION

NOTES

THE GUARDRAIL ANCHOR ASSEMBLY SHALL CONSIST OF A 1/4" HOLD DOWN PLATE AND 7 - 7/8" Ø BOLTS WITH NUTS AND WASHERS.

THE HOLD-DOWN PLATE SHALL CONFORM TO AASHTO M270 GRADE 36. AFTER FABRICATION, THE HOLD-DOWN PLATE SHALL BE HOT-DIP GALVANIZED IN ACCORDANCE WITH AASHTO M111.

BOLTS SHALL CONFORM TO THE REQUIREMENTS OF ASTM A307 AND NUTS SHALL CONFORM TO THE REQUIREMENTS OF AASHTO M291. BOLTS, NUTS AND WASHERS SHALL BE GALVANIZED. (AT THE CONTRACTOR'S OPTION, STAINLESS STEEL BOLTS, NUTS AND WASHERS MAY BE USED AS AN ALTERNATE FOR THE 7/8" Ø GALVANIZED BOLTS, NUTS AND WASHERS. THEY SHALL CONFORM TO OR EXCEED THE MECHANICAL REQUIREMENTS OF ASTM A307. THE USE OF THIS ALTERNATE SHALL BE APPROVED BY THE ENGINEER.)

THE GUARDRAIL ANCHOR ASSEMBLY IS REQUIRED AT ALL POINTS WHERE APPROACH GUARDRAIL IS TO BE ATTACHED TO THE END OF BARRIER RAIL. FOR POINTS OF ATTACHMENT, SEE SKETCH.

AFTER INSTALLATION, THE EXPOSED THREAD OF THE BOLT SHALL BE BURRED WITH A SHARP POINTED TOOL.

THE COST OF THE GUARDRAIL ANCHOR ASSEMBLY SHALL BE INCLUDED IN THE UNIT CONTRACT PRICE BID FOR VERTICAL CONCRETE BARRIER RAIL.

THE VERTICAL REINFORCING BARS MAY BE SHIFTED SLIGHTLY IN THE VERTICAL CONCRETE BARRIER RAIL TO CLEAR ASSEMBLY BOLTS.

THE 1 1/4" Ø HOLES SHALL BE FORMED OR DRILLED WITH A CORE BIT. IMPACT TOOLS WILL NOT BE PERMITTED. ANY CONCRETE DAMAGED BY THIS WORK SHALL BE REPAIRED TO THE SATISFACTION OF THE ENGINEER.

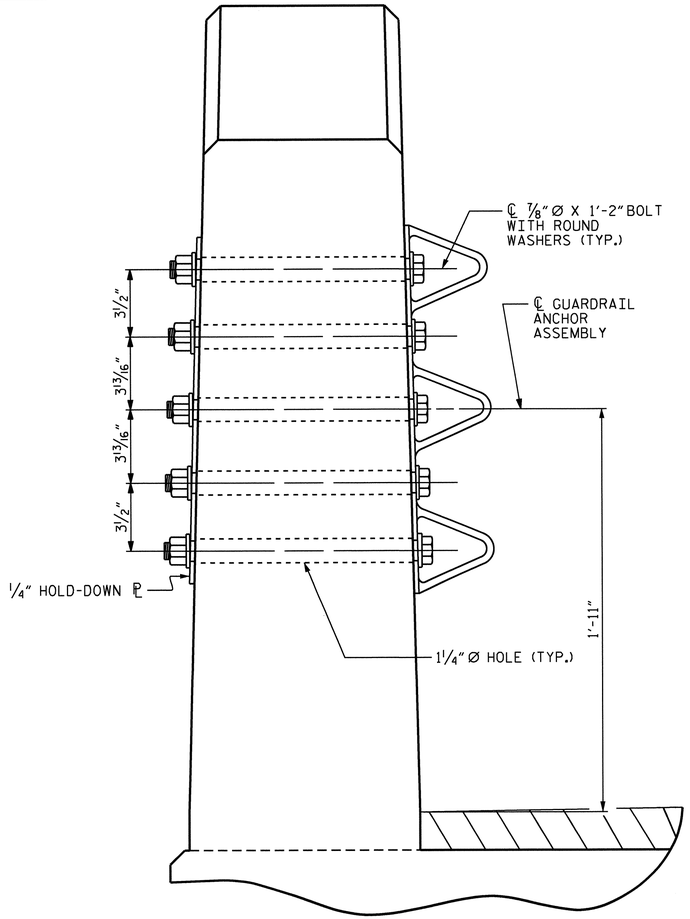

SECTION E-E

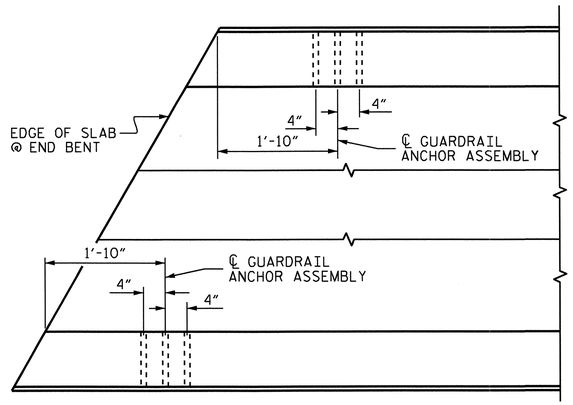

PLAN

LOCATION OF ANCHORS FOR GUARDRAIL

END BENT #1 SHOWN, END BENT #2 SIMILAR.

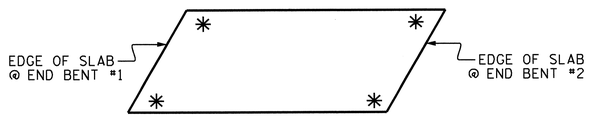

SKETCH SHOWING POINTS OF ATTACHMENT

✳ DENOTES GUARDRAIL ANCHOR ASSEMBLY

GUARDRAIL ANCHOR ASSEMBLY DETAILS

ASSEMBLED BY : H. T. BARBOUR	DATE : 5-31-13	ADDED 5/6/10	
CHECKED BY : D. HODGE	DATE : 5-13	REV. 10/1/11	MAA/GM
DRAWN BY : MAA 5/10		REV. 12/5/11	MAA/GM
CHECKED BY : GM 5/10			

11-JUN-2013 07:58
R:\Structures\Str1\Plans\tbarbour\Microstation\R3101_SD_TS.dgn
tbarbour

PROJECT NO. R-3101
ALLEGHANY COUNTY
STATION: 71+53.83-L-
SHEET 12 OF 14

STATE OF NORTH CAROLINA
DEPARTMENT OF TRANSPORTATION
RALEIGH

STANDARD
GUARDRAIL ANCHORAGE FOR VERTICAL CONCRETE BARRIER RAIL

NORTH CAROLINA PROFESSIONAL SEAL 19826 ENGINEER BRUCE D. KLAPPENBACH
7-26-2013

REVISIONS						SHEET NO.
NO.	BY:	DATE:	NO.	BY:	DATE:	S-18
1			3			TOTAL SHEETS
2			4			65

(SHT 2) STD. NO. GRA3

BILL OF MATERIAL FOR ONE 25′ CORED SLAB UNIT

BAR	NUMBER	SIZE	TYPE	EXTERIOR UNIT LENGTH	EXTERIOR UNIT WEIGHT	INTERIOR UNIT LENGTH	INTERIOR UNIT WEIGHT
B1	2	#4	STR	24′-7″	33	24′-7″	33
S1	8	#5	3	4′-6″	38	4′-6″	38
S2	52	#4	3	5′-4″	185	5′-4″	185
✱ S3	34	#5	1	6′-2″	219		
S5	4	#4	3	5′-5″	14	5′-5″	14
S6	4	#4	3	5′-6″	15	5′-6″	15
S7	4	#4	3	5′-7″	15	5′-7″	15
S8	4	#4	3	5′-9″	15	5′-9″	15
REINFORCING STEEL LBS.					315		315
✱EPOXY COATED REINFORCING STEEL LBS.					219		
5000 P.S.I. CONCRETE CU. YDS.					3.9		3.8
5000 P.S.I. CONCRETE CU. YDS. (TYPE III)							4.1
0.6″ Ø L.R. STRANDS No.					9		9

BILL OF MATERIAL FOR ONE 60′ CORED SLAB UNIT

BAR	NUMBER	SIZE	TYPE	EXTERIOR UNIT LENGTH	EXTERIOR UNIT WEIGHT	INTERIOR UNIT LENGTH	INTERIOR UNIT WEIGHT
B20	6	#4	STR	21′-2″	85	21′-2″	85
S10	8	#5	3	5′-0″	42	5′-0″	42
S11	146	#4	3	5′-10″	569	5′-10″	569
✱S12	69	#5	1	6′-4″	456		
S14	4	#4	4	5′-11″	16	5′-11″	16
S15	4	#5	3	7′-1″	30	7′-1″	30
S16	4	#4	3	5′-11″	16	5′-11″	16
S17	4	#4	3	6′-1″	16	6′-1″	16
S18	4	#4	3	6′-3″	17	6′-3″	17
REINFORCING STEEL LBS.					791		791
✱EPOXY COATED REINFORCING STEEL LBS.					456		
5500 P.S.I. CONCRETE CU. YDS.					10.5		10.4
5500 P.S.I. CONCRETE CU. YDS. (TYPE III)							11.1
0.6″ Ø L.R. STRANDS No.					21		21

BAR TYPES

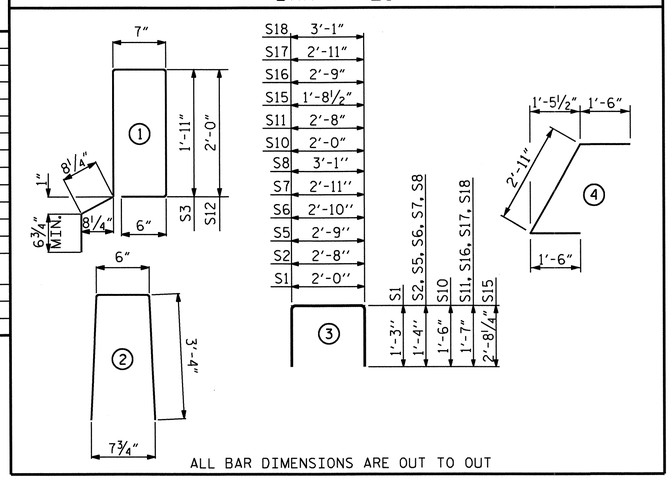

ALL BAR DIMENSIONS ARE OUT TO OUT

BILL OF MATERIAL FOR VERTICAL CONCRETE BARRIER RAIL

BAR	BARS PER EXTERIOR UNIT	TOTAL NO.	SIZE	TYPE	LENGTH	WEIGHT
✱ B8	10	10	#5	STR	24′-6″	256
✱B23	40	40	#5	STR	16′-11″	706
✱ S4	34	34	#5	2	7′-2″	254
✱S13	69	69	#5	2	7′-2″	516
✱EPOXY COATED REINFORCING STEEL				LBS.		1732
CLASS AA CONCRETE				CU.YDS.		11.4
TOTAL VERTICAL CONCRETE BARRIER RAIL				LN. FT.		85.14

DEAD LOAD DEFLECTION AND CAMBER

25′ CORED SLAB UNIT	3′-0″ × 1′-9″ 0.6″ Ø L.R. STRAND
CAMBER (SLAB ALONE IN PLACE)	5/16″ ↑
DEFLECTION DUE TO SUPERIMPOSED DEAD LOAD✱✱	1/16″ ↓
FINAL CAMBER	1/4″ ↑

✱✱ INCLUDES FUTURE WEARING SURFACE

DEAD LOAD DEFLECTION AND CAMBER

60′ CORED SLAB UNIT	3′-0″ × 2′-0″ 0.6″ Ø L.R. STRAND
CAMBER (SLAB ALONE IN PLACE)	2 9/16″ ↑
DEFLECTION DUE TO SUPERIMPOSED DEAD LOAD✱✱	9/16″ ↓
FINAL CAMBER	2″ ↑

✱✱ INCLUDES FUTURE WEARING SURFACE

NOTES

ALL PRESTRESSING STRANDS SHALL BE 7-WIRE LOW RELAXATION GRADE 270 STRANDS AND SHALL CONFORM TO AASHTO M203 EXCEPT FOR SAMPLING REQUIREMENTS WHICH SHALL BE IN ACCORDANCE WITH THE STANDARD SPECIFICATIONS.

ALL REINFORCING STEEL CAST WITH THE CORED SLAB SECTIONS SHALL BE GRADE 60 AND SHALL BE INCLUDED IN THE UNIT PRICE BID FOR PRESTRESSED CONCRETE CORED SLABS.

RECESSES FOR TRANSVERSE STRANDS SHALL BE GROUTED AFTER THE TENSIONING OF THE STRANDS.

THE 2½″ Ø DOWEL HOLES AT FIXED ENDS OF SLAB SECTIONS SHALL BE FILLED WITH NON-SHRINK GROUT.

THE BACKER RODS SHALL CONFORM TO THE REQUIREMENTS OF TYPE M BOND BREAKER. SEE SECTION 1028 OF THE STANDARD SPECIFICATIONS.

WHEN CORED SLABS ARE CAST, AN INTERNAL HOLD-DOWN SYSTEM SHALL BE EMPLOYED TO PREVENT VOIDS FROM RISING OR MOVING SIDEWAYS. AT LEAST SIX WEEKS PRIOR TO CASTING CORED SLABS, THE CONTRACTOR SHALL SUBMIT TO THE ENGINEER FOR REVIEW AND COMMENT, DETAILED DRAWINGS OF THE PROPOSED HOLD-DOWN SYSTEM. IN ADDITION TO STRUCTURAL DETAILS, LOCATION AND SPACING OF THE HOLD-DOWNS SHALL BE INDICATED.

ALL REINFORCING STEEL IN THE VERTICAL CONCRETE BARRIER RAIL SHALL BE EPOXY COATED.

PRESTRESSING STRANDS SHALL BE CUT FLUSH WITH THE CORED SLAB UNIT ENDS.

APPLY EPOXY PROTECTIVE COATING TO CORED SLAB UNIT ENDS.

GROOVED CONTRACTION JOINTS, ½″ IN DEPTH, SHALL BE TOOLED IN ALL EXPOSED FACES OF THE BARRIER RAIL AND IN ACCORDANCE WITH ARTICLE 825-10(B) OF THE STANDARD SPECIFICATIONS. A CONTRACTION JOINT SHALL BE LOCATED AT EACH THIRD POINT BETWEEN BARRIER RAIL EXPANSION JOINTS. ONLY ONE CONTRACTION JOINT IS REQUIRED AT MIDPOINT OF BARRIER RAIL SEGMENTS LESS THAN 20 FEET IN LENGTH AND NO CONTRACTION JOINTS ARE REQUIRED FOR THOSE SEGMENTS LESS THAN 10 FEET IN LENGTH.

TRANSVERSE POST TENSIONING OF THE CORED SLAB UNITS SHALL BE DONE IN ACCORDANCE WITH THE STANDARD SPECIFICATIONS.

THE TRANSFER OF LOAD FROM THE ANCHORAGES TO THE CORED SLAB UNIT SHALL BE DONE WHEN THE CONCRETE HAS REACHED A COMPRESSIVE STRENGTH OF NOT LESS THAN THE REQUIRED STRENGTH SHOWN IN THE "CONCRETE RELEASE STRENGTH" TABLE.

FOR GROUT FOR STRUCTURES, SEE SPECIAL PROVISIONS.

MAINTAIN A SYMMETRIC TENSION FORCE BETWEEN EACH PAIR OF TRANSVERSE POST TENSIONING STRANDS IN THE DIAPHRAGM IN SPAN B.

GRADE 270 STRANDS

	0.6″ Ø L.R.
AREA (SQUARE INCHES)	0.217
ULTIMATE STRENGTH (LBS. PER STRAND)	58,600
APPLIED PRESTRESS (LBS. PER STRAND)	43,950

CONCRETE RELEASE STRENGTH

UNIT	PSI
25′ UNITS	4000
60′ UNITS	4000

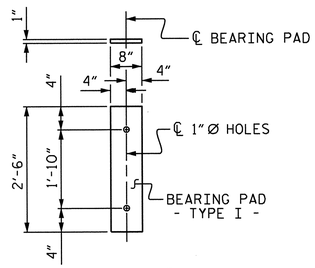

FIXED END
(TYPE I - 28 REQ'D)

ELASTOMERIC BEARING DETAILS

ELASTOMER IN ALL BEARINGS SHALL BE 60 DUROMETER HARDNESS.

CORED SLABS REQUIRED

	NUMBER	LENGTH	TOTAL LENGTH
25′ UNIT			
EXTERIOR C.S.	1	25′-0″	25′-0″
INTERIOR C.S.	6	25′-0″	150′-0″
TOTAL	7		175′-0″

CORED SLABS REQUIRED

	NUMBER	LENGTH	TOTAL LENGTH
60′ UNIT			
EXTERIOR C.S.	1	60′-0″	60′-0″
INTERIOR C.S.	6	60′-0″	360′-0″
TOTAL	7		420′-0″

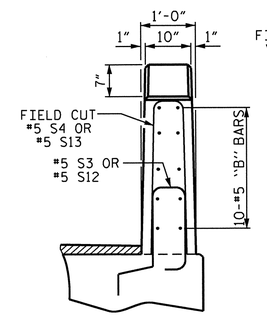

END VIEW

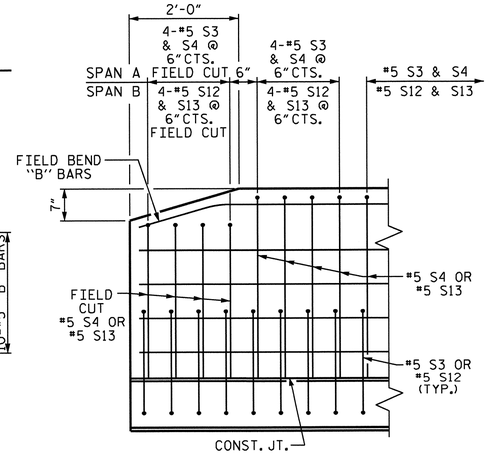

SIDE VIEW

END OF RAIL DETAILS

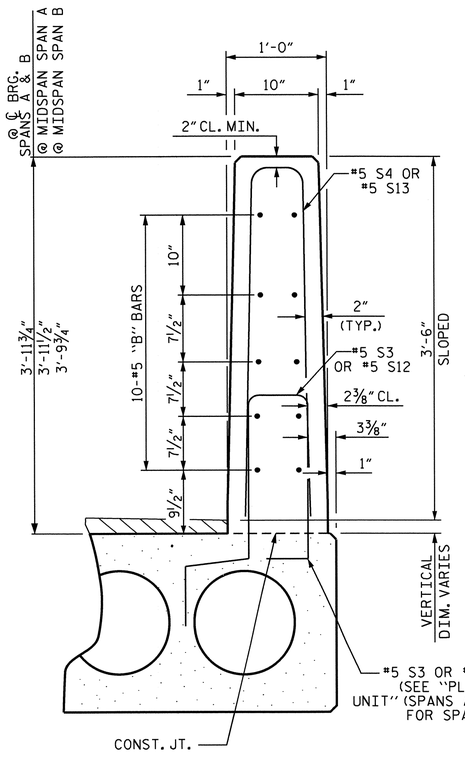

VERTICAL CONCRETE BARRIER RAIL SECTION

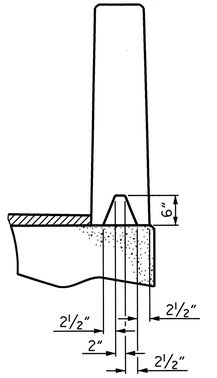

SECTION S-S
AT DAM IN OPEN JOINT
(THIS IS TO BE USED ONLY WHEN SLIP FORM IS USED)

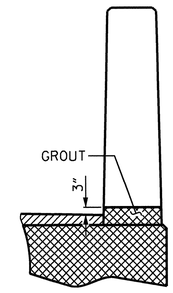

SECTION T-T
AT OPEN JOINT AT BENT

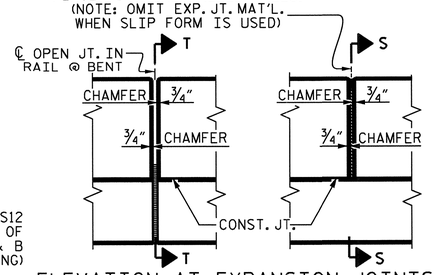

ELEVATION AT EXPANSION JOINTS

PROJECT NO. R-3101
ALLEGHANY COUNTY
STATION: 71+53.83-L-

SHEET 13 OF 14

STATE OF NORTH CAROLINA
DEPARTMENT OF TRANSPORTATION
RALEIGH

PRESTRESSED CONCRETE CORED SLAB UNIT STAGE I 120°-00′-00″

REVISIONS NO.	BY:	DATE:	NO.	BY:	DATE:
1			3		
2			4		

SHEET NO. S-19
TOTAL SHEETS 65

NORTH CAROLINA PROFESSIONAL SEAL 15822 ENGINEER BRADLEY D. KLAPPENBACH 7-26-2013

DRAWN BY :	H. T. BARBOUR	DATE :	4-17-13
CHECKED BY :	D. HODGE	DATE :	5-13
DESIGN ENGINEER OF RECORD:	S. T. CHAMPION	DATE :	6-13

11-JUN-2013 07:58
R:\Structures\Str1\Plans\tbarbour\Microstation\R3101_SD_TS.dgn
tbarbour

STD. NO. 21"PCS3_39_120S

BILL OF MATERIAL FOR ONE 25′ CORED SLAB UNIT

BAR	NUMBER	SIZE	TYPE	EXTERIOR UNIT LENGTH	EXTERIOR UNIT WEIGHT	INTERIOR UNIT LENGTH	INTERIOR UNIT WEIGHT
B1	2	#4	STR	24′-7″	33	24′-7″	33
S1	8	#5	3	4′-6″	38	4′-6″	38
S2	52	#4	3	5′-4″	185	5′-4″	185
✱ S3	34	#5	1	6′-2″	219		
S5	4	#4	3	5′-5″	14	5′-5″	14
S6	4	#4	3	5′-6″	15	5′-6″	15
S7	4	#4	3	5′-7″	15	5′-7″	15
S8	4	#4	3	5′-9″	15	5′-9″	15
REINFORCING STEEL			LBS.		315		315
✱EPOXY COATED REINFORCING STEEL			LBS.		219		
5000 P.S.I. CONCRETE			CU. YDS.		3.9		3.8
0.6″Ø L.R. STRANDS			No.		9		9

BILL OF MATERIAL FOR ONE 60′ CORED SLAB UNIT

BAR	NUMBER	SIZE	TYPE	EXTERIOR UNIT LENGTH	EXTERIOR UNIT WEIGHT	INTERIOR UNIT LENGTH	INTERIOR UNIT WEIGHT
B20	6	#4	STR	21′-2″	85	21′-2″	85
S10	8	#5	3	5′-0″	42	5′-0″	42
S11	146	#4	3	5′-10″	569	5′-10″	569
✱S12	69	#5	1	6′-4″	456		
S14	4	#4	4	5′-11″	16	5′-11″	16
S15	4	#5	3	7′-1″	30	7′-1″	30
S16	4	#4	3	5′-11″	16	5′-11″	16
S17	4	#4	3	6′-1″	16	6′-1″	16
S18	4	#4	3	6′-3″	17	6′-3″	17
REINFORCING STEEL			LBS.		791		791
✱EPOXY COATED REINFORCING STEEL			LBS.		456		
5500 P.S.I. CONCRETE			CU. YDS.		10.5		10.4
0.6″Ø L.R. STRANDS			No.		21		21

BAR TYPES

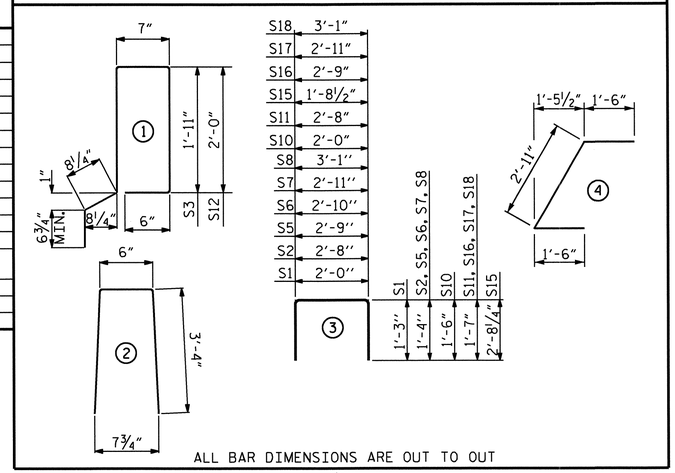

ALL BAR DIMENSIONS ARE OUT TO OUT

BILL OF MATERIAL FOR VERTICAL CONCRETE BARRIER RAIL

BAR	BARS PER EXTERIOR UNIT	TOTAL NO.	SIZE	TYPE	LENGTH	WEIGHT
✱ B8	10	10	#5	STR	24′-6″	256
✱B23	40	40	#5	STR	16′-11″	706
✱ S4	34	34	#5	2	7′-2″	254
✱S13	69	69	#5	2	7′-2″	516
✱EPOXY COATED REINFORCING STEEL				LBS.		1732
CLASS AA CONCRETE				CU.YDS.		11.4
TOTAL VERTICAL CONCRETE BARRIER RAIL				LN. FT.		85.14

GROOVING BRIDGE FLOORS

CONCRETE OVERLAY	3376 SQ. FT.
APPROACH SLABS	1175 SQ. FT.
STAGE I & II TOTAL	4551 SQ. FT.

DEAD LOAD DEFLECTION AND CAMBER

	3′-0″ x 1′-9″ 0.6″Ø L.R. STRAND
25′ CORED SLAB UNIT	
CAMBER (SLAB ALONE IN PLACE)	5/16″ ↑
DEFLECTION DUE TO SUPERIMPOSED DEAD LOAD✱✱	1/16″ ↓
FINAL CAMBER	1/4″ ↑

✱✱ INCLUDES FUTURE WEARING SURFACE

DEAD LOAD DEFLECTION AND CAMBER

	3′-0″ x 2′-0″ 0.6″Ø L.R. STRAND
60′ CORED SLAB UNIT	
CAMBER (SLAB ALONE IN PLACE)	2 9/16″ ↑
DEFLECTION DUE TO SUPERIMPOSED DEAD LOAD✱✱	9/16″ ↓
FINAL CAMBER	2″ ↑

✱✱ INCLUDES FUTURE WEARING SURFACE

CORED SLABS REQUIRED

25′ UNIT	NUMBER	LENGTH	TOTAL LENGTH
EXTERIOR C.S.	1	25′-0″	25′-0″
INTERIOR C.S.	7	25′-0″	175′-0″
TOTAL	8		200′-0″

CORED SLABS REQUIRED

60′ UNIT	NUMBER	LENGTH	TOTAL LENGTH
EXTERIOR C.S.	1	60′-0″	60′-0″
INTERIOR C.S.	7	60′-0″	420′-0″
TOTAL	8		480′-0″

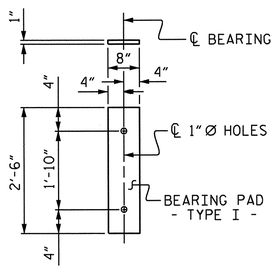

FIXED END
(TYPE I - 32 REQ'D)

ELASTOMERIC BEARING DETAILS

ELASTOMER IN ALL BEARINGS SHALL BE 60 DUROMETER HARDNESS.

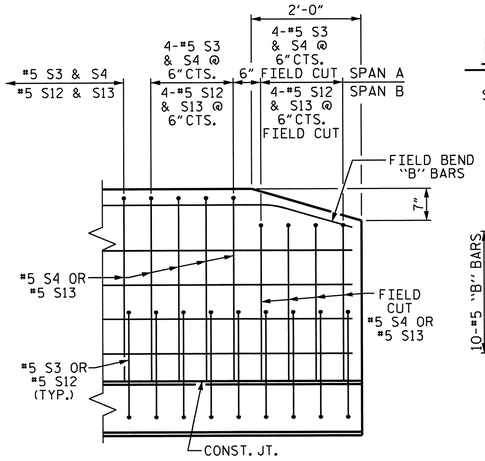

SIDE VIEW

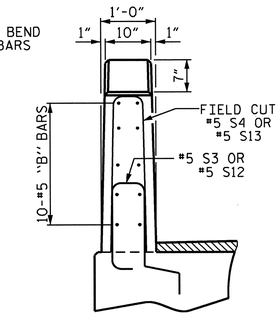

END VIEW

END OF RAIL DETAILS

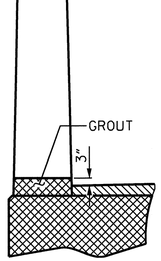

SECTION T-T
AT OPEN JOINT AT BENT

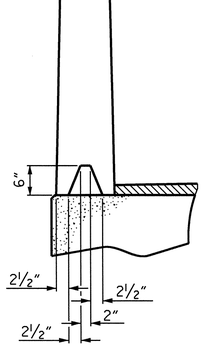

SECTION S-S
AT DAM IN OPEN JOINT
(THIS IS TO BE USED ONLY WHEN SLIP FORM IS USED)

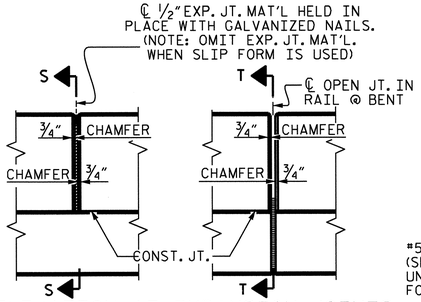

ELEVATION AT EXPANSION JOINTS

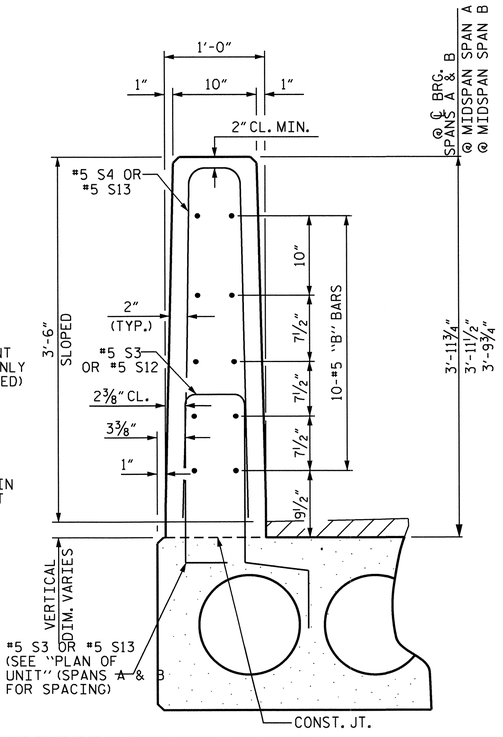

VERTICAL CONCRETE BARRIER RAIL SECTION

NOTES

ALL PRESTRESSING STRANDS SHALL BE 7-WIRE LOW RELAXATION GRADE 270 STRANDS AND SHALL CONFORM TO AASHTO M203 EXCEPT FOR SAMPLING REQUIREMENTS WHICH SHALL BE IN ACCORDANCE WITH THE STANDARD SPECIFICATIONS.

ALL REINFORCING STEEL CAST WITH THE CORED SLAB SECTIONS SHALL BE GRADE 60 AND SHALL BE INCLUDED IN THE UNIT PRICE BID FOR PRESTRESSED CONCRETE CORED SLABS.

RECESSES FOR TRANSVERSE STRANDS SHALL BE GROUTED AFTER THE TENSIONING OF THE STRANDS.

THE 2½″Ø DOWEL HOLES AT FIXED ENDS OF SLAB SECTIONS SHALL BE FILLED WITH NON-SHRINK GROUT.

THE BACKER RODS SHALL CONFORM TO THE REQUIREMENTS OF TYPE M BOND BREAKER. SEE SECTION 1028 OF THE STANDARD SPECIFICATIONS.

WHEN CORED SLABS ARE CAST, AN INTERNAL HOLD-DOWN SYSTEM SHALL BE EMPLOYED TO PREVENT VOIDS FROM RISING OR MOVING SIDEWAYS. AT LEAST SIX WEEKS PRIOR TO CASTING CORED SLABS, THE CONTRACTOR SHALL SUBMIT TO THE ENGINEER FOR REVIEW AND COMMENT, DETAILED DRAWINGS OF THE PROPOSED HOLD-DOWN SYSTEM, IN ADDITION TO STRUCTURAL DETAILS, LOCATION AND SPACING OF THE HOLD-DOWNS SHALL BE INDICATED.

ALL REINFORCING STEEL IN THE VERTICAL CONCRETE BARRIER RAIL SHALL BE EPOXY COATED.

PRESTRESSING STRANDS SHALL BE CUT FLUSH WITH THE CORED SLAB UNIT ENDS.

APPLY EPOXY PROTECTIVE COATING TO CORED SLAB UNIT ENDS.

GROOVED CONTRACTION JOINTS, ½″ IN DEPTH, SHALL BE TOOLED IN ALL EXPOSED FACES OF THE BARRIER RAIL AND IN ACCORDANCE WITH ARTICLE 825-10(B) OF THE STANDARD SPECIFICATIONS. A CONTRACTION JOINT SHALL BE LOCATED AT EACH THIRD POINT BETWEEN BARRIER RAIL EXPANSION JOINTS. ONLY ONE CONTRACTION JOINT IS REQUIRED AT MIDPOINT OF BARRIER RAIL SEGMENTS LESS THAN 20 FEET IN LENGTH AND NO CONTRACTION JOINTS ARE REQUIRED FOR THOSE SEGMENTS LESS THAN 10 FEET IN LENGTH.

TRANSVERSE POST TENSIONING OF THE CORED SLAB UNITS SHALL BE DONE IN ACCORDANCE WITH THE STANDARD SPECIFICATIONS.

THE TRANSFER OF LOAD FROM THE ANCHORAGES TO THE CORED SLAB UNIT SHALL BE DONE WHEN THE CONCRETE HAS REACHED A COMPRESSIVE STRENGTH OF NOT LESS THAN THE REQUIRED STRENGTH SHOWN IN THE "CONCRETE RELEASE STRENGTH" TABLE.

FOR GROUT FOR STRUCTURES, SEE SPECIAL PROVISIONS.

MAINTAIN A SYMMETRIC TENSION FORCE BETWEEN EACH PAIR OF TRANSVERSE POST TENSIONING STRANDS IN THE DIAPHRAGM IN SPAN B.

GRADE 270 STRANDS

	0.6″Ø L.R.
AREA (SQUARE INCHES)	0.217
ULTIMATE STRENGTH (LBS. PER STRAND)	58,600
APPLIED PRESTRESS (LBS. PER STRAND)	43,950

CONCRETE RELEASE STRENGTH

UNIT	PSI
25′ UNITS	4000
60′ UNITS	4000

PROJECT NO. R-3101
ALLEGHANY COUNTY
STATION: 71+53.83-L-

SHEET 14 OF 14

STATE OF NORTH CAROLINA
DEPARTMENT OF TRANSPORTATION
RALEIGH

PRESTRESSED CONCRETE CORED SLAB UNIT STAGE II 120°-00′-00″

NORTH CAROLINA PROFESSIONAL SEAL 15825 ENGINEER D. KLAPPER
7-26-2013

REVISIONS						SHEET NO.
NO.	BY:	DATE:	NO.	BY:	DATE:	S-20
1			3			TOTAL SHEETS
2			4			65

DRAWN BY : H. T. BARBOUR DATE : 4-17-13
CHECKED BY : D. HODGE DATE : 5-13
DESIGN ENGINEER OF RECORD: S. T. CHAMPION DATE : 6-13

24-JUL-2013 15:24
O:\Structures\Strl\Plans\tbarbour\Microstation\R3101_SD_TS.dgn
tbarbour

STD. NO. 21"PCS3_39_120S

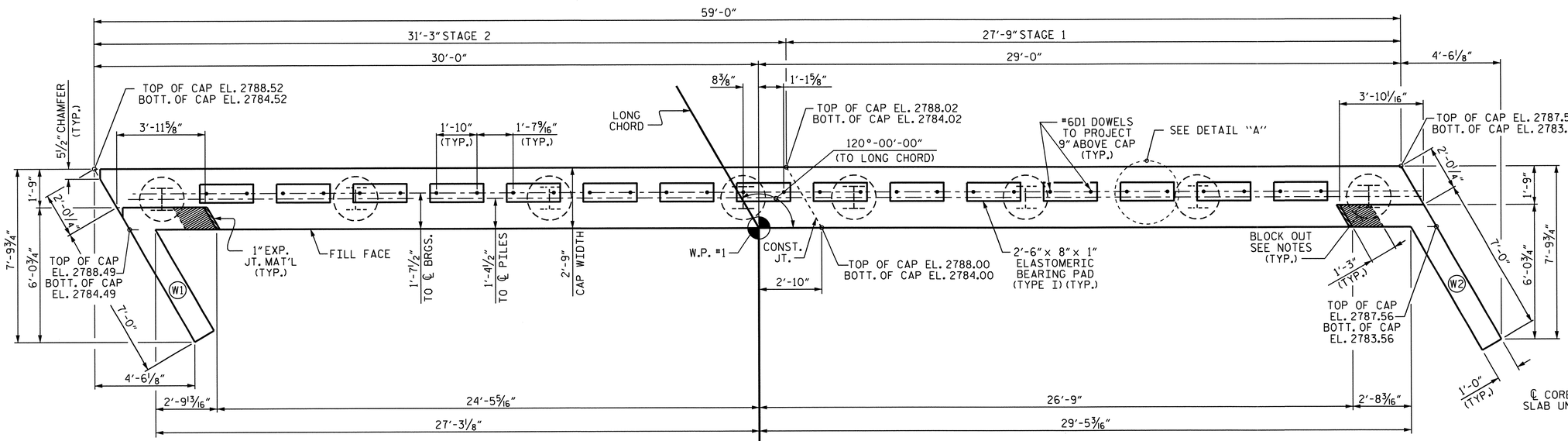

PLAN

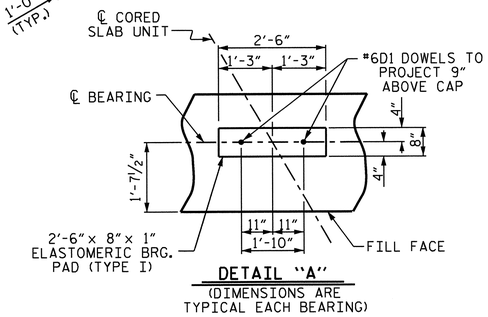

DETAIL "A"
(DIMENSIONS ARE TYPICAL EACH BEARING)

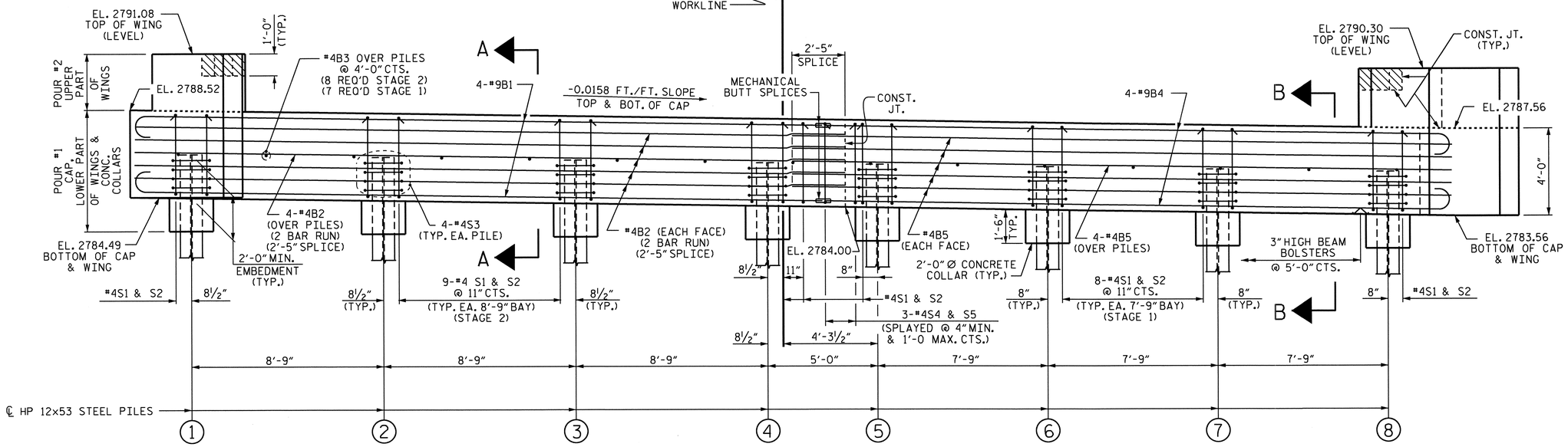

ELEVATION

EXTEND #9B4 1'-0" AND #4B5 2'-5" INTO STAGE 2

NOTES

STIRRUPS IN CAP MAY BE SHIFTED AS NECESSARY TO CLEAR DOWELS.

THE CONCRETE IN THE SHADED AREA OF THE WING SHALL BE POURED AFTER THE VERTICAL CONCRETE BARRIER RAIL IS CAST IF SLIP FORMING IS USED.

FOR PILE SPLICE DETAILS, SEE SHEET 3 OF 3.

FOR WING DETAILS, SEE SHEET 2 OF 3.

TOP OF PILE ELEVATIONS	
PILE	ELEVATION
1	2786.47
2	2786.33
3	2786.19
4	2786.06
5	2785.98
6	2785.85
7	2785.73
8	2785.61

PROJECT NO. R-3101

ALLEGHANY COUNTY

STATION: 71+53.83 -L-

SHEET 1 OF 3

STATE OF NORTH CAROLINA
DEPARTMENT OF TRANSPORTATION
RALEIGH

SUBSTRUCTURE

END BENT #1

NORTH CAROLINA PROFESSIONAL SEAL 15825 ENGINEER BRUCE D. KLAPPENBACH
7-26-2013

REVISIONS						SHEET NO.
NO.	BY:	DATE:	NO.	BY:	DATE:	S-21
1			3			TOTAL SHEETS
2			4			65

STR. #1

DRAWN BY : KEITH D. LAYNE DATE : 5-14-13
CHECKED BY : D. A. DAVENPORT DATE : 5-22-13
DESIGN ENGINEER OF RECORD: S.T. CHAMPION DATE : 6-10-13

24-JUL-2013 15:26
O:\Structures\Str1\Plans\R-3101_sd_Ebts_01.dgn
tbarbour

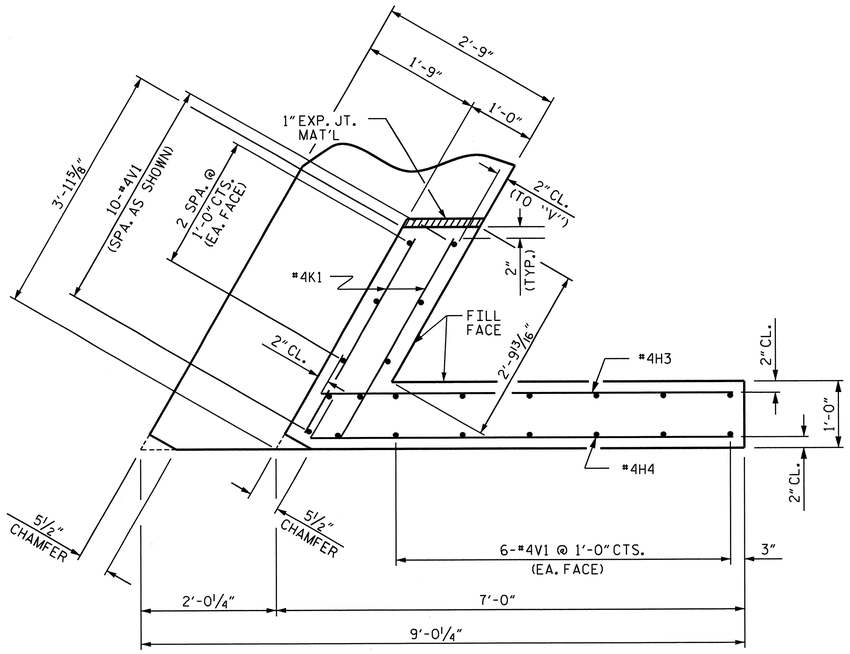

PLAN OF WING (W1)

STAGE 2

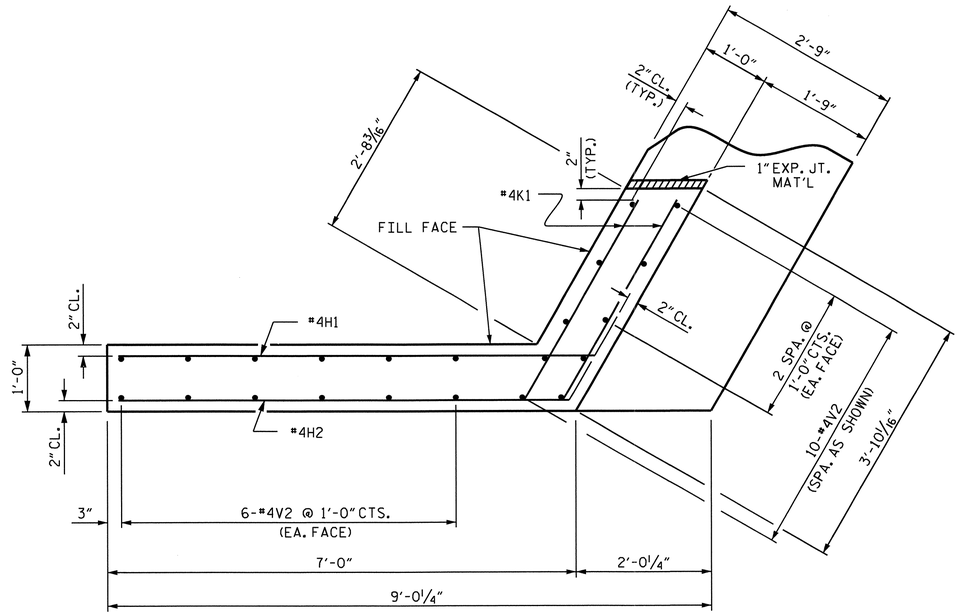

PLAN OF WING (W2)

STAGE 1

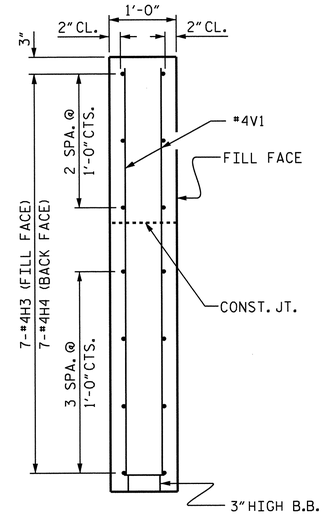

SECTION X-X

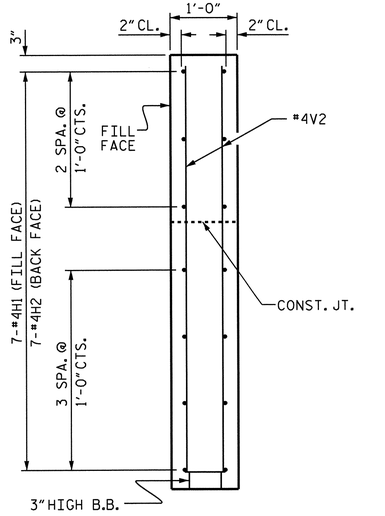

SECTION Y-Y

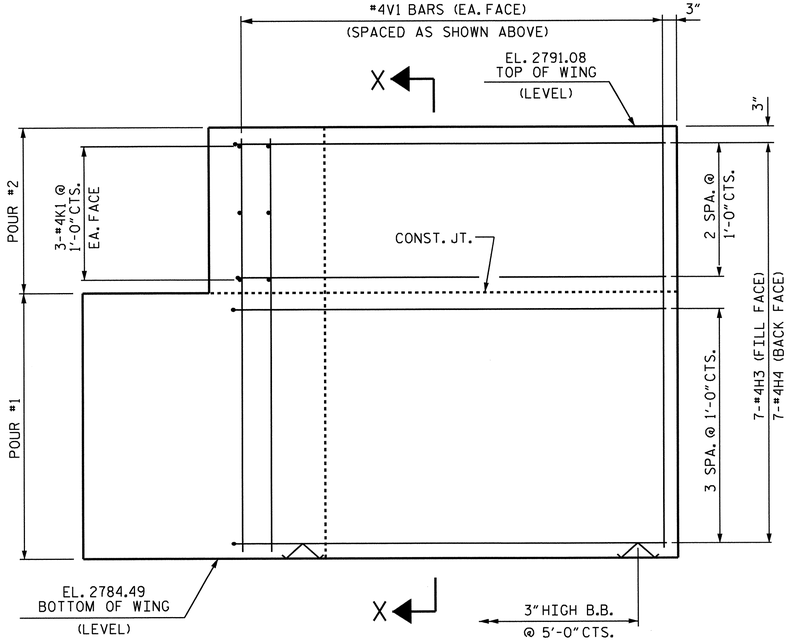

ELEVATION OF WING (W1)

STAGE 2

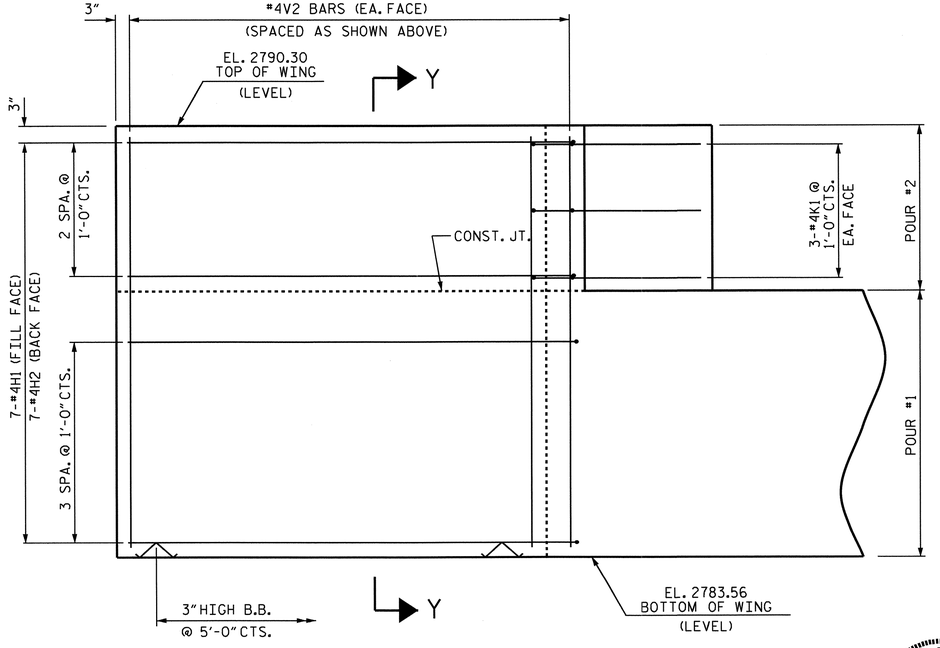

ELEVATION OF WING (W2)

STAGE 1

WING DETAILS

PROJECT NO. R-3101

ALLEGHANY COUNTY

STATION: 71+53.83 -L-

SHEET 2 OF 3

STATE OF NORTH CAROLINA
DEPARTMENT OF TRANSPORTATION
RALEIGH

SUBSTRUCTURE
END BENT #1
WING DETAILS

REVISIONS						SHEET NO.
NO.	BY:	DATE:	NO.	BY:	DATE:	S-22
1			3			TOTAL SHEETS
2			4			65

NORTH CAROLINA PROFESSIONAL SEAL 15825 ENGINEER BRIANNE D. KLAPPENBACH
7-26-2013

DRAWN BY :	KEITH D. LAYNE	DATE :	5-14-13
CHECKED BY :	D. A. DAVENPORT	DATE :	5-22-13
DESIGN ENGINEER OF RECORD:	S.T. CHAMPION	DATE :	6-10-13

11-JUN-2013 11:45
R:\Structures\Strl\Plans\R-3101_sd_Ebts_01.dgn
bklappenbach

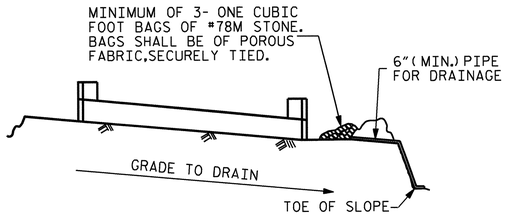

BAGGED STONE AND PIPE SHALL BE PLACED IMMEDIATELY AFTER COMPLETION OF END BENT EXCAVATION. PIPE MAY BE EITHER CONCRETE, CORRUGATED STEEL, CORRUGATED ALUMINUM ALLOY, OR CORRUGATED PLASTIC. PERFORATED PIPE WILL NOT BE ALLOWED.

BAGGED STONE SHALL REMAIN IN PLACE UNTIL THE ENGINEER DIRECTS THAT IT BE REMOVED. THE CONTRACTOR SHALL REMOVE AND DISPOSE OF SILT ACCUMULATIONS AT BAGGED STONE WHEN SO DIRECTED BY THE ENGINEER. BAGS SHALL BE REMOVED AND REPLACED WHENEVER THE ENGINEER DETERMINES THAT THEY HAVE DETERIORATED AND LOST THEIR EFFECTIVENESS.

NO SEPARATE PAYMENT WILL BE MADE FOR THIS WORK AND THE ENTIRE COST OF THIS WORK SHALL BE INCLUDED IN THE UNIT CONTRACT PRICE BID FOR THE SEVERAL PAY ITEMS.

TEMPORARY DRAINAGE AT END BENT

BAR TYPES

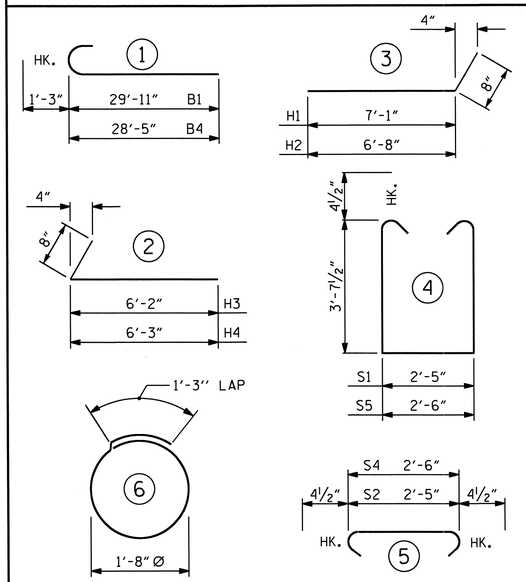

ALL BAR DIMENSIONS ARE OUT TO OUT.

BILL OF MATERIAL

END BENT #1 - STAGE 2

BAR	NO.	SIZE	TYPE	LENGTH	WEIGHT
B1	8	#9	1	31'-2"	848
B2	28	#4	STR	16'-8"	312
B3	8	#4	STR	2'-5"	13
D1	16	#6	STR	1'-6"	36
H3	7	#4	2	6'-10"	32
H4	7	#4	2	6'-11"	32
K1	6	#4	STR	3'-4"	13
S1	30	#4	4	10'-5"	209
S2	30	#4	5	3'-2"	63
S3	16	#4	6	6'-6"	69
S4	1	#4	5	3'-3"	2
S5	1	#4	4	10'-6"	7
V1	22	#4	STR	6'-2"	91

REINFORCING STEEL 1,727 LBS.

CLASS A CONCRETE BREAKDOWN

POUR #1 CAP, LOWER PART OF WINGS & COLLARS 14.2 C.Y.

POUR #2 UPPER PART OF WINGS 0.9 C.Y.

TOTAL CLASS A CONCRETE 15.1 C.Y.

HP 12x53 STEEL PILES

NO: 4 LIN. FT.= 200

STEEL PILE POINTS NO: 4

END BENT #1 - STAGE 1

BAR	NO.	SIZE	TYPE	LENGTH	WEIGHT
B4	8	#9	1	29'-8"	807
B5	14	#4	STR	30'-0"	281
B3	7	#4	STR	2'-5"	11
D1	14	#6	STR	1'-6"	32
H1	7	#4	3	7'-9"	36
H2	7	#4	3	7'-4"	34
K1	6	#4	STR	3'-4"	13
S1	26	#4	4	10'-5"	181
S2	26	#4	5	3'-2"	55
S3	16	#4	6	6'-6"	69
S4	2	#4	5	3'-3"	4
S5	2	#4	4	10'-6"	14
V2	22	#4	STR	6'-4"	93

REINFORCING STEEL 1,630 LBS.

CLASS A CONCRETE BREAKDOWN

POUR #1 CAP, LOWER PART OF WINGS & COLLARS 12.9 C.Y.

POUR #2 UPPER PART OF WINGS 1.0 C.Y.

TOTAL CLASS A CONCRETE 13.9 C.Y.

HP 12x53 STEEL PILES

NO: 4 LIN. FT.= 120

STEEL PILE POINTS NO: 4

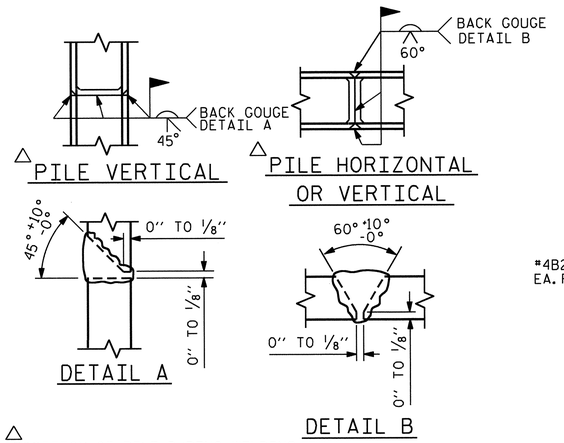

△ POSITION OF PILE DURING WELDING.

PILE SPLICE DETAILS

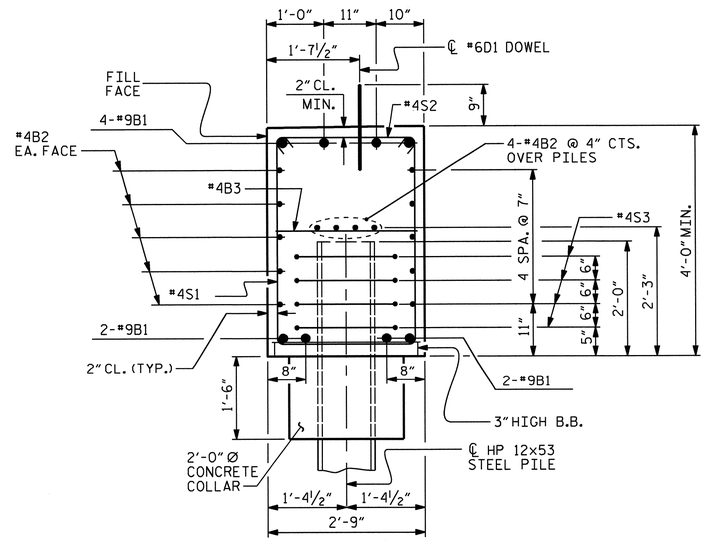

SECTION A-A

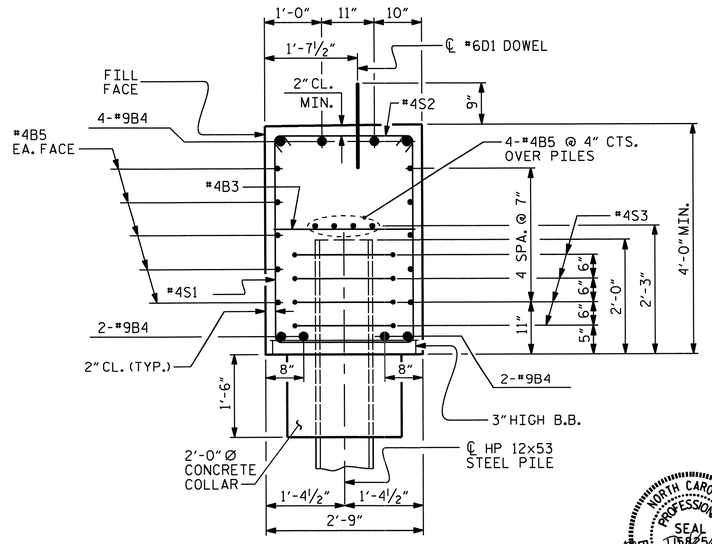

SECTION B-B

NORTH CAROLINA PROFESSIONAL SEAL 15825 ENGINEER TIMOTHY D. KLAPPENBACH
7-26-2013

PROJECT NO. R-3101

ALLEGHANY COUNTY

STATION: 71+53.83 -L-

SHEET 3 OF 3

STATE OF NORTH CAROLINA
DEPARTMENT OF TRANSPORTATION
RALEIGH

SUBSTRUCTURE

END BENT #1 DETAILS

REVISIONS						SHEET NO.
NO.	BY:	DATE:	NO.	BY:	DATE:	S-23
1			3			TOTAL SHEETS
2			4			65

STR. #1

DRAWN BY : KEITH D. LAYNE DATE : 5-14-13
CHECKED BY : D. A. DAVENPORT DATE : 5-22-13
DESIGN ENGINEER OF RECORD: S.T. CHAMPION DATE : 6-10-13

11-JUN-2013 18:41
R:\Structures\Str1\Plans\R-3101_sd_Ebts_01.dgn
tbarbour

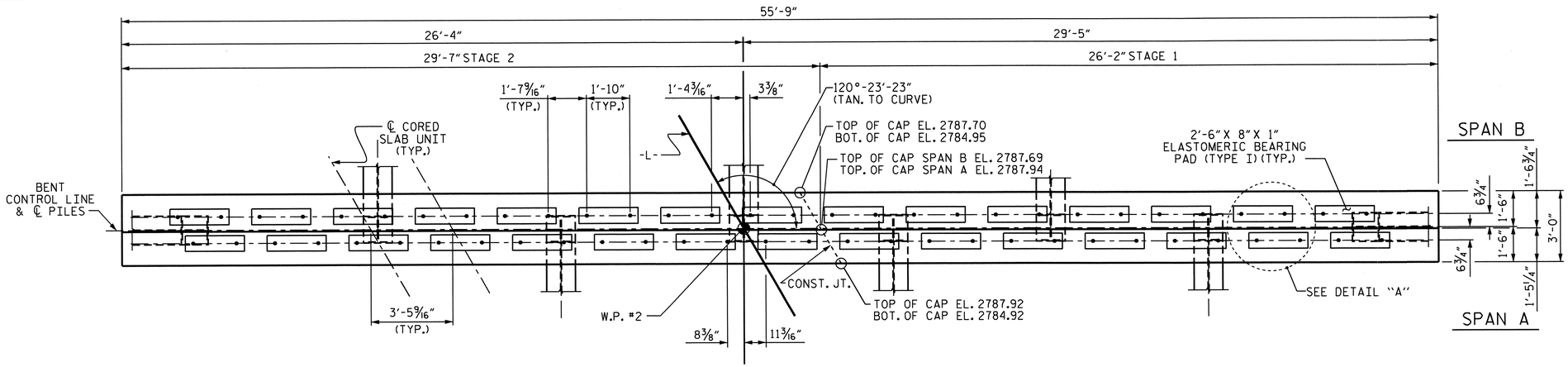

PLAN

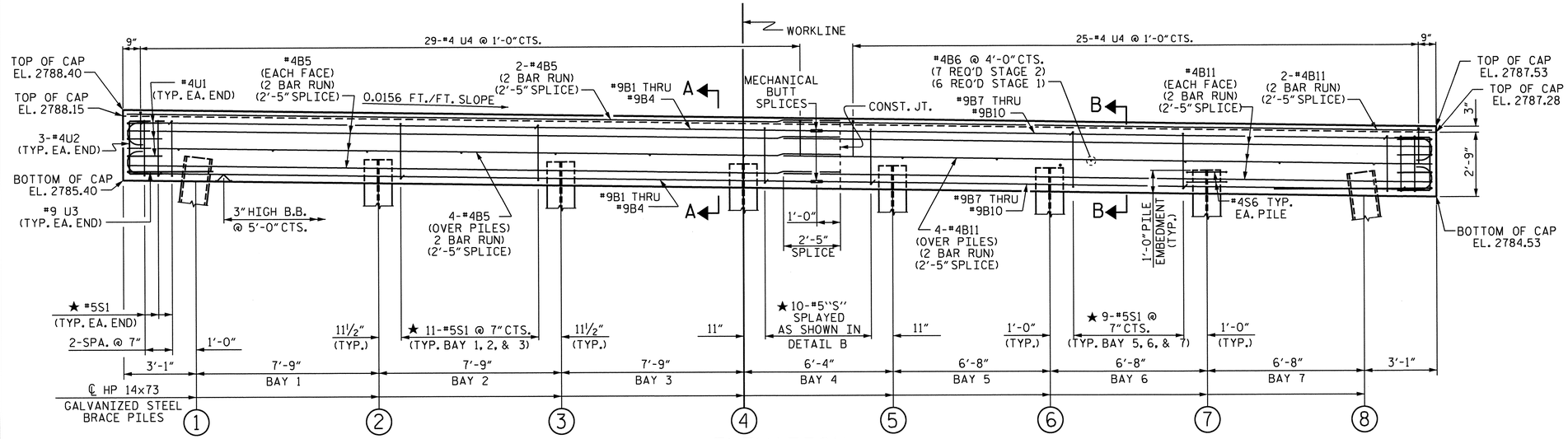

ELEVATION

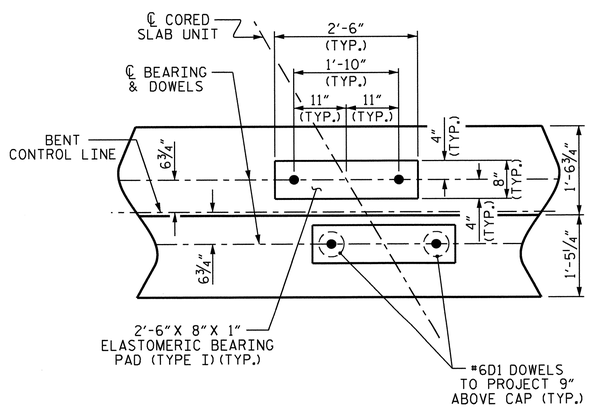

DETAIL "A"

(DIMENSIONS ARE TYPICAL EACH BEARING)

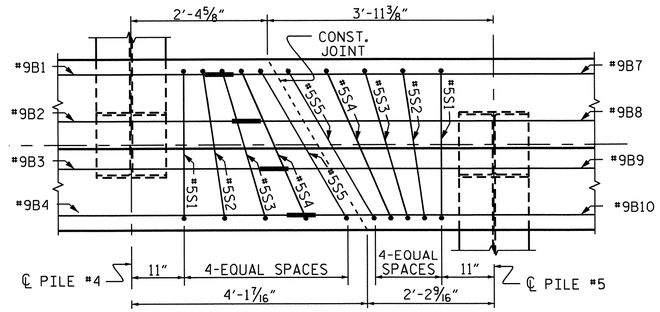

DETAIL "B"

NOTES

STIRRUPS IN CAP MAY BE SHIFTED AS NECESSARY TO CLEAR DOWELS.

★ INVERT ALTERNATE STIRRUPS.

GALVANIZE THE FULL LENGTH OF EACH INTERIOR BENT PILE IN ACCORDANCE WITH SECTION 1076 OF THE STANDARD SPECIFICATIONS.

TOP OF PILE ELEVATIONS

PILE	ELEVATION
1	2786.35
2	2786.25
3	2786.14
4	2786.04
5	2785.94
6	2785.83
7	2785.73
8	2785.62

PROJECT NO. R-3101

ALLEGHANY COUNTY

STATION: 71+53.83 -L-

SHEET 1 OF 2

STATE OF NORTH CAROLINA
DEPARTMENT OF TRANSPORTATION
RALEIGH

SUBSTRUCTURE

BENT #1

REVISIONS						SHEET NO.
NO.	BY:	DATE:	NO.	BY:	DATE:	S-24
1			3			TOTAL SHEETS
2			4			65

STR. #1

NORTH CAROLINA PROFESSIONAL SEAL 15825 ENGINEER BRUCE D. KLAPPENBERGER
7-26-2013

DRAWN BY : KEITH D. LAYNE DATE : 5-17-13
CHECKED BY : D. A. DAVENPORT DATE : 5-22-13
DESIGN ENGINEER OF RECORD: S. T. CHAMPION DATE : 6-10-13

24-JUL-2013 15:58
O:\Structures\Str1\Plans\R-3101_sd_Bts_01.dgn
tbarbour

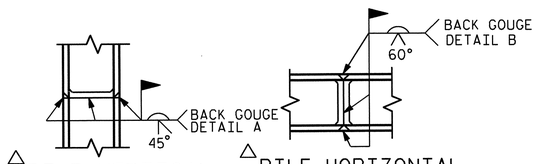

△ PILE VERTICAL

△ PILE HORIZONTAL OR VERTICAL

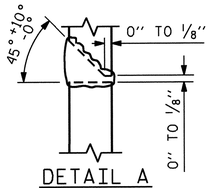

DETAIL A

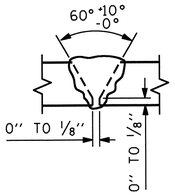

DETAIL B

△ POSITION OF PILE DURING WELDING.

PILE SPLICE DETAILS

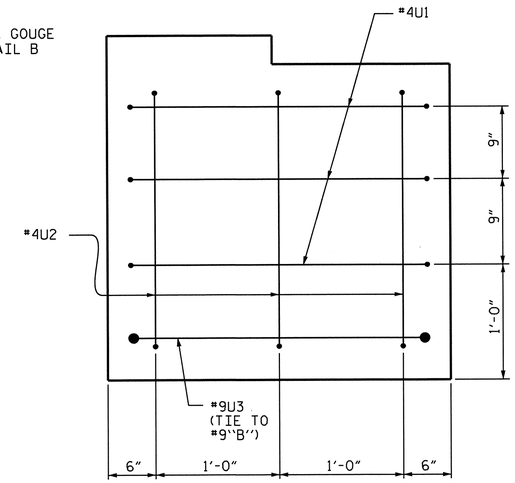

END OF CAP VIEW

(SIMILAR BOTH ENDS)

BAR TYPES

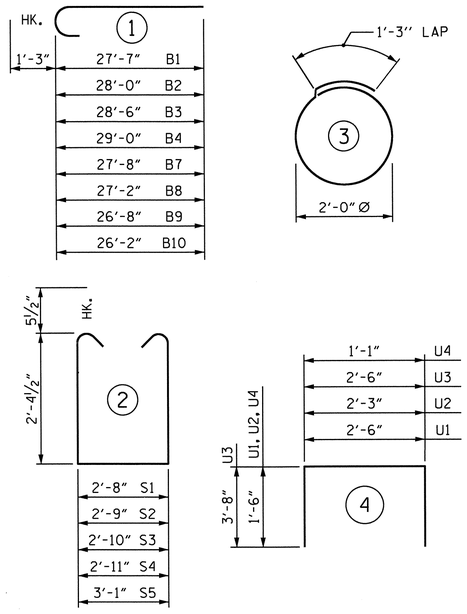

ALL BAR DIMENSIONS ARE OUT TO OUT.

BILL OF MATERIAL

BENT #1 STAGE 2

BAR	NO.	SIZE	TYPE	LENGTH	WEIGHT
B1	2	#9	1	28'-10"	196
B2	2	#9	1	29'-3"	199
B3	2	#9	1	29'-9"	202
B4	2	#9	1	30'-3"	206
B5	24	#4	STR	16'-4"	262
B6	7	#4	STR	2'-8"	12
D1	32	#6	STR	1'-6"	72
S1	37	#5	2	8'-4"	322
S2	1	#5	2	8'-5"	9
S3	1	#5	2	8'-6"	9
S4	1	#5	2	8'-7"	9
S5	1	#5	2	8'-9"	9
S6	8	#4	3	7'-7"	41
U1	3	#4	4	5'-6"	11
U2	3	#4	4	5'-3"	11
U3	1	#9	4	9'-10"	33
U4	29	#4	4	4'-1"	79

REINFORCING STEEL 1,682

TOTAL CLASS A CONCRETE 9.6 C.Y.

HP 14x73 GALVANIZED STEEL PILES

No. 4 LIN. FT. 200

STEEL PILE POINTS No. 4

BENT #1 STAGE 1

BAR	NO.	SIZE	TYPE	LENGTH	WEIGHT
B7	2	#9	1	28'-11"	197
B8	2	#9	1	28'-5"	193
B9	2	#9	1	27'-11"	190
B10	2	#9	1	27'-5"	186
B11	24	#4	STR	15'-10"	254
B6	6	#4	STR	2'-8"	11
D1	28	#6	STR	1'-6"	63
S1	31	#5	2	8'-4"	269
S2	1	#5	2	8'-5"	9
S3	1	#5	2	8'-6"	9
S4	1	#5	2	8'-7"	9
S5	1	#5	2	8'-9"	9
S6	8	#4	3	7'-7"	41
U1	3	#4	4	5'-6"	11
U2	3	#4	4	5'-3"	11
U3	1	#9	4	9'-10"	33
U4	25	#4	4	4'-1"	68

REINFORCING STEEL 1,563

TOTAL CLASS A CONCRETE 8.3 C.Y.

HP 14x73 GALVANIZED STEEL PILES

No. 4 LIN. FT. 120

STEEL PILE POINTS No. 4

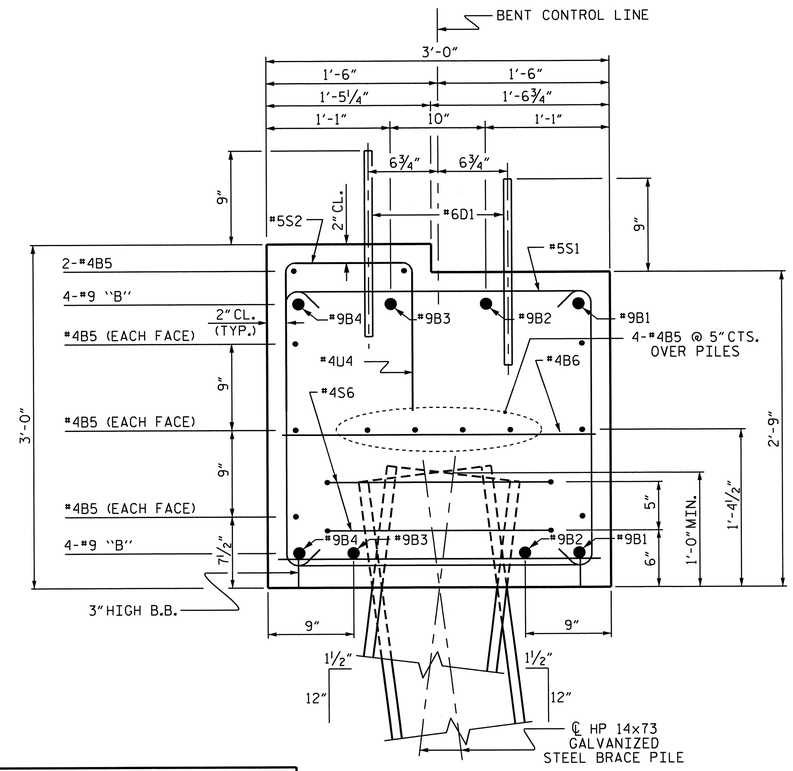

SECTION A-A

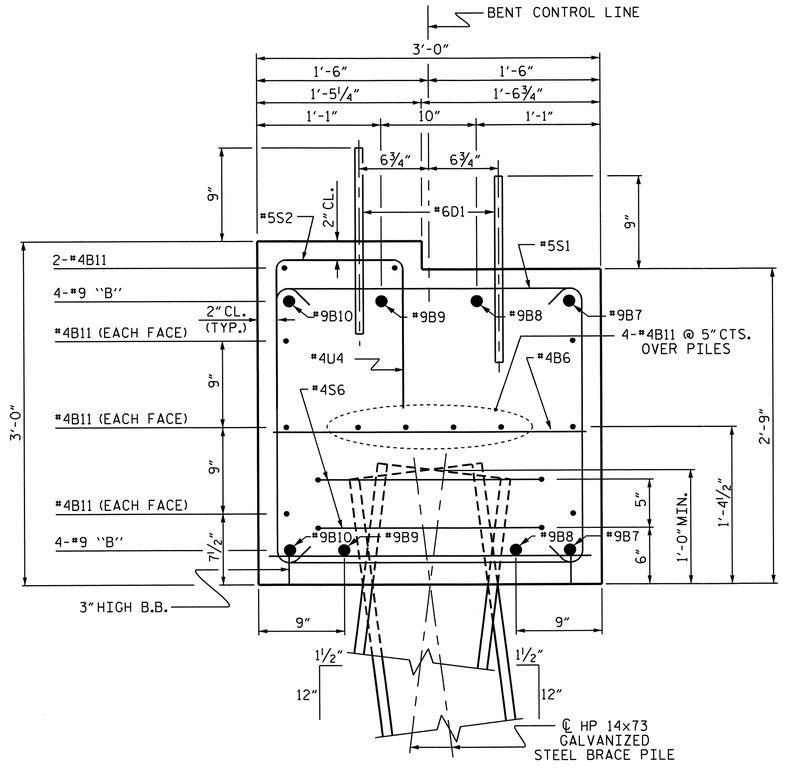

SECTION B-B

PROJECT NO. R-3101

ALLEGHANY COUNTY

STATION: 71+53.83 -L-

SHEET 2 OF 2

STATE OF NORTH CAROLINA
DEPARTMENT OF TRANSPORTATION
RALEIGH

SUBSTRUCTURE

BENT #1

REVISIONS						SHEET NO.
NO.	BY:	DATE:	NO.	BY:	DATE:	S-25
1			3			TOTAL SHEETS
2			4			65

NORTH CAROLINA PROFESSIONAL SEAL 15825 ENGINEER BRUCE D. KLAPPENBACH
7-26-2013

DRAWN BY : KEITH D. LAYNE DATE : 5-17-13
CHECKED BY : D. A. DAVENPORT DATE : 5-22-13
DESIGN ENGINEER OF RECORD: S. T. CHAMPION DATE : 6-10-13

24-JUL-2013 15:58
D:\Structures\Str1\Plans\R-3101_sd_Bts_01.dgn
tbarbour

STR. #1

NOTES

STIRRUPS IN CAP MAY BE SHIFTED AS NECESSARY TO CLEAR DOWELS.

THE CONCRETE IN THE SHADED AREA OF THE WING SHALL BE POURED AFTER THE VERTICAL CONCRETE BARRIER RAIL IS CAST IF SLIP FORMING IS USED.

FOR PILE SPLICE DETAILS, SEE SHEET 3 OF 3.

FOR WING DETAILS, SEE SHEET 2 OF 3.

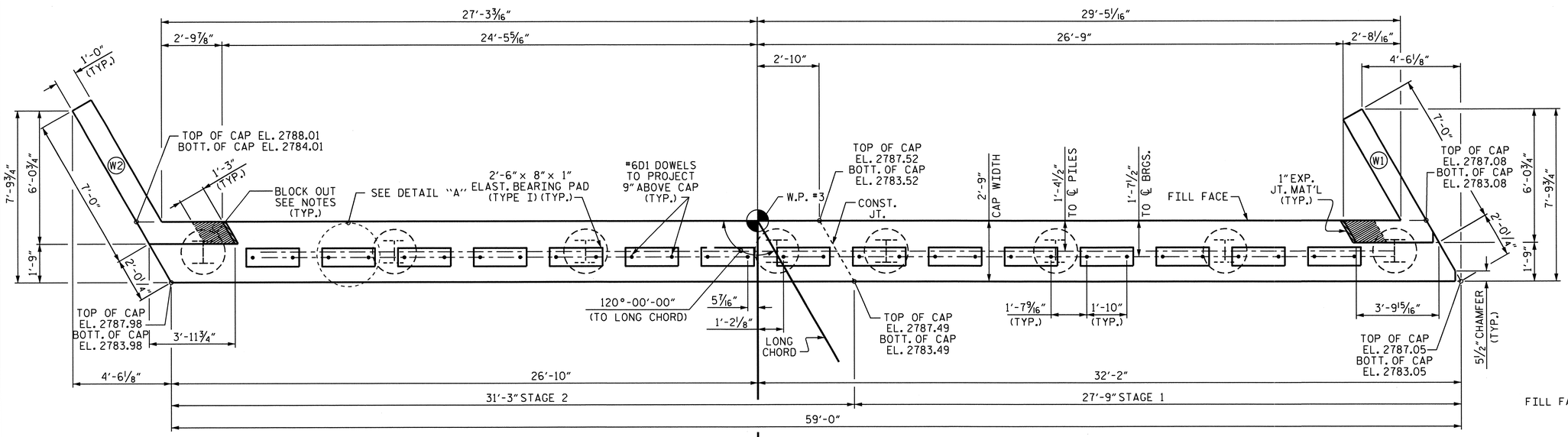

PLAN

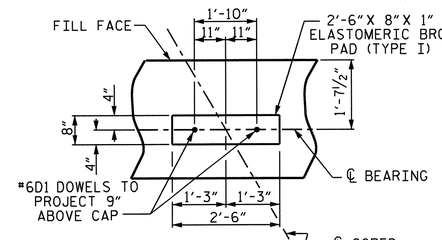

DETAIL "A"
(DIMENSIONS ARE TYPICAL EACH BEARING)

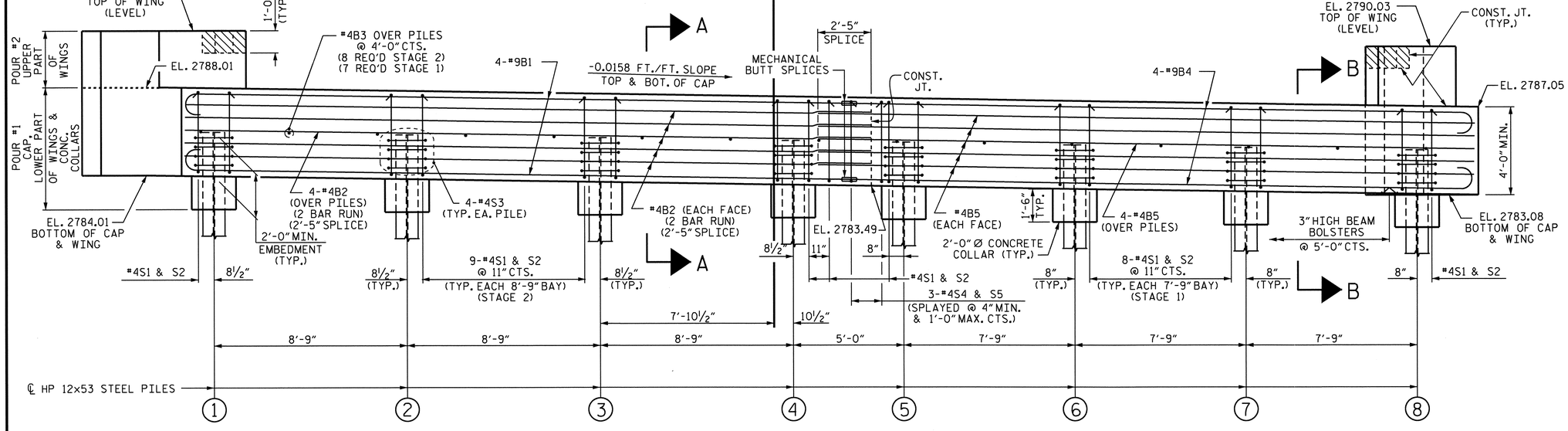

ELEVATION

EXTEND #9B4 1'-0" AND #4B5 2'-5" INTO STAGE 2

TOP OF PILE ELEVATIONS	
PILE	ELEVATION
1	2785.96
2	2785.82
3	2785.68
4	2785.54
5	2785.47
6	2785.34
7	2785.22
8	2785.10

PROJECT NO. R-3101

ALLEGHANY COUNTY

STATION: 71+53.83 -L-

SHEET 1 OF 3

STATE OF NORTH CAROLINA
DEPARTMENT OF TRANSPORTATION
RALEIGH

SUBSTRUCTURE

END BENT #2

NORTH CAROLINA PROFESSIONAL SEAL 19825 ENGINEER BRUCE D. KLAPPENBACH 7-22-2013

REVISIONS						SHEET NO.
NO.	BY:	DATE:	NO.	BY:	DATE:	S-26
1			3			TOTAL SHEETS
2			4			65

DRAWN BY : KEITH D. LAYNE DATE : 5-14-13
CHECKED BY : D. A. DAVENPORT DATE : 5-22-13
DESIGN ENGINEER OF RECORD: S.T. CHAMPION DATE : 6-10-13

24-JUL-2013 15:28
O:\Structures\Str1\Plans\R-3101_sd_Ebts_01.dgn
tbarbour

STR. #1

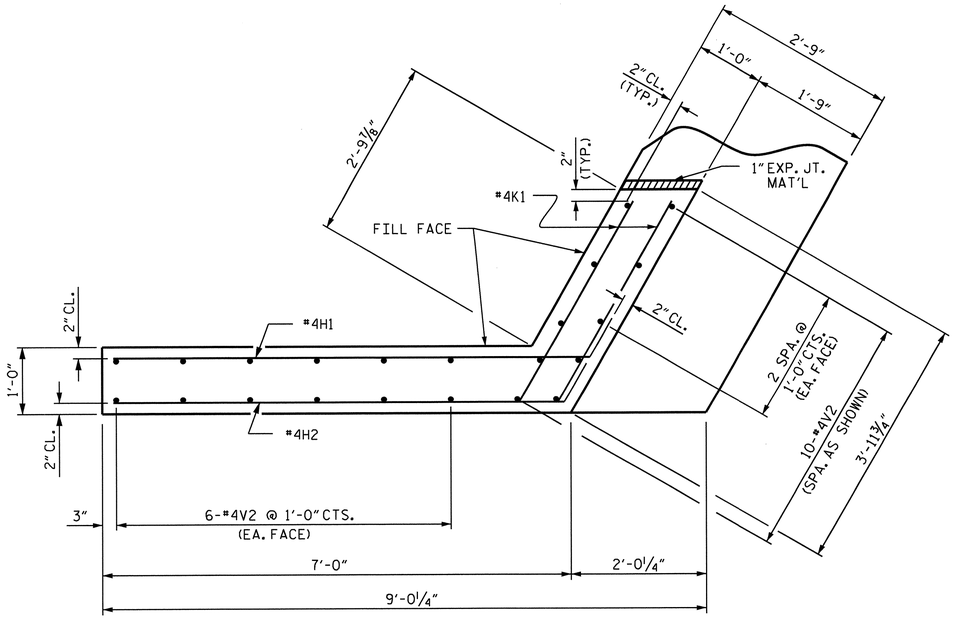

PLAN OF WING (W2)

STAGE 2

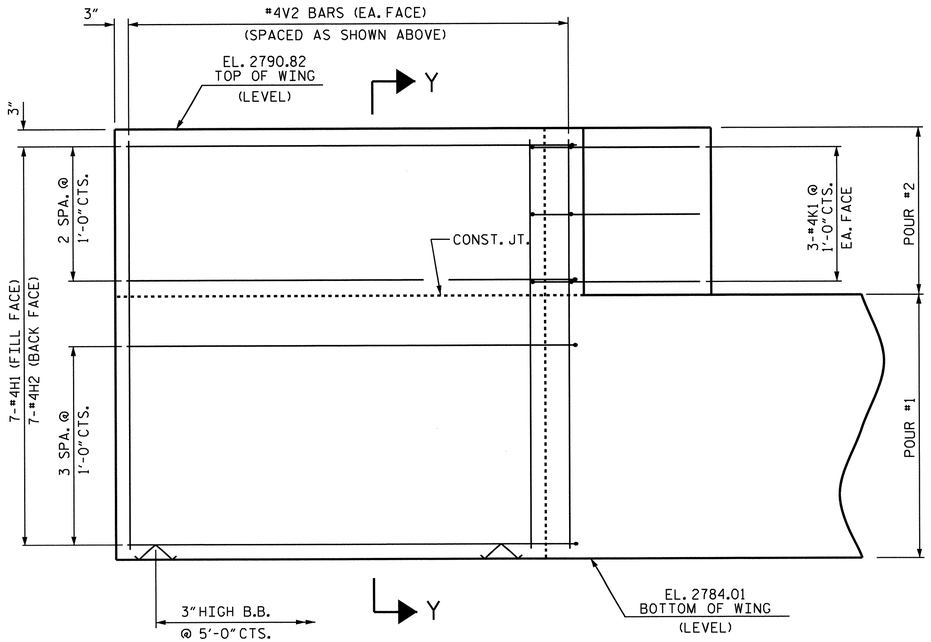

ELEVATION OF WING (W2)

STAGE 2

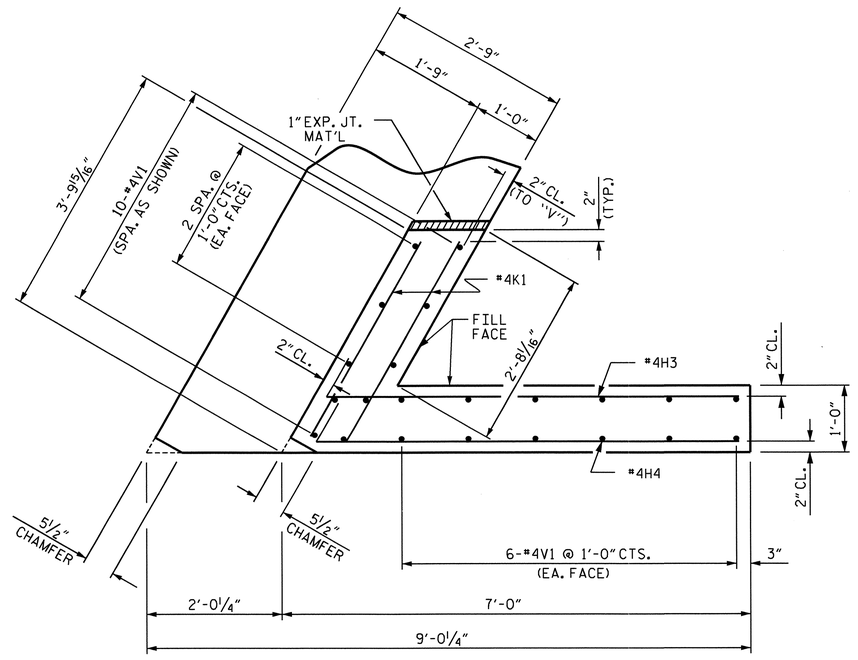

PLAN OF WING (W1)

STAGE 1

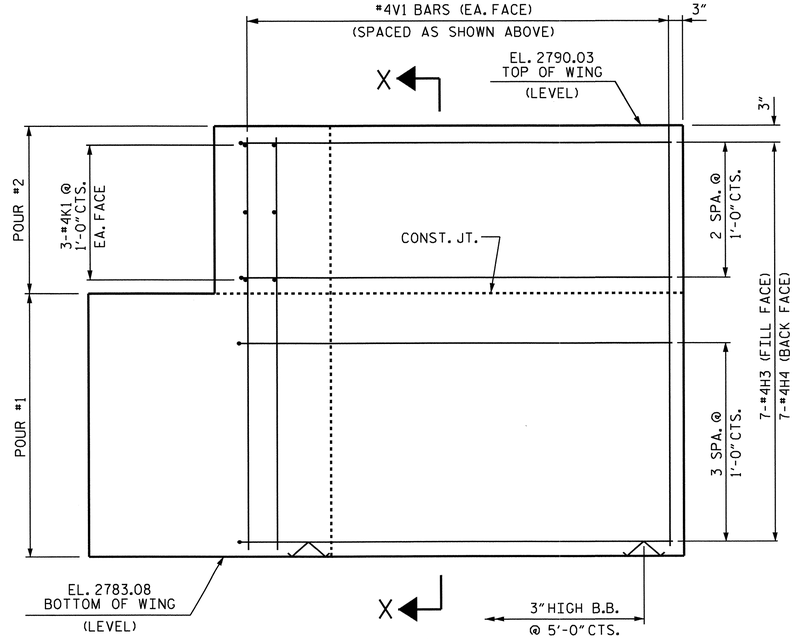

ELEVATION OF WING (W1)

STAGE 1

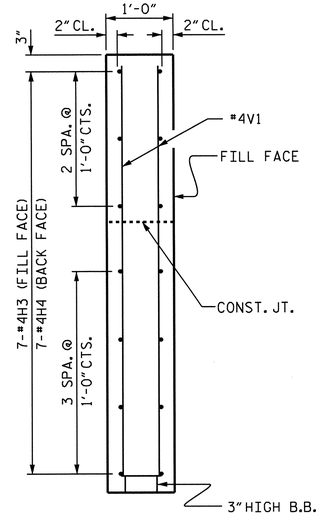

SECTION X-X

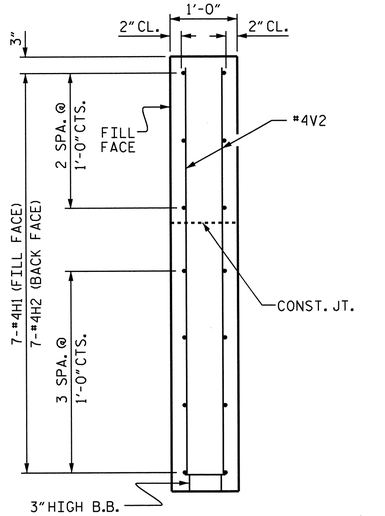

SECTION Y-Y

PROJECT NO. R-3101

ALLEGHANY COUNTY

STATION: 71+53.83 -L-

SHEET 2 OF 3

STATE OF NORTH CAROLINA
DEPARTMENT OF TRANSPORTATION
RALEIGH

SUBSTRUCTURE
END BENT #2
WING DETAILS

REVISIONS						SHEET NO.
NO.	BY:	DATE:	NO.	BY:	DATE:	S-27
1			3			TOTAL SHEETS
2			4			65

DRAWN BY : KEITH D. LAYNE DATE : 5-14-13
CHECKED BY : D. A. DAVENPORT DATE : 5-22-13
DESIGN ENGINEER OF RECORD: S.T. CHAMPION DATE : 6-10-13

NORTH CAROLINA PROFESSIONAL SEAL 16825 ENGINEER BRIAN D. KLAPPENBACH
7-26-2013

11-JUN-2013 11:45
R:\Structures\Strl\Plans\R-3101_sd_Edts_01.dgn
bklappenbach

WING DETAILS

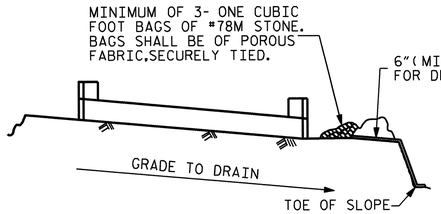

BAGGED STONE AND PIPE SHALL BE PLACED IMMEDIATELY AFTER COMPLETION OF END BENT EXCAVATION. PIPE MAY BE EITHER CONCRETE, CORRUGATED STEEL, CORRUGATED ALUMINUM ALLOY, OR CORRUGATED PLASTIC. PERFORATED PIPE WILL NOT BE ALLOWED.

BAGGED STONE SHALL REMAIN IN PLACE UNTIL THE ENGINEER DIRECTS THAT IT BE REMOVED. THE CONTRACTOR SHALL REMOVE AND DISPOSE OF SILT ACCUMULATIONS AT BAGGED STONE WHEN SO DIRECTED BY THE ENGINEER. BAGS SHALL BE REMOVED AND REPLACED WHENEVER THE ENGINEER DETERMINES THAT THEY HAVE DETERIORATED AND LOST THEIR EFFECTIVENESS.

NO SEPARATE PAYMENT WILL BE MADE FOR THIS WORK AND THE ENTIRE COST OF THIS WORK SHALL BE INCLUDED IN THE UNIT CONTRACT PRICE BID FOR THE SEVERAL PAY ITEMS.

TEMPORARY DRAINAGE AT END BENT

BAR TYPES

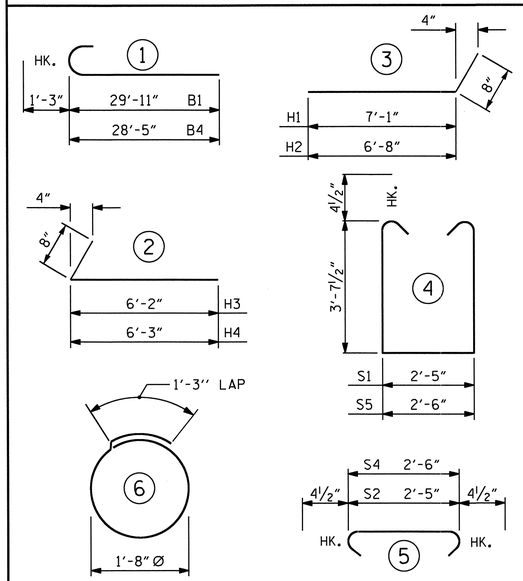

ALL BAR DIMENSIONS ARE OUT TO OUT.

BILL OF MATERIAL

END BENT #2 - STAGE 2

BAR	NO.	SIZE	TYPE	LENGTH	WEIGHT
B1	8	#9	1	31'-2"	848
B2	28	#4	STR	16'-8"	312
B3	8	#4	STR	2'-5"	13
D1	16	#6	STR	1'-6"	36
H1	7	#4	3	7'-9"	36
H2	7	#4	3	7'-4"	34
K1	6	#4	STR	3'-4"	13
S1	30	#4	4	10'-5"	209
S2	30	#4	5	3'-2"	63
S3	16	#4	6	6'-6"	69
S4	1	#4	5	3'-3"	2
S5	1	#4	4	10'-6"	7
V2	22	#4	STR	6'-5"	94

REINFORCING STEEL 1,736 LBS.

CLASS A CONCRETE BREAKDOWN
POUR #1 CAP, LOWER PART OF WINGS & COLLARS 14.2 C.Y.
POUR #2 UPPER PART OF WINGS 0.9 C.Y.
TOTAL CLASS A CONCRETE 15.1 C.Y.

HP 12x53 STEEL PILES
NO: 4 LIN. FT.= 160
STEEL PILE POINTS NO: 4

END BENT #2 - STAGE 1

BAR	NO.	SIZE	TYPE	LENGTH	WEIGHT
B4	8	#9	1	29'-8"	807
B5	14	#4	STR	30'-0"	281
B3	7	#4	STR	2'-5"	11
D1	14	#6	STR	1'-6"	32
H3	7	#4	2	6'-10"	32
H4	7	#4	2	6'-11"	32
K1	6	#4	STR	3'-4"	13
S1	26	#4	4	10'-5"	181
S2	26	#4	5	3'-2"	55
S3	16	#4	6	6'-6"	69
S4	2	#4	5	3'-3"	4
S5	2	#4	4	10'-6"	14
V1	22	#4	STR	6'-7"	97

REINFORCING STEEL 1,628 LBS.

CLASS A CONCRETE BREAKDOWN
POUR #1 CAP, LOWER PART OF WINGS & COLLARS 12.9 C.Y.
POUR #2 UPPER PART OF WINGS 1.0 C.Y.
TOTAL CLASS A CONCRETE 13.9 C.Y.

HP 12x53 STEEL PILES
NO: 4 LIN. FT.= 140
STEEL PILE POINTS NO: 4

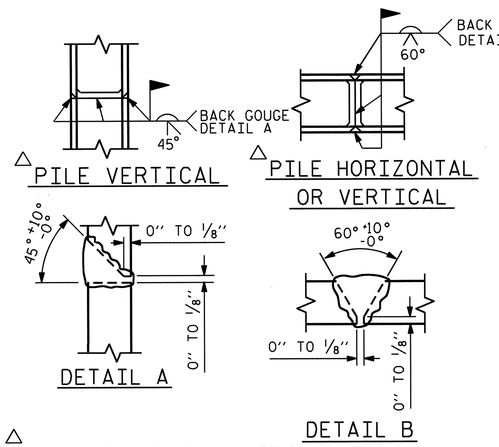

△ POSITION OF PILE DURING WELDING.

PILE SPLICE DETAILS

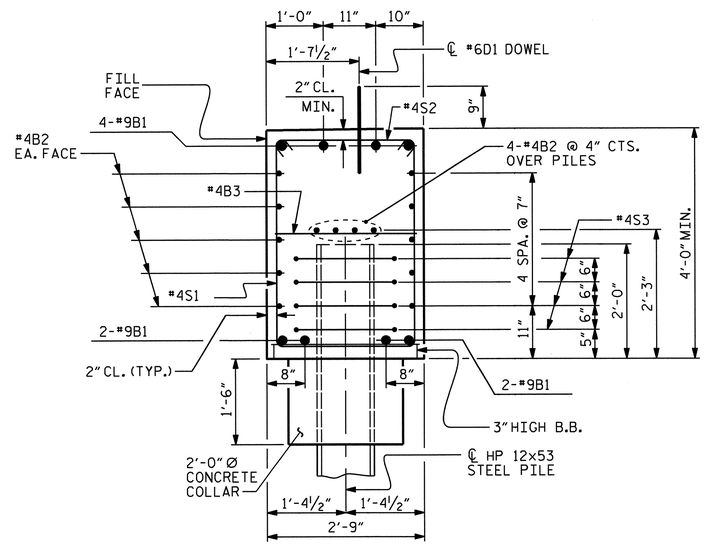

SECTION A-A

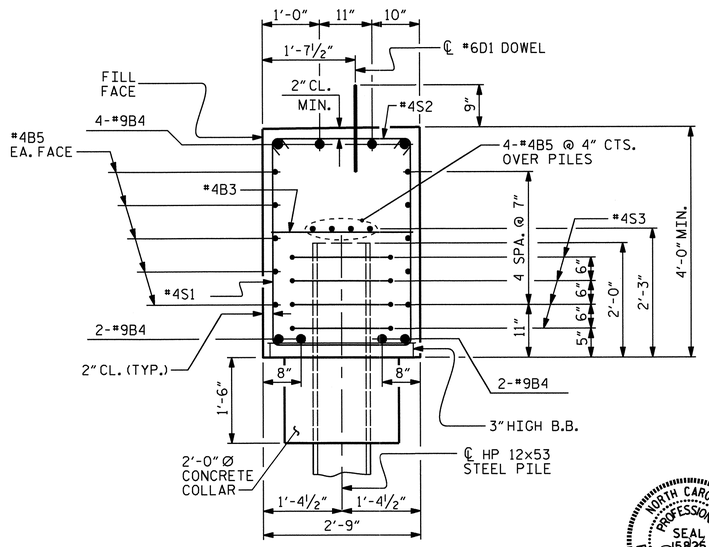

SECTION B-B

PROJECT NO. R-3101
ALLEGHANY COUNTY
STATION: 71+53.83 -L-

SHEET 3 OF 3

STATE OF NORTH CAROLINA
DEPARTMENT OF TRANSPORTATION
RALEIGH

SUBSTRUCTURE

END BENT #2 DETAILS

REVISIONS						SHEET NO.
NO.	BY:	DATE:	NO.	BY:	DATE:	S-28
1			3			TOTAL SHEETS
2			4			65

STR. #1

DRAWN BY : KEITH D. LAYNE DATE : 5-14-13
CHECKED BY : D. A. DAVENPORT DATE : 5-22-13
DESIGN ENGINEER OF RECORD: S.T. CHAMPION DATE : 6-10-13

11-JUN-2013 18:42
R:\Structures\Str1\Plans\R-3101_sd_Ebts_01.dgn
tbarbour

NOTES :

FOR BERM WIDTH DIMENSIONS, SEE GENERAL DRAWING.

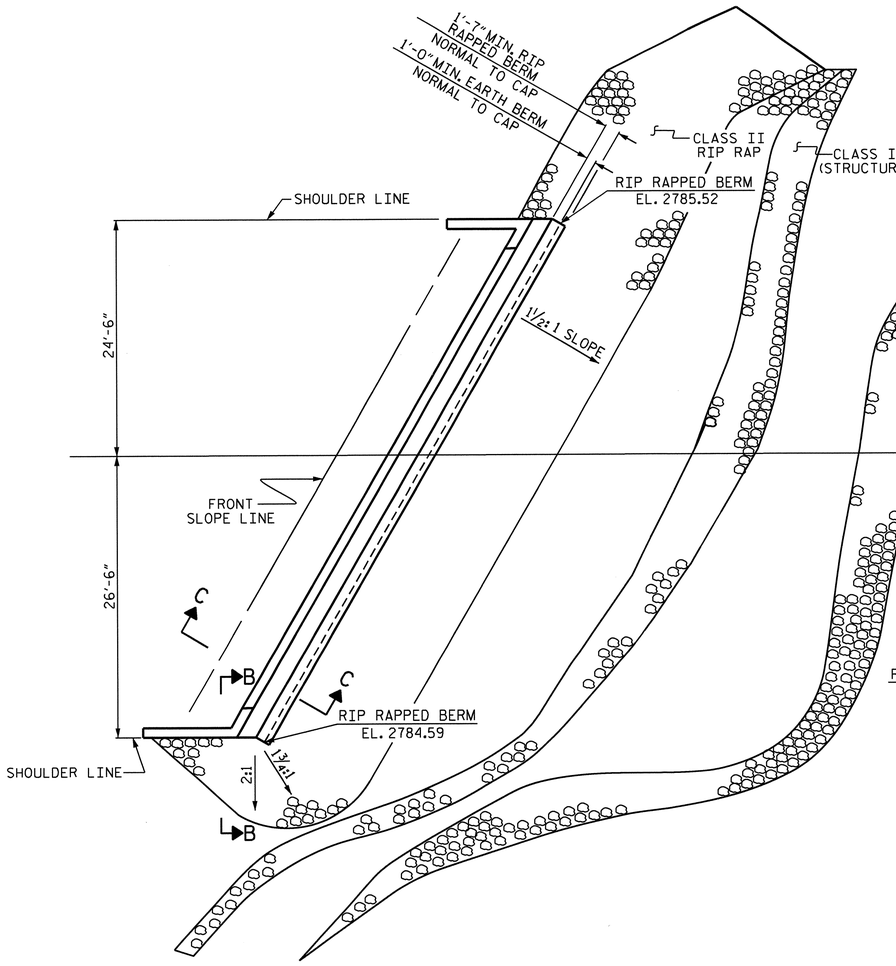

END BENT No. 1

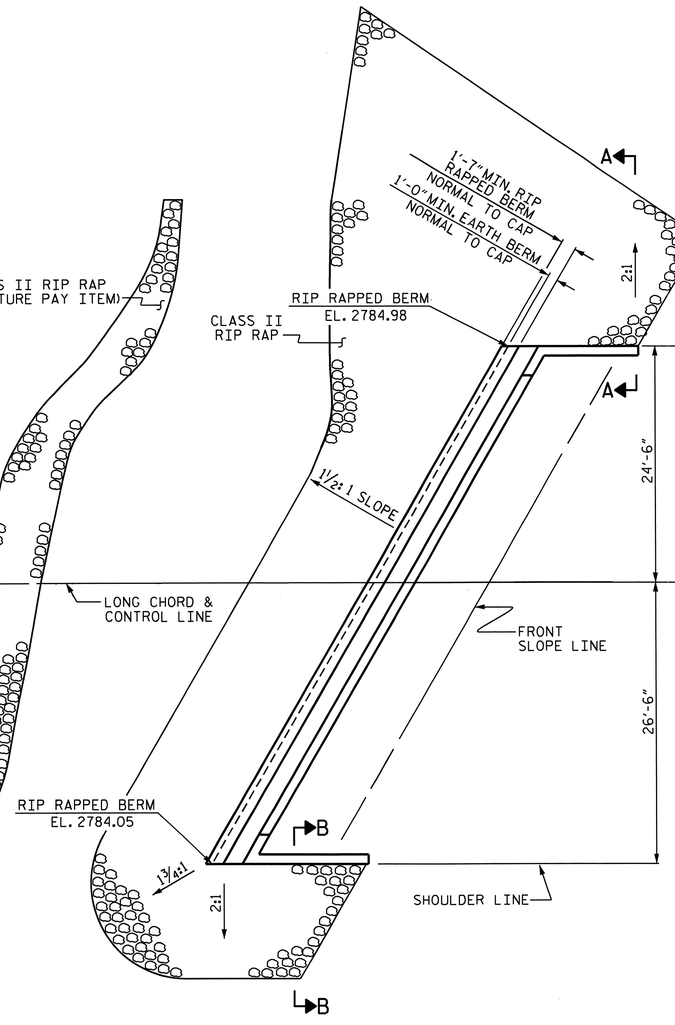

END BENT No. 2

PLAN OF RIP RAP

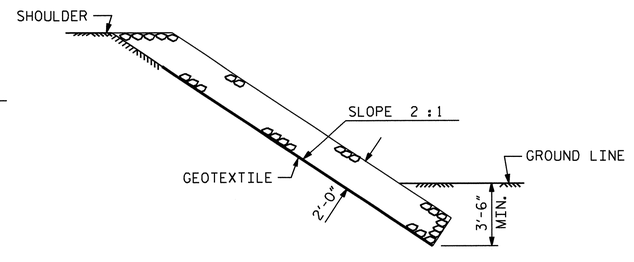

SECTION B-B

ESTIMATED QUANTITIES		
BRIDGE @ STA. 71+53.83 -L-	RIP RAP CLASS II (2'-0" THICK)	GEOTEXTILE FOR DRAINAGE
	TONS	SQUARE YARDS
END BENT 1	160	180
END BENT 2	230	260
TOTAL	390	440

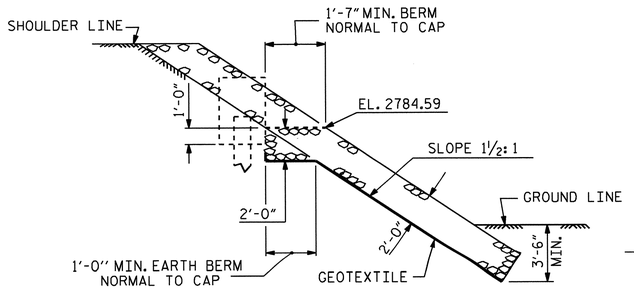

SECTION C-C

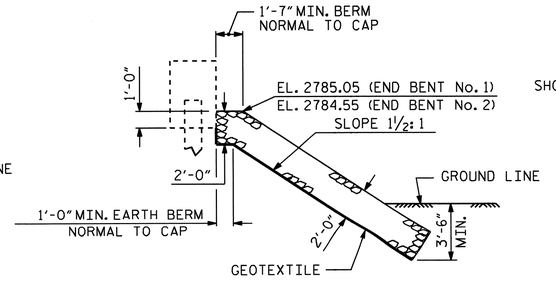

℄ SECTION BERM RIP RAPPED

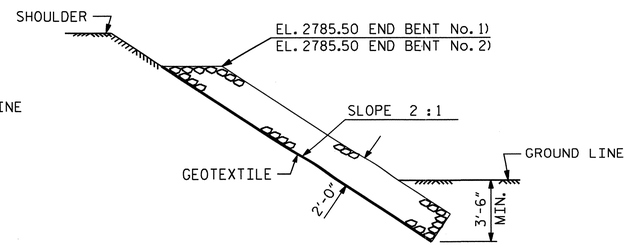

SECTION A-A

PROJECT NO. R-3101

ALLEGHANY COUNTY

STATION: 71+53.83 -L-

STATE OF NORTH CAROLINA
DEPARTMENT OF TRANSPORTATION
RALEIGH

STANDARD

RIP RAP DETAILS

REVISIONS						SHEET NO.
NO.	BY:	DATE:	NO.	BY:	DATE:	S-29
1			3			TOTAL SHEETS
2			4			65

ASSEMBLED BY : S. B. WILLIAMS	DATE : 5-13	
CHECKED BY : B. A. DUKE	DATE : 6-13	
DRAWN BY : REK 1/84	REV. 5/1/06R	TLA/GM
CHECKED BY : RDU 1/84	REV. 10/1/11	MAA/GM
	REV. 12/21/11	MAA/GM

14-JUN-2013 16:24
R:\Structures\Stru\Plans\RIP RAP\R3101_SD_RR.dgn
bklappenbach

STR. #1

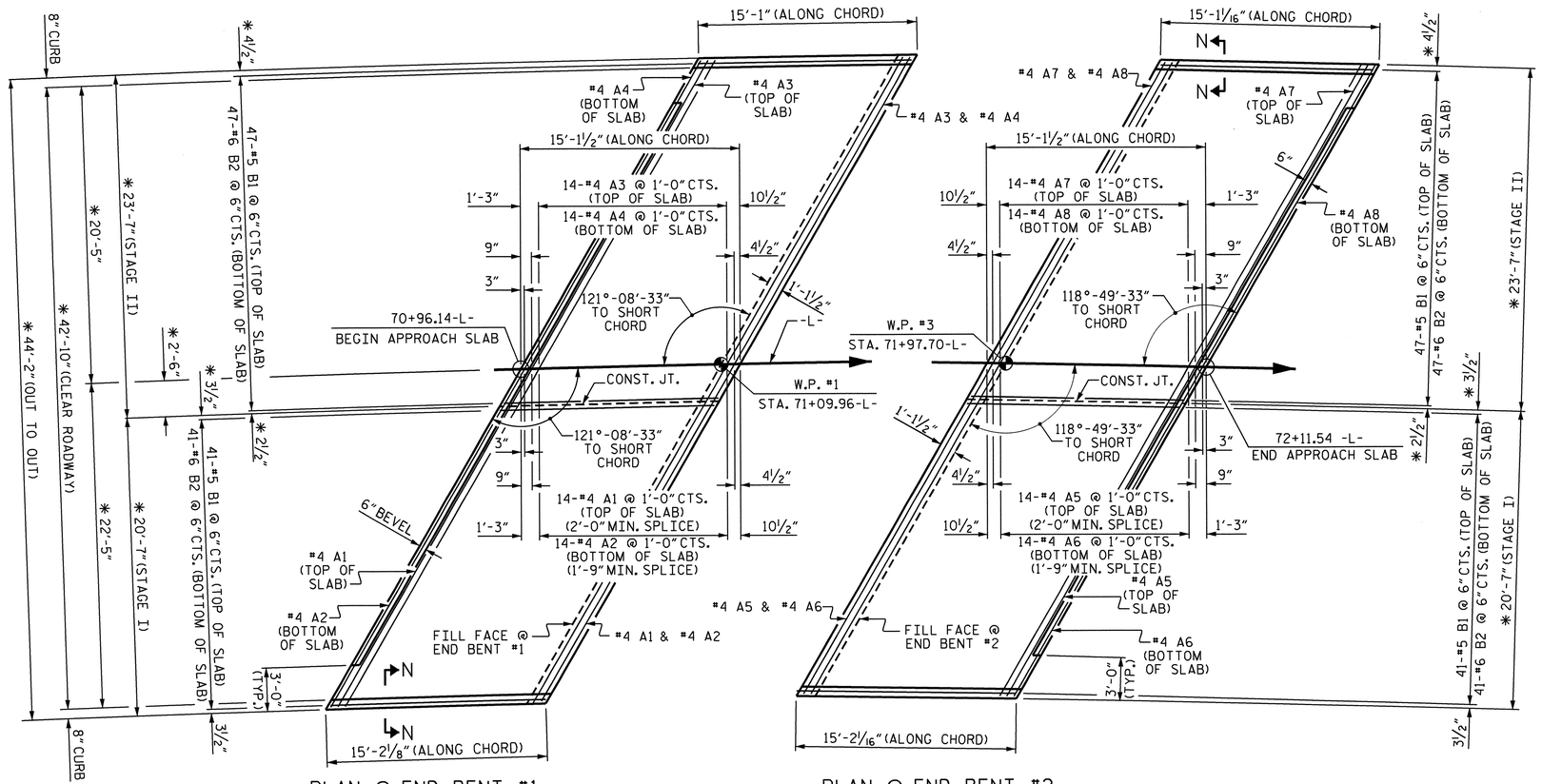

DIMENSIONS SHOWN ARE TYPICAL FOR BOTH APPROACH SLABS UNLESS OTHERWISE NOTED.

*DIMENSIONS ARE TO CIRCLES CONCENTRIC WITH ℄ -L-.

ARC OFFSETS ARE NEGLIGIBLE, THEREFORE NOT SHOWN.

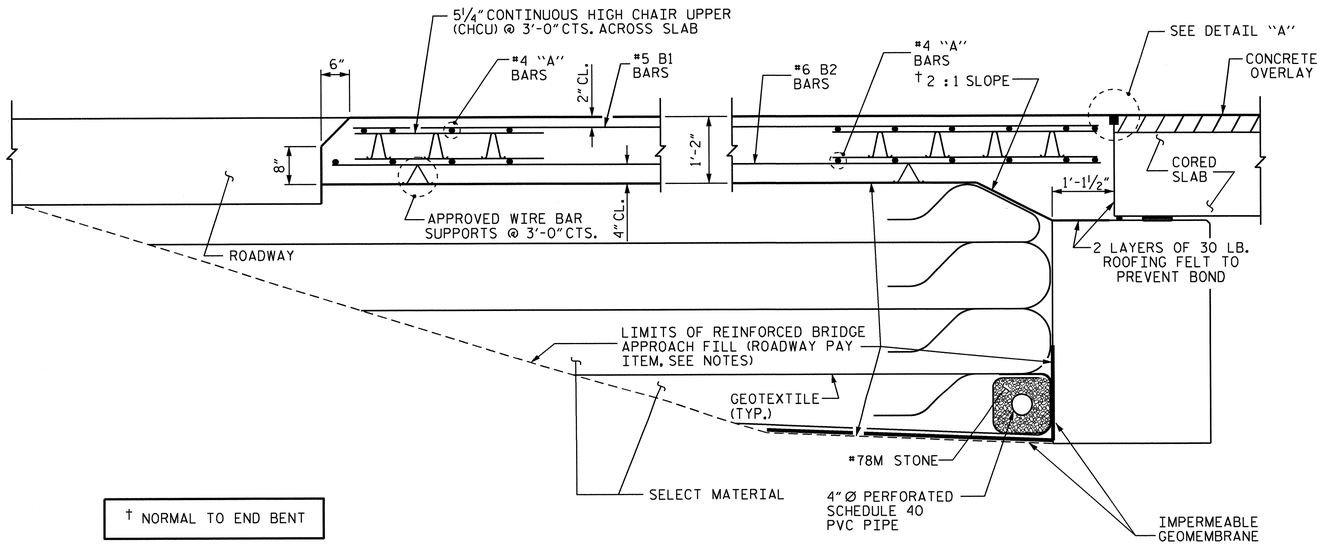

† NORMAL TO END BENT

SECTION THRU SLAB

SPLICE LENGTHS		
BAR SIZE	EPOXY COATED	UNCOATED
#4	2'-0"	1'-9"
#5	2'-6"	2'-2"
#6	3'-10"	2'-7"

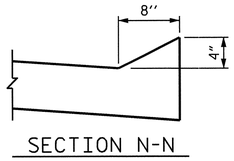

SECTION N-N

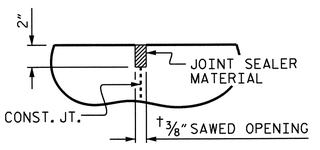

DETAIL "A"

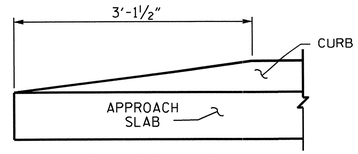

END OF CURB WITHOUT SHOULDER BERM GUTTER

CURB DETAILS

BILL OF MATERIAL

APPROACH SLAB AT END BENT No. 1 (STAGE I)

BAR	NO.	SIZE	TYPE	LENGTH	WEIGHT
* A1	16	#4	STR	26'-5"	282
A2	16	#4	STR	26'-2"	280
* B1	41	#5	STR	14'-2"	606
B2	41	#6	STR	14'-6"	893
REINFORCING STEEL				LBS.	1173
* EPOXY COATED REINFORCING STEEL				LBS.	888
CLASS AA CONCRETE				C.Y.	15.5

APPROACH SLAB AT END BENT No. 2 (STAGE I)

BAR	NO.	SIZE	TYPE	LENGTH	WEIGHT
* A5	16	#4	STR	25'-10"	276
A6	16	#4	STR	25'-6"	273
* B1	41	#5	STR	14'-2"	606
B2	41	#6	STR	14'-6"	893
REINFORCING STEEL				LBS.	1166
* EPOXY COATED REINFORCING STEEL				LBS.	882
CLASS AA CONCRETE				C.Y.	15.5

APPROACH SLAB AT END BENT No. 1 (STAGE II)

BAR	NO.	SIZE	TYPE	LENGTH	WEIGHT
* A3	16	#4	STR	27'-1"	289
A4	16	#4	STR	27'-1"	289
* B1	47	#5	STR	14'-2"	694
B2	47	#6	STR	14'-6"	1024
REINFORCING STEEL				LBS.	1313
* EPOXY COATED REINFORCING STEEL				LBS.	983
CLASS AA CONCRETE				C.Y.	17.7

APPROACH SLAB AT END BENT No. 2 (STAGE II)

BAR	NO.	SIZE	TYPE	LENGTH	WEIGHT
* A7	16	#4	STR	26'-5"	282
A8	16	#4	STR	26'-5"	282
* B1	47	#5	STR	14'-2"	694
B2	47	#6	STR	14'-6"	1024
REINFORCING STEEL				LBS.	1306
* EPOXY COATED REINFORCING STEEL				LBS.	976
CLASS AA CONCRETE				C.Y.	17.7

NOTES

APPROACH SLAB SHALL BE POURED AFTER CONCRETE WEARING SURFACE IS POURED.

FOR REINFORCED BRIDGE APPROACH FILL INCLUDING GEOTEXTILE, IMPERMEABLE GEOMEMBRANE, 4" Ø DRAINAGE PIPE, #78M STONE, AND SELECT MATERIAL, SEE ROADWAY PLANS.

AREA BETWEEN THE WINGWALL AND APPROACH SLAB SHALL BE GRADED TO DRAIN THE WATER AWAY FROM THE FILL FACE OF THE BRIDGE AND SHALL BE PAVED. SEE ROADWAY PLANS.

THE JOINT OPENING AT THE APPROACH SLAB/DECK INTERFACE SHALL BE SAWED NO MORE THAN 12 HOURS AFTER THE APPROACH SLAB IS CAST. THE JOINT SHALL BE CLEANED OF ALL DEBRIS BEFORE THE SEALANT IS APPLIED. THE JOINT SEALER MATERIAL SHALL CONFORM TO THE REQUIREMENTS OF SECTION 1028-3 OF THE STANDARD SPECIFICATIONS.

PROJECT NO. R-3101

ALLEGHANY COUNTY

STATION: 71+53.83-L-

SHEET 1 OF 2

STATE OF NORTH CAROLINA
DEPARTMENT OF TRANSPORTATION
RALEIGH

STANDARD

BRIDGE APPROACH SLAB FOR PRESTRESSED CONCRETE CORED SLAB

REVISIONS						SHEET NO.
NO.	BY:	DATE:	NO.	BY:	DATE:	S-30
1			3			TOTAL SHEETS
2			4			65

STR. #1

STD. NO. BAS3 (SHT 1b)

ASSEMBLED BY : H. T. BARBOUR	DATE : 5-20-13		
CHECKED BY : B. D. KLAPPENBACH	DATE : 5-13		
DRAWN BY : FCJ 6/87	REV. 5/1/06RR	KMM/GM	
CHECKED BY : EGA 6/87	REV. 10/1/11	MAA/GM	
	REV. 12/21/11	MAA/GM	

NORTH CAROLINA PROFESSIONAL SEAL 15828 ENGINEER BRUCE D. KLAPPENBACH 7-26-2013

24-JUL-2013 16:02
O:\Structures\Str1\Plans\tbarbour\Microstation\R3101_SD_AS.dgn
tbarbour

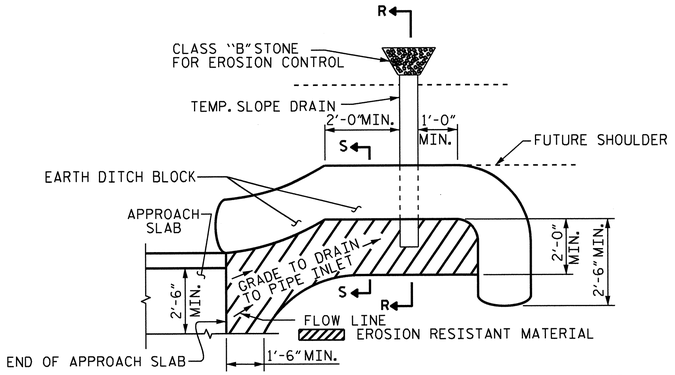

NOTE: IMMEDIATELY AFTER THE CONSTRUCTION OF THE APPROACH SLAB, THE CONTRACTOR SHALL PROVIDE TEMPORARY BERM AND SLOPE DRAIN. CONTRACTOR SHALL GRADE TO PIPE INLET AND PROVIDE EROSION RESISTANT MATERIAL AS SHOWN. THE EROSION RESISTANT MATERIAL SHALL BE EITHER 1) ASPHALT PLANT MIX, TYPE 1 OR TYPE 2, MIN. 2" DEPTH, 2) EROSION CONTROL MAT, OR 3) CONCRETE, AS DIRECTED BY THE ENGINEER. THE SLOPE DRAIN SHALL CONSIST OF A NON-PERFORATED TEMPORARY DRAINAGE PIPE, 12 INCHES IN DIAMETER.

PLAN VIEW

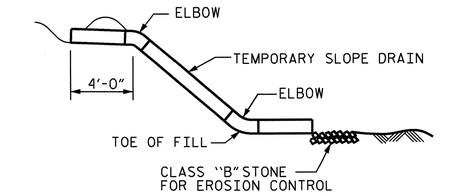

SECTION R-R

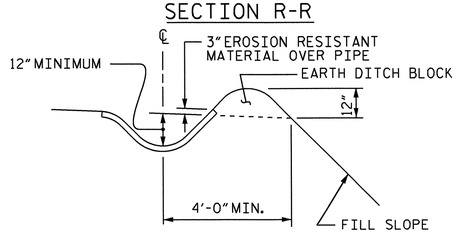

SECTION S-S

TEMPORARY BERM AND SLOPE DRAIN DETAILS

(TO BE USED WHEN SHOULDER BERM GUTTER IS REQUIRED)

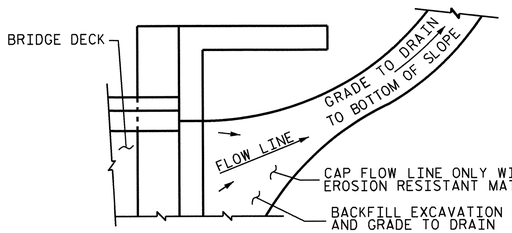

NOTE: IF THE APPROACH SLAB IS NOT CONSTRUCTED IMMEDIATELY AFTER THE BACKFILLING OF THE END BENT EXCAVATION, GRADE TO DRAIN TO THE BOTTOM OF THE SLOPE AND PROVIDE EROSION RESISTANT MATERIAL, SUCH AS FIBERGLASS ROVING OR AS DIRECTED BY THE ENGINEER TO PREVENT SOIL EROSION AND TO PROTECT THE AREA ADJACENT TO THE STRUCTURE. THE CONTRACTOR WILL BE REQUIRED TO REMOVE THESE MATERIALS PRIOR TO CONSTRUCTION OF THE APPROACH SLAB.

TEMPORARY DRAINAGE DETAIL

ASSEMBLED BY : H. T. BARBOUR	DATE : 5-20-13		
CHECKED BY : B. D. KLAPPENBACH	DATE : 5-13		
DRAWN BY : FCJ 11/88	REV. 10/1/11	MAA/GM	
CHECKED BY : ARB 11/88	REV. 7/12	MAA/GM	
	REV. 10/12	MAA/GM	

11-JUN-2013 11:47
R:\Structures\Str1\Plans\tbarbour\Microstation\R3101_SD_AS.dgn
bklappenbach

PROJECT NO. R-3101

ALLEGHANY COUNTY

STATION: 71+53.83-L-

SHEET 2 OF 2

STATE OF NORTH CAROLINA
DEPARTMENT OF TRANSPORTATION
RALEIGH

STANDARD

BRIDGE APPROACH SLAB DETAILS

NORTH CAROLINA PROFESSIONAL SEAL 15825 ENGINEER D. KLAPPENBACH
7-22-2013

REVISIONS						SHEET NO.
NO.	BY:	DATE:	NO.	BY:	DATE:	S-31
1			3			TOTAL SHEETS
2			4			65

STR. #1

F.A. PROTECT NO. STP-0021(14)

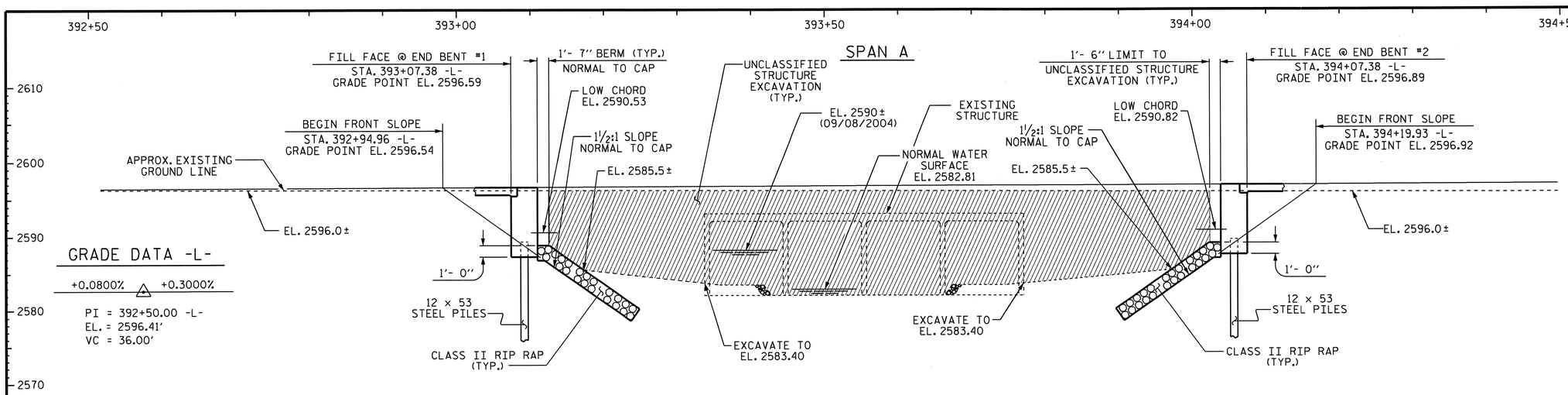

SECTION ALONG -L-

SECTIONS @ END BENTS ARE SHOWN @ RIGHT ANGLES

THE APPROXIMATE NATURAL GROUND ELEVATIONS ARE ALONG THE EDGE OF THE BRIDGE ON THE UPSTREAM SIDE

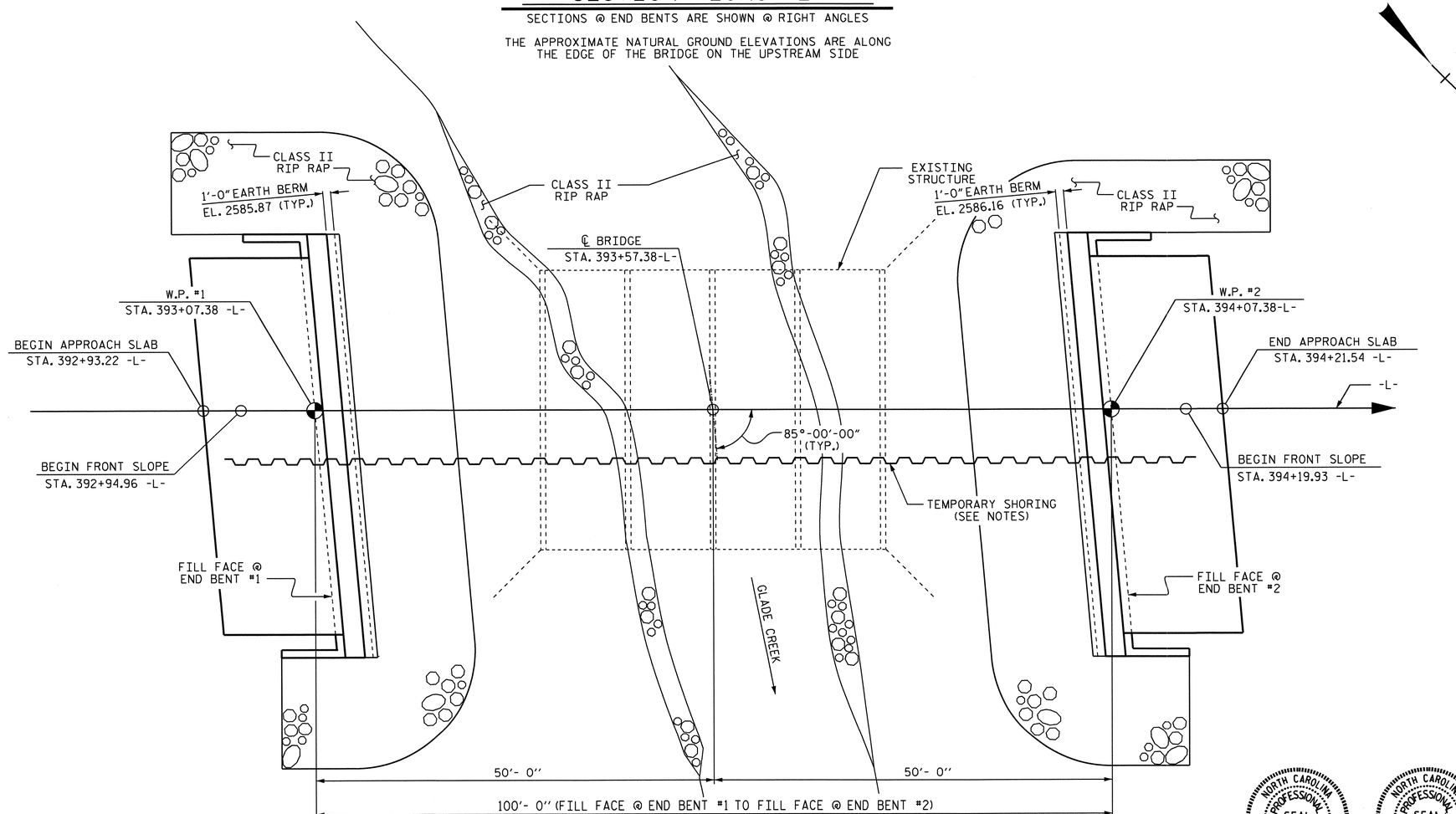

PLAN

(PILES NOT SHOWN FOR CLARITY)

PROJECT NO. R-3101

ALLEGHANY COUNTY

STATION: 393+57.38 -L-

SHEET 1 OF 3 BRIDGE No. 22

STATE OF NORTH CAROLINA
DEPARTMENT OF TRANSPORTATION
RALEIGH

GENERAL DRAWING

FOR BRIDGE OVER GLADE CREEK ON US 21 BETWEEN SR 1100 AND SR 1121

NORTH CAROLINA PROFESSIONAL SEAL 13014 ENGINEER QUANG H. NGUYEN 7-25-13

NORTH CAROLINA PROFESSIONAL SEAL 15826 ENGINEER BRIAN D. KLAPPENBACH 7-26-13

REVISIONS						SHEET NO.
NO.	BY:	DATE:	NO.	BY:	DATE:	S-32
1			3			TOTAL SHEETS
2			4			65

DRAWN BY : D. A. GLADDEN DATE : 5-23-13
CHECKED BY : B.D. KLAPPENBACH DATE : 6/13

25-JUL-2013 08:18
O:\Structures\Str2\Plans\dgladden\Microstation\R3101_SD_pgd.dgn
tbarbour

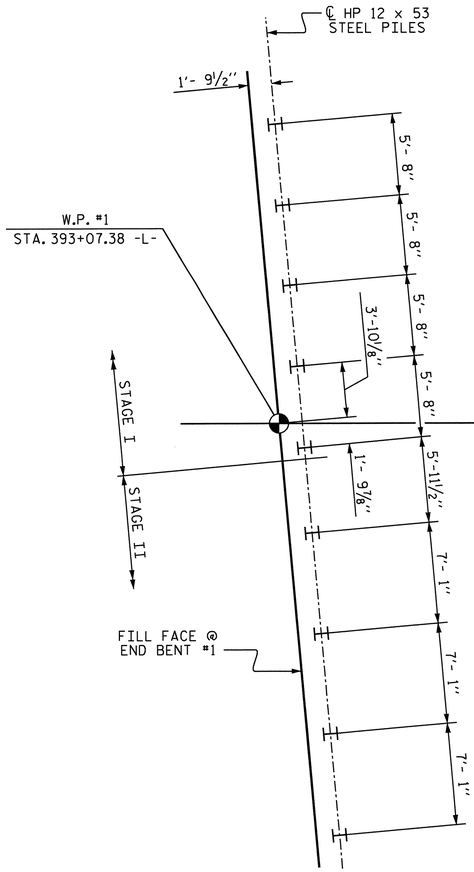

END BENT #1

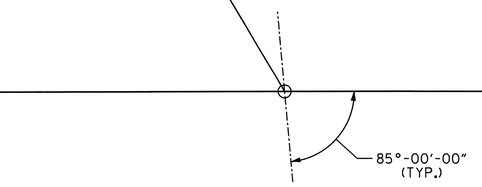

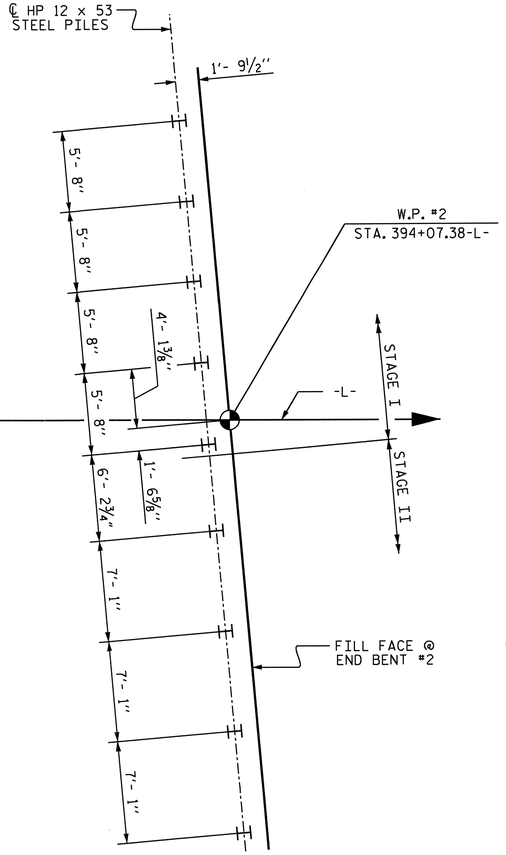

END BENT #2

FOUNDATION LAYOUT

(DIMENSIONS LOCATING PILES ARE SHOWN TO THE PILE CENTERLINE.)

NOTES:

FOR PILES, SEE SECTION 450 OF THE STANDARD SPECIFICATIONS.

PILES AT END BENTS No. 1 AND 2 ARE DESIGNED FOR A FACTORED RESISTANCE OF 120 TONS PER PILE

DRIVE PILES AT END BENTS No. 1 AND 2 TO A REQUIRED DRIVING RESISTANCE OF 200 TONS PER PILE

STEEL H-PILE POINTS ARE REQUIRED FOR STEEL H-PILES AT END BENTS No. 1 AND 2. FOR STEEL PILE POINTS, SEE SECTION 450 OF THE STANDARD SPECIFICATIONS.

PROJECT NO. R-3101

ALLEGHANY COUNTY

STATION: 393+57.38 -L-

SHEET 2 OF 3

STATE OF NORTH CAROLINA
DEPARTMENT OF TRANSPORTATION
RALEIGH

GENERAL DRAWING

FOR BRIDGE OVER GLADE CREEK ON US 21 BETWEEN SR 1100 AND SR 1121

REVISIONS						SHEET NO.
NO.	BY:	DATE:	NO.	BY:	DATE:	S-33
1			3			TOTAL SHEETS
2			4			65

STR. 2

DRAWN BY : D. A. GLADDEN DATE : 5-23-13
CHECKED BY : B.D. KLAPPENBACH DATE : 6/13
DESIGN ENGINEER OF RECORD: H. KIM DATE : 6/13

25-JUL-2013 08:18
O:\Structures\Str2\Plans\dgladden\Microstation\R3101_SD_pgd.dgn
tbarbour

BENCH MARK: -BL59- 5#8"REBAR W/ CAP N 996741.6817 E 1394699.7288 STA. 381+41.92 -BL- ELEV. 2596.26

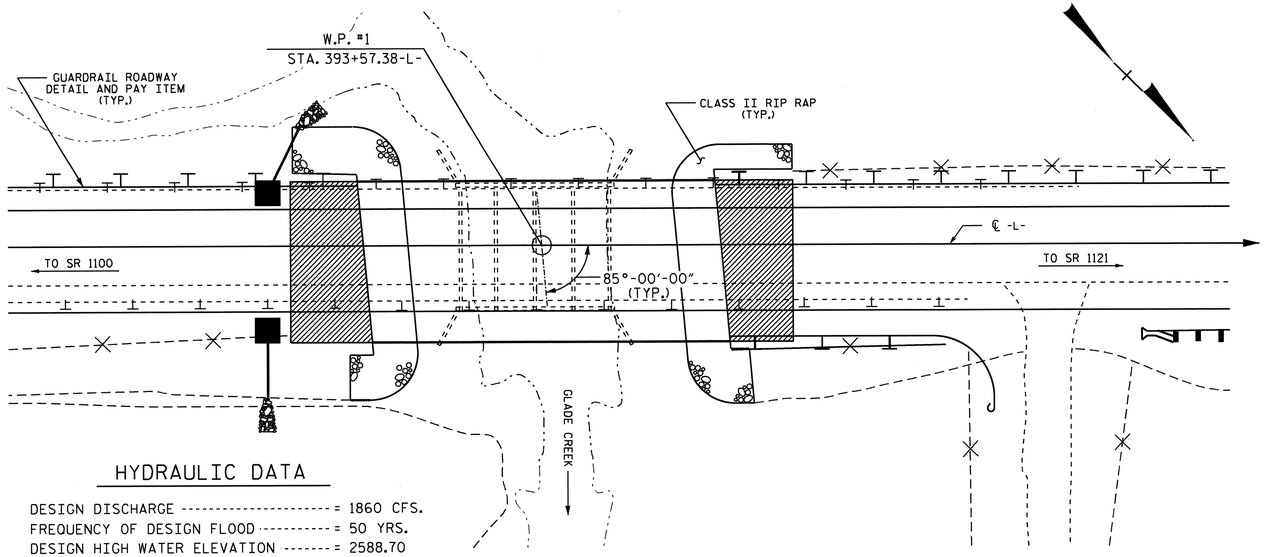

HYDRAULIC DATA

DESIGN DISCHARGE ---------- = 1860 CFS.
FREQUENCY OF DESIGN FLOOD ---------- = 50 YRS.
DESIGN HIGH WATER ELEVATION ---------- = 2588.70
DRAINAGE AREA ---------- = 6.6 SQ. MI.
BASE DISCHARGE (Q100) ---------- = 2210 CFS.
BASE HIGH WATER ELEVATION ---------- = 2589.32

OVERTOPPING FLOOD DATA

OVERTOPPING DISCHARGE ---------- = 6610 CFS.
FREQUENCY OF OVERTOPPING FLOOD ---------- = >500 YRS.
OVERTOPPING FLOOD ELEVATION ---------- = 2596.00

NOTE: FOR UTILITY INFORMATION, SEE UTILITY PLANS AND SPECIAL PROVISIONS.

LOCATION SKETCH

NOTES

ASSUMED LIVE LOAD = HL-93 OR ALTERNATE LOADING.

THIS BRIDGE HAS BEEN DESIGNED IN ACCORDANCE WITH THE AASHTO LRFD BRIDGE DESIGN SPECIFICATIONS.

FOR OTHER DESIGN DATA AND GENERAL NOTES, SEE SHEET SN.

FOR SUBMITTAL OF WORKING DRAWINGS, SEE SPECIAL PROVISIONS.

FOR FALSEWORK AND FORMWORK, SEE SPECIAL PROVISIONS.

FOR CRANE SAFETY, SEE SPECIAL PROVISIONS.

THE CONTRACTOR SHALL PROVIDE INDEPENDENT ASSURANCE SAMPLES OF REINFORCING STEEL AS FOLLOWS: FOR PROJECTS REQUIRING UP TO 400 TONS OF REINFORCING STEEL, ONE 30 INCH SAMPLE OF EACH SIZE BAR USED, AND FOR PROJECTS REQUIRING OVER 400 TONS OF REINFORCING STEEL, TWO 30 INCH SAMPLES OF EACH SIZE BAR USED. THE BARS FROM WHICH THE SAMPLES ARE TAKEN MUST THEN BE SPLICED WITH REPLACEMENT BARS OF THE SIZE AND LENGTH OF THE SAMPLE, PLUS A MINIMUM LAP SPLICE OF THIRTY BAR DIAMETERS. PAYMENT FOR THE SAMPLES OF REINFORCING STEEL SHALL BE CONSIDERED INCIDENTAL TO VARIOUS PAY ITEMS.

REMOVABLE FORMS MAY BE USED IN LIEU OF METAL STAY-IN-PLACE FORMS IN ACCORDANCE WITH ARTICLE 420-3 OF THE STANDARD SPECIFICATIONS.

NEEDLE BEAMS WILL NOT BE ALLOWED UNLESS OTHERWISE CALLED FOR ON THE PLANS OR APPROVED BY THE ENGINEER.

THIS BRIDGE IS LOCATED IN SEISMIC ZONE 1.

FOR GROUT FOR STRUCTURES, SEE SPECIAL PROVISIONS.

PRESTRESSED CONCRETE DECK PANELS MAY BE USED IN LIEU OF METAL STAY-IN-PLACE FORMS IN ACCORDANCE WITH ARTICLE 420-3 OF THE STANDARD SPECIFICATIONS.

THE CLASS AA CONCRETE IN THE BRIDGE DECK SHALL CONTAIN FLY ASH OR GROUND GRANULATED BLAST FURNACE SLAG AT THE SUBSTITUTION RATE SPECIFIED IN ARTICLE 1024-1 AND IN ACCORDANCE WITH ARTICLES 1024-5 AND 1024-6 OF THE STANDARD SPECIFICATIONS. NO PAYMENT WILL BE MADE FOR THIS SUBSTITUTION AS IT IS CONSIDERED INCIDENTAL TO THE COST OF THE REINFORCED CONCRETE DECK SLAB.

THE MATERIAL SHOWN IN THE CROSS-HATCHED AREA SHALL BE EXCAVATED FOR A DISTANCE OF 30 FT. EACH SIDE OF CENTERLINE ROADWAY AS DIRECTED BY THE ENGINEER. THIS WORK WILL BE PAID FOR AT THE CONTRACT LUMP SUM PRICE FOR UNCLASSIFIED STRUCTURE EXCAVATION. SEE SECTION 412 OF THE STANDARD SPECIFICATIONS.

FOR LIMITS OF TEMPORARY SHORING FOR MAINTENANCE OF TRAFFIC, SEE TRAFFIC CONTROL PLANS. FOR PAY ITEM FOR TEMPORARY SHORING FOR MAINTENANCE OF TRAFFIC, SEE ROADWAY PLANS.

THE EXISTING STRUCTURE CONSISTING OF A 10 FT. X 10 FT. QUADRUPLE BARREL REINFORCED CONCRETE BOX CULVERT WITH AN APPROXIMATE LENGTH OF 35'-8" AT THE PROPOSED SITE SHALL BE REMOVED.

FOR EROSION CONTROL MEASURES, SEE EROSION CONTROL PLANS.

THIS STRUCTURE HAS BEEN DESIGNED IN ACCORDANCE WITH "HEC 18-EVALUATING SCOUR AT BRIDGES."

FOR PLACING LOAD ON STRUCTURE MEMBERS, SEE SPECIAL PROVISIONS.

TOTAL BILL OF MATERIAL

	REMOVAL OF EXISTING STRUCTURE	UNCLASSIFIED STRUCTURE EXCAVATION	REINFORCED CONCRETE DECK SLAB	GROOVING BRIDGE FLOORS	CLASS A CONCRETE	BRIDGE APPROACH SLAB	REINFORCING STEEL	54" PRESTRESSED CONCRETE GIRDERS		HP 12 X 53 STEEL PILES		STEEL PILE POINTS	VERTICAL CONCRETE BARRIER RAIL	RIP RAP CLASS II (2'- 0" THICK)	GEOTEXILE FOR DRAINAGE	ELASTOMERIC BEARINGS
	LUMP SUM	LUMP SUM	SQ. FT.	SQ. FT.	CU. YDS.	LUMP SUM	LBS.	NO.	LIN.FT.	NO.	LIN.FT.	NO.	LIN.FT.	TONS	TONS	LUMP SUM
SUPERSTRUCTURE			4548	5179		LUMP SUM		6	586.94				196.67			LUMP SUM
END BENT NO. 1					33.9		3808			9	225	9		130	145	
END BENT NO. 2					33.5		3873			9	225	9		150	165	
TOTAL	LUMP SUM	LUMP SUM	4548	5179	67.4	LUMP SUM	7681	6	586.94	18	450	18	196.67	280	310	LUMP SUM

PROJECT NO. R-3101
ALLEGHANY COUNTY
STATION: 393+57.38 -L-

SHEET 3 OF 3

STATE OF NORTH CAROLINA
DEPARTMENT OF TRANSPORTATION
RALEIGH

GENERAL DRAWING

FOR BRIDGE OVER GLADE CREEK ON US 21 BETWEEN SR 1100 AND SR 1121

NORTH CAROLINA PROFESSIONAL SEAL 038251 ENGINEER BRADLEY D. KLAPPENBACH
7-26-2013

REVISIONS						SHEET NO.
NO.	BY:	DATE:	NO.	BY:	DATE:	S-34
1			3			TOTAL SHEETS
2			4			65

DRAWN BY : D. A. GLADDEN DATE : 5-23-13
CHECKED BY : B.D. KLAPPENBACH DATE : 6/13

25-JUL-2013 11:40
O:\Structures\Str2\Plans\dgladden\Microstation\R3101_SD_pgd.dgn
tbarbour

STR. 2

LOAD AND RESISTANCE FACTOR RATING (LRFR) SUMMARY FOR PRESTRESSED CONCRETE GIRDERS

LEVEL		VEHICLE	WEIGHT (W) (TONS)	CONTROLLING LOAD RATING (#)	MINIMUM RATING FACTORS (RF)	TONS = W X RF	STRENGTH I LIMIT STATE										SERVICE III LIMIT STATE						COMMENT NUMBER
								MOMENT					SHEAR					MOMENT						
							LIVELOAD FACTORS	DISTRIBUTION FACTORS (DF)	RATING FACTOR	SPAN	GIRDER LOCATION	DISTANCE FROM LEFT END OF SPAN (ft)	DISTRIBUTION FACTORS (DF)	RATING FACTOR	SPAN	GIRDER LOCATION	DISTANCE FROM LEFT END OF SPAN (ft)	LIVELOAD FACTORS	DISTRIBUTION FACTORS (DF)	RATING FACTOR	SPAN	GIRDER LOCATION	DISTANCE FROM LEFT END OF SPAN (ft)	
DESIGN LOAD RATING		HL-93(Inv)	N/A	1	1.11	--	1.75	0.757	1.68	A	ER	48.201	0.867	1.98	A	I	38.561	0.80	0.757	1.11	A	ER	48.201	
		HL-93(Opr)	N/A	--	2.18	--	1.35	0.757	2.18	A	ER	48.201	0.867	2.56	A	I	38.561	N/A	--	--	--	--	--	
		HS-20(Inv)	36.000	2	1.53	55.185	1.75	0.757	2.32	A	ER	48.201	0.867	2.42	A	I	38.561	0.80	0.757	1.53	A	ER	48.201	
		HS-20(Opr)	36.000	--	3.01	108.459	1.35	0.757	3.01	A	ER	48.201	0.867	3.13	A	I	38.561	N/A	--	--	--	--	--	
LEGAL LOAD RATING	SV	SNSH	13.500	--	3.62	48.911	1.4	0.757	6.87	A	ER	48.201	0.867	7.07	A	I	38.561	0.80	0.757	3.62	A	ER	48.201	
		SNGARBS2	20.000	--	2.63	52.580	1.4	0.757	4.98	A	ER	48.201	0.867	5.06	A	I	38.561	0.80	0.757	2.63	A	ER	48.201	
		SNAGRIS2	22.000	--	2.46	54.143	1.4	0.757	4.66	A	ER	48.201	0.867	4.71	A	I	38.561	0.80	0.757	2.46	A	ER	48.201	
		SNCOTTS3	27.250	--	1.80	49.073	1.4	0.757	3.41	A	ER	48.201	0.867	3.53	A	I	38.561	0.80	0.757	1.80	A	ER	48.201	
		SNAGGRS4	34.925	--	1.48	51.605	1.4	0.757	2.8	A	ER	48.201	0.867	2.96	A	I	38.561	0.80	0.757	1.48	A	ER	48.201	
		SNS5A	35.550	--	1.45	51.433	1.4	0.757	2.74	A	ER	48.201	0.867	3.01	A	I	38.561	0.80	0.757	1.45	A	ER	48.201	
		SNS6A	39.950	--	1.32	52.585	1.4	0.757	2.49	A	ER	48.201	0.867	2.76	A	I	38.561	0.80	0.757	1.32	A	ER	48.201	
		SNS7B	42.000	--	1.25	52.629	1.4	0.757	2.37	A	ER	48.201	0.867	2.72	A	I	38.561	0.80	0.757	1.25	A	ER	48.201	
	TTST	TNAGRIT3	33.000	--	1.60	52.861	1.4	0.757	3.04	A	ER	48.201	0.867	3.27	A	I	38.561	0.80	0.757	1.60	A	ER	48.201	
		TNT4A	33.075	--	1.61	53.115	1.4	0.757	3.04	A	ER	48.201	0.867	3.18	A	I	38.561	0.80	0.757	1.61	A	ER	48.201	
		TNT6A	41.600	--	1.30	54.188	1.4	0.757	2.47	A	ER	48.201	0.867	2.92	A	I	38.561	0.80	0.757	1.30	A	ER	48.201	
		TNT7A	42.000	--	1.30	54.751	1.4	0.757	2.47	A	ER	48.201	0.867	2.86	A	I	38.561	0.80	0.757	1.30	A	ER	48.201	
		TNT7B	42.000	--	1.34	56.078	1.4	0.757	2.53	A	ER	48.201	0.867	2.65	A	I	38.561	0.80	0.757	1.34	A	ER	48.201	
		TNAGRIT4	43.000	--	1.28	55.044	1.4	0.757	2.43	A	ER	48.201	0.867	2.56	A	I	38.561	0.80	0.757	1.28	A	ER	48.201	
		TNAGT5A	45.000	--	1.21	54.526	1.4	0.757	2.3	A	ER	48.201	0.867	2.56	A	I	38.561	0.80	0.757	1.21	A	ER	48.201	
		TNAGT5B	45.000	3	1.20	54.056	1.4	0.757	2.28	A	ER	48.201	0.867	2.43	A	I	38.561	0.80	0.757	1.20	A	ER	48.201	

LOAD FACTORS:

DESIGN LOAD RATING FACTORS	LIMIT STATE	γ_{DC}	γ_{DW}
	STRENGTH I	1.25	1.50
	SERVICE III	1.00	1.00

NOTES:

MINIMUM RATING FACTORS ARE BASED ON THE STRENGTH I AND SERVICE III LIMIT STATES.

ALLOWABLE STRESSES FOR SERVICE III LIMIT STATE ARE AS REQUIRED FOR DESIGN.

COMMENTS:

1.
2.
3.
4.

(#) CONTROLLING LOAD RATING

(1) DESIGN LOAD RATING (HL-93)

(2) DESIGN LOAD RATING (HS-20)

(3) LEGAL LOAD RATING **

** SEE CHART FOR VEHICLE TYPE

GIRDER LOCATION

I - INTERIOR GIRDER
EL - EXTERIOR LEFT GIRDER
ER - EXTERIOR RIGHT GIRDER

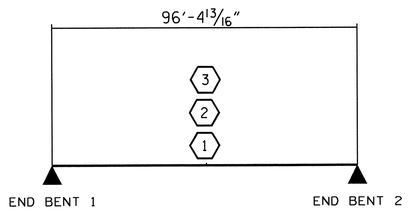

LRFR SUMMARY

PROJECT NO. R-3101

ALLEGHANY COUNTY

STATION: 393+57.38 -L-

STATE OF NORTH CAROLINA
DEPARTMENT OF TRANSPORTATION
RALEIGH

STANDARD

LRFR SUMMARY FOR PRESTRESSED CONCRETE GIRDERS (NON-INTERSTATE TRAFFIC)

NORTH CAROLINA PROFESSIONAL SEAL 15825 ENGINEER BRUCE R. KNICK D. KLAPPENBACH 7-22-2013

REVISIONS						SHEET NO.
NO.	BY:	DATE:	NO.	BY:	DATE:	S-35
1			3			TOTAL SHEETS
2			4			65

STD. NO. LRFR1

ASSEMBLED BY : H.P. KIM		DATE : 6-10-13	
CHECKED BY : R.Z. RONG		DATE : 6-10-13	
DRAWN BY : MAA 1/08	REV. 11/12/08RR		MAA/GM
CHECKED BY : GM/DI 2/08	REV. 10/1/11		MAA/GM

11-JUN-2013 12:15
R:\Structures\Str2\Plans\R3101_SD_LRFR.dgn
bklappenbach

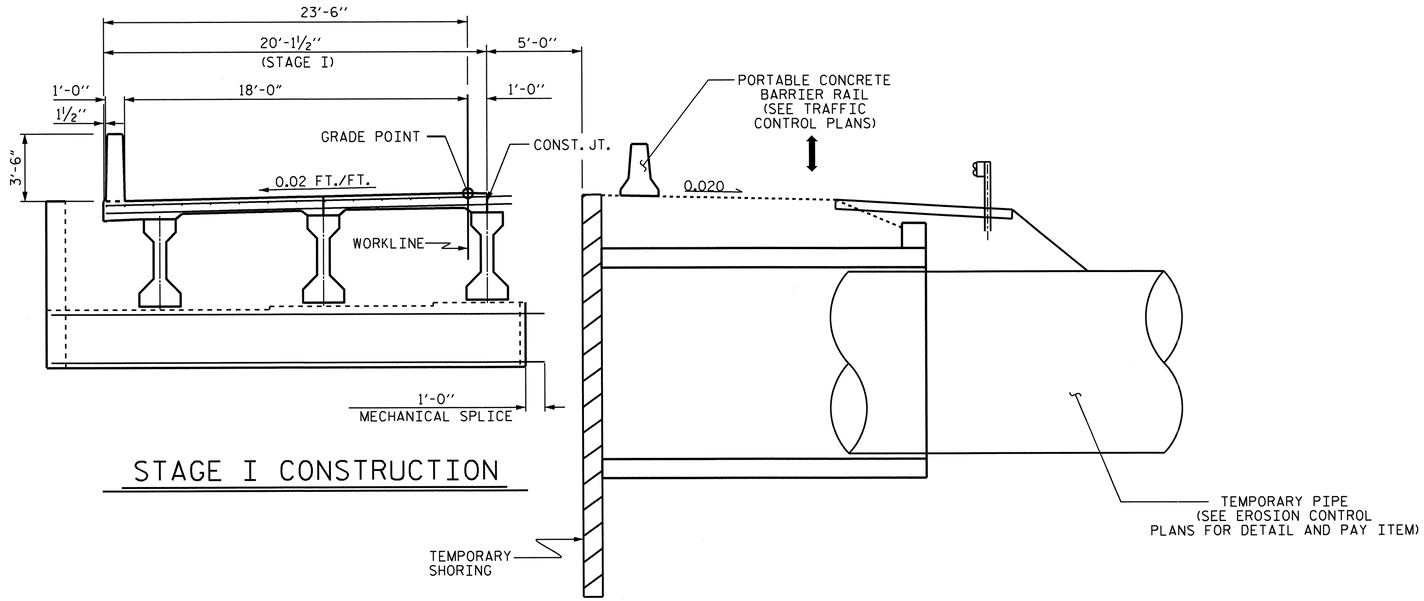

STAGE I CONSTRUCTION

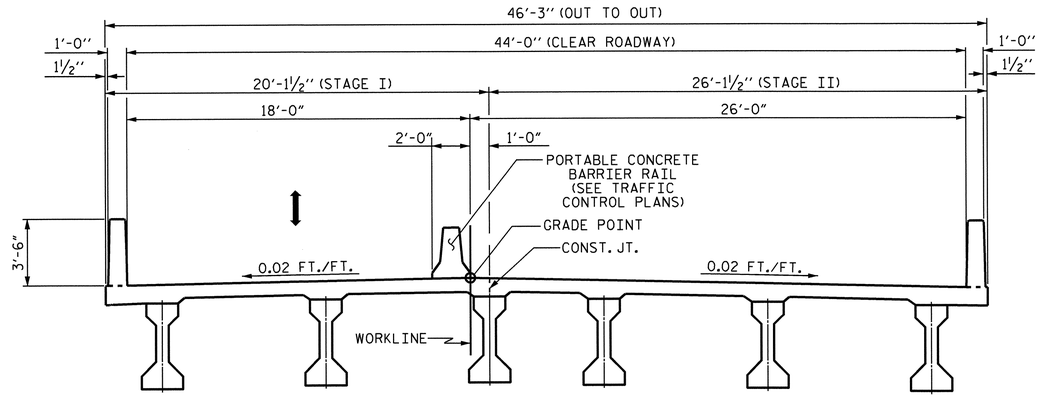

STAGE II CONSTRUCTION

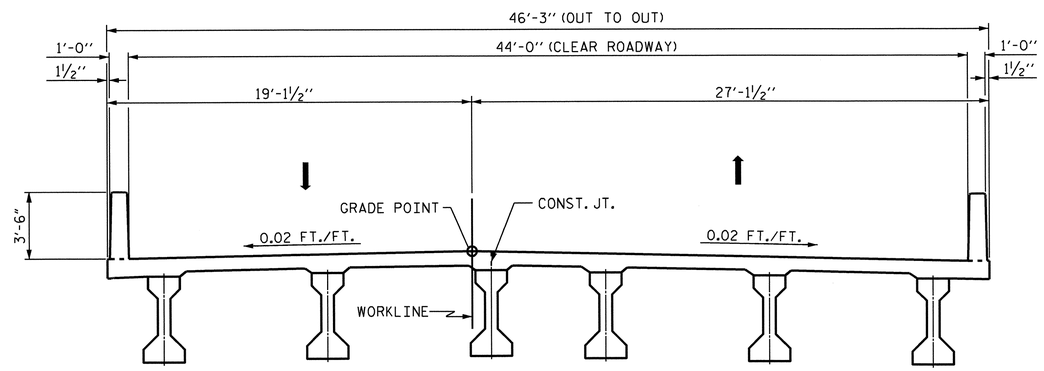

FINAL TYPICAL SECTION

NOTES

FOR TEMPORARY GUARDRAIL DETAILS AND PAY ITEM, SEE ROADWAY PLANS.

PROJECT NO. R-3101

ALLEGHANEY COUNTY

STATION: 393+57.38 -L-

STATE OF NORTH CAROLINA
DEPARTMENT OF TRANSPORTATION
RALEIGH

SUPERSTRUCTURE
STAGING SEQUENCE

REVISIONS						SHEET NO.
NO.	BY:	DATE:	NO.	BY:	DATE:	S-36
1			3			TOTAL SHEETS
2			4			65

NORTH CAROLINA PROFESSIONAL SEAL 15826 ENGINEER BRUCE D. KLAPPENBACH
7-26-2013

DRAWN BY : V.X. NGUYEN DATE : 4/11/13
CHECKED BY : B.D. KLAPPENBACH DATE : 6/8/13
DESIGN ENGINEER OF RECORD: _____ DATE : _____

25-JUL-2013 12:11
O:\Structures\Str2\Plans\vnguyen\R-3101_SD_PC.dgn
tbarbour

STR. #2

NOTES

PROVIDE 1¼" HIGH BEAM BOLSTERS UPPER AT 4'-0" CTS. ATOP THE METAL STAY-IN-PLACE FORMS TO SUPPORT THE BOTTOM MAT OF 'A' BARS. WHEN USING REMOVABLE FORMS, PROVIDE CONTINUOUS HIGH CHAIRS FOR METAL DECK (C.H.C.M.) @ 4'-0" CTS. WITH A HEIGHT TO SUPPORT THE BOTTOM MAT OF 'A' BARS A CLEAR DISTANCE OF 2½" ABOVE THE TOP OF THE REMOVABLE FORM.

LONGITUDINAL STEEL MAY BE SHIFTED SLIGHTLY, AS NECESSARY, TO AVOID INTERFERENCE WITH STIRRUPS IN PRESTRESSED CONCRETE GIRDERS.

PREVIOUSLY CAST CONCRETE IN THE SPAN SHALL HAVE ATTAINED A MINIMUM COMPRESSIVE STRENGTH OF 3,000 PSI BEFORE ADDITIONAL CONCRETE IS CAST IN THE UNIT.

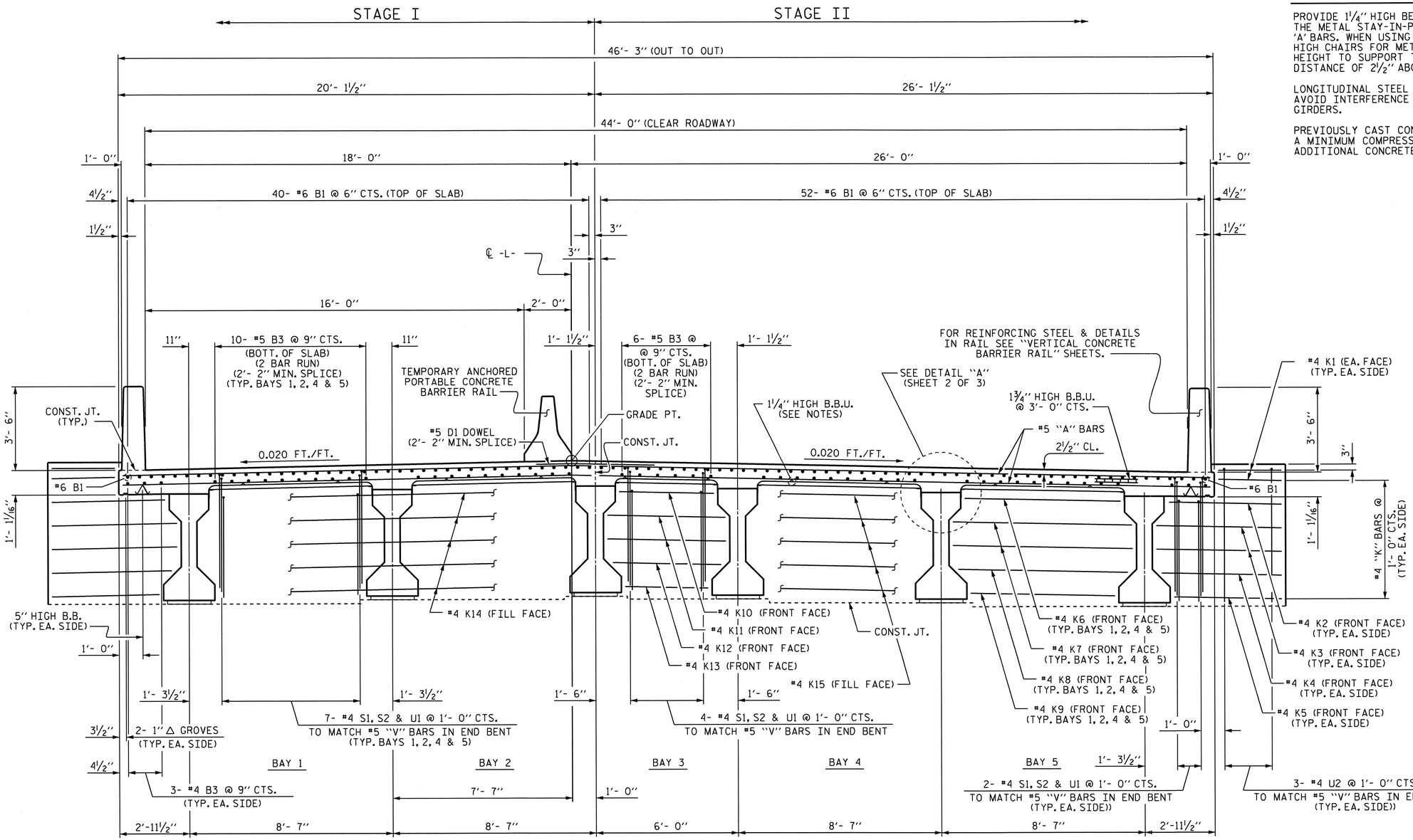

TYPICAL SECTION AT INTEGRAL END BENT

PROJECT NO. R-3101

ALLEGHANY COUNTY

STATION: 393+57.38 -L-

SHEET 1 OF 3

STATE OF NORTH CAROLINA
DEPARTMENT OF TRANSPORTATION
RALEIGH

SUPERSTRUCTURE
TYPICAL SECTION

NORTH CAROLINA PROFESSIONAL SEAL 16825 ENGINEER D. KLAPPENBERGER
7-26-2013

REVISIONS						SHEET NO.
NO.	BY:	DATE:	NO.	BY:	DATE:	S-37
1			3			TOTAL SHEETS
2			4			65

DRAWN BY : D. A. GLADDEN DATE : 3-28-13
CHECKED BY : H. T. BARBOUR DATE : 6-11-13
DESIGN ENGINEER OF RECORD: H. KIM DATE : 6-11-13

25-JUL-2013 08:28
O:\Structures\Str2\Plans\dgladden\Microstation\R3101_SD_SPR_new.dgn
tbarbour

STR. #2

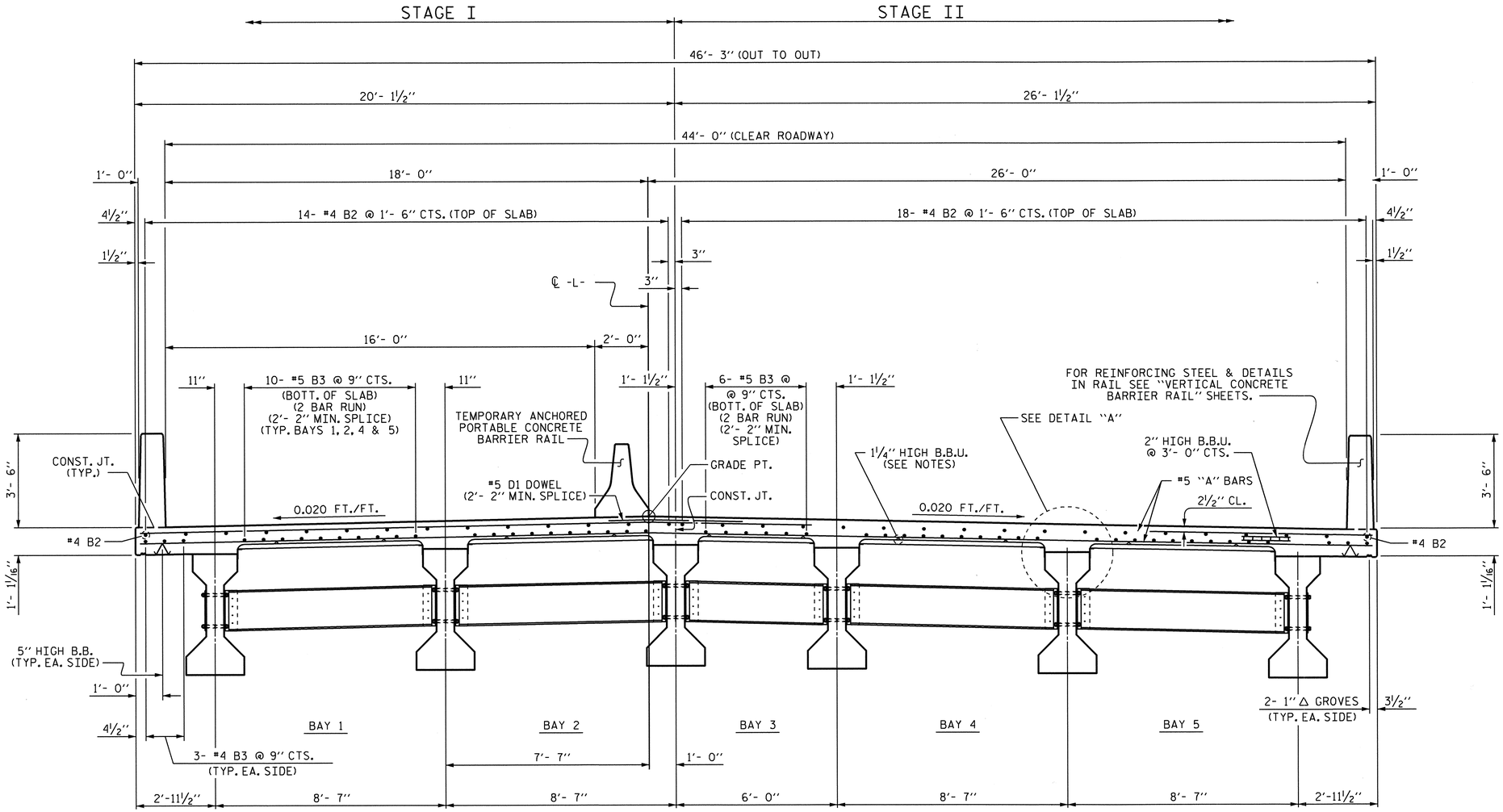

TYPICAL SECTION AT INTERMEDIATE DIAPHRAGMS

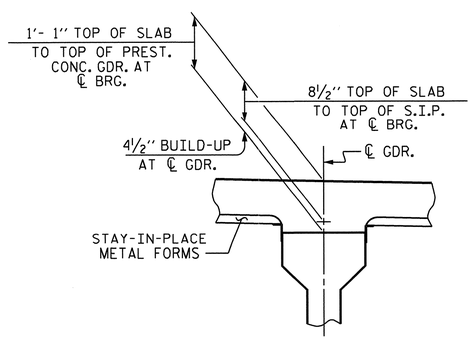

DETAIL "A"

NORTH CAROLINA PROFESSIONAL SEAL 15825 ENGINEER D. KLAPPENBACH
7-26-2017

PROJECT NO. R-3101
ALLEGHANY COUNTY
STATION: 393+57.38 -L-

SHEET 2 OF 3

STATE OF NORTH CAROLINA
DEPARTMENT OF TRANSPORTATION
RALEIGH

SUPERSTRUCTURE TYPICAL SECTION

REVISIONS						SHEET NO.
NO.	BY:	DATE:	NO.	BY:	DATE:	S-38
1			3			TOTAL SHEETS
2			4			65

DRAWN BY : D. A. GLADDEN DATE : 3-28-13
CHECKED BY : H. T. BARBOUR DATE : 6-11-13
DESIGN ENGINEER OF RECORD: H. KIM DATE : 6-11-13

25-JUL-2013 08:29
O:\Structures\Str2\Plans\dgladden\Microstation\R3101_SD_SPR_new.dgn
tbarbour

STR. #2

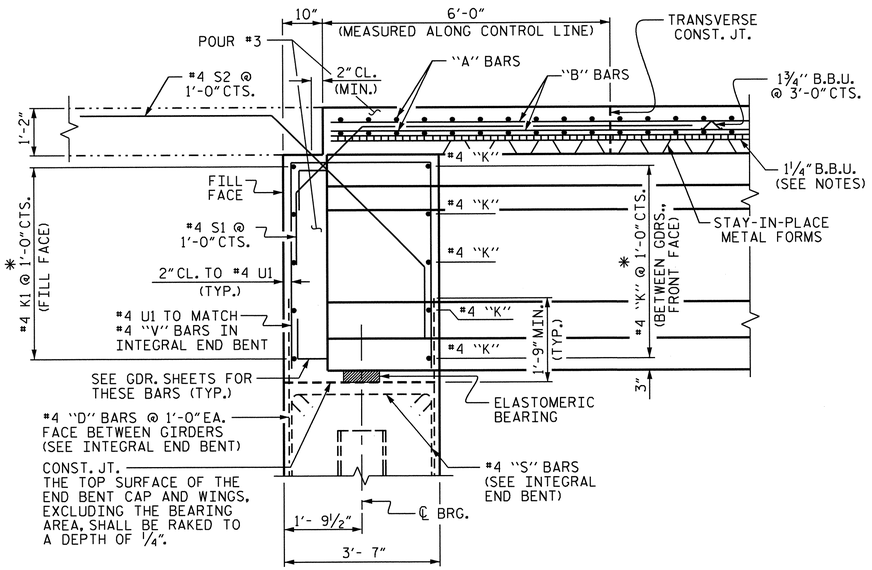

SECTION THRU INTEGRAL END BENT

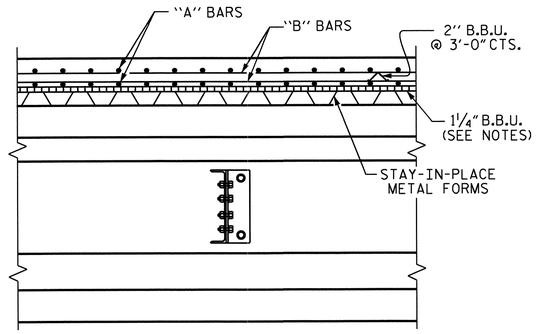

SECTION THRU INTERMEDIATE DIAPHRAGM

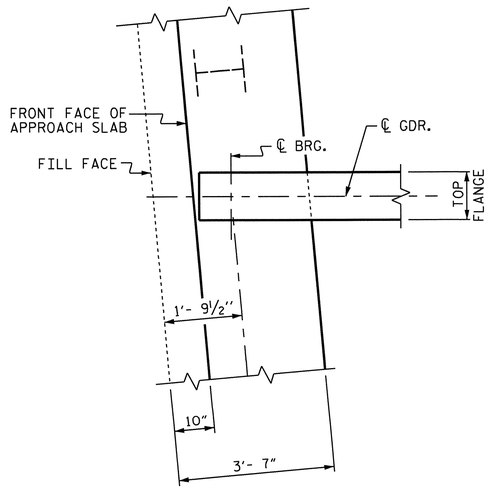

PLAN OF GIRDER AT INTEGRAL END BENT

PROJECT NO. R-3101

ALLEGHANY COUNTY

STATION: 393+57.38 -L-

SHEET 3 OF 3

STATE OF NORTH CAROLINA
DEPARTMENT OF TRANSPORTATION
RALEIGH

SUPERSTRUCTURE TYPICAL SECTION

NORTH CAROLINA PROFESSIONAL SEAL 15825 ENGINEER BRUCE D. KLAPPENBACH
9-18-2013

REVISIONS						SHEET NO.
NO.	BY:	DATE:	NO.	BY:	DATE:	S-39
1			3			TOTAL SHEETS
2			4			65

DRAWN BY : D. A. GLADDEN DATE : 3-28-13
CHECKED BY : H. T. BARBOUR DATE : 6-11-13
DESIGN ENGINEER OF RECORD: H. KIM DATE : 6-11-13

19-SEP-2013 12:11
R:\Structures\Str2\Plans\dgladden\Microstation\R3101_SD_SPR_new.dgn
bklappenbach

STR. #2

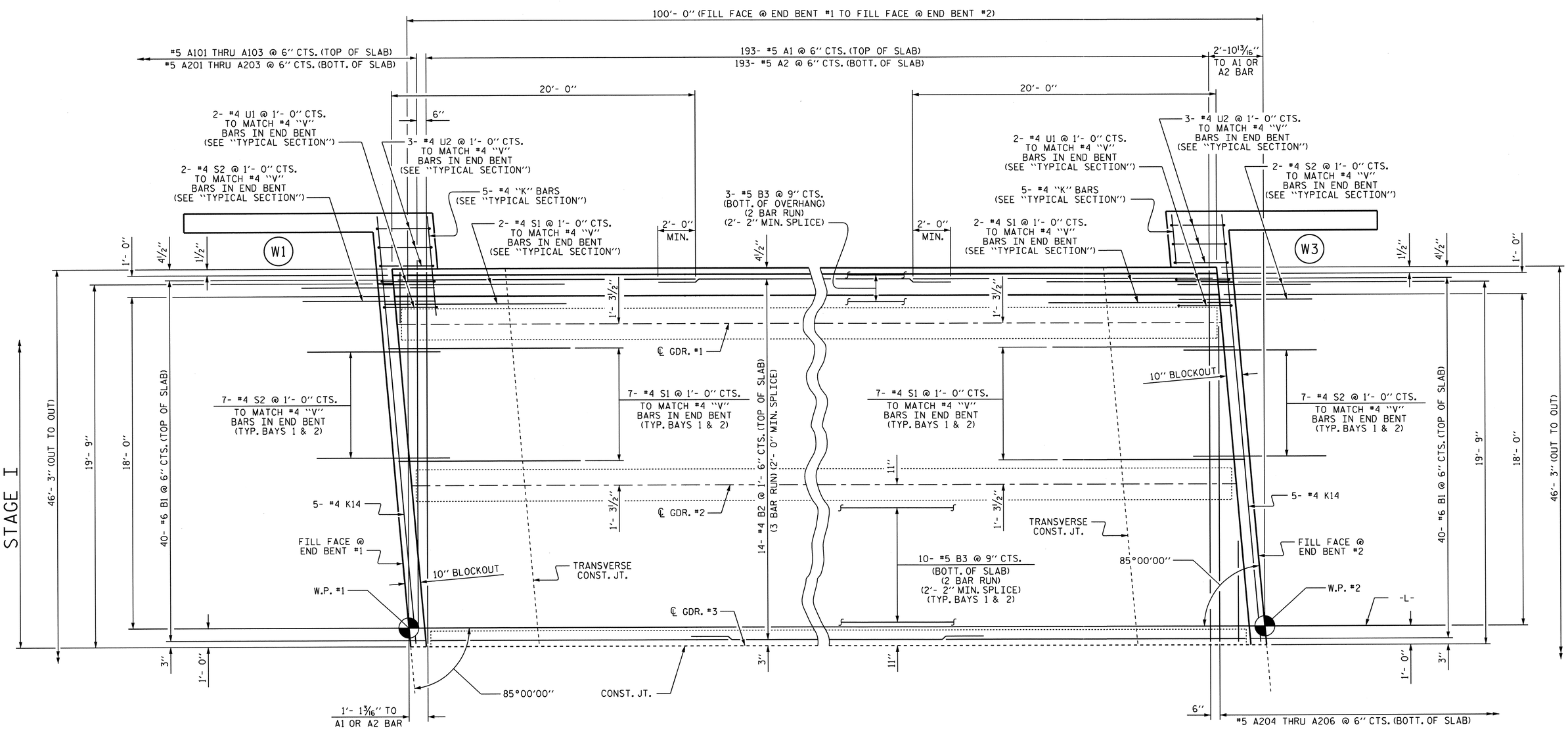

PLAN OF SPAN A (STAGE I)

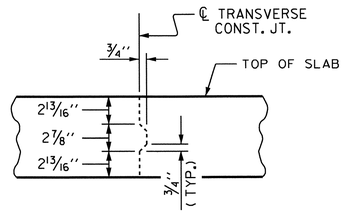

TRANSVERSE CONSTRUCTION JOINT DETAIL

NOTE: REINFORCING STEEL IN SLAB NOT SHOWN.
LONGITUDINAL REINFORCING STEEL SHALL BE CONTINUOUS THRU JOINT

NORTH CAROLINA PROFESSIONAL SEAL 15825 ENGINEER BRADLEY D. KLAPPENBERGER 7-26-2013

PROJECT NO. R-3101
ALLEGHANY COUNTY
STATION: 393+57.38 -L-

SHEET 1 OF 2

STATE OF NORTH CAROLINA
DEPARTMENT OF TRANSPORTATION
RALEIGH

SUPERSTRUCTURE PLAN OF SPAN (STAGE I)

REVISIONS						SHEET NO.
NO.	BY:	DATE:	NO.	BY:	DATE:	S-40
1			3			TOTAL SHEETS
2			4			65

STR. #2

DRAWN BY : D. A. GLADDEN DATE : 4-3-13
CHECKED BY : H. T. BARBOUR DATE : 6-11-13
DESIGN ENGINEER OF RECORD: H. KIM DATE : 6-11-13

11-JUN-2013 16:58
R:\Structures\Str2\Plans\dgladden\Microstation\R3101_SD_SPR_new.dgn
dgladden

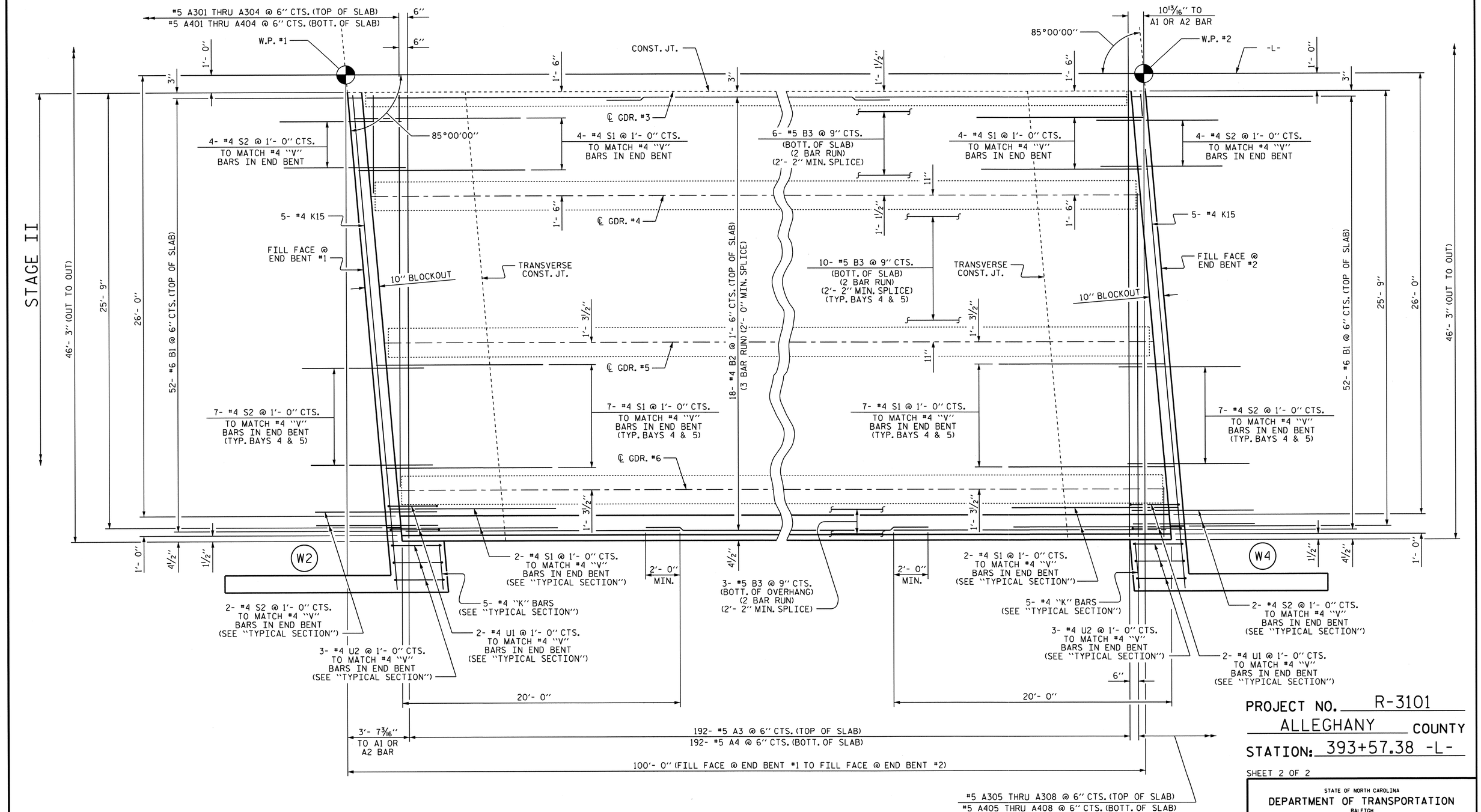

PLAN OF SPAN A (STAGE II)

PROJECT NO. R-3101

ALLEGHANY COUNTY

STATION: 393+57.38 -L-

SHEET 2 OF 2

STATE OF NORTH CAROLINA
DEPARTMENT OF TRANSPORTATION
RALEIGH

SUPERSTRUCTURE PLAN OF SPAN (STAGE II)

REVISIONS						SHEET NO.
NO.	BY:	DATE:	NO.	BY:	DATE:	S-41
1			3			TOTAL SHEETS
2			4			65

NORTH CAROLINA PROFESSIONAL SEAL 16825 ENGINEER BRUCE D. KLAPPENBACH
7-26-2013

DRAWN BY : D. A. GLADDEN DATE : 4-3-13
CHECKED BY : H. T. BARBOUR DATE : 6-11-13
DESIGN ENGINEER OF RECORD: H. KIM DATE : 6-11-13

11-JUN-2013 16:59
R:\Structures\Str2\Plans\dgladden\Microstation\R3101_SD_SPR_new.dgn
dgladden

STR. #2

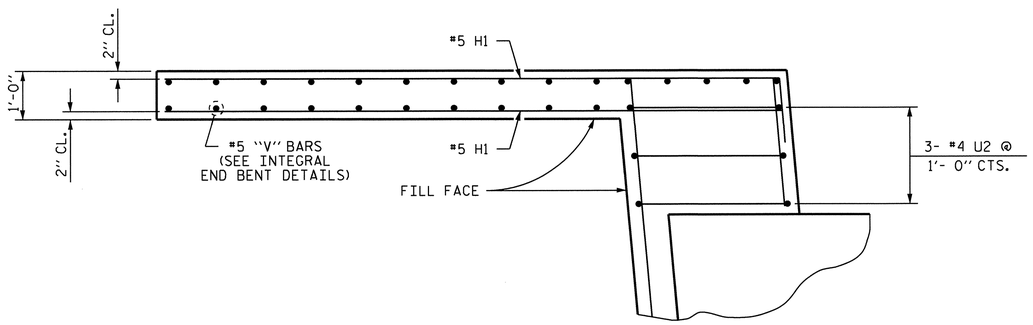

PLAN OF LEFT WING (W1)

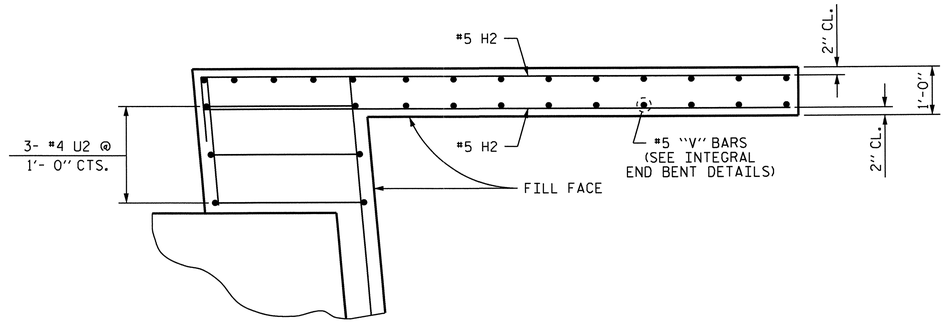

PLAN OF RIGHT WING (W2)

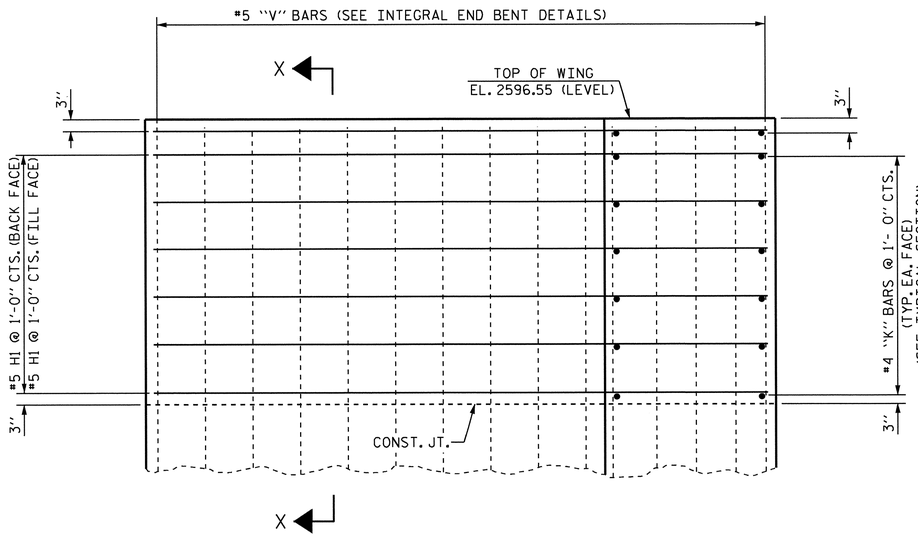

ELEVATION OF LEFT WING (W1)

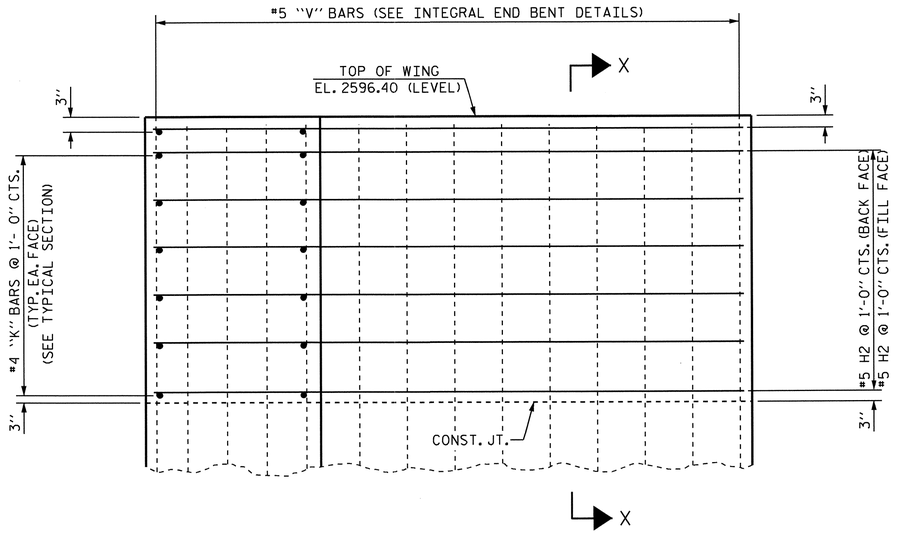

ELEVATION OF RIGHT WING (W2)

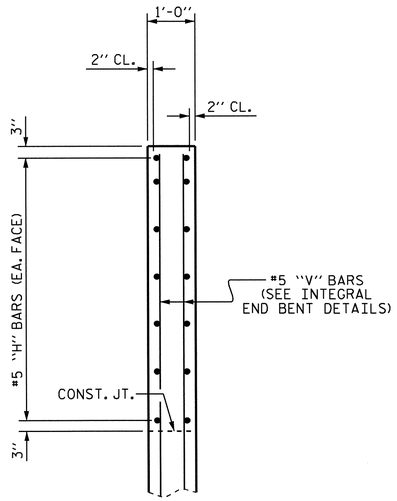

SECTION X-X

PROJECT NO. R-3101

ALLEGHANY COUNTY

STATION: 393+57.38 -L-

SHEET 1 OF 2

STATE OF NORTH CAROLINA
DEPARTMENT OF TRANSPORTATION
RALEIGH

SUPERSTRUCTURE TOP OF WINGS AT END BENT #1

REVISIONS						SHEET NO.
NO.	BY:	DATE:	NO.	BY:	DATE:	S-42
1			3			TOTAL SHEETS
2			4			65

NORTH CAROLINA PROFESSIONAL SEAL 5828 ENGINEER BRUCE D. KLAPPENBACH 7-26-2013

DRAWN BY :	D. A. GLADDEN	DATE : 4-3-13
CHECKED BY :	H. T. BARBOUR	DATE : 6-11-13
DESIGN ENGINEER OF RECORD:	H. KIM	DATE : 6-11-13

25-JUL-2013 08:34
O:\Structures\Str2\Plans\dgladden\Microstation\R3101_SD_SPR_new.dgn
tbarbour

STR. #2

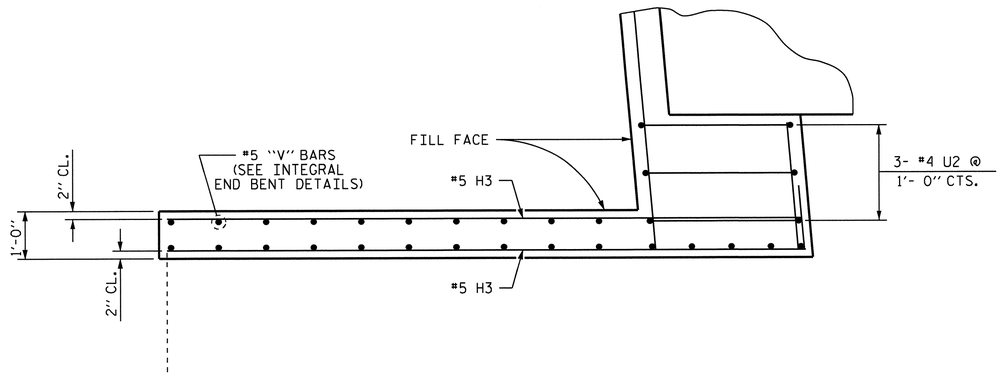

PLAN OF LEFT WING (W3)

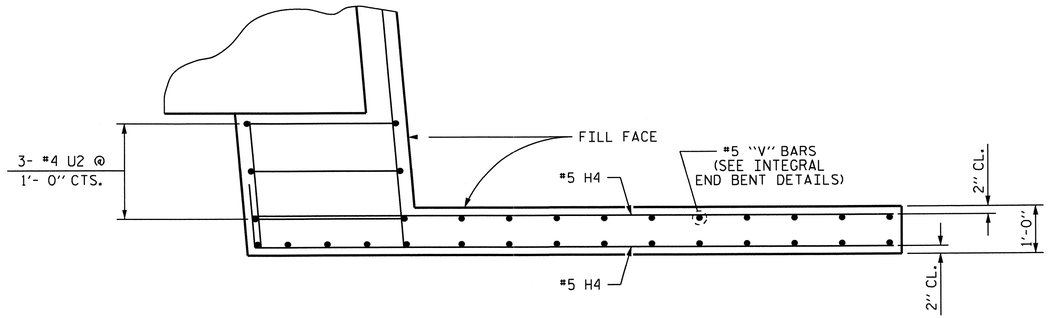

PLAN OF RIGHT WING (W4)

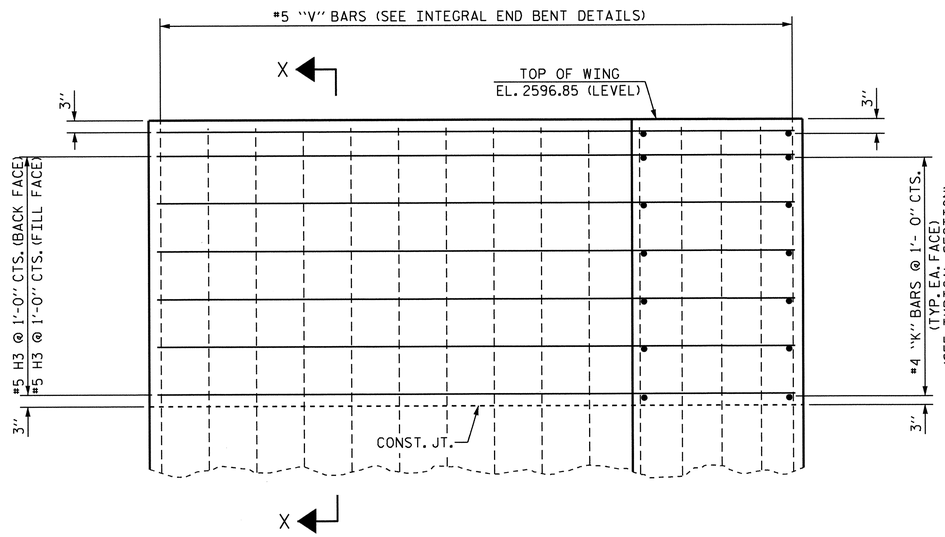

ELEVATION OF LEFT WING (W3)

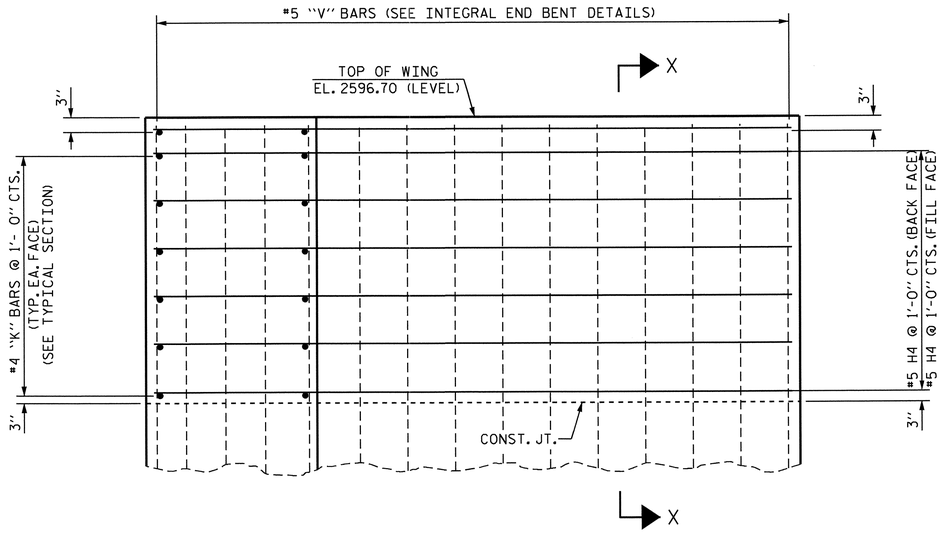

ELEVATION OF RIGHT WING (W4)

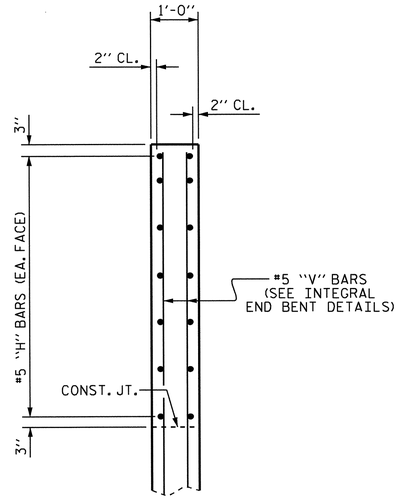

SECTION X-X

PROJECT NO. R-3101

ALLEGHANY COUNTY

STATION: 393+57.38 -L-

SHEET 2 OF 2

STATE OF NORTH CAROLINA
DEPARTMENT OF TRANSPORTATION
RALEIGH

SUPERSTRUCTURE TOP OF WINGS AT END BENT #2

REVISIONS						SHEET NO.
NO.	BY:	DATE:	NO.	BY:	DATE:	S-43
1			3			TOTAL SHEETS
2			4			65

NORTH CAROLINA PROFESSIONAL SEAL 15825 ENGINEER BRUCE O. KLAPPENBACH
7-26-2013

DRAWN BY :	D. A. GLADDEN	DATE : 4-3-13
CHECKED BY :	H. T. BARBOUR	DATE : 6-11-13
DESIGN ENGINEER OF RECORD:	H. KIM	DATE : 6-11-13

25-JUL-2013 08:34
O:\Structures\Str2\Plans\dgladden\Microstation\R3101_SD_SPR_new.dgn
tbarbour

STR. #2

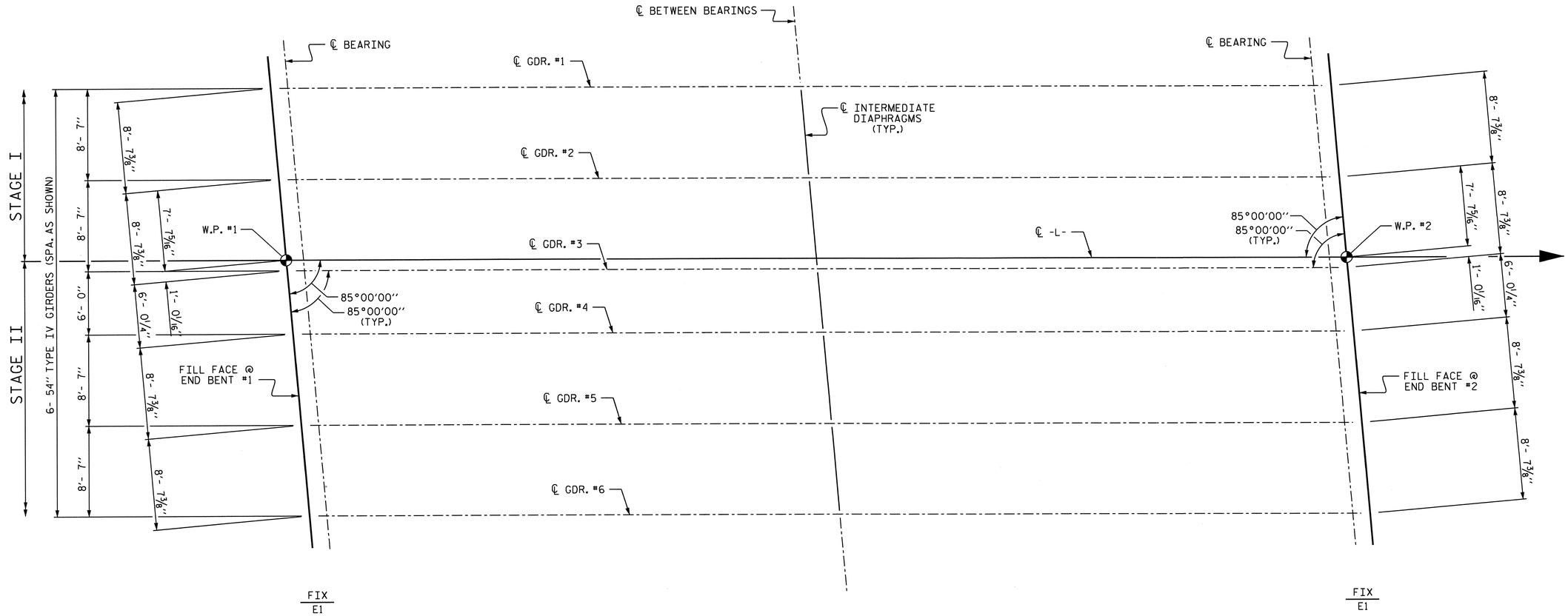

FRAMING PLAN

PROJECT NO. R-3101

ALLEGHANY COUNTY

STATION: 393+57.38 -L-

STATE OF NORTH CAROLINA
DEPARTMENT OF TRANSPORTATION
RALEIGH

SUPERSTRUCTURE FRAMING PLAN

NORTH CAROLINA PROFESSIONAL SEAL 13825 ENGINEER BRUCE D. KLAPPENBACH
7-26-2013

REVISIONS						SHEET NO.
NO.	BY:	DATE:	NO.	BY:	DATE:	S-44
1			3			TOTAL SHEETS
2			4			65

DRAWN BY : D. A. GLADDEN DATE : 4-3-13
CHECKED BY : H. T. BARBOUR DATE : 6-11-13
DESIGN ENGINEER OF RECORD: H. KIM DATE : 6-11-13

11-JUN-2013 17:00
R:\Structures\Str2\Plans\dgladden\Microstation\R3101_SD_SPR_new.dgn
dgladden

STR. #2

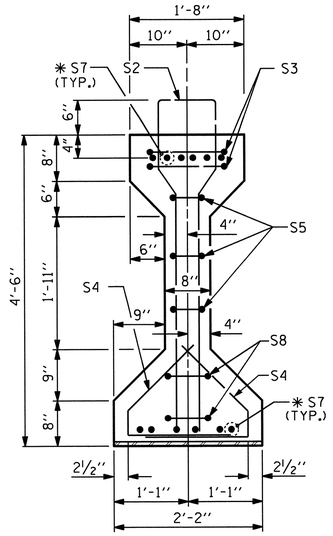

SECTION A-A

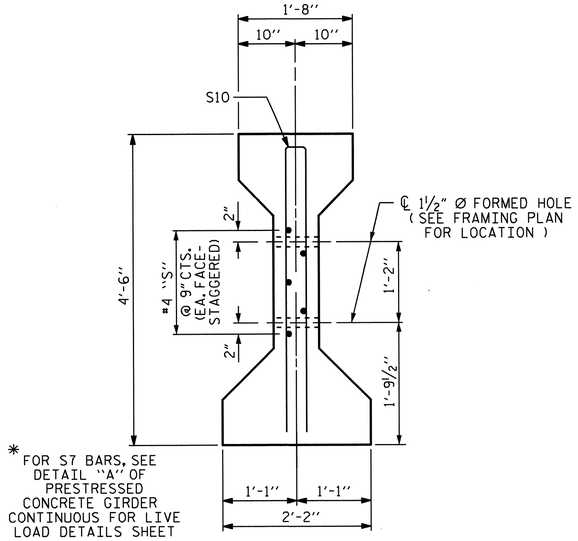

SECTION C-C

(S1 BARS NOT SHOWN)

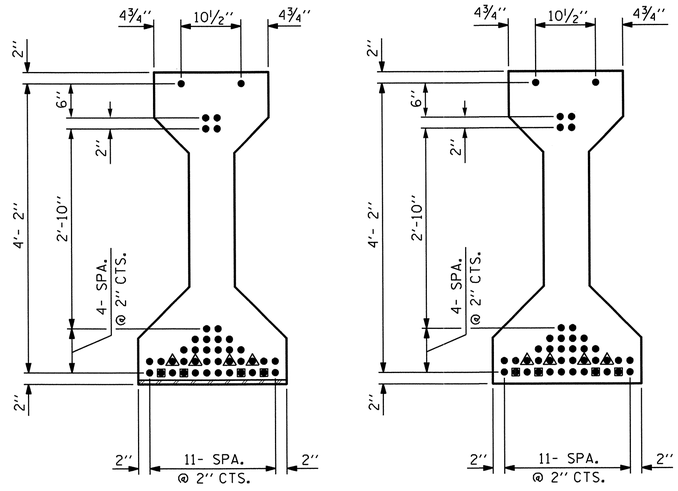

AT END OF GIRDER AT ℄ OF GIRDER

0.6" Ø LOW RELAXATION STRAND LAYOUT

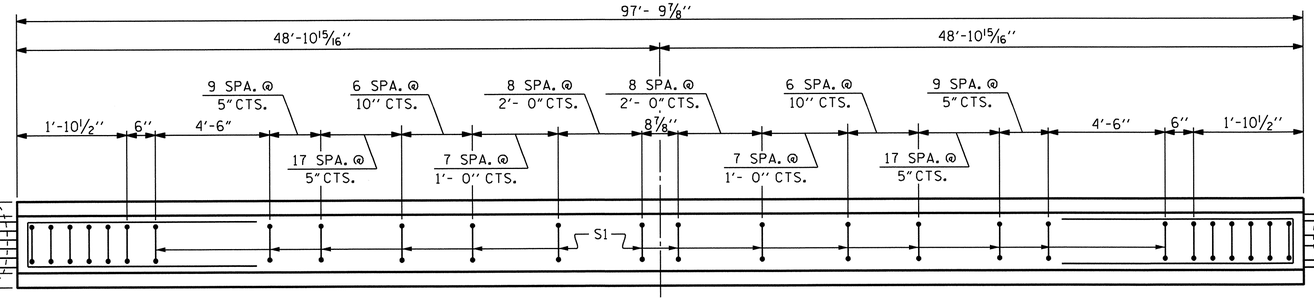

PLAN OF GIRDER

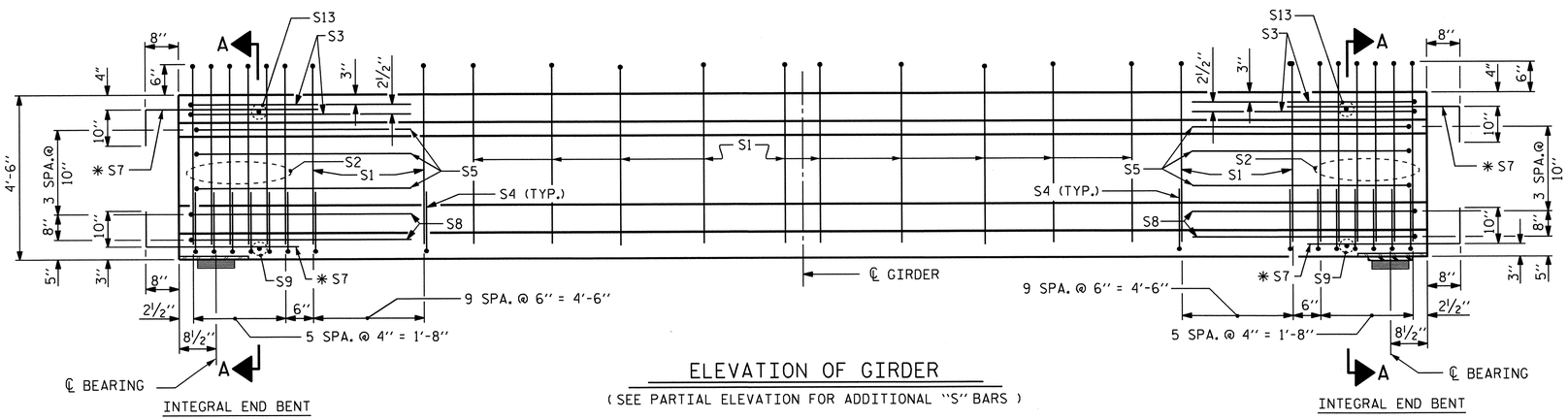

ELEVATION OF GIRDER

(SEE PARTIAL ELEVATION FOR ADDITIONAL "S" BARS)

DEBONDING LEGEND

- ● FULLY BONDED STRANDS
- ▣ STRANDS DEBONDED FOR 16'- 0" FROM END OF GIRDER
- ▲ STRANDS DEBONDED FOR 14'- 0" FROM END OF GIRDER

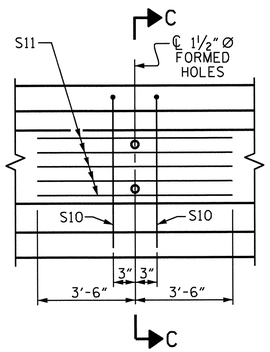

PARTIAL ELEVATION

SHOWING INTERMEDIATE DIAPHRAGM REINFORCING STEEL FOR GIRDERS 1, 2, 4, 5 & 6.

0.6" Ø L. R. GRADE 270 STRANDS		
AREA (SQUARE INCHES)	ULTIMATE STRENGTH (LBS. PER STRAND)	APPLIED PRESTRESS (LBS. PER STRAND)
0.217	58,600	43,950

REINFORCING STEEL FOR ONE GIRDER

BAR	NUMBER	SIZE	TYPE	LENGTH	WEIGHT
S1	114	#4	1	10'-8"	812
S2	12	#6	1	10'-8"	192
S3	4	#4	2	9'-1"	24
S4	64	#4	3	3'-5"	146
S5	6	#4	2	8'-5"	34
* S7	24	#5	STR	3'-8"	92
S8	4	#4	2	8'-7"	23
S9	2	#3	STR	1'-10"	1
S10	2	#5	2	8'-8"	18
S11	5	#4	STR	7'-0"	23
S13	2	#3	STR	1'-4"	1

* NOTE: S7 BARS SHALL BE BENT BEFORE SHIPMENT. HEAT BENDING SHALL NOT BE ALLOWED.

BAR TYPES

ALL BAR DIMENSIONS ARE OUT-TO-OUT

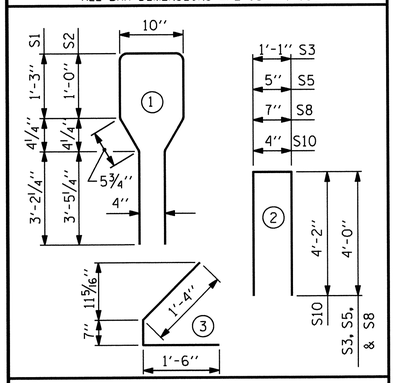

QUANTITIES FOR ONE GIRDER

	REINFORCING STEEL LB.	8000 PSI CONCRETE C.Y.	0.6" Ø L. R. STRANDS No.
	1366	19.9	42

GIRDERS REQUIRED

NUMBER	LENGTH	TOTAL LENGTH
5	97'- 9⅞"	489'- 1⅜"

PROJECT NO. R-3101

ALLEGHANY COUNTY

STATION: 393+57.38 -L-

SHEET 1 OF 3

STATE OF NORTH CAROLINA
DEPARTMENT OF TRANSPORTATION
RALEIGH

AASHTO TYPE IV PRESTRESSED CONCRETE GIRDER CONTINUOUS FOR LIVE LOAD (SPAN A)

(GIRDERS 1, 2, 4, 5 & 6)

NORTH CAROLINA PROFESSIONAL SEAL 7582E ENGINEER D. KLAPPENBACH 7-26-2013

REVISIONS						SHEET NO.
NO.	BY:	DATE:	NO.	BY:	DATE:	S-45
1			3			TOTAL SHEETS
2			4			65

STR. #2 STD. NO. PCG6

ASSEMBLED BY : D. A. GLADDEN DATE : 4-4-13
CHECKED BY : H. T. BARBOUR DATE : 6-11-13

DRAWN BY : ELR 8/91
CHECKED BY : GRP 8/91

REV. 10/17/00R RWW/LES
REV. 5/1/06R TLA/GM
REV. 10/1/11 MAA/GM

DESIGN ENGINEER OF RECORD: H. KIM DATE : 6-11-13

25-JUL-2013 08:59
O:\Structures\Str2\Plans\dgladden\Microstation\R3101_SD_SPR_new.dgn
tbarbour

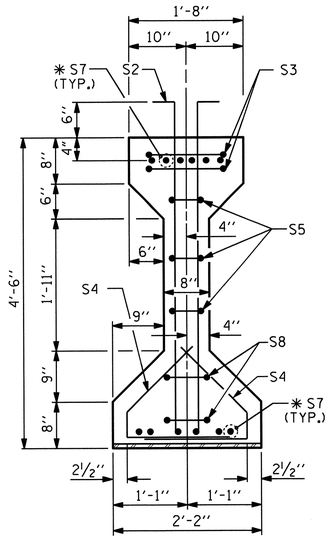

SECTION A-A

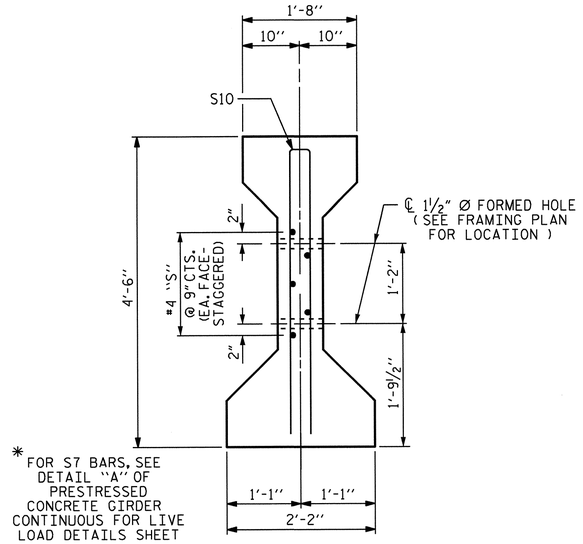

SECTION C-C

(S1 BARS NOT SHOWN)

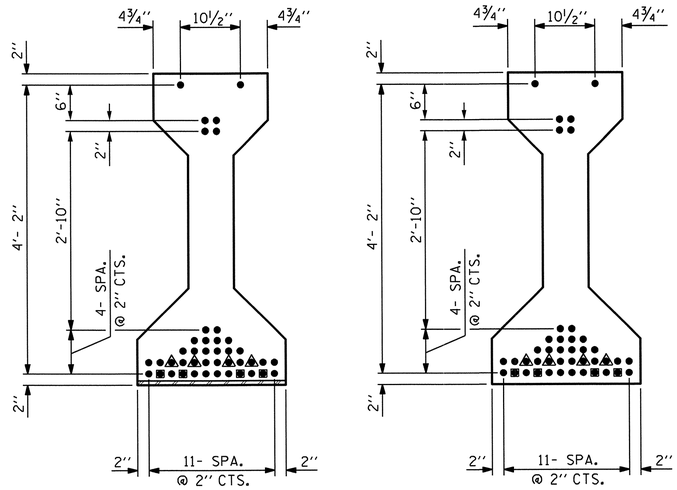

AT END OF GIRDER AT ℄ OF GIRDER

0.6" Ø LOW RELAXATION STRAND LAYOUT

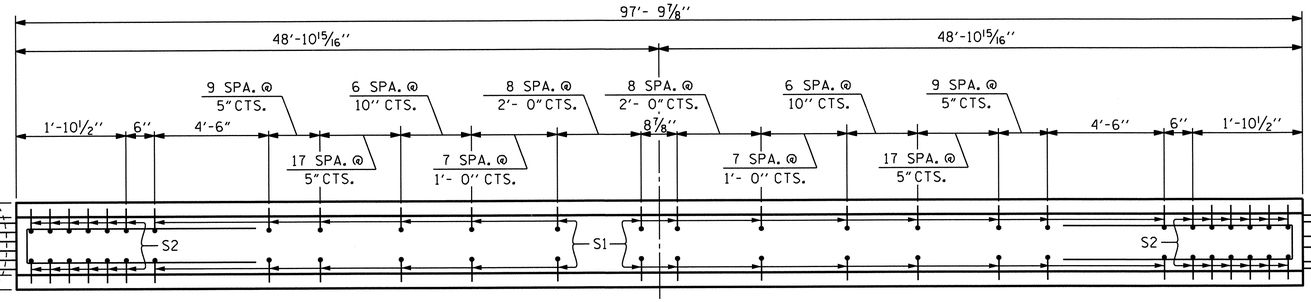

PLAN OF GIRDER

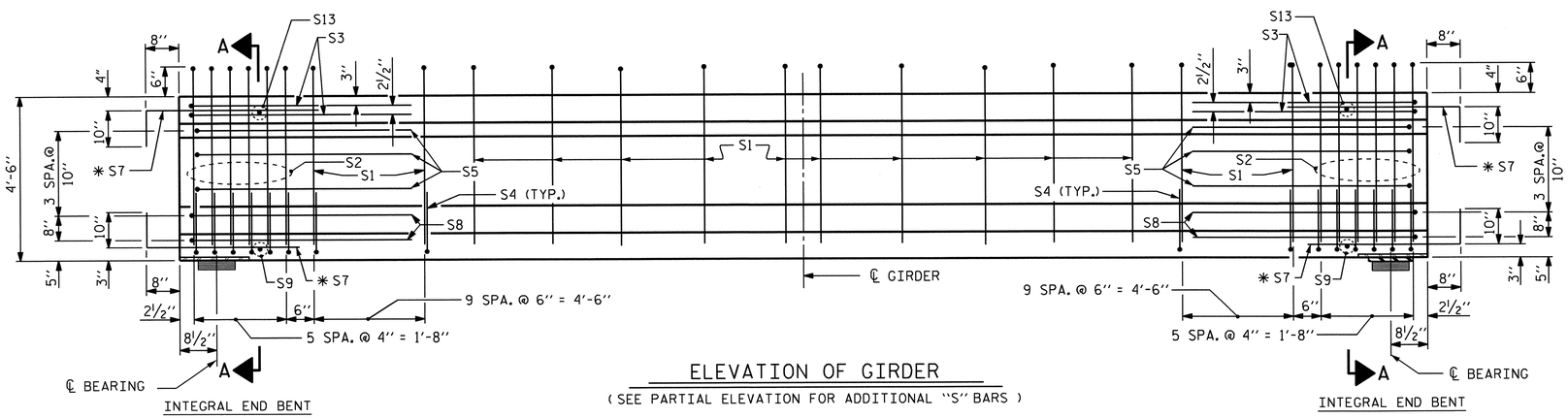

ELEVATION OF GIRDER

(SEE PARTIAL ELEVATION FOR ADDITIONAL "S" BARS)

DEBONDING LEGEND

- ● FULLY BONDED STRANDS
- ▣ STRANDS DEBONDED FOR 16'- 0" FROM END OF GIRDER
- ▲ STRANDS DEBONDED FOR 14'- 0" FROM END OF GIRDER

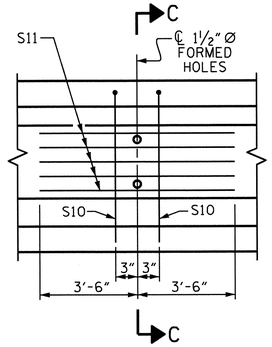

PARTIAL ELEVATION

SHOWING INTERMEDIATE DIAPHRAGM REINFORCING STEEL FOR GIRDERS 1, 2, 4, 5 & 6.

0.6" Ø L. R. GRADE 270 STRANDS

AREA (SQUARE INCHES)	ULTIMATE STRENGTH (LBS. PER STRAND)	APPLIED PRESTRESS (LBS. PER STRAND)
0.217	58,600	43,950

REINFORCING STEEL FOR ONE GIRDER

BAR	NUMBER	SIZE	TYPE	LENGTH	WEIGHT
S1	228	#4	1	5'-4"	812
S2	24	#6	1	5'-4"	192
S3	4	#4	2	9'-1"	24
S4	64	#4	3	3'-5"	146
S5	6	#4	2	8'-5"	34
* S7	24	#5	STR	3'-8"	92
S8	4	#4	2	8'-7"	23
S9	2	#3	STR	1'-10"	1
S10	2	#5	2	8'-8"	18
S11	5	#4	STR	7'- 0"	23
S13	2	#3	STR	1'-4"	1

* NOTE: S7 BARS SHALL BE BENT BEFORE SHIPMENT. HEAT BENDING SHALL NOT BE ALLOWED.

BAR TYPES

ALL BAR DIMENSIONS ARE OUT-TO-OUT

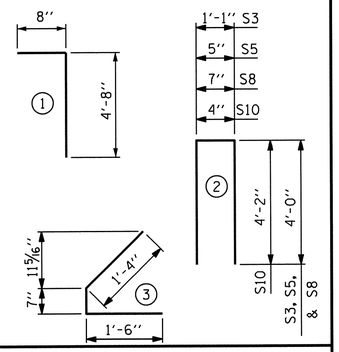

QUANTITIES FOR ONE GIRDER

	REINFORCING STEEL LB.	8000 PSI CONCRETE C.Y.	0.6" Ø L. R. STRANDS No.
	1366	19.9	42

GIRDERS REQUIRED

NUMBER	LENGTH	TOTAL LENGTH
1	97'- 9⅞"	97'- 9⅞"

PROJECT NO. R-3101

ALLEGHANY COUNTY

STATION: 393+57.38 -L-

SHEET 2 OF 3

STATE OF NORTH CAROLINA
DEPARTMENT OF TRANSPORTATION
RALEIGH

AASHTO TYPE IV PRESTRESSED CONCRETE GIRDER CONTINUOUS FOR LIVE LOAD (SPAN A)

(GIRDER 3)

NORTH CAROLINA PROFESSIONAL SEAL 19824 ENGINEER BRADLEY D. KLAPPENBERGER 7-26-2013

REVISIONS						SHEET NO.
NO.	BY:	DATE:	NO.	BY:	DATE:	S-46
1			3			TOTAL SHEETS
2			4			65

ASSEMBLED BY : D. A. GLADDEN DATE : 4-4-13
CHECKED BY : H. T. BARBOUR DATE : 6-11-13

DRAWN BY : ELR 8/91
CHECKED BY : GRP 8/91

REV. 10/17/00R RWW/LES
REV. 5/1/06R TLA/GM
REV. 10/1/11 MAA/GM

DESIGN ENGINEER OF RECORD:
H. KIM DATE : 6-11-13

25-JUL-2013 08:59
O:\Structures\Str2\Plans\dgladden\Microstation\R3101_SD_SPR_new.dgn
tbarbour

STR. #2

STD. NO. PCG6

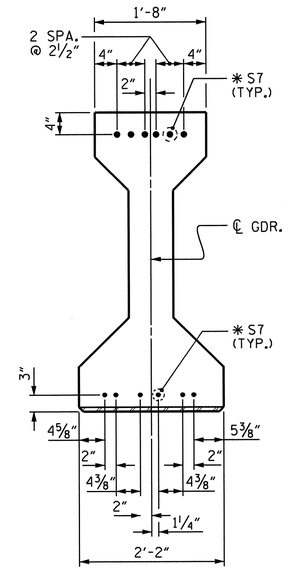

DETAIL "A"

(FOR AASHTO TYPE IV GIRDERS)

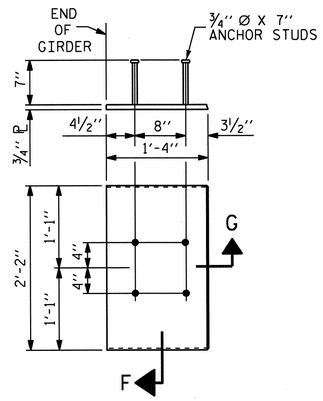

EMBEDDED PLATE "B-1" DETAILS FOR AASHTO TYPE IV GIRDER

(2 REQ'D PER GIRDER)

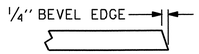

SECTION "G"

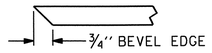

SECTION "F"

(SEE NOTES)

NOTES

ALL PRESTRESSING STRANDS SHALL BE 7-WIRE LOW-RELAXATION GRADE 270 STRANDS AND SHALL CONFORM TO AASHTO M203 EXCEPT FOR SAMPLING REQUIREMENTS WHICH SHALL BE IN ACCORDANCE WITH THE STANDARD SPECIFICATIONS.

ALL REINFORCING STEEL SHALL BE GRADE 60.

EMBEDDED PLATE "B-1" SHALL BE GALVANIZED IN ACCORDANCE WITH THE STANDARD SPECIFICATIONS. BEVEL EDGES OF PLATE "B-1" TO GIVE CLOSE FIT BUT NOT TIGHT FIT TO STEEL CASTING FORM.

ANCHOR STUDS SHALL CONFORM TO AASHTO M169 GRADES 1010 THROUGH 1020 OR APPROVED EQUAL, AND SHALL MEET THE TYPE "B" REQUIREMENTS OF SUBSECTION 7.3 OF THE ANSI/AASHTO/AWS D1.5 BRIDGE WELDING CODE.

AT ENDS OF GIRDERS TO BE EMBEDDED IN CONCRETE DIAPHRAGMS OR END WALLS, PRESTRESSING STRANDS MAY EXTEND A MAXIMUM OF 2" BEYOND THE GIRDER ENDS. OTHERWISE, PRESTRESSING STRANDS SHALL BE CUT FLUSH WITH THE GIRDER ENDS.

THE TRANSFER OF LOAD FROM THE ANCHORAGES TO THE GIRDER SHALL BE DONE WHEN CONCRETE HAS REACHED A COMPRESSIVE STRENGTH OF NOT LESS THAN 6500 PSI.

DEPENDING ON THE TYPE OF SYSTEM USED TO SUPPORT THE DECK SLAB FORMS, PRESET ANCHORS MAY BE NECESSARY IN THE PRESTRESSED CONCRETE GIRDER.

THE TOP SURFACE OF THE GIRDER, EXCLUDING THE OUTSIDE 4", SHALL BE RAKED TO A DEPTH OF ¼".

THE CONTRACTOR HAS THE OPTION TO PROVIDE, AT NO ADDITIONAL COST TO THE DEPARTMENT, 2 ADDITIONAL STRANDS AT THE TOP OF THE GIRDER TO FACILITATE TYING OF THE REINFORCING STEEL. THESE STRANDS SHALL BE PULLED TO A LOAD OF 4500 lbs.

PROJECT NO. R-3101

ALLEGHANY COUNTY

STATION: 393+57.38 -L-

SHEET 3 OF 3

STATE OF NORTH CAROLINA
DEPARTMENT OF TRANSPORTATION
RALEIGH

STANDARD

PRESTRESSED CONCRETE GIRDER CONTINUOUS FOR LIVE LOAD DETAILS

REVISIONS						SHEET NO.
NO.	BY:	DATE:	NO.	BY:	DATE:	S-47
1			3			TOTAL SHEETS
2			4			65

NORTH CAROLINA PROFESSIONAL SEAL 15825 ENGINEER DAVID K. LAPPENBUSCH

7-26-2013

ASSEMBLED BY : D. A. GLADDEN	DATE : 4-4-13		
CHECKED BY : H. T. BARBOUR	DATE : 6-11-13		
DRAWN BY : ELR 11/91		REV. 7/10/01RR	LES/RDR
CHECKED BY : GRP 11/91		REV. 5/1/06	TLA/GM
		REV. 10/1/11	MAA/GM

11-JUN-2013 17:05
R:\Structures\Str2\Plans\dgladden\Microstation\R3101_SD_SPR_new.dgn
dgladden

STR. #2

STD. NO. PCG9

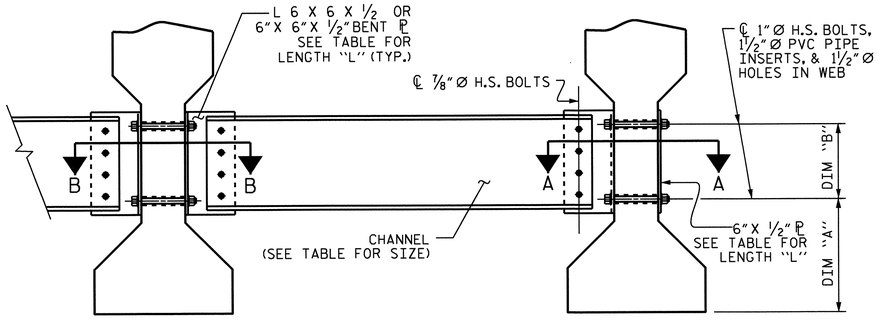

EXTERIOR GIRDER

INTERIOR GIRDER

PART SECTION AT INTERMEDIATE DIAPHRAGM

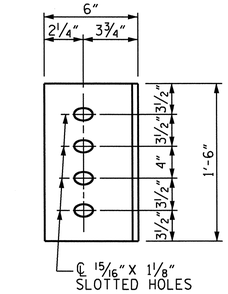

DIAPHRAGM FACE

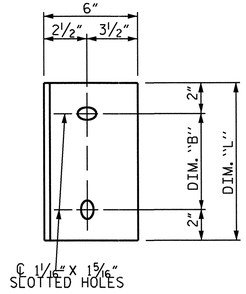

WEB FACE

CONNECTOR PLATE DETAILS

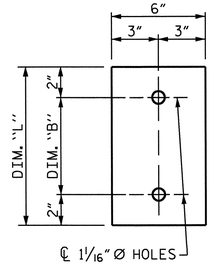

PLATE DETAILS

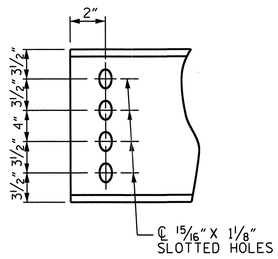

CHANNEL END

STRUCTURAL STEEL NOTES

ALL INTERMEDIATE DIAPHRAGM STEEL AND CONNECTOR PLATES SHALL BE AASHTO M270 GRADE 50 OR APPROVED EQUAL.

TENSION ON THE ASTM A325 BOLTS THROUGH THE CHANNEL MEMBER SHALL BE CALIBRATED USING DIRECT TENSION INDICATOR WASHERS IN ACCORDANCE WITH THE STANDARD SPECIFICATIONS.

TENSION ON THE ASTM A449 BOLTS THROUGH THE GIRDER WEB SHALL BE SNUG TIGHTENED FOLLOWED BY AN ADDITIONAL ¼ TURN.

THE PLATES, BENT PLATES, CHANNELS, AND ANGLES SHALL BE METALLIZED IN ACCORDANCE WITH THE STANDARD SPECIFICATIONS. FOR THERMAL SPRAYED COATINGS (METALLIZATION), SEE SPECIAL PROVISIONS.

FOR METALLIZATION, APPLY AN 8 MIL THICK 99.99 PERCENT ZINC (W-Zn-1) THERMAL SPRAYED COATING WITH A 0.5 MIL THICK SEAL COAT TO ALL STEEL DIAPHRAGM SURFACES IN ACCORDANCE WITH THE THERMAL SPRAYED COATINGS SPECIAL PROVISION AND SECTION 442 OF THE STANDARD SPECIFICATIONS.

USE AN ASTM F436 HARDENED WASHER WITH STANDARD AND SLOTTED HOLES UNDER EACH BOLT HEAD AND NUT.

FOR BOLTS THROUGH THE GIRDER WEB, PROVIDE SUFFICIENT LENGTH OF THREADS ON ALL BOLTS TO ACCOMMODATE WASHERS AND THE THICKNESS OF CONNECTING MEMBER PLUS AT LEAST ¼"PROJECTION BEYOND THE NUT.

INTERMEDIATE DIAPHRAGM ASSEMBLY SHALL COMPLY WITH SECTION 1072 OF THE STANDARD SPECIFICATIONS.

SUBMIT TWO SETS OF WORKING DRAWINGS FOR THE INTERMEDIATE DIAPHRAGM ASSEMBLY FOR REVIEW, COMMENTS AND ACCEPTANCE. AFTER REVIEW, COMMENTS, AND ACCEPTANCE, SUBMIT SEVEN SETS FOR DISTRIBUTION.

IN THE EXTERIOR BAYS, PLACE TEMPORARY STRUTS BETWEEN PRESTRESSED GIRDERS ADJACENT TO THE STEEL DIAPHRAGMS. STRUTS SHALL REMAIN IN PLACE 3 DAYS AFTER CONCRETE IS PLACED.

THE COST OF THE STEEL DIAPHRAGMS AND ASSEMBLIES SHALL BE INCLUDED IN THE UNIT PRICE BID FOR PRESTRESSED CONCRETE GIRDERS.

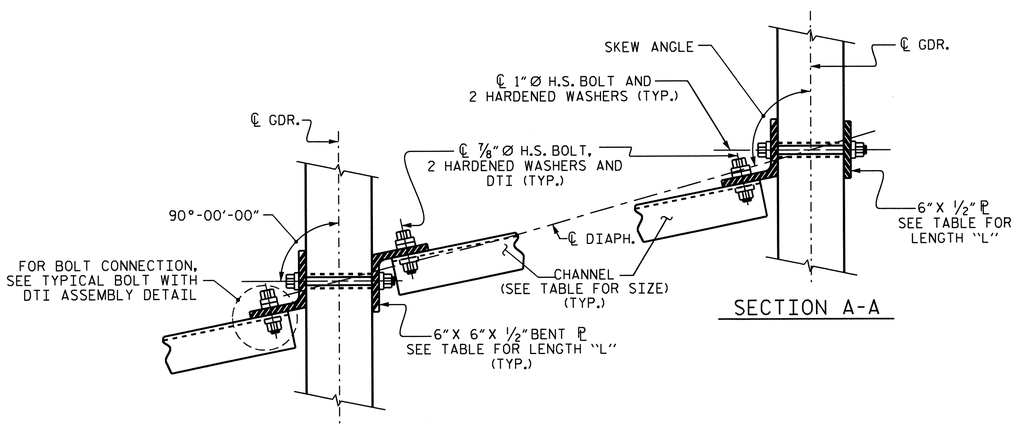

SECTION A-A

SECTION B-B

CONNECTION DETAILS

TABLE

GIRDER TYPE	CHANNEL SIZE	DIM "A"	DIM "B"	DIM "L"
IV	MC 18 x 42.7	1'-9½"	1'-2"	1'-6"

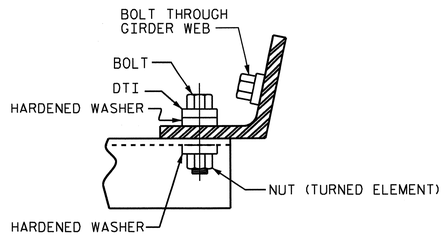

BOLT WITH DTI ASSEMBLY DETAIL

PROJECT NO. R-3101

ALLEGHANY COUNTY

STATION: 393+57.38 -L-

STATE OF NORTH CAROLINA
DEPARTMENT OF TRANSPORTATION
RALEIGH

STANDARD

INTERMEDIATE STEEL DIAPHRAGMS FOR TYPE IV PRESTRESSED CONCRETE GIRDERS

REVISIONS						SHEET NO.
NO.	BY:	DATE:	NO.	BY:	DATE:	S-48
1			3			TOTAL SHEETS
2			4			65

NORTH CAROLINA PROFESSIONAL SEAL 15825 ENGINEER D. KLAPPENBERGER
7-26-2013

ASSEMBLED BY : D. A. GLADDEN	DATE : 3-28-13		
CHECKED BY : H. T. BARBOUR	DATE : 6-11-13		
DRAWN BY : TLA 6/05	ADDED 10/21/05		
CHECKED BY : VC 6/05	REV. 5/1/06RRR	KMM/GM	
	REV. 10/1/11	MAA/GM	

11-JUN-2013 17:06
R:\Structures\Str2\Plans\dgladden\Microstation\R3101_SD_SPR_new.dgn
dgladden

STR. #2 STD. NO. PCG10

DEAD LOAD DEFLECTION TABLE FOR GIRDERS

0.6"Ø LOW RELAXATION	GIRDER #1										
TENTH POINTS	0	.1	.2	.3	.4	.5	.6	.7	.8	.9	0
CAMBER (GIRDER ALONE IN PLACE) ↑	0	0.103	0.195	0.267	0.312	0.328	0.312	0.267	0.195	0.103	0
✳ DEFLECTION DUE TO SUPERIMPOSED D.L. ↓	0	0.044	0.083	0.113	0.132	0.139	0.132	0.113	0.083	0.044	0
FINAL CAMBER ↑	0	11/16"	1 3/8"	1 7/8"	2 3/16"	2 1/4"	2 3/16"	1 7/8"	1 3/8"	11/16"	0

DEAD LOAD DEFLECTION TABLE FOR GIRDERS

0.6"Ø LOW RELAXATION	GIRDER #2										
TENTH POINTS	0	.1	.2	.3	.4	.5	.6	.7	.8	.9	0
CAMBER (GIRDER ALONE IN PLACE) ↑	0	0.103	0.195	0.267	0.312	0.328	0.312	0.267	0.195	0.103	0
✳ DEFLECTION DUE TO SUPERIMPOSED D.L. ↓	0	0.047	0.089	0.121	0.142	0.149	0.142	0.121	0.089	0.047	0
FINAL CAMBER ↑	0	11/16"	1 1/4"	1 3/4"	2 1/16"	2 1/8"	2 1/16"	1 3/4"	1 1/4"	11/16"	0

DEAD LOAD DEFLECTION TABLE FOR GIRDERS

0.6"Ø LOW RELAXATION	GIRDER #3										
TENTH POINTS	0	.1	.2	.3	.4	.5	.6	.7	.8	.9	0
CAMBER (GIRDER ALONE IN PLACE) ↑	0	0.103	0.195	0.267	0.312	0.328	0.312	0.267	0.195	0.103	0
✳ DEFLECTION DUE TO SUPERIMPOSED D.L. (STAGE I) ↓	0	0.031	0.059	0.081	0.095	0.100	0.095	0.081	0.059	0.031	0
✳ DEFLECTION DUE TO SUPERIMPOSED D.L. (STAGE II) ↓	0	0.016	0.030	0.040	0.047	0.049	0.047	0.040	0.030	0.016	0
FINAL CAMBER ↑	0	11/16"	1 1/4"	1 3/4"	2 1/16"	2 1/8"	2 1/16"	1 3/4"	1 1/4"	11/16"	0

DEAD LOAD DEFLECTION TABLE FOR GIRDERS

0.6"Ø LOW RELAXATION	GIRDERS #4 & #5										
TENTH POINTS	0	.1	.2	.3	.4	.5	.6	.7	.8	.9	0
CAMBER (GIRDER ALONE IN PLACE) ↑	0	0.103	0.195	0.267	0.312	0.328	0.312	0.267	0.195	0.103	0
✳ DEFLECTION DUE TO SUPERIMPOSED D.L. ↓	0	0.047	0.089	0.121	0.142	0.149	0.142	0.121	0.089	0.047	0
FINAL CAMBER ↑	0	11/16"	1 1/4"	1 3/4"	2 1/16"	2 1/8"	2 1/16"	1 3/4"	1 1/4"	11/16"	0

DEAD LOAD DEFLECTION TABLE FOR GIRDERS

0.6"Ø LOW RELAXATION	GIRDER #6										
TENTH POINTS	0	.1	.2	.3	.4	.5	.6	.7	.8	.9	0
CAMBER (GIRDER ALONE IN PLACE) ↑	0	0.103	0.195	0.267	0.312	0.328	0.312	0.267	0.195	0.103	0
✳ DEFLECTION DUE TO SUPERIMPOSED D.L. ↓	0	0.044	0.083	0.113	0.132	0.139	0.132	0.113	0.083	0.044	0
FINAL CAMBER ↑	0	11/16"	1 3/8"	1 7/8"	2 3/16"	2 1/4"	2 3/16"	1 7/8"	1 3/8"	11/16"	0

✳ INCLUDES FUTURE WEARING SURFACE
ALL VALUES ARE SHOWN IN FEET (DECIMAL FORM), EXCEPT " FINAL CAMBER ", WHICH IS GIVEN IN INCHES (FRACTION FORM).

NORTH CAROLINA PROFESSIONAL SEAL 15825 ENGINEER BRUCE D. KLAPPENBACH
7-26-2013

PROJECT NO. R-3101
ALLEGHANY COUNTY
STATION: 393+57.38 -L-

STATE OF NORTH CAROLINA
DEPARTMENT OF TRANSPORTATION
RALEIGH

DEAD LOAD DEFLECTIONS

REVISIONS						SHEET NO.
NO.	BY:	DATE:	NO.	BY:	DATE:	S-49
1			3			TOTAL SHEETS
2			4			65

DRAWN BY : R. P. PATEL DATE : 6-6-13
CHECKED BY : D. HODGE DATE : 6/13
DESIGN ENGINEER OF RECORD: H. KIM DATE : 4/13

11-JUN-2013 17:32
R:\Structures\Str2\Plans\raman\R-3101_SD_DL.dgn
dgladden

STR. #2

NOTES

THE ELASTOMER IN THE STEEL REINFORCED BEARINGS SHALL HAVE A SHEAR MODULUS OF 0.160 KSI, IN ACCORDANCE WITH AASHTO M251.

FOR STEEL REINFORCED ELASTOMERIC BEARINGS, SEE SPECIAL PROVISIONS.

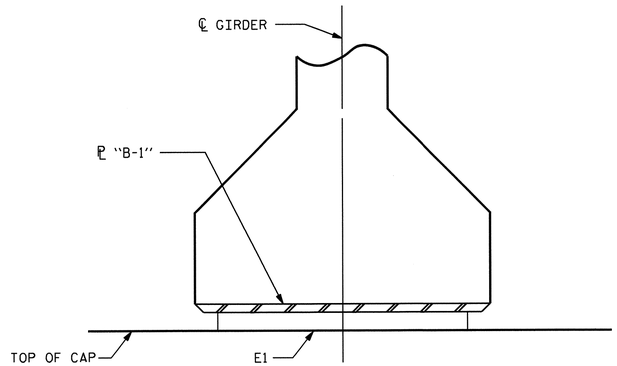

SECTION E-E

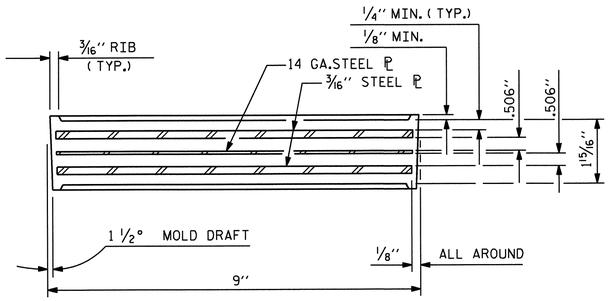

TYPICAL SECTION OF ELASTOMERIC BEARINGS

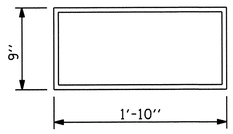

E1 (12 REQ'D)

PLAN VIEW OF ELASTOMERIC BEARING

TYPE IV

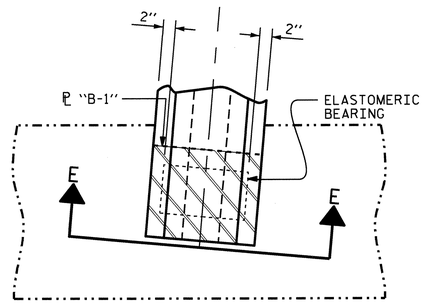

TYPICAL PLAN @ END BENT

MAXIMUM ALLOWABLE SERVICE LOADS	
D.L.+L.L. (NO IMPACT)	
TYPE IV	225 K

PROJECT NO. R-3101

ALLEGHANY COUNTY

STATION: 393+57.38 -L-

STATE OF NORTH CAROLINA
DEPARTMENT OF TRANSPORTATION
RALEIGH

STANDARD

ELASTOMERIC BEARING DETAILS

PRESTRESSED CONCRETE GIRDER SUPERSTRUCTURE

NORTH CAROLINA PROFESSIONAL SEAL 15825 ENGINEER BRUCE D. KLAPPERICH
7-26-2013

REVISIONS						SHEET NO.
NO.	BY:	DATE:	NO.	BY:	DATE:	S-50
1			3			TOTAL SHEETS
2			4			65

STD. NO. EB3

ASSEMBLED BY : D. A. GLADDEN	DATE : 5-28-13	
CHECKED BY : H. T. BARBOUR	DATE : 6-11-13	
DRAWN BY : WJH 8/89	REV. 5/1/06	TLA/GM
CHECKED BY : CRK 8/89	REV. 10/1/11	MAA/GM
	REV. 10/24/12	AAC/MAA

11-JUN-2013 17:06
R:\Structures\Str2\Plans\dgladden\Microstation\R3101_SD_SPR_new.dgn
dgladden

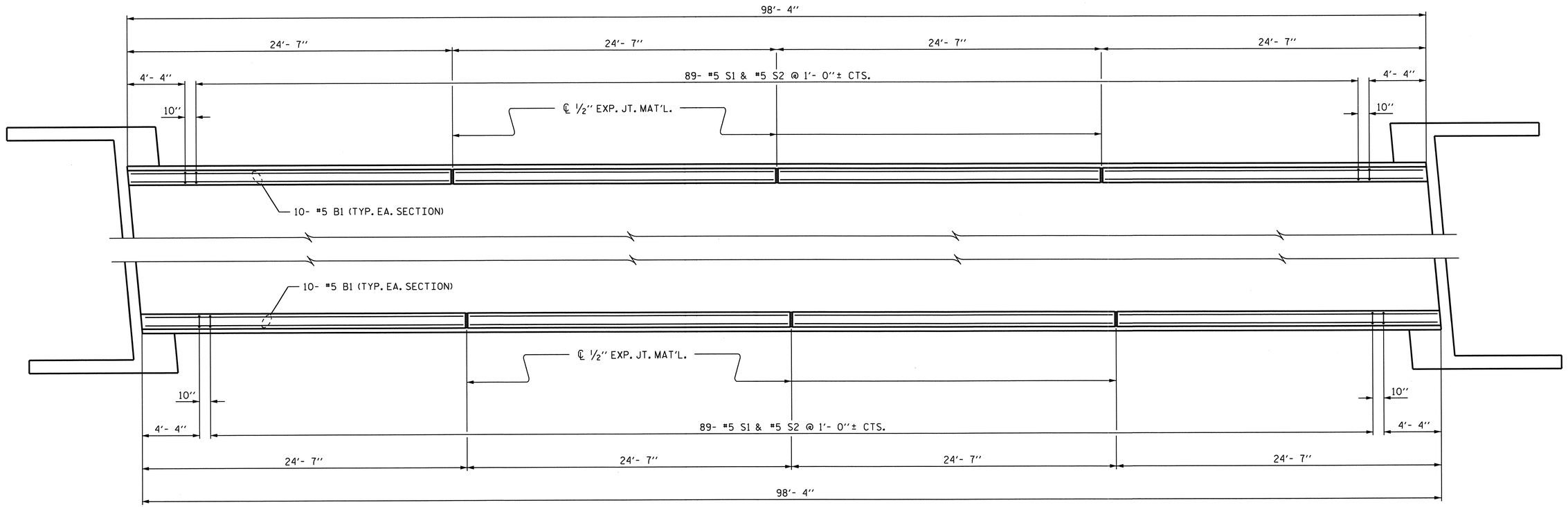

PLAN OF VERTICAL CONCRETE BARRIER RAIL

PROJECT NO. R-3101

ALLEGHANY COUNTY

STATION: 393+57.38 -L-

SHEET 1 OF 3

STATE OF NORTH CAROLINA
DEPARTMENT OF TRANSPORTATION
RALEIGH

VERTICAL CONCRETE BARRIER RAIL

REVISIONS						SHEET NO.
NO.	BY:	DATE:	NO.	BY:	DATE:	S-51
1			3			TOTAL SHEETS
2			4			65

NORTH CAROLINA PROFESSIONAL SEAL 15825 ENGINEER BRUCE O. KLAPPENBACH
7-26-2013

STR. #2

DRAWN BY : D. A. GLADDEN DATE : 5-1-13
CHECKED BY : H. T. BARBOUR DATE : 6-11-13
DESIGN ENGINEER OF RECORD: H. KIM DATE : 6-11-13

11-JUN-2013 17:07
R:\Structures\Str2\Plans\dgladden\Microstation\R3101_SD_SPR_new.dgn
dgladden

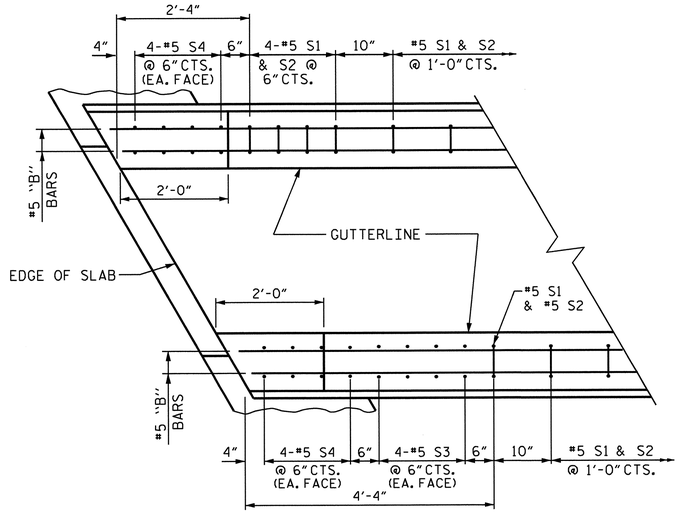

PLAN

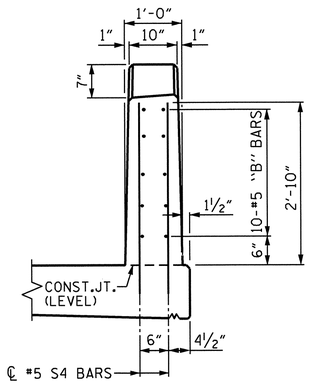

END VIEW

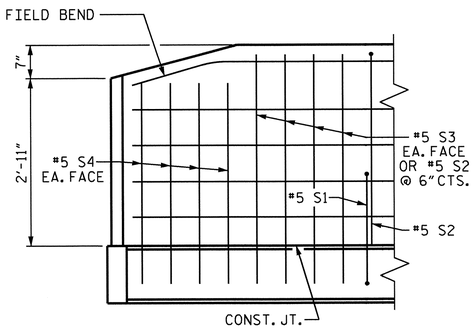

SIDE VIEW

END OF RAIL DETAILS

FOR ADHESIVE ANCHORING AT SAWED JOINTS

NOTES

THE BARRIER RAIL IN EACH SPAN SHALL NOT BE CAST UNTIL ALL SLAB CONCRETE IN THAT SPAN HAS BEEN CAST AND HAS REACHED A MINIMUM COMPRESSIVE STRENGTH OF 3,000 PSI.

ALL REINFORCING STEEL IN BARRIER RAILS SHALL BE EPOXY COATED.

THE #5 S3 & S4 BARS SHALL BE INSTALLED, USING AN ADHESIVE ANCHORING SYSTEM, AFTER SAWING THE JOINT. THE YIELD LOAD FOR THE #5 S3 & S4 BARS IS 18.6 KIPS. FIELD TESTING FOR THE ADHESIVE BONDING SYSTEM IS NOT REQUIRED.

GROOVED CONTRACTION JOINTS, 1½" IN DEPTH, SHALL BE TOOLED IN ALL EXPOSED FACES OF THE BARRIER RAIL AND IN ACCORDANCE WITH ARTICLE 825-10(B) OF THE STANDARD SPECIFICATIONS. THE CONTRACTION JOINT SHALL BE LOCATED AT EACH THIRD POINT BETWEEN BARRIER RAIL EXPANSION JOINTS. ONLY ONE CONTRACTION JOINT IS REQUIRED AT MIDPOINT OF BARRIER RAIL SEGMENTS LESS THAN 20 FEET IN LENGTH AND NO CONTRACTION JOINTS ARE REQUIRED FOR THOSE SEGMENTS LESS THAN 10 FEET IN LENGTH.

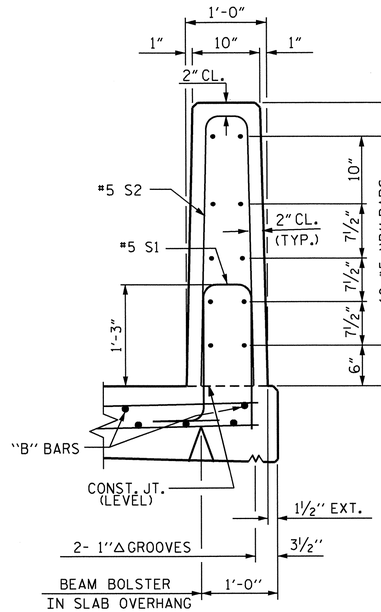

SECTION THRU RAIL

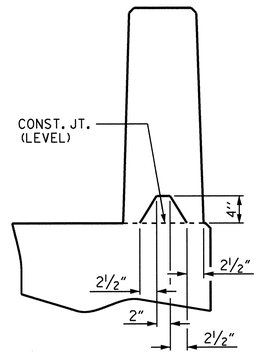

SECTION S-S

AT DAM IN OPEN JOINT
(THIS IS TO BE USED ONLY WHEN SLIP FORM IS USED)

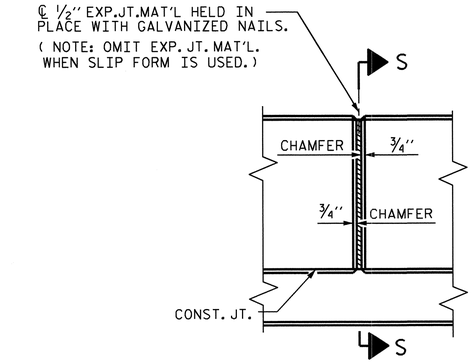

ELEVATION AT EXPANSION JOINTS

BARRIER RAIL DETAILS

BAR TYPES

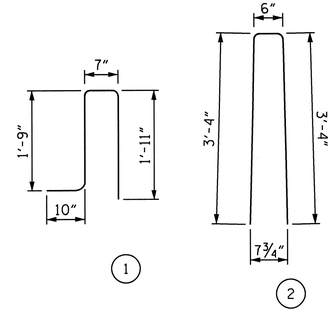

ALL BAR DIMENSIONS ARE OUT TO OUT

BILL OF MATERIAL

FOR VERTICAL CONCRETE BARRIER RAIL ONLY

BAR	NO.	SIZE	TYPE	LENGTH	WEIGHT
* B1	80	#5	STR	24'-2"	2016
* S1	188	#5	1	5'-1"	997
* S2	188	#5	2	7'-2"	1405
* S3	16	#5	STR	4'-0"	67
* S4	32	#5	STR	3'-6"	117

* EPOXY COATED REINFORCING STEEL	4602	LBS.
CLASS AA CONCRETE	23.4	CU. YDS.
VERTICAL CONCRETE BARRIER RAIL	196.67	LIN. FT.

PROJECT NO. R-3101

ALLEGHANY COUNTY

STATION: 393+57.38 -L-

SHEET 2 OF 3

STATE OF NORTH CAROLINA
DEPARTMENT OF TRANSPORTATION
RALEIGH

VERTICAL CONCRETE BARRIER RAIL

REVISIONS						SHEET NO.
NO.	BY:	DATE:	NO.	BY:	DATE:	S-52
1			3			TOTAL SHEETS
2			4			65

ASSEMBLED BY : D. A. GLADDEN DATE : 5-1-13
CHECKED BY : H. T. BARBOUR DATE : 6-11-13

DRAWN BY : MAA 5/10
CHECKED BY : GM 5/10

ADDED 5/6/10
REV. 10/1/11 MAA/GM
REV. 12/5/11 MAA/GM

11-JUN-2013 17:08
R:\Structures\Str2\Plans\dgladden\Microstation\R3101_SD_SPR_new.dgn
dgladden

STR. #2 STD. NO. CBR2(SHT 3)

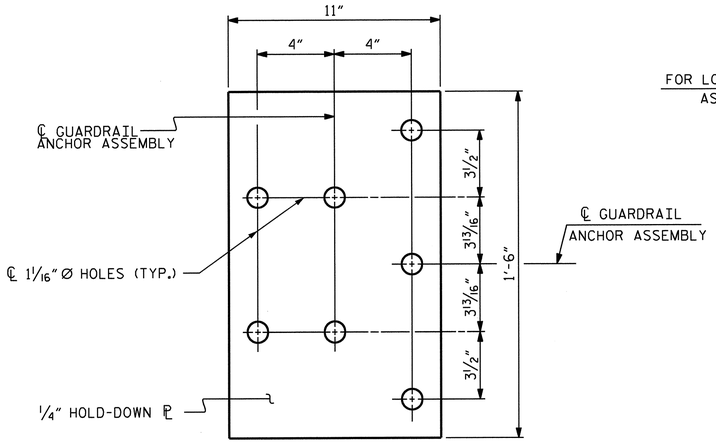

PLAN

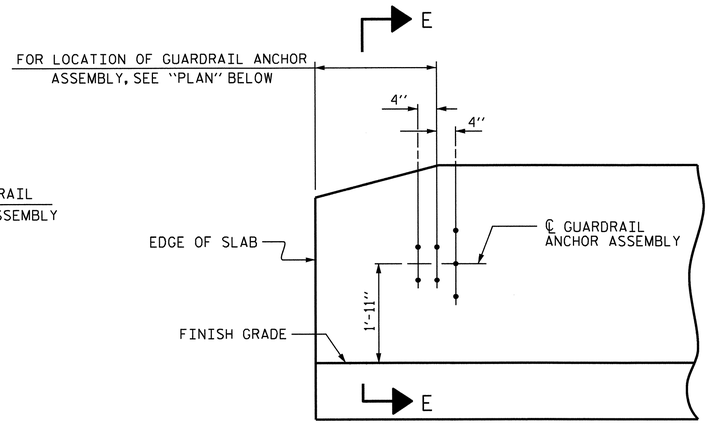

ELEVATION

NOTES

THE GUARDRAIL ANCHOR ASSEMBLY SHALL CONSIST OF A 1/4" HOLD DOWN PLATE AND 7 - 7/8" Ø BOLTS WITH NUTS AND WASHERS.

THE HOLD-DOWN PLATE SHALL CONFORM TO AASHTO M270 GRADE 36. AFTER FABRICATION, THE HOLD-DOWN PLATE SHALL BE HOT-DIP GALVANIZED IN ACCORDANCE WITH AASHTO M111.

BOLTS SHALL CONFORM TO THE REQUIREMENTS OF ASTM A307 AND NUTS SHALL CONFORM TO THE REQUIREMENTS OF AASHTO M291. BOLTS, NUTS AND WASHERS SHALL BE GALVANIZED. (AT THE CONTRACTOR'S OPTION, STAINLESS STEEL BOLTS, NUTS AND WASHERS MAY BE USED AS AN ALTERNATE FOR THE 7/8" Ø GALVANIZED BOLTS, NUTS AND WASHERS. THEY SHALL CONFORM TO OR EXCEED THE MECHANICAL REQUIREMENTS OF ASTM A307. THE USE OF THIS ALTERNATE SHALL BE APPROVED BY THE ENGINEER.)

THE GUARDRAIL ANCHOR ASSEMBLY IS REQUIRED AT ALL POINTS WHERE APPROACH GUARDRAIL IS TO BE ATTACHED TO THE END OF BARRIER RAIL. FOR POINTS OF ATTACHMENT, SEE SKETCH.

AFTER INSTALLATION, THE EXPOSED THREAD OF THE BOLT SHALL BE BURRED WITH A SHARP POINTED TOOL.

THE COST OF THE GUARDRAIL ANCHOR ASSEMBLY SHALL BE INCLUDED IN THE UNIT CONTRACT PRICE BID FOR VERTICAL CONCRETE BARRIER RAIL.

THE VERTICAL REINFORCING BARS MAY BE SHIFTED SLIGHTLY IN THE VERTICAL CONCRETE BARRIER RAIL TO CLEAR ASSEMBLY BOLTS.

THE 1 1/4" Ø HOLES SHALL BE FORMED OR DRILLED WITH A CORE BIT. IMPACT TOOLS WILL NOT BE PERMITTED. ANY CONCRETE DAMAGED BY THIS WORK SHALL BE REPAIRED TO THE SATISFACTION OF THE ENGINEER.

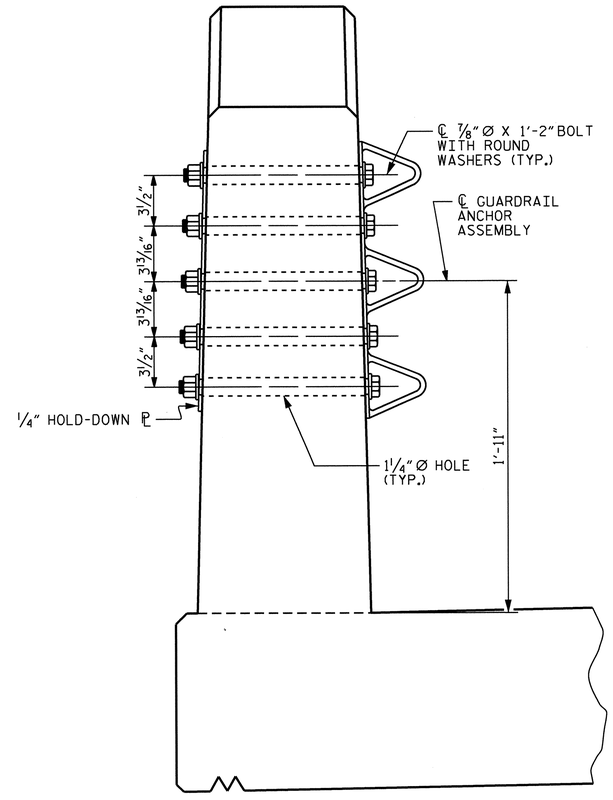

SECTION E-E

GUARDRAIL ANCHOR ASSEMBLY DETAILS

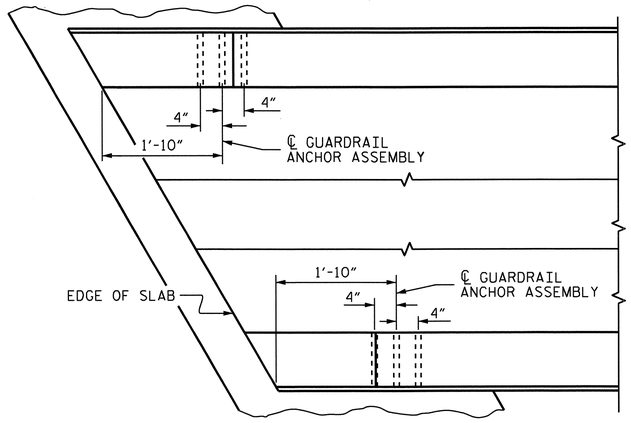

PLAN

LOCATION OF ANCHORS FOR GUARDRAIL

END BENT #1 SHOWN, END BENT #2 SIMILAR.

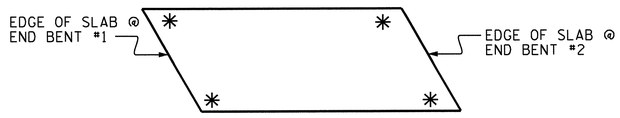

SKETCH SHOWING POINTS OF ATTACHMENT

✳ DENOTES GUARDRAIL ANCHOR ASSEMBLY

PROJECT NO. R-3101

ALLEGHANY COUNTY

STATION: 393+57.38 -L-

SHEET 3 OF 3

STATE OF NORTH CAROLINA
DEPARTMENT OF TRANSPORTATION
RALEIGH

STANDARD
GUARDRAIL ANCHORAGE FOR VERTICAL CONCRETE BARRIER RAIL

REVISIONS						SHEET NO.
NO.	BY:	DATE:	NO.	BY:	DATE:	S-53
1			3			TOTAL SHEETS
2			4			65

NORTH CAROLINA PROFESSIONAL SEAL 15825 ENGINEER BRUCE D. KLAPPENBACH
7-24-2013

ASSEMBLED BY : D. A. GLADDEN	DATE : 5-1-13
CHECKED BY : H. T. BARBOUR	DATE : 6-11-13
DRAWN BY : MAA 5/10	ADDED 5/6/10
CHECKED BY : GM 5/10	REV. 10/1/11 MAA/GM
	REV. 12/5/11 MAA/GM

11-JUN-2013 17:08
R:\Structures\Str2\Plans\dgladden\Microstation\R3101_SD_SPR_new.dgn
dgladden

(SHT 3) STD. NO. GRA3

BILL OF MATERIAL

STAGE I

BAR	NO.	SIZE	TYPE	LENGTH	WEIGHT
✱ A1	193	#5	STR	19'- 9"	3976
A2	193	#5	STR	19'- 9"	3976
✱ A101	1	#5	STR	14'- 4"	15
✱ A102	1	#5	STR	8'- 7"	9
✱ A103	1	#5	STR	2'-11"	3
✱ A104	1	#5	STR	16'- 9"	17
✱ A105	1	#5	STR	11'- 1"	12
✱ A106	1	#5	STR	5'- 4"	6
A201	1	#5	STR	14'- 4"	15
A202	1	#5	STR	8'- 7"	9
A203	1	#5	STR	2'-11"	3
A204	1	#5	STR	16'- 9"	17
A205	1	#5	STR	11'- 1"	12
A206	1	#5	STR	5'- 4"	6
✱ B1	80	#6	STR	19'- 9"	2373
✱ B2	42	#4	STR	22'- 2"	622
B3	46	#5	STR	50'- 1"	2403
✱ D1	195	#5	STR	5'- 0"	1017
H1	14	#5	3	13'- 7"	198
H2	14	#5	4	13'- 0"	204
K1	2	#4	STR	2'- 8"	4
K2	1	#4	STR	4'- 8"	3
K3	2	#4	STR	5'- 3"	7
K4	1	#4	STR	5'- 0"	3
K5	1	#4	STR	4'- 6"	3
K6	2	#4	STR	6'- 7"	9
K7	4	#4	STR	7'- 7"	20
K8	2	#4	STR	7'- 1"	9
K9	2	#4	STR	6'- 1"	8
K14	5	#4	STR	22'- 9"	76
✱ S1	32	#4	1	11'-11"	255
✱ S2	32	#4	1	10'-10"	232
U1	32	#4	2	11'- 9"	251
U2	3	#4	2	14'- 3"	29

REINFORCING STEEL = 7274 LBS
EPOXY COATED REINF. STEEL = 8537 LBS

STAGE II

BAR	NO.	SIZE	TYPE	LENGTH	WEIGHT
✱ A3	192	#5	STR	25'- 9"	5157
A4	192	#5	STR	25'- 9"	5157
✱ A301	1	#5	STR	22'- 9"	24
✱ A302	1	#5	STR	17'- 1"	18
✱ A303	1	#5	STR	11'- 4"	12
✱ A304	1	#5	STR	5'- 7"	6
✱ A305	1	#5	STR	20'- 0"	21
✱ A306	1	#5	STR	14'- 4"	15
✱ A307	1	#5	STR	8'- 7"	9
✱ A308	1	#5	STR	2'-11"	3
A401	1	#5	STR	22'- 9"	24
A402	1	#5	STR	17'- 1"	18
A403	1	#5	STR	11'- 4"	12
A404	1	#5	STR	5'- 7"	6
A405	1	#5	STR	20'- 0"	21
A406	1	#5	STR	14'- 4"	15
A407	1	#5	STR	8'- 7"	9
A408	1	#5	STR	2'-11"	3
✱ B1	104	#6	STR	19'- 9"	3085
✱ B2	54	#4	STR	22'- 2"	800
B3	58	#5	STR	50'- 1"	3030
H3	14	#5	4	13'- 3"	193
H4	14	#5	3	13'- 4"	195
K1	2	#4	STR	2'- 8"	4
K2	1	#4	STR	4'- 8"	3
K3	2	#4	STR	5'- 3"	7
K4	1	#4	STR	5'- 0"	3
K5	1	#4	STR	4'- 6"	3
K6	2	#4	STR	6'- 7"	9
K7	4	#4	STR	7'- 7"	20
K8	2	#4	STR	7'- 1"	9
K9	2	#4	STR	6'- 1"	8
K10	1	#4	STR	4'- 0"	3
K11	2	#4	STR	4'-11"	7
K12	1	#4	STR	4'- 7"	3
K13	1	#4	STR	3'- 6"	2
K15	5	#4	STR	28'-10"	96
✱ S1	40	#4	1	11'-11"	318
✱ S2	40	#4	1	10'-10"	289
U1	40	#4	2	11'- 9"	314
U2	3	#4	2	14'- 3"	29

REINFORCING STEEL = 9203 LBS
EPOXY COATED REINF. STEEL = 9757 LBS

BAR TYPES

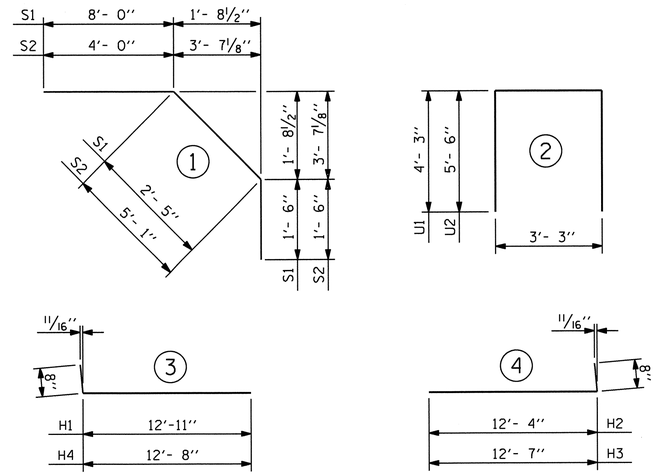

ALL BAR DIMENSIONS ARE OUT TO OUT

SUPERSTRUCTURE REINFORCING STEEL LENGTHS ARE BASED ON THE FOLLOWING MINIMUM SPLICE LENGTHS

BAR SIZE	SUPERSTRUCTURE EXCEPT APPROACH SLABS, PARAPET, AND BARRIER RAIL		APPROACH SLABS		PARAPET AND BARRIER RAIL
	EPOXY COATED	UNCOATED	EPOXY COATED	UNCOATED	
#4	2'-0"	1'-9"	2'-0"	1'-9"	2'-9"
#5	2'-6"	2'-2"	2'-6"	2'-2"	3'-5"
#6	3'-0"	2'-7"	3'-10"	2'-7"	4'-4"
#7	5'-3"	3'-6"			
#8	6'-10"	4'-7"			

GROOVING BRIDGE FLOORS

APPROACH SLABS	1161	SQ.FT.
BRIDGE DECK	4018	SQ.FT.
TOTAL	5179	SQ.FT.

SUPERSTRUCTURE BILL OF MATERIAL

STAGE I

	CLASS AA CONCRETE	REINFORCING STEEL	✱ EPOXY COATED REINFORCING STEEL
	(CU. YDS.)	(LBS.)	(LBS.)
POUR 1	52.2	7274	8537
POUR 2 ✱✱✱	40.6		
TOTALS ✱✱	92.8	7274	8537

STAGE II

	CLASS AA CONCRETE	REINFORCING STEEL	✱ EPOXY COATED REINFORCING STEEL
	(CU. YDS.)	(LBS.)	(LBS.)
POUR 1	67.5	9203	9757
POUR 2 ✱✱✱	48.7		
TOTALS ✱✱	116.2	9203	9757

✱✱ QUANTITIES FOR CONCRETE BARRIER RAIL ARE NOT INCLUDED

✱✱✱ POUR #2 INCLUDES 6'-10" SECTION OF THE BRIDGE DECK AND UPPER PART OF INTEGRAL END BENTS AND WINGS.

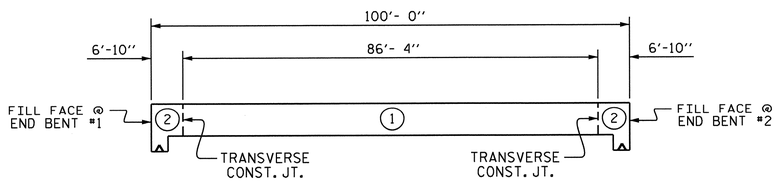

POURING SEQUENCE

POUR #2 CAN NOT BE POURED UNTIL POURS #1 HAS REACH A MINIMUN STRENGTH OF 3000 PSI.

POUR #2 INCLUDES 6'-10" SECTION OF THE BRIDGE DECK AND UPPER PART OF INTEGRAL END BENTS AND WINGS.

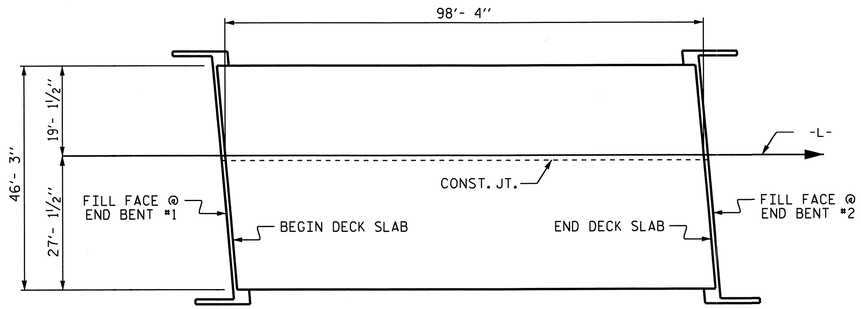

LAYOUT FOR COMPUTING AREA REINFORCED CONCRETE DECK SLAB (SQ. FT. = 4,548)

NORTH CAROLINA PROFESSIONAL SEAL 15825 ENGINEER D. KL APPENBRINK
7-26-2013

PROJECT NO. R-3101
ALLEGHANY COUNTY
STATION: 393+57.38 -L-

STATE OF NORTH CAROLINA
DEPARTMENT OF TRANSPORTATION
RALEIGH

SUPERSTRUCTURE BILL OF MATERIAL

REVISIONS						SHEET NO.
NO.	BY:	DATE:	NO.	BY:	DATE:	S-54
1			3			TOTAL SHEETS
2			4			65

ASSEMBLED BY : D. A. GLADDEN DATE : 4-10-13
CHECKED BY : H. T. BARBOUR DATE : 6-11-13

DRAWN BY : JMB 5/87
CHECKED BY : SJD 9/87

REV. 6/1/94 EEM/GRP
REV. 8/16/99 RWW/LES
REV. 5/1/06 TLA/GM

11-JUN-2013 17:08
R:\Structures\Str2\Plans\dgladden\Microstation\R3101_SD_SPR_new.dgn
dgladden

STR. #2 STD. NO. BOM2

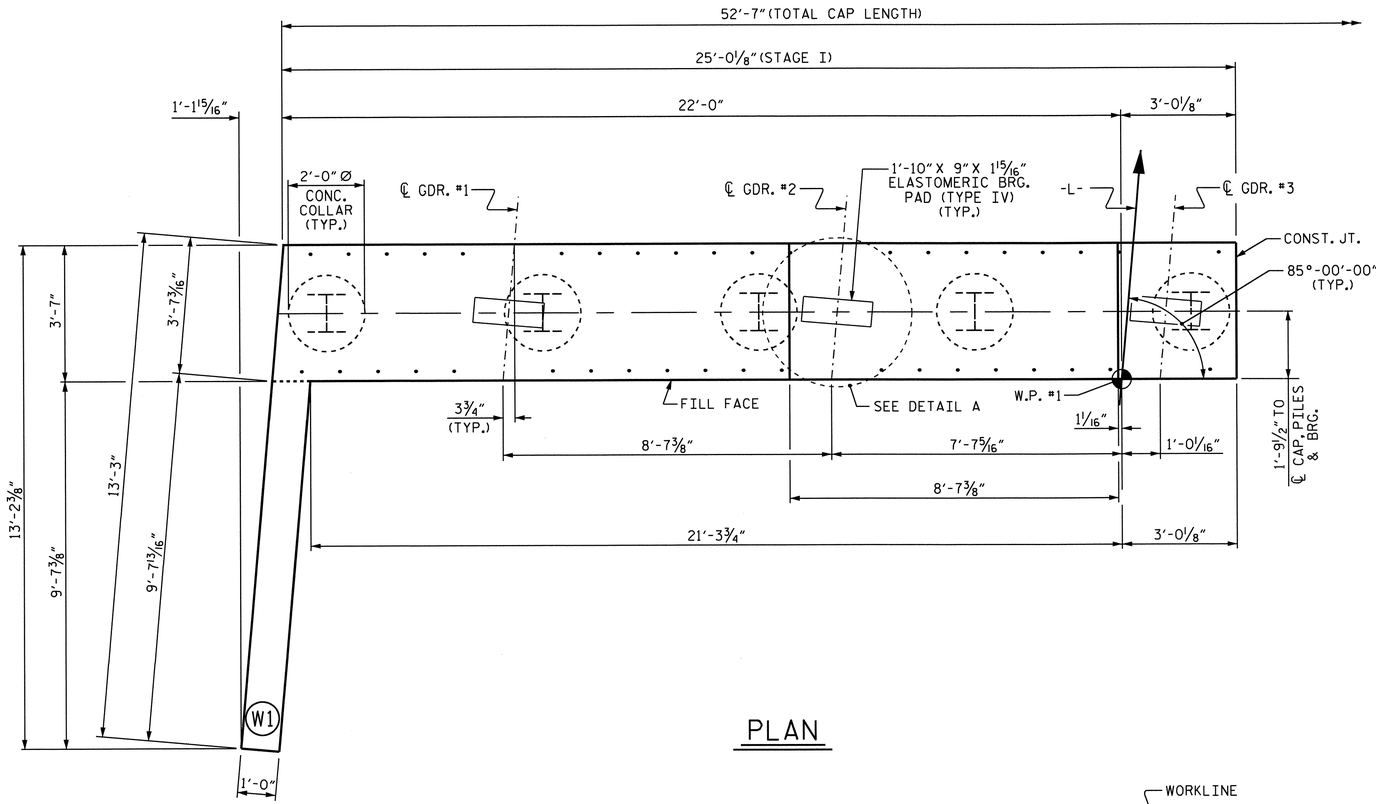

PLAN

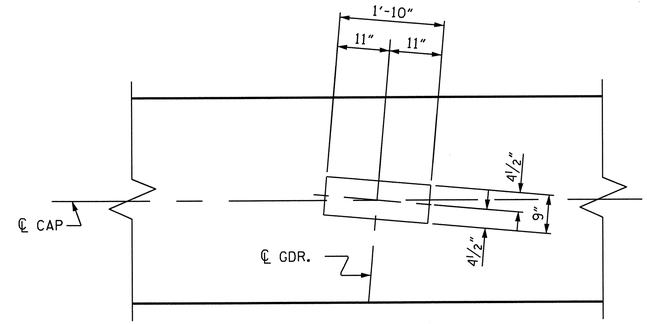

DETAIL A

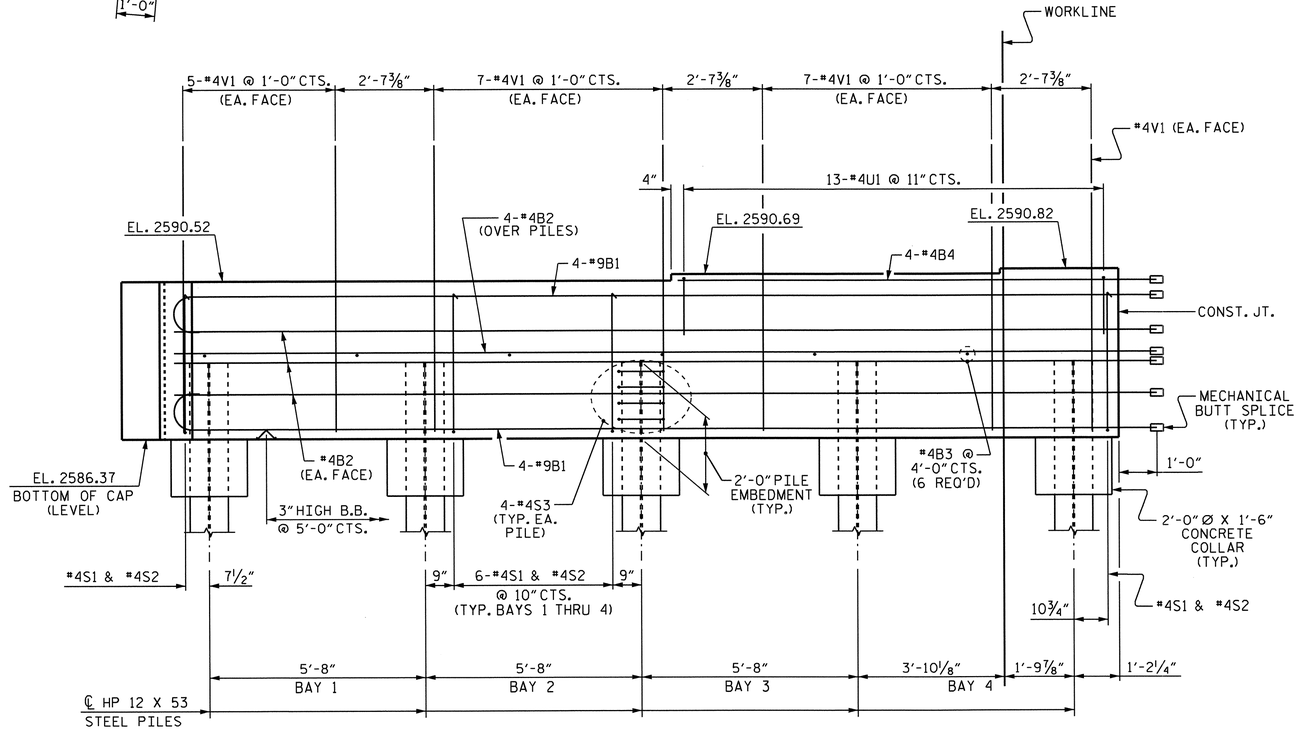

ELEVATION

NOTES

SEE SUPERSTRUCTURE SHEETS FOR UPPER PART OF INTEGRAL END BENT DETAILS.

INSTALL THE 4" DIA. DRAIN PIPE THROUGH THE WING WALL AS REQUIRED FOR REINFORCED BRIDGE APPROACH FILLS. SEE THE ROADWAY PLANS. REINFORCING STEEL IN THE WING WALL MAY BE SHIFTED AS NECESSARY TO CLEAR THE DRAIN PIPE.

PROJECT NO. R-3101

ALLEGHANY COUNTY

STATION: 393+57.38 -L-

SHEET 1 OF 4

STATE OF NORTH CAROLINA
DEPARTMENT OF TRANSPORTATION
RALEIGH

SUBSTRUCTURE

INTEGRAL END BENT #1 (STAGE I)

NORTH CAROLINA PROFESSIONAL SEAL 15825 ENGINEER BRUCE D. KLAPPENBACH
7-26-2013

REVISIONS						SHEET NO.
NO.	BY:	DATE:	NO.	BY:	DATE:	S-55
1			3			TOTAL SHEETS
2			4			65

DRAWN BY : M.K. BEARD DATE : 5/31/13
CHECKED BY : B.D. KLAPPENBACH DATE : 6/11/13
DESIGN ENGINEER OF RECORD: H.P. KIM DATE : 6/11/13

25-JUL-2013 12:24
O:\Structures\Str2\Plans\R3101_SD_E*.dgn
tbarbour

STR. #2

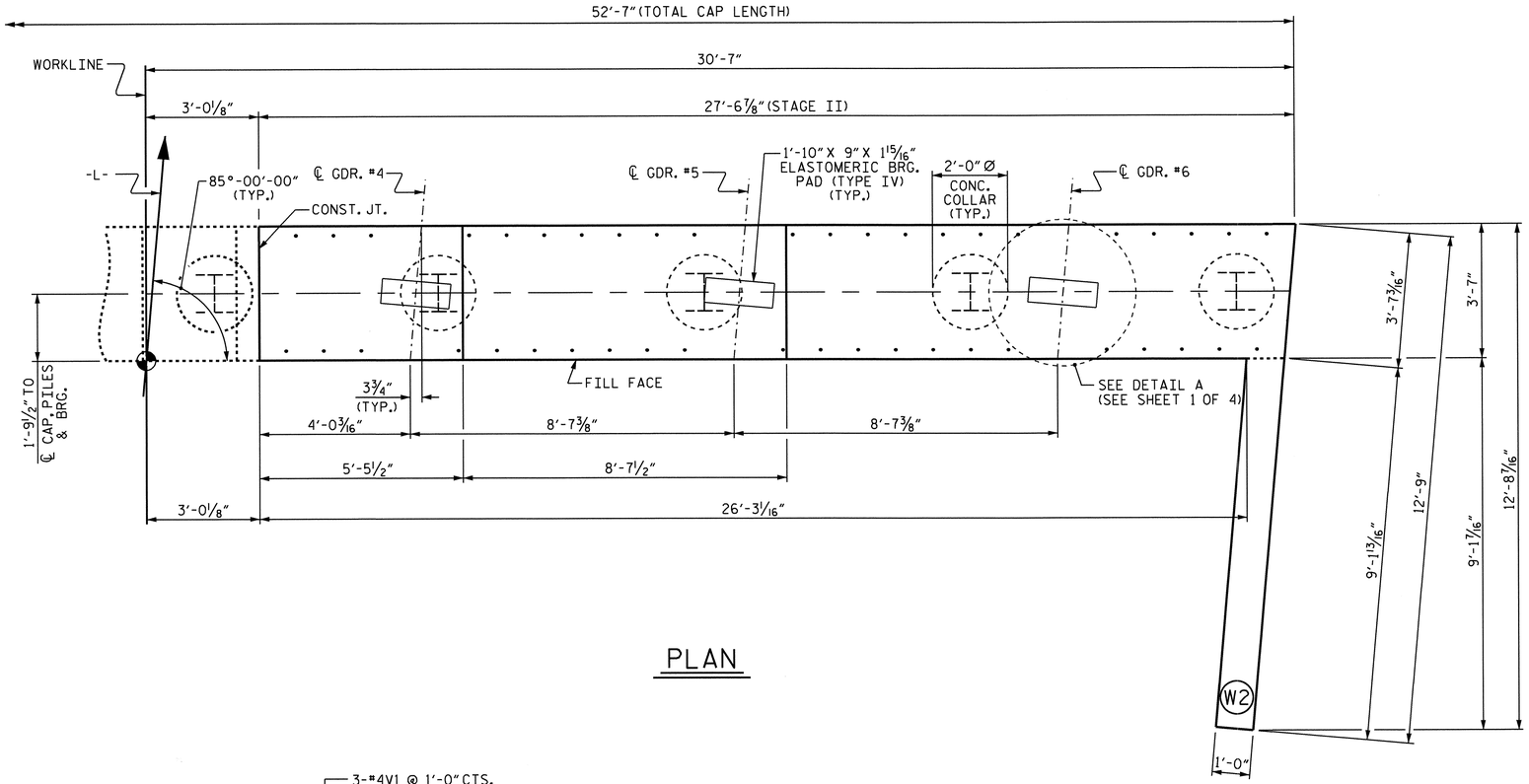

PLAN

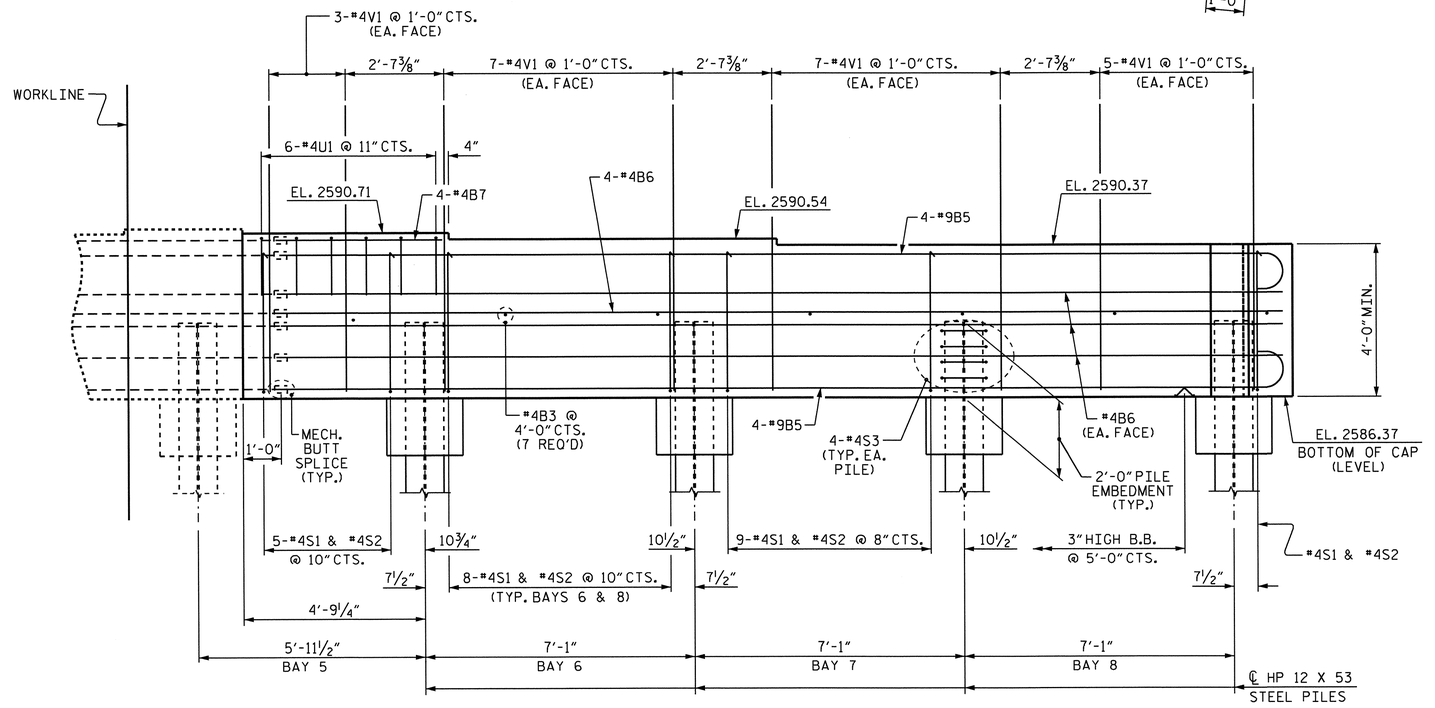

ELEVATION

NOTES

SEE SUPERSTRUCTURE SHEETS FOR UPPER PART OF INTEGRAL END BENT DETAILS.

INSTALL THE 4" DIA. DRAIN PIPE THROUGH THE WING WALL AS REQUIRED FOR REINFORCED BRIDGE APPROACH FILLS. SEE THE ROADWAY PLANS. REINFORCING STEEL IN THE WING WALL MAY BE SHIFTED AS NECESSARY TO CLEAR THE DRAIN PIPE.

PROJECT NO. R-3101

ALLEGHANY COUNTY

STATION: 393+57.38 -L-

SHEET 2 OF 4

STATE OF NORTH CAROLINA
DEPARTMENT OF TRANSPORTATION
RALEIGH

SUBSTRUCTURE

INTEGRAL END BENT #1 (STAGE II)

NORTH CAROLINA PROFESSIONAL SEAL 15825 ENGINEER BRYCE D. KLAPPENBACH
7-26-2013

REVISIONS						SHEET NO.
NO.	BY:	DATE:	NO.	BY:	DATE:	S-56
1			3			TOTAL SHEETS
2			4			65

STR. #2

DRAWN BY :	M.K. BEARD	DATE : 6/3/13
CHECKED BY :	B.D. KLAPPENBACH	DATE : 6/11/13
DESIGN ENGINEER OF RECORD:	H.P. KIM	DATE : 6/11/13

25-JUL-2013 09:34
O:\Structures\Str2\Plans\R3101_SD_E*.dgn
tbarbour

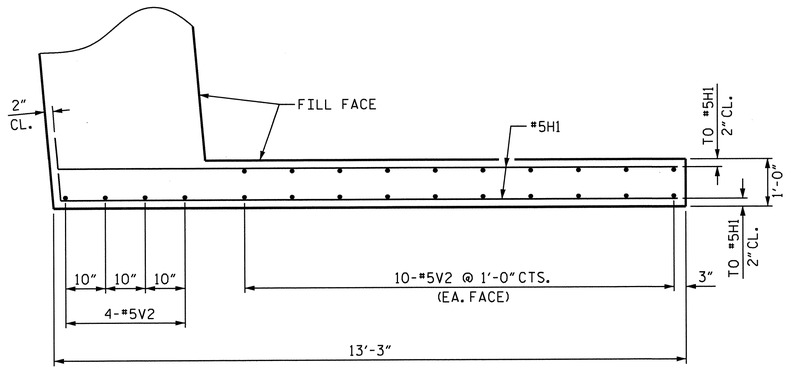

PLAN OF LEFT WING (W1)
(STAGE I)

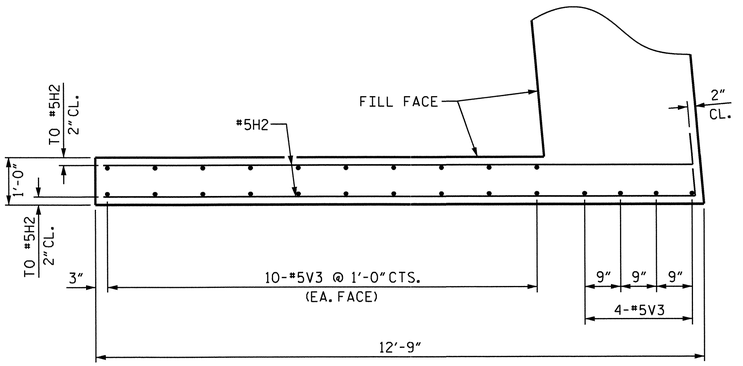

PLAN OF RIGHT WING (W2)
(STAGE II)

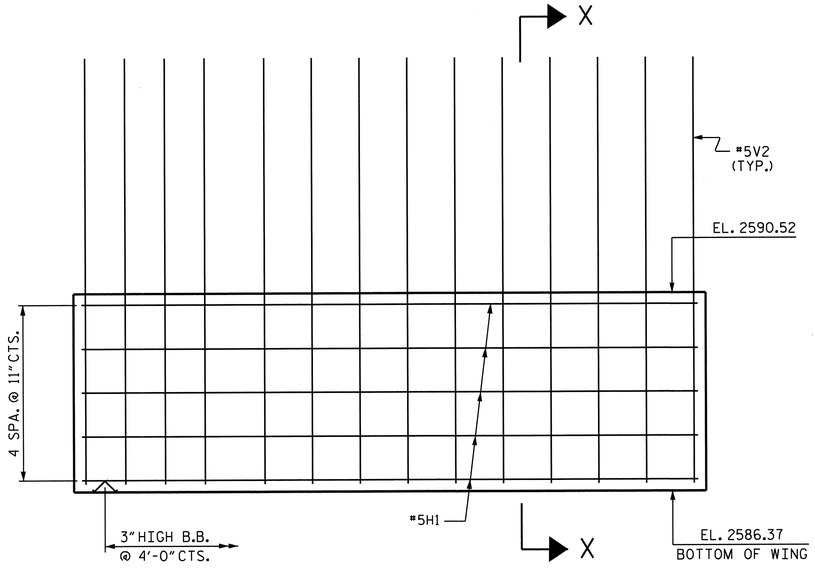

ELEVATION OF LEFT WING (W1)
(STAGE I)

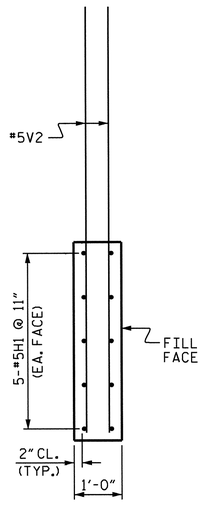

SECTION X-X

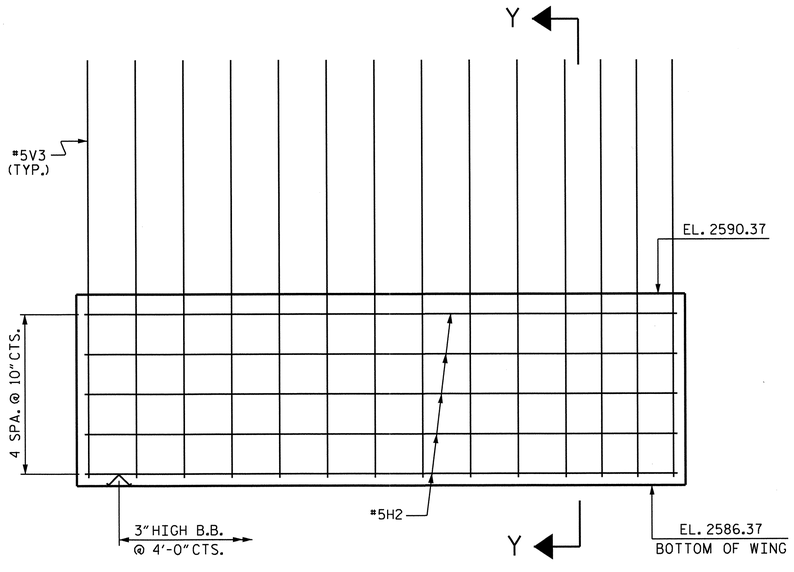

ELEVATION OF RIGHT WING (W2)
(STAGE II)

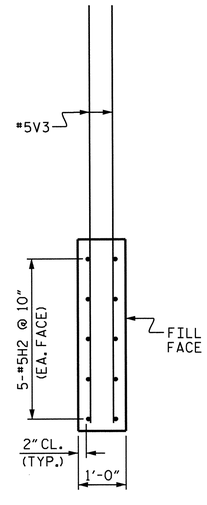

SECTION Y-Y

NOTE: THE UPPER PORTION OF THE WINGS SHALL BE POURED WITH THE SUPERSTRUCTURE. FOR DETAILS AND REINFORCING STEEL, SEE SUPERSTRUCTURE DETAILS.

PROJECT NO. R-3101

ALLEGHANY COUNTY

STATION: 393+57.38 -L-

SHEET 3 OF 4

STATE OF NORTH CAROLINA
DEPARTMENT OF TRANSPORTATION
RALEIGH

SUBSTRUCTURE

INTEGRAL END BENT #1

NORTH CAROLINA PROFESSIONAL SEAL 15825 ENGINEER BRADLEY D. KLAPPENBACH
7-24-2013

REVISIONS						SHEET NO.
NO.	BY:	DATE:	NO.	BY:	DATE:	S-57
1			3			TOTAL SHEETS
2			4			65

DRAWN BY : M.K. BEARD DATE : 6/3/13
CHECKED BY : B.D. KLAPPENBACH DATE : 6/11/13
DESIGN ENGINEER OF RECORD: H.P. KIM DATE : 6/11/13

11-JUN-2013 16:13
R:\Structures\Str2\Plans\R3101_SD_E*.dgn
dahodge

STR. #2

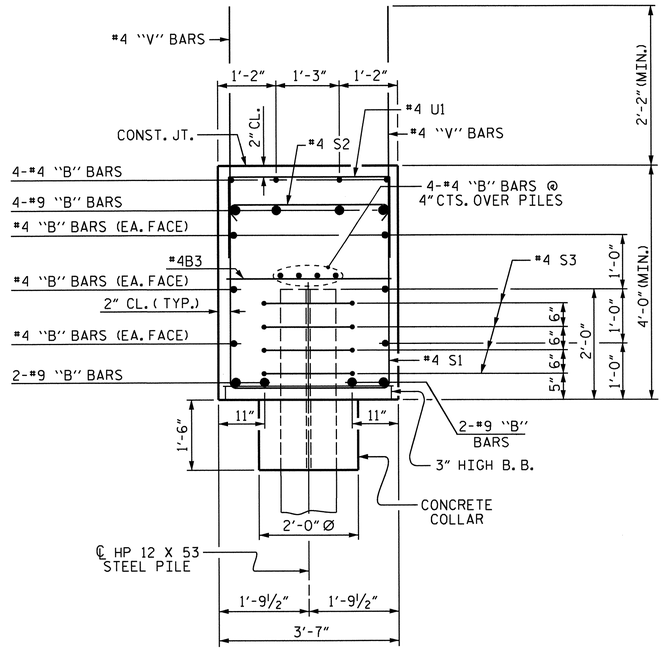

SECTION THRU CAP

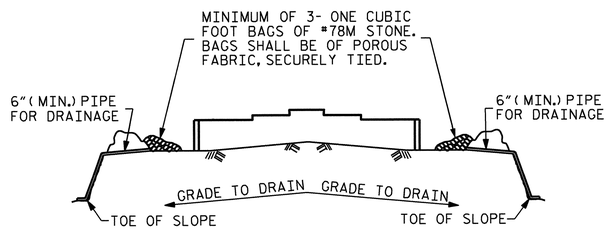

BAGGED STONE AND PIPE SHALL BE PLACED IMMEDIATELY AFTER COMPLETION OF END BENT EXCAVATION. PIPE MAY BE EITHER CONCRETE, CORRUGATED STEEL, CORRUGATED ALUMINUM ALLOY, OR CORRUGATED PLASTIC. PERFORATED PIPE WILL NOT BE ALLOWED.

BAGGED STONE SHALL REMAIN IN PLACE UNTIL THE ENGINEER DIRECTS THAT IT BE REMOVED. THE CONTRACTOR SHALL REMOVE AND DISPOSE OF SILT ACCUMULATIONS AT BAGGED STONE WHEN SO DIRECTED BY THE ENGINEER. BAGS SHALL BE REMOVED AND REPLACED WHENEVER THE ENGINEER DETERMINES THAT THEY HAVE DETERIORATED AND LOST THEIR EFFECTIVENESS.

NO SEPARATE PAYMENT WILL BE MADE FOR THIS WORK AND THE ENTIRE COST OF THIS WORK SHALL BE INCLUDED IN THE UNIT CONTRACT PRICE BID FOR THE SEVERAL PAY ITEMS.

TEMPORARY DRAINAGE AT END BENT

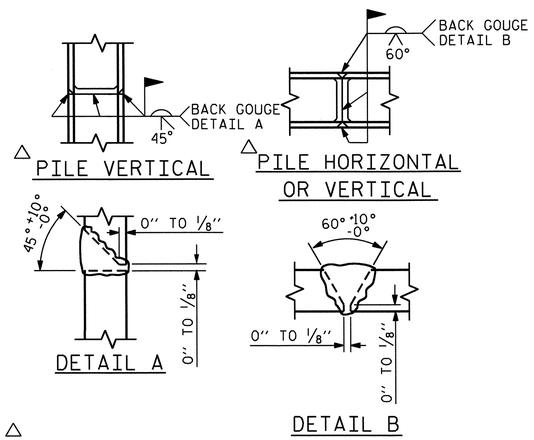

△ POSITION OF PILE DURING WELDING.

PILE SPLICE DETAILS

BILL OF MATERIAL — INTEGRAL END BENT #1 — STAGE I

BAR	No.	SIZE	TYPE	LENGTH	WEIGHT
B1	8	#9	1	27'-4"	743
B2	10	#4	STR	26'-0"	174
B3	6	#4	STR	3'-3"	13
B4	4	#4	STR	12'-6"	33
H1	10	#5	2	13'-9"	143
S1	26	#4	4	11'-3"	195
S2	26	#4	5	4'-0"	69
S3	20	#4	6	6'-6"	87
U1	13	#4	7	6'-3"	54
V1	40	#4	STR	6'-1"	163
V2	24	#5	STR	9'-9"	244

REINFORCING STEEL LBS 1918

CLASS A CONCRETE 16.5 C.Y.

HP 12 X 53 STEEL PILES
No. 5 125 LIN.FT.

STEEL PILE POINTS No. 5

BILL OF MATERIAL — INTEGRAL END BENT #1 — STAGE II

BAR	No.	SIZE	TYPE	LENGTH	WEIGHT
B3	7	#4	STR	3'-3"	15
B5	8	#9	1	27'-3"	741
B6	10	#4	STR	26'-0"	174
B7	4	#4	STR	4'-3"	11
H2	10	#5	3	13'-2"	137
S1	31	#4	4	11'-3"	233
S2	31	#4	5	4'-0"	83
S3	12	#4	6	6'-6"	52
U1	6	#4	7	6'-3"	25
V1	44	#4	STR	6'-1"	179
V3	24	#5	STR	9'-7"	240

REINFORCING STEEL LBS 1890

CLASS A CONCRETE 17.4 C.Y.

HP 12 X 53 STEEL PILES
No. 4 100 LIN.FT.

STEEL PILE POINTS No. 4

BAR TYPES

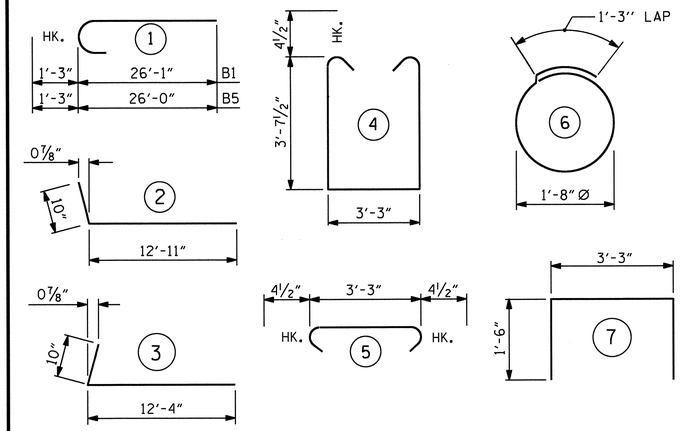

ALL BAR DIMENSIONS ARE OUT TO OUT.

PROJECT NO. R-3101

ALLEGHANY COUNTY

STATION: 393+57.38 -L-

SHEET 4 OF 4

STATE OF NORTH CAROLINA
DEPARTMENT OF TRANSPORTATION
RALEIGH

SUBSTRUCTURE

INTEGRAL END BENT #1

NORTH CAROLINA PROFESSIONAL SEAL 15825 ENGINEER BRADLEY D. KLAPPENBACH
7-26-2013

REVISIONS						SHEET NO.
NO.	BY:	DATE:	NO.	BY:	DATE:	S-58
1			3			TOTAL SHEETS
2			4			65

DRAWN BY : M.K. BEARD DATE : 6/3/13
CHECKED BY : B.D. KLAPPENBACH DATE : 6/11/13
DESIGN ENGINEER OF RECORD: H.P. KIM DATE : 6/11/13

STR. #2

NOTES

SEE SUPERSTRUCTURE SHEETS FOR UPPER PART OF INTEGRAL END BENT DETAILS.

INSTALL THE 4" DIA. DRAIN PIPE THROUGH THE WING WALL AS REQUIRED FOR REINFORCED BRIDGE APPROACH FILLS, SEE THE ROADWAY PLANS. REINFORCING STEEL IN THE WING WALL MAY BE SHIFTED AS NECESSARY TO CLEAR THE DRAIN PIPE.

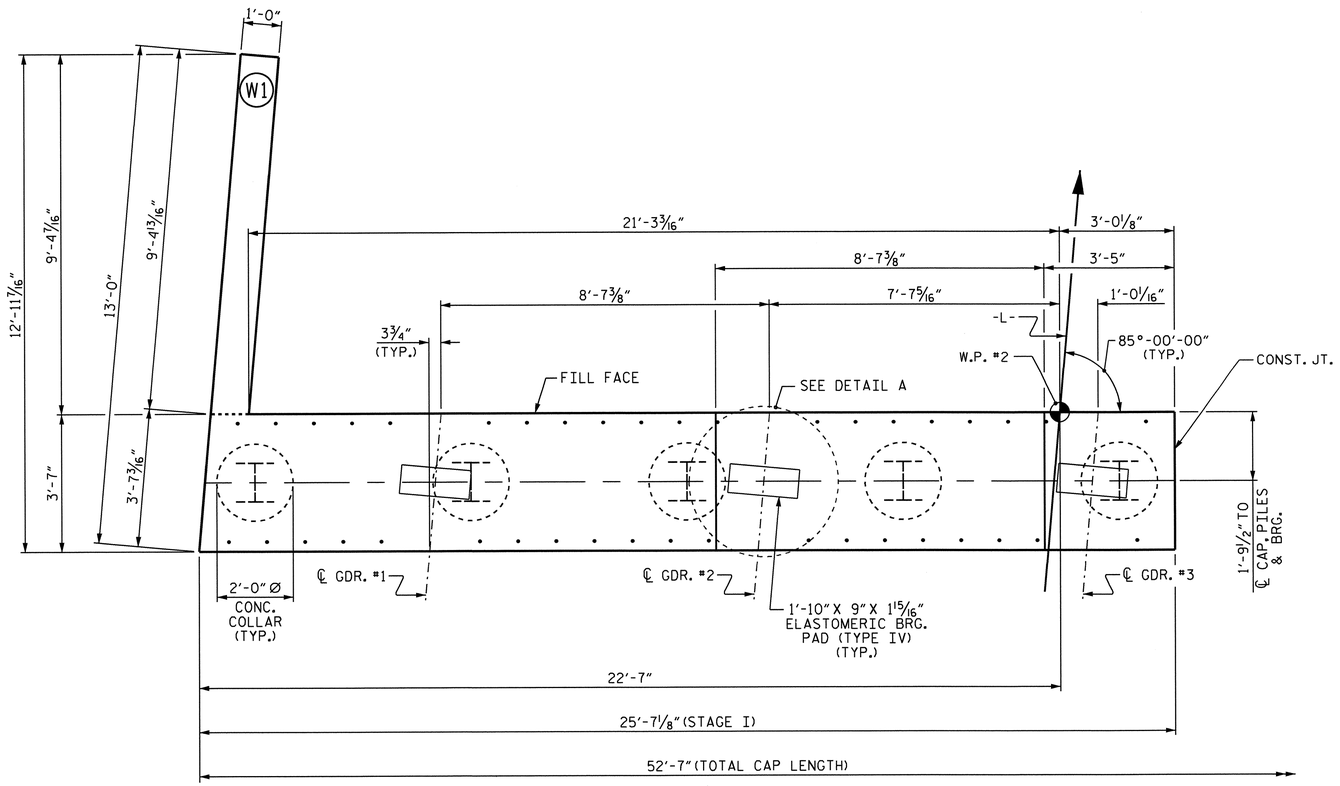

PLAN

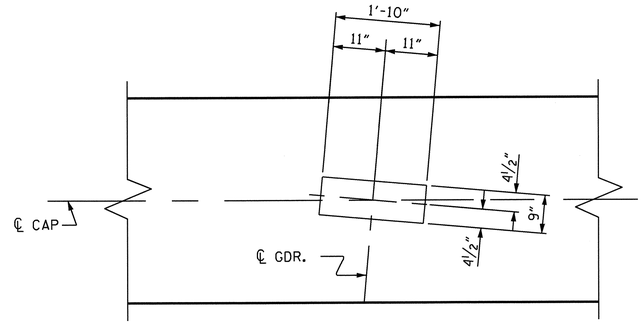

DETAIL A

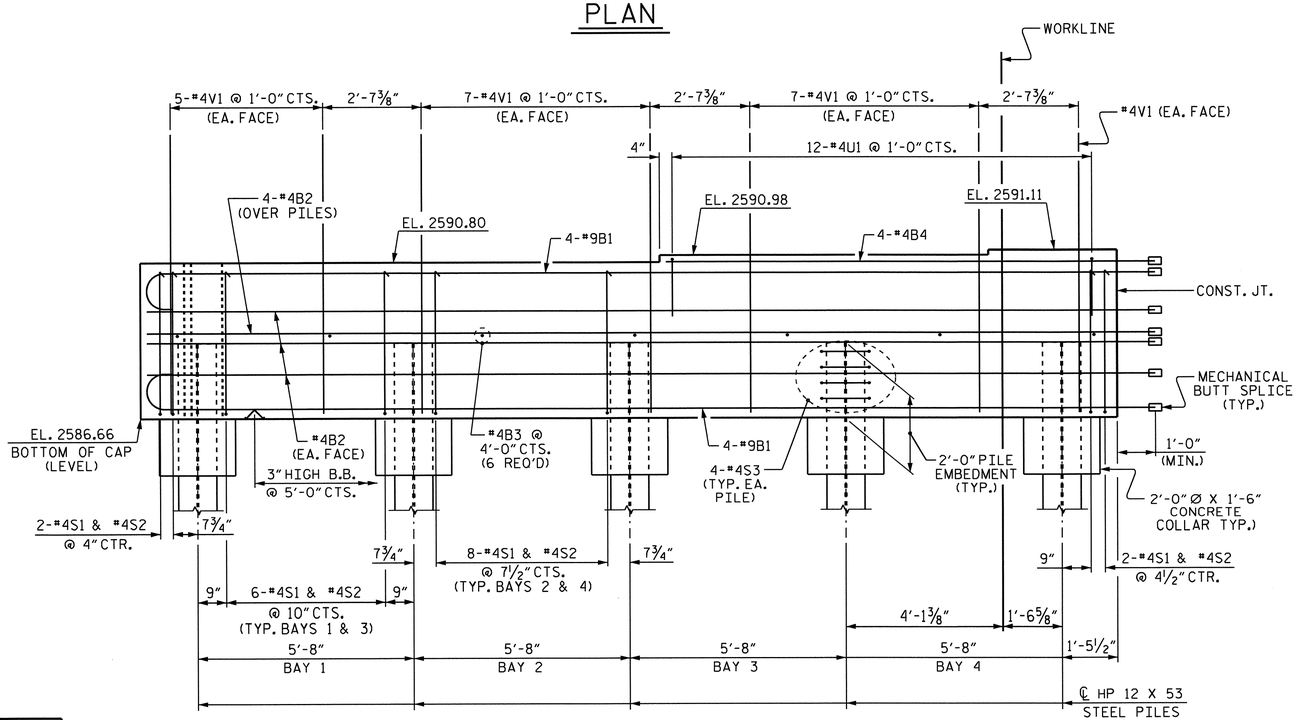

ELEVATION

PROJECT NO. R-3101

ALLEGHANY COUNTY

STATION: 393+57.38 -L-

SHEET 1 OF 4

STATE OF NORTH CAROLINA
DEPARTMENT OF TRANSPORTATION
RALEIGH

SUBSTRUCTURE

INTEGRAL END BENT #2 (STAGE I)

REVISIONS						SHEET NO.
NO.	BY:	DATE:	NO.	BY:	DATE:	S-59
1			3			TOTAL SHEETS
2			4			65

NORTH CAROLINA PROFESSIONAL SEAL 15825 ENGINEER BRUCE D. KLAPPENBERGER 7-26-2013

DRAWN BY : M.K. BEARD DATE : 6/5/13
CHECKED BY : D. HODGE DATE : 6/13
DESIGN ENGINEER OF RECORD: H.P. KIM DATE : 6/11/13

25-JUL-2013 12:24
O:\Structures\Str2\Plans\R3101_SD_E*.dgn
tbarbour

STR. #2

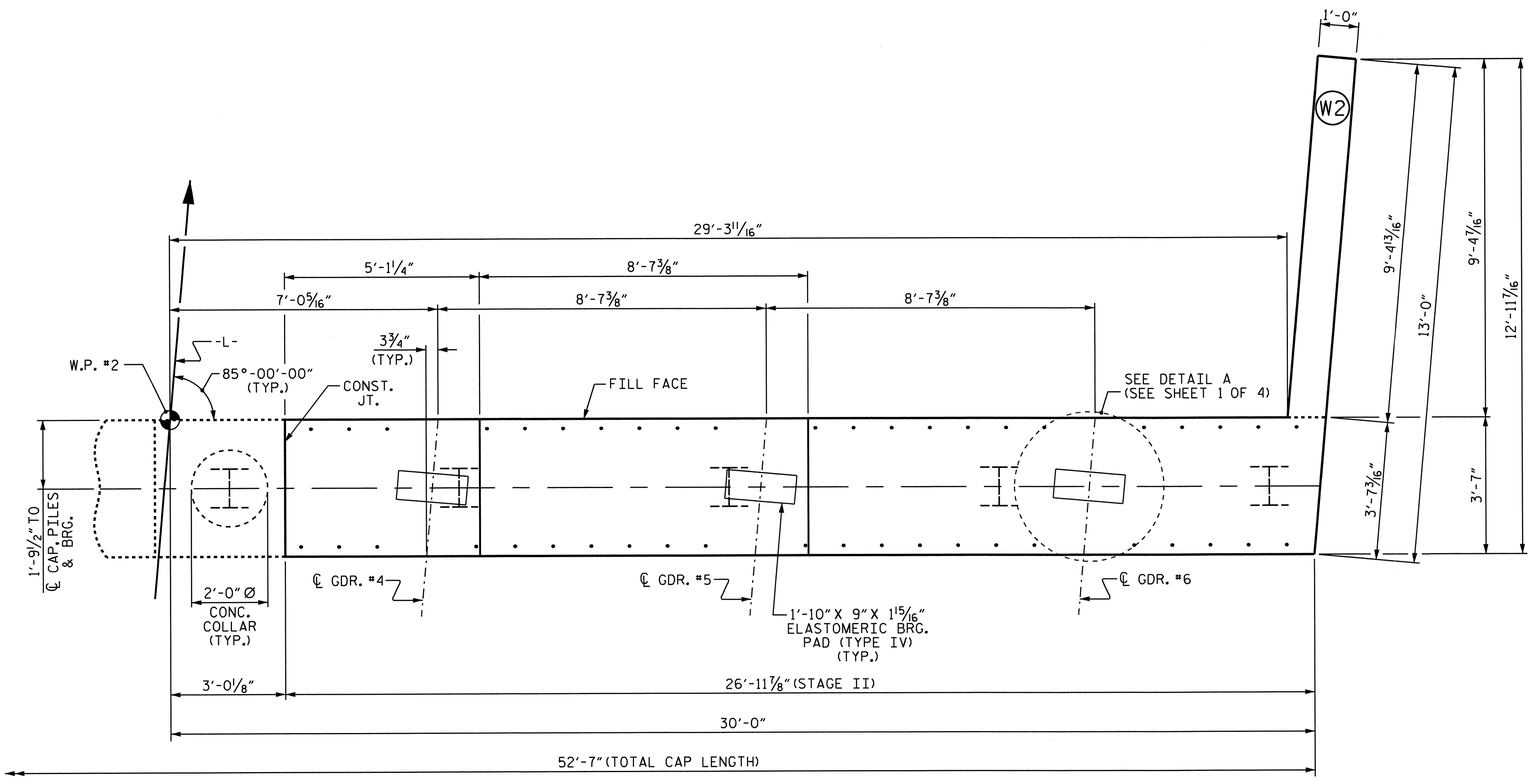

PLAN

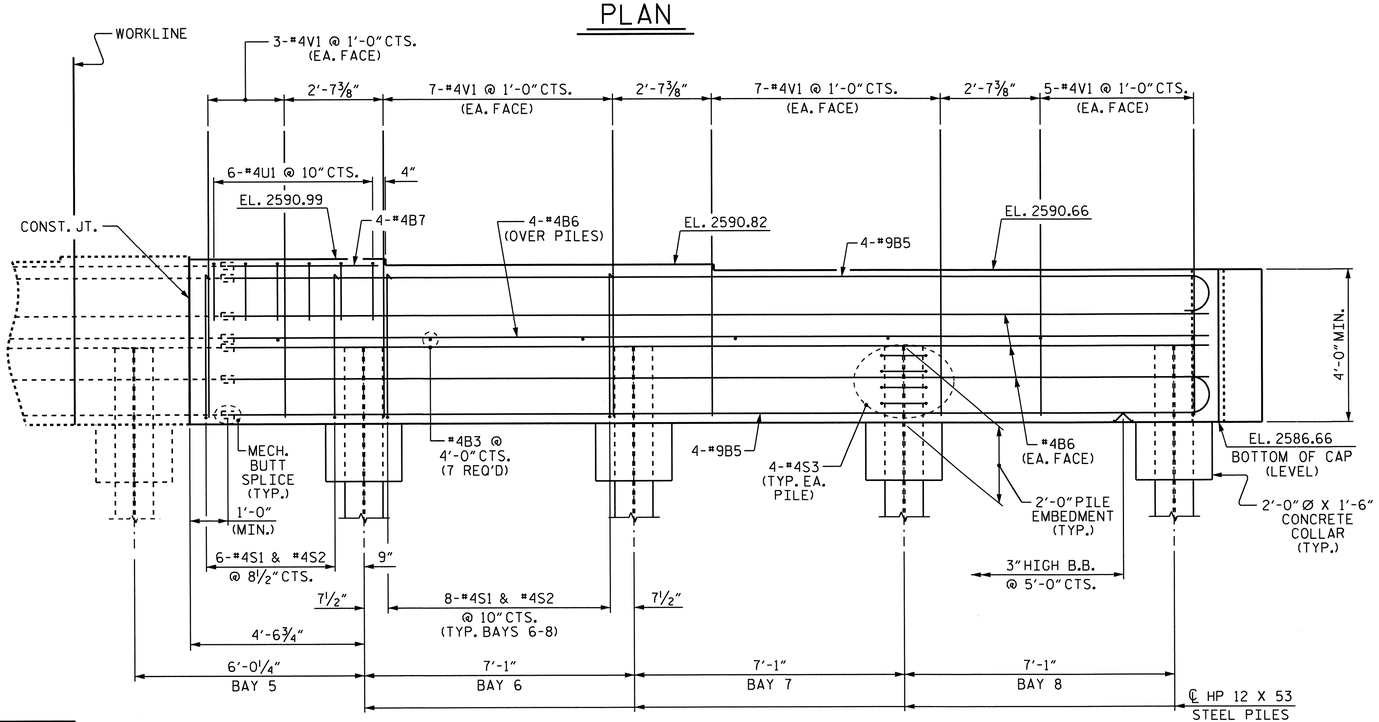

ELEVATION

NOTES

SEE SUPERSTRUCTURE SHEETS FOR UPPER PART OF INTEGRAL END BENT DETAILS.

INSTALL THE 4"DIA. DRAIN PIPE THROUGH THE WING WALL AS REQUIRED FOR REINFORCED BRIDGE APPROACH FILLS. SEE THE ROADWAY PLANS. REINFORCING STEEL IN THE WING WALL MAY BE SHIFTED AS NECESSARY TO CLEAR THE DRAIN PIPE.

PROJECT NO. R-3101

ALLEGHANY COUNTY

STATION: 393+57.38 -L-

SHEET 2 OF 4

STATE OF NORTH CAROLINA
DEPARTMENT OF TRANSPORTATION
RALEIGH

SUBSTRUCTURE

INTEGRAL END BENT #2

(STAGE II)

NORTH CAROLINA PROFESSIONAL SEAL 15825 ENGINEER BRUCE D. KLAPPENBERGER
7-26-2013

REVISIONS						SHEET NO.
NO.	BY:	DATE:	NO.	BY:	DATE:	S-60
1			3			TOTAL SHEETS
2			4			65

DRAWN BY : M.K. BEARD DATE : 6/5/13
CHECKED BY : D. HODGE DATE : 6/13
DESIGN ENGINEER OF RECORD: H.P. KIM DATE : 6/11/13

25-JUL-2013 12:26
O:\Structures\Str2\Plans\R3101_SD_E*.dgn
tbarbour

STR. #2

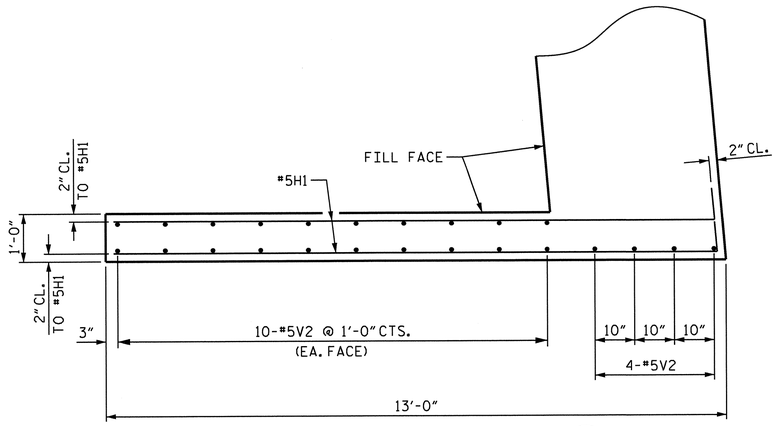

PLAN OF LEFT WING (W1)

(STAGE I)

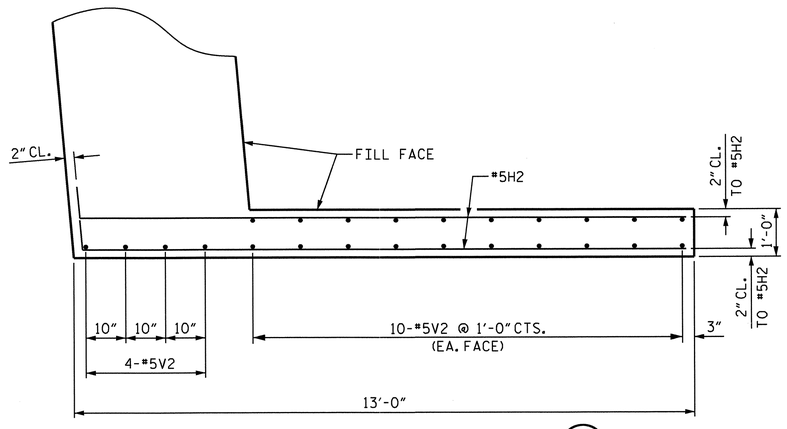

PLAN OF RIGHT WING (W2)

(STAGE II)

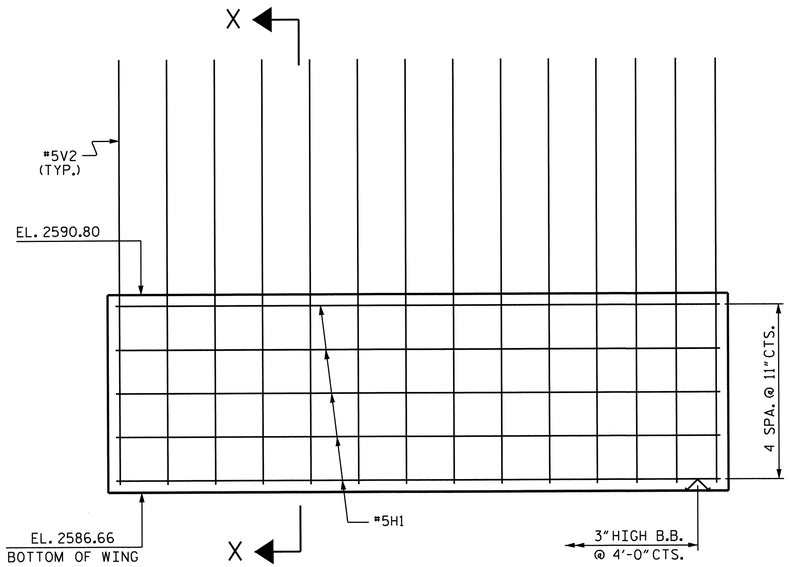

ELEVATION OF LEFT WING (W1)

(STAGE I)

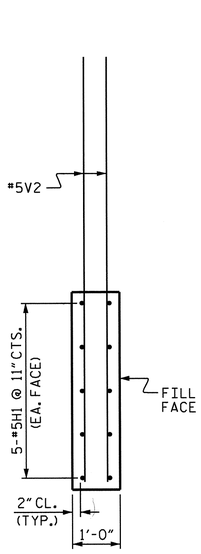

SECTION X-X

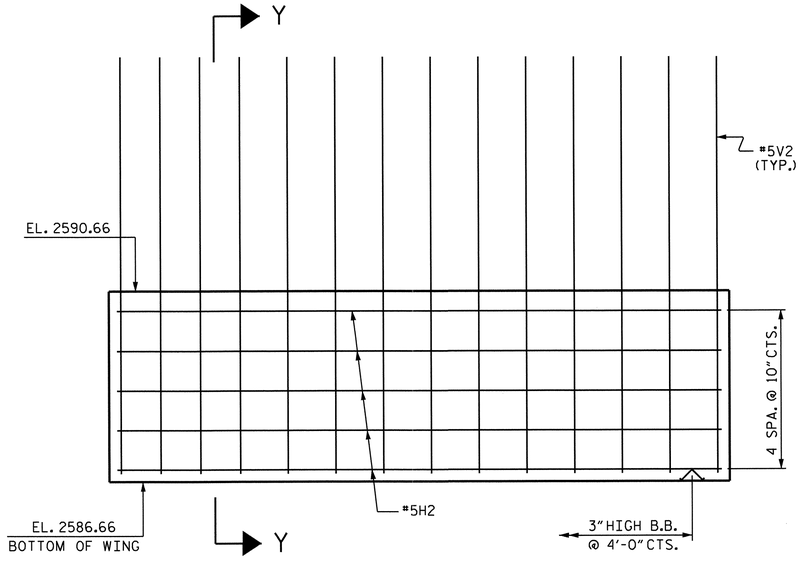

ELEVATION OF RIGHT WING (W2)

(STAGE II)

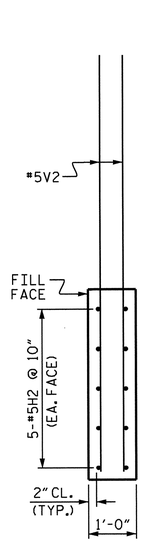

SECTION Y-Y

NOTE: THE UPPER PORTION OF THE WINGS SHALL BE POURED WITH THE SUPERSTRUCTURE. FOR DETAILS AND REINFORCING STEEL, SEE SUPERSTRUCTURE DETAILS.

PROJECT NO. R-3101

ALLEGHANY COUNTY

STATION: 393+57.38 -L-

SHEET 3 OF 4

STATE OF NORTH CAROLINA
DEPARTMENT OF TRANSPORTATION
RALEIGH

SUBSTRUCTURE

INTEGRAL END BENT #2

REVISIONS						SHEET NO.
NO.	BY:	DATE:	NO.	BY:	DATE:	S-61
1			3			TOTAL SHEETS
2			4			65

DRAWN BY : M.K. BEARD DATE : 6/3/13
CHECKED BY : D. HODGE DATE : 6/13
DESIGN ENGINEER OF RECORD: H.P. KIM DATE : 6/11/13

11-JUN-2013 16:14
R:\Structures\Str2\Plans\R3101_SD_E*.dgn
dahodge

STR. #2

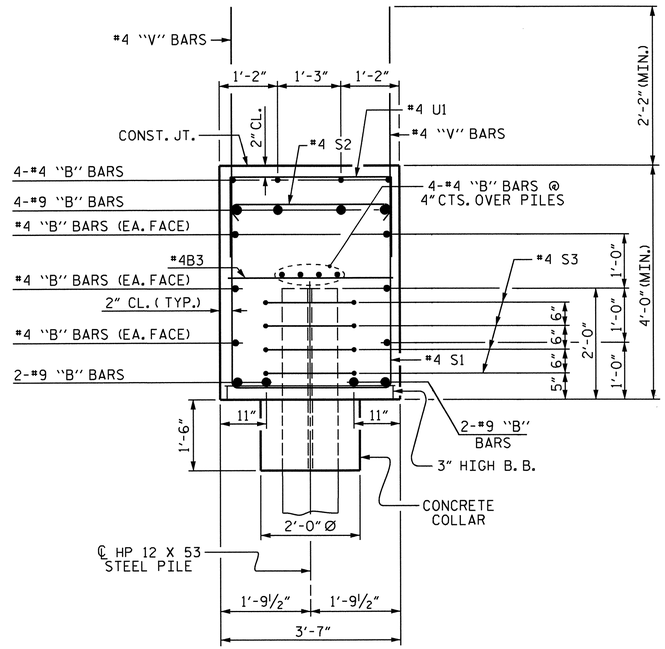

SECTION THRU CAP

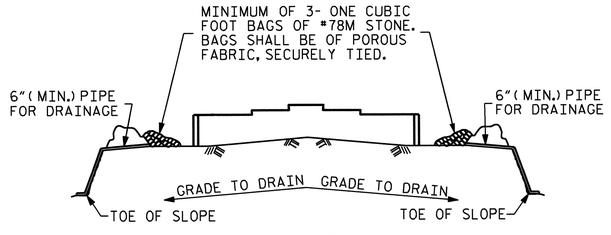

BAGGED STONE AND PIPE SHALL BE PLACED IMMEDIATELY AFTER COMPLETION OF END BENT EXCAVATION. PIPE MAY BE EITHER CONCRETE, CORRUGATED STEEL, CORRUGATED ALUMINUM ALLOY, OR CORRUGATED PLASTIC. PERFORATED PIPE WILL NOT BE ALLOWED.

BAGGED STONE SHALL REMAIN IN PLACE UNTIL THE ENGINEER DIRECTS THAT IT BE REMOVED. THE CONTRACTOR SHALL REMOVE AND DISPOSE OF SILT ACCUMULATIONS AT BAGGED STONE WHEN SO DIRECTED BY THE ENGINEER. BAGS SHALL BE REMOVED AND REPLACED WHENEVER THE ENGINEER DETERMINES THAT THEY HAVE DETERIORATED AND LOST THEIR EFFECTIVENESS.

NO SEPARATE PAYMENT WILL BE MADE FOR THIS WORK AND THE ENTIRE COST OF THIS WORK SHALL BE INCLUDED IN THE UNIT CONTRACT PRICE BID FOR THE SEVERAL PAY ITEMS.

TEMPORARY DRAINAGE AT END BENT

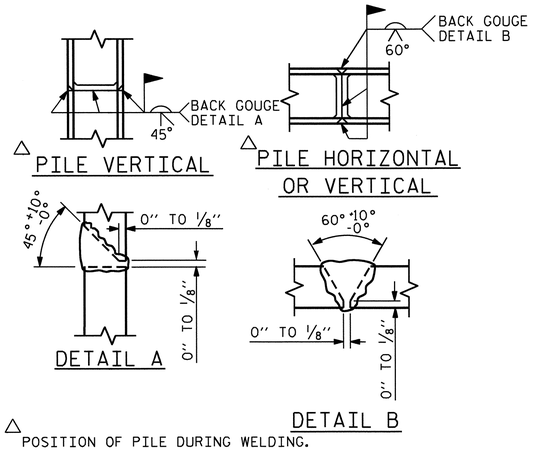

△ POSITION OF PILE DURING WELDING.

PILE SPLICE DETAILS

BILL OF MATERIAL — INTEGRAL END BENT #2 — STAGE I

BAR	No.	SIZE	TYPE	LENGTH	WEIGHT
B1	8	#9	1	27'-8"	753
B2	10	#4	STR	26'-5"	176
B3	6	#4	STR	3'-3"	13
B4	4	#4	STR	12'-9"	34
H1	10	#5	2	13'-5"	140
S1	32	#4	4	11'-3"	240
S2	32	#4	5	4'-0"	86
S3	20	#4	6	6'-6"	87
U1	12	#4	7	6'-3"	50
V1	40	#4	STR	6'-1"	163
V2	24	#5	STR	9'-8"	242

REINFORCING STEEL LBS 1984

CLASS A CONCRETE 16.7 C.Y.

HP 12 X 53 STEEL PILES
No. 5 125 LIN.FT.

STEEL PILE POINTS No. 5

BILL OF MATERIAL — INTEGRAL END BENT #2 — STAGE II

BAR	No.	SIZE	TYPE	LENGTH	WEIGHT
B3	7	#4	STR	3'-3"	15
B5	8	#9	1	26'-11"	732
B6	10	#4	STR	25'-8"	171
B7	4	#4	STR	3'-11"	10
H2	10	#5	3	13'-6"	141
S1	30	#4	4	11'-3"	225
S2	30	#4	5	4'-0"	80
S3	16	#4	6	6'-6"	69
U1	6	#4	7	6'-3"	25
V1	44	#4	STR	6'-1"	179
V2	24	#5	STR	9'-8"	242

REINFORCING STEEL LBS 1889

CLASS A CONCRETE 16.8 C.Y.

HP 12 X 53 STEEL PILES
No. 4 100 LIN.FT.

STEEL PILE POINTS No. 4

BAR TYPES

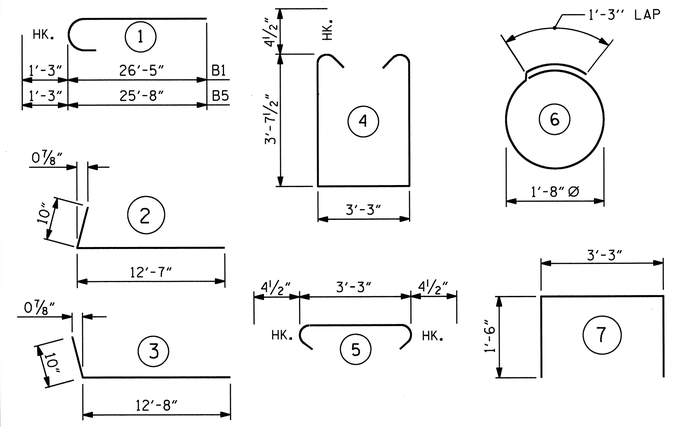

ALL BAR DIMENSIONS ARE OUT TO OUT.

PROJECT NO. R-3101

ALLEGHANY COUNTY

STATION: 393+57.38 -L-

SHEET 4 OF 4

STATE OF NORTH CAROLINA
DEPARTMENT OF TRANSPORTATION
RALEIGH

SUBSTRUCTURE

INTEGRAL END BENT #2

NORTH CAROLINA PROFESSIONAL SEAL 15825 ENGINEER D. KLAPPENBACH
7-26-2013

REVISIONS						SHEET NO.
NO.	BY:	DATE:	NO.	BY:	DATE:	S-62
1			3			TOTAL SHEETS
2			4			65

DRAWN BY : M.K. BEARD DATE : 6/3/13
CHECKED BY : D. HODGE DATE : 6/13
DESIGN ENGINEER OF RECORD: H.P. KIM DATE : 6/11/13

STR. #2

NOTES :

FOR BERM WIDTH DIMENSIONS, SEE GENERAL DRAWING.

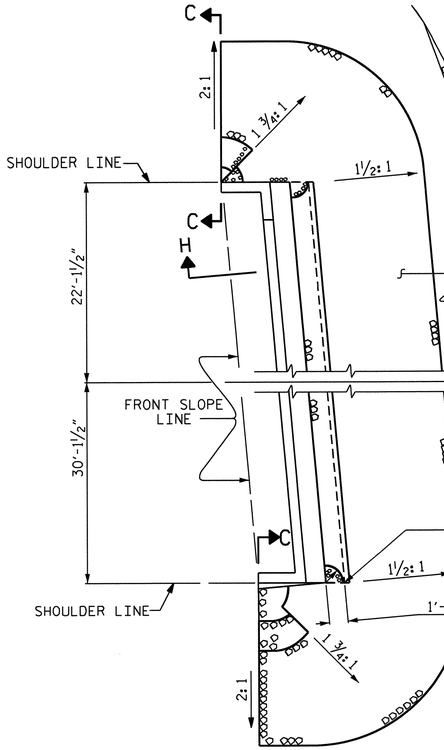

END BENT No. 1

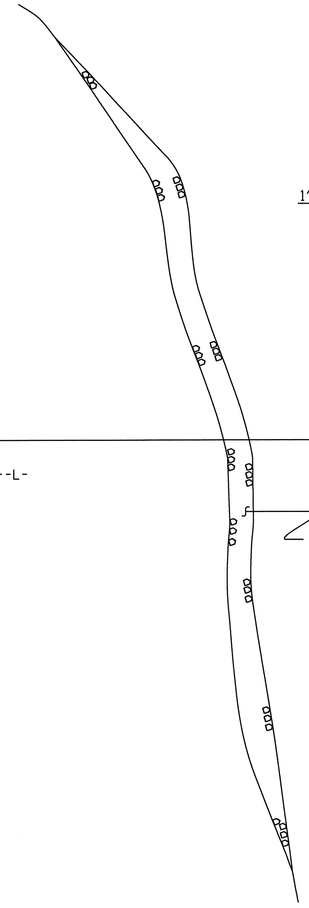

PLAN OF RIP RAP

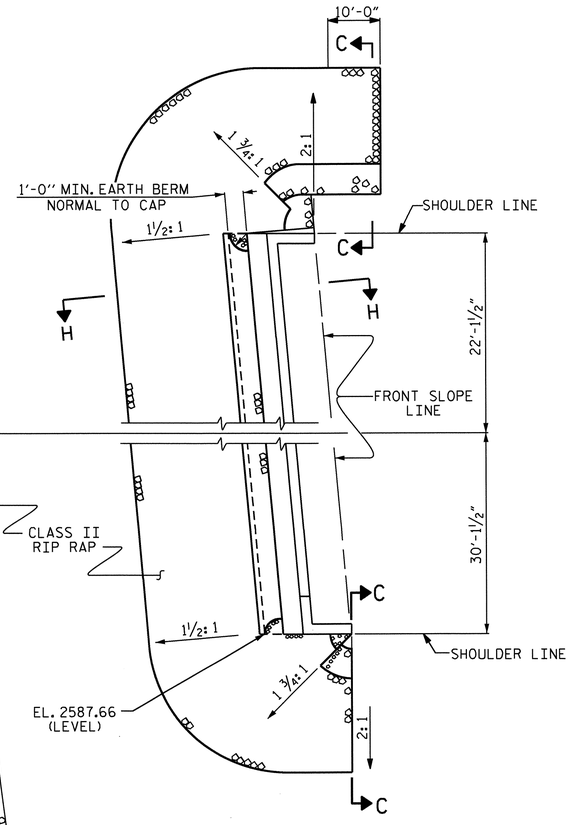

END BENT No. 2

ESTIMATED QUANTITIES		
BRIDGE @ STA. 393+57.38 -L-	RIP RAP CLASS II (2'-0" THICK)	GEOTEXTILE FOR DRAINAGE
	TONS	SQUARE YARDS
END BENT 1	130	145
END BENT 2	150	165
TOTAL	280	310

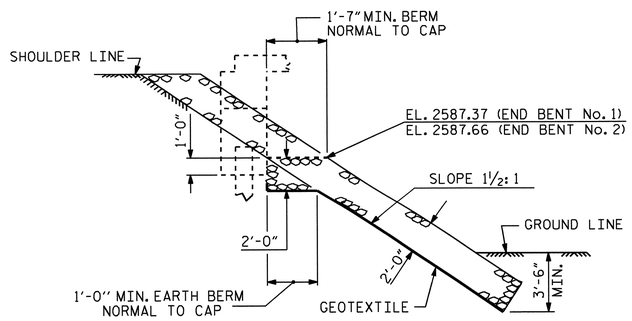

SECTION H-H

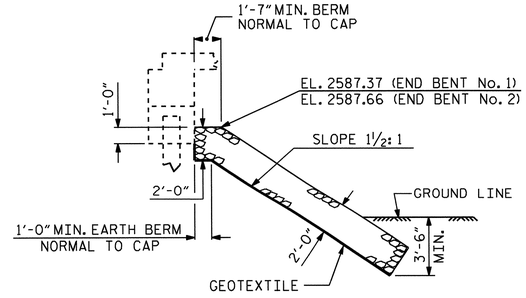

℄ SECTION
BERM RIP RAPPED

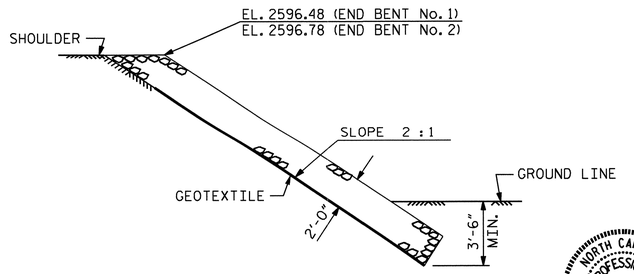

SECTION C-C

PROJECT NO. R-3101

ALLEGHANY COUNTY

STATION: 393+57.38 -L-

STATE OF NORTH CAROLINA
DEPARTMENT OF TRANSPORTATION
RALEIGH

RIP RAP DETAILS

REVISIONS						SHEET NO.
NO.	BY:	DATE:	NO.	BY:	DATE:	S-63
1			3			TOTAL SHEETS
2			4			65

ASSEMBLED BY : S. B. WILLIAMS	DATE : 5-13	
CHECKED BY : B. DUKE	DATE : 5-13	
DRAWN BY : REK 1/84	REV. 5/1/06R	TLA/GM
CHECKED BY : RDU 1/84	REV. 10/1/11	MAA/GM
	REV. 12/21/11	MAA/GM

25-JUL-2013 09:38
O:\Structures\Str2\Plans\RIP RAP\R3101_SD_RR.dgn
tbarbour

STR. #2

STD. NO. RR1 (Sht 1)

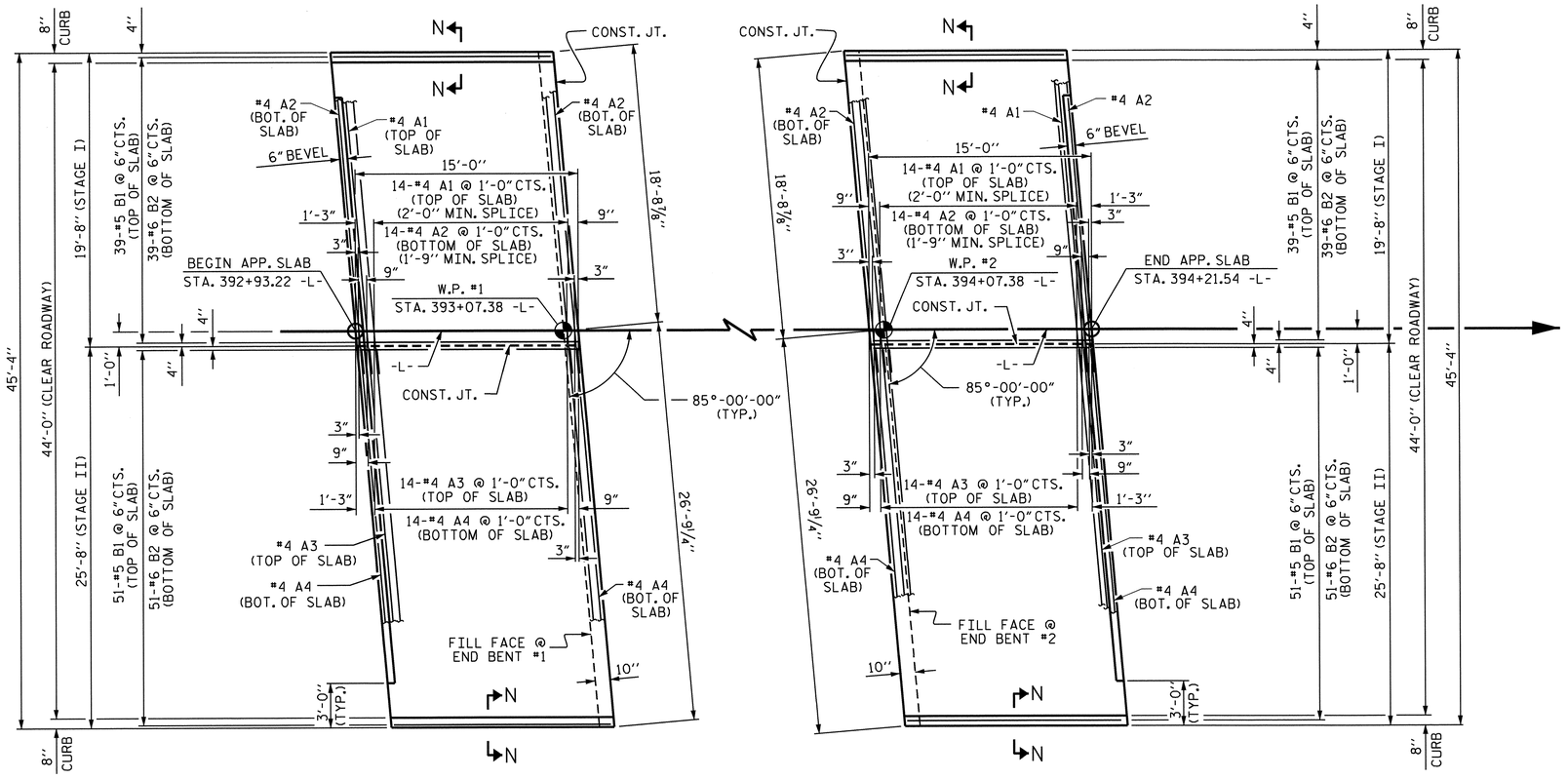

PLAN @ END BENT #1

PLAN @ END BENT #2

DIMENSIONS SHOWN ARE TYPICAL FOR BOTH APPROACH SLABS

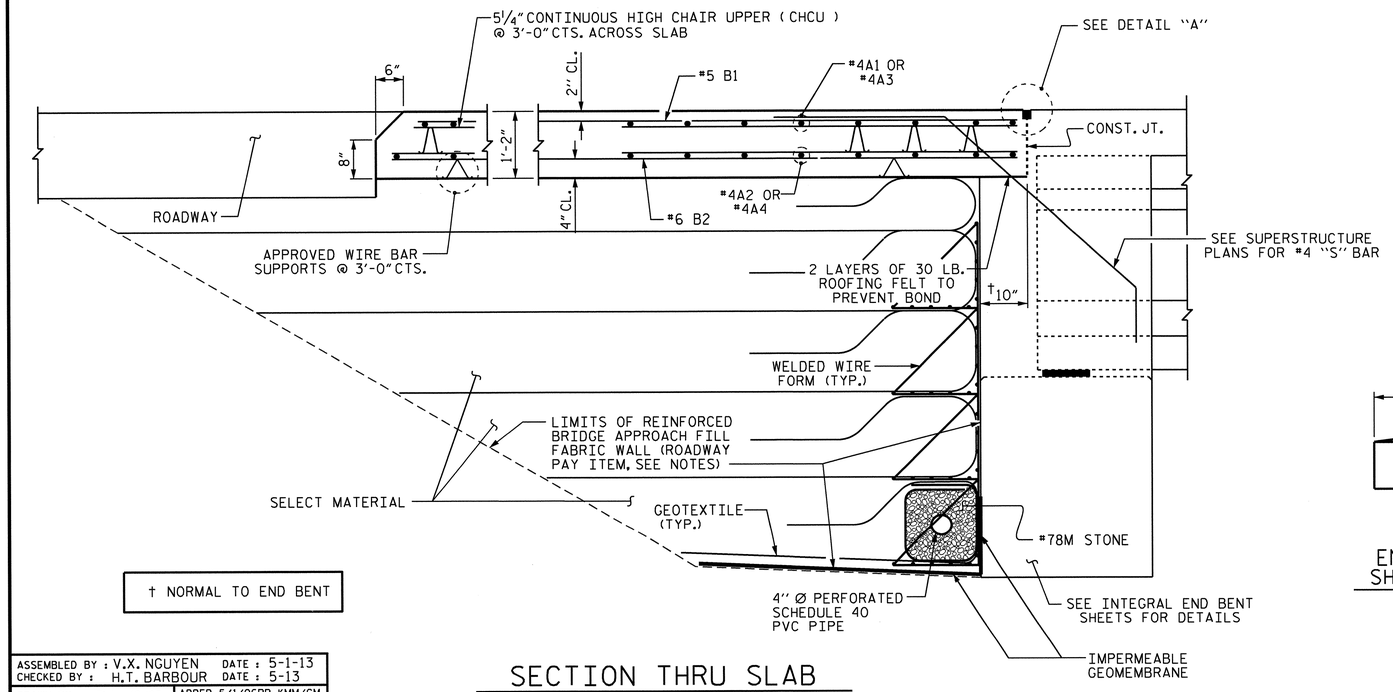

† NORMAL TO END BENT

SECTION THRU SLAB

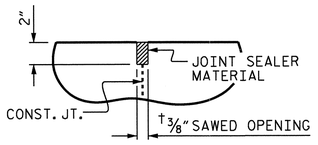

DETAIL "A"

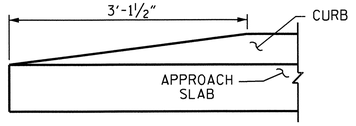

END OF CURB WITHOUT SHOULDER BERM GUTTER

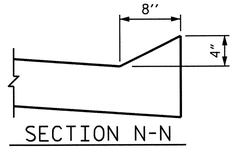

SECTION N-N

BILL OF MATERIAL

APPROACH SLAB AT END BENT No. 1 (STAGE I)

BAR	NO.	SIZE	TYPE	LENGTH	WEIGHT
* A1	15	#4	STR	21'-9"	218
A2	15	#4	STR	21'-6"	215
* B1	39	#5	STR	14'-3"	580
B2	39	#6	STR	14'-8"	859
REINFORCING STEEL				LBS.	1074
* EPOXY COATED REINFORCING STEEL				LBS.	798
CLASS AA CONCRETE				C.Y.	12.7

APPROACH SLAB AT END BENT No. 2 (STAGE I)

BAR	NO.	SIZE	TYPE	LENGTH	WEIGHT
* A1	15	#4	STR	21'-9"	218
A2	15	#4	STR	21'-6"	215
* B1	39	#5	STR	14'-3"	580
B2	39	#6	STR	14'-8"	859
REINFORCING STEEL				LBS.	1074
* EPOXY COATED REINFORCING STEEL				LBS.	798
CLASS AA CONCRETE				C.Y.	12.7

APPROACH SLAB AT END BENT No. 1 (STAGE II)

BAR	NO.	SIZE	TYPE	LENGTH	WEIGHT
* A3	15	#4	STR	25'-5"	255
A4	15	#4	STR	25'-5"	255
* B1	51	#5	STR	14'-3"	758
B2	51	#6	STR	14'-8"	1123
REINFORCING STEEL				LBS.	1398
* EPOXY COATED REINFORCING STEEL				LBS.	1013
CLASS AA CONCRETE				C.Y.	16.5

APPROACH SLAB AT END BENT No. 2 (STAGE II)

BAR	NO.	SIZE	TYPE	LENGTH	WEIGHT
* A3	15	#4	STR	25'-5"	255
A4	15	#4	STR	25'-5"	255
* B1	51	#5	STR	14'-3"	758
B2	51	#6	STR	14'-8"	1123
REINFORCING STEEL				LBS.	1398
* EPOXY COATED REINFORCING STEEL				LBS.	1013
CLASS AA CONCRETE				C.Y.	16.5

NOTES

APPROACH SLAB SHALL NOT BE CONSTRUCTED PRIOR TO COMPLETION OF THE BRIDGE DECK.

FOR REINFORCED BRIDGE APPROACH FILL FABRIC WALL INCLUDING GEOTEXTILE, IMPERMEABLE GEOMEMBRANE, 4" Ø DRAINAGE PIPE, #78M STONE, WELDED WIRE FORM, AND SELECT MATERIAL, SEE ROADWAY PLANS.

AREA BETWEEN THE WINGWALL AND APPROACH SLAB SHALL BE GRADED TO DRAIN THE WATER AWAY FROM THE FILL FACE OF THE BRIDGE AND SHALL BE PAVED. SEE ROADWAY PLANS.

THE JOINT OPENING AT THE APPROACH SLAB/DECK INTERFACE SHALL BE SAWED NO MORE THAN 12 HOURS AFTER THE APPROACH SLAB IS CAST. THE JOINT SHALL BE CLEANED OF ALL DEBRIS BEFORE THE SEALANT IS APPLIED. THE JOINT SEALER MATERIAL SHALL CONFORM TO THE REQUIREMENTS OF SECTION 1028-3 OF THE STANDARD SPECIFICATIONS.

PROJECT NO. R-3101

ALLEGHANY COUNTY

STATION: 393+57.38 -L-

SHEET 1 OF 2

STATE OF NORTH CAROLINA
DEPARTMENT OF TRANSPORTATION
RALEIGH

STANDARD

BRIDGE APPROACH SLAB FOR INTEGRAL ABUTMENT

REVISIONS						SHEET NO.
NO.	BY:	DATE:	NO.	BY:	DATE:	S-64
1			3			TOTAL SHEETS
2			4			65

STR. #2

NORTH CAROLINA PROFESSIONAL SEAL 15825 ENGINEER BRUCE D. KLAPPENBACH
7-26-2013

ASSEMBLED BY : V.X. NGUYEN	DATE : 5-1-13
CHECKED BY : H.T. BARBOUR	DATE : 5-13
DRAWN BY : TLA 10/05	ADDED 5/1/06RR KMM/GM
CHECKED BY : GM 5/06	REV. 10/1/11 MAA/GM
	REV. 12/21/11 MAA/GM

25-JUL-2013 09:39
0:\Structures\Str2\Plans\vnguyen\R-3101_SD_AS.dgn
tbarbour

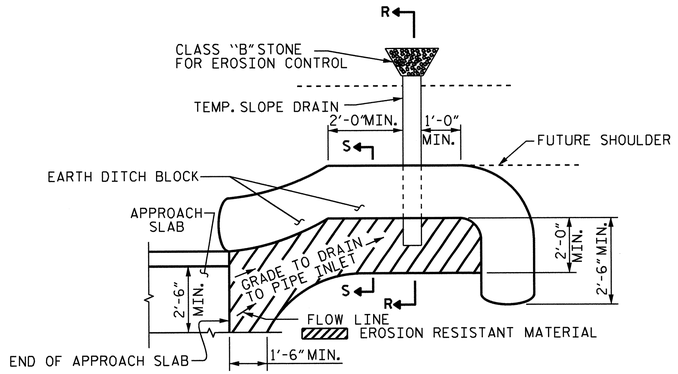

NOTE: IMMEDIATELY AFTER THE CONSTRUCTION OF THE APPROACH SLAB, THE CONTRACTOR SHALL PROVIDE TEMPORARY BERM AND SLOPE DRAIN. CONTRACTOR SHALL GRADE TO PIPE INLET AND PROVIDE EROSION RESISTANT MATERIAL AS SHOWN. THE EROSION RESISTANT MATERIAL SHALL BE EITHER 1) ASPHALT PLANT MIX, TYPE 1 OR TYPE 2, MIN. 2" DEPTH, 2) EROSION CONTROL MAT, OR 3) CONCRETE, AS DIRECTED BY THE ENGINEER. THE SLOPE DRAIN SHALL CONSIST OF A NON-PERFORATED TEMPORARY DRAINAGE PIPE, 12 INCHES IN DIAMETER.

PLAN VIEW

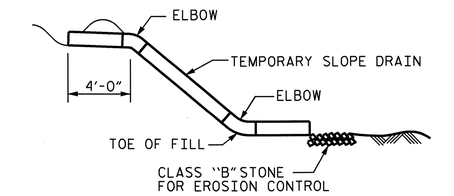

SECTION R-R

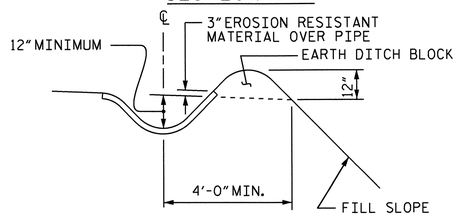

SECTION S-S

TEMPORARY BERM AND SLOPE DRAIN DETAILS

(TO BE USED WHEN SHOULDER BERM GUTTER IS REQUIRED)

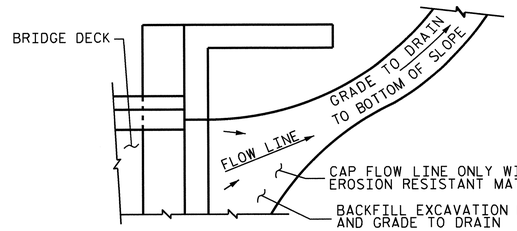

NOTE: IF THE APPROACH SLAB IS NOT CONSTRUCTED IMMEDIATELY AFTER THE BACKFILLING OF THE END BENT EXCAVATION, GRADE TO DRAIN TO THE BOTTOM OF THE SLOPE AND PROVIDE EROSION RESISTANT MATERIAL, SUCH AS FIBERGLASS ROVING OR AS DIRECTED BY THE ENGINEER TO PREVENT SOIL EROSION AND TO PROTECT THE AREA ADJACENT TO THE STRUCTURE. THE CONTRACTOR WILL BE REQUIRED TO REMOVE THESE MATERIALS PRIOR TO CONSTRUCTION OF THE APPROACH SLAB.

TEMPORARY DRAINAGE DETAIL

ASSEMBLED BY : V.X. NGUYEN	DATE : 5-1-13		
CHECKED BY : H.T. BARBOUR	DATE : 5-13		
DRAWN BY : FCJ 11/88	REV. 10/1/11	MAA/GM	
CHECKED BY : ARB 11/88	REV. 7/12	MAA/GM	
	REV. 10/12	MAA/GM	

11-JUN-2013 12:17
R:\Structures\Str2\Plans\vnguyen\R-3101_SD_AS.dgn
bklappenbach

PROJECT NO. R-3101

ALLEGHANY COUNTY

STATION: 393+57.38 -L-

SHEET 2 OF 2

STATE OF NORTH CAROLINA
DEPARTMENT OF TRANSPORTATION
RALEIGH

STANDARD

BRIDGE APPROACH SLAB DETAILS

NORTH CAROLINA PROFESSIONAL SEAL 5825 ENGINEER BRUCE D. KLAPPENBACH
7-26-2013

REVISIONS						SHEET NO.
NO.	BY:	DATE:	NO.	BY:	DATE:	S-65
1			3			TOTAL SHEETS
2			4			65

STR. #2

F. A. PROJECT : STP-21(14)

BENCHMARK: BL-61, 5/8" REBAR W/CAP, STA 400+72.56 -BL-, EL. 2595.17

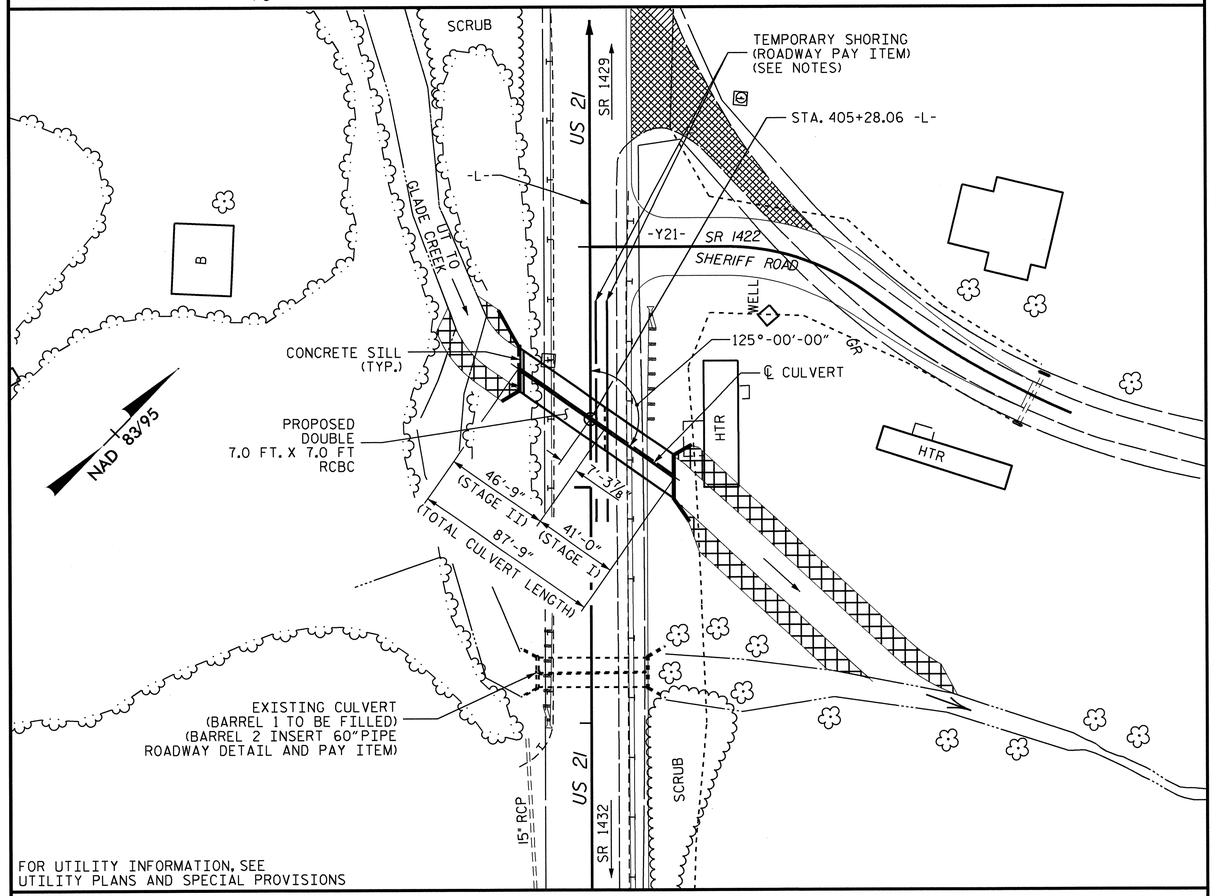

FOR UTILITY INFORMATION, SEE
UTILITY PLANS AND SPECIAL PROVISIONS

LOCATION SKETCH

ROADWAY DATA

GRADE PT. EL. @ STA. 405+28.06 -L- = 2595.91
BED EL. @ STA. 405+28.06 -L- = 2581.41
ROADWAY SLOPES @ STA. 405+28.06 -L- = 2:1

HYDRAULIC DATA

DESIGN DISCHARGE	= 578 C.F.S.
FREQUENCY OF DESIGN FLOOD	= 50 YR.
DESIGN HIGH WATER ELEVATION	= 2589.02
DRAINAGE AREA	= 1.3 SQ. MI.
BASE DISCHARGE (Q100)	= 694 C.F.S.
BASE HIGH WATER ELEVATION	= 2589.79

OVERTOPPING FLOOD DATA

OVERTOPPING DISCHARGE	= 1210 C.F.S.
FREQUENCY OF OVERTOPPING FLOOD	= 500+ YR.
OVERTOPPING FLOOD ELEVATION	= 2596.00

TOTAL STRUCTURE QUANTITIES

CLASS A CONCRETE		
STAGE I	CU. YDS.	69.2
STAGE II	CU. YDS.	77.7
TOTAL	CU. YDS.	146.9
REINFORCING STEEL		
STAGE I	LBS.	7,724
STAGE II	LBS.	8,553
TOTAL	LBS.	16,277
FOUNDATION CONDITIONING MATERIAL		
STAGE I	TONS	46
STAGE II	TONS	53
TOTAL	TONS	99
CULVERT EXCAVATION		LUMP SUM

NOTES

ASSUMED LIVE LOAD ---------- HL-93 OR ALTERNATE LOADING.

DESIGN FILL---------- 7.57 FT. MAX

FOR OTHER DESIGN DATA AND NOTES SEE STANDARD NOTE SHEET.

3"Ø WEEP HOLES INDICATED TO BE IN ACCORDANCE WITH THE SPECIFICATIONS.

CONCRETE IN CULVERTS TO BE POURED IN THE FOLLOWING ORDER:

1. WING FOOTINGS, FLOOR SLAB INCLUDING 4" OF ALL VERTICAL WALLS AND EDGE BEAM.
2. THE REMAINING PORTIONS OF THE WALLS AND WINGS FULL HEIGHT FOLLOWED BY ROOF SLAB, HEADWALL, EDGE BEAM AND SILL.

THE RESIDENT ENGINEER SHALL CHECK THE LENGTH OF CULVERT BEFORE STAKING IT OUT TO MAKE CERTAIN THAT IT WILL PROPERLY TAKE CARE OF THE FILL.

DIMENSIONS FOR WING LAYOUT AS WELL AS ADDITIONAL REINFORCING STEEL EMBEDDED IN BARREL ARE SHOWN ON WING SHEET.

AT THE CONTRACTOR'S OPTION, HE MAY SPLICE THE VERTICAL REINFORCING STEEL IN THE INTERIOR FACE OF EXTERIOR AND INTERIOR WALL ABOVE LOWER WALL CONSTRUCTION JOINT. THE SPLICE LENGTH SHALL BE AS PROVIDED IN THE SPLICE LENGTH CHART SHOWN ON THE PLANS. EXTRA WEIGHT OF STEEL DUE TO THE SPLICES SHALL BE PAID FOR BY THE CONTRACTOR.

THE CONTRACTOR SHALL PROVIDE INDEPENDENT ASSURANCE SAMPLES OF REINFORCING STEEL AS FOLLOWS: FOR PROJECTS REQUIRING UP TO 400 TONS OF REINFORCING STEEL, ONE 30 INCH SAMPLE OF EACH SIZE BAR USED, AND FOR PROJECTS REQUIRING OVER 400 TONS OF REINFORCING STEEL, TWO 30 INCH SAMPLES OF EACH SIZE BAR USED. THE BARS FROM WHICH THE SAMPLES ARE TAKEN MUST THEN BE SPLICED WITH REPLACEMENT BARS OF THE SIZE AND LENGTH OF THE SAMPLE, PLUS A MINIMUM LAP SPLICE OF THIRTY BAR DIAMETERS. PAYMENT FOR THE SAMPLES OF REINFORCING STEEL SHALL BE CONSIDERED INCIDENTAL TO VARIOUS PAY ITEMS.

A 3 FOOT STRIP OF FILTER FABRIC SHALL BE ATTACHED TO THE FILL FACE OF THE WING COVERING THE ENTIRE LENGTH OF THE EXPANSION JOINT.

FOR CULVERT DIVERSION DETAILS AND PAY ITEM, SEE EROSION CONTROL PLANS.

FOR SUBMITTAL OF WORKING DRAWINGS, SEE SPECIAL PROVISIONS.

FOR FALSEWORK AND FORMWORK, SEE SPECIAL PROVISIONS.

FOR GROUT FOR STRUCTURES, SEE SPECIAL PROVISIONS.

FOR CRANE SAFETY, SEE SPECIAL PROVISIONS.

FOR LIMITS OF TEMPORARY SHORING FOR MAINTENANCE OF TRAFFIC, SEE TRAFFIC CONTROL PLANS. FOR PAY ITEM FOR LIMITS OF TEMPORARY SHORING FOR MAINTENANCE OF TRAFFIC, SEE ROADWAY PLANS.

STEEL IN THE BOTTOM SLAB MAY BE SPLICED AT THE PERMITTED CONSTRUCTION JOINT AT THE CONTRACTOR'S OPTION. EXTRA WEIGHT OF STEEL DUE TO THE SPLICES SHALL BE PAID FOR BY THE CONTRACTOR.

AT THE CONTRACTOR'S OPTION HE MAY SUBMIT, TO THE ENGINEER FOR APPROVAL, DESIGN AND DETAIL DRAWINGS FOR A PRECAST REINFORCED CONCRETE BOX CULVERT IN LIEU OF THE CAST-IN-PLACE CULVERT SHOWN ON THE PLANS. THE DESIGN SHALL PROVIDE THE SAME SIZE AND NUMBER OF BARRELS AS USED ON THE CAST-IN-PLACE DESIGN. FOR OPTIONAL PRECAST REINFORCED CONCRETE BOX CULVERT, SEE SPECIAL PROVISIONS.

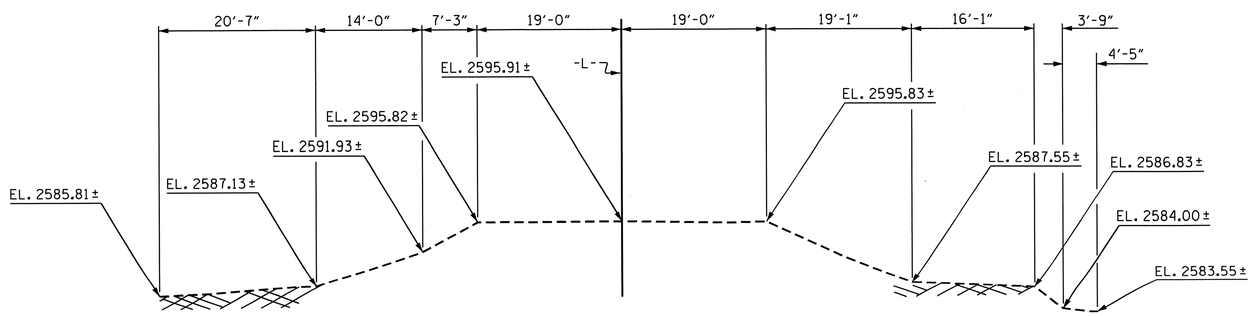

PROFILE ALONG ℄ CULVERT

NORTH CAROLINA PROFESSIONAL SEAL 13014 ENGINEER QUANG H. NGUYEN
Quang H. Nguyen 7-26-13

NORTH CAROLINA PROFESSIONAL SEAL 19825 ENGINEER BRUCE D. KLAPPENBACH
7-26-2013

PROJECT NO. R-3101
ALLEGHANY COUNTY
STATION: 405+28.06 -L-

SHEET 1 OF 9

STATE OF NORTH CAROLINA
DEPARTMENT OF TRANSPORTATION
RALEIGH
BARREL STANDARD
DOUBLE
7.0 FT. X 7.0 FT.
CONCRETE BOX CULVERT
125° SKEW

REVISIONS						SHEET NO.
NO.	BY:	DATE:	NO.	BY:	DATE:	C-1
1			3			TOTAL SHEETS
2			4			22

STR. #3 STD. NO. CB31A

DRAWN BY : J.P. MCCARTHA DATE : 4-19-13
CHECKED BY : R.P. PATEL DATE : 4-22-13
DESIGN ENGINEER OF RECORD: BART DUKE DATE : 6-3-13

25-JUL-2013 10:11
D:\Structures\Str3\Plans\R-3101_SD_CU.dgn
tbarbour

STAGE I STRUCTURE QUANTITIES		
CLASS A CONCRETE		
BARREL @ 1.366 CY/FT	56.0	C.Y.
WING ETC.	13.2	C.Y.
TOTAL	69.2	C.Y.
REINFORCING STEEL		
BARREL	7,063	LBS.
WINGS ETC.	661	LBS.
TOTAL	7,724	LBS.
FOUNDATION COND. MAT'L	46	TONS

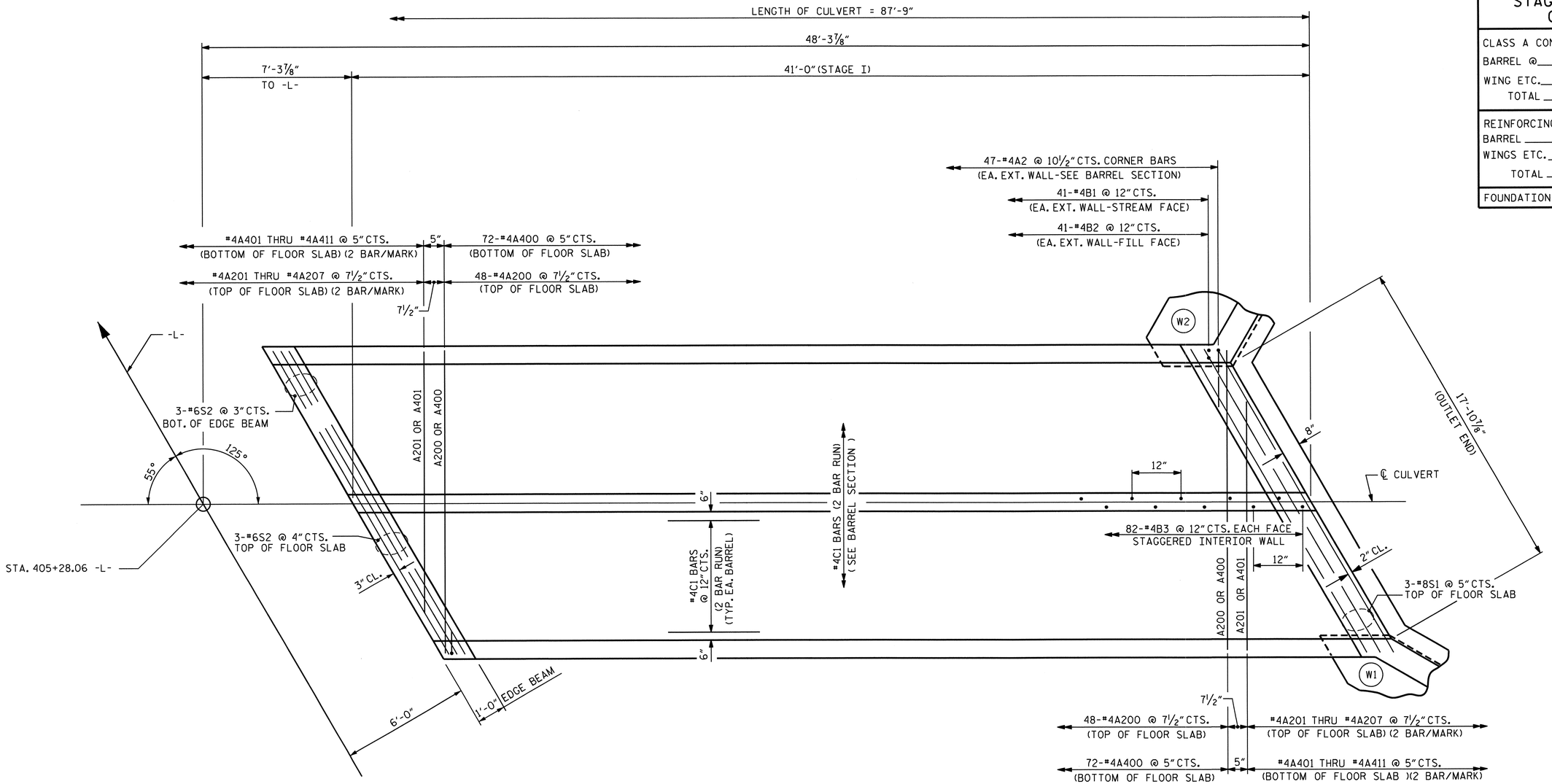

FLOOR PLAN
(STAGE I)

PROJECT NO. R-3101

ALLEGHANY COUNTY

STATION: 405+28.06 -L-

SHEET 2 OF 9

STATE OF NORTH CAROLINA
DEPARTMENT OF TRANSPORTATION
RALEIGH

DOUBLE 7.0 FT. X 7.0 FT. CONCRETE BOX CULVERT 125° SKEW (STAGE I)

NORTH CAROLINA PROFESSIONAL SEAL 15825 ENGINEER BRUCE O. KLAPPENBACH
7-2-2013

REVISIONS						SHEET NO.
NO.	BY:	DATE:	NO.	BY:	DATE:	C-2
1			3			TOTAL SHEETS
2			4			22

STR. #3

DRAWN BY : J.P. MCCARTHA DATE : 4-19-13
CHECKED BY : R.P. PATEL DATE : 4-22-13
DESIGN ENGINEER OF RECORD: BART DUKE DATE : 6-3-13

10-JUN-2013 11:35
R:\Structures\Str3\Plans\R-3101_SD_CU.dgn
bklappenbach

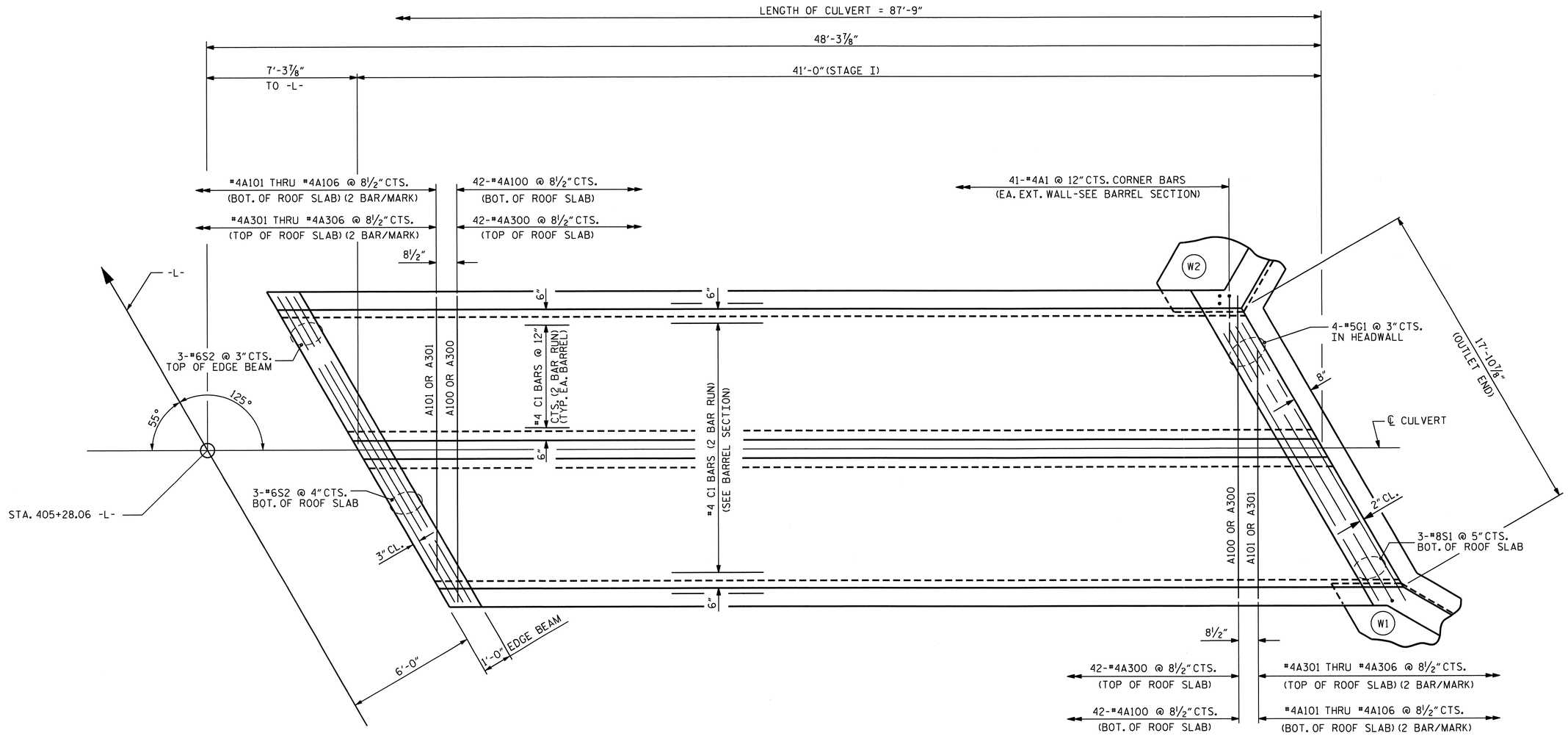

ROOF PLAN
(STAGE I)

PROJECT NO. R-3101

ALLEGHANY COUNTY

STATION: 405+28.06 -L-

SHEET 3 OF 9

STATE OF NORTH CAROLINA
DEPARTMENT OF TRANSPORTATION
RALEIGH

DOUBLE 7.0 FT. X 7.0 FT. CONCRETE BOX CULVERT 125° SKEW (STAGE I)

NORTH CAROLINA PROFESSIONAL SEAL 15825 ENGINEER BRUCE D. KLAPPENBACH
7-24-2013

REVISIONS						SHEET NO.
NO.	BY:	DATE:	NO.	BY:	DATE:	C-3
1			3			TOTAL SHEETS
2			4			22

STR. #3

DRAWN BY : J.P. MCCARTHA DATE : 4-19-13
CHECKED BY : R. P. PATEL DATE : 4-22-13
DESIGN ENGINEER OF RECORD: BART DUKE DATE : 6-3-13

10-JUN-2013 11:35
R:\Structures\Str3\Plans\R-3101_SD_CU.dgn
bklappenbach

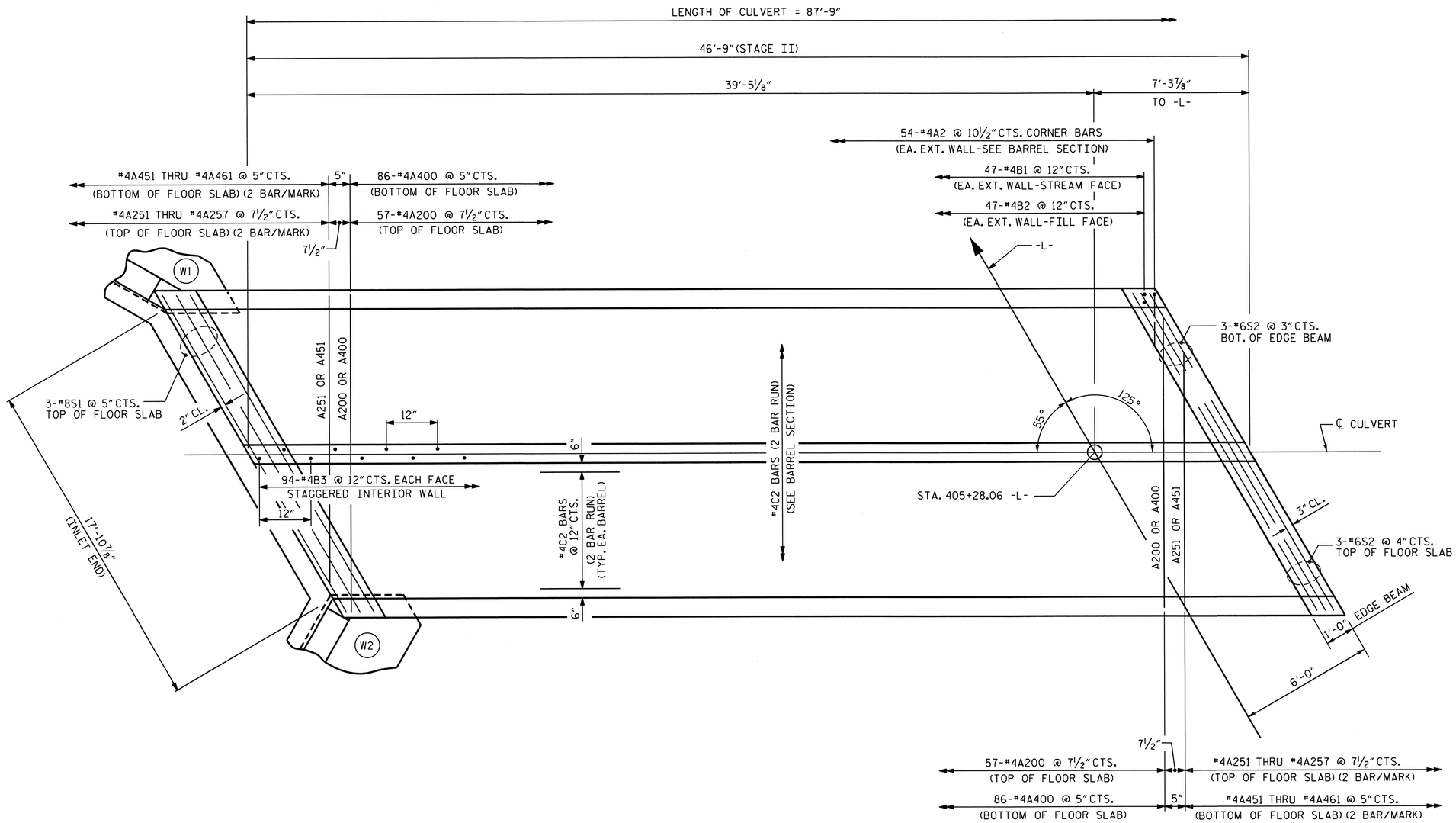

FLOOR PLAN
(STAGE II)

STAGE II STRUCTURE QUANTITIES

CLASS A CONCRETE		
BARREL @ 1.366 CY/FT	63.9	C.Y.
SILL	0.6	C.Y.
WING ETC.	13.2	C.Y.
TOTAL	77.7	C.Y.
REINFORCING STEEL		
BARREL	7,892	LBS.
WINGS ETC.	661	LBS.
TOTAL	8,553	LBS.
FOUNDATION COND. MAT'L	53.0	TONS

PROJECT NO. R-3101

ALLEGHANY COUNTY

STATION: 405+28.06 -L-

SHEET 4 OF 9

STATE OF NORTH CAROLINA
DEPARTMENT OF TRANSPORTATION
RALEIGH

DOUBLE 7.0 FT. X 7.0 FT. CONCRETE BOX CULVERT 125° SKEW (STAGE II)

NORTH CAROLINA PROFESSIONAL SEAL 15825 ENGINEER BRUCE D. KLAPPENBACH
7-26-2013

REVISIONS						SHEET NO.
NO.	BY:	DATE:	NO.	BY:	DATE:	C-4
1			3			TOTAL SHEETS
2			4			22

DRAWN BY : J.P. MCCARTHA DATE : 4-19-13
CHECKED BY : R.P. PATEL DATE : 4-22-13
DESIGN ENGINEER OF RECORD: BART DUKE DATE : 6-3-13

10-JUN-2013 11:35
R:\Structures\Str3\Plans\R-3101_SD_CU.dgn
bklappenbach

STR. #3

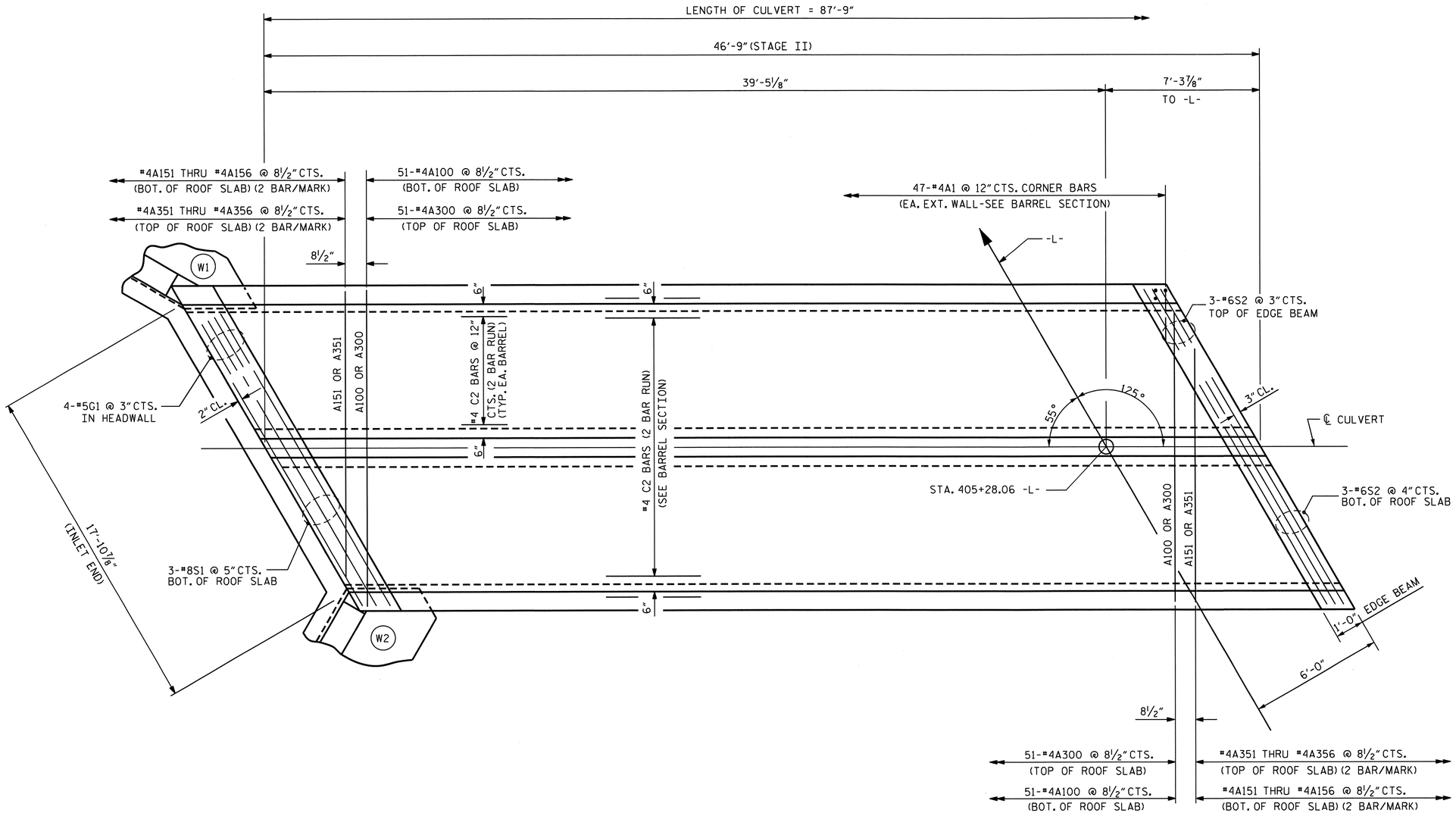

ROOF PLAN
(STAGE II)

PROJECT NO. R-3101

ALLEGHANY COUNTY

STATION: 405+28.06 -L-

SHEET 5 OF 9

STATE OF NORTH CAROLINA
DEPARTMENT OF TRANSPORTATION
RALEIGH

DOUBLE 7.0 FT. X 7.0 FT. CONCRETE BOX CULVERT 125° SKEW (STAGE II)

REVISIONS						SHEET NO.
NO.	BY:	DATE:	NO.	BY:	DATE:	C-5
1			3			TOTAL SHEETS
2			4			22

STR. #3

NORTH CAROLINA PROFESSIONAL SEAL 15825 ENGINEER BART D. KLAPPENBACH
7-26-2013

DRAWN BY : J.P. MCCARTHA DATE : 4-19-13
CHECKED BY : R. P. PATEL DATE : 4-22-13
DESIGN ENGINEER OF RECORD: BART DUKE DATE : 6-3-13

10-JUN-2013 11:34
R:\Structures\Str3\Plans\R-3101_SD_CU.dgn
bklappenbach

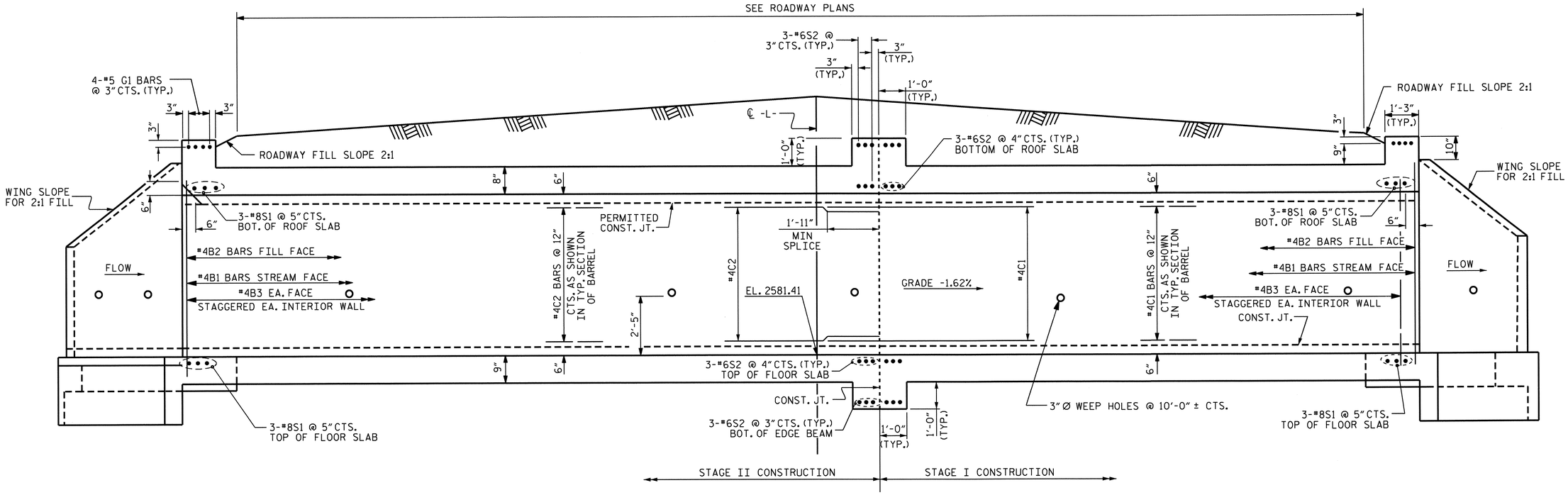

STAGE II CULVERT SECTION NORMAL TO ROADWAY

STAGE I CULVERT SECTION NORMAL TO ROADWAY

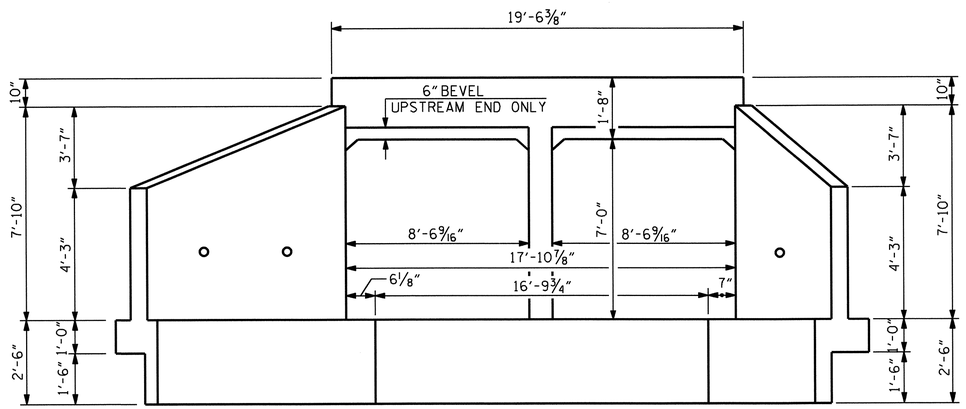

END ELEVATION NORMAL TO SKEW

PROJECT NO. R-3101

ALLEGHANY COUNTY

STATION: 405+28.06 -L-

SHEET 6 OF 9

STATE OF NORTH CAROLINA
DEPARTMENT OF TRANSPORTATION
RALEIGH

BARREL STANDARD
DOUBLE 7.0 FT. X 7.0 FT. CONCRETE BOX CULVERT 125° SKEW

NORTH CAROLINA PROFESSIONAL SEAL 15825 ENGINEER RAYMOND D. KLAPPENBACH
7-26-2013

REVISIONS						SHEET NO.
NO.	BY:	DATE:	NO.	BY:	DATE:	C-6
1			3			TOTAL SHEETS
2			4			22

STR. #3 STD. NO. CB332

ASSEMBLED BY : J.P. MCCARTHA DATE : 4-19-13	CHECKED BY : R.P. PATEL DATE : 4-23-13	SPECIAL
DRAWN BY : W.BRYAN STALEY II DATE : NOV.5,1971	CHECKED BY : JOEL A. JOHNSON DATE : NOV.13,1971	STANDARD

REVISED 11-19-99 BY M.W. CHECKED BY R.W.W.
REVISED 8-28-92 BY E.L.R. CHECKED BY G.R.P.
REDRAWN 8/1990 BY S.A.T., CHECKED BY E.L.R.

25-JUL-2013 09:54
D:\Structures\Str3\Plans\R-3101_SD_CU.dgn

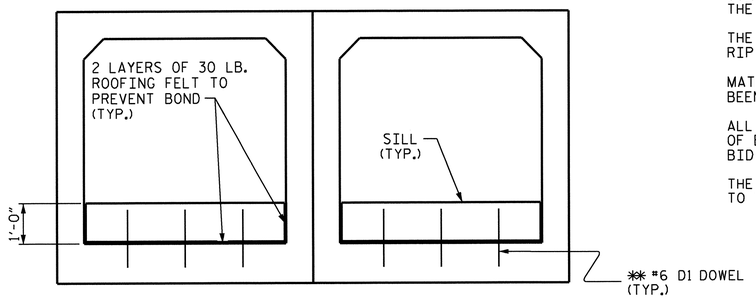

ELEVATION
(INLET END)

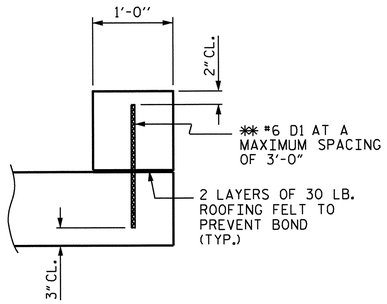

SECTION THROUGH SILL

** DOWELS MAY BE PUSHED INTO GREEN CONCRETE AFTER SLAB HAS BEEN FLOAT FINISHED.

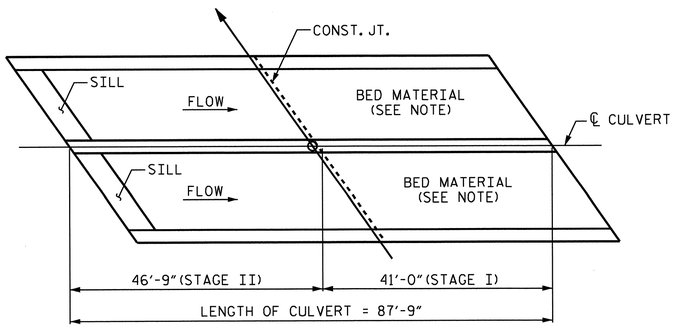

PLAN OF CULVERT SHOWING LOCATION OF SILL

CULVERT SILL DETAILS

NOTES

BED MATERIAL EXCAVATED FROM THE SITE FOR BOX CULVERT CONSTRUCTION IS TO BE STOCKPILED AND LATER PLACED ON THE FLOOR OF THE COMPLETED CULVERT.

THE STOCKPILED MATERIAL MAY BE SUBSIDIZED WITH CLASS B RIP RAP AND IS SUBJECT TO THE APPROVAL OF THE ENGINEER.

MATERIAL SHALL NOT BE REMOVED UNTIL STREAM FLOW HAS BEEN PERMANENTLY CUT OFF FROM THAT PORTION OF THE STREAM.

ALL WORK INVOLVING EXCAVATION, STOCKPILING AND PLACING OF BED MATERIAL SHALL BE INCLUDED IN THE LUMP SUM PRICE BID FOR "CULVERT EXCAVATION".

THE CONTRACTOR SHALL SUBMIT A PLAN FOR SILL INSTALLATION TO THE ENGINEER.

BAR TYPE

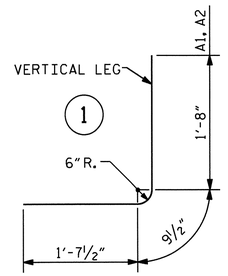

ALL BAR DIMENSIONS ARE OUT TO OUT

SPLICE LENGTHS CHART

BAR	SIZE	SPLICE LENGTH
C1	#4	1'-11"
B1, B2	#4	1'-9"

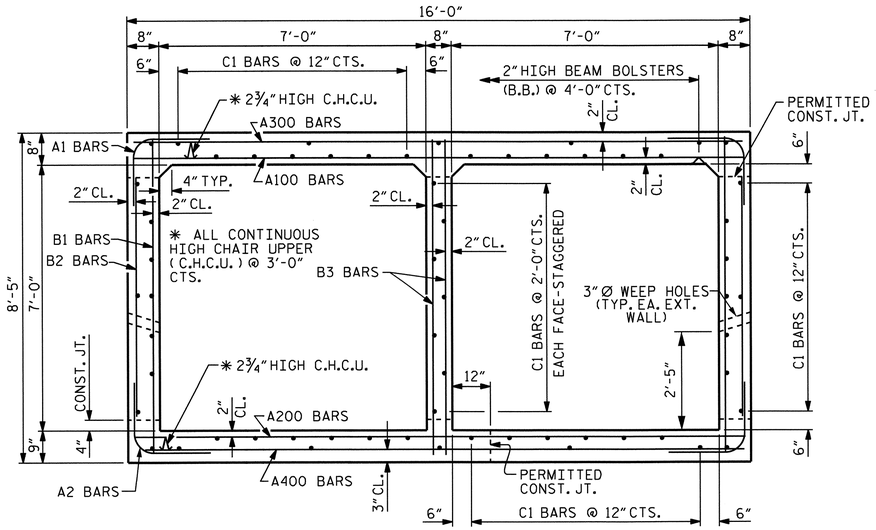

RIGHT ANGLE SECTION OF BARREL

THERE ARE 61 "C" BARS IN SECTION OF BARREL.

BILL OF MATERIAL

STAGE I						STAGE II					
BAR	NO.	SIZE	TYPE	LENGTH	WEIGHT	BAR	NO.	SIZE	TYPE	LENGTH	WEIGHT
A1	82	#4	1	4'-1"	224	A1	94	#4	1	4'-1"	256
A2	94	#4	1	4'-1"	256	A2	108	#4	1	4'-1"	295
A100	42	#4	STR	15'-7"	437	A100	51	#4	STR	15'-7"	531
A101	4	#4	STR	14'-0"	37	A151	4	#4	STR	13'-6"	36
A102	4	#4	STR	11'-11"	32	A152	4	#4	STR	11'-6"	31
A103	4	#4	STR	9'-11"	26	A153	4	#4	STR	9'-6"	25
A104	4	#4	STR	7'-11"	21	A154	4	#4	STR	7'-6"	20
A105	4	#4	STR	5'-11"	16	A155	4	#4	STR	5'-5"	14
A106	4	#4	STR	3'-10"	10	A156	4	#4	STR	3'-5"	9
A200	48	#4	STR	15'-7"	500	A200	57	#4	STR	15'-7"	593
A201	4	#4	STR	14'-0"	37	A251	4	#4	STR	14'-1"	38
A202	4	#4	STR	12'-2"	33	A252	4	#4	STR	12'-3"	33
A203	4	#4	STR	10'-5"	28	A253	4	#4	STR	10'-5"	28
A204	4	#4	STR	8'-7"	23	A254	4	#4	STR	8'-9"	23
A205	4	#4	STR	6'-10"	18	A255	4	#4	STR	6'-11"	18
A206	4	#4	STR	5'-1"	14	A256	4	#4	STR	5'-2"	14
A207	4	#4	STR	3'-3"	9	A257	4	#4	STR	3'-4"	9
A300	42	#4	STR	15'-7"	437	A300	51	#4	STR	15'-7"	531
A301	4	#4	STR	14'-0"	37	A351	4	#4	STR	13'-6"	36
A302	4	#4	STR	11'-11"	32	A352	4	#4	STR	11'-6"	31
A303	4	#4	STR	9'-11"	26	A353	4	#4	STR	9'-6"	25
A304	4	#4	STR	7'-11"	21	A354	4	#4	STR	7'-6"	20
A305	4	#4	STR	5'-11"	16	A355	4	#4	STR	5'-5"	14
A306	4	#4	STR	3'-10"	10	A356	4	#4	STR	3'-5"	9
A400	72	#4	STR	15'-7"	749	A400	86	#4	STR	15'-7"	895
A401	4	#4	STR	14'-5"	39	A451	4	#4	STR	14'-4"	38
A402	4	#4	STR	13'-3"	35	A452	4	#4	STR	13'-2"	35
A403	4	#4	STR	12'-1"	32	A453	4	#4	STR	12'-0"	32
A404	4	#4	STR	10'-10"	29	A454	4	#4	STR	10'-10"	29
A405	4	#4	STR	9'-8"	26	A455	4	#4	STR	9'-7"	26
A406	4	#4	STR	8'-6"	23	A456	4	#4	STR	8'-6"	23
A407	4	#4	STR	7'-3"	19	A457	4	#4	STR	7'-3"	19
A408	4	#4	STR	6'-1"	16	A458	4	#4	STR	6'-0"	16
A409	4	#4	STR	4'-11"	13	A459	4	#4	STR	4'-10"	13
A410	4	#4	STR	3'-9"	10	A460	4	#4	STR	3'-9"	10
A411	4	#4	STR	2'-6"	7	A461	4	#4	STR	2'-6"	7
B1	82	#4	STR	7'-11"	434	B1	94	#4	STR	7'-11"	497
B2	82	#4	STR	6'-4"	347	B2	94	#4	STR	6'-4"	398
B3	82	#4	STR	7'-11"	434	B3	94	#4	STR	7'-11"	497
C1	122	#4	STR	22'-4"	1820	C2	122	#4	STR	24'-3"	1976
						D1	6	#6	STR	1'-4"	12
G1	4	#5	STR	19'-1"	80	G1	4	#5	STR	19'-1"	80
S1	6	#8	STR	19'-1"	306	S1	6	#8	STR	19'-1"	306
S2	12	#6	STR	19'-1"	344	S2	12	#6	STR	19'-1"	344
REINFORCING STEEL 7,063 LBS						REINFORCING STEEL 7,892 LBS					

PROJECT NO. R-3101

ALLEGHANY COUNTY

STATION: 405+28.06 -L-

SHEET 7 OF 9

STATE OF NORTH CAROLINA
DEPARTMENT OF TRANSPORTATION
RALEIGH

BARREL STANDARD
DOUBLE
7.0 FT. X 7.0 FT.
CONCRETE BOX CULVERT
125° SKEW

REVISIONS						SHEET NO.
NO.	BY:	DATE:	NO.	BY:	DATE:	C-7
1			3			TOTAL SHEETS
2			4			22

STR. #3

NORTH CAROLINA PROFESSIONAL SEAL 15825 ENGINEER B. KLAPPENBACH
7-26-2013

DRAWN BY :	J.P. MCCARTHA	DATE :	4-19-13
CHECKED BY :	R.P. PATEL	DATE :	4-23-13
DESIGN ENGINEER OF RECORD:	BART DUKE	DATE :	6-3-13

10-JUN-2013 11:34
R:\Structures\Str3\Plans\R-3101_SD_CU.dgn
bklappenbach

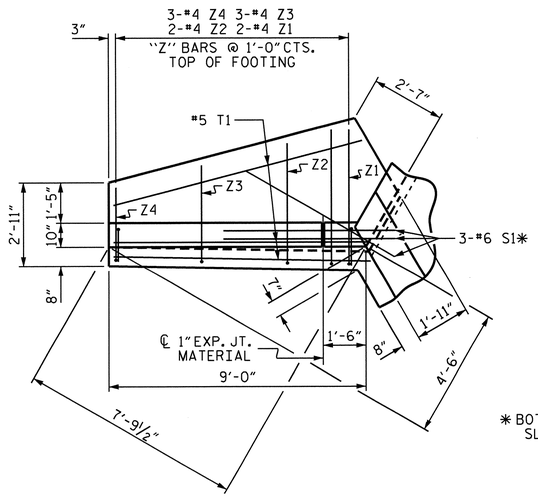

* BOTTOM OF FLOOR SLAB & FOOTING

PLAN W2

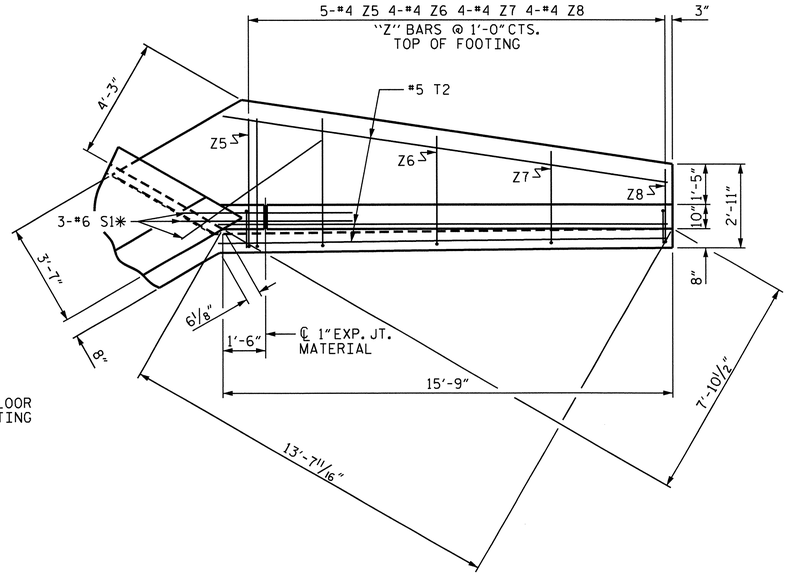

PLAN W1

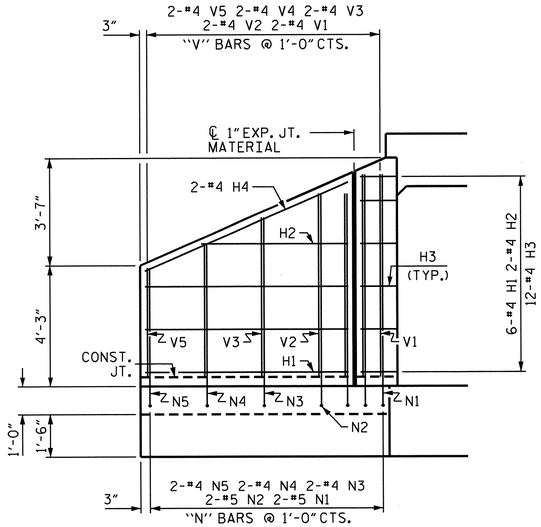

ELEVATION W2

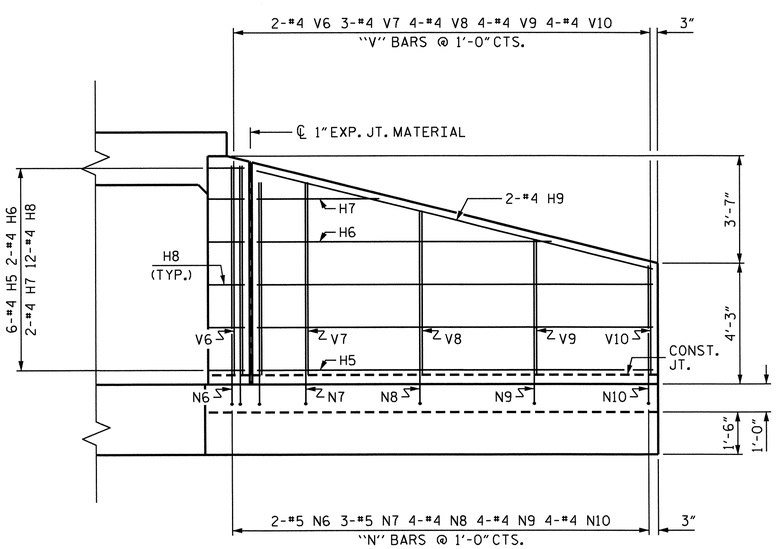

ELEVATION W1

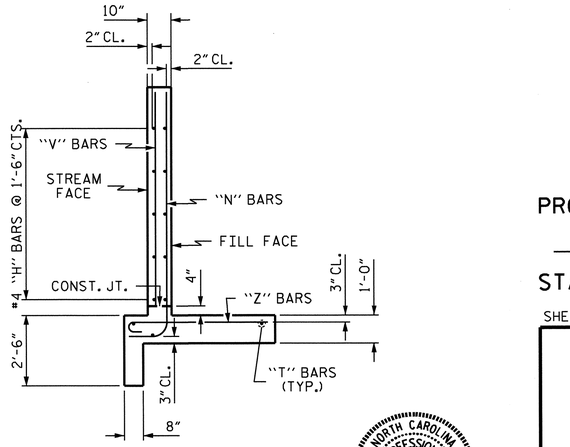

TYPICAL WING SECTION

BAR TYPES

ALL BAR DIMENSIONS ARE OUT TO OUT.

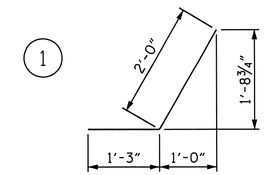

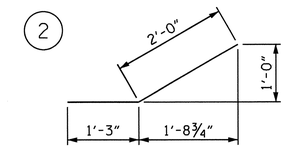

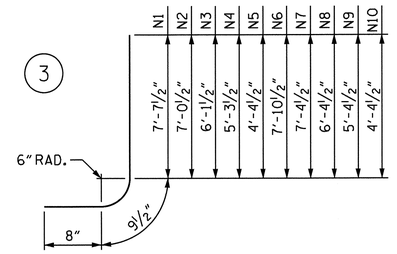

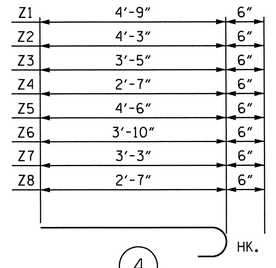

BILL OF MATERIAL

BAR	NO.	SIZE	TYPE	LENGTH	WEIGHT
H1	6	#4	STR	7'-1"	28
H2	2	#4	STR	5'-2"	7
H3	12	#4	1	3'-3"	26
H4	2	#4	STR	7'-9"	10
H5	6	#4	STR	13'-10"	55
H6	2	#4	STR	10'-4"	14
H7	2	#4	STR	4'-3"	6
H8	12	#4	2	3'-3"	26
H9	2	#4	STR	14'-3"	19
N1	2	#5	3	9'-1"	19
N2	2	#5	3	8'-6"	18
N3	2	#4	3	7'-7"	10
N4	2	#4	3	6'-9"	9
N5	2	#4	3	5'-10"	8
N6	2	#5	3	9'-4"	19
N7	3	#5	3	8'-10"	28
N8	4	#4	3	7'-10"	21
N9	4	#4	3	6'-10"	18
N10	4	#4	3	5'-10"	16
S1	6	#6	STR	6'-0"	54
T1	3	#5	STR	9'-0"	28
T2	3	#5	STR	15'-9"	49
V1	2	#4	STR	7'-1"	9
V2	2	#4	STR	6'-5"	9
V3	2	#4	STR	5'-7"	8
V4	2	#4	STR	4'-8"	6
V5	2	#4	STR	3'-10"	5
V6	2	#4	STR	7'-4"	10
V7	3	#4	STR	6'-9"	14
V8	4	#4	STR	5'-9"	15
V9	4	#4	STR	4'-9"	13
V10	4	#4	STR	3'-10"	10
Z1	2	#4	4	5'-3"	7
Z2	2	#4	4	4'-9"	6
Z3	3	#4	4	3'-11"	8
Z4	3	#4	4	3'-1"	6
Z5	5	#4	4	5'-0"	17
Z6	4	#4	4	4'-4"	12
Z7	4	#4	4	3'-9"	10
Z8	4	#4	4	3'-1"	8

REINFORCING STEEL FOR 2 WINGS 661 LBS

CLASS A CONCRETE

2 WINGS	9.9	CY
1 HEADWALL	0.9	CY
1 EDGE BEAMS	1.4	CY
1 END CURTAIN WALL	1.0	CY
TOTAL	13.2	CY

PROJECT NO. R-3101

ALLEGHANY COUNTY

STATION: 405+28.06 -L-

SHEET 8 OF 9

STATE OF NORTH CAROLINA
DEPARTMENT OF TRANSPORTATION
RALEIGH

STANDARD WINGS FOR CONCRETE BOX CULVERT

H = 7'-0" SLOPE = 2:1

125° SKEW

REVISIONS					
NO.	BY:	DATE:	NO.	BY:	DATE:
1			3		
2			4		

SHEET NO. C-8

TOTAL SHEETS 22

STR. #3 STD. NO. CW6007

ASSEMBLED BY : J.P. MCCARTHA DATE : 4-19-13
CHECKED BY : R.P. PATEL DATE : 4-22-13

DRAWN BY : CCJ 11/99
CHECKED BY : RWW 03/00

10-JUN-2013 11:34
R:\Structures\Str3\Plans\R-3101_SD_CU.dgn

LOAD AND RESISTANCE FACTOR RATING (LRFR) SUMMARY FOR REINFORCED CONCRETE BOX CULVERTS

LEVEL		VEHICLE	WEIGHT (W) (TONS)	⟨#⟩ CONTROLLING LOAD RATING	MINIMUM RATING FACTORS (RF)	TONS = W x RF	STRENGTH I LIMIT STATE									COMMENT NUMBER
							LIVE-LOAD FACTORS $\gamma_{(LL)}$	MOMENT				SHEAR				
								RATING FACTOR	BOX NO.	ELEMENT TYPE	DISTANCE FROM LEFT END OF ELEMENT (ft)	RATING FACTOR	BOX NO.	ELEMENT TYPE	DISTANCE FROM LEFT END OF ELEMENT (ft)	
DESIGN LOAD RATING		HL-93 (INVENTORY)	N/A	⟨1⟩	1.21	--	1.75	1.62	1	BOTTOM SLAB	7.48	1.21	1	TOP SLAB	6.85	
		HL-93 (OPERATING)	N/A		1.56	--	1.35	2.09	1	BOTTOM SLAB	7.48	1.56	1	TOP SLAB	6.85	
		HS-20 (INVENTORY)	36.000	⟨2⟩	1.82	65.43	1.75	2.20	1	BOTTOM SLAB	7.48	1.82	1	TOP SLAB	6.85	
		HS-20 (OPERATING)	36.000		2.36	84.82	1.35	2.85	1	BOTTOM SLAB	7.48	2.36	1	TOP SLAB	6.85	
LEGAL LOAD RATING	SINGLE VEHICLE (SV)	SNSH	13.500		3.25	43.94	1.40	4.25	1	BOTTOM SLAB	7.48	3.25	1	TOP SLAB	6.85	
		SNGARBS2	20.000		3.03	60.64	1.40	3.94	1	BOTTOM SLAB	7.48	3.03	1	TOP SLAB	6.85	
		SNAGRIS2	22.000		3.25	71.61	1.40	3.99	1	BOTTOM SLAB	7.48	3.25	1	TOP SLAB	6.85	
		SNCOTTS3	27.250	⟨3⟩	1.50	40.89	1.40	2.02	1	BOTTOM SLAB	7.48	1.50	1	TOP SLAB	6.85	
		SNAGGRS4	34.925		1.76	61.30	1.40	2.03	1	BOTTOM SLAB	7.48	1.76	1	TOP SLAB	6.85	
		SNS5A	35.550		1.62	57.67	1.40	1.90	1	BOTTOM SLAB	7.48	1.62	1	TOP SLAB	6.85	
		SNS6A	39.950		1.64	65.43	1.40	1.90	1	BOTTOM SLAB	7.48	1.64	1	TOP SLAB	6.85	
		SNS7B	42.000		1.64	68.78	1.40	1.90	1	BOTTOM SLAB	7.48	1.64	1	TOP SLAB	6.85	
	TRUCK TRACTOR SEMI-TRAILER (TTST)	TNAGRIT3	33.000		2.67	88.10	1.40	2.77	1	BOTTOM SLAB	7.48	2.67	1	BOTTOM SLAB	6.79	
		TNT4A	33.075		1.77	58.61	1.40	2.26	1	BOTTOM SLAB	7.48	1.77	1	TOP SLAB	6.85	
		TNT6A	41.600		1.72	71.64	1.40	2.06	1	BOTTOM SLAB	7.48	1.72	1	TOP SLAB	6.85	
		TNT7A	42.000		1.77	74.34	1.40	2.27	1	BOTTOM SLAB	7.48	1.77	1	TOP SLAB	6.85	
		TNT7B	42.000		1.75	73.58	1.40	1.97	1	BOTTOM SLAB	7.48	1.75	1	TOP SLAB	6.85	
		TNAGRIT4	43.000		1.69	72.74	1.40	2.01	1	BOTTOM SLAB	7.48	1.69	1	TOP SLAB	6.85	
		TNAGT5A	45.000		1.73	77.88	1.40	2.04	1	BOTTOM SLAB	7.48	1.73	1	TOP SLAB	6.85	
		TNAGT5B	45.000		1.74	78.23	1.40	2.08	1	BOTTOM SLAB	7.48	1.74	1	TOP SLAB	6.85	

LOAD FACTORS:

DESIGN LOAD RATING FACTORS

LOAD TYPE	MAX FACTOR	MIN FACTOR
DC	1.25	0.90
DW	1.50	0.65
EV	1.30	0.90
EH	1.35	0.90
ES	1.35	0.90
LS	1.75	--
WA	1.00	--

NOTE:

RATING FACTORS ARE BASED ON THE STRENGTH I LIMIT STATE.

⟨#⟩ CONTROLLING LOAD RATING

⟨1⟩ DESIGN LOAD RATING (HL-93)

⟨2⟩ DESIGN LOAD RATING (HS-20)

⟨3⟩ LEGAL LOAD RATING **

** SEE CHART FOR VEHICLE TYPE

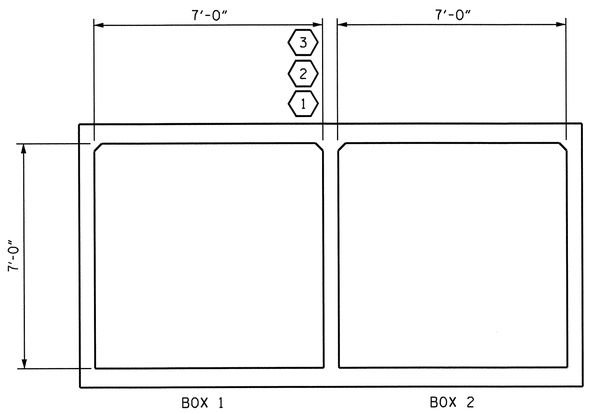

LRFR SUMMARY

(LOOKING DOWNSTREAM)

PROJECT NO. R-3101

ALLEGHANY COUNTY

STATION: 405+28.06 -L-

SHEET 9 OF 9

STATE OF NORTH CAROLINA
DEPARTMENT OF TRANSPORTATION
RALEIGH

STANDARD
LRFR SUMMARY FOR REINFORCED CONCRETE BOX CULVERTS
(NON-INTERSTATE TRAFFIC)

REVISIONS						SHEET NO.
NO.	BY:	DATE:	NO.	BY:	DATE:	C-9
1			3			TOTAL SHEETS
2			4			22

STR. #3 STD. NO. LRFR5

NORTH CAROLINA PROFESSIONAL SEAL 15825 ENGINEER BRUCE D. KLAPPERICH
7-26-2013

ASSEMBLED BY : J.P. MCCARTHA DATE : 4-19-13
CHECKED BY : R.P. PATEL DATE : 4-22-13

DRAWN BY : WMC 7/11
CHECKED BY : GM 7/11
REV. 10/1/11 MAA/GM

25-JUL-2013 09:55
O:\Structures\Str3\Plans\R-3101_SD_CU.dgn
tbarbour

F. A. PROJECT : STP-21(14)

BENCHMARK: BL-68 REBAR AND CAP IN GROUND, 15.9' LEFT OF STATION 444+45.40 -L-, EL. 2687.47

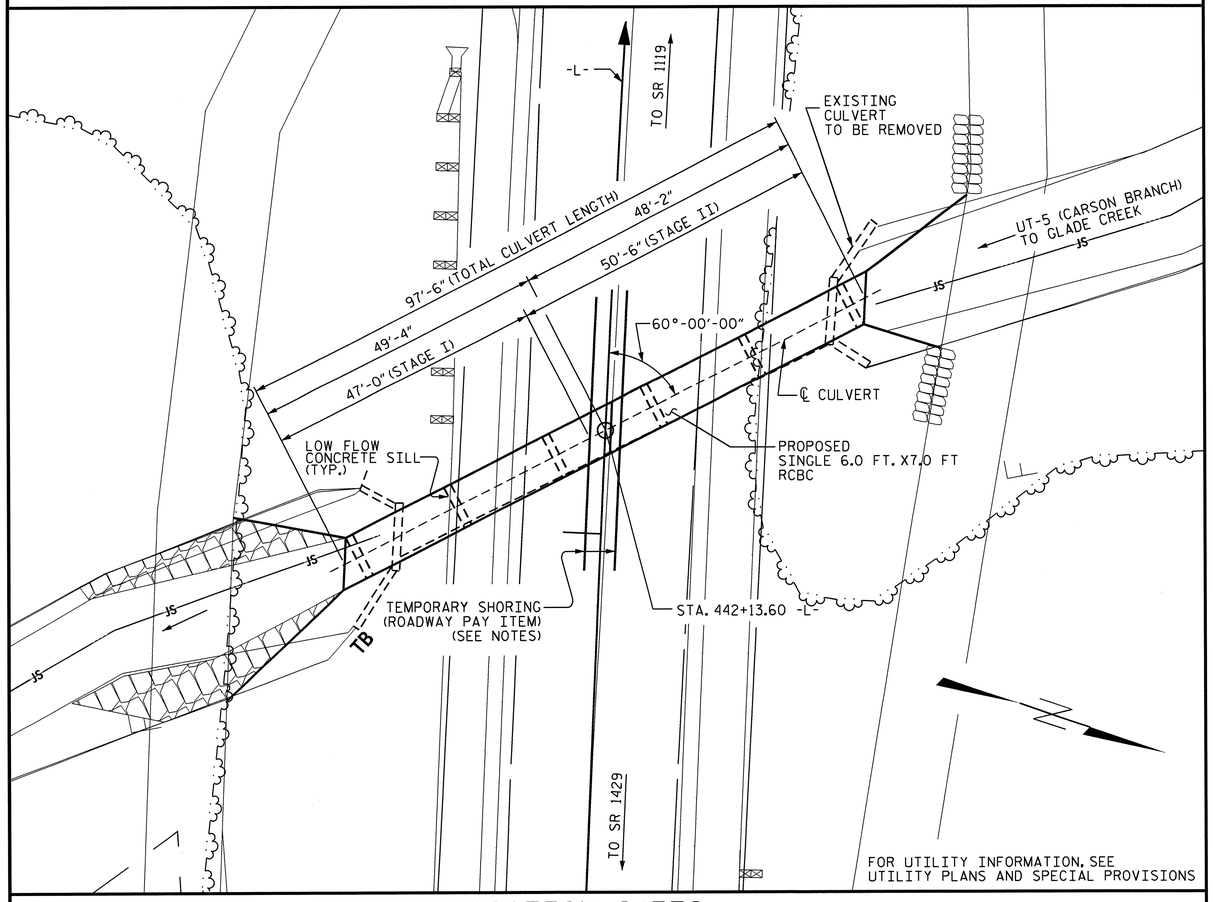

LOCATION SKETCH

ROADWAY DATA

GRADE PT. EL. @ STA. 442+13.60 -L-	= 2675.47
BED EL. @ STA. 442+13.60 -L-	= 2658.25
ROADWAY SLOPES @ STA. 442+13.60 -L-	= 2:1

HYDRAULIC DATA

DESIGN DISCHARGE	= 200 C.F.S.
FREQUENCY OF DESIGN FLOOD	= 50 YR.
DESIGN HIGH WATER ELEVATION	= 2664.90
DRAINAGE AREA	= 260 AC
BASE DISCHARGE (Q100)	= 240 C.F.S.
BASE HIGH WATER ELEVATION	= 2665.6

OVERTOPPING FLOOD DATA

OVERTOPPING DISCHARGE	= -
FREQUENCY OF OVERTOPPING FLOOD	= 500+ YR.
OVERTOPPING FLOOD ELEVATION	= 2675.3

TOTAL STRUCTURE QUANTITIES

CLASS A CONCRETE		
STAGE I	CU. YDS.	44.8
STAGE II	CU. YDS.	47.3
TOTAL	CU. YDS.	92.1
REINFORCING STEEL		
STAGE I	LBS.	4,354
STAGE II	LBS.	4,579
TOTAL	LBS.	8,933
FOUNDATION CONDITIONING MATERIAL		
STAGE I	TONS	24
STAGE II	TONS	26
TOTAL	TONS	50

CULVERT EXCAVATION	LUMP SUM

NOTES

ASSUMED LIVE LOAD ---------- HL-93 OR ALTERNATE LOADING.

DESIGN FILL---------- 10.49 FT. MAX

DESIGN FILL---------- 9.86 FT. MIN.

FOR OTHER DESIGN DATA AND NOTES SEE STANDARD NOTE SHEET.

3" Ø WEEP HOLES INDICATED TO BE IN ACCORDANCE WITH THE SPECIFICATIONS.

CONCRETE IN CULVERTS TO BE POURED IN THE FOLLOWING ORDER:

1. WING FOOTINGS, FLOOR SLAB INCLUDING 4" OF ALL VERTICAL WALLS AND EDGE BEAM.
2. THE REMAINING PORTIONS OF THE WALLS AND WINGS FULL HEIGHT FOLLOWED BY ROOF SLAB, HEADWALL, EDGE BEAM AND LOW FLOW SILL.

THE RESIDENT ENGINEER SHALL CHECK THE LENGTH OF CULVERT BEFORE STAKING IT OUT TO MAKE CERTAIN THAT IT WILL PROPERLY TAKE CARE OF THE FILL.

DIMENSIONS FOR WING LAYOUT AS WELL AS ADDITIONAL REINFORCING STEEL EMBEDDED IN BARREL ARE SHOWN ON WING SHEET.

AT THE CONTRACTOR'S OPTION, HE MAY SPLICE THE VERTICAL REINFORCING STEEL IN THE INTERIOR FACE OF EXTERIOR WALL ABOVE LOWER WALL CONSTRUCTION JOINT. THE SPLICE LENGTH SHALL BE AS PROVIDED IN THE SPLICE LENGTH CHART SHOWN ON THE PLANS. EXTRA WEIGHT OF STEEL DUE TO THE SPLICES SHALL BE PAID FOR BY THE CONTRACTOR.

THE CONTRACTOR SHALL PROVIDE INDEPENDENT ASSURANCE SAMPLES OF REINFORCING STEEL AS FOLLOWS: FOR PROJECTS REQUIRING UP TO 400 TONS OF REINFORCING STEEL, ONE 30 INCH SAMPLE OF EACH SIZE BAR USED, AND FOR PROJECTS REQUIRING OVER 400 TONS OF REINFORCING STEEL, TWO 30 INCH SAMPLES OF EACH SIZE BAR USED. THE BARS FROM WHICH THE SAMPLES ARE TAKEN MUST THEN BE SPLICED WITH REPLACEMENT BARS OF THE SIZE AND LENGTH OF THE SAMPLE, PLUS A MINIMUM LAP SPLICE OF THIRTY BAR DIAMETERS. PAYMENT FOR THE SAMPLES OF REINFORCING STEEL SHALL BE CONSIDERED INCIDENTAL TO VARIOUS PAY ITEMS.

A 3 FOOT STRIP OF FILTER FABRIC SHALL BE ATTACHED TO THE FILL FACE OF THE WING COVERING THE ENTIRE LENGTH OF THE EXPANSION JOINT.

FOR CULVERT DIVERSION DETAILS AND PAY ITEM, SEE EROSION CONTROL PLANS.

FOR SUBMITTAL OF WORKING DRAWINGS, SEE SPECIAL PROVISIONS.

FOR FALSEWORK AND FORMWORK, SEE SPECIAL PROVISIONS.

FOR GROUT FOR STRUCTURES, SEE SPECIAL PROVISIONS.

FOR CRANE SAFETY, SEE SPECIAL PROVISIONS.

FOR LIMITS OF TEMPORARY SHORING FOR MAINTENANCE OF TRAFFIC, SEE TRAFFIC CONTROL PLANS. FOR PAY ITEM FOR LIMITS OF TEMPORARY SHORING FOR MAINTENANCE OF TRAFFIC, SEE ROADWAY PLANS.

AT THE CONTRACTOR'S OPTION HE MAY SUBMIT, TO THE ENGINEER FOR APPROVAL, DESIGN AND DETAIL DRAWINGS FOR A PRECAST REINFORCED CONCRETE BOX CULVERT IN LIEU OF THE CAST-IN-PLACE CULVERT SHOWN ON THE PLANS. THE DESIGN SHALL PROVIDE THE SAME SIZE AND NUMBER OF BARRELS AS USED ON THE CAST-IN-PLACE DESIGN. FOR OPTIONAL PRECAST REINFORCED CONCRETE BOX CULVERT, SEE SPECIAL PROVISIONS.

THE EXISTING STRUCTURE CONSISTING OF A 6 FT. X 6 FT. SINGLE BARREL REINFORCED CONCRETE BOX CULVERT WITH AN APPROXIMATE LENGTH OF 70 FT. AT THE PROPOSED SITE SHALL BE REMOVED.

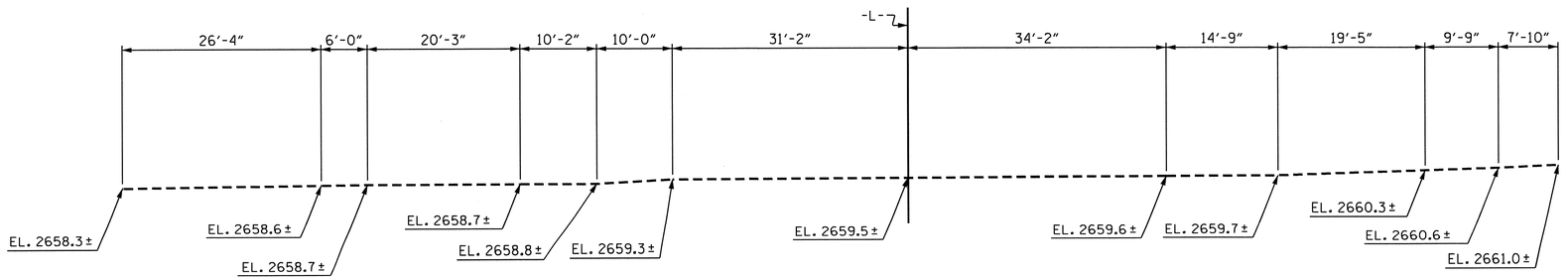

PROFILE ALONG ℄ CULVERT

NORTH CAROLINA PROFESSIONAL SEAL 13014 ENGINEER QUANG H. NGUYEN
Quang H. Nguyen 7-26-13

NORTH CAROLINA PROFESSIONAL SEAL 15825 BRIDGE ENGINEER D. KLAPPENBACH
7-26-2013

PROJECT NO. R-3101

ALLEGHANY COUNTY

STATION: 442+13.60 -L-

SHEET 1 OF 7

STATE OF NORTH CAROLINA
DEPARTMENT OF TRANSPORTATION
RALEIGH

BARREL STANDARD
SINGLE 6.0 FT. X 7.0 FT. CONCRETE BOX CULVERT 60° SKEW

REVISIONS						SHEET NO.
NO.	BY:	DATE:	NO.	BY:	DATE:	C-10
1			3			TOTAL SHEETS
2			4			22

STR. #4 STD. NO. CB31A

DRAWN BY : R. P. PATEL DATE : 4-3-13
CHECKED BY : J. P. MCCARTHA DATE : 4-8-13
DESIGN ENGINEER OF RECORD: BART DUKE DATE : 6-6-13

25-JUL-2013 10:09
O:\Structures\Str4\Plans\R-3101_SD_CUL.dgn
tbarbour

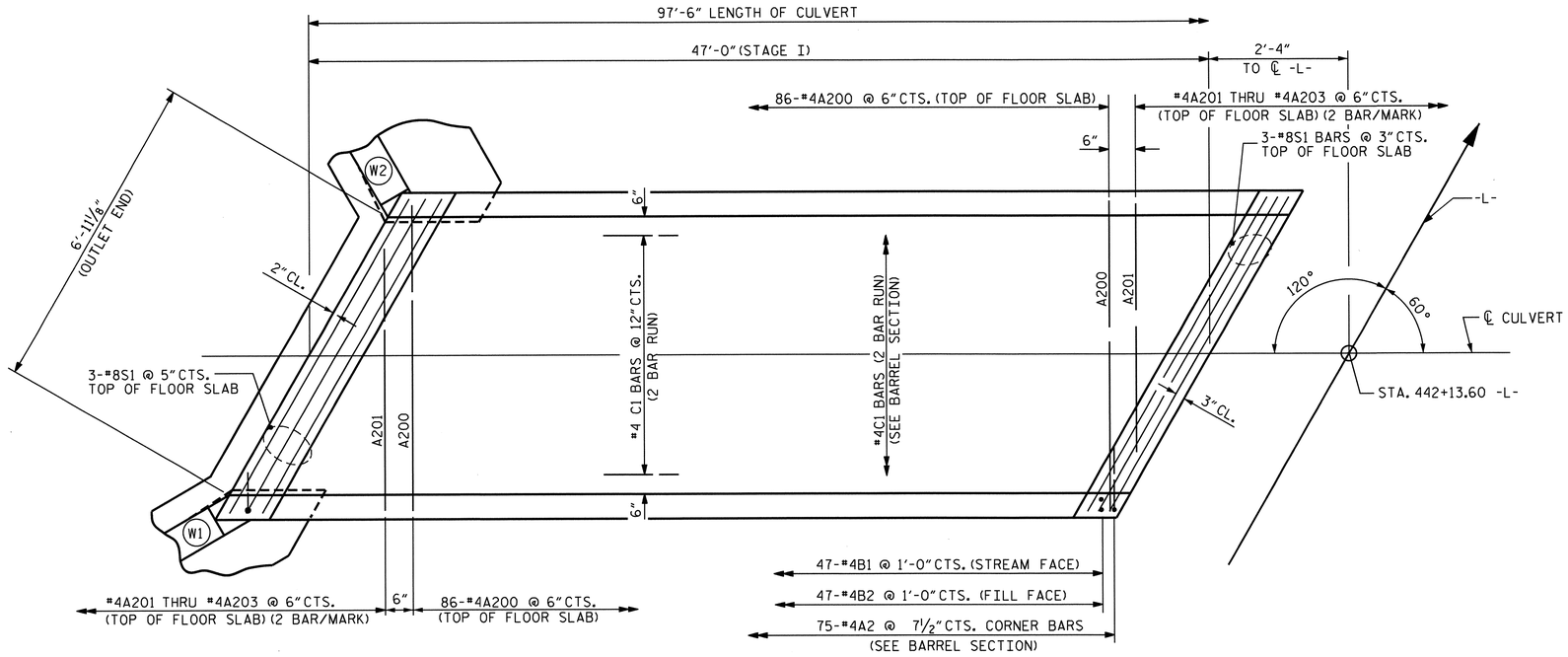

STAGE I PLAN - FLOOR PLAN

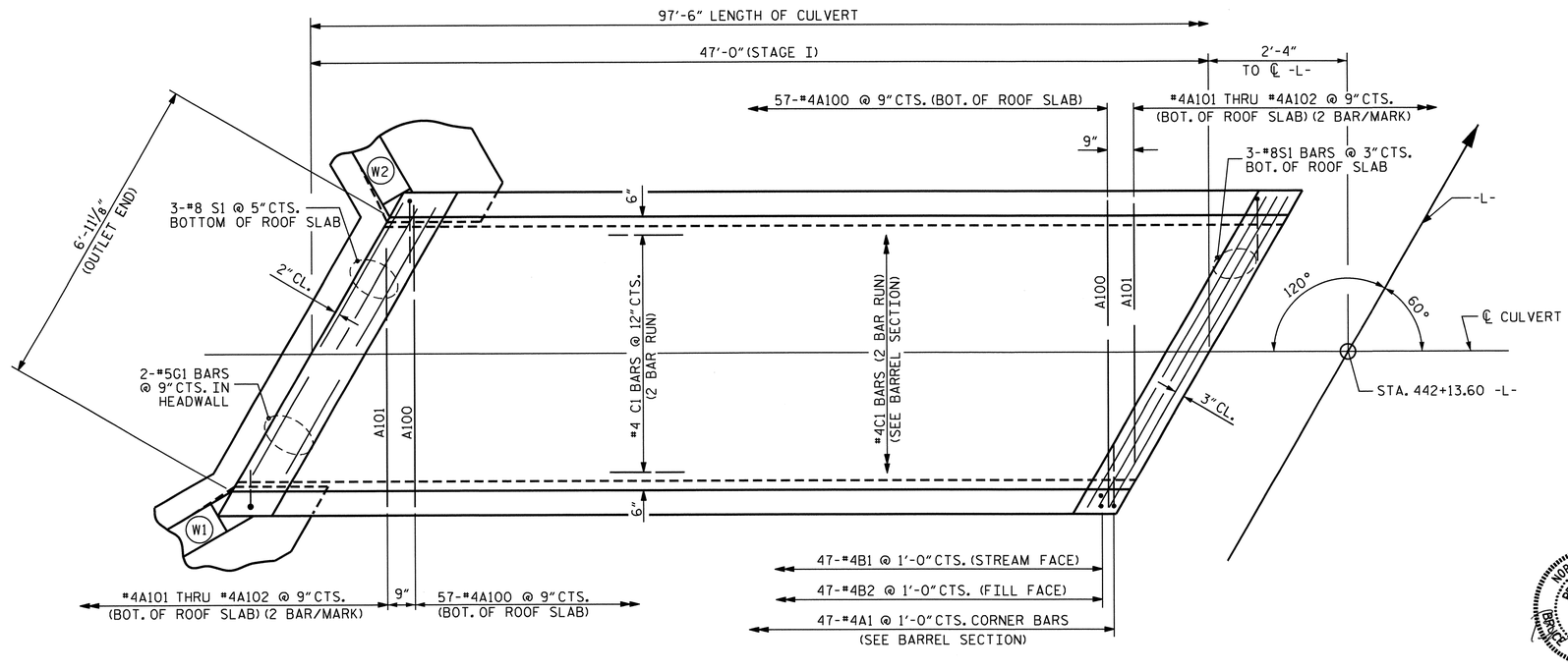

STAGE I PLAN - ROOF PLAN

STAGE I STRUCTURE QUANTITIES

CLASS A CONCRETE		
BARREL @ 0.712 CY/FT	33.5	C.Y.
WING ETC.	11.3	C.Y.
TOTAL	44.8	C.Y.
REINFORCING STEEL		
BARREL	3,693	LBS.
WINGS ETC.	661	LBS.
TOTAL	4,354	LBS.
FOUNDATION COND. MAT'L	24.0	TONS

DRAWN BY : R. P. PATEL DATE : 4-4-13
CHECKED BY : J. P. MCCARTHA DATE : 4-8-13
DESIGN ENGINEER OF RECORD: BART DUKE DATE : 6-6-13

25-JUL-2013 10:09
O:\Structures\Str4\Plans\R-3101_SD_CUL.dgn
tbarbour

NORTH CAROLINA PROFESSIONAL SEAL 15925 ENGINEER D. KLAPPROTH BRIDGE
7-26-2013

PROJECT NO. R-3101
ALLEGHANY COUNTY
STATION: 442+13.60 -L-

SHEET 2 OF 7

STATE OF NORTH CAROLINA
DEPARTMENT OF TRANSPORTATION
RALEIGH

BARREL STANDARD
SINGLE 6.0 FT. X 7.0 FT. CONCRETE BOX CULVERT 60° SKEW (STAGE I)

REVISIONS						SHEET NO.
NO.	BY:	DATE:	NO.	BY:	DATE:	C-11
1			3			TOTAL SHEETS
2			4			22

STR. #4

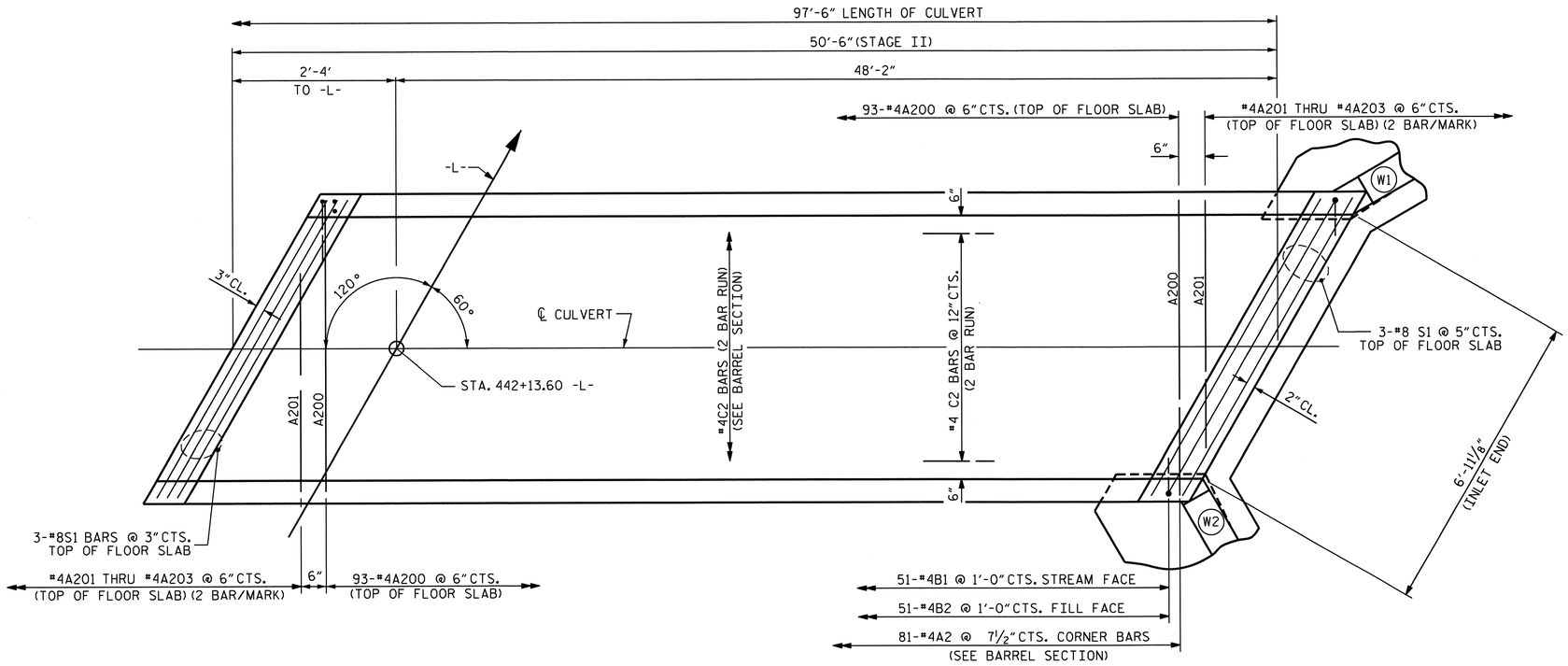

STAGE II PLAN - FLOOR PLAN

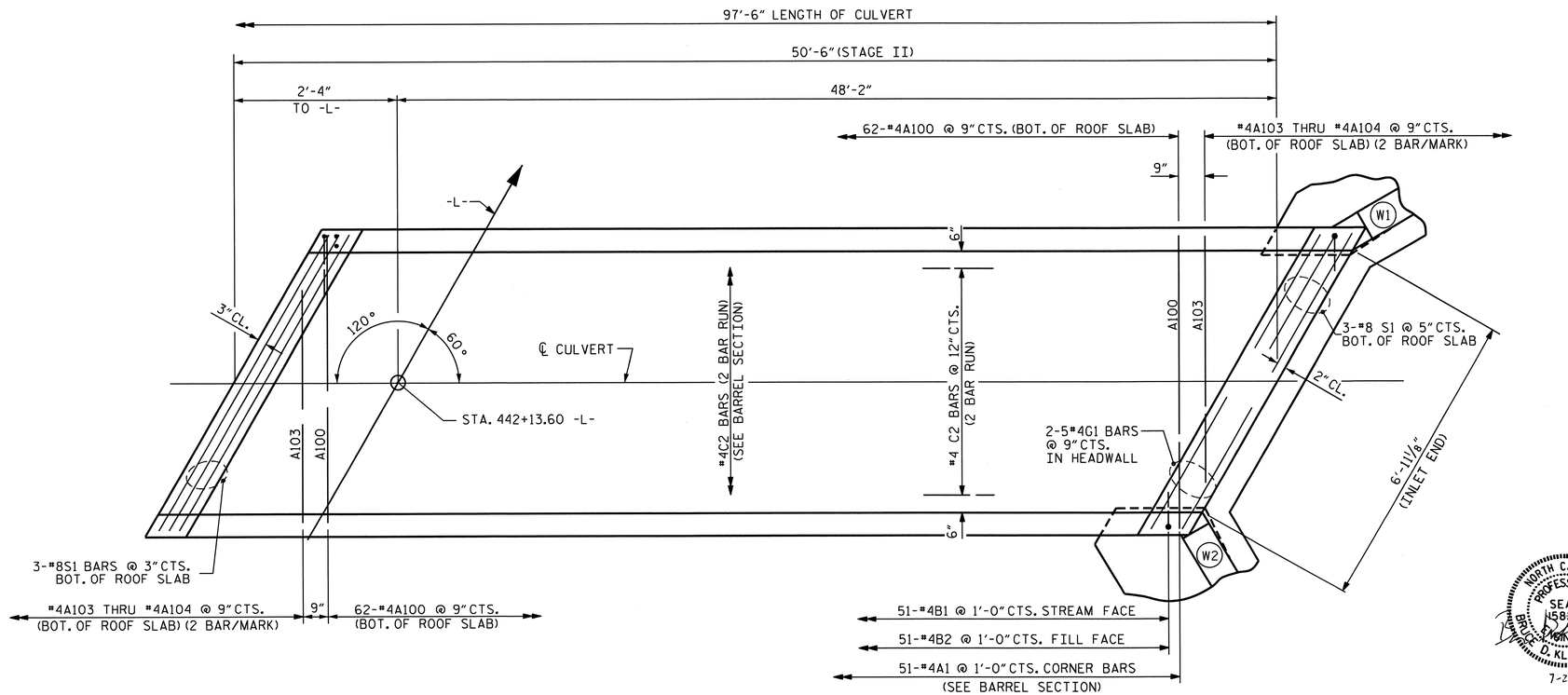

STAGE II PLAN - ROOF PLAN

STAGE II STRUCTURE QUANTITIES

CLASS A CONCRETE		
BARREL @ 0.712 CY/FT	36.0	C.Y.
WING ETC.	11.3	C.Y.
TOTAL	47.3	C.Y.
REINFORCING STEEL		
BARREL	3,918	LBS.
WINGS ETC.	661	LBS.
TOTAL	4,579	LBS.
FOUNDATION COND. MAT'L	26.0	TONS

PROJECT NO. R-3101

ALLEGHANY COUNTY

STATION: 442+13.60 -L-

SHEET 3 OF 7

STATE OF NORTH CAROLINA
DEPARTMENT OF TRANSPORTATION
RALEIGH

BARREL STANDARD

SINGLE
6.0 FT. X 7.0 FT.
CONCRETE BOX CULVERT
60° SKEW (STAGE II)

REVISIONS						SHEET NO.
NO.	BY:	DATE:	NO.	BY:	DATE:	C-12
1			3			TOTAL SHEETS
2			4			22

STR. #4

NORTH CAROLINA PROFESSIONAL SEAL 15825 ENGINEER BRUCE D. KLAPPENBACH
7-26-2013

DRAWN BY : R. P. PATEL DATE : 4-4-13
CHECKED BY : J. P. MCCARTHA DATE : 4-8-13
DESIGN ENGINEER OF RECORD: BART DUKE DATE : 6-6-13

25-JUL-2013 11:53
O:\Structures\Str4\Plans\R-3101_SD_CUL.dgn
tbarbour

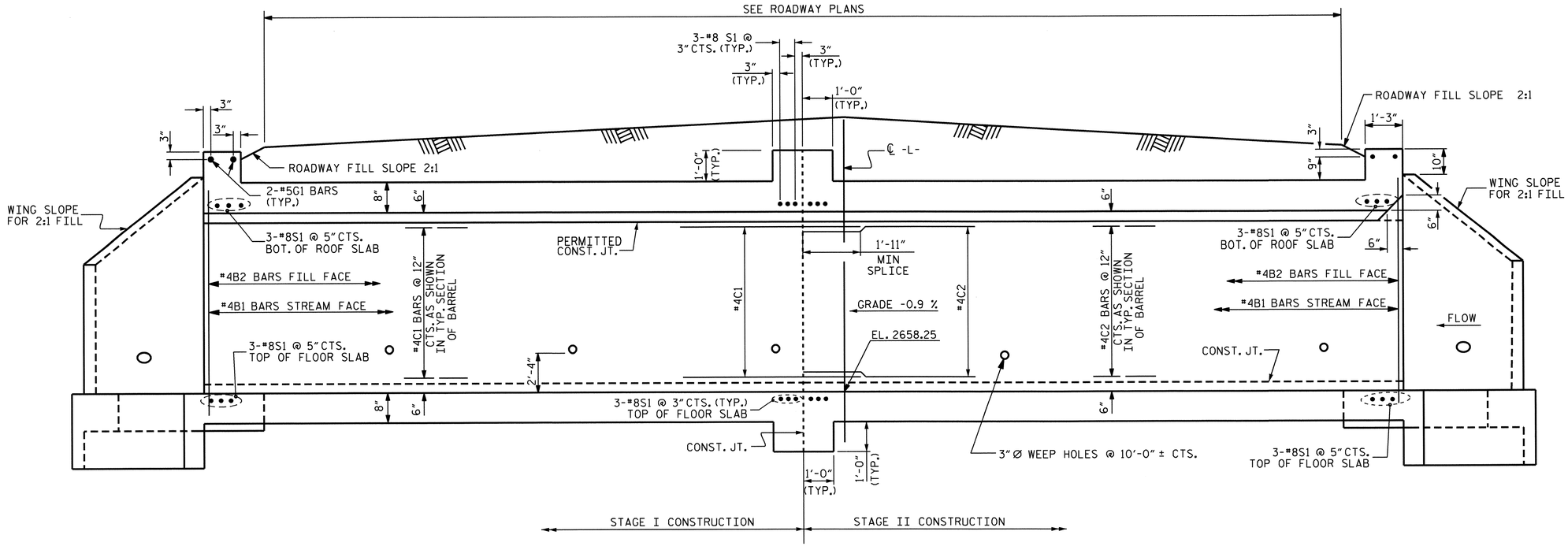

STAGE I CULVERT SECTION NORMAL TO ROADWAY

STAGE II CULVERT SECTION NORMAL TO ROADWAY

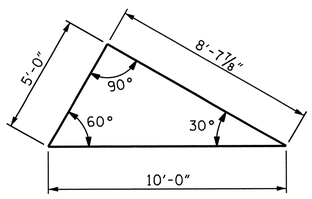

SKEW TRIANGLE

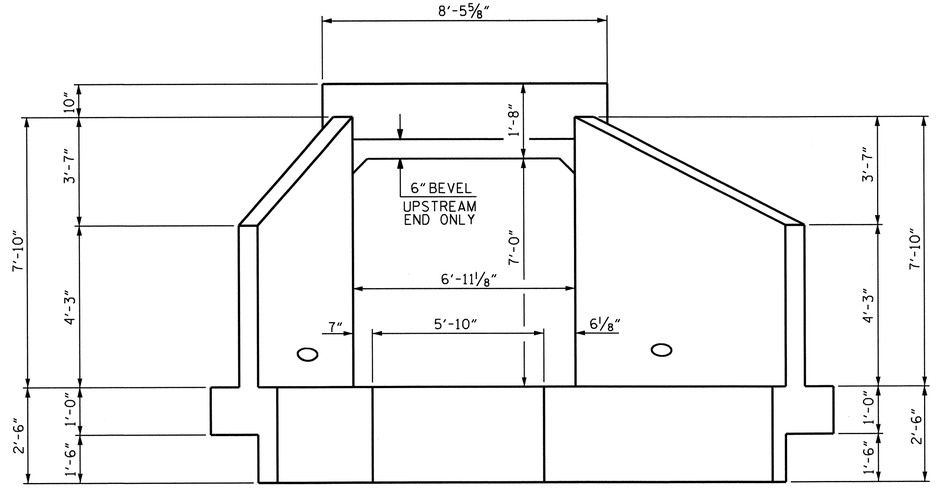

END ELEVATION NORMAL TO SKEW

REVISED 8-28-92 BY E.L.R. CHECKED BY G.R.P.
REVISED 8-22-89 BY A.R.B. CHECKED BY C.R.K.
REDRAWN 8-22-89
REVISED 11-19-99 BY M.M. CHECKED BY R.W.W.

ASSEMBLED BY : R. P. PATEL	DATE : 4-4-13	SPECIAL
CHECKED BY : J. P. MCCARTHA	DATE : 4-8-13	
DRAWN BY : B.M. MEYERS	DATE : AUG. 1989	STANDARD
CHECKED BY : A.R. BISSETTE	DATE : AUG. 1989	

25-JUL-2013 10:10
O:\Structures\Str4\Plans\R-3101_SD_CUL.dgn

PROJECT NO. R-3101
ALLEGHANY COUNTY
STATION: 442+13.60 -L-

SHEET 4 OF 7

STATE OF NORTH CAROLINA
DEPARTMENT OF TRANSPORTATION
RALEIGH

BARREL STANDARD

SINGLE 6.0 FT. X 7.0 FT. CONCRETE BOX CULVERT 60° SKEW

NORTH CAROLINA PROFESSIONAL SEAL 15825 ENGINEER RICHARD D. KLAPPENBACH 7-26-2013

REVISIONS						SHEET NO.
NO.	BY:	DATE:	NO.	BY:	DATE:	C-13
1			3			TOTAL SHEETS
2			4			22

STR. #4 STD. NO. CB31

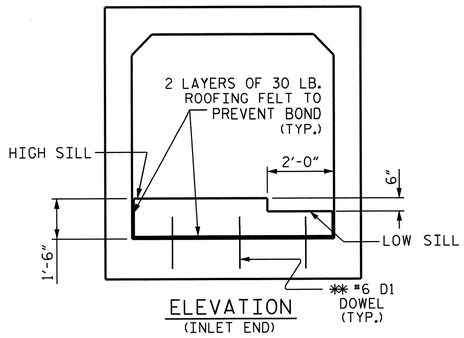

ELEVATION
(INLET END)

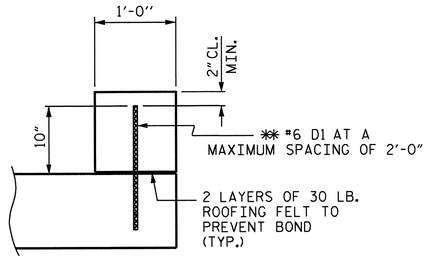

SECTION THROUGH SILL

** DOWELS MAY BE PUSHED INTO GREEN CONCRETE AFTER SLAB HAS BEEN FLOAT FINISHED.

CULVERT SILL DETAILS

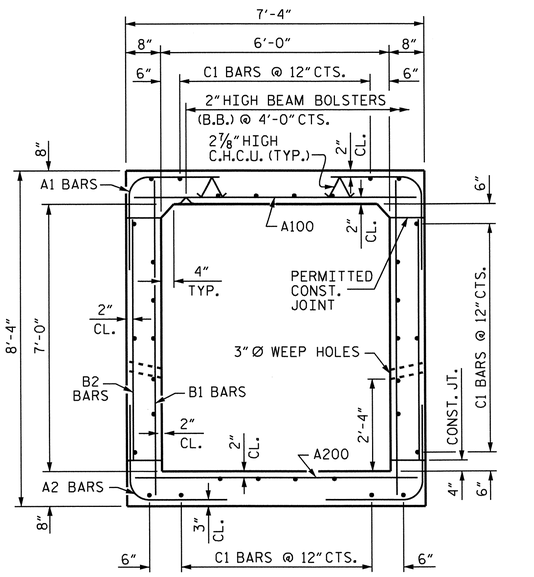

RIGHT ANGLE SECTION OF BARREL

THERE ARE 32 "C" BARS IN SECTION OF BARREL

BILL OF MATERIAL

STAGE I						STAGE II					
BAR	NO.	SIZE	TYPE	LENGTH	WEIGHT	BAR	NO.	SIZE	TYPE	LENGTH	WEIGHT
A1	94	#4	1	4'-6"	283	A1	102	#4	1	4'-6"	307
A2	150	#4	1	4'-5"	443	A2	162	#4	1	4'-5"	478
A100	57	#4	STR	6'-11"	263	A100	62	#4	STR	6'-11"	286
A101	4	#4	STR	4'-10"	13	A103	4	#4	STR	4'-7"	12
A102	4	#4	STR	2'-3"	6	A104	4	#4	STR	2'-0"	5
A200	86	#4	STR	6'-11"	397	A200	93	#4	STR	6'-11"	430
A201	4	#4	STR	5'-3"	14	A201	4	#4	STR	5'-3"	14
A202	4	#4	STR	3'-6"	9	A202	4	#4	STR	3'-6"	9
A203	4	#4	STR	1'-9"	5	A203	4	#4	STR	1'-9"	5
B1	94	#4	STR	7'-10"	492	B1	102	#4	STR	7'-10"	534
B2	94	#4	STR	6'-4"	398	B2	102	#4	STR	6'-4"	432
C1	64	#4	STR	25'-3"	1079	C2	64	#4	STR	26'-1"	1115
D1	9	#6	STR	1'-4"	18	D1	9	#6	STR	1'-4"	18
G1	2	#5	STR	8'-0"	17	G1	2	#5	STR	8'-0"	17
S1	12	#8	STR	8'-0"	256	S1	12	#8	STR	8'-0"	256
REINFORCING STEEL				3,693	LBS	REINFORCING STEEL				3,918	LBS

SPLICE LENGTHS CHART

BAR	SIZE	SPLICE LENGTH
C1	#4	1'-11"
B1	#4	1'-9"

BAR TYPE

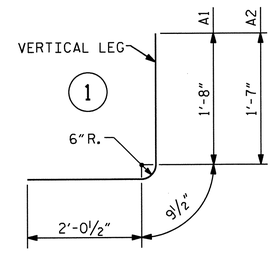

ALL BAR DIMENSIONS ARE OUT TO OUT

NOTES

BED MATERIAL EXCAVATED FROM THE SITE FOR BOX CULVERT CONSTRUCTION IS TO BE STOCKPILED AND LATER PLACED ON THE FLOOR OF THE COMPLETED CULVERT.

BED MATERIAL PLACED BETWEEN SILLS IN THE CULVERT SHALL PROVIDE A CONTINUOUS LOW FLOW CHANNEL BETWEEN THE LOWER SILLS.

THE STOCKPILED MATERIAL MAY BE SUBSIDIZED WITH CLASS B RIP RAP AND IS SUBJECT TO APPROVAL OF THE ENGINEER.

MATERIAL SHALL NOT BE REMOVED UNTIL STREAM FLOW HAS BEEN PERMANENTLY CUT OFF FROM THAT PORTION OF THE STREAM.

ALL WORK INVOLVING EXCAVATION, STOCKPILING AND PLACING OF BED MATERIAL SHALL BE INCLUDED IN THE LUMP SUM PRICE BID FOR "CULVERT EXCAVATION".

THE CONTRACTOR SHALL SUBMIT A PLAN FOR SILL INSTALLATION TO THE ENGINEER.

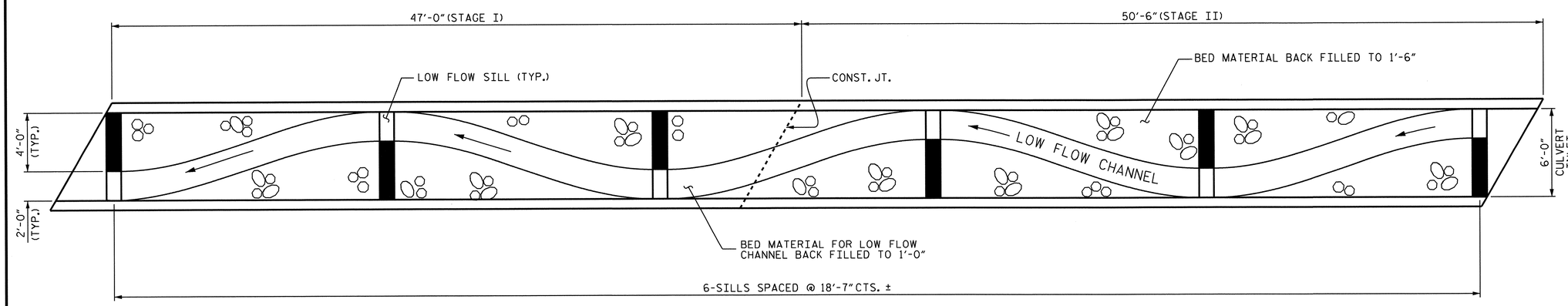

PLAN SHOWING 1'-6" SILL SPACING ARRANGEMENT

(BED MATERIAL COMPRISED OF ROCK, SAND AND MUD)

NORTH CAROLINA PROFESSIONAL SEAL 15825 ENGINEER BRUCE D. KLAPPENBACH
7-26-2013

PROJECT NO. R-3101
ALLEGHANY COUNTY
STATION: 442+13.60 -L-

SHEET 5 OF 7

STATE OF NORTH CAROLINA
DEPARTMENT OF TRANSPORTATION
RALEIGH

BARREL STANDARD
SINGLE
6.0 FT. X 7.0 FT.
CONCRETE BOX CULVERT
60° SKEW

REVISIONS						SHEET NO.
NO.	BY:	DATE:	NO.	BY:	DATE:	C-14
1			3			TOTAL SHEETS
2			4			22

STR. #4

DRAWN BY : R. P. PATEL DATE : 4-3-13
CHECKED BY : J. P. MCCARTHA DATE : 4-8-13
DESIGN ENGINEER OF RECORD: BART DUKE DATE : 6-6-13

25-JUL-2013 10:10
Q:\Structures\Str4\Plans\R-3101_SD_CUL.dgn
tbarbour

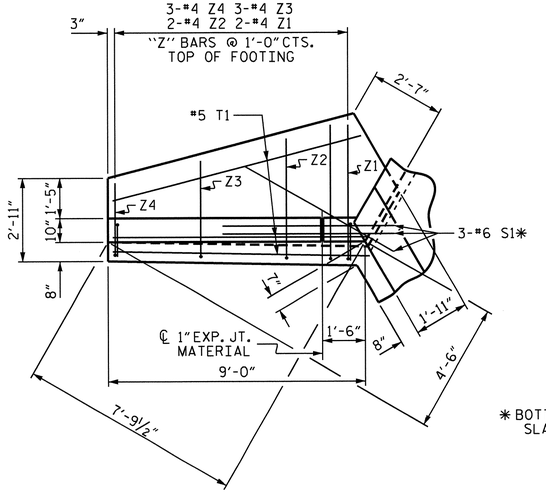

* BOTTOM OF FLOOR SLAB & FOOTING

PLAN W2

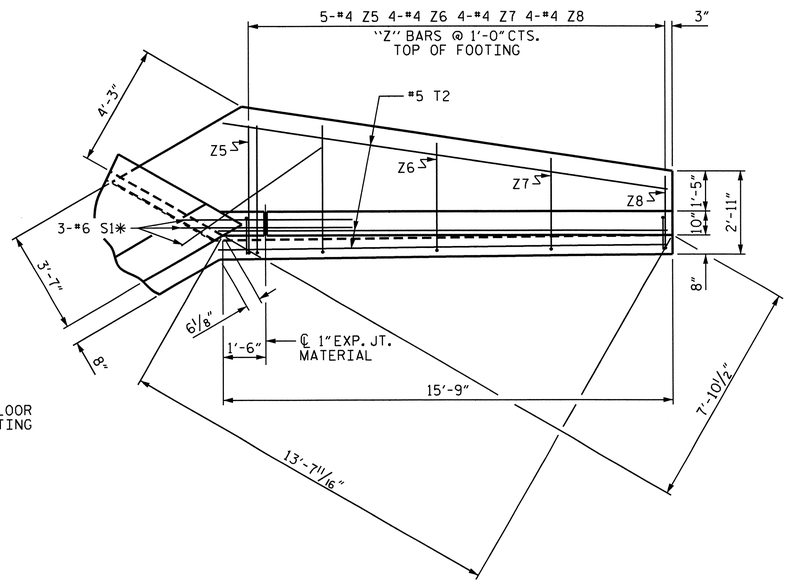

PLAN W1

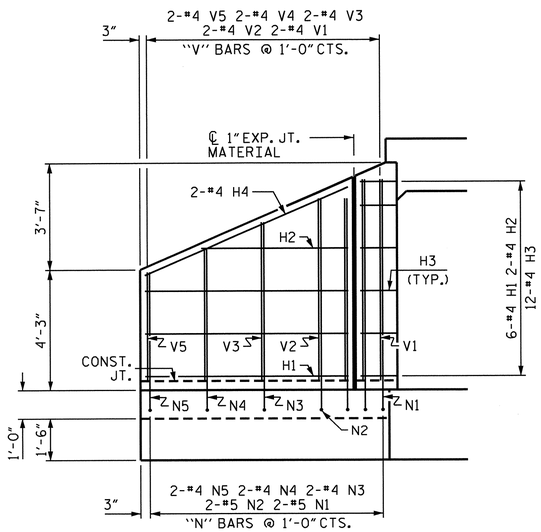

ELEVATION W2

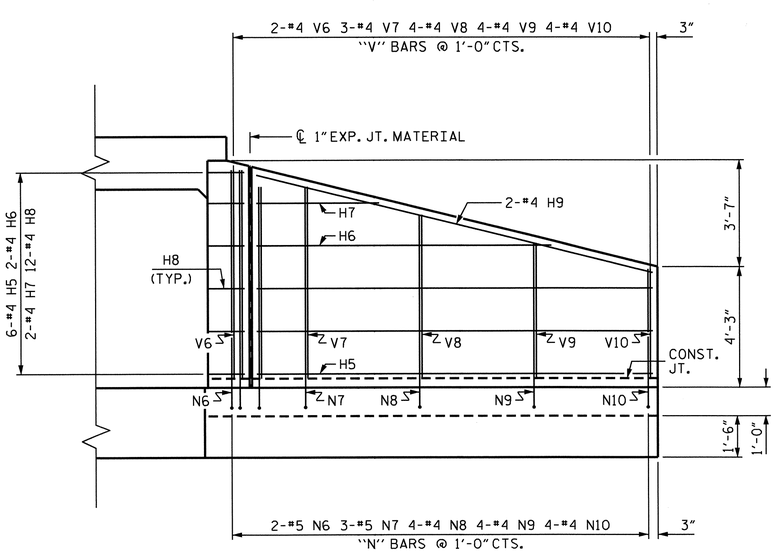

ELEVATION W1

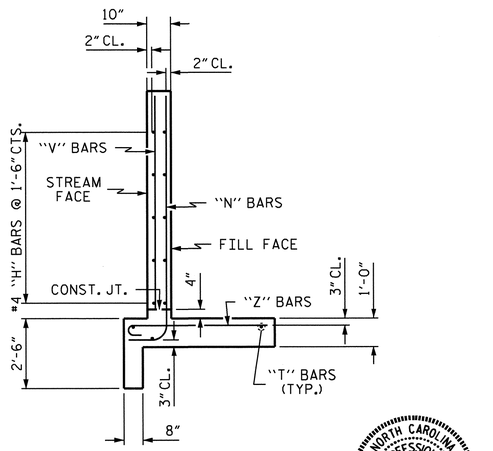

TYPICAL WING SECTION

BAR TYPES

ALL BAR DIMENSIONS ARE OUT TO OUT.

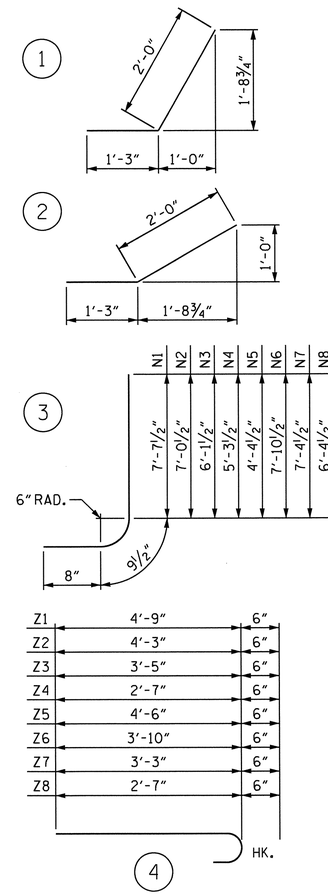

BILL OF MATERIAL

BAR	NO.	SIZE	TYPE	LENGTH	WEIGHT
H1	6	#4	STR	7'-1"	28
H2	2	#4	STR	5'-2"	7
H3	12	#4	1	3'-3"	26
H4	2	#4	STR	7'-9"	10
H5	6	#4	STR	13'-10"	55
H6	2	#4	STR	10'-4"	14
H7	2	#4	STR	4'-3"	6
H8	12	#4	2	3'-3"	26
H9	2	#4	STR	14'-3"	19
N1	2	#5	3	9'-1"	19
N2	2	#5	3	8'-6"	18
N3	2	#4	3	7'-7"	10
N4	2	#4	3	6'-9"	9
N5	2	#4	3	5'-10"	8
N6	2	#5	3	9'-4"	19
N7	3	#5	3	8'-10"	28
N8	4	#4	3	7'-10"	21
N9	4	#4	3	6'-10"	18
N10	4	#4	3	5'-10"	16
S1	6	#6	STR	6'-0"	54
T1	3	#5	STR	9'-0"	28
T2	3	#5	STR	15'-9"	49
V1	2	#4	STR	7'-1"	9
V2	2	#4	STR	6'-5"	9
V3	2	#4	STR	5'-7"	8
V4	2	#4	STR	4'-8"	6
V5	2	#4	STR	3'-10"	5
V6	2	#4	STR	7'-4"	10
V7	3	#4	STR	6'-9"	14
V8	4	#4	STR	5'-9"	15
V9	4	#4	STR	4'-9"	13
V10	4	#4	STR	3'-10"	10
Z1	2	#4	4	5'-3"	7
Z2	2	#4	4	4'-9"	6
Z3	3	#4	4	3'-11"	8
Z4	3	#4	4	3'-1"	6
Z5	5	#4	4	5'-0"	17
Z6	4	#4	4	4'-4"	12
Z7	4	#4	4	3'-9"	10
Z8	4	#4	4	3'-1"	8

REINFORCING STEEL FOR 2 WINGS	661 LBS
CLASS A CONCRETE	
2 WINGS	9.9 CY
1 HEADWALL	0.4 CY
1 EDGE BEAMS	0.6 CY
1 END CURTAIN WALL	0.4 CY
TOTAL	11.3 CY

PROJECT NO. R-3101

ALLEGHANY COUNTY

STATION: 442+13.60 -L-

SHEET 6 OF 7

STATE OF NORTH CAROLINA
DEPARTMENT OF TRANSPORTATION
RALEIGH

STANDARD WINGS FOR CONCRETE BOX CULVERT

H = 7'-0" SLOPE = 2:1

60° SKEW

NORTH CAROLINA PROFESSIONAL SEAL 15825 ENGINEER BRUCE D. KLAPPENBACH 7-26-2013

REVISIONS						SHEET NO.
NO.	BY:	DATE:	NO.	BY:	DATE:	C-15
1			3			TOTAL SHEETS
2			4			22

ASSEMBLED BY : R. P. PATEL	DATE : 4-3-13
CHECKED BY : J. P. MCCARTHA	DATE : 4-8-13
DRAWN BY : CCJ 11/99	
CHECKED BY : RWW 03/00	

10-JUN-2013 11:33
R:\Structures\Str4\Plans\R-3101_SD_CUL.dgn

STR. #4 STD. NO. CW6007

LOAD AND RESISTANCE FACTOR RATING (LRFR) SUMMARY FOR REINFORCED CONCRETE BOX CULVERTS

LEVEL		VEHICLE	WEIGHT (W) (TONS)	⟨#⟩ CONTROLLING LOAD RATING	MINIMUM RATING FACTORS (RF)	TONS = W x RF	STRENGTH I LIMIT STATE									COMMENT NUMBER
								MOMENT				SHEAR				
							LIVE-LOAD FACTORS (γ_{LL})	RATING FACTOR	BOX NO.	ELEMENT TYPE	DISTANCE FROM LEFT END OF ELEMENT (ft)	RATING FACTOR	BOX NO.	ELEMENT TYPE	DISTANCE FROM LEFT END OF ELEMENT (ft)	
DESIGN LOAD RATING		HL-93 (INVENTORY)	N/A	⟨1⟩	4.80	--	1.75	4.80	1	EXTERIOR WALL	3.83	9.53	1	EXTERIOR WALL	6.85	
		HL-93 (OPERATING)	N/A		6.22	--	1.35	6.22	1	EXTERIOR WALL	3.83	12.36	1	EXTERIOR WALL	6.85	
		HS-20 (INVENTORY)	36.000	⟨2⟩	4.80	172.75	1.75	4.80	1	EXTERIOR WALL	3.83	9.53	1	EXTERIOR WALL	6.85	
		HS-20 (OPERATING)	36.000		6.22	223.93	1.35	6.22	1	EXTERIOR WALL	3.83	12.36	1	EXTERIOR WALL	6.85	
LEGAL LOAD RATING	SINGLE VEHICLE (SV)	SNSH	13.500	⟨3⟩	6.00	80.98	1.40	6.00	1	EXTERIOR WALL	3.83	11.92	1	EXTERIOR WALL	6.85	
		SNGARBS2	20.000		6.00	119.97	1.40	6.00	1	EXTERIOR WALL	3.83	11.92	1	EXTERIOR WALL	6.85	
		SNAGRIS2	22.000		6.00	131.96	1.40	6.00	1	EXTERIOR WALL	3.83	11.92	1	EXTERIOR WALL	6.85	
		SNCOTTS3	27.250		6.00	163.45	1.40	6.00	1	EXTERIOR WALL	3.83	11.92	1	EXTERIOR WALL	6.85	
		SNAGGRS4	34.925		6.00	209.49	1.40	6.00	1	EXTERIOR WALL	3.83	11.92	1	EXTERIOR WALL	6.85	
		SNS5A	35.550		6.00	213.24	1.40	6.00	1	EXTERIOR WALL	3.83	11.92	1	EXTERIOR WALL	6.85	
		SNS6A	39.950		6.00	239.63	1.40	6.00	1	EXTERIOR WALL	3.83	11.92	1	EXTERIOR WALL	6.85	
		SNS7B	42.000		6.00	251.93	1.40	6.00	1	EXTERIOR WALL	3.83	11.92	1	EXTERIOR WALL	6.85	
	TRUCK TRACTOR SEMI-TRAILER (TTST)	TNAGRIT3	33.000		6.00	197.94	1.40	6.00	1	EXTERIOR WALL	3.83	11.92	1	EXTERIOR WALL	6.85	
		TNT4A	33.075		6.00	198.39	1.40	6.00	1	EXTERIOR WALL	3.83	11.92	1	EXTERIOR WALL	6.85	
		TNT6A	41.600		6.00	249.53	1.40	6.00	1	EXTERIOR WALL	3.83	11.92	1	EXTERIOR WALL	6.85	
		TNT7A	42.000		6.00	251.93	1.40	6.00	1	EXTERIOR WALL	3.83	11.92	1	EXTERIOR WALL	6.85	
		TNT7B	42.000		6.00	251.93	1.40	6.00	1	EXTERIOR WALL	3.83	11.92	1	EXTERIOR WALL	6.85	
		TNAGRIT4	43.000		6.00	257.92	1.40	6.00	1	EXTERIOR WALL	3.83	11.92	1	EXTERIOR WALL	6.85	
		TNAGT5A	45.000		6.00	269.92	1.40	6.00	1	EXTERIOR WALL	3.83	11.92	1	EXTERIOR WALL	6.85	
		TNAGT5B	45.000		6.00	269.92	1.40	6.00	1	EXTERIOR WALL	3.83	11.92	1	EXTERIOR WALL	6.85	

LOAD FACTORS:

DESIGN LOAD RATING FACTORS

LOAD TYPE	MAX FACTOR	MIN FACTOR
DC	1.25	0.90
DW	1.50	0.65
EV	1.30	0.90
EH	1.35	0.90
ES	1.35	0.90
LS	1.75	--
WA	1.00	--

NOTE:

RATING FACTORS ARE BASED ON THE STRENGTH I LIMIT STATE.

COMMENTS:

1.
2.
3.
4.

⟨#⟩ CONTROLLING LOAD RATING

⟨1⟩ DESIGN LOAD RATING (HL-93)

⟨2⟩ DESIGN LOAD RATING (HS-20)

⟨3⟩ LEGAL LOAD RATING **

** SEE CHART FOR VEHICLE TYPE

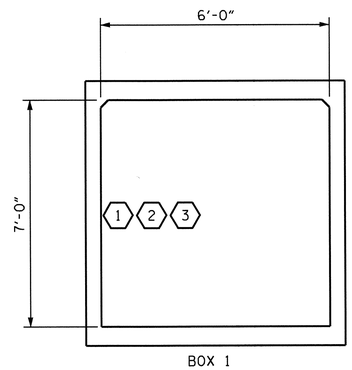

BOX 1

LRFR SUMMARY

(LOOKING DOWNSTREAM)

NORTH CAROLINA PROFESSIONAL SEAL 15825 ENGINEER BRUCE D. KLAPPENBACH
7-26-2013

PROJECT NO. R-3101

ALLEGHANY COUNTY

STATION: 442+13.60 -L-

SHEET 7 OF 7

STATE OF NORTH CAROLINA
DEPARTMENT OF TRANSPORTATION
RALEIGH

STANDARD

LRFR SUMMARY FOR REINFORCED CONCRETE BOX CULVERTS
(NON-INTERSTATE TRAFFIC)

REVISIONS					
NO.	BY:	DATE:	NO.	BY:	DATE:
1			3		
2			4		

SHEET NO. C-16

TOTAL SHEETS 22

STR. #4 STD. NO. LRFR5

ASSEMBLED BY : R. P. PATEL	DATE : 3-28-13	
CHECKED BY : J. P. MCCARTHA	DATE : 4-8-13	
DRAWN BY : WMC	7/11	REV. 10/1/11 MAA/GM
CHECKED BY : GM	7/11	

10-JUN-2013 11:32
R:\Structures\Str4\Plans\R-3101_SD_CUL.dgn
bklappenbach

F. A. PROJECT : STP-21(14)

BENCHMARK: BL-23 = REBAR W/CAP, STA 39+73.55 -BL-, EL. 2872.24

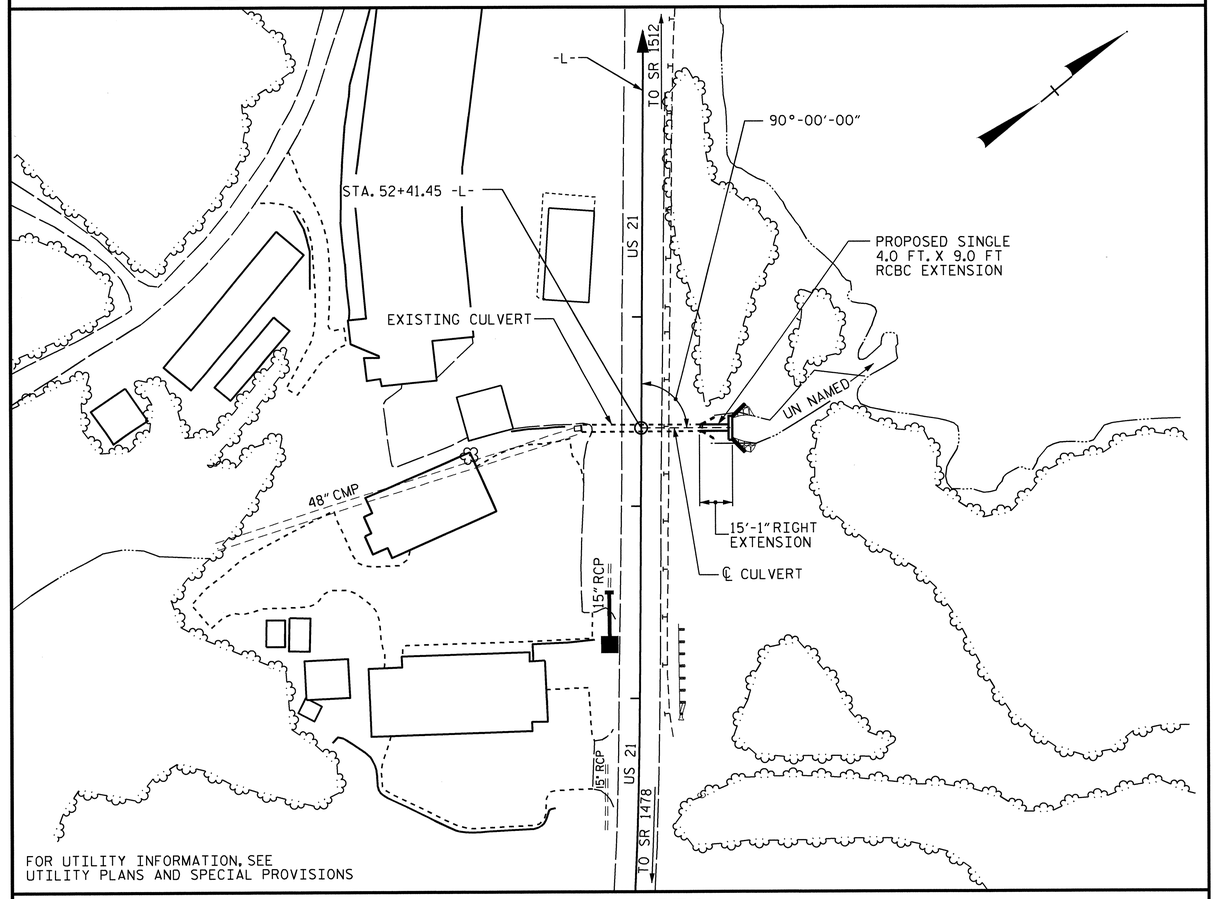

FOR UTILITY INFORMATION, SEE
UTILITY PLANS AND SPECIAL PROVISIONS

LOCATION SKETCH

ROADWAY DATA

GRADE PT. EL. @ STA. 52+41.45 -L-	= 2826.62
BED EL. @ STA. 52+41.45 -L-	= 2805.50
ROADWAY SLOPES @ STA. 52+41.45 -L-	= 2:1

HYDRAULIC DATA

DESIGN DISCHARGE	= 85 C.F.S.
FREQUENCY OF DESIGN FLOOD	= 50 YR.
DESIGN HIGH WATER ELEVATION	= 2813.7
DRAINAGE AREA	= 0.15 SQ. MI.
BASE DISCHARGE (Q100)	= 100 C.F.S.
BASE HIGH WATER ELEVATION	= 2814.15

OVERTOPPING FLOOD DATA

OVERTOPPING DISCHARGE	= 400 C.F.S.
FREQUENCY OF OVERTOPPING FLOOD	= 500+ YR.
OVERTOPPING FLOOD ELEVATION	= 2823.5

TOTAL STRUCTURE QUANTITIES

CLASS A CONCRETE RIGHT EXTENSION	CU. YDS.	31.8
REINFORCING STEEL RIGHT EXTENSION	LBS.	2,653
FOUNDATION CONDITIONING MATERIAL RIGHT EXTENSION	TONS	6.0
CULVERT EXCAVATION	LUMP SUM	

NOTES

ASSUMED LIVE LOAD ---------- HL-93 OR ALTERNATE LOADING.

DESIGN FILL---------- 12.46 FT. MAX

DESIGN FILL---------- 12.37 FT. MIN.

FOR OTHER DESIGN DATA AND NOTES SEE STANDARD NOTE SHEET.

3"Ø WEEP HOLES INDICATED TO BE IN ACCORDANCE WITH THE SPECIFICATIONS.

CONCRETE IN CULVERTS TO BE POURED IN THE FOLLOWING ORDER:

1. WING FOOTINGS AND FLOOR SLAB INCLUDING 4" OF ALL VERTICAL WALLS.
2. THE REMAINING PORTIONS OF THE WALLS AND WINGS FULL HEIGHT FOLLOWED BY ROOF SLAB AND HEADWALL.

THE RESIDENT ENGINEER SHALL CHECK THE LENGTH OF CULVERT BEFORE STAKING IT OUT TO MAKE CERTAIN THAT IT WILL PROPERLY TAKE CARE OF THE FILL.

DIMENSIONS FOR WING LAYOUT AS WELL AS ADDITIONAL REINFORCING STEEL EMBEDDED IN BARREL ARE SHOWN ON WING SHEET.

AT THE CONTRACTOR'S OPTION, HE MAY SPLICE THE VERTICAL REINFORCING STEEL IN THE INTERIOR FACE OF EXTERIOR WALL ABOVE LOWER WALL CONSTRUCTION JOINT. THE SPLICE LENGTH SHALL BE AS PROVIDED IN THE SPLICE LENGTH CHART SHOWN ON THE PLANS. EXTRA WEIGHT OF STEEL DUE TO THE SPLICES SHALL BE PAID FOR BY THE CONTRACTOR.

THE CONTRACTOR SHALL PROVIDE INDEPENDENT ASSURANCE SAMPLES OF REINFORCING STEEL AS FOLLOWS: FOR PROJECTS REQUIRING UP TO 400 TONS OF REINFORCING STEEL, ONE 30 INCH SAMPLE OF EACH SIZE BAR USED, AND FOR PROJECTS REQUIRING OVER 400 TONS OF REINFORCING STEEL, TWO 30 INCH SAMPLES OF EACH SIZE BAR USED. THE BARS FROM WHICH THE SAMPLES ARE TAKEN MUST THEN BE SPLICED WITH REPLACEMENT BARS OF THE SIZE AND LENGTH OF THE SAMPLE, PLUS A MINIMUM LAP SPLICE OF THIRTY BAR DIAMETERS. PAYMENT FOR THE SAMPLES OF REINFORCING STEEL SHALL BE CONSIDERED INCIDENTAL TO VARIOUS PAY ITEMS.

A 3 FOOT STRIP OF FILTER FABRIC SHALL BE ATTACHED TO THE FILL FACE OF THE WING COVERING THE ENTIRE LENGTH OF THE EXPANSION JOINT.

FOR CULVERT DIVERSION DETAILS AND PAY ITEM, SEE EROSION CONTROL PLANS.

FOR SUBMITTAL OF WORKING DRAWINGS, SEE SPECIAL PROVISIONS.

FOR FALSEWORK AND FORMWORK, SEE SPECIAL PROVISIONS.

FOR GROUT FOR STRUCTURES, SEE SPECIAL PROVISIONS.

FOR CRANE SAFETY, SEE SPECIAL PROVISIONS.

IF APPROVED BY THE ENGINEER, THE CONTRACTOR MAY USE THE EXISTING WINGS AS TEMPORARY SHORING FOR THE CONSTRUCTION OF THE CULVERT EXTENSION. IN THIS CASE, THE BOTTOM SLAB OF THE EXTENSION SHALL BE POURED AT LEAST 72 HOURS PRIOR TO CUTTING THE WINGS. THE WINGS MAY BE CUT EARLIER PROVIDED THE SLAB CONCRETE STRENGTH HAS REACHED A MINIMUM COMPRESSIVE STRENGTH OF 1500 PSI.

DOWELS SHALL BE USED TO CONNECT THE CULVERT EXTENSION TO THE EXISTING CULVERT AS SHOWN. FOR NOTE REGARDING SETTING OF DOWELS, SEE SHEET SN.

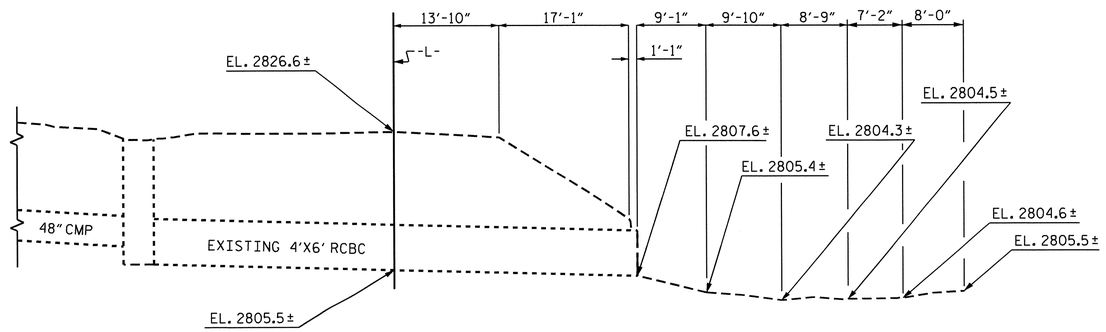

PROFILE ALONG ℄ CULVERT

NORTH CAROLINA PROFESSIONAL SEAL 13014 ENGINEER QUANG H. NGUYEN
Quang H. Nguyen 7-26-13

NORTH CAROLINA PROFESSIONAL SEAL 15825 ENGINEER BRUCE D. KLAPPENBACH
7-26-2013

PROJECT NO. R-3101

ALLEGHANY COUNTY

STATION: 52+41.45 -L-

SHEET 1 OF 6

STATE OF NORTH CAROLINA
DEPARTMENT OF TRANSPORTATION
RALEIGH

SINGLE 4.0 FT. X 9.0 FT. CONCRETE BOX CULVERT 90° SKEW (RIGHT EXTENSION)

REVISIONS						SHEET NO.
NO.	BY:	DATE:	NO.	BY:	DATE:	C-17
1			3			TOTAL SHEETS
2			4			22

STR. #5

DRAWN BY : J.P. MCCARTHA DATE : 5-10-13
CHECKED BY : R.P. PATEL DATE : 5-15-13
DESIGN ENGINEER OF RECORD: MARC LEBLANC DATE : 3-20-13

25-JUL-2013 11:11
O:\Structures\Str5\Plans\R3101_SD_CUL.dgn
tbarbour

RIGHT EXTENSION STRUCTURE QUANTITIES	
CLASS A CONCRETE	
BARREL @ 0.712 CY/FT	10.7 C.Y.
WING ETC.	21.1 C.Y.
TOTAL	31.8 C.Y.
REINFORCING STEEL	
BARREL	1,751 LBS.
WINGS ETC.	902 LBS.
TOTAL	2,653 LBS.
FOUNDATION COND. MAT'L	6.0 TONS

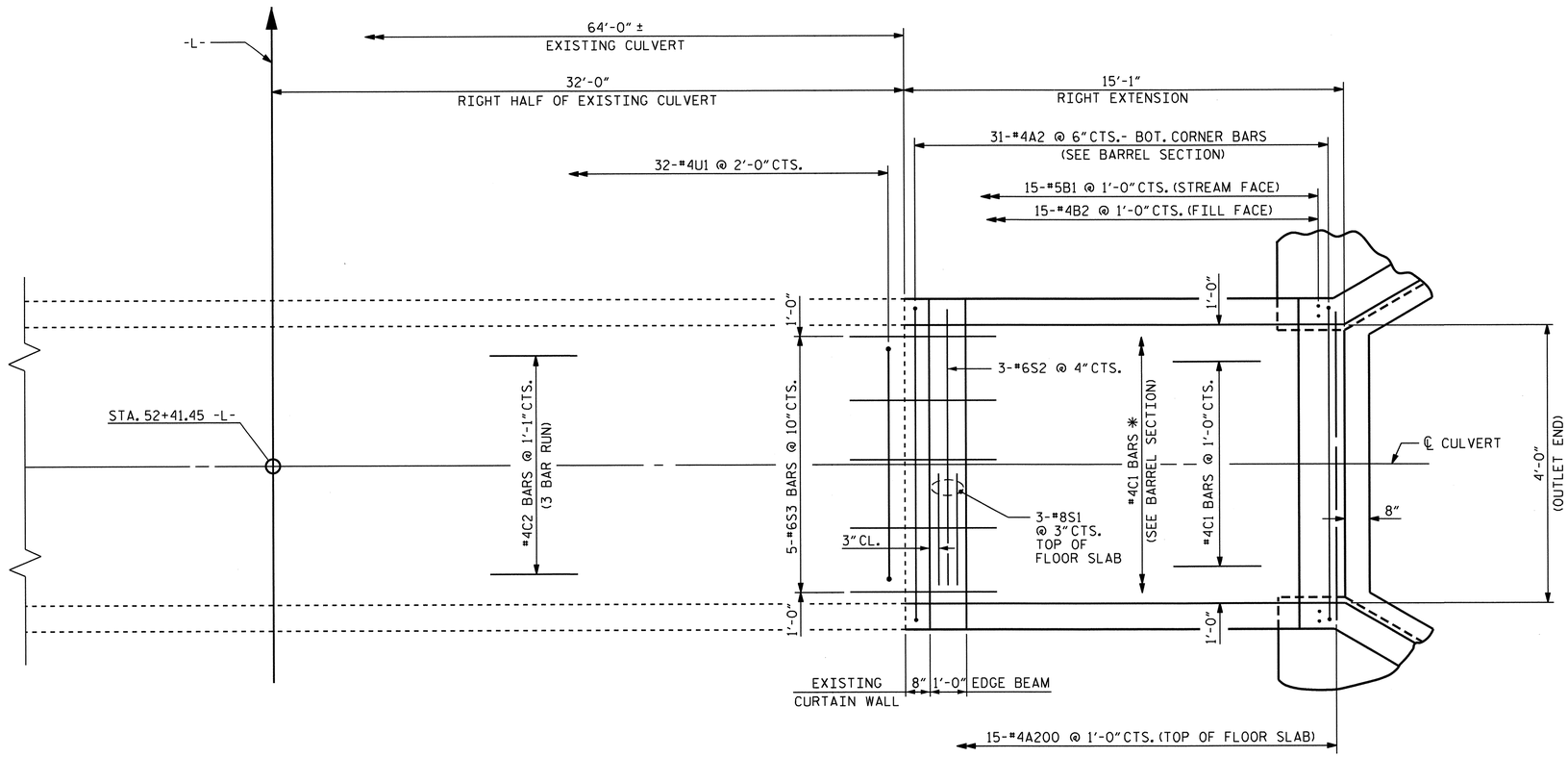

* BEND #4C1 BAR IN FLOOR SLAB AS NECESSARY INTO EDGE BEAM.

RIGHT EXTENSION - PLAN OF FLOOR SLAB

PROJECT NO. R-3101

ALLEGHANY COUNTY

STATION: 52+41.45 -L-

SHEET 2 OF 6

STATE OF NORTH CAROLINA
DEPARTMENT OF TRANSPORTATION
RALEIGH

SINGLE 4.0 FT. X 9.0 FT. CONCRETE BOX CULVERT 90° SKEW (RIGHT EXTENSION)

REVISIONS						SHEET NO.
NO.	BY:	DATE:	NO.	BY:	DATE:	C-18
1			3			TOTAL SHEETS
2			4			22

STR. #5

NORTH CAROLINA PROFESSIONAL SEAL 19825 ENGINEER BRUCE D. KLAPPENBACH
7-26-2013

DRAWN BY : J.P. MCCARTHA DATE : 5-10-13
CHECKED BY : R.P. PATEL DATE : 5-15-13
DESIGN ENGINEER OF RECORD: MARC LEBLANC DATE : 3-20-13

10-JUN-2013 11:32
R:\Structures\Str5\Plans\R3101_SD_CUL.dgn
bklappenbach

BAR TYPES

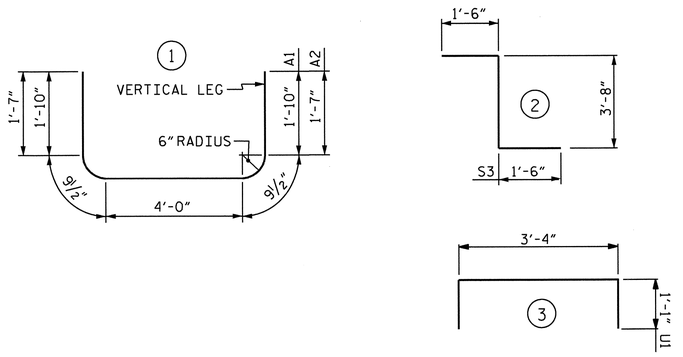

ALL BAR DIMENSIONS ARE OUT TO OUT

BILL OF MATERIAL

RIGHT EXTENSION

BAR	NO.	SIZE	TYPE	LENGTH	WEIGHT
A1	15	5	1	9'-3"	145
A2	31	4	1	8'-9"	181
A100	15	4	STR	4'-11"	49
A200	15	4	STR	4'-11"	49
B1	30	5	STR	9'-10"	308
B2	30	4	STR	8'-4"	166
C1	34	4	STR	14'-9"	335
C2	12	4	STR	22'-5"	180
D1	12	6	STR	2'-6"	45
G1	2	4	STR	5'-0"	7
S1	6	8	STR	5'-0"	80
S2	5	6	STR	5'-0"	38
S3	5	6	2	6'-8''	50
U1	32	4	3	5'-6''	118

REINFORCING STEEL 1,751 LBS.

SPLICE LENGTHS CHART

BAR	SIZE	SPLICE LENGTH
B1	#4	1'-9"
C2	#4	1'-9"

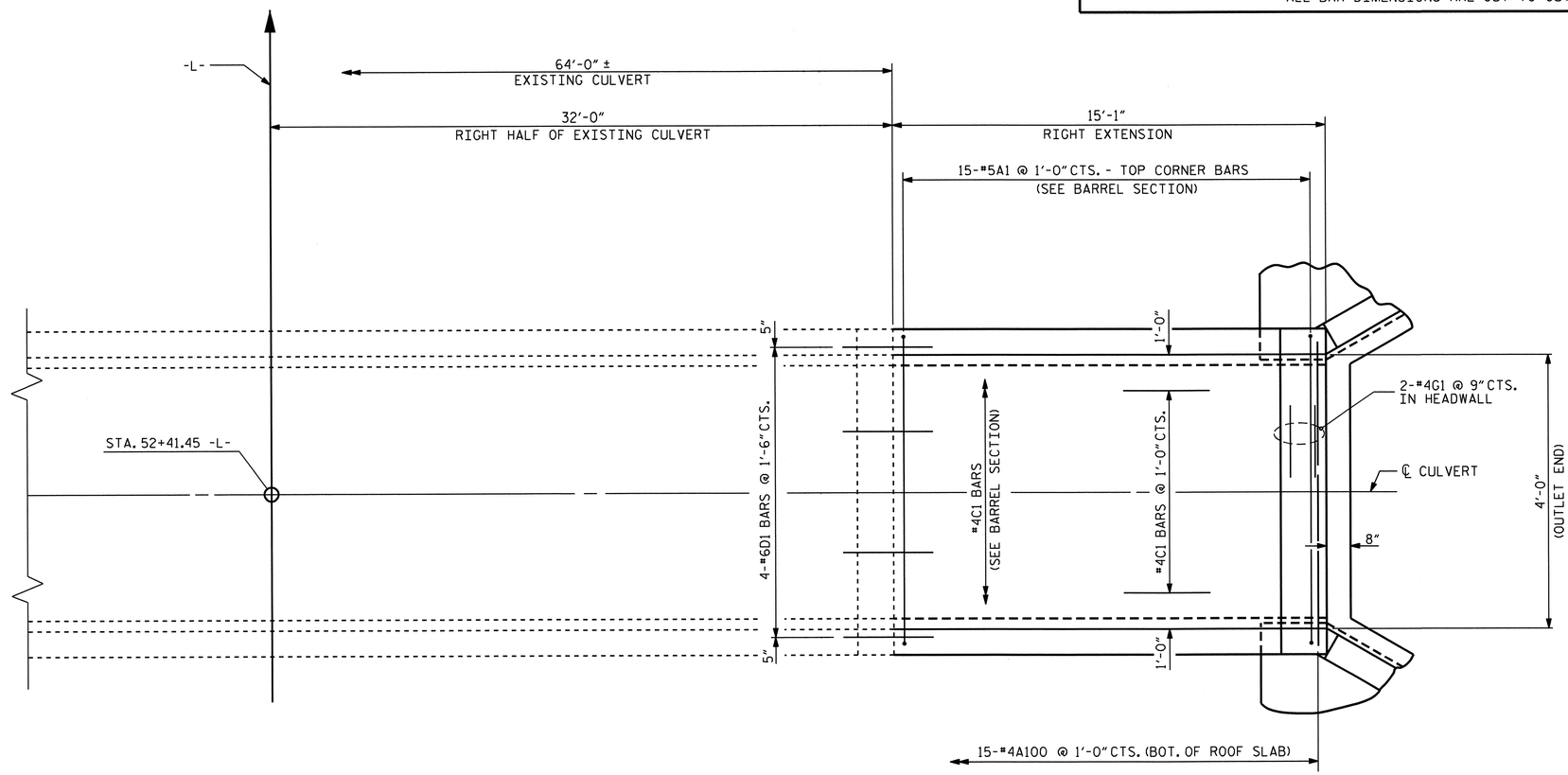

RIGHT EXTENSION - PLAN OF ROOF SLAB

PROJECT NO. R-3101

ALLEGHANY COUNTY

STATION: 52+41.45 -L-

SHEET 3 OF 6

STATE OF NORTH CAROLINA
DEPARTMENT OF TRANSPORTATION
RALEIGH

SINGLE 4.0 FT. X 9.0 FT. CONCRETE BOX CULVERT 90° SKEW (RIGHT EXTENSION)

REVISIONS						SHEET NO.
NO.	BY:	DATE:	NO.	BY:	DATE:	C-19
1			3			TOTAL SHEETS
2			4			22

STR. #5

DRAWN BY : J.P. MCCARTHA DATE : 5-10-13
CHECKED BY : R.P. PATEL DATE : 5-15-13
DESIGN ENGINEER OF RECORD: MARC LEBLANC DATE : 3-20-13

10-JUN-2013 11:32
R:\Structures\Str5\Plans\R3101_SD_CUL.dgn
bklappenbach

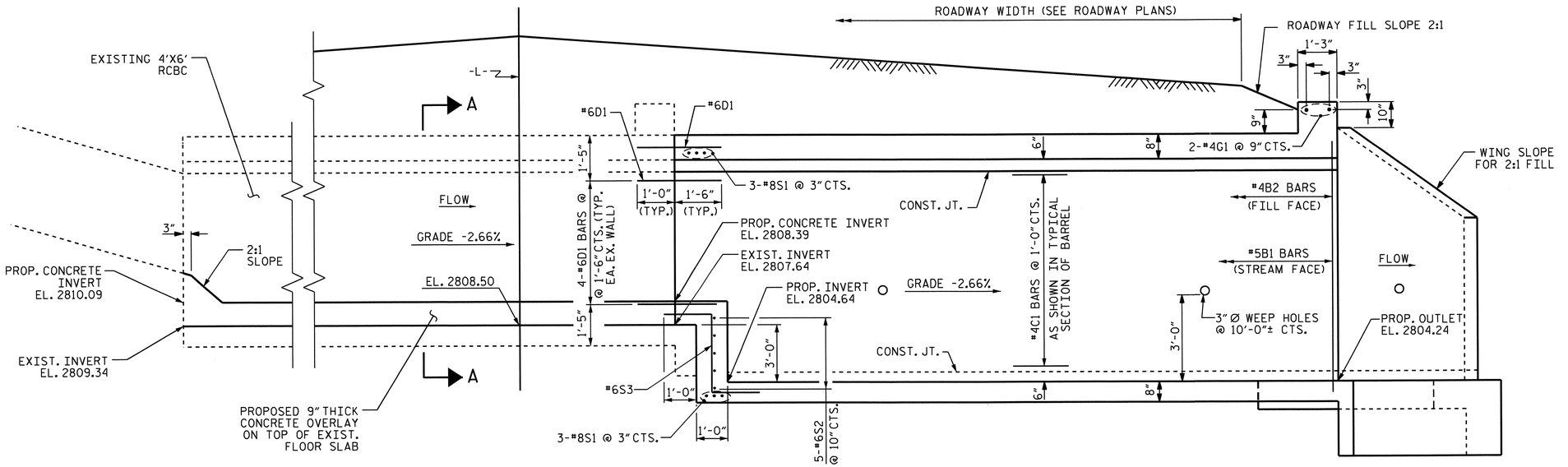

CULVERT SECTION NORMAL TO ROADWAY

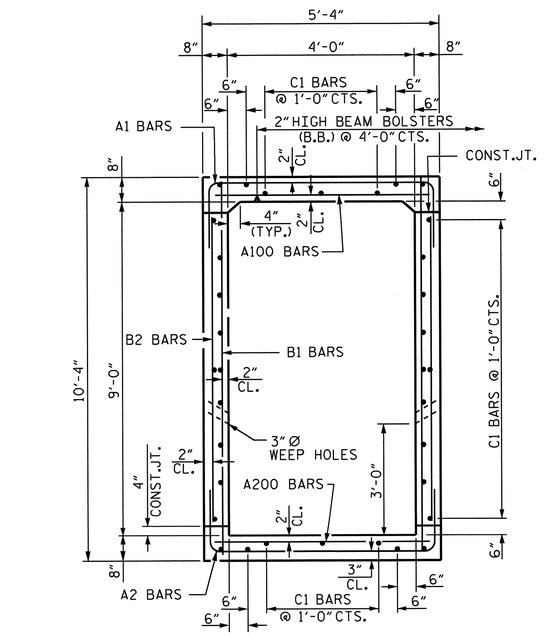

RIGHT ANGLE SECTION OF BARREL

(THERE ARE 34 "C" BARS IN SECTION OF BARREL)

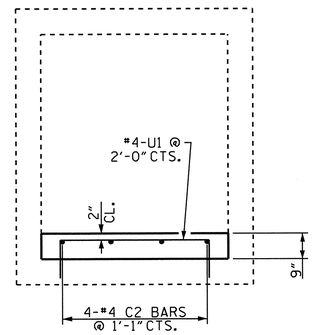

SECTION A-A

(LOOKING DOWNSTREAM)

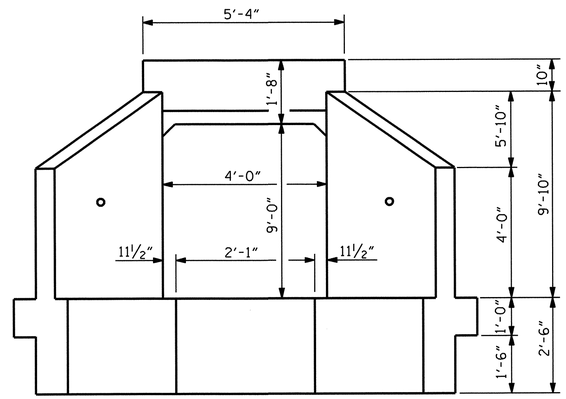

END ELEVATION

REVISED 8-28-92 BY E.L.R. CHECKED BY G.R.P.
REVISED 8-22-89 BY A.R.B. CHECKED BY C.R.K.
REDRAWN 8-22-1989
REVISED 11-19-99 BY M.M. CHECKED BY R.W.W.

ASSEMBLED BY : J.P. MCCARTHA	DATE : 5-10-13	SPECIAL
CHECKED BY : R.P. PATEL	DATE : 5-15-13	
DRAWN BY : R. WRIGHT	DATE : AUG. 1989	STANDARD
CHECKED BY : A.R. BISSETTE	DATE : AUG. 1989	

25-JUL-2013 11:12
D:\Structures\Str5\Plans\R3101_SD_CUL.dgn

PROJECT NO. R-3101
ALLEGHANY COUNTY
STATION: 52+41.45 -L-

SHEET 4 OF 6

STATE OF NORTH CAROLINA
DEPARTMENT OF TRANSPORTATION
RALEIGH

BARREL STANDARD
SINGLE
4.0 FT. X 9.0 FT.
CONCRETE BOX CULVERT
90° SKEW

NORTH CAROLINA PROFESSIONAL SEAL 15825 ENGINEER BRUCE D. KLAPPENBERGER
7-26-2013

REVISIONS						SHEET NO.
NO.	BY:	DATE:	NO.	BY:	DATE:	C-20
1			3			TOTAL SHEETS
2			4			22

STR. #5 STD. NO. CB11

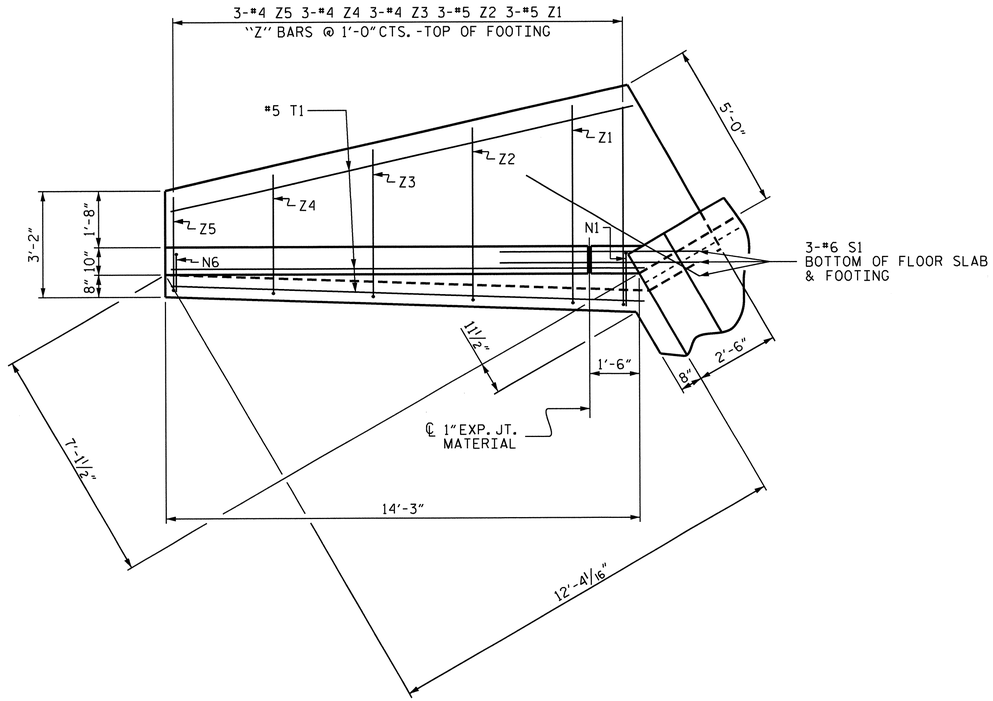

PLAN

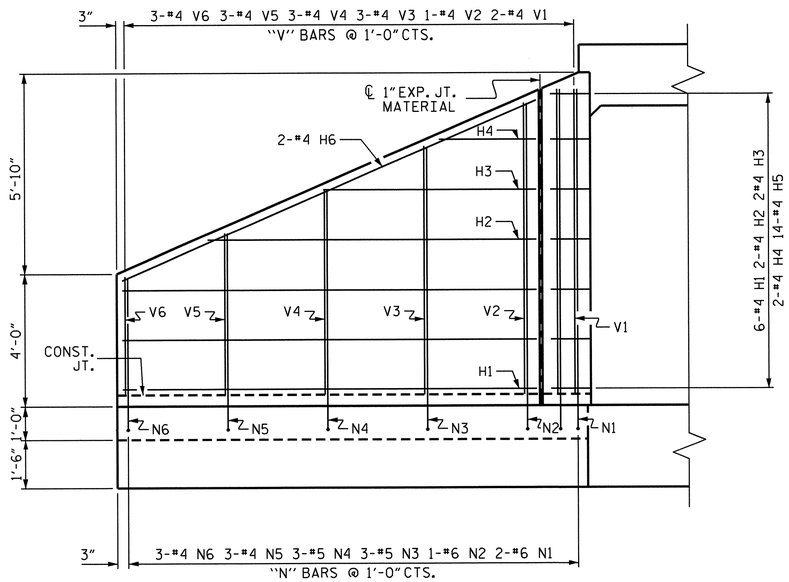

ELEVATION

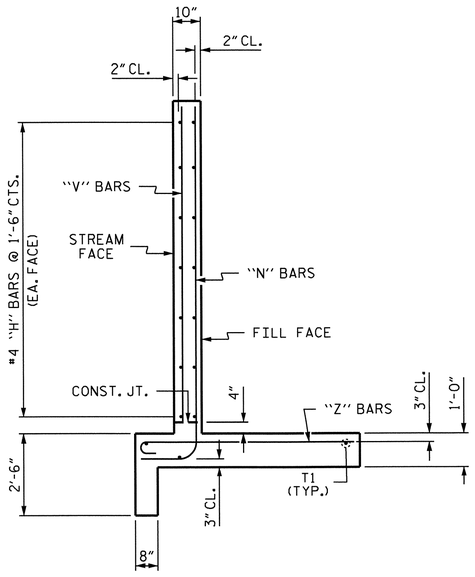

TYPICAL WING SECTION

BAR TYPES

ALL BAR DIMENSIONS ARE OUT TO OUT.

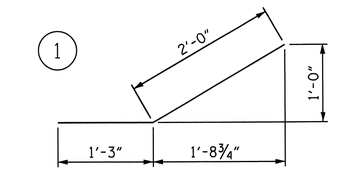

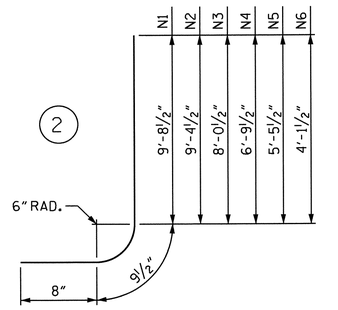

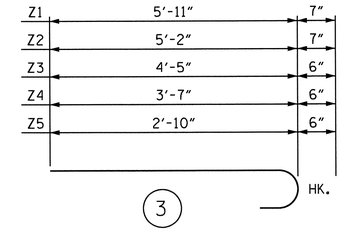

BILL OF MATERIAL

BAR	NO.	SIZE	TYPE	LENGTH	WEIGHT
H1	12	#4	STR	12'-5"	100
H2	4	#4	STR	9'-10"	26
H3	4	#4	STR	6'-5"	17
H4	4	#4	STR	2'-11"	8
H5	28	#4	1	3'-3"	61
H6	4	#4	STR	13'-6"	36
N1	4	#6	2	11'-2"	67
N2	2	#6	2	10'-10"	33
N3	6	#5	2	9'-6"	59
N4	6	#5	2	8'-3"	52
N5	6	#4	2	6'-11"	28
N6	6	#4	2	5'-7"	22
S1	6	#6	STR	6'-0"	54
T1	6	#5	STR	14'-3"	89
V1	4	#4	STR	9'-2"	24
V2	2	#4	STR	8'-9"	12
V3	6	#4	STR	7'-5"	30
V4	6	#4	STR	6'-2"	25
V5	6	#4	STR	4'-10"	19
V6	6	#4	STR	3'-7"	14
Z1	6	#5	3	6'-6"	41
Z2	6	#5	3	5'-9"	36
Z3	6	#4	3	4'-11"	20
Z4	6	#4	3	4'-1"	16
Z5	6	#4	3	3'-4"	13

REINFORCING STEEL FOR 2 WINGS 902 LBS

CLASS A CONCRETE

2 WINGS	13.1 CY
1 HEADWALL	0.2 CY
1 EDGE BEAM	0.4 CY
1 END CURTAIN WALL	0.1 CY
PROP. 9" THICK CONC. OVERLAY ON TOP OF EXIST. FLOOR SLAB	7.3 CY
TOTAL	21.1 CY

PROJECT NO. R-3101

ALLEGHANY COUNTY

STATION: 52+41.45 -L-

SHEET 5 OF 6

STATE OF NORTH CAROLINA
DEPARTMENT OF TRANSPORTATION
RALEIGH

STANDARD WINGS FOR CONCRETE BOX CULVERT

H = 9'-0" SLOPE = 2:1

90° SKEW

NORTH CAROLINA PROFESSIONAL SEAL 15825 ENGINEER BRUCE D. KLAPPENBACH 7-26-2013

REVISIONS						SHEET NO.
NO.	BY:	DATE:	NO.	BY:	DATE:	C-21
1			3			TOTAL SHEETS
2			4			22

STR. #5 STD. NO. CW9009

ASSEMBLED BY : J.P. MCCARTHA	DATE : 5/10/13
CHECKED BY : R.P. PATEL	DATE : 5/15/13
DRAWN BY : CCJ 10/99	
CHECKED BY : RWW 03/00	

25-JUL-2013 11:13
O:\Structures\Str5\Plans\R3101_SD_CUL.dgn
tbarbour

LOAD AND RESISTANCE FACTOR RATING (LRFR) SUMMARY FOR REINFORCED CONCRETE BOX CULVERTS

LEVEL		VEHICLE	WEIGHT (W) (TONS)	(#) CONTROLLING LOAD RATING	MINIMUM RATING FACTORS (RF)	TONS = W x RF	STRENGTH I LIMIT STATE									COMMENT NUMBER
							LIVE-LOAD FACTORS (γ_{LL})	MOMENT				SHEAR				
								RATING FACTOR	BOX NO.	ELEMENT TYPE	DISTANCE FROM LEFT END OF ELEMENT (ft)	RATING FACTOR	BOX NO.	ELEMENT TYPE	DISTANCE FROM LEFT END OF ELEMENT (ft)	
DESIGN LOAD RATING		HL-93 (INVENTORY)	N/A	(1)	1.52	--	1.75	1.52	1	EXTERIOR WALL	5.08	4.49	1	EXTERIOR WALL	8.85	
		HL-93 (OPERATING)	N/A		1.97	--	1.35	1.97	1	EXTERIOR WALL	5.08	5.83	1	EXTERIOR WALL	8.85	
		HS-20 (INVENTORY)	36.000	(2)	1.52	54.62	1.75	1.52	1	EXTERIOR WALL	5.08	4.49	1	EXTERIOR WALL	8.85	
		HS-20 (OPERATING)	36.000		1.97	70.80	1.35	1.97	1	EXTERIOR WALL	5.08	5.83	1	EXTERIOR WALL	8.85	
LEGAL LOAD RATING	SINGLE VEHICLE (SV)	SNSH	13.500	(3)	1.90	25.60	1.40	1.90	1	EXTERIOR WALL	5.08	5.62	1	EXTERIOR WALL	8.85	
		SNGARBS2	20.000		1.90	37.93	1.40	1.90	1	EXTERIOR WALL	5.08	5.62	1	EXTERIOR WALL	8.85	
		SNAGRIS2	22.000		1.90	41.72	1.40	1.90	1	EXTERIOR WALL	5.08	5.62	1	EXTERIOR WALL	8.85	
		SNCOTTS3	27.250		1.90	51.68	1.40	1.90	1	EXTERIOR WALL	5.08	5.62	1	EXTERIOR WALL	8.85	
		SNAGGRS4	34.925		1.90	66.24	1.40	1.90	1	EXTERIOR WALL	5.08	5.62	1	EXTERIOR WALL	8.85	
		SNS5A	35.550		1.90	67.42	1.40	1.90	1	EXTERIOR WALL	5.08	5.62	1	EXTERIOR WALL	8.85	
		SNS6A	39.950		1.90	75.77	1.40	1.90	1	EXTERIOR WALL	5.08	5.62	1	EXTERIOR WALL	8.85	
		SNS7B	42.000		1.90	79.65	1.40	1.90	1	EXTERIOR WALL	5.08	5.62	1	EXTERIOR WALL	8.85	
	TRUCK TRACTOR SEMI-TRAILER (TTST)	TNAGRIT3	33.000		1.90	62.58	1.40	1.90	1	EXTERIOR WALL	5.08	5.62	1	EXTERIOR WALL	8.85	
		TNT4A	33.075		1.90	62.73	1.40	1.90	1	EXTERIOR WALL	5.08	5.62	1	EXTERIOR WALL	8.85	
		TNT6A	41.600		1.90	78.89	1.40	1.90	1	EXTERIOR WALL	5.08	5.62	1	EXTERIOR WALL	8.85	
		TNT7A	42.000		1.90	79.65	1.40	1.90	1	EXTERIOR WALL	5.08	5.62	1	EXTERIOR WALL	8.85	
		TNT7B	42.000		1.90	79.65	1.40	1.90	1	EXTERIOR WALL	5.08	5.62	1	EXTERIOR WALL	8.85	
		TNAGRIT4	43.000		1.90	81.55	1.40	1.90	1	EXTERIOR WALL	5.08	5.62	1	EXTERIOR WALL	8.85	
		TNAGT5A	45.000		1.90	85.34	1.40	1.90	1	EXTERIOR WALL	5.08	5.62	1	EXTERIOR WALL	8.85	
		TNAGT5B	45.000		1.90	85.34	1.40	1.90	1	EXTERIOR WALL	5.08	5.62	1	EXTERIOR WALL	8.85	

LOAD FACTORS:

DESIGN LOAD RATING FACTORS

LOAD TYPE	MAX FACTOR	MIN FACTOR
DC	1.25	0.90
DW	1.50	0.65
EV	1.30	0.90
EH	1.35	0.90
ES	1.35	0.90
LS	1.75	--
WA	1.00	--

NOTE:

RATING FACTORS ARE BASED ON THE STRENGTH I LIMIT STATE.

(#) CONTROLLING LOAD RATING

(1) DESIGN LOAD RATING (HL-93)

(2) DESIGN LOAD RATING (HS-20)

(3) LEGAL LOAD RATING **

** SEE CHART FOR VEHICLE TYPE

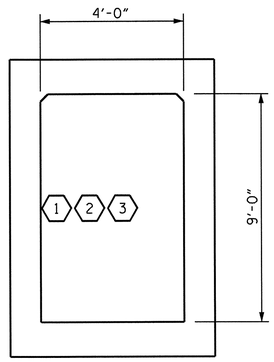

LRFR SUMMARY

(LOOKING DOWNSTREAM)

PROJECT NO. R-3101

ALLEGHANY COUNTY

STATION: 52+41.45 -L-

SHEET 6 OF 6

STATE OF NORTH CAROLINA
DEPARTMENT OF TRANSPORTATION
RALEIGH

STANDARD
LRFR SUMMARY FOR REINFORCED CONCRETE BOX CULVERTS
(NON-INTERSTATE TRAFFIC)

REVISIONS						SHEET NO.
NO.	BY:	DATE:	NO.	BY:	DATE:	C-22
1			3			TOTAL SHEETS
2			4			22

STR. #5 STD. NO. LRFR5

NORTH CAROLINA PROFESSIONAL SEAL 15825 ENGINEER BRUCE D. KLAPPENBACH
7-26-2013

ASSEMBLED BY : J.P. MCCARTHA	DATE : 5-10-13	
CHECKED BY : R.P. PATEL	DATE : 5-15-13	
DRAWN BY : WMC 7/11	REV. 10/1/11	MAA/GM
CHECKED BY : GM 7/11		

10-JUN-2013 11:31
R:\Structures\Str5\Plans\R3101_SD_CUL.dgn
bklappenbach

GEOTECHNICAL ENGINEER	ENGINEER
NORTH CAROLINA PROFESSIONAL SEAL 29869 ENGINEER JANE C CLARK — SIGNATURE 3/14/13 DATE	SIGNATURE DATE

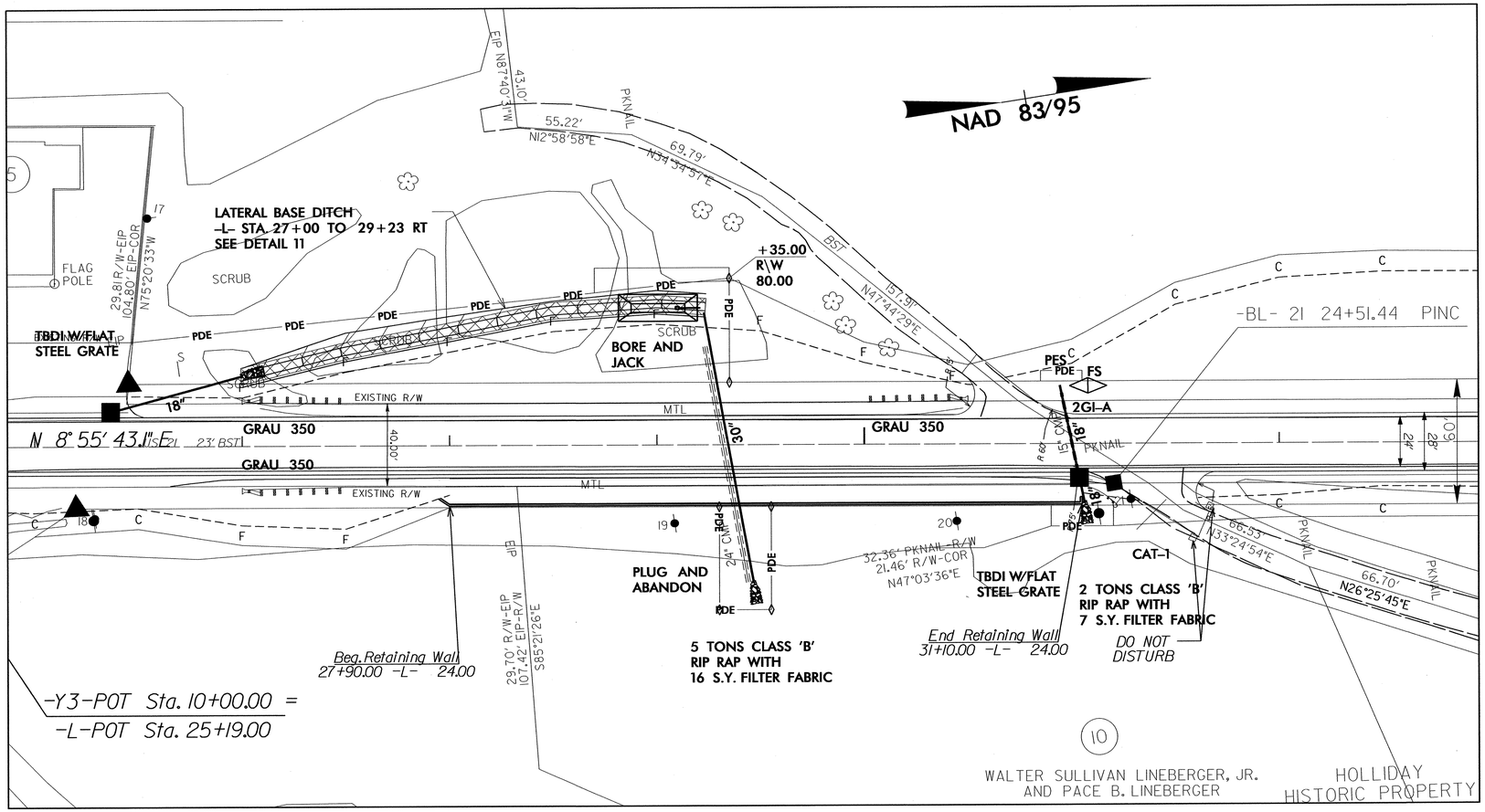

ESTIMATED MSE WALL QUANTITIES (SQUARE FEET)	
MSE RETAINING WALL NO. 1	2456 SF
MSE RETAINING WALL NO. 2	1250 SF

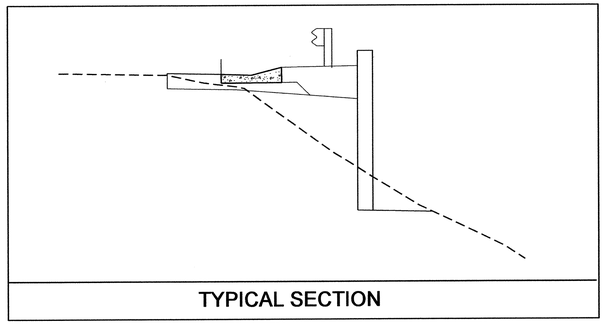

LOCATION SKETCH

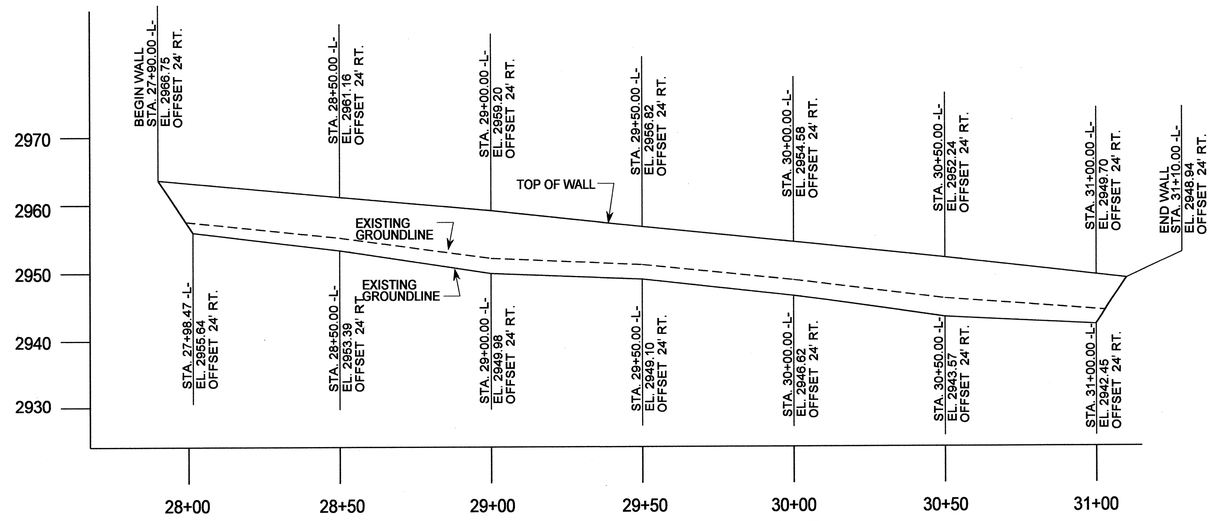

RETAINING WALL ENEVELOPE

PREPARED BY: EJS	DATE: 1/13
REVIEWED BY: SCC	DATE: 7/13

PROJECT NO.: R-3101

ALLEGHANY ***COUNTY***

STATION: 27+90.00-L- TO 31+10.00-L-

SHEET 1 OF 4

GEOTECHNICAL ENGINEERING UNIT

- ☐ *EASTERN REGIONAL OFFICE*
- ☒ *WESTERN REGIONAL OFFICE*
- ☐ *CONTRACT OFFICE*

STATE OF NORTH CAROLINA
DEPARTMENT OF TRANSPORTATION
RALEIGH

MECHANICALLY STABILIZED EARTH (MSE) RETAINING WALL #1

REVISIONS						SHEET NO.
NO.	BY	DATE	NO.	BY	DATE	W-1
1			3			TOTAL SHEETS
2			4			10

GEOTECHNICAL ENGINEER	ENGINEER
NORTH CAROLINA PROFESSIONAL SEAL 29869 ENGINEER SHANE C CLARK	
SIGNATURE 7/16/13 DATE	SIGNATURE DATE

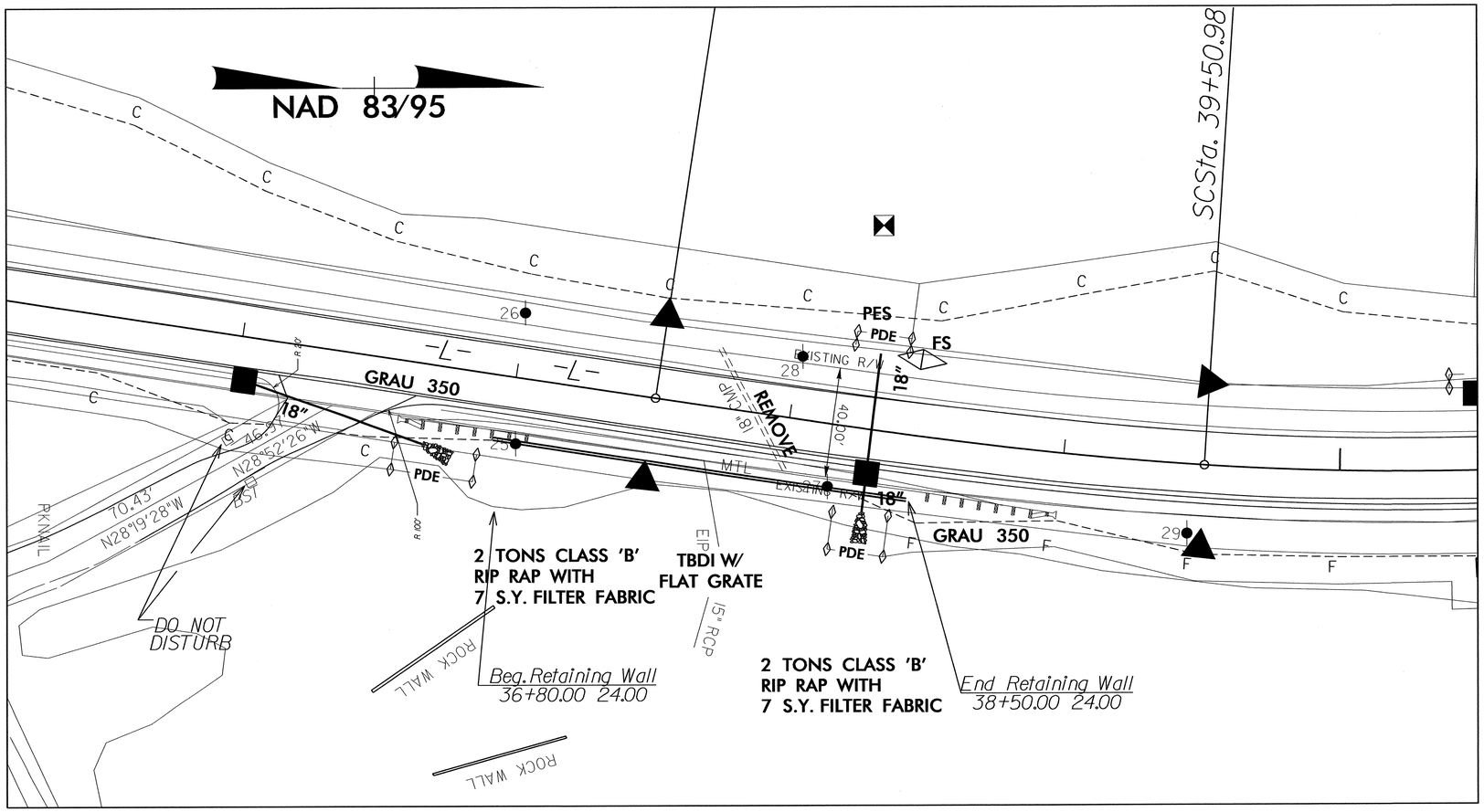

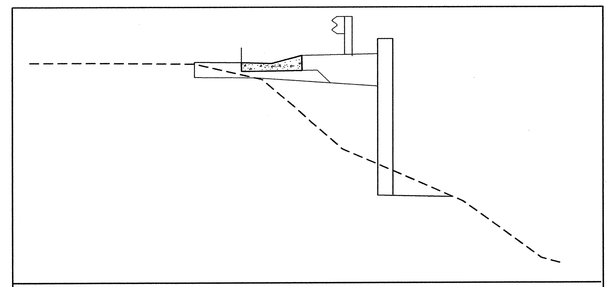

LOCATION SKETCH

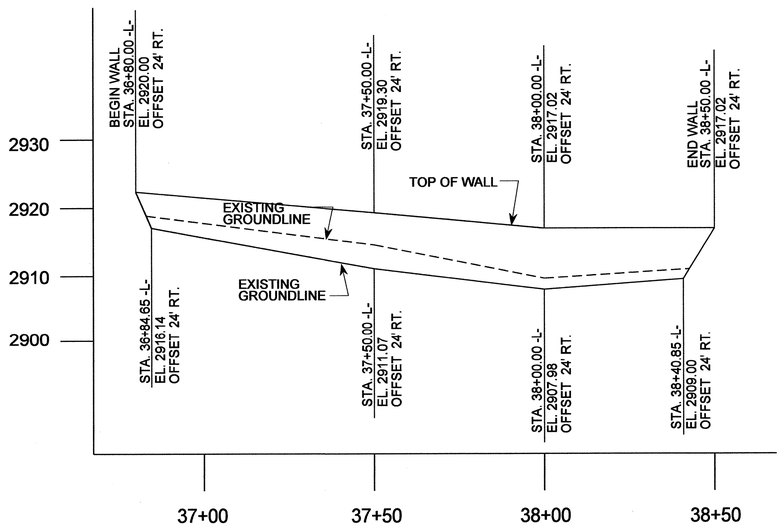

RETAINING WALL ENEVELOPE

PREPARED BY: EJS	DATE: 1/13
REVIEWED BY: SCC	DATE: 7/13

PROJECT NO.: R-3101

ALLEGHANY ***COUNTY***

STATION: 36+80.00-L- TO 38+50.00-L-

SHEET 2 OF 4

GEOTECHNICAL ENGINEERING UNIT

☐ *EASTERN REGIONAL OFFICE*

☒ *WESTERN REGIONAL OFFICE*

☐ *CONTRACT OFFICE*

STATE OF NORTH CAROLINA
DEPARTMENT OF TRANSPORTATION
RALEIGH

MECHANICALLY STABILIZED EARTH (MSE) RETAINING WALL #2

REVISIONS						SHEET NO.
NO.	BY	DATE	NO.	BY	DATE	W-2
1			3			TOTAL SHEETS
2			4			10

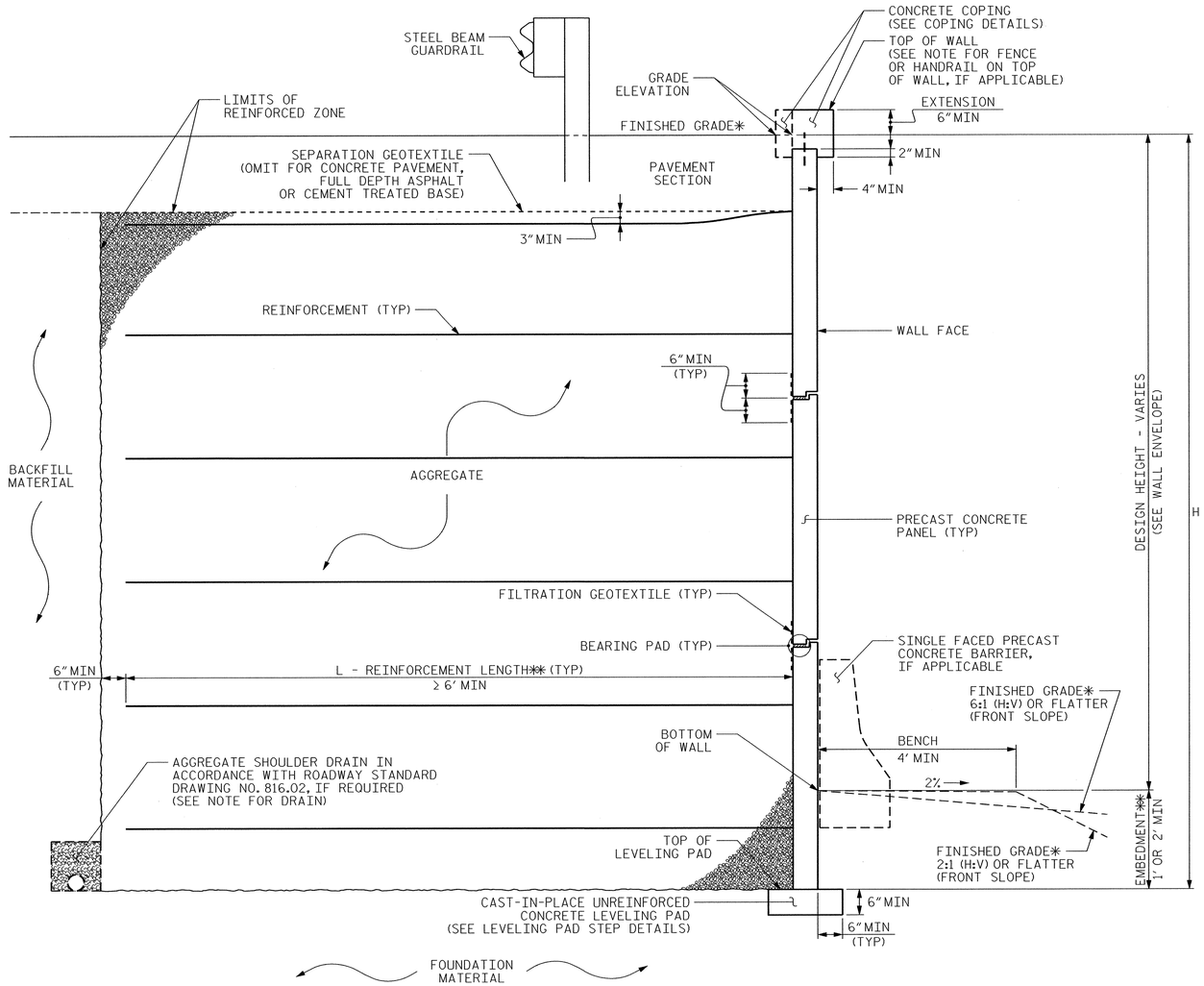

MSE WALL WITH PRECAST PANELS - TYPICAL SECTION

*SEE ROADWAY PLANS FOR FINISHED GRADE DETAILS.
**SEE MSE RETAINING WALLS PROVISION FOR EMBEDMENT AND REINFORCEMENT LENGTH REQUIREMENTS.

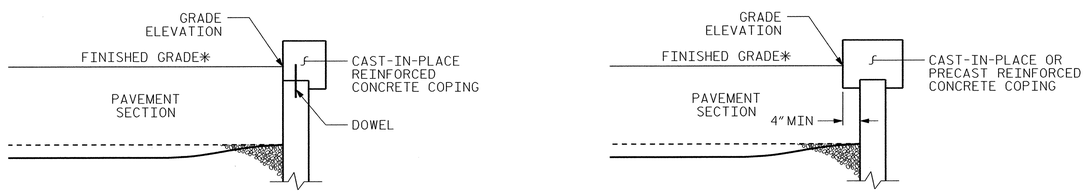

COPING DETAILS

AT THE CONTRACTOR'S OPTION, CONNECT COPING TO PANELS WITH DOWELS OR EXTEND COPING DOWN BACK OF PANELS.
*SEE ROADWAY PLANS FOR FINISHED GRADE DETAILS.

PREPARED BY: J.T.W.	DATE: 7.12
REVIEWED BY: S.C.C.	DATE: 7.13

GEOTECHNICAL ENGINEER

NORTH CAROLINA PROFESSIONAL SEAL 29869 ENGINEER SHANE C CLARK

SIGNATURE 7/16/13 DATE

ENGINEER

SIGNATURE DATE

PROJECT NO.: R-3101

ALLEGHANY *COUNTY*

STATION: 27+90.00-L- TO 31+10.00-L-

SHEET 3 OF 4 36+80.00-L- TO 38+50.00-L-

GEOTECHNICAL ENGINEERING UNIT

☐ *EASTERN REGIONAL OFFICE*
☒ *WESTERN REGIONAL OFFICE*
☐ *CONTRACT OFFICE*

STATE OF NORTH CAROLINA
DEPARTMENT OF TRANSPORTATION
RALEIGH

MECHANICALLY STABILIZED EARTH (MSE) RETAINING WALL DETAILS

REVISIONS						SHEET NO.
NO.	BY	DATE	NO.	BY	DATE	W-3
1			3			TOTAL SHEETS
2			4			10

GEOTECHNICAL ENGINEER	ENGINEER
NORTH CAROLINA PROFESSIONAL SEAL 29869 ENGINEER JANE C CLARK SIGNATURE 7/16/13 DATE	SIGNATURE DATE

NOTES:

FOR MECHANICALLY STABILIZED EARTH (MSE) RETAINING WALLS, SEE MECHANICALLY STABILIZED EARTH RETAINING WALLS PROVISION.

FOR STEEL BEAM GUARDRAIL, SEE ROADWAY PLANS AND SECTION 862 OF THE STANDARD SPECIFICATIONS.

USE AN MSE WALL SYSTEM WITH PRECAST CONCRETE PANELS THAT MEET SECTION 1077 OF THE STANDARD SPECIFICATIONS FOR RETAINING WALL NO. 1 AND NO. 2.

A STAINED, SIMULATED STONE FINISH IS REQUIRED ON ALL EXPOSED WALL FACES FOR RETAINING WALL NO. 1 AND NO. 2. SEE SIMULATED STONE FORMLINER FINISH SPECIAL PROVISIONS.

A DRAIN IS REQUIRED FOR RETAINING WALL NO. 1 AND NO. 2.

BEFORE BEGINNING MSE WALL DESIGN FOR RETAINING WALL NO. 1 OR NO. 2, SURVEY WALL LOCATION AND SUBMIT A REVISED WALL PROFILE VIEW (WALL ENVELOPE) FOR REVIEW. DO NOT START WALL DESIGN OR CONSTRUCTION UNTIL THE REVISED WALL ENVELOPE IS ACCEPTED.

DESIGN RETAINING WALL NO. 1 AND NO. 2 FOR THE FOLLOWING:
1) H = DESIGN HEIGHT + EMBEDMENT
2) DESIGN LIFE = 100 YEARS
3) MAXIMUM FACTORED VERTICAL STRESS ON FOUNDATION MATERIAL = 3000 LB/SF
4) MINIMUM REINFORCEMENT LENGTH (L) = 0.7 × H FT
5) MINIMUM EMBEDMENT ELEVATION = 2 FT OR H/5 FT
6) AGGREGATE PARAMETERS:

AGGREGATE TYPE*	UNIT WEIGHT (γ) LB/CF	FRICTION ANGLE (ϕ) DEGREES	COHESION (c) LB/SF
COARSE	110	38	0
FINE	125	34	0
*SEE MSE RETAINING WALLS PROVISION FOR COARSE AND FINE AGGREGATE MATERIAL REQUIREMENTS.			

7) IN-SITU ASSUMED MATERIAL PARAMETERS:

MATERIAL TYPE	UNIT WEIGHT (γ) LB/CF	FRICTION ANGLE (ϕ) DEGREES	COHESION (c) LB/SF
BACKFILL	110	30	0
FOUNDATION	110	30	0

DESIGN RETAINING WALL NO. 1 AND NO. 2 FOR A LIVE LOAD (TRAFFIC) SURCHARGE.

DESIGN RETAINING WALL NO. 1 AND NO. 2 FOR A PIPE EXTENDING THROUGH OR UNDER THE WALL AS SHOWN IN DRAINAGE PLANS. VERIFY PIPE LOCATION AND ELEVATION BEFORE BEGINNING MSE WALL DESIGN OR CONSTRUCTION.

EXISTING OR FUTURE OBSTRUCTIONS SUCH AS FOUNDATIONS, GUARDRAIL, FENCE OR HANDRAIL POSTS, PAVEMENTS, PIPES, INLETS OR UTILITIES MAY INTERFERE WITH REINFORCEMENT FOR RETAINING WALL NO. 1 AND NO. 2.

DO NOT PLACE LEVELING PAD CONCRETE, AGGREGATE OR REINFORCEMENT FOR RETAINING WALL NO. 1 OR NO. 2 UNTIL EXCAVATION DIMENSIONS AND FOUNDATION MATERIAL ARE APPROVED.

"TEMPORARY SHORING" IS REQUIRED FOR RETAINING WALL NO. 1 AND 2 IN ACCORDANCE WITH THE TEMPORARY SHORING PROVISION. SEE TRAFFIC CONTROL PLANS.

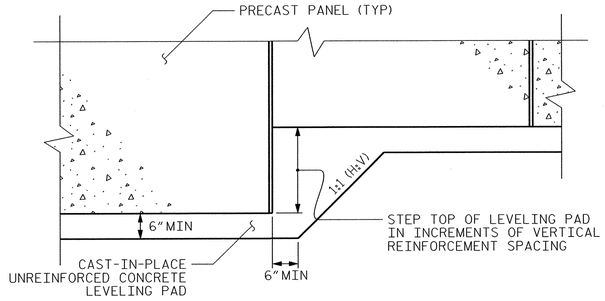

PRECAST CONCRETE PANELS

LEVELING PAD STEP DETAILS

PREPARED BY: J.T.W.	DATE: 7.12
REVIEWED BY: S.C.C.	DATE: 7.13

PROJECT NO.: R-3101
ALLEGHANY ***COUNTY***
STATION: 27+90.00-L- TO 31+10.00-L-
SHEET 4 OF 4 36+80.00-L- TO 38+50.00-L-

GEOTECHNICAL ENGINEERING UNIT
☐ ***EASTERN REGIONAL OFFICE***
☒ ***WESTERN REGIONAL OFFICE***
☐ ***CONTRACT OFFICE***
STATE OF NORTH CAROLINA
DEPARTMENT OF TRANSPORTATION
RALEIGH

MECHANICALLY STABILIZED EARTH (MSE) RETAINING WALL DETAILS

REVISIONS						SHEET NO.
NO.	BY	DATE	NO.	BY	DATE	W-4
1			3			TOTAL SHEETS
2			4			10

GEOTECHNICAL ENGINEER	ENGINEER
NORTH CAROLINA PROFESSIONAL SEAL 29869 ENGINEER SHANE C CLARK — SIGNATURE 7/16/13 DATE	SIGNATURE DATE

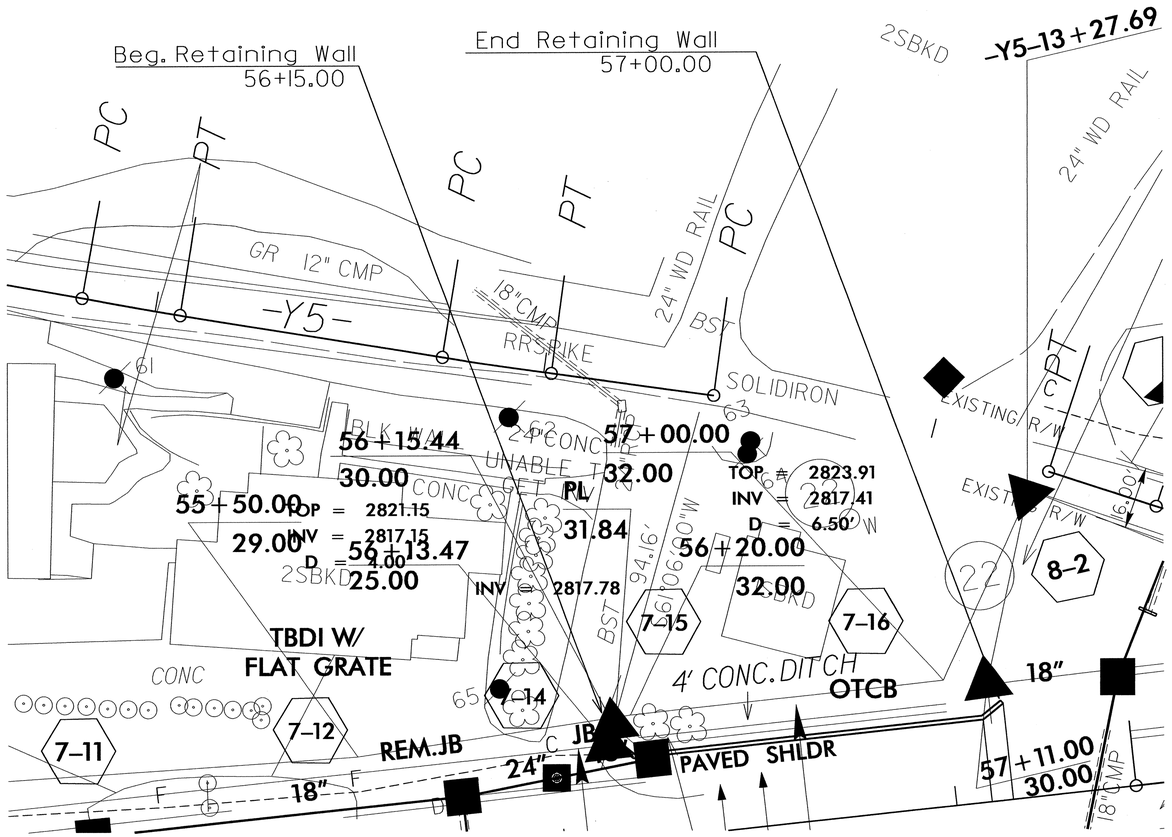

LOCATION SKETCH

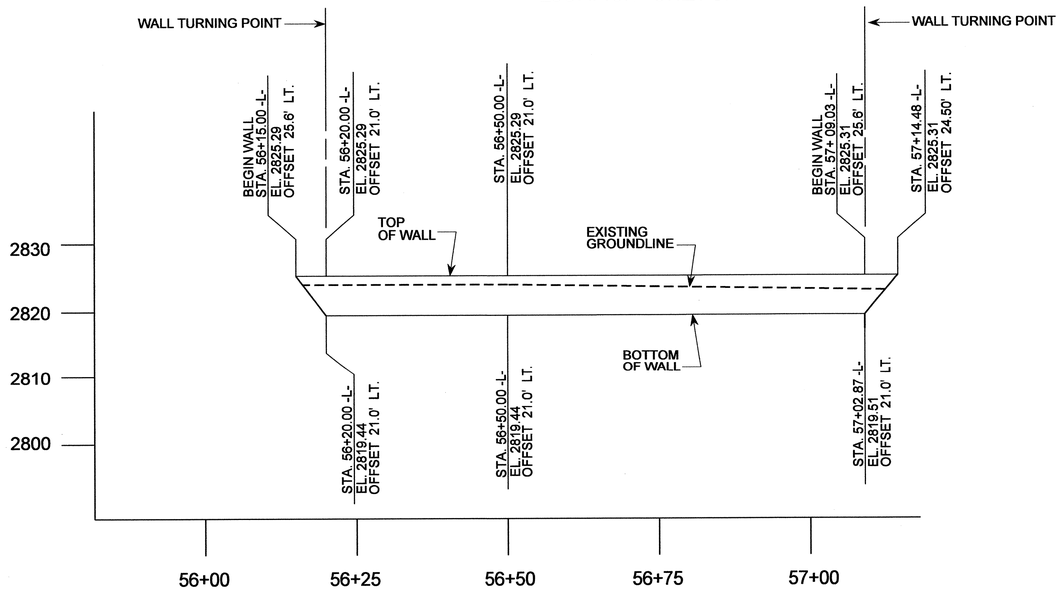

RETAINING WALL ENEVELOPE

PREPARED BY: EJS	DATE: 1/13
REVIEWED BY: SCC	DATE: 7/13

ESTIMATED WALL QUANTITIES

RETAINING WALL NO.	CAST-IN-PLACE GRAVITY RETAINING WALL (SQUARE FEET)
3	548
TOTAL QUANTITY = 548 SF	

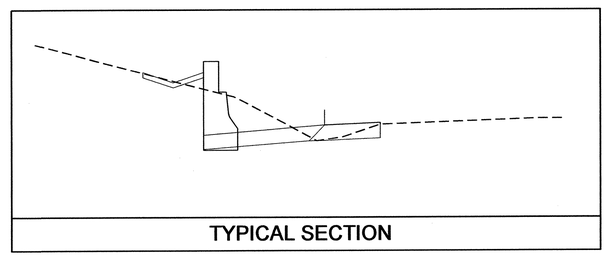

TYPICAL SECTION

PROJECT NO.: R-3101

ALLEGHANY ***COUNTY***

STATION: 56+15.00-L- TO 57+14.48-L-

SHEET 1 OF 2

GEOTECHNICAL ENGINEERING UNIT

- ☐ *EASTERN REGIONAL OFFICE*
- ☒ *WESTERN REGIONAL OFFICE*
- ☐ *CONTRACT OFFICE*

STATE OF NORTH CAROLINA
DEPARTMENT OF TRANSPORTATION
RALEIGH

CAST-IN-PLACE GRAVITY RETAINING WALL #3

REVISIONS						SHEET NO.
NO.	BY	DATE	NO.	BY	DATE	W-5
1			3			TOTAL SHEETS
2			4			10

GEOTECHNICAL ENGINEER

NORTH CAROLINA PROFESSIONAL SEAL 29869 ENGINEER SHANE C CLARK

SIGNATURE 7/16/13 DATE

ENGINEER

SIGNATURE DATE

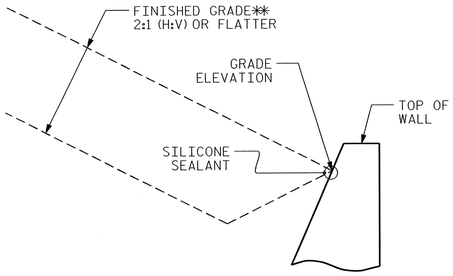

SLOPE CASE

**SEE ROADWAY PLANS FOR FINISHED GRADE AND DITCH DETAILS.

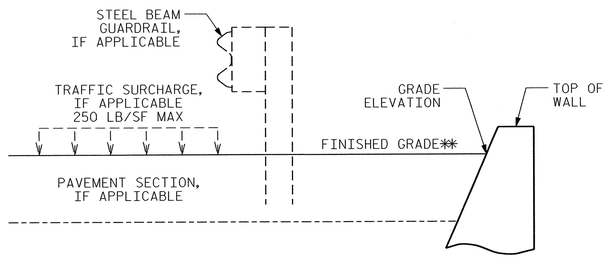

NO SLOPE CASE

**SEE ROADWAY PLANS FOR FINISHED GRADE DETAILS.

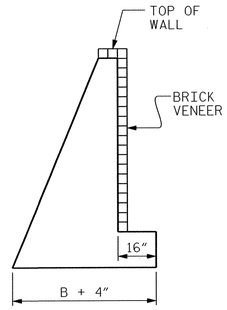

BRICK VENEER DETAIL

(WHEN APPLICABLE)

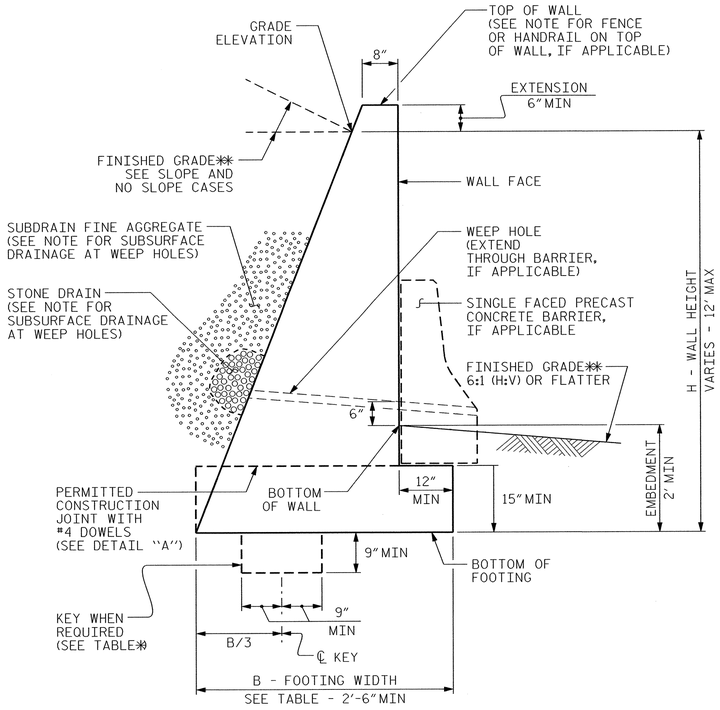

STANDARD CIP GRAVITY WALL

**SEE ROADWAY PLANS FOR FINISHED GRADE AND DITCH DETAILS.

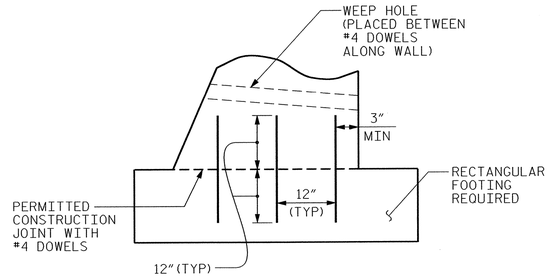

DETAIL "A"

H (FT)	3 - < 6	6 - 9	> 9 - 12
SLOPE CASE	.66	.70*	.75*
NO SLOPE CASE WITH TRAFFIC SURCHARGE	.80	.75*	.70*
NO SLOPE CASE WITHOUT TRAFFIC SURCHARGE	.60	.60	.60

B/H RATIO (B = 2'-6"MIN)

*KEY IS REQUIRED FOR "SLOPE CASE" OR "NO SLOPE CASE WITH TRAFFIC SURCHARGE" WHEN H IS 6' OR GREATER.

NOTES:

FOR CAST-IN-PLACE (CIP) GRAVITY RETAINING WALLS, SEE CAST-IN-PLACE GRAVITY RETAINING WALLS PROVISION.

A STAINED, SIMULATED STONE FORMLINER FINISH IS REQUIRED FOR ALL EXPOSED FACES FOR RETAINING WALL NO. 3. SEE SIMULATED STONE FORMLINER FINISH SPECIAL PROVISIONS.

FOR STEEL BEAM GUARDRAIL, SEE ROADWAY PLANS AND SECTION 862 OF THE STANDARD SPECIFICATIONS.

FOR SINGLE FACED PRECAST CONCRETE BARRIER, SEE ROADWAY PLANS AND SECTION 857 OF THE STANDARD SPECIFICATIONS.

FOR FENCES OR HANDRAILS ON TOP OF WALLS, SEE ROADWAY PLANS FOR FENCE OR HANDRAIL ATTACHMENT DETAILS.

FOR SUBSURFACE DRAINAGE AT WEEP HOLES, SEE ARTICLE 414-8 OF THE STANDARD SPECIFICATIONS.

STANDARD CIP GRAVITY WALLS ARE BASED ON THE FOLLOWING IN-SITU ASSUMED SOIL PARAMETERS:
- UNIT WEIGHT, γ = 120 LB/CF
- FRICTION ANGLE, ϕ = 35 DEGREES (GROUNDWATER WITHIN 7' OF BOTTOM OF FOOTING)
- FRICTION ANGLE, ϕ = 30 DEGREES (GROUNDWATER MORE THAN 7' BELOW BOTTOM OF FOOTING)
- COHESION, c = 0 LB/SF

DO NOT USE STANDARD CIP GRAVITY WALLS IF ASSUMED SOIL PARAMETERS ARE NOT APPLICABLE OR GROUNDWATER IS ABOVE BOTTOM OF FOOTING.

DO NOT USE STANDARD CIP GRAVITY WALLS WHEN VERY LOOSE OR SOFT SOIL OR MUCK IS BELOW WALLS.

BEFORE BEGINNING STANDARD CIP GRAVITY WALL CONSTRUCTION, SURVEY WALL LOCATIONS AND SUBMIT WALL PROFILE VIEWS (WALL ENVELOPES) FOR REVIEW. FOR WALL ENVELOPES, INCLUDE BOTTOM OF WALL, EXISTING GROUND AND GRADE ELEVATIONS AND OTHER ELEVATIONS AS NEEDED AT INTERVALS OF 25' OR LESS ALONG WALLS. DO NOT START WALL CONSTRUCTION UNTIL WALL ENVELOPES ARE ACCEPTED.

FOR BRICK VENEERS, SUBMIT BRICK SAMPLES FOR APPROVAL BEFORE BEGINNING STANDARD CIP GRAVITY WALL CONSTRUCTION.

DO NOT PLACE CONCRETE FOR FOOTINGS UNTIL EXCAVATION DIMENSIONS AND FOUNDATION MATERIAL ARE APPROVED.

WHEN CONSTRUCTING STANDARD CIP GRAVITY WALLS WITH A CONSTRUCTION JOINT AS SHOWN IN DETAIL "A", PROVIDE A MINIMUM OF 3 EQUALLY SPACED #4 DOWELS AT INTERVALS OF 1'-6" ALONG WALLS.

PROJECT NO.: R-3101

ALLEGHANY ***COUNTY***

STATION: 56+15.00-L- TO 57+14.48-L-

SHEET 2 OF 2

PREPARED BY: EJS	DATE: 1/13
REVIEWED BY: SCC	DATE: 7/13

GEOTECHNICAL ENGINEERING UNIT

☐ ***EASTERN REGIONAL OFFICE***

☒ ***WESTERN REGIONAL OFFICE***

☐ ***CONTRACT OFFICE***

STATE OF NORTH CAROLINA
DEPARTMENT OF TRANSPORTATION
RALEIGH

CAST-IN-PLACE GRAVITY RETAINING WALL #3

REVISIONS						SHEET NO.
NO.	BY	DATE	NO.	BY	DATE	W-6
1			3			TOTAL SHEETS
2			4			10

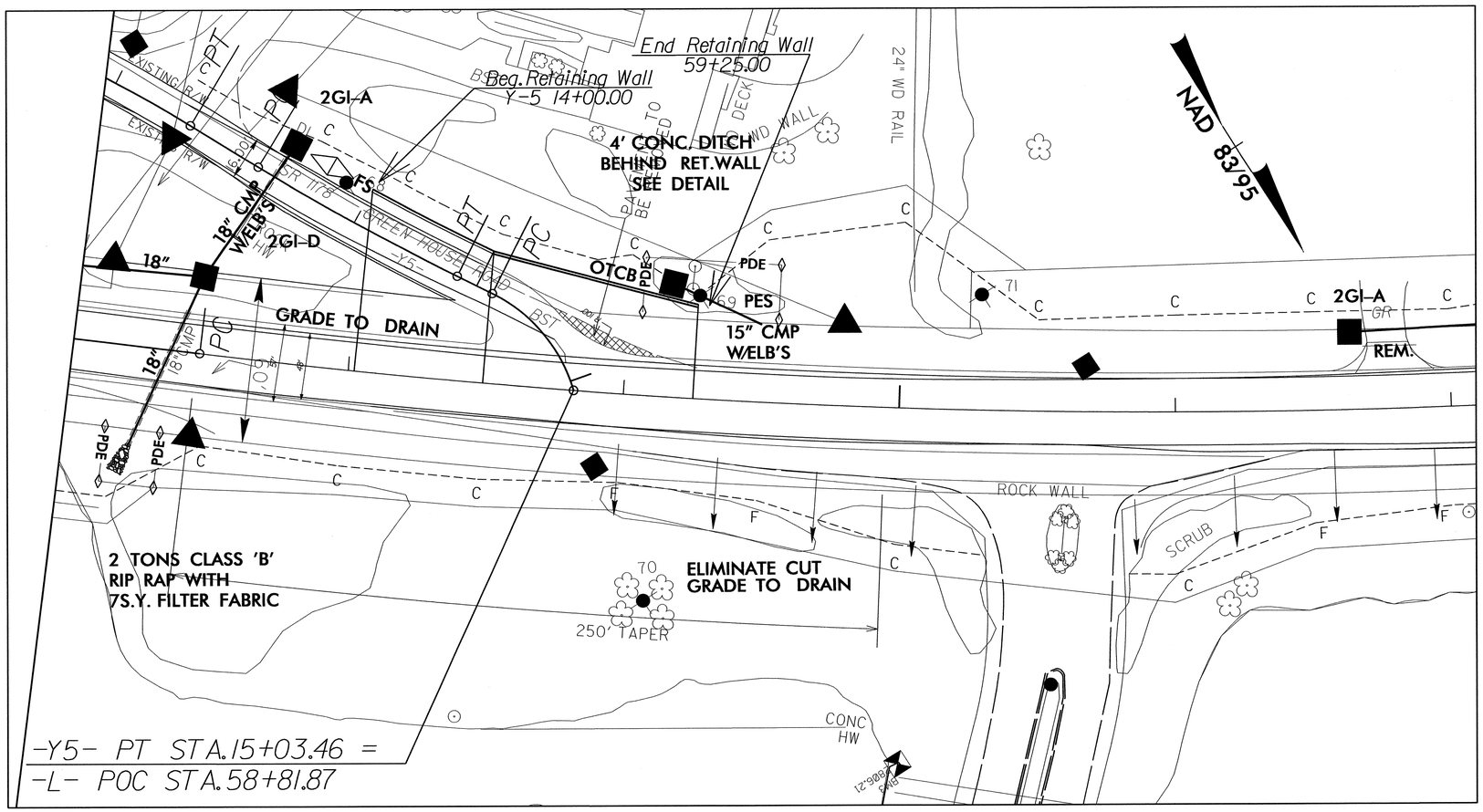

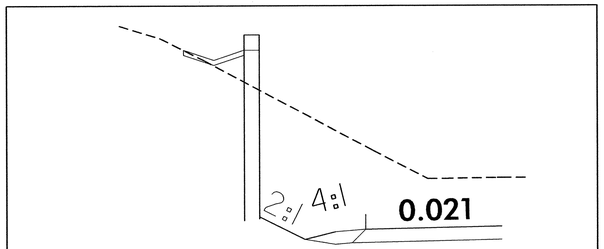

TYPICAL SECTION

LOCATION SKETCH

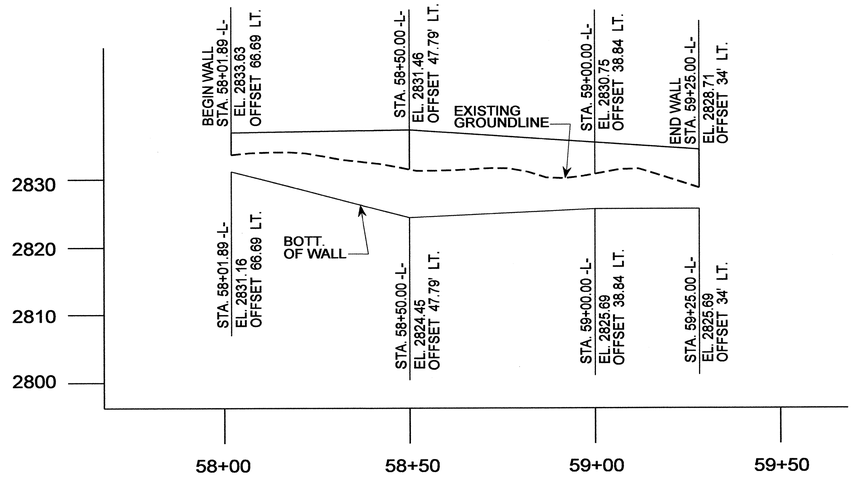

RETAINING WALL ENEVELOPE

ESTIMATED SOIL NAIL WALL QUANTITIES			
RETAINING WALL NO.	SOIL NAIL RETAINING WALLS (SQUARE FEET)	SOIL NAIL VERIFICATION TESTS	SOIL NAIL PROOF TESTS
4	1272	1	6
TOTAL QUANTITIES	1272 SF	1	6

GEOTECHNICAL ENGINEER

NORTH CAROLINA PROFESSIONAL SEAL 29869 ENGINEER SHANE C CLARK

SIGNATURE 7/16/13 DATE

ENGINEER

SIGNATURE DATE

PROJECT NO.: R-3101

ALLEGHANY COUNTY

STATION: 14+00.00-Y5- TO 59+25.00-L-

SHEET 1 OF 2

PREPARED BY: EJS	DATE: 1/13
REVIEWED BY: SCC	DATE: 7/13

GEOTECHNICAL ENGINEERING UNIT

- ☐ EASTERN REGIONAL OFFICE
- ☒ WESTERN REGIONAL OFFICE
- ☐ CONTRACT OFFICE

STATE OF NORTH CAROLINA
DEPARTMENT OF TRANSPORTATION
RALEIGH

SOIL NAIL RETAINING WALL #4

REVISIONS						SHEET NO.
NO.	BY	DATE	NO.	BY	DATE	W-7
1			3			TOTAL SHEETS
2			4			10

GEOTECHNICAL ENGINEER	ENGINEER
NORTH CAROLINA PROFESSIONAL SEAL 29869 ENGINEER SHANE C CLARK	
SIGNATURE 7/16/13 DATE	SIGNATURE DATE

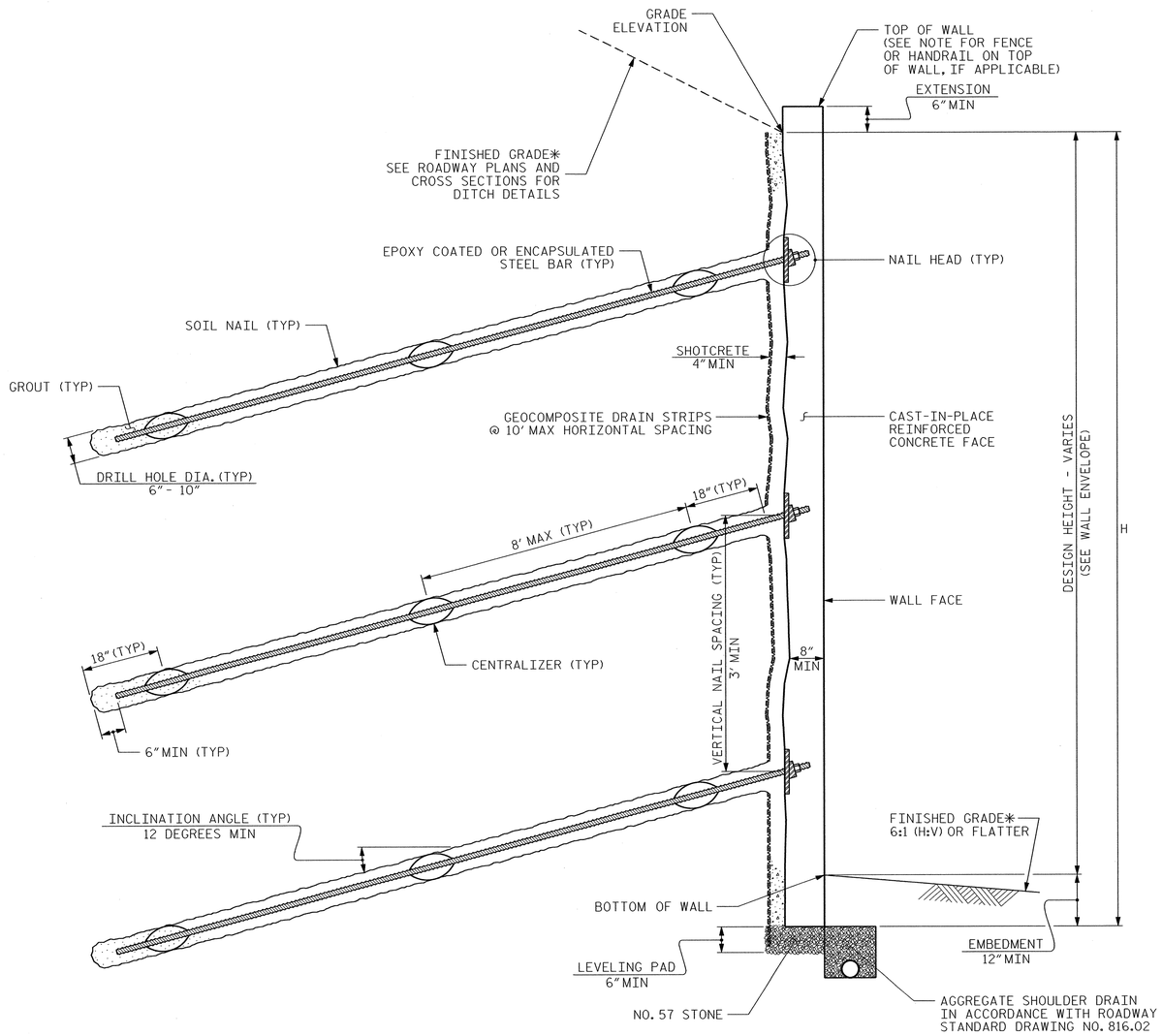

SOIL NAIL WALL - TYPICAL SECTION

*SEE ROADWAY PLANS FOR FINISHED GRADE AND DITCH DETAILS.

NOTES:

FOR SOIL NAIL RETAINING WALLS, SEE SOIL NAIL RETAINING WALLS PROVISION.

A FENCE OR HANDRAIL IS REQUIRED ON TOP OF RETAINING WALL NO. 4. SEE ROADWAY PLANS FOR FENCE OR HANDRAIL ATTACHMENT DETAILS.

A STAINED, SIMULATED STONE FORM LINER FINISH IS REQUIRED FOR THE CAST-IN-PLACE REINFORCED CONCRETE FACE FOR RETAINING WALL NO. 4. SEE SIMULATED STONE FORM LINER FINISH SPECIAL PROVISIONS.

BEFORE BEGINNING SOIL NAIL WALL DESIGN FOR RETAINING WALL NO. 4, SURVEY WALL LOCATION AND SUBMIT A REVISED WALL PROFILE VIEW (WALL ENVELOPE) FOR REVIEW. DO NOT START WALL DESIGN OR CONSTRUCTION UNTIL THE REVISED WALL ENVELOPE IS ACCEPTED.

WRAP END SLOPES AROUND ENDS OF WALL AS DIRECTED BY THE ENGINEER.

DESIGN RETAINING WALL NO. 4 FOR THE FOLLOWING:
1) H = DESIGN HEIGHT + EMBEDMENT
2) DESIGN LIFE = 100 YEARS
3) MINIMUM EMBEDMENT ELEVATION = 2 FT
4) IN-SITU ASSUMED MATERIAL PARAMETERS:
   UNIT WEIGHT, γ = 120 LB/CF
   FRICTION ANGLE, ϕ = 30 DEGREES
   COHESION, c = 0 LB/SF

EXISTING OR FUTURE OBSTRUCTIONS SUCH AS FOUNDATIONS, GUARDRAIL, FENCE OR HANDRAIL POSTS, PAVEMENTS, PIPES, INLETS OR UTILITIES MAY INTERFERE WITH SOIL NAILS FOR RETAINING WALL NO. 4.

PREPARED BY: EJS	DATE: 1/13
REVIEWED BY: SCC	DATE: 7/13

PROJECT NO.: R-3101
ALLEGHANY ***COUNTY***
STATION: 14+00.00-Y5- TO 59+25.00-L-
SHEET 2 OF 2

GEOTECHNICAL ENGINEERING UNIT
☐ ***EASTERN REGIONAL OFFICE***
☒ ***WESTERN REGIONAL OFFICE***
☐ ***CONTRACT OFFICE***
STATE OF NORTH CAROLINA
DEPARTMENT OF TRANSPORTATION
RALEIGH

SOIL NAIL RETAINING WALL #4 DETAILS

REVISIONS						SHEET NO.
NO.	BY	DATE	NO.	BY	DATE	W-8
1			3			TOTAL SHEETS
2			4			10

GEOTECHNICAL ENGINEER	ENGINEER
NORTH CAROLINA PROFESSIONAL SEAL 29869 ENGINEER SHANE C CLARK	
SIGNATURE 7/16/13 DATE	SIGNATURE DATE

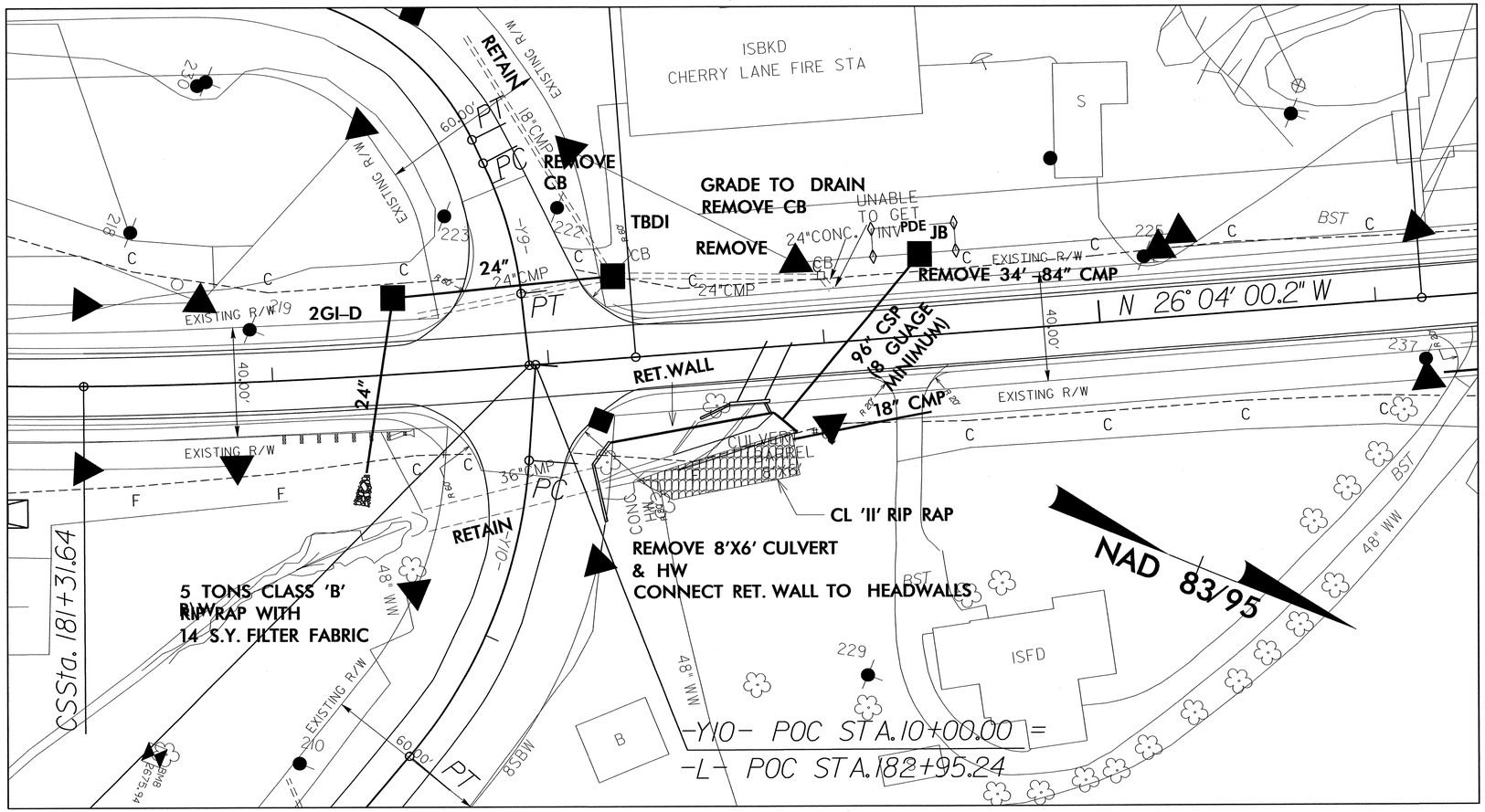

LOCATION SKETCH

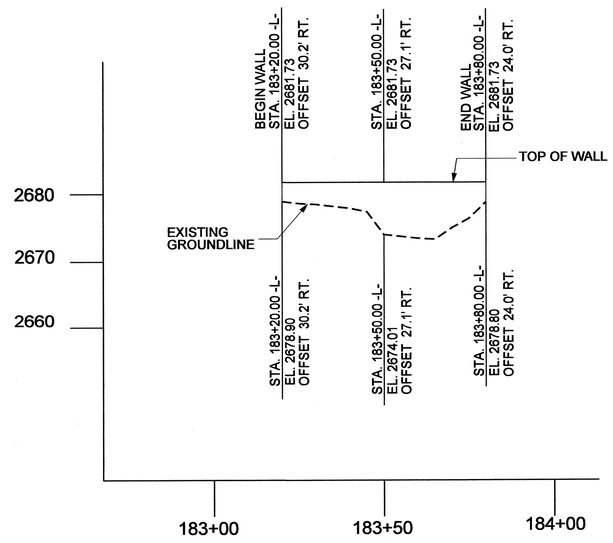

RETAINING WALL ENEVELOPE

ESTIMATED WALL QUANTITIES	
RETAINING WALL NO.	CAST-IN-PLACE GRAVITY RETAINING WALL (SQUARE FEET)
5	330
TOTAL QUANTITY = 330 SF	

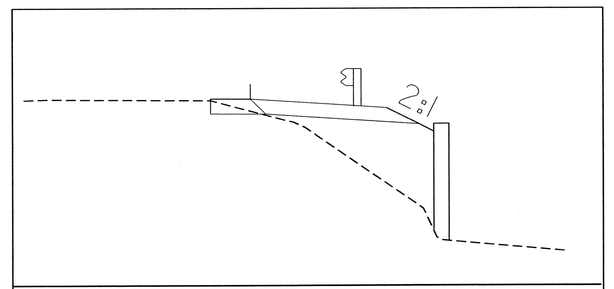

TYPICAL SECTION

PREPARED BY: EJS	DATE: 1/13
REVIEWED BY: SCC	DATE: 7/13

PROJECT NO.: R-3101
ALLEGHANY ***COUNTY***
STATION: 183+20.00-L- TO 183+80.00-L-
SHEET 1 OF 2

GEOTECHNICAL ENGINEERING UNIT
☐ *EASTERN REGIONAL OFFICE*
☒ *WESTERN REGIONAL OFFICE*
☐ *CONTRACT OFFICE*
STATE OF NORTH CAROLINA
DEPARTMENT OF TRANSPORTATION
RALEIGH

CAST-IN-PLACE GRAVITY RETAINING WALL #5

REVISIONS						SHEET NO.
NO.	BY	DATE	NO.	BY	DATE	W-9
1			3			TOTAL SHEETS
2			4			10

GEOTECHNICAL ENGINEER

NORTH CAROLINA PROFESSIONAL SEAL 29869 ENGINEER SHANE C CLARK

SIGNATURE 7/16/13 DATE

ENGINEER

SIGNATURE DATE

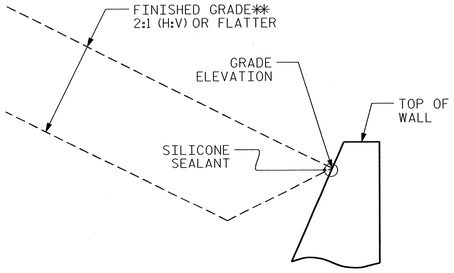

SLOPE CASE

**SEE ROADWAY PLANS FOR FINISHED GRADE AND DITCH DETAILS.

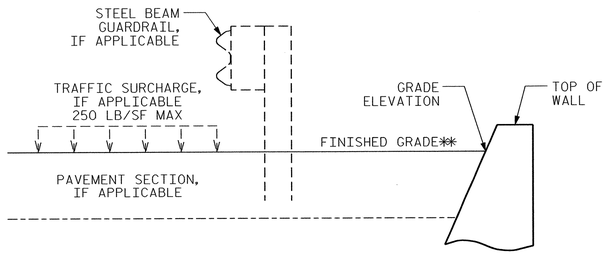

NO SLOPE CASE

**SEE ROADWAY PLANS FOR FINISHED GRADE DETAILS.

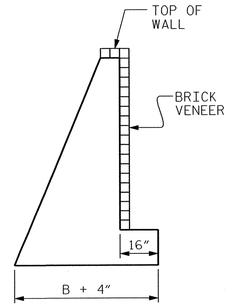

BRICK VENEER DETAIL

(WHEN APPLICABLE)

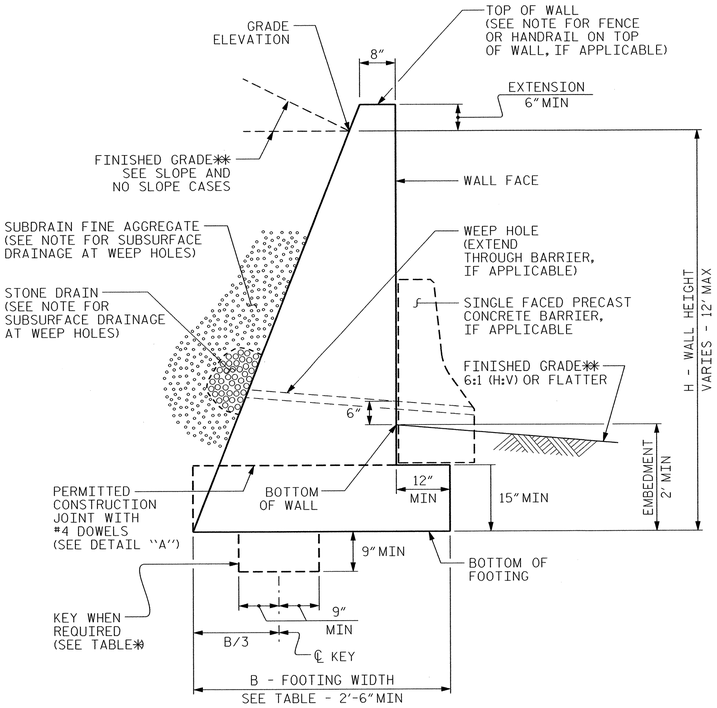

STANDARD CIP GRAVITY WALL

**SEE ROADWAY PLANS FOR FINISHED GRADE AND DITCH DETAILS.

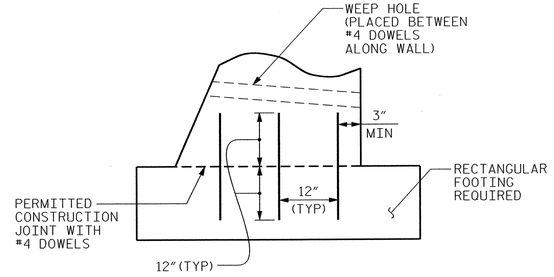

DETAIL "A"

H (FT)	3 - < 6	6 - 9	> 9 - 12
SLOPE CASE	.66	.70*	.75*
NO SLOPE CASE WITH TRAFFIC SURCHARGE	.80	.75*	.70*
NO SLOPE CASE WITHOUT TRAFFIC SURCHARGE	.60	.60	.60

B/H RATIO (B = 2'-6" MIN)

*KEY IS REQUIRED FOR "SLOPE CASE" OR "NO SLOPE CASE WITH TRAFFIC SURCHARGE" WHEN H IS 6' OR GREATER.

NOTES:

FOR STANDARD CAST-IN-PLACE (CIP) GRAVITY RETAINING WALLS, SEE CAST-IN-PLACE GRAVITY RETAINING WALLS PROVISION.

CIP GRAVITY WALL WILL EXTEND BETWEEN THE TWO ADJACENT CULVERT HEADWALLS. SEAL THE JOINTS BETWEEN AS DIRECTED BY THE ENGINEER. SEALING WILL BE CONSIDERED INCIDENTAL TO THE WALL.

FOR STEEL BEAM GUARDRAIL, SEE ROADWAY PLANS AND SECTION 862 OF THE STANDARD SPECIFICATIONS.

FOR SINGLE FACED PRECAST CONCRETE BARRIER, SEE ROADWAY PLANS AND SECTION 857 OF THE STANDARD SPECIFICATIONS.

FOR FENCES OR HANDRAILS ON TOP OF WALLS, SEE ROADWAY PLANS FOR FENCE OR HANDRAIL ATTACHMENT DETAILS.

FOR SUBSURFACE DRAINAGE AT WEEP HOLES, SEE ARTICLE 414-8 OF THE STANDARD SPECIFICATIONS.

STANDARD CIP GRAVITY WALLS ARE BASED ON THE FOLLOWING IN-SITU ASSUMED SOIL PARAMETERS:
- UNIT WEIGHT, γ = 120 LB/CF
- FRICTION ANGLE, ϕ = 35 DEGREES (GROUNDWATER WITHIN 7' OF BOTTOM OF FOOTING)
- FRICTION ANGLE, ϕ = 30 DEGREES (GROUNDWATER MORE THAN 7' BELOW BOTTOM OF FOOTING)
- COHESION, c = 0 LB/SF

DO NOT USE STANDARD CIP GRAVITY WALLS IF ASSUMED SOIL PARAMETERS ARE NOT APPLICABLE OR GROUNDWATER IS ABOVE BOTTOM OF FOOTING.

DO NOT USE STANDARD CIP GRAVITY WALLS WHEN VERY LOOSE OR SOFT SOIL OR MUCK IS BELOW WALLS.

BEFORE BEGINNING STANDARD CIP GRAVITY WALL CONSTRUCTION, SURVEY WALL LOCATIONS AND SUBMIT WALL PROFILE VIEWS (WALL ENVELOPES) FOR REVIEW. FOR WALL ENVELOPES, INCLUDE BOTTOM OF WALL, EXISTING GROUND AND GRADE ELEVATIONS AND OTHER ELEVATIONS AS NEEDED AT INTERVALS OF 25' OR LESS ALONG WALLS. DO NOT START WALL CONSTRUCTION UNTIL WALL ENVELOPES ARE ACCEPTED.

FOR BRICK VENEERS, SUBMIT BRICK SAMPLES FOR APPROVAL BEFORE BEGINNING STANDARD CIP GRAVITY WALL CONSTRUCTION.

DO NOT PLACE CONCRETE FOR FOOTINGS UNTIL EXCAVATION DIMENSIONS AND FOUNDATION MATERIAL ARE APPROVED.

WHEN CONSTRUCTING STANDARD CIP GRAVITY WALLS WITH A CONSTRUCTION JOINT AS SHOWN IN DETAIL "A", PROVIDE A MINIMUM OF 3 EQUALLY SPACED #4 DOWELS AT INTERVALS OF 1'-6" ALONG WALLS.

PREPARED BY: EJS	DATE: 1/13
REVIEWED BY: SCC	DATE: 7/13

PROJECT NO.: R-3101

ALLEGHANY ***COUNTY***

STATION: 56+15.00-L- TO 57+14.48-L-

SHEET 2 OF 2

GEOTECHNICAL ENGINEERING UNIT

☐ ***EASTERN REGIONAL OFFICE***

☒ ***WESTERN REGIONAL OFFICE***

☐ ***CONTRACT OFFICE***

STATE OF NORTH CAROLINA
DEPARTMENT OF TRANSPORTATION
RALEIGH

CAST-IN-PLACE GRAVITY RETAINING WALL #5

REVISIONS						SHEET NO.
NO.	BY	DATE	NO.	BY	DATE	W-10
1			3			TOTAL SHEETS
2			4			10

STANDARD NOTES

DESIGN DATA:

SPECIFICATIONS	A.A.S.H.T.O. (CURRENT)
LIVE LOAD	SEE PLANS
IMPACT ALLOWANCE	SEE A.A.S.H.T.O.
STRESS IN EXTREME FIBER OF	
STRUCTURAL STEEL - AASHTO M270 GRADE 36	20,000 LBS. PER SQ. IN.
- AASHTO M270 GRADE 50W	27,000 LBS. PER SQ. IN.
- AASHTO M270 GRADE 50	27,000 LBS. PER SQ. IN.
REINFORCING STEEL IN TENSION	
GRADE 60	24,000 LBS. PER SQ. IN.
CONCRETE IN COMPRESSION	1,200 LBS. PER SQ. IN.
CONCRETE IN SHEAR	SEE A.A.S.H.T.O.
STRUCTURAL TIMBER - TREATED OR	
UNTREATED - EXTREME FIBER STRESS	1,800 LBS. PER SQ. IN.
COMPRESSION PERPENDICULAR TO GRAIN OF TIMBER	375 LBS. PER SQ. IN.
EQUIVALENT FLUID PRESSURE OF EARTH	30 LBS. PER CU. FT. (MINIMUM)

MATERIAL AND WORKMANSHIP:

EXCEPT AS MAY OTHERWISE BE SPECIFIED ON PLANS OR IN THE SPECIAL PROVISIONS, ALL MATERIAL AND WORKMANSHIP SHALL BE IN ACCORDANCE WITH THE 2012 "STANDARD SPECIFICATIONS FOR ROADS AND STRUCTURES" OF THE N. C. DEPARTMENT OF TRANSPORTATION.

STEEL SHEET PILING FOR PERMANENT OR TEMPORARY APPLICATIONS SHALL BE HOT ROLLED.

CONCRETE:

UNLESS OTHERWISE REQUIRED ON PLANS, CLASS A CONCRETE SHALL BE USED FOR ALL PORTIONS OF ALL STRUCTURES WITH THE EXCEPTION THAT: CLASS AA CONCRETE SHALL BE USED IN BRIDGE SUPERSTRUCTURES, ABUTMENT BACKWALLS, AND APPROACH SLABS; AND CLASS B CONCRETE SHALL BE USED FOR SLOPE PROTECTION AND RIP RAP.

CONCRETE CHAMFERS:

UNLESS OTHERWISE NOTED ON THE PLANS, ALL EXPOSED CORNERS ON STRUCTURES SHALL BE CHAMFERED 3/4" WITH THE FOLLOWING EXCEPTIONS: TOP CORNERS OF CURBS MAY BE ROUNDED TO 1-1/2" RADIUS WHICH IS BUILT INTO CURB FORMS; CORNERS OF TRANSVERSE FLOOR EXPANSION JOINTS SHALL BE ROUNDED WITH A 1/4" FINISHING TOOL UNLESS OTHERWISE REQUIRED ON PLANS; AND CORNERS OF EXPANSION JOINTS IN THE ROADWAY FACES AND TOPS OF CURBS AND SIDEWALKS SHALL BE ROUNDED TO A 1/4" RADIUS WITH A FINISHING STONE OR TOOL UNLESS OTHERWISE REQUIRED ON PLANS.

DOWELS:

DOWELS WHEN INDICATED ON PLANS AS FOR CULVERT EXTENSIONS, SHALL BE EMBEDDED AT LEAST 12" INTO THE OLD CONCRETE AND GROUTED INTO PLACE WITH 1:2 CEMENT MORTAR.

ALLOWANCE FOR DEAD LOAD DEFLECTION, SETTLEMENT, ETC. IN CASTING SUPERSTRUCTURES:

BRIDGES SHALL BE BUILT ON THE GRADE OR VERTICAL CURVE SHOWN ON PLANS. SLABS, CURBS AND PARAPETS SHALL CONFORM TO THE GRADE OR CURVE.

ALL DIMENSIONS WHICH ARE GIVEN IN SECTION AND ARE AFFECTED BY DEAD LOAD DEFLECTIONS ARE DIMENSIONS AT CENTER LINE OF BEARING UNLESS OTHERWISE NOTED ON PLANS. IN SETTING FORMS FOR STEEL BEAM BRIDGES AND PRESTRESSED CONCRETE GIRDER BRIDGES, ADJUSTMENTS SHALL BE MADE DUE TO THE DEAD LOAD DEFLECTIONS FOR THE ELEVATIONS SHOWN. WHERE BLOCKS ARE SHOWN OVER BEAMS FOR BUILDING UP TO THE SLAB, THE VERTICAL DIMENSIONS OF THE BLOCKS SHALL BE ADJUSTED BETWEEN BEARINGS TO COMPENSATE FOR DEAD LOAD DEFLECTIONS, VERTICAL CURVE ORDINATE, AND ACTUAL BEAM CAMBER. WHERE BOTTOM OF SLAB IS IN LINE WITH BOTTOM OF TOP FLANGES, DEPTH OF SLAB BETWEEN BEARINGS SHALL BE ADJUSTED TO COMPENSATE FOR DEAD LOAD DEFLECTION, VERTICAL CURVE ORDINATE, AND ACTUAL BEAM CAMBER.

IN SETTING FALSEWORK AND FORMS FOR REINFORCED CONCRETE SPANS, AN ALLOWANCE SHALL BE MADE FOR DEAD LOAD DEFLECTIONS, SETTLEMENT OF FALSEWORK, AND PERMANENT CAMBER WHICH SHALL BE PROVIDED FOR IN ADDITION TO THE ELEVATIONS SHOWN. AFTER REMOVAL OF THE FALSEWORK, THE FINISHED STRUCTURES SHALL CONFORM TO THE PROFILE AND ELEVATIONS SHOWN ON THE PLANS AND CONSTRUCTION ELEVATIONS FURNISHED BY THE ENGINEER.

DETAILED DRAWINGS FOR FALSEWORK OR FORMS FOR BRIDGE SUPERSTRUCTURE AND ANY STRUCTURE OR PARTS OF A STRUCTURE AS NOTED ON THE PLANS SHALL BE SUBMITTED TO THE ENGINEER FOR APPROVAL BEFORE CONSTRUCTION OF THE FALSEWORK OR FORMS IS STARTED.

REINFORCING STEEL:

ALL REINFORCING STEEL SHALL BE DEFORMED. DIMENSIONS RELATIVE TO PLACEMENT OF REINFORCING ARE TO CENTERS OF BARS UNLESS OTHERWISE INDICATED IN THE PLANS. DIMENSIONS ON BAR DETAILS ARE TO CENTERS OF BARS OR ARE OUT TO OUT AS INDICATED ON PLANS.

WIRE BAR SUPPORTS SHALL BE PROVIDED FOR REINFORCING STEEL WHERE INDICATED ON THE PLANS. WHEN BAR SUPPORT PIECES ARE PLACED IN CONTINUOUS LINES, THEY SHALL BE SO PLACED THAT THE ENDS OF THE SUPPORTING WIRES SHALL BE LAPPED TO LOCK LEGS ON ADJOINING PIECES.

STRUCTURAL STEEL:

AT THE CONTRACTOR'S OPTION, HE MAY SUBSTITUTE 7/8" Ø SHEAR STUDS FOR THE 3/4" Ø STUDS SPECIFIED ON THE PLANS. THIS SUBSTITUTION SHALL BE MADE AT THE RATE OF 3 - 7/8" Ø STUDS FOR 4 - 3/4" Ø STUDS, AND STUD SPACING CHANGES SHALL BE MADE AS NECESSARY TO PROVIDE THE SAME EQUIVALENT NUMBER OF 7/8" Ø STUDS ALONG THE BEAM AS SHOWN FOR 3/4" Ø STUDS BASED ON THE RATIO OF 3 - 7/8" Ø STUDS FOR 4 - 3/4" Ø STUDS. STUDS OF THE LENGTH SPECIFIED ON THE PLANS MUST BE PROVIDED. THE MAXIMUM SPACING SHALL BE 2'-0".

EXCEPT AT THE INTERIOR SUPPORTS OF CONTINUOUS BEAMS WHERE THE COVER PLATE IS IN CONTACT WITH BEARING PLATE, THE CONTRACTOR MAY, AT HIS OPTION, SUBSTITUTE FOR THE COVER PLATES DESIGNATED ON THE PLANS COVER PLATES OF THE EQUIVALENT AREA PROVIDED THESE PLATES ARE AT LEAST 5/16" IN THICKNESS AND DO NOT EXCEED A WIDTH EQUAL TO THE FLANGE WIDTH LESS 2" OR A THICKNESS EQUAL TO 2 TIMES THE FLANGE THICKNESS. THE SIZE OF FILLET WELDS SHALL CONFORM TO THE REQUIREMENTS OF THE CURRENT ANSI/AASHTO/AWS "BRIDGE WELDING CODE". ELECTROSLAG WELDING WILL NOT BE PERMITTED.

WITH THE SOLE EXCEPTION OF EDGES AT SURFACES WHICH BEAR ON OTHER SURFACES, ALL SHARP EDGES AND ENDS OF SHAPES AND PLATES SHALL BE SLIGHTLY ROUNDED BY SUITABLE MEANS TO A RADIUS OF APPROXIMATELY 1/16 INCH OR EQUIVALENT FLAT SURFACE AT A SUITABLE ANGLE PRIOR TO PAINTING, GALVANIZING, OR METALLIZING.

HANDRAILS AND POSTS:

METAL STANDARDS AND FACES OF THE CONCRETE END POSTS FOR THE METAL RAIL SHALL BE SET NORMAL TO THE GRADE OF THE CURB, UNLESS OTHERWISE SHOWN ON PLANS. THE METAL RAIL AND TOPS OF CONCRETE POSTS USED WITH THE ALUMINUM RAIL SHALL BE BUILT PARALLEL TO THE GRADE OF THE CURB.

METAL HANDRAILS SHALL BE IN ACCORDANCE WITH THE PLANS. RAILS SHALL BE AS MANUFACTURED FOR BRIDGE RAILING. CASTINGS SHALL BE OF A UNIFORM APPEARANCE. FINS AND OTHER DEFORMATIONS RESULTING FROM CASTING OR OTHERWISE SHALL BE REMOVED IN A MANNER SO THAT A UNIFORM COLORING OF THE COMPLETED CASTING SHALL BE OBTAINED. CASTINGS WITH DISCOLORATIONS OR OF NON-UNIFORM COLORING WILL NOT BE ACCEPTED. CERTIFIED MILL REPORTS ARE REQUIRED FOR METAL RAILS AND POSTS.

SPECIAL NOTES:

GENERALLY, IN CASE OF DISCREPANCY, THIS STANDARD SHEET OF NOTES SHALL GOVERN OVER THE SPECIFICATIONS, BUT THE REMAINDER OF THE PLANS SHALL GOVERN OVER NOTES HEREON, AND SPECIAL PROVISIONS SHALL GOVERN OVER ALL. SEE SPECIFICATIONS ARTICLE 105-4.

ENGLISH

JANUARY, 1990

STD. NO. SN

REV. 6-16-95 EEM @ RGW REV. 5-7-03 RWW @ JTE REV. 10-1-11 MAA @ GM
REV. 8-16-99 RWW @ LES REV. 5-1-06 TLA @ GM