STATE OF NORTH CAROLINA
DIVISION OF HIGHWAYS

TRANSPORTATION MANAGEMENT PLAN

ALLEGHANY COUNTY

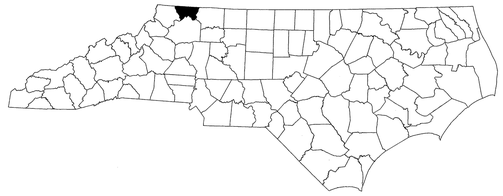

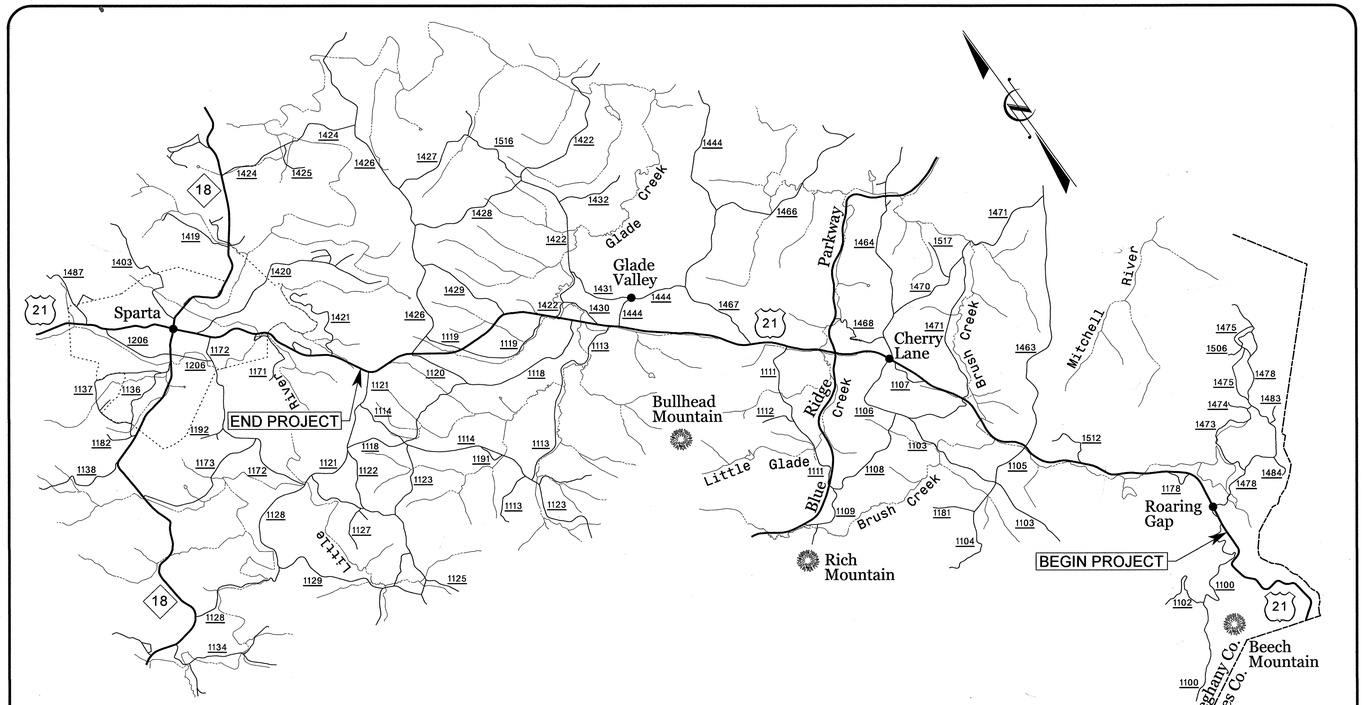

VICINITY MAP

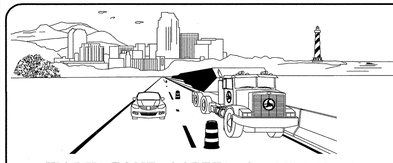

WORK ZONE SAFETY & MOBILITY
"from the MOUNTAINS to the COAST"

N.C.D.O.T. WORK ZONE TRAFFIC CONTROL
1561 MAIL SERVICE CENTER (MSC) RALEIGH, NC 27699-1561
750 N. GREENFIELD PARKWAY, GARNER, NC 27529 (DELIVERY)
PHONE: (919) 773-2800 FAX: (919) 771-2745

J. S. BOURNE, P.E. — STATE TRAFFIC MANAGEMENT ENGINEER
G. L. GETTIER, P.E. — TRAFFIC CONTROL PROJECT ENGINEER
J. W. WOOLARD, P.E. — TRAFFIC CONTROL PROJECT DESIGN ENGINEER
S. B. COATS — TRAFFIC CONTROL DESIGN ENGINEER

DIVISION OF HIGHWAYS · STATE OF NORTH CAROLINA · DEPARTMENT OF TRANSPORTATION · WORK ZONE TRAFFIC CONTROL

INDEX OF SHEETS

SHEET NO.	TITLE
TMP-1	TITLE SHEET, VICINITY MAP AND INDEX OF SHEETS
TMP-1A	LIST OF APPLICABLE ROADWAY STANDARD DRAWINGS, AND LEGEND
TMP-1B	TRANSPORTATION OPERATIONS PLAN: (MANAGEMENT STRATEGIES, GENERAL NOTES AND LOCAL NOTES)
TMP-2	PORTABLE CONCRETE BARRIER AT TEMPORARY SHORING LOCATIONS
TMP-2A	TEMPORARY SHORING DATA
TMP-2B	TEMPORARY SHORING DATA
TMP-2C	SPECIAL SIGN DESIGNS - CHERRY LANE ROAD AND BRUSH CREEK ROAD
TMP-2D	SPECIAL SIGN DESIGN - GLADE VALLEY ROAD
TMP-3 THRU TMP-3D	TEMPORARY TRAFFIC CONTROL PHASING
TMP-4	SITE OVERVIEW
	-L- LINE
TMP-5 THRU TMP-21	PHASE I DETAILS
TMP-22	PHASE II - OFF-SITE DETOUR - GREEN HOUSE ROAD (-Y4-)
TMP-23	PHASE II - OFF-SITE DETOUR - GREEN HOUSE ROAD (-Y5-)
TMP-24	PHASE II - OFF-SITE DETOUR - FOXFIRE ROAD (-Y11-)
TMP-25	PHASE II - OFF-SITE DETOUR - FOXFIRE ROAD (-Y12REV-)
TMP-26	PHASE II - OFF-SITE DETOUR - SHERIFF ROAD (-Y19REV-)
TMP-27	PHASE II DETAILS
TMP-28	PHASE II DETAILS
	SITE 1
TMP-29 THRU TMP-36	PHASE I THRU PHASE IV - BRIDGE ON US 21 - STA. 71+60+/-
	SITE 2
TMP-37 THRU TMP-47	PHASE I THRU PHASE V - 96" CSP ON US 21 - STA. 184+09+/-
	SITE 3
TMP-48 THRU TMP-56	PHASE I THRU PHASE IV - CULVERT ON US 21 - STA. 372+50+/-
	SITE 4
TMP-57 THRU TMP-64	PHASE I THRU PHASE IV - BRIDGE ON US 21 - STA. 393+57+/-
	SITE 5
TMP-65 THRU TMP-73	PHASE I THRU PHASE IV - CULVERT ON US 21 - STA. 405+28+/-
	SITE 6
TMP-74 THRU TMP-81	PHASE I THRU PHASE IV - CULVERT ON US 21 - STA. 442+13+/-
	SITE 7
TMP-82 THRU TMP-89	PHASE I THRU PHASE IV - CULVERT ON US 21 - STA. 468+00+/-

APPROVED:
DATE: 5/29/13

SEAL
NORTH CAROLINA PROFESSIONAL SEAL 19862 ENGINEER J. W. WOOLARD, JR.

SHEET NO.
TMP-1

R-3101

TIP PROJECT:

5/28/2013
P:\tipprojects-rv30\traffic\trafficcontrol\tcp\general\R3101_TC_GEN_TMP01.dgn
Users\tscoats

PROJ. REFERENCE NO.	SHEET NO.
R-3101	TMP-1A

ROADWAY STANDARD DRAWINGS

THE FOLLOWING ROADWAY STANDARDS AS SHOWN IN "ROADWAY STANDARD DRAWINGS" - PROJECT SERVICES UNIT - N.C. DEPARTMENT OF TRANSPORTATION - RALEIGH, N.C., DATED JANUARY 2012 ARE APPLICABLE TO THIS PROJECT AND BY REFERENCE HEREBY ARE CONSIDERED A PART OF THESE PLANS:

STD. NO.	TITLE
1101.01	WORK ZONE WARNING SIGNS
1101.02	TEMPORARY LANE CLOSURES
1101.03	TEMPORARY ROAD CLOSURES
1101.04	TEMPORARY SHOULDER CLOSURES
1101.05	WORK ZONE VEHICLE ACCESSES
1101.06	WARNING SIGNS FOR BLASTING ZONES
1101.11	TRAFFIC CONTROL DESIGN TABLES
1110.01	STATIONARY WORK ZONE SIGNS
1110.02	PORTABLE WORK ZONE SIGNS
1130.01	DRUMS
1135.01	CONES
1145.01	BARRICADES
1150.01	FLAGGING DEVICES
1160.01	TEMPORARY CRASH CUSHION
1165.01	WORK VEHICLE LIGHTING SYSTEMS AND TMA DELINEATION
1170.01	PORTABLE CONCRETE BARRIER
1180.01	SKINNY - DRUM
1205.01	PAVEMENT MARKINGS - LINE TYPES AND OFFSETS
1205.02	PAVEMENT MARKINGS - TWO LANE AND MULTILANE ROADWAYS
1205.04	PAVEMENT MARKINGS - INTERSECTIONS
1205.12	PAVEMENT MARKINGS - BRIDGES
1250.01	RAISED PAVEMENT MARKERS - INSTALLATION SPACING
1251.01	RAISED PAVEMENT MARKERS - (PERMANENT AND TEMPORARY)
1261.01	GUARDRAIL AND BARRIER DELINEATORS - INSTALLATION SPACING
1261.02	GUARDRAIL AND BARRIER DELINEATORS - TYPES AND MOUNTING
1262.01	GUARDRAIL END DELINEATION

LEGEND

GENERAL

- DIRECTION OF TRAFFIC FLOW
- DIRECTION OF PEDESTRIAN TRAFFIC FLOW
- EXIST. PVMT.
- NORTH ARROW
- PROPOSED PVMT.
- TEMP. SHORING (LOCATION PURPOSES ONLY)
- WORK AREA
- REMOVAL
- MILLING
- TEMPORARY PAVEMENT

SIGNALS

EXISTING PROPOSED TEMPORARY

PAVEMENT MARKINGS

——EXISTING LINES
——TEMPORARY LINES

TRAFFIC CONTROL DEVICES

- BARRICADE (TYPE III)
- CONE
- DRUM SKINNY DRUM TUBULAR MARKER
- TEMPORARY CRASH CUSHION
- FLASHING ARROW BOARD
- FLAGGER
- LAW ENFORCEMENT
- TRUCK MOUNTED ATTENUATOR (TMA)
- CHANGEABLE MESSAGE SIGN

TEMPORARY SIGNING

- PORTABLE SIGN
- STATIONARY SIGN
- STATIONARY OR PORTABLE SIGN

PAVEMENT MARKERS

- CRYSTAL/CRYSTAL
- CRYSTAL/RED
- YELLOW/YELLOW

PAVEMENT MARKING SYMBOLS

PAVEMENT MARKING SYMBOLS

TEMPORARY PAVEMENT MARKING

CA - WHITE EDGELINE (COLD APPLIED PLASTIC-TYPE 4) - 4″
CI - YELLOW DOUBLE CENTER (COLD APPLIED PLASTIC-TYPE 4) - 4″
PA - WHITE EDGELINE (PAINT) - 4″
PD - 2 FT. WHITE MINISKIP (PAINT) - 4″
PI - YELLOW DOUBLE CENTER (PAINT) - 4″
P2 - WHITE STOP BAR (PAINT) - 24″

APPROVED: DATE:

SEAL

NORTH CAROLINA PROFESSIONAL SEAL 19862 ENGINEER W. WOOLARD JR. 5/29/13

DIVISION OF HIGHWAYS STATE OF NORTH CAROLINA DEPARTMENT OF TRANSPORTATION WORK ZONE TRAFFIC CONTROL

ROADWAY STANDARD DRAWINGS & LEGEND

5/28/2013
p:\tipprojects-r\r3101\traffic\trafficcontrol\tcp\general\R3101_TC_GEN_TMP01A.dgn
User:scodts

PROJ. REFERENCE NO.	SHEET NO.
R-3101	TMP-1B

MANAGEMENT STRATEGIES

CONSTRUCTION

PROPOSED WIDENING OF US 21 FROM SR 1100 (OKLAHOMA ROAD) TO SR 1121 (PINE SWAMP ROAD), INCLUDING STRUCTURES, CULVERTS, RETAINING WALLS, AND PIPE INSTALLATION.

TMP DESIGN PARAMETERS

GENERAL NOTES

CHANGES MAY BE REQUIRED WHEN PHYSICAL DIMENSIONS IN THE DETAIL DRAWINGS, STANDARD DETAILS AND ROADWAY DETAILS ARE NOT ATTAINABLE TO MEET FIELD CONDITIONS, OR RESULT IN DUPLICATE, OR UNDESIRED OVERLAPPING OF DEVICES. MODIFICATION MAY INCLUDE: MOVING, SUPPLEMENTING, COVERING OR REMOVAL OF DEVICES, AS DIRECTED BY THE ENGINEER.

THE FOLLOWING GENERAL NOTES APPLY AT ALL TIMES FOR THE DURATION OF THE CONSTRUCTION PROJECT, EXCEPT WHEN OTHERWISE NOTED IN THE PLAN, OR DIRECTED BY THE ENGINEER.

TIME RESTRICTIONS

A) DO NOT STOP TRAFFIC AS FOLLOWS:

ROAD NAME	DAY AND TIME RESTRICTIONS	DURATION & OPERATION
US 21 (-L-)	MONDAY THRU FRIDAY 6:00 A.M. - 9:00 A.M. 4:00 P.M. - 6:00 P.M.	15 MINUTES FOR TRAFFIC SHIFTS, PAVEMENT TIE-INS, PAVEMENT MARKING TIE-INS

B) DO NOT CONDUCT ANY HAULING OPERATIONS AGAINST THE FLOW OF TRAFFIC OF AN OPEN TRAVELWAY UNLESS THE HAULING OPERATION IS PROTECTED BY BARRIER OR GUARDRAIL OR AS DIRECTED BY THE ENGINEER.

LANE AND SHOULDER CLOSURE REQUIREMENTS

C) REMOVE LANE CLOSURE DEVICES FROM THE LANE WHEN WORK IS NOT BEING PERFORMED BEHIND THE LANE CLOSURE OR WHEN A LANE CLOSURE IS NO LONGER NEEDED, OR AS DIRECTED BY THE ENGINEER.

D) WHEN PERSONNEL AND/OR EQUIPMENT ARE WORKING WITHIN 15 FT OF AN AN OPEN TRAVEL LANE, CLOSE THE NEAREST OPEN SHOULDER USING ROADWAY STANDARD DRAWING NO. 1101.04 UNLESS THE WORK AREA IS PROTECTED BY BARRIER OR GUARDRAIL OR A LANE CLOSURE IS INSTALLED.

E) WHEN PERSONNEL AND/OR EQUIPMENT ARE WORKING ON THE SHOULDER ADJACENT TO AN UNDIVIDED FACILITY AND WITHIN 5 FT OF AN OPEN TRAVEL LANE, CLOSE THE NEAREST OPEN TRAVEL LANE USING ROADWAY STANDARD DRAWING NO. 1101.02 UNLESS THE WORK AREA IS PROTECTED BY BARRIER OR GUARDRAIL.

WHEN PERSONNEL AND/OR EQUIPMENT ARE WORKING ON THE SHOULDER ADJACENT TO A DIVIDED FACILITY AND WITHIN 10 FT OF AN OPEN TRAVEL LANE, CLOSE THE NEAREST OPEN TRAVEL LANE USING ROADWAY STANDARD DRAWING NO. 1101.02 UNLESS THE WORK AREA IS PROTECTED BY BARRIER OR GUARDRAIL.

F) WHEN PERSONNEL AND/OR EQUIPMENT ARE WORKING WITHIN A LANE OF TRAVEL OF AN UNDIVIDED OR DIVIDED FACILITY, CLOSE THE LANE ACCORDING TO THE TRAFFIC CONTROL PLANS, ROADWAY STANDARD DRAWINGS OR AS DIRECTED BY THE ENGINEER. CONDUCT THE WORK SO THAT ALL PERSONNEL AND/OR EQUIPMENT REMAIN WITHIN THE CLOSED TRAVEL LANE.

G) DO NOT WORK SIMULTANEOUSLY WITHIN 15 FT ON BOTH SIDES OF AN OPEN TRAVELWAY, RAMP OR LOOP WITHIN THE SAME LOCATION UNLESS PROTECTED WITH GUARDRAIL OR BARRIER.

H) PROVIDE TRAFFIC CONTROL FOR APPROPRIATE LANE CLOSURES FOR SURVEYING DONE BY THE DEPARTMENT.

PAVEMENT EDGE DROP OFF REQUIREMENTS

I) BACKFILL AT A 6:1 SLOPE UP TO THE EDGE AND ELEVATION OF EXISTING PAVEMENT IN AREAS ADJACENT TO AN OPENED TRAVEL LANE THAT HAS AN EDGE OF PAVEMENT DROP-OFF AS FOLLOWS:

BACKFILL DROP-OFFS THAT EXCEED 2 INCHES ON ROADWAYS WITH POSTED SPEED LIMITS OF 45 MPH OR GREATER.

BACKFILL DROP-OFFS THAT EXCEED 3 INCHES ON ROADWAYS WITH POSTED SPEED LIMITS LESS THAN 45 MPH.

BACKFILL WITH SUITABLE COMPACTED MATERIAL, AS APPROVED BY THE ENGINEER, AT NO EXPENSE TO THE DEPARTMENT.

J) DO NOT EXCEED A DIFFERENCE OF 2 INCHES IN ELEVATION BETWEEN OPEN LANES TRAFFIC FOR NOMINAL LIFTS OF 1.5 INCHES. INSTALL ADVANCE WARNING "UNEVEN LANES" SIGNS (W8-11) 350 FT. IN ADVANCE AND A MINIMUM OF EVERY HALF MILE THROUGHOUT THE UNEVEN AREA.

TRAFFIC PATTERN ALTERATIONS

K) NOTIFY THE ENGINEER TWENTY ONE (21) CALENDAR DAYS PRIOR TO ANY TRAFFIC PATTERN ALTERATION.

SIGNING

L) INSTALL ADVANCE WORK ZONE WARNING SIGNS WHEN WORK IS WITHIN 40 FT FROM THE EDGE OF TRAVEL LANE AND NO MORE THAN THREE (3) DAYS PRIOR TO THE BEGINNING OF CONSTRUCTION.

M) PROVIDE SIGNING AND DEVICES REQUIRED TO CLOSE THE ROAD ACCORDING TO THE ROADWAY STANDARD DRAWINGS AND TRAFFIC CONTROL PLANS.

PROVIDE SIGNING REQUIRED FOR THE OFF-SITE DETOUR ROUTE AS SHOWN IN THE TRAFFIC CONTROL PLANS.

N) COVER OR REMOVE ALL SIGNS AND DEVICES REQUIRED TO CLOSE THE ROAD WHEN ROAD CLOSURE IS NOT IN OPERATION.

COVER OR REMOVE ALL SIGNS REQUIRED FOR THE OFF-SITE DETOUR WHEN THE DETOUR IS NOT IN OPERATION.

O) ENSURE ALL NECESSARY SIGNING IS IN PLACE PRIOR TO ALTERING ANY TRAFFIC PATTERN.

P) INSTALL BLACK ON ORANGE "DIP" SIGNS (W8-2) AND/OR "BUMP" SIGNS (W8-1) 350 FT. IN ADVANCE OF THE UNEVEN AREA, OR AS DIRECTED BY THE ENGINEER.

TRAFFIC BARRIER

Q) INSTALL TEMPORARY BARRIER ACCORDING TO THE TRANSPORTATION MANAGEMENT PLANS A MAXIMUM OF TWO (2) WEEKS PRIOR TO BEGINNING WORK IN ANY LOCATION. ONCE TEMPORARY BARRIER IS INSTALLED AT ANY LOCATION, PROCEED IN A CONTINUOUS MANNER TO COMPLETE THE PROPOSED WORK IN THAT LOCATION UNLESS OTHERWISE STATED IN THE TRANSPORTATION MANAGEMENT PLANS OR AS DIRECTED BY THE ENGINEER.

DO NOT PLACE BARRIER DIRECTLY ON ANY SURFACE OTHER THAN ASPHALT OR CONCRETE.

ONCE TEMPORARY BARRIER IS INSTALLED AT ANY LOCATION AND NO WORK IS PERFORMED BEHIND THE TEMPORARY BARRIER FOR A PERIOD LONGER THAN TWO (2) MONTHS, REMOVE/RESET TEMPORARY BARRIER AT NO COST TO THE DEPARTMENT UNLESS OTHERWISE STATED IN THE TRANSPORTATION MANAGEMENT PLANS, TEMPORARY BARRIER IS PROTECTING A HAZARD, OR AS DIRECTED BY THE ENGINEER.

INSTALL TEMPORARY BARRIER WITH THE TRAFFIC FLOW, BEGINNING WITH THE UPSTREAM SIDE OF TRAFFIC. REMOVE TEMPORARY BARRIER AGAINST THE TRAFFIC FLOW, BEGINNING WITH THE DOWNSTREAM SIDE OF TRAFFIC.

INSTALL AND SPACE DRUMS NO GREATER THAN TWICE THE POSTED SPEED LIMIT (MPH) TO CLOSE OR KEEP THE SECTION OF THE ROADWAY CLOSED UNTIL THE TEMPORARY BARRIER CAN BE PLACED OR AFTER THE TEMPORARY BARRIER IS REMOVED.

R) PROTECT THE APPROACH END OF MOVABLE/PORTABLE CONCRETE BARRIER AT ALL TIMES DURING THE INSTALLATION AND REMOVAL OF THE BARRIER BY EITHER A TRUCK MOUNTED IMPACT ATTENUATOR (MAXIMUM 72 HOURS) OR A TEMPORARY CRASH CUSHION.

PROTECT THE APPROACH END OF MOVABLE/PORTABLE CONCRETE BARRIER FROM ONCOMING TRAFFIC AT ALL TIMES BY A TEMPORARY CRASH CUSHION UNLESS THE APPROACH END OF MOVABLE/PORTABLE CONCRETE BARRIER IS OFFSET FROM ONCOMING TRAFFIC AS FOLLOWS OR AS SHOWN IN THE PLANS: (SEE ALSO 1101.05)

POSTED SPEED LIMIT	MINIMUM OFFSET
40 OR LESS	15 FT
45 - 50	20 FT
55	25 FT
60 MPH or HIGHER	30 FT

TRAFFIC CONTROL DEVICES

S) WHEN LANE CLOSURES ARE NOT IN EFFECT SPACE CHANNELIZING DEVICES IN WORK AREAS NO GREATER IN FEET THAN TWICE THE POSTED SPEED LIMIT (MPH) EXCEPT, 10 FT ON-CENTER IN RADII, AND 3 FT OFF THE EDGE OF AN OPEN TRAVELWAY. REFER TO STANDARD SPECIFICATIONS FOR ROADS AND STRUCTURES SECTIONS 1130 (DRUMS), 1135 (CONES) AND 1180 (SKINNY DRUMS) FOR ADDITIONAL REQUIREMENTS.

T) PLACE TYPE III BARRICADES, WITH "ROAD CLOSED" SIGN R11-2 ATTACHED, OF SUFFICIENT LENGTH TO CLOSE ENTIRE ROADWAY.

PAVEMENT MARKINGS AND MARKERS

U) INSTALL TEMPORARY PAVEMENT MARKINGS AND TEMPORARY PAVEMENT MARKERS ON INTERIM LAYERS OF PAVEMENT AS FOLLOWS:

ROAD NAME	MARKING	MARKER
ALL ROADS	PAINT	TEMPORARY
STRUCTURES	COLD APPLIED PLASTIC TYPE IV-REMOVABLE TAPE	TEMPORARY

V) PLACE ONE APPLICATION OF PAINT FOR TEMPORARY TRAFFIC PATTERNS. PLACE A SECOND APPLICATION OF PAINT SIX (6) MONTHS AFTER THE INITIAL APPLICATION AND EVERY SIX MONTHS AS DIRECTED BY THE ENGINEER.

W) TIE PROPOSED PAVEMENT MARKING LINES TO EXISTING PAVEMENT MARKING LINES.

X) REMOVE/REPLACE ANY CONFLICTING/DAMAGED PAVEMENT MARKINGS AND MARKERS BY THE END OF EACH DAY'S OPERATION.

APPROVED: DATE:

SEAL

NORTH CAROLINA PROFESSIONAL SEAL 19862 ENGINEER J. W. WOOLARD III

5/29/13

DIVISION OF HIGHWAYS * STATE OF NORTH CAROLINA * DEPARTMENT OF TRANSPORTATION * WORK ZONE TRAFFIC CONTROL

TRANSPORTATION OPERATIONS PLAN

5/28/2013
p:\tipprojects-r\r3101\traffic\traffic control\top\general\R3101_TC_GEN_TMP01B.dgn
User:scoats

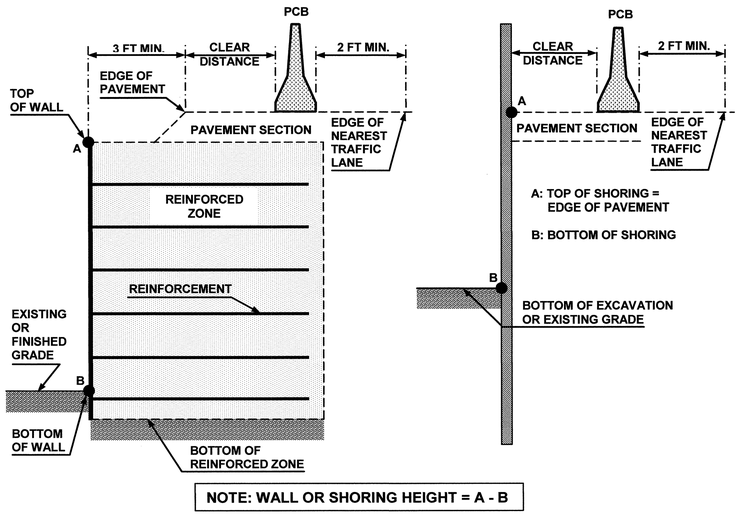

NOTE: WALL OR SHORING HEIGHT = A - B

FIGURE A

NOTES

1- REFER TO THE TRAFFIC CONTROL PLANS FOR TEMPORARY SHORING LOCATIONS AND NOTES.

2- REFER TO THE "TEMPORARY SHORING" PROJECT SPECIAL PROVISION FOR INFORMATION ABOUT TEMPORARY SHORING AND PORTABLE CONCRETE BARRIER (PCB).

3- PCB IS REQUIRED IF TEMPORARY SHORING IS LOCATED WITHIN THE CLEAR ZONE IN ACCORDANCE WITH THE AASHTO ROADSIDE DESIGN GUIDE. DO NOT PLACE BARRIER DIRECTLY ON ANY SURFACE OTHER THAN ASPHALT OR CONCRETE. (CONTACT NCDOT PAVEMENT MANAGEMENT UNIT FOR APPLICABLE PAVEMENT DESIGN).

4- BASED ON THE CLEAR DISTANCE, OFFSET, DESIGN SPEED AND PAVEMENT TYPE, CHOOSE AN UNANCHORED OR ANCHORED PCB FROM THE TABLE SHOWN IN FIGURE B. CLEAR DISTANCE IS DEFINED AS SHOWN IN FIGURE A AND OFFSET IS DEFINED AS SHOWN IN FIGURE B.

5- AT THE CONTRACTOR'S OPTION OR IF THE MINIMUM REQUIRED CLEAR DISTANCE IS NOT AVAILABLE, SET PCB NEXT TO AND UP AGAINST THE TRAFFIC SIDE OF THE TEMPORARY SHORING EXCEPT FOR BARRIER ABOVE TEMPORARY WALLS. PCB WITH THE MINIMUM REQUIRED CLEAR DISTANCE IS REQUIRED ABOVE TEMPORARY WALLS.

6- USE NCDOT PORTABLE CONCRETE BARRIER (PCB) IN ACCORDANCE WITH ROADWAY STANDARD DRAWING NO. 1170.01 AND SECTION 1170 OF THE STANDARD SPECIFICATIONS.

7- PCB REQUIREMENTS FOR TEMPORARY WALLS APPLY TO TEMPORARY MECHANICALLY STABILIZED EARTH (MSE) WALLS AND TEMPORARY SOIL NAIL WALLS.

8- SET PCB WITH A MINIMUM HORIZONTAL DISTANCE OF 2 FT BETWEEN THE FRONT FACE OF THE BARRIER AND THE EDGE OF THE NEAREST TRAFFIC LANE AS SHOWN IN FIGURE A UNLESS OTHERWISE SHOWN IN THE PLANS AND OR AS APPROVED BY THE ENGINEER.

9- FOR PCB ABOVE AND BEHIND TEMPORARY WALLS, PROVIDE A MINIMUM DISTANCE OF 3 FT BETWEEN THE EDGE OF PAVEMENT AND THE WALL FACE AS SHOWN IN FIGURE A. IF THESE MINIMUM REQUIRED DISTANCES ARE NOT AVAILABLE, CONTACT THE ENGINEER.

10- TABLE SHOWN IN FIGURE B IS BASED ON NCDOT RESEARCH PROJECT NO. 2005-010 WITH VEHICLE TYPE USED FOR NCHRP 350 CRASH TESTS. BARRIER DEFLECTIONS AND RESULTING MINIMUM REQUIRED CLEAR DISTANCES MIGHT VARY SIGNIFICANTLY FOR LARGER HEAVIER VEHICLES, RUNS OF BARRIER LESS THAN 200 FT IN LENGTH AND WET OR DRY PAVEMENT.

MINIMUM REQUIRED CLEAR DISTANCE, inches

Barrier Type	Pavement Type	Offset * ft	Design Speed, mph					
			<30	31-40	41-50	51-60	61-70	71-80
Unanchored PCB	Asphalt	<8	24	26	29	32	36	40
		8-14	26	28	31	35	38	42
		14-20	27	29	34	36	39	43
		20-26	28	31	35	38	40	44
		26-32	29	32	36	39	42	45
		32-38	30	34	38	41	43	46
		38-44	31	34	41	43	45	48
		44-50	31	35	41	43	46	49
		50-56	32	36	42	44	47	50
		>56	32	36	42	45	47	51
	Concrete	<8	17	18	21	22	25	26
		8-14	19	20	23	25	26	29
		14-20	22	22	24	26	28	31
		20-26	23	24	26	27	30	34
		26-32	24	25	27	28	32	35
		32-38	24	26	27	30	33	36
		38-44	25	26	28	30	34	37
		44-50	26	26	28	32	35	37
		50-56	26	26	28	32	35	38
		>56	26	27	29	32	36	38
Anchored PCB	Asphalt	All Offsets	24 for All Design Speeds					
Anchored PCB	Concrete (including bridge approach slabs)	All Offsets	12 for All Design Speeds					

*** See Figure Below**

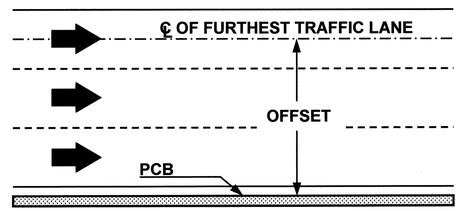

FIGURE B

APPROVED: DATE:

SEAL

NORTH CAROLINA PROFESSIONAL SEAL 19862 ENGINEER T. W. WOOLARD JR. 5/29/13

DIVISION OF HIGHWAYS STATE OF NORTH CAROLINA DEPARTMENT OF TRANSPORTATION WORK ZONE TRAFFIC CONTROL

PORTABLE CONCRETE BARRIER AT TEMPORARY SHORING LOCATIONS

5/28/2013
p:\tipprojects-r\r3101\traffic\trafficcontrol\tcp\general\R3101_TC_GEN_TMP02.dgn
User:scoats

PROJ. REFERENCE NO.	SHEET NO.
R-3101	TMP-2A

SHORING LOCATION NO.	BEGIN STATION AND OFFSET	END STATION AND OFFSET	ESTIMATED AVERAGE HEIGHT	ESTIMATED MAXIMUM HEIGHT	SHORING LOCATION TYPE
NO. 1	STA. 52+32 -L- 27.0 FT. RT.	STA. 52+50 -L- 27.0 FT. RT.	9.9 FT.	11.6 FT.	STRUCTURES
NO. 2	STA. 71+07 -L- 2.0 FT. LT.	STA. 72+17 -L- 2.0 FT. LT.	8.1 FT.	14.6 FT.	STRUCTURES
NO. 3	STA. 183+24 -L- 19.0 FT. RT.	STA. 183+82 -L- 19.0 FT. RT.	4.3 FT.	5.0 FT.	ROADWAY
NO. 4	STA. 184+02 -L- 4.0 FT. LT.	STA. 184+22 -L- 4.0 FT. LT.	5.7 FT.	10.1 FT.	STRUCTURES
NO. 5	STA. 183+77 -L- 4.0 FT. LT.	STA. 184+02 -L- 4.0 FT. LT.	7.1 FT.	10.5 FT.	STRUCTURES
NO. 6	STA. 372+51 -L- 21.0 FT. LT.	STA. 372+66 -L- 21.0 FT. LT.	5.8 FT.	5.8 FT.	ROADWAY
NO. 7	STA. 372+53 -L- 1.0 FT. RT.	STA. 372+66 -L- 1.0 FT. RT.	9.2 FT.	10.9 FT.	STRUCTURES
NO. 8	STA. 392+96 -L- 6.0 FT. RT.	STA. 394+18 -L- 6.0 FT. RT.	6.1 FT.	14.3 FT.	STRUCTURES
NO. 9	STA. 405+12 -L- 1.3 FT. RT.	STA. 405+42 -L- 1.3 FT. RT.	15.3 FT.	15.3 FT.	STRUCTURES
NO. 10	STA. 405+09 -L- 6.0 FT. RT.	STA. 405+39 -L- 6.0 FT. RT.	10.2 FT.	15.3 FT.	STRUCTURES
NO. 11	STA. 442+23 -L- 27.0 FT. RT.	STA. 442+43 -L- 27.0 FT. RT.	6.1 FT.	6.1 FT.	ROADWAY
NO. 12	STA. 442+05 -L- 2.0 FT. RT.	STA. 442+24 -L- 2.0 FT. RT.	14.0 FT.	16.9 FT.	STRUCTURES
NO. 13	STA. 442+03 -L- 2.0 FT. LT.	STA. 442+22 -L- 2.0 FT. LT.	14.9 FT.	18.1 FT.	STRUCTURES
NO. 14	STA. 467+69 -L- 21.5 FT. LT.	STA. 467+84 -L- 21.5 FT. LT.	5.8 FT.	5.8 FT.	ROADWAY
NO. 15	STA. 467+80 -L- 0.5 FT. RT.	STA. 467+95 -L- 0.5 FT. RT.	9.1 FT.	11.4 FT.	STRUCTURES
NO. 16	STA. 28+00 -L- 14.0 FT. RT.	STA. 31+05 -L- 14.0 FT. RT.	8.0 FT.	8.0 FT.	STRUCTURES
NO. 17	STA. 36+95 -L- 14.0 FT. RT.	STA. 38+25 -L- 14.0 FT. RT.	7.6 FT.	9.0 FT.	STRUCTURES

TEMPORARY SHORING NOTES

SHORING LOCATION NOS. 1, 4, 5, 7, 9, 10, 11, 12, 13 and 15

FOR TEMPORARY SHORING AND POSITIVE PROTECTION FOR TEMPORARY SHORING, SEE PLANS AND TEMPORARY SHORING PROVISION.

TEMPORARY SHORING IS REQUIRED FOR THE PIPE AND/OR CULVERT INSTALLATION AT THE ABOVE LOCATIONS.

BEFORE BEGINNING TEMPORARY SHORING DESIGN OR CONSTRUCTION, SURVEY EXISTING GROUND ELEVATIONS IN THE VICINITY OF SHORING LOCATIONS TO DETERMINE ACTUAL SHORING HEIGHTS.

DESIGN TEMPORARY SHORING AT THE ABOVE LOCATIONS USING THE FOLLOWING ASSUMED SOIL PARAMETERS AND GROUNDWATER ELEVATION:

UNIT WEIGHT (γ) = 120 LB/CF
FRICTION ANGLE (ϕ)= 30 DEGREES
COHESION (c) = 0 LB/SF
GROUNDWATER ELEVATION = VARIES

LIMITED SUBSURFACE INFORMATION IS AVAILABLE IN THE VICINITY OF TEMPORARY SHORING AT THE ABOVE LOCATIONS. THE INFORMATION PROVIDED FOR TEMPORARY SHORING DESIGN WAS ASSUMED AND MAY NOT BE APPLICABLE TO THE ACTUAL SITE CONDITIONS ENCOUNTERED DURING CONSTRUCTION.

AT THE CONTRACTOR'S OPTION, USE STANDARD TEMPORARY SHORING FOR TEMPORARY SHORING AT THE ABOVE LOCATIONS. SEE STANDARD DRAWING NO. 1801.01 FOR STANDARD TEMPORARY SHORING.

IT MAY BE PREFERRED TO USE A TEMPORARY SOIL NAIL WALL FOR TEMPORARY SHORING AT THE ABOVE LOCATIONS. FOR TEMPORARY SOIL NAIL WALLS, SEE TEMPORARY SOIL NAIL WALLS PROVISION.

SHORING LOCATION NO. 2

FOR TEMPORARY SHORING AND POSITIVE PROTECTION FOR TEMPORARY SHORING, SEE PLANS AND TEMPORARY SHORING PROVISION.

BEFORE BEGINNING TEMPORARY SHORING DESIGN OR CONSTRUCTION, SURVEY EXISTING GROUND ELEVATIONS IN THE VICINITY OF SHORING LOCATIONS TO DETERMINE ACTUAL SHORING HEIGHTS.

DESIGN TEMPORARY SHORING FROM STATION 71+07 -L-, 2 FT LEFT, TO STATION 72+17 -L-, 2 FT LEFT, FOR THE FOLLOWING ASSUMED SOIL PARAMETERS AND GROUNDWATER ELEVATION:

UNIT WEIGHT (γ) = 120 LB/CF
FRICTION ANGLE (ϕ) = 30 DEGREES
COHESION (c) = 0 LB/SF
GROUNDWATER ELEVATION = 2780 FT

DRIVEN PILING FOR TEMPORARY SHORING FROM STATION 71+07 -L-, 2 FT LEFT, TO STATION 72+17 -L-, 2 FT LEFT MAY NOT PENETRATE BELOW ELEVATION 2750 FT DUE TO OBSTRUCTIONS, VERY DENSE OR HARD SOIL, BOULDERS OR WEATHERED OR HARD ROCK.

AT THE CONTRACTOR'S OPTION, USE STANDARD TEMPORARY SHORING FOR TEMPORARY SHORING FROM STATION 71+07 -L-, 2 FT LEFT, TO STATION 72+17 -L-, 2 FT LEFT. SEE STANDARD DRAWING NO. 1801.01 FOR STANDARD TEMPORARY SHORING.

WHEN BACKFILL FOR BRIDGE APPROACH FILLS OVERLAPS WITH THE REINFORCED ZONE OF TEMPORARY WALLS, USE SHORING BACKFILL OR BACKFILL MATERIAL REQUIRED FOR BRIDGE APPROACH FILLS, WHICHEVER IS BETTER, IN THE REINFORCED ZONE OF TEMPORARY WALLS.

SHORING LOCATION NO. 8

FOR TEMPORARY SHORING AND POSITIVE PROTECTION FOR TEMPORARY SHORING, SEE PLANS AND TEMPORARY SHORING PROVISION.

BEFORE BEGINNING TEMPORARY SHORING DESIGN OR CONSTRUCTION, SURVEY EXISTING GROUND ELEVATIONS IN THE VICINITY OF SHORING LOCATIONS TO DETERMINE ACTUAL SHORING HEIGHTS.

DESIGN TEMPORARY SHORING FROM STATION 392+96 -L-, 6 FT RIGHT, TO STATION 394+18 -L-, 6 FT RIGHT, FOR THE FOLLOWING ASSUMED SOIL PARAMETERS AND GROUNDWATER ELEVATION:

UNIT WEIGHT (γ) = 120 LB/CF
FRICTION ANGLE (ϕ) = 30 DEGREES
COHESION (c) = 0 LB/SF
GROUNDWATER ELEVATION = 2780 FT

DRIVEN PILING FOR TEMPORARY SHORING FROM STATION 392+96-L- , 6 FT RIGHT, TO STATION 394+18 -L-, 6 FT RIGHT MAY NOT PENETRATE BELOW ELEVATION 2570 FT DUE TO OBSTRUCTIONS, VERY DENSE OR HARD SOIL, BOULDERS OR WEATHERED OR HARD ROCK.

AT THE CONTRACTOR'S OPTION, USE STANDARD TEMPORARY SHORING FOR TEMPORARY SHORING FROM STATION 392+96 -L-, 6 FT RIGHT, TO STATION 394+18 -L-, 6 FT RIGHT. SEE STANDARD DRAWING NO. 1801.01 FOR STANDARD TEMPORARY SHORING.

WHEN BACKFILL FOR BRIDGE APPROACH FILLS OVERLAPS WITH THE REINFORCED ZONE OF TEMPORARY WALLS, USE SHORING BACKFILL OR BACKFILL MATERIAL REQUIRED FOR BRIDGE APPROACH FILLS, WHICHEVER IS BETTER, IN THE REINFORCED ZONE OF TEMPORARY WALLS.

THE TEMPORARY SHORING NOTES SHOWN ON THIS SHEET WERE PROVIDED THROUGH A SEALED DOCUMENT FROM THE GEOTECHNICAL ENGINEERING UNIT. THE DOCUMENT WAS SUBMITTED TO THE WZTC SECTION ON 07-22-2013 AND SEALED BY A PROFESSIONAL ENGINEER, SHANE C. CLARK, LICENSE # 029869.

APPROVED: _____ DATE: _____

SEAL

NORTH CAROLINA PROFESSIONAL SEAL 19862 ENGINEER W. WOOLARD JR.

7/22/13

DIVISION OF HIGHWAYS STATE OF NORTH CAROLINA DEPARTMENT OF TRANSPORTATION WORK ZONE TRAFFIC CONTROL

TEMPORARY SHORING NOTES

22-JUL-2013 09:46
\\dot\dfsroot01\Proj\TIPProjects-R\R3101\Traffic\TrafficControl\TCP\GENERAL\R3101_TC_GEN_TMP02A.dgn
scoarts AT TE265846

PROJ. REFERENCE NO.	SHEET NO.
R-3101	TMP-2B

TEMPORARY SHORING NOTES (CONTINUED)

SHORING LOCATION NOS. 3, 6, 11, and 14

FOR TEMPORARY SHORING AND POSITIVE PROTECTION FOR TEMPORARY SHORING, SEE PLANS AND TEMPORARY SHORING PROVISION.

TEMPORARY SHORING IS REQUIRED FOR THE PIPE AND/OR CULVERT INSTALLATION AT THE ABOVE LOCATIONS

BEFORE BEGINNING TEMPORARY SHORING DESIGN OR CONSTRUCTION, SURVEY EXISTING GROUND ELEVATIONS IN THE VICINITY OF SHORING LOCATIONS TO DETERMINE ACTUAL SHORING HEIGHTS.

DESIGN TEMPORARY SHORING AT THE ABOVE LOCATIONS USING THE FOLLOWING ASSUMED SOIL PARAMETERS AND GROUNDWATER ELEVATION:

UNIT WEIGHT (γ) = 120 LB/CF
FRICTION ANGLE (ϕ) = 30 DEGREES
COHESION (c) = 0 LB/SF
GROUNDWATER ELEVATION = VARIES

LIMITED SUBSURFACE INFORMATION IS AVAILABLE IN THE VICINITY OF TEMPORARY SHORING AT THE ABOVE LOCATIONS. THE INFORMATION PROVIDED FOR TEMPORARY SHORING DESIGN WAS ASSUMED AND MAY NOT BE APPLICABLE TO THE ACTUAL SITE CONDITIONS ENCOUNTERED DURING CONSTRUCTION.

AT THE CONTRACTOR'S OPTION, USE STANDARD TEMPORARY SHORING FOR TEMPORARY SHORING AT THE ABOVE LOCATIONS. SEE STANDARD DRAWING NO. 1801.01 FOR STANDARD TEMPORARY SHORING.

IT MAY BE PREFERRED TO USE A TEMPORARY SOIL NAIL WALL FOR TEMPORARY SHORING AT THE ABOVE LOCATIONS. FOR TEMPORARY SOIL NAIL WALLS, SEE TEMPORARY SOIL NAIL WALLS PROVISION.

SHORING LOCATION NOS. 16 and 17

FOR TEMPORARY SHORING AND POSITIVE PROTECTION FOR TEMPORARY SHORING, SEE PLANS AND TEMPORARY SHORING PROVISION.

BEFORE BEGINNING TEMPORARY SHORING DESIGN OR CONSTRUCTION, SURVEY EXISTING GROUND ELEVATIONS IN THE VICINITY OF SHORING LOCATIONS TO DETERMINE ACTUAL SHORING HEIGHTS.

DESIGN TEMPORARY SHORING AT THE ABOVE LOCATIONS USING THE FOLLOWING ASSUMED SOIL PARAMETERS AND GROUNDWATER ELEVATION:

UNIT WEIGHT (γ) = 120 LB/CF
FRICTION ANGLE (ϕ) = 30 DEGREES
COHESION (c) = 0 LB/SF
GROUNDWATER ELEVATION = VARIES

LIMITED SUBSURFACE INFORMATION IS AVAILABLE IN THE VICINITY OF TEMPORARY SHORING AT THE ABOVE LOCATIONS. THE INFORMATION PROVIDED FOR TEMPORARY SHORING DESIGN WAS ASSUMED AND MAY NOT BE APPLICABLE TO THE ACTUAL SITE CONDITIONS ENCOUNTERED DURING CONSTRUCTION.

DO NOT USE A TEMPORARY WALL FOR TEMPORARY SHORING AT THE ABOVE LOCATIONS.

AT THE CONTRACTOR'S OPTION, USE STANDARD TEMPORARY SHORING FOR TEMPORARY SHORING AT THE ABOVE LOCATIONS. SEE STANDARD DRAWING NO. 1801.01 FOR STANDARD TEMPORARY SHORING.

IT MAY BE PREFERRED TO USE A TEMPORARY SOIL NAIL WALL FOR TEMPORARY SHORING AT THE ABOVE LOCATIONS. FOR TEMPORARY SOIL NAIL WALLS, SEE TEMPORARY SOIL NAIL WALLS PROVISION.

THE TEMPORARY SHORING NOTES SHOWN ON THIS SHEET WERE PROVIDED THROUGH A SEALED DOCUMENT FROM THE GEOTECHNICAL ENGINEERING UNIT. THE DOCUMENT WAS SUBMITTED TO THE WZTC SECTION ON 07-22-2013 AND SEALED BY A PROFESSIONAL ENGINEER, SHANE C. CLARK, LICENSE # 029869.

APPROVED:_____ DATE:_____

SEAL

NORTH CAROLINA PROFESSIONAL SEAL 19862 ENGINEER H. WOOLARD JR.

7/22/13

DIVISION OF HIGHWAYS * STATE OF NORTH CAROLINA * DEPARTMENT OF TRANSPORTATION * WORK ZONE TRAFFIC CONTROL

TEMPORARY SHORING NOTES

22-JUL-2013 09:47
\\dot\dfsroot\Proj\TIPProjects-R\R3101\Traffic\TrafficControl\TCP\GENERAL\R3101_TC_GEN_TMP02B.dgn
scoots AT TE265846

PROJ. REFERENCE NO.	SHEET NO.
R-3101	TMP-2C

SIGN NUMBER: SP13033
TYPE: STATIONARY
QUANTITY: SEE PLANS

BACKG COLOR: Fluorescent Orange
COPY COLOR: Black

SYMBOL	X	Y	WID	HT

SIGN WIDTH: 4'-0"
HEIGHT: 2'-0"
TOTAL AREA: 8.0 Sq.Ft.

BORDER TYPE: INSET
RECESS: 0.38"
WIDTH: 0.63"
RADII: 1.5"

NO. Z BARS:
LENGTH:

MAT'L: 0.080" (2.0 mm) ALUMINUM

DESIGN BY: W. Johnson
PROJECT ID: R-3101

CHECKED BY:
DIV: 11

DATE: Feb 05, 2013

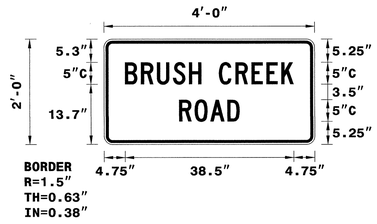

Spacing Factor is 1 unless specified otherwise

USE NOTES: 1,2

1. Legend and border shall be direct applied black non-reflective sheeting.
2. Background shall be NC GRADE B fluorescent orange retroreflective sheeting.

LETTER POSITIONS

Letter spacings are to start of next letter

																													Series/Size Text Length
		B	R	U	S	H		C	R	E	E	K																	C 2000
	4.8	3.7	3.7	3.7	3.6	2.8	4	3.8	3.7	3.4	3.4	2.8	4.8																38.5
		R	O	A	D																								C 2000
	17.1	3.6	3.5	3.9	2.8	17.1																							13.8

FILENAME: traffic control

NORTH CAROLINA D.O.T. SIGN DETAIL

SIGN NUMBER: SP13034
TYPE: STATIONARY
QUANTITY: SEE PLANS

BACKG COLOR: Fluorescent Orange
COPY COLOR: Black

SYMBOL	X	Y	WID	HT

SIGN WIDTH: 4'-0"
HEIGHT: 2'-0"
TOTAL AREA: 8.0 Sq.Ft.

BORDER TYPE: INSET
RECESS: 0.38"
WIDTH: 0.63"
RADII: 1.5"

NO. Z BARS:
LENGTH:

MAT'L: 0.080" (2.0 mm) ALUMINUM

DESIGN BY: W. Johnson
PROJECT ID: R-3101

CHECKED BY:
DIV: 11

DATE: Feb 05, 2013

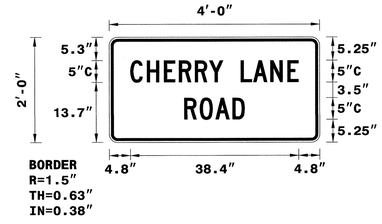

Spacing Factor is 1 unless specified otherwise

USE NOTES: 1,2

1. Legend and border shall be direct applied black non-reflective sheeting.
2. Background shall be NC GRADE B fluorescent orange retroreflective sheeting.

LETTER POSITIONS

Letter spacings are to start of next letter

																													Series/Size Text Length
		C	H	E	R	R	Y		L	A	N	E																	C 2000
	4.8	3.8	3.9	3.4	3.7	3.2	3.2	4	2.9	3.9	3.9	2.6	4.8																38.4
		R	O	A	D																								C 2000
	17.1	3.6	3.6	3.9	2.8	17.1																							13.8

FILENAME: traffic control

NORTH CAROLINA D.O.T. SIGN DETAIL

THE SPECIAL SIGN DESIGN SHOWN ON THIS SHEET WERE PROVIDED THROUGH A SEALED DOCUMENT FROM SIGNING AND DELINEATION. THE DOCUMENT WAS SUBMITTED TO WZTC ON 02-07-2013 AND SEALED BY A PROFESSIONAL ENGINEER, RONALD W. KING, P.E., LICENSE #022959.

APPROVED: _____ DATE: _____

SEAL

NORTH CAROLINA PROFESSIONAL SEAL 19862 ENGINEER J.W. WOOLARD JR.

5/29/13

DIVISION OF HIGHWAYS
STATE OF NORTH CAROLINA
DEPARTMENT OF TRANSPORTATION
WORK ZONE TRAFFIC CONTROL

SPECIAL SIGN DESIGN
CHERRY LANE ROAD
AND
BRUSH CREEK ROAD

5/28/2013
p:\tip\projects-r\r-3101\traffic\trafficcontrol\tip\general\R3101_TC_GEN_TMP02C.dgn
Usertscodts

PROJ. REFERENCE NO.	SHEET NO.
R-3101	TMP-2D

SIGN NUMBER: SP13050
TYPE: STATIONARY
QUANTITY: SEE PLANS

SIGN WIDTH: 4′-0″
HEIGHT: 2′-0″
TOTAL AREA: 8.0 Sq.Ft.

BORDER TYPE: INSET
RECESS: 0.38″
WIDTH: 0.63″
RADII: 1.5″

NO. Z BARS:
LENGTH:

BACKG COLOR: Fluorescent Orange
COPY COLOR: Black

SYMBOL	X	Y	WID	HT

MAT'L: 0.080″ (2.0 mm) ALUMINUM

USE NOTES: 1,2

1. Legend and border shall be direct applied black non-reflective sheeting.
2. Background shall be NC GRADE B fluorescent orange retroreflective sheeting.

DESIGN BY: W. Johnson
PROJECT ID: R-3101
CHECKED BY:
DIV: 11
DATE: Feb 14, 2013

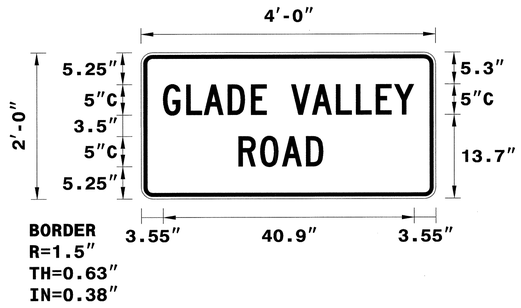

Spacing Factor is 1 unless specified otherwise

LETTER POSITIONS

Letter spacings are to start of next letter

																											Series/Size Text Length
		G	L	A	D	E		V	A	L	L	E	Y														C 2000
	3.6	3.8	2.8	3.9	3.8	2.6	4	3.4	3.9	3.3	3.2	3	3.2	3.6													40.9
		R	O	A	D																						C 2000
	15.9	3.5	3.6	3.9	2.8	18.4																					13.8

FILENAME: traffic control

NORTH CAROLINA D.O.T. SIGN DETAIL

THE SPECIAL SIGN DESIGN SHOWN ON THIS SHEET WERE PROVIDED THROUGH A SEALED DOCUMENT FROM SIGNING AND DELINEATION. THE DOCUMENT WAS SUBMITTED TO WZTC ON 02-14-2013 AND SEALED BY A PROFESSIONAL ENGINEER, RONALD W. KING, P.E., LICENSE #022959.

APPROVED: _____ DATE: _____

SEAL

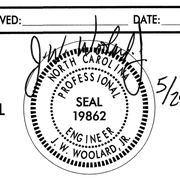

5/29/13

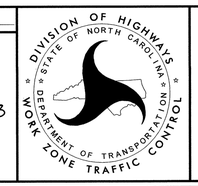

SPECIAL SIGN DESIGN
GLADE VALLEY ROAD

5/28/2013
p:\tipprojects-r\r3101\traffic\trafficcontrol\tcp\general\R3101_TC_GEN_TMP02D.dgn
User:scoats

TEMPORARY TRAFFIC CONTROL PHASING

PROJ. REFERENCE NO.	SHEET NO.
R-3101	TMP-3

THIS PROJECT IS DIVIDED INTO THE CONSTRUCTION OF THE PROPOSED US 21 (-L-), INCLUDING PROPOSED -Y- LINES, AND THE CONSTRUCTION OF THE SEVEN PROPOSED BRIDGE AND CULVERT SITES. [SITE 1 - (US 21 - STA. 71+60+/- -L-); SITE 2 - (US 21-STA. 184+09+/- -L-); SITE 3 - (US 21 - STA. 372+50+/- -L-); SITE 4 - (US 21 - STA. 393+57+/- -L-); SITE 5 - (US 21 - STA. 405+28+/- -L-); SITE 6 - (US 21 - STA. 442+13+/- -L-); SITE 7 - (US 21 - STA. 468+00+/- -L-)] [SEE OVERVIEW ON SHEET TMP-4].

THE CONTRACTOR SHALL WORK SIMULTANEOUSLY ON PROPOSED US 21 (-L-) AND PROPOSED -Y- LINES. ALL SEVEN PROPOSED BRIDGE AND CULVERT SITES MAY BE CONSTRUCTED SIMULTANEOUSLY ALONG WITH -L- AND -Y- LINES WITH THE EXCEPTION OF SITES 4 AND 5. SITE 4 AND SITE 5 SHALL NOT BE UNDER CONSTRUCTION AT THE SAME TIME (SEE OVERVIEW ON SHEET TMP-4).

NOTE: BEFORE BEGINNING CONSTRUCTION THE CONTRACTOR SHALL:

PLACE ADVANCE WORK ZONE WARNING SIGNS ALONG EXISTING US 21 (-L-) AND ALL -Y- LINES (SEE RSD 1101.01, SHEET 3 OF 3).

CONSTRUCTION OF PROPOSED US 21 (-L-) AND PROPOSED -Y- LINES

PHASE I

THE FOLLOWING NOTES ARE APPLICABLE FOR PHASE I.

NOTE: CONTRACTOR SHALL CONSTRUCT ALL PAVEMENT (TEMPORARY AND/OR PROPOSED) TO MAINTAIN DRAINAGE AND NOT POND WATER IN THE TRAFFIC LANES.

NOTE: CONTRACTOR SHALL PLACE TRAFFIC BACK INTO THE EXISTING PATTERN AT THE END OF EACH WORK PERIOD.

NOTE: CONTRACTOR SHALL PLACE TYPE III BARRICADES & DRUMS AT ALL -Y- LINES AND DRUMS AT ALL DRIVEWAYS TO KEEP PROPOSED/TEMPORARY WIDENING CLOSED TO TRAFFIC.

NOTE: TEMPORARY PAVEMENT MAY BE UTILIZED IN THE CONSTRUCTION OF PROPOSED PAVEMENT AS DIRECT BY THE ENGINEER.

NOTE: WHEN CONSTRUCTING DRAINAGE STRUCTURES ADJACENT TO TRAFFIC, INSTALL TEMPORARY STEEL PLATES, AS DIRECTED BY THE ENGINEER. MAY WORK EACH LOCATION INDEPENDENTLY OR CONCURRENTLY, UNLESS OTHERWISE DIRECTED BY THE ENGINEER. WORK IN A CONTINUOUS MANNER TO PERFORM THE WORK IN THE FOLLOWING SEQUENCE, IN STEPS 'A' THRU 'E'.

A: CLOSE THE APPROPRIATE TRAVEL LANE TO TRAFFIC USING ROADWAY STANDARD DRAWING NO. 1101.02 SHEETS 1 & 2 OF 15.

B: CONSTRUCT PROPOSED STRUCTURE OR INSTALL PRE-CAST DRAINAGE STRUCTURE AS SHOWN IN THE CONSTRUCTION PLANS AND COVER WITH STEEL PLATES TO PROTECT STRUCTURE DURING CURING.

C: OPEN TRAVEL LANE TO EXISTING TRAFFIC PATTERN BY THE END OF EACH WORK PERIOD.

D: WHEN PROPERLY CURED, CLOSE THE APPROPRIATE TRAVEL LANE USING ROADWAY STANDARD DRAWING NO. 1101.02, SHEETS 1 & 2 OF 15. BACKFILL & PAVE, IF REQUIRED, UP TO THE EDGE AND ELEVATION OF EXISTING PAVEMENT (SEE CONSTRUCTION PLANS).

E: OPEN TRAVEL LANE TO EXISTING TRAFFIC PATTERN BY THE END OF THE WORK PERIOD.

STEP 1: CONTRACTOR, USING ROADWAY STANDARD DRAWING NO. 1101.02, SHEET 1 & 2 OF 15.

SHALL CONSTRUCT TRENCHLESS INSTALLATION OF PROPOSED DRAINAGE UNDER EXISTING US 21 (-L-) AS DIRECTED BY THE ENGINEER (SEE CONSTRUCTION PLANS).

SHALL CONSTRUCT PROPOSED WIDENING OF US 21 (-L-), (INCLUDING PROPOSED SHOULDERS, PROPOSED CURB & GUTTER, PROPOSED DRAINAGE, AND PROPOSED GUARDRAIL) UP TO, BUT NOT INCLUDING THE FINAL LAYER OF SURFACE COURSE AS FOLLOWS (SEE TMP-5 THRU TMP-21, TMP-29, TMP-37, TMP-48, TMP-57, TMP-65, TMP-74, TMP-82 AND CONSTRUCTION PLANS):

- STA. 13+00+/- -L- TO STA. 26+50+/- -L-
- STA. 39+50+/- -L- TO STA. 69+56+/- -L-
- STA. 73+65+/- -L- TO STA. 164+00+/- -L-
- STA. 170+50+/- -L- TO STA. 182+42+/- -L-
- STA. 185+49+/- -L- TO STA. 246+50+/- -L-
- STA. 269+00+/- -L- TO STA. 371+58+/- -L-
- STA. 373+58+/- -L- TO STA. 391+37+/- -L-
- STA. 395+77+/- -L- TO STA. 403+62+/- -L-
- STA. 406+93+/- -L- TO STA. 440+65+/- -L-
- STA. 443+54+/- -L- TO STA. 466+63+/- -L-
- STA. 469+13+/- -L- TO STA. 510+00+/- -L-

SHALL CONSTRUCT US 21 (-L-), (INCLUDING PROPOSED SHOULDERS, PROPOSED CURB & GUTTER, PROPOSED DRAINAGE, PROPOSED RETAINING WALLS AND PROPOSED GUARDRAIL) UP TO, BUT NOT INCLUDING THE FINAL LAYER OF SURFACE COURSE FROM STA. 26+50+/- -L- TO STA. 39+50+/- -L- AS FOLLOWS:

1) SHALL CONSTRUCT PROPOSED WIDENING OF US 21 (-L-), (INCLUDING PROPOSED SHOULDERS, PROPOSED CURB & GUTTER, PROPOSED DRAINAGE, AND PROPOSED GUARDRAIL) UP TO, BUT NOT INCLUDING THE FINAL LAYER OF SURFACE COURSE AS FOLLOWS (SEE TMP-5 AND CONSTRUCTION PLANS):

   - STA. 26+50+/- -L- TO STA. 39+50+/- -L-

2) USING FLAGGERS, PLACE TEMPORARY PAVEMENT MARKINGS FROM STA. 26+50+/- -L- TO STA. 39+50+/- -L- AND SHIFT TRAFFIC. PLACE SHORING, INSTALL TEMPORARY GUARDRAIL, AND CONSTRUCT RETAINING WALLS AS FOLLOWS(SEE TMP-5A).
   - STA. 28+00 +/- -L- TO STA. 31+05+/- -L-
   - STA. 36+95 +/- -L- TO STA. 38+25+/- -L-

3) USING FLAGGERS, REMOVE TEMPORARY GUARDRAIL, COMPLETE WIDENING, AND CONSTRUCT EXPRESSWAY GUTTER AS FOLLOWS (SEE TMP-5B).
   - STA. 28+00 +/- -L- TO STA. 31+10+/- -L-
   - STA. 36+75 +/- -L- TO STA. 38+35+/- -L-

SHALL CONSTRUCT PROPOSED -Y- LINES, (INCLUDING PROPOSED SHOULDERS AND PROPOSED DRAINAGE) UP TO BUT NOT INCLUDING THE FINAL LAYER OF SURFACE COURSE AS FOLLOWS (SEE TMP-12 AND TMP-17):

- STA. 14+25+/- -Y12REV- TO STA. 14+91+/- -Y12REV-
- STA. 10+15+/- -Y19REV- TO STA. 10+50+/- -Y19REV-

SHALL CONSTRUCT THE FOLLOWING PROPOSED WIDENING OF -Y- LINES AND ENTRANCE DRIVES (INCLUDING PROPOSED SHOULDERS, PROPOSED CURB & GUTTER, AND PROPOSED DRAINAGE) UP TO, BUT NOT INCLUDING THE FINAL LAYER OF SURFACE COURSE (SEE TMP-5 THRU TMP-9, TMP-12, TMP-14, TMP-15, TMP-17 THRU TMP-20, TMP-57, AND CONSTRUCTION PLANS):

- -Y1- (OKLAHOMA ROAD/SR 1100)
- -Y2- (OLD GAP ROAD/SR 1478)
- -Y3- (ROARING GAP ROAD/SR 1478)
- OLD BEAU BOULEVARD
- RED BIRD LANE
- LITTLE BRIDGE LANE
- -Y7- (MOUNTAIN VIEW ROAD/SR 1463)
- -Y8- (CAMP BUTLER ROAD/SR 1105)
- -Y14- (CHERRY LANE ROAD/SR 1106)
- -Y15- (PULL TAIL ROAD/SR 1111)
- ROYAL ACRES LANE
- ARBOR LANE
- -Y16REV- (STOKER ROAD/SR 1467)
- -Y18- (DEWITT ROAD/SR 1113)
- -Y20- (MACEDONIA CHURCH ROAD/SR 1118)
- -Y22- (OLD US 21/SR 1119)
- -Y23- (ANDREWS RIDGE ROAD/SR 1429)
- JOINES PARK ROAD
- -Y24- (NARROW ROAD/SR 1119)
- -Y25- (OLD US 21/SR 1119)
- -Y26- (CHESTNUT GROVE CHURCH ROAD/SR 1426)
- -Y27- (MACEDONIA CHURCH ROAD/SR 1120)

SHALL CONSTRUCT THE FOLLOWING PROPOSED -Y- LINES AND ENTRANCE DRIVES THAT REQUIRE A FILL OR CUT SECTION OF EXISTING ROADWAY, AS DIRECTED BY THE ENGINEER, (INCLUDING PROPOSED SHOULDERS, PROPOSED CURB & GUTTER, AND PROPOSED DRAINAGE) UP TO, BUT NOT INCLUDING THE FINAL LAYER OF SURFACE COURSE BY PLACING AGGREGATE BASE COURSE, INCIDENTAL STONE, OR ASPHALT BASE COURSE & BINDER COURSE TO MAINTAIN ACCESS. PLACE TEMPORARY PAVEMENT MARKINGS AND OPEN TO TRAFFIC, (SEE TMP-7, TMP-8, TMP-12, AND CONSTRUCTION PLANS):

- -D1- (COUNTRY DOWNS AVENUE) (CUT)
- -Y6- (HOLLY KNOLL ROAD/SR 1512) (CUT)
- -Y13- (SHAWTOWN ROAD/SR 1464) (CUT)

PHASE II

ICT - 7 DAYS

CONTRACTOR SHALL WORK IN A CONTINUOUS MANNER TO COMPLETE THE FOLLOWING IN PHASE II, STEPS 1 THRU 3 IN 7 CALENDAR DAYS. (SEE INTERMEDIATE CONTRACT TIME AND SPECIAL PROVISIONS).

STEP 1: INSTALL ALL OFF-SITE DETOUR SIGNING (SEE TMP-22).
- USING ROADWAY STANDARD DRAWING NO. 1101.03, SHEET 2 OF 9, CLOSE -Y4- (GREEN HOUSE ROAD/SR 1178) FROM STA.10+00+/- -Y4- TO STA. 11+50+/- -Y4-.

STEP 2: CONSTRUCT PROPOSED -Y4- UP TO, BUT NOT INCLUDING THE FINAL SURFACE COURSE AS FOLLOWS (SEE CONSTRUCTION PLANS):
- STA. 10+00 +/- -Y4- TO STA. 11+50+/- -Y4-
- PLACE TEMPORARY PAVEMENT MARKINGS AND MARKERS (SEE FINAL PAVEMENT MARKING PLAN).

STEP 3: REMOVE ALL TYPE III BARRICADES AND DETOUR SIGNING. REOPEN -Y4- (GREEN HOUSE ROAD/SR 1178) TO A 2-LANE, 2-WAY TRAFFIC PATTERN.

ICT - 30 DAYS

CONTRACTOR SHALL WORK IN A CONTINUOUS MANNER TO COMPLETE THE FOLLOWING IN PHASE II, STEPS 4 THRU 6 IN 30 CALENDAR DAYS. (SEE INTERMEDIATE CONTRACT TIME AND SPECIAL PROVISIONS).

STEP 4: INSTALL ALL OFF-SITE DETOUR SIGNING (SEE TMP-23).
- USING ROADWAY STANDARD DRAWING NO. 1101.03, SHEET 2 OF 9, CLOSE -Y5- (GREEN HOUSE ROAD/SR 1178) FROM STA.13+25+/- -Y5- TO STA. 14+88+/- -Y5-.

STEP 5: CONSTRUCT PROPOSED -Y5-, INCLUDING PROPOSED DRAINAGE, PROPOSED RETAINING WALL, AND PAVEMENT REMOVAL, UP TO, BUT NOT INCLUDING THE FINAL SURFACE COURSE AS FOLLOWS (SEE CONSTRUCTION PLANS):
- STA. 13+25 +/- -Y5- TO STA. 14+88+/- -Y5-
- PLACE TEMPORARY PAVEMENT MARKINGS AND MARKERS (SEE FINAL PAVEMENT MARKING PLAN).

STEP 6: REMOVE ALL TYPE III BARRICADES AND DETOUR SIGNING. REOPEN -Y5- (GREEN HOUSE ROAD/SR 1178) TO A 2-LANE, 2-WAY TRAFFIC PATTERN.

ICT - 7 DAYS

CONTRACTOR SHALL WORK IN A CONTINUOUS MANNER TO COMPLETE THE FOLLOWING IN PHASE II, STEPS 7 THRU 9 IN 7 CALENDAR DAYS. (SEE INTERMEDIATE CONTRACT TIME AND SPECIAL PROVISIONS).

STEP 7: INSTALL ALL OFF-SITE DETOUR SIGNING (SEE TMP-24).
- USING ROADWAY STANDARD DRAWING NO. 1101.03, SHEET 2 OF 9, CLOSE -Y11- (FOXFIRE ROAD/SR 1107) FROM STA.10+00+/- -Y11- TO STA. 12+19+/- -Y11-.

STEP 8: CONSTRUCT PROPOSED -Y11-, INCLUDING PAVEMENT REMOVAL UP TO, BUT NOT INCLUDING THE FINAL SURFACE COURSE AS FOLLOWS (SEE CONSTRUCTION PLANS):
- STA. 10+00 +/- -Y11- TO STA. 12+19+/- -Y11-
- PLACE TEMPORARY PAVEMENT MARKINGS AND MARKERS (SEE FINAL PAVEMENT MARKING PLAN).

STEP 9: REMOVE ALL TYPE III BARRICADES AND DETOUR SIGNING. REOPEN -Y11- (FOXFIRE ROAD/SR 1107) TO A 2-LANE, 2-WAY TRAFFIC PATTERN.

ICT - 7 DAYS

CONTRACTOR SHALL WORK IN A CONTINUOUS MANNER TO COMPLETE THE FOLLOWING IN PHASE II, STEPS 10 THRU 12 IN 7 CALENDAR DAYS. (SEE INTERMEDIATE CONTRACT TIME AND SPECIAL PROVISIONS).

STEP 10: INSTALL ALL OFF-SITE DETOUR SIGNING (SEE TMP-25).
- USING ROADWAY STANDARD DRAWING NO. 1101.03, SHEET 2 OF 9, CLOSE -Y12REV- (FOXFIRE ROAD/SR 1107) FROM STA.11+00+/- -Y12REV- TO STA. 14+91+/- -Y12REV-.

STEP 11: CONSTRUCT PROPOSED -Y12REV-, INCLUDING PROPOSED GUARDRAIL, AND PAVEMENT REMOVAL, UP TO, BUT NOT INCLUDING THE FINAL SURFACE COURSE AS FOLLOWS (SEE CONSTRUCTION PLANS):
- STA. 11+00 +/- -Y12REV- TO STA. 14+25+/- -Y12REV-
- PLACE TEMPORARY PAVEMENT MARKINGS AND MARKERS (SEE FINAL PAVEMENT MARKING PLAN).

STEP 12: REMOVE ALL TYPE III BARRICADES AND DETOUR SIGNING. REOPEN -Y12REV- (FOXFIRE ROAD/SR 1107) TO A 2-LANE, 2-WAY TRAFFIC PATTERN.

APPROVED: _____ DATE: _____

SEAL

NORTH CAROLINA PROFESSIONAL SEAL 19862 ENGINEER J. W. WOOLARD, JR. 7/22/13

DIVISION OF HIGHWAYS • STATE OF NORTH CAROLINA • DEPARTMENT OF TRANSPORTATION • WORK ZONE TRAFFIC CONTROL

TEMPORARY TRAFFIC CONTROL PHASING

22-JUL-2013 09:08
\\dot\dfsroot01\Proj\TIPProjects-R\R3101\Traffic\TrafficControl\TCP\GENERAL\R3101_TC_GEN_TMP03.dgn
scoats AT TE26846

PROJ. REFERENCE NO.	SHEET NO.
R-3101	TMP-3A

TEMPORARY TRAFFIC CONTROL PHASING

PHASE II (CONTINUED)

ICT - 3 DAYS

CONTRACTOR SHALL WORK IN A CONTINUOUS MANNER TO COMPLETE THE FOLLOWING IN PHASE II, STEPS 13 THRU 15 IN 3 CALENDAR DAYS. (SEE INTERMEDIATE CONTRACT TIME AND SPECIAL PROVISIONS).

STEP 13: INSTALL ALL OFF-SITE DETOUR SIGNING (SEE TMP-26).

- USING ROADWAY STANDARD DRAWING NO. 1101.03, SHEET 2 OF 9, CLOSE -Y19REV- (SHERIFF ROAD/SR 1430) FROM STA.10+15+/- -Y19REV- TO STA. 12+00+/- -Y19REV-.

STEP 14: CONSTRUCT PROPOSED -Y19REV-, INCLUDING PROPOSED DRAINAGE, AND PAVEMENT REMOVAL, UP TO, BUT NOT INCLUDING THE FINAL SURFACE COURSE AS FOLLOWS (SEE CONSTRUCTION PLANS):

- STA. 10+50 +/- -Y19REV- TO STA. 12+00+/- -Y19REV-
- PLACE FINAL TEMPORARY MARKINGS AND MARKERS (SEE FINAL PAVEMENT MARKING PLAN).

STEP 15: REMOVE ALL TYPE III BARRICADES AND DETOUR SIGNING. REOPEN -Y19REV- (SHERIFF ROAD/SR 1430) TO A 2-LANE, 2-WAY TRAFFIC PATTERN.

NOTE: CONTRACTOR SHALL PROCEED WITH THE FOLLOWING STEPS AFTER COMPLETION OF ALL SEVEN INDEPENDENT SITES.

STEP 16: MILL AND PAVE THE FINAL SURFACE COURSE AS FOLLOWS (SEE TMP-27 AND TMP-28)

- STA. 164+00 +/- -L- TO STA. 167+75+/- -L-
- STA. 168+97 +/- -L- TO STA. 170+50+/- -L-
- STA. 246+50 +/- -L- TO STA. 269+00+/- -L-
- PLACE FINAL PAVEMENT MARKINGS AND MARKERS (SEE FINAL PAVEMENT MARKING PLAN).

STEP 17: PLACE THE FINAL SURFACE COURSE ON -L- LINE AS FOLLOWS:

- STA. 12+00 +/- -L- TO STA. 164+00+/- -L-
- STA. 170+50 +/- -L- TO STA. 246+50+/- -L-
- STA. 269+00 +/- -L- TO STA. 510+00+/- -L-
- PLACE FINAL PAVEMENT MARKINGS AND MARKERS (SEE FINAL PAVEMENT MARKING PLAN).

STEP 18: PLACE THE FINAL SURFACE COURSE ON THE FOLLOWING -Y- LINES:

- -Y1- (OKLAHOMA ROAD/SR 1100)
- -Y2- (OLD GAP ROAD/SR 1478)
- -Y3- (ROARING GAP ROAD/SR 1478)
- -Y4- (GREEN HOUSE ROAD/SR 1178)
- -Y5- (GREEN HOUSE ROAD/SR 1178)
- OLD BEAU BOULEVARD
- RED BIRD LANE
- -D1- (COUNTRY DOWNS LANE)
- LITTLE BRIDGE LANE
- -Y6- (HOLLY KNOLL ROAD/SR 1512)
- -Y7- (MOUNTAIN VIEW ROAD/SR 1463)
- -Y8- (CAMP BUTLER ROAD/SR 1105)
- -Y9- (CHERRY LANE ROAD/SR 1106)
- -Y10- (BRUSH CREEK ROAD/SR 1471)
- -Y11- (FOXFIRE ROAD/SR 1107)
- -Y12REV- (FOXFIRE ROAD/SR 1107)
- -Y13- (SHAWTOWN ROAD/SR 1464)
- -Y14- (CHERRY LANE ROAD/SR 1106)
- -Y15- (PULL TAIL ROAD/SR 1111)
- ROYAL ACRES LANE
- ARBOR LANE
- -Y16REV- (STOKER ROAD/SR 1467)
- -Y18- (DEWITT ROAD/SR 1113)
- -Y19REV- (SHERIFF ROAD/SR 1430)
- -Y21- (SHERIFF ROAD/SR 1422)
- -Y20- (MACEDONIA CHURCH ROAD/SR 1118)
- -Y22- (OLD US 21/SR 1119)
- -Y23- (ANDREWS RIDGE ROAD/SR 1429)
- JOINES PARK ROAD
- -Y24- (NARROW ROAD/SR 1119)
- -Y25- (OLD US 21/SR 1119)
- -Y26- (CHESTNUT GROVE CHURCH ROAD/SR 1426)
- -Y27- (MACEDONIA CHURCH ROAD/SR 1120)
- PLACE FINAL PAVEMENT MARKINGS AND MARKERS (SEE FINAL PAVEMENT MARKING PLAN).

STEP 19: CONTRACTOR SHALL REMOVE ALL TRAFFIC CONTROL DEVICES FROM PROJECT.

CONSTRUCTION OF PROPOSED SITE 1
STA. 71+60+/- -L-

PHASE I

STEP 1. USING RSD NO. 1101.02 (SHEET 1 OF 15), WIDEN -L- LINE, INSTALL TEMPORARY DRAINAGE PIPES, CONSTRUCT TEMPORARY PAVEMENT, AND INSTALL TEMPORARY GUARDRAIL AS FOLLOWS (SEE CONSTRUCTION PLANS AND TMP-29):

- STA. 69+56+/- -L- TO STA. 73+65+/- -L-
- INSTALL/CONSTRUCT TEMPORARY SIGNALS, BUT DO NOT ACTIVATE (SEE SIGNALS PLAN).

PHASE II

STEP 1. USING RSD NO. 1101.02 (SHEET 1 OF 15), PLACE TEMPORARY PAVEMENT MARKINGS AND MARKERS. USING RSD 1101.02 (SHEET 14 OF 15) FOR PLACEMENT OF WARNING SIGNS. ACTIVATE TEMPORARY SIGNALS AS FOLLOWS (SEE CONSTRUCTION PLANS AND TMP-31):

- STA. 68+56+/- -L- TO STA. 74+65+/- -L-
- SHIFT TRAFFIC FROM A TWO-LANE, TWO-WAY TRAFFIC TO A ONE-LANE, TWO-WAY TRAFFIC PATTERN ON -L- LINE.
- PLACE PORTABLE CONCRETE BARRIER AS FOLLOWS (SEE TMP-31):
  - STA. 70+42+/- -L- TO STA. 71+02+/- -L- (UNANCHORED)
  - STA. 71+02+/- -L- TO STA. 72+22+/- -L- (ANCHORED)
  - STA. 72+22+/- -L- TO STA. 72+92+/- -L- (UNANCHORED)

STEP 2. AWAY FROM TRAFFIC, WIDEN -L- LINE, INCLUDING STAGE I (BRIDGE), APPROACHES,TEMPORARY BRIDGE GUARDRAIL (SEE STRUCTURES PLANS), SHORING, DRAINAGE, CULVERT REMOVAL, AND TEMPORARY GUARDRAIL UP TO BUT NOT INCLUDING THE FINAL LAYER OF SURFACE COURSE AS FOLLOWS (SEE CONSTRUCTION PLANS AND TMP-31):

- STA. 69+56+/- -L- TO STA. 73+65+/- -L-

PHASE III

STEP 1. USING RSD NO. 1101.02 (SHEET 1 OF 15), PLACE TEMPORARY PAVEMENT MARKINGS AND MARKERS AS FOLLOWS (SEE CONSTRUCTION PLANS AND TMP-33):

- STA. 69+50+/- -L- TO STA. 73+65+/- -L-
- SHIFT TRAFFIC FROM A ONE-LANE, TWO-WAY TRAFFIC TO A ONE-LANE, TWO-WAY TRAFFIC PATTERN ON -L- LINE.
- RESET PORTABLE CONCRETE BARRIER AS FOLLOWS (SEE TMP-33):
  - STA. 70+44+/- -L- TO STA. 70+94+/- -L- (UNANCHORED)
  - STA. 70+94+/- -L- TO STA. 71+14+/- -L- (ANCHORED)
  - STA. 72+02+/- -L- TO STA. 72+22+/- -L- (ANCHORED)
  - STA. 72+22+/- -L- TO STA. 72+82+/- -L- (UNANCHORED)

STEP 2. AWAY FROM TRAFFIC, CONSTRUCT STAGE II (BRIDGE), APPROACHES, DRAINAGE, CULVERT REMOVAL, PERMANENT GUARDRAIL, AND TEMPORARY PAVEMENT REMOVAL, UP TO BUT NOT INCLUDING THE FINAL LAYER OF SURFACE COURSE AS FOLLOWS (SEE CONSTRUCTION PLANS AND TMP-33):

- STA. 69+56+/- -L- TO STA. 73+65+/- -L-

PHASE IV

STEP 1. USING RSD NO. 1101.02 (SHEET 1 OF 15), DEACTIVATE TEMPORARY SIGNALS,REMOVE PCB, AND PLACE TEMPORARY PAVEMENT MARKINGS AND MARKERS AS FOLLOWS (SEE CONSTRUCTION PLANS AND TMP-35):

- STA. 69+50+/- -L- TO STA. 74+65+/- -L-
- SHIFT TRAFFIC FROM A ONE-LANE, TWO-WAY TRAFFIC TO A TWO-LANE, TWO-WAY TRAFFIC PATTERN ON -L- LINE.

STEP 2. USING RSD NO. 1101.02 (SHEET 1 OF 15), REMOVE TEMPORARY PAVEMENT, COMPLETE DRAINAGE, AND INSTALL PERMANENT GUARDRAIL (SEE CONSTRUCTION PLANS AND TMP-35):

- REMOVE ALL TRAFFIC CONTROL DEVICES AND ADVANCE WARNING SIGNS FROM SITE 1, US 21 (-L-).

APPROVED: _____ DATE: _____

SEAL

NORTH CAROLINA PROFESSIONAL SEAL 19862 ENGINEER J. W. WOOLARD JR. 5/29/13

DIVISION OF HIGHWAYS * STATE OF NORTH CAROLINA * DEPARTMENT OF TRANSPORTATION * WORK ZONE TRAFFIC CONTROL

TEMPORARY TRAFFIC CONTROL PHASING

5/28/2013
P:\tipprojects-r\r3101\traffic\trafficcontrol\tcp\general\R3101_TC_GEN_TMP03A.dgn
User:scoots

PROJ. REFERENCE NO.	SHEET NO.
R-3101	TMP-3B

TEMPORARY TRAFFIC CONTROL PHASING

CONSTRUCTION OF PROPOSED SITE 2
STA. 184+09+/- -L-

PHASE I

STEP 1. USING RSD NO. 1101.02 (SHEET 1 OF 15), WIDEN -L- LINE, PAVE/WEDGE TEMPORARY PAVEMENT (IF NECESSARY), AND CONSTRUCT DRAINAGE AS FOLLOWS (SEE CONSTRUCTION PLANS AND TMP-37):

- STA. 182+42+/- -L- TO STA. 185+49+/- -L-

- INSTALL/CONSTRUCT TEMPORARY SIGNALS, BUT DO NOT ACTIVATE (SEE SIGNALS PLAN).

PHASE II

STEP 1. INSTALL ALL OFF-SITE DETOUR SIGNING (SEE TMP-41)

- USING RSD NO. 1101.03 (SHEET 2 OF 9), CLOSE -Y9- (CHERRY LANE RD./SR 1106) FROM STA. 9+50+/- -Y9- TO STA. 11+50+/- -Y9- AND -Y10- (BRUSH CREEK RD./SR 1471) FROM STA. 10+20+/- -Y10- TO STA. 11+25+/- -Y10- (SEE TMP-39).

STEP 2. USING RSD NO. 1101.02 (SHEET 1 OF 15), PLACE TEMPORARY PAVEMENT MARKINGS AND MARKERS. USING RSD 1101.02 (SHEET 14 OF 15) FOR PLACEMENT OF WARNING SIGNS. ACTIVATE TEMPORARY SIGNALS AS FOLLOWS (SEE CONSTRUCTION PLANS AND TMP-39):

- STA. 181+52+/- -L- TO STA. 186+19+/- -L-

- SHIFT TRAFFIC FROM A TWO-LANE, TWO-WAY TRAFFIC TO A ONE-LANE, TWO-WAY TRAFFIC PATTERN ON -L- LINE.

- PLACE PORTABLE CONCRETE BARRIER AS FOLLOWS (SEE TMP-39):
  - STA. 183+27+/- -L- TO STA. 183+77+/- -L- (UNANCHORED)
  - STA. 183+77+/- -L- TO STA. 184+37+/- -L- (ANCHORED)
  - STA. 184+37+/- -L- TO STA. 184+77+/- -L- (UNANCHORED)

STEP 3. AWAY FROM TRAFFIC, WIDEN -L- LINE, INSTALL STAGE I (96" CSP) AND HEADWALL, SHORING, AND TEMPORARY GUARDRAIL, UP TO, BUT NOT INCLUDING THE FINAL LAYER OF SURFACE COURSE AS FOLLOWS (SEE CONSTRUCTION PLANS AND TMP-39):

- STA. 183+24+/- -L- TO STA. 185+49+/- -L-

PHASE III

STEP 1. USING RSD NO. 1101.02 (SHEET 1 OF 15), PLACE TEMPORARY PAVEMENT MARKINGS AND MARKERS AS FOLLOWS (SEE CONSTRUCTION PLANS AND TMP-42):

- STA. 182+42+/- -L- TO STA. 185+49+/- -L-

- SHIFT TRAFFIC FROM A ONE-LANE, TWO-WAY TRAFFIC TO A ONE-LANE, TWO-WAY TRAFFIC PATTERN ON -L- LINE.

- RESET PORTABLE CONCRETE BARRIER AS FOLLOWS (SEE TMP-42):
  - STA. 183+15+/- -L- TO STA. 183+65+/- -L- (UNANCHORED)
  - STA. 183+65+/- -L- TO STA. 184+35+/- -L- (ANCHORED)
  - STA. 184+35+/- -L- TO STA. 184+95+/- -L- (UNANCHORED)

STEP 2. AWAY FROM TRAFFIC, COMPLETE 96" CSP INSTALLATION AND CONSTRUCT DRAINAGE STRUCTURE, REMOVE EXISTING CULVERT, AND DRAINAGE (SEE CONSTRUCTION PLANS AND TMP-42):

PHASE IV

STEP 1. USING RSD NO. 1101.02 (SHEET 1 OF 15), PLACE TEMPORARY PAVEMENT MARKINGS AND MARKERS AS FOLLOWS (SEE CONSTRUCTION PLANS AND TMP-44):

- STA. 182+42+/- -L- TO STA. 185+49+/- -L-

- SHIFT TRAFFIC FROM A ONE-LANE, TWO-WAY TRAFFIC TO A ONE-LANE, TWO-WAY TRAFFIC PATTERN ON -L- LINE.

- RESET PORTABLE CONCRETE BARRIER AS FOLLOWS (SEE TMP-44):
  - STA. 183+17+/- -L- TO STA. 183+67+/- -L- (UNANCHORED)
  - STA. 183+67+/- -L- TO STA. 184+37+/- -L- (ANCHORED)
  - STA. 184+37+/- -L- TO STA. 184+77+/- -L- (UNANCHORED)

STEP 2. AWAY FROM TRAFFIC, COMPLETE REMOVAL OF EXISTING CULVERT AND HEADWALL, CONSTRUCT RETAINING WALL, INSTALL PERMANENT GUARDRAIL (SEE CONSTRUCTION PLANS AND TMP-44).

PHASE V

STEP 1. USING RSD NO. 1101.02 (SHEET 1 OF 15), DEACTIVATE TEMPORARY SIGNALS,REMOVE PCB, AND PLACE TEMPORARY PAVEMENT MARKINGS AND MARKERS AS FOLLOWS (SEE CONSTRUCTION PLANS AND TMP-46):

- STA. 181+52+/- -L- TO STA. 186+19+/- -L-

- SHIFT TRAFFIC FROM A ONE-LANE, TWO-WAY TRAFFIC TO A TWO-LANE, TWO-WAY TRAFFIC PATTERN ON -L- LINE.

- REMOVE ALL TRAFFIC CONTROL DEVICES, BARRICADES, AND DETOUR SIGNS FROM -Y9- (CHERRY LANE RD.) AND -Y10- (BRUSH CREEK RD.) AND REOPEN TO TRAFFIC.

STEP 2. USING RSD NO. 1101.02 (SHEET 1 OF 15), CONSTRUCT EXPRESSWAY GUTTER AS FOLLOWS (SEE CONSTRUCTION PLANS AND TMP-46):

- STA. 183+35+/- -L- TO STA. 188+00+/- -L-

CONSTRUCTION OF PROPOSED SITE 3
STA. 372+50+/- -L-

PHASE I

STEP 1. USING RSD NO. 1101.02 (SHEET 1 OF 15), WIDEN -L- LINE, INCLUDING SHORING, INSTALL DRAINAGE PIPE, CONSTRUCT TEMPORARY PAVEMENT, AND INSTALL TEMPORARY GUARDRAIL AS FOLLOWS (SEE CONSTRUCTION PLANS AND TMP-48):

- STA. 371+58+/- -L- TO STA. 373+58+/- -L-

- INSTALL/CONSTRUCT TEMPORARY SIGNALS, BUT DO NOT ACTIVATE (SEE SIGNALS PLAN).

ICT - 21 DAYS

CONTRACTOR SHALL WORK IN A CONTINUOUS MANNER TO COMPLETE THE FOLLOWING IN SITE 3, PHASE II THRU PHASE IV, IN 21 CALENDAR DAYS. (SEE INTERMEDIATE CONTRACT TIME AND SPECIAL PROVISIONS).

PHASE II

STEP 1. INSTALL ALL OFF-SITE DETOUR SIGNING (SEE TMP-52)

- USING RSD NO. 1101.03 (SHEET 2 OF 9), CLOSE -Y17- (GLADE VALLEY RD./SR 1106) FROM STA. 10+20+/- -Y17- TO STA. 12+50+/- -Y17-.

STEP 2. USING RSD NO. 1101.02 (SHEET 1 OF 15), PLACE TEMPORARY PAVEMENT MARKINGS AND MARKERS. USING RSD 1101.02 (SHEET 14 OF 15) FOR PLACEMENT OF WARNING SIGNS. ACTIVATE TEMPORARY SIGNALS AS FOLLOWS (SEE CONSTRUCTION PLANS AND TMP-50):

- STA. 370+83+/- -L- TO STA. 374+33+/- -L-

- SHIFT TRAFFIC FROM A TWO-LANE, TWO-WAY TRAFFIC TO A ONE-LANE, TWO-WAY TRAFFIC PATTERN ON -L- LINE.

- PLACE PORTABLE CONCRETE BARRIER AS FOLLOWS (SEE TMP-50):
  - STA. 372+14+/- -L- TO STA. 372+44+/- -L- (UNANCHORED)
  - STA. 372+44+/- -L- TO STA. 372+74+/- -L- (ANCHORED)
  - STA. 372+74+/- -L- TO STA. 373+04+/- -L- (UNANCHORED)

STEP 3. AWAY FROM TRAFFIC, WIDEN -L- LINE, CONSTRUCT SHORING, REMOVE EXISTING CULVERT, CONSTRUCT HEADWALL, UP TO BUT NOT INCLUDING THE FINAL LAYER OF SURFACE COURSE AS FOLLOWS (SEE CONSTRUCTION PLANS AND TMP-50):

- STA. 371+58+/- -L- TO STA. 373+58+/- -L-

AWAY FROM TRAFFIC, CONSTRUCT -Y17-, INCLUDING ISLAND REMOVAL, UP TO BUT NOT INCLUDING THE FINAL LAYER OF SURFACE COURSE AS FOLLOWS (SEE CONSTRUCTION PLANS AND TMP-50):

- STA. 10+50+/- -Y17- TO STA. 12+50+/- -Y17-

ICT - 21 DAYS (CONTINUED)

PHASE III

STEP 1. USING RSD NO. 1101.02 (SHEET 1 OF 15), PLACE TEMPORARY PAVEMENT MARKINGS AND MARKERS AS FOLLOWS (SEE CONSTRUCTION PLANS AND TMP-53):

- STA. 371+58+/- -L- TO STA. 373+73+/- -L-

- SHIFT TRAFFIC FROM A ONE-LANE, TWO-WAY TRAFFIC TO A ONE-LANE, TWO-WAY TRAFFIC PATTERN ON -L- LINE.

- RESET PORTABLE CONCRETE BARRIER AS FOLLOWS (SEE TMP-53):
  - STA. 372+19+/- -L- TO STA. 372+49+/- -L- (UNANCHORED)
  - STA. 372+49+/- -L- TO STA. 372+79+/- -L- (ANCHORED)
  - STA. 372+79+/- -L- TO STA. 373+09+/- -L- (UNANCHORED)

STEP 2. AWAY FROM TRAFFIC, WIDEN -L- LINE, INCLUDING EXISTING CULVERT REMOVAL, PERMANENT GUARDRAIL INSTALLATION, AND CONSTRUCT HEADWALL UP TO BUT NOT INCLUDING THE FINAL LAYER OF SURFACE COURSE AS FOLLOWS (SEE CONSTRUCTION PLANS AND TMP-53):

- STA. 371+58+/- -L- TO STA. 373+58+/- -L-

PHASE IV

STEP 1. USING RSD NO. 1101.02 (SHEET 1 OF 15), DEACTIVATE TEMPORARY SIGNALS,REMOVE PCB, AND PLACE TEMPORARY PAVEMENT MARKINGS AND MARKERS AS FOLLOWS (SEE CONSTRUCTION PLANS AND TMP-55):

- STA. 370+83+/- -L- TO STA. 374+33+/- -L-
- STA. 10+21+/- -Y17- TO STA. 12+50+/- -Y17-

- SHIFT TRAFFIC FROM A ONE-LANE, TWO-WAY TRAFFIC TO A TWO-LANE, TWO-WAY TRAFFIC PATTERN ON -L- LINE.

STEP 2. REMOVE ALL TYPE III BARRICADES AND DETOUR SIGNING. REOPEN -Y17- (VALLEY GLADE ROAD/SR 1106) TO A 2-LANE, 2-WAY TRAFFIC PATTERN.

- REMOVE ALL TRAFFIC CONTROL DEVICES AND ADVANCE WARNING SIGNS FROM SITE 3, US 21 (-L-).

CONSTRUCTION OF PROPOSED SITE 4
STA. 393+57+/- -L-

PHASE I

STEP 1. USING RSD NO. 1101.02 (SHEET 1 OF 15), WIDEN -L- LINE, INSTALL TEMPORARY DRAINAGE PIPES, CONSTRUCT TEMPORARY PAVEMENT, AND INSTALL TEMPORARY GUARDRAIL AS FOLLOWS (SEE CONSTRUCTION PLANS AND TMP-57):

- STA. 391+37+/- -L- TO STA. 395+77+/- -L-

- INSTALL/CONSTRUCT TEMPORARY SIGNALS, BUT DO NOT ACTIVATE (SEE SIGNALS PLAN).

PHASE II

STEP 1. USING RSD NO. 1101.02 (SHEET 1 OF 15), PLACE TEMPORARY PAVEMENT MARKINGS AND MARKERS. USING RSD 1101.02 (SHEET 14 OF 15) FOR PLACEMENT OF WARNING SIGNS. ACTIVATE TEMPORARY SIGNALS AS FOLLOWS (SEE CONSTRUCTION PLANS AND TMP-59):

- STA. 390+37+/- -L- TO STA. 396+77+/- -L-

- SHIFT TRAFFIC FROM A TWO-LANE, TWO-WAY TRAFFIC TO A ONE-LANE, TWO-WAY TRAFFIC PATTERN ON -L- LINE.

- PLACE PORTABLE CONCRETE BARRIER AS FOLLOWS (SEE TMP-59):
  - STA. 392+22+/- -L- TO STA. 392+82+/- -L- (UNANCHORED)
  - STA. 392+82+/- -L- TO STA. 394+32+/- -L- (ANCHORED)
  - STA. 394+32+/- -L- TO STA. 394+92+/- -L- (UNANCHORED)

APPROVED: _____ DATE: _____

SEAL

NORTH CAROLINA PROFESSIONAL SEAL 19862 ENGINEER J. W. WOOLARD JR.

7/11/13

DIVISION OF HIGHWAYS * STATE OF NORTH CAROLINA * DEPARTMENT OF TRANSPORTATION * WORK ZONE TRAFFIC CONTROL

TEMPORARY TRAFFIC CONTROL PHASING

7/11/2013
P:\TIPProjects-R\R3101\Traffic\TrafficControl\TCP\GENERAL\R3101_TC_GEN_TMP03B.dgn
User:scodts

PROJ. REFERENCE NO.	SHEET NO.
R-3101	TMP-3C

TEMPORARY TRAFFIC CONTROL PHASING

CONSTRUCTION OF PROPOSED SITE 4 STA. 393+57+/- -L- (CONTINUED)

PHASE II (CONTINUED)

STEP 2. AWAY FROM TRAFFIC, WIDEN -L- LINE, INCLUDING STAGE I (BRIDGE), APPROACHES,SHORING, DRAINAGE, CULVERT REMOVAL, AND TEMPORARY GUARDRAIL UP TO BUT NOT INCLUDING THE FINAL LAYER OF SURFACE COURSE AS FOLLOWS (SEE CONSTRUCTION PLANS AND TMP-59):

- STA. 391+37+/- -L- TO STA. 395+77+/- -L-

PHASE III

STEP 1. USING RSD NO. 1101.02 (SHEET 1 OF 15), PLACE TEMPORARY PAVEMENT MARKINGS AND MARKERS AS FOLLOWS (SEE CONSTRUCTION PLANS AND TMP-61):

- STA. 391+37+/- -L- TO STA. 395+77+/- -L-

- SHIFT TRAFFIC FROM A ONE-LANE, TWO-WAY TRAFFIC TO A ONE-LANE, TWO-WAY TRAFFIC PATTERN ON -L- LINE.

- RESET PORTABLE CONCRETE BARRIER AS FOLLOWS (SEE TMP-61):
  - STA. 392+22+/- -L- TO STA. 392+82+/- -L- (UNANCHORED)
  - STA. 392+82+/- -L- TO STA. 394+32+/- -L- (ANCHORED)
  - STA. 394+32+/- -L- TO STA. 394+92+/- -L- (UNANCHORED)

STEP 2. AWAY FROM TRAFFIC, WIDEN -L- LINE, INCLUDING STAGE II (BRIDGE), APPROACHES, DRAINAGE, CULVERT REMOVAL, PERMANENT GUARDRAIL, AND TEMPORARY PAVEMENT REMOVAL, UP TO BUT NOT INCLUDING THE FINAL LAYER OF SURFACE COURSE AS FOLLOWS (SEE CONSTRUCTION PLANS AND TMP-61):

- STA. 391+37+/- -L- TO STA. 395+77+/- -L-

PHASE IV

STEP 1. USING RSD NO. 1101.02 (SHEET 1 OF 15), DEACTIVATE TEMPORARY SIGNALS,REMOVE PCB, AND PLACE TEMPORARY PAVEMENT MARKINGS AND MARKERS AS FOLLOWS (SEE CONSTRUCTION PLANS AND TMP-63):

- STA. 390+37+/- -L- TO STA. 396+77+/- -L-

- SHIFT TRAFFIC FROM A ONE-LANE, TWO-WAY TRAFFIC TO A TWO-LANE, TWO-WAY TRAFFIC PATTERN ON -L- LINE.

STEP 2. USING RSD NO. 1101.02 (SHEET 1 OF 15), REMOVE TEMPORARY PAVEMENT, COMPLETE DRAINAGE, AND INSTALL PERMANENT GUARDRAIL (SEE CONSTRUCTION PLANS AND TMP-63):

- REMOVE ALL TRAFFIC CONTROL DEVICES AND ADVANCE WARNING SIGNS FROM SITE 4, US 21 (-L-).

CONSTRUCTION OF PROPOSED SITE 5 STA. 405+28+/- -L-

PHASE I

STEP 1. USING RSD NO. 1101.02 (SHEET 1 OF 15), CONSTRUCT TEMPORARY PAVEMENT AND TEMPORARY GUARDRAIL AS FOLLOWS (SEE CONSTRUCTION PLANS AND TMP-65):

- STA. 403+62+/- -L- TO STA. 406+93+/- -L-

- INSTALL/CONSTRUCT TEMPORARY SIGNALS, BUT DO NOT ACTIVATE (SEE SIGNALS PLAN).

PHASE II

STEP 1. INSTALL ALL OFF-SITE DETOUR SIGNING (SEE TMP-69)

- USING RSD NO. 1101.03 (SHEET 2 OF 9), CLOSE -Y21- (SHERIFF RD./SR 1422) FROM STA. 10+17+/- -Y17- TO STA. 12+00+/- -Y21-.

STEP 2. USING RSD NO. 1101.02 (SHEET 1 OF 15), PLACE TEMPORARY PAVEMENT MARKINGS AND MARKERS. USING RSD 1101.02 (SHEET 14 OF 15) FOR PLACEMENT OF WARNING SIGNS. ACTIVATE TEMPORARY SIGNALS AS FOLLOWS (SEE CONSTRUCTION PLANS AND TMP-67):

- STA. 402+72+/- -L- TO STA. 407+93+/- -L-

- SHIFT TRAFFIC FROM A TWO-LANE, TWO-WAY TRAFFIC TO A ONE-LANE, TWO-WAY TRAFFIC PATTERN ON -L- LINE.

- PLACE PORTABLE CONCRETE BARRIER AS FOLLOWS (SEE TMP-67):
  - STA. 404+37+/- -L- TO STA. 404+87+/- -L- (UNANCHORED)
  - STA. 404+87+/- -L- TO STA. 405+67+/- -L- (ANCHORED)
  - STA. 405+67+/- -L- TO STA. 406+17+/- -L- (UNANCHORED)

STEP 3. AWAY FROM TRAFFIC, WIDEN -L- LINE, INCLUDING STAGE I (CULVERT), SHORING, DRAINAGE, AND TEMPORARY GUARDRAIL UP TO BUT NOT INCLUDING THE FINAL LAYER OF SURFACE COURSE AS FOLLOWS (SEE CONSTRUCTION PLANS AND TMP-67):

- STA. 403+62+/- -L- TO STA. 406+45+/- -L-

AWAY FROM TRAFFIC, CONSTRUCT -Y21-, UP TO BUT NOT INCLUDING THE FINAL LAYER OF SURFACE COURSE AS FOLLOWS (SEE CONSTRUCTION PLANS AND TMP-67):

- STA. 10+17+/- -Y21- TO STA. 12+00+/- -Y21-

PHASE III

STEP 1. USING RSD NO. 1101.02 (SHEET 1 OF 15), PLACE TEMPORARY PAVEMENT MARKINGS AND MARKERS AS FOLLOWS (SEE CONSTRUCTION PLANS AND TMP-70):

- STA. 403+62+/- -L- TO STA. 406+93+/- -L-

- SHIFT TRAFFIC FROM A ONE-LANE, TWO-WAY TRAFFIC TO A ONE-LANE, TWO-WAY TRAFFIC PATTERN ON -L- LINE.

- RESET PORTABLE CONCRETE BARRIER AS FOLLOWS (SEE TMP-70):
  - STA. 404+37+/- -L- TO STA. 404+87+/- -L- (UNANCHORED)
  - STA. 404+87+/- -L- TO STA. 405+67+/- -L- (ANCHORED)
  - STA. 405+67+/- -L- TO STA. 406+17+/- -L- (UNANCHORED)

STEP 2. AWAY FROM TRAFFIC, CONSTRUCT STAGE II (CULVERT), INCLUDING PERMANENT GUARDRAIL, AND TEMPORARY PAVEMENT REMOVAL, UP TO BUT NOT INCLUDING THE FINAL LAYER OF SURFACE COURSE AS FOLLOWS (SEE CONSTRUCTION PLANS AND TMP-70):

- STA. 403+62+/- -L- TO STA. 406+93+/- -L-

PHASE IV

STEP 1. USING RSD NO. 1101.02 (SHEET 1 OF 15), DEACTIVATE TEMPORARY SIGNALS,REMOVE PCB, AND PLACE TEMPORARY PAVEMENT MARKINGS AND MARKERS AS FOLLOWS (SEE CONSTRUCTION PLANS AND TMP-72):

- STA. 402+72+/- -L- TO STA. 407+93+/- -L-

- SHIFT TRAFFIC FROM A ONE-LANE, TWO-WAY TRAFFIC TO A TWO-LANE, TWO-WAY TRAFFIC PATTERN ON -L- LINE.

STEP 2. USING RSD NO. 1101.02 (SHEET 1 OF 15), REMOVE TEMPORARY PAVEMENT AND INSTALL PERMANENT GUARDRAIL (SEE CONSTRUCTION PLANS AND TMP-72):

- REMOVE ALL TRAFFIC CONTROL DEVICES AND ADVANCE WARNING SIGNS FROM SITE 5, US 21 (-L-).

- REMOVE ALL TYPE III BARRICADES AND DETOUR SIGNING. REOPEN -Y21- (SHERIFF ROAD/SR 1422) TO A TWO-LANE, TWO-WAY TRAFFIC PATTERN.

CONSTRUCTION OF PROPOSED SITE 6 STA. 442+13+/- -L-

PHASE I

STEP 1. USING RSD NO. 1101.02 (SHEET 1 OF 15), WIDEN -L- LINE, CONSTRUCT TEMPORARY PAVEMENT, AND INSTALL TEMPORARY GUARDRAIL AS FOLLOWS (SEE CONSTRUCTION PLANS AND TMP-74):

- STA. 440+65+/- -L- TO STA. 443+54+/- -L-

- INSTALL/CONSTRUCT TEMPORARY SIGNALS, BUT DO NOT ACTIVATE (SEE SIGNALS PLAN).

PHASE II

STEP 1. USING RSD NO. 1101.02 (SHEET 1 OF 15), PLACE TEMPORARY PAVEMENT MARKINGS AND MARKERS. USING RSD 1101.02 (SHEET 14 OF 15) FOR PLACEMENT OF WARNING SIGNS. ACTIVATE TEMPORARY SIGNALS AS FOLLOWS (SEE CONSTRUCTION PLANS AND TMP-76):

- STA. 439+65+/- -L- TO STA. 444+44+/- -L-

- SHIFT TRAFFIC FROM A TWO-LANE, TWO-WAY TRAFFIC TO A ONE-LANE, TWO-WAY TRAFFIC PATTERN ON -L- LINE.

- PLACE PORTABLE CONCRETE BARRIER AS FOLLOWS (SEE TMP-76):
  - STA. 441+39+/- -L- TO STA. 441+89+/- -L- (UNANCHORED)
  - STA. 441+89+/- -L- TO STA. 442+39+/- -L- (ANCHORED)
  - STA. 442+39+/- -L- TO STA. 442+59+/- -L- (UNANCHORED)

STEP 2. AWAY FROM TRAFFIC, WIDEN -L- LINE, INCLUDING STAGE I (CULVERT), EXISTING CULVERT REMOVAL, SHORING, AND TEMPORARY GUARDRAIL UP TO, BUT NOT INCLUDING THE FINAL LAYER OF SURFACE COURSE AS FOLLOWS (SEE CONSTRUCTION PLANS AND TMP-76):

- STA. 440+65+/- -L- TO STA. 443+54+/- -L-

PHASE III

STEP 1. USING RSD NO. 1101.02 (SHEET 1 OF 15), PLACE TEMPORARY PAVEMENT MARKINGS AND MARKERS AS FOLLOWS (SEE CONSTRUCTION PLANS AND TMP-78):

- STA. 440+65+/- -L- TO STA. 443+54+/- -L-

- SHIFT TRAFFIC FROM A ONE-LANE, TWO-WAY TRAFFIC TO A ONE-LANE, TWO-WAY TRAFFIC PATTERN ON -L- LINE.

- RESET PORTABLE CONCRETE BARRIER AS FOLLOWS (SEE TMP-78):
  - STA. 441+39+/- -L- TO STA. 441+89+/- -L- (UNANCHORED)
  - STA. 441+89+/- -L- TO STA. 442+29+/- -L- (ANCHORED)
  - STA. 442+29+/- -L- TO STA. 442+69+/- -L- (UNANCHORED)

STEP 2. AWAY FROM TRAFFIC, CONSTRUCT STAGE II (CULVERT), EXISTING CULVERT REMOVAL, PERMANENT GUARDRAIL, AND TEMPORARY PAVEMENT REMOVAL, UP TO, BUT NOT INCLUDING THE FINAL LAYER OF SURFACE COURSE AS FOLLOWS (SEE CONSTRUCTION PLANS AND TMP-78):

- STA. 440+65+/- -L- TO STA. 443+54+/- -L-

PHASE IV

STEP 1. USING RSD NO. 1101.02 (SHEET 1 OF 15), DEACTIVATE TEMPORARY SIGNALS,REMOVE PCB, AND PLACE TEMPORARY PAVEMENT MARKINGS AND MARKERS AS FOLLOWS (SEE CONSTRUCTION PLANS AND TMP-80):

- STA. 439+65+/- -L- TO STA. 444+44+/- -L-

- SHIFT TRAFFIC FROM A ONE-LANE, TWO-WAY TRAFFIC TO A TWO-LANE, TWO-WAY TRAFFIC PATTERN ON -L- LINE.

STEP 2. USING RSD NO. 1101.02 (SHEET 1 OF 15), REMOVE TEMPORARY PAVEMENT, AND INSTALL PERMANENT GUARDRAIL (SEE CONSTRUCTION PLANS AND TMP-80):

- REMOVE ALL TRAFFIC CONTROL DEVICES AND ADVANCE WARNING SIGNS FROM SITE 6, US 21 (-L-).

APPROVED: _____ DATE: _____

SEAL

NORTH CAROLINA PROFESSIONAL SEAL 19862 ENGINEER J. W. WOOLAND, JR.

5/29/13

DIVISION OF HIGHWAYS STATE OF NORTH CAROLINA DEPARTMENT OF TRANSPORTATION WORK ZONE TRAFFIC CONTROL

TEMPORARY TRAFFIC CONTROL PHASING

5/28/2013
p:\tipprojects-r\r3101\traffic\trafficcontrol\tcp\general\R3101_TC_GEN_TMP03C.dgn
User:scodts

PROJ. REFERENCE NO.	SHEET NO.
R-3101	TMP-3D

TEMPORARY TRAFFIC CONTROL PHASING

CONSTRUCTION OF PROPOSED SITE 7
STA. 468+00+/- -L-

PHASE I

STEP 1. USING RSD NO. 1101.02 (SHEET 1 OF 15), INSTALL DRAINAGE PIPE, CONSTRUCT TEMPORARY PAVEMENT, SHORING, AND TEMPORARY GUARDRAIL AS FOLLOWS (SEE CONSTRUCTION PLANS AND TMP-82):

- STA. 466+63+/- -L- TO STA. 469+13+/- -L-

- INSTALL/CONSTRUCT TEMPORARY SIGNALS, BUT DO NOT ACTIVATE (SEE SIGNALS PLAN).

PHASE II

STEP 1. USING RSD NO. 1101.02 (SHEET 1 OF 15), PLACE TEMPORARY PAVEMENT MARKINGS AND MARKERS. USING RSD 1101.02 (SHEET 14 OF 15) FOR PLACEMENT OF WARNING SIGNS. ACTIVATE TEMPORARY SIGNALS AS FOLLOWS (SEE CONSTRUCTION PLANS AND TMP-84):

- STA. 465+88+/- -L- TO STA. 469+88+/- -L-

- SHIFT TRAFFIC FROM A TWO-LANE, TWO-WAY TRAFFIC TO A ONE-LANE, TWO-WAY TRAFFIC PATTERN ON -L- LINE.

- PLACE PORTABLE CONCRETE BARRIER AS FOLLOWS (SEE TMP-84):
  - STA. 467+25+/- -L- TO STA. 467+65+/- -L- (UNANCHORED)
  - STA. 467+65+/- -L- TO STA. 468+15+/- -L- (ANCHORED)
  - STA. 468+15+/- -L- TO STA. 468+55+/- -L- (UNANCHORED)

STEP 2. AWAY FROM TRAFFIC, WIDEN -L- LINE, INCLUDING EXISTING CULVERT REMOVAL, SHORING, CONSTRUCT HEADWALL, AND TEMPORARY GUARDRAIL UP TO BUT NOT INCLUDING THE FINAL LAYER OF SURFACE COURSE AS FOLLOWS (SEE CONSTRUCTION PLANS AND TMP-84):

- STA. 466+63+/- -L- TO STA. 469+13+/- -L-

PHASE III

STEP 1. USING RSD NO. 1101.02 (SHEET 1 OF 15), PLACE TEMPORARY PAVEMENT MARKINGS AND MARKERS AS FOLLOWS (SEE CONSTRUCTION PLANS AND TMP-86):

- STA. 466+63+/- -L- TO STA. 469+13+/- -L-

- SHIFT TRAFFIC FROM A ONE-LANE, TWO-WAY TRAFFIC TO A ONE-LANE, TWO-WAY TRAFFIC PATTERN ON -L- LINE.

- RESET PORTABLE CONCRETE BARRIER AS FOLLOWS (SEE TMP-86):
  - STA. 467+25+/- -L- TO STA. 467+65+/- -L- (UNANCHORED)
  - STA. 467+65+/- -L- TO STA. 468+15+/- -L- (ANCHORED)
  - STA. 468+15+/- -L- TO STA. 468+55+/- -L- (UNANCHORED)

STEP 2. AWAY FROM TRAFFIC, REMOVE EXISTING CULVERT, INSTALL PERMANENT GUARDRAIL, CONSTRUCT HEADWALL, AND TEMPORARY PAVEMENT REMOVAL, UP TO BUT NOT INCLUDING THE FINAL LAYER OF SURFACE COURSE AS FOLLOWS (SEE CONSTRUCTION PLANS AND TMP-86):

- STA. 466+63+/- -L- TO STA. 469+13+/- -L-

PHASE IV

STEP 1. USING RSD NO. 1101.02 (SHEET 1 OF 15), DEACTIVATE TEMPORARY SIGNALS,REMOVE PCB, AND PLACE TEMPORARY PAVEMENT MARKINGS AND MARKERS AS FOLLOWS (SEE CONSTRUCTION PLANS AND TMP-88):

- STA. 465+88+/- -L- TO STA. 469+88+/- -L-

- SHIFT TRAFFIC FROM A ONE-LANE, TWO-WAY TRAFFIC TO A TWO-LANE, TWO-WAY TRAFFIC PATTERN ON -L- LINE.

STEP 2. USING RSD NO. 1101.02 (SHEET 1 OF 15), REMOVE TEMPORARY PAVEMENT AND REMOVE TEMPORARY GUARDRAIL (SEE CONSTRUCTION PLANS AND TMP-88):

- REMOVE ALL TRAFFIC CONTROL DEVICES AND ADVANCE WARNING SIGNS FROM SITE 7, US 21 (-L-).

APPROVED: _____ DATE: _____

SEAL

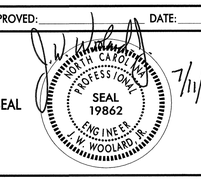

7/11/13

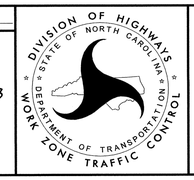

TEMPORARY TRAFFIC CONTROL PHASING

7/11/2013
P:\TIPProjects-R\R3101\Traffic\TrafficControl\TCP\GENERAL\R3101_TC_GEN_TMP03D.dgn
Userscoots

PROJ. REFERENCE NO.	SHEET NO.
R-3101	TMP-4

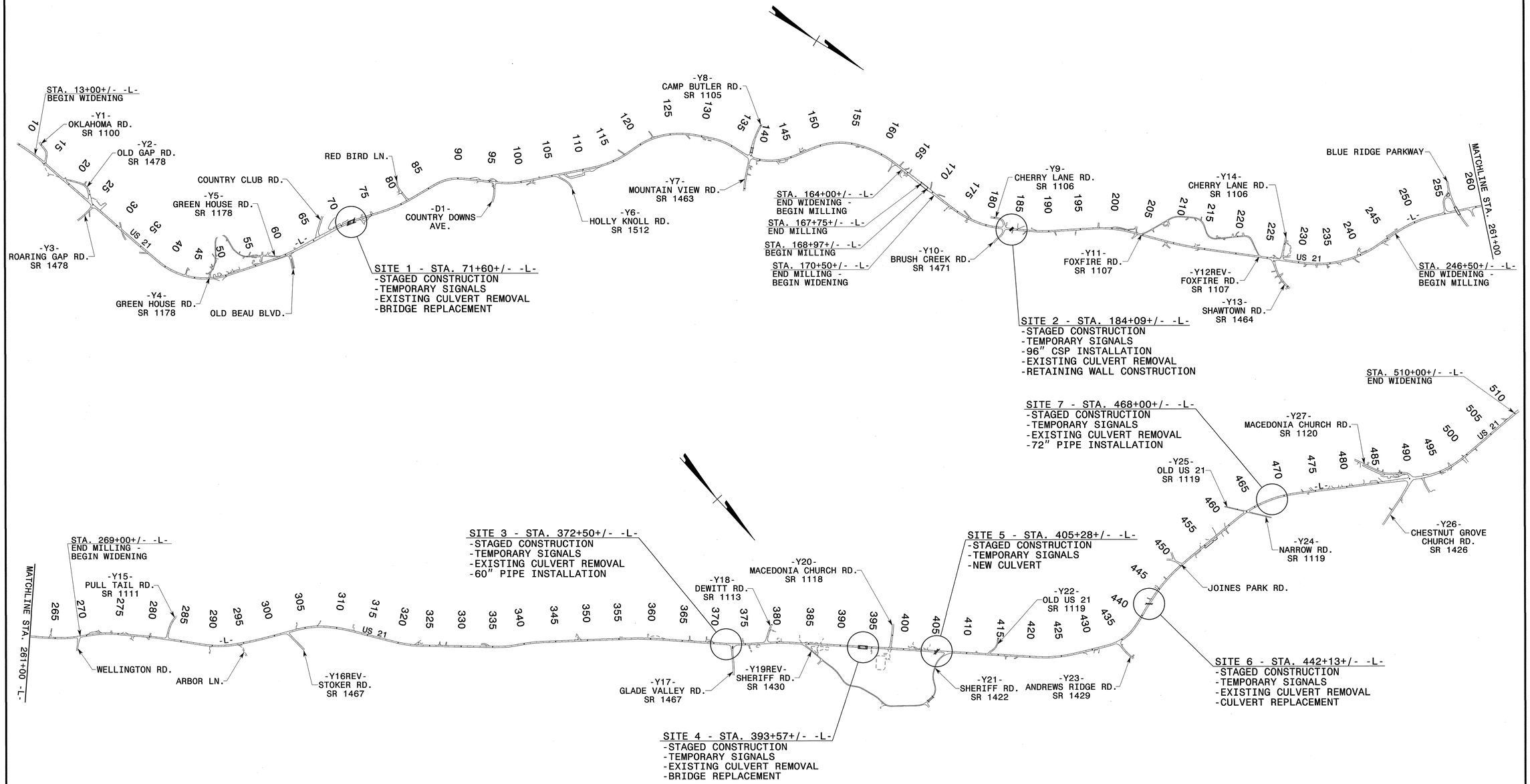

APPROVED: _____ DATE: 5/29/13

SEAL

NORTH CAROLINA PROFESSIONAL SEAL 19862 ENGINEER WILLIAM WOOLARD JR.

DIVISION OF HIGHWAYS * STATE OF NORTH CAROLINA * DEPARTMENT OF TRANSPORTATION WORK ZONE TRAFFIC CONTROL

SITE OVERVIEW

5/28/2013
p:\tlprojects-r\r30\traffic\trafficcontrol\tcp\-L- LINE\R30LTC_PHL_TMP04.dgn
User:scoots

PROJ. REFERENCE NO.	SHEET NO.
R-3101	TMP-5

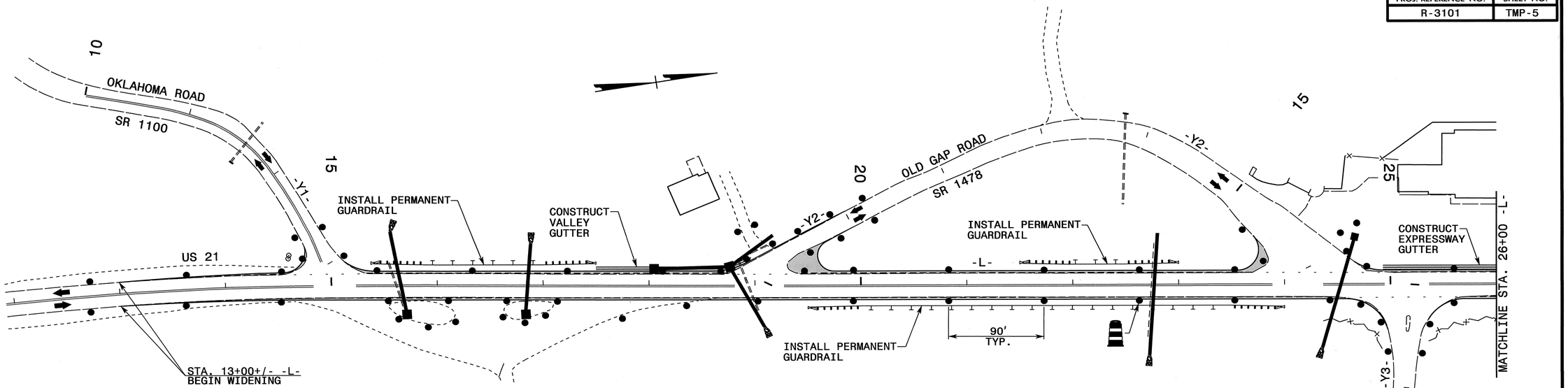

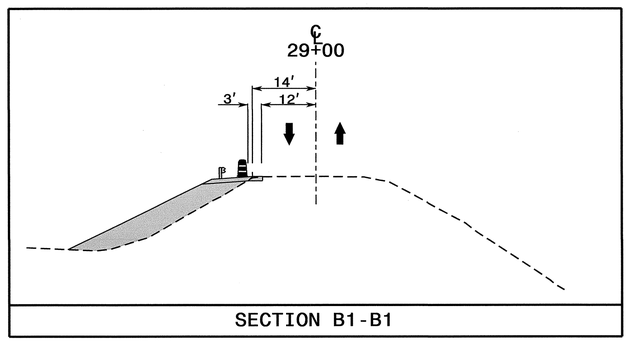

SECTION B1-B1

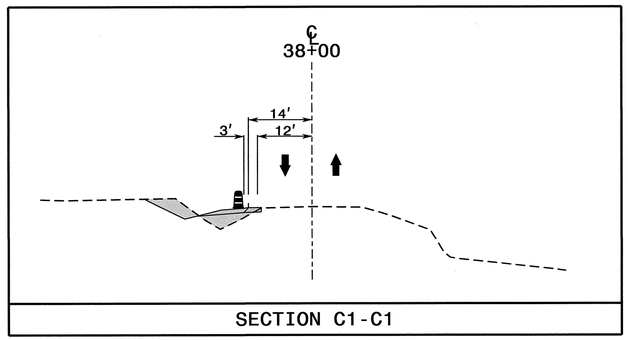

SECTION C1-C1

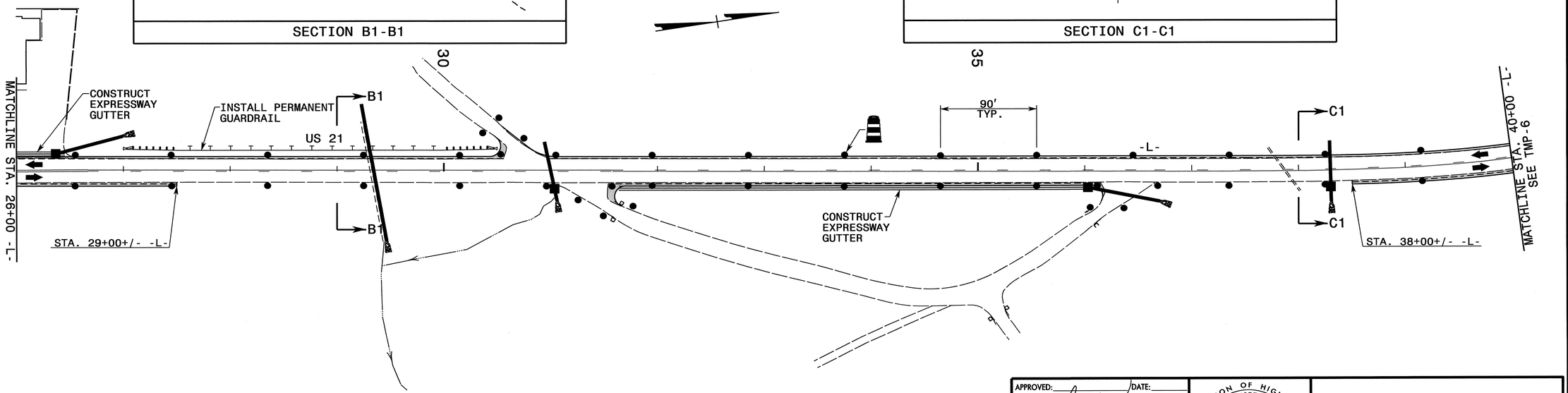

APPROVED: DATE:

SEAL

NORTH CAROLINA PROFESSIONAL SEAL 19862 ENGINEER J. W. WOOLARD, JR.

7/22/13

DIVISION OF HIGHWAYS • STATE OF NORTH CAROLINA • DEPARTMENT OF TRANSPORTATION • WORK ZONE TRAFFIC CONTROL

PHASE I DETAILS

22-JUL-2013 09:05
\\dot\dfsroot01\Proj\TIPProjects-R\R3101\Traffic\TrafficControl\TCP\-L- LINE\R3101_TC_PHI_TMP05.dgn
scoats AT TE265846

PROJ. REFERENCE NO.	SHEET NO.
R-3101	TMP-5A

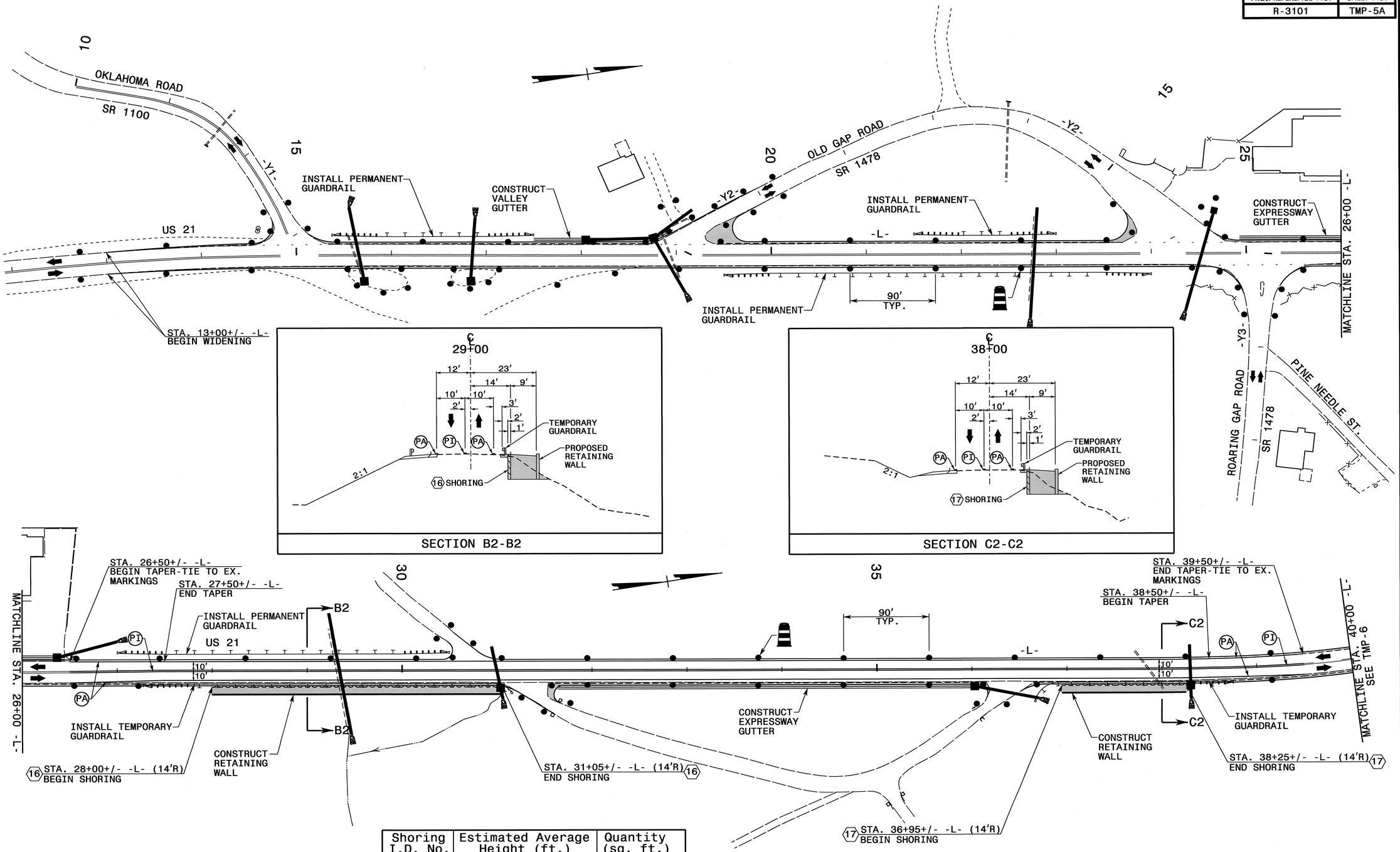

Shoring I.D. No.	Estimated Average Height (ft.)	Quantity (sq. ft.)
16	8.0 FT.	2,440 SQ. FT.
17	7.6 FT.	988 SQ. FT.

APPROVED: DATE:

SEAL — NORTH CAROLINA PROFESSIONAL SEAL 19862 ENGINEER J. W. WOODLAND JR. — 7/22/13

DIVISION OF HIGHWAYS • STATE OF NORTH CAROLINA • DEPARTMENT OF TRANSPORTATION • WORK ZONE TRAFFIC CONTROL

PHASE I DETAILS RETAINING WALLS

22-JUL-2013 09:06
\\dot\dfsroot\Proj\TIPProjects-R\R3101\Traffic\TrafficControl\TCP\-L- LINE\R3101_TC_PHI_TMP05A.dgn
scoots AT TE26946

PROJ. REFERENCE NO.	SHEET NO.
R-3101	TMP-5B

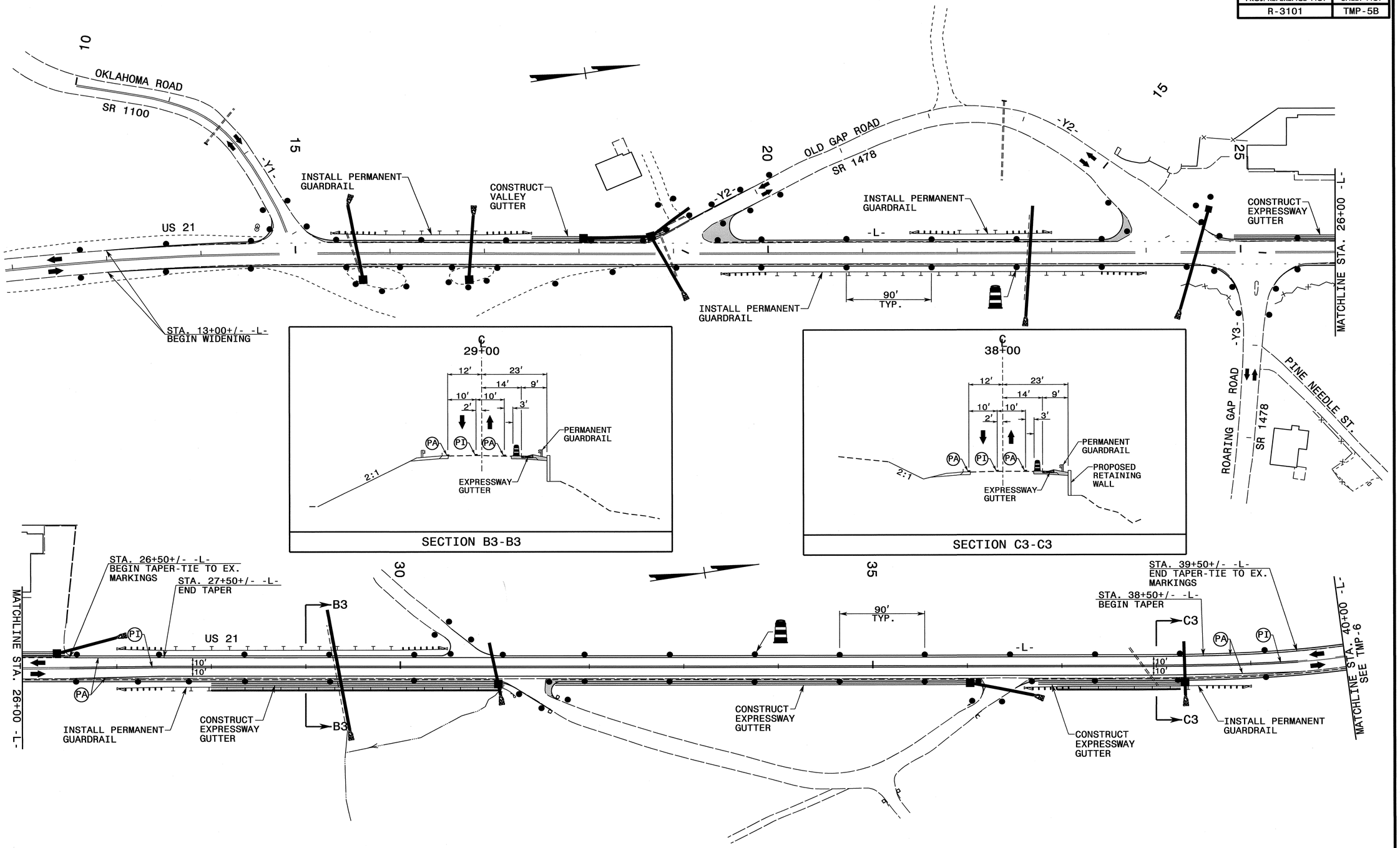

APPROVED: DATE:

SEAL

NORTH CAROLINA PROFESSIONAL SEAL 19862 ENGINEER W. WOOLARD

1/22/13

DIVISION OF HIGHWAYS STATE OF NORTH CAROLINA DEPARTMENT OF TRANSPORTATION WORK ZONE TRAFFIC CONTROL

PHASE I DETAILS RETAINING WALLS

22-JUL-2013 09:07
\\dot\dfsroot01\Proj\TIPProjects-R\R3101\Traffic\TrafficControl\TCP\-L- LINE\R3101_TC_PHI_TMP05B.dgn
scoats AT TE26846

PROJ. REFERENCE NO.	SHEET NO.
R-3101	TMP-6

Shoring I.D. No.	Estimated Average Height (ft.)	Quantity (sq. ft.)
①	9.9 FT.	178 SQ. FT.

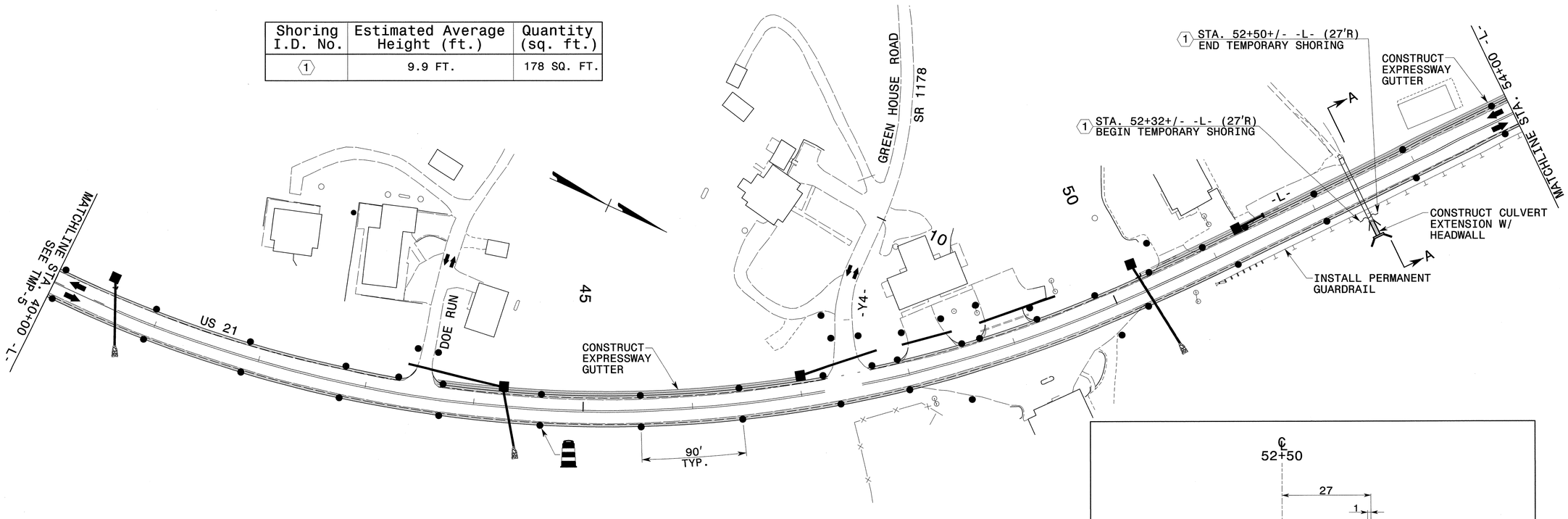

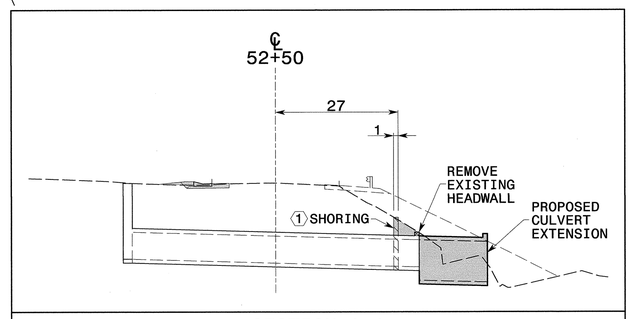

SECTION A-A

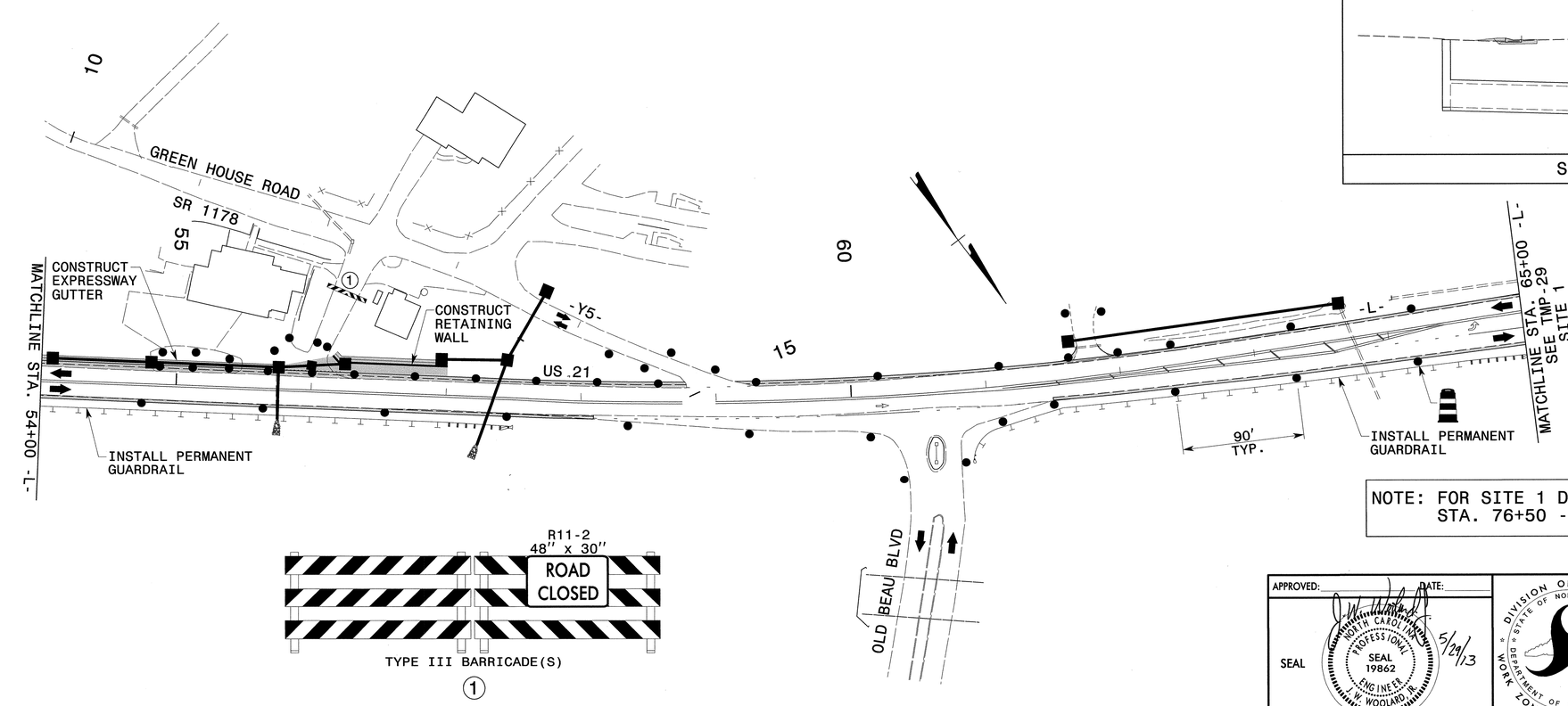

TYPE III BARRICADE(S)

①

NOTE: FOR SITE 1 DETAILS FROM STA. 65+00 -L- TO STA. 76+50 -L-, SEE TMP-29 THRU TMP-36

APPROVED: DATE:

SEAL

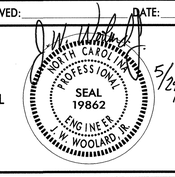

PHASE I DETAILS

5/28/2013
P:\tipprojects-r\r30\traffic\trafficcontrol\tcp\-L- LINE\R30LTC_PHL_TMP06.dgn
User:scodts

PROJ. REFERENCE NO.	SHEET NO.
R-3101	TMP-7

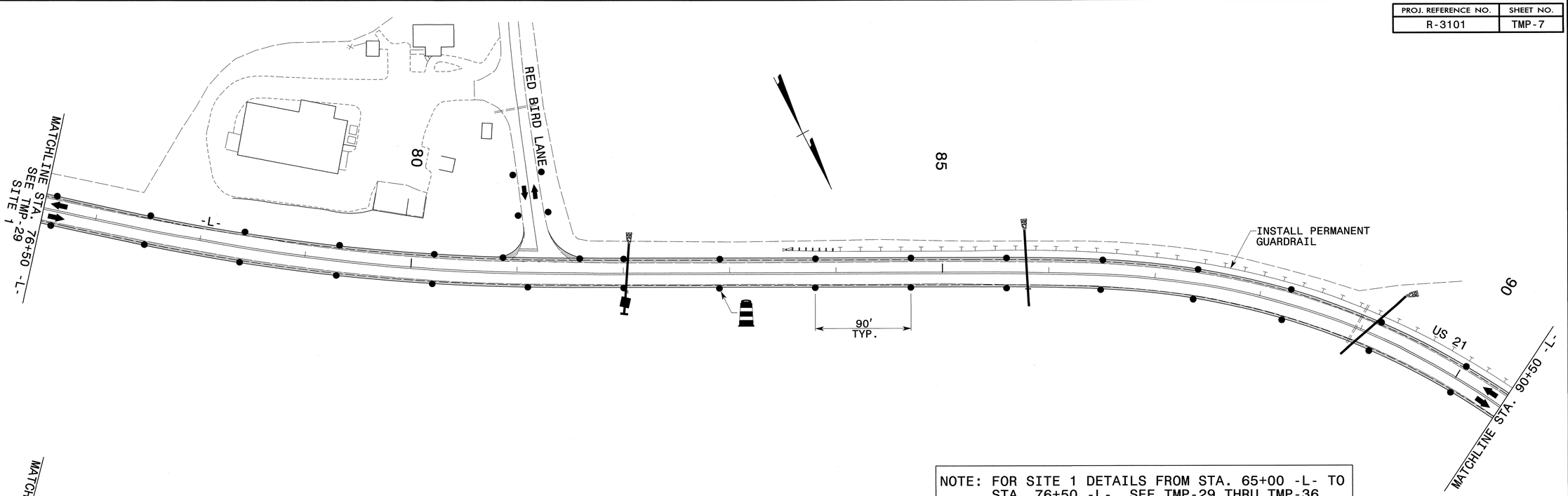

NOTE: FOR SITE 1 DETAILS FROM STA. 65+00 -L- TO STA. 76+50 -L-, SEE TMP-29 THRU TMP-36

TYPE III BARRICADE(S)
①

APPROVED: _____ DATE: _____

SEAL

NORTH CAROLINA PROFESSIONAL SEAL 19862 ENGINEER W. WOOLARD JR. 5/29/13

DIVISION OF HIGHWAYS
STATE OF NORTH CAROLINA
DEPARTMENT OF TRANSPORTATION
WORK ZONE TRAFFIC CONTROL

PHASE I DETAILS

5/28/2013
P:\tlprojects-r\r3101\traffic\trafficcontrol\top\-L- LINE\R3101_TC_PHL_TMP07.dgn
User:scoats

PROJ. REFERENCE NO.	SHEET NO.
R-3101	TMP-8

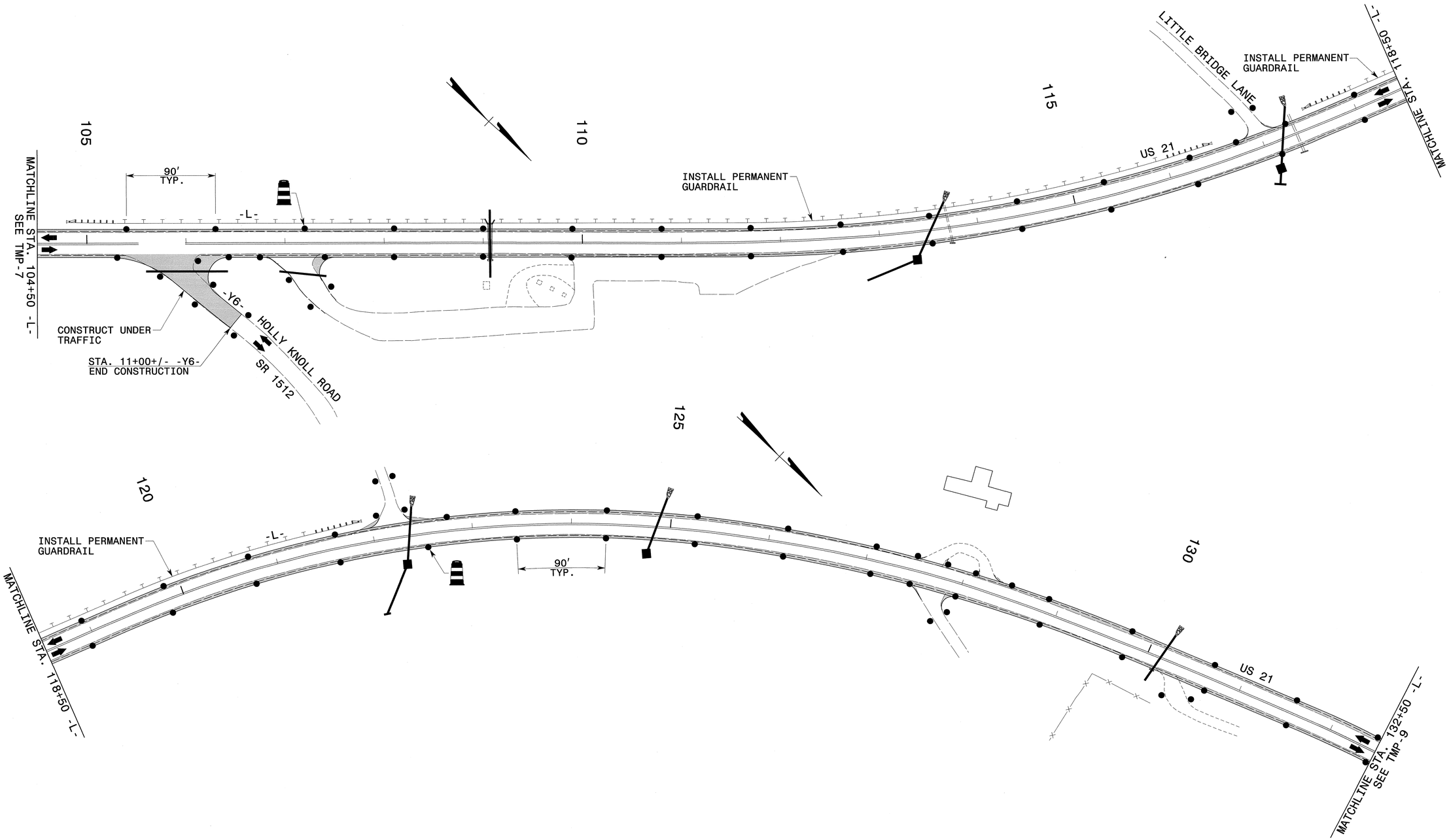

APPROVED: _____ DATE: _____

SEAL

NORTH CAROLINA PROFESSIONAL SEAL 19862 ENGINEER J. W. WOOLARD, JR.

5/29/13

DIVISION OF HIGHWAYS
STATE OF NORTH CAROLINA
DEPARTMENT OF TRANSPORTATION
WORK ZONE TRAFFIC CONTROL

PHASE I DETAILS

5/28/2013
P:\tIprojects-r\r3101\traffic\trafficcontrol\tcp\-L- LINE\R3101_TC_PHI_TMP08.dgn
User:scoats

PROJ. REFERENCE NO.	SHEET NO.
R-3101	TMP-9

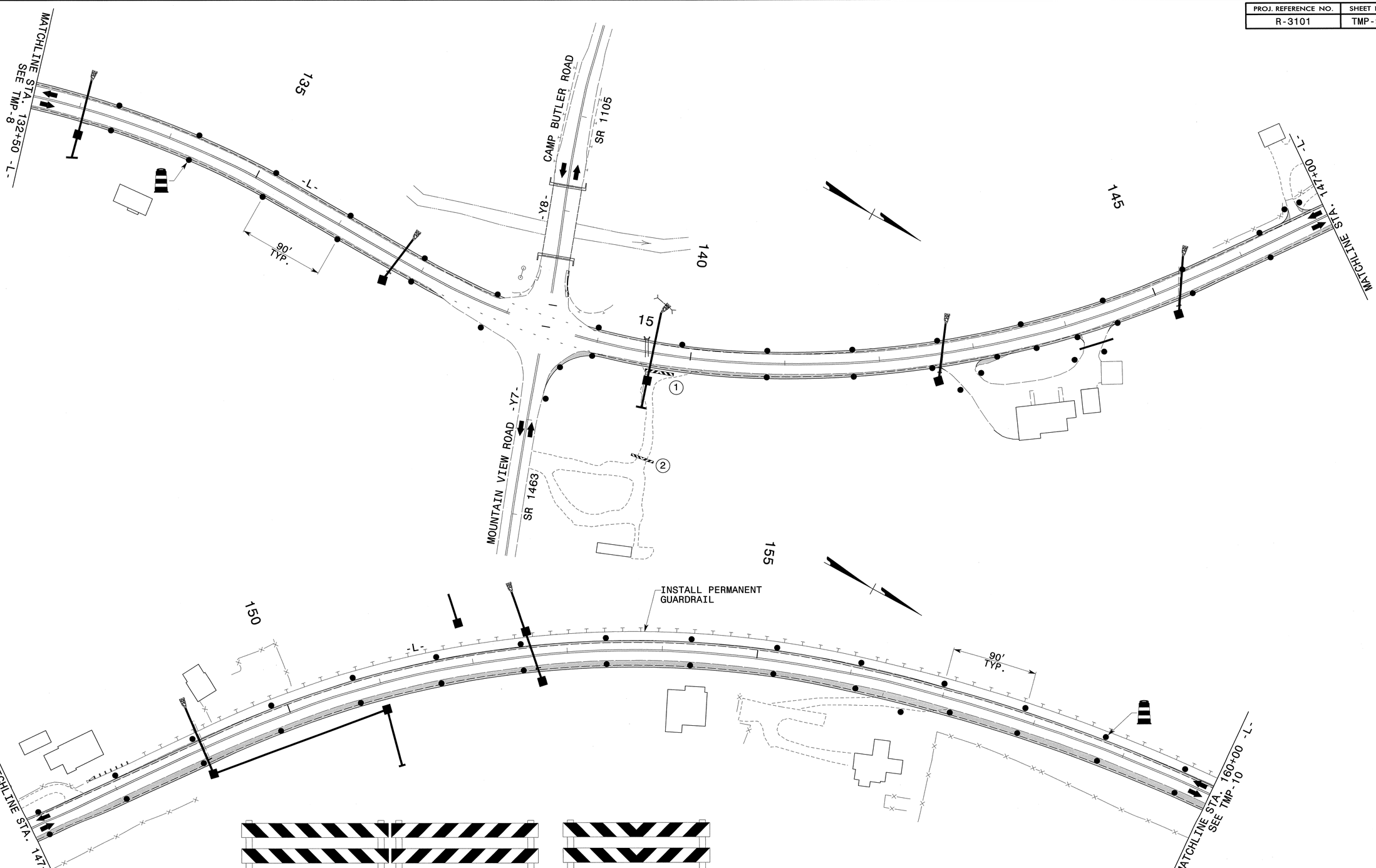

TYPE III BARRICADE(S)
(1)

TYPE III BARRICADE
(2)

APPROVED: DATE:

SEAL

NORTH CAROLINA PROFESSIONAL SEAL 19862 ENGINEER J.W. WOOLARD, JR.

5/29/13

DIVISION OF HIGHWAYS
STATE OF NORTH CAROLINA
DEPARTMENT OF TRANSPORTATION
WORK ZONE TRAFFIC CONTROL

PHASE I DETAILS

5/28/2013
P:\tipprojects-r\r3101\traffic\trafficcontrol\tcp\-L- LINE\R3101_TC_PHI_TMP09.dgn
User:tscoats

PROJ. REFERENCE NO.	SHEET NO.
R-3101	TMP-10

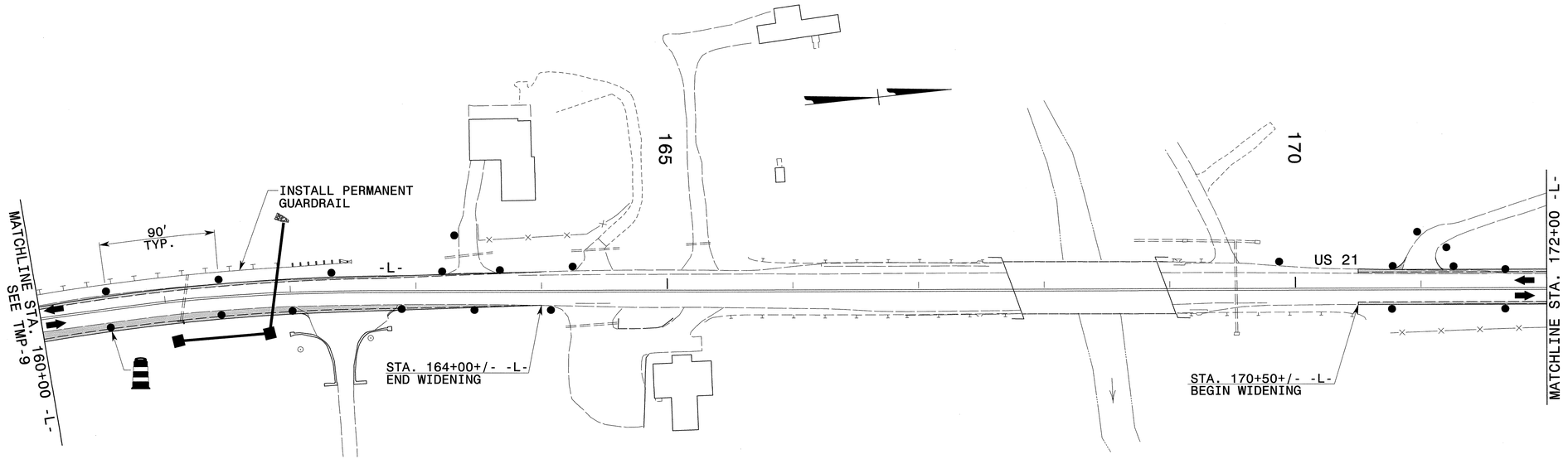

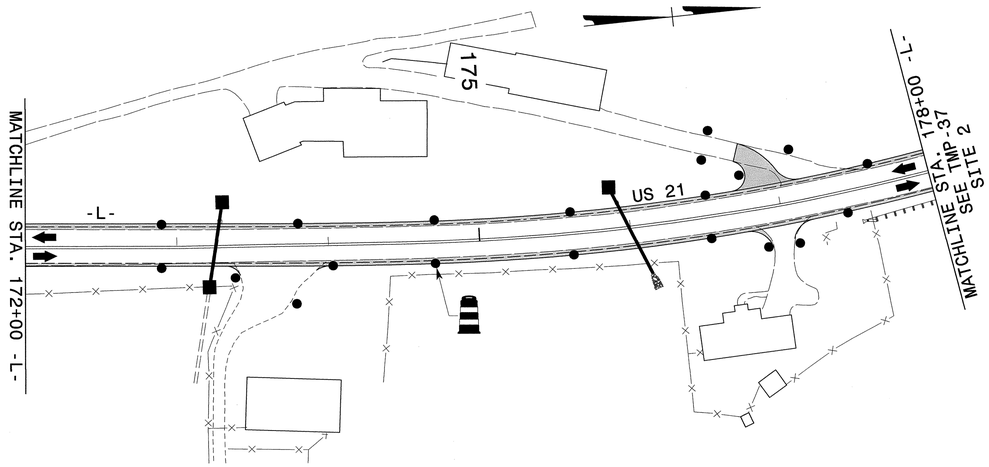

NOTE: FOR SITE 2 DETAILS FROM STA. 178+00 -L- TO STA. 188+50 -L-, SEE TMP-37 THRU TMP-47

APPROVED: _____ DATE: _____

SEAL

PHASE I DETAILS

5/28/2013
p:\tipprojects-r\r3101\traffic\trafficcontrol\tcp\-L- LINE\R3101_TC_PHL_TMP10.dgn
User:scodfs

PROJ. REFERENCE NO.	SHEET NO.
R-3101	TMP-11

NOTE: FOR SITE 2 DETAILS FROM STA. 178+00 -L- TO STA. 188+50 -L-, SEE TMP-37 THRU TMP-47

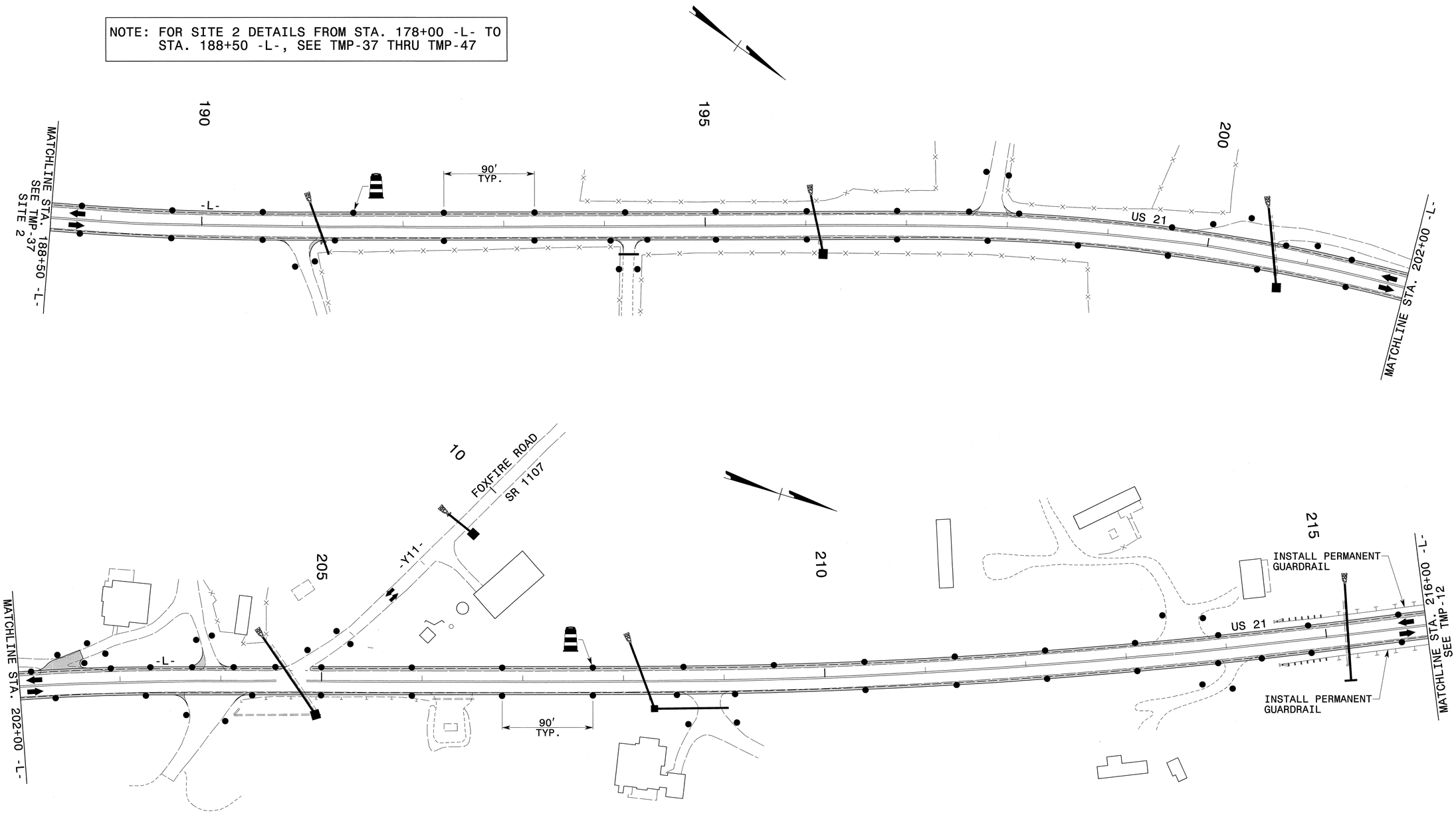

APPROVED: _____ DATE: _____

SEAL

NORTH CAROLINA PROFESSIONAL SEAL 19862 ENGINEER J.W. WOOLARD JR.

5/24/13

DIVISION OF HIGHWAYS
STATE OF NORTH CAROLINA
DEPARTMENT OF TRANSPORTATION
WORK ZONE TRAFFIC CONTROL

PHASE I DETAILS

5/28/2013
P:\tipprojects-r\r3101\traffic\trafficcontrol\tcp\-L- LINE\R3101_TC_PHI_TMPII.dgn
User:scoats

PROJ. REFERENCE NO.	SHEET NO.
R-3101	TMP-12

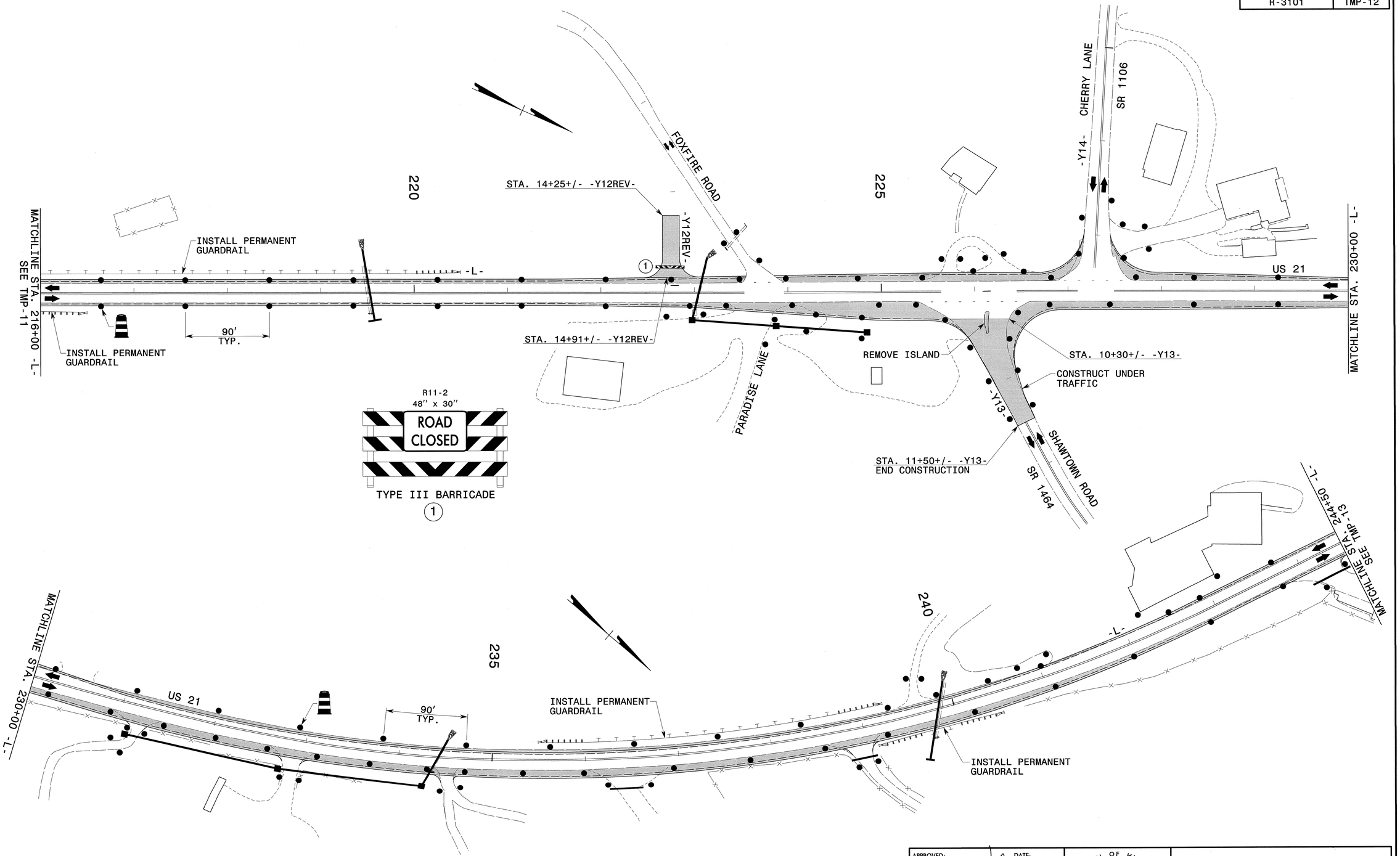

APPROVED: _____ DATE: _____

SEAL

NORTH CAROLINA PROFESSIONAL SEAL 19862 ENGINEER J. W. WOOLARD, JR.

5/29/13

DIVISION OF HIGHWAYS * STATE OF NORTH CAROLINA * DEPARTMENT OF TRANSPORTATION * WORK ZONE TRAFFIC CONTROL

PHASE I DETAILS

5/28/2013
p:\tipprojects-r\r-3101\traffic\trafficcontrol\tcp\-L- LINE\R3101_TC_PH1_TMP12.dgn
User:scoots

PROJ. REFERENCE NO.	SHEET NO.
R-3101	TMP-13

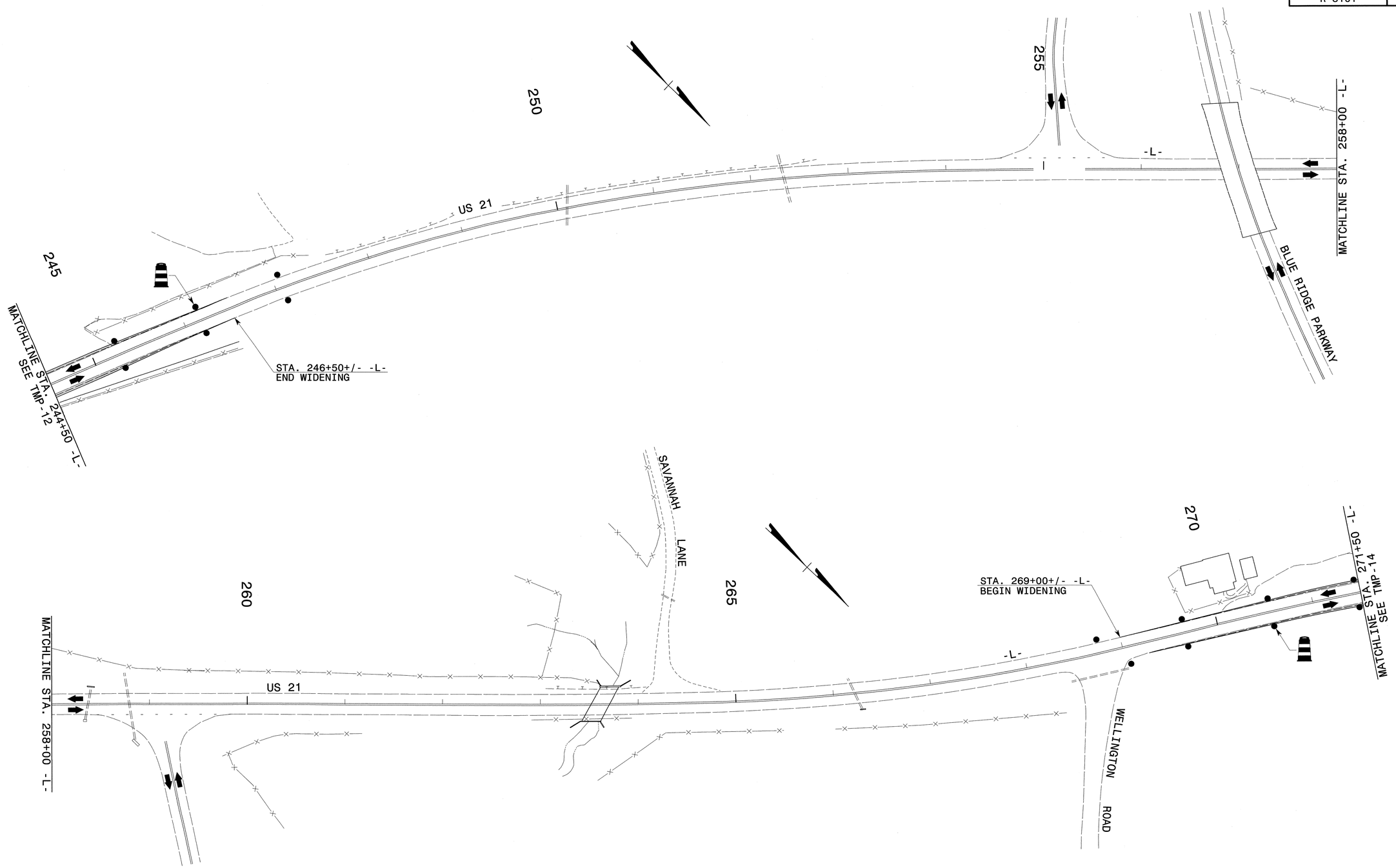

APPROVED: DATE:

SEAL

NORTH CAROLINA PROFESSIONAL SEAL 19862 ENGINEER W. WOOLARD, JR.

5/29/13

DIVISION OF HIGHWAYS * STATE OF NORTH CAROLINA * DEPARTMENT OF TRANSPORTATION * WORK ZONE TRAFFIC CONTROL

PHASE I DETAILS

5/28/2013
p:\tipprojects-r\r3101\traffic\trafficcontrol\tcp\-L- LINE\R3101_TC_PHI_TMP13.dgn
User:scodts

PROJ. REFERENCE NO.	SHEET NO.
R-3101	TMP-14

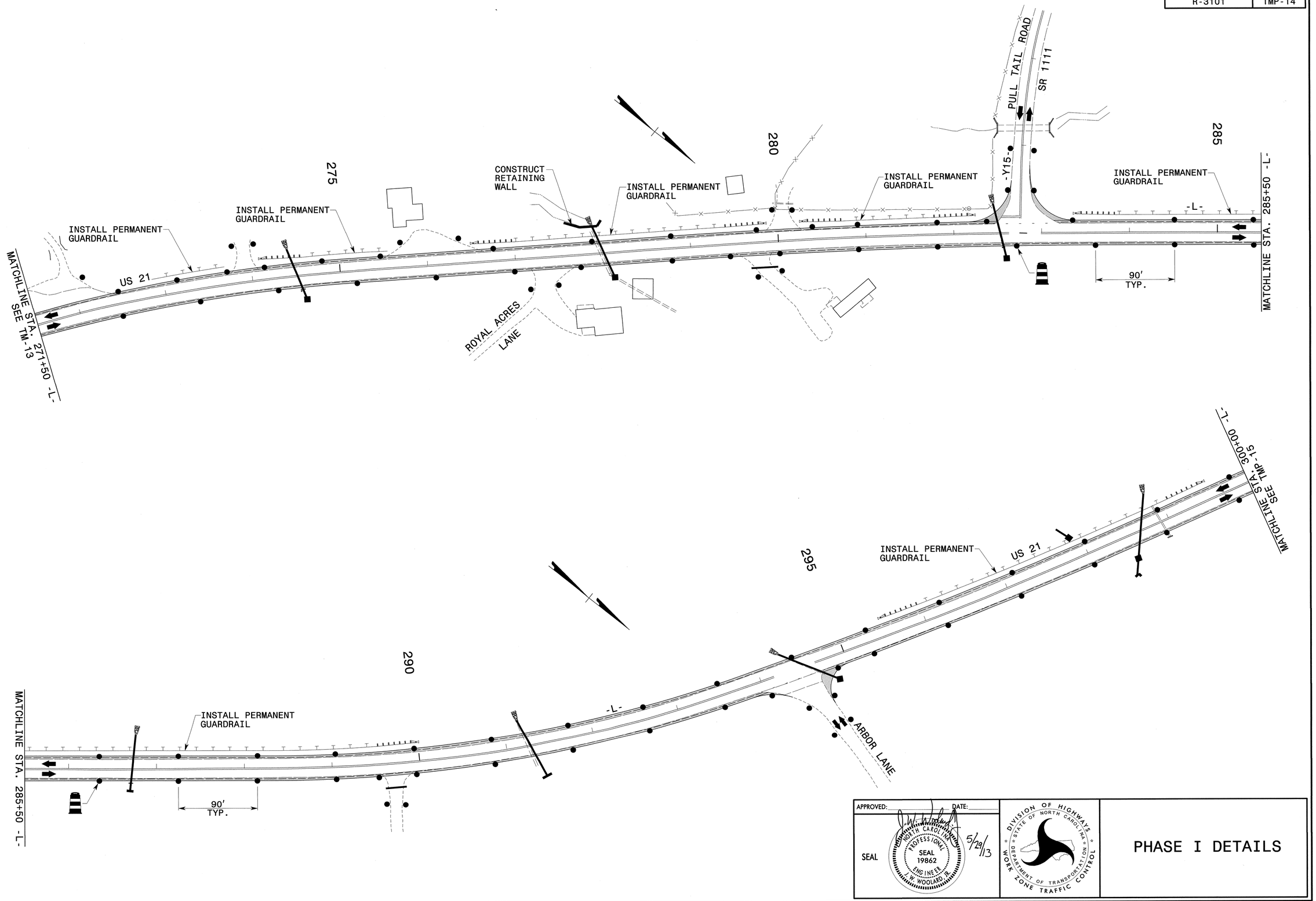

APPROVED: _____ DATE: _____

SEAL

NORTH CAROLINA PROFESSIONAL SEAL 19862 ENGINEER J. W. WOOLARD JR.

5/29/13

DIVISION OF HIGHWAYS
STATE OF NORTH CAROLINA
DEPARTMENT OF TRANSPORTATION
WORK ZONE TRAFFIC CONTROL

PHASE I DETAILS

5/28/2013
P:\tipprojects-r\r3101\traffic\trafficcontrol\tcp\-L- LINE\R3101_TC_PHI_TMP14.dgn
User:scoats

PROJ. REFERENCE NO.	SHEET NO.
R-3101	TMP-15

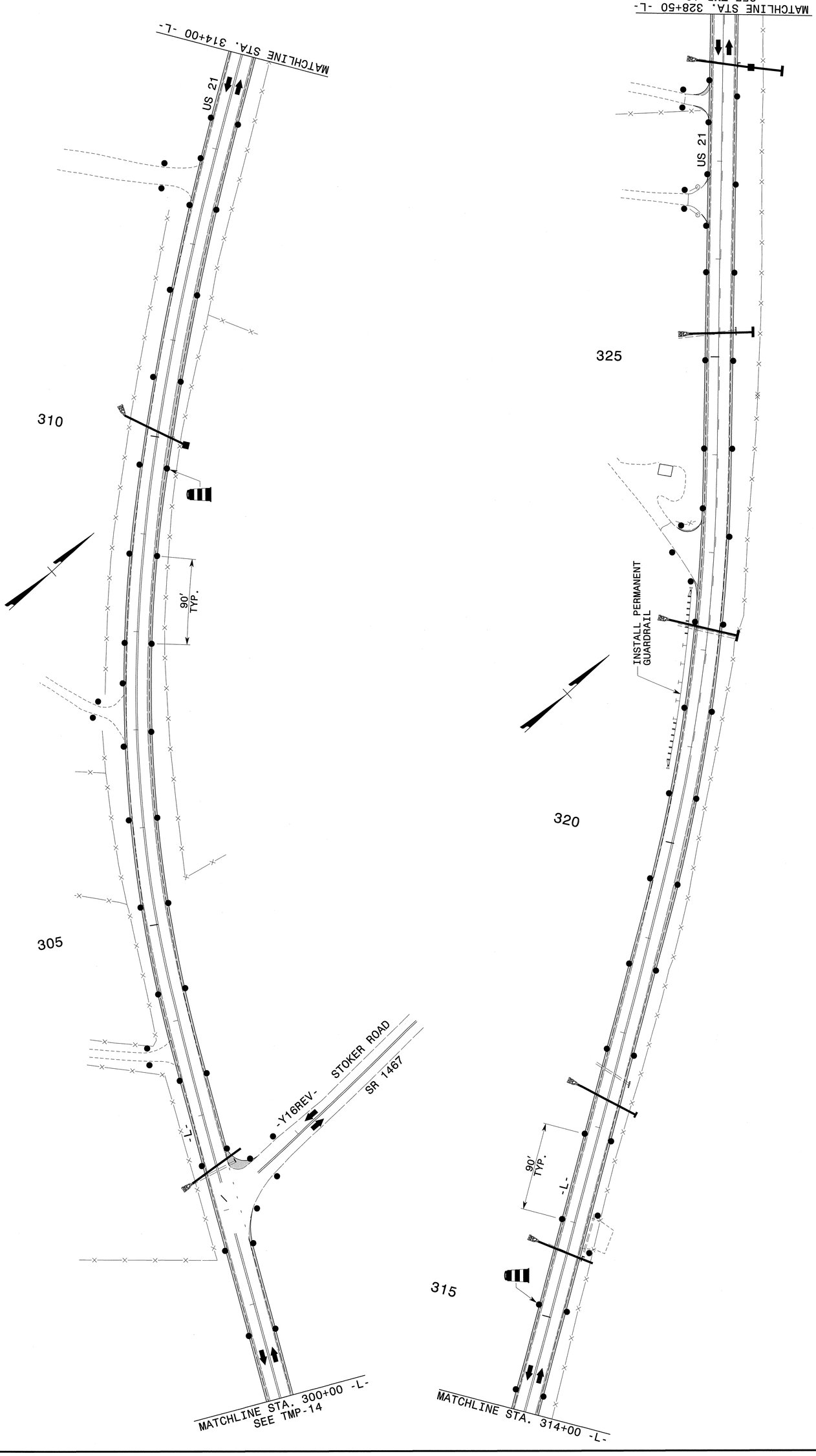

PHASE I DETAILS

DIVISION OF HIGHWAYS • STATE OF NORTH CAROLINA • DEPARTMENT OF TRANSPORTATION • WORK ZONE TRAFFIC CONTROL

APPROVED: DATE: 5/28/13

SEAL

NORTH CAROLINA PROFESSIONAL SEAL 19862 ENGINEER J.W. WOOLARD JR.

5/28/2013
p:\tipprojects-r\r3101\traffic\trafficcontrol\tcp\-L- LINE\R3101_TC_PHI_TMP15.dgn
User:scoats

PROJ. REFERENCE NO.	SHEET NO.
R-3101	TMP-16

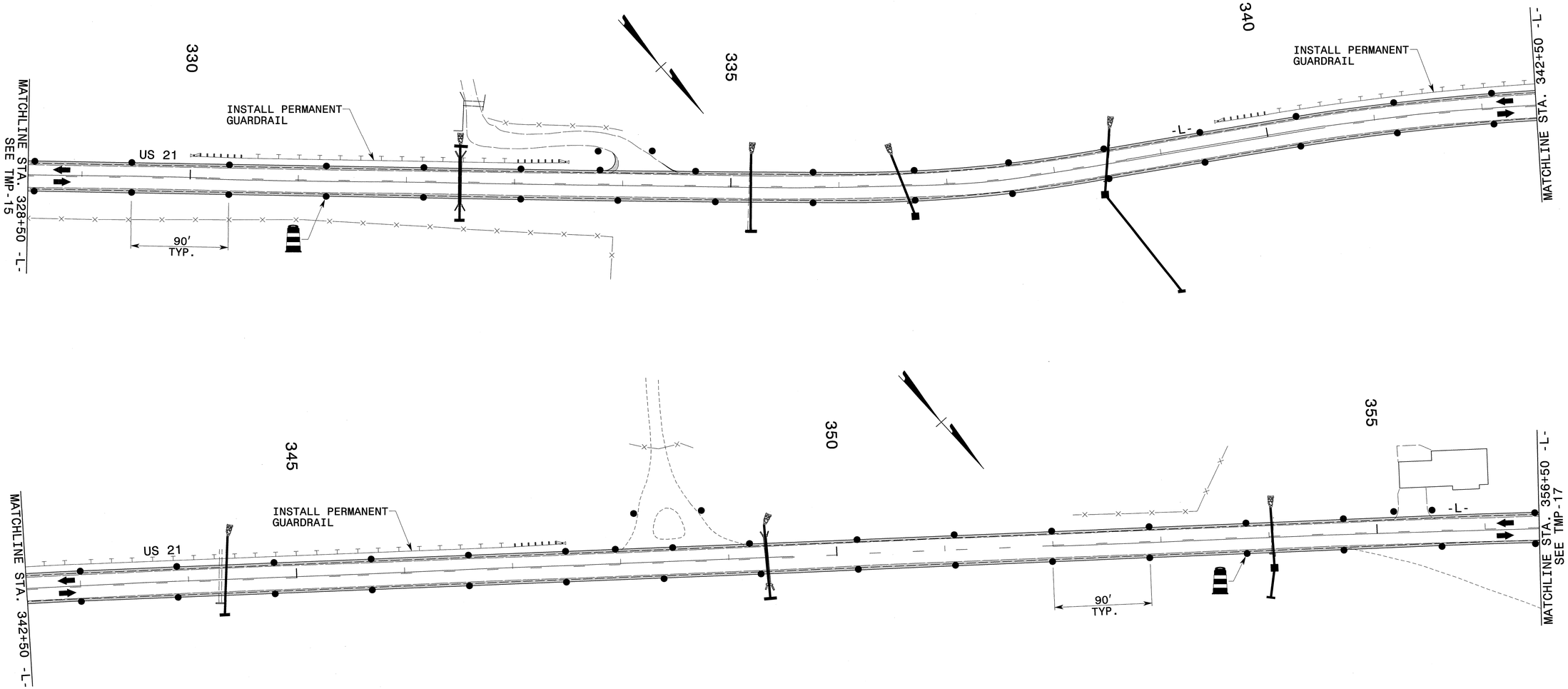

APPROVED: _____ DATE: _____

SEAL

NORTH CAROLINA PROFESSIONAL SEAL 19862 ENGINEER J. W. WOOLARD JR.

5/29/13

DIVISION OF HIGHWAYS * STATE OF NORTH CAROLINA * DEPARTMENT OF TRANSPORTATION * WORK ZONE TRAFFIC CONTROL

PHASE I DETAILS

5/28/2013
p:\tipprojects-r\r3101\traffic\trafficcontrol\tcp\-L- LINE\R3101_TC_PHI_TMP16.dgn
Userscoats

PROJ. REFERENCE NO.	SHEET NO.
R-3101	TMP-17

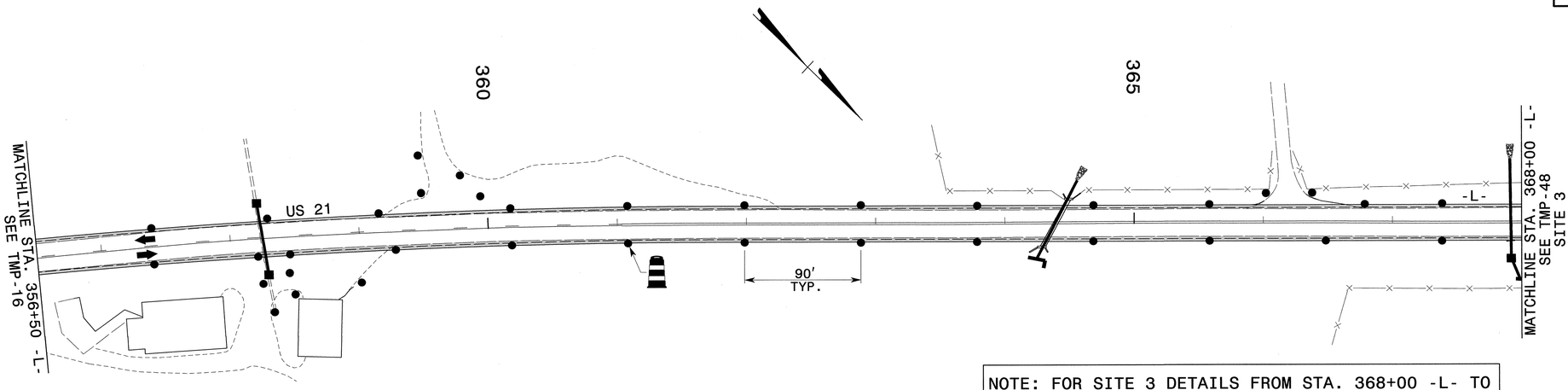

NOTE: FOR SITE 3 DETAILS FROM STA. 368+00 -L- TO STA. 377+00 -L-, SEE TMP-48 THRU TMP-56

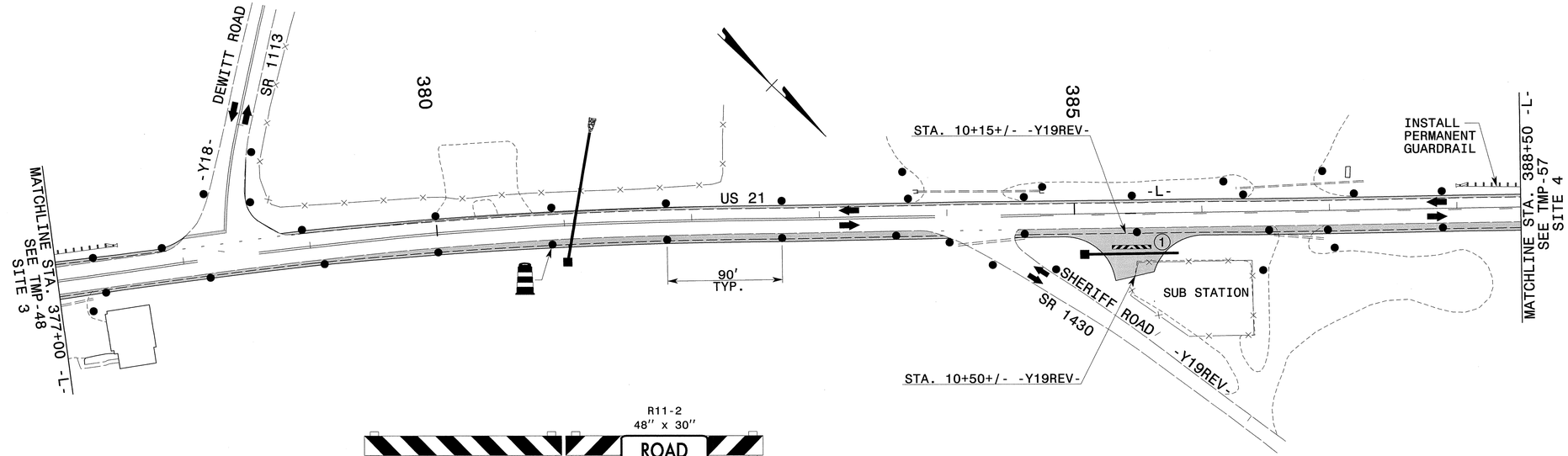

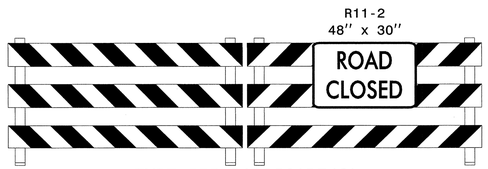

TYPE III BARRICADE(S)

(1)

NOTE: FOR SITE 4 DETAILS FROM STA. 388+50 -L- TO STA. 399+50 -L-, SEE TMP-57 THRU TMP-64

APPROVED: DATE:

SEAL

NORTH CAROLINA PROFESSIONAL SEAL 19862 ENGINEER J. W. WOOLARD JR.

5/29/13

DIVISION OF HIGHWAYS STATE OF NORTH CAROLINA DEPARTMENT OF TRANSPORTATION WORK ZONE TRAFFIC CONTROL

PHASE I DETAILS

5/28/2013
p:\tiprojects-rv3101\traffic\trafficcontrol\tcp\-L- LINE\R3101_TC_PHI_TMP17.dgn
User:scoats

PROJ. REFERENCE NO.	SHEET NO.
R-3101	TMP-18

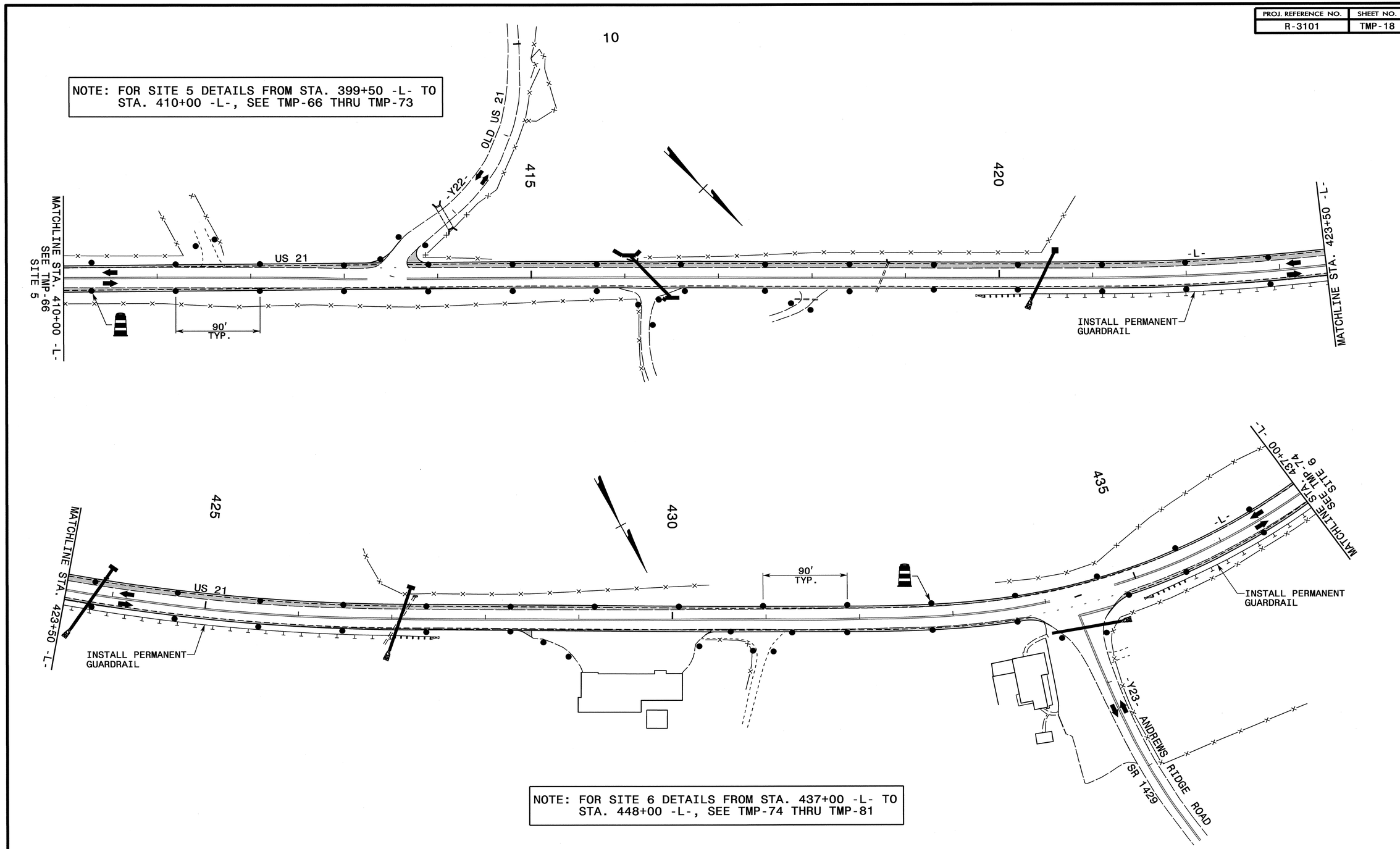

APPROVED: DATE:

SEAL

NORTH CAROLINA PROFESSIONAL SEAL 19862 ENGINEER W. WOOLARD, JR.

5/29/13

DIVISION OF HIGHWAYS STATE OF NORTH CAROLINA DEPARTMENT OF TRANSPORTATION WORK ZONE TRAFFIC CONTROL

PHASE I DETAILS

28-MAY-2013 17:54
\\dot\dfsroot01\Proj\tipprojects-r\r3101\traffic\trafficcontrol\tcp\-L- LINE\R3101_TC_PHI_TMP18.dgn
scoats AT TE265846

PROJ. REFERENCE NO.	SHEET NO.
R-3101	TMP-19

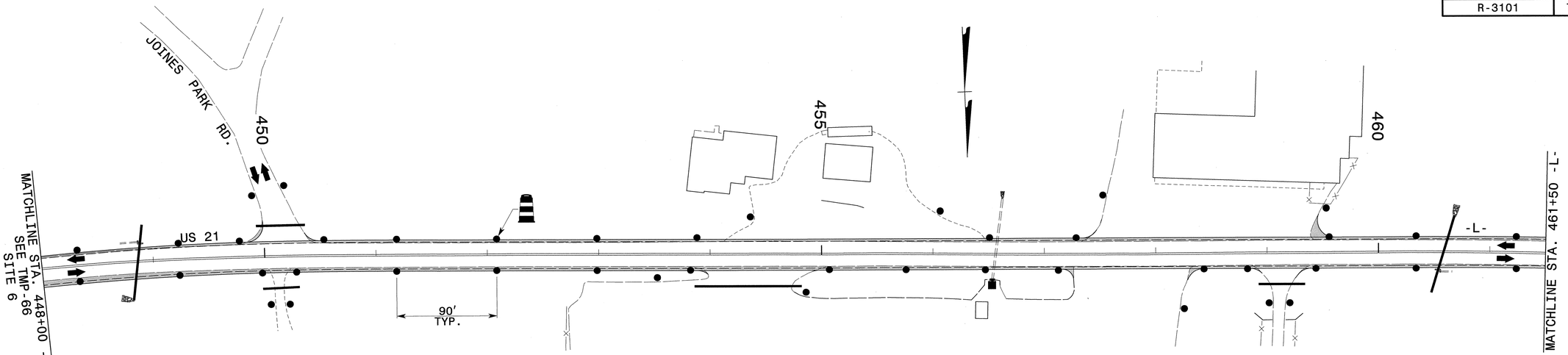

NOTE: FOR SITE 6 DETAILS FROM STA. 437+00 -L- TO STA. 448+00 -L-, SEE TMP-66 THRU TMP-73

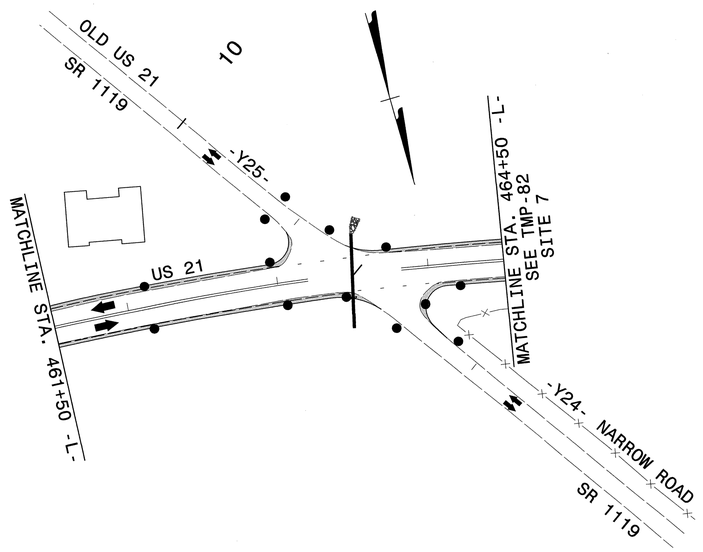

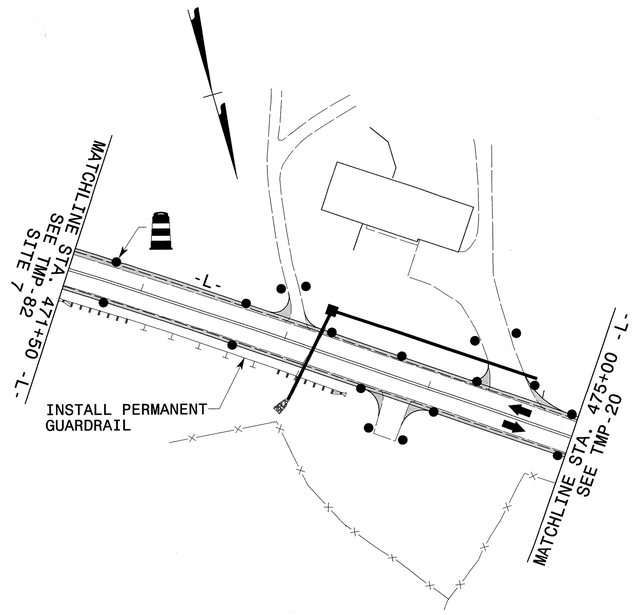

NOTE: FOR SITE 7 DETAILS FROM STA. 464+50 -L- TO STA. 471+50 -L-, SEE TMP-82 THRU TMP-89

APPROVED: DATE:

SEAL

NORTH CAROLINA PROFESSIONAL SEAL 19862 ENGINEER J. W. WOOLARD, JR.

5/29/13

DIVISION OF HIGHWAYS STATE OF NORTH CAROLINA DEPARTMENT OF TRANSPORTATION WORK ZONE TRAFFIC CONTROL

PHASE I DETAILS

5/28/2013
p:\tipprojects-r\r3101\traffic\trafficcontrol\tcp\-L- LINE\R3101_TC_PHI_TMP19.dgn
User:scoats

PROJ. REFERENCE NO.	SHEET NO.
R-3101	TMP-20

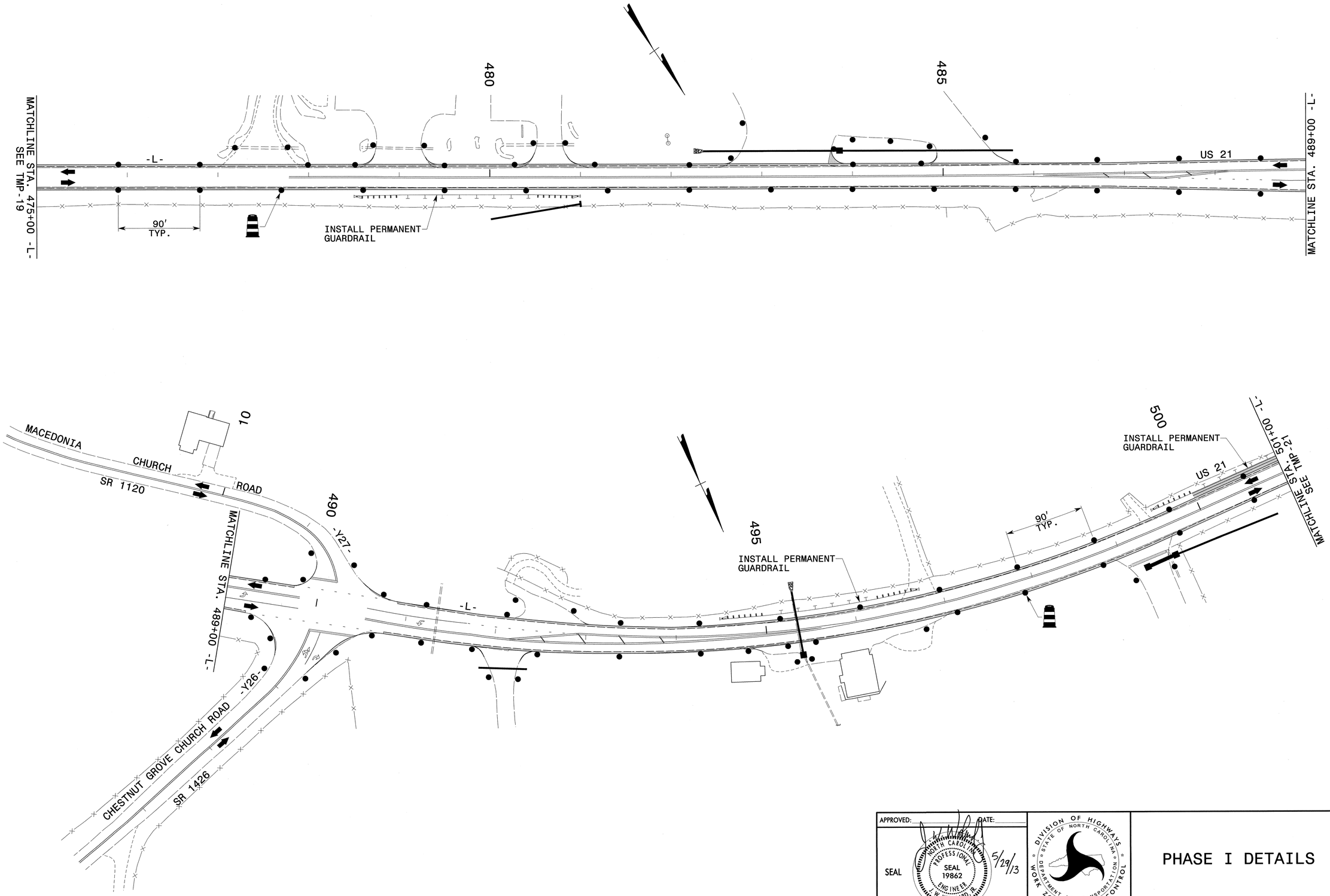

APPROVED: DATE:

SEAL

NORTH CAROLINA PROFESSIONAL SEAL 19862 ENGINEER J. WOOLARD, JR.

5/29/13

DIVISION OF HIGHWAYS * STATE OF NORTH CAROLINA * DEPARTMENT OF TRANSPORTATION * WORK ZONE TRAFFIC CONTROL

PHASE I DETAILS

5/28/2013
p:\tipprojects-r\r3101\traffic\trafficcontrol\tcp\-L- LINE\R3101_TC_PHI_TMP20.dgn
User:scoats

PROJ. REFERENCE NO.	SHEET NO.
R-3101	TMP-21

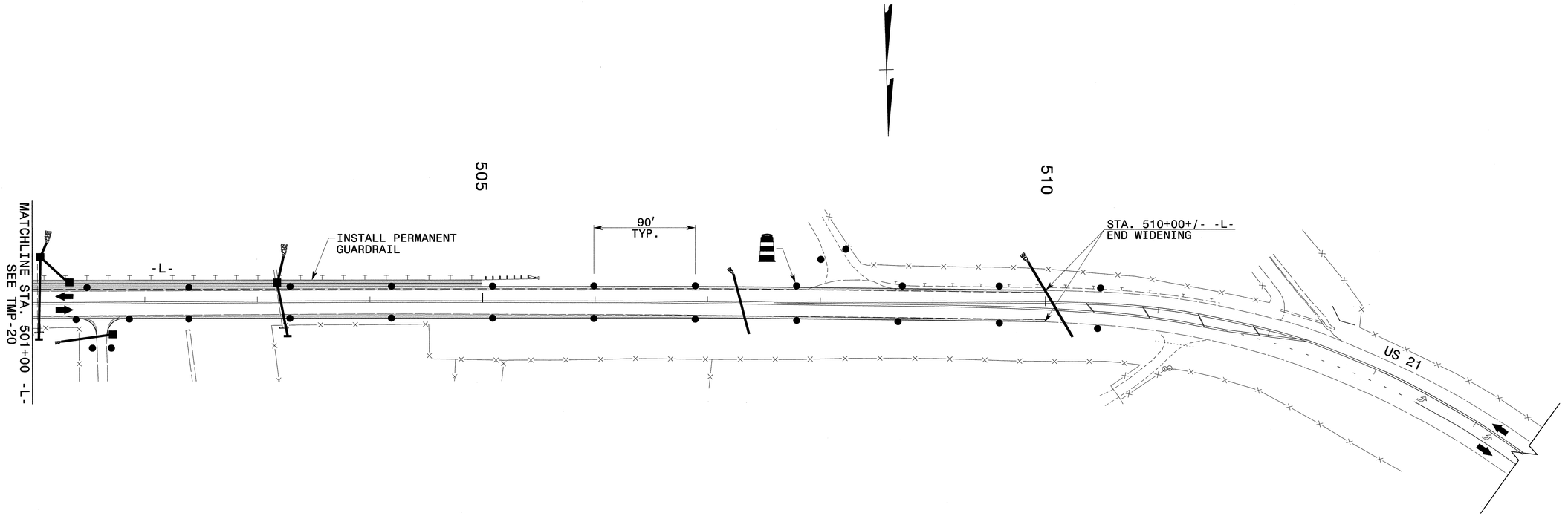

APPROVED:

DATE: 5/29/13

SEAL

NORTH CAROLINA PROFESSIONAL SEAL 19862 ENGINEER J. W. WOOLARD, JR.

DIVISION OF HIGHWAYS * STATE OF NORTH CAROLINA * DEPARTMENT OF TRANSPORTATION * WORK ZONE TRAFFIC CONTROL

PHASE I DETAILS

5/28/2013
p:\tipprojects-r\r-3101\traffic\trafficcontrol\tcp\-L- LINE\R3101_TC_PHI_TMP21.dgn
User:scoats

PROJ. REFERENCE NO.	SHEET NO.
R-3101	TMP-22

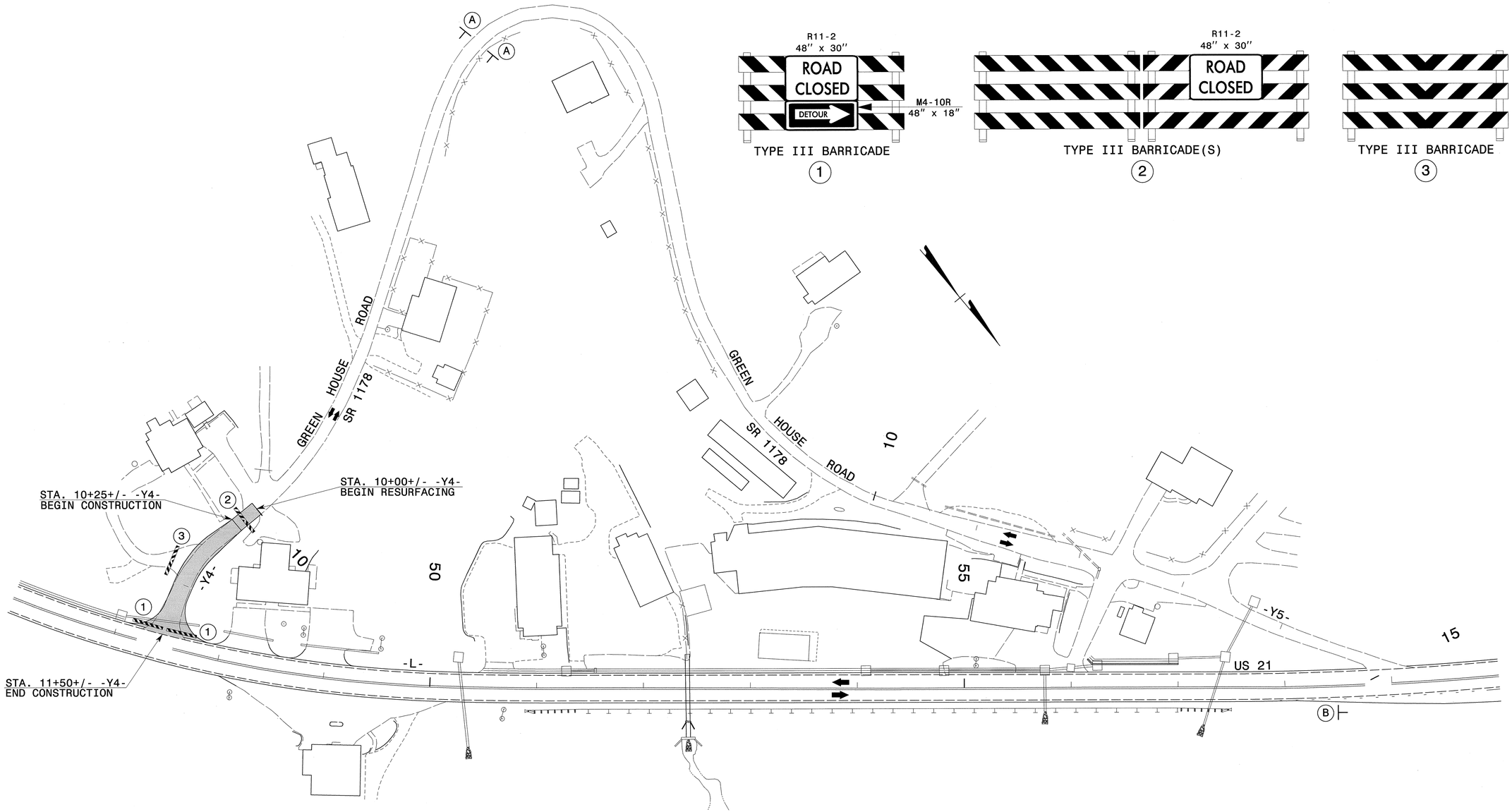

ROAD CLOSED 500 FT
W20-3
48" X 48"
A

END DETOUR
M4-8 A
24" X 18"
B

APPROVED: DATE:

SEAL

NORTH CAROLINA PROFESSIONAL SEAL 19862 ENGINEER W. WOOLARD, JR.

5/29/13

DIVISION OF HIGHWAYS
STATE OF NORTH CAROLINA
DEPARTMENT OF TRANSPORTATION
WORK ZONE TRAFFIC CONTROL

PHASE II
OFF-SITE DETOUR
GREEN HOUSE ROAD
SR 1178
-Y4-

5/28/2013
p:\tipprojects-r\r3101\traffic\trafficcontrol\tcp\-L- LINE\R3101_TC_PH2_TMP22.dgn
User:scoats

PROJ. REFERENCE NO.	SHEET NO.
R-3101	TMP-23

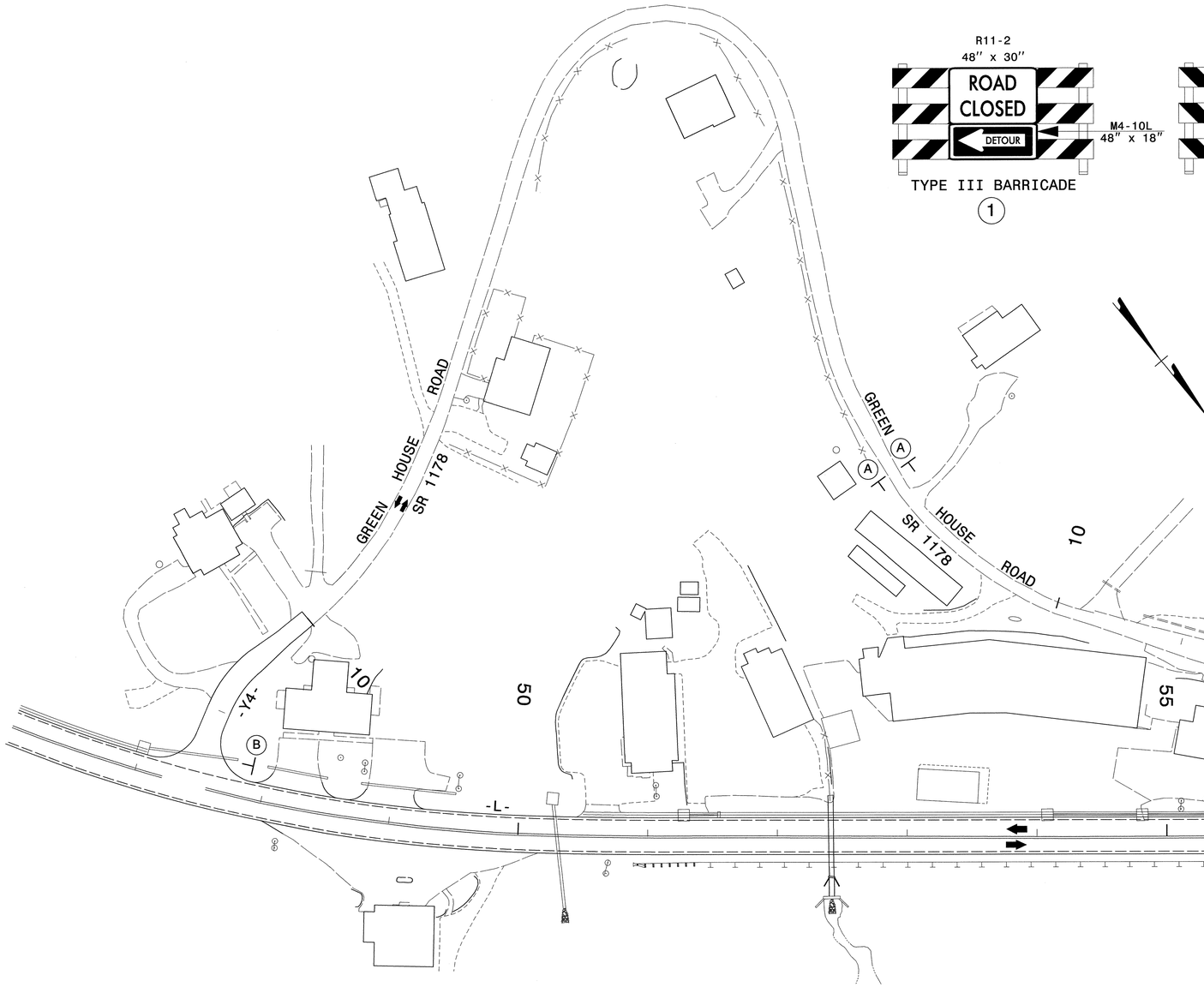

TYPE III BARRICADE

(1)

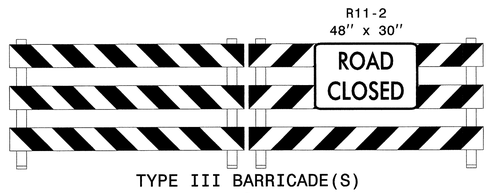

TYPE III BARRICADE(S)

(2)

(A)

(B)

APPROVED: DATE: 7/11/13

SEAL

NORTH CAROLINA PROFESSIONAL SEAL 19862 ENGINEER J. W. WOOLARD, JR.

DIVISION OF HIGHWAYS STATE OF NORTH CAROLINA DEPARTMENT OF TRANSPORTATION WORK ZONE TRAFFIC CONTROL

PHASE II
OFF-SITE DETOUR
GREEN HOUSE ROAD
SR 1178
-Y5-

7/11/2013
P:\TIPProjects-R\R3101\Traffic\TrafficControl\TCP\-L- LINE\R3101_TC_PH2_TMP23.dgn
Users\cdars

PROJ. REFERENCE NO.	SHEET NO.
R-3101	TMP-24

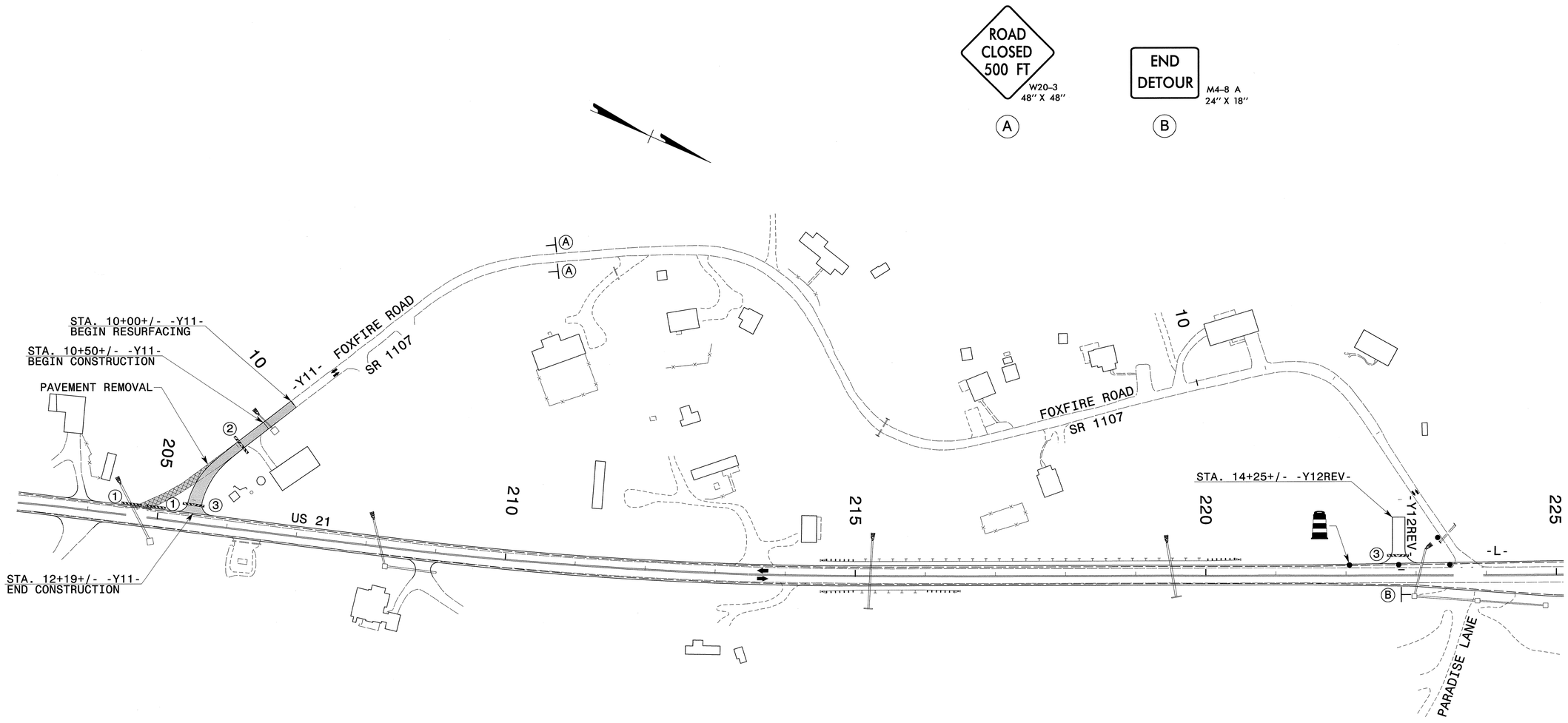

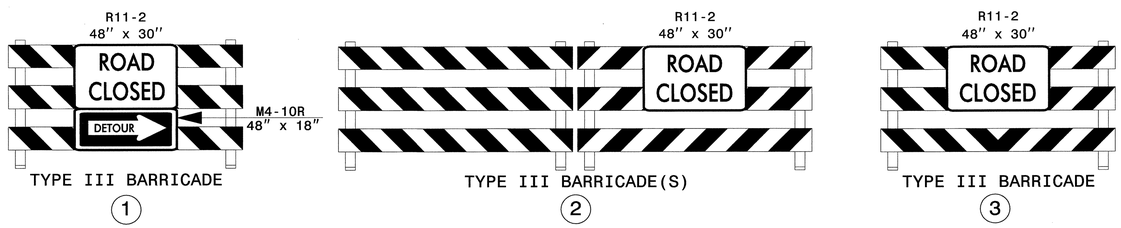

APPROVED: DATE:

SEAL

NORTH CAROLINA PROFESSIONAL SEAL 19862 ENGINEER J. W. WOOLARD, JR. 5/29/13

DIVISION OF HIGHWAYS STATE OF NORTH CAROLINA DEPARTMENT OF TRANSPORTATION WORK ZONE TRAFFIC CONTROL

PHASE II
OFF-SITE DETOUR
FOXFIRE ROAD
SR 1107
-Y11-

5/28/2013
p:\ftpprojects-r\r3101\traffic\trafficcontrol\top\-L- LINEWR3101_TC_PH2_TMP24.dgn
User:scoofs

PROJ. REFERENCE NO.	SHEET NO.
R-3101	TMP-25

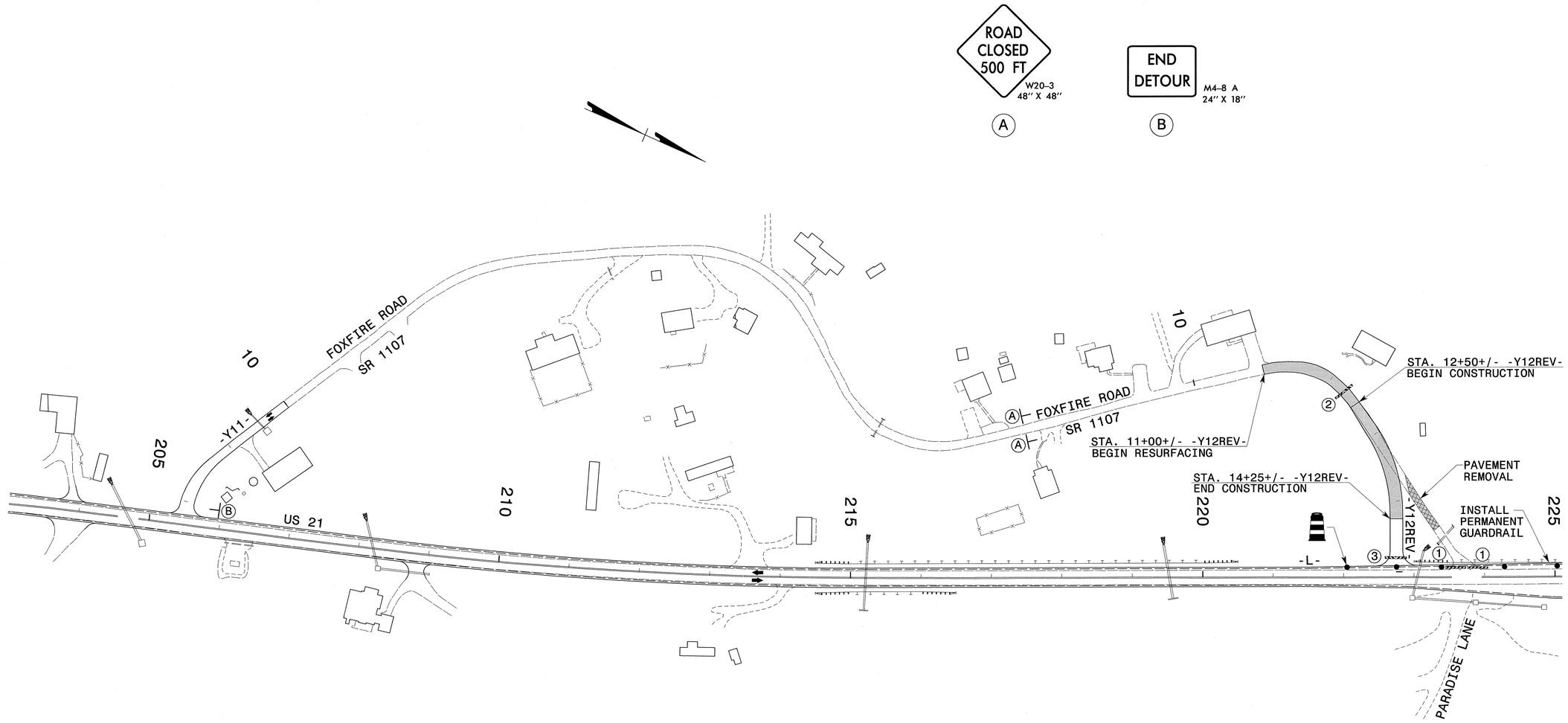

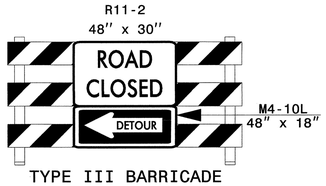

TYPE III BARRICADE

(1)

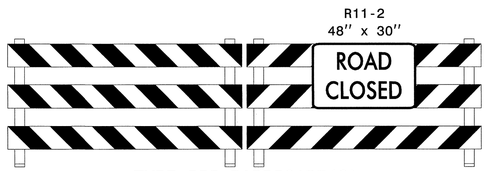

TYPE III BARRICADE(S)

(2)

TYPE III BARRICADE

(3)

APPROVED: DATE: 5/29/13

SEAL

NORTH CAROLINA PROFESSIONAL SEAL 19862 ENGINEER J. W. WOOLARD, JR.

DIVISION OF HIGHWAYS * STATE OF NORTH CAROLINA * DEPARTMENT OF TRANSPORTATION * WORK ZONE TRAFFIC CONTROL

PHASE II
OFF-SITE DETOUR
FOXFIRE ROAD
SR 1107
-Y12REV-

5/28/2013
p:\Tipprojects-r\r3101\traffic\trafficcontrol\tcp\-L- LINE\R3101_TC_PH2_TMP25.dgn
User:scoofs

PROJ. REFERENCE NO.	SHEET NO.
R-3101	TMP-26

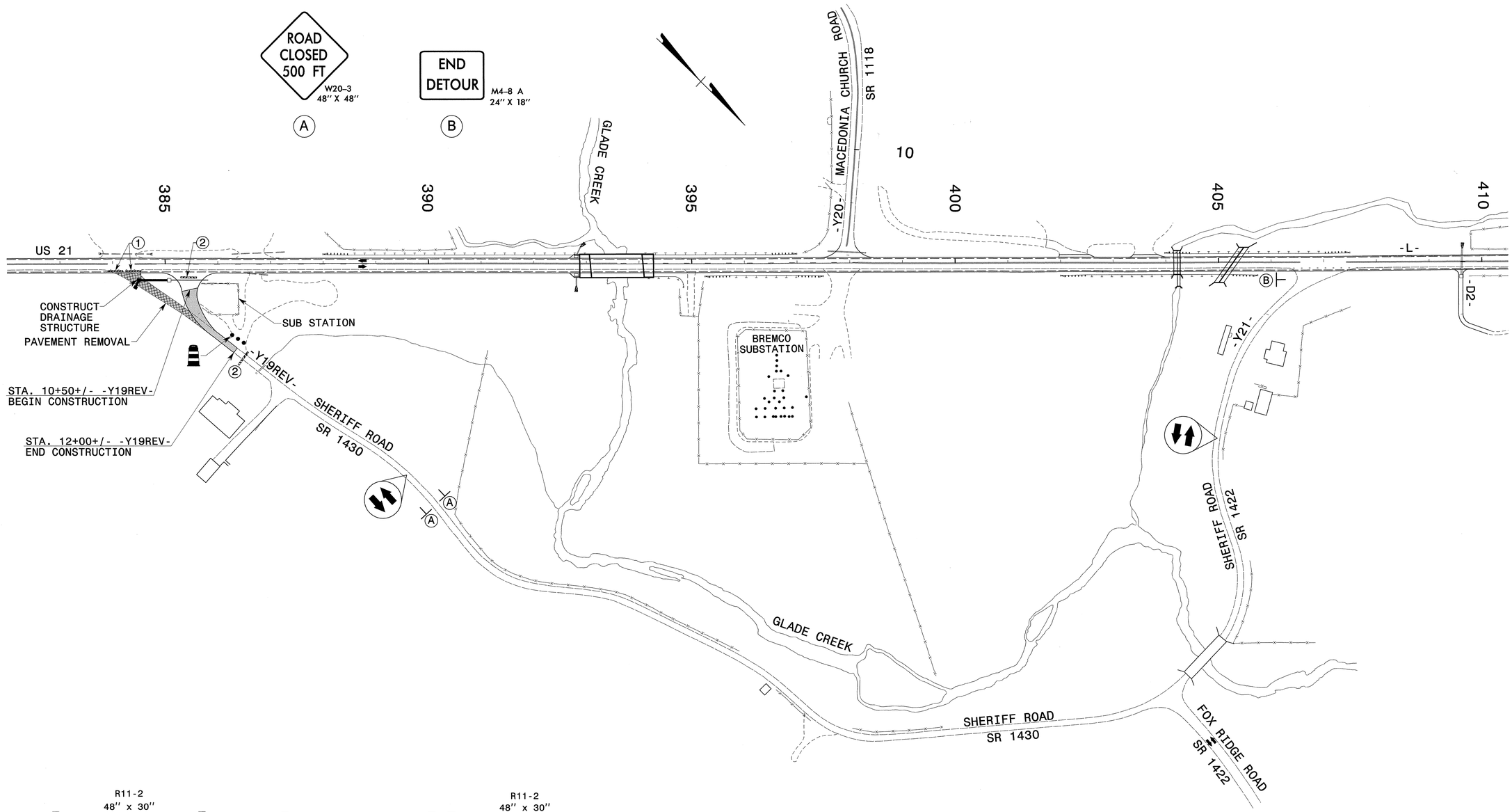

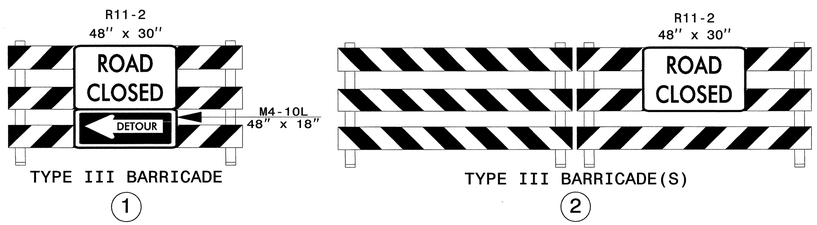

APPROVED: _____ DATE: _____

SEAL

NORTH CAROLINA PROFESSIONAL SEAL 19862 ENGINEER W. WOOLARD JR.

7/11/13

DIVISION OF HIGHWAYS · STATE OF NORTH CAROLINA · DEPARTMENT OF TRANSPORTATION · WORK ZONE TRAFFIC CONTROL

PHASE II
OFF-SITE DETOUR
SHERIFF ROAD
SR 1430
-Y19REV-

7/11/2013
P:\TIPProjects-R\R3101\Traffic\TrafficControl\TCP\-L- LINE\R3101_TC_PH2_TMP26.dgn
Users\cogts

PROJ. REFERENCE NO.	SHEET NO.
R-3101	TMP-27

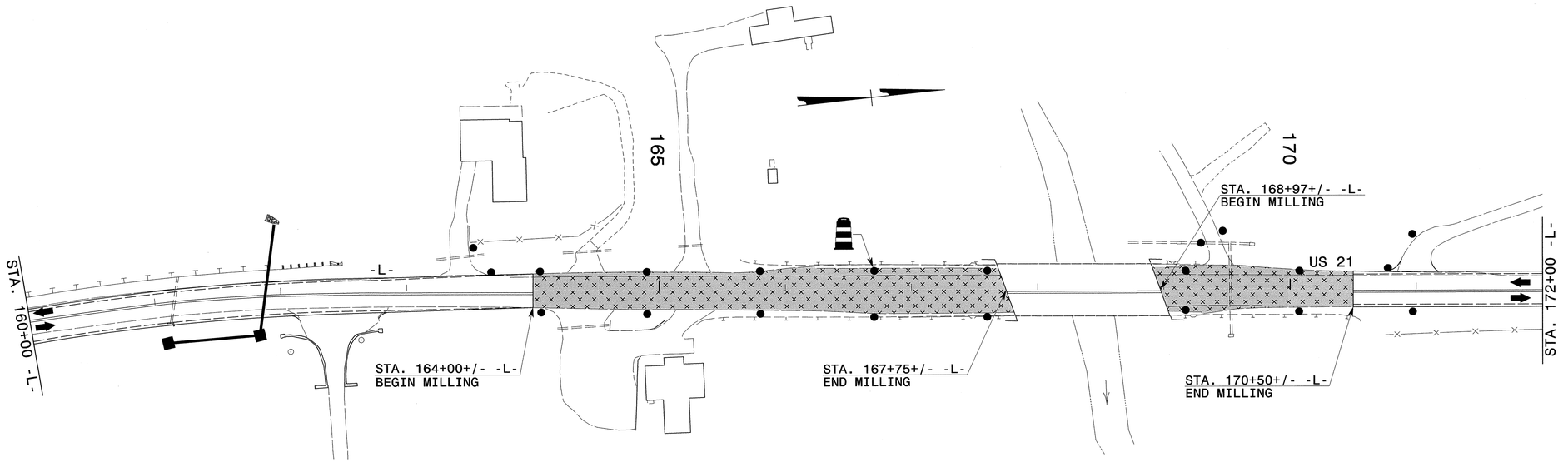

APPROVED: DATE:

SEAL

NORTH CAROLINA PROFESSIONAL SEAL 19862 ENGINEER W. WOOLARD JR.

5/29/13

DIVISION OF HIGHWAYS STATE OF NORTH CAROLINA DEPARTMENT OF TRANSPORTATION WORK ZONE TRAFFIC CONTROL

PHASE II DETAILS

5/28/2013
p:\tipprojects-r\r3101\traffic\trafficcontrol\tcp\-L- LINE\R3101_TC_PH2_TMP27.dgn
User:scodrs

PROJ. REFERENCE NO.	SHEET NO.
R-3101	TMP-28

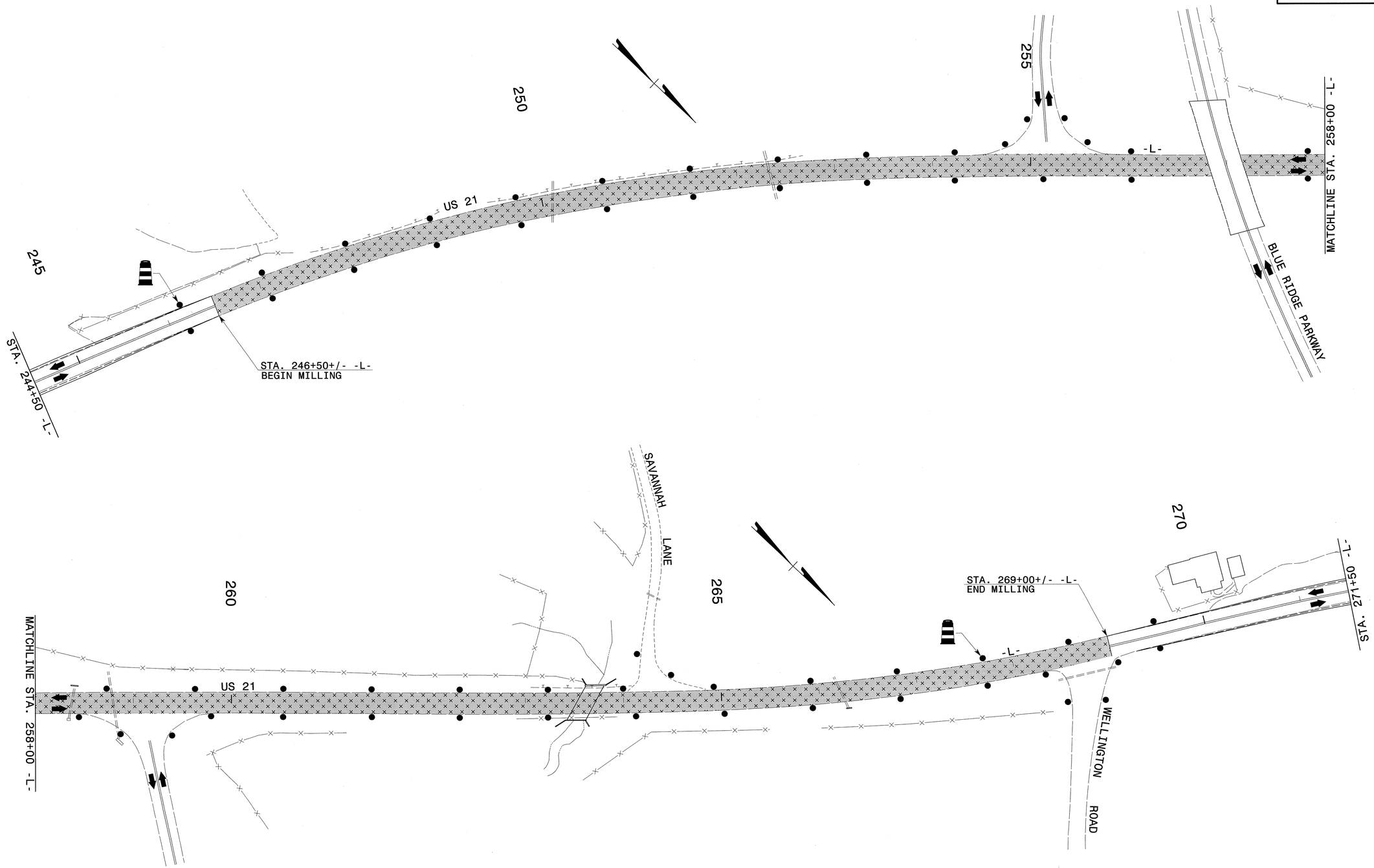

APPROVED: DATE:

SEAL

NORTH CAROLINA PROFESSIONAL SEAL 19862 ENGINEER JOHN WOOLARD JR.

5/29/13

DIVISION OF HIGHWAYS * STATE OF NORTH CAROLINA * DEPARTMENT OF TRANSPORTATION * WORK ZONE TRAFFIC CONTROL

PHASE II DETAILS

5/28/2013
p:\tipprojects-r\r3101\traffic\trafficcontrol\tcp\-L- LINE\R3101_TC_PH2_TMP28.dgn
User:scodts

PROJ. REFERENCE NO.	SHEET NO.
R-3101	TMP-29

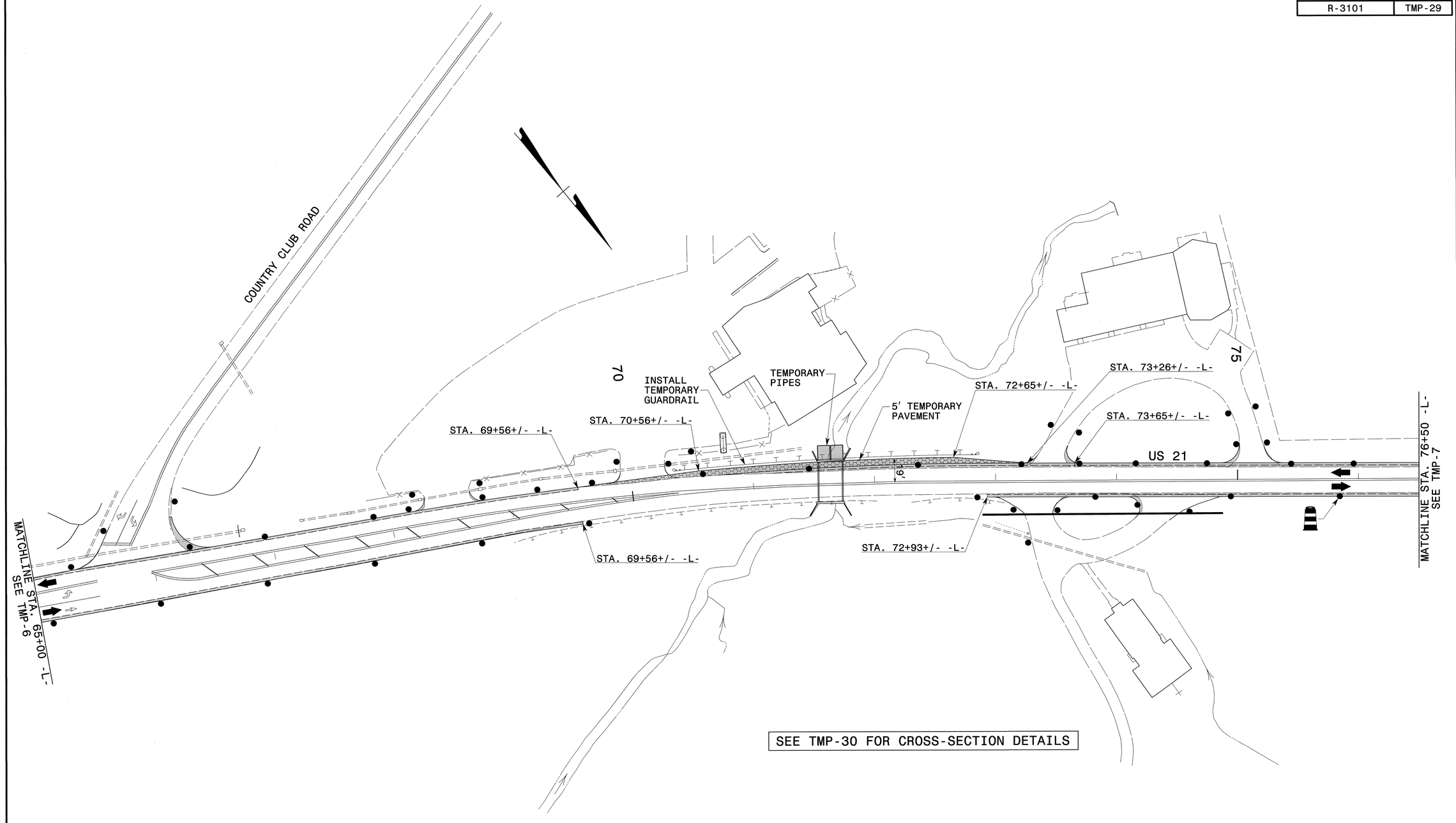

SEE TMP-30 FOR CROSS-SECTION DETAILS

APPROVED: DATE:

SEAL

NORTH CAROLINA PROFESSIONAL SEAL 19862 ENGINEER W. WOOLARD, JR.

5/29/13

DIVISION OF HIGHWAYS STATE OF NORTH CAROLINA DEPARTMENT OF TRANSPORTATION WORK ZONE TRAFFIC CONTROL

SITE 1
PHASE I
BRIDGE ON US 21
STA. 71+60+/-

5/28/2013
p:\fpprojects-r\r3101\traffic\trafficcontrol\top\SITE1\R3101_TC_SITE1_PH1_TMP29.dgn
User:scoats

PROJ. REFERENCE NO.	SHEET NO.
R-3101	TMP-30

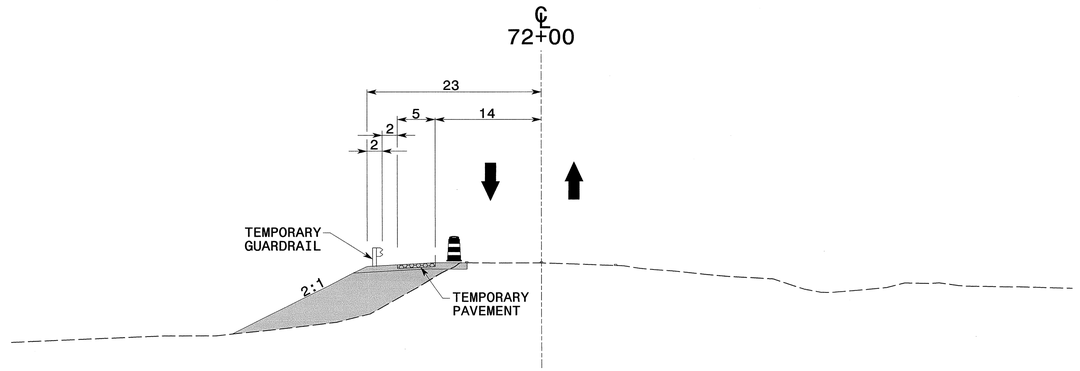

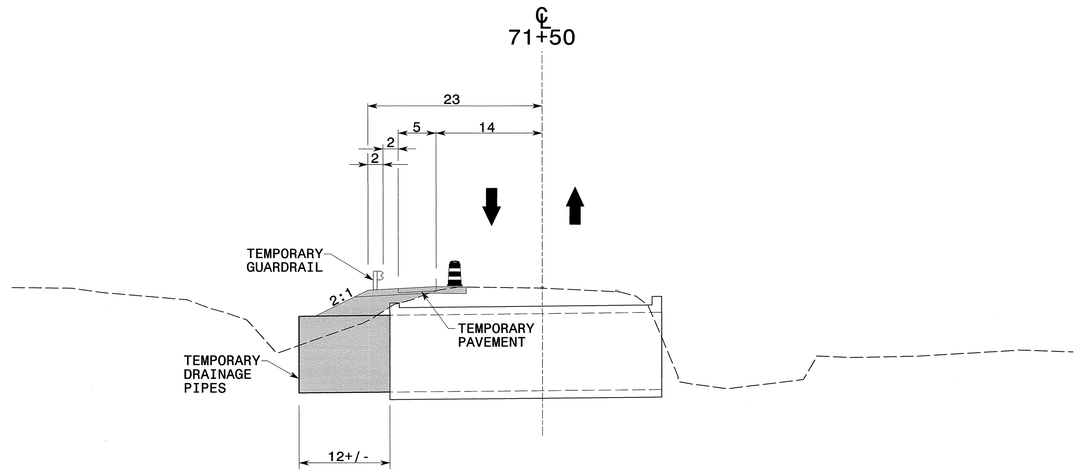

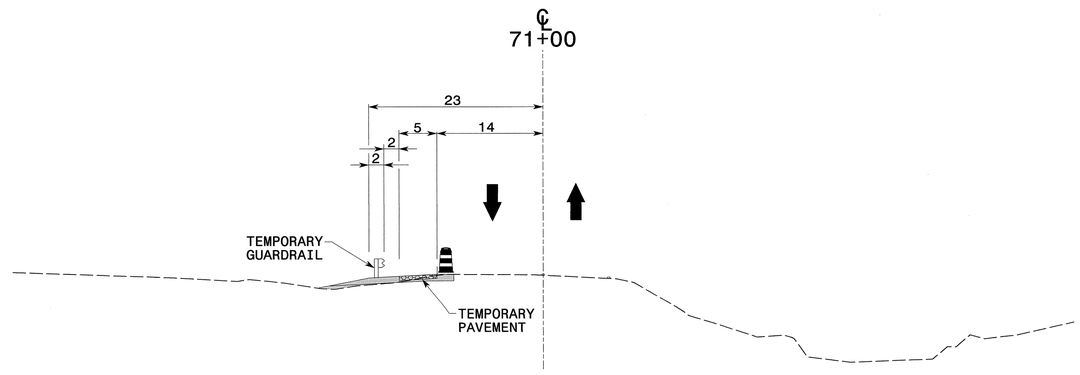

APPROVED: _____ DATE: _____

SEAL

NORTH CAROLINA PROFESSIONAL SEAL 19862 ENGINEER W. WOOLARD JR.

5/29/13

DIVISION OF HIGHWAYS * STATE OF NORTH CAROLINA * DEPARTMENT OF TRANSPORTATION * WORK ZONE TRAFFIC CONTROL

SITE 1
PHASE I
CROSS-SECTIONS

5/28/2013
p:\fpprojects-r\r3101\traffic\trafficcontrol\tcp\SITE1\R3101_TC_SITE1_PH1_TMP30.dgn
User:scodts

PROJ. REFERENCE NO.	SHEET NO.
R-3101	TMP-31

Shoring I.D. No.	Estimated Average Height (ft.)	Quantity (sq. ft.)
⟨2⟩	8.1 FT.	892 SQ. FT.

R11-2
48" x 30"
ROAD CLOSED

TYPE III BARRICADE
(1)

TYPE III BARRICADE(S)
(2)

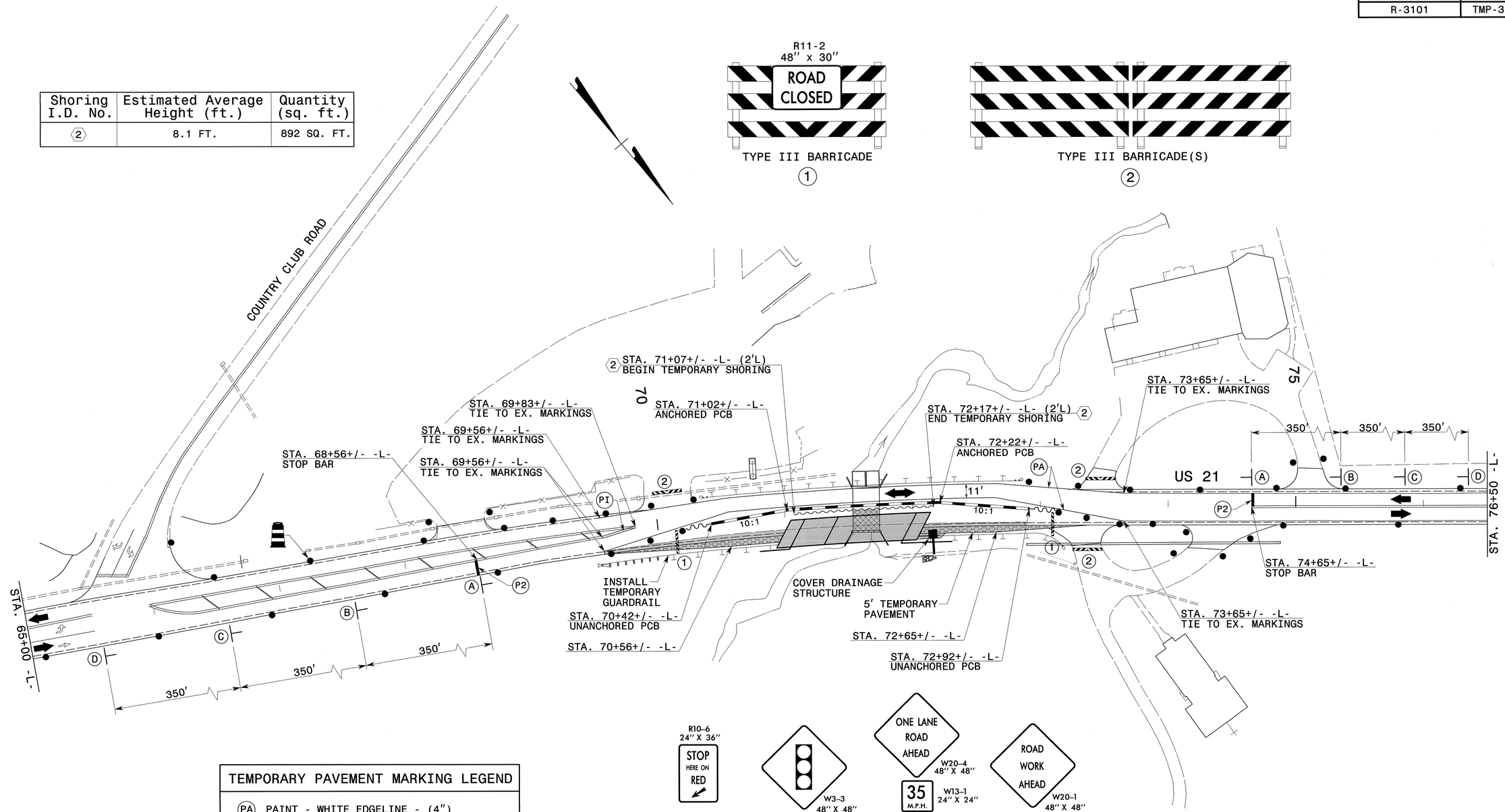

TEMPORARY PAVEMENT MARKING LEGEND	
(PA)	PAINT - WHITE EDGELINE - (4")
(PI)	PAINT - YELLOW DOUBLE CENTER - (4")
(P2)	PAINT - WHITE STOP BAR - (24")

REFER TO RSD NOS. 1205.01, 1205.02, 1205.12, 1250.01, AND 1251.01 FOR PLACEMENT OF TEMPORARY PAVEMENT MARKINGS AND MARKERS UNLESS NOTED OTHERWISE.

R10-6
24" X 36"
STOP HERE ON RED
(A)

W3-3
48" X 48"
(B)

ONE LANE ROAD AHEAD
W20-4
48" X 48"
35 M.P.H.
W13-1
24" X 24"
(C)

ROAD WORK AHEAD
W20-1
48" X 48"
(D)

SEE TMP-32 FOR CROSS-SECTION DETAILS

APPROVED: DATE:

SEAL

NORTH CAROLINA PROFESSIONAL SEAL 19862 ENGINEER W. WOOLARD, JR.

7/11/13

DIVISION OF HIGHWAYS STATE OF NORTH CAROLINA DEPARTMENT OF TRANSPORTATION WORK ZONE TRAFFIC CONTROL

SITE 1
PHASE II
BRIDGE ON US 21
STA. 71+60+/-

7/11/2013
P:\TIPProjects-R\R3101\Traffic\TrafficControl\TCP\SITE1\R3101_TC_SITE1_PH2_TMP31.dgn
User:scoats

PROJ. REFERENCE NO.	SHEET NO.
R-3101	TMP-32

℄
72+00

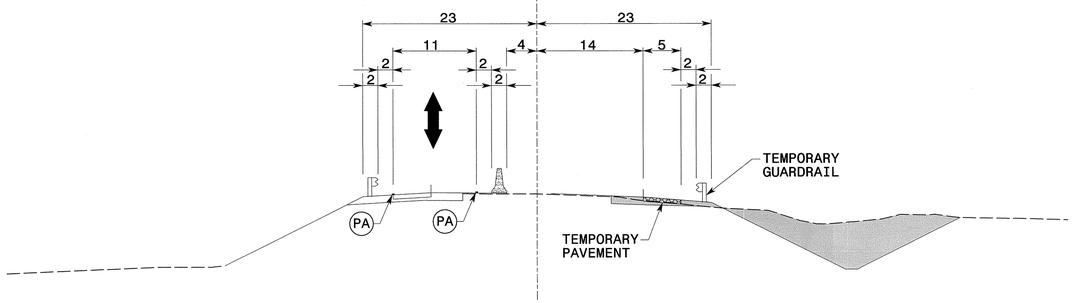

℄
71+50

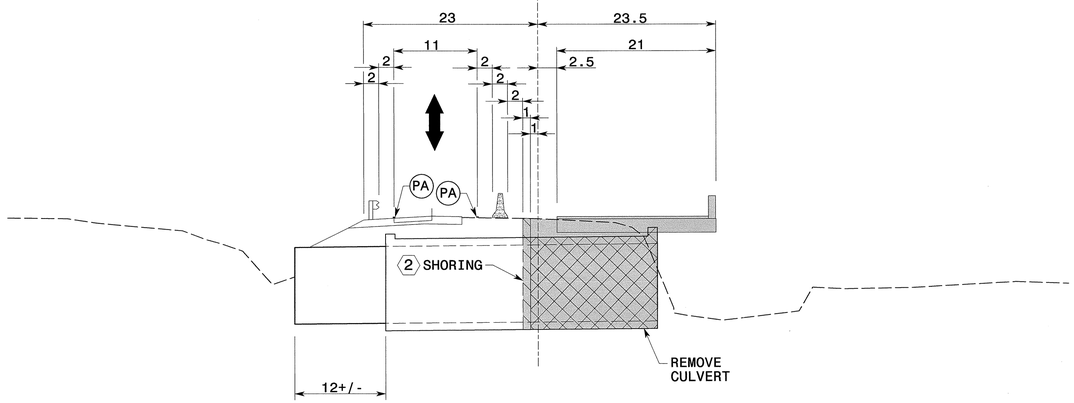

℄
71+00

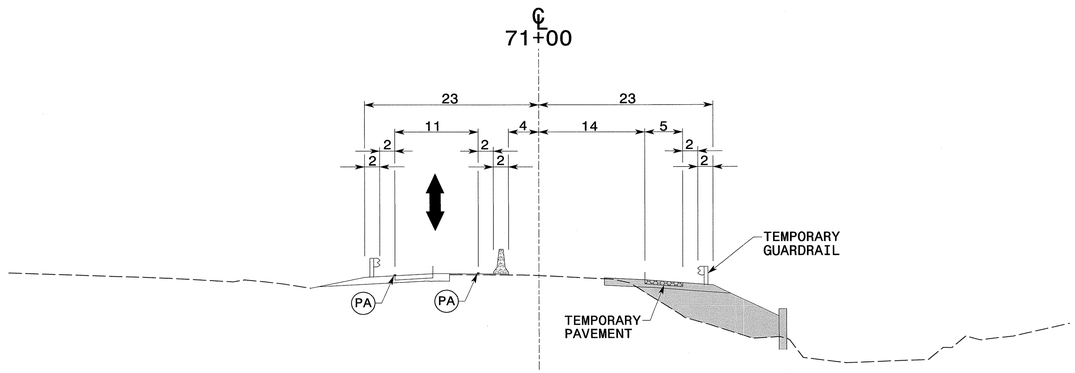

APPROVED: _____ DATE: _____

SEAL

NORTH CAROLINA PROFESSIONAL SEAL 19862 ENGINEER J. W. WOOLARD JR.

5/29/13

DIVISION OF HIGHWAYS
STATE OF NORTH CAROLINA
DEPARTMENT OF TRANSPORTATION
WORK ZONE TRAFFIC CONTROL

SITE 1
PHASE II
CROSS-SECTIONS

5/28/2013
p:\tipprojects-r\r3101\traffic\trafficcontrol\tcp\SITE1\R3101_TC_SITE1_PH2_TMP32.dgn
User:scoats

PROJ. REFERENCE NO.	SHEET NO.
R-3101	TMP-33

TYPE III BARRICADE

(1)

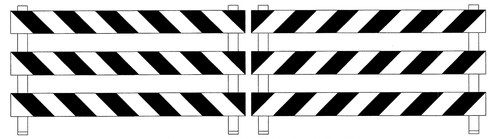

TYPE III BARRICADE(S)

(2)

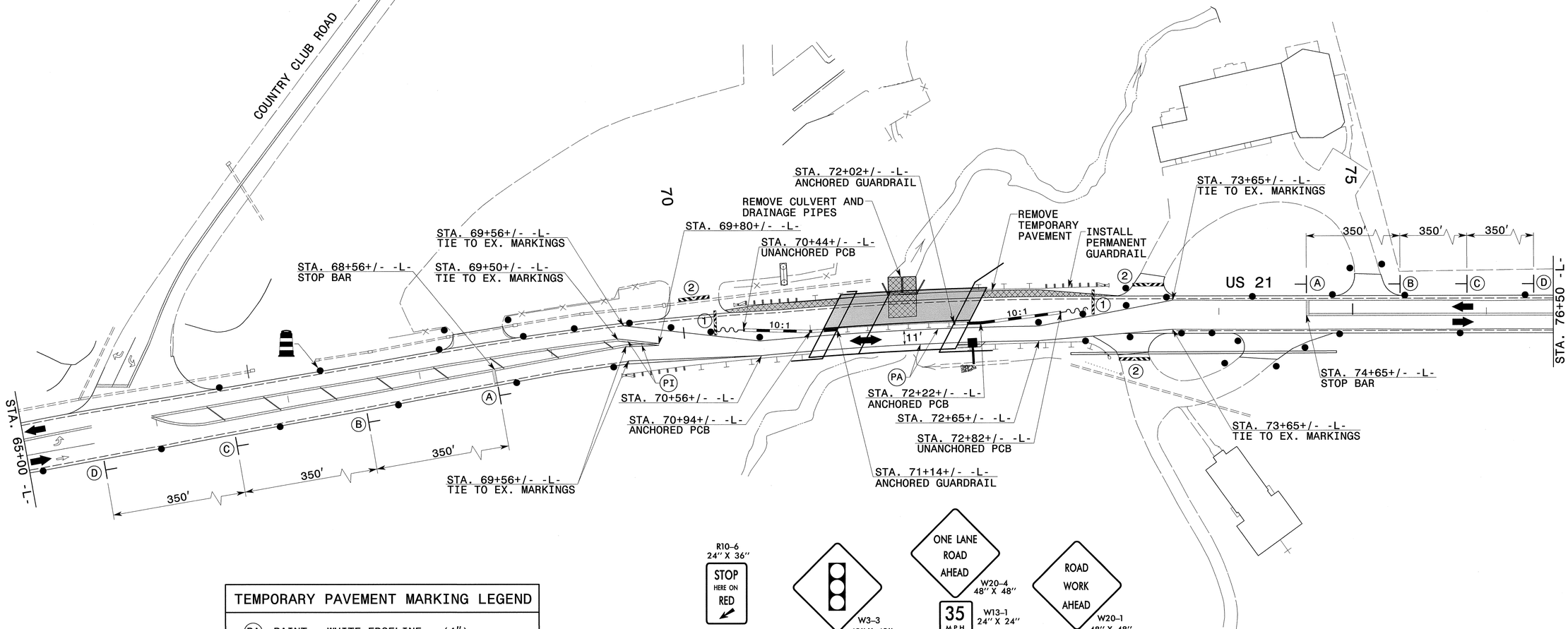

TEMPORARY PAVEMENT MARKING LEGEND	
(PA)	PAINT - WHITE EDGELINE - (4")
(PI)	PAINT - YELLOW DOUBLE CENTER - (4")

REFER TO RSD NOS. 1205.01, 1205.02, 1205.12, 1250.01, AND 1251.01 FOR PLACEMENT OF TEMPORARY PAVEMENT MARKINGS AND MARKERS UNLESS NOTED OTHERWISE.

(A)

(B)

(C)

(D)

SEE TMP-34 FOR CROSS-SECTION DETAILS

APPROVED: DATE: 5/29/13

SEAL

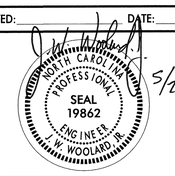

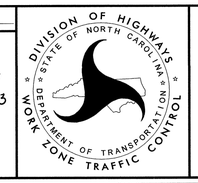

SITE 1
PHASE III
BRIDGE ON US 21
STA. 71+60+/-

5/28/2013
P:\Tipprojects-r\r3101\traffic\trafficcontrol\top\SITE1\R3101_TC_SITE1_PH3_TMP33.dgn
User:scodfs

PROJ. REFERENCE NO.	SHEET NO.
R-3101	TMP-34

℄
72+00

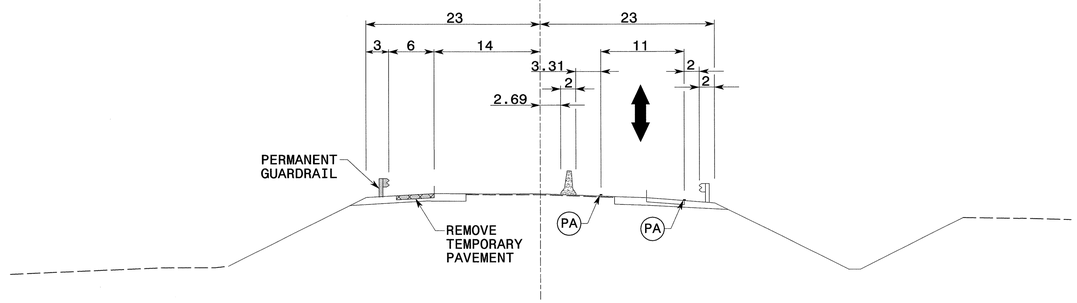

℄
71+50

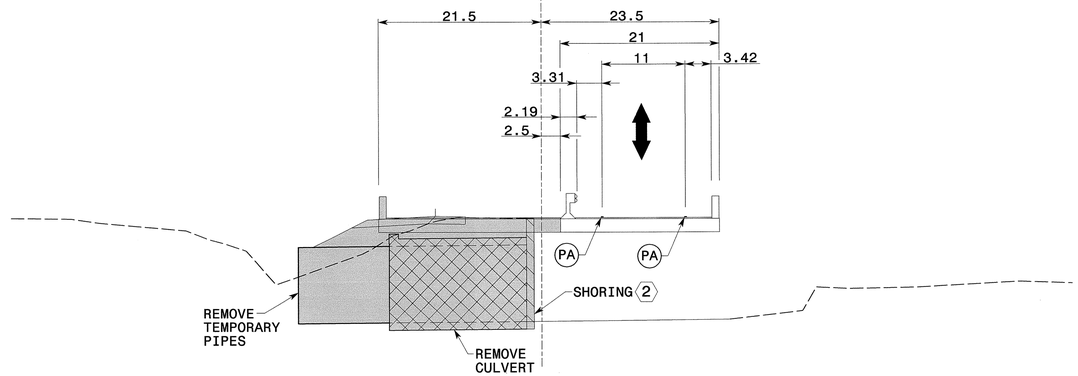

℄
71+00

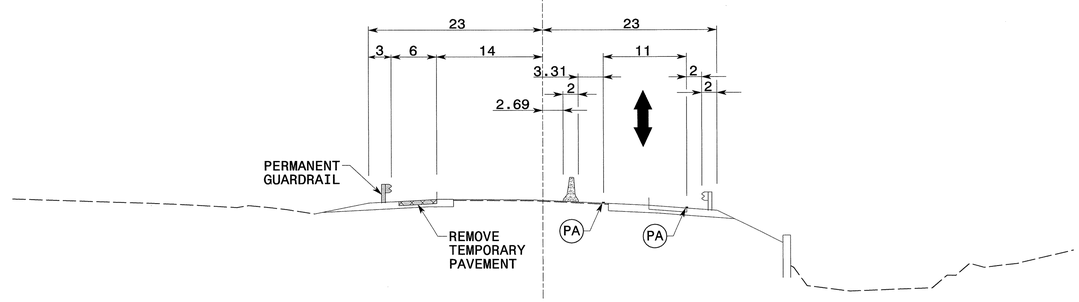

APPROVED: DATE:

SEAL

NORTH CAROLINA PROFESSIONAL SEAL 19862 ENGINEER J. W. WOOLARD

5/29/13

DIVISION OF HIGHWAYS · STATE OF NORTH CAROLINA · DEPARTMENT OF TRANSPORTATION · WORK ZONE TRAFFIC CONTROL

SITE 1
PHASE III
CROSS-SECTIONS

5/28/2013
p:\tipprojects-r\r3101\traffic\trafficcontrol\tcp\SITE1\R3101_TC_SITE1_PH3_TMP34.dgn
User:scofs

PROJ. REFERENCE NO.	SHEET NO.
R-3101	TMP-35

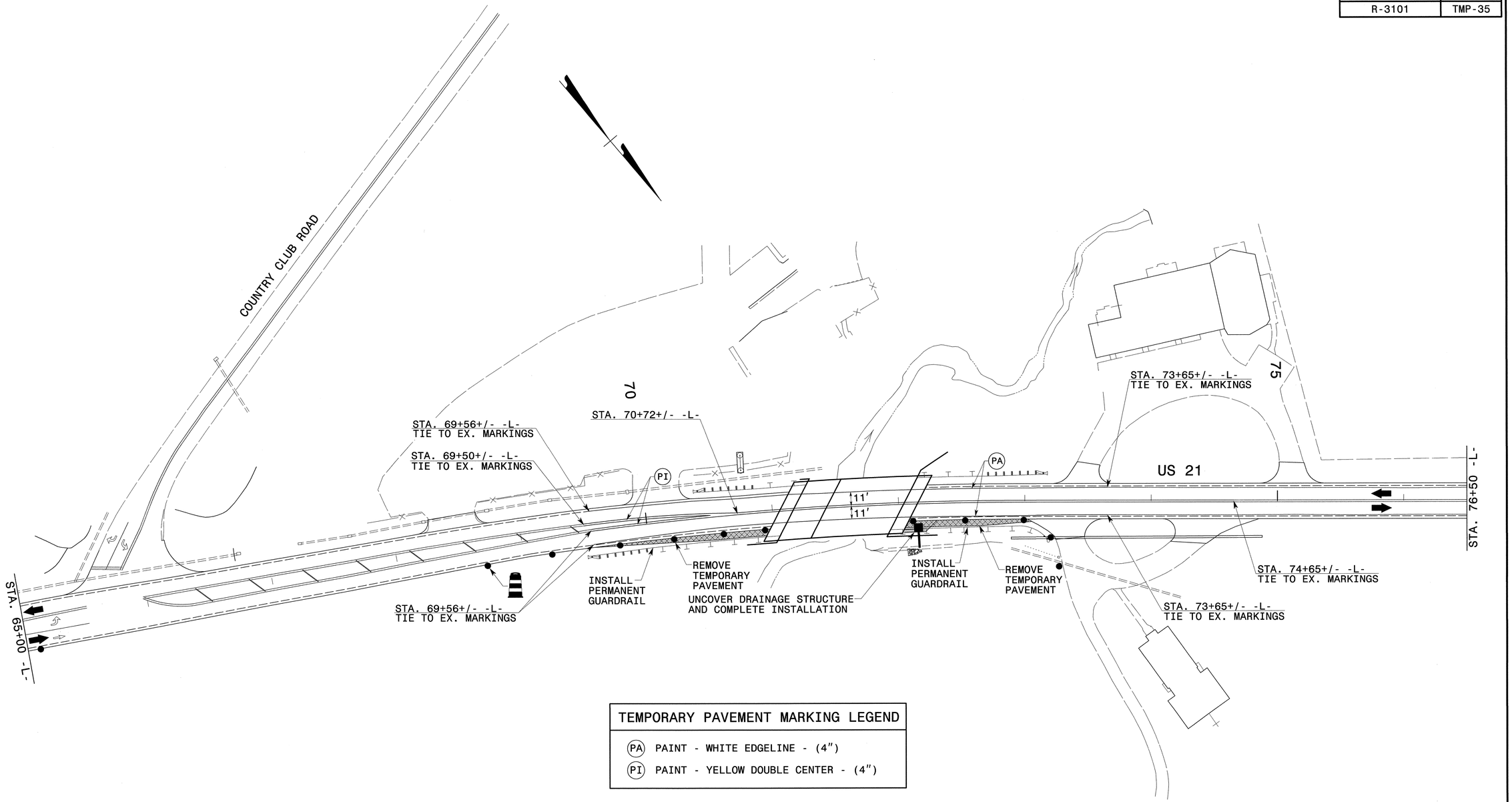

TEMPORARY PAVEMENT MARKING LEGEND

- (PA) PAINT - WHITE EDGELINE - (4")
- (PI) PAINT - YELLOW DOUBLE CENTER - (4")

REFER TO RSD NOS. 1205.01, 1205.02, 1205.12, 1250.01, AND 1251.01 FOR PLACEMENT OF TEMPORARY PAVEMENT MARKINGS AND MARKERS UNLESS NOTED OTHERWISE.

SEE TMP-36 FOR CROSS-SECTION DETAILS

APPROVED: _____ DATE: _____

SEAL

NORTH CAROLINA PROFESSIONAL SEAL 19862 ENGINEER J. W. WOOLARD JR.

7/11/13

DIVISION OF HIGHWAYS STATE OF NORTH CAROLINA DEPARTMENT OF TRANSPORTATION WORK ZONE TRAFFIC CONTROL

SITE 1
PHASE IV
BRIDGE ON US 21
STA. 71+60+/-

7/11/2013
P:\TIPProjects-R\R3101\Traffic\TrafficControl\TCP\SITE1\R3101_TC_SITE1_PH4_TMP35.dgn
User:scoats

PROJ. REFERENCE NO.	SHEET NO.
R-3101	TMP-36

℄
72+00

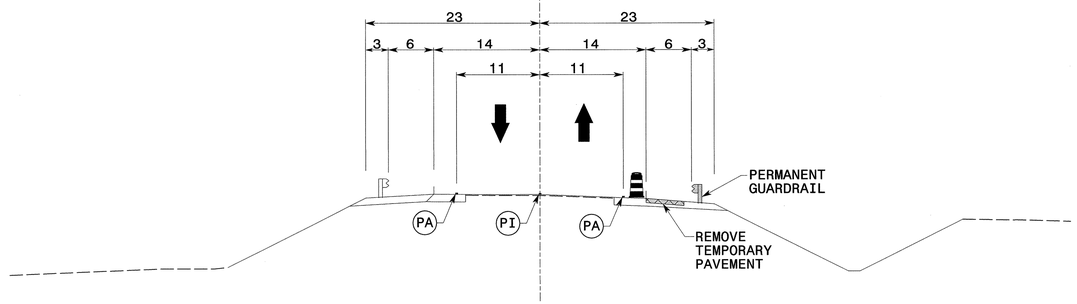

℄
71+50

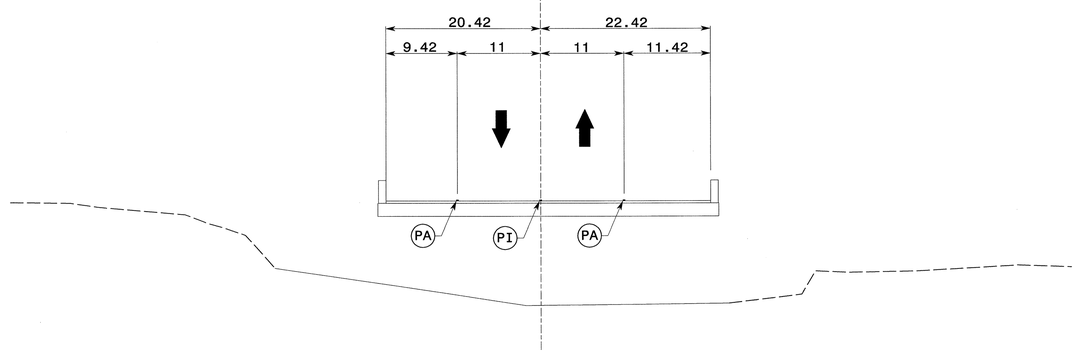

℄
71+00

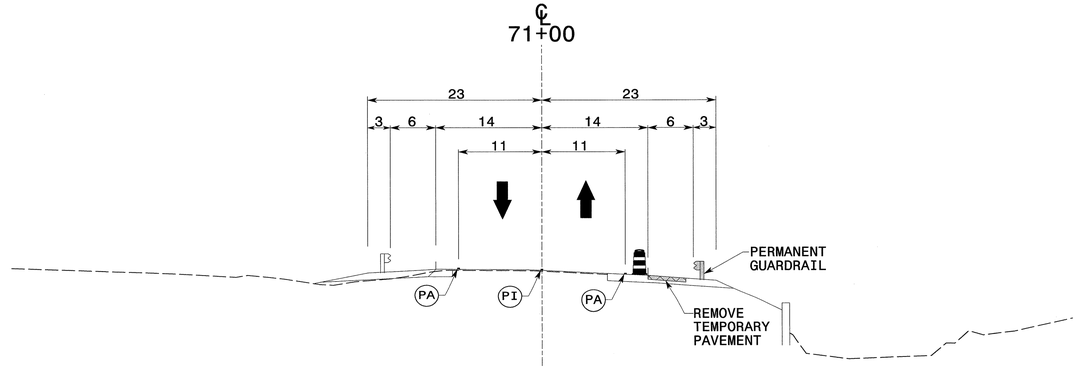

APPROVED: DATE:

SEAL

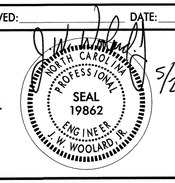

5/29/13

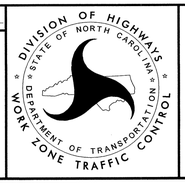

SITE 1
PHASE IV
CROSS-SECTIONS

5/28/2013
P:\TIPprojects-r-r-3101\traffic\trafficcontrol\tcp\SITE1\R3101_TC_SITE1_PH4_TMP36.dgn
User:scoots

PROJ. REFERENCE NO.	SHEET NO.
R-3101	TMP-37

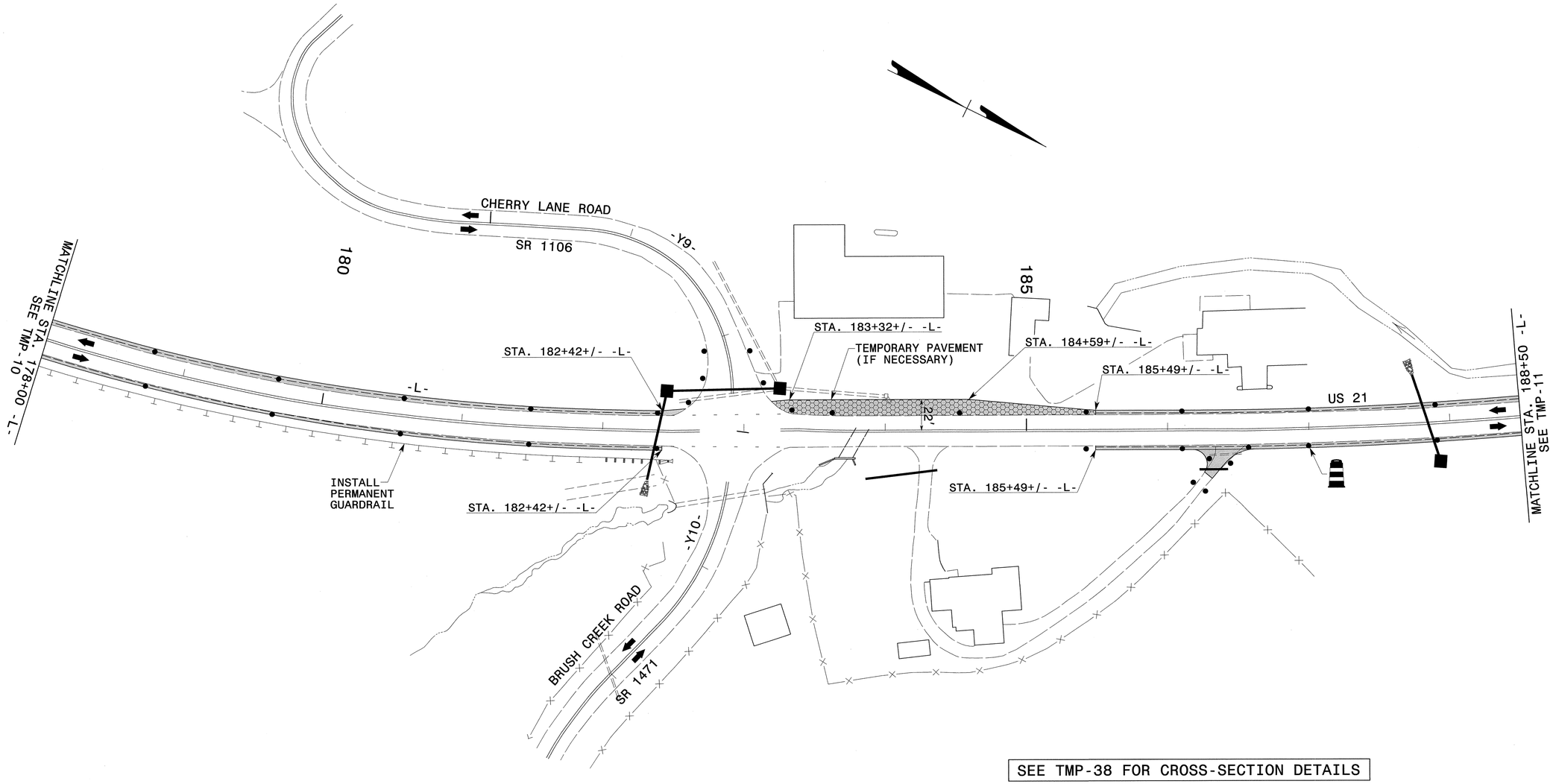

SEE TMP-38 FOR CROSS-SECTION DETAILS

APPROVED: _____ DATE: _____

SEAL

NORTH CAROLINA PROFESSIONAL SEAL 19862 ENGINEER J. W. WOOLARD JR.

5/29/13

DIVISION OF HIGHWAYS STATE OF NORTH CAROLINA DEPARTMENT OF TRANSPORTATION WORK ZONE TRAFFIC CONTROL

SITE 2
PHASE I
96" CSP ON US 21
STA. 184+09+/-

5/28/2013
p:\tipprojects-r\r3101\traffic\trafficcontrol\tcp\SITE2\R3101_TC_SITE2_PHI_TMP37.dgn
Users\cadds

PROJ. REFERENCE NO.	SHEET NO.
R-3101	TMP-38

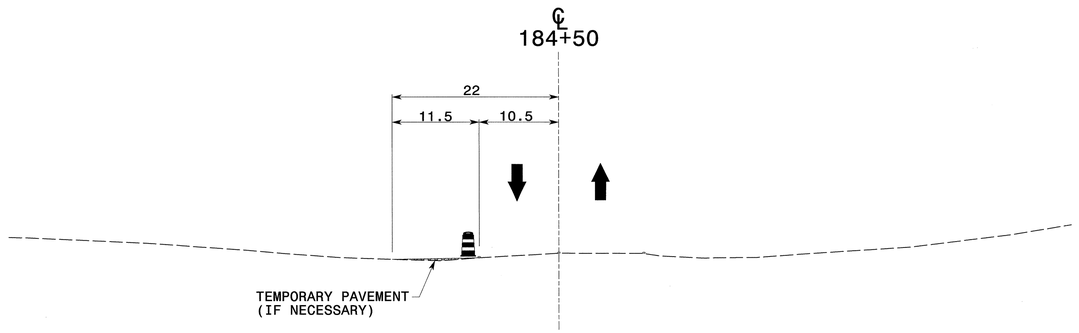

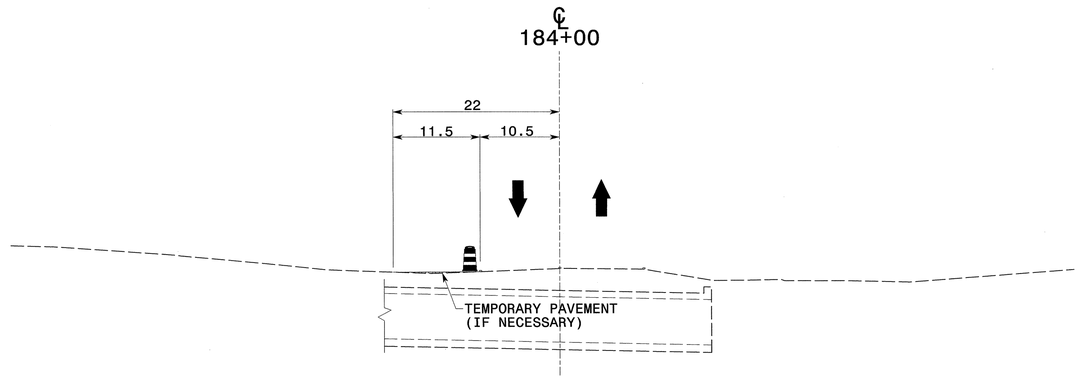

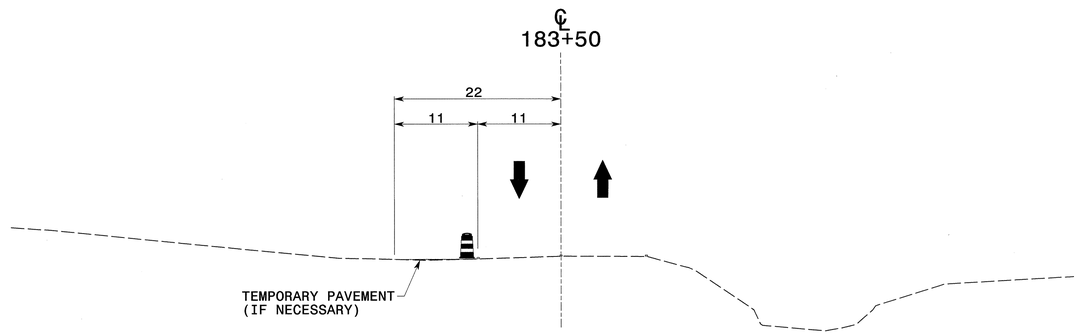

APPROVED: DATE:

SEAL

NORTH CAROLINA PROFESSIONAL SEAL 19862 ENGINEER J. WOOLARD JR.

5/29/13

DIVISION OF HIGHWAYS * STATE OF NORTH CAROLINA * DEPARTMENT OF TRANSPORTATION * WORK ZONE TRAFFIC CONTROL

SITE 2
PHASE I
CROSS-SECTIONS

5/28/2013
p:\tipprojects-r\r3101\traffic\trafficcontrol\tep\SITE2\R3101_TC_SITE2_PHI_TMP38.dgn
User:scodts

PROJ. REFERENCE NO.	SHEET NO.
R-3101	TMP-39

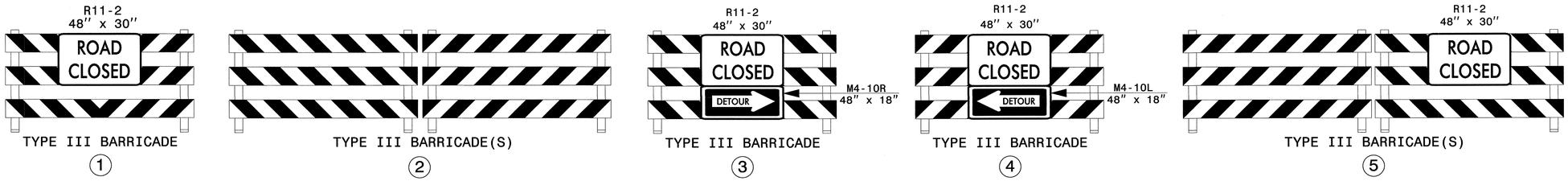

NOTE: FOR OFF-SITE DETOUR OF CHERRY LANE ROAD (-Y9-) AND BRUSH CREEK ROAD (-Y10-) SIGNAGE AND BARRICADES, SEE TMP-41.

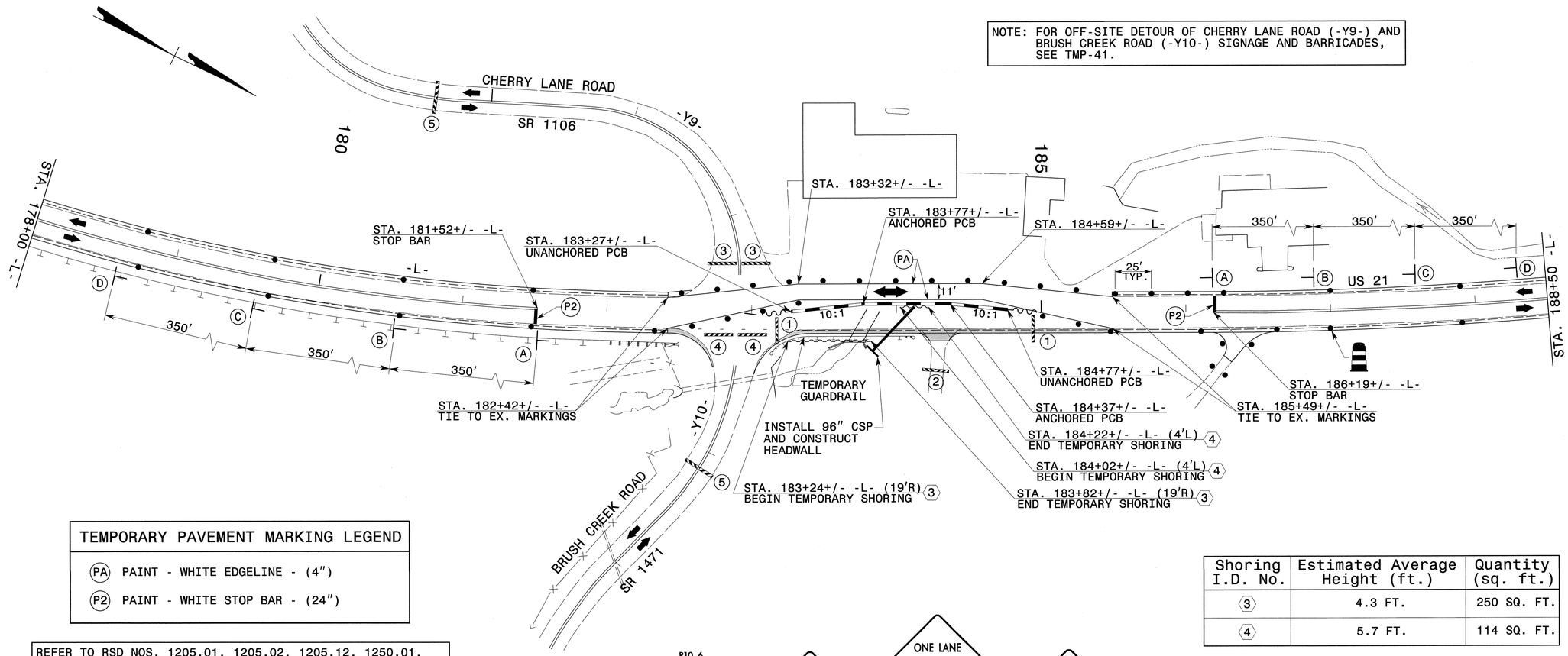

TEMPORARY PAVEMENT MARKING LEGEND	
PA	PAINT - WHITE EDGELINE - (4")
P2	PAINT - WHITE STOP BAR - (24")

REFER TO RSD NOS. 1205.01, 1205.02, 1205.12, 1250.01, AND 1251.01 FOR PLACEMENT OF TEMPORARY PAVEMENT MARKINGS AND MARKERS UNLESS NOTED OTHERWISE.

SEE TMP-40 FOR CROSS-SECTION DETAILS

Shoring I.D. No.	Estimated Average Height (ft.)	Quantity (sq. ft.)
3	4.3 FT.	250 SQ. FT.
4	5.7 FT.	114 SQ. FT.

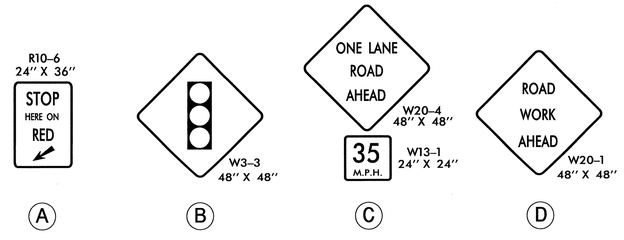

APPROVED: DATE:

SEAL

NORTH CAROLINA PROFESSIONAL SEAL 19862 ENGINEER J. W. WOOLARD JR. 5/29/13

DIVISION OF HIGHWAYS * STATE OF NORTH CAROLINA * DEPARTMENT OF TRANSPORTATION * WORK ZONE TRAFFIC CONTROL

SITE 2
PHASE II
96" CSP ON US 21
STA. 184+09+/-

5/28/2013
p:\ttpprojects-r\r3101\traffic\trafficcontrol\top\SITE2\R3101_TC_SITE2_PH2_TMP39.dgn
Users\scoats

PROJ. REFERENCE NO.	SHEET NO.
R-3101	TMP-40

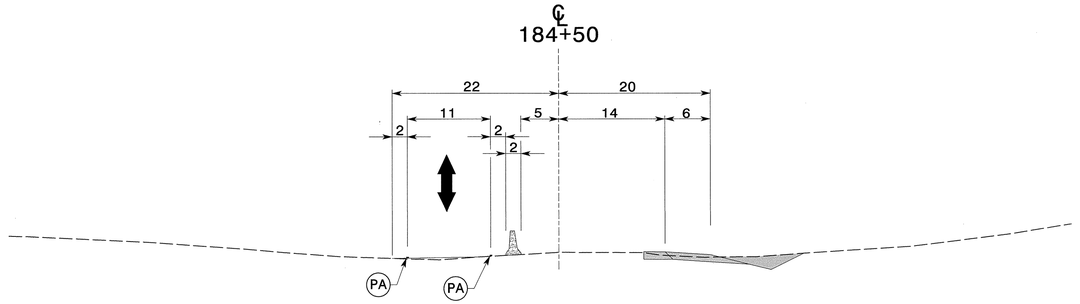

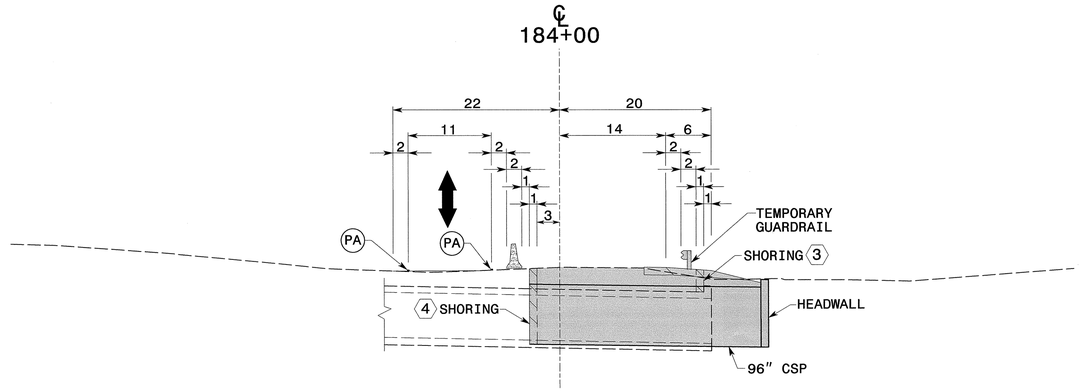

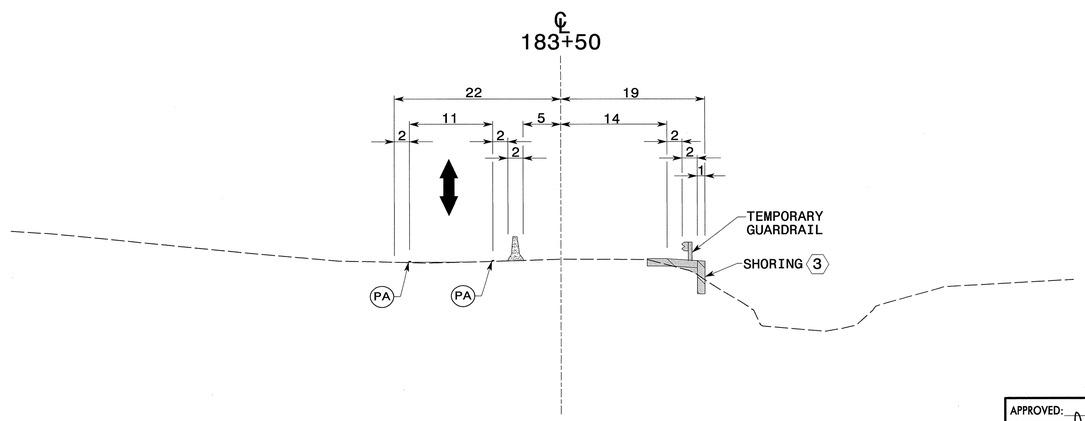

APPROVED: DATE:

SEAL

NORTH CAROLINA PROFESSIONAL SEAL 19862 ENGINEER J. W. WOOLARD, JR.

5/29/13

DIVISION OF HIGHWAYS
STATE OF NORTH CAROLINA
DEPARTMENT OF TRANSPORTATION
WORK ZONE TRAFFIC CONTROL

SITE 2
PHASE II
CROSS-SECTIONS

5/28/2013
p:\tipprojects-r\r3101\traffic\trafficcontrol\tcp\SITE2\R3101_TC_SITE2_PH2_TMP40.dgn
User:scoats

PROJ. REFERENCE NO.	SHEET NO.
R-3101	TMP-41

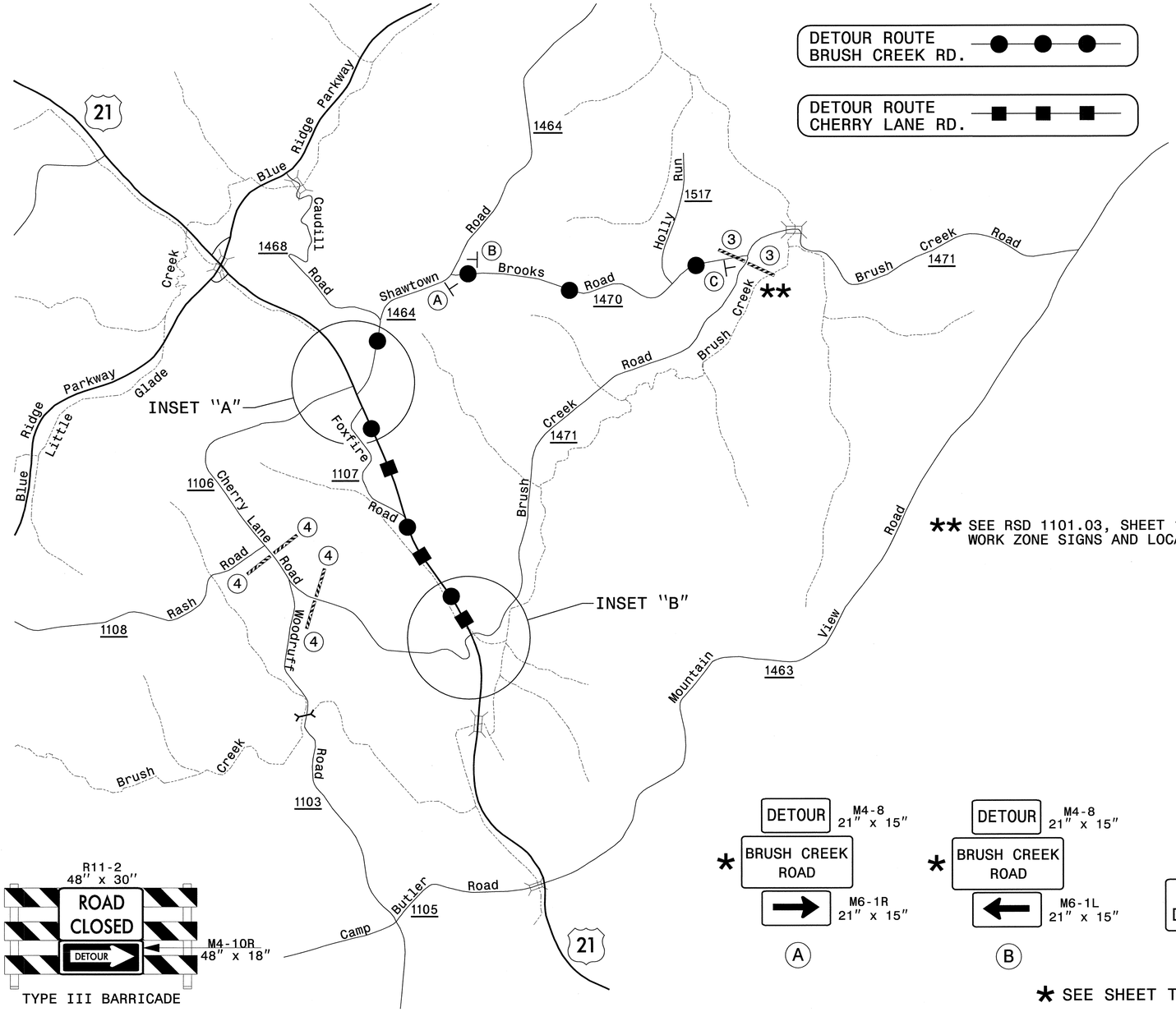

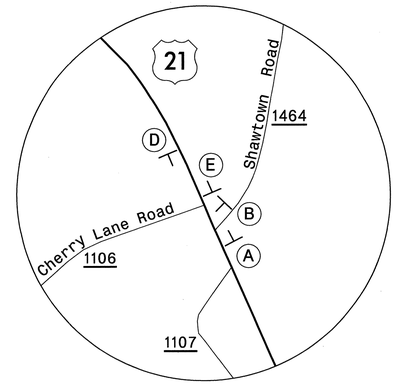

INSET "A"

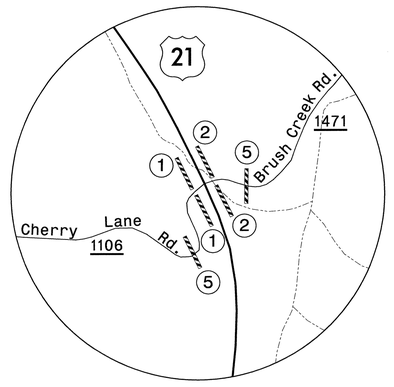

INSET "B"

TYPE III BARRICADE

(1)

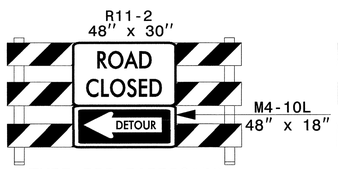

TYPE III BARRICADE

(2)

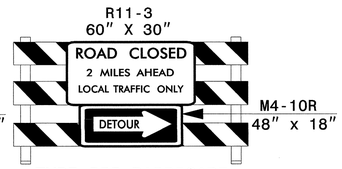

TYPE III BARRICADE

(3)

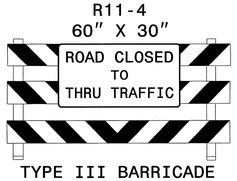

TYPE III BARRICADE

(4)

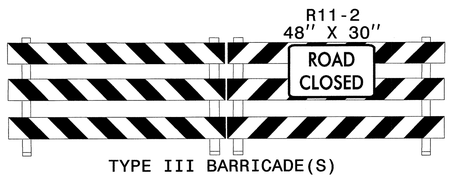

TYPE III BARRICADE(S)

(5)

(A)

(B)

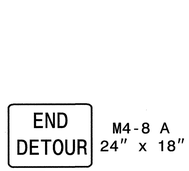

(C)

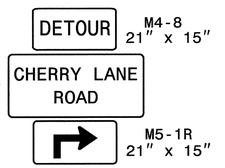

(D)

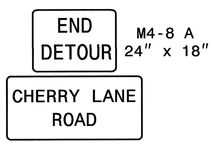

(E)

* SEE SHEET TMP-2C FOR SIGN DESIGN

APPROVED: DATE:

SEAL

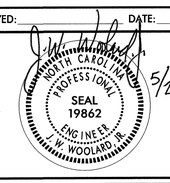

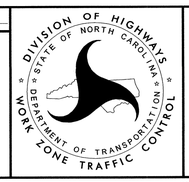

OFF-SITE DETOUR
BRUSH CREEK ROAD
SR 1471
AND
CHERRY LANE ROAD
SR 1106

5/28/2013
p:\Tipprojects-r\r3101\traffic\trafficcontrol\tcp\SITE2\R3101_TC_SITE2_PH2_TMP41.dgn
User:scoots

PROJ. REFERENCE NO.	SHEET NO.
R-3101	TMP-42

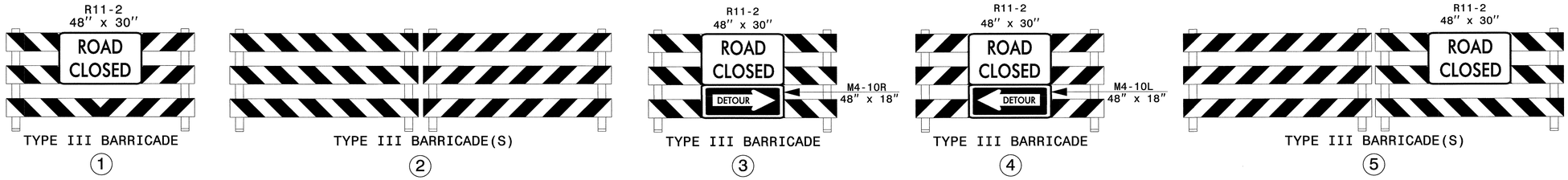

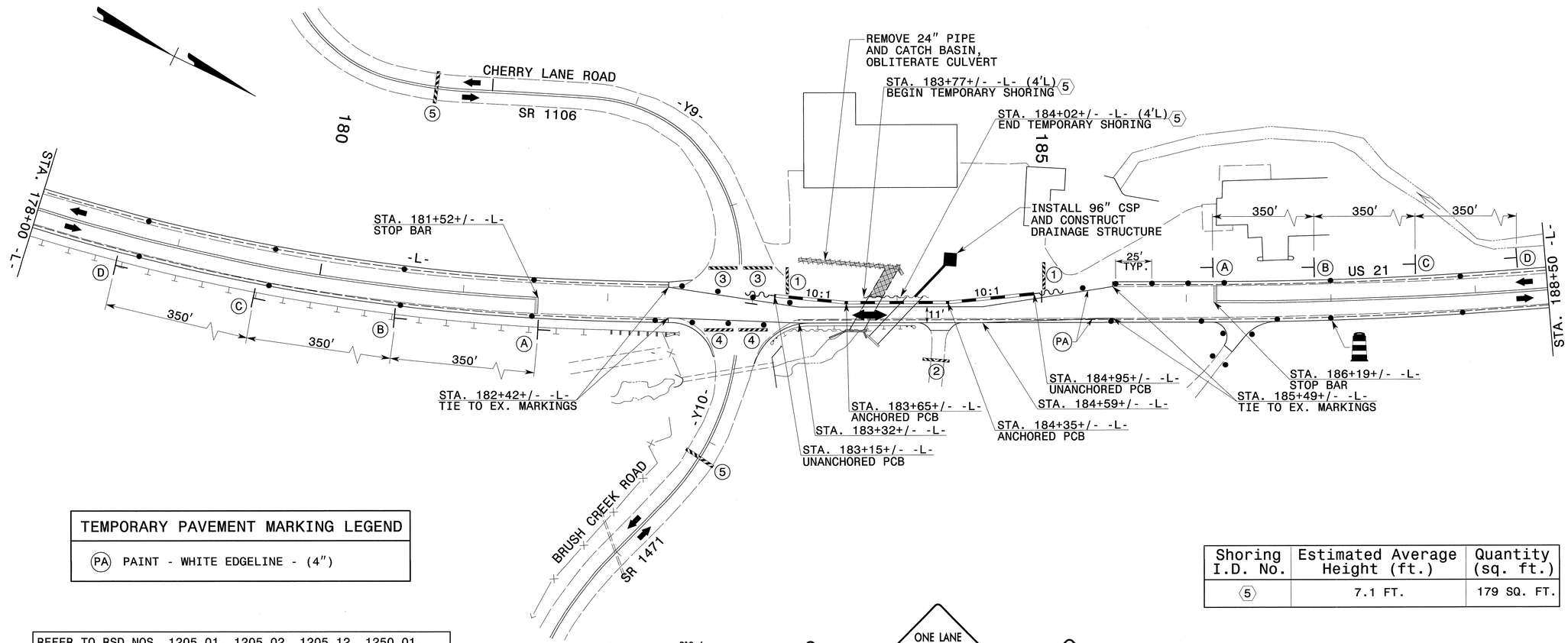

TEMPORARY PAVEMENT MARKING LEGEND
(PA) PAINT - WHITE EDGELINE - (4")

REFER TO RSD NOS. 1205.01, 1205.02, 1205.12, 1250.01, AND 1251.01 FOR PLACEMENT OF TEMPORARY PAVEMENT MARKINGS AND MARKERS UNLESS NOTED OTHERWISE.

SEE TMP-43 FOR CROSS-SECTION DETAILS

Shoring I.D. No.	Estimated Average Height (ft.)	Quantity (sq. ft.)
5	7.1 FT.	179 SQ. FT.

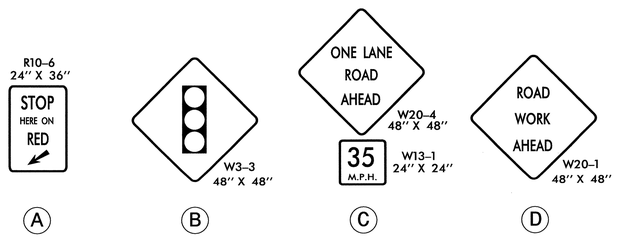

APPROVED: DATE:

SEAL

NORTH CAROLINA PROFESSIONAL SEAL 19862 ENGINEER J. W. WOOLARD JR.

7/11/13

DIVISION OF HIGHWAYS
STATE OF NORTH CAROLINA
DEPARTMENT OF TRANSPORTATION
WORK ZONE TRAFFIC CONTROL

SITE 2
PHASE III
96" CSP ON US 21
STA. 184+09+/-

7/11/2013
P:\TIPProjects-R\R3101\Traffic\TrafficControl\TCP\SITE2\R3101_TC_SITE2_PH3_TMP42.dgn
User:scoats

PROJ. REFERENCE NO.	SHEET NO.
R-3101	TMP-43

℄
184+50

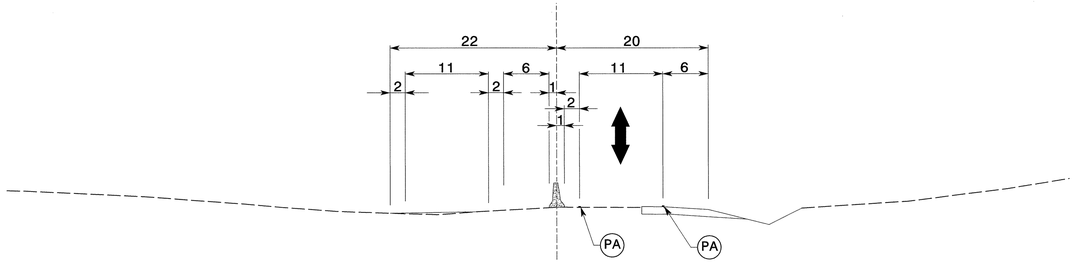

℄
184+00

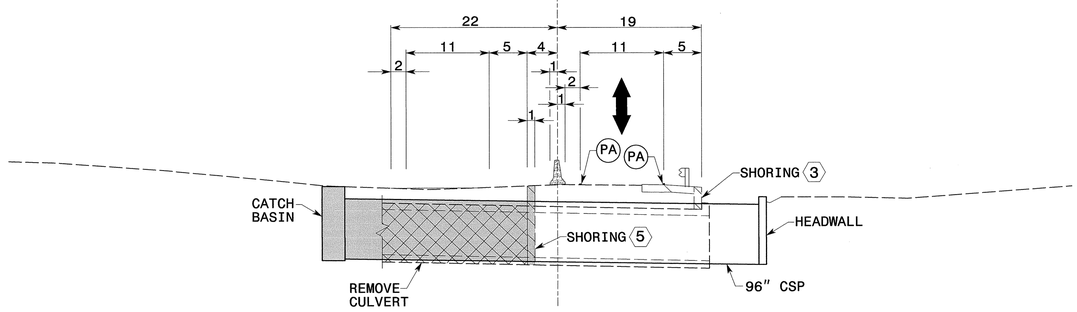

℄
183+50

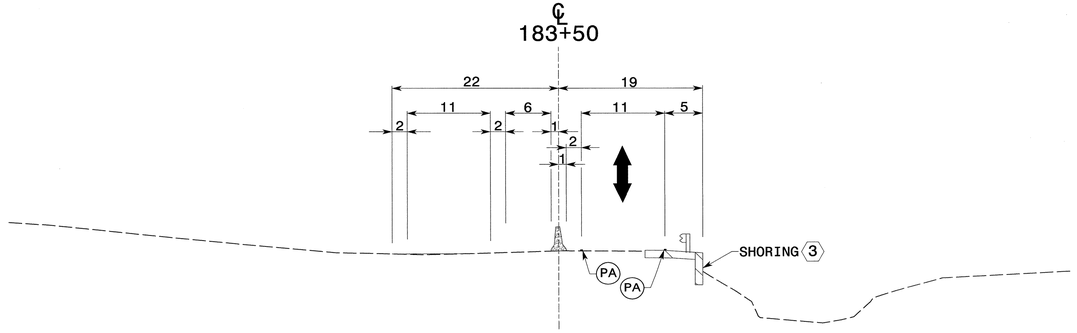

APPROVED: _____ DATE: _____

SEAL

NORTH CAROLINA PROFESSIONAL SEAL 19862 ENGINEER J. W. WOOLARD, JR.

5/29/13

DIVISION OF HIGHWAYS STATE OF NORTH CAROLINA DEPARTMENT OF TRANSPORTATION WORK ZONE TRAFFIC CONTROL

SITE 2
PHASE III
CROSS-SECTIONS

5/28/2013
p:\tipprojects-r\r3101\traffic\trafficcontrol\tcp\SITE2\R3101_TC_SITE2_PH3_TMP43.dgn
Userscoats

PROJ. REFERENCE NO.	SHEET NO.
R-3101	TMP-44

TYPE III BARRICADE

(1)

TYPE III BARRICADE(S)

(2)

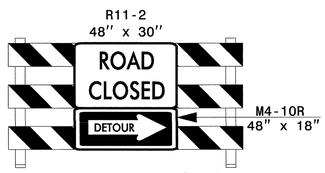

TYPE III BARRICADE

(3)

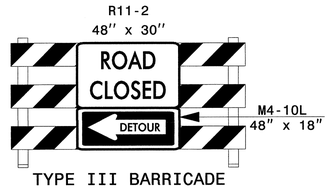

TYPE III BARRICADE

(4)

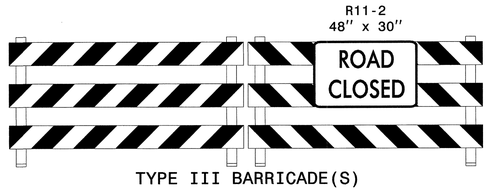

TYPE III BARRICADE(S)

(5)

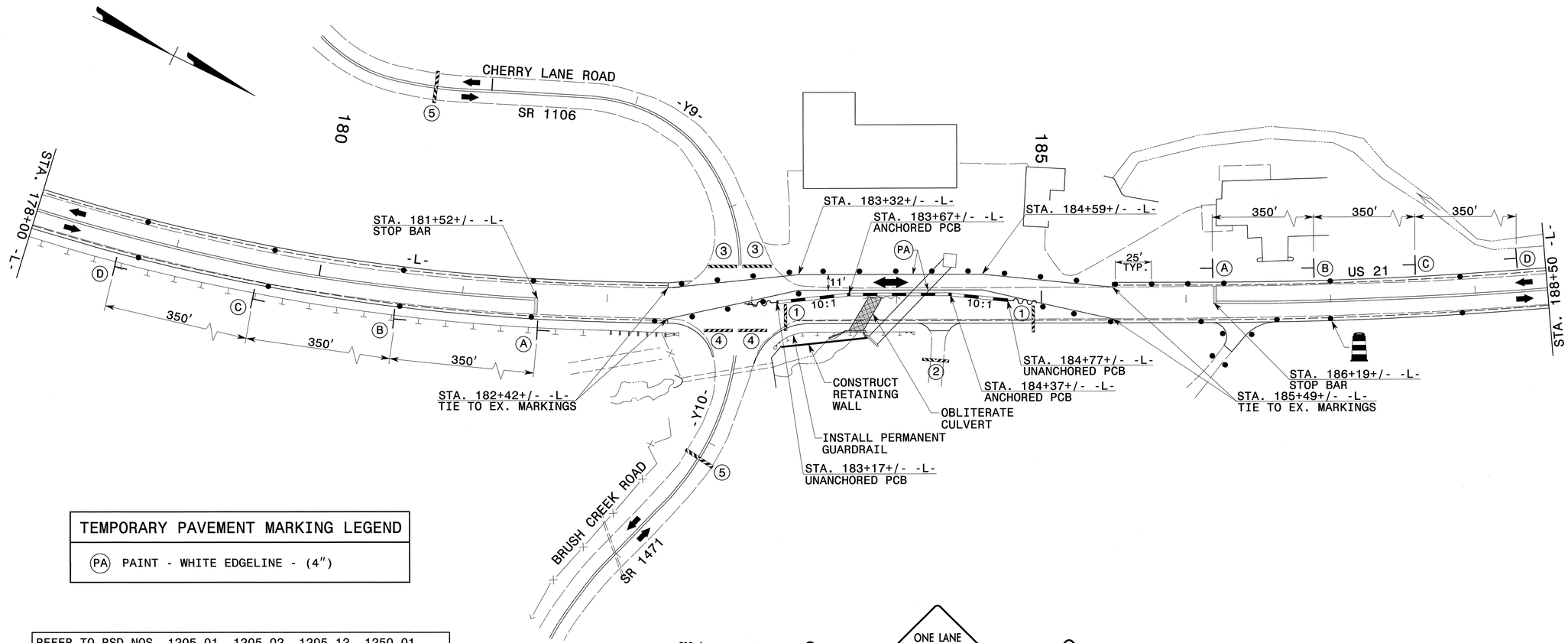

TEMPORARY PAVEMENT MARKING LEGEND
(PA) PAINT - WHITE EDGELINE - (4")

REFER TO RSD NOS. 1205.01, 1205.02, 1205.12, 1250.01, AND 1251.01 FOR PLACEMENT OF TEMPORARY PAVEMENT MARKINGS AND MARKERS UNLESS NOTED OTHERWISE.

SEE TMP-45 FOR CROSS-SECTION DETAILS

(A)

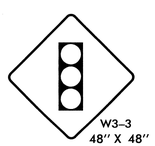

(B)

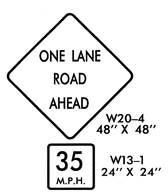

(C)

(D)

APPROVED: DATE:

SEAL

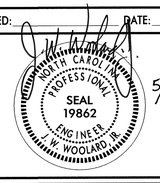

5/29/13

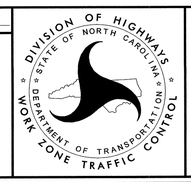

SITE 2
PHASE IV
96" CSP ON US 21
STA. 184+09+/-

5/28/2013
p:\tipprojects-r\r3101\traffic\trafficcontrol\tcp\SITE2\R3101_TC_SITE2_PH4_TMP44.dgn
User:scoots

PROJ. REFERENCE NO.	SHEET NO.
R-3101	TMP-45

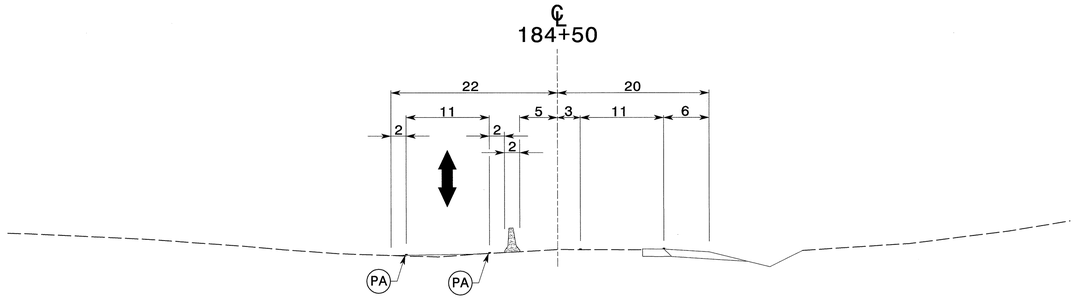

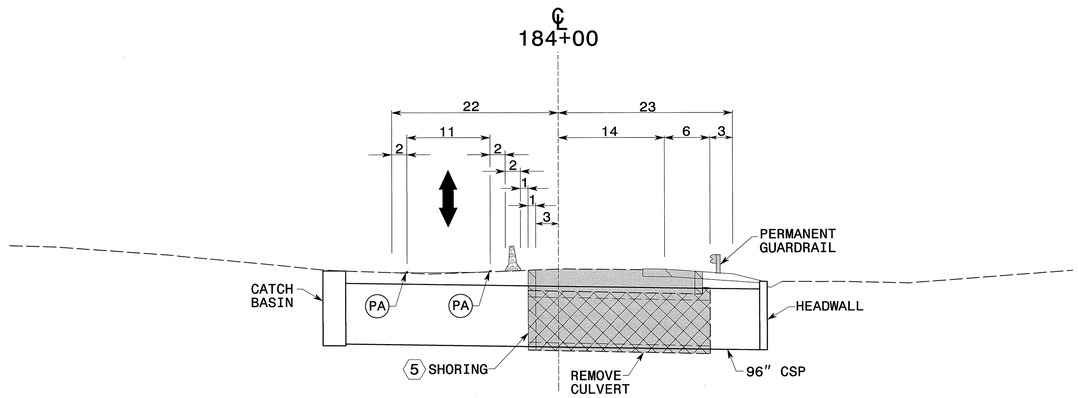

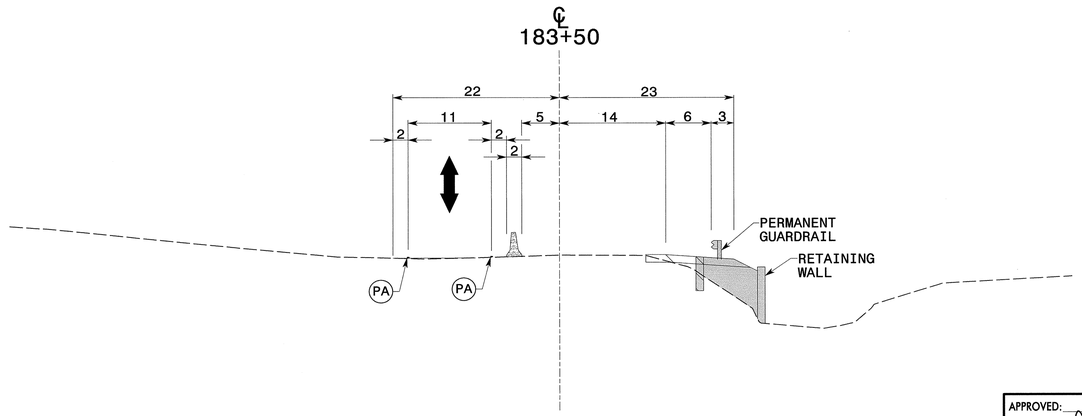

APPROVED:

DATE:

SEAL

NORTH CAROLINA PROFESSIONAL SEAL 19862 ENGINEER W. WOOLARD JR.

5/29/13

DIVISION OF HIGHWAYS STATE OF NORTH CAROLINA DEPARTMENT OF TRANSPORTATION WORK ZONE TRAFFIC CONTROL

SITE 2
PHASE IV
CROSS-SECTIONS

5/28/2013
p:\tipprojects-r\r3101\traffic\trafficcontrol\tcp\SITE2\R3101_TC_SITE2_PH4_TMP45.dgn
User:scodts

PROJ. REFERENCE NO.	SHEET NO.
R-3101	TMP-46

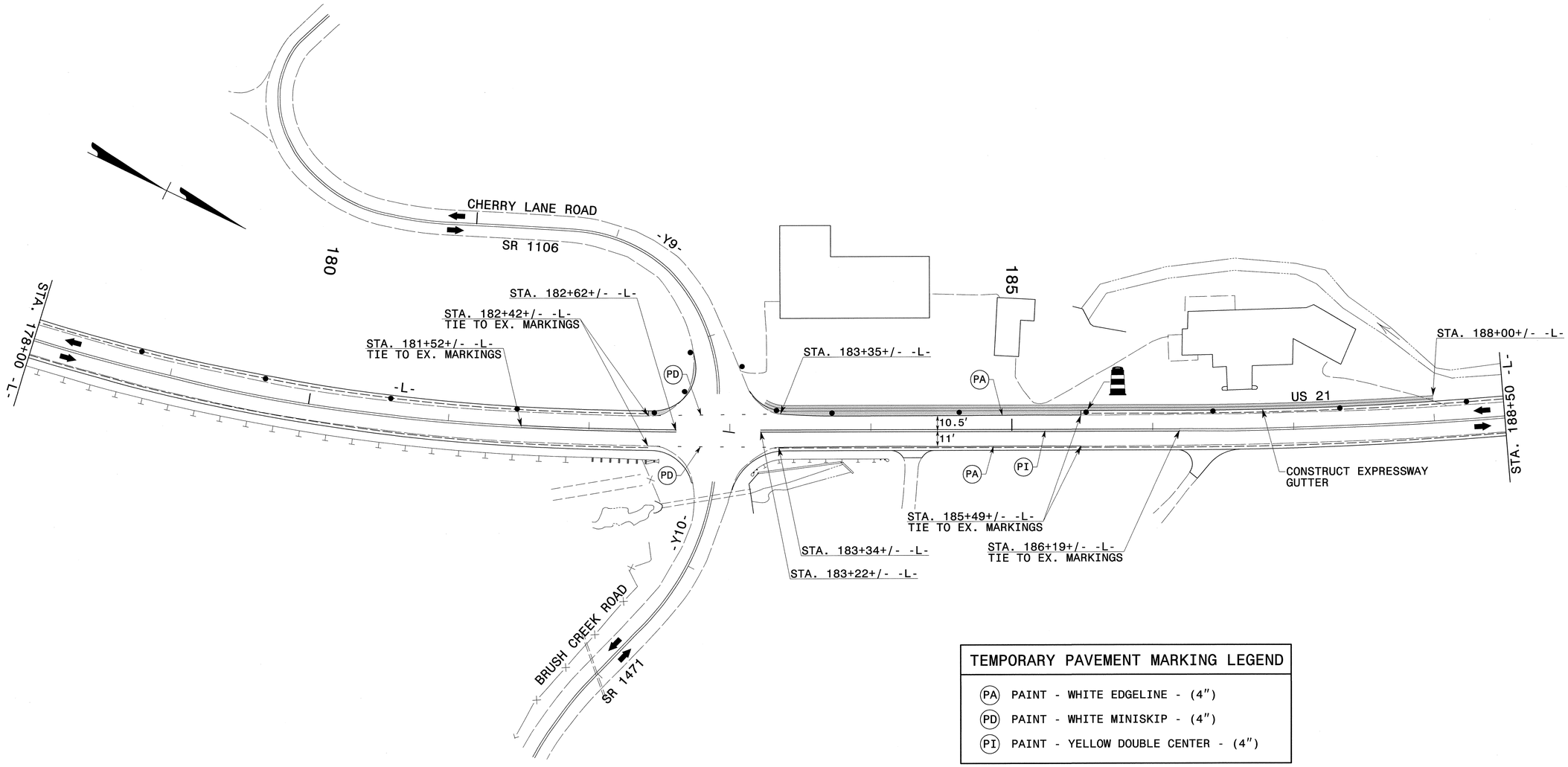

TEMPORARY PAVEMENT MARKING LEGEND

- (PA) PAINT - WHITE EDGELINE - (4")
- (PD) PAINT - WHITE MINISKIP - (4")
- (PI) PAINT - YELLOW DOUBLE CENTER - (4")

REFER TO RSD NOS. 1205.01, 1205.02, 1205.12, 1250.01, AND 1251.01 FOR PLACEMENT OF TEMPORARY PAVEMENT MARKINGS AND MARKERS UNLESS NOTED OTHERWISE.

SEE TMP-47 FOR CROSS-SECTION DETAILS

APPROVED: _____ DATE: _____

SEAL

NORTH CAROLINA PROFESSIONAL SEAL 19862 ENGINEER J. W. WOOLARD JR.

5/29/13

DIVISION OF HIGHWAYS * STATE OF NORTH CAROLINA * DEPARTMENT OF TRANSPORTATION * WORK ZONE TRAFFIC CONTROL

SITE 2
PHASE V
96" CSP ON US 21
STA. 184+09+/-

5/28/2013
p:\Tipprojects-r\r3101\traffic\trafficcontrol\tcp\SITE2\R3101_TC_SITE2_PH5_TMP46.dgn
User:scoats

PROJ. REFERENCE NO.	SHEET NO.
R-3101	TMP-47

℄
184+50

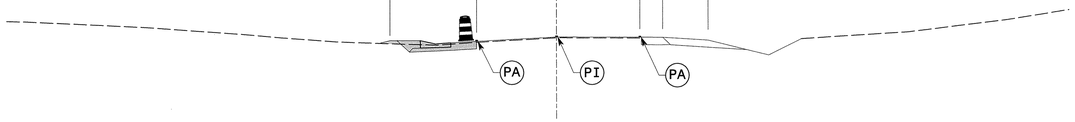

℄
184+00

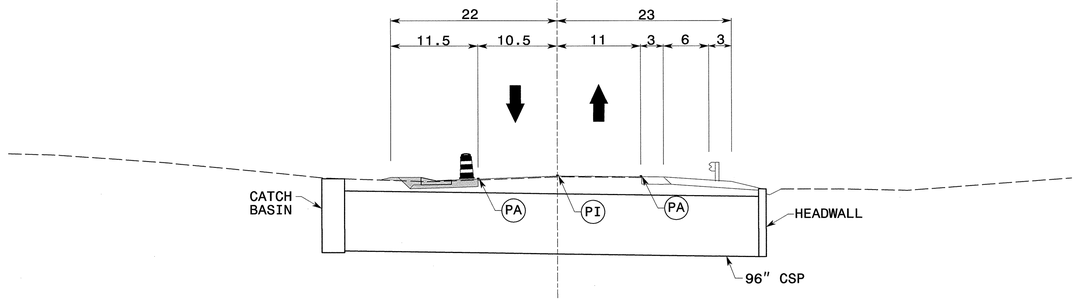

℄
183+50

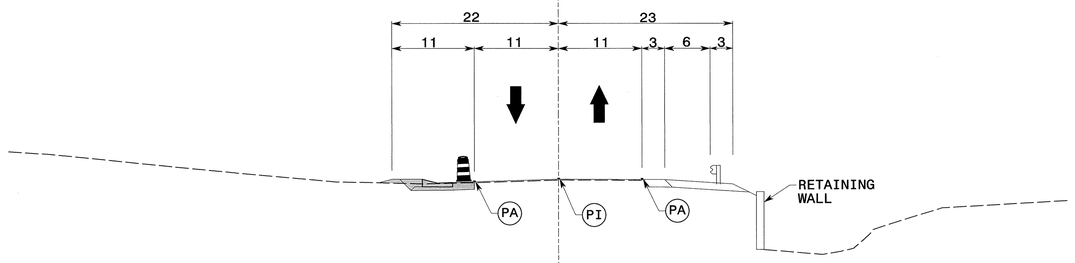

APPROVED: DATE: 5/29/13

SEAL

NORTH CAROLINA PROFESSIONAL SEAL 19862 ENGINEER J.W. WOOLARD JR.

DIVISION OF HIGHWAYS * STATE OF NORTH CAROLINA * DEPARTMENT OF TRANSPORTATION * WORK ZONE TRAFFIC CONTROL

SITE 2
PHASE V
CROSS-SECTIONS

5/28/2013
p:\tipprojects-r\r3101\traffic\trafficcontrol\tcp\SITE2\R3101_TC_SITE2_PH5_TMP47.dgn
Userscoats

PROJ. REFERENCE NO.	SHEET NO.
R-3101	TMP-48

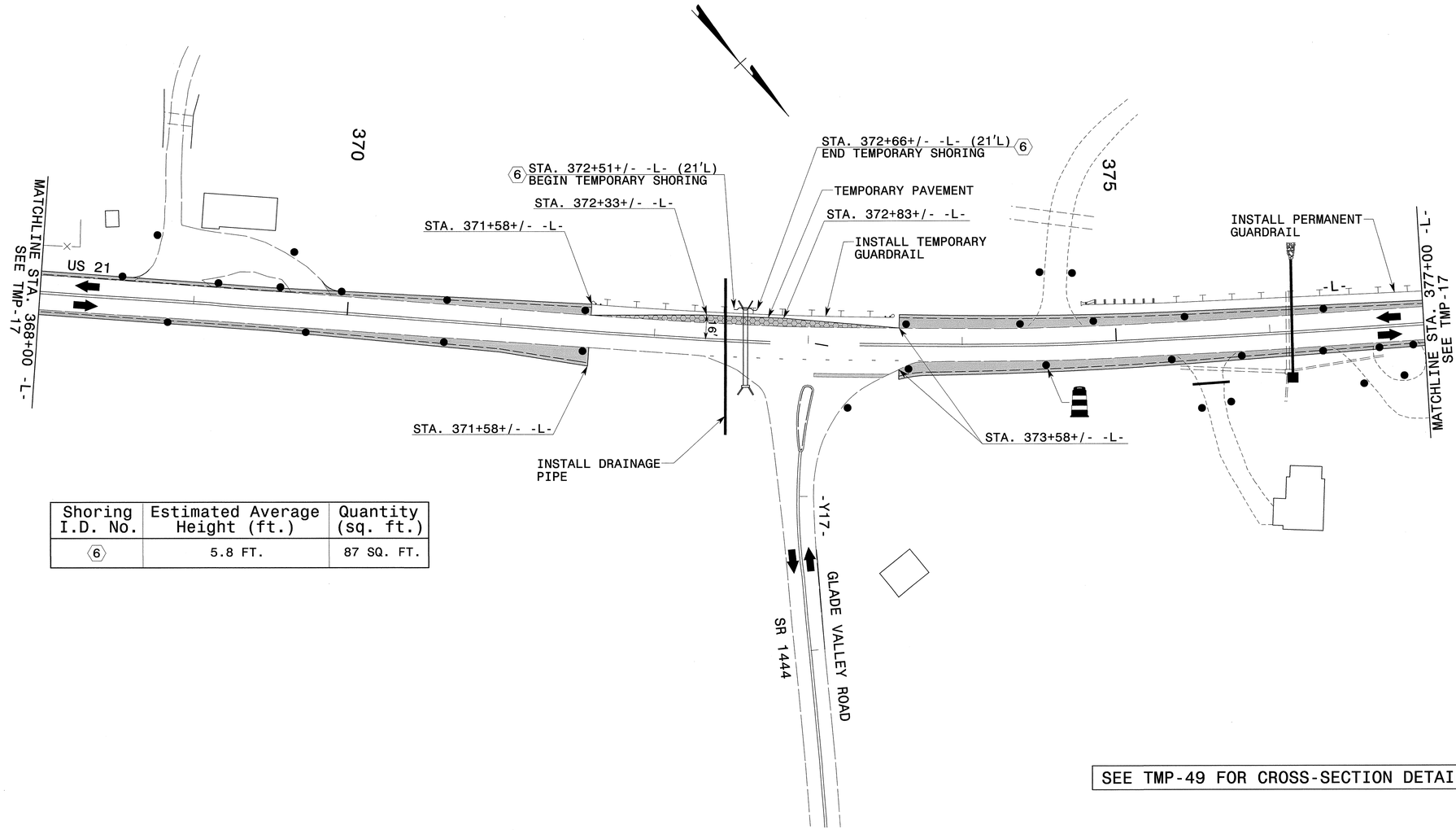

Shoring I.D. No.	Estimated Average Height (ft.)	Quantity (sq. ft.)
6	5.8 FT.	87 SQ. FT.

SEE TMP-49 FOR CROSS-SECTION DETAILS

APPROVED: DATE: 7/11/13

SEAL

NORTH CAROLINA PROFESSIONAL SEAL 19862 ENGINEER J. W. WOOLARD, JR.

DIVISION OF HIGHWAYS STATE OF NORTH CAROLINA DEPARTMENT OF TRANSPORTATION WORK ZONE TRAFFIC CONTROL

SITE 3
PHASE I
CULVERT ON US 21
STA. 372+50+/-

7/11/2013
P:\TIPProjects-R\R3101\Traffic\TrafficControl\TCP\SITE3\R3101_TC_SITE3_PHI_TMP48.dgn
User:scodts

PROJ. REFERENCE NO.	SHEET NO.
R-3101	TMP-49

℄
373+00

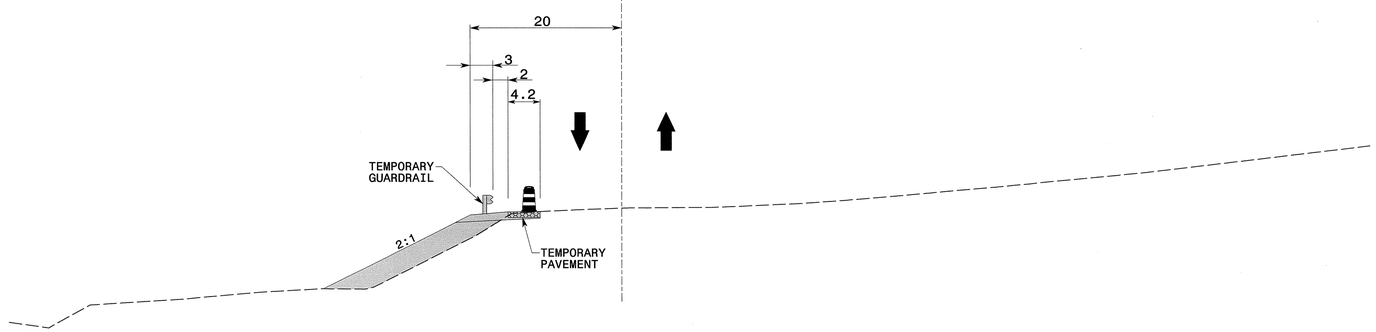

℄
372+50

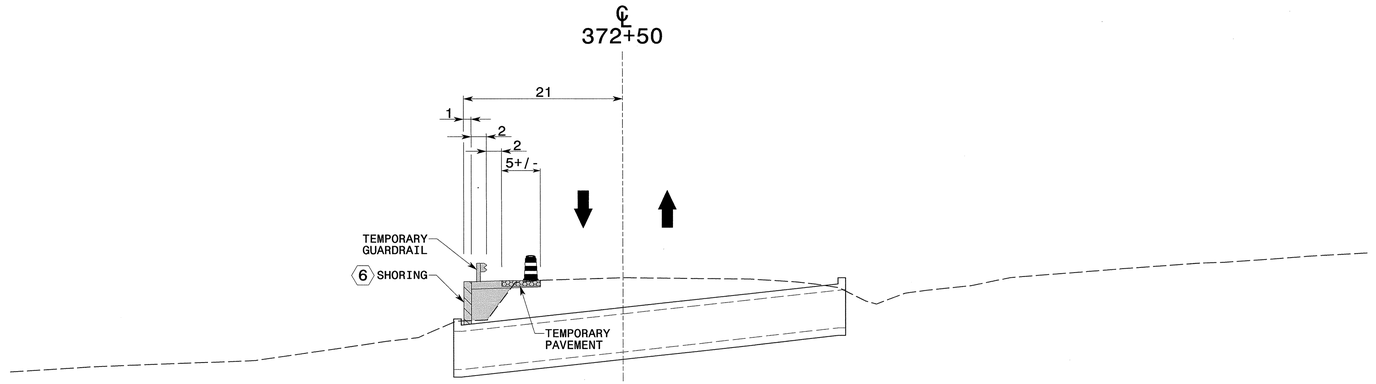

℄
372+00

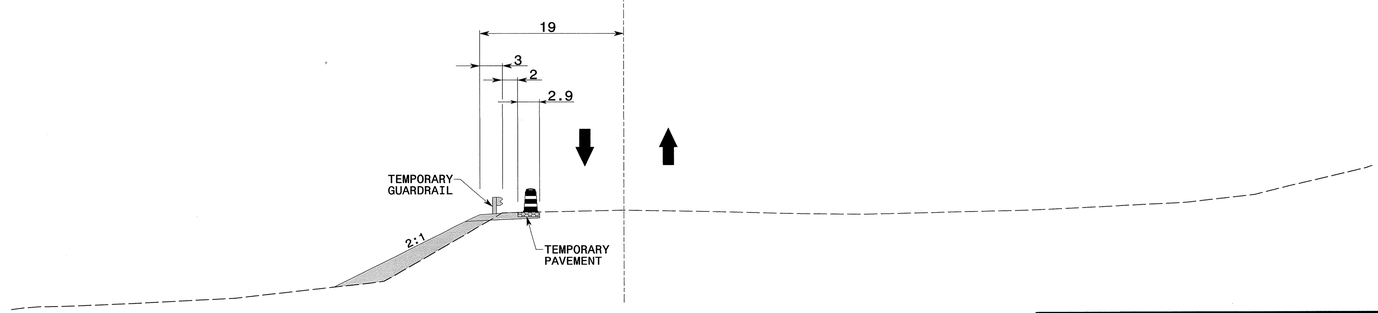

APPROVED: DATE:

SEAL

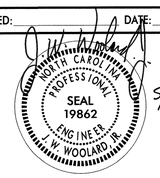

5/29/13

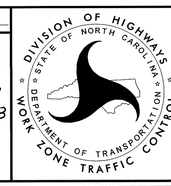

SITE 3
PHASE I
CROSS-SECTIONS

5/28/2013
p:\tipprojects-r\r3101\traffic\trafficcontrol\tcp\SITE3\R3101_TC_SITE3_PHL_TMP49.dgn
User:scoats

PROJ. REFERENCE NO.	SHEET NO.
R-3101	TMP-50

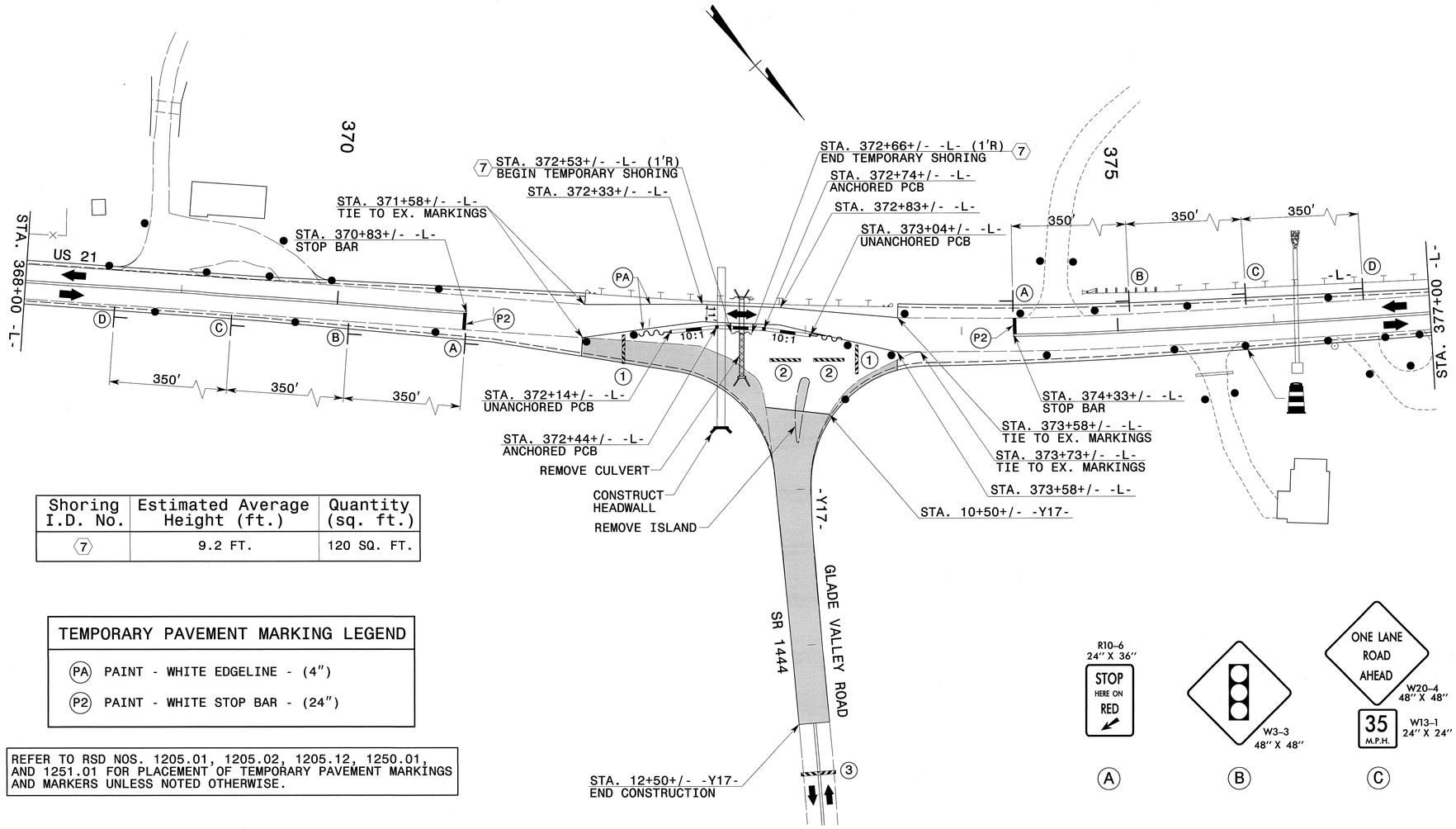

Shoring I.D. No.	Estimated Average Height (ft.)	Quantity (sq. ft.)
7	9.2 FT.	120 SQ. FT.

TEMPORARY PAVEMENT MARKING LEGEND	
PA	PAINT - WHITE EDGELINE - (4")
P2	PAINT - WHITE STOP BAR - (24")

REFER TO RSD NOS. 1205.01, 1205.02, 1205.12, 1250.01, AND 1251.01 FOR PLACEMENT OF TEMPORARY PAVEMENT MARKINGS AND MARKERS UNLESS NOTED OTHERWISE.

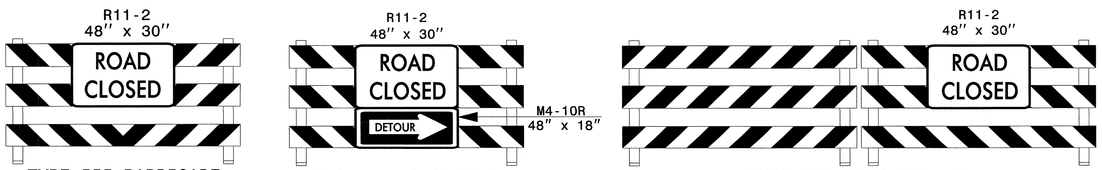

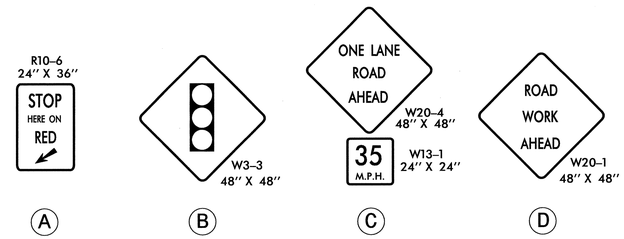

NOTE: FOR OFF-SITE DETOUR OF GLADE VALLEY ROAD (-Y17-), SIGNAGE AND BARRICADES, SEE TMP-52.

SEE TMP-51 FOR CROSS-SECTION DETAILS

APPROVED: DATE: 5/29/13

SEAL

NORTH CAROLINA PROFESSIONAL SEAL 19862 ENGINEER J. W. WOOLARD JR.

DIVISION OF HIGHWAYS STATE OF NORTH CAROLINA DEPARTMENT OF TRANSPORTATION WORK ZONE TRAFFIC CONTROL

SITE 3
PHASE II
CULVERT ON US 21
STA. 372+50+/-

5/28/2013
p:\dpr\projects-r\r3101\traffic\trafficcontrol\tcp\SITE3\R3101_TC_SITE3_PH2_TMP50.dgn
User:scoots

PROJ. REFERENCE NO.	SHEET NO.
R-3101	TMP-51

℄
373+00

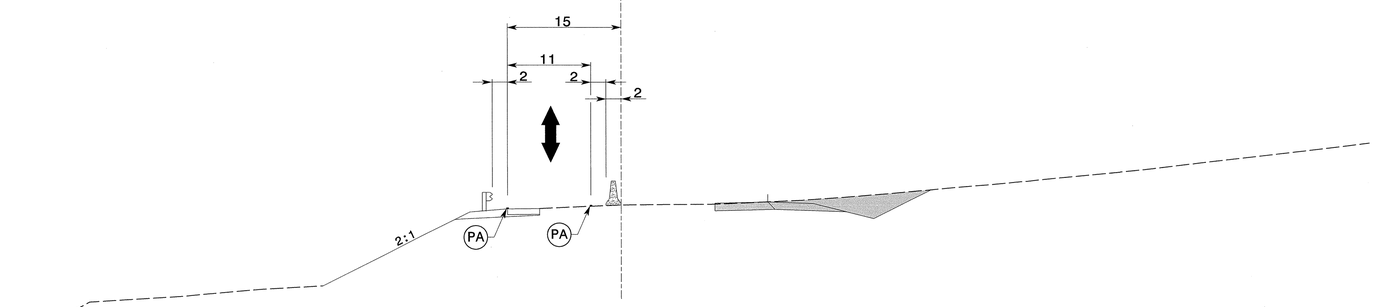

℄
372+50

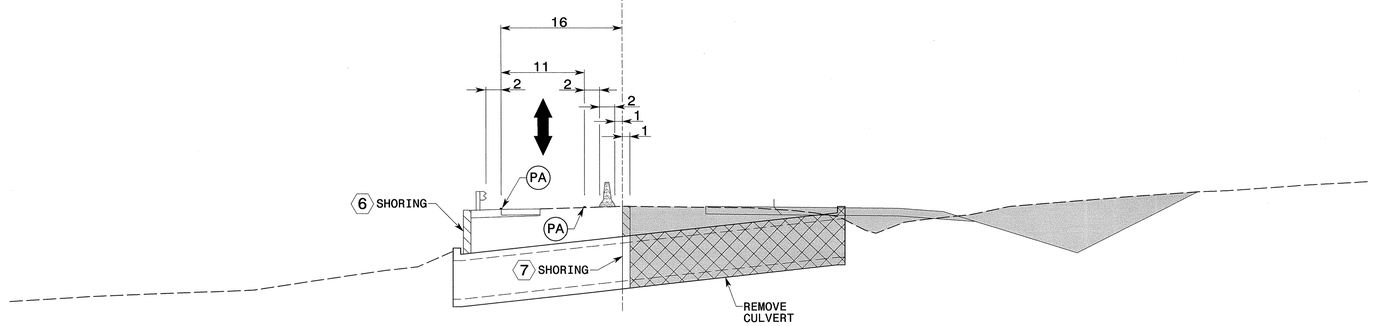

℄
372+00

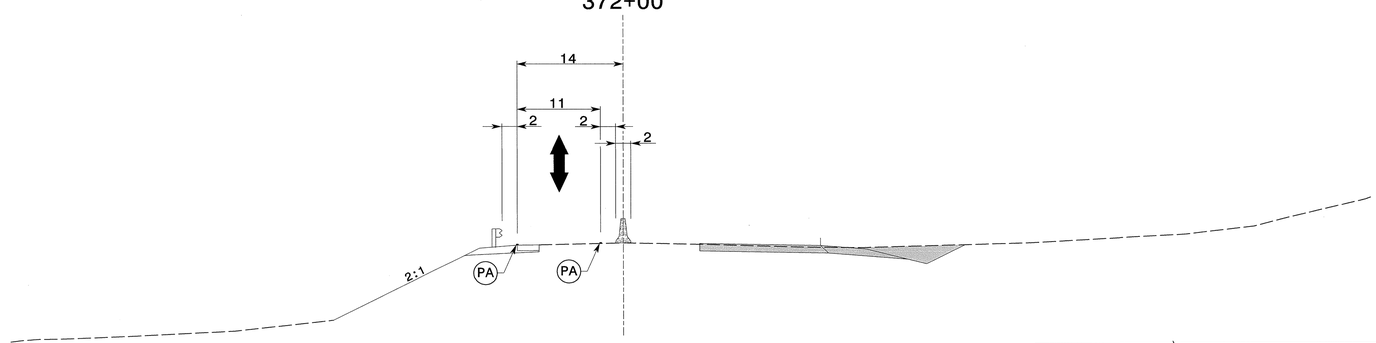

APPROVED: DATE:

SEAL

NORTH CAROLINA PROFESSIONAL SEAL 19862 ENGINEER W. WOOLARD JR.

5/29/13

DIVISION OF HIGHWAYS
STATE OF NORTH CAROLINA
DEPARTMENT OF TRANSPORTATION
WORK ZONE TRAFFIC CONTROL

SITE 3
PHASE II
CROSS-SECTIONS

5/28/2013
p:\tipprojects-r\r3101\traffic\trafficcontrol\top\SITE3\R3101_TC_SITE3_PH2_TMP51.dgn
User:scoats

PROJ. REFERENCE NO.	SHEET NO.
R-3101	TMP-52

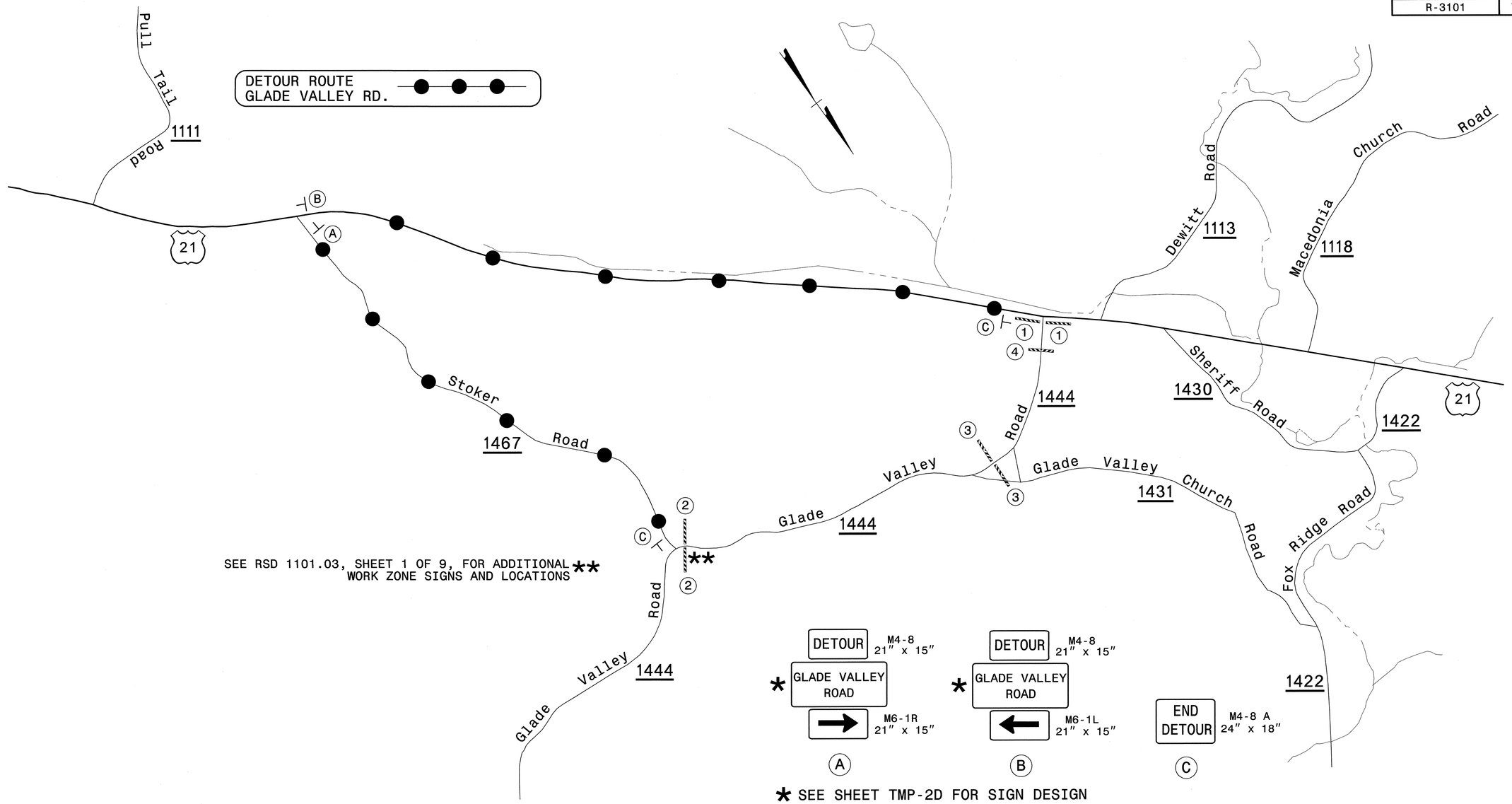

* SEE SHEET TMP-2D FOR SIGN DESIGN

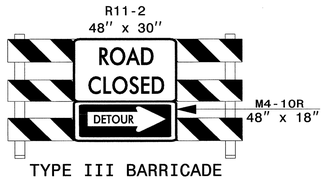

TYPE III BARRICADE

1

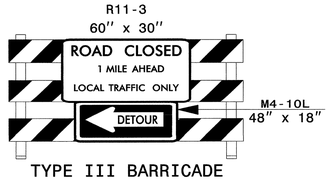

TYPE III BARRICADE

2

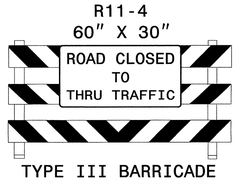

TYPE III BARRICADE

3

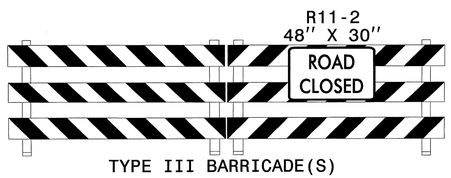

TYPE III BARRICADE(S)

4

APPROVED: J. W. Woolard Jr. DATE: 5/29/13

SEAL

NORTH CAROLINA PROFESSIONAL SEAL 19862 ENGINEER J. W. WOOLARD JR.

DIVISION OF HIGHWAYS * STATE OF NORTH CAROLINA * DEPARTMENT OF TRANSPORTATION * WORK ZONE TRAFFIC CONTROL

OFF-SITE DETOUR
GLADE VALLEY ROAD
SR 1444
-Y17-

5/28/2013
P:\tipprojects-r\r3101\traffic\traffic control\top\SITE3\R3101_TC_SITE3_PH2_TMP52.dgn
User:sdoafs

PROJ. REFERENCE NO.	SHEET NO.
R-3101	TMP-53

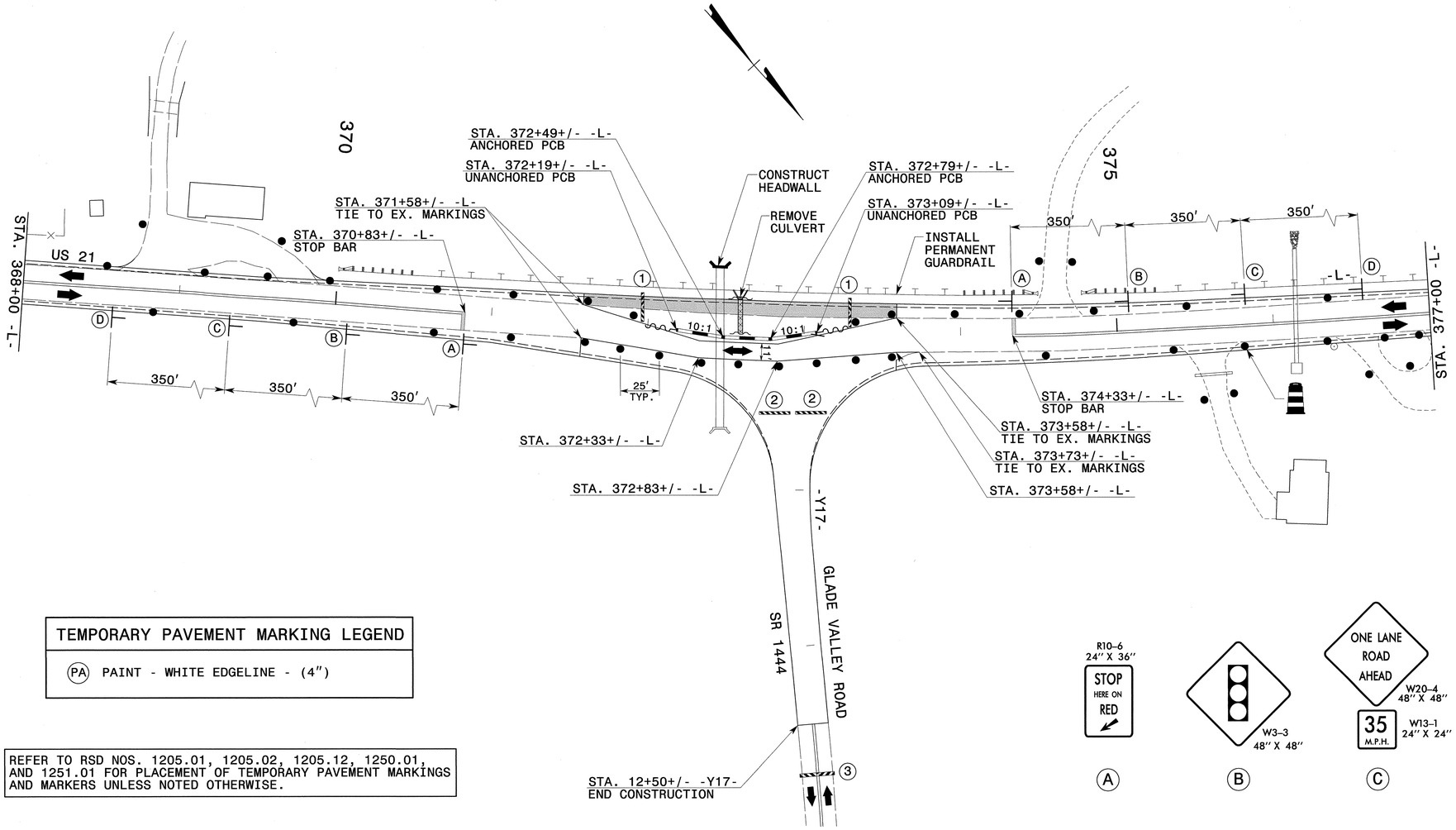

TEMPORARY PAVEMENT MARKING LEGEND

(PA) PAINT - WHITE EDGELINE - (4")

REFER TO RSD NOS. 1205.01, 1205.02, 1205.12, 1250.01, AND 1251.01 FOR PLACEMENT OF TEMPORARY PAVEMENT MARKINGS AND MARKERS UNLESS NOTED OTHERWISE.

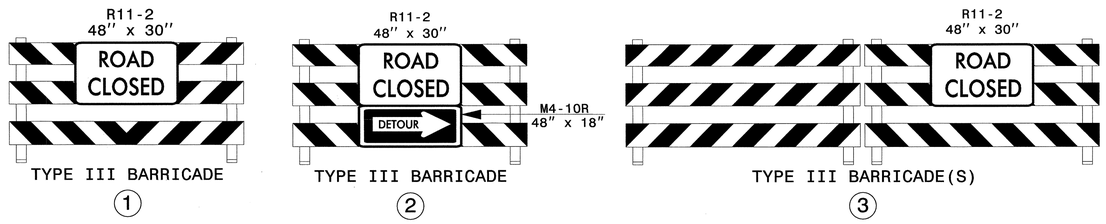

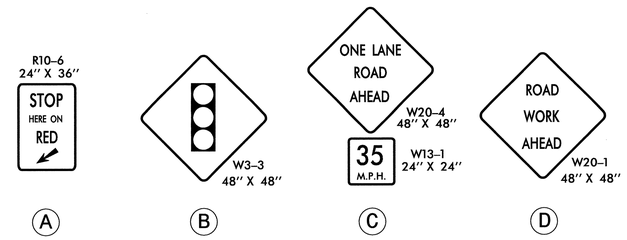

NOTE: FOR OFF-SITE DETOUR OF GLADE VALLEY ROAD (-Y17-), SIGNAGE AND BARRICADES, SEE TMP-52.

SEE TMP-54 FOR CROSS-SECTION DETAILS

APPROVED: DATE:

SEAL

NORTH CAROLINA PROFESSIONAL SEAL 19862 ENGINEER J.W. WOOLARD, JR.

5/29/13

DIVISION OF HIGHWAYS * STATE OF NORTH CAROLINA * DEPARTMENT OF TRANSPORTATION * WORK ZONE TRAFFIC CONTROL

SITE 3
PHASE III
CULVERT ON US 21
STA. 372+50+/-

5/28/2013
p:\tipprojects-r\r3101\traffic\trafficcontrol\top\SITE3\R3101_TC_SITE3_PH3_TMP53.dgn
User:scoats

PROJ. REFERENCE NO.	SHEET NO.
R-3101	TMP-54

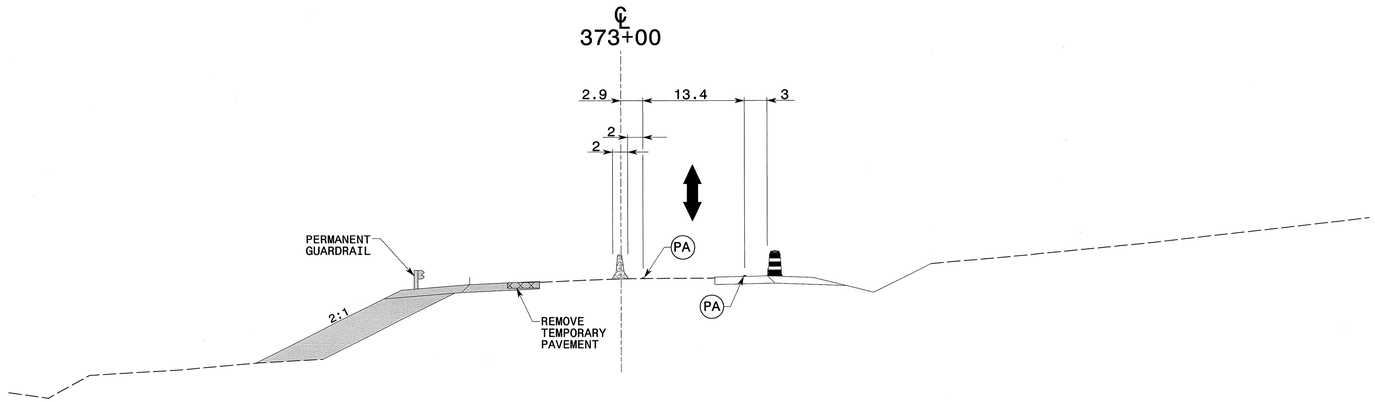

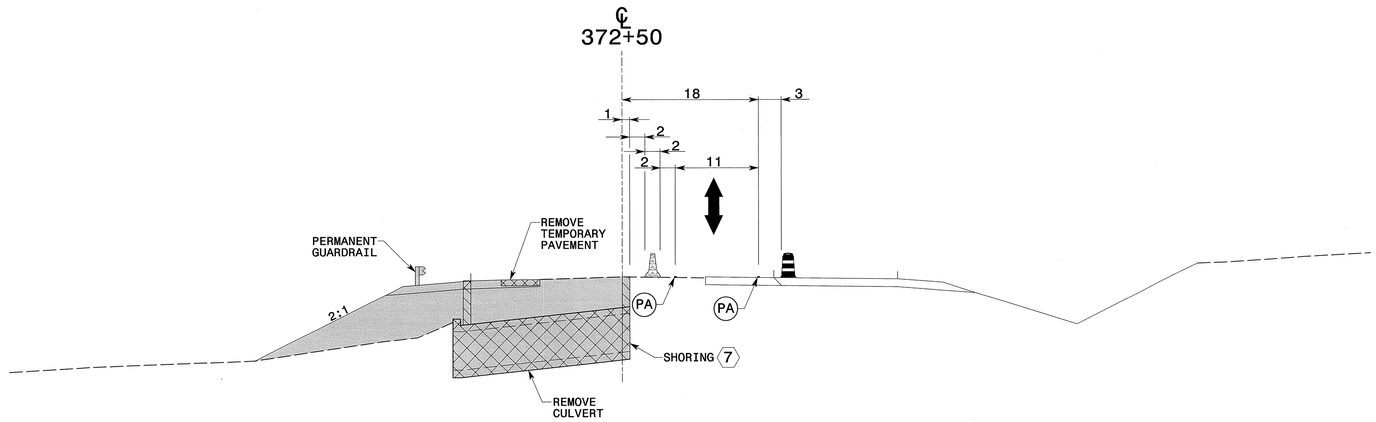

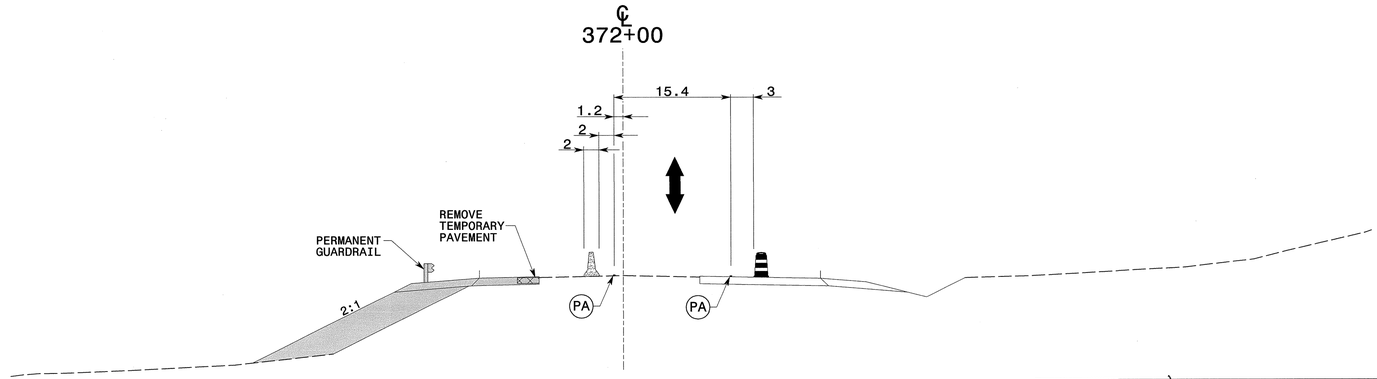

APPROVED: DATE:

SEAL

NORTH CAROLINA PROFESSIONAL SEAL 19862 ENGINEER W. WOOLARD JR.

5/29/13

DIVISION OF HIGHWAYS STATE OF NORTH CAROLINA DEPARTMENT OF TRANSPORTATION WORK ZONE TRAFFIC CONTROL

SITE 3
PHASE III
CROSS-SECTIONS

5/28/2013
p:\tipprojects-r\r3101\traffic\trafficcontrol\tcp\SITE3\R3101_TC_SITE3_PH3_TMP54.dgn
User:scoatts

PROJ. REFERENCE NO.	SHEET NO.
R-3101	TMP-55

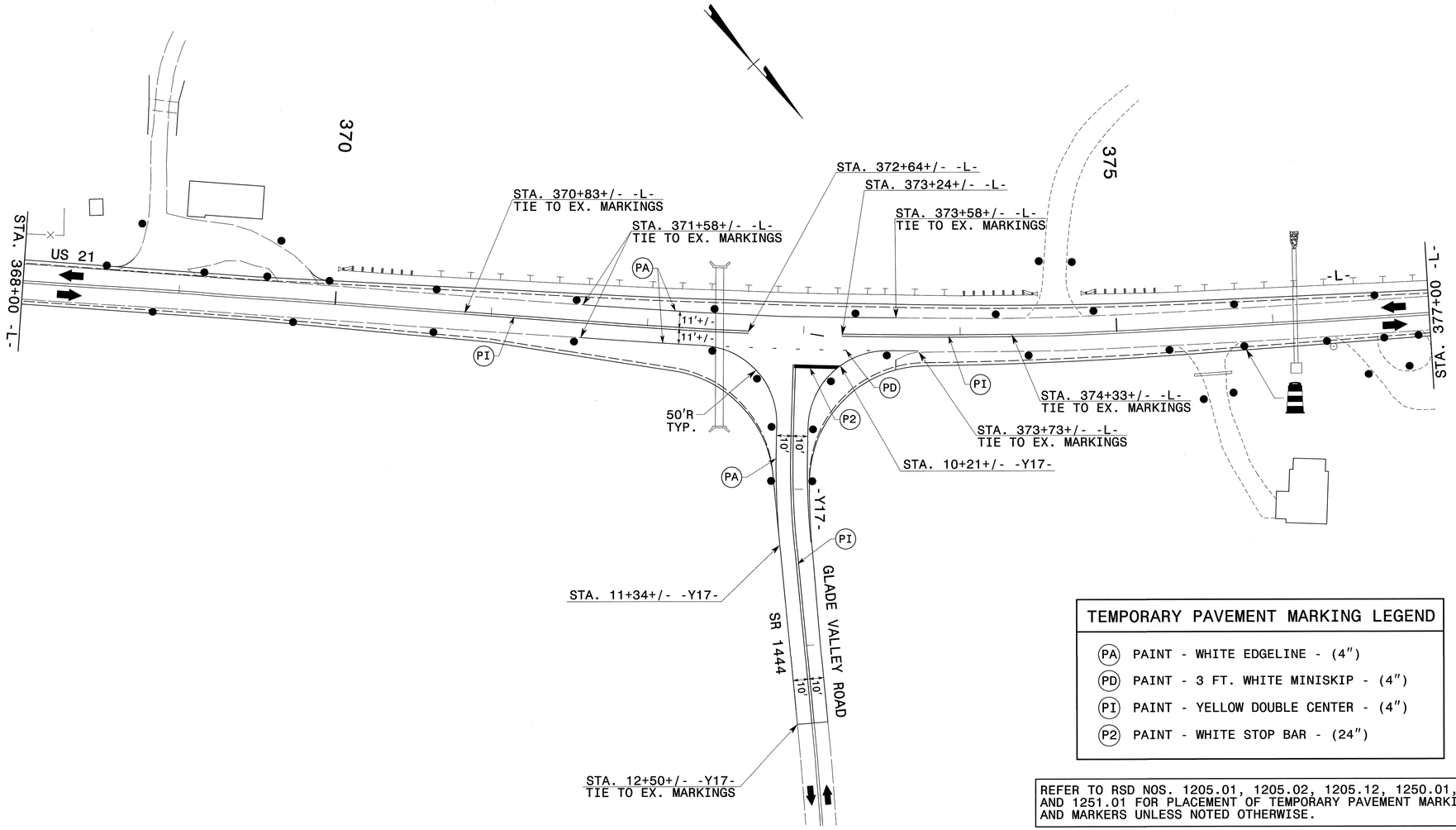

TEMPORARY PAVEMENT MARKING LEGEND

- (PA) PAINT - WHITE EDGELINE - (4")
- (PD) PAINT - 3 FT. WHITE MINISKIP - (4")
- (PI) PAINT - YELLOW DOUBLE CENTER - (4")
- (P2) PAINT - WHITE STOP BAR - (24")

REFER TO RSD NOS. 1205.01, 1205.02, 1205.12, 1250.01, AND 1251.01 FOR PLACEMENT OF TEMPORARY PAVEMENT MARKINGS AND MARKERS UNLESS NOTED OTHERWISE.

SEE TMP-56 FOR CROSS-SECTION DETAILS

APPROVED: DATE: 5/29/13

SEAL

NORTH CAROLINA PROFESSIONAL SEAL 19862 ENGINEER J.W. WOOLARD JR.

DIVISION OF HIGHWAYS * STATE OF NORTH CAROLINA * DEPARTMENT OF TRANSPORTATION * WORK ZONE TRAFFIC CONTROL

SITE 3
PHASE IV
CULVERT ON US 21
STA. 372+50+/-

5/28/2013
p:\tipprojects-r\r-3101\traffic\trafficcontrol\tcp\SITE3\R3101_TC_SITE3_PH4_TMP55.dgn
User:scoats

PROJ. REFERENCE NO.	SHEET NO.
R-3101	TMP-56

℄
373+00

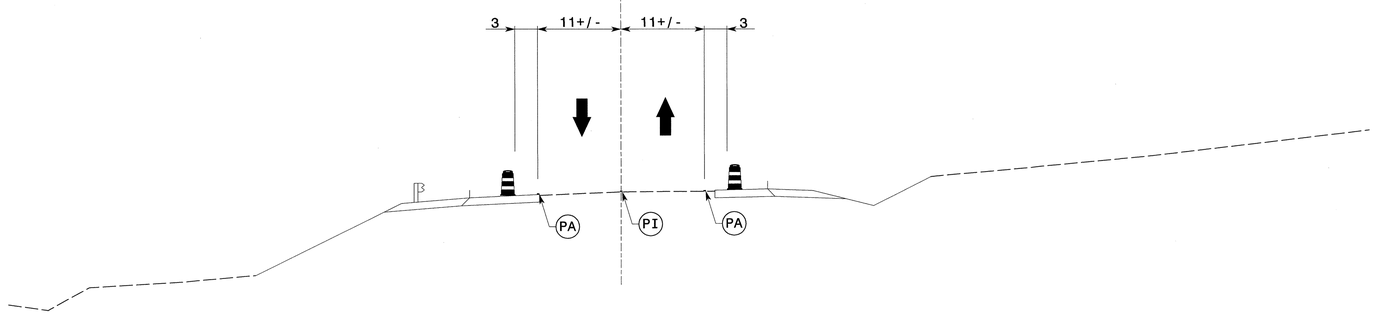

℄
372+50

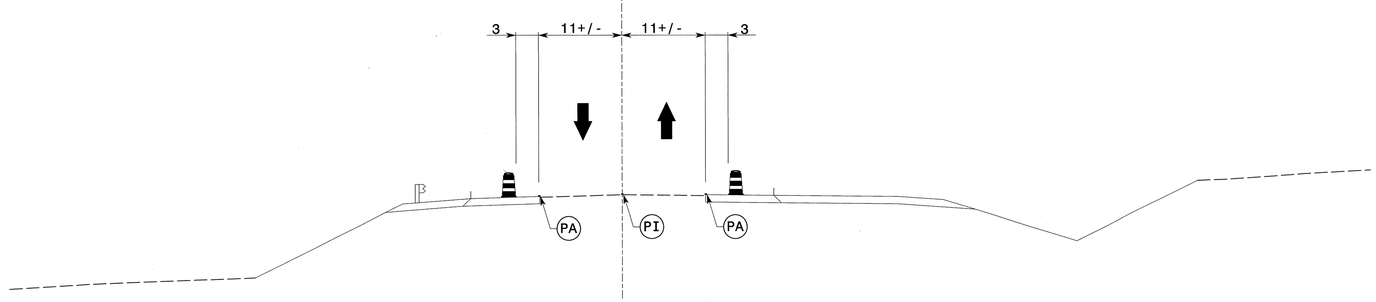

℄
372+00

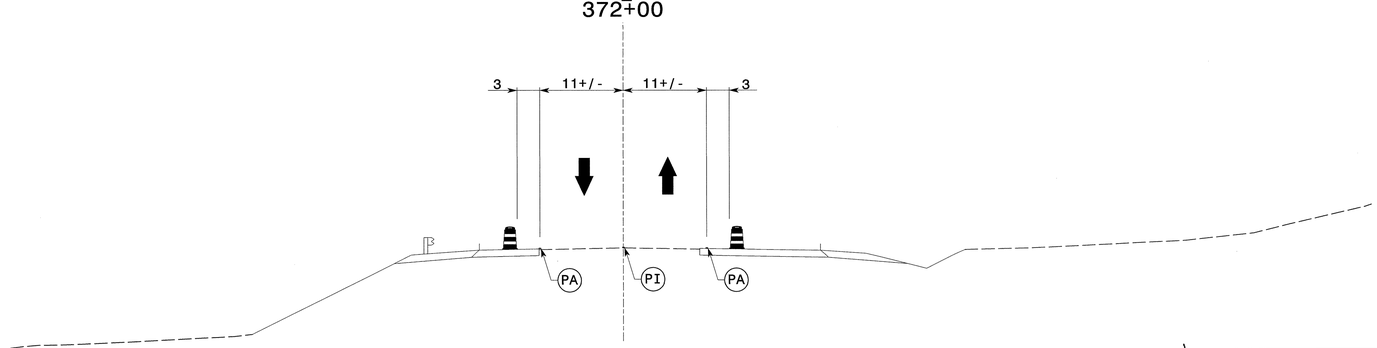

APPROVED: DATE: 5/29/13

SEAL

NORTH CAROLINA PROFESSIONAL SEAL 19862 ENGINEER J. W. WOOLARD JR.

DIVISION OF HIGHWAYS STATE OF NORTH CAROLINA DEPARTMENT OF TRANSPORTATION WORK ZONE TRAFFIC CONTROL

SITE 3
PHASE IV
CROSS-SECTIONS

5/28/2013
p:\tipprojects\r3101\traffic\trafficcontrol\top\SITE3\R3101_TC_SITE3_PH4_TMP56.dgn
User:scoats

PROJ. REFERENCE NO.	SHEET NO.
R-3101	TMP-57

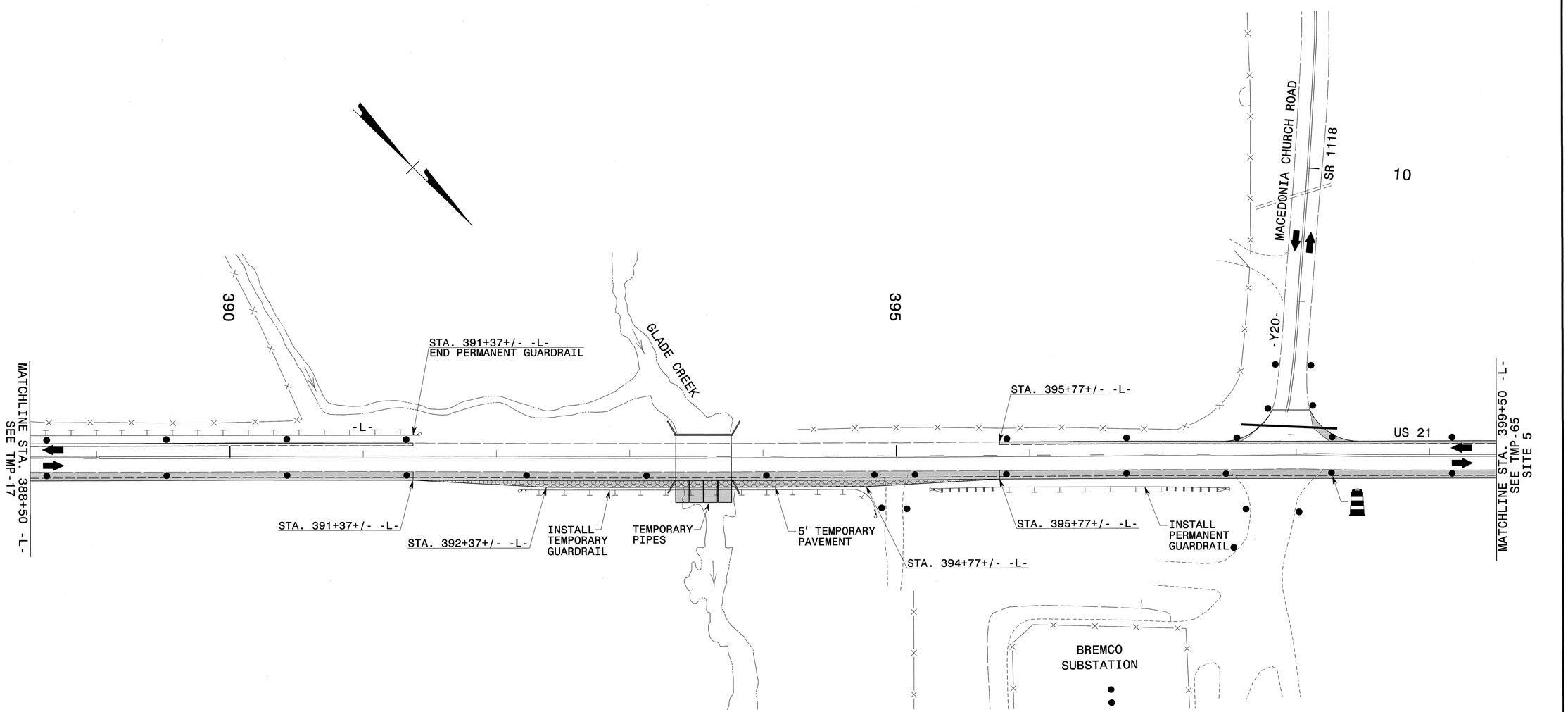

NOTE: FOR SITE 5 DETAILS FROM STA. 399+50 -L- TO STA. 410+00 -L-, SEE TMP-65 THRU TMP-72

SEE TMP-58 FOR CROSS-SECTION DETAILS

APPROVED: DATE:

SEAL

NORTH CAROLINA PROFESSIONAL SEAL 19862 ENGINEER J. W. WOOLARD JR.

5/29/13

DIVISION OF HIGHWAYS * STATE OF NORTH CAROLINA * DEPARTMENT OF TRANSPORTATION * WORK ZONE TRAFFIC CONTROL

SITE 4
PHASE I
BRIDGE ON US 21
STA. 393+57+/-

5/28/2013
p:\tipprojects-r\r3101\traffic\trafficcontrol\tcp\SITE4\R3101_TC_SITE4_PHI_TMP57.dgn
User:scodts

PROJ. REFERENCE NO.	SHEET NO.
R-3101	TMP-58

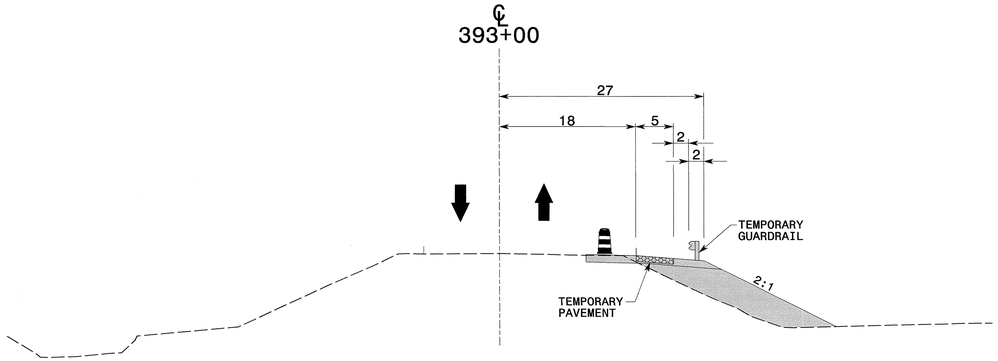

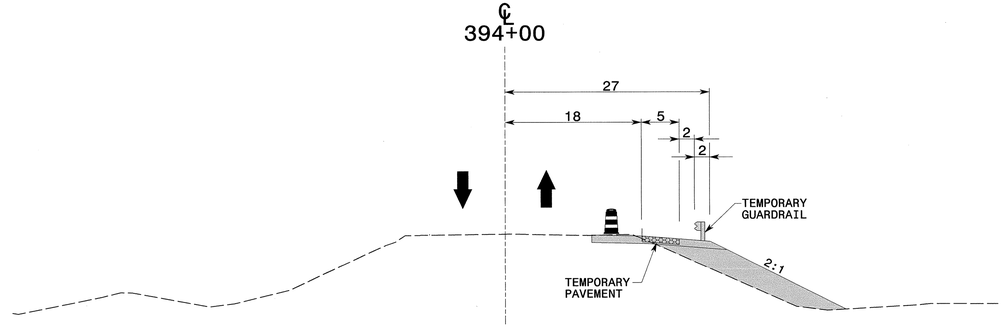

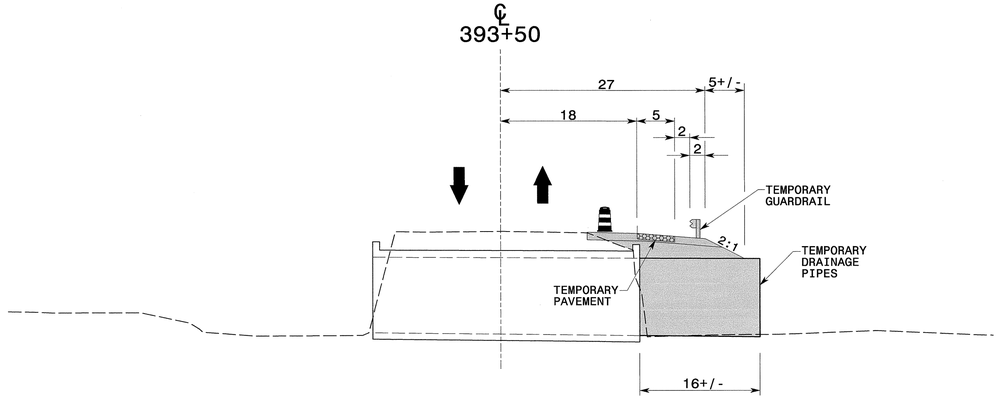

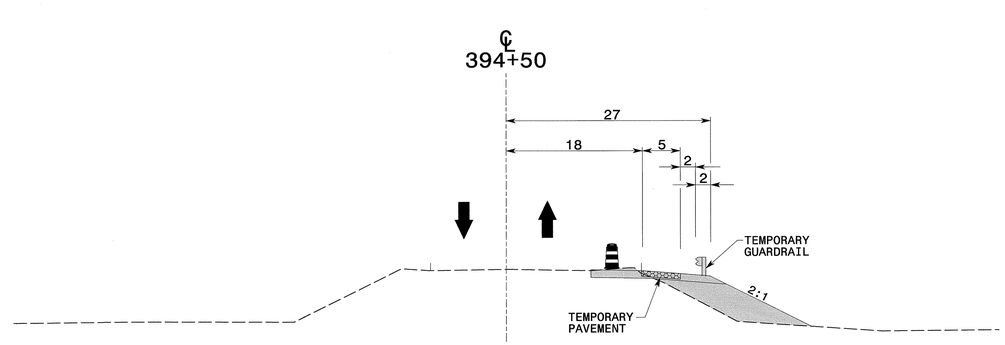

APPROVED: _____ DATE: _____

SEAL

NORTH CAROLINA PROFESSIONAL SEAL 19862 ENGINEER J. W. WOOLARD JR.

5/29/13

DIVISION OF HIGHWAYS * STATE OF NORTH CAROLINA * DEPARTMENT OF TRANSPORTATION * WORK ZONE TRAFFIC CONTROL

SITE 4
PHASE I
CROSS-SECTIONS

5/28/2013
P:\ftpprojects-r\r3101\traffic\trafficcontrol\tcp\SITE4\R3101_TC_SITE4_PHI_TMP58.dgn
User:scoatrs

PROJ. REFERENCE NO.	SHEET NO.
R-3101	TMP-59

Shoring I.D. No.	Estimated Average Height (ft.)	Quantity (sq. ft.)
⑧	6.1 FT.	745 SQ. FT.

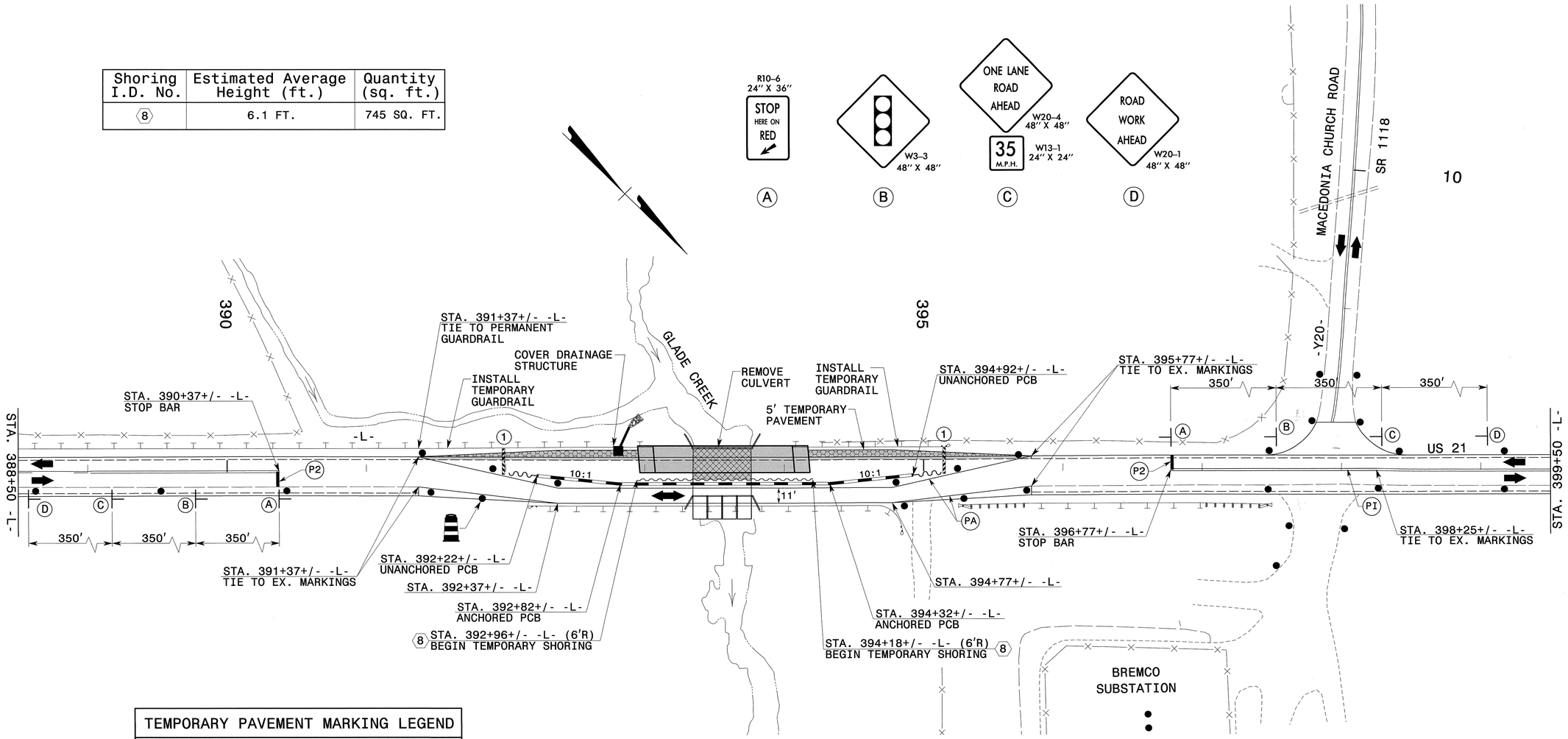

TEMPORARY PAVEMENT MARKING LEGEND	
(PA)	PAINT - WHITE EDGELINE - (4")
(PI)	PAINT - YELLOW DOUBLE CENTER - (4")
(P2)	PAINT - WHITE STOP BAR - (24")

REFER TO RSD NOS. 1205.01, 1205.02, 1205.12, 1250.01, AND 1251.01 FOR PLACEMENT OF TEMPORARY PAVEMENT MARKINGS AND MARKERS UNLESS NOTED OTHERWISE.

TYPE III BARRICADE
(1)

SEE TMP-60 FOR CROSS-SECTION DETAILS

APPROVED: DATE:

SEAL

NORTH CAROLINA PROFESSIONAL SEAL 19862 ENGINEER J. W. WOOLARD, JR. 7/11/13

DIVISION OF HIGHWAYS * STATE OF NORTH CAROLINA * DEPARTMENT OF TRANSPORTATION WORK ZONE TRAFFIC CONTROL

SITE 4
PHASE II
BRIDGE ON US 21
STA. 393+57+/-

7/11/2013
P:\TIP\Projects-R\R3101\Traffic\TrafficControl\TCP\SITE4\R3101_TC_SITE4_PH2_TMP59.dgn
User:scoots

PROJ. REFERENCE NO.	SHEET NO.
R-3101	TMP-60

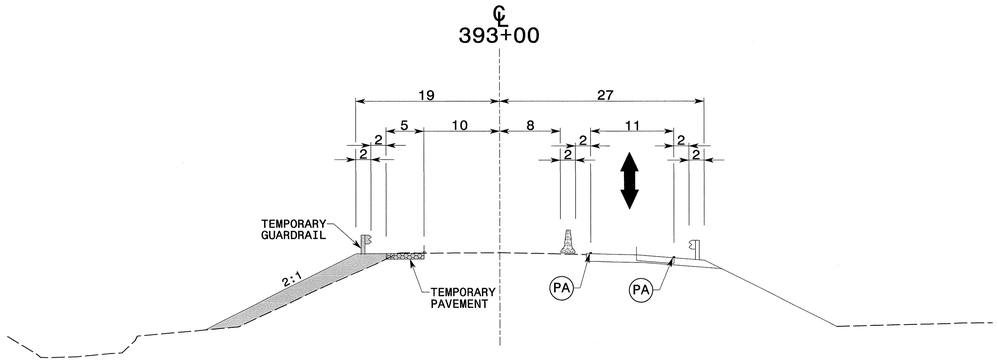

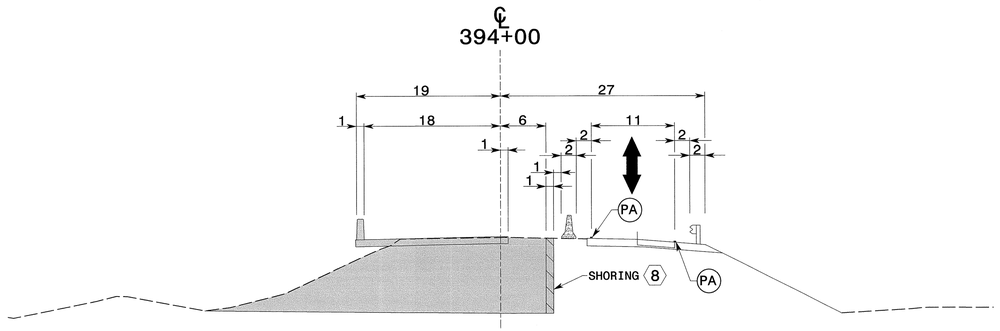

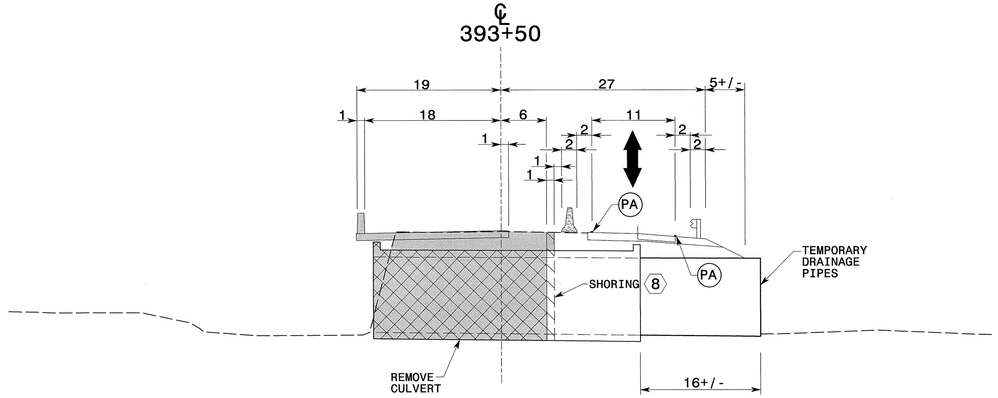

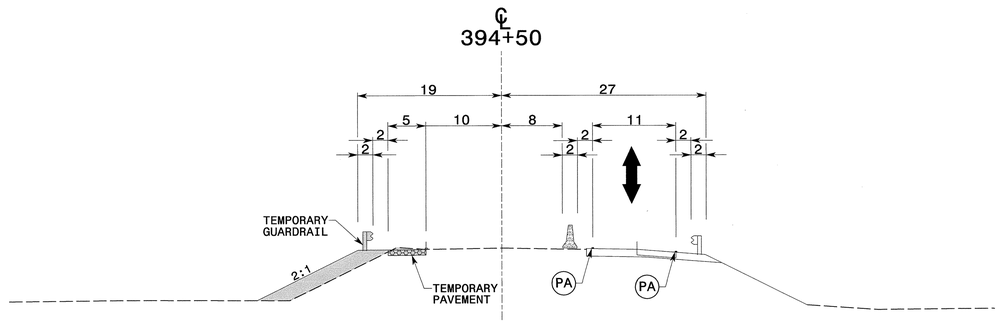

APPROVED: DATE:

SEAL

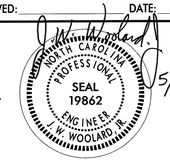

5/29/13

SITE 4
PHASE II
CROSS-SECTIONS

5/28/2013
p:\tipprojects-r\r3101\traffic\trafficcontrol\tap\SITE4\R3101_TC_SITE4_PH2_TMP60.dgn
User:scoats

PROJ. REFERENCE NO.	SHEET NO.
R-3101	TMP-61

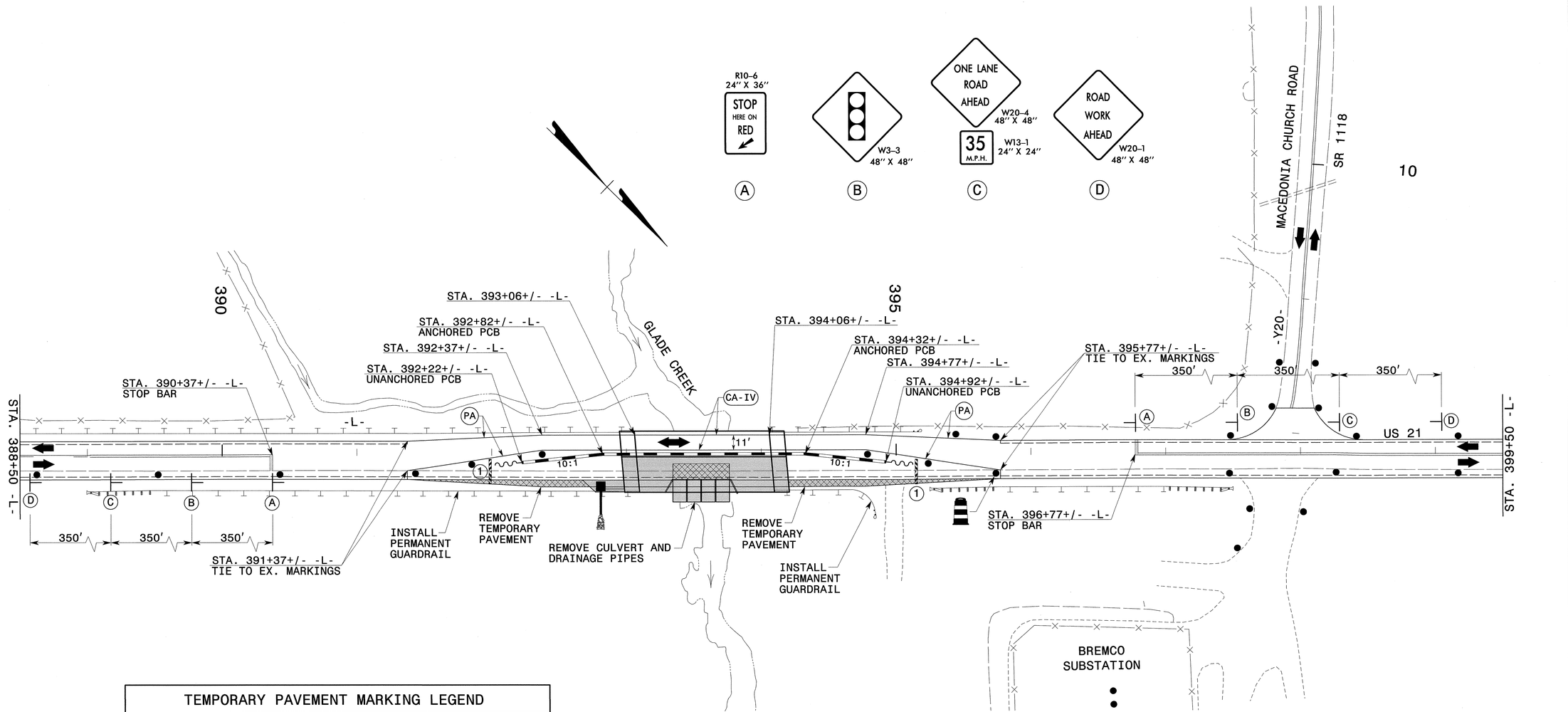

TEMPORARY PAVEMENT MARKING LEGEND

(CA-IV)	COLD APPLIED PLASTIC (TYPE 4) - WHITE EDGELINE - (4")
(PA)	PAINT - WHITE EDGELINE - (4")

REFER TO RSD NOS. 1205.01, 1205.02, 1205.12, 1250.01, AND 1251.01 FOR PLACEMENT OF TEMPORARY PAVEMENT MARKINGS AND MARKERS UNLESS NOTED OTHERWISE.

R11-2
48" x 30"

TYPE III BARRICADE
(1)

SEE TMP-62 FOR CROSS-SECTION DETAILS

APPROVED: DATE:

SEAL

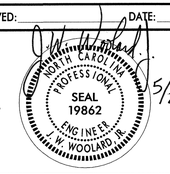

5/29/13

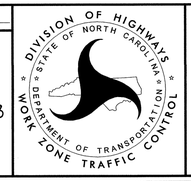

SITE 4
PHASE III
BRIDGE ON US 21
STA. 393+57+/-

5/28/2013
p:\tipprojects-r\r3101\traffic\trafficcontrol\tap\SITE4\R3101_TC_SITE4_PH3_TMP61.dgn
User:scodrs

PROJ. REFERENCE NO.	SHEET NO.
R-3101	TMP-62

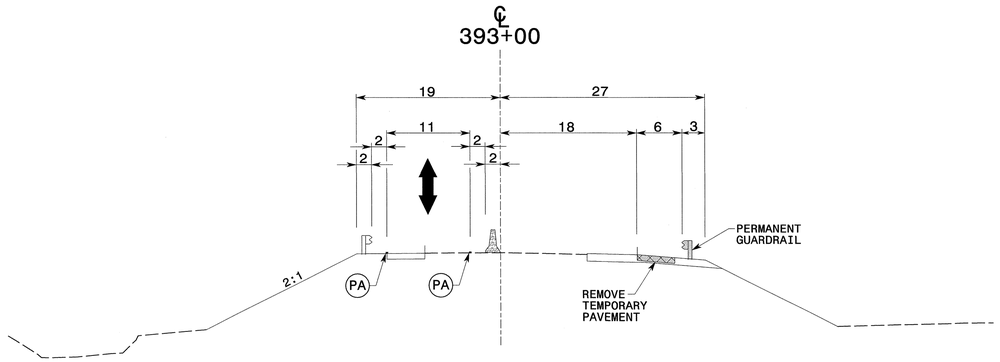

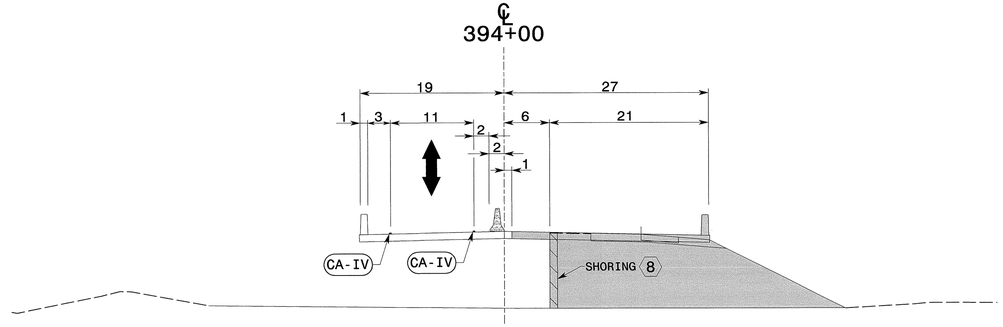

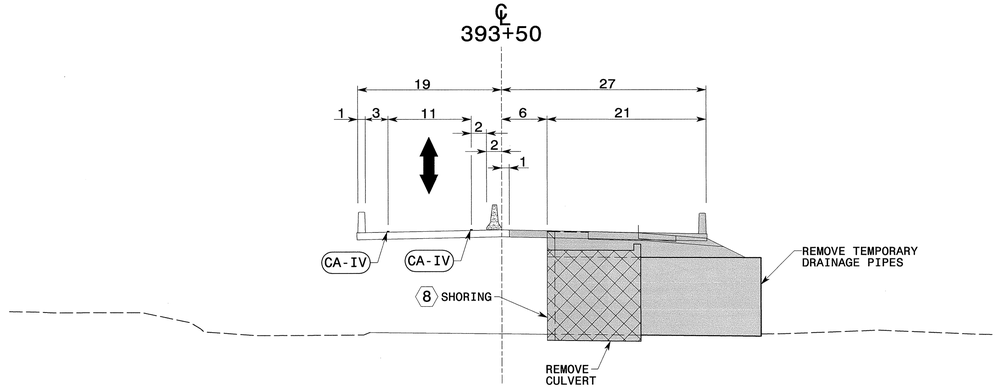

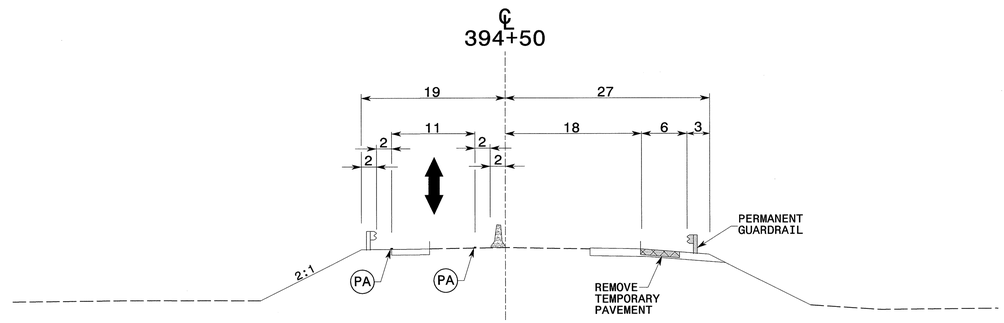

APPROVED: DATE:

SEAL

NORTH CAROLINA PROFESSIONAL SEAL 19862 ENGINEER H. WOOLARD, JR.

5/29/13

DIVISION OF HIGHWAYS * STATE OF NORTH CAROLINA * DEPARTMENT OF TRANSPORTATION * WORK ZONE TRAFFIC CONTROL

SITE 4
PHASE III
CROSS-SECTIONS

5/28/2013
p:\tipprojects-r\r3101\traffic\trafficcontrol\tcp\SITE4\R3101_TC_SITE4_PH3_TMP62.dgn
User:scoats

PROJ. REFERENCE NO.	SHEET NO.
R-3101	TMP-63

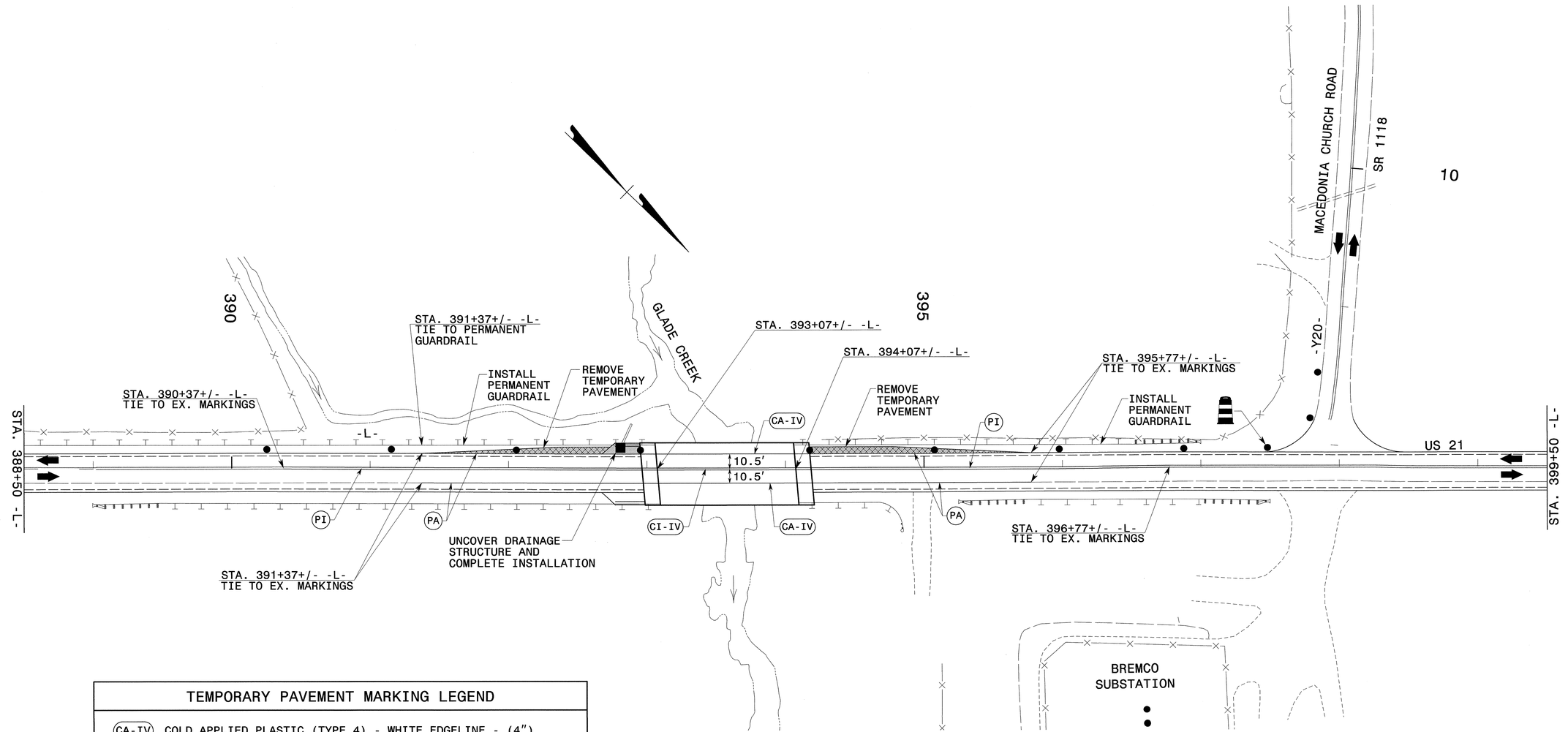

TEMPORARY PAVEMENT MARKING LEGEND	
CA-IV	COLD APPLIED PLASTIC (TYPE 4) - WHITE EDGELINE - (4")
CI-IV	COLD APPLIED PLASTIC (TYPE 4) - YELLOW DOUBLE CENTER - (4")
PA	PAINT - WHITE EDGELINE - (4")
PI	PAINT - YELLOW DOUBLE CENTER - (4")

REFER TO RSD NOS. 1205.01, 1205.02, 1205.12, 1250.01, AND 1251.01 FOR PLACEMENT OF TEMPORARY PAVEMENT MARKINGS AND MARKERS UNLESS NOTED OTHERWISE.

SEE TMP-64 FOR CROSS-SECTION DETAILS

APPROVED: _____ DATE: _____

SEAL

NORTH CAROLINA PROFESSIONAL SEAL 19862 ENGINEER J.W. WOOLARD JR.

7/11/13

DIVISION OF HIGHWAYS
STATE OF NORTH CAROLINA
DEPARTMENT OF TRANSPORTATION
WORK ZONE TRAFFIC CONTROL

SITE 4
PHASE IV
BRIDGE ON US 21
STA. 393+57+/-

7/11/2013
P:\TIP\Projects-R\R3101\Traffic\TrafficControl\TCP\SITE4\R3101_TC_SITE4_PH4_TMP63.dgn
User:scoats

PROJ. REFERENCE NO.	SHEET NO.
R-3101	TMP-64

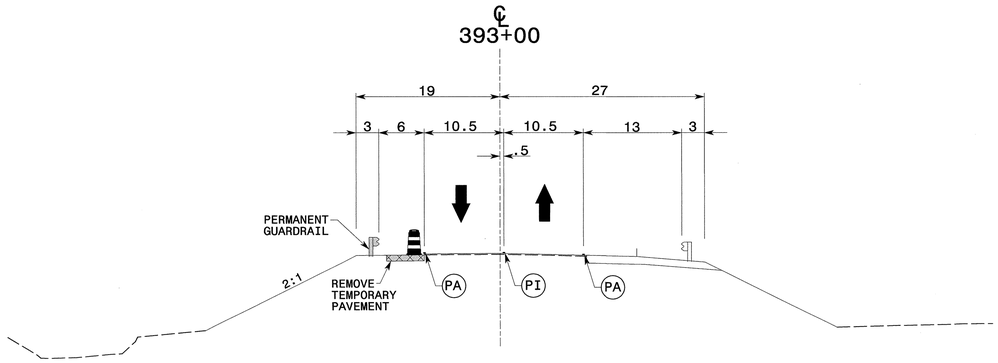

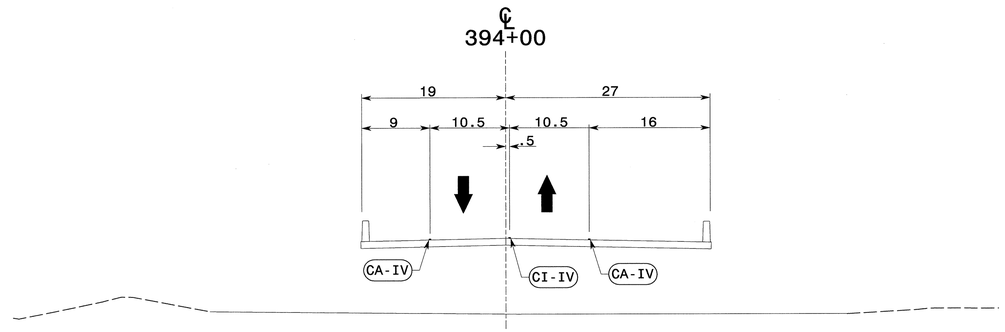

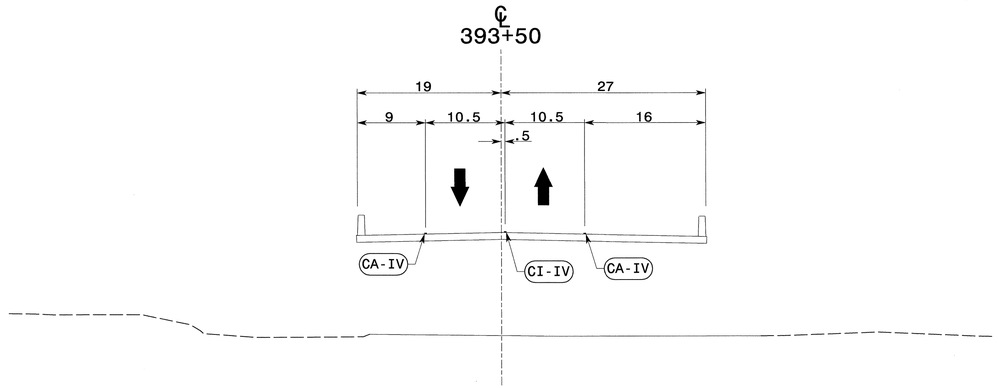

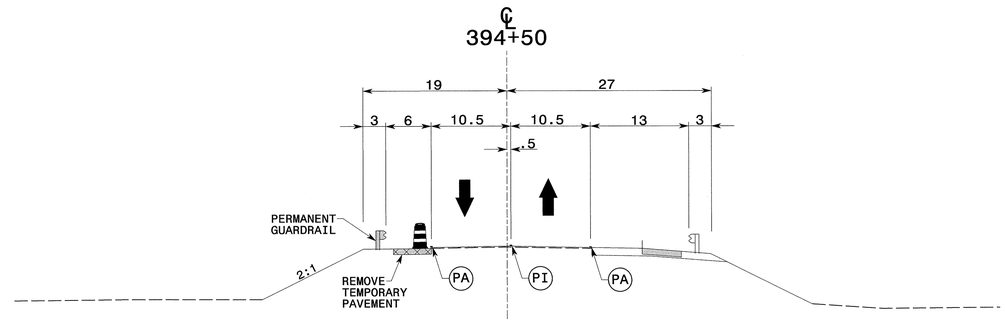

APPROVED: _____ DATE: _____

SEAL

NORTH CAROLINA PROFESSIONAL SEAL 19862 ENGINEER J. W. WOOLARD JR.

5/29/13

DIVISION OF HIGHWAYS * STATE OF NORTH CAROLINA * DEPARTMENT OF TRANSPORTATION * WORK ZONE TRAFFIC CONTROL

SITE 4
PHASE IV
CROSS-SECTIONS

5/28/2013
P:\tipprojects-r\r3101\traffic\trafficcontrol\tap\SITE4\R3101_TC_SITE4_PH4_TMP64.dgn
User:scoats

PROJ. REFERENCE NO.	SHEET NO.
R-3101	TMP-65

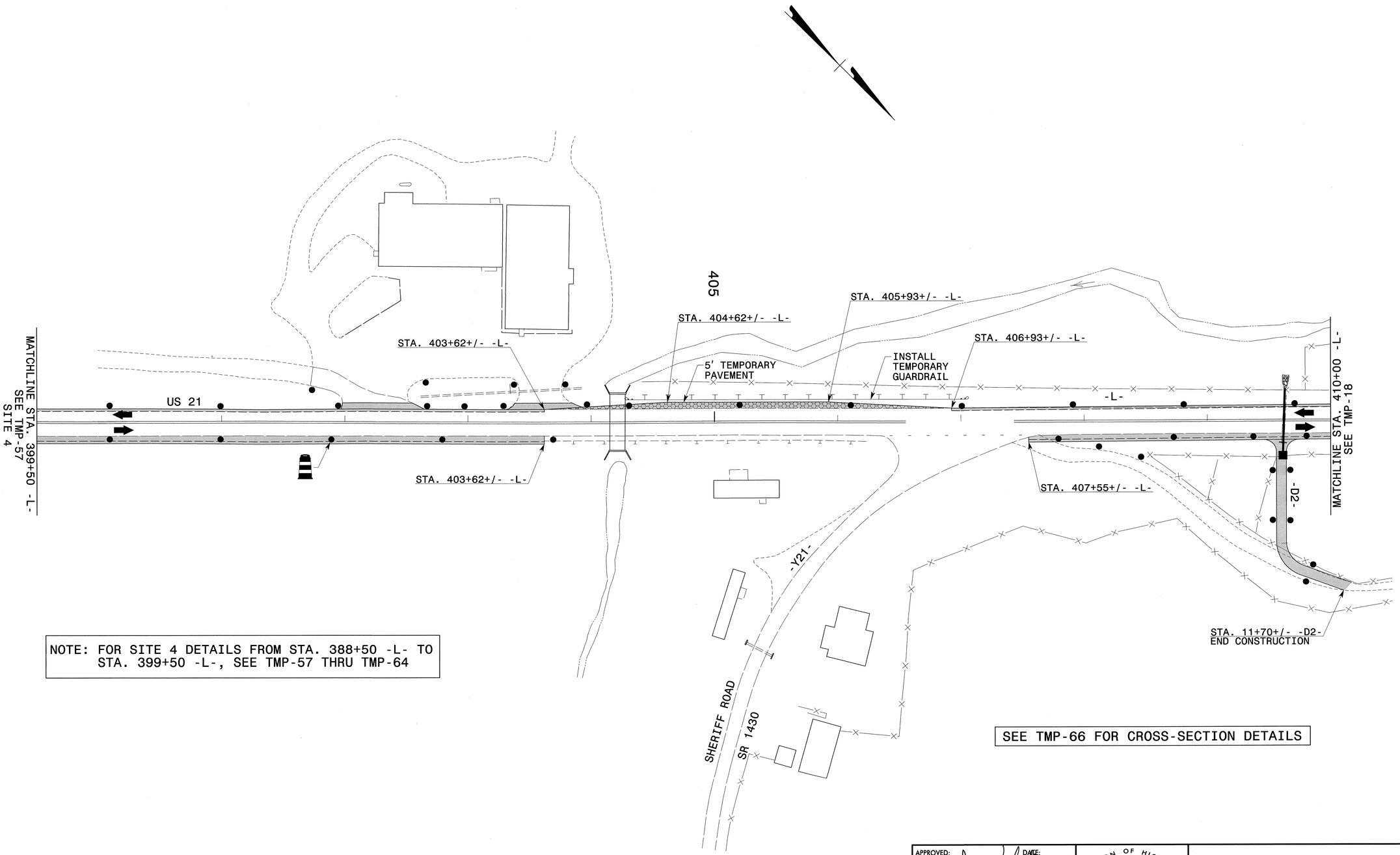

NOTE: FOR SITE 4 DETAILS FROM STA. 388+50 -L- TO STA. 399+50 -L-, SEE TMP-57 THRU TMP-64

SEE TMP-66 FOR CROSS-SECTION DETAILS

APPROVED: DATE: 5/29/13

SEAL

NORTH CAROLINA PROFESSIONAL SEAL 19862 ENGINEER W. WOOLARD JR.

DIVISION OF HIGHWAYS STATE OF NORTH CAROLINA DEPARTMENT OF TRANSPORTATION WORK ZONE TRAFFIC CONTROL

SITE 5
PHASE I
CULVERT ON US 21
STA. 405+28+/-

5/28/2013
P:\tipprojects-r\r3101\traffic\trafficcontrol\tcp\SITE5\R3101_TC_SITE5_PHI_TMP65.dgn
User:scodts

PROJ. REFERENCE NO.	SHEET NO.
R-3101	TMP-66

℄
406+00

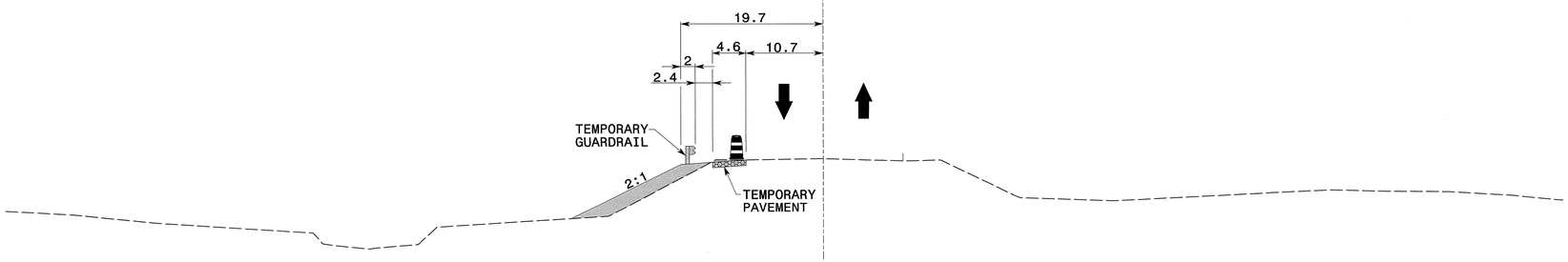

℄
405+50

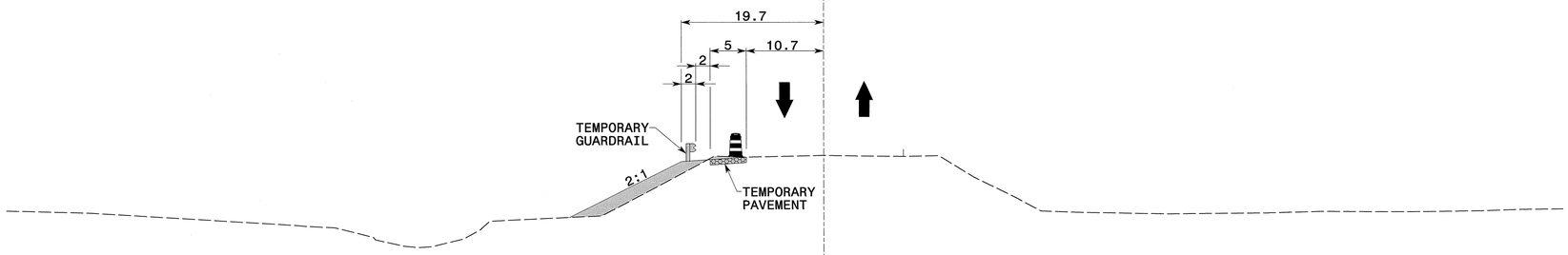

℄
405+00

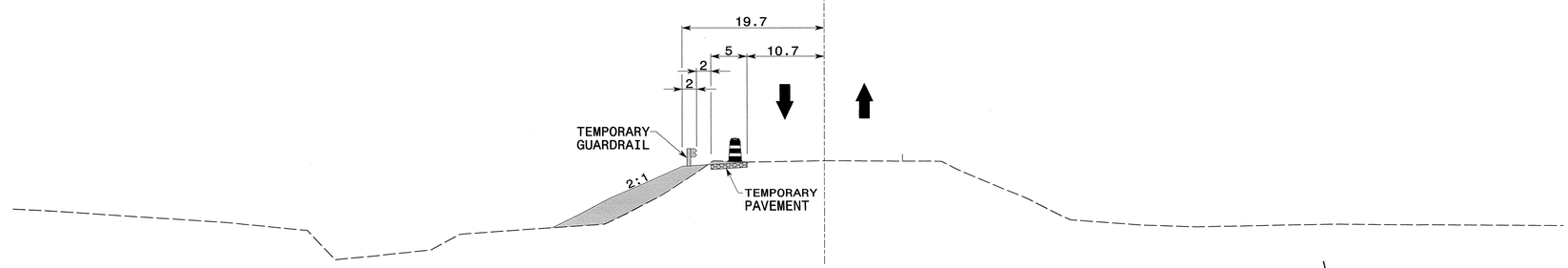

APPROVED: _____ DATE: _____

SEAL

NORTH CAROLINA PROFESSIONAL SEAL 19862 ENGINEER W. WOOLARD JR.

5/29/13

DIVISION OF HIGHWAYS * STATE OF NORTH CAROLINA * DEPARTMENT OF TRANSPORTATION * WORK ZONE TRAFFIC CONTROL

SITE 5
PHASE I
CROSS-SECTIONS

5/28/2013
P:\dpr\projects-r\r3101\traffic\trafficcontrol\top\SITE5\R3101_TC_SITE5_PHL_TMP66.dgn
User:scodts

PROJ. REFERENCE NO.	SHEET NO.
R-3101	TMP-67

Shoring I.D. No.	Estimated Average Height (ft.)	Quantity (sq. ft.)
9	15.3 FT.	459 SQ. FT.
10	10.2 FT.	306 SQ. FT.

TYPE III BARRICADE
(1)

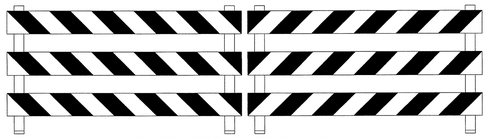
TYPE III BARRICADE(S)
(2)

TYPE III BARRICADE
(3)

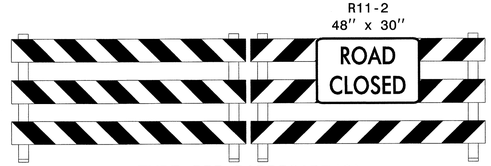

TYPE III BARRICADE(S)
(4)

NOTE: FOR OFF-SITE DETOUR OF SHERIFF ROAD (-Y21-) SIGNAGE AND BARRICADES, SEE TMP-69.

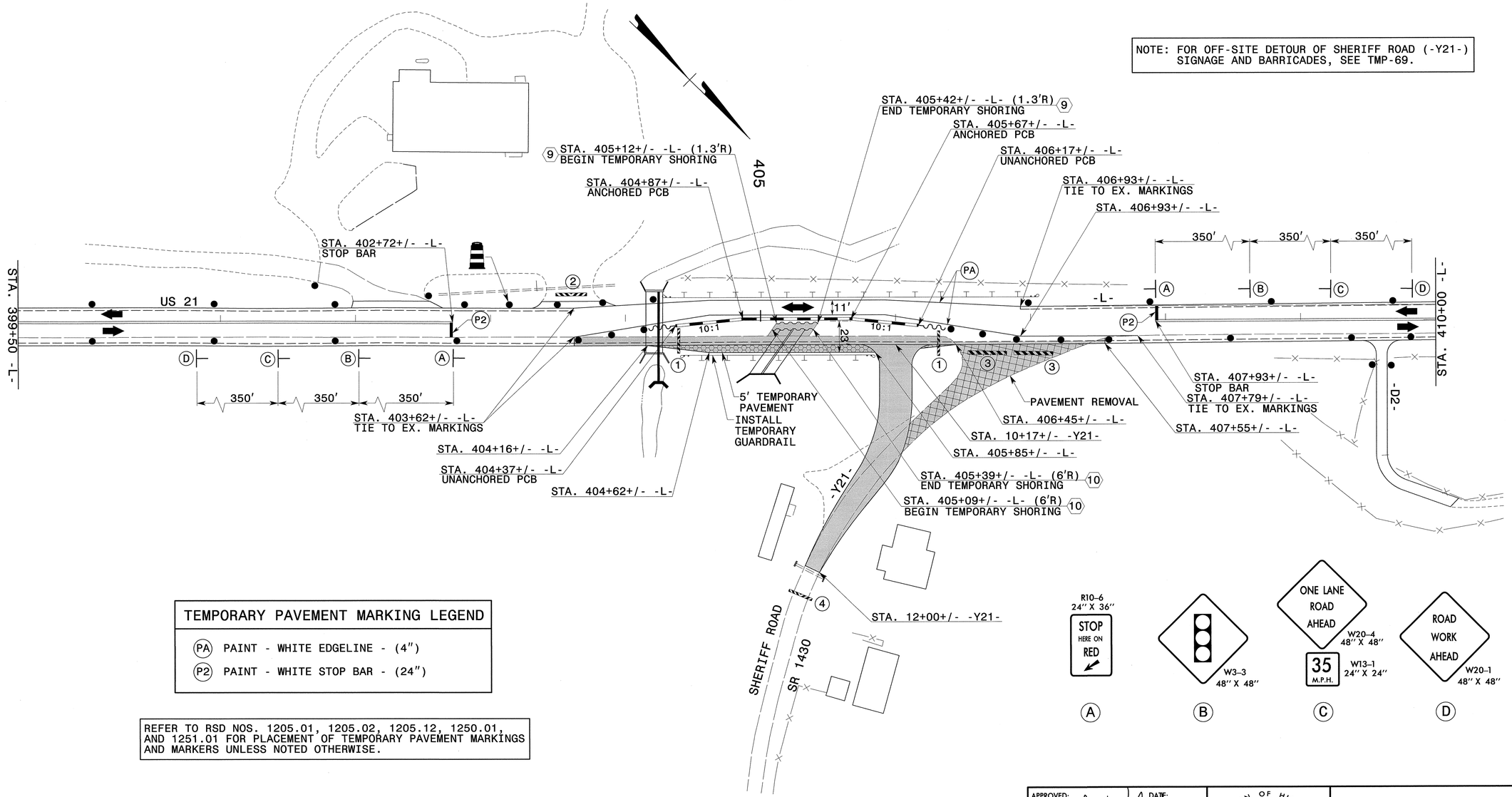

TEMPORARY PAVEMENT MARKING LEGEND
(PA) PAINT - WHITE EDGELINE - (4")
(P2) PAINT - WHITE STOP BAR - (24")

REFER TO RSD NOS. 1205.01, 1205.02, 1205.12, 1250.01, AND 1251.01 FOR PLACEMENT OF TEMPORARY PAVEMENT MARKINGS AND MARKERS UNLESS NOTED OTHERWISE.

SEE TMP-68 FOR CROSS-SECTION DETAILS

(A) (B) (C) (D)

APPROVED: DATE:

SEAL

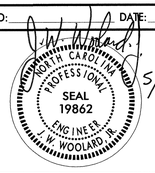

SITE 5
PHASE II
CULVERT ON US 21
STA. 405+28+/-

5/28/2013
P:\tipprojects-r\r3101\traffic\trafficcontrol\tcp\SITE5\R3101_TC_SITE5_PH2_TMP67.dgn
User:scoats

PROJ. REFERENCE NO.	SHEET NO.
R-3101	TMP-68

℄
406+00

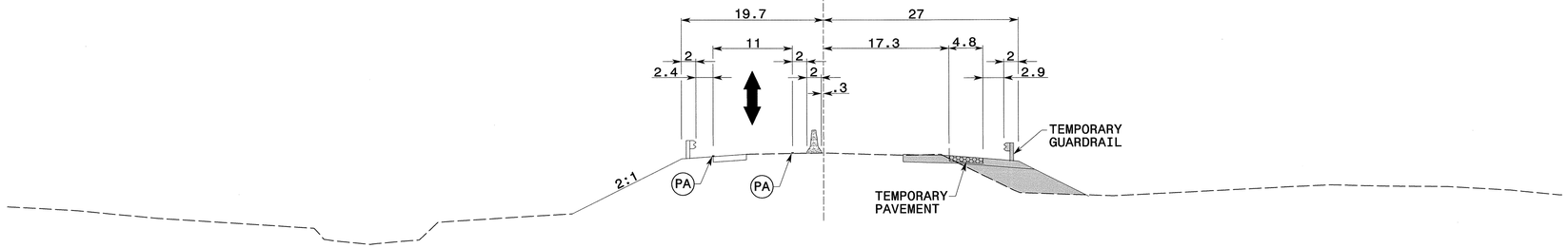

℄
405+50

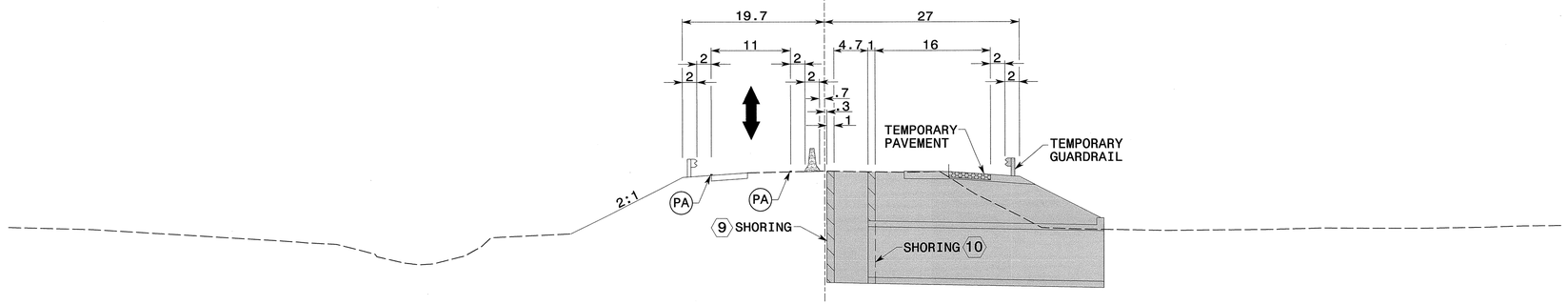

℄
405+00

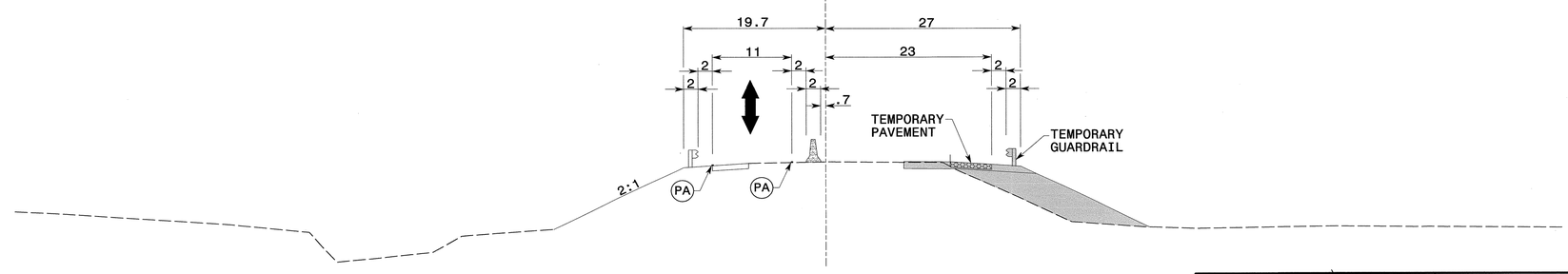

APPROVED: DATE:

SEAL

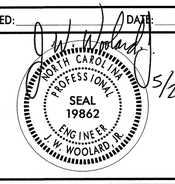

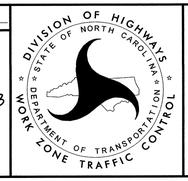

SITE 5
PHASE II
CROSS-SECTIONS

5/28/2013
P:\TIPprojects-r\r-3101\traffic\trafficcontrol\top\SITE5\R3101_TC_SITE5_PH2_TMP68.dgn
User:scoats

PROJ. REFERENCE NO.	SHEET NO.
R-3101	TMP-69

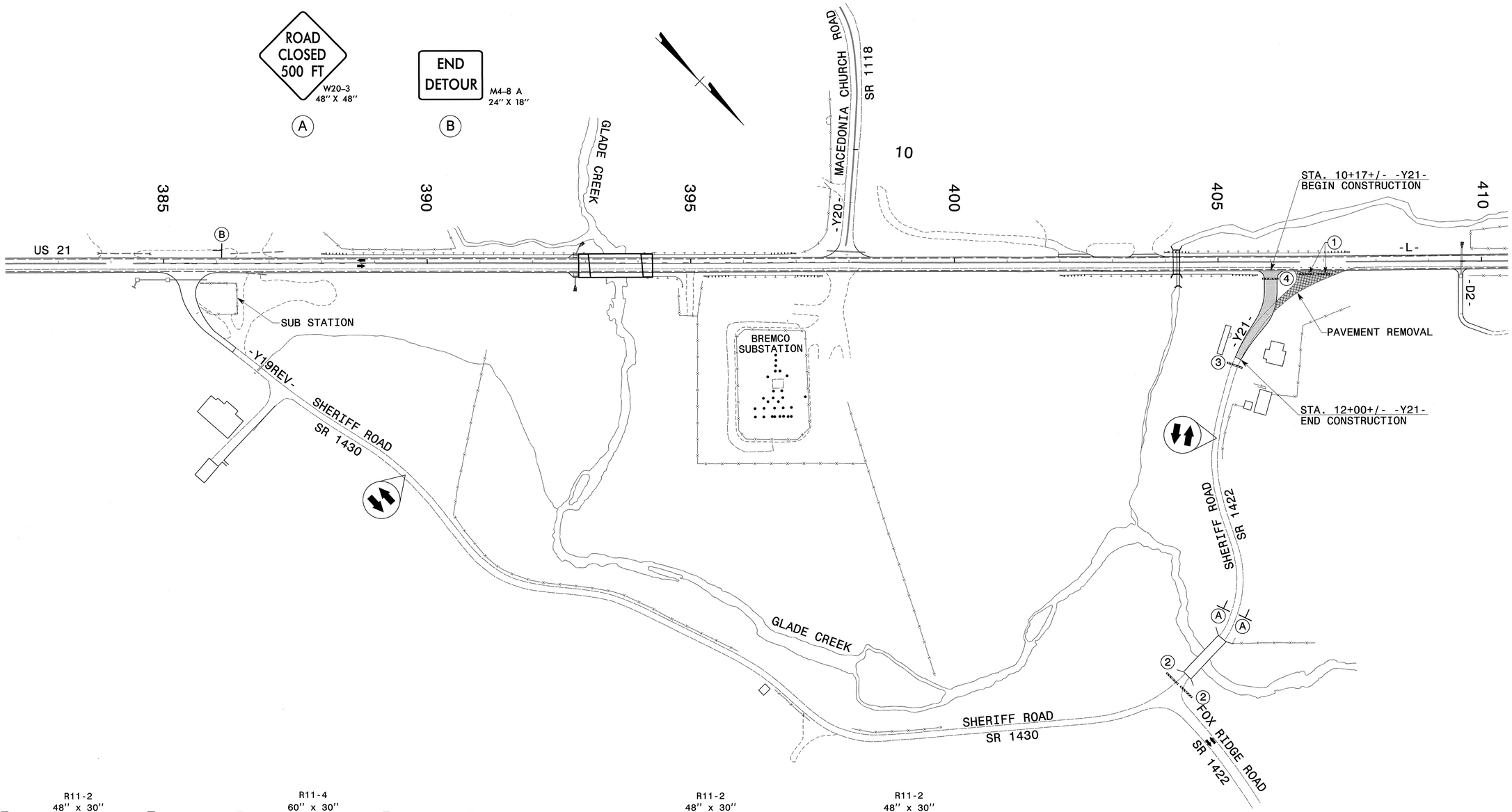

R11-2
48" x 30"
ROAD CLOSED
DETOUR
M4-10R
48" x 18"
TYPE III BARRICADE
1

R11-4
60" x 30"
ROAD CLOSED TO THRU TRAFFIC
DETOUR
M4-10L
48" x 18"
TYPE III BARRICADE
2

R11-2
48" x 30"
ROAD CLOSED
TYPE III BARRICADE(S)
3

R11-2
48" x 30"
ROAD CLOSED
TYPE III BARRICADE
4

APPROVED: DATE:

SEAL

NORTH CAROLINA PROFESSIONAL SEAL 19862 ENGINEER J. W. WOOLARD JR.

5/29/13

DIVISION OF HIGHWAYS STATE OF NORTH CAROLINA DEPARTMENT OF TRANSPORTATION WORK ZONE TRAFFIC CONTROL

SITE 5
PHASE II
OFF-SITE DETOUR
SHERIFF ROAD
SR 1422
-Y21-

5/28/2013
P:\tipprojects-r\r3101\traffic\trafficcontrol\top\SITE5\R3101_TC_SITE5_PH2_TMP69.dgn
User:scoatts

PROJ. REFERENCE NO.	SHEET NO.
R-3101	TMP-70

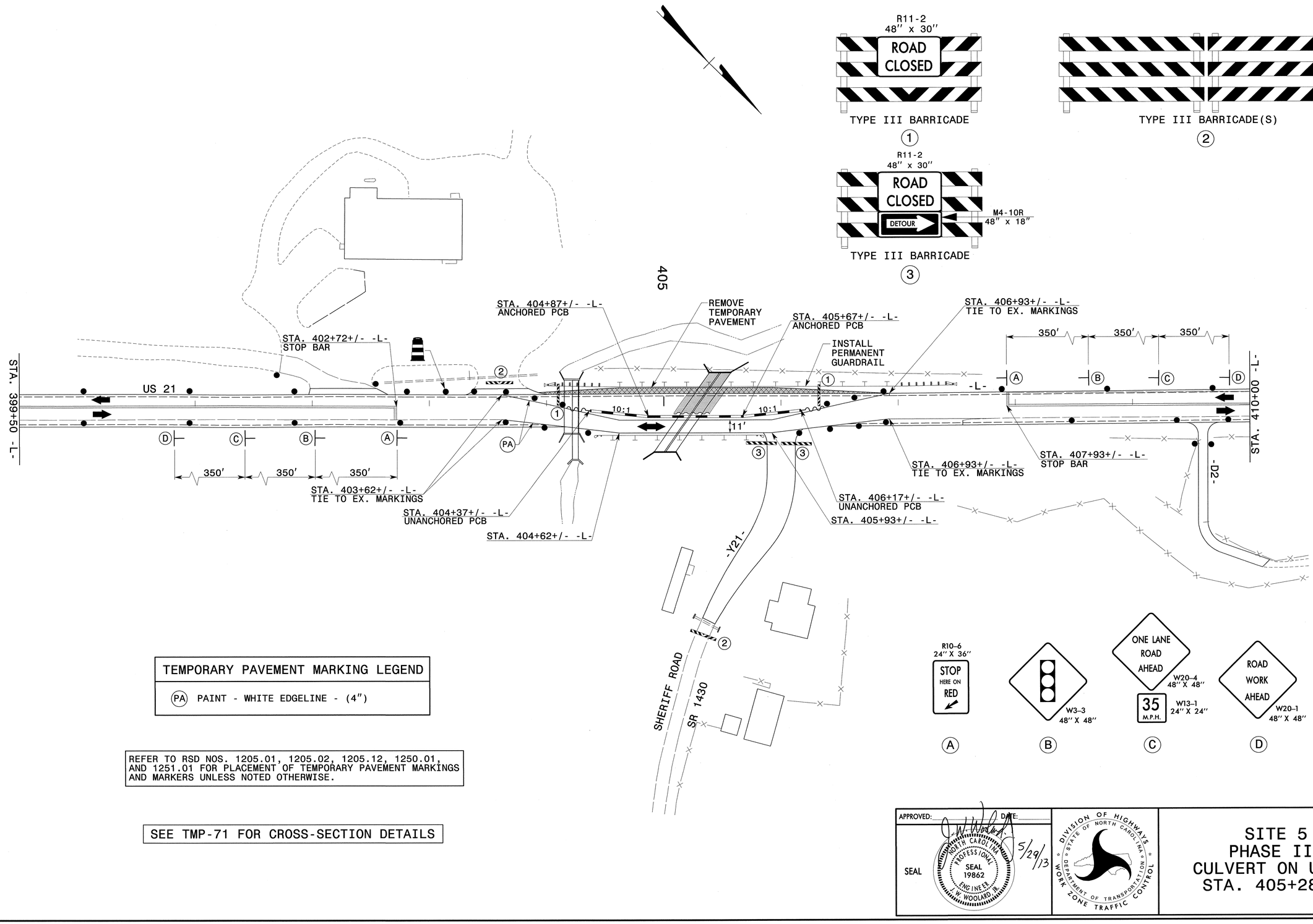

TEMPORARY PAVEMENT MARKING LEGEND
(PA) PAINT - WHITE EDGELINE - (4")

REFER TO RSD NOS. 1205.01, 1205.02, 1205.12, 1250.01, AND 1251.01 FOR PLACEMENT OF TEMPORARY PAVEMENT MARKINGS AND MARKERS UNLESS NOTED OTHERWISE.

SEE TMP-71 FOR CROSS-SECTION DETAILS

APPROVED: _____ DATE: 5/29/13

SEAL

NORTH CAROLINA PROFESSIONAL SEAL 19862 ENGINEER J. W. WOOLARD, JR.

DIVISION OF HIGHWAYS * STATE OF NORTH CAROLINA * DEPARTMENT OF TRANSPORTATION * WORK ZONE TRAFFIC CONTROL

SITE 5
PHASE III
CULVERT ON US 21
STA. 405+28+/-

5/28/2013
P:\tipprojects-r\r3101\traffic\trafficcontrol\tcp\SITE5\R3101_TC_SITE5_PH3_TMP70.dgn
Users\scodts

PROJ. REFERENCE NO.	SHEET NO.
R-3101	TMP-71

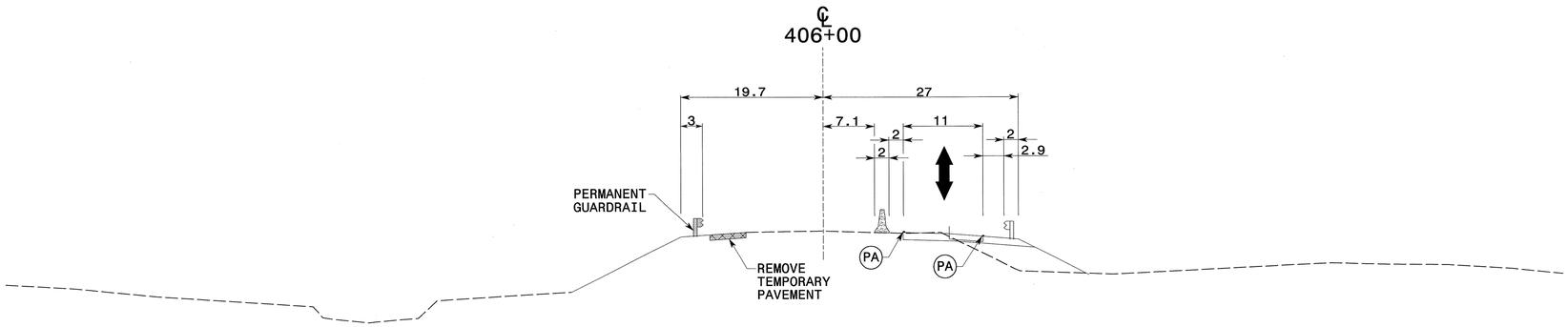

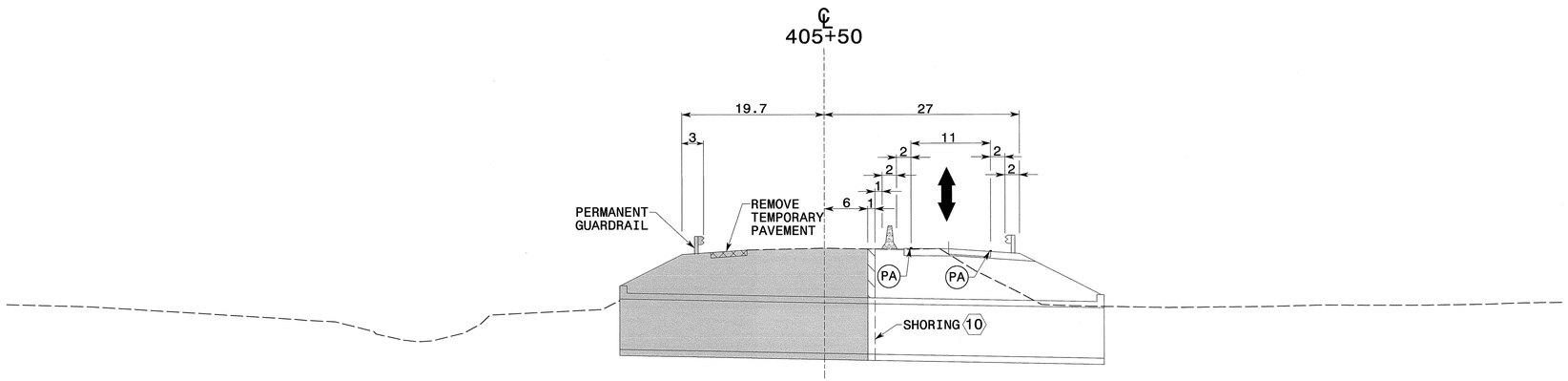

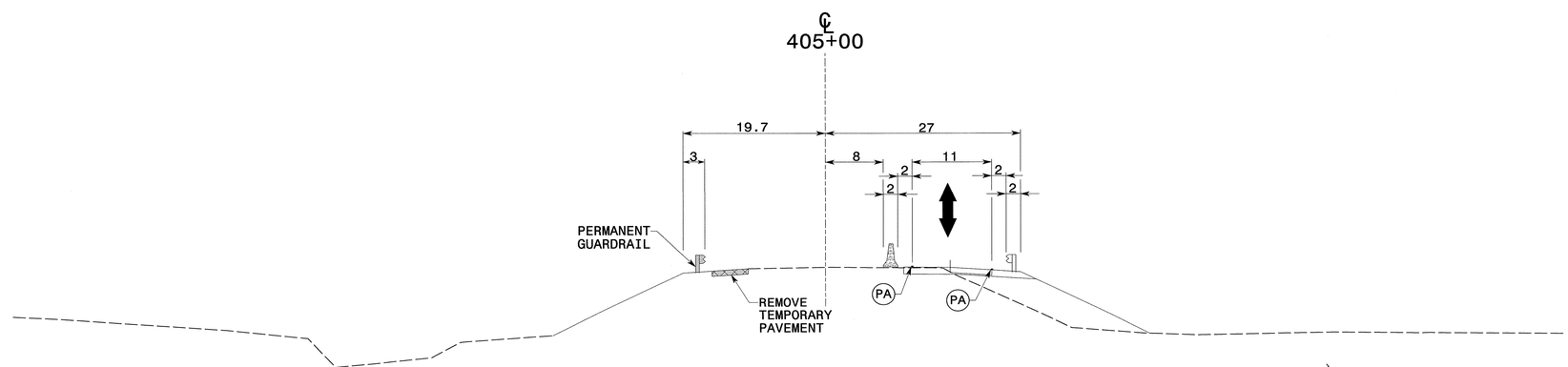

APPROVED: J. W. Woolard Jr. DATE: 5/29/13

SEAL

NORTH CAROLINA PROFESSIONAL SEAL 19862 ENGINEER J. W. WOOLARD, JR.

DIVISION OF HIGHWAYS · STATE OF NORTH CAROLINA · DEPARTMENT OF TRANSPORTATION · WORK ZONE TRAFFIC CONTROL

SITE 5
PHASE III
CROSS-SECTIONS

5/28/2013
p:\tipprojects-r\r3101\traffic\trafficcontrol\tcp\SITE5\R3101_TC_SITE5_PH3_TMP71.dgn
User:scoats

PROJ. REFERENCE NO.	SHEET NO.
R-3101	TMP-72

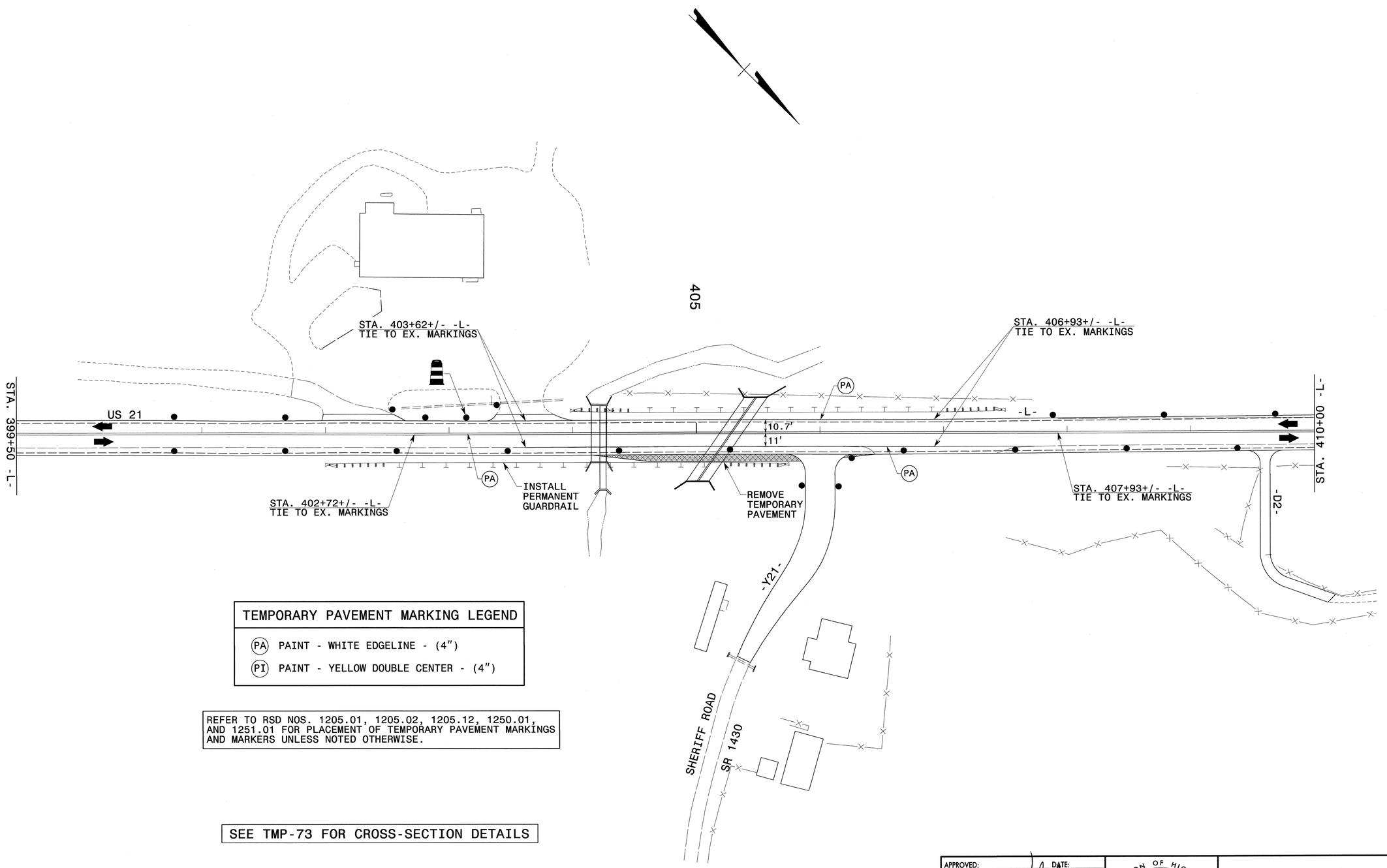

TEMPORARY PAVEMENT MARKING LEGEND	
(PA)	PAINT - WHITE EDGELINE - (4")
(PI)	PAINT - YELLOW DOUBLE CENTER - (4")

REFER TO RSD NOS. 1205.01, 1205.02, 1205.12, 1250.01, AND 1251.01 FOR PLACEMENT OF TEMPORARY PAVEMENT MARKINGS AND MARKERS UNLESS NOTED OTHERWISE.

SEE TMP-73 FOR CROSS-SECTION DETAILS

APPROVED: DATE:

SEAL

NORTH CAROLINA PROFESSIONAL SEAL 19862 ENGINEER J.W. WOOLARD JR.

5/29/13

DIVISION OF HIGHWAYS * STATE OF NORTH CAROLINA * DEPARTMENT OF TRANSPORTATION * WORK ZONE TRAFFIC CONTROL

SITE 5
PHASE IV
CULVERT ON US 21
STA. 405+28+/-

5/28/2013
p:\tipprojects-r\r3101\traffic\trafficcontrol\tcp\SITE5\R3101_TC_SITE5_PH4_TMP72.dgn
User:scoofs

PROJ. REFERENCE NO.	SHEET NO.
R-3101	TMP-73

℄
406+00

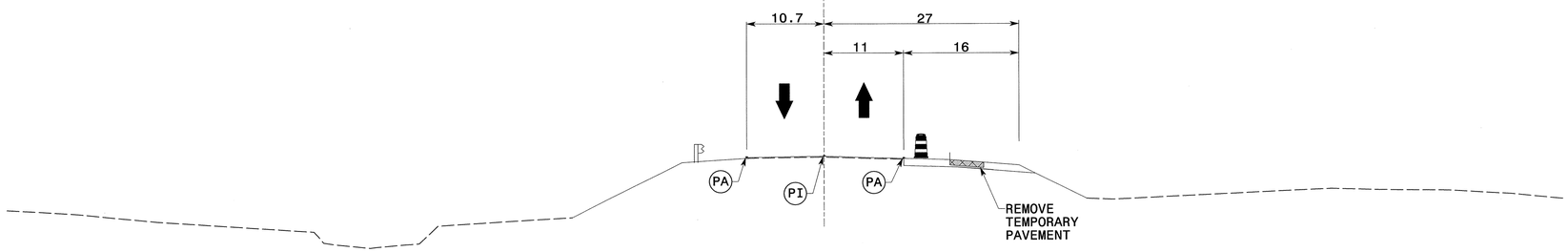

℄
405+50

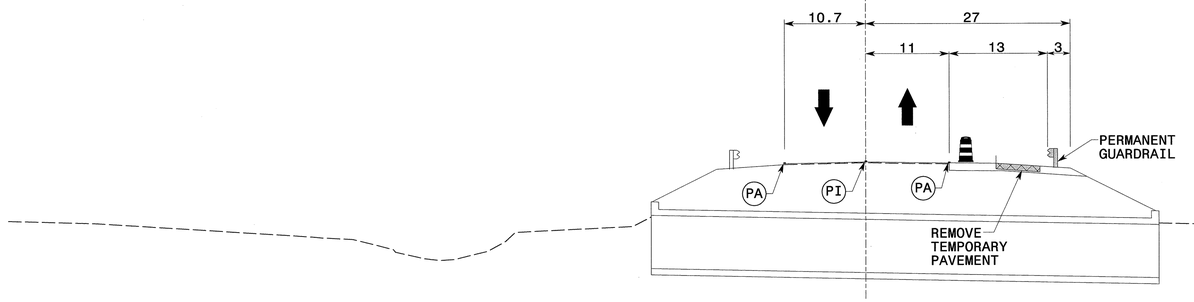

℄
405+00

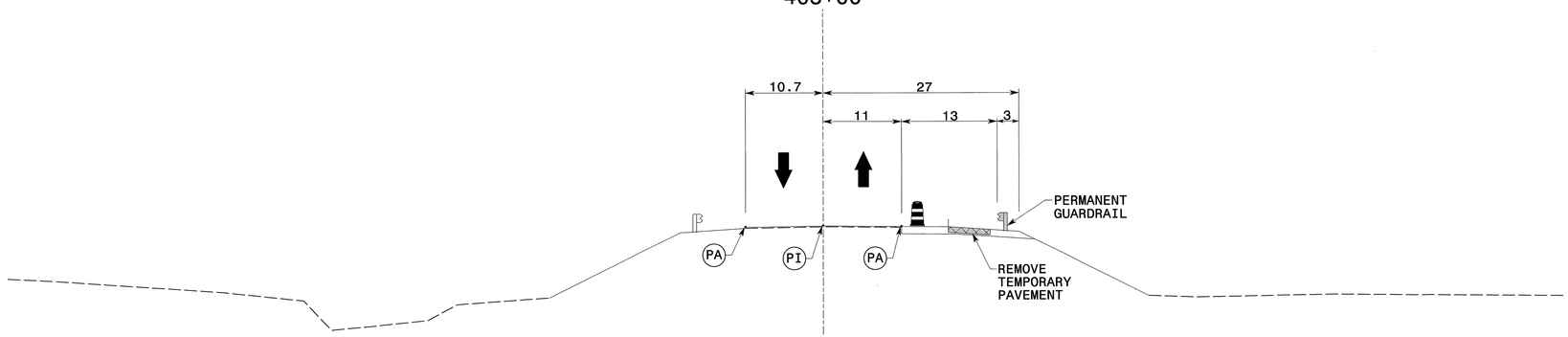

APPROVED: DATE:

SEAL

NORTH CAROLINA PROFESSIONAL SEAL 19862 ENGINEER J. W. WOOLARD JR.

5/29/13

DIVISION OF HIGHWAYS * STATE OF NORTH CAROLINA * DEPARTMENT OF TRANSPORTATION WORK ZONE TRAFFIC CONTROL

SITE 5
PHASE IV
CROSS-SECTIONS

5/28/2013
P:\tipprojects-r\r3101\traffic\trafficcontrol\tcp\SITE5\R3101_TC_SITE5_PH4_TMP73.dgn
User:scoats

PROJ. REFERENCE NO.	SHEET NO.
R-3101	TMP-74

Shoring I.D. No.	Estimated Average Height (ft.)	Quantity (sq. ft.)
(11)	6.1 FT.	122 SQ. FT.

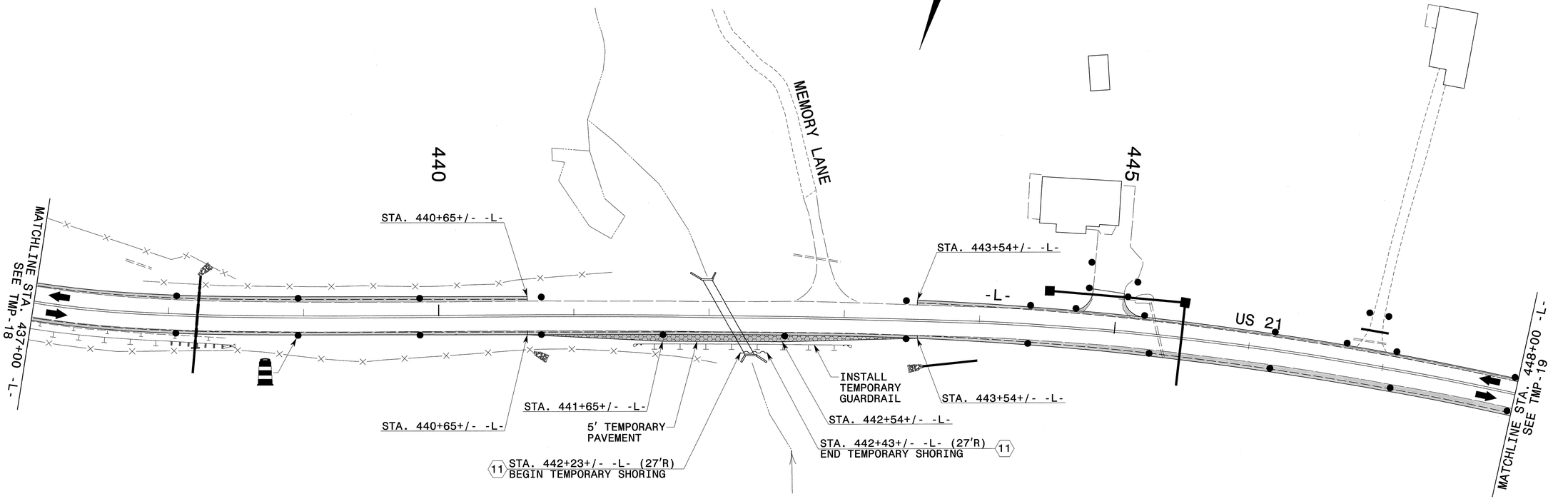

SEE TMP-75 FOR CROSS-SECTION DETAILS

APPROVED: DATE: 5/29/13

SEAL

NORTH CAROLINA PROFESSIONAL SEAL 19862 ENGINEER J. WOOLARD, JR.

DIVISION OF HIGHWAYS * STATE OF NORTH CAROLINA * DEPARTMENT OF TRANSPORTATION * WORK ZONE TRAFFIC CONTROL

SITE 6
PHASE I
CULVERT ON US 21
STA. 442+13+/-

5/28/2013
p:\tipprojects-r\r-3101\traffic\trafficcontrol\tcp\SITE6\R3101_TC_SITE6_PHI_TMP74.dgn
User:scodts

PROJ. REFERENCE NO.	SHEET NO.
R-3101	TMP-75

℄
442+50

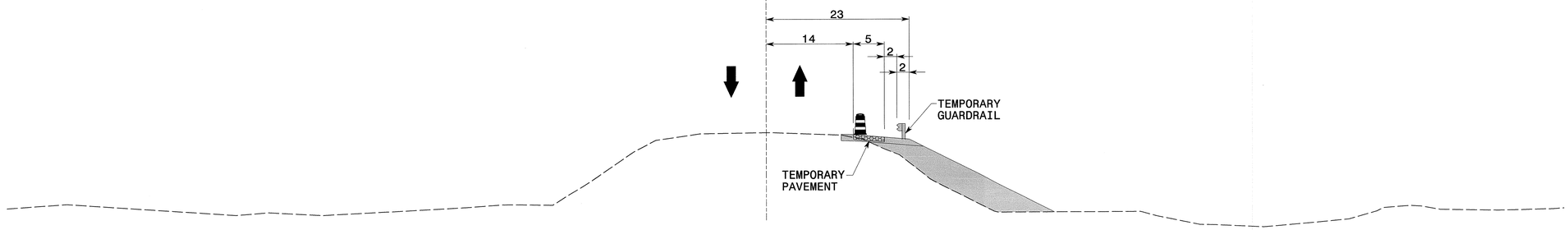

℄
442+00

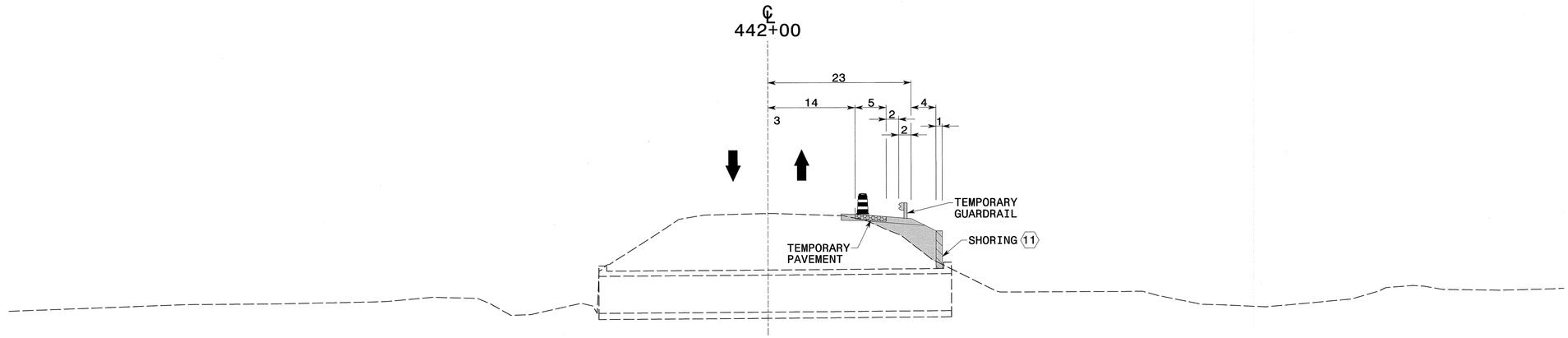

℄
441+50

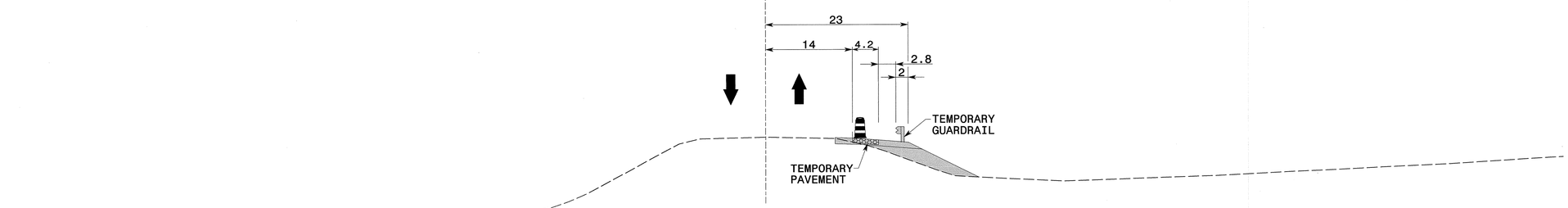

APPROVED: DATE:

SEAL

NORTH CAROLINA PROFESSIONAL SEAL 19862 ENGINEER J. W. WOOLARD, JR.

5/29/13

DIVISION OF HIGHWAYS * STATE OF NORTH CAROLINA * DEPARTMENT OF TRANSPORTATION * WORK ZONE TRAFFIC CONTROL

SITE 6
PHASE I
CROSS-SECTIONS

5/28/2013
P:\tipprojects-r\r3101\traffic\trafficcontrol\top\SITE6\R3101_TC_SITE6_PHI_TMP75.dgn
User:scoats

PROJ. REFERENCE NO.	SHEET NO.
R-3101	TMP-76

Shoring I.D. No.	Estimated Average Height (ft.)	Quantity (sq. ft.)
(12)	14.0 FT.	266 SQ. FT.
(13)	14.9 FT.	283 SQ. FT.

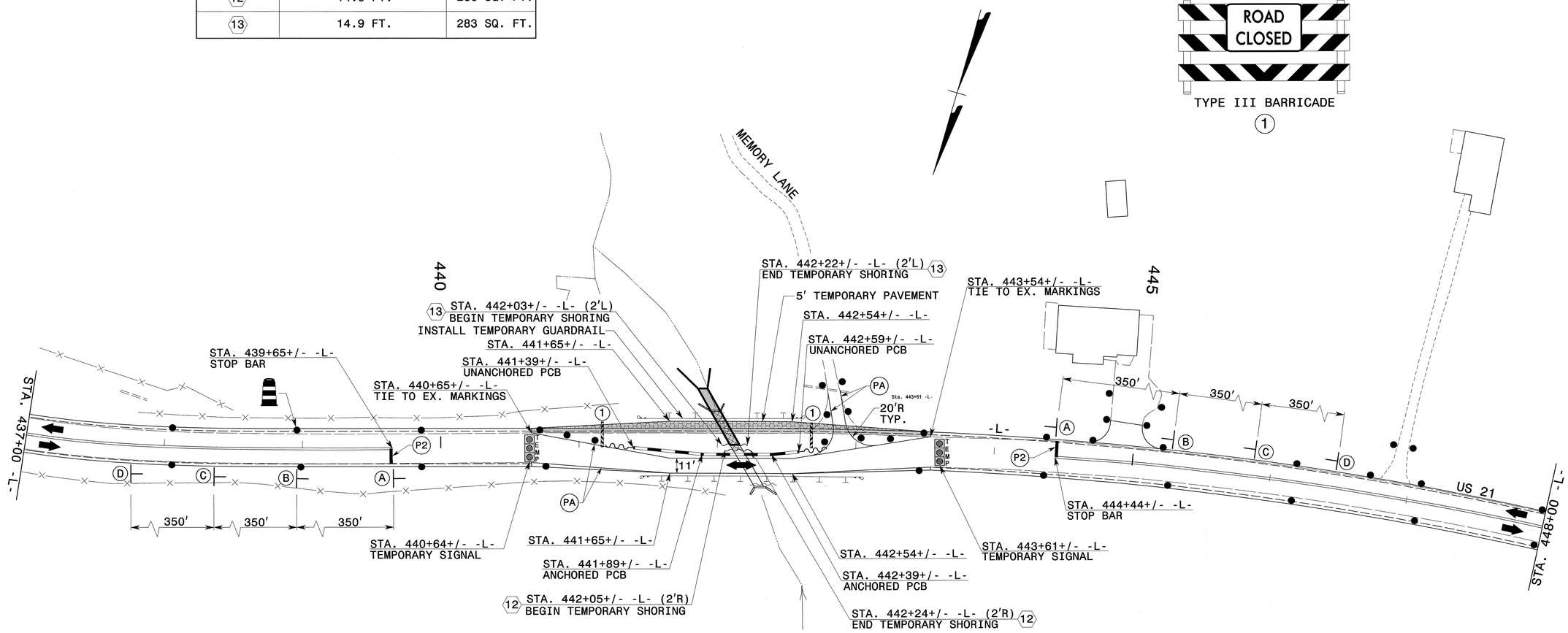

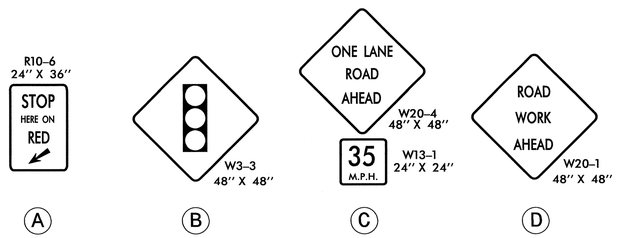

TEMPORARY PAVEMENT MARKING LEGEND	
(PA)	PAINT - WHITE EDGELINE - (4")
(P2)	PAINT - WHITE STOP BAR - (24")

REFER TO RSD NOS. 1205.01, 1205.02, 1205.12, 1250.01, AND 1251.01 FOR PLACEMENT OF TEMPORARY PAVEMENT MARKINGS AND MARKERS UNLESS NOTED OTHERWISE.

SEE TMP-77 FOR CROSS-SECTION DETAILS

APPROVED: DATE:

SEAL

NORTH CAROLINA PROFESSIONAL SEAL 19862 ENGINEER W. WOOLARD JR.

5/29/13

DIVISION OF HIGHWAYS * STATE OF NORTH CAROLINA * DEPARTMENT OF TRANSPORTATION * WORK ZONE TRAFFIC CONTROL

SITE 6
PHASE II
CULVERT ON US 21
STA. 442+13+/-

5/28/2013
p:\Tipprojects\r3101\traffic\trafficcontrol\tcp\SITE6\R3101_TC_SITE6_PH2_TMP76.dgn
User:rscoats

PROJ. REFERENCE NO.	SHEET NO.
R-3101	TMP-77

℄
442+50

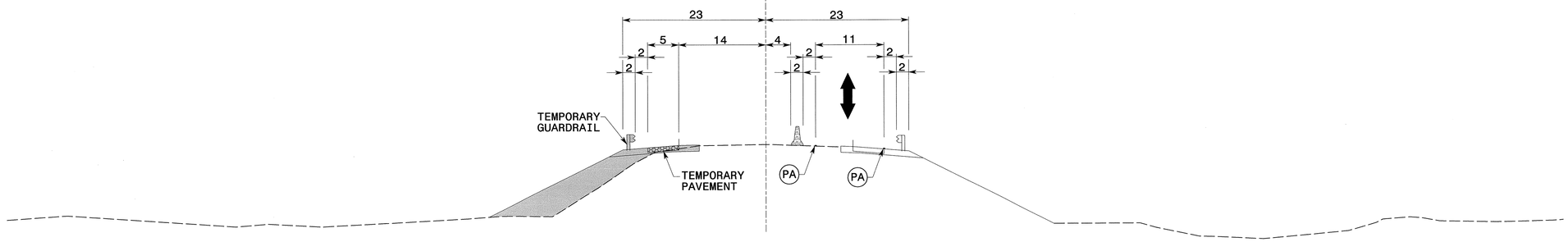

℄
442+00

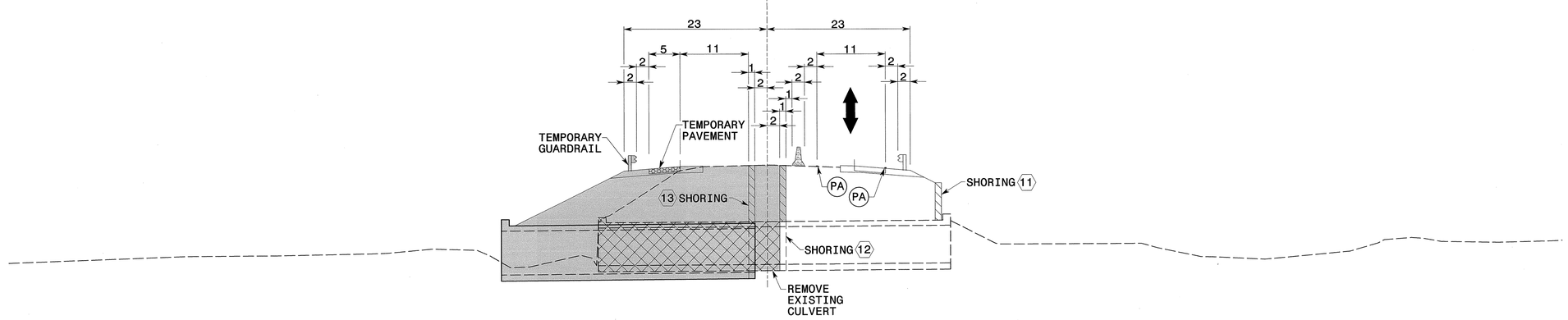

℄
441+50

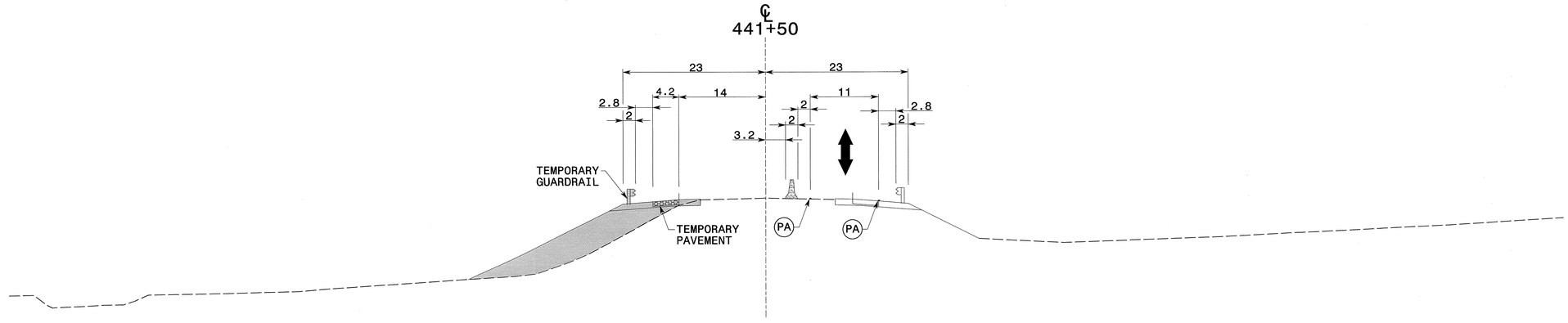

APPROVED: DATE:

SEAL

NORTH CAROLINA PROFESSIONAL SEAL 19862 ENGINEER W. WOOLARD JR.

5/29/13

DIVISION OF HIGHWAYS * STATE OF NORTH CAROLINA * DEPARTMENT OF TRANSPORTATION * WORK ZONE TRAFFIC CONTROL

SITE 6
PHASE II
CROSS-SECTIONS

5/28/2013
p:\tipprojects-r\r3101\traffic\trafficcontrol\tcp\SITE6\R3101_TC_SITE6_PH2_TMP77.dgn
User:scodts

PROJ. REFERENCE NO.	SHEET NO.
R-3101	TMP-78

R11-2
48" x 30"
ROAD CLOSED
TYPE III BARRICADE
(1)

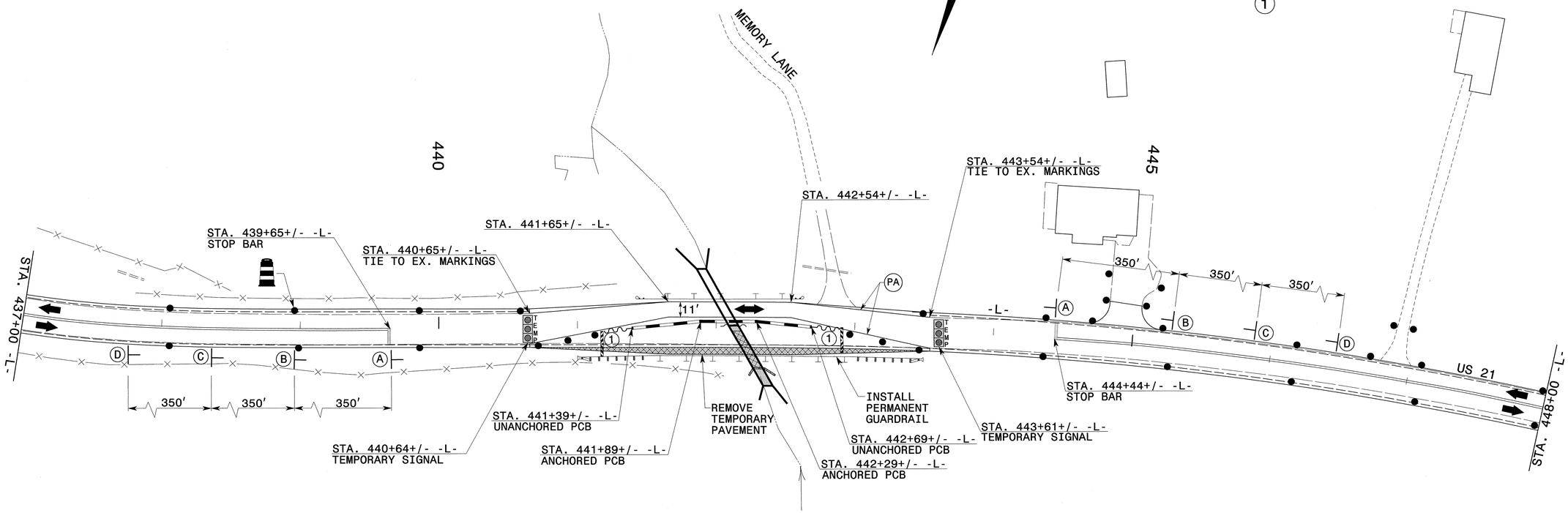

R10-6
24" X 36"
STOP
HERE ON
RED
(A)

W3-3
48" X 48"
(B)

ONE LANE
ROAD
AHEAD
W20-4
48" X 48"
35
M.P.H.
W13-1
24" X 24"
(C)

ROAD
WORK
AHEAD
W20-1
48" X 48"
(D)

TEMPORARY PAVEMENT MARKING LEGEND
(PA) PAINT - WHITE EDGELINE - (4")

REFER TO RSD NOS. 1205.01, 1205.02, 1205.12, 1250.01, AND 1251.01 FOR PLACEMENT OF TEMPORARY PAVEMENT MARKINGS AND MARKERS UNLESS NOTED OTHERWISE.

SEE TMP-79 FOR CROSS-SECTION DETAILS

APPROVED: DATE:

SEAL

NORTH CAROLINA PROFESSIONAL SEAL 19862 ENGINEER W. WOOLARD, JR.

5/29/13

DIVISION OF HIGHWAYS
STATE OF NORTH CAROLINA
DEPARTMENT OF TRANSPORTATION
WORK ZONE TRAFFIC CONTROL

SITE 6
PHASE III
CULVERT ON US 21
STA. 442+13+/-

5/28/2013
P:\TIPprojects-r\r3101\traffic\trafficcontrol\tcp\SITE6\R3101_TC_SITE6_PH3_TMP78.dgn
User:scodts

PROJ. REFERENCE NO.	SHEET NO.
R-3101	TMP-79

℄
442+50

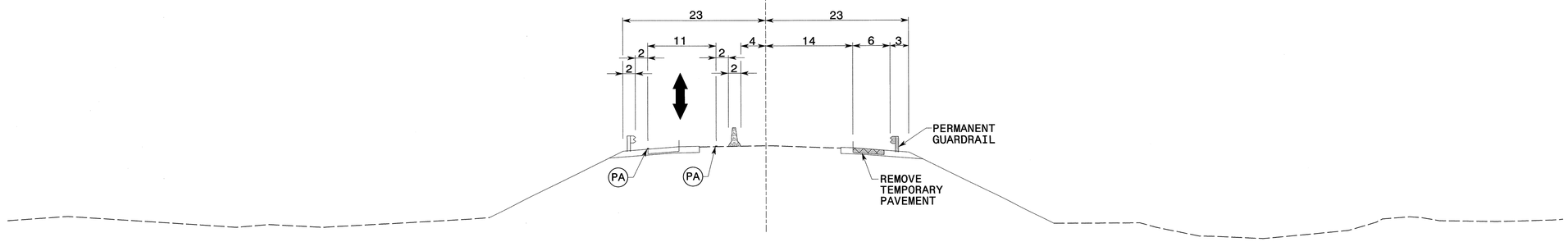

℄
442+00

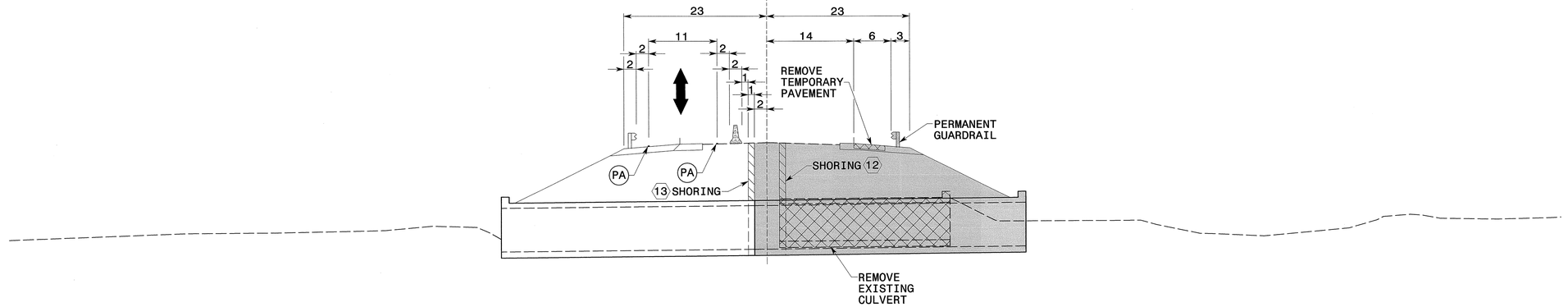

℄
441+50

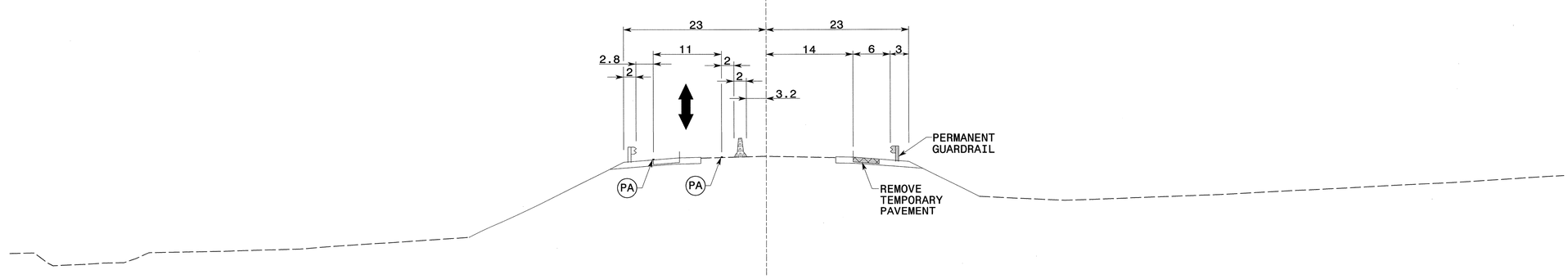

APPROVED: DATE:

SEAL

NORTH CAROLINA PROFESSIONAL SEAL 19862 ENGINEER W. WOOLARD, JR.

5/29/13

DIVISION OF HIGHWAYS STATE OF NORTH CAROLINA DEPARTMENT OF TRANSPORTATION WORK ZONE TRAFFIC CONTROL

SITE 6
PHASE III
CROSS-SECTIONS

5/28/2013
p:\tipprojects-r\r3101\traffic\trafficcontrol\tcp\SITE6\R3101_TC_SITE6_PH3_TMP79.dgn
User:scodts

PROJ. REFERENCE NO.	SHEET NO.
R-3101	TMP-80

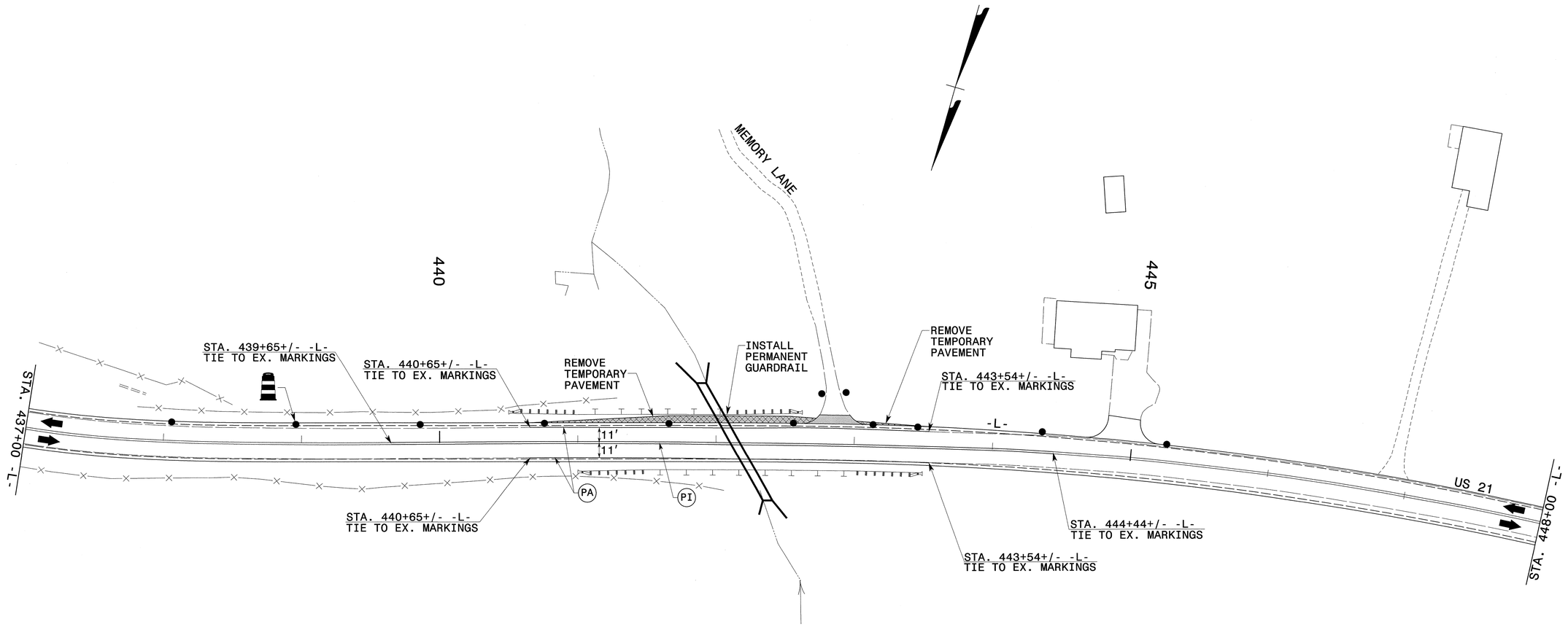

TEMPORARY PAVEMENT MARKING LEGEND	
(PA)	PAINT - WHITE EDGELINE - (4")
(PI)	PAINT - YELLOW DOUBLE CENTER - (4")

REFER TO RSD NOS. 1205.01, 1205.02, 1205.12, 1250.01, AND 1251.01 FOR PLACEMENT OF TEMPORARY PAVEMENT MARKINGS AND MARKERS UNLESS NOTED OTHERWISE.

SEE TMP-81 FOR CROSS-SECTION DETAILS

APPROVED: DATE: 5/29/13

SEAL

NORTH CAROLINA PROFESSIONAL SEAL 19862 ENGINEER J. W. WOOLARD, JR.

DIVISION OF HIGHWAYS * STATE OF NORTH CAROLINA * DEPARTMENT OF TRANSPORTATION * WORK ZONE TRAFFIC CONTROL

SITE 6
PHASE IV
CULVERT ON US 21
STA. 442+13+/-

5/28/2013
P:\tipprojects-r\r3101\traffic\trafficcontrol\tcp\SITE6\R3101_TC_SITE6_PH4_TMP80.dgn
User:scoats

PROJ. REFERENCE NO.	SHEET NO.
R-3101	TMP-81

℄
442+50

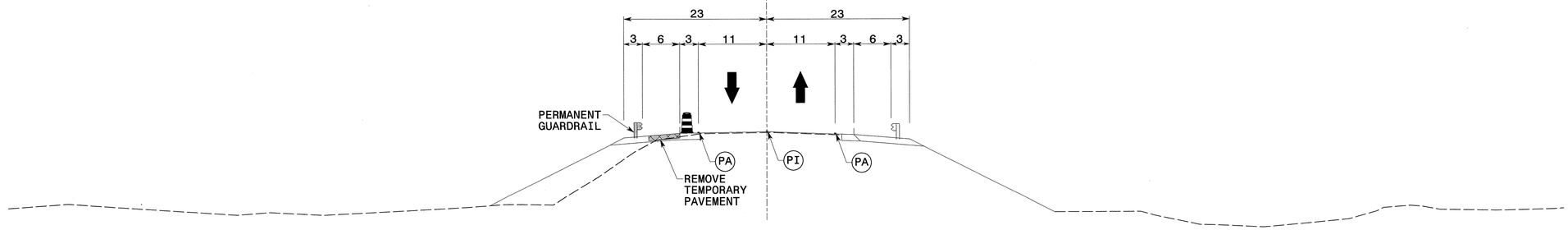

℄
442+00

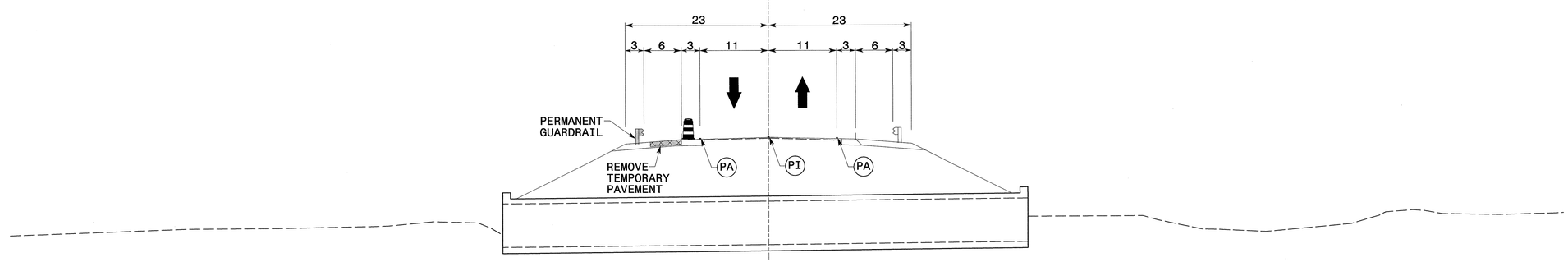

℄
441+50

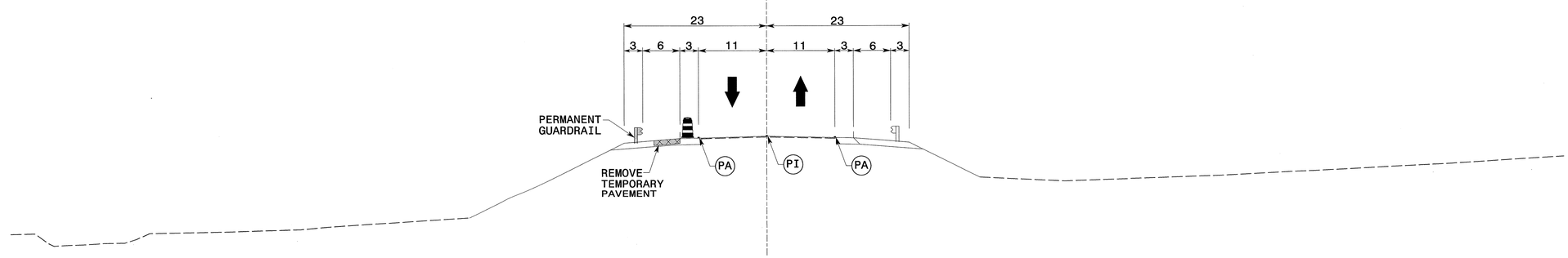

APPROVED: _____ DATE: _____

SEAL

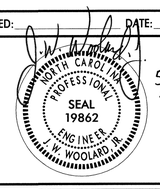

5/29/13

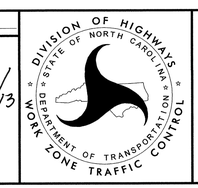

SITE 6
PHASE IV
CROSS-SECTIONS

5/28/2013
p:\tipprojects-r\r3101\traffic\trafficcontrol\tcp\SITE6\R3101_TC_SITE6_PH4_TMP81.dgn
User:scoats

PROJ. REFERENCE NO.	SHEET NO.
R-3101	TMP-82

Shoring I.D. No.	Estimated Average Height (ft.)	Quantity (sq. ft.)
14	5.8 FT.	87 SQ. FT.

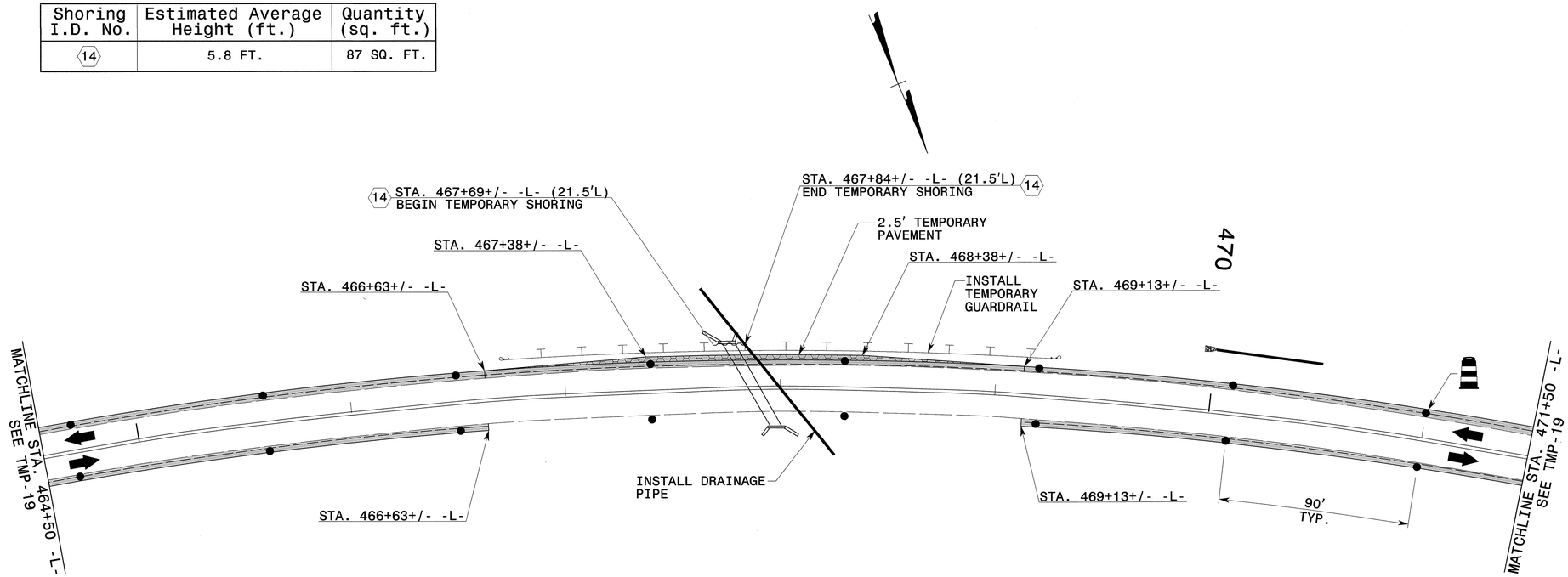

SEE TMP-83 FOR CROSS-SECTION DETAILS

APPROVED: DATE:

SEAL

NORTH CAROLINA PROFESSIONAL SEAL 19862 ENGINEER W. WOOLARD JR.

7/11/13

DIVISION OF HIGHWAYS * STATE OF NORTH CAROLINA * DEPARTMENT OF TRANSPORTATION * WORK ZONE TRAFFIC CONTROL

SITE 7
PHASE I
CULVERT ON US 21
STA. 468+00+/-

7/11/2013
P:\TIPProjects-R\R3101\Traffic\TrafficControl\TCP\SITE7\R3101_TC_SITE7_PHI_TMP82.dgn
User:scoats

PROJ. REFERENCE NO.	SHEET NO.
R-3101	TMP-83

℄ 468+50

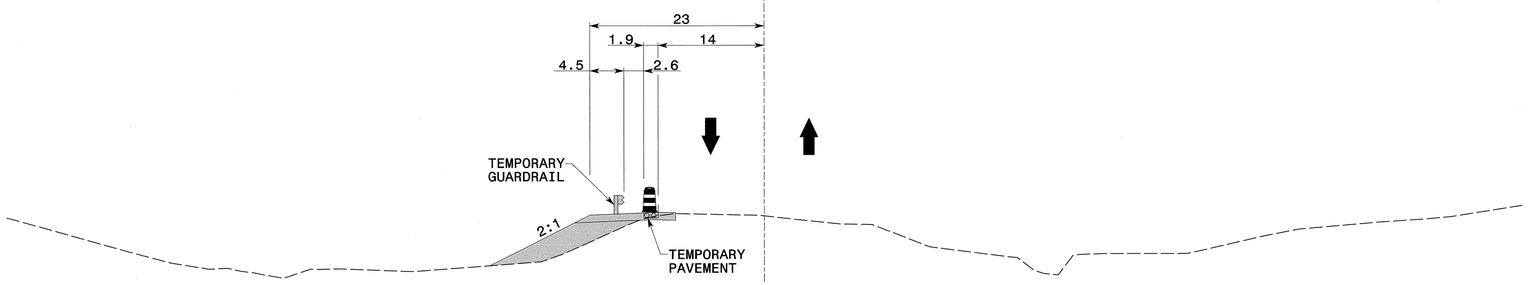

℄ 468+00

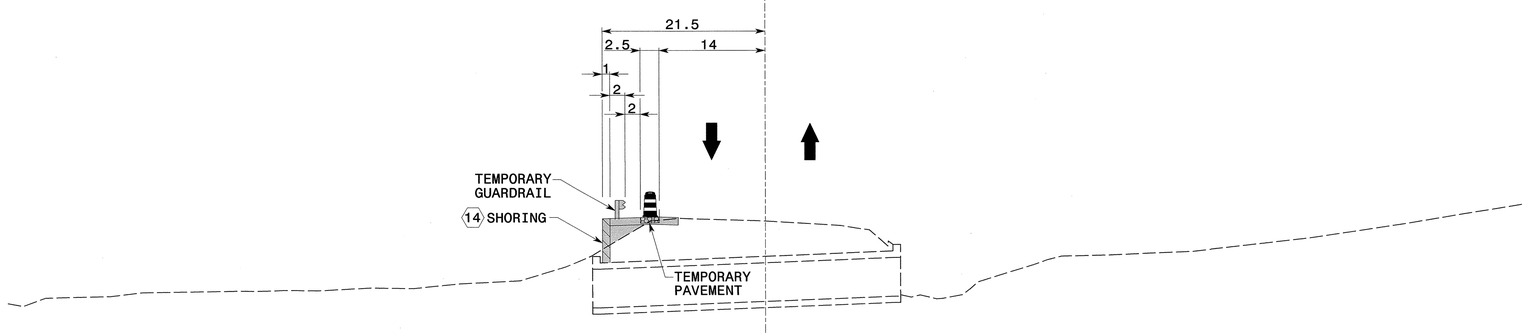

℄ 467+50

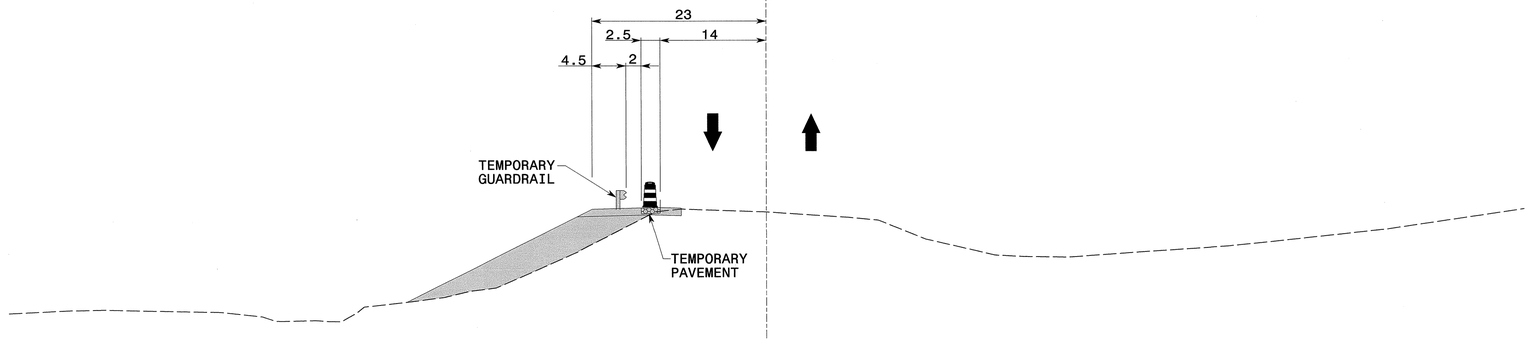

APPROVED: _____ DATE: _____

SEAL

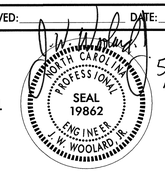

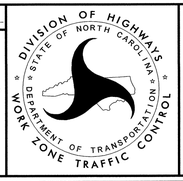

SITE 7
PHASE I
CROSS-SECTIONS

5/28/2013
p:\tipprojects-r\r3101\traffic\trafficcontrol\tep\SITE7\R3101_TC_SITE7_PHI_TMP83.dgn
User:scoats

PROJ. REFERENCE NO.	SHEET NO.
R-3101	TMP-84

Shoring I.D. No.	Estimated Average Height (ft.)	Quantity (sq. ft.)
(15)	9.1 FT.	137 SQ. FT.

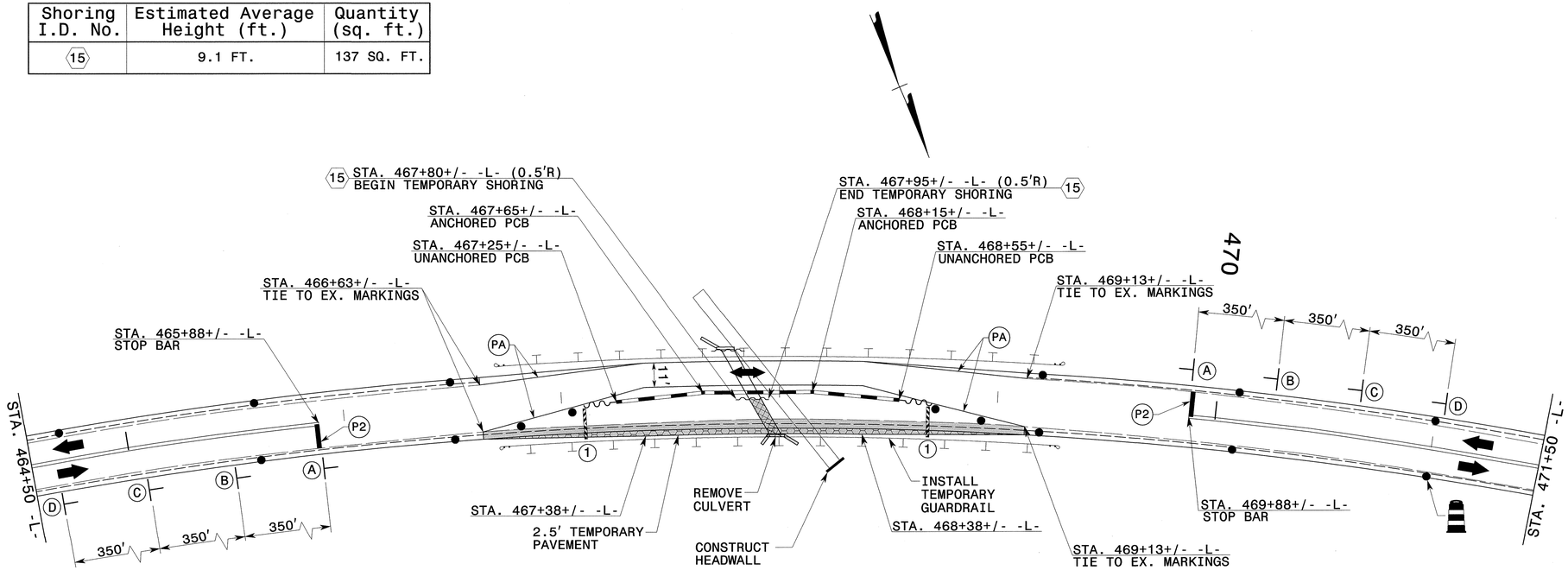

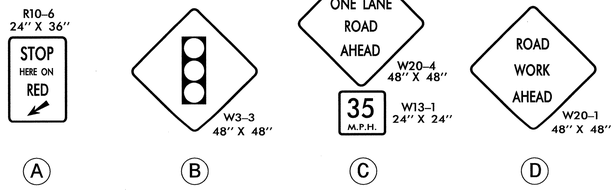

TYPE III BARRICADE
(1)

TEMPORARY PAVEMENT MARKING LEGEND	
(PA)	PAINT - WHITE EDGELINE - (4")
(P2)	PAINT - WHITE STOP BAR - (24")

REFER TO RSD NOS. 1205.01, 1205.02, 1205.12, 1250.01, AND 1251.01 FOR PLACEMENT OF TEMPORARY PAVEMENT MARKINGS AND MARKERS UNLESS NOTED OTHERWISE.

SEE TMP-85 FOR CROSS-SECTION DETAILS

APPROVED: _____ DATE: _____

SEAL

NORTH CAROLINA PROFESSIONAL SEAL 19862 ENGINEER J. W. WOOLARD JR.

5/29/13

DIVISION OF HIGHWAYS * STATE OF NORTH CAROLINA * DEPARTMENT OF TRANSPORTATION * WORK ZONE TRAFFIC CONTROL

SITE 7
PHASE II
CULVERT ON US 21
STA. 468+00+/-

5/28/2013
p:\tipprojects-r\r3101\traffic\trafficcontrol\tcp\SITE7\R3101_TC_SITE7_PH2_TMP84.dgn
User:scoats

PROJ. REFERENCE NO.	SHEET NO.
R-3101	TMP-85

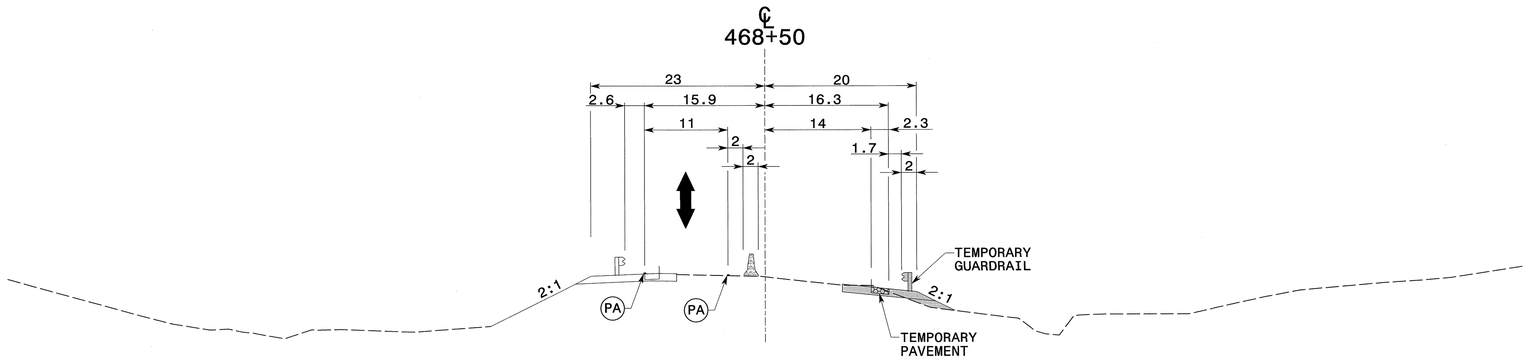

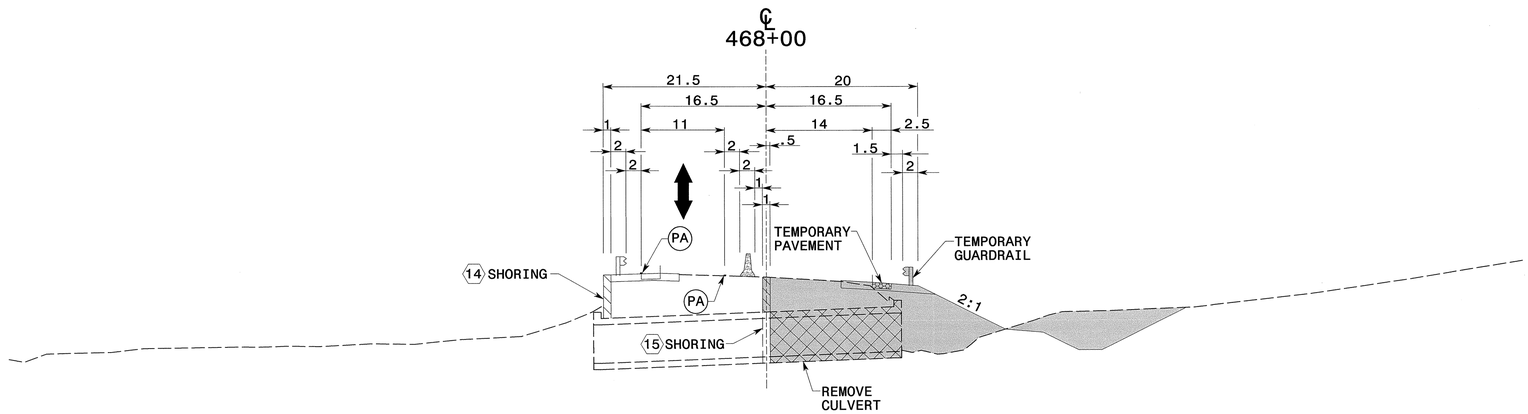

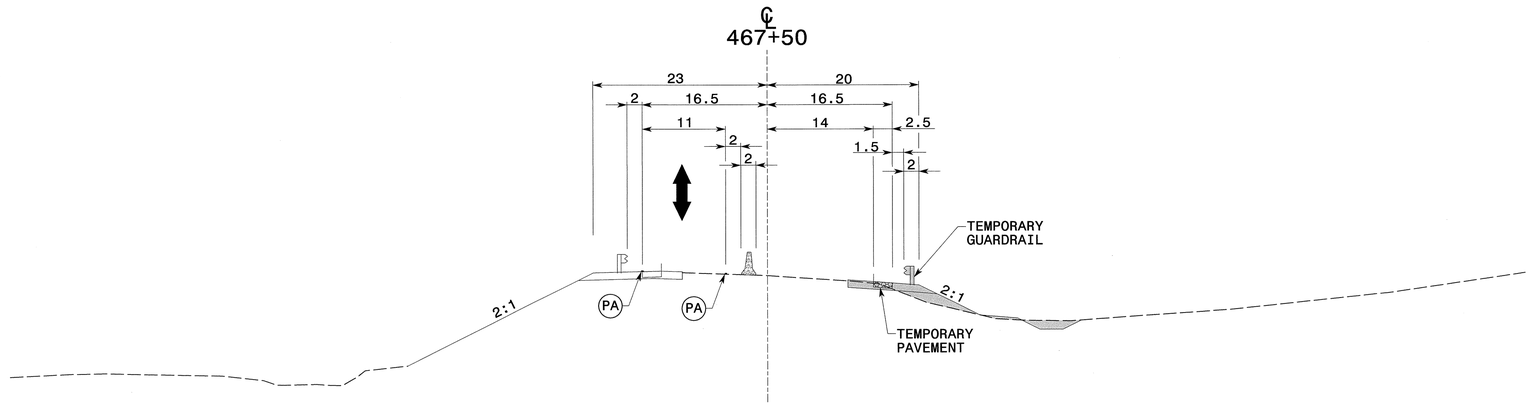

APPROVED: DATE:

SEAL

NORTH CAROLINA PROFESSIONAL SEAL 19862 ENGINEER J. W. WOOLARD JR.

5/29/13

DIVISION OF HIGHWAYS * STATE OF NORTH CAROLINA * DEPARTMENT OF TRANSPORTATION * WORK ZONE TRAFFIC CONTROL

SITE 7
PHASE II
CROSS-SECTIONS

5/28/2013
p:\tipprojects-r\r3101\traffic\trafficcontrol\tep\SITE7\R3101_TC_SITE7_PH2_TMP85.dgn
User:scoats

PROJ. REFERENCE NO.	SHEET NO.
R-3101	TMP-86

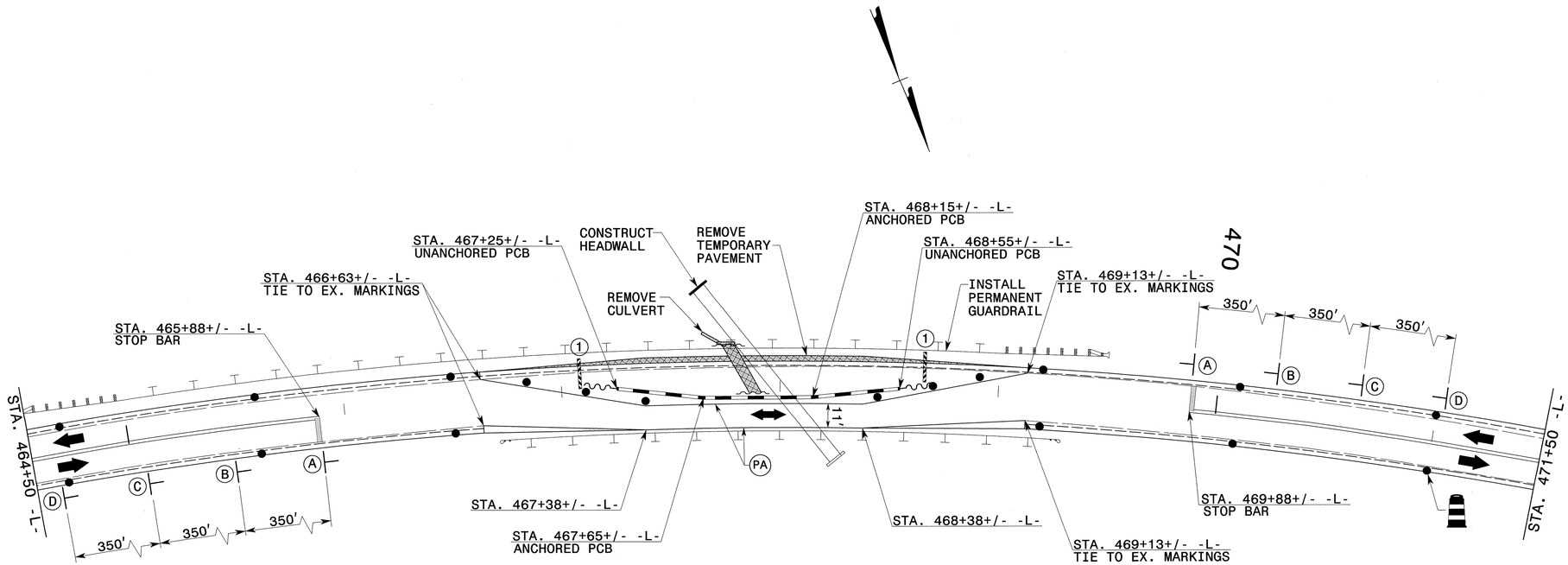

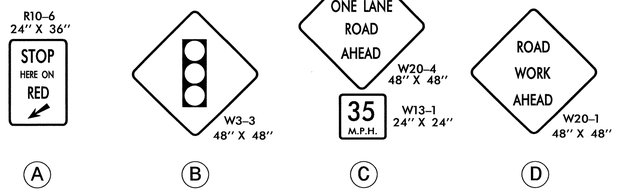

TYPE III BARRICADE

(1)

TEMPORARY PAVEMENT MARKING LEGEND
(PA) PAINT - WHITE EDGELINE - (4")

REFER TO RSD NOS. 1205.01, 1205.02, 1205.12, 1250.01, AND 1251.01 FOR PLACEMENT OF TEMPORARY PAVEMENT MARKINGS AND MARKERS UNLESS NOTED OTHERWISE.

SEE TMP-87 FOR CROSS-SECTION DETAILS

APPROVED: _____ DATE: _____

SEAL

NORTH CAROLINA PROFESSIONAL SEAL 19862 ENGINEER J.W. WOOLARD JR.

5/29/13

DIVISION OF HIGHWAYS
STATE OF NORTH CAROLINA
DEPARTMENT OF TRANSPORTATION
WORK ZONE TRAFFIC CONTROL

SITE 7
PHASE III
CULVERT ON US 21
STA. 468+00+/-

5/28/2013
p:\tipprojects-r\r3101\traffic\trafficcontrol\tcp\SITE7\R3101_TC_SITE7_PH3_TMP86.dgn
Usertscodts

PROJ. REFERENCE NO.	SHEET NO.
R-3101	TMP-87

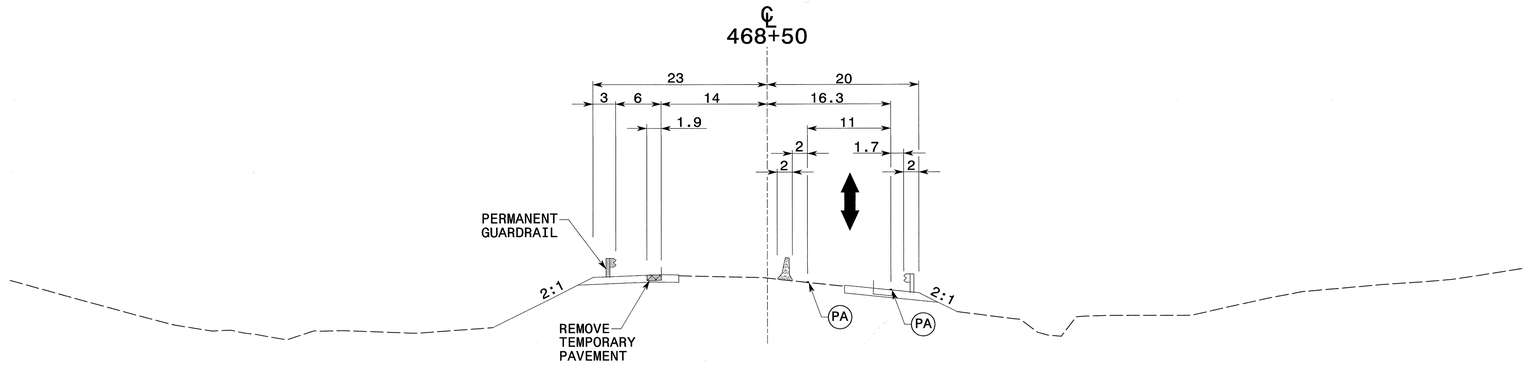

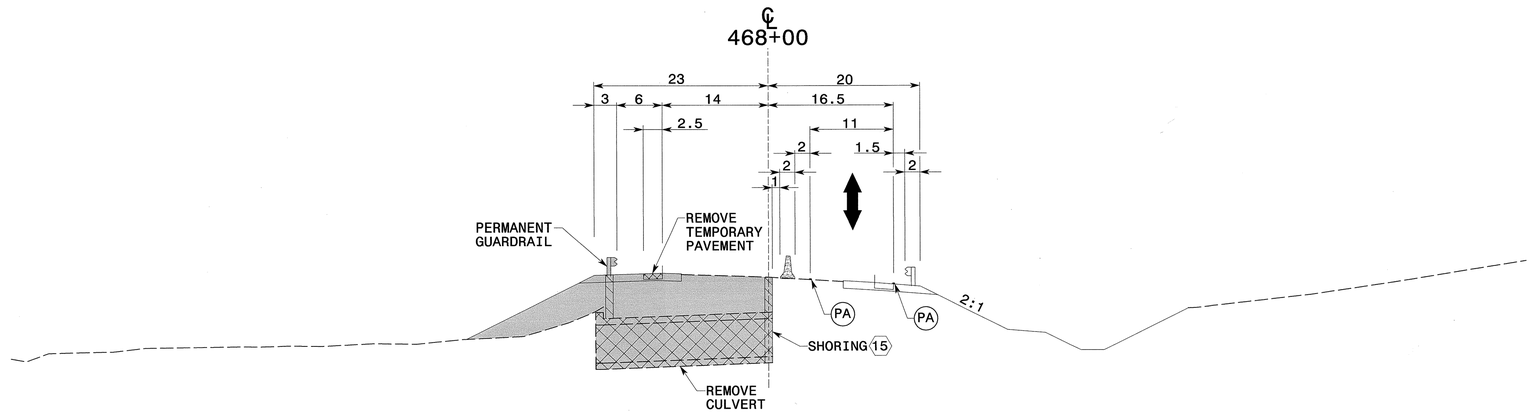

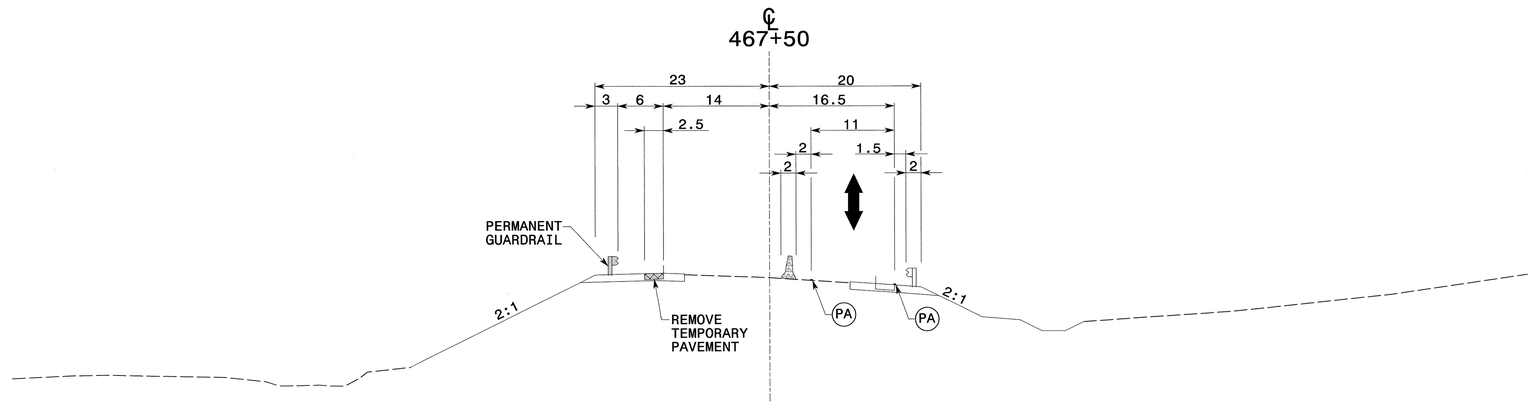

APPROVED: DATE: 5/29/13

SEAL

NORTH CAROLINA PROFESSIONAL SEAL 19862 ENGINEER W. WOOLARD JR.

DIVISION OF HIGHWAYS * STATE OF NORTH CAROLINA * DEPARTMENT OF TRANSPORTATION WORK ZONE TRAFFIC CONTROL

SITE 7
PHASE III
CROSS-SECTIONS

5/28/2013
P:\tip\projects-r\r3101\traffic\traffiocontrol\tcp\SITE7\R3101_TC_SITE7_PH3_TMP87.dgn
User:scoots

PROJ. REFERENCE NO.	SHEET NO.
R-3101	TMP-88

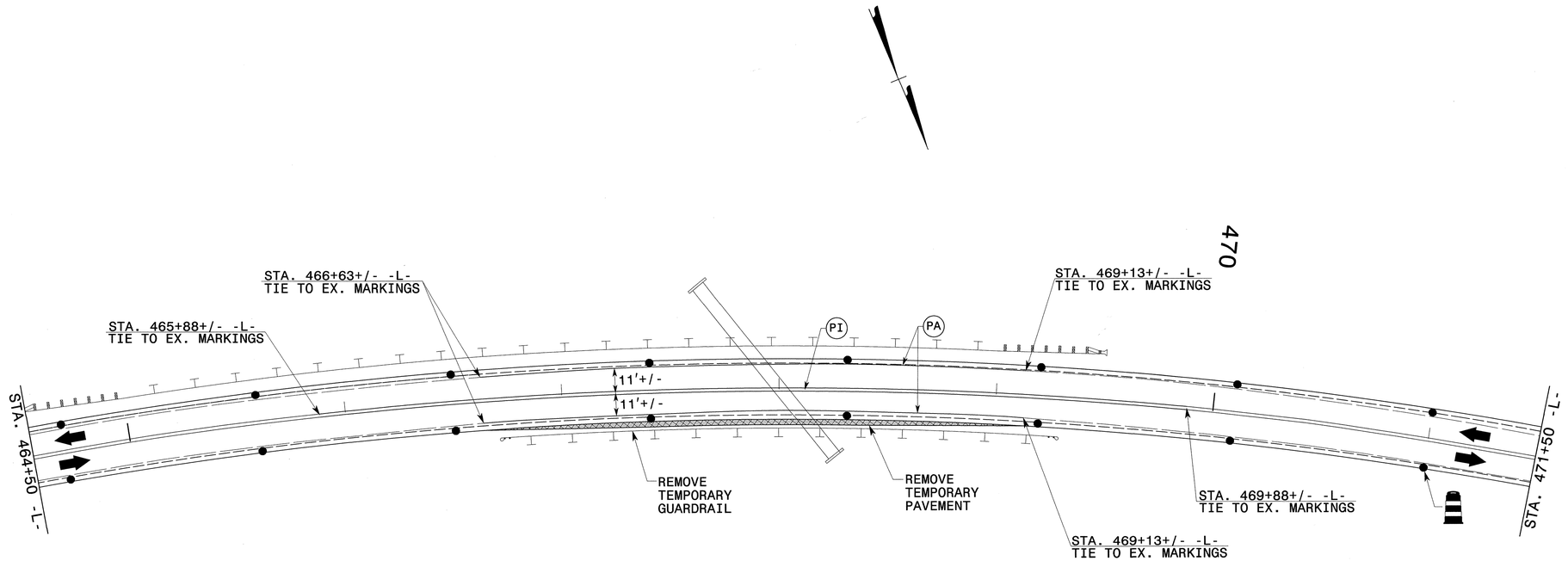

TEMPORARY PAVEMENT MARKING LEGEND	
(PA)	PAINT - WHITE EDGELINE - (4")
(PI)	PAINT - YELLOW DOUBLE CENTER - (4")

REFER TO RSD NOS. 1205.01, 1205.02, 1205.12, 1250.01, AND 1251.01 FOR PLACEMENT OF TEMPORARY PAVEMENT MARKINGS AND MARKERS UNLESS NOTED OTHERWISE.

SEE TMP-89 FOR CROSS-SECTION DETAILS

APPROVED: DATE: 5/29/13

SEAL

NORTH CAROLINA PROFESSIONAL SEAL 19862 ENGINEER J. W. WOOLARD JR.

DIVISION OF HIGHWAYS * STATE OF NORTH CAROLINA * DEPARTMENT OF TRANSPORTATION * WORK ZONE TRAFFIC CONTROL

SITE 7
PHASE IV
CULVERT ON US 21
STA. 468+00+/-

5/28/2013
p:\tipprojects-r\r3101\traffic\trafficcontrol\tcp\SITE7\R3101_TC_SITE7_PH4_TMP88.dgn
Userscoats

PROJ. REFERENCE NO.	SHEET NO.
R-3101	TMP-89

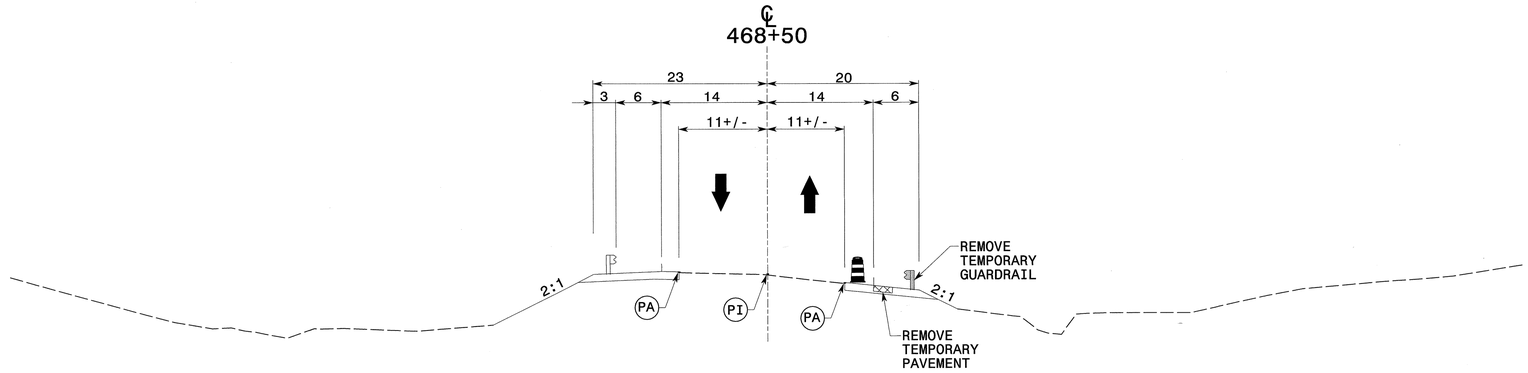

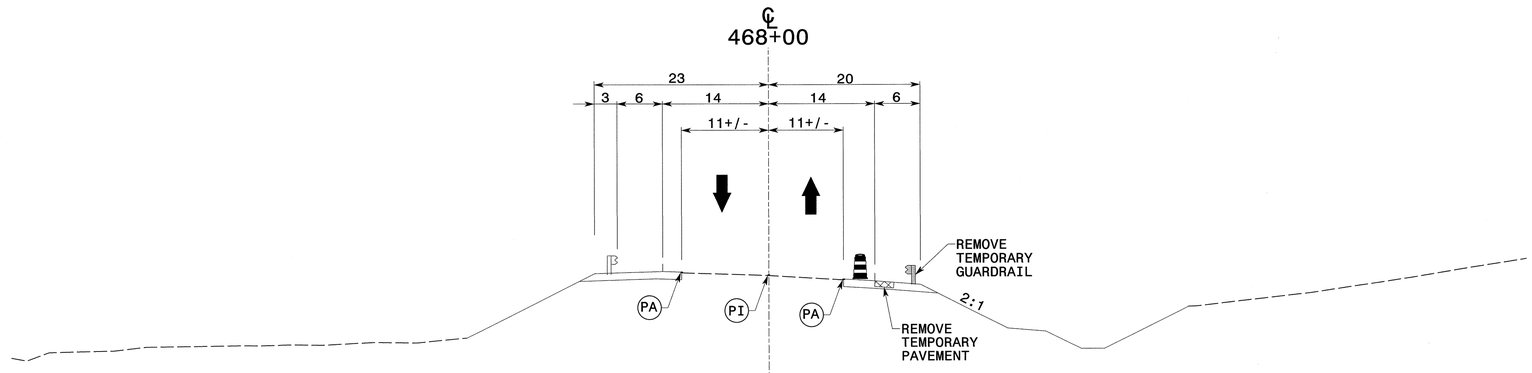

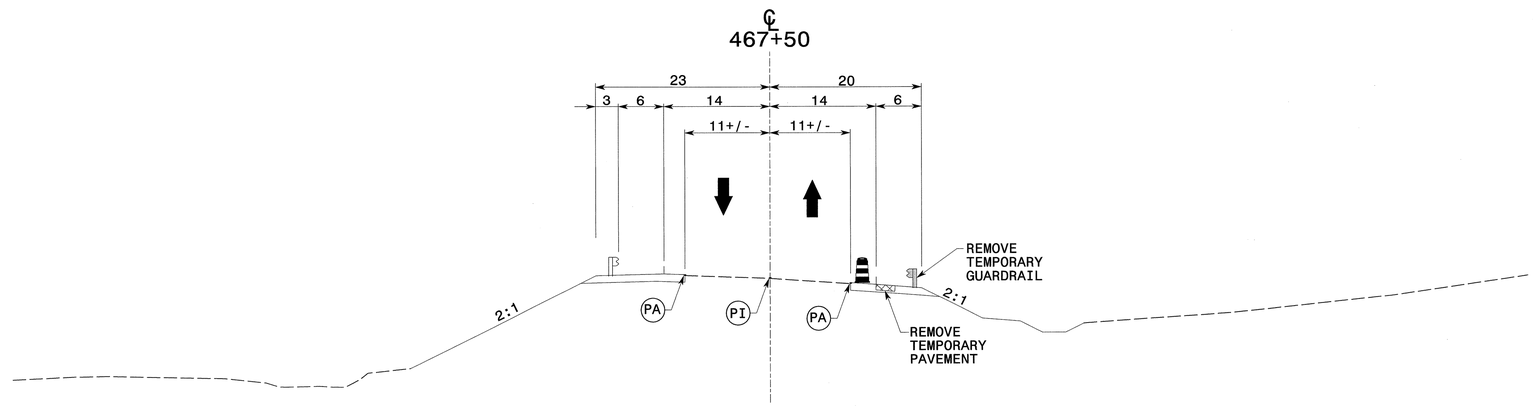

APPROVED: DATE:

SEAL

NORTH CAROLINA PROFESSIONAL SEAL 19862 ENGINEER W. WOOLARD, JR.

5/29/13

DIVISION OF HIGHWAYS STATE OF NORTH CAROLINA DEPARTMENT OF TRANSPORTATION WORK ZONE TRAFFIC CONTROL

SITE 7
PHASE IV
CROSS-SECTIONS

5/28/2013
p:\tipprojects-r\r3101\traffic\trafficcontrol\top\SITE7\R3101_TC_SITE7_PH4_TMP89.dgn
User:scodfs