DGN 0422DEL_P19

TIP PROJECT: P-5201

CONTRACT: C203255

STATE OF NORTH CAROLINA
NCDOT RAIL DIVISION

STATE	STATE PROJECT REFERENCE NO.	SHEET NO.	TOTAL SHEETS
N.C.	P-5201	TS-01	

STATE PROJ. NO.	F. A. PROJ. NO.	DESCRIPTION
52100.1.STR03TIB	FR-HSR-0006-10-01-00	UTIL PE, PE
43219.2.STR05P5201		R/W
52100.3.STR01T4_		UTIL CONST
52100.3.STR01T4_	FRA-FR-HSR-0006-10-01-00	CONST

WAKE COUNTY

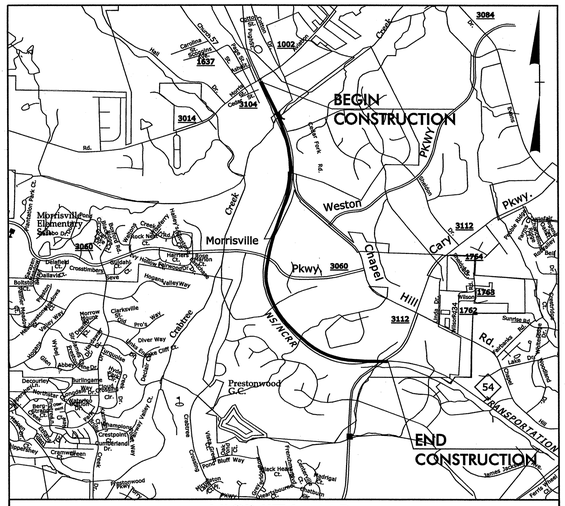

VICINITY MAP

LOCATION: FROM EAST OF CRABTREE CREEK (MP H69.0) TO EAST OF NW CARY PARKWAY (MP H70.6) ON THE NORTH CAROLINA RAILROAD / NORFOLK SOUTHERN H-LINE

TYPE OF WORK: RAIL TRACKBED CONSTRUCTION FOR RAILROAD CURVE IMPROVEMENTS AND TRACKBED WIDENING FOR FUTURE SECOND MAIN LINE TRACK. (INCLUDES GRADING, DRAINAGE, PAVING, STRUCTURES, SIGNALS AND TRACKBED)

STRUCTURES

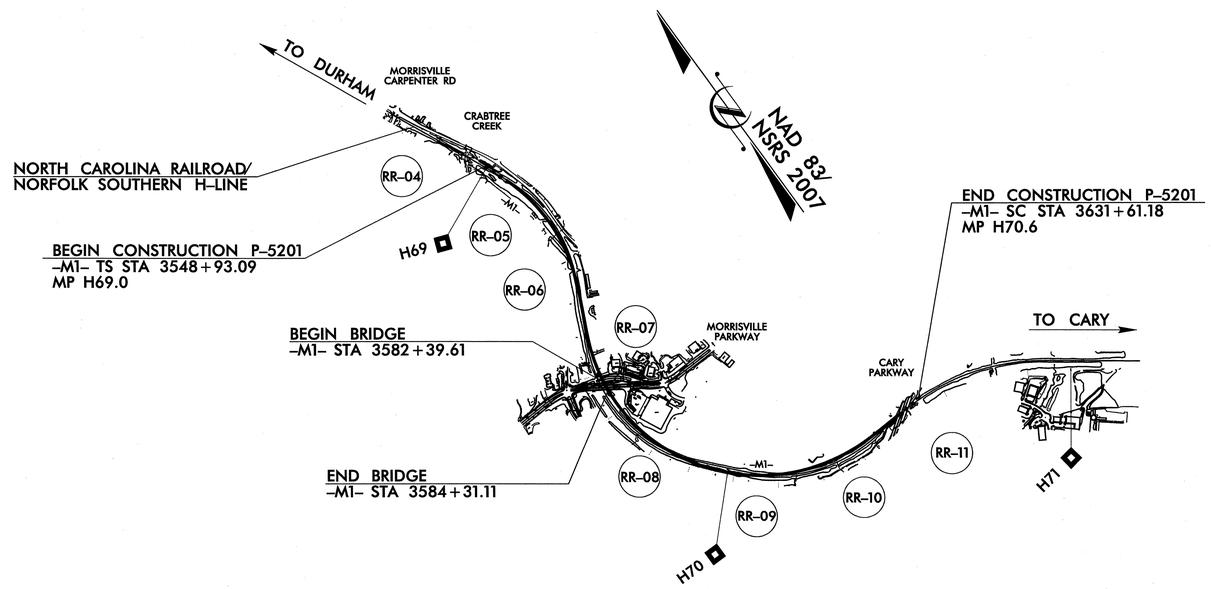

PROJECT LENGTH

LENGTH OF RAIL TIP PROJECT P-5201	=	1.530 MILES
LENGTH OF STRUCTURE	=	0.036 MILES
TOTAL LENGTH OF MAIN TRACK	=	1.566 MILES
LENGTH OF ROADWAY TIP PROJECT	=	0.308 MILES

Prepared In the Office of:

AECOM
NC FIRM LICENSE No: F-0342
701 Corporate Center Drive, Suite 475
Raleigh, NC 27607
(919) 854-6200 - (919) 854-6259(FAX)

2012 STANDARD SPECIFICATIONS

RIGHT OF WAY DATE:
SEPTEMBER 2012

LETTING DATE:
December 17, 2013

RILEY BIRMINGHAM, PE
RAIL PROJECT ENGINEER

TOM HILDEBRAND, PE
ROADWAY PROJECT ENGINEER

MARK KAMPRATH, PE
HYDRAULICS PROJECT ENGINEER

MARK PEARSON, PE
STRUCTURE PROJECT ENGINEER

SANDRA STEPNEY, PE
NCDOT PROJECT MANAGER

STRUCTURES ENGINEER

NORTH CAROLINA PROFESSIONAL SEAL 10656 ENGINEER MARK PEARSON
9/13/13

SIGNATURE: P.E.

STATE OF NORTH CAROLINA DEPARTMENT OF TRANSPORTATION

NC DEPARTMENT OF TRANSPORTATION
RAIL DIVISION
DESIGN AND CONSTRUCTION

11:20:36 AM
Q:\60238803\400_Technical_Information_Disc_Files\450_NCDOTStdTechDesignFiles\Structures\P-5201_SD_DSN_TSH.dgn
Lowery,d

0422DEL_P19

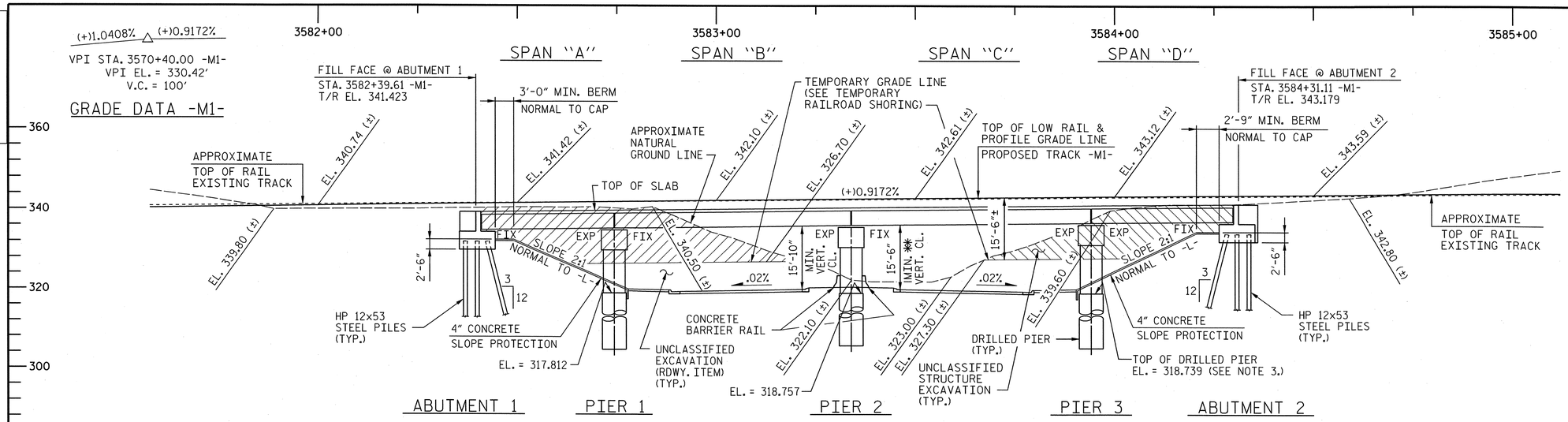

SECTION ALONG ℄ -M1-

(ABUTMENTS AND PIERS ALONG SECTIONS AT RIGHT ANGLES TO PIERS AND ABUTMENTS)

NOTES:

1. SEE "GENERAL DRAWING - LONG CHORD LAYOUT (SHEET 3 OF 4)" FOR GENERAL NOTES.
2. DESIGN SPEED:
   50 MPH FOR FREIGHT
   65 MPH FOR PASSENGER
3. THESE ELEVATIONS ARE AT THE CENTER DRILLED PIERS. FOR ELEVATIONS AT OTHER DRILLED PIERS, SEE SHEETS "SUBSTRUCTURE - PIER 1", "SUBSTRUCTURE - PIER 2" AND "SUBSTRUCTURE - PIER 3"

✱✱ CONTROL POINT FOR MINIMUM VERTICAL CLEARANCE OF 15'-6" OCCURS AT EXTERIOR GIRDER ON EAST SIDE.

(+)0.3608% (+)8.8626%
VPI STA. 24+30.00 -L1-
VPI EL. = 319.60'
V.C. = 546'

GRADE DATA -L1- LEFT

(GRADE POINT AT MEDIAN EDGE OF PAVEMENT)

(+)0.3142% (+)8.8987%
VPI STA. 24+30.00 -L1-
VPI EL. = 319.45'
V.C. = 550'

GRADE DATA -L1- RIGHT

(GRADE POINT AT MEDIAN EDGE OF PAVEMENT)

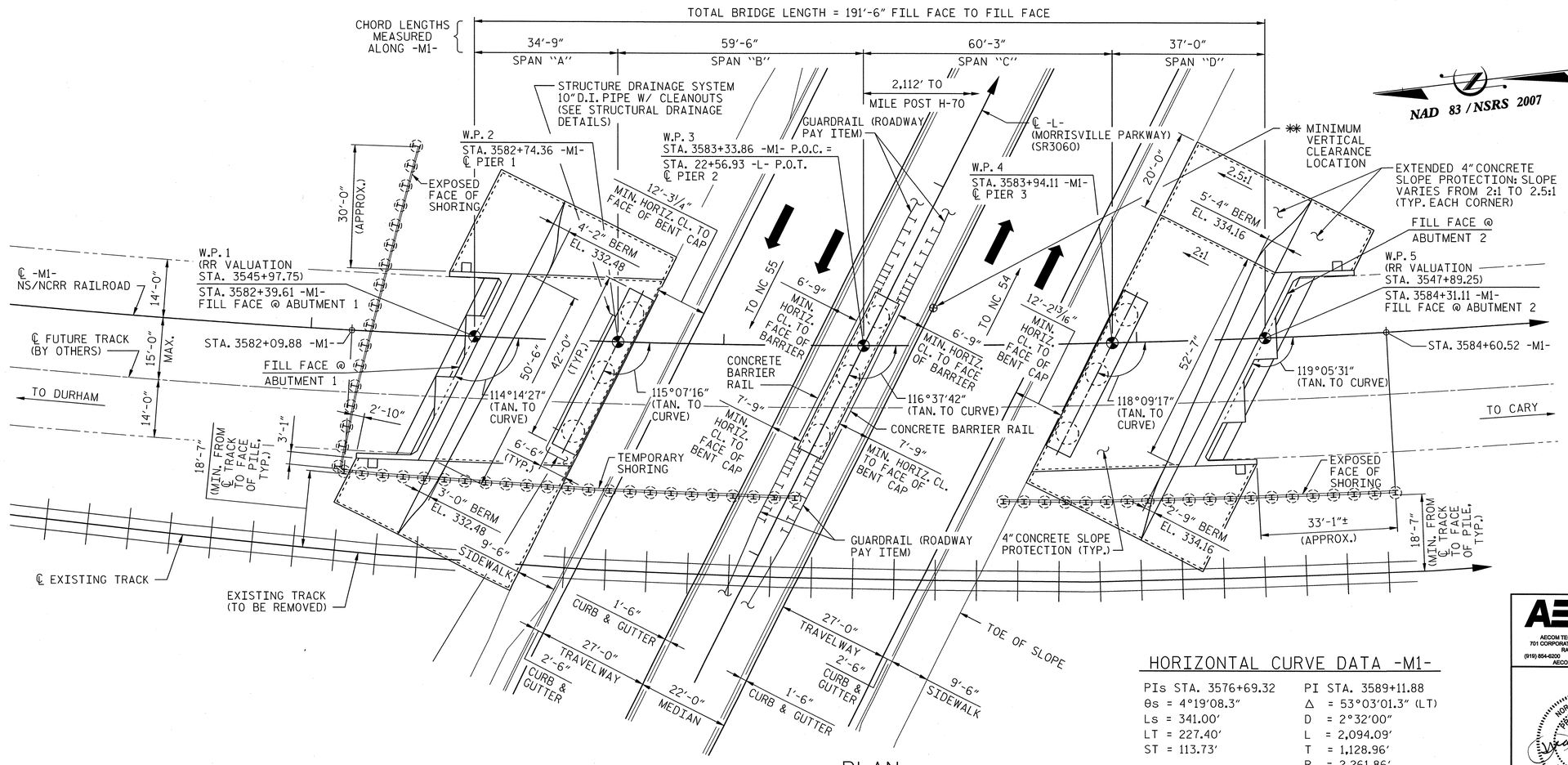

PLAN

(ABUTMENT PILES NOT SHOWN FOR CLARITY)

HORIZONTAL CURVE DATA -M1-

PIs STA. 3576+69.32	PI STA. 3589+11.88
θs = 4°19'08.3"	Δ = 53°03'01.3" (LT)
Ls = 341.00'	D = 2°32'00"
LT = 227.40'	L = 2,094.09'
ST = 113.73'	T = 1,128.96'
	R = 2,261.86'

MILEPOST H-69.6

PROJECT NO. P-5201

WAKE **COUNTY**

STATION: P.O.C. 3583+33.86 -M1-
P.O.T. 22+56.93 -L-

SHEET 1 OF 5 BRIDGE NO. H-69.6

DRAWN BY : DDL DATE : 8/12
CHECKED BY : LMP DATE : 8/12

AECOM
AECOM TECHNICAL SERVICES, INC.
701 CORPORATE CENTER DRIVE, SUITE 475
RALEIGH, NC 27607
(919) 854-6200 www.aecom.com
AECOM License No. F-0342

NORTH CAROLINA PROFESSIONAL ENGINEER SEAL 10656 MARK PEARSON 7/26/13

STATE OF NORTH CAROLINA
DEPARTMENT OF TRANSPORTATION
RALEIGH

GENERAL DRAWING
FOR NS/NCRR RAILROAD
BRIDGE OVER SR 3060
(MORRISVILLE PARKWAY)

REVISIONS							SHEET NO.
NO.	BY:	DATE:	NO.	BY:	DATE:		S-01
1			3				TOTAL SHEETS
2			4				56

DATE: 9/12/2013
TIME: 3:55:42 PM

USER: 80092
DGN: Q:\60236803\400_Technical_Information_Disc_Files\450_NCDOT SHT Tech\Design Files\Structures\P-5201_SD_DSH_PlanElev.dgn

0422DEL_P19

NAD 83 / NSRS 2007

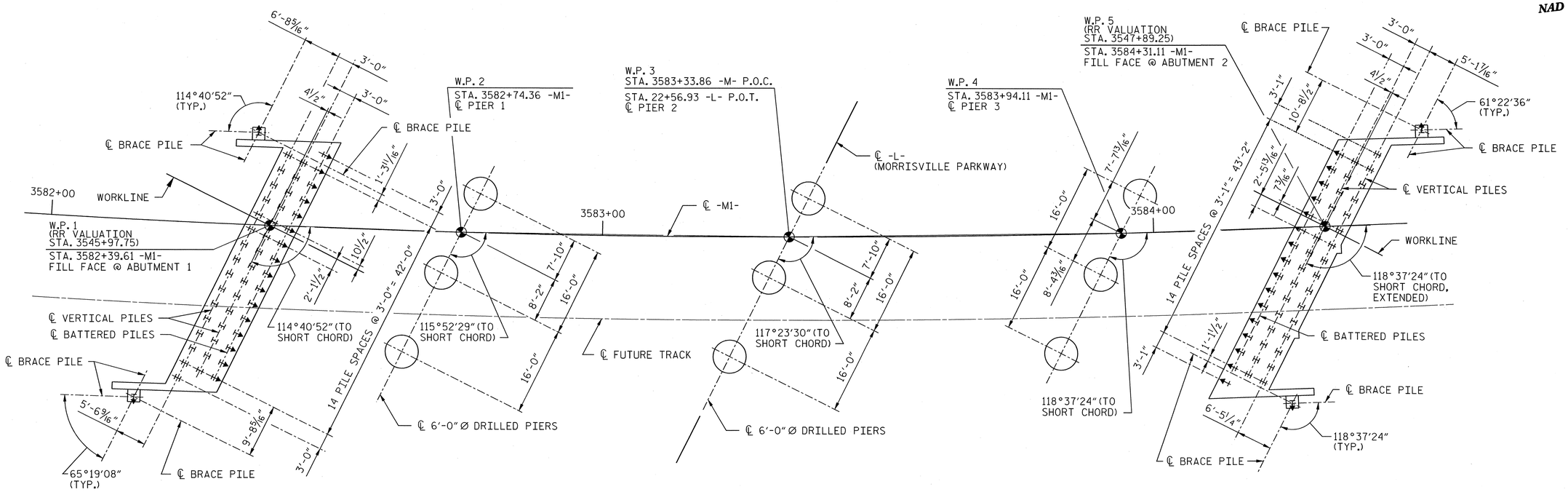

FOUNDATION LAYOUT

FOUNDATION NOTES:

1. FOUNDATION DESIGN WAS PERFORMED USING ASD AND AREMA METHODS.
2. FOR DRILLED PIERS, SEE SECTION 411 OF THE STANDARD SPECIFICATIONS.
3. INSTALL DRILLED PIERS AT PIER NO. 1 THAT EXTEND TO AN ELEVATION NO HIGHER THAN 302.5 FEET (LEFT) AND 306.5 FEET (RIGHT), AND HAVE A MINIMUM PENETRATION OF 9.0 FEET INTO ROCK.
4. DRILLED PIERS AT PIER NO. 1 ARE DESIGNED FOR A BEARING CAPACITY OF 505 TONS PER PILE. CHECK FIELD CONDITIONS FOR THE REQUIRED TIP RESISTANCE OF 30 TSF.
5. INSTALL DRILLED PIERS AT PIER NO. 2 THAT EXTEND TO AN ELEVATION NO HIGHER THAN 304.7 FEET (LEFT) AND 298.7 FEET (RIGHT), AND HAVE A MINIMUM PENETRATION OF 9.0 FEET INTO ROCK.
6. DRILLED PIERS AT PIER NO. 2 ARE DESIGNED FOR A BEARING CAPACITY OF 595 TONS PER PILE. CHECK FIELD CONDITIONS FOR THE REQUIRED TIP RESISTANCE OF 30 TSF.
7. INSTALL DRILLED PIERS AT PIER NO. 3 THAT EXTEND TO AN ELEVATION NO HIGHER THAN 306.5 FEET (LEFT & RIGHT), AND HAVE A MINIMUM PENETRATION OF 9.0 FEET INTO ROCK.
8. DRILLED PIERS AT PIER NO. 3 ARE DESIGNED FOR A BEARING CAPACITY OF 500 TONS PER PILE. CHECK FIELD CONDITIONS FOR THE REQUIRED TIP RESISTANCE OF 30 TSF.
9. DRILLED PIER EXCAVATIONS AT PIERS NO. 1, NO. 2 AND NO. 3 WILL EXTEND INTO MATERIAL THAT DETERIORATES WHEN EXPOSED TO THE ELEMENTS. CHECK FIELD CONDITIONS FOR THE REQUIRED END BEARING CAPACITY AND PLACE CONCRETE IMMEDIATELY AFTER THE EXCAVATION IS COMPLETED.
10. PERMANENT STEEL CASING IS NOT REQUIRED FOR DRILLED PIERS.
11. TEMPORARY CASING WILL BE REQUIRED TO CONSTRUCT THE COLUMNS AT PIERS NO. 1, NO. 2 AND NO. 3. THESE CASINGS SHALL BE SIZED TO ACCOMMODATE THE COLUMN FORMS. SEE DRILLED PIER DETAILS SHEET.
12. SID INSPECTIONS SHALL BE REQUIRED FOR DRILLED PIERS. THE ENGINEER WILL DETERMINE THE NEED FOR SID INSPECTIONS. FOR SID INSPECTIONS, SEE SECTION 411 OF THE STANDARD SPECIFICATIONS.
13. DRILLED PIER CONCRETE SHALL BE USED FOR ALL DRILLED PIERS.
14. DO NOT USE SLURRY CONSTRUCTION FOR DRILLED PIERS.
15. CSL TUBES AND TESTING ARE REQUIRED FOR DRILLED PIERS. FOR CROSSHOLE SONIC LOGGING, SEE SECTION 411 OF THE STANDARD SPECIFICATIONS.
16. PAYMENT FOR DRILLED PIERS SHALL BE FROM TOP OF SHAFT TO TIP OF SHAFT.
17. FOR PILES, SEE SECTION 450 OF THE STANDARD SPECIFICATIONS.
18. PILES AT ABUTMENT NO. 1 AND ABUTMENT NO. 2 ARE DESIGNED FOR A BEARING CAPACITY OF 75 TONS PER PILE.
19. PILE EXCAVATION IS REQUIRED TO INSTALL PILES AT ABUTMENT NO. 1. EXCAVATE HOLES AT PILE LOCATIONS TO A TIP ELEVATION NO HIGHER THAN 311.4 FEET. FOR PILE EXCAVATION, SEE SECTION 450 OF THE STANDARD SPECIFICATIONS.
20. PILE EXCAVATION IS REQUIRED TO INSTALL PILES AT ABUTMENT NO. 2. EXCAVATE HOLES IN PILE LOCATIONS TO A TIP ELEVATION NO HIGHER THAN 313.2 FEET. FOR PILE EXCAVATION, SEE SECTION 450 OF THE STANDARD SPECIFICATIONS.
21. ALL PILES ARE STEEL HP 12x53.
22. ▼ INDICATES PILE TO BE BATTERED 3:12 IN DIRECTION OF ARROW.
23. ALL DIMENSIONS TO BATTERED PILES ARE AT BOTTOM OF CAP ELEVATION.
24. ALL DIMENSIONS ARE PARALLEL OR NORMAL TO FILL FACE ABUTMENTS, ℄ PIERS, OR WORKLINE.
25. FOR FOUNDATION ELEVATIONS AND DETAILS, SEE PIER AND ABUTMENT DETAILS.
26. ROCK QUANTITY SHOULD BE VERIFIED DURING CONSTRUCTION.

PROJECT NO. P-5201

WAKE COUNTY

STATION: P.O.C. 3583+33.86 -M1-
P.O.T. 22+56.93 -L-

SHEET 2 OF 5

AECOM
AECOM TECHNICAL SERVICES, INC.
701 CORPORATE CENTER DRIVE, SUITE 475
RALEIGH, NC 27607
(919) 854-6200 www.aecom.com
AECOM License No. F-0342

NORTH CAROLINA PROFESSIONAL ENGINEER SEAL 10656 L. MARK PEARSON 9/13/13

STATE OF NORTH CAROLINA
DEPARTMENT OF TRANSPORTATION
RALEIGH

GENERAL DRAWING
FOUNDATION LAYOUT

REVISIONS						SHEET NO.
NO.	BY:	DATE:	NO.	BY:	DATE:	S-02
1			3			TOTAL SHEETS
2			4			56

DRAWN BY : MTB DATE : 04/13
CHECKED BY : JL DATE : 04/13

DATE: 9/13/2013
TIME: 3:48:20 PM

USER: 04962
DGN: 0:\60225803\400_Technical_Information_Disc_Files\450_NCDOT SID\TechDesign\Files\Structural\P-5201_SD_DSN_FoundLayout.dgn

0422DEL_P19

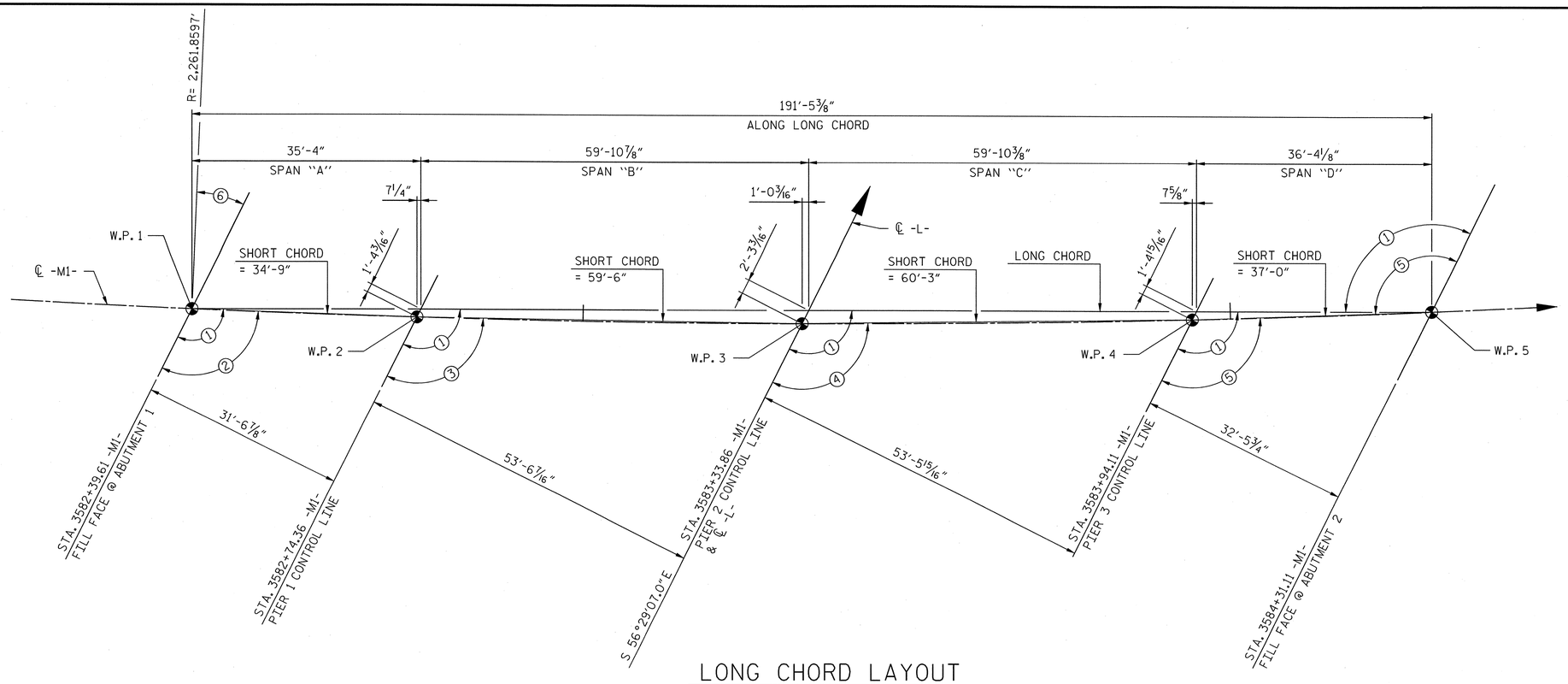

NAD 83 / NSRS 2007

TABLE OF ANGLES	
No.	ANGLE
1	116°39'59"
2	114°40'52"
3	115°52'29"
4	117°23'30"
5	118°37'24"
6	24°14'27"

LONG CHORD LAYOUT

(ALL PIERS AND ABUTMENTS ARE PARALLEL)

GENERAL NOTES:

1. ASSUMED LIVE LOAD: AREMA E80 OR ALTERNATE LIVE LOAD.
2. FOR OTHER DESIGN DATA AND GENERAL NOTES, SEE SHEET SN.
3. FOR EROSION CONTROL MEASURES, SEE EROSION CONTROL PLANS.
4. THIS BRIDGE HAS BEEN DESIGNED IN ACCORDANCE WITH THE REQUIREMENTS OF THE CURRENT EDITION OF AREMA'S "MANUAL FOR RAILWAY ENGINEERING, VOL. 2, STRUCTURES", AND NORFOLK SOUTHERN CORPORATION'S "GUIDELINES FOR DESIGN OF HIGHWAY SEPARATION STRUCTURES UNDER RAILROAD (UNDERPASS GRADE SEPARATION)".
5. THIS BRIDGE HAS BEEN DESIGNED IN ACCORDANCE WITH THE REQUIREMENTS OF THE AASHTO STANDARD SPECIFICATIONS FOR SEISMIC DESIGN OF HIGHWAY BRIDGES FOR SEISMIC PERFORMANCE CATEGORY A.
6. REINFORCING STEEL SHALL BE ASTM A615, GRADE 60. ALL DIMENSIONS RELATING TO BAR SPACING ARE TO BAR CENTERS UNLESS NOTED. FABRICATION TO BE IN ACCORDANCE WITH THE "MANUAL OF STANDARD PRACTICE", ACI 315-80. ALL REINFORCING IN THE CONCRETE DECK SLAB AND PARAPETS SHALL BE EPOXY COATED.
7. EXPANSION JOINT MATERIAL SHALL BE EITHER RUBBER OR CORK CONFORMING WITH AASHTO SPECIFICATIONS M-153-84 EXCEPT AS SHOWN ON THE PLANS OR IN THE SPECIAL PROVISIONS. CELLULAR AND BULB TYPE WATERSTOPS AND RUBBER JOINT COMPOUNDS SHALL BE SHOWN ON THE PLANS AND IN THE SPECIAL PROVISIONS.
8. STRUCTURE DRAINAGE SYSTEM: METAL DRAINS BEHIND ABUTMENTS AND DUCTILE IRON PIPE COLLECTOR SYSTEM SHALL BE AS SHOWN ON THE PLANS AND OUTLINED IN THE SPECIAL PROVISIONS. DETAILS OF THE DRAINAGE SYSTEM SHALL BE SUBMITTED TO THE CHIEF ENGINEER, BRIDGES AND STRUCTURES, NORFOLK SOUTHERN CORPORATION, ATLANTA, GA FOR APPROVAL.
9. DAMPPROOFING: PIER COLUMNS UP TO GROUND LINE, BACK OF BACKWALLS AND ABUTMENT SEATS, AND BACK OF WINGS SHALL BE DAMPPROOFED WITH METHOD "B" DAMPPROOFING.
10. WATERPROOFING: ALL CONSTRUCTION JOINTS AND ANY SHRINKAGE CRACKS WHICH WILL BE COVERED BY FILL SHALL BE WATERPROOFED WITH A TWO PART WATERPROOFING SYSTEM CONSISTING OF A MEMBRANE LAYER AND A PROTECTION COURSE. STRIPS OF WATERPROOFING NO LESS THAN 2 FEET WIDE SHALL BE PLACED SYMMETRICALLY OVER JOINTS. TROUGH (EXCLUDING THE END DAM) SHALL BE WATERPROOFED WITH A TWO PART WATERPROOFING SYSTEM CONSISTING OF A MEMBRANE LAYER AND A 1 INCH THICK ASPHALT PLANKING OR OTHER RAILWAY APPROVED PROTECTION MATERIAL. ALL WATERPROOFING MATERIALS SHALL CONFORM TO THE RECOMMENDED PRACTICES IN THE AREMA MANUAL OF RAILWAY ENGINEERING CHAPTER 29.
11. FOR WATERPROOFING, SEE SPECIAL PROVISIONS.
12. FOR WATERSTOPS, SEE SPECIAL PROVISIONS.
13. THE CONTRACTOR SHALL PROVIDE INDEPENDENT ASSURANCE SAMPLES OF REINFORCING STEEL AS FOLLOWS: FOR PROJECTS REQUIRING UP TO 400 TONS OF REINFORCING STEEL, ONE 30 INCH SAMPLE OF EACH SIZE BAR USED, AND FOR PROJECTS REQUIRING OVER 400 TONS OF REINFORCING STEEL, TWO 30 INCH SAMPLES OF EACH SIZE BAR USED. THE BARS FROM WHICH THE SAMPLES ARE TAKEN MUST THEN BE SPLICED WITH REPLACEMENT BARS OF THE SIZE AND LENGTH OF THE SAMPLE, PLUS A MINIMUM LAP SPLICE OF THIRTY BAR DIAMETERS. PAYMENT FOR THE SAMPLES OF REINFORCING STEEL SHALL BE CONSIDERED INCIDENTAL TO VARIOUS PAY ITEMS.
14. ALL MATERIALS AND WORKMANSHIP SHALL BE IN ACCORDANCE WITH "STANDARD SPECIFICATIONS FOR ROADS AND STRUCTURES", JANUARY 2012, NORTH CAROLINA DEPARTMENT OF TRANSPORTATION (HEREIN CALLED STANDARD SPECIFICATIONS), EXCEPT AS NOTED HEREIN, ELSEWHERE ON PLANS, OR IN THE SPECIAL PROVISIONS (STRUCTURAL STEEL IN ACCORDANCE WITH CURRENT AREMA SPECIFICATIONS).
15. ALL CONCRETE USED IN SUPERSTRUCTURES AND SUBSTRUCTURES SHALL BE 4,500 PSI CLASS AA CONCRETE WITH NO. 57 OR 67 COARSE AGGREGATE AND SHALL BE AIR-ENTRAINED. MINIMUM CEMENT PER CUBIC YARD OF CONCRETE SHALL BE 6.5 BAGS. NO SUBSTITUTION OF FLYASH, BLAST FURNACE SLAG OR OTHER MATERIAL WILL BE PERMITTED IN MEETING THIS MINIMUM CEMENT REQUIREMENT. CHAMFER ALL EXPOSED EDGES AND CORNERS ¾" EXCEPT AS NOTED. THE USE OF GROUND GRANULATED BLAST FURNACE SLAG IS NOT PERMITTED IN THIS STRUCTURE.
16. CONTROL OF WORK: ALL WORK INVOLVED IN THE CONSTRUCTION OF THE RAILWAY STRUCTURE SHALL BE PERFORMED SATISFACTORY TO THE ENGINEER AND/OR NORFOLK SOUTHERN RAILWAY COMPANY. ALL METHODS OF HANDLING THE WORK AFFECTING THE SAFETY OF RAIL OPERATIONS MUST BE APPROVED BY THE RAILWAY COMPANY BEFORE PROCEEDING WITH THAT PORTION OF THE WORK. RAIL TRAFFIC SHALL, AT ALL TIMES, BE MAINTAINED AND PROTECTED. THE CONTRACTOR SHALL NOT AT ANY TIME DELAY OR INTERFERE WITH RAIL OPERATIONS.
17. NEEDLE BEAMS WILL NOT BE ALLOWED UNLESS OTHERWISE CALLED FOR ON THE PLANS OR APPROVED BY THE ENGINEER.
18. FOR METAL HANDRAIL, SEE SPECIAL PROVISIONS.
19. FOR SELF-LUBRICATING EXPANSION BEARING ASSEMBLIES, SEE SPECIAL PROVISIONS.
20. FOR CONDUIT IN PARAPETS, SEE SPECIAL PROVISIONS.
21. FOR PORTLAND CEMENT, SEE SPECIAL PROVISIONS.
22. FOR FINE AND COARSE AGGREGATE, SEE SPECIAL PROVISIONS.
23. SEE "STRUCTURAL STEEL DETAILS" SHEET FOR STRUCTURAL STEEL NOTES.
24. FOR RUBBER JOINT COMPOUNDS, SEE SPECIAL PROVISIONS.
25. FOR STRUCTURE DRAINAGE SYSTEM, SEE SPECIAL PROVISIONS.
26. FOR STRUCTURAL STEEL, SEE SPECIAL PROVISIONS.
27. FOR RAILROAD TRACKWORK, SEE RAILROAD TRACKWORK PLANS.
28. FOR SUBMITTAL OF WORKING DRAWINGS, SEE SPECIAL PROVISIONS.
29. FOR FALSEWORK AND FORMWORK, SEE SPECIAL PROVISIONS.
30. FOR CRANE SAFETY, SEE SPECIAL PROVISIONS.
31. FOR GROUT FOR STRUCTURES, SEE SPECIAL PROVISIONS.
32. FOR REINFORCED CONCRETE DECK SLAB, SEE SPECIAL PROVISIONS.
33. THE MATERIAL SHOWN IN THE CROSS-HATCHED AREA SHALL BE EXCAVATED AS INDICATED IN THE TEMPORARY WALL PLAN ON SHEET S-53 AS DIRECTED BY THE ENGINEER. SEE ALSO THE RAILROAD CROSS SECTIONS. THIS WORK WILL BE PAID FOR AT THE CONTRACT LUMP SUM PRICE FOR UNCLASSIFIED STRUCTURE EXCAVATION. SEE SECTION 412 OF THE STANDARD SPECIFICATIONS. FINAL SLOPES OF THE EXCAVATION SHALL NOT EXCEED 2:1.
34. WORK SHALL NOT BE STARTED ON THIS BRIDGE UNTIL THE TEMPORARY SHORING HAS BEEN INSTALLED AND APPROVED, THE SITE EXCAVATED TO THE APPROVED TEMPORARY GRADE ELEVATIONS, AND THE NECESSARY TEMPORARY EROSION CONTROL AND SEDIMENT CONTROL MEASURES INSTALLED AND ACCEPTED.
35. FOR TEMPORARY RAILROAD SHORING, SEE SPECIAL PROVISIONS.
36. FOR BACKFILL BEHIND ABUTMENTS AND OTHER BACKFILL AROUND THE STRUCTURE, SEE SPECIAL PROVISION "BACKFILLING AROUND STRUCTURES".
37. FOR PAINTING STRUCTURAL STEEL, SEE SPECIAL PROVISIONS.
38. FOR ELASTOMERIC FLASHING, SEE SPECIAL PROVISIONS.
39. FOR PROTECTION OF RAILWAY INTERESTS, SEE SPECIAL PROVISIONS.
40. FOR RAILROAD ROADBED, SEE SPECIAL PROVISIONS.

DRAWN BY : MTB DATE : 03/13
CHECKED BY : JL DATE : 03/13

PROJECT NO. P-5201
WAKE COUNTY
STATION: P.O.C. 3583+33.86 -M1-
P.O.T. 22+56.93 -L-
SHEET 3 OF 5

AECOM
AECOM TECHNICAL SERVICES, INC.
701 CORPORATE CENTER DRIVE, SUITE 475
RALEIGH, NC 27607
(919) 854-6200 www.aecom.com
AECOM License No. F-0342

NORTH CAROLINA PROFESSIONAL ENGINEER SEAL L. MARK PEARSON LICENSE 10656 9/13/13

STATE OF NORTH CAROLINA
DEPARTMENT OF TRANSPORTATION
RALEIGH

GENERAL DRAWING
LONG CHORD LAYOUT

REVISIONS						SHEET NO.
NO.	BY:	DATE:	NO.	BY:	DATE:	S-03
1			3			TOTAL SHEETS
2			4			56

DATE: 9/12/2013
TIME: 3:56:54 PM
USER: 64902
DGN: G:\60258603\400_Technical_Information_Disc_Files\450_NCDOT Std Tech Design Files\Structures\P-5201_SD_DSN_Longchordlayout.dgn

0422DEL_P19

BENCH MARK: -BL- 3, IRON PIN W/ CAP
STA. 20+63.35 -L-, OFFSET 98.18' LEFT
COORDINATES: N 750,251.2810 E 2,051,794.5660
ELEV. = 336.55'

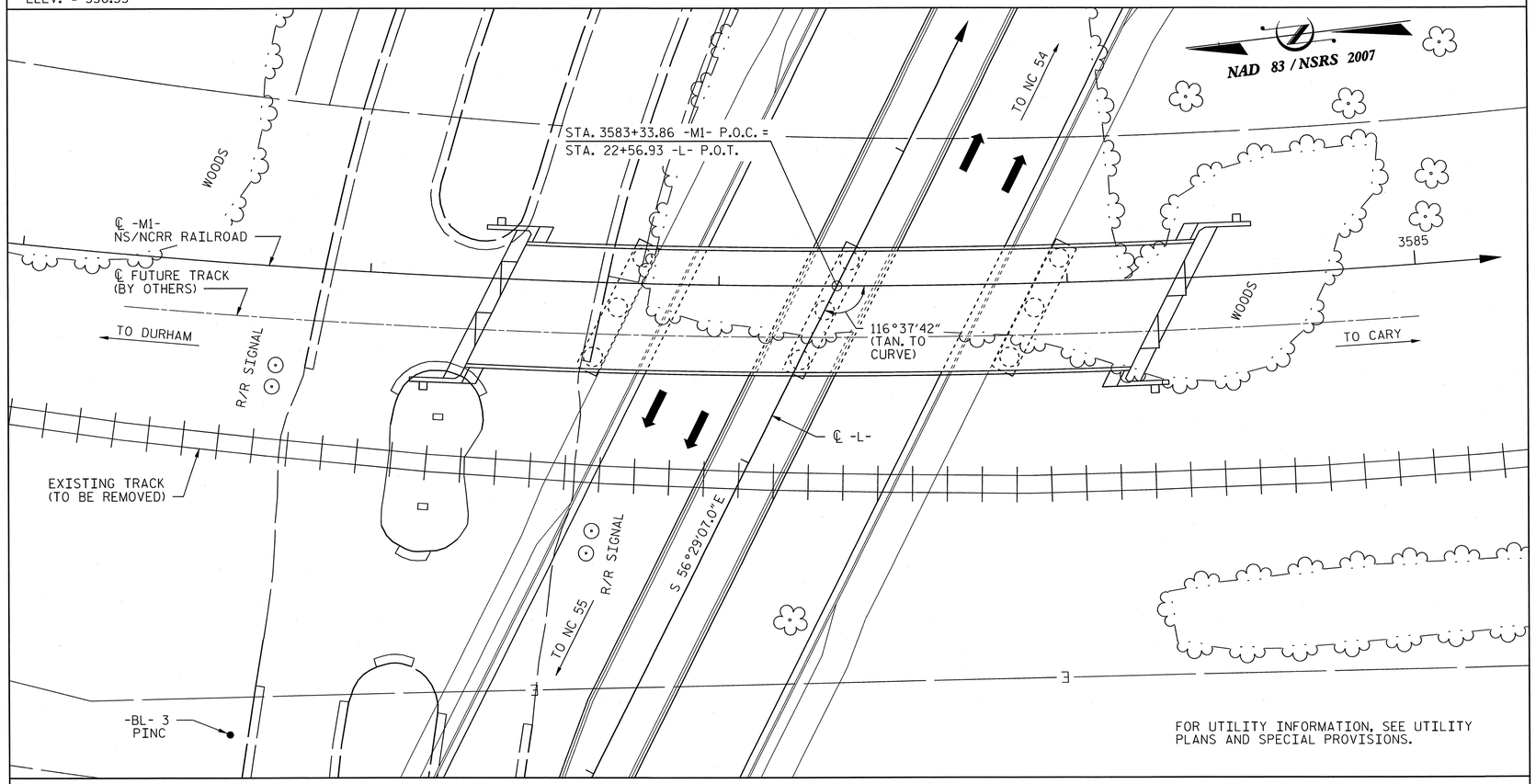

LOCATION SKETCH

SEQUENCE OF CONSTRUCTION:

ROADWAY AND RAILROAD TRAFFIC ARE TO BE MAINTAINED AT ALL TIMES ALONG THE ON-SITE TEMPORARY ROADWAY DETOUR DURING CONSTRUCTION OF THE FOLLOWING:

1. COMPLETE ALL NECESSARY UTILITY ADJUSTMENTS AND RELOCATIONS TO CLEAR THE BRIDGE AND TEMPORARY SHORING CONSTRUCTION AREAS.
2. COMPLETE ALL NECESSARY CLEARING AND GRUBBING AND INSTALL AND MAINTAIN EROSION AND SEDIMENT CONTROL MEASURES REQUIRED FOR THE GRADING AND BRIDGE CONSTRUCTION.
3. IMPLEMENT ANY NECESSARY TEMPORARY CONSTRUCTION DEWATERING OR DRAINAGE MEASURES.
4. INSTALL TEMPORARY SHORING FOR SUPPORT OF EXCAVATION ADJACENT TO RAILROAD AND TEMPORARY ROADWAY DETOUR.
5. EXCAVATE TO BOTTOM OF ABUTMENTS AND TO TEMPORARY GRADE ELEVATIONS AT PIERS.
6. CONSTRUCT PROPOSED DOUBLE TRACK RAILROAD BRIDGE OVER MORRISVILLE PARKWAY. CONSTRUCT CONCRETE SLOPE PROTECTION TO ONE FOOT ABOVE TEMPORARY GRADE ELEVATION AND CLEAR OF THE TEMPORARY SHORING.
7. CONSTRUCT THE RAILROAD ROADBED APPROACHING THE BRIDGE AND TEMPORARY STRUCTURE DRAINAGE SYSTEM. REMOVE SHORING AS REQUIRED TO COMPLETE ROAD BED.
8. PLACE THE SUBBALLAST TO THE REQUIRED GRADE FOR THE PERMANENT MAIN TRACK.
9. ✱ CONSTRUCT THE NEW SEGMENT OF THE PERMANENT MAIN TRACK.
10. ✱ LINE THE END SEGMENTS OF THE EXISTING TRACK OVER TO THE NEW ALIGNMENT. SURFACE THE PERMANENT MAIN TRACK AND PLACE IT IN SERVICE.
11. ✱ REMOVE THE UNUSED SEGMENT OF THE EXISTING TRACK.
12. REMOVE AND STOCKPILE THE UNUSED BALLAST FROM THE EXISTING ROADBED AND GRADE THE ROADWAY SECTION THROUGH THE EXISTING ROADBEDTO THE TEMPORARY GRADE ELEVATION.
13. REMOVE THE SHORING AND COMPLETE THE ROADWAY EXCAVATION AND GRADE THE CUT SLOPES TO THE PROPOSED SUBGRADE ELEVATIONS.
14. CONSTRUCT THE PERMANENT ROADWAY DRAINAGE SYSTEMS.
15. CONSTRUCT THE PERMANENT BRIDGE DRAINAGE SYSTEM CONNECTIONS.
16. FINISH GRADING THE END SLOPES AND SIDE SLOPES AND CONSTRUCT THE REMAINDER OF THE CONCRETE SLOPE PROTECTION.
17. COMPLETE FINAL GRADING, SEEDING AND MULCHING AT THE ABUTMENTS AND WING WALLS.

✱ DENOTES OPERATIONS TO BE PERFORMED BY THE RAILROAD COMPANY.

PROJECT NO. P-5201
WAKE COUNTY
STATION: P.O.C. 3583+33.86 -M1-
P.O.T. 22+56.93 -L-
SHEET 4 OF 5

AECOM
AECOM TECHNICAL SERVICES, INC.
701 CORPORATE CENTER DRIVE, SUITE 475
RALEIGH, NC 27607
(919) 854-6200 www.aecom.com
AECOM License No. F-0342

NORTH CAROLINA PROFESSIONAL SEAL 056 ENGINEER MARK PEARSON 7/30/13

STATE OF NORTH CAROLINA
DEPARTMENT OF TRANSPORTATION
RALEIGH

GENERAL DRAWING
LOCATION SKETCH

REVISIONS						SHEET NO.
NO.	BY:	DATE:	NO.	BY:	DATE:	S-04
1			3			TOTAL SHEETS
2			4			56

DRAWN BY : DDL DATE : 9/12
CHECKED BY : LMP DATE : 9/12

DATE: 9/12/2013
TIME: 3:50:42 PM
USER: rpalanez
DGN: Q:\6092398803\400_Technical_Information_Disc_Files\450_NCDOT Staff tech\Delegate Files\Structures\P-5201_SD_DSN_LOC.dgn

0422DEL_P19

DRAWING INDEX

S-01 GENERAL DRAWING - PLAN AND ELEVATION
S-02 GENERAL DRAWING - FOUNDATION LAYOUT
S-03 GENERAL DRAWING - LONG CHORD LAYOUT
S-04 GENERAL DRAWING - LOCATION SKETCH
S-05 GENERAL DRAWING - DRAWING INDEX & TOTAL BILL OF MATERIAL
S-06 SUPERSTRUCTURE - TYPICAL SECTION
S-07 SUPERSTRUCTURE - TYPICAL DECK DETAILS
S-08 SUPERSTRUCTURE - PLAN OF SPAN "A"
S-09 SUPERSTRUCTURE - PLAN OF SPAN "B"
S-10 SUPERSTRUCTURE - PLAN OF SPAN "C"
S-11 SUPERSTRUCTURE - PLAN OF SPAN "D"
S-12 SUPERSTRUCTURE - FRAMING PLAN AND GIRDER DETAILS - SPAN "A"
S-13 SUPERSTRUCTURE - FRAMING PLAN AND GIRDER DETAILS - SPAN "B"
S-14 SUPERSTRUCTURE - FRAMING PLAN AND GIRDER DETAILS - SPAN "C"
S-15 SUPERSTRUCTURE - FRAMING PLAN AND GIRDER DETAILS - SPAN "D"
S-16 SUPERSTRUCTURE - STRUCTURAL STEEL DETAILS (1 OF 2)
S-17 SUPERSTRUCTURE - STRUCTURAL STEEL DETAILS (2 OF 2)
S-18 SUPERSTRUCTURE - BEARING DETAILS SPANS "A" & "D"
S-19 SUPERSTRUCTURE - BEARING DETAILS SPANS "B" & "C"
S-20 SUPERSTRUCTURE - EXPANSION PLATE DETAILS (1 OF 2)
S-21 SUPERSTRUCTURE - EXPANSION PLATE DETAILS (2 OF 2)
S-22 SUPERSTRUCTURE - METAL HANDRAIL DETAILS (1 OF 2)
S-23 SUPERSTRUCTURE - METAL HANDRAIL DETAILS (2 OF 2)
S-24 SUPERSTRUCTURE - BILL OF MATERIALS
S-25 SUBSTRUCTURE - ABUTMENT 1 (1 OF 5)
S-26 SUBSTRUCTURE - ABUTMENT 1 (2 OF 5)
S-27 SUBSTRUCTURE - ABUTMENT 1 (3 OF 5)
S-28 SUBSTRUCTURE - ABUTMENT 1 (4 OF 5)
S-29 SUBSTRUCTURE - ABUTMENT 1 (5 OF 5)
S-30 SUBSTRUCTURE - PIER 1 (1 OF 2)
S-31 SUBSTRUCTURE - PIER 1 (2 OF 2)
S-32 SUBSTRUCTURE - PIER 2 (1 OF 2)
S-33 SUBSTRUCTURE - PIER 2 (2 OF 2)
S-34 SUBSTRUCTURE - PIER 3 (1 OF 2)
S-35 SUBSTRUCTURE - PIER 3 (2 OF 2)
S-36 SUBSTRUCTURE - DRILLED PIER DETAILS
S-37 SUBSTRUCTURE - ABUTMENT 2 (1 OF 5)
S-38 SUBSTRUCTURE - ABUTMENT 2 (2 OF 5)
S-39 SUBSTRUCTURE - ABUTMENT 2 (3 OF 5)
S-40 SUBSTRUCTURE - ABUTMENT 2 (4 OF 5)
S-41 SUBSTRUCTURE - ABUTMENT 2 (5 OF 5)
S-42 STRUCTURE DRAINAGE DETAILS (1 OF 8)
S-43 STRUCTURE DRAINAGE DETAILS (2 OF 8)
S-44 STRUCTURE DRAINAGE DETAILS (3 OF 8)
S-45 STRUCTURE DRAINAGE DETAILS (4 OF 8)
S-46 STRUCTURE DRAINAGE DETAILS (5 OF 8)
S-47 STRUCTURE DRAINAGE DETAILS (6 OF 8)
S-48 STRUCTURE DRAINAGE DETAILS (7 OF 8)
S-49 STRUCTURE DRAINAGE DETAILS (8 OF 8)
S-50 SLOPE PROTECTION DETAILS (1 OF 2)
S-51 SLOPE PROTECTION DETAILS (2 OF 2)
S-52 TEMPORARY RAILROAD SHORING LAYOUT (1 OF 2)
S-53 TEMPORARY RAILROAD SHORING LAYOUT (2 OF 2)
S-54 TEMPORARY RAILROAD SHORING DETAILS (1 OF 3)
S-55 TEMPORARY RAILROAD SHORING DETAILS (2 OF 3)
S-56 TEMPORARY RAILROAD SHORING DETAILS (3 OF 3)

SX-01 STRUCTURE EXCAVATION SECTIONS (1 OF 8)
SX-02 STRUCTURE EXCAVATION SECTIONS (2 OF 8)
SX-03 STRUCTURE EXCAVATION SECTIONS (3 OF 8)
SX-04 STRUCTURE EXCAVATION SECTIONS (4 OF 8)
SX-05 STRUCTURE EXCAVATION SECTIONS (5 OF 8)
SX-06 STRUCTURE EXCAVATION SECTIONS (6 OF 8)
SX-07 STRUCTURE EXCAVATION SECTIONS (7 OF 8)
SX-08 STRUCTURE EXCAVATION SECTIONS (8 OF 8)

TOTAL BILL OF MATERIAL

	UNCLASSIFIED STRUCTURE EXCAVATION	6'-0" DIA. DRILLED PIERS IN SOIL	6'-0" DIA. DRILLED PIERS NOT IN SOIL	PILE EXCAVATION IN SOIL	PILE EXCAVATION NOT IN SOIL	SID INSPECTION	CSL TESTING	REINFORCED CONCRETE DECK SLAB	CLASS AA CONCRETE	REINFORCING STEEL	SPIRAL COLUMN REINFORCING STEEL	STRUCTURAL STEEL	HP 12x53 STEEL PILES	
	LUMP SUM	LIN. FT.	LIN. FT.	EACH	EACH	EACH	EACH	SQ. FT.	CU. YDS.	LBS.	LBS.	APPROX. LBS.	NO.	LIN. FT.
SUPERSTRUCTURE	LUMP SUM	—	—	—	—	—	—	6975	—	—	—	610893	—	—
ABUTMENT #1	—	—	—	400.0	280.0	—	—	—	110.2	18168	—	—	49	1029
PIER #1	—	13.0	27.0	—	—	—	—	—	89.8	27175	7118	—	—	—
PIER #2	—	24.2	27.0	—	—	—	—	—	88.9	29135	9132	—	—	—
PIER #3	—	9.8	27.0	—	—	—	—	—	89.9	26584	7323	—	—	—
ABUTMENT #2	—	—	—	294.0	386.0	—	—	—	116.0	18632	—	—	49	1029
TOTAL	LUMP SUM	47.0	81.0	694.0	666.0	1	1	6975	494.8	119694	23573	610893	98	2058

TOTAL BILL OF MATERIAL (CONT'D.)

	METHOD B DAMPPROOFING	1'-0" x 1'-9" CONCRETE PARAPET	CONDUIT IN PARAPET	4" SLOPE PROTECTION	PAINTING STRUCTURAL STEEL	SELF-LUBRICATING EXPANSION BEARING ASSEMBLIES	STRUCTURE DRAINAGE SYSTEM	TEMPORARY RAILROAD SHORING	METAL HANDRAIL	1" ASPHALT PLANKING PROTECTIVE COURSE FOR DECK	MEMBRANE LAYER WATERPROOFING FOR DECK	TWO PART MEMBRANE WATERPROOFING SYSTEM
	SQ. YDS.	LIN. FT.	LUMP SUM	SQ. YDS.	LUMP SUM	LUMP SUM	LUMP SUM	LUMP SUM	LIN. FT.	SQ. YDS.	SQ. YDS.	SQ. YDS.
SUPERSTRUCTURE	—	376.7	LUMP SUM	—	LUMP SUM	LUMP SUM	LUMP SUM	LUMP SUM	453.7	761.0	761.0	—
ABUTMENT #1	90.0	—	—	390.0	—	—	LUMP SUM	LUMP SUM	—	—	—	20.0
PIER #1	5.0	—	—	—	—	—	LUMP SUM	LUMP SUM	—	—	—	—
PIER #2	5.0	—	—	—	—	—	LUMP SUM	LUMP SUM	—	—	—	—
PIER #3	5.0	—	—	—	—	—	LUMP SUM	LUMP SUM	—	—	—	—
ABUTMENT #2	90.0	—	—	408.3	—	—	—	—	—	—	—	20.0
TOTAL	195.0	376.7	LUMP SUM	798.3	LUMP SUM	LUMP SUM	LUMP SUM	LUMP SUM	453.7	761.0	761.0	40.0

PROJECT NO. P-5201

WAKE **COUNTY**

STATION: P.O.C. 3583+33.86 -M1-
P.O.T. 22+56.93 -L-

SHEET 5 OF 5

AECOM
AECOM TECHNICAL SERVICES, INC.
701 CORPORATE CENTER DRIVE, SUITE 475
RALEIGH, NC 27607
(919) 854-6200 www.aecom.com
AECOM License No. F-0342

NORTH CAROLINA PROFESSIONAL ENGINEER SEAL 30656 MARK PEARSON 7/12/13

STATE OF NORTH CAROLINA
DEPARTMENT OF TRANSPORTATION
RALEIGH

GENERAL DRAWING

DRAWING INDEX AND TOTAL BILL OF MATERIAL

REVISIONS							SHEET NO.
NO.	BY:	DATE:	NO.	BY:	DATE:		S-05
1			3				TOTAL SHEETS
2			4				56

DRAWN BY : MTB DATE : 03/13
CHECKED BY : JL DATE : 03/13

DATE: 9/12/2013
TIME: 3:50:59 PM

USER: 06962
DGN: Q:\60225860\Technical_Information_Disc_Files\450_NCDOT\SHTechDesign\Files\Structures\P-5201_SD_DSN_Index.dgn

0422DEL_P19

NOTES FOR CONDUIT IN PARAPET:

1. CONDUIT TO BE 4"Ø P.V.C. CONDUIT IN ACCORDANCE WITH UNDERWRITER'S LABORATORY SPECIFICATIONS.
2. GALVANIZED METAL EXPANSION FITTINGS SHALL BE LOCATED AT THE EXPANSION JOINT OF PIER 1, 2, 3, AND ABUTMENTS 1 AND 2.
3. COUPLING SHALL BE PROVIDED BEHIND BACKWALL OF ABUTMENT 1 AND 2 FOR CONNECTION TO 4"Ø RIGID PIPE. (RIGID PIPE BY RAILWAY COMPANY).

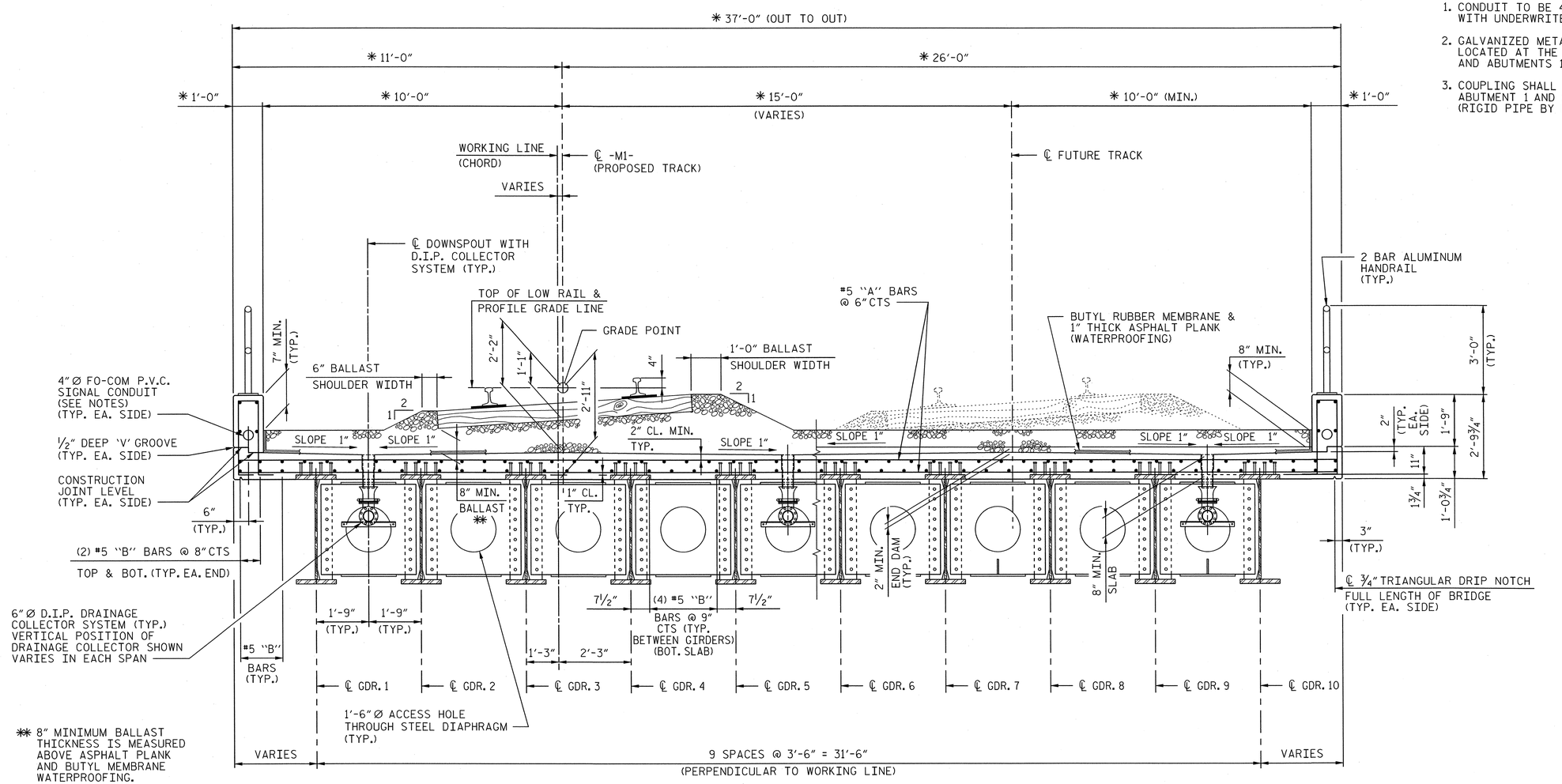

TYPICAL HALF SECTION
AT INTERMEDIATE DIAPHRAGMS

TYPICAL HALF SECTION
AT END DIAPHRAGMS

TYPICAL SECTION

* DENOTES RADIAL DIMENSION.

PAINTED STEEL PLATE GIRDERS FABRICATED FROM ASTM A709, GRADE 50 STEEL.

GIRDER LAYOUT LINES ARE PARALLEL TO THE WORKING LINE IN EACH SPAN.

PROJECT NO. P-5201

WAKE **COUNTY**

STATION: P.O.C. 3583+33.86 -M1-
P.O.T. 22+56.93 -L-

AECOM
AECOM TECHNICAL SERVICES, INC.
701 CORPORATE CENTER DRIVE, SUITE 475
RALEIGH, NC 27607
(919) 854-6200 www.aecom.com
AECOM License No. F-0342

NORTH CAROLINA PROFESSIONAL ENGINEER SEAL 19656 L. MARK PEARSON 9/13/13

STATE OF NORTH CAROLINA
DEPARTMENT OF TRANSPORTATION
RALEIGH

SUPERSTRUCTURE

TYPICAL SECTION

REVISIONS						SHEET NO.
NO.	BY:	DATE:	NO.	BY:	DATE:	S-06
1			3			TOTAL SHEETS
2			4			56

DRAWN BY : DDL DATE : 04/13
CHECKED BY : JL DATE : 04/13

DATE: 9/12/2013
TIME: 3:59:20 PM

USER: pdaphz
DGN: G:\2012\36803\400_Technical_Information_Disc_Files\450_NCDOT Std Details\Structures\P-5201_SD_DSN_TypSec.dgn

0422DEL_P19

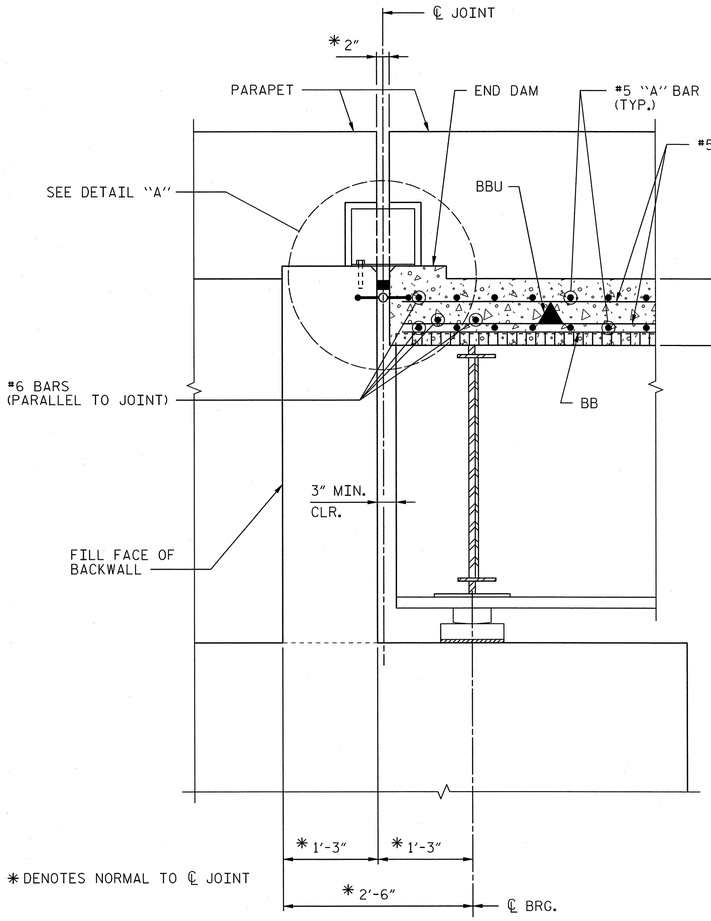

SECTION "A-A"

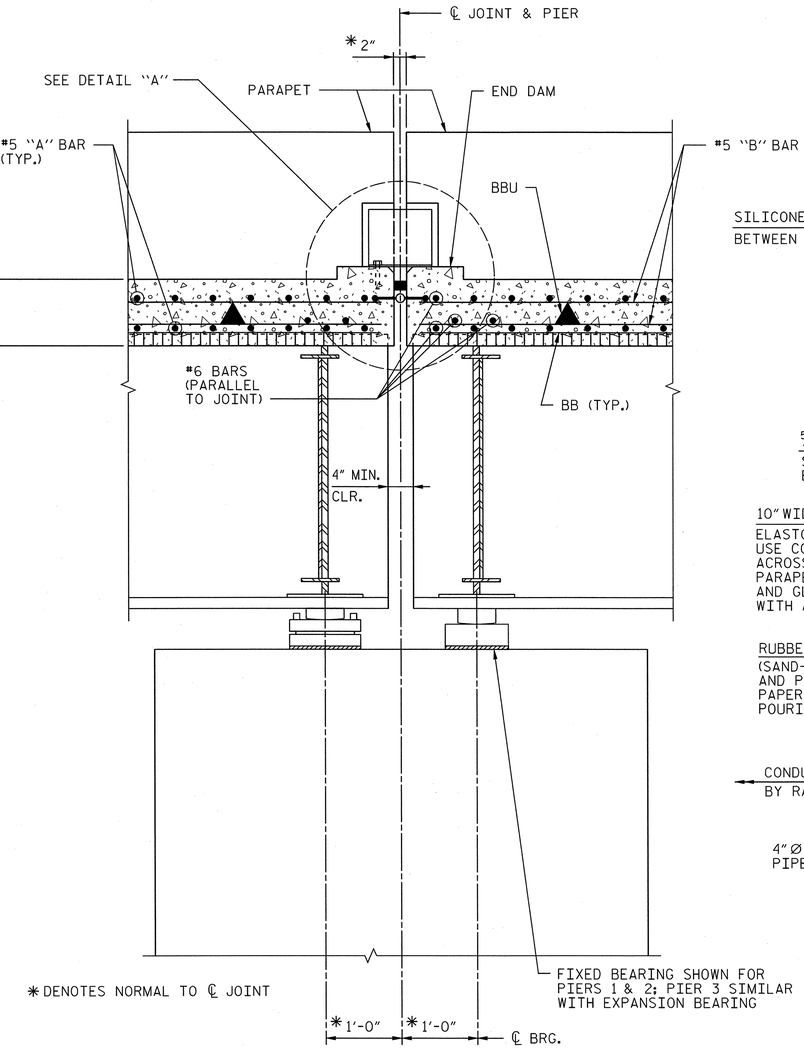

SECTION "B-B"

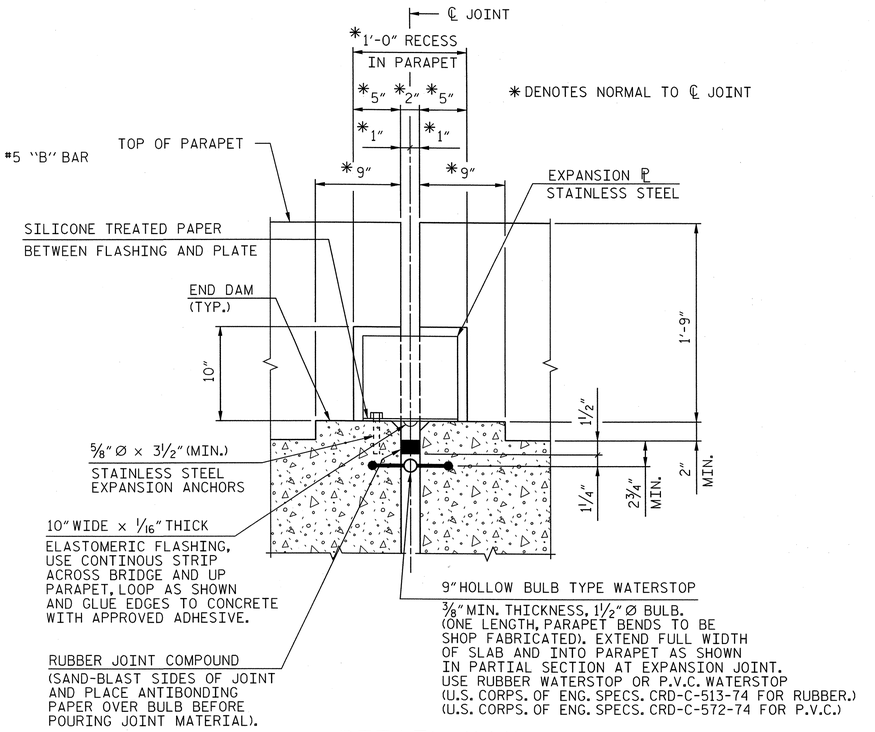

DETAIL "A"

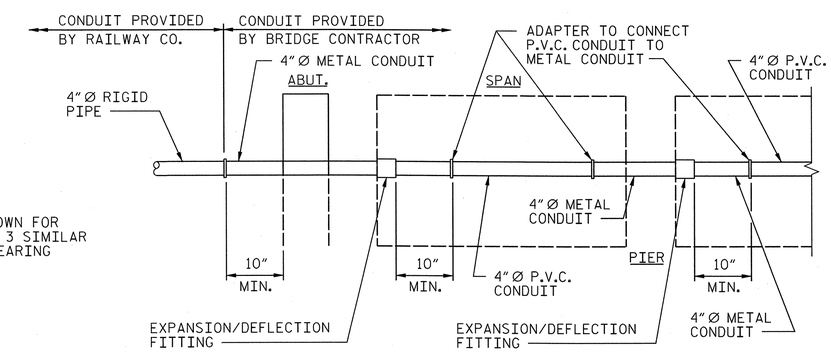

CONDUIT LAYOUT

NOT TO SCALE

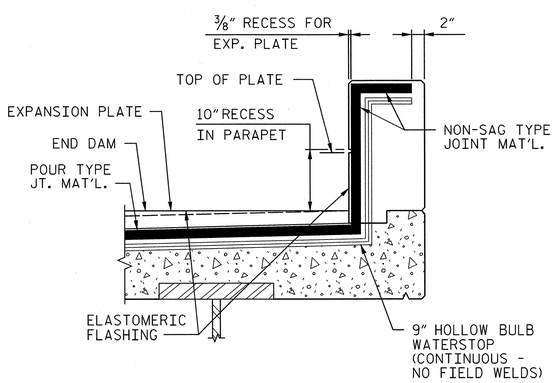

PARTIAL SECTION AT EXPANSION JOINT

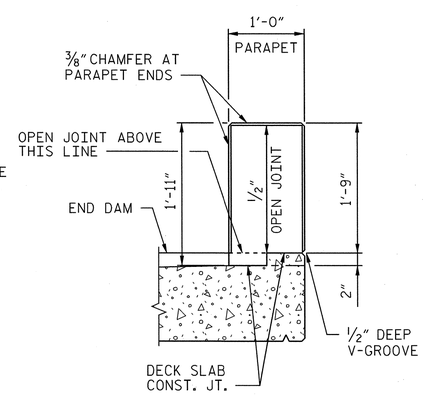

SECTION THRU OPEN JOINT IN PARAPET

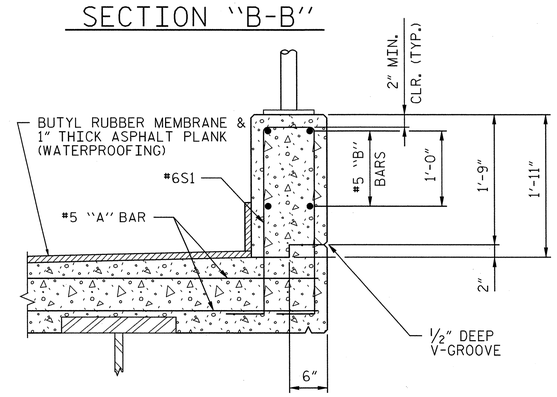

SECTION THRU PARAPET

PROJECT NO. P-5201

WAKE **COUNTY**

STATION: P.O.C. 3583+33.86 -M1-
P.O.T. 22+56.93 -L-

AECOM
AECOM TECHNICAL SERVICES, INC.
701 CORPORATE CENTER DRIVE, SUITE 475
RALEIGH, NC 27607
(919) 854-6200 www.aecom.com
AECOM License No. F-0342

NORTH CAROLINA PROFESSIONAL ENGINEER SEAL 036561 MARK PEARSON 9/13/13

STATE OF NORTH CAROLINA
DEPARTMENT OF TRANSPORTATION
RALEIGH

SUPERSTRUCTURE
TYPICAL DECK DETAILS

REVISIONS								SHEET NO.
NO.	BY:	DATE:	NO.	BY:	DATE:			S-07
1			3					TOTAL SHEETS
2			4					56

DRAWN BY : DDL DATE : 04/13
CHECKED BY : JL DATE : 04/13

DATE: 9/12/2013
TIME: 3:57:50 PM

USER: gx60238983
DGN: /JKC007 Std Tech Design Files\Structures\P-5201_SD_DSN_SuperDeckDetails.dgn

0422DEL_P19

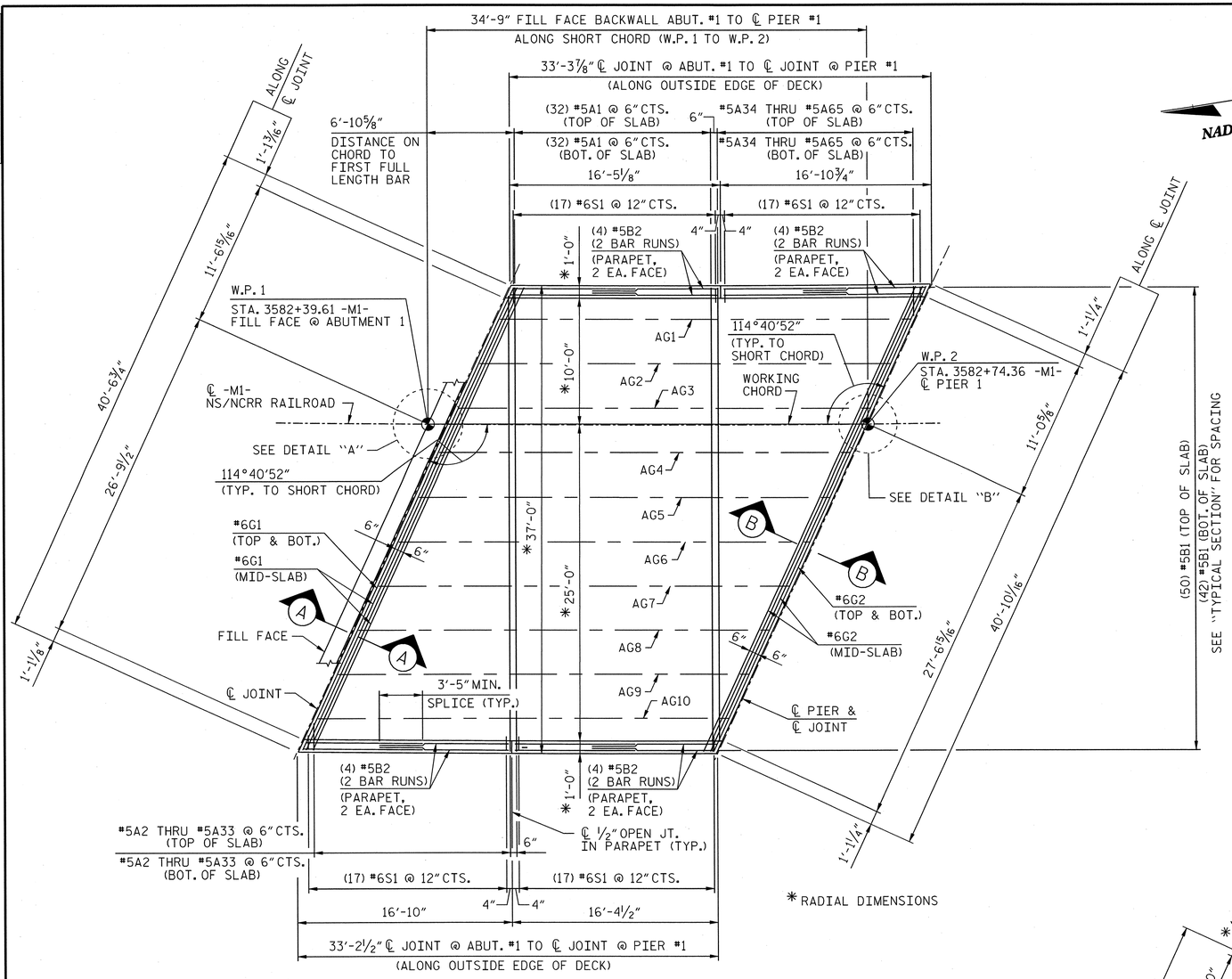

PLAN

NAD 83 / NSRS 2007

NOTES:

1. ALL REINFORCING SHALL BE EPOXY COATED.
2. FOR SECTIONS "A-A" AND "B-B", SEE "TYPICAL DECK DETAILS" SHEET.
3. FOR DECK DRAIN DETAIL, SEE DETAIL "3" ON "STRUCTURAL DRAINAGE DETAILS" SHEET.

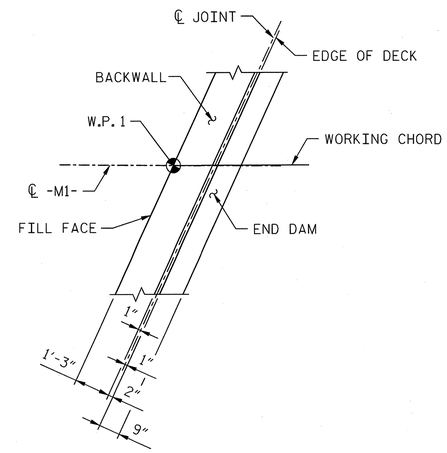

DETAIL "A"

(REINFORCING NOT SHOWN)

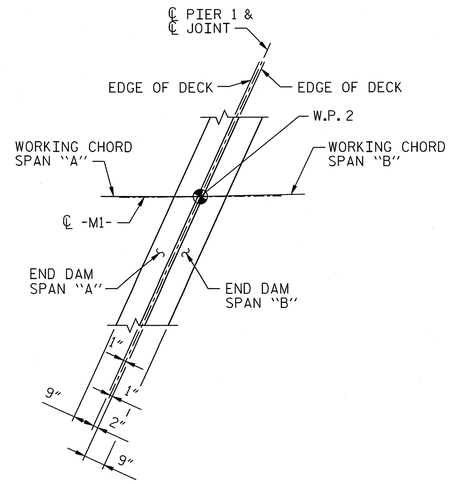

DETAIL "B"

(REINFORCING NOT SHOWN)

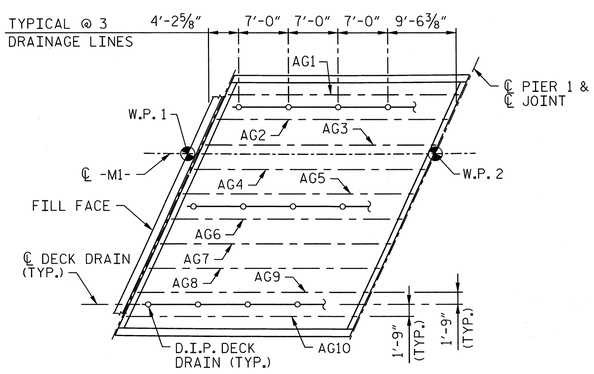

DECK DRAIN LOCATIONS

D.I.P. = DUCTILE IRON PIPE

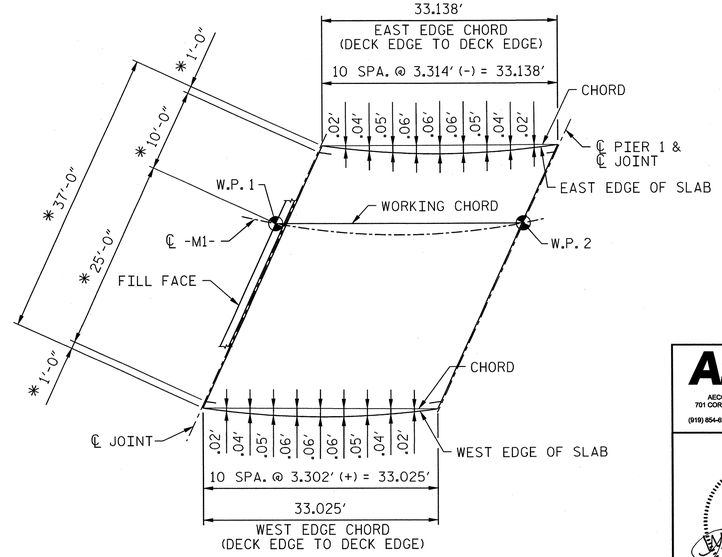

OFFSET DIMENSIONS FOR SLAB EDGES

PROJECT NO. P-5201

WAKE COUNTY

STATION: P.O.C. 3583+33.86 -M1-
P.O.T. 22+56.93 -L-

AECOM
AECOM TECHNICAL SERVICES, INC.
701 CORPORATE CENTER DRIVE, SUITE 475
RALEIGH, NC 27607
(919) 854-6200 www.aecom.com
AECOM License No. F-0342

NORTH CAROLINA PROFESSIONAL SEAL 10656 ENGINEER J. MARK PEARSON 9/13/13

STATE OF NORTH CAROLINA
DEPARTMENT OF TRANSPORTATION
RALEIGH

SUPERSTRUCTURE

PLAN OF SPAN "A"

REVISIONS						SHEET NO.
NO.	BY:	DATE:	NO.	BY:	DATE:	S-08
1			3			TOTAL SHEETS
2			4			56

DRAWN BY : MTB DATE : 03/13
CHECKED BY : JL DATE : 03/13

DATE: 9/12/2013
TIME: 3:54:22 PM

USER: gatch22
DGN: G:\62238003-400_Technical_Information_Disc_Files\450_NCDOT\StructTech\Design\Files\Structures\P-5201_SD_DSN_Plan_Span_Adgn

0422DEL_P19

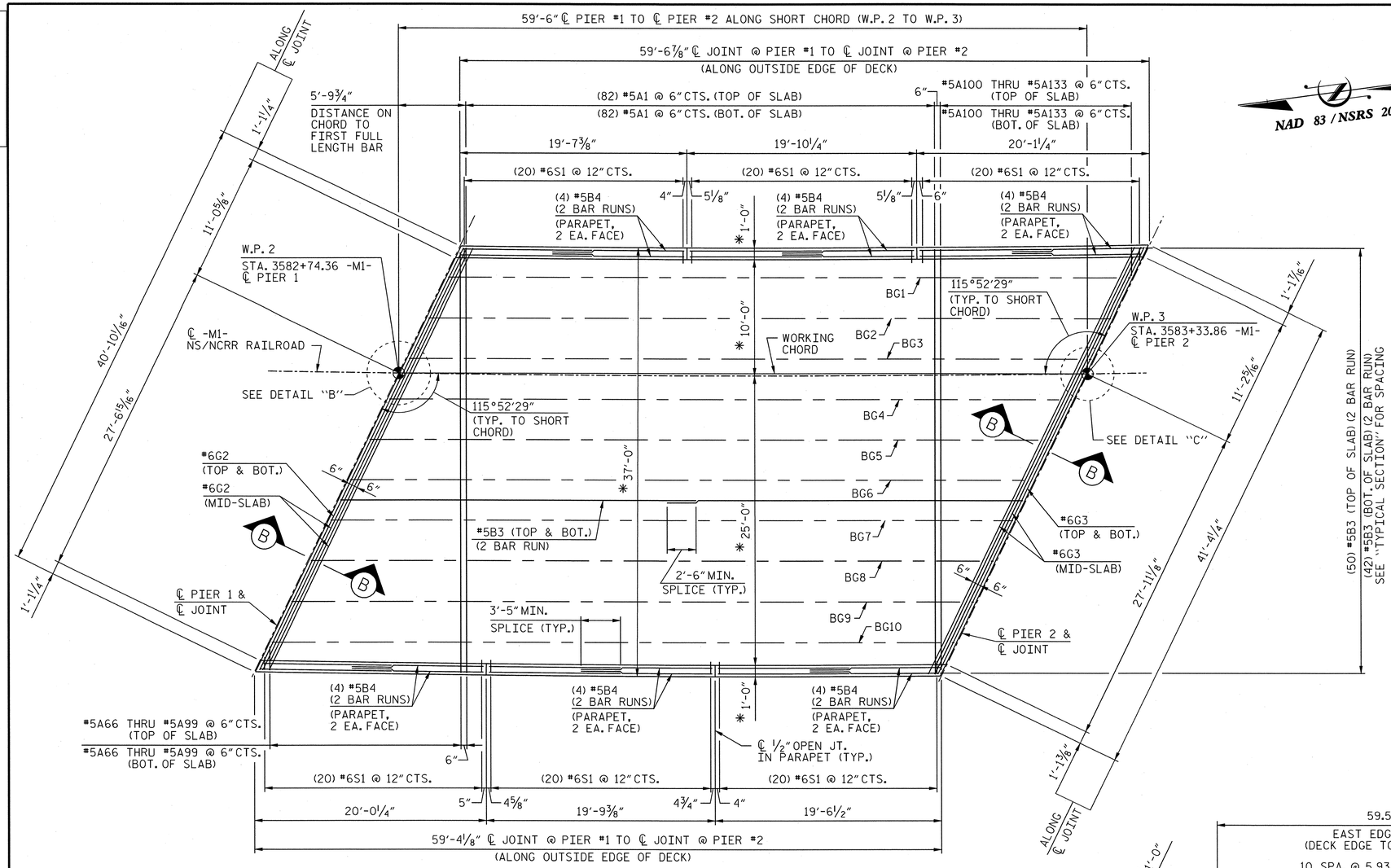

PLAN

* RADIAL DIMENSIONS

NAD 83 / NSRS 2007

NOTES:

1. ALL REINFORCING SHALL BE EPOXY COATED.
2. FOR SECTION "B-B", SEE "TYPICAL DECK DETAILS" SHEET.
3. FOR DETAIL "B", SEE "SUPERSTRUCTURE PLAN OF SPAN "A" SHEET.
4. FOR DECK DRAIN DETAIL, SEE DETAIL "3" ON "STRUCTURAL DRAINAGE DETAILS".

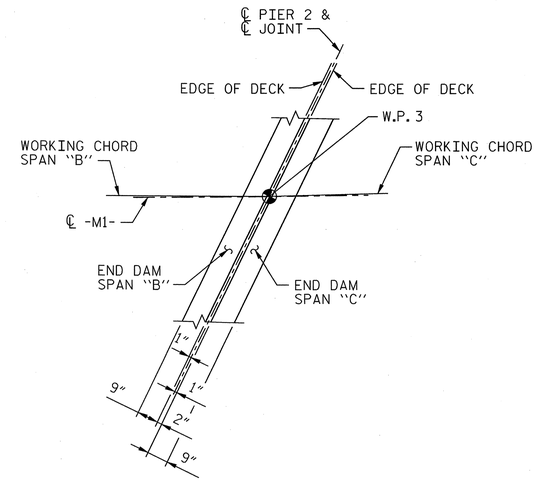

DETAIL "C"

(REINFORCING NOT SHOWN)

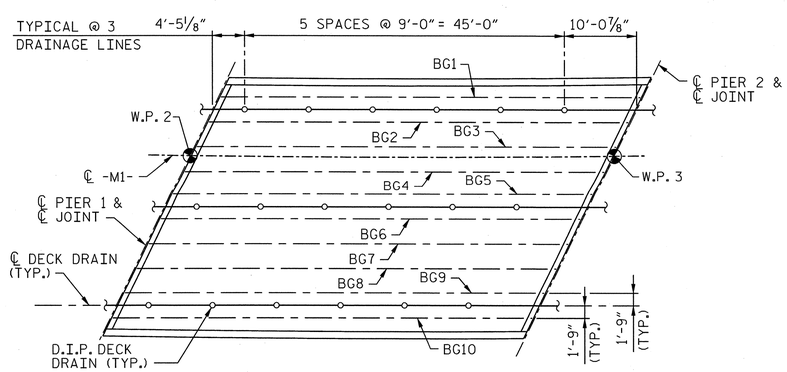

DECK DRAIN LOCATIONS

D.I.P. = DUCTILE IRON PIPE

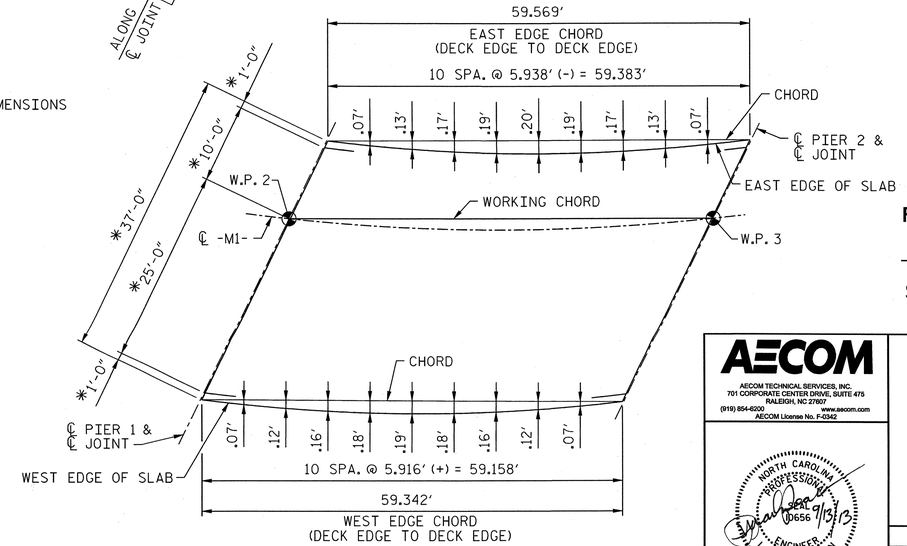

OFFSET DIMENSIONS FOR SLAB EDGES

PROJECT NO. P-5201

WAKE COUNTY

STATION: P.O.C. 3583+33.86 -M1-
P.O.T. 22+56.93 -L-

AECOM
AECOM TECHNICAL SERVICES, INC.
701 CORPORATE CENTER DRIVE, SUITE 475
RALEIGH, NC 27607
(919) 854-6200 www.aecom.com
AECOM License No. F-0342

NORTH CAROLINA PROFESSIONAL ENGINEER SEAL 0656 L. MARK PEARSON 7/13/13

STATE OF NORTH CAROLINA
DEPARTMENT OF TRANSPORTATION
RALEIGH

SUPERSTRUCTURE

PLAN OF SPAN "B"

REVISIONS							SHEET NO.
NO.	BY:	DATE:	NO.	BY:	DATE:		S-09
1			3				TOTAL SHEETS
2			4				56

DRAWN BY : MTB DATE : 03/13
CHECKED BY : JL DATE : 03/13

DATE: 9/12/2013
TIME: 3:54:42 PM

USER: 80496hz
DGN: G:\50123880\3-400_Technical_Information_Disc_Files\450_NCDOT\Shiftfiles\Deliqn\Files\Structures\P-5201_SD_DSN_Plan_Span_B.dgn

0422DEL_P19

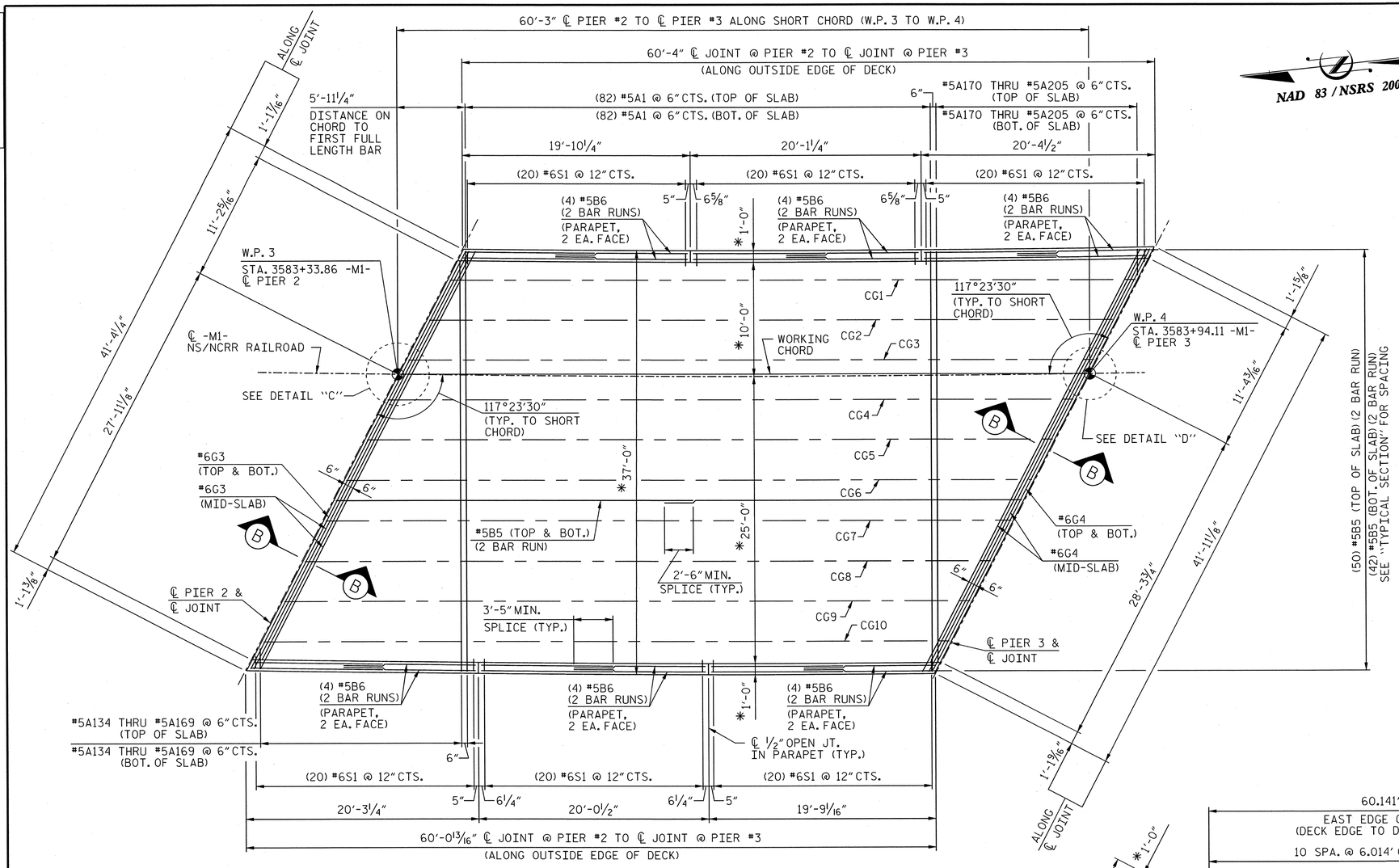

NAD 83 / NSRS 2007

NOTES:

1. ALL REINFORCING SHALL BE EPOXY COATED.
2. FOR SECTION "B-B", SEE "TYPICAL DECK DETAILS" SHEET.
3. FOR DETAIL "C", SEE "SUPERSTRUCTURE PLAN OF SPAN "B" SHEET.
4. FOR DECK DRAIN DETAIL, SEE DETAIL "3" ON "STRUCTURAL DRAINAGE DETAILS" SHEET.

PLAN

* RADIAL DIMENSIONS

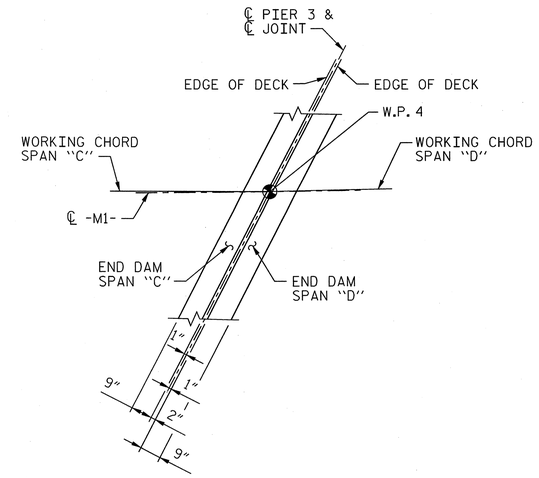

DETAIL "D"

(REINFORCING NOT SHOWN)

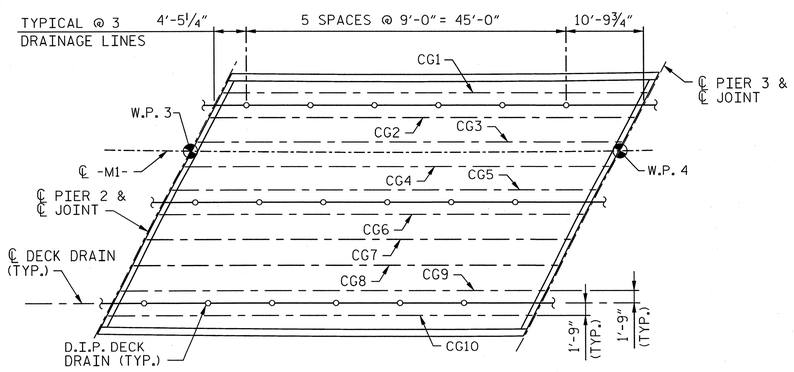

DECK DRAIN LOCATIONS

D.I.P. = DUCTILE IRON PIPE

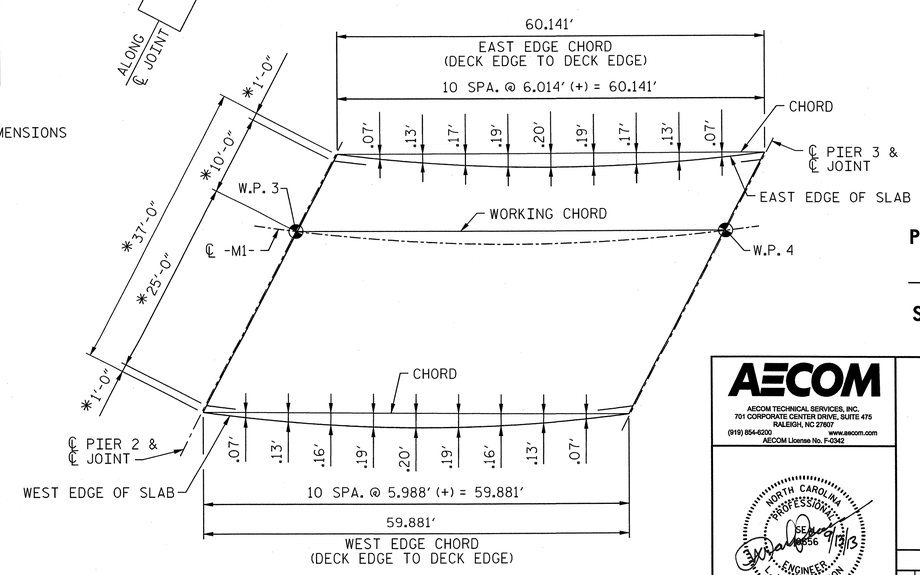

OFFSET DIMENSIONS FOR SLAB EDGES

PROJECT NO. P-5201

WAKE COUNTY

STATION: P.O.C. 3583+33.86 -M1-
P.O.T. 22+56.93 -L-

AECOM
AECOM TECHNICAL SERVICES, INC.
701 CORPORATE CENTER DRIVE, SUITE 475
RALEIGH, NC 27607
(919) 854-6200 www.aecom.com
AECOM License No. F-0342

NORTH CAROLINA PROFESSIONAL SEAL 19856 ENGINEER MARK PEARSON 9/13/13

STATE OF NORTH CAROLINA
DEPARTMENT OF TRANSPORTATION
RALEIGH

SUPERSTRUCTURE

PLAN OF SPAN "C"

REVISIONS						SHEET NO.
NO.	BY:	DATE:	NO.	BY:	DATE:	S-10
1			3			TOTAL SHEETS
2			4			56

DRAWN BY : MTB DATE : 03/13
CHECKED BY : JL DATE : 03/13

DATE: 9/12/2013
TIME: 3:55:02 PM

USER: pdaniel
DGN: Q:\60223980\3-400_Technical_Information_Disc_Files\450_NCDOT Std Textbook\Design Files\Structures\P-5201_SD_DSN_Plan_Span_C.dgn

0422DEL_P19

DGN

DATE: 9/12/2013
TIME: 3:55:22 PM

USER: pdetatz
DGN: GK8023680TX-K00_Technical_Information_Disc_Files\490_NCDOT Staff Exhibits\Pro Files\Structures\P-5201_SD_DSN_Plan_Span_D.dgn

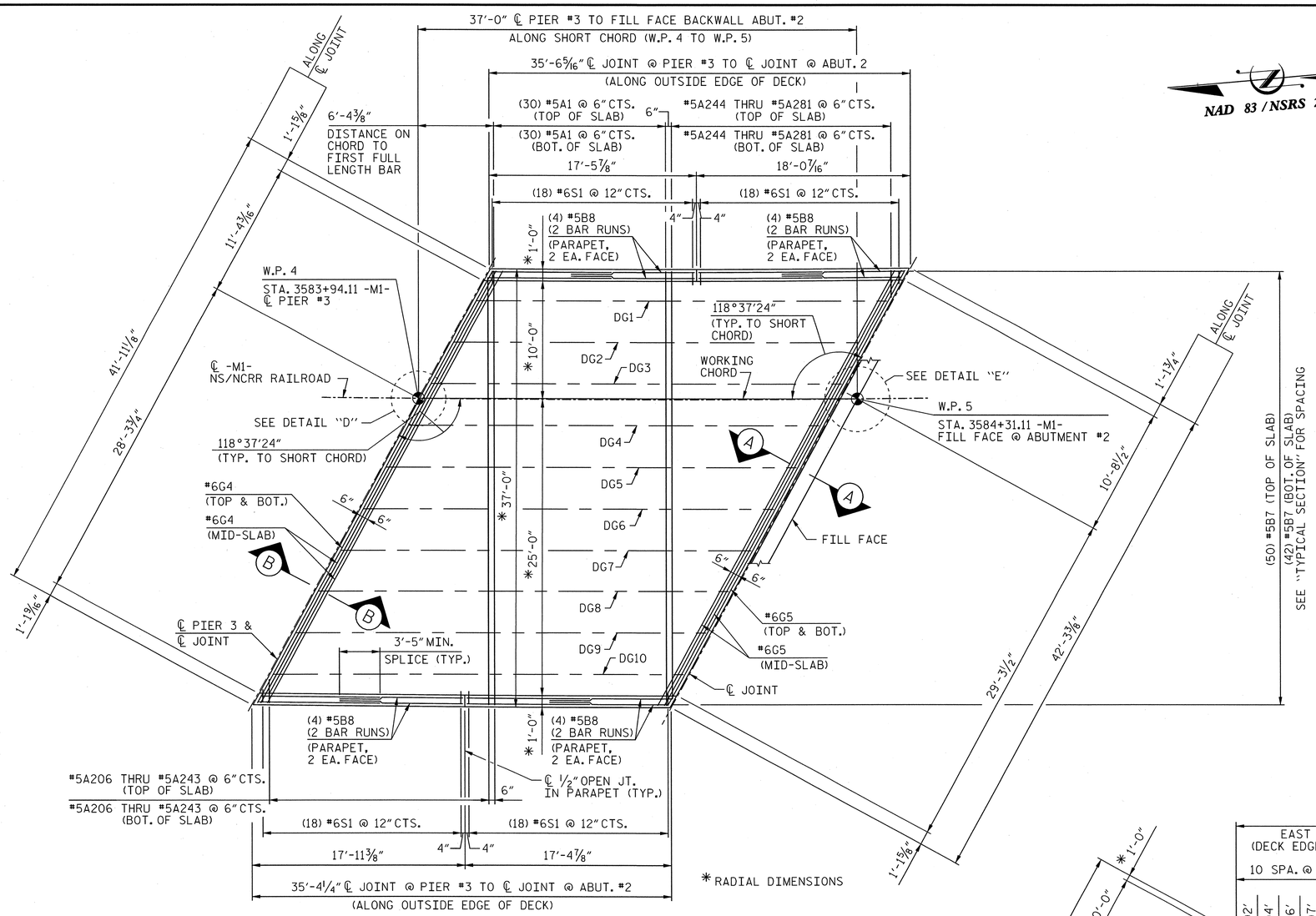

PLAN

NAD 83 / NSRS 2007

NOTES:

1. ALL REINFORCING SHALL BE EPOXY COATED.
2. FOR SECTIONS "A-A" AND "B-B", SEE "TYPICAL DECK DETAILS" SHEET.
3. FOR DETAIL "D", SEE "SUPERSTRUCTURE PLAN OF SPAN "C" SHEET.
4. FOR DECK DRAIN DETAIL, SEE DETAIL "3" ON "STRUCTURAL DRAINAGE DETAILS" SHEET.

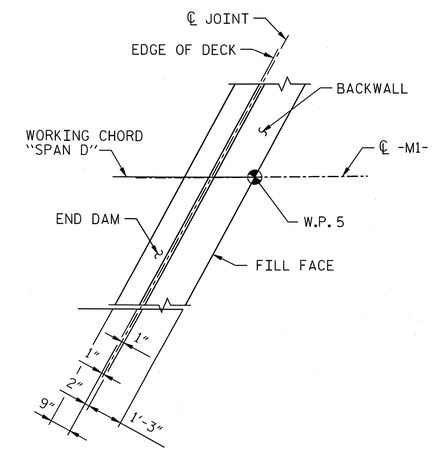

DETAIL "E"

(REINFORCING NOT SHOWN)

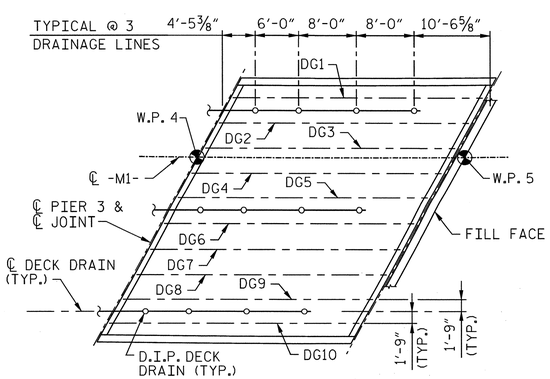

DECK DRAIN LOCATIONS

D.I.P. = DUCTILE IRON PIPE

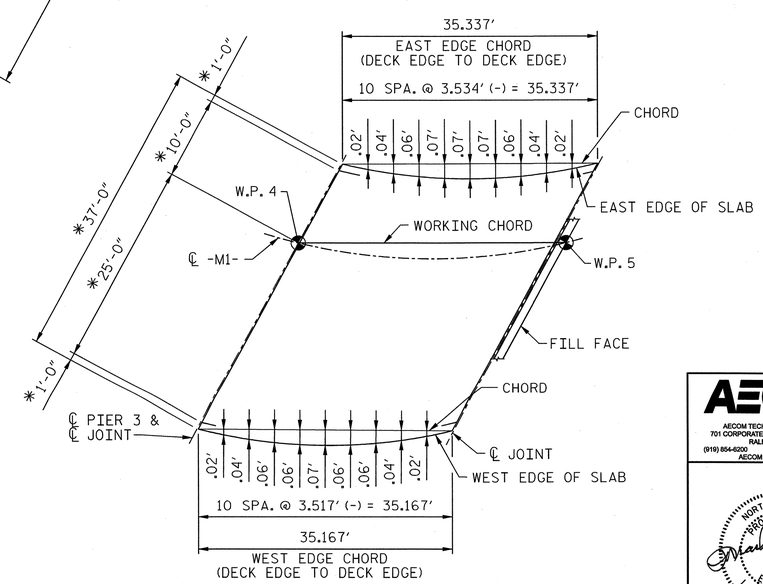

OFFSET DIMENSIONS FOR SLAB EDGES

PROJECT NO. P-5201

WAKE COUNTY

STATION: P.O.C. 3583+33.86 -M1-
P.O.T. 22+56.93 -L-

AECOM

AECOM TECHNICAL SERVICES, INC.
701 CORPORATE CENTER DRIVE, SUITE 475
RALEIGH, NC 27607
(919) 854-6200 www.aecom.com
AECOM License No. F-0342

NORTH CAROLINA PROFESSIONAL ENGINEER SEAL 10656 9/13/13 L. MARK PEARSON

STATE OF NORTH CAROLINA
DEPARTMENT OF TRANSPORTATION
RALEIGH

SUPERSTRUCTURE

PLAN OF SPAN "D"

REVISIONS								SHEET NO.
NO.	BY:	DATE:	NO.	BY:	DATE:			S-11
1			3					TOTAL SHEETS
2			4					56

DRAWN BY : MTB DATE : 03/13
CHECKED BY : JL DATE : 03/13

0422DEL_P19

DGN

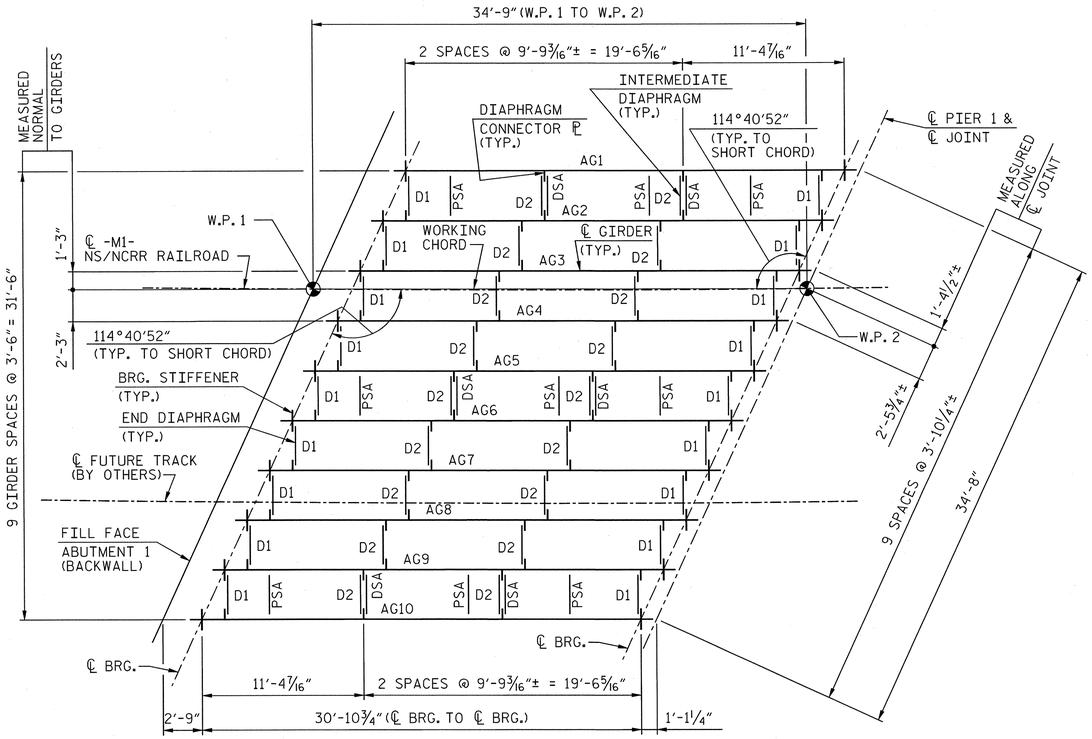

FRAMING PLAN

NOTE: ALL GIRDERS ARE PARALLEL TO WORKING CHORD.

NAD 83 / NSRS 2007

NOTES:

1. ALL DIMENSIONS ON THIS DRAWING ARE HORIZONTAL.
2. ℄ ABUTMENT 1, ℄ PIER 1, AND ℄ BEARINGS ARE PARALLEL.
3. FOR STRUCTURAL STEEL NOTES, DIAPHRAGM DETAILS, STIFFENER & CONNECTOR ℙ DETAILS, SHEAR STUD CONNECTOR DETAIL, FLANGE TO WEB WELD DETAIL, WELD TERMINATION DETAIL AND SHOP SPLICE DETAIL, SEE "STRUCTURAL STEEL DETAILS" SHEETS.
4. FOR BEARINGS, SEE "BEARING DETAILS" SHEET.
5. FOR DSA AND PSA DRAIN PIPE SUPPORT DETAILS, SEE "STRUCTURE DRAINAGE DETAILS" SHEET.
6. BEARING STIFFENERS AND END DIAPHRAGM CONNECTOR PLATES ARE ORIENTED NORMAL TO CENTERLINE OF GIRDER.
7. THE GIRDERS IN SPAN "A" CAN BE SUBSTITUTED EQUIVALENTLY WITH W44 x 290.

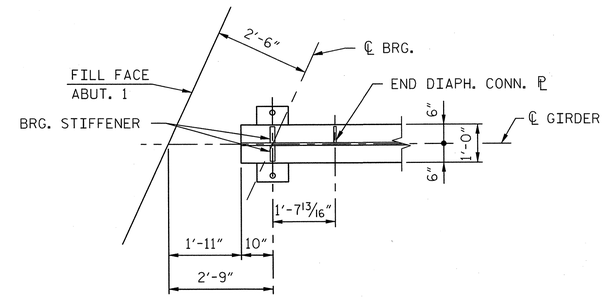

AT ABUTMENT 1

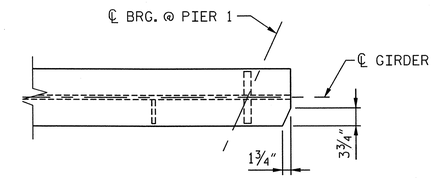

TOP FLANGE CLIP DIMENSIONS

(SPAN "A" AT PIER 1)

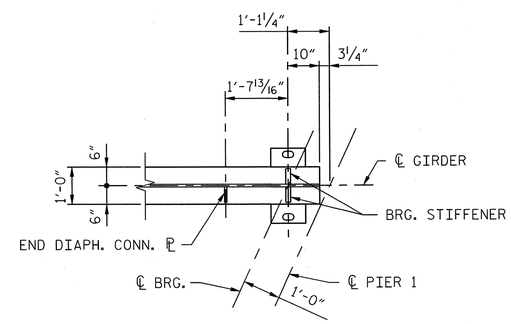

AT PIER 1

GIRDER END DIAPHRAGMS

(BOTTOM FLANGE SHOWN)

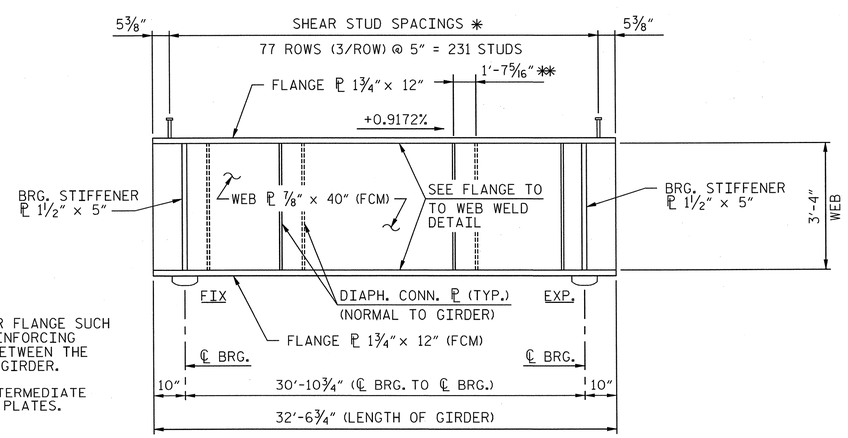

NOTES:

✱ ALIGN STUDS ON GIRDER FLANGE SUCH THAT BOTTOM SLAB REINFORCING BARS CAN BE PLACED BETWEEN THE STUDS NORMAL TO THE GIRDER.

✱✱ TYPICAL OFFSET AT INTERMEDIATE DIAPHRAGM CONNECTOR PLATES.

TYPICAL BEAM ELEVATION

(INTERIOR GIRDER SHOWN, EXTERIOR GIRDER SIMILAR)
(NTS)

CAMBER TABLE (DECIMAL INCHES)											
TENTH POINT	0.0	0.1	0.2	0.3	0.4	0.5	0.6	0.7	0.8	0.9	1.0
REQUIRED CAMBER	0.000	0.012	0.024	0.032	0.038	0.040	0.038	0.032	0.024	0.012	0.000

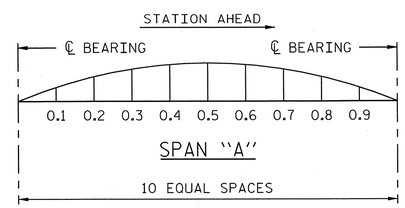

SCHEMATIC CAMBER ORDINATES

PROJECT NO. P-5201

WAKE COUNTY

STATION: P.O.C. 3583+33.86 -M1-
P.O.T. 22+56.93 -L-

SHEET 1 OF 4

AECOM
AECOM TECHNICAL SERVICES, INC.
701 CORPORATE CENTER DRIVE, SUITE 475
RALEIGH, NC 27607
(919) 854-6200 www.aecom.com
AECOM License No. F-0342

NORTH CAROLINA PROFESSIONAL SEAL 10656 ENGINEER J. MARK PEARSON 9/13/13

STATE OF NORTH CAROLINA
DEPARTMENT OF TRANSPORTATION
RALEIGH

SUPERSTRUCTURE

FRAMING PLAN AND GIRDER DETAILS - SPAN "A"

REVISIONS						SHEET NO.
NO.	BY:	DATE:	NO.	BY:	DATE:	S-12
1			3			TOTAL SHEETS
2			4			56

DRAWN BY : MTB DATE : 03/13
CHECKED BY : JL DATE : 03/13

DATE: 9/12/2013
TIME: 3:48:42 PM

USER: gaiahz
DGN: G:\60238803\400_Technical_Information_Disc_Files\450_NCDOT Shift and Design Files\Structures\P-5201_S3_DSN_FramingPlan_Align

0422DEL_P19

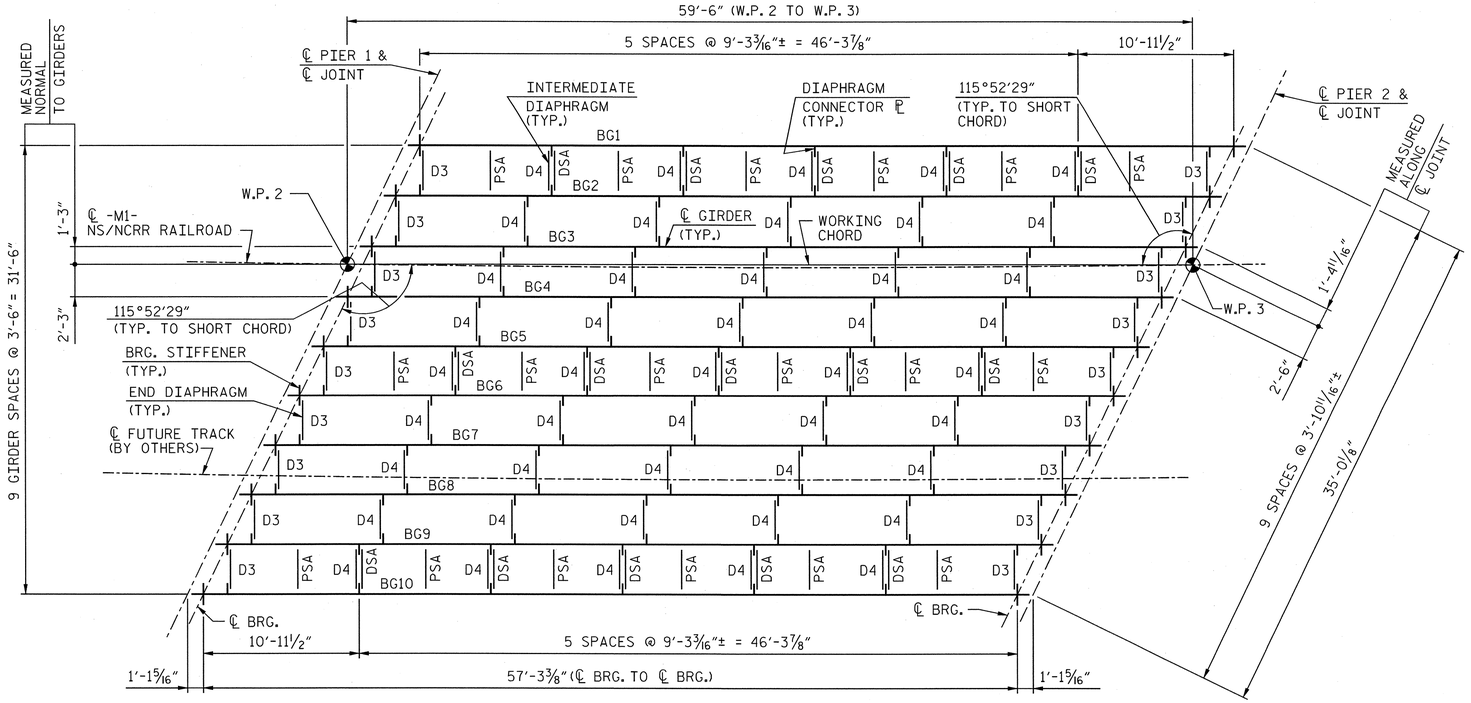

FRAMING PLAN

NOTE: ALL GIRDERS ARE PARALLEL TO WORKING CHORD.

NAD 83 / NSRS 2007

NOTES:

1. ALL DIMENSIONS ON THIS DRAWING ARE HORIZONTAL.
2. ℄ PIER 1, ℄ PIER 2, AND ℄ BEARINGS ARE PARALLEL.
3. FOR STRUCTURAL STEEL NOTES, DIAPHRAGM DETAILS, STIFFENER & CONNECTOR ℙ DETAILS, SHEAR STUD CONNECTOR DETAIL, FLANGE TO WEB WELD DETAIL, WELD TERMINATION DETAIL AND SHOP SPLICE DETAIL, SEE "STRUCTURAL STEEL DETAILS" SHEETS.
4. FOR BEARINGS, SEE "BEARING DETAILS" SHEET.
5. FOR DSA AND PSA DRAIN PIPE SUPPORT DETAILS, SEE "STRUCTURE DRAINAGE DETAILS" SHEET.
6. BEARING STIFFENERS AND END DIAPHRAGM CONNECTOR PLATES ARE ORIENTED NORMAL TO CENTERLINE OF GIRDER.

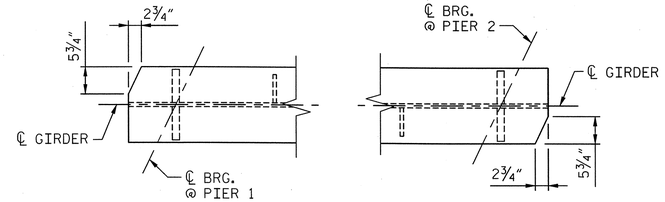

TOP FLANGE CLIP DIMENSIONS

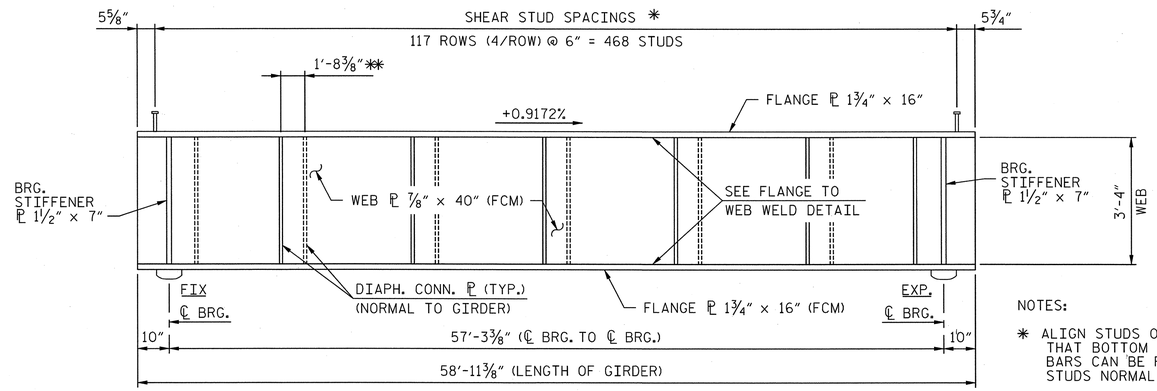

TYPICAL BEAM ELEVATION

(INTERIOR GIRDER SHOWN, EXTERIOR GIRDER SIMILAR)
(NTS)

NOTES:

* ALIGN STUDS ON GIRDER FLANGE SUCH THAT BOTTOM SLAB REINFORCING BARS CAN BE PLACED BETWEEN THE STUDS NORMAL TO THE GIRDER.

** TYPICAL OFFSET AT INTERMEDIATE DIAPHRAGM CONNECTOR PLATES.

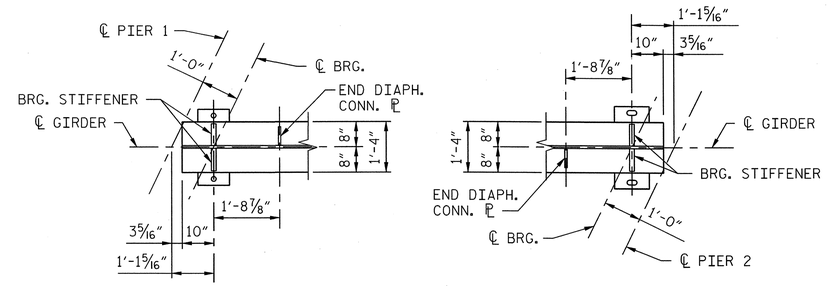

GIRDER END DIAPHRAGMS

(BOTTOM FLANGE SHOWN)

CAMBER TABLE (DECIMAL INCHES)											
TENTH POINT	0.0	0.1	0.2	0.3	0.4	0.5	0.6	0.7	0.8	0.9	1.0
REQUIRED CAMBER	0.000	0.130	0.246	0.336	0.394	0.414	0.394	0.336	0.246	0.130	0.000

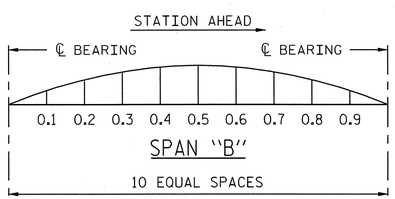

SCHEMATIC CAMBER ORDINATES

PROJECT NO. P-5201

WAKE **COUNTY**

STATION: P.O.C. 3583+33.86 -M1-
P.O.T. 22+56.93 -L-

SHEET 2 OF 4

AECOM
AECOM TECHNICAL SERVICES, INC.
701 CORPORATE CENTER DRIVE, SUITE 475
RALEIGH, NC 27607
(919) 854-6200 www.aecom.com
AECOM License No. F-0342

NORTH CAROLINA PROFESSIONAL SEAL 10656 ENGINEER L. MARK PEARSON 9/13/13

STATE OF NORTH CAROLINA
DEPARTMENT OF TRANSPORTATION
RALEIGH

SUPERSTRUCTURE

FRAMING PLAN AND GIRDER DETAILS - SPAN "B"

REVISIONS						SHEET NO.
NO.	BY:	DATE:	NO.	BY:	DATE:	S-13
1			3			TOTAL SHEETS
2			4			56

DRAWN BY : MTB DATE : 03/13
CHECKED BY : JL DATE : 03/13

DATE: 9/12/2013
TIME: 3:49:48 PM
USER: 90492
DGN: Q:\60223680\SHEETS\400_Technical_Information_Disc_Files\450_NCDOT\SHT\techdata\InFiles\Structures\P-5201_SD_DSN_FramingPlan_B.dgn

0422DEL_P19

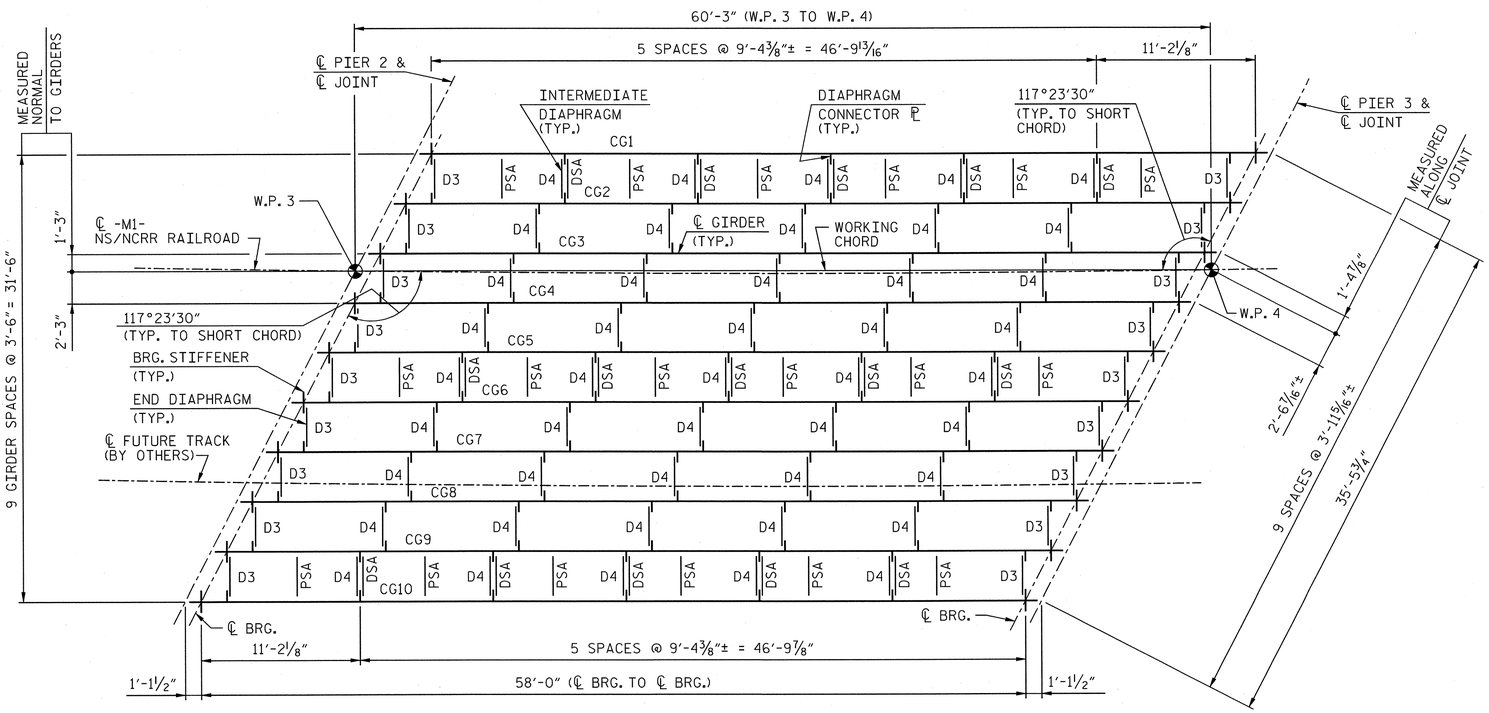

FRAMING PLAN

NOTE: ALL GIRDERS ARE PARALLEL TO WORKING CHORD.

NAD 83 / NSRS 2007

NOTES:

1. ALL DIMENSIONS ON THIS DRAWING ARE HORIZONTAL.
2. ℄ PIER 2, ℄ PIER 3, AND ℄ BEARINGS ARE PARALLEL.
3. FOR STRUCTURAL STEEL NOTES, DIAPHRAGM DETAILS, STIFFENER & CONNECTOR ℙ DETAILS, SHEAR STUD CONNECTOR DETAIL, FLANGE TO WEB WELD DETAIL, WELD TERMINATION DETAIL AND SHOP SPLICE DETAIL, SEE "STRUCTURAL STEEL DETAILS" SHEETS.
4. FOR BEARINGS, SEE "BEARING DETAILS" SHEET.
5. FOR DSA AND PSA DRAIN PIPE SUPPORT DETAILS, SEE "STRUCTURE DRAINAGE DETAILS" SHEET.
6. BEARING STIFFENERS AND END DIAPHRAGM CONNECTOR PLATES ARE ORIENTED NORMAL TO CENTERLINE OF GIRDER.

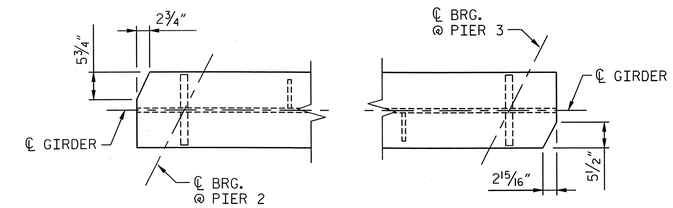

TOP FLANGE CLIP DIMENSIONS

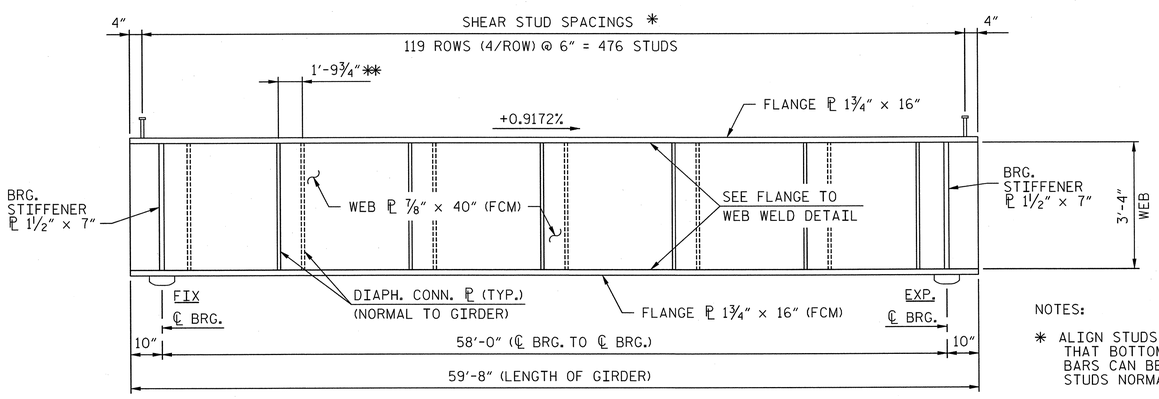

TYPICAL BEAM ELEVATION

(INTERIOR GIRDER SHOWN, EXTERIOR GIRDER SIMILAR)
(NTS)

NOTES:

* ALIGN STUDS ON GIRDER FLANGE SUCH THAT BOTTOM SLAB REINFORCING BARS CAN BE PLACED BETWEEN THE STUDS NORMAL TO THE GIRDER.

** TYPICAL OFFSET AT INTERMEDIATE DIAPHRAGM CONNECTOR PLATES.

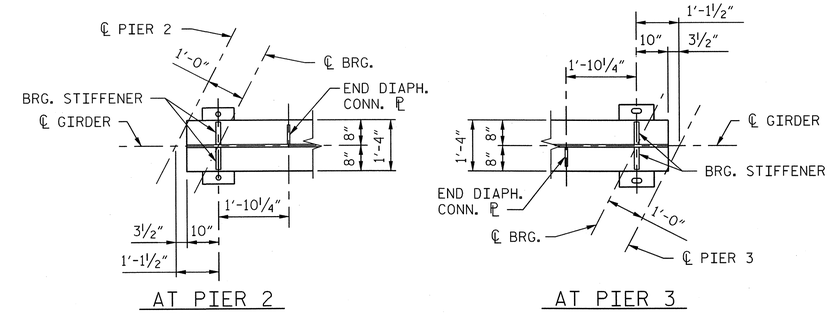

GIRDER END DIAPHRAGMS

(BOTTOM FLANGE SHOWN)

CAMBER TABLE (DECIMAL INCHES)											
TENTH POINT	0.0	0.1	0.2	0.3	0.4	0.5	0.6	0.7	0.8	0.9	1.0
REQUIRED CAMBER	0.000	0.136	0.258	0.353	0.414	0.435	0.414	0.353	0.258	0.136	0.000

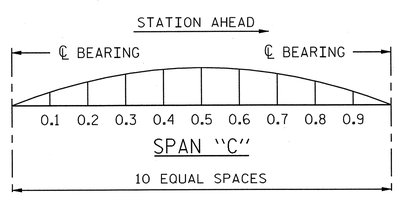

SCHEMATIC CAMBER ORDINATES

PROJECT NO. P-5201

WAKE COUNTY

STATION: P.O.C. 3583+33.86 -M1-
P.O.T. 22+56.93 -L-

SHEET 3 OF 4

AECOM
AECOM TECHNICAL SERVICES, INC.
701 CORPORATE CENTER DRIVE, SUITE 475
RALEIGH, NC 27607
(919) 854-6200 www.aecom.com
AECOM License No. F-0342

NORTH CAROLINA PROFESSIONAL SEAL 10656 ENGINEER J. MARK PEARSON 9/13/13

STATE OF NORTH CAROLINA
DEPARTMENT OF TRANSPORTATION
RALEIGH

SUPERSTRUCTURE

FRAMING PLAN AND GIRDER DETAILS - SPAN "C"

REVISIONS						SHEET NO.
NO.	BY:	DATE:	NO.	BY:	DATE:	S-14
1			3			TOTAL SHEETS
2			4			56

DRAWN BY : MTB DATE : 03/13
CHECKED BY : JL DATE : 03/13

DATE: 9/12/2013
TIME: 3:49:38 PM

USER: pearmj
DGN: G:\60236803\400_Technical_Information_Dies_Files\450_NCDOT Std Details\Structures\P-5201_SD_DSN_FramingPlan_C.dgn

0422DEL_P19

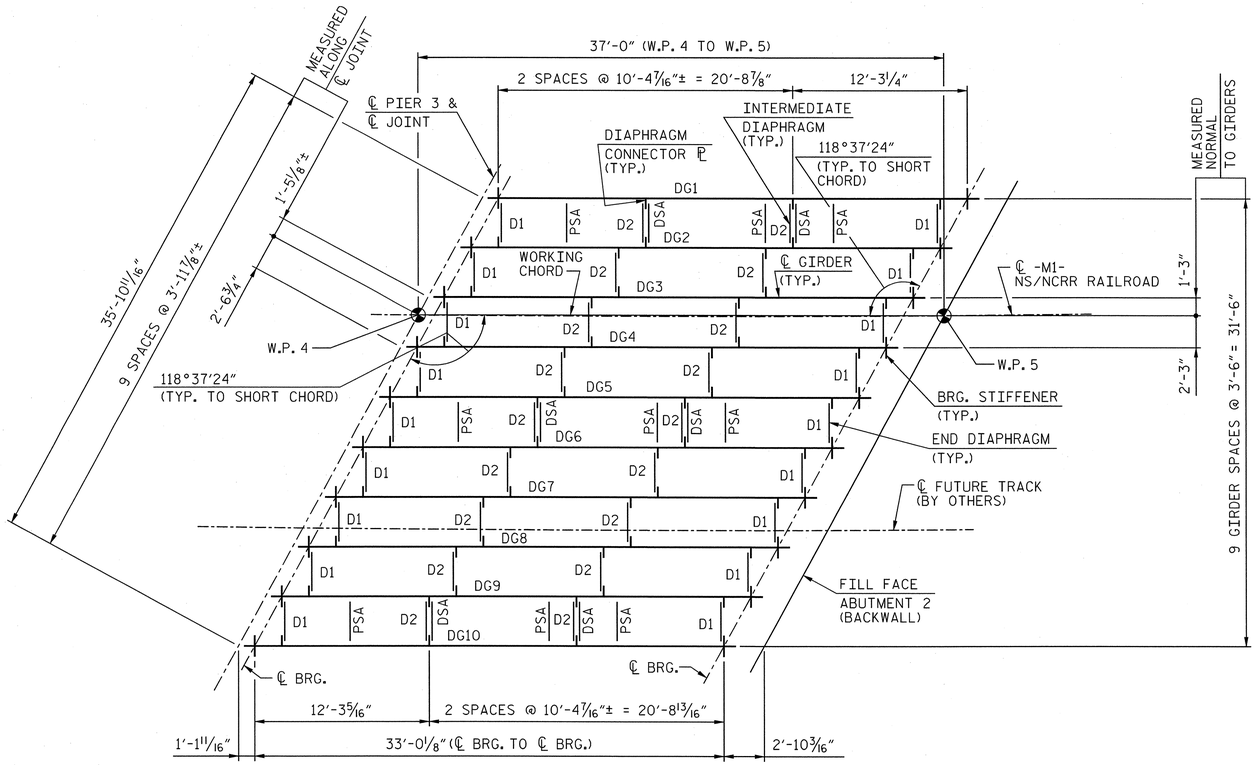

FRAMING PLAN

NOTE: ALL GIRDERS ARE PARALLEL TO WORKING CHORD.

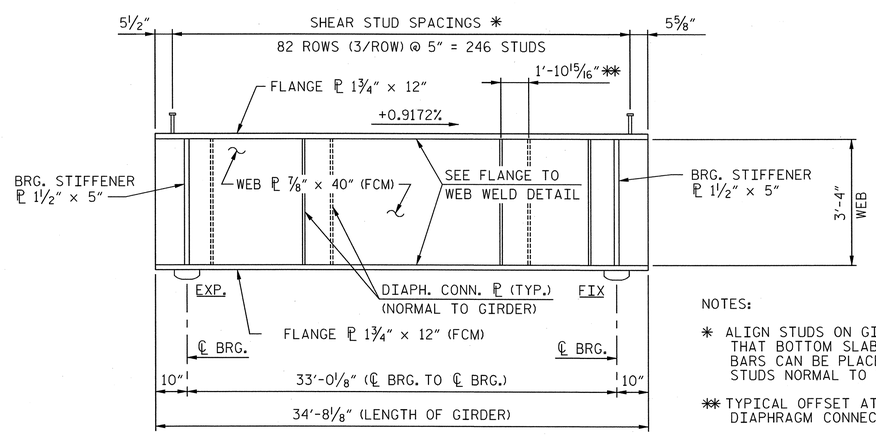

TYPICAL BEAM ELEVATION

(INTERIOR GIRDER SHOWN, EXTERIOR GIRDER SIMILAR)
(NTS)

NOTES:

✱ ALIGN STUDS ON GIRDER FLANGE SUCH THAT BOTTOM SLAB REINFORCING BARS CAN BE PLACED BETWEEN THE STUDS NORMAL TO THE GIRDER.

✱✱ TYPICAL OFFSET AT INTERMEDIATE DIAPHRAGM CONNECTOR PLATES.

CAMBER TABLE (DECIMAL INCHES)											
TENTH POINT	0.0	0.1	0.2	0.3	0.4	0.5	0.6	0.7	0.8	0.9	1.0
REQUIRED CAMBER	0.000	0.016	0.031	0.042	0.049	0.052	0.049	0.042	0.031	0.016	0.000

NAD 83 / NSRS 2007

NOTES:

1. ALL DIMENSIONS ON THIS DRAWING ARE HORIZONTAL.
2. ℄ PIER 3, ℄ ABUTMENT 2, AND ℄ BEARINGS ARE PARALLEL.
3. FOR STRUCTURAL STEEL NOTES, DIAPHRAGM DETAILS, STIFFENER & CONNECTOR ℙ DETAILS, SHEAR STUD CONNECTOR DETAIL, FLANGE TO WEB WELD DETAIL, WELD TERMINATION DETAIL AND SHOP SPLICE DETAIL, SEE "STRUCTURAL STEEL DETAILS" SHEETS.
4. FOR BEARINGS, SEE "BEARING DETAILS" SHEET.
5. FOR DSA AND PSA DRAIN PIPE SUPPORT DETAILS, SEE "STRUCTURE DRAINAGE DETAILS" SHEET.
6. BEARING STIFFENERS AND END DIAPHRAGM CONNECTOR PLATES ARE ORIENTED NORMAL TO CENTERLINE OF GIRDER.
7. THE GIRDERS IN SPAN "D" CAN BE SUBSTITUTED EQUIVALENTLY WITH W44 × 290.

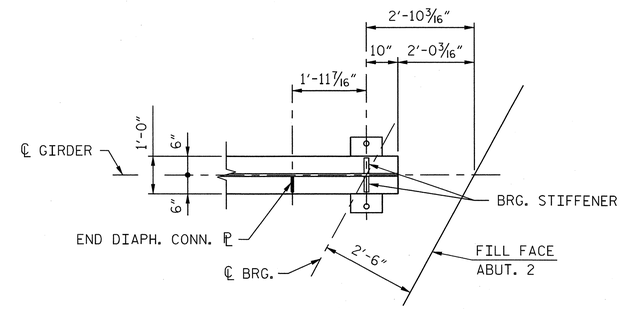

AT ABUTMENT 2

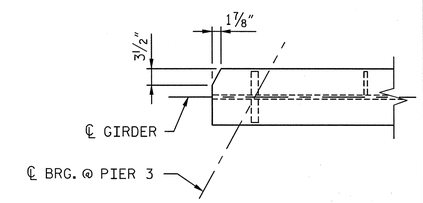

TOP FLANGE CLIP DIMENSIONS

(SPAN "D" AT PIER 3)

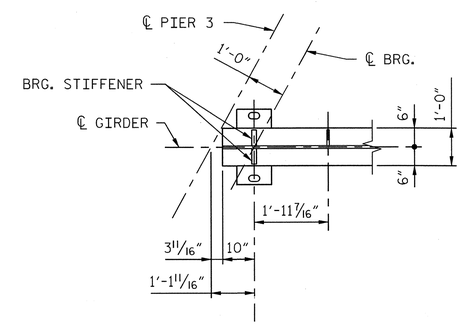

AT PIER 3

GIRDER END DIAPHRAGMS

(BOTTOM FLANGE SHOWN)

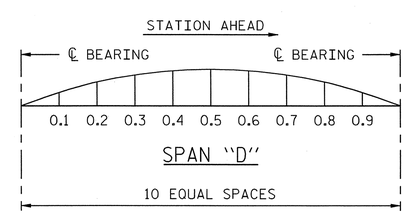

SCHEMATIC CAMBER ORDINATES

PROJECT NO. P-5201

WAKE COUNTY

STATION: P.O.C. 3583+33.86 -M1-
P.O.T. 22+56.93 -L-

SHEET 4 OF 4

AECOM
AECOM TECHNICAL SERVICES, INC.
701 CORPORATE CENTER DRIVE, SUITE 475
RALEIGH, NC 27607
(919) 854-6200 www.aecom.com
AECOM License No. F-0342

NORTH CAROLINA PROFESSIONAL SEAL 025669 ENGINEER L. MARK PEARSON 9/12/13

STATE OF NORTH CAROLINA
DEPARTMENT OF TRANSPORTATION
RALEIGH

SUPERSTRUCTURE

FRAMING PLAN AND GIRDER DETAILS - SPAN "D"

REVISIONS								SHEET NO.
NO.	BY:	DATE:	NO.	BY:	DATE:			S-15
1			3					TOTAL SHEETS
2			4					56

DRAWN BY : MTB DATE : 03/13
CHECKED BY : JL DATE : 03/13

DATE: 9/12/2013
TIME: 3:46:57 PM

USER: patchoz
DGN: G:\60238803\400_Technical_Information_Dies_Files\450_NCDOT Stuff\ncDesignFiles\Structures\P-5201_SD_DSN_FramingPlan_D.dgn

0422DEL_P19

NOTES:

1. FOR DIAPHRAGM LOCATIONS, SEE FRAMING PLANS.
2. FOR DETAILS OF DIAPHRAGM SUPPORT ANGLES (DSA), SEE "STRUCTURE DRAINAGE DETAILS" SHEET.
3. FOR STRUCTURAL STEEL NOTES, STIFFENER DETAILS, SHEAR STUD CONNECTOR DETAIL, FLANGE TO WEB WELD DETAIL, WELD TERMINATION DETAIL AND SHOP SPLICE DETAIL, SEE "STRUCTURAL STEEL DETAILS", SHEET 2 OF 2.

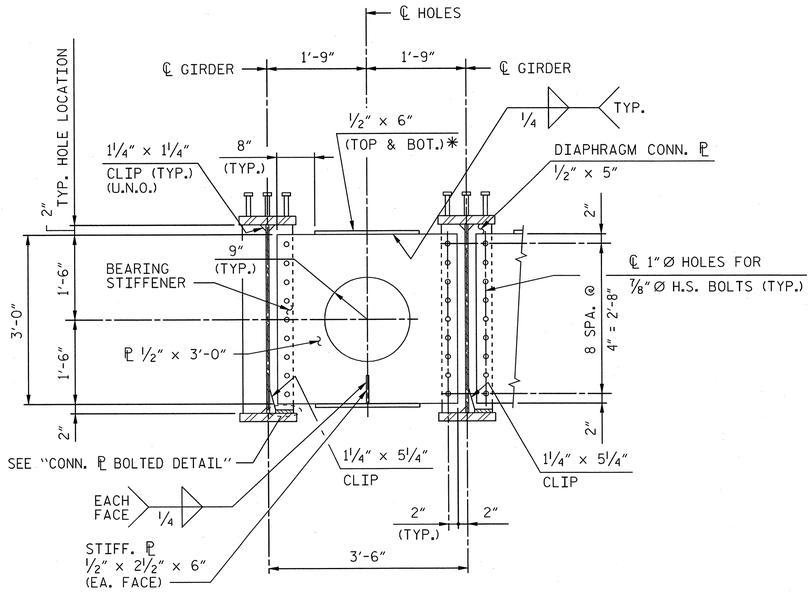

SECTION AT END DIAPHRAGM - D1

* NOTE: CUT BOT. FLANGE ℙ OF D1 TO PERMIT INSTALLATION OF ANCHOR BOLTS.

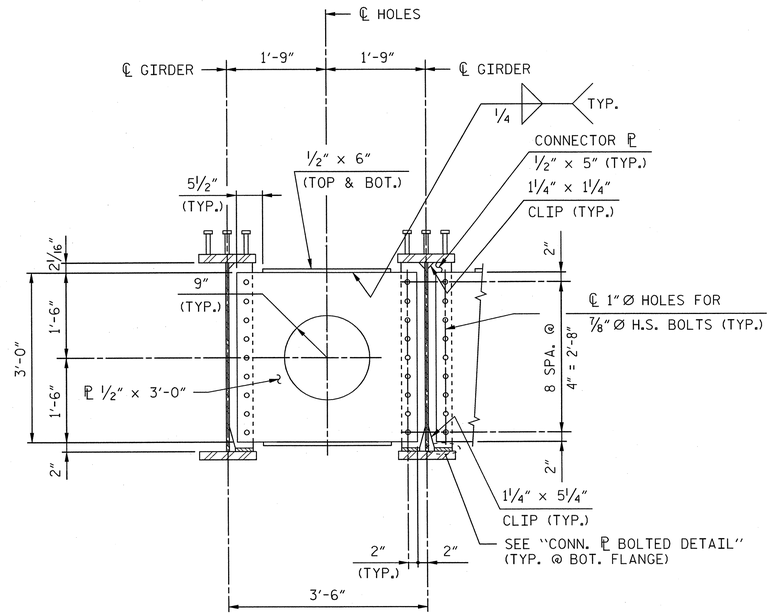

SECTION AT INTERMEDIATE DIAPHRAGM - D2

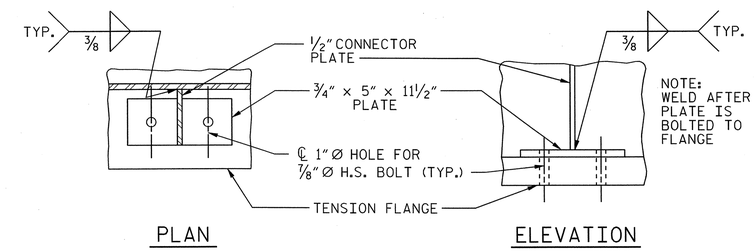

CONN. ℙ BOLTED DETAIL

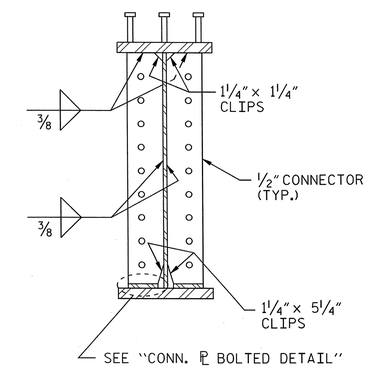

CONNECTOR ℙ DETAIL

SPAN "A" SHOWN, SPANS "B", "C" & "D" SIMILAR

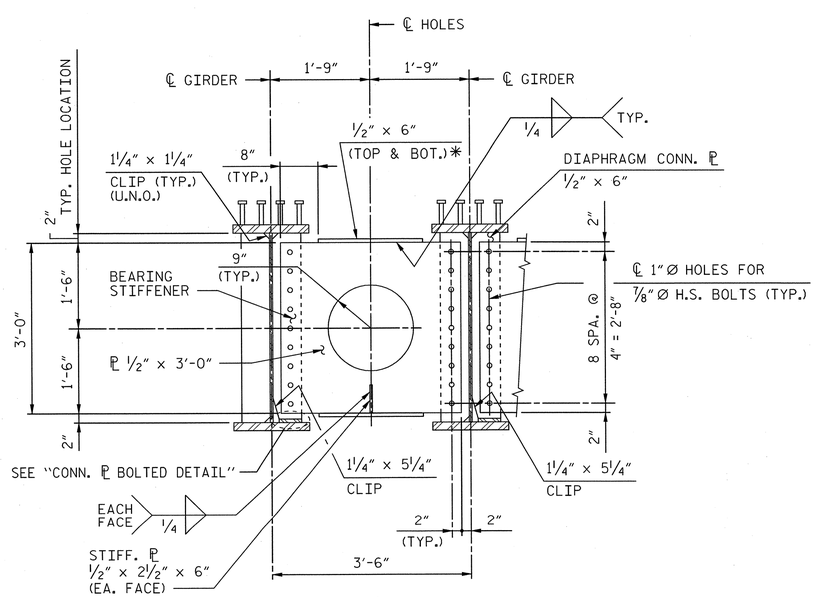

SECTION AT END DIAPHRAGM - D3

* NOTE: CUT BOT. FLANGE ℙ OF D3 TO PERMIT INSTALLATION OF ANCHOR BOLTS.

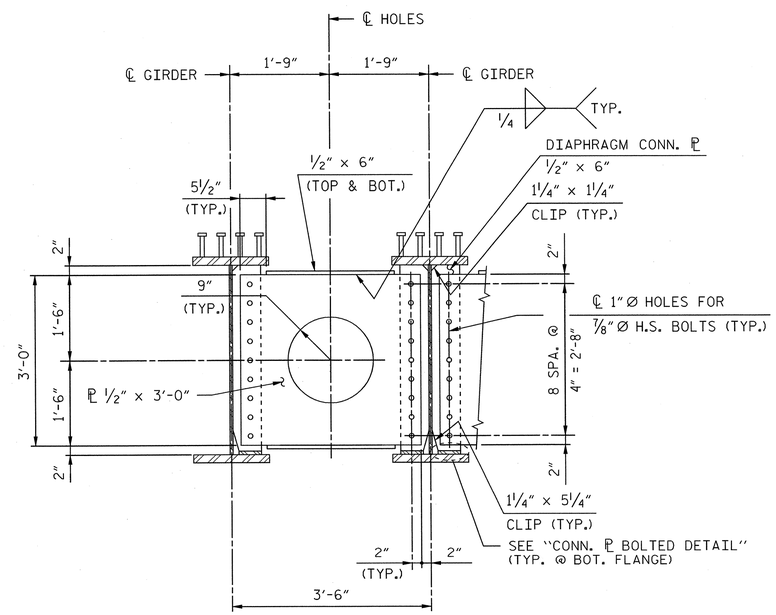

SECTION AT INTERMEDIATE DIAPHRAGM - D4

PROJECT NO. P-5201

WAKE **COUNTY**

STATION: P.O.C. 3583+33.86 -M1-
P.O.T. 22+56.93 -L-

SHEET 1 OF 2

AECOM
AECOM TECHNICAL SERVICES, INC.
701 CORPORATE CENTER DRIVE, SUITE 475
RALEIGH, NC 27607
(919) 854-6200 www.aecom.com
AECOM License No. F-0342

NORTH CAROLINA PROFESSIONAL SEAL 10656 ENGINEER J. MARK PEARSON 9/12/13

STATE OF NORTH CAROLINA
DEPARTMENT OF TRANSPORTATION
RALEIGH

SUPERSTRUCTURE

STRUCTURAL STEEL DETAILS

REVISIONS							SHEET NO.
NO.	BY:	DATE:	NO.	BY:	DATE:		S-16
1			3				TOTAL SHEETS
2			4				56

DRAWN BY : DDL DATE : 04/13
CHECKED BY : JL DATE : 04/13

DATE: 9/12/2013
TIME: 3:06:43 PM
USER: pdaphaz
DGN: C:\pw\2388013v400_Technical_Information_Disc_FTI\ek450_NCDOTStructechDesignFiles\Structures\P-5201_SD_DSN_StructSteelDetails 04.dgn

0422DEL_P19
0001ADD_P19

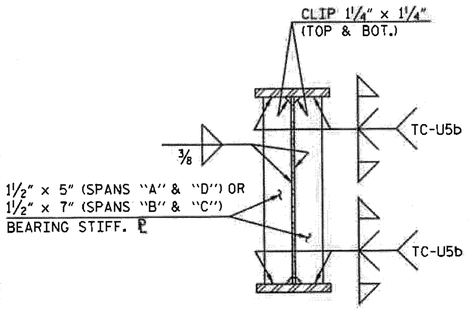

BEARING STIFFENER

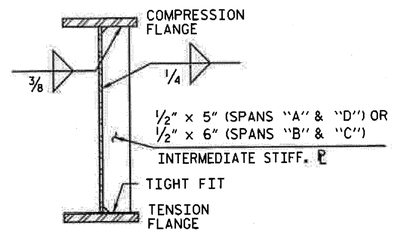

INTERMEDIATE STIFFENER

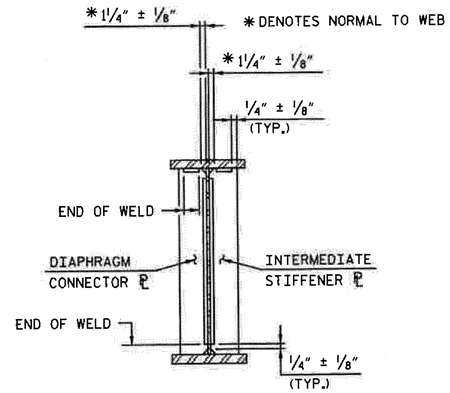

WELD TERMINATION DETAIL
(FILLET WELDS ONLY)

STIFFENER ℙ DETAILS

(FOR CONNECTION ℙ DETAIL, SEE "STRUCTURAL STEEL DETAILS", SHEET 1 OF 2)

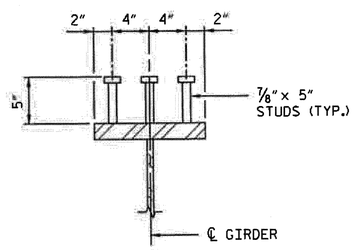

SHEAR STUD CONNECTOR DETAIL
(TYP. ALL GIRDERS - SPANS "A" AND "D")

NOTE:

ALIGN STUDS ON GIRDER FLANGE SUCH THAT BOTTOM SLAB REINFORCING BARS CAN BE PLACED BETWEEN THE STUDS NORMAL TO THE GIRDERS.

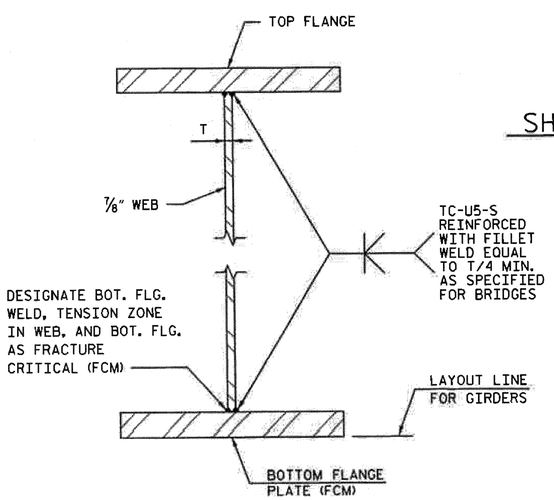

FLANGE TO WEB WELD DETAIL

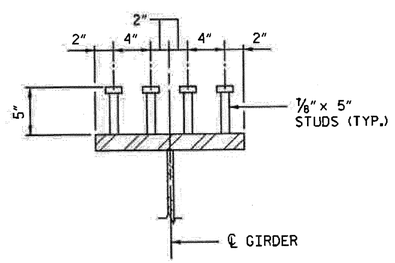

SHEAR STUD CONNECTOR DETAIL
(TYP. ALL GIRDERS - SPANS "B" AND "C")

NOTE:

ALIGN STUDS ON GIRDER FLANGE SUCH THAT BOTTOM SLAB REINFORCING BARS CAN BE PLACED BETWEEN THE STUDS NORMAL TO THE GIRDERS.

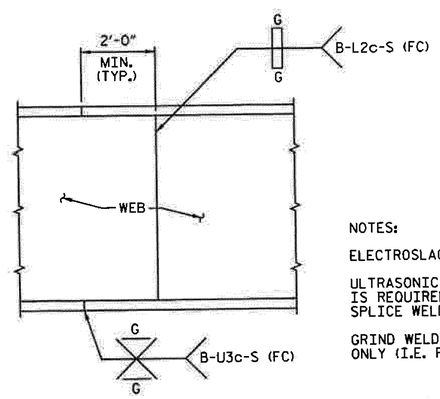

SHOP SPLICE DETAIL

NOTES:

ELECTROSLAG WELDING IS NOT PERMITTED.

ULTRASONIC OR RADIOGRAPHIC INSPECTION IS REQUIRED FOR ALL FLANGE AND WEB SPLICE WELDS, SEE SPECIAL PROVISIONS.

GRIND WELDS IN DIRECTION OF STRESS ONLY (I.E. PARALLEL TO ℄ GIRDER).

STRUCTURAL STEEL NOTES:

1. STRUCTURAL STEEL: fs = 27.5 ksi STRUCTURAL STEEL SHALL CONFORM TO THE FOLLOWING ASTM SPECIFICATIONS:

   BOTTOM FLANGES AND TENSION PORTIONS OF WEBS OF GIRDERS:
   A709, GRADE 50 WITH SUPPLEMENTALS S84-F2, S91 AND S93 APPLYING, AND IMPACT TEST REQUIREMENT OF 25 ft-lb @ 40°F AS GOVERNED BY ASTM A673 FOR TEST FREQUENCY "P".

   TOP FLANGES AND COMPRESSION PORTIONS OF WEBS OF GIRDERS:
   A709, GRADE 50 WITH SUPPLEMENTALS S83-T2 AND S91 APPLYING, AND WITH IMPACT TEST REQUIREMENT OF 15 ft-lb @ 40°F AS GOVERNED BY ASTM A673 FOR TEST FREQUENCY "H".

   ANCHOR BOLTS FOR BEARING DEVICES SHALL CONFORM TO ASTM F-1554. ANCHOR BOLTS, NUTS, AND PLATE WASHERS SHALL BE HOT-DIP GALVANIZED IN ACCORDANCE WITH ASTM A153.

   MISCELLANEOUS MATERIAL: A709, GRADE 50.

2. ALL DIMENSIONS SHOWN ARE HORIZONTAL OR VERTICAL UNLESS OTHERWISE NOTED.
3. DESIGN SPECIFICATIONS: CURRENT AREMA MRE SPECIFICATION CHAPTER 15, STEEL STRUCTURE - GIRDER BOTTOM FLANGE PLATE INCLUDING WEB TO FLANGE WELD AND TENSION ZONE OF WEB PLATE ARE DESIGNATED FRACTURE CRITICAL (FCM) MEMBERS.
4. MILL TEST REPORTS: NORFOLK SOUTHERN RAILWAY COMPANY SHALL BE FURNISHED COPIES OF MILL TEST REPORTS FOR ALL MATERIALS EXCEPT MISCELLANEOUS PLATES AND SHAPES. REPORTS SHALL INDICATE COMPLIANCE WITH ALL SPECIFIED REQUIREMENTS.
5. INSPECTION: SHOP INSPECTION BY NORFOLK SOUTHERN REAILWAY COMPANY OR ITS AUTHORIZED AGENT, SEE SPECIAL PROVISIONS FOR ADDITIONAL WELDING INSPECTION OF FLANGE PLATE TO WEB PLATES WELDS.
6. SHOP AND FIELD PAINT: STRUCTURAL STEEL SHALL BE PAINTED IN ACCORDANCE WITH THE CURRENT NORFOLK SOUTHERN CORPORATION SPECIFICATIONS. THE SYSTEM TO BE USED SHALL BE AN INORGANIC ZINC-ACRYLIC SYSTEM. TOP OF TOP FLANGE AND VERTICAL EDGES OF TOP FLANGE OF ALL GIRDERS SHALL BE PAINTED. TOP COAT TO BE APPLIED IN THE FIELD.
7. SHOP DRAWINGS: SHOP DRAWINGS SHALL BE APPOVED BY THE CHIEF ENGINEER - BRIDGES & STRUCTURES, NORFOLK SOUTHERN CORPORATION, ATLANTA, GEORGIA. MATERIAL SHALL NOT BE FABRICATED UNTIL DRAWINGS HAVE BEEN APPROVED. COPIES OF APPROVED SHOP DRAWINGS ARE TO BE FURNISHED TO NCDOT. SHOP DRAWINGS SHALL BE LABELED "NORFOLK SOUTHERN MP H-69.6".
8. HOLES: OPEN HOLES AS NOTED.
9. HIGH STRENGTH BOLTS, NUTS AND WASHERS: ASTM DESIGNATION A325.
10. ANCHOR BOLTS SHALL BE 1¼"Ø IN ACCORDANCE WITH A.R.E.M.A. SPECIFICATIONS AND SHALL BE GROUTED IN FORMED HOLES AFTER GIRDERS ARE ERECTED.
11. FOR CAMBER REQUIREMENTS, SEE FRAMING PLANS.
12. CAMBERED GIRDER LENGTHS SHALL BE ADJUSTED AND BEARINGS PLACED ON CAMBERED GIRDERS SO AS TO BE ALIGNED WITH THE ANCHORS AFTER DEAD LOAD DEFLECTION HAS OCCURRED. SHOP PLANS SHALL BE PREPARED ACCORDINGLY.
13. BEARING PADS SHALL BE USED WHENEVER STEEL MASONRY PLATE, OR OTHER STEEL BEARING PLATE, BEARS ON CONCRETE. PADS SHALL BE PREFORMED FABRIC BEARING PADS, ½" THICK. PREFORMED FABRIC BEARING PADS SHALL BE SHOCK PAD STYLE 15175 AS MANUFACTURED BY ALERT MANUFACTURING AND SUPPLY COMPANY, CHICAGO, ILLINOIS, OR FABREEKA PADS AS MANUFACTURED BY FABREEKA PRODUCTS COMPANY, 1190 ADAMS STREET, BOSTON, MASSACHUSETTS, OR SORBTEX PADS AS MANUFACTURED BY VDSS ENGINEERING, INC., CHICAGO, ILLINOIS, OR APPROVED EQUAL.
14. SHEAR CONNECTORS ON GIRDERS MAY BE SHIFTED UP TO 1" TO CLEAR FLANGE SPLICE WELDS.
15. WEB SHOP SPLICES ARE PERMITTED TO LIMIT THE MAXIMUM REQUIRED WEB PIECE LENGTHS TO 45 FT. PERMITTED WEB SHOP SPLICES SHALL NOT BE LOCATED WITHIN 15 FT. OF MAXIMUM DEAD LOAD DEFLECTION AND SHALL BE LOCATED AS FAR AS POSSIBLE FROM CONNECTOR PLATE OR INTERMEDIATE STIFFENER WELDS. FLANGE SHOP SPLICES SHALL NOT BE PERMITTED UNLESS NOTED.
16. FOR PROTECTION OF PAINTED STEEL, SEE SPECIAL PROVISIONS.
17. FOR STRUCTURAL STEEL, SEE SPECIAL PROVISION "NORFOLK SOUTHERN SPECIFICATIONS FOR STRUCTURAL STEEL".
18. FOR FABRICATION OF STRUCTURAL STEEL, SEE SPECIAL PROVISIONS.
19. FIELD CONNECTIONS SHALL BE BOLTED WITH ⅞"Ø ASTM A325, TYPE 1 HIGH STRENGTH BOLTS WITH HARDENED WASHERS IN ACCORDANCE WITH AREMA SPECIFICATIONS USING THE TURN OF NUT METHOD.

PROJECT NO. P-5201
WAKE COUNTY
STATION: P.O.C. 3583+33.86 -M1-
P.O.T. 22+56.93 -L-
SHEET 2 OF 2

AECOM
AECOM TECHNICAL SERVICES, INC.
701 CORPORATE CENTER DRIVE, SUITE 475
RALEIGH, NC 27607
(919) 854-6200 www.aecom.com
AECOM License No. F-0342

NORTH CAROLINA PROFESSIONAL SEAL ENGINEER L. MARK PENNINGTON 10866 12/5/13

STATE OF NORTH CAROLINA
DEPARTMENT OF TRANSPORTATION
RALEIGH

SUPERSTRUCTURE

STRUCTURAL STEEL DETAILS

REVISIONS							
NO.	BY:	DATE:	NO.	BY:	DATE:	SHEET NO. S-17
1			3			TOTAL SHEETS
2			4			

DRAWN BY : DDL DATE : 04/13
CHECKED BY : JL DATE : 04/13

USER: wilsdm
DGN: 0422DEL_P19_0001ADD_P19.dgn
DATE: 12/5/2013
TIME: 10:33:10 AM

0422DEL_P19

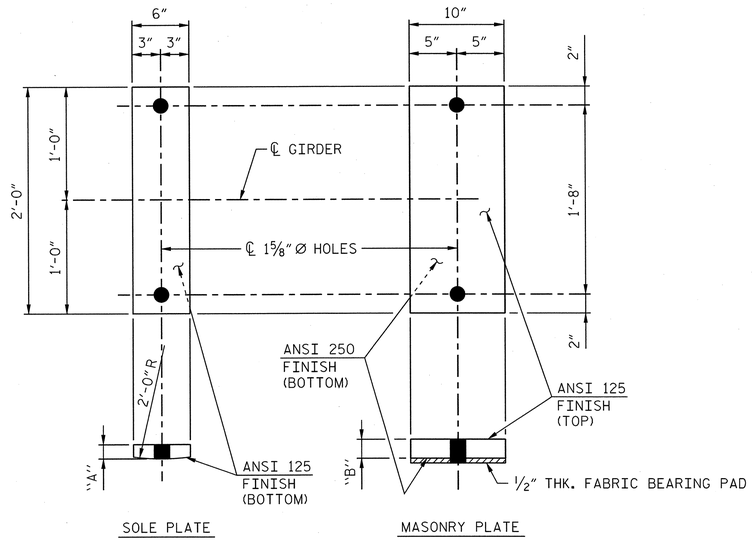

FIXED BEARINGS

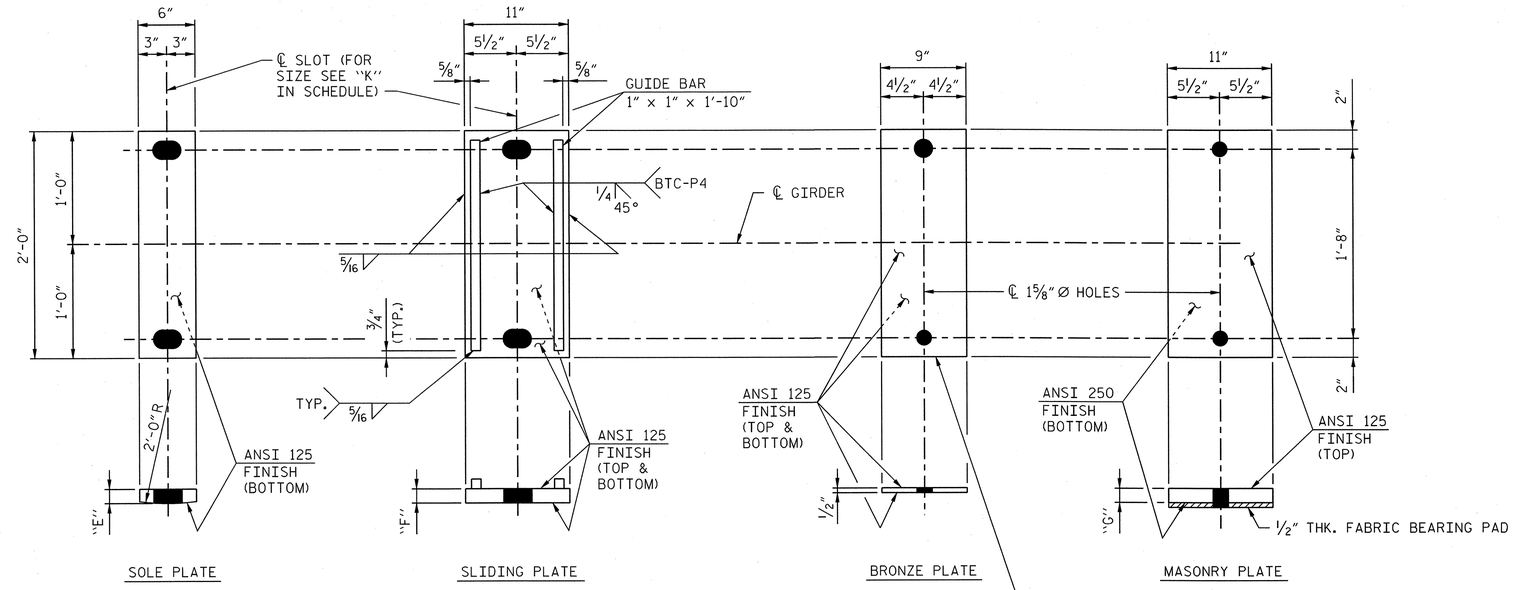

EXPANSION BEARINGS

BRONZE PLATE TO BE ASTM B22 - COPPER ALLOY 913 OR ASTM B100 - COPPER ALLOY 510. TOP SURFACE TO BE SELF LUBRICATING.

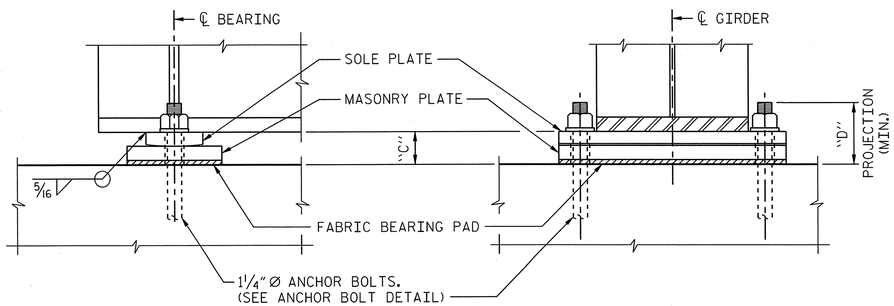

FIXED BEARING ASSEMBLY (FBA-1)

(20 REQ'D.)

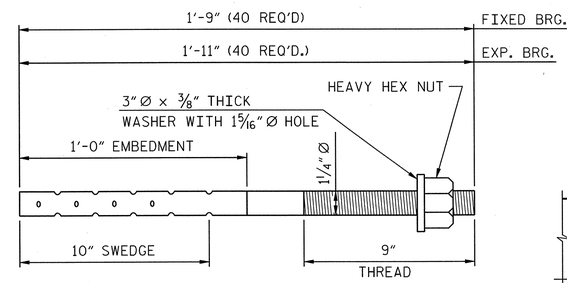

ANCHOR BOLT DETAIL

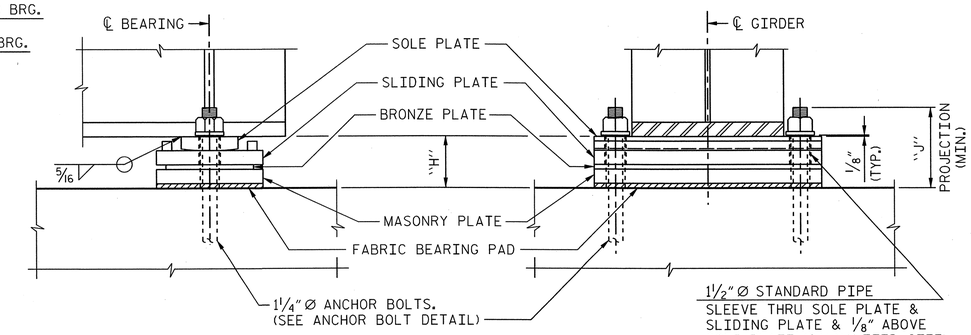

EXPANSION BEARING ASSEMBLY (EBA-1)

(20 REQ'D.)

BEARING PLATE SCHEDULE

GIRDER	DIMENSIONS (in.)									
	FIXED BEARING (FBA-1)				EXPANSION BEARING (EBA-1)					
	"A"	"B"	"C"	"D"	"E"	"F"	"G"	"H"	"J"	"K"
AG1	1½"	3 9/16"	5 9/16"	9"	1½"	1½"	3⅛"	7⅛"	11½"	2" x 3½"
AG2	1½"	3⅜"	5⅜"	9"	1½"	1½"	2 15/16"	6 15/16"	11½"	2" x 3½"
AG3	1½"	3 3/16"	5 3/16"	9"	1½"	1½"	2¾"	6¾"	11½"	2" x 3½"
AG4	1½"	3 1/16"	5 1/16"	9"	1½"	1½"	2 9/16"	6 9/16"	11½"	2" x 3½"
AG5	1½"	2⅞"	4⅞"	9"	1½"	1½"	2⅜"	6⅜"	11½"	2" x 3½"
AG6	1½"	2 11/16"	4 11/16"	9"	1½"	1½"	2 3/16"	6 3/16"	11½"	2" x 3½"
AG7	1½"	2½"	4½"	9"	1½"	1½"	2 1/16"	6 1/16"	11½"	2" x 3½"
AG8	1½"	2⅜"	4⅜"	9"	1½"	1½"	1⅞"	5⅞"	11½"	2" x 3½"
AG9	1½"	2 3/16"	4 3/16"	9"	1½"	1½"	1 11/16"	5 11/16"	11½"	2" x 3½"
AG10	1½"	2"	4"	9"	1½"	1½"	1½"	5½"	11½"	2" x 3½"
DG1	1½"	3⅞"	5⅞"	9"	1½"	1½"	4⅜"	8⅜"	11½"	2" x 3½"
DG2	1½"	3 11/16"	5 11/16"	9"	1½"	1½"	4⅛"	8⅛"	11½"	2" x 3½"
DG3	1½"	3½"	5½"	9"	1½"	1½"	3 15/16"	7 15/16"	11½"	2" x 3½"
DG4	1½"	3¼"	5¼"	9"	1½"	1½"	3¾"	7¾"	11½"	2" x 3½"
DG5	1½"	3 1/16"	5 1/16"	9"	1½"	1½"	3½"	7½"	11½"	2" x 3½"
DG6	1½"	2 13/16"	4 13/16"	9"	1½"	1½"	3 5/16"	7 5/16"	11½"	2" x 3½"
DG7	1½"	2⅝"	4⅝"	9"	1½"	1½"	3⅛"	7⅛"	11½"	2" x 3½"
DG8	1½"	2 7/16"	4 7/16"	9"	1½"	1½"	2 15/16"	6 15/16"	11½"	2" x 3½"
DG9	1½"	2 3/16"	4 3/16"	9"	1½"	1½"	2 11/16"	6 11/16"	11½"	2" x 3½"
DG10	1½"	2"	4"	9"	1½"	1½"	2½"	6½"	11½"	2" x 3½"

NOTES:

ANCHOR BOLTS, SLIDING PLATE (EXPANSION BEARING) AND MASONRY PLATE (FIXED AND EXPANSION BEARINGS) SHALL BE HOT DIPPED GALVANIZED.

ALL PLATE SURFACES SHALL BE PAINTED WITH A 3 COAT PAINT SYSTEM EXCEPT AS SPECIFIED BELOW.

(A) THE SLIDING PLATE (EXPANSION BEARING) SHALL NOT BE PAINTED BUT SHALL RECEIVE A COAT OF LUBRICATION.

(B) THE MASONRY PLATE (FIXED AND EXPANSION BEARINGS) SHALL NOT BE PAINTED.

(C) THE BOTTOM SURFACE OF THE SOLE PLATE SHALL NOT BE PAINTED BUT SHALL RECEIVE A SINGLE COAT OF PRIMER APPLIED IN THE SHOP.

(D) THE TOP SURFACE OF THE SOLE PLATE SHALL NOT BE PAINTED IN THE VICINITY OF THE WELD BETWEEN THE SOLE PLATE AND THE BOTTOM FLANGE.

FOR ACRYLIC PAINT SYSTEM FOR STRUCTURAL STEEL, SEE SPECIAL PROVISIONS.

FOR SELF LUBRICATING EXPANSION BEARING ASSEMBLIES, SEE SPECIAL PROVIVSIONS.

PROJECT NO. P-5201

WAKE COUNTY

STATION: P.O.C. 3583+33.86 -M1-
P.O.T. 22+56.93 -L-

SHEET 1 OF 2

AECOM
AECOM TECHNICAL SERVICES, INC.
701 CORPORATE CENTER DRIVE, SUITE 475
RALEIGH, NC 27607
(919) 854-6200 www.aecom.com
AECOM License No. F-0342

NORTH CAROLINA PROFESSIONAL ENGINEER SEAL 036569 9/16/13 L. MARK PEARSON

STATE OF NORTH CAROLINA
DEPARTMENT OF TRANSPORTATION
RALEIGH

SUPERSTRUCTURE

BEARING DETAILS
SPANS "A" & "D"

REVISIONS						SHEET NO.
NO.	BY:	DATE:	NO.	BY:	DATE:	S-18
1			3			TOTAL SHEETS
2			4			56

DRAWN BY : MTB DATE : 03/13
CHECKED BY : JL DATE : 03/13

DATE: 9/16/2013
TIME: 10:09:32 AM
USER: Lowery
DGN: G:\60236803\400_Technical_Information_Disc_Files\450_NCDOT\SHT\eachDesignFiles\Structures\P-5201_SD_DSN_BrgDet8_1.dgn

0422DEL_P19

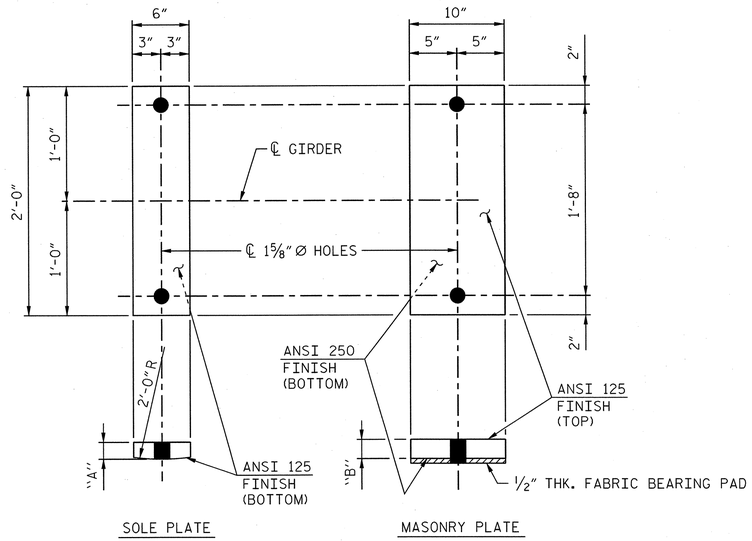

FIXED BEARINGS

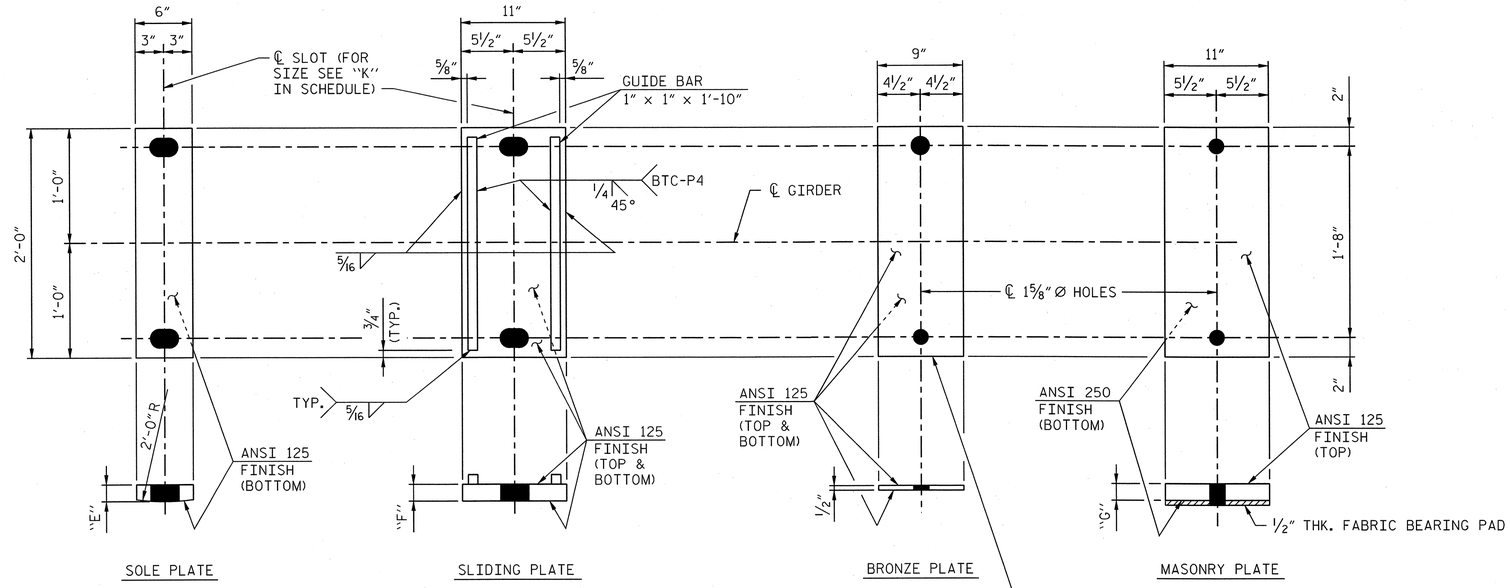

EXPANSION BEARINGS

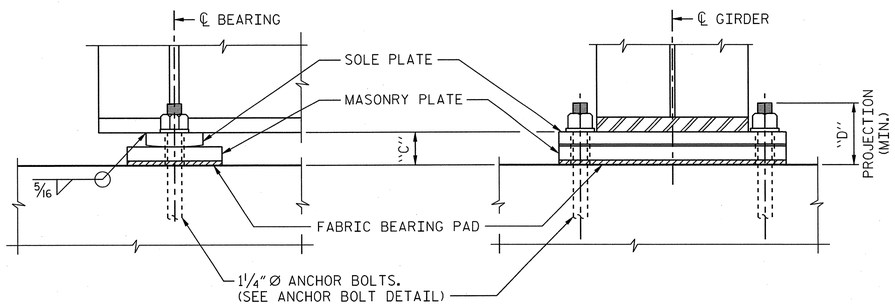

FIXED BEARING ASSEMBLY (FBA-2)

(20 REQ'D.)

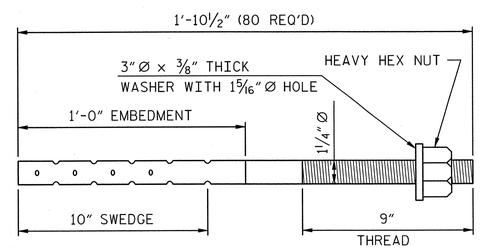

ANCHOR BOLT DETAIL

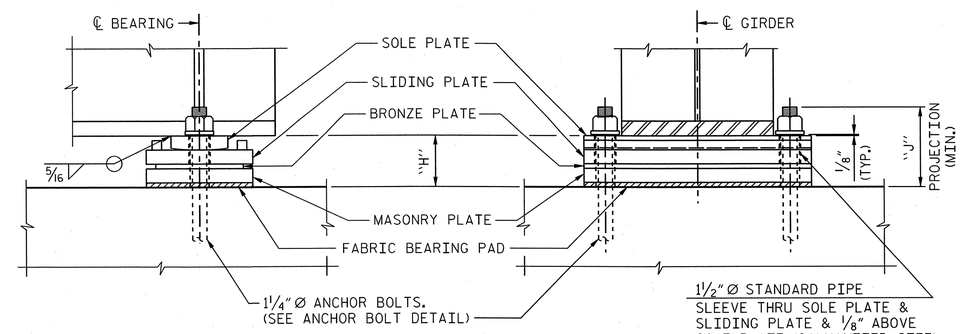

EXPANSION BEARING ASSEMBLY (EBA-2)

(20 REQ'D.)

BEARING PLATE SCHEDULE

GIRDER	DIMENSIONS (in.)									
	FIXED BEARING (FBA-2)				EXPANSION BEARING (EBA-2)					
	"A"	"B"	"C"	"D"	"E"	"F"	"G"	"H"	"J"	"K"
BG1	1¾"	5⅛"	7⅜"	11½"	1¾"	1¾"	3½"	8"	11½"	2" x 3½"
BG2	1¾"	4 15/16"	7 3/16"	11½"	1¾"	1¾"	3 5/16"	7 13/16"	11½"	2" x 3½"
BG3	1¾"	4¾"	7"	11½"	1¾"	1¾"	3⅛"	7⅝"	11½"	2" x 3½"
BG4	1¾"	4 3/16"	6 13/16"	11½"	1¾"	1¾"	2 15/16"	7 7/16"	11½"	2" x 3½"
BG5	1¾"	4⅜"	6⅝"	11½"	1¾"	1¾"	2 11/16"	7 3/16"	11½"	2" x 3½"
BG6	1¾"	4¼"	6½"	11½"	1¾"	1¾"	2½"	7"	11½"	2" x 3½"
BG7	1¾"	4 1/16"	6 5/16"	11½"	1¾"	1¾"	2 5/16"	6 13/16"	11½"	2" x 3½"
BG8	1¾"	3⅞"	6⅛"	11½"	1¾"	1¾"	2⅛"	6⅝"	11½"	2" x 3½"
BG9	1¾"	3 11/16"	5 15/16"	11½"	1¾"	1¾"	1 15/16"	6 7/16"	11½"	2" x 3½"
BG10	1¾"	3½"	5¾"	11½"	1¾"	1¾"	1¾"	6¼"	11½"	2" x 3½"
CG1	1¾"	6"	8¼"	11½"	1¾"	1¾"	3⅝"	8⅛"	11½"	2" x 3½"
CG2	1¾"	5 13/16"	8 1/16"	11½"	1¾"	1¾"	3⅜"	7⅞"	11½"	2" x 3½"
CG3	1¾"	5⅝"	7⅞"	11½"	1¾"	1¾"	3 3/16"	7 11/16"	11½"	2" x 3½"
CG4	1¾"	5 7/16"	7 11/16"	11½"	1¾"	1¾"	3"	7½"	11½"	2" x 3½"
CG5	1¾"	5 3/16"	7 7/16"	11½"	1¾"	1¾"	2¾"	7¼"	11½"	2" x 3½"
CG6	1¾"	5"	7¼"	11½"	1¾"	1¾"	2 9/16"	7 1/16"	11½"	2" x 3½"
CG7	1¾"	4 13/16"	7 1/16"	11½"	1¾"	1¾"	2⅜"	6⅞"	11½"	2" x 3½"
CG8	1¾"	4⅝"	6⅞"	11½"	1¾"	1¾"	2 3/16"	6 11/16"	11½"	2" x 3½"
CG9	1¾"	4 7/16"	6 11/16"	11½"	1¾"	1¾"	1 15/16"	6 7/16"	11½"	2" x 3½"
CG10	1¾"	4¼"	6½"	11½"	1¾"	1¾"	1¾"	6¼"	11½"	2" x 3½"

NOTES:

ANCHOR BOLTS, SLIDING PLATE (EXPANSION BEARING) AND MASONRY PLATE (FIXED AND EXPANSION BEARINGS) SHALL BE HOT DIPPED GALVANIZED.

ALL PLATE SURFACES SHALL BE PAINTED WITH A 3 COAT PAINT SYSTEM EXCEPT AS SPECIFIED BELOW.

(A) THE SLIDING PLATE (EXPANSION BEARING) SHALL NOT BE PAINTED BUT SHALL RECEIVE A COAT OF LUBRICATION.

(B) THE MASONRY PLATE (FIXED AND EXPANSION BEARINGS) SHALL NOT BE PAINTED.

(C) THE BOTTOM SURFACE OF THE SOLE PLATE SHALL NOT BE PAINTED BUT SHALL RECEIVE A SINGLE COAT OF PRIMER APPLIED IN THE SHOP.

(D) THE TOP SURFACE OF THE SOLE PLATE SHALL NOT BE PAINTED IN THE VICINITY OF THE WELD BETWEEN THE SOLE PLATE AND THE BOTTOM FLANGE.

FOR ACRYLIC PAINT SYSTEM FOR STRUCTURAL STEEL, SEE SPECIAL PROVISIONS.

FOR SELF LUBRICATING EXPANSION BEARING ASSEMBLIES, SEE SPECIAL PROVIVSIONS.

PROJECT NO. P-5201

WAKE COUNTY

STATION: P.O.C. 3583+33.86 -M1-
P.O.T. 22+56.93 -L-

SHEET 2 OF 2

AECOM
AECOM TECHNICAL SERVICES, INC.
701 CORPORATE CENTER DRIVE, SUITE 475
RALEIGH, NC 27607
(919) 854-6200 www.aecom.com
AECOM License No. F-0342

NORTH CAROLINA PROFESSIONAL SEAL ENGINEER L. MARK PEARSON 10656 9/16/13

STATE OF NORTH CAROLINA
DEPARTMENT OF TRANSPORTATION
RALEIGH

SUPERSTRUCTURE

BEARING DETAILS
SPANS "B" & "C"

REVISIONS						SHEET NO.
NO.	BY:	DATE:	NO.	BY:	DATE:	S-19
1			3			TOTAL SHEETS
2			4			56

DRAWN BY : MTB DATE : 03/13
CHECKED BY : JL DATE : 03/13

DATE: 9/16/2013
TIME: 10:35:03 AM
USER: Lowerd
DGN: Q:\60236903\v400_Technical\Information_Dissemination\Structures\P-5201\SD_DSN\BrgDets_2.dgn

0422DEL_P19

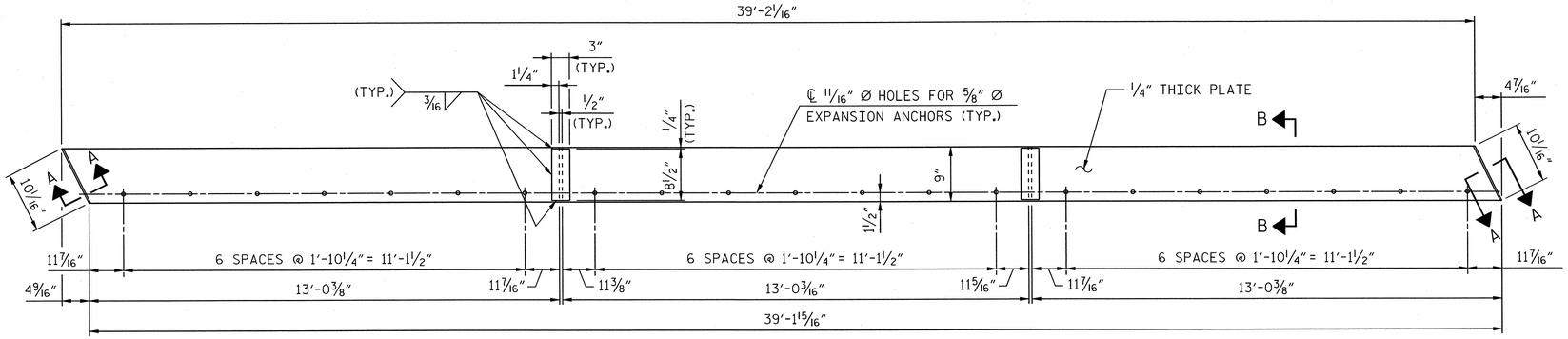

PIER #2

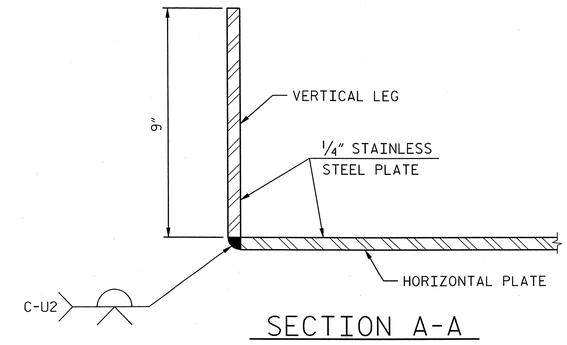

SECTION A-A

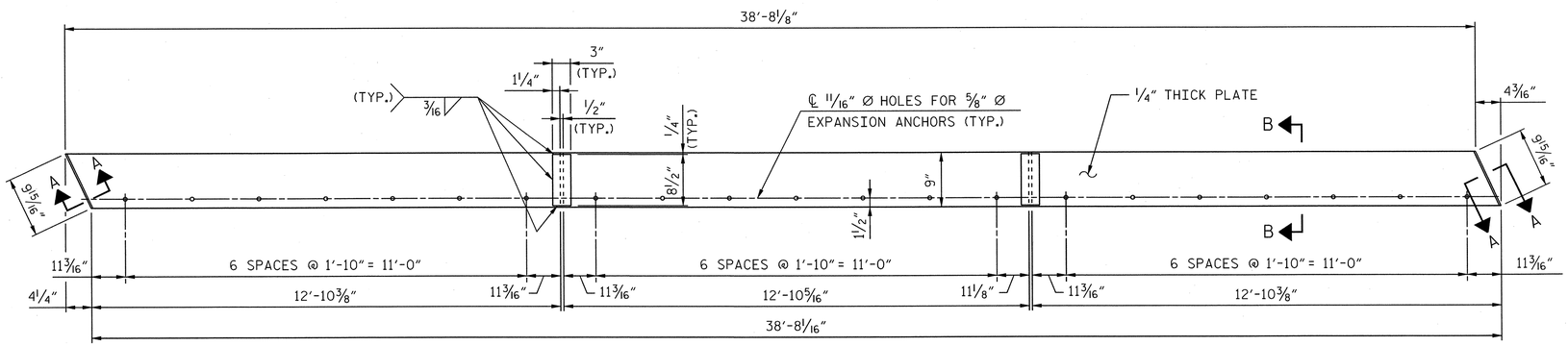

PIER #1

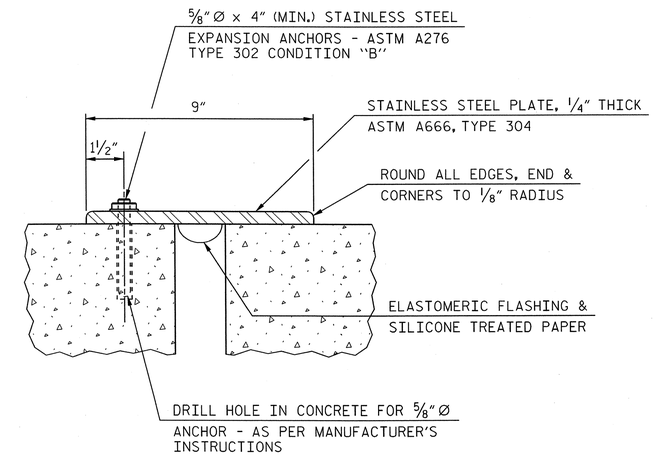

SECTION B-B
(DETAIL OF EXPANSION ANCHOR)

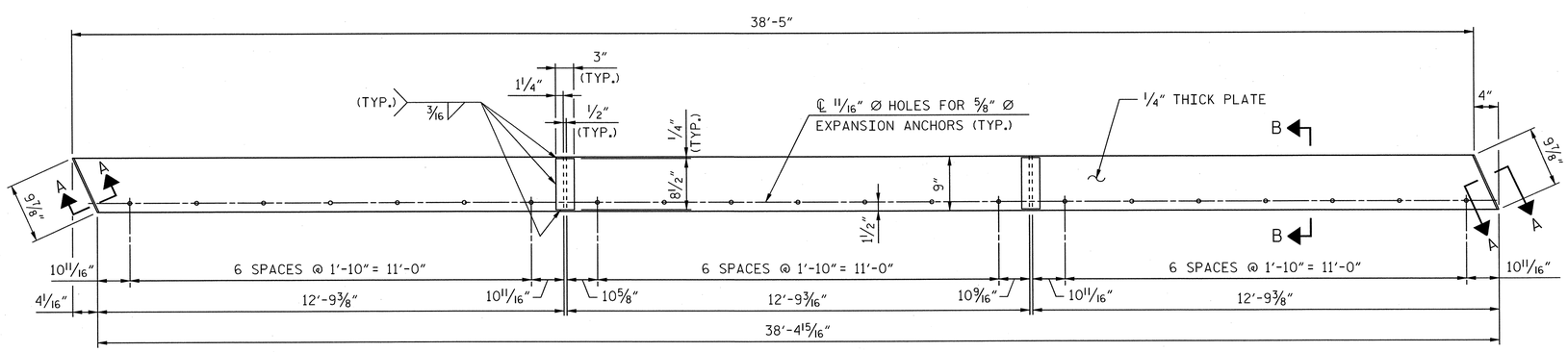

ABUTMENT #1

PLAN - EXPANSION PLATES

UP STATION

DRAWN BY : MTB DATE : 03/13
CHECKED BY : JL DATE : 03/13

PROJECT NO. P-5201
WAKE **COUNTY**
STATION: P.O.C. 3583+33.86 -M1-
P.O.T. 22+56.93 -L-

SHEET 1 OF 2

AECOM
AECOM TECHNICAL SERVICES, INC.
701 CORPORATE CENTER DRIVE, SUITE 475
RALEIGH, NC 27607
(919) 854-6200 www.aecom.com
AECOM License No. F-0342

NORTH CAROLINA PROFESSIONAL SEAL 18656 ENGINEER L. MARK PEARSON 9/12/13

STATE OF NORTH CAROLINA
DEPARTMENT OF TRANSPORTATION
RALEIGH

SUPERSTRUCTURE

EXPANSION PLATE DETAILS

REVISIONS								SHEET NO.
NO.	BY:	DATE:	NO.	BY:	DATE:			S-20
1			3					TOTAL SHEETS
2			4					56

DATE: 9/12/2013
TIME: 3:41:44 PM

USER: 206062
DGN: 0422DEL_P19_03.dgn

0422DEL_P19

DGN

DATE: 9/12/2013
TIME: 3:44:51 PM

USER: pxiong2
DGN: G:\82538803\400_Technical_Information_Disc_Files\450_NCDOT\Drafting\Structures\P-5201_SD_DSN_ExpPlateDets_2.dgn

NOTES:

1. FOR SECTIONS "A-A" & "B-B", SEE SHEET S-20.

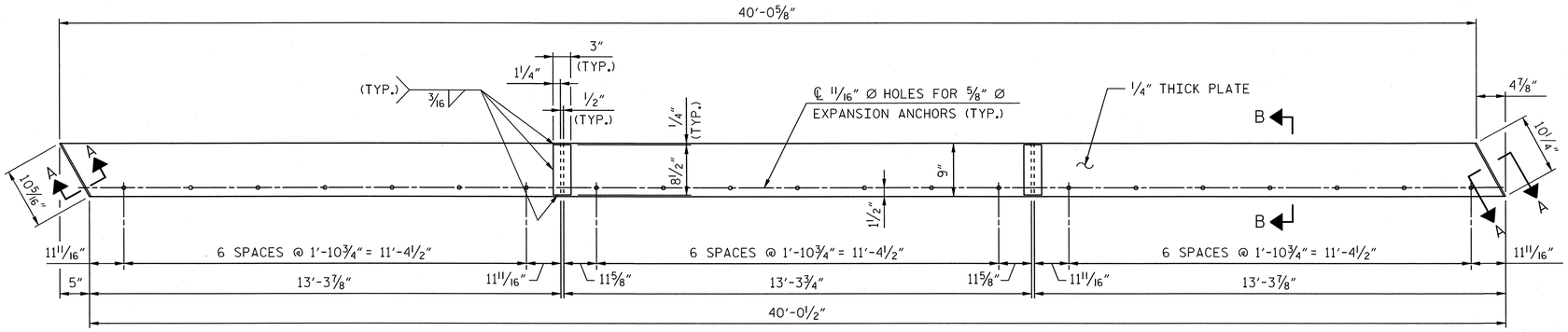

ABUTMENT #2

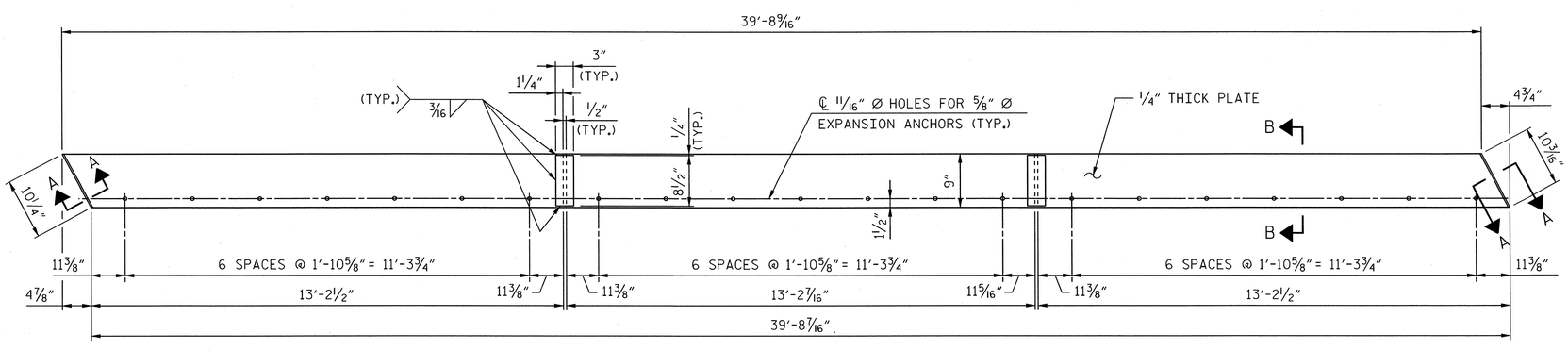

PIER #3

PLAN - EXPANSION PLATES

UP STATION

DRAWN BY :	MTB	DATE :	03/13
CHECKED BY :	JL	DATE :	03/13

PROJECT NO. P-5201

WAKE COUNTY

STATION: P.O.C. 3583+33.86 -M1-
P.O.T. 22+56.93 -L-

SHEET 2 OF 2

AECOM
AECOM TECHNICAL SERVICES, INC.
701 CORPORATE CENTER DRIVE, SUITE 475
RALEIGH, NC 27607
(919) 854-6200 www.aecom.com
AECOM License No. F-0342

NORTH CAROLINA PROFESSIONAL SEAL 10656 ENGINEER L. MARK PEARSON 9/13/13

STATE OF NORTH CAROLINA
DEPARTMENT OF TRANSPORTATION
RALEIGH

SUPERSTRUCTURE

EXPANSION PLATE DETAILS

REVISIONS						SHEET NO.
NO.	BY:	DATE:	NO.	BY:	DATE:	S-21
1			3			TOTAL SHEETS
2			4			56

0422DEL_P19

DCN

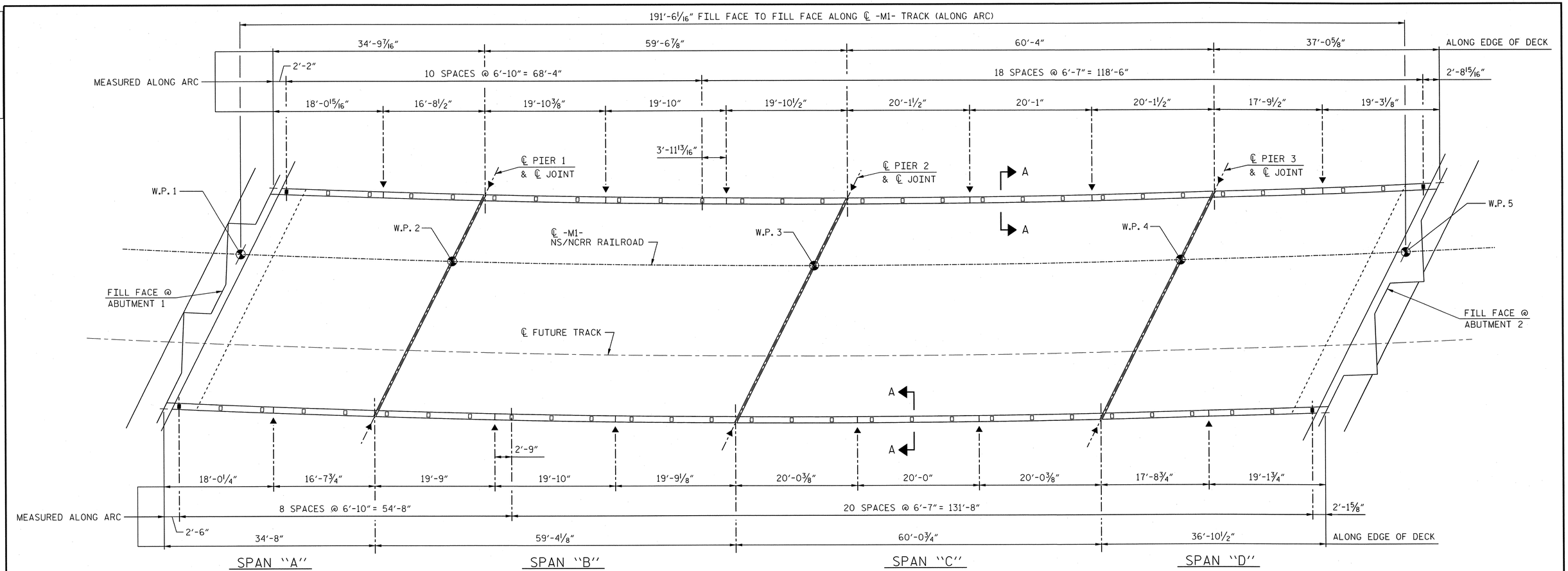

HANDRAIL POST SPACING PLAN - BRIDGE

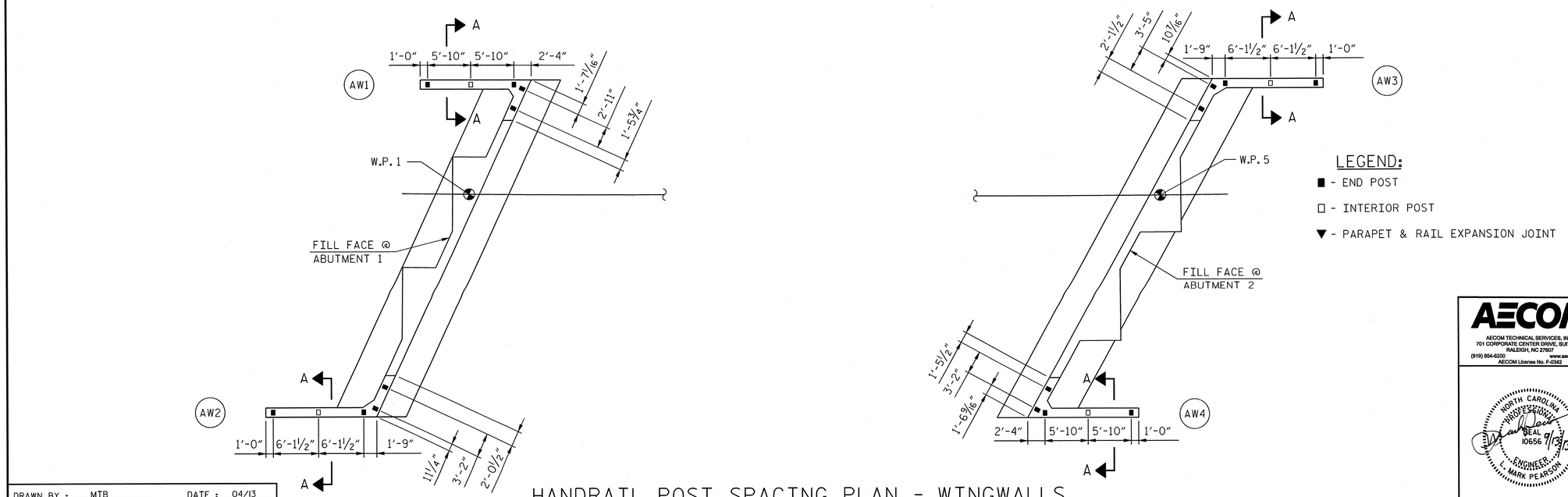

HANDRAIL POST SPACING PLAN - WINGWALLS

PROJECT NO. P-5201

WAKE COUNTY

STATION: P.O.C. 3583+33.86 -M1-
P.O.T. 22+56.93 -L-

SHEET 1 OF 2

AECOM
AECOM TECHNICAL SERVICES, INC.
701 CORPORATE CENTER DRIVE, SUITE 475
RALEIGH, NC 27607
(919) 854-6200 www.aecom.com
AECOM License No. F-0342

NORTH CAROLINA PROFESSIONAL SEAL 10656 ENGINEER MARK PEARSON 9/13/13

STATE OF NORTH CAROLINA
DEPARTMENT OF TRANSPORTATION
RALEIGH

SUPERSTRUCTURE

METAL HANDRAIL DETAILS

REVISIONS						SHEET NO.
NO.	BY:	DATE:	NO.	BY:	DATE:	S-22
1			3			TOTAL SHEETS
2			4			56

DRAWN BY : MTB DATE : 04/13
CHECKED BY : JL DATE : 04/13

DATE: 9/12/2013
TIME: 3:50:25 PM

USER: palahaz
DGN: Q:\60239803\400_Technical_Information_Disc_Files\450_NCDOT\SdTechDesignFiles\Structures\P-5201_SD_DSN_MtlHandRail.dgn

0422DEL_P19

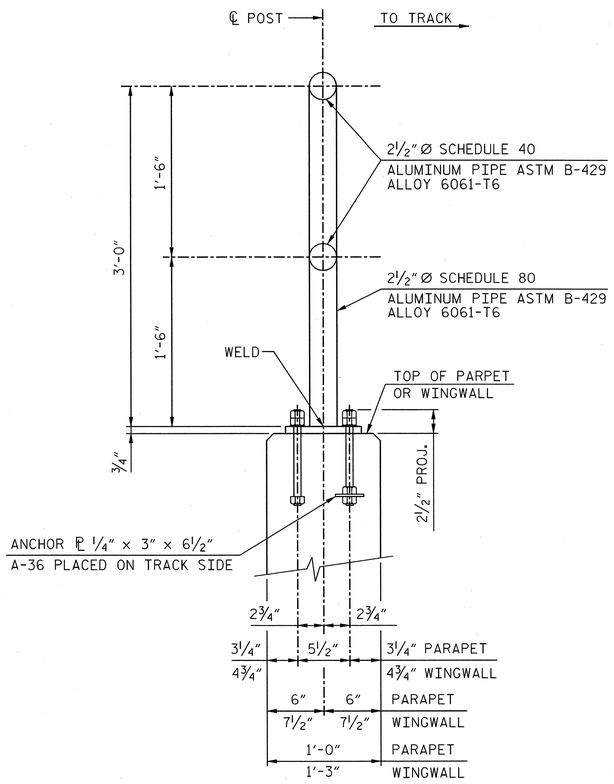

SECTION A-A

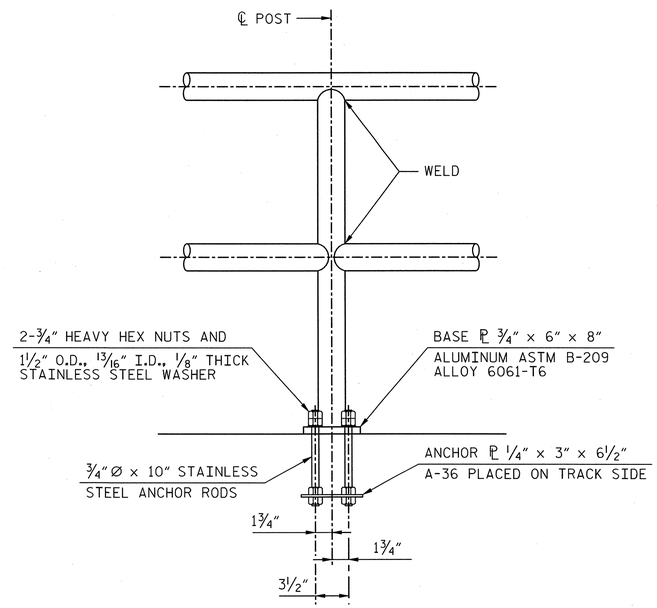

FRONT VIEW

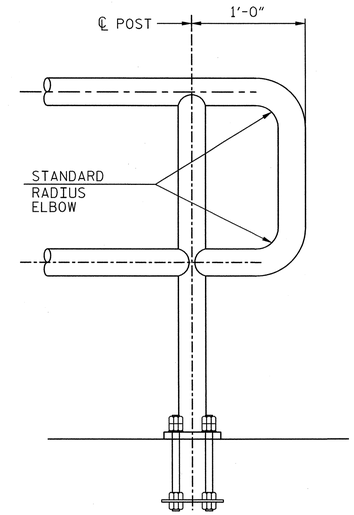

END POST DETAIL

(ON ABUTMENT WINGS AND ENDS
OF BRIDGE PARAPETS - SEE SHT. 1 OF 2)

NOTES:

1. JOINTS IN RAILING (SPLICE GAP) SHALL BE LOCATED AS SHOWN IN POST SPACING PLAN.
2. ALUMINUM PIPE TO BE ASTM B-429, ALLOY 6061-T6 AND BASE PLATE TO BE ASTM B-209, ALLOY 6061-T6.
3. STAINLESS STEEL BOLTS, CAP SCREWS, AND NUTS TO BE ASTM A-276 TYPE 304. STAINLESS STEEL WASHERS TO BE AST, A-276 TYPE 302.
4. POSTS TO BE SET PERPENDICULAR TO TOP OF CURB AND RAILS SHALL BE PLACED PARALLEL TO THE GRADE OF THE BRIDGE.
5. CERTIFIED MILL REPORTS ARE REQUIRED FOR RAIL AND POSTS. SHOP INSPECTIONS ARE NOT REQUIRED.
6. AFTER ANCHOR ROD NUTS HAVE BEEN TIGHTENED, THREADS SHALL BE NICKED TO LOCK NUTS.
7. CURVED RAIL USAGE: WHERE RAILS ARE TO BE USED ON BRIDGES ON HORIZONTAL AND/OR VERTICAL CURVATURE, THE CONTRACTOR MAY, AT HIS OPTION, HAVE THE REQUIRED CURVATURE IN THE RAIL FORMED IN THE SHOP OR IN THE FIELD. IN EITHER EVENT THE RAIL SHALL CONFORM WITHOUT BUCKLING OR KINKING TO THE REQUIRED CURVATURE IN A UNIFORM MANNER ACCEPTABLE TO THE ENGINEER.
8. ANCHOR PLATES SHALL BE STEEL CONFORMING TO ASTM SPECIFICATION A36.
9. ANCHOR RODS SHALL CONFORM TO ASTM SPECIFICATION A276 TYPE 302 OR 304, STAINLESS STEEL, AND TREADS SHALL BE ROLLED, NOT CUT.
10. UPPER ANCHOR ROD NUTS SHALL BE HEAVY HEX NUTS, PER ASTM A276 TYPE 302 OR 304 STAINLESS STEEL.
11. LOWER ANCHOR ROD NUTS SHALL BE HEAVY STEEL HEX NUTS, PER ASTM A563.
12. THE CENTERLINE OF ANY SPLICE AND/OR EXPANSION JOINT IS TO BE LOCATED AT LEAST 2'-0" AWAY FROM CENTERLINE OF POST. EXPANSION AND/OR SPLICE JOINTS FOR EACH RAIL OF TWO RAILINGS ARE TO BE PLACED IN THE SAME LOCATION AND IN THE SAME PANEL.
13. WELDING SHALL BE IN ACCORDANCE WITH THE CURRENT AWS STRUCTURAL WELDING CODE - ALUMINUM.
14. THE BOTTOM OF THE BASE PLATES SHALL BE THOROUGHLY COATED WITH ALUMINUM INPREGNATED CAULKING COMPOUND OF APPROVED QUALITY.
15. THE LENGTH OF THE METAL RAIL TO BE PAID FOR SHALL BE THE CONTINUOUS LENGTH MEASURED FROM END TO END OF RAIL, ALONG THE TOP OF RAIL.
16. SHOP DRAWINGS SHALL BE REQUIRED FOR HANDRAILS AND ANCHORAGES.

PAY LENGTH = 453'-8"

ALUMINUM HANDRAIL AND POST

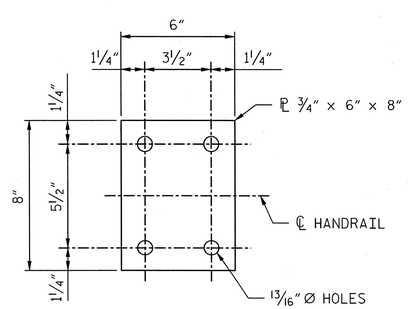

BASE PLATE

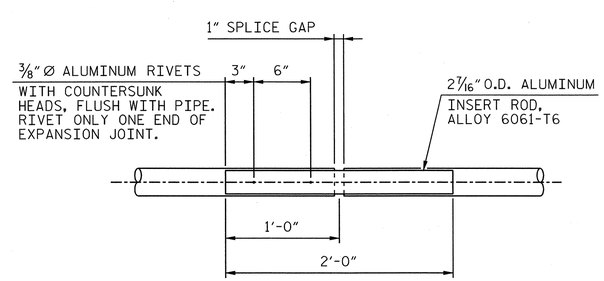

EXPANSION JOINT DETAIL

PROJECT NO. P-5201

WAKE COUNTY

STATION: P.O.C. 3583+33.86 -M1-
P.O.T. 22+56.93 -L-

SHEET 2 OF 2

AECOM
AECOM TECHNICAL SERVICES, INC.
701 CORPORATE CENTER DRIVE, SUITE 475
RALEIGH, NC 27607
(919) 854-6200 www.aecom.com
AECOM License No. F-0342

NORTH CAROLINA PROFESSIONAL SEAL 10656 ENGINEER L. MARK PEARSON 9/13/13

STATE OF NORTH CAROLINA
DEPARTMENT OF TRANSPORTATION
RALEIGH

SUPERSTRUCTURE

METAL HANDRAIL DETAILS

REVISIONS							SHEET NO.
NO.	BY:	DATE:	NO.	BY:	DATE:		S-23
1			3				TOTAL SHEETS
2			4				56

DRAWN BY : MTB DATE : 04/13
CHECKED BY : JL DATE : 04/13

DATE: 9/12/2013
TIME: 3:56:46 PM
USER: pa0hbz
DGN: G:\60258369\3-400_Technical_Information_Disc_Files\450_NCDOT Stuff and Design Files\Structures\P-5201_SD_DSN_MHandRail_2.dgn

0422DEL_P19

DGN:

DATE: 9/12/2013
TIME: 3:51:21 PM

USER: p00762
DGN: Q:\60236980\400_Technical_Information_Disc_Files\400_NCDOT Std Details\Design Files\Structures\P-5201_SD_DSN_SuperBOM.dgn

REINFORCING STEEL SCHEDULE

SPAN "A"

BAR	NO.	SIZE	TYPE	LENGTH	WEIGHT
A1	64	#5	STR.	36'-8"	2,448
A2	2	#5	STR.	2'-1"	4
A3	2	#5	STR.	3'-3"	7
A4	2	#5	STR.	4'-4"	9
A5	2	#5	STR.	5'-5"	11
A6	2	#5	STR.	6'-6"	14
A7	2	#5	STR.	7'-7"	16
A8	2	#5	STR.	8'-8"	18
A9	2	#5	STR.	9'-9"	20
A10	2	#5	STR.	10'-10"	23
A11	2	#5	STR.	11'-11"	25
A12	2	#5	STR.	13'-1"	27
A13	2	#5	STR.	14'-2"	30
A14	2	#5	STR.	15'-3"	32
A15	2	#5	STR.	16'-4"	34
A16	2	#5	STR.	17'-5"	36
A17	2	#5	STR.	18'-6"	39
A18	2	#5	STR.	19'-7"	41
A19	2	#5	STR.	20'-8"	43
A20	2	#5	STR.	21'-9"	45
A21	2	#5	STR.	22'-10"	48
A22	2	#5	STR.	24'-0"	50
A23	2	#5	STR.	25'-1"	52
A24	2	#5	STR.	26'-2"	55
A25	2	#5	STR.	27'-3"	57
A26	2	#5	STR.	28'-4"	59
A27	2	#5	STR.	29'-5"	61
A28	2	#5	STR.	30'-6"	64
A29	2	#5	STR.	31'-7"	66
A30	2	#5	STR.	32'-8"	68
A31	2	#5	STR.	33'-9"	70
A32	2	#5	STR.	34'-11"	73
A33	2	#5	STR.	36'-0"	75
A34	2	#5	STR.	36'-0"	75
A35	2	#5	STR.	34'-11"	73
A36	2	#5	STR.	33'-10"	71
A37	2	#5	STR.	32'-8"	68
A38	2	#5	STR.	31'-7"	66
A39	2	#5	STR.	30'-6"	64
A40	2	#5	STR.	29'-5"	61
A41	2	#5	STR.	28'-4"	59
A42	2	#5	STR.	27'-3"	57
A43	2	#5	STR.	26'-2"	55
A44	2	#5	STR.	25'-1"	52
A45	2	#5	STR.	24'-0"	50
A46	2	#5	STR.	22'-11"	48
A47	2	#5	STR.	21'-10"	46
A48	2	#5	STR.	20'-9"	43
A49	2	#5	STR.	19'-8"	41
A50	2	#5	STR.	18'-7"	39
A51	2	#5	STR.	17'-6"	37
A52	2	#5	STR.	16'-5"	34
A53	2	#5	STR.	15'-4"	32
A54	2	#5	STR.	14'-3"	30
A55	2	#5	STR.	13'-2"	27
A56	2	#5	STR.	12'-1"	25
A57	2	#5	STR.	11'-0"	23
A58	2	#5	STR.	9'-11"	21
A59	2	#5	STR.	8'-10"	18
A60	2	#5	STR.	7'-9"	16
A61	2	#5	STR.	6'-8"	14
A62	2	#5	STR.	5'-7"	12
A63	2	#5	STR.	4'-6"	9
A64	2	#5	STR.	3'-5"	7
A65	2	#5	STR.	2'-4"	5
B1	92	#5	STR.	32'-8"	3,135
B2	32	#5	STR.	9'-11"	331
G1	4	#6	STR.	40'-2"	241
G2	4	#6	STR.	40'-5"	243
S1	68	#6	1	6'-6"	664

SPAN "B"

BAR	NO.	SIZE	TYPE	LENGTH	WEIGHT
A1	164	#5	STR.	36'-8"	6,272
A66	2	#5	STR.	2'-0"	4
A67	2	#5	STR.	3'-1"	6
A68	2	#5	STR.	4'-1"	9
A69	2	#5	STR.	5'-1"	11
A70	2	#5	STR.	6'-2"	13
A71	2	#5	STR.	7'-2"	15
A72	2	#5	STR.	8'-3"	17
A73	2	#5	STR.	9'-3"	19
A74	2	#5	STR.	10'-4"	22
A75	2	#5	STR.	11'-4"	24
A76	2	#5	STR.	12'-5"	26
A77	2	#5	STR.	13'-5"	28
A78	2	#5	STR.	14'-6"	30
A79	2	#5	STR.	15'-6"	32
A80	2	#5	STR.	16'-7"	35
A81	2	#5	STR.	17'-7"	37
A82	2	#5	STR.	18'-8"	39
A83	2	#5	STR.	19'-8"	41
A84	2	#5	STR.	20'-9"	43
A85	2	#5	STR.	21'-9"	45
A86	2	#5	STR.	22'-9"	47
A87	2	#5	STR.	23'-10"	50
A88	2	#5	STR.	24'-10"	52
A89	2	#5	STR.	25'-11"	54
A90	2	#5	STR.	26'-11"	56
A91	2	#5	STR.	28'-0"	58
A92	2	#5	STR.	29'-0"	60
A93	2	#5	STR.	30'-1"	63
A94	2	#5	STR.	31'-1"	65
A95	2	#5	STR.	32'-1"	67
A96	2	#5	STR.	33'-2"	69
A97	2	#5	STR.	34'-2"	71
A98	2	#5	STR.	35'-3"	74
A99	2	#5	STR.	36'-3"	76
A100	2	#5	STR.	36'-3"	76
A101	2	#5	STR.	35'-3"	74
A102	2	#5	STR.	34'-3"	71
A103	2	#5	STR.	33'-2"	69
A104	2	#5	STR.	32'-2"	67
A105	2	#5	STR.	31'-2"	65
A106	2	#5	STR.	30'-1"	63
A107	2	#5	STR.	29'-1"	61
A108	2	#5	STR.	28'-1"	59
A109	2	#5	STR.	27'-0"	56
A110	2	#5	STR.	26'-0"	54
A111	2	#5	STR.	25'-0"	52
A112	2	#5	STR.	23'-11"	50
A113	2	#5	STR.	22'-11"	48
A114	2	#5	STR.	21'-11"	46
A115	2	#5	STR.	20'-10"	43
A116	2	#5	STR.	19'-10"	41
A117	2	#5	STR.	18'-10"	39
A118	2	#5	STR.	17'-10"	37
A119	2	#5	STR.	16'-9"	35
A120	2	#5	STR.	15'-9"	33
A121	2	#5	STR.	14'-9"	31
A122	2	#5	STR.	13'-8"	29
A123	2	#5	STR.	12'-8"	26
A124	2	#5	STR.	11'-8"	24
A125	2	#5	STR.	10'-7"	22
A126	2	#5	STR.	9'-7"	20
A127	2	#5	STR.	8'-7"	18
A128	2	#5	STR.	7'-7"	16
A129	2	#5	STR.	6'-6"	14
A130	2	#5	STR.	5'-6"	11
A131	2	#5	STR.	4'-6"	9
A132	2	#5	STR.	3'-5"	7
A133	2	#5	STR.	2'-5"	5
B3	184	#5	STR.	30'-9"	5,901
B4	48	#5	STR.	11'-6"	576
G2	4	#6	STR.	40'-5"	243
G3	4	#6	STR.	40'-11"	246
S1	120	#6	1	6'-6"	1,172

SPAN "C"

BAR	NO.	SIZE	TYPE	LENGTH	WEIGHT
A1	164	#5	STR.	36'-8"	6,272
A134	2	#5	STR.	1'-10"	4
A135	2	#5	STR.	2'-9"	6
A136	2	#5	STR.	3'-9"	8
A137	2	#5	STR.	4'-9"	10
A138	2	#5	STR.	5'-8"	12
A139	2	#5	STR.	6'-8"	14
A140	2	#5	STR.	7'-8"	16
A141	2	#5	STR.	8'-7"	18
A142	2	#5	STR.	9'-7"	20
A143	2	#5	STR.	10'-7"	22
A144	2	#5	STR.	11'-6"	24
A145	2	#5	STR.	12'-6"	26
A146	2	#5	STR.	13'-6"	28
A147	2	#5	STR.	14'-5"	30
A148	2	#5	STR.	15'-5"	32
A149	2	#5	STR.	16'-5"	34
A150	2	#5	STR.	17'-4"	36
A151	2	#5	STR.	18'-4"	38
A152	2	#5	STR.	19'-4"	40
A153	2	#5	STR.	20'-3"	42
A154	2	#5	STR.	21'-3"	44
A155	2	#5	STR.	22'-3"	46
A156	2	#5	STR.	23'-2"	48
A157	2	#5	STR.	24'-2"	50
A158	2	#5	STR.	25'-2"	52
A159	2	#5	STR.	26'-1"	54
A160	2	#5	STR.	27'-1"	56
A161	2	#5	STR.	28'-1"	59
A162	2	#5	STR.	29'-0"	60
A163	2	#5	STR.	30'-0"	63
A164	2	#5	STR.	31'-0"	65
A165	2	#5	STR.	31'-11"	67
A166	2	#5	STR.	32'-11"	69
A167	2	#5	STR.	33'-11"	71
A168	2	#5	STR.	34'-10"	73
A169	2	#5	STR.	35'-10"	75
A170	2	#5	STR.	35'-10"	75
A171	2	#5	STR.	34'-11"	73
A172	2	#5	STR.	33'-11"	71
A173	2	#5	STR.	32'-11"	69
A174	2	#5	STR.	32'-0"	67
A175	2	#5	STR.	31'-0"	65
A176	2	#5	STR.	30'-1"	63
A177	2	#5	STR.	29'-1"	61
A178	2	#5	STR.	28'-2"	59
A179	2	#5	STR.	27'-2"	57
A180	2	#5	STR.	26'-3"	55
A181	2	#5	STR.	25'-3"	53
A182	2	#5	STR.	24'-4"	51
A183	2	#5	STR.	23'-4"	49
A184	2	#5	STR.	22'-5"	47
A185	2	#5	STR.	21'-5"	45
A186	2	#5	STR.	20'-6"	43
A187	2	#5	STR.	19'-6"	41
A188	2	#5	STR.	18'-7"	39
A189	2	#5	STR.	17'-7"	37
A190	2	#5	STR.	16'-8"	35
A191	2	#5	STR.	15'-8"	33
A192	2	#5	STR.	14'-9"	31
A193	2	#5	STR.	13'-9"	29
A194	2	#5	STR.	12'-10"	27
A195	2	#5	STR.	11'-10"	25
A196	2	#5	STR.	10'-11"	23
A197	2	#5	STR.	9'-11"	21
A198	2	#5	STR.	9'-0"	19
A199	2	#5	STR.	8'-0"	17
A200	2	#5	STR.	7'-1"	15
A201	2	#5	STR.	6'-1"	13
A202	2	#5	STR.	5'-2"	11
A203	2	#5	STR.	4'-2"	9
A204	2	#5	STR.	3'-3"	7
A205	2	#5	STR.	2'-3"	5
B5	184	#5	STR.	31'-1"	5,965
B6	48	#5	STR.	11'-8"	584
G3	4	#6	STR.	40'-11"	246
G4	4	#6	STR.	41'-6"	249
S1	120	#6	1	6'-6"	1,172

SPAN "D"

BAR	NO.	SIZE	TYPE	LENGTH	WEIGHT
A1	60	#5	STR.	36'-8"	4,819
A206	2	#5	STR.	2'-0"	4
A207	2	#5	STR.	2'-11"	6
A208	2	#5	STR.	3'-10"	8
A209	2	#5	STR.	4'-9"	10
A210	2	#5	STR.	5'-8"	12
A211	2	#5	STR.	6'-7"	14
A212	2	#5	STR.	7'-7"	16
A213	2	#5	STR.	8'-6"	18
A214	2	#5	STR.	9'-5"	20
A215	2	#5	STR.	10'-4"	22
A216	2	#5	STR.	11'-3"	23
A217	2	#5	STR.	12'-2"	25
A218	2	#5	STR.	13'-1"	27
A219	2	#5	STR.	14'-0"	29
A220	2	#5	STR.	14'-11"	31
A221	2	#5	STR.	15'-10"	33
A222	2	#5	STR.	16'-9"	35
A223	2	#5	STR.	17'-8"	37
A224	2	#5	STR.	18'-7"	39
A225	2	#5	STR.	19'-6"	41
A226	2	#5	STR.	20'-5"	43
A227	2	#5	STR.	21'-4"	45
A228	2	#5	STR.	22'-3"	46
A229	2	#5	STR.	23'-2"	48
A230	2	#5	STR.	24'-2"	50
A231	2	#5	STR.	25'-1"	52
A232	2	#5	STR.	26'-0"	54
A233	2	#5	STR.	26'-11"	56
A234	2	#5	STR.	27'-10"	58
A235	2	#5	STR.	28'-9"	60
A236	2	#5	STR.	29'-8"	62
A237	2	#5	STR.	30'-7"	64
A238	2	#5	STR.	31'-6"	66
A239	2	#5	STR.	32'-5"	68
A240	2	#5	STR.	33'-4"	70
A241	2	#5	STR.	34'-3"	71
A242	2	#5	STR.	35'-2"	73
A243	2	#5	STR.	36'-1"	75
A244	2	#5	STR.	36'-1"	75
A245	2	#5	STR.	35'-2"	73
A246	2	#5	STR.	34'-3"	71
A247	2	#5	STR.	33'-4"	70
A248	2	#5	STR.	32'-5"	68
A249	2	#5	STR.	31'-6"	66
A250	2	#5	STR.	30'-7"	64
A251	2	#5	STR.	29'-8"	62
A252	2	#5	STR.	28'-9"	60
A253	2	#5	STR.	27'-10"	58
A254	2	#5	STR.	26'-11"	56
A255	2	#5	STR.	26'-0"	54
A256	2	#5	STR.	25'-1"	52
A257	2	#5	STR.	24'-2"	50
A258	2	#5	STR.	23'-3"	48
A259	2	#5	STR.	22'-4"	47
A260	2	#5	STR.	21'-5"	45
A261	2	#5	STR.	20'-6"	43
A262	2	#5	STR.	19'-7"	41
A263	2	#5	STR.	18'-9"	39
A264	2	#5	STR.	17'-10"	37
A265	2	#5	STR.	16'-11"	35
A266	2	#5	STR.	16'-0"	33
A267	2	#5	STR.	15'-1"	31
A268	2	#5	STR.	14'-2"	30
A269	2	#5	STR.	13'-3"	28
A270	2	#5	STR.	12'-4"	26
A271	2	#5	STR.	11'-5"	24
A272	2	#5	STR.	10'-6"	22
A273	2	#5	STR.	9'-7"	20
A274	2	#5	STR.	8'-8"	18
A275	2	#5	STR.	7'-9"	16
A276	2	#5	STR.	6'-10"	14
A277	2	#5	STR.	5'-11"	12
A278	2	#5	STR.	5'-0"	10
A279	2	#5	STR.	4'-1"	9
A280	2	#5	STR.	3'-2"	7
A281	2	#5	STR.	2'-3"	5

SPAN "D" (CONT'D.)

BAR	NO.	SIZE	TYPE	LENGTH	WEIGHT
B7	92	#5	STR.	34'-11"	3,350
B8	32	#5	STR.	10'-6"	350
G4	4	#6	STR.	41'-6"	249
G5	4	#6	STR.	41'-10"	251
S1	72	#6	1	6'-6"	703

BAR TYPES

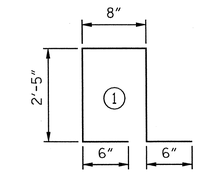

ALL BAR DIMENSIONS ARE OUT TO OUT

BILL OF MATERIAL BREAKDOWN BY SPAN

SPANS	CLASS AA CONCRETE (CU. YDS.)		EPOXY COATED REINFORCING STEEL
	DECK SLAB	PARAPET	(LBS.)
SPAN "A"	37.3	4.5	9,612
SPAN "B"	66.3	8.1	17,139
SPAN "C"	67.2	8.2	17,340
SPAN "D"	39.7	4.8	12,752
TOTALS	210.5	25.6	56,843

TOTAL SUPERSTRUCTURE BILL OF MATERIAL

	CLASS AA CONCRETE	EPOXY COATED REINFORCING STEEL
	(CU. YDS.)	(LBS.)
DECK SLAB	210.5	55,002
PARAPET	25.6	1,841
TOTALS	236.1	56,843

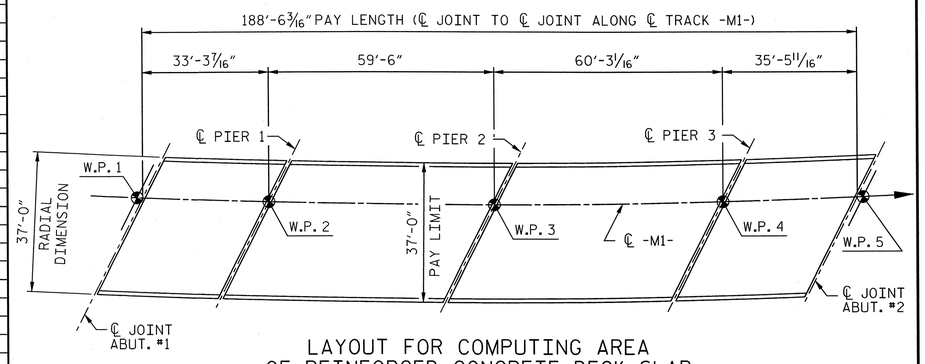

LAYOUT FOR COMPUTING AREA
OF REINFORCED CONCRETE DECK SLAB
(SQ. FEET = 6,975.1)

PROJECT NO. P-5201

WAKE **COUNTY**

STATION: P.O.C. 3583+33.86 -M1-
P.O.T. 22+56.93 -L-

DRAWN BY : MTB DATE : 03/13
CHECKED BY : JL DATE : 03/13

AECOM
AECOM TECHNICAL SERVICES, INC.
701 CORPORATE CENTER DRIVE, SUITE 475
RALEIGH, NC 27607
(919) 854-6200 www.aecom.com
AECOM License No. F-0342

NORTH CAROLINA PROFESSIONAL SEAL 10656 ENGINEER MARK PEARSON 9/13/13

STATE OF NORTH CAROLINA
DEPARTMENT OF TRANSPORTATION
RALEIGH

SUPERSTRUCTURE
BILL OF MATERIAL

REVISIONS						SHEET NO.
NO.	BY:	DATE:	NO.	BY:	DATE:	S-24
1			3			TOTAL SHEETS
2			4			56

0422DEL_P19

DGN

DATE: 9/18/2013
TIME: 3:53PM

USER: 80802
DGN: G:\80825\80803\400_Technical_Information_Disc_Files\450_NCDOT Std Test Design Files\Structures\P-5201_SD_DSN_Abut-1.dgn

NAD 83 / NSRS 2007

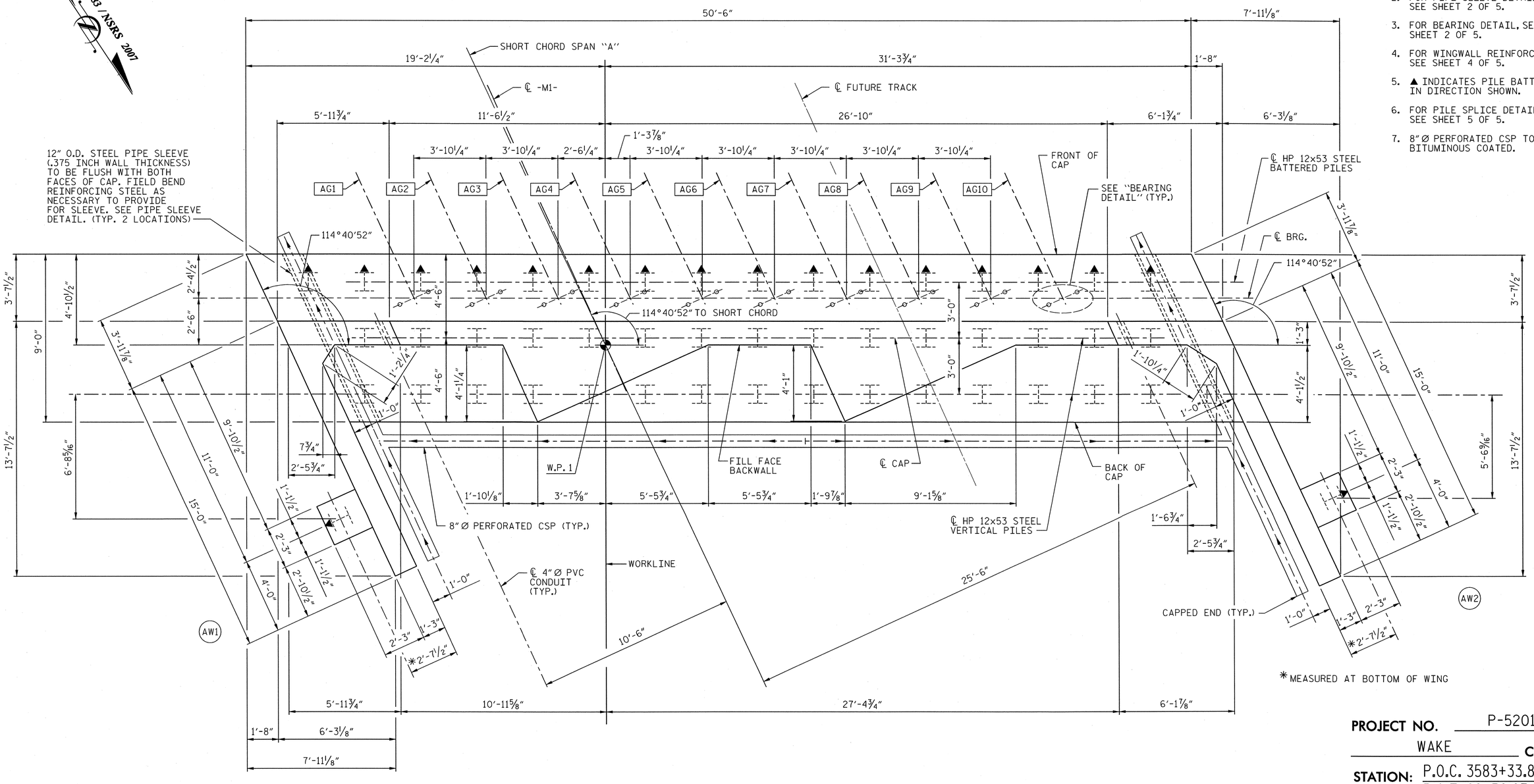

* MEASURED AT BOTTOM OF WING

NOTES:

1. FOR ABUTMENT REINFORCING, SEE SHEET 3 OF 5.
2. FOR PIPE SLEEVE DETAIL, SEE SHEET 2 OF 5.
3. FOR BEARING DETAIL, SEE SHEET 2 OF 5.
4. FOR WINGWALL REINFORCING, SEE SHEET 4 OF 5.
5. ▲ INDICATES PILE BATTER 3:12 IN DIRECTION SHOWN.
6. FOR PILE SPLICE DETAILS, SEE SHEET 5 OF 5.
7. 8" Ø PERFORATED CSP TO BE BITUMINOUS COATED.

PLAN

PROJECT NO. P-5201

WAKE **COUNTY**

STATION: P.O.C. 3583+33.86 -M1-
P.O.T. 22+56.93 -L-

SHEET 1 OF 5

AECOM

AECOM TECHNICAL SERVICES, INC.
701 CORPORATE CENTER DRIVE, SUITE 475
RALEIGH, NC 27607
(919) 854-6200
www.aecom.com
AECOM License No. F-0342

NORTH CAROLINA PROFESSIONAL ENGINEER SEAL 10656 9/13/13 L. MARK PEARSON

STATE OF NORTH CAROLINA
DEPARTMENT OF TRANSPORTATION
RALEIGH

SUBSTRUCTURE

ABUTMENT #1
PLAN

REVISIONS						SHEET NO.
NO.	BY:	DATE:	NO.	BY:	DATE:	S-25
1			3			TOTAL SHEETS
2			4			56

DRAWN BY : MTB DATE : 04/13
CHECKED BY : JL DATE : 04/13

0422DEL_P19

NOTES:

1. FOR ABUTMENT REINFORCING, SEE SHEET 3 OF 5.
2. FOR WINGWALL REINFORCING, SEE SHEET 4 OF 5.
3. FOR SECTION "A-A", SEE SHEET 5 OF 5.
4. FOR PILE SPLICE DETAILS, SEE SHEET 5 OF 5.

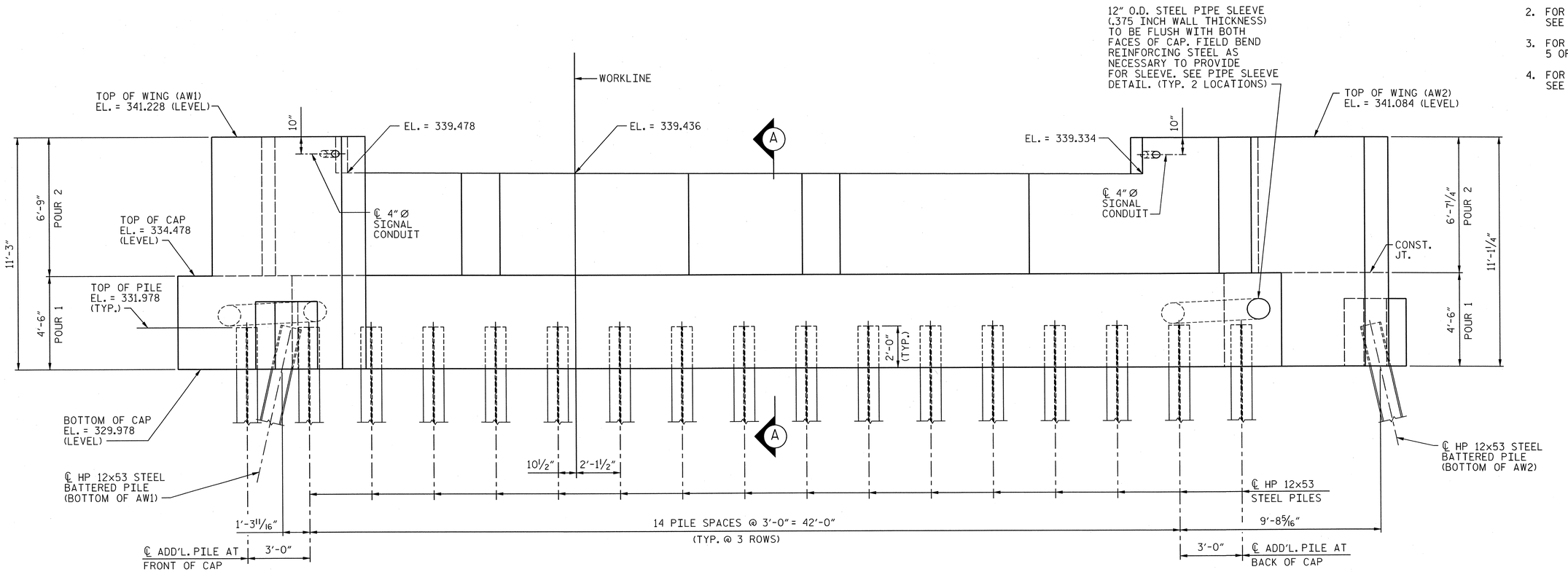

ELEVATION

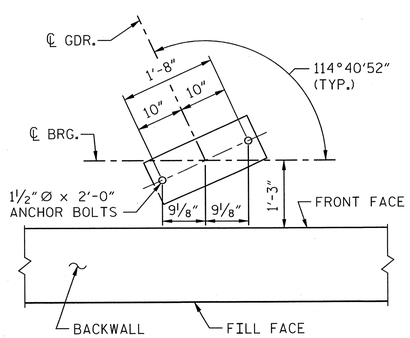

BEARING DETAIL

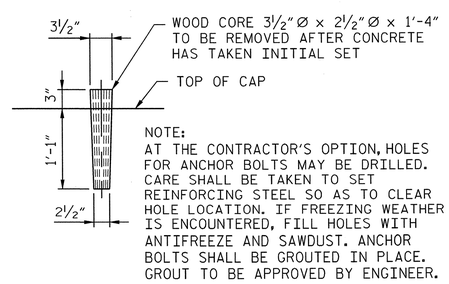

DETAIL OF WOOD CORE FOR ANCHOR BOLT HOLES

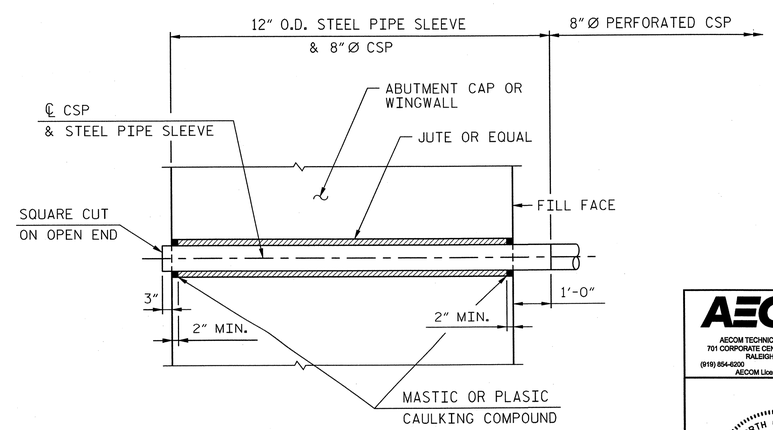

PIPE SLEEVE DETAIL

PROJECT NO. P-5201

WAKE **COUNTY**

STATION: P.O.C. 3583+33.86 -M1-
P.O.T. 22+56.93 -L-

SHEET 2 OF 5

AECOM
AECOM TECHNICAL SERVICES, INC.
701 CORPORATE CENTER DRIVE, SUITE 475
RALEIGH, NC 27607
(919) 854-6200 www.aecom.com
AECOM License No. F-0342

NORTH CAROLINA PROFESSIONAL SEAL 0656 ENGINEER MARK PEARSON

STATE OF NORTH CAROLINA
DEPARTMENT OF TRANSPORTATION
RALEIGH

SUBSTRUCTURE

ABUTMENT #1
ELEVATION

REVISIONS							SHEET NO.
NO.	BY:	DATE:	NO.	BY:	DATE:		S-26
1			3				TOTAL SHEETS
2			4				56

DRAWN BY : MTB DATE : 04/13
CHECKED BY : JL DATE : 04/13

DATE: 9/12/2013
TIME: 3:59:27 PM

USER: pdaniel
DGN: G:\60236803\400_Technical_Information_Disc_Files\450_NCDOT Staff Tech\DesignFiles\Structures\P-5201_SD_DSN_Abut-1_2.dgn

0422DEL_P19

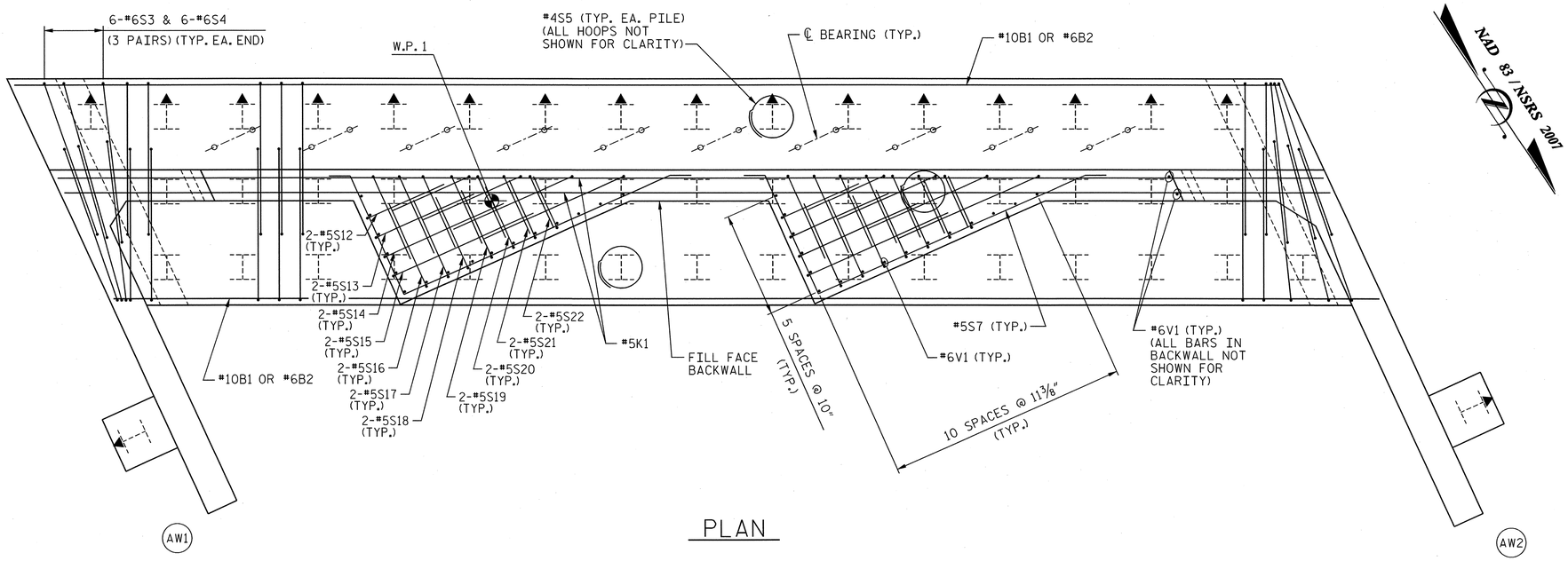

PLAN

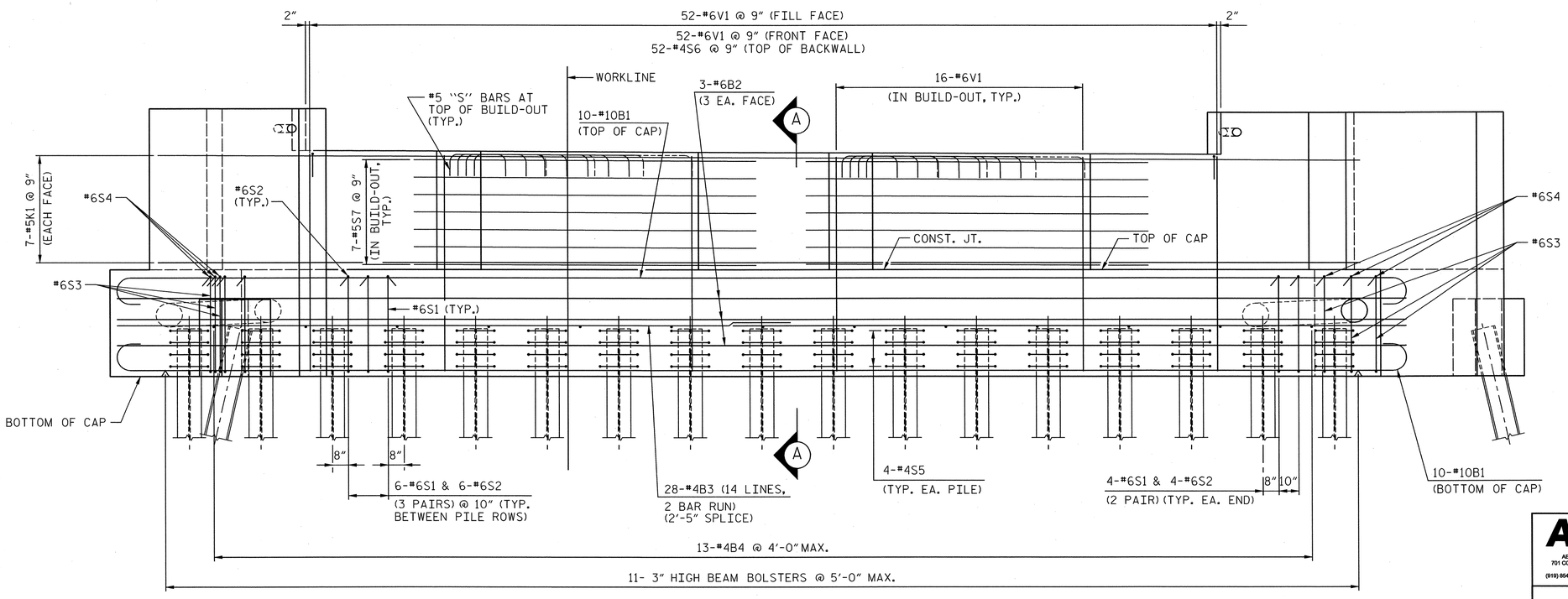

ELEVATION

NOTES:

1. STIRRUPS IN CAP MAY BE SHIFTED AS NECESSARY TO CLEAR ANCHOR BOLTS.
2. FOR WINGWALL REINFORCING AND DETAILS, SEE SHEET 4 OF 5.
3. FOR SECTION "A-A", SEE SHEET 5 OF 5.
4. ▲ INDICATES PILE BATTER 3:12 IN DIRECTION SHOWN.

PROJECT NO. P-5201

WAKE **COUNTY**

STATION: P.O.C. 3583+33.86 -M1-
P.O.T. 22+56.93 -L-

SHEET 3 OF 5

AECOM
AECOM TECHNICAL SERVICES, INC.
701 CORPORATE CENTER DRIVE, SUITE 475
RALEIGH, NC 27607
(919) 854-6200 www.aecom.com
AECOM License No. F-0342

NORTH CAROLINA PROFESSIONAL SEAL 0656 ENGINEER L. MARK PEARSON 9/13/13

STATE OF NORTH CAROLINA
DEPARTMENT OF TRANSPORTATION
RALEIGH

SUBSTRUCTURE

ABUTMENT #1
REINFORCING

REVISIONS						SHEET NO.
NO.	BY:	DATE:	NO.	BY:	DATE:	S-27
1			3			TOTAL SHEETS
2			4			56

DRAWN BY : MTB DATE : 04/13
CHECKED BY : JL DATE : 04/13

DATE: 9/12/2013
TIME: 3:39:50 PM

USER: 69092
DGN: 0:\60256803\400_Technical_Information_Disc_Files\450_NCDOT Stuff\eBridge Files\Structures\P-5201_SD_DSN_Abut-1_34.dgn

0422DEL_P19

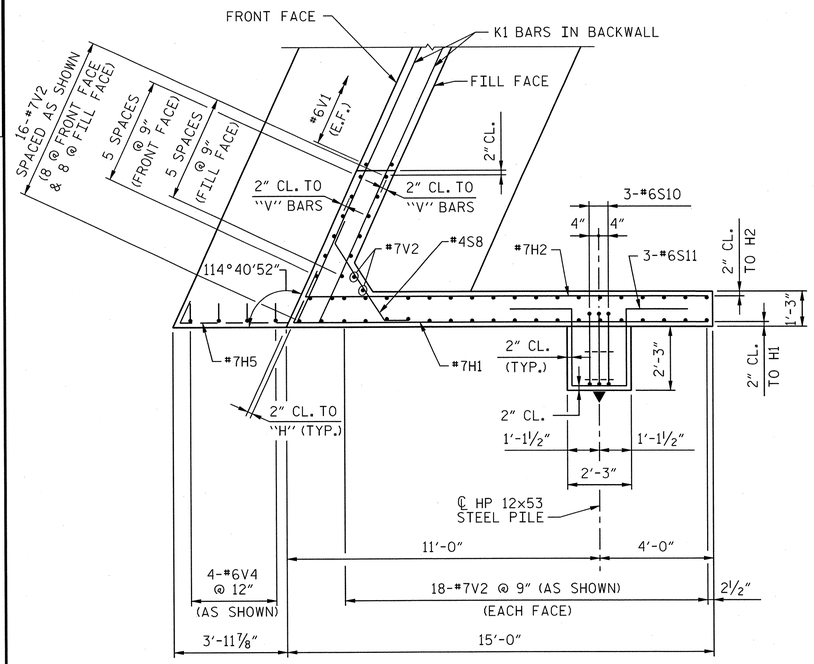

PLAN WING - AW1

NOTE:
SEE "METAL HANDRAIL DETAILS" SHEET FOR LOCATIONS OF ANCHOR ASSEMBLIES FOR METAL HANDRAIL.

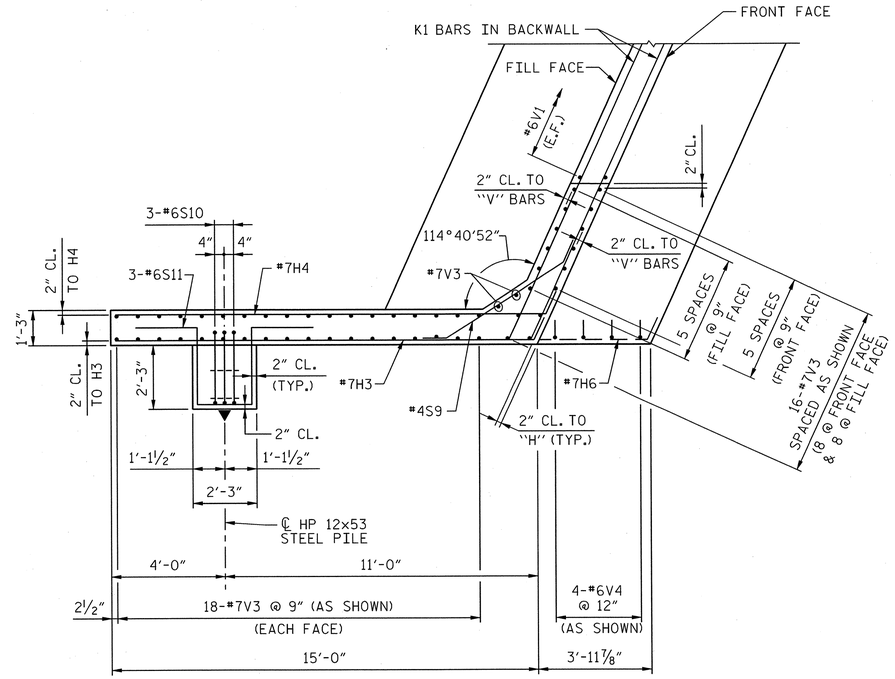

PLAN WING - AW2

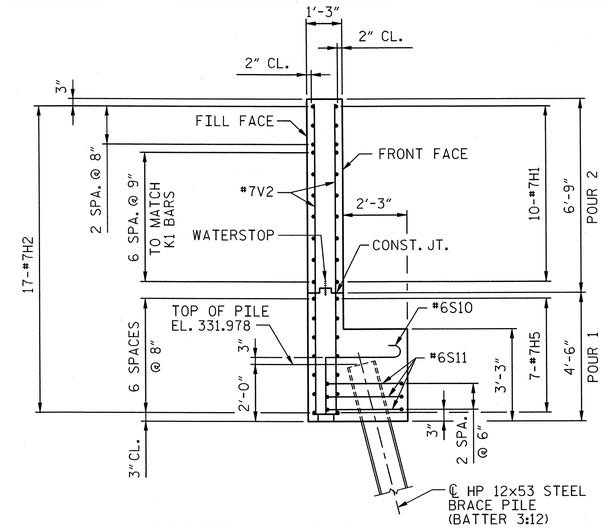

SECTION "B-B" (AW1)

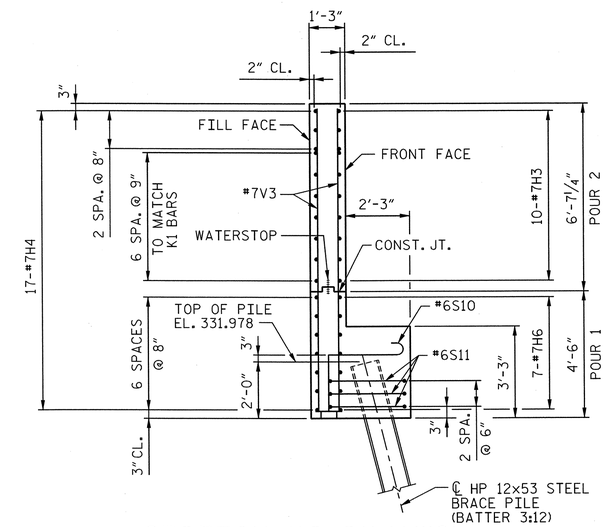

SECTION "C-C" (AW2)

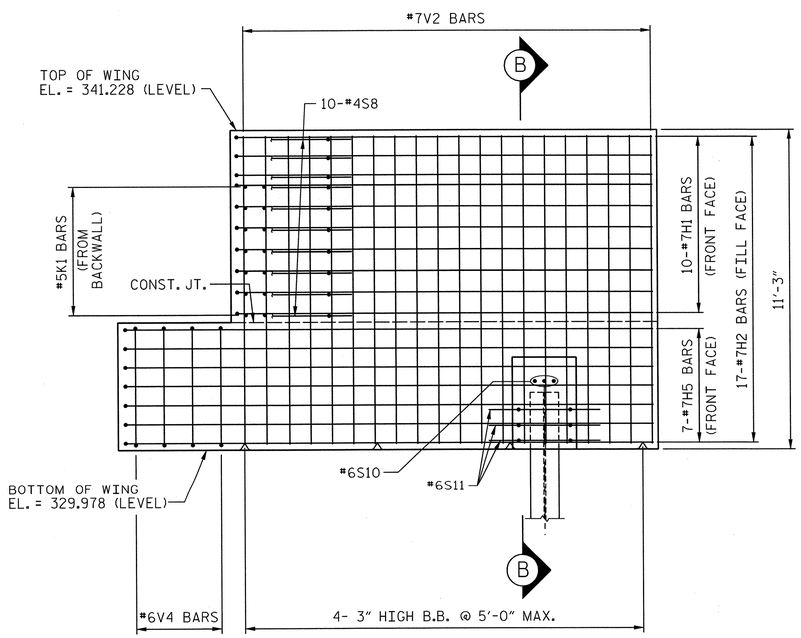

ELEVATION - AW1

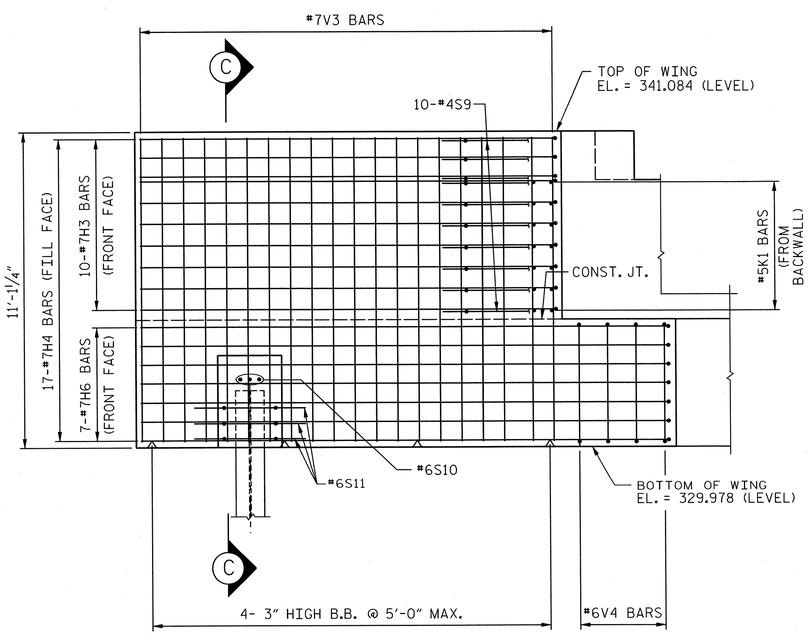

ELEVATION - AW2

PROJECT NO. P-5201

WAKE COUNTY

STATION: P.O.C. 3583+33.86 -M1-
P.O.T. 22+56.93 -L-

SHEET 4 OF 5

AECOM
AECOM TECHNICAL SERVICES, INC.
701 CORPORATE CENTER DRIVE, SUITE 475
RALEIGH, NC 27607
(919) 854-6200 www.aecom.com
AECOM License No. F-0342

NORTH CAROLINA PROFESSIONAL SEAL 10656 ENGINEER C. MARK PEARSON 9/13/13

STATE OF NORTH CAROLINA
DEPARTMENT OF TRANSPORTATION
RALEIGH

SUBSTRUCTURE

ABUTMENT #1
SECTIONS AND DETAILS

REVISIONS						SHEET NO.
NO.	BY:	DATE:	NO.	BY:	DATE:	S-28
1			3			TOTAL SHEETS
2			4			56

DRAWN BY : MTB DATE : 04/13
CHECKED BY : JL DATE : 04/13

DATE: 9/12/2013
TIME: 3:46:59 PM

USER: pd0fbzz
DGN: G:\5023\5803\400_Technical_Information_Disc_Files\450_NCDOT Shell\Deliverables\Structures\P-5201_SD_DSN_Abut-1_4.dgn

0422DEL_P19

DATE: 9/12/2013
TIME: 3:44:13 PM

USER: 80105
DGN: G:\80228\80031400_Technical_Information_Disc_Files\450_NCDOT Staff tools\Bentley\Structures\P-5201_SD_DSN_Abut-1_5.dgn

NOTE:
SEE SECTION "A-A" ON "TYPICAL DECK DETAILS" SHEET FOR WATERSTOP IN DECK JOINT.

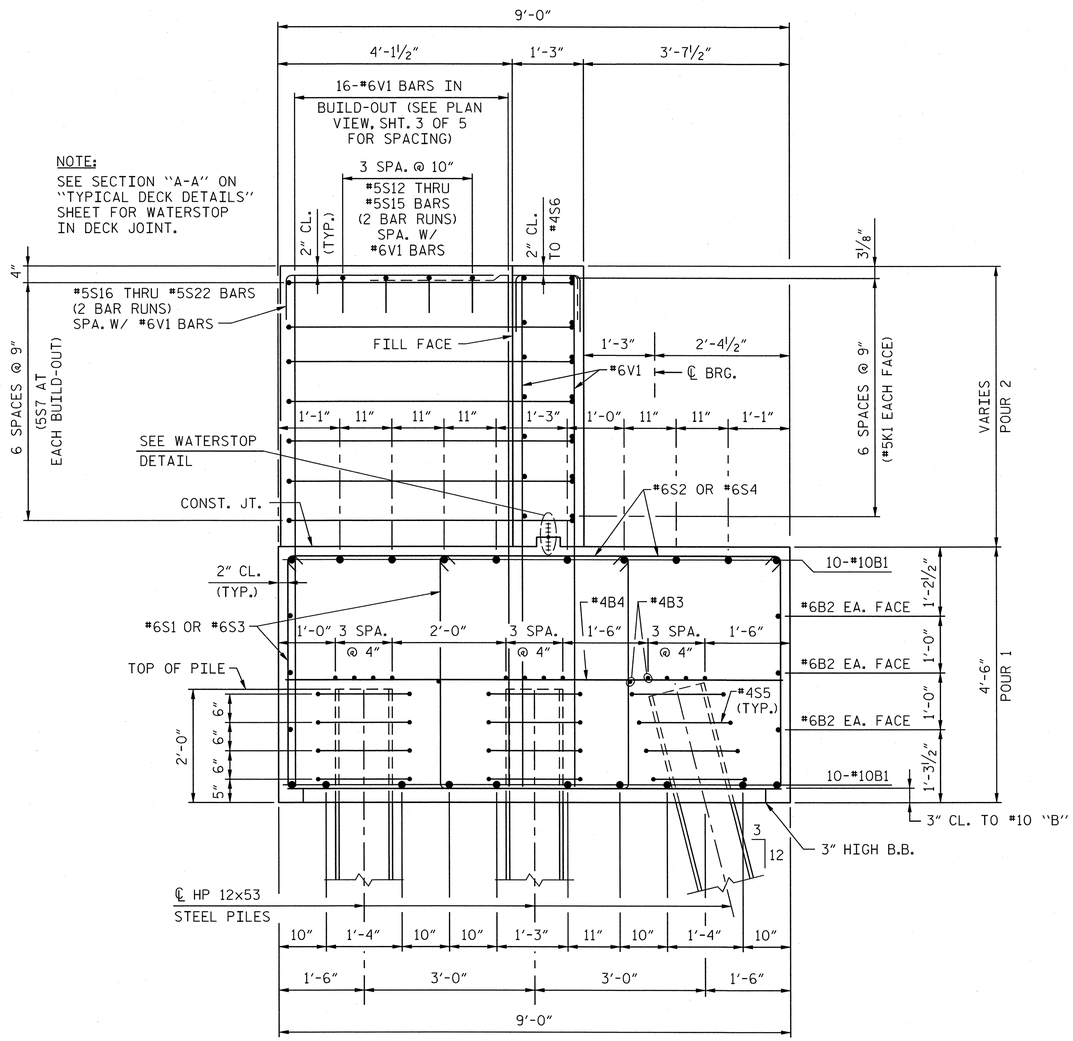

SECTION "A-A"

BAR TYPES

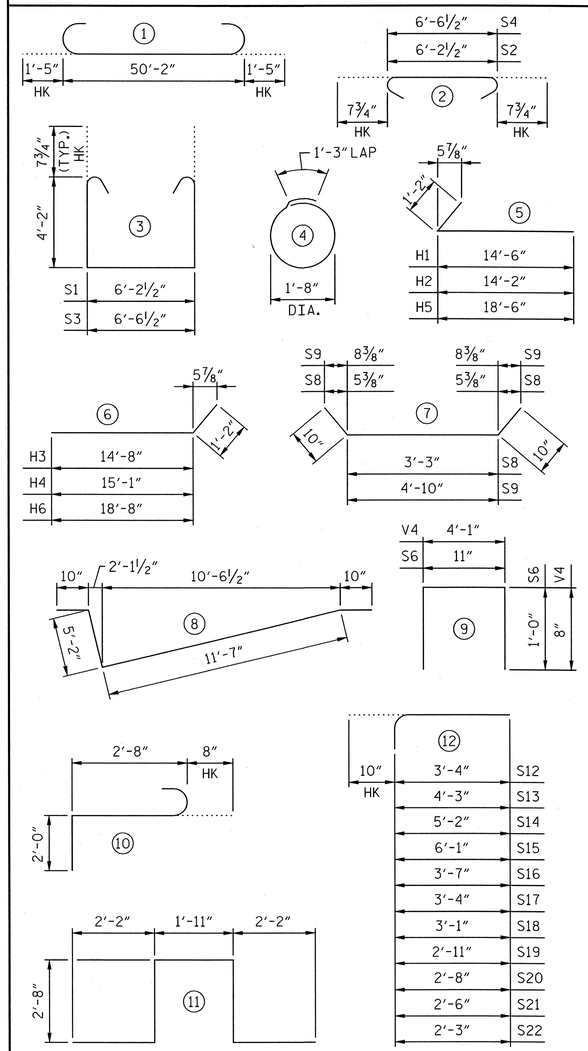

ALL BAR DIMENSIONS ARE OUT TO OUT.

BILL OF MATERIAL

ABUTMENT #1

BAR	NO.	SIZE	TYPE	LENGTH	WEIGHT
B1	20	#10	1	53'-0"	4561
B2	6	#6	STR	50'-2"	452
B3	28	#4	STR	26'-4"	493
B4	13	#4	STR	8'-8"	75
H1	10	#7	5	15'-8"	320
H2	17	#7	5	15'-4"	533
H3	10	#7	6	15'-10"	324
H4	17	#7	6	16'-3"	565
H5	7	#7	5	19'-8"	281
H6	7	#7	6	19'-10"	284
K1	14	#5	STR	50'-2"	733
S1	92	#6	3	15'-10"	2188
S2	92	#6	2	7'-6"	1036
S3	12	#6	3	16'-2"	291
S4	12	#6	2	7'-10"	141
S5	188	#4	4	6'-6"	816
S6	52	#4	9	2'-11"	101
S7	14	#5	8	18'-5"	269
S8	10	#4	7	4'-11"	33
S9	10	#4	7	6'-6"	43
S10	6	#6	10	5'-4"	48
S11	6	#6	11	11'-7"	104
S12	4	#5	12	4'-2"	17
S13	4	#5	12	5'-1"	21
S14	4	#5	12	6'-0"	25
S15	4	#5	12	6'-11"	29
S16	4	#5	12	4'-5"	18
S17	4	#5	12	4'-2"	17
S18	4	#5	12	3'-11"	16
S19	4	#5	12	3'-9"	16
S20	4	#5	12	3'-6"	15
S21	4	#5	12	3'-4"	14
S22	4	#5	12	3'-1"	13
V1	136	#6	STR	9'-0"	1838
V2	54	#7	STR	10'-10"	1196
V3	54	#7	STR	10'-8"	1177
V4	8	#6	9	5'-5"	65
TOTAL REINFORCING STEEL				LBS.	18168

ABUTMENT #1 TOTAL QUANTITIES

CLASS AA CONCRETE		
POUR 1 (CAP & LOWER WING)	C.Y.	80.8
POUR 2 (BACKWALL & UPPER WING)	C.Y.	29.4
TOTAL	C.Y.	110.2
HP 12x53 STEEL PILES	NO.	49
	LIN. FT.	1029
PILE EXCAVATION IN SOIL	LIN. FT.	404.3
PILE EXCAVATION NOT IN SOIL	LIN. FT.	575.8

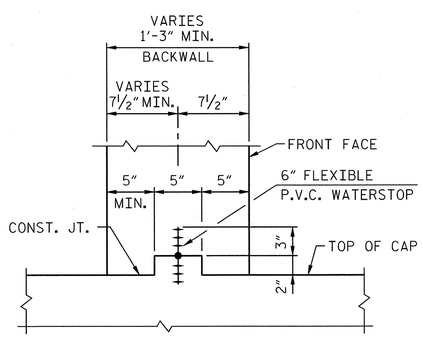

WATERSTOP DETAIL

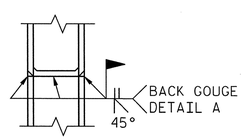

✱✱ PILE VERTICAL

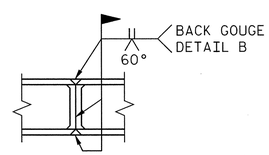

✱✱ PILE HORIZONTAL OR VERTICAL

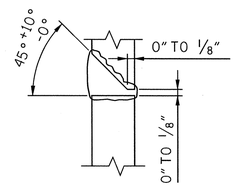

DETAIL A

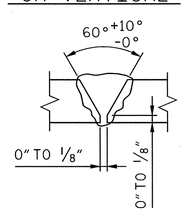

DETAIL B

✱✱ POSITION OF PILE DURING WELDING.

PILE SPLICE DETAILS

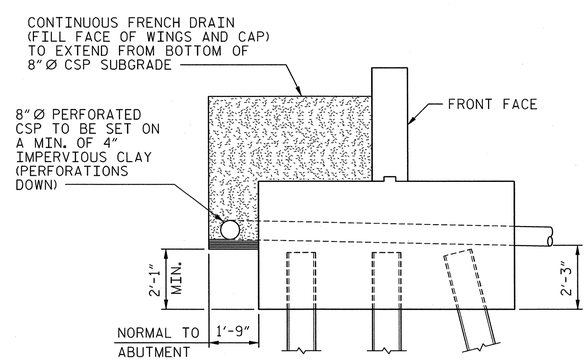

CONTINUOUS FRENCH DRAIN DETAIL

PROJECT NO. P-5201
WAKE COUNTY
STATION: P.O.C. 3583+33.86 -M1-
P.O.T. 22+56.93 -L-

SHEET 5 OF 5

AECOM
AECOM TECHNICAL SERVICES, INC.
701 CORPORATE CENTER DRIVE, SUITE 475
RALEIGH, NC 27607
(919) 854-6200 www.aecom.com
AECOM License No. F-0342

NORTH CAROLINA PROFESSIONAL SEAL 10656 ENGINEER L. MARK PEARSON
9/13/13

STATE OF NORTH CAROLINA
DEPARTMENT OF TRANSPORTATION
RALEIGH

SUBSTRUCTURE

ABUTMENT #1
DETAILS

REVISIONS						SHEET NO.
NO.	BY:	DATE:	NO.	BY:	DATE:	S-29
1			3			TOTAL SHEETS
2			4			56

DRAWN BY : MTB DATE : 04/13
CHECKED BY : JL DATE : 04/13

0422DEL_P19

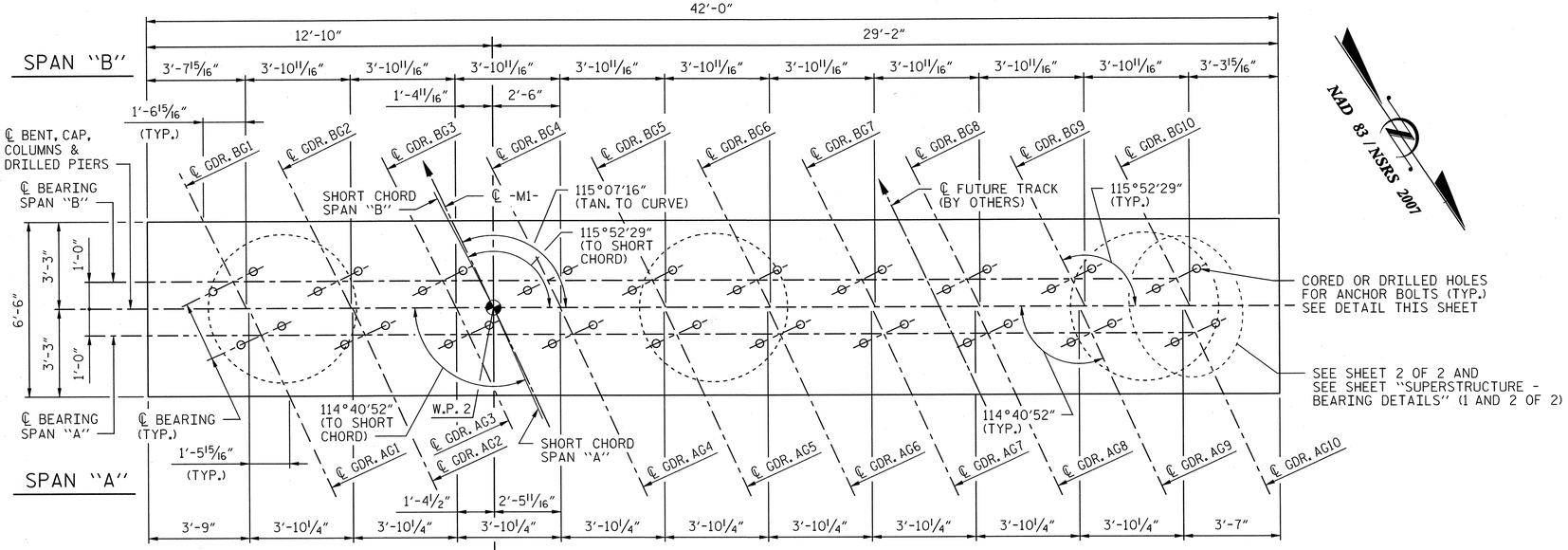

PLAN

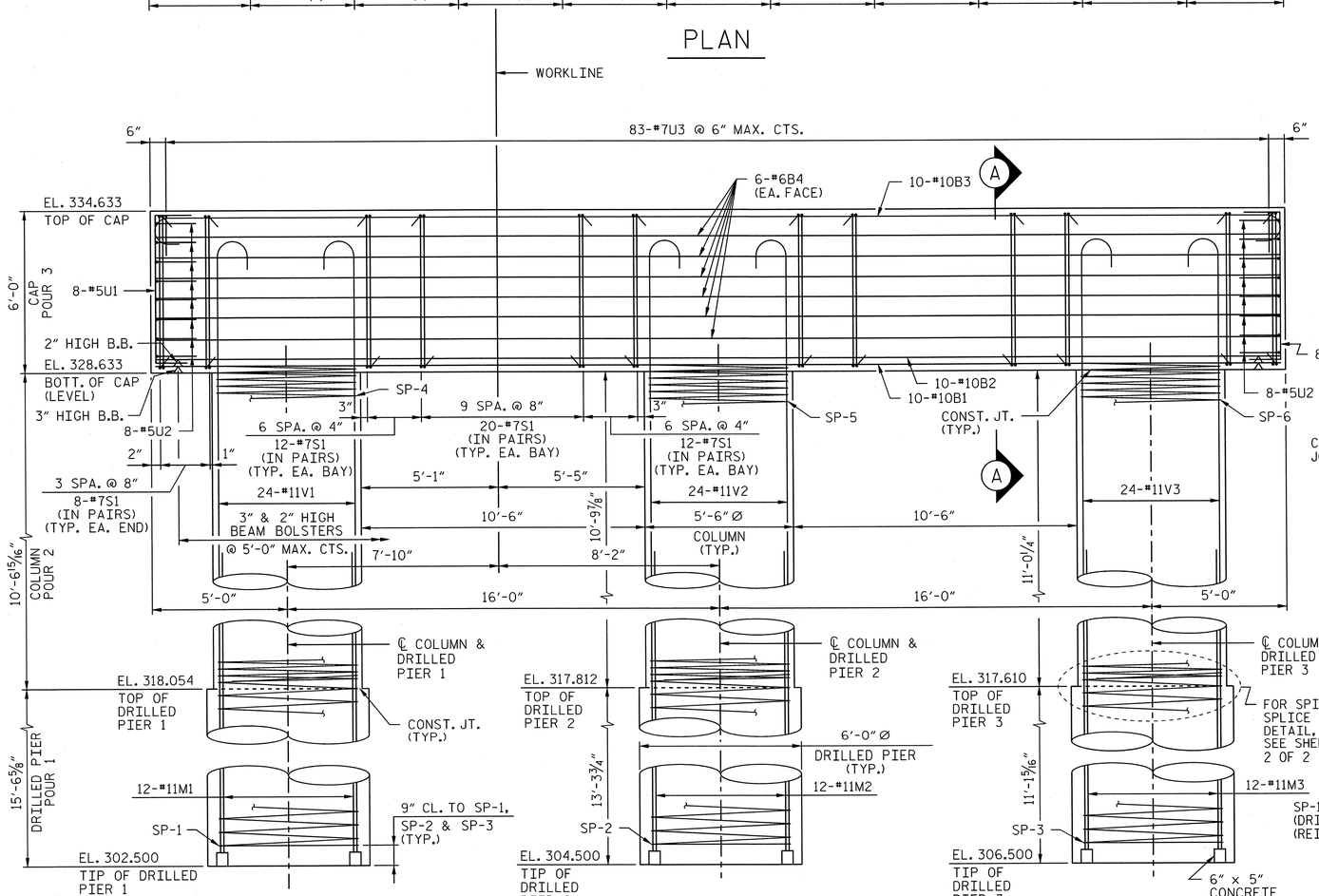

ELEVATION

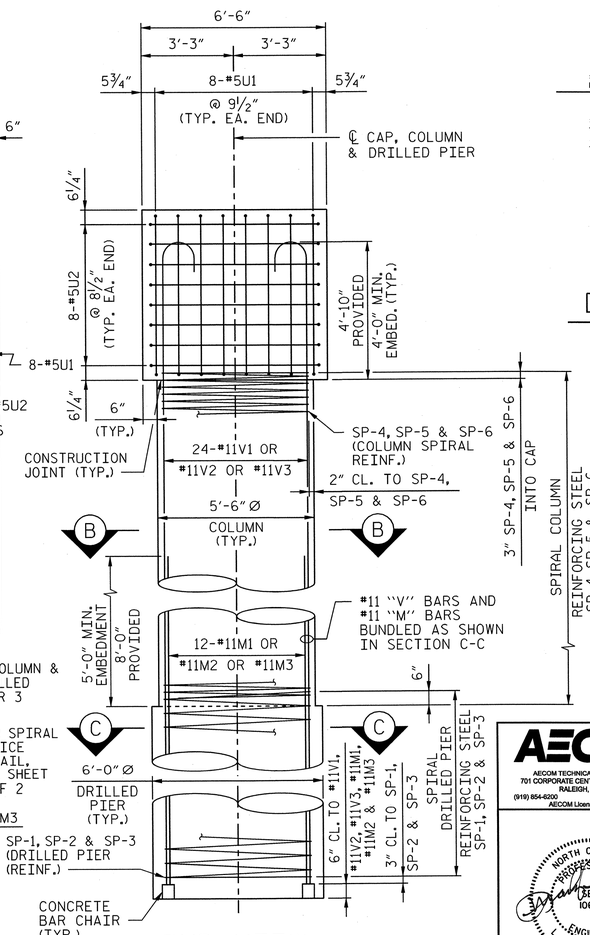

END VIEW

NOTES:

1. FOR EPOXY PROTECTIVE COATING, SEE STANDARD SPECIFICATIONS.
2. STIRRUPS IN CAP MAY BE SHIFTED AS NECESSARY TO CLEAR ANCHOR BOLTS.
3. HOOKS ON "V" BARS MAY BE TURNED AS NECESSARY FOR PLACING REINFORCING STEEL.
4. THE TOP SURFACE AREAS OF THE PIER CAPS SHALL BE CURED IN ACCORDANCE WITH THE STANDARD SPECIFICATIONS EXCEPT THAT THE MEMBRANCE CURING COMPOUND METHOD SHALL NOT BE USED.
5. ALL STEEL IN THE DRILLED PIERS IS INCLUDED IN THE PAY ITEMS FOR "REINFORCING STEEL" AND "SPIRAL COLUMN REINFORCING STEEL".
6. THE CONTRACTOR'S ATTENTION IS CALLED TO THE FACT THAT THE LONGITUDINAL REINFORCEMENT FOR THE DRILLED PIERS IS DETAILED WITH 3 FEET OF EXTRA LENGTH.
7. SPLICING OF THE LONGITUDINAL BARS IN THE DRILLED PIERS WILL NOT BE PERMITTED.
8. THE LOCATION OF THE CONSTRUCTION JOINT IN THE DRILLED PIERS IS BASED ON AN APPROXIMATE GROUND LINE ELEVATION. IF THE CONSTRUCTION JOINT IS ABOVE THE ACTUAL GROUND ELEVATION, THE CONTRACTOR SHALL PLACE THE CONSTRUCTION JOINT ONE FOOT BELOW THE GROUND LINE.
9. A TWO PART WATERPROOFING SYSTEM SHOULD BE APPLIED AROUND THE CONSTRUCTION JOINT AT THE COLUMN AND DRILLED PIER FOR EACH COLUMN.
10. METHOD B DAMPPROOFING SHOULD BE APPLIED TO ANY PART OF THE COLUMN THAT IS BELOW THE GROUND LINE.
11. INVERT ALTERNATE STIRRUP PAIRS IN BENT CAP.

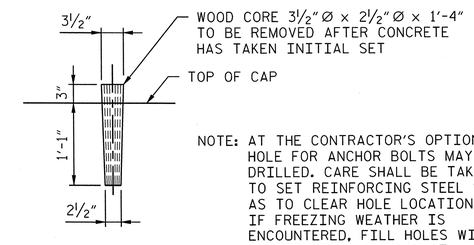

NOTE: AT THE CONTRACTOR'S OPTION, HOLE FOR ANCHOR BOLTS MAY BE DRILLED. CARE SHALL BE TAKEN TO SET REINFORCING STEEL SO AS TO CLEAR HOLE LOCATION. IF FREEZING WEATHER IS ENCOUNTERED, FILL HOLES WITH ANTIFREEZE AND SAWDUST.

DETAIL OF WOOD CORE FOR ANCHOR BOLT HOLES

NAD 83 / NSRS 2007

PROJECT NO. P-5201

WAKE COUNTY

STATION: P.O.C. 3583+33.86 -M1-
P.O.T. 22+56.93 -L-

SHEET 1 OF 2

AECOM
AECOM TECHNICAL SERVICES, INC.
701 CORPORATE CENTER DRIVE, SUITE 475
RALEIGH, NC 27607
(919) 854-6200 www.aecom.com
AECOM License No. F-0342

NORTH CAROLINA PROFESSIONAL SEAL 10656 ENGINEER MARK PEARSON 9/12/13

STATE OF NORTH CAROLINA
DEPARTMENT OF TRANSPORTATION
RALEIGH

SUBSTRUCTURE

PIER 1
PLAN AND ELEVATION

REVISIONS						SHEET NO.
NO.	BY:	DATE:	NO.	BY:	DATE:	S-30
1			3			TOTAL SHEETS
2			4			56

DRAWN BY : DDL DATE : 03/13
CHECKED BY : JL DATE : 03/13

DATE: 9/12/2013
TIME: 3:52:59 PM

USER: pdaniel
DGN: G:\5201398\03-400_Technical_Information_Disc_Files\450_NCDOT SHE Tech Design Files\Structures\P-5201_S3_DSN_Pier-1.dgn

0422DEL_P19

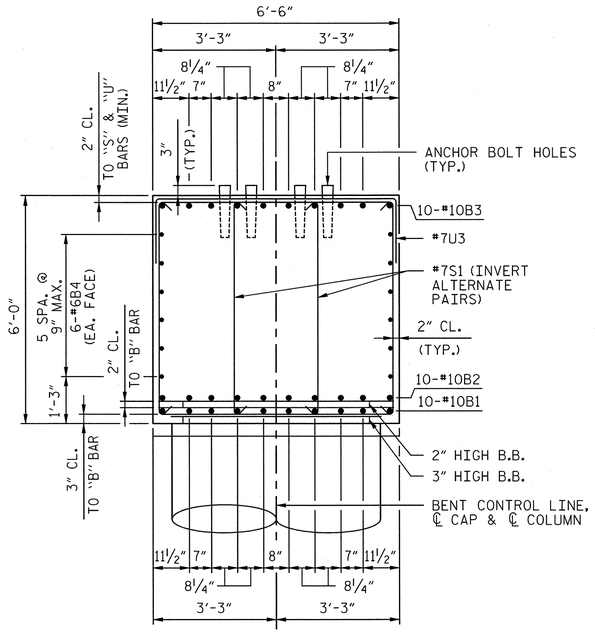

SECTION "A"

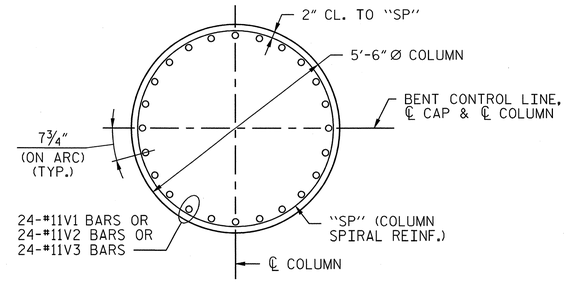

SECTION "B-B"

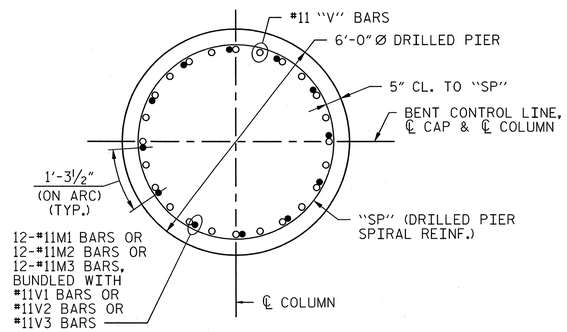

SECTION "C-C"

○ #11V1 OR #11V2 OR #11V3 (COLUMN AND DRILLED PIER)

● #11M1 OR #11M2 OR #11M3 (DRILLED PIER)

BAR TYPES

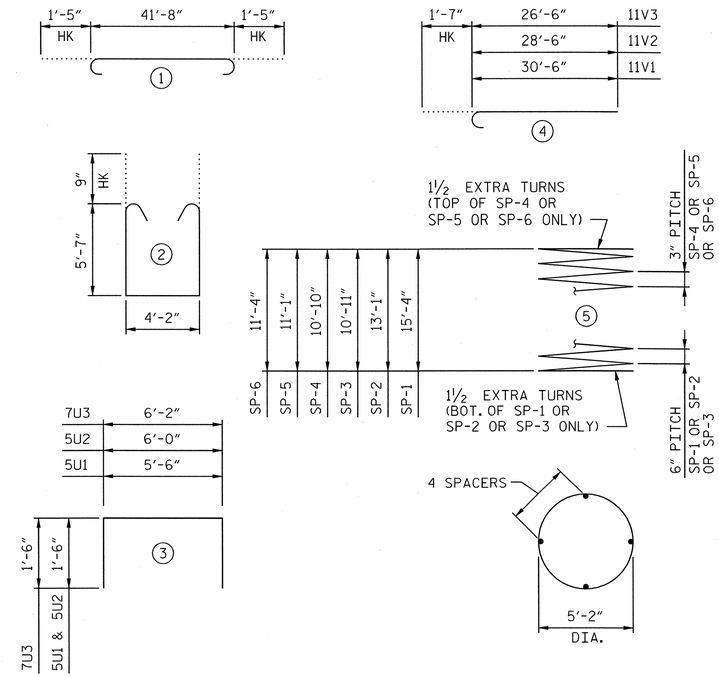

ALL BAR DIMENSIONS ARE OUT TO OUT.

BILL OF MATERIAL

PIER 1

BAR	NO.	SIZE	TYPE	LENGTH	WEIGHT
B1	10	#10	STR	41'-8"	1793
B2	10	#10	STR	41'-8"	1793
B3	10	#10	1	44'-6"	1915
B4	12	#6	STR	41'-8"	751
M1	12	#11	STR	23'-1"	1472
M2	12	#11	STR	20'-10"	1328
M3	12	#11	STR	18'-8"	1190
S1	104	#7	2	16'-10"	3578
U1	16	#5	3	8'-6"	142
U2	16	#5	3	9'-0"	150
U3	83	#7	3	9'-2"	1555
V1	24	#11	4	32'-1"	4091
V2	24	#11	4	30'-1"	3836
V3	24	#11	4	28'-1"	3581
REINFORCING STEEL				LBS.	27175
SP-1	2	**	5	515'-0"	2105
SP-2	2	**	5	443'-0"	1181
SP-3	2	**	5	373'-8"	1528
SP-4	1	***	5	720'-6"	751
SP-5	1	***	5	736'-8"	768
SP-6	1	***	5	752'-8"	785
SPIRAL COLUMN REINFORCING STEEL				LBS.	7118

** THE "SP" SPIRAL REINFORCING STEEL SHALL BE BUNDLED #7 PLAIN OR DEFORMED BAR.

*** THE "SP" SPIRAL REINFORCING STEEL SHALL BE W31 OR D-31 COLD DRAWN WIRE OR #5 PLAIN OR DEFORMED BAR.

PIER 1 TOTAL QUANTITIES

CLASS AA CONCRETE		
POUR 2 (COLUMNS)	C.Y.	28.5
POUR 3 (CAP & STEP)	C.Y.	61.3
TOTAL CLASS AA CONCRETE	C.Y.	89.8
DRILLED PIERS, CONCRETE		
POUR 1	C.Y.	41.9
6'-0" Ø DRILLED PIERS IN SOIL	LIN. FT.	13.0
6'-0" Ø DRILLED PIERS NOT IN SOIL	LIN. FT.	27.0
CSL TUBES	LIN. FT.	260.0

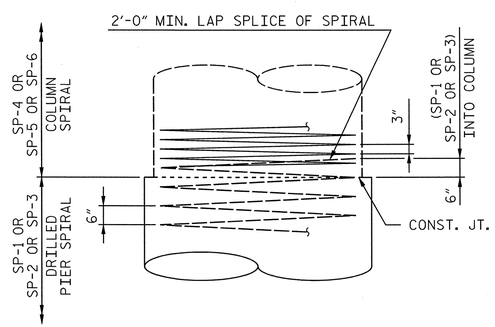

CONSTRUCTION JOINT DETAIL

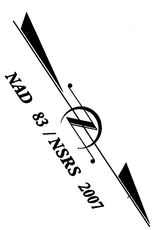

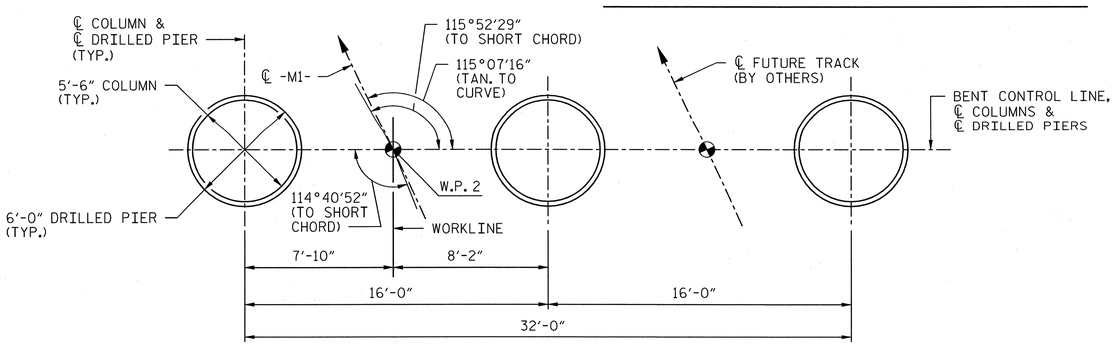

FOOTING PLAN

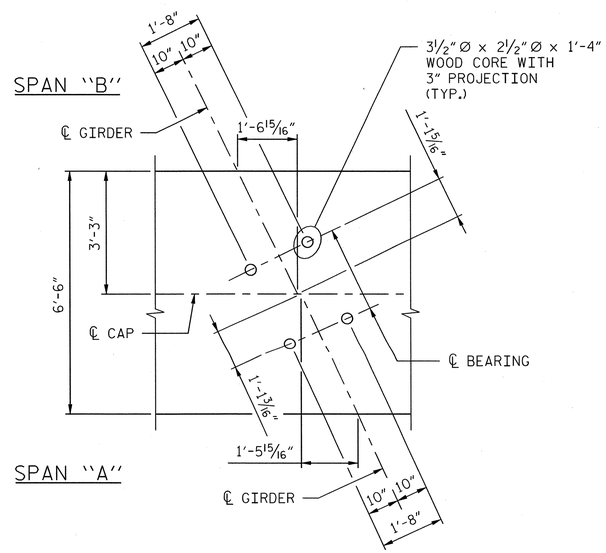

BEARING DETAIL

PROJECT NO. P-5201

WAKE **COUNTY**

STATION: P.O.C. 3583+33.86 -M1-
P.O.T. 22+56.93 -L-

SHEET 2 OF 2

AECOM
AECOM TECHNICAL SERVICES, INC.
701 CORPORATE CENTER DRIVE, SUITE 475
RALEIGH, NC 27607
(919) 854-6200 www.aecom.com
AECOM License No. F-0342

NORTH CAROLINA PROFESSIONAL SEAL 10656 ENGINEER L. MARK PEARSON 9/13/13

STATE OF NORTH CAROLINA
DEPARTMENT OF TRANSPORTATION
RALEIGH

SUBSTRUCTURE

PIER 1
SECTIONS AND DETAILS

REVISIONS						SHEET NO.
NO.	BY:	DATE:	NO.	BY:	DATE:	S-31
1			3			TOTAL SHEETS
2			4			54

DRAWN BY : DDL DATE : 03/13
CHECKED BY : JL DATE : 03/13

DATE: 9/12/2013
TIME: 3:58:33 PM

USER: DA9012
DGN: G:\60223980\3-400_Technical_Information_Disc_Files\450_NCDOT Staff Tech Design Files\Structures\P-5201_SD_DSN_Pier-1_2.dgn

0422DEL_P19

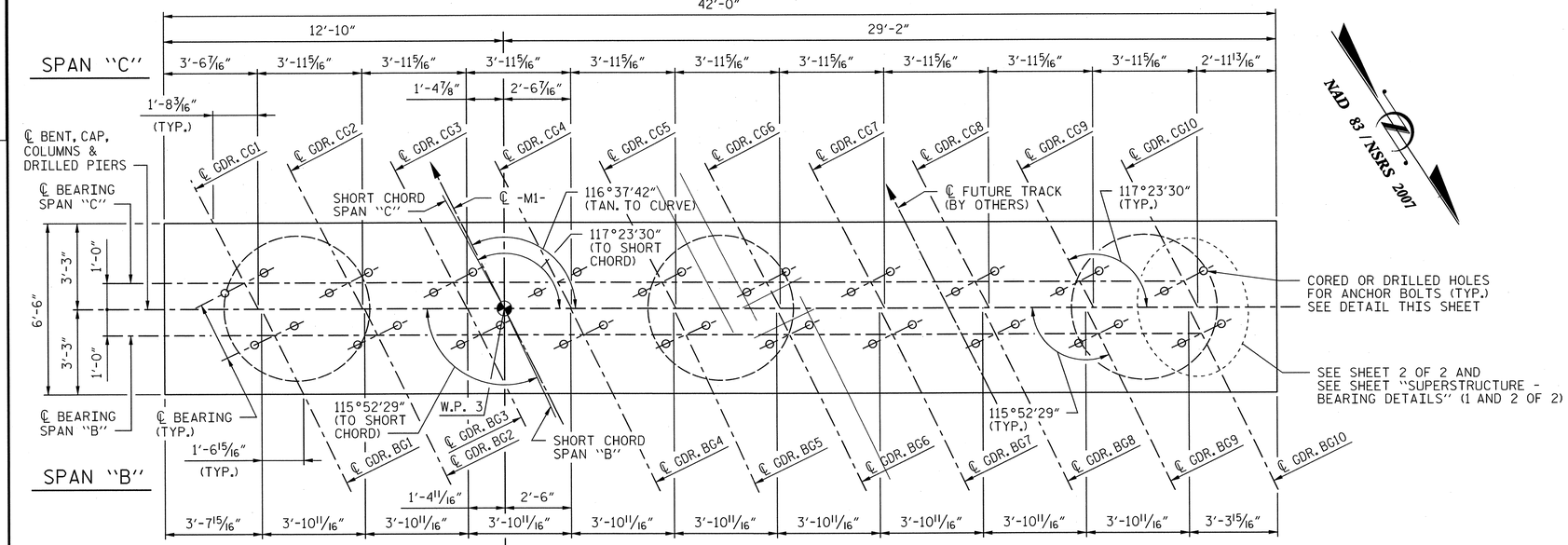

PLAN

NOTES:

1. FOR EPOXY PROTECTIVE COATING, SEE STANDARD SPECIFICATIONS.
2. STIRRUPS IN CAP MAY BE SHIFTED AS NECESSARY TO CLEAR ANCHOR BOLTS.
3. HOOKS ON "V" BARS MAY BE TURNED AS NECESSARY FOR PLACING REINFORCING STEEL.
4. THE TOP SURFACE AREAS OF THE PIER CAPS SHALL BE CURED IN ACCORDANCE WITH THE STANDARD SPECIFICATIONS EXCEPT THAT THE MEMBRANCE CURING COMPOUND METHOD SHALL NOT BE USED.
5. ALL STEEL IN THE DRILLED PIERS IS INCLUDED IN THE PAY ITEMS FOR "REINFORCING STEEL" AND "SPIRAL COLUMN REINFORCING STEEL".
6. THE CONTRACTOR'S ATTENTION IS CALLED TO THE FACT THAT THE LONGITUDINAL REINFORCEMENT FOR THE DRILLED PIERS IS DETAILED WITH 3 FEET OF EXTRA LENGTH.
7. SPLICING OF THE LONGITUDINAL BARS IN THE DRILLED PIERS WILL NOT BE PERMITTED.
8. THE LOCATION OF THE CONSTRUCTION JOINT IN THE DRILLED PIERS IS BASED ON AN APPROXIMATE GROUND LINE ELEVATION. IF THE CONSTRUCTION JOINT IS ABOVE THE ACTUAL GROUND ELEVATION, THE CONTRACTOR SHALL PLACE THE CONSTRUCTION JOINT ONE FOOT BELOW THE GROUND LINE.
9. A TWO PART WATERPROOFING SYSTEM SHOULD BE APPLIED AROUND THE CONSTRUCTION JOINT AT THE COLUMN AND DRILLED PIER FOR EACH COLUMN.
10. METHOD B DAMPPROOFING SHOULD BE APPLIED TO ANY PART OF THE COLUMN THAT IS BELOW THE GROUND LINE.
11. INVERT ALTERNATE STIRRUP PAIRS IN BENT CAP.

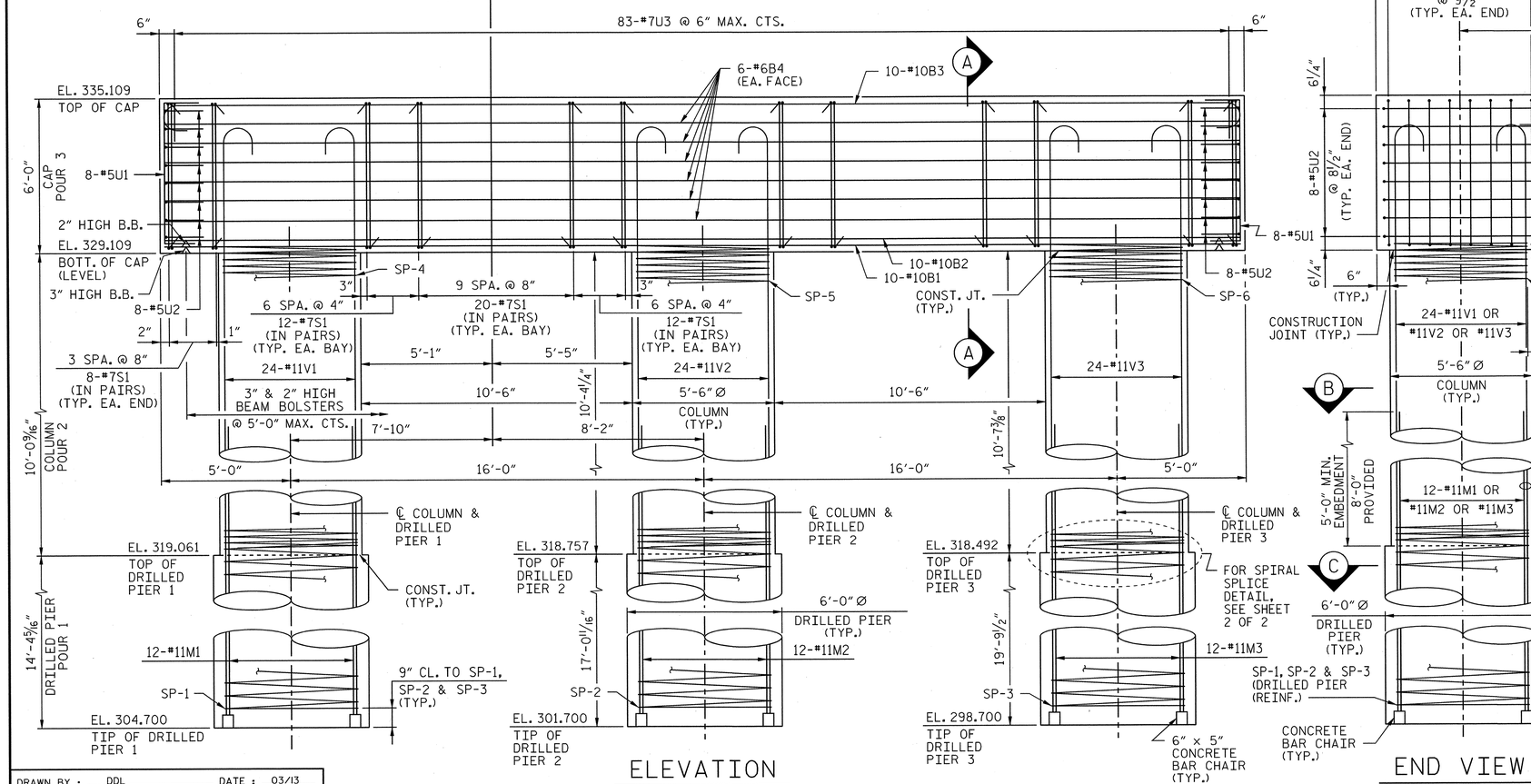

ELEVATION

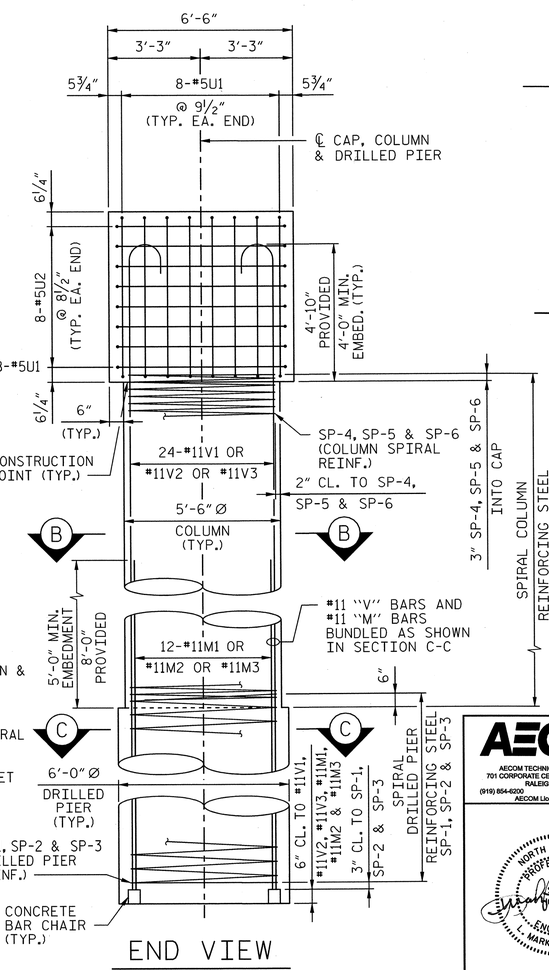

END VIEW

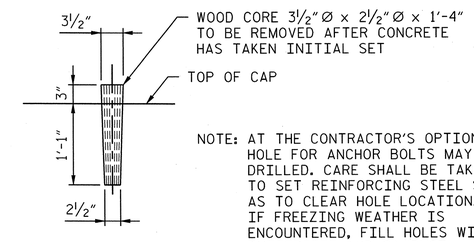

NOTE: AT THE CONTRACTOR'S OPTION, HOLE FOR ANCHOR BOLTS MAY BE DRILLED. CARE SHALL BE TAKEN TO SET REINFORCING STEEL SO AS TO CLEAR HOLE LOCATION. IF FREEZING WEATHER IS ENCOUNTERED, FILL HOLES WITH ANTIFREEZE AND SAWDUST.

DETAIL OF WOOD CORE FOR ANCHOR BOLT HOLES

PROJECT NO. P-5201
WAKE COUNTY
STATION: P.O.C. 3583+33.86 -M1-
P.O.T. 22+56.93 -L-

SHEET 1 OF 2

AECOM
AECOM TECHNICAL SERVICES, INC.
701 CORPORATE CENTER DRIVE, SUITE 475
RALEIGH, NC 27607
(919) 854-6200 www.aecom.com
AECOM License No. F-0342

NORTH CAROLINA PROFESSIONAL ENGINEER SEAL 10656 9/13/13 J. MARK PEARSON

STATE OF NORTH CAROLINA
DEPARTMENT OF TRANSPORTATION
RALEIGH

SUBSTRUCTURE

PIER 2
PLAN AND ELEVATION

REVISIONS								SHEET NO.
NO.	BY:	DATE:	NO.	BY:	DATE:			S-32
1			3					TOTAL SHEETS
2			4					56

DRAWN BY : DDL DATE : 03/13
CHECKED BY : JL DATE : 03/13

DATE: 9/12/2013
TIME: 3:52:54 PM

USER: g06762
DGN: G:\6012\5803\400_Technical_Information_Disc_Files\450_NCDOT\Std\BeltDesign\TitleSheets\Structures\P-5201_S3_DSN_Pier-2_Ldgn

0422DEL_P19

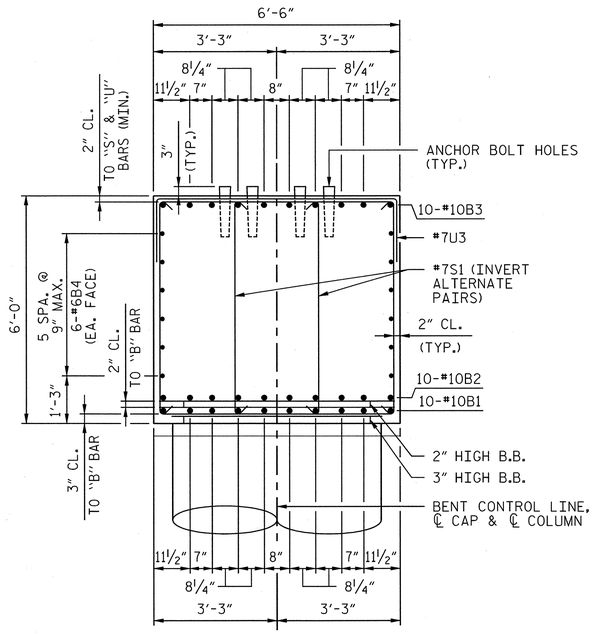

SECTION "A"

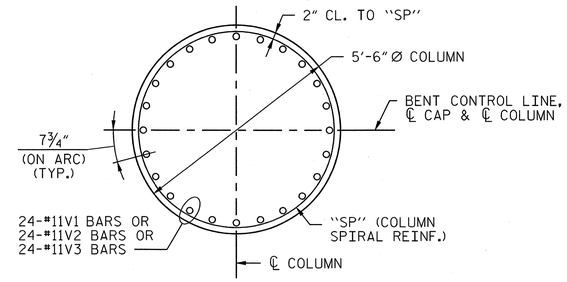

SECTION "B-B"

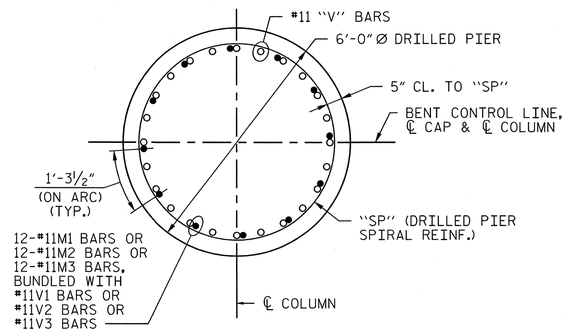

SECTION "C-C"

○ #11V1 OR #11V2 OR #11V3 (COLUMN AND DRILLED PIER)

● #11M1 OR #11M2 OR #11M3 (DRILLED PIER)

BAR TYPES

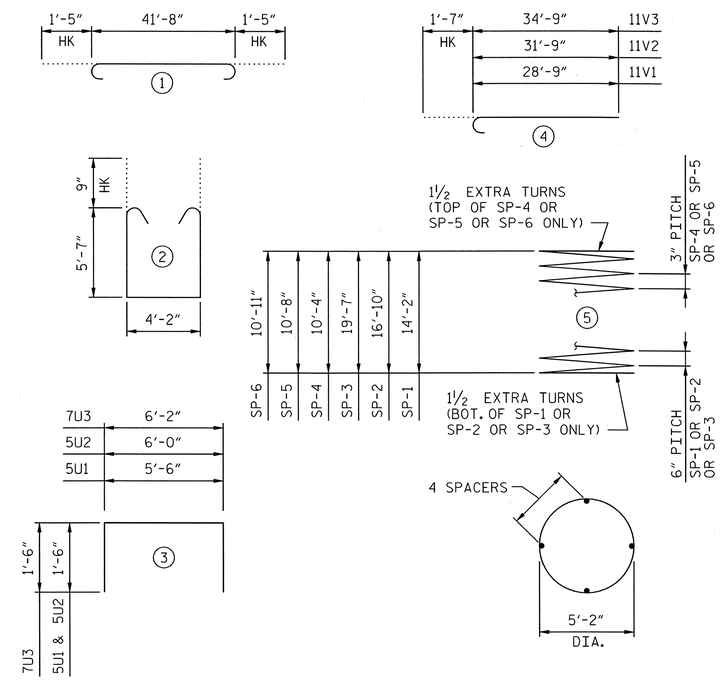

ALL BAR DIMENSIONS ARE OUT TO OUT.

BILL OF MATERIAL

PIER 2

BAR	NO.	SIZE	TYPE	LENGTH	WEIGHT
B1	10	#10	STR	41'-8"	1793
B2	10	#10	STR	41'-8"	1793
B3	10	#10	1	44'-6"	1915
B4	12	#6	STR	41'-8"	751
M1	12	#11	STR	21'-11"	1397
M2	12	#11	STR	24'-7"	1567
M3	12	#11	STR	27'-4"	1743
S1	104	#7	2	16'-10"	3578
U1	16	#5	3	8'-6"	142
U2	16	#5	3	9'-0"	150
U3	83	#7	3	9'-2"	1555
V1	24	#11	4	30'-4"	3868
V2	24	#11	4	33'-4"	4250
V3	24	#11	4	36'-4"	4633
REINFORCING STEEL				LBS.	29135
SP-1	2	**	5	477'-8"	1953
SP-2	2	**	5	563'-2"	2302
SP-3	2	**	5	651'-2"	2662
SP-4	1	***	5	688'-4"	718
SP-5	1	***	5	709'-10"	740
SP-6	1	***	5	725'-10"	757
SPIRAL COLUMN REINFORCING STEEL				LBS.	9132

** THE "SP" SPIRAL REINFORCING STEEL SHALL BE BUNDLED #7 PLAIN OR DEFORMED BAR.

*** THE "SP" SPIRAL REINFORCING STEEL SHALL BE W31 OR D-31 COLD DRAWN WIRE OR #5 PLAIN OR DEFORMED BAR.

PIER 2 TOTAL QUANTITIES

CLASS AA CONCRETE		
POUR 2 (COLUMNS)	C.Y.	27.3
POUR 3 (CAP & STEP)	C.Y.	61.6
TOTAL CLASS AA CONCRETE	C.Y.	88.9
DRILLED PIERS, CONCRETE		
POUR 1	C.Y.	53.6
6'-0" Ø DRILLED PIERS IN SOIL	LIN. FT.	24.2
6'-0" Ø DRILLED PIERS NOT IN SOIL	LIN. FT.	27.0
CSL TUBES	LIN. FT.	330.0

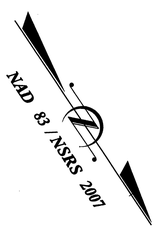

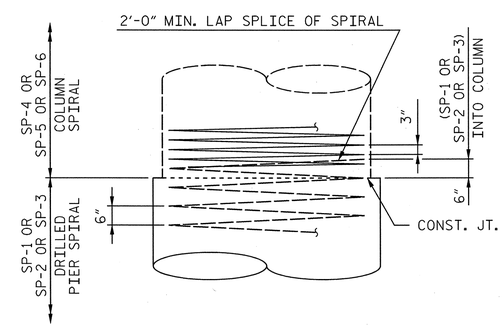

CONSTRUCTION JOINT DETAIL

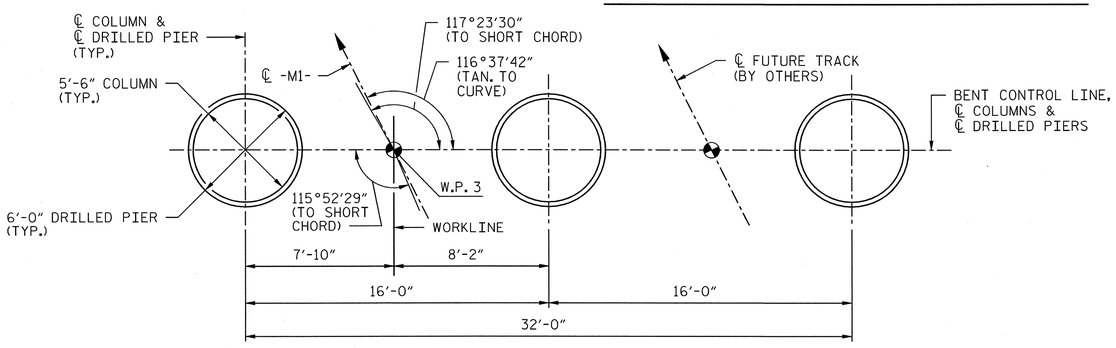

FOOTING PLAN

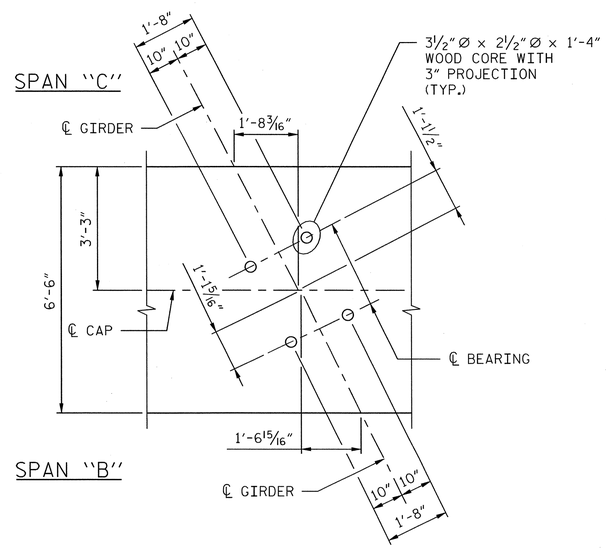

BEARING DETAIL

DRAWN BY : DDL DATE : 03/13
CHECKED BY : JL DATE : 03/13

PROJECT NO. P-5201

WAKE COUNTY

STATION: P.O.C. 3583+33.86 -M1-
P.O.T. 22+56.93 -L-

SHEET 2 OF 2

AECOM
AECOM TECHNICAL SERVICES, INC.
701 CORPORATE CENTER DRIVE, SUITE 475
RALEIGH, NC 27607
(919) 854-6200 www.aecom.com
AECOM License No. F-0342

NORTH CAROLINA PROFESSIONAL SEAL 10656 ENGINEER L. MARK PEARSON 9/12/2013

STATE OF NORTH CAROLINA
DEPARTMENT OF TRANSPORTATION
RALEIGH

SUBSTRUCTURE

PIER 2
SECTIONS AND DETAILS

REVISIONS						SHEET NO.
NO.	BY:	DATE:	NO.	BY:	DATE:	S-33
1			3			TOTAL SHEETS
2			4			56

USER: 80902
DGN: Q:\0422DEL\B603-H00_Technical_Information_Dist_Files\450_NCDOT SHS\TechDesignFiles\Structures\P-5201_SD_DSN_Pier-2_2.dgn
DATE: 9/12/2013
TIME: 3:53:23 PM

0422DEL_P19

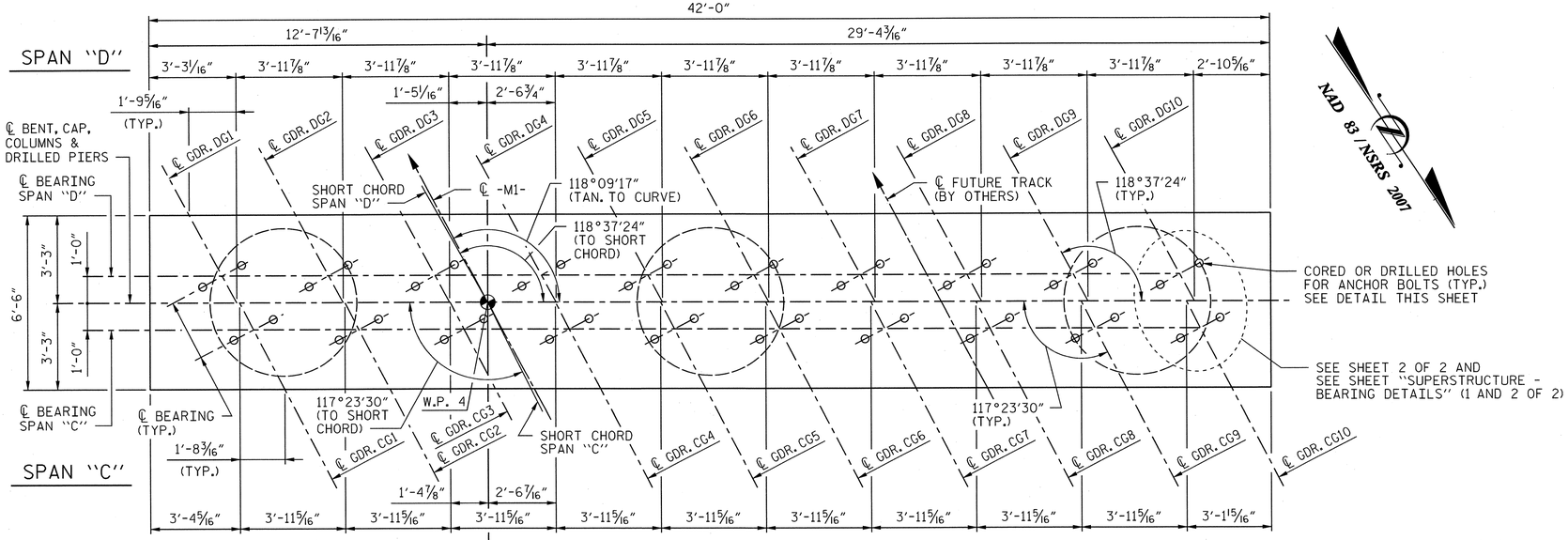

PLAN

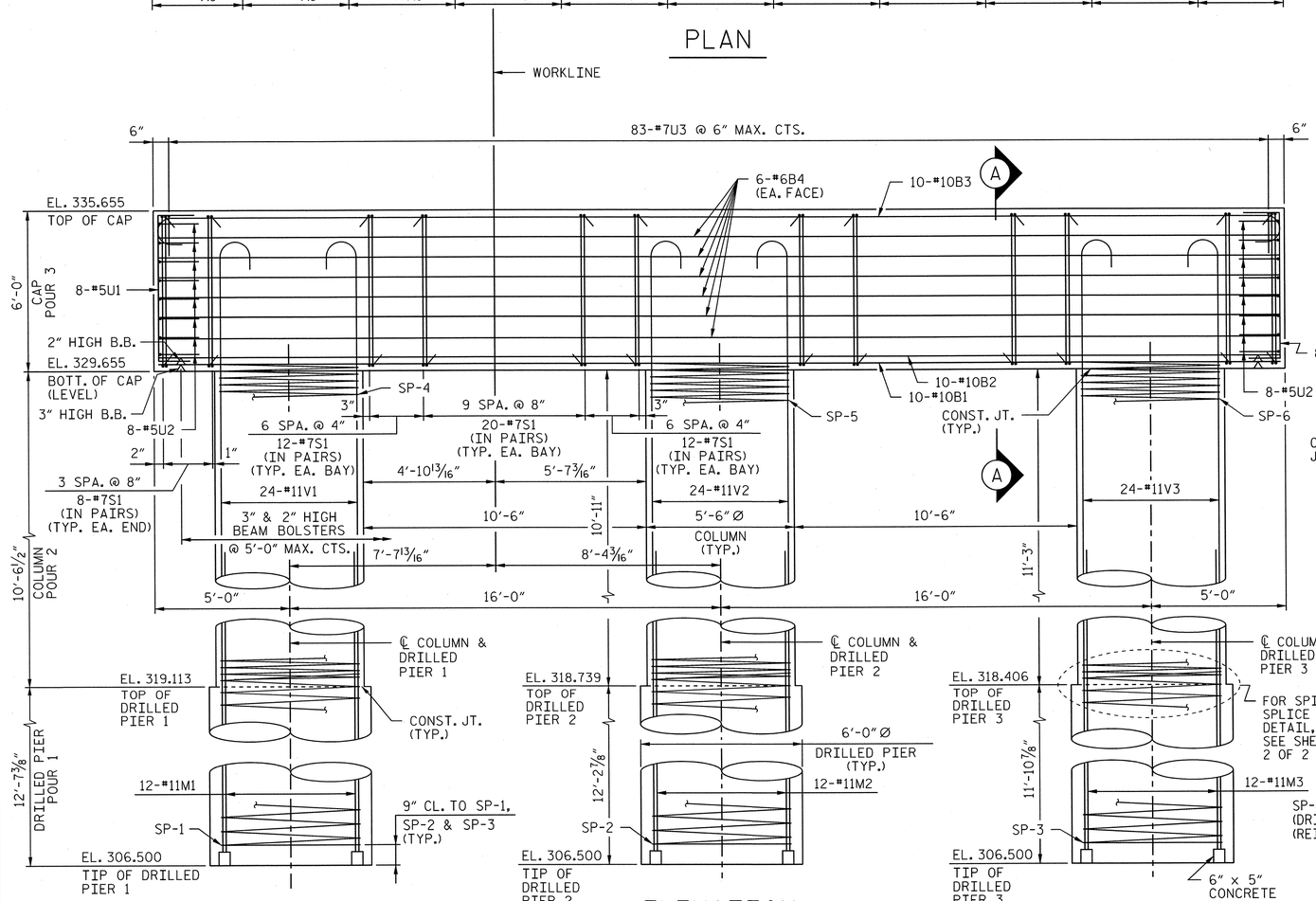

ELEVATION

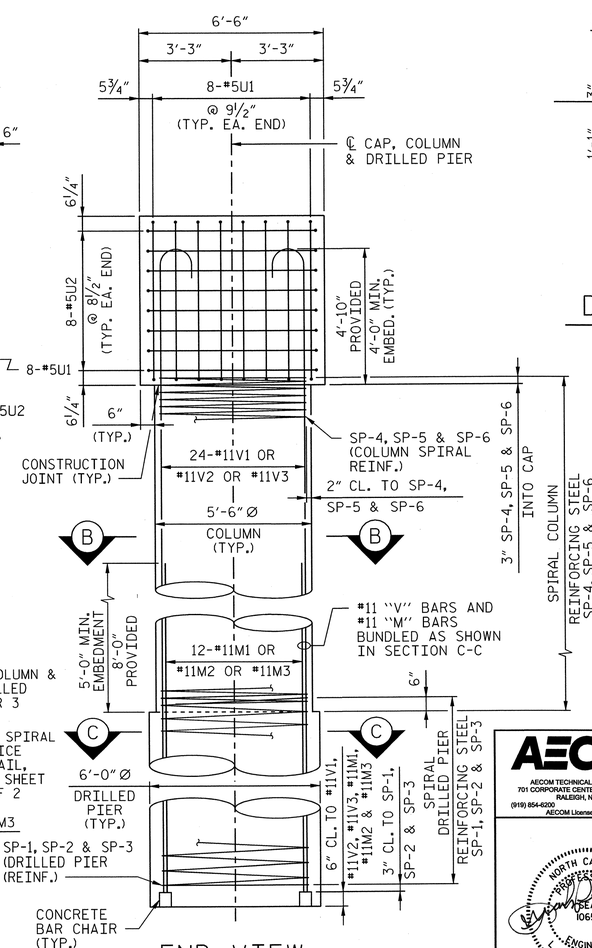

END VIEW

NOTES:

1. FOR EPOXY PROTECTIVE COATING, SEE STANDARD SPECIFICATIONS.
2. STIRRUPS IN CAP MAY BE SHIFTED AS NECESSARY TO CLEAR ANCHOR BOLTS.
3. HOOKS ON "V" BARS MAY BE TURNED AS NECESSARY FOR PLACING REINFORCING STEEL.
4. THE TOP SURFACE AREAS OF THE PIER CAPS SHALL BE CURED IN ACCORDANCE WITH THE STANDARD SPECIFICATIONS EXCEPT THAT THE MEMBRANCE CURING COMPOUND METHOD SHALL NOT BE USED.
5. ALL STEEL IN THE DRILLED PIERS IS INCLUDED IN THE PAY ITEMS FOR "REINFORCING STEEL" AND "SPIRAL COLUMN REINFORCING STEEL".
6. THE CONTRACTOR'S ATTENTION IS CALLED TO THE FACT THAT THE LONGITUDINAL REINFORCEMENT FOR THE DRILLED PIERS IS DETAILED WITH 3 FEET OF EXTRA LENGTH.
7. SPLICING OF THE LONGITUDINAL BARS IN THE DRILLED PIERS WILL NOT BE PERMITTED.
8. THE LOCATION OF THE CONSTRUCTION JOINT IN THE DRILLED PIERS IS BASED ON AN APPROXIMATE GROUND LINE ELEVATION. IF THE CONSTRUCTION JOINT IS ABOVE THE ACTUAL GROUND ELEVATION, THE CONTRACTOR SHALL PLACE THE CONSTRUCTION JOINT ONE FOOT BELOW THE GROUND LINE.
9. A TWO PART WATERPROOFING SYSTEM SHOULD BE APPLIED AROUND THE CONSTRUCTION JOINT AT THE COLUMN AND DRILLED PIER FOR EACH COLUMN.
10. METHOD B DAMPPROOFING SHOULD BE APPLIED TO ANY PART OF THE COLUMN THAT IS BELOW THE GROUND LINE.
11. INVERT ALTERNATE STIRRUP PAIRS IN BENT CAP.

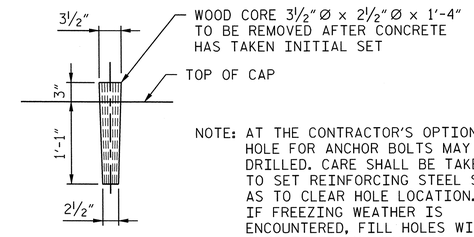

NOTE: AT THE CONTRACTOR'S OPTION, HOLE FOR ANCHOR BOLTS MAY BE DRILLED. CARE SHALL BE TAKEN TO SET REINFORCING STEEL SO AS TO CLEAR HOLE LOCATION. IF FREEZING WEATHER IS ENCOUNTERED, FILL HOLES WITH ANTIFREEZE AND SAWDUST.

DETAIL OF WOOD CORE FOR ANCHOR BOLT HOLES

PROJECT NO. P-5201

WAKE **COUNTY**

STATION: P.O.C. 3583+33.86 -M1-
P.O.T. 22+56.93 -L-

SHEET 1 OF 2

AECOM
AECOM TECHNICAL SERVICES, INC.
701 CORPORATE CENTER DRIVE, SUITE 475
RALEIGH, NC 27607
(919) 854-6200 www.aecom.com
AECOM License No. F-0342

NORTH CAROLINA PROFESSIONAL SEAL 10656 ENGINEER L. MARK PEARSON 9/13/13

STATE OF NORTH CAROLINA
DEPARTMENT OF TRANSPORTATION
RALEIGH

SUBSTRUCTURE

PIER 3
PLAN AND ELEVATION

REVISIONS								SHEET NO.
NO.	BY:	DATE:	NO.	BY:	DATE:			S-34
1			3					TOTAL SHEETS
2			4					56

DRAWN BY : DDL DATE : 03/13
CHECKED BY : JL DATE : 03/13

DATE: 9/12/2013
TIME: 3:56:46 PM

USER: 00092
DGN: QK6623980J3-WOO_Technical_Information_Disc_Files\450_WOOT SKIFTeb\Design Files\Structures\P-5201_SD_DSN_Pier-3_Udgn

0422DEL_P19

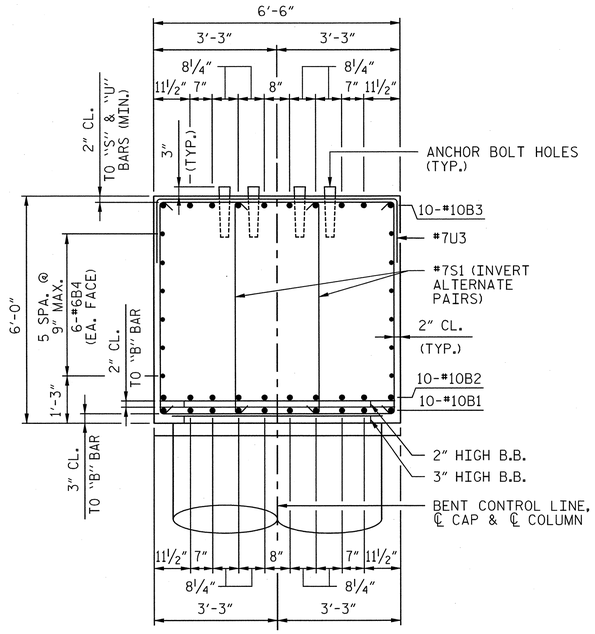

SECTION "A"

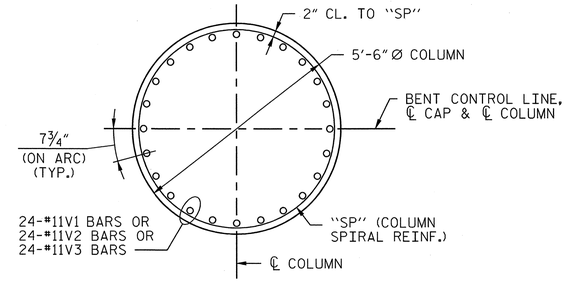

SECTION "B-B"

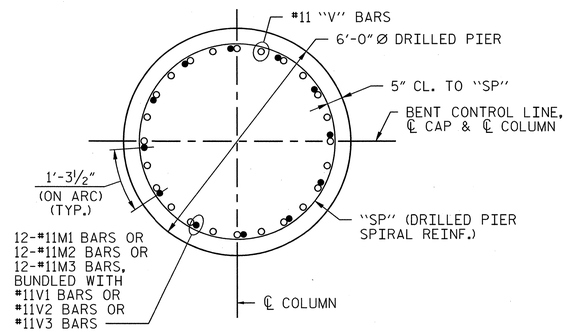

SECTION "C-C"

○ #11V1 OR #11V2 OR #11V3 (COLUMN AND DRILLED PIER)

● #11M1 OR #11M2 OR #11M3 (DRILLED PIER)

BAR TYPES

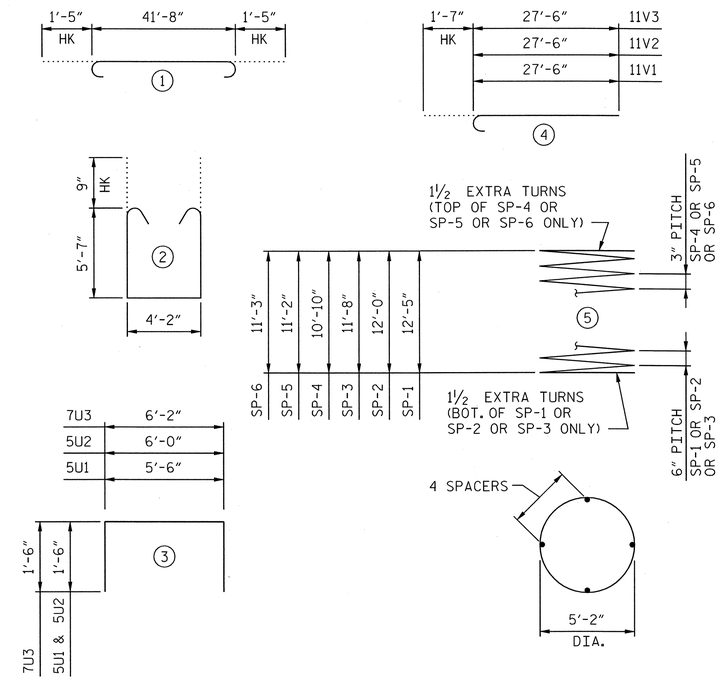

ALL BAR DIMENSIONS ARE OUT TO OUT.

BILL OF MATERIAL

PIER 3

BAR	NO.	SIZE	TYPE	LENGTH	WEIGHT
B1	10	#10	STR	41'-8"	1793
B2	10	#10	STR	41'-8"	1793
B3	10	#10	1	44'-6"	1915
B4	12	#6	STR	41'-8"	751
M1	12	#11	STR	20'-2"	1286
M2	12	#11	STR	19'-9"	1259
M3	12	#11	STR	19'-5"	1238
S1	104	#7	2	16'-10"	3578
U1	16	#5	3	8'-6"	142
U2	16	#5	3	9'-0"	150
U3	83	#7	3	9'-2"	1555
V1	24	#11	4	29'-1"	3708
V2	24	#11	4	29'-1"	3708
V3	24	#11	4	29'-1"	3708
REINFORCING STEEL				LBS.	26584
SP-1	2	**	5	421'-8"	1724
SP-2	2	**	5	408'-4"	1669
SP-3	2	**	5	397'-8"	1626
SP-4	1	***	5	720'-6"	751
SP-5	1	***	5	742'-0"	774
SP-6	1	***	5	747'-4"	779
SPIRAL COLUMN REINFORCING STEEL				LBS.	7323

** THE "SP" SPIRAL REINFORCING STEEL SHALL BE BUNDLED #7 PLAIN OR DEFORMED BAR.

*** THE "SP" SPIRAL REINFORCING STEEL SHALL BE W31 OR D-31 COLD DRAWN WIRE OR #5 PLAIN OR DEFORMED BAR.

PIER 3 TOTAL QUANTITIES

CLASS AA CONCRETE		
POUR 2 (COLUMNS)	C.Y.	28.8
POUR 3 (CAP & STEP)	C.Y.	61.1
TOTAL CLASS AA CONCRETE	C.Y.	89.9
DRILLED PIERS, CONCRETE		
POUR 1	C.Y.	38.5
6'-0" Ø DRILLED PIERS IN SOIL	LIN. FT.	9.8
6'-0" Ø DRILLED PIERS NOT IN SOIL	LIN. FT.	27.0
CSL TUBES	LIN. FT.	240.0

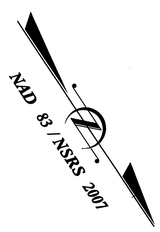

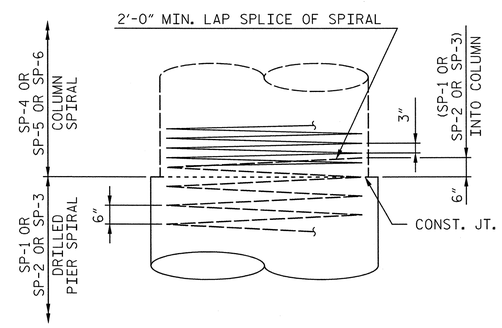

CONSTRUCTION JOINT DETAIL

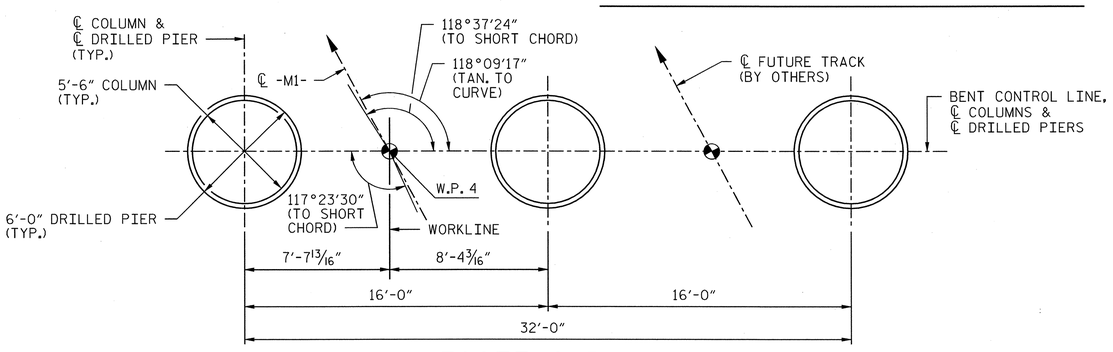

FOOTING PLAN

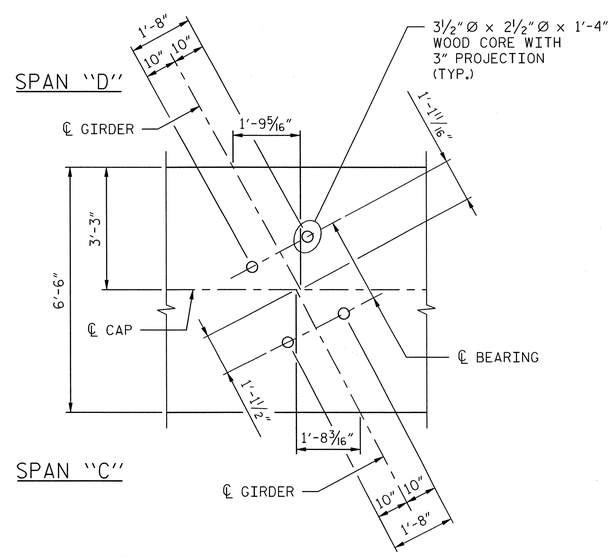

BEARING DETAIL

DRAWN BY : DDL DATE : 03/13
CHECKED BY : JL DATE : 03/13

PROJECT NO. P-5201

WAKE **COUNTY**

STATION: P.O.C. 3583+33.86 -M1-
P.O.T. 22+56.93 -L-

SHEET 2 OF 2

AECOM
AECOM TECHNICAL SERVICES, INC.
701 CORPORATE CENTER DRIVE, SUITE 475
RALEIGH, NC 27607
(919) 854-6200 www.aecom.com
AECOM License No. F-0342

NORTH CAROLINA PROFESSIONAL SEAL 10656 ENGINEER L. MARK PEARSON 7/18/13

STATE OF NORTH CAROLINA
DEPARTMENT OF TRANSPORTATION
RALEIGH

SUBSTRUCTURE

PIER 3
SECTIONS AND DETAILS

REVISIONS						SHEET NO.
NO.	BY:	DATE:	NO.	BY:	DATE:	S-35
1			3			TOTAL SHEETS
2			4			56

USER: 206962
DGN: Q:\60239807-WCO_Technical_Information_Disc_Files\450_NCDOT SHD Text\Design Files\Structures\P-5201_SD_DSN_Pier-3_2.dgn
DATE: 9/12/2013
TIME: 3:53:59 PM

0422DEL_P19

DGN

DATE: 9/12/2013
TIME: 3:47:29 PM

USER: 80693
DGN: Q:\60236803\400_Technical_Information_Disc_Files\450_NCDOT Std Tech Design Files\Structures\P-5201_SD_DSN_DrilledPierDetails.dgn

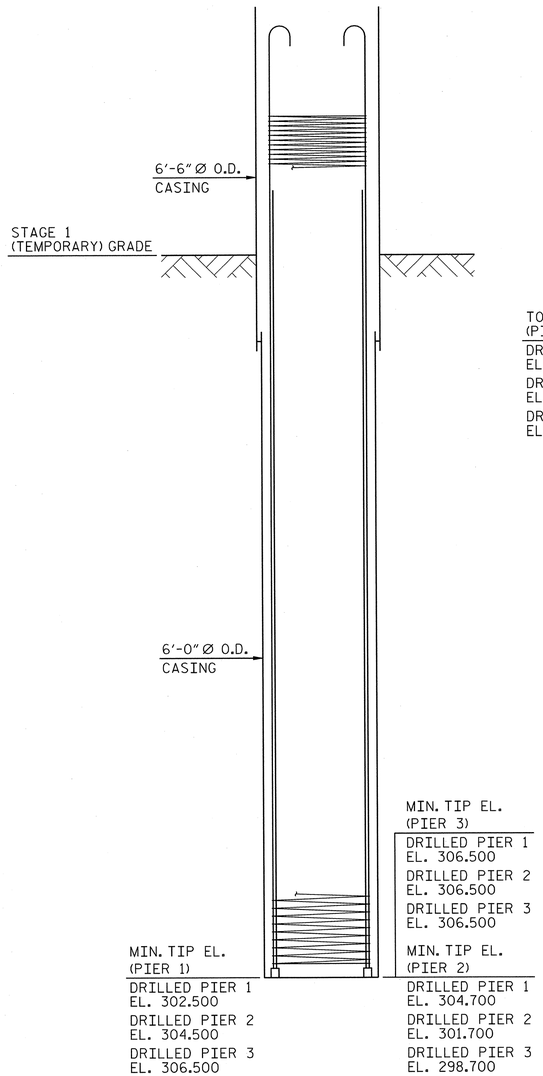

STEP 1

1. AUGER AND INSTALL 6'-6" Ø O.D. CASING TO ELEVATION SHOWN.
2. AUGER AND INSTALL 6'-0" Ø O.D. CASING TO MINIMUM TIP ELEVATION AS SHOWN.
3. INSTALL REBAR CAGE.

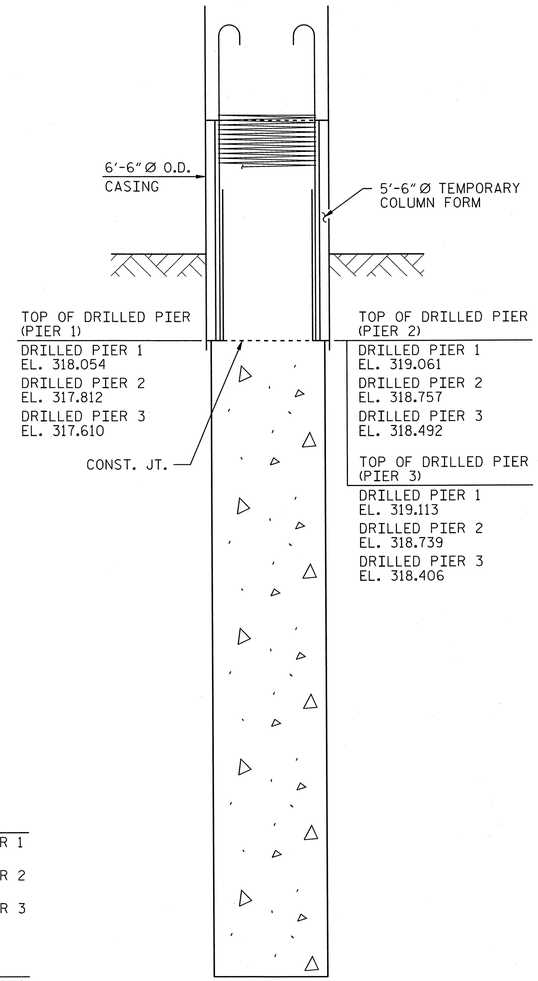

STEP 2

1. POUR CONCRETE TO TOP OF DRILLED PIER ELEVATION AS SHOWN WHILE EXTRACTING 6'-0" Ø O.D. CASING.
2. INSTALL 5'-6" Ø TEMPORARY COLUMN FORM.

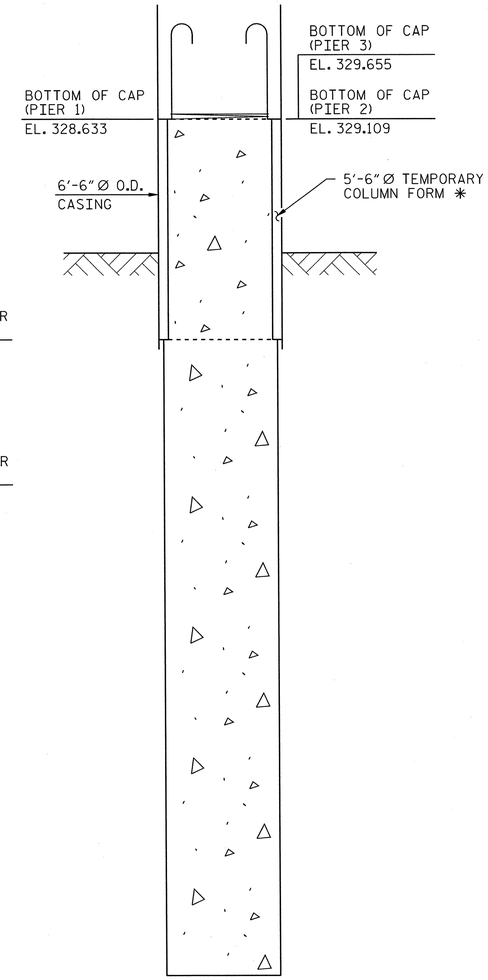

STEP 3

1. POUR CONCRETE TO BOTTOM OF CAP ELEVATION AS SHOWN.
2. EXTRACT 6'-6" Ø O.D. CASING AFTER CONCRETE HAS REACHED A MINIMUM COMPRESSIVE STRENGTH OF 3000 PSI.

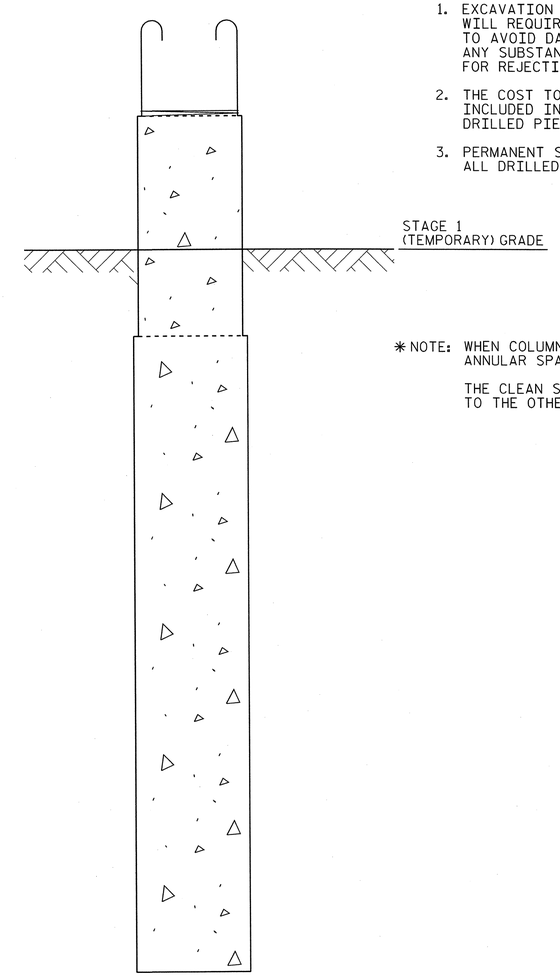

STEP 4

1. EXCAVATE TO FINISH GRADE ELEVATION AS SHOWN.
2. REMOVE 5'-6" Ø TEMPORARY COLUMN FORM.
3. PATCH COLUMN SURFACE AS NECESSARY TO ESTABLISH ACCEPTABLE APPEARENCE.

NOTES:

1. EXCAVATION AGAINST THE COLUMNS (STEP 4) WILL REQUIRE CAREFUL DIGGING IN ORDER TO AVOID DAMAGING THE COLUMNS. ANY SUBSTANTIAL DAMAGE WILL BE CAUSE FOR REJECTION OF THAT PARTICULAR COLUMN.
2. THE COST TO PERFORM THIS WORK SHALL BE INCLUDED IN THE UNIT PRICE BID FOR 6'-0" Ø DRILLED PIERS.
3. PERMANENT STEEL CASING IS NOT REQUIRED FOR ALL DRILLED PIERS.

✱ NOTE: WHEN COLUMN FORM IS REMOVED BACKFILL ANNULAR SPACE WITH CLEAN SAND.

THE CLEAN SAND BACKFILL IS INCIDENTAL TO THE OTHER WORK ITEMS.

DRILLED PIER CONSTRUCTION SEQUENCE

(FOR ALL DRILLED PIERS AND COLUMNS)

PROJECT NO. P-5201

WAKE **COUNTY**

STATION: P.O.C. 3583+33.86 -M1-
P.O.T. 22+56.93 -L-

AECOM
AECOM TECHNICAL SERVICES, INC.
701 CORPORATE CENTER DRIVE, SUITE 475
RALEIGH, NC 27607
(919) 854-6200 www.aecom.com
AECOM License No. F-0342

NORTH CAROLINA PROFESSIONAL ENGINEER SEAL 19656 L. MARK PEARSON 9/12/13

STATE OF NORTH CAROLINA
DEPARTMENT OF TRANSPORTATION
RALEIGH

SUBSTRUCTURE

DRILLED PIER DETAILS

REVISIONS								SHEET NO.
NO.	BY:	DATE:	NO.	BY:	DATE:			S-36
1			3					TOTAL SHEETS
2			4					56

DRAWN BY : DDL DATE : 04/13
CHECKED BY : JL DATE : 04/13

0422DEL_P19

DGN

DATE: 9/12/2013
TIME: 3:49:25 PM

USER: rpdotgt
DGN: Q:\B0235980\3-400_Technical_Information_Disc_Files\450_WCDOT Std Tech Design Files\Structures\P-5201_SD_DSN_Abut-2.dgn

NOTES:

1. FOR ABUTMENT REINFORCING, SEE SHEET 3 OF 5.
2. FOR PIPE SLEEVE DETAIL, SEE SHEET 2 OF 5.
3. FOR BEARING DETAIL, SEE SHEET 2 OF 5.
4. FOR WINGWALL REINFORCING, SEE SHEET 4 OF 5.
5. ▲ INDICATES PILE BATTER 3:12 IN DIRECTION SHOWN.
6. FOR PILE SPLICE DETAILS, SEE SHEET 5 OF 5.
7. 8"Ø PERFORATED CSP TO BE BITUMINOUS COATED.

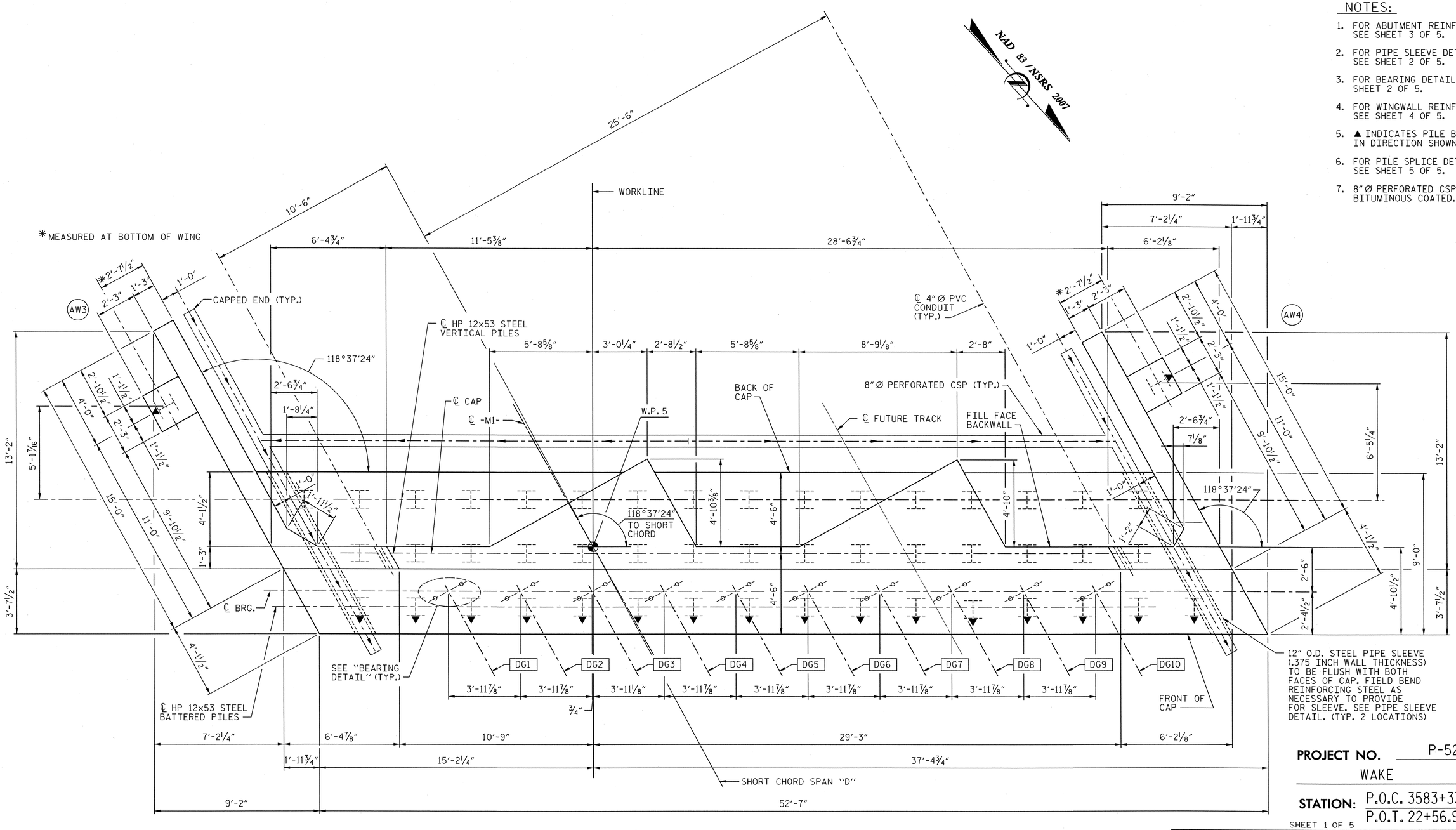

PLAN

PROJECT NO. P-5201

WAKE **COUNTY**

STATION: P.O.C. 3583+33.86 -M1-
P.O.T. 22+56.93 -L-

SHEET 1 OF 5

AECOM

AECOM TECHNICAL SERVICES, INC.
701 CORPORATE CENTER DRIVE, SUITE 475
RALEIGH, NC 27607
(919) 854-6200 www.aecom.com
AECOM License No. F-0342

NORTH CAROLINA PROFESSIONAL SEAL 10656 ENGINEER L. MARK PEARSON 9/13/13

STATE OF NORTH CAROLINA
DEPARTMENT OF TRANSPORTATION
RALEIGH

SUBSTRUCTURE

ABUTMENT #2
PLAN

REVISIONS							SHEET NO.
NO.	BY:	DATE:	NO.	BY:	DATE:		S-37
1			3				TOTAL SHEETS
2			4				56

DRAWN BY : MTB DATE : 04/13
CHECKED BY : JL DATE : 04/13

0422DEL_P19

DGN

NOTES:

1. FOR ABUTMENT REINFORCING, SEE SHEET 3 OF 5.
2. FOR WINGWALL REINFORCING, SEE SHEET 4 OF 5.
3. FOR SECTION "A-A", SEE SHEET 5 OF 5.
4. FOR PILE SPLICE DETAILS, SEE SHEET 5 OF 5.

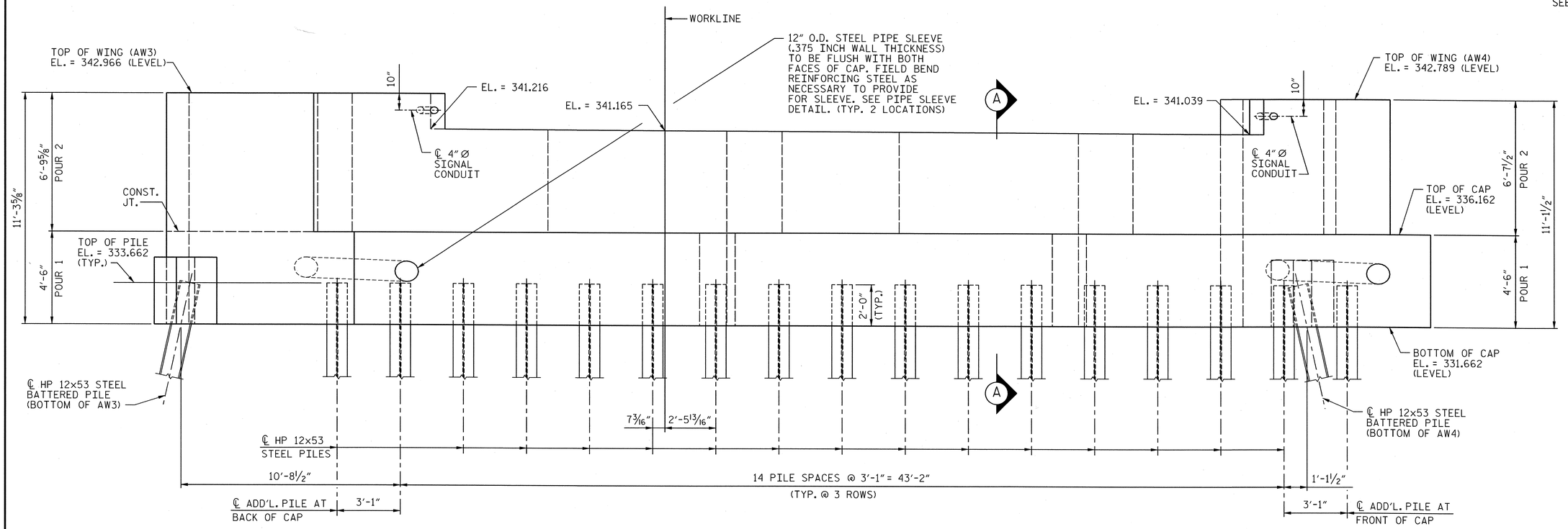

ELEVATION

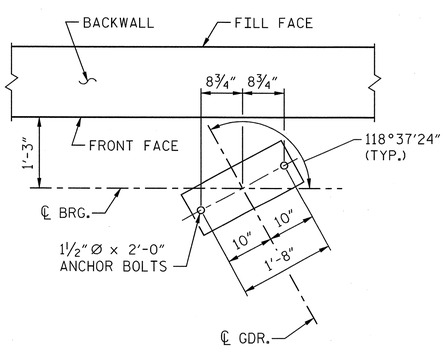

BEARING DETAIL

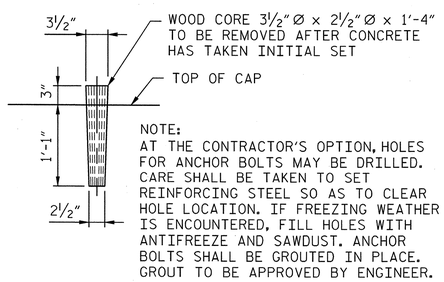

NOTE:
AT THE CONTRACTOR'S OPTION, HOLES FOR ANCHOR BOLTS MAY BE DRILLED. CARE SHALL BE TAKEN TO SET REINFORCING STEEL SO AS TO CLEAR HOLE LOCATION. IF FREEZING WEATHER IS ENCOUNTERED, FILL HOLES WITH ANTIFREEZE AND SAWDUST. ANCHOR BOLTS SHALL BE GROUTED IN PLACE. GROUT TO BE APPROVED BY ENGINEER.

DETAIL OF WOOD CORE FOR ANCHOR BOLT HOLES

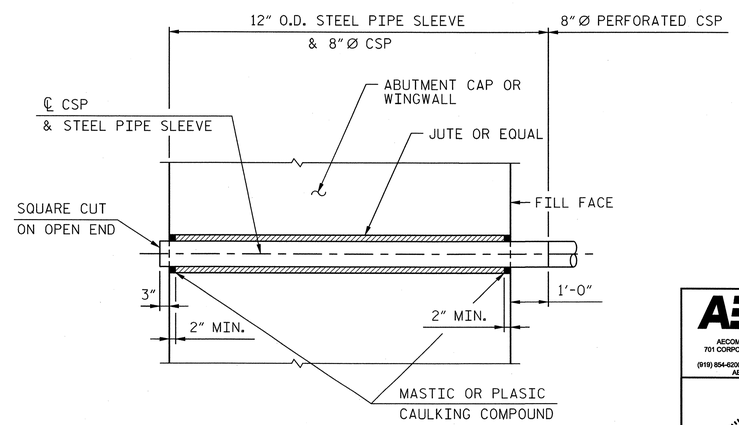

PIPE SLEEVE DETAIL

PROJECT NO. P-5201

WAKE COUNTY

STATION: P.O.C. 3583+33.86 -M1-
P.O.T. 22+56.93 -L-

SHEET 2 OF 5

AECOM
AECOM TECHNICAL SERVICES, INC.
701 CORPORATE CENTER DRIVE, SUITE 475
RALEIGH, NC 27607
(919) 854-6200 www.aecom.com
AECOM License No. F-0342

NORTH CAROLINA PROFESSIONAL ENGINEER SEAL 10656 7/13/12 J. MARK PEARSON

STATE OF NORTH CAROLINA
DEPARTMENT OF TRANSPORTATION
RALEIGH

SUBSTRUCTURE

ABUTMENT #2
ELEVATION

REVISIONS						SHEET NO.
NO.	BY:	DATE:	NO.	BY:	DATE:	S-38
1			3			TOTAL SHEETS
2			4			56

DRAWN BY : MTB DATE : 04/13
CHECKED BY : JL DATE : 04/13

DATE: 9/12/2013
TIME: 3:41:56 PM

USER: pdd02
DGN: G:\60123863\100_Technical_Information_Disc_Files\450_NCDOT\Structures\P-5201_SD_DSN_Abut-2.dgn

0422DEL_P19

DGN

DATE: 9/12/2013
TIME: 3:42:07 PM

USER: pd0922
DGN: G:\0622\38803\400_Technical_Information_Disc_Files\450_NCDOT\StdTechDesignFiles\Structures\P-5201_SD_DSN_Abut-2_3.dgn

NOTES:

1. STIRRUPS IN CAP MAY BE SHIFTED AS NECESSARY TO CLEAR ANCHOR BOLTS.
2. FOR WINGWALL REINFORCING AND DETAILS, SEE SHEET 4 OF 5.
3. FOR SECTION "A-A", SEE SHEET 5 OF 5.
4. ▲ INDICATES PILE BATTER 3:12 IN DIRECTION SHOWN.

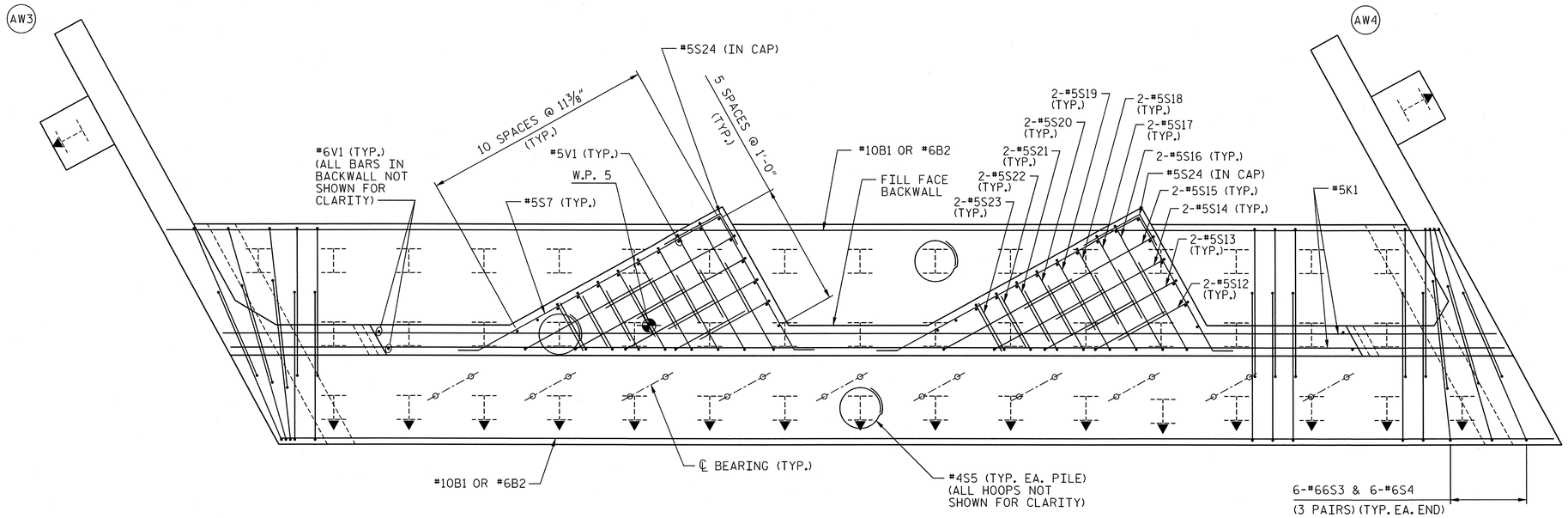

PLAN

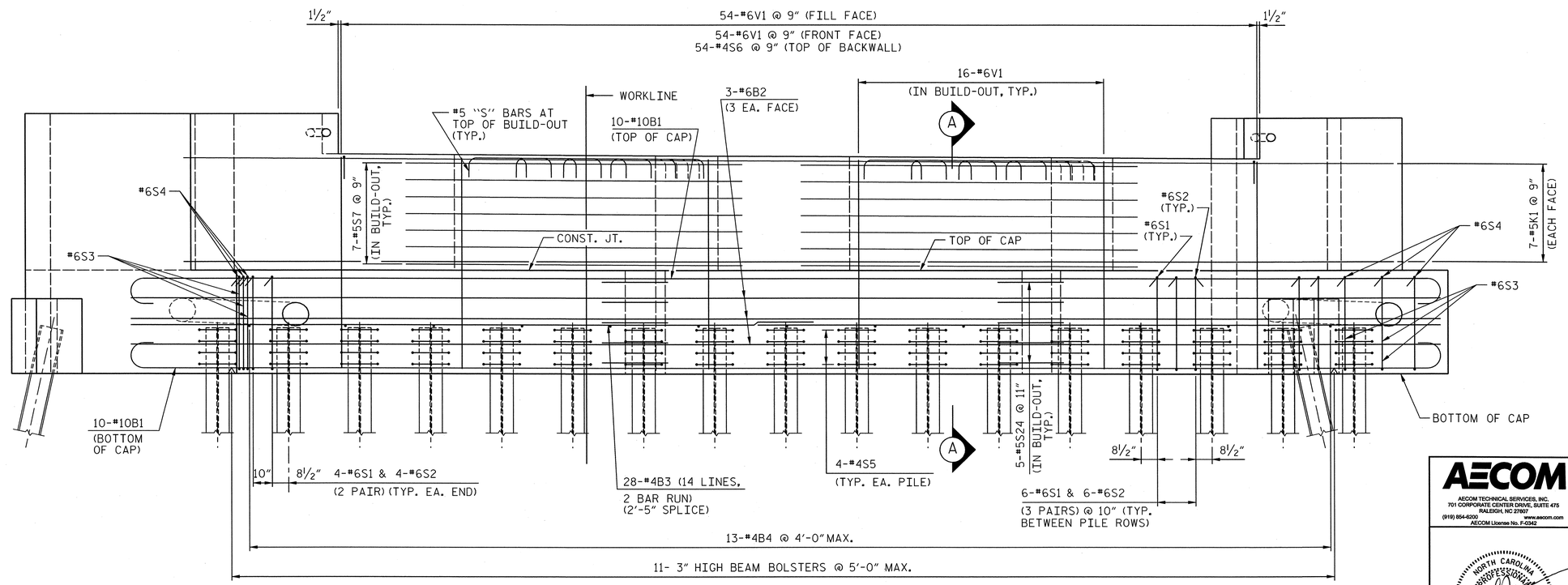

ELEVATION

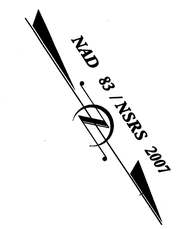

PROJECT NO. P-5201

WAKE COUNTY

STATION: P.O.C. 3583+33.86 -M1-
P.O.T. 22+56.93 -L-

SHEET 3 OF 5

AECOM
AECOM TECHNICAL SERVICES, INC.
701 CORPORATE CENTER DRIVE, SUITE 475
RALEIGH, NC 27607
(919) 854-6200 www.aecom.com
AECOM License No. F-0342

NORTH CAROLINA PROFESSIONAL ENGINEER SEAL 10656 9/13/13 MARK PEARSON

STATE OF NORTH CAROLINA
DEPARTMENT OF TRANSPORTATION
RALEIGH

SUBSTRUCTURE

ABUTMENT #2
REINFORCING

REVISIONS						SHEET NO.
NO.	BY:	DATE:	NO.	BY:	DATE:	S-39
1			3			TOTAL SHEETS
2			4			56

DRAWN BY : MTB DATE : 04/13
CHECKED BY : JL DATE : 04/13

0422DEL_P19

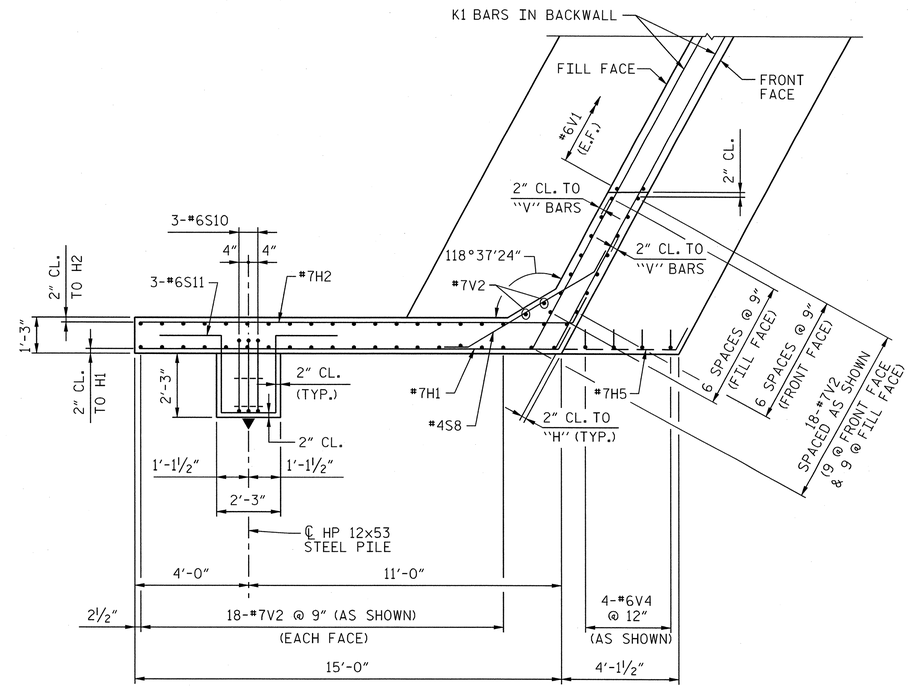

PLAN WING - AW3

NOTE:
SEE "METAL HANDRAIL DETAILS" SHEET FOR LOCATIONS OF ANCHOR ASSEMBLIES FOR METAL HANDRAIL.

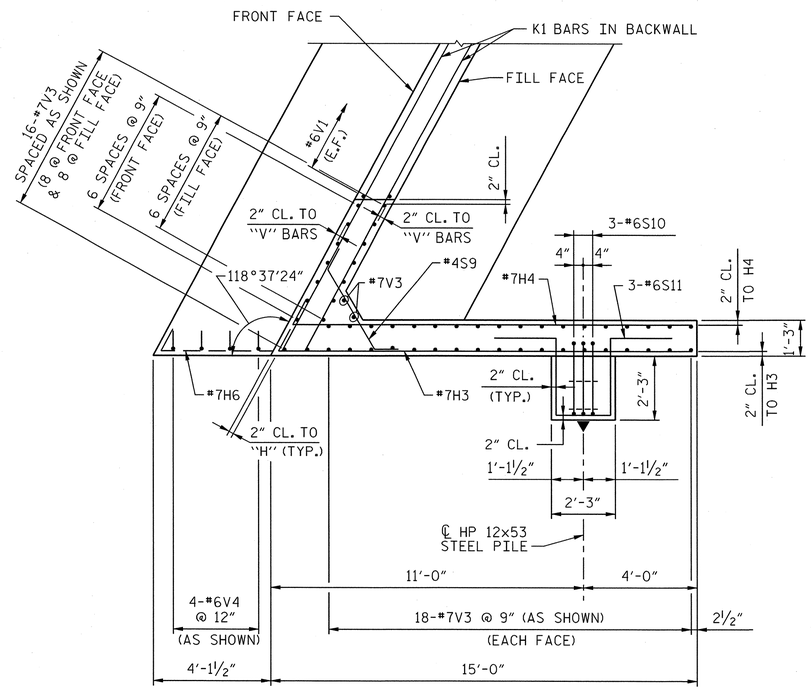

PLAN WING - AW4

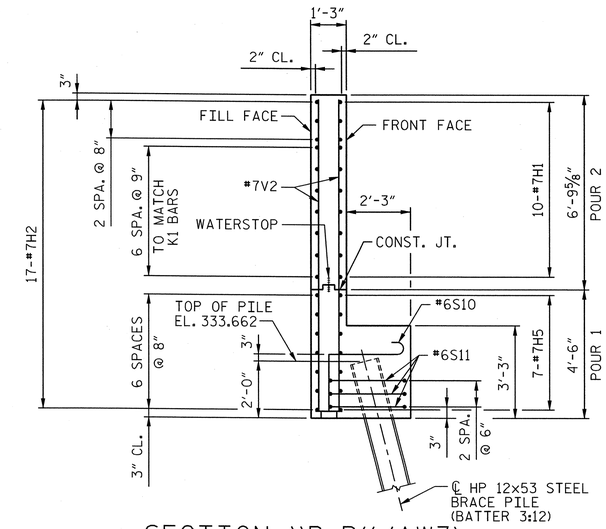

SECTION "B-B" (AW3)

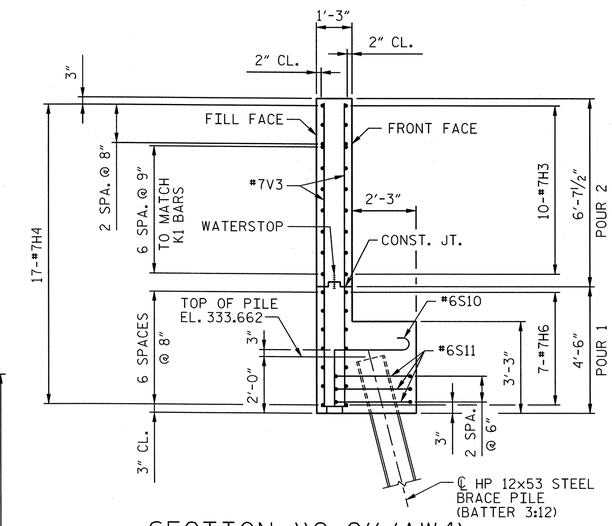

SECTION "C-C" (AW4)

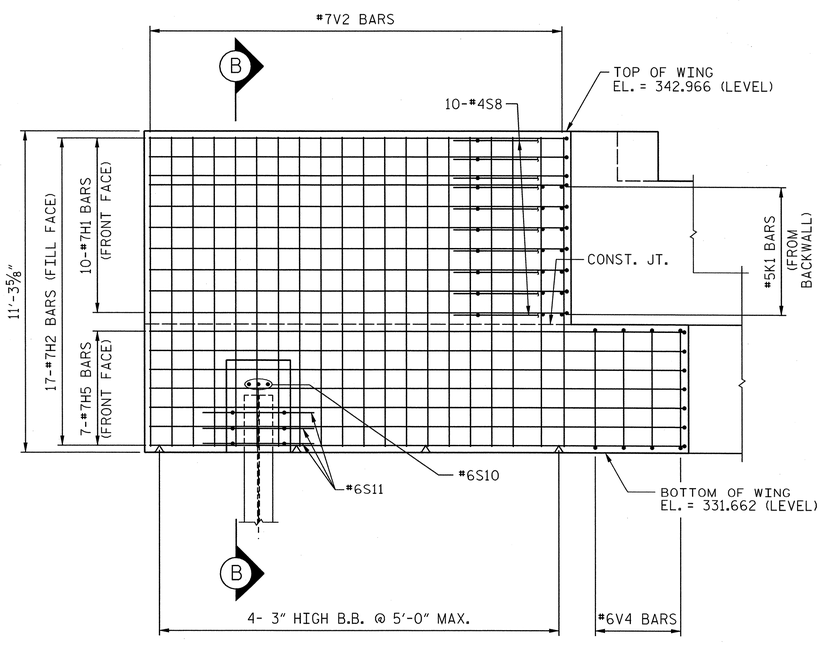

ELEVATION - AW3

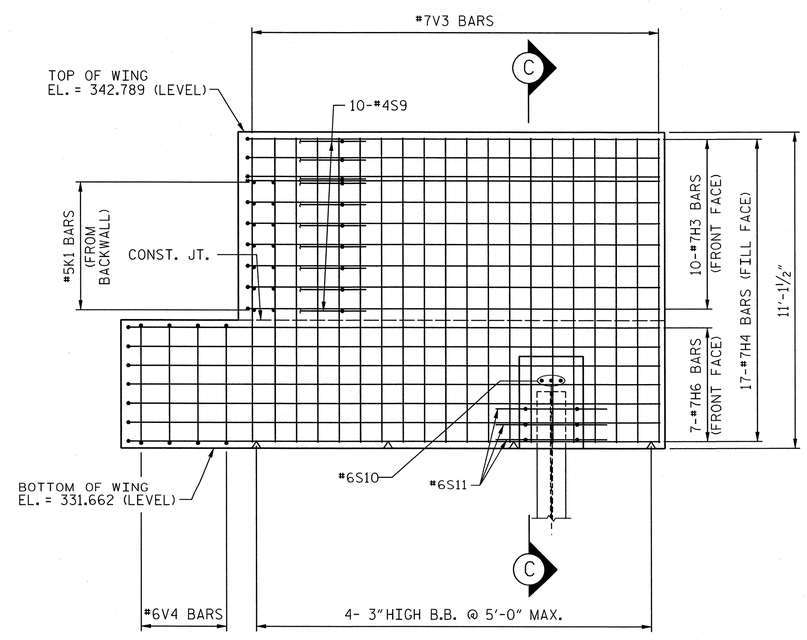

ELEVATION - AW4

PROJECT NO. P-5201

WAKE COUNTY

STATION: P.O.C. 3583+33.86 -M1-
P.O.T. 22+56.93 -L-

SHEET 4 OF 5

AECOM
AECOM TECHNICAL SERVICES, INC.
701 CORPORATE CENTER DRIVE, SUITE 475
RALEIGH, NC 27607
(919) 854-6200 www.aecom.com
AECOM License No. F-0342

NORTH CAROLINA PROFESSIONAL SEAL 00656 ENGINEER MARK PEARSON 9/13/13

STATE OF NORTH CAROLINA
DEPARTMENT OF TRANSPORTATION
RALEIGH

SUBSTRUCTURE

ABUTMENT #2
SECTIONS AND DETAILS

REVISIONS						SHEET NO.
NO.	BY:	DATE:	NO.	BY:	DATE:	S-40
1			3			TOTAL SHEETS
2			4			56

DRAWN BY : MTB DATE : 04/13
CHECKED BY : JL DATE : 04/13

DATE: 9/12/2013
TIME: 3:42:57 PM

USER: pdaniz
DGN: G:\60238903\400_Technical_Information_Dis_Files\450_NCDOT Std Tech\Design Files\Structures\P-5201_SD_DSN_Abut-2_4.dgn

0422DEL_P19

NOTE:
SEE SECTION "A-A" ON "TYPICAL DECK DETAILS" SHEET FOR WATERSTOP IN DECK JOINT.

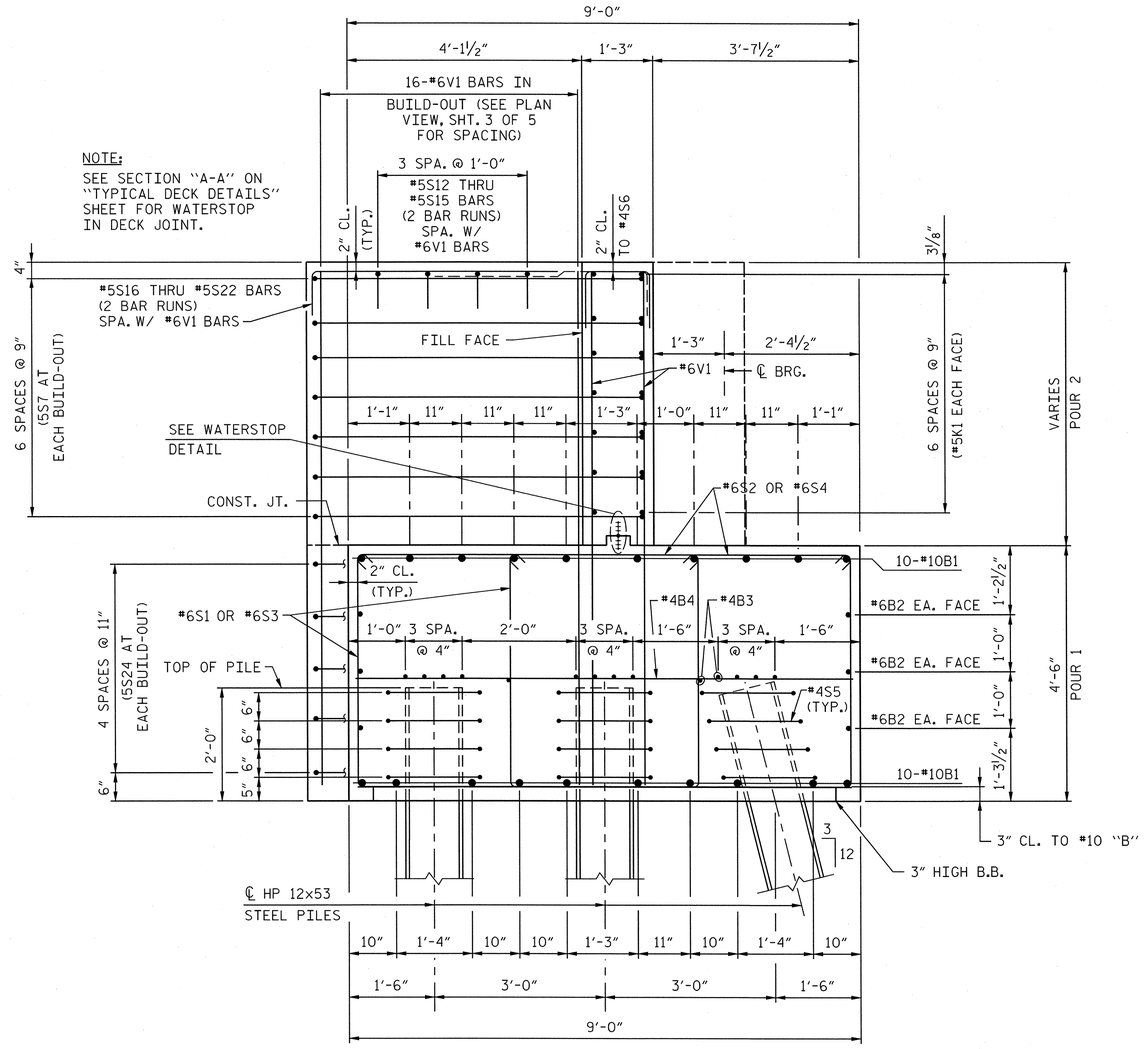

SECTION "A-A"

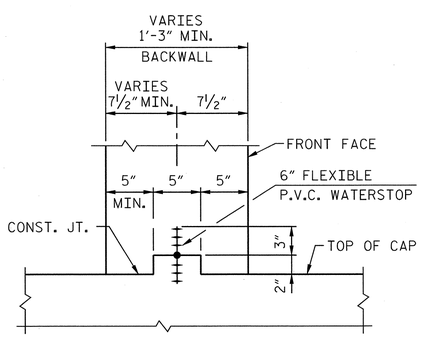

WATERSTOP DETAIL

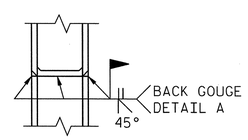

** PILE VERTICAL

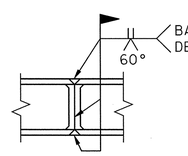

** PILE HORIZONTAL OR VERTICAL

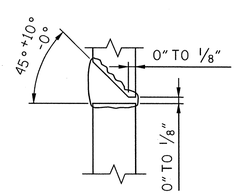

DETAIL A

*POSITION OF PILE DURING WELDING.

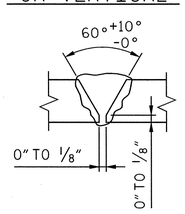

DETAIL B

PILE SPLICE DETAILS

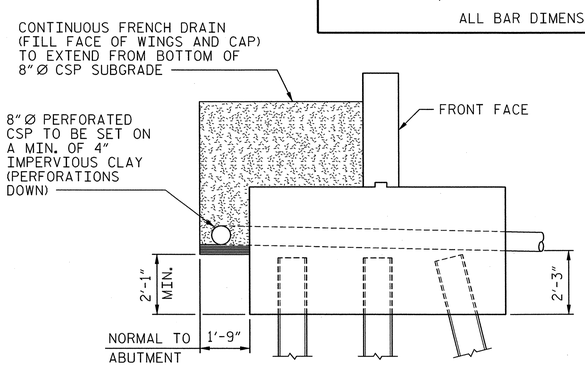

CONTINUOUS FRENCH DRAIN DETAIL

BAR TYPES

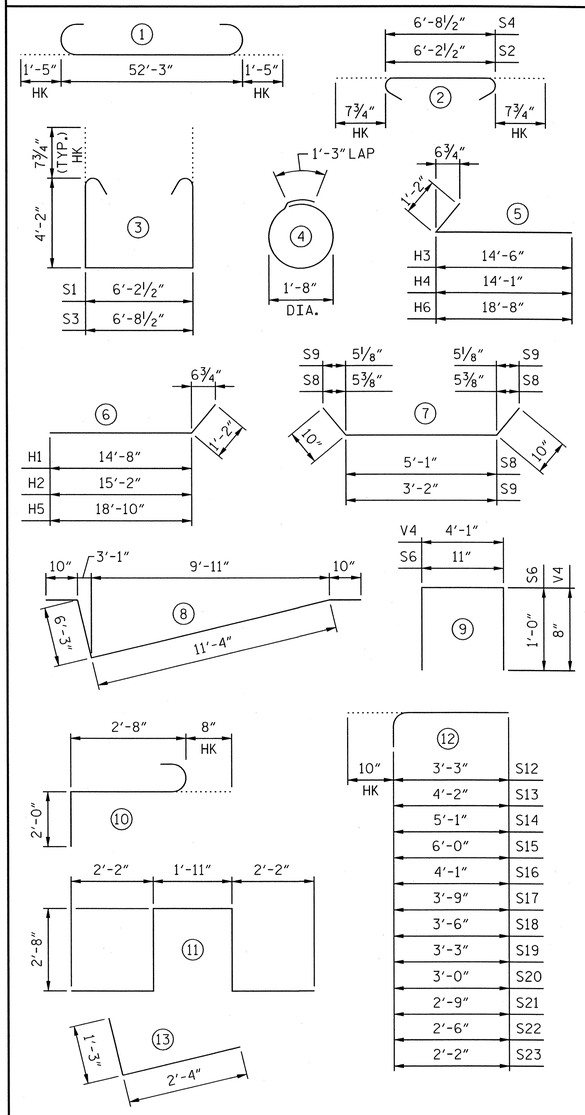

ALL BAR DIMENSIONS ARE OUT TO OUT.

BILL OF MATERIAL

ABUTMENT #2

BAR	NO.	SIZE	TYPE	LENGTH	WEIGHT
B1	20	#10	1	55'-1"	4740
B2	6	#6	STR	52'-3"	471
B3	28	#4	STR	27'-5"	513
B4	13	#4	STR	8'-8"	75
H1	10	#7	6	15'-10"	324
H2	17	#7	6	16'-4"	568
H3	10	#7	5	15'-8"	320
H4	17	#7	5	15'-3"	530
H5	7	#7	6	20'-0"	286
H6	7	#7	5	19'-10"	284
K1	14	#5	STR	52'-3"	763
S1	92	#6	3	15'-10"	2188
S2	92	#6	2	7'-6"	1036
S3	12	#6	3	16'-4"	294
S4	12	#6	2	8'-0"	144
S5	188	#4	4	6'-6"	816
S6	54	#4	9	2'-11"	105
S7	14	#5	8	19'-3"	281
S8	10	#4	7	6'-9"	45
S9	10	#4	7	6'-6"	43
S10	6	#6	10	5'-4"	48
S11	6	#6	11	11'-7"	104
S12	4	#5	12	4'-1"	17
S13	4	#5	12	5'-0"	21
S14	4	#5	12	5'-11"	25
S15	4	#5	12	6'-10"	29
S16	4	#5	12	4'-11"	21
S17	4	#5	12	4'-7"	19
S18	4	#5	12	4'-4"	18
S19	4	#5	12	4'-1"	17
S20	4	#5	12	3'-10"	16
S21	4	#5	12	3'-7"	15
S22	4	#5	12	3'-4"	14
S23	4	#5	12	3'-0"	13
S24	10	#5	13	3'-7"	37
V1	140	#6	STR	9'-1"	1910
V2	56	#7	STR	10'-10"	1240
V3	54	#7	STR	10'-8"	1177
V4	8	#6	9	5'-5"	65

TOTAL REINFORCING STEEL LBS. 18632

ABUTMENT #2 TOTAL QUANTITIES

CLASS AA CONCRETE		
POUR 1 (CAP & LOWER WING)	C.Y.	84.0
POUR 2 (BACKWALL & UPPER WING)	C.Y.	32.0
TOTAL	C.Y.	116.0
HP 12x53 STEEL PILES	NO.	49
	LIN. FT.	1029
PILE EXCAVATION IN SOIL	LIN. FT.	556.2
PILE EXCAVATION NOT IN SOIL	LIN. FT.	423.9

PROJECT NO. P-5201
WAKE COUNTY
STATION: P.O.C. 3583+33.86 -M1-
P.O.T. 22+56.93 -L-

SHEET 5 OF 5

AECOM
AECOM TECHNICAL SERVICES, INC.
701 CORPORATE CENTER DRIVE, SUITE 475
RALEIGH, NC 27607
(919) 854-6200 www.aecom.com
AECOM License No. F-0342

NORTH CAROLINA PROFESSIONAL SEAL 10656 ENGINEER L. MARK PEARSON 9/12/13

STATE OF NORTH CAROLINA
DEPARTMENT OF TRANSPORTATION
RALEIGH

SUBSTRUCTURE

ABUTMENT #2 DETAILS

REVISIONS							
NO.	BY:	DATE:	NO.	BY:	DATE:		
1			3				
2			4				

SHEET NO. S-41
TOTAL SHEETS 56

DRAWN BY : MTB DATE : 04/13
CHECKED BY : JL DATE : 04/13

DATE: 9/12/2013
TIME: 3:42:48 PM

USER: pdotgtz
DGN: GA5023983D3-v00_Technical_Information_Disc_Files\450_NCDOT Staff and Design Files\Structures\P-5201_SD_DSN_Abut-2_5.dgn

0422DEL_P19

NOTES:

1. ALL DIMENSIONS ARE SUBJECT TO ADJUSTMENTS TO FIT MEASUREMENTS TAKEN AFTER DECKS HAVE BEEN POURED.
2. ABBREVIATIONS:

   D.I. = DUCTILE IRON
   P.L. = PIPE LENGTH
   P.E. = PLAIN END
   FLG. = FLANGE
   M.J. = MECHANICAL JOINT
   LG. = LENGTH
   TYP. = TYPICAL
   GALV. = GALVANIZED
   EL. = ELEVATION
   S. = SLOPE

3. FOR FITTINGS SCHEDULE AND ESTIMATED QUANTITIES, SEE SHEET 8 OF 8.

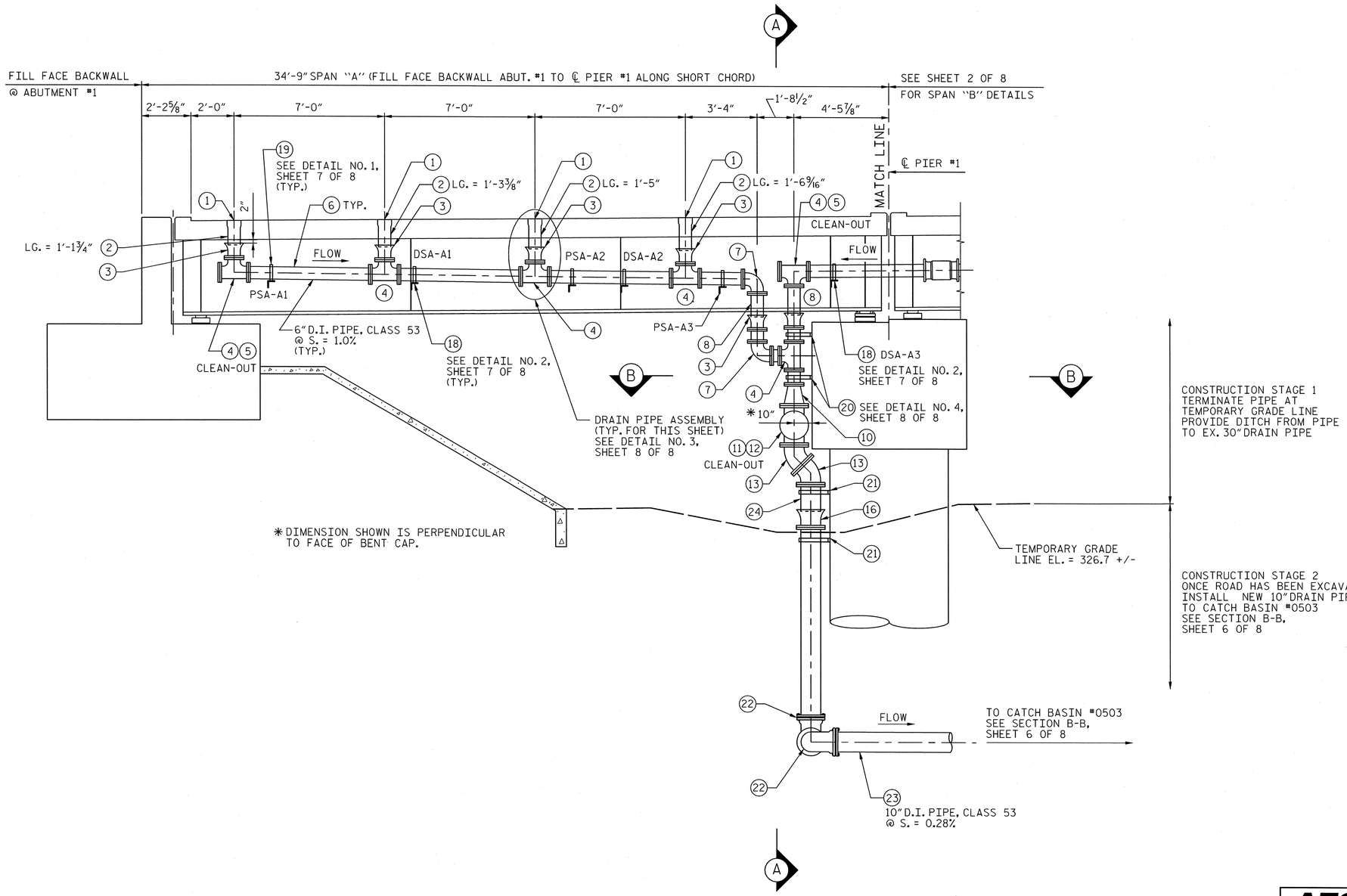

DRAINAGE DETAILS - SPAN "A"
(TYP 3 LOCATIONS)

PROJECT NO. P-5201

WAKE **COUNTY**

STATION: P.O.C. 3583+33.86 -M1-
P.O.T. 22+56.93 -L-

SHEET 1 OF 8

AECOM
AECOM TECHNICAL SERVICES, INC.
701 CORPORATE CENTER DRIVE, SUITE 475
RALEIGH, NC 27607
(919) 854-6200 www.aecom.com
AECOM License No. F-0342

NORTH CAROLINA PROFESSIONAL SEAL 10656 ENGINEER MARK PEARSON 9/19/13

STATE OF NORTH CAROLINA
DEPARTMENT OF TRANSPORTATION
RALEIGH

STRUCTURE DRAINAGE DETAILS

REVISIONS						SHEET NO.
NO.	BY:	DATE:	NO.	BY:	DATE:	S-42
1			3			TOTAL SHEETS
2			4			58

DRAWN BY : JMS DATE : 04/13
CHECKED BY : DSS DATE : 04/13

DATE: 9/12/2013
TIME: 3:44:02 PM

USER: pdahlz
DGN: G:\60238803\400_Technical_Information_Dsn_Files\450_NCDOT Std Tech Des\pwFiles\Structures\P-5201_SD_DSN_Drain_1.dgn

NOTES:

1. ALL DIMENSIONS ARE SUBJECT TO ADJUSTMENTS TO FIT MEASUREMENTS TAKEN AFTER DECKS HAVE BEEN POURED.
2. ABBREVIATIONS:

   D.I. = DUCTILE IRON
   P.L. = PIPE LENGTH
   P.E. = PLAIN END
   FLG. = FLANGE
   M.J. = MECHANICAL JOINT
   LG. = LENGTH
   TYP. = TYPICAL
   EL. = ELEVATION
   S. = SLOPE

3. FOR FITTING SCHEDULE AND ESTIMATED QUANTITIES, SEE SHEET 8 OF 8.

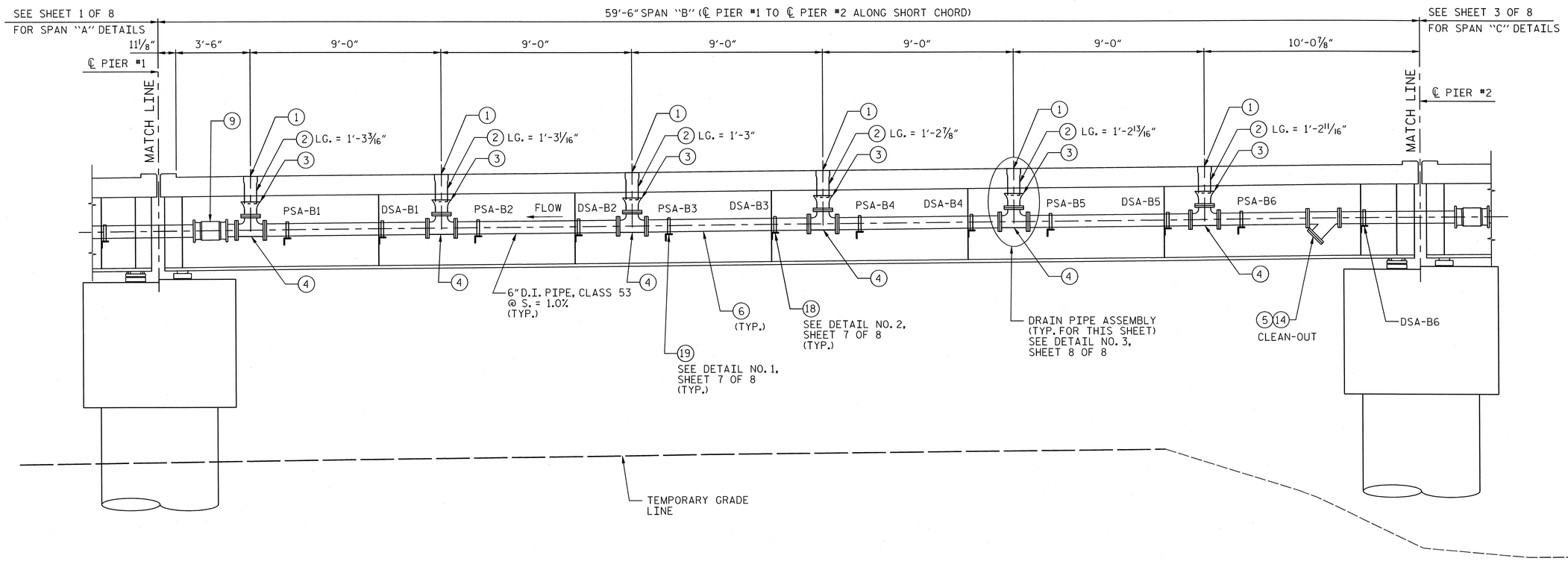

DRAINAGE DETAILS - SPAN "B"
(TYP 3 LOCATIONS)

PROJECT NO. P-5201

WAKE **COUNTY**

STATION: P.O.C. 3583+33.86 -M1-
P.O.T. 22+56.93 -L-

SHEET 2 OF 8

AECOM
AECOM TECHNICAL SERVICES, INC.
701 CORPORATE CENTER DRIVE, SUITE 475
RALEIGH, NC 27607
(919) 854-6200 www.aecom.com
AECOM License No. F-0342

NORTH CAROLINA PROFESSIONAL ENGINEER SEAL 16656 9/13/13 MARK PEARSON

STATE OF NORTH CAROLINA
DEPARTMENT OF TRANSPORTATION
RALEIGH

STRUCTURE DRAINAGE DETAILS

REVISIONS						SHEET NO.
NO.	BY:	DATE:	NO.	BY:	DATE:	S-43
1			3			TOTAL SHEETS
2			4			56

DRAWN BY : JMS DATE : 04/13
CHECKED BY : DSS DATE : 04/13

DGN 0422DEL_P19
DATE: 9/12/2013
TIME: 3:44:29 PM
USER: pdaniel
DGN: C:\SDI23\9803\v00_Technical_Information_Files\450_NCDOT Staff Tech Design Files\Structures\P-5201_SD_DSN_Drain_2.dgn

0422DEL_P19

NOTES:

1. ALL DIMENSIONS ARE SUBJECT TO ADJUSTMENTS TO FIT MEASUREMENTS TAKEN AFTER DECKS HAVE BEEN POURED.
2. ABBREVIATIONS:

   D.I. = DUCTILE IRON
   P.L. = PIPE LENGTH
   P.E. = PLAIN END
   FLG. = FLANGE
   M.J. = MECHANICAL JOINT
   LG. = LENGTH
   TYP. = TYPICAL
   EL. = ELEVATION
   S. = SLOPE

3. FOR FITTING SCHEDULE AND ESTIMATED QUANTITIES, SEE SHEET 8 OF 8.

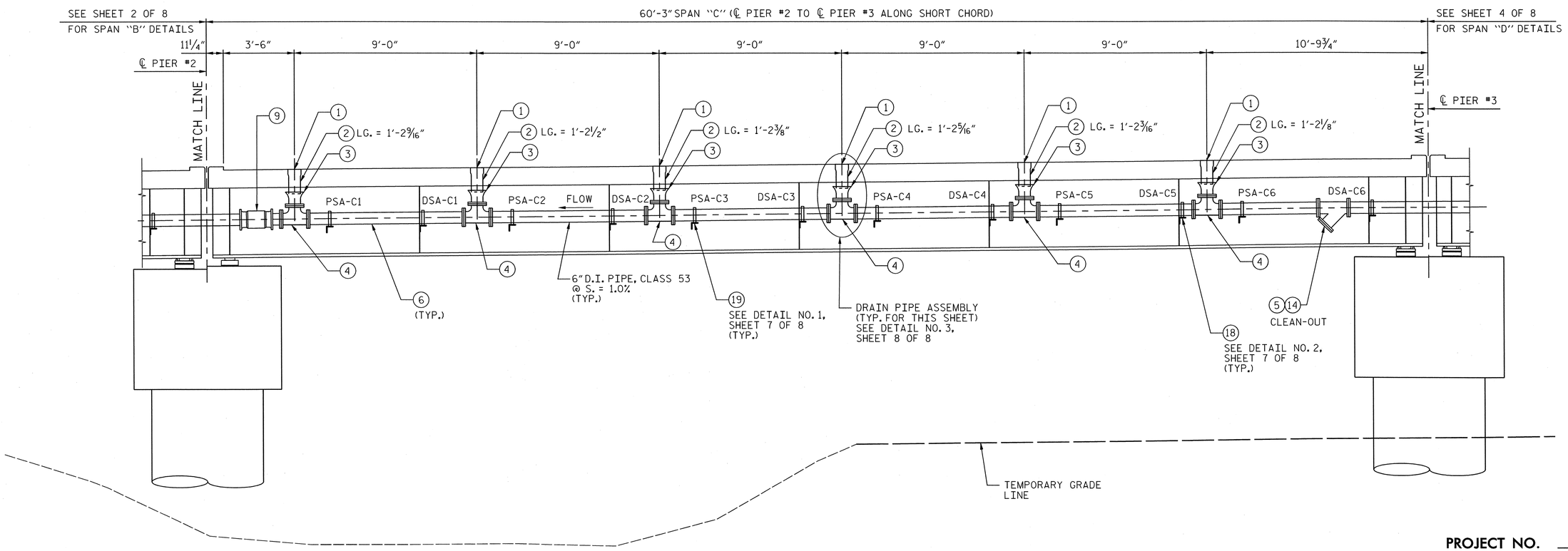

DRAINAGE DETAILS - SPAN "C"
(TYP 3 LOCATIONS)

PROJECT NO. P-5201

WAKE **COUNTY**

STATION: P.O.C. 3583+33.86 -M1-
P.O.T. 22+56.93 -L-

SHEET 3 OF 8

AECOM
AECOM TECHNICAL SERVICES, INC.
701 CORPORATE CENTER DRIVE, SUITE 475
RALEIGH, NC 27607
(919) 854-6200 www.aecom.com
AECOM License No. F-0342

NORTH CAROLINA PROFESSIONAL SEAL 10656 ENGINEER MARK PEARSON 9/13/13

STATE OF NORTH CAROLINA
DEPARTMENT OF TRANSPORTATION
RALEIGH

STRUCTURE DRAINAGE DETAILS

REVISIONS						SHEET NO.
NO.	BY:	DATE:	NO.	BY:	DATE:	S-44
1			3			TOTAL SHEETS
2			4			56

DRAWN BY : JMS DATE : 04/13
CHECKED BY : DSS DATE : 04/13

DATE: 9/12/2013
TIME: 3:44:49 PM

USER: pdi107
DGN: G:\60236803\400_Technical_Information_Disc_Files\P50_NCDOT Std Tech\Design Files\Structures\P-5201_SD_DSN_Drafn_3.dgn

NOTES:

1. ALL DIMENSIONS ARE SUBJECT TO ADJUSTMENTS TO FIT MEASUREMENTS TAKEN AFTER DECKS HAVE BEEN POURED.
2. ABBREVIATIONS:

   D.I. = DUCTILE IRON
   P.L. = PIPE LENGTH
   P.E. = PLAIN END
   FLG. = FLANGE
   M.J. = MECHANICAL JOINT
   LG. = LENGTH
   TYP. = TYPICAL
   EL. = ELEVATION
   S. = SLOPE

3. FOR FITTING SCHEDULE AND ESTIMATED QUANTITIES, SEE SHEET 8 OF 8.

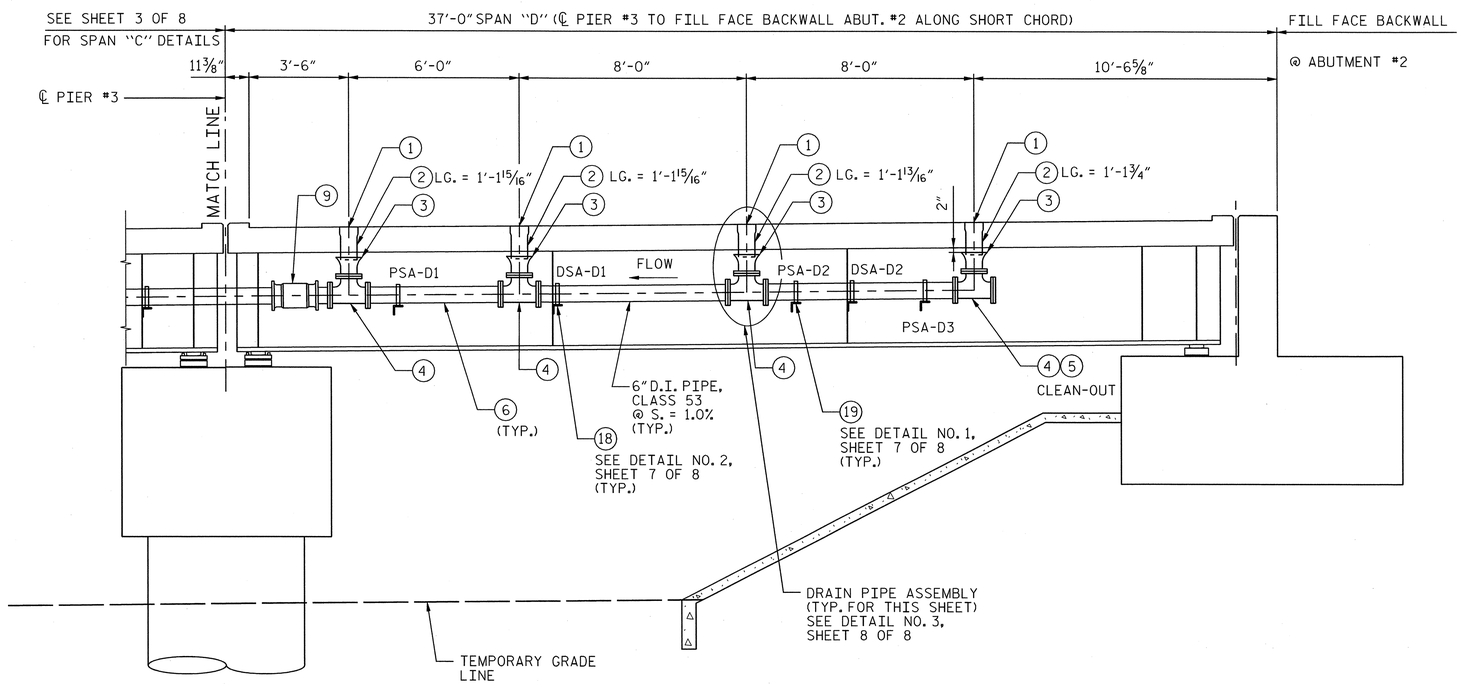

DRAINAGE DETAILS - SPAN "D"
(TYP 3 LOCATIONS)

PROJECT NO. P-5201

WAKE **COUNTY**

STATION: P.O.C. 3583+33.86 -M1-
P.O.T. 22+56.93 -L-

SHEET 4 OF 8

AECOM
AECOM TECHNICAL SERVICES, INC.
701 CORPORATE CENTER DRIVE, SUITE 475
RALEIGH, NC 27607
(919) 854-6200 www.aecom.com
AECOM License No. F-0342

NORTH CAROLINA PROFESSIONAL SEAL 19656 ENGINEER MARK PEARSON 9/13/13

STATE OF NORTH CAROLINA
DEPARTMENT OF TRANSPORTATION
RALEIGH

STRUCTURE DRAINAGE DETAILS

REVISIONS						SHEET NO.
NO.	BY:	DATE:	NO.	BY:	DATE:	S-45
1			3			TOTAL SHEETS
2			4			56

DRAWN BY : JMS DATE : 04/13
CHECKED BY : DSS DATE : 04/13

0422DEL_P19
DGN
DATE: 9/12/2013
TIME: 3:45:14 PM
USER: gdaboz
DGN: G:\0422\38803\400_Technical_Information_Disc_Files\450_NCDOT Std Textbook Design Files\Structures\P-5201_SD_DSN_Draft_14.dgn

0422DEL_P19

DATE: 9/12/2013
TIME: 3:45:42 PM

USER: polphzt
DGN: G:\60238803\400_Technical_Information_Dist_Files\450_NCDOT Std Tech Des\prFiles\Structures\P-5201_SD_DSN_Drain_5.dgn

NOTES:

1. ALL DIMENSIONS ARE SUBJECT TO ADJUSTMENTS TO FIT MEASUREMENTS TAKEN AFTER DECKS HAVE BEEN POURED.
2. ABBREVIATIONS:

   D.I. = DUCTILE IRON
   P.L. = PIPE LENGTH
   P.E. = PLAIN END
   FLG. = FLANGE
   M.J. = MECHANICAL JOINT
   LG. = LENGTH
   TYP. = TYPICAL
   EL. = ELEVATION
   S. = SLOPE

3. FOR FITTING SCHEDULE AND ESTIMATED QUANTITIES, SEE SHEET 8 OF 8.

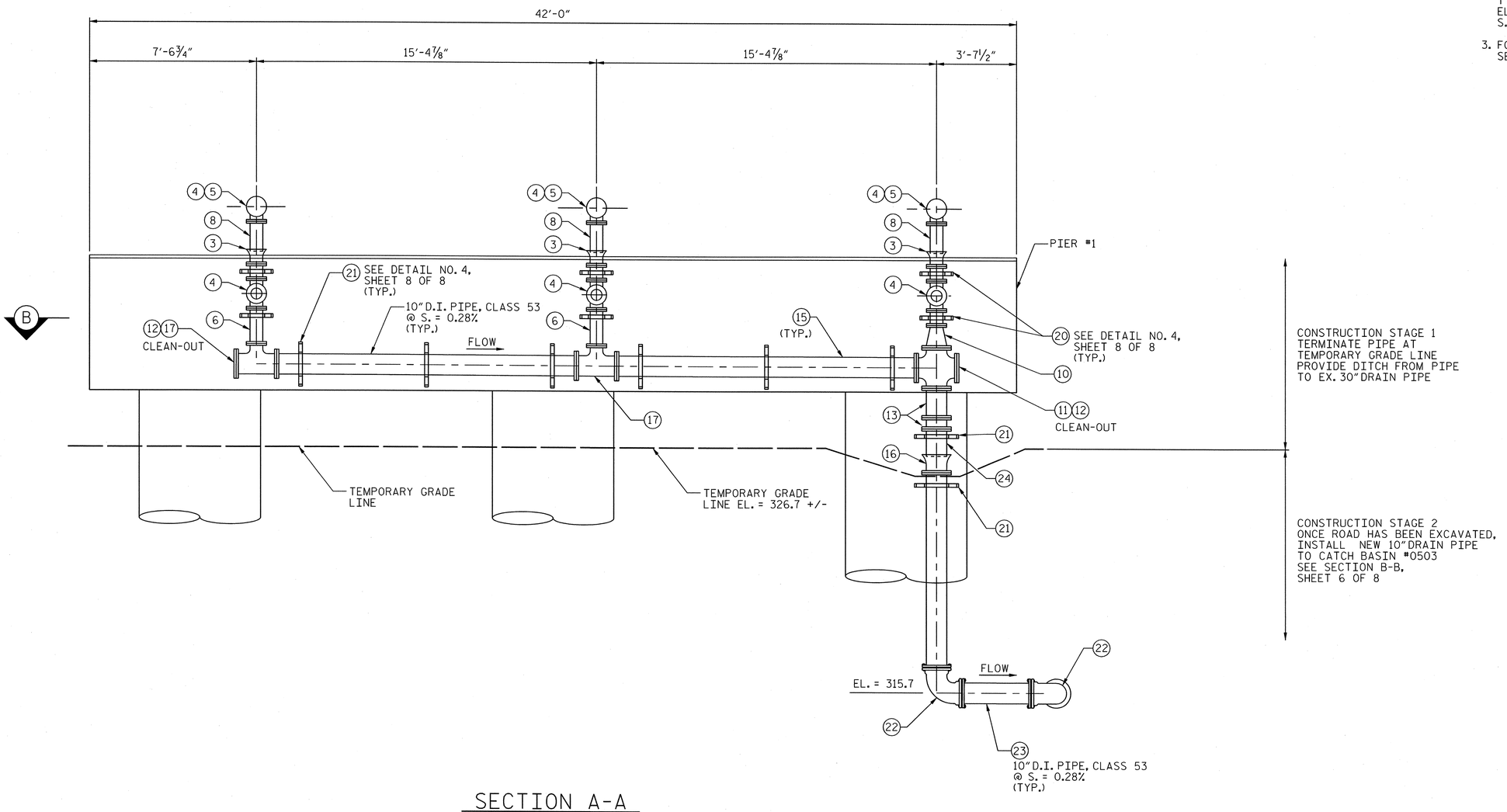

SECTION A-A
DRAINAGE DETAILS - SPAN "A"

PROJECT NO. P-5201

WAKE **COUNTY**

STATION: P.O.C. 3583+33.86 -M1-
P.O.T. 22+56.93 -L-

SHEET 5 OF 8

AECOM
AECOM TECHNICAL SERVICES, INC.
701 CORPORATE CENTER DRIVE, SUITE 475
RALEIGH, NC 27607
(919) 854-6200 www.aecom.com
AECOM License No. F-0342

NORTH CAROLINA PROFESSIONAL SEAL 10656 ENGINEER MARK PEARSON 9/13/13

STATE OF NORTH CAROLINA
DEPARTMENT OF TRANSPORTATION
RALEIGH

STRUCTURE DRAINAGE DETAILS

REVISIONS							
NO.	BY:	DATE:	NO.	BY:	DATE:		
1			3				
2			4				

SHEET NO. S-46
TOTAL SHEETS 56

DRAWN BY : JMS DATE : 04/13
CHECKED BY : DSS DATE : 04/13

0422DEL_P19

DCN

NOTES:

1. ALL DIMENSIONS ARE SUBJECT TO ADJUSTMENTS TO FIT MEASUREMENTS TAKEN AFTER DECKS HAVE BEEN POURED.
2. ABBREVIATIONS:

   D.I. = DUCTILE IRON
   P.L. = PIPE LENGTH
   P.E. = PLAIN END
   FLG. = FLANGE
   M.J. = MECHANICAL JOINT
   LG. = LENGTH
   TYP. = TYPICAL
   EL. = ELEVATION
   S. = SLOPE

3. FOR FITTING SCHEDULE AND ESTIMATED QUANTITIES, SEE SHEET 8 OF 8.

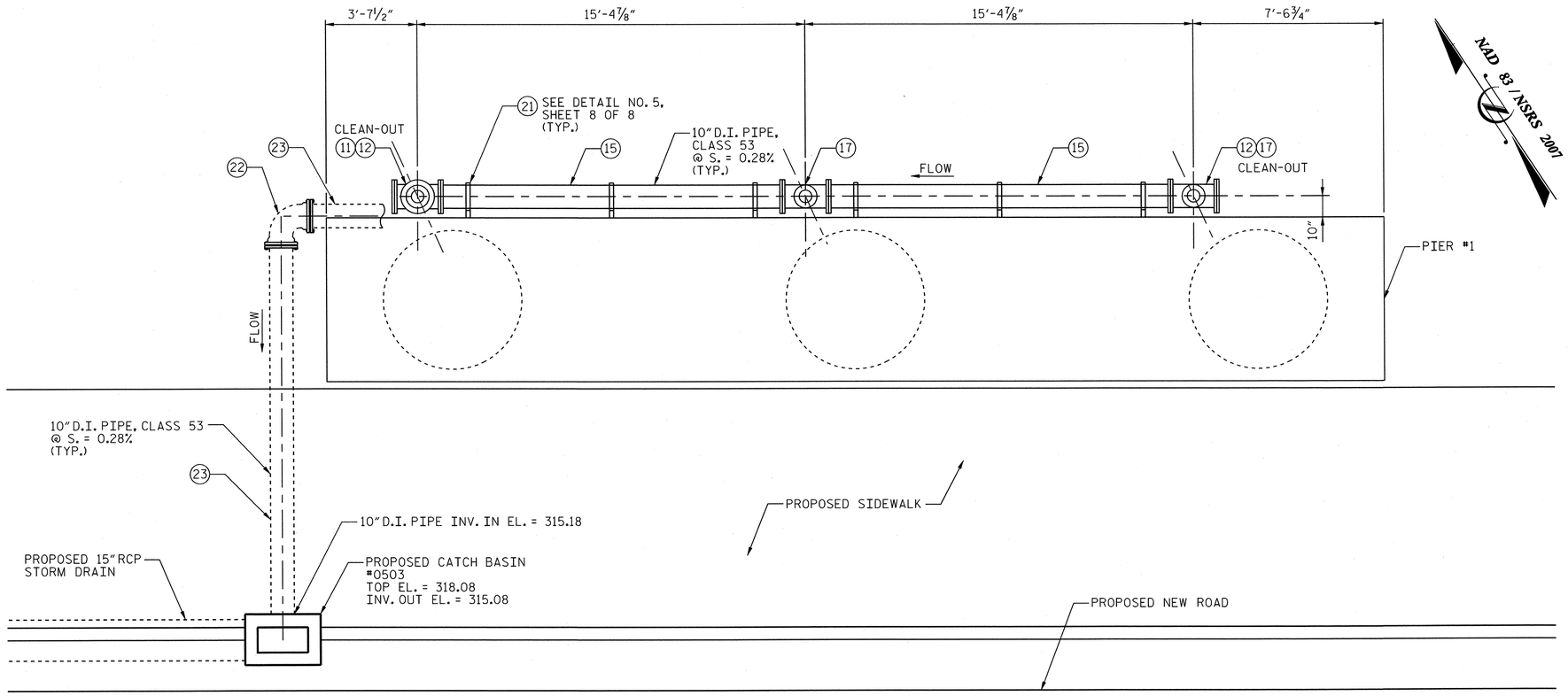

SECTION B-B
PLAN VIEW

PROJECT NO. P-5201

WAKE **COUNTY**

STATION: P.O.C. 3583+33.86 -M1-
P.O.T. 22+56.93 -L-

SHEET 6 OF 8

AECOM
AECOM TECHNICAL SERVICES, INC.
701 CORPORATE CENTER DRIVE, SUITE 475
RALEIGH, NC 27607
(919) 854-6200 www.aecom.com
AECOM License No. F-0342

NORTH CAROLINA PROFESSIONAL SEAL 10656 ENGINEER L. MARK PEARSON 9/13/13

STATE OF NORTH CAROLINA
DEPARTMENT OF TRANSPORTATION
RALEIGH

STRUCTURE DRAINAGE DETAILS

REVISIONS						SHEET NO.
NO.	BY:	DATE:	NO.	BY:	DATE:	S-47
1			3			TOTAL SHEETS
2			4			56

DRAWN BY : JMS DATE : 04/13
CHECKED BY : DSS DATE : 04/13

DATE: 9/12/2013
TIME: 3:46:04 PM

USER: 00109?
DGN: 0:\60223803\400_Technical_Information_Disc_Files\450_NCDOT Std Tech Data\prFiles\Structures\P-5201_SD_DSN_Drain_6.dgn

0422DEL_P19

DGN

NOTES:

1. FOR LOCATIONS AND DESIGNATIONS OF DSA & PSA, SEE FRAMING PLAN AND DRAINAGE DETAILS.
2. MAKE FINAL PIPE ALIGNMENT AND TIGHTEN U-BOLTS AFTER RAILROAD TRACK HAS BEEN LAID ACROSS THE BRIDGE.
3. PROVIDE PVC OR NEOPRENE-COATED STRIPS, EPOXY-CEMENTED TO THE U-BOLT OR PIPE FOR STRAY CURRENT PROTECTION.
4. FOR STRUCTURE DRAINAGE SYSTEM, SEE SPECIAL PROVISIONS.

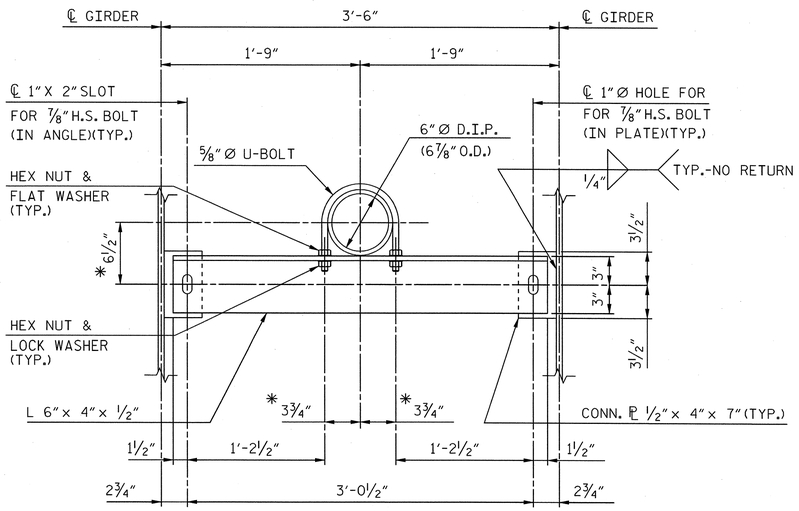

ELEVATION

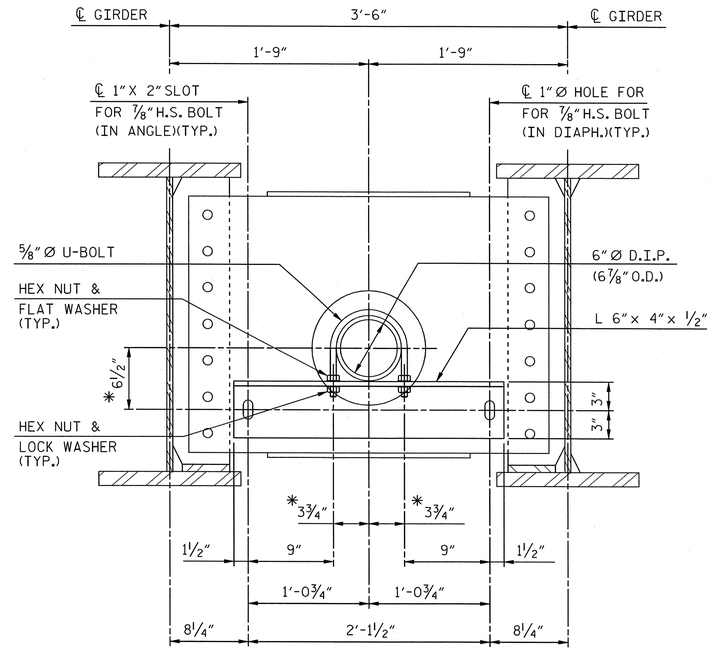

ELEVATION

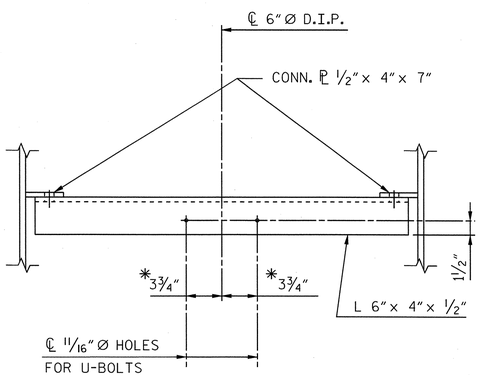

PLAN

DETAIL NO. 1
PIPE SUPPORT ANGLE (PSA)

*ADJUST AS NECESSARY TO ALLOW FOR STRAY CURRENT PROTECTION. SEE NOTE #3, THIS SHEET.

ELEVATION

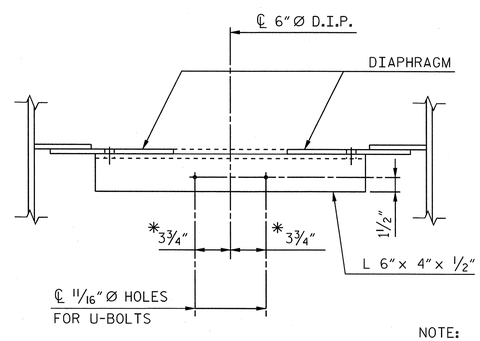

PLAN

NOTE:
DIAPHRAGM FLANGE ℙ
NOT SHOWN FOR CLARITY

DETAIL NO. 2
DIAPHRAGM SUPPORT ANGLE (DSA)

DSA	"Y"
A1	2'-2 3/8"
A2	2'-4 5/8"
A3	2'-2"
B1	2'-1 7/8"
B2	2'-1 3/4"
B3	2'-1 11/16"
B4	2'-1 9/16"
B5	2'-1 1/2"
B6	2'-1 3/8"
C1	2'-1 1/4"
C2	2'-1 3/16"
C3	2'-1 1/16"
C4	2'-1"
C5	2'-0 7/8"
C6	2'-0 13/16"
D1	2'-0 5/8"
D2	2'-0 9/16"

PSA	"Y"
A1	2'-0 7/8"
A2	2'-4 1/8"
A3	2'-5 11/16"
B1	2'-1 7/8"
B2	2'-1 13/16"
B3	2'-1 11/16"
B4	2'-1 5/8"
B5	2'-1 9/16"
B6	2'-1 7/16"
C1	2'-1 5/16"
C2	2'-1 3/16"
C3	2'-1 1/8"
C4	2'-1 1/16"
C5	2'-0 15/16"
C6	2'-0 7/8"
D1	2'-0 11/16"
D2	2'-0 9/16"
D3	2'-0 1/2"

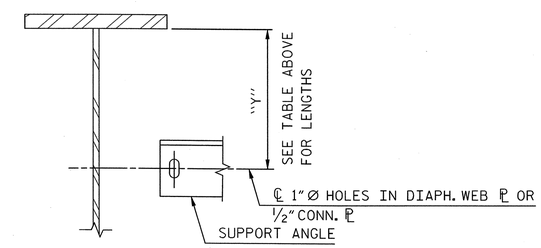

PROJECT NO. P-5201

WAKE COUNTY

STATION: P.O.C. 3583+33.86 -M1-
P.O.T. 22+56.93 -L-

SHEET 7 OF 8

AECOM
AECOM TECHNICAL SERVICES, INC.
701 CORPORATE CENTER DRIVE, SUITE 475
RALEIGH, NC 27607
(919) 854-6200 www.aecom.com
AECOM License No. F-0342

NORTH CAROLINA PROFESSIONAL SEAL 10656 ENGINEER L. MARK PEARSON 9/13/13

STATE OF NORTH CAROLINA
DEPARTMENT OF TRANSPORTATION
RALEIGH

STRUCTURE DRAINAGE DETAILS

REVISIONS						SHEET NO.
NO.	BY:	DATE:	NO.	BY:	DATE:	S-48
1			3			TOTAL SHEETS
2			4			56

DRAWN BY : JWH DATE : 04/13
CHECKED BY : JL DATE : 04/13

DATE: 9/12/2013
TIME: 3:46:24 PM

USER: pplotnz
DGN: G:\60236803\400_Technical_Information_Disc_Files\450_NCDOT Std Tech Design Files\Structures\P-5201_SD_DSN_Drainage Details_T.dgn

0422DEL_P19

FITTING SCHEDULE AND ESTIMATED QUANTITIES

MARK	SIZE	DESCRIPTION	MATERIAL	UNIT	TOTAL
1	6"	GRATE, NEENAH R-4373 SERIES, HEAVY DUTY, OR EQUAL	CAST IRON	EA.	60
2	6"	PIPE, BELL x PLAIN END, NO GASKET, CLASS 53	DUCTILE IRON	FT.	78
3	6"	FLANGE & FLARE (BELL MOUTH), LG. = 8.0", OPENING WIDTH = 11.0"	DUCTILE IRON	EA.	66
4	6"	TEE, FLG.	DUCTILE IRON	EA.	66
5	6"	BLIND FLANGE	DUCTILE IRON	EA.	15
6	6"	PIPE, CLASS 53, FLG., BOTH ENDS	DUCTILE IRON	FT.	450
7	6"	90° ELL, FLG.	DUCTILE IRON	EA.	6
8	6"	PIPE, FLANGE x PLAIN END, CLASS 53	DUCTILE IRON	FT.	8
9	6"	EXPANSION JOINT, EBAA 206FO; OR EQUAL	DUCTILE IRON	EA.	9
10	10" x 6"	REDUCER, FLG.	DUCTILE IRON	EA.	1
11	10"	CROSS, FLG.	DUCTILE IRON	EA.	1
12	10"	BLIND FLANGE	DUCTILE IRON	EA.	2
13	10"	45° ELL, FLG.	DUCTILE IRON	EA.	2
14	6" x 6"	WYE, FLG.	DUCTILE IRON	EA.	6
15	10"	PIPE, CLASS 53, FLG., BOTH ENDS	DUCTILE IRON	FT.	28
16	10"	FLANGE & FLARE (BELL MOUTH), LG. = 10.0", OPENING WIDTH = 16.0"	DUCTILE IRON	EA.	1
17	10" x 6"	REDUCING TEE, FLG.	DUCTILE IRON	EA.	2
18	PER DETAIL NO. 2	DIAPHRAGM SUPPORT ANGLE (DSA)	STEEL	EA.	51
19	PER DETAIL NO. 1	PIPE SUPPORT ANGLE (PSA)	STEEL	EA.	54
20	PER DETAIL NO. 4	OFFSET PIPE CLAMP FOR 6" D.I. PIPE	GALV. STEEL	EA.	6
21	PER DETAIL NO. 4	OFFSET PIPE CLAMP FOR 10" D.I. PIPE	GALV. STEEL	EA.	8
22	10"	90° ELL, M.J., AWWA C110	DUCTILE IRON	EA.	2
23	10"	PIPE, CLASS 53	DUCTILE IRON	FT.	28
24	10"	PIPE, FLANGE x PLAIN END, CLASS 53	DUCTILE IRON	FT.	1.3

NOTES:

1. ALL DIMENSIONS ARE SUBJECT TO ADJUSTMENTS TO FIT MEASUREMENTS TAKEN AFTER DECKS HAVE BEEN POURED.
2. ABBREVIATIONS:

   D.I. = DUCTILE IRON
   P.L. = PIPE LENGTH
   P.E. = PLAIN END
   FLG. = FLANGE
   M.J. = MECHANICAL JOINT
   LG. = LENGTH
   TYP. = TYPICAL
   GALV. = GALVANIZED
   EL. = ELEVATION
   MANUF. = MANUFACTURER
   MIN. = MINIMUM
3. FLANGED FITTINGS SHALL BE DUCTILE IRON CONFORMING TO ANSI/AWWA C110/A21.10.
4. MECHANICAL JOINT FITTINGS SHALL BE DUCTILE IRON CONFORMING TO ANSI/AWWA C153/A21.53, COMPACT, AND SHALL HAVE A MECHANICAL JOINT RESTRAINT ON EACH END.
5. STAINLESS STEEL BOLTS SHALL BE USED FOR ALL FITTINGS.
6. THE PROPOSED CLOSED DRAINAGE SYSTEM IS TO RECEIVE THE SAME PAINT SYSTEM AS THE SUPERSTRUCTURE.
7. ALL PIPES SHALL BE CLASS 53 DUCTILE IRON.
8. FOR LOCATIONS AND DESIGNATIONS OF DSA AND PSA, SEE FRAMING PLANS.
9. PIPE LENGTHS SHOWN ALLOW FOR 1/8" THICK GASKETS TO BE USED AT ALL BOLTED FLANGE CONNECTIONS.
10. MAKE FINAL PIPE ALIGNMENT AND TIGHTEN U-BOLTS AFTER RAILROAD TRACK HAS BEEN LAID ACROSS THE BRIDGE.
11. FOR STRUCTURE DRAINAGE SYSTEM, SEE SPECIAL PROVISIONS.
12. PROVIDE PVC OR NEOPRENE-COATED STRIPS, EPOXY-CEMENTED TO THE U-BOLT OR PIPE TO FURNISH STRAY CURRENT PROTECTION.

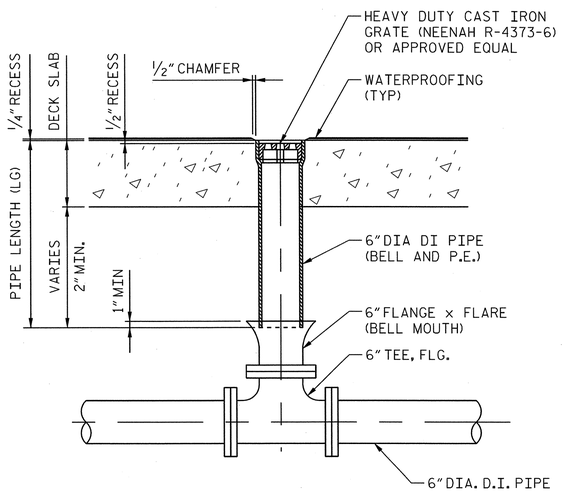

DETAIL NO. 3
DRAIN PIPE ASSEMBLY

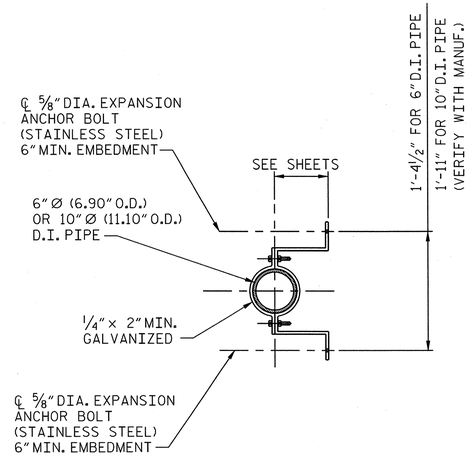

DETAIL NO. 4
OFFSET PIPE CLAMP

PROJECT NO. P-5201
WAKE COUNTY
STATION: P.O.C. 3583+33.86 -M1-
P.O.T. 22+56.93 -L-
SHEET 8 OF 8

AECOM
AECOM TECHNICAL SERVICES, INC.
701 CORPORATE CENTER DRIVE, SUITE 475
RALEIGH, NC 27607
(919) 854-6200 www.aecom.com
AECOM License No. F-0342

NORTH CAROLINA PROFESSIONAL SEAL 10656 ENGINEER MARK PEARSON 9/13/13

STATE OF NORTH CAROLINA
DEPARTMENT OF TRANSPORTATION
RALEIGH

STRUCTURE DRAINAGE DETAILS

REVISIONS						SHEET NO.
NO.	BY:	DATE:	NO.	BY:	DATE:	S-49
1			3			TOTAL SHEETS
2			4			56

DRAWN BY : JMS DATE : 04/13
CHECKED BY : DSS DATE : 04/13

DATE: 9/12/2013
TIME: 3:46:49 PM

USER: pd0fd7
DGN: G:\5023\6803\400_Technical_Information_Disc_Files\450_NCDOT Staff tech\Design Files\Structures\P-5201_SD_DSN_Drainage Details_8.dgn

0422DEL_P19

DGN

DATE: 9/12/2013
TIME: 3:36:03 PM

USER: pdphtz
DGN: G:\5023\50803\400_Technical_Information_Disc_Files\450_NCDOT Staff and Design Files\Structures\P-5201_SD_DSN_SlopeProtection_1.dgn

NAD 83 / NSRS 2007

NOTE:
EXTENDED 4" CONCRETE SLOPE PROTECTION AT STAGE 2: SLOPE VARIES FROM 2:1 TO 2.5:1 (TYP. EACH CORNER)

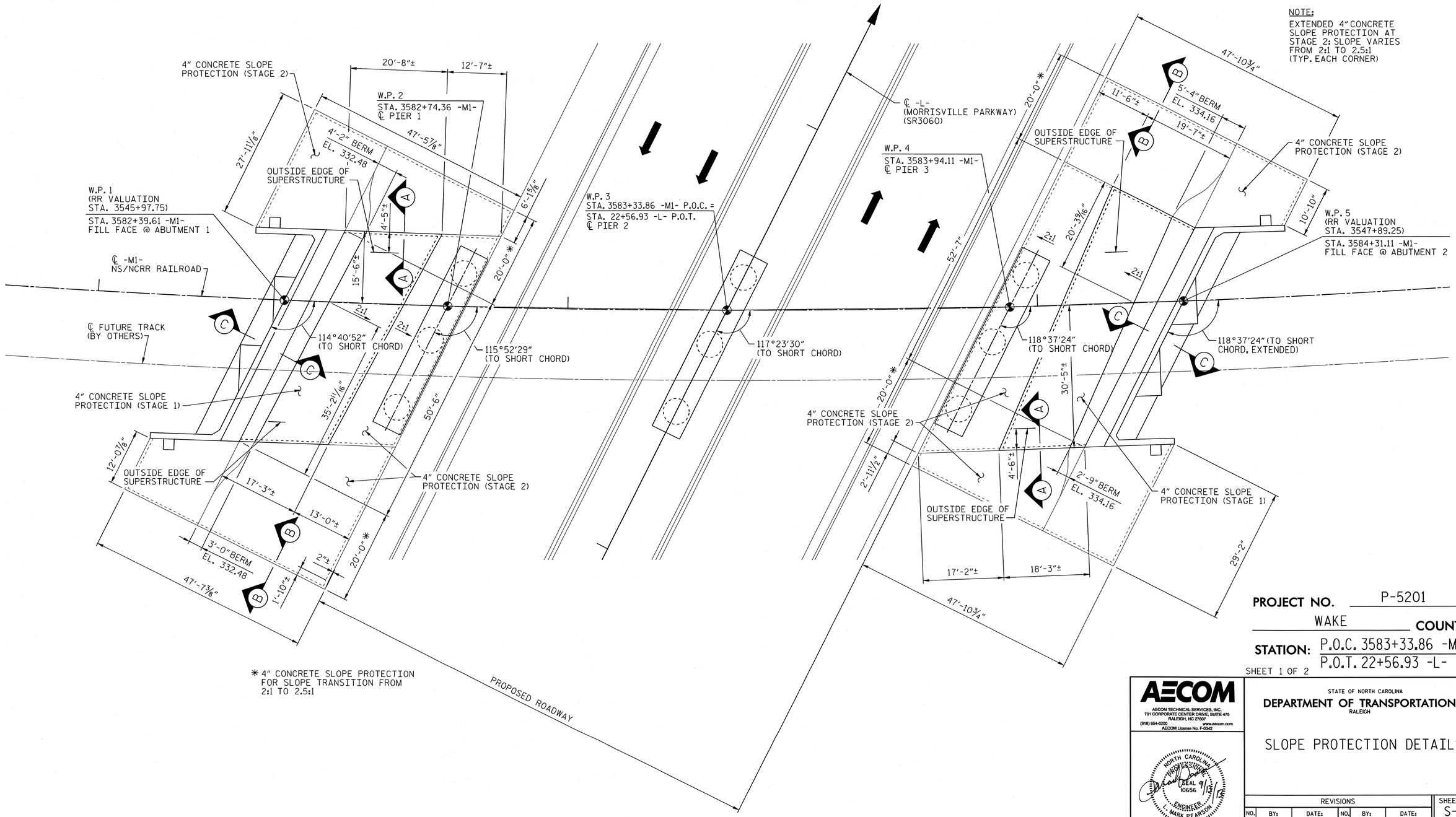

* 4" CONCRETE SLOPE PROTECTION FOR SLOPE TRANSITION FROM 2:1 TO 2.5:1

PLAN

PROJECT NO. P-5201

WAKE COUNTY

STATION: P.O.C. 3583+33.86 -M1-
P.O.T. 22+56.93 -L-

SHEET 1 OF 2

AECOM
AECOM TECHNICAL SERVICES, INC.
701 CORPORATE CENTER DRIVE, SUITE 475
RALEIGH, NC 27607
(919) 854-6200 www.aecom.com
AECOM License No. F-0342

NORTH CAROLINA PROFESSIONAL SEAL 10656 ENGINEER J. MARK PEARSON 9/13

STATE OF NORTH CAROLINA
DEPARTMENT OF TRANSPORTATION
RALEIGH

SLOPE PROTECTION DETAILS

REVISIONS						SHEET NO.
NO.	BY:	DATE:	NO.	BY:	DATE:	S-50
1			3			TOTAL SHEETS
2			4			56

DRAWN BY : MTB DATE : 05/13
CHECKED BY : JL DATE : 05/13

0422DEL_P19

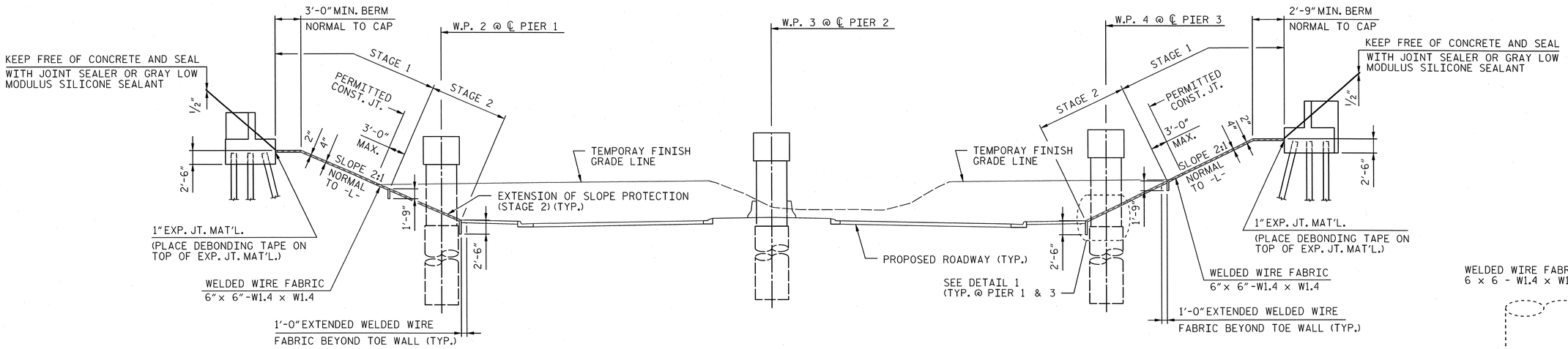

ELEVATION

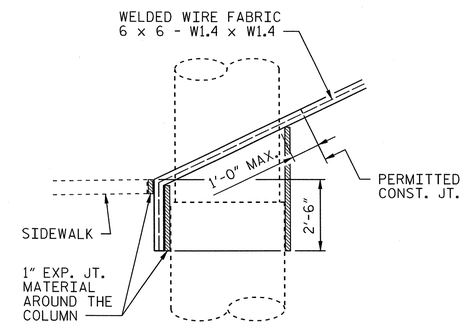

DETAIL 1

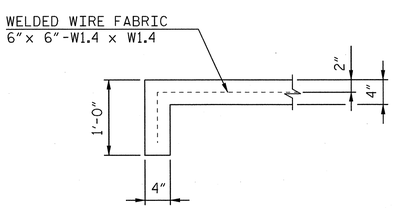

SECTION A-A

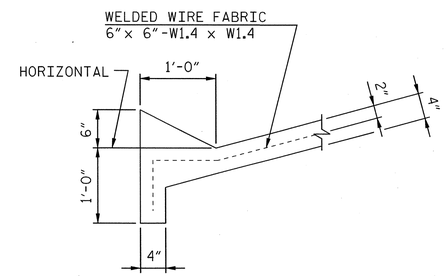

SECTION B-B

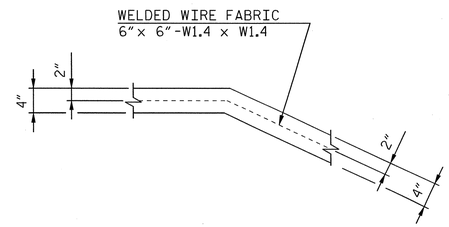

SECTION C-C

GENERAL NOTES:

SLOPE PROTECTION SHALL BE PLACED UNDER THE ENDS OF THE BRIDGE AS SHOWN IN THE DETAILS. MEASUREMENT AND PAYMENT SHALL BE AS PRESCRIBED IN SECTION 462 OF THE STANDARD SPECIFICATIONS. FOR BERM WIDTH, SEE GENERAL DRAWING.

SLOPE PROTECTION SHALL CONSIST OF 4" POURED-IN-PLACE CONCRETE PAVING AS SHOWN IN THE DETAILS ON THIS SHEET. CONCRETE SHALL BE CLASS "B". THE CONCRETE SURFACE SHALL BE FLOATED WITH A WOODEN FLOAT AND FINISHED. WELDED WIRE FABRIC REINFORCING SHALL BE 6 x 6 - W1.4 x W1.4, 60" WIDE. SLOPE PROTECTION SHALL BE POURED IN 5'-0" STRIPS AS SHOWN IN THE "POURING DETAIL" WITH 2'-0" LONG #4 BARS PLACED ALONG THE SLOPE BETWEEN STRIPS AT 1'-6" MAXIMUM SPACING. SLOPE PROTECTION MAY BE POURED IN ALTERNATE 4'-0" AND 5'-0" STRIPS AS SHOWN IN THE "OPTIONAL POURING DETAIL" WITH ADJACENT RUNS OF WELDED WIRE FABRIC LAPPING AT LEAST 6". THE COST OF THE WELDED WIRE FABRIC AND #4 BARS, IF USED, SHALL BE INCLUDED IN THE CONTRACT UNIT PRICE BID PER SQUARE YARD FOR SLOPE PROTECTION.

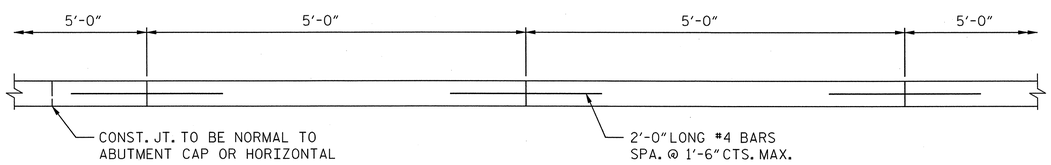

STRIP WIDTHS MAY VARY IN CURVED PORTION.

POURING DETAIL

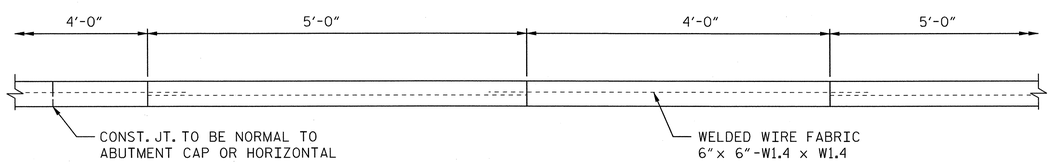

POUR A 4'-0" STRIP FIRST. STRIP WIDTHS MAY VARY IN CURVED PORTION.

OPTIONAL POURING DETAIL

ESTIMATED QUANTITIES

	BRIDGE AT STA. 3583+33.86 -M-	4" SLOPE PROTECTION (SQ. YD.)	* WELDED WIRE FABRIC 60" WIDE (L.F.)
STAGE 1	ABUTMENT 1	126.3	263.0
	ABUTMENT 2	141.6	288.5
STAGE 2	ABUTMENT 1	263.7	731.8
	ABUTMENT 2	266.7	761.8

* QUANTITY SHOWN IS BASED ON ALTERNATE 4'-0" AND 5'-0" POURS.

PROJECT NO. P-5201
WAKE COUNTY
STATION: P.O.C. 3583+33.86 -M1-
P.O.T. 22+56.93 -L-
SHEET 2 OF 2

AECOM
AECOM TECHNICAL SERVICES, INC.
701 CORPORATE CENTER DRIVE, SUITE 475
RALEIGH, NC 27607
(919) 854-6200 www.aecom.com
AECOM License No. F-0342

NORTH CAROLINA PROFESSIONAL SEAL 19656 ENGINEER MARK PEARSON
9/13/13

STATE OF NORTH CAROLINA
DEPARTMENT OF TRANSPORTATION
RALEIGH

SLOPE PROTECTION DETAILS

REVISIONS						SHEET NO.
NO.	BY:	DATE:	NO.	BY:	DATE:	S-51
1			3			TOTAL SHEETS
2			4			56

DRAWN BY : MTB DATE : 05/13
CHECKED BY : JL DATE : 05/13

DATE: 9/13/2013
TIME: 11:46:23 AM

USER: Lowerd
DGN: ...\Technical_Information_Dist_Files\450_NCDOT Std Tech Design Files\Structures\P-5201_SD_DSN_SlopeProtection_2.dgn

0422DEL_P19

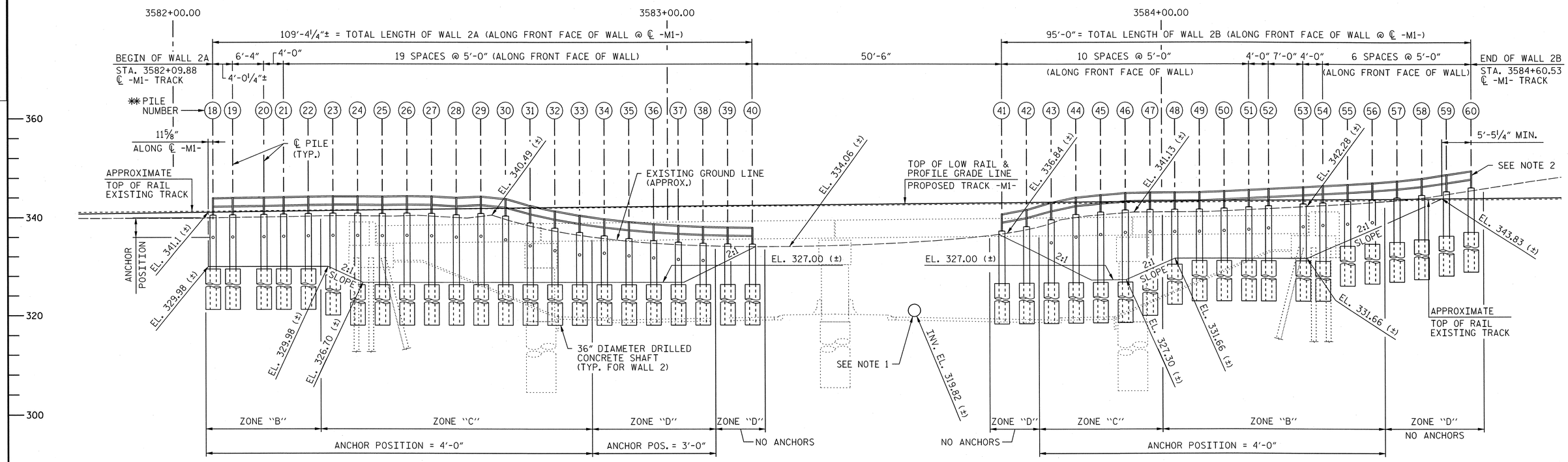

TEMPORARY WALLS 2A & 2B ELEVATION

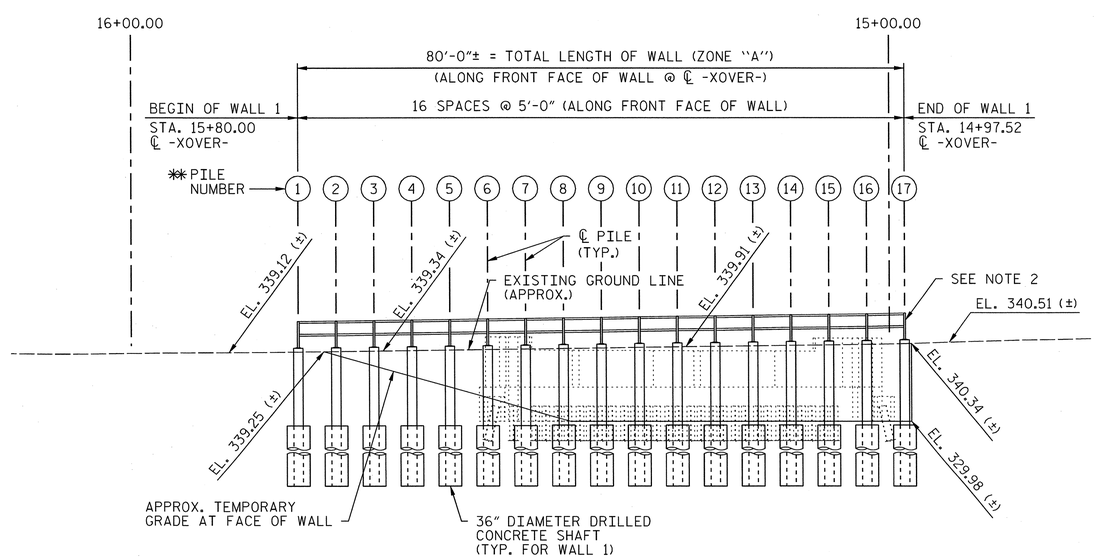

TEMPORARY WALL 1 ELEVATION

NOTES:

1. VERIFY LOCATION OF EXISTING 30" CROSS PIPE BEFORE DRILLING HOLES FOR CONCRETE SHAFTS.
2. FOR TEMPORARY HANDRAIL AT WALL, SEE SHEET S-55.

PROJECT NO. P-5201

WAKE **COUNTY**

STATION: P.O.C. 3583+33.86 -M1-
P.O.T. 22+56.93 -L-

SHEET 1 OF 2

AECOM
AECOM TECHNICAL SERVICES, INC.
701 CORPORATE CENTER DRIVE, SUITE 475
RALEIGH, NC 27607
(919) 854-6200 www.aecom.com
AECOM License No. F-0342

NORTH CAROLINA PROFESSIONAL SEAL 10656 ENGINEER J. MARK PEARSON 9/13/13

STATE OF NORTH CAROLINA
DEPARTMENT OF TRANSPORTATION
RALEIGH

TEMPORARY RAILROAD SHORING LAYOUT

REVISIONS						SHEET NO.
NO.	BY:	DATE:	NO.	BY:	DATE:	S-52
1			3			TOTAL SHEETS
2			4			56

DRAWN BY : DDL DATE : 04/13
CHECKED BY : JL DATE : 04/13

DATE: 9/12/2013
TIME: 3:05:42 PM

USER: p00702
DGN: G:\02236603\400_Technical_Information_Disc_Files\450_NCDOT Staff Act\Design Files\Structures\P-5201_SD_DSN_Wall_Profile.dgn

0422DEL_P19

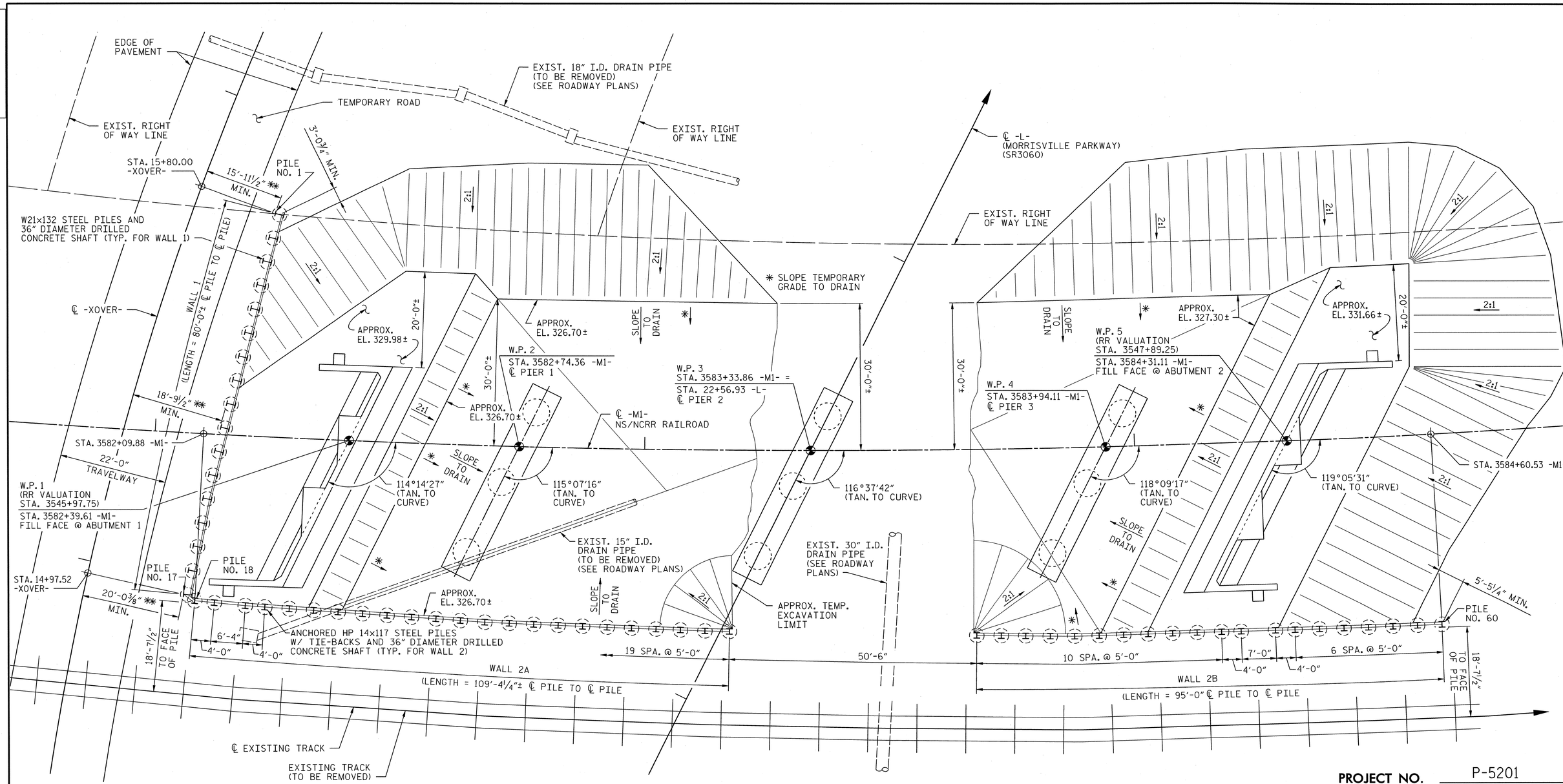

** OFFSET FROM ℄ TEMPORARY ROAD TO NEAR FACE OF SOLDIER PILE (VARIES AS SHOWN).

TEMPORARY WALL PLAN

(EXCAVATION FOR BRIDGE CONSTRUCTION)

PROJECT NO. P-5201

WAKE **COUNTY**

STATION: P.O.C. 3583+33.86 -M1-
P.O.T. 22+56.93 -L-

SHEET 2 OF 2

NOTES:

1. FOR EROSION AND SEDIMENT CONTROL, SEE "EROSION CONTROL PLANS".
2. THE APPROXIMATE LIMITS OF UNCLASSIFIED STRUCTURE EXCAVATION ARE SHOWN FOR STAGE 1 CONSTRUCTION OF THE BRIDGE.
3. MODIFICATIONS TO THE PLAN ARE SUBJECT TO THE APPROVAL OF THE ENGINEER.

DRAWN BY : DDL DATE : 04/13
CHECKED BY : JL DATE : 04/13

AECOM
AECOM TECHNICAL SERVICES, INC.
701 CORPORATE CENTER DRIVE, SUITE 475
RALEIGH, NC 27607
(919) 854-6200 www.aecom.com
AECOM License No. F-0342

NORTH CAROLINA PROFESSIONAL ENGINEER SEAL 10656 9/13/13 MARK PEARSON

STATE OF NORTH CAROLINA
DEPARTMENT OF TRANSPORTATION
RALEIGH

TEMPORARY RAILROAD SHORING LAYOUT

REVISIONS						SHEET NO.
NO.	BY:	DATE:	NO.	BY:	DATE:	S-53
1			3			TOTAL SHEETS
2			4			56

DATE: 9/12/2013
TIME: 4:03:03 PM
USER: g0ldhz
DGN: G:\GD23803\400_Technical_Information_Disc_Files\450_NCDOT\Sht\Tech2\Design\Files\Structures\P-5201_SD_DSN_Wall_Profile.3.dgn

TEMPORARY WALL NOTES:

CONSTRUCTION SPECIFICATIONS:

NORTH CAROLINA DEPARTMENT OF TRANSPORTATION "STANDARD SPECIFICATIONS FOR ROADS AND STRUCTURES", JANUARY 2012 (HEREIN CALLED STANDARD SPECIFICATIONS).

DESIGN CRITERIA:

DESIGN IS IN ACCORDANCE WITH THE FOLLOWING:
1. NCDOT STRUCTURES DESIGN MANUAL DATED DECEMBER 2012
2. AASHTO LRFD BRIDGE DESIGN SPECIFICATIONS, 6TH EDITION (2012).
3. NORFOLK SOUTHERN CORPORATION'S "GUIDELINES FOR DESIGN OF HIGHWAY SEPARATION STRUCTURES UNDER RAILROAD (UNDERPASS GRADE SEPARATION)"
4. CURRENT EDITION OF AREMA'S "MANUAL FOR RAILWAY ENGINEERING, VOL. 2, STRUCTURES"
5. AISC STEEL CONSTRUCTION MANUAL 14TH EDITION

UNLESS NOTED OTHERWISE, THE HORIZONTAL DEFLECTION OF THE WALLS SHALL NOT EXCEED 0.5 INCHES. PILE DEFLECTIONS MAY CAUSE DISTRESS OF THE ADJACENT RAILROAD DETOUR TRACK DURING CONSTRUCTION.

THE DESIGN INCLUDES A LIVE LOAD SURCHARGE ALLOWANCE IN ACCORDANCE WITH AREMA ARTICLE 8-20.3.2.2. THE CONTRACTOR IS RESPONSIBLE FOR DETERMINING THE ADEQUACY OF THE WALL WITH RESPECT TO ANY ADDITIONAL LOADS RESULTING FROM THE CONTRACTOR'S CONSTRUCTION PROCEDURES OR OPERATIONS.

PLAN DIMENSIONS:

ALL DIMENSIONS IN THESE PLANS ARE MEASURED HORIZONTALLY (LEVEL) OR VERTICALLY (PLUMB) UNLESS OTHERWISE NOTED.

DO NOT SCALE DRAWINGS. IF DIMENSIONS ARE IN QUESTION, CONTACT THE ENGINEER BEFORE CONTINUING WITH CONSTRUCTION.

STRUCTURAL STEEL:

STEEL PILE: ASTM A572 OR A709, GRADE 50
WALERS: ASTM A572 OR A709, GRADE 50
PLATES: ASTM A572 OR A709, GRADE 50
BOLTS: ASTM A325, TYPE I
ANCHOR NUTS: STANDARD HEAVY DUTY HEXAGON HEAD TYPE CONFORMING TO ASTM A29 GRADE C-1045 GALVANIZE TIES, BOLTS, NUTS, AND WASHERS.
SOLDIER PILES: SOLDIER PILES ARE HP 14x117 OR W21x132.

WELDING:

1. WELD METAL TO BE E70XX
2. WELDING DERAILS AND OPERATIONS SHALL BE IN ACCORDANCE WITH THE CURRENT EDITION OF THE AASHTO/AWS D1.5 BRIDGE WELDING CODE.
3. WELDS REQUIRING NON-DESTRUCTIVE TESTING SHALL BE TESTED IN ACCORDANCE WITH AASHTO/AWS D1.5 BRIDGE WELDING CODE.

CORROSION PROTECTION:
1. UNLESS NOTED OTHERWISE, NO CORROSION PROTECTION MEASURES ARE REQUIRED.
2. SECTION PROPERTIES DO NOT INCLUDE SACRIFICIAL THICKNESS FOR THE TEMPORARY WALL.
3. SOIL ANCHORS SHALL HAVE CORROSION PROTECTION IN ACCORDANCE WITH CURRENT "RECOMMENDATIONS FOR PRESTRESSED ROCK AND SOIL ANCHORS" FROM THE POST-TENSIONING INSTITUTE.

WALL DATA TABLE:

SOLDIER PILE WALL REQUIREMENTS DETAILED IN THE PLANS HAVE BEEN DESIGNED AS PER THE SOIL PROPERTIES:
SOIL UNIT WEIGHT = 120 PCF
SOIL FRICTION ANGLE = 26.0 DEGREES
IF FIELD CONDITIONS DIFFER FROM THOSE SHOWN, THE ENGINEER SHALL BE NOTIFIED AND WALL REDESIGN CONSIDERED.

ANCHORS:

THE ANCHOR FORCE IS GIVEN ALONG THE BAR (RESULTANT FORCE). UNLESS NOTED OTHERWISE THE ANCHOR VERTICAL INSTALLATION ANGLE IS TO BE 20 DEGREES AND THE HORIZONTAL INSTALLATION IS 0 DEGREES (PERPENDICULAR TO WALL ALIGNMENT).

THE SERVICE ANCHOR FORCE (ANCHOR DESIGN LOAD) ASSUMES LOAD FACTORS EQUAL TO 1.0 FOR ALL INCLUDED LOADS.

THE ANCHOR FORCE IS BASED ON THE MAXIMUM ANCHOR SPACING SHOWN IN THE WALL DATA TABLE. ANY ADJUSTMENTS TO THE ANCHOR SPACING OR THE ANCHOR VERTICAL INSTALLATION ANGLE WILL REQUIRE MODIFICATIONS TO THE ANCHOR FORCE, WALER STRUCTURAL SECTION AND CONNECTIONS WHICH SHALL BE APPROVED BY THE ENGINEER.

ANCHOR BAR TYPE: DEFINITION OF ANCHOR BAR TYPE (UNLESS OTHERWISE NOTED):
ANCHOR BAR TYPE IS ASTM A722, GRADE 150 KSI (AASHTO M275). ANCHOR BARS SHALL BE IN ACCORDANCE WITH CURRENT "RECOMMENDATIONS FOR PRESTRESSED ROCK AND SOIL ANCHORS" FROM THE POST-TENSIONING INSTITUTE.

IF SPECIFIED, THE ANCHOR BAR MINIMUM TOTAL LENGTH INDICATED IN THE WALL DATA TABLE IS REQUIRED FOR GLOBAL STABILITY. THE ANCHOR BAR BONDED LENGTH PLUS THE MINIMUM UNBONDED LENGTH SHOWN IN THE WALL DATA TABLE SHALL MEET OR EXCEED THE ANCHOR BAR MINIMUM TOTAL LENGTH AS SHOWN IN THE WALL DATA TABLE.

LAGGING:

LAGGING SHALL BE CONSTRUCTION GRADE LUMBER OR BETTER WITH A MINIMUM TABULATED UNIT STRESS IN BENDING (FB) OF 1,200 PSI. THE NOMINAL THICKNESS OF LAGGING SELECTED SHALL NOT BE LESS THAN 4 IN. FOR THE WALLS ADJACENT TO DETOUR ROADWAY, AND 6 IN. FOR THE WALLS ADJACENT TO RAILROAD.

LAGGING INSTALLATION SHALL BE COORDINATED WITH THE EXCAVATION. ALONG THE LAGGING LINE, THE SOIL SHALL BE REMOVED TO THE BACK OF LAGGING LOCATION, PLUS A TOLERANCE OF ONE (1) INCH MAXIMUM OVER EXCAVATION BEHIND THE LAGGING. LAGGING SHALL BE INSTALLED SO THE LAGGING IS IN CONTACT WITH THE SOIL.

CONSTRUCTION:

THE CONTRACTOR IS RESPONSIBLE FOR THE SAFETY AND STABILITY OF THE STRUCTURE AT EACH STAGE OF CONSTRUCTION.

THE CONTRACTOR IS RESPONSIBLE TO COORDINATE INSTALLATION OF FEATURES SUCH AS PILES, SHAFTS, DRAINAGE PIPES, DRAINAGE STRUCTURES, ETC. WITHIN THE ANCHORED REGION OF THE WALL TO ENSURE THE STRUCTURAL INTEGRITY OF THE ANCHORED WALL SYSTEM.

EXISTING OR PROPOSED FEATURES (INCLUDING BUT NOT LIMITED TO CONDUIT, PIPING, UTILITY LINES, EXISTING STRUCTURES) WHICH INTERFERE WITH THE INSTALLATION OF THE WALL SHALL BE LOCATED AND COORDINATED PRIOR TO THE START OF CONSTRUCTION BY THE CONTRACTOR.

CONSTRUCTION ENGINEERING NOTE: CONSTRUCTION ENGINEERING FOR DETAILS NOT PROVIDED IN THESE PLANS SHALL BE THE RESPONSIBILITY OF THE CONTRACTOR. ALL CONSTRUCTION ENGINEERING SHALL BE PERFORMED BY A NORTH CAROLINA PROFESSIONAL ENGINEER. ALL CONSTRUCTION ENGINEERING MUST BE SUBMITTED TO THE ENGINEER FOR REVIEW.

WALL ANCHORS SHALL BE LOCATED BY THE CONTRACTOR TO SATISFY MAXIMUM SPACING OF ANCHORS. DRAINAGE STRUCTURE/INLET LOCATIONS TO BE ADJUSTED UP TO 2 FT. IN EITHER DIRECTION ALONG THE LONGITUDINAL FLOW LINE TO ACCOMMODATE PLACEMENT OF WALL ANCHORS. THE CONTRACTOR SHALL REWORK SHOULDER GRADING UP TO 30 FT. IN EITHER DIRECTION LONGITUDINALLY ALONG THE FLOW LINE TO MAINTAIN ADEQUATE LONGITUDINAL GRADES FOR PROPER DRAINAGE TO PREVENT PONDING.

THE DESIGN OF THE TEMPORARY WALL IS BASED ON THE ASSUMPTION THAT EXCAVATION WILL EXTEND NO DEEPER THAN THE EXCAVATION ELEVATION. IF A CONDITION OTHER THAN THAT DETAILED EXISTS, THE ENGINEER SHALL BE CONTACTED TO DETERMINE THE NEED FOR MODIFICATIONS.

IF THE CONTRACTOR CANNOT DRIVE THE PILING TO THE MINIMUM EMBEDMENT DEPTH, THE ENGINEER SHALL BE CONTACTED TO DETERMINE THE NEED FOR MODIFICATIONS.

THE CONTRACTOR IS RESPONSIBLE FOR WATER RETENTION DURING CONSTRUCTION. UNLESS OTHERWISE NOTED THE CONTRACTOR SHALL ENSURE THE WATER LEVEL ON BOTH SIDES OF THE WALL IS LOWER THAN THE EXCAVATION LEVEL ANYTIME DURING THE CONSTRUCTION, IMPLEMENTING TEMPORARY DEWATERING OR OTHER WATER CONTROL MEASURES AS NEEDED.

THE CONTRACTOR SHALL BE RESPONSIBLE FOR THE CONSTRUCTION SEQUENCE OF THE SOLDIER PILE WALL.

THE DESIGN OF THE STRUCTURE IS BASED ON THE ASSUMED CONSTRUCTION SEQUENCE. THE CONTRACTOR SHALL VERIFY THE ACCURACY AND THE CONSTRUCTABILITY OF THE ASSUMED CONSTRUCTION SEQUENCE AND THE CONSTRUCTION SEQUENCE ASSUMPTIONS UTILIZED. THE CONTRACTOR MAY CHANGE THE CONSTRUCTION SEQUENCE AND CONSTRUCTION SEQUENCE ASSUMPTIONS ACCORDING TO THE PROVISIONS OF THE CONSTRUCTION ENGINEERING NOTE. CONSTRUCTION ENGINEERING RESULTING FROM CHANGES TO THE ASSUMED CONSTRUCTION SEQUENCE AND CONSTRUCTION SEQUENCE ASSUMPTIONS SHOWN IN THE PLANS SHALL BE THE RESPONSIBILITY OF THE CONTRACTOR.

ASSUMED CONSTRUCTION SEQUENCE:

1. LOCATE / RELOCATE ALL UTILITIES OR OTHER CONFLICTS WHICH MAY INTERFERE WITH SOLDIER PILE OR ANCHOR INSTALLATION.
2. EXCAVATED SIDE OF WALL TO BE UNIFORM GROUND PROFILE WITHIN TWICE RETAINED HEIGHT OF WALL.
3. DRILL HOLES TO MINIMUM EMBEDMENT DEPTH.
4. INSTALL SOLDIER PILES AND FILL THE HOLES WITH CONCRETE AND GROUT TO ELEVATION 6 IN. BELOW THE EXCAVATION ELEVATION. REMOVE ANY FLUIDS AND FILL REMAINING PORTIONS OF HOLES WITH FLOWABLE FILL. CURE CONCRETE OR GROUT AT LEAST 7 DAYS BEFORE EXCAVATING.
5. REMOVE FLOWABLE FILL AND MATERIAL IN BETWEEN PILES AS NECESSARY TO INSTALL TIMBER LAGGING.
6. BACKFILL RETAINED SIDE OF WALL TO UNIFORM RETAINED EARTH GROUND PROFILE AS REQUIRED.
7. EXCAVATE TO A POINT NO MORE THAN 2 FT BELOW THE ANCHOR ELEVATION(S), CREATING A LEVEL BENCH FOR ANCHOR DRILLING OPERATIONS.
8. INSTALL ANCHORS.
9. PERFORM BOTH PERFORMANCE AND PROOF TESTS ON ANCHOR BAR AND LOCK-OFF ANCHOR BAR IN ACCORDANCE WITH CURRENT "RECOMMENDATIONS FOR PRESTRESSED ROCK AND SOIL ANCHORS" FROM THE POST-TENSIONING INSTITUTE.
10. EXCAVATE TO THE FINAL EXCAVATION ELEVATION AS REQUIRED.

ZONE	MAXIMUM EXPOSED HEIGHT OF WALL, H	SOLDIER PILE PROPERTIES			SOIL ANCHORS				
		ELASTIC SECTION MODULUS	MOMENT OF INERTIA	MIN. EMBEDMENT DEPTH, D	MAXIMUM SPACING, S	SIZE	UNBONDED LENGTH	MINIMUM BONDED LENGTH ✱	TOTAL LENGTH MINIMUM
	(FT)	(IN^3)	(IN^4)	(FT)	(FT)	(IN)	(FT)	(FT)	(FT)
"A"	12	295	3220	38	5	NOT USED			
"B"	12	172	1220	25	5	1¼	15	55	70
"C"	15	172	1220	25	5	1¼	15	55	70
"D"	10	172	1220	25	5	1¼	15	55	70

SERVICE ANCHOR FORCE = 70.0 kips, ANCHOR DRILLED HOLE DIAMETER IS 6".
✱ MINIMUM ANCHOR BONDED LENGTH INCLUDES A MINIMUM BONDED LENGTH IN UNWEATHERED ROCK OF 7 FEET.

WALL DATA TABLE

PROJECT NO. P-5201
WAKE COUNTY
STATION: P.O.C. 3583+33.86 -M1-
P.O.T. 22+56.93 -L-
SHEET 1 OF 3

AECOM
AECOM TECHNICAL SERVICES, INC.
701 CORPORATE CENTER DRIVE, SUITE 475
RALEIGH, NC 27607
(919) 854-6200 www.aecom.com
AECOM License No. F-0342

NORTH CAROLINA PROFESSIONAL ENGINEER SEAL 10656 9/16/13 L. MARK PEARSON

STATE OF NORTH CAROLINA
DEPARTMENT OF TRANSPORTATION
RALEIGH

TEMPORARY RAILROAD SHORING DETAILS

REVISIONS						SHEET NO.
NO.	BY:	DATE:	NO.	BY:	DATE:	S-54
1			3			TOTAL SHEETS
2			4			56

DRAWN BY : JWH DATE : 01/13
CHECKED BY : JL DATE : 01/13

0422DEL_P19
DATE: 9/16/2013
TIME: 10:56:22 AM
USER: Lawanya
DGN: Q:\60125886\3\400_Technical_Information_Disc_Files\450_NCDOT Site Design Files\Structural\P-5201_SD_DSN_Wall_Set.dgn

0422DEL_P19

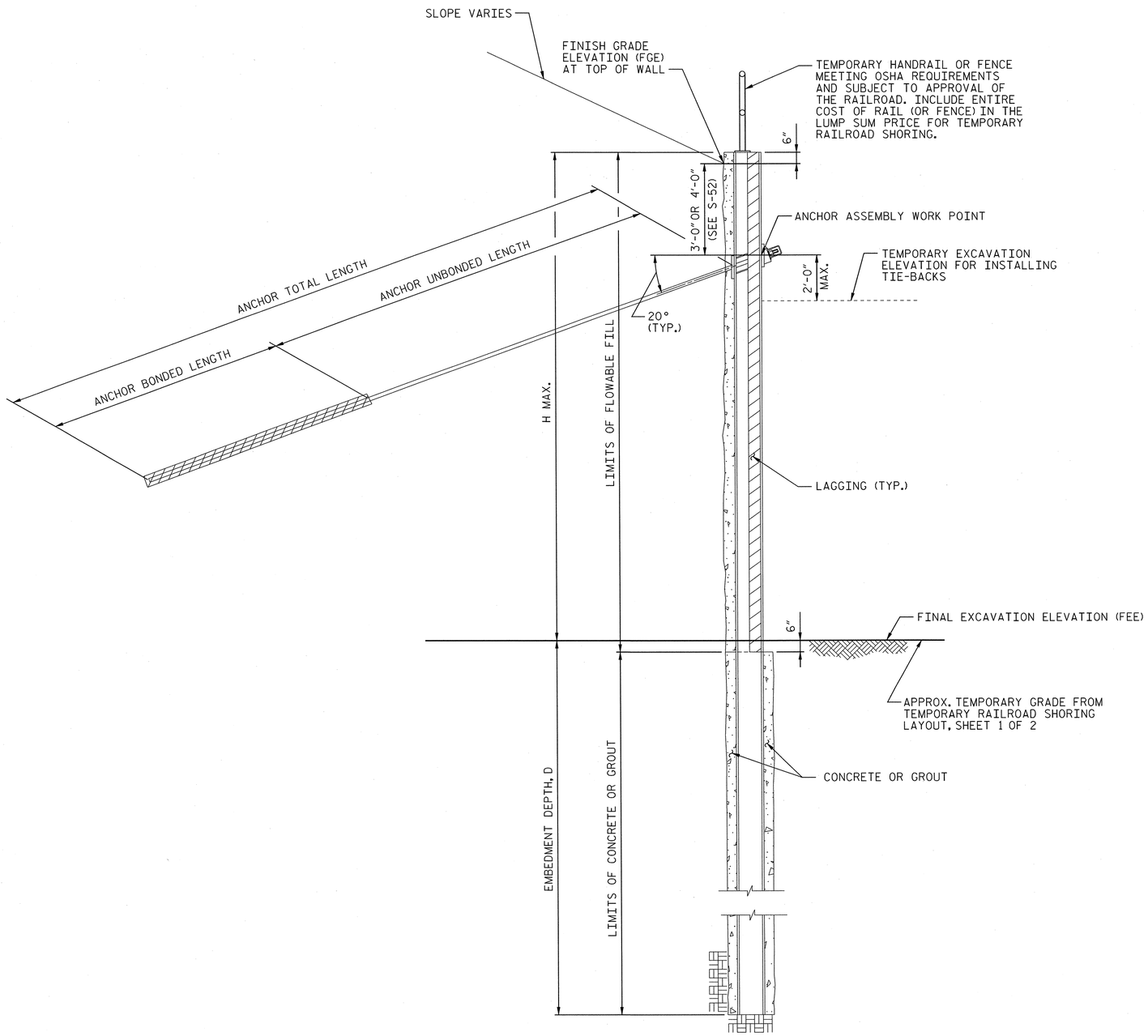

TYPICAL SECTION

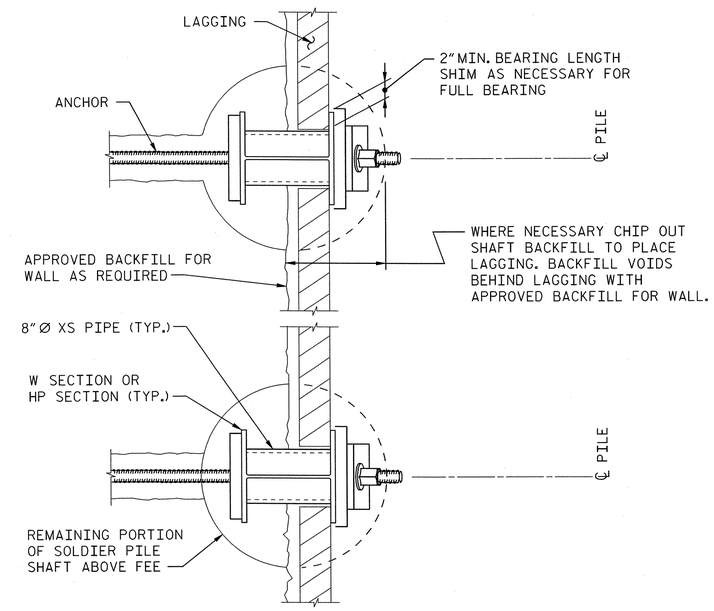

PLAN - SOLDIER PILE

PROJECT NO. P-5201

WAKE **COUNTY**

STATION: P.O.C. 3583+33.86 -M1-
P.O.T. 22+56.93 -L-

SHEET 2 OF 3

AECOM
AECOM TECHNICAL SERVICES, INC.
701 CORPORATE CENTER DRIVE, SUITE 475
RALEIGH, NC 27607
(919) 854-6200 www.aecom.com
AECOM License No. F-0342

NORTH CAROLINA PROFESSIONAL SEAL ENGINEER MARK PEARSON 20656 9/13/13

STATE OF NORTH CAROLINA
DEPARTMENT OF TRANSPORTATION
RALEIGH

TEMPORARY RAILROAD SHORING

DETAILS

REVISIONS								SHEET NO.
NO.	BY:	DATE:	NO.	BY:	DATE:			S-55
1			3					TOTAL SHEETS
2			4					56

DRAWN BY : JWH DATE : 05/13
CHECKED BY : JL DATE : 05/13

DATE: 9/12/2013
TIME: 4:06:44 PM

USER: pd0967
DGN: 0422023680Jv400_Technical_Information_Disc_Files\450_NCDOT StdTechDesignFiles\Structures\P-5201_50_DSN_Wall_Sect 02.dgn

0422DEL_P19

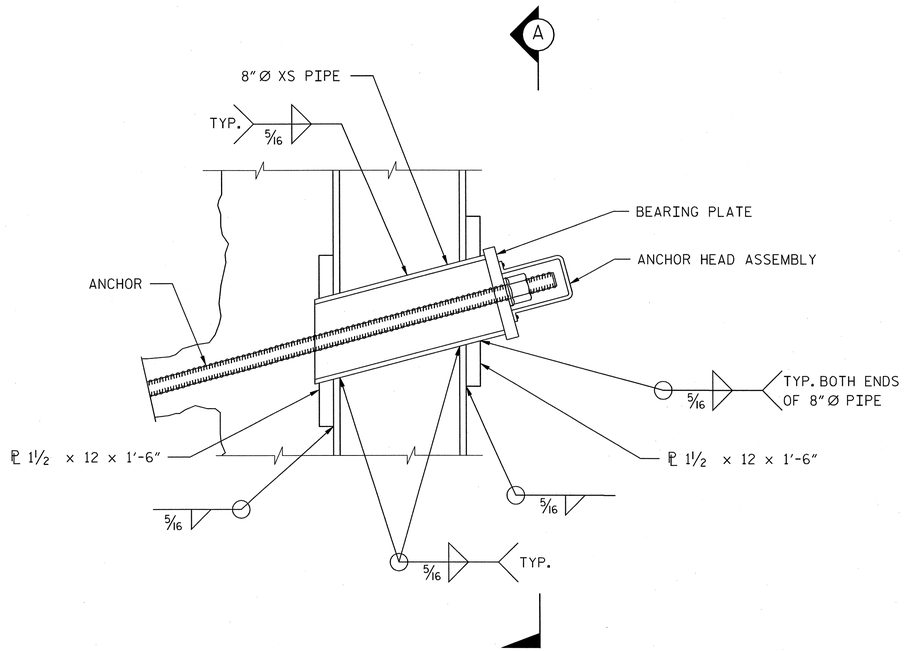

ELEVATION - SOLDIER PILE
WITH P.G.A. THRU WEB

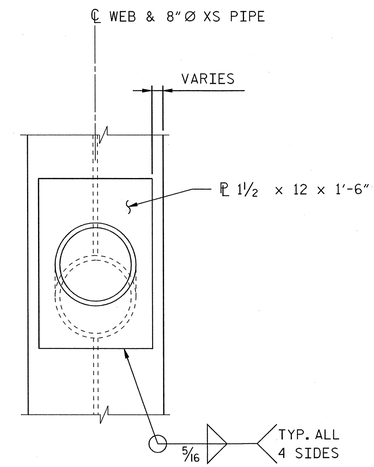

VIEW A-A

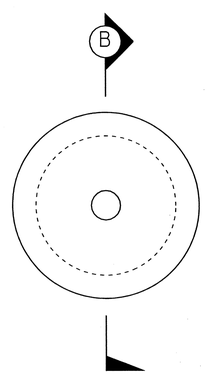

BEARING PLATE

BEARING PLATE SHALL BE DESIGNED BY THE CONTRACTOR AND SUBMITTED TO THE ENGINEER FOR APPROVAL IN ACCORDANCE WITH THE STANDARD SPECIFICATIONS.

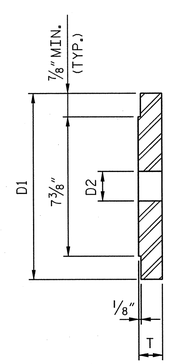

SECTION B-B

PROJECT NO. P-5201

WAKE COUNTY

STATION: P.O.C. 3583+33.86 -M1-
P.O.T. 22+56.93 -L-

SHEET 3 OF 3

AECOM
AECOM TECHNICAL SERVICES, INC.
701 CORPORATE CENTER DRIVE, SUITE 475
RALEIGH, NC 27607
(919) 854-6200 www.aecom.com
AECOM License No. F-0342

NORTH CAROLINA PROFESSIONAL ENGINEER SEAL 0656 MARK PEARSON 9/13/13

STATE OF NORTH CAROLINA
DEPARTMENT OF TRANSPORTATION
RALEIGH

TEMPORARY RAILROAD SHORING

DETAILS

REVISIONS								SHEET NO.
NO.	BY:	DATE:	NO.	BY:	DATE:			S-56
1			3					TOTAL SHEETS
2			4					56

DRAWN BY : MTB DATE : 05/13
CHECKED BY : JL DATE : 05/13

DATE: 9/12/2013
TIME: 4:01:25 PM

USER: pa0d07
DGN: Q:\60239803\400_Technical_Information_Disc_Files\450_NCDOT Std Tech Design Files\Structures\P-5201_SD_DSN_Well_Set 03.dgn

0422DEL_P19

DGN

0 2.5 5	PROJ. REFERENCE NO.	SHEET NO.
	P-5201	SX-1

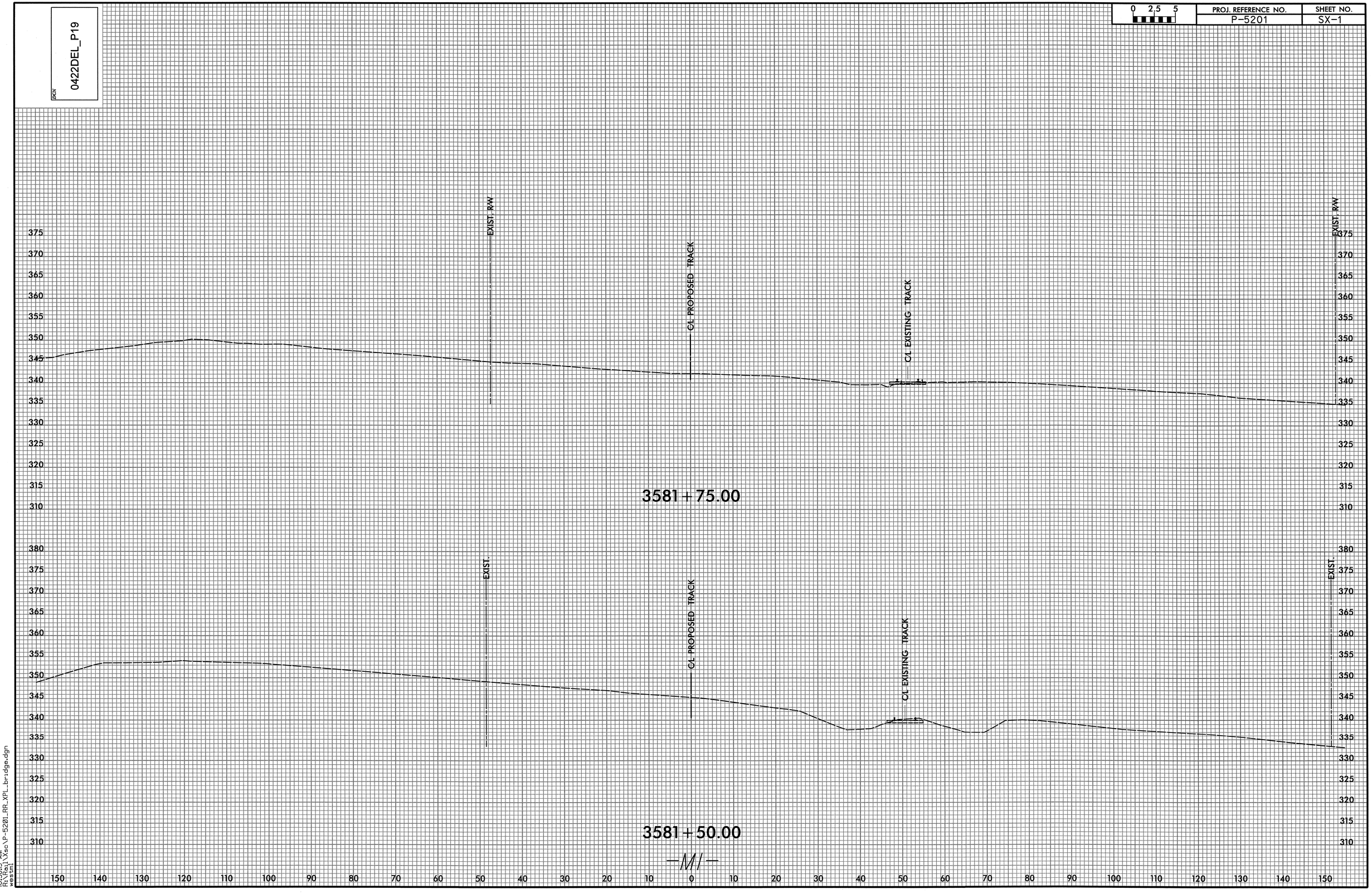

10:38:45 AM
R:\Rail\Misc\P-5201_RR_XPL_bridge.dgn
westml

0 2.5 5	PROJ. REFERENCE NO.	SHEET NO.
	P-5201	SX-2

PGN 0422DEL_P19

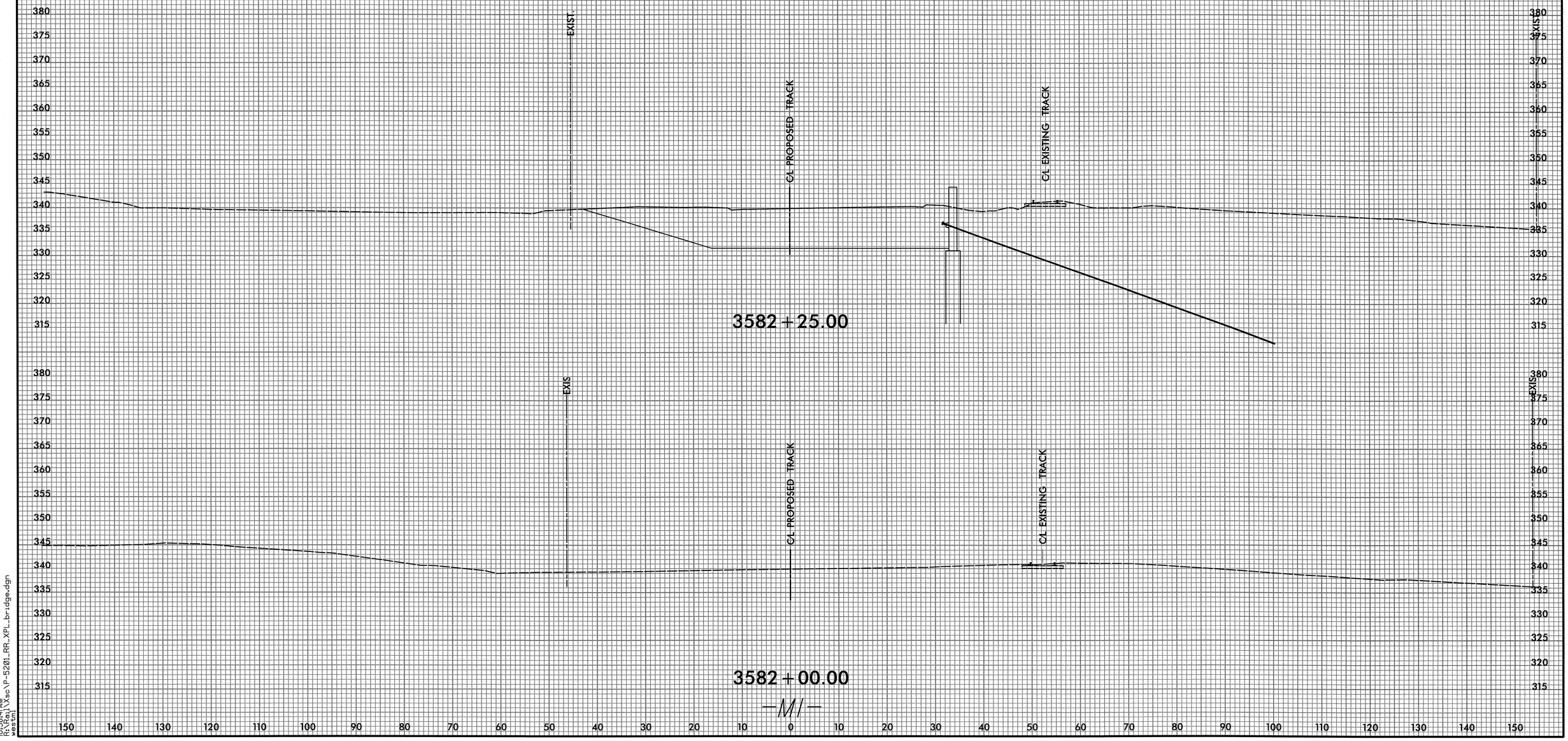

10:38:41 AM
R:\Rail\Xsc\P-5201_RR_XPL_bridge.dgn
westml

0422DEL_P19

DGN

0 2.5 5	PROJ. REFERENCE NO.	SHEET NO.
	P-5201	SX-3

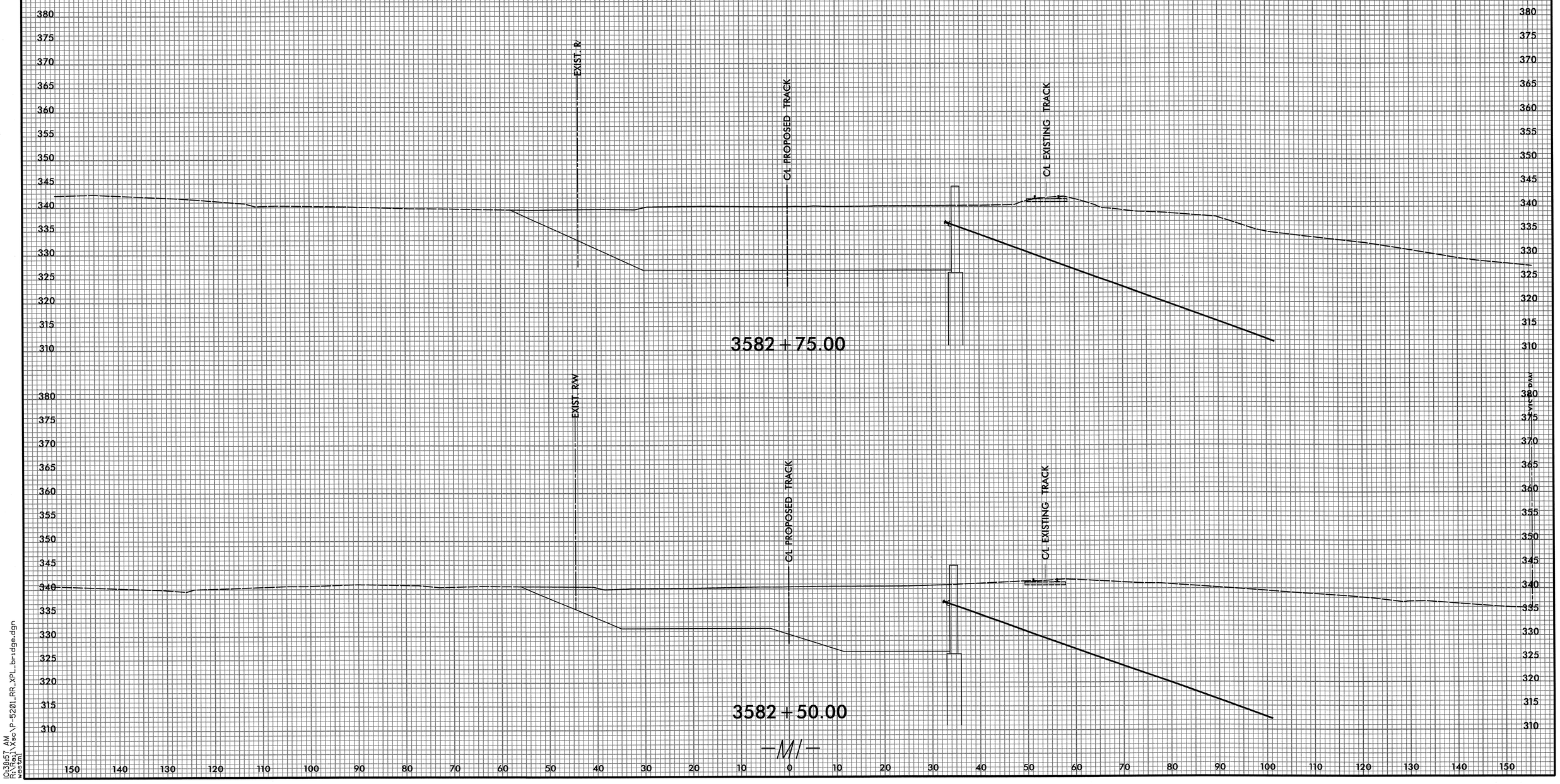

10:38:57 AM
R:\Rail\Rs\P-5201_RR_XPL_bridge.dgn
westm

0 2.5 5	PROJ. REFERENCE NO.	SHEET NO.
	P-5201	SX-4

DGN 0422DEL_P19

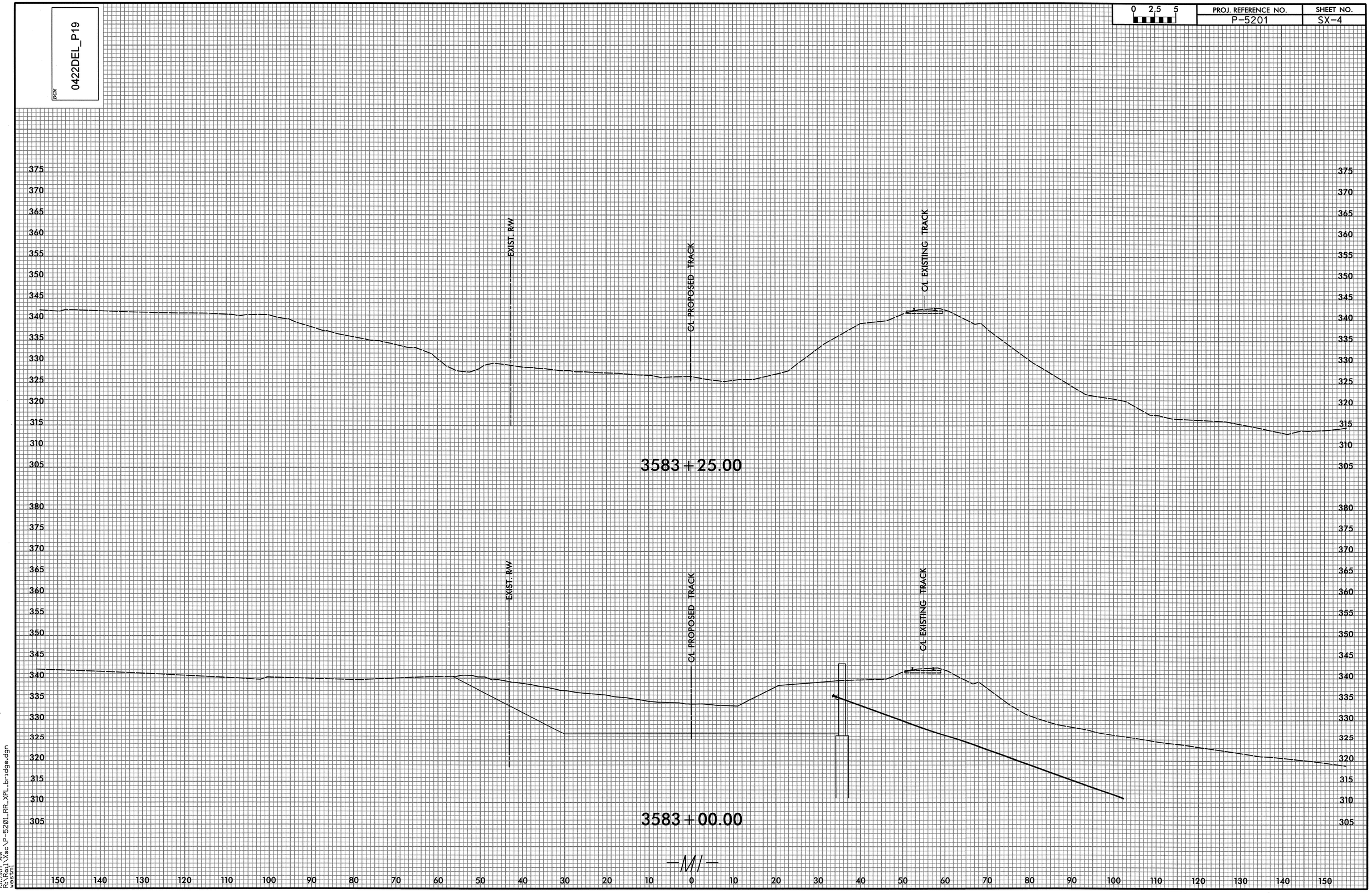

—M/—

10:39:17 AM
R:\Proj\Xsc\P-5201_RR_XPL_bridge.dgn
westml

0 2.5 5	PROJ. REFERENCE NO.	SHEET NO.
	P-5201	SX-5

DGN 0422DEL_P19

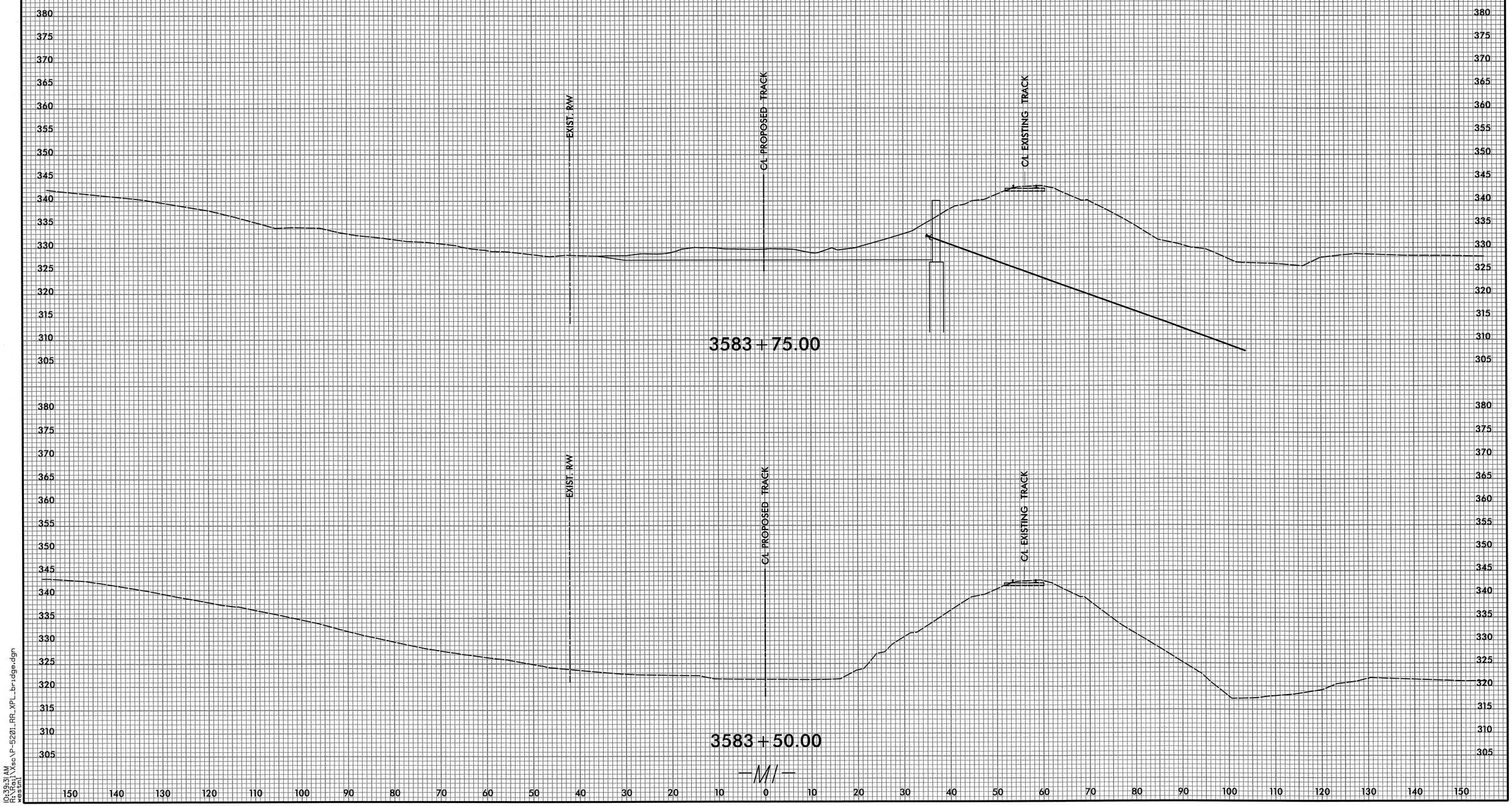

10:39:31 AM
R:\3921\Wsc\P-5201_RR_XPL_bridge.dgn
westm

0 2.5 5	PROJ. REFERENCE NO.	SHEET NO.
	P-5201	SX-6

0422DEL_P19

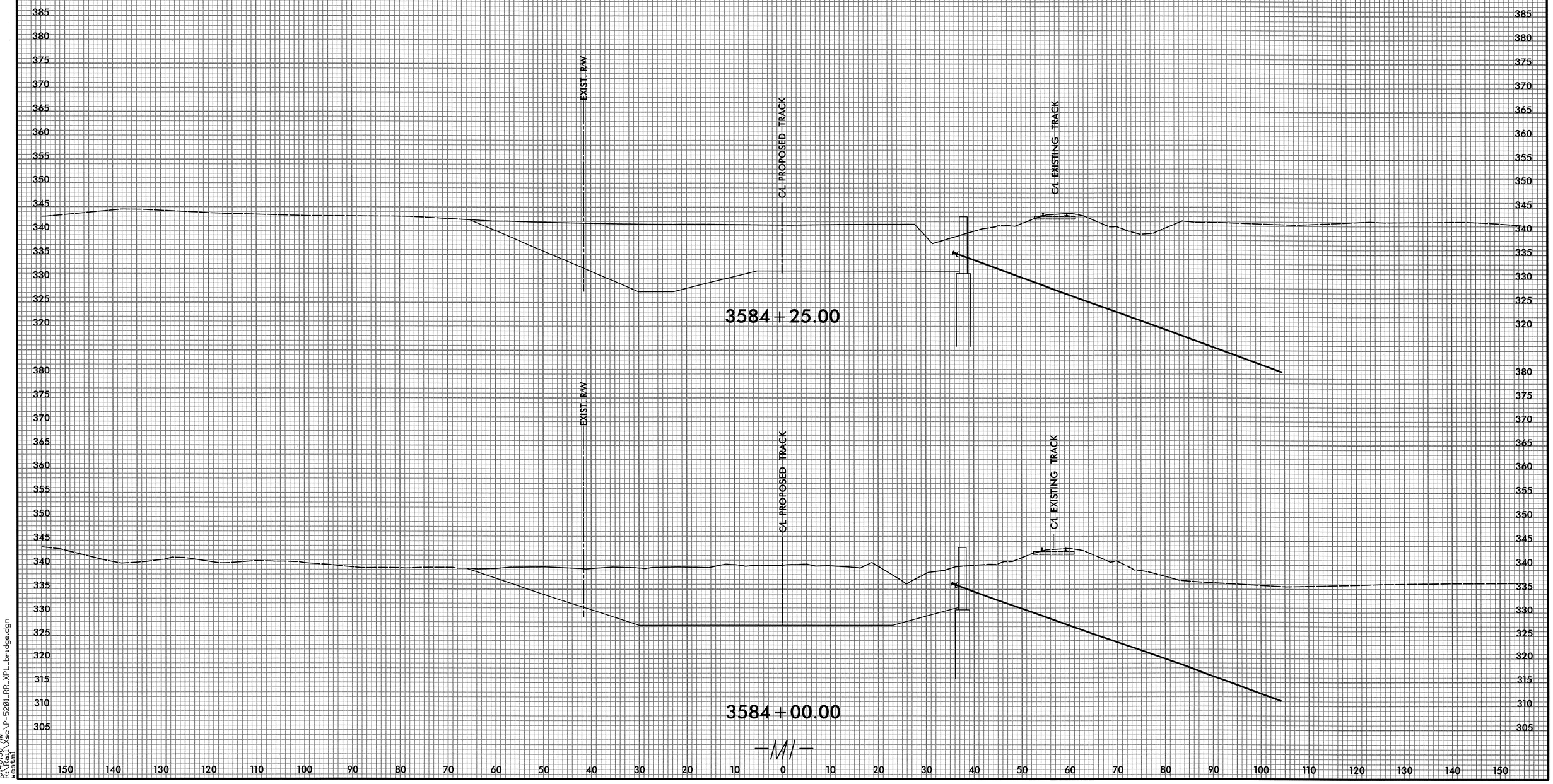

10:40:38 AM
R:\Rail\Esc\P-5201_RR_XPL_bridge.dgn
westml

0422DEL_P19

DGN

0 2.5 5	PROJ. REFERENCE NO.	SHEET NO.
	P-5201	SX-7

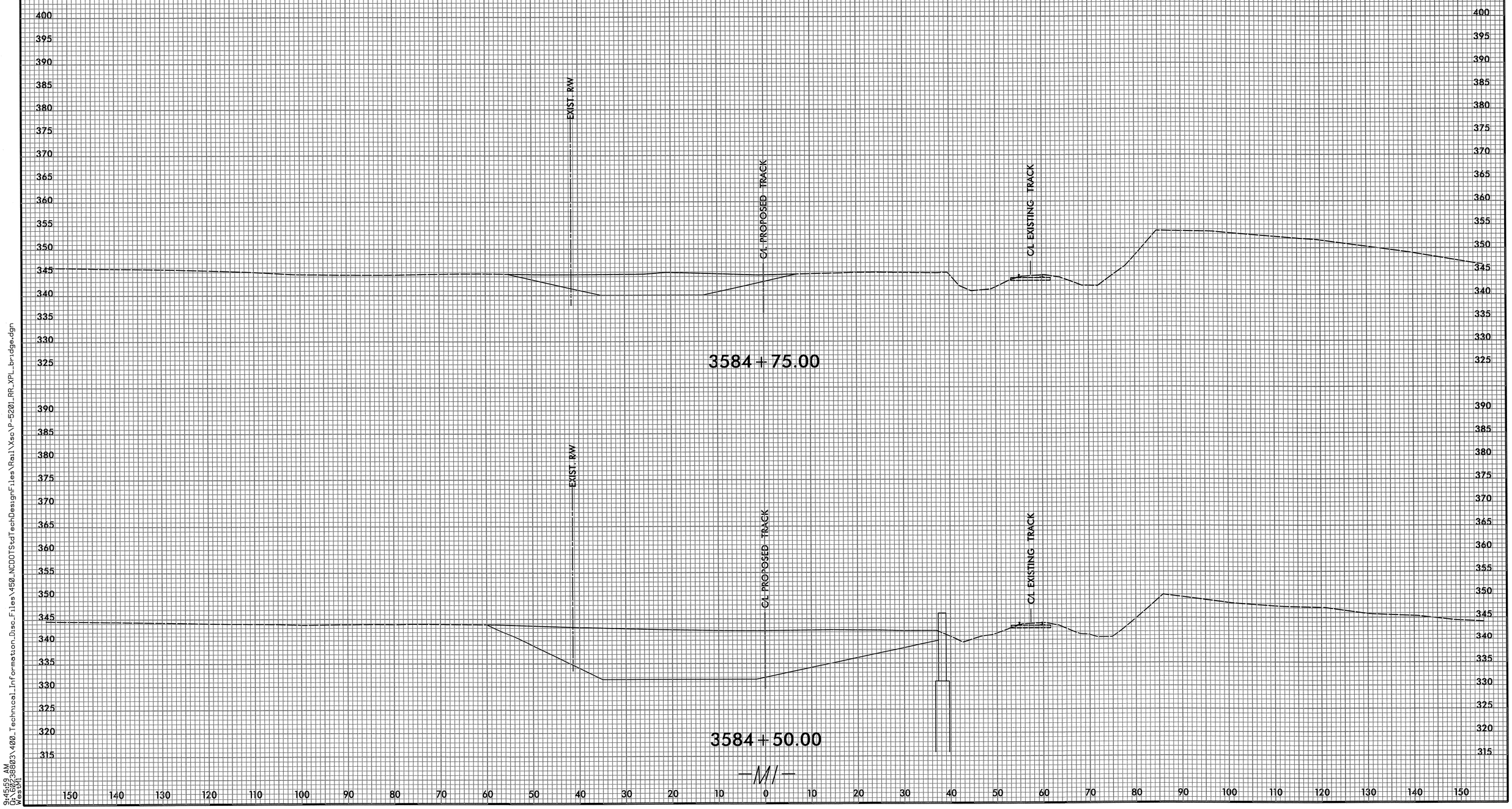

9:45:52 AM
Oct 15, 2008
Westwi

q:\450_NCDOTStdTechDesignFiles\Rail\Xso\P-5201_RR_XPL_bridge.dgn
\400_Technical_Information_Disc_Files\

0422DEL_P19

0 2.5 5	PROJ. REFERENCE NO.	SHEET NO.
	P-5201	SX-8

10:43:10 AM
R:\Rail\Xsc\P-5201_RR_XPL_bridge.dgn
westml

0422DEL_P19

DGN

GEOTECHNICAL ENGINEER

NORTH CAROLINA PROFESSIONAL SEAL 20140 ENGINEER DONALD C. DEWEY

SIGNATURE 9/17/2013 DATE

ENGINEER

SIGNATURE DATE

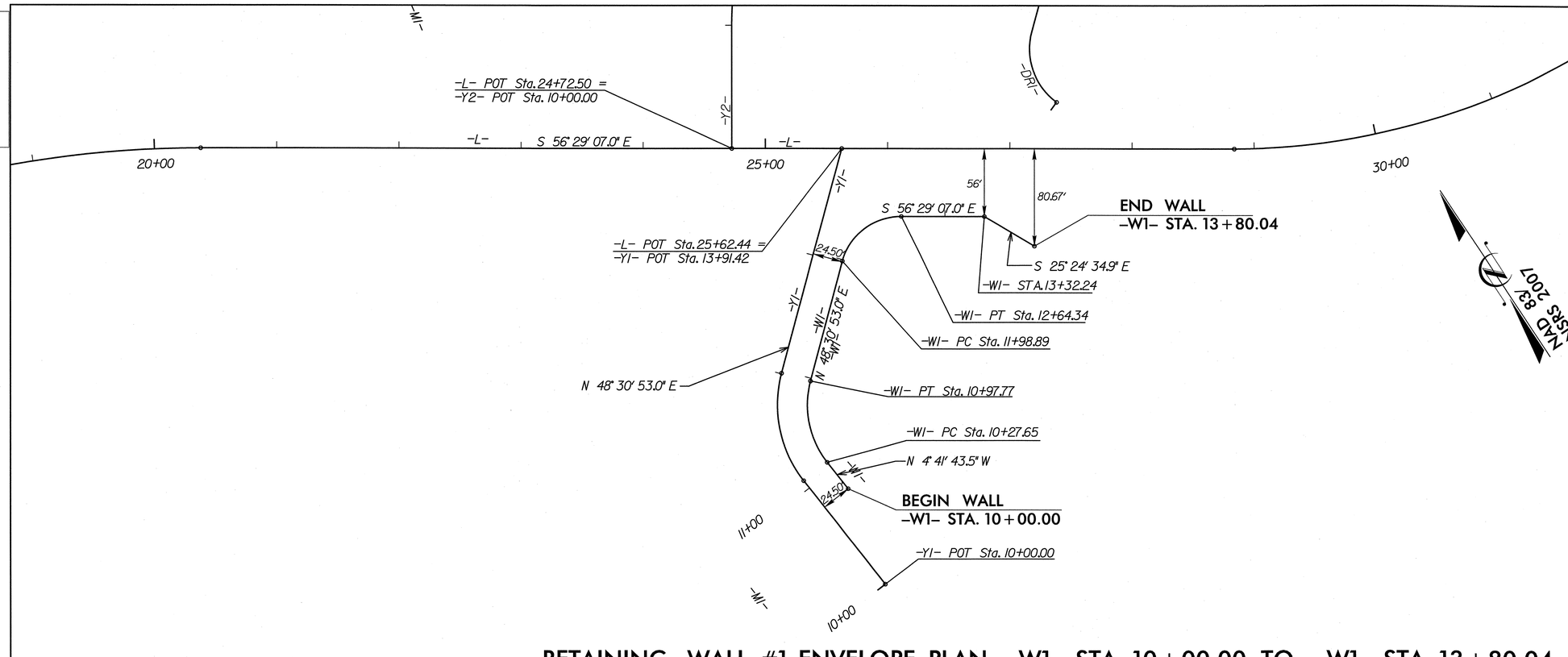

RETAINING WALL #1 ENVELOPE PLAN -W1- STA 10+00.00 TO -W1- STA. 13+80.04

RETAINING WALL #1 ENVELOPE PROFILE -W1- STA 10+00.00 TO -W1- STA. 13+80.04

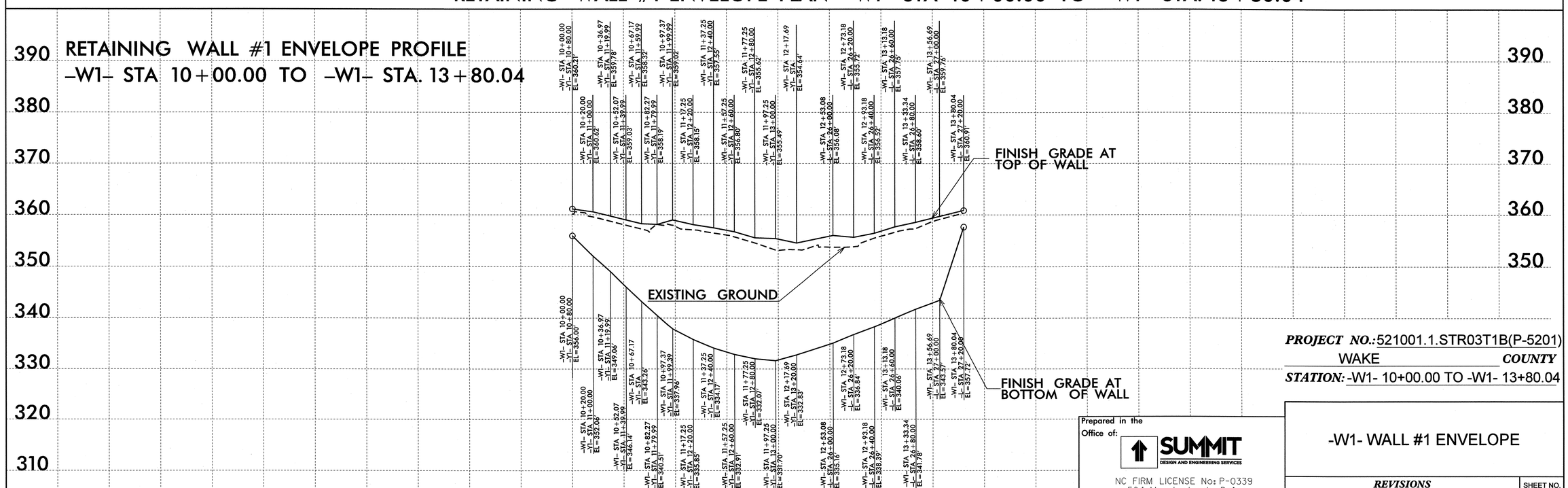

PROJECT NO.: 521001.1.STR03T1B(P-5201)

WAKE COUNTY

STATION: -W1- 10+00.00 TO -W1- 13+80.04

Prepared in the Office of:

SUMMIT DESIGN AND ENGINEERING SERVICES

NC FIRM LICENSE No: P-0339
504 Meadowlands Drive
Hillsborough, NC 27278
(919) 732-3883 - (919) 732-6676 (FAX)

-W1- WALL #1 ENVELOPE

REVISIONS						SHEET NO.
NO.	BY	DATE	NO.	BY	DATE	W-1
1	-	-	3	-	-	TOTAL SHEETS
2	-	-	4	-	-	2

PREPARED BY: - DATE: -

REVIEWED BY: - DATE: -

DGN 0422DEL_P19

GEOTECHNICAL ENGINEER	ENGINEER
NORTH CAROLINA PROFESSIONAL SEAL 20140 ENGINEER DONALD C. DEWEY — SIGNATURE: Don Davey — DATE: 9/17/2013	SIGNATURE — DATE

NOTE(S):

1. **SEE ROADWAY PLANS FOR LOCATION OF PROPOSED PARKING LOT DRAINAGE SYSTEM, CURB AND GUTTER, AND GUARDRAIL.**

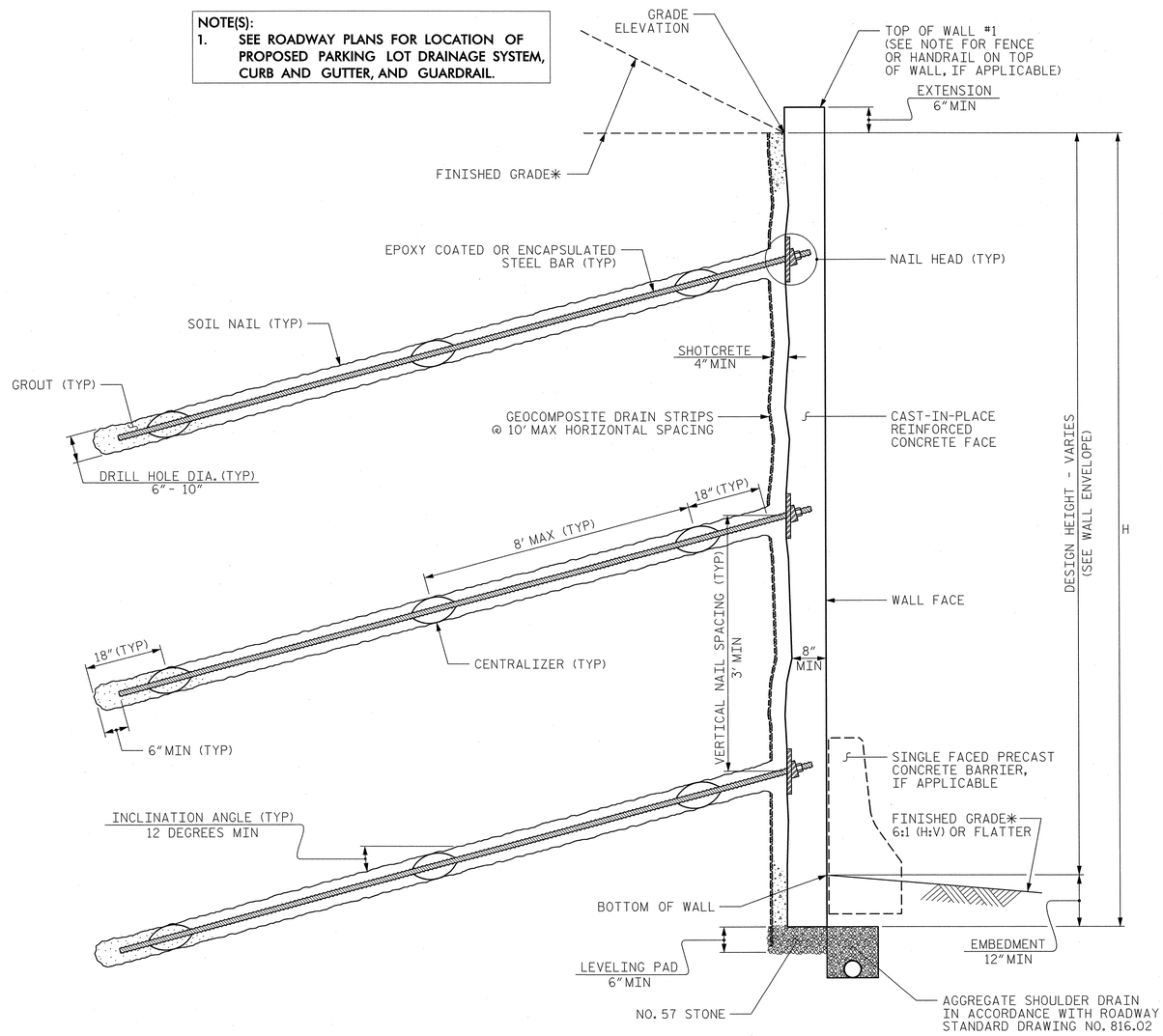

SOIL NAIL WALL - TYPICAL SECTION

*SEE ROADWAY PLANS FOR FINISHED GRADE AND DITCH DETAILS.

NOTES:

FOR SOIL NAIL RETAINING WALLS, SEE SOIL NAIL RETAINING WALLS PROVISION.

FOR STEEL BEAM GUARDRAIL, SEE ROADWAY PLANS AND SECTION 862 OF THE STANDARD SPECIFICATIONS.

FOR SINGLE FACED PRECAST CONCRETE BARRIER, SEE ROADWAY PLANS AND SECTION 857 OF THE STANDARD SPECIFICATIONS.

A FENCE OR HANDRAIL IS REQUIRED ON TOP OF RETAINING WALL NO. 1. SEE ROADWAY PLANS FOR FENCE OR HANDRAIL ATTACHMENT DETAILS.

BEFORE BEGINNING SOIL NAIL WALL DESIGN FOR RETAINING WALL NO. 1, SURVEY WALL LOCATION AND SUBMIT A REVISED WALL PROFILE VIEW (WALL ENVELOPE) FOR REVIEW. DO NOT START WALL DESIGN OR CONSTRUCTION UNTIL THE REVISED WALL ENVELOPE IS ACCEPTED.

DESIGN RETAINING WALL NO. 1 FOR THE FOLLOWING:
1) H = DESIGN HEIGHT + EMBEDMENT
2) DESIGN LIFE = 75 YEARS
3) MINIMUM EMBEDMENT ELEVATION = 330 FT
4) IN-SITU ASSUMED MATERIAL PARAMETERS ABOVE ELEVATION 345 FT:
   UNIT WEIGHT, γ = 120 LB/CF
   FRICTION ANGLE, ϕ = 30 DEGREES
   COHESION, c = 0 LB/SF
5) IN-SITU ASSUMED MATERIAL PARAMETERS BELOW ELEVATION 345 FT
   UNIT WEIGHT, γ = 130 LB/CF
   FRICTION ANGLE, ϕ = 35 DEGREES
   COHESION, c = 1000 LB/S

"TEMPORARY SHORING" MAY BE REQUIRED FOR RETAINING WALL NO. 1 IN ACCORDANCE WITH THE TEMPORARY SHORING PROVISION. SEE ROADWAY, STRUCTURE or TRAFFIC CONTROL PLANS.

SOIL NAIL RETAINING WALL	6900	SQ. FT.
SOIL NAIL VERIFICATION TESTS	3	EA.
SOIL NAIL PROOF TESTS	30	EA.

PROJECT NO.: 521001.1.STR03T1B(P-5201)
WAKE ***COUNTY***
STATION: -W1- 10+00.00 TO -W1- 13+80.04

Prepared in the Office of:
SUMMIT DESIGN AND ENGINEERING SERVICES
NC FIRM LICENSE No: P-0339
504 Meadowlands Drive
Hillsborough, NC 27278
(919) 732-3883 - (919) 732-6676 (FAX)

STD CELL Wall_SoldierPile

SOIL NAIL WALL- TYPICAL & NOTES

DATE: 6-14-2013

SHEET NO. W-2
TOTAL SHEETS 2

STANDARD NOTES

DESIGN DATA:

SPECIFICATIONS	A.A.S.H.T.O. (CURRENT)
LIVE LOAD	SEE PLANS
IMPACT ALLOWANCE	SEE A.A.S.H.T.O.
STRESS IN EXTREME FIBER OF	
STRUCTURAL STEEL - AASHTO M270 GRADE 36	20,000 LBS. PER SQ. IN.
- AASHTO M270 GRADE 50W	27,000 LBS. PER SQ. IN.
- AASHTO M270 GRADE 50	27,000 LBS. PER SQ. IN.
REINFORCING STEEL IN TENSION	
GRADE 60	24,000 LBS. PER SQ. IN.
CONCRETE IN COMPRESSION	1,200 LBS. PER SQ. IN.
CONCRETE IN SHEAR	SEE A.A.S.H.T.O.
STRUCTURAL TIMBER - TREATED OR	
UNTREATED - EXTREME FIBER STRESS	1,800 LBS. PER SQ. IN.
COMPRESSION PERPENDICULAR TO GRAIN OF TIMBER	375 LBS. PER SQ. IN.
EQUIVALENT FLUID PRESSURE OF EARTH	30 LBS. PER CU. FT. (MINIMUM)

MATERIAL AND WORKMANSHIP:

EXCEPT AS MAY OTHERWISE BE SPECIFIED ON PLANS OR IN THE SPECIAL PROVISIONS, ALL MATERIAL AND WORKMANSHIP SHALL BE IN ACCORDANCE WITH THE 2012 "STANDARD SPECIFICATIONS FOR ROADS AND STRUCTURES" OF THE N. C. DEPARTMENT OF TRANSPORTATION.

STEEL SHEET PILING FOR PERMANENT OR TEMPORARY APPLICATIONS SHALL BE HOT ROLLED.

CONCRETE:

UNLESS OTHERWISE REQUIRED ON PLANS, CLASS A CONCRETE SHALL BE USED FOR ALL PORTIONS OF ALL STRUCTURES WITH THE EXCEPTION THAT: CLASS AA CONCRETE SHALL BE USED IN BRIDGE SUPERSTRUCTURES, ABUTMENT BACKWALLS, AND APPROACH SLABS; AND CLASS B CONCRETE SHALL BE USED FOR SLOPE PROTECTION AND RIP RAP.

CONCRETE CHAMFERS:

UNLESS OTHERWISE NOTED ON THE PLANS, ALL EXPOSED CORNERS ON STRUCTURES SHALL BE CHAMFERED 3/4" WITH THE FOLLOWING EXCEPTIONS: TOP CORNERS OF CURBS MAY BE ROUNDED TO 1-1/2" RADIUS WHICH IS BUILT INTO CURB FORMS; CORNERS OF TRANSVERSE FLOOR EXPANSION JOINTS SHALL BE ROUNDED WITH A 1/4" FINISHING TOOL UNLESS OTHERWISE REQUIRED ON PLANS; AND CORNERS OF EXPANSION JOINTS IN THE ROADWAY FACES AND TOPS OF CURBS AND SIDEWALKS SHALL BE ROUNDED TO A 1/4" RADIUS WITH A FINISHING STONE OR TOOL UNLESS OTHERWISE REQUIRED ON PLANS.

DOWELS:

DOWELS WHEN INDICATED ON PLANS AS FOR CULVERT EXTENSIONS, SHALL BE EMBEDDED AT LEAST 12" INTO THE OLD CONCRETE AND GROUTED INTO PLACE WITH 1:2 CEMENT MORTAR.

ALLOWANCE FOR DEAD LOAD DEFLECTION, SETTLEMENT, ETC. IN CASTING SUPERSTRUCTURES:

BRIDGES SHALL BE BUILT ON THE GRADE OR VERTICAL CURVE SHOWN ON PLANS. SLABS, CURBS AND PARAPETS SHALL CONFORM TO THE GRADE OR CURVE.

ALL DIMENSIONS WHICH ARE GIVEN IN SECTION AND ARE AFFECTED BY DEAD LOAD DEFLECTIONS ARE DIMENSIONS AT CENTER LINE OF BEARING UNLESS OTHERWISE NOTED ON PLANS. IN SETTING FORMS FOR STEEL BEAM BRIDGES AND PRESTRESSED CONCRETE GIRDER BRIDGES, ADJUSTMENTS SHALL BE MADE DUE TO THE DEAD LOAD DEFLECTIONS FOR THE ELEVATIONS SHOWN. WHERE BLOCKS ARE SHOWN OVER BEAMS FOR BUILDING UP TO THE SLAB, THE VERTICAL DIMENSIONS OF THE BLOCKS SHALL BE ADJUSTED BETWEEN BEARINGS TO COMPENSATE FOR DEAD LOAD DEFLECTIONS, VERTICAL CURVE ORDINATE, AND ACTUAL BEAM CAMBER. WHERE BOTTOM OF SLAB IS IN LINE WITH BOTTOM OF TOP FLANGES, DEPTH OF SLAB BETWEEN BEARINGS SHALL BE ADJUSTED TO COMPENSATE FOR DEAD LOAD DEFLECTION, VERTICAL CURVE ORDINATE, AND ACTUAL BEAM CAMBER.

IN SETTING FALSEWORK AND FORMS FOR REINFORCED CONCRETE SPANS, AN ALLOWANCE SHALL BE MADE FOR DEAD LOAD DEFLECTIONS, SETTLEMENT OF FALSEWORK, AND PERMANENT CAMBER WHICH SHALL BE PROVIDED FOR IN ADDITION TO THE ELEVATIONS SHOWN. AFTER REMOVAL OF THE FALSEWORK, THE FINISHED STRUCTURES SHALL CONFORM TO THE PROFILE AND ELEVATIONS SHOWN ON THE PLANS AND CONSTRUCTION ELEVATIONS FURNISHED BY THE ENGINEER.

DETAILED DRAWINGS FOR FALSEWORK OR FORMS FOR BRIDGE SUPERSTRUCTURE AND ANY STRUCTURE OR PARTS OF A STRUCTURE AS NOTED ON THE PLANS SHALL BE SUBMITTED TO THE ENGINEER FOR APPROVAL BEFORE CONSTRUCTION OF THE FALSEWORK OR FORMS IS STARTED.

REINFORCING STEEL:

ALL REINFORCING STEEL SHALL BE DEFORMED. DIMENSIONS RELATIVE TO PLACEMENT OF REINFORCING ARE TO CENTERS OF BARS UNLESS OTHERWISE INDICATED IN THE PLANS. DIMENSIONS ON BAR DETAILS ARE TO CENTERS OF BARS OR ARE OUT TO OUT AS INDICATED ON PLANS.

WIRE BAR SUPPORTS SHALL BE PROVIDED FOR REINFORCING STEEL WHERE INDICATED ON THE PLANS. WHEN BAR SUPPORT PIECES ARE PLACED IN CONTINUOUS LINES, THEY SHALL BE SO PLACED THAT THE ENDS OF THE SUPPORTING WIRES SHALL BE LAPPED TO LOCK LEGS ON ADJOINING PIECES.

STRUCTURAL STEEL:

AT THE CONTRACTOR'S OPTION, HE MAY SUBSTITUTE 7/8" Ø SHEAR STUDS FOR THE 3/4" Ø STUDS SPECIFIED ON THE PLANS. THIS SUBSTITUTION SHALL BE MADE AT THE RATE OF 3 - 7/8" Ø STUDS FOR 4 - 3/4" Ø STUDS, AND STUD SPACING CHANGES SHALL BE MADE AS NECESSARY TO PROVIDE THE SAME EQUIVALENT NUMBER OF 7/8" Ø STUDS ALONG THE BEAM AS SHOWN FOR 3/4" Ø STUDS BASED ON THE RATIO OF 3 - 7/8" Ø STUDS FOR 4 - 3/4" Ø STUDS. STUDS OF THE LENGTH SPECIFIED ON THE PLANS MUST BE PROVIDED. THE MAXIMUM SPACING SHALL BE 2'-0".

EXCEPT AT THE INTERIOR SUPPORTS OF CONTINUOUS BEAMS WHERE THE COVER PLATE IS IN CONTACT WITH BEARING PLATE, THE CONTRACTOR MAY, AT HIS OPTION, SUBSTITUTE FOR THE COVER PLATES DESIGNATED ON THE PLANS COVER PLATES OF THE EQUIVALENT AREA PROVIDED THESE PLATES ARE AT LEAST 5/16" IN THICKNESS AND DO NOT EXCEED A WIDTH EQUAL TO THE FLANGE WIDTH LESS 2" OR A THICKNESS EQUAL TO 2 TIMES THE FLANGE THICKNESS. THE SIZE OF FILLET WELDS SHALL CONFORM TO THE REQUIREMENTS OF THE CURRENT ANSI/AASHTO/AWS "BRIDGE WELDING CODE". ELECTROSLAG WELDING WILL NOT BE PERMITTED.

WITH THE SOLE EXCEPTION OF EDGES AT SURFACES WHICH BEAR ON OTHER SURFACES, ALL SHARP EDGES AND ENDS OF SHAPES AND PLATES SHALL BE SLIGHTLY ROUNDED BY SUITABLE MEANS TO A RADIUS OF APPROXIMATELY 1/16 INCH OR EQUIVALENT FLAT SURFACE AT A SUITABLE ANGLE PRIOR TO PAINTING, GALVANIZING, OR METALLIZING.

HANDRAILS AND POSTS:

METAL STANDARDS AND FACES OF THE CONCRETE END POSTS FOR THE METAL RAIL SHALL BE SET NORMAL TO THE GRADE OF THE CURB, UNLESS OTHERWISE SHOWN ON PLANS. THE METAL RAIL AND TOPS OF CONCRETE POSTS USED WITH THE ALUMINUM RAIL SHALL BE BUILT PARALLEL TO THE GRADE OF THE CURB.

METAL HANDRAILS SHALL BE IN ACCORDANCE WITH THE PLANS. RAILS SHALL BE AS MANUFACTURED FOR BRIDGE RAILING. CASTINGS SHALL BE OF A UNIFORM APPEARANCE. FINS AND OTHER DEFORMATIONS RESULTING FROM CASTING OR OTHERWISE SHALL BE REMOVED IN A MANNER SO THAT A UNIFORM COLORING OF THE COMPLETED CASTING SHALL BE OBTAINED. CASTINGS WITH DISCOLORATIONS OR OF NON-UNIFORM COLORING WILL NOT BE ACCEPTED. CERTIFIED MILL REPORTS ARE REQUIRED FOR METAL RAILS AND POSTS.

SPECIAL NOTES:

GENERALLY, IN CASE OF DISCREPANCY, THIS STANDARD SHEET OF NOTES SHALL GOVERN OVER THE SPECIFICATIONS, BUT THE REMAINDER OF THE PLANS SHALL GOVERN OVER NOTES HEREON, AND SPECIAL PROVISIONS SHALL GOVERN OVER ALL. SEE SPECIFICATIONS ARTICLE 105-4.

ENGLISH

JANUARY, 1990