| STATE | STATE PROJECT REFERENCE NO. | SHEET NO. | TOTAL SHEETS |
|---|---|---|---|
| N.C. | R-2303D | | |

| STATE PROJ. NO. | F.A. PROJ. NO. | DESCRIPTION |
|---|---|---|
| 34416.1.1 | | PE |
| 34416.2.5 | | R/W, UTIL. |
| 34416.3.6 | | CONST. |

STATE OF NORTH CAROLINA
DIVISION OF HIGHWAYS

# SAMPSON COUNTY

**LOCATION: NC 24 FROM SR 1303 (MITCHELL LOOP ROAD) TO US 421-701 / SR 1296 (SUNSET AVENUE)**

**TYPE OF WORK: GRADING, DRAINAGE, PAVING, WIDENING, SIGNALS STRUCTURES, AND CULVERTS**

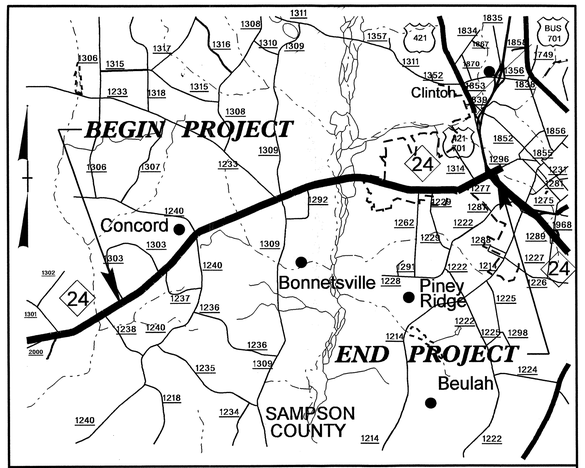


VICINITY MAP

NAD 83/95

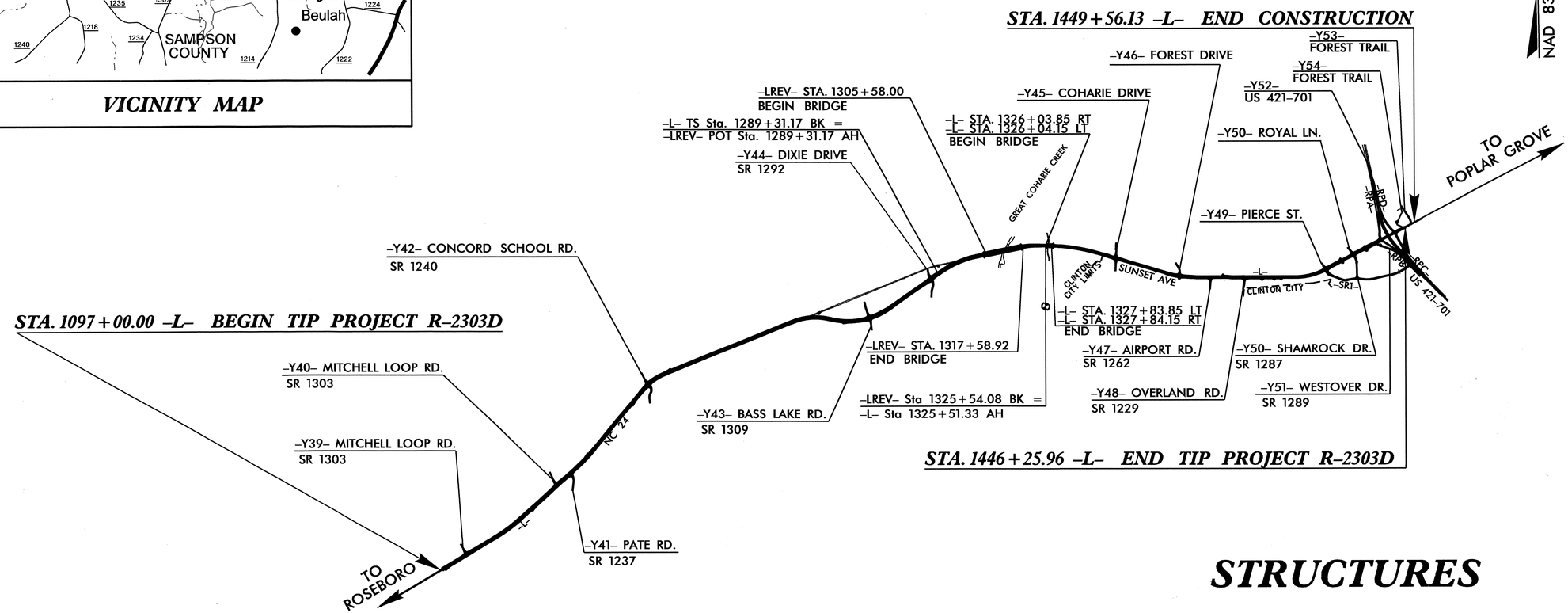


## STRUCTURES

TIP PROJECT: R-2303D

CONTRACT: C203464

| DESIGN DATA | |
|---|---|
| ADT 2013 = | 20240 |
| ADT 2033 = | 41840 |
| DHV = | 11 % |
| D ≐ | 55 % |
| T = | 8 % * |
| V (SHOULDER) = | 60 MPH |
| V (CURB & GUTTER) = | 50 MPH |
| * (TTST 5% + DUAL 3%) | |
| FUNC. CLASS = | ARTERIAL |
| STATEWIDE TIER | |

**PROJECT LENGTH**

| | | |
|---|---|---|
| LENGTH ROADWAY TIP PROJECT R-2303D | = | 6.47 MILES |
| LENGTH STRUCTURES TIP PROJECT R-2303D | = | 0.26 MILES |
| TOTAL LENGTH TIP PROJECT R-2303D | = | 6.73 MILES |

Prepared for the Office of:
**DIVISION OF HIGHWAYS**
1000 Birch Ridge Dr., Raleigh NC, 27610

2012 STANDARD SPECIFICATIONS

LETTING DATE:
November 19, 2013

DIVISION OF HIGHWAYS
STATE OF NORTH CAROLINA

26-JUN-2013 06:52
$$$$$$$$$$$$$$$$DGN$$$$$$$$$$$$$$$$
dcrutcher

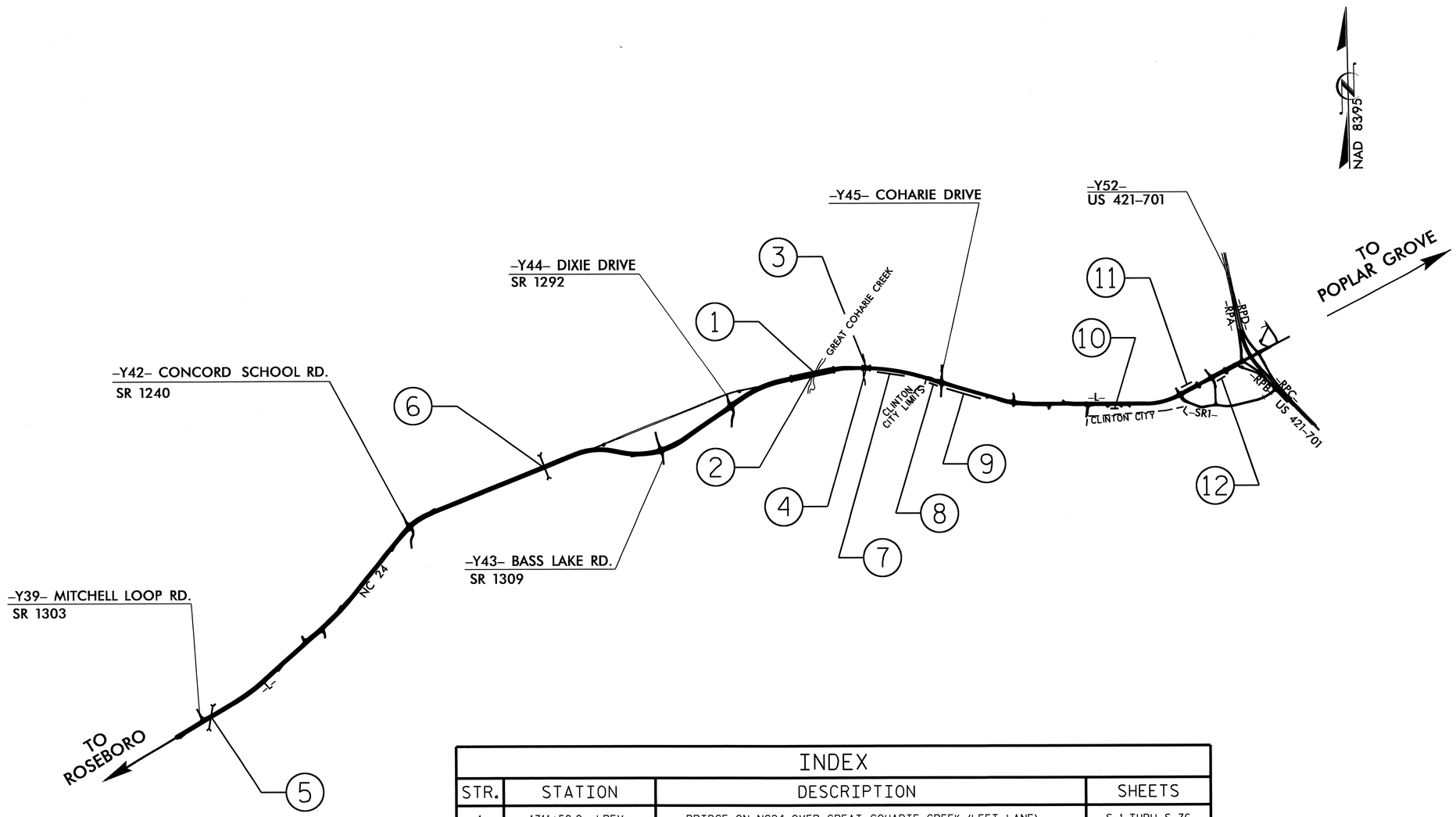


## INDEX

| STR. | STATION | DESCRIPTION | SHEETS |
|---|---|---|---|
| 1 | 1311+58.0 -LREV- | BRIDGE ON NC24 OVER GREAT COHARIE CREEK (LEFT LANE) | S-1 THRU S-76 |
| 2 | 1311+58.0 -LREV- | BRIDGE ON NC24 OVER GREAT COHARIE CREEK (RIGHT LANE) | S-77 THRU S-152 |
| 3 | 1326+94.00 -L- | BRIDGE ON NC24 OVER GREAT COHARIE CREEK OVERFLOW (LEFT LANE) | S-153 THRU S-185 |
| 4 | 1326+94.00 -L- | BRIDGE ON NC24 OVER GREAT COHARIE CREEK OVERFLOW (RIGHT LANE) | S-186 THRU S-218 |
| 5 | 1109+25.00 -L- | SINGLE 7 X 7 CONCRETE BOX CULVERT | C-1 THRU C-7 |
| 6 | 1224+46.00 -L- | SINGLE 9 X 9 CONCRETE BOX CULVERT | C-8 THRU C-14 |
| 7 | 1331+20.00 -L- | WALL #1 - SOLDIER PILE RETAINING WALL | W-1 THRU W-7 |
| 8 | 1341+25.00 -L- | WALL #2 - SOLDIER PILE RETAINING WALL | |
| 9 | 1350+25.00 -L- | WALL #3 - CIP GRAVITY/SOLDIER PILE RETAINING WALL | |
| 10 | 1397+10.00 -L- | WALL #4 - SEGMENTAL GRAVITY RETAINING WALL | |
| 11 | 1420+90.00 -L- | WALL #5 - SEGMENTAL GRAVITY RETAINING WALL | |
| 12 | 1428+75.00 -L- | WALL #6 - SEGMENTAL GRAVITY RETAINING WALL | |

PROJECT NO. R-2303D
SAMPSON COUNTY
STATION:

STATE OF NORTH CAROLINA
DEPARTMENT OF TRANSPORTATION
RALEIGH

INDEX

| REVISIONS | | | | | |
|---|---|---|---|---|---|
| NO. | BY: | DATE: | NO. | BY: | DATE: |
| 1 | | | 3 | | |
| 2 | | | 4 | | |

DRAWN BY : W.D. CRUTCHER DATE : 6-25-13
CHECKED BY : D.S. STUTTS DATE : 6-25-13

26-JUN-2013 06:54
S:\PEF\Darrell\r2303d_title_index.dgn

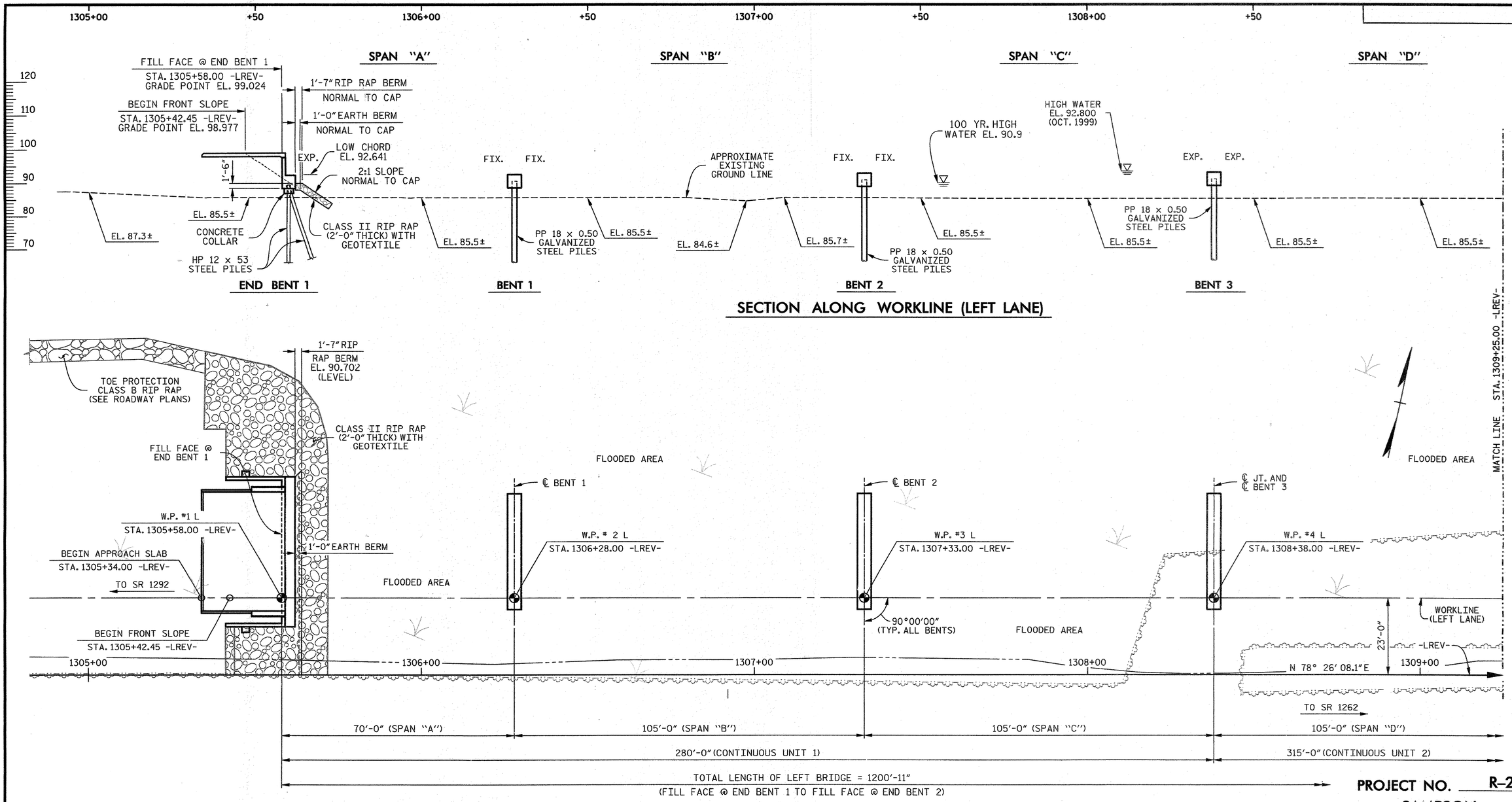


## SECTION ALONG WORKLINE (LEFT LANE)




## PLAN

PILES NOT SHOWN IN PLAN VIEW.

**PROJECT NO.** R-2303D

**SAMPSON** COUNTY

**STATION:** 1311+58.00 -LREV-

SHEET 1 OF 7 REPLACES BRIDGE No. 42

### HYDRAULIC DATA

| | TOTAL (MAIN STREAM) |
|---|---|
| DESIGN DISCHARGE | = 6720 (5610) C.F.S. |
| FREQUENCY OF DESIGN FLOOD | = 50 YEARS |
| DESIGN HIGH WATER ELEVATION | = 89.200 |
| DRAINAGE AREA | = 158 SQ. MI. |
| BASIC DISCHARGE (Q100) | = 8215 (6990) C.F.S. |
| BASIC HIGH WATER ELEVATION | = 90.900 |

### OVERTOPPING FLOOD DATA

| | |
|---|---|
| OVERTOPPING DISCHARGE | = N/A |
| FREQUENCY OF OVERTOPPING FLOOD | = + 500 YEARS |
| OVERTOPPING FLOOD ELEVATION | = 95.300 |

I HEREBY CERTIFY THESE PLANS ARE THE AS-BUILT PLANS.

CDM Smith

Camp Dresser & McKee
421 Fayetteville Street, Suite 1303
Raleigh, NC 27604
NC COA No. F-1255

DRAWN BY : K.E. LOFTON DATE : 10-12
CHECKED BY : T.M. HARRIS DATE : 11-12
DESIGN ENGINEER : P.R. HOLSHOUSER DATE : 1-13

DWG. No. S01-001

NORTH CAROLINA PROFESSIONAL SEAL 20668 ENGINEER PAUL R. HOLSHOUSER 2/24/2013

STATE OF NORTH CAROLINA
DEPARTMENT OF TRANSPORTATION
RALEIGH

GENERAL DRAWING

BRIDGE OVER GREAT COHARIE CREEK ON NC 24 (-LREV-) BETWEEN SR 1292 AND SR 1262

(LEFT LANE)

| REVISIONS | | | | | | SHEET No. |
|---|---|---|---|---|---|---|
| No. | BY: | DATE: | No. | BY: | DATE: | S-1 |
| 1 | | | 3 | | | TOTAL SHEETS |
| 2 | | | 4 | | | 218 |

FILE: r:\rcobb\r2303d\structures\PLANS\Str_1\R2303D_SD_Str1_gd1.dgn
DATE: 2/21/2013 10:10:54 AM

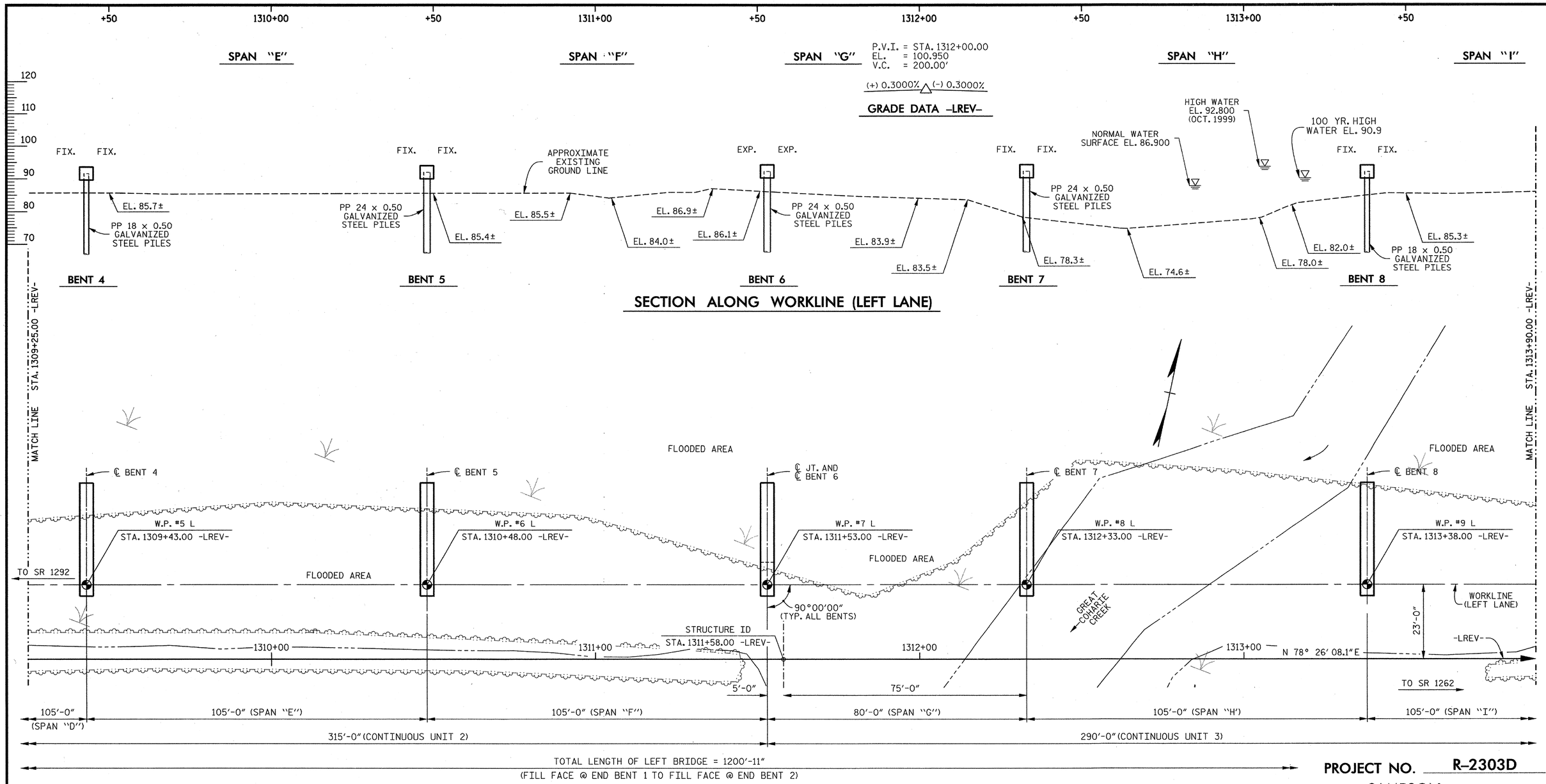


## PLAN

PILES NOT SHOWN IN PLAN VIEW.

PROJECT NO. R-2303D

SAMPSON COUNTY

STATION: 1311+58.00 -LREV-

SHEET 2 OF 7

STATE OF NORTH CAROLINA
DEPARTMENT OF TRANSPORTATION
RALEIGH

GENERAL DRAWING

BRIDGE OVER GREAT COHARIE CREEK ON NC 24 (-LREV-) BETWEEN SR 1292 AND SR 1262

(LEFT LANE)

CDM Smith

Camp Dresser & McKee
421 Fayetteville Street, Suite 1303
Raleigh, NC 27604
NC COA No. F-1255

| | | | |
|---|---|---|---|
| DRAWN BY : | K.E. LOFTON | DATE : | 10-12 |
| CHECKED BY : | T.M. HARRIS | DATE : | 11-12 |
| DESIGN ENGINEER : | P.R. HOLSHOUSER | DATE : | 1-13 |

DWG. No. S01-002

NORTH CAROLINA PROFESSIONAL SEAL 20668 ENGINEER PAUL R. HOLSHOUSER 2/08/2013

| REVISIONS | | | | | | SHEET No. |
|---|---|---|---|---|---|---|
| No. | BY: | DATE: | No. | BY: | DATE: | S-2 |
| 1 | | | 3 | | | TOTAL SHEETS |
| 2 | | | 4 | | | 218 |

FILE: r:\cadd\r2303d\structures\PLANS\Str_1\R2303D_SD_Str1_gd2.dgn
DATE: 12/30/2012 9:07:09 PM

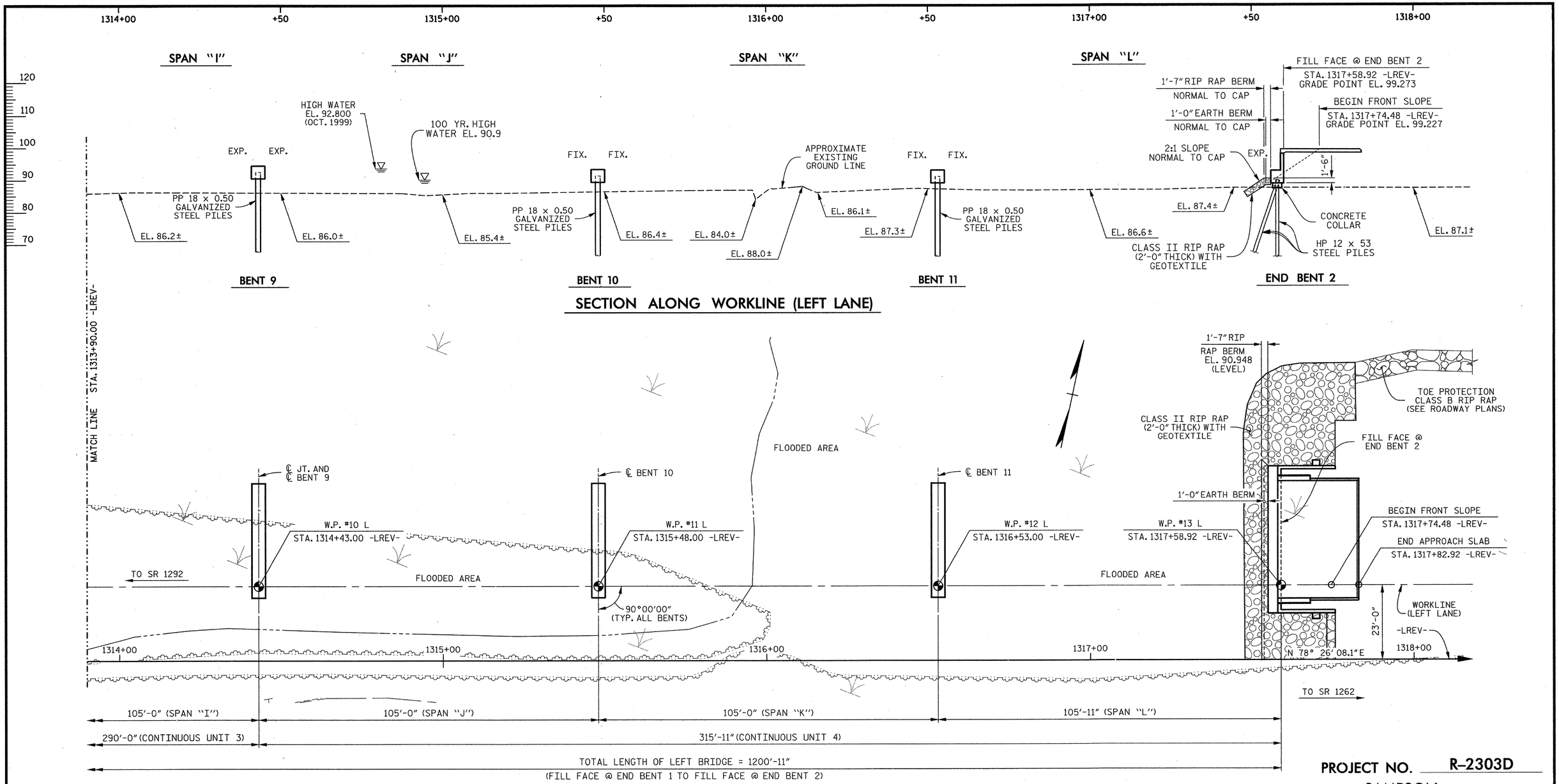


## PLAN

PILES NOT SHOWN IN PLAN VIEW.

PROJECT NO. R-2303D

SAMPSON COUNTY

STATION: 1311+58.00 -LREV-

SHEET 3 OF 7

STATE OF NORTH CAROLINA
DEPARTMENT OF TRANSPORTATION
RALEIGH

GENERAL DRAWING

BRIDGE OVER GREAT COHARIE CREEK ON NC 24 (-LREV-) BETWEEN SR 1292 AND SR 1262

(LEFT LANE)

CDM Smith

Camp Dresser & McKee
421 Fayetteville Street, Suite 1303
Raleigh, NC 27604
NC COA No. F-1255

DRAWN BY : K.E. LOFTON DATE : 10-12
CHECKED BY : T.M. HARRIS DATE : 11-12
DESIGN ENGINEER : P.R. HOLSHOUSER DATE : 1-13

DWG. No. S01-003

NORTH CAROLINA PROFESSIONAL SEAL 20668 ENGINEER PAUL R. HOLSHOUSER 2/08/2013

| REVISIONS | | | | | | | SHEET No. |
|---|---|---|---|---|---|---|---|
| No. | BY: | DATE: | No. | BY: | DATE: | | S-3 |
| 1 | | | 3 | | | | TOTAL SHEETS |
| 2 | | | 4 | | | | 218 |

FILE: r:\nodot\r2303d\structures\PLANS\Sr_1\R2303D_SD_Sr1_pg03.dgn
DATE: 1/9/2013 11:44:36 AM

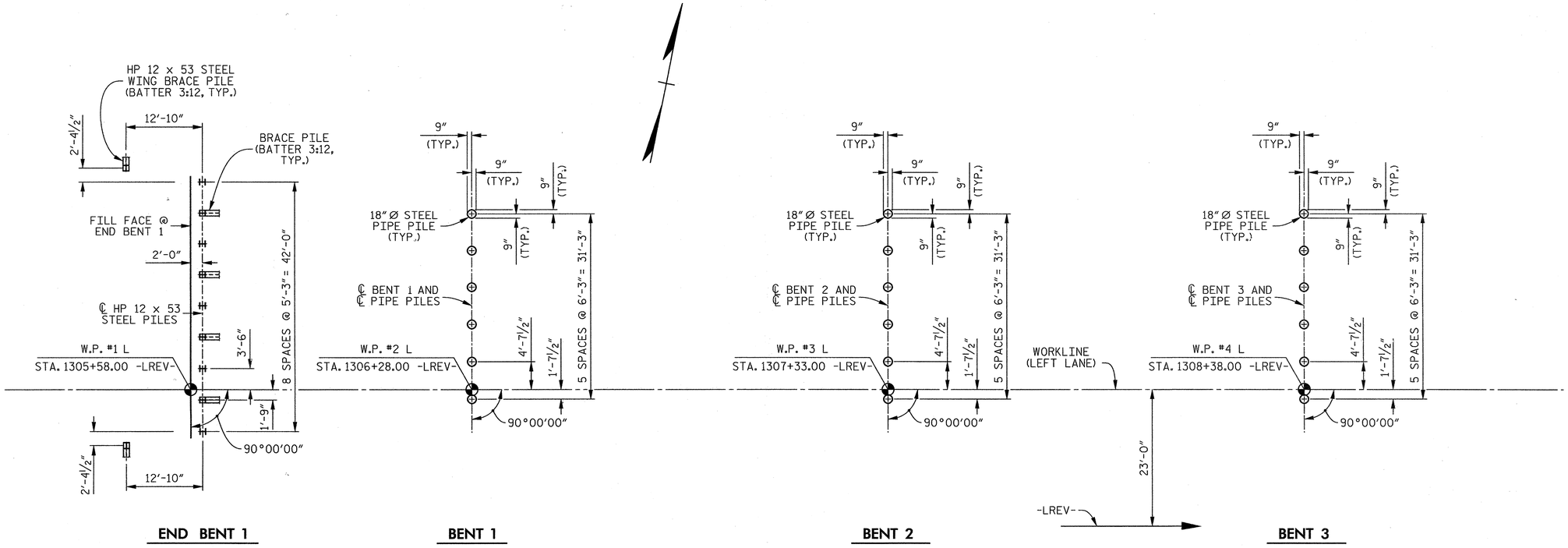


## FOUNDATION LAYOUT

## NOTES

OBSERVE A 1 MONTH WAITING PERIOD AFTER CONSTRUCTING THE EMBANKMENT TO WITHIN 2 FEET OF FINISHED GRADE BEFORE BEGINNING END BENT CONSTRUCTION AT END BENT 1 AND END BENT 2.

FOR PILES, SEE SECTION 450 OF THE STANDARD SPECIFICATIONS.

PILES AT END BENT 1 AND END BENT 2 ARE DESIGNED FOR A FACTORED RESISTANCE OF 110 TONS PER PILE.

END BENT PILES ARE HP 12 x 53 STEEL PILES.

DRIVE PILES AT END BENT 1 AND END BENT 2 TO A REQUIRED DRIVING RESISTANCE OF 185 TONS PER PILE.

PILES AT BENT 1 THRU BENT 11 ARE DESIGNED FOR A FACTORED RESISTANCE OF 260, 275, 275, 275, 275, 260, 255, 275, 275, 275 AND 275 TONS, RESPECTIVELY PER PILE.

DRIVE PILES AT BENT 1 THRU BENT 11 TO A REQUIRED DRIVING RESISTANCE OF 350, 375, 375, 375, 375, 355, 375, 380, 380, 380 AND 380 TONS, RESPECTIVELY PER PILE.

INSTALL PILES AT BENT 1 THRU BENT 11 TO A TIP ELEVATION NO HIGHER THAN 54.0, 54.0, 54.0, 54.0, 54.0, 52.0, 52.0, 54.0, 54.0, 54.0 AND 54.0 FT, RESPECTIVELY.

THE SCOUR CRITICAL ELEVATIONS FOR BENT 1 THRU BENT 11 ARE ELEVATION 77.0, 77.0, 77.0, 77.0, 77.0, 77.0, 72.0, 77.0, 77.0, 77.0 AND 77.0 FT, RESPECTIVELY. SCOUR CRITICAL ELEVATIONS ARE USED TO MONITOR POSSIBLE SCOUR PROBLEMS DURING THE LIFE OF THE STRUCTURE.

IT HAS BEEN ESTIMATED THAT A HAMMER WITH AN EQUIVALENT RATED ENERGY IN THE RANGE OF 90-190 FT-KIPS PER BLOW WILL BE REQUIRED TO DRIVE PILES AT BENT 1 THRU BENT 11. THIS ESTIMATED ENERGY RANGE DOES NOT RELEASE THE CONTRACTOR FROM PROVIDING DRIVING EQUIPMENT IN ACCORDANCE WITH SUBARTICLE 450-3(D)(2) OF THE STANDARD SPECIFICATIONS.

TESTING THE PRODUCTION PILES WITH THE PDA DURING DRIVING, RESTRIKING OR REDRIVING IS REQUIRED. FOR PDA TESTING, SEE SECTION 450 OF THE STANDARD SPECIFICATIONS AND FOR PILE DRIVING CRITERIA.

PIPE PILE PLATES MAY BE REQUIRED FOR STEEL PIPE PILES AT BENT 1 THRU BENT 11. THE ENGINEER WILL DETERMINE THE NEED FOR PIPE PILES PLATES AFTER DRIVING TEST PILES OR A FEW INITIAL PRODUCTION PILES. USE PIPE PILE PLATES WITH A DIAMETER EQUAL TO THE PIPE PILE DIAMETER. FOR STEEL PIPE PILE PLATES, SEE SECTION 450 OF THE STANDARD SPECIFICATIONS.

PILE DIMENSIONS ARE SHOWN TO THE CENTERLINE OF THE PILES AT THE BOTTOM OF THE END BENT CAPS.

PROJECT NO. R-2303D
SAMPSON COUNTY
STATION: 1311+58.00 -LREV-

SHEET 4 OF 7

STATE OF NORTH CAROLINA
DEPARTMENT OF TRANSPORTATION
RALEIGH

GENERAL DRAWING

BRIDGE OVER GREAT COHARIE CREEK ON NC 24 (-LREV-) BETWEEN SR 1292 AND SR 1262

(LEFT LANE)

CDM Smith
Camp Dresser & McKee
421 Fayetteville Street, Suite 1303
Raleigh, NC 27604
NC COA No. F-1255

DRAWN BY : K.E. LOFTON DATE : 10-12
CHECKED BY : T.M. HARRIS DATE : 11-12
DESIGN ENGINEER : P.R. HOLSHOUSER DATE : 1-13

DWG. No. S01-004

NORTH CAROLINA PROFESSIONAL SEAL 20668 ENGINEER PAUL R. HOLSHOUSER 12/24/2013

| REVISIONS | | | | | | | SHEET No. |
|---|---|---|---|---|---|---|---|
| No. | BY: | DATE: | No. | BY: | DATE: | | 8-4 |
| 1 | | | 3 | | | | TOTAL SHEETS |
| 2 | | | 4 | | | | 218 |

FILE: c:\cadd\23036\structures\PLANS\Sv_1\R2303D_S0_Sn1_Ft.dgn
DATE: 2/21/2013 10:10:57 AM

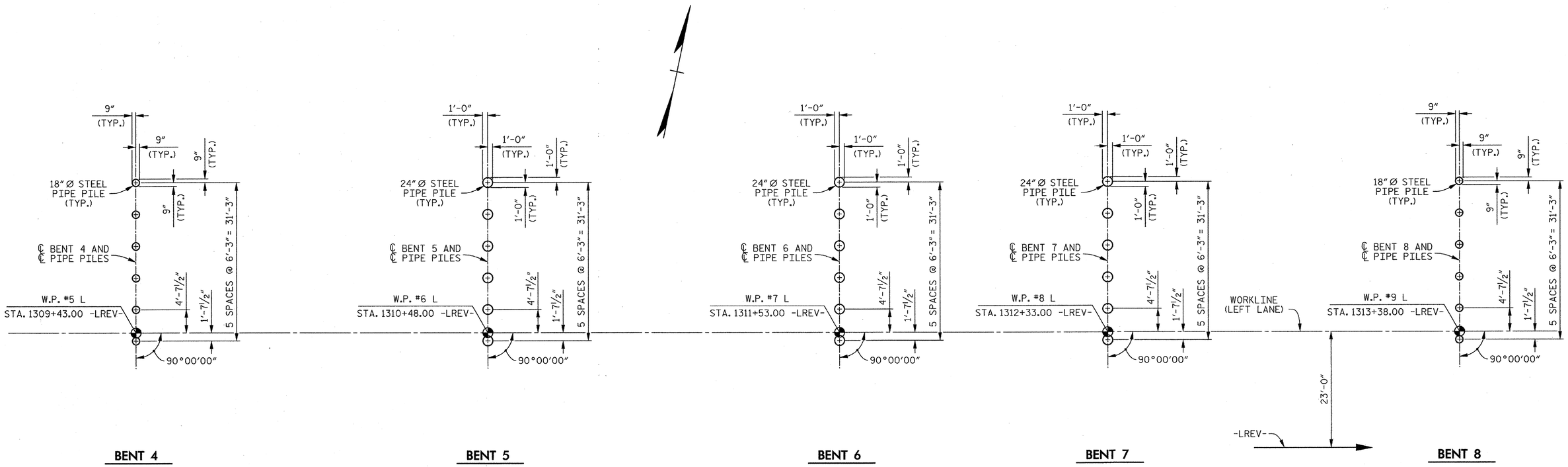


## FOUNDATION LAYOUT

### NOTES

FOR NOTES, SEE SHEET 4 OF 7.

PROJECT NO. R-2303D

SAMPSON COUNTY

STATION: 1311+58.00 -LREV-

SHEET 5 OF 7

STATE OF NORTH CAROLINA
DEPARTMENT OF TRANSPORTATION
RALEIGH

GENERAL DRAWING

BRIDGE OVER GREAT COHARIE CREEK ON NC 24 (-LREV-) BETWEEN SR 1292 AND SR 1262

(LEFT LANE)

CDM Smith
Camp Dresser & McKee
421 Fayetteville Street, Suite 1303
Raleigh, NC 27604
NC COA No. F-1255

| | | | |
|---|---|---|---|
| DRAWN BY : | K.E. LOFTON | DATE : | 10-12 |
| CHECKED BY : | T.M. HARRIS | DATE : | 11-12 |
| DESIGN ENGINEER : | P.R. HOLSHOUSER | DATE : | 1-13 |

DWG. No. S01-005

NORTH CAROLINA PROFESSIONAL SEAL 20668 ENGINEER PAUL R. HOLSHOUSER 2/08/2013

| REVISIONS | | | | | | SHEET No. |
|---|---|---|---|---|---|---|
| No. | BY: | DATE: | No. | BY: | DATE: | S-5 |
| 1 | | | 3 | | | TOTAL SHEETS |
| 2 | | | 4 | | | 218 |

FILE: r:\indot\r2303d\structures\PLANS\Str_1\R2303D_SD_Str1_fl2.dgn
DATE: 12/30/2012 9:07:26 PM

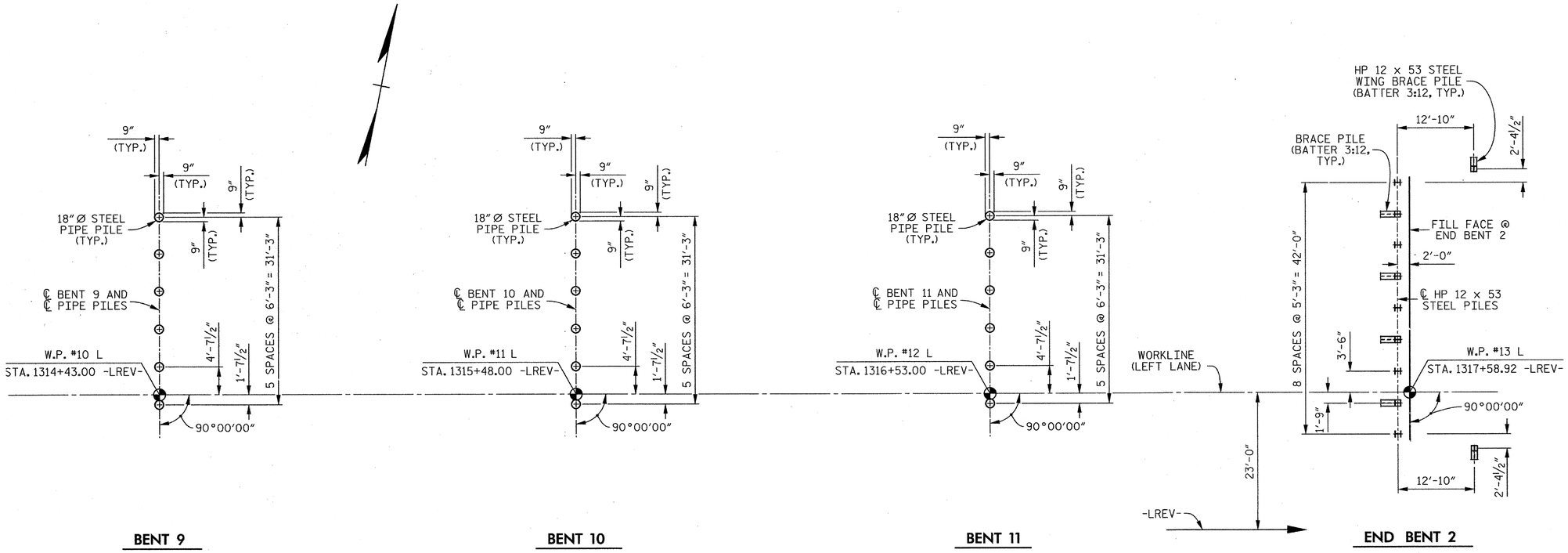


## FOUNDATION LAYOUT

**NOTES**

FOR NOTES, SEE SHEET 4 OF 7.

PROJECT NO. R-2303D

SAMPSON COUNTY

STATION: 1311+58.00 -LREV-

SHEET 6 OF 7

STATE OF NORTH CAROLINA
DEPARTMENT OF TRANSPORTATION
RALEIGH

GENERAL DRAWING

BRIDGE OVER GREAT COHARIE CREEK ON NC 24 (-LREV-) BETWEEN SR 1292 AND SR 1262

(LEFT LANE)

CDM Smith
Camp Dresser & McKee
421 Fayetteville Street, Suite 1303
Raleigh, NC 27604
NC COA No. F-1255

| | | | |
|---|---|---|---|
| DRAWN BY : | K.E. LOFTON | DATE : | 10-12 |
| CHECKED BY : | T.M. HARRIS | DATE : | 11-12 |
| DESIGN ENGINEER : | P.R. HOLSHOUSER | DATE : | 1-13 |

DWG. No. S01-006

NORTH CAROLINA PROFESSIONAL SEAL 20668 ENGINEER PAUL R. HOLSHOUSER
2/08/2013

| REVISIONS | | | | | | SHEET No. |
|---|---|---|---|---|---|---|
| No. | BY: | DATE: | No. | BY: | DATE: | S-6 |
| 1 | | | 3 | | | TOTAL SHEETS |
| 2 | | | 4 | | | 218 |

FILE: r:\nodal\r2303d\structures\PLANS\Str_1\R2303D_SD_Str1_R3.dgn
DATE: 12/30/2012 9:07:40 PM

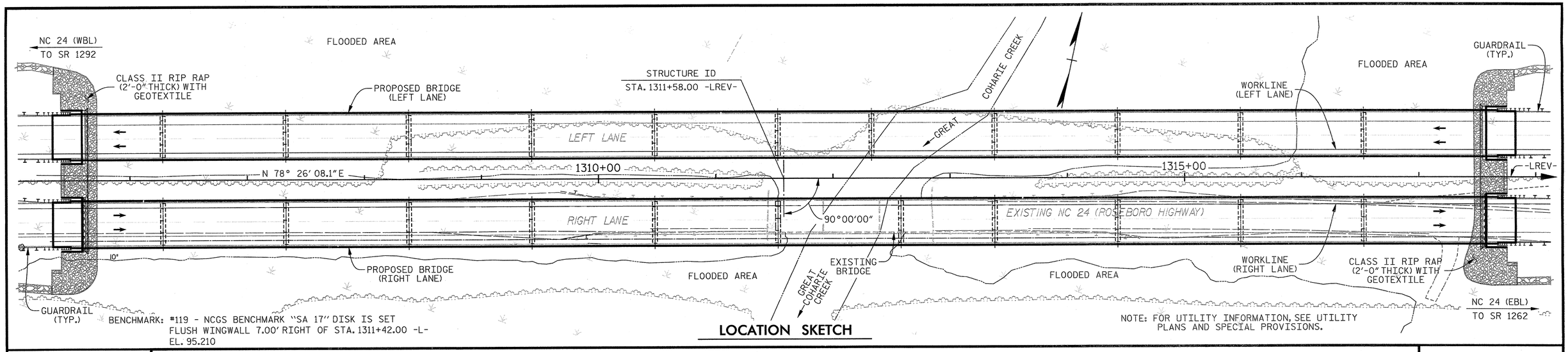


NOTE: FOR UTILITY INFORMATION, SEE UTILITY PLANS AND SPECIAL PROVISIONS.

## LOCATION SKETCH

## TOTAL BILL OF MATERIAL

| | PDA TESTING | REINFORCED CONCRETE DECK SLAB | GROOVING BRIDGE FLOORS | CLASS A CONCRETE | BRIDGE APPROACH SLABS | REINFORCING STEEL | MODIFIED 63" PRESTRESSED CONCRETE GIRDER | | HP 12 x 53 STEEL PILES | | PP 18 x 0.50 GALVANIZED STEEL PILES | | PP 24 x 0.50 GALVANIZED STEEL PILES | | PILE REDRIVES | CONCRETE BARRIER RAIL | RIP RAP CLASS II (2'-0" THICK) | GEOTEXTILE FOR DRAINAGE | ELASTOMERIC BEARINGS | EXPANSION JOINT SEALS |
|---|---|---|---|---|---|---|---|---|---|---|---|---|---|---|---|---|---|---|---|---|
| | EACH | SQ. FT. | SQ. FT. | CU. YDS. | LUMP SUM | LBS. | No. | LIN. FT. | No. | LIN. FT. | No. | LIN. FT. | No. | LIN. FT. | EACH | LIN. FT. | TON | SQ. YD. | LUMP SUM | LUMP SUM |
| SUPERSTRUCTURE | | 47,052 | 40,970 | | LUMP SUM | | 48 | 4,756.3 | | | | | | | | 2,437.8 | | | LUMP SUM | LUMP SUM |
| END BENT 1 | | | | 47.6 | | 7,596 | | | 11 | 660.0 | | | | | 5 | | 235 | 265 | | |
| BENT 1 | | | | 22.8 | | 5,205 | | | | | 6 | 390.0 | | | 3 | | | | | |
| BENT 2 | | | | 22.8 | | 5,205 | | | | | 6 | 390.0 | | | 3 | | | | | |
| BENT 3 | | | | 22.8 | | 5,205 | | | | | 6 | 450.0 | | | 3 | | | | | |
| BENT 4 | | | | 22.8 | | 5,205 | | | | | 6 | 420.0 | | | 3 | | | | | |
| BENT 5 | | | | 22.0 | | 4,993 | | | | | | | 6 | 360.0 | 3 | | | | | |
| BENT 6 | | | | 22.0 | | 4,993 | | | | | | | 6 | 390.0 | 3 | | | | | |
| BENT 7 | | | | 22.0 | | 4,993 | | | | | | | 6 | 450.0 | 3 | | | | | |
| BENT 8 | | | | 22.8 | | 5,205 | | | | | 6 | 312.0 | | | 3 | | | | | |
| BENT 9 | | | | 22.8 | | 5,205 | | | | | 6 | 450.0 | | | 3 | | | | | |
| BENT 10 | | | | 22.8 | | 5,205 | | | | | 6 | 330.0 | | | 3 | | | | | |
| BENT 11 | | | | 22.8 | | 5,205 | | | | | 6 | 450.0 | | | 3 | | | | | |
| END BENT 2 | | | | 47.5 | | 7,596 | | | 11 | 605.0 | | | | | 5 | | 210 | 235 | | |
| | | | | | | | | | | | | | | | | | | | | |
| TOTAL | 4 | 47,052 | 40,970 | 343.5 | LUMP SUM | 71,811 | 48 | 4,756.3 | 22 | 1,265.0 | 48 | 3,192.0 | 18 | 1,200.0 | 43 | 2,437.8 | 445 | 500 | LUMP SUM | LUMP SUM |

## NOTES

ASSUMED LIVE LOAD = HL 93 OR ALTERNATE LOADING.

THIS BRIDGE HAS BEEN DESIGNED IN ACCORDANCE WITH THE AASHTO LRFD BRIDGE DESIGN SPECIFICATIONS.

THIS STRUCTURE HAS BEEN DESIGNED IN ACCORDANCE WITH HEC 18, "EVALUATING SCOUR AT BRIDGES", MAY, 2001.

THIS BRIDGE HAS BEEN DESIGNED IN ACCORDANCE WITH THE REQUIREMENTS OF THE AASHTO LRFD BRIDGE DESIGN SPECIFICATIONS FOR SEISMIC DESIGN PERFORMANCE ZONE 1.

FOR OTHER DESIGN DATA AND GENERAL NOTES, SEE "STANDARD NOTES" SHEET.

ALL REINFORCING STEEL SHALL BE GRADE 60.

REMOVABLE FORMS MAY BE USED IN LIEU OF METAL STAY-IN-PLACE FORMS IN ACCORDANCE WITH RTICLE 420-3 OF THE STANDARD SPECIFICATIONS.

NEEDLE BEAMS WILL NOT BE ALLOWED UNLESS OTHERWISE CALLED FOR ON THE PLANS OR APPROVED BY THE ENGINEER.

FOR SUBMITTAL OF WORKING DRAWINGS, SEE SPECIAL PROVISIONS.

FOR EROSION CONTROL MEASURES, SEE EROSION CONTROL PLANS.

FOR FALSEWORK AND FORMWORK, SEE SPECIAL PROVISIONS.

FOR CRANE SAFETY, SEE SPECIAL PROVISIONS.

FOR GROUT FOR STRUCTURES, SEE SPECIAL PROVISIONS.

FOR PLACING LOAD ON STRUCTURE MEMBERS, SEE SPECIAL PROVISIONS.

FOR EXPANSION JOINT SEALS, SEE SPECIAL PROVISIONS.

FOR STEEL REINFORCED ELASTOMERIC BEARINGS, SEE SPECIAL PROVISIONS.

FOR INTERIOR BENTS ONLY PARTIAL GALVANIZING OF THE PILES ARE REQUIRED. SEE INTERIOR BENT SHEETS FOR GALVANIZED LENGTHS. PAYMENT FOR PARTIALLY GALVANIZED PILES WILL BE MADE UNDER THE CONTRACT UNIT PRICE FOR GALVANIZED STEEL PILES.

PROJECT NO. R-2303D

SAMPSON COUNTY

STATION: 1311+58.00 -LREV-

SHEET 7 OF 7

STATE OF NORTH CAROLINA
DEPARTMENT OF TRANSPORTATION
RALEIGH

GENERAL DRAWING

BRIDGE OVER GREAT COHARIE CREEK ON NC 24 (-LREV-) BETWEEN SR 1292 AND SR 1262

(LEFT LANE)

CDM Smith
Camp Dresser & McKee
421 Fayetteville Street, Suite 1303
Raleigh, NC 27604
NC COA No. F-1255

DRAWN BY : K.E. LOFTON DATE : 10-12
CHECKED BY : P.R. HOLSHOUSER DATE : 11-12
DESIGN ENGINEER : P.R. HOLSHOUSER DATE : 1-13

DWG. No. S01-007

NORTH CAROLINA PROFESSIONAL SEAL 20668 ENGINEER PAUL R. HOLSHOUSER 2/27/2013

| REVISIONS | | | | | | SHEET No. |
|---|---|---|---|---|---|---|
| No. | BY: | DATE: | No. | BY: | DATE: | S-7 |
| 1 | | | 3 | | | TOTAL SHEETS |
| 2 | | | 4 | | | 218 |

FILE: n:\rdsdp\2303d\proj\wbs\PLANS\Str_1\R2303D_SD_Str1_b1.dgn
DATE: 2/27/2013 10:11:04 AM

# LOAD AND RESISTANCE FACTOR RATING (LRFR) SUMMARY FOR PRESTRESSED CONCRETE GIRDERS

| LEVEL | | VEHICLE | WEIGHT (W) (TONS) | CONTROLLING LOAD RATING (#) | MINIMUM RATING FACTORS (RF) | TONS = W × RF | STRENGTH I LIMIT STATE | | | | | | | | | | | SERVICE III LIMIT STATE | | | | | | COMMENT NUMBER |
|---|---|---|---|---|---|---|---|---|---|---|---|---|---|---|---|---|---|---|---|---|---|---|---|---|
| | | | | | | | | MOMENT | | | | | SHEAR | | | | | | MOMENT | | | | | |
| | | | | | | | LIVE-LOAD FACTORS ($\gamma_{LL}$) | DISTRIBUTION FACTORS (DF) | RATING FACTOR | SPANS | GIRDER LOCATION | DISTANCE FROM LEFT END OF SPAN (ft) | DISTRIBUTION FACTORS (DF) | RATING FACTOR | SPAN | GIRDER LOCATION | DISTANCE FROM LEFT END OF SPAN (ft) | LIVE-LOAD FACTORS ($\gamma_{LL}$) | DISTRIBUTION FACTORS (DF) | RATING FACTOR | SPANS | GIRDER LOCATION | DISTANCE FROM LEFT END OF SPAN (ft) | |
| DESIGN LOAD RATING | | HL-93 (INVENTORY) | N/A | 1 | 1.11 | -- | 1.75 | 0.922 | 1.15 | G | EL | 38.9 | 0.922 | 1.28 | B | EL | 30.5 | 0.80 | 0.922 | 1.11 | G | EL | 38.9 | -- |
| | | HL-93 (OPERATING) | N/A | | 1.49 | -- | 1.35 | 0.922 | 1.49 | G | EL | 38.9 | 0.922 | 1.65 | B | EL | 30.5 | N/A | -- | -- | -- | -- | -- | -- |
| | | HS-20 (INVENTORY) | 36.000 | 2 | 1.47 | 52.92 | 1.75 | 0.922 | 1.52 | G | EL | 38.9 | 0.983 | 1.91 | B | I | 20.1 | 0.80 | 0.922 | 1.47 | G | EL | 38.9 | -- |
| | | HS-20 (OPERATING) | 36.000 | | 1.97 | 70.92 | 1.35 | 0.922 | 1.97 | G | EL | 38.9 | 0.983 | 2.48 | B | I | 20.1 | N/A | -- | -- | -- | -- | -- | -- |
| LEGAL LOAD RATING | SINGLE VEHICLE (SV) | SNSH | 13.500 | | 3.36 | 45.36 | 1.40 | 0.922 | 4.35 | G | EL | 38.9 | 0.983 | 6.43 | B | I | 20.1 | 0.80 | 0.922 | 3.36 | G | EL | 38.9 | -- |
| | | SNGARBS2 | 20.000 | | 2.49 | 49.80 | 1.40 | 0.922 | 3.22 | G | EL | 38.9 | 0.983 | 4.39 | B | I | 20.1 | 0.80 | 0.922 | 2.49 | G | EL | 38.9 | -- |
| | | SNAGRIS2 | 22.000 | | 2.35 | 49.35 | 1.40 | 0.922 | 3.04 | G | EL | 38.9 | 0.983 | 4.02 | B | I | 20.1 | 0.80 | 0.922 | 2.35 | G | EL | 38.9 | -- |
| | | SNCOTTS3 | 27.250 | | 1.67 | 45.51 | 1.40 | 0.922 | 2.16 | G | EL | 38.9 | 0.983 | 2.99 | B | I | 20.1 | 0.80 | 0.922 | 1.67 | G | EL | 38.9 | -- |
| | | SNAGGRS4 | 34.925 | | 1.39 | 48.55 | 1.40 | 0.922 | 1.80 | G | EL | 38.9 | 0.983 | 2.38 | B | I | 20.1 | 0.80 | 0.922 | 1.39 | G | EL | 38.9 | -- |
| | | SNS5A | 35.550 | | 1.36 | 48.35 | 1.40 | 0.922 | 1.76 | G | EL | 38.9 | 0.983 | 2.39 | B | I | 20.1 | 0.80 | 0.922 | 1.36 | G | EL | 38.9 | -- |
| | | SNS6A | 39.950 | | 1.25 | 49.94 | 1.40 | 0.922 | 1.61 | G | EL | 38.9 | 0.983 | 2.14 | B | I | 20.1 | 0.80 | 0.922 | 1.25 | G | EL | 38.9 | -- |
| | | SNS7B | 42.000 | | 1.19 | 49.98 | 1.40 | 0.922 | 1.53 | G | EL | 38.9 | 0.983 | 2.07 | B | I | 20.1 | 0.80 | 0.922 | 1.19 | G | EL | 38.9 | -- |
| | TRUCK TRACTOR SEMI-TRAILER (TTST) | TNAGRIT3 | 33.000 | | 1.52 | 48.64 | 1.40 | 0.922 | 1.96 | G | EL | 38.9 | 0.983 | 2.63 | B | I | 20.1 | 0.80 | 0.922 | 1.52 | G | EL | 38.9 | -- |
| | | TNT4A | 33.075 | | 1.52 | 50.27 | 1.40 | 0.922 | 1.97 | G | EL | 38.9 | 0.983 | 2.56 | B | I | 20.1 | 0.80 | 0.922 | 1.52 | G | EL | 38.9 | -- |
| | | TNT6A | 41.600 | | 1.24 | 51.58 | 1.40 | 0.922 | 1.61 | G | EL | 38.9 | 0.983 | 2.20 | B | I | 20.1 | 0.80 | 0.922 | 1.24 | G | EL | 38.9 | -- |
| | | TNT7A | 42.000 | | 1.25 | 52.50 | 1.40 | 0.922 | 1.61 | G | EL | 38.9 | 0.983 | 2.15 | B | I | 20.1 | 0.80 | 0.922 | 1.25 | G | EL | 38.9 | -- |
| | | TNT7B | 42.000 | | 1.29 | 54.18 | 1.40 | 0.922 | 1.67 | G | EL | 38.9 | 0.983 | 2.03 | B | I | 20.1 | 0.80 | 0.922 | 1.29 | G | EL | 38.9 | -- |
| | | TNAGRIT4 | 43.000 | | 1.23 | 52.89 | 1.40 | 0.922 | 1.59 | G | EL | 38.9 | 0.983 | 1.96 | B | I | 20.1 | 0.80 | 0.922 | 1.23 | G | EL | 38.9 | -- |
| | | TNAGT5A | 45.000 | | 1.16 | 52.20 | 1.40 | 0.922 | 1.50 | G | EL | 38.9 | 0.983 | 1.92 | B | I | 20.1 | 0.80 | 0.922 | 1.16 | G | EL | 38.9 | -- |
| | | TNAGT5B | 45.000 | 3 | 1.15 | 51.75 | 1.40 | 0.922 | 1.48 | G | EL | 38.9 | 0.983 | 1.85 | B | I | 20.1 | 0.80 | 0.922 | 1.15 | G | EL | 38.9 | -- |

## LOAD FACTORS

| | LIMIT STATE | $\gamma_{DC}$ | $\gamma_{DW}$ |
|---|---|---|---|
| DESIGN LOAD RATING FACTORS | STRENGTH I | 1.25 | 1.50 |
| | SERVICE III | 1.00 | 1.00 |

## NOTES

MINIMUM RATING FACTORS ARE BASED ON THE STRENGTH I AND SERVICE III LIMIT STATES.

ALLOWABLE STRESSES FOR SERVICE III LIMIT STATE ARE AS REQUIRED FOR DESIGN.

## COMMENTS

1. SPAN "B" THRU SPAN "F" AND SPAN "H" THRU SPAN "L" ARE IDENTICAL.
2. LEFT AND RIGHT EXTERIOR GIRDER ARE IDENTICAL.

(#) CONTROLLING LOAD RATING

(1) DESIGN LOAD RATING (HL-93)

(2) DESIGN LOAD RATING (HS-20)

(3) LEGAL LOAD RATING **

** SEE CHART FOR VEHICLE TYPE

GIRDER LOCATION

I - INTERIOR GIRDER
EL - EXTERIOR LEFT GIRDER
ER - EXTERIOR RIGHT GIRDER

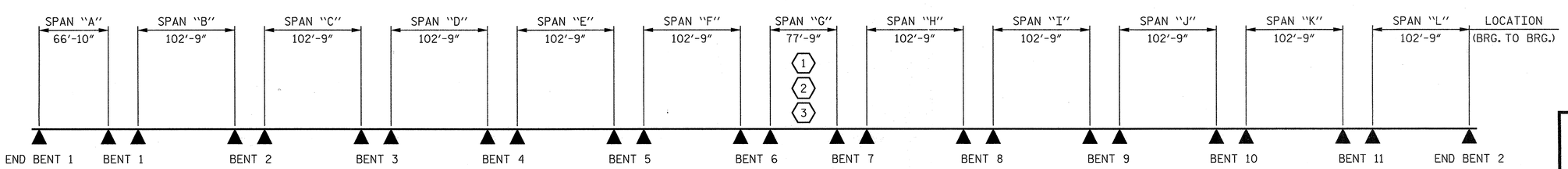


## LRFR SUMMARY

PROJECT NO. R-2303D
SAMPSON COUNTY
STATION: 1311+58.00 -LREV-

STATE OF NORTH CAROLINA
DEPARTMENT OF TRANSPORTATION
RALEIGH

STANDARD
LRFR SUMMARY FOR PRESTRESSED CONCRETE GIRDERS (NON-INTERSTATE TRAFFIC) (LEFT LANE)

CDM Smith
Camp Dresser & McKee
421 Fayetteville Street, Suite 1303
Raleigh, NC 27604
NC COA No. F-1255

DRAWN BY : K.E. LOFTON DATE : 10-12
CHECKED BY : P.R. HOLSHOUSER DATE : 11-12
DESIGN ENGINEER : P.R. HOLSHOUSER DATE : 1-13

DWG. No. S01-008

NORTH CAROLINA PROFESSIONAL SEAL 20668 ENGINEER PAUL R. HOLSHOUSER 1/24/2013

| REVISIONS | | | | | | SHEET No. |
|---|---|---|---|---|---|---|
| No. | BY: | DATE: | No. | BY: | DATE: | S-8 |
| 1 | | | 3 | | | TOTAL SHEETS |
| 2 | | | 4 | | | 218 |

STD. No. LRFR1

ASSEMBLED BY : K. E. LOFTON DATE : 10-12
CHECKED BY : P.R. HOLSHOUSER DATE : 11-12
DRAWN BY : MAA 1/08
CHECKED BY : GM/DI 2/08
REV. 11/12/08RR MAA/GM

FILE: r:\roadwy\2303d\structures\PLANS\Str_1\R2303D_SD_Str1_h1.dgn
DATE: 2/22/2013 10:11:06 AM

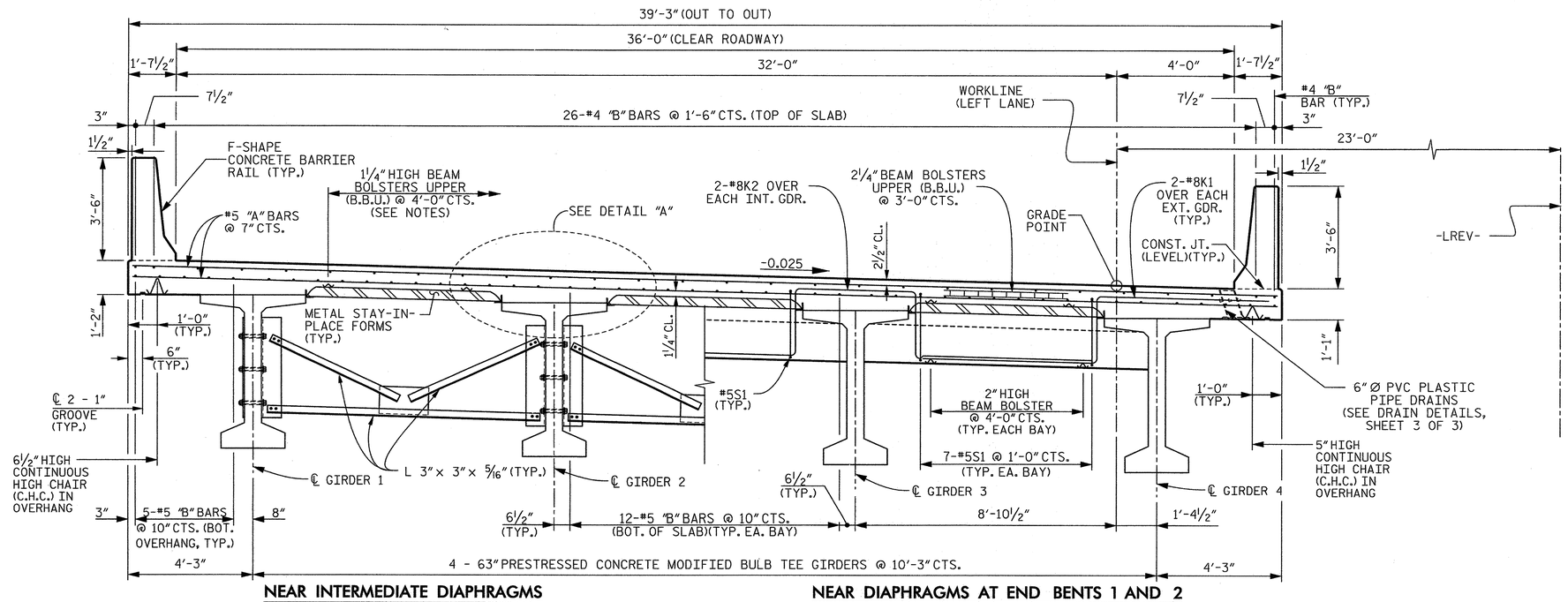


**NEAR INTERMEDIATE DIAPHRAGMS**

**NEAR DIAPHRAGMS AT END BENTS 1 AND 2 AND BENTS 3, 6, AND 9**

## TYPICAL SECTION

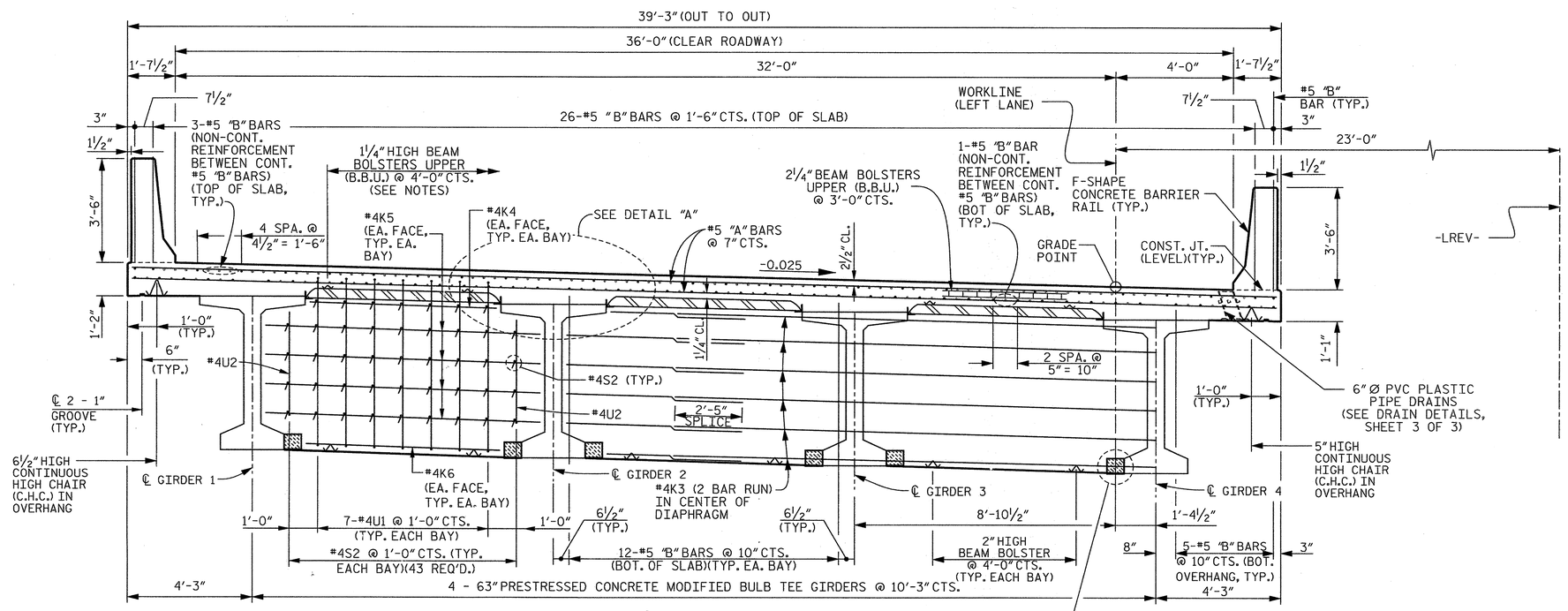


**NEAR DIAPHRAGMS AT BENTS 1, 2, 4, 5, 7, 8, 10 AND 11**

## TYPICAL SECTION

FOR BLOCK OUT DETAIL SEE SHEET 2 OF 3

## NOTES

PROVIDE 1¼" HIGH BEAM BOLSTERS UPPER AT 4'-0" CTS. ATOP THE METAL STAY-IN-PLACE FORMS TO SUPPORT THE BOTTOM MAT OF "A" BARS. WHEN USING REMOVABLE FORMS, PROVIDE CONTINUOUS HIGH CHAIRS FOR METAL DECK (C.H.C.M.) @ 4'-0" CTS. WITH A HEIGHT TO SUPPORT THE BOTTOM MAT OF "A" BARS A CLEAR DISTANCE OF 2½" ABOVE THE TOP OF THE REMOVABLE FORM.

LONGITUDINAL STEEL MAY BE SHIFTED SLIGHTLY, AS NECESSARY, TO AVOID INTERFERENCE WITH BOTH STIRRUPS IN PRESTRESSED CONCRETE GIRDERS AND DECK DRAINS.

PREVIOUSLY CAST CONCRETE IN A CONTINUOUS UNIT SHALL HAVE ATTAINED A MINIMUM COMPRESSIVE STRENGTH OF 3,000 PSI BEFORE ADDITIONAL CONCRETE IS CAST IN THE UNIT.

BARRIER RAIL IN A CONTINUOUS UNIT SHALL NOT BE CAST UNTIL ALL SLAB CONCRETE IN THE UNIT HAS BEEN CAST AND HAS REACHED A MINIMUM COMPRESSIVE STRENGTH OF 3,000 PSI.

CONCRETE IN END BENT 1, BENT 3, BENT 6, BENT 9 AND END BENT 2 DIAPHRAGMS MAY BE CLASS A IN LIEU OF CLASS AA.

FOR F-SHAPE CONCRETE BARRIER RAIL DETAILS, SEE "CONCRETE BARRIER RAIL" SHEETS.

FOR POURING SEQUENCE, SEE "SUPERSTRUCTURE BILL OF MATERIAL SHEET 1 OF 2.

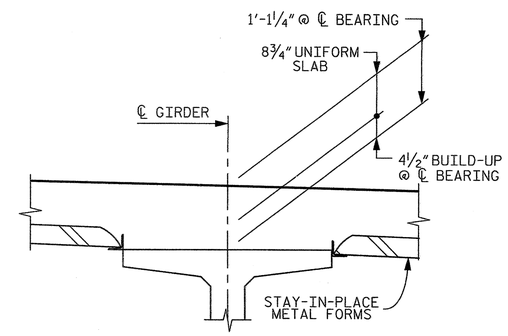


**DETAIL "A"**

PROJECT NO. R-2303D

SAMPSON COUNTY

STATION: 1311+58.00 -LREV-

SHEET 1 OF 3

STATE OF NORTH CAROLINA
DEPARTMENT OF TRANSPORTATION
RALEIGH

SUPERSTRUCTURE

# TYPICAL SECTION

# (LEFT LANE)

CDM Smith
Camp Dresser & McKee
421 Fayetteville Street, Suite 1303
Raleigh, NC 27604
NC COA No. F-1255

DRAWN BY : C.E.DIXON DATE : 10-12
CHECKED BY : J.T.ECKEL DATE : 10-12
DESIGN ENGINEER : P.R. HOLSHOUSER DATE : 1-13

DWG. No. S01-009

NORTH CAROLINA PROFESSIONAL SEAL 20668 ENGINEER PAUL R. HOLSHOUSER 2/22/2013

| REVISIONS | | | | | | |
|---|---|---|---|---|---|---|
| No. | BY: | DATE: | No. | BY: | DATE: | |
| 1 | | | 3 | | | |
| 2 | | | 4 | | | |

SHEET No. S-9

TOTAL SHEETS 218

FILE: R:\NCDOT\R2303D\STRUCTURES\PLANS\Sr_1\R2303D_SD_Sr1_ts3.dgn
DATE: 2/22/2013 10:11:09 AM

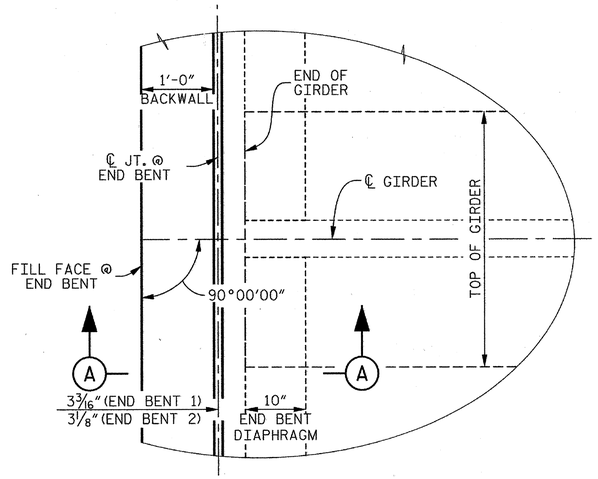


## PLAN OF DIAPHRAGM AT END BENT

(END BENT 1 SHOWN, END BENT 2 SIMILAR)

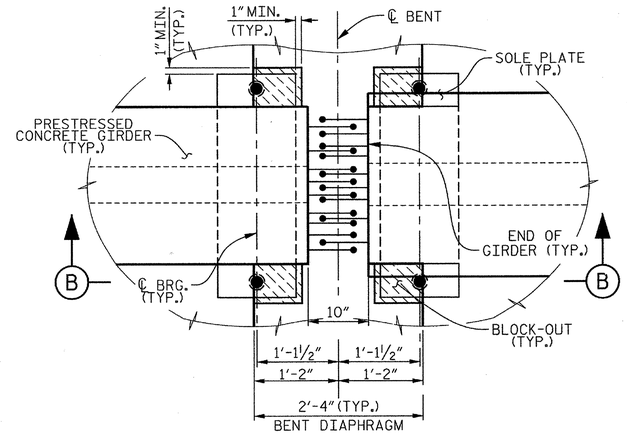


PLAN

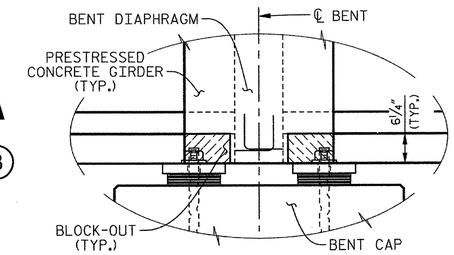


SECTION B–B

## BENT DIAPHRAGM BLOCK-OUT DETAIL

(TYPICAL BENTS 1, 2, 4, 5, 7, 8, 10 AND 11)

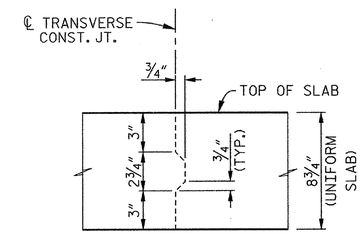


## TRANSVERSE CONSTRUCTION JOINT DETAIL

REINFORCING STEEL IN SLAB NOT SHOWN.
LONGITUDINAL REINFORCING STEEL SHALL BE CONTINUOUS THRU JOINT.

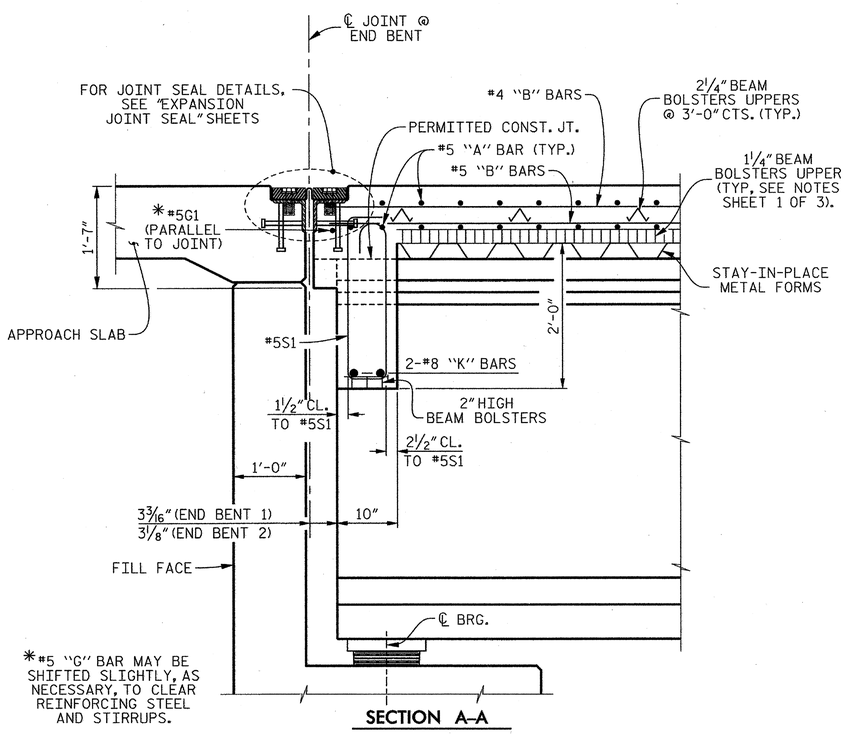


SECTION A–A

## SECTION THRU END BENT DIAPHRAGM

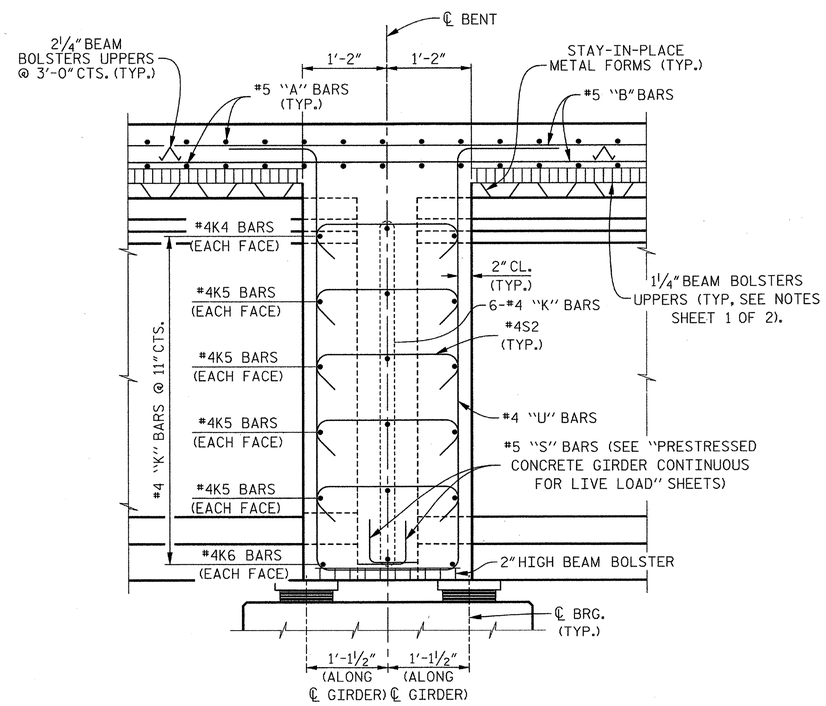


## SECTION THRU BENT DIAPHRAGM

(TYPICAL BENTS 1, 2, 4, 5, 7, 8, 10 AND 11)

PROJECT NO. R-2303D
SAMPSON COUNTY
STATION: 1311+58.00 -LREV-

SHEET 2 OF 3

STATE OF NORTH CAROLINA
DEPARTMENT OF TRANSPORTATION
RALEIGH

SUPERSTRUCTURE

# TYPICAL SECTION DETAILS

# (LEFT LANE)

CDM Smith
Camp Dresser & McKee
421 Fayetteville Street, Suite 1303
Raleigh, NC 27604
NC COA No. F-1255

| | | | |
|---|---|---|---|
| DRAWN BY : | C.E.DIXON | DATE : | 10-12 |
| CHECKED BY : | J.T.ECKEL | DATE : | 10-12 |
| DESIGN ENGINEER : | P.R. HOLSHOUSER | DATE : | 1-13 |

DWG. No. S01-010

NORTH CAROLINA PROFESSIONAL SEAL 20668 ENGINEER PAUL R. HOLSHOUSER 2/28/2013

| REVISIONS | | | | | | SHEET No. |
|---|---|---|---|---|---|---|
| No. | BY: | DATE: | No. | BY: | DATE: | S-10 |
| 1 | | | 3 | | | TOTAL SHEETS |
| 2 | | | 4 | | | 218 |

FILE: R:\NCDOT\R2303D\STRUCTURES\PLANS\Sr_1\R2303D_SD_Sr1_bz2.dgn
DATE: 1/2/2013 10:38:06 AM

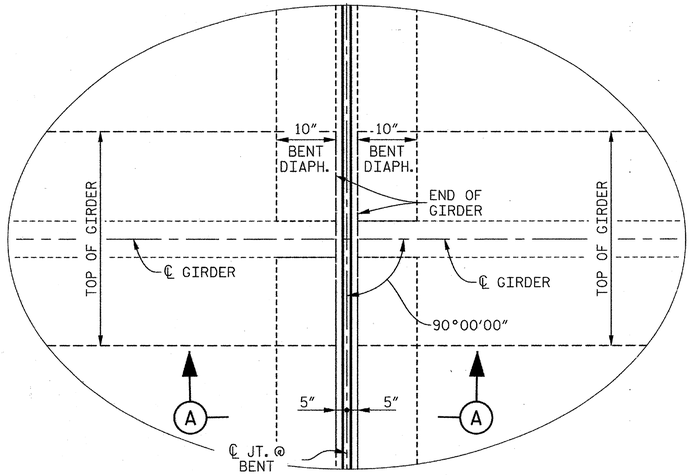


## PLAN OF DIAPHRAGMS AT BENTS 3, 6 AND 9

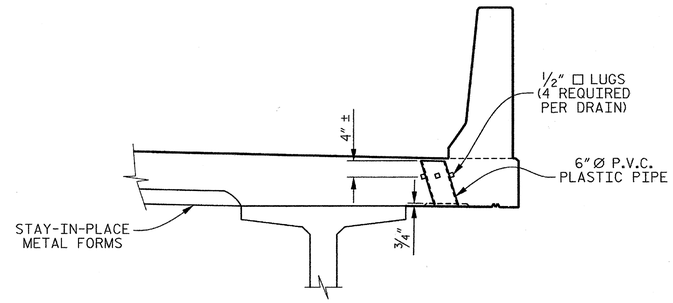


ELEVATION

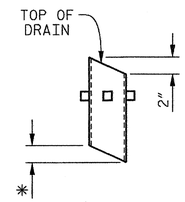


* TO BE SET TO MATCH SLOPE OF BOTTOM OF OVERHANG (70 DRAINS REQUIRED)

PIPE DETAIL

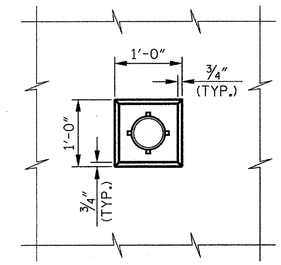


PLAN OF RECESS

TOP OF FLOOR DRAINS TO BE SET ⅜" BELOW SURFACE OF SLAB.

4 - ½" □ LUGS TO BE GLUED TO THE P.V.C. PLASTIC PIPE AT EQUAL SPACES AROUND THE PIPE DRAIN APPROXIMATELY 4" FROM THE TOP OF THE PIPE.

THE 6" DIAMETER P.V.C. PLASTIC PIPE AND FITTINGS SHALL BE SCHEDULE 40 AND CONFORM TO ASTM D1785.

## DRAIN DETAILS

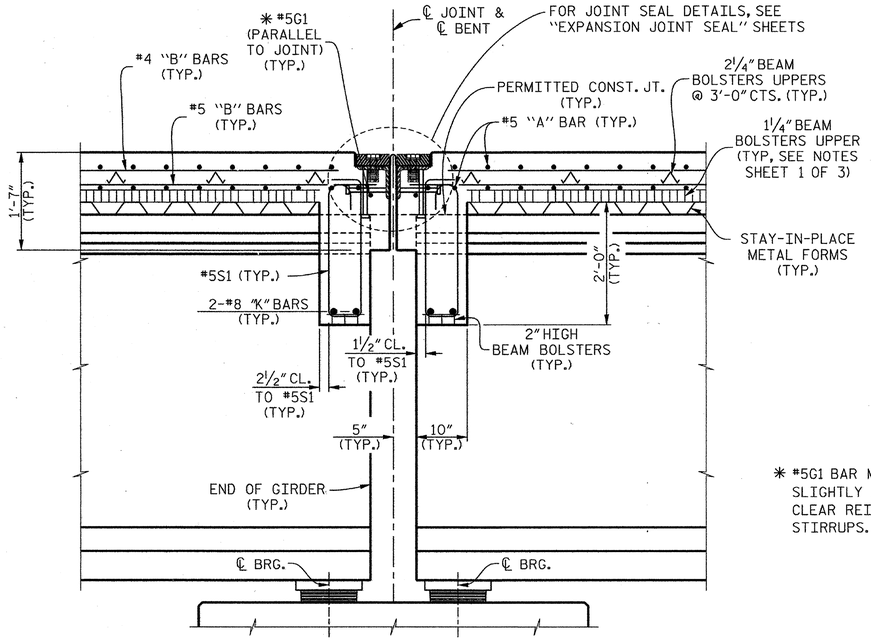


* #5G1 BAR MAY BE SHIFTED SLIGHTLY AS NECESSARY TO CLEAR REINFORCING STEEL AND STIRRUPS.

SECTION A-A

## SECTION THRU DIAPHRAGMS @ BENTS 3, 6 AND 9

PROJECT NO. R-2303D

SAMPSON COUNTY

STATION: 1311+58.00 -LREV-

SHEET 3 OF 3

STATE OF NORTH CAROLINA
DEPARTMENT OF TRANSPORTATION
RALEIGH

SUPERSTRUCTURE

TYPICAL SECTION DETAILS

(LEFT LANE)

CDM Smith
Camp Dresser & McKee
421 Fayetteville Street, Suite 1303
Raleigh, NC 27604
NC COA No. F-1255

| | | | |
|---|---|---|---|
| DRAWN BY : | C.E.DIXON | DATE : | 10-12 |
| CHECKED BY : | J.T.ECKEL | DATE : | 10-12 |
| DESIGN ENGINEER : | P.R. HOLSHOUSER | DATE : | 1-13 |

DWG. No. S01-011

NORTH CAROLINA PROFESSIONAL SEAL 20668 ENGINEER PAUL R. HOLSHOUSER 2/08/2013

| REVISIONS | | | | | | SHEET No. |
|---|---|---|---|---|---|---|
| No. | BY: | DATE: | No. | BY: | DATE: | S-11 |
| 1 | | | 3 | | | TOTAL SHEETS |
| 2 | | | 4 | | | 218 |

FILE: R:\NCDOT\R2303D\STRUCTURES\PLANS\Str_1\R2303D_SD_Str1_ts3.dgn
DATE: 1/3/2013 10:38:07 AM

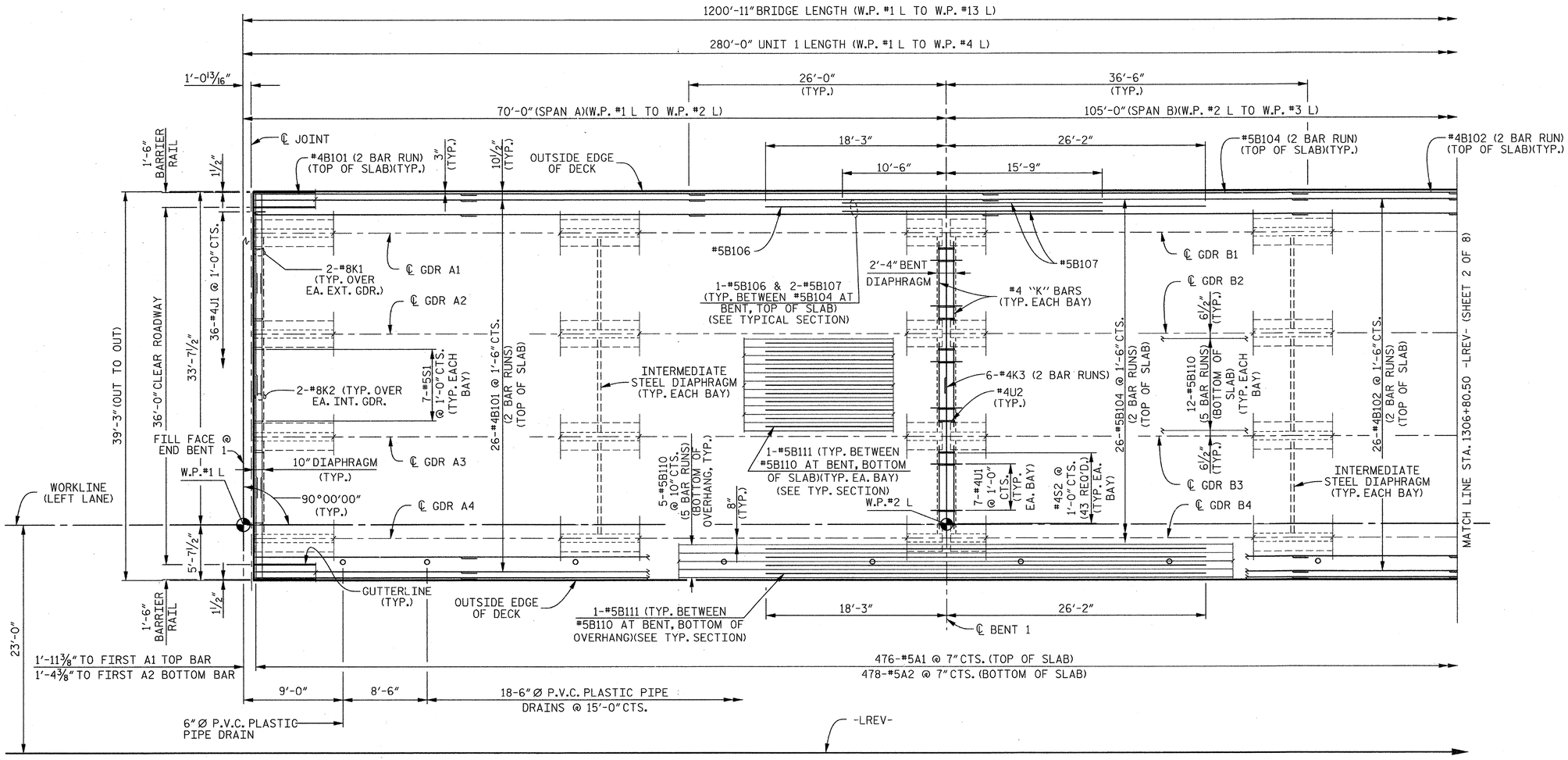


## PLAN OF SPANS – UNIT 1

PROJECT NO. R-2303D
SAMPSON COUNTY
STATION: 1311+58.00 -LREV-

SHEET 1 OF 8

### NOTES

FOR NOTES, SEE "TYPICAL SECTION" SHEET 1 OF 3.

FOR SLAB POURING SEQUENCE, SEE "SUPERSTRUCTURE BILL OF MATERIAL" SHEET 1 OF 2.

FOR SPLICE LENGTHS, SEE "SUPERSTRUCTURE BILL OF MATERIAL" SHEET 2 OF 2.

THE LOCATION OF THE FIRST A2 BOTTOM BAR MAY BE ADJUSTED SLIGHTLY TO AVOID CONFLICT WITH EXPANSION JOINT SEAL ASSEMBLY.

CDM Smith
Camp Dresser & McKee
421 Fayetteville Street, Suite 1303
Raleigh, NC 27604
NC COA No. F-1255

DRAWN BY : C.E.DIXON DATE : 10-12
CHECKED BY : J.T.ECKEL DATE : 10-12
DESIGN ENGINEER : P.R. HOLSHOUSER DATE : 7-13

DWG. No. S01-012

NORTH CAROLINA PROFESSIONAL SEAL 20668 ENGINEER PAUL R. HOLSHOUSER 2/18/2013

STATE OF NORTH CAROLINA
DEPARTMENT OF TRANSPORTATION
RALEIGH

SUPERSTRUCTURE

PLAN OF SPANS (UNIT 1)

(LEFT LANE)

| REVISIONS | | | | | | | | | SHEET No. |
|---|---|---|---|---|---|---|---|---|---|
| No. | BY: | DATE: | No. | BY: | DATE: | | | | S-12 |
| 1 | | | 3 | | | | | | TOTAL SHEETS |
| 2 | | | 4 | | | | | | 218 |

FILE: R:\NCDOT\R2303D\STRUCTURES\PLANS\Str_1\R2303D_S0_Str1_pat1.dgn
DATE: 12/31/2012 9:25:57 AM

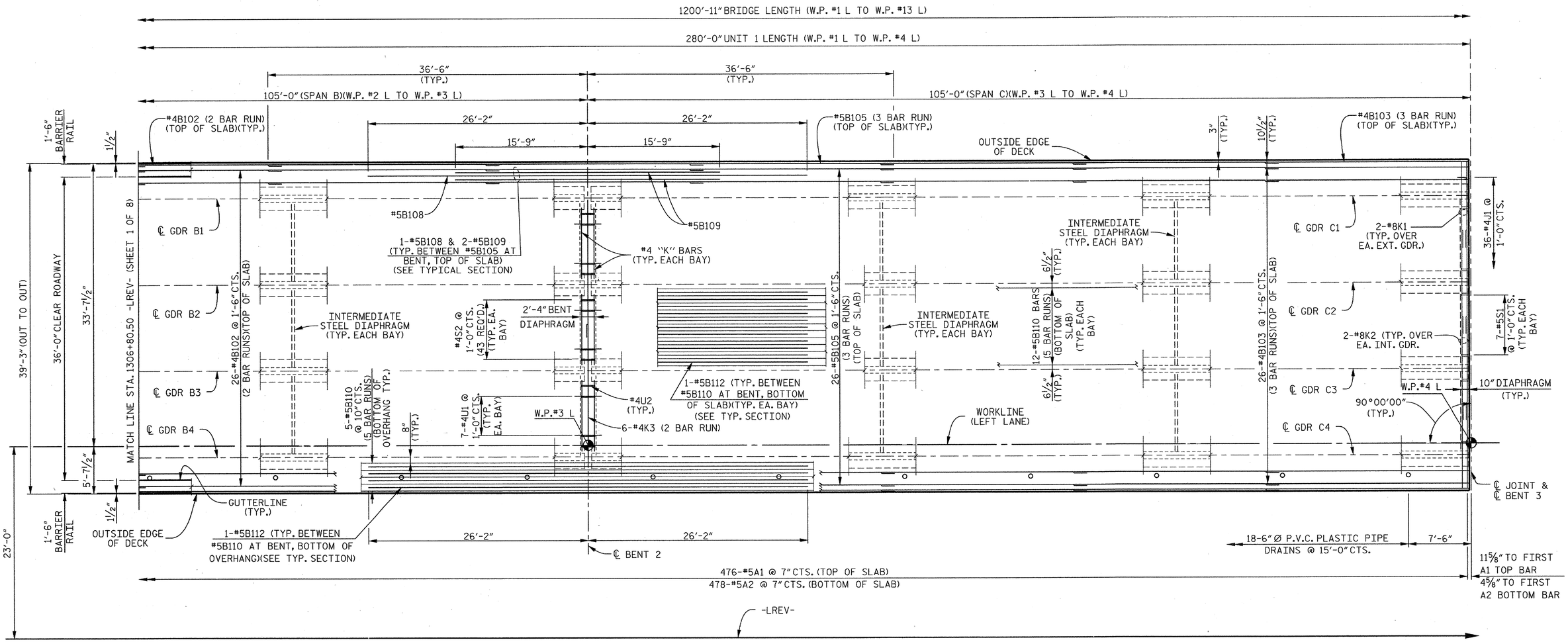


## PLAN OF SPANS – UNIT 1

PROJECT NO. R-2303D

SAMPSON COUNTY

STATION: 1311+58.00 -LREV-

SHEET 2 OF 8

STATE OF NORTH CAROLINA
DEPARTMENT OF TRANSPORTATION
RALEIGH

SUPERSTRUCTURE

PLAN OF SPANS (UNIT 1)

(LEFT LANE)

CDM Smith

Camp Dresser & McKee
421 Fayetteville Street, Suite 1303
Raleigh, NC 27604
NC COA No. F-1255

DRAWN BY : C.E.DIXON DATE : 10-12
CHECKED BY : J.T.ECKEL DATE : 10-12
DESIGN ENGINEER : P.R. HOLSHOUSER DATE : 1-13

DWG. No. S01-013

NORTH CAROLINA PROFESSIONAL SEAL 20668 ENGINEER PAUL R. HOLSHOUSER 10/9/2013

| REVISIONS | | | | | | SHEET No. |
|---|---|---|---|---|---|---|
| No. | BY: | DATE: | No. | BY: | DATE: | S-13 |
| 1 | | | 3 | | | TOTAL SHEETS |
| 2 | | | 4 | | | 218 |

FILE: R:\NCDOT\R2303D\STRUCTURES\PLANS\Sr_1\R2303D_SD_Sr1_pa2.dgn
DATE: 12/3/2012 9:25:38 AM

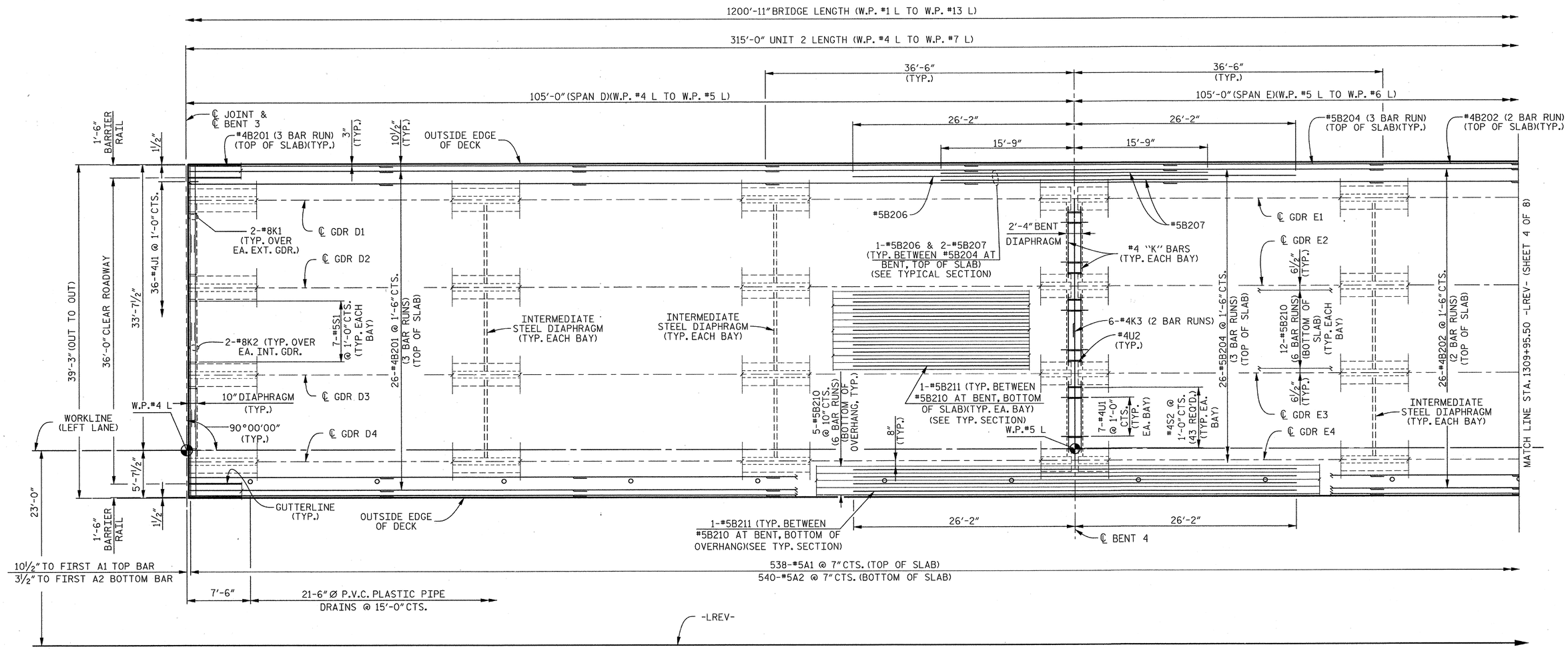


## PLAN OF SPANS – UNIT 2

PROJECT NO. R-2303D
SAMPSON COUNTY
STATION: 1311+58.00 -LREV-

SHEET 3 OF 8

### NOTES

FOR NOTES, SEE "TYPICAL SECTION" SHEET 1 OF 3.

FOR SLAB POURING SEQUENCE, SEE "SUPERSTRUCTURE BILL OF MATERIAL" SHEET 1 OF 2.

FOR SPLICE LENGTHS, SEE "SUPERSTRUCTURE BILL OF MATERIAL" SHEET 2 OF 2.

THE LOCATION OF THE FIRST A2 BOTTOM BAR MAY BE ADJUSTED SLIGHTLY TO AVOID CONFLICT WITH EXPANSION JOINT SEAL ASSEMBLY.

CDM Smith
Camp Dresser & McKee
421 Fayetteville Street, Suite 1303
Raleigh, NC 27604
NC COA No. F-1255

DRAWN BY : J.T.ECKEL DATE : 10-12
CHECKED BY : A.A.MONTIEL DATE : 10-12
DESIGN ENGINEER : P.R. HOLSHOUSER DATE : 1-13

DWG. No. S01-014

NORTH CAROLINA PROFESSIONAL SEAL 20668 ENGINEER PAUL R. HOLSHOUSER 2/08/2013

STATE OF NORTH CAROLINA
DEPARTMENT OF TRANSPORTATION
RALEIGH

SUPERSTRUCTURE

PLAN OF SPANS (UNIT 2)

(LEFT LANE)

| REVISIONS | | | | | | SHEET No. |
|---|---|---|---|---|---|---|
| No. | BY: | DATE: | No. | BY: | DATE: | S-14 |
| 1 | | | 3 | | | TOTAL SHEETS |
| 2 | | | 4 | | | 218 |

FILE: R:\NCDOT\R2303D\STRUCTURES\PLANS\Sfv_T1R2303D_SD_SV1_pa3.dgn
DATE: 12/3/2012 9:26:00 AM

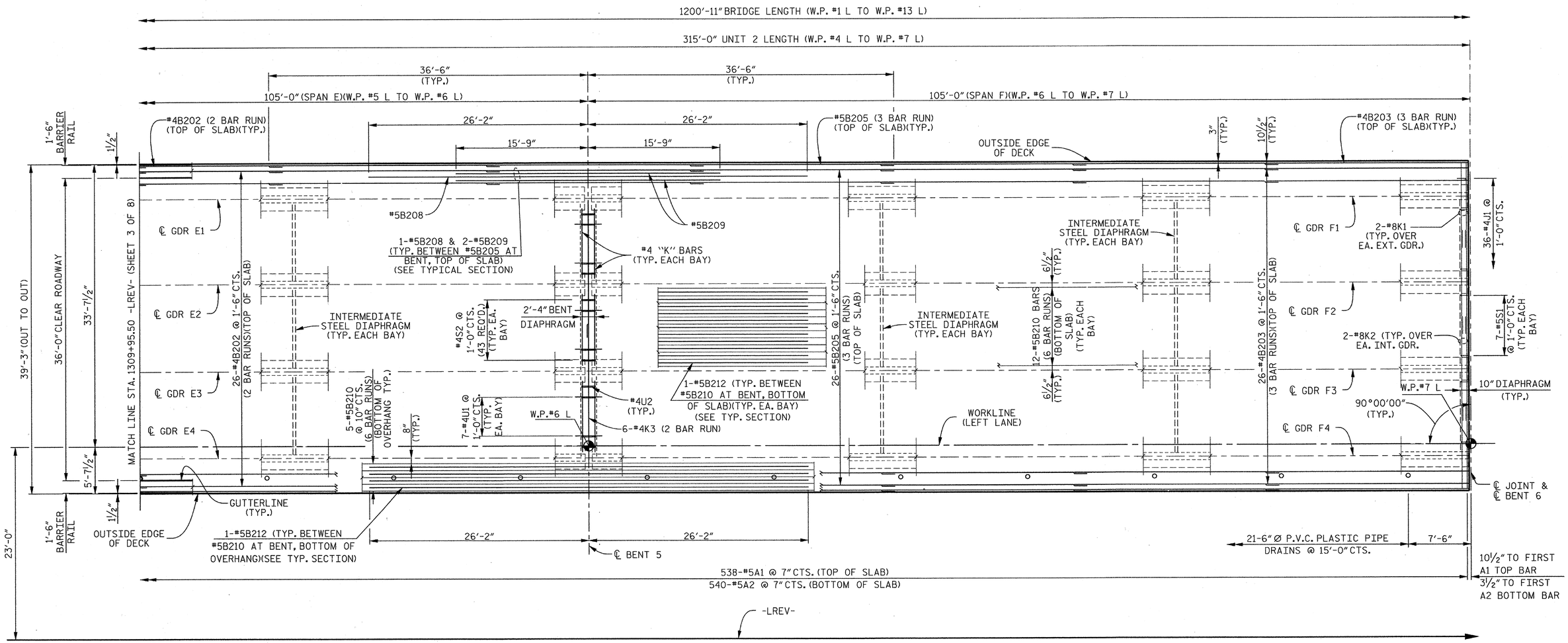


## PLAN OF SPANS – UNIT 2

PROJECT NO. R-2303D

SAMPSON COUNTY

STATION: 1311+58.00 -LREV-

SHEET 4 OF 8

STATE OF NORTH CAROLINA
DEPARTMENT OF TRANSPORTATION
RALEIGH

SUPERSTRUCTURE

PLAN OF SPANS (UNIT 2)

(LEFT LANE)

CDM Smith

Camp Dresser & McKee
421 Fayetteville Street, Suite 1303
Raleigh, NC 27604
NC COA No. F-1255

DRAWN BY : J.T.ECKEL DATE : 10-12
CHECKED BY : A.A.MONTIEL DATE : 10-12
DESIGN ENGINEER : P.R. HOLSHOUSER DATE : 1-13

DWG. No. S01-015

NORTH CAROLINA PROFESSIONAL SEAL 20668 ENGINEER PAUL R. HOLSHOUSER
2/08/2013

| REVISIONS | | | | | | SHEET No. |
|---|---|---|---|---|---|---|
| No. | BY: | DATE: | No. | BY: | DATE: | 8-15 |
| 1 | | | 3 | | | TOTAL SHEETS |
| 2 | | | 4 | | | 218 |

FILE: R:\NCDOT\R2303D\STRUCTURES\PLANS\Str_1\R2303D_SD_Str1_pn4.dgn
DATE: 12/03/2012 9:26:01 AM

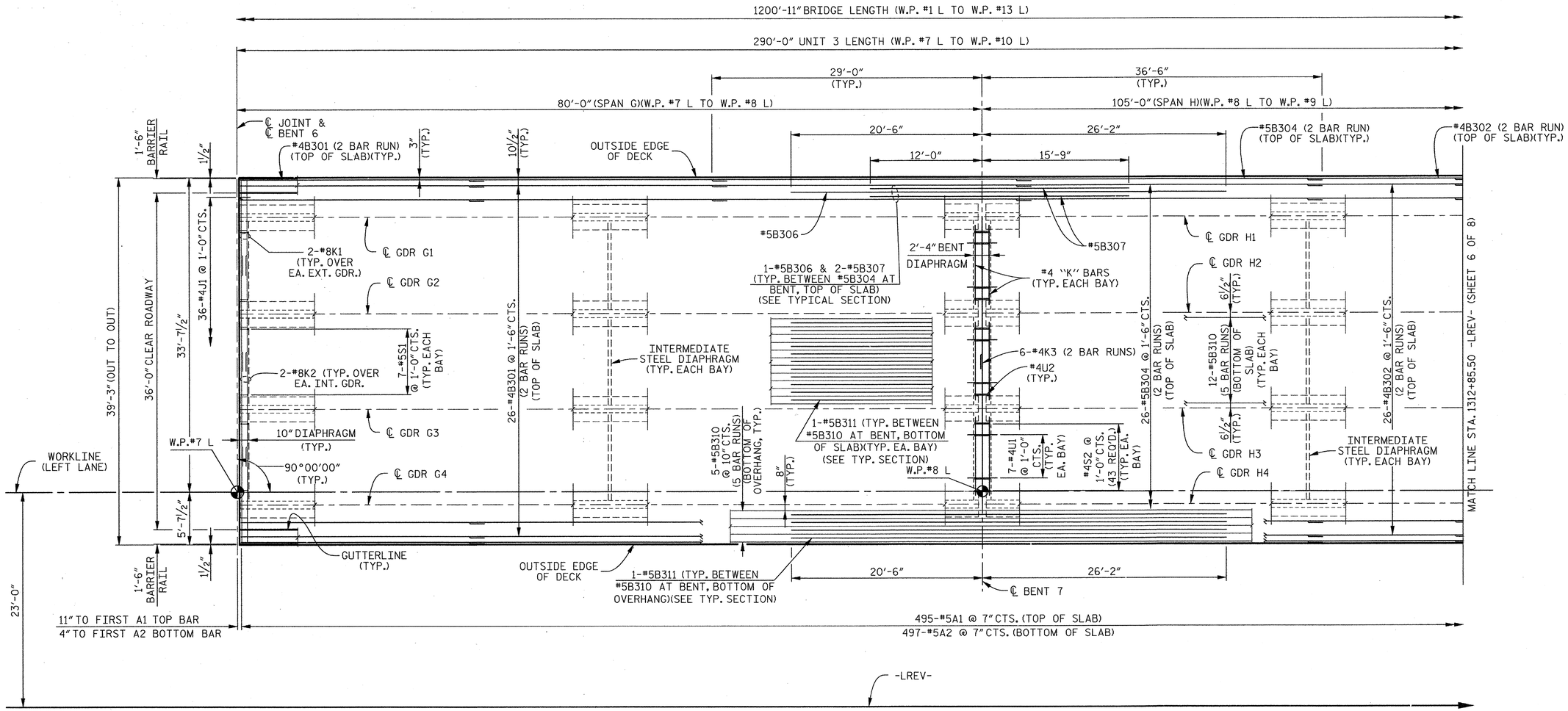


## PLAN OF SPANS – UNIT 3

PROJECT NO. R-2303D
SAMPSON COUNTY
STATION: 1311+58.00 -LREV-

SHEET 5 OF 8

### NOTES

FOR NOTES, SEE "TYPICAL SECTION" SHEET 1 OF 3.

FOR SLAB POURING SEQUENCE, SEE "SUPERSTRUCTURE BILL OF MATERIAL" SHEET 1 OF 2.

FOR SPLICE LENGTHS, SEE "SUPERSTRUCTURE BILL OF MATERIAL" SHEET 2 OF 2.

THE LOCATION OF THE FIRST A2 BOTTOM BAR MAY BE ADJUSTED SLIGHTLY TO AVOID CONFLICT WITH EXPANSION JOINT SEAL ASSEMBLY.

CDM Smith
Camp Dresser & McKee
421 Fayetteville Street, Suite 1303
Raleigh, NC 27604
NC COA No. F-1255

DRAWN BY : J.T.ECKEL DATE : 10-12
CHECKED BY : A.A.MONTIEL DATE : 10-12
DESIGN ENGINEER : P.R. HOLSHOUSER DATE : 1-13

DWG. No. S01-016

NORTH CAROLINA PROFESSIONAL SEAL 20668 ENGINEER PAUL R. HOLSHOUSER
2/08/2013

STATE OF NORTH CAROLINA
DEPARTMENT OF TRANSPORTATION
RALEIGH

SUPERSTRUCTURE

PLAN OF SPANS (UNIT 3)

(LEFT LANE)

| REVISIONS | | | | | | | SHEET No. |
|---|---|---|---|---|---|---|---|
| No. | BY: | DATE: | No. | BY: | DATE: | | S-16 |
| 1 | | | 3 | | | | TOTAL SHEETS |
| 2 | | | 4 | | | | 218 |

FILE: R:\NCDOT\R2303D\STRUCTURES\PLANS\Sv_T1\R2303D_SD_SV1_pa5.dgn
DATE: 12/21/2012 9:28:03 AM

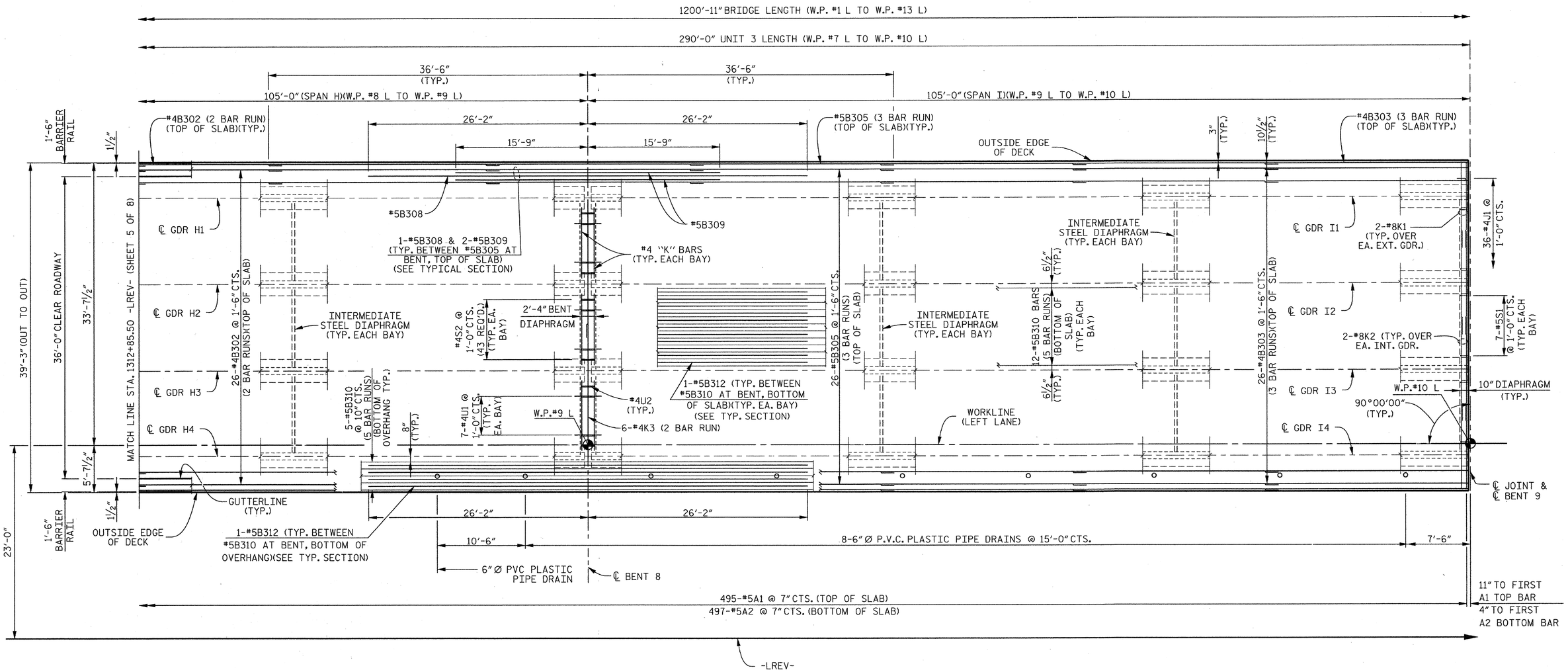


## PLAN OF SPANS – UNIT 3

PROJECT NO. R-2303D

SAMPSON COUNTY

STATION: 1311+58.00 -LREV-

SHEET 6 OF 8

STATE OF NORTH CAROLINA
DEPARTMENT OF TRANSPORTATION
RALEIGH

SUPERSTRUCTURE

PLAN OF SPANS (UNIT 3)

(LEFT LANE)

CDM Smith

Camp Dresser & McKee
421 Fayetteville Street, Suite 1303
Raleigh, NC 27604
NC COA No. F-1255

DRAWN BY : J.T.ECKEL DATE : 10-12
CHECKED BY : A.A.MONTIEL DATE : 10-12
DESIGN ENGINEER : P.R. HOLSHOUSER DATE : 1-13

DWG. No. S01-017

NORTH CAROLINA PROFESSIONAL SEAL 20668 ENGINEER PAUL R. HOLSHOUSER
2/08/2013

| REVISIONS | | | | | | |
|---|---|---|---|---|---|---|
| No. | BY: | DATE: | No. | BY: | DATE: | |
| 1 | | | 3 | | | |
| 2 | | | 4 | | | |

SHEET No. S-17

TOTAL SHEETS 218

FILE: R:\NCDOT\R2303D\STRUCTURES\PLANS\Str_1\R2303D_S0_Str1_pg6.dgn
DATE: 12/31/2012 9:26:05 AM

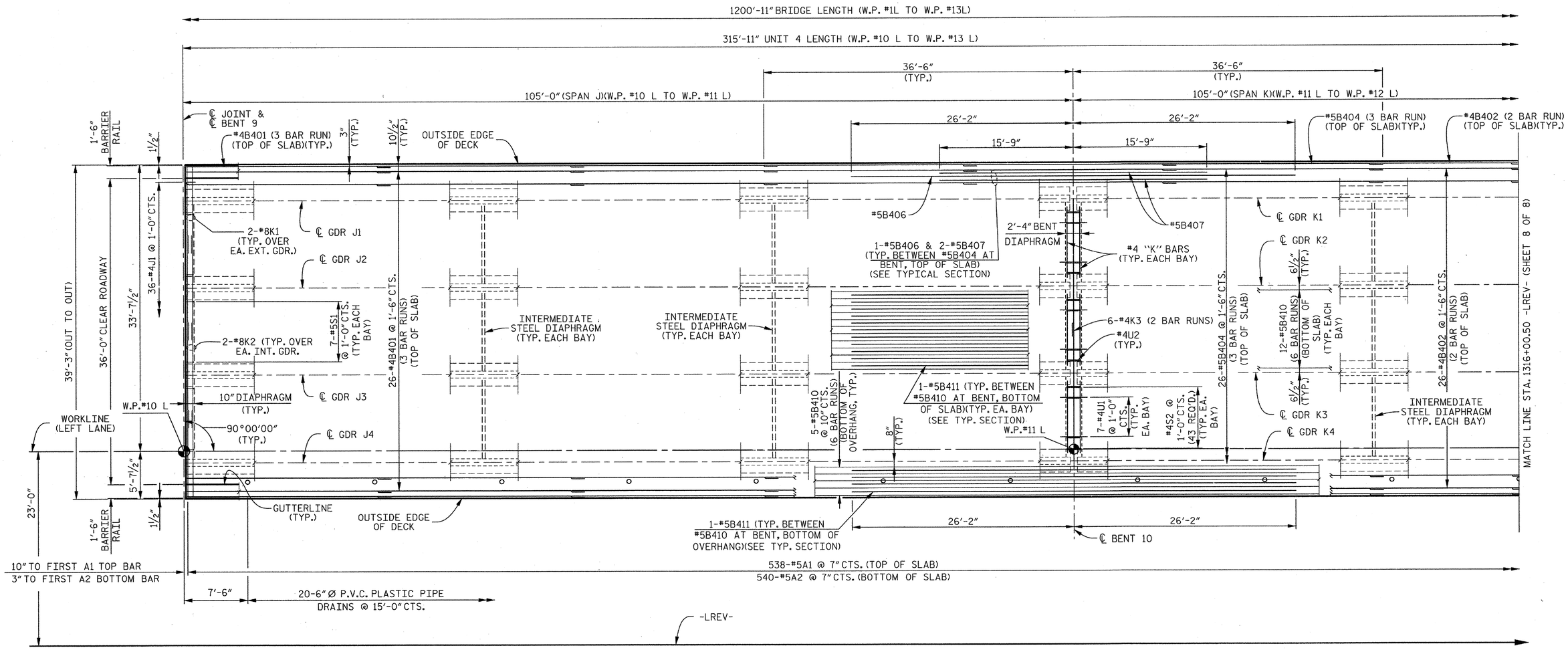


## PLAN OF SPANS – UNIT 4

PROJECT NO. R-2303D

SAMPSON COUNTY

STATION: 1311+58.00 -LREV-

SHEET 7 OF 8

### NOTES

FOR NOTES, SEE "TYPICAL SECTION" SHEET 1 OF 3.

FOR SLAB POURING SEQUENCE, SEE "SUPERSTRUCTURE BILL OF MATERIAL" SHEET 1 OF 2.

FOR SPLICE LENGTHS, SEE "SUPERSTRUCTURE BILL OF MATERIAL" SHEET 2 OF 2.

THE LOCATION OF THE FIRST A2 BOTTOM BAR MAY BE ADJUSTED SLIGHTLY TO AVOID CONFLICT WITH EXPANSION JOINT SEAL ASSEMBLY.

CDM Smith
Camp Dresser & McKee
421 Fayetteville Street, Suite 1303
Raleigh, NC 27604
NC COA No. F-1255

DRAWN BY : J.T.ECKEL DATE : 10-12
CHECKED BY : A.A.MONTIEL DATE : 10-12
DESIGN ENGINEER : P.R. HOLSHOUSER DATE : 1-13

DWG. No. S01-018

NORTH CAROLINA PROFESSIONAL SEAL 20668 ENGINEER PAUL R. HOLSHOUSER
2/08/2013

STATE OF NORTH CAROLINA
DEPARTMENT OF TRANSPORTATION
RALEIGH

SUPERSTRUCTURE

PLAN OF SPANS (UNIT 4)

(LEFT LANE)

| REVISIONS | | | | | | | SHEET No. |
|---|---|---|---|---|---|---|---|
| No. | BY: | DATE: | No. | BY: | DATE: | | S-18 |
| 1 | | | 3 | | | | TOTAL SHEETS |
| 2 | | | 4 | | | | 218 |

FILE: R:\NCDOT\R2303D\STRUCTURES\PLANS\Str_1\R2303D_SD_SP1_pn7.dgn
DATE: 12/07/2012 9:26:06 AM

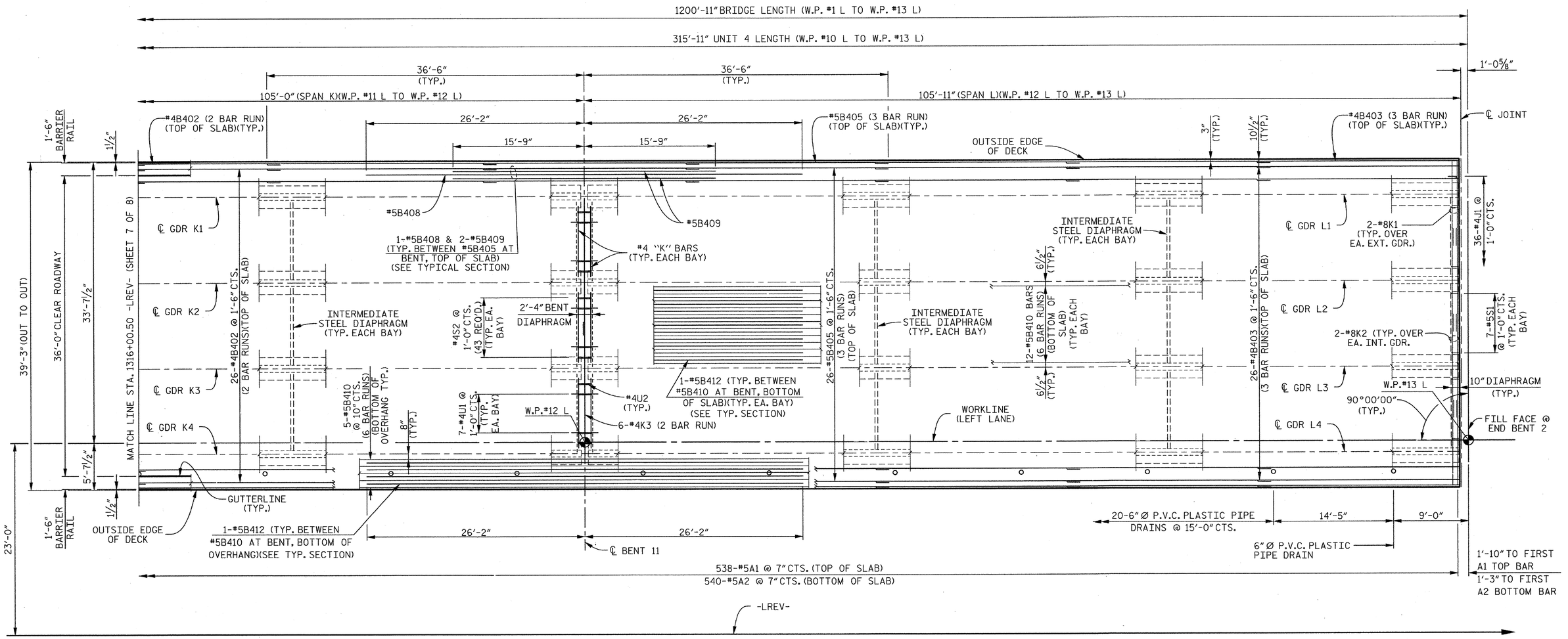


## PLAN OF SPANS – UNIT 4

PROJECT NO. R-2303D

SAMPSON COUNTY

STATION: 1311+58.00 -LREV-

SHEET 8 OF 8

STATE OF NORTH CAROLINA
DEPARTMENT OF TRANSPORTATION
RALEIGH

SUPERSTRUCTURE

PLAN OF SPANS (UNIT 4)

(LEFT LANE)

CDM Smith
Camp Dresser & McKee
421 Fayetteville Street, Suite 1303
Raleigh, NC 27604
NC COA No. F-1255

DRAWN BY : J.T.ECKEL DATE : 10-12
CHECKED BY : A.A.MONTIEL DATE : 10-12
DESIGN ENGINEER : P.R. HOLSHOUSER DATE : 1-13

DWG. No. S01-019

NORTH CAROLINA PROFESSIONAL SEAL 20668 ENGINEER PAUL R. HOLSHOUSER
2/08/2013

| REVISIONS | | | | | | |
|---|---|---|---|---|---|---|
| No. | BY: | DATE: | No. | BY: | DATE: | |
| 1 | | | 3 | | | |
| 2 | | | 4 | | | |

SHEET No. S-19

TOTAL SHEETS 218

FILE: R:\NCDOT\R2303D\STRUCTURES\PLANS\Str_71\R2303D_SD_Str1_pa8.dgn
DATE: 12/07/2012 9:26:08 AM

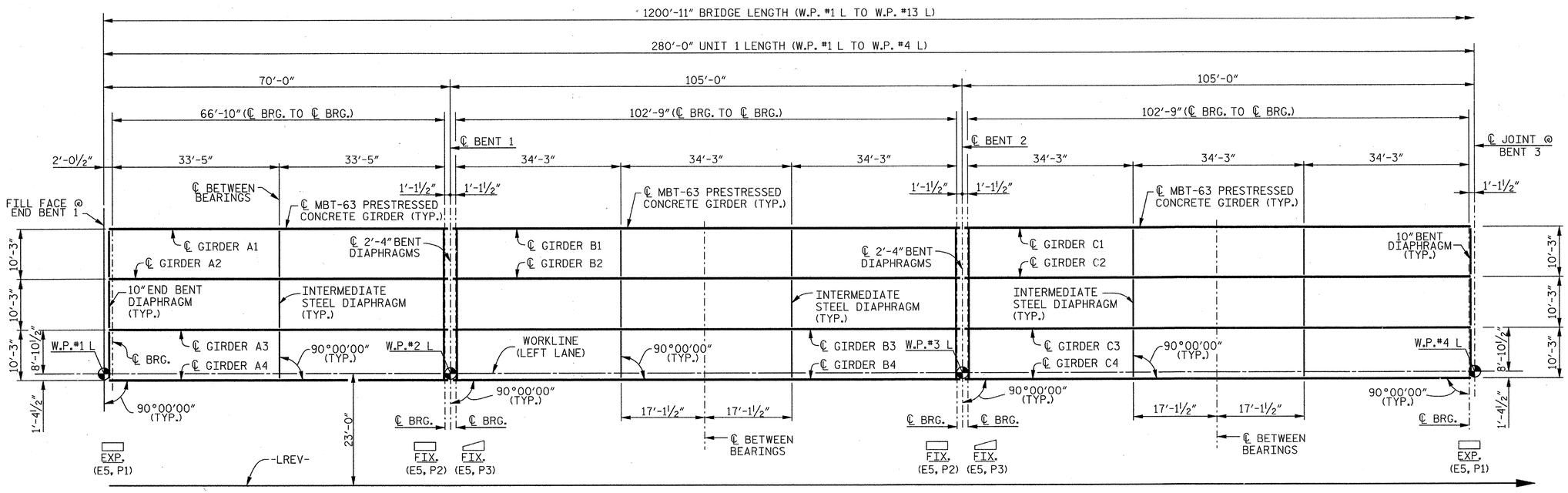


**SPAN "A"** **SPAN "B"** **SPAN "C"**

## FRAMING PLAN – UNIT 1

### NOTES

FOR FRAMING PLAN - UNIT 2, SEE SHEET 2 OF 4.

FOR INTERMEDIATE STEEL DIAPHRAGM DETAILS, SEE "INTERMEDIATE STEEL DIAPHRAGMS FOR 63" MODIFIED BULB TEE PRESTRESSED CONCRETE GIRDERS" SHEET.

PROJECT NO. R-2303D
SAMPSON COUNTY
STATION: 1311+58.00 -LREV-

SHEET 1 OF 4

STATE OF NORTH CAROLINA
DEPARTMENT OF TRANSPORTATION
RALEIGH

SUPERSTRUCTURE

FRAMING PLAN
(UNIT 1)
(LEFT LANE)

CDM Smith
Camp Dresser & McKee
421 Fayetteville Street, Suite 1303
Raleigh, NC 27604
NC COA No. F-1255

DRAWN BY : C.E.DIXON DATE : 10-12
CHECKED BY : J.T.ECKEL DATE : 10-12
DESIGN ENGINEER : P.R. HOLSHOUSER DATE : 1-13

DWG. No. S01-020

NORTH CAROLINA PROFESSIONAL SEAL 20668 ENGINEER PAUL R. HOLSHOUSER
2/04/2013

| REVISIONS | | | | | | SHEET No. |
|---|---|---|---|---|---|---|
| No. | BY: | DATE: | No. | BY: | DATE: | S-20 |
| 1 | | | 3 | | | TOTAL SHEETS |
| 2 | | | 4 | | | 218 |

FILE: R:\NCDOT\R2303D\STRUCTURES\PLANS\Sr_1\R2303D_SD_Sn1_fp1.dgn
DATE: 1/2/2013 8:31:05 AM

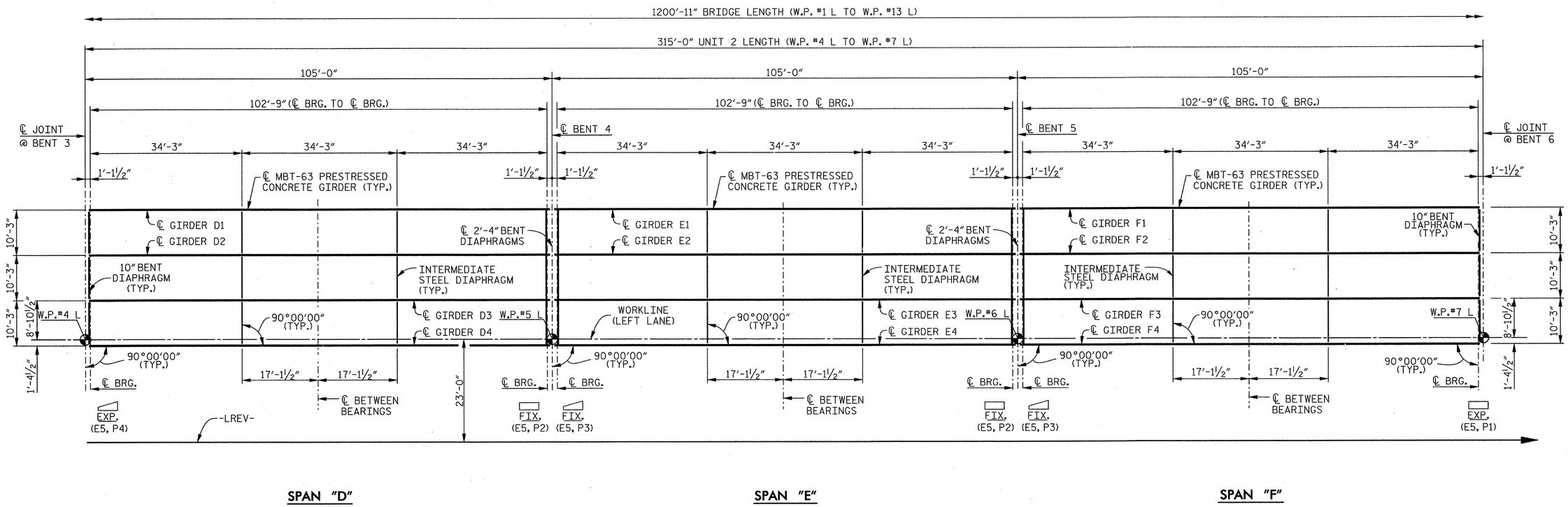


SPAN "D" SPAN "E" SPAN "F"

## FRAMING PLAN – UNIT 2

### NOTES

FOR FRAMING PLAN - UNIT 1, SEE SHEET 1 OF 4.

FOR FRAMING PLAN - UNIT 3, SEE SHEET 3 OF 4.

FOR INTERMEDIATE STEEL DIAPHRAGM DETAILS, SEE "INTERMEDIATE STEEL DIAPHRAGMS FOR 63" MODIFIED BULB TEE PRESTRESSED CONCRETE GIRDERS" SHEET.

PROJECT NO. R-2303D

SAMPSON COUNTY

STATION: 1311+58.00 -LREV-

SHEET 2 OF 4

STATE OF NORTH CAROLINA
DEPARTMENT OF TRANSPORTATION
RALEIGH

SUPERSTRUCTURE

FRAMING PLAN (UNIT 2)

(LEFT LANE)

CDM Smith

Camp Dresser & McKee
421 Fayetteville Street, Suite 1303
Raleigh, NC 27604
NC COA No. F-1255

DRAWN BY : C.E.DIXON DATE : 10-12
CHECKED BY : J.T.ECKEL DATE : 10-12
DESIGN ENGINEER : P.R. HOLSHOUSER DATE : 1-13

DWG. No. S01-021

NORTH CAROLINA PROFESSIONAL SEAL 20668 ENGINEER PAUL R. HOLSHOUSER 2/08/2013

| REVISIONS | | | | | | SHEET No. |
|---|---|---|---|---|---|---|
| No. | BY: | DATE: | No. | BY: | DATE: | S-21 |
| 1 | | | 3 | | | TOTAL SHEETS |
| 2 | | | 4 | | | 218 |

FILE: R:\NCDOT\R2303D\STRUCTURES\PLANS\Sr_1\R2303D_SD_Sn1_fp2.dgn
DATE: 12/3/2012 9:26:11 AM

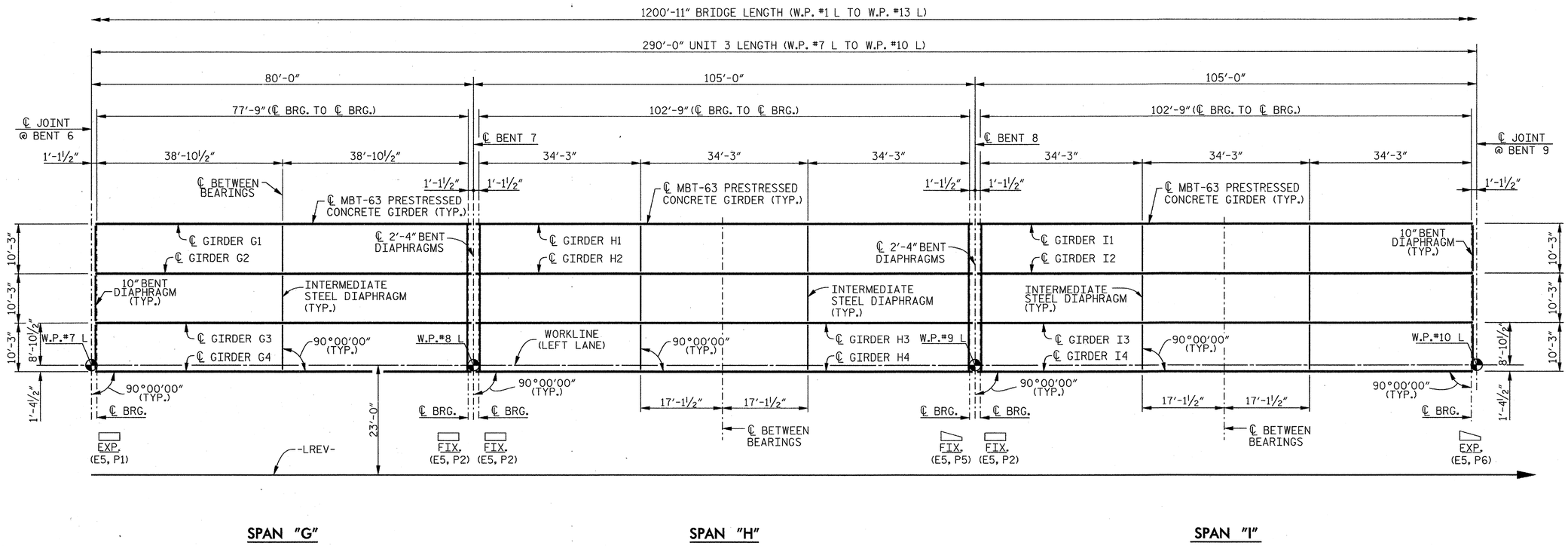


## FRAMING PLAN – UNIT 3

### NOTES

FOR FRAMING PLAN - UNIT 2, SEE SHEET 2 OF 4.

FOR FRAMING PLAN - UNIT 4, SEE SHEET 4 OF 4.

FOR INTERMEDIATE STEEL DIAPHRAGM DETAILS, SEE "INTERMEDIATE STEEL DIAPHRAGMS FOR 63" MODIFIED BULB TEE PRESTRESSED CONCRETE GIRDERS" SHEET.

PROJECT NO. R-2303D

SAMPSON COUNTY

STATION: 1311+58.00 -LREV-

SHEET 3 OF 4

STATE OF NORTH CAROLINA
DEPARTMENT OF TRANSPORTATION
RALEIGH

SUPERSTRUCTURE

FRAMING PLAN (UNIT 3)

(LEFT LANE)

CDM Smith

Camp Dresser & McKee
421 Fayetteville Street, Suite 1303
Raleigh, NC 27604
NC COA No. F-1255

DRAWN BY : C.E.DIXON DATE : 10-12
CHECKED BY : J.T.ECKEL DATE : 10-12
DESIGN ENGINEER : P.R. HOLSHOUSER DATE : 1-13

DWG. No. S01-022

NORTH CAROLINA PROFESSIONAL SEAL 20668 ENGINEER PAUL R. HOLSHOUSER
2/08/2013

| REVISIONS | | | | | | |
|---|---|---|---|---|---|---|
| No. | BY: | DATE: | No. | BY: | DATE: | |
| 1 | | | 3 | | | |
| 2 | | | 4 | | | |

SHEET No. S-22

TOTAL SHEETS 218

FILE: R:\NCDOT\R2303D\STRUCTURES\PLANS\Sv_1\R2303D_SD_Sn1_b3.dgn
DATE: 12/3/2012 9:26:12 AM

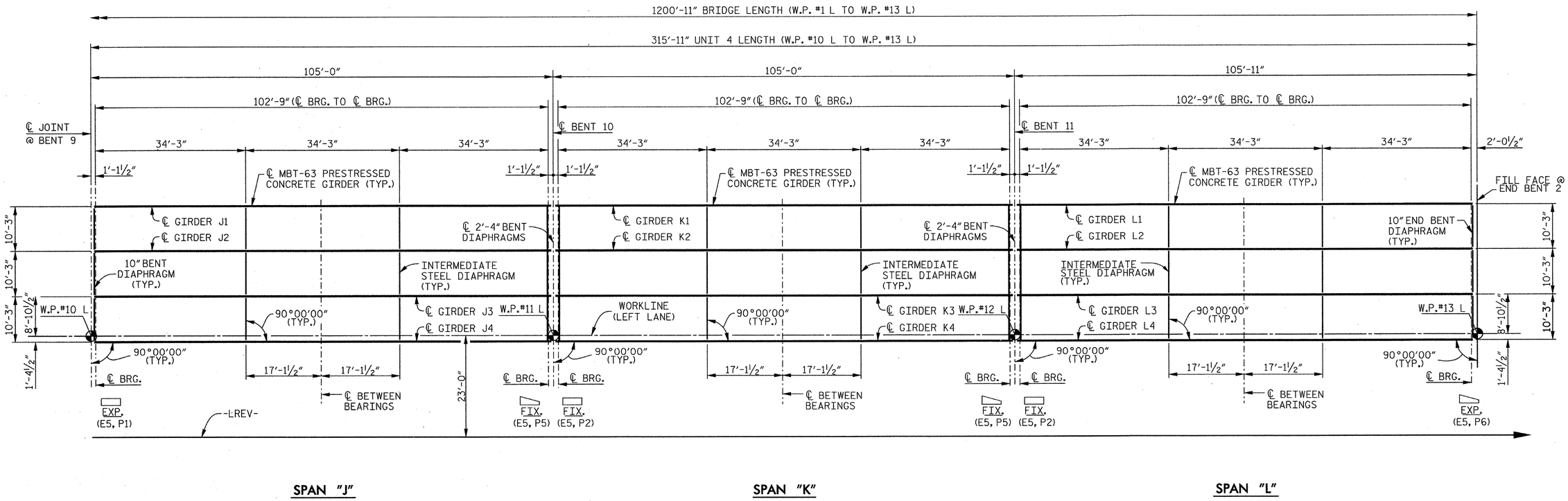


## FRAMING PLAN – UNIT 4

### NOTES

FOR FRAMING PLAN - UNIT 3, SEE SHEET 3 OF 4.

FOR INTERMEDIATE STEEL DIAPHRAGM DETAILS, SEE "INTERMEDIATE STEEL DIAPHRAGMS FOR 63" MODIFIED BULB TEE PRESTRESSED CONCRETE GIRDERS" SHEET.

PROJECT NO. R-2303D

SAMPSON COUNTY

STATION: 1311+58.00 -LREV-

SHEET 4 OF 4

STATE OF NORTH CAROLINA
DEPARTMENT OF TRANSPORTATION
RALEIGH

SUPERSTRUCTURE

FRAMING PLAN (UNIT 4)

(LEFT LANE)

CDM Smith

Camp Dresser & McKee
421 Fayetteville Street, Suite 1303
Raleigh, NC 27604
NC COA No. F-1255

DRAWN BY : C.E.DIXON DATE : 10-12
CHECKED BY : J.T.ECKEL DATE : 10-12
DESIGN ENGINEER : P.R. HOLSHOUSER DATE : 1-13

DWG. No. S01-023

NORTH CAROLINA PROFESSIONAL SEAL 20668 ENGINEER PAUL R. HOLSHOUSER 2/08/2013

| REVISIONS | | | | | | SHEET No. |
|---|---|---|---|---|---|---|
| No. | BY: | DATE: | No. | BY: | DATE: | S-23 |
| 1 | | | 3 | | | TOTAL SHEETS |
| 2 | | | 4 | | | 218 |

FILE: R:\NCDOT\R2303D\STRUCTURES\PLANS\Str_1\R2303D_SD_Str1_fp4.dgn
DATE: 12/3/2012 9:26:13 AM

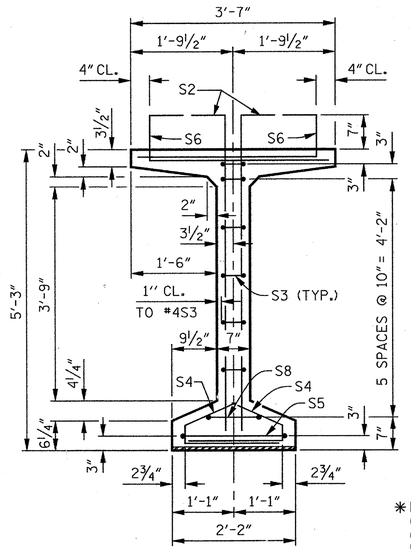


SECTION A–A

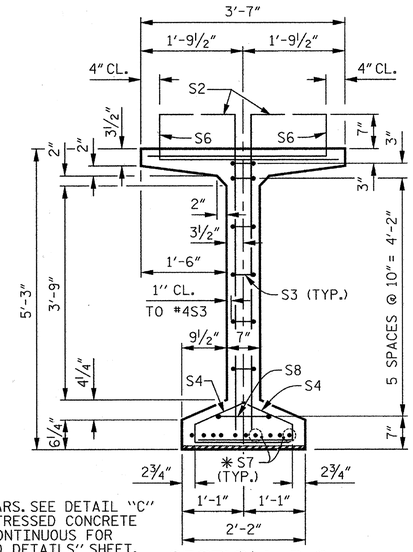


✱FOR S7 BARS. SEE DETAIL "C" OF "PRESTRESSED CONCRETE GIRDER CONTINUOUS FOR LIVE LOAD DETAILS" SHEET.

SECTION B–B

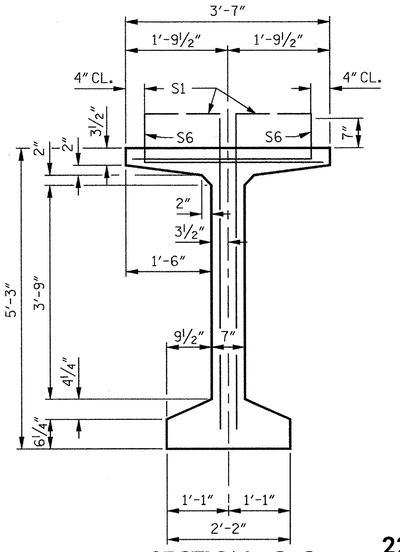


SECTION C–C
(S9 BARS NOT SHOWN)

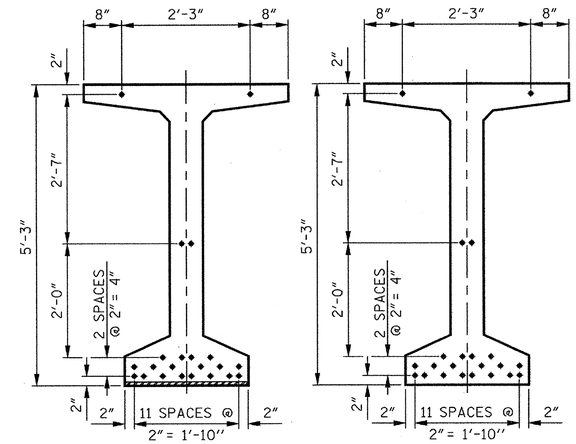


## 22 – 0.6" Ø LOW RELAXATION STRAND LAYOUT

**DEBONDING LEGEND**

- FULLY BONDED STRANDS

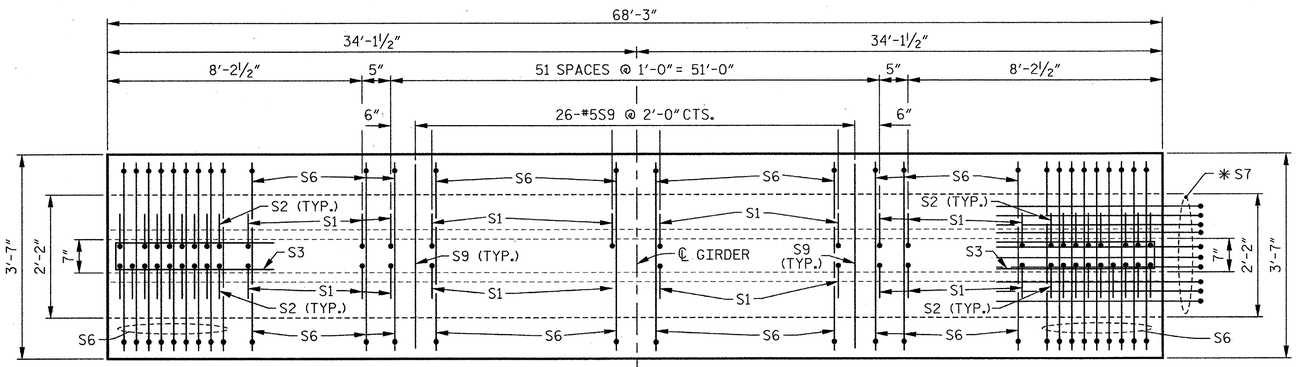


PLAN OF GIRDER

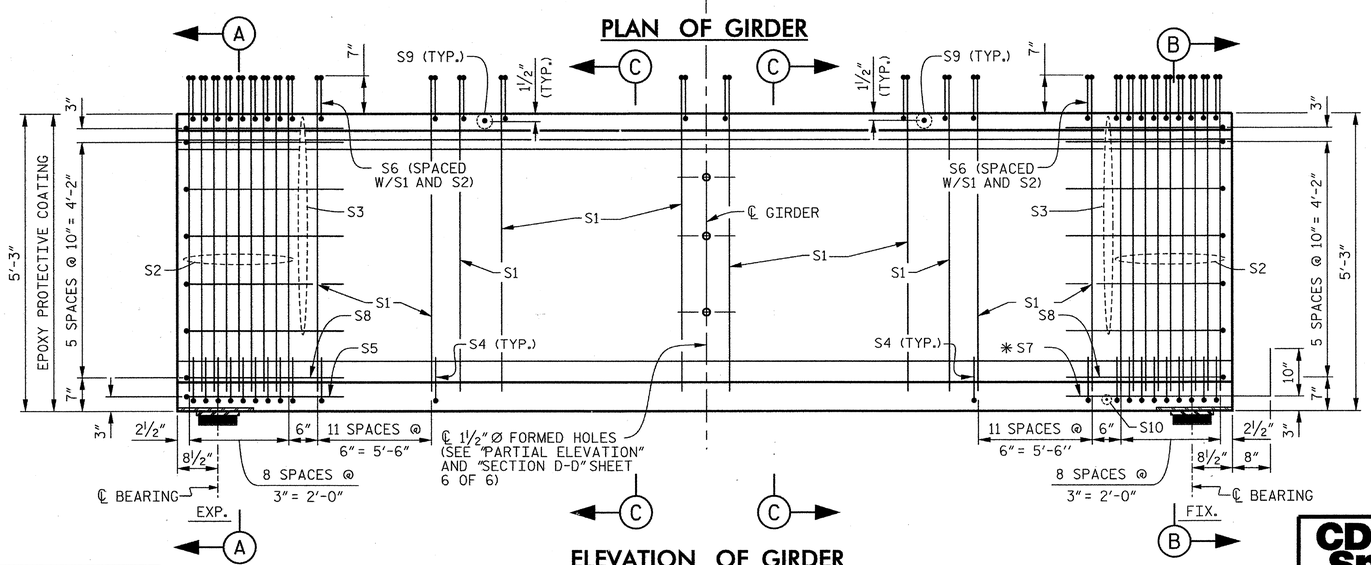


ELEVATION OF GIRDER

| 0.6" Ø L. R. GRADE 270 STRANDS | | |
|---|---|---|
| AREA (SQUARE INCHES) | ULTIMATE STRENGTH (LBS. PER STRAND) | APPLIED PRESTRESS (LBS. PER STRAND) |
| 0.217 | 58,600 | 43,950 |

**REINFORCING STEEL FOR ONE GIRDER**

| BAR | NUMBER | SIZE | TYPE | LENGTH | WEIGHT |
|---|---|---|---|---|---|
| S1 | 152 | #4 | 1 | 6'- 2" | 626 |
| S2 | 36 | #5 | 1 | 6'- 2" | 232 |
| S3 | 12 | #4 | 2 | 8'- 5" | 67 |
| S4 | 84 | #4 | 3 | 3'- 0" | 168 |
| S5 | 1 | #5 | 2 | 9'- 10" | 10 |
| S6 | 188 | #5 | 4 | 4'- 5" | 866 |
| ✱S7 | 10 | #5 | STR | 3'- 8" | 38 |
| S8 | 2 | #5 | 2 | 9'- 0" | 19 |
| S9 | 26 | #5 | STR | 3'- 3" | 88 |
| S10 | 1 | #3 | STR | 1'- 10" | 1 |
| S11 | 4 | #5 | 2 | 10'- 2" | 42 |
| S12 | 8 | #4 | STR | 8'- 0" | 43 |

✱NOTE: S7 BARS SHALL BE BENT BEFORE SHIPMENT. HEAT BENDING SHALL NOT BE ALLOWED.

**BAR TYPES**

ALL BAR DIMENSIONS ARE OUT-TO-OUT.

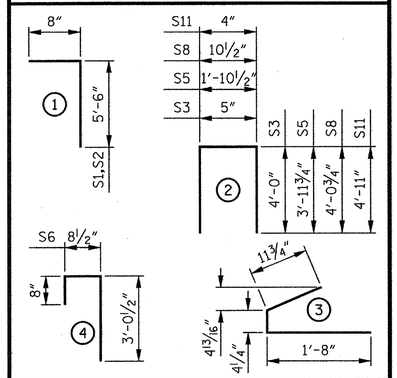


**QUANTITIES FOR ONE GIRDER**

| REINFORCING STEEL | 5,500 PSI CONCRETE | 0.6" Ø L.R. STRANDS |
|---|---|---|
| LB. | C.Y. | No. |
| 2,200 | 13.5 | 22 |

**GIRDERS REQUIRED**

| NUMBER | LENGTH | TOTAL LENGTH |
|---|---|---|
| 4 | 68'-3" | 273.000' |

PROJECT NO. R–2303D

SAMPSON COUNTY

STATION: 1311+58.00 –LREV–

SHEET 1 OF 6

STATE OF NORTH CAROLINA
DEPARTMENT OF TRANSPORTATION
RALEIGH

# STANDARD 63" PRESTRESSED CONCRETE MODIFIED BULB TEE CONTINUOUS FOR LIVE LOAD SPAN A (LEFT LANE)

| ASSEMBLED BY : C.E.DIXON | DATE : 10-12 |
|---|---|
| CHECKED BY : J.T.ECKEL | DATE : 10-12 |
| DRAWN BY : EEM 2/6/97 | REV. 10/17/00 RWW/LES |
| CHECKED BY : VAP 2/6/97 | REV. 5/1/06R TLA/GM |
| | REV. 10/1/11 MAA/GM |

CDM Smith
Camp Dresser & McKee
421 Fayetteville Street, Suite 1303
Raleigh, NC 27604
NC COA No. F-1255

| DRAWN BY : C.E.DIXON | DATE : 10-12 |
|---|---|
| CHECKED BY : J.T.ECKEL | DATE : 10-12 |
| DESIGN ENGINEER : P.R. HOLSHOUSER | DATE : 1-13 |

DWG. No. S01-024

NORTH CAROLINA PROFESSIONAL SEAL 20668 ENGINEER PAUL R. HOLSHOUSER 2/08/2013

REVISIONS

| No. | BY: | DATE: | No. | BY: | DATE: |
|---|---|---|---|---|---|
| 1 | | | 3 | | |
| 2 | | | 4 | | |

SHEET No. S-24

TOTAL SHEETS 218

STD. No. PCG7

FILE: R:\NCDOT\R2303D\STRUCTURES\PLANS\Sr_1\R2303D_SD_Sr1_pg1.dgn
DATE: 12/12/2012 9:26:14 AM

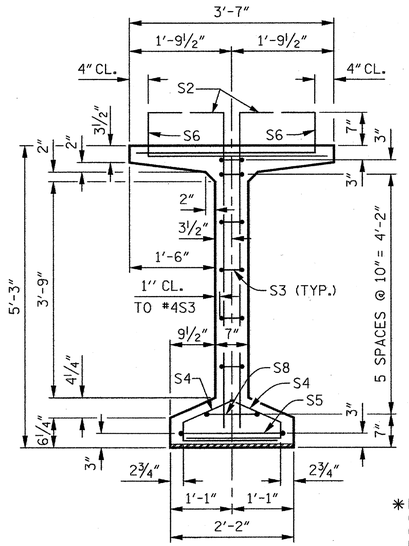


## SECTION A–A

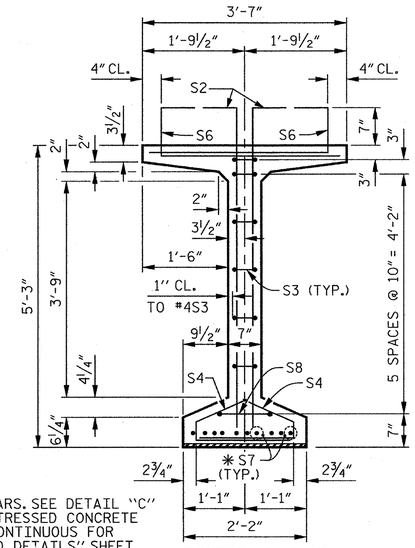


*FOR S7 BARS. SEE DETAIL "C" OF "PRESTRESSED CONCRETE GIRDER CONTINUOUS FOR LIVE LOAD DETAILS" SHEET.

## SECTION B–B

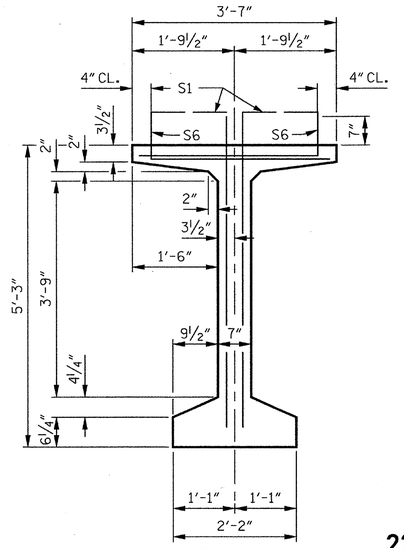


## SECTION C–C

(S9 BARS NOT SHOWN)

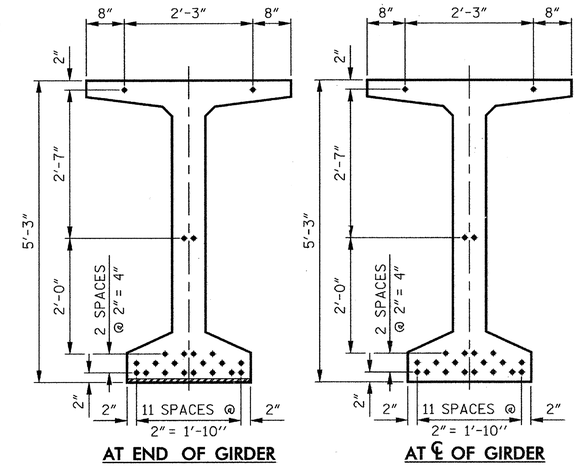


## 22 – 0.6" Ø LOW RELAXATION STRAND LAYOUT

### DEBONDING LEGEND

- FULLY BONDED STRANDS

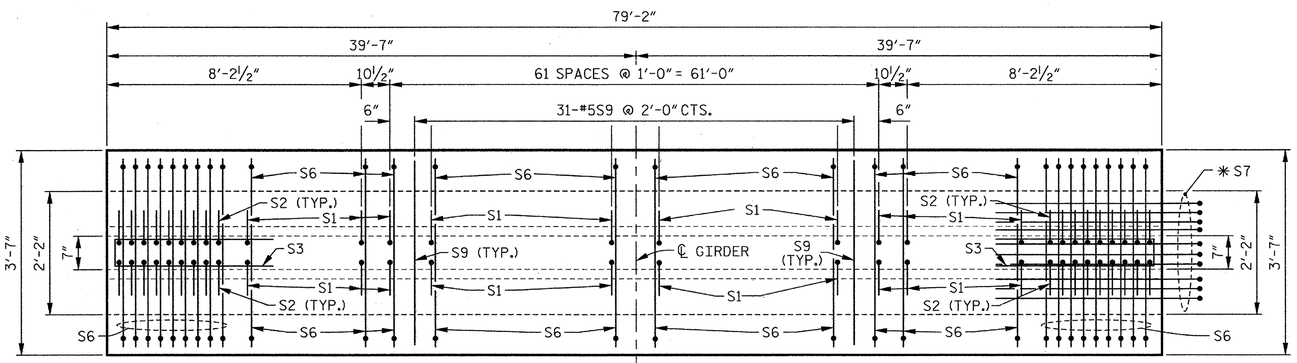


## PLAN OF GIRDER

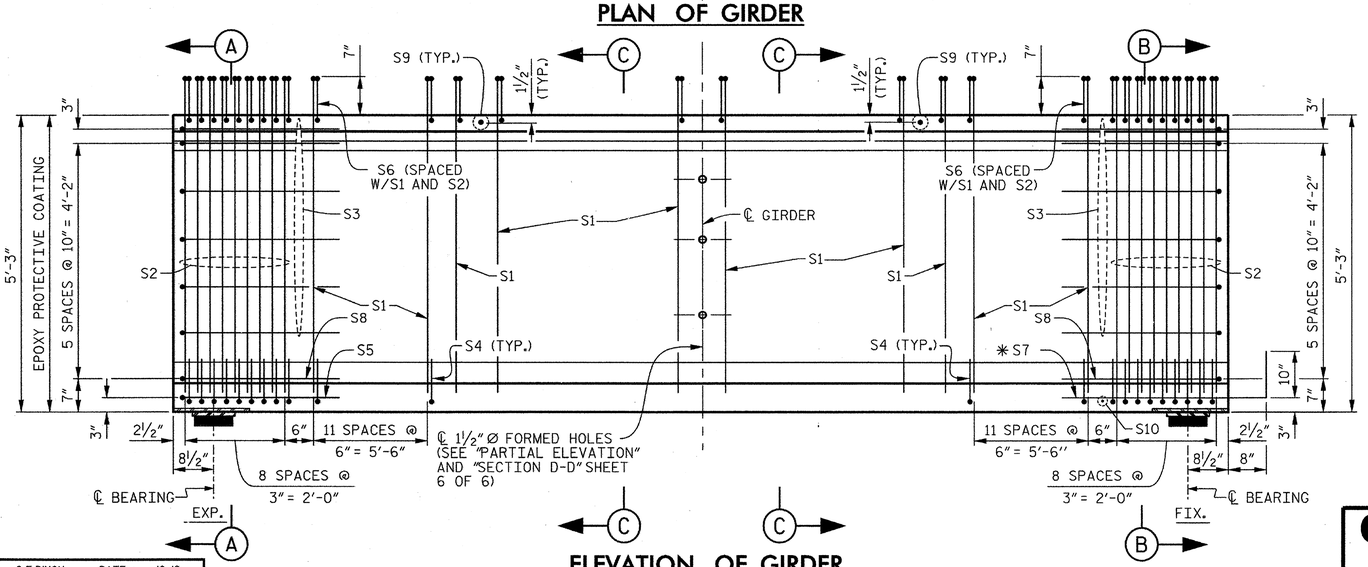


## ELEVATION OF GIRDER

### 0.6" Ø L. R. GRADE 270 STRANDS

| AREA (SQUARE INCHES) | ULTIMATE STRENGTH (LBS. PER STRAND) | APPLIED PRESTRESS (LBS. PER STRAND) |
|---|---|---|
| 0.217 | 58,600 | 43,950 |

### REINFORCING STEEL FOR ONE GIRDER

| BAR | NUMBER | SIZE | TYPE | LENGTH | WEIGHT |
|---|---|---|---|---|---|
| S1 | 172 | #4 | 1 | 6'- 2" | 709 |
| S2 | 36 | #5 | 1 | 6'- 2" | 232 |
| S3 | 12 | #4 | 2 | 8'- 5" | 67 |
| S4 | 84 | #4 | 3 | 3'- 0" | 168 |
| S5 | 1 | #5 | 2 | 9'-10" | 10 |
| S6 | 208 | #5 | 4 | 4'- 5" | 958 |
| * S7 | 10 | #5 | STR | 3'- 8" | 38 |
| S8 | 2 | #5 | 2 | 9'- 0" | 19 |
| S9 | 31 | #5 | STR | 3'- 3" | 105 |
| S10 | 1 | #3 | STR | 1'- 10" | 1 |
| S11 | 4 | #5 | 2 | 10'- 2" | 42 |
| S12 | 8 | #4 | STR | 8'- 0" | 43 |

* NOTE: S7 BARS SHALL BE BENT BEFORE SHIPMENT. HEAT BENDING SHALL NOT BE ALLOWED.

### BAR TYPES

ALL BAR DIMENSIONS ARE OUT-TO-OUT.

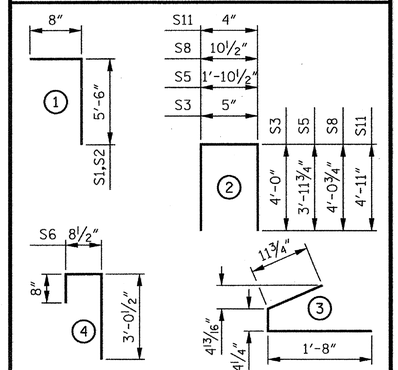


### QUANTITIES FOR ONE GIRDER

| REINFORCING STEEL | 5,500 PSI CONCRETE | 0.6" Ø L.R. STRANDS |
|---|---|---|
| LB. | C.Y. | No. |
| 2,392 | 15.7 | 22 |

### GIRDERS REQUIRED

| NUMBER | LENGTH | TOTAL LENGTH |
|---|---|---|
| 4 | 79'-2" | 316.667' |

PROJECT NO. R-2303D

SAMPSON COUNTY

STATION: 1311+58.00 -LREV-

SHEET 2 OF 6

STATE OF NORTH CAROLINA
DEPARTMENT OF TRANSPORTATION
RALEIGH

STANDARD
63" PRESTRESSED CONCRETE
MODIFIED BULB TEE CONTINUOUS
FOR LIVE LOAD
SPAN G
(LEFT LANE)

CDM Smith
Camp Dresser & McKee
421 Fayetteville Street, Suite 1303
Raleigh, NC 27604
NC COA No. F-1255

DRAWN BY : C.E.DIXON DATE : 10-12
CHECKED BY : J.T.ECKEL DATE : 10-12
DESIGN ENGINEER : P.R. HOLSHOUSER DATE : 1-13

DWG. No. S01-025

NORTH CAROLINA PROFESSIONAL SEAL 20668 ENGINEER PAUL R. HOLSHOUSER 2/08/2013

| REVISIONS | | | | | | |
|---|---|---|---|---|---|---|
| No. | BY: | DATE: | No. | BY: | DATE: | |
| 1 | | | 3 | | | |
| 2 | | | 4 | | | |

SHEET No. S-25
TOTAL SHEETS 218

STD. No. PCG7

| | | | |
|---|---|---|---|
| ASSEMBLED BY : | C.E.DIXON | DATE : | 10-12 |
| CHECKED BY : | J.T.ECKEL | DATE : | 10-12 |
| DRAWN BY : EEM 2/6/97 | REV. 10/17/00 | RWW/LES | |
| CHECKED BY : VAP 2/6/97 | REV. 5/1/06R | TLA/GM | |
| | REV. 10/1/11 | MAA/GM | |

FILE: R:\NCDOT\R2303D\STRUCTURES\PLANS\Sr_1\R2303D_SD_Sr1_pg2.dgn
DATE: 12/3/2012 9:26:16 AM

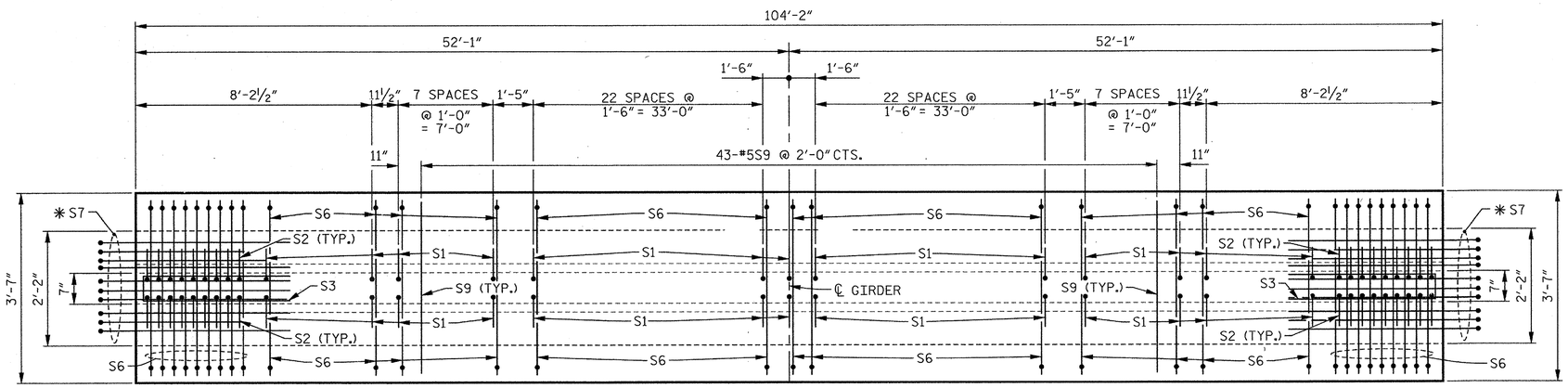


## PLAN OF GIRDER

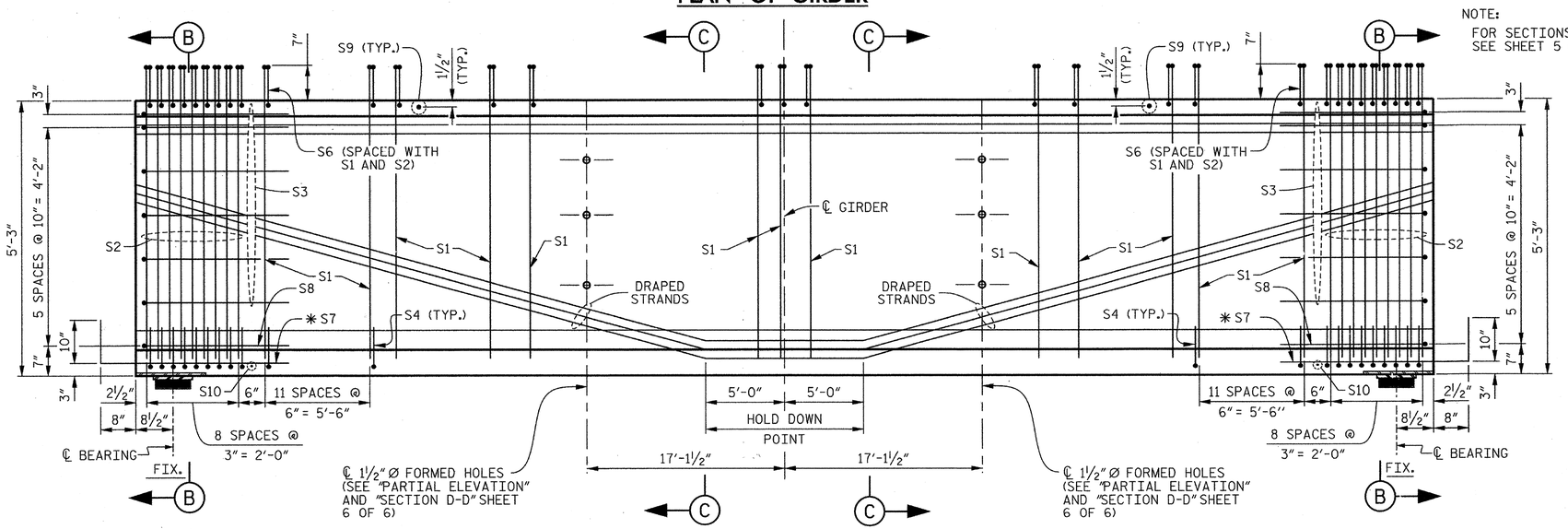


## ELEVATION OF GIRDER

NOTE:
FOR SECTIONS B-B AND C-C, SEE SHEET 5 OF 6.

### 0.6" Ø L. R. GRADE 270 STRANDS

| AREA (SQUARE INCHES) | ULTIMATE STRENGTH (LBS. PER STRAND) | APPLIED PRESTRESS (LBS. PER STRAND) |
|---|---|---|
| 0.217 | 58,600 | 43,950 |

### REINFORCING STEEL FOR ONE GIRDER

| BAR | NUMBER | SIZE | TYPE | LENGTH | WEIGHT |
|---|---|---|---|---|---|
| S1 | 172 | #4 | 1 | 6'- 2" | 709 |
| S2 | 36 | #5 | 1 | 6'- 2" | 232 |
| S3 | 12 | #4 | 2 | 8'- 5" | 67 |
| S4 | 84 | #4 | 3 | 3'- 0" | 168 |
| S6 | 208 | #5 | 4 | 4'- 5" | 958 |
| ✱S7 | 20 | #5 | STR | 3'- 8" | 76 |
| S8 | 2 | #5 | 2 | 9'- 0" | 19 |
| S9 | 43 | #5 | STR | 3'- 3" | 146 |
| S10 | 2 | #3 | STR | 1'- 10" | 1 |
| S11 | 8 | #5 | 2 | 10'- 2" | 85 |
| S12 | 16 | #4 | STR | 8'- 0" | 86 |

✱NOTE: S7 BARS SHALL BE BENT BEFORE SHIPMENT. HEAT BENDING SHALL NOT BE ALLOWED.

### BAR TYPES

ALL BAR DIMENSIONS ARE OUT-TO-OUT.

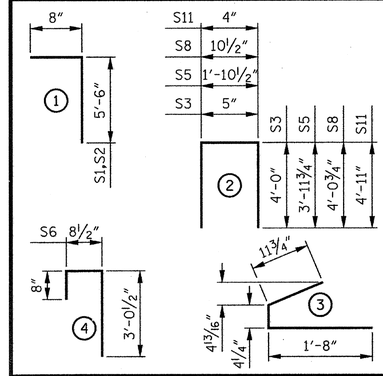


### QUANTITIES FOR ONE GIRDER

| REINFORCING STEEL | 8,000 PSI CONCRETE | 0.6" Ø L.R. STRANDS |
|---|---|---|
| LB. | C.Y. | No. |
| 2,547 | 20.6 | 36 |

### GIRDERS REQUIRED

| NUMBER | LENGTH | TOTAL LENGTH |
|---|---|---|
| 16 | 104'-2" | 1,666.667' |

PROJECT NO. R-2303D
SAMPSON COUNTY
STATION: 1311+58.00 -LREV-

SHEET 3 OF 6

STATE OF NORTH CAROLINA
DEPARTMENT OF TRANSPORTATION
RALEIGH

STANDARD
63" PRESTRESSED CONCRETE MODIFIED BULB TEE CONTINUOUS FOR LIVE LOAD SPANS B, E, H AND K
(LEFT LANE)

CDM Smith
Camp Dresser & McKee
421 Fayetteville Street, Suite 1303
Raleigh, NC 27604
NC COA No. F-1255

DRAWN BY : C.E.DIXON DATE : 10-12
CHECKED BY : J.T.ECKEL DATE : 10-12
DESIGN ENGINEER : P.R. HOLSHOUSER DATE : 1-13
DWG. No. S01-026

NORTH CAROLINA PROFESSIONAL SEAL 20668 ENGINEER PAUL R. HOLSHOUSER
1/28/2013

| REVISIONS | | | | | | |
|---|---|---|---|---|---|---|
| No. | BY: | DATE: | No. | BY: | DATE: | |
| 1 | | | 3 | | | |
| 2 | | | 4 | | | |

SHEET No. S-26
TOTAL SHEETS 218

STD. No. PCG7

ASSEMBLED BY : C.E.DIXON DATE : 10-12
CHECKED BY : J.T.ECKEL DATE : 10-12
DRAWN BY : EEM 2/6/97 REV. 10/17/00 RWW/LES
CHECKED BY : VAP 2/6/97 REV. 5/1/06R TLA/GM
REV. 10/1/11 MAA/GM

FILE: R:\NCDOT\R2303D\STRUCTURES\PLANS\Sr_1\R2303D_SD_Sr1_pg3.dgn
DATE: 12/31/2012 9:26:18 AM

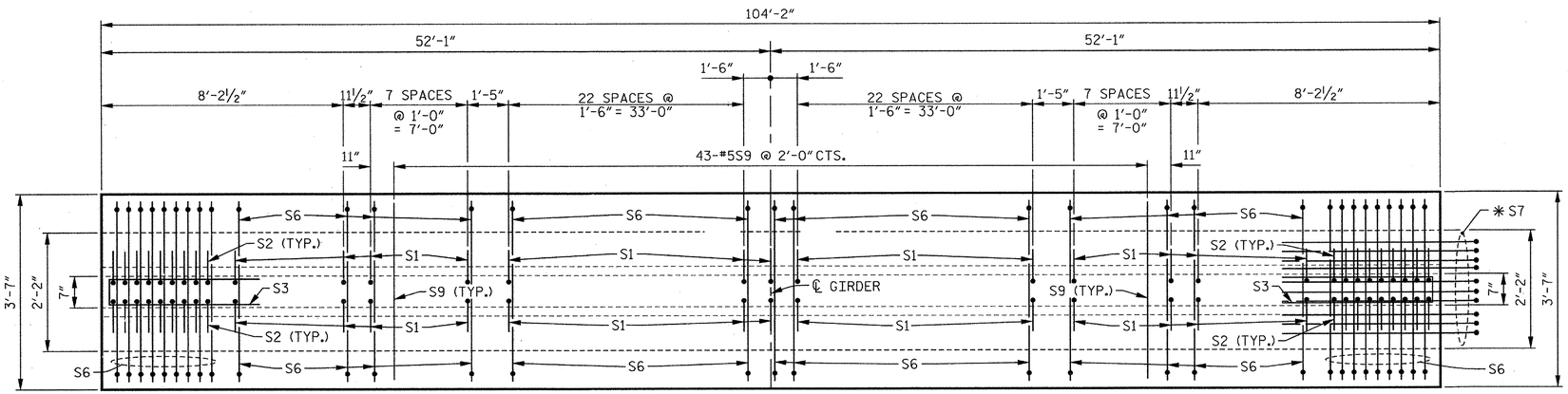


## PLAN OF GIRDER

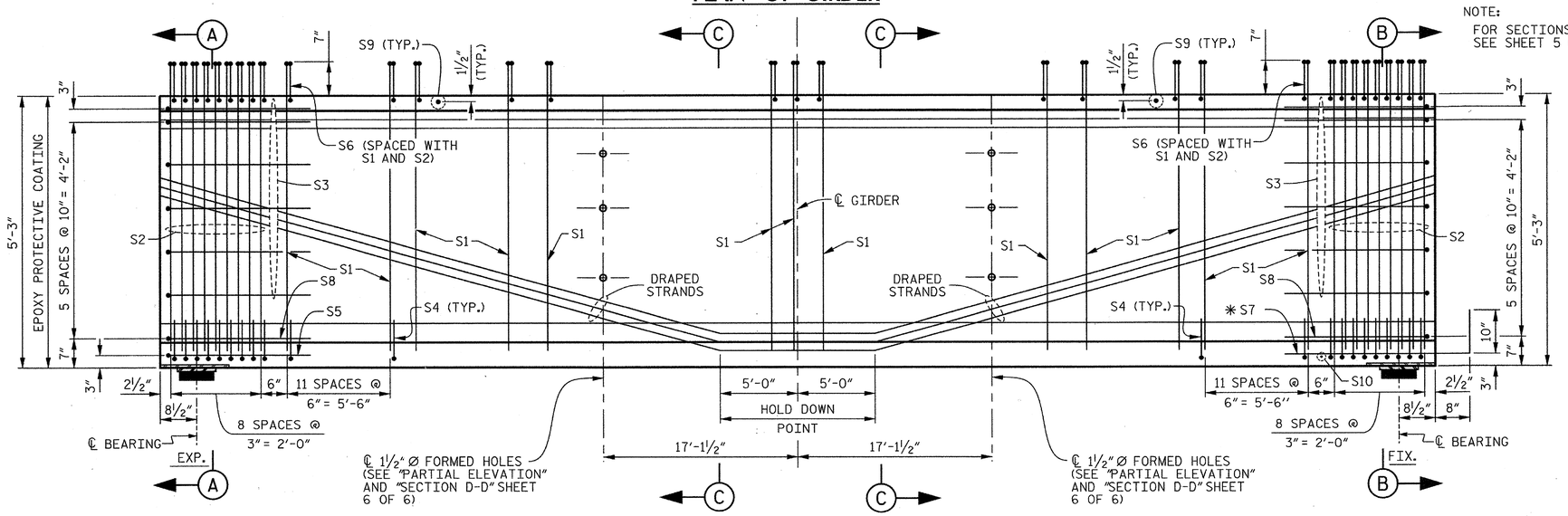


## ELEVATION OF GIRDER

NOTE:
FOR SECTIONS A-A, B-B AND C-C, SEE SHEET 5 OF 6.

### 0.6" Ø L. R. GRADE 270 STRANDS

| AREA (SQUARE INCHES) | ULTIMATE STRENGTH (LBS. PER STRAND) | APPLIED PRESTRESS (LBS. PER STRAND) |
|---|---|---|
| 0.217 | 58,600 | 43,950 |

### REINFORCING STEEL FOR ONE GIRDER

| BAR | NUMBER | SIZE | TYPE | LENGTH | WEIGHT |
|---|---|---|---|---|---|
| S1 | 172 | #4 | 1 | 6'- 2" | 709 |
| S2 | 36 | #5 | 1 | 6'- 2" | 232 |
| S3 | 12 | #4 | 2 | 8'- 5" | 67 |
| S4 | 84 | #4 | 3 | 3'- 0" | 168 |
| S5 | 1 | #5 | 2 | 9'-10" | 10 |
| S6 | 208 | #5 | 4 | 4'- 5" | 958 |
| ✱ S7 | 10 | #5 | STR | 3'- 8" | 38 |
| S8 | 2 | #5 | 2 | 9'- 0" | 19 |
| S9 | 43 | #5 | STR | 3'- 3" | 146 |
| S10 | 1 | #3 | STR | 1'-10" | 1 |
| S11 | 8 | #5 | 2 | 10'- 2" | 85 |
| S12 | 16 | #4 | STR | 8'- 0" | 86 |

✱ NOTE: S7 BARS SHALL BE BENT BEFORE SHIPMENT. HEAT BENDING SHALL NOT BE ALLOWED.

### BAR TYPES

ALL BAR DIMENSIONS ARE OUT-TO-OUT.

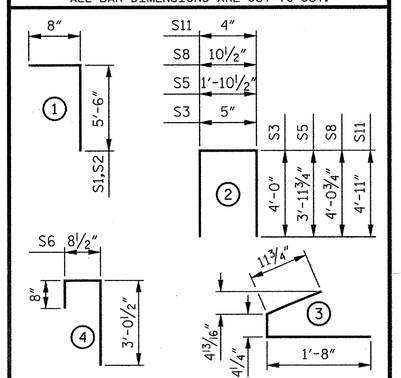


### QUANTITIES FOR ONE GIRDER

| REINFORCING STEEL | 8,000 PSI CONCRETE | 0.6" Ø L.R. STRANDS |
|---|---|---|
| LB. | C.Y. | No. |
| 2,519 | 20.6 | 36 |

### GIRDERS REQUIRED

| NUMBER | LENGTH | TOTAL LENGTH |
|---|---|---|
| 24 | 104'-2" | 2,500.000' |

PROJECT NO. R-2303D
SAMPSON COUNTY
STATION: 1311+58.00 -LREV-

SHEET 4 OF 6

STATE OF NORTH CAROLINA
DEPARTMENT OF TRANSPORTATION
RALEIGH

STANDARD
63" PRESTRESSED CONCRETE
MODIFIED BULB TEE CONTINUOUS
FOR LIVE LOAD
SPANS C, D, F, I, J AND L
(LEFT LANE)

CDM Smith
Camp Dresser & McKee
421 Fayetteville Street, Suite 1303
Raleigh, NC 27604
NC COA No. F-1255

DRAWN BY : C.E.DIXON DATE : 10-12
CHECKED BY : J.T.ECKEL DATE : 10-12
DESIGN ENGINEER : P.R. HOLSHOUSER DATE : 1-13
DWG. No. S01-027

NORTH CAROLINA PROFESSIONAL SEAL 20668 ENGINEER PAUL R. HOLSHOUSER 2/08/2013

| REVISIONS | | | | | | |
|---|---|---|---|---|---|---|
| No. | BY: | DATE: | No. | BY: | DATE: | |
| 1 | | | 3 | | | |
| 2 | | | 4 | | | |

SHEET No. S-27
TOTAL SHEETS 218

STD. No. PCG7

ASSEMBLED BY : C.E.DIXON DATE : 10-12
CHECKED BY : J.T.ECKEL DATE : 10-12
DRAWN BY : EEM 2/6/97 REV. 10/17/00 RWW/LES
CHECKED BY : VAP 2/6/97 REV. 5/1/06R TLA/GM
REV. 10/1/11 MAA/GM

FILE: R:\NCDOT\R2303D\STRUCTURES\PLANS\Sr_1\R2303D_SD_Sr1_pg4.dgn
DATE: 12/12/2012 9:26:19 AM

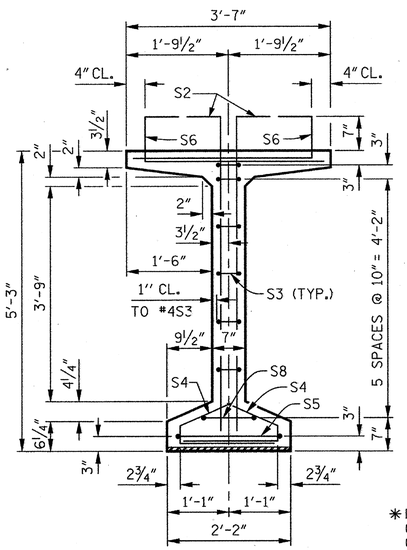


SECTION A–A

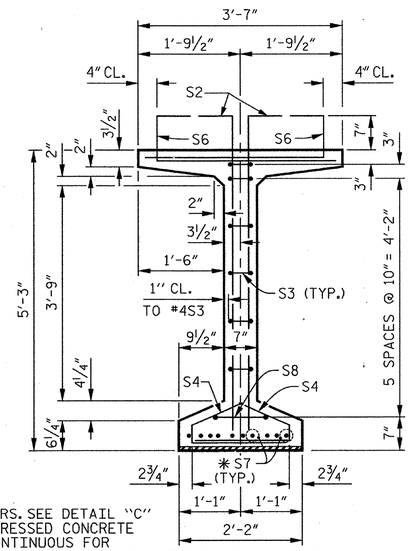


*FOR S7 BARS. SEE DETAIL "C" OF "PRESTRESSED CONCRETE GIRDER CONTINUOUS FOR LIVE LOAD DETAILS" SHEET.

SECTION B–B

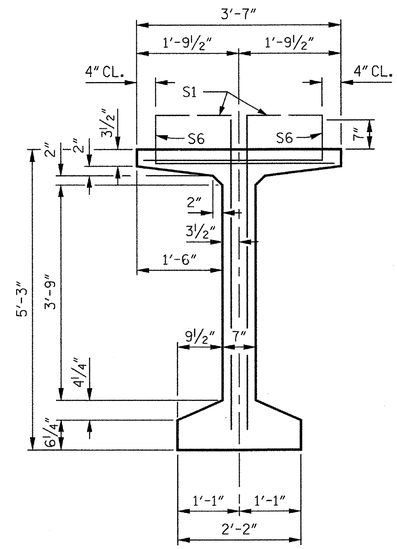


SECTION C–C
(S9 BARS NOT SHOWN)

## DEBONDING LEGEND

- ● FULLY BONDED STRANDS
- ⊡ STRANDS DEBONDED FOR 2'-0" FROM END OF GIRDER
- ◬ STRANDS DEBONDED FOR 4'-0" FROM END OF GIRDER

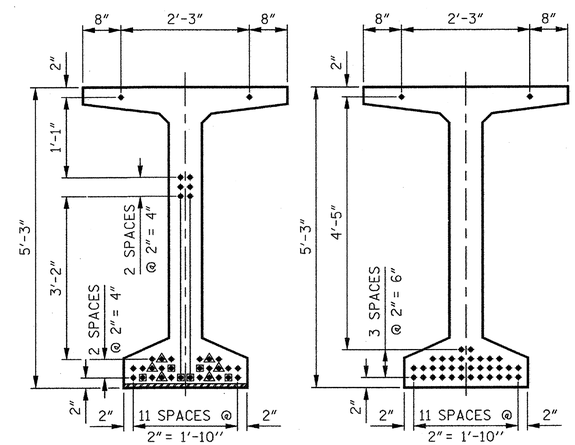


AT END OF GIRDER

AT ℄ OF GIRDER

## 36 – 0.6" Ø LOW RELAXATION STRAND LAYOUT

PROJECT NO. R–2303D

SAMPSON COUNTY

STATION: 1311+58.00 –LREV–

SHEET 5 OF 6

STATE OF NORTH CAROLINA
DEPARTMENT OF TRANSPORTATION
RALEIGH

# STANDARD 63" PRESTRESSED CONCRETE MODIFIED BULB TEE CONTINUOUS FOR LIVE LOAD SPANS B, C, D, E, F, H, I, J, K AND L (LEFT LANE)

| REVISIONS | | | | | | SHEET No. |
|---|---|---|---|---|---|---|
| No. | BY: | DATE: | No. | BY: | DATE: | S-28 |
| 1 | | | 3 | | | TOTAL SHEETS |
| 2 | | | 4 | | | 28 |

CDM Smith
Camp Dresser & McKee
421 Fayetteville Street, Suite 1303
Raleigh, NC 27604
NC COA No. F-1255

DRAWN BY : C.E.DIXON DATE : 10-12
CHECKED BY : J.T.ECKEL DATE : 10-12
DESIGN ENGINEER : P.R. HOLSHOUSER DATE : 1-13

DWG. No. S01-028

NORTH CAROLINA PROFESSIONAL SEAL 20668 ENGINEER PAUL R. HOLSHOUSER 2/08/2013

| | | | |
|---|---|---|---|
| ASSEMBLED BY : | C.E.DIXON | DATE : | 10-12 |
| CHECKED BY : | J.T.ECKEL | DATE : | 10-12 |
| DRAWN BY : EEM 2/6/97 | REV. 10/17/00 | RWW/LES | |
| CHECKED BY : VAP 2/6/97 | REV. 5/1/06R | TLA/GM | |
| | REV. 10/1/11 | MAA/GM | |

FILE: R:\NCDOT\R2303D\STRUCTURES\PLANS\Sr_1\R2303D_SD_Sr1_pg5.dgn
DATE: 12/20/2012 9:26:21 AM

STD. No. PCG7

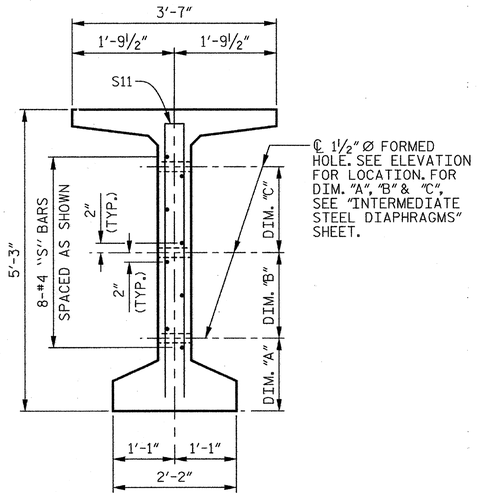


## SECTION E–E

(S1, S6 & S9 BARS NOT SHOWN)

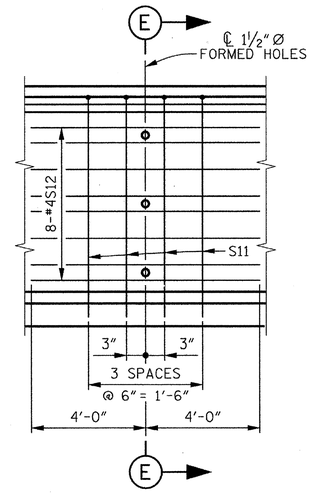


## PARTIAL ELEVATION

## NOTES

ALL PRESTRESSING STRANDS SHALL BE 7-WIRE LOW-RELAXATION GRADE 270 STRANDS AND SHALL CONFORM TO AASHTO M203 EXCEPT FOR SAMPLING REQUIREMENTS WHICH SHALL BE IN ACCORDANCE WITH THE STANDARD SPECIFICATIONS.

ALL REINFORCING STEEL SHALL BE GRADE 60.

APPLY EPOXY PROTECTIVE COATING TO END OF GIRDER SURFACES INDICATED IN ELEVATION VIEW.

EMBEDDED PLATE "B-1" SHALL BE GALVANIZED IN ACCORDANCE WITH THE STANDARD SPECIFICATIONS. BEVEL EDGES OF PLATE "B-1" TO GIVE CLOSE FIT BUT NOT TIGHT FIT TO STEEL CASTING FORM.

ANCHOR STUDS SHALL CONFORM TO AASHTO M169 GRADES 1010 THROUGH 1020 OR APPROVED EQUAL, AND SHALL MEET THE TYPE "B" REQUIREMENTS OF SUBSECTION 7.3 OF THE ANSI/AASHTO/AWS D1.5 BRIDGE WELDING CODE.

AT ENDS OF GIRDERS TO BE EMBEDDED IN CONCRETE DIAPHRAGMS OR END WALLS, PRESTRESSING STRANDS MAY EXTEND A MAXIMUM OF 2" BEYOND THE GIRDER ENDS. OTHERWISE, PRESTRESSING STRANDS SHALL BE CUT FLUSH WITH THE GIRDER ENDS.

THE TRANSFER OF LOAD FROM THE ANCHORAGES TO THE GIRDER SHALL BE DONE WHEN CONCRETE HAS REACHED A COMPRESSIVE STRENGTH OF NOT LESS THAN 6,500 PSI FOR ALL SPANS EXCEPT SPANS A AND G WHICH SHALL HAVE REACHED A COMPRESSIVE STRENGTH OF 4,400 PSI.

DEPENDING ON THE TYPE OF SYSTEM USED TO SUPPORT THE DECK SLAB FORMS, PRESET ANCHORS MAY BE NECESSARY IN THE PRESTRESSED CONCRETE GIRDER.

THE TOP SURFACE OF THE GIRDER, EXCLUDING THE OUTSIDE 4", SHALL BE RAKED TO A DEPTH OF ¼".

WHEN DRAPED STRANDS ARE DETAILED, THE LONGITUDINAL LOCATION OF THE HOLD DOWN DEVICES SHALL BE WITHIN 6" OF THE LOCATION SHOWN AND THE CENTER OF GRAVITY OF THE GROUP OF DRAPED STRANDS SHALL BE LOCATED WITHIN ½" OF THE THEORETICAL LOCATION SHOWN.

A 2" x 2" CHAMFER IS ALLOWED AT THE INTERSECTION OF THE WEB AND THE BOTTOM FLANGE OF THE 63" MODIFIED BULB TEES.

THE CONTRACTOR HAS THE OPTION TO PROVIDE, AT NO ADDITIONAL COST TO THE DEPARTMENT, 2 ADDITIONAL STRANDS AT THE TOP OF THE GIRDER TO FACILITATE TYING OF THE REINFORCING STEEL. THESE STRANDS SHALL BE PULLED TO A LOAD OF 4,500 lbs.

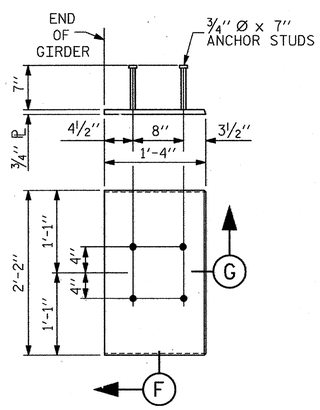


## EMBEDDED PLATE "B–1" DETAILS FOR 63" MODIFIED BULB TEES

(2 REQUIRED PER GIRDER)

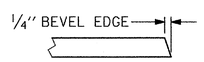


## SECTION "G"

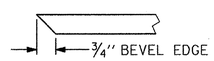


## SECTION "F"

(SEE NOTES)

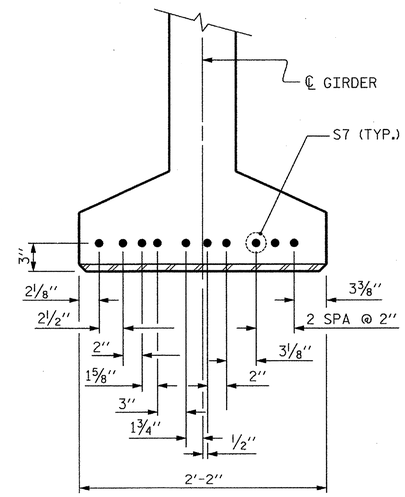


## DETAIL "C"

(FOR 63" MODIFIED BULB TEES)

PROJECT NO. R–2303D

SAMPSON COUNTY

STATION: 1311+58.00 –LREV–

SHEET 6 OF 6

STATE OF NORTH CAROLINA
DEPARTMENT OF TRANSPORTATION
RALEIGH

STANDARD

# PRESTRESSED CONCRETE GIRDER CONTINUOUS FOR LIVE LOAD DETAILS

## (LEFT LANE)

| | | | | | |
|---|---|---|---|---|---|
| ASSEMBLED BY : | C.E. DIXON | DATE : 10-12 | | | |
| CHECKED BY : | J.T. ECKEL | DATE : 10-12 | | | |
| DRAWN BY : ELR 11/91 | REV. 7/10/01RR | LES/RDR | | | |
| CHECKED BY : GRP 11/91 | REV. 5/1/06 | TLA/GM | | | |
| | REV. 10/1/11 | MAA/GM | | | |

FILE: R:\NCDOT\R2303D\STRUCTURES\PLANS\Str_1\R2303D_SD_Str1_pg6.dgn
DATE: 12/3/2012 9:26:22 AM

CDM Smith

Camp Dresser & McKee
421 Fayetteville Street, Suite 1303
Raleigh, NC 27604
NC COA No. F-1255

| | | | |
|---|---|---|---|
| DRAWN BY : | C.E.DIXON | DATE : | 10-12 |
| CHECKED BY : | J.T.ECKEL | DATE : | 10-12 |
| DESIGN ENGINEER : | P.R. HOLSHOUSER | DATE : | 1-13 |

DWG. No. S01-029

NORTH CAROLINA PROFESSIONAL SEAL 20668 ENGINEER PAUL R. HOLSHOUSER 2/28/2013

| REVISIONS | | | | | | |
|---|---|---|---|---|---|---|
| No. | BY: | DATE: | No. | BY: | DATE: | |
| 1 | | | 3 | | | |
| 2 | | | 4 | | | |

SHEET No. S-29

TOTAL SHEETS 218

STD. No. PCG9

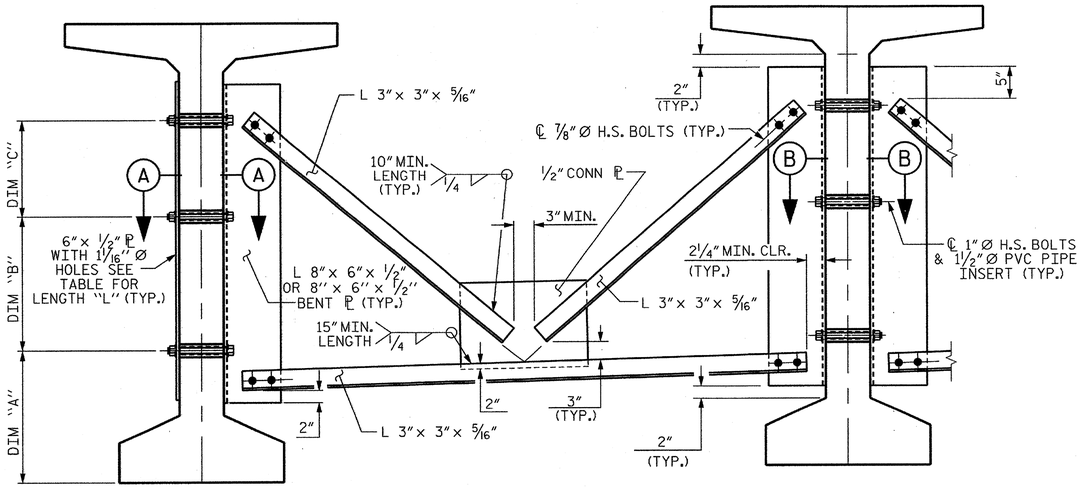


EXTERIOR GIRDER

INTERIOR GIRDER

## PART SECTION AT INTERMEDIATE DIAPHRAGM

( 63" BULB TEE )

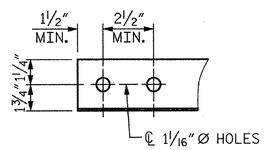


## ANGLE END

( L 3"× 3"× 5/16" )

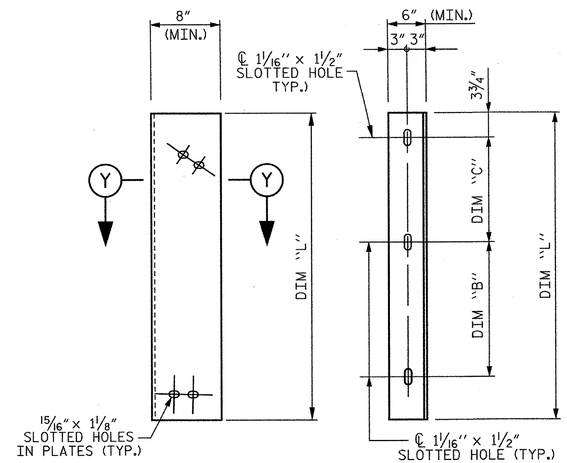


DIAPHRAGM FACE

WEB FACE

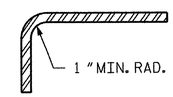


SECTION Y–Y

## CONNECTOR PLATE DETAILS

## STRUCTURAL STEEL NOTES

ALL INTERMEDIATE DIAPHRAGM STEEL AND CONNECTOR PLATES SHALL BE AASHTO M270 GRADE 50 OR APPROVED EQUAL.

TENSION ON THE ASTM A325 BOLTS THROUGH THE ANGLE MEMBER SHALL BE CALIBRATED USING DIRECT TENSION INDICATOR WASHERS IN ACCORDANCE WITH THE STANDARD SPECIFICATIONS.

TENSION ON THE ASTM A449 BOLTS THROUGH THE GIRDER WEB SHALL BE SNUG TIGHTENED FOLLOWED BY AN ADDITIONAL 1/4 TURN.

THE PLATES, BENT PLATES, AND ANGLES SHALL BE GALVANIZED OR METALLIZED IN ACCORDANCE WITH THE STANDARD SPECIFICATIONS. FOR THERMAL SPRAYED COATINGS (METALLIZATION), SEE SPECIAL PROVISIONS.

FOR METALLIZATION, APPLY AN 8 MIL THICK 99.99 PERCENT ZINC (W-Zn-1) THERMAL SPRAYED COATING WITH A 0.5 MIL THICK SEAL COAT TO ALL STEEL DIAPHRAGM SURFACES IN ACCORDANCE WITH THE THERMAL SPRAYED COATINGS SPECIAL PROVISION AND SECTION 442 OF THE STANDARD SPECIFICATIONS.

GALVANIZE THE HIGH STRENGTH BOLTS, NUTS, WASHERS AND DIRECT TENSION INDICATORS IN ACCORDANCE WITH THE STANDARD SPECIFICATIONS.

USE AN ASTM F436 HARDENED WASHER WITH STANDARD AND SLOTTED HOLES UNDER EACH BOLT HEAD AND NUT.

FOR BOLTS THROUGH THE GIRDER WEB, PROVIDE SUFFICIENT LENGTH OF THREADS ON ALL BOLTS TO ACCOMMODATE WASHERS AND THE THICKNESS OF CONNECTING MEMBER PLUS AT LEAST 1/4" PROJECTION BEYOND THE NUT.

INTERMEDIATE DIAPHRAGM ASSEMBLY SHALL COMPLY WITH SECTION 1072 OF THE STANDARD SPECIFICATIONS.

SUBMIT TWO SETS OF WORKING DRAWINGS FOR THE INTERMEDIATE DIAPHRAGM ASSEMBLY FOR REVIEW, COMMENTS AND ACCEPTANCE. AFTER REVIEW, COMMENTS, AND ACCEPTANCE, SUBMIT SEVEN SETS FOR DISTRIBUTION.

IN THE EXTERIOR BAYS, PLACE TEMPORARY STRUTS BETWEEN PRESTRESSED GIRDERS ADJACENT TO THE STEEL DIAPHRAGMS. STRUTS SHALL REMAIN IN PLACE 3 DAYS AFTER CONCRETE IS PLACED.

THE COST OF THE STEEL DIAPHRAGMS AND ASSEMBLIES SHALL BE INCLUDED IN THE UNIT PRICE BID FOR PRESTRESSED CONCRETE GIRDERS.

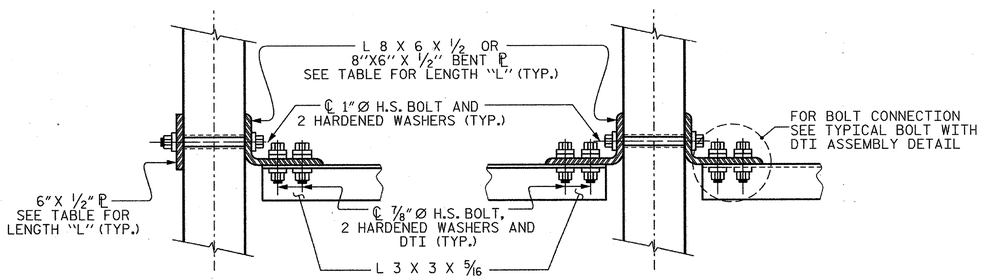


SECTION A–A

SECTION B–B

## CONNECTION DETAILS

(FOR SKEW = 90°)

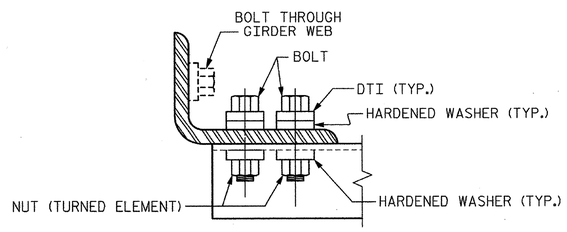


## BOLT WITH DTI ASSEMBLY DETAIL

| TABLE | | | | |
|---|---|---|---|---|
| GIRDER TYPE | DIM "A" | DIM "B" | DIM "C" | DIM "L" |
| 63" BULB TEE | 1'-9" | 1'-4" | 1'-0 1/2" | 3'-5" |

PROJECT NO. R–2303D

SAMPSON COUNTY

STATION: 1311+58.00 –LREV–

STATE OF NORTH CAROLINA
DEPARTMENT OF TRANSPORTATION
RALEIGH

STANDARD

INTERMEDIATE STEEL DIAPHRAGMS FOR 63" MODIFIED BULB TEE PRESTRESSED CONCRETE GIRDERS

(LEFT LANE)

| REVISIONS | | | | | | SHEET No. |
|---|---|---|---|---|---|---|
| No. | BY: | DATE: | No. | BY: | DATE: | S-30 |
| 1 | | | 3 | | | TOTAL SHEETS |
| 2 | | | 4 | | | 218 |

CDM Smith

Camp Dresser & McKee
421 Fayetteville Street, Suite 1303
Raleigh, NC 27604
NC COA No. F-1255

DRAWN BY : J.T.ECKEL DATE : 10-12
CHECKED BY : A.A.MONTIEL DATE : 10-12
DESIGN ENGINEER : P.R. HOLSHOUSER DATE : 1-13

DWG. No. S01-030

NORTH CAROLINA PROFESSIONAL SEAL 20668 ENGINEER PAUL R. HOLSHOUSER 1/08/2013

STD. No. PCG11

ASSEMBLED BY : J.T. ECKEL DATE : 10-12
CHECKED BY : A.A. MONTIEL DATE : 10-12
DRAWN BY : RWW 11/09
CHECKED BY : GM 11/09
ADDED 11/23/09R
REV. 10/1/11 MAA/GM

FILE: R:\NCDOT\R2303D\STRUCTURES\PLANS\Sv_T1\R2303D_SD_SP1_sd1.dgn
DATE: 12/31/2012 9:26:23 AM

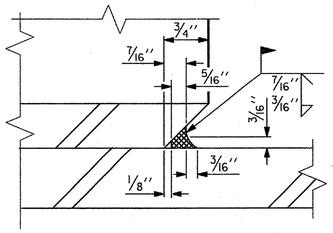


## DETAIL "A"

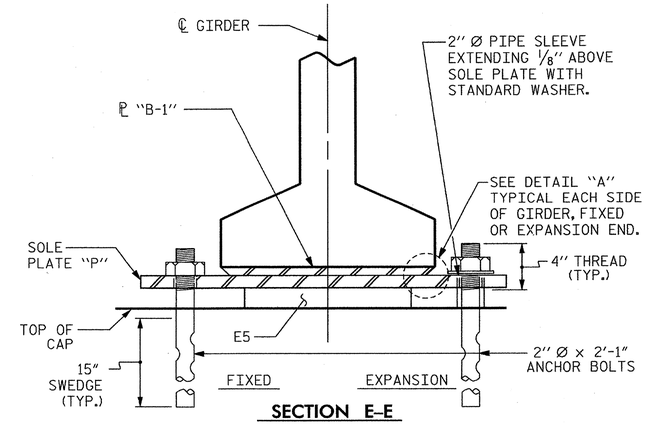


## SECTION E-E

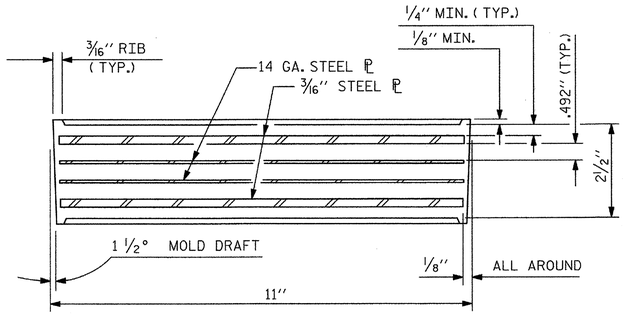


## TYPICAL SECTION OF ELASTOMERIC BEARINGS

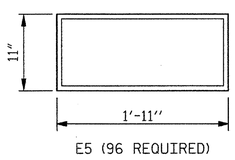


## PLAN VIEW OF ELASTOMERIC BEARING

## TYPE VI

## NOTES

AT ALL FIXED POINTS OF SUPPORT, NUTS FOR ANCHOR BOLTS ARE TO BE TIGHTENED FINGER TIGHT AND THEN BACKED OFF 1/2 TURN. THE THREAD OF THE NUT AND BOLT SHALL THEN BE BURRED WITH A SHARP POINTED TOOL.

THE 2" Ø PIPE SLEEVE SHALL BE CUT FROM SCHEDULE 40 PVC PLASTIC PIPE. THE PVC PLASTIC PIPE SHALL MEET THE REQUIREMENTS OF ASTM D1785.

STEEL SOLE PLATES, ANCHOR BOLTS, NUTS, AND WASHERS SHALL BE GALVANIZED IN ACCORDANCE WITH THE STANDARD SPECIFICATIONS.

PRIOR TO WELDING, GRIND THE GALVANIZED SURFACE OF THE PORTION OF THE EMBEDDED PLATE AND SOLE PLATE THAT ARE TO BE WELDED. AFTER WELDING, DAMAGED GALVANIZED SURFACES SHALL BE REPAIRED IN ACCORDANCE WITH THE STANDARD SPECIFICATIONS.

WHEN WELDING THE SOLE PLATE TO THE EMBEDDED PLATE IN THE GIRDER, USE TEMPERATURE INDICATING WAX PENS, OR OTHER SUITABLE MEANS, TO ENSURE THAT THE TEMPERATURE OF THE SOLE PLATE DOES NOT EXCEED 300°F. TEMPERATURES ABOVE THIS MAY DAMAGE THE ELASTOMER.

SOLE PLATE "P", BOLTS, NUTS, WASHERS, AND PIPE SLEEVE SHALL BE INCLUDED IN THE PAY ITEM FOR PRESTRESSED CONCRETE GIRDERS.

ANCHOR BOLTS SHALL MEET THE REQUIREMENTS OF ASTM A449. NUTS SHALL MEET THE REQUIREMENTS OF AASHTO M291-DH OR AASHTO M292-2H. WASHERS SHALL MEET THE REQUIREMENTS OF AASHTO M293. NO SHOP DRAWINGS ARE REQUIRED FOR ANCHOR BOLTS, NUTS AND WASHERS. SHOP INSPECTION IS REQUIRED.

ALL SURFACES OF BEARING PLATES SHALL BE SMOOTH AND STRAIGHT.

THE ELASTOMER IN THE STEEL REINFORCED BEARINGS SHALL HAVE A SHEAR MODULUS OF 0.160 KSI, IN ACCORDANCE WITH AASHTO M251.

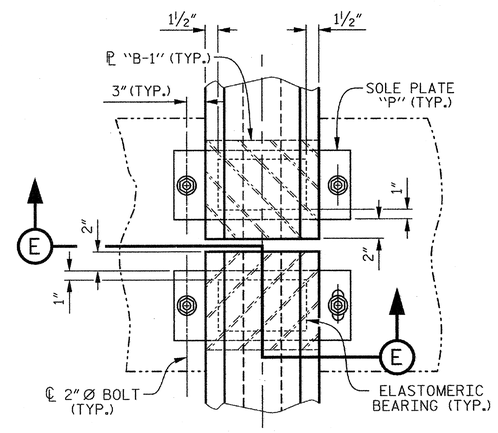


## TYPICAL HALF-PLAN
(SHOWING FIXED BEARING)

## TYPICAL HALF-PLAN
(SHOWING EXPANSION BEARING)

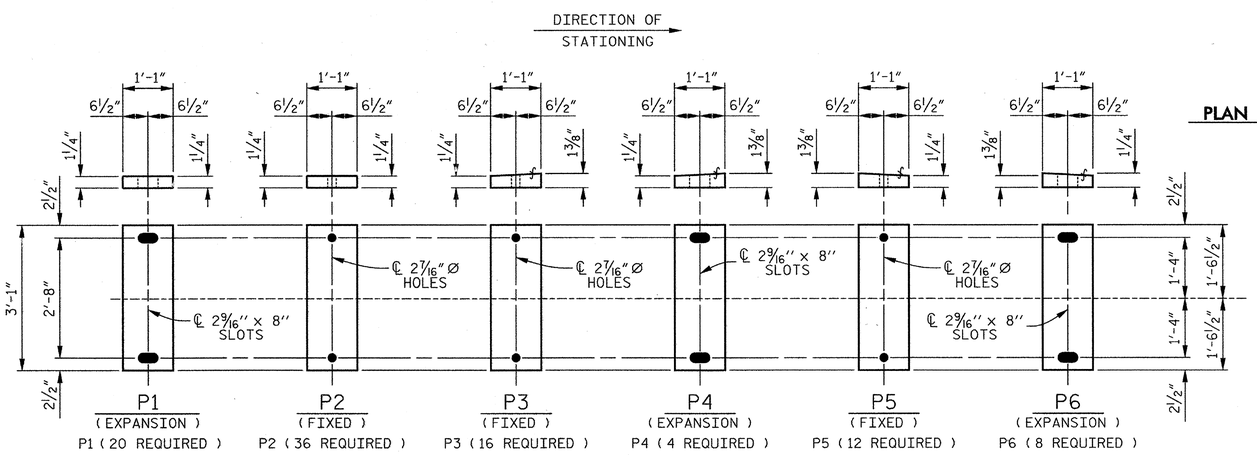


## SOLE PLATE DETAILS ("P")

PROJECT NO. R-2303D
SAMPSON COUNTY
STATION: 1311+58.00 -LREV-

STATE OF NORTH CAROLINA
DEPARTMENT OF TRANSPORTATION
RALEIGH

STANDARD

# ELASTOMERIC BEARING DETAILS PRESTRESSED CONCRETE GIRDER SUPERSTRUCTURE (LEFT LANE)

| | | | |
|---|---|---|---|
| ASSEMBLED BY : | J.T. ECKEL | DATE : | 10-12 |
| CHECKED BY : | A.A. MONTIEL | DATE : | 10-12 |
| DRAWN BY : EEM 2/97 | REV. 5/1/06 | TLA/GM | |
| CHECKED BY : VAP 2/97 | REV. 10/1/11 | MAA/GM | |
| | REV. 10/24/12 | AAC/MAA | |

CDM Smith
Camp Dresser & McKee
421 Fayetteville Street, Suite 1303
Raleigh, NC 27604
NC COA No. F-1255

| | | | |
|---|---|---|---|
| DRAWN BY : | J.T.ECKEL | DATE : | 10-12 |
| CHECKED BY : | A.A.MONTIEL | DATE : | 10-12 |
| DESIGN ENGINEER : | P.R. HOLSHOUSER | DATE : | 1-13 |

DWG. No. S01-031

NORTH CAROLINA PROFESSIONAL SEAL 20668 ENGINEER PAUL R. HOLSHOUSER 2/08/2013

| REVISIONS | | | | | | | | |
|---|---|---|---|---|---|---|---|---|
| No. | BY: | DATE: | No. | BY: | DATE: | SHEET No. | S-31 |
| 1 | | | 3 | | | TOTAL SHEETS | 218 |
| 2 | | | 4 | | | | |

STD. No. EB4

FILE: R:\NCDOT\R2303D\STRUCTURES\PLANS\Sr_T\R2303D_SD_Shrt_eb1.dgn
DATE: 12/3/2012 9:26:25 AM

## CAMBER AND DEAD LOAD DEFLECTIONS

| | SPAN A | | | | | | | | | | |
|---|---|---|---|---|---|---|---|---|---|---|---|
| GIRDERS 1 AND 4 | ℄ BRG. | 0.10 | 0.20 | 0.30 | 0.40 | 0.50 | 0.60 | 0.70 | 0.80 | 0.90 | ℄ BRG. |
| CAMBER (GIRDER ALONE IN PLACE) ↑ | 0.000 | 0.049 | 0.086 | 0.112 | 0.128 | 0.133 | 0.128 | 0.112 | 0.086 | 0.049 | 0.000 |
| DEFLECTION DUE TO SUPERIMPOSED D.L.✱ ↑ | 0.000 | 0.009 | 0.019 | 0.026 | 0.031 | 0.033 | 0.031 | 0.026 | 0.019 | 0.009 | 0.000 |
| FINAL CAMBER ↑ | 0 | 1/2" | 13/16" | 1 1/16" | 1 3/16" | 1 3/16" | 1 3/16" | 1 1/16" | 13/16" | 1/2" | 0 |
| | | | | | | | | | | | |
| GIRDERS 2 AND 3 | ℄ BRG. | 0.10 | 0.20 | 0.30 | 0.40 | 0.50 | 0.60 | 0.70 | 0.80 | 0.90 | ℄ BRG. |
| CAMBER (GIRDER ALONE IN PLACE) ↑ | 0.000 | 0.049 | 0.086 | 0.112 | 0.128 | 0.133 | 0.128 | 0.112 | 0.086 | 0.049 | 0.000 |
| DEFLECTION DUE TO SUPERIMPOSED D.L.✱ ↑ | 0.000 | 0.009 | 0.018 | 0.025 | 0.030 | 0.032 | 0.030 | 0.025 | 0.018 | 0.009 | 0.000 |
| FINAL CAMBER ↑ | 0 | 1/2" | 13/16" | 1 1/16" | 1 3/16" | 1 3/16" | 1 3/16" | 1 1/16" | 13/16" | 1/2" | 0 |

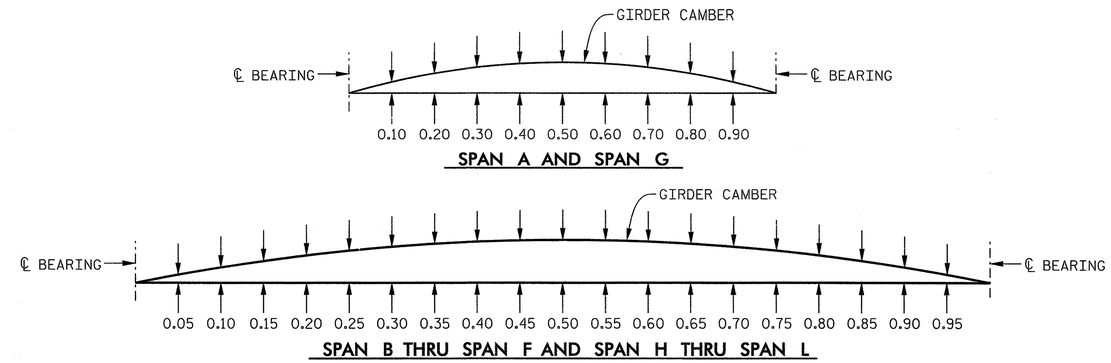


**GIRDER CAMBER AND DEFLECTIONS**

## CAMBER AND DEAD LOAD DEFLECTIONS

| | SPAN B THRU SPAN F AND SPAN H THRU SPAN L | | | | | | | | | | | | | | | | | | | | |
|---|---|---|---|---|---|---|---|---|---|---|---|---|---|---|---|---|---|---|---|---|---|
| GIRDERS 1 AND 4 | ℄ BRG. | 0.05 | 0.10 | 0.15 | 0.20 | 0.25 | 0.30 | 0.35 | 0.40 | 0.45 | 0.50 | 0.55 | 0.60 | 0.65 | 0.70 | 0.75 | 0.80 | 0.85 | 0.90 | 0.95 | ℄ BRG. |
| CAMBER (GIRDER ALONE IN PLACE) ↑ | 0.000 | 0.070 | 0.140 | 0.193 | 0.246 | 0.284 | 0.322 | 0.345 | 0.368 | 0.376 | 0.384 | 0.376 | 0.368 | 0.345 | 0.322 | 0.284 | 0.246 | 0.193 | 0.140 | 0.070 | 0.000 |
| DEFLECTION DUE TO SUPERIMPOSED D.L.✱ ↑ | 0.000 | 0.023 | 0.045 | 0.067 | 0.089 | 0.106 | 0.123 | 0.134 | 0.145 | 0.149 | 0.153 | 0.149 | 0.145 | 0.134 | 0.123 | 0.106 | 0.089 | 0.067 | 0.045 | 0.023 | 0.000 |
| FINAL CAMBER ↑ | 0 | 9/16" | 1 1/8" | 1 1/2" | 1 7/8" | 2 1/8" | 2 3/8" | 2 9/16" | 2 11/16" | 2 3/4" | 2 3/4" | 2 3/4" | 2 11/16" | 2 9/16" | 2 3/8" | 2 1/8" | 1 7/8" | 1 1/2" | 1 1/8" | 9/16" | 0 |
| | | | | | | | | | | | | | | | | | | | | | |
| GIRDERS 2 AND 3 | ℄ BRG. | 0.05 | 0.10 | 0.15 | 0.20 | 0.25 | 0.30 | 0.35 | 0.40 | 0.45 | 0.50 | 0.55 | 0.60 | 0.65 | 0.70 | 0.75 | 0.80 | 0.85 | 0.90 | 0.95 | ℄ BRG. |
| CAMBER (GIRDER ALONE IN PLACE) ↑ | 0.000 | 0.070 | 0.140 | 0.193 | 0.246 | 0.284 | 0.322 | 0.345 | 0.368 | 0.376 | 0.384 | 0.376 | 0.368 | 0.345 | 0.322 | 0.284 | 0.246 | 0.193 | 0.140 | 0.070 | 0.000 |
| DEFLECTION DUE TO SUPERIMPOSED D.L.✱ ↑ | 0.000 | 0.022 | 0.044 | 0.065 | 0.086 | 0.102 | 0.119 | 0.129 | 0.140 | 0.144 | 0.147 | 0.144 | 0.140 | 0.129 | 0.119 | 0.102 | 0.086 | 0.065 | 0.044 | 0.022 | 0.000 |
| FINAL CAMBER ↑ | 0 | 9/16" | 1 1/8" | 1 9/16" | 1 15/16" | 2 3/16" | 2 7/16" | 2 9/16" | 2 3/4" | 2 13/16" | 2 13/16" | 2 13/16" | 2 3/4" | 2 9/16" | 2 7/16" | 2 3/16" | 1 15/16" | 1 9/16" | 1 1/8" | 9/16" | 0 |

## CAMBER AND DEAD LOAD DEFLECTIONS

| | SPAN G | | | | | | | | | | |
|---|---|---|---|---|---|---|---|---|---|---|---|
| GIRDERS 1 AND 4 | ℄ BRG. | 0.10 | 0.20 | 0.30 | 0.40 | 0.50 | 0.60 | 0.70 | 0.80 | 0.90 | ℄ BRG. |
| CAMBER (GIRDER ALONE IN PLACE) ↑ | 0.000 | 0.060 | 0.105 | 0.135 | 0.153 | 0.158 | 0.153 | 0.135 | 0.105 | 0.060 | 0.000 |
| DEFLECTION DUE TO SUPERIMPOSED D.L.✱ ↑ | 0.000 | 0.017 | 0.035 | 0.048 | 0.057 | 0.060 | 0.057 | 0.048 | 0.035 | 0.017 | 0.000 |
| FINAL CAMBER ↑ | 0 | 1/2" | 13/16" | 1 1/16" | 1 1/8" | 1 3/16" | 1 1/8" | 1 1/16" | 13/16" | 1/2" | 0 |
| | | | | | | | | | | | |
| GIRDERS 2 AND 3 | ℄ BRG. | 0.10 | 0.20 | 0.30 | 0.40 | 0.50 | 0.60 | 0.70 | 0.80 | 0.90 | ℄ BRG. |
| CAMBER (GIRDER ALONE IN PLACE) ↑ | 0.000 | 0.060 | 0.105 | 0.135 | 0.153 | 0.158 | 0.153 | 0.135 | 0.105 | 0.060 | 0.000 |
| DEFLECTION DUE TO SUPERIMPOSED D.L.✱ ↑ | 0.000 | 0.017 | 0.034 | 0.047 | 0.055 | 0.058 | 0.055 | 0.047 | 0.034 | 0.017 | 0.000 |
| FINAL CAMBER ↑ | 0 | 1/2" | 7/8" | 1 1/16" | 1 3/16" | 1 3/16" | 1 3/16" | 1 1/16" | 7/8" | 1/2" | 0 |

✱ INCLUDES FUTURE WEARING SURFACE.

ALL VALUES ARE SHOWN IN FEET (DECIMAL FORM), EXCEPT "FINAL CAMBER", WHICH IS GIVEN IN INCHES (FRACTION FORM).

PROJECT NO. R-2303D
SAMPSON COUNTY
STATION: 1311+58.00 -LREV-

STATE OF NORTH CAROLINA
DEPARTMENT OF TRANSPORTATION
RALEIGH

SUPERSTRUCTURE

**DEAD LOAD DEFLECTIONS AND CAMBER TABLES (LEFT LANE)**


CDM Smith
Camp Dresser & McKee
421 Fayetteville Street, Suite 1303
Raleigh, NC 27604
NC COA No. F-1255


DRAWN BY : J.T.ECKEL DATE : 10-12
CHECKED BY : A.A.MONTIEL DATE : 10-12
DESIGN ENGINEER : P.R. HOLSHOUSER DATE : 1-13

DWG. No. S01-032

NORTH CAROLINA PROFESSIONAL SEAL 20668 ENGINEER PAUL R. HOLSHOUSER 2/22/2013

| REVISIONS | | | | | | SHEET No. |
|---|---|---|---|---|---|---|
| No. | BY: | DATE: | No. | BY: | DATE: | S-32 |
| 1 | | | 3 | | | TOTAL SHEETS |
| 2 | | | 4 | | | 218 |


FILE: R:\NCDOT\R2303D\STRUCTURES\PLANS\Str_1\R2303D_SD_Str1_dd1.dgn
DATE: 2/22/2013 10:11:10 AM

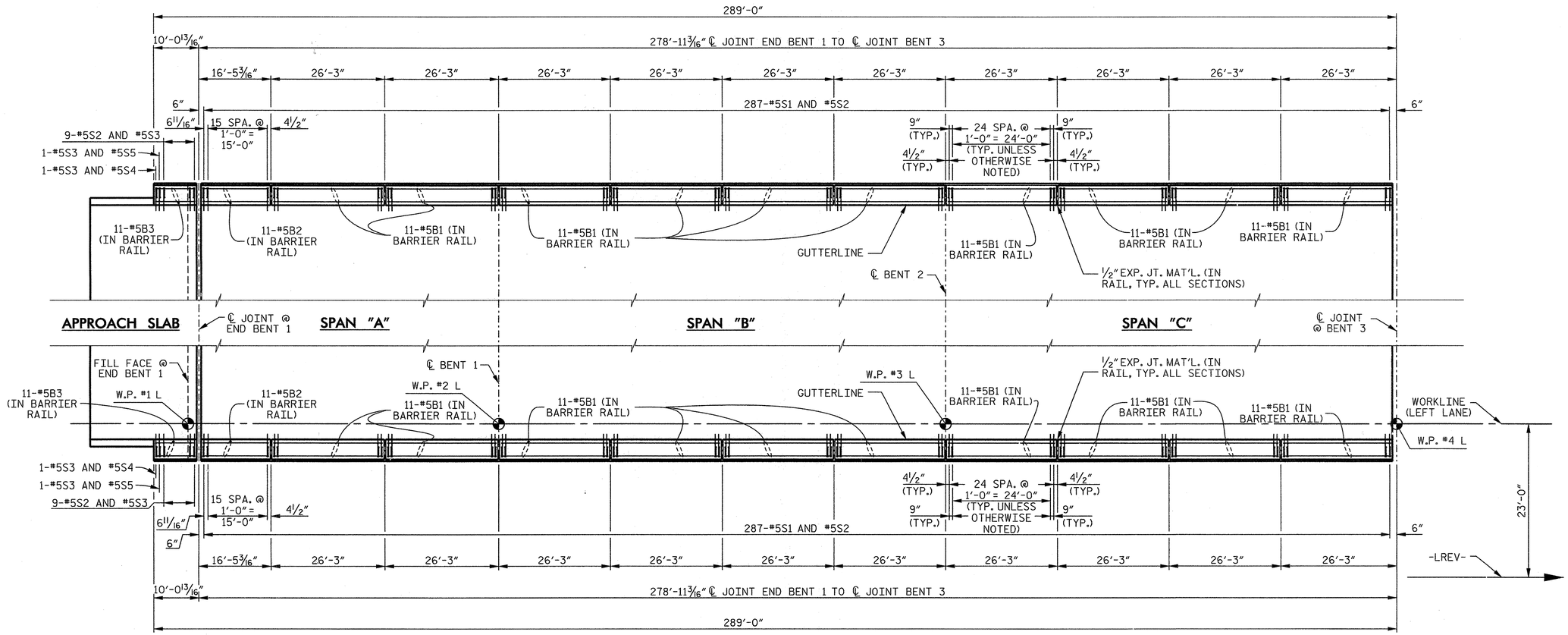


PLAN OF CONCRETE BARRIER RAIL – UNIT 1

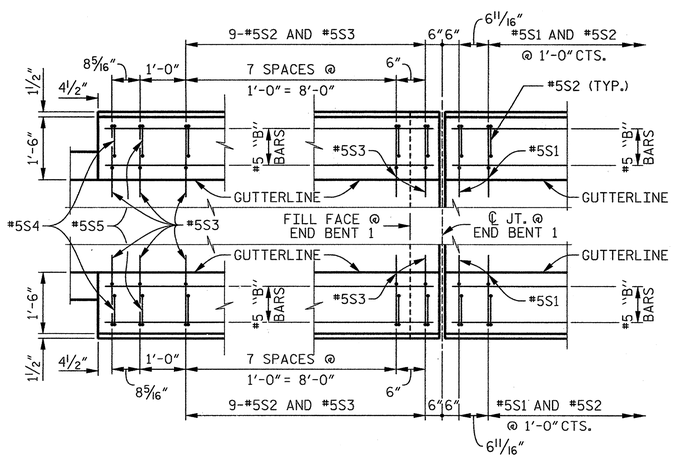


PLAN @ END BENT 1

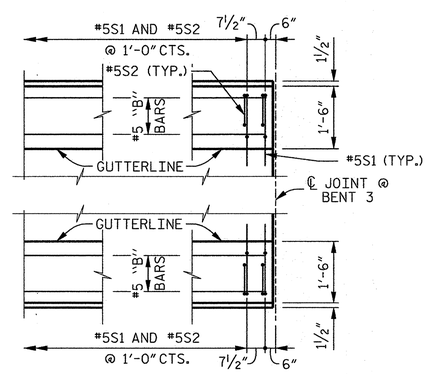


PLAN @ BENT 3

PROJECT NO. R-2303D

SAMPSON COUNTY

STATION: 1311+58.00 -LREV-

SHEET 1 OF 5

STATE OF NORTH CAROLINA
DEPARTMENT OF TRANSPORTATION
RALEIGH

SUPERSTRUCTURE

CONCRETE BARRIER RAIL (UNIT 1)

(LEFT LANE)

CDM Smith

Camp Dresser & McKee
421 Fayetteville Street, Suite 1303
Raleigh, NC 27604
NC COA No. F-1255

| | | | |
|---|---|---|---|
| DRAWN BY : | C.E.DIXON | DATE : | 10-12 |
| CHECKED BY : | J.T.ECKEL | DATE : | 10-12 |
| DESIGN ENGINEER : | P.R. HOLSHOUSER | DATE : | 1-13 |

DWG. No. S01-033

NORTH CAROLINA PROFESSIONAL SEAL 20668 ENGINEER PAUL R. HOLSHOUSER 2/22/2013

REVISIONS

| No. | BY: | DATE: | No. | BY: | DATE: |
|---|---|---|---|---|---|
| 1 | | | 3 | | |
| 2 | | | 4 | | |

SHEET No. S-33

TOTAL SHEETS 218

FILE: R:\NCDOT\R2303D\STRUCTURES\PLANS\Str_1\R2303D_SD_Str1_bri.dgn
DATE: 2/22/2013 10:50:47 AM

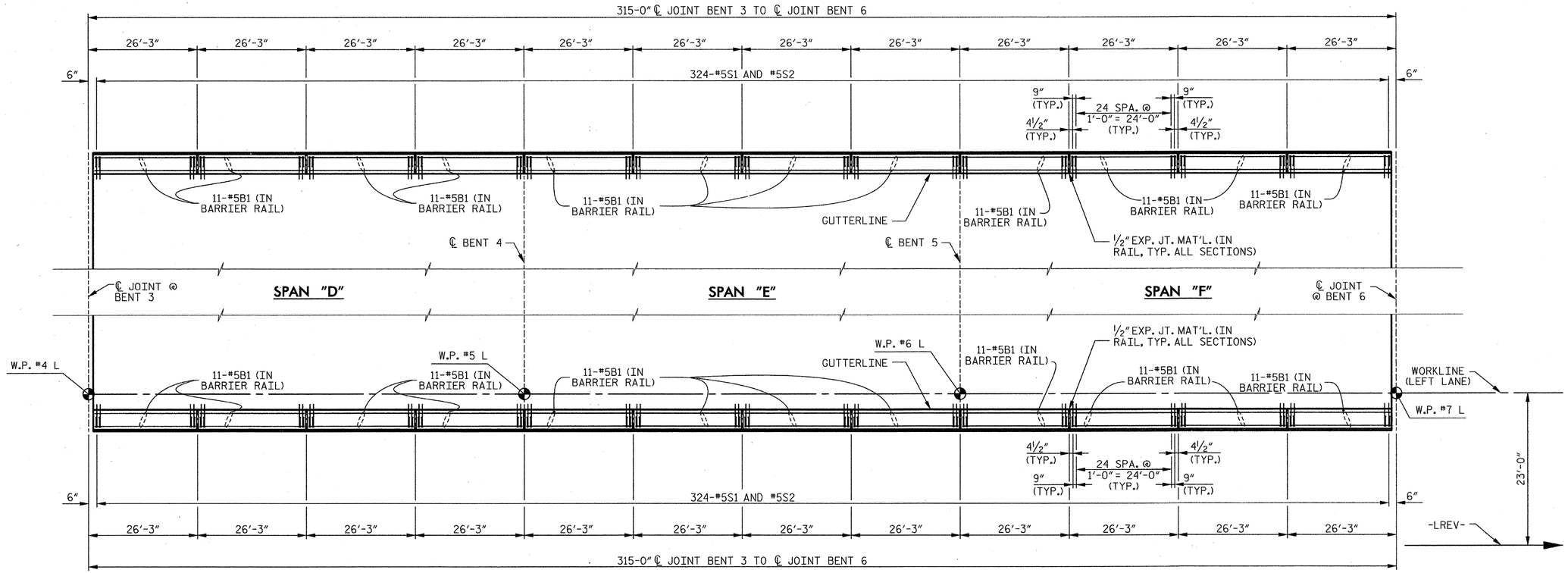


## PLAN OF CONCRETE BARRIER RAIL – UNIT 2

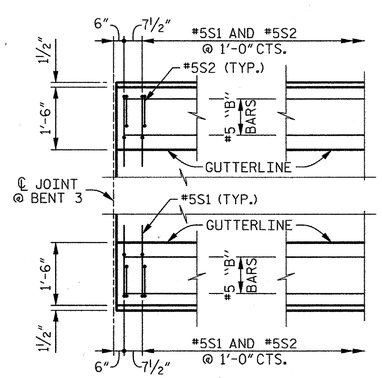


## PLAN @ BENT 3

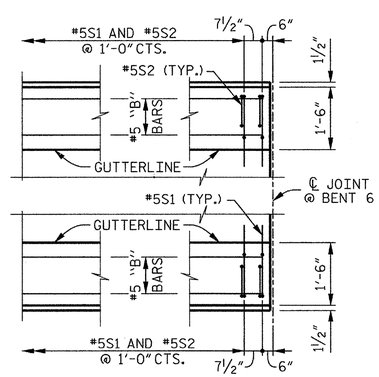


## PLAN @ BENT 6

PROJECT NO. R-2303D

SAMPSON COUNTY

STATION: 1311+58.00 -LREV-

SHEET 2 OF 5

STATE OF NORTH CAROLINA
DEPARTMENT OF TRANSPORTATION
RALEIGH

SUPERSTRUCTURE

# CONCRETE BARRIER RAIL (UNIT 2)

## (LEFT LANE)

CDM Smith

Camp Dresser & McKee
421 Fayetteville Street, Suite 1303
Raleigh, NC 27604
NC COA No. F-1255

DRAWN BY : C.E.DIXON DATE : 10-12
CHECKED BY : J.T.ECKEL DATE : 10-12
DESIGN ENGINEER : P.R. HOLSHOUSER DATE : 1-13

DWG. No. S01-034

NORTH CAROLINA PROFESSIONAL SEAL 20668 ENGINEER PAUL R. HOLSHOUSER 2/08/2013

| REVISIONS | | | | | | |
|---|---|---|---|---|---|---|
| No. | BY: | DATE: | No. | BY: | DATE: | |
| 1 | | | 3 | | | |
| 2 | | | 4 | | | |

SHEET No. S-34

TOTAL SHEETS 218

FILE: R:\NCDOT\R2303D\STRUCTURES\PLANS\Sv_T1R23032_SD_Sv1_bx2.dgn
DATE: 12/5/2012 9:26:39 AM

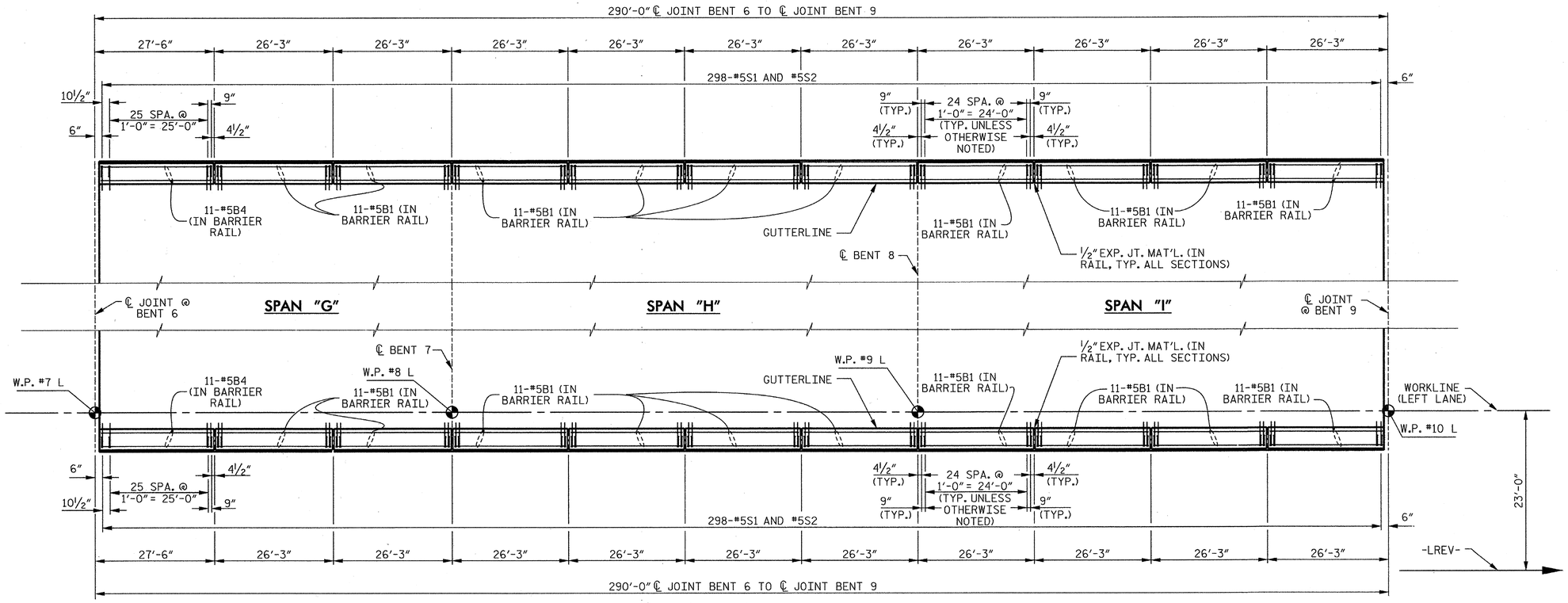


## PLAN OF CONCRETE BARRIER RAIL – UNIT 3

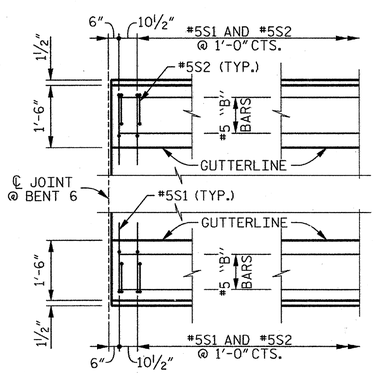


## PLAN @ BENT 6

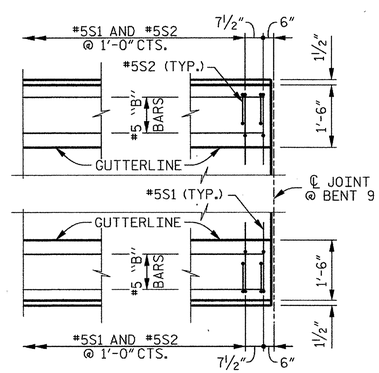


## PLAN @ BENT 9

PROJECT NO. R-2303D

SAMPSON COUNTY

STATION: 1311+58.00 -LREV-

SHEET 3 OF 5

STATE OF NORTH CAROLINA
DEPARTMENT OF TRANSPORTATION
RALEIGH

SUPERSTRUCTURE

CONCRETE BARRIER RAIL (UNIT 3)

(LEFT LANE)

CDM Smith

Camp Dresser & McKee
421 Fayetteville Street, Suite 1303
Raleigh, NC 27604
NC COA No. F-1255

DRAWN BY : C.E.DIXON DATE : 10-12
CHECKED BY : J.T.ECKEL DATE : 10-12
DESIGN ENGINEER : P.R. HOLSHOUSER DATE : 1-13

DWG. No. S01-035

NORTH CAROLINA PROFESSIONAL SEAL 20668 ENGINEER PAUL R. HOLSHOUSER 2/08/2013

| REVISIONS | | | | | | |
|---|---|---|---|---|---|---|
| No. | BY: | DATE: | No. | BY: | DATE: | |
| 1 | | | 3 | | | |
| 2 | | | 4 | | | |

SHEET No. S-35

TOTAL SHEETS 218

FILE: R:\NCDOT\R2303D\STRUCTURES\PLANS\Str_T\R2303D_SD_Str1_bx3.dgn
DATE: 12/12/2012 9:26:59 AM

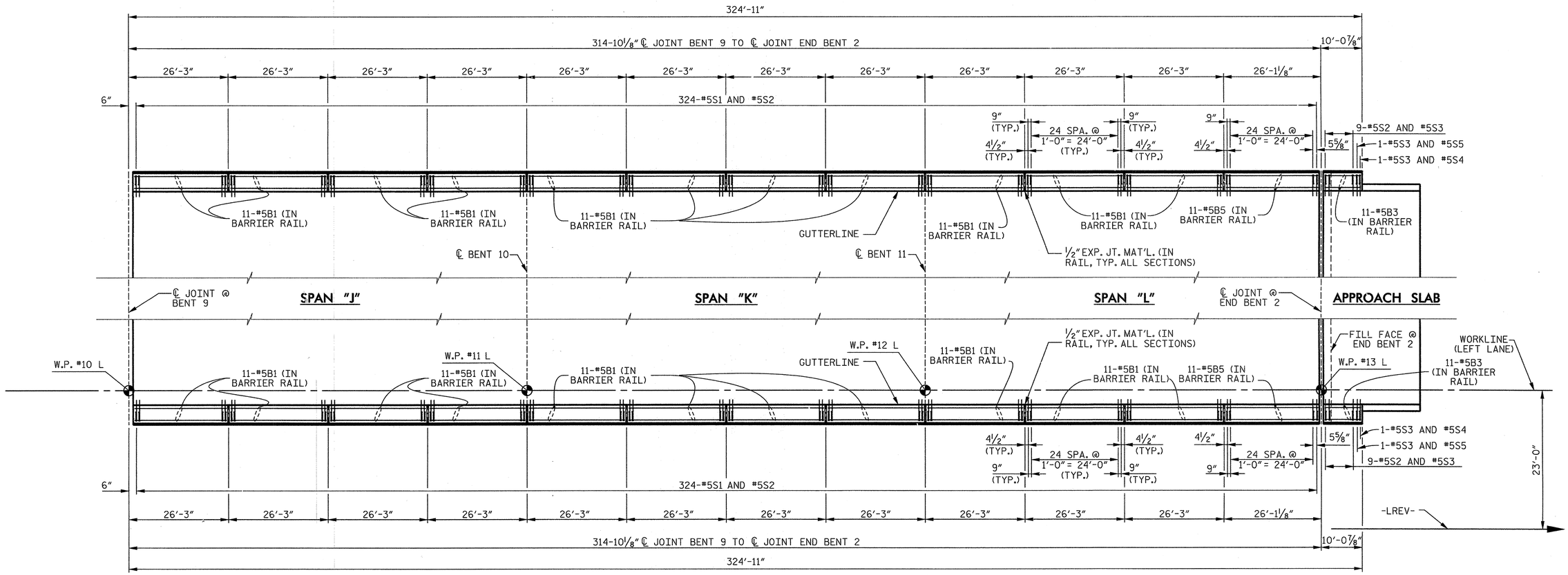


## PLAN OF CONCRETE BARRIER RAIL – UNIT 4

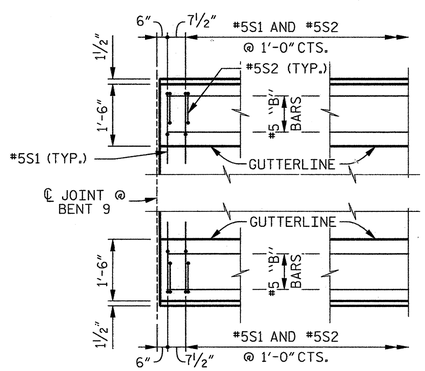


## PLAN @ BENT 9

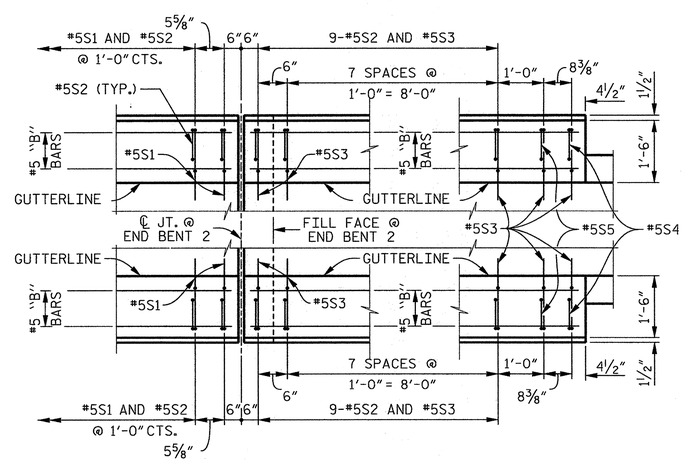


## PLAN @ END BENT 2

PROJECT NO. R-2303D

SAMPSON COUNTY

STATION: 1311+58.00 -LREV-

SHEET 4 OF 5

STATE OF NORTH CAROLINA
DEPARTMENT OF TRANSPORTATION
RALEIGH

SUPERSTRUCTURE

CONCRETE BARRIER RAIL (UNIT 4)

(LEFT LANE)

CDM Smith
Camp Dresser & McKee
421 Fayetteville Street, Suite 1303
Raleigh, NC 27604
NC COA No. F-1255

| | | | |
|---|---|---|---|
| DRAWN BY : | C.E.DIXON | DATE : | 10-12 |
| CHECKED BY : | J.T.ECKEL | DATE : | 10-12 |
| DESIGN ENGINEER : | P.R. HOLSHOUSER | DATE : | 1-13 |

DWG. No. S01-036

NORTH CAROLINA PROFESSIONAL SEAL 20668 ENGINEER PAUL R. HOLSHOUSER 2/22/2013

| REVISIONS | | | | | | SHEET No. |
|---|---|---|---|---|---|---|
| No. | BY: | DATE: | No. | BY: | DATE: | S-36 |
| 1 | | | 3 | | | TOTAL SHEETS |
| 2 | | | 4 | | | 218 |

FILE: R:\NCDOT\R2303D\STRUCTURES\PLANS\Str_1\R2303D_SD_Str1_br4.dgn
DATE: 2/22/2013 10:50:49 AM

## TOTAL CONCRETE BARRIER RAIL QUANTITIES

| CONCRETE BARRIER RAIL | EPOXY COATED REINFORCING STEEL | CLASS "AA" CONCRETE |
|---|---|---|
| L.F. | LBS. | CU. YDS. |
| 2,437.83 | 57,849 | 330.8 |

## BILL OF MATERIAL FOR UNIT 1

FOR CONCRETE BARRIER RAIL ONLY

| BAR | No. | SIZE | TYPE | LENGTH | WEIGHT |
|---|---|---|---|---|---|
| *B1 | 220 | #5 | STR | 25'-10" | 5,928 |
| *B2 | 22 | #5 | STR | 16'-0" | 367 |
| *B3 | 22 | #5 | STR | 9'-8" | 222 |
| *S1 | 574 | #5 | 1 | 4'-7" | 2,744 |
| *S2 | 592 | #5 | 2 | 7'-0" | 4,322 |
| *S3 | 22 | #5 | 1 | 5'-1" | 117 |
| *S4 | 2 | #5 | 2 | 5'-8" | 12 |
| *S5 | 2 | #5 | 2 | 6'-4" | 13 |

*EPOXY COATED REINFORCING STEEL 13,725 LBS.

CLASS "AA" CONCRETE 78.4 CU. YDS.

CONCRETE BARRIER RAIL 578.00 LIN. FT.

## BILL OF MATERIAL FOR UNIT 2

FOR CONCRETE BARRIER RAIL ONLY

| BAR | No. | SIZE | TYPE | LENGTH | WEIGHT |
|---|---|---|---|---|---|
| *B1 | 264 | #5 | STR | 25'-10" | 7,113 |
| *S1 | 648 | #5 | 1 | 4'-7" | 3,098 |
| *S2 | 648 | #5 | 2 | 7'-0" | 4,731 |

*EPOXY COATED REINFORCING STEEL 14,942 LBS.

CLASS "AA" CONCRETE 85.5 CU. YDS.

CONCRETE BARRIER RAIL 630.00 LIN. FT.

## BILL OF MATERIAL FOR UNIT 3

FOR CONCRETE BARRIER RAIL ONLY

| BAR | No. | SIZE | TYPE | LENGTH | WEIGHT |
|---|---|---|---|---|---|
| *B1 | 220 | #5 | STR | 25'-10" | 5,928 |
| *B4 | 22 | #5 | STR | 27'-1" | 621 |
| *S1 | 596 | #5 | 1 | 4'-7" | 2,849 |
| *S2 | 596 | #5 | 2 | 7'-0" | 4,351 |

*EPOXY COATED REINFORCING STEEL 13,749 LBS.

CLASS "AA" CONCRETE 78.7 CU. YDS.

CONCRETE BARRIER RAIL 580.00 LIN. FT.

## BILL OF MATERIAL FOR UNIT 4

FOR CONCRETE BARRIER RAIL ONLY

| BAR | No. | SIZE | TYPE | LENGTH | WEIGHT |
|---|---|---|---|---|---|
| *B1 | 242 | #5 | STR | 25'-10" | 6,520 |
| *B3 | 22 | #5 | STR | 9'-8" | 222 |
| *B5 | 22 | #5 | STR | 25'-8" | 589 |
| *S1 | 648 | #5 | 1 | 4'-7" | 3,098 |
| *S2 | 666 | #5 | 2 | 7'-0" | 4,862 |
| *S3 | 22 | #5 | 1 | 5'-1" | 117 |
| *S4 | 2 | #5 | 2 | 5'-8" | 12 |
| *S5 | 2 | #5 | 2 | 6'-4" | 13 |

*EPOXY COATED REINFORCING STEEL 15,433 LBS.

CLASS "AA" CONCRETE 88.2 CU. YDS.

CONCRETE BARRIER RAIL 649.83 LIN. FT.

## BAR TYPES

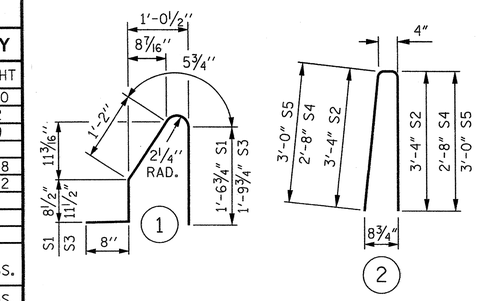


ALL BAR DIMENSIONS ARE OUT TO OUT.

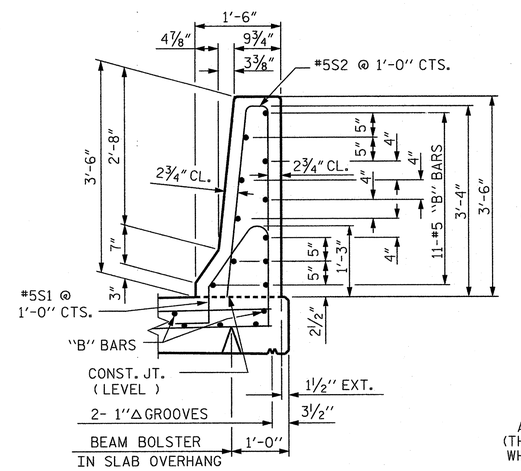


SECTION THRU RAIL

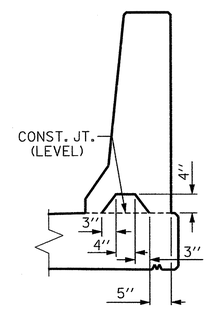


SECTION S-S

AT DAM IN OPEN JOINT (THIS IS TO BE USED ONLY WHEN SLIP FORM IS USED)

### NOTES

THE BARRIER RAIL IN A CONTINUOUS UNIT SHALL NOT BE CAST UNTIL ALL SLAB CONCRETE IN THAT UNIT HAS BEEN CAST AND HAS REACHED A MINIMUM COMPRESSIVE STRENGTH OF 3,000 PSI.

ALL REINFORCING STEEL IN BARRIER RAILS SHALL BE EPOXY COATED.

GROOVED CONTRACTION JOINTS, 1/2" IN DEPTH, SHALL BE TOOLED IN ALL EXPOSED FACES OF THE BARRIER RAIL AND IN ACCORDANCE WITH ARTICLE 825-10(B) OF THE STANDARD SPECIFICATIONS. THE CONTRACTION JOINT SHALL BE LOCATED AT EACH THIRD POINT BETWEEN BARRIER RAIL EXPANSION JOINTS. ONLY ONE CONTRACTION JOINT IS REQUIRED AT MIDPOINT OF BARRIER RAIL SEGMENTS LESS THAN 20 FEET IN LENGTH AND NO CONTRACTION JOINTS ARE REQUIRED FOR THOSE SEGMENTS LESS THAN 10 FEET IN LENGTH.

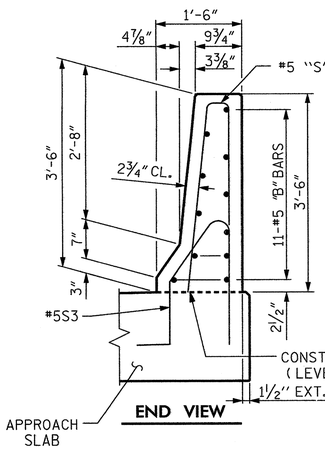


END VIEW

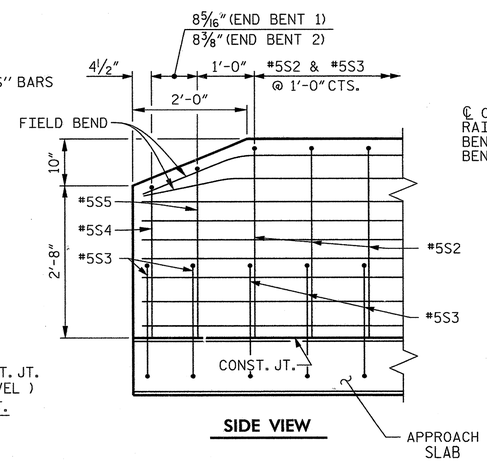


SIDE VIEW

END OF RAIL DETAILS

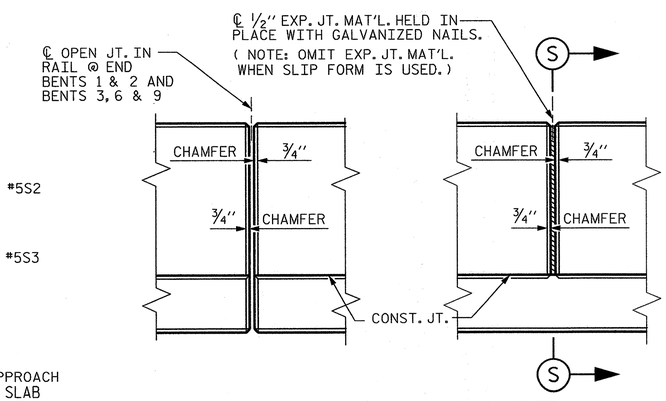


ELEVATION AT EXPANSION JOINTS

BARRIER RAIL DETAILS

PROJECT NO. R-2303D

SAMPSON COUNTY

STATION: 1311+58.00 -LREV-

SHEET 5 OF 5

STATE OF NORTH CAROLINA
DEPARTMENT OF TRANSPORTATION
RALEIGH

STANDARD

CONCRETE BARRIER RAIL DETAILS

(LEFT LANE)

CDM Smith

Camp Dresser & McKee
421 Fayetteville Street, Suite 1303
Raleigh, NC 27604
NC COA No. F-1255

DRAWN BY : C.E.DIXON DATE : 10-12
CHECKED BY : J.T.ECKEL DATE : 10-12
DESIGN ENGINEER : P.R. HOLSHOUSER DATE : 1-13

DWG. No. S01-037

NORTH CAROLINA PROFESSIONAL SEAL 20668 ENGINEER PAUL R. HOLSHOUSER 2/22/2013

| REVISIONS | | | | | | |
|---|---|---|---|---|---|---|
| No. | BY: | DATE: | No. | BY: | DATE: | |
| 1 | | | 3 | | | |
| 2 | | | 4 | | | |

SHEET No. 5-37

TOTAL SHEETS 218

STD. No. CBR1

| | | | |
|---|---|---|---|
| ASSEMBLED BY : | C.E. DIXON | DATE : | 10-12 |
| CHECKED BY : | J.T. ECKEL | DATE : | 10-12 |
| DRAWN BY : ARB 5/87 | REV. 10/1/11 | MAA/GM | |
| CHECKED BY : SJD 9/87 | REV. 7/12 | MAA/GM | |
| | REV. 10/12 | MAA/GM | |

FILE: R:\HCDOT\R2303D\STRUCTURES\PLANS\Str_11\R2303D_SD_Sht_brd.dgn
DATE: 2/22/2013 10:26:39 AM

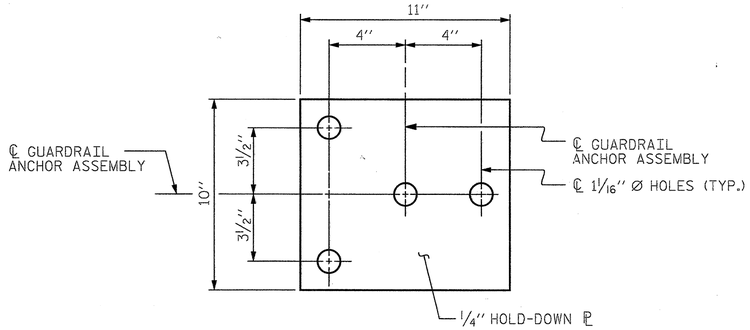


## PLAN

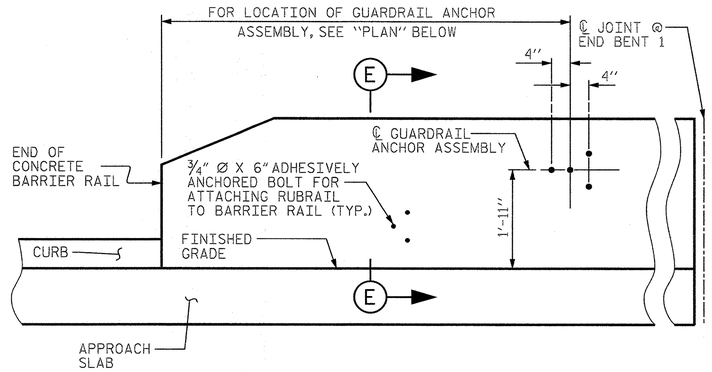


## ELEVATION

(END BENT 1 SHOWN, END BENT 2 SIMILAR)

## NOTES

THE GUARDRAIL ANCHOR ASSEMBLY SHALL CONSIST OF A 1/4" HOLD-DOWN PLATE AND 4 - 7/8" Ø BOLTS WITH NUTS AND WASHERS, RUBRAIL, AND ADHESIVELY ANCHORED BOLTS.

THE HOLD-DOWN PLATE SHALL CONFORM TO AASHTO M270 GRADE 36. AFTER FABRICATION, THE HOLD-DOWN PLATE SHALL BE HOT-DIP GALVANIZED IN ACCORDANCE WITH AASHTO M111.

BOLTS SHALL CONFORM TO THE REQUIREMENTS OF ASTM A307 AND NUTS SHALL CONFORM TO THE REQUIREMENTS OF AASHTO M291. BOLTS, NUTS AND WASHERS SHALL BE GALVANIZED. (AT THE CONTRACTOR'S OPTION, STAINLESS STEEL BOLTS, NUTS AND WASHERS MAY BE USED AS AN ALTERNATE FOR THE 7/8" Ø GALVANIZED BOLTS, NUTS AND WASHERS. THEY SHALL CONFORM TO OR EXCEED THE MECHANICAL REQUIREMENTS OF ASTM A307. THE USE OF THIS ALTERNATE SHALL BE APPROVED BY THE ENGINEER.)

THE GUARDRAIL ANCHOR ASSEMBLY IS REQUIRED AT ALL POINTS WHERE APPROACH GUARDRAIL IS TO BE ATTACHED TO THE END OF BARRIER RAIL. FOR POINTS OF ATTACHMENT, SEE SKETCH.

AFTER INSTALLATION, THE EXPOSED THREAD OF THE BOLT SHALL BE BURRED WITH A SHARP POINTED TOOL.

THE COST OF THE GUARDRAIL ANCHOR ASSEMBLY SHALL BE INCLUDED IN THE UNIT CONTRACT PRICE BID FOR CONCRETE BARRIER RAIL.

THE 1 1/4" Ø HOLES SHALL BE FORMED OR DRILLED WITH A CORE BIT. IMPACT TOOLS WILL NOT BE PERMITTED. ANY CONCRETE DAMAGED BY THIS WORK SHALL BE REPAIRED TO THE SATISFACTION OF THE ENGINEER.

THE C6 X 8.2 RUBRAIL IS TO BE ADHESIVELY ANCHORED TO THE RAIL USING THREE 3/4" Ø X 6" BOLTS WITH WASHERS. LEVEL ONE FIELD TESTING IS REQUIRED, AND THE YIELD LOAD OF THE 3/4" Ø BOLT IS 12 KIPS. FOR ADHESIVELY ANCHORED ANCHOR BOLTS OR DOWELS, SEE STANDARD SPECIFICATIONS. SEE ROADWAY STANDARD 862.03 FOR DETAILS AND LOCATION OF THE RUBRAIL.

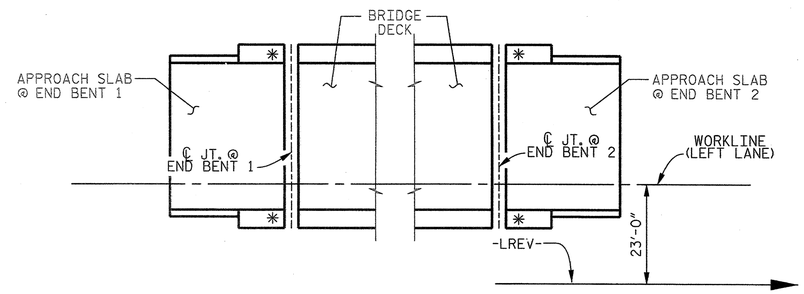


## SKETCH SHOWING POINTS OF ATTACHMENT

✱ DENOTES GUARDRAIL ANCHOR ASSEMBLY

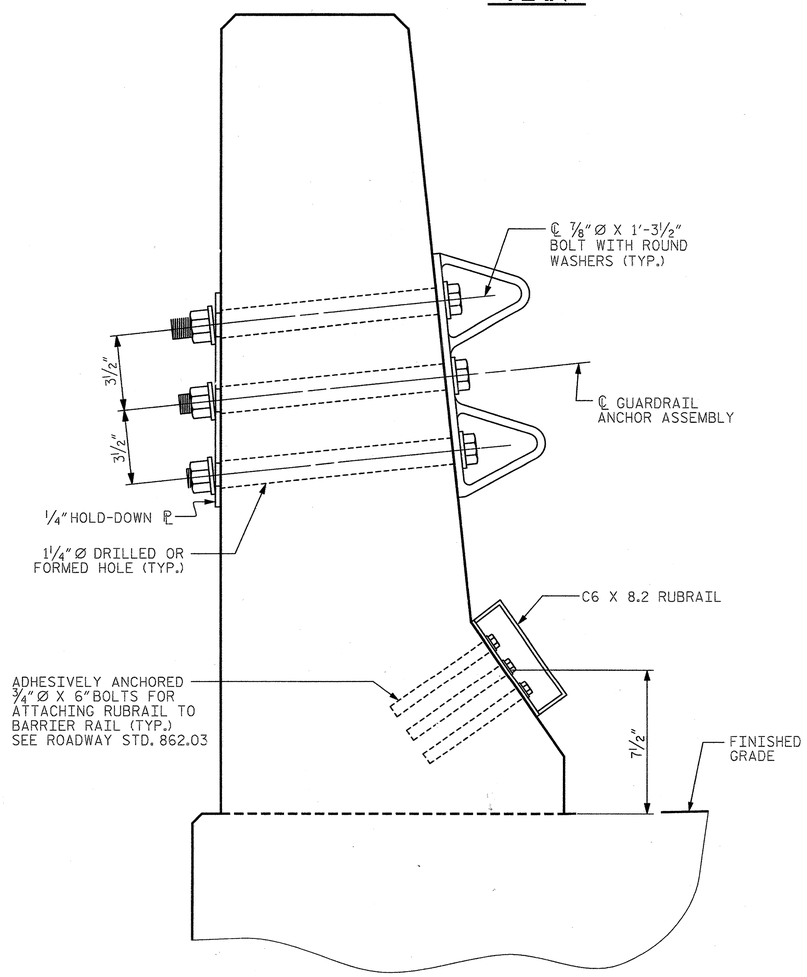


SECTION E-E

## GUARDRAIL ANCHOR ASSEMBLY DETAILS

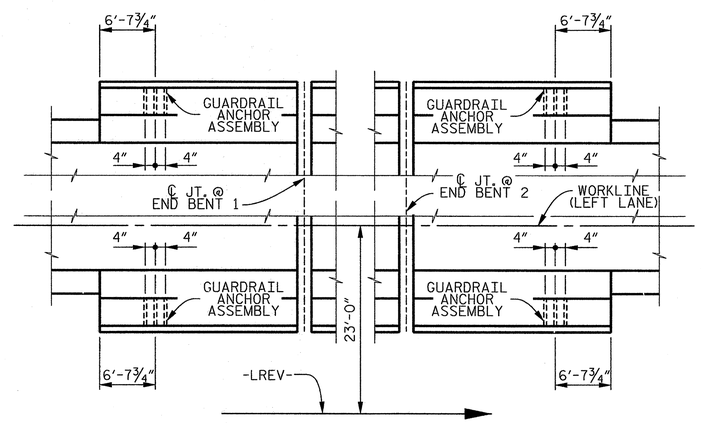


PLAN

## LOCATION OF ANCHORS FOR GUARDRAIL

PROJECT NO. R-2303D

SAMPSON COUNTY

STATION: 1311+58.00 -LREV-

STATE OF NORTH CAROLINA
DEPARTMENT OF TRANSPORTATION
RALEIGH

SUPERSTRUCTURE

# GUARDRAIL ANCHORAGE FOR BARRIER RAIL (LEFT LANE)

| ASSEMBLED BY : | C.E. DIXON | DATE : 10-12 |
|---|---|---|
| CHECKED BY : | J.T. ECKEL | DATE : 10-12 |

| | | | | |
|---|---|---|---|---|
| DRAWN BY : | TLA | 5/06 | REV. 10/1/11 | MAA/GM |
| CHECKED BY : | GM | 5/06 | REV. 7/12 | MAA/GM |
| | | | REV. 10/12 | MAA/GM |

CDM Smith
Camp Dresser & McKee
421 Fayetteville Street, Suite 1303
Raleigh, NC 27604
NC COA No. F-1255

| | | | |
|---|---|---|---|
| DRAWN BY : | C.E.DIXON | DATE : | 10-12 |
| CHECKED BY : | J.T.ECKEL | DATE : | 10-12 |
| DESIGN ENGINEER : | P.R. HOLSHOUSER | DATE : | 1-13 |

DWG. No. S01-038

NORTH CAROLINA PROFESSIONAL SEAL 20668 ENGINEER PAUL R. HOLSHOUSER 02/28/13

| REVISIONS | | | | | | SHEET No. |
|---|---|---|---|---|---|---|
| No. | BY: | DATE: | No. | BY: | DATE: | S-38 |
| 1 | | | 3 | | | TOTAL SHEETS |
| 2 | | | 4 | | | 218 |

STD. No. GRA2

FILE: R:\NCDOT\R2303D\STRUCTURES\PLANS\Str_1\R2303D_SD_Str1_gr1.dgn
DATE: 2/27/2013 10:11:17 AM

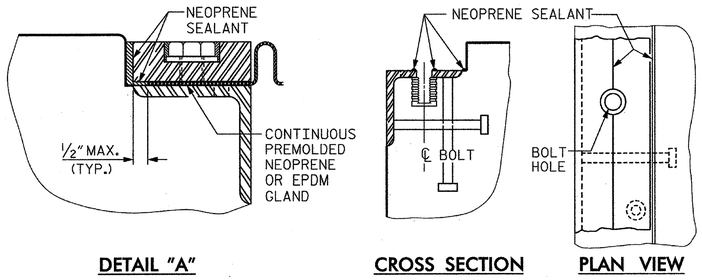


DETAIL "A" CROSS SECTION PLAN VIEW

## INSTALLATION SKETCH

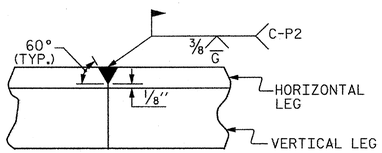


## DETAIL – FIELD WELD SPLICE OF BASE ANGLE

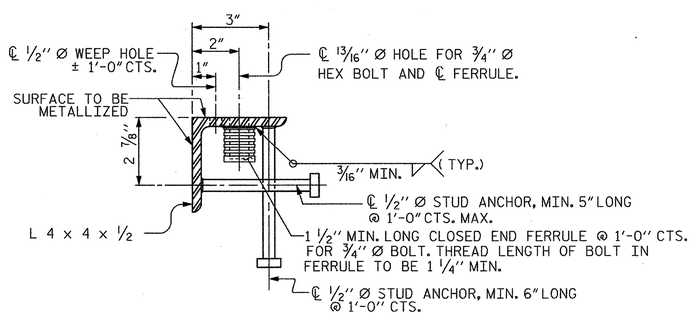


## TYPICAL SECTION OF BASE ANGLE ASSEMBLY

## INSTALLATION PROCEDURE

1. A TEMPLATE OR OTHER SUITABLE DEVICE SHALL BE USED TO FORM THE TOP OF THE EXPANSION JOINT SEAL BLOCKOUT TO THE PROPER DEPTH AND WIDTH. THE TEMPLATE SHALL BE 4 1/8" TO 4 1/4" WIDE AND OF SUCH THICKNESS AS TO PROVIDE FOR CORRECT FINAL ELEVATION OF TOP OF HOLD-DOWN PLATES. THE TEMPLATE SHALL BE ATTACHED TO THE BASE ANGLE ASSEMBLY WITH THE 3/4" Ø HEX HEAD BOLTS PROVIDED FOR THE HOLD-DOWN PLATES. A 1" Ø HOLE SHALL BE PROVIDED IN THE TEMPLATE CENTERED OVER EACH WEEP HOLE IN THE 4" X 4" X 1/2" BASE ANGLE. OTHER METHODS OF INSURING DRAINAGE THROUGH WEEP HOLES MAY BE EMPLOYED SUBJECT TO ENGINEER'S APPROVAL.
2. AFTER THE CONCRETE HAS BEEN CAST ON BOTH SIDES OF THE JOINT, REMOVE THE TEMPLATE. THOROUGHLY CLEAN THE BOLT HOLES AND THE ANGLE PLATE. REMOVE ANY EXCESS CONCRETE THAT COMES OUT OF THE WEEP HOLES. ANY DAMAGED STEEL SHALL BE COATED WITH A MINIMUM THICKNESS OF 4 DRY MILS OF ZINC-RICH PAINT IN ACCORDANCE WITH THE STANDARD SPECIFICATIONS.
3. LAY THE GLAND ON THE BASE ANGLE AND FIELD MARK THE GLAND FOR THE BOLT HOLES. HOLES IN THE GLAND SHALL BE PUNCHED 7/8" IN DIAMETER WITH A HAND PUNCH.
4. IN ORDER TO CHECK FOR PROPER ALIGNMENT, PLACE THE GLAND AND HOLD-DOWN PLATES ON THE BASE ANGLE. DO NOT APPLY NEOPRENE SEALANT. BOLT THE HOLD-DOWN PLATES TO THE BASE ANGLE BUT DO NOT TIGHTEN. THE ENGINEER SHALL INSPECT THE JOINT SEAL DEVICE FOR PROPER ALIGNMENT.
5. AFTER INSPECTION, REMOVE THE HOLD-DOWN PLATES AND GLAND. APPLY NEOPRENE SEALANT TO THE BASE ANGLE IN ACCORDANCE WITH THE "INSTALLATION SKETCH". PLACE GLAND AND HOLD-DOWN PLATES ON THE BASE ANGLE. BOLT THE HOLD-DOWN PLATES TO THE BASE ANGLE ASSEMBLY AND TORQUE THE BOLTS TO 88 FT-LBS WITH A TORQUE WRENCH. CHECK THE TORQUE AFTER THREE (3) HOURS AND, IF NECESSARY, RETIGHTEN TO 88 FT-LBS. A FINAL CHECK SHALL BE MADE AT SEVEN (7) DAYS. TORQUE SHALL NOT BE LESS THAN 80 FT-LBS AFTER SEVEN (7) DAYS.
6. AFTER PROPER TORQUING, CLEAN THE BOLT HOLE RECESSES AND THE RECESS BETWEEN THE JOINT SEAL DEVICE AND CONCRETE, COMPLETELY FILL THESE RECESSES WITH NEOPRENE SEALANT.

## GENERAL NOTES

1. FOR EXPANSION JOINT SEALS, SEE SPECIAL PROVISIONS.
2. ALL PLATES AND ANGLES SHALL CONFORM TO AASHTO M270 GRADE 36 STEEL OR APPROVED EQUAL. ALL HOLD-DOWN BOLTS SHALL CONFORM TO ASTM F593 ALLOY 304 STAINLESS STEEL AND WASHERS SHALL CONFORM TO ASTM F844 EXCEPT THEY SHALL BE MADE FROM ALLOY 304 STAINLESS STEEL. ALL STUD ANCHORS SHALL CONFORM TO AASHTO M169, GRADES 1010 THRU 1020 OR APPROVED EQUAL. ALL CONCRETE INSERTS SHALL BE CLOSED END AND SHALL CONFORM TO AASHTO M169, GRADE 12L14. TENSILE CAPACITY SHALL BE 3000 LBS. MIN.
3. A PREMOLDED CORRUGATED OR NON-CORRUGATED GLAND SHALL BE USED FOR JOINTS SKEWED BETWEEN 50° THRU 130°. FOR JOINTS SKEWED LESS THAN 50° OR MORE THAN 130°, ONLY A CORRUGATED GLAND SHALL BE USED.
4. CLOSED END FERRULES AND STUD ANCHORS SHALL BE SHOP WELDED AND ALL HOLES SHALL BE SHOP DRILLED AS SHOWN ON PLANS. STUD ANCHORS SHALL BE ELECTRIC ARC END WELDED WITH COMPLETE FUSION.
5. SURFACES COMING IN CONTACT WITH NEOPRENE SHALL BE GROUND SMOOTH PRIOR TO METALLIZING.
6. UPON COMPLETION OF SHOP FABRICATION, THE HOLD DOWN PLATE AND BASE ANGLE ASSEMBLY, AS SHOWN IN THE "TYPICAL SECTION OF BASE ANGLE ASSEMBLY", SHALL BE METALLIZED. SEE SPECIAL PROVISION FOR THERMAL SPRAYED COATINGS (METALLIZATION).
7. BASE ANGLE ASSEMBLY SHALL BE CONTINUOUS FOR THE LENGTH OF THE JOINT. AT CROWN BREAKS, THE ENDS OF THE BASE ANGLE ASSEMBLY SHALL BE CUT PARALLEL TO THE BRIDGE CENTERLINE FOR SKEWS LESS THAN 80° AND GREATER THAN 100°. FINISHED WELD SHALL BE GROUND SMOOTH AND COATED WITH A MINIMUM THICKNESS OF 4 DRY MILS OF ZINC-RICH PAINT IN ACCORDANCE WITH THE STANDARD SPECIFICATIONS.
8. FIELD SPLICES OF HOLD-DOWN PLATES SHALL BE KEPT TO A MINIMUM. CONTRACTOR SHALL FURNISH DETAILED PLANS SHOWING PROPOSED SPLICE LOCATIONS FOR APPROVAL. HOLD-DOWN PLATES SHALL NOT EXCEED 20' LENGTHS UNLESS APPROVED BY THE ENGINEER.
9. NO ALTERNATE JOINT DETAILS SHALL BE PERMITTED IN LIEU OF THOSE SHOWN ON THESE PLANS.
10. THE CONTRACTOR MAY, AT HIS OPTION, USE ADHESIVELY ANCHORED ANCHOR BOLTS IN PLACE OF CONCRETE INSERTS FOR COVER PLATES. THE YIELD LOAD OF THE 3/4" Ø BOLT IS 10 KIPS. FIELD TESTING OF THE ADHESIVE BONDING SYSTEM IS NOT REQUIRED.

### MOVEMENT AND SETTING AT JOINT

| LOCATION | SKEW ANGLE | TOTAL MOVEMENT (ALONG ℄ RDWY) | PERPENDICULAR JOINT OPENING AT 45° F | PERPENDICULAR JOINT OPENING AT 60° F | PERPENDICULAR JOINT OPENING AT 90° F |
|---|---|---|---|---|---|
| END BENT 1 | 90°00'00" | 1" | 1 13/16" | 1 5/8" | 1 3/8" |
| BENT 3 | 90°00'00" | 2 1/2" | 2 7/8" | 2 1/2" | 1 7/8" |
| BENT 6 | 90°00'00" | 2 3/8" | 2 3/4" | 2 3/8" | 1 3/4" |
| BENT 9 | 90°00'00" | 2 1/2" | 2 7/8" | 2 1/2" | 1 7/8" |
| END BENT 2 | 90°00'00" | 1 1/4" | 1 15/16" | 1 3/4" | 1 7/16" |

PROJECT NO. R-2303D
SAMPSON COUNTY
STATION: 1311+58.00 -LREV-

SHEET 1 OF 3

STATE OF NORTH CAROLINA
DEPARTMENT OF TRANSPORTATION
RALEIGH

STANDARD

EXPANSION JOINT SEAL DETAILS

(LEFT LANE)


CDM Smith
Camp Dresser & McKee
421 Fayetteville Street, Suite 1303
Raleigh, NC 27604
NC COA No. F-1255


DRAWN BY : C.E.DIXON DATE : 10-12
CHECKED BY : J.T.ECKEL DATE : 10-12
DESIGN ENGINEER : P.R. HOLSHOUSER DATE : 1-13

DWG. No. S01-039

NORTH CAROLINA PROFESSIONAL SEAL 20668 ENGINEER PAUL R. HOLSHOUSER 2/08/2013

| REVISIONS | | | | | | SHEET No. |
|---|---|---|---|---|---|---|
| No. | BY: | DATE: | No. | BY: | DATE: | S-39 |
| 1 | | | 3 | | | TOTAL SHEETS |
| 2 | | | 4 | | | 218 |

STD. No. EJS1

| | | | |
|---|---|---|---|
| ASSEMBLED BY : | C.E.DIXON | DATE : | 10-12 |
| CHECKED BY : | J.T.ECKEL | DATE : | 10-12 |

| | | | | |
|---|---|---|---|---|
| DRAWN BY : REK 9/87 | REV. 5/7/03R | RWW/JTE |
| CHECKED BY : CRK 10/87 | REV. 5/1/06R | TLA/GM |
| | REV. 10/1/11 | MAA/GM |

FILE: R:\NCDOT\R2303D\STRUCTURES\PLANS\Str_01\R2303D_SD_Str1_epl-1.dgn
DATE: 1/22/2013 10:09:22 AM

## NOTES

FOR "TYPICAL SECTION OF BASE ANGLE ASSEMBLY", SEE SHEET 1 OF 3.

FOR DETAIL "A", SEE SHEET 1 OF 3.

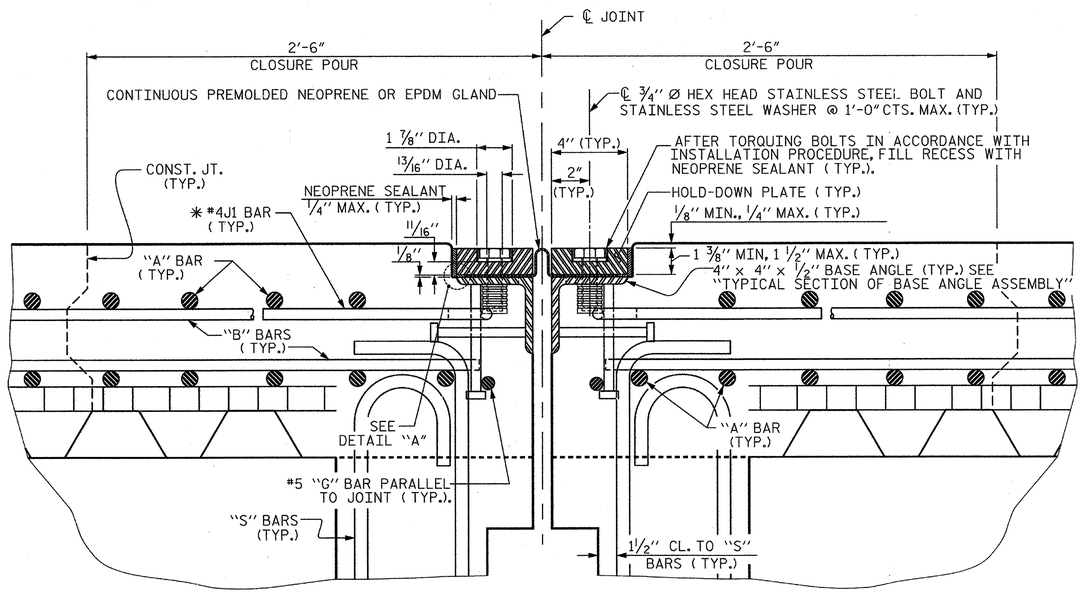


## EXPANSION JOINT DETAILS

SECTION NORMAL TO JOINT AT BENTS 3, 6 AND 9

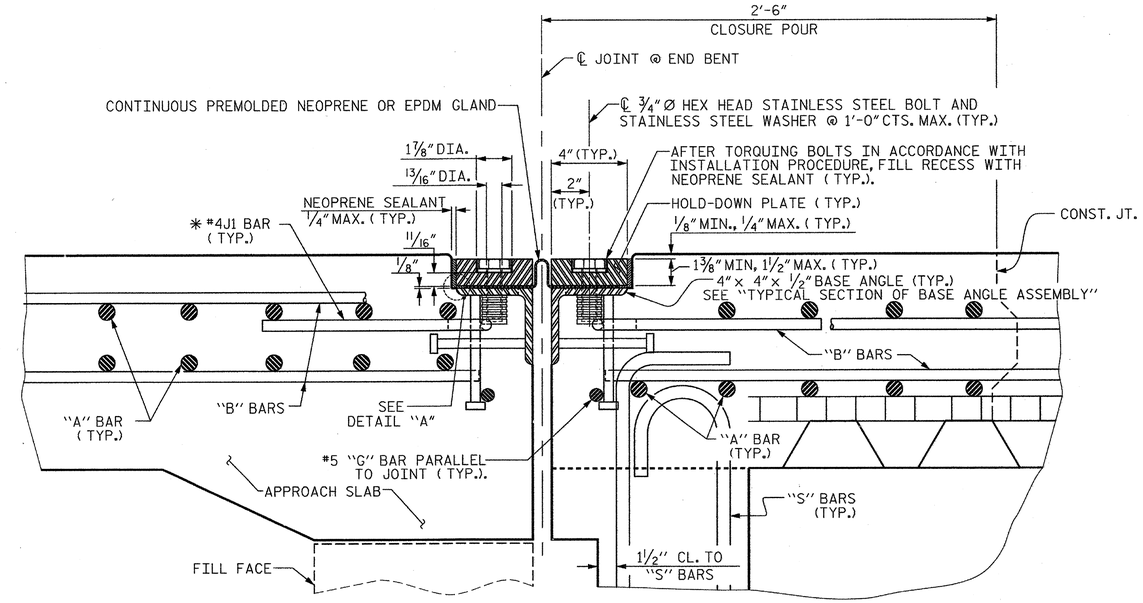


## EXPANSION JOINT DETAILS

SECTION NORMAL TO JOINT AT END BENT 1, END BENT 2 SIMILAR

✳ THE QUANTITY OF #4J1 BARS ON THE BILL OF MATERIAL IS BASED ON 1'-0" CENTERS. J1 BARS SHALL BE PLACED AT EACH VERTICAL STUD ANCHOR BOLT. IN THE EVENT THAT THE NUMBER OF VERTICAL STUD ANCHORS EXCEEDS THE NUMBER OF J1 BARS SPECIFIED, ADDITIONAL J1 BARS WILL NOT BE REQUIRED.

PROJECT NO. R-2303D

SAMPSON COUNTY

STATION: 1311+58.00 -LREV-

SHEET 2 OF 3

STATE OF NORTH CAROLINA
DEPARTMENT OF TRANSPORTATION
RALEIGH

STANDARD

EXPANSION JOINT SEAL DETAILS

(LEFT LANE)

| REVISIONS | | | | | | | SHEET No. |
|---|---|---|---|---|---|---|---|
| No. | BY: | DATE: | No. | BY: | DATE: | | S-40 |
| 1 | | | 3 | | | | TOTAL SHEETS |
| 2 | | | 4 | | | | 218 |

STD. No. EJS1

CDM Smith
Camp Dresser & McKee
421 Fayetteville Street, Suite 1303
Raleigh, NC 27604
NC COA No. F-1255

DRAWN BY : C.E.DIXON DATE : 10-12
CHECKED BY : J.T.ECKEL DATE : 10-12
DESIGN ENGINEER : P.R. HOLSHOUSER DATE : 1-13

DWG. No. S01-040

NORTH CAROLINA PROFESSIONAL SEAL 20668 ENGINEER PAUL R. HOLSHOUSER 1/08/2013

| | | | |
|---|---|---|---|
| ASSEMBLED BY : | C.E.DIXON | DATE : | 10-12 |
| CHECKED BY : | J.T.ECKEL | DATE : | 10-12 |
| DRAWN BY : REK | 9/87 | REV. 5/7/03R | RWW/JTE |
| CHECKED BY : CRK | 10/87 | REV. 5/1/06R | TLA/GM |
| | | REV. 10/1/11 | MAA/GM |

FILE: R:\NCDOT\R2303D\STRUCTURES\PLANS\Sht_1\R2303D_SD_Sht1_alt2.dgn
DATE: 1/22/13 10:34:12 AM

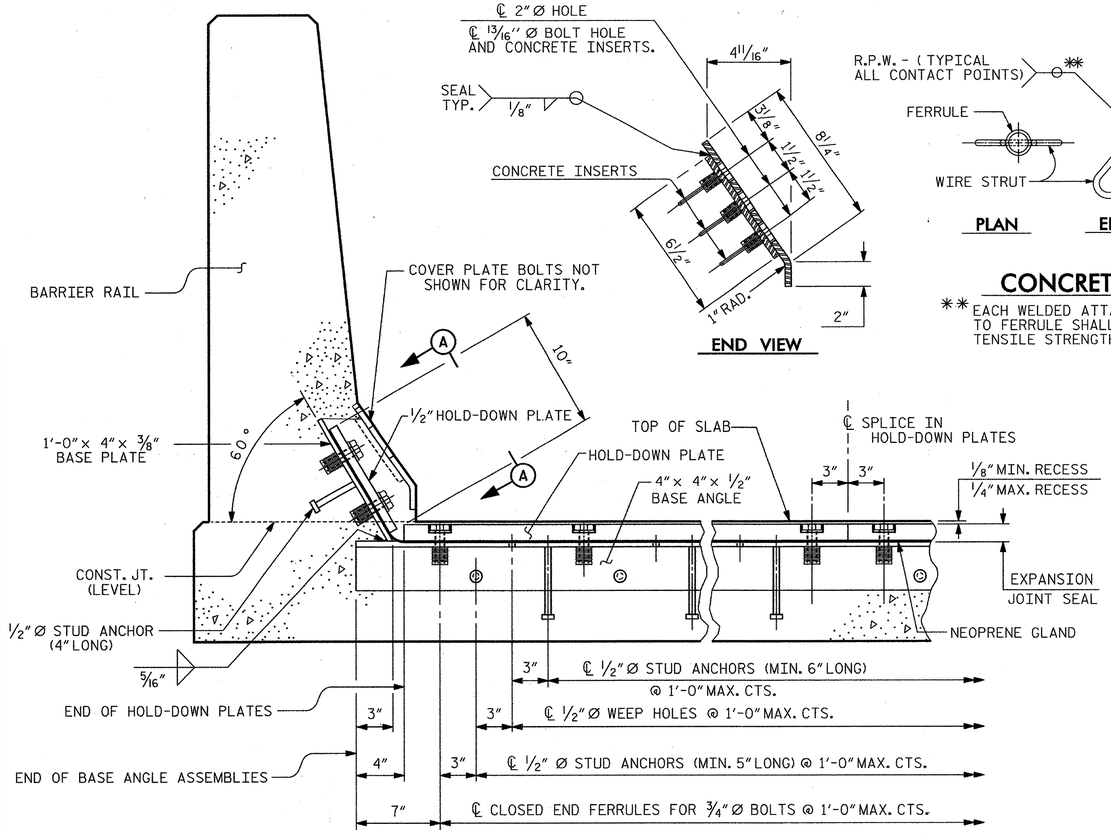


## SECTION THRU RAIL NORMAL TO JOINT

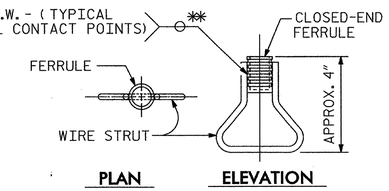


## CONCRETE INSERT

** EACH WELDED ATTACHMENT OF WIRE TO FERRULE SHALL DEVELOP THE TENSILE STRENGTH OF THE WIRE.

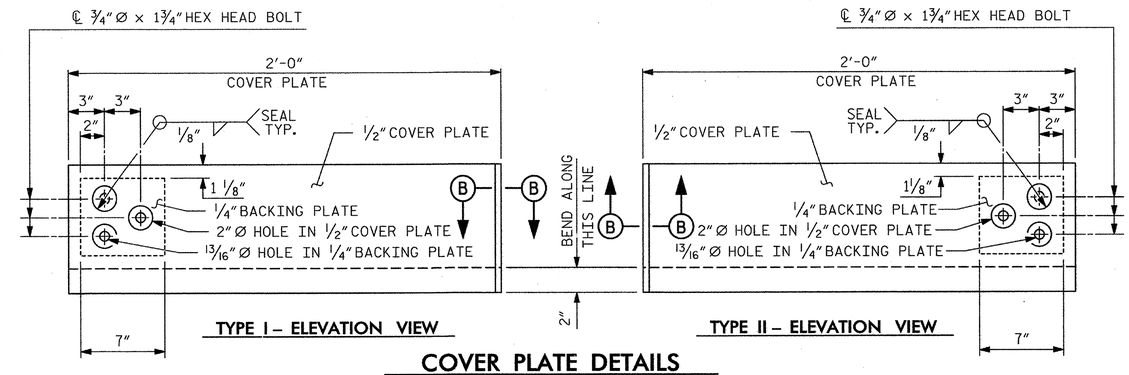


## COVER PLATE DETAILS

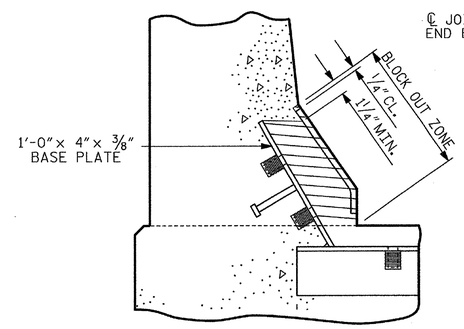


## BLOCK OUT DETAIL

SEE "SECTION A-A" FOR OTHER DETAILS.

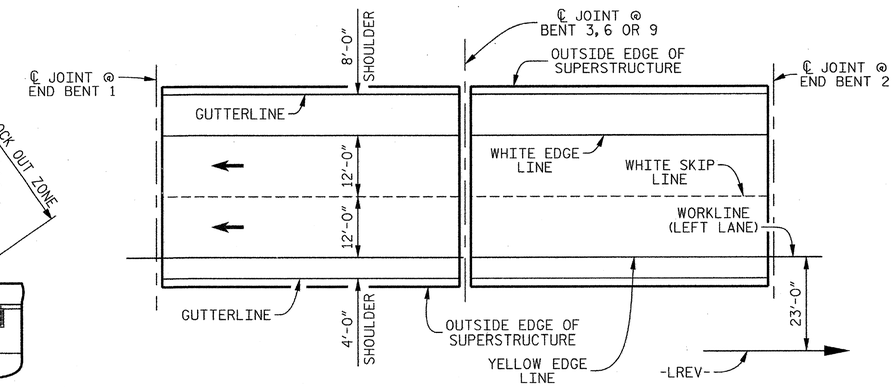


## PAVEMENT MARKING ALIGNMENT

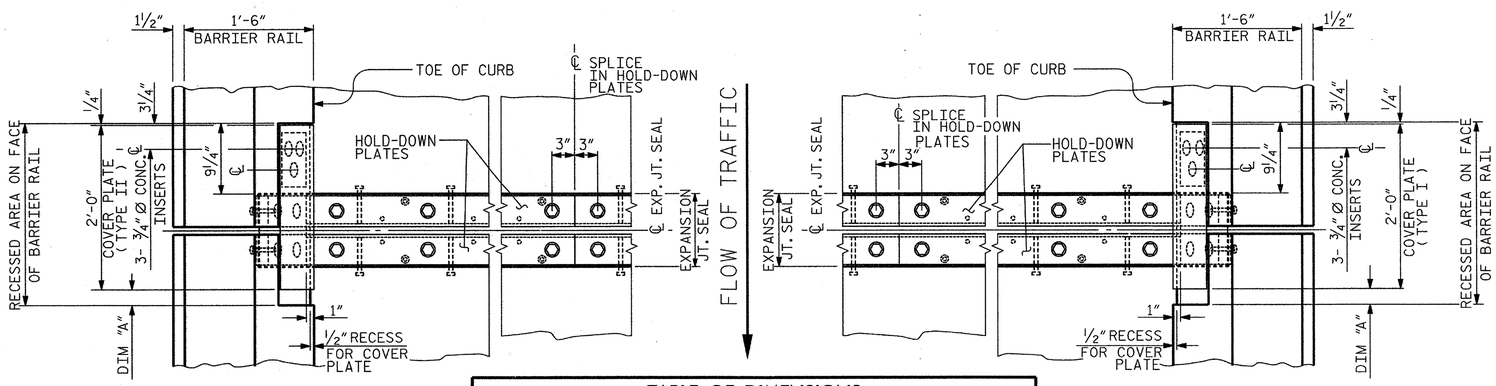


| TABLE OF DIMENSIONS | | | |
|---|---|---|---|
| LOCATION | DIM "A" AT 45° F | DIM "A" AT 60° F | DIM "A" AT 90° F |
| END BENT 1 | 1 11/16" | 1 1/2" | 1 1/4" |
| BENT 3 | 2 5/8" | 2 1/4" | 1 5/8" |
| BENT 6 | 2 9/16" | 2 3/16" | 1 9/16" |
| BENT 9 | 2 5/8" | 2 1/4" | 1 5/8" |
| END BENT 2 | 1 13/16" | 1 5/8" | 1 5/16" |

## PLAN OF EXPANSION JOINT SEAL – LEFT SIDE

## PLAN OF EXPANSION JOINT SEAL – RIGHT SIDE

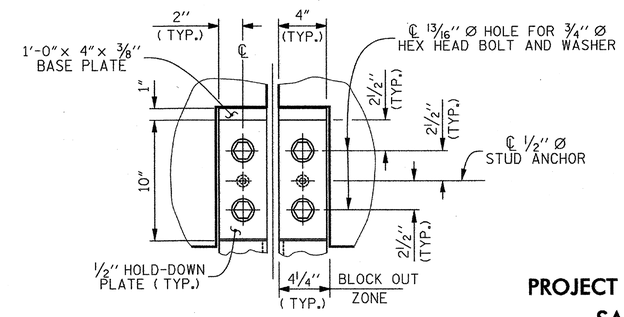


## SECTION A–A

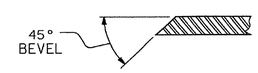


## SECTION B–B

PROJECT NO. R-2303D

SAMPSON COUNTY

STATION: 1311+58.00 -LREV-

SHEET 3 OF 3

STATE OF NORTH CAROLINA
DEPARTMENT OF TRANSPORTATION
RALEIGH

STANDARD

# EXPANSION JOINT SEAL DETAILS FOR BARRIER RAIL (LEFT LANE)

CDM Smith
Camp Dresser & McKee
421 Fayetteville Street, Suite 1303
Raleigh, NC 27604
NC COA No. F-1255

DRAWN BY : C.E.DIXON DATE : 10-12
CHECKED BY : J.T.ECKEL DATE : 10-12
DESIGN ENGINEER : P.R. HOLSHOUSER DATE : 1-13

DWG. No. S01-041

NORTH CAROLINA PROFESSIONAL SEAL 20668 ENGINEER P. R. HOLSHOUSER 2/08/2013

| REVISIONS | | | | | | |
|---|---|---|---|---|---|---|
| No. | BY: | DATE: | No. | BY: | DATE: | |
| 1 | | | 3 | | | |
| 2 | | | 4 | | | |

SHEET No. S-41
TOTAL SHEETS 218

STD. No. EJS2

| | | | |
|---|---|---|---|
| ASSEMBLED BY : | C.E.DIXON | DATE : | 10-12 |
| CHECKED BY : | J.T.ECKEL | DATE : | 10-12 |
| DRAWN BY : REK 9/87 | REV. 10/1/11 | MAA/GM | |
| CHECKED BY : CRK 10/87 | REV. 7/12 | MAA/GM | |
| | REV. 10/12 | MAA/GM | |

FILE: R:\NCDOT\R2303D\STRUCTURES\PLANS\Sr_1\R2303D_SD_Sr1_ejs2.dgn
DATE: 12/31/2012 9:26:38 AM

INDICATES POUR NUMBER AND DIRECTION OF POUR.

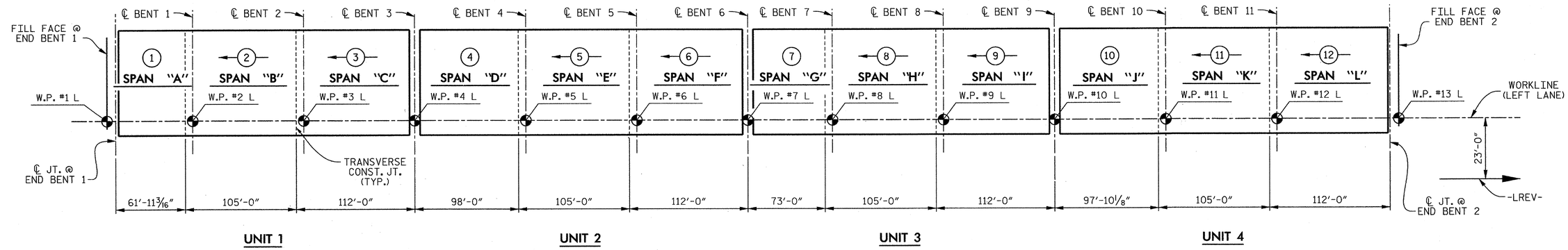


## POURING SEQUENCE

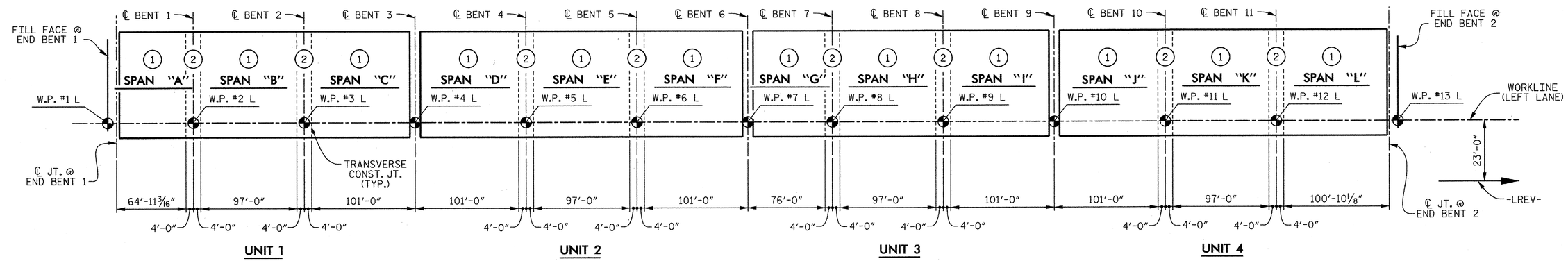


## OPTIONAL POURING SEQUENCE

POUR (2) CAN NOT BE STARTED UNTIL BOTH ADJACENT (1) POURS REACH A MINIMUM OF 3000 PSI

| CLASS AA CONCRETE BREAKDOWN | |
|---|---|
| POUR 1 | 84.9 CU. YDS. |
| POUR 2 | 155.0 CU. YDS. |
| POUR 3 | 166.2 CU. YDS. |
| POUR 4 | 133.2 CU. YDS. |
| POUR 5 | 155.0 CU. YDS. |
| POUR 6 | 166.2 CU. YDS. |
| POUR 7 | 99.7 CU. YDS. |
| POUR 8 | 155.0 CU. YDS. |
| POUR 9 | 166.2 CU. YDS. |
| POUR 10 | 133.0 CU. YDS. |
| POUR 11 | 155.0 CU. YDS. |
| POUR 12 | 166.2 CU. YDS. |
| | |
| TOTAL | 1,735.6 CU. YDS. |

| GROOVING BRIDGE FLOORS | |
|---|---|
| | SQ. FT. |
| APPROACH SLAB @ END BENT 1 | 786 |
| APPROACH SLAB @ END BENT 2 | 786 |
| BRIDGE DECK (UNIT 1) | 9,165 |
| BRIDGE DECK (UNIT 2) | 10,354 |
| BRIDGE DECK (UNIT 3) | 9,529 |
| BRIDGE DECK (UNIT 4) | 10,350 |
| | |
| TOTAL | 40,970 |

| TOTAL SUPERSTRUCTURE QUANTITIES | | | |
|---|---|---|---|
| | REINFORCING STEEL | EPOXY COATED REINFORCING STEEL | CLASS "AA" CONCRETE |
| | LBS. | LBS. | CU. YDS. |
| UNIT 1 | 38,565 | 33,646 | 406.1 |
| UNIT 2 | 43,248 | 37,540 | 454.4 |
| UNIT 3 | 39,952 | 34,795 | 420.9 |
| UNIT 4 | 43,248 | 37,540 | 454.2 |
| | | | |
| ** TOTAL | 165,013 | 143,521 | 1,735.6 |

** QUANTITIES FOR CONCRETE BARRIER RAIL ARE NOT INCLUDED. SEE "CONCRETE BARRIER RAIL" SHEETS FOR DETAILS.

PROJECT NO. R-2303D
SAMPSON COUNTY
STATION: 1311+58.00 -LREV-

SHEET 1 OF 2

STATE OF NORTH CAROLINA
DEPARTMENT OF TRANSPORTATION
RALEIGH

SUPERSTRUCTURE

BILL OF MATERIAL

(LEFT LANE)

CDM Smith
Camp Dresser & McKee
421 Fayetteville Street, Suite 1303
Raleigh, NC 27604
NC COA No. F-1255

DRAWN BY : J.T. ECKEL DATE : 10-12
CHECKED BY : A.A. MONTIEL DATE : 10-12
DESIGN ENGINEER : P.R. HOLSHOUSER DATE : 1-13

DWG. No. S01-042

NORTH CAROLINA PROFESSIONAL SEAL 20668 ENGINEER PAUL R. HOLSHOUSER 2/04/2013

| REVISIONS | | | | | | SHEET No. |
|---|---|---|---|---|---|---|
| No. | BY: | DATE: | No. | BY: | DATE: | S-42 |
| 1 | | | 3 | | | TOTAL SHEETS |
| 2 | | | 4 | | | 218 |

FILE: R:\NCDOT\R2303D\STRUCTURES\PLANS\Sv_TI\R2303D_SD_SV1_bm1.dgn
DATE: 12/31/2012 9:26:37 AM

## BILL OF MATERIAL FOR UNIT 1

| BAR | No. | SIZE | TYPE | LENGTH | WEIGHT |
|---|---|---|---|---|---|
| ✱A1 | 476 | #5 | STR | 38'-11" | 19,321 |
| A2 | 478 | #5 | STR | 38'-11" | 19,402 |
| ✱B101 | 56 | #4 | STR | 23'-5" | 876 |
| ✱B102 | 56 | #4 | STR | 19'-0" | 711 |
| ✱B103 | 84 | #4 | STR | 24'-10" | 1,393 |
| ✱B104 | 56 | #5 | STR | 32'-6" | 1,898 |
| ✱B105 | 84 | #5 | STR | 26'-0" | 2,278 |
| ✱B106 | 25 | #5 | STR | 44'-5" | 1,158 |
| ✱B107 | 50 | #5 | STR | 26'-3" | 1,369 |
| ✱B108 | 25 | #5 | STR | 52'-4" | 1,365 |
| ✱B109 | 50 | #5 | STR | 31'-6" | 1,643 |
| B110 | 230 | #5 | STR | 57'-7" | 13,814 |
| B111 | 41 | #5 | STR | 44'-5" | 1,899 |
| B112 | 41 | #5 | STR | 52'-4" | 2,238 |
| ✱G1 | 2 | #5 | STR | 38'-11" | 81 |
| ✱J1 | 72 | #4 | 6 | 1'- 5" | 68 |
| ✱K1 | 8 | #8 | 1 | 14'-3" | 304 |
| ✱K2 | 8 | #8 | 2 | 20'-11" | 447 |
| K3 | 24 | #4 | STR | 16'-7" | 266 |
| K4 | 12 | #4 | STR | 6'- 4" | 51 |
| K5 | 48 | #4 | STR | 9'- 4" | 299 |
| K6 | 12 | #4 | STR | 6'- 8" | 53 |
| ✱S1 | 42 | #5 | 3 | 6'- 1" | 266 |
| S2 | 258 | #4 | 4 | 2'- 9" | 474 |
| ✱U1 | 42 | #4 | 2 | 16'-8" | 468 |
| U2 | 12 | #4 | 5 | 8'- 8" | 69 |

REINFORCING STEEL 38,565 LBS.

✱EPOXY COATED REINFORCING STEEL 33,646 LBS.

## BILL OF MATERIAL FOR UNIT 2

| BAR | No. | SIZE | TYPE | LENGTH | WEIGHT |
|---|---|---|---|---|---|
| ✱A1 | 538 | #5 | STR | 38'-11" | 21,837 |
| A2 | 540 | #5 | STR | 38'-11" | 21,919 |
| ✱B201 | 84 | #4 | STR | 24'-10" | 1,393 |
| ✱B202 | 56 | #4 | STR | 19'-0" | 711 |
| ✱B203 | 84 | #4 | STR | 24'-10" | 1,393 |
| ✱B204 | 84 | #5 | STR | 26'-0" | 2,278 |
| ✱B205 | 84 | #5 | STR | 26'-0" | 2,278 |
| ✱B206 | 25 | #5 | STR | 52'-4" | 1,365 |
| ✱B207 | 50 | #5 | STR | 31'-6" | 1,643 |
| ✱B208 | 25 | #5 | STR | 52'-4" | 1,365 |
| ✱B209 | 50 | #5 | STR | 31'-6" | 1,643 |
| B210 | 276 | #5 | STR | 54'-4" | 15,641 |
| B211 | 41 | #5 | STR | 52'-4" | 2,238 |
| B212 | 41 | #5 | STR | 52'-4" | 2,238 |
| ✱G1 | 2 | #5 | STR | 38'-11" | 81 |
| ✱J1 | 72 | #4 | 6 | 1'- 5" | 68 |
| ✱K1 | 8 | #8 | 1 | 14'-3" | 304 |
| ✱K2 | 8 | #8 | 2 | 20'-11" | 447 |
| K3 | 24 | #4 | STR | 16'-7" | 266 |
| K4 | 12 | #4 | STR | 6'- 4" | 51 |
| K5 | 48 | #4 | STR | 9'- 4" | 299 |
| K6 | 12 | #4 | STR | 6'- 8" | 53 |
| ✱S1 | 42 | #5 | 3 | 6'- 1" | 266 |
| S2 | 258 | #4 | 4 | 2'- 9" | 474 |
| ✱U1 | 42 | #4 | 2 | 16'-8" | 468 |
| U2 | 12 | #4 | 5 | 8'- 8" | 69 |

REINFORCING STEEL 43,248 LBS.

✱EPOXY COATED REINFORCING STEEL 37,540 LBS.

## BILL OF MATERIAL FOR UNIT 3

| BAR | No. | SIZE | TYPE | LENGTH | WEIGHT |
|---|---|---|---|---|---|
| ✱A1 | 495 | #5 | STR | 38'-11" | 20,092 |
| A2 | 497 | #5 | STR | 38'-11" | 20,173 |
| ✱B301 | 56 | #4 | STR | 27'-6" | 1,029 |
| ✱B302 | 56 | #4 | STR | 19'-0" | 711 |
| ✱B303 | 84 | #4 | STR | 24'-10" | 1,393 |
| ✱B304 | 56 | #5 | STR | 34'-0" | 1,986 |
| ✱B305 | 84 | #5 | STR | 26'-0" | 2,278 |
| ✱B306 | 25 | #5 | STR | 46'-8" | 1,217 |
| ✱B307 | 50 | #5 | STR | 27'-9" | 1,447 |
| ✱B308 | 25 | #5 | STR | 52'-4" | 1,365 |
| ✱B309 | 50 | #5 | STR | 31'-6" | 1,643 |
| B310 | 230 | #5 | STR | 59'-9" | 14,333 |
| B311 | 41 | #5 | STR | 46'-8" | 1,996 |
| B312 | 41 | #5 | STR | 52'-4" | 2,238 |
| ✱G1 | 2 | #5 | STR | 38'-11" | 81 |
| ✱J1 | 72 | #4 | 6 | 1'- 5" | 68 |
| ✱K1 | 8 | #8 | 1 | 14'-3" | 304 |
| ✱K2 | 8 | #8 | 2 | 20'-11" | 447 |
| K3 | 24 | #4 | STR | 16'-7" | 266 |
| K4 | 12 | #4 | STR | 6'- 4" | 51 |
| K5 | 48 | #4 | STR | 9'- 4" | 299 |
| K6 | 12 | #4 | STR | 6'- 8" | 53 |
| ✱S1 | 42 | #5 | 3 | 6'- 1" | 266 |
| S2 | 258 | #4 | 4 | 2'- 9" | 474 |
| ✱U1 | 42 | #4 | 2 | 16'-8" | 468 |
| U2 | 12 | #4 | 5 | 8'- 8" | 69 |

REINFORCING STEEL 39,952 LBS.

✱EPOXY COATED REINFORCING STEEL 34,795 LBS.

## BILL OF MATERIAL FOR UNIT 4

| BAR | No. | SIZE | TYPE | LENGTH | WEIGHT |
|---|---|---|---|---|---|
| ✱A1 | 538 | #5 | STR | 38'-11" | 21,837 |
| A2 | 540 | #5 | STR | 38'-11" | 21,919 |
| ✱B401 | 84 | #4 | STR | 24'-10" | 1,393 |
| ✱B402 | 56 | #4 | STR | 19'-0" | 711 |
| ✱B403 | 84 | #4 | STR | 24'-10" | 1,393 |
| ✱B404 | 84 | #5 | STR | 26'-0" | 2,278 |
| ✱B405 | 84 | #5 | STR | 26'-0" | 2,278 |
| ✱B406 | 25 | #5 | STR | 52'-4" | 1,365 |
| ✱B407 | 50 | #5 | STR | 31'-6" | 1,643 |
| ✱B408 | 25 | #5 | STR | 52'-4" | 1,365 |
| ✱B409 | 50 | #5 | STR | 31'-6" | 1,643 |
| B410 | 276 | #5 | STR | 54'-4" | 15,641 |
| B411 | 41 | #5 | STR | 52'-4" | 2,238 |
| B412 | 41 | #5 | STR | 52'-4" | 2,238 |
| ✱G1 | 2 | #5 | STR | 38'-11" | 81 |
| ✱J1 | 72 | #4 | 6 | 1'- 5" | 68 |
| ✱K1 | 8 | #8 | 1 | 14'-3" | 304 |
| ✱K2 | 8 | #8 | 2 | 20'-11" | 447 |
| K3 | 24 | #4 | STR | 16'-7" | 266 |
| K4 | 12 | #4 | STR | 6'- 4" | 51 |
| K5 | 48 | #4 | STR | 9'- 4" | 299 |
| K6 | 12 | #4 | STR | 6'- 8" | 53 |
| ✱S1 | 42 | #5 | 3 | 6'- 1" | 266 |
| S2 | 258 | #4 | 4 | 2'- 9" | 474 |
| ✱U1 | 42 | #4 | 2 | 16'-8" | 468 |
| U2 | 12 | #4 | 5 | 8'- 8" | 69 |

REINFORCING STEEL 43,248 LBS.

✱EPOXY COATED REINFORCING STEEL 37,540 LBS.

## BAR TYPES

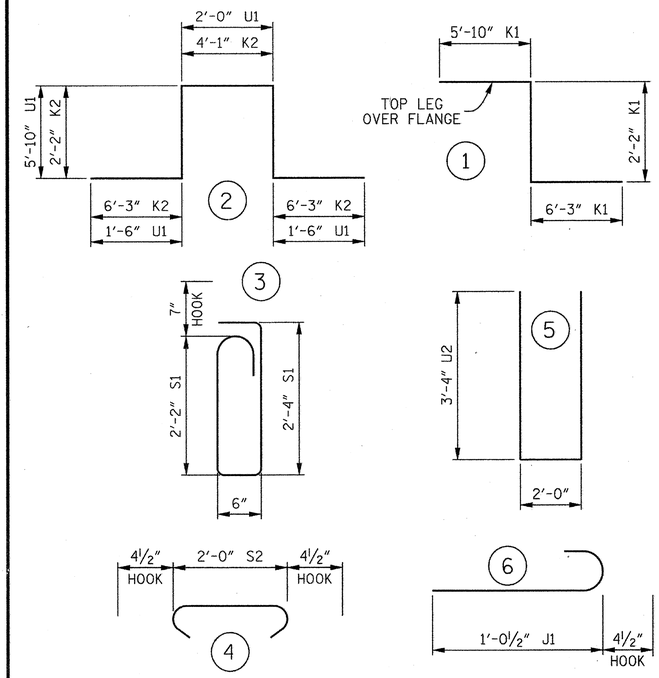


ALL BAR DIMENSIONS ARE OUT TO OUT.

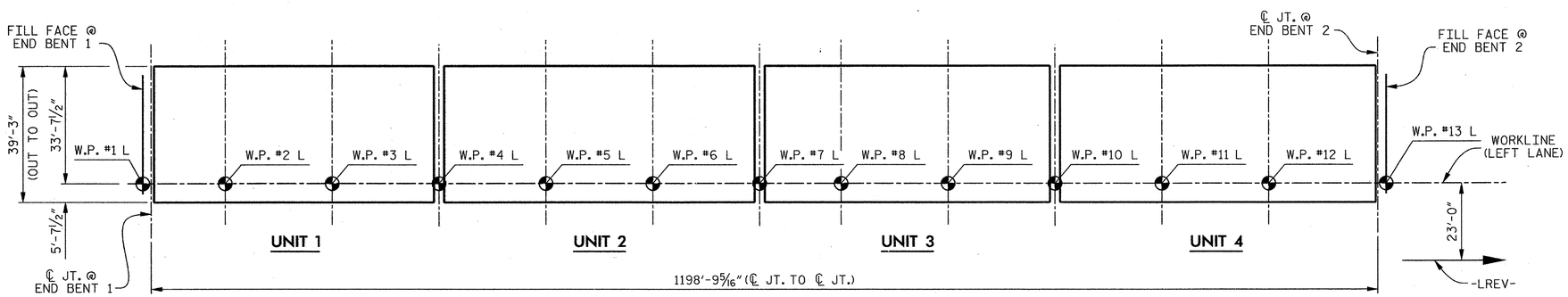


## LAYOUT FOR COMPUTING AREA OF REINFORCED CONCRETE DECK SLAB

(47,052 SQ. FT.)

SUPERSTRUCTURE REINFORCING STEEL LENGTHS ARE BASED ON THE FOLLOWING MINIMUM SPLICE LENGTHS

| BAR SIZE | SUPERSTRUCTURE EXCEPT APPROACH SLABS, PARAPET AND BARRIER RAIL | | APPROACH SLABS | | PARAPET AND BARRIER RAIL |
|---|---|---|---|---|---|
| | EPOXY COATED | UNCOATED | EPOXY COATED | UNCOATED | |
| #4 | 2'-0" | 1'-9" | 2'-0" | 1'-9" | 2'-9" |
| #5 | 2'-6" | 2'-2" | 2'-6" | 2'-2" | 3'-5" |
| #6 | 3'-0" | 2'-7" | 3'-10" | 2'-7" | 4'-4" |
| #7 | 5'-3" | 3'-6" | — | — | — |
| #8 | 6'-10" | 4'-7" | — | — | — |

PROJECT NO. R-2303D

SAMPSON COUNTY

STATION: 1311+58.00 -LREV-

SHEET 2 OF 2

STATE OF NORTH CAROLINA
DEPARTMENT OF TRANSPORTATION
RALEIGH

SUPERSTRUCTURE

# BILL OF MATERIAL

(LEFT LANE)

CDM Smith
Camp Dresser & McKee
421 Fayetteville Street, Suite 1303
Raleigh, NC 27604
NC COA No. F-1255

DRAWN BY : J.T. ECKEL DATE : 10-12
CHECKED BY : A.A. MONTIEL DATE : 10-12
DESIGN ENGINEER : P.R. HOLSHOUSER DATE : 1-13

DWG. No. S01-043

NORTH CAROLINA PROFESSIONAL SEAL 20668 ENGINEER PAUL R. HOLSHOUSER
2/08/2013

| REVISIONS | | | | | | | SHEET No. |
|---|---|---|---|---|---|---|---|
| No. | BY: | DATE: | No. | BY: | DATE: | | S-43 |
| 1 | | | 3 | | | | TOTAL SHEETS |
| 2 | | | 4 | | | | 218 |

FILE: R:\NCDOT\R2303D\STRUCTURES\PLANS\Sp_1\R2303D_SD_Sp1_bm2.dgn
DATE: 12/31/2012 9:26:42 AM

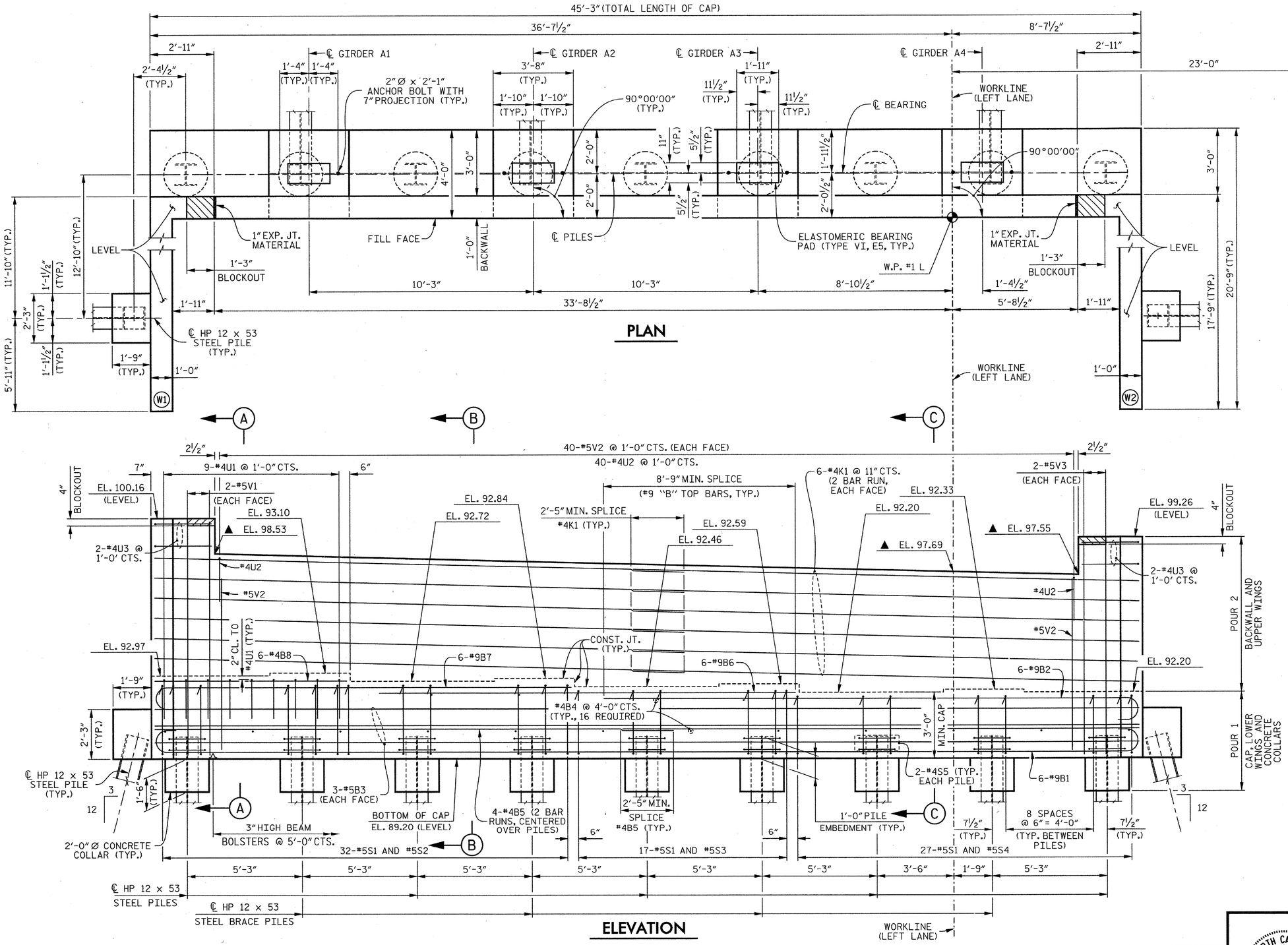


## NOTES

STIRRUPS AND "U" BARS IN CAP MAY BE SHIFTED AS NECESSARY TO CLEAR ANCHOR BOLTS.

THE TOP SURFACE AREA OF THE END BENT CAP SHALL BE CURED IN ACCORDANCE WITH THE STANDARD SPECIFICATIONS EXCEPT THAT THE MEMBRANE CURING COMPOUND METHOD SHALL NOT BE USED.

THE TOP SURFACE OF THE END BENT CAP EXCEPT THE BRIDGE SEAT BUILD-UPS SHALL BE SLOPED TRANSVERSELY FROM THE FILL FACE TO THE FRONT FACE AT THE RATE OF 2%.

BACKWALL SHALL BE PLACED BEFORE APPLYING THE EPOXY PROTECTIVE COATING.

▲ THIS ELEVATION IS TAKEN AT FILL FACE OF BACKWALL.

FOR SECTION A-A, SECTION B-B AND SECTION C-C, SEE SHEET 3 OF 3.

FOR LOCATION OF ELEVATIONS BETWEEN BRIDGE SEAT BUILD-UPS, SEE SECTION VIEWS ON SHEET 3 OF 3.

FOR PILE SPLICE DETAILS, SEE SHEET 3 OF 3.

FOR TEMPORARY DRAINAGE AT END BENT DETAIL, SEE SHEET 3 OF 3.

THE CONCRETE IN THE SHADED AREA OF THE WING SHALL BE POURED AFTER THE BARRIER RAIL IS CAST IF SLIP FORMING IS USED.

THE CONTRACTOR SHALL PROVIDE FOR INSTALLATION OF THE 4" DIAMETER DRAIN PIPE THROUGH THE WING WALL AS REQUIRED FOR REINFORCED BRIDGE APPROACH FILLS, SEE THE ROADWAY PLANS. REINFORCING STEEL IN THE WING WALL MAY BE SHIFTED AS NECESSARY TO CLEAR THE DRAIN PIPE.

PROJECT NO. R-2303D
SAMPSON COUNTY
STATION: 1311+58.00 -LREV-

SHEET 1 OF 3

STATE OF NORTH CAROLINA
DEPARTMENT OF TRANSPORTATION
RALEIGH

SUBSTRUCTURE

END BENT 1

(LEFT LANE)

CDM Smith
Camp Dresser & McKee
421 Fayetteville Street, Suite 1303
Raleigh, NC 27604
NC COA No. F-1255

| | | | |
|---|---|---|---|
| DRAWN BY : | K.E. LOFTON | DATE : | 10-12 |
| CHECKED BY : | P.R. HOLSHOUSER | DATE : | 10-12 |
| DESIGN ENGINEER : | P.R. HOLSHOUSER | DATE : | 1-13 |

DWG. No. S01-044

NORTH CAROLINA PROFESSIONAL SEAL 20668 ENGINEER PAUL R. HOLSHOUSER 2/08/2013

| REVISIONS | | | | | | | SHEET No. |
|---|---|---|---|---|---|---|---|
| No. | BY: | DATE: | No. | BY: | DATE: | | S-44 |
| 1 | | | 3 | | | | TOTAL SHEETS |
| 2 | | | 4 | | | | 218 |

FILE: n:\nodot\r2303d\structures\PLANS\Sv_T1\R2303D_S01_Sht1_eb11.dgn
DATE: 12/20/2012 9:07:48 PM

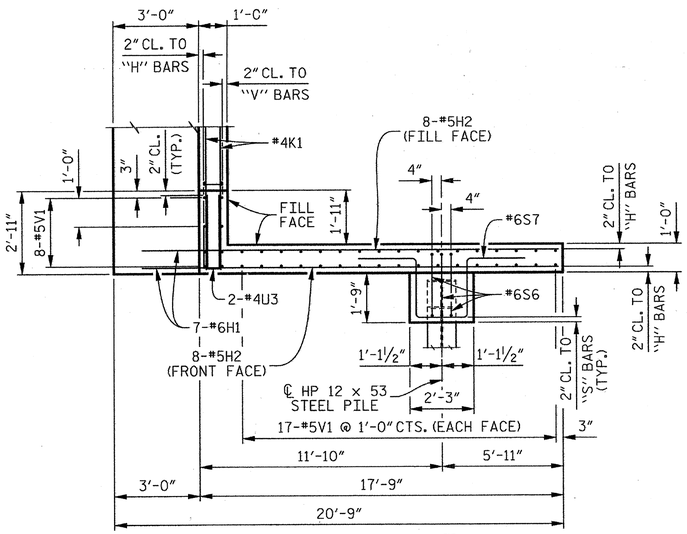


## PLAN OF WING (W1)

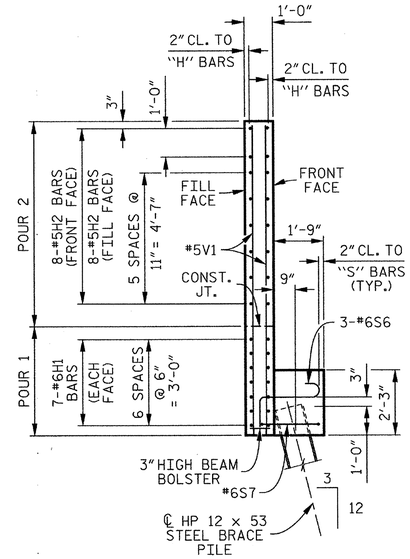


## SECTION D–D

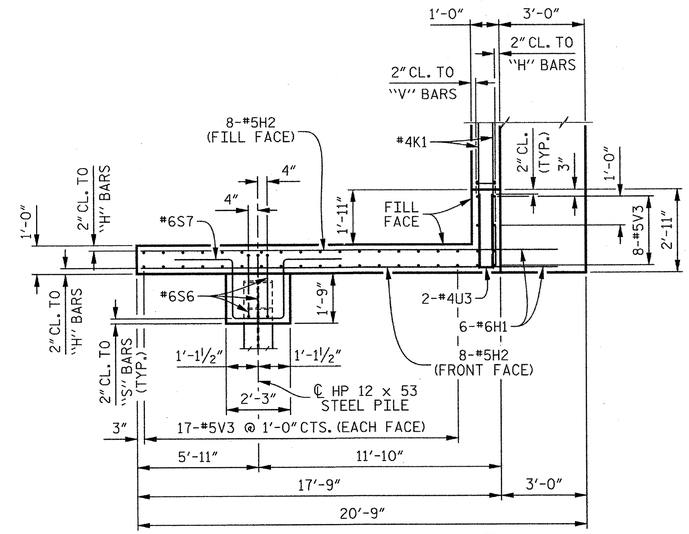


## PLAN OF WING (W2)

NOTE:
FOR ADDITIONAL WING PILE DIMENSION, SEE "GENERAL DRAWING FOUNDATION LAYOUT", SHEET 4 OF 7.

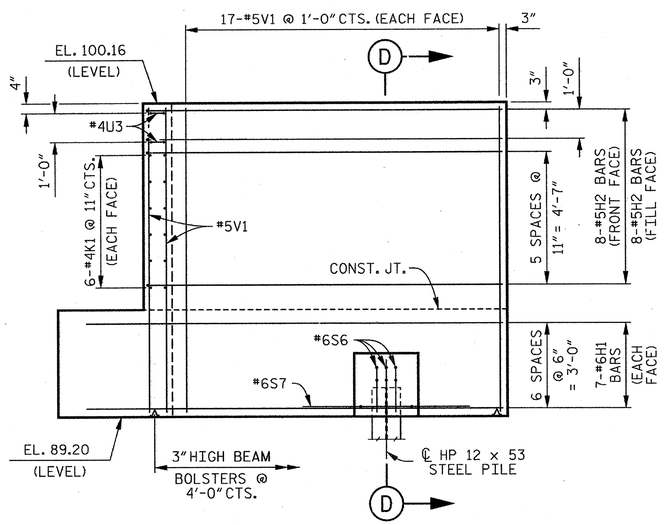


## ELEVATION OF WING (W1)

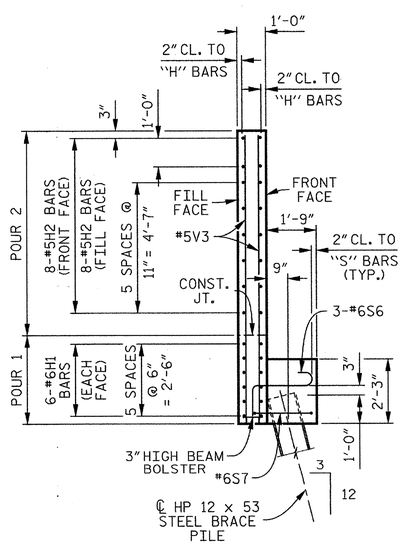


## SECTION E–E

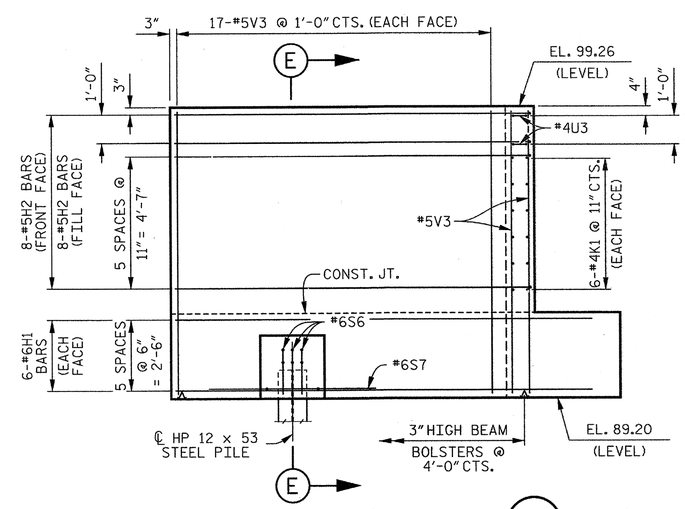


## ELEVATION OF WING (W2)

PROJECT NO. R–2303D
SAMPSON COUNTY
STATION: 1311+58.00 –LREV–

SHEET 2 OF 3

STATE OF NORTH CAROLINA
DEPARTMENT OF TRANSPORTATION
RALEIGH

SUBSTRUCTURE

END BENT 1

(LEFT LANE)

CDM Smith
Camp Dresser & McKee
421 Fayetteville Street, Suite 1303
Raleigh, NC 27604
NC COA No. F–1255

DRAWN BY : K.E. LOFTON DATE : 10–12
CHECKED BY : P.R. HOLSHOUSER DATE : 10–12
DESIGN ENGINEER : P.R. HOLSHOUSER DATE : 1–13

DWG. No. S01-045

NORTH CAROLINA PROFESSIONAL SEAL 20668 ENGINEER PAUL R. HOLSHOUSER 2/08/2013

| REVISIONS | | | | | | | | SHEET No. |
|---|---|---|---|---|---|---|---|---|
| No. | BY: | DATE: | No. | BY: | DATE: | | | S-45 |
| 1 | | | 3 | | | | | TOTAL SHEETS |
| 2 | | | 4 | | | | | 218 |

FILE: r:\roadw\r2303d\structures\PLANS\Sht_1\R2303D_S0_Sht_ab12.dgn
DATE: 12/20/2012 9:07:50 PM

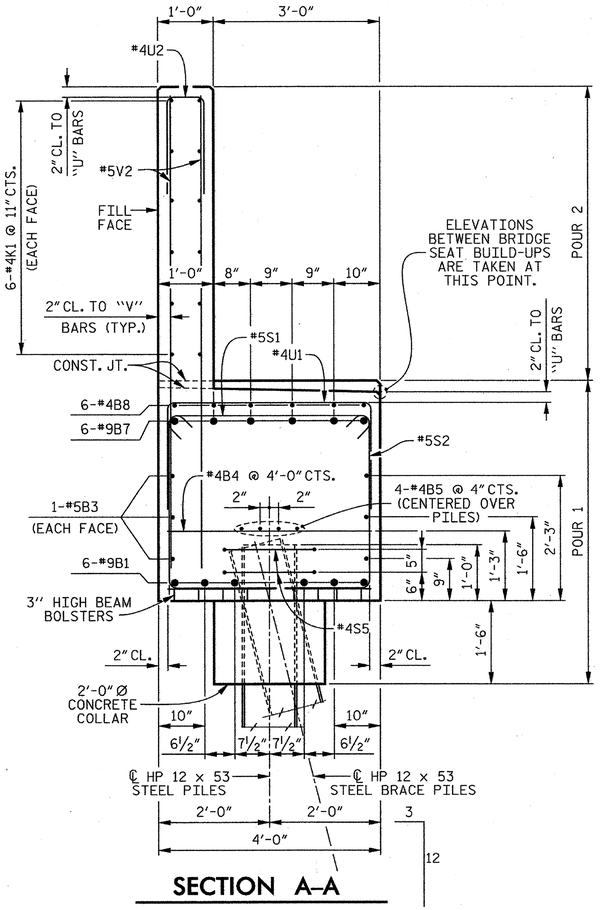


## SECTION A–A

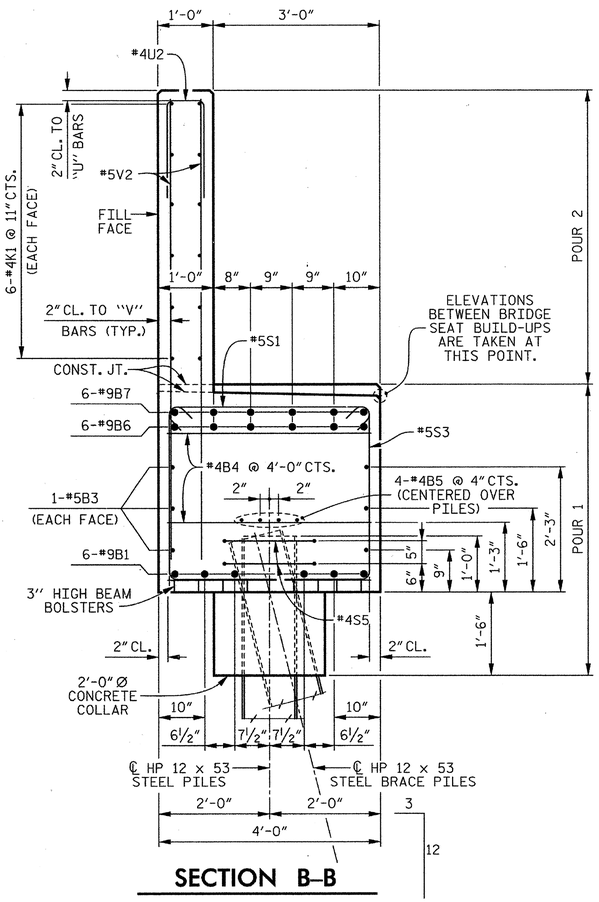


## SECTION B–B

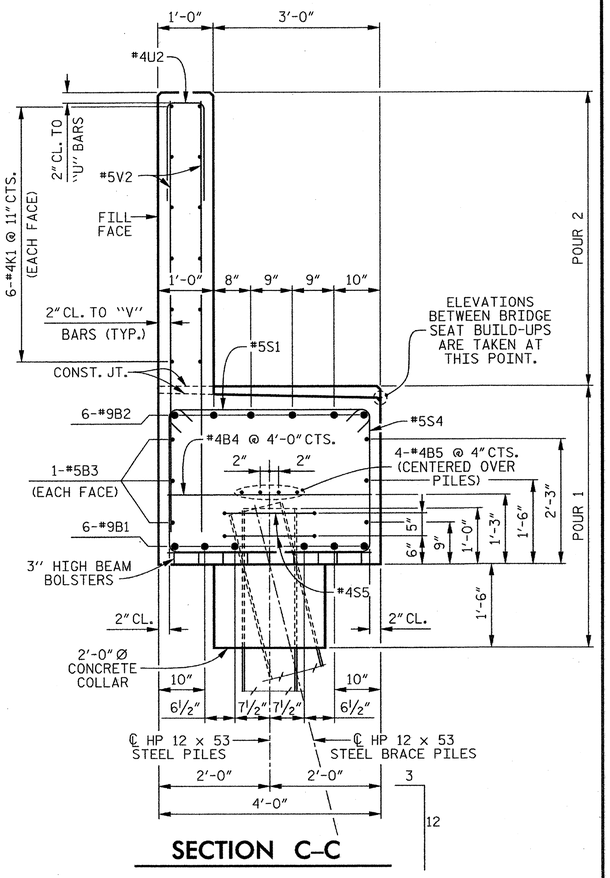


## SECTION C–C

## BAR TYPES

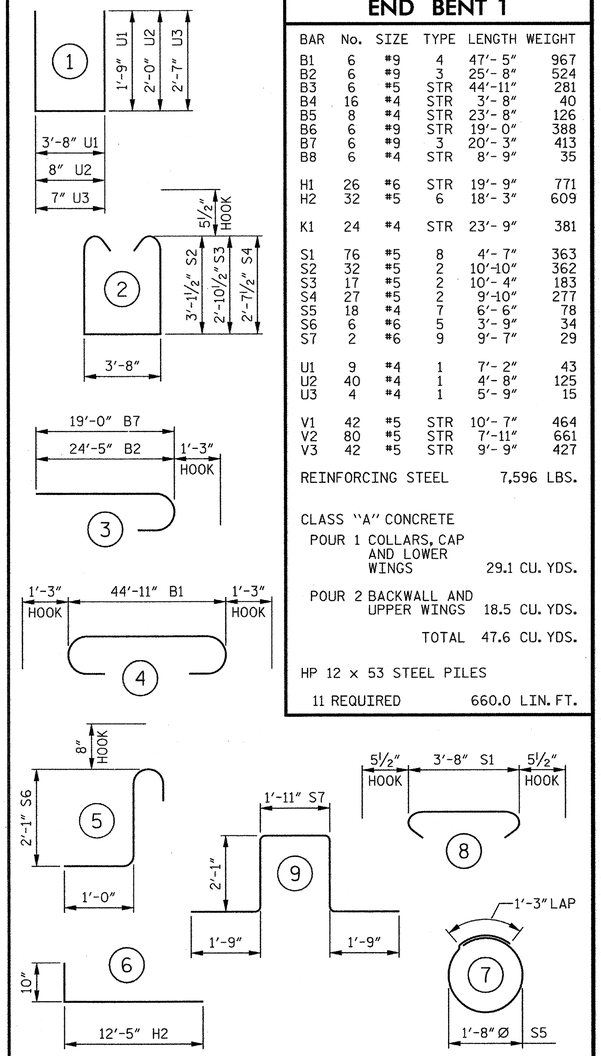


ALL BAR DIMENSIONS ARE OUT TO OUT.

## BILL OF MATERIAL

### END BENT 1

| BAR | No. | SIZE | TYPE | LENGTH | WEIGHT |
|---|---|---|---|---|---|
| B1 | 6 | #9 | 4 | 47'- 5" | 967 |
| B2 | 6 | #9 | 3 | 25'- 8" | 524 |
| B3 | 6 | #5 | STR | 44'-11" | 281 |
| B4 | 16 | #4 | STR | 3'- 8" | 40 |
| B5 | 8 | #4 | STR | 23'- 8" | 126 |
| B6 | 6 | #9 | STR | 19'- 0" | 388 |
| B7 | 6 | #9 | 3 | 20'- 3" | 413 |
| B8 | 6 | #4 | STR | 8'- 9" | 35 |
| H1 | 26 | #6 | STR | 19'- 9" | 771 |
| H2 | 32 | #5 | 6 | 18'- 3" | 609 |
| K1 | 24 | #4 | STR | 23'- 9" | 381 |
| S1 | 76 | #5 | 8 | 4'- 7" | 363 |
| S2 | 32 | #5 | 2 | 10'-10" | 362 |
| S3 | 17 | #5 | 2 | 10'- 4" | 183 |
| S4 | 27 | #5 | 2 | 9'-10" | 277 |
| S5 | 18 | #4 | 7 | 6'- 6" | 78 |
| S6 | 6 | #6 | 5 | 3'- 9" | 34 |
| S7 | 2 | #6 | 9 | 9'- 7" | 29 |
| U1 | 9 | #4 | 1 | 7'- 2" | 43 |
| U2 | 40 | #4 | 1 | 4'- 8" | 125 |
| U3 | 4 | #4 | 1 | 5'- 9" | 15 |
| V1 | 42 | #5 | STR | 10'- 7" | 464 |
| V2 | 80 | #5 | STR | 7'-11" | 661 |
| V3 | 42 | #5 | STR | 9'- 9" | 427 |

REINFORCING STEEL 7,596 LBS.

CLASS "A" CONCRETE

POUR 1 COLLARS, CAP AND LOWER WINGS 29.1 CU. YDS.

POUR 2 BACKWALL AND UPPER WINGS 18.5 CU. YDS.

TOTAL 47.6 CU. YDS.

HP 12 x 53 STEEL PILES

11 REQUIRED 660.0 LIN. FT.

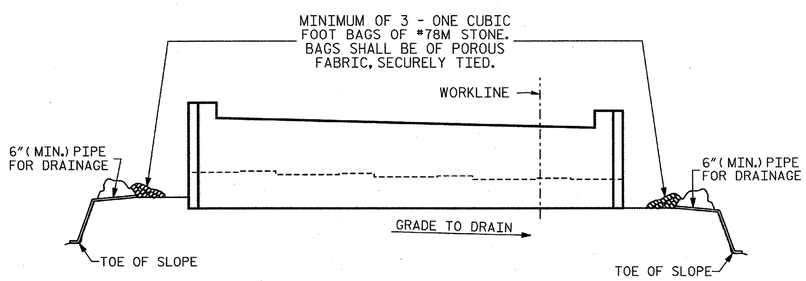


BAGGED STONE AND PIPE SHALL BE PLACED IMMEDIATELY AFTER COMPLETION OF END BENT EXCAVATION. PIPE MAY BE EITHER CONCRETE, CORRUGATED STEEL, CORRUGATED ALUMINUM ALLOY, OR CORRUGATED PLASTIC. PERFORATED PIPE WILL NOT BE ALLOWED.

BAGGED STONE SHALL REMAIN IN PLACE UNTIL THE ENGINEER DIRECTS THAT IT BE REMOVED. THE CONTRACTOR SHALL REMOVE AND DISPOSE OF SILT ACCUMULATIONS AT BAGGED STONE WHEN SO DIRECTED BY THE ENGINEER. BAGS SHALL BE REMOVED AND REPLACED WHENEVER THE ENGINEER DETERMINES THAT THEY HAVE DETERIORATED AND LOST THEIR EFFECTIVENESS.

## TEMPORARY DRAINAGE AT END BENT

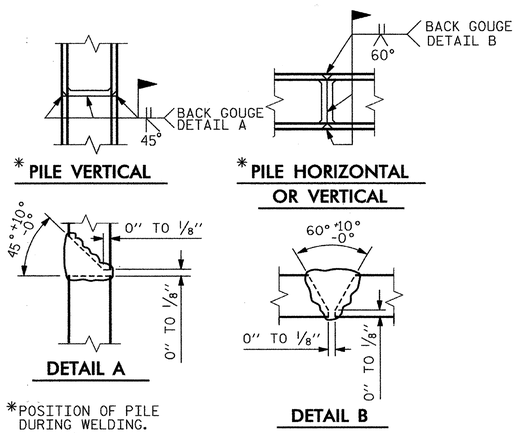


*POSITION OF PILE DURING WELDING.

## PILE SPLICE DETAILS

PROJECT NO. R-2303D

SAMPSON COUNTY

STATION: 1311+58.00 –LREV–

SHEET 3 OF 3

STATE OF NORTH CAROLINA
DEPARTMENT OF TRANSPORTATION
RALEIGH

SUBSTRUCTURE

END BENT 1

(LEFT LANE)

CDM Smith
Camp Dresser & McKee
421 Fayetteville Street, Suite 1303
Raleigh, NC 27604
NC COA No. F-1255

DRAWN BY : K.E. LOFTON DATE : 10-12
CHECKED BY : P.R. HOLSHOUSER DATE : 10-12
DESIGN ENGINEER : P.R. HOLSHOUSER DATE : 1-13

DWG. No. S01-046

NORTH CAROLINA PROFESSIONAL SEAL 20668 ENGINEER PAUL R. HOLSHOUSER 2/28/2013

| REVISIONS | | | | | | SHEET No. |
|---|---|---|---|---|---|---|
| No. | BY: | DATE: | No. | BY: | DATE: | S-46 |
| 1 | | | 3 | | | TOTAL SHEETS |
| 2 | | | 4 | | | 218 |

FILE: n:\roadwy\r2303d\structures\PLANS\Sv_1\R2303D_SD_Snt_eb13.dgn
DATE: 1/15/2013 2:59:16 PM

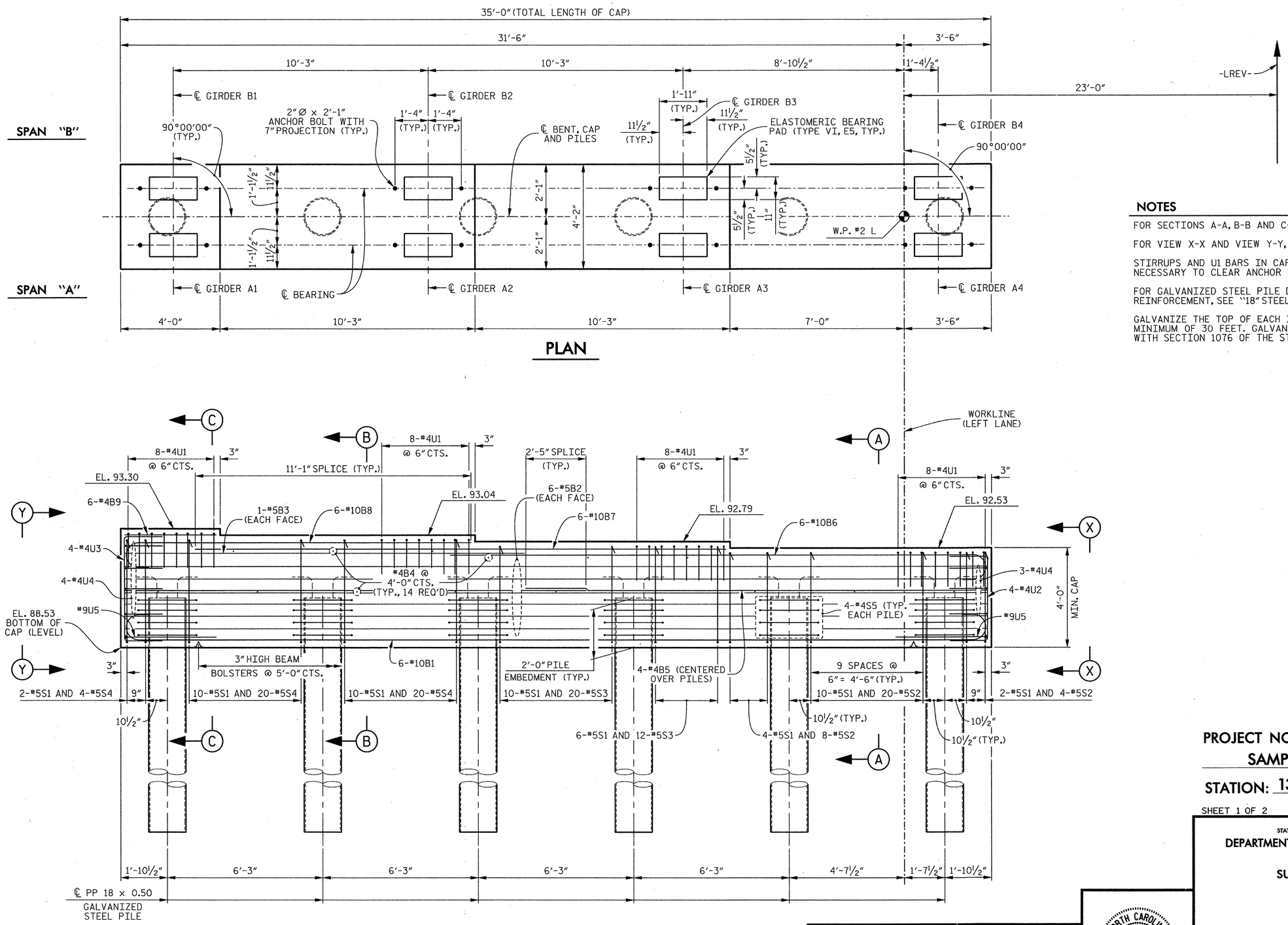


## NOTES

FOR SECTIONS A-A, B-B AND C-C, SEE SHEET 2 OF 2.

FOR VIEW X-X AND VIEW Y-Y, SEE SHEET 2 OF 2.

STIRRUPS AND U1 BARS IN CAP MAY BE SHIFTED AS NECESSARY TO CLEAR ANCHOR BOLTS.

FOR GALVANIZED STEEL PILE DETAILS AND REINFORCEMENT, SEE "18" STEEL PIPE PILE" SHEET.

GALVANIZE THE TOP OF EACH INTERIOR BENT PILE A MINIMUM OF 30 FEET. GALVANIZE IN ACCORDANCE WITH SECTION 1076 OF THE STANDARD SPECIFICATIONS.

PROJECT NO. R-2303D

SAMPSON COUNTY

STATION: 1311+58.00 -LREV-

SHEET 1 OF 2

STATE OF NORTH CAROLINA
DEPARTMENT OF TRANSPORTATION
RALEIGH

SUBSTRUCTURE

BENT 1

(LEFT LANE)

CDM Smith
Camp Dresser & McKee
421 Fayetteville Street, Suite 1303
Raleigh, NC 27604
NC COA No. F-1255

| | | | |
|---|---|---|---|
| DRAWN BY : | J.D. BORUTA | DATE : | 10-12 |
| CHECKED BY : | P.R. HOLSHOUSER | DATE : | 11-12 |
| DESIGN ENGINEER : | P.R. HOLSHOUSER | DATE : | 1-13 |

DWG. No. S01-047

NORTH CAROLINA PROFESSIONAL SEAL 20668 ENGINEER PAUL R. HOLSHOUSER 2/08/2013

| REVISIONS | | | | | | SHEET No. |
|---|---|---|---|---|---|---|
| No. | BY: | DATE: | No. | BY: | DATE: | S-47 |
| 1 | | | 3 | | | TOTAL SHEETS |
| 2 | | | 4 | | | 218 |

FILE: r:\radar\r2303d\structures\PLANS\Str_1\R2303D_SD_Str1_b11.dgn
DATE: 12/30/2012 9:07:54 PM

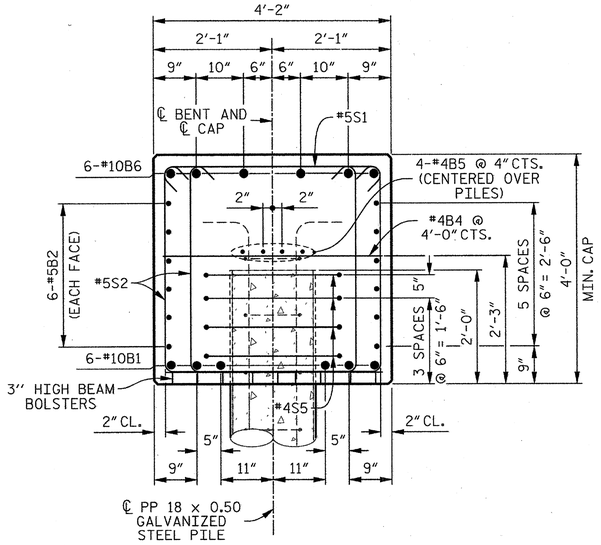


## SECTION A–A

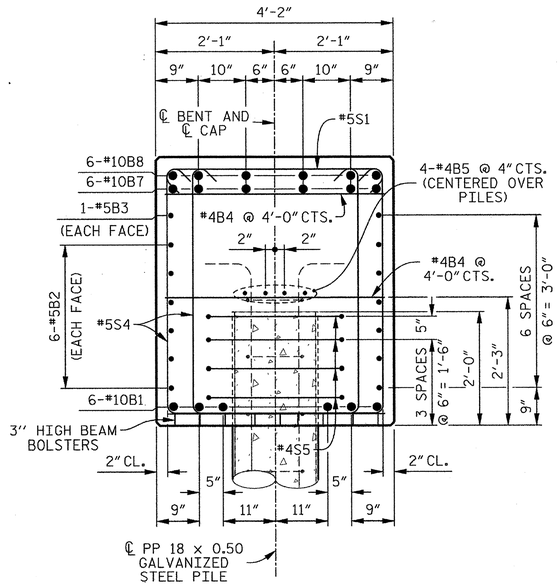


## SECTION B–B

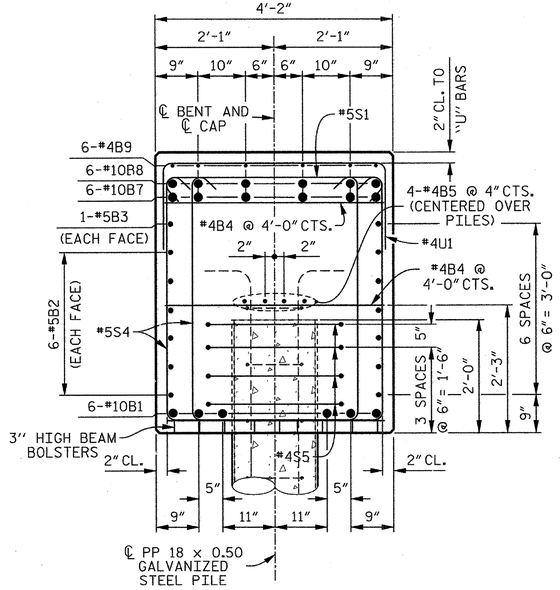


## SECTION C–C

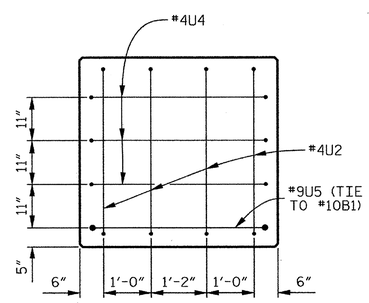


## END VIEW X–X

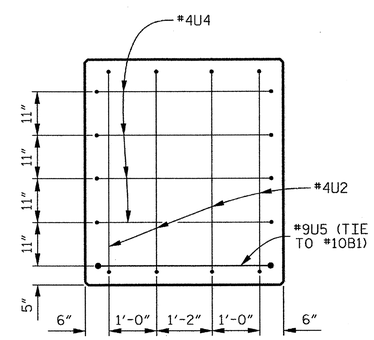


## END VIEW Y–Y

## BAR TYPES

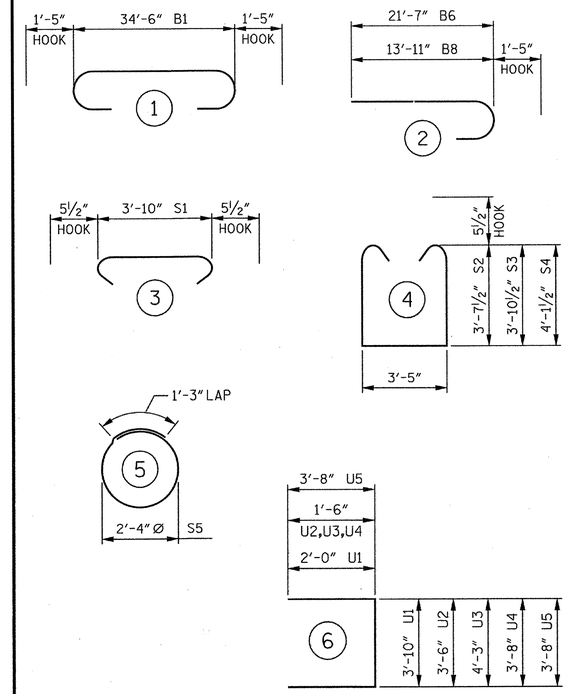


ALL BAR DIMENSIONS ARE OUT TO OUT.

## BILL OF MATERIAL

### BENT 1

| BAR | No. | SIZE | TYPE | LENGTH | WEIGHT |
|---|---|---|---|---|---|
| B1 | 6 | #10 | 1 | 37'- 4" | 964 |
| B2 | 12 | #5 | STR | 34'- 8" | 434 |
| B3 | 2 | #5 | STR | 16'- 1" | 34 |
| B4 | 14 | #4 | STR | 3'-10" | 36 |
| B5 | 8 | #4 | STR | 18'- 7" | 99 |
| B6 | 6 | #10 | 2 | 23'- 0" | 594 |
| B7 | 6 | #10 | STR | 21'- 4" | 551 |
| B8 | 6 | #10 | 2 | 15'- 4" | 396 |
| B9 | 6 | #4 | STR | 3'- 8" | 15 |
| S1 | 54 | #5 | 3 | 4'- 9" | 268 |
| S2 | 32 | #5 | 4 | 11'- 7" | 386 |
| S3 | 32 | #5 | 4 | 12'- 1" | 403 |
| S4 | 44 | #5 | 4 | 12'- 7" | 578 |
| S5 | 24 | #4 | 5 | 8'- 7" | 138 |
| U1 | 32 | #4 | 6 | 7'-10" | 167 |
| U2 | 4 | #4 | 6 | 6'- 6" | 17 |
| U3 | 4 | #4 | 6 | 7'- 4" | 19 |
| U4 | 7 | #4 | 6 | 6'- 8" | 31 |
| U5 | 2 | #9 | 6 | 11'- 0" | 75 |

REINFORCING STEEL 5,205 LBS.

CLASS "A" CONCRETE
POUR 1 CAP 22.8 CU. YDS.

PP 18 x 0.50 GALVANIZED STEEL PILES
6 REQUIRED 390 LIN. FT.

PIPE PILE PLATES
No. = 6

THE CONCRETE DISPLACED BY THE FILLED GALVANIZED STEEL PIPE PILES HAS BEEN DEDUCTED FROM THE QUANTITY OF CLASS "A" CONCRETE FOR THE BENT CAP.

REINFORCING STEEL FOR GALVANIZED STEEL PILES ARE NOT INCLUDED. SEE "18" STEEL PIPE PILE" SHEET FOR DETAILS.

PROJECT NO. R-2303D
SAMPSON COUNTY
STATION: 1311+58.00 -LREV-

SHEET 2 OF 2

STATE OF NORTH CAROLINA
DEPARTMENT OF TRANSPORTATION
RALEIGH

SUBSTRUCTURE

BENT 1

(LEFT LANE)

CDM Smith
Camp Dresser & McKee
421 Fayetteville Street, Suite 1303
Raleigh, NC 27604
NC COA No. F-1255

DRAWN BY : J.D. BORUTA DATE : 10-12
CHECKED BY : P.R. HOLSHOUSER DATE : 11-12
DESIGN ENGINEER : P.R. HOLSHOUSER DATE : 1-13

DWG. No. S01-048

NORTH CAROLINA PROFESSIONAL SEAL 20668 ENGINEER PAUL R. HOLSHOUSER 1/08/2013

| REVISIONS | | | | | | |
|---|---|---|---|---|---|---|
| No. | BY: | DATE: | No. | BY: | DATE: | |
| 1 | | | 3 | | | |
| 2 | | | 4 | | | |

SHEET No. S-48
TOTAL SHEETS 218

FILE: r:\model\2303d\structures\PLANS\Str_01\R2303D_S0_Str1_b12.dgn
DATE: 12/20/2012 9:07:57 PM

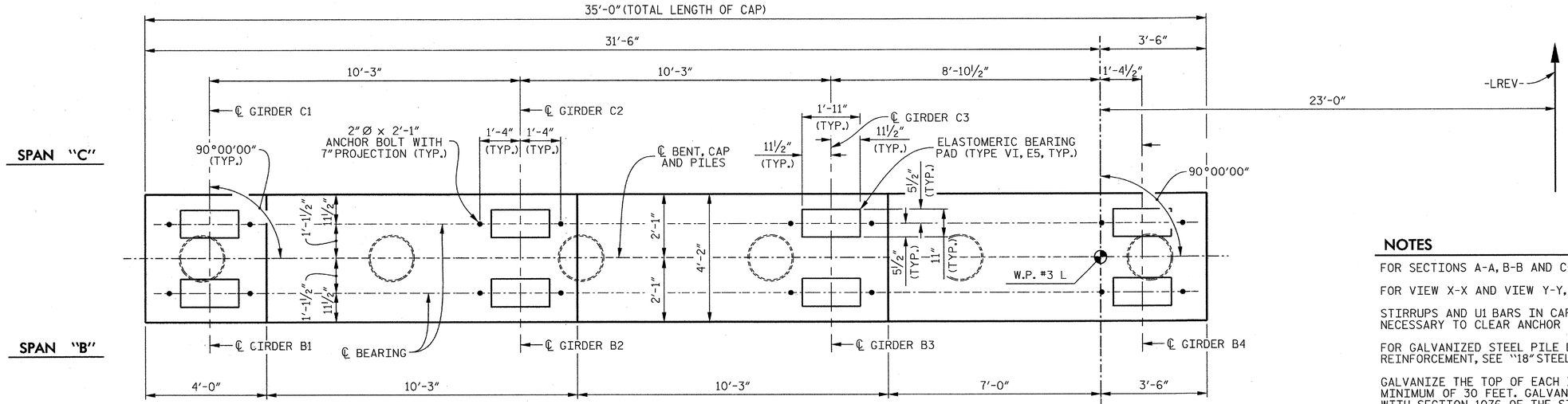


## PLAN

## NOTES

FOR SECTIONS A-A, B-B AND C-C, SEE SHEET 2 OF 2.

FOR VIEW X-X AND VIEW Y-Y, SEE SHEET 2 OF 2.

STIRRUPS AND U1 BARS IN CAP MAY BE SHIFTED AS NECESSARY TO CLEAR ANCHOR BOLTS.

FOR GALVANIZED STEEL PILE DETAILS AND REINFORCEMENT, SEE "18" STEEL PIPE PILE" SHEET.

GALVANIZE THE TOP OF EACH INTERIOR BENT PILE A MINIMUM OF 30 FEET. GALVANIZE IN ACCORDANCE WITH SECTION 1076 OF THE STANDARD SPECIFICATIONS.

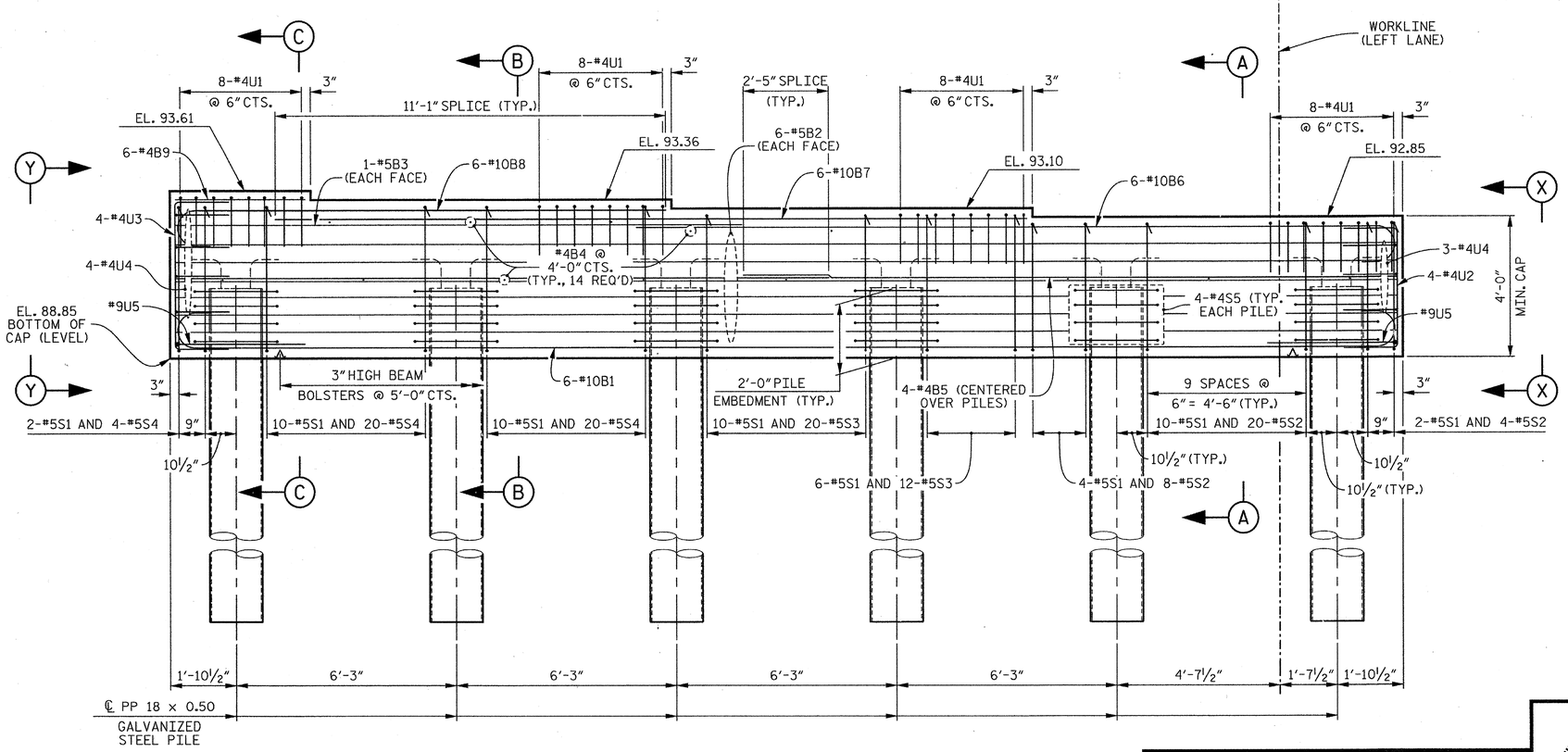


## ELEVATION

PROJECT NO. R-2303D

SAMPSON COUNTY

STATION: 1311+58.00 -LREV-

SHEET 1 OF 2

STATE OF NORTH CAROLINA
DEPARTMENT OF TRANSPORTATION
RALEIGH

SUBSTRUCTURE

BENT 2

(LEFT LANE)

CDM Smith

Camp Dresser & McKee
421 Fayetteville Street, Suite 1303
Raleigh, NC 27604
NC COA No. F-1255

| | | | |
|---|---|---|---|
| DRAWN BY : | J.D. BORUTA | DATE : | 10-12 |
| CHECKED BY : | P.R. HOLSHOUSER | DATE : | 11-12 |
| DESIGN ENGINEER : | P.R. HOLSHOUSER | DATE : | 1-13 |

DWG. No. S01-049

NORTH CAROLINA PROFESSIONAL SEAL 20668 ENGINEER PAUL R. HOLSHOUSER 2/08/2013

| REVISIONS | | | | | | SHEET No. |
|---|---|---|---|---|---|---|
| No. | BY: | DATE: | No. | BY: | DATE: | S-49 |
| 1 | | | 3 | | | TOTAL SHEETS |
| 2 | | | 4 | | | 218 |

FILE: r:\model\r2303d\structures\PLANS\Str_1\R2303D_SD_Str1_b21.dgn
DATE: 12/30/2012 9:07:59 PM

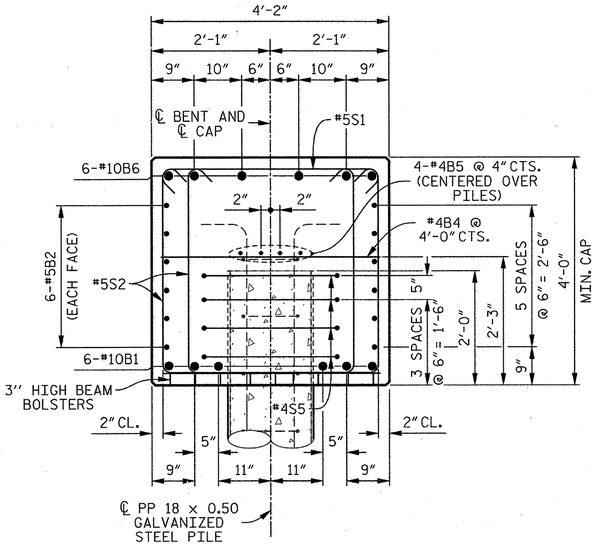


## SECTION A–A

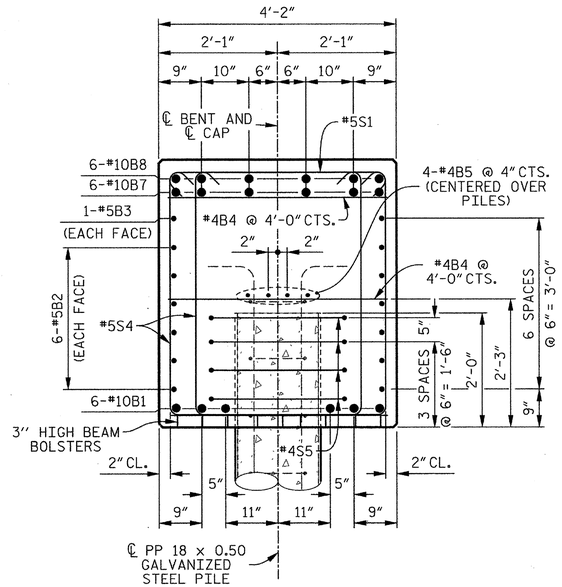


## SECTION B–B

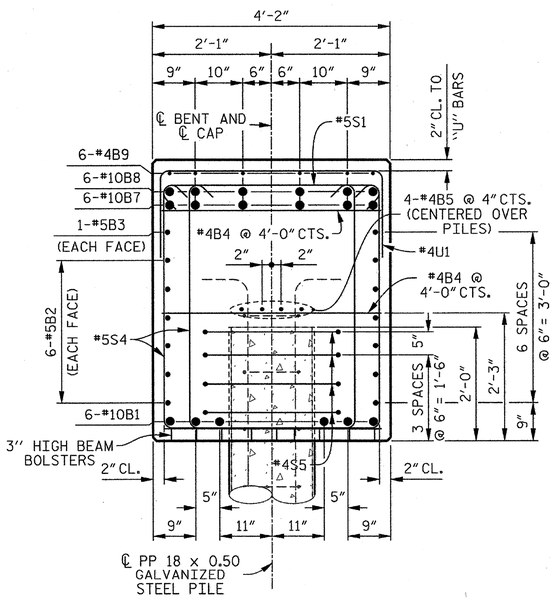


## SECTION C–C

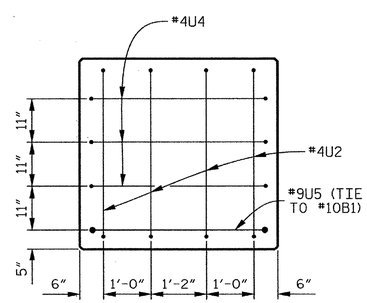


## END VIEW X–X

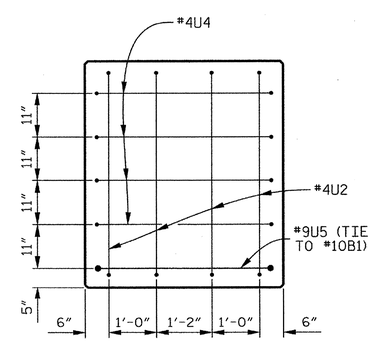


## END VIEW Y–Y

## BAR TYPES

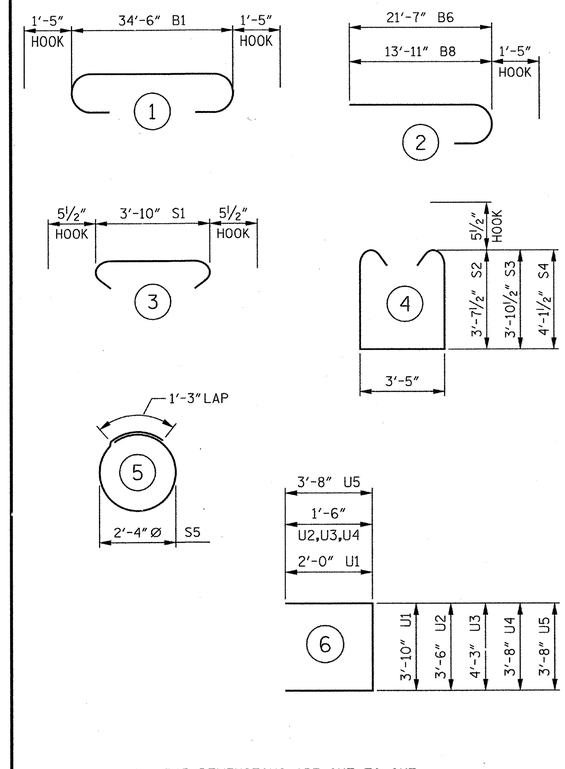


ALL BAR DIMENSIONS ARE OUT TO OUT.

## BILL OF MATERIAL

### BENT 2

| BAR | No. | SIZE | TYPE | LENGTH | WEIGHT |
|---|---|---|---|---|---|
| B1 | 6 | #10 | 1 | 37'- 4" | 964 |
| B2 | 12 | #5 | STR | 34'- 8" | 434 |
| B3 | 2 | #5 | STR | 16'- 1" | 34 |
| B4 | 14 | #4 | STR | 3'-10" | 36 |
| B5 | 8 | #4 | STR | 18'- 7" | 99 |
| B6 | 6 | #10 | 2 | 23'- 0" | 594 |
| B7 | 6 | #10 | STR | 21'- 4" | 551 |
| B8 | 6 | #10 | 2 | 15'- 4" | 396 |
| B9 | 6 | #4 | STR | 3'- 8" | 15 |
| S1 | 54 | #5 | 3 | 4'- 9" | 268 |
| S2 | 32 | #5 | 4 | 11'- 7" | 386 |
| S3 | 32 | #5 | 4 | 12'- 1" | 403 |
| S4 | 44 | #5 | 4 | 12'- 7" | 578 |
| S5 | 24 | #4 | 5 | 8'- 7" | 138 |
| U1 | 32 | #4 | 6 | 7'-10" | 167 |
| U2 | 4 | #4 | 6 | 6'- 6" | 17 |
| U3 | 4 | #4 | 6 | 7'- 4" | 19 |
| U4 | 7 | #4 | 6 | 6'- 8" | 31 |
| U5 | 2 | #9 | 6 | 11'- 0" | 75 |

REINFORCING STEEL 5,205 LBS.

CLASS "A" CONCRETE
POUR 1 CAP 22.8 CU. YDS.

PP 18 x 0.50 GALVANIZED STEEL PILES
6 REQUIRED 390 LIN. FT.

PIPE PILE PLATES
No. = 6

THE CONCRETE DISPLACED BY THE FILLED GALVANIZED STEEL PIPE PILES HAS BEEN DEDUCTED FROM THE QUANTITY OF CLASS "A" CONCRETE FOR THE BENT CAP.

REINFORCING STEEL FOR GALVANIZED STEEL PILES ARE NOT INCLUDED. SEE "18" STEEL PIPE PILE" SHEET FOR DETAILS.

PROJECT NO. R-2303D
SAMPSON COUNTY
STATION: 1311+58.00 -LREV-

SHEET 2 OF 2

STATE OF NORTH CAROLINA
DEPARTMENT OF TRANSPORTATION
RALEIGH

SUBSTRUCTURE

BENT 2

(LEFT LANE)

CDM Smith
Camp Dresser & McKee
421 Fayetteville Street, Suite 1303
Raleigh, NC 27604
NC COA No. F-1255

DRAWN BY : J.D. BORUTA DATE : 10-12
CHECKED BY : P.R. HOLSHOUSER DATE : 11-12
DESIGN ENGINEER : P.R. HOLSHOUSER DATE : 1-13

DWG. No. S01-050

NORTH CAROLINA PROFESSIONAL SEAL 20668 ENGINEER P. R. HOLSHOUSER
2/04/2013

| REVISIONS | | | | | | SHEET No. |
|---|---|---|---|---|---|---|
| No. | BY: | DATE: | No. | BY: | DATE: | S-50 |
| 1 | | | 3 | | | TOTAL SHEETS |
| 2 | | | 4 | | | 218 |

FILE: r:\model\2303d\structures\PLANS\Str_1\R2303D_SD_Sht_b22.dgn
DATE: 12/20/2012 9:08:02 PM

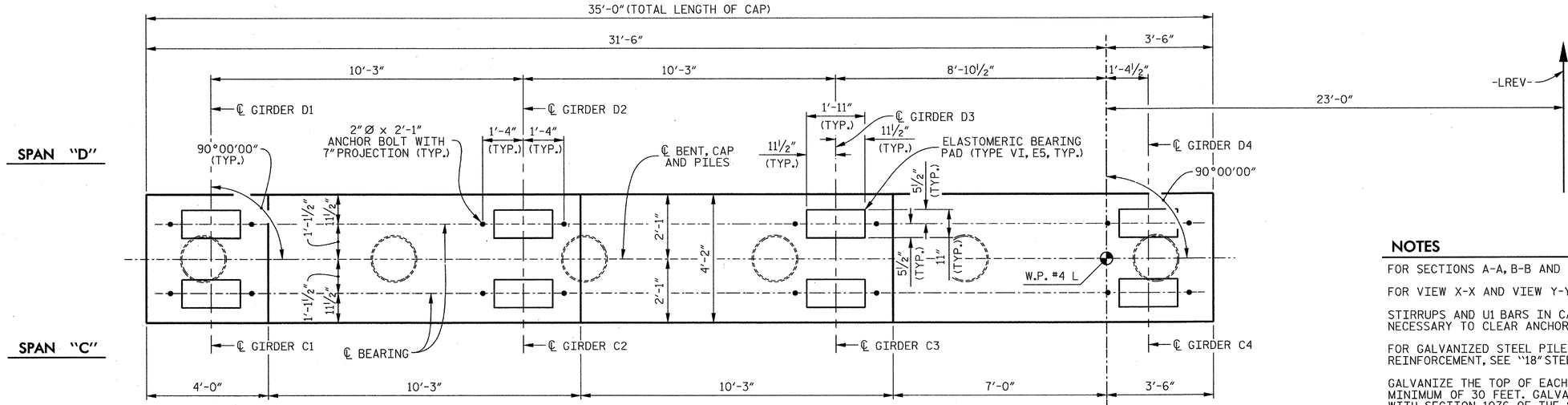


## PLAN

## NOTES

FOR SECTIONS A-A, B-B AND C-C, SEE SHEET 2 OF 2.

FOR VIEW X-X AND VIEW Y-Y, SEE SHEET 2 OF 2.

STIRRUPS AND U1 BARS IN CAP MAY BE SHIFTED AS NECESSARY TO CLEAR ANCHOR BOLTS.

FOR GALVANIZED STEEL PILE DETAILS AND REINFORCEMENT, SEE "18" STEEL PIPE PILE" SHEET.

GALVANIZE THE TOP OF EACH INTERIOR BENT PILE A MINIMUM OF 30 FEET. GALVANIZE IN ACCORDANCE WITH SECTION 1076 OF THE STANDARD SPECIFICATIONS.

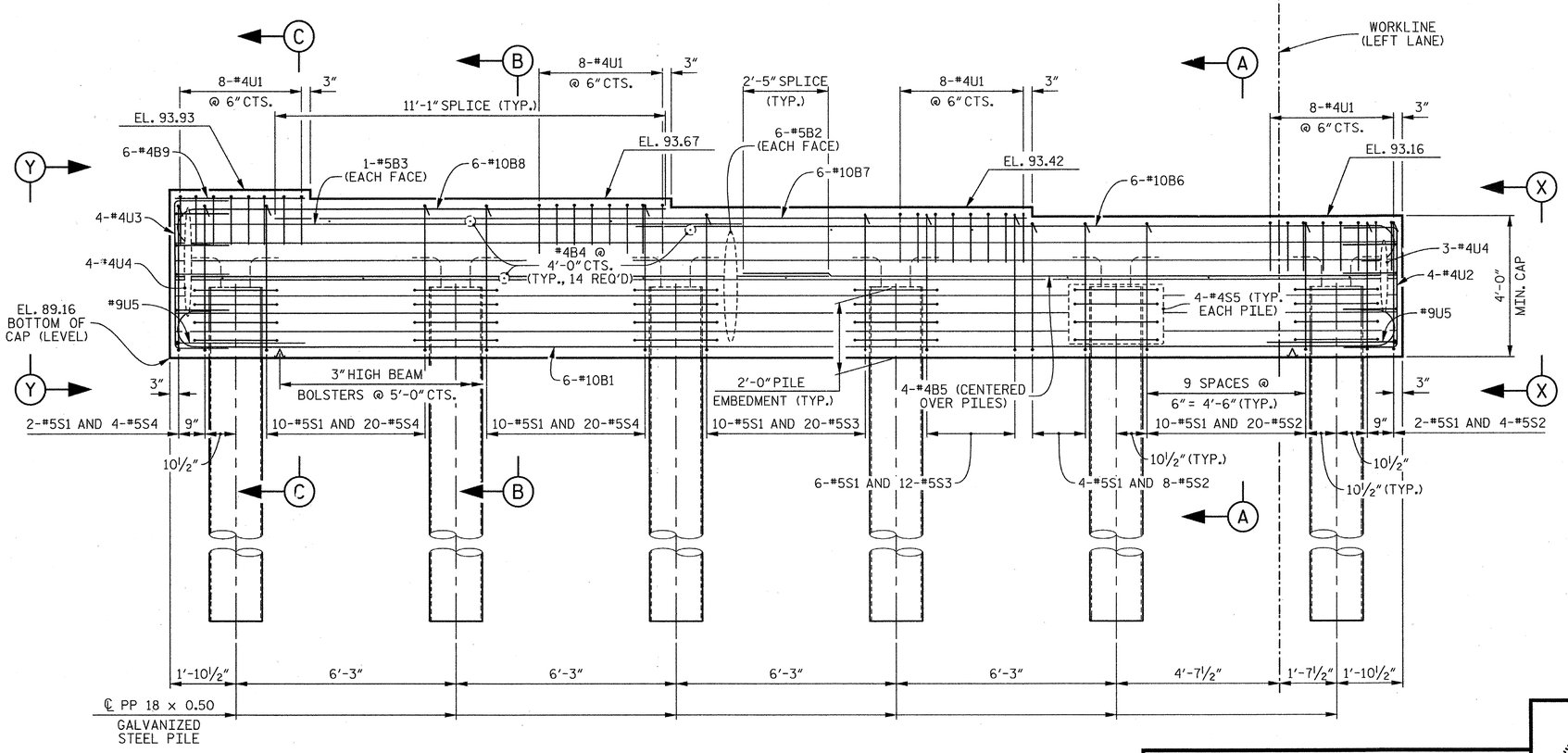


## ELEVATION

PROJECT NO. R-2303D

SAMPSON COUNTY

STATION: 1311+58.00 -LREV-

SHEET 1 OF 2

STATE OF NORTH CAROLINA
DEPARTMENT OF TRANSPORTATION
RALEIGH

SUBSTRUCTURE

BENT 3

(LEFT LANE)

CDM Smith

Camp Dresser & McKee
421 Fayetteville Street, Suite 1303
Raleigh, NC 27604
NC COA No. F-1255

| | | | |
|---|---|---|---|
| DRAWN BY : | J.D. BORUTA | DATE : | 10-12 |
| CHECKED BY : | P.R. HOLSHOUSER | DATE : | 11-12 |
| DESIGN ENGINEER : | P.R. HOLSHOUSER | DATE : | 1-13 |

DWG. No. S01-051

NORTH CAROLINA PROFESSIONAL SEAL 20668 ENGINEER PAUL R. HOLSHOUSER 2/08/2013

| REVISIONS | | | | | | | | SHEET No. |
|---|---|---|---|---|---|---|---|---|
| No. | BY: | DATE: | No. | BY: | DATE: | | | S-51 |
| 1 | | | 3 | | | | | TOTAL SHEETS |
| 2 | | | 4 | | | | | 218 |

FILE: r:\model\r2303d\structures\PLANS\Str_1\R2303D_SD_Str1_b31.dgn
DATE: 12/30/2012 9:08:03 PM

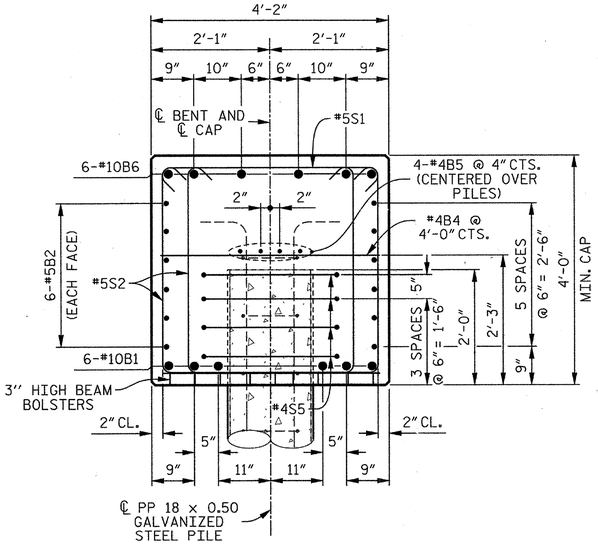


## SECTION A–A

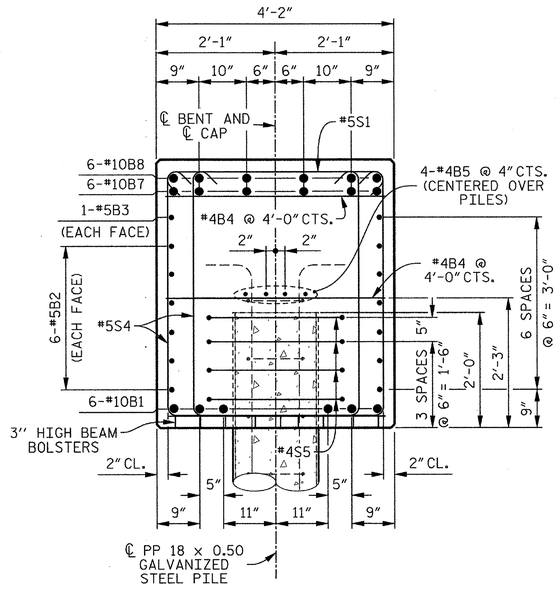


## SECTION B–B

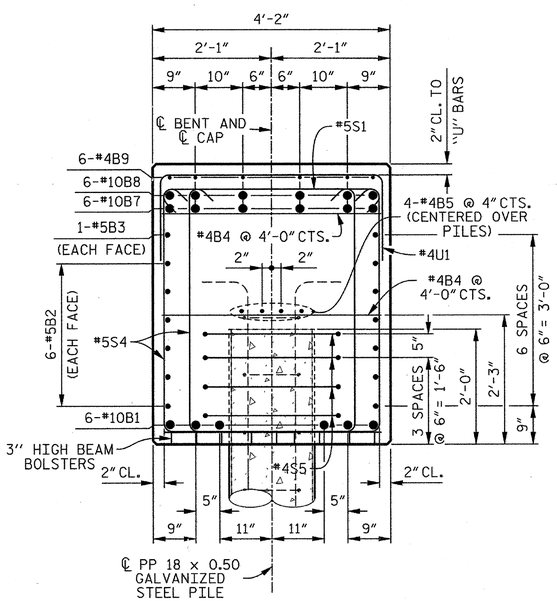


## SECTION C–C

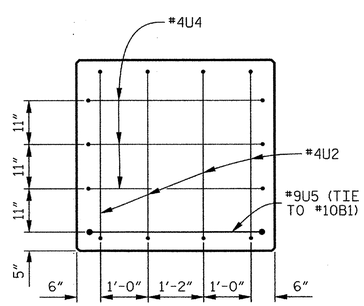


## END VIEW X–X

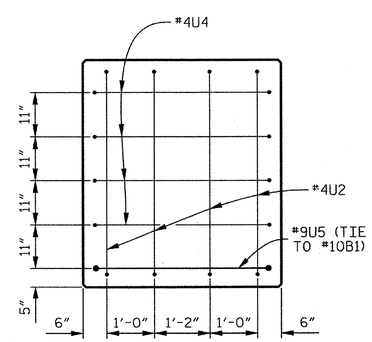


## END VIEW Y–Y

## BAR TYPES

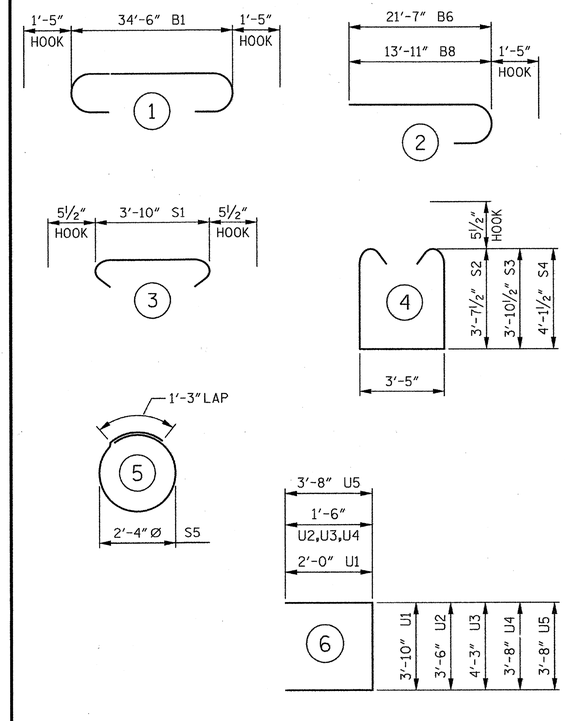


ALL BAR DIMENSIONS ARE OUT TO OUT.

## BILL OF MATERIAL

### BENT 3

| BAR | No. | SIZE | TYPE | LENGTH | WEIGHT |
|---|---|---|---|---|---|
| B1 | 6 | #10 | 1 | 37'- 4" | 964 |
| B2 | 12 | #5 | STR | 34'- 8" | 434 |
| B3 | 2 | #5 | STR | 16'- 1" | 34 |
| B4 | 14 | #4 | STR | 3'-10" | 36 |
| B5 | 8 | #4 | STR | 18'- 7" | 99 |
| B6 | 6 | #10 | 2 | 23'- 0" | 594 |
| B7 | 6 | #10 | STR | 21'- 4" | 551 |
| B8 | 6 | #10 | 2 | 15'- 4" | 396 |
| B9 | 6 | #4 | STR | 3'- 8" | 15 |
| S1 | 54 | #5 | 3 | 4'- 9" | 268 |
| S2 | 32 | #5 | 4 | 11'- 7" | 386 |
| S3 | 32 | #5 | 4 | 12'- 1" | 403 |
| S4 | 44 | #5 | 4 | 12'- 7" | 578 |
| S5 | 24 | #4 | 5 | 8'- 7" | 138 |
| U1 | 32 | #4 | 6 | 7'-10" | 167 |
| U2 | 4 | #4 | 6 | 6'- 6" | 17 |
| U3 | 4 | #4 | 6 | 7'- 4" | 19 |
| U4 | 7 | #4 | 6 | 6'- 8" | 31 |
| U5 | 2 | #9 | 6 | 11'- 0" | 75 |

REINFORCING STEEL 5,205 LBS.

CLASS "A" CONCRETE
POUR 1 CAP 22.8 CU. YDS.

PP 18 x 0.50 GALVANIZED STEEL PILES
6 REQUIRED 450 LIN. FT.

PIPE PILE PLATES
No. = 6

THE CONCRETE DISPLACED BY THE FILLED GALVANIZED STEEL PIPE PILES HAS BEEN DEDUCTED FROM THE QUANTITY OF CLASS "A" CONCRETE FOR THE BENT CAP.

REINFORCING STEEL FOR GALVANIZED STEEL PILES ARE NOT INCLUDED. SEE "18" STEEL PIPE PILE" SHEET FOR DETAILS.

PROJECT NO. R-2303D
SAMPSON COUNTY
STATION: 1311+58.00 –LREV–

SHEET 2 OF 2

STATE OF NORTH CAROLINA
DEPARTMENT OF TRANSPORTATION
RALEIGH

SUBSTRUCTURE

BENT 3

(LEFT LANE)

CDM Smith
Camp Dresser & McKee
421 Fayetteville Street, Suite 1303
Raleigh, NC 27604
NC COA No. F-1255

| | | | |
|---|---|---|---|
| DRAWN BY : | J.D. BORUTA | DATE : | 10-12 |
| CHECKED BY : | P.R. HOLSHOUSER | DATE : | 11-12 |
| DESIGN ENGINEER : | P.R. HOLSHOUSER | DATE : | 1-13 |

DWG. No. S01-052

NORTH CAROLINA PROFESSIONAL SEAL 20668 ENGINEER PAUL R. HOLSHOUSER 1/28/2013

| REVISIONS | | | | | | | SHEET No. |
|---|---|---|---|---|---|---|---|
| No. | BY: | DATE: | No. | BY: | DATE: | | S-52 |
| 1 | | | 3 | | | | TOTAL SHEETS |
| 2 | | | 4 | | | | 28 |

FILE: r:\rcobb\r2303d\structures\PLANS\Sc_1\R2303D_SD_Sm1_b32.dgn
DATE: 12/20/2012 9:08:07 PM

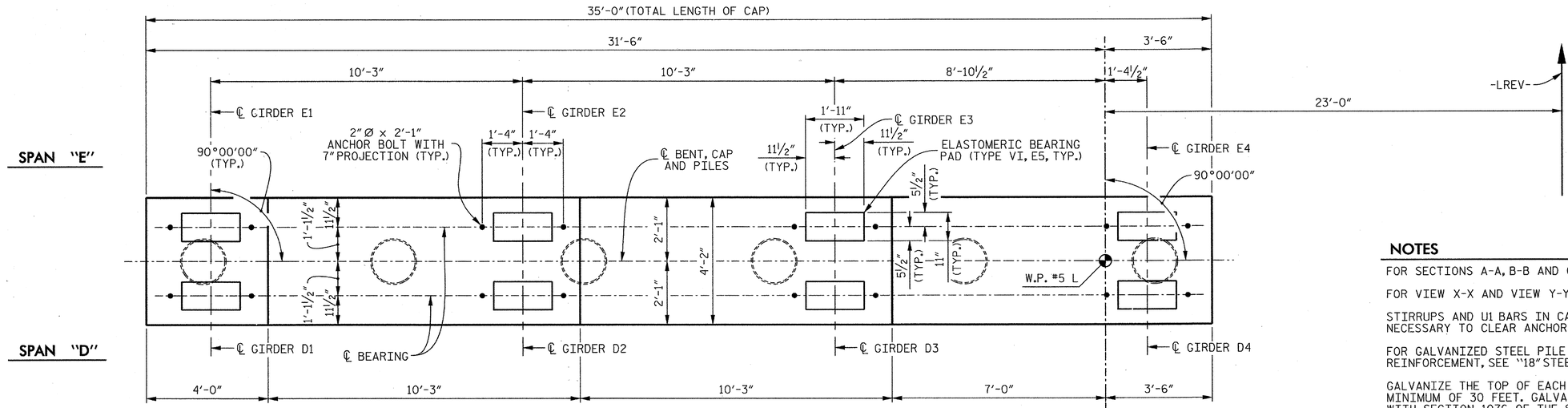


## PLAN

## NOTES

FOR SECTIONS A-A, B-B AND C-C, SEE SHEET 2 OF 2.

FOR VIEW X-X AND VIEW Y-Y, SEE SHEET 2 OF 2.

STIRRUPS AND U1 BARS IN CAP MAY BE SHIFTED AS NECESSARY TO CLEAR ANCHOR BOLTS.

FOR GALVANIZED STEEL PILE DETAILS AND REINFORCEMENT, SEE "18" STEEL PIPE PILE" SHEET.

GALVANIZE THE TOP OF EACH INTERIOR BENT PILE A MINIMUM OF 30 FEET. GALVANIZE IN ACCORDANCE WITH SECTION 1076 OF THE STANDARD SPECIFICATIONS.

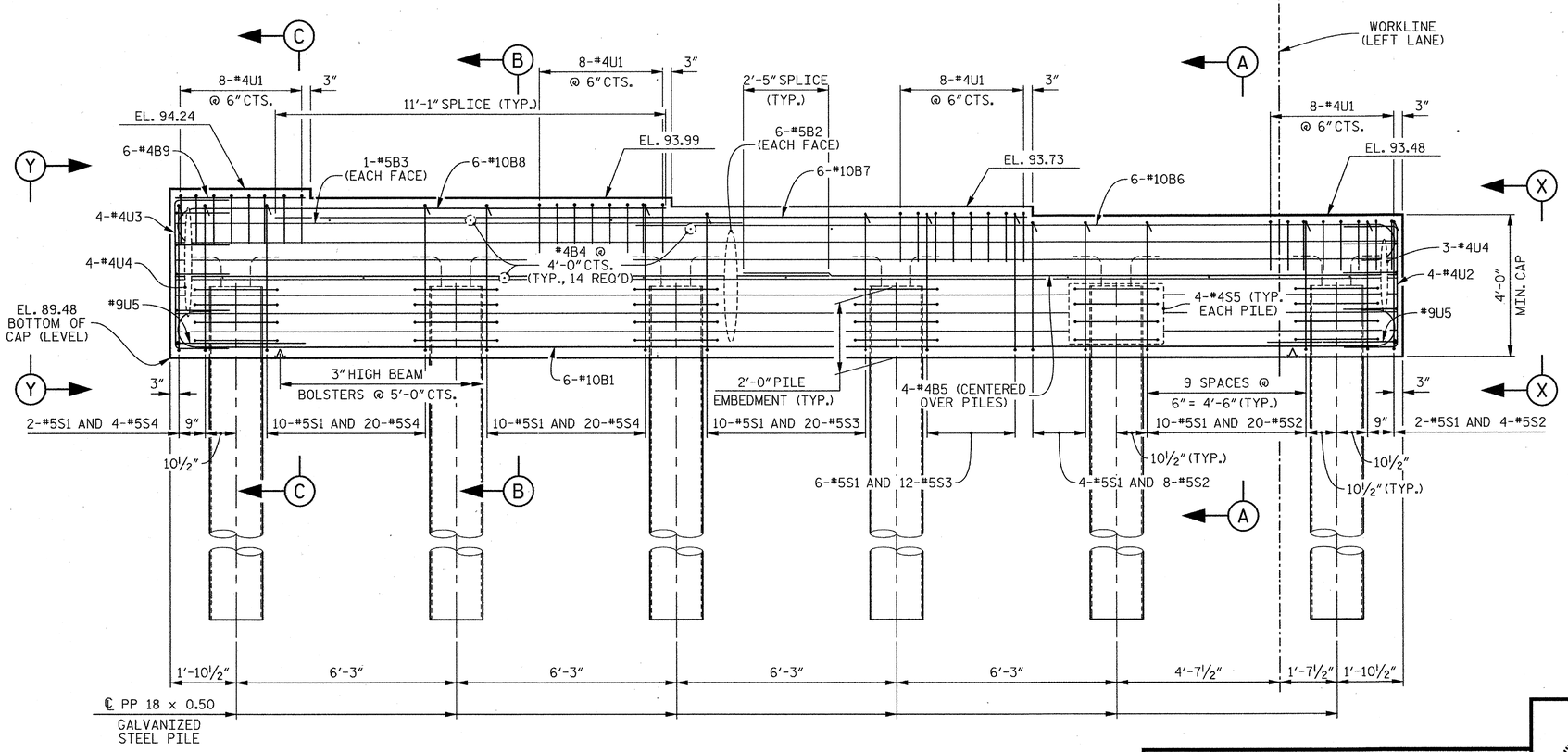


## ELEVATION

PROJECT NO. R-2303D

SAMPSON COUNTY

STATION: 1311+58.00 -LREV-

SHEET 1 OF 2

STATE OF NORTH CAROLINA
DEPARTMENT OF TRANSPORTATION
RALEIGH

SUBSTRUCTURE

BENT 4

(LEFT LANE)

CDM Smith

Camp Dresser & McKee
421 Fayetteville Street, Suite 1303
Raleigh, NC 27604
NC COA No. F-1255

| | | | |
|---|---|---|---|
| DRAWN BY : | J.D. BORUTA | DATE : | 10-12 |
| CHECKED BY : | P.R. HOLSHOUSER | DATE : | 11-12 |
| DESIGN ENGINEER : | P.R. HOLSHOUSER | DATE : | 1-13 |

DWG. No. S01-053

NORTH CAROLINA PROFESSIONAL SEAL 20668 ENGINEER PAUL R. HOLSHOUSER
10/8/2013

| REVISIONS | | | | | | |
|---|---|---|---|---|---|---|
| No. | BY: | DATE: | No. | BY: | DATE: | |
| 1 | | | 3 | | | |
| 2 | | | 4 | | | |

SHEET No. S-53

TOTAL SHEETS 218

FILE: r:\ncdot\r2303d\structures\PLANS\Br_1\R2303D_SD_Sht_b41.dgn
DATE: 12/30/2012 9:08:08 PM

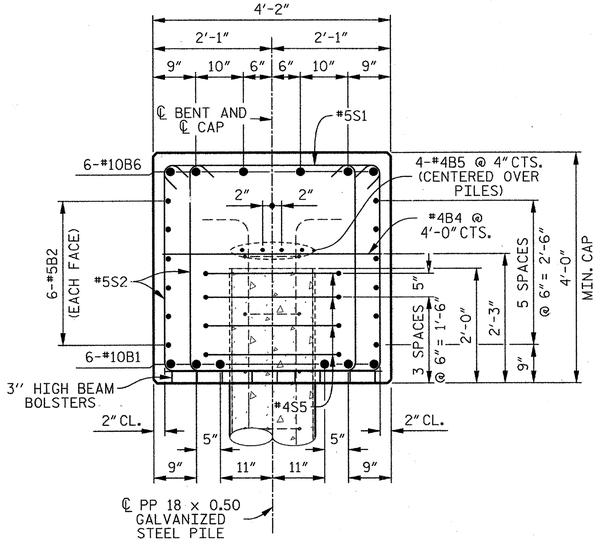


## SECTION A–A

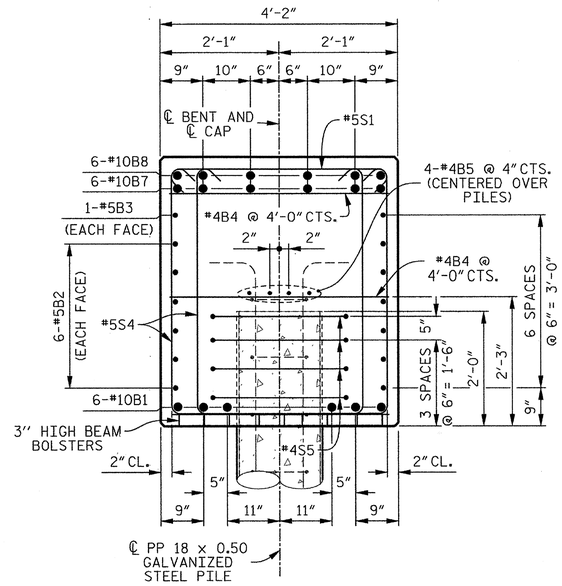


## SECTION B–B

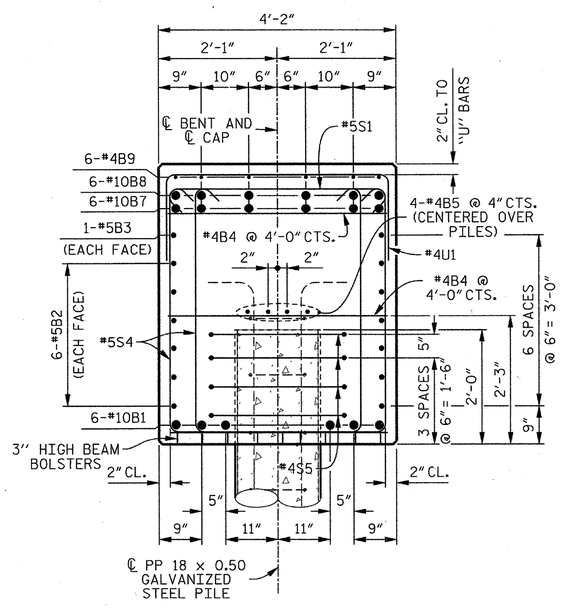


## SECTION C–C

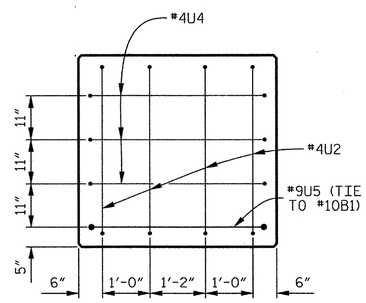


## END VIEW X–X

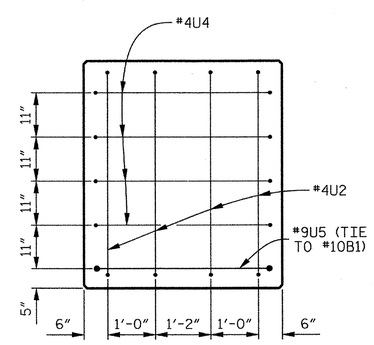


## END VIEW Y–Y

## BAR TYPES

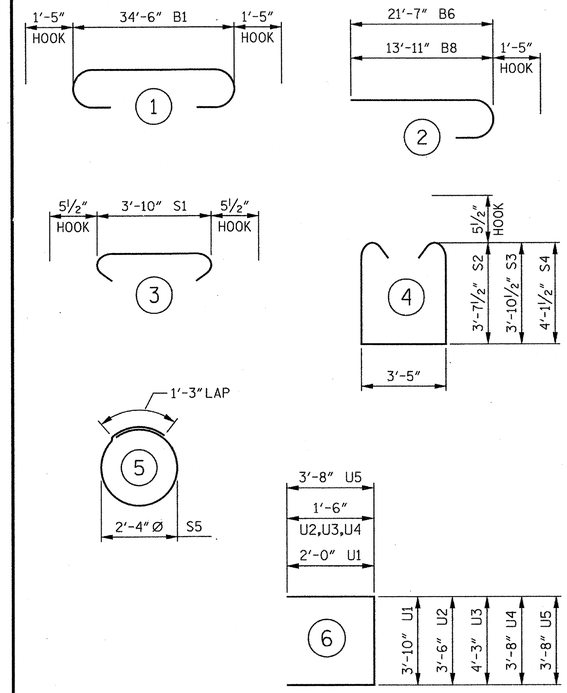


ALL BAR DIMENSIONS ARE OUT TO OUT.

## BILL OF MATERIAL

### BENT 4

| BAR | No. | SIZE | TYPE | LENGTH | WEIGHT |
|---|---|---|---|---|---|
| B1 | 6 | #10 | 1 | 37'- 4" | 964 |
| B2 | 12 | #5 | STR | 34'- 8" | 434 |
| B3 | 2 | #5 | STR | 16'- 1" | 34 |
| B4 | 14 | #4 | STR | 3'-10" | 36 |
| B5 | 8 | #4 | STR | 18'- 7" | 99 |
| B6 | 6 | #10 | 2 | 23'- 0" | 594 |
| B7 | 6 | #10 | STR | 21'- 4" | 551 |
| B8 | 6 | #10 | 2 | 15'- 4" | 396 |
| B9 | 6 | #4 | STR | 3'- 8" | 15 |
| S1 | 54 | #5 | 3 | 4'- 9" | 268 |
| S2 | 32 | #5 | 4 | 11'- 7" | 386 |
| S3 | 32 | #5 | 4 | 12'- 1" | 403 |
| S4 | 44 | #5 | 4 | 12'- 7" | 578 |
| S5 | 24 | #4 | 5 | 8'- 7" | 138 |
| U1 | 32 | #4 | 6 | 7'-10" | 167 |
| U2 | 4 | #4 | 6 | 6'- 6" | 17 |
| U3 | 4 | #4 | 6 | 7'- 4" | 19 |
| U4 | 7 | #4 | 6 | 6'- 8" | 31 |
| U5 | 2 | #9 | 6 | 11'- 0" | 75 |

REINFORCING STEEL 5,205 LBS.

CLASS "A" CONCRETE
POUR 1 CAP 22.8 CU. YDS.

PP 18 x 0.50 GALVANIZED STEEL PILES
6 REQUIRED 420 LIN. FT.

PIPE PILE PLATES
No. = 6

THE CONCRETE DISPLACED BY THE FILLED GALVANIZED STEEL PIPE PILES HAS BEEN DEDUCTED FROM THE QUANTITY OF CLASS "A" CONCRETE FOR THE BENT CAP.

REINFORCING STEEL FOR GALVANIZED STEEL PILES ARE NOT INCLUDED. SEE "18" STEEL PIPE PILE" SHEET FOR DETAILS.

PROJECT NO. R-2303D
SAMPSON COUNTY
STATION: 1311+58.00 -LREV-

SHEET 2 OF 2

STATE OF NORTH CAROLINA
DEPARTMENT OF TRANSPORTATION
RALEIGH

SUBSTRUCTURE

BENT 4

(LEFT LANE)

CDM Smith
Camp Dresser & McKee
421 Fayetteville Street, Suite 1303
Raleigh, NC 27604
NC COA No. F-1255

DRAWN BY : J.D. BORUTA DATE : 10-12
CHECKED BY : P.R. HOLSHOUSER DATE : 11-12
DESIGN ENGINEER : P.R. HOLSHOUSER DATE : 1-13

DWG. No. S01-054

NORTH CAROLINA PROFESSIONAL SEAL 20668 ENGINEER PAUL R. HOLSHOUSER 2-08-2013

| REVISIONS | | | | | | SHEET No. |
|---|---|---|---|---|---|---|
| No. | BY: | DATE: | No. | BY: | DATE: | S-54 |
| 1 | | | 3 | | | TOTAL SHEETS |
| 2 | | | 4 | | | 218 |

FILE: r:\model\2303d\structures\PLANS\Str_1\R2303D_SD_Str_1_b42.dgn
DATE: 12/20/2012 9:08:12 PM

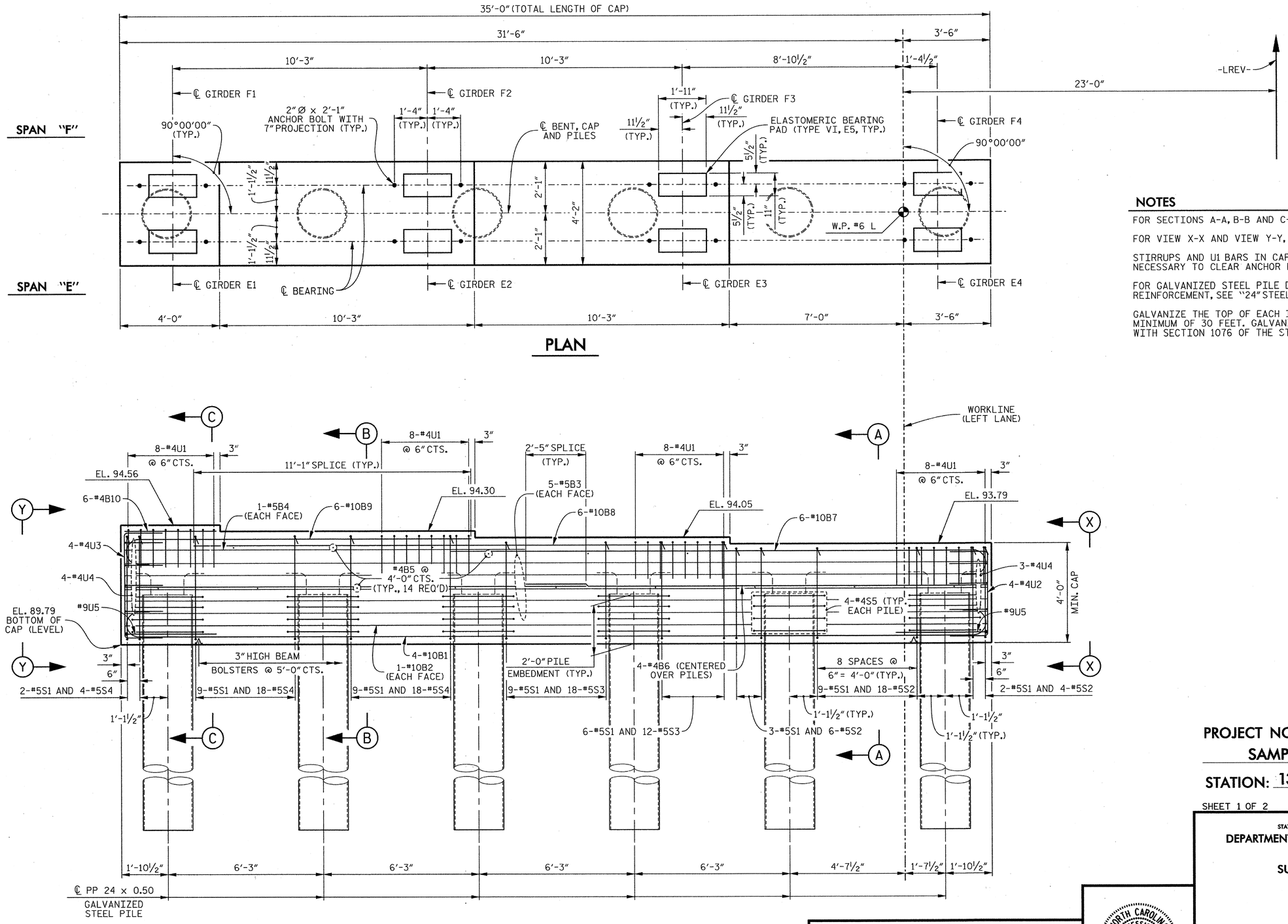


## NOTES

FOR SECTIONS A-A, B-B AND C-C, SEE SHEET 2 OF 2.

FOR VIEW X-X AND VIEW Y-Y, SEE SHEET 2 OF 2.

STIRRUPS AND U1 BARS IN CAP MAY BE SHIFTED AS NECESSARY TO CLEAR ANCHOR BOLTS.

FOR GALVANIZED STEEL PILE DETAILS AND REINFORCEMENT, SEE "24" STEEL PIPE PILE" SHEET.

GALVANIZE THE TOP OF EACH INTERIOR BENT PILE A MINIMUM OF 30 FEET. GALVANIZE IN ACCORDANCE WITH SECTION 1076 OF THE STANDARD SPECIFICATIONS.

PROJECT NO. R-2303D

SAMPSON COUNTY

STATION: 1311+58.00 -LREV-

SHEET 1 OF 2

STATE OF NORTH CAROLINA
DEPARTMENT OF TRANSPORTATION
RALEIGH

SUBSTRUCTURE

BENT 5

(LEFT LANE)

CDM Smith

Camp Dresser & McKee
421 Fayetteville Street, Suite 1303
Raleigh, NC 27604
NC COA No. F-1255

| | | | |
|---|---|---|---|
| DRAWN BY : | J.D. BORUTA | DATE : | 10-12 |
| CHECKED BY : | P.R. HOLSHOUSER | DATE : | 11-12 |
| DESIGN ENGINEER : | P.R. HOLSHOUSER | DATE : | 1-13 |

DWG. No. S01-055

NORTH CAROLINA PROFESSIONAL SEAL 20668 ENGINEER PAUL R. HOLSHOUSER 2/08/2013

| REVISIONS | | | | | | SHEET No. |
|---|---|---|---|---|---|---|
| No. | BY: | DATE: | No. | BY: | DATE: | S-55 |
| 1 | | | 3 | | | TOTAL SHEETS |
| 2 | | | 4 | | | 218 |

FILE: r:\ncdot\r2303d\structures\PLANS\Str_1\R2303D_SD_Str1_b51.dgn
DATE: 12/30/2012 9:08:14 PM

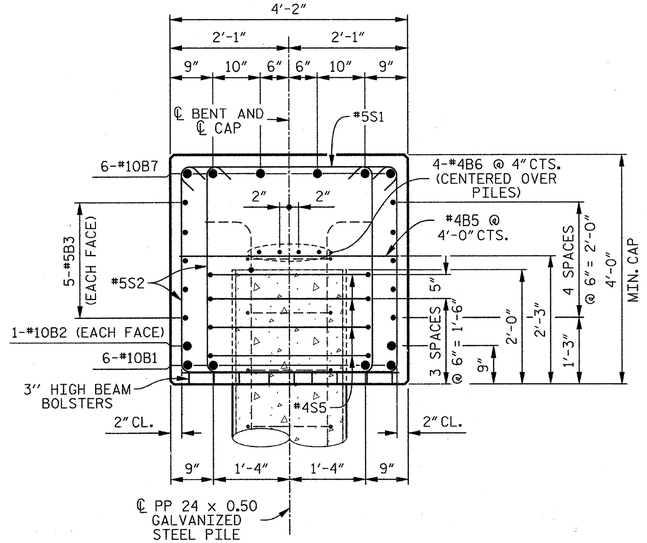


## SECTION A–A

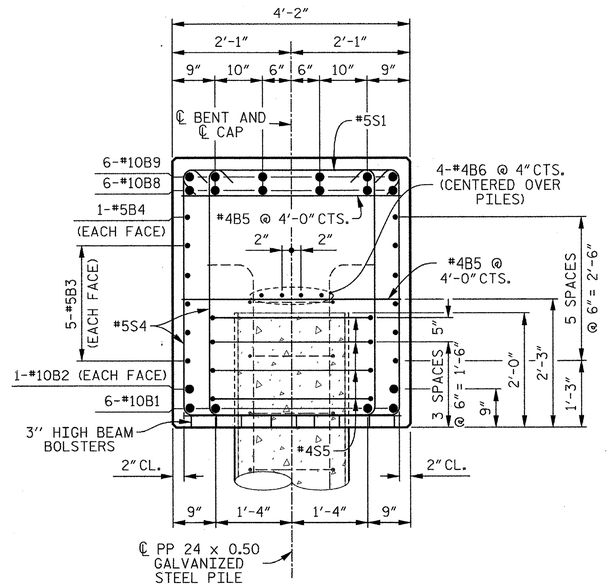


## SECTION B–B

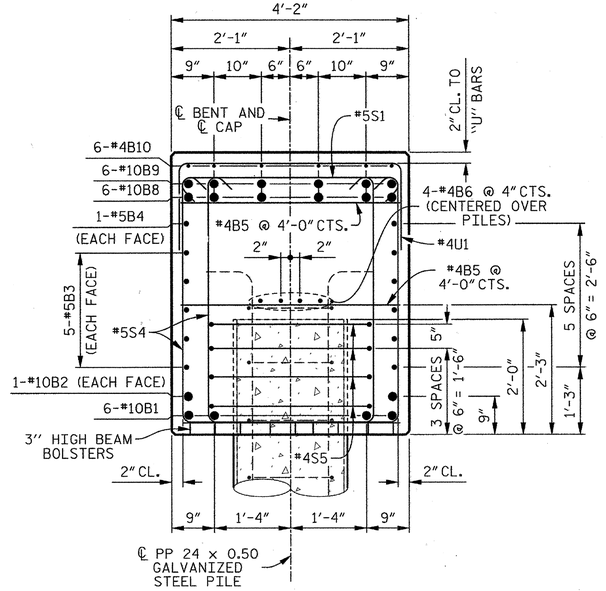


## SECTION C–C

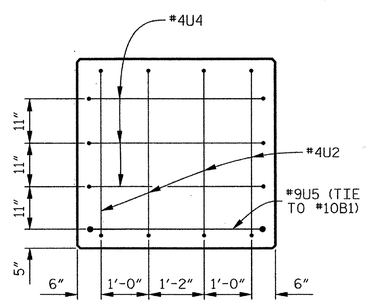


## END VIEW X–X

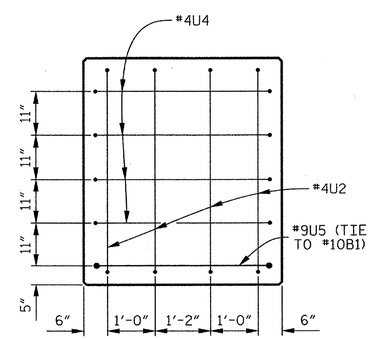


## END VIEW Y–Y

## BAR TYPES

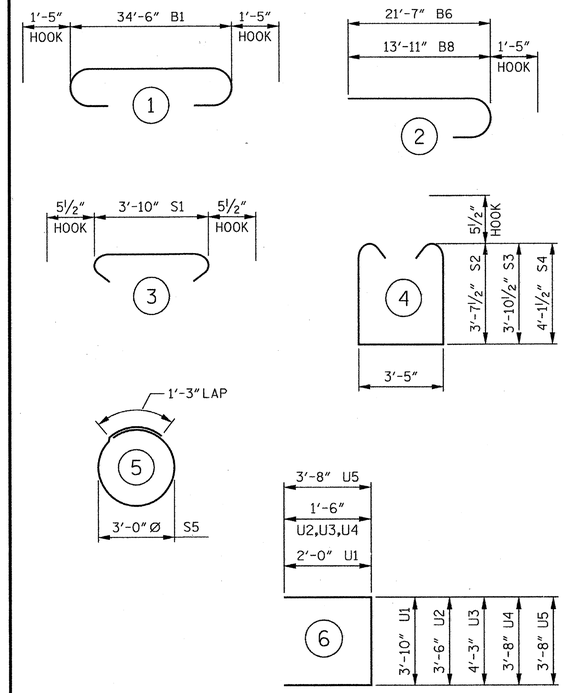


ALL BAR DIMENSIONS ARE OUT TO OUT.

## BILL OF MATERIAL

### BENT 5

| BAR | No. | SIZE | TYPE | LENGTH | WEIGHT |
|---|---|---|---|---|---|
| B1 | 4 | #10 | 1 | 37'- 4" | 643 |
| B2 | 2 | #10 | STR | 34'- 8" | 298 |
| B3 | 10 | #5 | STR | 34'- 8" | 362 |
| B4 | 2 | #5 | STR | 16'- 1" | 34 |
| B5 | 14 | #4 | STR | 3'-10" | 36 |
| B6 | 8 | #4 | STR | 18'- 7" | 99 |
| B7 | 6 | #10 | 2 | 23'- 0" | 594 |
| B8 | 6 | #10 | STR | 21'- 4" | 551 |
| B9 | 6 | #10 | 2 | 15'- 4" | 396 |
| B10 | 6 | #4 | STR | 3'- 8" | 15 |
| S1 | 49 | #5 | 3 | 4'- 9" | 243 |
| S2 | 28 | #5 | 4 | 11'- 7" | 338 |
| S3 | 30 | #5 | 4 | 12'- 1" | 378 |
| S4 | 40 | #5 | 4 | 12'- 7" | 525 |
| S5 | 24 | #4 | 5 | 10'- 9" | 172 |
| U1 | 32 | #4 | 6 | 7'-10" | 167 |
| U2 | 4 | #4 | 6 | 6'- 6" | 17 |
| U3 | 4 | #4 | 6 | 7'- 4" | 19 |
| U4 | 7 | #4 | 6 | 6'- 8" | 31 |
| U5 | 2 | #9 | 6 | 11'- 0" | 75 |

REINFORCING STEEL 4,993 LBS.

CLASS "A" CONCRETE
POUR 1 CAP 22.0 CU. YDS.

PP 24 x 0.50 GALVANIZED STEEL PILES
6 REQUIRED 360 LIN. FT.

PIPE PILE PLATES
No. = 6

THE CONCRETE DISPLACED BY THE FILLED GALVANIZED STEEL PIPE PILES HAS BEEN DEDUCTED FROM THE QUANTITY OF CLASS "A" CONCRETE FOR THE BENT CAP.

REINFORCING STEEL FOR GALVANIZED STEEL PILES ARE NOT INCLUDED. SEE "24" STEEL PIPE PILE" SHEET FOR DETAILS.

PROJECT NO. R-2303D
SAMPSON COUNTY
STATION: 1311+58.00 –LREV–

SHEET 2 OF 2

STATE OF NORTH CAROLINA
DEPARTMENT OF TRANSPORTATION
RALEIGH

SUBSTRUCTURE

BENT 5

(LEFT LANE)

CDM Smith
Camp Dresser & McKee
421 Fayetteville Street, Suite 1303
Raleigh, NC 27604
NC COA No. F-1255

DRAWN BY : J.D. BORUTA DATE : 10-12
CHECKED BY : P.R. HOLSHOUSER DATE : 11-12
DESIGN ENGINEER : P.R. HOLSHOUSER DATE : 1-13

DWG. No. S01-056

NORTH CAROLINA PROFESSIONAL SEAL 20668 ENGINEER P. PAUL R. HOLSHOUSER 12/08/2013

| REVISIONS | | | | | | | | SHEET No. |
|---|---|---|---|---|---|---|---|---|
| No. | BY: | DATE: | No. | BY: | DATE: | | | S-56 |
| 1 | | | 3 | | | | | TOTAL SHEETS |
| 2 | | | 4 | | | | | 28 |

FILE: r:\cadd\r2303d\structures\PLANS\Br_1\R2303D_S0_Br1_LS2.dgn
DATE: 12/09/2013 9:08:16 PM

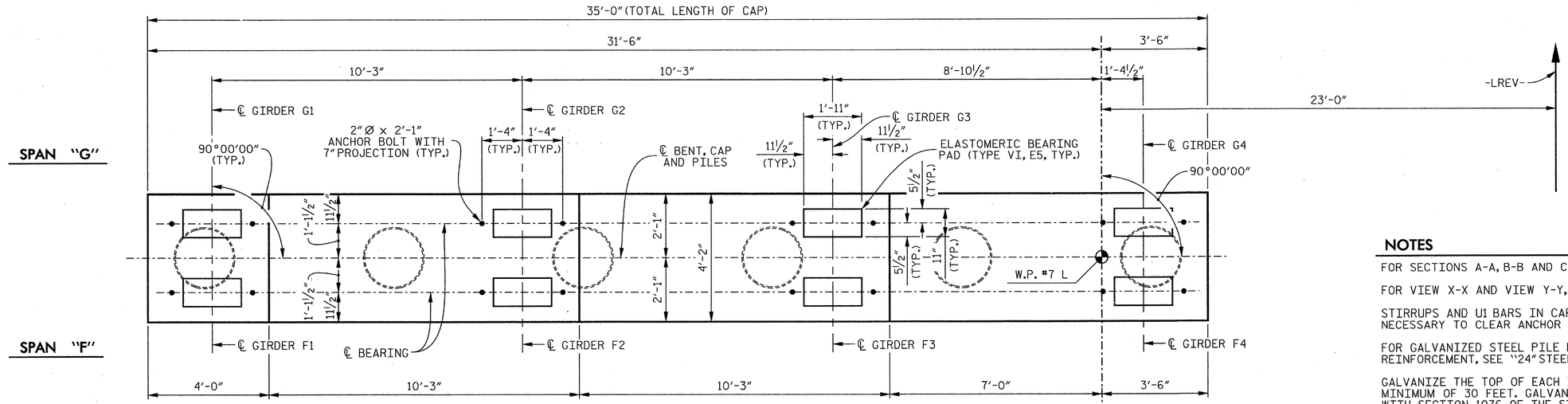


## PLAN

## NOTES

FOR SECTIONS A-A, B-B AND C-C, SEE SHEET 2 OF 2.

FOR VIEW X-X AND VIEW Y-Y, SEE SHEET 2 OF 2.

STIRRUPS AND U1 BARS IN CAP MAY BE SHIFTED AS NECESSARY TO CLEAR ANCHOR BOLTS.

FOR GALVANIZED STEEL PILE DETAILS AND REINFORCEMENT, SEE "24" STEEL PIPE PILE" SHEET.

GALVANIZE THE TOP OF EACH INTERIOR BENT PILE A MINIMUM OF 30 FEET. GALVANIZE IN ACCORDANCE WITH SECTION 1076 OF THE STANDARD SPECIFICATIONS.

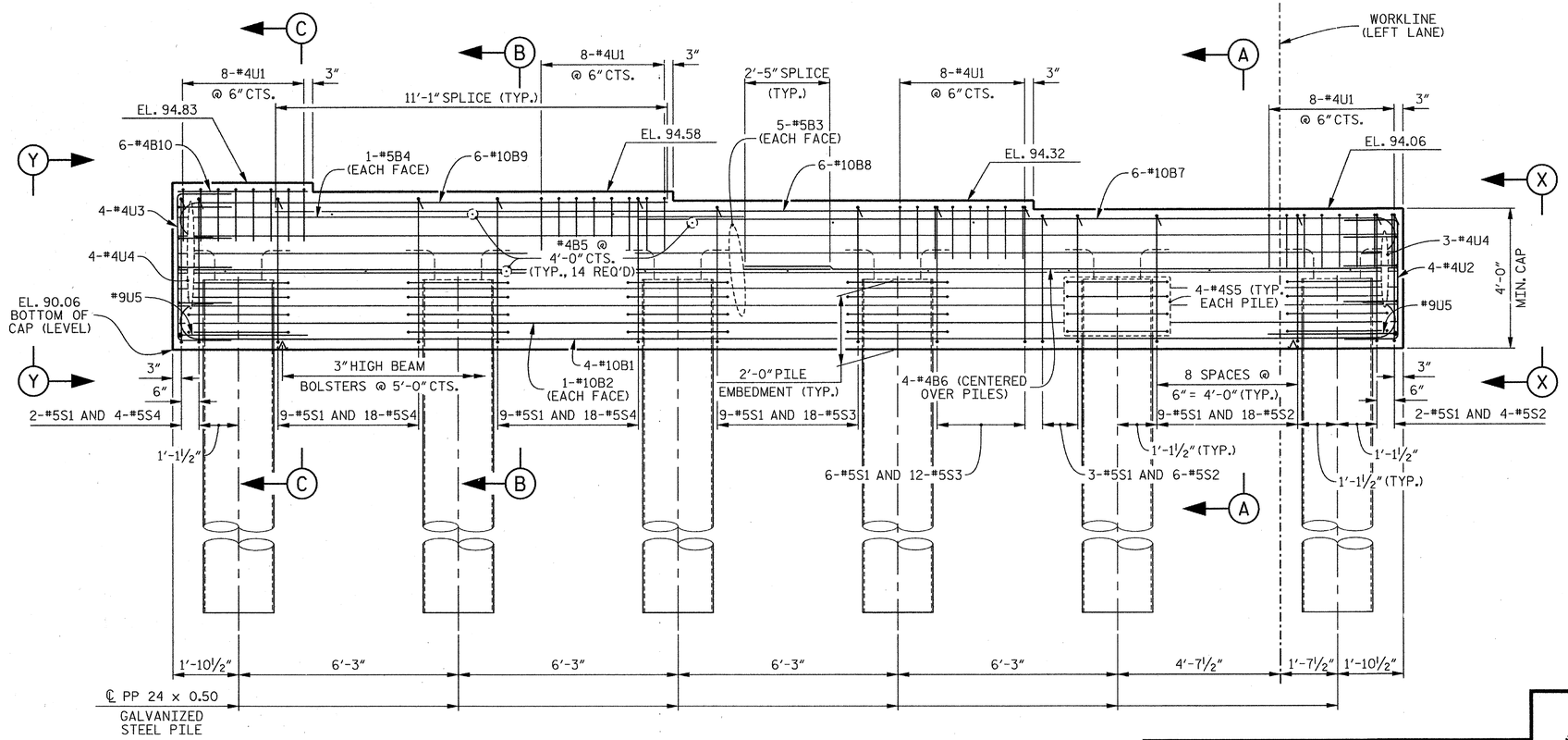


## ELEVATION

PROJECT NO. R-2303D

SAMPSON COUNTY

STATION: 1311+58.00 -LREV-

SHEET 1 OF 2

STATE OF NORTH CAROLINA
DEPARTMENT OF TRANSPORTATION
RALEIGH

SUBSTRUCTURE

BENT 6

(LEFT LANE)

CDM Smith

Camp Dresser & McKee
421 Fayetteville Street, Suite 1303
Raleigh, NC 27604
NC COA No. F-1255

DRAWN BY : J.D. BORUTA DATE : 10-12
CHECKED BY : P.R. HOLSHOUSER DATE : 11-12
DESIGN ENGINEER : P.R. HOLSHOUSER DATE : 1-13

DWG. No. S01-057

NORTH CAROLINA PROFESSIONAL SEAL 20668 ENGINEER PAUL R. HOLSHOUSER 2/08/2013

| REVISIONS | | | | | | | SHEET No. |
|---|---|---|---|---|---|---|---|
| No. | BY: | DATE: | No. | BY: | DATE: | | S-57 |
| 1 | | | 3 | | | | TOTAL SHEETS |
| 2 | | | 4 | | | | 218 |

FILE: r:\model\2303d\structures\PLANS\Br_1\R2303D_S0_Brt_b61.dgn
DATE: 12/20/2012 9:08:18 PM

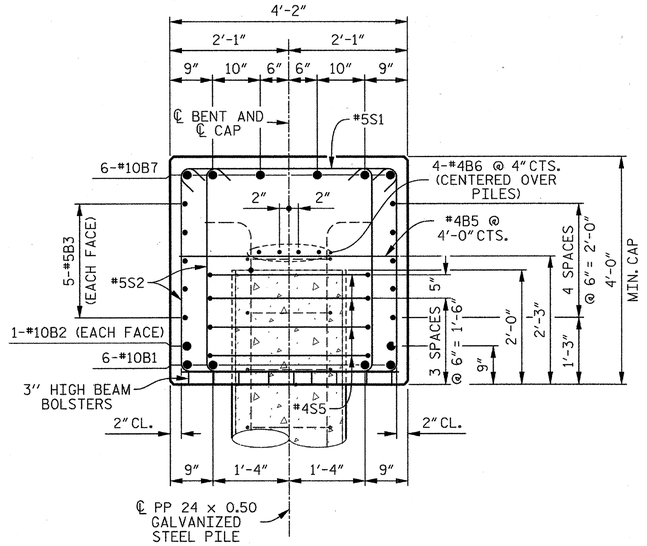


## SECTION A–A

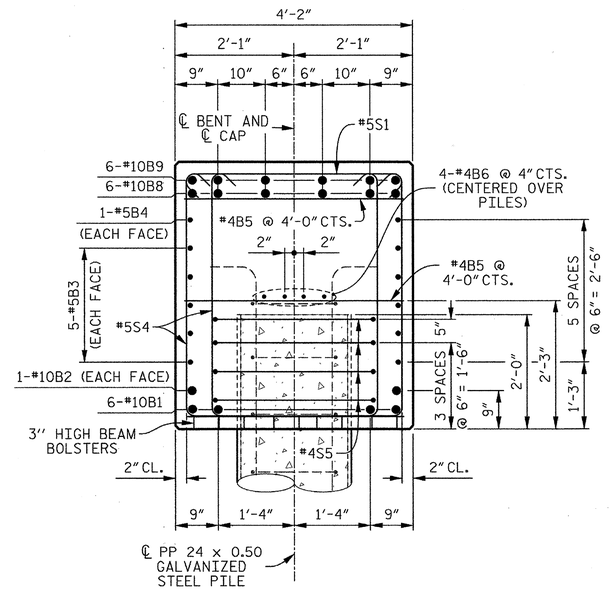


## SECTION B–B

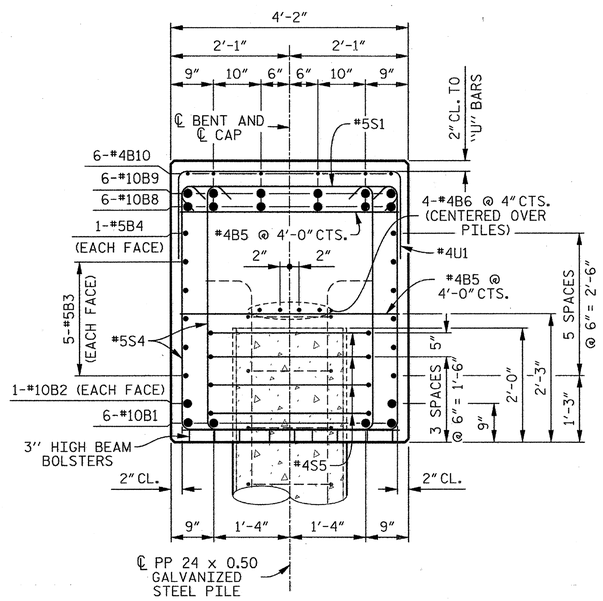


## SECTION C–C

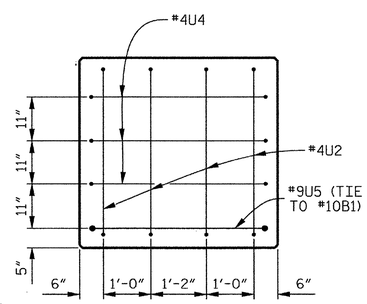


## END VIEW X–X

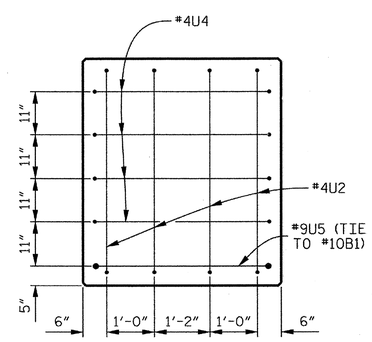


## END VIEW Y–Y

## BAR TYPES

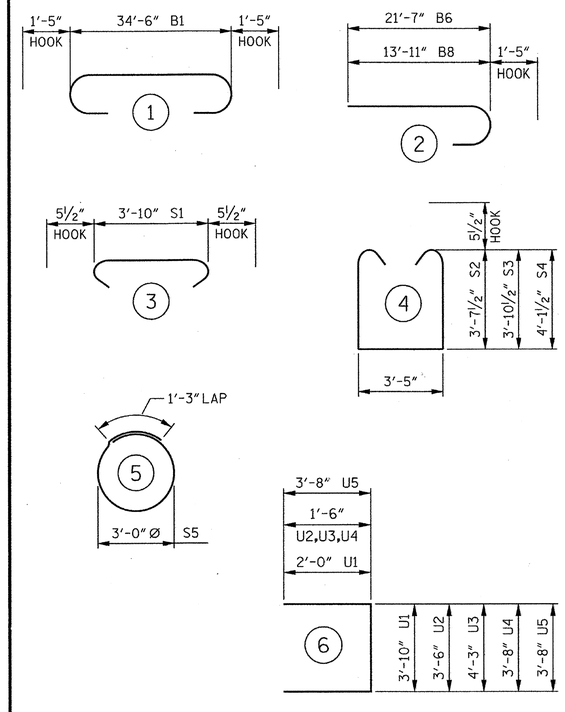


ALL BAR DIMENSIONS ARE OUT TO OUT.

## BILL OF MATERIAL

### BENT 6

| BAR | No. | SIZE | TYPE | LENGTH | WEIGHT |
|---|---|---|---|---|---|
| B1 | 4 | #10 | 1 | 37'- 4" | 643 |
| B2 | 2 | #10 | STR | 34'- 8" | 298 |
| B3 | 10 | #5 | STR | 34'- 8" | 362 |
| B4 | 2 | #5 | STR | 16'- 1" | 34 |
| B5 | 14 | #4 | STR | 3'-10" | 36 |
| B6 | 8 | #4 | STR | 18'- 7" | 99 |
| B7 | 6 | #10 | 2 | 23'- 0" | 594 |
| B8 | 6 | #10 | STR | 21'- 4" | 551 |
| B9 | 6 | #10 | 2 | 15'- 4" | 396 |
| B10 | 6 | #4 | STR | 3'- 8" | 15 |
| S1 | 49 | #5 | 3 | 4'- 9" | 243 |
| S2 | 28 | #5 | 4 | 11'- 7" | 338 |
| S3 | 30 | #5 | 4 | 12'- 1" | 378 |
| S4 | 40 | #5 | 4 | 12'- 7" | 525 |
| S5 | 24 | #4 | 5 | 10'- 9" | 172 |
| U1 | 32 | #4 | 6 | 7'-10" | 167 |
| U2 | 4 | #4 | 6 | 6'- 6" | 17 |
| U3 | 4 | #4 | 6 | 7'- 4" | 19 |
| U4 | 7 | #4 | 6 | 6'- 8" | 31 |
| U5 | 2 | #9 | 6 | 11'- 0" | 75 |

REINFORCING STEEL 4,993 LBS.

CLASS "A" CONCRETE
POUR 1 CAP 22.0 CU. YDS.

PP 24 x 0.50 GALVANIZED STEEL PILES
6 REQUIRED 450 LIN. FT.

PIPE PILE PLATES
No. = 6

THE CONCRETE DISPLACED BY THE FILLED GALVANIZED STEEL PIPE PILES HAS BEEN DEDUCTED FROM THE QUANTITY OF CLASS "A" CONCRETE FOR THE BENT CAP.

REINFORCING STEEL FOR GALVANIZED STEEL PILES ARE NOT INCLUDED. SEE "24" STEEL PIPE PILE" SHEET FOR DETAILS.

PROJECT NO. R-2303D
SAMPSON COUNTY
STATION: 1311+58.00 -LREV-

SHEET 2 OF 2

STATE OF NORTH CAROLINA
DEPARTMENT OF TRANSPORTATION
RALEIGH

SUBSTRUCTURE

BENT 6

(LEFT LANE)

CDM Smith
Camp Dresser & McKee
421 Fayetteville Street, Suite 1303
Raleigh, NC 27604
NC COA No. F-1255

DRAWN BY : J.D. BORUTA DATE : 10-12
CHECKED BY : P.R. HOLSHOUSER DATE : 11-12
DESIGN ENGINEER : P.R. HOLSHOUSER DATE : 1-13

DWG. No. S01-058

NORTH CAROLINA PROFESSIONAL SEAL 20668 ENGINEER PAUL R. HOLSHOUSER 2/08/2013

| REVISIONS | | | | | | SHEET No. |
|---|---|---|---|---|---|---|
| No. | BY: | DATE: | No. | BY: | DATE: | S-58 |
| 1 | | | 3 | | | TOTAL SHEETS |
| 2 | | | 4 | | | 218 |

FILE: n:\radar\23054\structures\PLANS\Str_1\R2303D_S0_Sht_bk2.dgn
DATE: 12/20/2012 9:08:21 PM

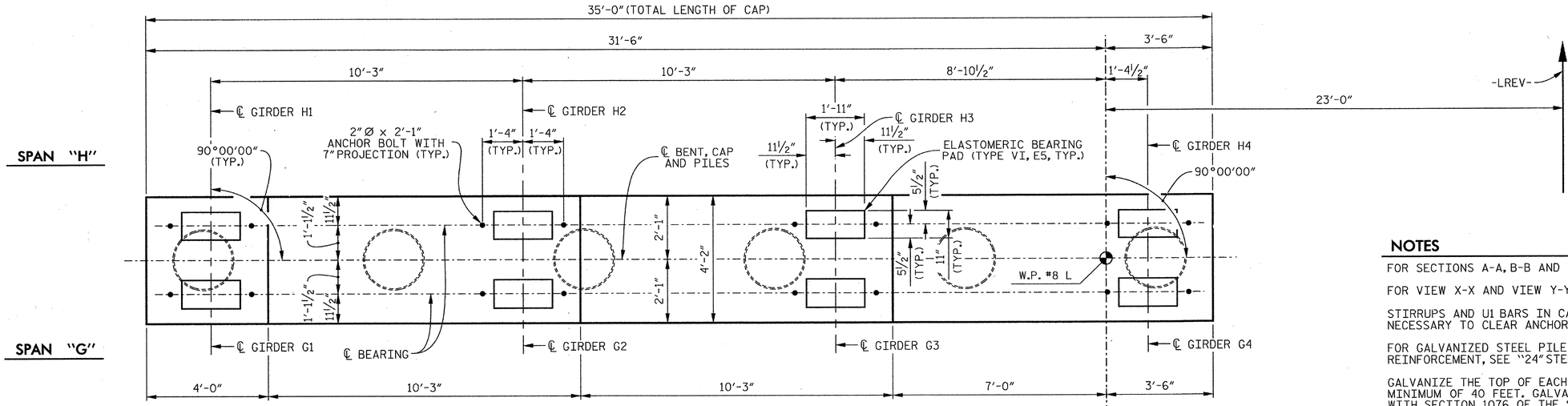


## PLAN

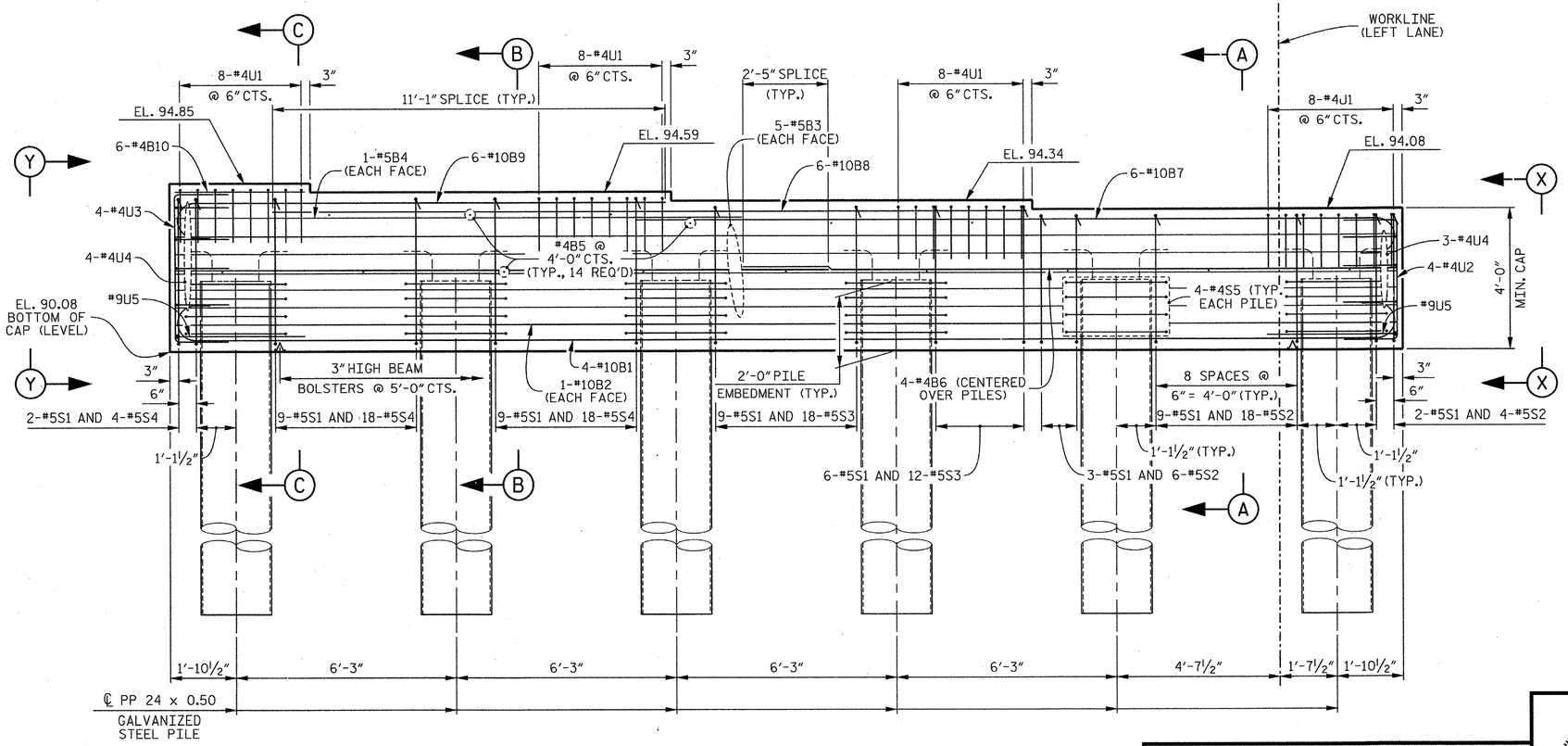


## ELEVATION

## NOTES

FOR SECTIONS A-A, B-B AND C-C, SEE SHEET 2 OF 2.

FOR VIEW X-X AND VIEW Y-Y, SEE SHEET 2 OF 2.

STIRRUPS AND U1 BARS IN CAP MAY BE SHIFTED AS NECESSARY TO CLEAR ANCHOR BOLTS.

FOR GALVANIZED STEEL PILE DETAILS AND REINFORCEMENT, SEE "24" STEEL PIPE PILE" SHEET.

GALVANIZE THE TOP OF EACH INTERIOR BENT PILE A MINIMUM OF 40 FEET. GALVANIZE IN ACCORDANCE WITH SECTION 1076 OF THE STANDARD SPECIFICATIONS.

PROJECT NO. R-2303D

SAMPSON COUNTY

STATION: 1311+58.00 -LREV-

SHEET 1 OF 2

STATE OF NORTH CAROLINA
DEPARTMENT OF TRANSPORTATION
RALEIGH

SUBSTRUCTURE

BENT 7

(LEFT LANE)

CDM Smith
Camp Dresser & McKee
421 Fayetteville Street, Suite 1303
Raleigh, NC 27604
NC COA No. F-1255

| | | | |
|---|---|---|---|
| DRAWN BY : | J.D. BORUTA | DATE : | 10-12 |
| CHECKED BY : | P.R. HOLSHOUSER | DATE : | 11-12 |
| DESIGN ENGINEER : | P.R. HOLSHOUSER | DATE : | 1-13 |

DWG. No. S01-059

NORTH CAROLINA PROFESSIONAL SEAL 20668 ENGINEER PAUL R. HOLSHOUSER 2/08/2013

| REVISIONS | | | | | | SHEET No. |
|---|---|---|---|---|---|---|
| No. | BY: | DATE: | No. | BY: | DATE: | S-59 |
| 1 | | | 3 | | | TOTAL SHEETS |
| 2 | | | 4 | | | 218 |

FILE: r:\cadd\r2303d\structures\PLANS\Str_1\R2303D_SD_Str1_b71.dgn
DATE: 12/3/2012 9:38:52 AM

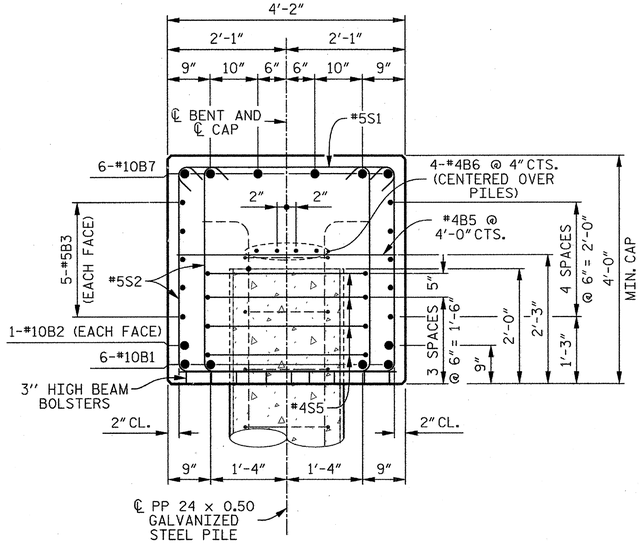


## SECTION A–A

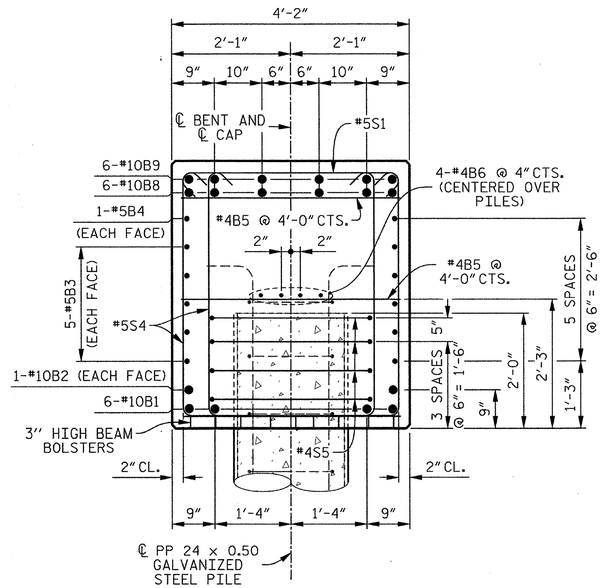


## SECTION B–B

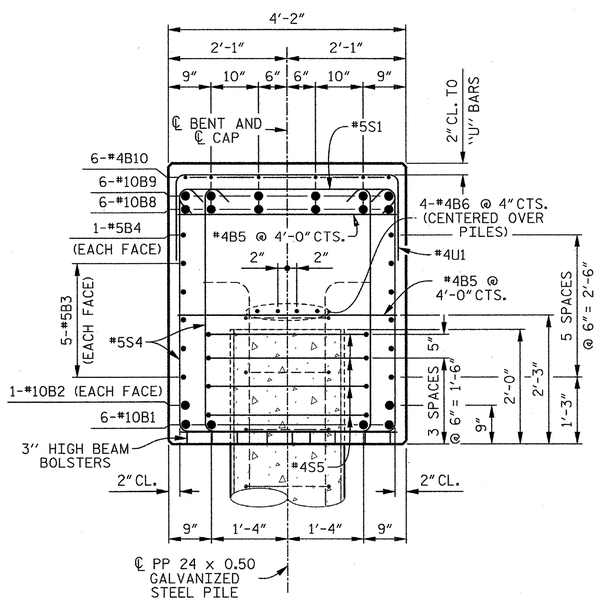


## SECTION C–C

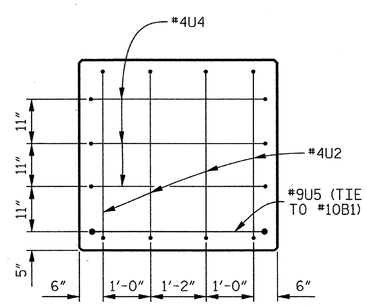


## END VIEW X–X

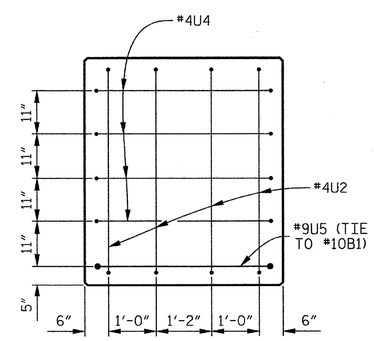


## END VIEW Y–Y

## BAR TYPES

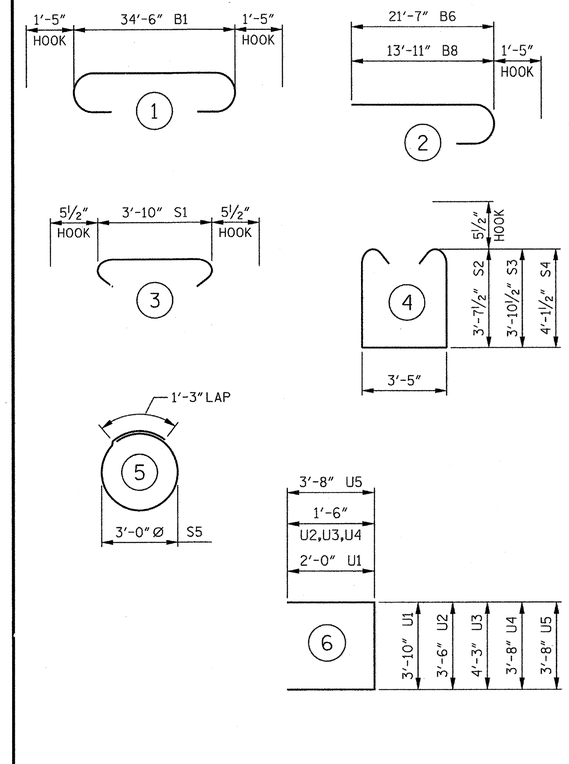


ALL BAR DIMENSIONS ARE OUT TO OUT.

## BILL OF MATERIAL

### BENT 7

| BAR | No. | SIZE | TYPE | LENGTH | WEIGHT |
|---|---|---|---|---|---|
| B1 | 4 | #10 | 1 | 37'- 4" | 643 |
| B2 | 2 | #10 | STR | 34'- 8" | 298 |
| B3 | 10 | #5 | STR | 34'- 8" | 362 |
| B4 | 2 | #5 | STR | 16'- 1" | 34 |
| B5 | 14 | #4 | STR | 3'-10" | 36 |
| B6 | 8 | #4 | STR | 18'- 7" | 99 |
| B7 | 6 | #10 | 2 | 23'- 0" | 594 |
| B8 | 6 | #10 | STR | 21'- 4" | 551 |
| B9 | 6 | #10 | 2 | 15'- 4" | 396 |
| B10 | 6 | #4 | STR | 3'- 8" | 15 |
| S1 | 49 | #5 | 3 | 4'- 9" | 243 |
| S2 | 28 | #5 | 4 | 11'- 7" | 338 |
| S3 | 30 | #5 | 4 | 12'- 1" | 378 |
| S4 | 40 | #5 | 4 | 12'- 7" | 525 |
| S5 | 24 | #4 | 5 | 10'- 9" | 172 |
| U1 | 32 | #4 | 6 | 7'-10" | 167 |
| U2 | 4 | #4 | 6 | 6'- 6" | 17 |
| U3 | 4 | #4 | 6 | 7'- 4" | 19 |
| U4 | 7 | #4 | 6 | 6'- 8" | 31 |
| U5 | 2 | #9 | 6 | 11'- 0" | 75 |

REINFORCING STEEL 4,993 LBS.

CLASS "A" CONCRETE
POUR 1 CAP 22.0 CU. YDS.

PP 24 x 0.50 GALVANIZED STEEL PILES
6 REQUIRED 480 LIN. FT.

PIPE PILE PLATES
No. = 6

THE CONCRETE DISPLACED BY THE FILLED GALVANIZED STEEL PIPE PILES HAS BEEN DEDUCTED FROM THE QUANTITY OF CLASS "A" CONCRETE FOR THE BENT CAP.

REINFORCING STEEL FOR GALVANIZED STEEL PILES ARE NOT INCLUDED. SEE "24" STEEL PIPE PILE" SHEET FOR DETAILS.

PROJECT NO. R-2303D
SAMPSON COUNTY
STATION: 1311+58.00 -LREV-

SHEET 2 OF 2

STATE OF NORTH CAROLINA
DEPARTMENT OF TRANSPORTATION
RALEIGH

SUBSTRUCTURE

BENT 7

(LEFT LANE)

CDM Smith
Camp Drasser & McKee
421 Fayetteville Street, Suite 1303
Raleigh, NC 27604
NC COA No. F-1255

DRAWN BY : J.D. BORUTA DATE : 10-12
CHECKED BY : P.R. HOLSHOUSER DATE : 11-12
DESIGN ENGINEER : P.R. HOLSHOUSER DATE : 1-13

DWG. No. S01-060

NORTH CAROLINA PROFESSIONAL SEAL 20668 ENGINEER PAUL R. HOLSHOUSER
2/26/2013

| REVISIONS | | | | | | SHEET No. |
|---|---|---|---|---|---|---|
| No. | BY: | DATE: | No. | BY: | DATE: | S-60 |
| 1 | | | 3 | | | TOTAL SHEETS |
| 2 | | | 4 | | | 218 |

FILE: r:\model\2303d\structures\PLANS\Sr_1\R2303D_SD_Sr1_b72.dgn
DATE: 12/30/2012 9:08:26 PM

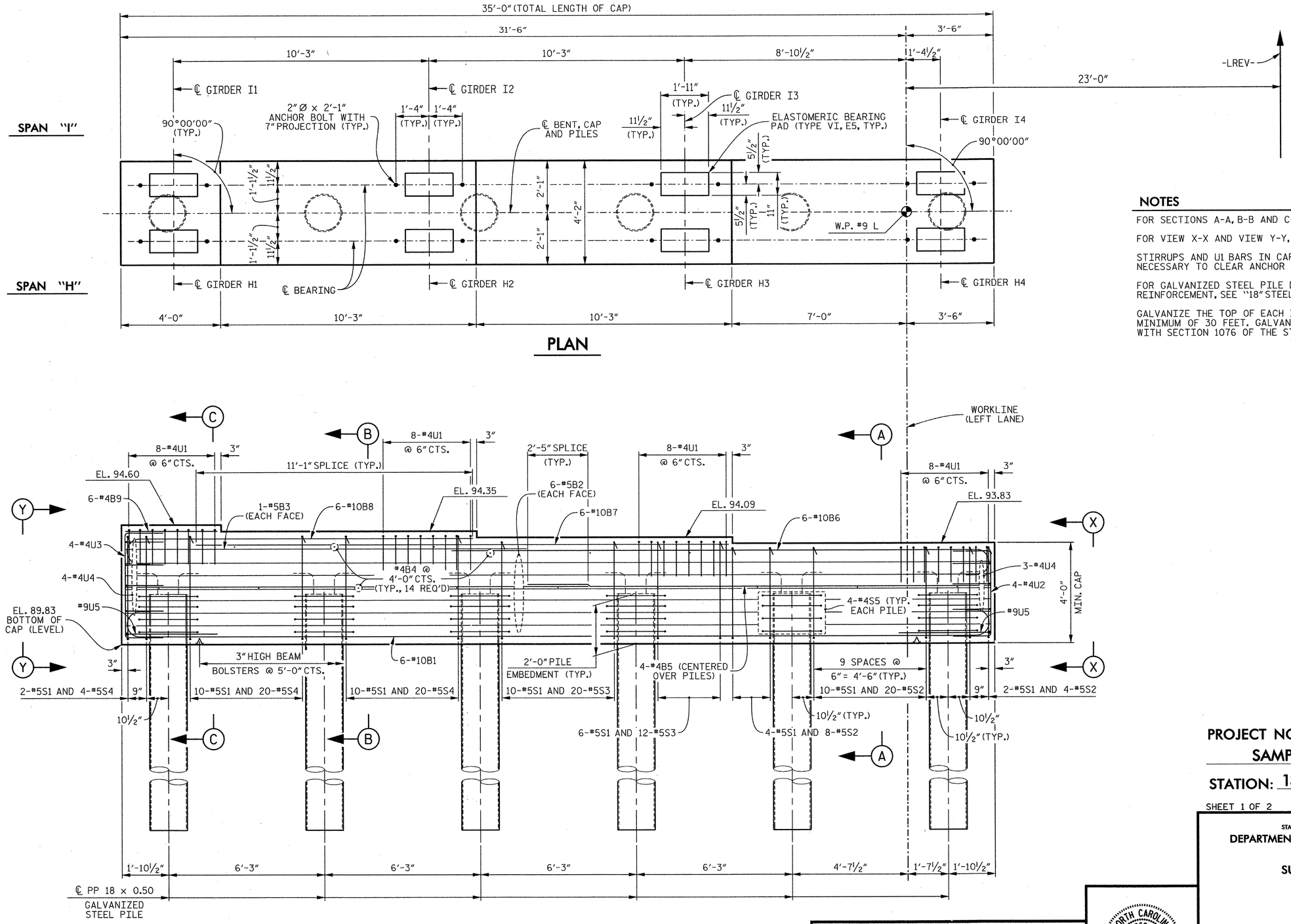


## NOTES

FOR SECTIONS A-A, B-B AND C-C, SEE SHEET 2 OF 2.

FOR VIEW X-X AND VIEW Y-Y, SEE SHEET 2 OF 2.

STIRRUPS AND U1 BARS IN CAP MAY BE SHIFTED AS NECESSARY TO CLEAR ANCHOR BOLTS.

FOR GALVANIZED STEEL PILE DETAILS AND REINFORCEMENT, SEE "18" STEEL PIPE PILE" SHEET.

GALVANIZE THE TOP OF EACH INTERIOR BENT PILE A MINIMUM OF 30 FEET. GALVANIZE IN ACCORDANCE WITH SECTION 1076 OF THE STANDARD SPECIFICATIONS.

PROJECT NO. R-2303D

SAMPSON COUNTY

STATION: 1311+58.00 -LREV-

SHEET 1 OF 2

STATE OF NORTH CAROLINA
DEPARTMENT OF TRANSPORTATION
RALEIGH

SUBSTRUCTURE

BENT 8

(LEFT LANE)

CDM Smith
Camp Dresser & McKee
421 Fayetteville Street, Suite 1303
Raleigh, NC 27604
NC COA No. F-1255

| | | | |
|---|---|---|---|
| DRAWN BY : | J.D. BORUTA | DATE : | 10-12 |
| CHECKED BY : | P.R. HOLSHOUSER | DATE : | 11-12 |
| DESIGN ENGINEER : | P.R. HOLSHOUSER | DATE : | 1-13 |

DWG. No. S01-061

NORTH CAROLINA PROFESSIONAL SEAL 20668 ENGINEER PAUL R. HOLSHOUSER 2/08/2013

| REVISIONS | | | | | | SHEET No. |
|---|---|---|---|---|---|---|
| No. | BY: | DATE: | No. | BY: | DATE: | S-61 |
| 1 | | | 3 | | | TOTAL SHEETS |
| 2 | | | 4 | | | 218 |

FILE: r:\ncdot\r2303d\structural\PLANS\Str_1\R2303D_SD_Str1_b81.dgn
DATE: 12/30/2012 9:08:28 PM

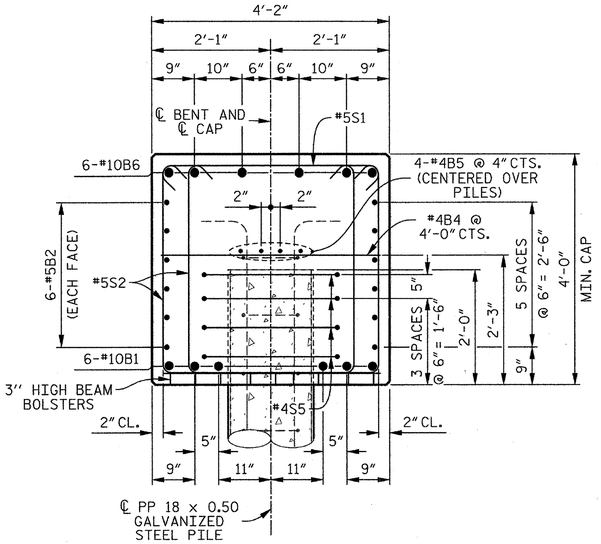


## SECTION A–A

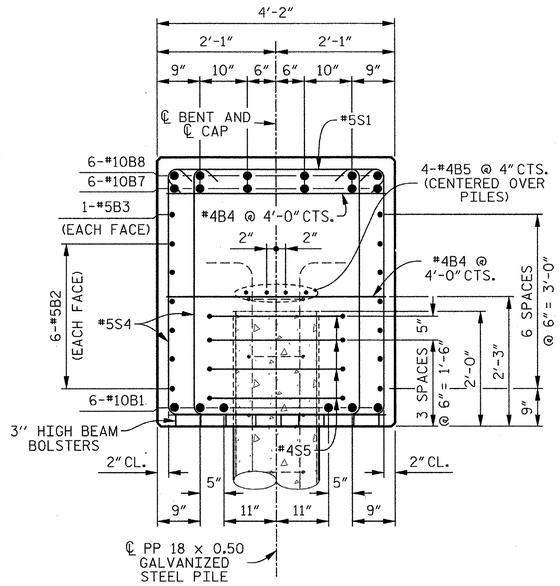


## SECTION B–B

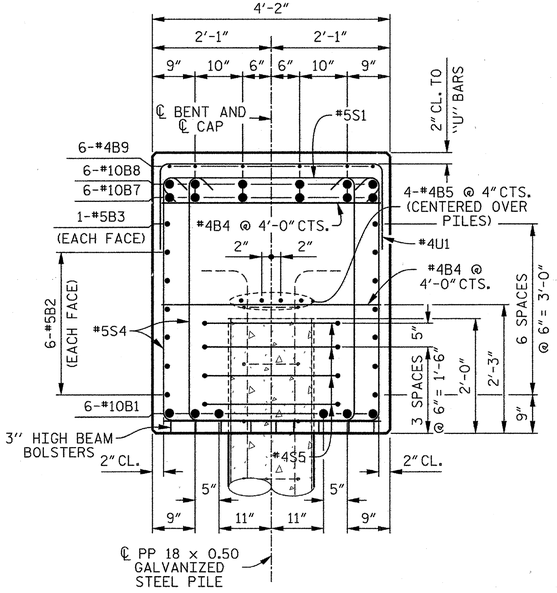


## SECTION C–C

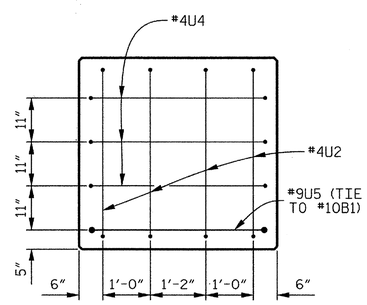


## END VIEW X–X

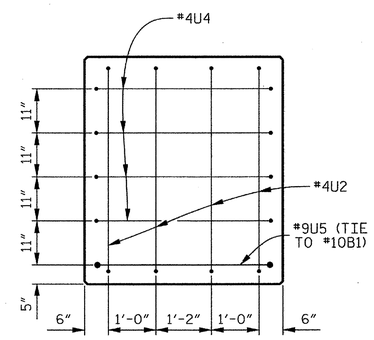


## END VIEW Y–Y

## BAR TYPES

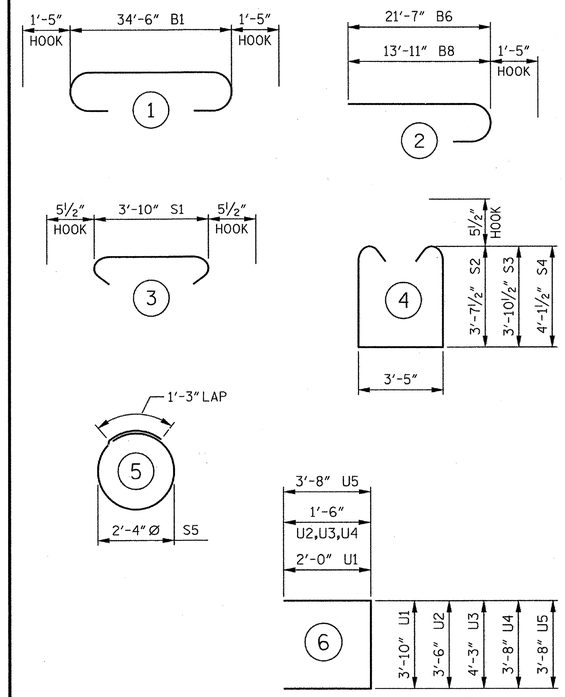


ALL BAR DIMENSIONS ARE OUT TO OUT.

## BILL OF MATERIAL

### BENT 8

| BAR | No. | SIZE | TYPE | LENGTH | WEIGHT |
|---|---|---|---|---|---|
| B1 | 6 | #10 | 1 | 37'- 4" | 964 |
| B2 | 12 | #5 | STR | 34'- 8" | 434 |
| B3 | 2 | #5 | STR | 16'- 1" | 34 |
| B4 | 14 | #4 | STR | 3'-10" | 36 |
| B5 | 8 | #4 | STR | 18'- 7" | 99 |
| B6 | 6 | #10 | 2 | 23'- 0" | 594 |
| B7 | 6 | #10 | STR | 21'- 4" | 551 |
| B8 | 6 | #10 | 2 | 15'- 4" | 396 |
| B9 | 6 | #4 | STR | 3'- 8" | 15 |
| S1 | 54 | #5 | 3 | 4'- 9" | 268 |
| S2 | 32 | #5 | 4 | 11'- 7" | 386 |
| S3 | 32 | #5 | 4 | 12'- 1" | 403 |
| S4 | 44 | #5 | 4 | 12'- 7" | 578 |
| S5 | 24 | #4 | 5 | 8'- 7" | 138 |
| U1 | 32 | #4 | 6 | 7'-10" | 167 |
| U2 | 4 | #4 | 6 | 6'- 6" | 17 |
| U3 | 4 | #4 | 6 | 7'- 4" | 19 |
| U4 | 7 | #4 | 6 | 6'- 8" | 31 |
| U5 | 2 | #9 | 6 | 11'- 0" | 75 |

REINFORCING STEEL 5,205 LBS.

CLASS "A" CONCRETE
POUR 1 CAP 22.8 CU. YDS.

PP 18 x 0.50 GALVANIZED STEEL PILES
6 REQUIRED 450 LIN. FT.

PIPE PILE PLATES
No. = 6

THE CONCRETE DISPLACED BY THE FILLED GALVANIZED STEEL PIPE PILES HAS BEEN DEDUCTED FROM THE QUANTITY OF CLASS "A" CONCRETE FOR THE BENT CAP.

REINFORCING STEEL FOR GALVANIZED STEEL PILES ARE NOT INCLUDED. SEE "18" STEEL PIPE PILE" SHEET FOR DETAILS.

PROJECT NO. R-2303D
SAMPSON COUNTY
STATION: 1311+58.00 -LREV-

SHEET 2 OF 2

STATE OF NORTH CAROLINA
DEPARTMENT OF TRANSPORTATION
RALEIGH

SUBSTRUCTURE

BENT 8

(LEFT LANE)

CDM Smith
Camp Dresser & McKee
421 Fayetteville Street, Suite 1303
Raleigh, NC 27604
NC COA No. F-1255

DRAWN BY : J.D. BORUTA DATE : 10-12
CHECKED BY : P.R. HOLSHOUSER DATE : 11-12
DESIGN ENGINEER : P.R. HOLSHOUSER DATE : 1-13

DWG. No. S01-062

NORTH CAROLINA PROFESSIONAL SEAL 20668 ENGINEER PAUL R. HOLSHOUSER 2/08/2013

| REVISIONS | | | | | | | | SHEET No. |
|---|---|---|---|---|---|---|---|---|
| No. | BY: | DATE: | No. | BY: | DATE: | | | S-62 |
| 1 | | | 3 | | | | | TOTAL SHEETS |
| 2 | | | 4 | | | | | 218 |

FILE: r:\models\2303d\structures\PLANS\Br_1\R2303D_SD_Sbr1_BB2.dgn
DATE: 12/31/2012 9:35:38 AM

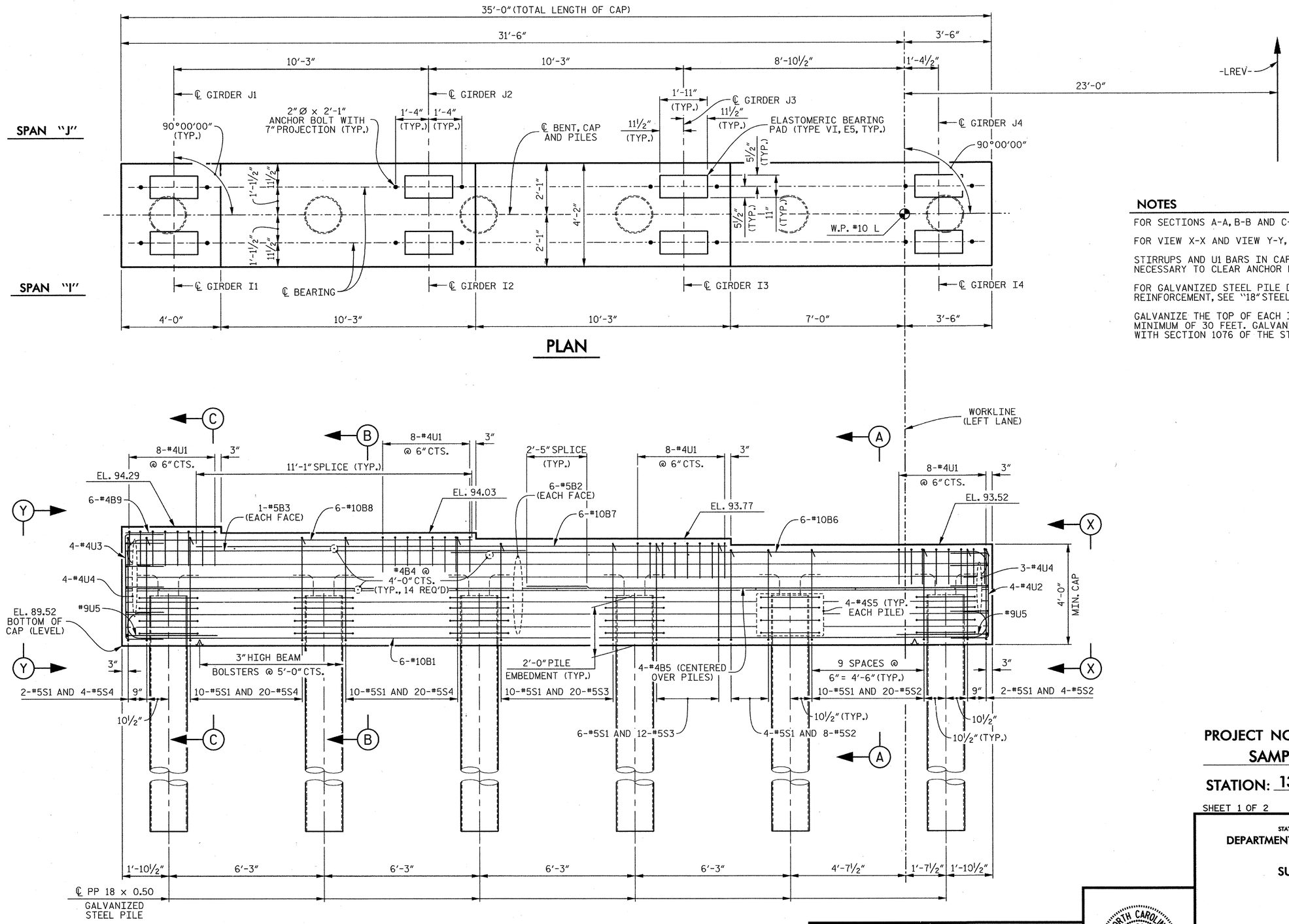


## NOTES

FOR SECTIONS A-A, B-B AND C-C, SEE SHEET 2 OF 2.

FOR VIEW X-X AND VIEW Y-Y, SEE SHEET 2 OF 2.

STIRRUPS AND U1 BARS IN CAP MAY BE SHIFTED AS NECESSARY TO CLEAR ANCHOR BOLTS.

FOR GALVANIZED STEEL PILE DETAILS AND REINFORCEMENT, SEE "18" STEEL PIPE PILE" SHEET.

GALVANIZE THE TOP OF EACH INTERIOR BENT PILE A MINIMUM OF 30 FEET. GALVANIZE IN ACCORDANCE WITH SECTION 1076 OF THE STANDARD SPECIFICATIONS.

PROJECT NO. R-2303D

SAMPSON COUNTY

STATION: 1311+58.00 -LREV-

SHEET 1 OF 2

STATE OF NORTH CAROLINA
DEPARTMENT OF TRANSPORTATION
RALEIGH

SUBSTRUCTURE

BENT 9

(LEFT LANE)

CDM Smith
Camp Dresser & McKee
421 Fayetteville Street, Suite 1303
Raleigh, NC 27604
NC COA No. F-1255

| | | | |
|---|---|---|---|
| DRAWN BY : | J.D. BORUTA | DATE : | 10-12 |
| CHECKED BY : | P.R. HOLSHOUSER | DATE : | 11-12 |
| DESIGN ENGINEER : | P.R. HOLSHOUSER | DATE : | 1-13 |

DWG. No. S01-063

NORTH CAROLINA PROFESSIONAL SEAL 20668 ENGINEER PAUL R. HOLSHOUSER 2/08/2013

| REVISIONS | | | | | | SHEET No. |
|---|---|---|---|---|---|---|
| No. | BY: | DATE: | No. | BY: | DATE: | S-63 |
| 1 | | | 3 | | | TOTAL SHEETS |
| 2 | | | 4 | | | 218 |

FILE: r:\ncdot\r2303d\structures\PLANS\Str_1\R2303D_SD_Str1_b91.dgn
DATE: 12/30/2012 9:08:33 PM

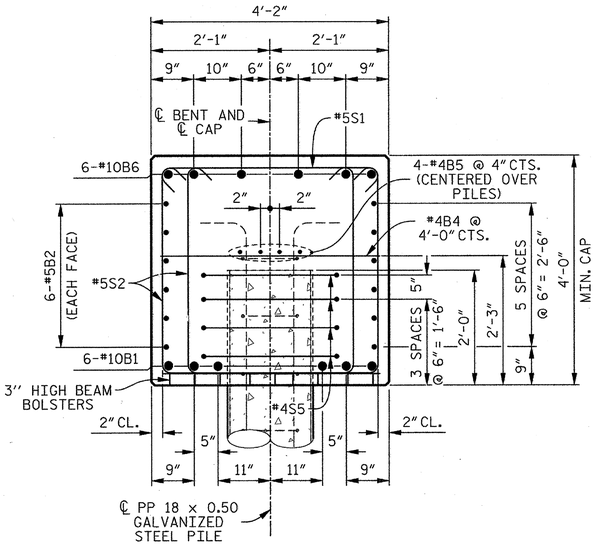


## SECTION A–A

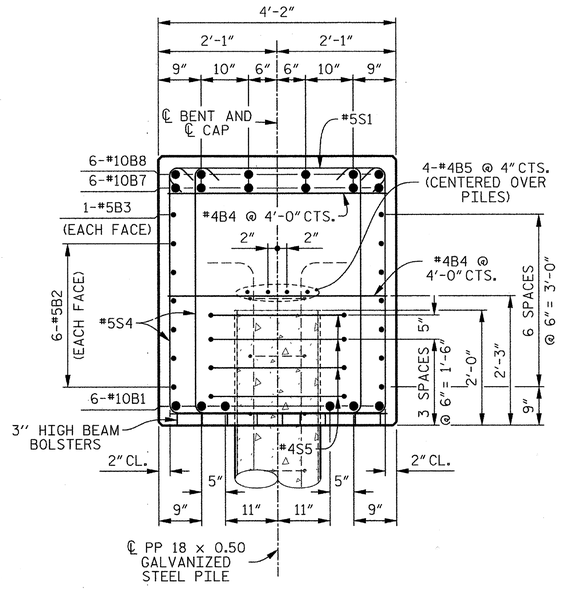


## SECTION B–B

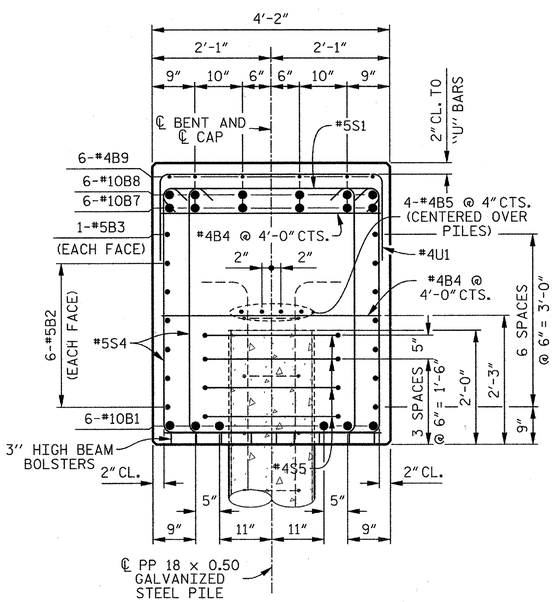


## SECTION C–C

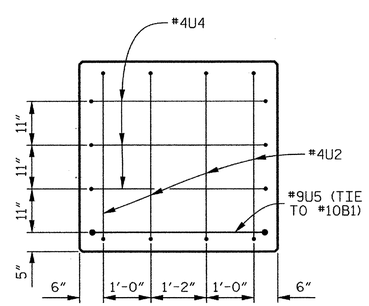


## END VIEW X–X

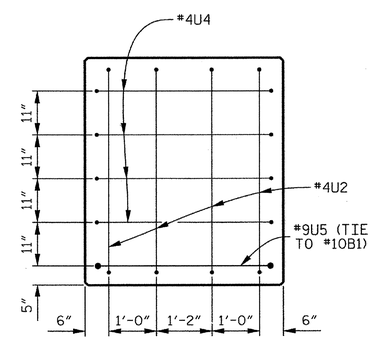


## END VIEW Y–Y

## BAR TYPES

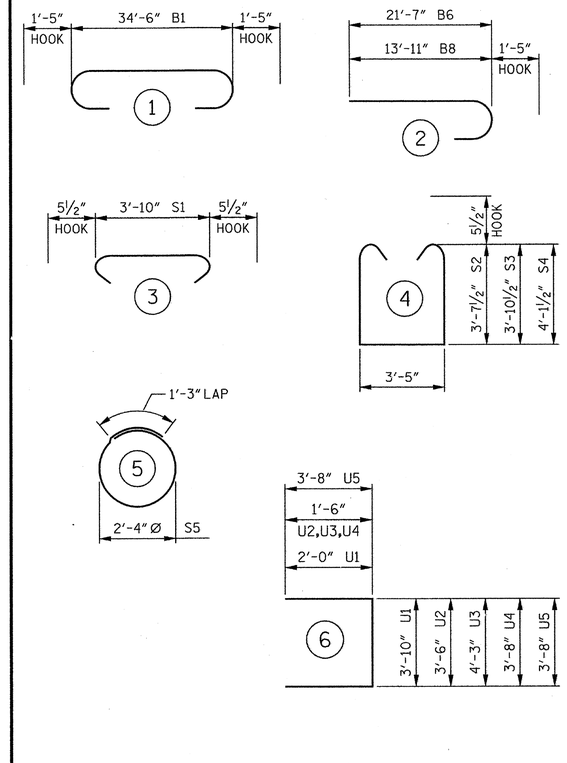


ALL BAR DIMENSIONS ARE OUT TO OUT.

## BILL OF MATERIAL

### BENT 9

| BAR | No. | SIZE | TYPE | LENGTH | WEIGHT |
|---|---|---|---|---|---|
| B1 | 6 | #10 | 1 | 37'- 4" | 964 |
| B2 | 12 | #5 | STR | 34'- 8" | 434 |
| B3 | 2 | #5 | STR | 16'- 1" | 34 |
| B4 | 14 | #4 | STR | 3'-10" | 36 |
| B5 | 8 | #4 | STR | 18'- 7" | 99 |
| B6 | 6 | #10 | 2 | 23'- 0" | 594 |
| B7 | 6 | #10 | STR | 21'- 4" | 551 |
| B8 | 6 | #10 | 2 | 15'- 4" | 396 |
| B9 | 6 | #4 | STR | 3'- 8" | 15 |
| S1 | 54 | #5 | 3 | 4'- 9" | 268 |
| S2 | 32 | #5 | 4 | 11'- 7" | 386 |
| S3 | 32 | #5 | 4 | 12'- 1" | 403 |
| S4 | 44 | #5 | 4 | 12'- 7" | 578 |
| S5 | 24 | #4 | 5 | 8'- 7" | 138 |
| U1 | 32 | #4 | 6 | 7'-10" | 167 |
| U2 | 4 | #4 | 6 | 6'- 6" | 17 |
| U3 | 4 | #4 | 6 | 7'- 4" | 19 |
| U4 | 7 | #4 | 6 | 6'- 8" | 31 |
| U5 | 2 | #9 | 6 | 11'- 0" | 75 |

REINFORCING STEEL 5,205 LBS.

CLASS "A" CONCRETE
POUR 1 CAP 22.8 CU. YDS.

PP 18 x 0.50 GALVANIZED STEEL PILES
6 REQUIRED 420 LIN. FT.

PIPE PILE PLATES
No. = 6

THE CONCRETE DISPLACED BY THE FILLED GALVANIZED STEEL PIPE PILES HAS BEEN DEDUCTED FROM THE QUANTITY OF CLASS "A" CONCRETE FOR THE BENT CAP.

REINFORCING STEEL FOR GALVANIZED STEEL PILES ARE NOT INCLUDED. SEE "18" STEEL PIPE PILE" SHEET FOR DETAILS.

PROJECT NO. R-2303D
SAMPSON COUNTY
STATION: 1311+58.00 –LREV–

SHEET 2 OF 2

STATE OF NORTH CAROLINA
DEPARTMENT OF TRANSPORTATION
RALEIGH

SUBSTRUCTURE

BENT 9

(LEFT LANE)

CDM Smith
Camp Dresser & McKee
421 Fayetteville Street, Suite 1303
Raleigh, NC 27604
NC COA No. F-1255

DRAWN BY : J.D. BORUTA DATE : 10-12
CHECKED BY : P.R. HOLSHOUSER DATE : 11-12
DESIGN ENGINEER : P.R. HOLSHOUSER DATE : 1-13

DWG. No. S01-064

NORTH CAROLINA PROFESSIONAL SEAL 20668 ENGINEER PAUL R. HOLSHOUSER 2/08/2013

| REVISIONS | | | | | | SHEET No. |
|---|---|---|---|---|---|---|
| No. | BY: | DATE: | No. | BY: | DATE: | S-64 |
| 1 | | | 3 | | | TOTAL SHEETS |
| 2 | | | 4 | | | 218 |

FILE: r:\models\2303d\structures\PLANS\Sr_1\R2303D_SD_Sr1_b92.dgn
DATE: 12/19/2012 9:35:31 AM

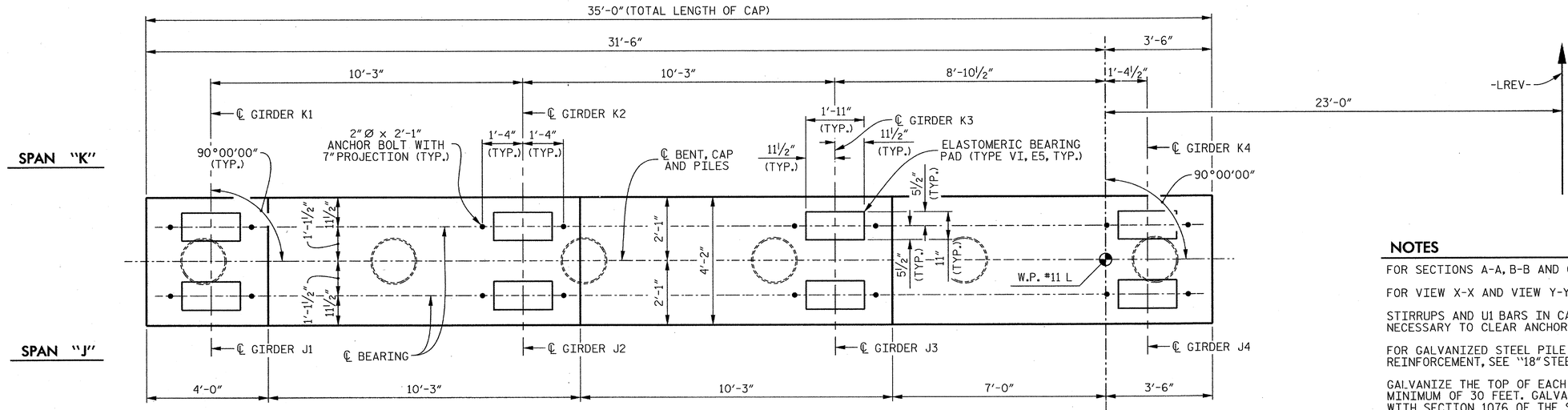


## PLAN

## NOTES

FOR SECTIONS A-A, B-B AND C-C, SEE SHEET 2 OF 2.

FOR VIEW X-X AND VIEW Y-Y, SEE SHEET 2 OF 2.

STIRRUPS AND U1 BARS IN CAP MAY BE SHIFTED AS NECESSARY TO CLEAR ANCHOR BOLTS.

FOR GALVANIZED STEEL PILE DETAILS AND REINFORCEMENT, SEE "18" STEEL PIPE PILE" SHEET.

GALVANIZE THE TOP OF EACH INTERIOR BENT PILE A MINIMUM OF 30 FEET. GALVANIZE IN ACCORDANCE WITH SECTION 1076 OF THE STANDARD SPECIFICATIONS.

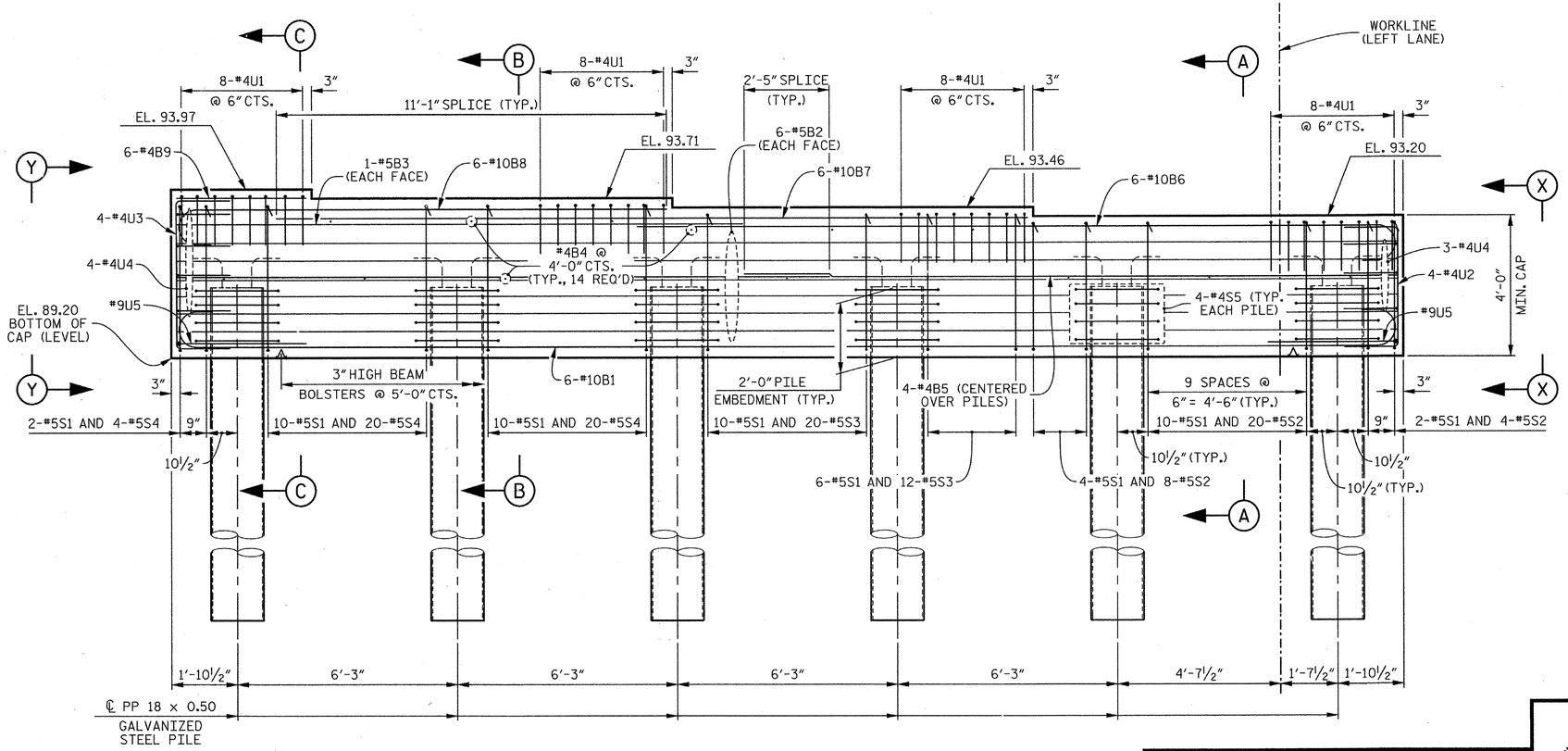


## ELEVATION

PROJECT NO. R-2303D

SAMPSON COUNTY

STATION: 1311+58.00 -LREV-

SHEET 1 OF 2

STATE OF NORTH CAROLINA
DEPARTMENT OF TRANSPORTATION
RALEIGH

SUBSTRUCTURE

BENT 10

(LEFT LANE)

CDM Smith
Camp Dresser & McKee
421 Fayetteville Street, Suite 1303
Raleigh, NC 27604
NC COA No. F-1255

DRAWN BY : J.D. BORUTA DATE : 10-12
CHECKED BY : P.R. HOLSHOUSER DATE : 11-12
DESIGN ENGINEER : P.R. HOLSHOUSER DATE : 1-13

DWG. No. S01-065

NORTH CAROLINA PROFESSIONAL SEAL 20668 ENGINEER PAUL R. HOLSHOUSER 1/09/2013

| REVISIONS | | | | | | |
|---|---|---|---|---|---|---|
| No. | BY: | DATE: | No. | BY: | DATE: | |
| 1 | | | 3 | | | |
| 2 | | | 4 | | | |

SHEET No. S-65

TOTAL SHEETS 218

FILE: r:\models\2303d\structures\PLANS\Br_1\R2303D_S0_Br1_b101.dgn
DATE: 12/20/2012 9:08:38 PM

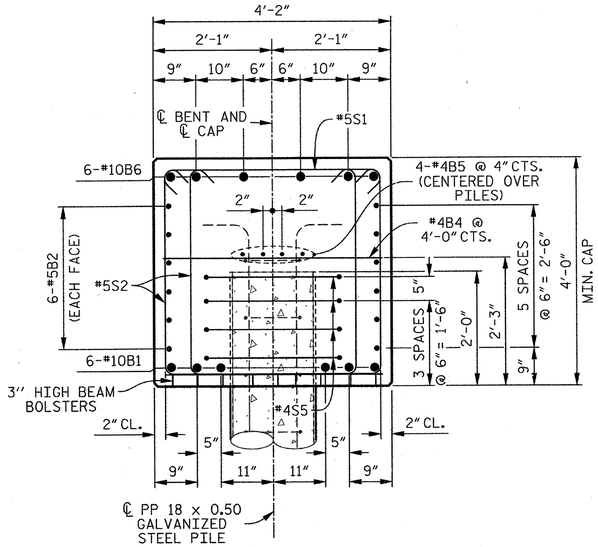


## SECTION A–A

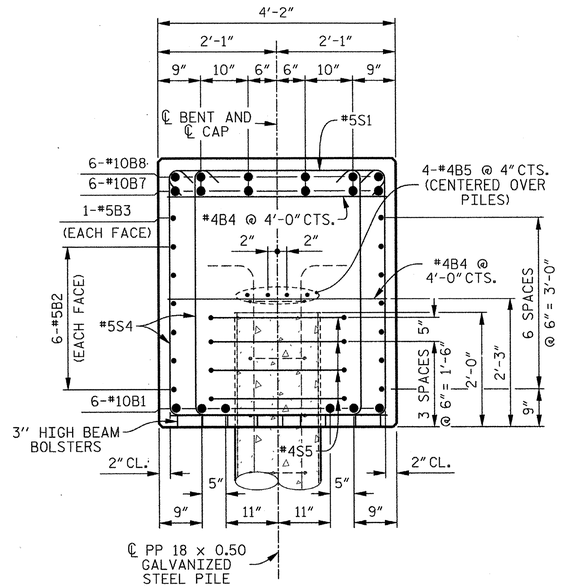


## SECTION B–B

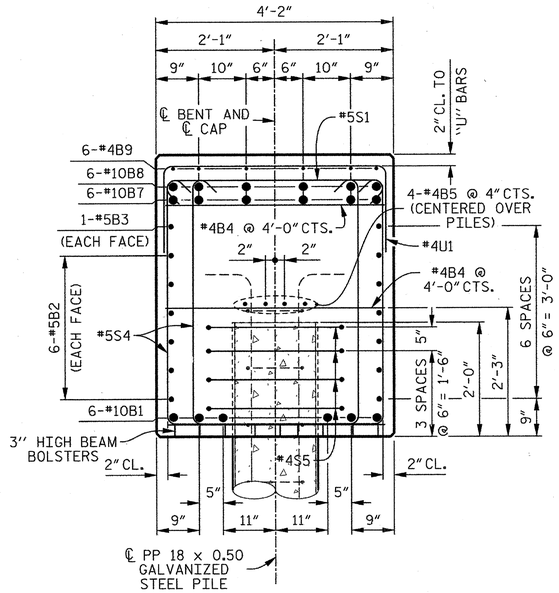


## SECTION C–C

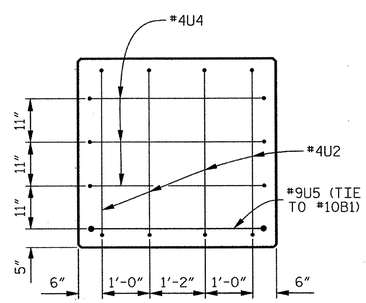


## END VIEW X–X

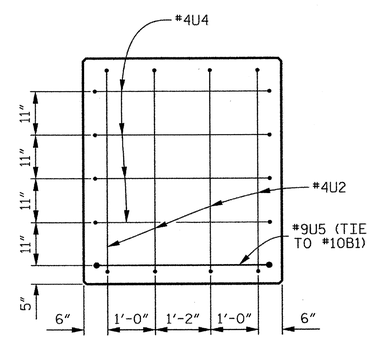


## END VIEW Y–Y

## BAR TYPES

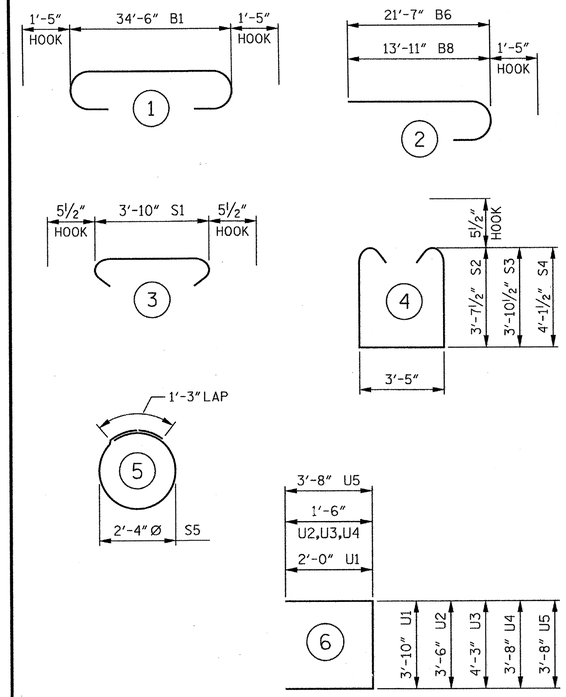


ALL BAR DIMENSIONS ARE OUT TO OUT.

## BILL OF MATERIAL

### BENT 10

| BAR | No. | SIZE | TYPE | LENGTH | WEIGHT |
|---|---|---|---|---|---|
| B1 | 6 | #10 | 1 | 37'- 4" | 964 |
| B2 | 12 | #5 | STR | 34'- 8" | 434 |
| B3 | 2 | #5 | STR | 16'- 1" | 34 |
| B4 | 14 | #4 | STR | 3'-10" | 36 |
| B5 | 8 | #4 | STR | 18'- 7" | 99 |
| B6 | 6 | #10 | 2 | 23'- 0" | 594 |
| B7 | 6 | #10 | STR | 21'- 4" | 551 |
| B8 | 6 | #10 | 2 | 15'- 4" | 396 |
| B9 | 6 | #4 | STR | 3'- 8" | 15 |
| S1 | 54 | #5 | 3 | 4'- 9" | 268 |
| S2 | 32 | #5 | 4 | 11'- 7" | 386 |
| S3 | 32 | #5 | 4 | 12'- 1" | 403 |
| S4 | 44 | #5 | 4 | 12'- 7" | 578 |
| S5 | 24 | #4 | 5 | 8'- 7" | 138 |
| U1 | 32 | #4 | 6 | 7'-10" | 167 |
| U2 | 4 | #4 | 6 | 6'- 6" | 17 |
| U3 | 4 | #4 | 6 | 7'- 4" | 19 |
| U4 | 7 | #4 | 6 | 6'- 8" | 31 |
| U5 | 2 | #9 | 6 | 11'- 0" | 75 |

REINFORCING STEEL 5,205 LBS.

CLASS "A" CONCRETE
POUR 1 CAP 22.8 CU. YDS.

PP 18 x 0.50 GALVANIZED STEEL PILES
6 REQUIRED 330 LIN. FT.

PIPE PILE PLATES
No. = 6

THE CONCRETE DISPLACED BY THE FILLED GALVANIZED STEEL PIPE PILES HAS BEEN DEDUCTED FROM THE QUANTITY OF CLASS "A" CONCRETE FOR THE BENT CAP.

REINFORCING STEEL FOR GALVANIZED STEEL PILES ARE NOT INCLUDED. SEE "18" STEEL PIPE PILE" SHEET FOR DETAILS.

PROJECT NO. R-2303D
SAMPSON COUNTY
STATION: 1311+58.00 -LREV-

SHEET 2 OF 2

STATE OF NORTH CAROLINA
DEPARTMENT OF TRANSPORTATION
RALEIGH

SUBSTRUCTURE

BENT 10

(LEFT LANE)

CDM Smith
Camp Dresser & McKee
421 Fayetteville Street, Suite 1303
Raleigh, NC 27604
NC COA No. F-1255

DRAWN BY : J.D. BORUTA DATE : 10-12
CHECKED BY : P.R. HOLSHOUSER DATE : 11-12
DESIGN ENGINEER : P.R. HOLSHOUSER DATE : 1-13

DWG. No. S01-066

NORTH CAROLINA PROFESSIONAL SEAL 20668 ENGINEER P. PAUL R. HOLSHOUSER 2/08/2013

| REVISIONS | | | | | | | | SHEET No. |
|---|---|---|---|---|---|---|---|---|
| No. | BY: | DATE: | No. | BY: | DATE: | | | S-06 |
| 1 | | | 3 | | | | | TOTAL SHEETS |
| 2 | | | 4 | | | | | 218 |

FILE: n:\rodoh\r2303d\structures\PLANS\Str_1\R2303D_S02_Sht_b\I02.dgn
DATE: 12/20/2012 9:08:41 PM

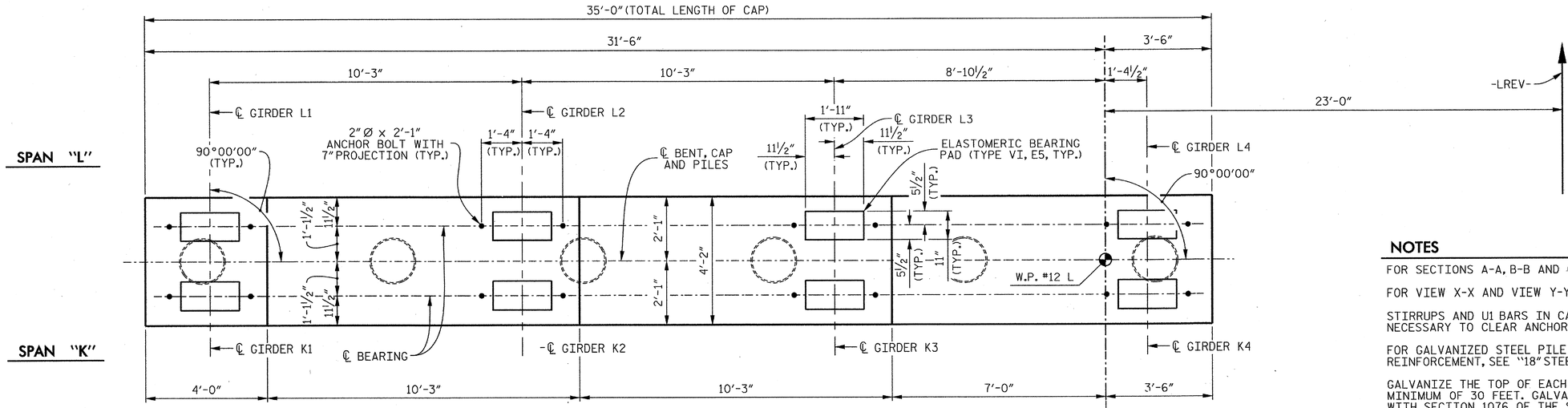


## PLAN

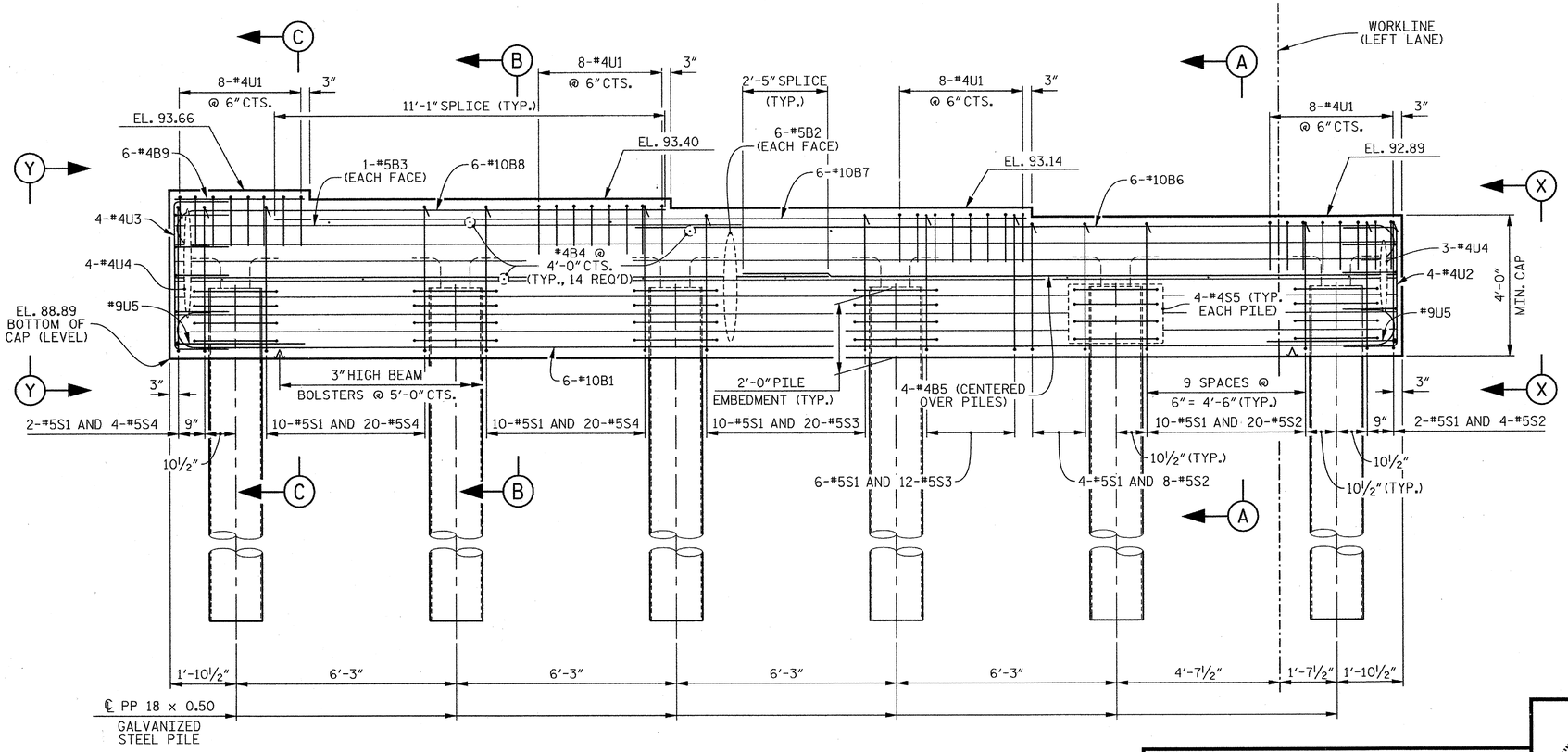


## ELEVATION

## NOTES

FOR SECTIONS A-A, B-B AND C-C, SEE SHEET 2 OF 2.

FOR VIEW X-X AND VIEW Y-Y, SEE SHEET 2 OF 2.

STIRRUPS AND U1 BARS IN CAP MAY BE SHIFTED AS NECESSARY TO CLEAR ANCHOR BOLTS.

FOR GALVANIZED STEEL PILE DETAILS AND REINFORCEMENT, SEE "18" STEEL PIPE PILE" SHEET.

GALVANIZE THE TOP OF EACH INTERIOR BENT PILE A MINIMUM OF 30 FEET. GALVANIZE IN ACCORDANCE WITH SECTION 1076 OF THE STANDARD SPECIFICATIONS.

PROJECT NO. R-2303D

SAMPSON COUNTY

STATION: 1311+58.00 -LREV-

SHEET 1 OF 2

STATE OF NORTH CAROLINA
DEPARTMENT OF TRANSPORTATION
RALEIGH

SUBSTRUCTURE

BENT 11

(LEFT LANE)

CDM Smith
Camp Dresser & McKee
421 Fayetteville Street, Suite 1303
Raleigh, NC 27604
NC COA No. F-1255

| | | | |
|---|---|---|---|
| DRAWN BY : | J.D. BORUTA | DATE : | 10-12 |
| CHECKED BY : | P.R. HOLSHOUSER | DATE : | 11-12 |
| DESIGN ENGINEER : | P.R. HOLSHOUSER | DATE : | 1-13 |

DWG. No. S01-067

NORTH CAROLINA PROFESSIONAL SEAL 20668 ENGINEER PAUL R. HOLSHOUSER 2/08/2013

| REVISIONS | | | | | | SHEET No. |
|---|---|---|---|---|---|---|
| No. | BY: | DATE: | No. | BY: | DATE: | S-67 |
| 1 | | | 3 | | | TOTAL SHEETS |
| 2 | | | 4 | | | 218 |

FILE: r:\radar\r2303d\structures\PLANS\Str_1\R2303D_SD_Str1_b111.dgn
DATE: 12/30/2012 9:08:43 PM

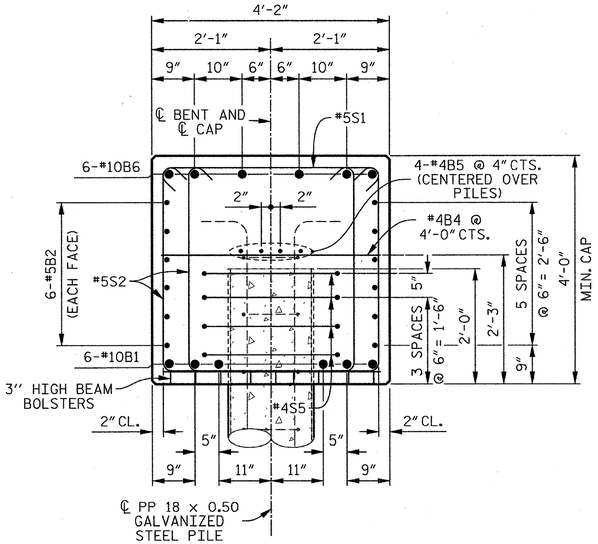


## SECTION A–A

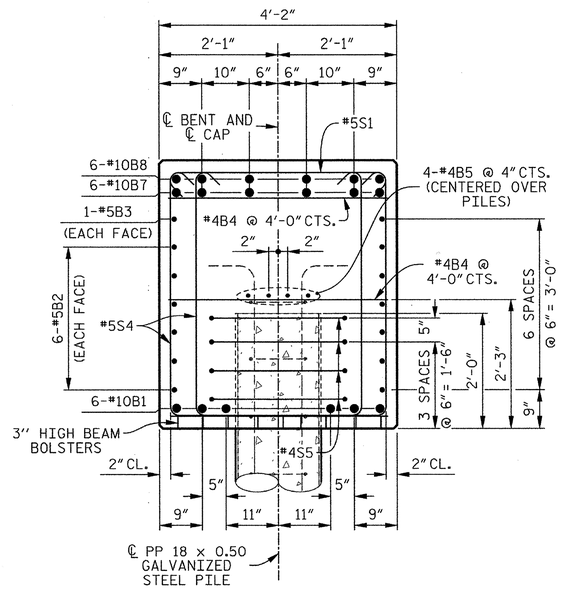


## SECTION B–B

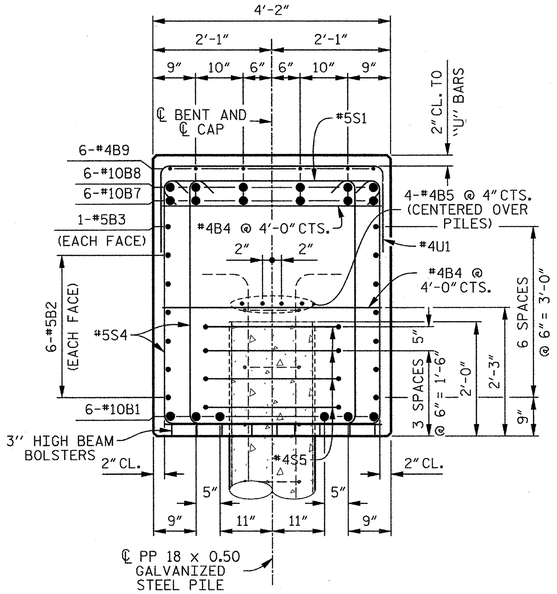


## SECTION C–C

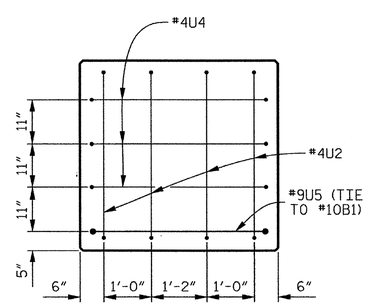


## END VIEW X–X

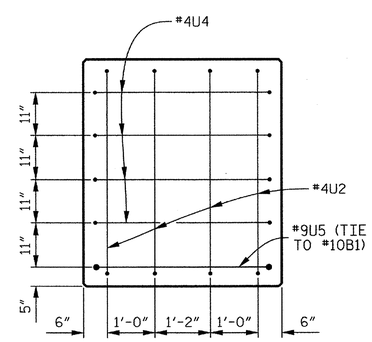


## END VIEW Y–Y

## BAR TYPES

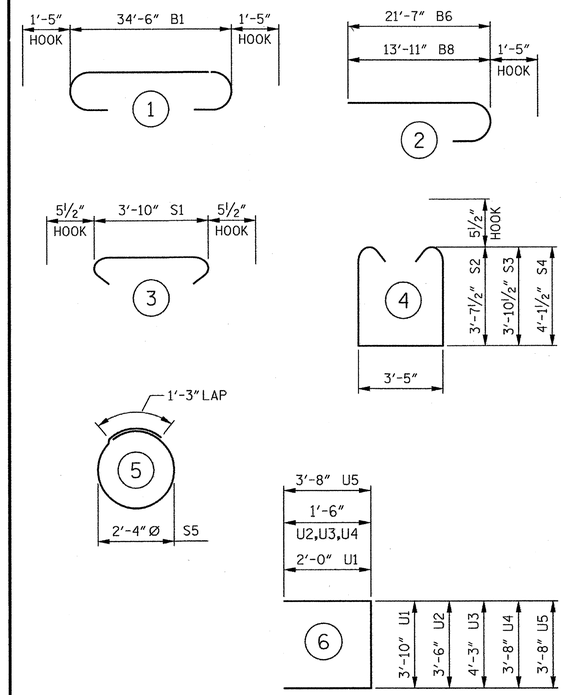


ALL BAR DIMENSIONS ARE OUT TO OUT.

## BILL OF MATERIAL

### BENT 11

| BAR | No. | SIZE | TYPE | LENGTH | WEIGHT |
|---|---|---|---|---|---|
| B1 | 6 | #10 | 1 | 37'- 4" | 964 |
| B2 | 12 | #5 | STR | 34'- 8" | 434 |
| B3 | 2 | #5 | STR | 16'- 1" | 34 |
| B4 | 14 | #4 | STR | 3'-10" | 36 |
| B5 | 8 | #4 | STR | 18'- 7" | 99 |
| B6 | 6 | #10 | 2 | 23'- 0" | 594 |
| B7 | 6 | #10 | STR | 21'- 4" | 551 |
| B8 | 6 | #10 | 2 | 15'- 4" | 396 |
| B9 | 6 | #4 | STR | 3'- 8" | 15 |
| S1 | 54 | #5 | 3 | 4'- 9" | 268 |
| S2 | 32 | #5 | 4 | 11'- 7" | 386 |
| S3 | 32 | #5 | 4 | 12'- 1" | 403 |
| S4 | 44 | #5 | 4 | 12'- 7" | 578 |
| S5 | 24 | #4 | 5 | 8'- 7" | 138 |
| U1 | 32 | #4 | 6 | 7'-10" | 167 |
| U2 | 4 | #4 | 6 | 6'- 6" | 17 |
| U3 | 4 | #4 | 6 | 7'- 4" | 19 |
| U4 | 7 | #4 | 6 | 6'- 8" | 31 |
| U5 | 2 | #9 | 6 | 11'- 0" | 75 |

REINFORCING STEEL 5,205 LBS.

CLASS "A" CONCRETE
POUR 1 CAP 22.8 CU. YDS.

PP 18 x 0.50 GALVANIZED STEEL PILES
6 REQUIRED 450 LIN. FT.

PIPE PILE PLATES
No. = 6

THE CONCRETE DISPLACED BY THE FILLED GALVANIZED STEEL PIPE PILES HAS BEEN DEDUCTED FROM THE QUANTITY OF CLASS "A" CONCRETE FOR THE BENT CAP.

REINFORCING STEEL FOR GALVANIZED STEEL PILES ARE NOT INCLUDED. SEE "18" STEEL PIPE PILE" SHEET FOR DETAILS.

PROJECT NO. R-2303D
SAMPSON COUNTY
STATION: 1311+58.00 -LREV-

SHEET 2 OF 2

STATE OF NORTH CAROLINA
DEPARTMENT OF TRANSPORTATION
RALEIGH

SUBSTRUCTURE

BENT 11

(LEFT LANE)

CDM Smith
Camp Dresser & McKee
421 Fayetteville Street, Suite 1303
Raleigh, NC 27604
NC COA No. F-1255

DRAWN BY : J.D. BORUTA DATE : 10-12
CHECKED BY : P.R. HOLSHOUSER DATE : 11-12
DESIGN ENGINEER : P.R. HOLSHOUSER DATE : 1-13

DWG. No. S01-068

NORTH CAROLINA PROFESSIONAL SEAL 20668 ENGINEER PAUL R. HOLSHOUSER
12/31/2013

| REVISIONS | | | | | | SHEET No. |
|---|---|---|---|---|---|---|
| No. | BY: | DATE: | No. | BY: | DATE: | S-28 |
| 1 | | | 3 | | | TOTAL SHEETS |
| 2 | | | 4 | | | 218 |

FILE: n:\radsf\2303d\structures\PLANS\Sv_T\R2303D_S2_Sv1_bT12.dgn
DATE: 12/20/2012 9:08:46 PM

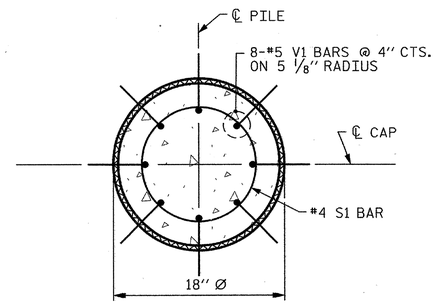


## PLAN

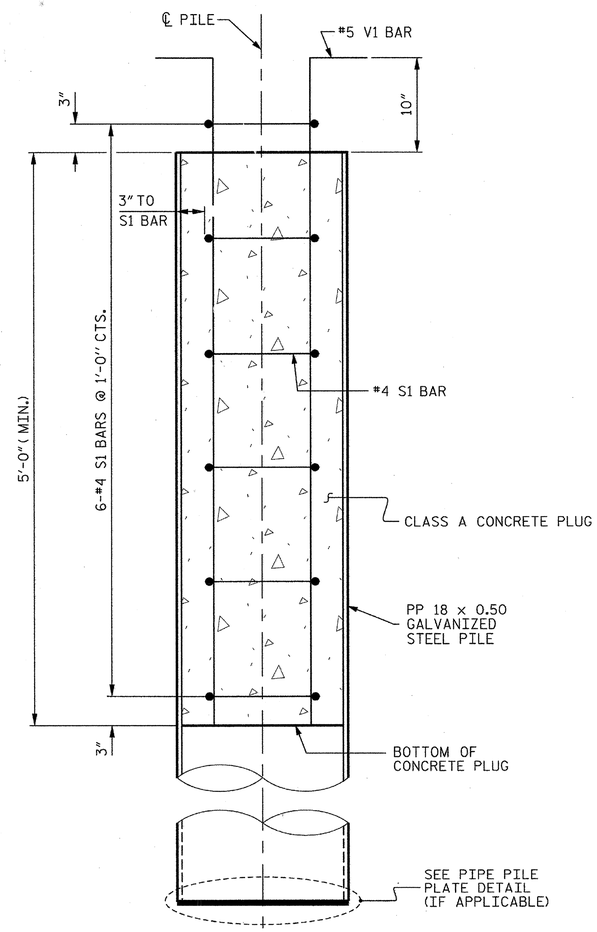


## ELEVATION

## PP 18 x 0.50 GALVANIZED STEEL PILE

## NOTES

PIPE PILES SHALL BE IN ACCORDANCE WITH SECTION 1084 OF THE STANDARD SPECIFICATIONS.

GALVANIZE STEEL PIPE PILES IN ACCORDANCE WITH SECTION 1076 OF THE STANDARD SPECIFICATIONS UNLESS METALLIZING IS REQUIRED. GALVANIZING OR METALLIZING PIPE PILE PLATES IS NOT REQUIRED.

PIPE PILE PLATES, IF REQUIRED, SHALL BE IN ACCORDANCE WITH SECTION 450 OF THE STANDARD SPECIFICATIONS.

REMOVE AND REPLACE OR REPAIR TO THE SATISFACTION OF THE ENGINEER PILES THAT ARE DAMAGED, DEFORMED OR COLLAPSED DURING INSTALLATION OR DRIVING.

PILE SPLICES SHALL BE IN ACCORDANCE WITH THE STANDARD SPECIFICATIONS AND AWS D1.1.

FOR CLOSED END PIPE PILES, REMOVE ALL SOIL AND WATER FROM INSIDE THE PILES JUST PRIOR TO PLACING REINFORCING STEEL AND CONCRETE FOR THE CONCRETE PLUG.

FOR OPEN END PIPE PILES, REMOVE ENOUGH SOIL AND WATER FROM INSIDE THE PILES TO CONSTRUCT THE CONCRETE PLUG WITHOUT FOULING THE CONCRETE.

FORM THE CONCRETE PLUG SUCH THAT THE REINFORCING STEEL OR CONCRETE DOES NOT MOVE AND THE CLEARANCE FROM THE REINFORCING STEEL TO THE INSIDE OF THE PILE IS MAINTAINED AFTER CONCRETE PLACEMENT. DO NOT PLACE CONCRETE IN THE BENT CAP UNTIL THE CONCRETE PLUG HAS ATTAINED A MINIMUM COMPRESSIVE STRENGTH OF 1500 PSI.

THE REINFORCING STEEL, CLASS A CONCRETE, AND GALVANIZING ARE CONSIDERED INCIDENTAL TO THE CONTRACT UNIT PRICE BID PER LINEAR FOOT FOR PP 18 x 0.50 GALVANIZED STEEL PILES.

PIPE PILE PLATES MAY BE REQUIRED FOR STEEL PIPE PILES AT BENT 1 THRU BENT 11. THE ENGINEER WILL DETERMINE THE NEED FOR PIPE PILES PLATES AFTER DRIVING TEST PILES OR A FEW INITIAL PRODUCTION PILES. USE PIPE PILE PLATES WITH A DIAMETER EQUAL TO THE PIPE PILE DIAMETER. FOR STEEL PIPE PILE PLATES, SEE SECTION 450 OF THE STANDARD SPECIFICATIONS.

## BILL OF MATERIAL FOR ONE PP 18 x 0.50 GALVANIZED STEEL PILE

| BAR | No. | SIZE | TYPE | LENGTH | WEIGHT |
|---|---|---|---|---|---|
| S1 | 6 | #4 | 1 | 4'-5" | 18 |
| | | | | | |
| V1 | 8 | #5 | 2 | 6'-8" | 56 |
| | | | | | |
| REINFORCING STEEL | | | | | 74 LBS. |
| | | | | | |
| CLASS A CONCRETE | | | | | |
| 5'-0" MINIMUM PLUG | | | | | 0.3 CU. YDS. |

## BAR TYPES

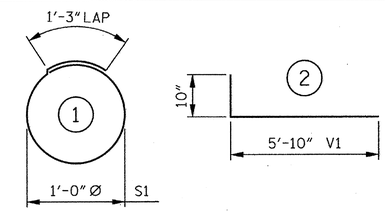


ALL BAR DIMENSIONS ARE OUT TO OUT.

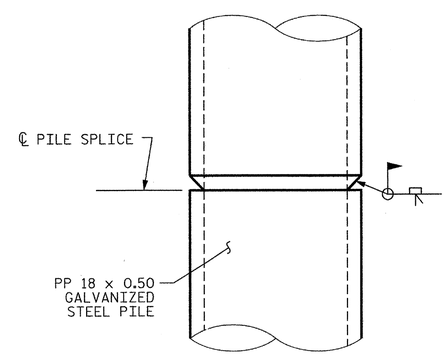


## PIPE PILE SPLICE DETAIL

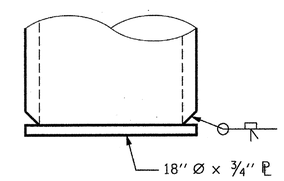


## PIPE PILE PLATE DETAIL

(IF APPLICABLE)

PROJECT NO. R-2303D

SAMPSON COUNTY

STATION: 1311+58.00 -LREV-

STATE OF NORTH CAROLINA
DEPARTMENT OF TRANSPORTATION
RALEIGH

STANDARD

18" STEEL PIPE PILE

(LEFT LANE)

CDM Smith
Camp Dresser & McKee
421 Fayetteville Street, Suite 1303
Raleigh, NC 27604
NC COA No. F-1255

DRAWN BY : J.D. BORUTA DATE : 10-12
CHECKED BY : P.R. HOLSHOUSER DATE : 10-12
DESIGN ENGINEER : P.R. HOLSHOUSER DATE : 1-13

DWG. No. S01-069

NORTH CAROLINA PROFESSIONAL SEAL 20668 ENGINEER PAUL R. HOLSHOUSER 2/05/2013

| REVISIONS | | | | | | | SHEET No. |
|---|---|---|---|---|---|---|---|
| No. | BY: | DATE: | No. | BY: | DATE: | | S-69 |
| 1 | | | 3 | | | | TOTAL SHEETS |
| 2 | | | 4 | | | | 218 |

STD. No. SPP3

ASSEMBLED BY : J.D. BORUTA DATE : 10-12
CHECKED BY : P.R. HOLSHOUSER DATE : 10-12

DRAWN BY : RWW 1/01
CHECKED BY : LES 1/01

REV. 10/1/05 LBG/TLA
REV. 5/1/06R MAA/KMM
REV. 10/1/11 MAA/GM

FILE: r:\roadw\r2303d\structures\PLANS\Str_11\R2303D_SD_SP1_appl.dgn
DATE: 12/05/2012 9:08:48 PM

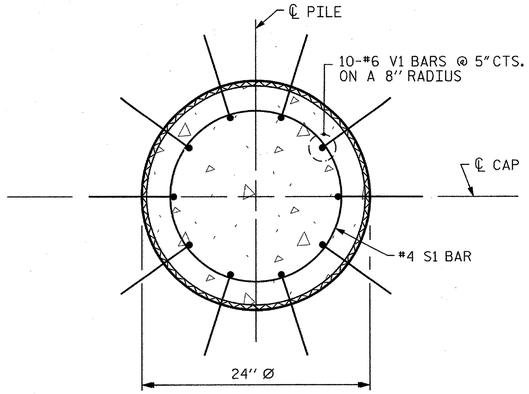


## PLAN

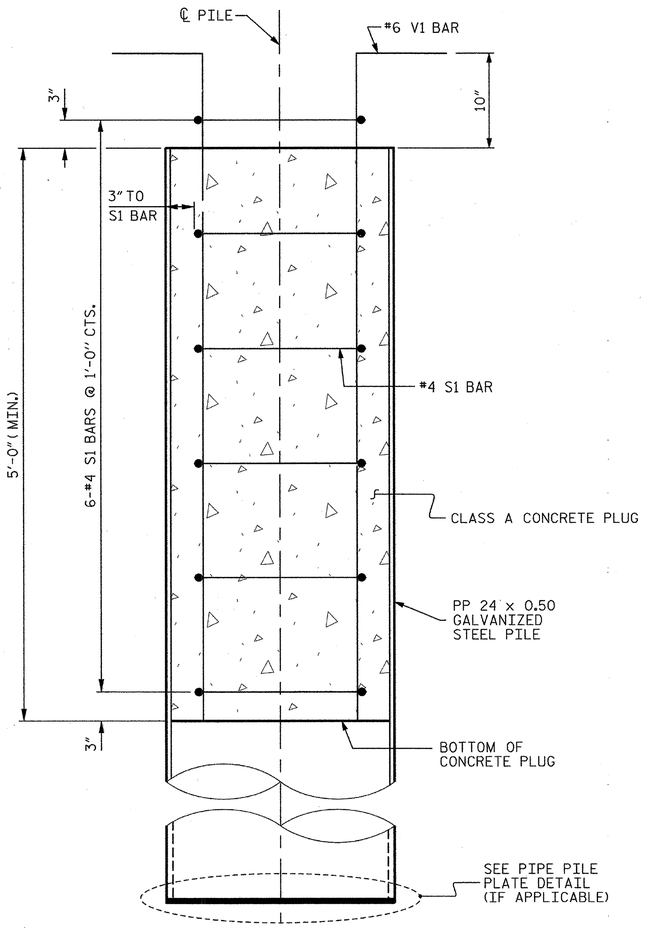


## ELEVATION

## PP 24 x 0.50 GALVANIZED STEEL PILE

## NOTES

PIPE PILES SHALL BE IN ACCORDANCE WITH SECTION 1084 OF THE STANDARD SPECIFICATIONS.

GALVANIZE STEEL PIPE PILES IN ACCORDANCE WITH SECTION 1076 OF THE STANDARD SPECIFICATIONS UNLESS METALLIZING IS REQUIRED. GALVANIZING OR METALLIZING PIPE PILE PLATES IS NOT REQUIRED.

PIPE PILE PLATES, IF REQUIRED, SHALL BE IN ACCORDANCE WITH SECTION 450 OF THE STANDARD SPECIFICATIONS.

REMOVE AND REPLACE OR REPAIR TO THE SATISFACTION OF THE ENGINEER PILES THAT ARE DAMAGED, DEFORMED OR COLLAPSED DURING INSTALLATION OR DRIVING.

PILE SPLICES SHALL BE IN ACCORDANCE WITH THE STANDARD SPECIFICATIONS AND AWS D1.1.

FOR CLOSED END PIPE PILES, REMOVE ALL SOIL AND WATER FROM INSIDE THE PILES JUST PRIOR TO PLACING REINFORCING STEEL AND CONCRETE FOR THE CONCRETE PLUG.

FOR OPEN END PIPE PILES, REMOVE ENOUGH SOIL AND WATER FROM INSIDE THE PILES TO CONSTRUCT THE CONCRETE PLUG WITHOUT FOULING THE CONCRETE.

FORM THE CONCRETE PLUG SUCH THAT THE REINFORCING STEEL OR CONCRETE DOES NOT MOVE AND THE CLEARANCE FROM THE REINFORCING STEEL TO THE INSIDE OF THE PILE IS MAINTAINED AFTER CONCRETE PLACEMENT. DO NOT PLACE CONCRETE IN THE BENT CAP UNTIL THE CONCRETE PLUG HAS ATTAINED A MINIMUM COMPRESSIVE STRENGTH OF 1500 PSI.

THE REINFORCING STEEL, CLASS A CONCRETE, AND GALVANIZING ARE CONSIDERED INCIDENTAL TO THE CONTRACT UNIT PRICE BID PER LINEAR FOOT FOR PP 24 X 0.50 GALVANIZED STEEL PILES.

PIPE PILE PLATES MAY BE REQUIRED FOR STEEL PIPE PILES AT BENT 1 THRU BENT 11. THE ENGINEER WILL DETERMINE THE NEED FOR PIPE PILES PLATES AFTER DRIVING TEST PILES OR A FEW INITIAL PRODUCTION PILES. USE PIPE PILE PLATES WITH A DIAMETER EQUAL TO THE PIPE PILE DIAMETER. FOR STEEL PIPE PILE PLATES, SEE SECTION 450 OF THE STANDARD SPECIFICATIONS.

## BILL OF MATERIAL FOR ONE PP 24 x 0.50 GALVANIZED STEEL PILE

| BAR | NO. | SIZE | TYPE | LENGTH | WEIGHT |
|---|---|---|---|---|---|
| S1 | 6 | #4 | 1 | 6'-0" | 24 |
| V1 | 10 | #6 | 2 | 6'-8" | 100 |
| REINFORCING STEEL | | | | | 124 LBS. |
| CLASS A CONCRETE | | | | | |
| 5'-0" MINIMUM PLUG | | | | | 0.5 CU. YDS. |

## BAR TYPES

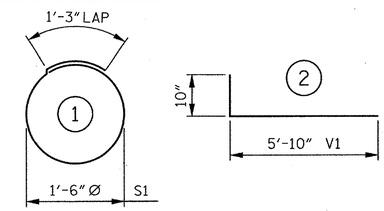


ALL BAR DIMENSIONS ARE OUT TO OUT.

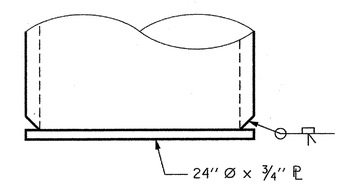


## PIPE PILE PLATE DETAIL

(IF APPLICABLE)

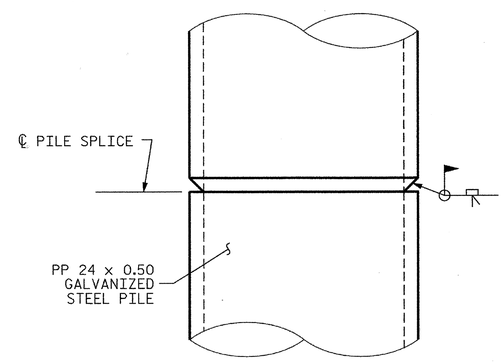


## PIPE PILE SPLICE DETAIL

PROJECT NO. R-2303D

SAMPSON COUNTY

STATION: 1311+58.00 -LREV-

STATE OF NORTH CAROLINA
DEPARTMENT OF TRANSPORTATION
RALEIGH

STANDARD

24" STEEL PIPE PILE

(LEFT LANE)

CDM Smith
Camp Dresser & McKee
421 Fayetteville Street, Suite 1303
Raleigh, NC 27604
NC COA No. F-1255

| | | | |
|---|---|---|---|
| DRAWN BY : | J.D. BORUTA | DATE : | 10-12 |
| CHECKED BY : | P.R. HOLSHOUSER | DATE : | 10-12 |
| DESIGN ENGINEER : | P.R. HOLSHOUSER | DATE : | 1-13 |

DWG. No. S01-070

NORTH CAROLINA PROFESSIONAL SEAL 20668 ENGINEER PAUL R. HOLSHOUSER 2/08/2013

| REVISIONS | | | | | | | | SHEET No. |
|---|---|---|---|---|---|---|---|---|
| No. | BY: | DATE: | No. | BY: | DATE: | | | S-70 |
| 1 | | | 3 | | | | | TOTAL SHEETS |
| 2 | | | 4 | | | | | 218 |

| | | | |
|---|---|---|---|
| ASSEMBLED BY : | J.D. BORUTA | DATE : | 10-12 |
| CHECKED BY : | P.R. HOLSHOUSER | DATE : | 10-12 |
| DRAWN BY : TLA 8/05 | ADDED 10/1/05 | | |
| CHECKED BY : GM 9/05 | REV. 5/1/06R | MAA/KMM | |
| | REV. 10/1/11 | MAA/GM | |

FILE: r:\models\2303d\structures\PLANS\Dir_1\R2303D_S0_Sht_sspp2.dgn
DATE: 12/20/2012 9:08:49 PM

SPP4

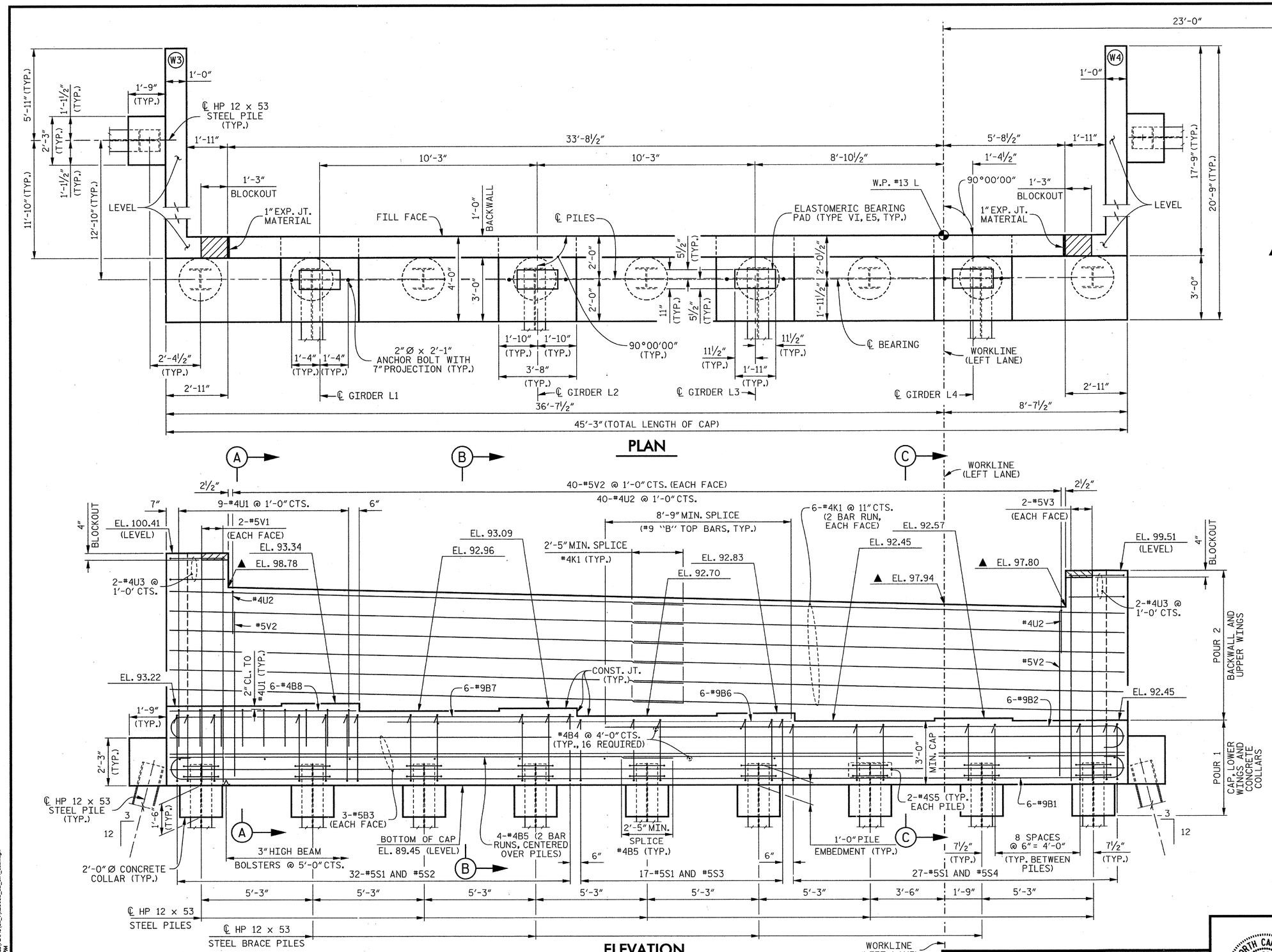


## PLAN




## ELEVATION

## NOTES

THE CONCRETE IN THE SHADED AREA OF THE WING SHALL BE POURED AFTER THE BARRIER RAIL IS CAST IF SLIP FORMING IS USED.

THE CONTRACTOR SHALL PROVIDE FOR INSTALLATION OF THE 4" DIAMETER DRAIN PIPE THROUGH THE WING WALL AS REQUIRED FOR REINFORCED BRIDGE APPROACH FILLS. SEE THE ROADWAY PLANS. REINFORCING STEEL IN THE WING WALL MAY BE SHIFTED AS NECESSARY TO CLEAR THE DRAIN PIPE.

PROJECT NO. R-2303D

SAMPSON COUNTY

STATION: 1311+58.00 -LREV-

SHEET 1 OF 3

STATE OF NORTH CAROLINA
DEPARTMENT OF TRANSPORTATION
RALEIGH

SUBSTRUCTURE

END BENT 2

(LEFT LANE)

CDM Smith

Camp Dresser & McKee
421 Fayetteville Street, Suite 1303
Raleigh, NC 27604
NC COA No. F-1255

| | | | |
|---|---|---|---|
| DRAWN BY : | K.E. LOFTON | DATE : | 10-12 |
| CHECKED BY : | P.R. HOLSHOUSER | DATE : | 10-12 |
| DESIGN ENGINEER : | P.R. HOLSHOUSER | DATE : | 1-13 |

DWG. No. S01-071

NORTH CAROLINA PROFESSIONAL SEAL 20668 ENGINEER PAUL R. HOLSHOUSER 10/08/2013

| REVISIONS | | | | | | | | SHEET No. |
|---|---|---|---|---|---|---|---|---|
| No. | BY: | DATE: | No. | BY: | DATE: | | | S-71 |
| 1 | | | 3 | | | | | TOTAL SHEETS |
| 2 | | | 4 | | | | | 218 |

FILE: n:\radon\2303d\structural\PLANS\Str_T1R2303D_S01_Sm1_ab21.dgn
DATE: 12/20/2012 9:08:50 PM

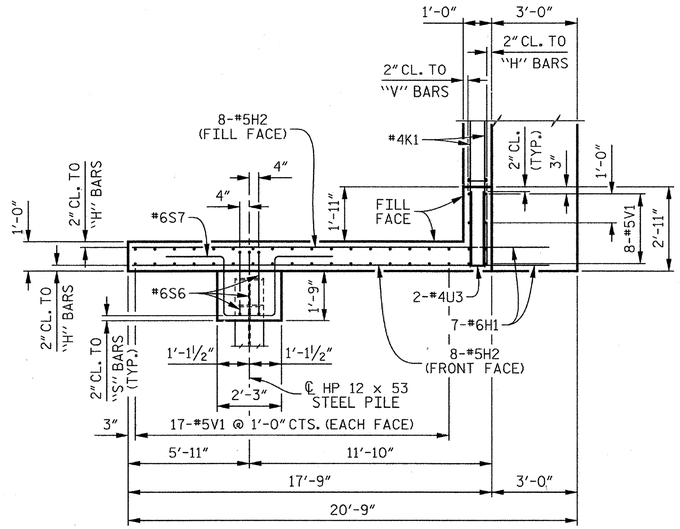


## PLAN OF WING (W3)

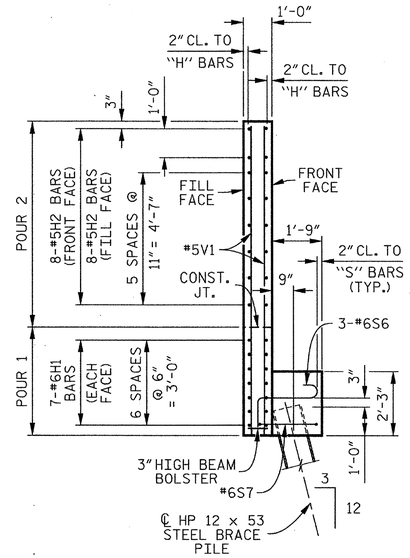


## SECTION D–D

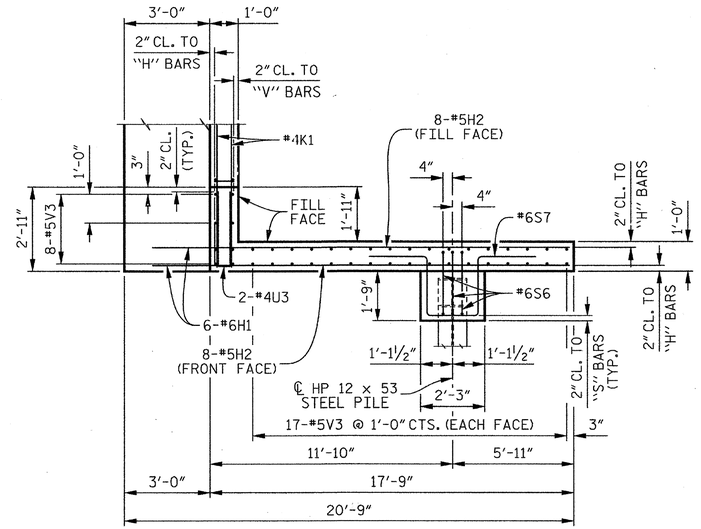


## PLAN OF WING (W4)

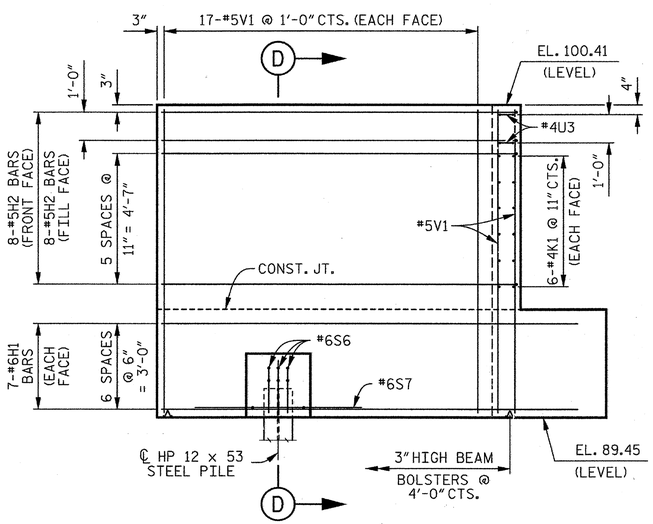


## ELEVATION OF WING (W3)

NOTE:
FOR ADDITIONAL WING PILE DIMENSION, SEE "GENERAL DRAWING FOUNDATION LAYOUT", SHEET 6 OF 7.

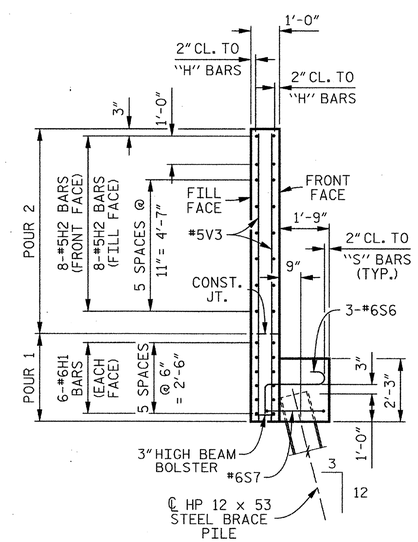


## SECTION E–E

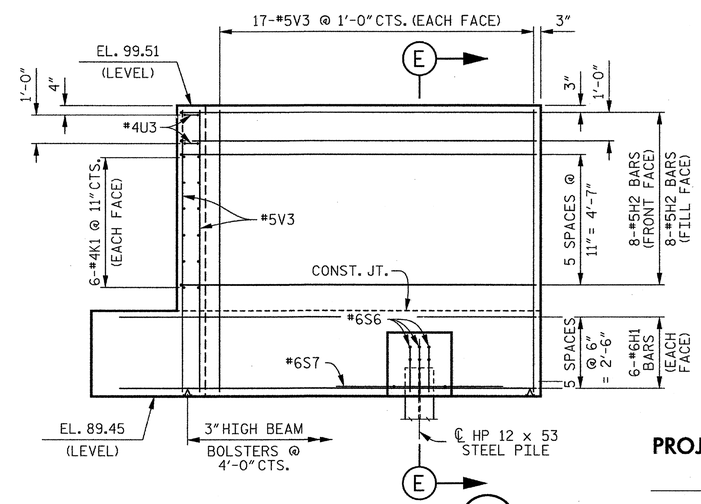


## ELEVATION OF WING (W4)

PROJECT NO. R-2303D
SAMPSON COUNTY
STATION: 1311+58.00 -LREV-

SHEET 2 OF 3

STATE OF NORTH CAROLINA
DEPARTMENT OF TRANSPORTATION
RALEIGH

SUBSTRUCTURE

END BENT 2

(LEFT LANE)

CDM Smith
Camp Dresser & McKee
421 Fayetteville Street, Suite 1303
Raleigh, NC 27604
NC COA No. F-1255

| | | | |
|---|---|---|---|
| DRAWN BY : | K.E. LOFTON | DATE : | 10-12 |
| CHECKED BY : | P.R. HOLSHOUSER | DATE : | 10-12 |
| DESIGN ENGINEER : | P.R. HOLSHOUSER | DATE : | 1-13 |

DWG. No. S01-072

NORTH CAROLINA PROFESSIONAL SEAL 20668 ENGINEER PAUL R. HOLSHOUSER 2/8/2013

| REVISIONS | | | | | | | | SHEET No. |
|---|---|---|---|---|---|---|---|---|
| No. | BY: | DATE: | No. | BY: | DATE: | | | S-72 |
| 1 | | | 3 | | | | | TOTAL SHEETS |
| 2 | | | 4 | | | | | 218 |

FILE: r:\model\2303d\structures\PLANS\Sht_1\R2303D_SD_Sht_ab22.dgn
DATE: 12/06/2012 9:56:52 AM

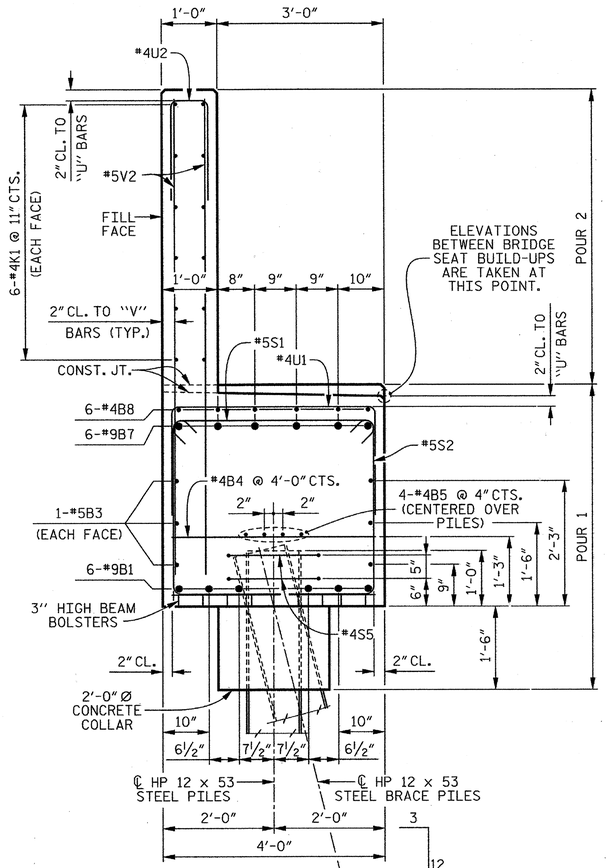


## SECTION A–A

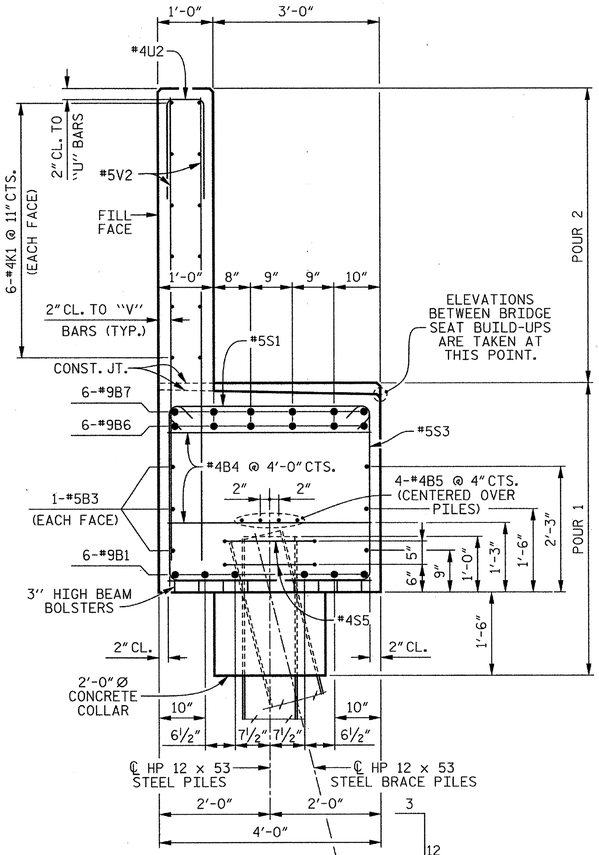


## SECTION B–B

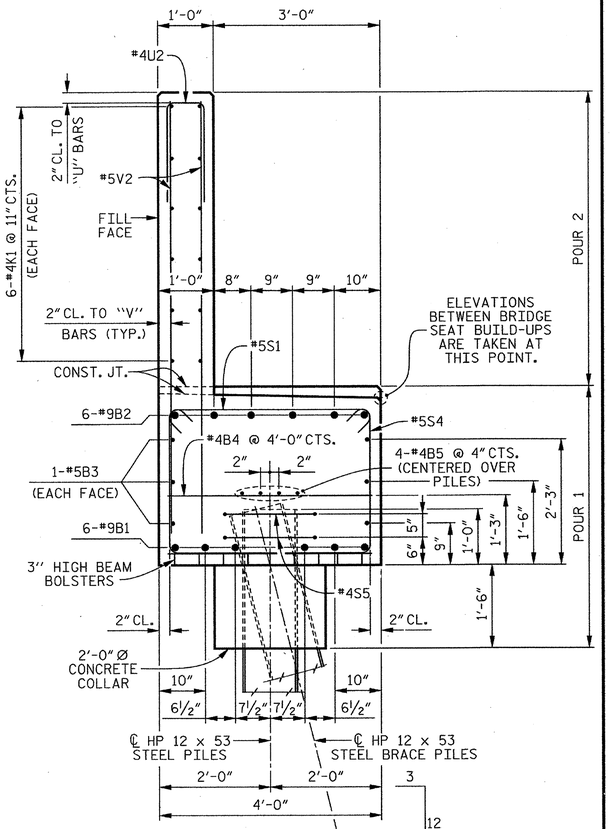


## SECTION C–C

## BAR TYPES

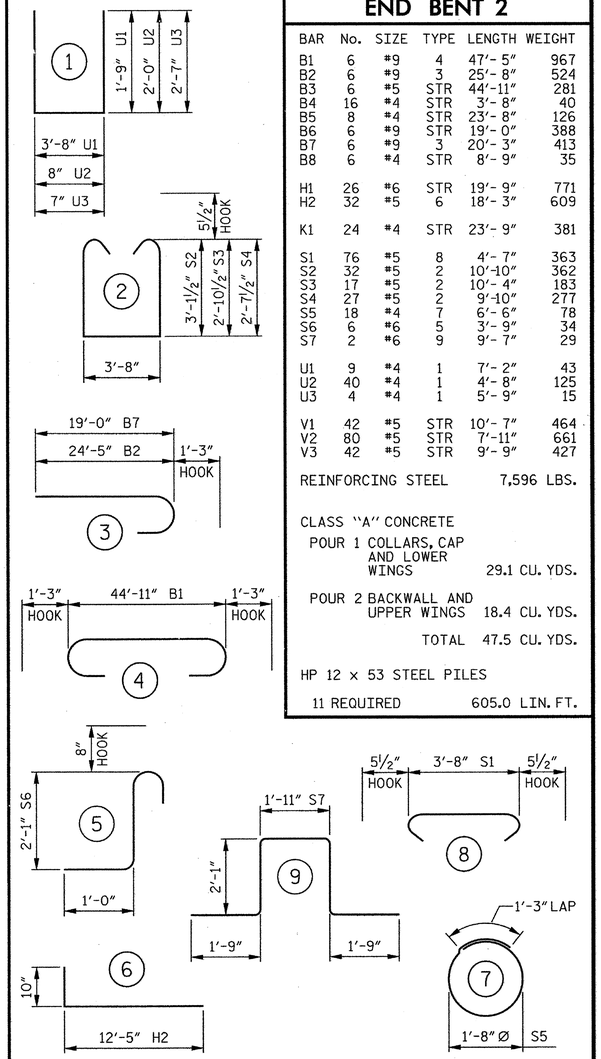


ALL BAR DIMENSIONS ARE OUT TO OUT.

## BILL OF MATERIAL

## END BENT 2

| BAR | No. | SIZE | TYPE | LENGTH | WEIGHT |
|---|---|---|---|---|---|
| B1 | 6 | #9 | 4 | 47'- 5" | 967 |
| B2 | 6 | #9 | 3 | 25'- 8" | 524 |
| B3 | 6 | #5 | STR | 44'-11" | 281 |
| B4 | 16 | #4 | STR | 3'- 8" | 40 |
| B5 | 8 | #4 | STR | 23'- 8" | 126 |
| B6 | 6 | #9 | STR | 19'- 0" | 388 |
| B7 | 6 | #9 | 3 | 20'- 3" | 413 |
| B8 | 6 | #4 | STR | 8'- 9" | 35 |
| H1 | 26 | #6 | STR | 19'- 9" | 771 |
| H2 | 32 | #5 | 6 | 18'- 3" | 609 |
| K1 | 24 | #4 | STR | 23'- 9" | 381 |
| S1 | 76 | #5 | 8 | 4'- 7" | 363 |
| S2 | 32 | #5 | 2 | 10'-10" | 362 |
| S3 | 17 | #5 | 2 | 10'- 4" | 183 |
| S4 | 27 | #5 | 2 | 9'-10" | 277 |
| S5 | 18 | #4 | 7 | 6'- 6" | 78 |
| S6 | 6 | #6 | 5 | 3'- 9" | 34 |
| S7 | 2 | #6 | 9 | 9'- 7" | 29 |
| U1 | 9 | #4 | 1 | 7'- 2" | 43 |
| U2 | 40 | #4 | 1 | 4'- 8" | 125 |
| U3 | 4 | #4 | 1 | 5'- 9" | 15 |
| V1 | 42 | #5 | STR | 10'- 7" | 464 |
| V2 | 80 | #5 | STR | 7'-11" | 661 |
| V3 | 42 | #5 | STR | 9'- 9" | 427 |

REINFORCING STEEL 7,596 LBS.

CLASS "A" CONCRETE

POUR 1 COLLARS, CAP AND LOWER WINGS 29.1 CU. YDS.

POUR 2 BACKWALL AND UPPER WINGS 18.4 CU. YDS.

TOTAL 47.5 CU. YDS.

HP 12 x 53 STEEL PILES

11 REQUIRED 605.0 LIN. FT.

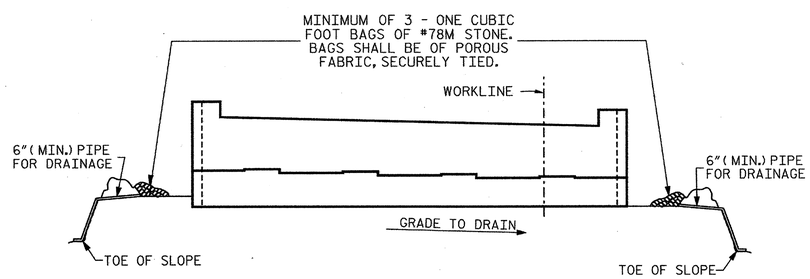


BAGGED STONE AND PIPE SHALL BE PLACED IMMEDIATELY AFTER COMPLETION OF END BENT EXCAVATION. PIPE MAY BE EITHER CONCRETE, CORRUGATED STEEL, CORRUGATED ALUMINUM ALLOY, OR CORRUGATED PLASTIC. PERFORATED PIPE WILL NOT BE ALLOWED.

BAGGED STONE SHALL REMAIN IN PLACE UNTIL THE ENGINEER DIRECTS THAT IT BE REMOVED. THE CONTRACTOR SHALL REMOVE AND DISPOSE OF SILT ACCUMULATIONS AT BAGGED STONE WHEN SO DIRECTED BY THE ENGINEER. BAGS SHALL BE REMOVED AND REPLACED WHENEVER THE ENGINEER DETERMINES THAT THEY HAVE DETERIORATED AND LOST THEIR EFFECTIVENESS.

## TEMPORARY DRAINAGE AT END BENT

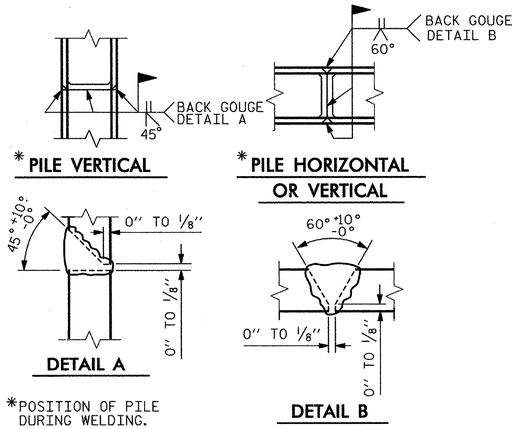


*POSITION OF PILE DURING WELDING.

## PILE SPLICE DETAILS

PROJECT NO. R-2303D

SAMPSON COUNTY

STATION: 1311+58.00 -LREV-

SHEET 3 OF 3

STATE OF NORTH CAROLINA
DEPARTMENT OF TRANSPORTATION
RALEIGH

SUBSTRUCTURE

END BENT 2

(LEFT LANE)

CDM Smith
Camp Dresser & McKee
421 Fayetteville Street, Suite 1303
Raleigh, NC 27604
NC COA No. F-1255

| | | | |
|---|---|---|---|
| DRAWN BY : | K.E. LOFTON | DATE : | 10-12 |
| CHECKED BY : | P.R. HOLSHOUSER | DATE : | 10-12 |
| DESIGN ENGINEER : | P.R. HOLSHOUSER | DATE : | 1-13 |

DWG. No. S01-073

NORTH CAROLINA PROFESSIONAL SEAL 20668 ENGINEER PAUL R. HOLSHOUSER 2/08/2013

| REVISIONS | | | | | | SHEET No. |
|---|---|---|---|---|---|---|
| No. | BY: | DATE: | No. | BY: | DATE: | S-73 |
| 1 | | | 3 | | | TOTAL SHEETS |
| 2 | | | 4 | | | 218 |

FILE: r:\model\2303d\structures\PLANS\Str_T\R2303D_SD_Str1_ab23.dgn
DATE: 1/9/2013 2:39:18 PM

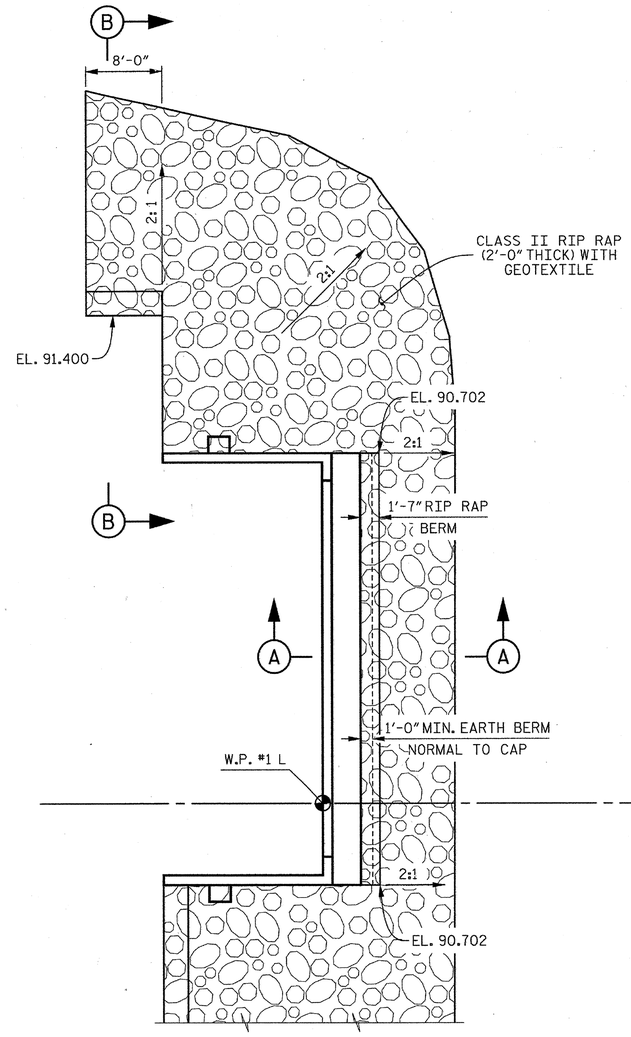


## END BENT 1

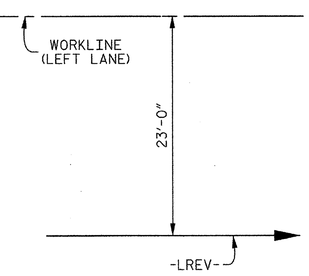


## PLAN

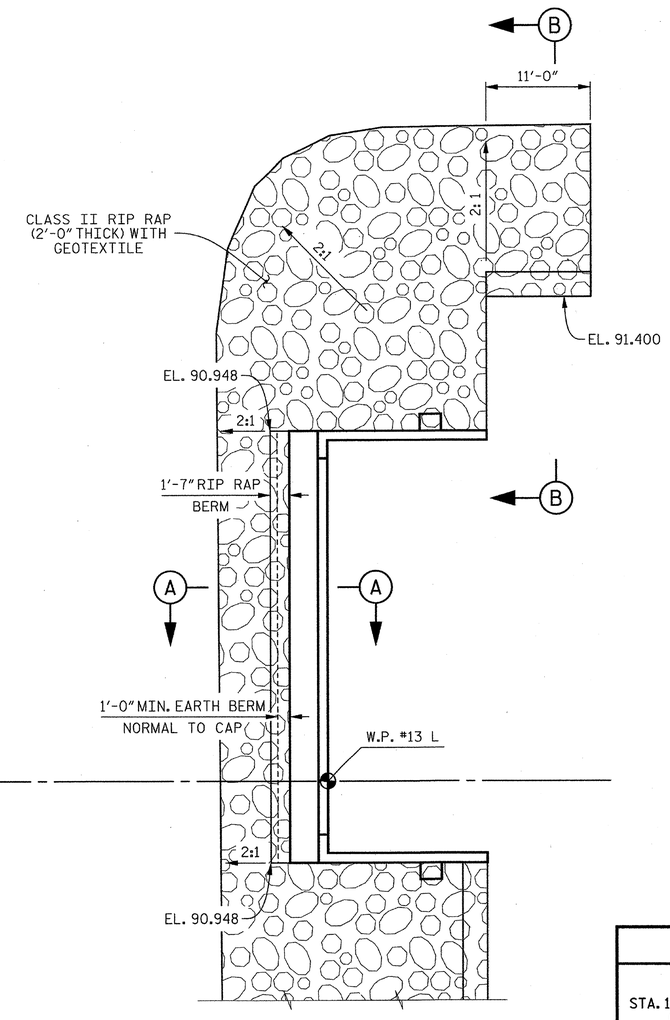


## END BENT 2

| ESTIMATED QUANTITIES | | |
|---|---|---|
| BRIDGE @ STA. 1311+58.00 -LREV- (LEFT LANE) | RIP RAP CLASS II ( TONS ) | GEOTEXTILE FOR DRAINAGE ( SQUARE YARDS ) |
| END BENT 1 | 235 | 265 |
| END BENT 2 | 210 | 235 |

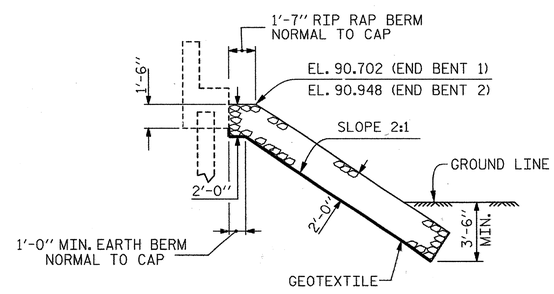


## SECTION A–A

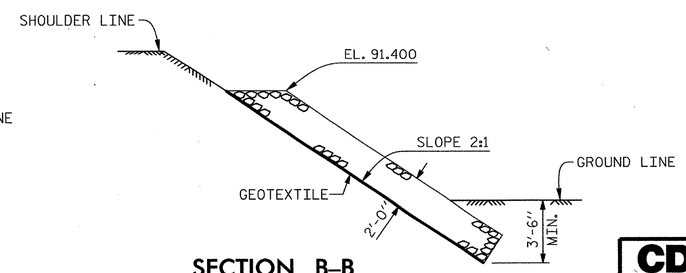


## SECTION B–B

PROJECT NO. R–2303D

SAMPSON COUNTY

STATION: 1311+58.00 –LREV–

STATE OF NORTH CAROLINA
DEPARTMENT OF TRANSPORTATION
RALEIGH

STANDARD

# RIP RAP DETAILS

# (LEFT LANE)

| ASSEMBLED BY : K.E. LOFTON | DATE : 11-12 |
|---|---|
| CHECKED BY : P.R. HOLSHOUSER | DATE : 12-12 |

| | | | |
|---|---|---|---|
| DRAWN BY : REK 1/84 | REV. 8/16/99 | RWW/LES |
| CHECKED BY : RDU 1/84 | REV. 10/17/00 | RWW/LES |
| | REV. 5/1/06 | TLA/GM |

CDM Smith
Camp Dresser & McKee
421 Fayetteville Street, Suite 1303
Raleigh, NC 27604
NC COA No. F-1255

| | | |
|---|---|---|
| DRAWN BY : K.E. LOFTON | DATE : 11-12 | DWG. No. |
| CHECKED BY : P.R. HOLSHOUSER | DATE : 12-12 | S01-074 |
| DESIGN ENGINEER : P.R. HOLSHOUSER | DATE : 1-13 | |

NORTH CAROLINA PROFESSIONAL SEAL 20668 ENGINEER PAUL R. HOLSHOUSER
1/30/2013

| REVISIONS | | | | | | |
|---|---|---|---|---|---|---|
| No. | BY: | DATE: | No. | BY: | DATE: | |
| 1 | | | 3 | | | |
| 2 | | | 4 | | | |

SHEET No. S-74
TOTAL SHEETS 218

STD. No. RR1

FILE: r:\model\2303d\structures\PLANS\Str_1\R2303D_SD_Str1_rr1.dgn
DATE: 12/30/2012 9:08:35 PM

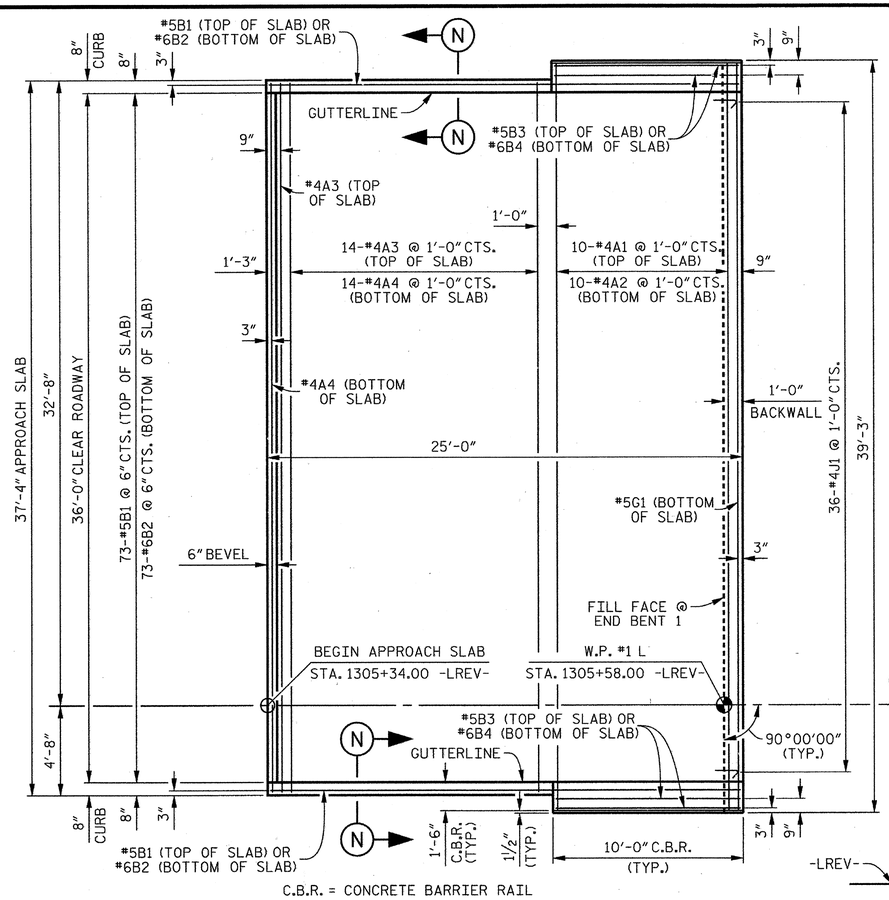


## PLAN OF APPROACH SLAB AT END BENT 1

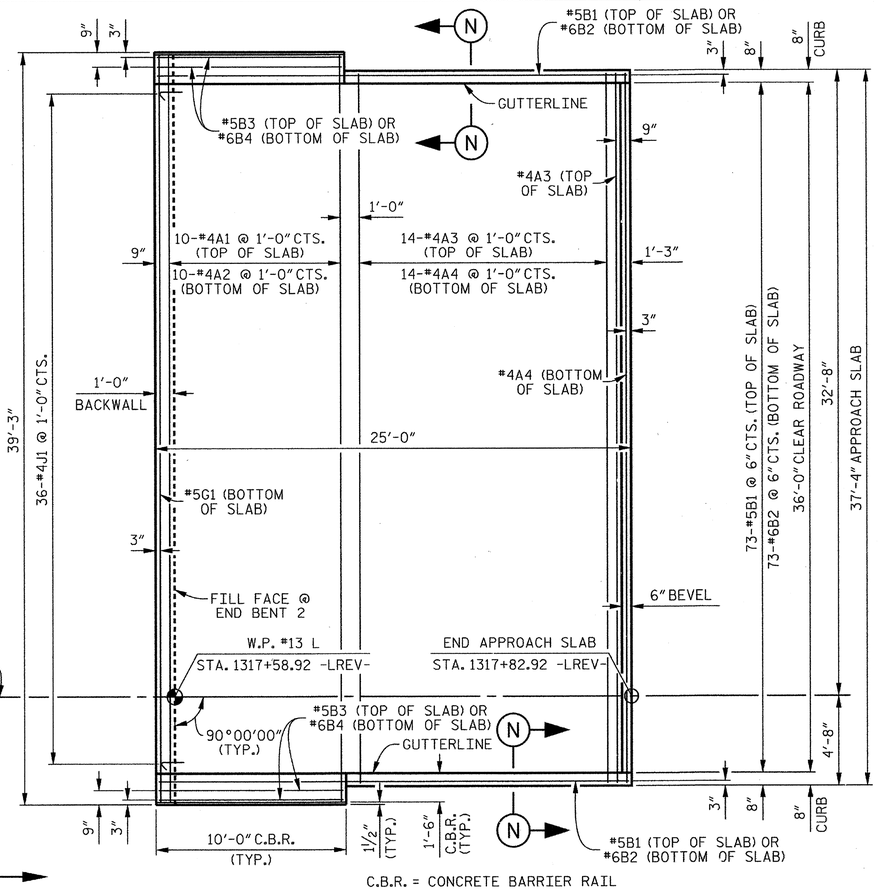


## PLAN OF APPROACH SLAB AT END BENT 2

## BAR TYPE

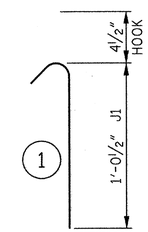


ALL BAR DIMENSIONS ARE OUT TO OUT.

## BILL OF MATERIAL

### APPROACH SLAB AT END BENT 1 OR END BENT 2

| BAR | No. | SIZE | TYPE | LENGTH | WEIGHT |
|---|---|---|---|---|---|
| ✱ A1 | 10 | #4 | STR | 38'-11" | 260 |
| A2 | 10 | #4 | STR | 38'-11" | 260 |
| ✱ A3 | 15 | #4 | STR | 37'-0" | 371 |
| A4 | 15 | #4 | STR | 37'-0" | 371 |
| ✱ B1 | 75 | #5 | STR | 23'-10" | 1,864 |
| B2 | 75 | #6 | STR | 24'-8" | 2,779 |
| ✱ B3 | 4 | #5 | STR | 9'-8" | 40 |
| B4 | 4 | #6 | STR | 9'-8" | 58 |
| ✱ G1 | 1 | #5 | STR | 38'-11" | 41 |
| ✱ J1 | 36 | #4 | 1 | 1'-5" | 34 |
| REINFORCING STEEL | | | | | 3,468 LBS. |
| ✱ EPOXY COATED REINFORCING STEEL | | | | | 2,610 LBS. |
| CLASS "AA" CONCRETE ✱ | | | | | |
| POUR 1 | | SLAB | | | 41.2 CU. YDS. |

✱ QUANTITIES FOR BARRIER RAIL ARE NOT INCLUDED.

## NOTES

APPROACH SLAB SHALL NOT BE CONSTRUCTED PRIOR TO COMPLETION OF THE BRIDGE DECK.

FOR REINFORCED BRIDGE APPROACH FILL INCLUDING FABRIC, IMPERMEABLE GEOMEMBRANE, 4"Ø DRAINAGE PIPE, #78M STONE AND SELECT MATERIAL, SEE ROADWAY PLANS.

AREA BETWEEN THE WINGWALL AND APPROACH SLAB SHALL BE GRADED TO DRAIN THE WATER AWAY FROM THE FILL FACE OF THE BRIDGE AND SHALL BE PAVED, SEE ROADWAY PLANS.

SEE "CONCRETE BARRIER RAIL" SHEET FOR LOCATION OF "S" BARS AND CONCRETE QUANITIES FOR CONCRETE BARRIER RAIL.

THE QUANTITY OF #4J1 BARS ON THE BILL OF MATERIAL IS BASED ON 1'-0" CENTERS. #4J1 BARS SHALL BE PLACED AT EACH VERTICAL STUD ANCHOR BOLT. IN THE EVENT THAT THE NUMBER OF VERTICAL STUD ANCHORS EXCEEDS THE NUMBER OF #4J1 BARS SPECIFIED, ADDITIONAL #4J1 BARS WILL NOT BE REQUIRED.

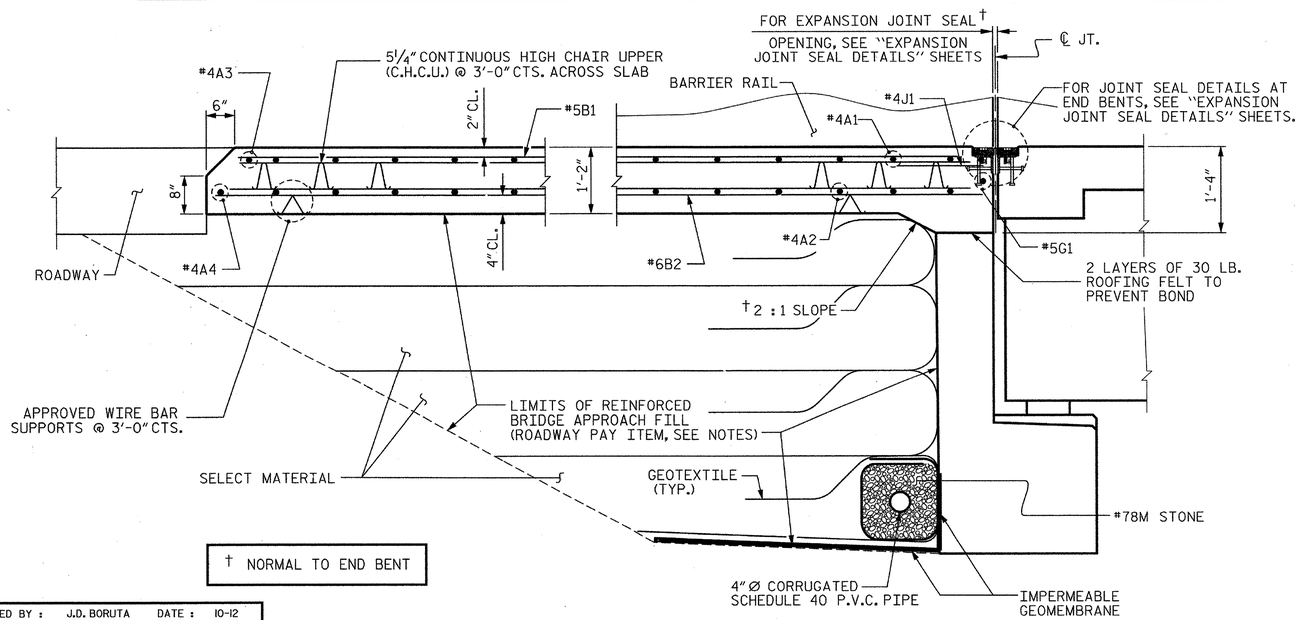


## SECTION THRU SLAB

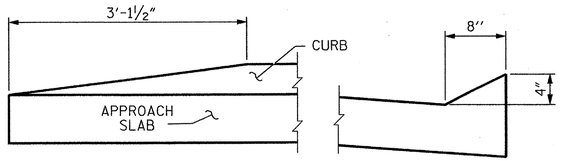


END OF CURB WITHOUT SHOULDER BERM GUTTER

SECTION N-N

## CURB DETAILS

PROJECT NO. R-2303D

SAMPSON COUNTY

STATION: 1311+58.00 -LREV-

SHEET 1 OF 2

STATE OF NORTH CAROLINA
DEPARTMENT OF TRANSPORTATION
RALEIGH

STANDARD

# BRIDGE APPROACH SLAB FOR FLEXIBLE PAVEMENT (LEFT LANE)

CDM Smith
Camp Dresser & McKee
421 Fayetteville Street, Suite 1303
Raleigh, NC 27604
NC COA No. F-1255

DRAWN BY : J.D. BORUTA DATE : 10-12
CHECKED BY : T.M. HARRIS DATE : 11-12
DESIGN ENGINEER : P.R. HOLSHOUSER DATE : 1-13

DWG. No. S01-075

NORTH CAROLINA PROFESSIONAL SEAL 20668 ENGINEER PAUL R. HOLSHOUSER

| REVISIONS | | | | | | |
|---|---|---|---|---|---|---|
| No. | BY: | DATE: | No. | BY: | DATE: | |
| 1 | | | 3 | | | |
| 2 | | | 4 | | | |

SHEET No. S-75
TOTAL SHEETS 218

STD. No. BAS2

| | | | |
|---|---|---|---|
| ASSEMBLED BY : | J.D. BORUTA | DATE : | 10-12 |
| CHECKED BY : | T.M. HARRIS | DATE : | 11-12 |
| DRAWN BY : EEM 3/95 | REV. 5/1/06RR | | KMM/GM |
| CHECKED BY : VAP 3/95 | REV. 10/1/11 | | MAA/GM |
| | REV. 12/21/11 | | MAA/GM |

FILE: n:\roadwy\2303d\structures\PLANS\Sv_1\R2303D_SD_Srf_a01.dgn
DATE: 12/20/2012 9:08:57 PM

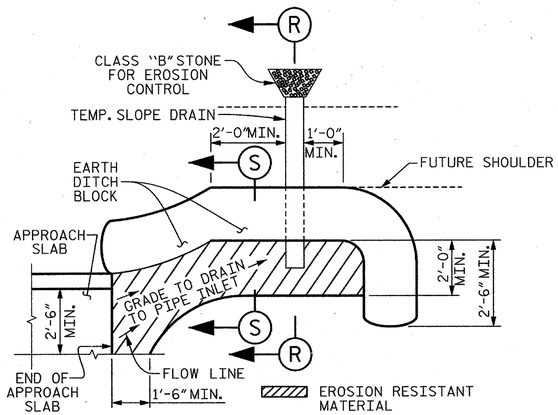


NOTE: IMMEDIATELY AFTER THE CONSTRUCTION OF THE APPROACH SLAB, THE CONTRACTOR SHALL PROVIDE TEMPORARY BERM AND SLOPE DRAIN. CONTRACTOR SHALL GRADE TO PIPE INLET AND PROVIDE EROSION RESISTANT MATERIAL AS SHOWN. THE EROSION RESISTANT MATERIAL SHALL BE EITHER 1) ASPHALT PLANT MIX, TYPE 1 OR TYPE 2, MIN. 2" DEPTH, 2) EROSION CONTROL MAT, OR 3) CONCRETE, AS DIRECTED BY THE ENGINEER. THE SLOPE DRAIN SHALL CONSIST OF A NON-PERFORATED TEMPORARY DRAINAGE PIPE, 12 INCHES IN DIAMETER.

PLAN VIEW

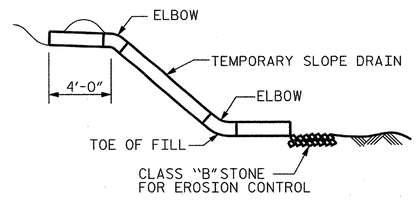


SECTION R-R

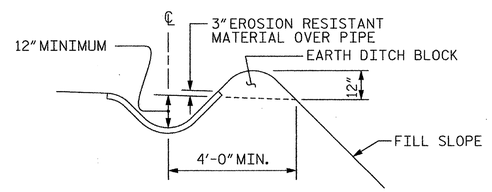


SECTION S-S

## TEMPORARY BERM AND SLOPE DRAIN DETAILS

(TO BE USED WHEN SHOULDER BERM GUTTER IS REQUIRED)

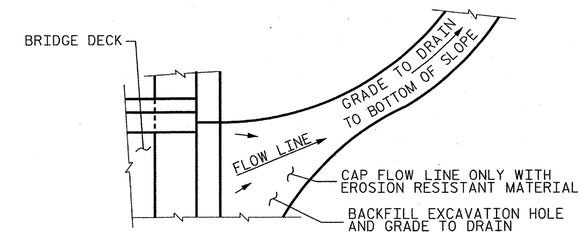


NOTE: IF THE APPROACH SLAB IS NOT CONSTRUCTED IMMEDIATELY AFTER THE BACKFILLING OF THE END BENT EXCAVATION, GRADE TO DRAIN TO THE BOTTOM OF THE SLOPE AND PROVIDE EROSION RESISTANT MATERIAL, SUCH AS FIBERGLASS ROVING OR AS DIRECTED BY THE ENGINEER TO PREVENT SOIL EROSION AND TO PROTECT THE AREA ADJACENT TO THE STRUCTURE. THE CONTRACTOR WILL BE REQUIRED TO REMOVE THESE MATERIALS PRIOR TO CONSTRUCTION OF THE APPROACH SLAB.

## TEMPORARY DRAINAGE DETAIL

PROJECT NO. R-2303D

SAMPSON COUNTY

STATION: 1311+58.00 -LREV-

SHEET 2 OF 2

STATE OF NORTH CAROLINA
DEPARTMENT OF TRANSPORTATION
RALEIGH

STANDARD

BRIDGE APPROACH SLAB DETAILS (LEFT LANE)

CDM Smith
Camp Dresser & McKee
421 Fayetteville Street, Suite 1303
Raleigh, NC 27604
NC COA No. F-1255

| | | | |
|---|---|---|---|
| DRAWN BY : | J.D. BORUTA | DATE : | 10-12 |
| CHECKED BY : | T.M. HARRIS | DATE : | 11-12 |
| DESIGN ENGINEER : | P.R. HOLSHOUSER | DATE : | 1-13 |

DWG. No. S01-076

NORTH CAROLINA PROFESSIONAL SEAL 20668 ENGINEER PAUL R. HOLSHOUSER 2/08/2013

| REVISIONS | | | | | | SHEET No. |
|---|---|---|---|---|---|---|
| No. | BY: | DATE: | No. | BY: | DATE: | S-76 |
| 1 | | | 3 | | | TOTAL SHEETS |
| 2 | | | 4 | | | 218 |

STD. No. BAS4

| | | | |
|---|---|---|---|
| ASSEMBLED BY : | J. D. BORUTA | DATE : | 10-12 |
| CHECKED BY : | T. M. HARRIS | DATE : | 11-12 |
| DRAWN BY : FCJ | 11/88 | REV. 5/7/03 | RWW/JTE |
| CHECKED BY : ARB | 11/88 | REV. 5/1/06RRR | MAA/KMM |
| | | REV. 10/1/11 | MAA/GM |

FILE: r:\nodot\r2303d\structures\PLANS\Str_1\R2303D_SD_Str1_cs2.dgn
DATE: 12/30/2012 9:08:58 PM

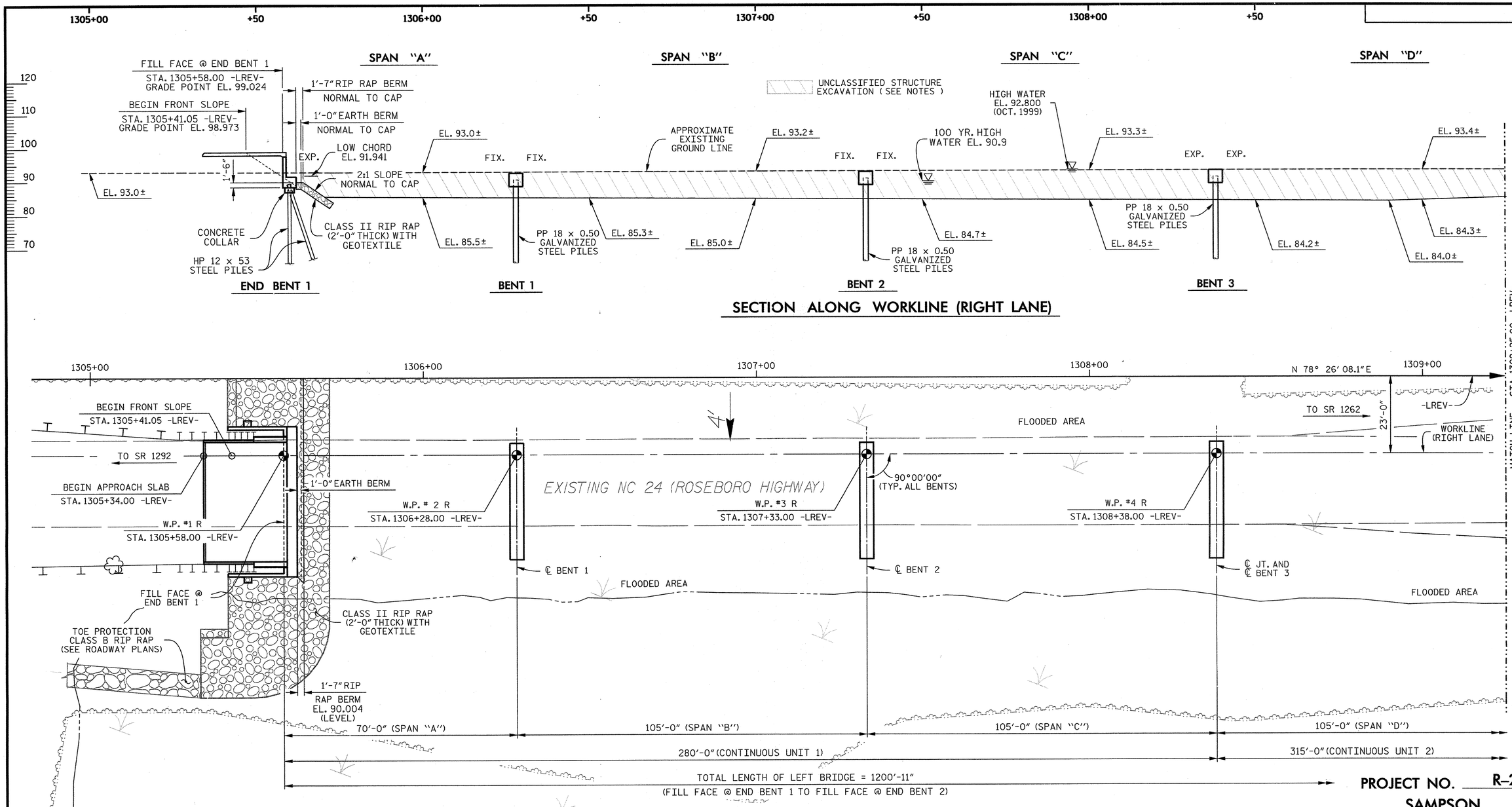


## SECTION ALONG WORKLINE (RIGHT LANE)




## PLAN

PILES NOT SHOWN IN PLAN VIEW.

FOR TEMPORARY ACCESS NOT SHOWN, SEE LOCATION SKETCH.

## HYDRAULIC DATA

| | TOTAL (MAIN STREAM) |
|---|---|
| DESIGN DISCHARGE | = 6720 (5610) C.F.S. |
| FREQUENCY OF DESIGN FLOOD | = 50 YEARS |
| DESIGN HIGH WATER ELEVATION | = 89.200 |
| DRAINAGE AREA | = 158 SQ. MI. |
| BASIC DISCHARGE (Q100) | = 8215 (6990) C.F.S. |
| BASIC HIGH WATER ELEVATION | = 90.900 |

## OVERTOPPING FLOOD DATA

| | |
|---|---|
| OVERTOPPING DISCHARGE | = N/A |
| FREQUENCY OF OVERTOPPING FLOOD | = + 500 YEARS |
| OVERTOPPING FLOOD ELEVATION | = 95.300 |

PROJECT NO. R-2303D
SAMPSON COUNTY
STATION: 1311+58.00 -LREV-

SHEET 1 OF 7 REPLACES BRIDGE No. 42

I HEREBY CERTIFY THESE PLANS ARE THE AS-BUILT PLANS.

CDM Smith
Camp Dresser & McKee
421 Fayetteville Street, Suite 1303
Raleigh, NC 27604
NC COA No. F-1255

DRAWN BY : K.E. LOFTON DATE : 11-12
CHECKED BY : P.R. HOLSHOUSER DATE : 12-12
DESIGN ENGINEER : P.R. HOLSHOUSER DATE : 1-13

DWG. No. S02-001

NORTH CAROLINA PROFESSIONAL SEAL 20668 ENGINEER PAUL R. HOLSHOUSER 2/19/2013

STATE OF NORTH CAROLINA
DEPARTMENT OF TRANSPORTATION
RALEIGH

GENERAL DRAWING

BRIDGE OVER GREAT COHARIE CREEK ON NC 24 (-LREV-) BETWEEN SR 1292 AND SR 1262

(RIGHT LANE)

| REVISIONS | | | | | | | SHEET No. |
|---|---|---|---|---|---|---|---|
| No. | BY: | DATE: | No. | BY: | DATE: | | S-77 |
| 1 | | | 3 | | | | TOTAL SHEETS |
| 2 | | | 4 | | | | 218 |

FILE: r:\model\2303d\structural\PLANS\Str_21\R2303D_S0_Sht2_gen1.dgn
DATE: 2/20/2013 10:16:05 AM

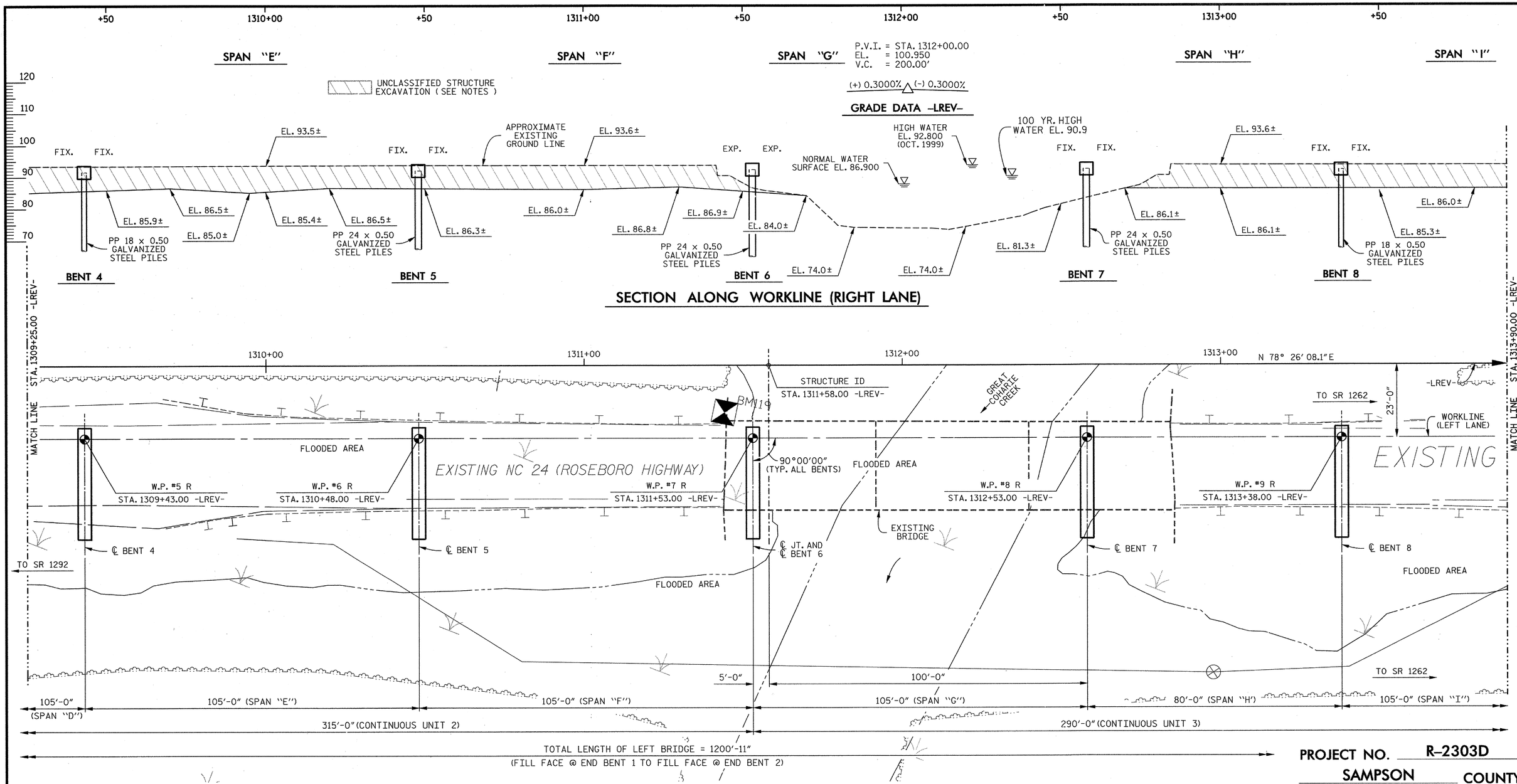


## PLAN

PILES NOT SHOWN IN PLAN VIEW.

PROJECT NO. R-2303D

SAMPSON COUNTY

STATION: 1311+58.00 -LREV-

SHEET 2 OF 7

STATE OF NORTH CAROLINA
DEPARTMENT OF TRANSPORTATION
RALEIGH

GENERAL DRAWING

BRIDGE OVER GREAT COHARIE CREEK ON NC 24 (-LREV-) BETWEEN SR 1292 AND SR 1262

(RIGHT LANE)

CDM Smith

Camp Dresser & McKee
421 Fayetteville Street, Suite 1303
Raleigh, NC 27604
NC COA No. F-1255

| | | | |
|---|---|---|---|
| DRAWN BY : | K.E. LOFTON | DATE : | 11-12 |
| CHECKED BY : | P.R. HOLSHOUSER | DATE : | 12-12 |
| DESIGN ENGINEER : | P.R. HOLSHOUSER | DATE : | 1-13 |

DWG. No. S02-002

NORTH CAROLINA PROFESSIONAL SEAL 20668 ENGINEER PAUL R. HOLSHOUSER 2/08/2013

REVISIONS

| No. | BY: | DATE: | No. | BY: | DATE: |
|---|---|---|---|---|---|
| 1 | | | 3 | | |
| 2 | | | 4 | | |

SHEET No. S-78

TOTAL SHEETS 218

FILE: R:\NCDOT\R2303D\STRUCTURES\PLANS\Str_2\R2303D_SD_Str2_gd2.dgn
DATE: 12/30/2012 9:22:46 PM

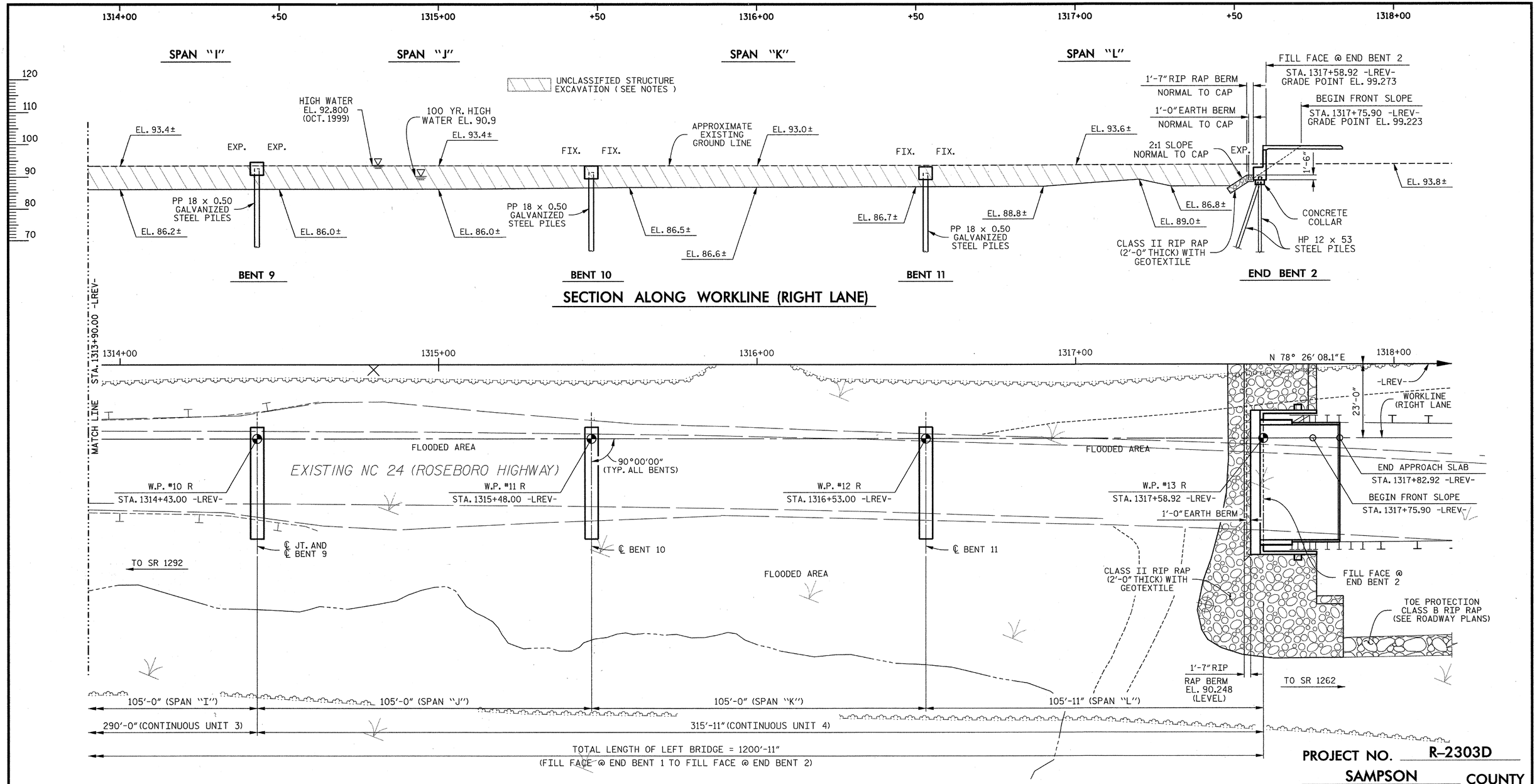


## PLAN

PILES NOT SHOWN IN PLAN VIEW.

PROJECT NO. R-2303D

SAMPSON COUNTY

STATION: 1311+58.00 -LREV-

SHEET 3 OF 7

STATE OF NORTH CAROLINA
DEPARTMENT OF TRANSPORTATION
RALEIGH

GENERAL DRAWING

BRIDGE OVER GREAT COHARIE CREEK ON NC 24 (-LREV-) BETWEEN SR 1292 AND SR 1262

(RIGHT LANE)

CDM Smith
Camp Dresser & McKee
421 Fayetteville Street, Suite 1303
Raleigh, NC 27604
NC COA No. F-1255

| | | | |
|---|---|---|---|
| DRAWN BY : | K.E. LOFTON | DATE : | 11-12 |
| CHECKED BY : | P.R. HOLSHOUSER | DATE : | 12-12 |
| DESIGN ENGINEER : | P.R. HOLSHOUSER | DATE : | 1-13 |

DWG. No. S02-003

NORTH CAROLINA PROFESSIONAL SEAL 20668 ENGINEER PAUL R. HOLSHOUSER 2/08/2013

| REVISIONS | | | | | | SHEET No. |
|---|---|---|---|---|---|---|
| No. | BY: | DATE: | No. | BY: | DATE: | S-79 |
| 1 | | | 3 | | | TOTAL SHEETS |
| 2 | | | 4 | | | 218 |

FILE: r:\model\r2303d\structures\PLANS\Str_2\R2303D_SD_Str2_gd3.dgn
DATE: 1/3/2013 11:45:24 AM

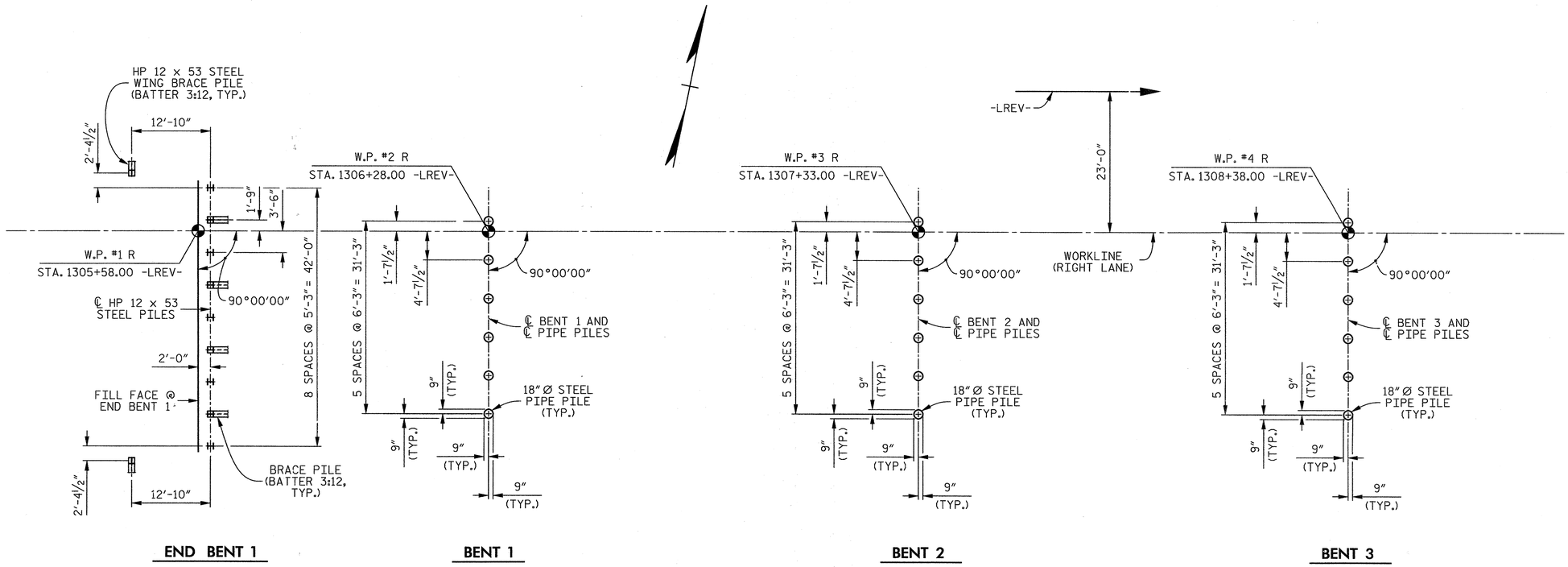


## FOUNDATION LAYOUT

### NOTES

FOR PILES, SEE SECTION 450 OF THE STANDARD SPECIFICATIONS.

PILES AT END BENT 1 AND END BENT 2 ARE DESIGNED FOR A FACTORED RESISTANCE OF 110 TONS PER PILE.

END BENT PILES ARE HP 12 x 53 STEEL PILES.

DRIVE PILES AT END BENT 1 AND END BENT 2 TO A REQUIRED DRIVING RESISTANCE OF 185 TONS PER PILE.

PILES AT BENT 1 THRU BENT 11 ARE DESIGNED FOR A FACTORED RESISTANCE OF 260, 275, 275, 275, 275, 275, 255, 260, 275, 275 AND 275 TONS, RESPECTIVELY PER PILE.

DRIVE PILES AT BENT 1 THRU BENT 11 TO A REQUIRED DRIVING RESISTANCE OF 350, 370, 370, 370, 370, 370, 345, 355, 370, 370 AND 370 TONS, RESPECTIVELY PER PILE.

INSTALL PILES AT BENT 1 THRU BENT 11 TO A TIP ELEVATION NO HIGHER THAN 55.0, 55.0, 55.0, 55.0, 55.0, 52.0, 52.0, 52.0, 55.0, 55.0 AND 55.0 FT, RESPECTIVELY.

THE SCOUR CRITICAL ELEVATIONS FOR BENT 1 THRU BENT 11 ARE ELEVATION 77.0, 77.0, 77.0, 77.0, 77.0, 77.0, 72.0, 77.0, 77.0, 77.0 AND 77.0 FT, RESPECTIVELY. SCOUR CRITICAL ELEVATIONS ARE USED TO MONITOR POSSIBLE SCOUR PROBLEMS DURING THE LIFE OF THE STRUCTURE.

IT HAS BEEN ESTIMATED THAT A HAMMER WITH AN EQUIVALENT RATED ENERGY IN THE RANGE OF 90-190 FT-KIPS PER BLOW WILL BE REQUIRED TO DRIVE PILES AT BENT 1 THRU BENT 11. THIS ESTIMATED ENERGY RANGE DOES NOT RELEASE THE CONTRACTOR FROM PROVIDING DRIVING EQUIPMENT IN ACCORDANCE WITH SUBARTICLE 450-3(D)(2) OF THE STANDARD SPECIFICATIONS.

TESTING THE PRODUCTION PILES WITH THE PDA DURING DRIVING, RESTRIKING OR REDRIVING IS REQUIRED. FOR PDA TESTING, SEE SECTION 450 OF THE STANDARD SPECIFICATIONS AND FOR PILE DRIVING CRITERIA.

PIPE PILE PLATES MAY BE REQUIRED FOR STEEL PIPE PILES AT BENT 1 THRU BENT 11. THE ENGINEER WILL DETERMINE THE NEED FOR PIPE PILES PLATES AFTER DRIVING TEST PILES OR A FEW INITIAL PRODUCTION PILES. USE PIPE PILE PLATES WITH A DIAMETER EQUAL TO THE PIPE PILE DIAMETER. FOR STEEL PIPE PILE PLATES, SEE SECTION 450 OF THE STANDARD SPECIFICATIONS.

PILE DIMENSIONS ARE SHOWN TO THE CENTERLINE OF THE PILES AT THE BOTTOM OF THE END BENT CAPS.

PROJECT NO. R-2303D
SAMPSON COUNTY
STATION: 1311+58.00 -LREV-

SHEET 4 OF 7

STATE OF NORTH CAROLINA
DEPARTMENT OF TRANSPORTATION
RALEIGH

GENERAL DRAWING

BRIDGE OVER GREAT COHARIE CREEK ON NC 24 (-LREV-) BETWEEN SR 1292 AND SR 1262

(RIGHT LANE)

CDM Smith
Camp Dresser & McKee
421 Fayetteville Street, Suite 1303
Raleigh, NC 27604
NC COA No. F-1255

| | | | |
|---|---|---|---|
| DRAWN BY : | K.E. LOFTON | DATE : | 11-12 |
| CHECKED BY : | P.R. HOLSHOUSER | DATE : | 12-12 |
| DESIGN ENGINEER : | P.R. HOLSHOUSER | DATE : | 1-13 |

DWG. No. S02-004

NORTH CAROLINA PROFESSIONAL SEAL 20668 ENGINEER PAUL R. HOLSHOUSER
2/22/2013

REVISIONS

| No. | BY: | DATE: | No. | BY: | DATE: |
|---|---|---|---|---|---|
| 1 | | | 3 | | |
| 2 | | | 4 | | |

SHEET No. S-80
TOTAL SHEETS 218

FILE: r:\ncdot\r2303d\structures\PLANS\Str_2\R2303D_SD_Str2_fl1.dgn
DATE: 2/21/2013 10:18:16 AM

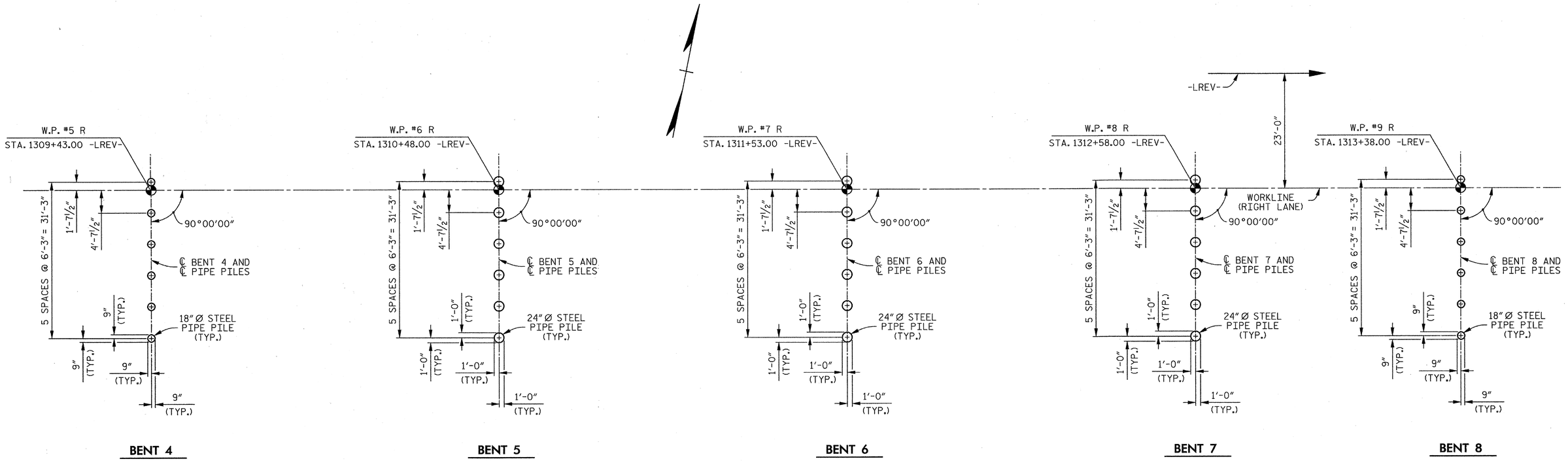


## FOUNDATION LAYOUT

### NOTES

FOR NOTES, SEE SHEET 4 OF 7.

PROJECT NO. R-2303D

SAMPSON COUNTY

STATION: 1311+58.00 -LREV-

SHEET 5 OF 7

STATE OF NORTH CAROLINA
DEPARTMENT OF TRANSPORTATION
RALEIGH

GENERAL DRAWING

BRIDGE OVER GREAT COHARIE CREEK ON NC 24 (-LREV-) BETWEEN SR 1292 AND SR 1262

(RIGHT LANE)

CDM Smith

Camp Dresser & McKee
421 Fayetteville Street, Suite 1303
Raleigh, NC 27604
NC COA No. F-1255

| | | | |
|---|---|---|---|
| DRAWN BY : | K.E. LOFTON | DATE : | 11-12 |
| CHECKED BY : | P.R. HOLSHOUSER | DATE : | 12-12 |
| DESIGN ENGINEER : | P.R. HOLSHOUSER | DATE : | 1-13 |

DWG. No. S02-005

NORTH CAROLINA PROFESSIONAL SEAL 20668 ENGINEER PAUL R. HOLSHOUSER 2/08/2013

| REVISIONS | | | | | | SHEET No. |
|---|---|---|---|---|---|---|
| No. | BY: | DATE: | No. | BY: | DATE: | S-81 |
| 1 | | | 3 | | | TOTAL SHEETS |
| 2 | | | 4 | | | 218 |

FILE: r:\ncdot\r2303d\structures\PLANS\Str_2\R2303D_SD_Str2_f12.dgn
DATE: 12/30/2012 9:22:56 PM

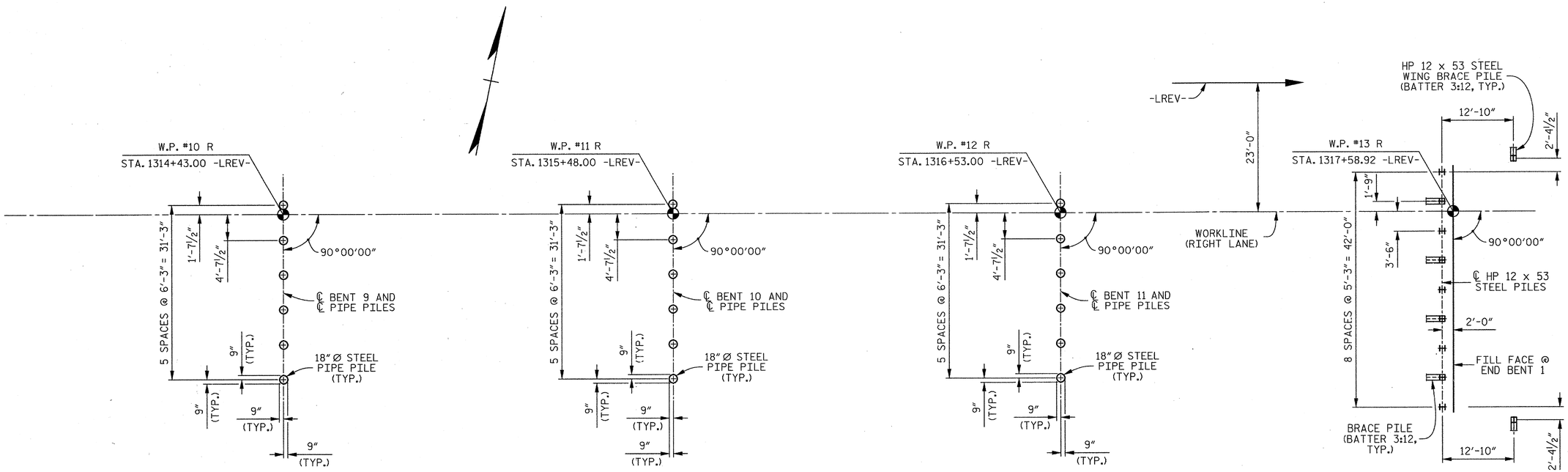


## FOUNDATION LAYOUT

**NOTES**

FOR NOTES, SEE SHEET 4 OF 7.

PROJECT NO. R-2303D

SAMPSON COUNTY

STATION: 1311+58.00 -LREV-

SHEET 6 OF 7

STATE OF NORTH CAROLINA
DEPARTMENT OF TRANSPORTATION
RALEIGH

GENERAL DRAWING

BRIDGE OVER GREAT COHARIE CREEK ON NC 24 (-LREV-) BETWEEN SR 1292 AND SR 1262

(RIGHT LANE)

CDM Smith
Camp Dresser & McKee
421 Fayetteville Street, Suite 1303
Raleigh, NC 27604
NC COA No. F-1255

DRAWN BY : K.E. LOFTON DATE : 11-12
CHECKED BY : P.R. HOLSHOUSER DATE : 11-12
DESIGN ENGINEER : P.R. HOLSHOUSER DATE : 1-13

DWG. No. S02-006

NORTH CAROLINA PROFESSIONAL SEAL 20668 ENGINEER PAUL R. HOLSHOUSER 12/08/2013

| REVISIONS | | | | | | SHEET No. |
|---|---|---|---|---|---|---|
| No. | BY: | DATE: | No. | BY: | DATE: | S-82 |
| 1 | | | 3 | | | TOTAL SHEETS |
| 2 | | | 4 | | | 218 |

FILE: c:\cadd\r2303d\structures\PLANS\Str_2\R2303D_SD_Str2_R3.dgn
DATE: 12/31/2012 4:17:02 PM

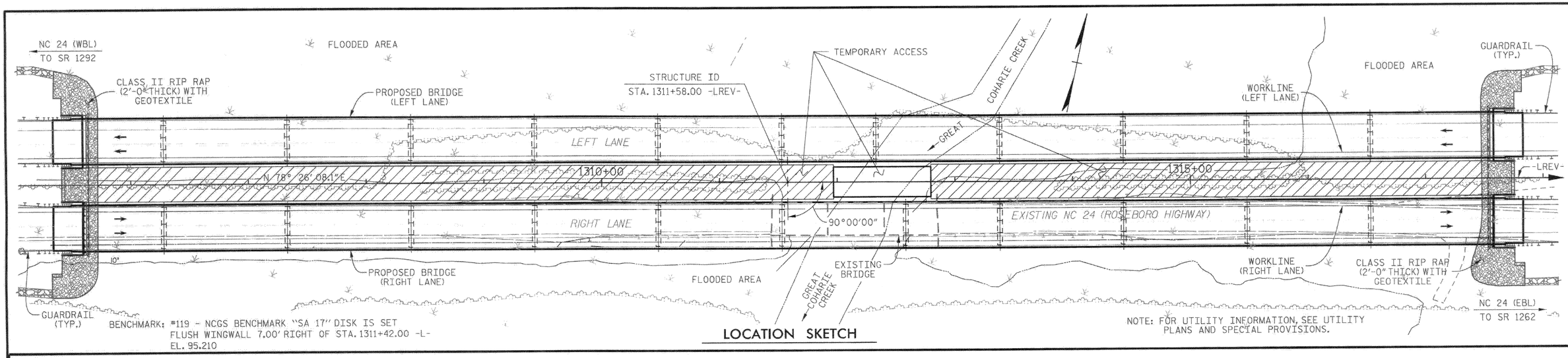


BENCHMARK: #119 - NCGS BENCHMARK "SA 17" DISK IS SET FLUSH WINGWALL 7.00' RIGHT OF STA. 1311+42.00 -L- EL. 95.210

NOTE: FOR UTILITY INFORMATION, SEE UTILITY PLANS AND SPECIAL PROVISIONS.

## LOCATION SKETCH

## TOTAL BILL OF MATERIAL

| | CONSTRUCTION, MAINTENANCE & REMOVAL OF TEMP. ACCESS AT STA. 1311+58.00-LREV- | REMOVAL OF EXISTING STRUCTURE @ STA. 1311+58.00 -LREV- | PDA TESTING | UNCLASSIFIED STRUCTURE EXCAVATION @ STA. 1311+58.00 -LREV- | REINFORCED CONCRETE DECK SLAB | GROOVING BRIDGE FLOORS | CLASS A CONCRETE | BRIDGE APPROACH SLABS | REINFORCING STEEL | MODIFIED 63" PRESTRESSED CONCRETE GIRDER | | HP 12 x 53 STEEL PILES | | PP 18 x 0.50 GALVANIZED STEEL PILES | | PP 24 x 0.50 GALVANIZED STEEL PILES | | PILE REDRIVES | CONCRETE BARRIER RAIL | RIP RAP CLASS II (2'-0" THICK) | GEOTEXTILE FOR DRAINAGE | ELASTOMERIC BEARINGS | EXPANSION JOINT SEALS |
|---|---|---|---|---|---|---|---|---|---|---|---|---|---|---|---|---|---|---|---|---|---|---|---|
| | LUMP SUM | LUMP SUM | EACH | LUMP SUM | SQ. FT. | SQ. FT. | CU. YDS. | LUMP SUM | LBS. | No. | LIN. FT. | No. | LIN. FT. | No. | LIN. FT. | No. | LIN. FT. | EACH | LIN. FT. | TON | SQ. YD. | LUMP SUM | LUMP SUM |
| SUPERSTRUCTURE | | | | | 47,052 | 40,970 | | LUMP SUM | | 48 | 4,756.3 | | | | | | | | 2,437.8 | | | LUMP SUM | LUMP SUM |
| END BENT 1 | | | | | | | 47.6 | | 7,596 | | | 11 | 605.0 | | | | | 5 | | 235 | 210 | | |
| BENT 1 | | | | | | | 22.8 | | 5,205 | | | | | 6 | 390.0 | | | 3 | | | | | |
| BENT 2 | | | | | | | 22.8 | | 5,205 | | | | | 6 | 390.0 | | | 3 | | | | | |
| BENT 3 | | | | | | | 22.8 | | 5,205 | | | | | 6 | 450.0 | | | 3 | | | | | |
| BENT 4 | | | | | | | 22.8 | | 5,205 | | | | | 6 | 420.0 | | | 3 | | | | | |
| BENT 5 | | | | | | | 22.0 | | 4,993 | | | | | | | 6 | 360.0 | 3 | | | | | |
| BENT 6 | | | | | | | 22.0 | | 4,993 | | | | | | | 6 | 390.0 | 3 | | | | | |
| BENT 7 | | | | | | | 22.0 | | 4,993 | | | | | | | 6 | 450.0 | 3 | | | | | |
| BENT 8 | | | | | | | 22.8 | | 5,205 | | | | | 6 | 312.0 | | | 3 | | | | | |
| BENT 9 | | | | | | | 22.8 | | 5,205 | | | | | 6 | 450.0 | | | 3 | | | | | |
| BENT 10 | | | | | | | 22.8 | | 5,205 | | | | | 6 | 330.0 | | | 3 | | | | | |
| BENT 11 | | | | | | | 22.8 | | 5,205 | | | | | 6 | 450.0 | | | 3 | | | | | |
| END BENT 2 | | | | | | | 47.5 | | 7,596 | | | 11 | 660.0 | | | | | 5 | | 210 | 190 | | |
| | | | | | | | | | | | | | | | | | | | | | | | |
| TOTAL | LUMP SUM | LUMP SUM | 4 | LUMP SUM | 47,052 | 40,970 | 343.5 | LUMP SUM | 71,811 | 48 | 4,756.3 | 22 | 1,265.0 | 48 | 3,192.0 | 18 | 1,200.0 | 43 | 2,437.8 | 445 | 400 | LUMP SUM | LUMP SUM |

## NOTES

ASSUMED LIVE LOAD = HL 93 OR ALTERNATE LOADING.

THIS BRIDGE HAS BEEN DESIGNED IN ACCORDANCE WITH THE AASHTO LRFD BRIDGE DESIGN SPECIFICATIONS.

THIS STRUCTURE HAS BEEN DESIGNED IN ACCORDANCE WITH HEC 18, "EVALUATING SCOUR AT BRIDGES", MAY, 2001.

THIS BRIDGE HAS BEEN DESIGNED IN ACCORDANCE WITH THE REQUIREMENTS OF THE AASHTO LRFD BRIDGE DESIGN SPECIFICATIONS FOR SEISMIC DESIGN PERFORMANCE ZONE 1.

FOR OTHER DESIGN DATA AND GENERAL NOTES, SEE "STANDARD NOTES" SHEET.

FOR SUBMITTAL OF WORKING DRAWINGS, SEE SPECIAL PROVISIONS.

ALL REINFORCING STEEL SHALL BE GRADE 60.

FOR FALSEWORK AND FORMWORK, SEE SPECIAL PROVISIONS.

FOR CRANE SAFETY, SEE SPECIAL PROVISIONS.

FOR PLACING LOAD ON STRUCTURE MEMBERS, SEE SPECIAL PROVISIONS.

FOR GROUT FOR STRUCTURES, SEE SPECIAL PROVISIONS.

THE EXISTING STRUCTURE CONSISTING OF 3 SPANS AT APPROXIMATELY 47'-8", 47'-7" AND 47'-5" OF REINFORCED CONCRETE DECK WITH ASPHALT WEARING SURFACE ON T-BEAMS WITH 25'-10" CLEAR ROADWAY WIDTH ON CONCRETE CAPS AND TIMBER PILES AT END BENTS AND CONCRETE CAPS ON CONCRETE COLUMNS ON PILE FOOTINGS AT BENTS LOCATED AT THE PROPOSED STRUCTURE SHALL BE REMOVED. THE EXISTING BRIDGE IS PRESENTLY POSTED FOR LEGAL LOAD LIMIT. SHOULD THE STRUCTURAL INTEGRITY OF THE BRIDGE FURTHER DETERIORATE DURING CONSTRUCTION OF THE PROPOSED STRUCTURE A LOAD LIMIT MAY BE POSTED AND MAY BE REDUCED AS FOUND NECESSARY DURING THE LIFE OF THE PROJECT.

THE SUBSTRUCTURE OF THE EXISTING BRIDGE INDICATED ON THE PLANS IS FROM THE BEST INFORMATION AVAILABLE. SINCE THIS INFORMATION IS SHOWN FOR THE CONVENIENCE OF THE CONTRACTOR, THE CONTRACTOR SHALL HAVE NO CLAIM WHATSOEVER AGAINST THE DEPARTMENT OF TRANSPORTATION FOR ANY DELAYS OR ADDITIONAL COST INCURRED BASED ON DIFFERENCES BETWEEN THE EXISTING BRIDGE SUBSTRUCTURE SHOWN ON THE PLANS AND THE ACTUAL CONDITIONS AT THE PROJECT SITE.

REMOVAL OF THE EXISTING BRIDGE SHALL BE PERFORMED SO AS NOT TO ALLOW DEBRIS TO FALL INTO THE WATER. THE CONTRACTOR SHALL REMOVE THE BRIDGE AND SUBMIT PLANS FOR DEMOLITION IN ACCORDANCE WITH ARTICLE 402-2 OF THE STANDARD SPECIFICATIONS.

NEEDLE BEAMS WILL NOT BE ALLOWED UNLESS OTHERWISE CALLED FOR ON THE PLANS OR APPROVED BY THE ENGINEER.

REMOVABLE FORMS MAY BE USED IN LIEU OF METAL STAY-IN-PLACE FORMS IN ACCORDANCE WITH RTICLE 420-3 OF THE STANDARD SPECIFICATIONS.

THE MATERIAL SHOWN IN THE CROSS-HATCHED AREA SHALL BE EXCAVATED FOR A DISTANCE OF 50 FEET LEFT AND 40 FEET RIGHT OF CENTERLINE ROADWAY AS DIRECTED BY THE ENGINEER. THIS WORK WILL BE PAID FOR AT THE CONTRACT LUMP SUM PRICE FOR UNCLASSIFIED STRUCTURE EXCAVATION. SEE SECTION 412 OF THE STANDARD SPECIFICATIONS.

FOR EXPANSION JOINT SEALS, SEE SPECIAL PROVISIONS.

FOR EROSION CONTROL MEASURES, SEE EROSION CONTROL PLANS.

FOR STEEL REINFORCED ELASTOMERIC BEARINGS, SEE SPECIAL PROVISIONS.

FOR INTERIOR BENTS ONLY PARTIAL GALVANIZING OF THE PILES ARE REQUIRED. SEE INTERIOR BENT SHEETS FOR GALVANIZED LENGTHS. PAYMENT FOR PARTIALLY GALVANIZED PILES WILL BE MADE UNDER THE CONTRACT UNIT PRICE FOR GALVANIZED STEEL PILES.

PROJECT NO. R-2303D
SAMPSON COUNTY
STATION: 1311+58.00 -LREV-

STATE OF NORTH CAROLINA
DEPARTMENT OF TRANSPORTATION
RALEIGH

GENERAL DRAWING

BRIDGE OVER GREAT COHARIE CREEK ON NC 24 (-LREV-) BETWEEN SR 1292 AND SR 1262

(RIGHT LANE)

CDM Smith
Camp Dresser & McKee
421 Fayetteville Street, Suite 1303
Raleigh, NC 27604
NC COA No. F-1255

DRAWN BY : K.E. LOFTON DATE : 11-12
CHECKED BY : P.R. HOLSHOUSER DATE : 12-12
DESIGN ENGINEER : P.R. HOLSHOUSER DATE : 1-13

DWG. No. S02-007

NORTH CAROLINA PROFESSIONAL SEAL 036002 ENGINEER FRANK G. BALE, JR.
7/10/13

| REVISIONS | | | | | | |
|---|---|---|---|---|---|---|
| No. | BY: | DATE: | No. | BY: | DATE: | |
| 1 | | | 3 | | | |
| 2 | | | 4 | | | |

SHEET No. S-83
TOTAL SHEETS 218

FILE: M:\NCDOT\R-2303D Sampson County\Structures\Bridge 2\Plans\R2303D_SD_SH2_b_REV.dgn
DATE: 7/10/2013 2:26:20 PM

# LOAD AND RESISTANCE FACTOR RATING (LRFR) SUMMARY FOR PRESTRESSED CONCRETE GIRDERS

| LEVEL | | VEHICLE | WEIGHT (W) (TONS) | CONTROLLING LOAD RATING (#) | MINIMUM RATING FACTORS (RF) | TONS = W × RF | STRENGTH I LIMIT STATE | | | | | | | | | | | SERVICE III LIMIT STATE | | | | | | COMMENT NUMBER |
|---|---|---|---|---|---|---|---|---|---|---|---|---|---|---|---|---|---|---|---|---|---|---|---|---|
| | | | | | | | | MOMENT | | | | | SHEAR | | | | | | MOMENT | | | | | |
| | | | | | | | LIVE-LOAD FACTORS ($\gamma_{LL}$) | DISTRIBUTION FACTORS (DF) | RATING FACTOR | SPANS | GIRDER LOCATION | DISTANCE FROM LEFT END OF SPAN (ft) | DISTRIBUTION FACTORS (DF) | RATING FACTOR | SPAN | GIRDER LOCATION | DISTANCE FROM LEFT END OF SPAN (ft) | LIVE-LOAD FACTORS ($\gamma_{LL}$) | DISTRIBUTION FACTORS (DF) | RATING FACTOR | SPANS | GIRDER LOCATION | DISTANCE FROM LEFT END OF SPAN (ft) | |
| DESIGN LOAD RATING | | HL-93 (INVENTORY) | N/A | 1 | 1.11 | -- | 1.75 | 0.922 | 1.15 | H | EL | 38.9 | 0.922 | 1.28 | B | EL | 30.5 | 0.80 | 0.922 | 1.11 | H | EL | 38.9 | -- |
| | | HL-93 (OPERATING) | N/A | | 1.49 | -- | 1.35 | 0.922 | 1.49 | H | EL | 38.9 | 0.922 | 1.65 | B | EL | 30.5 | N/A | -- | -- | -- | -- | -- | -- |
| | | HS-20 (INVENTORY) | 36.000 | 2 | 1.47 | 52.92 | 1.75 | 0.922 | 1.52 | H | EL | 38.9 | 0.983 | 1.91 | B | I | 20.1 | 0.80 | 0.922 | 1.47 | H | EL | 38.9 | -- |
| | | HS-20 (OPERATING) | 36.000 | | 1.97 | 70.92 | 1.35 | 0.922 | 1.97 | H | EL | 38.9 | 0.983 | 2.48 | B | I | 20.1 | N/A | -- | -- | -- | -- | -- | -- |
| LEGAL LOAD RATING | SINGLE VEHICLE (SV) | SNSH | 13.500 | | 3.36 | 45.36 | 1.40 | 0.922 | 4.35 | H | EL | 38.9 | 0.983 | 6.43 | B | I | 20.1 | 0.80 | 0.922 | 3.36 | H | EL | 38.9 | -- |
| | | SNGARBS2 | 20.000 | | 2.49 | 49.80 | 1.40 | 0.922 | 3.22 | H | EL | 38.9 | 0.983 | 4.39 | B | I | 20.1 | 0.80 | 0.922 | 2.49 | H | EL | 38.9 | -- |
| | | SNAGRIS2 | 22.000 | | 2.35 | 49.35 | 1.40 | 0.922 | 3.04 | H | EL | 38.9 | 0.983 | 4.02 | B | I | 20.1 | 0.80 | 0.922 | 2.35 | H | EL | 38.9 | -- |
| | | SNCOTTS3 | 27.250 | | 1.67 | 45.51 | 1.40 | 0.922 | 2.16 | H | EL | 38.9 | 0.983 | 2.99 | B | I | 20.1 | 0.80 | 0.922 | 1.67 | H | EL | 38.9 | -- |
| | | SNAGGRS4 | 34.925 | | 1.39 | 48.55 | 1.40 | 0.922 | 1.80 | H | EL | 38.9 | 0.983 | 2.38 | B | I | 20.1 | 0.80 | 0.922 | 1.39 | H | EL | 38.9 | -- |
| | | SNS5A | 35.550 | | 1.36 | 48.35 | 1.40 | 0.922 | 1.76 | H | EL | 38.9 | 0.983 | 2.39 | B | I | 20.1 | 0.80 | 0.922 | 1.36 | H | EL | 38.9 | -- |
| | | SNS6A | 39.950 | | 1.25 | 49.94 | 1.40 | 0.922 | 1.61 | H | EL | 38.9 | 0.983 | 2.14 | B | I | 20.1 | 0.80 | 0.922 | 1.25 | H | EL | 38.9 | -- |
| | | SNS7B | 42.000 | | 1.19 | 49.98 | 1.40 | 0.922 | 1.53 | H | EL | 38.9 | 0.983 | 2.07 | B | I | 20.1 | 0.80 | 0.922 | 1.19 | H | EL | 38.9 | -- |
| | TRUCK TRACTOR SEMI-TRAILER (TTST) | TNAGRIT3 | 33.000 | | 1.52 | 48.64 | 1.40 | 0.922 | 1.96 | H | EL | 38.9 | 0.983 | 2.63 | B | I | 20.1 | 0.80 | 0.922 | 1.52 | H | EL | 38.9 | -- |
| | | TNT4A | 33.075 | | 1.52 | 50.27 | 1.40 | 0.922 | 1.97 | H | EL | 38.9 | 0.983 | 2.56 | B | I | 20.1 | 0.80 | 0.922 | 1.52 | H | EL | 38.9 | -- |
| | | TNT6A | 41.600 | | 1.24 | 51.58 | 1.40 | 0.922 | 1.61 | H | EL | 38.9 | 0.983 | 2.20 | B | I | 20.1 | 0.80 | 0.922 | 1.24 | H | EL | 38.9 | -- |
| | | TNT7A | 42.000 | | 1.25 | 52.50 | 1.40 | 0.922 | 1.61 | H | EL | 38.9 | 0.983 | 2.15 | B | I | 20.1 | 0.80 | 0.922 | 1.25 | H | EL | 38.9 | -- |
| | | TNT7B | 42.000 | | 1.29 | 54.18 | 1.40 | 0.922 | 1.67 | H | EL | 38.9 | 0.983 | 2.03 | B | I | 20.1 | 0.80 | 0.922 | 1.29 | H | EL | 38.9 | -- |
| | | TNAGRIT4 | 43.000 | | 1.23 | 52.89 | 1.40 | 0.922 | 1.59 | H | EL | 38.9 | 0.983 | 1.96 | B | I | 20.1 | 0.80 | 0.922 | 1.23 | H | EL | 38.9 | -- |
| | | TNAGT5A | 45.000 | | 1.16 | 52.20 | 1.40 | 0.922 | 1.50 | H | EL | 38.9 | 0.983 | 1.92 | B | I | 20.1 | 0.80 | 0.922 | 1.16 | H | EL | 38.9 | -- |
| | | TNAGT5B | 45.000 | 3 | 1.15 | 51.75 | 1.40 | 0.922 | 1.48 | H | EL | 38.9 | 0.983 | 1.85 | B | I | 20.1 | 0.80 | 0.922 | 1.15 | H | EL | 38.9 | -- |

## LOAD FACTORS

| DESIGN LOAD RATING FACTORS | LIMIT STATE | $\gamma_{DC}$ | $\gamma_{DW}$ |
|---|---|---|---|
| | STRENGTH I | 1.25 | 1.50 |
| | SERVICE III | 1.00 | 1.00 |

## NOTES

MINIMUM RATING FACTORS ARE BASED ON THE STRENGTH I AND SERVICE III LIMIT STATES.

ALLOWABLE STRESSES FOR SERVICE III LIMIT STATE ARE AS REQUIRED FOR DESIGN.

## COMMENTS

1. SPAN "B" THRU SPAN "G" AND SPAN "I" THRU SPAN "L" ARE IDENTICAL.
2. LEFT AND RIGHT EXTERIOR GIRDER ARE IDENTICAL.

(#) CONTROLLING LOAD RATING

(1) DESIGN LOAD RATING (HL-93)

(2) DESIGN LOAD RATING (HS-20)

(3) LEGAL LOAD RATING **

** SEE CHART FOR VEHICLE TYPE

GIRDER LOCATION

I - INTERIOR GIRDER
EL - EXTERIOR LEFT GIRDER
ER - EXTERIOR RIGHT GIRDER

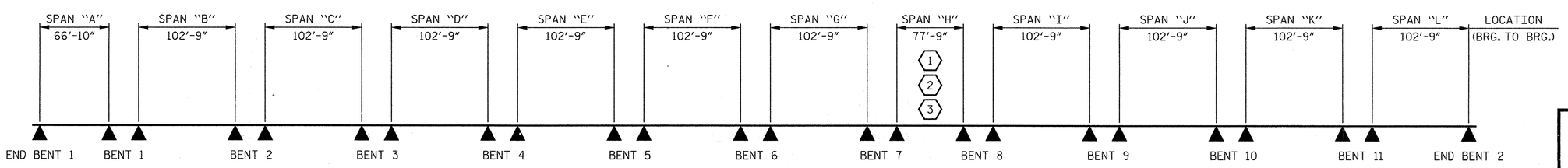


## LRFR SUMMARY

PROJECT NO. R-2303D
SAMPSON COUNTY
STATION: 1311+58.00 -LREV-

STATE OF NORTH CAROLINA
DEPARTMENT OF TRANSPORTATION
RALEIGH

STANDARD
LRFR SUMMARY FOR PRESTRESSED CONCRETE GIRDERS (NON-INTERSTATE TRAFFIC) (RIGHT LANE)

CDM Smith
Camp Dresser & McKee
421 Fayetteville Street, Suite 1303
Raleigh, NC 27604
NC COA No. F-1255

DRAWN BY : K.E. LOFTON DATE : 10-12
CHECKED BY : P.R. HOLSHOUSER DATE : 11-12
DESIGN ENGINEER : P.R. HOLSHOUSER DATE : 1-13

DWG. No. S02-008

NORTH CAROLINA PROFESSIONAL SEAL 20668 ENGINEER PAUL R. HOLSHOUSER 2/21/2013

| REVISIONS | | | | | | SHEET No. |
|---|---|---|---|---|---|---|
| No. | BY: | DATE: | No. | BY: | DATE: | S-84 |
| 1 | | | 3 | | | TOTAL SHEETS |
| 2 | | | 4 | | | 218 |

ASSEMBLED BY : K. E. LOFTON DATE : 10-12
CHECKED BY : P.R. HOLSHOUSER DATE : 11-12
DRAWN BY : MAA 1/08
CHECKED BY : GM/DI 2/08
REV. 11/12/08RR MAA/GM

FILE: r:\roadwy\2303d\structures\PLANS\Sc_21\R2303D_S02_SH2_R1.dgn
DATE: 2/21/2013 10:18:19 AM

STD. No. LRFR1

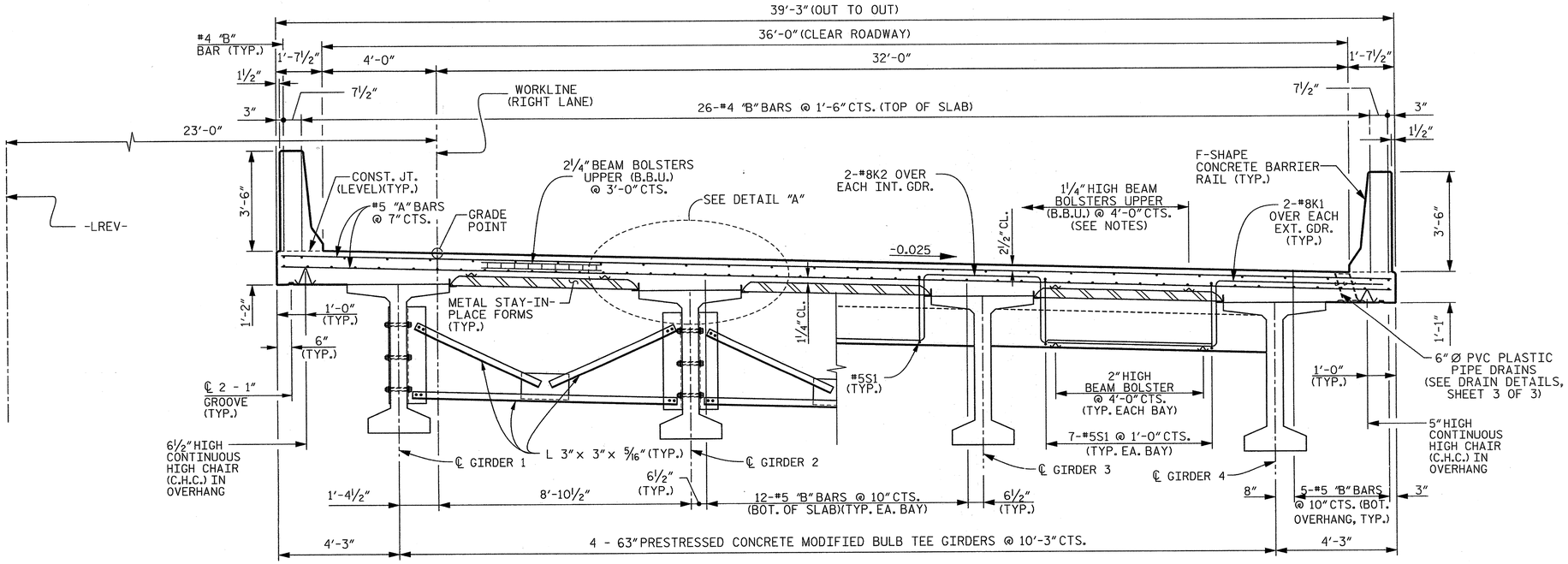


**NEAR INTERMEDIATE DIAPHRAGMS**

**TYPICAL SECTION**

**NEAR DIAPHRAGMS AT END BENTS 1 AND 2 AND BENTS 3, 6, AND 9**

## NOTES

PROVIDE 1¼" HIGH BEAM BOLSTERS UPPER AT 4'-0" CTS. ATOP THE METAL STAY-IN-PLACE FORMS TO SUPPORT THE BOTTOM MAT OF "A" BARS. WHEN USING REMOVABLE FORMS, PROVIDE CONTINUOUS HIGH CHAIRS FOR METAL DECK (C.H.C.M.) @ 4'-0" CTS. WITH A HEIGHT TO SUPPORT THE BOTTOM MAT OF "A" BARS A CLEAR DISTANCE OF 2½" ABOVE THE TOP OF THE REMOVABLE FORM.

LONGITUDINAL STEEL MAY BE SHIFTED SLIGHTLY, AS NECESSARY, TO AVOID INTERFERENCE WITH BOTH STIRRUPS IN PRESTRESSED CONCRETE GIRDERS AND DECK DRAINS.

PREVIOUSLY CAST CONCRETE IN A CONTINUOUS UNIT SHALL HAVE ATTAINED A MINIMUM COMPRESSIVE STRENGTH OF 3,000 PSI BEFORE ADDITIONAL CONCRETE IS CAST IN THE UNIT.

BARRIER RAIL IN A CONTINUOUS UNIT SHALL NOT BE CAST UNTIL ALL SLAB CONCRETE IN THE UNIT HAS BEEN CAST AND HAS REACHED A MINIMUM COMPRESSIVE STRENGTH OF 3,000 PSI.

CONCRETE IN END BENT 1, BENT 3, BENT 6, BENT 9 AND END BENT 2 DIAPHRAGMS MAY BE CLASS A IN LIEU OF CLASS AA.

FOR F-SHAPE CONCRETE BARRIER RAIL DETAILS, SEE "CONCRETE BARRIER RAIL" SHEETS.

FOR POURING SEQUENCE, SEE "SUPERSTRUCTURE BILL OF MATERIAL" SHEET 1 OF 2.

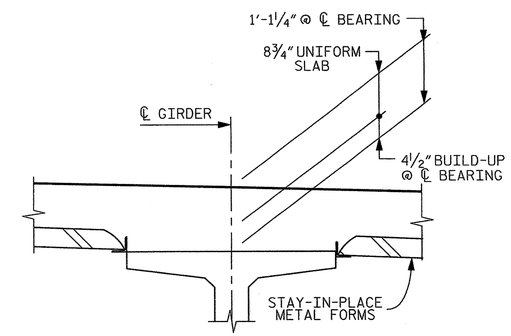


**DETAIL "A"**

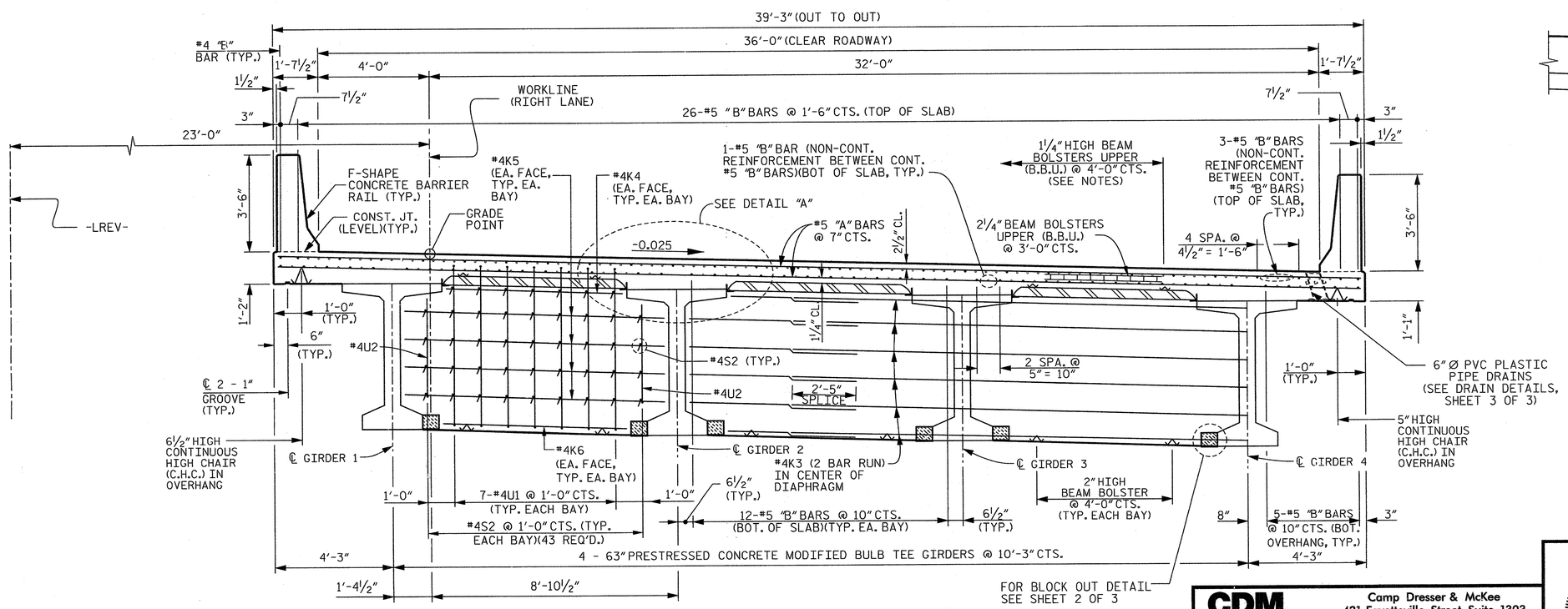


**NEAR INTERMEDIATE DIAPHRAGMS AT BENTS 1, 2, 4, 5, 7, 8, 10 AND 11**

**TYPICAL SECTION**

PROJECT NO. R-2303D

SAMPSON COUNTY

STATION: 1311+58.00 -LREV-

SHEET 1 OF 3

STATE OF NORTH CAROLINA
DEPARTMENT OF TRANSPORTATION
RALEIGH

SUPERSTRUCTURE

TYPICAL SECTION

(RIGHT LANE)

CDM Smith

Camp Dresser & McKee
421 Fayetteville Street, Suite 1303
Raleigh, NC 27604
NC COA No. F-1255

DRAWN BY : C.E.DIXON DATE : 11-12
CHECKED BY : J.T.ECKEL DATE : 11-12
DESIGN ENGINEER : P.R. HOLSHOUSER DATE : 1-13

DWG. No. S02-009

NORTH CAROLINA PROFESSIONAL SEAL 20668 ENGINEER PAUL R. HOLSHOUSER 2/22/2013

| REVISIONS | | | | | | SHEET No. |
|---|---|---|---|---|---|---|
| No. | BY: | DATE: | No. | BY: | DATE: | S-85 |
| 1 | | | 3 | | | TOTAL SHEETS |
| 2 | | | 4 | | | 218 |

FILE: r:\radar\2303d\structures\PLANS\Sv_2\R2303D_SD_SH2_s1.dgn
DATE: 2/22/2013 10:18:22 AM

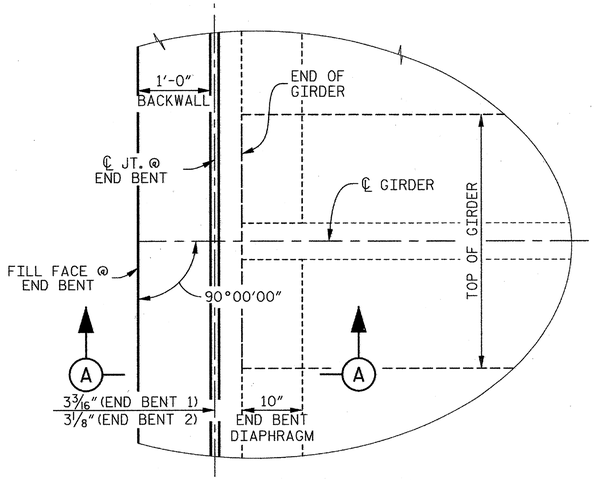


## PLAN OF DIAPHRAGM AT END BENT

(END BENT 1 SHOWN, END BENT 2 SIMILAR)

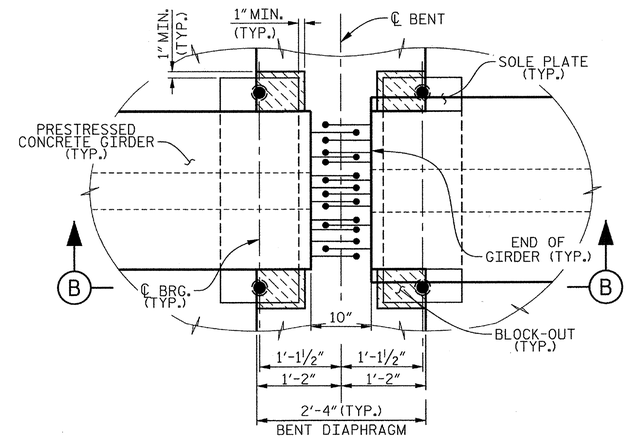


PLAN

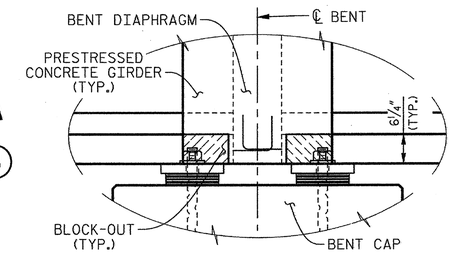


SECTION B–B

## BENT DIAPHRAGM BLOCK–OUT DETAIL

(TYPICAL BENT NOS. 1, 2, 4, 5, 7, 8, 10 AND 11)

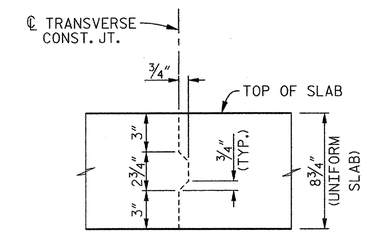


## TRANSVERSE CONSTRUCTION JOINT DETAIL

REINFORCING STEEL IN SLAB NOT SHOWN.
LONGITUDINAL REINFORCING STEEL SHALL BE CONTINUOUS THRU JOINT.

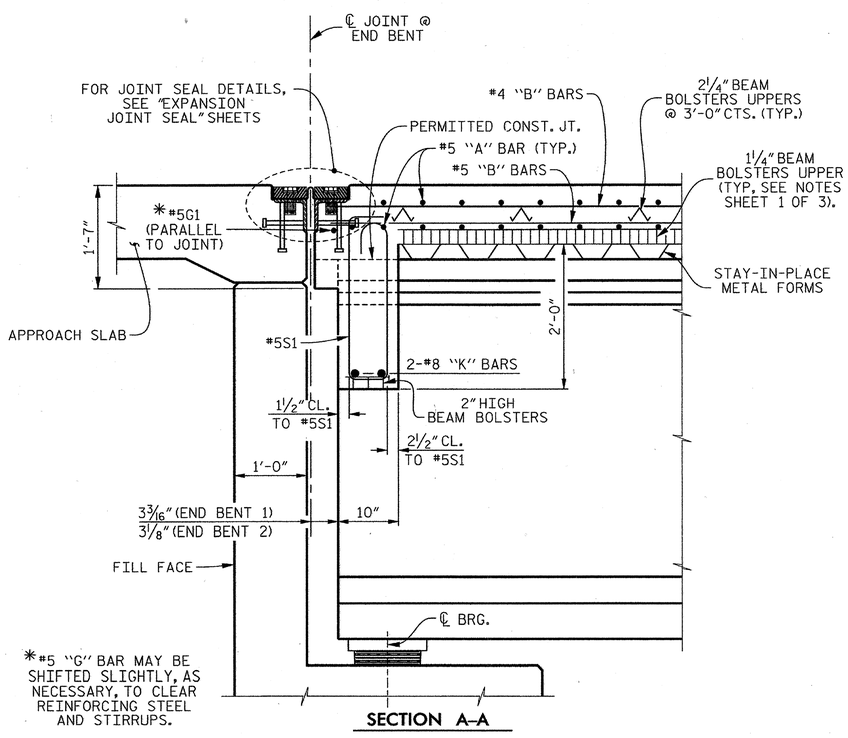


SECTION A–A

## SECTION THRU END BENT DIAPHRAGM

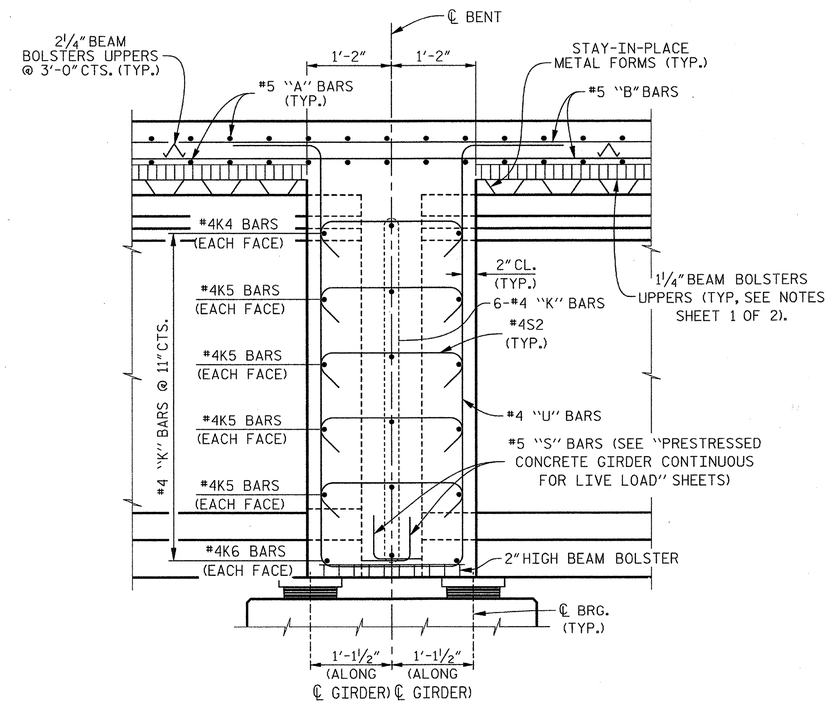


## SECTION THRU BENT DIAPHRAGM

(TYPICAL BENT NOS. 1, 2, 4, 5, 7, 8, 10 AND 11)

PROJECT NO. R–2303D
SAMPSON COUNTY
STATION: 1311+58.00 –LREV–

SHEET 2 OF 3

STATE OF NORTH CAROLINA
DEPARTMENT OF TRANSPORTATION
RALEIGH

SUPERSTRUCTURE

# TYPICAL SECTION DETAILS

# (RIGHT LANE)

CDM Smith
Camp Dresser & McKee
421 Fayetteville Street, Suite 1303
Raleigh, NC 27604
NC COA No. F–1255

| | | | |
|---|---|---|---|
| DRAWN BY : C.E.DIXON | DATE : 11–12 | DWG. No. | |
| CHECKED BY : J.T.ECKEL | DATE : 11–12 | S02-010 | |
| DESIGN ENGINEER : P.R. HOLSHOUSER | DATE : 1–13 | | |

NORTH CAROLINA PROFESSIONAL SEAL 20668 ENGINEER PAUL R. HOLSHOUSER 2/19/2013

| REVISIONS | | | | | | SHEET No. |
|---|---|---|---|---|---|---|
| No. | BY: | DATE: | No. | BY: | DATE: | S-86 |
| 1 | | | 3 | | | TOTAL SHEETS |
| 2 | | | 4 | | | 218 |

FILE: n:\node\r2303d\structures\PLANS\Str_2\R2303D_S02_Str2_h02.dgn
DATE: 12/20/2012 9:23:05 PM

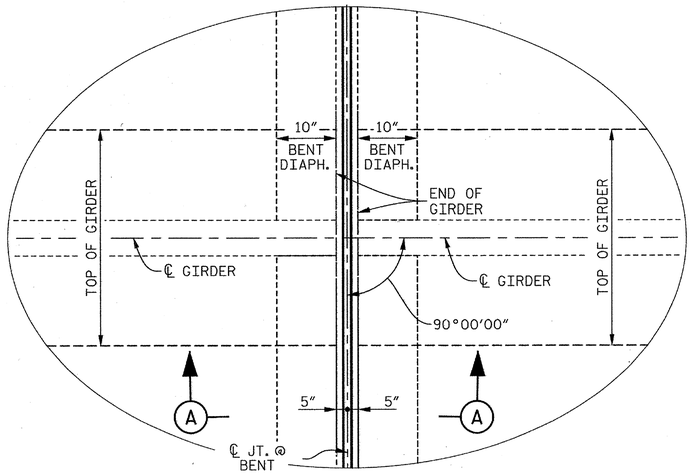


## PLAN OF DIAPHRAGMS AT BENT NOS. 3, 6 AND 9

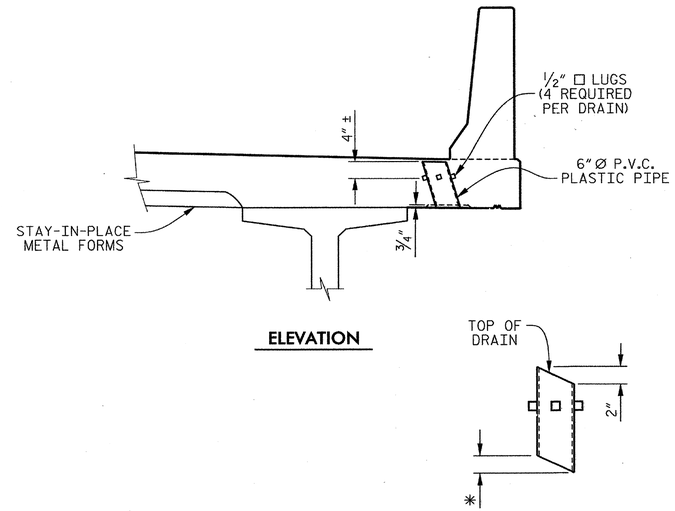


**ELEVATION**

* TO BE SET TO MATCH SLOPE OF BOTTOM OF OVERHANG (70 DRAINS REQUIRED)

**PIPE DETAIL**

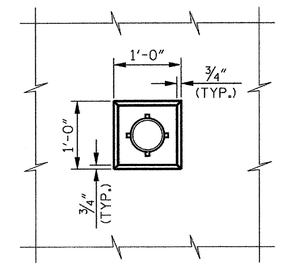


**PLAN OF RECESS**

TOP OF FLOOR DRAINS TO BE SET 3/8" BELOW SURFACE OF SLAB.

4 - 1/2" □ LUGS TO BE GLUED TO THE P.V.C. PLASTIC PIPE AT EQUAL SPACES AROUND THE PIPE DRAIN APPROXIMATELY 4" FROM THE TOP OF THE PIPE.

THE 6" DIAMETER P.V.C. PLASTIC PIPE AND FITTINGS SHALL BE SCHEDULE 40 AND CONFORM TO ASTM D1785.

## DRAIN DETAILS

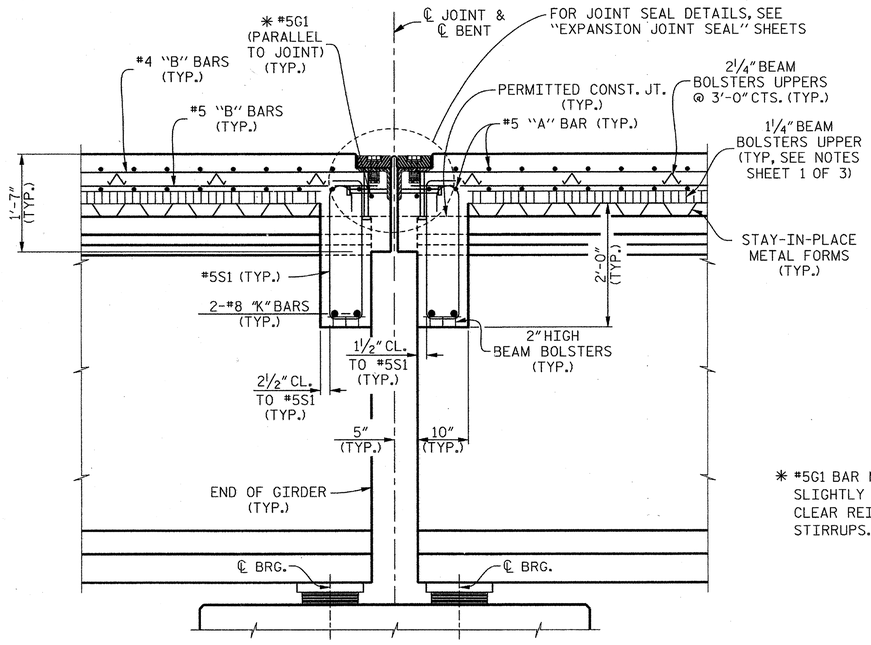


* #5G1 BAR MAY BE SHIFTED SLIGHTLY AS NECESSARY TO CLEAR REINFORCING STEEL AND STIRRUPS.

**SECTION A–A**

## SECTION THRU DIAPHRAGMS @ BENT NOS. 3, 6 AND 9

PROJECT NO. R-2303D
SAMPSON COUNTY
STATION: 1311+58.00 -L REV-

SHEET 3 OF 3

STATE OF NORTH CAROLINA
DEPARTMENT OF TRANSPORTATION
RALEIGH

SUPERSTRUCTURE

# TYPICAL SECTION DETAILS

## (RIGHT LANE)

CDM Smith
Camp Dresser & McKee
421 Fayetteville Street, Suite 1303
Raleigh, NC 27604
NC COA No. F-1255

DRAWN BY : C.E.DIXON DATE : 11-12
CHECKED BY : J.T.ECKEL DATE : 11-12
DESIGN ENGINEER : P.R. HOLSHOUSER DATE : 1-13

DWG. No. S02-011

NORTH CAROLINA PROFESSIONAL SEAL 20668 ENGINEER PAUL R. HOLSHOUSER 2/08/2013

| REVISIONS | | | | | | | SHEET No. |
|---|---|---|---|---|---|---|---|
| No. | BY: | DATE: | No. | BY: | DATE: | | S-87 |
| 1 | | | 3 | | | | TOTAL SHEETS |
| 2 | | | 4 | | | | 218 |

FILE: n:\nodot\r2303d\structures\PLANS\Str_2\R2303D_SD_Sh2_ts3.dgn
DATE: 12/06/2012 9:23:06 PM

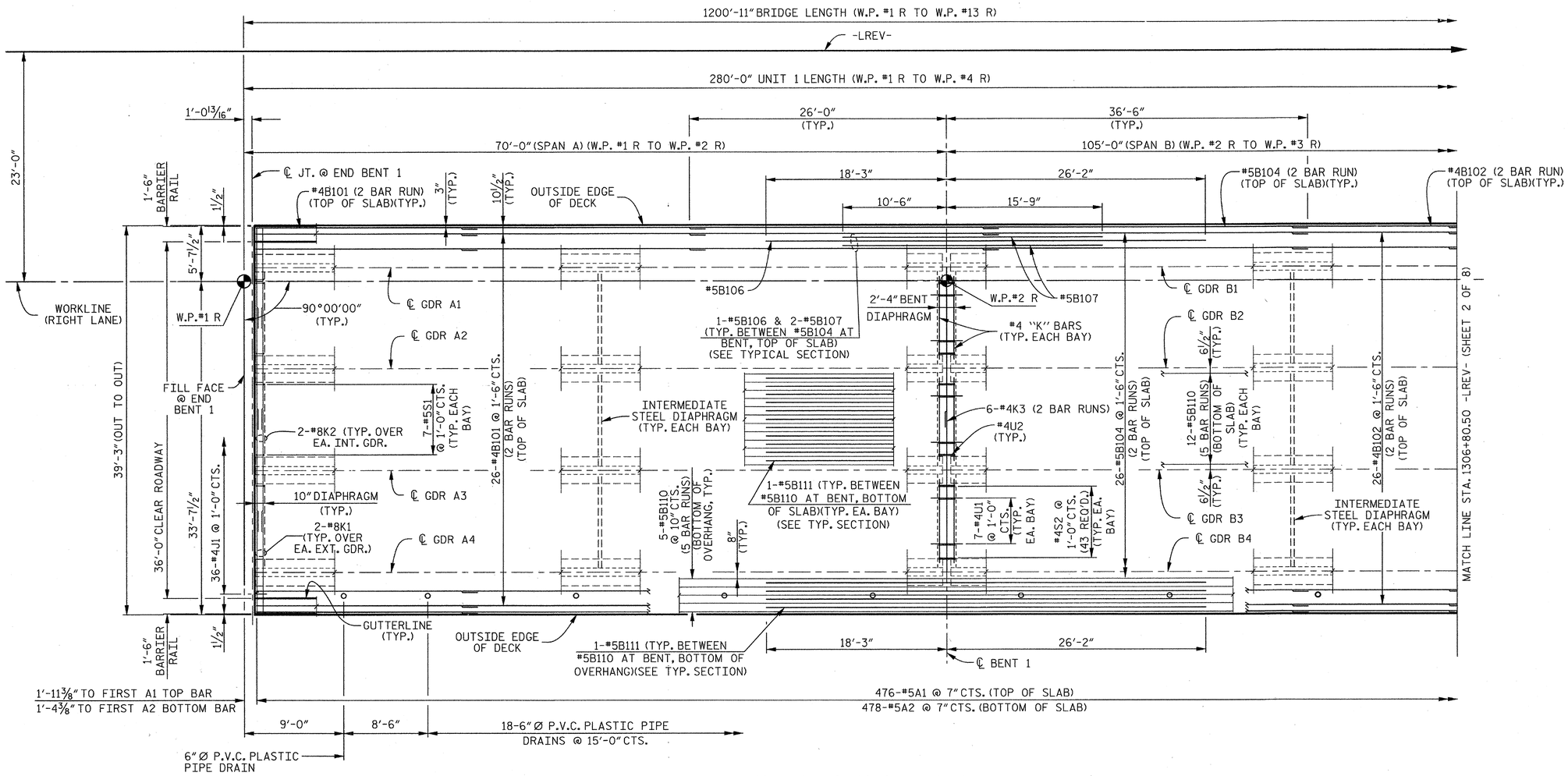


## PLAN OF SPANS – UNIT 1

### NOTES

FOR NOTES, SEE "TYPICAL SECTION" SHEET 1 OF 3.

FOR SLAB POURING SEQUENCE, SEE "SUPERSTRUCTURE BILL OF MATERIAL" SHEET 1 OF 2.

FOR SPLICE LENGTHS, SEE "SUPERSTRUCTURE BILL OF MATERIAL" SHEET 2 OF 2.

THE LOCATION OF THE FIRST A2 BOTTOM BAR MAY BE ADJUSTED SLIGHTLY TO AVOID CONFLICT WITH EXPANSION JOINT SEAL ASSEMBLY.

PROJECT NO. R-2303D
SAMPSON COUNTY
STATION: 1311+58.00 -LREV-

SHEET 1 OF 8

STATE OF NORTH CAROLINA
DEPARTMENT OF TRANSPORTATION
RALEIGH

SUPERSTRUCTURE

PLAN OF SPANS (UNIT 1)

(RIGHT LANE)

CDM Smith
Camp Dresser & McKee
421 Fayetteville Street, Suite 1303
Raleigh, NC 27604
NC COA No. F-1255

DRAWN BY : C.E.DIXON DATE : 11-12
CHECKED BY : J.T.ECKEL DATE : 11-12
DESIGN ENGINEER : P.R. HOLSHOUSER DATE : 1-13

DWG. No. S02-012

NORTH CAROLINA PROFESSIONAL SEAL 20668 ENGINEER PAUL R. HOLSHOUSER 2/28/2013

| REVISIONS | | | | | | SHEET No. |
|---|---|---|---|---|---|---|
| No. | BY: | DATE: | No. | BY: | DATE: | S-88 |
| 1 | | | 3 | | | TOTAL SHEETS |
| 2 | | | 4 | | | 218 |

FILE: n:\cadd\r2303d\structural\PLANS\Str_2\R2303D_S02_Str2_pt1.dgn
DATE: 12/20/2012 9:23:08 PM

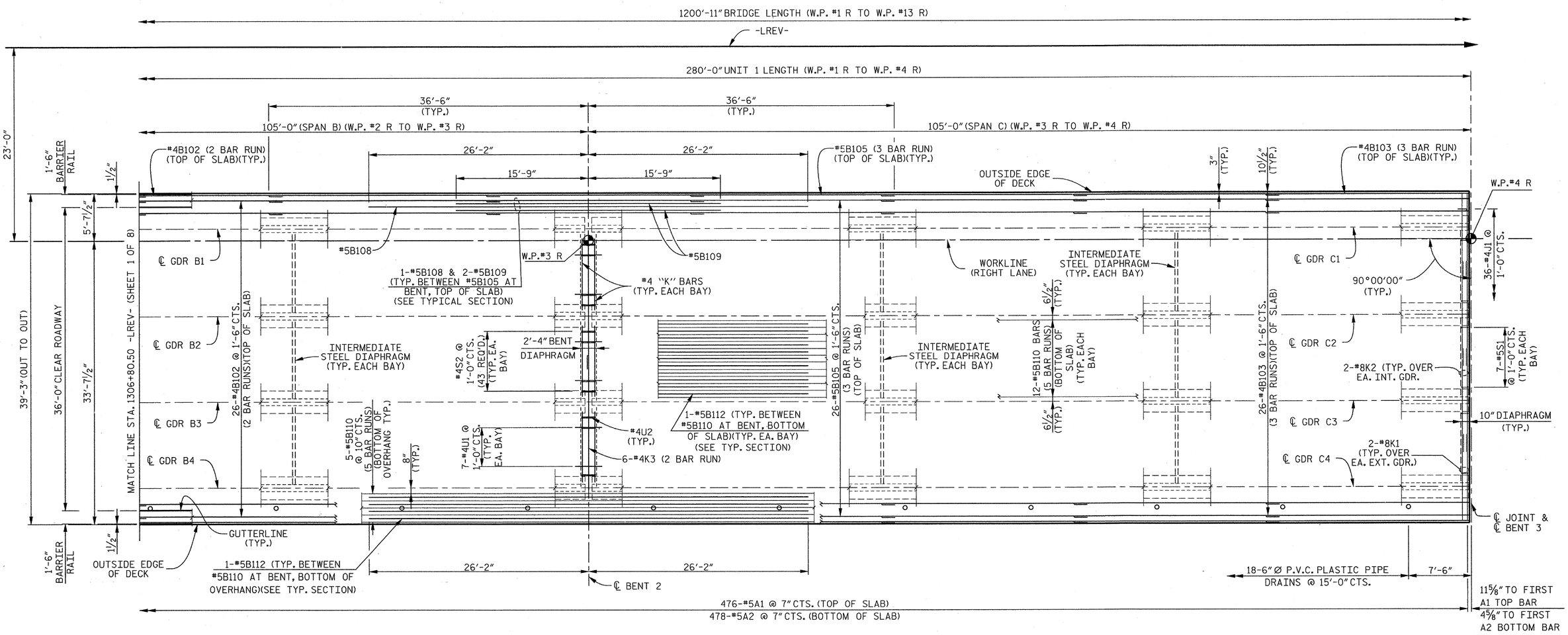


## PLAN OF SPANS – UNIT 1

PROJECT NO. R-2303D

SAMPSON COUNTY

STATION: 1311+58.00 -LREV-

SHEET 2 OF 8

STATE OF NORTH CAROLINA
DEPARTMENT OF TRANSPORTATION
RALEIGH

SUPERSTRUCTURE

PLAN OF SPANS (UNIT 1)

(RIGHT LANE)

CDM Smith

Camp Dresser & McKee
421 Fayetteville Street, Suite 1303
Raleigh, NC 27604
NC COA No. F-1255

DRAWN BY : C.E.DIXON DATE : 11-12
CHECKED BY : J.T.ECKEL DATE : 11-12
DESIGN ENGINEER : P.R. HOLSHOUSER DATE : 1-13

DWG. No. S02-013

NORTH CAROLINA PROFESSIONAL SEAL 20668 ENGINEER PAUL R. HOLSHOUSER
2/08/2013

| REVISIONS | | | | | | SHEET No. |
|---|---|---|---|---|---|---|
| No. | BY: | DATE: | No. | BY: | DATE: | S-89 |
| 1 | | | 3 | | | TOTAL SHEETS |
| 2 | | | 4 | | | 218 |

FILE: r:\model\2303d\structures\PLANS\Str_2\R2303D_SD_Str2_pg2.dgn
DATE: 12/9/2012 9:23:10 PM

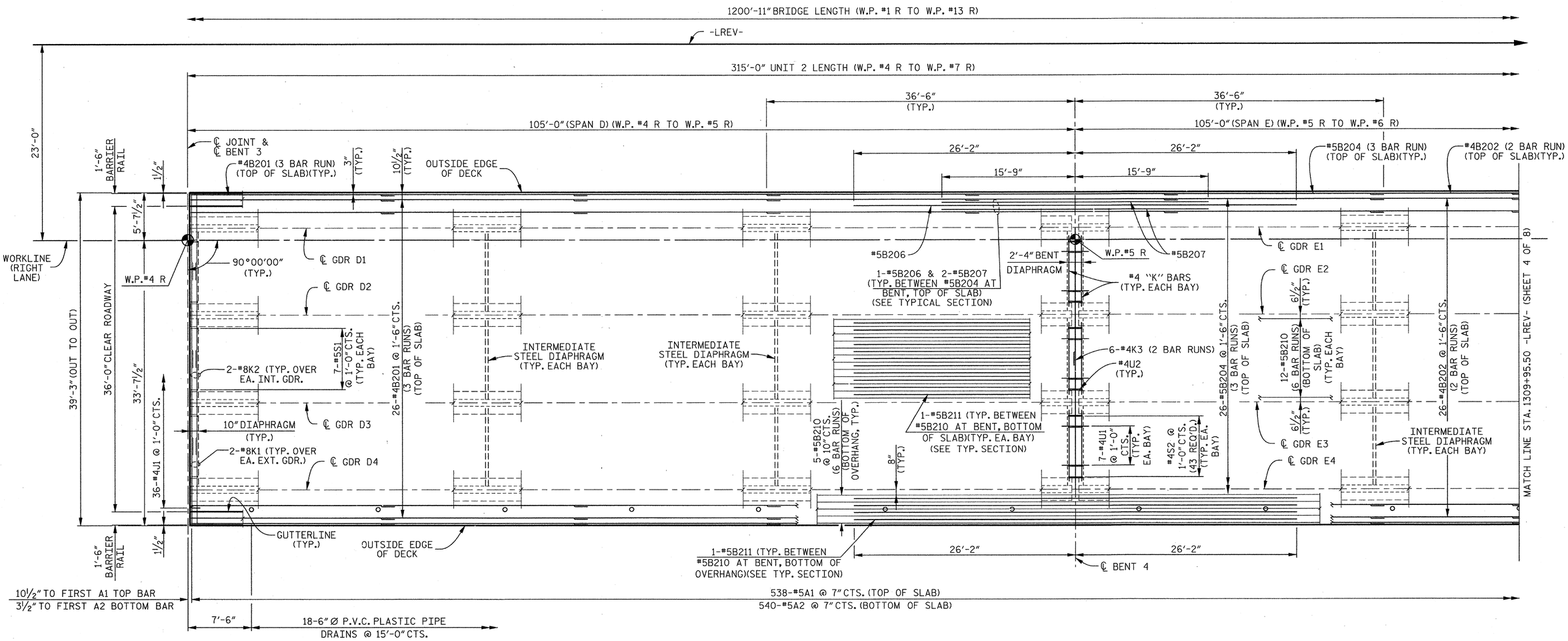


## PLAN OF SPANS – UNIT 2

### NOTES

FOR NOTES, SEE "TYPICAL SECTION" SHEET 1 OF 3.

FOR SLAB POURING SEQUENCE, SEE "SUPERSTRUCTURE BILL OF MATERIAL" SHEET 1 OF 2.

FOR SPLICE LENGTHS, SEE "SUPERSTRUCTURE BILL OF MATERIAL" SHEET 2 OF 2.

THE LOCATION OF THE FIRST A2 BOTTOM BAR MAY BE ADJUSTED SLIGHTLY TO AVOID CONFLICT WITH EXPANSION JOINT SEAL ASSEMBLY.

PROJECT NO. R-2303D
SAMPSON COUNTY
STATION: 1311+58.00 -LREV-

SHEET 3 OF 8

STATE OF NORTH CAROLINA
DEPARTMENT OF TRANSPORTATION
RALEIGH

SUPERSTRUCTURE

PLAN OF SPANS (UNIT 2)

(RIGHT LANE)

CDM Smith
Camp Dresser & McKee
421 Fayetteville Street, Suite 1303
Raleigh, NC 27604
NC COA No. F-1255

DRAWN BY : C.E.DIXON DATE : 11-12
CHECKED BY : J.T.ECKEL DATE : 11-12
DESIGN ENGINEER : P.R. HOLSHOUSER DATE : 1-13

DWG. No. S02-014

NORTH CAROLINA PROFESSIONAL SEAL 20668 ENGINEER PAUL R. HOLSHOUSER 2/08/2013

| REVISIONS | | | | | | SHEET No. |
|---|---|---|---|---|---|---|
| No. | BY: | DATE: | No. | BY: | DATE: | 3-96 |
| 1 | | | 3 | | | TOTAL SHEETS |
| 2 | | | 4 | | | 218 |

FILE: n:\node\r2303d\structures\PLANS\Sr_2\R2303D_SD_Sh2_pt3.dgn
DATE: 12/20/2012 9:23:12 PM

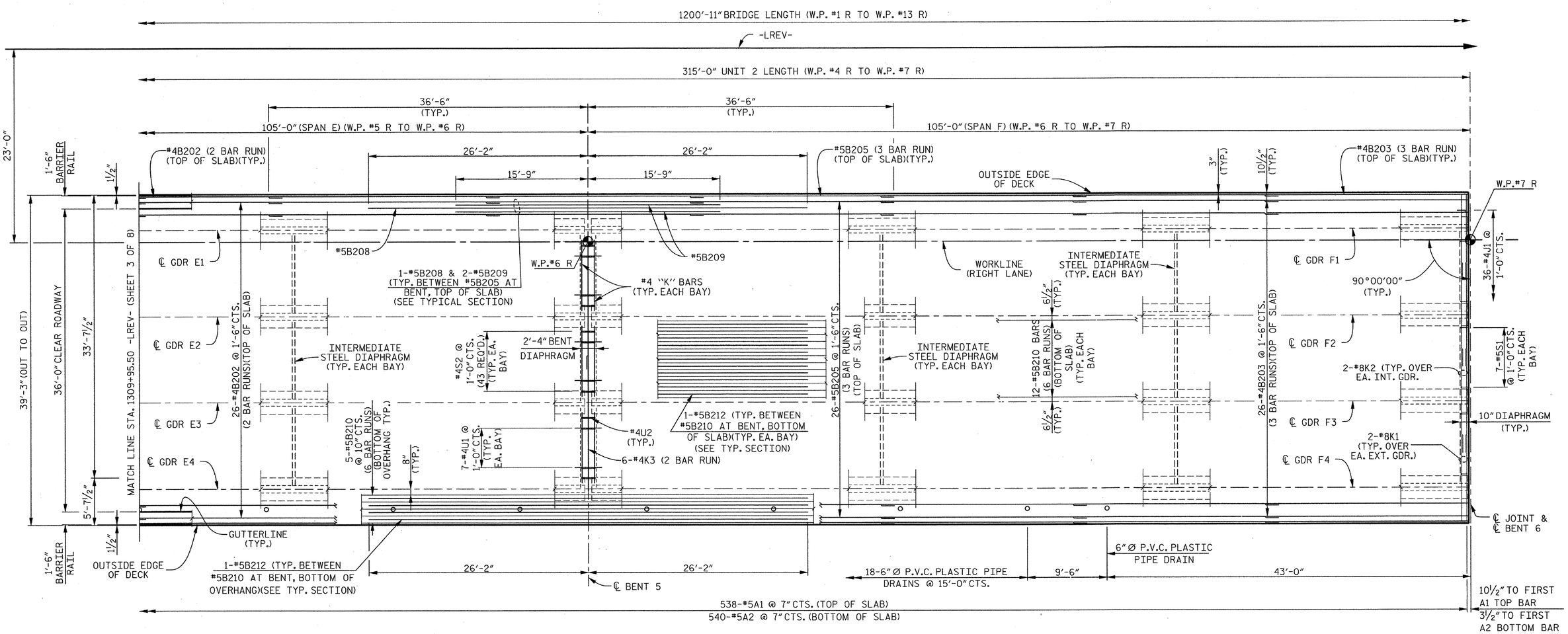


## PLAN OF SPANS – UNIT 2

PROJECT NO. R-2303D

SAMPSON COUNTY

STATION: 1311+58.00 -LREV-

SHEET 4 OF 8

STATE OF NORTH CAROLINA
DEPARTMENT OF TRANSPORTATION
RALEIGH

SUPERSTRUCTURE

PLAN OF SPANS (UNIT 2)

(RIGHT LANE)

CDM Smith

Camp Dresser & McKee
421 Fayetteville Street, Suite 1303
Raleigh, NC 27604
NC COA No. F-1255

DRAWN BY : C.E.DIXON DATE : 11-12
CHECKED BY : J.T.ECKEL DATE : 11-12
DESIGN ENGINEER : P.R. HOLSHOUSER DATE : 1-13

DWG. No. S02-015

NORTH CAROLINA PROFESSIONAL SEAL 20668 ENGINEER PAUL R. HOLSHOUSER

| REVISIONS | | | | | | | SHEET No. |
|---|---|---|---|---|---|---|---|
| No. | BY: | DATE: | No. | BY: | DATE: | | S-91 |
| 1 | | | 3 | | | | TOTAL SHEETS |
| 2 | | | 4 | | | | 218 |

FILE: r:\model\2303d\structures\PLANS\Sr_2\R2303D_SD_Sr2_ps4.dgn
DATE: 12/30/2012 9:23:13 PM

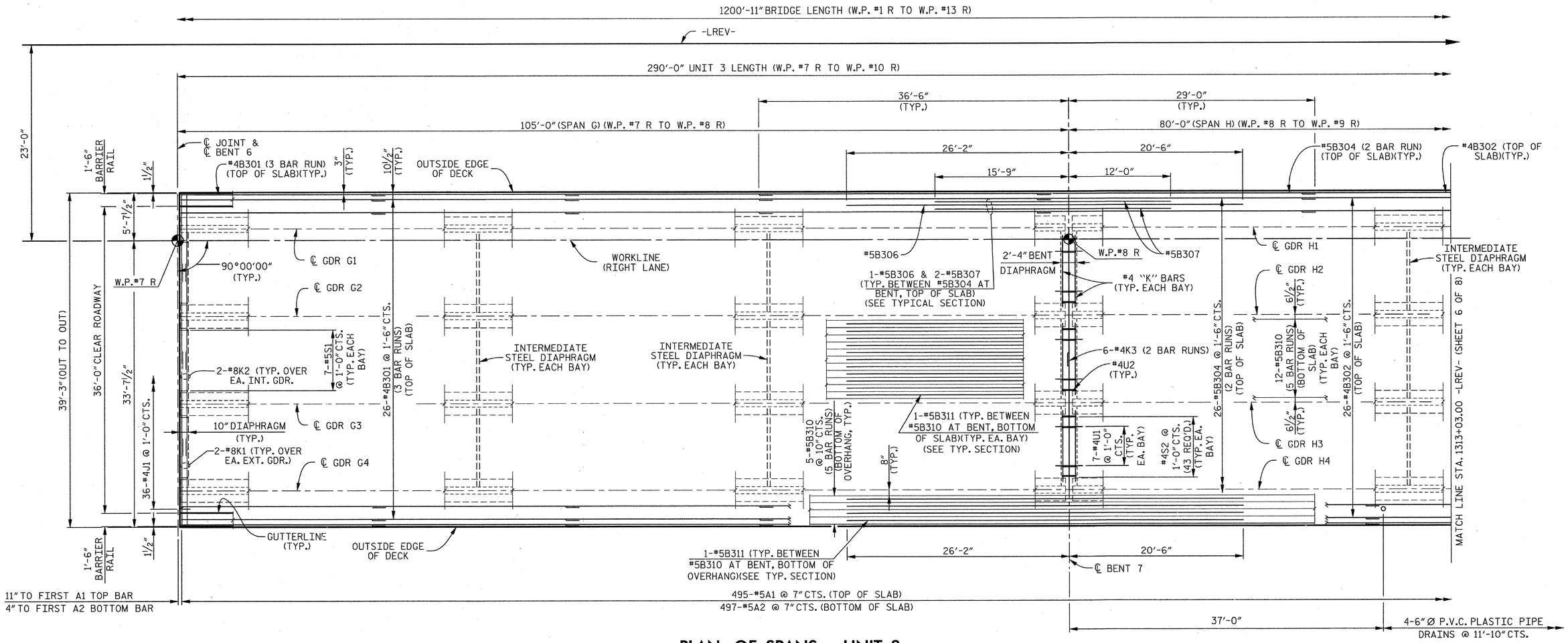


## PLAN OF SPANS – UNIT 3

### NOTES

FOR NOTES, SEE "TYPICAL SECTION" SHEET 1 OF 3.

FOR SLAB POURING SEQUENCE, SEE "SUPERSTRUCTURE BILL OF MATERIAL" SHEET 1 OF 2.

FOR SPLICE LENGTHS, SEE "SUPERSTRUCTURE BILL OF MATERIAL" SHEET 2 OF 2.

THE LOCATION OF THE FIRST A2 BOTTOM BAR MAY BE ADJUSTED SLIGHTLY TO AVOID CONFLICT WITH EXPANSION JOINT SEAL ASSEMBLY.

PROJECT NO. R-2303D

SAMPSON COUNTY

STATION: 1311+58.00 -LREV-

SHEET 5 OF 8

STATE OF NORTH CAROLINA
DEPARTMENT OF TRANSPORTATION
RALEIGH

SUPERSTRUCTURE

PLAN OF SPANS (UNIT 3)

(RIGHT LANE)

CDM Smith
Camp Dresser & McKee
421 Fayetteville Street, Suite 1303
Raleigh, NC 27604
NC COA No. F-1255

| | | | |
|---|---|---|---|
| DRAWN BY : | C.E.DIXON | DATE : | 11-12 |
| CHECKED BY : | J.T.ECKEL | DATE : | 11-12 |
| DESIGN ENGINEER : | P.R. HOLSHOUSER | DATE : | 1-13 |

DWG. No. S02-016

NORTH CAROLINA PROFESSIONAL SEAL 20668 ENGINEER PAUL R. HOLSHOUSER 2/08/2013

| REVISIONS | | | | | | SHEET No. |
|---|---|---|---|---|---|---|
| No. | BY: | DATE: | No. | BY: | DATE: | S-92 |
| 1 | | | 3 | | | TOTAL SHEETS |
| 2 | | | 4 | | | 218 |

FILE: r:\nodot\r2303d\structures\PLANS\Str_2\R2303D_SD_Str2_ps5.dgn
DATE: 12/30/2012 9:23:15 PM

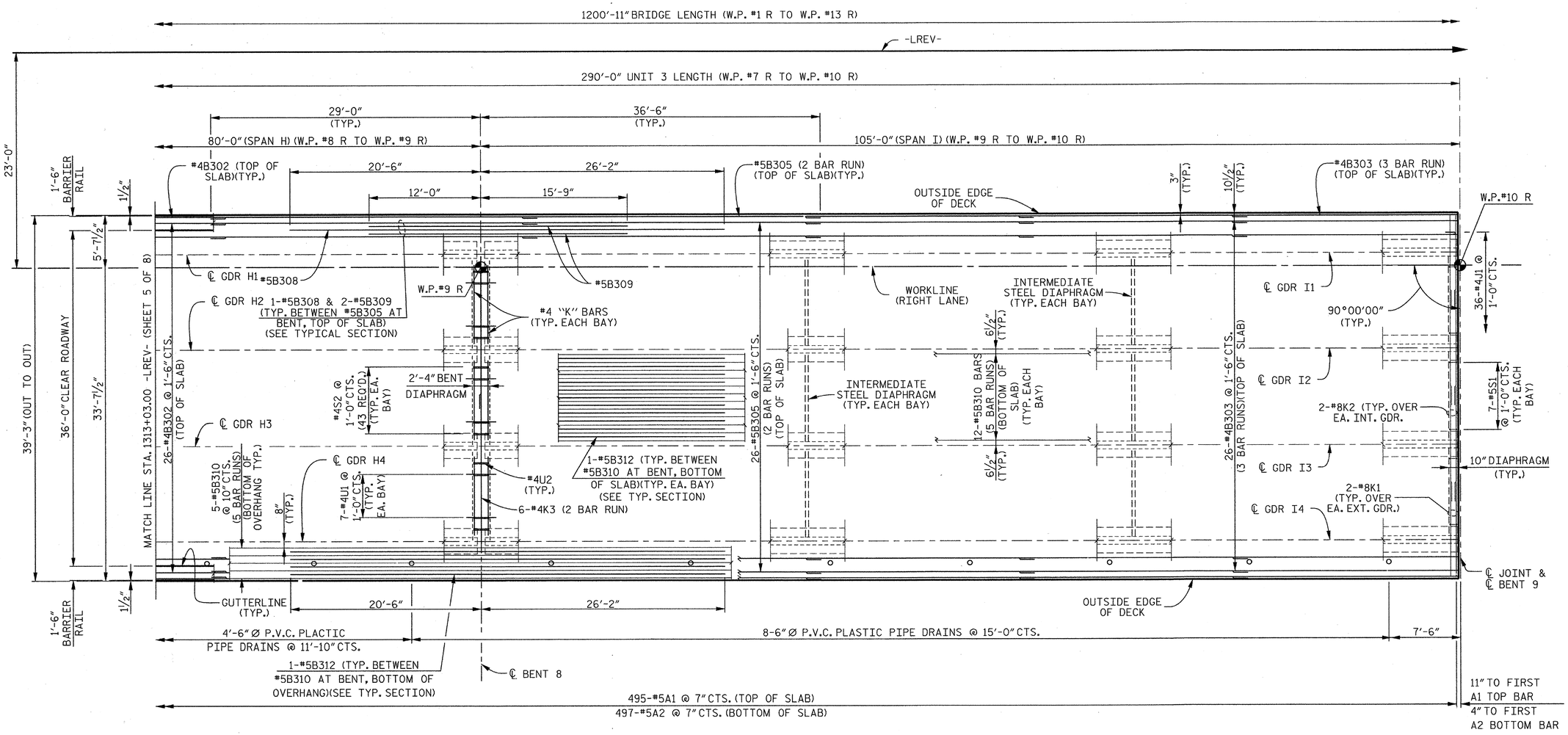


## PLAN OF SPANS – UNIT 3

PROJECT NO. R-2303D

SAMPSON COUNTY

STATION: 1311+58.00 -LREV-

SHEET 6 OF 8

STATE OF NORTH CAROLINA
DEPARTMENT OF TRANSPORTATION
RALEIGH

SUPERSTRUCTURE

PLAN OF SPANS (UNIT 3)

(RIGHT LANE)

CDM Smith

Camp Dresser & McKee
421 Fayetteville Street, Suite 1303
Raleigh, NC 27604
NC COA No. F-1255

| | | | |
|---|---|---|---|
| DRAWN BY : | C.E.DIXON | DATE : | 11-12 |
| CHECKED BY : | J.T.ECKEL | DATE : | 11-12 |
| DESIGN ENGINEER : | P.R. HOLSHOUSER | DATE : | 1-13 |

DWG. No. S02-017

NORTH CAROLINA PROFESSIONAL SEAL 20668 ENGINEER PAUL R. HOLSHOUSER 12/08/2013

| REVISIONS | | | | | | | SHEET No. |
|---|---|---|---|---|---|---|---|
| No. | BY: | DATE: | No. | BY: | DATE: | | S-93 |
| 1 | | | 3 | | | | TOTAL SHEETS |
| 2 | | | 4 | | | | 2-18 |

FILE: r:\roadwy\2303d\structures\PLANS\Sp_2\R2303D_SD_SH2_pn6.dgn
DATE: 12/05/2012 9:23:17 PM

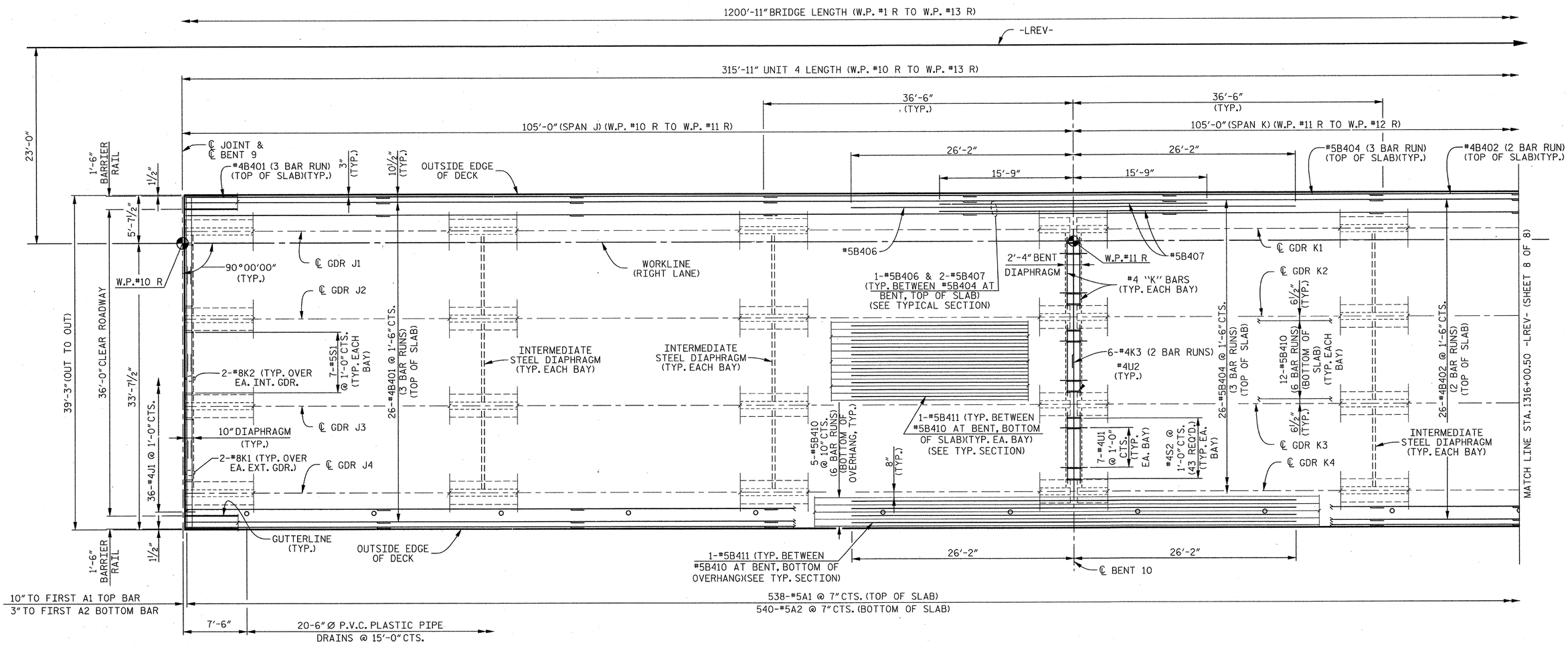


## PLAN OF SPANS – UNIT 4

### NOTES

FOR NOTES, SEE "TYPICAL SECTION" SHEET 1 OF 3.

FOR SLAB POURING SEQUENCE, SEE "SUPERSTRUCTURE BILL OF MATERIAL" SHEET 1 OF 2.

FOR SPLICE LENGTHS, SEE "SUPERSTRUCTURE BILL OF MATERIAL" SHEET 2 OF 2.

THE LOCATION OF THE FIRST A2 BOTTOM BAR MAY BE ADJUSTED SLIGHTLY TO AVOID CONFLICT WITH EXPANSION JOINT SEAL ASSEMBLY.

PROJECT NO. R-2303D
SAMPSON COUNTY
STATION: 1311+58.00 -LREV-

SHEET 7 OF 8

STATE OF NORTH CAROLINA
DEPARTMENT OF TRANSPORTATION
RALEIGH

SUPERSTRUCTURE

PLAN OF SPANS (UNIT 4)

(RIGHT LANE)

CDM Smith
Camp Dresser & McKee
421 Fayetteville Street, Suite 1303
Raleigh, NC 27604
NC COA No. F-1255

DRAWN BY : C.E.DIXON DATE : 11-12
CHECKED BY : J.T.ECKEL DATE : 11-12
DESIGN ENGINEER : P.R. HOLSHOUSER DATE : 1-13

DWG. No. S02-018

NORTH CAROLINA PROFESSIONAL SEAL 20668 ENGINEER PAUL R. HOLSHOUSER 1/18/2013

| REVISIONS | | | | | | SHEET No. |
|---|---|---|---|---|---|---|
| No. | BY: | DATE: | No. | BY: | DATE: | S-94 |
| 1 | | | 3 | | | TOTAL SHEETS |
| 2 | | | 4 | | | 218 |

FILE: r:\model\2303d\structures\PLANS\Str_2\R2303D_SD_Str2_pa7.dgn
DATE: 12/20/2012 9:23:18 PM

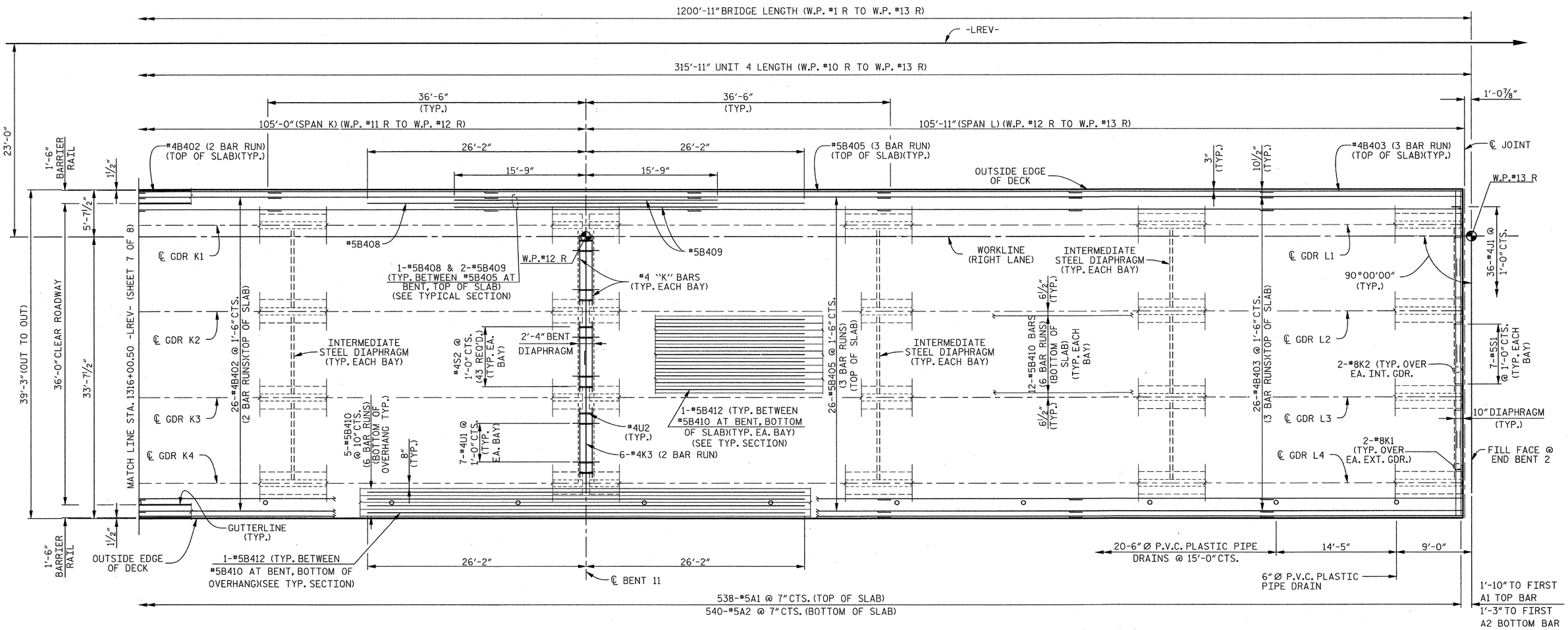


## PLAN OF SPANS – UNIT 4

PROJECT NO. R-2303D

SAMPSON COUNTY

STATION: 1311+58.00 -LREV-

SHEET 8 OF 8

STATE OF NORTH CAROLINA
DEPARTMENT OF TRANSPORTATION
RALEIGH

SUPERSTRUCTURE

PLAN OF SPANS (UNIT 4)

(RIGHT LANE)

CDM Smith

Camp Dresser & McKee
421 Fayetteville Street, Suite 1303
Raleigh, NC 27604
NC COA No. F-1255

DRAWN BY : C.E.DIXON DATE : 11-12
CHECKED BY : J.T.ECKEL DATE : 11-12
DESIGN ENGINEER : P.R. HOLSHOUSER DATE : 1-13

DWG. No. S02-019

NORTH CAROLINA PROFESSIONAL SEAL 20668 ENGINEER PAUL R. HOLSHOUSER 1/08/2013

| REVISIONS | | | | | | SHEET No. |
|---|---|---|---|---|---|---|
| No. | BY: | DATE: | No. | BY: | DATE: | S-95 |
| 1 | | | 3 | | | TOTAL SHEETS |
| 2 | | | 4 | | | 218 |

FILE: r:\models\2303d\structures\PLANS\Br_2\R2303D_S0_Sh2_pa8.dgn
DATE: 12/30/2012 1:23:30 PM

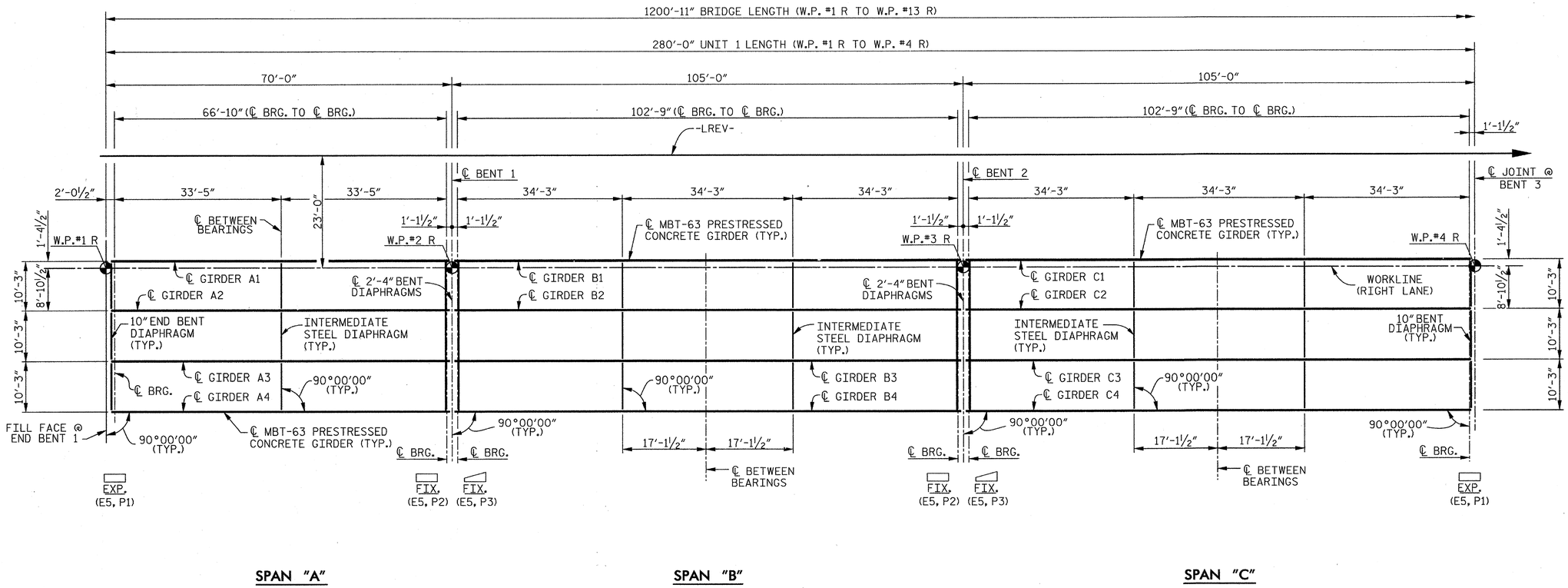


# FRAMING PLAN – UNIT 1

## NOTES

FOR FRAMING PLAN - UNIT 2, SEE SHEET 2 OF 4.

FOR INTERMEDIATE STEEL DIAPHRAGM DETAILS, SEE "INTERMEDIATE STEEL DIAPHRAGMS FOR 63" MODIFIED BULB TEE PRESTRESSED CONCRETE GIRDERS" SHEET.

PROJECT NO. R-2303D

SAMPSON COUNTY

STATION: 1311+58.00 -LREV-

SHEET 1 OF 4

STATE OF NORTH CAROLINA
DEPARTMENT OF TRANSPORTATION
RALEIGH

SUPERSTRUCTURE

FRAMING PLAN (UNIT 1)

(RIGHT LANE)

CDM Smith

Camp Dresser & McKee
421 Fayetteville Street, Suite 1303
Raleigh, NC 27604
NC COA No. F-1255

DRAWN BY : C.E.DIXON DATE : 11-12
CHECKED BY : J.T.ECKEL DATE : 11-12
DESIGN ENGINEER : P.R. HOLSHOUSER DATE : 1-13

DWG. No. S02-020

NORTH CAROLINA PROFESSIONAL SEAL 20668 ENGINEER P. PAUL R. HOLSHOUSER
2/08/2013

| REVISIONS | | | | | | |
|---|---|---|---|---|---|---|
| No. | BY: | DATE: | No. | BY: | DATE: | |
| 1 | | | 3 | | | |
| 2 | | | 4 | | | |

SHEET No. S-96

TOTAL SHEETS 218

FILE: r:\ncdot\r2303d\structures\PLANS\Str_2\R2303D_SD_Str2_fp1.dgn
DATE: 12/20/2012 9:23:21 PM

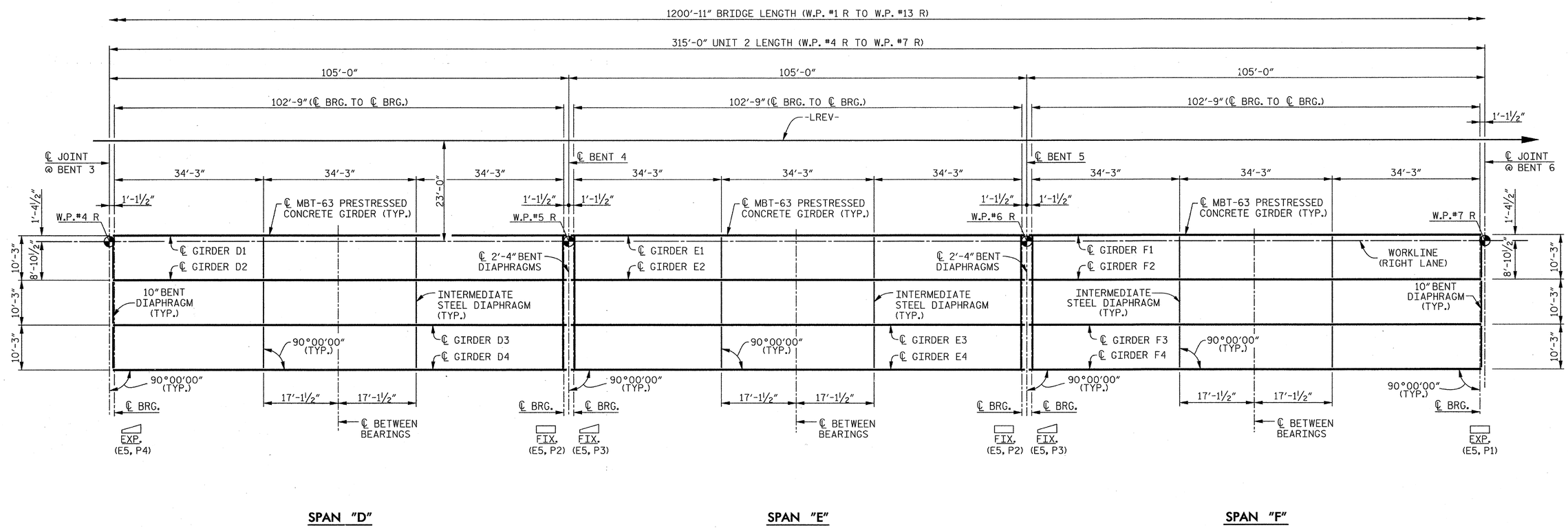


SPAN "D" SPAN "E" SPAN "F"

## NOTES

FOR FRAMING PLAN - UNIT 1, SEE SHEET 1 OF 4.

FOR FRAMING PLAN - UNIT 3, SEE SHEET 3 OF 4.

FOR INTERMEDIATE STEEL DIAPHRAGM DETAILS, SEE "INTERMEDIATE STEEL DIAPHRAGMS FOR 63" MODIFIED BULB TEE PRESTRESSED CONCRETE GIRDERS" SHEET.

# FRAMING PLAN – UNIT 2

PROJECT NO. R-2303D
SAMPSON COUNTY
STATION: 1311+58.00 -LREV-

SHEET 2 OF 4

STATE OF NORTH CAROLINA
DEPARTMENT OF TRANSPORTATION
RALEIGH

SUPERSTRUCTURE

FRAMING PLAN (UNIT 2)

(RIGHT LANE)

CDM Smith
Camp Dresser & McKee
421 Fayetteville Street, Suite 1303
Raleigh, NC 27604
NC COA No. F-1255

DRAWN BY : C.E.DIXON DATE : 11-12
CHECKED BY : J.T.ECKEL DATE : 11-12
DESIGN ENGINEER : P.R. HOLSHOUSER DATE : 1-13

DWG. No. S02-021

NORTH CAROLINA PROFESSIONAL SEAL 20668 ENGINEER P. PAUL R. HOLSHOUSER 12/18/2013

| REVISIONS | | | | | | SHEET No. |
|---|---|---|---|---|---|---|
| No. | BY: | DATE: | No. | BY: | DATE: | S-97 |
| 1 | | | 3 | | | TOTAL SHEETS |
| 2 | | | 4 | | | 218 |

FILE: n:\model\2303d\structures\PLANS\Sr_2\R2303D_S0_Sht2_fp2.dgn
DATE: 12/20/2012 9:23:23 PM

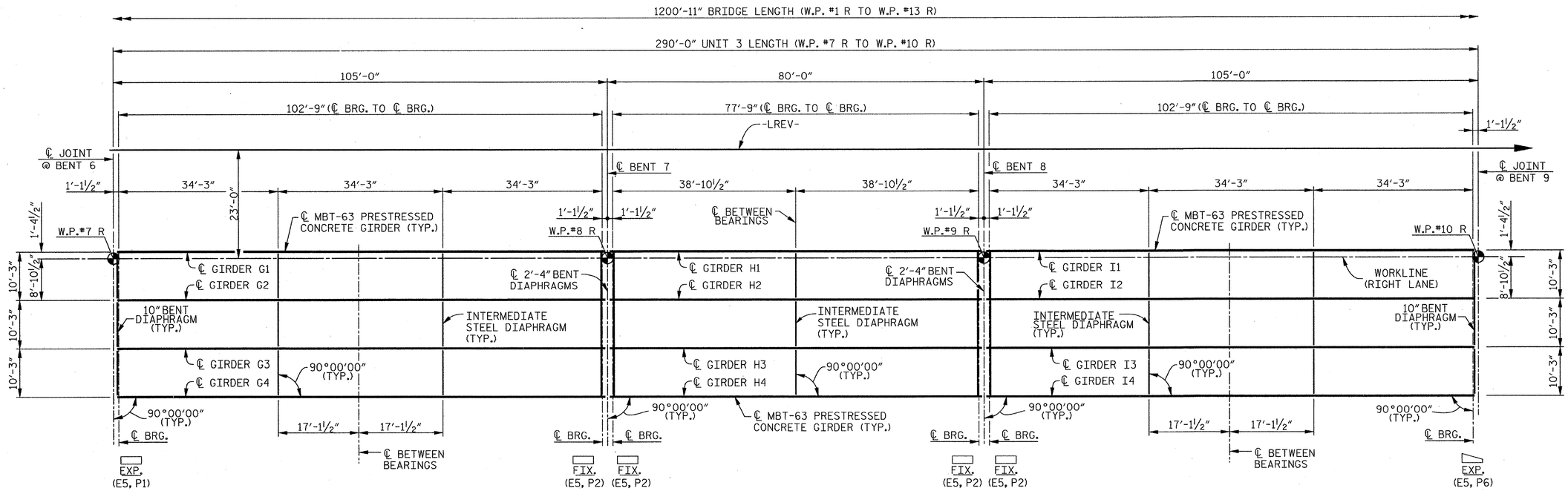


## FRAMING PLAN – UNIT 3

### NOTES

FOR FRAMING PLAN - UNIT 2, SEE SHEET 2 OF 4.

FOR FRAMING PLAN - UNIT 4, SEE SHEET 4 OF 4.

FOR INTERMEDIATE STEEL DIAPHRAGM DETAILS, SEE "INTERMEDIATE STEEL DIAPHRAGMS FOR 63" MODIFIED BULB TEE PRESTRESSED CONCRETE GIRDERS" SHEET.

PROJECT NO. R-2303D

SAMPSON COUNTY

STATION: 1311+58.00 -LREV-

SHEET 3 OF 4

STATE OF NORTH CAROLINA
DEPARTMENT OF TRANSPORTATION
RALEIGH

SUPERSTRUCTURE

FRAMING PLAN (UNIT 3)

(RIGHT LANE)

CDM Smith

Camp Dresser & McKee
421 Fayetteville Street, Suite 1303
Raleigh, NC 27604
NC COA No. F-1255

| | | | |
|---|---|---|---|
| DRAWN BY : | C.E.DIXON | DATE : | 11-12 |
| CHECKED BY : | J.T.ECKEL | DATE : | 11-12 |
| DESIGN ENGINEER : | P.R. HOLSHOUSER | DATE : | 1-13 |

DWG. No. S02-022

NORTH CAROLINA PROFESSIONAL SEAL 20668 ENGINEER PAUL R. HOLSHOUSER 21087 2013

| REVISIONS | | | | | | SHEET No. |
|---|---|---|---|---|---|---|
| No. | BY: | DATE: | No. | BY: | DATE: | S-98 |
| 1 | | | 3 | | | TOTAL SHEETS |
| 2 | | | 4 | | | 218 |

FILE: r:\nodot\r2303d\structures\PLANS\Str_2\R2303D_SD_Str2_fp3.dgn
DATE: 12/30/2012 9:23:24 PM

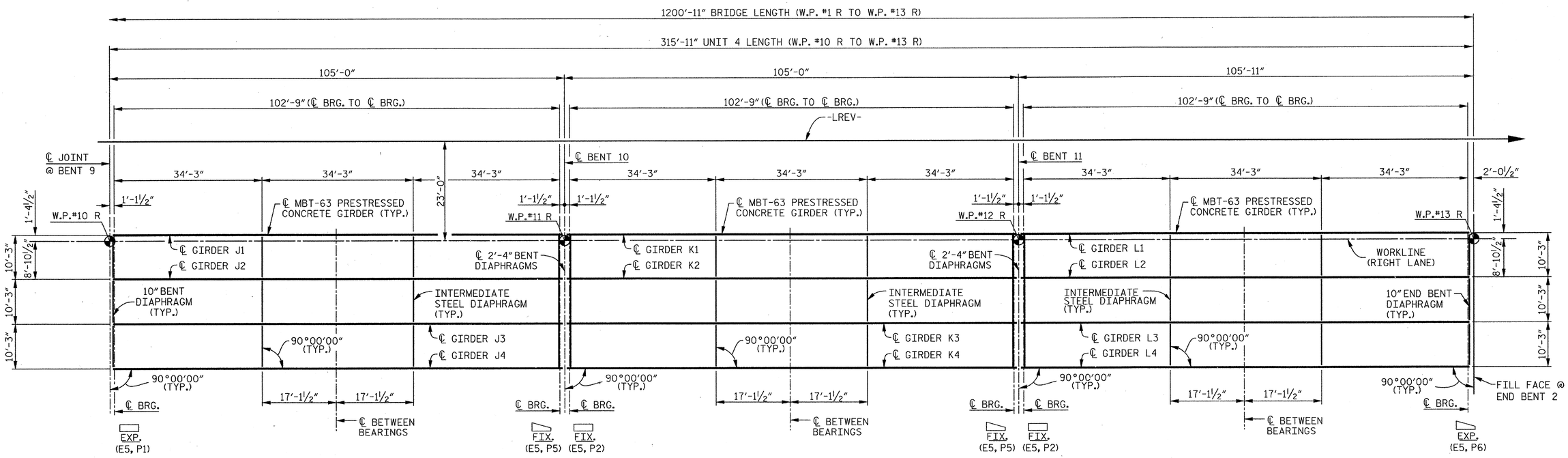


## FRAMING PLAN – UNIT 4

### NOTES

FOR FRAMING PLAN - UNIT 3, SEE SHEET 3 OF 4.

FOR INTERMEDIATE STEEL DIAPHRAGM DETAILS, SEE "INTERMEDIATE STEEL DIAPHRAGMS FOR 63" MODIFIED BULB TEE PRESTRESSED CONCRETE GIRDERS" SHEET.

PROJECT NO. R-2303D

SAMPSON COUNTY

STATION: 1311+58.00 -LREV-

SHEET 4 OF 4

STATE OF NORTH CAROLINA
DEPARTMENT OF TRANSPORTATION
RALEIGH

SUPERSTRUCTURE

FRAMING PLAN (UNIT 4)

(RIGHT LANE)

CDM Smith

Camp Dresser & McKee
421 Fayetteville Street, Suite 1303
Raleigh, NC 27604
NC COA No. F-1255

| | | | |
|---|---|---|---|
| DRAWN BY : | C.E.DIXON | DATE : | 11-12 |
| CHECKED BY : | J.T.ECKEL | DATE : | 11-12 |
| DESIGN ENGINEER : | P.R. HOLSHOUSER | DATE : | 1-13 |

DWG. No. S02-023

NORTH CAROLINA PROFESSIONAL SEAL 20668 ENGINEER PAUL R. HOLSHOUSER 2/08/2013

| REVISIONS | | | | | | SHEET No. |
|---|---|---|---|---|---|---|
| No. | BY: | DATE: | No. | BY: | DATE: | S-99 |
| 1 | | | 3 | | | TOTAL SHEETS |
| 2 | | | 4 | | | 218 |

FILE: r:\model\r2303d\structures\PLANS\Str_2\R2303D_SD_Str2_fp4.dgn
DATE: 12/30/2012 9:23:26 PM

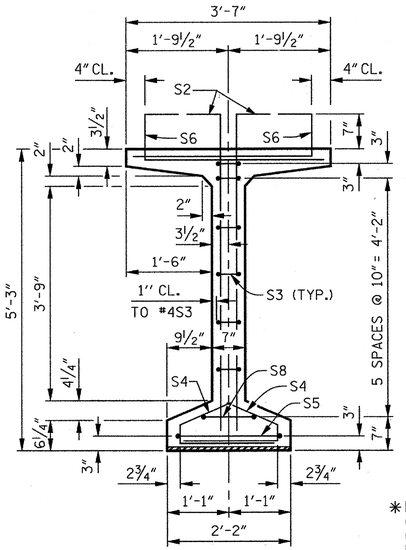


SECTION A–A

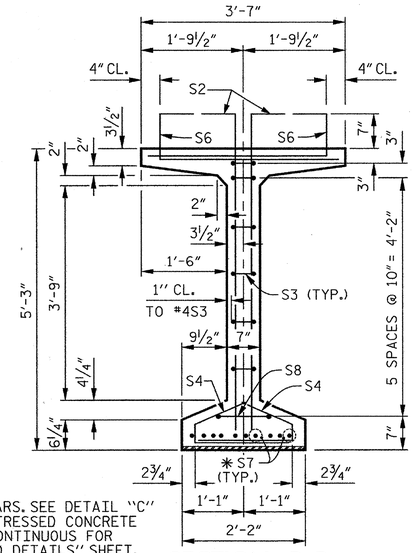


✱FOR S7 BARS. SEE DETAIL "C" OF "PRESTRESSED CONCRETE GIRDER CONTINUOUS FOR LIVE LOAD DETAILS" SHEET.

SECTION B–B

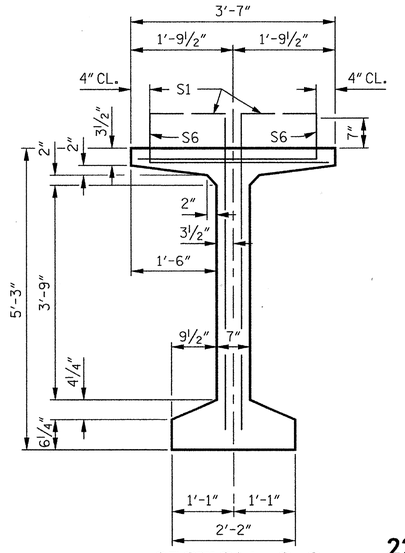


SECTION C–C
(S9 BARS NOT SHOWN)

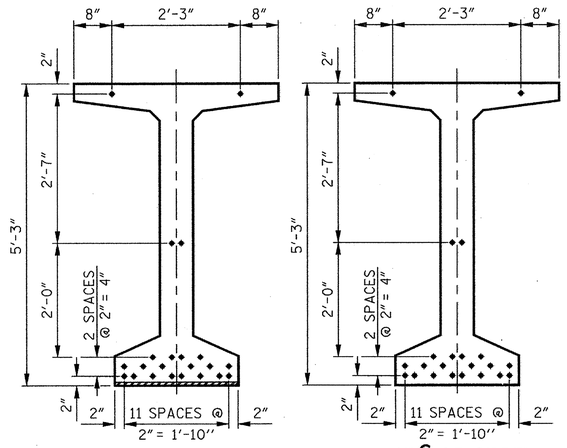


## 22 – 0.6" Ø LOW RELAXATION STRAND LAYOUT

### DEBONDING LEGEND

- FULLY BONDED STRANDS

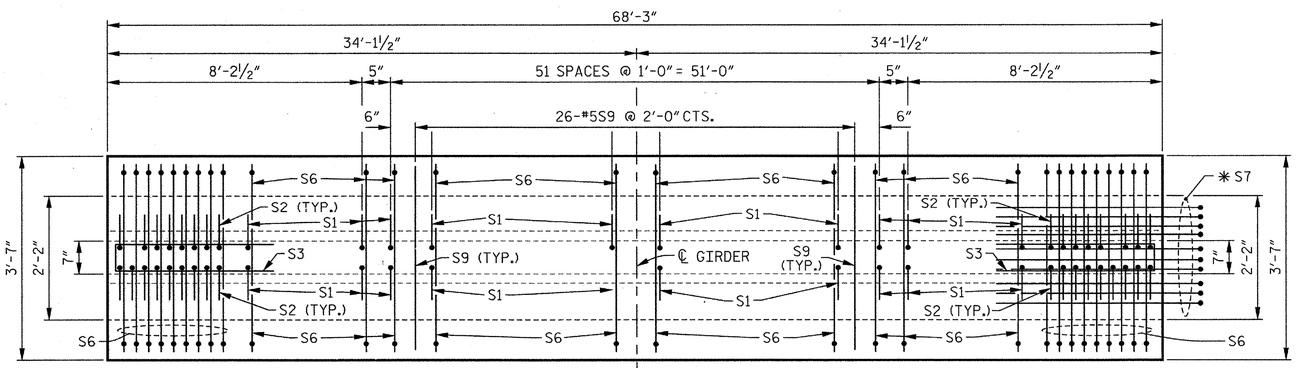


PLAN OF GIRDER

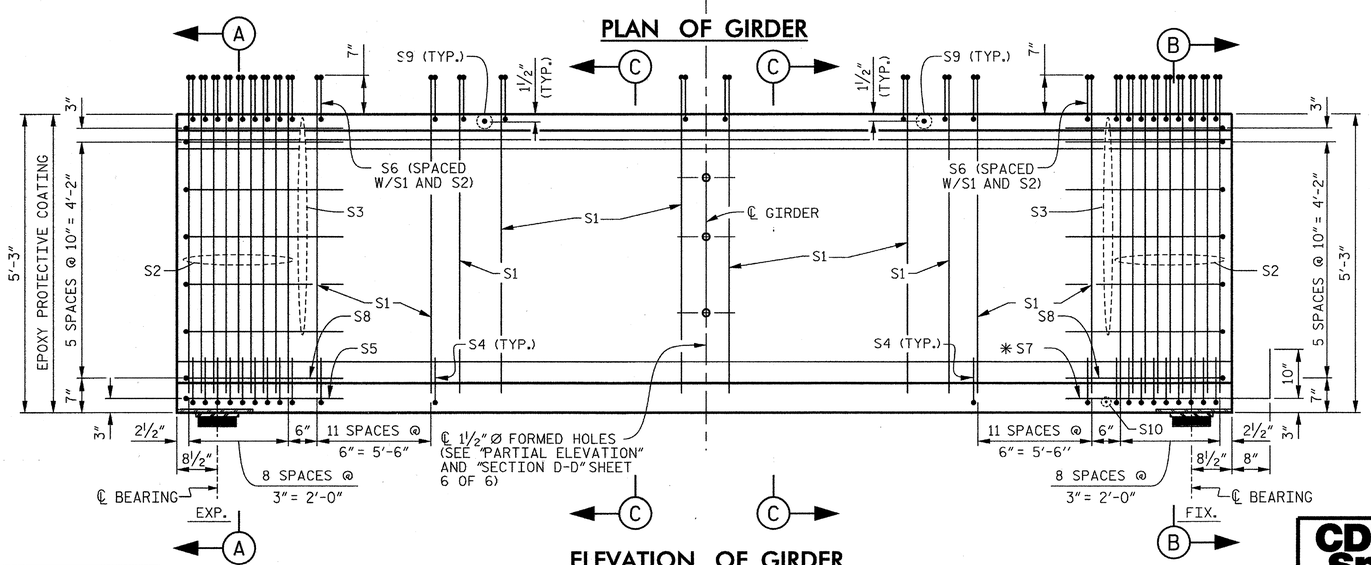


ELEVATION OF GIRDER

| 0.6" Ø L. R. GRADE 270 STRANDS | | |
|---|---|---|
| AREA (SQUARE INCHES) | ULTIMATE STRENGTH (LBS. PER STRAND) | APPLIED PRESTRESS (LBS. PER STRAND) |
| 0.217 | 58,600 | 43,950 |

### REINFORCING STEEL FOR ONE GIRDER

| BAR | NUMBER | SIZE | TYPE | LENGTH | WEIGHT |
|---|---|---|---|---|---|
| S1 | 152 | #4 | 1 | 6'- 2" | 626 |
| S2 | 36 | #5 | 1 | 6'- 2" | 232 |
| S3 | 12 | #4 | 2 | 8'- 5" | 67 |
| S4 | 84 | #4 | 3 | 3'- 0" | 168 |
| S5 | 1 | #5 | 2 | 9'- 10" | 10 |
| S6 | 188 | #5 | 4 | 4'- 5" | 866 |
| ✱ S7 | 10 | #5 | STR | 3'- 8" | 38 |
| S8 | 2 | #5 | 2 | 9'- 0" | 19 |
| S9 | 26 | #5 | STR | 3'- 3" | 88 |
| S10 | 1 | #3 | STR | 1'- 10" | 1 |
| S11 | 4 | #5 | 2 | 10'- 2" | 42 |
| S12 | 8 | #4 | STR | 8'- 0" | 43 |

✱NOTE: S7 BARS SHALL BE BENT BEFORE SHIPMENT. HEAT BENDING SHALL NOT BE ALLOWED.

### BAR TYPES

ALL BAR DIMENSIONS ARE OUT-TO-OUT.

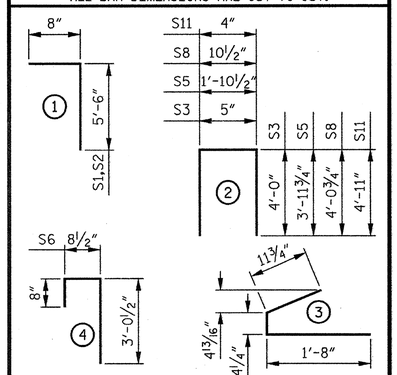


### QUANTITIES FOR ONE GIRDER

| REINFORCING STEEL | 5,500 PSI CONCRETE | 0.6" Ø L.R. STRANDS |
|---|---|---|
| LB. | C.Y. | No. |
| 2,200 | 13.5 | 22 |

### GIRDERS REQUIRED

| NUMBER | LENGTH | TOTAL LENGTH |
|---|---|---|
| 4 | 68'-3" | 273.000' |

PROJECT NO. R-2303D

SAMPSON COUNTY

STATION: 1311+58.00 -LREV-

SHEET 1 OF 6

STATE OF NORTH CAROLINA
DEPARTMENT OF TRANSPORTATION
RALEIGH

STANDARD
63" PRESTRESSED CONCRETE
MODIFIED BULB TEE CONTINUOUS
FOR LIVE LOAD
SPAN A
(RIGHT LANE)

| ASSEMBLED BY : C.E.DIXON | DATE : 11-12 |
|---|---|
| CHECKED BY : J.T.ECKEL | DATE : 11-12 |
| DRAWN BY : EEM 2/6/97 | REV. 10/17/00 RWW/LES |
| CHECKED BY : VAP 2/6/97 | REV. 5/1/06R TLA/GM |
| | REV. 10/1/11 MAA/GM |

FILE: n:\model\2303d\structures\PLANS\Sr_21R2303D_SD_Sr2_pg1.dgn
DATE: 12/10/2012 9:23:37 PM

CDM Smith
Camp Dresser & McKee
421 Fayetteville Street, Suite 1303
Raleigh, NC 27604
NC COA No. F-1255

| DRAWN BY : C.E.DIXON | DATE : 11-12 |
|---|---|
| CHECKED BY : J.T.ECKEL | DATE : 11-12 |
| DESIGN ENGINEER : P.R. HOLSHOUSER | DATE : 1-13 |

DWG. No. S02-024

NORTH CAROLINA PROFESSIONAL SEAL 20668 ENGINEER PAUL R. HOLSHOUSER 1/10/2013

| REVISIONS | | | | | | |
|---|---|---|---|---|---|---|
| No. | BY: | DATE: | No. | BY: | DATE: | |
| 1 | | | 3 | | | |
| 2 | | | 4 | | | |

SHEET No. S-100
TOTAL SHEETS 218

STD. No. PCG7

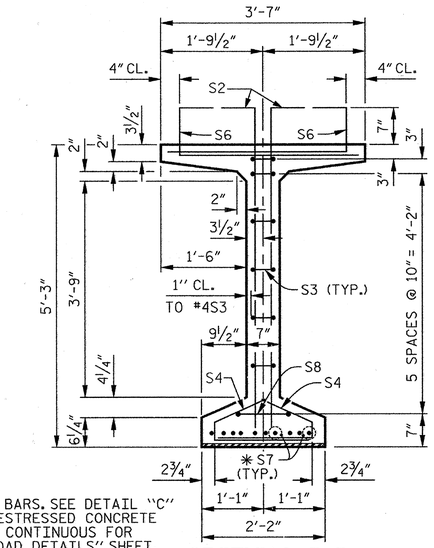


FOR S7 BARS. SEE DETAIL "C" OF "PRESTRESSED CONCRETE GIRDER CONTINUOUS FOR LIVE LOAD DETAILS" SHEET.

## SECTION B–B

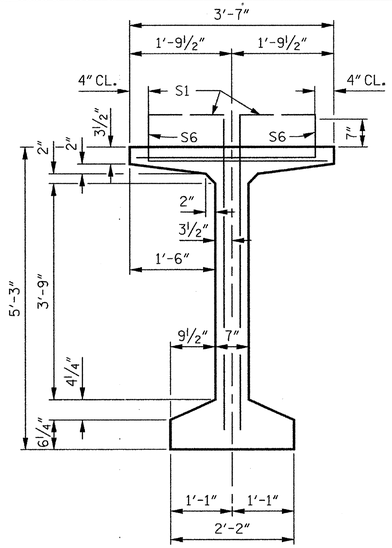


## SECTION C–C

(S9 BARS NOT SHOWN)

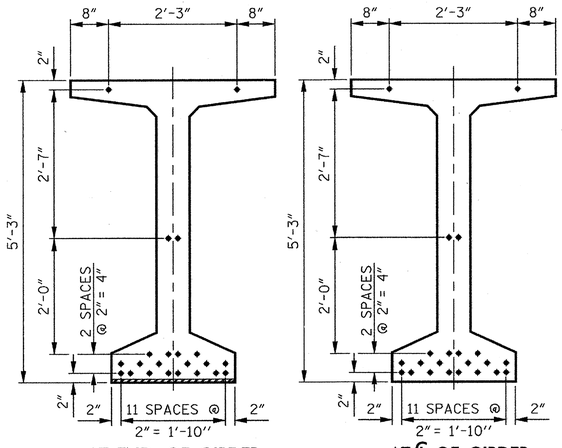


## 22 – 0.6" Ø LOW RELAXATION STRAND LAYOUT

**DEBONDING LEGEND**

- FULLY BONDED STRANDS

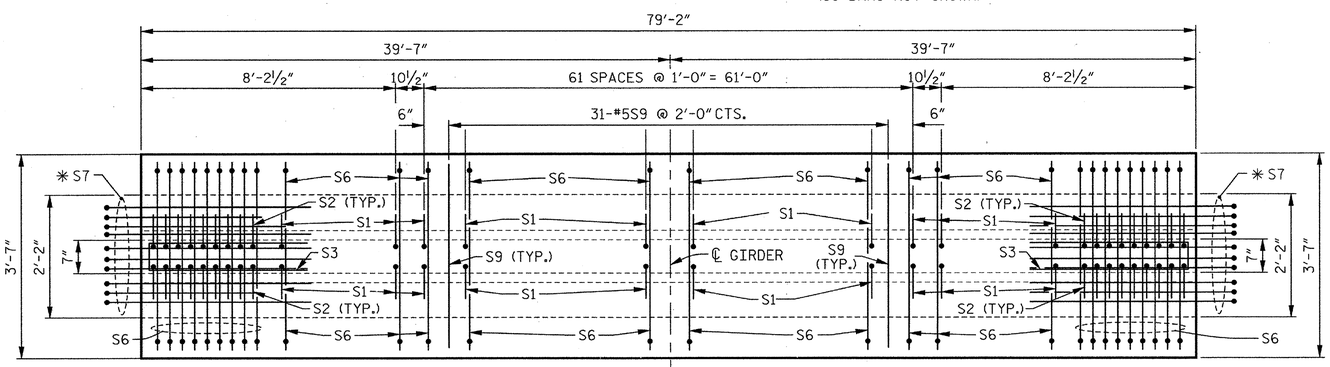


## PLAN OF GIRDER

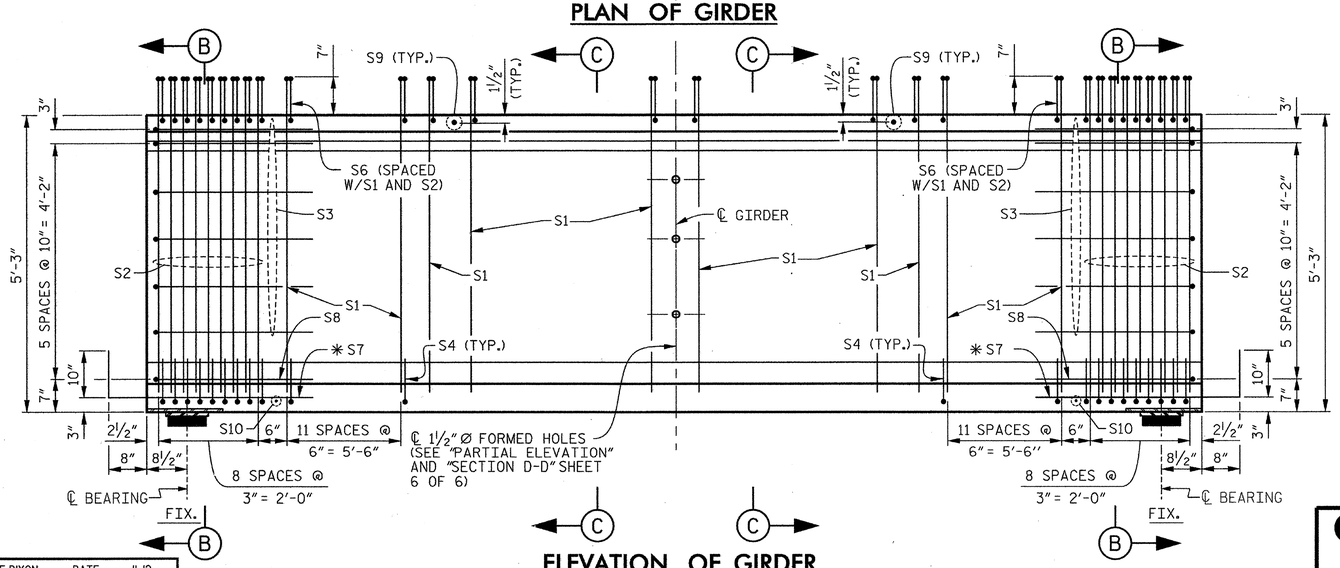


## ELEVATION OF GIRDER

| 0.6" Ø L. R. GRADE 270 STRANDS | | |
|---|---|---|
| AREA (SQUARE INCHES) | ULTIMATE STRENGTH (LBS. PER STRAND) | APPLIED PRESTRESS (LBS. PER STRAND) |
| 0.217 | 58,600 | 43,950 |

**REINFORCING STEEL FOR ONE GIRDER**

| BAR | NUMBER | SIZE | TYPE | LENGTH | WEIGHT |
|---|---|---|---|---|---|
| S1 | 172 | #4 | 1 | 6'- 2" | 709 |
| S2 | 36 | #5 | 1 | 6'- 2" | 232 |
| S3 | 12 | #4 | 2 | 8'- 5" | 67 |
| S4 | 84 | #4 | 3 | 3'- 0" | 168 |
| S6 | 208 | #5 | 4 | 4'- 5" | 958 |
| ✳ S7 | 20 | #5 | STR | 3'- 8" | 76 |
| S8 | 2 | #5 | 2 | 9'- 0" | 19 |
| S9 | 31 | #5 | STR | 3'- 3" | 105 |
| S10 | 2 | #3 | STR | 1'- 10" | 1 |
| S11 | 4 | #5 | 2 | 10'- 2" | 42 |
| S12 | 8 | #4 | STR | 8'- 0" | 43 |

✳ NOTE: S7 BARS SHALL BE BENT BEFORE SHIPMENT. HEAT BENDING SHALL NOT BE ALLOWED.

**BAR TYPES**

ALL BAR DIMENSIONS ARE OUT-TO-OUT.

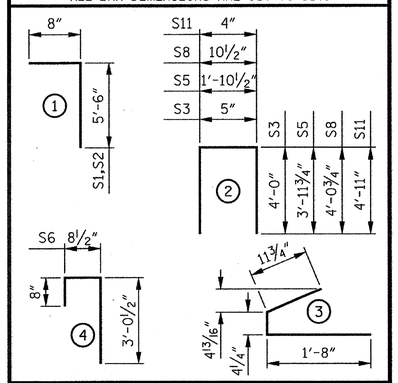


**QUANTITIES FOR ONE GIRDER**

| REINFORCING STEEL | 5,500 PSI CONCRETE | 0.6" Ø L.R. STRANDS |
|---|---|---|
| LB. | C.Y. | No. |
| 2,420 | 15.7 | 22 |

**GIRDERS REQUIRED**

| NUMBER | LENGTH | TOTAL LENGTH |
|---|---|---|
| 4 | 79'-2" | 316.667' |

PROJECT NO. R-2303D

SAMPSON COUNTY

STATION: 1311+58.00 -LREV-

SHEET 2 OF 6

STATE OF NORTH CAROLINA
DEPARTMENT OF TRANSPORTATION
RALEIGH

STANDARD
63" PRESTRESSED CONCRETE
MODIFIED BULB TEE CONTINUOUS
FOR LIVE LOAD
SPAN H
(RIGHT LANE)

| REVISIONS | | | | | | | SHEET No. |
|---|---|---|---|---|---|---|---|
| No. | BY: | DATE: | No. | BY: | DATE: | | S-101 |
| 1 | | | 3 | | | | TOTAL SHEETS |
| 2 | | | 4 | | | | 218 |

CDM Smith
Camp Dresser & McKee
421 Fayetteville Street, Suite 1303
Raleigh, NC 27604
NC COA No. F-1255

DRAWN BY : C.E.DIXON DATE : 11-12
CHECKED BY : J.T.ECKEL DATE : 11-12
DESIGN ENGINEER : P.R. HOLSHOUSER DATE : 1-13
DWG. No. S02-025

NORTH CAROLINA PROFESSIONAL SEAL 20668 ENGINEER P. PAUL R. HOLSHOUSER

| | | | |
|---|---|---|---|
| ASSEMBLED BY : | C.E.DIXON | DATE : | 11-12 |
| CHECKED BY : | J.T.ECKEL | DATE : | 11-12 |
| DRAWN BY : EEM 2/6/97 | REV. 10/17/00 | RWW/LES | |
| CHECKED BY : VAP 2/6/97 | REV. 5/1/06R | TLA/GM | |
| | REV. 10/1/11 | MAA/GM | |

FILE: n:\roadwy\2303d\structures\PLANS\Sht_2\R2303D_SD_SH2_pg2.dgn
DATE: 12/20/2012 9:25:19 PM

STD. No. PCG7

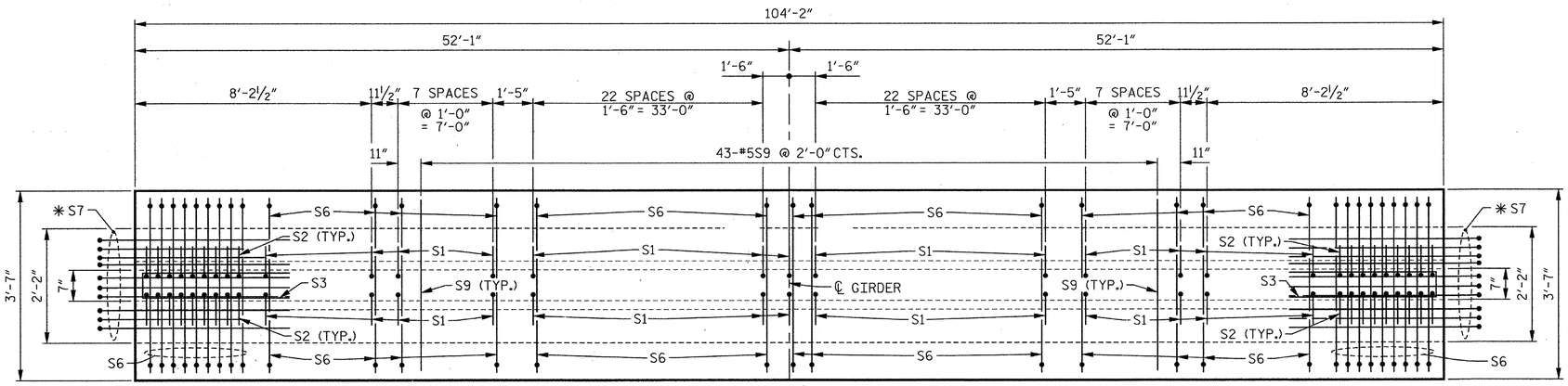


## PLAN OF GIRDER

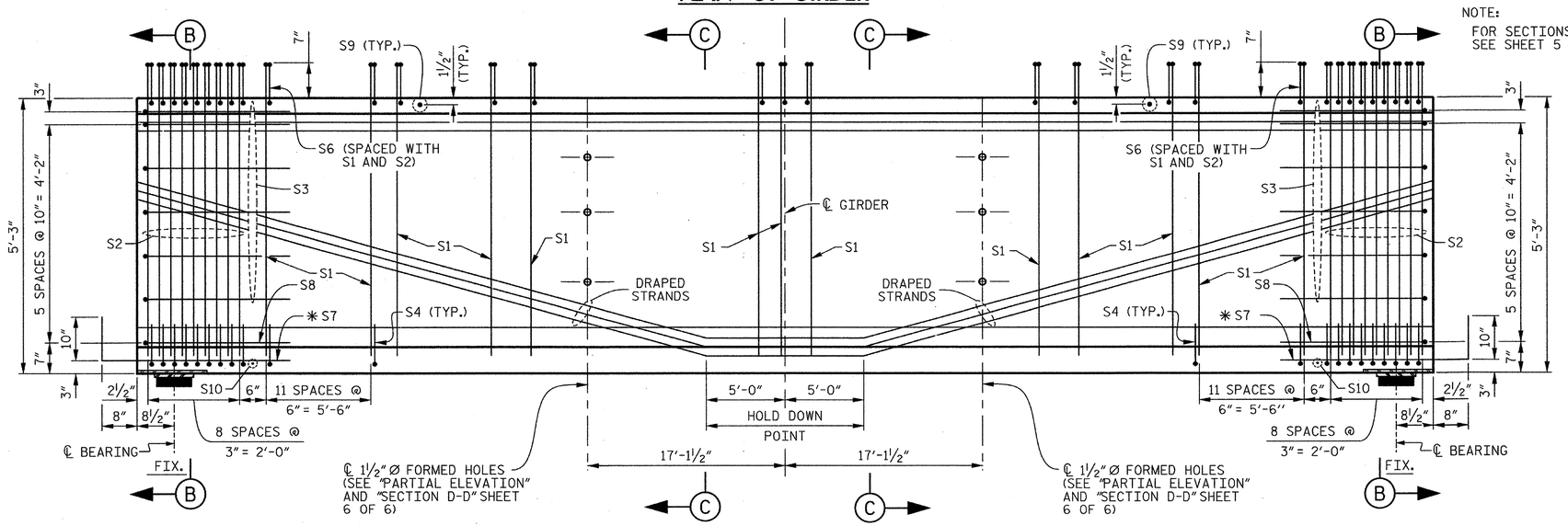


## ELEVATION OF GIRDER

NOTE:
FOR SECTIONS B-B AND C-C, SEE SHEET 5 OF 6.

### 0.6" Ø L. R. GRADE 270 STRANDS

| AREA (SQUARE INCHES) | ULTIMATE STRENGTH (LBS. PER STRAND) | APPLIED PRESTRESS (LBS. PER STRAND) |
|---|---|---|
| 0.217 | 58,600 | 43,950 |

### REINFORCING STEEL FOR ONE GIRDER

| BAR | NUMBER | SIZE | TYPE | LENGTH | WEIGHT |
|---|---|---|---|---|---|
| S1 | 172 | #4 | 1 | 6'- 2" | 709 |
| S2 | 36 | #5 | 1 | 6'- 2" | 232 |
| S3 | 12 | #4 | 2 | 8'- 5" | 67 |
| S4 | 84 | #4 | 3 | 3'- 0" | 168 |
| S6 | 208 | #5 | 4 | 4'- 5" | 958 |
| ✱S7 | 20 | #5 | STR | 3'- 8" | 76 |
| S8 | 2 | #5 | 2 | 9'- 0" | 19 |
| S9 | 43 | #5 | STR | 3'- 3" | 146 |
| S10 | 2 | #3 | STR | 1'- 10" | 1 |
| S11 | 8 | #5 | 2 | 10'- 2" | 85 |
| S12 | 16 | #4 | STR | 8'- 0" | 86 |

✱NOTE: S7 BARS SHALL BE BENT BEFORE SHIPMENT. HEAT BENDING SHALL NOT BE ALLOWED.

### BAR TYPES

ALL BAR DIMENSIONS ARE OUT-TO-OUT.

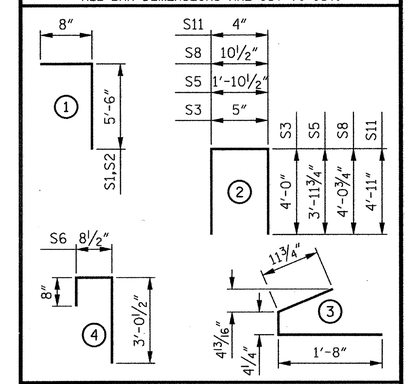


### QUANTITIES FOR ONE GIRDER

| REINFORCING STEEL | 8,000 PSI CONCRETE | 0.6" Ø L.R. STRANDS |
|---|---|---|
| LB. | C.Y. | No. |
| 2,547 | 20.6 | 36 |

### GIRDERS REQUIRED

| NUMBER | LENGTH | TOTAL LENGTH |
|---|---|---|
| 12 | 104'-2" | 1,250.000' |

PROJECT NO. R-2303D
SAMPSON COUNTY
STATION: 1311+58.00 -LREV-

SHEET 3 OF 6

STATE OF NORTH CAROLINA
DEPARTMENT OF TRANSPORTATION
RALEIGH

STANDARD
63" PRESTRESSED CONCRETE
MODIFIED BULB TEE CONTINUOUS
FOR LIVE LOAD
SPANS B, E AND K
(RIGHT LANE)

CDM Smith
Camp Dresser & McKee
421 Fayetteville Street, Suite 1303
Raleigh, NC 27604
NC COA No. F-1255

DRAWN BY : C.E.DIXON DATE : 11-12
CHECKED BY : J.T.ECKEL DATE : 11-12
DESIGN ENGINEER : P.R. HOLSHOUSER DATE : 1-13
DWG. No. S02-026

NORTH CAROLINA PROFESSIONAL SEAL 20668 ENGINEER P. R. HOLSHOUSER 2/08/2013

| REVISIONS | | | | | | |
|---|---|---|---|---|---|---|
| No. | BY: | DATE: | No. | BY: | DATE: | |
| 1 | | | 3 | | | |
| 2 | | | 4 | | | |

SHEET No. S-102
TOTAL SHEETS 218

STD. No. PCG7

ASSEMBLED BY : C.E.DIXON DATE : 11-12
CHECKED BY : J.T.ECKEL DATE : 11-12
DRAWN BY : EEM 2/6/97 REV. 10/17/00 RWW/LES
CHECKED BY : VAP 2/6/97 REV. 5/1/06R TLA/GM
REV. 10/1/11 MAA/GM

FILE: r:\roadway\r2303d\structures\PLANS\Str_2\R2303D_SD_Sv2_pg3.dgn
DATE: 12/20/2012 9:23:30 PM

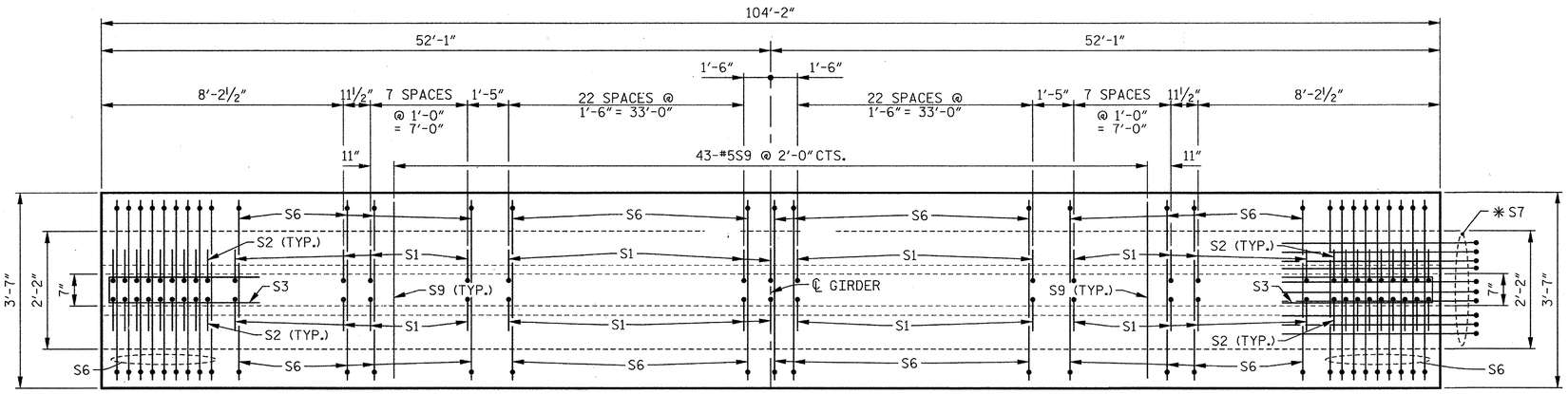


## PLAN OF GIRDER

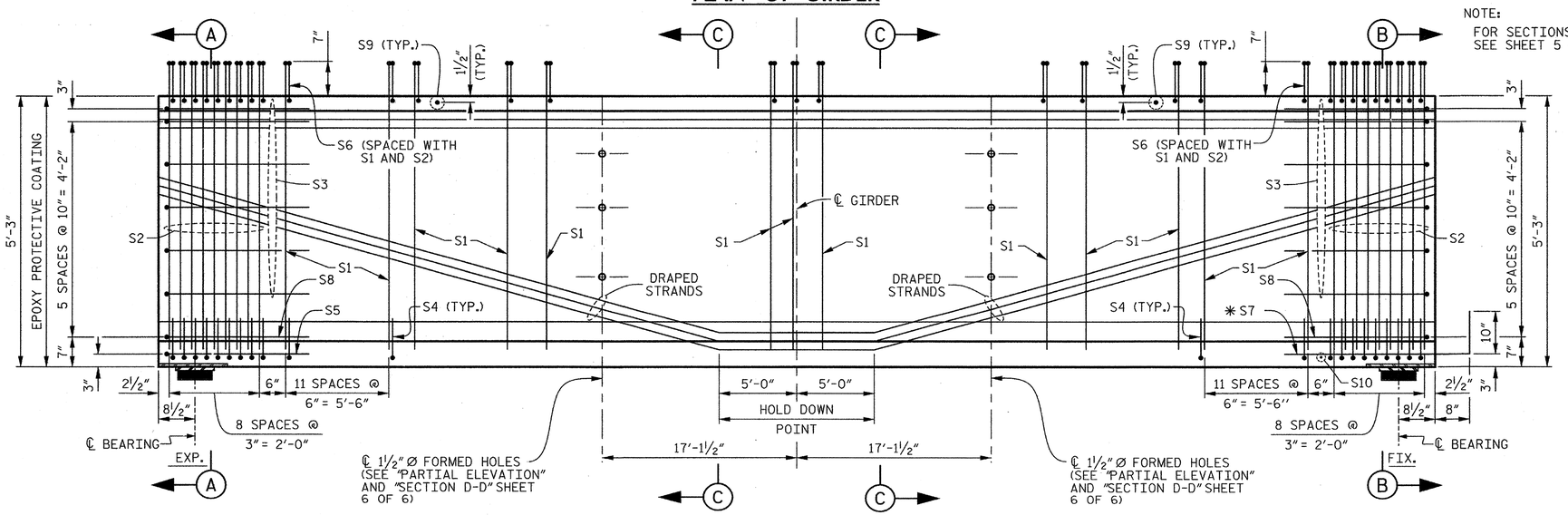


NOTE:
FOR SECTIONS A-A, B-B AND C-C, SEE SHEET 5 OF 6.

## ELEVATION OF GIRDER

### 0.6" Ø L. R. GRADE 270 STRANDS

| AREA (SQUARE INCHES) | ULTIMATE STRENGTH (LBS. PER STRAND) | APPLIED PRESTRESS (LBS. PER STRAND) |
|---|---|---|
| 0.217 | 58,600 | 43,950 |

### REINFORCING STEEL FOR ONE GIRDER

| BAR | NUMBER | SIZE | TYPE | LENGTH | WEIGHT |
|---|---|---|---|---|---|
| S1 | 172 | #4 | 1 | 6'- 2" | 709 |
| S2 | 36 | #5 | 1 | 6'- 2" | 232 |
| S3 | 12 | #4 | 2 | 8'- 5" | 67 |
| S4 | 84 | #4 | 3 | 3'- 0" | 168 |
| S5 | 1 | #5 | 2 | 9'-10" | 10 |
| S6 | 208 | #5 | 4 | 4'- 5" | 958 |
| ✱S7 | 10 | #5 | STR | 3'- 8" | 38 |
| S8 | 2 | #5 | 2 | 9'- 0" | 19 |
| S9 | 43 | #5 | STR | 3'- 3" | 146 |
| S10 | 1 | #3 | STR | 1'-10" | 1 |
| S11 | 8 | #5 | 2 | 10'- 2" | 85 |
| S12 | 16 | #4 | STR | 8'- 0" | 86 |

✱NOTE: S7 BARS SHALL BE BENT BEFORE SHIPMENT. HEAT BENDING SHALL NOT BE ALLOWED.

### BAR TYPES

ALL BAR DIMENSIONS ARE OUT-TO-OUT.

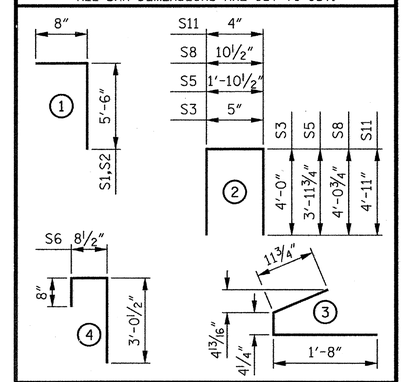


### QUANTITIES FOR ONE GIRDER

| REINFORCING STEEL | 8,000 PSI CONCRETE | 0.6" Ø L.R. STRANDS |
|---|---|---|
| LB. | C.Y. | No. |
| 2,519 | 20.6 | 36 |

### GIRDERS REQUIRED

| NUMBER | LENGTH | TOTAL LENGTH |
|---|---|---|
| 28 | 104'-2" | 2,916.667' |

PROJECT NO. R-2303D
SAMPSON COUNTY
STATION: 1311+58.00 -LREV-

SHEET 4 OF 6

STATE OF NORTH CAROLINA
DEPARTMENT OF TRANSPORTATION
RALEIGH

# STANDARD 63" PRESTRESSED CONCRETE MODIFIED BULB TEE CONTINUOUS FOR LIVE LOAD SPANS C, D, F, G, I, J AND L (RIGHT LANE)

| ASSEMBLED BY : C.E.DIXON | DATE : 11-12 |
|---|---|
| CHECKED BY : J.T.ECKEL | DATE : 11-12 |

| DRAWN BY : EEM 2/6/97 | REV. 10/17/00 | RWW/LES |
|---|---|---|
| CHECKED BY : VAP 2/6/97 | REV. 5/1/06R | TLA/GM |
| | REV. 10/1/11 | MAA/GM |

CDM Smith
Camp Dresser & McKee
421 Fayetteville Street, Suite 1303
Raleigh, NC 27604
NC COA No. F-1255

| DRAWN BY : C.E.DIXON | DATE : 11-12 |
|---|---|
| CHECKED BY : J.T.ECKEL | DATE : 11-12 |
| DESIGN ENGINEER : P.R. HOLSHOUSER | DATE : 1-13 |

DWG. No. S02-027

NORTH CAROLINA PROFESSIONAL SEAL 20668 ENGINEER PAUL R. HOLSHOUSER 12/04/2013

REVISIONS

| No. | BY: | DATE: | No. | BY: | DATE: |
|---|---|---|---|---|---|
| 1 | | | 3 | | |
| 2 | | | 4 | | |

SHEET No. S-163
TOTAL SHEETS 218

STD. No. PCG7

FILE: r:\radar\r2303d\structures\PLANS\Sp_21\R2303D_SD_SV2_pg4.dgn
DATE: 12/20/2012 9:23:32 PM

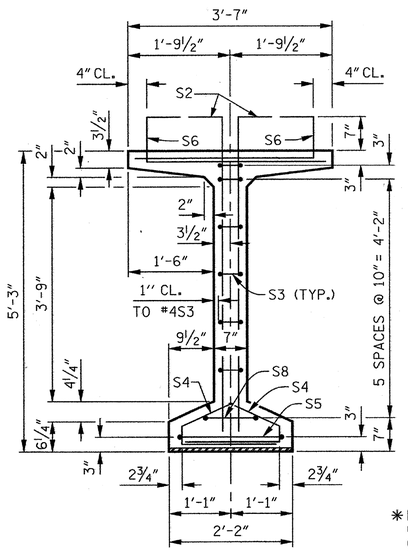


SECTION A–A

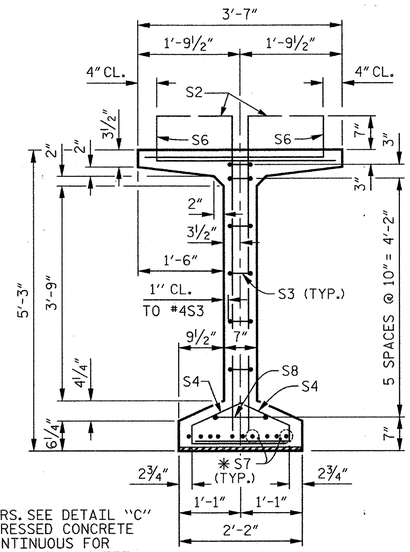


✱FOR S7 BARS. SEE DETAIL "C" OF "PRESTRESSED CONCRETE GIRDER CONTINUOUS FOR LIVE LOAD DETAILS" SHEET.

SECTION B–B

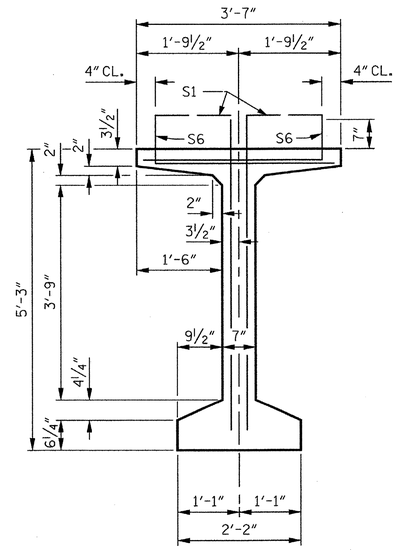


SECTION C–C
(S9 BARS NOT SHOWN)

**DEBONDING LEGEND**

- ● FULLY BONDED STRANDS
- ⊡ STRANDS DEBONDED FOR 2'-0" FROM END OF GIRDER
- ◬ STRANDS DEBONDED FOR 4'-0" FROM END OF GIRDER

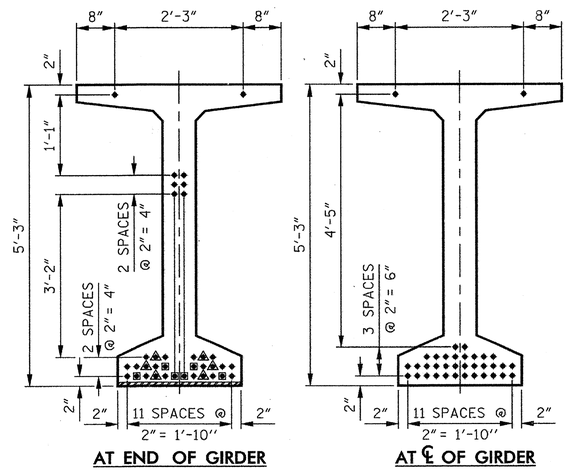


AT END OF GIRDER

AT ℄ OF GIRDER

36 – 0.6" Ø LOW RELAXATION STRAND LAYOUT

PROJECT NO. R–2303D

SAMPSON COUNTY

STATION: 1311+58.00 –LREV–

SHEET 5 OF 6

STATE OF NORTH CAROLINA
DEPARTMENT OF TRANSPORTATION
RALEIGH

STANDARD
63" PRESTRESSED CONCRETE
MODIFIED BULB TEE CONTINUOUS
FOR LIVE LOAD
SPANS B, C, D, E, F, G, I, J, K AND L
(RIGHT LANE)

CDM Smith
Camp Dresser & McKee
421 Fayetteville Street, Suite 1303
Raleigh, NC 27604
NC COA No. F–1255

| | | | |
|---|---|---|---|
| DRAWN BY : | C.E.DIXON | DATE : | 11–12 |
| CHECKED BY : | J.T.ECKEL | DATE : | 11–12 |
| DESIGN ENGINEER : | P.R. HOLSHOUSER | DATE : | 1–13 |

DWG. No. S02-028

NORTH CAROLINA PROFESSIONAL SEAL 20668 ENGINEER PAUL R. HOLSHOUSER 1/10/2013

| REVISIONS | | | | | | SHEET No. |
|---|---|---|---|---|---|---|
| No. | BY: | DATE: | No. | BY: | DATE: | S-104 |
| 1 | | | 3 | | | TOTAL SHEETS |
| 2 | | | 4 | | | 218 |

| | | | |
|---|---|---|---|
| ASSEMBLED BY : | C.E.DIXON | DATE : | 11-12 |
| CHECKED BY : | J.T.ECKEL | DATE : | 11-12 |
| DRAWN BY : EEM 2/6/97 | REV. 10/17/00 | RWW/LES | |
| CHECKED BY : VAP 2/6/97 | REV. 5/1/06R | TLA/GM | |
| | REV. 10/1/11 | MAA/GM | |

FILE: r:\ncdot\r2303d\structures\PLANS\Str_2\R2303d_SD_Str2_pg5.dgn
DATE: 12/30/2012 9:23:33 PM

PCG7

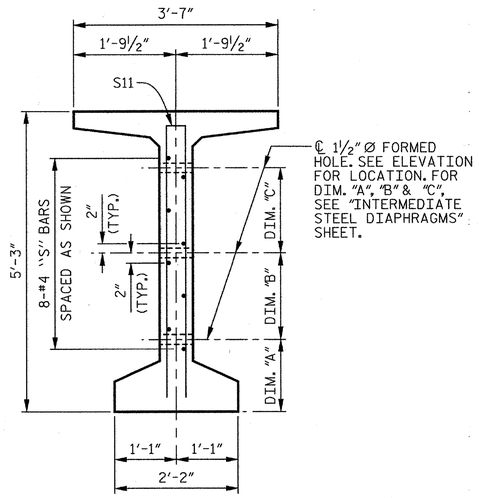


## SECTION E–E

(S1, S6 & S9 BARS NOT SHOWN)

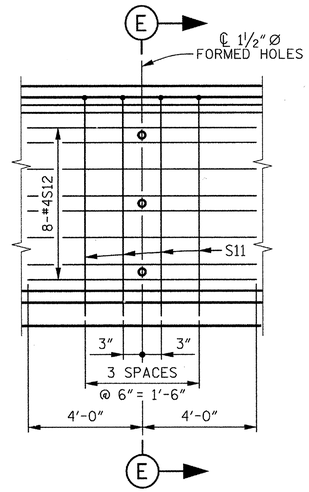


## PARTIAL ELEVATION

## NOTES

ALL PRESTRESSING STRANDS SHALL BE 7-WIRE LOW-RELAXATION GRADE 270 STRANDS AND SHALL CONFORM TO AASHTO M203 EXCEPT FOR SAMPLING REQUIREMENTS WHICH SHALL BE IN ACCORDANCE WITH THE STANDARD SPECIFICATIONS.

ALL REINFORCING STEEL SHALL BE GRADE 60.

APPLY EPOXY PROTECTIVE COATING TO END OF GIRDER SURFACES INDICATED IN ELEVATION VIEW.

EMBEDDED PLATE "B-1" SHALL BE GALVANIZED IN ACCORDANCE WITH THE STANDARD SPECIFICATIONS. BEVEL EDGES OF PLATE "B-1" TO GIVE CLOSE FIT BUT NOT TIGHT FIT TO STEEL CASTING FORM.

ANCHOR STUDS SHALL CONFORM TO AASHTO M169 GRADES 1010 THROUGH 1020 OR APPROVED EQUAL, AND SHALL MEET THE TYPE "B" REQUIREMENTS OF SUBSECTION 7.3 OF THE ANSI/AASHTO/AWS D1.5 BRIDGE WELDING CODE.

AT ENDS OF GIRDERS TO BE EMBEDDED IN CONCRETE DIAPHRAGMS OR END WALLS, PRESTRESSING STRANDS MAY EXTEND A MAXIMUM OF 2" BEYOND THE GIRDER ENDS. OTHERWISE, PRESTRESSING STRANDS SHALL BE CUT FLUSH WITH THE GIRDER ENDS.

THE TRANSFER OF LOAD FROM THE ANCHORAGES TO THE GIRDER SHALL BE DONE WHEN CONCRETE HAS REACHED A COMPRESSIVE STRENGTH OF NOT LESS THAN 6,500 PSI FOR ALL SPANS EXCEPT SPANS A AND H WHICH SHALL HAVE REACHED A COMPRESSIVE STRENGTH OF 4,400 PSI.

DEPENDING ON THE TYPE OF SYSTEM USED TO SUPPORT THE DECK SLAB FORMS, PRESET ANCHORS MAY BE NECESSARY IN THE PRESTRESSED CONCRETE GIRDER.

THE TOP SURFACE OF THE GIRDER, EXCLUDING THE OUTSIDE 4", SHALL BE RAKED TO A DEPTH OF ¼".

WHEN DRAPED STRANDS ARE DETAILED, THE LONGITUDINAL LOCATION OF THE HOLD DOWN DEVICES SHALL BE WITHIN 6" OF THE LOCATION SHOWN AND THE CENTER OF GRAVITY OF THE GROUP OF DRAPED STRANDS SHALL BE LOCATED WITHIN ½" OF THE THEORETICAL LOCATION SHOWN.

A 2" x 2" CHAMFER IS ALLOWED AT THE INTERSECTION OF THE WEB AND THE BOTTOM FLANGE OF THE 63" MODIFIED BULB TEES.

THE CONTRACTOR HAS THE OPTION TO PROVIDE, AT NO ADDITIONAL COST TO THE DEPARTMENT, 2 ADDITIONAL STRANDS AT THE TOP OF THE GIRDER TO FACILITATE TYING OF THE REINFORCING STEEL. THESE STRANDS SHALL BE PULLED TO A LOAD OF 4,500 lbs.

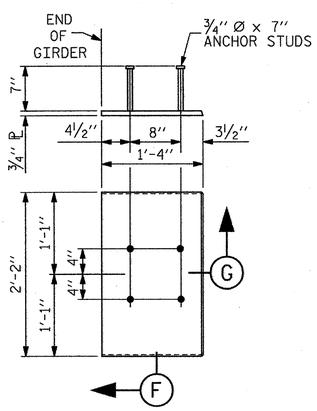


## EMBEDDED PLATE "B-1" DETAILS FOR 63" MODIFIED BULB TEES

(2 REQUIRED PER GIRDER)

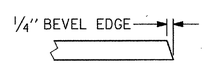


## SECTION "G"

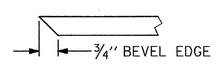


## SECTION "F"

(SEE NOTES)

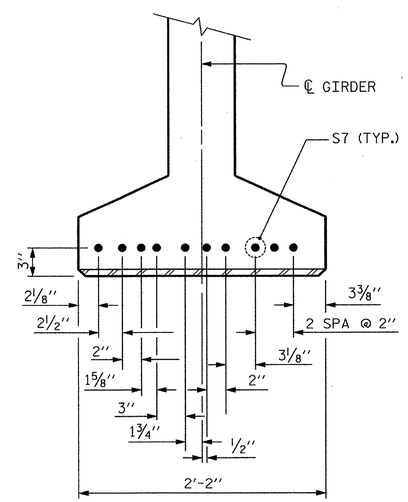


## DETAIL "C"

(FOR 63" MODIFIED BULB TEES)

PROJECT NO. R-2303D

SAMPSON COUNTY

STATION: 1311+58.00 -LREV-

SHEET 6 OF 6

STATE OF NORTH CAROLINA
DEPARTMENT OF TRANSPORTATION
RALEIGH

STANDARD

# PRESTRESSED CONCRETE GIRDER CONTINUOUS FOR LIVE LOAD DETAILS

## (RIGHT LANE)

CDM Smith
Camp Dresser & McKee
421 Fayetteville Street, Suite 1303
Raleigh, NC 27604
NC COA No. F-1255

DRAWN BY : C.E.DIXON DATE : 11-12
CHECKED BY : J.T.ECKEL DATE : 11-12
DESIGN ENGINEER : P.R. HOLSHOUSER DATE : 1-13

DWG. No. S02-029

NORTH CAROLINA PROFESSIONAL SEAL 20668 ENGINEER PAUL R. HOLSHOUSER 2/08/2013

| REVISIONS | | | | | | | | SHEET No. |
|---|---|---|---|---|---|---|---|---|
| No. | BY: | DATE: | No. | BY: | DATE: | | | S-105 |
| 1 | | | 3 | | | | | TOTAL SHEETS |
| 2 | | | 4 | | | | | 218 |

STD. No. PCG9

ASSEMBLED BY : C.E. DIXON DATE : 11-12
CHECKED BY : J.T. ECKEL DATE : 11-12

DRAWN BY : ELR 11/91
CHECKED BY : GRP 11/91

REV. 7/10/01RR LES/RDR
REV. 5/1/06 TLA/GM
REV. 10/1/11 MAA/GM

FILE: r:\roadway\2303d\structures\PLANS\Str_21\R2303D_SD_SV2_pg6.dgn
DATE: 12/03/2012 9:23:53 PM

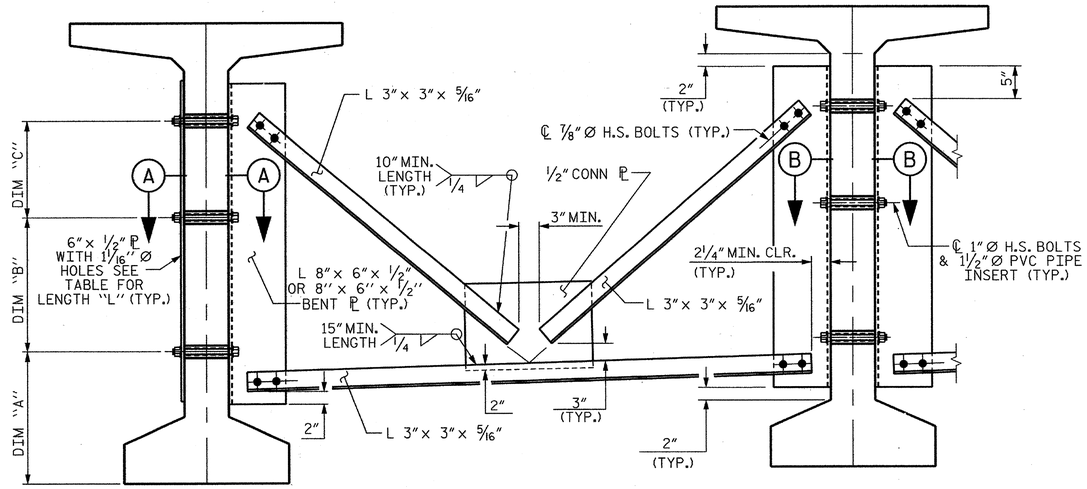


EXTERIOR GIRDER

INTERIOR GIRDER

## PART SECTION AT INTERMEDIATE DIAPHRAGM

(63" BULB TEE)

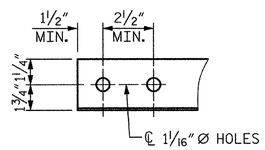


## ANGLE END

(L 3"× 3"× 5/16")

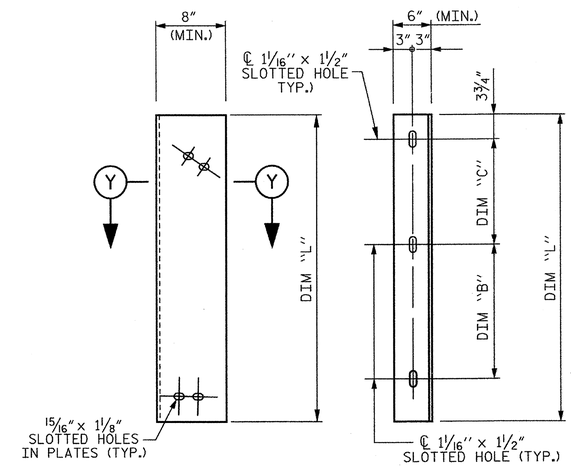


DIAPHRAGM FACE

WEB FACE

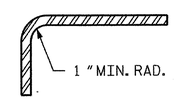


SECTION Y–Y

## CONNECTOR PLATE DETAILS

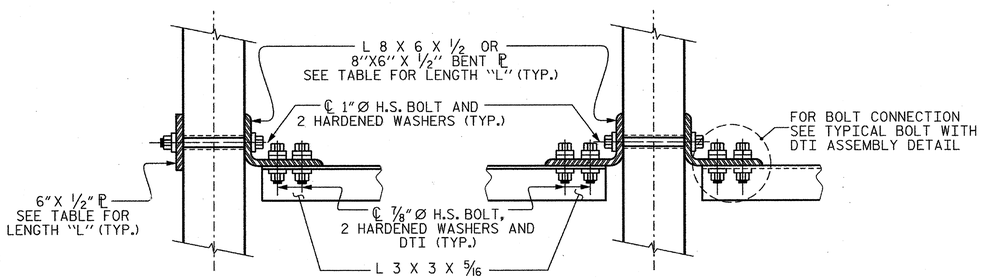


SECTION A–A

SECTION B–B

## CONNECTION DETAILS

(FOR SKEW = 90°)

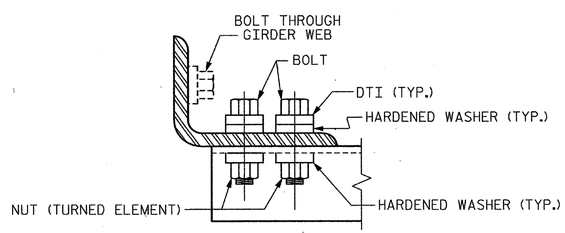


## BOLT WITH DTI ASSEMBLY DETAIL

## STRUCTURAL STEEL NOTES

ALL INTERMEDIATE DIAPHRAGM STEEL AND CONNECTOR PLATES SHALL BE AASHTO M270 GRADE 50 OR APPROVED EQUAL.

TENSION ON THE ASTM A325 BOLTS THROUGH THE ANGLE MEMBER SHALL BE CALIBRATED USING DIRECT TENSION INDICATOR WASHERS IN ACCORDANCE WITH THE STANDARD SPECIFICATIONS.

TENSION ON THE ASTM A449 BOLTS THROUGH THE GIRDER WEB SHALL BE SNUG TIGHTENED FOLLOWED BY AN ADDITIONAL 1/4 TURN.

THE PLATES, BENT PLATES, AND ANGLES SHALL BE GALVANIZED OR METALLIZED IN ACCORDANCE WITH THE STANDARD SPECIFICATIONS. FOR THERMAL SPRAYED COATINGS (METALLIZATION), SEE SPECIAL PROVISIONS.

FOR METALLIZATION, APPLY AN 8 MIL THICK 99.99 PERCENT ZINC (W-Zn-1) THERMAL SPRAYED COATING WITH A 0.5 MIL THICK SEAL COAT TO ALL STEEL DIAPHRAGM SURFACES IN ACCORDANCE WITH THE THERMAL SPRAYED COATINGS SPECIAL PROVISION AND SECTION 442 OF THE STANDARD SPECIFICATIONS.

GALVANIZE THE HIGH STRENGTH BOLTS, NUTS, WASHERS AND DIRECT TENSION INDICATORS IN ACCORDANCE WITH THE STANDARD SPECIFICATIONS.

USE AN ASTM F436 HARDENED WASHER WITH STANDARD AND SLOTTED HOLES UNDER EACH BOLT HEAD AND NUT.

FOR BOLTS THROUGH THE GIRDER WEB, PROVIDE SUFFICIENT LENGTH OF THREADS ON ALL BOLTS TO ACCOMMODATE WASHERS AND THE THICKNESS OF CONNECTING MEMBER PLUS AT LEAST 1/4" PROJECTION BEYOND THE NUT.

INTERMEDIATE DIAPHRAGM ASSEMBLY SHALL COMPLY WITH SECTION 1072 OF THE STANDARD SPECIFICATIONS.

SUBMIT TWO SETS OF WORKING DRAWINGS FOR THE INTERMEDIATE DIAPHRAGM ASSEMBLY FOR REVIEW, COMMENTS AND ACCEPTANCE. AFTER REVIEW, COMMENTS, AND ACCEPTANCE, SUBMIT SEVEN SETS FOR DISTRIBUTION.

IN THE EXTERIOR BAYS, PLACE TEMPORARY STRUTS BETWEEN PRESTRESSED GIRDERS ADJACENT TO THE STEEL DIAPHRAGMS. STRUTS SHALL REMAIN IN PLACE 3 DAYS AFTER CONCRETE IS PLACED.

THE COST OF THE STEEL DIAPHRAGMS AND ASSEMBLIES SHALL BE INCLUDED IN THE UNIT PRICE BID FOR PRESTRESSED CONCRETE GIRDERS.

**TABLE**

| GIRDER TYPE | DIM "A" | DIM "B" | DIM "C" | DIM "L" |
|---|---|---|---|---|
| 63" BULB TEE | 1'-9" | 1'-4" | 1'-0 1/2" | 3'-5" |

PROJECT NO. R-2303D

SAMPSON COUNTY

STATION: 1311+58.00 -LREV-

STATE OF NORTH CAROLINA
DEPARTMENT OF TRANSPORTATION
RALEIGH

STANDARD

INTERMEDIATE STEEL DIAPHRAGMS FOR 63" MODIFIED BULB TEE PRESTRESSED CONCRETE GIRDERS

(RIGHT LANE)

CDM Smith

Camp Dresser & McKee
421 Fayetteville Street, Suite 1303
Raleigh, NC 27604
NC COA No. F-1255

DRAWN BY : C.E.DIXON DATE : 11-12
CHECKED BY : J.T.ECKEL DATE : 11-12
DESIGN ENGINEER : P.R. HOLSHOUSER DATE : 1-13

DWG. No. S02-030

NORTH CAROLINA PROFESSIONAL SEAL 20668 ENGINEER PAUL R. HOLSHOUSER 11-13-2013

| REVISIONS | | | | | | SHEET No. |
|---|---|---|---|---|---|---|
| No. | BY: | DATE: | No. | BY: | DATE: | S-106 |
| 1 | | | 3 | | | TOTAL SHEETS |
| 2 | | | 4 | | | 218 |

STD. No. PCG11

ASSEMBLED BY : C.E.DIXON DATE : 11-12
CHECKED BY : J.T. ECKEL DATE : 11-12
DRAWN BY : RWW 11/09
CHECKED BY : GM 11/09
ADDED 11/23/09R
REV. 10/1/11 MAA/GM

FILE: r:\nodot\r2303d\structures\PLANS\Str_2\R2303D_S02_Sht2_dt1.dgn
DATE: 12/02/2012 9:23:36 PM

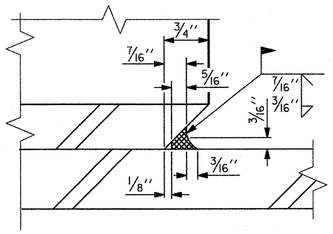


## DETAIL "A"

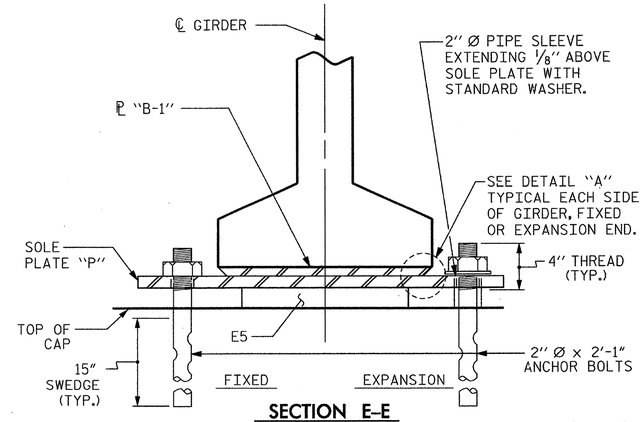


## SECTION E-E

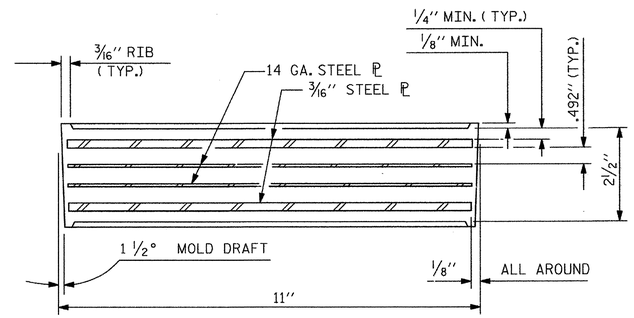


## TYPICAL SECTION OF ELASTOMERIC BEARINGS

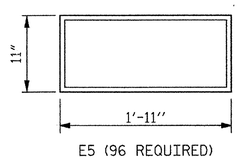


E5 (96 REQUIRED)

## PLAN VIEW OF ELASTOMERIC BEARING

## TYPE VI

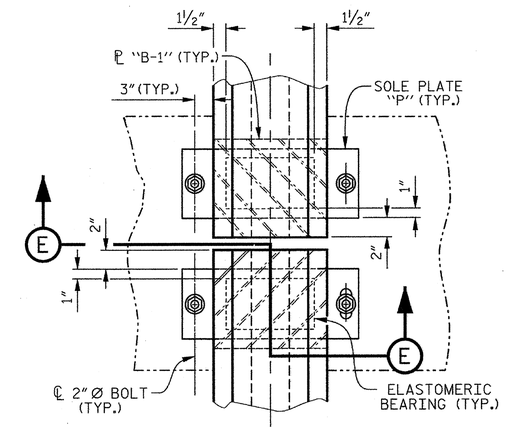


## TYPICAL HALF-PLAN
(SHOWING FIXED BEARING)

## TYPICAL HALF-PLAN
(SHOWING EXPANSION BEARING)

## NOTES

AT ALL FIXED POINTS OF SUPPORT, NUTS FOR ANCHOR BOLTS ARE TO BE TIGHTENED FINGER TIGHT AND THEN BACKED OFF 1/2 TURN. THE THREAD OF THE NUT AND BOLT SHALL THEN BE BURRED WITH A SHARP POINTED TOOL.

THE 2" Ø PIPE SLEEVE SHALL BE CUT FROM SCHEDULE 40 PVC PLASTIC PIPE. THE PVC PLASTIC PIPE SHALL MEET THE REQUIREMENTS OF ASTM D1785.

STEEL SOLE PLATES, ANCHOR BOLTS, NUTS, AND WASHERS SHALL BE GALVANIZED IN ACCORDANCE WITH THE STANDARD SPECIFICATIONS.

PRIOR TO WELDING, GRIND THE GALVANIZED SURFACE OF THE PORTION OF THE EMBEDDED PLATE AND SOLE PLATE THAT ARE TO BE WELDED. AFTER WELDING, DAMAGED GALVANIZED SURFACES SHALL BE REPAIRED IN ACCORDANCE WITH THE STANDARD SPECIFICATIONS.

WHEN WELDING THE SOLE PLATE TO THE EMBEDDED PLATE IN THE GIRDER, USE TEMPERATURE INDICATING WAX PENS, OR OTHER SUITABLE MEANS, TO ENSURE THAT THE TEMPERATURE OF THE SOLE PLATE DOES NOT EXCEED 300°F. TEMPERATURES ABOVE THIS MAY DAMAGE THE ELASTOMER.

SOLE PLATE "P", BOLTS, NUTS, WASHERS, AND PIPE SLEEVE SHALL BE INCLUDED IN THE PAY ITEM FOR PRESTRESSED CONCRETE GIRDERS.

ANCHOR BOLTS SHALL MEET THE REQUIREMENTS OF ASTM A449. NUTS SHALL MEET THE REQUIREMENTS OF AASHTO M291-DH OR AASHTO M292-2H. WASHERS SHALL MEET THE REQUIREMENTS OF AASHTO M293. NO SHOP DRAWINGS ARE REQUIRED FOR ANCHOR BOLTS, NUTS AND WASHERS. SHOP INSPECTION IS REQUIRED.

ALL SURFACES OF BEARING PLATES SHALL BE SMOOTH AND STRAIGHT.

THE ELASTOMER IN THE STEEL REINFORCED BEARINGS SHALL HAVE A SHEAR MODULUS OF 0.160 KSI, IN ACCORDANCE WITH AASHTO M251.

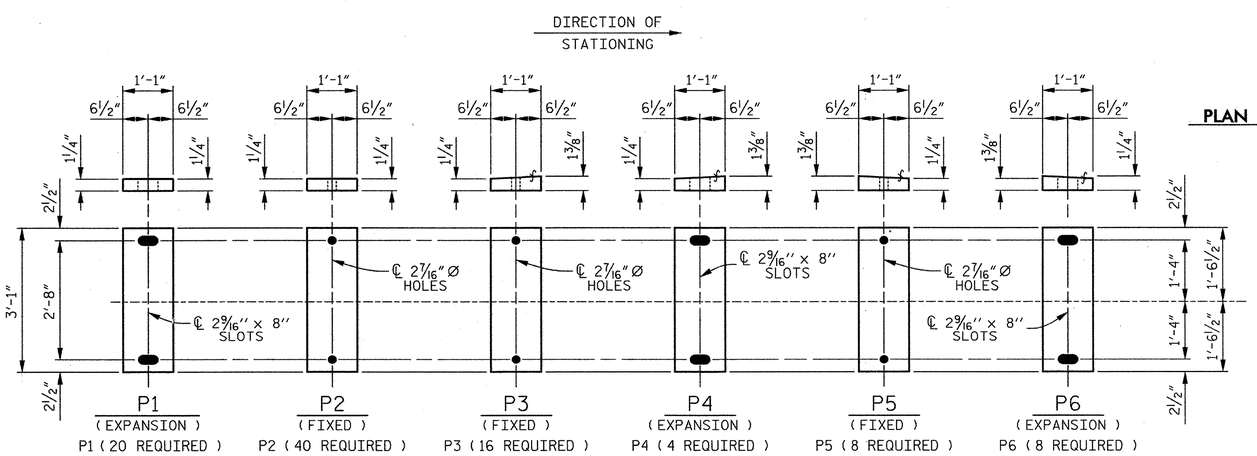


## SOLE PLATE DETAILS ("P")

PROJECT NO. R-2303D
SAMPSON COUNTY
STATION: 1311+58.00 -LREV-

STATE OF NORTH CAROLINA
DEPARTMENT OF TRANSPORTATION
RALEIGH

STANDARD

# ELASTOMERIC BEARING DETAILS PRESTRESSED CONCRETE GIRDER SUPERSTRUCTURE (RIGHT LANE)

| REVISIONS | | | | | | SHEET No. |
|---|---|---|---|---|---|---|
| No. | BY: | DATE: | No. | BY: | DATE: | S-107 |
| 1 | | | 3 | | | TOTAL SHEETS |
| 2 | | | 4 | | | 218 |

CDM Smith
Camp Dresser & McKee
421 Fayetteville Street, Suite 1303
Raleigh, NC 27604
NC COA No. F-1255

DRAWN BY : C.E. DIXON DATE : 11-12
CHECKED BY : J.T. ECKEL DATE : 11-12
DESIGN ENGINEER : P.R. HOLSHOUSER DATE : 1-13
DWG. No. S02-031

NORTH CAROLINA PROFESSIONAL SEAL 20668 ENGINEER PAUL R. HOLSHOUSER 1/08/2013

| | | | |
|---|---|---|---|
| ASSEMBLED BY : | C.E. DIXON | DATE : | 11-12 |
| CHECKED BY : | J.T. ECKEL | DATE : | 11-12 |
| DRAWN BY : EEM 2/97 | REV. 5/1/06 | TLA/GM | |
| CHECKED BY : VAP 2/97 | REV. 10/1/11 | MAA/GM | |
| | REV. 10/24/12 | AAC/MAA | |

FILE: r:\model\2303d\structures\PLANS\Sr_2\R2303D_SD_Sh2_ab1.dgn
DATE: 12/20/2012 9:23:38 PM

STD No. EB4

## CAMBER AND DEAD LOAD DEFLECTIONS

| | SPAN A | | | | | | | | | | |
|---|---|---|---|---|---|---|---|---|---|---|---|
| GIRDERS 1 AND 4 | ℄ BRG. | 0.10 | 0.20 | 0.30 | 0.40 | 0.50 | 0.60 | 0.70 | 0.80 | 0.90 | ℄ BRG. |
| CAMBER (GIRDER ALONE IN PLACE) ↑ | 0.000 | 0.049 | 0.086 | 0.112 | 0.128 | 0.133 | 0.128 | 0.112 | 0.086 | 0.049 | 0.000 |
| DEFLECTION DUE TO SUPERIMPOSED D.L.✳ ↑ | 0.000 | 0.009 | 0.019 | 0.026 | 0.031 | 0.033 | 0.031 | 0.026 | 0.019 | 0.009 | 0.000 |
| FINAL CAMBER ↑ | 0 | 1/2" | 13/16" | 1 1/16" | 1 3/16" | 1 3/16" | 1 3/16" | 1 1/16" | 13/16" | 1/2" | 0 |
| | | | | | | | | | | | |
| GIRDERS 2 AND 3 | ℄ BRG. | 0.10 | 0.20 | 0.30 | 0.40 | 0.50 | 0.60 | 0.70 | 0.80 | 0.90 | ℄ BRG. |
| CAMBER (GIRDER ALONE IN PLACE) ↑ | 0.000 | 0.049 | 0.086 | 0.112 | 0.128 | 0.133 | 0.128 | 0.112 | 0.086 | 0.049 | 0.000 |
| DEFLECTION DUE TO SUPERIMPOSED D.L.✳ ↑ | 0.000 | 0.009 | 0.018 | 0.025 | 0.030 | 0.032 | 0.030 | 0.025 | 0.018 | 0.009 | 0.000 |
| FINAL CAMBER ↑ | 0 | 1/2" | 13/16" | 1 1/16" | 1 3/16" | 1 3/16" | 1 3/16" | 1 1/16" | 13/16" | 1/2" | 0 |

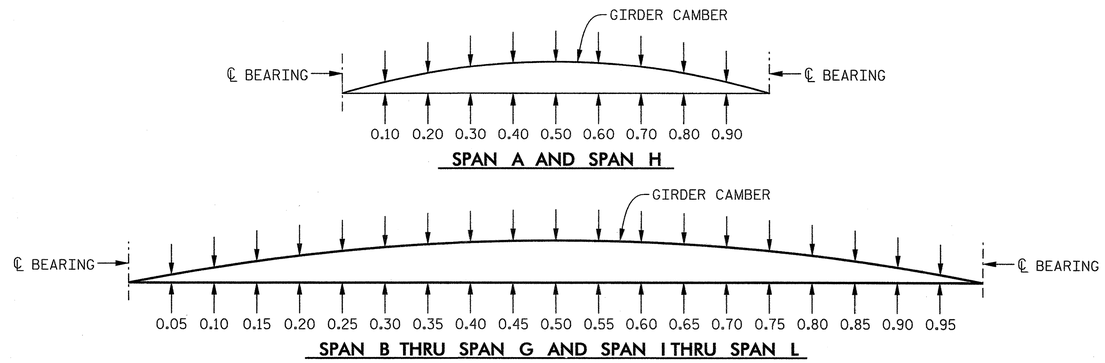


GIRDER CAMBER AND DEFLECTIONS

## CAMBER AND DEAD LOAD DEFLECTIONS

| | SPAN B THRU SPAN G AND SPAN I THRU SPAN L | | | | | | | | | | | | | | | | | | | | |
|---|---|---|---|---|---|---|---|---|---|---|---|---|---|---|---|---|---|---|---|---|---|
| GIRDERS 1 AND 4 | ℄ BRG. | 0.05 | 0.10 | 0.15 | 0.20 | 0.25 | 0.30 | 0.35 | 0.40 | 0.45 | 0.50 | 0.55 | 0.60 | 0.65 | 0.70 | 0.75 | 0.80 | 0.85 | 0.90 | 0.95 | ℄ BRG. |
| CAMBER (GIRDER ALONE IN PLACE) ↑ | 0.000 | 0.070 | 0.140 | 0.193 | 0.246 | 0.284 | 0.322 | 0.345 | 0.368 | 0.376 | 0.384 | 0.376 | 0.368 | 0.345 | 0.322 | 0.284 | 0.246 | 0.193 | 0.140 | 0.070 | 0.000 |
| DEFLECTION DUE TO SUPERIMPOSED D.L.✳ ↑ | 0.000 | 0.023 | 0.045 | 0.067 | 0.089 | 0.106 | 0.123 | 0.134 | 0.145 | 0.149 | 0.153 | 0.149 | 0.145 | 0.134 | 0.123 | 0.106 | 0.089 | 0.067 | 0.045 | 0.023 | 0.000 |
| FINAL CAMBER ↑ | 0 | 9/16" | 1 1/8" | 1 1/2" | 1 7/8" | 2 1/8" | 2 3/8" | 2 9/16" | 2 11/16" | 2 3/4" | 2 3/4" | 2 3/4" | 2 11/16" | 2 9/16" | 2 3/8" | 2 1/8" | 1 7/8" | 1 1/2" | 1 1/8" | 9/16" | 0 |
| | | | | | | | | | | | | | | | | | | | | | |
| GIRDERS 2 AND 3 | ℄ BRG. | 0.05 | 0.10 | 0.15 | 0.20 | 0.25 | 0.30 | 0.35 | 0.40 | 0.45 | 0.50 | 0.55 | 0.60 | 0.65 | 0.70 | 0.75 | 0.80 | 0.85 | 0.90 | 0.95 | ℄ BRG. |
| CAMBER (GIRDER ALONE IN PLACE) ↑ | 0.000 | 0.070 | 0.140 | 0.193 | 0.246 | 0.284 | 0.322 | 0.345 | 0.368 | 0.376 | 0.384 | 0.376 | 0.368 | 0.345 | 0.322 | 0.284 | 0.246 | 0.193 | 0.140 | 0.070 | 0.000 |
| DEFLECTION DUE TO SUPERIMPOSED D.L.✳ ↑ | 0.000 | 0.022 | 0.044 | 0.065 | 0.086 | 0.102 | 0.119 | 0.129 | 0.140 | 0.144 | 0.147 | 0.144 | 0.140 | 0.129 | 0.119 | 0.102 | 0.086 | 0.065 | 0.044 | 0.022 | 0.000 |
| FINAL CAMBER ↑ | 0 | 9/16" | 1 1/8" | 1 9/16" | 1 15/16" | 2 3/16" | 2 7/16" | 2 9/16" | 2 3/4" | 2 13/16" | 2 13/16" | 2 13/16" | 2 3/4" | 2 9/16" | 2 7/16" | 2 3/16" | 1 15/16" | 1 9/16" | 1 1/8" | 9/16" | 0 |

## CAMBER AND DEAD LOAD DEFLECTIONS

| | SPAN H | | | | | | | | | | |
|---|---|---|---|---|---|---|---|---|---|---|---|
| GIRDERS 1 AND 4 | ℄ BRG. | 0.10 | 0.20 | 0.30 | 0.40 | 0.50 | 0.60 | 0.70 | 0.80 | 0.90 | ℄ BRG. |
| CAMBER (GIRDER ALONE IN PLACE) ↑ | 0.000 | 0.060 | 0.105 | 0.135 | 0.153 | 0.158 | 0.153 | 0.135 | 0.105 | 0.060 | 0.000 |
| DEFLECTION DUE TO SUPERIMPOSED D.L.✳ ↑ | 0.000 | 0.017 | 0.035 | 0.048 | 0.057 | 0.060 | 0.057 | 0.048 | 0.035 | 0.017 | 0.000 |
| FINAL CAMBER ↑ | 0 | 1/2" | 13/16" | 1 1/16" | 1 1/8" | 1 3/16" | 1 1/8" | 1 1/16" | 13/16" | 1/2" | 0 |
| | | | | | | | | | | | |
| GIRDERS 2 AND 3 | ℄ BRG. | 0.10 | 0.20 | 0.30 | 0.40 | 0.50 | 0.60 | 0.70 | 0.80 | 0.90 | ℄ BRG. |
| CAMBER (GIRDER ALONE IN PLACE) ↑ | 0.000 | 0.060 | 0.105 | 0.135 | 0.153 | 0.158 | 0.153 | 0.135 | 0.105 | 0.060 | 0.000 |
| DEFLECTION DUE TO SUPERIMPOSED D.L.✳ ↑ | 0.000 | 0.017 | 0.034 | 0.047 | 0.055 | 0.058 | 0.055 | 0.047 | 0.034 | 0.017 | 0.000 |
| FINAL CAMBER ↑ | 0 | 1/2" | 7/8" | 1 1/16" | 1 3/16" | 1 3/16" | 1 3/16" | 1 1/16" | 7/8" | 1/2" | 0 |

✳ INCLUDES FUTURE WEARING SURFACE.

ALL VALUES ARE SHOWN IN FEET (DECIMAL FORM), EXCEPT "FINAL CAMBER", WHICH IS GIVEN IN INCHES (FRACTION FORM).

PROJECT NO. R-2303D
SAMPSON COUNTY
STATION: 1311+58.00 -LREV-

STATE OF NORTH CAROLINA
DEPARTMENT OF TRANSPORTATION
RALEIGH

SUPERSTRUCTURE

# DEAD LOAD DEFLECTIONS AND CAMBER TABLES (RIGHT LANE)


CDM Smith
Camp Dresser & McKee
421 Fayetteville Street, Suite 1303
Raleigh, NC 27604
NC COA No. F-1255


DRAWN BY : C.E. DIXON DATE : 11-12
CHECKED BY : J.T. ECKEL DATE : 11-12
DESIGN ENGINEER : P.R. HOLSHOUSER DATE : 1-13

DWG. No. S02-032

NORTH CAROLINA PROFESSIONAL SEAL 20668 ENGINEER PRAIN R. HOLSHOUSER 2/22/2013

| REVISIONS | | | | | | SHEET No. |
|---|---|---|---|---|---|---|
| No. | BY: | DATE: | No. | BY: | DATE: | S-108 |
| 1 | | | 3 | | | TOTAL SHEETS |
| 2 | | | 4 | | | 218 |

FILE: c:\pwdef\2303d\structures\PLANS\Sc_21\R2303D_S0_Sh2_Alt.dgn
DATE: 2/12/2013 10:18:23 AM

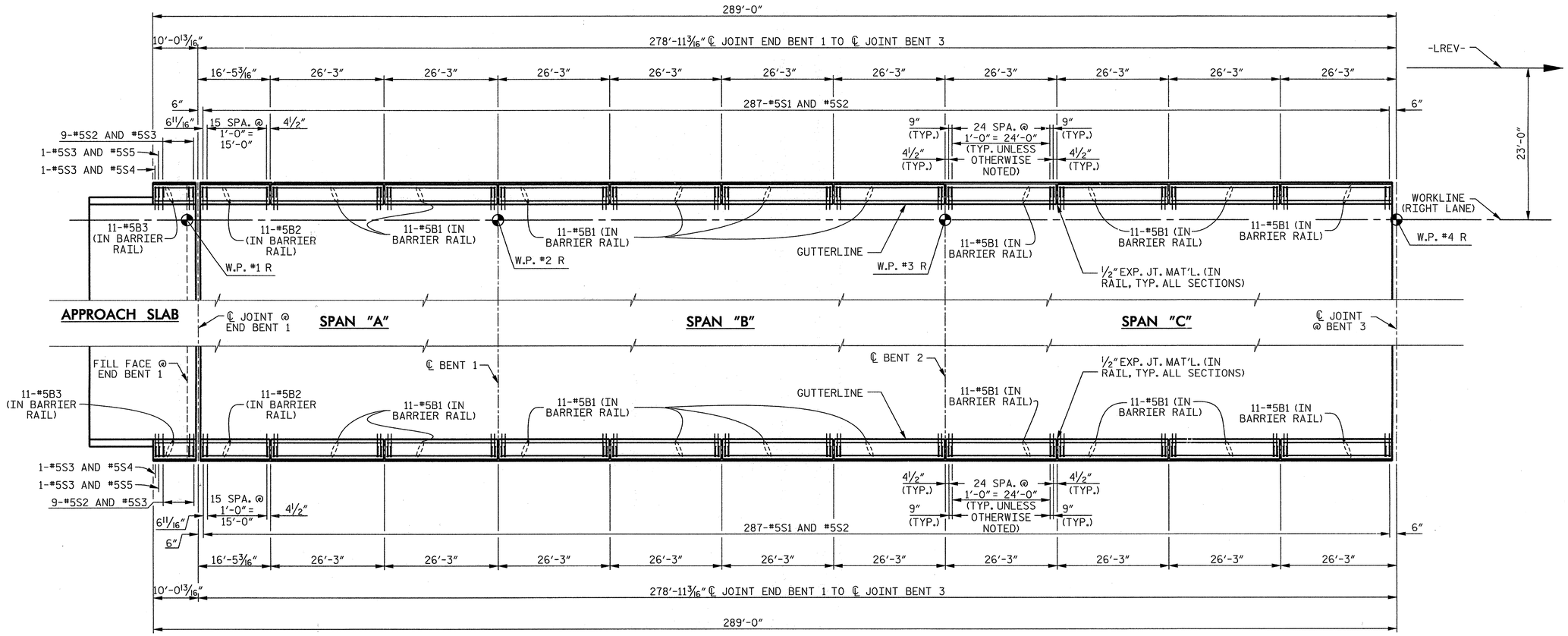


## PLAN OF CONCRETE BARRIER RAIL – UNIT 1

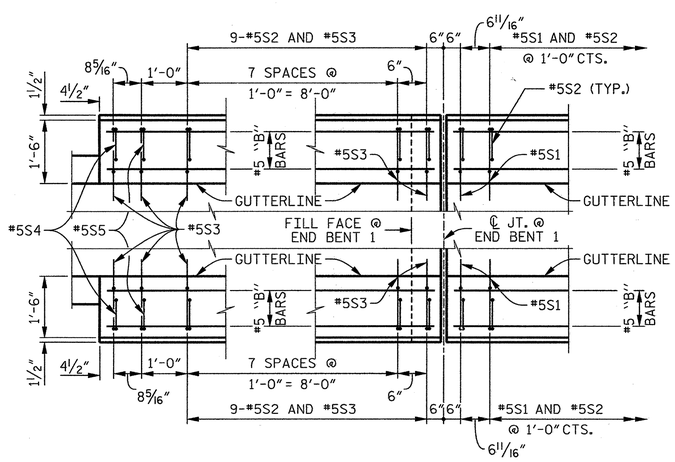


## PLAN @ END BENT 1

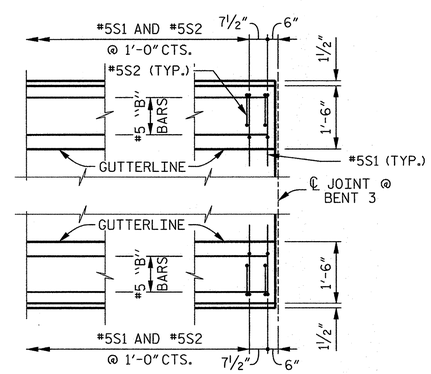


## PLAN @ BENT 3

PROJECT NO. R-2303D

SAMPSON COUNTY

STATION: 1311+58.00 -LREV-

SHEET 1 OF 5

STATE OF NORTH CAROLINA
DEPARTMENT OF TRANSPORTATION
RALEIGH

SUPERSTRUCTURE

# CONCRETE BARRIER RAIL (UNIT 1) (RIGHT LANE)

CDM Smith
Camp Dresser & McKee
421 Fayetteville Street, Suite 1303
Raleigh, NC 27604
NC COA No. F-1255

| | | | |
|---|---|---|---|
| DRAWN BY : | C.E.DIXON | DATE : | 10-12 |
| CHECKED BY : | J.T.ECKEL | DATE : | 10-12 |
| DESIGN ENGINEER : | P.R. HOLSHOUSER | DATE : | 1-13 |

DWG. No. S02-033

NORTH CAROLINA PROFESSIONAL SEAL 20668 ENGINEER PAUL R. HOLSHOUSER 2/22/2013

| REVISIONS | | | | | | SHEET No. |
|---|---|---|---|---|---|---|
| No. | BY: | DATE: | No. | BY: | DATE: | S-109 |
| 1 | | | 3 | | | TOTAL SHEETS |
| 2 | | | 4 | | | 218 |

FILE: r:\model\r2303d\structures\PLANS\Str_2\R2303D_SD_Str2_br1.dgn
DATE: 2/22/2013 10:56:26 AM

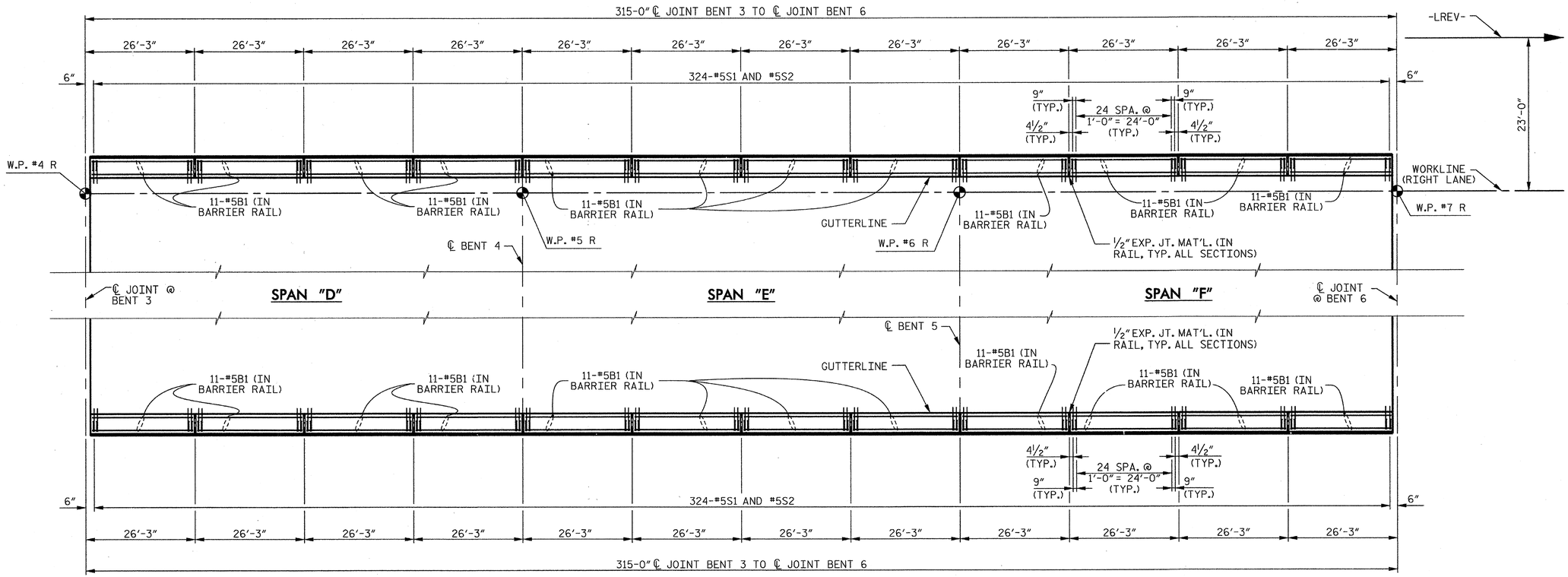


## PLAN OF CONCRETE BARRIER RAIL – UNIT 2

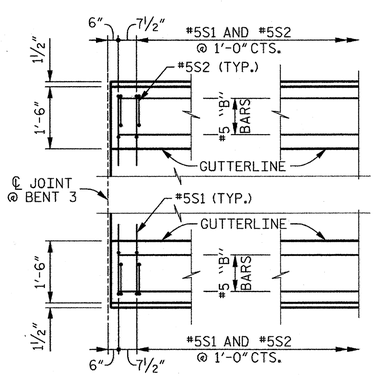


## PLAN @ BENT 3

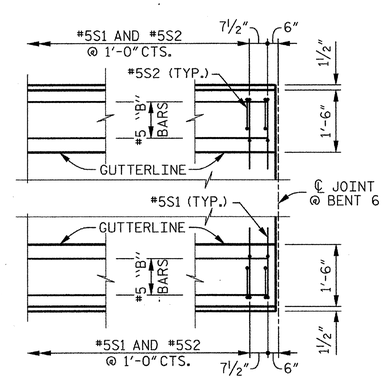


## PLAN @ BENT 6

PROJECT NO. R-2303D

SAMPSON COUNTY

STATION: 1311+58.00 -LREV-

SHEET 2 OF 5

STATE OF NORTH CAROLINA
DEPARTMENT OF TRANSPORTATION
RALEIGH

SUPERSTRUCTURE

# CONCRETE BARRIER RAIL (UNIT 2)

(RIGHT LANE)

CDM Smith

Camp Dresser & McKee
421 Fayetteville Street, Suite 1303
Raleigh, NC 27604
NC COA No. F-1255

DRAWN BY : C.E.DIXON DATE : 11-12
CHECKED BY : J.T.ECKEL DATE : 11-12
DESIGN ENGINEER : P.R. HOLSHOUSER DATE : 1-13

DWG. No. S02-034

NORTH CAROLINA PROFESSIONAL SEAL 20668 ENGINEER PAUL R. HOLSHOUSER 1/04/2013

| REVISIONS | | | | | | SHEET No. |
|---|---|---|---|---|---|---|
| No. | BY: | DATE: | No. | BY: | DATE: | S-110 |
| 1 | | | 3 | | | TOTAL SHEETS |
| 2 | | | 4 | | | 218 |

FILE: r:\model\2303d\structures\PLANS\Str_21R2303D_S0_Sh2_bv2.dgn
DATE: 12/30/2012 9:23:42 PM

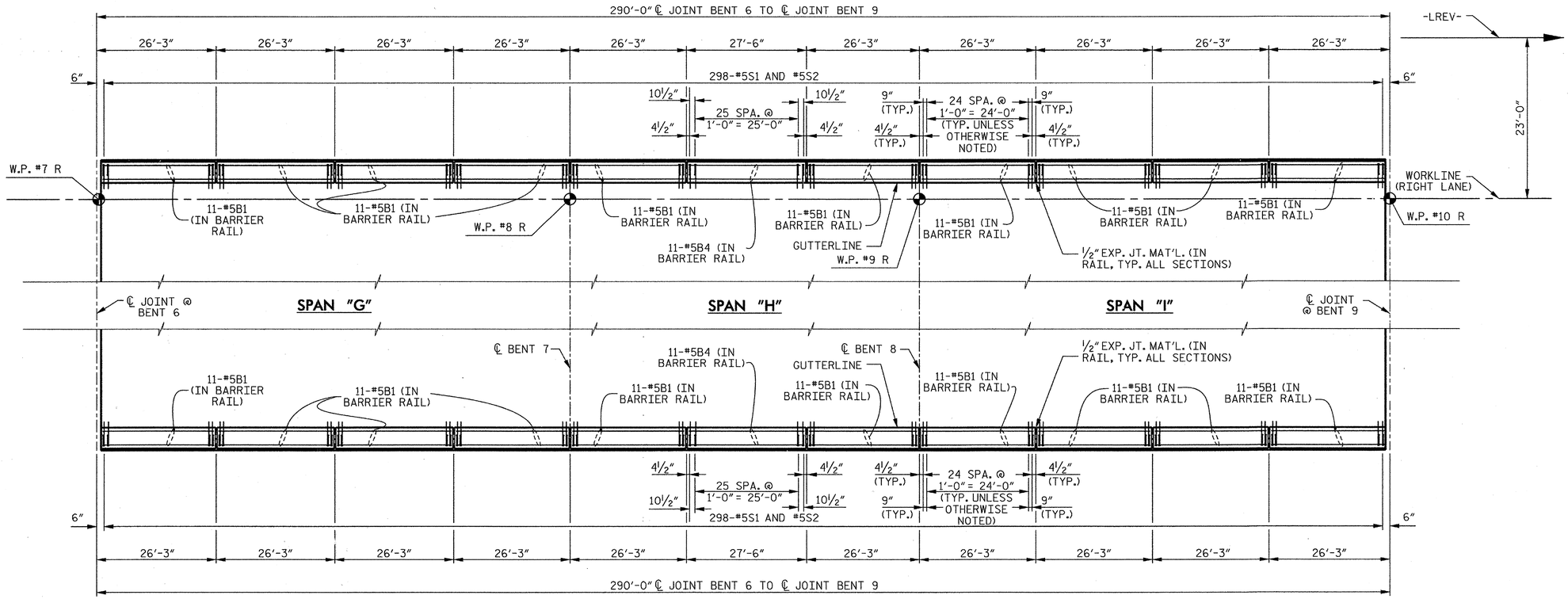


## PLAN OF CONCRETE BARRIER RAIL – UNIT 3

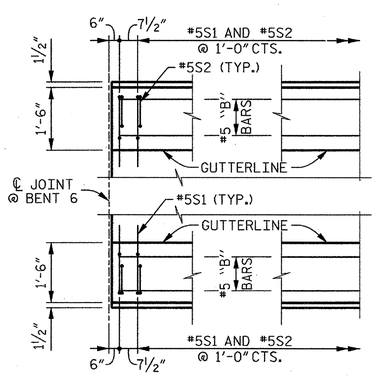


## PLAN @ BENT 6

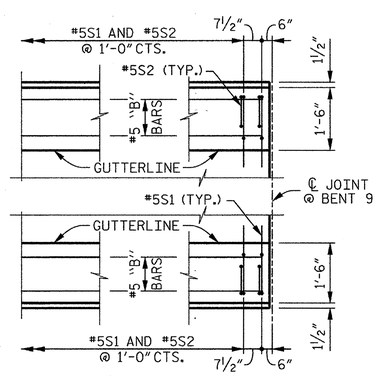


## PLAN @ BENT 9

PROJECT NO. R-2303D
SAMPSON COUNTY
STATION: 1311+58.00 -LREV-

SHEET 3 OF 5

STATE OF NORTH CAROLINA
DEPARTMENT OF TRANSPORTATION
RALEIGH

SUPERSTRUCTURE

# CONCRETE BARRIER RAIL (UNIT 3) (RIGHT LANE)

CDM Smith
Camp Dresser & McKee
421 Fayetteville Street, Suite 1303
Raleigh, NC 27604
NC COA No. F-1255

DRAWN BY : C.E.DIXON DATE : 11-12
CHECKED BY : J.T.ECKEL DATE : 11-12
DESIGN ENGINEER : P.R. HOLSHOUSER DATE : 1-13

DWG. No. S02-035

NORTH CAROLINA PROFESSIONAL SEAL 20668 ENGINEER PAUL R. HOLSHOUSER 2/04/2013

| REVISIONS | | | | | | | SHEET No. |
|---|---|---|---|---|---|---|---|
| No. | BY: | DATE: | No. | BY: | DATE: | | S-111 |
| 1 | | | 3 | | | | TOTAL SHEETS |
| 2 | | | 4 | | | | 218 |

FILE: r:\model\r2303d\structures\PLANS\Div_21\R2303D_SD_Sh2_bk3.dgn
DATE: 12/3/2012 9:23:44 PM

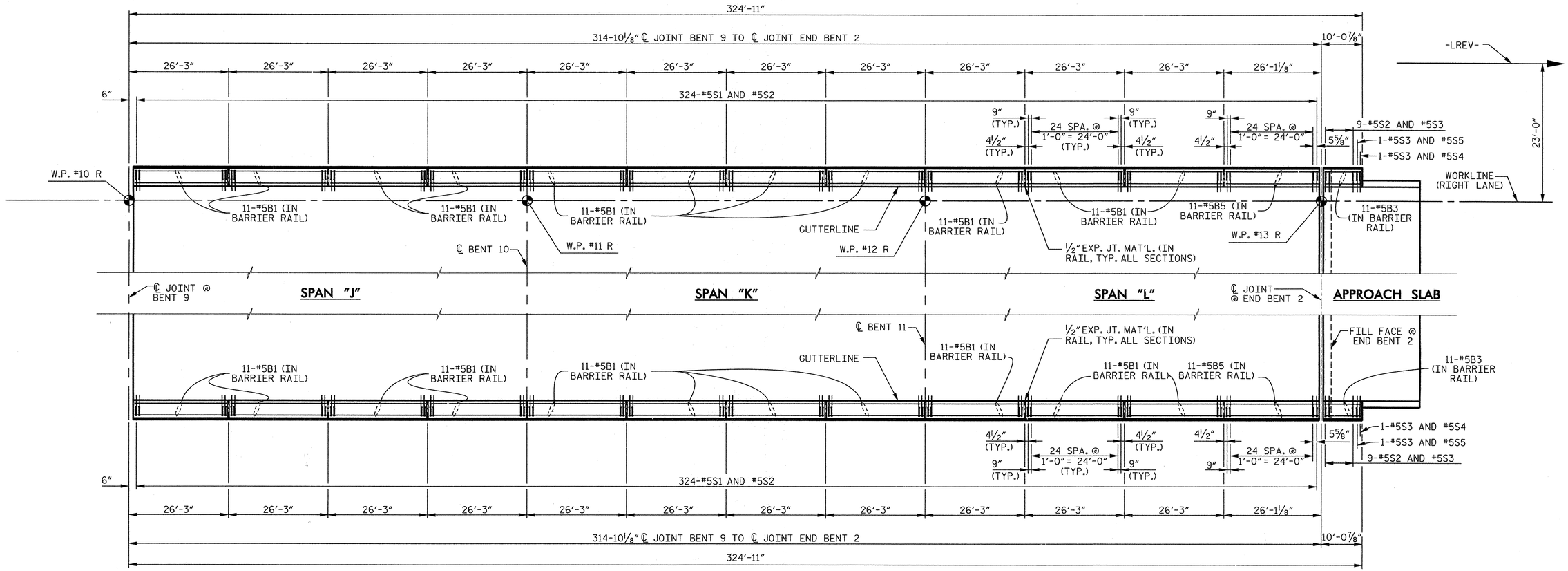


PLAN OF CONCRETE BARRIER RAIL – UNIT 4

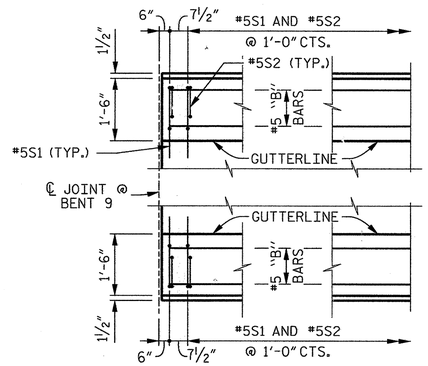


PLAN @ BENT 9

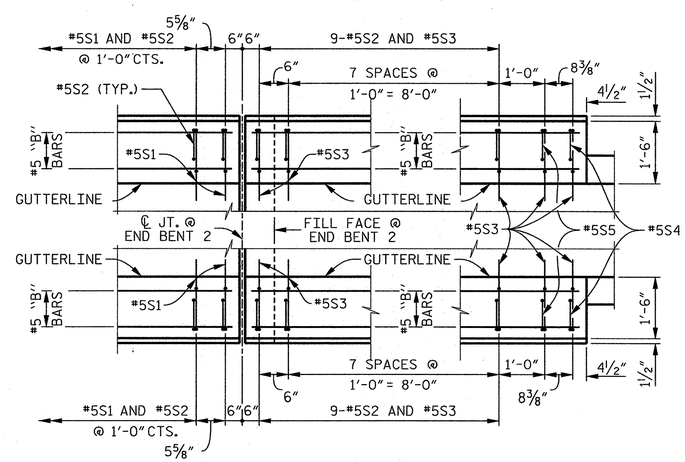


PLAN @ END BENT 2

PROJECT NO. R-2303D

SAMPSON COUNTY

STATION: 1311+58.00 -LREV-

SHEET 4 OF 5

STATE OF NORTH CAROLINA
DEPARTMENT OF TRANSPORTATION
RALEIGH

SUPERSTRUCTURE

CONCRETE BARRIER RAIL (UNIT 4)

(RIGHT LANE)

CDM Smith

Camp Dresser & McKee
421 Fayetteville Street, Suite 1303
Raleigh, NC 27604
NC COA No. F-1255

| | | | |
|---|---|---|---|
| DRAWN BY : | C.E.DIXON | DATE : | 11-12 |
| CHECKED BY : | J.T.ECKEL | DATE : | 11-12 |
| DESIGN ENGINEER : | P.R. HOLSHOUSER | DATE : | 1-13 |

DWG. No. S02-036

NORTH CAROLINA PROFESSIONAL SEAL 20668 ENGINEER PAUL R. HOLSHOUSER 2/22/2013

| REVISIONS | | | | | | SHEET No. |
|---|---|---|---|---|---|---|
| No. | BY: | DATE: | No. | BY: | DATE: | S-112 |
| 1 | | | 3 | | | TOTAL SHEETS |
| 2 | | | 4 | | | 218 |

FILE: r:\nodot\r2303d\structures\PLANS\Str_2\R2303D_SD_Str2_bn4.dgn
DATE: 2/22/2013 10:56:28 AM

## TOTAL CONCRETE BARRIER RAIL QUANTITIES

| CONCRETE BARRIER RAIL | EPOXY COATED REINFORCING STEEL | CLASS "AA" CONCRETE |
|---|---|---|
| L.F. | LBS. | CU. YDS. |
| 2,437.83 | 57,849 | 330.8 |

## BILL OF MATERIAL FOR UNIT 1

FOR CONCRETE BARRIER RAIL ONLY

| BAR | No. | SIZE | TYPE | LENGTH | WEIGHT |
|---|---|---|---|---|---|
| ✳B1 | 220 | #5 | STR | 25'-10" | 5,928 |
| ✳B2 | 22 | #5 | STR | 16'-0" | 367 |
| ✳B3 | 22 | #5 | STR | 9'-8" | 222 |
| ✳S1 | 574 | #5 | 1 | 4'-7" | 2,744 |
| ✳S2 | 592 | #5 | 2 | 7'-0" | 4,322 |
| ✳S3 | 22 | #5 | 1 | 5'-1" | 117 |
| ✳S4 | 2 | #5 | 2 | 5'-8" | 12 |
| ✳S5 | 2 | #5 | 2 | 6'-4" | 13 |

✳EPOXY COATED REINFORCING STEEL 13,725 LBS.

CLASS "AA" CONCRETE 78.4 CU. YDS.

CONCRETE BARRIER RAIL 578.00 LIN. FT.

## BILL OF MATERIAL FOR UNIT 2

FOR CONCRETE BARRIER RAIL ONLY

| BAR | No. | SIZE | TYPE | LENGTH | WEIGHT |
|---|---|---|---|---|---|
| ✳B1 | 264 | #5 | STR | 25'-10" | 7,113 |
| ✳S1 | 648 | #5 | 1 | 4'-7" | 3,098 |
| ✳S2 | 648 | #5 | 2 | 7'-0" | 4,731 |

✳EPOXY COATED REINFORCING STEEL 14,942 LBS.

CLASS "AA" CONCRETE 85.5 CU. YDS.

CONCRETE BARRIER RAIL 630.00 LIN. FT.

## BILL OF MATERIAL FOR UNIT 3

FOR CONCRETE BARRIER RAIL ONLY

| BAR | No. | SIZE | TYPE | LENGTH | WEIGHT |
|---|---|---|---|---|---|
| ✳B1 | 220 | #5 | STR | 25'-10" | 5,928 |
| ✳B4 | 22 | #5 | STR | 27'-1" | 621 |
| ✳S1 | 596 | #5 | 1 | 4'-7" | 2,849 |
| ✳S2 | 596 | #5 | 2 | 7'-0" | 4,351 |

✳EPOXY COATED REINFORCING STEEL 13,749 LBS.

CLASS "AA" CONCRETE 78.7 CU. YDS.

CONCRETE BARRIER RAIL 580.00 LIN. FT.

## BILL OF MATERIAL FOR UNIT 4

FOR CONCRETE BARRIER RAIL ONLY

| BAR | No. | SIZE | TYPE | LENGTH | WEIGHT |
|---|---|---|---|---|---|
| ✳B1 | 242 | #5 | STR | 25'-10" | 6,520 |
| ✳B3 | 22 | #5 | STR | 9'-8" | 222 |
| ✳B5 | 22 | #5 | STR | 25'-8" | 589 |
| ✳S1 | 648 | #5 | 1 | 4'-7" | 3,098 |
| ✳S2 | 666 | #5 | 2 | 7'-0" | 4,862 |
| ✳S3 | 22 | #5 | 1 | 5'-1" | 117 |
| ✳S4 | 2 | #5 | 2 | 5'-8" | 12 |
| ✳S5 | 2 | #5 | 2 | 6'-4" | 13 |

✳EPOXY COATED REINFORCING STEEL 15,433 LBS.

CLASS "AA" CONCRETE 88.2 CU. YDS.

CONCRETE BARRIER RAIL 649.83 LIN. FT.

## BAR TYPES

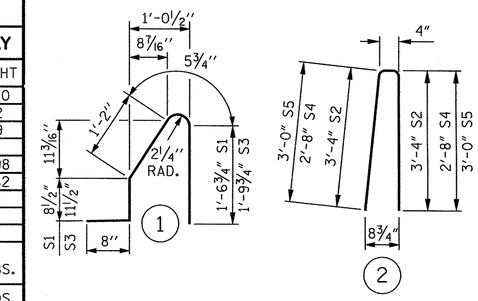


ALL BAR DIMENSIONS ARE OUT TO OUT.

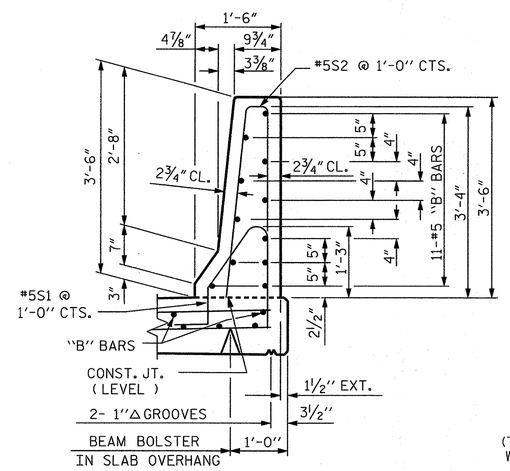


SECTION THRU RAIL

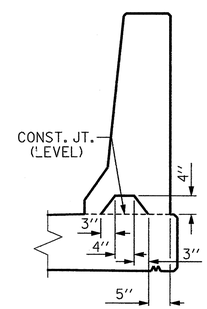


SECTION S-S

AT DAM IN OPEN JOINT (THIS IS TO BE USED ONLY WHEN SLIP FORM IS USED)

## NOTES

THE BARRIER RAIL IN A CONTINUOUS UNIT SHALL NOT BE CAST UNTIL ALL SLAB CONCRETE IN THAT UNIT HAS BEEN CAST AND HAS REACHED A MINIMUM COMPRESSIVE STRENGTH OF 3,000 PSI.

ALL REINFORCING STEEL IN BARRIER RAILS SHALL BE EPOXY COATED.

GROOVED CONTRACTION JOINTS, ½" IN DEPTH, SHALL BE TOOLED IN ALL EXPOSED FACES OF THE BARRIER RAIL AND IN ACCORDANCE WITH ARTICLE 825-10(B) OF THE STANDARD SPECIFICATIONS. THE CONTRACTION JOINT SHALL BE LOCATED AT EACH THIRD POINT BETWEEN BARRIER RAIL EXPANSION JOINTS. ONLY ONE CONTRACTION JOINT IS REQUIRED AT MIDPOINT OF BARRIER RAIL SEGMENTS LESS THAN 20 FEET IN LENGTH AND NO CONTRACTION JOINTS ARE REQUIRED FOR THOSE SEGMENTS LESS THAN 10 FEET IN LENGTH.

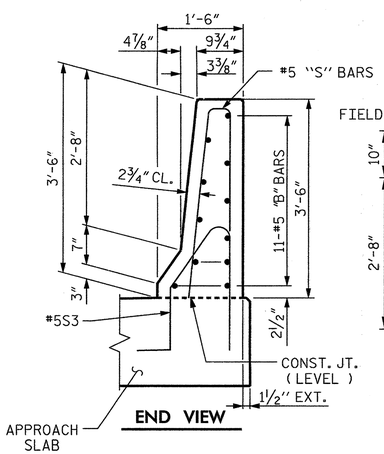


END VIEW

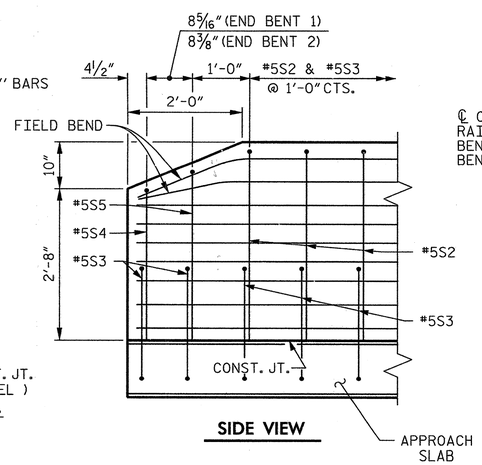


SIDE VIEW

END OF RAIL DETAILS

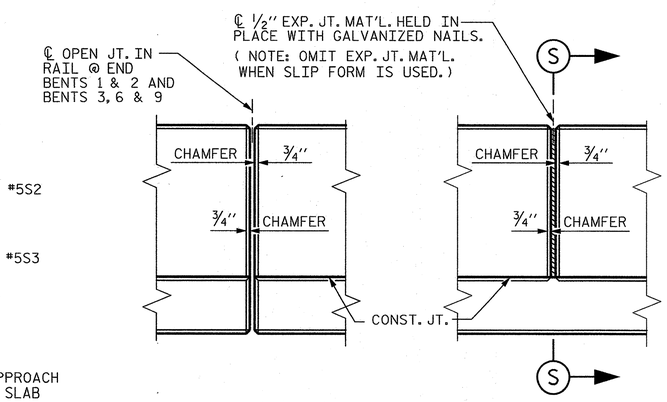


ELEVATION AT EXPANSION JOINTS

BARRIER RAIL DETAILS

PROJECT NO. R-2303D

SAMPSON COUNTY

STATION: 1311+58.00 -LREV-

SHEET 5 OF 5

STATE OF NORTH CAROLINA
DEPARTMENT OF TRANSPORTATION
RALEIGH

STANDARD

CONCRETE BARRIER RAIL DETAILS

(RIGHT LANE)

CDM Smith

Camp Dresser & McKee
421 Fayetteville Street, Suite 1303
Raleigh, NC 27604
NC COA No. F-1255

DRAWN BY : C.E.DIXON DATE : 11-12
CHECKED BY : J.T.ECKEL DATE : 11-12
DESIGN ENGINEER : P.R. HOLSHOUSER DATE : 1-13

DWG. No. S02-037

NORTH CAROLINA PROFESSIONAL SEAL 20668 ENGINEER PAUL R. HOLSHOUSER 1/22/2013

| REVISIONS | | | | | | | | SHEET No. |
|---|---|---|---|---|---|---|---|---|
| No. | BY: | DATE: | No. | BY: | DATE: | | | S-113 |
| 1 | | | 3 | | | | | TOTAL SHEETS |
| 2 | | | 4 | | | | | 218 |

STD. No. CBR1

| | | | |
|---|---|---|---|
| ASSEMBLED BY : C.E. DIXON | DATE : 11-12 | | |
| CHECKED BY : J.T. ECKEL | DATE : 11-12 | | |
| DRAWN BY : ARB 5/87 | REV. 10/1/11 | MAA/GM | |
| CHECKED BY : SJD 9/87 | REV. 7/12 | MAA/GM | |
| | REV. 10/12 | MAA/GM | |

FILE: c:\cadd\j2303d\dgns\PLANS\Sr_21823034_SD_Sr2_Sr3.dgn
DATE: 2/22/2013 10:56:29 AM

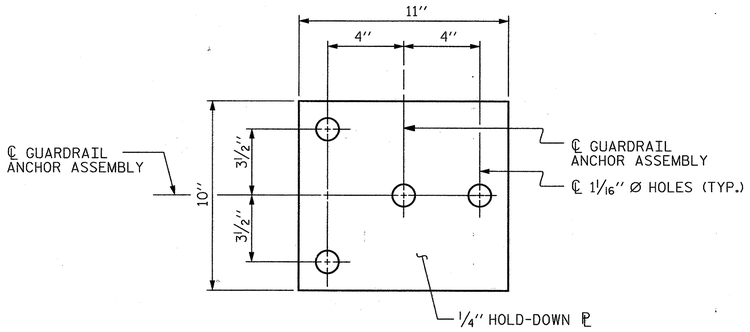


## PLAN

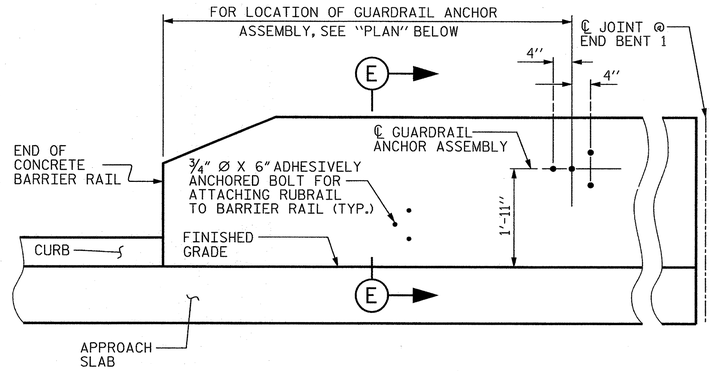


## ELEVATION

(END BENT 1 SHOWN, END BENT 2 SIMILAR)

## NOTES

THE GUARDRAIL ANCHOR ASSEMBLY SHALL CONSIST OF A 1/4" HOLD-DOWN PLATE AND 4 - 7/8" Ø BOLTS WITH NUTS AND WASHERS, RUBRAIL, AND ADHESIVELY ANCHORED BOLTS.

THE HOLD-DOWN PLATE SHALL CONFORM TO AASHTO M270 GRADE 36. AFTER FABRICATION, THE HOLD-DOWN PLATE SHALL BE HOT-DIP GALVANIZED IN ACCORDANCE WITH AASHTO M111.

BOLTS SHALL CONFORM TO THE REQUIREMENTS OF ASTM A307 AND NUTS SHALL CONFORM TO THE REQUIREMENTS OF AASHTO M291. BOLTS, NUTS AND WASHERS SHALL BE GALVANIZED. (AT THE CONTRACTOR'S OPTION, STAINLESS STEEL BOLTS, NUTS AND WASHERS MAY BE USED AS AN ALTERNATE FOR THE 7/8" Ø GALVANIZED BOLTS, NUTS AND WASHERS. THEY SHALL CONFORM TO OR EXCEED THE MECHANICAL REQUIREMENTS OF ASTM A307. THE USE OF THIS ALTERNATE SHALL BE APPROVED BY THE ENGINEER.)

THE GUARDRAIL ANCHOR ASSEMBLY IS REQUIRED AT ALL POINTS WHERE APPROACH GUARDRAIL IS TO BE ATTACHED TO THE END OF BARRIER RAIL. FOR POINTS OF ATTACHMENT, SEE SKETCH.

AFTER INSTALLATION, THE EXPOSED THREAD OF THE BOLT SHALL BE BURRED WITH A SHARP POINTED TOOL.

THE COST OF THE GUARDRAIL ANCHOR ASSEMBLY SHALL BE INCLUDED IN THE UNIT CONTRACT PRICE BID FOR CONCRETE BARRIER RAIL.

THE 1 1/4" Ø HOLES SHALL BE FORMED OR DRILLED WITH A CORE BIT. IMPACT TOOLS WILL NOT BE PERMITTED. ANY CONCRETE DAMAGED BY THIS WORK SHALL BE REPAIRED TO THE SATISFACTION OF THE ENGINEER.

THE C6 X 8.2 RUBRAIL IS TO BE ADHESIVELY ANCHORED TO THE RAIL USING THREE 3/4" Ø X 6" BOLTS WITH WASHERS. LEVEL ONE FIELD TESTING IS REQUIRED, AND THE YIELD LOAD OF THE 3/4" Ø BOLT IS 12 KIPS. FOR ADHESIVELY ANCHORED ANCHOR BOLTS OR DOWELS, SEE STANDARD SPECIFICATIONS. SEE ROADWAY STANDARD 862.03 FOR DETAILS AND LOCATION OF THE RUBRAIL.

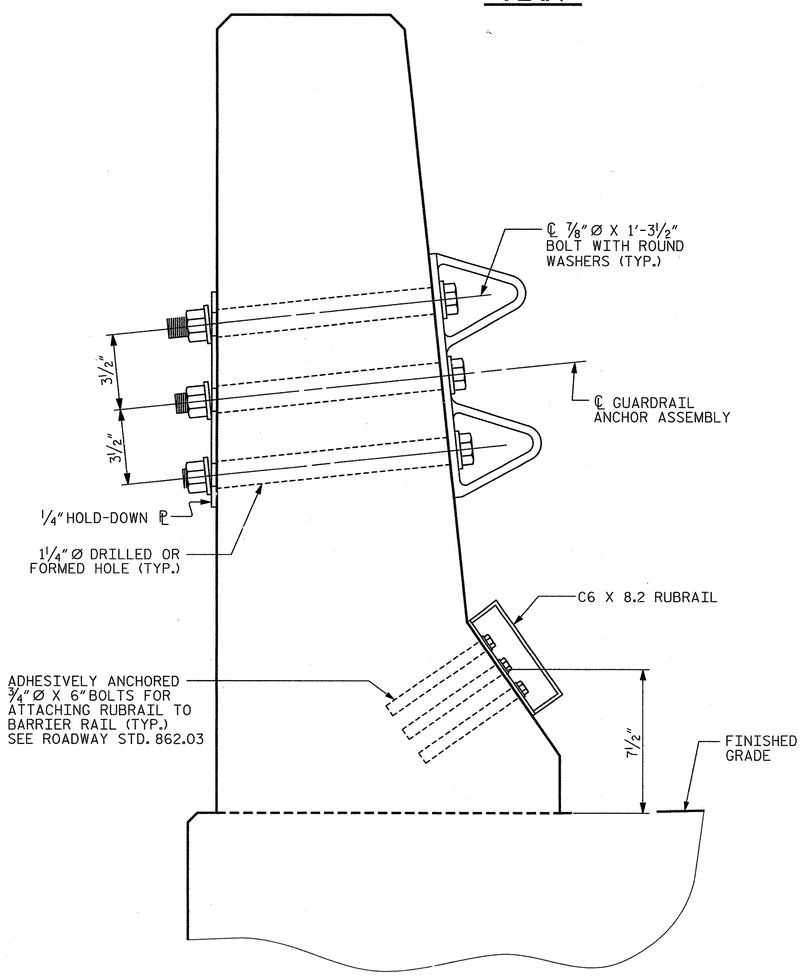


## SECTION E-E

## GUARDRAIL ANCHOR ASSEMBLY DETAILS

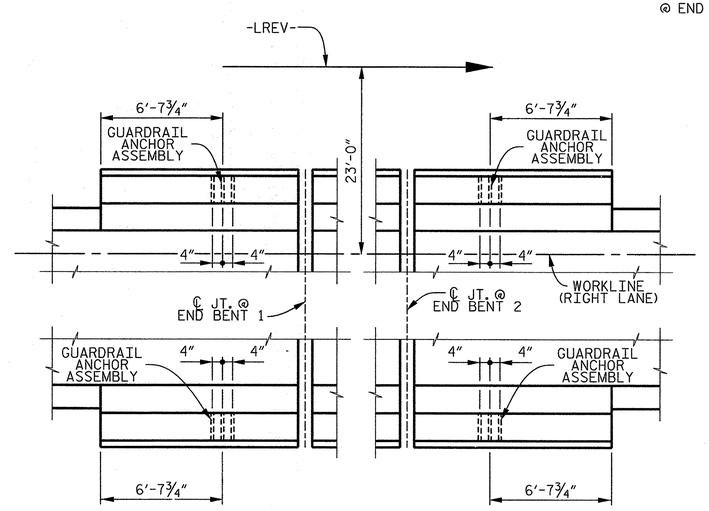


## PLAN

## LOCATION OF ANCHORS FOR GUARDRAIL

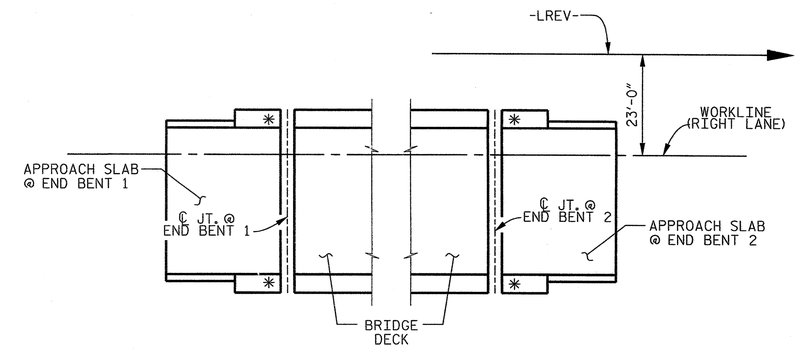


## SKETCH SHOWING POINTS OF ATTACHMENT

✱ DENOTES GUARDRAIL ANCHOR ASSEMBLY

PROJECT NO. R-2303D

SAMPSON COUNTY

STATION: 1311+58.00 -LREV-

STATE OF NORTH CAROLINA
DEPARTMENT OF TRANSPORTATION
RALEIGH

SUPERSTRUCTURE

# GUARDRAIL ANCHORAGE FOR BARRIER RAIL (RIGHT LANE)

| | | | |
|---|---|---|---|
| ASSEMBLED BY : | C.E. DIXON | DATE : | 11-12 |
| CHECKED BY : | J.T. ECKEL | DATE : | 11-12 |

| | | | | | |
|---|---|---|---|---|---|
| DRAWN BY : | TLA | 5/06 | REV. 10/1/11 | MAA/GM |
| CHECKED BY : | GM | 5/06 | REV. 7/12 | MAA/GM |
| | | | REV. 10/12 | MAA/GM |

CDM Smith
Camp Dresser & McKee
421 Fayetteville Street, Suite 1303
Raleigh, NC 27604
NC COA No. F-1255

| | | | |
|---|---|---|---|
| DRAWN BY : | C.E.DIXON | DATE : | 11-12 |
| CHECKED BY : | J.T.ECKEL | DATE : | 11-12 |
| DESIGN ENGINEER : | P.R. HOLSHOUSER | DATE : | 1-13 |

DWG. No. S02-038

NORTH CAROLINA PROFESSIONAL SEAL 20668 ENGINEER PAUL R. HOLSHOUSER 12/27/2013

| REVISIONS | | | | | | | | |
|---|---|---|---|---|---|---|---|---|
| No. | BY: | DATE: | No. | BY: | DATE: | SHEET No. S-114 |
| 1 | | | 3 | | | TOTAL SHEETS 218 |
| 2 | | | 4 | | | |

STD. No. GRA2

FILE: r:\model\2303d\structural\PLANS\Str_21\R2303D_SD_Str2_gr1.dgn
DATE: 2/12/2013 10:18:30 AM

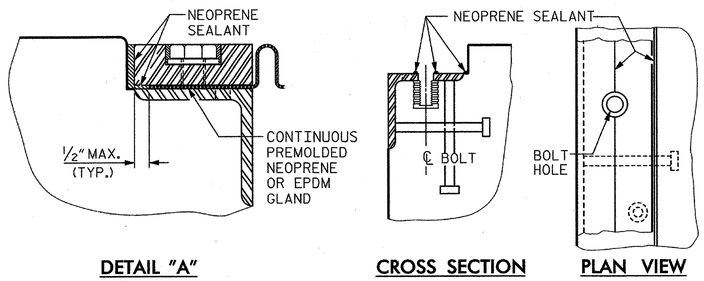


DETAIL "A" CROSS SECTION PLAN VIEW

## INSTALLATION SKETCH

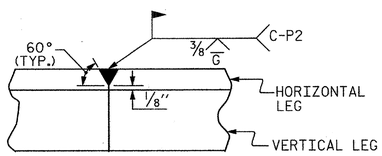


## DETAIL – FIELD WELD SPLICE OF BASE ANGLE

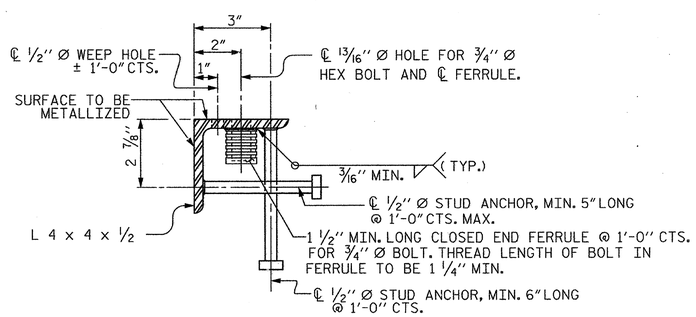


## TYPICAL SECTION OF BASE ANGLE ASSEMBLY

## INSTALLATION PROCEDURE

1. A TEMPLATE OR OTHER SUITABLE DEVICE SHALL BE USED TO FORM THE TOP OF THE EXPANSION JOINT SEAL BLOCKOUT TO THE PROPER DEPTH AND WIDTH. THE TEMPLATE SHALL BE 4 1/8" TO 4 1/4" WIDE AND OF SUCH THICKNESS AS TO PROVIDE FOR CORRECT FINAL ELEVATION OF TOP OF HOLD-DOWN PLATES. THE TEMPLATE SHALL BE ATTACHED TO THE BASE ANGLE ASSEMBLY WITH THE 3/4" Ø HEX HEAD BOLTS PROVIDED FOR THE HOLD-DOWN PLATES. A 1" Ø HOLE SHALL BE PROVIDED IN THE TEMPLATE CENTERED OVER EACH WEEP HOLE IN THE 4" X 4" X 1/2" BASE ANGLE. OTHER METHODS OF INSURING DRAINAGE THROUGH WEEP HOLES MAY BE EMPLOYED SUBJECT TO ENGINEER'S APPROVAL.
2. AFTER THE CONCRETE HAS BEEN CAST ON BOTH SIDES OF THE JOINT, REMOVE THE TEMPLATE. THOROUGHLY CLEAN THE BOLT HOLES AND THE ANGLE PLATE. REMOVE ANY EXCESS CONCRETE THAT COMES OUT OF THE WEEP HOLES. ANY DAMAGED STEEL SHALL BE COATED WITH A MINIMUM THICKNESS OF 4 DRY MILS OF ZINC-RICH PAINT IN ACCORDANCE WITH THE STANDARD SPECIFICATIONS.
3. LAY THE GLAND ON THE BASE ANGLE AND FIELD MARK THE GLAND FOR THE BOLT HOLES. HOLES IN THE GLAND SHALL BE PUNCHED 7/8" IN DIAMETER WITH A HAND PUNCH.
4. IN ORDER TO CHECK FOR PROPER ALIGNMENT, PLACE THE GLAND AND HOLD-DOWN PLATES ON THE BASE ANGLE. DO NOT APPLY NEOPRENE SEALANT. BOLT THE HOLD-DOWN PLATES TO THE BASE ANGLE BUT DO NOT TIGHTEN. THE ENGINEER SHALL INSPECT THE JOINT SEAL DEVICE FOR PROPER ALIGNMENT.
5. AFTER INSPECTION, REMOVE THE HOLD-DOWN PLATES AND GLAND. APPLY NEOPRENE SEALANT TO THE BASE ANGLE IN ACCORDANCE WITH THE "INSTALLATION SKETCH". PLACE GLAND AND HOLD-DOWN PLATES ON THE BASE ANGLE. BOLT THE HOLD-DOWN PLATES TO THE BASE ANGLE ASSEMBLY AND TORQUE THE BOLTS TO 88 FT-LBS WITH A TORQUE WRENCH. CHECK THE TORQUE AFTER THREE (3) HOURS AND, IF NECESSARY, RETIGHTEN TO 88 FT-LBS. A FINAL CHECK SHALL BE MADE AT SEVEN (7) DAYS. TORQUE SHALL NOT BE LESS THAN 80 FT-LBS AFTER SEVEN (7) DAYS.
6. AFTER PROPER TORQUING, CLEAN THE BOLT HOLE RECESSES AND THE RECESS BETWEEN THE JOINT SEAL DEVICE AND CONCRETE, COMPLETELY FILL THESE RECESSES WITH NEOPRENE SEALANT.

## GENERAL NOTES

1. FOR EXPANSION JOINT SEALS, SEE SPECIAL PROVISIONS.
2. ALL PLATES AND ANGLES SHALL CONFORM TO AASHTO M270 GRADE 36 STEEL OR APPROVED EQUAL. ALL HOLD-DOWN BOLTS SHALL CONFORM TO ASTM F593 ALLOY 304 STAINLESS STEEL AND WASHERS SHALL CONFORM TO ASTM F844 EXCEPT THEY SHALL BE MADE FROM ALLOY 304 STAINLESS STEEL. ALL STUD ANCHORS SHALL CONFORM TO AASHTO M169, GRADES 1010 THRU 1020 OR APPROVED EQUAL. ALL CONCRETE INSERTS SHALL BE CLOSED END AND SHALL CONFORM TO AASHTO M169, GRADE 12L14. TENSILE CAPACITY SHALL BE 3000 LBS. MIN.
3. A PREMOLDED CORRUGATED OR NON-CORRUGATED GLAND SHALL BE USED FOR JOINTS SKEWED BETWEEN 50° THRU 130°. FOR JOINTS SKEWED LESS THAN 50° OR MORE THAN 130°, ONLY A CORRUGATED GLAND SHALL BE USED.
4. CLOSED END FERRULES AND STUD ANCHORS SHALL BE SHOP WELDED AND ALL HOLES SHALL BE SHOP DRILLED AS SHOWN ON PLANS. STUD ANCHORS SHALL BE ELECTRIC ARC END WELDED WITH COMPLETE FUSION.
5. SURFACES COMING IN CONTACT WITH NEOPRENE SHALL BE GROUND SMOOTH PRIOR TO METALLIZING.
6. UPON COMPLETION OF SHOP FABRICATION, THE HOLD DOWN PLATE AND BASE ANGLE ASSEMBLY, AS SHOWN IN THE "TYPICAL SECTION OF BASE ANGLE ASSEMBLY", SHALL BE METALLIZED. SEE SPECIAL PROVISION FOR THERMAL SPRAYED COATINGS (METALLIZATION).
7. BASE ANGLE ASSEMBLY SHALL BE CONTINUOUS FOR THE LENGTH OF THE JOINT. AT CROWN BREAKS, THE ENDS OF THE BASE ANGLE ASSEMBLY SHALL BE CUT PARALLEL TO THE BRIDGE CENTERLINE FOR SKEWS LESS THAN 80° AND GREATER THAN 100°. FINISHED WELD SHALL BE GROUND SMOOTH AND COATED WITH A MINIMUM THICKNESS OF 4 DRY MILS OF ZINC-RICH PAINT IN ACCORDANCE WITH THE STANDARD SPECIFICATIONS.
8. FIELD SPLICES OF HOLD-DOWN PLATES SHALL BE KEPT TO A MINIMUM. CONTRACTOR SHALL FURNISH DETAILED PLANS SHOWING PROPOSED SPLICE LOCATIONS FOR APPROVAL. HOLD-DOWN PLATES SHALL NOT EXCEED 20' LENGTHS UNLESS APPROVED BY THE ENGINEER.
9. NO ALTERNATE JOINT DETAILS SHALL BE PERMITTED IN LIEU OF THOSE SHOWN ON THESE PLANS.
10. THE CONTRACTOR MAY, AT HIS OPTION, USE ADHESIVELY ANCHORED ANCHOR BOLTS IN PLACE OF CONCRETE INSERTS FOR COVER PLATES. THE YIELD LOAD OF THE 3/4" Ø BOLT IS 10 KIPS. FIELD TESTING OF THE ADHESIVE BONDING SYSTEM IS NOT REQUIRED.

### MOVEMENT AND SETTING AT JOINT

| LOCATION | SKEW ANGLE | TOTAL MOVEMENT (ALONG ℄ RDWY) | PERPENDICULAR JOINT OPENING AT 45° F | PERPENDICULAR JOINT OPENING AT 60° F | PERPENDICULAR JOINT OPENING AT 90° F |
|---|---|---|---|---|---|
| END BENT 1 | 90°00'00" | 1" | 1 13/16" | 1 5/8" | 1 3/8" |
| BENT 3 | 90°00'00" | 2 1/2" | 2 7/8" | 2 1/2" | 1 7/8" |
| BENT 6 | 90°00'00" | 2 3/8" | 2 3/4" | 2 3/8" | 1 3/4" |
| BENT 9 | 90°00'00" | 2 1/2" | 2 7/8" | 2 1/2" | 1 7/8" |
| END BENT 2 | 90°00'00" | 1 1/4" | 1 15/16" | 1 3/4" | 1 7/16" |

PROJECT NO. R-2303D
SAMPSON COUNTY
STATION: 1311+58.00 -LREV-

SHEET 1 OF 3

STATE OF NORTH CAROLINA
DEPARTMENT OF TRANSPORTATION
RALEIGH

STANDARD

EXPANSION JOINT SEAL DETAILS

(RIGHT LANE)

CDM Smith
Camp Dresser & McKee
421 Fayetteville Street, Suite 1303
Raleigh, NC 27604
NC COA No. F-1255

DRAWN BY : C.E.DIXON DATE : 11-12
CHECKED BY : J.T.ECKEL DATE : 11-12
DESIGN ENGINEER : P.R. HOLSHOUSER DATE : 1-13
DWG. No. S02-039

NORTH CAROLINA PROFESSIONAL SEAL 20668 ENGINEER PAUL R. HOLSHOUSER 2/28/2013

| REVISIONS | | | | | | SHEET No. |
|---|---|---|---|---|---|---|
| No. | BY: | DATE: | No. | BY: | DATE: | S-115 |
| 1 | | | 3 | | | TOTAL SHEETS |
| 2 | | | 4 | | | 218 |

STD. No. EJS1

ASSEMBLED BY : C.E.DIXON DATE : 11-12
CHECKED BY : J.T.ECKEL DATE : 11-12
DRAWN BY : REK 9/87 REV. 5/7/03R RWW/JTE
CHECKED BY : CRK 10/87 REV. 5/1/06R TLA/GM
REV. 10/1/11 MAA/GM

FILE: n:\roadway\r2303d\structures\PLANS\Str_2\R2303D_SD_Str2_epl1.dgn
DATE: 12/20/2012 9:23:48 PM

## NOTES

FOR "TYPICAL SECTION OF BASE ANGLE ASSEMBLY", SEE SHEET 1 OF 3.

FOR DETAIL "A", SEE SHEET 1 OF 3.

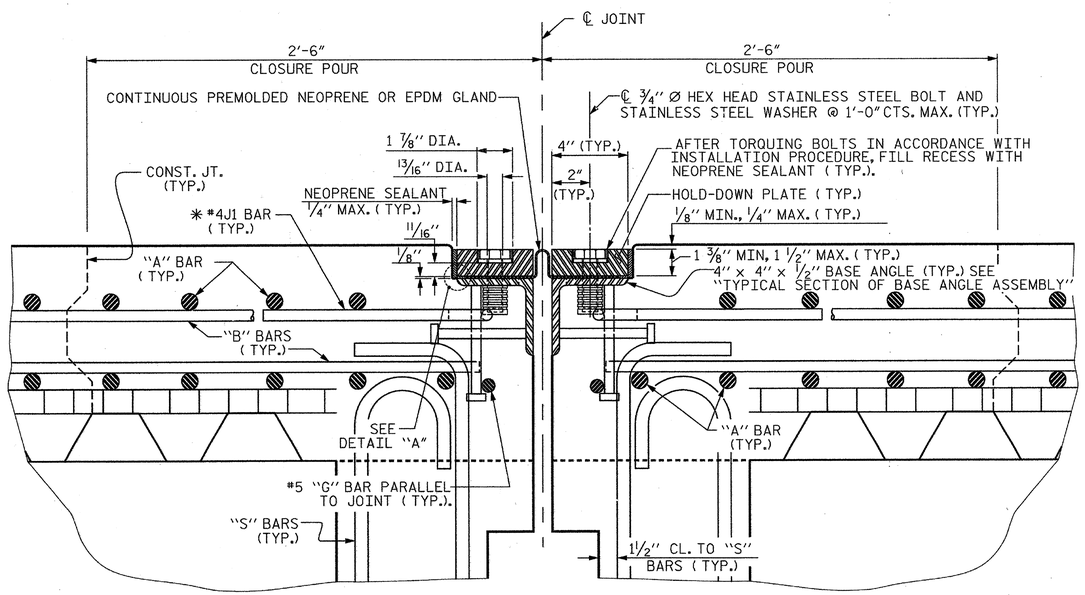


## EXPANSION JOINT DETAILS

SECTION NORMAL TO JOINT AT BENTS 3, 6 AND 9

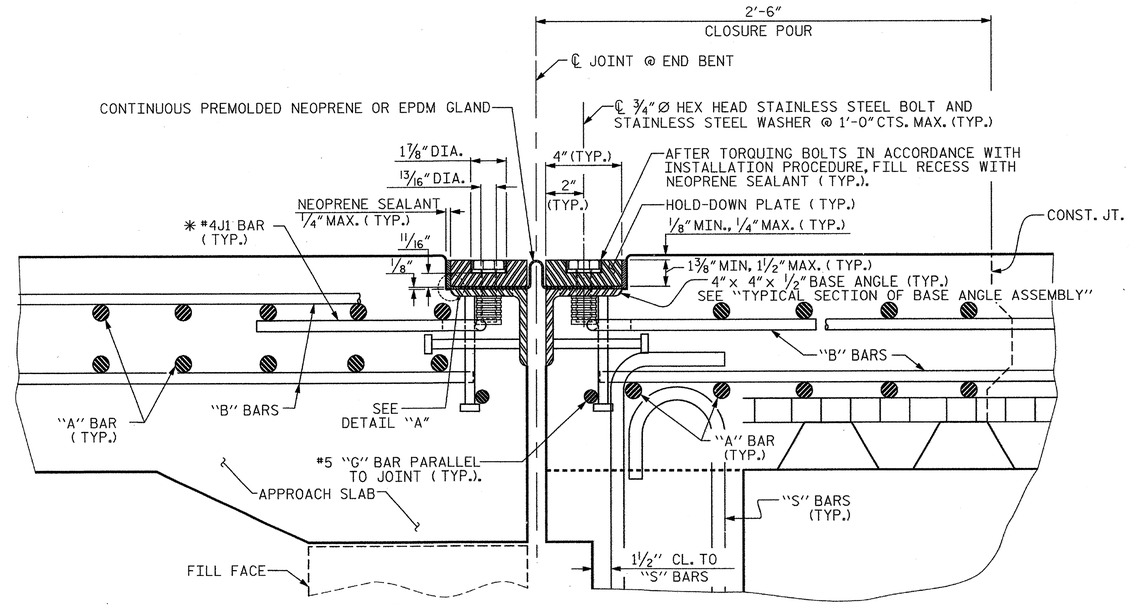


## EXPANSION JOINT DETAILS

SECTION NORMAL TO JOINT AT END BENT 1, END BENT 2 SIMILAR

✳ THE QUANTITY OF #4J1 BARS ON THE BILL OF MATERIAL IS BASED ON 1'-0" CENTERS. J1 BARS SHALL BE PLACED AT EACH VERTICAL STUD ANCHOR BOLT. IN THE EVENT THAT THE NUMBER OF VERTICAL STUD ANCHORS EXCEEDS THE NUMBER OF J1 BARS SPECIFIED, ADDITIONAL J1 BARS WILL NOT BE REQUIRED.

PROJECT NO. R-2303D

SAMPSON COUNTY

STATION: 1311+58.00 -LREV-

SHEET 2 OF 3

STATE OF NORTH CAROLINA
DEPARTMENT OF TRANSPORTATION
RALEIGH

STANDARD

EXPANSION JOINT SEAL DETAILS

(RIGHT LANE)

CDM Smith

Camp Dresser & McKee
421 Fayetteville Street, Suite 1303
Raleigh, NC 27604
NC COA No. F-1255

| | | | |
|---|---|---|---|
| DRAWN BY : | C.E.DIXON | DATE : | 11-12 |
| CHECKED BY : | J.T.ECKEL | DATE : | 11-12 |
| DESIGN ENGINEER : | P.R. HOLSHOUSER | DATE : | 1-13 |

DWG. No. S02-040

NORTH CAROLINA PROFESSIONAL SEAL 20668 ENGINEER PAUL R. HOLSHOUSER 2/08/2013

| REVISIONS | | | | | | |
|---|---|---|---|---|---|---|
| No. | BY: | DATE: | No. | BY: | DATE: | |
| 1 | | | 3 | | | |
| 2 | | | 4 | | | |

SHEET No. S-116

TOTAL SHEETS 218

STD. No. EJS1

| | | | |
|---|---|---|---|
| ASSEMBLED BY : | C.E.DIXON | DATE : | 11-12 |
| CHECKED BY : | J.T.ECKEL | DATE : | 11-12 |
| DRAWN BY : REK | 9/87 | REV. 5/7/03R | RWW/JTE |
| CHECKED BY : CRK | 10/87 | REV. 5/1/06R | TLA/GM |
| | | REV. 10/1/11 | MAA/GM |

FILE: r:\models\2303d\structures\PLANS\Str_2\R2303D_SD_Str2_ejs2.dgn
DATE: 12/20/2012 9:23:30 PM

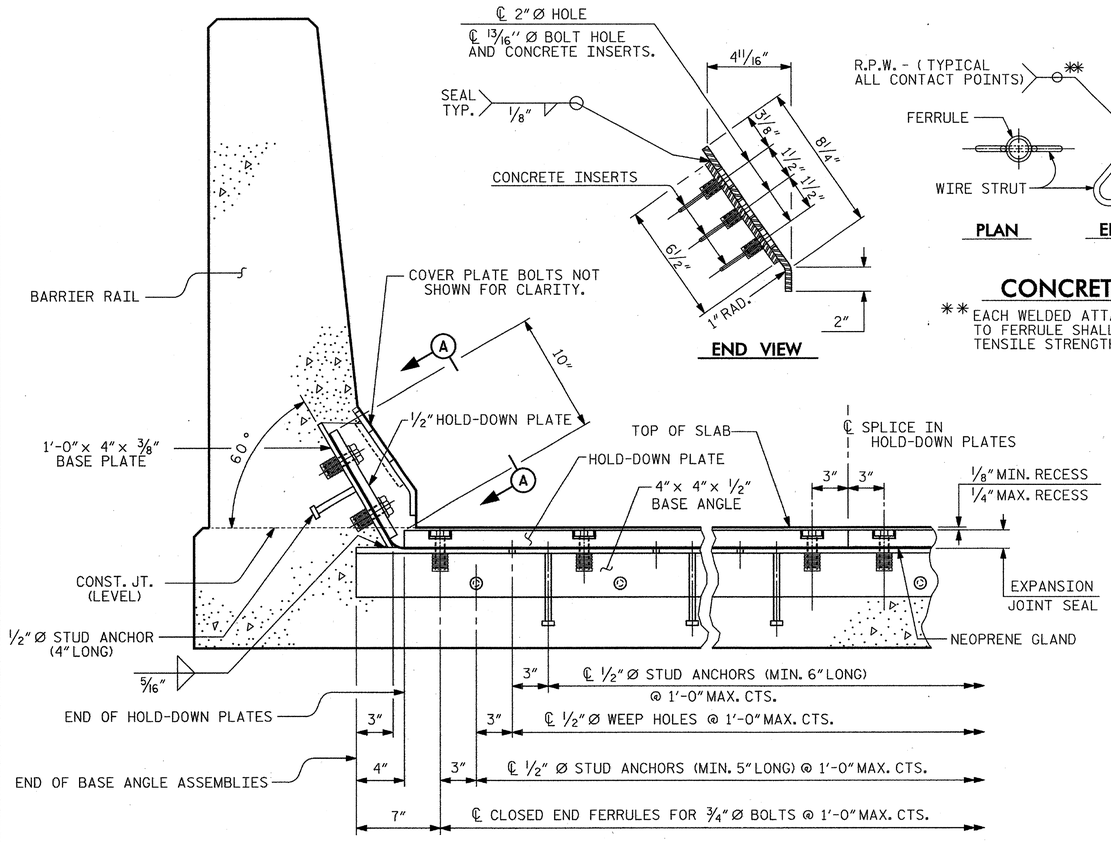


## CONCRETE INSERT

** EACH WELDED ATTACHMENT OF WIRE TO FERRULE SHALL DEVELOP THE TENSILE STRENGTH OF THE WIRE.

## SECTION THRU RAIL NORMAL TO JOINT

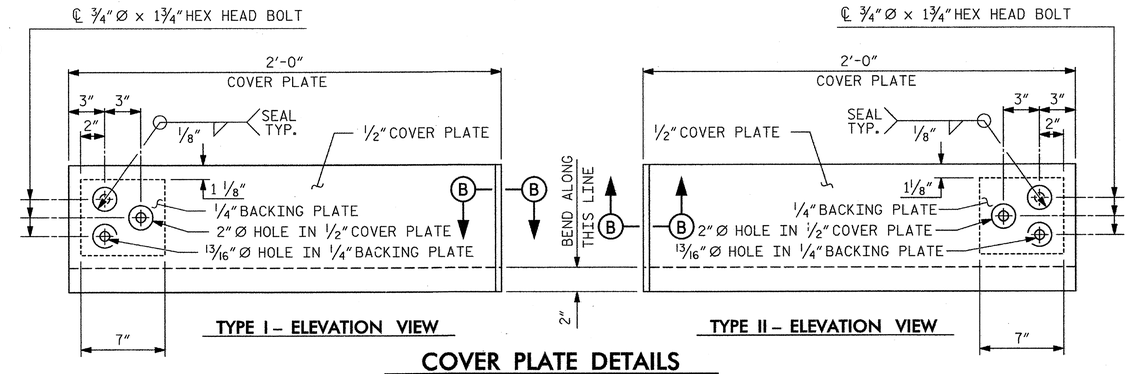


## COVER PLATE DETAILS

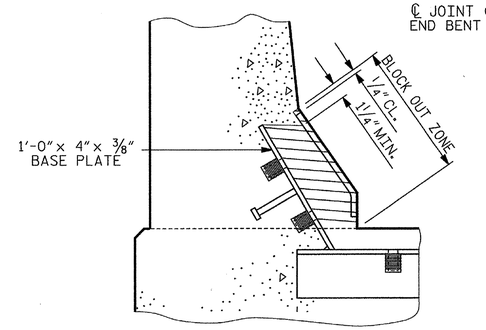


## BLOCK OUT DETAIL

SEE "SECTION A-A" FOR OTHER DETAILS.

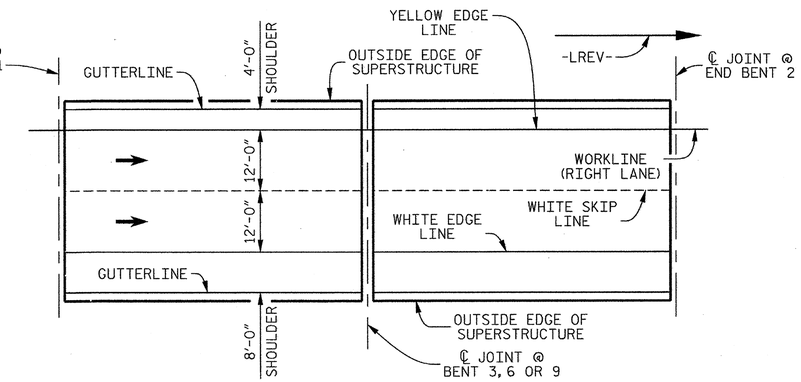


## PAVEMENT MARKING ALIGNMENT

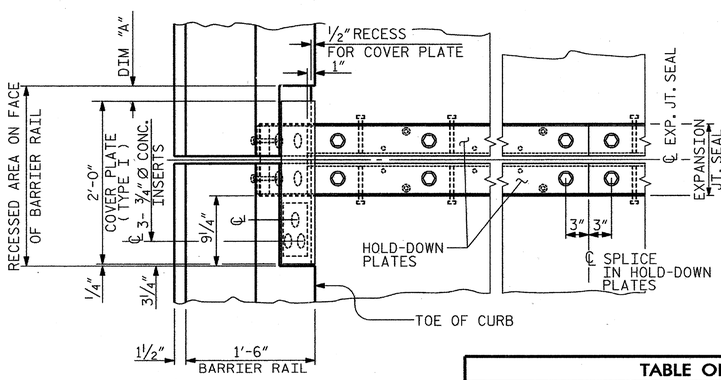


## PLAN OF EXPANSION JOINT SEAL – LEFT SIDE

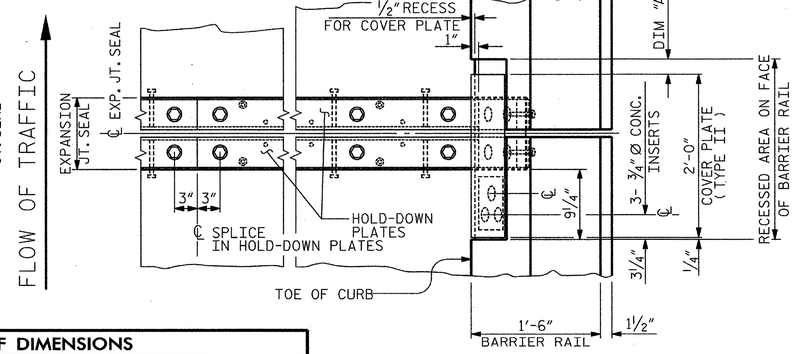


## PLAN OF EXPANSION JOINT SEAL – RIGHT SIDE

| TABLE OF DIMENSIONS | | | |
|---|---|---|---|
| LOCATION | DIM "A" AT 45° F | DIM "A" AT 60° F | DIM "A" AT 90° F |
| END BENT 1 | 1 11/16" | 1 1/2" | 1 1/4" |
| BENT 3 | 2 5/8" | 2 1/4" | 1 5/8" |
| BENT 6 | 2 9/16" | 2 3/16" | 1 9/16" |
| BENT 9 | 2 5/8" | 2 1/4" | 1 5/8" |
| END BENT 2 | 1 13/16" | 1 5/8" | 1 5/16" |

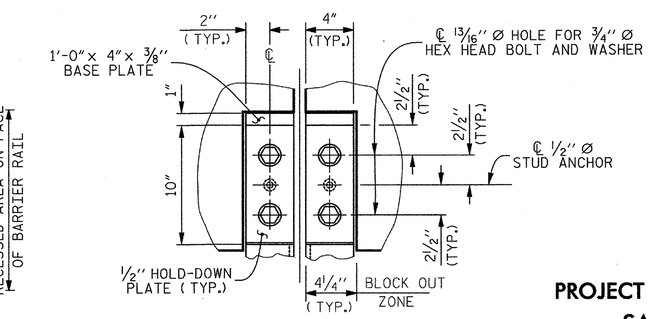


## SECTION A–A

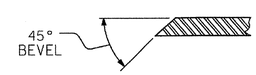


## SECTION B–B

PROJECT NO. R-2303D

SAMPSON COUNTY

STATION: 1311+58.00 -LREV-

SHEET 3 OF 3

STATE OF NORTH CAROLINA
DEPARTMENT OF TRANSPORTATION
RALEIGH

STANDARD

# EXPANSION JOINT SEAL DETAILS FOR BARRIER RAIL (RIGHT LANE)

CDM Smith
Camp Dresser & McKee
421 Fayetteville Street, Suite 1303
Raleigh, NC 27604
NC COA No. F-1255

DRAWN BY : C.E.DIXON DATE : 11-12
CHECKED BY : J.T.ECKEL DATE : 11-12
DESIGN ENGINEER : P.R. HOLSHOUSER DATE : 1-13

DWG. No. S02-041

NORTH CAROLINA PROFESSIONAL SEAL 20668 ENGINEER P. PAUL R. HOLSHOUSER 7/10/2013

| REVISIONS | | | | | | |
|---|---|---|---|---|---|---|
| No. | BY: | DATE: | No. | BY: | DATE: | |
| 1 | | | 3 | | | |
| 2 | | | 4 | | | |

SHEET No. S-117

TOTAL SHEETS 218

STD. No. EJS2

ASSEMBLED BY : C.E.DIXON DATE : 11-12
CHECKED BY : J.T.ECKEL DATE : 11-12

DRAWN BY : REK 9/87
CHECKED BY : CRK 10/87

REV. 10/1/11 MAA/GM
REV. 7/12 MAA/GM
REV. 10/12 MAA/GM

FILE: r:\model\2303d\structures\PLANS\R-2\R2303D_SD_Sr2_ejs3.dgn
DATE: 12/04/2012 9:23:52 PM

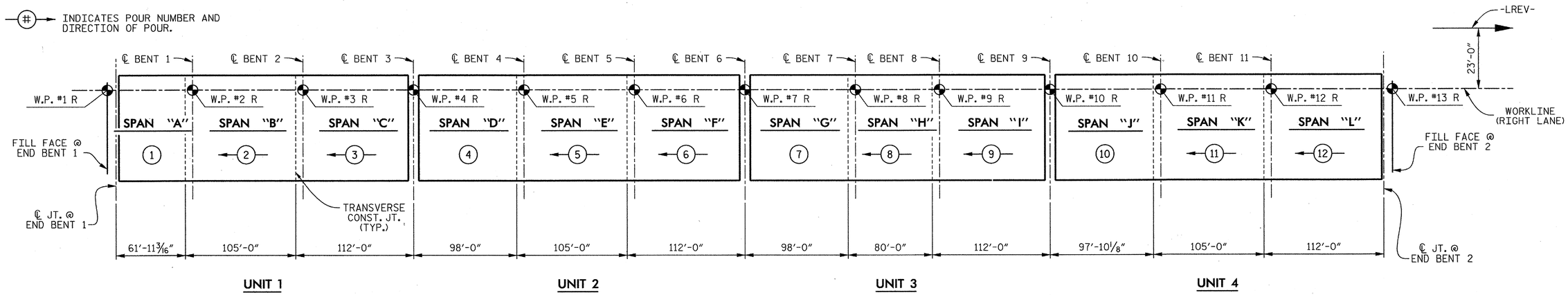


## POURING SEQUENCE

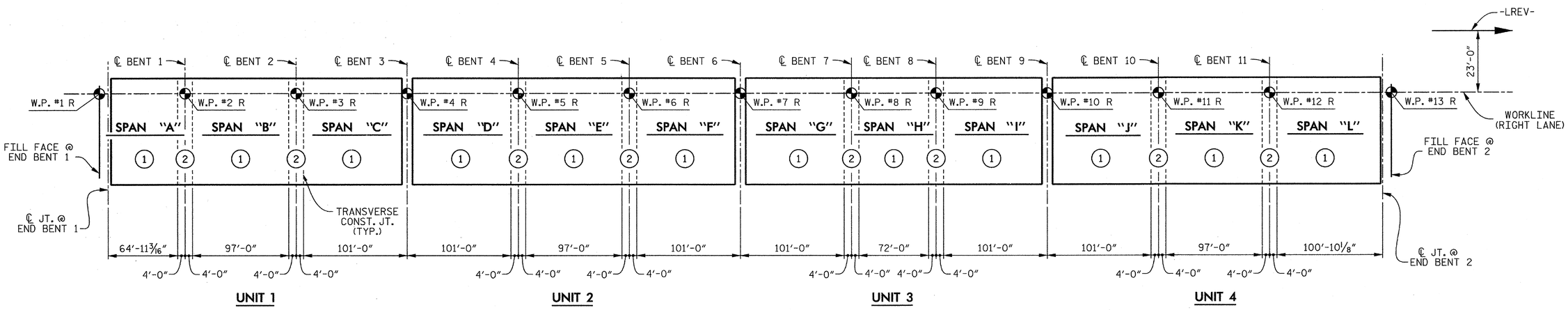


## OPTIONAL POURING SEQUENCE

POUR (2) CAN NOT BE STARTED UNTIL BOTH ADJACENT (1) POURS REACH A MINIMUM OF 3000 PSI

### CLASS AA CONCRETE BREAKDOWN

| | |
|---|---|
| POUR 1 | 84.9 CU. YDS. |
| POUR 2 | 155.0 CU. YDS. |
| POUR 3 | 166.2 CU. YDS. |
| POUR 4 | 133.2 CU. YDS. |
| POUR 5 | 155.0 CU. YDS. |
| POUR 6 | 166.2 CU. YDS. |
| POUR 7 | 133.2 CU. YDS. |
| POUR 8 | 121.5 CU. YDS. |
| POUR 9 | 166.2 CU. YDS. |
| POUR 10 | 133.0 CU. YDS. |
| POUR 11 | 155.0 CU. YDS. |
| POUR 12 | 166.2 CU. YDS. |
| | |
| TOTAL | 1,735.6 CU. YDS. |

### GROOVING BRIDGE FLOORS

| | SQ. FT. |
|---|---|
| APPROACH SLAB @ END BENT 1 | 786 |
| APPROACH SLAB @ END BENT 2 | 786 |
| BRIDGE DECK (UNIT 1) | 9,165 |
| BRIDGE DECK (UNIT 2) | 10,354 |
| BRIDGE DECK (UNIT 3) | 9,529 |
| BRIDGE DECK (UNIT 4) | 10,350 |
| | |
| TOTAL | 40,970 |

### TOTAL SUPERSTRUCTURE QUANTITIES

| | REINFORCING STEEL | EPOXY COATED REINFORCING STEEL | CLASS "AA" CONCRETE |
|---|---|---|---|
| | LBS. | LBS. | CU. YDS. |
| UNIT 1 | 38,565 | 33,646 | 406.1 |
| UNIT 2 | 43,248 | 37,540 | 454.4 |
| UNIT 3 | 39,710 | 34,298 | 420.9 |
| UNIT 4 | 43,248 | 37,540 | 454.2 |
| | | | |
| ** TOTAL | 164,771 | 143,024 | 1,735.6 |

** QUANTITIES FOR CONCRETE BARRIER RAIL ARE NOT INCLUDED. SEE "CONCRETE BARRIER RAIL" SHEETS FOR DETAILS.

PROJECT NO. R-2303D
SAMPSON COUNTY
STATION: 1311+58.00 -LREV-

SHEET 1 OF 2

STATE OF NORTH CAROLINA
DEPARTMENT OF TRANSPORTATION
RALEIGH

SUPERSTRUCTURE

# BILL OF MATERIAL

# (RIGHT LANE)


CDM Smith
Camp Dresser & McKee
421 Fayetteville Street, Suite 1303
Raleigh, NC 27604
NC COA No. F-1255


DRAWN BY : J.T. ECKEL DATE : 11-12
CHECKED BY : A.A. MONTIEL DATE : 11-12
DESIGN ENGINEER : P.R. HOLSHOUSER DATE : 1-13

DWG. No. S02-042

NORTH CAROLINA PROFESSIONAL SEAL 20668 ENGINEER PAUL R. HOLSHOUSER 2/07/2013

| REVISIONS | | | | | | SHEET No. |
|---|---|---|---|---|---|---|
| No. | BY: | DATE: | No. | BY: | DATE: | S-118 |
| 1 | | | 3 | | | TOTAL SHEETS |
| 2 | | | 4 | | | 218 |

FILE: r:\roadwy\2303d\structures\PLANS\br_21\R2303D_SD_Sh2_bm1.dgn
DATE: 1/22/2013 9:05:50 AM

## BILL OF MATERIAL FOR UNIT 1

| BAR | No. | SIZE | TYPE | LENGTH | WEIGHT |
|---|---|---|---|---|---|
| ✱A1 | 476 | #5 | STR | 38'-11" | 19,321 |
| A2 | 478 | #5 | STR | 38'-11" | 19,402 |
| ✱B101 | 56 | #4 | STR | 23'-5" | 876 |
| ✱B102 | 56 | #4 | STR | 19'-0" | 711 |
| ✱B103 | 84 | #4 | STR | 24'-10" | 1,393 |
| ✱B104 | 56 | #5 | STR | 32'-6" | 1,898 |
| ✱B105 | 84 | #5 | STR | 26'-0" | 2,278 |
| ✱B106 | 25 | #5 | STR | 44'-5" | 1,158 |
| ✱B107 | 50 | #5 | STR | 26'-3" | 1,369 |
| ✱B108 | 25 | #5 | STR | 52'-4" | 1,365 |
| ✱B109 | 50 | #5 | STR | 31'-6" | 1,643 |
| B110 | 230 | #5 | STR | 57'-7" | 13,814 |
| B111 | 41 | #5 | STR | 44'-5" | 1,899 |
| B112 | 41 | #5 | STR | 52'-4" | 2,238 |
| ✱G1 | 2 | #5 | STR | 38'-11" | 81 |
| ✱J1 | 72 | #4 | 6 | 1'- 5" | 68 |
| ✱K1 | 8 | #8 | 1 | 14'-3" | 304 |
| ✱K2 | 8 | #8 | 2 | 20'-11" | 447 |
| K3 | 24 | #4 | STR | 16'-7" | 266 |
| K4 | 12 | #4 | STR | 6'- 4" | 51 |
| K5 | 48 | #4 | STR | 9'- 4" | 299 |
| K6 | 12 | #4 | STR | 6'- 8" | 53 |
| ✱S1 | 42 | #5 | 3 | 6'- 1" | 266 |
| S2 | 258 | #4 | 4 | 2'- 9" | 474 |
| ✱U1 | 42 | #4 | 2 | 16'-8" | 468 |
| U2 | 12 | #4 | 5 | 8'- 8" | 69 |

REINFORCING STEEL 38,565 LBS.

✱EPOXY COATED REINFORCING STEEL 33,646 LBS.

## BILL OF MATERIAL FOR UNIT 2

| BAR | No. | SIZE | TYPE | LENGTH | WEIGHT |
|---|---|---|---|---|---|
| ✱A1 | 538 | #5 | STR | 38'-11" | 21,837 |
| A2 | 540 | #5 | STR | 38'-11" | 21,919 |
| ✱B201 | 84 | #4 | STR | 24'-10" | 1,393 |
| ✱B202 | 56 | #4 | STR | 19'-0" | 711 |
| ✱B203 | 84 | #4 | STR | 24'-10" | 1,393 |
| ✱B204 | 84 | #5 | STR | 26'-0" | 2,278 |
| ✱B205 | 84 | #5 | STR | 26'-0" | 2,278 |
| ✱B206 | 25 | #5 | STR | 52'-4" | 1,365 |
| ✱B207 | 50 | #5 | STR | 31'-6" | 1,643 |
| ✱B208 | 25 | #5 | STR | 52'-4" | 1,365 |
| ✱B209 | 50 | #5 | STR | 31'-6" | 1,643 |
| B210 | 276 | #5 | STR | 54'-4" | 15,641 |
| B211 | 41 | #5 | STR | 52'-4" | 2,238 |
| B212 | 41 | #5 | STR | 52'-4" | 2,238 |
| ✱G1 | 2 | #5 | STR | 38'-11" | 81 |
| ✱J1 | 72 | #4 | 6 | 1'- 5" | 68 |
| ✱K1 | 8 | #8 | 1 | 14'-3" | 304 |
| ✱K2 | 8 | #8 | 2 | 20'-11" | 447 |
| K3 | 24 | #4 | STR | 16'-7" | 266 |
| K4 | 12 | #4 | STR | 6'- 4" | 51 |
| K5 | 48 | #4 | STR | 9'- 4" | 299 |
| K6 | 12 | #4 | STR | 6'- 8" | 53 |
| ✱S1 | 42 | #5 | 3 | 6'- 1" | 266 |
| S2 | 258 | #4 | 4 | 2'- 9" | 474 |
| ✱U1 | 42 | #4 | 2 | 16'-8" | 468 |
| U2 | 12 | #4 | 5 | 8'- 8" | 69 |

REINFORCING STEEL 43,248 LBS.

✱EPOXY COATED REINFORCING STEEL 37,540 LBS.

## BILL OF MATERIAL FOR UNIT 3

| BAR | No. | SIZE | TYPE | LENGTH | WEIGHT |
|---|---|---|---|---|---|
| ✱A1 | 495 | #5 | STR | 38'-11" | 20,092 |
| A2 | 497 | #5 | STR | 38'-11" | 20,173 |
| ✱B301 | 84 | #4 | STR | 24'-10" | 1,393 |
| ✱B302 | 28 | #4 | STR | 26'-0" | 486 |
| ✱B303 | 84 | #4 | STR | 24'-10" | 1,393 |
| ✱B304 | 56 | #5 | STR | 34'-0" | 1,986 |
| ✱B305 | 56 | #5 | STR | 34'-0" | 1,986 |
| ✱B306 | 25 | #5 | STR | 46'-8" | 1,217 |
| ✱B307 | 50 | #5 | STR | 27'-9" | 1,447 |
| ✱B308 | 25 | #5 | STR | 46'-8" | 1,217 |
| ✱B309 | 50 | #5 | STR | 27'-9" | 1,447 |
| B310 | 230 | #5 | STR | 59'-9" | 14,333 |
| B311 | 41 | #5 | STR | 46'-8" | 1,996 |
| B312 | 41 | #5 | STR | 46'-8" | 1,996 |
| ✱G1 | 2 | #5 | STR | 38'-11" | 81 |
| ✱J1 | 72 | #4 | 6 | 1'- 5" | 68 |
| ✱K1 | 8 | #8 | 1 | 14'-3" | 304 |
| ✱K2 | 8 | #8 | 2 | 20'-11" | 447 |
| K3 | 24 | #4 | STR | 16'-7" | 266 |
| K4 | 12 | #4 | STR | 6'- 4" | 51 |
| K5 | 48 | #4 | STR | 9'- 4" | 299 |
| K6 | 12 | #4 | STR | 6'- 8" | 53 |
| ✱S1 | 42 | #5 | 3 | 6'- 1" | 266 |
| S2 | 258 | #4 | 4 | 2'- 9" | 474 |
| ✱U1 | 42 | #4 | 2 | 16'-8" | 468 |
| U2 | 12 | #4 | 5 | 8'- 8" | 69 |

REINFORCING STEEL 39,710 LBS.

✱EPOXY COATED REINFORCING STEEL 34,298 LBS.

## BILL OF MATERIAL FOR UNIT 4

| BAR | No. | SIZE | TYPE | LENGTH | WEIGHT |
|---|---|---|---|---|---|
| ✱A1 | 538 | #5 | STR | 38'-11" | 21,837 |
| A2 | 540 | #5 | STR | 38'-11" | 21,919 |
| ✱B401 | 84 | #4 | STR | 24'-10" | 1,393 |
| ✱B402 | 56 | #4 | STR | 19'-0" | 711 |
| ✱B403 | 84 | #4 | STR | 24'-10" | 1,393 |
| ✱B404 | 84 | #5 | STR | 26'-0" | 2,278 |
| ✱B405 | 84 | #5 | STR | 26'-0" | 2,278 |
| ✱B406 | 25 | #5 | STR | 52'-4" | 1,365 |
| ✱B407 | 50 | #5 | STR | 31'-6" | 1,643 |
| ✱B408 | 25 | #5 | STR | 52'-4" | 1,365 |
| ✱B409 | 50 | #5 | STR | 31'-6" | 1,643 |
| B410 | 276 | #5 | STR | 54'-4" | 15,641 |
| B411 | 41 | #5 | STR | 52'-4" | 2,238 |
| B412 | 41 | #5 | STR | 52'-4" | 2,238 |
| ✱G1 | 2 | #5 | STR | 38'-11" | 81 |
| ✱J1 | 72 | #4 | 6 | 1'- 5" | 68 |
| ✱K1 | 8 | #8 | 1 | 14'-3" | 304 |
| ✱K2 | 8 | #8 | 2 | 20'-11" | 447 |
| K3 | 24 | #4 | STR | 16'-7" | 266 |
| K4 | 12 | #4 | STR | 6'- 4" | 51 |
| K5 | 48 | #4 | STR | 9'- 4" | 299 |
| K6 | 12 | #4 | STR | 6'- 8" | 53 |
| ✱S1 | 42 | #5 | 3 | 6'- 1" | 266 |
| S2 | 258 | #4 | 4 | 2'- 9" | 474 |
| ✱U1 | 42 | #4 | 2 | 16'-8" | 468 |
| U2 | 12 | #4 | 5 | 8'- 8" | 69 |

REINFORCING STEEL 43,248 LBS.

✱EPOXY COATED REINFORCING STEEL 37,540 LBS.

## BAR TYPES

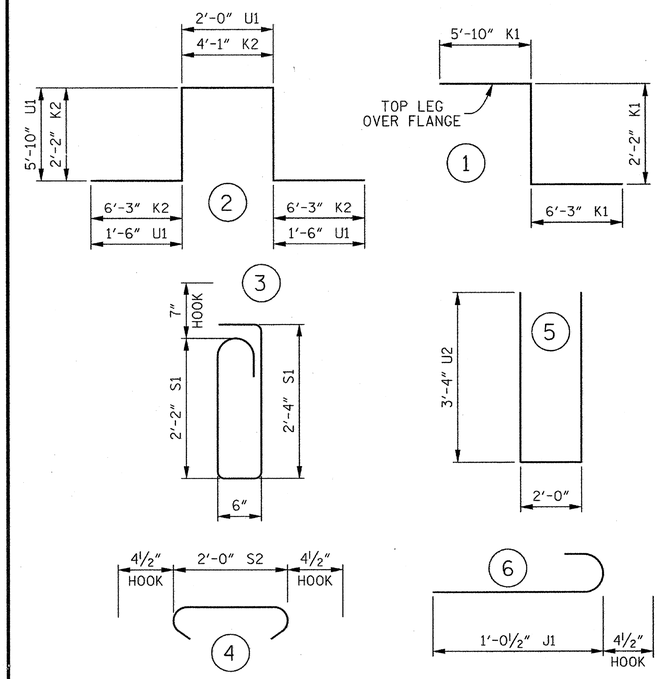


ALL BAR DIMENSIONS ARE OUT TO OUT.

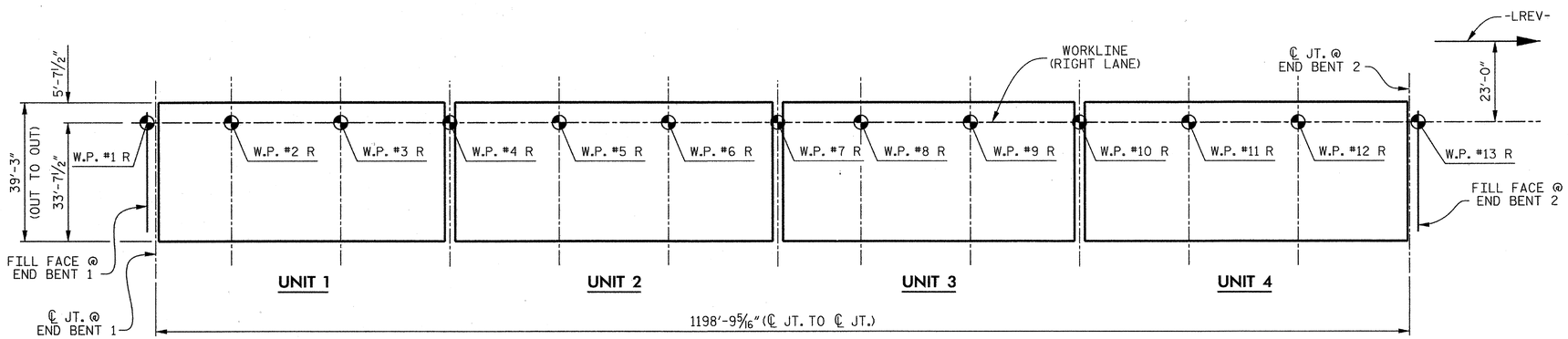


## LAYOUT FOR COMPUTING AREA OF REINFORCED CONCRETE DECK SLAB

(47,052 SQ. FT.)

SUPERSTRUCTURE REINFORCING STEEL LENGTHS ARE BASED ON THE FOLLOWING MINIMUM SPLICE LENGTHS

| BAR SIZE | SUPERSTRUCTURE EXCEPT APPROACH SLABS, PARAPET AND BARRIER RAIL | | APPROACH SLABS | | PARAPET AND BARRIER RAIL |
|---|---|---|---|---|---|
| | EPOXY COATED | UNCOATED | EPOXY COATED | UNCOATED | |
| #4 | 2'-0" | 1'-9" | 2'-0" | 1'-9" | 2'-9" |
| #5 | 2'-6" | 2'-2" | 2'-6" | 2'-2" | 3'-5" |
| #6 | 3'-0" | 2'-7" | 3'-10" | 2'-7" | 4'-4" |
| #7 | 5'-3" | 3'-6" | ——— | ——— | ——— |
| #8 | 6'-10" | 4'-7" | ——— | ——— | ——— |

PROJECT NO. R-2303D

SAMPSON COUNTY

STATION: 1311+58.00 -LREV-

SHEET 2 OF 2

STATE OF NORTH CAROLINA
DEPARTMENT OF TRANSPORTATION
RALEIGH

SUPERSTRUCTURE

# BILL OF MATERIAL

# (RIGHT LANE)

CDM Smith

Camp Dresser & McKee
421 Fayetteville Street, Suite 1303
Raleigh, NC 27604
NC COA No. F-1255

DRAWN BY : J.T. ECKEL DATE : 11-12
CHECKED BY : A.A. MONTIEL DATE : 11-12
DESIGN ENGINEER : P.R. HOLSHOUSER DATE : 1-13

DWG. No. S02-043

NORTH CAROLINA PROFESSIONAL SEAL 20668 ENGINEER P. PAUL R. HOLSHOUSER
1/28/2013

| REVISIONS | | | | | | | SHEET No. |
|---|---|---|---|---|---|---|---|
| No. | BY: | DATE: | No. | BY: | DATE: | | S-119 |
| 1 | | | 3 | | | | TOTAL SHEETS |
| 2 | | | 4 | | | | 218 |

FILE: r:\model\2303d\structures\PLANS\Str_2\R2303D_S0_Str2_bm2.dgn
DATE: 12/20/2012 9:23:56 PM

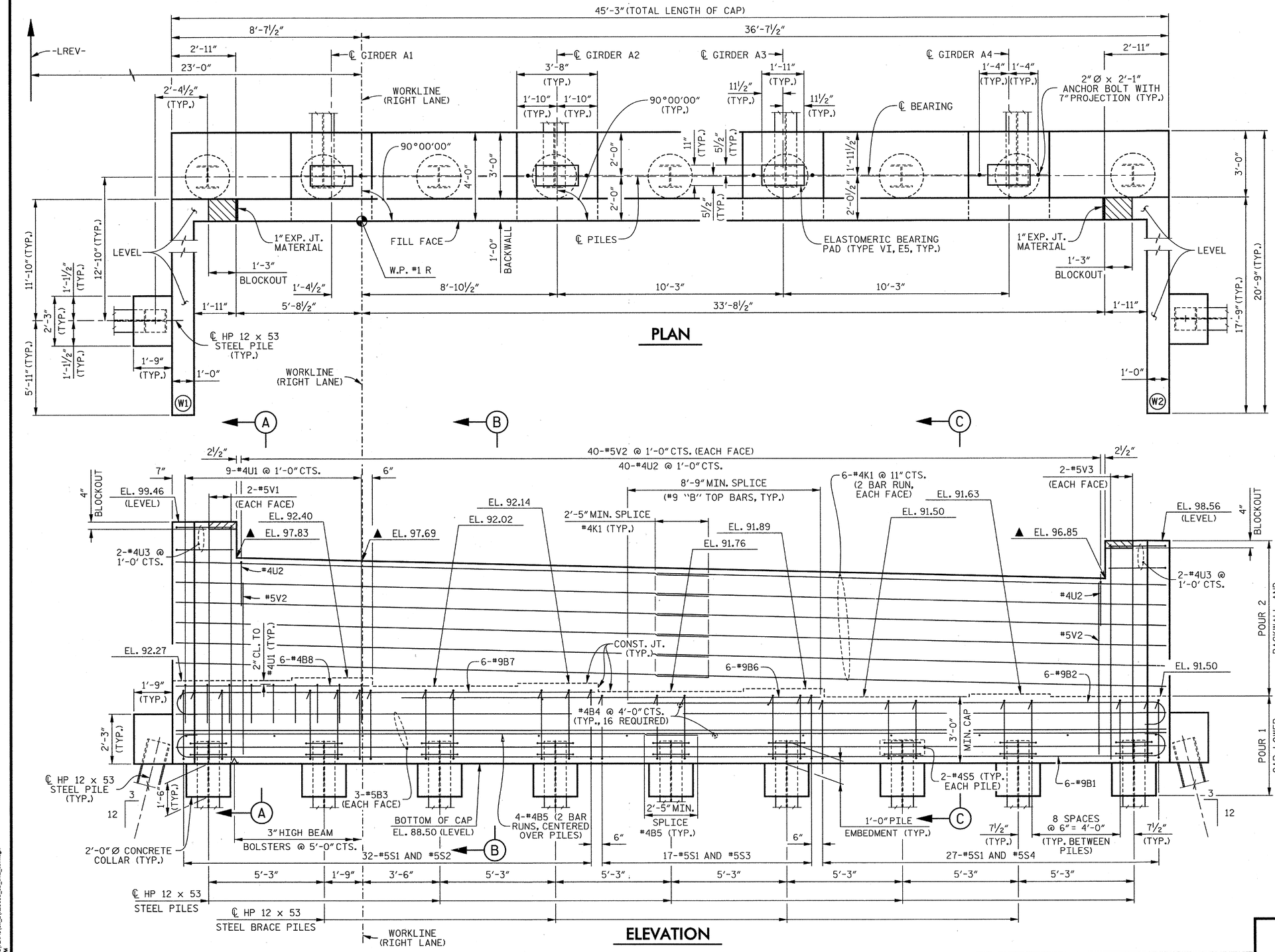


## NOTES

STIRRUPS AND "U" BARS IN CAP MAY BE SHIFTED AS NECESSARY TO CLEAR ANCHOR BOLTS.

THE TOP SURFACE AREA OF THE END BENT CAP SHALL BE CURED IN ACCORDANCE WITH THE STANDARD SPECIFICATIONS EXCEPT THAT THE MEMBRANE CURING COMPOUND METHOD SHALL NOT BE USED.

THE TOP SURFACE OF THE END BENT CAP EXCEPT THE BRIDGE SEAT BUILD-UPS SHALL BE SLOPED TRANSVERSELY FROM THE FILL FACE TO THE FRONT FACE AT THE RATE OF 2%.

BACKWALL SHALL BE PLACED BEFORE APPLYING THE EPOXY PROTECTIVE COATING.

▲ THIS ELEVATION IS TAKEN AT FILL FACE OF BACKWALL.

FOR SECTION A-A, SECTION B-B AND SECTION C-C, SEE SHEET 3 OF 3.

FOR LOCATION OF ELEVATIONS BETWEEN BRIDGE SEAT BUILD-UPS, SEE SECTION VIEWS ON SHEET 3 OF 3.

FOR PILE SPLICE DETAILS, SEE SHEET 3 OF 3.

FOR TEMPORARY DRAINAGE AT END BENT DETAIL, SEE SHEET 3 OF 3.

THE CONCRETE IN THE SHADED AREA OF THE WING SHALL BE POURED AFTER THE BARRIER RAIL IS CAST IF SLIP FORMING IS USED.

THE CONTRACTOR SHALL PROVIDE FOR INSTALLATION OF THE 4" DIAMETER DRAIN PIPE THROUGH THE WING WALL AS REQUIRED FOR REINFORCED BRIDGE APPROACH FILLS, SEE THE ROADWAY PLANS. REINFORCING STEEL IN THE WING WALL MAY BE SHIFTED AS NECESSARY TO CLEAR THE DRAIN PIPE.

PROJECT NO. R-2303D
SAMPSON COUNTY
STATION: 1311+58.00 -LREV-

SHEET 1 OF 3

STATE OF NORTH CAROLINA
DEPARTMENT OF TRANSPORTATION
RALEIGH

SUBSTRUCTURE

END BENT 1

(RIGHT LANE)

CDM Smith
Camp Dresser & McKee
421 Fayetteville Street, Suite 1303
Raleigh, NC 27604
NC COA No. F-1255

DRAWN BY : K.E. LOFTON DATE : 10-12
CHECKED BY : P.R. HOLSHOUSER DATE : 10-12
DESIGN ENGINEER : P.R. HOLSHOUSER DATE : 1-13

DWG. No. S02-044

NORTH CAROLINA PROFESSIONAL SEAL 20668 ENGINEER PAUL R. HOLSHOUSER 2/08/2013

| REVISIONS | | | | | | SHEET No. |
|---|---|---|---|---|---|---|
| No. | BY: | DATE: | No. | BY: | DATE: | S-120 |
| 1 | | | 3 | | | TOTAL SHEETS |
| 2 | | | 4 | | | 218 |

FILE: n:\radar\2303d\structures\PLANS\Str_21\R2303D_S0_SH2_Ab11.dgn
DATE: 12/30/2012 9:23:58 PM

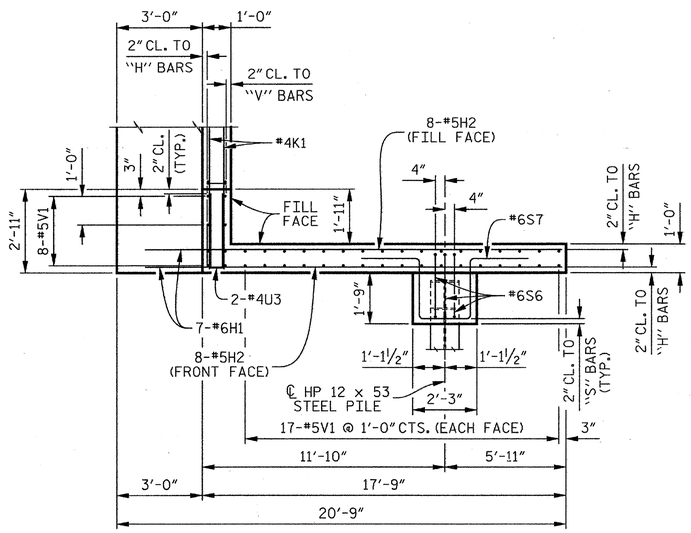


## PLAN OF WING (W1)

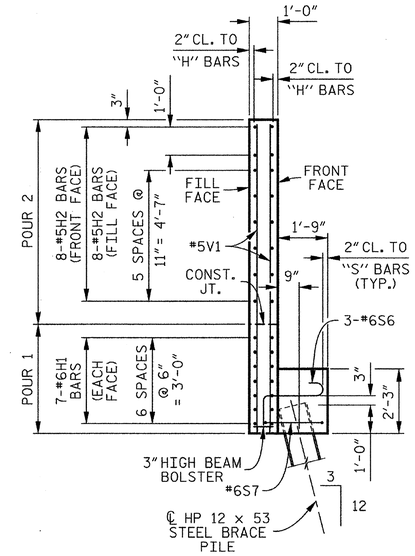


## SECTION D–D

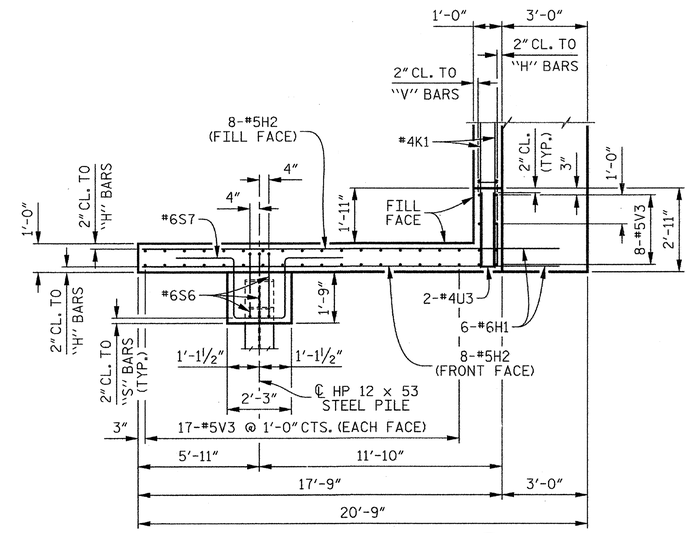


## PLAN OF WING (W2)

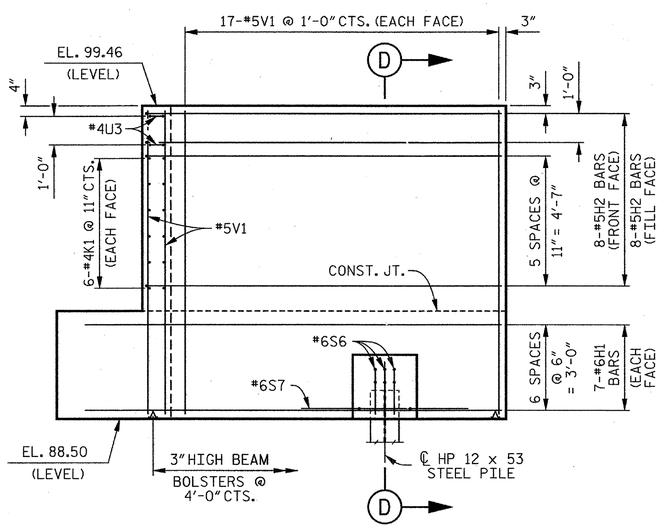


## ELEVATION OF WING (W1)

NOTE:
FOR ADDITIONAL WING PILE DIMENSION, SEE "GENERAL DRAWING FOUNDATION LAYOUT", SHEET 4 OF 7.

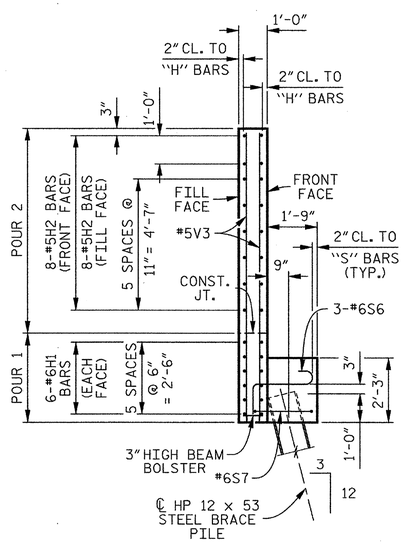


## SECTION E–E

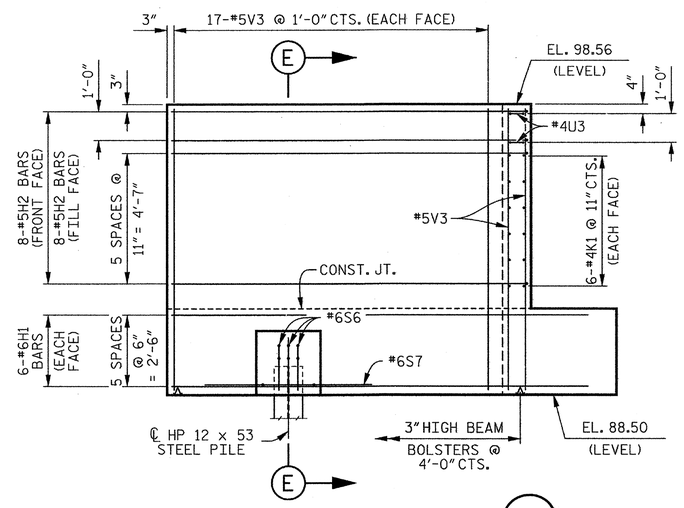


## ELEVATION OF WING (W2)

PROJECT NO. R-2303D
SAMPSON COUNTY
STATION: 1311+58.00 -LREV-

SHEET 2 OF 3

STATE OF NORTH CAROLINA
DEPARTMENT OF TRANSPORTATION
RALEIGH

SUBSTRUCTURE

END BENT 1

(RIGHT LANE)


CDM Smith
Camp Dresser & McKee
421 Fayetteville Street, Suite 1303
Raleigh, NC 27604
NC COA No. F-1255


| | | | |
|---|---|---|---|
| DRAWN BY : | K.E. LOFTON | DATE : | 10-12 |
| CHECKED BY : | P.R. HOLSHOUSER | DATE : | 10-12 |
| DESIGN ENGINEER : | P.R. HOLSHOUSER | DATE : | 1-13 |

DWG. No. S02-045

NORTH CAROLINA PROFESSIONAL SEAL 20668 ENGINEER PAUL R. HOLSHOUSER 1/29/2013

| REVISIONS | | | | | | | | SHEET No. |
|---|---|---|---|---|---|---|---|---|
| No. | BY: | DATE: | No. | BY: | DATE: | | | S-121 |
| 1 | | | 3 | | | | | TOTAL SHEETS |
| 2 | | | 4 | | | | | 218 |


FILE: r:\model\2303d\structures\PLANS\Sr_21R2303D_SD_Sr12_ab12.dgn
DATE: 12/20/2012 9:23:59 PM

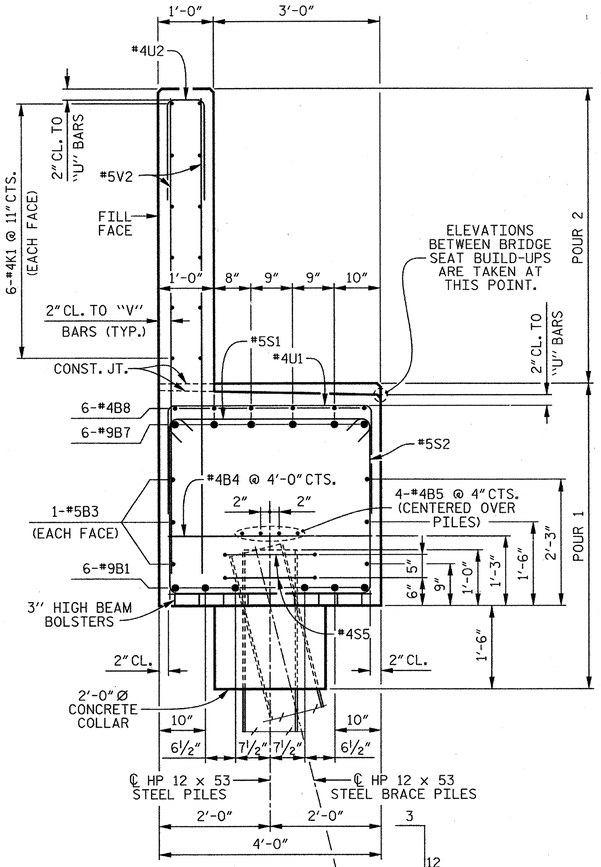


## SECTION A–A

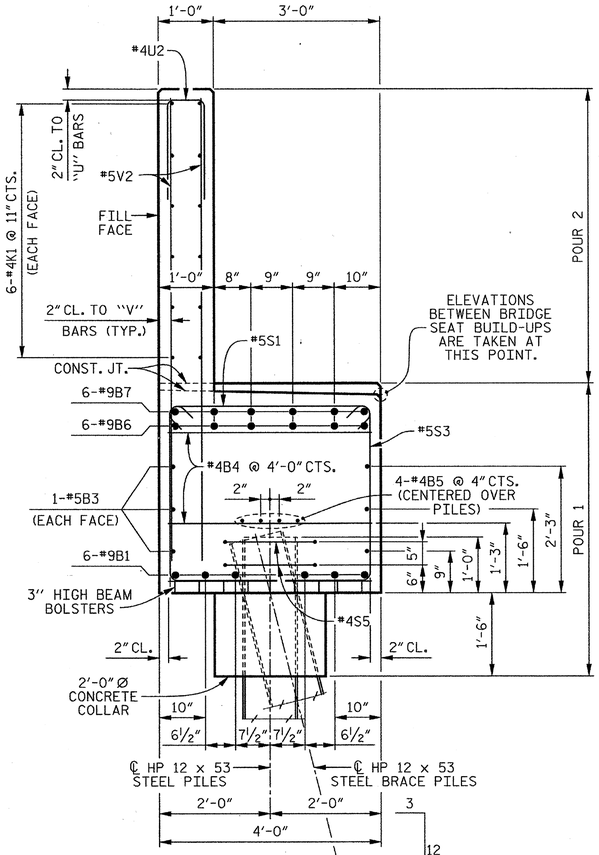


## SECTION B–B

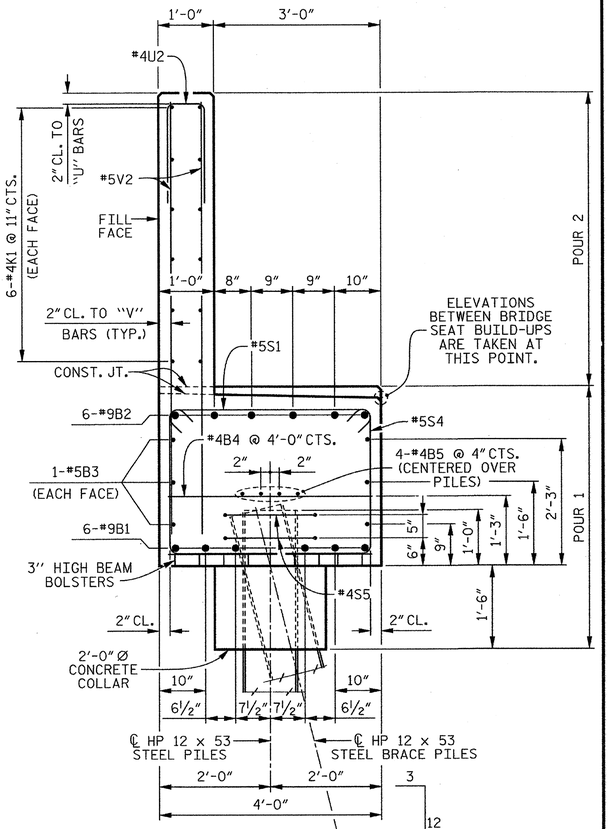


## SECTION C–C

## BAR TYPES

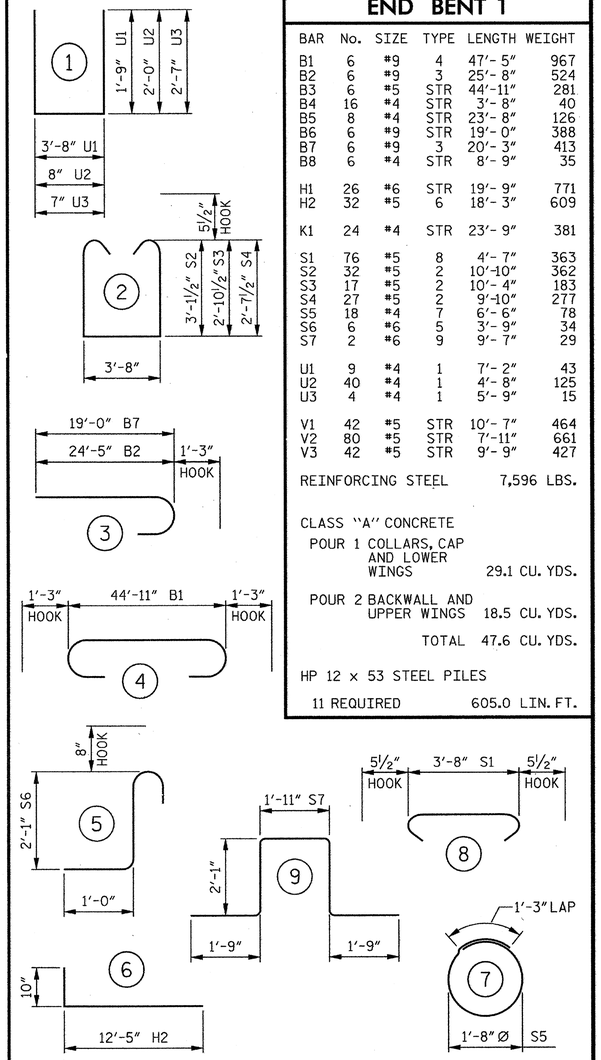


ALL BAR DIMENSIONS ARE OUT TO OUT.

## BILL OF MATERIAL

### END BENT 1

| BAR | No. | SIZE | TYPE | LENGTH | WEIGHT |
|---|---|---|---|---|---|
| B1 | 6 | #9 | 4 | 47'- 5" | 967 |
| B2 | 6 | #9 | 3 | 25'- 8" | 524 |
| B3 | 6 | #5 | STR | 44'-11" | 281 |
| B4 | 16 | #4 | STR | 3'- 8" | 40 |
| B5 | 8 | #4 | STR | 23'- 8" | 126 |
| B6 | 6 | #9 | STR | 19'- 0" | 388 |
| B7 | 6 | #9 | 3 | 20'- 3" | 413 |
| B8 | 6 | #4 | STR | 8'- 9" | 35 |
| H1 | 26 | #6 | STR | 19'- 9" | 771 |
| H2 | 32 | #5 | 6 | 18'- 3" | 609 |
| K1 | 24 | #4 | STR | 23'- 9" | 381 |
| S1 | 76 | #5 | 8 | 4'- 7" | 363 |
| S2 | 32 | #5 | 2 | 10'-10" | 362 |
| S3 | 17 | #5 | 2 | 10'- 4" | 183 |
| S4 | 27 | #5 | 2 | 9'-10" | 277 |
| S5 | 18 | #4 | 7 | 6'- 6" | 78 |
| S6 | 6 | #6 | 5 | 3'- 9" | 34 |
| S7 | 2 | #6 | 9 | 9'- 7" | 29 |
| U1 | 9 | #4 | 1 | 7'- 2" | 43 |
| U2 | 40 | #4 | 1 | 4'- 8" | 125 |
| U3 | 4 | #4 | 1 | 5'- 9" | 15 |
| V1 | 42 | #5 | STR | 10'- 7" | 464 |
| V2 | 80 | #5 | STR | 7'-11" | 661 |
| V3 | 42 | #5 | STR | 9'- 9" | 427 |

REINFORCING STEEL 7,596 LBS.

CLASS "A" CONCRETE

POUR 1 COLLARS, CAP AND LOWER WINGS 29.1 CU. YDS.

POUR 2 BACKWALL AND UPPER WINGS 18.5 CU. YDS.

TOTAL 47.6 CU. YDS.

HP 12 x 53 STEEL PILES

11 REQUIRED 605.0 LIN. FT.

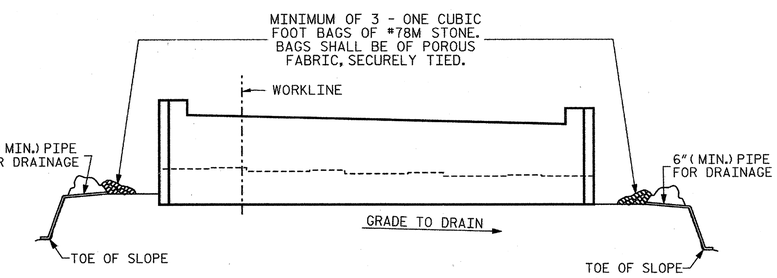


BAGGED STONE AND PIPE SHALL BE PLACED IMMEDIATELY AFTER COMPLETION OF END BENT EXCAVATION. PIPE MAY BE EITHER CONCRETE, CORRUGATED STEEL, CORRUGATED ALUMINUM ALLOY, OR CORRUGATED PLASTIC. PERFORATED PIPE WILL NOT BE ALLOWED.

BAGGED STONE SHALL REMAIN IN PLACE UNTIL THE ENGINEER DIRECTS THAT IT BE REMOVED. THE CONTRACTOR SHALL REMOVE AND DISPOSE OF SILT ACCUMULATIONS AT BAGGED STONE WHEN SO DIRECTED BY THE ENGINEER. BAGS SHALL BE REMOVED AND REPLACED WHENEVER THE ENGINEER DETERMINES THAT THEY HAVE DETERIORATED AND LOST THEIR EFFECTIVENESS.

## TEMPORARY DRAINAGE AT END BENT

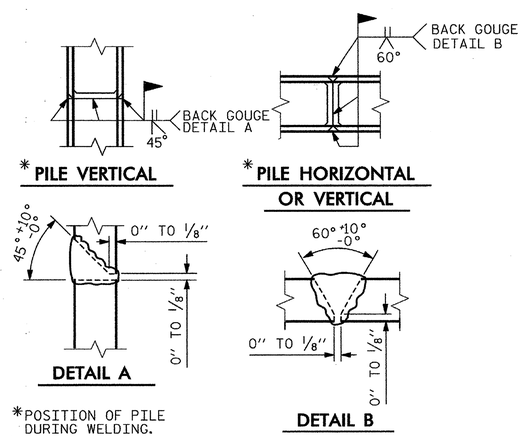


*POSITION OF PILE DURING WELDING.

## PILE SPLICE DETAILS

PROJECT NO. R-2303D

SAMPSON COUNTY

STATION: 1311+58.00 -LREV-

SHEET 3 OF 3

STATE OF NORTH CAROLINA
DEPARTMENT OF TRANSPORTATION
RALEIGH

SUBSTRUCTURE

END BENT 1

(RIGHT LANE)

CDM Smith
Camp Dresser & McKee
421 Fayetteville Street, Suite 1303
Raleigh, NC 27604
NC COA No. F-1255

DRAWN BY : K.E. LOFTON DATE : 10-12
CHECKED BY : P.R. HOLSHOUSER DATE : 10-12
DESIGN ENGINEER : P.R. HOLSHOUSER DATE : 1-13

DWG. No. S02-046

NORTH CAROLINA PROFESSIONAL SEAL 20668 ENGINEER PAUL R. HOLSHOUSER 10/28/13

| REVISIONS | | | | | | SHEET No. |
|---|---|---|---|---|---|---|
| No. | BY: | DATE: | No. | BY: | DATE: | S-122 |
| 1 | | | 3 | | | TOTAL SHEETS |
| 2 | | | 4 | | | 218 |

FILE: r:\roadwy\2303d\structures\PLANS\Sr_2\R2303D_S02_Sr2_eb13.dgn
DATE: 1/15/2013 2:39:37 PM

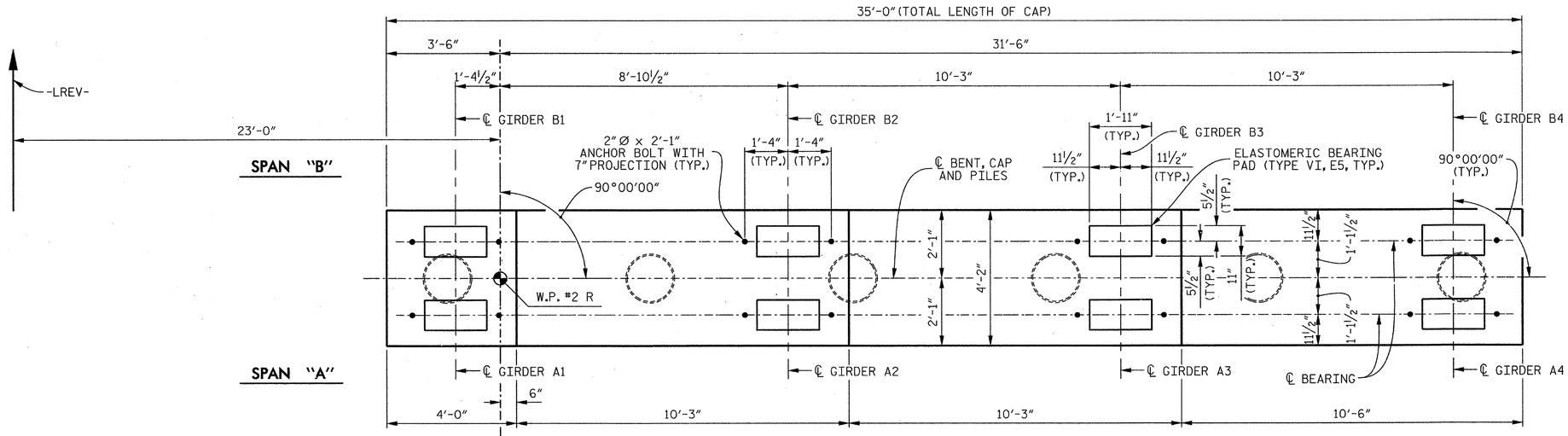


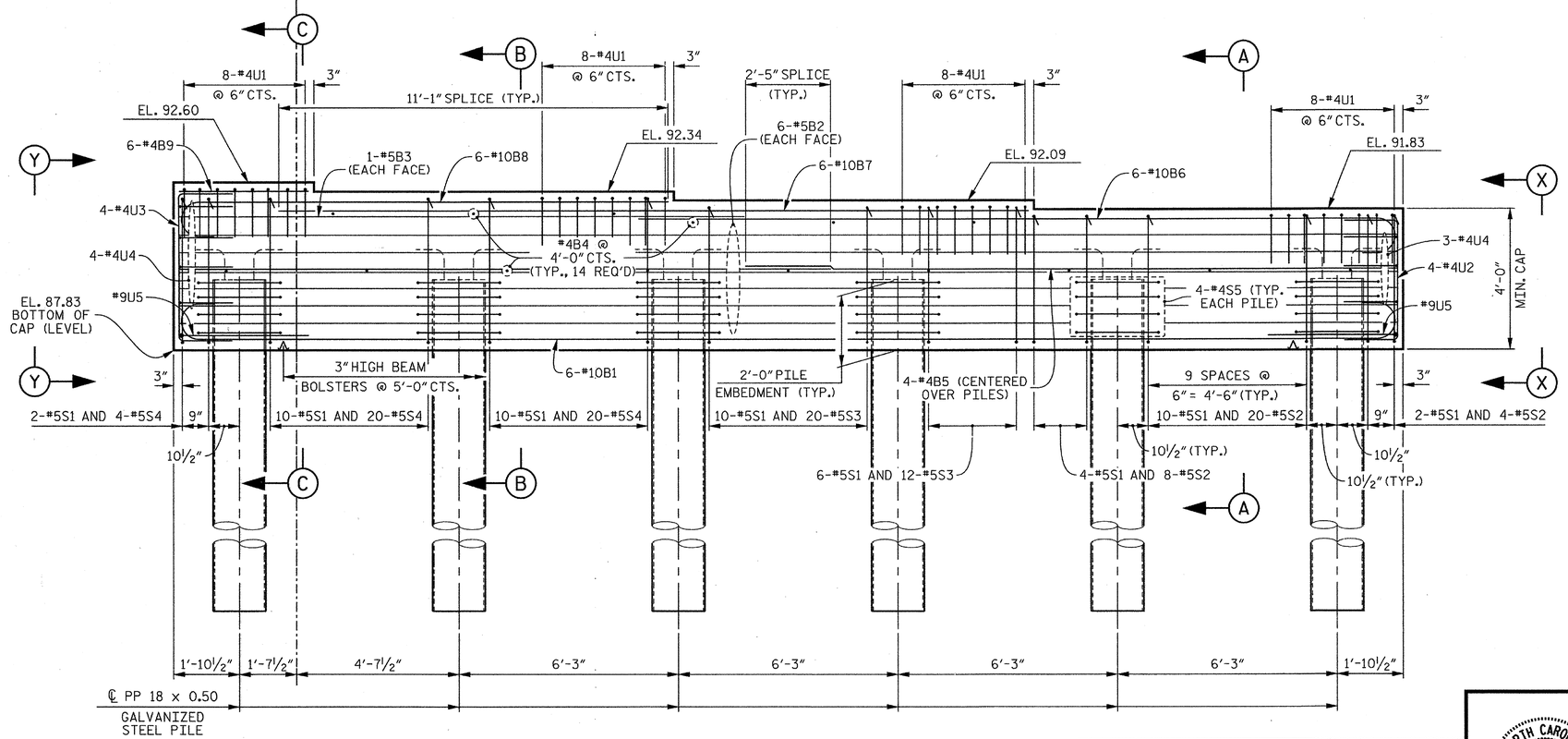


ELEVATION

## NOTES

FOR SECTIONS A-A, B-B AND C-C, SEE SHEET 2 OF 2.

FOR VIEW X-X AND VIEW Y-Y, SEE SHEET 2 OF 2.

STIRRUPS AND U1 BARS IN CAP MAY BE SHIFTED AS NECESSARY TO CLEAR ANCHOR BOLTS.

FOR GALVANIZED STEEL PILE DETAILS AND REINFORCEMENT, SEE "18" STEEL PIPE PILE" SHEET.

GALVANIZE THE TOP OF EACH INTERIOR BENT PILE A MINIMUM OF 30 FEET. GALVANIZE IN ACCORDANCE WITH SECTION 1076 OF THE STANDARD SPECIFICATIONS.

PROJECT NO. R-2303D
SAMPSON COUNTY
STATION: 1311+58.00 -LREV-

SHEET 1 OF 2

STATE OF NORTH CAROLINA
DEPARTMENT OF TRANSPORTATION
RALEIGH

SUBSTRUCTURE

BENT 1

(RIGHT LANE)

CDM Smith
Camp Dresser & McKee
421 Fayetteville Street, Suite 1303
Raleigh, NC 27604
NC COA No. F-1255

| | | | |
|---|---|---|---|
| DRAWN BY : | J.D. BORUTA | DATE : | 10-12 |
| CHECKED BY : | P.R. HOLSHOUSER | DATE : | 11-12 |
| DESIGN ENGINEER : | P.R. HOLSHOUSER | DATE : | 1-13 |

DWG. No. S02-047

NORTH CAROLINA PROFESSIONAL SEAL 20668 ENGINEER PAUL R. HOLSHOUSER 1/10/2013

| REVISIONS | | | | | | |
|---|---|---|---|---|---|---|
| No. | BY: | DATE: | No. | BY: | DATE: | |
| 1 | | | 3 | | | |
| 2 | | | 4 | | | |

SHEET No. S-123
TOTAL SHEETS 218

FILE: r:\models\2303d\structures\PLANS\Str_2\R2303D_SD_Str2_b11.dgn
DATE: 12/20/2012 9:24:03 PM

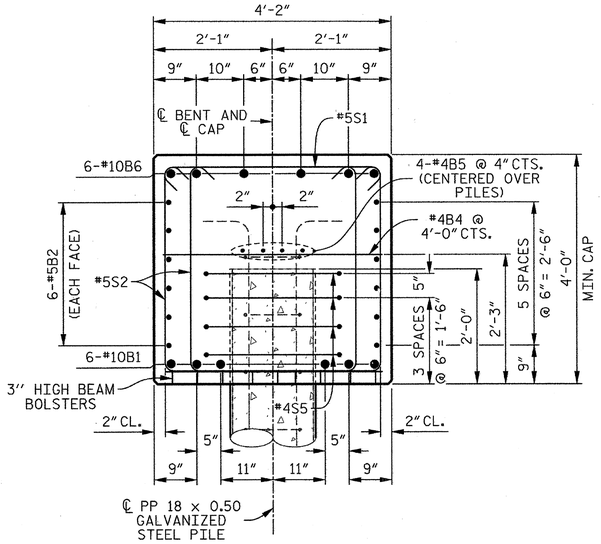


## SECTION A–A

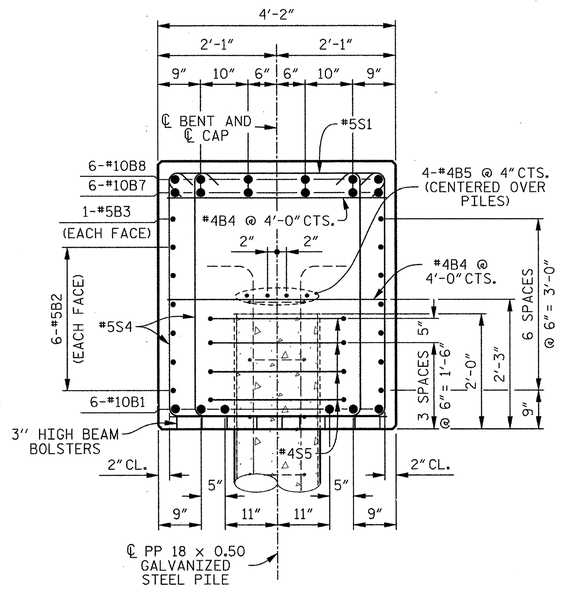


## SECTION B–B

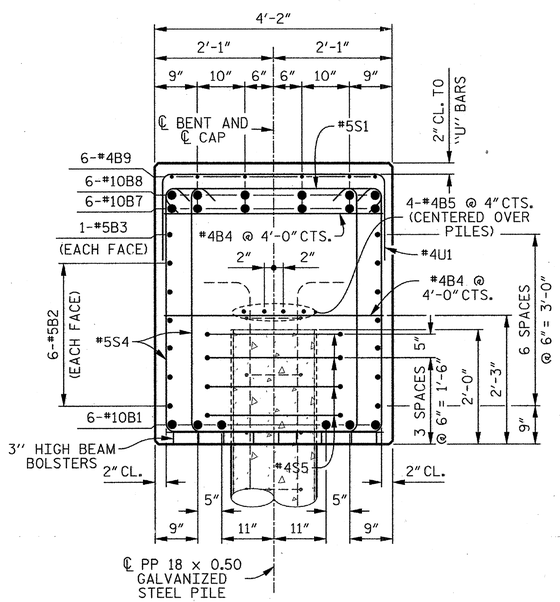


## SECTION C–C

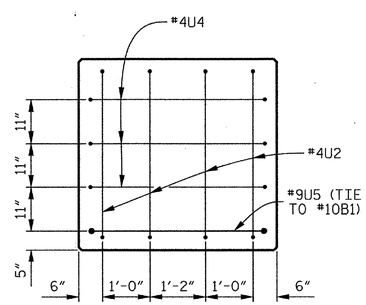


## END VIEW X–X

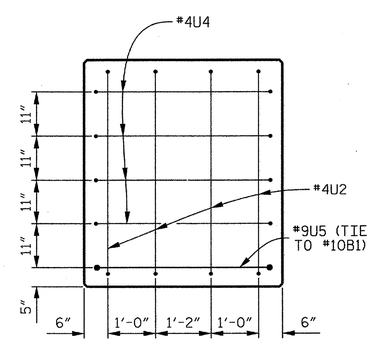


## END VIEW Y–Y

## BAR TYPES

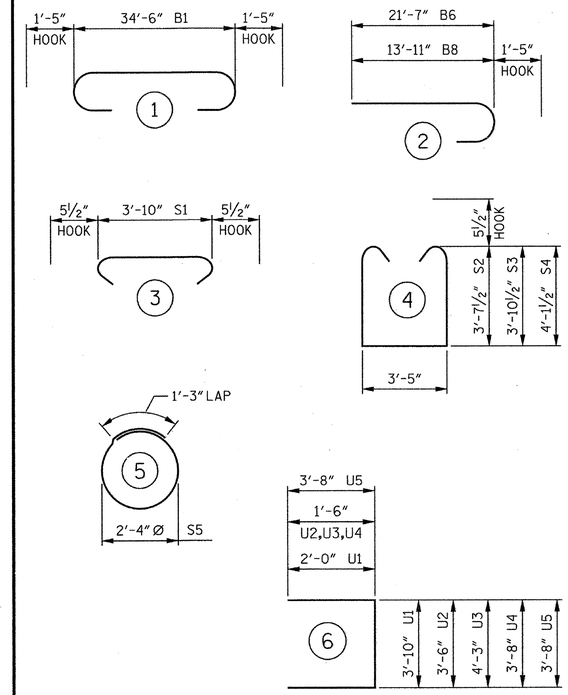


ALL BAR DIMENSIONS ARE OUT TO OUT.

## BILL OF MATERIAL

### BENT 1

| BAR | No. | SIZE | TYPE | LENGTH | WEIGHT |
|---|---|---|---|---|---|
| B1 | 6 | #10 | 1 | 37'- 4" | 964 |
| B2 | 12 | #5 | STR | 34'- 8" | 434 |
| B3 | 2 | #5 | STR | 16'- 1" | 34 |
| B4 | 14 | #4 | STR | 3'-10" | 36 |
| B5 | 8 | #4 | STR | 18'- 7" | 99 |
| B6 | 6 | #10 | 2 | 23'- 0" | 594 |
| B7 | 6 | #10 | STR | 21'- 4" | 551 |
| B8 | 6 | #10 | 2 | 15'- 4" | 396 |
| B9 | 6 | #4 | STR | 3'- 8" | 15 |
| S1 | 54 | #5 | 3 | 4'- 9" | 268 |
| S2 | 32 | #5 | 4 | 11'- 7" | 386 |
| S3 | 32 | #5 | 4 | 12'- 1" | 403 |
| S4 | 44 | #5 | 4 | 12'- 7" | 578 |
| S5 | 24 | #4 | 5 | 8'- 7" | 138 |
| U1 | 32 | #4 | 6 | 7'-10" | 167 |
| U2 | 4 | #4 | 6 | 6'- 6" | 17 |
| U3 | 4 | #4 | 6 | 7'- 4" | 19 |
| U4 | 7 | #4 | 6 | 6'- 8" | 31 |
| U5 | 2 | #9 | 6 | 11'- 0" | 75 |

REINFORCING STEEL 5,205 LBS.

CLASS "A" CONCRETE
POUR 1 CAP 22.8 CU. YDS.

PP 18 x 0.50 GALVANIZED STEEL PILES
6 REQUIRED 360 LIN. FT.

PIPE PILE PLATES
No. = 6

THE CONCRETE DISPLACED BY THE FILLED GALVANIZED STEEL PIPE PILES HAS BEEN DEDUCTED FROM THE QUANTITY OF CLASS "A" CONCRETE FOR THE BENT CAP.

REINFORCING STEEL FOR GALVANIZED STEEL PILES ARE NOT INCLUDED. SEE "18" STEEL PIPE PILE" SHEET FOR DETAILS.

PROJECT NO. R-2303D
SAMPSON COUNTY
STATION: 1311+58.00 -LREV-

SHEET 2 OF 2

STATE OF NORTH CAROLINA
DEPARTMENT OF TRANSPORTATION
RALEIGH

SUBSTRUCTURE

BENT 1

(RIGHT LANE)

CDM Smith
Camp Dresser & McKee
421 Fayetteville Street, Suite 1303
Raleigh, NC 27604
NC COA No. F-1255

DRAWN BY : J.D. BORUTA DATE : 10-12
CHECKED BY : P.R. HOLSHOUSER DATE : 11-12
DESIGN ENGINEER : P.R. HOLSHOUSER DATE : 1-13

DWG. No. S02-048

NORTH CAROLINA PROFESSIONAL SEAL 20668 ENGINEER PAUL R. HOLSHOUSER 2/15/2013

| REVISIONS | | | | | | |
|---|---|---|---|---|---|---|
| No. | BY: | DATE: | No. | BY: | DATE: | |
| 1 | | | 3 | | | |
| 2 | | | 4 | | | |

SHEET No. S-124
TOTAL SHEETS 218

FILE: r:\mobil\2303d\structures\PLANS\bn_2\R2303D_S0_Bn2_b12.dgn
DATE: 12/30/2012 9:24:08 PM

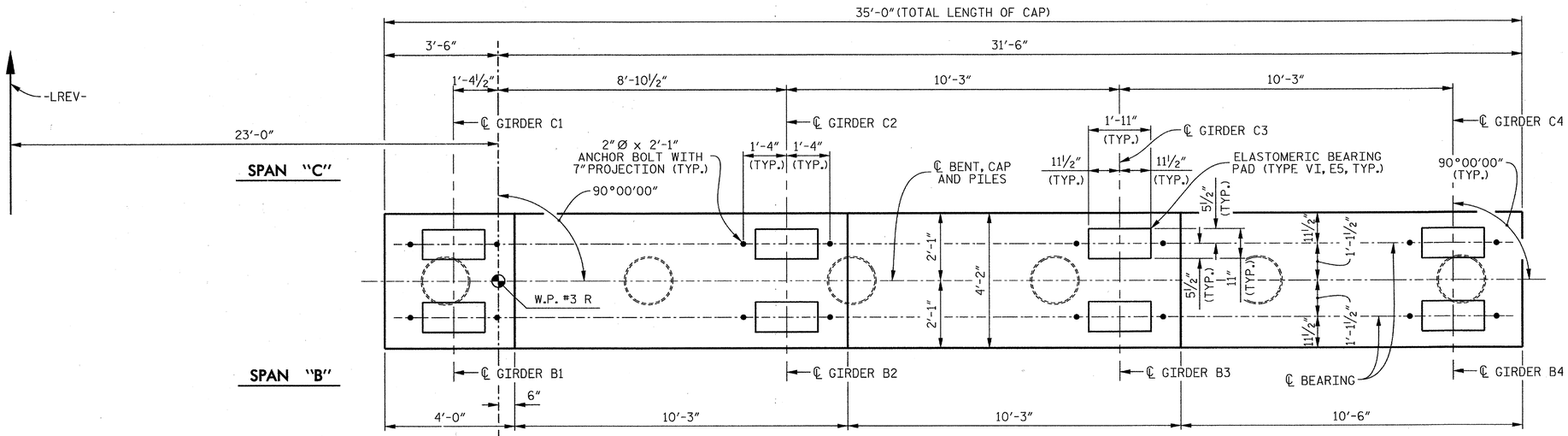


## PLAN

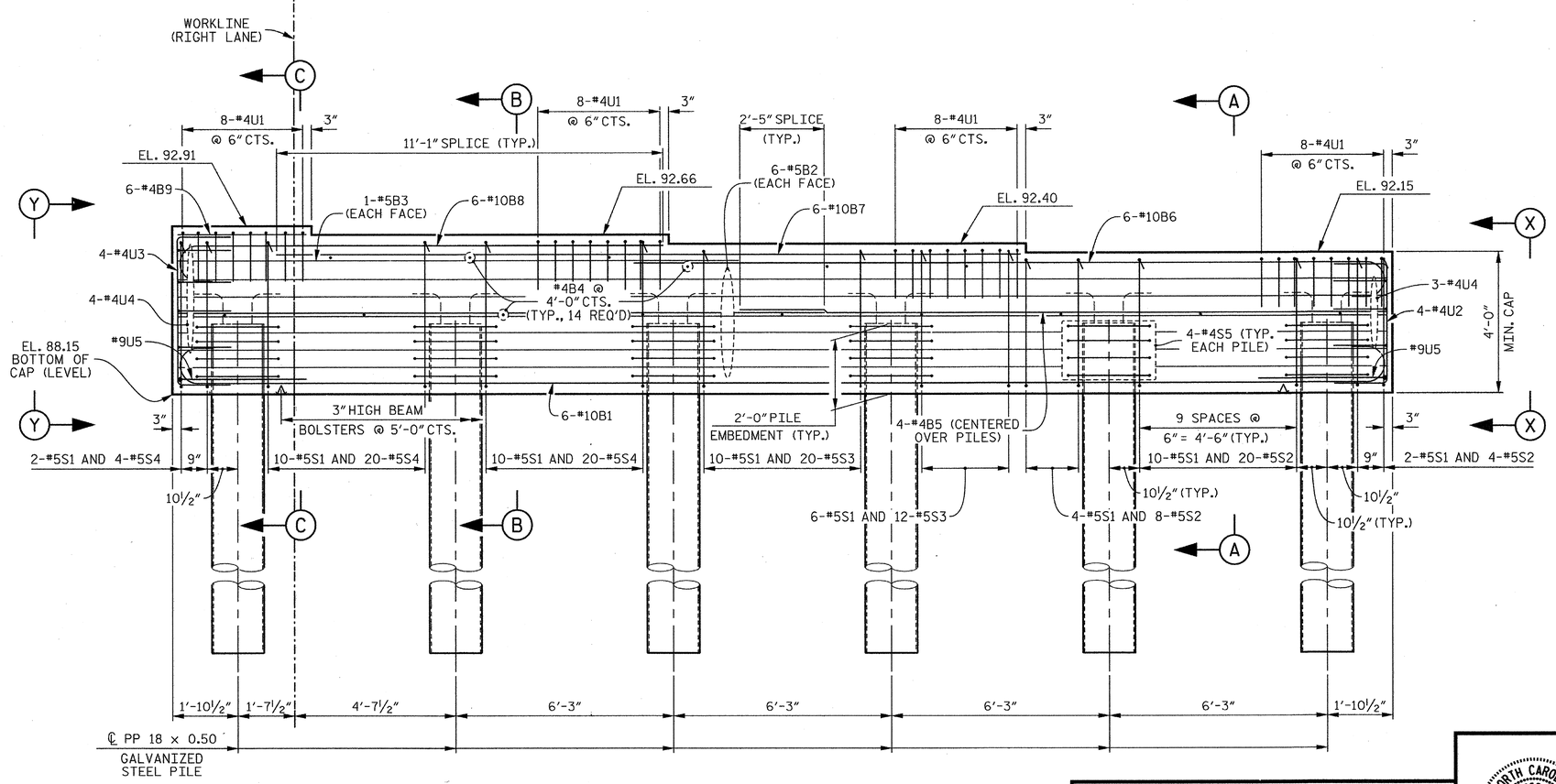


## ELEVATION

## NOTES

FOR SECTIONS A-A, B-B AND C-C, SEE SHEET 2 OF 2.

FOR VIEW X-X AND VIEW Y-Y, SEE SHEET 2 OF 2.

STIRRUPS AND U1 BARS IN CAP MAY BE SHIFTED AS NECESSARY TO CLEAR ANCHOR BOLTS.

FOR GALVANIZED STEEL PILE DETAILS AND REINFORCEMENT, SEE "18" STEEL PIPE PILE" SHEET.

GALVANIZE THE TOP OF EACH INTERIOR BENT PILE A MINIMUM OF 30 FEET. GALVANIZE IN ACCORDANCE WITH SECTION 1076 OF THE STANDARD SPECIFICATIONS.

PROJECT NO. R-2303D
SAMPSON COUNTY
STATION: 1311+58.00 -LREV-

SHEET 1 OF 2

STATE OF NORTH CAROLINA
DEPARTMENT OF TRANSPORTATION
RALEIGH

SUBSTRUCTURE

BENT 2

(RIGHT LANE)

CDM Smith
Camp Dresser & McKee
421 Fayetteville Street, Suite 1303
Raleigh, NC 27604
NC COA No. F-1255

DRAWN BY : J.D. BORUTA DATE : 10-12
CHECKED BY : P.R. HOLSHOUSER DATE : 11-12
DESIGN ENGINEER : P.R. HOLSHOUSER DATE : 1-13

DWG. No. S02-049

NORTH CAROLINA PROFESSIONAL SEAL 20668 ENGINEER PAUL R. HOLSHOUSER
2/08/2013

| REVISIONS | | | | | | SHEET No. |
|---|---|---|---|---|---|---|
| No. | BY: | DATE: | No. | BY: | DATE: | S-125 |
| 1 | | | 3 | | | TOTAL SHEETS |
| 2 | | | 4 | | | 218 |

FILE: I:\models\2303d\structmod\PLANS\Str_2\R2303D_S0_Sht2_bt21.dgn
DATE: 12/20/2012 9:24:49 PM

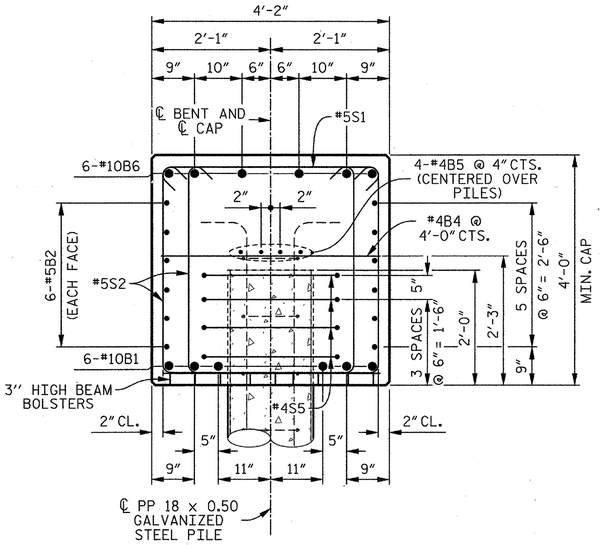


## SECTION A–A

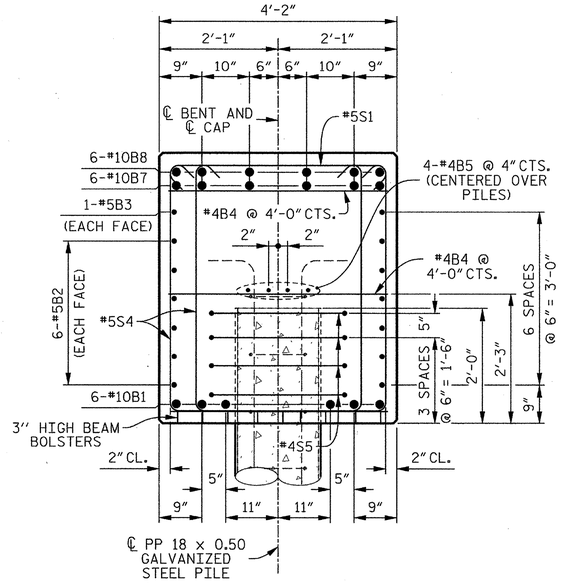


## SECTION B–B

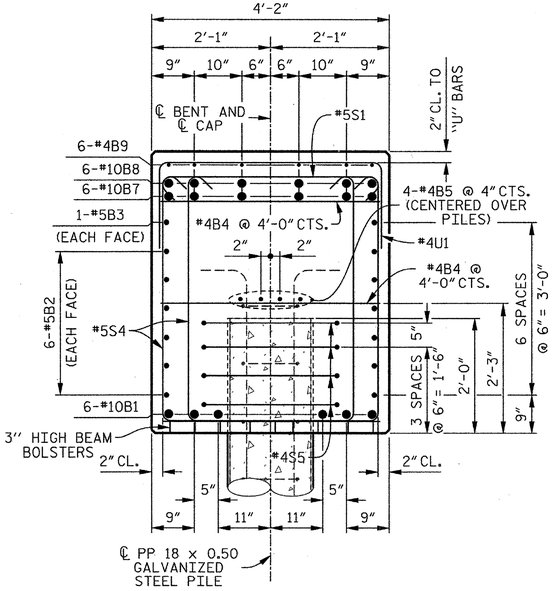


## SECTION C–C

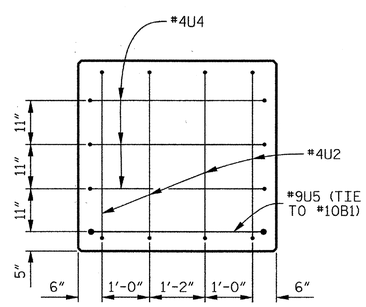


## END VIEW X–X

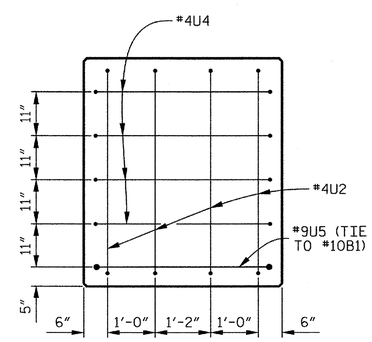


## END VIEW Y–Y

## BAR TYPES

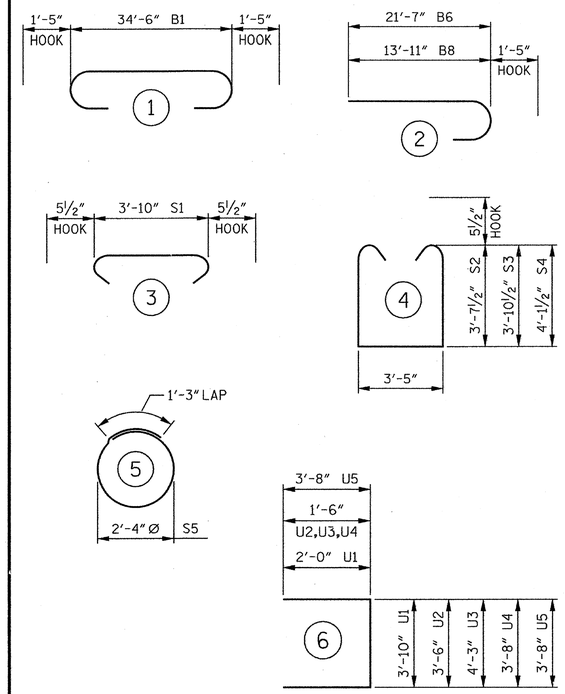


ALL BAR DIMENSIONS ARE OUT TO OUT.

## BILL OF MATERIAL

### BENT 2

| BAR | No. | SIZE | TYPE | LENGTH | WEIGHT |
|---|---|---|---|---|---|
| B1 | 6 | #10 | 1 | 37'- 4" | 964 |
| B2 | 12 | #5 | STR | 34'- 8" | 434 |
| B3 | 2 | #5 | STR | 16'- 1" | 34 |
| B4 | 14 | #4 | STR | 3'-10" | 36 |
| B5 | 8 | #4 | STR | 18'- 7" | 99 |
| B6 | 6 | #10 | 2 | 23'- 0" | 594 |
| B7 | 6 | #10 | STR | 21'- 4" | 551 |
| B8 | 6 | #10 | 2 | 15'- 4" | 396 |
| B9 | 6 | #4 | STR | 3'- 8" | 15 |
| S1 | 54 | #5 | 3 | 4'- 9" | 268 |
| S2 | 32 | #5 | 4 | 11'- 7" | 386 |
| S3 | 32 | #5 | 4 | 12'- 1" | 403 |
| S4 | 44 | #5 | 4 | 12'- 7" | 578 |
| S5 | 24 | #4 | 5 | 8'- 7" | 138 |
| U1 | 32 | #4 | 6 | 7'-10" | 167 |
| U2 | 4 | #4 | 6 | 6'- 6" | 17 |
| U3 | 4 | #4 | 6 | 7'- 4" | 19 |
| U4 | 7 | #4 | 6 | 6'- 8" | 31 |
| U5 | 2 | #9 | 6 | 11'- 0" | 75 |

REINFORCING STEEL 5,205 LBS.

CLASS "A" CONCRETE
POUR 1 CAP 22.8 CU. YDS.

PP 18 x 0.50 GALVANIZED STEEL PILES
6 REQUIRED 360 LIN. FT.

PIPE PILE PLATES
No. = 6

THE CONCRETE DISPLACED BY THE FILLED GALVANIZED STEEL PIPE PILES HAS BEEN DEDUCTED FROM THE QUANTITY OF CLASS "A" CONCRETE FOR THE BENT CAP.

REINFORCING STEEL FOR GALVANIZED STEEL PILES ARE NOT INCLUDED. SEE "18" STEEL PIPE PILE" SHEET FOR DETAILS.

PROJECT NO. R-2303D
SAMPSON COUNTY
STATION: 1311+58.00 -LREV-

SHEET 2 OF 2

STATE OF NORTH CAROLINA
DEPARTMENT OF TRANSPORTATION
RALEIGH

SUBSTRUCTURE

BENT 2

(RIGHT LANE)

CDM Smith
Camp Dresser & McKee
421 Fayetteville Street, Suite 1303
Raleigh, NC 27604
NC COA No. F-1255

DRAWN BY : J.D. BORUTA DATE : 10-12
CHECKED BY : P.R. HOLSHOUSER DATE : 11-12
DESIGN ENGINEER : P.R. HOLSHOUSER DATE : 1-13

DWG. No. S02-050

NORTH CAROLINA PROFESSIONAL SEAL 20668 ENGINEER P. RAUL R. HOLSHOUSER 2/08/2013

| REVISIONS | | | | | | | SHEET No. |
|---|---|---|---|---|---|---|---|
| No. | BY: | DATE: | No. | BY: | DATE: | | 8-126 |
| 1 | | | 3 | | | | TOTAL SHEETS |
| 2 | | | 4 | | | | 218 |

FILE: r:\node\r2303d\structures\PLANS\Sr_2\R2303D_SD_Sr2_b22.dgn
DATE: 12/20/2012 9:24:11 PM

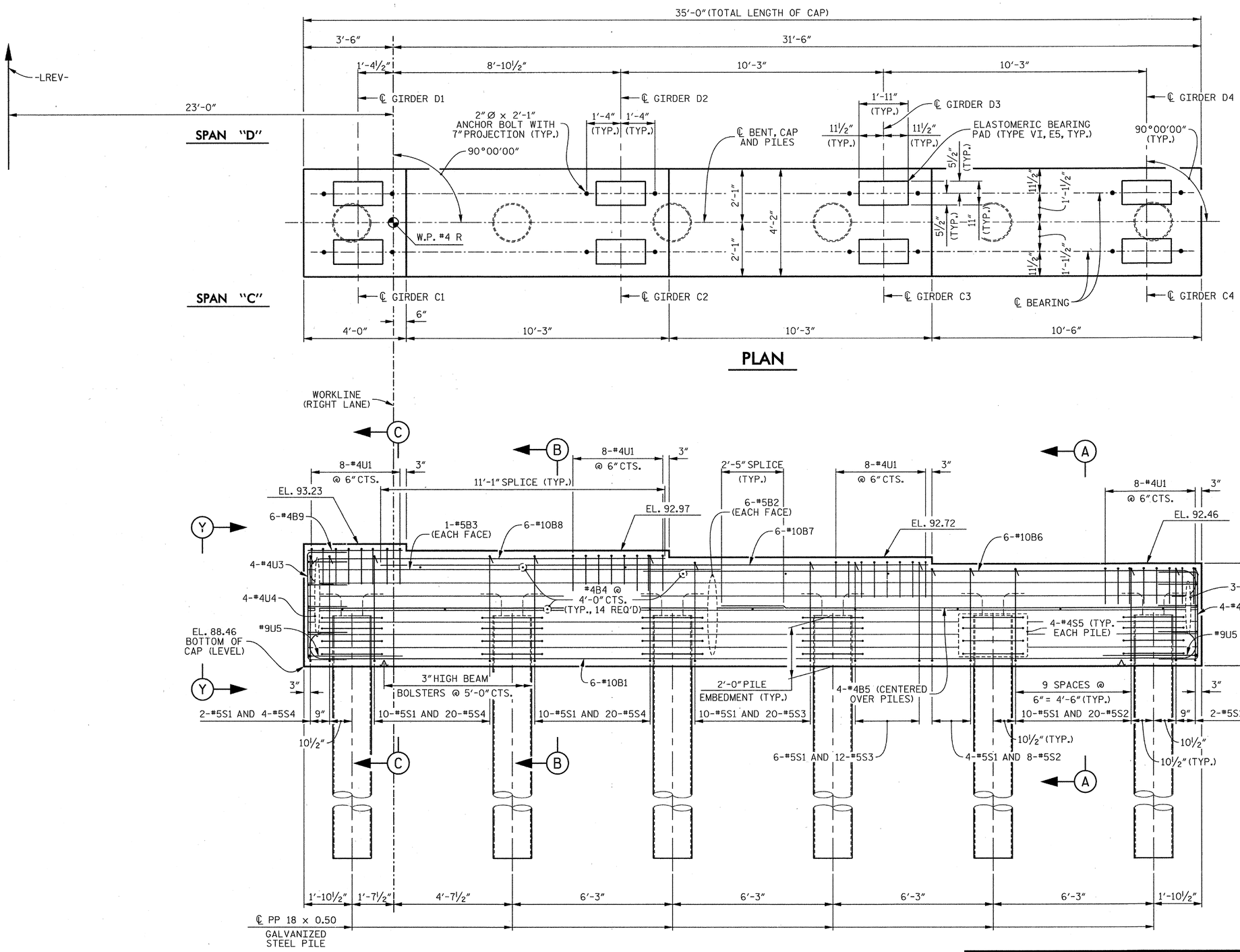


## NOTES

FOR SECTIONS A-A, B-B AND C-C, SEE SHEET 2 OF 2.

FOR VIEW X-X AND VIEW Y-Y, SEE SHEET 2 OF 2.

STIRRUPS AND U1 BARS IN CAP MAY BE SHIFTED AS NECESSARY TO CLEAR ANCHOR BOLTS.

FOR GALVANIZED STEEL PILE DETAILS AND REINFORCEMENT, SEE "18" STEEL PIPE PILE" SHEET.

GALVANIZE THE TOP OF EACH INTERIOR BENT PILE A MINIMUM OF 30 FEET. GALVANIZE IN ACCORDANCE WITH SECTION 1076 OF THE STANDARD SPECIFICATIONS.

PROJECT NO. R-2303D

SAMPSON COUNTY

STATION: 1311+58.00 -LREV-

SHEET 1 OF 2

STATE OF NORTH CAROLINA
DEPARTMENT OF TRANSPORTATION
RALEIGH

SUBSTRUCTURE

BENT 3

(RIGHT LANE)

CDM Smith
Camp Dresser & McKee
421 Fayetteville Street, Suite 1303
Raleigh, NC 27604
NC COA No. F-1255

DRAWN BY : J.D. BORUTA DATE : 10-12
CHECKED BY : P.R. HOLSHOUSER DATE : 11-12
DESIGN ENGINEER : P.R. HOLSHOUSER DATE : 1-13

DWG. No. S02-051

NORTH CAROLINA PROFESSIONAL SEAL 20668 ENGINEER PAUL R. HOLSHOUSER

| REVISIONS | | | | | | | | SHEET No. |
|---|---|---|---|---|---|---|---|---|
| No. | BY: | DATE: | No. | BY: | DATE: | | | S-127 |
| 1 | | | 3 | | | | | TOTAL SHEETS |
| 2 | | | 4 | | | | | 218 |

FILE: n:\roadwy\r2303d\structures\PLANS\Str_2\R2303D_SD_Str2_b31.dgn
DATE: 12/20/2012 9:24:13 PM

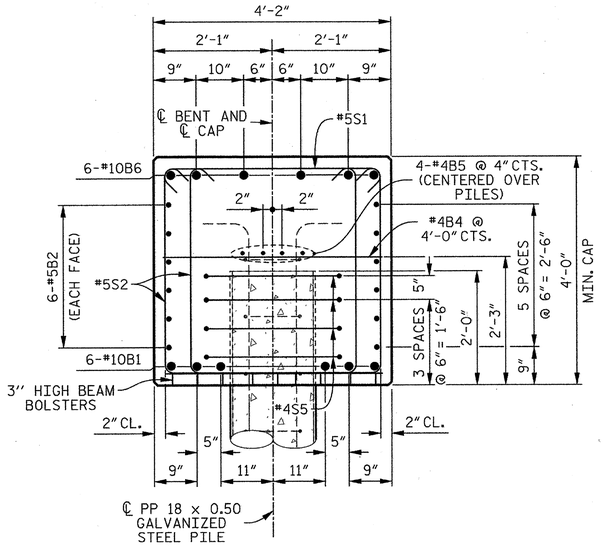


## SECTION A–A

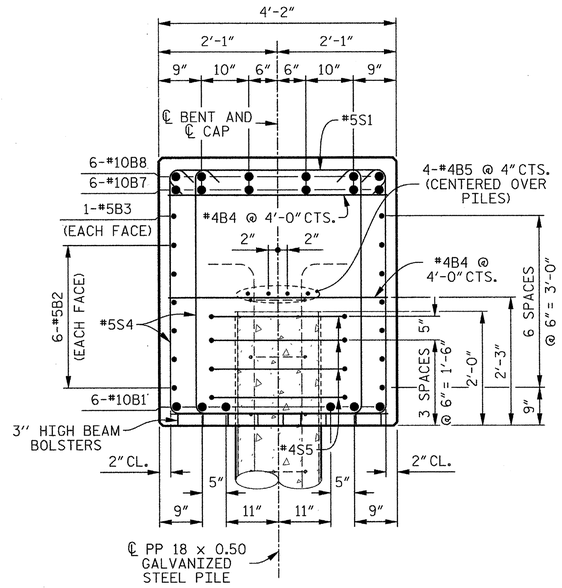


## SECTION B–B

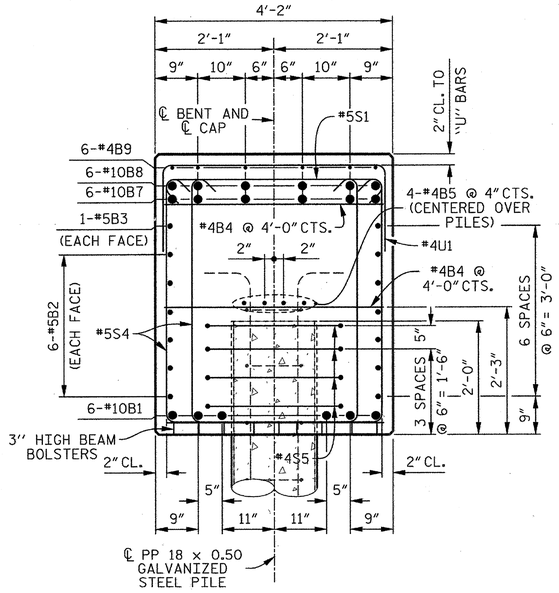


## SECTION C–C

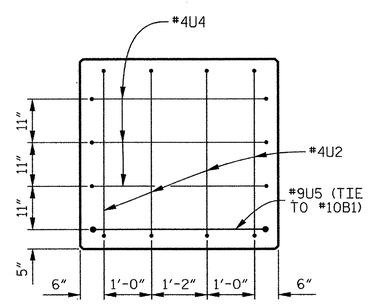


## END VIEW X–X

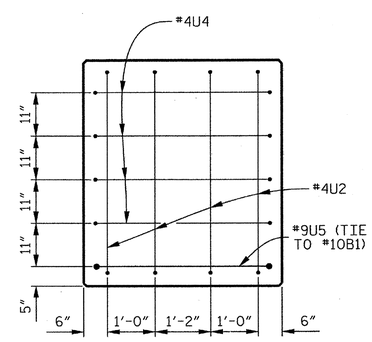


## END VIEW Y–Y

## BAR TYPES

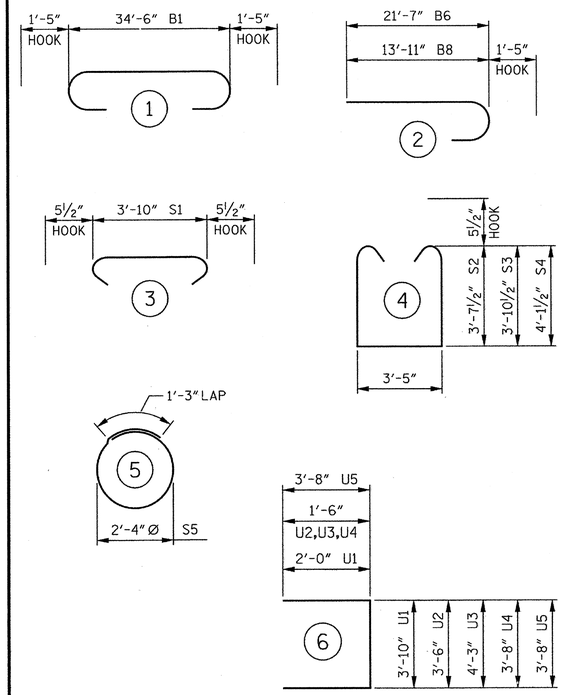


ALL BAR DIMENSIONS ARE OUT TO OUT.

## BILL OF MATERIAL

### BENT 3

| BAR | No. | SIZE | TYPE | LENGTH | WEIGHT |
|---|---|---|---|---|---|
| B1 | 6 | #10 | 1 | 37'- 4" | 964 |
| B2 | 12 | #5 | STR | 34'- 8" | 434 |
| B3 | 2 | #5 | STR | 16'- 1" | 34 |
| B4 | 14 | #4 | STR | 3'-10" | 36 |
| B5 | 8 | #4 | STR | 18'- 7" | 99 |
| B6 | 6 | #10 | 2 | 23'- 0" | 594 |
| B7 | 6 | #10 | STR | 21'- 4" | 551 |
| B8 | 6 | #10 | 2 | 15'- 4" | 396 |
| B9 | 6 | #4 | STR | 3'- 8" | 15 |
| S1 | 54 | #5 | 3 | 4'- 9" | 268 |
| S2 | 32 | #5 | 4 | 11'- 7" | 386 |
| S3 | 32 | #5 | 4 | 12'- 1" | 403 |
| S4 | 44 | #5 | 4 | 12'- 7" | 578 |
| S5 | 24 | #4 | 5 | 8'- 7" | 138 |
| U1 | 32 | #4 | 6 | 7'-10" | 167 |
| U2 | 4 | #4 | 6 | 6'- 6" | 17 |
| U3 | 4 | #4 | 6 | 7'- 4" | 19 |
| U4 | 7 | #4 | 6 | 6'- 8" | 31 |
| U5 | 2 | #9 | 6 | 11'- 0" | 75 |

REINFORCING STEEL 5,205 LBS.

CLASS "A" CONCRETE
POUR 1 CAP 22.8 CU. YDS.

PP 18 x 0.50 GALVANIZED STEEL PILES
6 REQUIRED 330 LIN. FT.

PIPE PILE PLATES
No. = 6

THE CONCRETE DISPLACED BY THE FILLED GALVANIZED STEEL PIPE PILES HAS BEEN DEDUCTED FROM THE QUANTITY OF CLASS "A" CONCRETE FOR THE BENT CAP.

REINFORCING STEEL FOR GALVANIZED STEEL PILES ARE NOT INCLUDED. SEE "18" STEEL PIPE PILE" SHEET FOR DETAILS.

PROJECT NO. R-2303D
SAMPSON COUNTY
STATION: 1311+58.00 -LREV-

SHEET 2 OF 2

STATE OF NORTH CAROLINA
DEPARTMENT OF TRANSPORTATION
RALEIGH

SUBSTRUCTURE

BENT 3

(RIGHT LANE)

CDM Smith
Camp Dresser & McKee
421 Fayetteville Street, Suite 1303
Raleigh, NC 27604
NC COA No. F-1255

DRAWN BY : J.D. BORUTA DATE : 10-12
CHECKED BY : P.R. HOLSHOUSER DATE : 11-12
DESIGN ENGINEER : P.R. HOLSHOUSER DATE : 1-13

DWG. No. S02-052

NORTH CAROLINA PROFESSIONAL SEAL 20668 ENGINEER PAUL R. HOLSHOUSER 2/08/2013

| REVISIONS | | | | | | | | SHEET No. |
|---|---|---|---|---|---|---|---|---|
| No. | BY: | DATE: | No. | BY: | DATE: | | | S-128 |
| 1 | | | 3 | | | | | TOTAL SHEETS |
| 2 | | | 4 | | | | | 218 |

FILE: c:\radot\2303d\structures\PLANS\Str_2\R2303D_S02_Str2_b32.dgn
DATE: 12/31/2012 11:35:54 AM

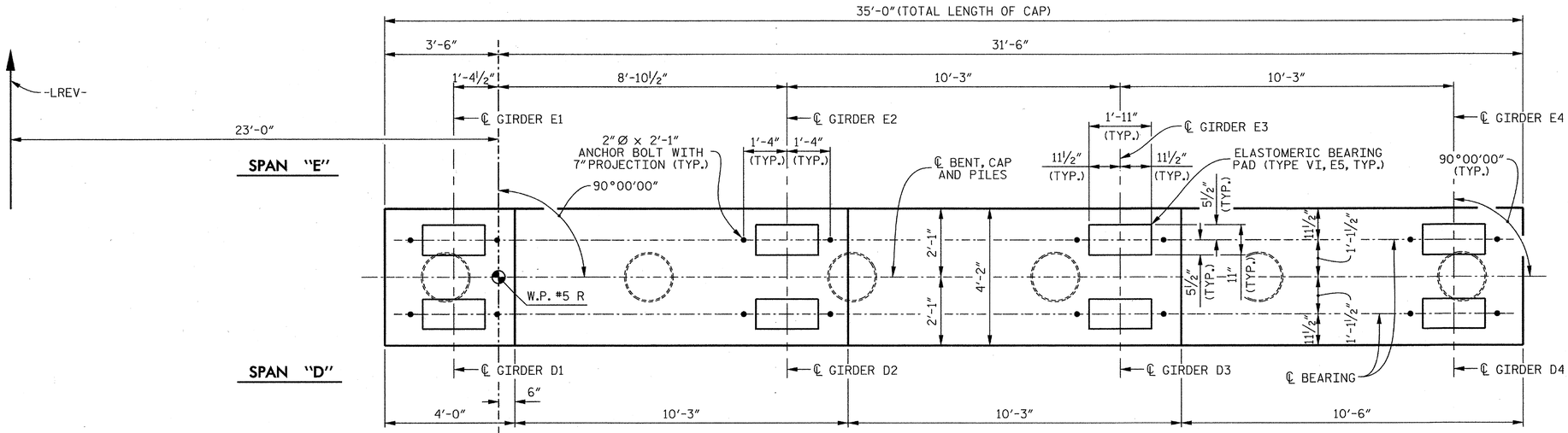


## PLAN

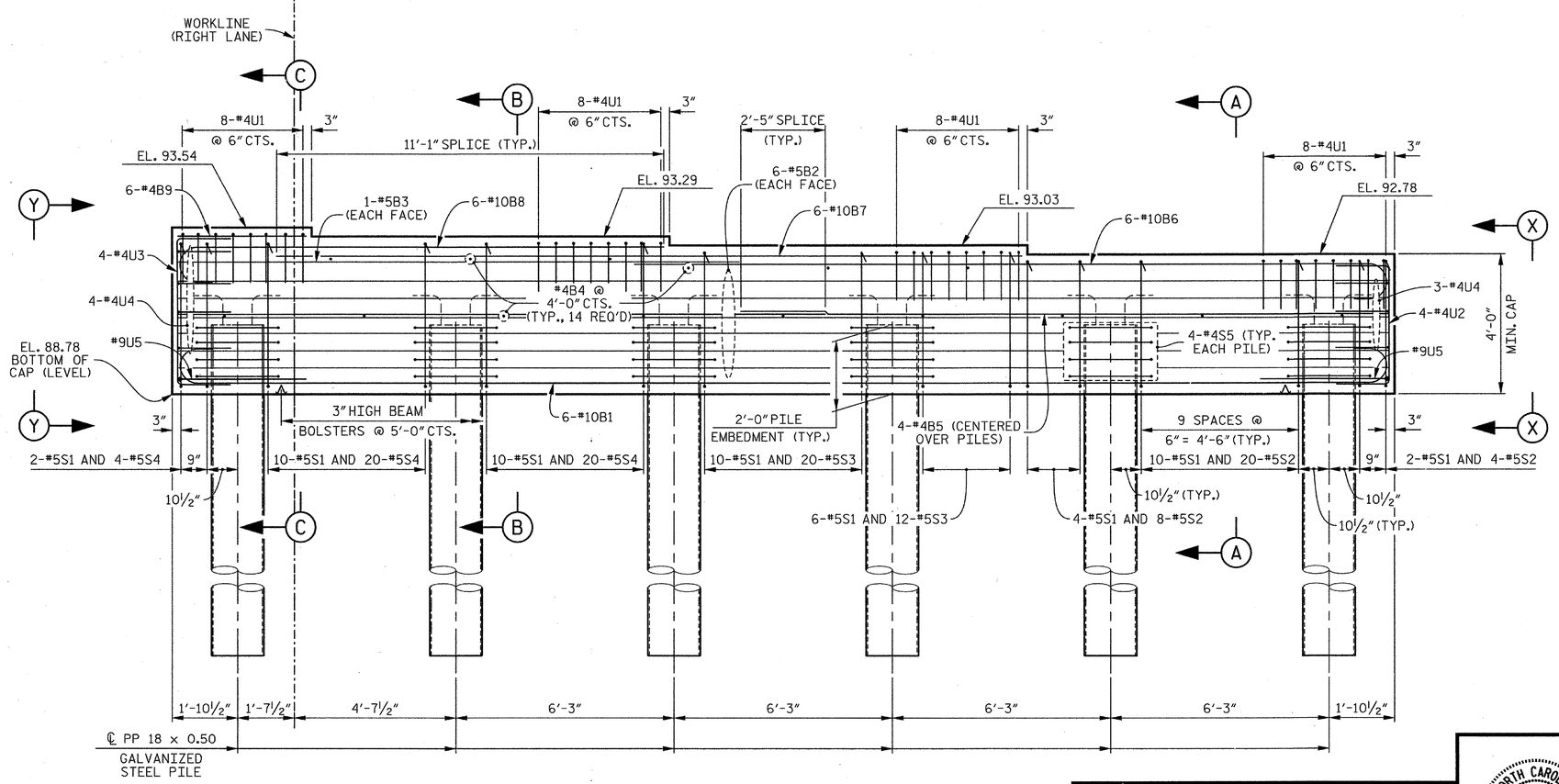


## ELEVATION

## NOTES

FOR SECTIONS A-A, B-B AND C-C, SEE SHEET 2 OF 2.

FOR VIEW X-X AND VIEW Y-Y, SEE SHEET 2 OF 2.

STIRRUPS AND U1 BARS IN CAP MAY BE SHIFTED AS NECESSARY TO CLEAR ANCHOR BOLTS.

FOR GALVANIZED STEEL PILE DETAILS AND REINFORCEMENT, SEE "18" STEEL PIPE PILE" SHEET.

GALVANIZE THE TOP OF EACH INTERIOR BENT PILE A MINIMUM OF 30 FEET. GALVANIZE IN ACCORDANCE WITH SECTION 1076 OF THE STANDARD SPECIFICATIONS.

PROJECT NO. R-2303D

SAMPSON COUNTY

STATION: 1311+58.00 -LREV-

SHEET 1 OF 2

STATE OF NORTH CAROLINA
DEPARTMENT OF TRANSPORTATION
RALEIGH

SUBSTRUCTURE

BENT 4

(RIGHT LANE)

CDM Smith
Camp Dresser & McKee
421 Fayetteville Street, Suite 1303
Raleigh, NC 27604
NC COA No. F-1255

| | | | |
|---|---|---|---|
| DRAWN BY : | J.D. BORUTA | DATE : | 10-12 |
| CHECKED BY : | P.R. HOLSHOUSER | DATE : | 11-12 |
| DESIGN ENGINEER : | P.R. HOLSHOUSER | DATE : | 1-13 |

DWG. No. S02-053

NORTH CAROLINA PROFESSIONAL SEAL 20668 ENGINEER PAUL R. HOLSHOUSER 2/08/2013

| REVISIONS | | | | | | SHEET No. |
|---|---|---|---|---|---|---|
| No. | BY: | DATE: | No. | BY: | DATE: | S-129 |
| 1 | | | 3 | | | TOTAL SHEETS |
| 2 | | | 4 | | | 218 |

FILE: r:\ncdot\r2303d\structures\PLANS\Str_2\R2303D_SD_Str2_b41.dgn
DATE: 12/30/2012 9:24:19 PM

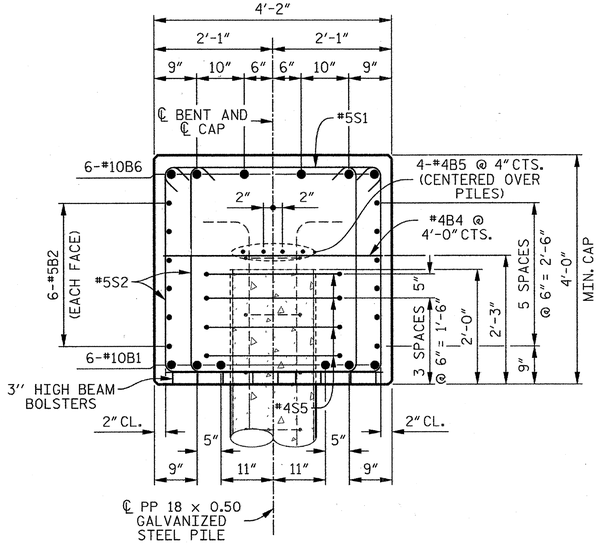


## SECTION A–A

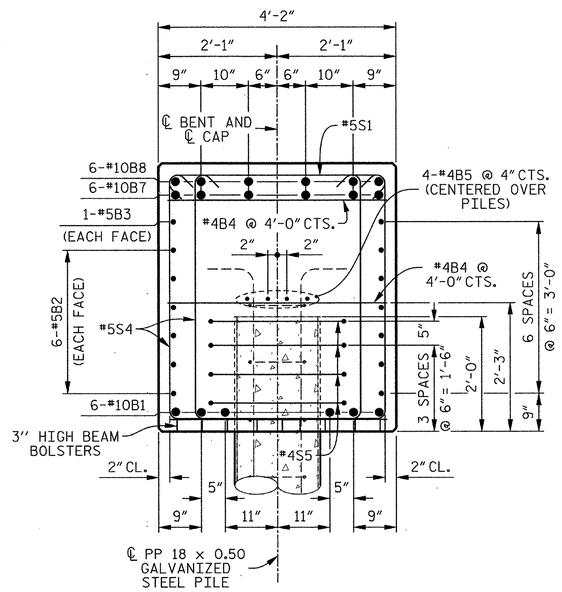


## SECTION B–B

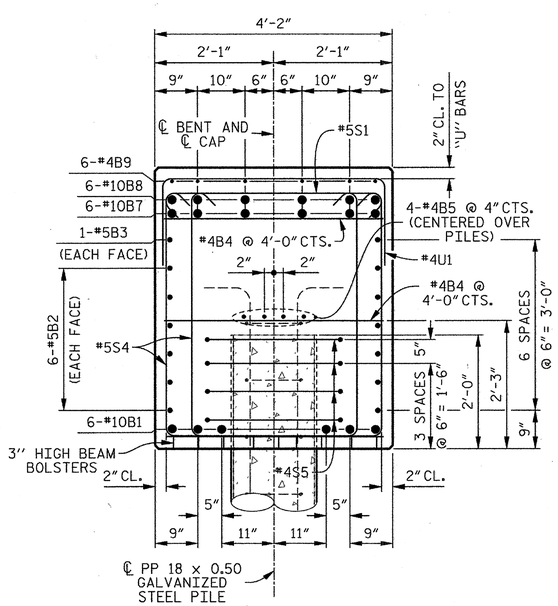


## SECTION C–C

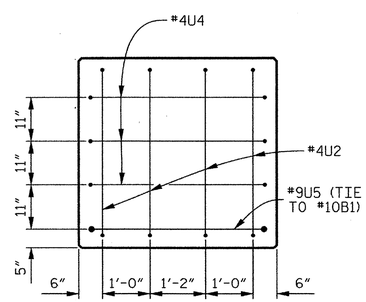


## END VIEW X–X

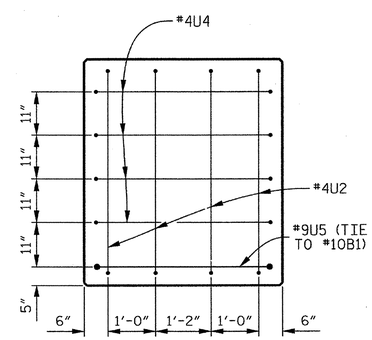


## END VIEW Y–Y

## BAR TYPES

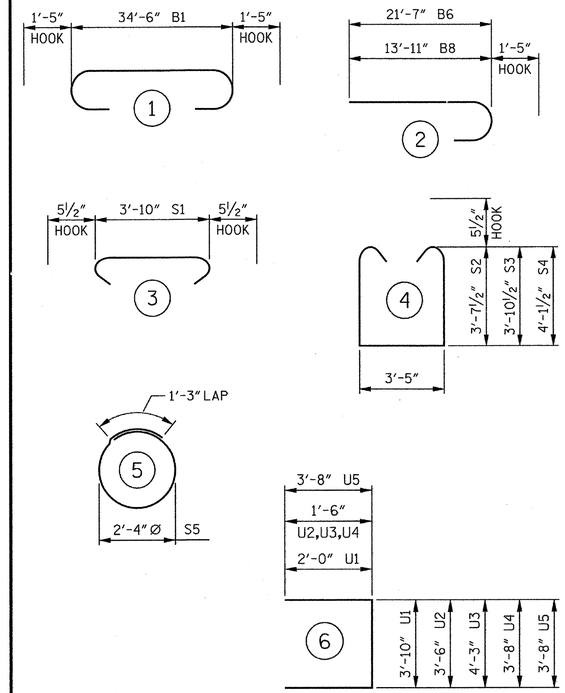


ALL BAR DIMENSIONS ARE OUT TO OUT.

## BILL OF MATERIAL

### BENT 4

| BAR | No. | SIZE | TYPE | LENGTH | WEIGHT |
|---|---|---|---|---|---|
| B1 | 6 | #10 | 1 | 37'- 4" | 964 |
| B2 | 12 | #5 | STR | 34'- 8" | 434 |
| B3 | 2 | #5 | STR | 16'- 1" | 34 |
| B4 | 14 | #4 | STR | 3'-10" | 36 |
| B5 | 8 | #4 | STR | 18'- 7" | 99 |
| B6 | 6 | #10 | 2 | 23'- 0" | 594 |
| B7 | 6 | #10 | STR | 21'- 4" | 551 |
| B8 | 6 | #10 | 2 | 15'- 4" | 396 |
| B9 | 6 | #4 | STR | 3'- 8" | 15 |
| S1 | 54 | #5 | 3 | 4'- 9" | 268 |
| S2 | 32 | #5 | 4 | 11'- 7" | 386 |
| S3 | 32 | #5 | 4 | 12'- 1" | 403 |
| S4 | 44 | #5 | 4 | 12'- 7" | 578 |
| S5 | 24 | #4 | 5 | 8'- 7" | 138 |
| U1 | 32 | #4 | 6 | 7'-10" | 167 |
| U2 | 4 | #4 | 6 | 6'- 6" | 17 |
| U3 | 4 | #4 | 6 | 7'- 4" | 19 |
| U4 | 7 | #4 | 6 | 6'- 8" | 31 |
| U5 | 2 | #9 | 6 | 11'- 0" | 75 |

REINFORCING STEEL 5,205 LBS.

CLASS "A" CONCRETE
POUR 1 CAP 22.8 CU. YDS.

PP 18 x 0.50 GALVANIZED STEEL PILES
6 REQUIRED 330 LIN. FT.

PIPE PILE PLATES
No. = 6

THE CONCRETE DISPLACED BY THE FILLED GALVANIZED STEEL PIPE PILES HAS BEEN DEDUCTED FROM THE QUANTITY OF CLASS "A" CONCRETE FOR THE BENT CAP.

REINFORCING STEEL FOR GALVANIZED STEEL PILES ARE NOT INCLUDED. SEE "18" STEEL PIPE PILE" SHEET FOR DETAILS.

PROJECT NO. R-2303D
SAMPSON COUNTY
STATION: 1311+58.00 -LREV-

SHEET 2 OF 2

STATE OF NORTH CAROLINA
DEPARTMENT OF TRANSPORTATION
RALEIGH

SUBSTRUCTURE

BENT 4

(RIGHT LANE)

CDM Smith
Camp Dresser & McKee
421 Fayetteville Street, Suite 1303
Raleigh, NC 27604
NC COA No. F-1255

DRAWN BY : J.D. BORUTA DATE : 10-12
CHECKED BY : P.R. HOLSHOUSER DATE : 11-12
DESIGN ENGINEER : P.R. HOLSHOUSER DATE : 1-13

DWG. No. S02-054

NORTH CAROLINA PROFESSIONAL SEAL 20668 ENGINEER PAUL R. HOLSHOUSER 2/08/2013

| REVISIONS | | | | | | SHEET No. |
|---|---|---|---|---|---|---|
| No. | BY: | DATE: | No. | BY: | DATE: | 8-130 |
| 1 | | | 3 | | | TOTAL SHEETS |
| 2 | | | 4 | | | 218 |

FILE: r:\node\r2303d\structures\PLANS\Str_2\R2303D_SD_Str2_b42.dgn
DATE: 12/20/2012 9:24:22 PM

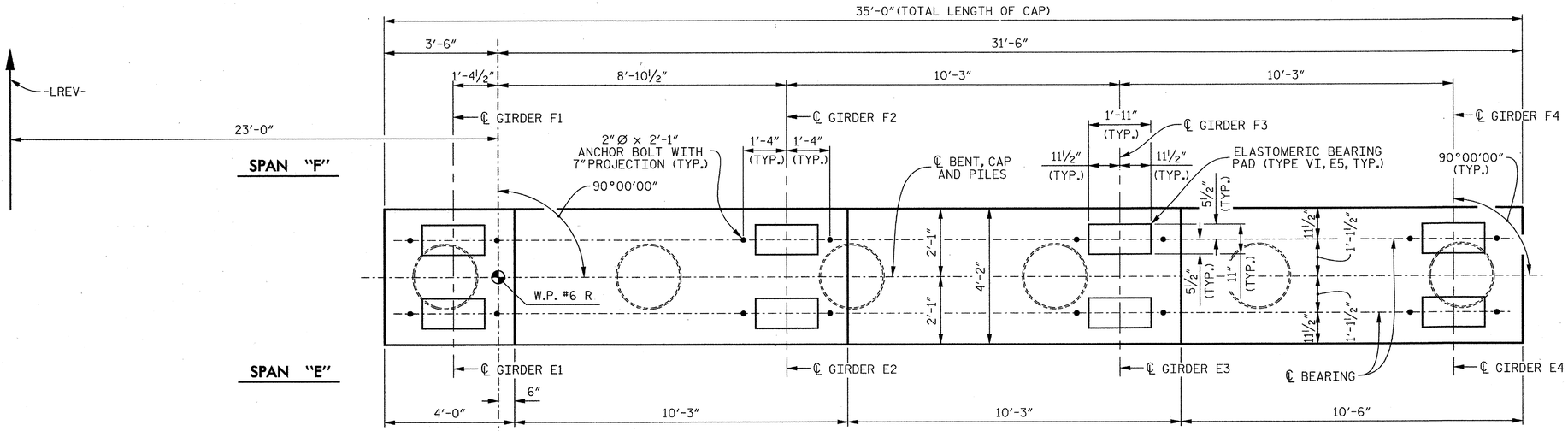


## PLAN

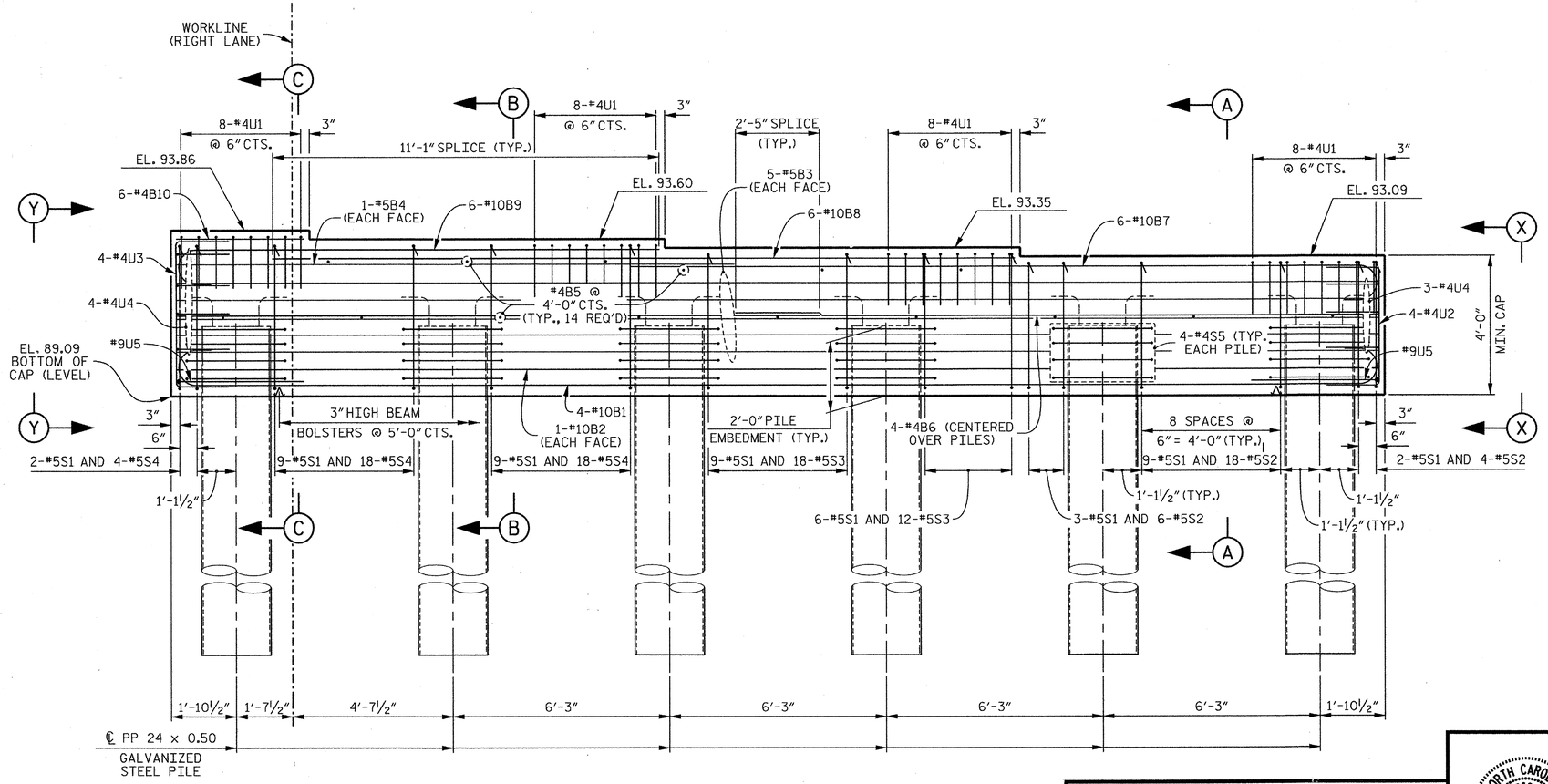


## ELEVATION

## NOTES

FOR SECTIONS A-A, B-B AND C-C, SEE SHEET 2 OF 2.

FOR VIEW X-X AND VIEW Y-Y, SEE SHEET 2 OF 2.

STIRRUPS AND U1 BARS IN CAP MAY BE SHIFTED AS NECESSARY TO CLEAR ANCHOR BOLTS.

FOR GALVANIZED STEEL PILE DETAILS AND REINFORCEMENT, SEE "24" STEEL PIPE PILE" SHEET.

GALVANIZE THE TOP OF EACH INTERIOR BENT PILE A MINIMUM OF 30 FEET. GALVANIZE IN ACCORDANCE WITH SECTION 1076 OF THE STANDARD SPECIFICATIONS.

PROJECT NO. R-2303D

SAMPSON COUNTY

STATION: 1311+58.00 -LREV-

SHEET 1 OF 2

STATE OF NORTH CAROLINA
DEPARTMENT OF TRANSPORTATION
RALEIGH

SUBSTRUCTURE

BENT 5

(RIGHT LANE)

CDM Smith
Camp Dresser & McKee
421 Fayetteville Street, Suite 1303
Raleigh, NC 27604
NC COA No. F-1255

DRAWN BY : J.D. BORUTA DATE : 10-12
CHECKED BY : P.R. HOLSHOUSER DATE : 11-12
DESIGN ENGINEER : P.R. HOLSHOUSER DATE : 1-13

DWG. No. S02-055

NORTH CAROLINA PROFESSIONAL SEAL 20668 ENGINEER PAUL R. HOLSHOUSER 2/08/2013

| REVISIONS | | | | | | SHEET No. |
|---|---|---|---|---|---|---|
| No. | BY: | DATE: | No. | BY: | DATE: | S-131 |
| 1 | | | 3 | | | TOTAL SHEETS |
| 2 | | | 4 | | | 218 |

FILE: r:\ncdot\r2303d\structures\PLANS\Str_2\R2303D_SD_Str2_b51.dgn
DATE: 12/30/2012 9:24:24 PM

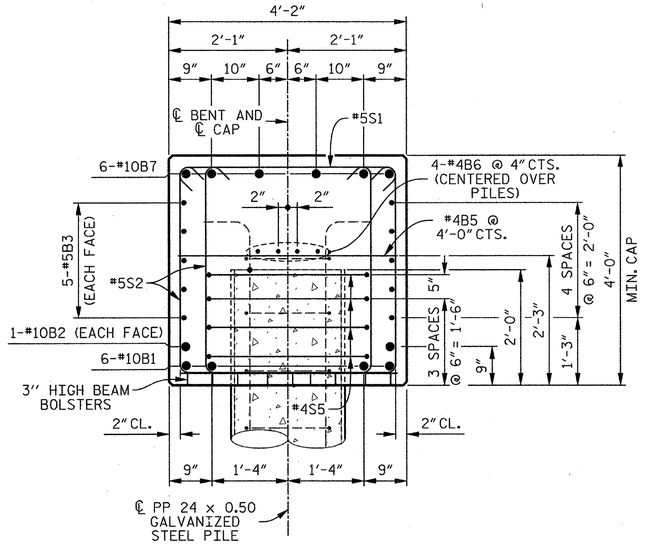


## SECTION A–A

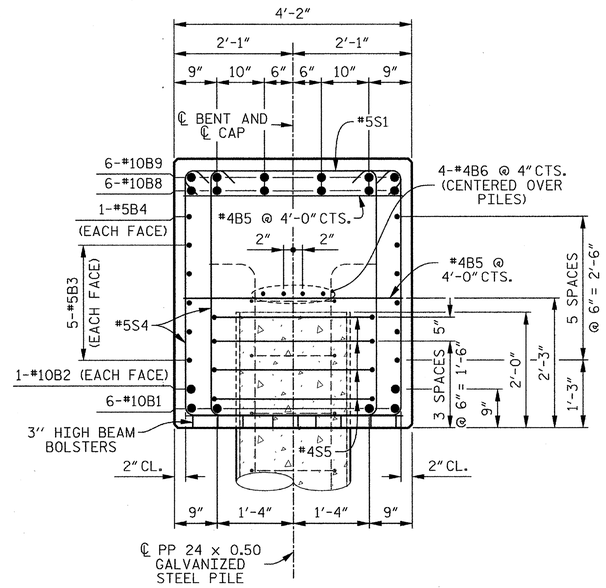


## SECTION B–B

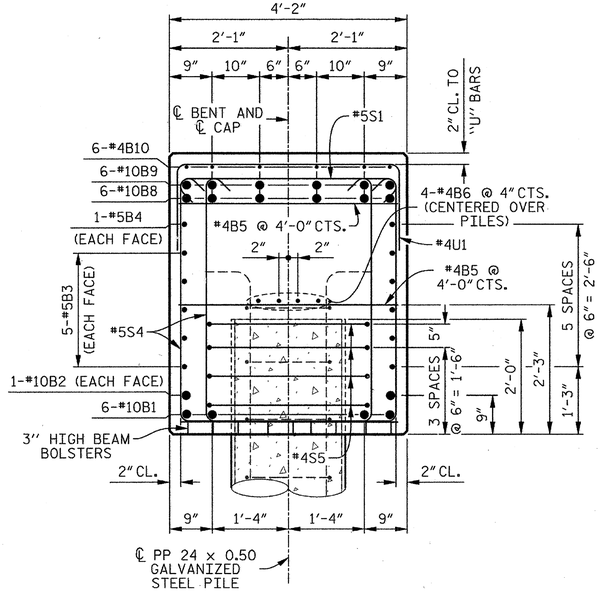


## SECTION C–C

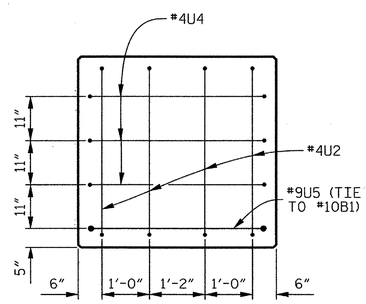


## END VIEW X–X

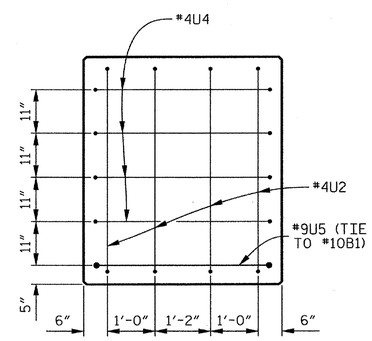


## END VIEW Y–Y

## BAR TYPES

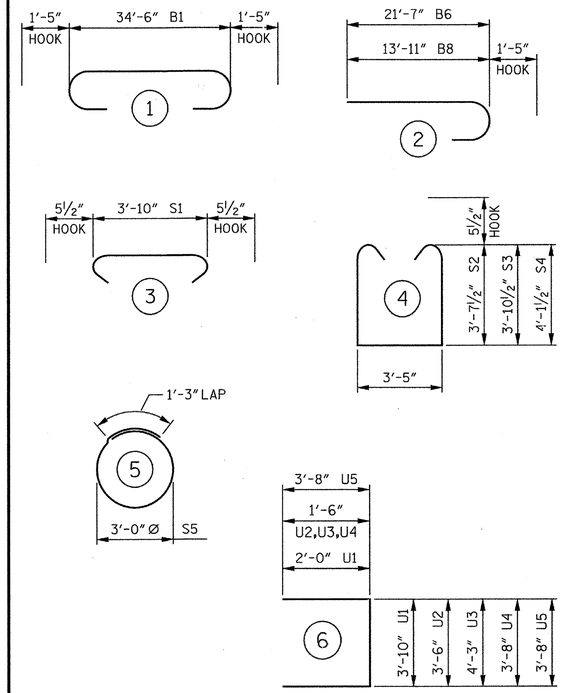


ALL BAR DIMENSIONS ARE OUT TO OUT.

## BILL OF MATERIAL

### BENT 5

| BAR | No. | SIZE | TYPE | LENGTH | WEIGHT |
|---|---|---|---|---|---|
| B1 | 4 | #10 | 1 | 37'- 4" | 643 |
| B2 | 2 | #10 | STR | 34'- 8" | 298 |
| B3 | 10 | #5 | STR | 34'- 8" | 362 |
| B4 | 2 | #5 | STR | 16'- 1" | 34 |
| B5 | 14 | #4 | STR | 3'-10" | 36 |
| B6 | 8 | #4 | STR | 18'- 7" | 99 |
| B7 | 6 | #10 | 2 | 23'- 0" | 594 |
| B8 | 6 | #10 | STR | 21'- 4" | 551 |
| B9 | 6 | #10 | 2 | 15'- 4" | 396 |
| B10 | 6 | #4 | STR | 3'- 8" | 15 |
| S1 | 49 | #5 | 3 | 4'- 9" | 243 |
| S2 | 28 | #5 | 4 | 11'- 7" | 338 |
| S3 | 30 | #5 | 4 | 12'- 1" | 378 |
| S4 | 40 | #5 | 4 | 12'- 7" | 525 |
| S5 | 24 | #4 | 5 | 10'- 9" | 172 |
| U1 | 32 | #4 | 6 | 7'-10" | 167 |
| U2 | 4 | #4 | 6 | 6'- 6" | 17 |
| U3 | 4 | #4 | 6 | 7'- 4" | 19 |
| U4 | 7 | #4 | 6 | 6'- 8" | 31 |
| U5 | 2 | #9 | 6 | 11'- 0" | 75 |

REINFORCING STEEL 4,993 LBS.

CLASS "A" CONCRETE
POUR 1 CAP 22.0 CU. YDS.

PP 24 x 0.50 GALVANIZED STEEL PILES
6 REQUIRED 420 LIN. FT.

PIPE PILE PLATES
No. = 6

THE CONCRETE DISPLACED BY THE FILLED GALVANIZED STEEL PIPE PILES HAS BEEN DEDUCTED FROM THE QUANTITY OF CLASS "A" CONCRETE FOR THE BENT CAP.

REINFORCING STEEL FOR GALVANIZED STEEL PILES ARE NOT INCLUDED. SEE "24" STEEL PIPE PILE" SHEET FOR DETAILS.

PROJECT NO. R-2303D
SAMPSON COUNTY
STATION: 1311+58.00 -LREV-

SHEET 2 OF 2

STATE OF NORTH CAROLINA
DEPARTMENT OF TRANSPORTATION
RALEIGH

SUBSTRUCTURE

BENT 5

(RIGHT LANE)

CDM Smith
Camp Dresser & McKee
421 Fayetteville Street, Suite 1303
Raleigh, NC 27604
NC COA No. F-1255

DRAWN BY : J.D. BORUTA DATE : 10-12
CHECKED BY : P.R. HOLSHOUSER DATE : 11-12
DESIGN ENGINEER : P.R. HOLSHOUSER DATE : 1-13

DWG. No. S02-056

NORTH CAROLINA PROFESSIONAL SEAL 20668 ENGINEER PAUL R. HOLSHOUSER 2/08/2013

| REVISIONS | | | | | | | | SHEET No. |
|---|---|---|---|---|---|---|---|---|
| No. | BY: | DATE: | No. | BY: | DATE: | | | S-132 |
| 1 | | | 3 | | | | | TOTAL SHEETS |
| 2 | | | 4 | | | | | 218 |

FILE: r:\model\2303d\structures\PLANS\div_2\R2303D_SD_Sh2_b32.dgn
DATE: 12/20/2012 9:24:27 PM

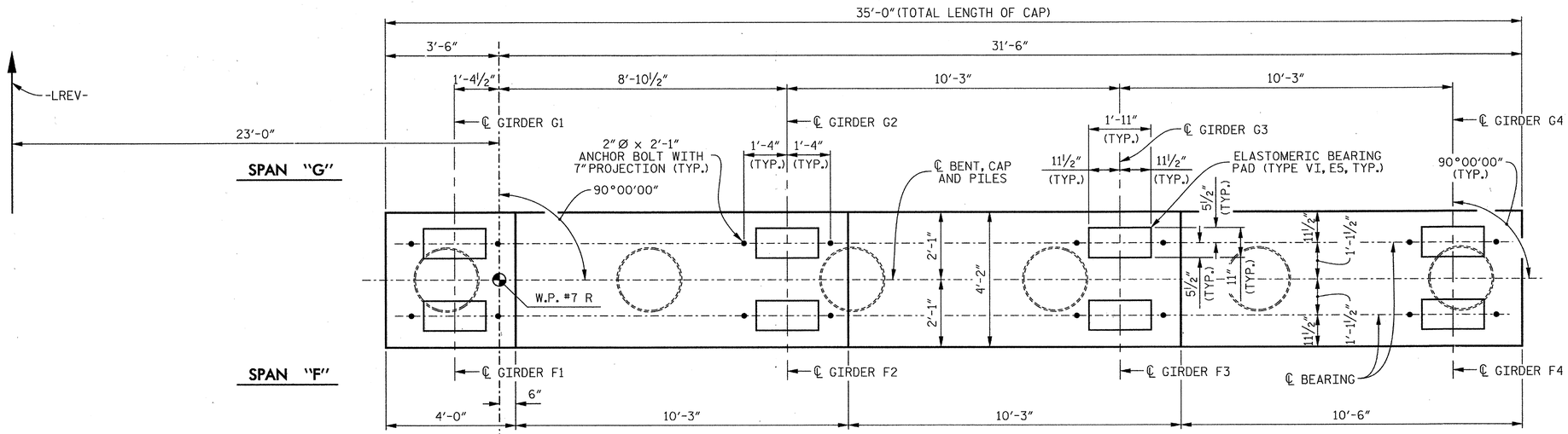


## PLAN

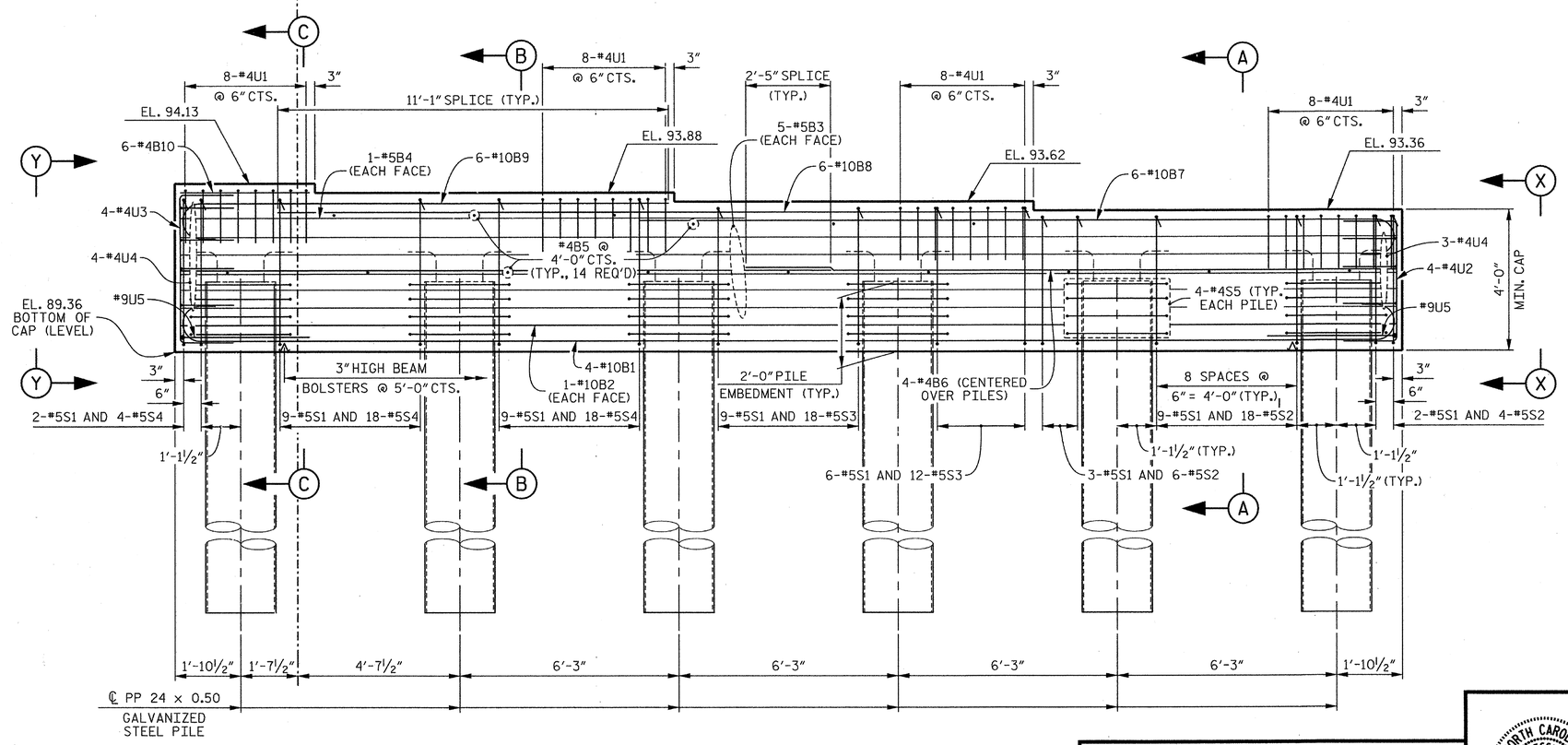


## ELEVATION

## NOTES

FOR SECTIONS A-A, B-B AND C-C, SEE SHEET 2 OF 2.

FOR VIEW X-X AND VIEW Y-Y, SEE SHEET 2 OF 2.

STIRRUPS AND U1 BARS IN CAP MAY BE SHIFTED AS NECESSARY TO CLEAR ANCHOR BOLTS.

FOR GALVANIZED STEEL PILE DETAILS AND REINFORCEMENT, SEE "24" STEEL PIPE PILE" SHEET.

GALVANIZE THE TOP OF EACH INTERIOR BENT PILE A MINIMUM OF 40 FEET. GALVANIZE IN ACCORDANCE WITH SECTION 1076 OF THE STANDARD SPECIFICATIONS.

PROJECT NO. R-2303D

SAMPSON COUNTY

STATION: 1311+58.00 -LREV-

SHEET 1 OF 2

STATE OF NORTH CAROLINA
DEPARTMENT OF TRANSPORTATION
RALEIGH

SUBSTRUCTURE

BENT 6

(RIGHT LANE)

CDM Smith
Camp Dresser & McKee
421 Fayetteville Street, Suite 1303
Raleigh, NC 27604
NC COA No. F-1255

| | | | |
|---|---|---|---|
| DRAWN BY : | J.D. BORUTA | DATE : | 10-12 |
| CHECKED BY : | P.R. HOLSHOUSER | DATE : | 11-12 |
| DESIGN ENGINEER : | P.R. HOLSHOUSER | DATE : | 1-13 |

DWG. No. S02-057

NORTH CAROLINA PROFESSIONAL SEAL 20668 ENGINEER PAUL R. HOLSHOUSER 2/08/2013

| REVISIONS | | | | | | SHEET No. |
|---|---|---|---|---|---|---|
| No. | BY: | DATE: | No. | BY: | DATE: | S-133 |
| 1 | | | 3 | | | TOTAL SHEETS |
| 2 | | | 4 | | | 218 |

FILE: r:\model\r2303d\structures\PLANS\Str_2\R2303D_SD_Str2_b61.dgn
DATE: 12/30/2012 9:24:30 PM

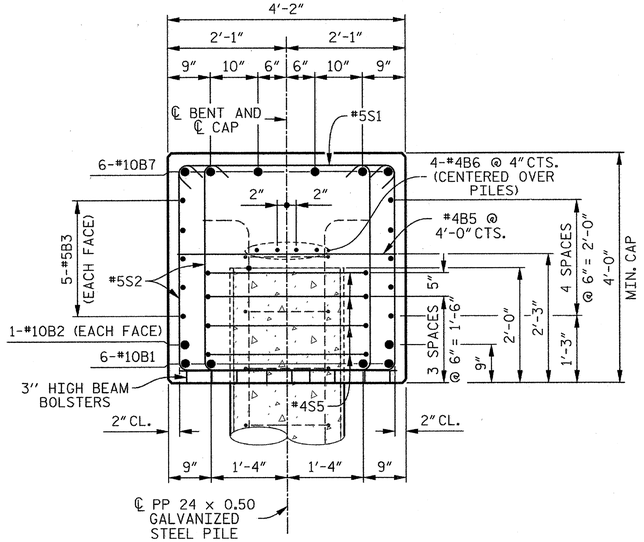


## SECTION A–A

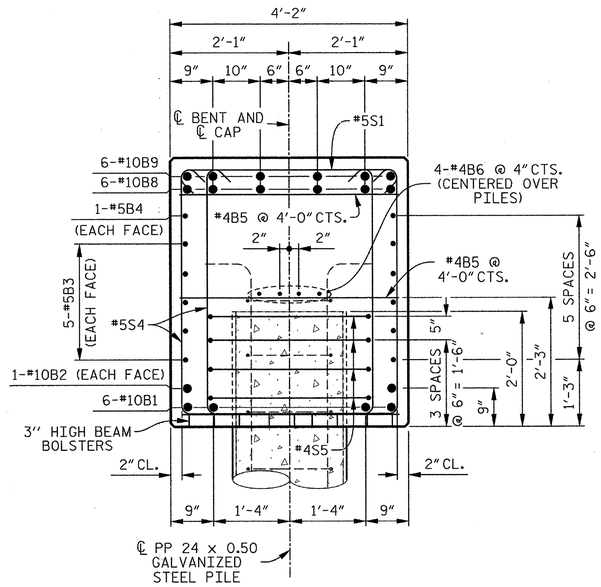


## SECTION B–B

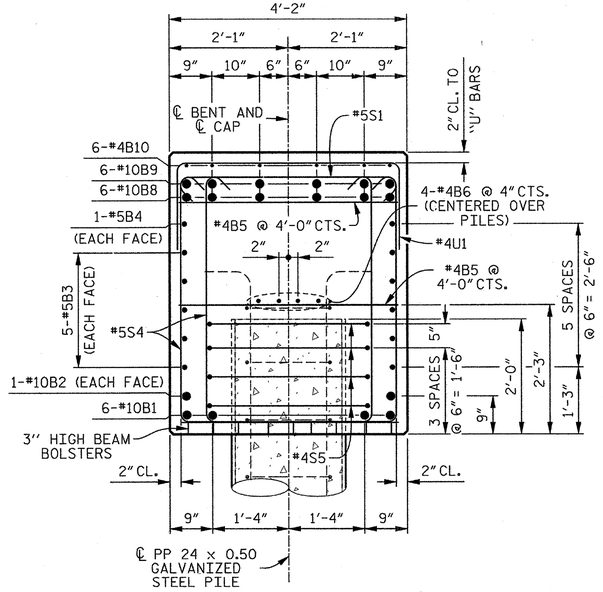


## SECTION C–C

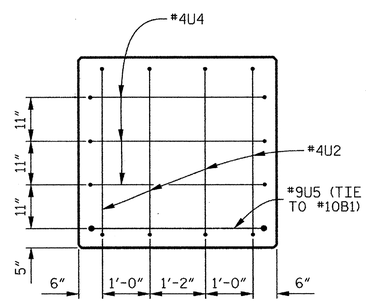


## END VIEW X–X

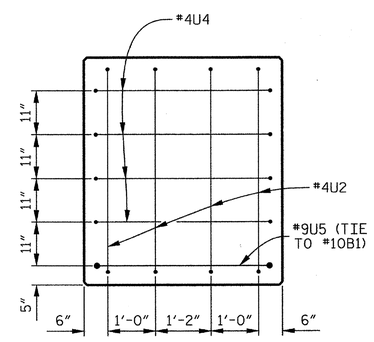


## END VIEW Y–Y

## BAR TYPES

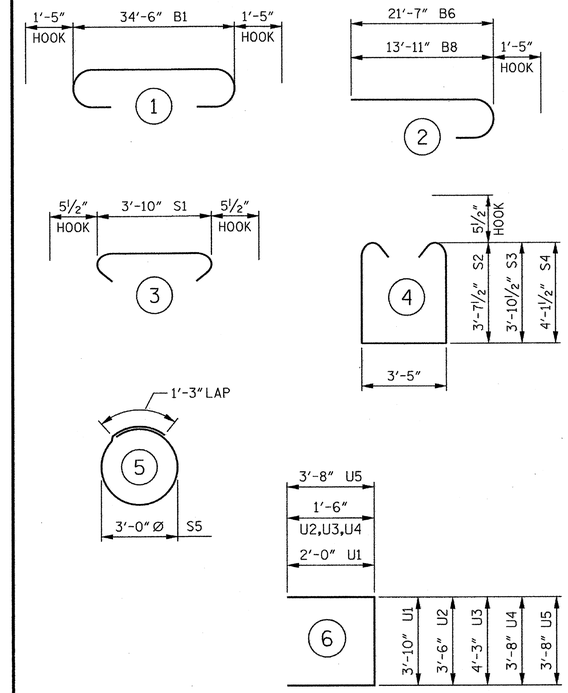


ALL BAR DIMENSIONS ARE OUT TO OUT.

## BILL OF MATERIAL

### BENT 6

| BAR | No. | SIZE | TYPE | LENGTH | WEIGHT |
|---|---|---|---|---|---|
| B1 | 4 | #10 | 1 | 37'- 4" | 643 |
| B2 | 2 | #10 | STR | 34'- 8" | 298 |
| B3 | 10 | #5 | STR | 34'- 8" | 362 |
| B4 | 2 | #5 | STR | 16'- 1" | 34 |
| B5 | 14 | #4 | STR | 3'-10" | 36 |
| B6 | 8 | #4 | STR | 18'- 7" | 99 |
| B7 | 6 | #10 | 2 | 23'- 0" | 594 |
| B8 | 6 | #10 | STR | 21'- 4" | 551 |
| B9 | 6 | #10 | 2 | 15'- 4" | 396 |
| B10 | 6 | #4 | STR | 3'- 8" | 15 |
| S1 | 49 | #5 | 3 | 4'- 9" | 243 |
| S2 | 28 | #5 | 4 | 11'- 7" | 338 |
| S3 | 30 | #5 | 4 | 12'- 1" | 378 |
| S4 | 40 | #5 | 4 | 12'- 7" | 525 |
| S5 | 24 | #4 | 5 | 10'- 9" | 172 |
| U1 | 32 | #4 | 6 | 7'-10" | 167 |
| U2 | 4 | #4 | 6 | 6'- 6" | 17 |
| U3 | 4 | #4 | 6 | 7'- 4" | 19 |
| U4 | 7 | #4 | 6 | 6'- 8" | 31 |
| U5 | 2 | #9 | 6 | 11'- 0" | 75 |

REINFORCING STEEL 4,993 LBS.

CLASS "A" CONCRETE
POUR 1 CAP 22.0 CU. YDS.

PP 24 x 0.50 GALVANIZED STEEL PILES
6 REQUIRED 390 LIN. FT.

PIPE PILE PLATES
No. = 6

THE CONCRETE DISPLACED BY THE FILLED GALVANIZED STEEL PIPE PILES HAS BEEN DEDUCTED FROM THE QUANTITY OF CLASS "A" CONCRETE FOR THE BENT CAP.

REINFORCING STEEL FOR GALVANIZED STEEL PILES ARE NOT INCLUDED. SEE "24" STEEL PIPE PILE" SHEET FOR DETAILS.

PROJECT NO. R-2303D
SAMPSON COUNTY
STATION: 1311+58.00 -LREV-

SHEET 2 OF 2

STATE OF NORTH CAROLINA
DEPARTMENT OF TRANSPORTATION
RALEIGH

SUBSTRUCTURE

BENT 6

(RIGHT LANE)

CDM Smith
Camp Dresser & McKee
421 Fayetteville Street, Suite 1303
Raleigh, NC 27604
NC COA No. F-1255

DRAWN BY : J.D. BORUTA DATE : 10-12
CHECKED BY : P.R. HOLSHOUSER DATE : 11-12
DESIGN ENGINEER : P.R. HOLSHOUSER DATE : 1-13

DWG. No. S02-058

NORTH CAROLINA PROFESSIONAL SEAL 20668 ENGINEER PAUL R. HOLSHOUSER

| REVISIONS | | | | | | | SHEET No. |
|---|---|---|---|---|---|---|---|
| No. | BY: | DATE: | No. | BY: | DATE: | | S-134 |
| 1 | | | 3 | | | | TOTAL SHEETS |
| 2 | | | 4 | | | | 218 |

FILE: r:\roadwy\2303d\structures\PLANS\Bn_21\R2303D_S0_Bn2_bk02.dgn
DATE: 12/20/2012 9:24:53 PM

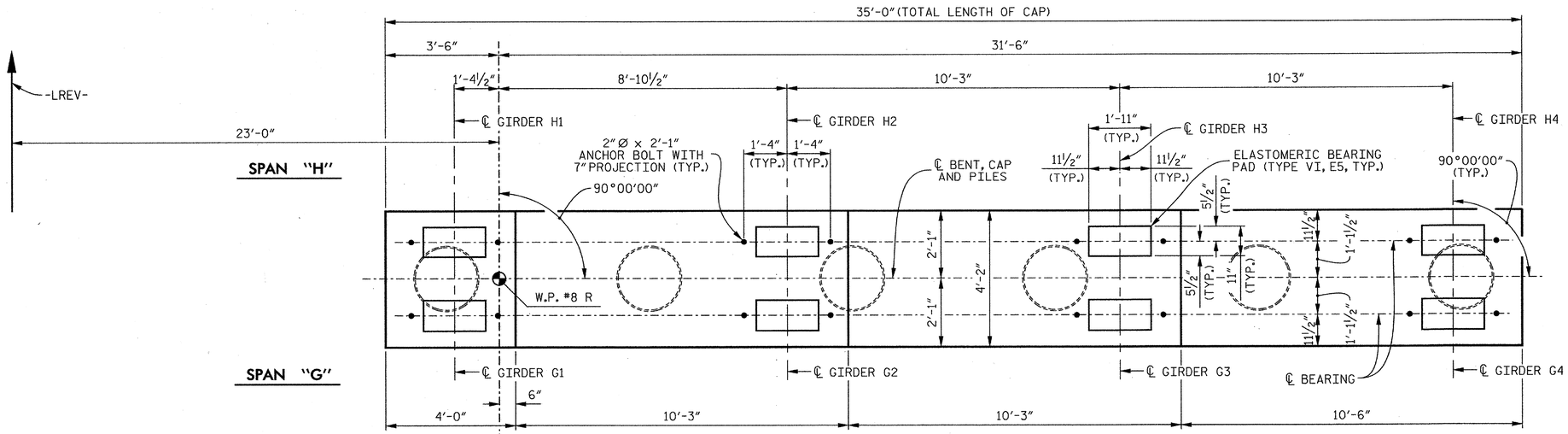


PLAN

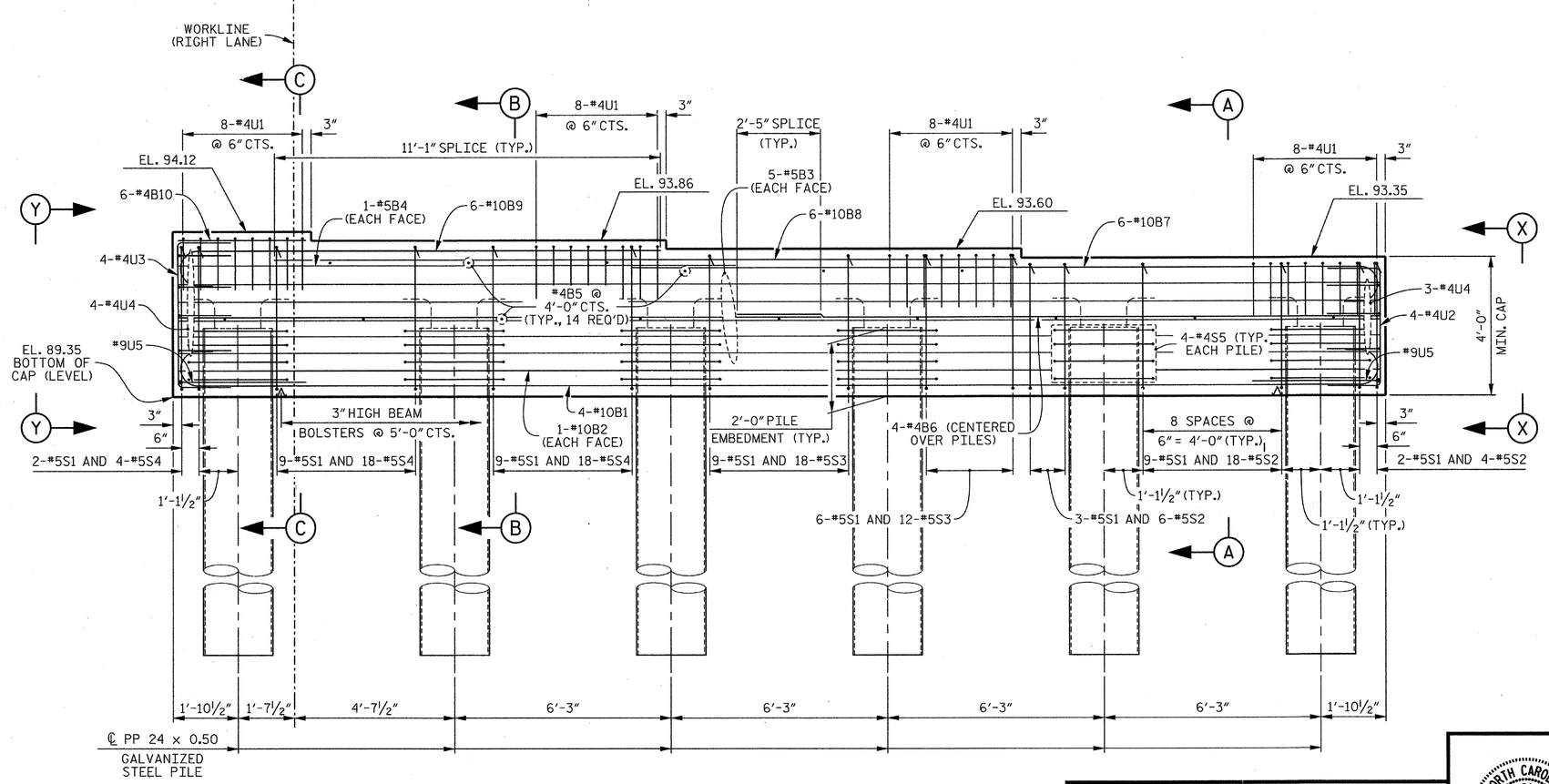


ELEVATION

## NOTES

FOR SECTIONS A-A, B-B AND C-C, SEE SHEET 2 OF 2.

FOR VIEW X-X AND VIEW Y-Y, SEE SHEET 2 OF 2.

STIRRUPS AND U1 BARS IN CAP MAY BE SHIFTED AS NECESSARY TO CLEAR ANCHOR BOLTS.

FOR GALVANIZED STEEL PILE DETAILS AND REINFORCEMENT, SEE "24" STEEL PIPE PILE" SHEET.

GALVANIZE THE TOP OF EACH INTERIOR BENT PILE A MINIMUM OF 40 FEET. GALVANIZE IN ACCORDANCE WITH SECTION 1076 OF THE STANDARD SPECIFICATIONS.

PROJECT NO. R-2303D

SAMPSON COUNTY

STATION: 1311+58.00 -LREV-

SHEET 1 OF 2

STATE OF NORTH CAROLINA
DEPARTMENT OF TRANSPORTATION
RALEIGH

SUBSTRUCTURE

BENT 7

(RIGHT LANE)

CDM Smith
Camp Dresser & McKee
421 Fayetteville Street, Suite 1303
Raleigh, NC 27604
NC COA No. F-1255

| | | | |
|---|---|---|---|
| DRAWN BY : | J.D. BORUTA | DATE : | 10-12 |
| CHECKED BY : | P.R. HOLSHOUSER | DATE : | 11-12 |
| DESIGN ENGINEER : | P.R. HOLSHOUSER | DATE : | 1-13 |

DWG. No. S02-059

NORTH CAROLINA PROFESSIONAL SEAL 20668 ENGINEER PAUL R. HOLSHOUSER 2/08/2013

| REVISIONS | | | | | | SHEET No. |
|---|---|---|---|---|---|---|
| No. | BY: | DATE: | No. | BY: | DATE: | S-135 |
| 1 | | | 3 | | | TOTAL SHEETS |
| 2 | | | 4 | | | 218 |

FILE: r:\model\r2303d\structures\PLANS\Str_2\R2303D_SD_Str2_b71.dgn
DATE: 12/30/2012 9:24:35 PM

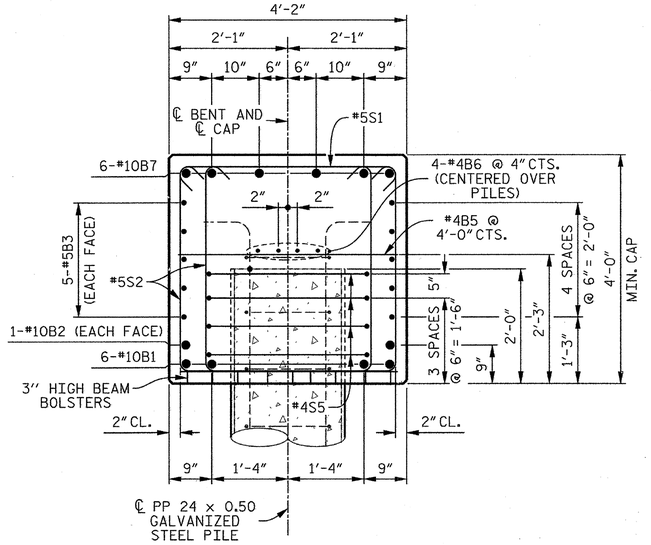


## SECTION A–A

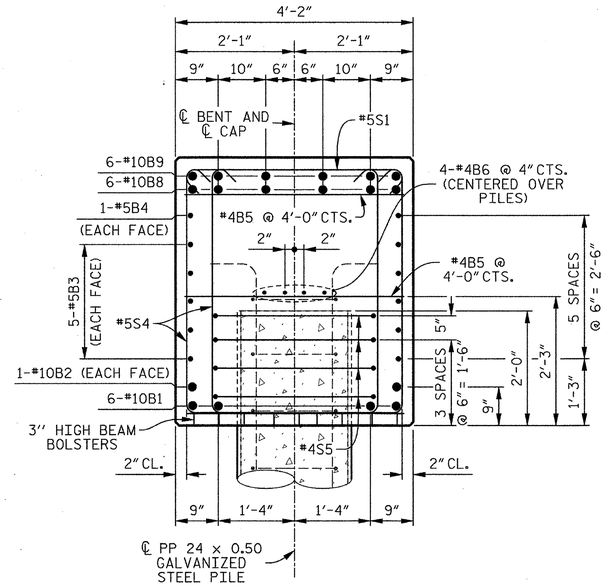


## SECTION B–B

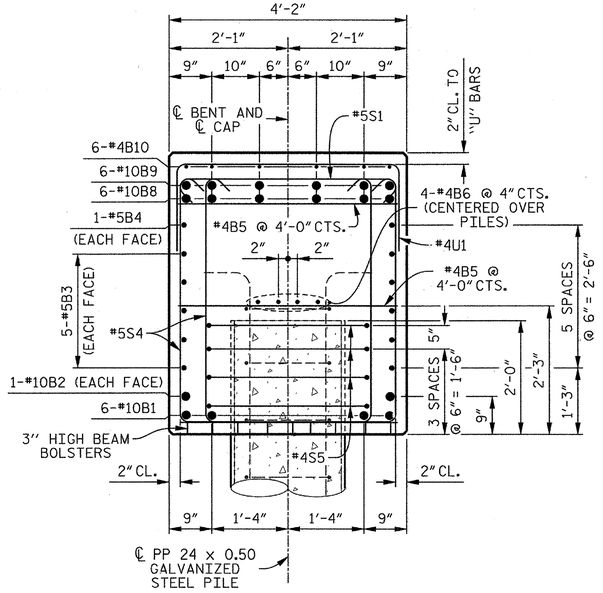


## SECTION C–C

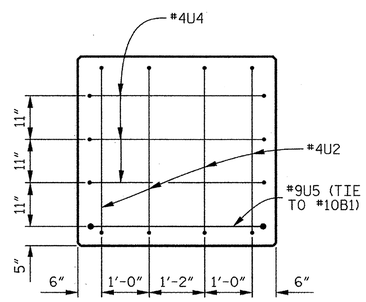


## END VIEW X–X

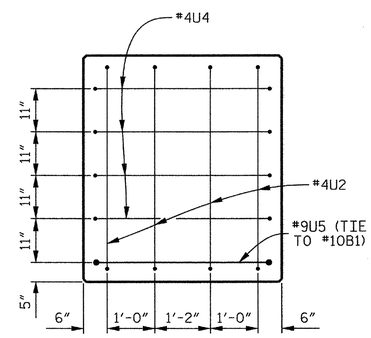


## END VIEW Y–Y

## BAR TYPES

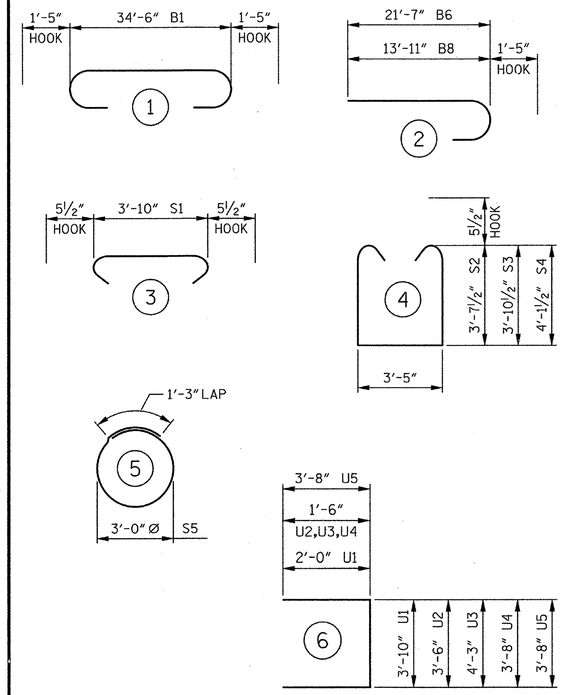


ALL BAR DIMENSIONS ARE OUT TO OUT.

## BILL OF MATERIAL

### BENT 7

| BAR | No. | SIZE | TYPE | LENGTH | WEIGHT |
|---|---|---|---|---|---|
| B1 | 4 | #10 | 1 | 37'- 4" | 643 |
| B2 | 2 | #10 | STR | 34'- 8" | 298 |
| B3 | 10 | #5 | STR | 34'- 8" | 362 |
| B4 | 2 | #5 | STR | 16'- 1" | 34 |
| B5 | 14 | #4 | STR | 3'-10" | 36 |
| B6 | 8 | #4 | STR | 18'- 7" | 99 |
| B7 | 6 | #10 | 2 | 23'- 0" | 594 |
| B8 | 6 | #10 | STR | 21'- 4" | 551 |
| B9 | 6 | #10 | 2 | 15'- 4" | 396 |
| B10 | 6 | #4 | STR | 3'- 8" | 15 |
| S1 | 49 | #5 | 3 | 4'- 9" | 243 |
| S2 | 28 | #5 | 4 | 11'- 7" | 338 |
| S3 | 30 | #5 | 4 | 12'- 1" | 378 |
| S4 | 40 | #5 | 4 | 12'- 7" | 525 |
| S5 | 24 | #4 | 5 | 10'- 9" | 172 |
| U1 | 32 | #4 | 6 | 7'-10" | 167 |
| U2 | 4 | #4 | 6 | 6'- 6" | 17 |
| U3 | 4 | #4 | 6 | 7'- 4" | 19 |
| U4 | 7 | #4 | 6 | 6'- 8" | 31 |
| U5 | 2 | #9 | 6 | 11'- 0" | 75 |

REINFORCING STEEL 4,993 LBS.

CLASS "A" CONCRETE
POUR 1 CAP 22.0 CU. YDS.

PP 24 x 0.50 GALVANIZED STEEL PILES
6 REQUIRED 390 LIN. FT.

PIPE PILE PLATES
No. = 6

THE CONCRETE DISPLACED BY THE FILLED GALVANIZED STEEL PIPE PILES HAS BEEN DEDUCTED FROM THE QUANTITY OF CLASS "A" CONCRETE FOR THE BENT CAP.

REINFORCING STEEL FOR GALVANIZED STEEL PILES ARE NOT INCLUDED. SEE "24" STEEL PIPE PILE" SHEET FOR DETAILS.

PROJECT NO. R-2303D
SAMPSON COUNTY
STATION: 1311+58.00 -LREV-

SHEET 2 OF 2

STATE OF NORTH CAROLINA
DEPARTMENT OF TRANSPORTATION
RALEIGH

SUBSTRUCTURE

BENT 7

(RIGHT LANE)

CDM Smith
Camp Dresser & McKee
421 Fayetteville Street, Suite 1303
Raleigh, NC 27604
NC COA No. F-1255

DRAWN BY : J.D. BORUTA DATE : 10-12
CHECKED BY : P.R. HOLSHOUSER DATE : 11-12
DESIGN ENGINEER : P.R. HOLSHOUSER DATE : 1-13

DWG. No. S02-060

NORTH CAROLINA PROFESSIONAL SEAL 20668 ENGINEER P. RAUL R. HOLSHOUSER 12/04/2013

| REVISIONS | | | | | | SHEET No. |
|---|---|---|---|---|---|---|
| No. | BY: | DATE: | No. | BY: | DATE: | S-136 |
| 1 | | | 3 | | | TOTAL SHEETS |
| 2 | | | 4 | | | 218 |

FILE: r:\radar\r2303d\plans\dwg\PLANS\br_2\R2303D_S0_br2_b72.dgn
DATE: 12/02/2013 9:24:58 PM

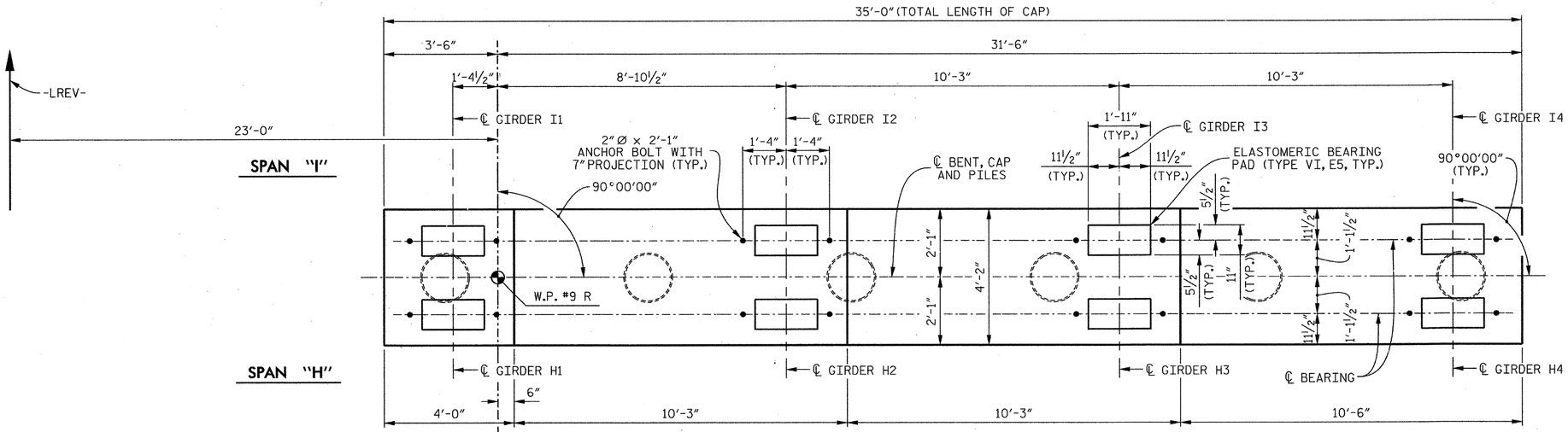


## PLAN

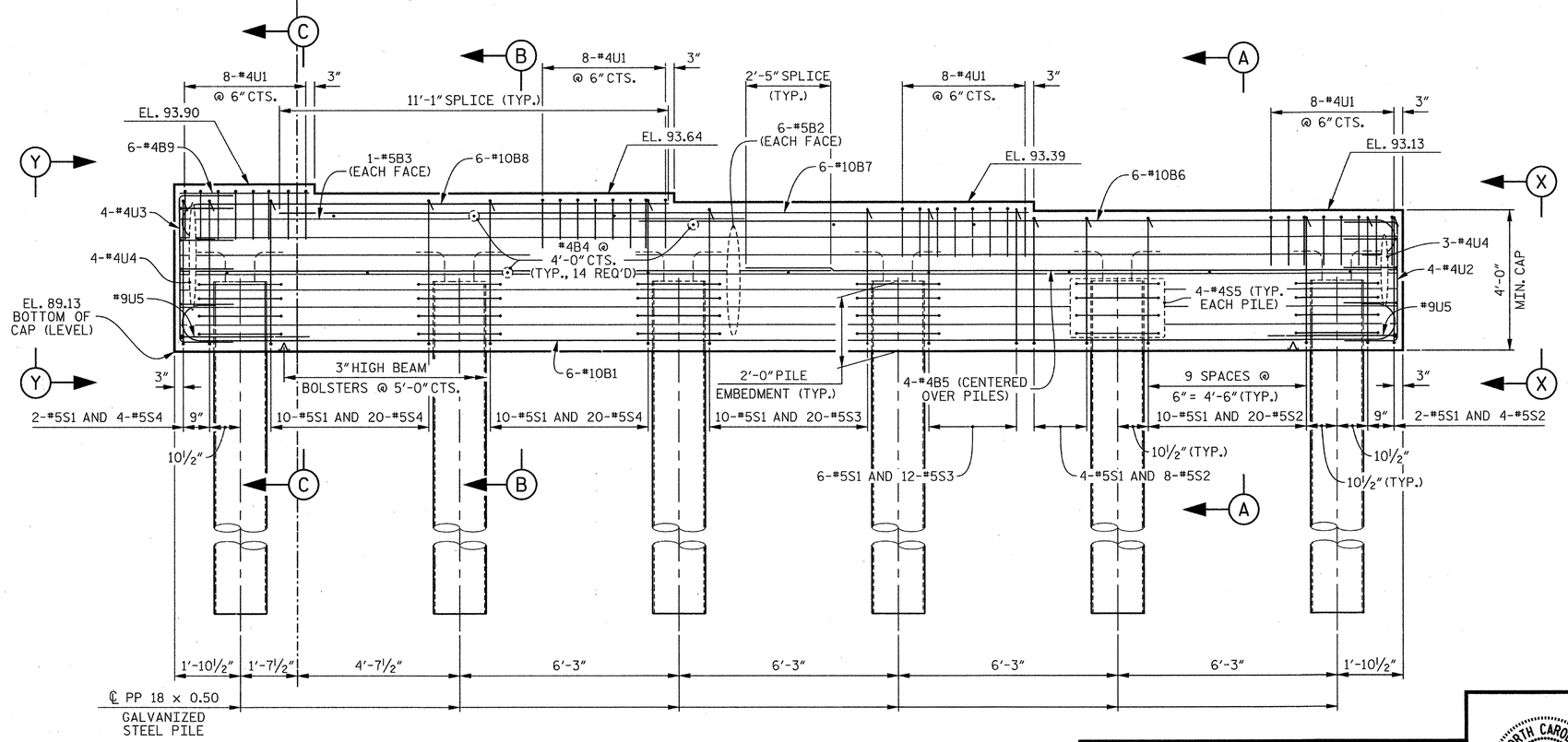


## ELEVATION

## NOTES

FOR SECTIONS A-A, B-B AND C-C, SEE SHEET 2 OF 2.

FOR VIEW X-X AND VIEW Y-Y, SEE SHEET 2 OF 2.

STIRRUPS AND U1 BARS IN CAP MAY BE SHIFTED AS NECESSARY TO CLEAR ANCHOR BOLTS.

FOR GALVANIZED STEEL PILE DETAILS AND REINFORCEMENT, SEE "18" STEEL PIPE PILE" SHEET.

GALVANIZE THE TOP OF EACH INTERIOR BENT PILE A MINIMUM OF 30 FEET. GALVANIZE IN ACCORDANCE WITH SECTION 1076 OF THE STANDARD SPECIFICATIONS.

PROJECT NO. R-2303D

SAMPSON COUNTY

STATION: 1311+58.00 -LREV-

SHEET 1 OF 2

STATE OF NORTH CAROLINA
DEPARTMENT OF TRANSPORTATION
RALEIGH

SUBSTRUCTURE

BENT 8

(RIGHT LANE)

CDM Smith

Camp Dresser & McKee
421 Fayetteville Street, Suite 1303
Raleigh, NC 27604
NC COA No. F-1255

| | | | |
|---|---|---|---|
| DRAWN BY : | J.D. BORUTA | DATE : | 10-12 |
| CHECKED BY : | P.R. HOLSHOUSER | DATE : | 11-12 |
| DESIGN ENGINEER : | P.R. HOLSHOUSER | DATE : | 1-13 |

DWG. No. S02-061

NORTH CAROLINA PROFESSIONAL SEAL 20668 ENGINEER PAUL R. HOLSHOUSER 10/8/2013

| REVISIONS | | | | | | |
|---|---|---|---|---|---|---|
| No. | BY: | DATE: | No. | BY: | DATE: | |
| 1 | | | 3 | | | |
| 2 | | | 4 | | | |

SHEET No. S-137

TOTAL SHEETS 218

FILE: r:\ncdot\2303d\structures\PLANS\Str_2\R2303D_SD_Sh2_b81.dgn
DATE: 12/06/2012 9:24:41 PM

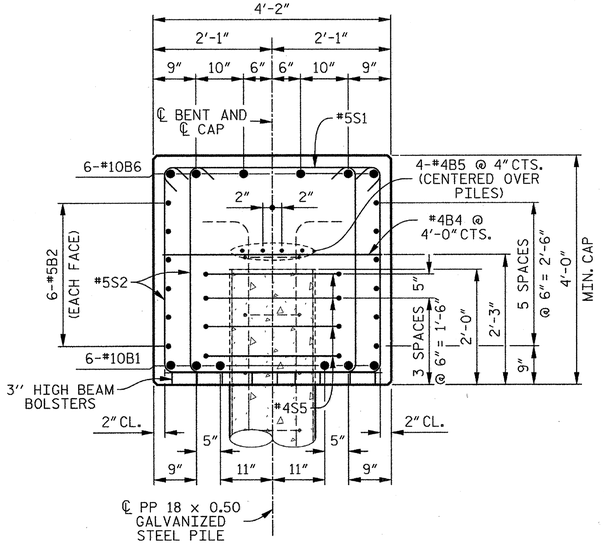


## SECTION A–A

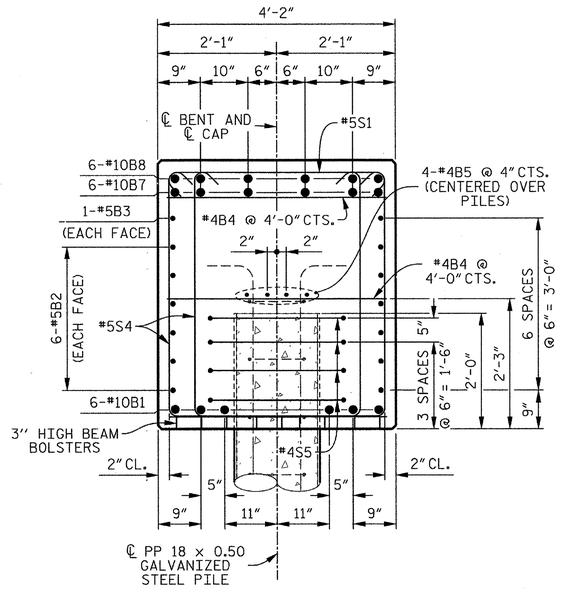


## SECTION B–B

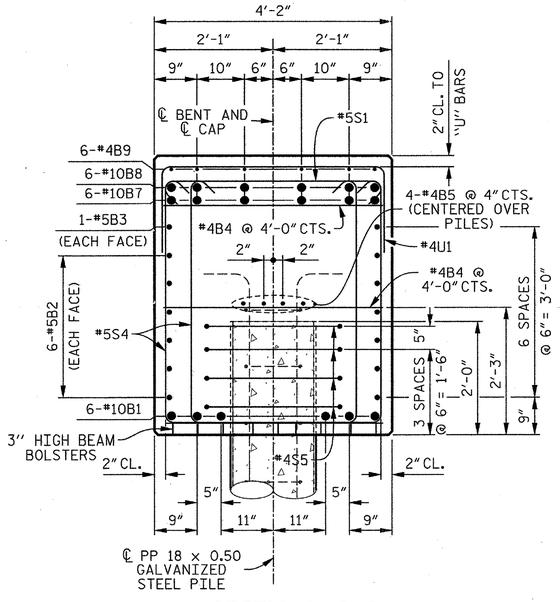


## SECTION C–C

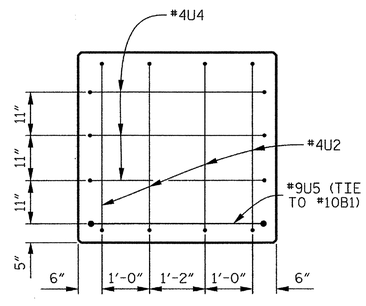


## END VIEW X–X

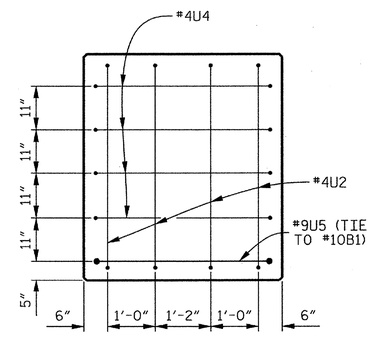


## END VIEW Y–Y

## BAR TYPES

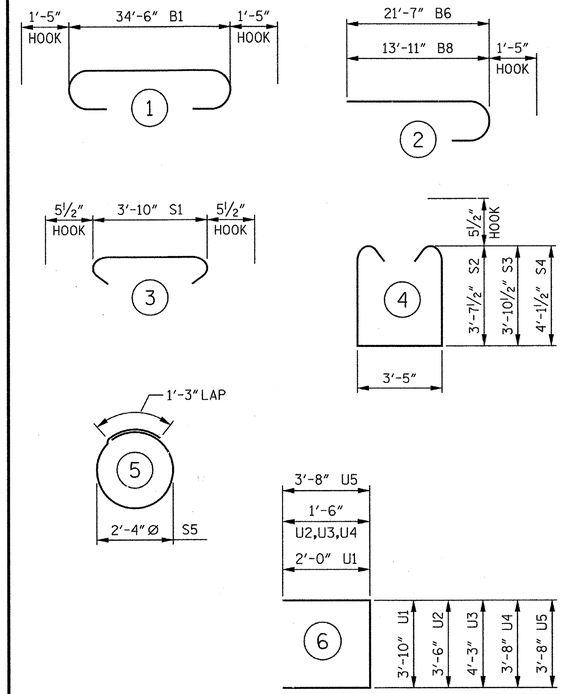


ALL BAR DIMENSIONS ARE OUT TO OUT.

## BILL OF MATERIAL

### BENT 8

| BAR | No. | SIZE | TYPE | LENGTH | WEIGHT |
|---|---|---|---|---|---|
| B1 | 6 | #10 | 1 | 37'- 4" | 964 |
| B2 | 12 | #5 | STR | 34'- 8" | 434 |
| B3 | 2 | #5 | STR | 16'- 1" | 34 |
| B4 | 14 | #4 | STR | 3'-10" | 36 |
| B5 | 8 | #4 | STR | 18'- 7" | 99 |
| B6 | 6 | #10 | 2 | 23'- 0" | 594 |
| B7 | 6 | #10 | STR | 21'- 4" | 551 |
| B8 | 6 | #10 | 2 | 15'- 4" | 396 |
| B9 | 6 | #4 | STR | 3'- 8" | 15 |
| S1 | 54 | #5 | 3 | 4'- 9" | 268 |
| S2 | 32 | #5 | 4 | 11'- 7" | 386 |
| S3 | 32 | #5 | 4 | 12'- 1" | 403 |
| S4 | 44 | #5 | 4 | 12'- 7" | 578 |
| S5 | 24 | #4 | 5 | 8'- 7" | 138 |
| U1 | 32 | #4 | 6 | 7'-10" | 167 |
| U2 | 4 | #4 | 6 | 6'- 6" | 17 |
| U3 | 4 | #4 | 6 | 7'- 4" | 19 |
| U4 | 7 | #4 | 6 | 6'- 8" | 31 |
| U5 | 2 | #9 | 6 | 11'- 0" | 75 |

REINFORCING STEEL 5,205 LBS.

CLASS "A" CONCRETE
POUR 1 CAP 22.8 CU. YDS.

PP 18 x 0.50 GALVANIZED STEEL PILES
6 REQUIRED 420 LIN. FT.

PIPE PILE PLATES
No. = 6

THE CONCRETE DISPLACED BY THE FILLED GALVANIZED STEEL PIPE PILES HAS BEEN DEDUCTED FROM THE QUANTITY OF CLASS "A" CONCRETE FOR THE BENT CAP.

REINFORCING STEEL FOR GALVANIZED STEEL PILES ARE NOT INCLUDED. SEE "18" STEEL PIPE PILE" SHEET FOR DETAILS.

PROJECT NO. R-2303D
SAMPSON COUNTY
STATION: 1311+58.00 -LREV-

SHEET 2 OF 2

STATE OF NORTH CAROLINA
DEPARTMENT OF TRANSPORTATION
RALEIGH

SUBSTRUCTURE

BENT 8

(RIGHT LANE)

CDM Smith
Camp Dresser & McKee
421 Fayetteville Street, Suite 1303
Raleigh, NC 27604
NC COA No. F-1255

DRAWN BY : J.D. BORUTA DATE : 10-12
CHECKED BY : P.R. HOLSHOUSER DATE : 11-12
DESIGN ENGINEER : P.R. HOLSHOUSER DATE : 1-13

DWG. No. S02-062

NORTH CAROLINA PROFESSIONAL SEAL 20668 ENGINEER PAUL R. HOLSHOUSER
2/08/2013

| REVISIONS | | | | | | | SHEET No. |
|---|---|---|---|---|---|---|---|
| No. | BY: | DATE: | No. | BY: | DATE: | | S-138 |
| 1 | | | 3 | | | | TOTAL SHEETS |
| 2 | | | 4 | | | | 218 |

FILE: c:\cadd\r2303d\structural\PLANS\Str_2\R2303D_SD_Str2_b82.dgn
DATE: 12/20/2012 2:24:44 PM

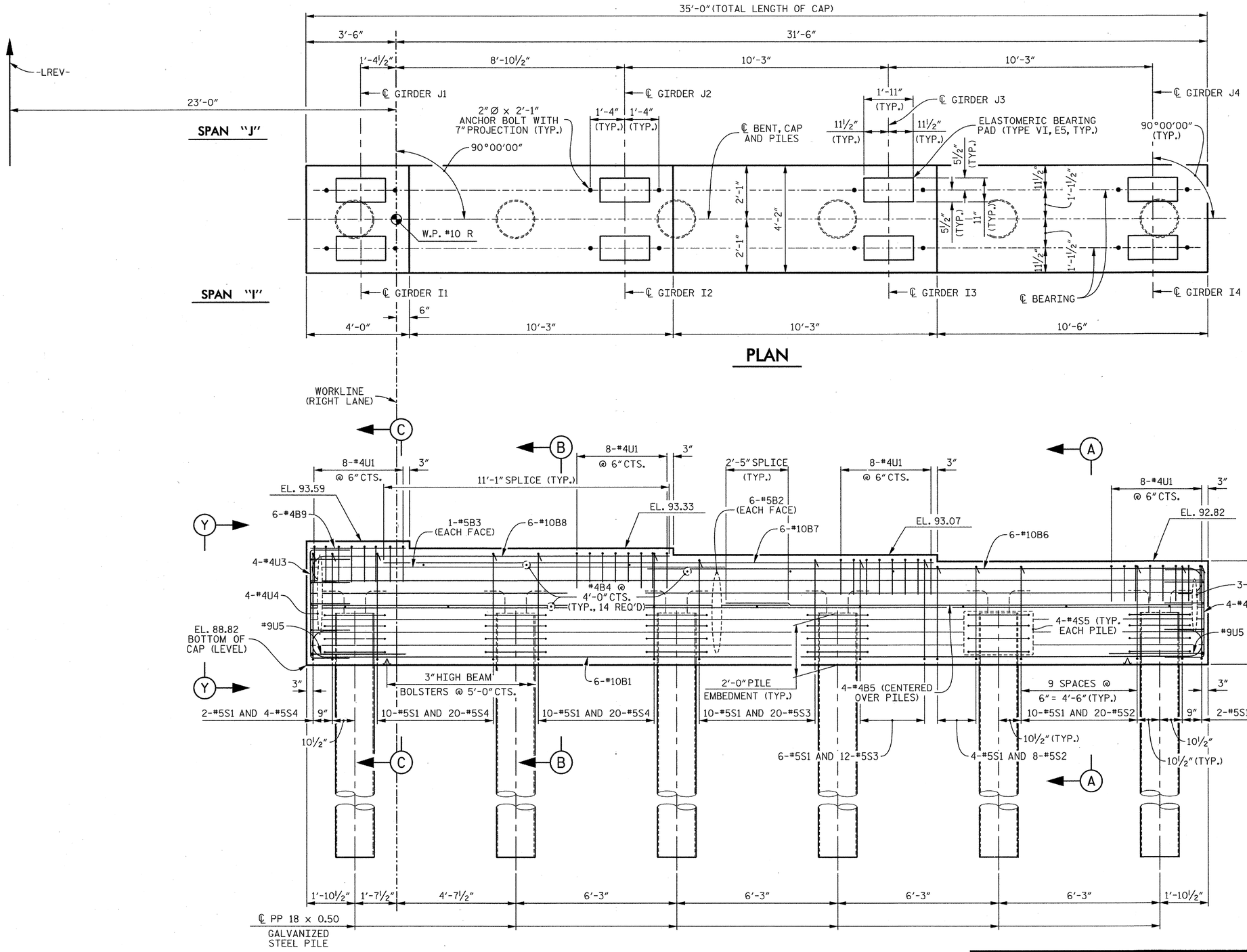


## NOTES

FOR SECTIONS A-A, B-B AND C-C, SEE SHEET 2 OF 2.

FOR VIEW X-X AND VIEW Y-Y, SEE SHEET 2 OF 2.

STIRRUPS AND U1 BARS IN CAP MAY BE SHIFTED AS NECESSARY TO CLEAR ANCHOR BOLTS.

FOR GALVANIZED STEEL PILE DETAILS AND REINFORCEMENT, SEE "18" STEEL PIPE PILE" SHEET.

GALVANIZE THE TOP OF EACH INTERIOR BENT PILE A MINIMUM OF 30 FEET. GALVANIZE IN ACCORDANCE WITH SECTION 1076 OF THE STANDARD SPECIFICATIONS.

PROJECT NO. R-2303D

SAMPSON COUNTY

STATION: 1311+58.00 -LREV-

SHEET 1 OF 2

STATE OF NORTH CAROLINA
DEPARTMENT OF TRANSPORTATION
RALEIGH

SUBSTRUCTURE

BENT 9

(RIGHT LANE)

CDM Smith
Camp Dresser & McKee
421 Fayetteville Street, Suite 1303
Raleigh, NC 27604
NC COA No. F-1255

| | | | |
|---|---|---|---|
| DRAWN BY : | J.D. BORUTA | DATE : | 10-12 |
| CHECKED BY : | P.R. HOLSHOUSER | DATE : | 11-12 |
| DESIGN ENGINEER : | P.R. HOLSHOUSER | DATE : | 1-13 |

DWG. No. S02-063

NORTH CAROLINA PROFESSIONAL SEAL 20668 ENGINEER PAUL R. HOLSHOUSER 2/08/2013

| REVISIONS | | | | | | SHEET No. |
|---|---|---|---|---|---|---|
| No. | BY: | DATE: | No. | BY: | DATE: | S-139 |
| 1 | | | 3 | | | TOTAL SHEETS |
| 2 | | | 4 | | | 218 |

FILE: r:\ncdot\r2303d\structures\PLANS\Str_2\R2303D_SD_Str2_b91.dgn
DATE: 12/30/2012 9:24:46 PM

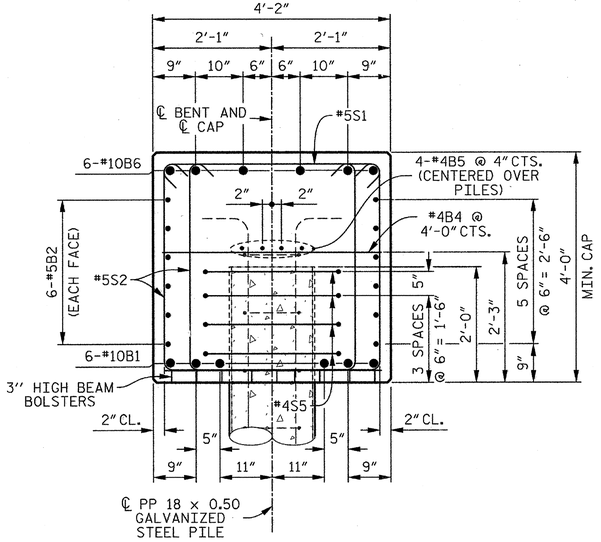


## SECTION A–A

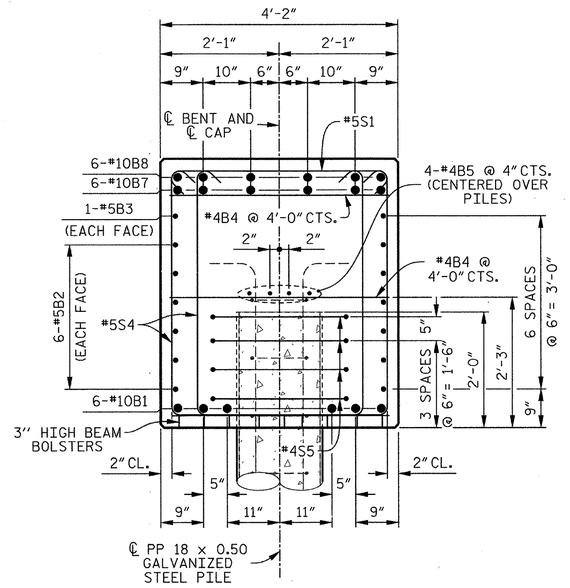


## SECTION B–B

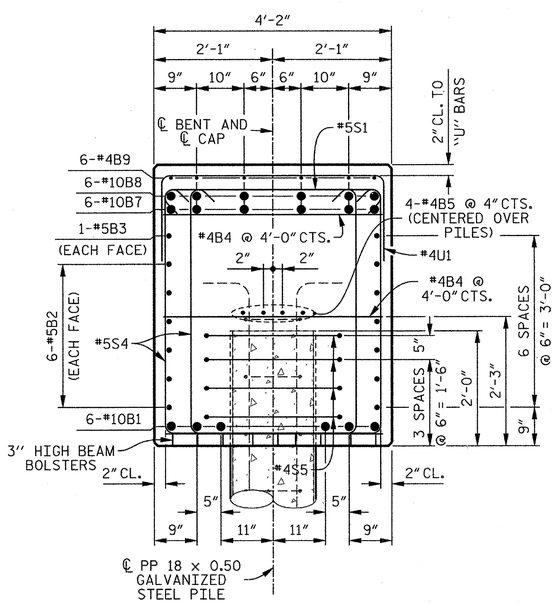


## SECTION C–C

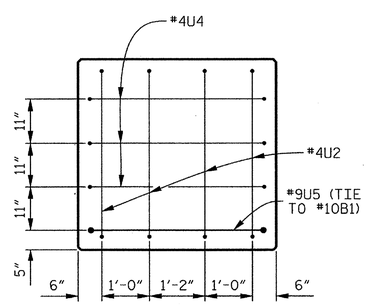


## END VIEW X–X

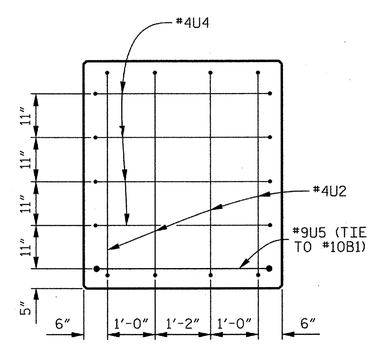


## END VIEW Y–Y

## BAR TYPES

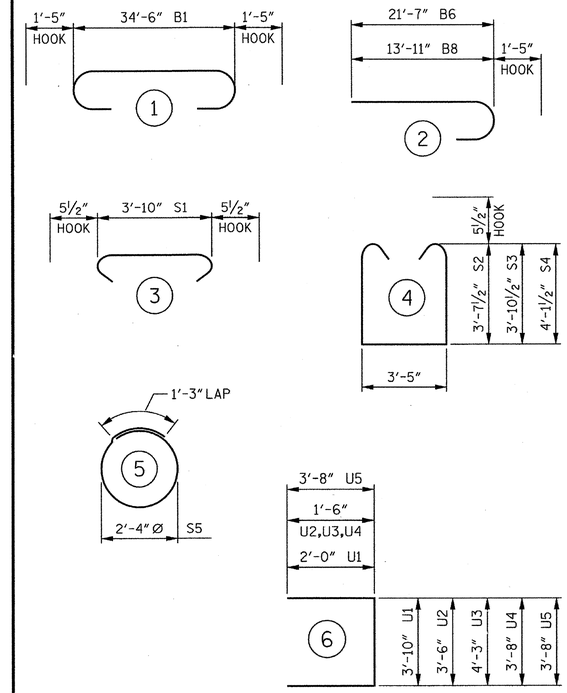


ALL BAR DIMENSIONS ARE OUT TO OUT.

## BILL OF MATERIAL

### BENT 9

| BAR | No. | SIZE | TYPE | LENGTH | WEIGHT |
|---|---|---|---|---|---|
| B1 | 6 | #10 | 1 | 37'- 4" | 964 |
| B2 | 12 | #5 | STR | 34'- 8" | 434 |
| B3 | 2 | #5 | STR | 16'- 1" | 34 |
| B4 | 14 | #4 | STR | 3'-10" | 36 |
| B5 | 8 | #4 | STR | 18'- 7" | 99 |
| B6 | 6 | #10 | 2 | 23'- 0" | 594 |
| B7 | 6 | #10 | STR | 21'- 4" | 551 |
| B8 | 6 | #10 | 2 | 15'- 4" | 396 |
| B9 | 6 | #4 | STR | 3'- 8" | 15 |
| S1 | 54 | #5 | 3 | 4'- 9" | 268 |
| S2 | 32 | #5 | 4 | 11'- 7" | 386 |
| S3 | 32 | #5 | 4 | 12'- 1" | 403 |
| S4 | 44 | #5 | 4 | 12'- 7" | 578 |
| S5 | 24 | #4 | 5 | 8'- 7" | 138 |
| U1 | 32 | #4 | 6 | 7'-10" | 167 |
| U2 | 4 | #4 | 6 | 6'- 6" | 17 |
| U3 | 4 | #4 | 6 | 7'- 4" | 19 |
| U4 | 7 | #4 | 6 | 6'- 8" | 31 |
| U5 | 2 | #9 | 6 | 11'- 0" | 75 |

REINFORCING STEEL 5,205 LBS.

CLASS "A" CONCRETE
POUR 1 CAP 22.8 CU. YDS.

PP 18 x 0.50 GALVANIZED STEEL PILES
6 REQUIRED 380 LIN. FT.

PIPE PILE PLATES
No. = 6

THE CONCRETE DISPLACED BY THE FILLED GALVANIZED STEEL PIPE PILES HAS BEEN DEDUCTED FROM THE QUANTITY OF CLASS "A" CONCRETE FOR THE BENT CAP.

REINFORCING STEEL FOR GALVANIZED STEEL PILES ARE NOT INCLUDED. SEE "18" STEEL PIPE PILE" SHEET FOR DETAILS.

PROJECT NO. R-2303D
SAMPSON COUNTY
STATION: 1311+58.00 -LREV-

SHEET 2 OF 2

STATE OF NORTH CAROLINA
DEPARTMENT OF TRANSPORTATION
RALEIGH

SUBSTRUCTURE

BENT 9

(RIGHT LANE)

CDM Smith
Camp Dresser & McKee
421 Fayetteville Street, Suite 1303
Raleigh, NC 27604
NC COA No. F-1255

| | | | |
|---|---|---|---|
| DRAWN BY : | J.D. BORUTA | DATE : | 10-12 |
| CHECKED BY : | P.R. HOLSHOUSER | DATE : | 11-12 |
| DESIGN ENGINEER : | P.R. HOLSHOUSER | DATE : | 1-13 |

DWG. No. S02-064

NORTH CAROLINA PROFESSIONAL SEAL 20668 ENGINEER PAUL R. HOLSHOUSER 2/10/2012

| REVISIONS | | | | | | | SHEET No. |
|---|---|---|---|---|---|---|---|
| No. | BY: | DATE: | No. | BY: | DATE: | | S-140 |
| 1 | | | 3 | | | | TOTAL SHEETS |
| 2 | | | 4 | | | | 218 |

FILE: n:\radsh\r2303d\structures\PLANS\Sty_2\R2303D_S0_Sty2_bt9.dgn
DATE: 10/20/2012 10:29:44 AM

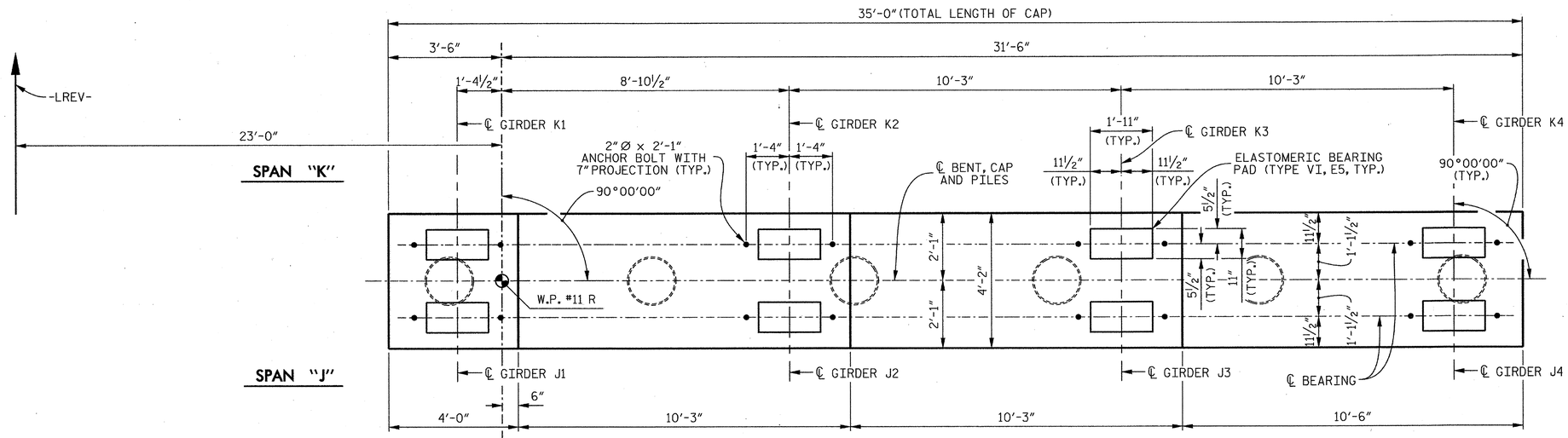


## PLAN

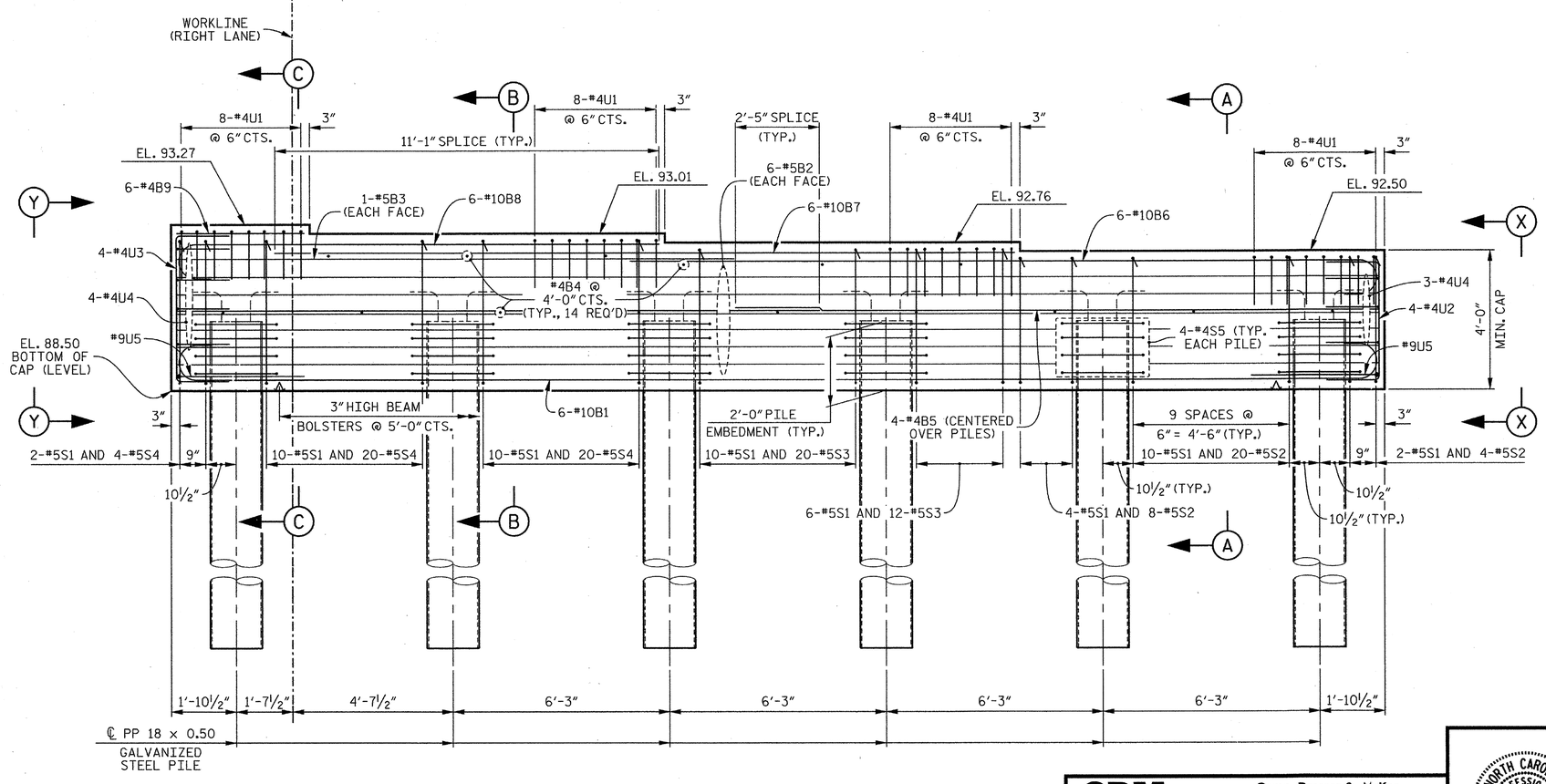


## ELEVATION

## NOTES

FOR SECTIONS A-A, B-B AND C-C, SEE SHEET 2 OF 2.

FOR VIEW X-X AND VIEW Y-Y, SEE SHEET 2 OF 2.

STIRRUPS AND U1 BARS IN CAP MAY BE SHIFTED AS NECESSARY TO CLEAR ANCHOR BOLTS.

FOR GALVANIZED STEEL PILE DETAILS AND REINFORCEMENT, SEE "18" STEEL PIPE PILE" SHEET.

GALVANIZE THE TOP OF EACH INTERIOR BENT PILE A MINIMUM OF 30 FEET. GALVANIZE IN ACCORDANCE WITH SECTION 1076 OF THE STANDARD SPECIFICATIONS.

PROJECT NO. R-2303D

SAMPSON COUNTY

STATION: 1311+58.00 -LREV-

SHEET 1 OF 2

STATE OF NORTH CAROLINA
DEPARTMENT OF TRANSPORTATION
RALEIGH

SUBSTRUCTURE

BENT 10

(RIGHT LANE)

CDM Smith
Camp Dresser & McKee
421 Fayetteville Street, Suite 1303
Raleigh, NC 27604
NC COA No. F-1255

| | | | |
|---|---|---|---|
| DRAWN BY : | J.D. BORUTA | DATE : | 10-12 |
| CHECKED BY : | P.R. HOLSHOUSER | DATE : | 11-12 |
| DESIGN ENGINEER : | P.R. HOLSHOUSER | DATE : | 1-13 |

DWG. No. S02-065

NORTH CAROLINA PROFESSIONAL SEAL 20668 ENGINEER PAUL R. HOLSHOUSER 2/08/2013

| REVISIONS | | | | | | SHEET No. |
|---|---|---|---|---|---|---|
| No. | BY: | DATE: | No. | BY: | DATE: | S-141 |
| 1 | | | 3 | | | TOTAL SHEETS |
| 2 | | | 4 | | | 218 |

FILE: r:\ncdot\r2303d\structures\PLANS\Str_2\R2303D_SD_Str2_b101.dgn
DATE: 1/2/2013 8:27:00 AM

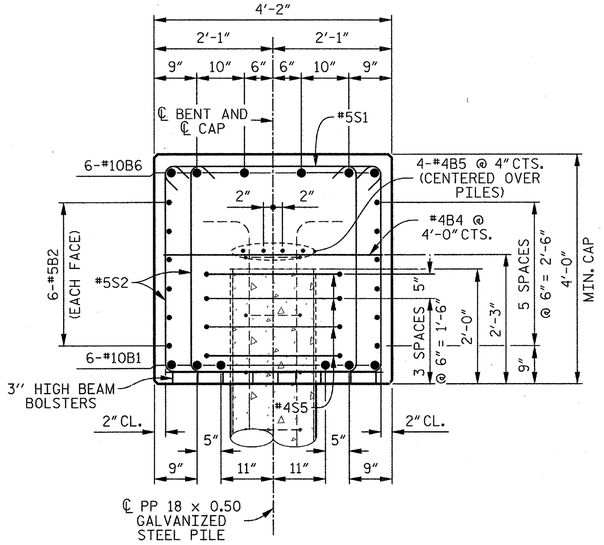


## SECTION A–A

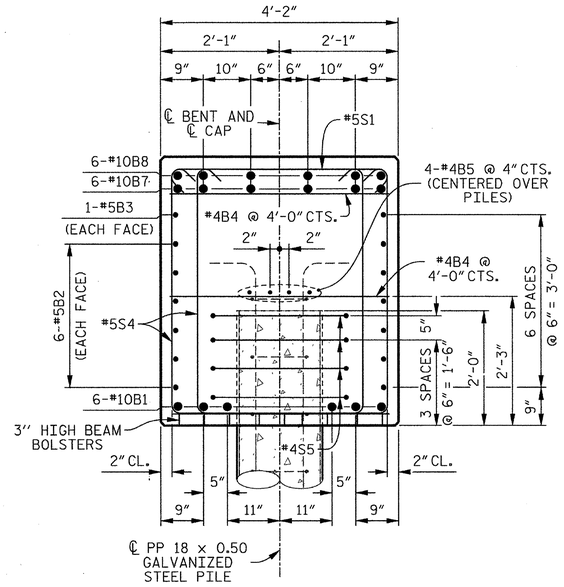


## SECTION B–B

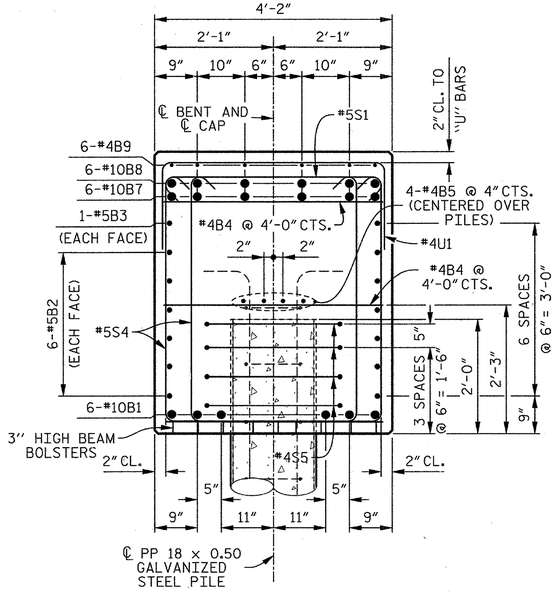


## SECTION C–C

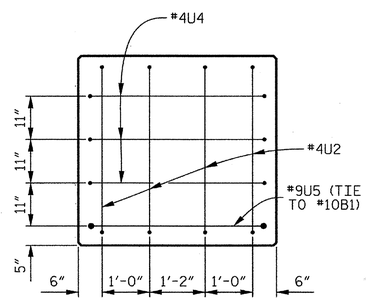


## END VIEW X–X

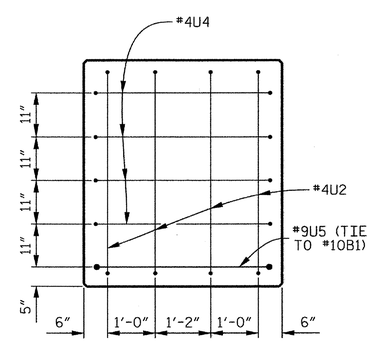


## END VIEW Y–Y

## BAR TYPES

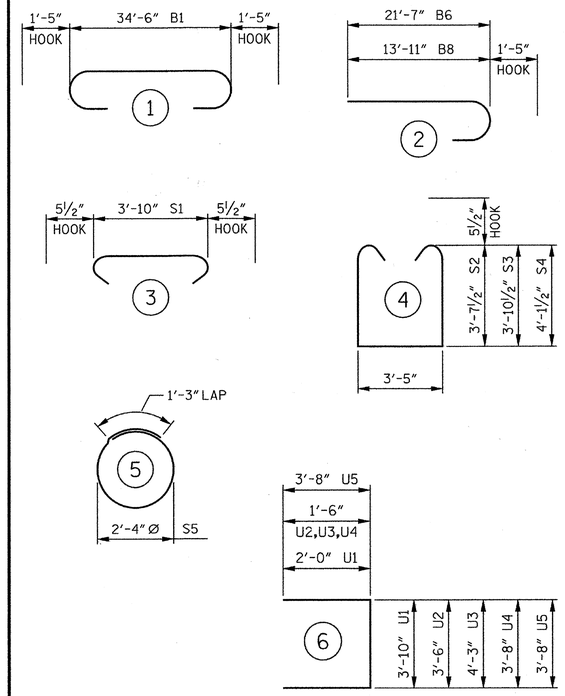


ALL BAR DIMENSIONS ARE OUT TO OUT.

## BILL OF MATERIAL

### BENT 10

| BAR | No. | SIZE | TYPE | LENGTH | WEIGHT |
|---|---|---|---|---|---|
| B1 | 6 | #10 | 1 | 37'- 4" | 964 |
| B2 | 12 | #5 | STR | 34'- 8" | 434 |
| B3 | 2 | #5 | STR | 16'- 1" | 34 |
| B4 | 14 | #4 | STR | 3'-10" | 36 |
| B5 | 8 | #4 | STR | 18'- 7" | 99 |
| B6 | 6 | #10 | 2 | 23'- 0" | 594 |
| B7 | 6 | #10 | STR | 21'- 4" | 551 |
| B8 | 6 | #10 | 2 | 15'- 4" | 396 |
| B9 | 6 | #4 | STR | 3'- 8" | 15 |
| S1 | 54 | #5 | 3 | 4'- 9" | 268 |
| S2 | 32 | #5 | 4 | 11'- 7" | 386 |
| S3 | 32 | #5 | 4 | 12'- 1" | 403 |
| S4 | 44 | #5 | 4 | 12'- 7" | 578 |
| S5 | 24 | #4 | 5 | 8'- 7" | 138 |
| U1 | 32 | #4 | 6 | 7'-10" | 167 |
| U2 | 4 | #4 | 6 | 6'- 6" | 17 |
| U3 | 4 | #4 | 6 | 7'- 4" | 19 |
| U4 | 7 | #4 | 6 | 6'- 8" | 31 |
| U5 | 2 | #9 | 6 | 11'- 0" | 75 |

REINFORCING STEEL 5,205 LBS.

CLASS "A" CONCRETE
POUR 1 CAP 22.8 CU. YDS.

PP 18 x 0.50 GALVANIZED STEEL PILES
6 REQUIRED 360 LIN. FT.

PIPE PILE PLATES
No. = 6

THE CONCRETE DISPLACED BY THE FILLED GALVANIZED STEEL PIPE PILES HAS BEEN DEDUCTED FROM THE QUANTITY OF CLASS "A" CONCRETE FOR THE BENT CAP.

REINFORCING STEEL FOR GALVANIZED STEEL PILES ARE NOT INCLUDED. SEE "18" STEEL PIPE PILE" SHEET FOR DETAILS.

PROJECT NO. R-2303D
SAMPSON COUNTY
STATION: 1311+58.00 –LREV–

SHEET 2 OF 2

STATE OF NORTH CAROLINA
DEPARTMENT OF TRANSPORTATION
RALEIGH

SUBSTRUCTURE

BENT 10

(RIGHT LANE)

CDM Smith
Camp Dresser & McKee
421 Fayetteville Street, Suite 1303
Raleigh, NC 27604
NC COA No. F-1255

DRAWN BY : J.D. BORUTA DATE : 10-12
CHECKED BY : P.R. HOLSHOUSER DATE : 11-12
DESIGN ENGINEER : P.R. HOLSHOUSER DATE : 1-13

DWG. No. S02-066

NORTH CAROLINA PROFESSIONAL SEAL 20668 ENGINEER PAUL R. HOLSHOUSER
2/08/2013

| REVISIONS | | | | | | | | SHEET No. |
|---|---|---|---|---|---|---|---|---|
| No. | BY: | DATE: | No. | BY: | DATE: | | | S-142 |
| 1 | | | 3 | | | | | TOTAL SHEETS |
| 2 | | | 4 | | | | | 218 |

FILE: r:\roadwy\2303d\structures\PLANS\Br_2\R2303D_SD_Br2_b002.dgn
DATE: 12/20/2012 9:24:35 PM

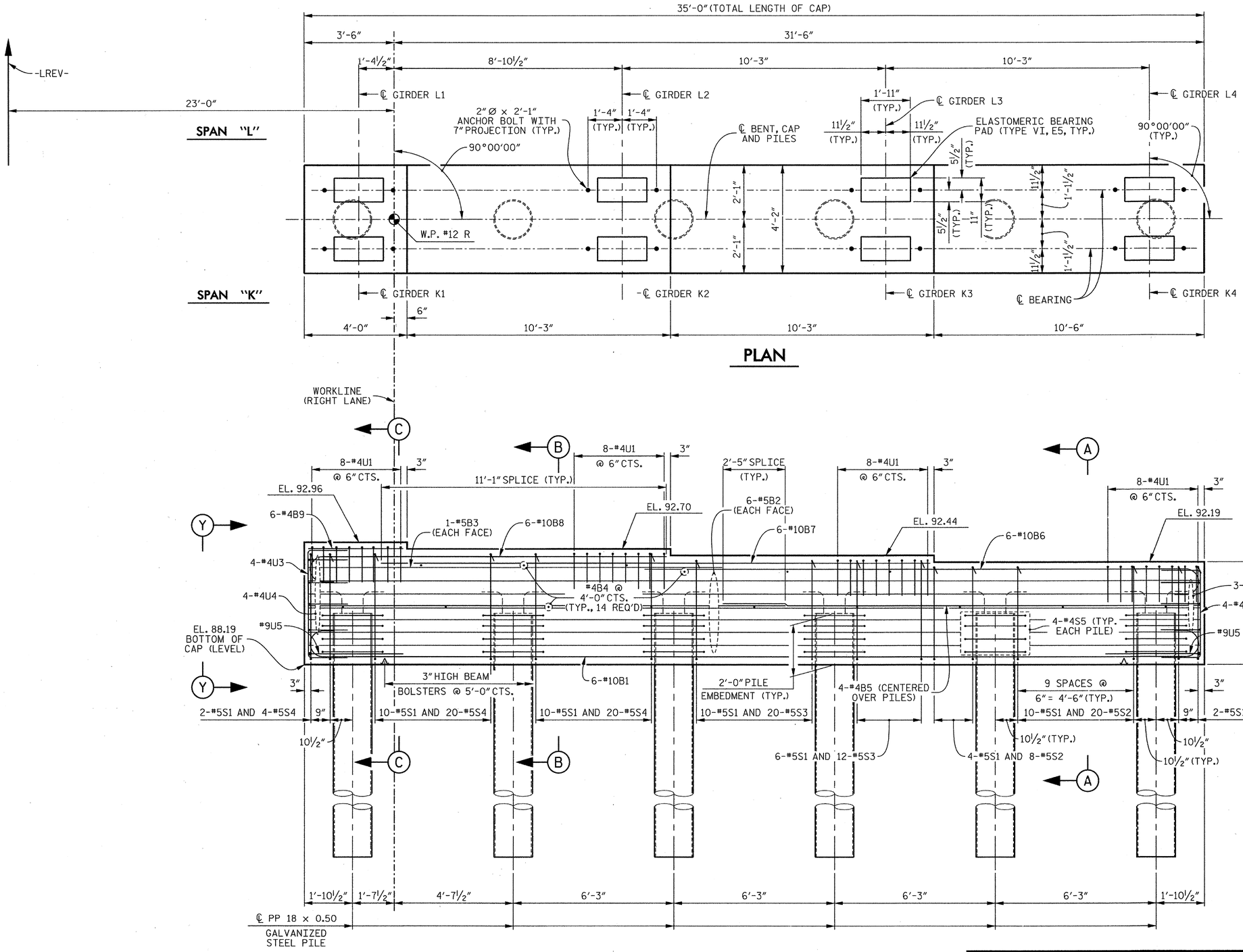


## NOTES

FOR SECTIONS A-A, B-B AND C-C, SEE SHEET 2 OF 2.

FOR VIEW X-X AND VIEW Y-Y, SEE SHEET 2 OF 2.

STIRRUPS AND U1 BARS IN CAP MAY BE SHIFTED AS NECESSARY TO CLEAR ANCHOR BOLTS.

FOR GALVANIZED STEEL PILE DETAILS AND REINFORCEMENT, SEE "18" STEEL PIPE PILE" SHEET.

GALVANIZE THE TOP OF EACH INTERIOR BENT PILE A MINIMUM OF 30 FEET. GALVANIZE IN ACCORDANCE WITH SECTION 1076 OF THE STANDARD SPECIFICATIONS.

PROJECT NO. R-2303D

SAMPSON COUNTY

STATION: 1311+58.00 -LREV-

SHEET 1 OF 2

STATE OF NORTH CAROLINA
DEPARTMENT OF TRANSPORTATION
RALEIGH

SUBSTRUCTURE

BENT 11

(RIGHT LANE)

CDM Smith

Camp Dresser & McKee
421 Fayetteville Street, Suite 1303
Raleigh, NC 27604
NC COA No. F-1255

| | | | |
|---|---|---|---|
| DRAWN BY : | J.D. BORUTA | DATE : | 10-12 |
| CHECKED BY : | P.R. HOLSHOUSER | DATE : | 11-12 |
| DESIGN ENGINEER : | P.R. HOLSHOUSER | DATE : | 1-13 |

DWG. No. S02-067

NORTH CAROLINA PROFESSIONAL SEAL 20668 ENGINEER PAUL R. HOLSHOUSER

REVISIONS

| No. | BY: | DATE: | No. | BY: | DATE: |
|---|---|---|---|---|---|
| 1 | | | 3 | | |
| 2 | | | 4 | | |

SHEET No. S-143

TOTAL SHEETS 218

FILE: r:\cadd\r2303d\structures\PLANS\Str_2\R2303D_SD_Str2_b111.dgn
DATE: 12/30/2012 9:24:57 PM

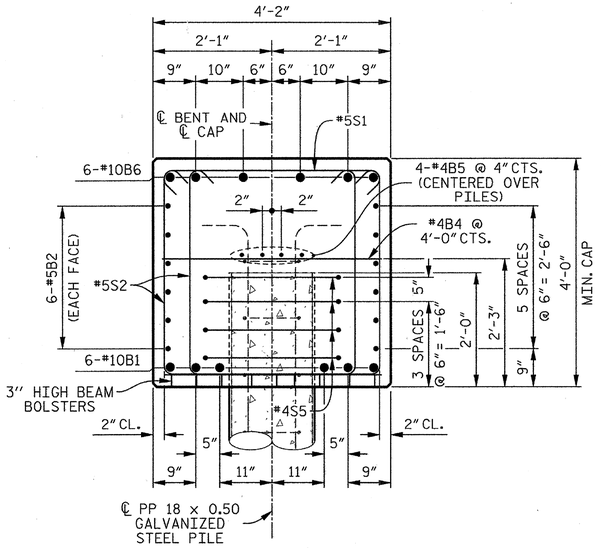


## SECTION A–A

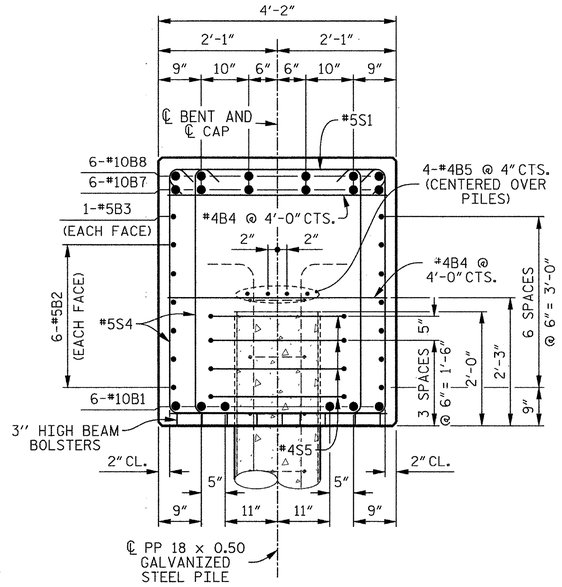


## SECTION B–B

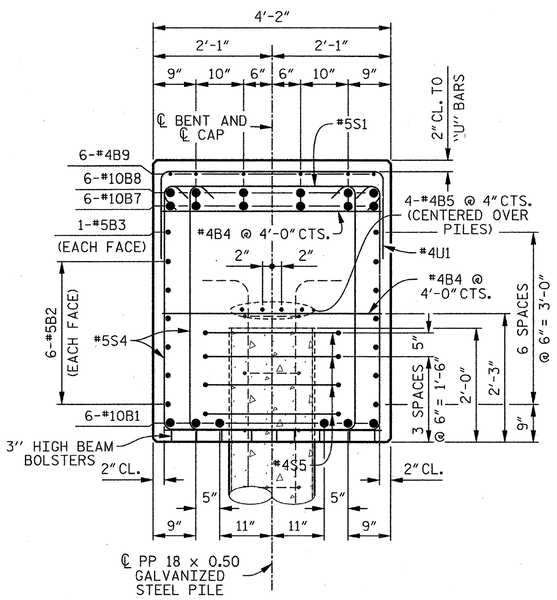


## SECTION C–C

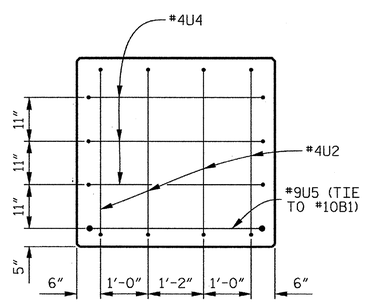


## END VIEW X–X

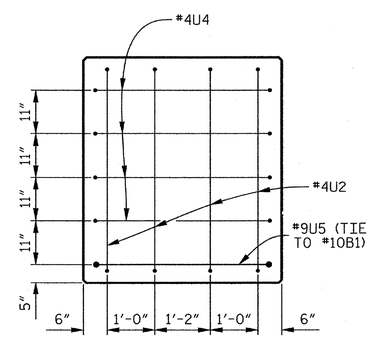


## END VIEW Y–Y

## BAR TYPES

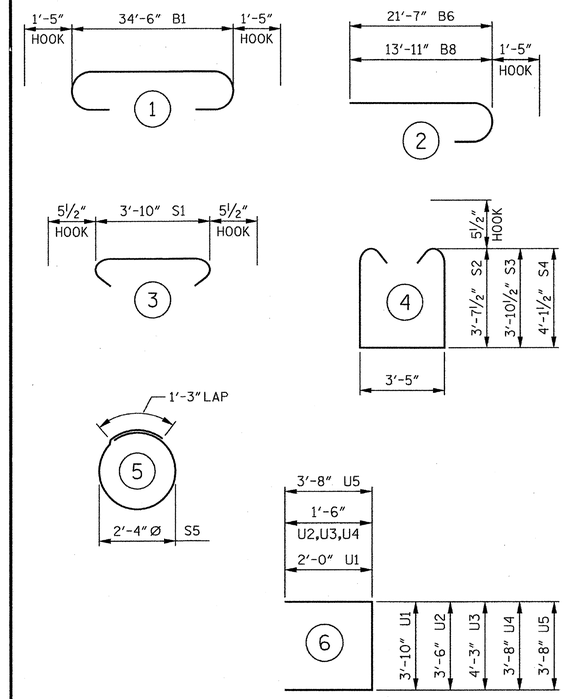


ALL BAR DIMENSIONS ARE OUT TO OUT.

## BILL OF MATERIAL

### BENT 11

| BAR | No. | SIZE | TYPE | LENGTH | WEIGHT |
|---|---|---|---|---|---|
| B1 | 6 | #10 | 1 | 37'- 4" | 964 |
| B2 | 12 | #5 | STR | 34'- 8" | 434 |
| B3 | 2 | #5 | STR | 16'- 1" | 34 |
| B4 | 14 | #4 | STR | 3'-10" | 36 |
| B5 | 8 | #4 | STR | 18'- 7" | 99 |
| B6 | 6 | #10 | 2 | 23'- 0" | 594 |
| B7 | 6 | #10 | STR | 21'- 4" | 551 |
| B8 | 6 | #10 | 2 | 15'- 4" | 396 |
| B9 | 6 | #4 | STR | 3'- 8" | 15 |
| S1 | 54 | #5 | 3 | 4'- 9" | 268 |
| S2 | 32 | #5 | 4 | 11'- 7" | 386 |
| S3 | 32 | #5 | 4 | 12'- 1" | 403 |
| S4 | 44 | #5 | 4 | 12'- 7" | 578 |
| S5 | 24 | #4 | 5 | 8'- 7" | 138 |
| U1 | 32 | #4 | 6 | 7'-10" | 167 |
| U2 | 4 | #4 | 6 | 6'- 6" | 17 |
| U3 | 4 | #4 | 6 | 7'- 4" | 19 |
| U4 | 7 | #4 | 6 | 6'- 8" | 31 |
| U5 | 2 | #9 | 6 | 11'- 0" | 75 |

REINFORCING STEEL 5,205 LBS.

CLASS "A" CONCRETE
POUR 1 CAP 22.8 CU. YDS.

PP 18 x 0.50 GALVANIZED STEEL PILES
6 REQUIRED 330 LIN. FT.

PIPE PILE PLATES
No. = 6

THE CONCRETE DISPLACED BY THE FILLED GALVANIZED STEEL PIPE PILES HAS BEEN DEDUCTED FROM THE QUANTITY OF CLASS "A" CONCRETE FOR THE BENT CAP.

REINFORCING STEEL FOR GALVANIZED STEEL PILES ARE NOT INCLUDED. SEE "18" STEEL PIPE PILE" SHEET FOR DETAILS.

PROJECT NO. R-2303D
SAMPSON COUNTY
STATION: 1311+58.00 -LREV-
SHEET 2 OF 2

STATE OF NORTH CAROLINA
DEPARTMENT OF TRANSPORTATION
RALEIGH

SUBSTRUCTURE

BENT 11

(RIGHT LANE)

CDM Smith
Camp Dresser & McKee
421 Fayetteville Street, Suite 1303
Raleigh, NC 27604
NC COA No. F-1255

DRAWN BY : J.D. BORUTA DATE : 10-12
CHECKED BY : P.R. HOLSHOUSER DATE : 11-12
DESIGN ENGINEER : P.R. HOLSHOUSER DATE : 1-13

DWG. No. S02-068

NORTH CAROLINA PROFESSIONAL SEAL 20668 ENGINEER PAUL R. HOLSHOUSER 1/08/2013

REVISIONS

| No. | BY: | DATE: | No. | BY: | DATE: |
|---|---|---|---|---|---|
| 1 | | | 3 | | |
| 2 | | | 4 | | |

SHEET No. S-144
TOTAL SHEETS 28

FILE: r:\model\2303d\structural\PLANS\Sk_2\R2303D_SD_Sk2_b112.dgn
DATE: 12/20/2012 9:25:00 PM

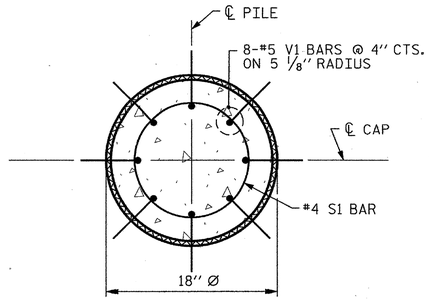


## PLAN

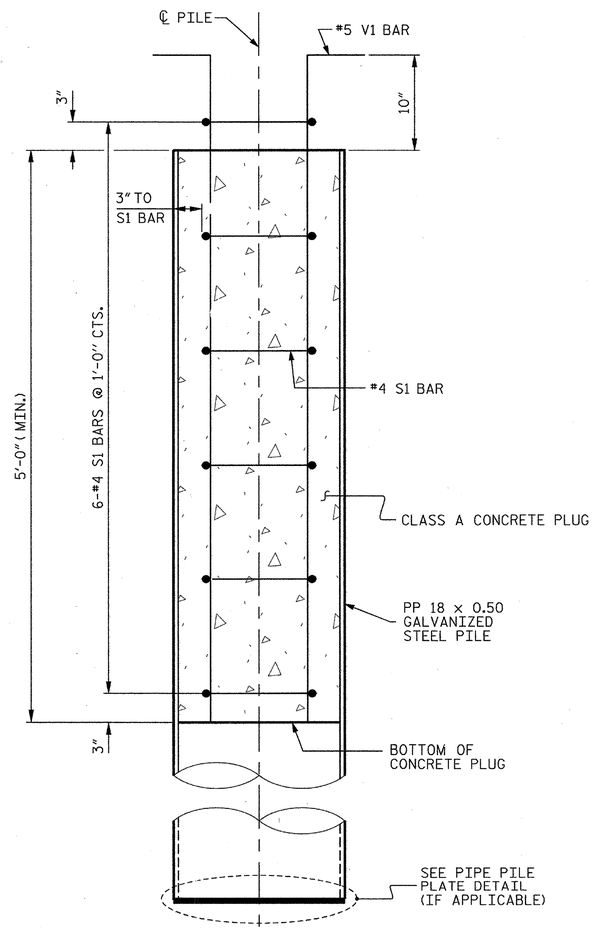


## ELEVATION

## PP 18 x 0.50 GALVANIZED STEEL PILE

## NOTES

PIPE PILES SHALL BE IN ACCORDANCE WITH SECTION 1084 OF THE STANDARD SPECIFICATIONS.

GALVANIZE STEEL PIPE PILES IN ACCORDANCE WITH SECTION 1076 OF THE STANDARD SPECIFICATIONS UNLESS METALLIZING IS REQUIRED. GALVANIZING OR METALLIZING PIPE PILE PLATES IS NOT REQUIRED.

PIPE PILE PLATES, IF REQUIRED, SHALL BE IN ACCORDANCE WITH SECTION 450 OF THE STANDARD SPECIFICATIONS.

REMOVE AND REPLACE OR REPAIR TO THE SATISFACTION OF THE ENGINEER PILES THAT ARE DAMAGED, DEFORMED OR COLLAPSED DURING INSTALLATION OR DRIVING.

PILE SPLICES SHALL BE IN ACCORDANCE WITH THE STANDARD SPECIFICATIONS AND AWS D1.1.

FOR CLOSED END PIPE PILES, REMOVE ALL SOIL AND WATER FROM INSIDE THE PILES JUST PRIOR TO PLACING REINFORCING STEEL AND CONCRETE FOR THE CONCRETE PLUG.

FOR OPEN END PIPE PILES, REMOVE ENOUGH SOIL AND WATER FROM INSIDE THE PILES TO CONSTRUCT THE CONCRETE PLUG WITHOUT FOULING THE CONCRETE.

FORM THE CONCRETE PLUG SUCH THAT THE REINFORCING STEEL OR CONCRETE DOES NOT MOVE AND THE CLEARANCE FROM THE REINFORCING STEEL TO THE INSIDE OF THE PILE IS MAINTAINED AFTER CONCRETE PLACEMENT. DO NOT PLACE CONCRETE IN THE BENT CAP UNTIL THE CONCRETE PLUG HAS ATTAINED A MINIMUM COMPRESSIVE STRENGTH OF 1500 PSI.

THE REINFORCING STEEL, CLASS A CONCRETE, AND GALVANIZING ARE CONSIDERED INCIDENTAL TO THE CONTRACT UNIT PRICE BID PER LINEAR FOOT FOR PP 18 x 0.50 GALVANIZED STEEL PILES.

PIPE PILE PLATES MAY BE REQUIRED FOR STEEL PIPE PILES AT BENT 1 THRU BENT 11. THE ENGINEER WILL DETERMINE THE NEED FOR PIPE PILES PLATES AFTER DRIVING TEST PILES OR A FEW INITIAL PRODUCTION PILES. USE PIPE PILE PLATES WITH A DIAMETER EQUAL TO THE PIPE PILE DIAMETER. FOR STEEL PIPE PILE PLATES, SEE SECTION 450 OF THE STANDARD SPECIFICATIONS.

## BILL OF MATERIAL FOR ONE PP 18 x 0.50 GALVANIZED STEEL PILE

| BAR | No. | SIZE | TYPE | LENGTH | WEIGHT |
|---|---|---|---|---|---|
| S1 | 6 | #4 | 1 | 4'-5" | 18 |
| | | | | | |
| V1 | 8 | #5 | 2 | 6'-8" | 56 |
| | | | | | |
| REINFORCING STEEL | | | | | 74 LBS. |
| | | | | | |
| CLASS A CONCRETE | | | | | |
| 5'-0" MINIMUM PLUG | | | | | 0.3 CU. YDS. |

## BAR TYPES

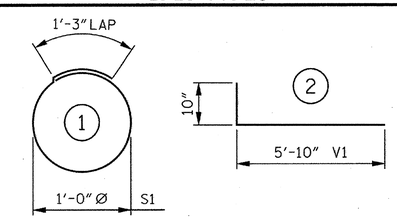


ALL BAR DIMENSIONS ARE OUT TO OUT.

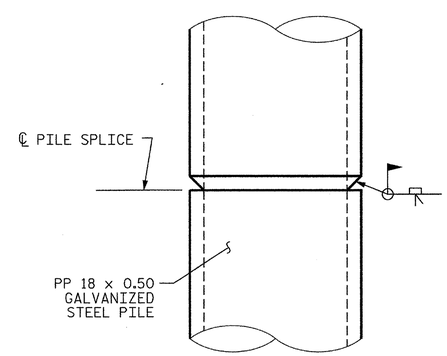


## PIPE PILE SPLICE DETAIL

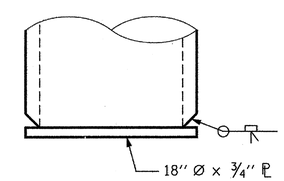


## PIPE PILE PLATE DETAIL

(IF APPLICABLE)

PROJECT NO. R-2303D

SAMPSON COUNTY

STATION: 1311+58.00 -LREV-

STATE OF NORTH CAROLINA
DEPARTMENT OF TRANSPORTATION
RALEIGH

STANDARD

18" STEEL PIPE PILE

(RIGHT LANE)

| ASSEMBLED BY : J.D. BORUTA | DATE : 10-12 |
|---|---|
| CHECKED BY : P.R. HOLSHOUSER | DATE : 10-12 |

| | | | | |
|---|---|---|---|---|
| DRAWN BY : RWW | 1/01 | REV. 10/1/05 | LBG/TLA |
| CHECKED BY : LES | 1/01 | REV. 5/1/06R | MAA/KMM |
| | | REV. 10/1/11 | MAA/GM |

CDM Smith
Camp Dresser & McKee
421 Fayetteville Street, Suite 1303
Raleigh, NC 27604
NC COA No. F-1255

| | | | |
|---|---|---|---|
| DRAWN BY : | J.D. BORUTA | DATE : | 10-12 |
| CHECKED BY : | P.R. HOLSHOUSER | DATE : | 10-12 |
| DESIGN ENGINEER : | P.R. HOLSHOUSER | DATE : | 1-13 |

DWG. No. S02-069

NORTH CAROLINA PROFESSIONAL SEAL 20668 ENGINEER P. R. HOLSHOUSER 2/08/2013

| REVISIONS | | | | | | | | SHEET No. |
|---|---|---|---|---|---|---|---|---|
| No. | BY: | DATE: | No. | BY: | DATE: | | | S-145 |
| 1 | | | 3 | | | | | TOTAL SHEETS |
| 2 | | | 4 | | | | | 218 |

STD. No. SPP3

FILE: c:\radar\2303d\structures\PLANS\Str_2\R2303D_SD_str2_sppt.dgn
DATE: 12/20/2012 1:25:52 PM

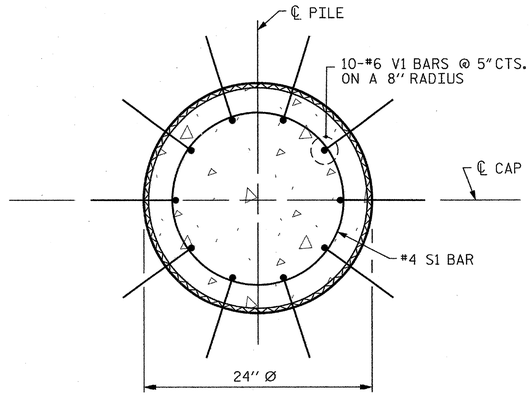


## PLAN

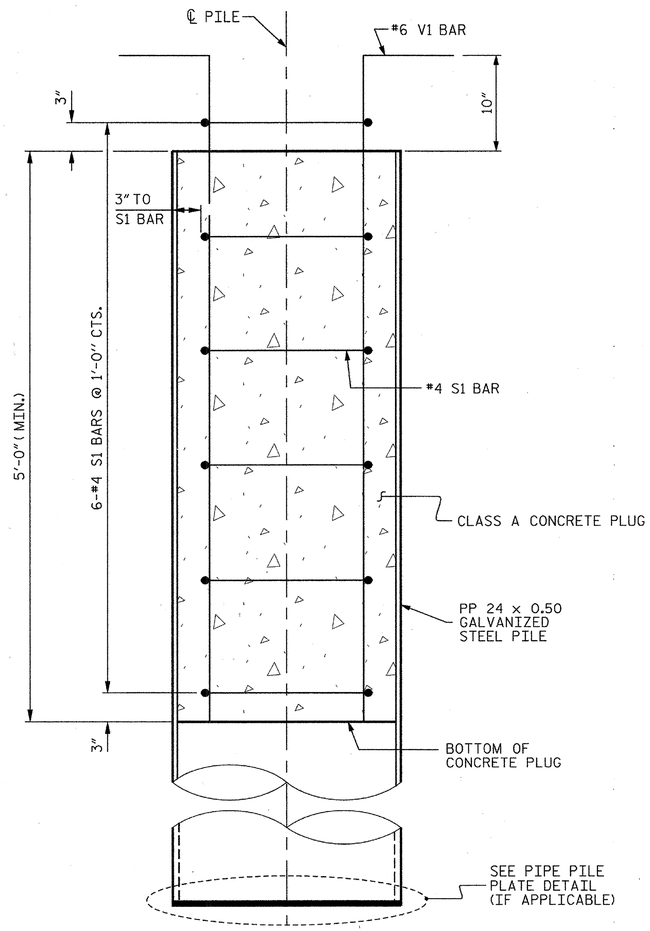


## ELEVATION

## PP 24 x 0.50 GALVANIZED STEEL PILE

## NOTES

PIPE PILES SHALL BE IN ACCORDANCE WITH SECTION 1084 OF THE STANDARD SPECIFICATIONS.

GALVANIZE STEEL PIPE PILES IN ACCORDANCE WITH SECTION 1076 OF THE STANDARD SPECIFICATIONS UNLESS METALLIZING IS REQUIRED. GALVANIZING OR METALLIZING PIPE PILE PLATES IS NOT REQUIRED.

PIPE PILE PLATES, IF REQUIRED, SHALL BE IN ACCORDANCE WITH SECTION 450 OF THE STANDARD SPECIFICATIONS.

REMOVE AND REPLACE OR REPAIR TO THE SATISFACTION OF THE ENGINEER PILES THAT ARE DAMAGED, DEFORMED OR COLLAPSED DURING INSTALLATION OR DRIVING.

PILE SPLICES SHALL BE IN ACCORDANCE WITH THE STANDARD SPECIFICATIONS AND AWS D1.1.

FOR CLOSED END PIPE PILES, REMOVE ALL SOIL AND WATER FROM INSIDE THE PILES JUST PRIOR TO PLACING REINFORCING STEEL AND CONCRETE FOR THE CONCRETE PLUG.

FOR OPEN END PIPE PILES, REMOVE ENOUGH SOIL AND WATER FROM INSIDE THE PILES TO CONSTRUCT THE CONCRETE PLUG WITHOUT FOULING THE CONCRETE.

FORM THE CONCRETE PLUG SUCH THAT THE REINFORCING STEEL OR CONCRETE DOES NOT MOVE AND THE CLEARANCE FROM THE REINFORCING STEEL TO THE INSIDE OF THE PILE IS MAINTAINED AFTER CONCRETE PLACEMENT. DO NOT PLACE CONCRETE IN THE BENT CAP UNTIL THE CONCRETE PLUG HAS ATTAINED A MINIMUM COMPRESSIVE STRENGTH OF 1500 PSI.

THE REINFORCING STEEL, CLASS A CONCRETE, AND GALVANIZING ARE CONSIDERED INCIDENTAL TO THE CONTRACT UNIT PRICE BID PER LINEAR FOOT FOR PP 24 X 0.50 GALVANIZED STEEL PILES.

PIPE PILE PLATES MAY BE REQUIRED FOR STEEL PIPE PILES AT BENT 1 THRU BENT 11. THE ENGINEER WILL DETERMINE THE NEED FOR PIPE PILES PLATES AFTER DRIVING TEST PILES OR A FEW INITIAL PRODUCTION PILES. USE PIPE PILE PLATES WITH A DIAMETER EQUAL TO THE PIPE PILE DIAMETER. FOR STEEL PIPE PILE PLATES, SEE SECTION 450 OF THE STANDARD SPECIFICATIONS.

## BILL OF MATERIAL FOR ONE PP 24 x 0.50 GALVANIZED STEEL PILE

| BAR | NO. | SIZE | TYPE | LENGTH | WEIGHT |
|---|---|---|---|---|---|
| S1 | 6 | #4 | 1 | 6'-0" | 24 |
| | | | | | |
| V1 | 10 | #6 | 2 | 6'-8" | 100 |
| | | | | | |
| REINFORCING STEEL | | | | | 124 LBS. |
| | | | | | |
| CLASS A CONCRETE | | | | | |
| 5'-0" MINIMUM PLUG | | | | | 0.5 CU. YDS. |

## BAR TYPES

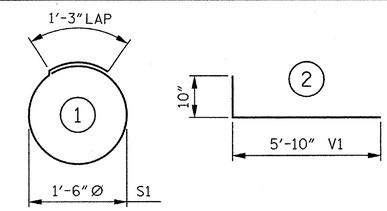


ALL BAR DIMENSIONS ARE OUT TO OUT.

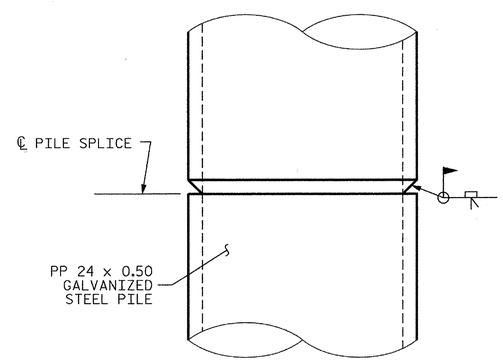


## PIPE PILE SPLICE DETAIL

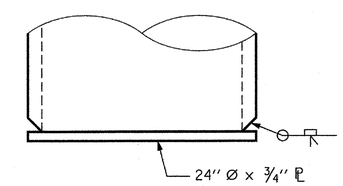


## PIPE PILE PLATE DETAIL

(IF APPLICABLE)

PROJECT NO. R-2303D

SAMPSON COUNTY

STATION: 1311+58.00 -LREV-

STATE OF NORTH CAROLINA
DEPARTMENT OF TRANSPORTATION
RALEIGH

STANDARD

24" STEEL PIPE PILE

(RIGHT LANE)

CDM Smith
Camp Dresser & McKee
421 Fayetteville Street, Suite 1303
Raleigh, NC 27604
NC COA No. F-1255

DRAWN BY : J.D. BORUTA DATE : 10-12
CHECKED BY : P.R. HOLSHOUSER DATE : 10-12
DESIGN ENGINEER : P.R. HOLSHOUSER DATE : 1-13

DWG. No. S02-070

NORTH CAROLINA PROFESSIONAL SEAL 20668 ENGINEER PAUL R. HOLSHOUSER 12/09/2013

| REVISIONS | | | | | | | | |
|---|---|---|---|---|---|---|---|---|
| No. | BY: | DATE: | No. | BY: | DATE: | | | |
| 1 | | | 3 | | | | | |
| 2 | | | 4 | | | | | |

SHEET No. S-146

TOTAL SHEETS 218

ASSEMBLED BY : J.D. BORUTA DATE : 10-12
CHECKED BY : P.R. HOLSHOUSER DATE : 10-12

DRAWN BY : TLA 8/05
CHECKED BY : GM 9/05

ADDED 10/1/05
REV. 5/1/06R MAA/KMM
REV. 10/1/11 MAA/GM

FILE: r:\model\2303d\structures\PLANS\Str_21\R2303D_SD_Str2_spp2.dgn
DATE: 12/09/2013 9:25:03 PM

SPP4

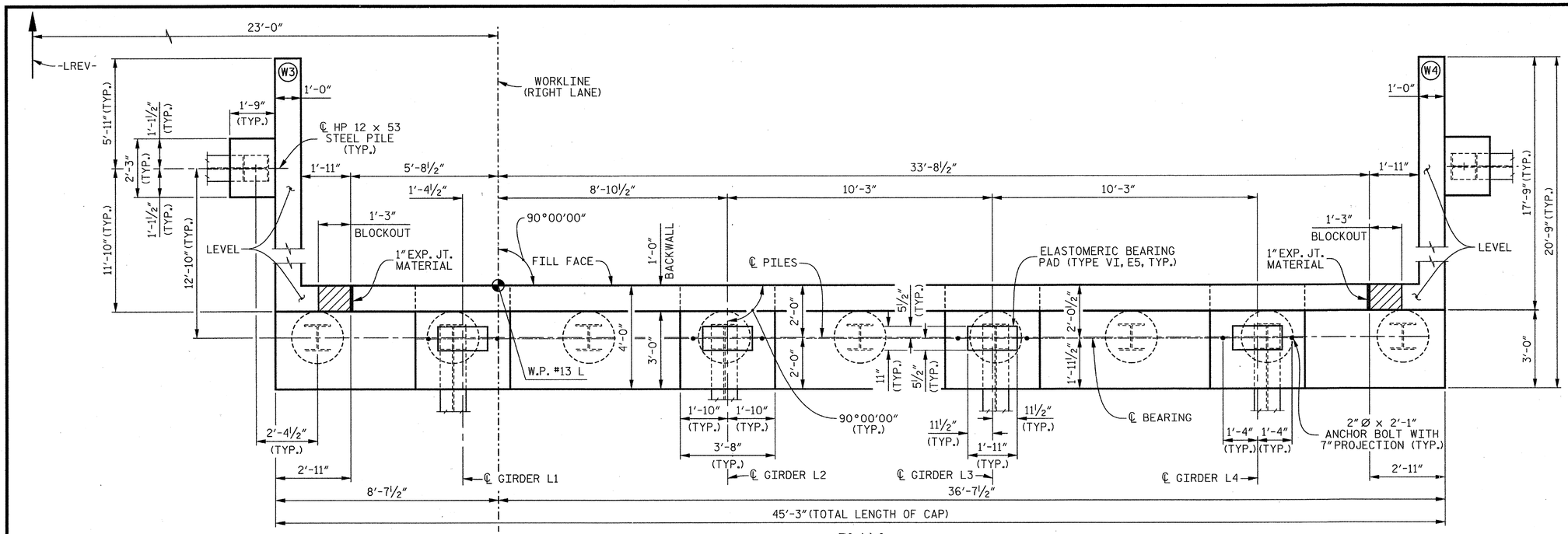


## PLAN

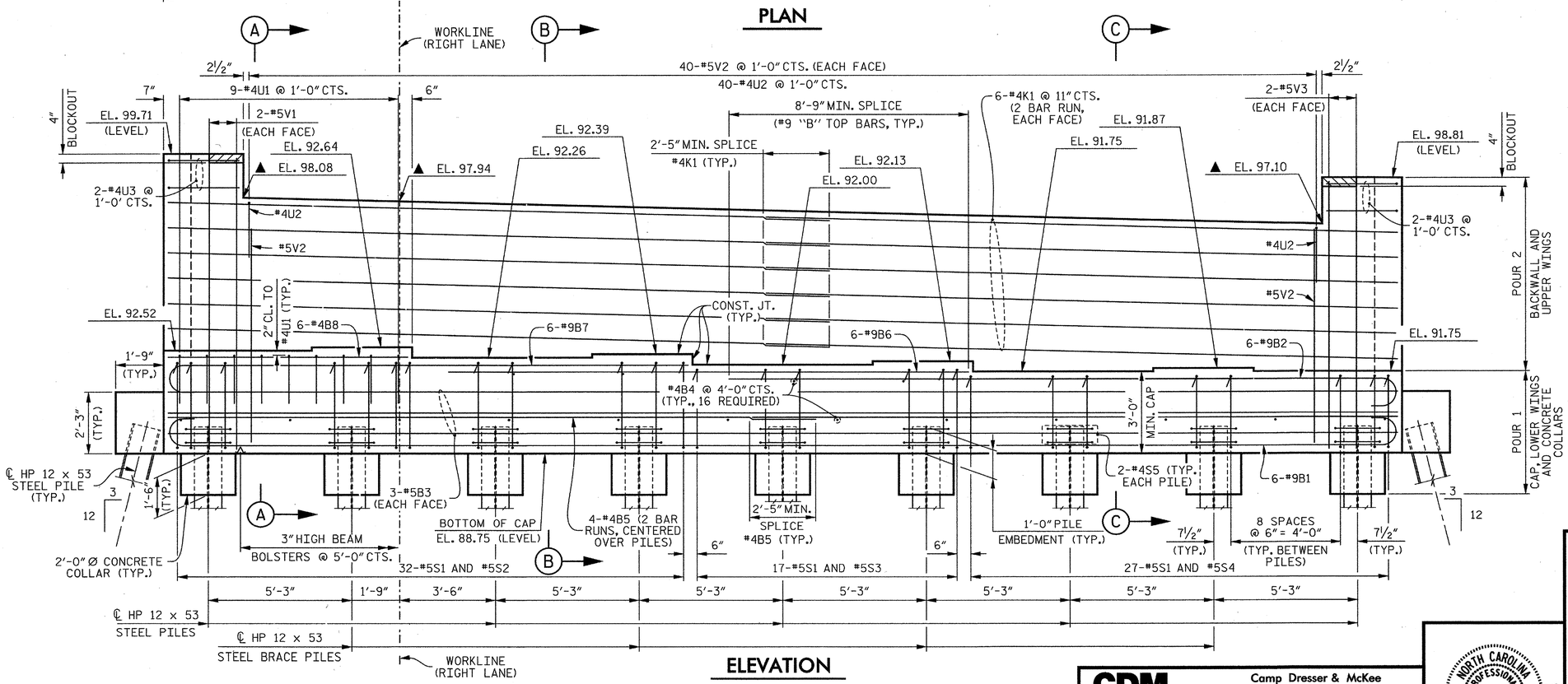


## ELEVATION

## NOTES

THE TOP SURFACE AREA OF THE END BENT CAP SHALL BE CURED IN ACCORDANCE WITH THE STANDARD SPECIFICATIONS EXCEPT THAT THE MEMBRANE CURING COMPOUND METHOD SHALL NOT BE USED.

THE TOP SURFACE OF THE END BENT CAP EXCEPT THE BRIDGE SEAT BUILD-UPS SHALL BE SLOPED TRANSVERSELY FROM THE FILL FACE TO THE FRONT FACE AT THE RATE OF 2%.

BACKWALL SHALL BE PLACED BEFORE APPLYING THE EPOXY PROTECTIVE COATING.

▲ THIS ELEVATION IS TAKEN AT FILL FACE OF BACKWALL.

FOR SECTION A-A, SECTION B-B AND SECTION C-C, SEE SHEET 3 OF 3.

FOR LOCATION OF ELEVATIONS BETWEEN BRIDGE SEAT BUILD-UPS, SEE SECTION VIEWS ON SHEET 3 OF 3.

FOR PILE SPLICE DETAILS, SEE SHEET 3 OF 3.

FOR TEMPORARY DRAINAGE AT END BENT DETAIL, SEE SHEET 3 OF 3.

THE CONCRETE IN THE SHADED AREA OF THE WING SHALL BE POURED AFTER THE BARRIER RAIL IS CAST IF SLIP FORMING IS USED.

THE CONTRACTOR SHALL PROVIDE FOR INSTALLATION OF THE 4" DIAMETER DRAIN PIPE THROUGH THE WING WALL AS REQUIRED FOR REINFORCED BRIDGE APPROACH FILLS, SEE THE ROADWAY PLANS. REINFORCING STEEL IN THE WING WALL MAY BE SHIFTED AS NECESSARY TO CLEAR THE DRAIN PIPE.

PROJECT NO. R-2303D
SAMPSON COUNTY
STATION: 1311+58.00 -LREV-

SHEET 1 OF 3

STATE OF NORTH CAROLINA
DEPARTMENT OF TRANSPORTATION
RALEIGH

SUBSTRUCTURE

END BENT 2

(RIGHT LANE)

CDM Smith
Camp Dresser & McKee
421 Fayetteville Street, Suite 1303
Raleigh, NC 27604
NC COA No. F-1255

DRAWN BY : K.E. LOFTON DATE : 10-12
CHECKED BY : P.R. HOLSHOUSER DATE : 10-12
DESIGN ENGINEER : P.R. HOLSHOUSER DATE : 1-13

DWG. No. S02-071

NORTH CAROLINA PROFESSIONAL SEAL 20668 ENGINEER PAUL R. HOLSHOUSER 1/30/2013

| REVISIONS | | | | | | SHEET No. |
|---|---|---|---|---|---|---|
| No. | BY: | DATE: | No. | BY: | DATE: | S-147 |
| 1 | | | 3 | | | TOTAL SHEETS |
| 2 | | | 4 | | | 218 |

FILE: c:\pwdata\c230306\structural\PLANS\Str_21\R2303D_S0_Str2_ab271.dgn
DATE: 12/20/2012 2:26:59 PM

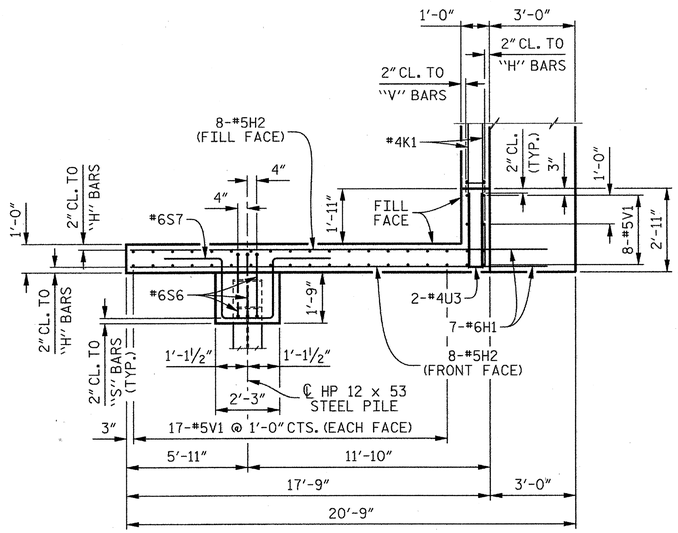


## PLAN OF WING (W3)

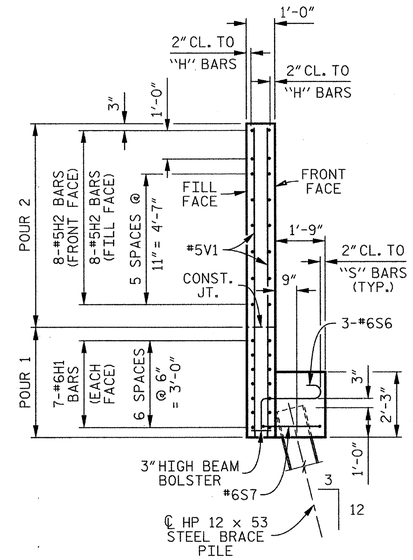


## SECTION D–D

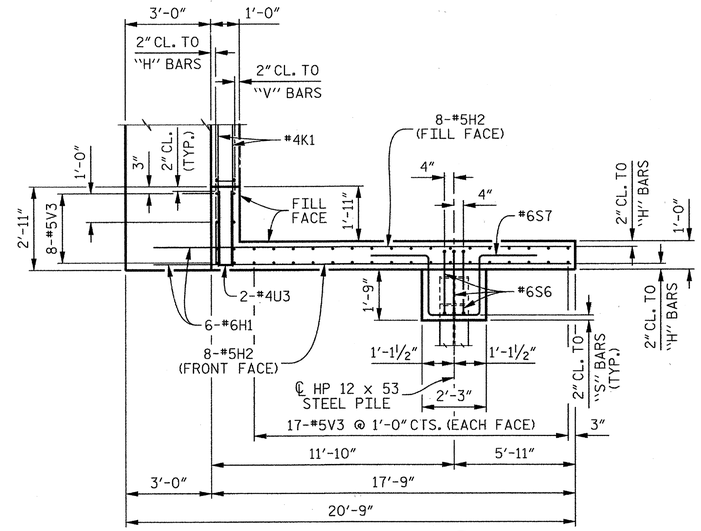


## PLAN OF WING (W4)

NOTE:
FOR ADDITIONAL WING PILE DIMENSION, SEE "GENERAL DRAWING FOUNDATION LAYOUT", SHEET 6 OF 7.

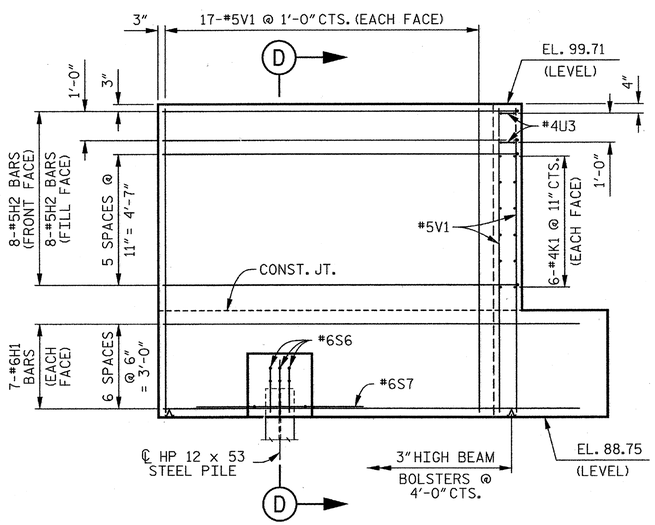


## ELEVATION OF WING (W3)

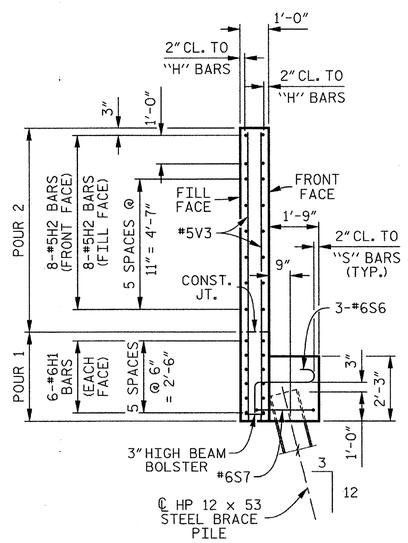


## SECTION E–E

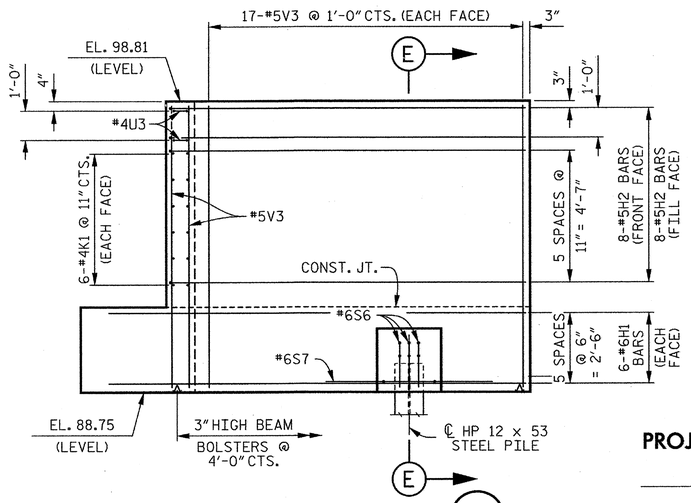


## ELEVATION OF WING (W4)

PROJECT NO. R-2303D
SAMPSON COUNTY
STATION: 1311+58.00 -LREV-

SHEET 2 OF 3

STATE OF NORTH CAROLINA
DEPARTMENT OF TRANSPORTATION
RALEIGH

SUBSTRUCTURE

END BENT 2

(RIGHT LANE)

CDM Smith
Camp Dresser & McKee
421 Fayetteville Street, Suite 1303
Raleigh, NC 27604
NC COA No. F-1255

| | | | |
|---|---|---|---|
| DRAWN BY : | K.E. LOFTON | DATE : | 10-12 |
| CHECKED BY : | P.R. HOLSHOUSER | DATE : | 10-12 |
| DESIGN ENGINEER : | P.R. HOLSHOUSER | DATE : | 1-13 |

DWG. No. S02-072

NORTH CAROLINA PROFESSIONAL SEAL 20668 ENGINEER PAUL R. HOLSHOUSER 10/28/13

| REVISIONS | | | | | | SHEET No. |
|---|---|---|---|---|---|---|
| No. | BY: | DATE: | No. | BY: | DATE: | S-148 |
| 1 | | | 3 | | | TOTAL SHEETS |
| 2 | | | 4 | | | 218 |

FILE: r:\model\2303d\structures\PLANS\Br_2\R2303D_S0_Br2_ab22.dgn
DATE: 12/05/2012 9:25:07 PM

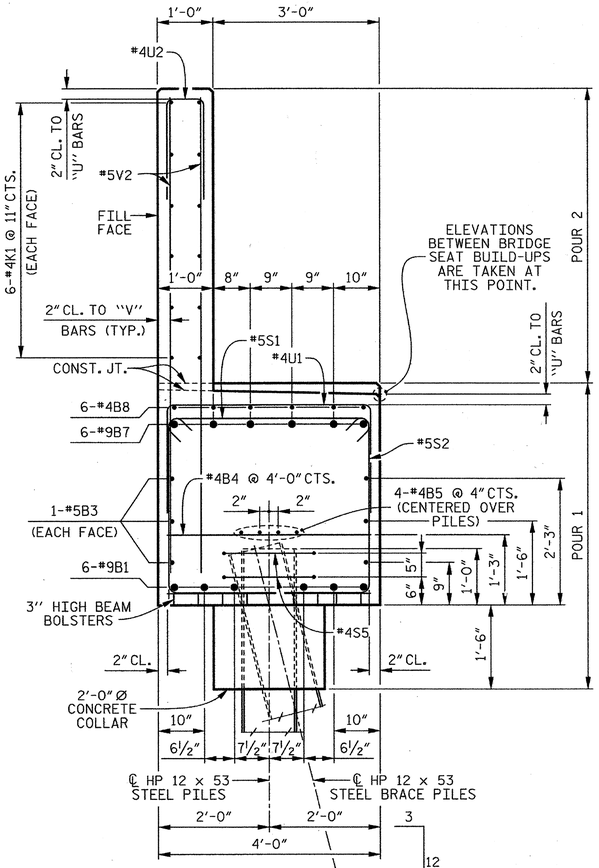


## SECTION A–A

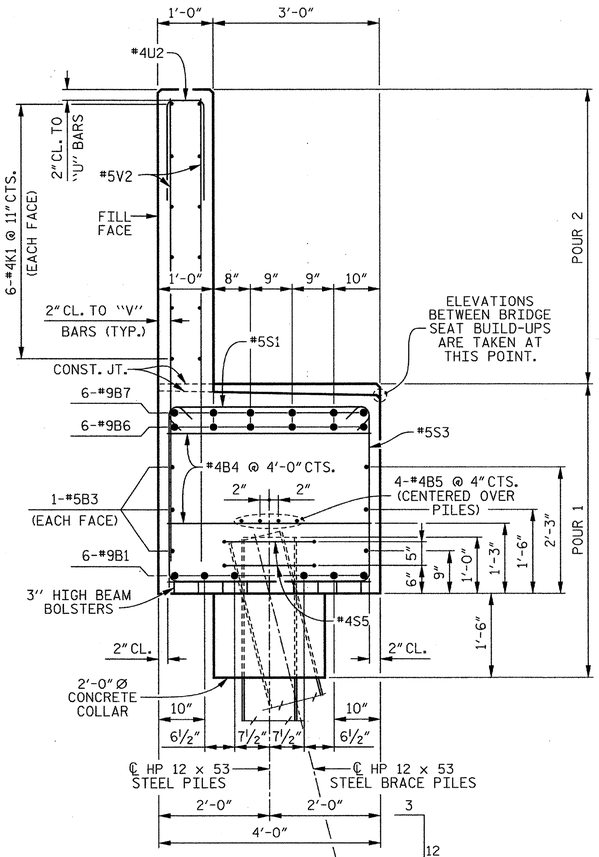


## SECTION B–B

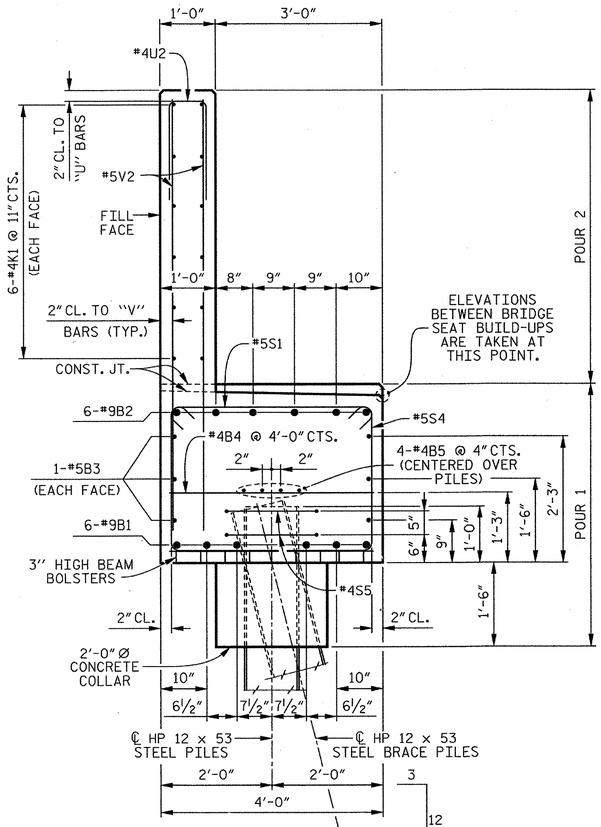


## SECTION C–C

## BAR TYPES

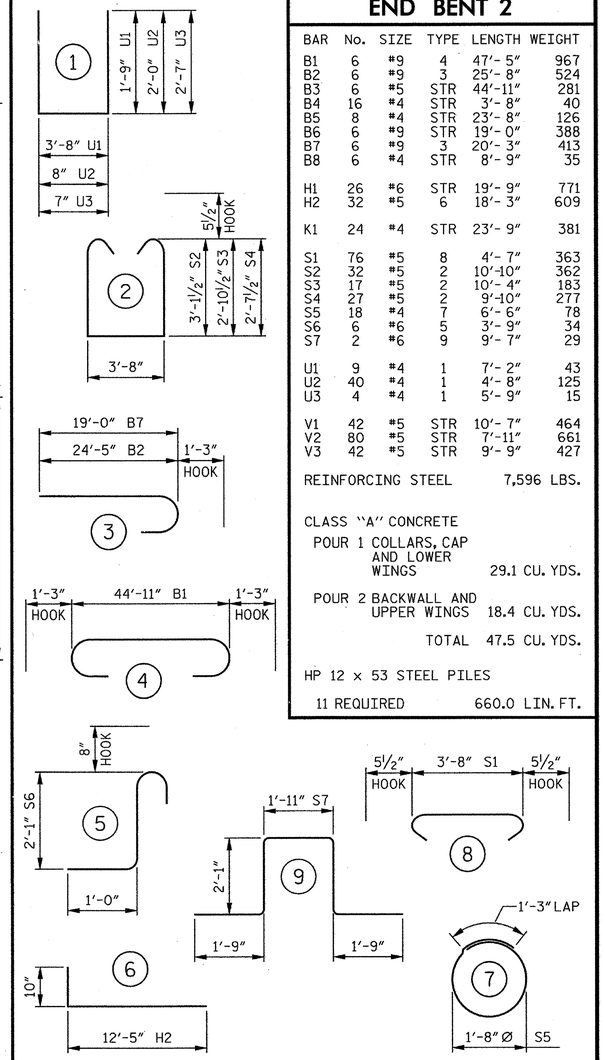


ALL BAR DIMENSIONS ARE OUT TO OUT.

## BILL OF MATERIAL

### END BENT 2

| BAR | No. | SIZE | TYPE | LENGTH | WEIGHT |
|---|---|---|---|---|---|
| B1 | 6 | #9 | 4 | 47'- 5" | 967 |
| B2 | 6 | #9 | 3 | 25'- 8" | 524 |
| B3 | 6 | #5 | STR | 44'-11" | 281 |
| B4 | 16 | #4 | STR | 3'- 8" | 40 |
| B5 | 8 | #4 | STR | 23'- 8" | 126 |
| B6 | 6 | #9 | STR | 19'- 0" | 388 |
| B7 | 6 | #9 | 3 | 20'- 3" | 413 |
| B8 | 6 | #4 | STR | 8'- 9" | 35 |
| H1 | 26 | #6 | STR | 19'- 9" | 771 |
| H2 | 32 | #5 | 6 | 18'- 3" | 609 |
| K1 | 24 | #4 | STR | 23'- 9" | 381 |
| S1 | 76 | #5 | 8 | 4'- 7" | 363 |
| S2 | 32 | #5 | 2 | 10'-10" | 362 |
| S3 | 17 | #5 | 2 | 10'- 4" | 183 |
| S4 | 27 | #5 | 2 | 9'-10" | 277 |
| S5 | 18 | #4 | 7 | 6'- 6" | 78 |
| S6 | 6 | #6 | 5 | 3'- 9" | 34 |
| S7 | 2 | #6 | 9 | 9'- 7" | 29 |
| U1 | 9 | #4 | 1 | 7'- 2" | 43 |
| U2 | 40 | #4 | 1 | 4'- 8" | 125 |
| U3 | 4 | #4 | 1 | 5'- 9" | 15 |
| V1 | 42 | #5 | STR | 10'- 7" | 464 |
| V2 | 80 | #5 | STR | 7'-11" | 661 |
| V3 | 42 | #5 | STR | 9'- 9" | 427 |

REINFORCING STEEL 7,596 LBS.

CLASS "A" CONCRETE

POUR 1 COLLARS, CAP AND LOWER WINGS 29.1 CU. YDS.

POUR 2 BACKWALL AND UPPER WINGS 18.4 CU. YDS.

TOTAL 47.5 CU. YDS.

HP 12 x 53 STEEL PILES

11 REQUIRED 660.0 LIN. FT.

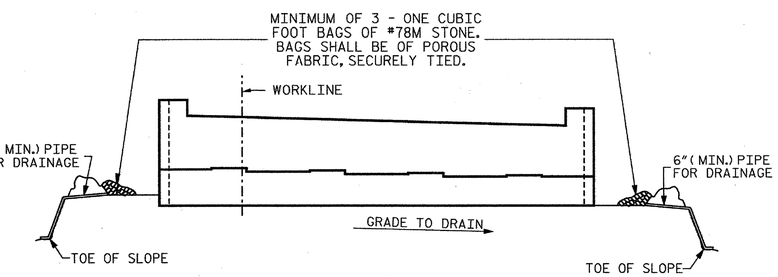


BAGGED STONE AND PIPE SHALL BE PLACED IMMEDIATELY AFTER COMPLETION OF END BENT EXCAVATION. PIPE MAY BE EITHER CONCRETE, CORRUGATED STEEL, CORRUGATED ALUMINUM ALLOY, OR CORRUGATED PLASTIC. PERFORATED PIPE WILL NOT BE ALLOWED.

BAGGED STONE SHALL REMAIN IN PLACE UNTIL THE ENGINEER DIRECTS THAT IT BE REMOVED. THE CONTRACTOR SHALL REMOVE AND DISPOSE OF SILT ACCUMULATIONS AT BAGGED STONE WHEN SO DIRECTED BY THE ENGINEER. BAGS SHALL BE REMOVED AND REPLACED WHENEVER THE ENGINEER DETERMINES THAT THEY HAVE DETERIORATED AND LOST THEIR EFFECTIVENESS.

## TEMPORARY DRAINAGE AT END BENT

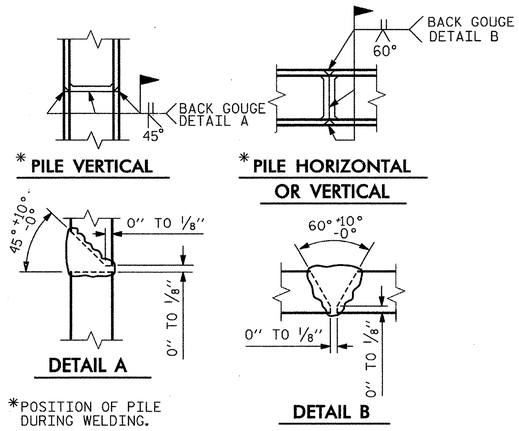


*POSITION OF PILE DURING WELDING.

## PILE SPLICE DETAILS

PROJECT NO. R-2303D

SAMPSON COUNTY

STATION: 1311+58.00 -LREV-

SHEET 3 OF 3

STATE OF NORTH CAROLINA
DEPARTMENT OF TRANSPORTATION
RALEIGH

SUBSTRUCTURE

END BENT 2

(RIGHT LANE)

CDM Smith

Camp Dresser & McKee
421 Fayetteville Street, Suite 1303
Raleigh, NC 27604
NC COA No. F-1255

DRAWN BY : K.E. LOFTON DATE : 10-12
CHECKED BY : P.R. HOLSHOUSER DATE : 10-12
DESIGN ENGINEER : P.R. HOLSHOUSER DATE : 1-13

DWG. No. S02-073

NORTH CAROLINA PROFESSIONAL SEAL 20668 ENGINEER PAUL R. HOLSHOUSER 2/01/2013

| REVISIONS | | | | | | SHEET No. |
|---|---|---|---|---|---|---|
| No. | BY: | DATE: | No. | BY: | DATE: | S-149 |
| 1 | | | 3 | | | TOTAL SHEETS |
| 2 | | | 4 | | | 218 |

FILE: r:\model\2303d\structures\PLANS\Br_2\R2303D_S0_Br2_eb03.dgn
DATE: 1/25/2013 2:39:53 PM

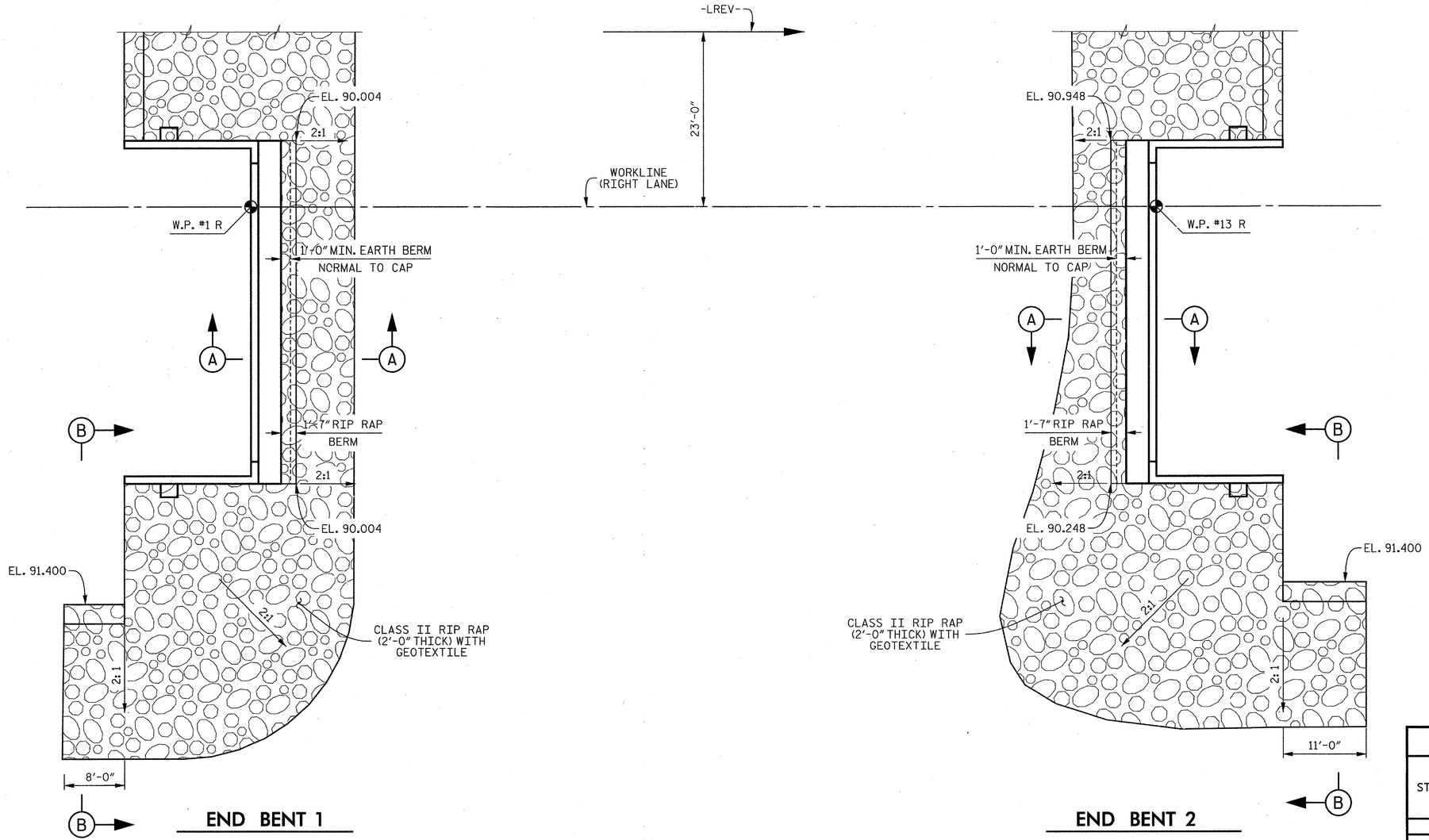


PLAN

| ESTIMATED QUANTITIES | | |
|---|---|---|
| BRIDGE @ STA. 1311+58.00 -LREV- (RIGHT LANE) | RIP RAP CLASS II ( TONS ) | GEOTEXTILE FOR DRAINAGE ( SQUARE YARDS ) |
| END BENT 1 | 210 | 235 |
| END BENT 2 | 190 | 210 |

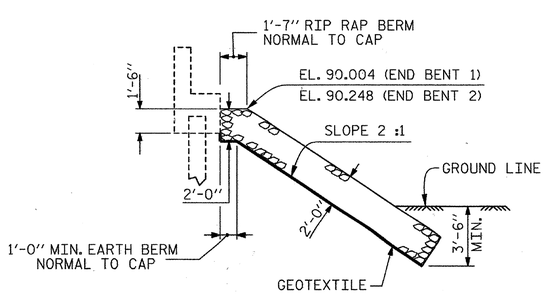


SECTION A–A

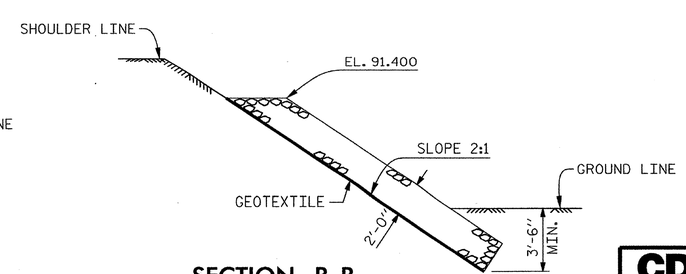


SECTION B–B

PROJECT NO. R-2303D

SAMPSON COUNTY

STATION: 1311+58.00 -LREV-

STATE OF NORTH CAROLINA
DEPARTMENT OF TRANSPORTATION
RALEIGH

STANDARD

RIP RAP DETAILS

(RIGHT LANE)

CDM Smith
Camp Dresser & McKee
421 Fayetteville Street, Suite 1303
Raleigh, NC 27604
NC COA No. F-1255

| | | | |
|---|---|---|---|
| DRAWN BY : | K.E. LOFTON | DATE : | 11-12 |
| CHECKED BY : | P.R. HOLSHOUSER | DATE : | 12-12 |
| DESIGN ENGINEER : | P.R. HOLSHOUSER | DATE : | 1-13 |

DWG. No. S02-074

NORTH CAROLINA PROFESSIONAL SEAL 20668 ENGINEER PAUL R. HOLSHOUSER 2/04/2013

| REVISIONS | | | | | | |
|---|---|---|---|---|---|---|
| No. | BY: | DATE: | No. | BY: | DATE: | SHEET No. 8-150 |
| 1 | | | 3 | | | TOTAL SHEETS 218 |
| 2 | | | 4 | | | |

| | | | |
|---|---|---|---|
| ASSEMBLED BY : | K.E. LOFTON | DATE : | 12-12 |
| CHECKED BY : | P.R. HOLSHOUSER | DATE : | |
| DRAWN BY : REK 1/84 | REV. 8/16/99 | RWW/LES | |
| CHECKED BY : RDU 1/84 | REV. 10/17/00 | RWW/LES | |
| | REV. 5/1/06 | TLA/GM | |

FILE: r:\model\2303d\structures\PLANS\Str_01\R2303D_SD_Str2_rrl.dgn
DATE: 12/20/2012 1:25:19 PM

STD. No. RR1

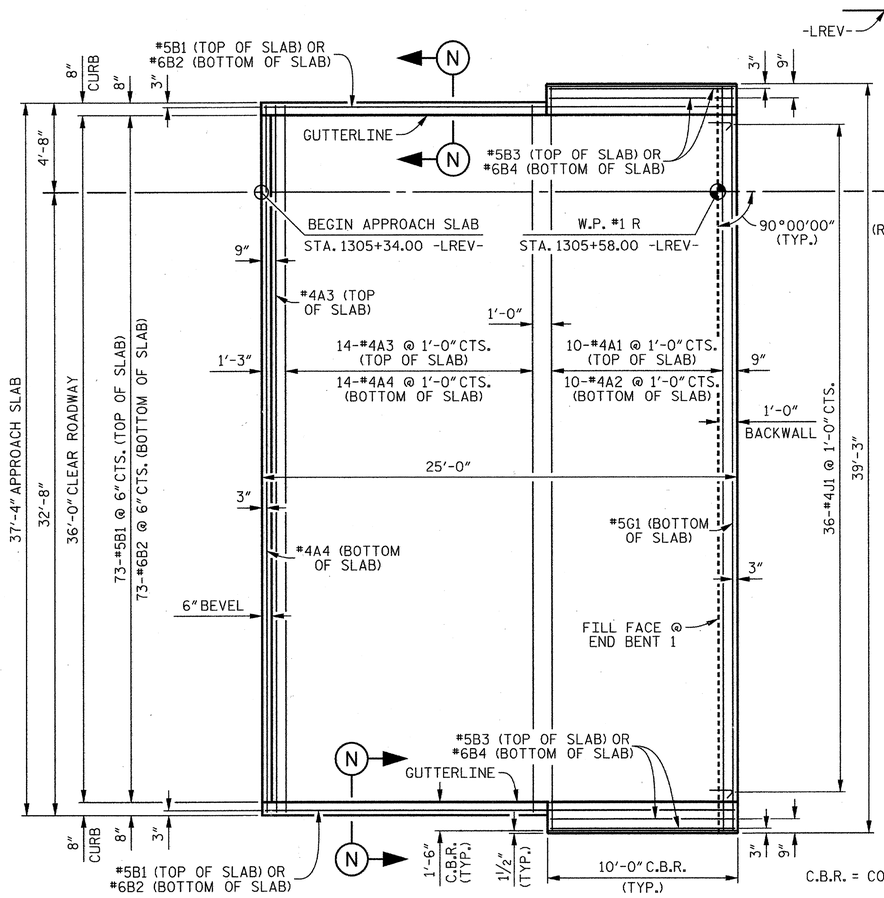


## PLAN OF APPROACH SLAB AT END BENT 1

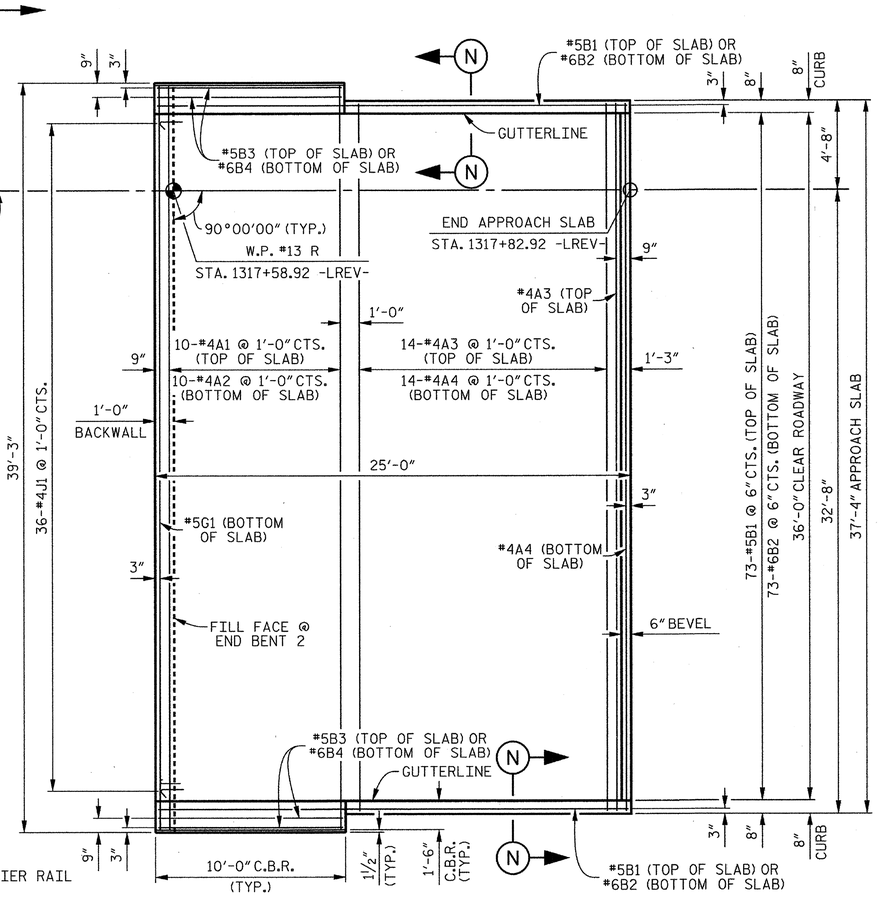


## PLAN OF APPROACH SLAB AT END BENT 2

C.B.R. = CONCRETE BARRIER RAIL

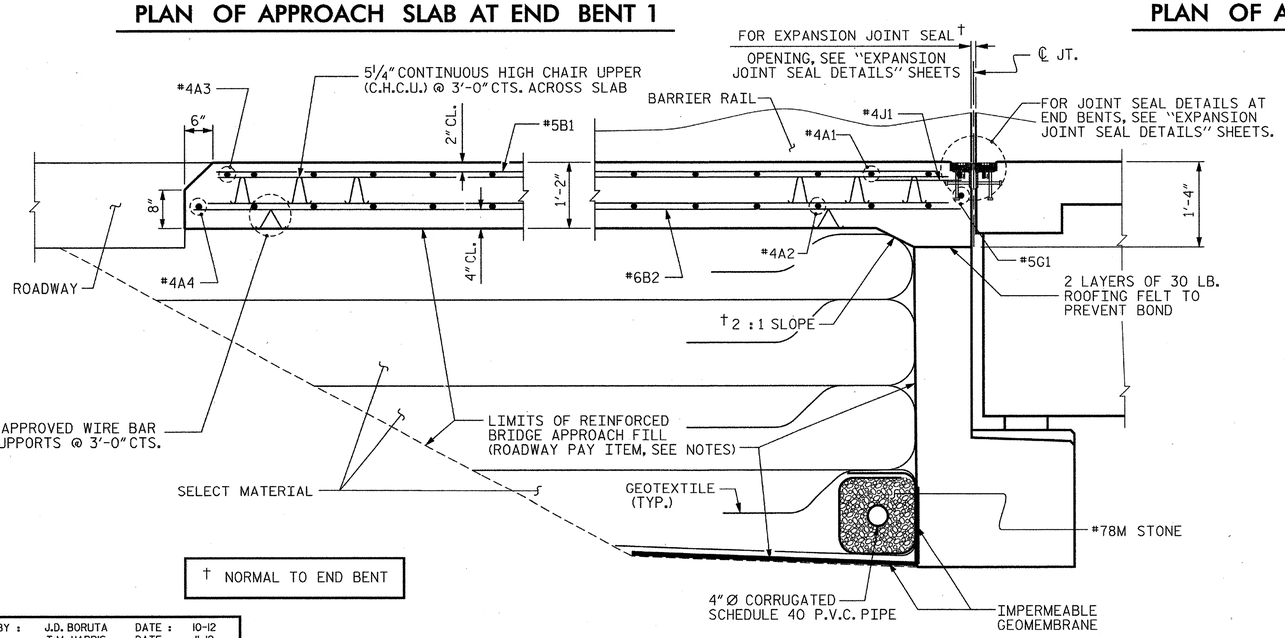


† NORMAL TO END BENT

## SECTION THRU SLAB

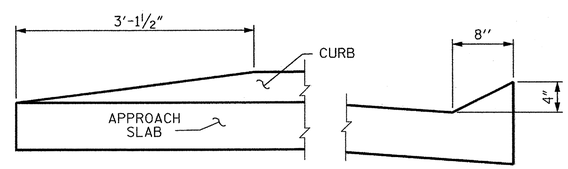


END OF CURB WITHOUT SHOULDER BERM GUTTER

SECTION N-N

## CURB DETAILS

## BAR TYPE

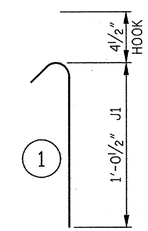


ALL BAR DIMENSIONS ARE OUT TO OUT.

## BILL OF MATERIAL

### APPROACH SLAB AT END BENT 1 OR END BENT 2

| BAR | No. | SIZE | TYPE | LENGTH | WEIGHT |
|---|---|---|---|---|---|
| ✱A1 | 10 | #4 | STR | 38'-11" | 260 |
| A2 | 10 | #4 | STR | 38'-11" | 260 |
| ✱A3 | 15 | #4 | STR | 37'-0" | 371 |
| A4 | 15 | #4 | STR | 37'-0" | 371 |
| ✱B1 | 75 | #5 | STR | 23'-10" | 1,864 |
| B2 | 75 | #6 | STR | 24'-8" | 2,779 |
| ✱B3 | 4 | #5 | STR | 9'-8" | 40 |
| B4 | 4 | #6 | STR | 9'-8" | 58 |
| ✱G1 | 1 | #5 | STR | 38'-11" | 41 |
| ✱J1 | 36 | #4 | 1 | 1'-5" | 34 |
| REINFORCING STEEL | | | | | 3,468 LBS. |
| ✱EPOXY COATED REINFORCING STEEL | | | | | 2,610 LBS. |

CLASS "AA" CONCRETE ✱

POUR 1 SLAB 41.2 CU. YDS.

✱ QUANTITIES FOR BARRIER RAIL ARE NOT INCLUDED.

## NOTES

APPROACH SLAB SHALL NOT BE CONSTRUCTED PRIOR TO COMPLETION OF THE BRIDGE DECK.

FOR REINFORCED BRIDGE APPROACH FILL INCLUDING FABRIC, IMPERMEABLE GEOMEMBRANE, 4" Ø DRAINAGE PIPE, #78M STONE AND SELECT MATERIAL, SEE ROADWAY PLANS.

AREA BETWEEN THE WINGWALL AND APPROACH SLAB SHALL BE GRADED TO DRAIN THE WATER AWAY FROM THE FILL FACE OF THE BRIDGE AND SHALL BE PAVED, SEE ROADWAY PLANS.

SEE "CONCRETE BARRIER RAIL" SHEET FOR LOCATION OF "S" BARS AND CONCRETE QUANITIES FOR CONCRETE BARRIER RAIL.

THE QUANTITY OF #4J1 BARS ON THE BILL OF MATERIAL IS BASED ON 1'-0" CENTERS. #4J1 BARS SHALL BE PLACED AT EACH VERTICAL STUD ANCHOR BOLT. IN THE EVENT THAT THE NUMBER OF VERTICAL STUD ANCHORS EXCEEDS THE NUMBER OF #4J1 BARS SPECIFIED, ADDITIONAL #4J1 BARS WILL NOT BE REQUIRED.

PROJECT NO. R-2303D

SAMPSON COUNTY

STATION: 1311+58.00 -LREV-

SHEET 1 OF 2

STATE OF NORTH CAROLINA
DEPARTMENT OF TRANSPORTATION
RALEIGH

STANDARD

# BRIDGE APPROACH SLAB FOR FLEXIBLE PAVEMENT (RIGHT LANE)

| ASSEMBLED BY : J.D. BORUTA | DATE : 10-12 |
|---|---|
| CHECKED BY : T.M. HARRIS | DATE : 11-12 |
| DRAWN BY : EEM 3/95 | REV. 5/1/06RR KMM/GM |
| CHECKED BY : VAP 3/95 | REV. 10/1/11 MAA/GM |
| | REV. 12/21/11 MAA/GM |

CDM Smith
Camp Dresser & McKee
421 Fayetteville Street, Suite 1303
Raleigh, NC 27604
NC COA No. F-1255

| DRAWN BY : J.D. BORUTA | DATE : 10-12 |
|---|---|
| CHECKED BY : T.M. HARRIS | DATE : 11-12 |
| DESIGN ENGINEER : P.R. HOLSHOUSER | DATE : 1-13 |

DWG. No. S02-075

NORTH CAROLINA PROFESSIONAL SEAL 20668 ENGINEER PAUL R. HOLSHOUSER 2/08/2013

| REVISIONS | | | | | | SHEET No. |
|---|---|---|---|---|---|---|
| No. | BY: | DATE: | No. | BY: | DATE: | S-151 |
| 1 | | | 3 | | | TOTAL SHEETS |
| 2 | | | 4 | | | 218 |

STD. No. BAS2

FILE: n:\model\r2303d\structures\PLANS\Sv_2\R2303D_S0_Sv2_ent.dgn
DATE: 12/20/2012 12:21:12 PM

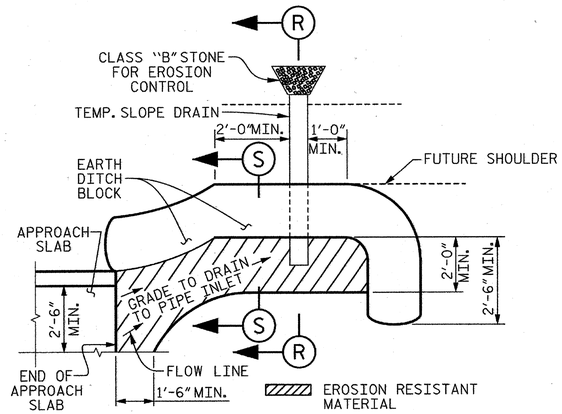


NOTE: IMMEDIATELY AFTER THE CONSTRUCTION OF THE APPROACH SLAB, THE CONTRACTOR SHALL PROVIDE TEMPORARY BERM AND SLOPE DRAIN. CONTRACTOR SHALL GRADE TO PIPE INLET AND PROVIDE EROSION RESISTANT MATERIAL AS SHOWN. THE EROSION RESISTANT MATERIAL SHALL BE EITHER 1) ASPHALT PLANT MIX, TYPE 1 OR TYPE 2, MIN. 2" DEPTH, 2) EROSION CONTROL MAT, OR 3) CONCRETE, AS DIRECTED BY THE ENGINEER. THE SLOPE DRAIN SHALL CONSIST OF A NON-PERFORATED TEMPORARY DRAINAGE PIPE, 12 INCHES IN DIAMETER.

PLAN VIEW

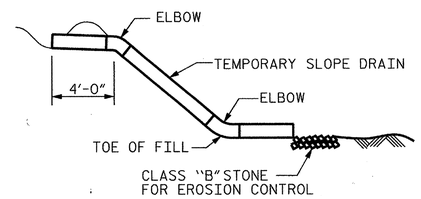


SECTION R-R

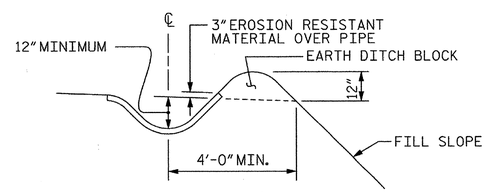


SECTION S-S

## TEMPORARY BERM AND SLOPE DRAIN DETAILS

(TO BE USED WHEN SHOULDER BERM GUTTER IS REQUIRED)

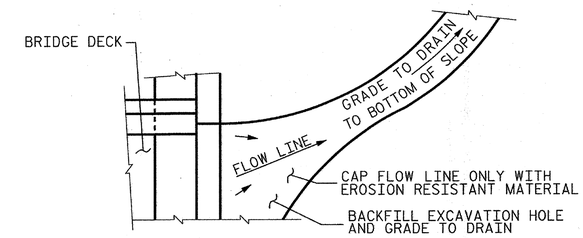


NOTE: IF THE APPROACH SLAB IS NOT CONSTRUCTED IMMEDIATELY AFTER THE BACKFILLING OF THE END BENT EXCAVATION, GRADE TO DRAIN TO THE BOTTOM OF THE SLOPE AND PROVIDE EROSION RESISTANT MATERIAL, SUCH AS FIBERGLASS ROVING OR AS DIRECTED BY THE ENGINEER TO PREVENT SOIL EROSION AND TO PROTECT THE AREA ADJACENT TO THE STRUCTURE. THE CONTRACTOR WILL BE REQUIRED TO REMOVE THESE MATERIALS PRIOR TO CONSTRUCTION OF THE APPROACH SLAB.

## TEMPORARY DRAINAGE DETAIL

PROJECT NO. R-2303D

SAMPSON COUNTY

STATION: 1311+58.00 -LREV-

SHEET 2 OF 2

STATE OF NORTH CAROLINA
DEPARTMENT OF TRANSPORTATION
RALEIGH

STANDARD

BRIDGE APPROACH SLAB DETAILS (RIGHT LANE)

CDM Smith
Camp Dresser & McKee
421 Fayetteville Street, Suite 1303
Raleigh, NC 27604
NC COA No. F-1255

| | | | |
|---|---|---|---|
| DRAWN BY : | J.D. BORUTA | DATE : | 10-12 |
| CHECKED BY : | T.M. HARRIS | DATE : | 11-12 |
| DESIGN ENGINEER : | P.R. HOLSHOUSER | DATE : | 1-13 |

DWG. No. S02-076

NORTH CAROLINA PROFESSIONAL SEAL 20668 ENGINEER PAUL R. HOLSHOUSER 12/04/2013

| REVISIONS | | | | | | SHEET No. |
|---|---|---|---|---|---|---|
| No. | BY: | DATE: | No. | BY: | DATE: | S-152 |
| 1 | | | 3 | | | TOTAL SHEETS |
| 2 | | | 4 | | | 218 |

STD. No. BAS4

| | | | |
|---|---|---|---|
| ASSEMBLED BY : | J. D. BORUTA | DATE : | 10-12 |
| CHECKED BY : | T. M. HARRIS | DATE : | 11-12 |
| DRAWN BY : FCJ | 11/88 | REV. 5/7/03 | RWW/JTE |
| CHECKED BY : ARB | 11/88 | REV. 5/1/06RRR | MAA/KMM |
| | | REV. 10/1/11 | MAA/GM |

FILE: r:\model\r2303d\structures\PLANS\Str_2\R2303D_SD_Str2_ca2.dgn
DATE: 12/30/2012 9:25:14 PM

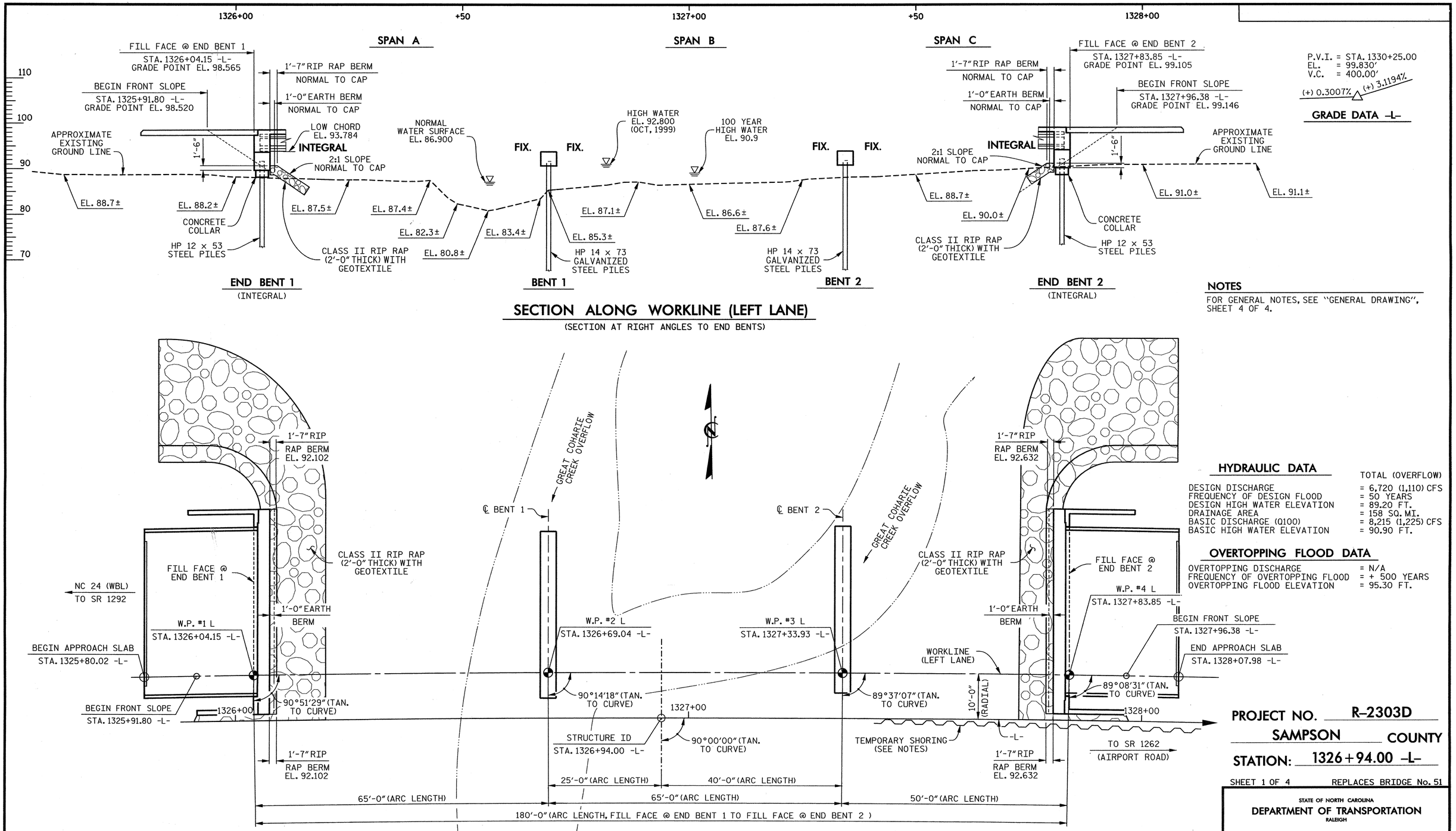


## SECTION ALONG WORKLINE (LEFT LANE)

(SECTION AT RIGHT ANGLES TO END BENTS)

P.V.I. = STA. 1330+25.00
EL. = 99.830'
V.C. = 400.00'
(+) 0.3007% (+) 3.1194%

## GRADE DATA -L-

## NOTES

FOR GENERAL NOTES, SEE "GENERAL DRAWING", SHEET 4 OF 4.




## PLAN

PILES NOT SHOWN IN PLAN VIEW.

## HYDRAULIC DATA

| | TOTAL (OVERFLOW) |
|---|---|
| DESIGN DISCHARGE | = 6,720 (1,110) CFS |
| FREQUENCY OF DESIGN FLOOD | = 50 YEARS |
| DESIGN HIGH WATER ELEVATION | = 89.20 FT. |
| DRAINAGE AREA | = 158 SQ. MI. |
| BASIC DISCHARGE (Q100) | = 8,215 (1,225) CFS |
| BASIC HIGH WATER ELEVATION | = 90.90 FT. |

## OVERTOPPING FLOOD DATA

| | |
|---|---|
| OVERTOPPING DISCHARGE | = N/A |
| FREQUENCY OF OVERTOPPING FLOOD | = + 500 YEARS |
| OVERTOPPING FLOOD ELEVATION | = 95.30 FT. |

## HORIZONTAL CURVE DATA -L-

PI = STA. 1334+00.44
Δ = 16° 06' 35.6" (RT.)
D = 0° 57' 17.7"
L = 849.11'
T = 1,687.02'
R = 6,000.00'

I HEREBY CERTIFY THESE PLANS ARE THE AS-BUILT PLANS.

CDM Smith
Camp Dresser & McKee
421 Fayetteville Street, Suite 1303
Raleigh, NC 27604
NC COA No. F-1255

| | | | |
|---|---|---|---|
| DRAWN BY : | K.E. LOFTON | DATE : | 8-12 |
| CHECKED BY : | P.R. HOLSHOUSER | DATE : | 12-12 |
| DESIGN ENGINEER : | P.R. HOLSHOUSER | DATE : | 3-13 |

DWG. No. S03-001

NORTH CAROLINA PROFESSIONAL SEAL 20668 ENGINEER PAUL R. HOLSHOUSER
3/14/2013

PROJECT NO. R-2303D
SAMPSON COUNTY
STATION: 1326+94.00 -L-

SHEET 1 OF 4 REPLACES BRIDGE No. 51

STATE OF NORTH CAROLINA
DEPARTMENT OF TRANSPORTATION
RALEIGH

GENERAL DRAWING

BRIDGE OVER GREAT COHARIE CREEK OVERFLOW ON NC 24 (-L-) BETWEEN SR 1292 AND SR 1262

(LEFT LANE)

| REVISIONS | | | | | | | | SHEET No. |
|---|---|---|---|---|---|---|---|---|
| No. | BY: | DATE: | No. | BY: | DATE: | | | S-153 |
| 1 | | | 3 | | | | | TOTAL SHEETS |
| 2 | | | 4 | | | | | 218 |

FILE: R:\NCDOT\R2303D\STRUCTURES\PLANS\Sv_31\R2303D_SD_Sv3_pdf.dgn
DATE: 3/7/2013 2:45:56 PM

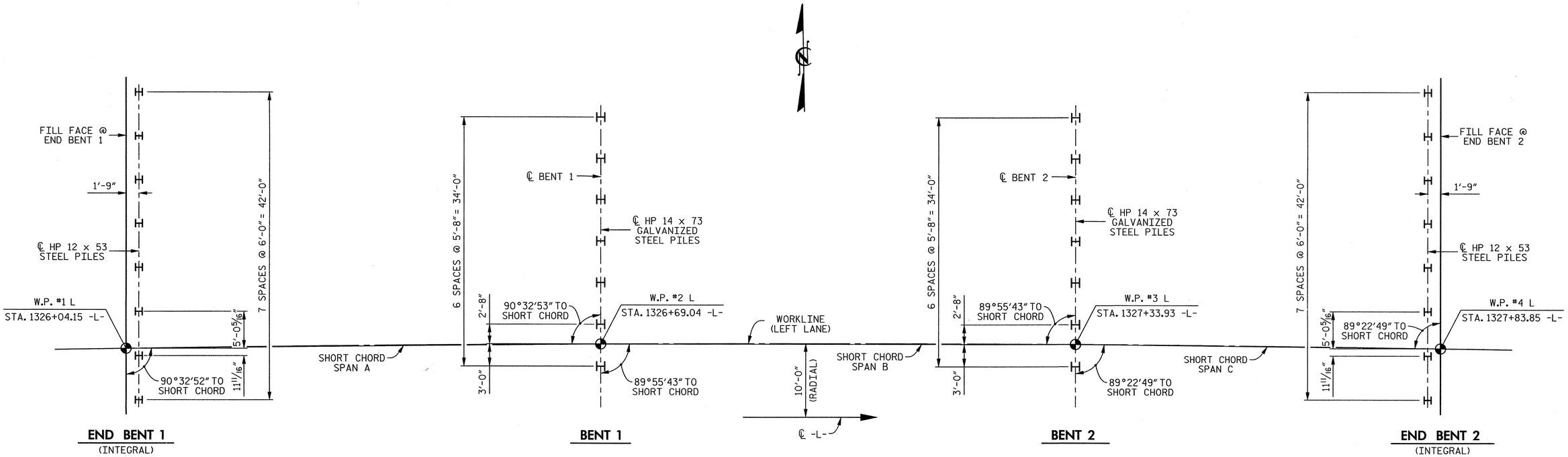


## FOUNDATION LAYOUT

### NOTES

DIMENSIONS LOCATING PILES ARE SHOWN TO PILE CENTERLINES AT THE BOTTOM OF THE BENT CAPS.

FOR PILES, SEE SECTION 450 OF THE STANDARD SPECIFICATIONS.

PILES AT END BENT 1 AND END BENT 2 ARE DESIGNED FOR A FACTORED RESISTANCE OF 90 TONS PER PILE.

ALL END BENT PILES ARE VERTICAL HP 12 x 53 STEEL PILES.

DRIVE PILES AT END BENT 1 AND END BENT 2 TO A REQUIRED DRIVING RESISTANCE OF 150 TONS PER PILE.

ALL INTERIOR BENT PILES ARE VERTICAL HP 14 x 73 GALVANIZED STEEL PILES.

PILES AT BENT 1 AND BENT 2 ARE DESIGNED FOR A FACTORED RESISTANCE OF 135 TONS PER PILE.

DRIVE PILES AT BENT 1 AND BENT 2 TO A REQUIRED DRIVING RESISTANCE OF 235 TONS PER PILE. THIS REQUIRED DRIVING RESISTANCE INCLUDES ADDITIONAL RESISTANCE FOR DOWNDRAG OR SCOUR.

INSTALL PILES AT BENT 1 AND BENT 2 TO A TIP ELEVATION NO HIGHER THAN 56.0 FT.

THE SCOUR CRITICAL ELEVATIONS FOR BENT 1 AND BENT 2 ARE ELEVATION 79.0 AND 83.0 FT, RESPECTIVELY. SCOUR CRITICAL ELEVATIONS ARE USED TO MONITOR POSSIBLE SCOUR PROBLEMS DURING THE LIFE OF THE STRUCTURE.

IT HAS BEEN ESTIMATED THAT A HAMMER WITH AN EQUIVALENT RATED ENERGY IN THE RANGE OF 50-90 FT-KIPS PER BLOW WILL BE REQUIRED TO DRIVE PILES AT BENT 1 AND BENT 2. THIS ESTIMATED ENERGY RANGE DOES NOT RELEASE THE CONTRACTOR FROM PROVIDING DRIVING EQUIPMENT IN ACCORDANCE WITH SUBARTICLE 450-3(D)(2) OF THE STANDARD SPECIFICATIONS.

TESTING PILES WITH THE PDA DURING DRIVING, RESTRIKING OR REDRIVING MAYBE REQUIRED. THE ENGINEER WILL DETERMINE THE NEED FOR PDA TESTING. FOR PDA TESTING, SEE SECTION 450 OF THE STANDARD SPECIFICATIONS AND FOR PILE DRIVING CRITERIA.

OBSERVE A 6 MONTH WAITING PERIOD AFTER CONSTRUCTING THE EMBANKMENT TO WITHIN 18 INCHES OF FINISHED GRADE BEFORE BEGINNING END BENT CONSTRUCTION AT END BENT NO. 1 AND END BENT NO. 2.

PROJECT NO. R-2303D

SAMPSON COUNTY

STATION: 1326+94.00 -L-

SHEET 2 OF 4

STATE OF NORTH CAROLINA
DEPARTMENT OF TRANSPORTATION
RALEIGH

GENERAL DRAWING

BRIDGE OVER GREAT COHARIE CREEK OVERFLOW ON NC 24 (-L-) BETWEEN SR 1292 AND SR 1262

(LEFT LANE)

CDM Smith
Camp Dresser & McKee
421 Fayetteville Street, Suite 1303
Raleigh, NC 27604
NC COA No. F-1255

| | | | |
|---|---|---|---|
| DRAWN BY : | K.E. LOFTON | DATE : | 11-12 |
| CHECKED BY : | P.R. HOLSHOUSER | DATE : | 1-13 |
| DESIGN ENGINEER : | P.R. HOLSHOUSER | DATE : | 3-13 |

DWG. No. S03-002

NORTH CAROLINA PROFESSIONAL SEAL 20668 ENGINEER PAUL R. HOLSHOUSER
3/14/2013

| REVISIONS | | | | | | SHEET No. |
|---|---|---|---|---|---|---|
| No. | BY: | DATE: | No. | BY: | DATE: | S-154 |
| 1 | | | 3 | | | TOTAL SHEETS |
| 2 | | | 4 | | | 218 |

FILE: r:\cadd\r2303d\structures\PLANS\Str_3\R2303D_SD_Str3_fl1.dgn
DATE: 3/5/2013 3:20:12 PM

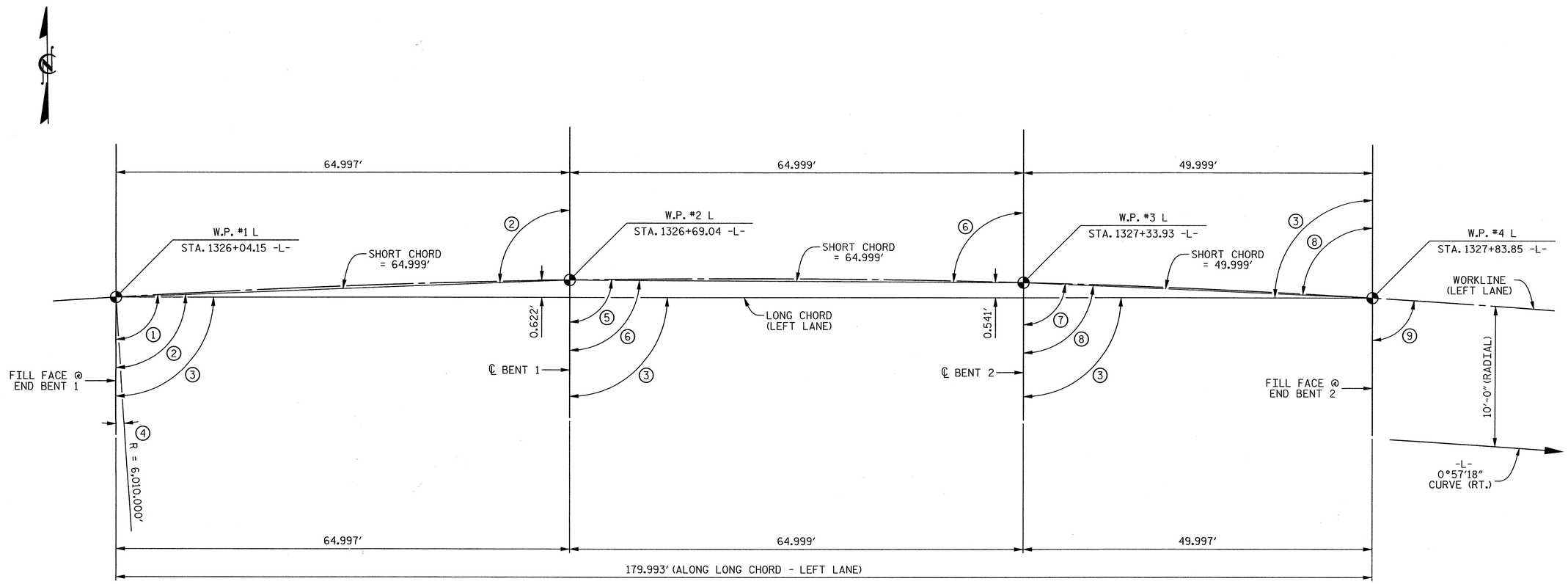


## LONG CHORD LAYOUT

END BENTS AND BENTS ARE PARALLEL

| ANGLES | |
|---|---|
| 1 | 90° 51' 29" (TAN. TO CURVE) |
| 2 | 90° 32' 53" |
| 3 | 90° 00' 00" |
| 4 | 00° 51' 29" |
| 5 | 90° 14' 18" (TAN. TO CURVE) |
| 6 | 89° 55' 43" |
| 7 | 89° 37' 07" (TAN. TO CURVE) |
| 8 | 89° 22' 49" |
| 9 | 89° 08' 31" (TAN. TO CURVE) |

**HORIZONTAL CURVE DATA -L-**

PI = STA. 1334+00.44
Δ = 16° 06' 35.6" (RT.)
D = 0° 57' 17.7"
L = 849.11'
T = 1,687.02'
R = 6,000.00'

**PROJECT NO.** R-2303D

**SAMPSON** COUNTY

**STATION:** 1326+94.00 -L-

SHEET 3 OF 4

STATE OF NORTH CAROLINA
DEPARTMENT OF TRANSPORTATION
RALEIGH

GENERAL DRAWING

BRIDGE ON NC 24 (-L-) OVER GREAT COHARIE CREEK OVERFLOW BETWEEN SR 1292 AND SR 1262

(LEFT LANE)

CDM Smith
Camp Dresser & McKee
421 Fayetteville Street, Suite 1303
Raleigh, NC 27604
NC COA No. F-1255

DRAWN BY : K.E. LOFTON DATE : 8-12
CHECKED BY : P.R. HOLSHOUSER DATE : 12-12
DESIGN ENGINEER : P.R. HOLSHOUSER DATE : 3-13

DWG. No. S03-003

NORTH CAROLINA PROFESSIONAL SEAL 20668 ENGINEER PAUL R. HOLSHOUSER
3/14/2013

| REVISIONS | | | | | | SHEET No. |
|---|---|---|---|---|---|---|
| No. | BY: | DATE: | No. | BY: | DATE: | S-155 |
| 1 | | | 3 | | | TOTAL SHEETS |
| 2 | | | 4 | | | 218 |

FILE: r:\radar\R2303D\Structures\PLANS\Str_3\R2303D_SD_Str3_lc1.dgn
DATE: 3/5/2013 3:20:14 PM

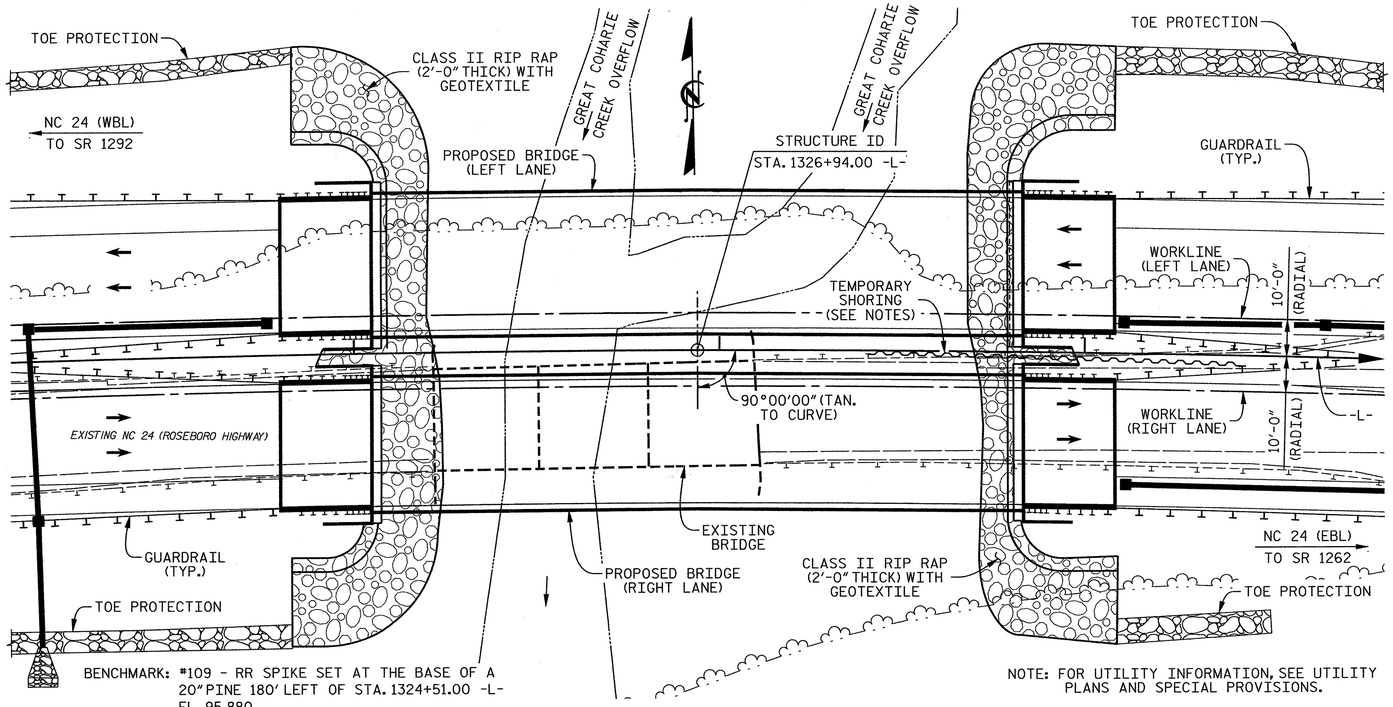


## LOCATION SKETCH

## NOTES

ASSUMED LIVE LOAD = HL 93 OR ALTERNATE LOADING.

THIS BRIDGE HAS BEEN DESIGNED IN ACCORDANCE WITH THE AASHTO LRFD BRIDGE DESIGN SPECIFICATIONS.

THIS STRUCTURE HAS BEEN DESIGNED IN ACCORDANCE WITH HEC 18, "EVALUATING SCOUR AT BRIDGES", MAY, 2001.

THIS BRIDGE HAS BEEN DESIGNED IN ACCORDANCE WITH THE REQUIREMENTS OF THE AASHTO LRFD BRIDGE DESIGN SPECIFICATIONS FOR SEISMIC DESIGN PERFORMANCE ZONE 1.

FOR OTHER DESIGN DATA AND GENERAL NOTES, SEE "STANDARD NOTES" SHEET.

ALL REINFORCING STEEL SHALL BE GRADE 60.

FOR LIMITS OF TEMPORARY SHORING FOR MAINTENANCE OF TRAFFIC, SEE TRAFFIC CONTROL PLANS. FOR PAY ITEM FOR TEMPORARY SHORING FOR MAINTENANCE OF TRAFFIC, SEE ROADWAY PLANS.

REMOVABLE FORMS MAY BE USED IN LIEU OF METAL STAY-IN-PLACE FORMS IN ACCORDANCE WITH RTICLE 420-3 OF THE STANDARD SPECIFICATIONS.

NEEDLE BEAMS WILL NOT BE ALLOWED UNLESS OTHERWISE CALLED FOR ON THE PLANS OR APPROVED BY THE ENGINEER.

FOR SUBMITTAL OF WORKING DRAWINGS, SEE SPECIAL PROVISIONS.

FOR EROSION CONTROL MEASURES, SEE EROSION CONTROL PLANS.

FOR FALSEWORK AND FORMWORK, SEE SPECIAL PROVISIONS.

FOR CRANE SAFETY, SEE SPECIAL PROVISIONS.

FOR GROUT FOR STRUCTURES, SEE SPECIAL PROVISIONS.

FOR PLACING LOAD ON STRUCTURE MEMBERS, SEE SPECIAL PROVISIONS.

FOR STEEL REINFORCED ELASTOMERIC BEARINGS, SEE SPECIAL PROVISIONS.

FOR INTERIOR BENTS ONLY PARTIAL GALVANIZING OF THE PILES ARE REQUIRED. SEE INTERIOR BENT SHEETS FOR GALVANIZED LENGTHS. PAYMENT FOR PARTIALLY GALVANIZED PILES WILL BE MADE UNDER THE CONTRACT UNIT PRICE FOR GALVANIZED STEEL PILES.

## TOTAL BILL OF MATERIAL

| | PDA TESTING | REINFORCED CONCRETE DECK SLAB | GROOVING BRIDGE FLOORS | CLASS A CONCRETE | BRIDGE APPROACH SLABS | REINFORCING STEEL | 45" PRESTRESSED CONCRETE GIRDER | | HP 12 x 53 STEEL PILES | | HP 14 x 73 GALVANIZED STEEL PILES | | PILE REDRIVES | CONCRETE BARRIER RAIL | RIP RAP CLASS II (2'-0" THICK) | GEOTEXTILE FOR DRAINAGE | ELASTOMERIC BEARINGS |
|---|---|---|---|---|---|---|---|---|---|---|---|---|---|---|---|---|---|
| | EACH | SQ. FT. | SQ. FT. | CU. YDS. | LUMP SUM | LBS. | No. | LIN. FT. | No. | LIN. FT. | No. | LIN. FT. | EACH | LIN. FT. | TON | SQ. YD. | LUMP SUM |
| SUPERSTRUCTURE | | 7,000 | 7,467 | | LUMP SUM | | 12 | 704.7 | | | | | | 356.7 | | | LUMP SUM |
| END BENT 1 | | | | 31.2 | | 5,722 | | | 8 | 400.0 | | | 4 | | 155 | 170 | |
| BENT 1 | | | | 20.7 | | 3,817 | | | | | 7 | 455.0 | 4 | | | | |
| BENT 2 | | | | 20.7 | | 3,817 | | | | | 7 | 420.0 | 4 | | | | |
| END BENT 2 | | | | 31.2 | | 5,722 | | | 8 | 400.0 | | | 4 | | 120 | 130 | |
| | | | | | | | | | | | | | | | | | |
| TOTAL | 1 | 7,000 | 7,467 | 103.8 | LUMP SUM | 19,078 | 12 | 704.7 | 16 | 800.0 | 14 | 875.0 | 16 | 356.7 | 275 | 300 | LUMP SUM |

PROJECT NO. R-2303D

SAMPSON COUNTY

STATION: 1326+94.00 -L-

SHEET 4 OF 4

STATE OF NORTH CAROLINA
DEPARTMENT OF TRANSPORTATION
RALEIGH

GENERAL DRAWING

BRIDGE OVER GREAT COHARIE CREEK OVERFLOW ON NC 24 (-L-) BETWEEN SR 1292 AND SR 1262

(LEFT LANE)

CDM Smith

Camp Dresser & McKee
421 Fayetteville Street, Suite 1303
Raleigh, NC 27604
NC COA No. F-1255

DRAWN BY : K.E. LOFTON DATE : 12-12
CHECKED BY : P.R. HOLSHOUSER DATE : 1-13
DESIGN ENGINEER : P.R. HOLSHOUSER DATE : 3-13

DWG. No. S03-004

NORTH CAROLINA PROFESSIONAL SEAL 20668 ENGINEER PAUL R. HOLSHOUSER 3/14/2013

| REVISIONS | | | | | | SHEET No. |
|---|---|---|---|---|---|---|
| No. | BY: | DATE: | No. | BY: | DATE: | S-156 |
| 1 | | | 3 | | | TOTAL SHEETS |
| 2 | | | 4 | | | 218 |

FILE: r:\roadwy\2303d\structures\PLANS\Str_3\R2303D_SD_Sht3_b1.dgn
DATE: 3/5/2013 3:20:20 PM

# LOAD AND RESISTANCE FACTOR RATING (LRFR) SUMMARY FOR PRESTRESSED CONCRETE GIRDERS

| LEVEL | | VEHICLE | WEIGHT (W) (TONS) | CONTROLLING LOAD RATING (#) | MINIMUM RATING FACTORS (RF) | TONS = W × RF | STRENGTH I LIMIT STATE | | | | | | | | | | | SERVICE III LIMIT STATE | | | | | | COMMENT NUMBER |
|---|---|---|---|---|---|---|---|---|---|---|---|---|---|---|---|---|---|---|---|---|---|---|---|---|
| | | | | | | | LIVE-LOAD FACTORS ($\gamma_{LL}$) | MOMENT | | | | | SHEAR | | | | | LIVE-LOAD FACTORS ($\gamma_{LL}$) | MOMENT | | | | | |
| | | | | | | | | DISTRIBUTION FACTORS (DF) | RATING FACTOR | SPANS | GIRDER LOCATION | DISTANCE FROM LEFT END OF SPAN (ft) | DISTRIBUTION FACTORS (DF) | RATING FACTOR | SPAN | GIRDER LOCATION | DISTANCE FROM LEFT END OF SPAN (ft) | | DISTRIBUTION FACTORS (DF) | RATING FACTOR | SPANS | GIRDER LOCATION | DISTANCE FROM LEFT END OF SPAN (ft) | |
| DESIGN LOAD RATING | | HL-93 (INVENTORY) | N/A | 1 | 1.05 | -- | 1.75 | 0.888 | 1.37 | B | E | 31.40 | 1.022 | 1.25 | B | I | 5.70 | 0.80 | 0.854 | 1.05 | B | I | 31.40 | --- |
| | | HL-93 (OPERATING) | N/A | | 1.62 | -- | 1.35 | 0.888 | 1.77 | B | E | 31.40 | 1.022 | 1.62 | B | I | 5.70 | N/A | --- | --- | --- | --- | --- | --- |
| | | HS-20 (INVENTORY) | 36.000 | 2 | 1.35 | 48.60 | 1.75 | 0.888 | 1.75 | B | E | 31.40 | 1.022 | 1.57 | B | I | 5.70 | 0.80 | 0.854 | 1.35 | B | I | 31.40 | --- |
| | | HS-20 (OPERATING) | 36.000 | | 2.06 | 74.16 | 1.35 | 0.888 | 2.27 | B | E | 31.40 | 1.022 | 2.06 | B | I | 5.70 | N/A | --- | --- | --- | --- | --- | --- |
| LEGAL LOAD RATING | SINGLE VEHICLE (SV) | SNSH | 13.500 | | 2.94 | 39.69 | 1.40 | 0.888 | 4.79 | B | E | 31.40 | 1.022 | 5.03 | B | I | 5.70 | 0.80 | 0.854 | 2.94 | B | I | 31.40 | --- |
| | | SNGARBS2 | 20.000 | | 2.23 | 44.60 | 1.40 | 0.888 | 3.63 | B | E | 31.40 | 1.022 | 3.52 | B | I | 5.70 | 0.80 | 0.854 | 2.23 | B | I | 31.40 | --- |
| | | SNAGRIS2 | 22.000 | | 2.13 | 44.73 | 1.40 | 0.888 | 3.47 | B | E | 31.40 | 1.022 | 3.25 | B | I | 5.70 | 0.80 | 0.854 | 2.13 | B | I | 31.40 | --- |
| | | SNCOTTS3 | 27.250 | | 1.47 | 40.06 | 1.40 | 0.888 | 2.38 | B | E | 31.40 | 1.022 | 2.36 | B | I | 5.70 | 0.80 | 0.854 | 1.47 | B | I | 31.40 | --- |
| | | SNAGGRS4 | 34.925 | | 1.24 | 43.31 | 1.40 | 0.888 | 2.02 | B | E | 31.40 | 1.022 | 1.93 | B | I | 5.70 | 0.80 | 0.854 | 1.24 | B | I | 31.40 | --- |
| | | SNS5A | 35.550 | | 1.21 | 43.02 | 1.40 | 0.888 | 1.97 | B | E | 31.40 | 1.022 | 1.97 | B | I | 5.70 | 0.80 | 0.854 | 1.21 | B | I | 31.40 | --- |
| | | SNS6A | 39.950 | | 1.12 | 44.74 | 1.40 | 0.888 | 1.82 | B | E | 31.40 | 1.022 | 1.79 | B | I | 5.70 | 0.80 | 0.854 | 1.12 | B | I | 31.40 | --- |
| | | SNS7B | 42.000 | | 1.07 | 44.94 | 1.40 | 0.888 | 1.73 | B | E | 31.40 | 1.022 | 1.76 | B | I | 5.70 | 0.80 | 0.854 | 1.07 | B | I | 31.40 | --- |
| | TRUCK TRACTOR SEMI-TRAILER (TTST) | TNAGRIT3 | 33.000 | | 1.37 | 43.84 | 1.40 | 0.888 | 2.22 | B | E | 31.40 | 1.022 | 2.17 | B | I | 5.70 | 0.80 | 0.854 | 1.37 | B | I | 31.40 | --- |
| | | TNT4A | 33.075 | | 1.37 | 45.31 | 1.40 | 0.888 | 2.23 | B | E | 31.40 | 1.022 | 2.08 | B | I | 5.70 | 0.80 | 0.854 | 1.37 | B | I | 31.40 | --- |
| | | TNT6A | 41.600 | | 1.13 | 47.01 | 1.40 | 0.888 | 1.84 | B | E | 31.40 | 1.022 | 1.90 | B | I | 5.70 | 0.80 | 0.854 | 1.13 | B | I | 31.40 | --- |
| | | TNT7A | 42.000 | | 1.14 | 47.88 | 1.40 | 0.888 | 1.85 | B | E | 31.40 | 1.022 | 1.82 | B | I | 5.70 | 0.80 | 0.854 | 1.14 | B | I | 31.40 | --- |
| | | TNT7B | 42.000 | | 1.19 | 49.98 | 1.40 | 0.888 | 1.93 | B | E | 31.40 | 1.022 | 1.71 | B | I | 5.70 | 0.80 | 0.854 | 1.19 | B | I | 31.40 | --- |
| | | TNAGRIT4 | 43.000 | | 1.12 | 48.16 | 1.40 | 0.888 | 1.82 | B | E | 31.40 | 1.022 | 1.62 | B | I | 5.70 | 0.80 | 0.854 | 1.12 | B | I | 31.40 | --- |
| | | TNAGT5A | 45.000 | | 1.06 | 47.70 | 1.40 | 0.888 | 1.72 | B | E | 31.40 | 1.022 | 1.63 | B | I | 5.70 | 0.80 | 0.854 | 1.06 | B | I | 31.40 | --- |
| | | TNAGT5B | 45.000 | 3 | 1.04 | 46.80 | 1.40 | 0.888 | 1.69 | B | E | 31.40 | 1.022 | 1.53 | B | I | 5.70 | 0.80 | 0.854 | 1.04 | B | I | 31.40 | --- |

## LOAD FACTORS

| DESIGN LOAD RATING FACTORS | LIMIT STATE | $\gamma_{DC}$ | $\gamma_{DW}$ |
|---|---|---|---|
| | STRENGTH I | 1.25 | 1.50 |
| | SERVICE III | 1.00 | 1.00 |

## NOTES

MINIMUM RATING FACTORS ARE BASED ON THE STRENGTH I AND SERVICE III LIMIT STATES.

ALLOWABLE STRESSES FOR SERVICE III LIMIT STATE ARE AS REQUIRED FOR DESIGN.

## COMMENTS

1. INTERIOR GIRDERS ARE IDENTICAL.
2. LEFT AND RIGHT EXTERIOR GIRDER ARE IDENTICAL.

## (#) CONTROLLING LOAD RATING

(1) DESIGN LOAD RATING (HL-93)

(2) DESIGN LOAD RATING (HS-20)

(3) LEGAL LOAD RATING **

** SEE CHART FOR VEHICLE TYPE

## GIRDER LOCATION

I - INTERIOR GIRDER
EL - EXTERIOR LEFT GIRDER
ER - EXTERIOR RIGHT GIRDER

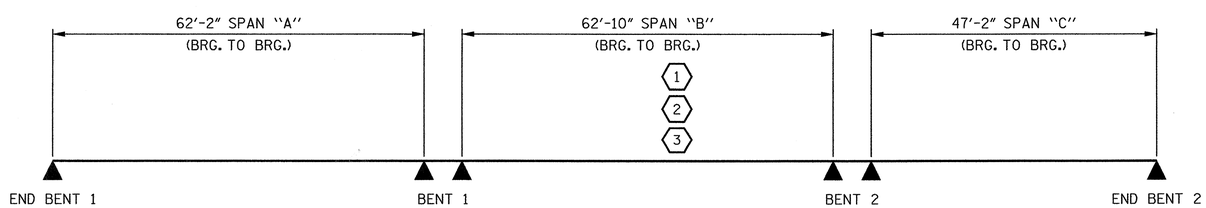


## LRFR SUMMARY

PROJECT NO. R-2303D
SAMPSON COUNTY
STATION: 1326+94.00 -L-

STATE OF NORTH CAROLINA
DEPARTMENT OF TRANSPORTATION
RALEIGH

STANDARD
LRFR SUMMARY FOR PRESTRESSED CONCRETE GIRDERS (NON-INTERSTATE TRAFFIC) (LEFT LANE)

NORTH CAROLINA PROFESSIONAL SEAL 20668 ENGINEER PAUL R. HOLSHOUSER 3/14/2013

| REVISIONS | | | | | | |
|---|---|---|---|---|---|---|
| No. | BY: | DATE: | No. | BY: | DATE: | |
| 1 | | | 3 | | | |
| 2 | | | 4 | | | |

SHEET No. 8-157
TOTAL SHEETS 218

CDM Smith
Camp Dresser & McKee
421 Fayetteville Street, Suite 1303
Raleigh, NC 27604
NC COA No. F-1255

DRAWN BY : K.E. LOFTON DATE : 8-12
CHECKED BY : P.R. HOLSHOUSER DATE : 12-12
DESIGN ENGINEER : P.R. HOLSHOUSER DATE : 3-13

DWG. No. S03-005

ASSEMBLED BY : K. E. LOFTON DATE : 8-12
CHECKED BY : P.R. HOLSHOUSER DATE : 12-12

DRAWN BY : MAA 1/08
CHECKED BY : GM/DI 2/08

REV. 11/12/08RR MAA/GM
REV. 10/1/11 MAA/GM

FILE: r:\rodot\R2303D\Structures\PLANS\Str_31\R2303D_SD_Str2_b1.dgn
DATE: 3/5/2013 3:20:21 PM

STD. No. LRFR1

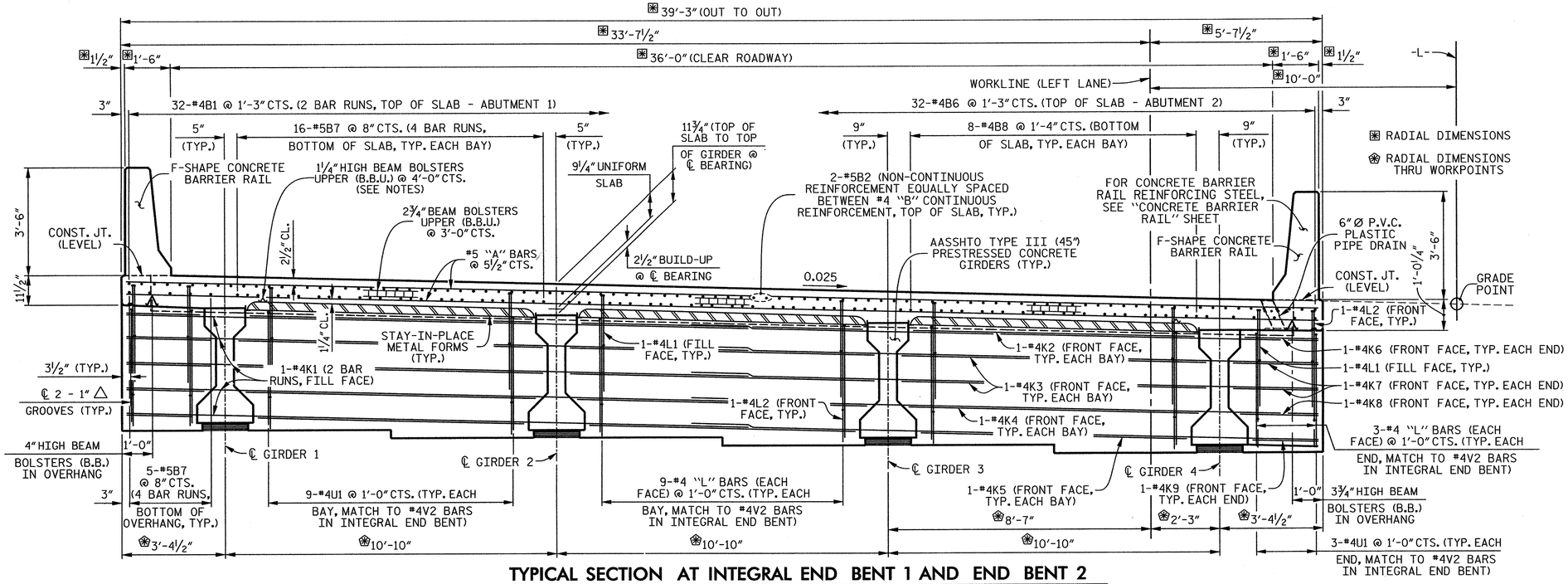


## TYPICAL SECTION AT INTEGRAL END BENT 1 AND END BENT 2

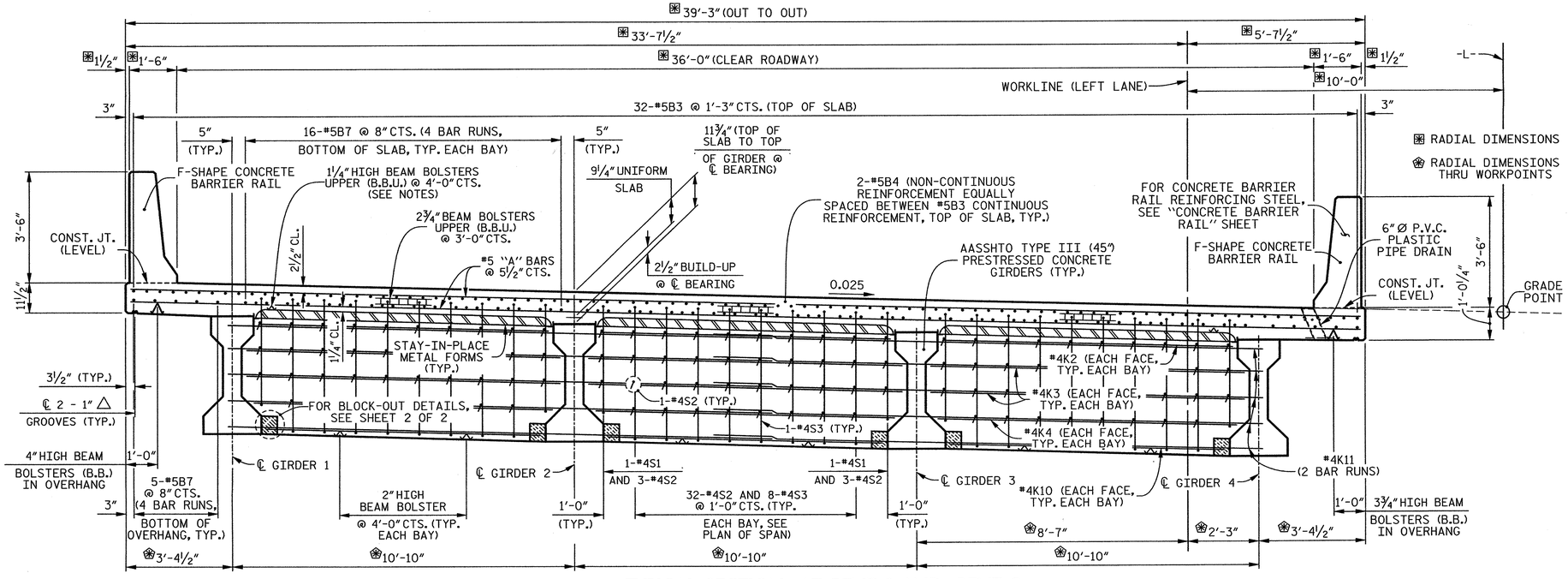


## TYPICAL SECTION AT BENT 1 AND BENT 2

## NOTES

PROVIDE 1¼" HIGH BEAM BOLSTERS UPPER AT 4'-0" CTS. ATOP THE METAL STAY-IN-PLACE FORMS TO SUPPORT THE BOTTOM MAT OF "A" BARS. WHEN USING REMOVABLE FORMS, PROVIDE CONTINUOUS HIGH CHAIRS FOR METAL DECK (C.H.C.M.) @ 4'-0" CTS. WITH A HEIGHT TO SUPPORT THE BOTTOM MAT OF "A" BARS A CLEAR DISTANCE OF 2½" ABOVE THE TOP OF THE REMOVABLE FORM.

LONGITUDINAL STEEL MAY BE SHIFTED SLIGHTLY, AS NECESSARY, TO AVOID INTERFERENCE WITH STIRRUPS IN PRESTRESSED CONCRETE GIRDERS.

PREVIOUSLY CAST CONCRETE IN A CONTINUOUS UNIT SHALL HAVE ATTAINED A MINIMUM COMPRESSIVE STRENGTH OF 3,000 PSI BEFORE ADDITIONAL CONCRETE IS CAST IN THE UNIT.

BARRIER RAIL IN A CONTINUOUS UNIT SHALL NOT BE CAST UNTIL ALL SLAB CONCRETE IN THE UNIT HAS BEEN CAST AND HAS REACHED A MINIMUM COMPRESSIVE STRENGTH OF 3,000 PSI.

CONCRETE IN ALL BENT DIAPHRAGMS MAY BE CLASS A IN LIEU OF CLASS AA.

FOR STEEL INTERMEDIATE DIAPHRAGMS, SEE "INTERMEDIATE STEEL DIAPHRAGM FOR TYPE III PRESTRESSED CONCRETE GIRDERS" SHEET, FOR LOCATIONS SEE "FRAMING PLAN" SHEET.

FOR F-SHAPE CONCRETE BARRIER RAIL DETAILS, SEE "CONCRETE BARRIER RAIL" SHEET.

FOR POURING SEQUENCE, SEE "SUPERSTRUCTURE BILL OF MATERIAL" SHEET.

PROJECT NO. R-2303D
SAMPSON COUNTY
STATION: 1326+94.00 -L-

SHEET 1 OF 2

STATE OF NORTH CAROLINA
DEPARTMENT OF TRANSPORTATION
RALEIGH

SUPERSTRUCTURE

# TYPICAL SECTION (LEFT LANE)

CDM Smith
Camp Dresser & McKee
421 Fayetteville Street, Suite 1303
Raleigh, NC 27604
NC COA No. F-1255

DRAWN BY : K.E. LOFTON DATE : 8-12
CHECKED BY : P.R. HOLSHOUSER DATE : 12-12
DESIGN ENGINEER : P.R. HOLSHOUSER DATE : 3-13

DWG. No. S03-006

NORTH CAROLINA PROFESSIONAL SEAL 20668 ENGINEER PAUL R. HOLSHOUSER 3/14/2013

| REVISIONS | | | | | | | | SHEET No. |
|---|---|---|---|---|---|---|---|---|
| No. | BY: | DATE: | No. | BY: | DATE: | | | S-158 |
| 1 | | | 3 | | | | | TOTAL SHEETS |
| 2 | | | 4 | | | | | 218 |

FILE: c:\cadd\r2303d\structure\PLANS\Sr_s1R2303D_SD_Sh3_s1.dgn
DATE: 3/5/2013 3:20:27 PM

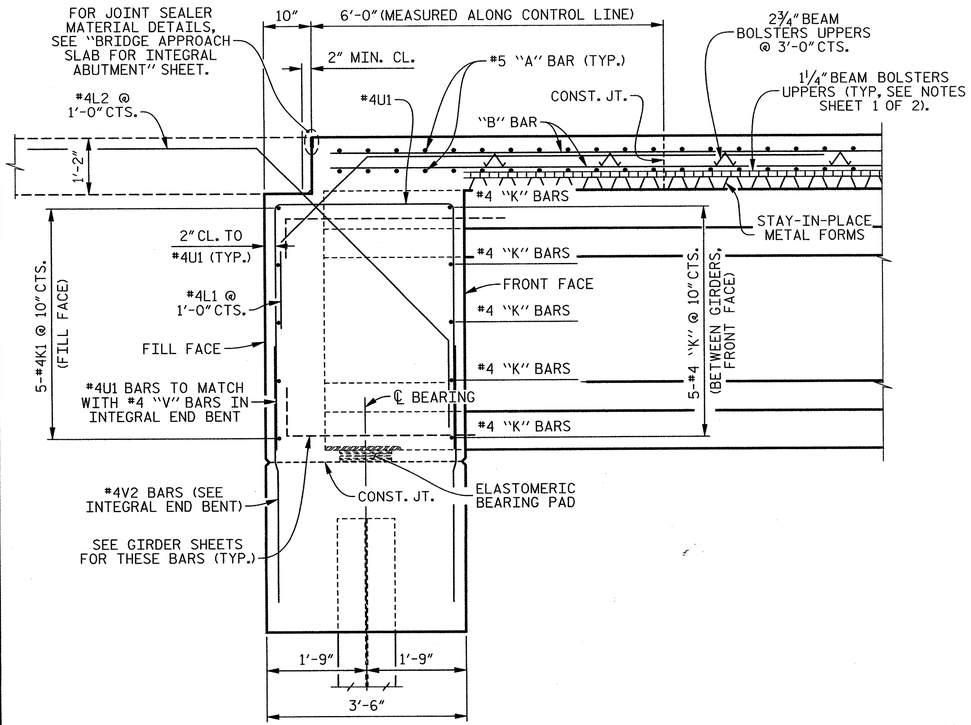


## SECTION THRU INTEGRAL END BENT

( END BENT 1 SHOWN, END BENT 2 SIMILAR )

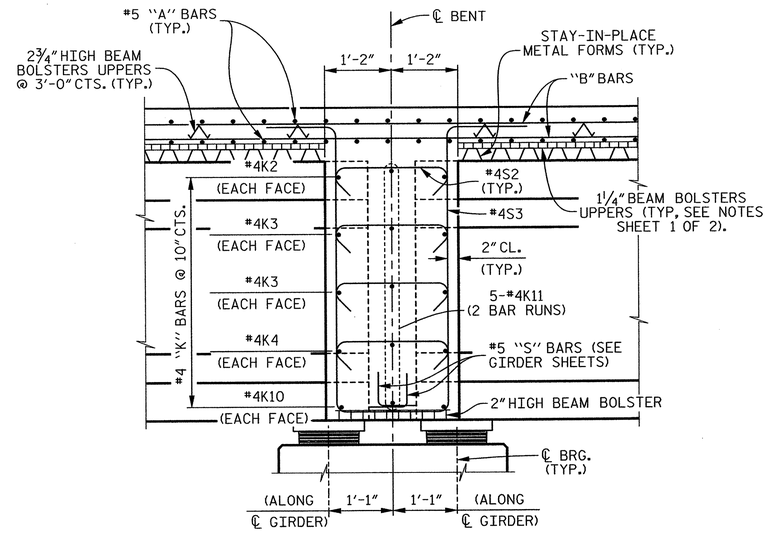


## SECTION THRU BENT DIAPHRAGM

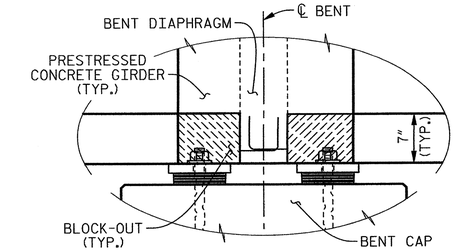


## SECTION B–B

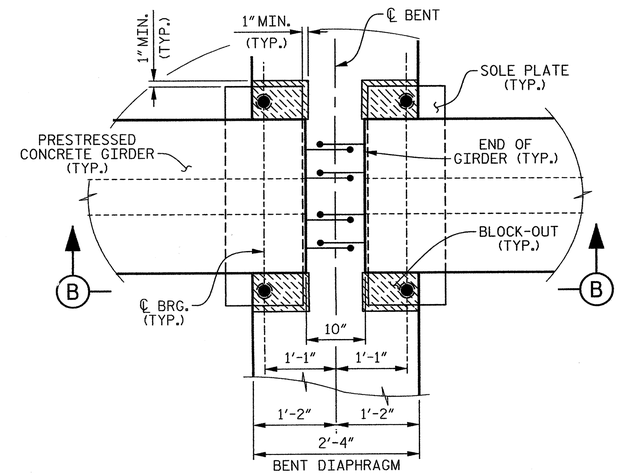


PLAN

## BENT DIAPHRAGM BLOCK-OUT DETAIL

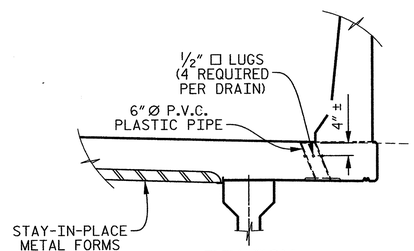


ELEVATION

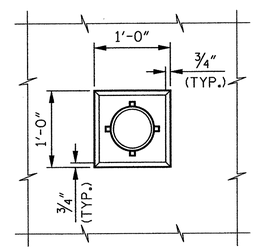


PLAN OF RECESS

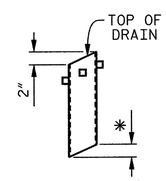


* TO BE SET TO MATCH SLOPE OF BOTTOM OF OVERHANG ( 7 DRAINS REQUIRED)

PIPE DETAIL

TOP OF FLOOR DRAIN TO BE SET ⅜" BELOW SURFACE OF SLAB.

4 - ½" □ LUGS TO BE GLUED TO THE P.V.C. PLASTIC PIPE AT EQUAL SPACES AROUND THE PIPE DRAIN APPROXIMATELY 4" FROM THE TOP OF THE PIPE.

THE 6" DIAMETER P.V.C. PLASTIC PIPE AND FITTINGS SHALL BE SCHEDULE 40 AND CONFORM TO ASTM D1785.

## DRAIN DETAILS

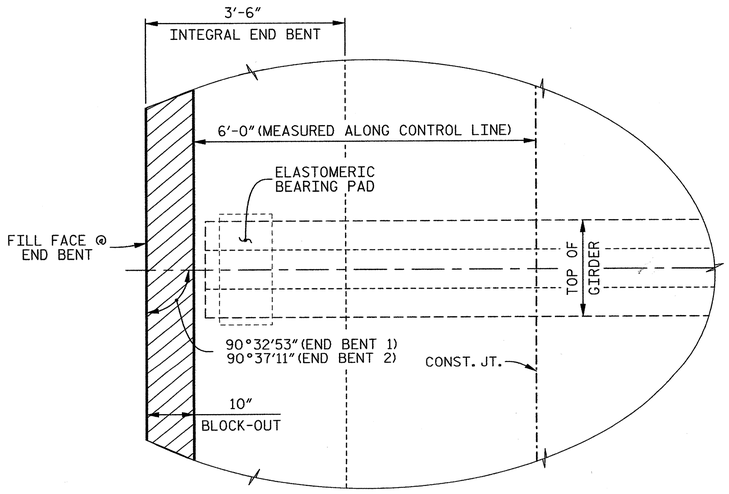


## PLAN OF GIRDER – INTEGRAL END BENT

( END BENT 1 SHOWN, END BENT 2 SIMILAR )

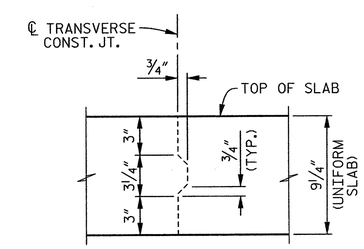


## TRANSVERSE CONSTRUCTION JOINT DETAIL

REINFORCING STEEL IN SLAB NOT SHOWN. LONGITUDINAL REINFORCING STEEL SHALL BE CONTINUOUS THRU JOINT.

PROJECT NO. R-2303D

SAMPSON COUNTY

STATION: 1326+94.00 –L–

SHEET 2 OF 2

STATE OF NORTH CAROLINA
DEPARTMENT OF TRANSPORTATION
RALEIGH

SUPERSTRUCTURE

TYPICAL SECTION DETAILS (LEFT LANE)

CDM Smith

Camp Dresser & McKee
421 Fayetteville Street, Suite 1303
Raleigh, NC 27604
NC COA No. F-1255

DRAWN BY : K.E. LOFTON DATE : 8-12
CHECKED BY : P.R. HOLSHOUSER DATE : 12-12
DESIGN ENGINEER : P.R. HOLSHOUSER DATE : 3-13

DWG. No. S03-007

NORTH CAROLINA PROFESSIONAL SEAL 20668 ENGINEER PAUL R. HOLSHOUSER
3/14/2013

| REVISIONS | | | | | | SHEET No. |
|---|---|---|---|---|---|---|
| No. | BY: | DATE: | No. | BY: | DATE: | S-159 |
| 1 | | | 3 | | | TOTAL SHEETS |
| 2 | | | 4 | | | 218 |

FILE: r:\roadwy\2303d\structures\PLANS\Sr_s\R2303D_SD_Sr2_sz2.dgn
DATE: 3/5/2013 3:20:31 PM

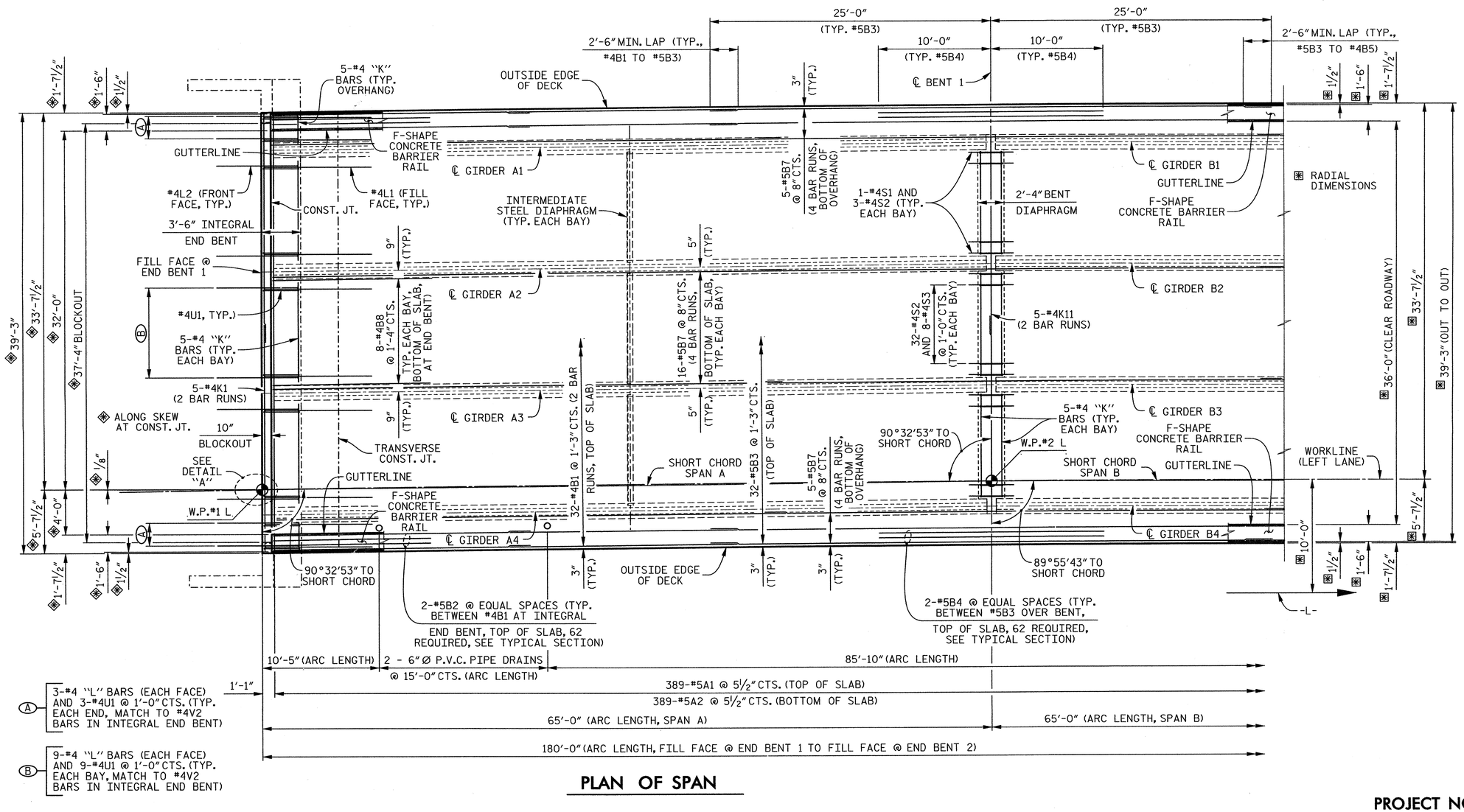


## PLAN OF SPAN

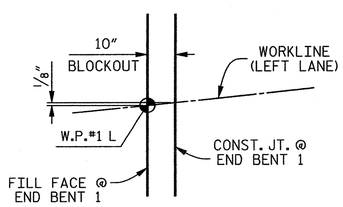


## DETAIL "A"

## NOTES

#5 "A" BARS SHALL BE PLACED PERPENDICULAR TO LONG CHORD WITH A 2" MINIMUM CLEARANCE ON EACH END.

SPACING FOR "B" BARS IN TOP OF SLAB IS RADIAL TO -L-.

FOR REINFORCING STEEL IN CONCRETE BARRIER, SEE "CONCRETE BARRIER RAIL" SHEET.

FOR SLAB POURING SEQUENCE AND SPLICE CHART, SEE "BILL OF MATERIAL" SHEET.

FOR ARC OFFSETS, SEE SHEET 3 OF 3.

PROJECT NO. R-2303D

SAMPSON COUNTY

STATION: 1326+94.00 -L-

SHEET 1 OF 3

STATE OF NORTH CAROLINA
DEPARTMENT OF TRANSPORTATION
RALEIGH

SUPERSTRUCTURE

PLAN OF SPAN

(LEFT LANE)

CDM Smith

Camp Dresser & McKee
421 Fayetteville Street, Suite 1303
Raleigh, NC 27604
NC COA No. F-1255

DRAWN BY : K.E. LOFTON DATE : 8-12
CHECKED BY : P.R. HOLSHOUSER DATE : 12-12
DESIGN ENGINEER : P.R. HOLSHOUSER DATE : 3-13

DWG. No. S03-008

NORTH CAROLINA PROFESSIONAL SEAL 20668 ENGINEER PAUL R. HOLSHOUSER
3/14/2013

| REVISIONS | | | | | | SHEET No. |
|---|---|---|---|---|---|---|
| No. | BY: | DATE: | No. | BY: | DATE: | S-160 |
| 1 | | | 3 | | | TOTAL SHEETS |
| 2 | | | 4 | | | 218 |

FILE: r:\model\2303d\structures\PLANS\Sr_3\R2303D_SD_Sr3_pol.dgn
DATE: 3/20/13 3:20:33 PM

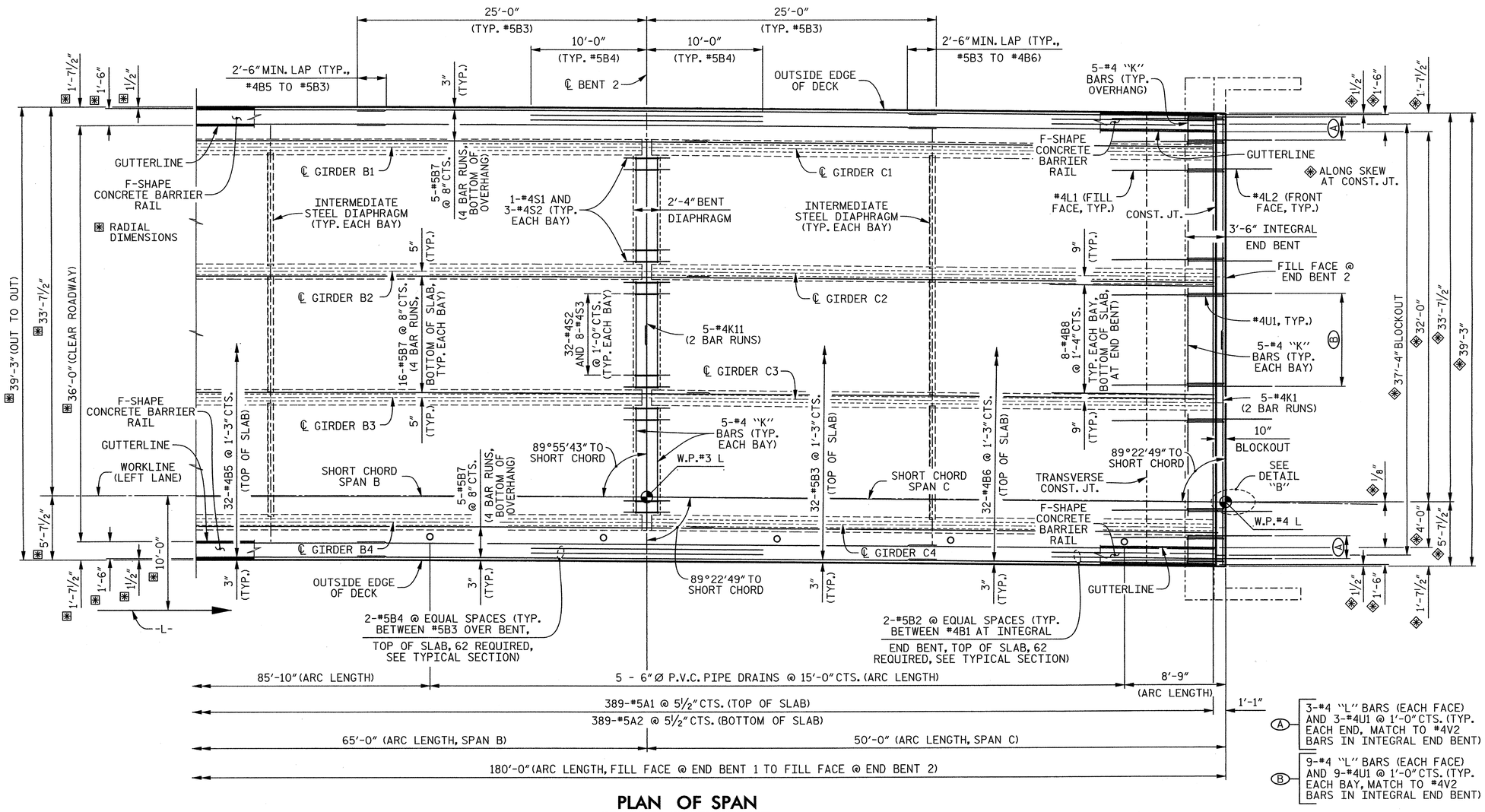


## PLAN OF SPAN

**NOTE**

FOR NOTES, SEE SHEET 1 OF 3.

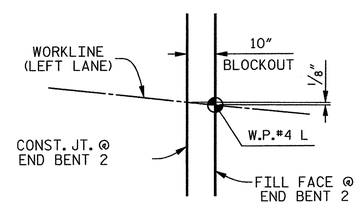


## DETAIL "B"

PROJECT NO. R-2303D

SAMPSON COUNTY

STATION: 1326+94.00 -L-

SHEET 2 OF 3

STATE OF NORTH CAROLINA
DEPARTMENT OF TRANSPORTATION
RALEIGH

SUPERSTRUCTURE

# PLAN OF SPAN (LEFT LANE)

CDM Smith
Camp Dresser & McKee
421 Fayetteville Street, Suite 1303
Raleigh, NC 27604
NC COA No. F-1255

DRAWN BY : K.E. LOFTON DATE : 8-12
CHECKED BY : P.R. HOLSHOUSER DATE : 12-12
DESIGN ENGINEER : P.R. HOLSHOUSER DATE : 3-13

DWG. No. S03-009

NORTH CAROLINA PROFESSIONAL SEAL 20668 ENGINEER PAUL R. HOLSHOUSER 3/14/2013

| REVISIONS | | | | | | |
|---|---|---|---|---|---|---|
| No. | BY: | DATE: | No. | BY: | DATE: | |
| 1 | | | 3 | | | |
| 2 | | | 4 | | | |

SHEET No. S-1cd

TOTAL SHEETS 218

FILE: r:\coder\r2303d\structures\PLANS\Str_3\R2303D_SD_Str3_pt2.dgn
DATE: 3/5/2013 3:20:35 PM

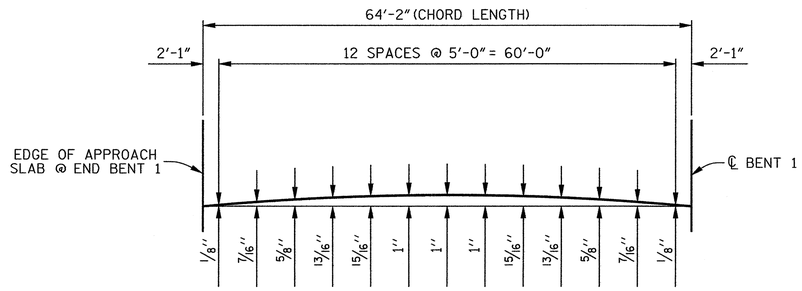


## ARC OFFSETS 43'-7 1/2" LEFT OF -L-

(SPAN A)

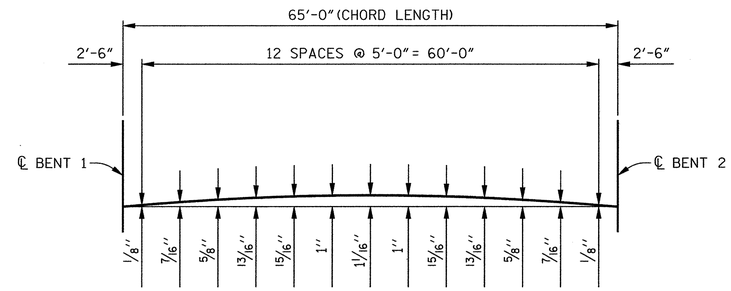


## ARC OFFSETS 43'-7 1/2" LEFT OF -L-

(SPAN B)

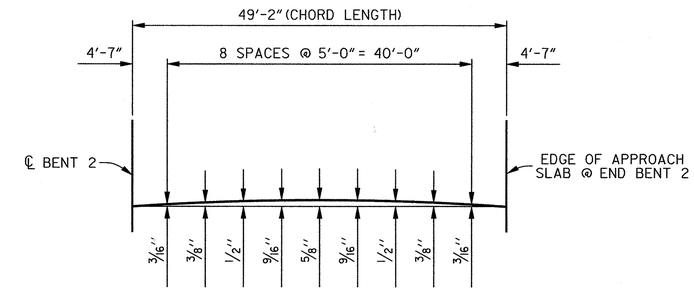


## ARC OFFSETS 43'-7 1/2" LEFT OF -L-

(SPAN C)

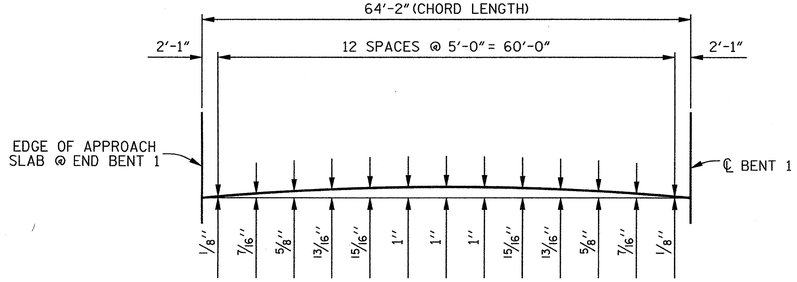


## ARC OFFSETS 4'-4 1/2" LEFT OF -L-

(SPAN A)

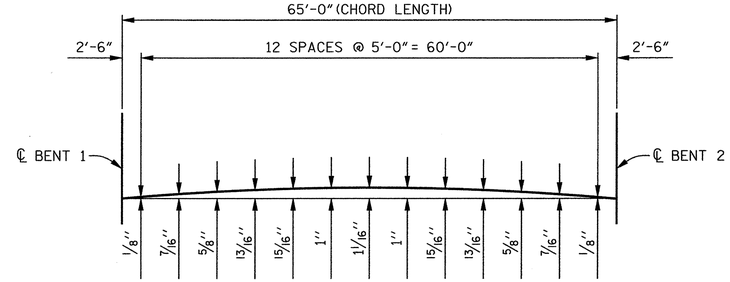


## ARC OFFSETS 4'-4 1/2" LEFT OF -L-

(SPAN B)

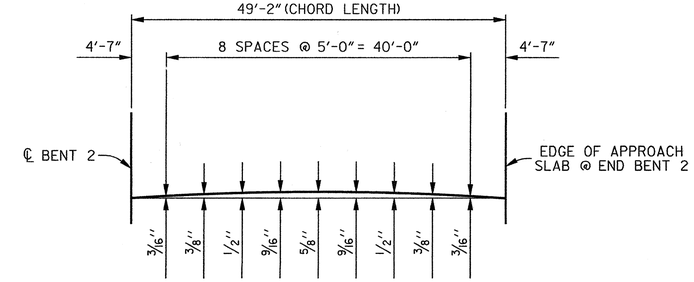


## ARC OFFSETS 4'-4 1/2" LEFT OF -L-

(SPAN C)

PROJECT NO. R-2303D

SAMPSON COUNTY

STATION: 1326+94.00 -L-

SHEET 3 OF 3

STATE OF NORTH CAROLINA
DEPARTMENT OF TRANSPORTATION
RALEIGH

SUPERSTRUCTURE

PLAN OF SPAN

(LEFT LANE)

CDM Smith

Camp Dresser & McKee
421 Fayetteville Street, Suite 1303
Raleigh, NC 27604
NC COA No. F-1255

DRAWN BY : K.E. LOFTON DATE : 8-12
CHECKED BY : P.R. HOLSHOUSER DATE : 12-12
DESIGN ENGINEER : P.R. HOLSHOUSER DATE : 3-13

DWG. No. S03-010

NORTH CAROLINA PROFESSIONAL SEAL 20668 ENGINEER PAUL R. HOLSHOUSER 3/14/2013

| REVISIONS | | | | | | SHEET No. |
|---|---|---|---|---|---|---|
| No. | BY: | DATE: | No. | BY: | DATE: | S-162 |
| 1 | | | 3 | | | TOTAL SHEETS |
| 2 | | | 4 | | | 218 |

FILE: n:\model\2303d\structure\PLANS\Str_31\2303D_SD_Sn3_pt3.dgn
DATE: 3/20/13 3:20:37 PM

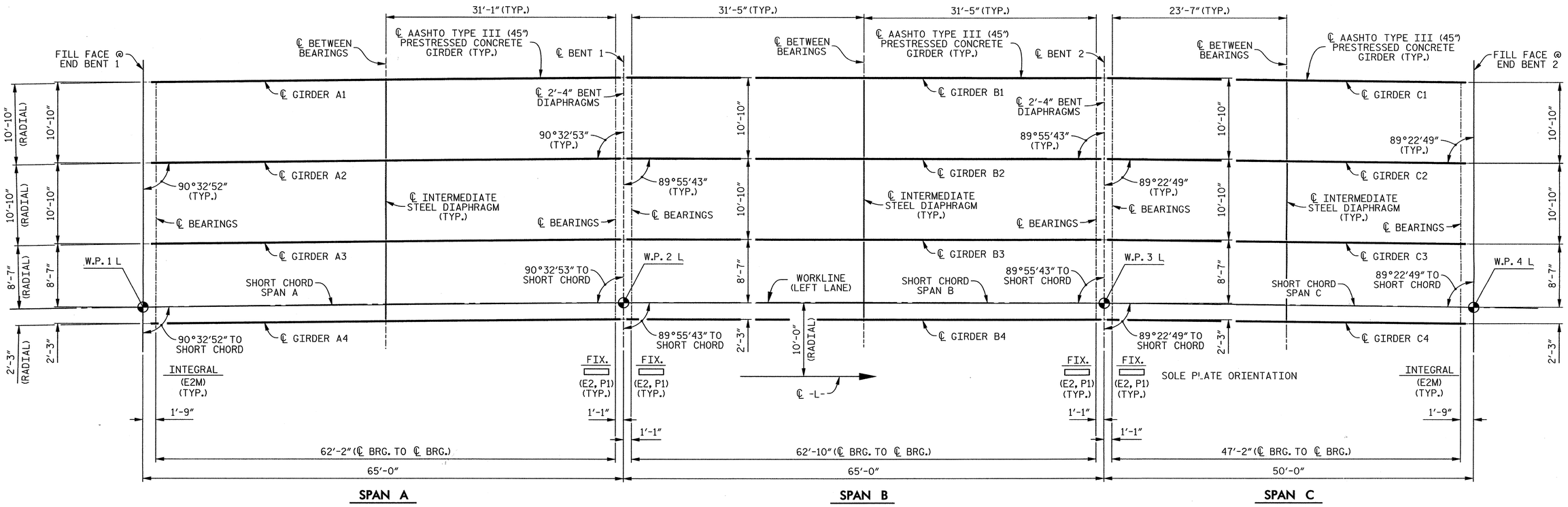


## FRAMING PLAN

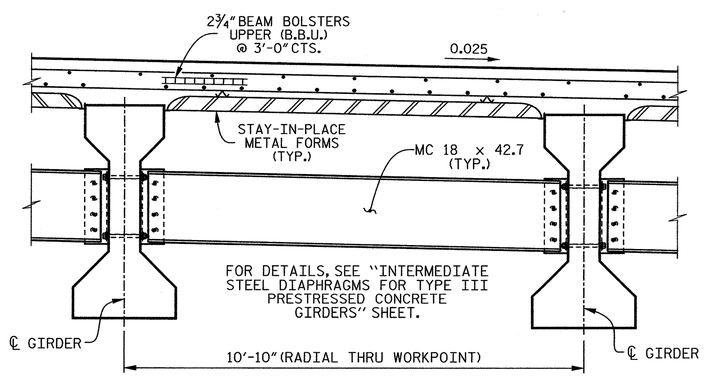


## PARTIAL TYPICAL SECTION

NEAR INTERMEDIATE DIAPHRAGM

PROJECT NO. R-2303D

SAMPSON COUNTY

STATION: 1326+94.00 -L-

STATE OF NORTH CAROLINA
DEPARTMENT OF TRANSPORTATION
RALEIGH

SUPERSTRUCTURE

FRAMING PLAN (LEFT LANE)

CDM Smith
Camp Dresser & McKee
421 Fayetteville Street, Suite 1303
Raleigh, NC 27604
NC COA No. F-1255

| | | | |
|---|---|---|---|
| DRAWN BY : | K.E. LOFTON | DATE : | 8-12 |
| CHECKED BY : | P.R. HOLSHOUSER | DATE : | 12-12 |
| DESIGN ENGINEER : | P.R. HOLSHOUSER | DATE : | 3-13 |

DWG. No. S03-011

NORTH CAROLINA PROFESSIONAL SEAL 20668 ENGINEER PAUL R. HOLSHOUSER 3/14/2013

| REVISIONS | | | | | | SHEET No. |
|---|---|---|---|---|---|---|
| No. | BY: | DATE: | No. | BY: | DATE: | S-163 |
| 1 | | | 3 | | | TOTAL SHEETS |
| 2 | | | 4 | | | 218 |

FILE: r:\rcdot\R2303D\Structures\PLANS\Str_3\R2303D_SD_Str3_fp1.dgn
DATE: 3/5/2013 3:20:40 PM

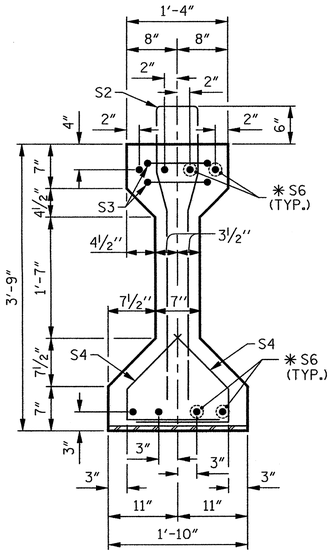


## SECTION A–A

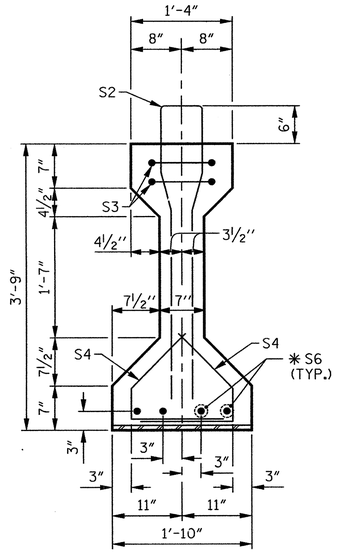


## SECTION B–B

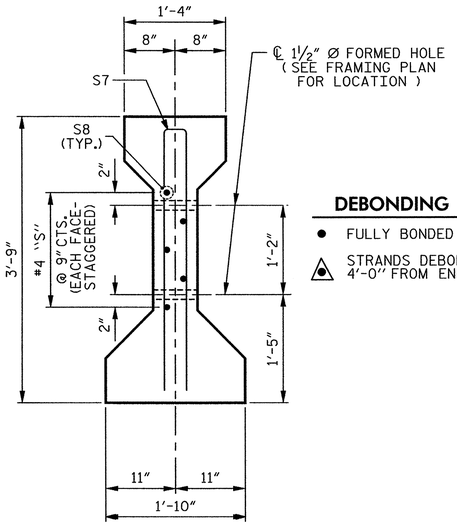


## SECTION C–C

(S1 BARS NOT SHOWN)

**DEBONDING LEGEND**

- ● FULLY BONDED STRANDS
- △ STRANDS DEBONDED FOR 4'-0" FROM END OF GIRDER

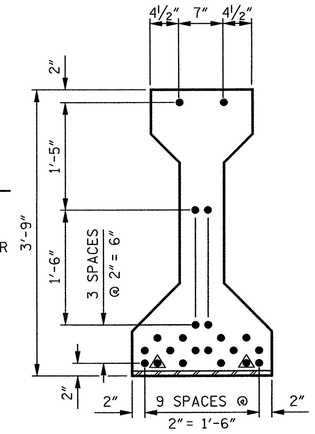


## AT END OF GIRDER

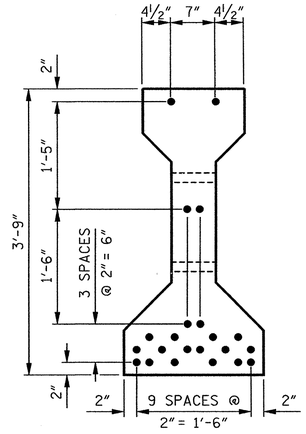


## AT ℄ OF GIRDER

## 22 –0.6" Ø LOW RELAXATION STRAND LAYOUT

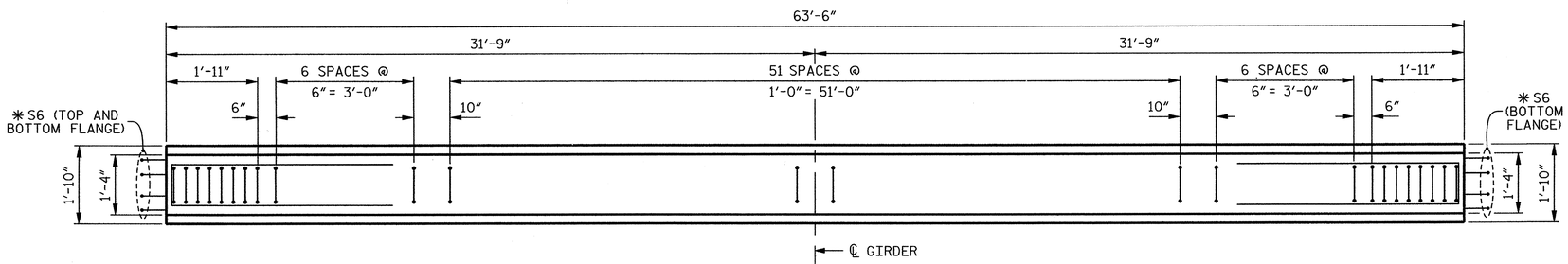


## PLAN OF GIRDER

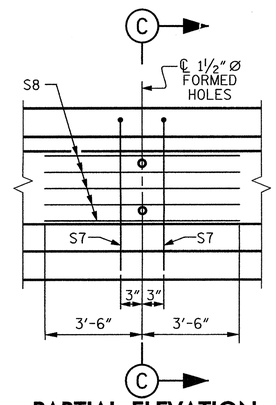


## PARTIAL ELEVATION

SHOWING INTERMEDIATE DIAPHRAGM REINFORCING STEEL FOR GIRDER 1 THRU GIRDER 4.

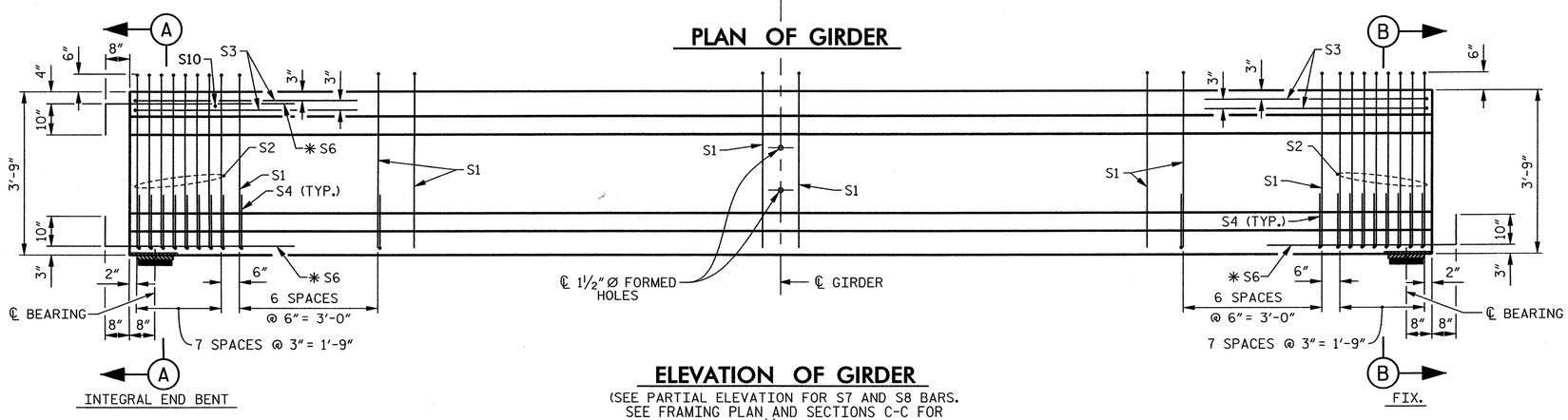


## ELEVATION OF GIRDER

(SEE PARTIAL ELEVATION FOR S7 AND S8 BARS. SEE FRAMING PLAN AND SECTIONS C-C FOR LOCATION OF 1½"Ø FORMED HOLES)

## 0.6" Ø L.R. GRADE 270 STRANDS

| AREA (SQUARE INCHES) | ULTIMATE STRENGTH (LBS. PER STRAND) | APPLIED PRESTRESS (LBS. PER STRAND) |
|---|---|---|
| 0.217 | 58,600 | 43,950 |

## REINFORCING STEEL FOR ONE GIRDER

| BAR | NUMBER | SIZE | TYPE | LENGTH | WEIGHT |
|---|---|---|---|---|---|
| S1 | 66 | #4 | 1 | 8'- 6" | 375 |
| S2 | 16 | #6 | 1 | 8'- 6" | 204 |
| S3 | 4 | #4 | 2 | 8'- 8" | 23 |
| S4 | 60 | #4 | 3 | 2'- 9" | 110 |
| ✱S6 | 12 | #5 | STR | 3'- 8" | 46 |
| S7 | 2 | #5 | 2 | 7'- 2" | 15 |
| S8 | 5 | #4 | STR | 7'- 0" | 23 |
| S10 | 1 | #3 | STR | 1'- 0" | 1 |
| | | | | | |

✱NOTE: S6 BARS SHALL BE BENT BEFORE SHIPMENT. HEAT BENDING SHALL NOT BE ALLOWED.

## BAR TYPES

ALL BAR DIMENSIONS ARE OUT-TO-OUT.

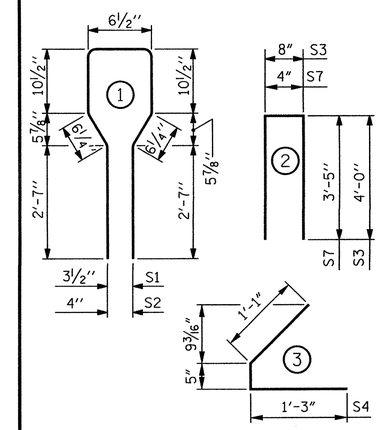


## QUANTITIES FOR ONE GIRDER

| | REINFORCING STEEL LB. | 6,000 PSI CONCRETE C.Y. | 0.6" Ø L.R. STRANDS No. |
|---|---|---|---|
| SPAN A | 797 | 9.1 | 22 |
| | | | |

## GIRDERS REQUIRED

| LOCATION | NUMBER | LENGTH | TOTAL LENGTH |
|---|---|---|---|
| SPAN A | 4 | 63'-6" | 254.000' |

PROJECT NO. R-2303D

SAMPSON COUNTY

STATION: 1326+94.00 –L–

SHEET 1 OF 4

STATE OF NORTH CAROLINA
DEPARTMENT OF TRANSPORTATION
RALEIGH

STANDARD

# AASHTO TYPE III PRESTRESSED CONCRETE GIRDER CONTINUOUS FOR LIVE LOAD – SPAN A (LEFT LANE)

CDM Smith
Camp Dresser & McKee
421 Fayetteville Street, Suite 1303
Raleigh, NC 27604
NC COA No. F-1255

DRAWN BY : K.E. LOFTON DATE : 8-12
CHECKED BY : P.R. HOLSHOUSER DATE : 12-12
DESIGN ENGINEER : P.R. HOLSHOUSER DATE : 3-13

DWG. No. S03-012

NORTH CAROLINA PROFESSIONAL SEAL 20668 ENGINEER PAUL R. HOLSHOUSER
3/14/2013

| REVISIONS | | | | | | SHEET No. |
|---|---|---|---|---|---|---|
| No. | BY: | DATE: | No. | BY: | DATE: | S-164 |
| 1 | | | 3 | | | TOTAL SHEETS |
| 2 | | | 4 | | | 218 |

STD. No. PCG5

ASSEMBLED BY : K.E. LOFTON DATE : 8-12
CHECKED BY : P.R. HOLSHOUSER DATE : 12-12

DRAWN BY : ELR 8/91
CHECKED BY : GRP 8/91

REV. 10/17/00R RWW/LES
REV. 5/1/06R TLA/GM
REV. 10/1/11 MAA/GM

FILE: r:\model\R2303D\Structures\PLANS\Str_31R2303D_SD_Str3_pg1.dgn
DATE: 3/20/2013 3:20:42 PM

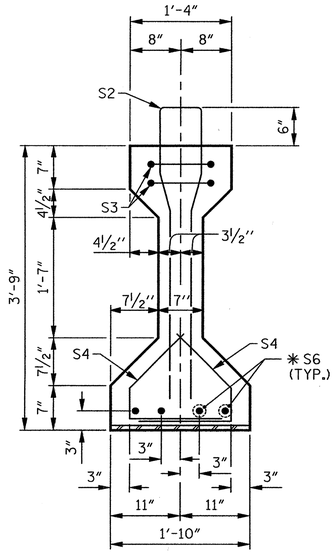


## SECTION B–B

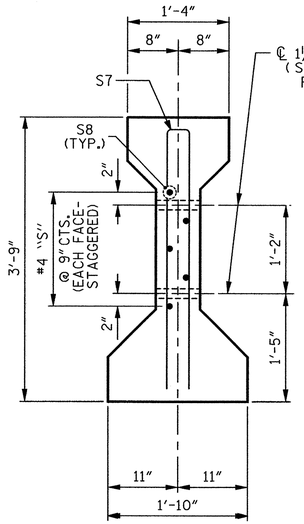


## SECTION C–C

(S1 BARS NOT SHOWN)

**DEBONDING LEGEND**

- ● FULLY BONDED STRANDS
- ▲ STRANDS DEBONDED FOR 4'-0" FROM END OF GIRDER

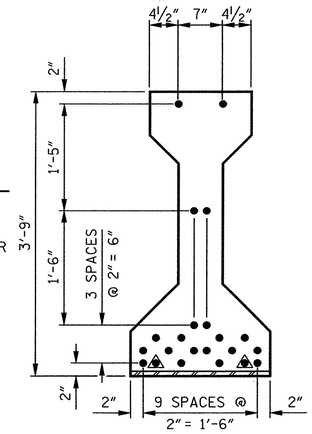


## AT END OF GIRDER

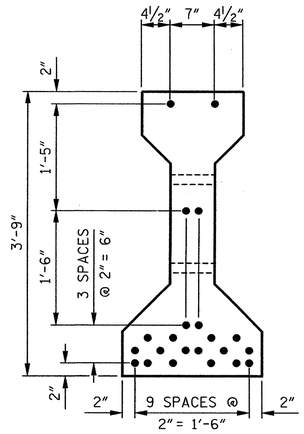


## AT ℄ OF GIRDER

## 22 –0.6" Ø LOW RELAXATION STRAND LAYOUT

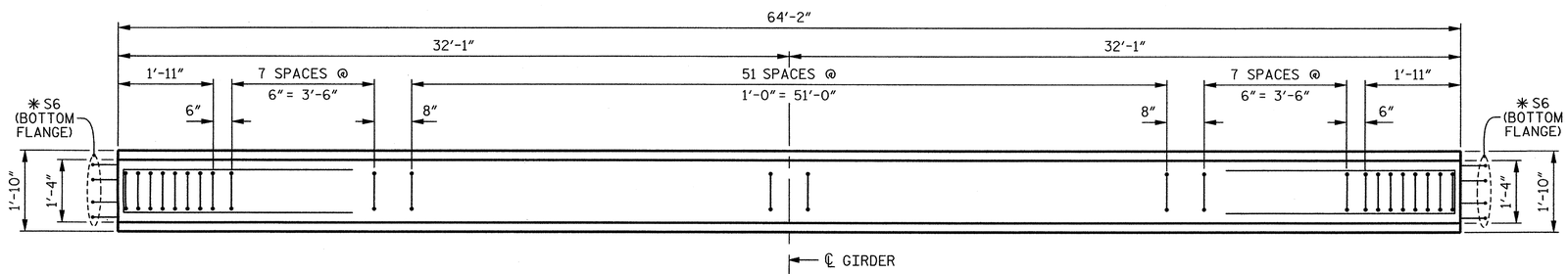


## PLAN OF GIRDER

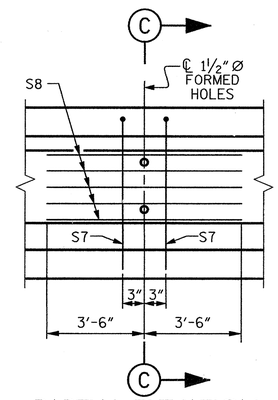


## PARTIAL ELEVATION

SHOWING INTERMEDIATE DIAPHRAGM REINFORCING STEEL FOR GIRDER 1 THRU GIRDER 4.

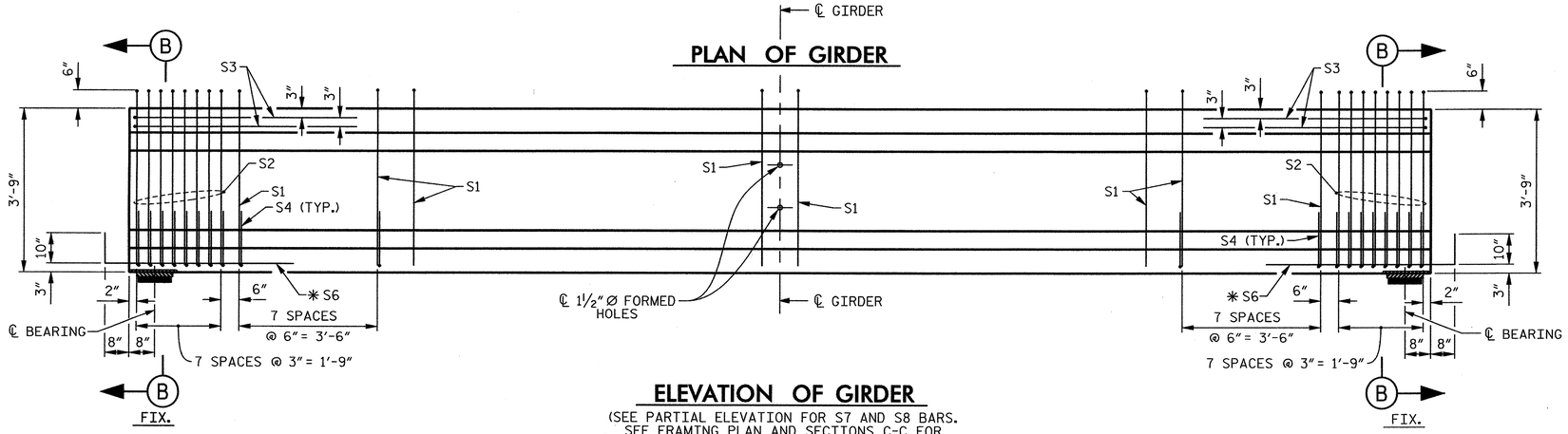


## ELEVATION OF GIRDER

(SEE PARTIAL ELEVATION FOR S7 AND S8 BARS. SEE FRAMING PLAN AND SECTIONS C-C FOR LOCATION OF 1½" Ø FORMED HOLES)

## 0.6" Ø L.R. GRADE 270 STRANDS

| AREA (SQUARE INCHES) | ULTIMATE STRENGTH (LBS. PER STRAND) | APPLIED PRESTRESS (LBS. PER STRAND) |
|---|---|---|
| 0.217 | 58,600 | 43,950 |

## REINFORCING STEEL FOR ONE GIRDER

| BAR | NUMBER | SIZE | TYPE | LENGTH | WEIGHT |
|---|---|---|---|---|---|
| S1 | 68 | #4 | 1 | 8'- 6" | 386 |
| S2 | 16 | #6 | 1 | 8'- 6" | 204 |
| S3 | 4 | #4 | 2 | 8'- 8" | 23 |
| S4 | 64 | #4 | 3 | 2'- 9" | 118 |
| ✱ S6 | 8 | #5 | STR | 3'- 8" | 31 |
| S7 | 2 | #5 | 2 | 7'- 2" | 15 |
| S8 | 5 | #4 | STR | 7'- 0" | 23 |
| | | | | | |
| | | | | | |

✱ NOTE: S6 BARS SHALL BE BENT BEFORE SHIPMENT. HEAT BENDING SHALL NOT BE ALLOWED.

## BAR TYPES

ALL BAR DIMENSIONS ARE OUT-TO-OUT.

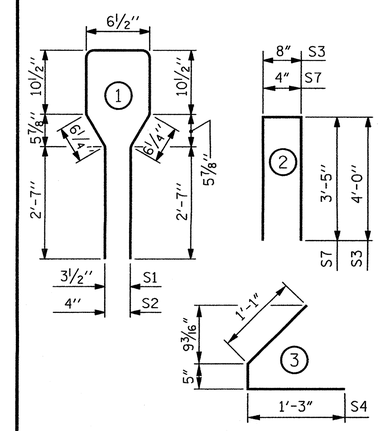


## QUANTITIES FOR ONE GIRDER

| | REINFORCING STEEL LB. | 6,000 PSI CONCRETE C.Y. | 0.6" Ø L.R. STRANDS No. |
|---|---|---|---|
| SPAN B | 800 | 9.2 | 22 |
| | | | |

## GIRDERS REQUIRED

| LOCATION | NUMBER | LENGTH | TOTAL LENGTH |
|---|---|---|---|
| SPAN B | 4 | 64'-2" | 256.667' |

PROJECT NO. R–2303D

SAMPSON COUNTY

STATION: 1326+94.00 –L–

SHEET 2 OF 4

STATE OF NORTH CAROLINA
DEPARTMENT OF TRANSPORTATION
RALEIGH

STANDARD

# AASHTO TYPE III PRESTRESSED CONCRETE GIRDER CONTINUOUS FOR LIVE LOAD – SPAN B (LEFT LANE)

| ASSEMBLED BY : K.E. LOFTON | DATE : 8-12 |
|---|---|
| CHECKED BY : P.R. HOLSHOUSER | DATE : 12-12 |

| | | | |
|---|---|---|---|
| DRAWN BY : ELR | 8/91 | REV. 10/17/00R | RWW/LES |
| CHECKED BY : GRP | 8/91 | REV. 5/1/06R | TLA/GM |
| | | REV. 10/1/11 | MAA/GM |

CDM Smith
Camp Dresser & McKee
421 Fayetteville Street, Suite 1303
Raleigh, NC 27604
NC COA No. F-1255

| | | | |
|---|---|---|---|
| DRAWN BY : | K.E. LOFTON | DATE : | 8-12 |
| CHECKED BY : | P.R. HOLSHOUSER | DATE : | 12-12 |
| DESIGN ENGINEER : | P.R. HOLSHOUSER | DATE : | 3-13 |

DWG. No. S03-013

NORTH CAROLINA PROFESSIONAL SEAL 20668 ENGINEER PAUL R. HOLSHOUSER 3/14/2013

| REVISIONS | | | | | | | SHEET No. |
|---|---|---|---|---|---|---|---|
| No. | BY: | DATE: | No. | BY: | DATE: | | S-165 |
| 1 | | | 3 | | | | TOTAL SHEETS |
| 2 | | | 4 | | | | 218 |

STD. No. PCG5

FILE: c:\cadd\R2303D\Structures\PLANS\Sk_3\R2303D_SD_Sk3_pg2.dgn
DATE: 3/5/2013 3:20:44 PM

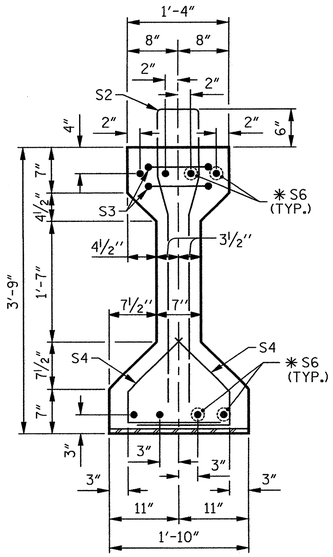


## SECTION A–A

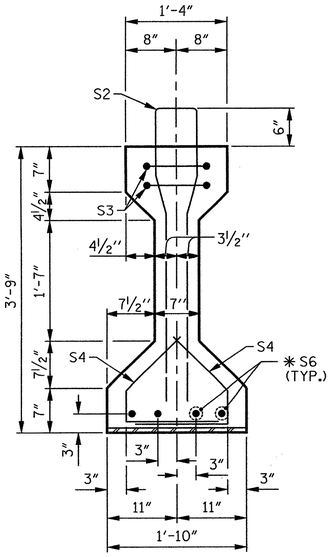


## SECTION B–B

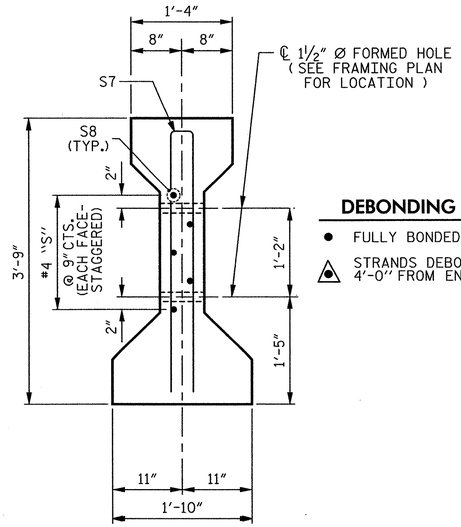


## SECTION C–C

(S1 BARS NOT SHOWN)

### DEBONDING LEGEND

- ● FULLY BONDED STRANDS
- △ STRANDS DEBONDED FOR 4'-0" FROM END OF GIRDER

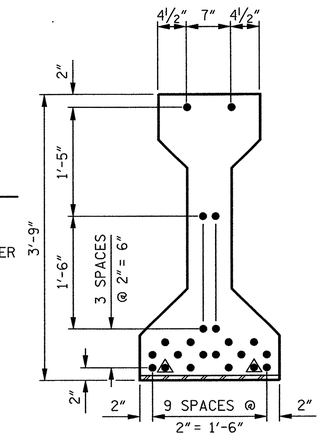


## AT END OF GIRDER

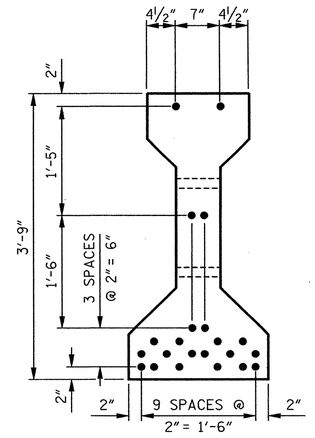


## AT ℄ OF GIRDER

## 22 –0.6" Ø LOW RELAXATION STRAND LAYOUT

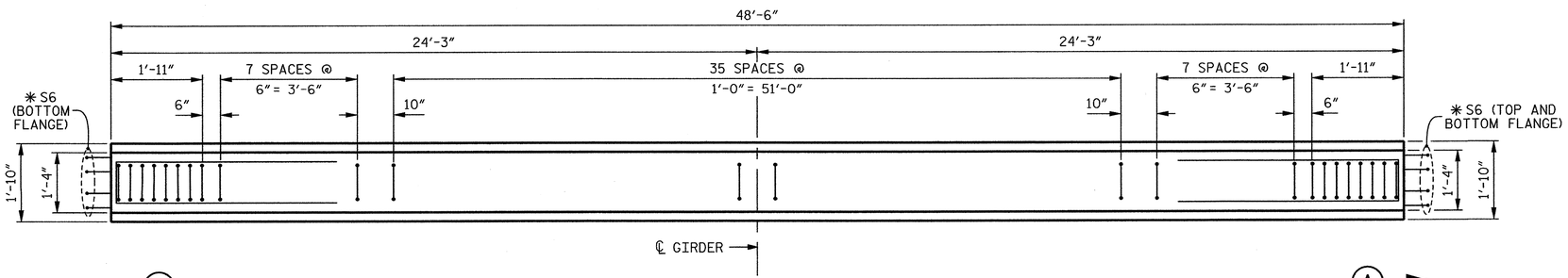


## PLAN OF GIRDER

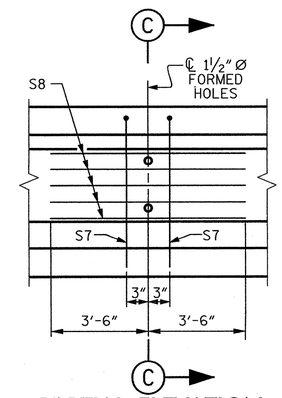


## PARTIAL ELEVATION

SHOWING INTERMEDIATE DIAPHRAGM REINFORCING STEEL FOR GIRDER 1 THRU GIRDER 4.

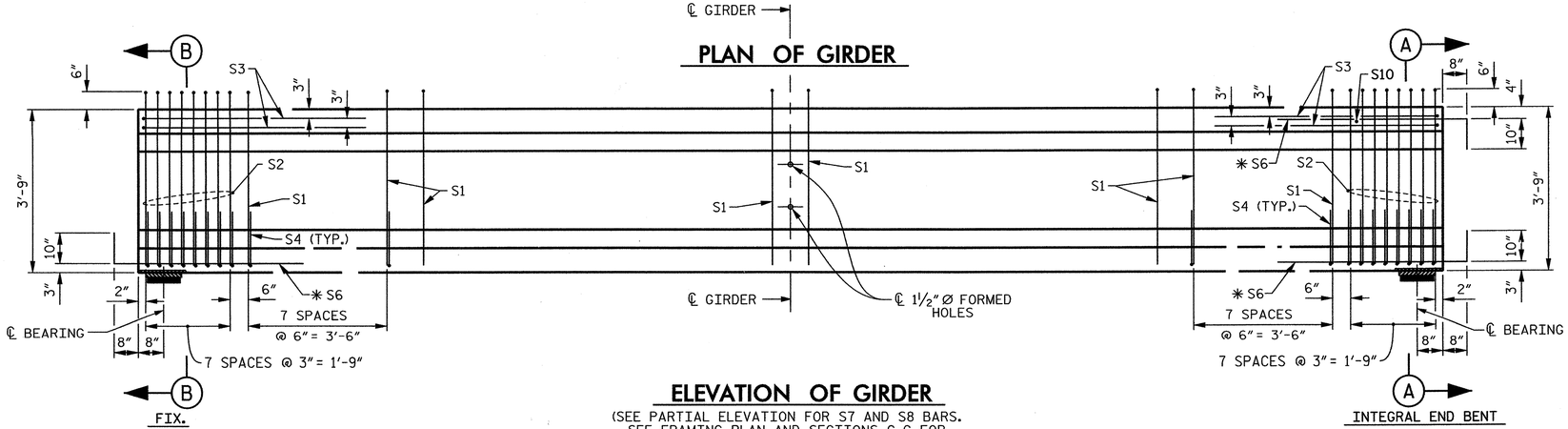


## ELEVATION OF GIRDER

(SEE PARTIAL ELEVATION FOR S7 AND S8 BARS. SEE FRAMING PLAN AND SECTIONS C-C FOR LOCATION OF 1½" Ø FORMED HOLES)

## 0.6" Ø L.R. GRADE 270 STRANDS

| AREA (SQUARE INCHES) | ULTIMATE STRENGTH (LBS. PER STRAND) | APPLIED PRESTRESS (LBS. PER STRAND) |
|---|---|---|
| 0.217 | 58,600 | 43,950 |

## REINFORCING STEEL FOR ONE GIRDER

| BAR | NUMBER | SIZE | TYPE | LENGTH | WEIGHT |
|---|---|---|---|---|---|
| S1 | 52 | #4 | 1 | 8'- 6" | 295 |
| S2 | 16 | #6 | 1 | 8'- 6" | 204 |
| S3 | 4 | #4 | 2 | 8'- 8" | 23 |
| S4 | 64 | #4 | 3 | 2'- 9" | 118 |
| ✱S6 | 12 | #5 | STR | 3'- 8" | 46 |
| S7 | 2 | #5 | 2 | 7'- 2" | 15 |
| S8 | 5 | #4 | STR | 7'- 0" | 23 |
| S10 | 1 | #3 | STR | 1'- 0" | 1 |
| | | | | | |
| | | | | | |

✱NOTE: S6 BARS SHALL BE BENT BEFORE SHIPMENT. HEAT BENDING SHALL NOT BE ALLOWED.

## BAR TYPES

ALL BAR DIMENSIONS ARE OUT-TO-OUT.

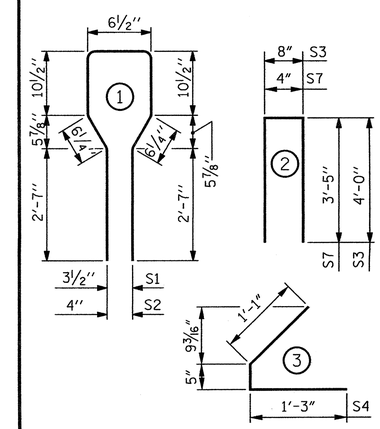


## QUANTITIES FOR ONE GIRDER

| | REINFORCING STEEL | 6,000 PSI CONCRETE | 0.6" Ø L.R. STRANDS |
|---|---|---|---|
| | LB. | C.Y. | No. |
| SPAN C | 725 | 7.0 | 22 |
| | | | |

## GIRDERS REQUIRED

| LOCATION | NUMBER | LENGTH | TOTAL LENGTH |
|---|---|---|---|
| SPAN C | 4 | 48'-6" | 194.000' |

PROJECT NO. R–2303D

SAMPSON COUNTY

STATION: 1326+94.00 –L–

SHEET 3 OF 4

STATE OF NORTH CAROLINA
DEPARTMENT OF TRANSPORTATION
RALEIGH

STANDARD

# AASHTO TYPE III PRESTRESSED CONCRETE GIRDER CONTINUOUS FOR LIVE LOAD – SPAN C (LEFT LANE)


CDM Smith
Camp Dresser & McKee
421 Fayetteville Street, Suite 1303
Raleigh, NC 27604
NC COA No. F-1255


| | | | |
|---|---|---|---|
| DRAWN BY : | K.E. LOFTON | DATE : | 8–12 |
| CHECKED BY : | P.R. HOLSHOUSER | DATE : | 12–12 |
| DESIGN ENGINEER : | P.R. HOLSHOUSER | DATE : | 3–13 |

DWG. No. S03-014

NORTH CAROLINA PROFESSIONAL SEAL 20668 ENGINEER PAUL R. HOLSHOUSER 3/14/2013

| REVISIONS | | | | | | | |
|---|---|---|---|---|---|---|---|
| No. | BY: | DATE: | No. | BY: | DATE: | SHEET No. | S-166 |
| 1 | | | 3 | | | TOTAL SHEETS | 218 |
| 2 | | | 4 | | | | |

STD. No. PCG5

| | | | |
|---|---|---|---|
| ASSEMBLED BY : | K.E. LOFTON | DATE : | 8-12 |
| CHECKED BY : | P.R. HOLSHOUSER | DATE : | 12-12 |
| DRAWN BY : ELR 8/91 | REV. 10/17/00R | RWW/LES | |
| CHECKED BY : GRP 8/91 | REV. 5/1/06R | TLA/GM | |
| | REV. 10/1/11 | MAA/GM | |

FILE: r:\roadw\R2303D\Structures\PLANS\Sr_3\R2303D_SD_Sr3_pg3.dgn
DATE: 3/5/2013 3:30:48 PM

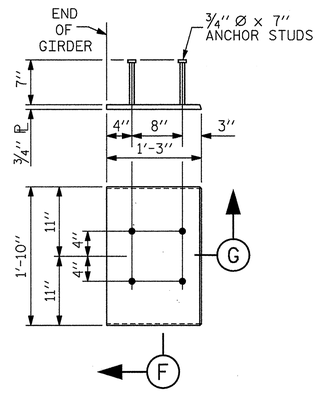


## EMBEDDED PLATE "B-1" DETAILS FOR AASHTO TYPE III GIRDER

(2 REQUIRED PER GIRDER)

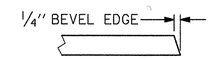


## SECTION "G"

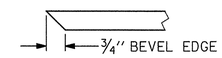


## SECTION "F"

(SEE NOTES)

## NOTES

ALL PRESTRESSING STRANDS SHALL BE 7-WIRE LOW-RELAXATION GRADE 270 STRANDS AND SHALL CONFORM TO AASHTO M203 EXCEPT FOR SAMPLING REQUIREMENTS WHICH SHALL BE IN ACCORDANCE WITH THE STANDARD SPECIFICATIONS.

ALL REINFORCING STEEL SHALL BE GRADE 60.

APPLY EPOXY PROTECTIVE COATING TO END OF GIRDER SURFACES INDICATED IN ELEVATION VIEW.

EMBEDDED PLATE "B-1" SHALL BE GALVANIZED IN ACCORDANCE WITH THE STANDARD SPECIFICATIONS. BEVEL EDGES OF PLATE "B-1" TO GIVE CLOSE FIT BUT NOT TIGHT FIT TO STEEL CASTING FORM.

ANCHOR STUDS SHALL CONFORM TO AASHTO M169 GRADES 1010 THROUGH 1020 OR APPROVED EQUAL, AND SHALL MEET THE TYPE "B" REQUIREMENTS OF SUBSECTION 7.3 OF THE ANSI/AASHTO/AWS D1.5 BRIDGE WELDING CODE.

AT ENDS OF GIRDERS TO BE EMBEDDED IN CONCRETE DIAPHRAGMS OR END WALLS, PRESTRESSING STRANDS MAY EXTEND A MAXIMUM OF 2" BEYOND THE GIRDER ENDS. OTHERWISE, PRESTRESSING STRANDS SHALL BE CUT FLUSH WITH THE GIRDER ENDS.

THE TRANSFER OF LOAD FROM THE ANCHORAGES TO THE GIRDER SHALL BE DONE WHEN CONCRETE HAS REACHED A COMPRESSIVE STRENGTH OF NOT LESS THAN 5,300 PSI.

DEPENDING ON THE TYPE OF SYSTEM USED TO SUPPORT THE DECK SLAB FORMS, PRESET ANCHORS MAY BE NECESSARY IN THE PRESTRESSED CONCRETE GIRDER.

THE TOP SURFACE OF THE GIRDER, EXCLUDING THE OUTSIDE 4", SHALL BE RAKED TO A DEPTH OF 1/4".

WHEN DRAPED STRANDS ARE DETAILED, THE LONGITUDINAL LOCATION OF THE HOLD DOWN DEVICES SHALL BE WITHIN 6" OF THE LOCATION SHOWN AND THE CENTER OF GRAVITY OF THE GROUP OF DRAPED STRANDS SHALL BE LOCATED WITHIN 1/2" OF THE THEORETICAL LOCATION SHOWN.

THE CONTRACTOR HAS THE OPTION TO PROVIDE, AT NO ADDITIONAL COST TO THE DEPARTMENT, 2 ADDITIONAL STRANDS AT THE TOP OF THE GIRDER TO FACILITATE TYING OF THE REINFORCING STEEL. THESE STRANDS SHALL BE PULLED TO A LOAD OF 4,500 LBS.

## CAMBER AND DEAD LOAD DEFLECTIONS

| | SPAN A | | | | | | | | | | |
|---|---|---|---|---|---|---|---|---|---|---|---|
| GIRDERS 1 AND 4 | ℄ BRG. | 0.10 | 0.20 | 0.30 | 0.40 | 0.50 | 0.60 | 0.70 | 0.80 | 0.90 | ℄ BRG. |
| CAMBER (GIRDER ALONE IN PLACE) ↑ | 0.000 | 0.060 | 0.103 | 0.133 | 0.151 | 0.156 | 0.151 | 0.133 | 0.103 | 0.060 | 0.000 |
| DEFLECTION DUE TO SUPERIMPOSED D.L.✳ ↑ | 0.000 | 0.019 | 0.038 | 0.053 | 0.063 | 0.066 | 0.063 | 0.053 | 0.038 | 0.019 | 0.000 |
| FINAL CAMBER ↑ | 0" | 1/2" | 3/4" | 15/16" | 1 1/16" | 1 1/16" | 1 1/16" | 15/16" | 3/4" | 1/2" | 0 |
| | | | | | | | | | | | |
| GIRDERS 2 AND 3 | ℄ BRG. | 0.10 | 0.20 | 0.30 | 0.40 | 0.50 | 0.60 | 0.70 | 0.80 | 0.90 | ℄ BRG. |
| CAMBER (GIRDER ALONE IN PLACE) ↑ | 0.000 | 0.060 | 0.103 | 0.133 | 0.151 | 0.156 | 0.151 | 0.133 | 0.103 | 0.060 | 0.000 |
| DEFLECTION DUE TO SUPERIMPOSED D.L.✳ ↑ | 0.000 | 0.022 | 0.044 | 0.061 | 0.072 | 0.076 | 0.072 | 0.061 | 0.044 | 0.022 | 0.000 |
| FINAL CAMBER ↑ | 0 | 7/16" | 11/16" | 7/8" | 15/16" | 15/16" | 15/16" | 7/8" | 11/16" | 7/16" | 0 |

| | SPAN B | | | | | | | | | | |
|---|---|---|---|---|---|---|---|---|---|---|---|
| GIRDERS 1 AND 4 | ℄ BRG. | 0.10 | 0.20 | 0.30 | 0.40 | 0.50 | 0.60 | 0.70 | 0.80 | 0.90 | ℄ BRG. |
| CAMBER (GIRDER ALONE IN PLACE) ↑ | 0.000 | 0.060 | 0.104 | 0.135 | 0.152 | 0.158 | 0.152 | 0.135 | 0.104 | 0.060 | 0.000 |
| DEFLECTION DUE TO SUPERIMPOSED D.L.✳ ↑ | 0.000 | 0.020 | 0.040 | 0.056 | 0.066 | 0.069 | 0.066 | 0.056 | 0.040 | 0.020 | 0.000 |
| FINAL CAMBER ↑ | 0" | 1/2" | 3/4" | 15/16" | 1 1/16" | 1 1/16" | 1 1/16" | 15/16" | 3/4" | 1/2" | 0 |
| | | | | | | | | | | | |
| GIRDERS 2 AND 3 | ℄ BRG. | 0.10 | 0.20 | 0.30 | 0.40 | 0.50 | 0.60 | 0.70 | 0.80 | 0.90 | ℄ BRG. |
| CAMBER (GIRDER ALONE IN PLACE) ↑ | 0.000 | 0.060 | 0.104 | 0.135 | 0.152 | 0.158 | 0.152 | 0.135 | 0.104 | 0.060 | 0.000 |
| DEFLECTION DUE TO SUPERIMPOSED D.L.✳ ↑ | 0.000 | 0.023 | 0.046 | 0.064 | 0.076 | 0.079 | 0.076 | 0.064 | 0.046 | 0.023 | 0.000 |
| FINAL CAMBER ↑ | 0 | 7/16" | 11/16" | 7/8" | 15/16" | 15/16" | 15/16" | 7/8" | 11/16" | 7/16" | 0 |

| | SPAN C | | | | | | | | | | |
|---|---|---|---|---|---|---|---|---|---|---|---|
| GIRDERS 1 AND 4 | ℄ BRG. | 0.10 | 0.20 | 0.30 | 0.40 | 0.50 | 0.60 | 0.70 | 0.80 | 0.90 | ℄ BRG. |
| CAMBER (GIRDER ALONE IN PLACE) ↑ | 0.000 | 0.042 | 0.070 | 0.092 | 0.104 | 0.109 | 0.104 | 0.092 | 0.070 | 0.042 | 0.000 |
| DEFLECTION DUE TO SUPERIMPOSED D.L.✳ ↑ | 0.000 | 0.006 | 0.013 | 0.018 | 0.021 | 0.022 | 0.021 | 0.018 | 0.013 | 0.006 | 0.000 |
| FINAL CAMBER ↑ | 0" | 7/16" | 11/16" | 7/8" | 1" | 1 1/16" | 1" | 7/8" | 11/16" | 7/16" | 0 |
| | | | | | | | | | | | |
| GIRDERS 2 AND 3 | ℄ BRG. | 0.10 | 0.20 | 0.30 | 0.40 | 0.50 | 0.60 | 0.70 | 0.80 | 0.90 | ℄ BRG. |
| CAMBER (GIRDER ALONE IN PLACE) ↑ | 0.000 | 0.042 | 0.070 | 0.092 | 0.104 | 0.109 | 0.104 | 0.092 | 0.070 | 0.042 | 0.000 |
| DEFLECTION DUE TO SUPERIMPOSED D.L.✳ ↑ | 0.000 | 0.007 | 0.015 | 0.020 | 0.024 | 0.025 | 0.024 | 0.020 | 0.015 | 0.007 | 0.000 |
| FINAL CAMBER ↑ | 0 | 7/16" | 11/16" | 7/8" | 15/16" | 1" | 15/16" | 7/8" | 11/16" | 7/16" | 0 |

✳ INCLUDES FUTURE WEARING SURFACE

ALL VALUES ARE SHOWN IN FEET (DECIMAL FORM), EXCEPT "FINAL CAMBER", WHICH IS GIVEN IN INCHES (FRACTION FORM).

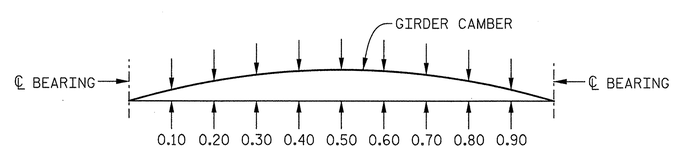


## GIRDER CAMBER AND DEFLECTIONS

PROJECT NO. R-2303D

SAMPSON COUNTY

STATION: 1326+94.00 -L-

SHEET 4 OF 4

STATE OF NORTH CAROLINA
DEPARTMENT OF TRANSPORTATION
RALEIGH

STANDARD

PRESTRESSED CONCRETE GIRDER CONTINUOUS FOR LIVE LOAD DETAILS (LEFT LANE)

| ASSEMBLED BY : K.E. LOFTON | DATE : 8-12 |
|---|---|
| CHECKED BY : P.R. HOLSHOUSER | DATE : 12-12 |

| | | |
|---|---|---|
| DRAWN BY : ELR 11/91 | REV. 7/10/01 | RR LES/RDR |
| CHECKED BY : GRP 11/91 | REV. 5/1/06 | TLA/GM |
| | REV. 10/1/11 | MAA/GM |

CDM Smith
Camp Dresser & McKee
421 Fayetteville Street, Suite 1303
Raleigh, NC 27604
NC COA No. F-1255

| | | | |
|---|---|---|---|
| DRAWN BY : | K.E. LOFTON | DATE : | 8-12 |
| CHECKED BY : | P.R. HOLSHOUSER | DATE : | 12-12 |
| DESIGN ENGINEER : | P.R. HOLSHOUSER | DATE : | 3-13 |

DWG. No. S03-015

NORTH CAROLINA PROFESSIONAL SEAL 20668 ENGINEER PAUL R. HOLSHOUSER 3/14/13

| REVISIONS | | | | | | SHEET No. |
|---|---|---|---|---|---|---|
| No. | BY: | DATE: | No. | BY: | DATE: | S-167 |
| 1 | | | 3 | | | TOTAL SHEETS |
| 2 | | | 4 | | | 218 |

STA. No. B000

FILE: R:\NCDOT\R2303D\STRUCTURES\PLANS\Sr_31\R2303D_SD_Sr3_pg4.dgn
DATE: 3/13/2013 4:21:17 PM

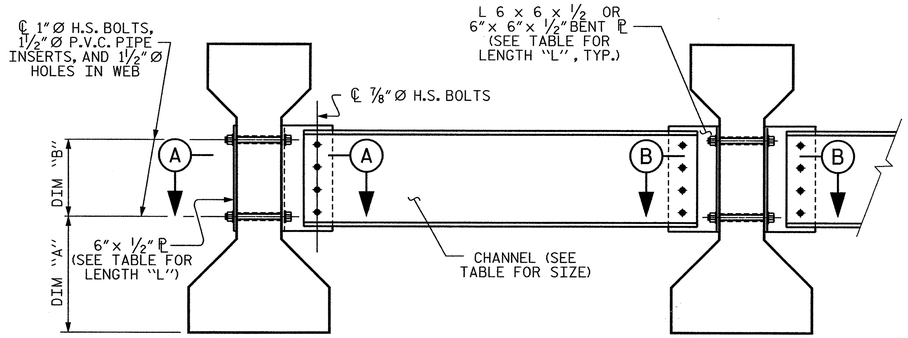


EXTERIOR GIRDER

INTERIOR GIRDER

## PART SECTION AT INTERMEDIATE DIAPHRAGM

| TABLE | | | | |
|---|---|---|---|---|
| GIRDER TYPE | CHANNEL SIZE | DIM "A" | DIM "B" | DIM "L" |
| III | MC 18 x 42.7 | 1'-5" | 1'-2" | 1'-6" |

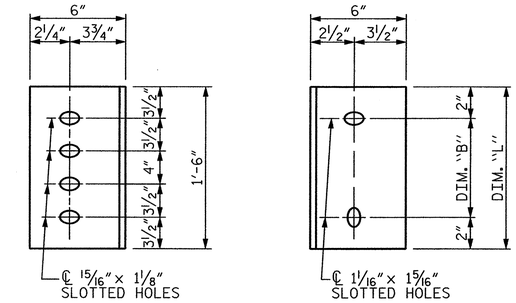


DIAPHRAGM FACE

WEB FACE

## CONNECTOR PLATE DETAILS

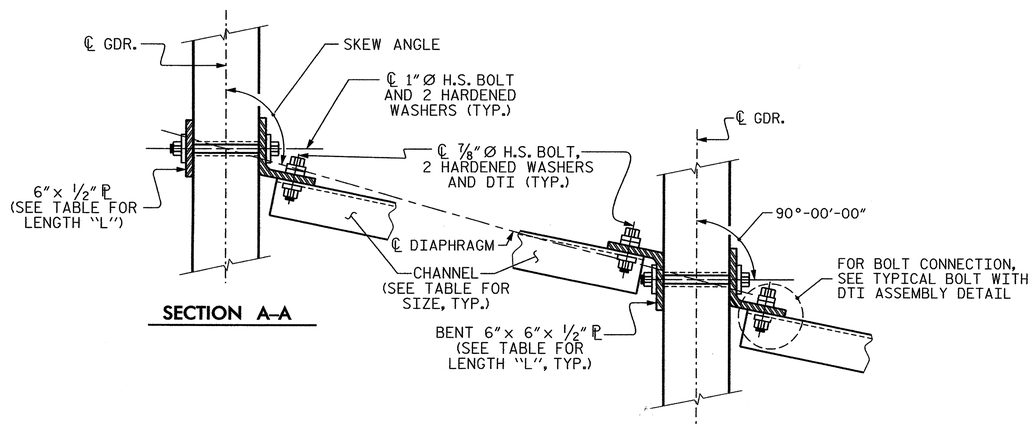


SECTION A–A

SECTION B–B

## CONNECTION DETAILS

( FOR 70° ≤ SKEW < 90° OR 90° < SKEW ≤ 110° )

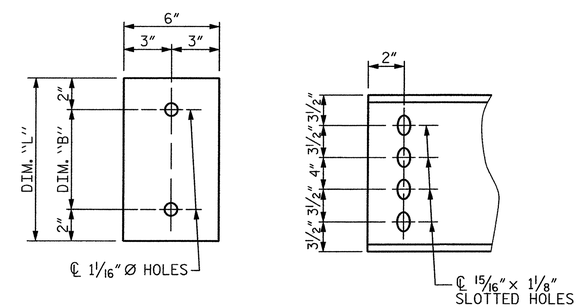


PLATE DETAILS

CHANNEL END

## STRUCTURAL STEEL NOTES

ALL INTERMEDIATE DIAPHRAGM STEEL AND CONNECTOR PLATES SHALL BE AASHTO M270 GRADE 50 OR APPROVED EQUAL.

TENSION ON THE ASTM A325 BOLTS THROUGH THE CHANNEL MEMBER SHALL BE CALIBRATED USING DIRECT TENSION INDICATOR WASHERS IN ACCORDANCE WITH THE STANDARD SPECIFICATIONS.

THE PLATES, BENT PLATES, CHANNELS, AND ANGLES SHALL BE GALVANIZED OR METALLIZED IN ACCORDANCE WITH THE STANDARD SPECIFICATIONS. FOR THERMAL SPRAYED COATINGS (METALLIZATION), SEE SPECIAL PROVISIONS.

FOR METALLIZATION, APPLY AN 8 MIL THICK 99.99 PERCENT ZINC (W-Zn-1) THERMAL SPRAYED COATING WITH A 0.5 MIL THICK SEAL COAT TO ALL STEEL DIAPHRAGM SURFACES IN ACCORDANCE WITH THE THERMAL SPRAYED COATINGS SPECIAL PROVISION AND SECTION 442 OF THE STANDARD SPECIFICATIONS.

GALVANIZE THE HIGH STRENGTH BOLTS, NUTS, WASHERS AND DIRECT TENSION INDICATORS IN ACCORDANCE WITH THE STANDARD SPECIFICATIONS.

USE AN ASTM F436 HARDENED WASHER WITH STANDARD AND SLOTTED HOLES UNDER EACH BOLT HEAD AND NUT.

FOR BOLTS THROUGH THE GIRDER WEB, PROVIDE SUFFICIENT LENGTH OF THREADS ON ALL BOLTS TO ACCOMMODATE WASHERS AND THE THICKNESS OF CONNECTING MEMBER PLUS AT LEAST ¼" PROJECTION BEYOND THE NUT.

INTERMEDIATE DIAPHRAGM ASSEMBLY SHALL COMPLY WITH SECTION 1072 OF THE STANDARD SPECIFICATIONS.

SUBMIT TWO SETS OF WORKING DRAWINGS FOR THE INTERMEDIATE DIAPHRAGM ASSEMBLY FOR REVIEW, COMMENTS AND ACCEPTANCE. AFTER REVIEW, COMMENTS, AND ACCEPTANCE, SUBMIT SEVEN SETS FOR DISTRIBUTION.

IN THE EXTERIOR BAYS, PLACE TEMPORARY STRUTS BETWEEN PRESTRESSED GIRDERS ADJACENT TO THE STEEL DIAPHRAGMS. STRUTS SHALL REMAIN IN PLACE 3 DAYS AFTER CONCRETE IS PLACED.

THE COST OF THE STEEL DIAPHRAGMS AND ASSEMBLIES SHALL BE INCLUDED IN THE UNIT PRICE BID FOR PRESTRESSED CONCRETE GIRDERS

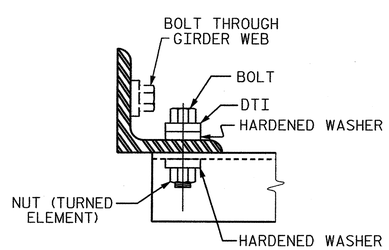


## BOLT WITH DTI ASSEMBLY DETAIL

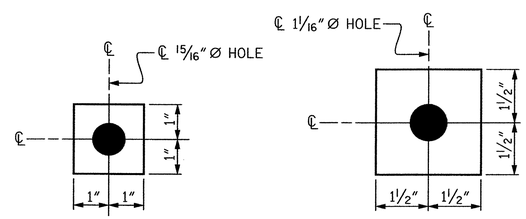


W1

ℙ 7/16" x 2" x 2"

USE WITH ⅞" Ø HVY. HEX NUTS & DIRECT TENSION INDICATOR WASHERS AT DIAPHRAGM ANGLE TO CONNECTOR PLATE CONNECTIONS

W2

ℙ 7/16" x 3" x 3"

USE WITH 1" Ø HVY. HEX NUTS AT CONNECTOR PLATE TO GIRDER CONNECTIONS

## WASHER DETAILS

PROJECT NO. R-2303D

SAMPSON COUNTY

STATION: 1326+94.00 –L–

STATE OF NORTH CAROLINA
DEPARTMENT OF TRANSPORTATION
RALEIGH

STANDARD

INTERMEDIATE STEEL DIAPHRAGMS FOR TYPE III PRESTRESSED CONCRETE GIRDERS

(LEFT LANE)

| ASSEMBLED BY : K.E. LOFTON | DATE : 8-12 |
|---|---|
| CHECKED BY : P.R. HOLSHOUSER | DATE : 12-12 |
| DRAWN BY : TLA 6/05 | ADDED 10/21/05 |
| CHECKED BY : VC 6/05 | REV. 5/1/06 RRR KMM/GM |
| | REV. 10/1/11 MAA/GM |

CDM Smith
Camp Dresser & McKee
421 Fayetteville Street, Suite 1303
Raleigh, NC 27604
NC COA No. F-1255

| DRAWN BY : K.E. LOFTON | DATE : 8-12 |
|---|---|
| CHECKED BY : P.R. HOLSHOUSER | DATE : 12-12 |
| DESIGN ENGINEER : P.R. HOLSHOUSER | DATE : 3-13 |

DWG. No. S03-016

NORTH CAROLINA PROFESSIONAL SEAL 20668 ENGINEER PAUL R. HOLSHOUSER
3/14/2013

| REVISIONS | | | | | | |
|---|---|---|---|---|---|---|
| No. | BY: | DATE: | No. | BY: | DATE: | |
| 1 | | | 3 | | | |
| 2 | | | 4 | | | |

SHEET No. S-168

TOTAL SHEETS 218

STD. No. PCG12

FILE: r:\cadd\R2303D\Structurals\PLANS\Str_31\R2303D_SD_Str3_dfl.dgn
DATE: 3/20/13 3:20:49 PM

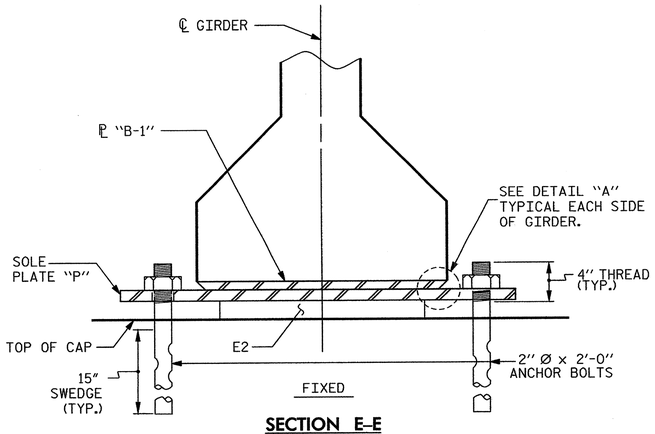


## SECTION E-E

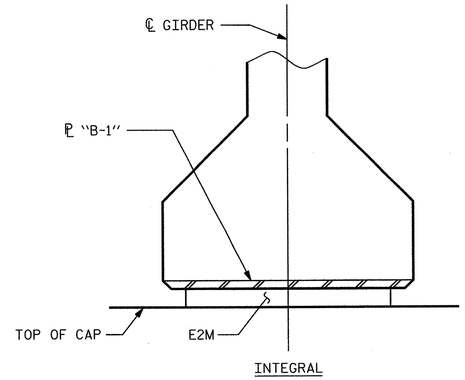


## SECTION F-F

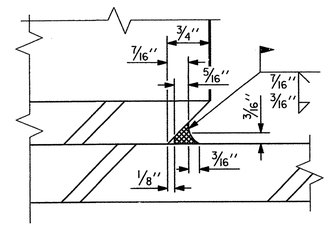


## DETAIL "A"

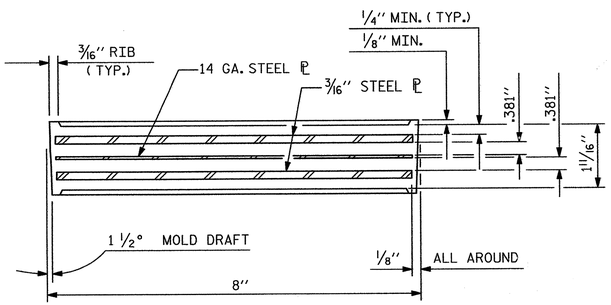


## TYPICAL SECTION OF ELASTOMERIC BEARINGS
(BENT 1 AND BENT 2)

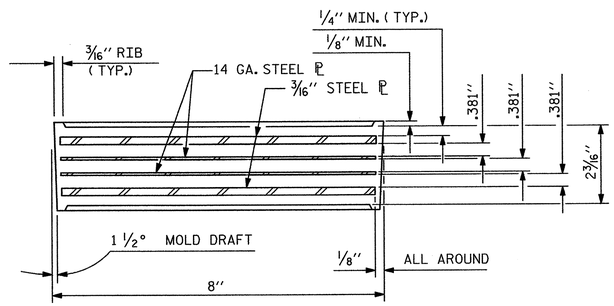


## TYPICAL SECTION OF ELASTOMERIC BEARINGS
(END BENT 1 AND END BENT 2)

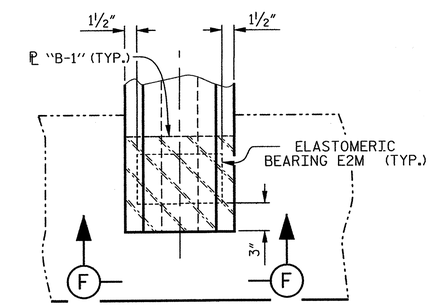


## PARTIAL PLAN – INTEGRAL END BENT

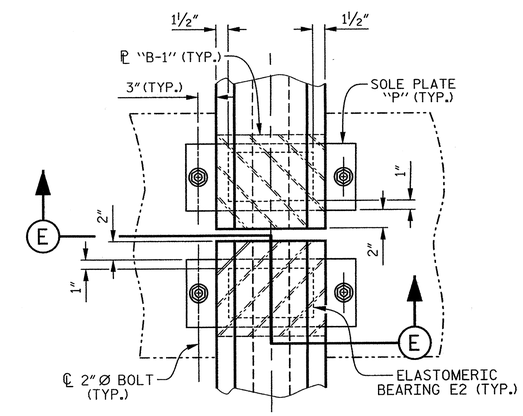


## PARTIAL PLAN – BENT

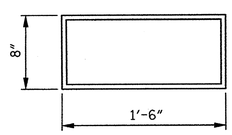


E2 ( 16 REQUIRED )

## PLAN VIEW OF ELASTOMERIC BEARING

## TYPE III

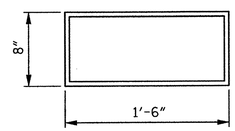


E2M ( 8 REQUIRED )

## PLAN VIEW OF ELASTOMERIC BEARING

## MODIFED TYPE III

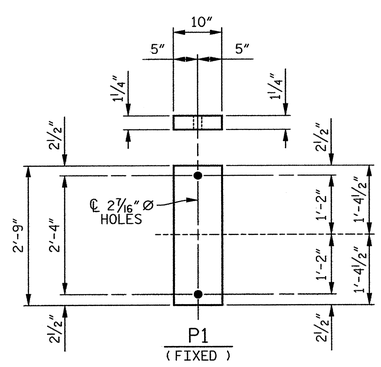


P1 ( 16 REQUIRED )

## SOLE PLATE DETAILS ("P")

## NOTES

FOR ELASTOMERIC BEARINGS, SEE SPECIAL PROVISIONS.

AT ALL FIXED POINTS OF SUPPORT, NUTS FOR ANCHOR BOLTS ARE TO BE TIGHTENED FINGER TIGHT AND THEN BACKED OFF 1/2 TURN. THE THREAD OF THE NUT AND BOLT SHALL THEN BE BURRED WITH A SHARP POINTED TOOL.

STEEL SOLE PLATES, ANCHOR BOLTS, NUTS, AND WASHERS SHALL BE GALVANIZED IN ACCORDANCE WITH THE STANDARD SPECIFICATIONS.

PRIOR TO WELDING, GRIND THE GALVANIZED SURFACE OF THE PORTION OF THE EMBEDDED PLATE AND SOLE PLATE THAT ARE TO BE WELDED. AFTER WELDING, DAMAGED GALVANIZED SURFACES SHALL BE REPAIRED IN ACCORDANCE WITH THE STANDARD SPECIFICATIONS.

WHEN WELDING THE SOLE PLATE TO THE EMBEDDED PLATE IN THE GIRDER, USE TEMPERATURE INDICATING WAX PENS, OR OTHER SUITABLE MEANS, TO ENSURE THAT THE TEMPERATURE OF THE SOLE PLATE DOES NOT EXCEED 300°F. TEMPERATURES ABOVE THIS MAY DAMAGE THE ELASTOMER.

SOLE PLATE "P", BOLTS, NUTS, WASHERS, AND PIPE SLEEVE SHALL BE INCLUDED IN THE PAY ITEM FOR PRESTRESSED CONCRETE GIRDERS.

ANCHOR BOLTS SHALL MEET THE REQUIREMENTS OF ASTM A449. NUTS SHALL MEET THE REQUIREMENTS OF AASHTO M291-DH OR AASHTO M292-2H. WASHERS SHALL MEET THE REQUIREMENTS OF AASHTO M293. SHOP DRAWINGS ARE NOT REQUIRED FOR ANCHOR BOLT, NUTS AND WASHERS. SHOP INSPECTION IS REQUIRED.

ALL SURFACES OF BEARING PLATES SHALL BE SMOOTH AND STRAIGHT.

ELASTOMER IN ALL BEARINGS SHALL BE 60 DUROMETER HARDNESS.

| LOAD RATINGS | |
|---|---|
| | MAX. D.L.+ L.L. |
| TYPE III | 178 K |

PROJECT NO. R-2303D
SAMPSON COUNTY
STATION: 1326+94.00 -L-

STATE OF NORTH CAROLINA
DEPARTMENT OF TRANSPORTATION
RALEIGH

STANDARD
ELASTOMERIC BEARING DETAILS PRESTRESSED CONCRETE GIRDER SUPERSTRUCTURE (LEFT LANE)

| REVISIONS | | | | | | | | SHEET No. |
|---|---|---|---|---|---|---|---|---|
| No. | BY: | DATE: | No. | BY: | DATE: | | | S-169 |
| 1 | | | 3 | | | | | TOTAL SHEETS |
| 2 | | | 4 | | | | | 218 |

STD. No. EB3

CDM Smith
Camp Dresser & McKee
421 Fayetteville Street, Suite 1303
Raleigh, NC 27604
NC COA No. F-1255

DRAWN BY : K.E. LOFTON DATE : 8-12
CHECKED BY : P.R. HOLSHOUSER DATE : 12-12
DESIGN ENGINEER : P.R. HOLSHOUSER DATE : 3-13

DWG. No. S03-017

NORTH CAROLINA PROFESSIONAL SEAL 20668 ENGINEER PAUL R. HOLSHOUSER
3/14/2013

| | | | |
|---|---|---|---|
| ASSEMBLED BY : K. E. LOFTON | DATE : 8-12 | | |
| CHECKED BY : P.R. HOLSHOUSER | DATE : 12-12 | | |
| DRAWN BY : WJH 8/89 | REV. 7/10/01 | RWW/LES | |
| CHECKED BY : CRK 8/89 | REV. 5/1/06 | TLA/GM | |
| | REV. 10/1/11 | MAA/GM | |

FILE: r:\model\2303d\structures\PLANS\Sr_31\R2303D_SD_Sr3_eb1.dgn
DATE: 3/5/2013 3:20:21 PM

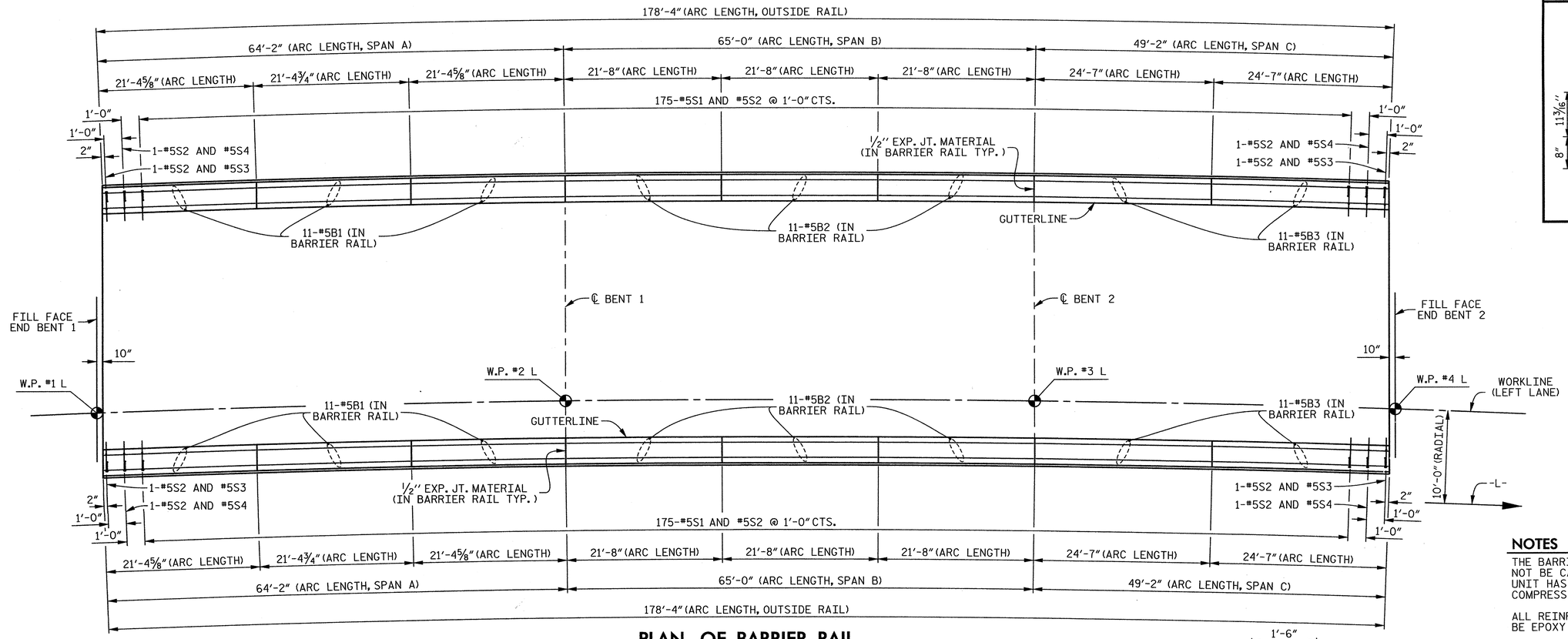


## PLAN OF BARRIER RAIL

## BAR TYPES

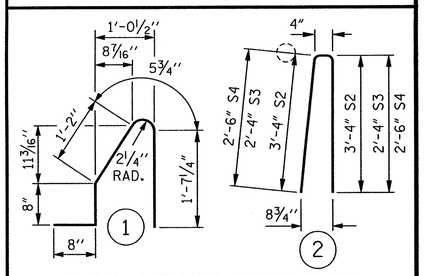


ALL BAR DIMENSIONS ARE OUT TO OUT.

## BILL OF MATERIAL

### FOR CONCRETE BARRIER RAIL ONLY

| BAR | No. | SIZE | TYPE | LENGTH | WEIGHT |
|---|---|---|---|---|---|
| ✱B1 | 66 | #5 | STR | 21'- 1" | 1,451 |
| ✱B2 | 66 | #5 | STR | 21'- 4" | 1,469 |
| ✱B3 | 44 | #5 | STR | 24'- 3" | 1,113 |
| ✱S1 | 350 | #5 | 1 | 4'- 7" | 1,673 |
| ✱S2 | 350 | #5 | 2 | 7'- 0" | 2,555 |
| ✱S3 | 4 | #5 | 2 | 5'- 0" | 21 |
| ✱S4 | 4 | #5 | 2 | 5'- 4" | 22 |
| ✱EPOXY COATED REINFORCING STEEL | | | | | 8,304 LBS. |
| CLASS "AA" CONCRETE | | | | | 48.4 CU. YDS. |
| CONCRETE BARRIER RAIL | | | | | 356.7 LIN. FT. |

## NOTES

THE BARRIER RAIL IN A CONTINUOUS UNIT SHALL NOT BE CAST UNTIL ALL SLAB CONCRETE IN THAT UNIT HAS BEEN CAST AND HAS REACHED A MINIMUM COMPRESSIVE STRENGTH OF 3,000 PSI.

ALL REINFORCING STEEL IN BARRIER RAILS SHALL BE EPOXY COATED.

GROOVED CONTRACTION JOINTS, 1/2" IN DEPTH, SHALL BE TOOLED IN ALL EXPOSED FACES OF THE BARRIER RAIL AND IN ACCORDANCE WITH ARTICLE 825-10(B) OF THE STANDARD SPECIFICATIONS. THE CONTRACTION JOINT SHALL BE LOCATED AT EACH THIRD POINT BETWEEN BARRIER RAIL EXPANSION JOINTS. ONLY ONE CONTRACTION JOINT IS REQUIRED AT MIDPOINT OF BARRIER RAIL SEGMENTS LESS THAN 20 FEET IN LENGTH AND NO CONTRACTION JOINTS ARE REQUIRED FOR THOSE SEGMENTS LESS THAN 10 FEET IN LENGTH.

THE #5S1 AND #5S2 BARS MAY BE SHIFTED AS NECESSARY TO CLEAR EXPANSION JOINTS IN RAIL.

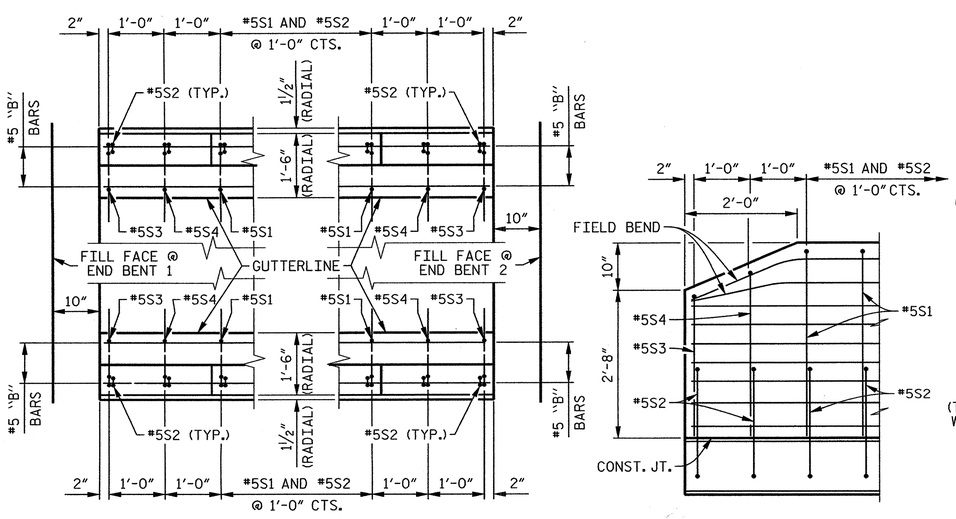


PLAN @ END BENT 1

PLAN @ END BENT 2

ELEVATION VIEW

## END OF RAIL DETAILS

FOR FORMED JOINTS

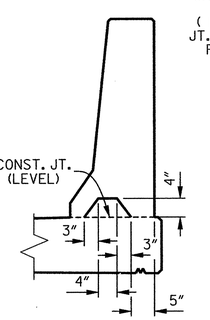


SECTION S-S

AT DAM IN OPEN JOINT (THIS IS TO BE USED ONLY WHEN SLIP FORM IS USED)

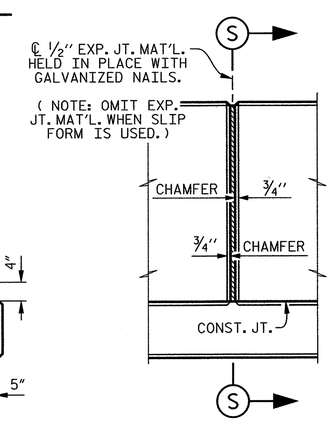


ELEVATION AT EXPANSION JOINTS

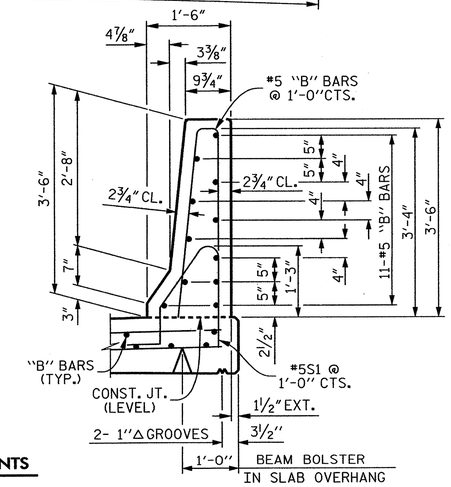


SECTION THRU RAIL

## BARRIER RAIL DETAILS

PROJECT NO. R-2303D

SAMPSON COUNTY

STATION: 1326+94.00 -L-

STATE OF NORTH CAROLINA
DEPARTMENT OF TRANSPORTATION
RALEIGH

STANDARD

# CONCRETE BARRIER RAIL (LEFT LANE)

| ASSEMBLED BY : K.E. LOFTON | DATE : 8-12 |
|---|---|
| CHECKED BY : P.R. HOLSHOUSER | DATE : 12-12 |

| | | | |
|---|---|---|---|
| DRAWN BY : ARB 5/87 | REV. 10/1/11 | MAA/GM |
| CHECKED BY : SJD 9/87 | REV. 7/12 | MAA/GM |
| | REV. 10/12 | MAA/GM |

CDM Smith
Camp Dresser & McKee
421 Fayetteville Street, Suite 1303
Raleigh, NC 27604
NC COA No. F-1255

| | | | |
|---|---|---|---|
| DRAWN BY : K.E. LOFTON | DATE : 8-12 | DWG. No. | S03-018 |
| CHECKED BY : P.R. HOLSHOUSER | DATE : 12-12 | | |
| DESIGN ENGINEER : P.R. HOLSHOUSER | DATE : 3-13 | | |

NORTH CAROLINA PROFESSIONAL SEAL 20668 ENGINEER PAUL R. HOLSHOUSER
3/14/2013

REVISIONS

| No. | BY: | DATE: | No. | BY: | DATE: |
|---|---|---|---|---|---|
| 1 | | | 3 | | |
| 2 | | | 4 | | |

SHEET No. S-170

TOTAL SHEETS 218

STD. No. CBR1

FILE: n:\cadd\B2303D\Structures\PLANS\Str_01\B2303D_SD_Sht3_Art.dgn
DATE: 3/5/2013 6:47:16 PM

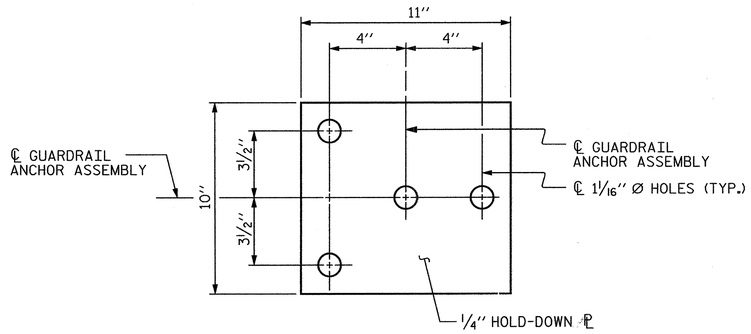


## PLAN

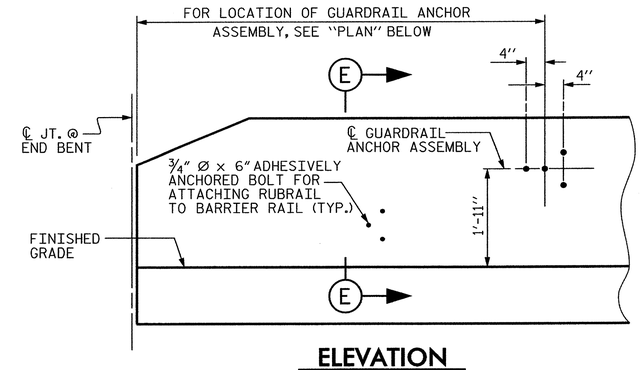


## ELEVATION

(FOR LOCATION OF RUBRAIL, SEE ROADWAY STD. 862.03, END BENT 1 SHOWN, END BENT 2 SIMILAR)

## NOTES

THE GUARDRAIL ANCHOR ASSEMBLY SHALL CONSIST OF A ¼'' HOLD DOWN PLATE AND 4 - ⅞'' Ø BOLTS WITH NUTS AND WASHERS, RUBRAIL, AND ADHESIVELY ANCHORED BOLTS.

THE HOLD-DOWN PLATE SHALL CONFORM TO AASHTO M270 GRADE 36. AFTER FABRICATION, THE HOLD-DOWN PLATE SHALL BE HOT-DIP GALVANIZED IN ACCORDANCE WITH AASHTO M111.

BOLTS SHALL CONFORM TO THE REQUIREMENTS OF ASTM A307 AND NUTS SHALL CONFORM TO THE REQUIREMENTS OF AASHTO M291. BOLTS, NUTS AND WASHERS SHALL BE GALVANIZED. (AT THE CONTRACTOR'S OPTION, STAINLESS STEEL BOLTS, NUTS AND WASHERS MAY BE USED AS AN ALTERNATE FOR THE ⅞'' Ø GALVANIZED BOLTS, NUTS AND WASHERS. THEY SHALL CONFORM TO OR EXCEED THE MECHANICAL REQUIREMENTS OF ASTM A307. THE USE OF THIS ALTERNATE SHALL BE APPROVED BY THE ENGINEER.)

THE GUARDRAIL ANCHOR ASSEMBLY IS REQUIRED AT ALL POINTS WHERE APPROACH GUARDRAIL IS TO BE ATTACHED TO THE END OF BARRIER RAIL. FOR POINTS OF ATTACHMENT, SEE SKETCH.

AFTER INSTALLATION, THE EXPOSED THREAD OF THE BOLT SHALL BE BURRED WITH A SHARP POINTED TOOL.

THE COST OF THE GUARDRAIL ANCHOR ASSEMBLY SHALL BE INCLUDED IN THE UNIT CONTRACT PRICE BID FOR CONCRETE BARRIER RAIL.

THE 1¼'' Ø HOLES SHALL BE FORMED OR DRILLED WITH A CORE BIT. IMPACT TOOLS WILL NOT BE PERMITTED. ANY CONCRETE DAMAGED BY THIS WORK SHALL BE REPAIRED TO THE SATISFACTION OF THE ENGINEER.

THE C6 x 8.2 RUBRAIL IS TO BE ADHESIVELY ANCHORED TO THE RAIL USING THREE ¾''Ø x 6'' BOLTS WITH WASHERS. LEVEL ONE FIELD TESTING IS REQUIRED, AND THE YIELD LOAD OF THE ¾''Ø BOLT IS 12 KIPS. FOR ADHESIVELY ANCHORED ANCHOR BOLTS OR DOWELS, SEE SPECIAL PROVISIONS. SEE ROADWAY STANDARD 862.03 FOR DETAILS AND LOCATION OF THE RUBRAIL.

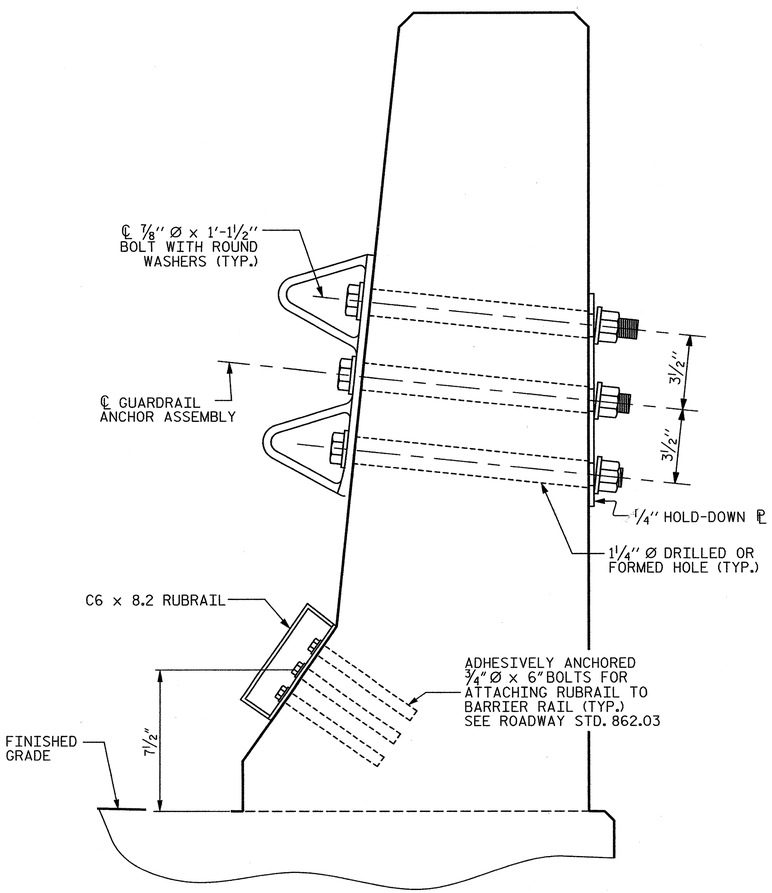


## SECTION E-E

## GUARDRAIL ANCHOR ASSEMBLY DETAILS

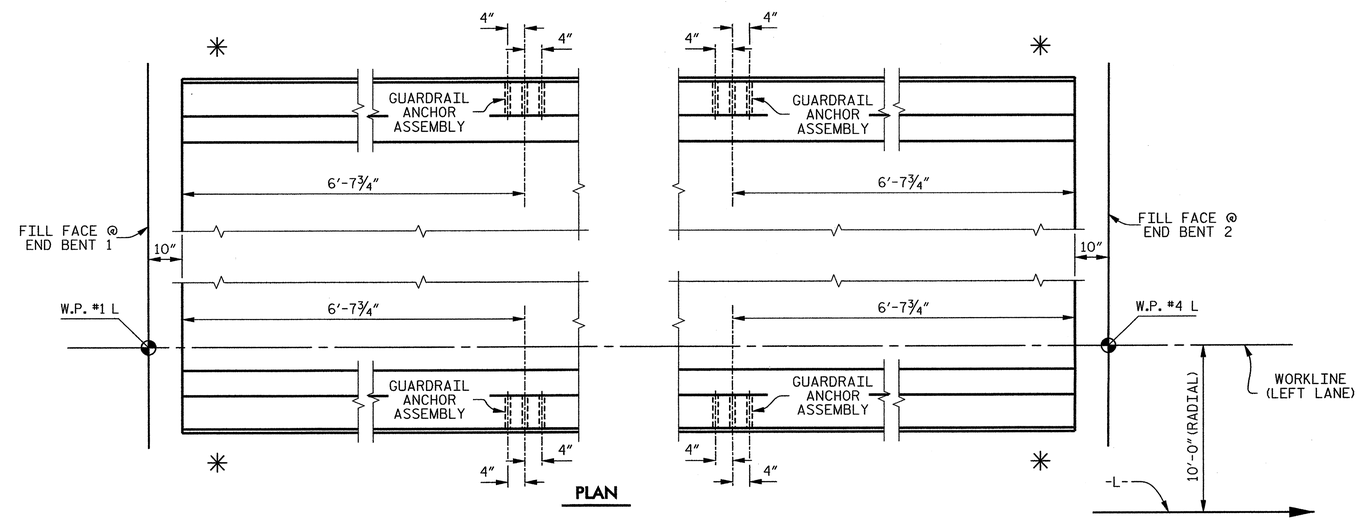


## PLAN

## LOCATION OF ANCHORS FOR GUARDRAIL

✳ DENOTES GUARDRAIL ANCHOR ASSEMBLY

PROJECT NO. R-2303D

SAMPSON COUNTY

STATION: 1326+94.00 -L-

STATE OF NORTH CAROLINA
DEPARTMENT OF TRANSPORTATION
RALEIGH

STANDARD

# GUARDRAIL ANCHORAGE FOR BARRIER RAIL (LEFT LANE)

| | | | | | |
|---|---|---|---|---|---|
| ASSEMBLED BY : | K.E. LOFTON | DATE : | 8-12 | | |
| CHECKED BY : | P.R. HOLSHOUSER | DATE : | 12-12 | | |
| DRAWN BY : | TLA | 5/06 | REV. 10/1/11 | MAA/GM | |
| CHECKED BY : | GM | 5/06 | REV. 7/12 | MAA/GM | |
| | | | REV. 10/12 | MAA/GM | |

CDM Smith
Camp Dresser & McKee
421 Fayetteville Street, Suite 1303
Raleigh, NC 27604
NC COA No. F-1255

DRAWN BY : K.E. LOFTON DATE : 8-12
CHECKED BY : P.R. HOLSHOUSER DATE : 12-12
DESIGN ENGINEER : P.R. HOLSHOUSER DATE : 3-13

DWG. No. S03-019

NORTH CAROLINA PROFESSIONAL SEAL 20668 ENGINEER PAUL R. HOLSHOUSER 3/14/2013

| REVISIONS | | | | | | |
|---|---|---|---|---|---|---|
| No. | BY: | DATE: | No. | BY: | DATE: | |
| 1 | | | 3 | | | |
| 2 | | | 4 | | | |

SHEET No. S-171

TOTAL SHEETS 218

STD. No. GRA2

FILE: r:\roadwy\R2303D\Structures\PLANS\Str_31\R2303D_SD_Sn2_grd.dgn
DATE: 3/20/2013 3:20:24 PM

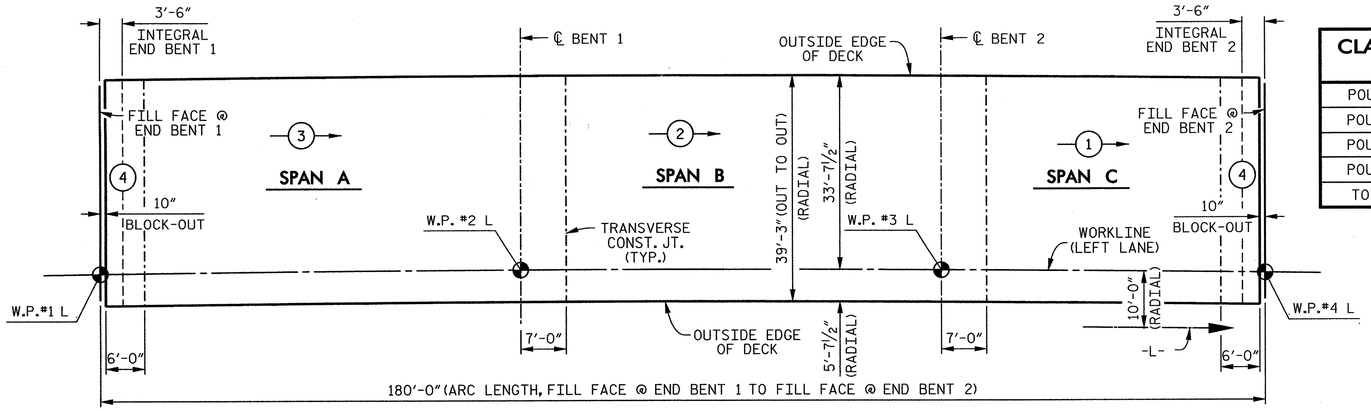


INDICATES POUR NUMBER AND DIRECTION OF POUR.

## POURING SEQUENCE

| CLASS AA CONCRETE BREAKDOWN | |
|---|---|
| POUR 1 | 57.3 CU. YDS. |
| POUR 2 | 94.6 CU. YDS. |
| POUR 3 | 84.2 CU. YDS. |
| POUR 4 | 29.2 CU. YDS. (EACH) |
| TOTAL | 294.6 CU. YDS. |

## BILL OF MATERIAL SPAN A THRU SPAN C

| BAR | No. | SIZE | TYPE | LENGTH | WEIGHT |
|---|---|---|---|---|---|
| ✱A1 | 389 | #5 | STR | 38'-11" | 15,790 |
| A2 | 389 | #5 | STR | 38'-11" | 15,790 |
| ✱B1 | 64 | #4 | STR | 21'-10" | 933 |
| ✱B2 | 124 | #5 | STR | 14'- 0" | 1,811 |
| ✱B3 | 64 | #5 | STR | 50'- 0" | 3,338 |
| ✱B4 | 124 | #5 | STR | 20'- 0" | 2,587 |
| ✱B5 | 32 | #4 | STR | 20'- 0" | 428 |
| ✱B6 | 32 | #4 | STR | 26'- 6" | 566 |
| B7 | 232 | #5 | STR | 46'- 3" | 11,191 |
| B8 | 48 | #4 | STR | 14'- 0" | 449 |
| K1 | 20 | #4 | STR | 20'- 4" | 272 |
| K2 | 18 | #4 | STR | 9'- 2" | 110 |
| K3 | 36 | #4 | STR | 9'-11" | 238 |
| K4 | 18 | #4 | STR | 9'- 5" | 113 |
| K5 | 6 | #4 | STR | 8'- 8" | 35 |
| K6 | 4 | #4 | STR | 2'- 5" | 6 |
| K7 | 8 | #4 | STR | 2'- 9" | 15 |
| K8 | 4 | #4 | STR | 2'- 6" | 7 |
| K9 | 4 | #4 | STR | 2'- 2" | 6 |
| K10 | 12 | #4 | STR | 7'- 8" | 61 |
| K11 | 20 | #4 | STR | 17'- 2" | 229 |
| ✱L1 | 66 | #4 | 4 | 11'- 8" | 514 |
| ✱L2 | 66 | #4 | 4 | 10'- 2" | 448 |
| S1 | 12 | #4 | 3 | 10'- 8" | 86 |
| S2 | 228 | #4 | 1 | 2'- 9" | 419 |
| S3 | 48 | #4 | 3 | 12'- 4" | 395 |
| ✱U1 | 66 | #4 | 2 | 10'- 2" | 448 |
| REINFORCING STEEL | | | | | 29,422 LBS. |
| ✱EPOXY COATED REINFORCING STEEL | | | | | 26,863 LBS. |
| CLASS "AA" CONCRETE | | | | | 294.6 CU. YDS. |

NOTE: QUANTITIES FOR CONCRETE BARRIER RAILS ARE NOT INCLUDED.

## BAR TYPES

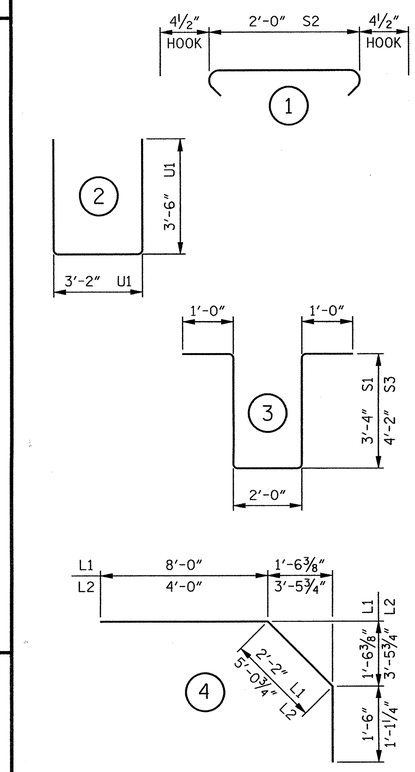


ALL BAR DIMENSIONS ARE OUT TO OUT.

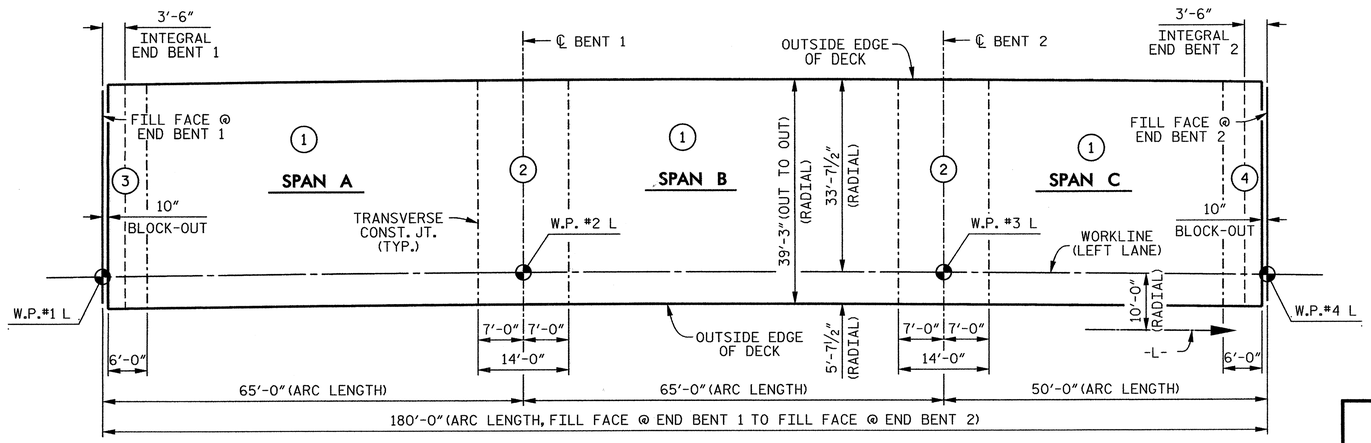


INDICATES POUR NUMBER

## OPTIONAL POURING SEQUENCE

| SUPERSTRUCTURE REINFORCING STEEL LENGTHS ARE BASED ON THE FOLLOWING MINIMUM SPLICE LENGTHS | | | | | |
|---|---|---|---|---|---|
| BAR SIZE | SUPERSTRUCTURE EXCEPT APPROACH SLABS, PARAPET AND BARRIER RAIL | | APPROACH SLABS | | PARAPET AND BARRIER RAIL |
| | EPOXY COATED | UNCOATED | EPOXY COATED | UNCOATED | |
| #4 | 2'-0" | 1'-9" | 2'-0" | 1'-9" | 2'-9" |
| #5 | 2'-6" | 2'-2" | 2'-6" | 2'-2" | 3'-5" |
| #6 | 3'-0" | 2'-7" | 3'-10" | 2'-7" | 4'-4" |
| #7 | 5'-3" | 3'-6" | | | |
| #8 | 6'-10" | 4'-7" | | | |

| GROOVING BRIDGE FLOORS | |
|---|---|
| APPROACH SLAB AT END BENT 1 | 797 SQ. FT. |
| BRIDGE DECK | 5,873 SQ. FT. |
| APPROACH SLAB AT END BENT 2 | 797 SQ. FT. |
| | |
| TOTAL | 7,467 SQ. FT. |

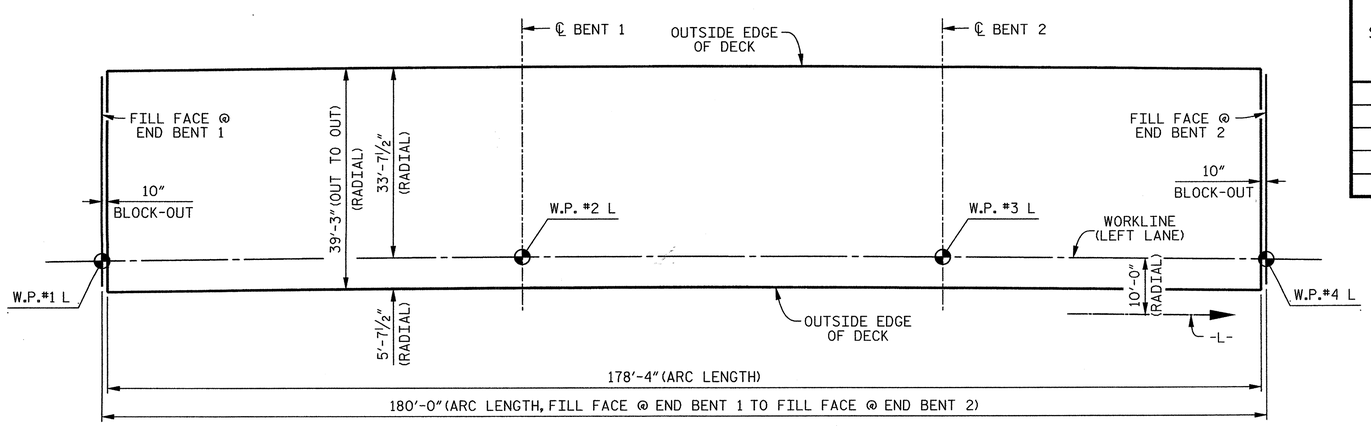


## LAYOUT FOR COMPUTING AREA OF REINFORCED CONCRETE DECK SLAB

(7,000 SQ. FT.)

PROJECT NO. R-2303D
SAMPSON COUNTY
STATION: 1326+94.00 -L-

STATE OF NORTH CAROLINA
DEPARTMENT OF TRANSPORTATION
RALEIGH

SUPERSTRUCTURE

# BILL OF MATERIAL

(LEFT LANE)

CDM Smith
Camp Dresser & McKee
421 Fayetteville Street, Suite 1303
Raleigh, NC 27604
NC COA No. F-1255

DRAWN BY : K.E. LOFTON DATE : 8-12
CHECKED BY : P.R. HOLSHOUSER DATE : 1-13
DESIGN ENGINEER : P.R. HOLSHOUSER DATE : 3-13

DWG. No. S03-020

NORTH CAROLINA PROFESSIONAL SEAL 20668 ENGINEER PAUL R. HOLSHOUSER
3/11/2013

| REVISIONS | | | | | | SHEET No. |
|---|---|---|---|---|---|---|
| No. | BY: | DATE: | No. | BY: | DATE: | S-172 |
| 1 | | | 3 | | | TOTAL SHEETS |
| 2 | | | 4 | | | 218 |

FILE: r:\roadway\2303d\structures\PLANS\Sr_3\R2303D_SD_Sr3_bm1.dgn
DATE: 3/5/2013
3:20:59 PM

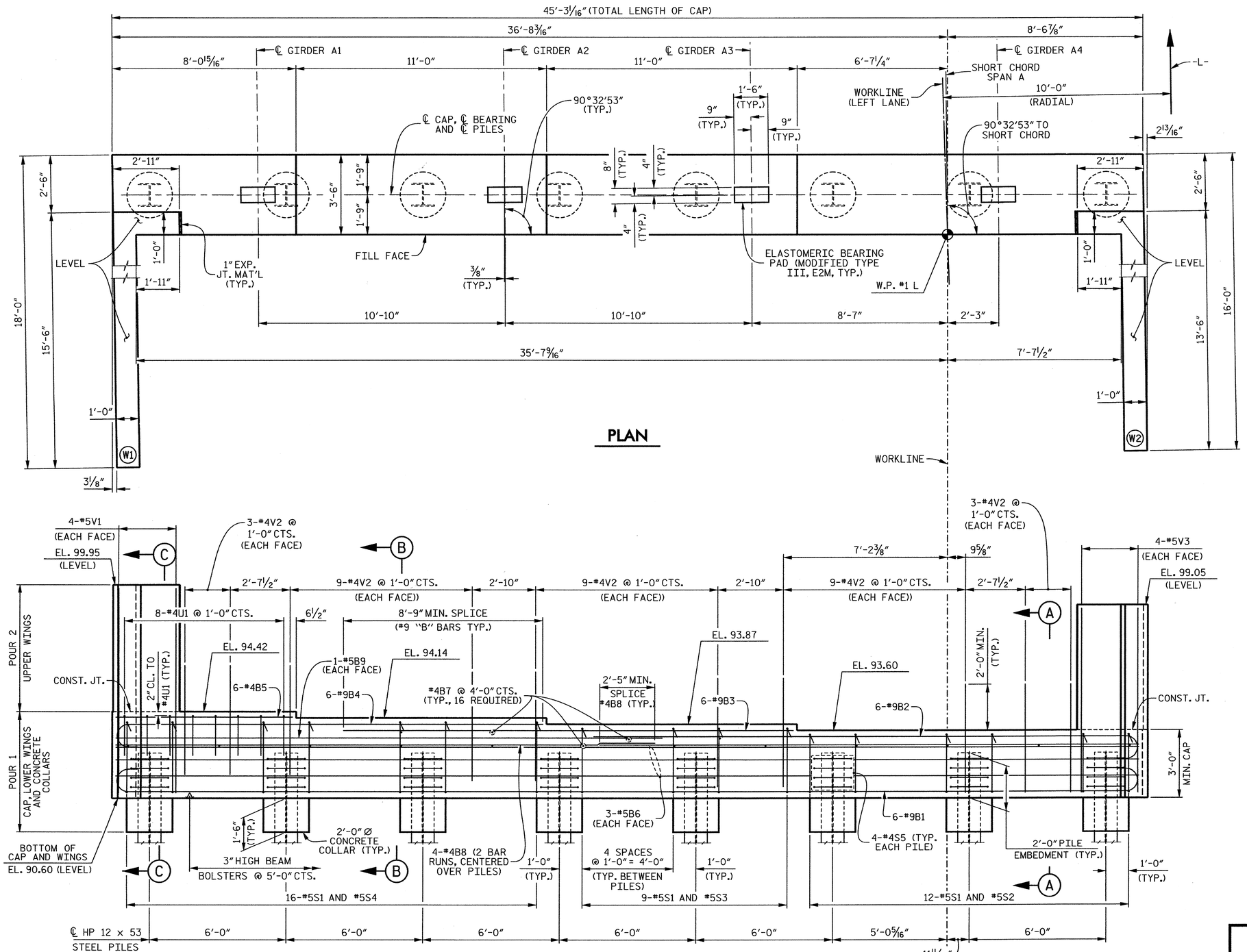


## NOTES

STIRRUPS AND "U" BARS IN CAP MAY BE SHIFTED AS NECESSARY TO CLEAR #4V2 BARS.

THE TOP SURFACE AREA OF THE END BENT CAP SHALL BE CURED IN ACCORDANCE WITH THE STANDARD SPECIFICATIONS EXCEPT THAT THE MEMBRANE CURING COMPOUND METHOD SHALL NOT BE USED.

THIS ELEVATION IS TAKEN AT FILL FACE OF BACKWALL.

FOR SECTION A-A, SECTION B-B AND SECTION C-C, SEE SHEET 3 OF 3.

FOR PILE SPLICE DETAILS, SEE SHEET 3 OF 3.

FOR TEMPORARY DRAINAGE AT END BENT DETAIL, SEE SHEET 3 OF 3.

THE CONTRACTOR SHALL PROVIDE FOR INSTALLATION OF THE 4" DIAMETER DRAIN PIPE THROUGH THE WING WALL AS REQUIRED FOR REINFORCED BRIDGE APPROACH FILLS, SEE THE ROADWAY PLANS. REINFORCING STEEL IN THE WING WALL MAY BE SHIFTED AS NECESSARY TO CLEAR THE DRAIN PIPE.

PROJECT NO. R-2303D
SAMPSON COUNTY
STATION: 1326+94.00 -L-

SHEET 1 OF 3

STATE OF NORTH CAROLINA
DEPARTMENT OF TRANSPORTATION
RALEIGH

SUBSTRUCTURE

END BENT 1

(LEFT LANE)

CDM Smith
Camp Dresser & McKee
421 Fayetteville Street, Suite 1303
Raleigh, NC 27604
NC COA No. F-1255

| | | | |
|---|---|---|---|
| DRAWN BY : | J.D. BORUTA | DATE : | 12-12 |
| CHECKED BY : | P.R. HOLSHOUSER | DATE : | 1-13 |
| DESIGN ENGINEER : | P.R. HOLSHOUSER | DATE : | 3-13 |

DWG. No. S03-021

NORTH CAROLINA PROFESSIONAL SEAL 20668 ENGINEER PAUL R. HOLSHOUSER
3/14/2013

| REVISIONS | | | | | | | | | SHEET No. |
|---|---|---|---|---|---|---|---|---|---|
| No. | BY: | DATE: | No. | BY: | DATE: | | | | S-173 |
| 1 | | | 3 | | | | | | TOTAL SHEETS |
| 2 | | | 4 | | | | | | 218 |

FILE: r:\radar\r2303d\structures\PLANS\Sh_3\R2303D_SD_Sh3_ab11.dgn
DATE: 3/5/2013 3:21:00 PM

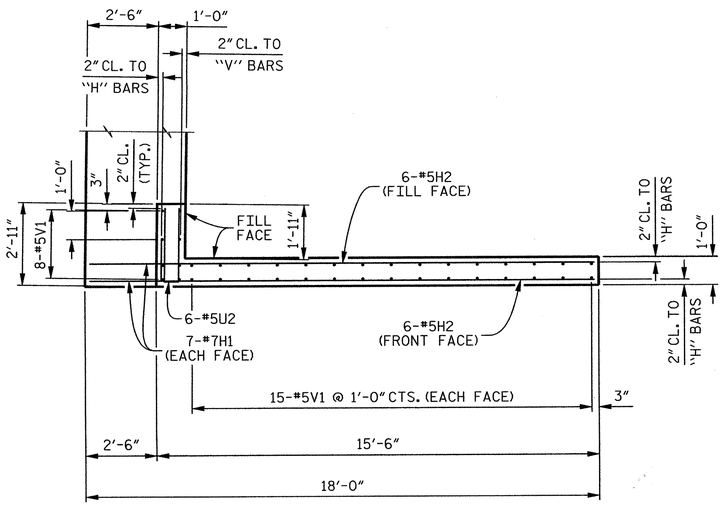


PLAN OF WING (W1)

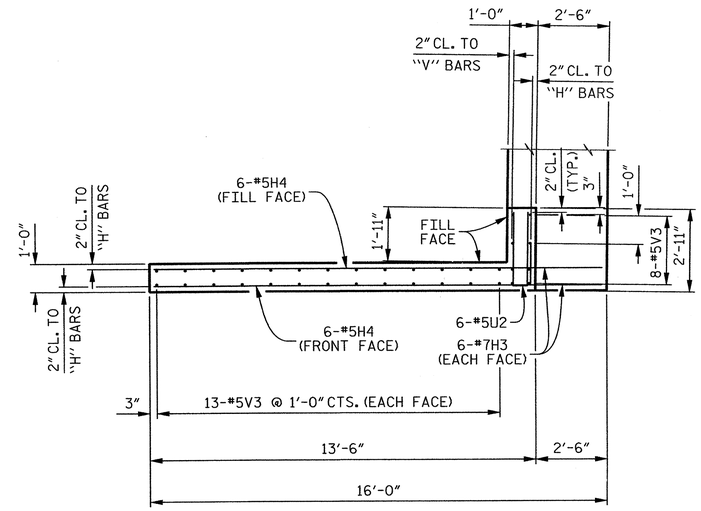


PLAN OF WING (W2)

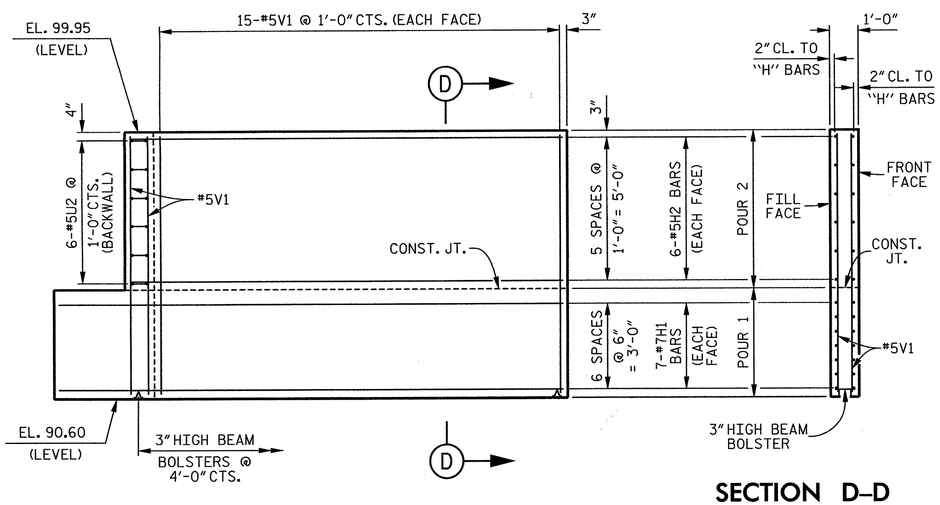


SECTION D–D

ELEVATION OF WING (W1)

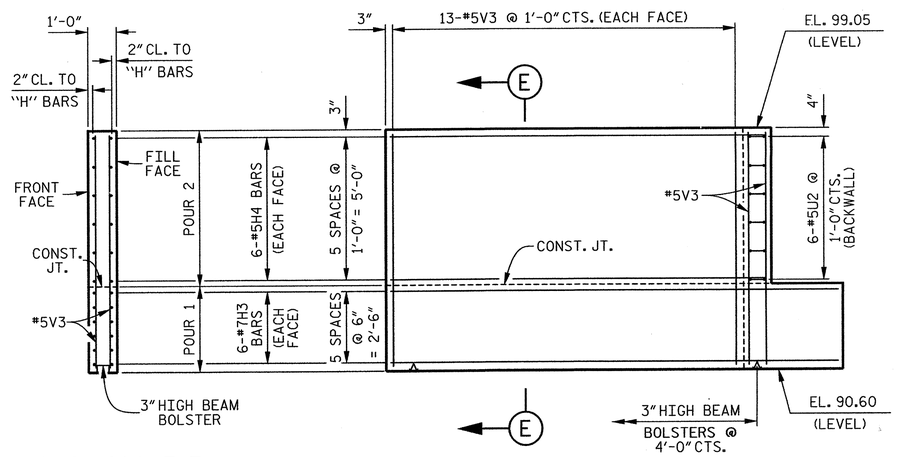


SECTION E–E

ELEVATION OF WING (W2)

PROJECT NO. R-2303D

SAMPSON COUNTY

STATION: 1326+94.00 -L-

SHEET 2 OF 3

STATE OF NORTH CAROLINA
DEPARTMENT OF TRANSPORTATION
RALEIGH

SUBSTRUCTURE

END BENT 1

(LEFT LANE)

CDM Smith

Camp Dresser & McKee
421 Fayetteville Street, Suite 1303
Raleigh, NC 27604
NC COA No. F-1255

| | | | |
|---|---|---|---|
| DRAWN BY : | J.D. BORUTA | DATE : | 12-12 |
| CHECKED BY : | P.R. HOLSHOUSER | DATE : | 1-13 |
| DESIGN ENGINEER : | P.R. HOLSHOUSER | DATE : | 3-13 |

DWG. No. S03-022

NORTH CAROLINA PROFESSIONAL SEAL 20668 ENGINEER PAUL R. HOLSHOUSER 3/14/2013

| REVISIONS | | | | | | SHEET No. |
|---|---|---|---|---|---|---|
| No. | BY: | DATE: | No. | BY: | DATE: | S-174 |
| 1 | | | 3 | | | TOTAL SHEETS |
| 2 | | | 4 | | | 218 |

FILE: c:\cadd\r2303d\structures\PLANS\Str_3\R2303D_SD_Str3_eb12.dgn
DATE: 3/5/2013 3:21:02 PM

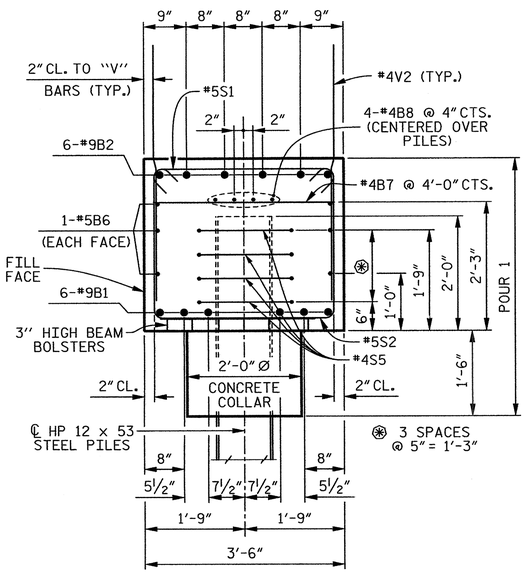


## SECTION A–A

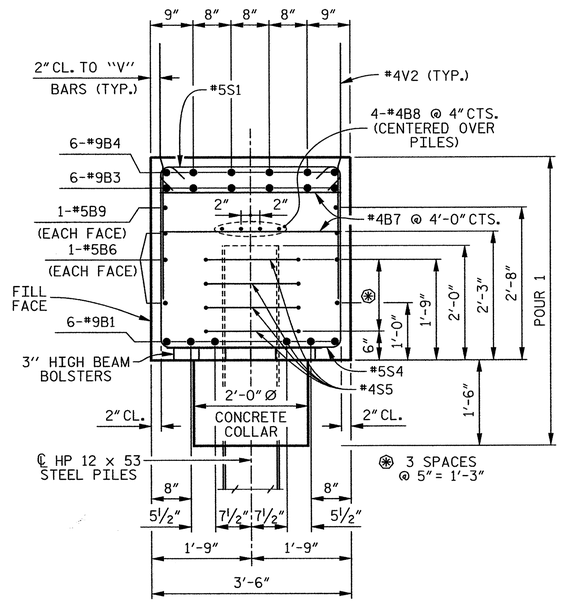


## SECTION B–B

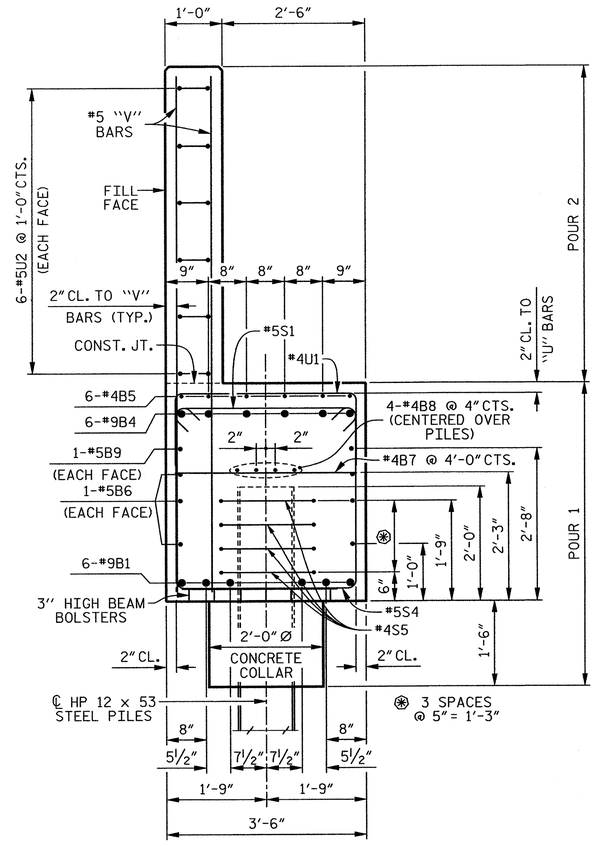


## SECTION C–C

## BAR TYPES

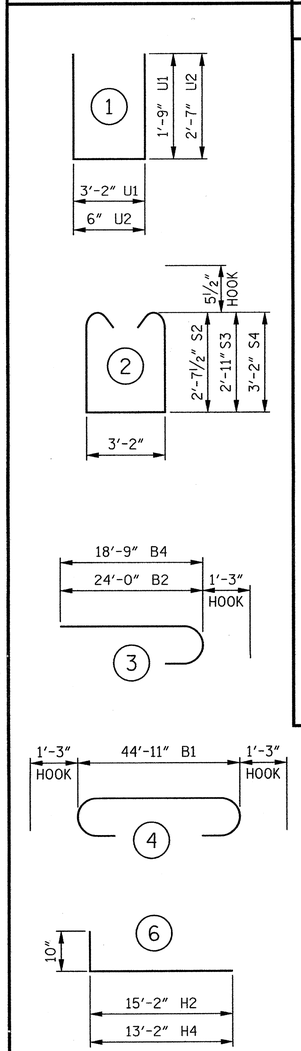


ALL BAR DIMENSIONS ARE OUT TO OUT.

## BILL OF MATERIAL

### END BENT 1

| BAR | No. | SIZE | TYPE | LENGTH | WEIGHT |
|---|---|---|---|---|---|
| B1 | 6 | #9 | 4 | 47'- 5" | 967 |
| B2 | 6 | #9 | 3 | 25'- 3" | 515 |
| B3 | 6 | #9 | STR | 19'-11" | 406 |
| B4 | 6 | #9 | 3 | 20'- 0" | 408 |
| B5 | 6 | #4 | STR | 7'- 8" | 31 |
| B6 | 6 | #5 | STR | 44'-11" | 281 |
| B7 | 16 | #4 | STR | 3'- 2" | 34 |
| B8 | 8 | #4 | STR | 23'- 9" | 127 |
| B9 | 2 | #5 | STR | 24'- 2" | 50 |
| H1 | 14 | #7 | STR | 17'- 7" | 503 |
| H2 | 12 | #5 | 6 | 16'- 0" | 200 |
| H3 | 12 | #7 | STR | 15'- 8" | 384 |
| H4 | 12 | #5 | 6 | 14'- 0" | 175 |
| S1 | 37 | #5 | 8 | 4'- 1" | 158 |
| S2 | 12 | #5 | 2 | 9'- 4" | 117 |
| S3 | 9 | #5 | 2 | 9'-11" | 93 |
| S4 | 16 | #5 | 2 | 10'- 5" | 174 |
| S5 | 32 | #4 | 7 | 6'- 6" | 139 |
| U1 | 8 | #4 | 1 | 6'- 8" | 36 |
| U2 | 12 | #5 | 1 | 5'- 8" | 71 |
| V1 | 38 | #5 | STR | 9'- 0" | 357 |
| V2 | 66 | #4 | STR | 4'- 9" | 209 |
| V3 | 34 | #5 | STR | 8'- 1" | 287 |

REINFORCING STEEL 5,722 LBS.

CLASS "A" CONCRETE

POUR 1 COLLARS, CAP AND LOWER WINGS 24.5 CU. YDS.

POUR 2 BACKWALL AND UPPER WINGS 6.7 CU. YDS.

TOTAL 31.2 CU. YDS.

HP 12 x 53 STEEL PILES

8 REQUIRED 400.0 LIN. FT.

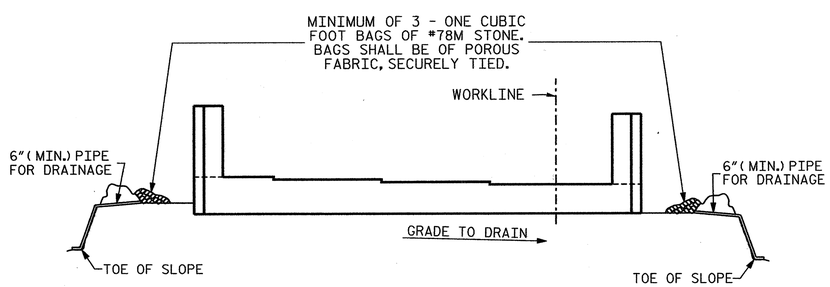


BAGGED STONE AND PIPE SHALL BE PLACED IMMEDIATELY AFTER COMPLETION OF END BENT EXCAVATION. PIPE MAY BE EITHER CONCRETE, CORRUGATED STEEL, CORRUGATED ALUMINUM ALLOY, OR CORRUGATED PLASTIC. PERFORATED PIPE WILL NOT BE ALLOWED.

BAGGED STONE SHALL REMAIN IN PLACE UNTIL THE ENGINEER DIRECTS THAT IT BE REMOVED. THE CONTRACTOR SHALL REMOVE AND DISPOSE OF SILT ACCUMULATIONS AT BAGGED STONE WHEN SO DIRECTED BY THE ENGINEER. BAGS SHALL BE REMOVED AND REPLACED WHENEVER THE ENGINEER DETERMINES THAT THEY HAVE DETERIORATED AND LOST THEIR EFFECTIVENESS.

## TEMPORARY DRAINAGE AT END BENT

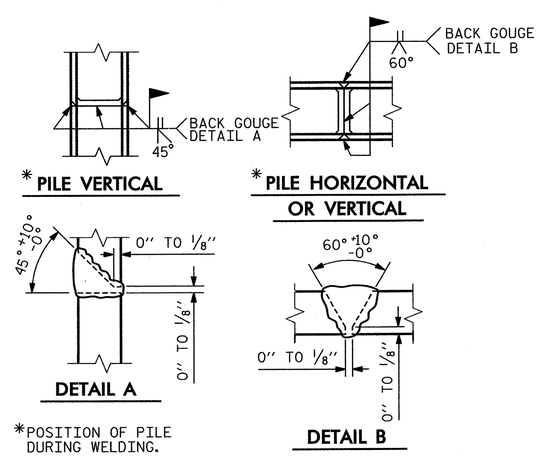


## PILE SPLICE DETAILS

PROJECT NO. R-2303D

SAMPSON COUNTY

STATION: 1326+94.00 -L-

SHEET 3 OF 3

STATE OF NORTH CAROLINA
DEPARTMENT OF TRANSPORTATION
RALEIGH

SUBSTRUCTURE

END BENT 1

(LEFT LANE)

CDM Smith

Camp Dresser & McKee
421 Fayetteville Street, Suite 1303
Raleigh, NC 27604
NC COA No. F-1255

DRAWN BY : J.D. BORUTA DATE : 12-12
CHECKED BY : P.R. HOLSHOUSER DATE : 1-13
DESIGN ENGINEER : P.R. HOLSHOUSER DATE : 3-13

DWG. No. S03-023

NORTH CAROLINA PROFESSIONAL SEAL 20668 ENGINEER PAUL R. HOLSHOUSER
3/14/2013

| REVISIONS | | | | | | | SHEET No. |
|---|---|---|---|---|---|---|---|
| No. | BY: | DATE: | No. | BY: | DATE: | | S-175 |
| 1 | | | 3 | | | | TOTAL SHEETS |
| 2 | | | 4 | | | | 218 |

FILE: n:\roadwy\r2303d\structures\PLANS\Str_3\R2303D_SD_Bnd3_ab13.dgn
DATE: 3/5/2013 3:21:03 PM

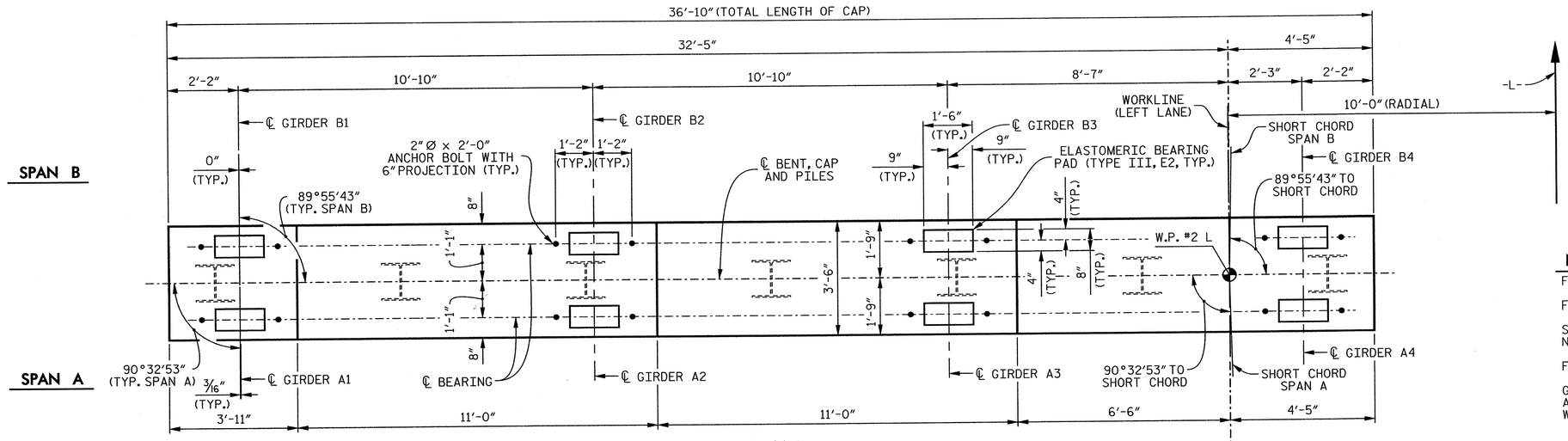


## PLAN

## NOTES

FOR SECTIONS A-A, B-B AND C-C, SEE SHEET 2 OF 2.

FOR VIEW X-X AND VIEW Y-Y, SEE SHEET 2 OF 2.

STIRRUPS AND U1 BARS IN CAP MAY BE SHIFTED AS NECESSARY TO CLEAR ANCHOR BOLTS.

FOR PILE SPLICE DETAILS, SEE SHEET 2 OF 2.

GALVANIZE THE TOP OF EACH INTERIOR BENT PILE A MINIMUM OF 35 FEET. GALVANIZE IN ACCORDANCE WITH SECTION 1076 OF THE STANDARD SPECIFICATIONS.

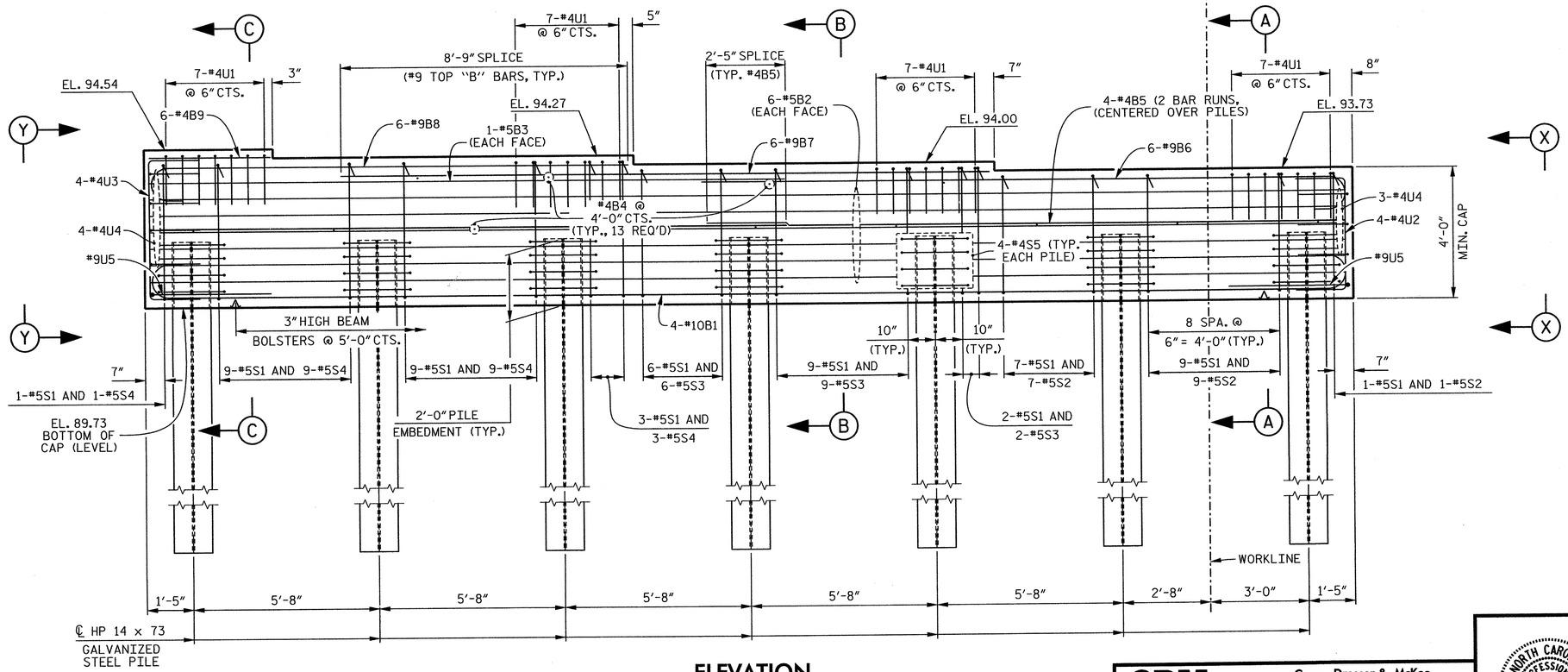


## ELEVATION

PROJECT NO. R-2303D

SAMPSON COUNTY

STATION: 1326+94.00 -L-

SHEET 1 OF 2

STATE OF NORTH CAROLINA
DEPARTMENT OF TRANSPORTATION
RALEIGH

SUBSTRUCTURE

BENT 1

(LEFT LANE)

CDM Smith
Camp Dresser & McKee
421 Fayetteville Street, Suite 1303
Raleigh, NC 27604
NC COA No. F-1255

| | | | |
|---|---|---|---|
| DRAWN BY : | C.E. DIXON | DATE : | 12-12 |
| CHECKED BY : | J.T. ECKEL | DATE : | 12-12 |
| DESIGN ENGINEER : | P.R. HOLSHOUSER | DATE : | 3-13 |

DWG. No. S03-024

NORTH CAROLINA PROFESSIONAL SEAL 20668 ENGINEER PAUL R. HOLSHOUSER 3/14/2013

| REVISIONS | | | | | | | | SHEET No. |
|---|---|---|---|---|---|---|---|---|
| No. | BY: | DATE: | No. | BY: | DATE: | | | S-176 |
| 1 | | | 3 | | | | | TOTAL SHEETS |
| 2 | | | 4 | | | | | 218 |

FILE: R:\NCDOT\R2303D\STRUCTURES\PLANS\Sv_S1\R2303D_SD_Sv3_S11.dgn
DATE: 3/2/2013 5:08:54 PM

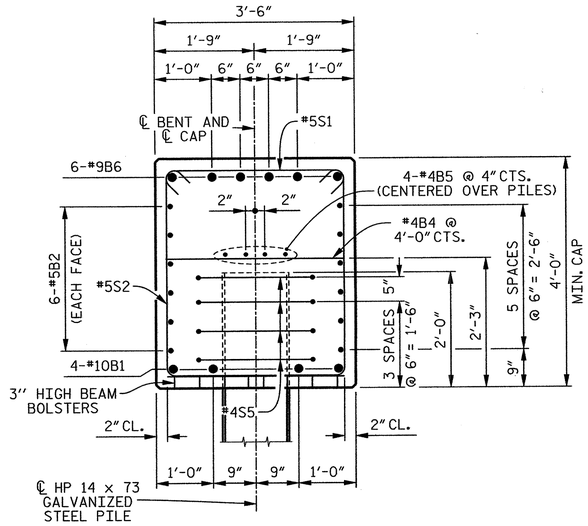


## SECTION A–A

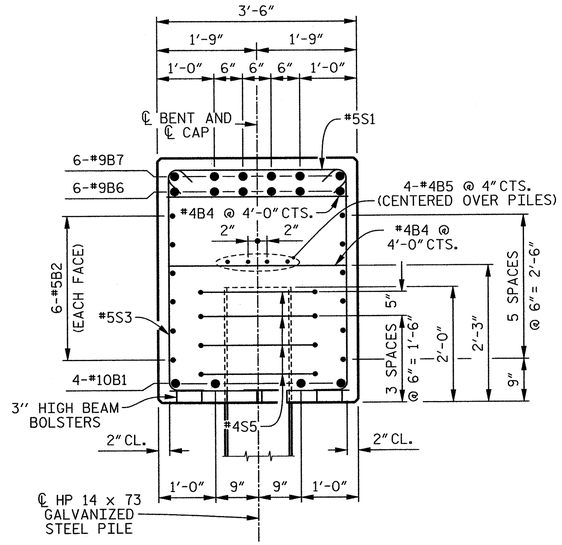


## SECTION B–B

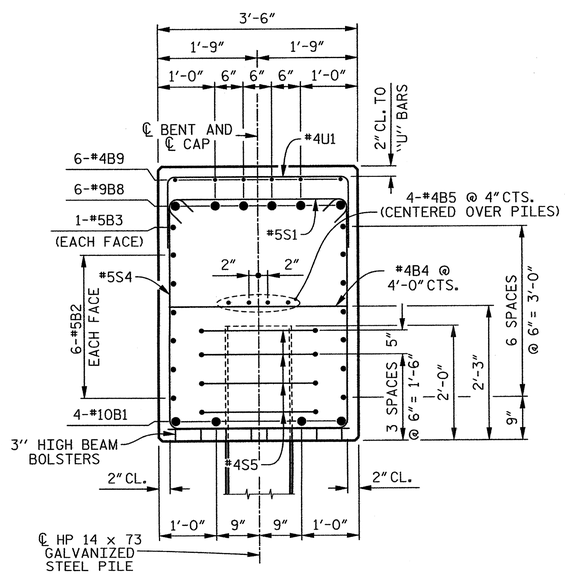


## SECTION C–C

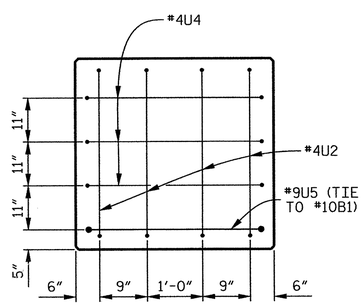


## END VIEW X–X

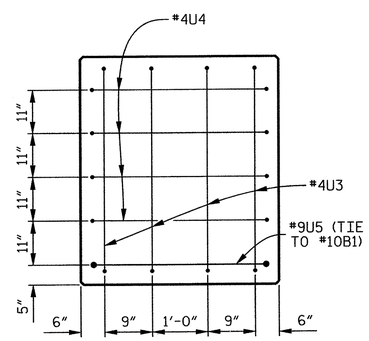


## END VIEW Y–Y

## BAR TYPES

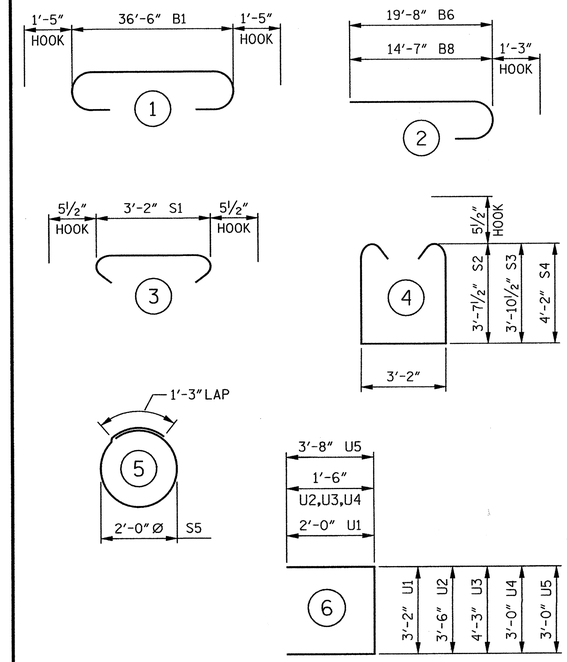


ALL BAR DIMENSIONS ARE OUT TO OUT.

## BILL OF MATERIAL

### BENT 1

| BAR | No. | SIZE | TYPE | LENGTH | WEIGHT |
|---|---|---|---|---|---|
| B1 | 4 | #10 | 1 | 39'- 4" | 677 |
| B2 | 12 | #5 | STR | 36'- 6" | 457 |
| B3 | 2 | #5 | STR | 19'-10" | 41 |
| B4 | 13 | #4 | STR | 3'- 2" | 27 |
| B5 | 8 | #4 | STR | 19'- 6" | 104 |
| B6 | 6 | #9 | 2 | 20'-11" | 427 |
| B7 | 6 | #9 | STR | 19'- 9" | 403 |
| B8 | 6 | #9 | 2 | 15'-10" | 323 |
| B9 | 6 | #4 | STR | 3'- 7" | 14 |
| S1 | 56 | #5 | 3 | 4'- 1" | 238 |
| S2 | 17 | #5 | 4 | 11'- 4" | 201 |
| S3 | 17 | #5 | 4 | 11'-10" | 210 |
| S4 | 22 | #5 | 4 | 12'- 5" | 285 |
| S5 | 28 | #4 | 5 | 7'- 7" | 142 |
| U1 | 28 | #4 | 6 | 7'- 2" | 134 |
| U2 | 4 | #4 | 6 | 6'- 6" | 17 |
| U3 | 4 | #4 | 6 | 7'- 3" | 19 |
| U4 | 7 | #4 | 6 | 6'- 0" | 28 |
| U5 | 2 | #9 | 6 | 10'- 4" | 70 |

REINFORCING STEEL 3,817 LBS.

CLASS "A" CONCRETE
POUR 1 CAP 20.7 CU. YDS.

HP 14 x 73 GALVANIZED STEEL PILES
7 REQUIRED 455 LIN. FT.

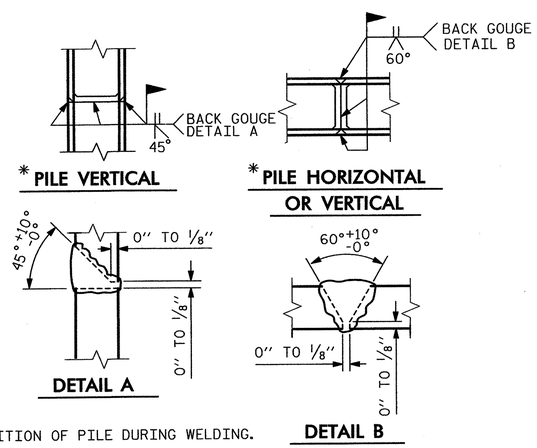


* POSITION OF PILE DURING WELDING.

## PILE SPLICE DETAILS

PROJECT NO. R-2303D
SAMPSON COUNTY
STATION: 1326+94.00 -L-

SHEET 2 OF 2

STATE OF NORTH CAROLINA
DEPARTMENT OF TRANSPORTATION
RALEIGH

SUBSTRUCTURE

BENT 1

(LEFT LANE)

CDM Smith
Camp Dresser & McKee
421 Fayetteville Street, Suite 1303
Raleigh, NC 27604
NC COA No. F-1255

DRAWN BY : C.E. DIXON DATE : 11-12
CHECKED BY : J.T. ECKEL DATE : 12-12
DESIGN ENGINEER : P.R. HOLSHOUSER DATE : 3-13

DWG. No. S03-025

NORTH CAROLINA PROFESSIONAL SEAL 20668 ENGINEER PAUL R. HOLSHOUSER
3/14/2013

| REVISIONS | | | | | | SHEET No. |
|---|---|---|---|---|---|---|
| No. | BY: | DATE: | No. | BY: | DATE: | S-177 |
| 1 | | | 3 | | | TOTAL SHEETS |
| 2 | | | 4 | | | 218 |

FILE: r:\roadwy\2303d\structures\PLANS\Str_01\2303D_SD_Str2_b12.dgn
DATE: 3/5/2013 3:21:07 PM

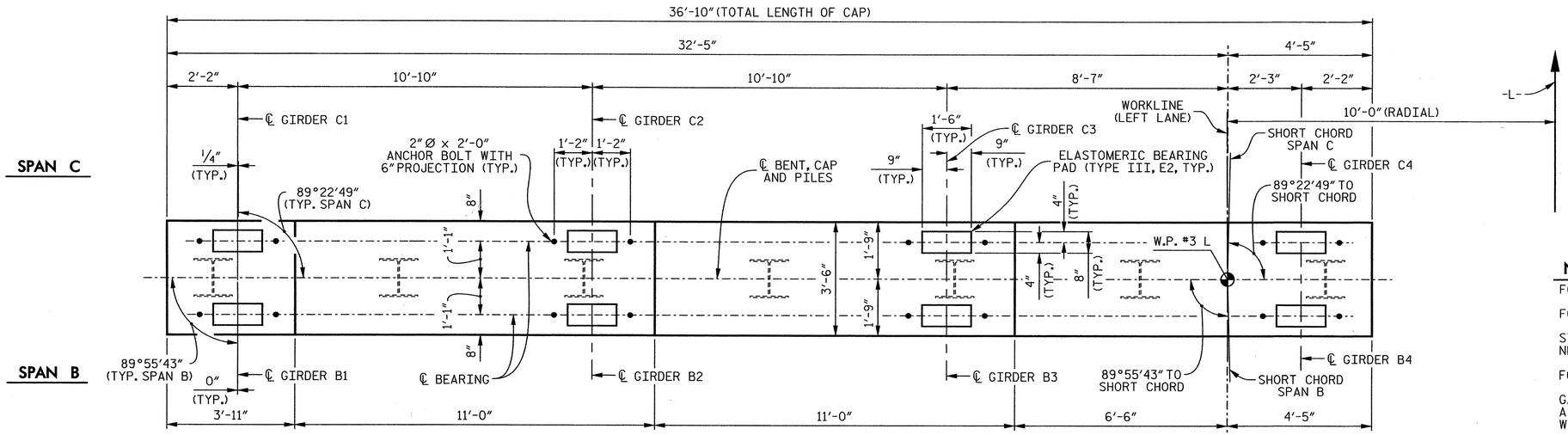


## PLAN

## NOTES

FOR SECTIONS A-A, B-B AND C-C, SEE SHEET 2 OF 2.

FOR VIEW X-X AND VIEW Y-Y, SEE SHEET 2 OF 2.

STIRRUPS AND U1 BARS IN CAP MAY BE SHIFTED AS NECESSARY TO CLEAR ANCHOR BOLTS.

FOR PILE SPLICE DETAILS, SEE SHEET 2 OF 2.

GALVANIZE THE TOP OF EACH INTERIOR BENT PILE A MINIMUM OF 35 FEET. GALVANIZE IN ACCORDANCE WITH SECTION 1076 OF THE STANDARD SPECIFICATIONS.

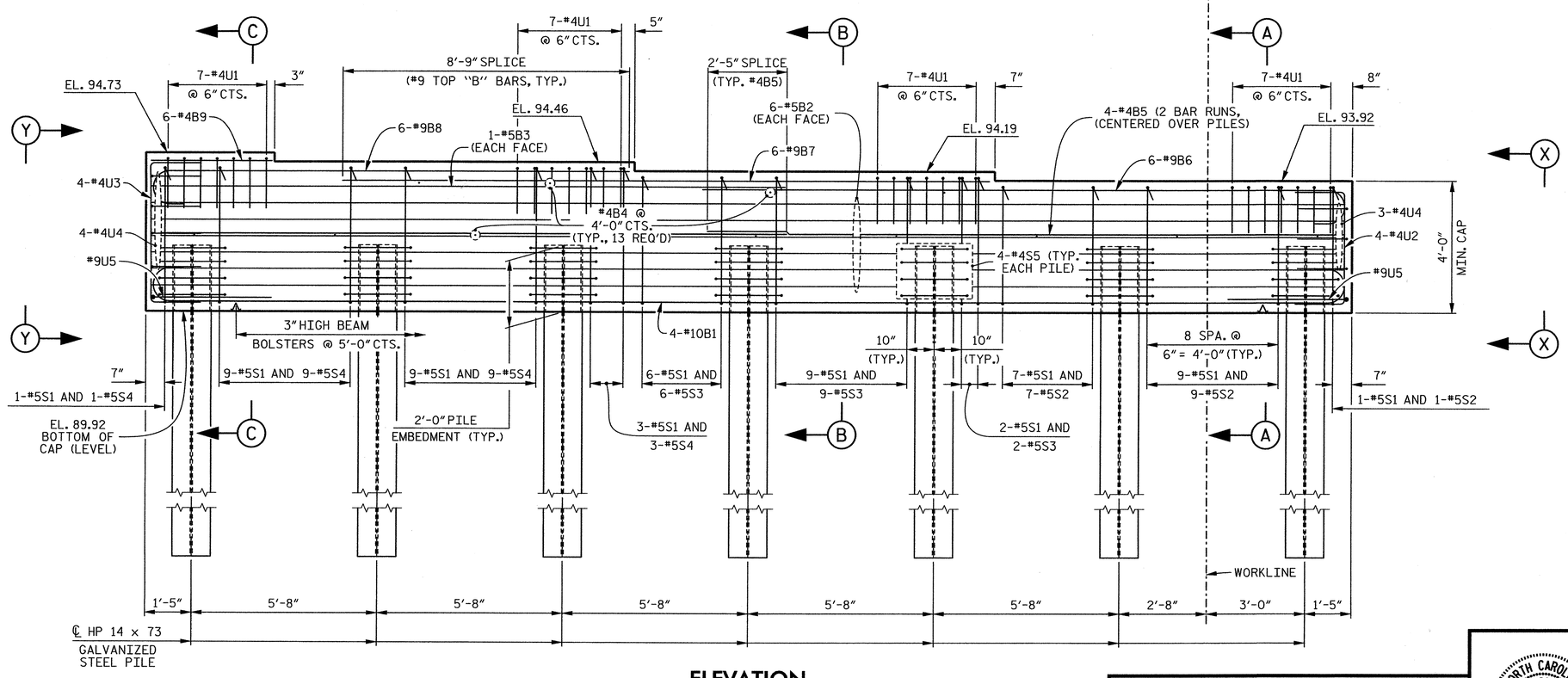


## ELEVATION

PROJECT NO. R-2303D

SAMPSON COUNTY

STATION: 1326+94.00 -L-

SHEET 1 OF 2

STATE OF NORTH CAROLINA
DEPARTMENT OF TRANSPORTATION
RALEIGH

SUBSTRUCTURE

BENT 2

(LEFT LANE)

CDM Smith

Camp Dresser & McKee
421 Fayetteville Street, Suite 1303
Raleigh, NC 27604
NC COA No. F-1255

| | | | |
|---|---|---|---|
| DRAWN BY : | C.E. DIXON | DATE : | 12-12 |
| CHECKED BY : | J.T. ECKEL | DATE : | 12-12 |
| DESIGN ENGINEER : | P.R. HOLSHOUSER | DATE : | 3-13 |

DWG. No. S03-026

NORTH CAROLINA PROFESSIONAL SEAL 20668 ENGINEER PAUL R. HOLSHOUSER 3/14/2013

| REVISIONS | | | | | | | | | SHEET No. |
|---|---|---|---|---|---|---|---|---|---|
| No. | BY: | DATE: | No. | BY: | DATE: | No. | BY: | DATE: | S-178 |
| 1 | | | 3 | | | | | | TOTAL SHEETS |
| 2 | | | 4 | | | | | | 218 |

FILE: R:\NCDOT\R2303D\STRUCTURES\PLANS\Sr_3\R2303D_SD_Sr3_b21.dgn
DATE: 3/8/2013 9:30:54 AM

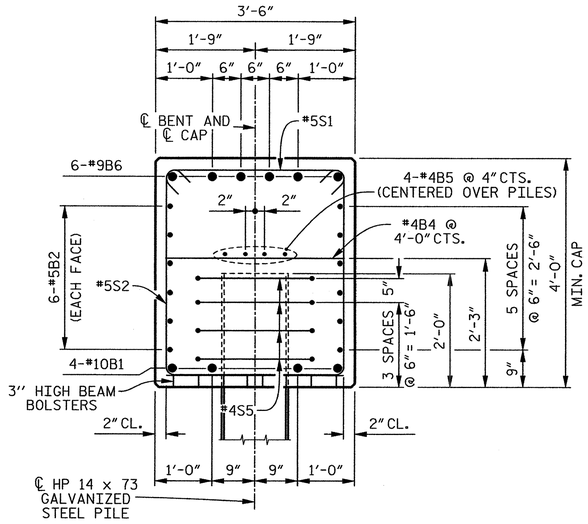


## SECTION A–A

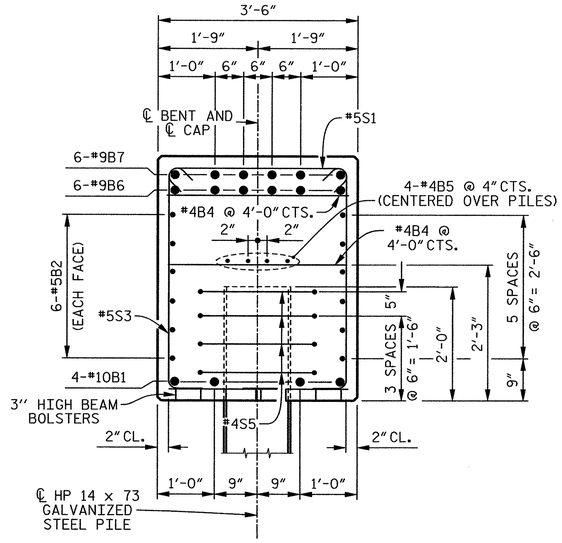


## SECTION B–B

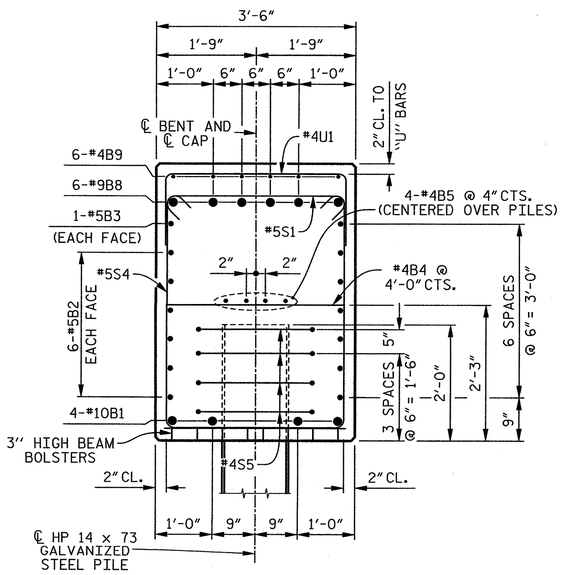


## SECTION C–C

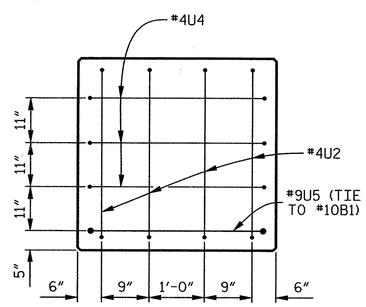


## END VIEW X–X

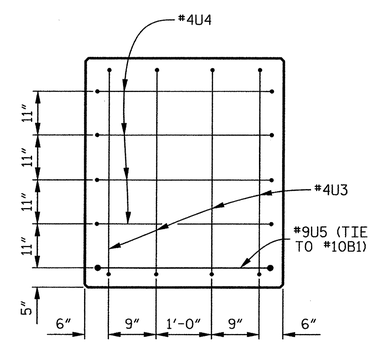


## END VIEW Y–Y

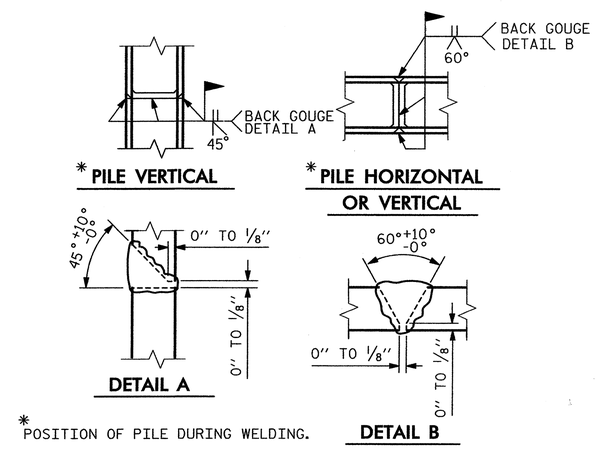


* POSITION OF PILE DURING WELDING.

## PILE SPLICE DETAILS

## BAR TYPES

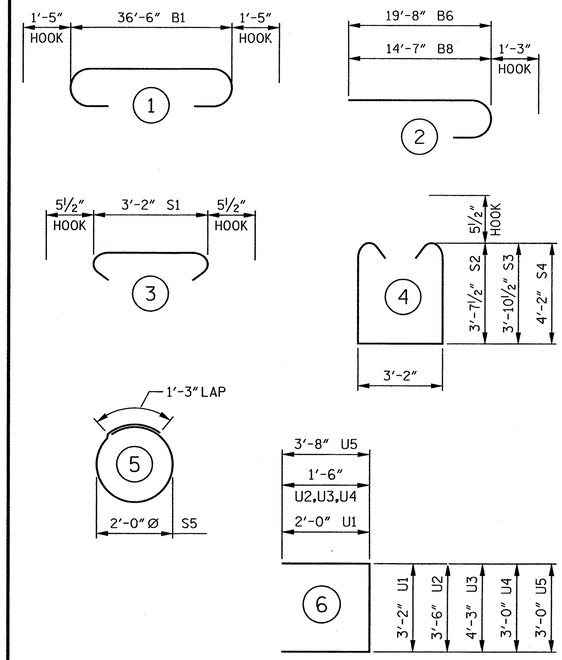


ALL BAR DIMENSIONS ARE OUT TO OUT.

## BILL OF MATERIAL

### BENT 2

| BAR | No. | SIZE | TYPE | LENGTH | WEIGHT |
|---|---|---|---|---|---|
| B1 | 4 | #10 | 1 | 39'- 4" | 677 |
| B2 | 12 | #5 | STR | 36'- 6" | 457 |
| B3 | 2 | #5 | STR | 19'-10" | 41 |
| B4 | 13 | #4 | STR | 3'- 2" | 27 |
| B5 | 8 | #4 | STR | 19'- 6" | 104 |
| B6 | 6 | #9 | 2 | 20'-11" | 427 |
| B7 | 6 | #9 | STR | 19'- 9" | 403 |
| B8 | 6 | #9 | 2 | 15'-10" | 323 |
| B9 | 6 | #4 | STR | 3'- 7" | 14 |
| S1 | 56 | #5 | 3 | 4'- 1" | 238 |
| S2 | 17 | #5 | 4 | 11'- 4" | 201 |
| S3 | 17 | #5 | 4 | 11'-10" | 210 |
| S4 | 22 | #5 | 4 | 12'- 5" | 285 |
| S5 | 28 | #4 | 5 | 7'- 7" | 142 |
| U1 | 28 | #4 | 6 | 7'- 2" | 134 |
| U2 | 4 | #4 | 6 | 6'- 6" | 17 |
| U3 | 4 | #4 | 6 | 7'- 3" | 19 |
| U4 | 7 | #4 | 6 | 6'- 0" | 28 |
| U5 | 2 | #9 | 6 | 10'- 4" | 70 |

REINFORCING STEEL 3,817 LBS.

CLASS "A" CONCRETE
POUR 1 CAP 20.7 CU. YDS.

HP 14 x 73 GALVANIZED STEEL PILES
7 REQUIRED 420 LIN. FT.

PROJECT NO. R-2303D
SAMPSON COUNTY
STATION: 1326+94.00 -L-

SHEET 2 OF 2

STATE OF NORTH CAROLINA
DEPARTMENT OF TRANSPORTATION
RALEIGH

SUBSTRUCTURE

BENT 2

(LEFT LANE)

CDM Smith
Camp Dresser & McKee
421 Fayetteville Street, Suite 1303
Raleigh, NC 27604
NC COA No. F-1255

DRAWN BY : C.E. DIXON DATE : 11-12
CHECKED BY : J.T. ECKEL DATE : 12-12
DESIGN ENGINEER : P.R. HOLSHOUSER DATE : 3-13
DWG. No. S03-027

NORTH CAROLINA PROFESSIONAL SEAL 20668 ENGINEER PAUL R. HOLSHOUSER 07/14/2013

| REVISIONS | | | | | | SHEET No. |
|---|---|---|---|---|---|---|
| No. | BY: | DATE: | No. | BY: | DATE: | S-179 |
| 1 | | | 3 | | | TOTAL SHEETS |
| 2 | | | 4 | | | 218 |

FILE: r:\roadwy\2303d\structures\PLANS\br_01\R2303D_S2_Br2_b22.dgn
DATE: 3/20/13 3:27:10 PM

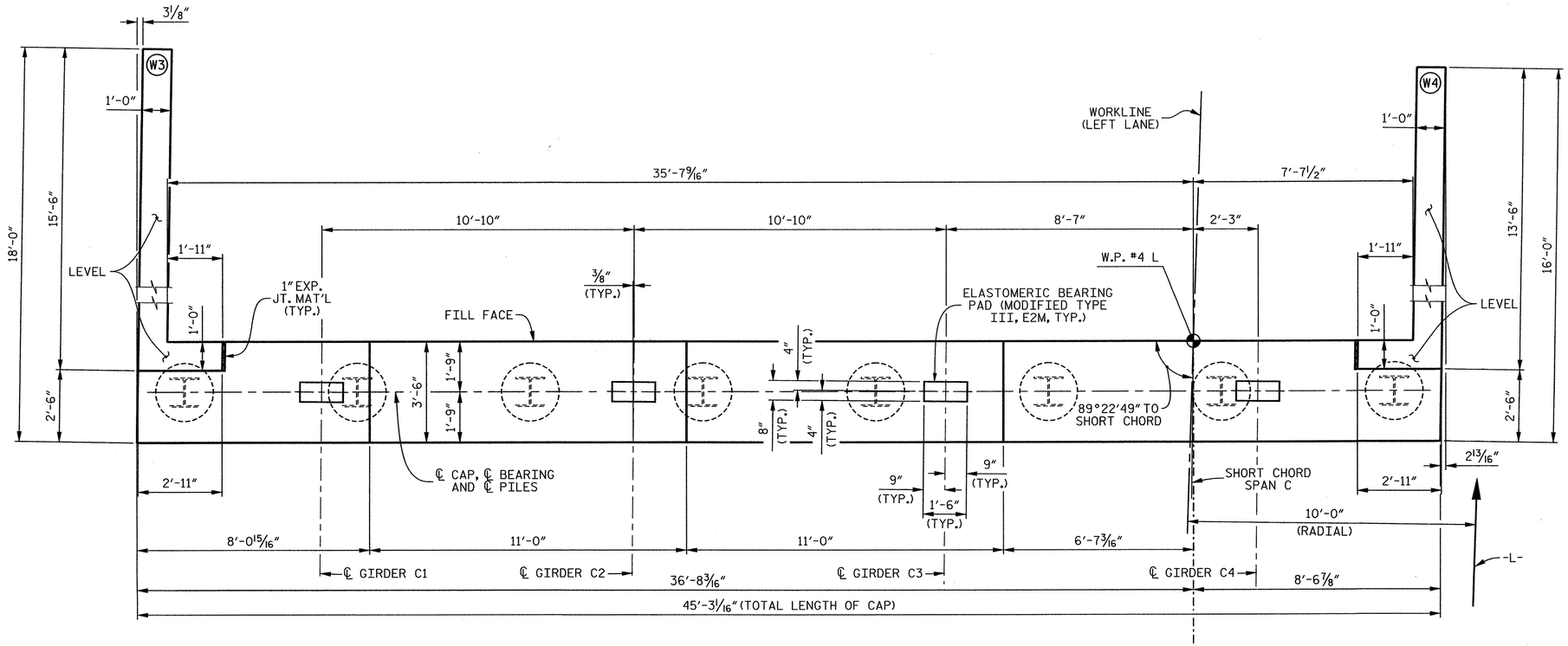


## PLAN

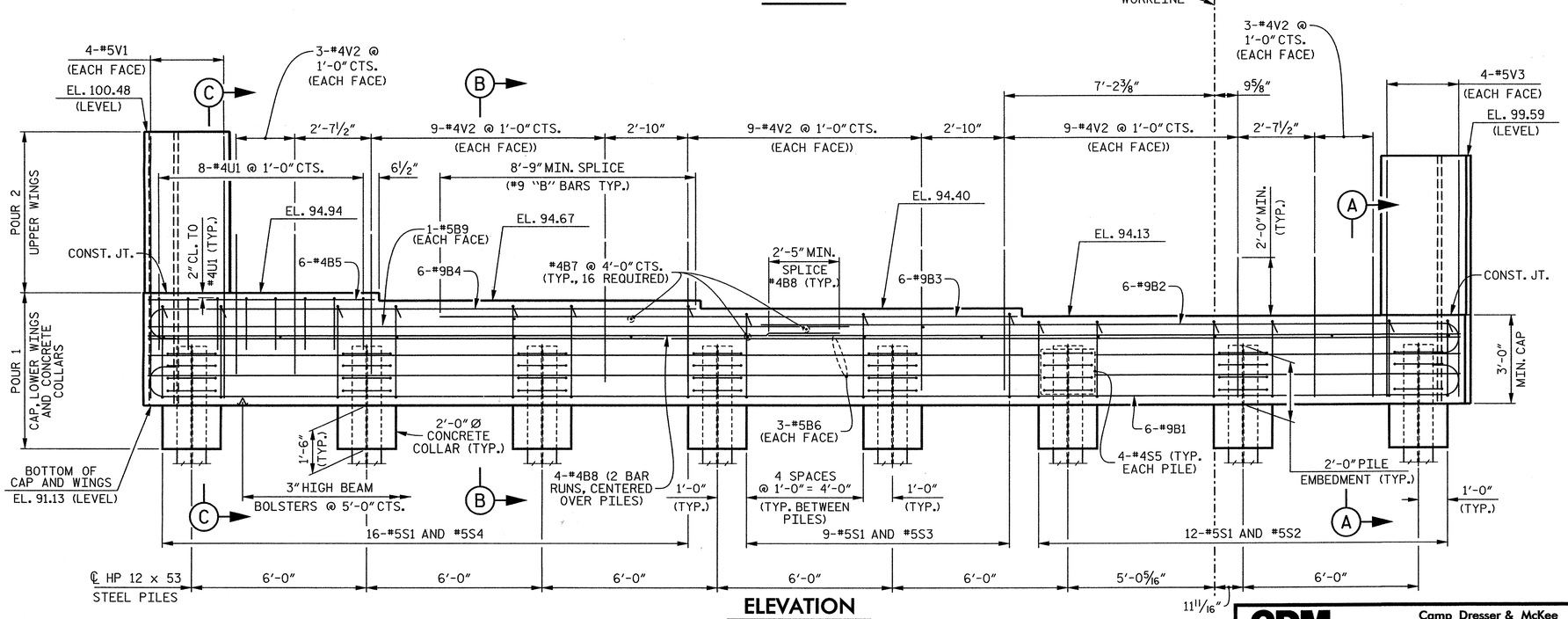


## ELEVATION

## NOTES

STIRRUPS AND "U" BARS IN CAP MAY BE SHIFTED AS NECESSARY TO CLEAR #4V2 BARS.

THE TOP SURFACE AREA OF THE END BENT CAP SHALL BE CURED IN ACCORDANCE WITH THE STANDARD SPECIFICATIONS EXCEPT THAT THE MEMBRANE CURING COMPOUND METHOD SHALL NOT BE USED.

THIS ELEVATION IS TAKEN AT FILL FACE OF BACKWALL.

FOR SECTION A-A, SECTION B-B AND SECTION C-C, SEE SHEET 3 OF 3.

FOR PILE SPLICE DETAILS, SEE SHEET 3 OF 3.

FOR TEMPORARY DRAINAGE AT END BENT DETAIL, SEE SHEET 3 OF 3.

THE CONTRACTOR SHALL PROVIDE FOR INSTALLATION OF THE 4" DIAMETER DRAIN PIPE THROUGH THE WING WALL AS REQUIRED FOR REINFORCED BRIDGE APPROACH FILLS, SEE THE ROADWAY PLANS. REINFORCING STEEL IN THE WING WALL MAY BE SHIFTED AS NECESSARY TO CLEAR THE DRAIN PIPE.

PROJECT NO. R-2303D
SAMPSON COUNTY
STATION: 1326+94.00 -L-

SHEET 1 OF 3

STATE OF NORTH CAROLINA
DEPARTMENT OF TRANSPORTATION
RALEIGH

SUBSTRUCTURE

END BENT 2

(LEFT LANE)

CDM Smith
Camp Dresser & McKee
421 Fayetteville Street, Suite 1303
Raleigh, NC 27604
NC COA No. F-1255

DRAWN BY: J.D. BORUTA DATE: 12-12
CHECKED BY: P.R. HOLSHOUSER DATE: 1-13
DESIGN ENGINEER: P.R. HOLSHOUSER DATE: 3-13

DWG. No. S03-028

NORTH CAROLINA PROFESSIONAL SEAL 20668 ENGINEER PAUL R. HOLSHOUSER 3/14/2013

| REVISIONS | | | | | | | SHEET No. |
|---|---|---|---|---|---|---|---|
| No. | BY: | DATE: | No. | BY: | DATE: | | S-180 |
| 1 | | | 3 | | | | TOTAL SHEETS |
| 2 | | | 4 | | | | 218 |

FILE: r:\cadd\r2303d\structures\PLANS\Str_01\R2303D_SD_SB3_ab01.dgn
DATE: 3/5/2013 3:21:12 PM

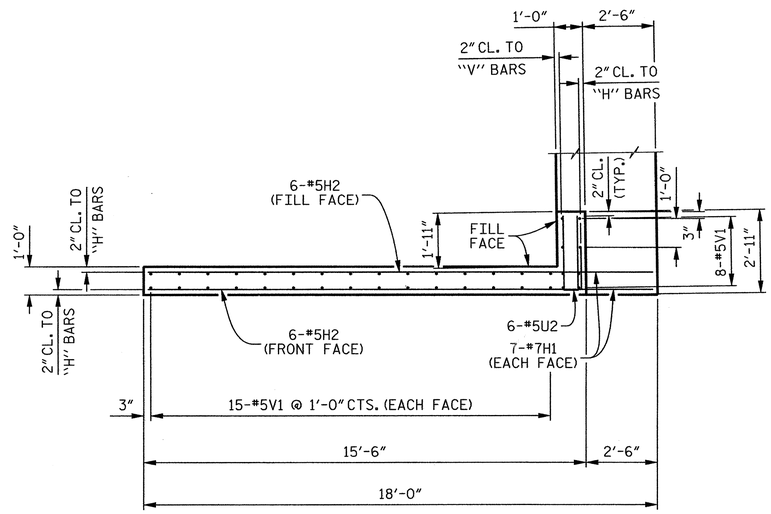


## PLAN OF WING (W3)

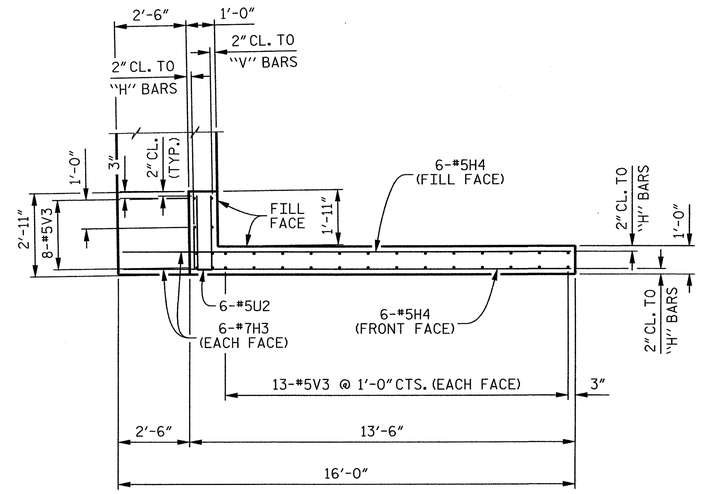


## PLAN OF WING (W4)

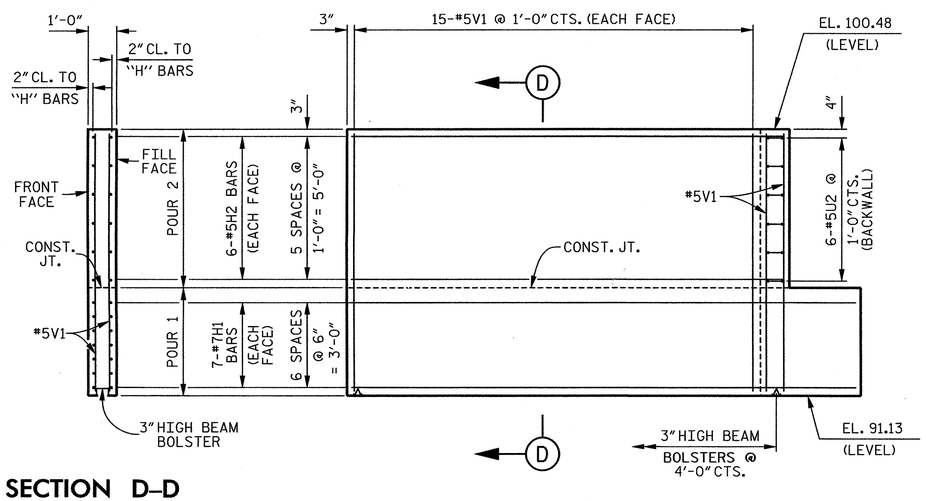


## SECTION D–D

## ELEVATION OF WING (W3)

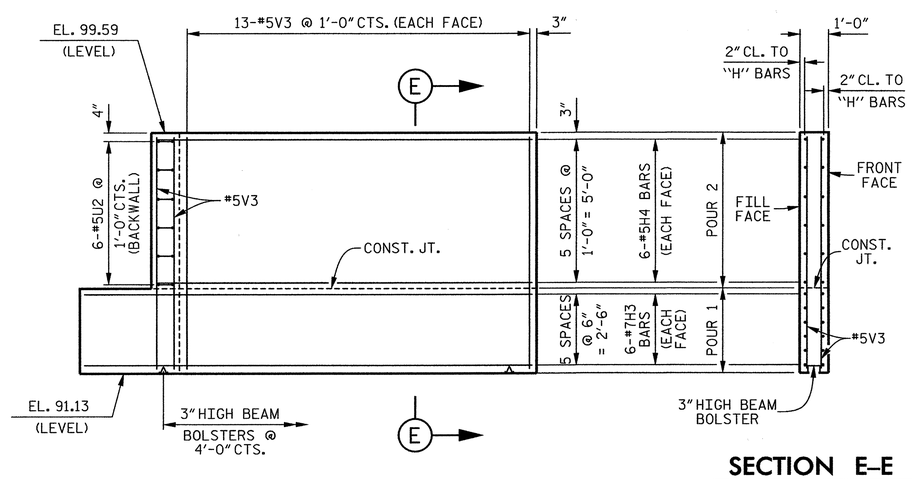


## SECTION E–E

## ELEVATION OF WING (W4)

PROJECT NO. R–2303D

SAMPSON COUNTY

STATION: 1326+94.00 –L–

SHEET 2 OF 3

STATE OF NORTH CAROLINA
DEPARTMENT OF TRANSPORTATION
RALEIGH

SUBSTRUCTURE

END BENT 2

(LEFT LANE)

CDM Smith
Camp Dresser & McKee
421 Fayetteville Street, Suite 1303
Raleigh, NC 27604
NC COA No. F–1255

DRAWN BY : J.D. BORUTA DATE : 12–12
CHECKED BY : P.R. HOLSHOUSER DATE : 1–13
DESIGN ENGINEER : P.R. HOLSHOUSER DATE : 3–13

DWG. No. S03-029

NORTH CAROLINA PROFESSIONAL SEAL 20668 ENGINEER PAUL R. HOLSHOUSER
3/14/2013

| REVISIONS | | | | | | SHEET No. |
|---|---|---|---|---|---|---|
| No. | BY: | DATE: | No. | BY: | DATE: | S-181 |
| 1 | | | 3 | | | TOTAL SHEETS |
| 2 | | | 4 | | | 218 |

FILE: n:\model\2303d\structure\PLAN\Str_3\R2303D_SD_Str3_ab22.dgn
DATE: 3/5/2013 3:21:14 PM

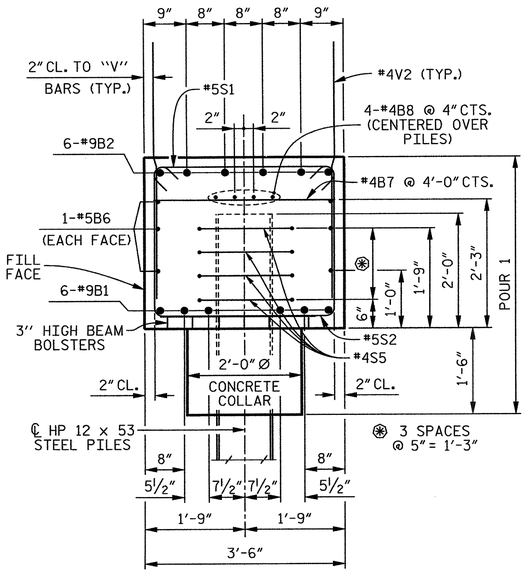


## SECTION A–A

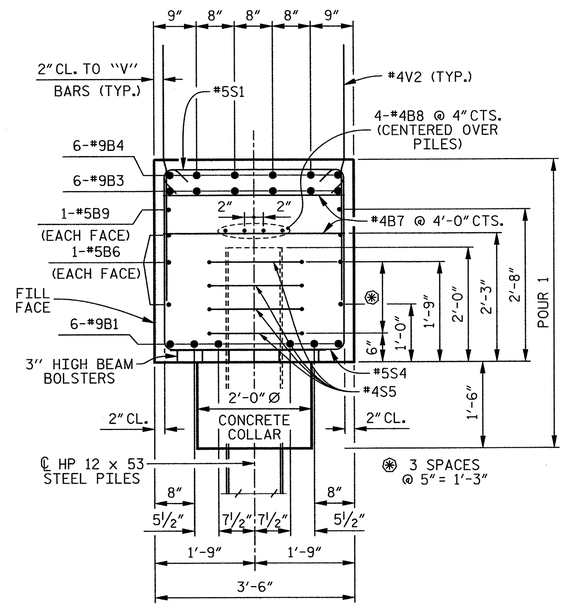


## SECTION B–B

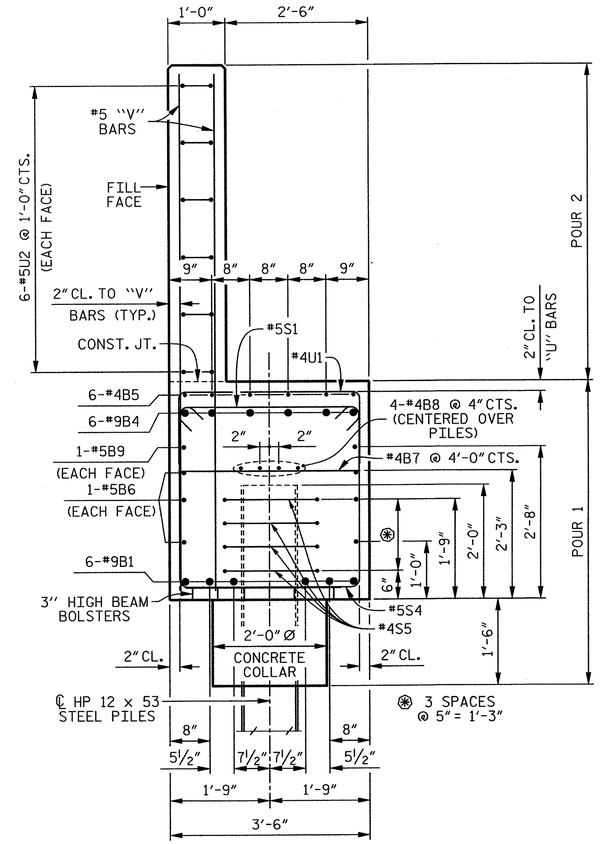


## SECTION C–C

## BAR TYPES

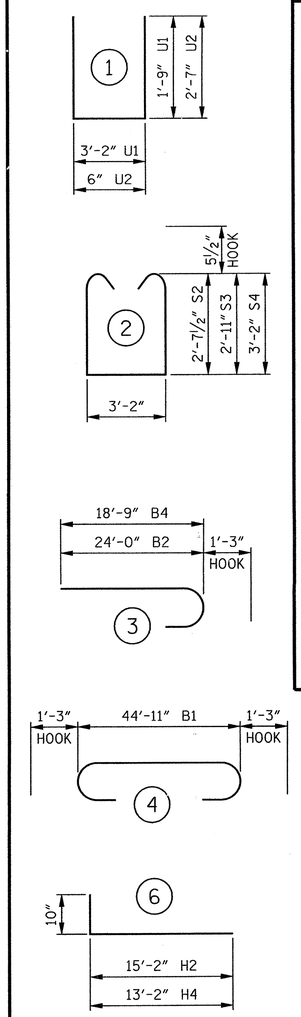


ALL BAR DIMENSIONS ARE OUT TO OUT.

## BILL OF MATERIAL

### END BENT 2

| BAR | No. | SIZE | TYPE | LENGTH | WEIGHT |
|---|---|---|---|---|---|
| B1 | 6 | #9 | 4 | 47′- 5″ | 967 |
| B2 | 6 | #9 | 3 | 25′- 3″ | 515 |
| B3 | 6 | #9 | STR | 19′-11″ | 406 |
| B4 | 6 | #9 | 3 | 20′- 0″ | 408 |
| B5 | 6 | #4 | STR | 7′- 8″ | 31 |
| B6 | 6 | #5 | STR | 44′-11″ | 281 |
| B7 | 16 | #4 | STR | 3′- 2″ | 34 |
| B8 | 8 | #4 | STR | 23′- 9″ | 127 |
| B9 | 2 | #5 | STR | 24′- 2″ | 50 |
| H1 | 14 | #7 | STR | 17′- 7″ | 503 |
| H2 | 12 | #5 | 6 | 16′- 0″ | 200 |
| H3 | 12 | #7 | STR | 15′- 8″ | 384 |
| H4 | 12 | #5 | 6 | 14′- 0″ | 175 |
| S1 | 37 | #5 | 8 | 4′- 1″ | 158 |
| S2 | 12 | #5 | 2 | 9′- 4″ | 117 |
| S3 | 9 | #5 | 2 | 9′-11″ | 93 |
| S4 | 16 | #5 | 2 | 10′- 5″ | 174 |
| S5 | 32 | #4 | 7 | 6′- 6″ | 139 |
| U1 | 8 | #4 | 1 | 6′- 8″ | 36 |
| U2 | 12 | #5 | 1 | 5′- 8″ | 71 |
| V1 | 38 | #5 | STR | 9′- 0″ | 357 |
| V2 | 66 | #4 | STR | 4′- 9″ | 209 |
| V3 | 34 | #5 | STR | 8′- 1″ | 287 |

REINFORCING STEEL 5,722 LBS.

CLASS "A" CONCRETE

POUR 1 COLLARS, CAP AND LOWER WINGS 24.5 CU. YDS.

POUR 2 BACKWALL AND UPPER WINGS 6.7 CU. YDS.

TOTAL 31.2 CU. YDS.

HP 12 x 53 STEEL PILES

8 REQUIRED 400.0 LIN. FT.

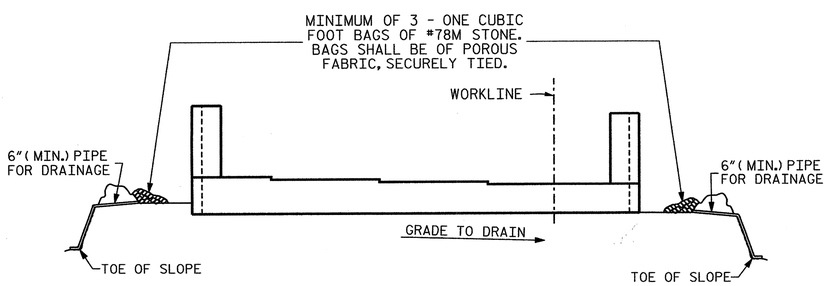


BAGGED STONE AND PIPE SHALL BE PLACED IMMEDIATELY AFTER COMPLETION OF END BENT EXCAVATION. PIPE MAY BE EITHER CONCRETE, CORRUGATED STEEL, CORRUGATED ALUMINUM ALLOY, OR CORRUGATED PLASTIC. PERFORATED PIPE WILL NOT BE ALLOWED.

BAGGED STONE SHALL REMAIN IN PLACE UNTIL THE ENGINEER DIRECTS THAT IT BE REMOVED. THE CONTRACTOR SHALL REMOVE AND DISPOSE OF SILT ACCUMULATIONS AT BAGGED STONE WHEN SO DIRECTED BY THE ENGINEER. BAGS SHALL BE REMOVED AND REPLACED WHENEVER THE ENGINEER DETERMINES THAT THEY HAVE DETERIORATED AND LOST THEIR EFFECTIVENESS.

## TEMPORARY DRAINAGE AT END BENT

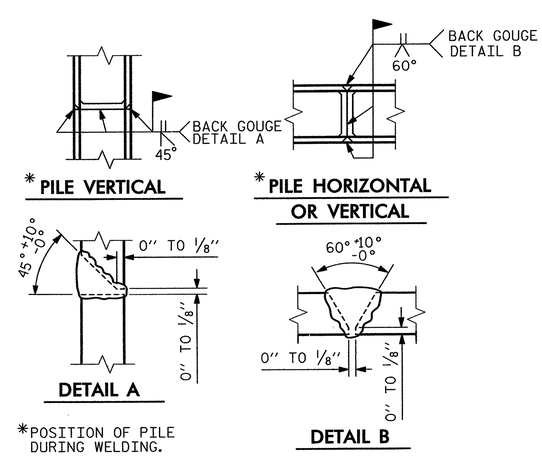


## PILE SPLICE DETAILS

PROJECT NO. R-2303D

SAMPSON COUNTY

STATION: 1326+94.00 -L-

SHEET 3 OF 3

STATE OF NORTH CAROLINA
DEPARTMENT OF TRANSPORTATION
RALEIGH

SUBSTRUCTURE

END BENT 2

(LEFT LANE)

CDM Smith

Camp Dresser & McKee
421 Fayetteville Street, Suite 1303
Raleigh, NC 27604
NC COA No. F-1255

DRAWN BY : J.D. BORUTA DATE : 12-12
CHECKED BY : P.R. HOLSHOUSER DATE : 1-13
DESIGN ENGINEER : P.R. HOLSHOUSER DATE : 3-13

DWG. No. S03-030

NORTH CAROLINA PROFESSIONAL SEAL 20668 ENGINEER PAUL R. HOLSHOUSER 3/14/2013

| REVISIONS | | | | | | SHEET No. |
|---|---|---|---|---|---|---|
| No. | BY: | DATE: | No. | BY: | DATE: | S-182 |
| 1 | | | 3 | | | TOTAL SHEETS |
| 2 | | | 4 | | | 218 |

FILE: r:\model\2303d\structures\PLANS\Sk_31\R2303D_SD_SH3_sk23.dgn
DATE: 3/5/2013 3:21:15 PM

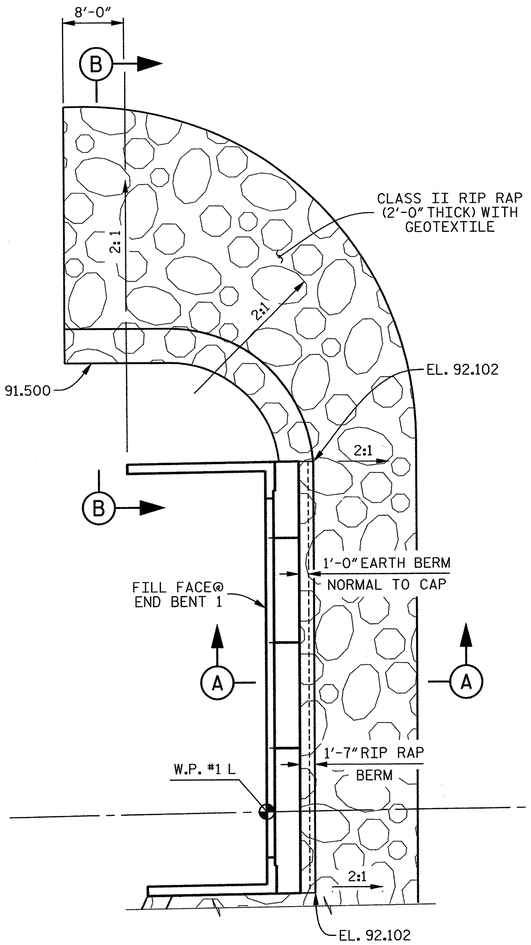


END BENT 1

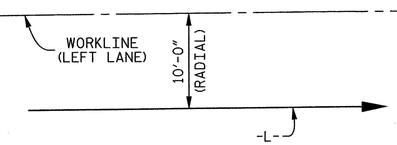


PLAN

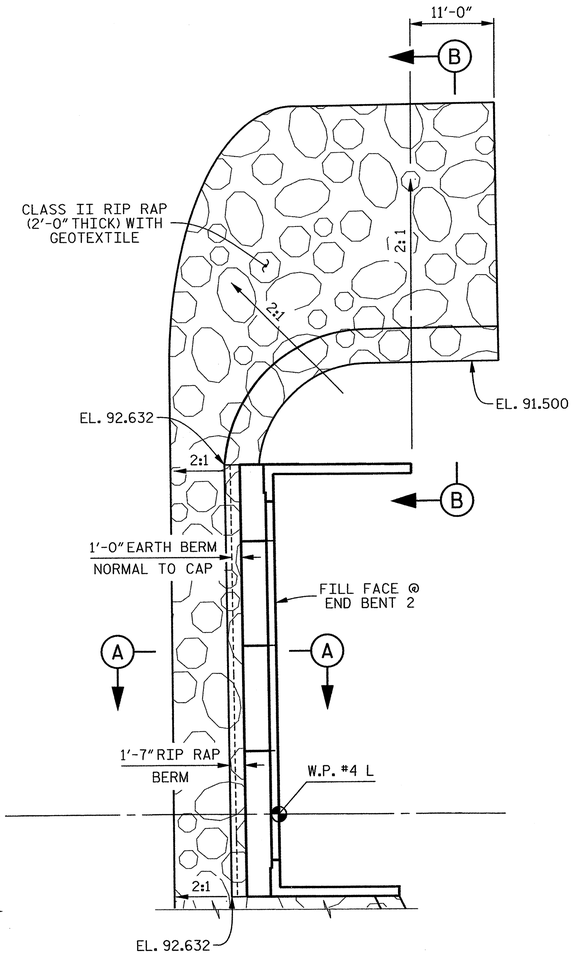


END BENT 2

## ESTIMATED QUANTITIES

| BRIDGE @ STA. 1326+94.00 -L- (LEFT LANE) | RIP RAP CLASS II ( TONS ) | GEOTEXTILE FOR DRAINAGE ( SQUARE YARDS ) |
|---|---|---|
| END BENT 1 | 155 | 170 |
| END BENT 2 | 120 | 130 |

PROJECT NO. R-2303D

SAMPSON COUNTY

STATION: 1326+94.00 -L-

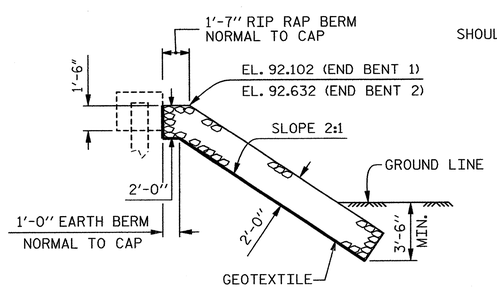


SECTION A-A

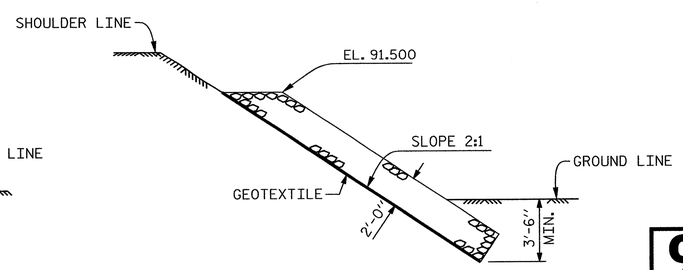


SECTION B-B

STATE OF NORTH CAROLINA
DEPARTMENT OF TRANSPORTATION
RALEIGH

STANDARD

RIP RAP DETAILS

(LEFT LANE)

CDM Smith
Camp Dresser & McKee
421 Fayetteville Street, Suite 1303
Raleigh, NC 27604
NC COA No. F-1255

| | | | |
|---|---|---|---|
| DRAWN BY : | K.E. LOFTON | DATE : | 8-12 |
| CHECKED BY : | P.R. HOLSHOUSER | DATE : | 12-12 |
| DESIGN ENGINEER : | P.R. HOLSHOUSER | DATE : | 3-13 |

DWG. No. S03-031

NORTH CAROLINA PROFESSIONAL SEAL 20668 ENGINEER PAUL R. HOLSHOUSER 3/14/2013

REVISIONS

| No. | BY: | DATE: | No. | BY: | DATE: |
|---|---|---|---|---|---|
| 1 | | | 3 | | |
| 2 | | | 4 | | |

SHEET No. S-183

TOTAL SHEETS 218

STD. No. RR1

| | | | |
|---|---|---|---|
| ASSEMBLED BY : | K.E. LOFTON | DATE : | 8-12 |
| CHECKED BY : | P.R. HOLSHOUSER | DATE : | 12-12 |
| DRAWN BY : REK 1/84 | REV. 5/1/06R | TLA/GM | |
| CHECKED BY : RDU 1/84 | REV. 10/1/11 | MAA/GM | |
| | REV. 12/21/11 | MAA/GM | |

FILE: r:\radar\r2303d\structures\PLANS\Str_3\R2303D_SD_Str3_rr1.dgn
DATE: 3/5/2013 3:21:21 PM

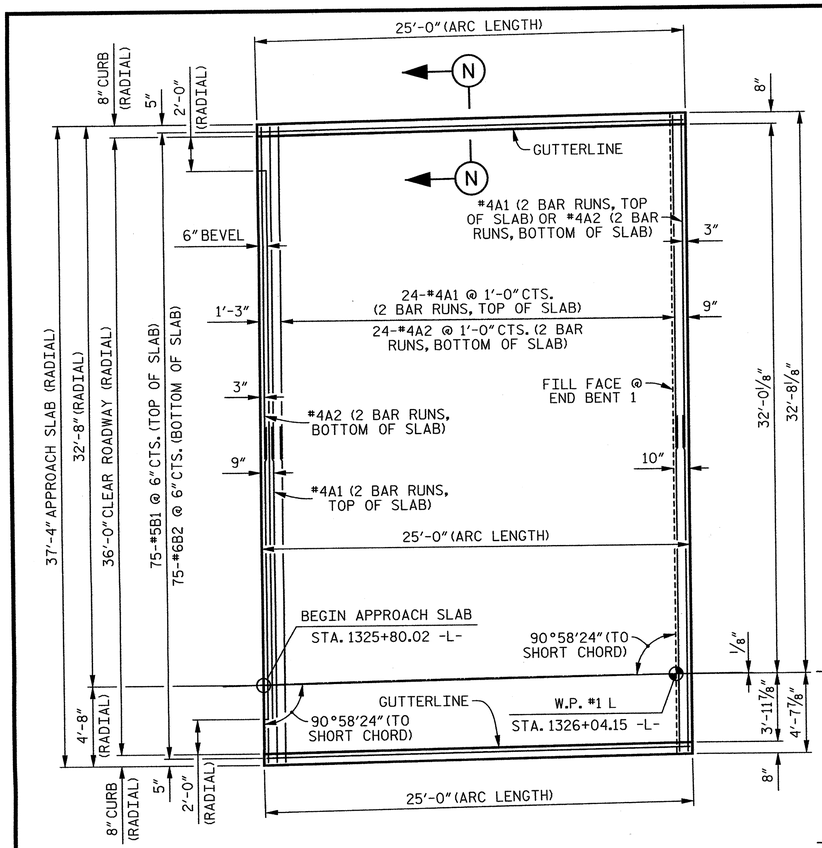


## PLAN OF APPROACH SLAB @ END BENT 1

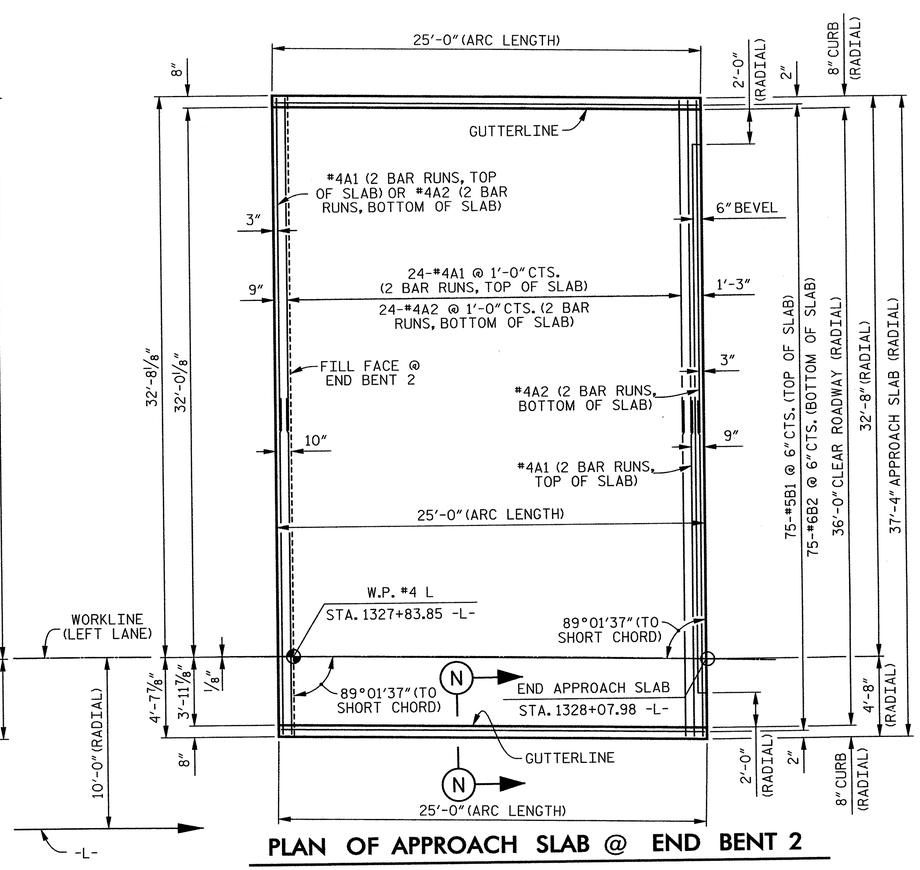


## PLAN OF APPROACH SLAB @ END BENT 2

## NOTES

APPROACH SLAB SHALL NOT BE CONSTRUCTED PRIOR TO COMPLETION OF THE BRIDGE DECK.

FOR REINFORCED BRIDGE APPROACH FILL INCLUDING FABRIC, IMPERMEABLE GEOMEMBRANE, 4" Ø DRAINAGE PIPE, #78M STONE, AND SELECT MATERIAL, SEE ROADWAY PLANS.

AREA BETWEEN THE WING WALL AND APPROACH SLAB SHALL BE GRADED TO DRAIN THE WATER AWAY FROM THE FILL FACE OF THE BRIDGE AND SHALL BE PAVED. SEE ROADWAY PLANS.

THE JOINT OPENING AT THE APPROACH SLAB-DECK INTERFACE SHALL BE SAWED NO MORE THAN 12 HOURS AFTER THE APPROACH SLAB IS CAST. THE JOINT SHALL BE CLEANED OF ALL DEBRIS BEFORE THE SEALANT IS APPLIED. THE JOINT SEALER MATERIAL SHALL CONFORM TO THE REQUIREMENTS OF SECTION 1028-3 OF THE STANDARD SPECIFICATIONS.

FOR ARC OFFSETS, SEE SHEET 2 OF 2.

### SPLICE LENGTHS

| BAR | SIZE | LENGTH |
|---|---|---|
| A1 | #4 | 2'-0" |
| A2 | #4 | 1'-9" |

### BILL OF MATERIAL

FOR ONE APPROACH SLAB (2 REQUIRED)

| BAR | No. | SIZE | TYPE | LENGTH | WEIGHT |
|---|---|---|---|---|---|
| *A1 | 52 | #4 | STR | 19'- 5" | 674 |
| A2 | 52 | #4 | STR | 19'- 4" | 672 |
| *B1 | 75 | #5 | STR | 24'- 2" | 1,890 |
| B2 | 75 | #6 | STR | 24'- 8" | 2,779 |
| REINFORCING STEEL | | | | | 3,451 LBS. |
| *EPOXY COATED REINFORCING STEEL | | | | | 2,564 LBS. |

CLASS "AA" CONCRETE

POUR 1 SLAB AND CURBS 40.3 CU. YDS.

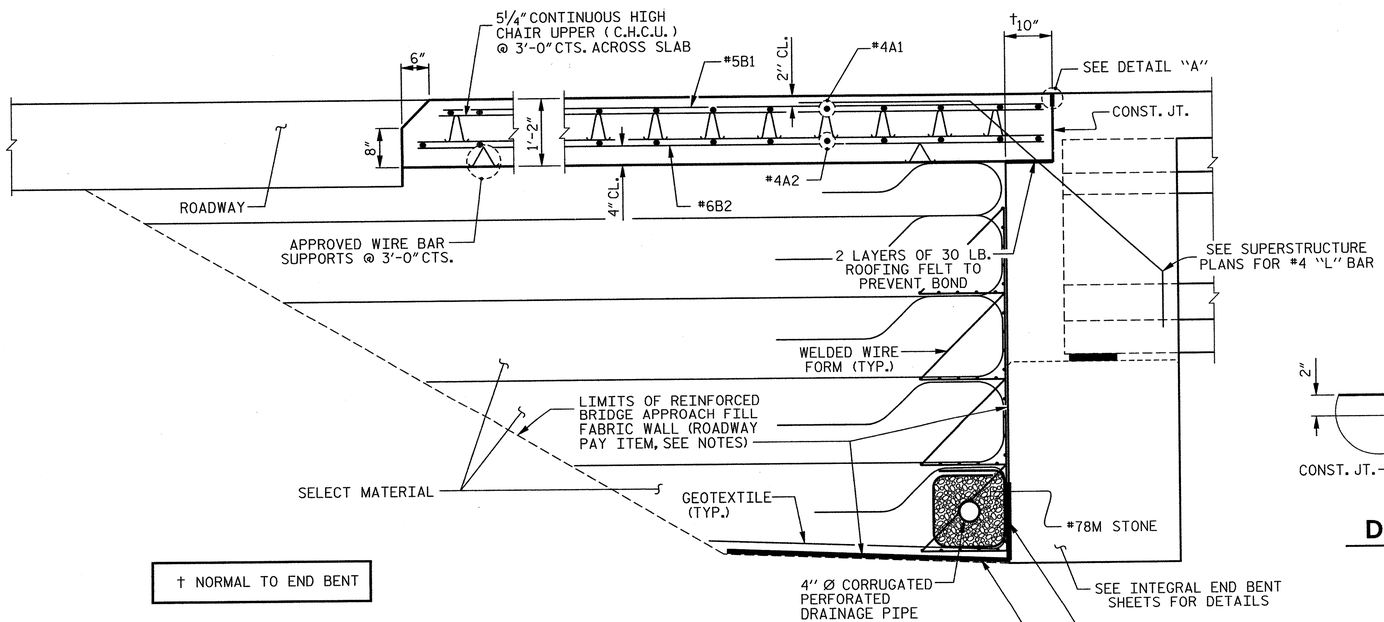


† NORMAL TO END BENT

## SECTION THRU SLAB

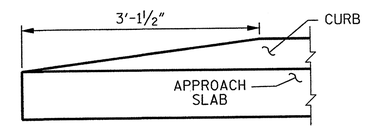


## END OF CURB WITHOUT SHOULDER BERM GUTTER

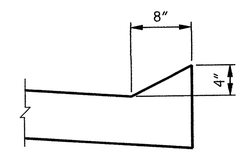


## SECTION N-N

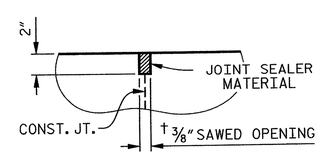


## DETAIL "A"

PROJECT NO. R-2303D

SAMPSON COUNTY

STATION: 1326+94.00 -L-

SHEET 1 OF 2

STATE OF NORTH CAROLINA
DEPARTMENT OF TRANSPORTATION
RALEIGH

STANDARD

# BRIDGE APPROACH SLAB FOR INTEGRAL ABUTMENT (LEFT LANE)

| REVISIONS | | | | | | SHEET No. |
|---|---|---|---|---|---|---|
| No. | BY: | DATE: | No. | BY: | DATE: | S-184 |
| 1 | | | 3 | | | TOTAL SHEETS |
| 2 | | | 4 | | | 218 |

STD. No. BAS5

CDM Smith
Camp Dresser & McKee
421 Fayetteville Street, Suite 1303
Raleigh, NC 27604
NC COA No. F-1255

DRAWN BY : K.E. LOFTON DATE : 8-12
CHECKED BY : P.R. HOLSHOUSER DATE : 12-12
DESIGN ENGINEER : P.R. HOLSHOUSER DATE : 3-13

DWG. No. S03-032

NORTH CAROLINA PROFESSIONAL SEAL 20668 ENGINEER P. RAUL R. HOLSHOUSER 3/14/2013

ASSEMBLED BY : K. E. LOFTON DATE : 8-12
CHECKED BY : P.R. HOLSHOUSER DATE : 12-12

DRAWN BY : TLA 10/05
CHECKED BY : GM 5/06

ADDED 5/1/06RR KMM/GM
REV. 10/1/11 MAA/GM
REV. 12/21/11 MAA/GM

FILE: P:\models\r2306d\structures\PLANS\Sv_31\R2303D_SD_Sv3_ext.dgn
DATE: 3/13/13 3:21:28 PM

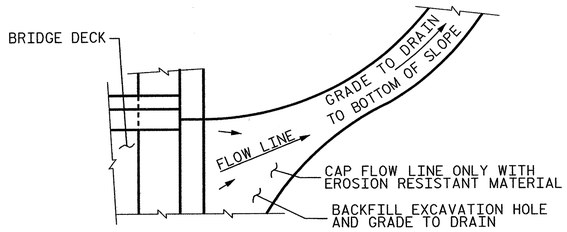


NOTE: IF THE APPROACH SLAB IS NOT CONSTRUCTED IMMEDIATELY AFTER THE BACKFILLING OF THE END BENT EXCAVATION, GRADE TO DRAIN TO THE BOTTOM OF THE SLOPE AND PROVIDE EROSION RESISTANT MATERIAL, SUCH AS FIBERGLASS ROVING OR AS DIRECTED BY THE ENGINEER TO PREVENT SOIL EROSION AND TO PROTECT THE AREA ADJACENT TO THE STRUCTURE. THE CONTRACTOR WILL BE REQUIRED TO REMOVE THESE MATERIALS PRIOR TO CONSTRUCTION OF THE APPROACH SLAB.

## TEMPORARY DRAINAGE DETAIL

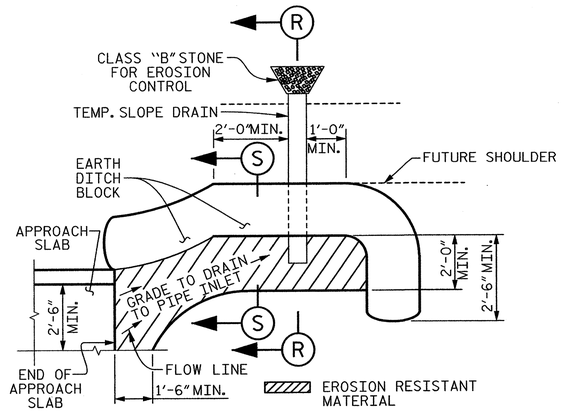


NOTE: IMMEDIATELY AFTER THE CONSTRUCTION OF THE APPROACH SLAB, THE CONTRACTOR SHALL PROVIDE TEMPORARY BERM AND SLOPE DRAIN. CONTRACTOR SHALL GRADE TO PIPE INLET AND PROVIDE EROSION RESISTANT MATERIAL AS SHOWN. THE EROSION RESISTANT MATERIAL SHALL BE EITHER 1) ASPHALT PLANT MIX, TYPE 1 OR TYPE 2, MIN. 2" DEPTH, 2) EROSION CONTROL MAT, OR 3) CONCRETE, AS DIRECTED BY THE ENGINEER. THE SLOPE DRAIN SHALL CONSIST OF A NON-PERFORATED TEMPORARY DRAINAGE PIPE, 12 INCHES IN DIAMETER.

PLAN VIEW

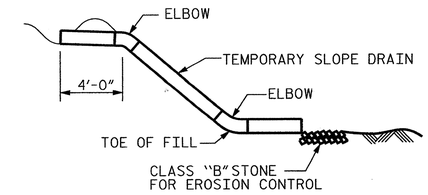


SECTION R–R

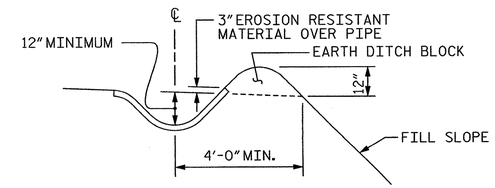


SECTION S–S

## TEMPORARY BERM AND SLOPE DRAIN DETAILS

(TO BE USED WHEN SHOULDER BERM GUTTER IS REQUIRED)

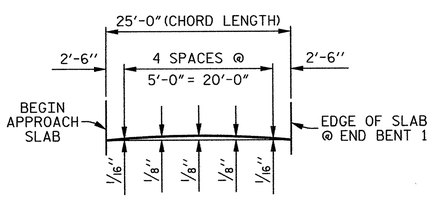


ARC OFFSETS 42'–8" LEFT OF –L–
(LEFT OUTSIDE EDGE OF APPROACH SLAB)

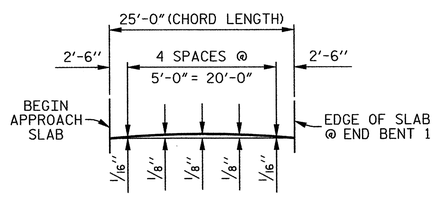


ARC OFFSETS 5'–4" LEFT OF –L–
(RIGHT OUTSIDE EDGE OF APPROACH SLAB)

## APPROACH SLAB @ END BENT 1

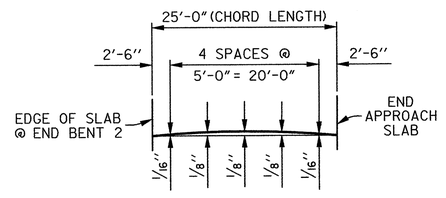


ARC OFFSETS 42'–8" LEFT OF –L–
(LEFT OUTSIDE EDGE OF APPROACH SLAB)

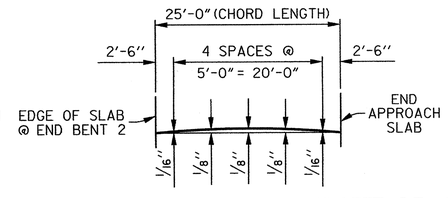


ARC OFFSETS 5'–4" LEFT OF –L–
(RIGHT OUTSIDE EDGE OF APPROACH SLAB)

## APPROACH SLAB @ END BENT 2

PROJECT NO. R–2303D
SAMPSON COUNTY
STATION: 1326+94.00 –L–

SHEET 2 OF 2

STATE OF NORTH CAROLINA
DEPARTMENT OF TRANSPORTATION
RALEIGH

STANDARD

# BRIDGE APPROACH SLAB DETAILS (LEFT LANE)

| ASSEMBLED BY : K. E. LOFTON | DATE : 8-12 |
|---|---|
| CHECKED BY : P.R. HOLSHOUSER | DATE : 12-12 |

| | | | |
|---|---|---|---|
| DRAWN BY : FCJ | 11/88 | REV. 5/7/03 | RWW/JTE |
| CHECKED BY : ARB | 11/88 | REV. 5/1/06RRR | MAA/KMM |
| | | REV. 10/1/11 | MAA/GM |

CDM Smith
Camp Dresser & McKee
421 Fayetteville Street, Suite 1303
Raleigh, NC 27604
NC COA No. F-1255

| | | | |
|---|---|---|---|
| DRAWN BY : | K.E. LOFTON | DATE : | 8-12 |
| CHECKED BY : | P.R. HOLSHOUSER | DATE : | 12-12 |
| DESIGN ENGINEER : | P.R. HOLSHOUSER | DATE : | 3-13 |

DWG. No. S03-033

NORTH CAROLINA PROFESSIONAL SEAL 20668 ENGINEER PAUL R. HOLSHOUSER 3/14/2013

REVISIONS

| No. | BY: | DATE: | No. | BY: | DATE: |
|---|---|---|---|---|---|
| 1 | | | 3 | | |
| 2 | | | 4 | | |

SHEET No. S-185
TOTAL SHEETS 218

STD. No. BAS4

FILE: n:\model\r2303d\structural\PLANS\bv_s1R2303D_SD_Sn3_sw2.dgn
DATE: 3/6/2013 3:27:30 PM

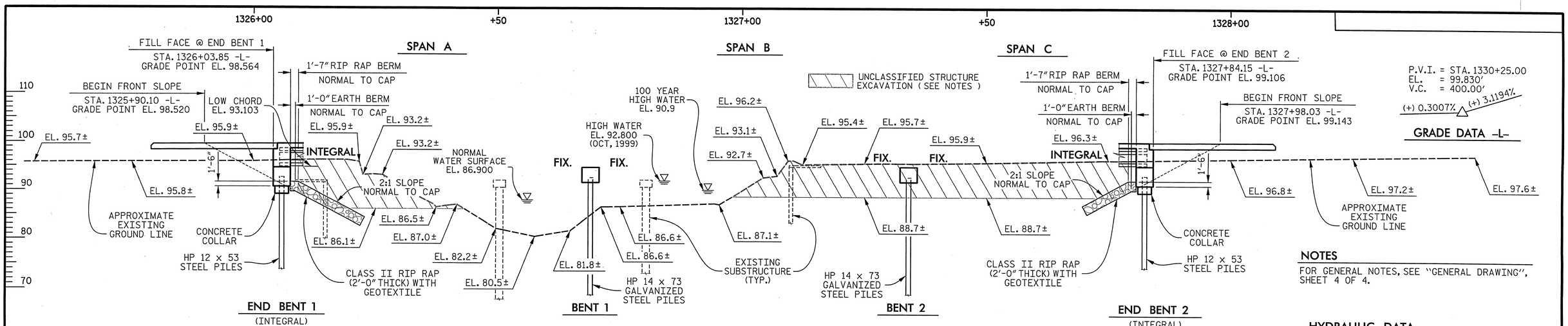


## SECTION ALONG WORKLINE (RIGHT LANE)

(SECTION AT RIGHT ANGLES TO END BENTS)

## NOTES

FOR GENERAL NOTES, SEE "GENERAL DRAWING", SHEET 4 OF 4.

## HYDRAULIC DATA

| | TOTAL (OVERFLOW) |
|---|---|
| DESIGN DISCHARGE | = 6,720 (1,110) CFS |
| FREQUENCY OF DESIGN FLOOD | = 50 YEARS |
| DESIGN HIGH WATER ELEVATION | = 89.20 FT. |
| DRAINAGE AREA | = 158 SQ. MI. |
| BASIC DISCHARGE (Q100) | = 8,215 (1,225) CFS |
| BASIC HIGH WATER ELEVATION | = 90.90 FT. |

## OVERTOPPING FLOOD DATA

| | |
|---|---|
| OVERTOPPING DISCHARGE | = N/A |
| FREQUENCY OF OVERTOPPING FLOOD | = + 500 YEARS |
| OVERTOPPING FLOOD ELEVATION | = 95.30 FT. |

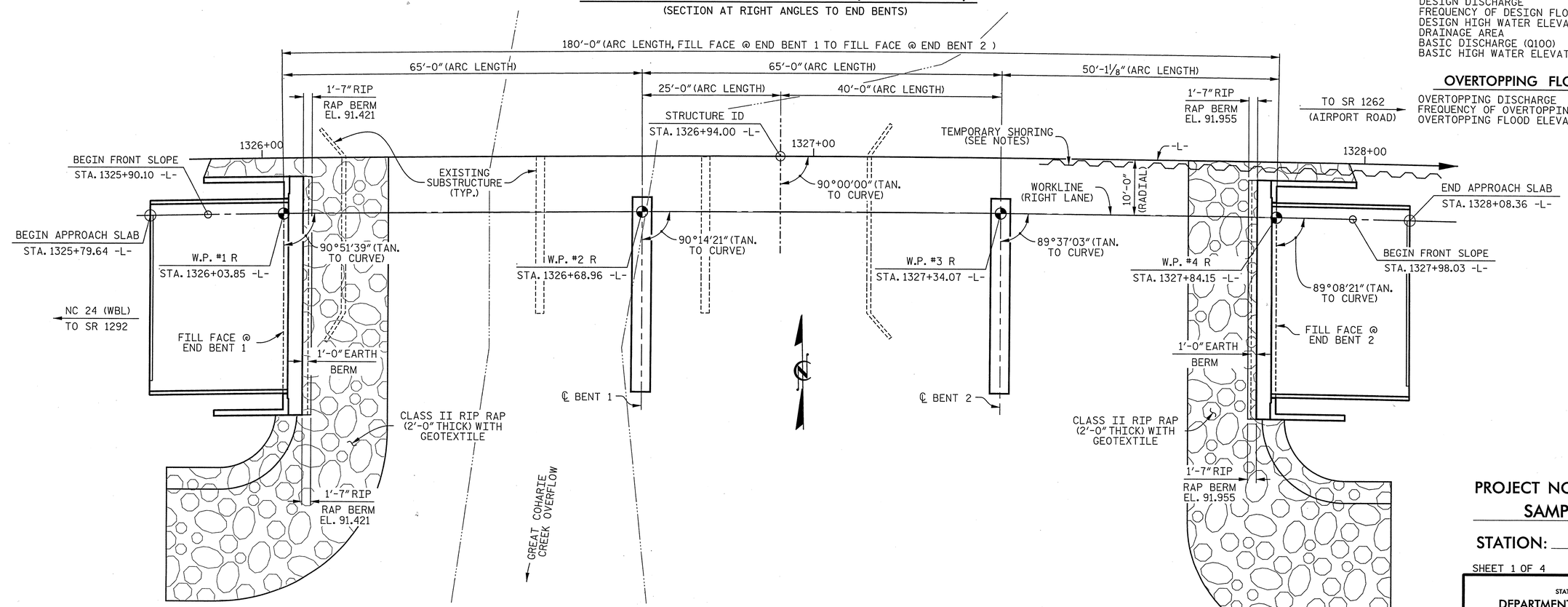


## PLAN

PILES NOT SHOWN IN PLAN VIEW.

## HORIZONTAL CURVE DATA -L-

PI = STA. 1334+00.44
Δ = 16° 06' 35.6" (RT.)
D = 0° 57' 17.7"
L = 849.11'
T = 1,687.02'
R = 6,000.00'

I HEREBY CERTIFY THESE PLANS ARE THE AS-BUILT PLANS.


CDM Smith
Camp Dresser & McKee
421 Fayetteville Street, Suite 1303
Raleigh, NC 27604
NC COA No. F-1255


| | | | |
|---|---|---|---|
| DRAWN BY : | K.E. LOFTON | DATE : | 1-13 |
| CHECKED BY : | P.R. HOLSHOUSER | DATE : | 1-13 |
| DESIGN ENGINEER : | P.R. HOLSHOUSER | DATE : | 3-13 |

DWG. No. S04-001

NORTH CAROLINA PROFESSIONAL SEAL 20668 ENGINEER PAUL R. HOLSHOUSER 3/14/13

PROJECT NO. R-2303D
SAMPSON COUNTY
STATION: 1326+94.00 -L-

SHEET 1 OF 4 REPLACES BRIDGE No. 51

STATE OF NORTH CAROLINA
DEPARTMENT OF TRANSPORTATION
RALEIGH

GENERAL DRAWING

BRIDGE OVER GREAT COHARIE CREEK OVERFLOW ON NC 24 (-L-) BETWEEN SR 1292 AND SR 1262

(RIGHT LANE)

| REVISIONS | | | | | | SHEET No. |
|---|---|---|---|---|---|---|
| No. | BY: | DATE: | No. | BY: | DATE: | S-126 |
| 1 | | | 3 | | | TOTAL SHEETS |
| 2 | | | 4 | | | 218 |

FILE: R:\NCDOT\R2303D\STRUCTURES\PLANS\Sv_01\R2303D_SD_Sht4_gnl.dgn
DATE: 3/19/2013
1:53:34 PM

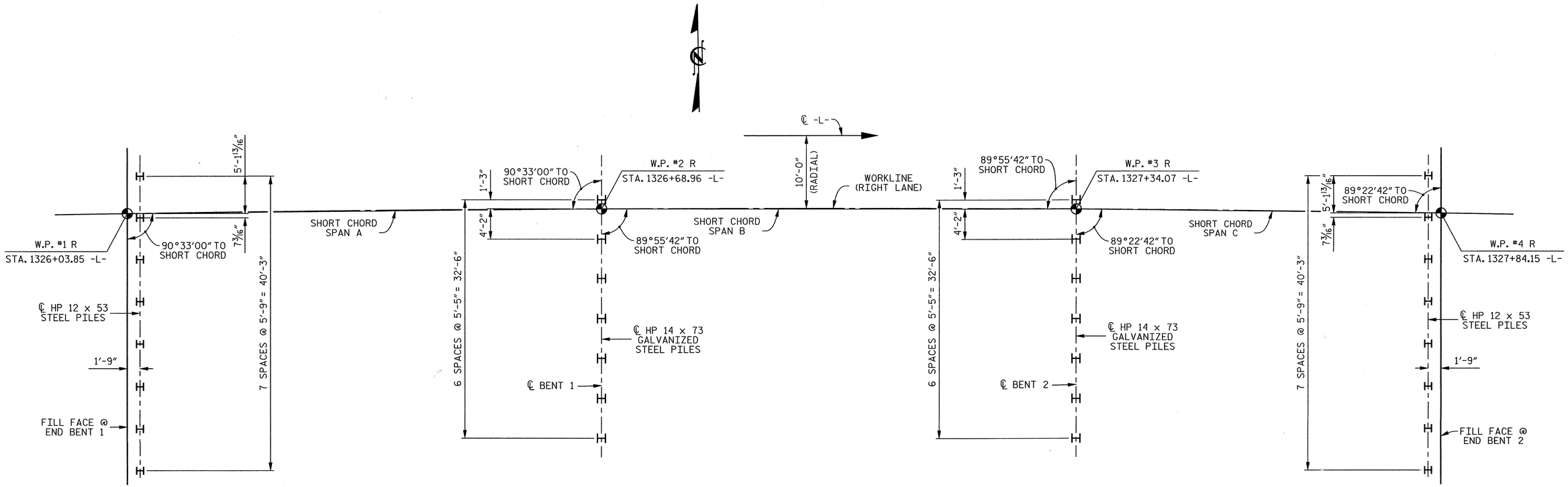


## FOUNDATION LAYOUT

### NOTES

DIMENSIONS LOCATING PILES ARE SHOWN TO PILE CENTERLINES AT THE BOTTOM OF THE BENT CAPS.

FOR PILES, SEE SECTION 450 OF THE STANDARD SPECIFICATIONS.

PILES AT END BENT 1 AND END BENT 2 ARE DESIGNED FOR A FACTORED RESISTANCE OF 90 TONS PER PILE.

ALL END BENT PILES ARE VERTICAL HP 12 x 53 STEEL PILES.

DRIVE PILES AT END BENT 1 AND END BENT 2 TO A REQUIRED DRIVING RESISTANCE OF 150 TONS PER PILE.

ALL INTERIOR BENT PILES ARE VERTICAL HP 14 x 73 GALVANIZED STEEL PILES.

PILES AT BENT 1 AND BENT 2 ARE DESIGNED FOR A FACTORED RESISTANCE OF 135 TONS PER PILE.

DRIVE PILES AT BENT 1 AND BENT 2 TO A REQUIRED DRIVING RESISTANCE OF 235 TONS PER PILE. THIS REQUIRED DRIVING RESISTANCE INCLUDES ADDITIONAL RESISTANCE FOR DOWNDRAG OR SCOUR.

INSTALL PILES AT BENT 1 AND BENT 2 TO A TIP ELEVATION NO HIGHER THAN 56.0 FT.

THE SCOUR CRITICAL ELEVATIONS FOR BENT 1 AND BENT 2 ARE ELEVATION 79.0 AND 82.0 FT, RESPECTIVELY. SCOUR CRITICAL ELEVATIONS ARE USED TO MONITOR POSSIBLE SCOUR PROBLEMS DURING THE LIFE OF THE STRUCTURE.

IT HAS BEEN ESTIMATED THAT A HAMMER WITH AN EQUIVALENT RATED ENERGY IN THE RANGE OF 50-90 FT-KIPS PER BLOW WILL BE REQUIRED TO DRIVE PILES AT BENT 1 AND BENT 2. THIS ESTIMATED ENERGY RANGE DOES NOT RELEASE THE CONTRACTOR FROM PROVIDING DRIVING EQUIPMENT IN ACCORDANCE WITH SUBARTICLE 450-3(D)(2) OF THE STANDARD SPECIFICATIONS.

TESTING PILES WITH THE PDA DURING DRIVING, RESTRIKING OR REDRIVING MAYBE REQUIRED. THE ENGINEER WILL DETERMINE THE NEED FOR PDA TESTING. FOR PDA TESTING, SEE SECTION 450 OF THE STANDARD SPECIFICATIONS AND FOR PILE DRIVING CRITERIA.

OBSERVE A 1 MONTH WAITING PERIOD AFTER CONSTRUCTING THE EMBANKMENT TO WITHIN 18 INCHES OF FINISHED GRADE BEFORE BEGINNING END BENT CONSTRUCTION AT END BENT NO. 1 AND END BENT NO. 2.

PROJECT NO. R-2303D
SAMPSON COUNTY
STATION: 1326+94.00 -L-

SHEET 2 OF 4

STATE OF NORTH CAROLINA
DEPARTMENT OF TRANSPORTATION
RALEIGH

GENERAL DRAWING

BRIDGE OVER GREAT COHARIE CREEK OVERFLOW ON NC 24 (-L-) BETWEEN SR 1292 AND SR 1262

(RIGHT LANE)

CDM Smith
Camp Dresser & McKee
421 Fayetteville Street, Suite 1303
Raleigh, NC 27604
NC COA No. F-1255

DRAWN BY : K.E. LOFTON DATE : 11-12
CHECKED BY : P.R. HOLSHOUSER DATE : 1-13
DESIGN ENGINEER : P.R. HOLSHOUSER DATE : 3-13

DWG. No. S04-002

NORTH CAROLINA PROFESSIONAL SEAL 20668 ENGINEER PAUL R. HOLSHOUSER 3/14/2013

| REVISIONS | | | | | | | | SHEET No. |
|---|---|---|---|---|---|---|---|---|
| No. | BY: | DATE: | No. | BY: | DATE: | | | S-187 |
| 1 | | | 3 | | | | | TOTAL SHEETS |
| 2 | | | 4 | | | | | 218 |

FILE: c:\cadd\R2303D\Structures\PLANS\Str_01\R2303D_SD_Sht4_01.dgn
DATE: 3/5/2013 3:28:34 PM

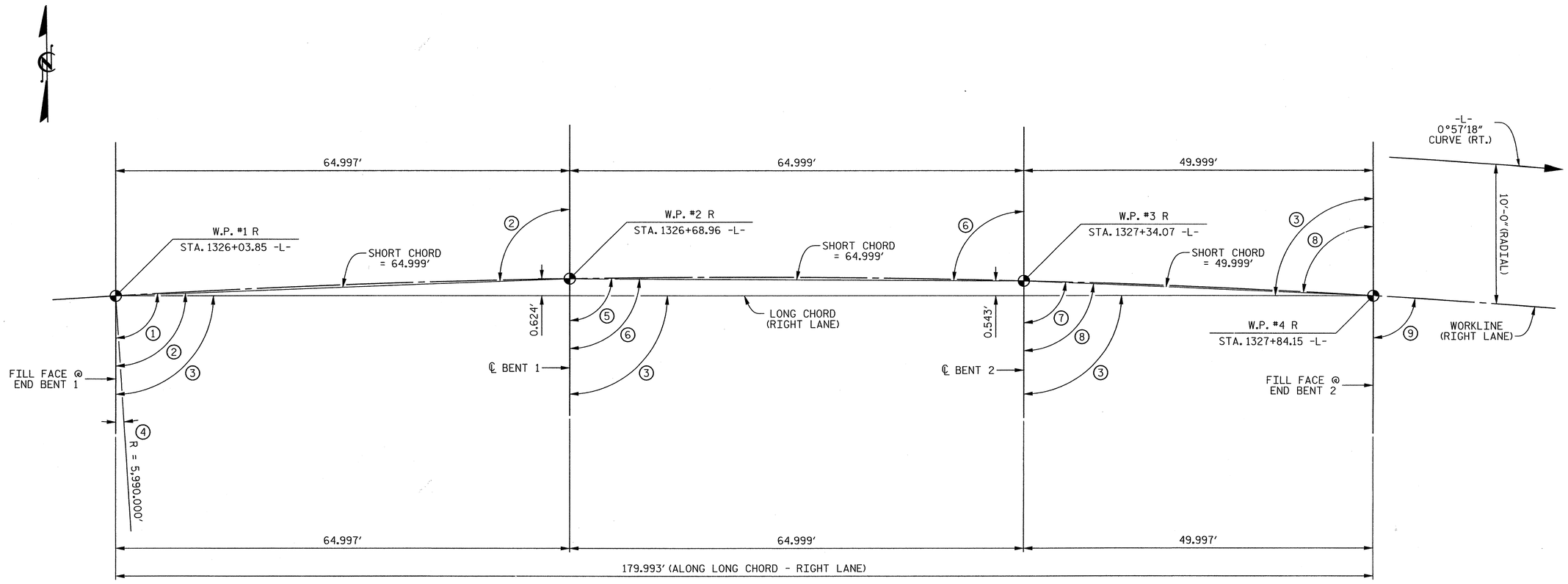


## LONG CHORD LAYOUT

END BENTS AND BENTS ARE PARALLEL

| ANGLES | |
|---|---|
| 1 | 90° 51' 39" (TAN. TO CURVE) |
| 2 | 90° 33' 00" |
| 3 | 90° 00' 00" |
| 4 | 00° 51' 39" |
| 5 | 90° 14' 21" (TAN. TO CURVE) |
| 6 | 89° 55' 42" |
| 7 | 89° 37' 03" (TAN. TO CURVE) |
| 8 | 89° 22' 42" |
| 9 | 89° 08' 21" (TAN. TO CURVE) |

**HORIZONTAL CURVE DATA -L-**

PI = STA. 1334+00.44
Δ = 16° 06' 35.6" (RT.)
D = 0° 57' 17.7"
L = 849.11'
T = 1,687.02'
R = 6,000.00'

PROJECT NO. R-2303D
SAMPSON COUNTY
STATION: 1326+94.00 -L-

SHEET 3 OF 4

STATE OF NORTH CAROLINA
DEPARTMENT OF TRANSPORTATION
RALEIGH

GENERAL DRAWING

BRIDGE ON NC 24 (-L-) OVER GREAT COHARIE CREEK OVERFLOW BETWEEN SR 1292 AND SR 1262

(RIGHT LANE)

CDM Smith
Camp Dresser & McKee
421 Fayetteville Street, Suite 1303
Raleigh, NC 27604
NC COA No. F-1255

DRAWN BY : K.E. LOFTON DATE : 12-12
CHECKED BY : P.R. HOLSHOUSER DATE : 1-13
DESIGN ENGINEER : P.R. HOLSHOUSER DATE : 3-13

DWG. No. S04-003

NORTH CAROLINA PROFESSIONAL SEAL 20668 ENGINEER PAUL R. HOLSHOUSER
3/14/2013

| REVISIONS | | | | | | SHEET No. |
|---|---|---|---|---|---|---|
| No. | BY: | DATE: | No. | BY: | DATE: | S-188 |
| 1 | | | 3 | | | TOTAL SHEETS |
| 2 | | | 4 | | | 218 |

FILE: r:\model\R2303D\Structures\PLANS\Str_3\R2303D_SD_Str4_lc1.dgn
DATE: 3/5/2013 3:28:35 PM

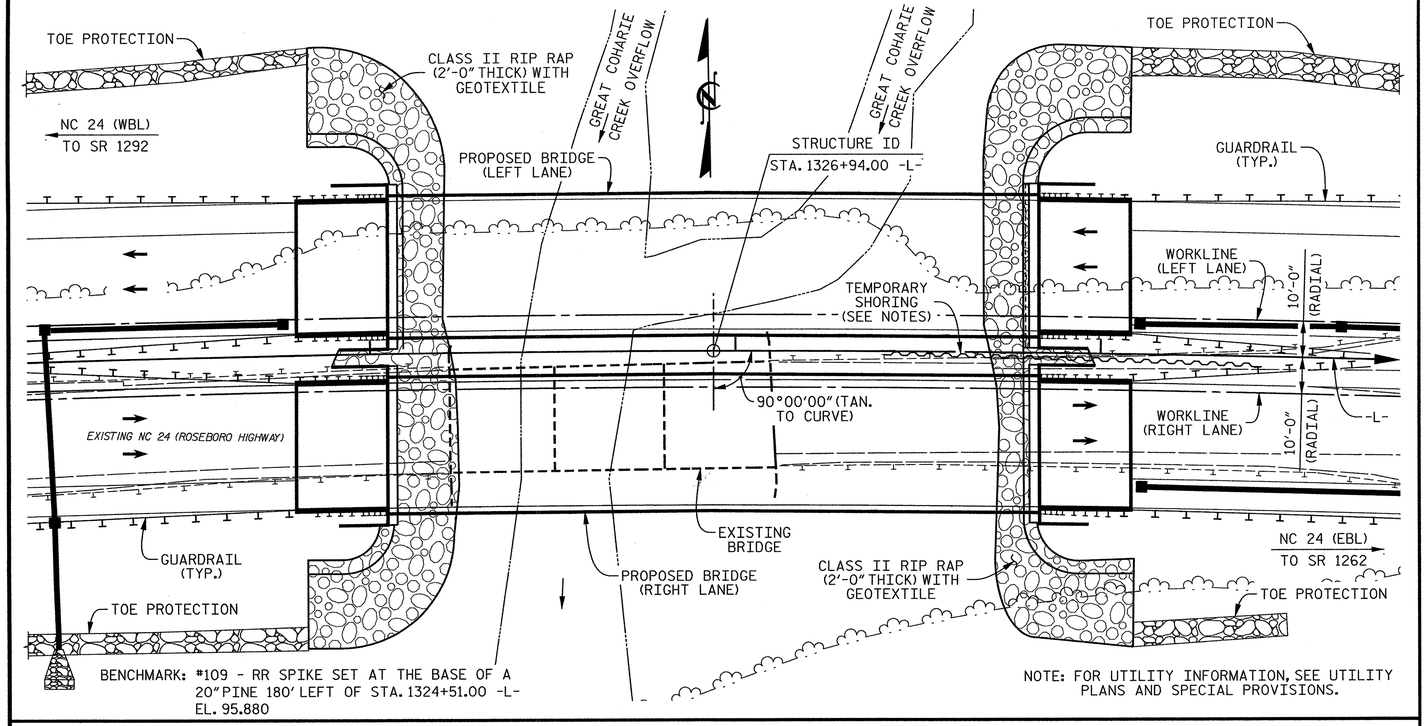


## LOCATION SKETCH

## NOTES

ASSUMED LIVE LOAD = HL 93 OR ALTERNATE LOADING.

THIS BRIDGE HAS BEEN DESIGNED IN ACCORDANCE WITH THE AASHTO LRFD BRIDGE DESIGN SPECIFICATIONS.

THIS STRUCTURE HAS BEEN DESIGNED IN ACCORDANCE WITH HEC 18, "EVALUATING SCOUR AT BRIDGES", MAY, 2001.

THIS BRIDGE HAS BEEN DESIGNED IN ACCORDANCE WITH THE REQUIREMENTS OF THE AASHTO LRFD BRIDGE DESIGN SPECIFICATIONS FOR SEISMIC DESIGN PERFORMANCE ZONE 1.

FOR OTHER DESIGN DATA AND GENERAL NOTES, SEE "STANDARD NOTES" SHEET.

FOR SUBMITTAL OF WORKING DRAWINGS, SEE SPECIAL PROVISIONS.

THE EXISTING STRUCTURE CONSISTING OF 3 SPANS AT APPROXIMATELY 30'-0", 30'-0" AND 30'-0" OF REINFORCED CONCRETE DECK WITH ASPHALT WEARING SURFACE ON T-BEAMS WITH 25'-0" CLEAR ROADWAY WIDTH ON CONCRETE CAPS AND TIMBER PILES AT END BENTS AND CONCRETE CAPS ON CONCRETE COLUMNS ON PILE FOOTINGS AT BENTS LOCATED AT THE PROPOSED STRUCTURE SHALL BE REMOVED. THE EXISTING BRIDGE IS PRESENTLY POSTED FOR LEGAL LOAD LIMIT. SHOULD THE STRUCTURAL INTEGRITY OF THE BRIDGE FURTHER DETERIORATE DURING CONSTRUCTION OF THE PROPOSED STRUCTURE A LOAD LIMIT MAY BE POSTED AND MAY BE REDUCED AS FOUND NECESSARY DURING THE LIFE OF THE PROJECT.

THE SUBSTRUCTURE OF THE EXISTING BRIDGE INDICATED ON THE PLANS IS FROM THE BEST INFORMATION AVAILABLE. SINCE THIS INFORMATION IS SHOWN FOR THE CONVENIENCE OF THE CONTRACTOR, THE CONTRACTOR SHALL HAVE NO CLAIM WHATSOEVER AGAINST THE DEPARTMENT OF TRANSPORTATION FOR ANY DELAYS OR ADDITIONAL COST INCURRED BASED ON DIFFERENCES BETWEEN THE EXISTING BRIDGE SUBSTRUCTURE SHOWN ON THE PLANS AND THE ACTUAL CONDITIONS AT THE PROJECT SITE.

REMOVAL OF THE EXISTING BRIDGE SHALL BE PERFORMED SO AS NOT TO ALLOW DEBRIS TO FALL INTO THE WATER. THE CONTRACTOR SHALL REMOVE THE BRIDGE AND SUBMIT PLANS FOR DEMOLITION IN ACCORDANCE WITH ARTICLE 402-2 OF THE STANDARD SPECIFICATIONS.

ALL REINFORCING STEEL SHALL BE GRADE 60.

FOR LIMITS OF TEMPORARY SHORING FOR MAINTENANCE OF TRAFFIC, SEE TRAFFIC CONTROL PLANS. FOR PAY ITEM FOR TEMPORARY SHORING FOR MAINTENANCE OF TRAFFIC, SEE ROADWAY PLANS.

NEEDLE BEAMS WILL NOT BE ALLOWED UNLESS OTHERWISE CALLED FOR ON THE PLANS OR APPROVED BY THE ENGINEER.

FOR EROSION CONTROL MEASURES, SEE EROSION CONTROL PLANS.

REMOVABLE FORMS MAY BE USED IN LIEU OF METAL STAY-IN-PLACE FORMS IN ACCORDANCE WITH RTICLE 420-3 OF THE STANDARD SPECIFICATIONS.

THE MATERIAL SHOWN IN THE CROSS-HATCHED AREA SHALL BE EXCAVATED FOR A DISTANCE OF 50 FEET LEFT AND 40 FEET RIGHT OF CENTERLINE ROADWAY AS DIRECTED BY THE ENGINEER. THIS WORK WILL BE PAID FOR AT THE CONTRACT LUMP SUM PRICE FOR UNCLASSIFIED STRUCTURE EXCAVATION. SEE SECTION 412 OF THE STANDARD SPECIFICATIONS.

FOR FALSEWORK AND FORMWORK, SEE SPECIAL PROVISIONS.

FOR CRANE SAFETY, SEE SPECIAL PROVISIONS.

FOR GROUT FOR STRUCTURES, SEE SPECIAL PROVISIONS.

FOR PLACING LOAD ON STRUCTURE MEMBERS, SEE SPECIAL PROVISIONS.

FOR STEEL REINFORCED ELASTOMERIC BEARINGS, SEE SPECIAL PROVISIONS.

FOR INTERIOR BENTS ONLY PARTIAL GALVANIZING OF THE PILES ARE REQUIRED. SEE INTERIOR BENT SHEETS FOR GALVANIZED LENGTHS. PAYMENT FOR PARTIALLY GALVANIZED PILES WILL BE MADE UNDER THE CONTRACT UNIT PRICE FOR GALVANIZED STEEL PILES.

## TOTAL BILL OF MATERIAL

| | REMOVAL OF EXISTING STRUCTURE @ STA. 1326+94.00 -L- | PDA TESTING | UNCLASSIFIED STRUCTURE EXCAVATION @ STA. 1326+94.00 -L- | REINFORCED CONCRETE DECK SLAB | GROOVING BRIDGE FLOORS | CLASS A CONCRETE | BRIDGE APPROACH SLABS | REINFORCING STEEL |
|---|---|---|---|---|---|---|---|---|
| | LUMP SUM | EACH | LUMP SUM | SQ. FT. | SQ. FT. | CU. YDS. | LUMP SUM | LBS. |
| SUPERSTRUCTURE | | | | 6,643 | 7,016 | | LUMP SUM | |
| END BENT 1 | | | | | | 30.3 | | 5,550 |
| BENT 1 | | | | | | 19.7 | | 3,635 |
| BENT 2 | | | | | | 19.8 | | 3,635 |
| END BENT 2 | | | | | | 30.3 | | 5,550 |
| | | | | | | | | |
| TOTAL | LUMP SUM | 1 | LUMP SUM | 6,643 | 7,016 | 100.1 | LUMP SUM | 18,370 |

| | 45" PRESTRESSED CONCRETE GIRDER | | HP 12 x 53 STEEL PILES | | HP 14 x 73 GALVANIZED STEEL PILES | | PILE REDRIVES | CONCRETE BARRIER RAIL | RIP RAP CLASS II (2'-0" THICK) | GEOTEXTILE FOR DRAINAGE | ELASTOMERIC BEARINGS |
|---|---|---|---|---|---|---|---|---|---|---|---|
| | No. | LIN. FT. | No. | LIN. FT. | No. | LIN. FT. | EACH | LIN. FT. | TON | SQ. YD. | LUMP SUM |
| SUPERSTRUCTURE | 12 | 704.7 | | | | | | 356.7 | | | LUMP SUM |
| END BENT 1 | | | 8 | 400.0 | | | 4 | | 165 | 185 | |
| BENT 1 | | | | | 7 | 420.0 | 4 | | | | |
| BENT 2 | | | | | 7 | 420.0 | 4 | | | | |
| END BENT 2 | | | 8 | 400.0 | | | 4 | | 135 | 150 | |
| | | | | | | | | | | | |
| TOTAL | 12 | 704.7 | 16 | 800.0 | 14 | 840.0 | 16 | 356.7 | 300 | 335 | LUMP SUM |

PROJECT NO. R-2303D
SAMPSON COUNTY
STATION: 1326+94.00 -L-

SHEET 4 OF 4

STATE OF NORTH CAROLINA
DEPARTMENT OF TRANSPORTATION
RALEIGH

GENERAL DRAWING

BRIDGE OVER GREAT COHARIE CREEK OVERFLOW ON NC 24 (-L-) BETWEEN SR 1292 AND SR 1262

(RIGHT LANE)

CDM Smith
Camp Dresser & McKee
421 Fayetteville Street, Suite 1303
Raleigh, NC 27604
NC COA No. F-1255

DRAWN BY : K.E. LOFTON DATE : 1-13
CHECKED BY : P.R. HOLSHOUSER DATE : 1-13
DESIGN ENGINEER : P.R. HOLSHOUSER DATE : 3-13

DWG. No. S04-004

NORTH CAROLINA PROFESSIONAL SEAL 20668 ENGINEER PAUL R. HOLSHOUSER 3/14/2013

| REVISIONS | | | | | | SHEET No. |
|---|---|---|---|---|---|---|
| No. | BY: | DATE: | No. | BY: | DATE: | S-189 |
| 1 | | | 3 | | | TOTAL SHEETS |
| 2 | | | 4 | | | 218 |

FILE: r:\radar\r2303d\structures\PLANS\Str_01\R2303D_SD_Str4_b1.dgn
DATE: 3/20/13 3:26:44 PM

# LOAD AND RESISTANCE FACTOR RATING (LRFR) SUMMARY FOR PRESTRESSED CONCRETE GIRDERS

| LEVEL | | VEHICLE | WEIGHT (W) (TONS) | CONTROLLING LOAD RATING (#) | MINIMUM RATING FACTORS (RF) | TONS = W × RF | STRENGTH I LIMIT STATE | | | | | | | | | | | SERVICE III LIMIT STATE | | | | | | COMMENT NUMBER |
|---|---|---|---|---|---|---|---|---|---|---|---|---|---|---|---|---|---|---|---|---|---|---|---|---|
| | | | | | | | | MOMENT | | | | | SHEAR | | | | | | MOMENT | | | | | |
| | | | | | | | LIVE-LOAD FACTORS $\gamma_{(LL)}$ | DISTRIBUTION FACTORS (DF) | RATING FACTOR | SPANS | GIRDER LOCATION | DISTANCE FROM LEFT END OF SPAN (ft) | DISTRIBUTION FACTORS (DF) | RATING FACTOR | SPAN | GIRDER LOCATION | DISTANCE FROM LEFT END OF SPAN (ft) | LIVE-LOAD FACTORS $\gamma_{(LL)}$ | DISTRIBUTION FACTORS (DF) | RATING FACTOR | SPANS | GIRDER LOCATION | DISTANCE FROM LEFT END OF SPAN (ft) | |
| DESIGN LOAD RATING | | HL-93 (INVENTORY) | N/A | 1 | 1.17 | -- | 1.75 | 0.854 | 1.43 | B | E | 31.40 | 0.977 | 1.33 | B | I | 5.70 | 0.80 | 0.821 | 1.17 | B | I | 31.40 | --- |
| | | HL-93 (OPERATING) | N/A | | 1.73 | -- | 1.35 | 0.854 | 1.85 | B | E | 31.40 | 0.977 | 1.73 | B | I | 5.70 | N/A | --- | --- | --- | --- | --- | --- |
| | | HS-20 (INVENTORY) | 36.000 | 2 | 1.49 | 53.64 | 1.75 | 0.854 | 1.82 | B | E | 31.40 | 0.977 | 1.69 | B | I | 5.70 | 0.80 | 0.821 | 1.49 | B | I | 31.40 | --- |
| | | HS-20 (OPERATING) | 36.000 | | 2.19 | 78.84 | 1.35 | 0.854 | 2.36 | B | E | 31.40 | 0.977 | 2.19 | B | I | 5.70 | N/A | --- | --- | --- | --- | --- | --- |
| LEGAL LOAD RATING | SINGLE VEHICLE (SV) | SNSH | 13.500 | | 3.27 | 44.15 | 1.40 | 0.854 | 4.98 | B | E | 31.40 | 0.977 | 5.33 | B | I | 5.70 | 0.80 | 0.821 | 3.27 | B | I | 31.40 | --- |
| | | SNGARBS2 | 20.000 | | 2.48 | 49.60 | 1.40 | 0.854 | 3.78 | B | E | 31.40 | 0.977 | 3.73 | B | I | 5.70 | 0.80 | 0.829 | 2.48 | B | I | 31.40 | --- |
| | | SNAGRIS2 | 22.000 | | 2.37 | 49.77 | 1.40 | 0.854 | 3.61 | B | E | 31.40 | 0.977 | 3.46 | B | I | 5.70 | 0.80 | 0.821 | 2.37 | B | I | 31.40 | --- |
| | | SNCOTTS3 | 27.250 | | 1.63 | 44.42 | 1.40 | 0.854 | 2.48 | B | E | 31.40 | 0.977 | 2.51 | B | I | 5.70 | 0.80 | 0.821 | 1.63 | B | I | 31.40 | --- |
| | | SNAGGRS4 | 34.925 | | 1.38 | 48.20 | 1.40 | 0.854 | 2.10 | B | E | 31.40 | 0.977 | 2.06 | B | I | 5.70 | 0.80 | 0.821 | 1.38 | B | I | 31.40 | --- |
| | | SNS5A | 35.550 | | 1.35 | 47.99 | 1.40 | 0.854 | 2.05 | B | E | 31.40 | 0.977 | 2.10 | B | I | 5.70 | 0.80 | 0.821 | 1.35 | B | I | 31.40 | --- |
| | | SNS6A | 39.950 | | 1.24 | 49.54 | 1.40 | 0.854 | 1.89 | B | E | 31.40 | 0.977 | 1.90 | B | I | 5.70 | 0.80 | 0.821 | 1.24 | B | I | 31.40 | --- |
| | | SNS7B | 42.000 | | 1.18 | 49.56 | 1.40 | 0.854 | 1.80 | B | E | 31.40 | 0.977 | 1.88 | B | I | 5.70 | 0.80 | 0.821 | 1.18 | B | I | 31.40 | --- |
| | TRUCK TRACTOR SEMI-TRAILER (TTST) | TNAGRIT3 | 33.000 | | 1.52 | 48.64 | 1.40 | 0.854 | 2.31 | B | E | 31.40 | 0.977 | 2.31 | B | I | 5.70 | 0.80 | 0.821 | 1.52 | B | I | 31.40 | --- |
| | | TNT4A | 33.075 | | 1.53 | 50.60 | 1.40 | 0.854 | 2.32 | B | E | 31.40 | 0.977 | 2.21 | B | I | 5.70 | 0.80 | 0.821 | 1.53 | B | I | 31.40 | --- |
| | | TNT6A | 41.600 | | 1.25 | 52.00 | 1.40 | 0.854 | 1.91 | B | E | 31.40 | 0.977 | 2.02 | B | I | 5.70 | 0.80 | 0.821 | 1.25 | B | I | 31.40 | --- |
| | | TNT7A | 42.000 | | 1.26 | 52.92 | 1.40 | 0.854 | 1.93 | B | E | 31.40 | 0.977 | 1.94 | B | I | 5.70 | 0.80 | 0.821 | 1.26 | B | I | 31.40 | --- |
| | | TNT7B | 42.000 | | 1.32 | 55.44 | 1.40 | 0.854 | 2.01 | B | E | 31.40 | 0.977 | 1.82 | B | I | 5.70 | 0.80 | 0.821 | 1.32 | B | I | 31.40 | --- |
| | | TNAGRIT4 | 43.000 | | 1.25 | 53.75 | 1.40 | 0.854 | 1.90 | B | E | 31.40 | 0.977 | 1.73 | B | I | 5.70 | 0.80 | 0.821 | 1.25 | B | I | 31.40 | --- |
| | | TNAGT5A | 45.000 | | 1.17 | 52.65 | 1.40 | 0.854 | 1.79 | B | E | 31.40 | 0.977 | 1.73 | B | I | 5.70 | 0.80 | 0.821 | 1.17 | B | I | 31.40 | --- |
| | | TNAGT5B | 45.000 | 3 | 1.15 | 51.75 | 1.40 | 0.854 | 1.76 | B | E | 31.40 | 0.977 | 1.63 | B | I | 5.70 | 0.80 | 0.821 | 1.15 | B | I | 31.40 | --- |

## LOAD FACTORS

| DESIGN LOAD RATING FACTORS | LIMIT STATE | $\gamma_{DC}$ | $\gamma_{DW}$ |
|---|---|---|---|
| | STRENGTH I | 1.25 | 1.50 |
| | SERVICE III | 1.00 | 1.00 |

## NOTES

MINIMUM RATING FACTORS ARE BASED ON THE STRENGTH I AND SERVICE III LIMIT STATES.

ALLOWABLE STRESSES FOR SERVICE III LIMIT STATE ARE AS REQUIRED FOR DESIGN.

## COMMENTS

1. INTERIOR GIRDERS ARE IDENTICAL.
2. LEFT AND RIGHT EXTERIOR GIRDER ARE IDENTICAL.

(#) CONTROLLING LOAD RATING

(1) DESIGN LOAD RATING (HL-93)

(2) DESIGN LOAD RATING (HS-20)

(3) LEGAL LOAD RATING **

** SEE CHART FOR VEHICLE TYPE

GIRDER LOCATION

I - INTERIOR GIRDER
EL - EXTERIOR LEFT GIRDER
ER - EXTERIOR RIGHT GIRDER

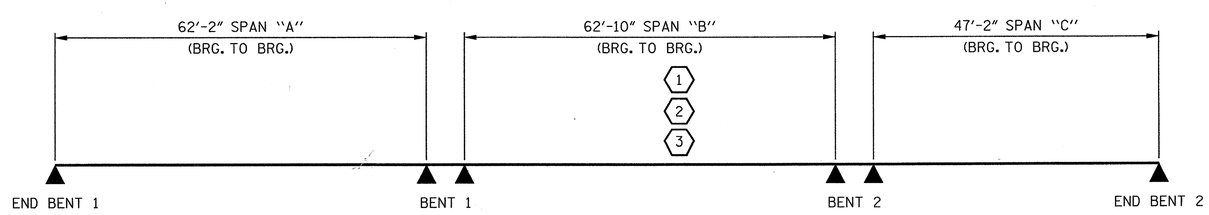


## LRFR SUMMARY

PROJECT NO. R-2303D
SAMPSON COUNTY
STATION: 1326+94.00 -L-

STATE OF NORTH CAROLINA
DEPARTMENT OF TRANSPORTATION
RALEIGH

STANDARD

LRFR SUMMARY FOR PRESTRESSED CONCRETE GIRDERS (NON-INTERSTATE TRAFFIC) (RIGHT LANE)

| REVISIONS | | | | | | SHEET No. |
|---|---|---|---|---|---|---|
| No. | BY: | DATE: | No. | BY: | DATE: | S-190 |
| 1 | | | 3 | | | TOTAL SHEETS |
| 2 | | | 4 | | | 218 |

STD. No. LRFR1

CDM Smith
Camp Dresser & McKee
421 Fayetteville Street, Suite 1303
Raleigh, NC 27604
NC COA No. F-1255

DRAWN BY : K.E. LOFTON DATE : 12-12
CHECKED BY : P.R. HOLSHOUSER DATE : 1-13
DESIGN ENGINEER : P.R. HOLSHOUSER DATE : 3-13
DWG. No. S04-005

NORTH CAROLINA PROFESSIONAL SEAL 20668 ENGINEER PAUL R. HOLSHOUSER 3/14/2013

ASSEMBLED BY : K. E. LOFTON DATE : 12-12
CHECKED BY : P.R. HOLSHOUSER DATE :
DRAWN BY : MAA 1/08 REV. 11/12/08RR MAA/GM
CHECKED BY : GM/DI 2/08 REV. 10/1/11 MAA/GM

FILE: c:\indot\R2303D\Structures\PLANS\Str_S\R2303D_SD_Str4_S1.dgn
DATE: 3/5/2013 3:28:38 PM

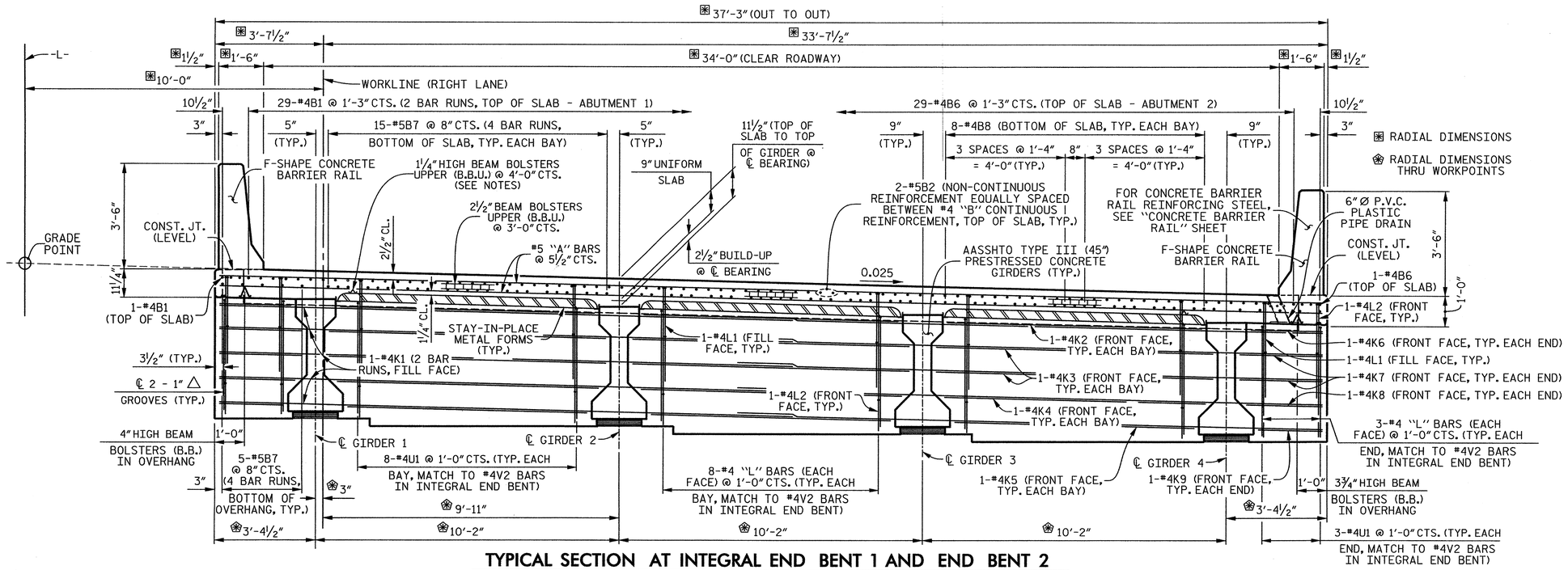


## TYPICAL SECTION AT INTEGRAL END BENT 1 AND END BENT 2

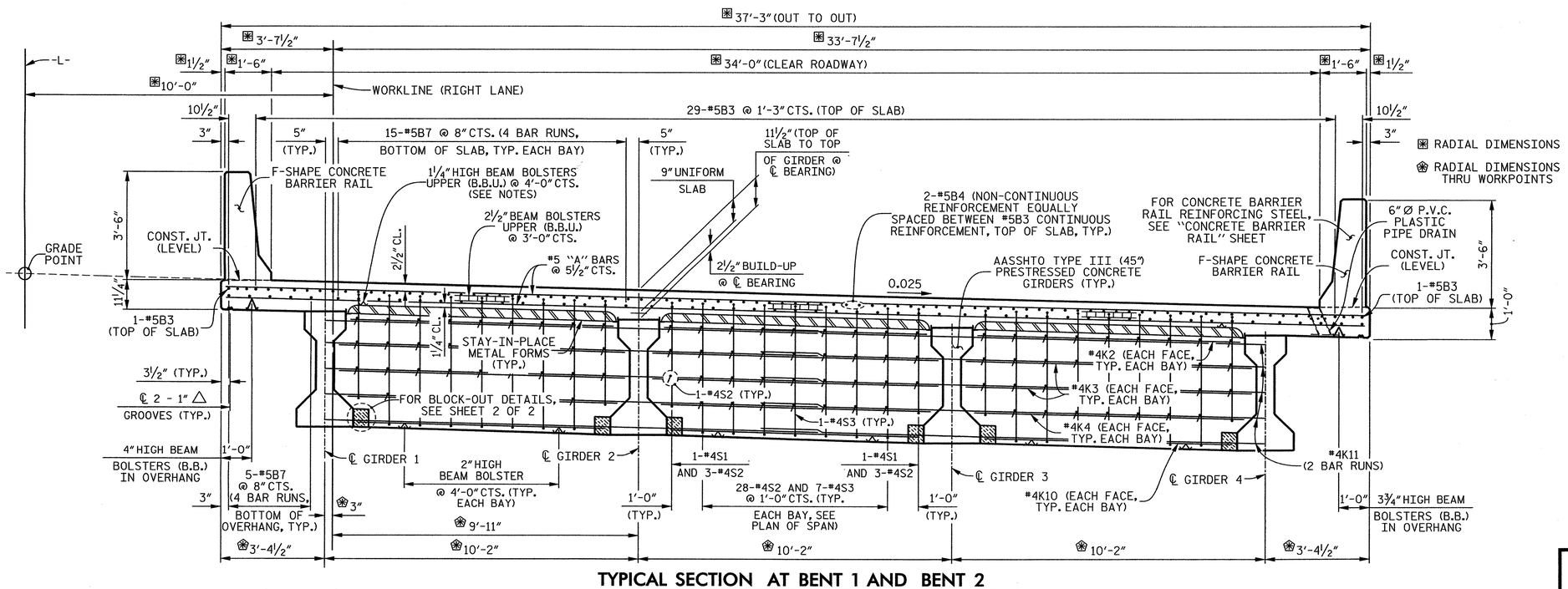


## TYPICAL SECTION AT BENT 1 AND BENT 2

## NOTES

PROVIDE 1¼" HIGH BEAM BOLSTERS UPPER AT 4'-0" CTS. ATOP THE METAL STAY-IN-PLACE FORMS TO SUPPORT THE BOTTOM MAT OF "A" BARS. WHEN USING REMOVABLE FORMS, PROVIDE CONTINUOUS HIGH CHAIRS FOR METAL DECK (C.H.C.M.) @ 4'-0" CTS. WITH A HEIGHT TO SUPPORT THE BOTTOM MAT OF "A" BARS A CLEAR DISTANCE OF 2½" ABOVE THE TOP OF THE REMOVABLE FORM.

LONGITUDINAL STEEL MAY BE SHIFTED SLIGHTLY, AS NECESSARY, TO AVOID INTERFERENCE WITH STIRRUPS IN PRESTRESSED CONCRETE GIRDERS.

PREVIOUSLY CAST CONCRETE IN A CONTINUOUS UNIT SHALL HAVE ATTAINED A MINIMUM COMPRESSIVE STRENGTH OF 3,000 PSI BEFORE ADDITIONAL CONCRETE IS CAST IN THE UNIT.

BARRIER RAIL IN A CONTINUOUS UNIT SHALL NOT BE CAST UNTIL ALL SLAB CONCRETE IN THE UNIT HAS BEEN CAST AND HAS REACHED A MINIMUM COMPRESSIVE STRENGTH OF 3,000 PSI.

CONCRETE IN ALL BENT DIAPHRAGMS MAY BE CLASS A IN LIEU OF CLASS AA.

FOR STEEL INTERMEDIATE DIAPHRAGMS, SEE "INTERMEDIATE STEEL DIAPHRAGM FOR TYPE III PRESTRESSED CONCRETE GIRDERS" SHEET, FOR LOCATIONS SEE "FRAMING PLAN" SHEET.

FOR F-SHAPE CONCRETE BARRIER RAIL DETAILS, SEE "CONCRETE BARRIER RAIL" SHEET.

FOR POURING SEQUENCE, SEE "SUPERSTRUCTURE BILL OF MATERIAL" SHEET.

PROJECT NO. R-2303D
SAMPSON COUNTY
STATION: 1326+94.00 -L-

SHEET 1 OF 2

STATE OF NORTH CAROLINA
DEPARTMENT OF TRANSPORTATION
RALEIGH

SUPERSTRUCTURE

TYPICAL SECTION

(RIGHT LANE)

CDM Smith
Camp Dresser & McKee
421 Fayetteville Street, Suite 1303
Raleigh, NC 27604
NC COA No. F-1255

DRAWN BY : K.E. LOFTON DATE : 12-12
CHECKED BY : P.R. HOLSHOUSER DATE : 1-13
DESIGN ENGINEER : P.R. HOLSHOUSER DATE : 3-13

DWG. No. S04-006

NORTH CAROLINA PROFESSIONAL SEAL 20668 ENGINEER PAUL R. HOLSHOUSER 3/14/2013

| REVISIONS | | | | | | |
|---|---|---|---|---|---|---|
| No. | BY: | DATE: | No. | BY: | DATE: | |
| 1 | | | 3 | | | |
| 2 | | | 4 | | | |

SHEET No. S-19
TOTAL SHEETS 218

FILE: r:\radar\R2303D\Structures\PLANS\Str_3\R2303D_SD_Sht4_b1.dgn
DATE: 3/5/2013 3:28:49 PM

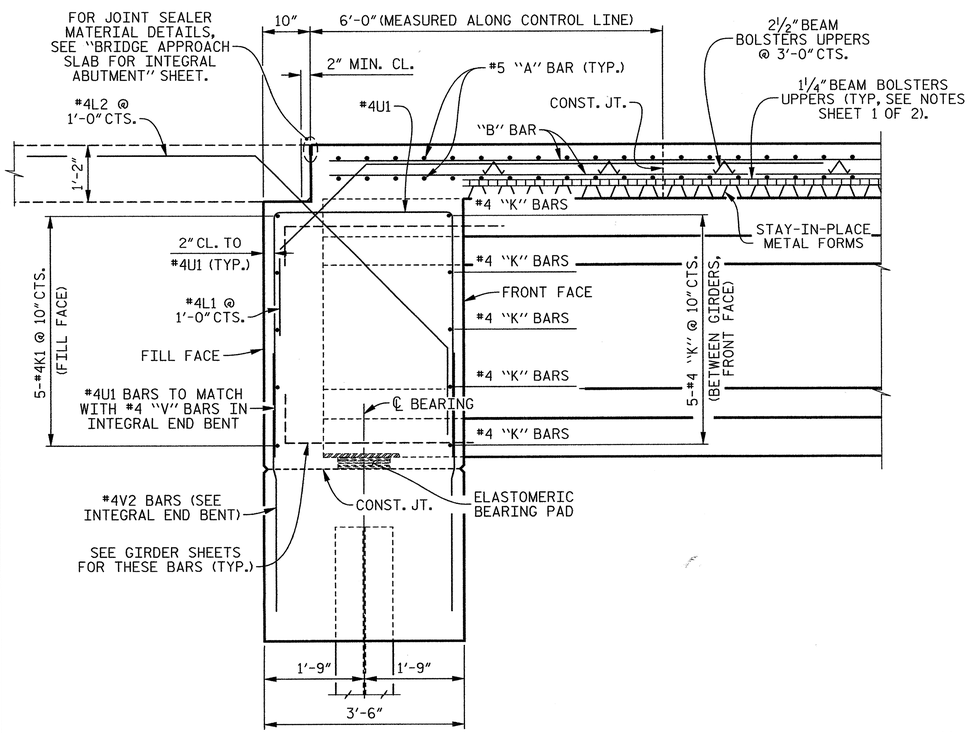


## SECTION THRU INTEGRAL END BENT

( END BENT 1 SHOWN, END BENT 2 SIMILAR )

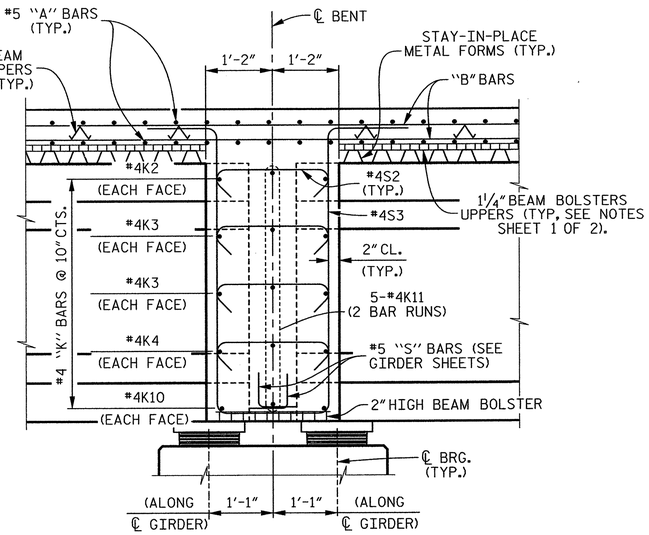


## SECTION THRU BENT DIAPHRAGM

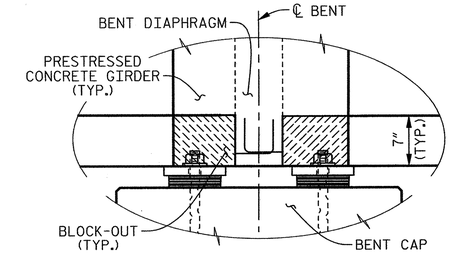


## SECTION B–B

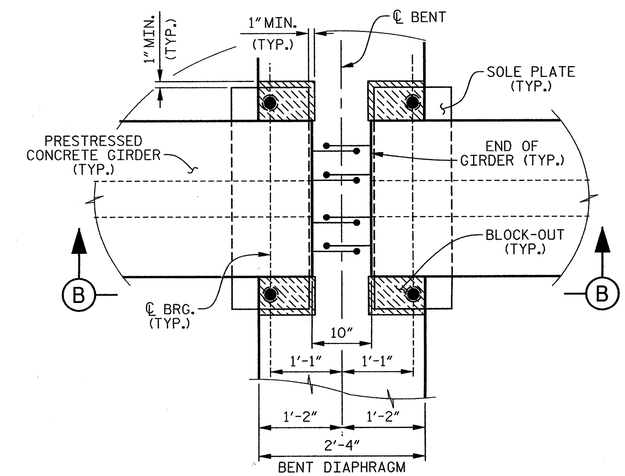


PLAN

## BENT DIAPHRAGM BLOCK–OUT DETAIL

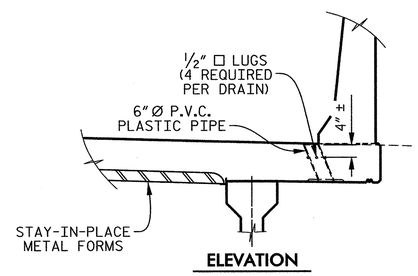


ELEVATION

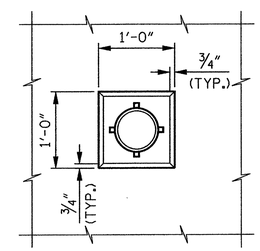


PLAN OF RECESS

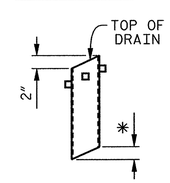


* TO BE SET TO MATCH SLOPE OF BOTTOM OF OVERHANG ( 7 DRAINS REQUIRED)

PIPE DETAIL

TOP OF FLOOR DRAIN TO BE SET ⅜" BELOW SURFACE OF SLAB.

4 - ½" □ LUGS TO BE GLUED TO THE P.V.C. PLASTIC PIPE AT EQUAL SPACES AROUND THE PIPE DRAIN APPROXIMATELY 4" FROM THE TOP OF THE PIPE.

THE 6" DIAMETER P.V.C. PLASTIC PIPE AND FITTINGS SHALL BE SCHEDULE 40 AND CONFORM TO ASTM D1785.

## DRAIN DETAILS

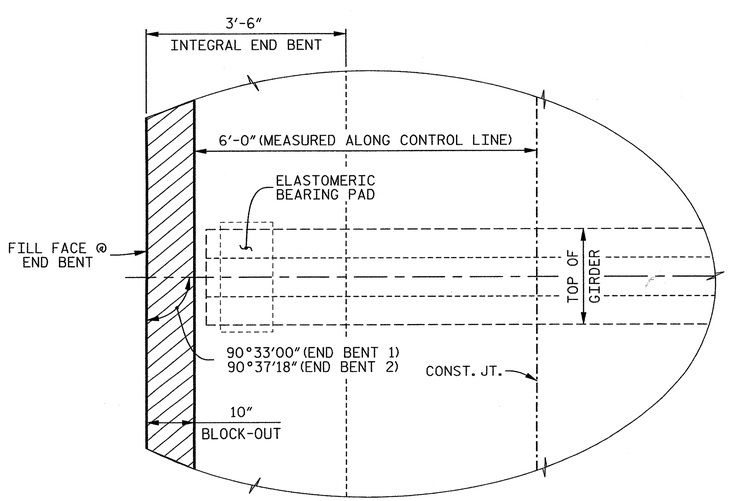


## PLAN OF GIRDER – INTEGRAL END BENT

( END BENT 1 SHOWN, END BENT 2 SIMILAR )

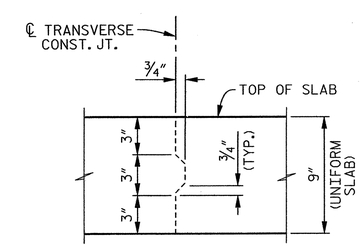


## TRANSVERSE CONSTRUCTION JOINT DETAIL

REINFORCING STEEL IN SLAB NOT SHOWN. LONGITUDINAL REINFORCING STEEL SHALL BE CONTINUOUS THRU JOINT.

PROJECT NO. R-2303D

SAMPSON COUNTY

STATION: 1326+94.00 -L-

SHEET 2 OF 2

STATE OF NORTH CAROLINA
DEPARTMENT OF TRANSPORTATION
RALEIGH

SUPERSTRUCTURE

TYPICAL SECTION DETAILS (RIGHT LANE)

CDM Smith
Camp Dresser & McKee
421 Fayetteville Street, Suite 1303
Raleigh, NC 27604
NC COA No. F-1255

DRAWN BY : K.E. LOFTON DATE : 8-12
CHECKED BY : P.R. HOLSHOUSER DATE : 12-12
DESIGN ENGINEER : P.R. HOLSHOUSER DATE : 3-13

DWG. No. S04-007

NORTH CAROLINA PROFESSIONAL SEAL 20668 ENGINEER PAUL R. HOLSHOUSER
3/14/2013

| REVISIONS | | | | | | | SHEET No. |
|---|---|---|---|---|---|---|---|
| No. | BY: | DATE: | No. | BY: | DATE: | | S-192 |
| 1 | | | 3 | | | | TOTAL SHEETS |
| 2 | | | 4 | | | | 218 |

FILE: r:\pocket\R2303D\Structures\PLANS\Str_3\R2303D_SD_Str4_bs2.dgn
DATE: 3/5/2013 2:26:26 PM

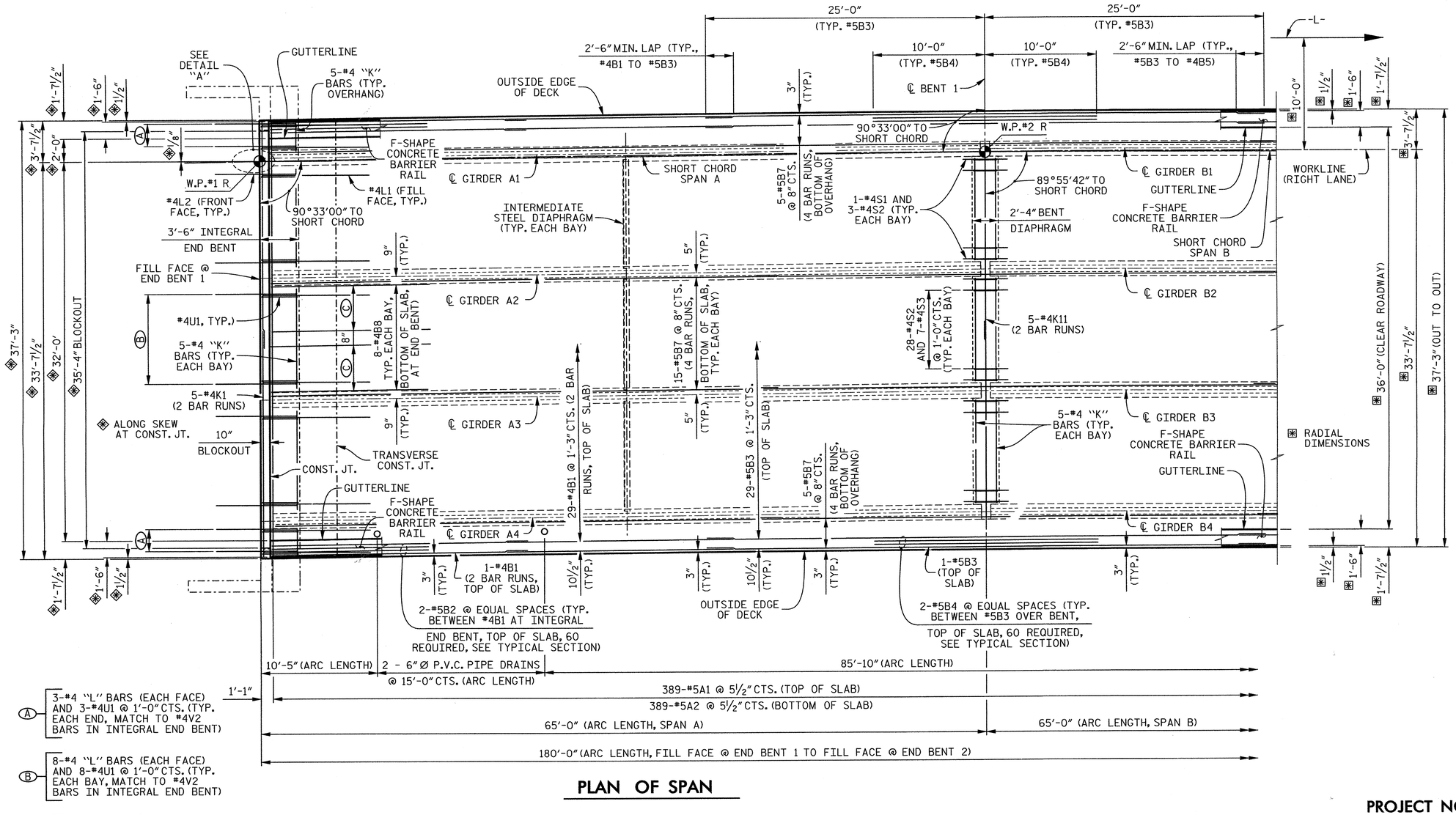


## PLAN OF SPAN

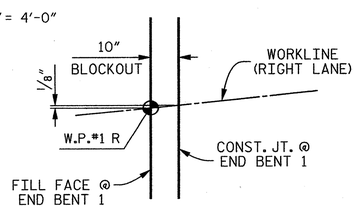


## DETAIL "A"

## NOTES

#5 "A" BARS SHALL BE PLACED PERPENDICULAR TO LONG CHORD WITH A 2" MINIMUM CLEARANCE ON EACH END.

SPACING FOR "B" BARS IN TOP OF SLAB IS RADIAL TO -L-.

FOR REINFORCING STEEL IN CONCRETE BARRIER, SEE "CONCRETE BARRIER RAIL" SHEET.

FOR SLAB POURING SEQUENCE AND SPLICE CHART, SEE "BILL OF MATERIAL" SHEET.

FOR ARC OFFSETS, SEE SHEET 3 OF 3.

PROJECT NO. R-2303D

SAMPSON COUNTY

STATION: 1326+94.00 -L-

SHEET 1 OF 3

STATE OF NORTH CAROLINA
DEPARTMENT OF TRANSPORTATION
RALEIGH

SUPERSTRUCTURE

PLAN OF SPAN

(RIGHT LANE)

CDM Smith
Camp Dresser & McKee
421 Fayetteville Street, Suite 1303
Raleigh, NC 27604
NC COA No. F-1255

DRAWN BY : K.E. LOFTON DATE : 1-13
CHECKED BY : P.R. HOLSHOUSER DATE : 1-13
DESIGN ENGINEER : P.R. HOLSHOUSER DATE : 3-13

DWG. No. S04-008

NORTH CAROLINA PROFESSIONAL SEAL 20668 ENGINEER PAUL R. HOLSHOUSER 3/14/2013

| REVISIONS | | | | | | | | SHEET No. |
|---|---|---|---|---|---|---|---|---|
| No. | BY: | DATE: | No. | BY: | DATE: | | | S-193 |
| 1 | | | 3 | | | | | TOTAL SHEETS |
| 2 | | | 4 | | | | | 218 |

FILE: n:\model\r2303d\structures\PLANS\Str_01\R2303D_S03_Sm4_pal1.dgn
DATE: 3/25/2013 3:29:00 PM

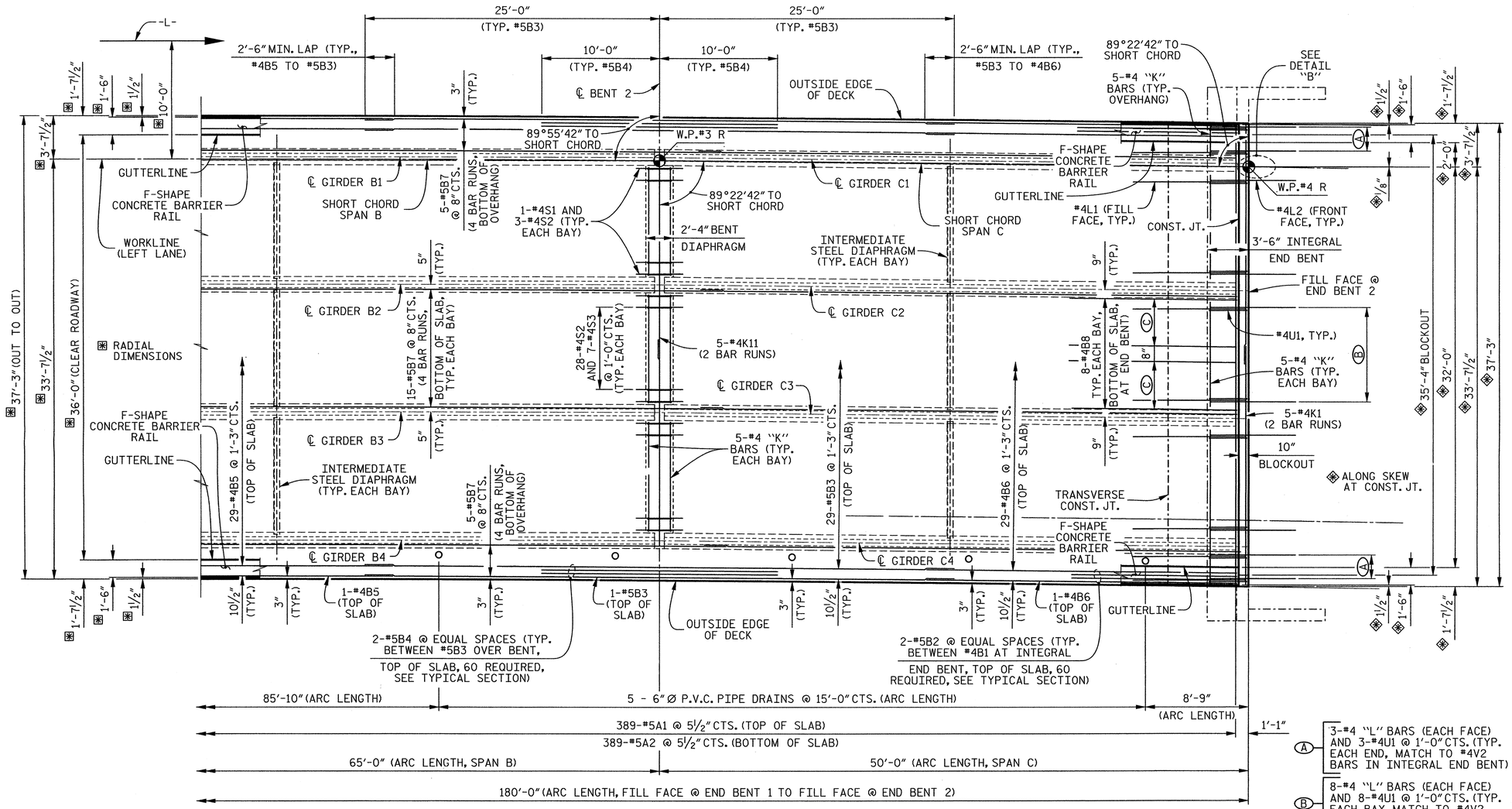


## PLAN OF SPAN

Ⓐ 3-#4 "L" BARS (EACH FACE) AND 3-#4U1 @ 1'-0" CTS. (TYP. EACH END, MATCH TO #4V2 BARS IN INTEGRAL END BENT)

Ⓑ 8-#4 "L" BARS (EACH FACE) AND 8-#4U1 @ 1'-0" CTS. (TYP. EACH BAY, MATCH TO #4V2 BARS IN INTEGRAL END BENT)

Ⓒ 3 SPACES @ 1'-4" = 4'-0"

**NOTE**

FOR NOTES, SEE SHEET 1 OF 3.

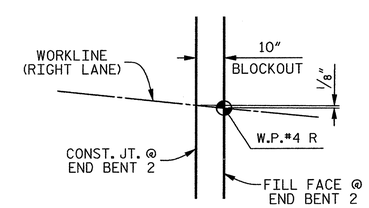


## DETAIL "B"

PROJECT NO. R-2303D

SAMPSON COUNTY

STATION: 1326+94.00 -L-

SHEET 2 OF 3

STATE OF NORTH CAROLINA
DEPARTMENT OF TRANSPORTATION
RALEIGH

SUPERSTRUCTURE

PLAN OF SPAN

(RIGHT LANE)

CDM Smith
Camp Dresser & McKee
421 Fayetteville Street, Suite 1303
Raleigh, NC 27604
NC COA No. F-1255

DRAWN BY: K.E. LOFTON DATE: 8-12
CHECKED BY: P.R. HOLSHOUSER DATE: 12-12
DESIGN ENGINEER: P.R. HOLSHOUSER DATE: 3-13

DWG. No. S04-009

NORTH CAROLINA PROFESSIONAL SEAL 20668 ENGINEER PAUL R. HOLSHOUSER 3/14/2013

| REVISIONS | | | | | | SHEET No. |
|---|---|---|---|---|---|---|
| No. | BY: | DATE: | No. | BY: | DATE: | S-194 |
| 1 | | | 3 | | | TOTAL SHEETS |
| 2 | | | 4 | | | 218 |

FILE: c:\pwdot\r2303d\dnrunres\PLANS\Sc_01\R2303D_S0_Sht4_pa2.dgn
DATE: 3/5/2013 3:21:02 PM

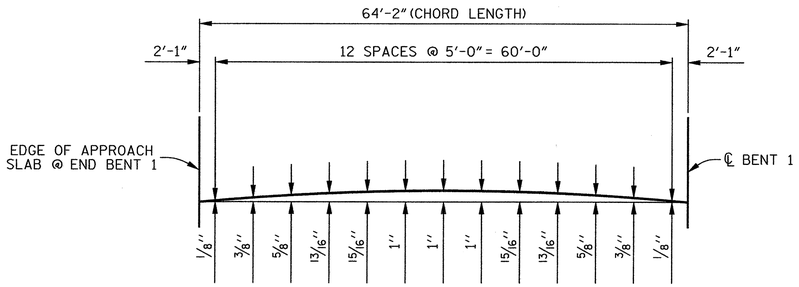


## ARC OFFSETS 6'-4 1/2" RIGHT OF -L-

(SPAN A)

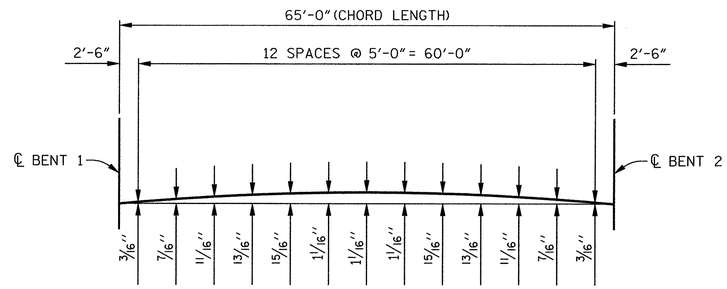


## ARC OFFSETS 6'-4 1/2" RIGHT OF -L-

(SPAN B)

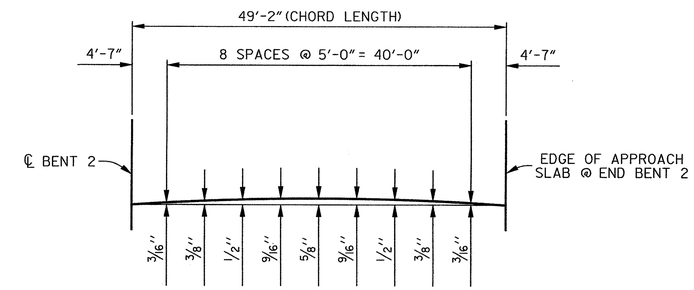


## ARC OFFSETS 6'-4 1/2" RIGHT OF -L-

(SPAN C)

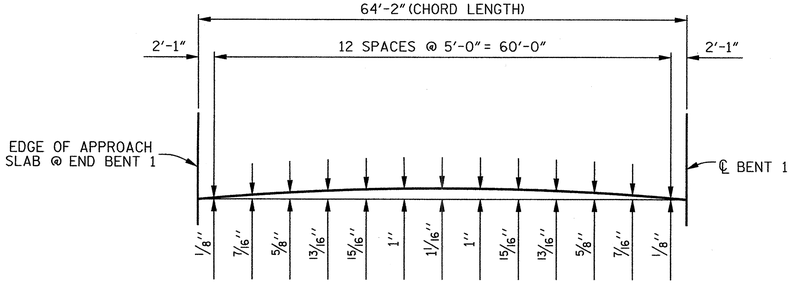


## ARC OFFSETS 43'-7 1/2" RIGHT OF -L-

(SPAN A)

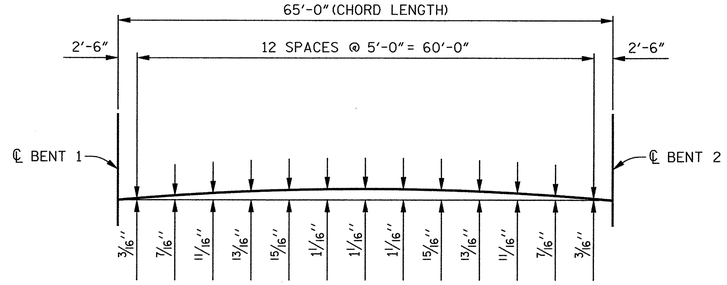


## ARC OFFSETS 43'-7 1/2" RIGHT OF -L-

(SPAN B)

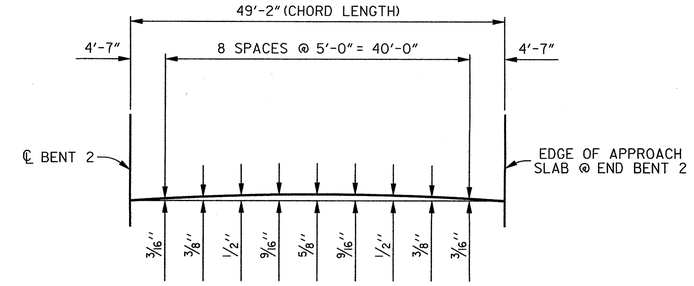


## ARC OFFSETS 43'-7 1/2" RIGHT OF -L-

(SPAN C)

PROJECT NO. R-2303D

SAMPSON COUNTY

STATION: 1326+94.00 -L-

SHEET 3 OF 3

STATE OF NORTH CAROLINA
DEPARTMENT OF TRANSPORTATION
RALEIGH

SUPERSTRUCTURE

PLAN OF SPAN

(RIGHT LANE)


CDM Smith
Camp Dresser & McKee
421 Fayetteville Street, Suite 1303
Raleigh, NC 27604
NC COA No. F-1255


DRAWN BY : K.E. LOFTON DATE : 8-12
CHECKED BY : P.R. HOLSHOUSER DATE : 12-12
DESIGN ENGINEER : P.R. HOLSHOUSER DATE : 3-13

DWG. No. S04-010

NORTH CAROLINA PROFESSIONAL SEAL 20668 ENGINEER PAUL R. HOLSHOUSER 3/14/2013

| REVISIONS | | | | | | |
|---|---|---|---|---|---|---|
| No. | BY: | DATE: | No. | BY: | DATE: | |
| 1 | | | 3 | | | |
| 2 | | | 4 | | | |

SHEET No. S-195

TOTAL SHEETS 218

FILE: r:\models\R2303D\Structures\PLANS\Str_3\R2303D_SD_Str4_pa3.dgn
DATE: 3/5/2013 3:29:03 PM

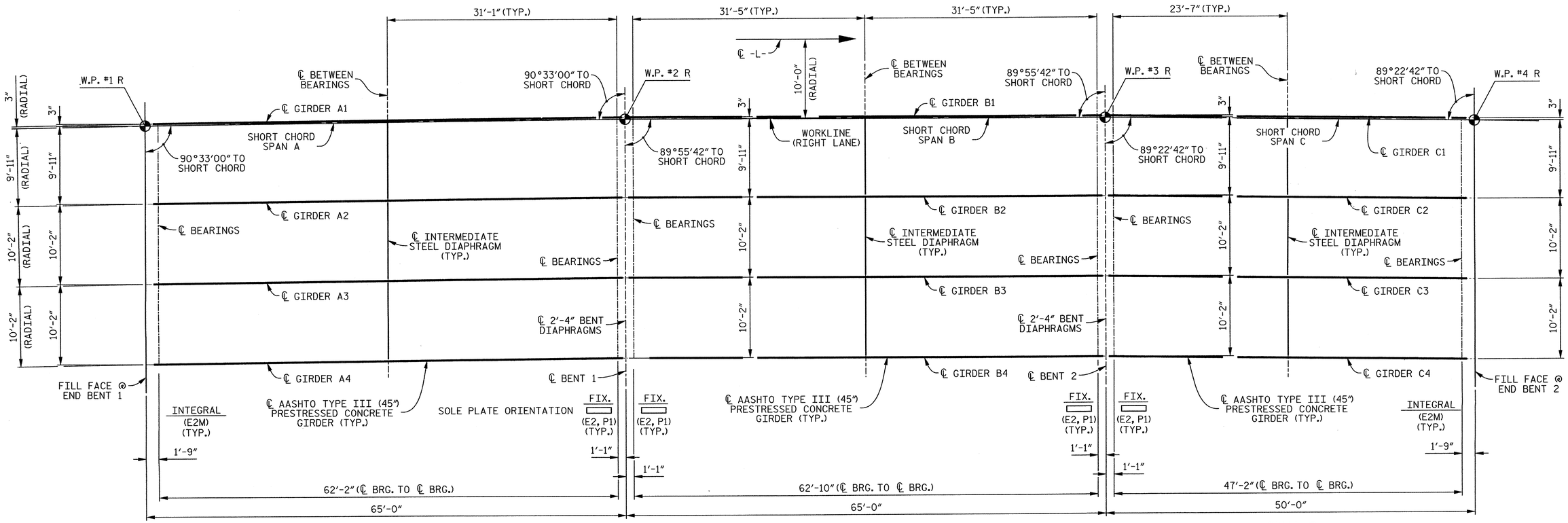


## FRAMING PLAN

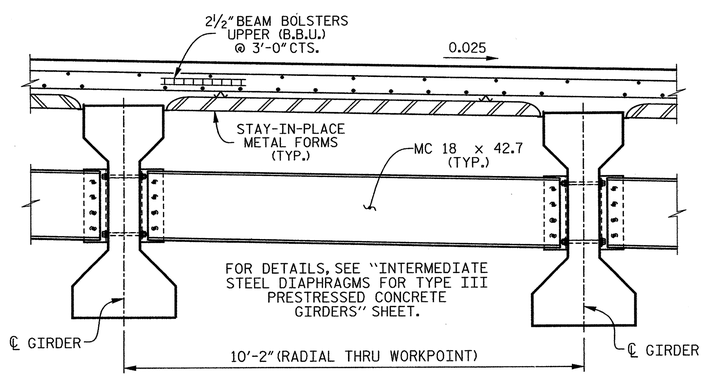


## PARTIAL TYPICAL SECTION

NEAR INTERMEDIATE DIAPHRAGM

PROJECT NO. R-2303D

SAMPSON COUNTY

STATION: 1326+94.00 -L-

STATE OF NORTH CAROLINA
DEPARTMENT OF TRANSPORTATION
RALEIGH

SUPERSTRUCTURE

# FRAMING PLAN (RIGHT LANE)

CDM Smith

Camp Dresser & McKee
421 Fayetteville Street, Suite 1303
Raleigh, NC 27604
NC COA No. F-1255

| | | | |
|---|---|---|---|
| DRAWN BY : | K.E. LOFTON | DATE : | 8-12 |
| CHECKED BY : | P.R. HOLSHOUSER | DATE : | 12-12 |
| DESIGN ENGINEER : | P.R. HOLSHOUSER | DATE : | 3-13 |

DWG. No. S04-011

NORTH CAROLINA PROFESSIONAL SEAL 20668 ENGINEER PAUL R. HOLSHOUSER 3/14/2013

| REVISIONS | | | | | | SHEET No. |
|---|---|---|---|---|---|---|
| No. | BY: | DATE: | No. | BY: | DATE: | S-196 |
| 1 | | | 3 | | | TOTAL SHEETS |
| 2 | | | 4 | | | 218 |

FILE: r:\model\R2303D\Structures\PLANS\Sr_31\R2303D_SD_Sr4_fp1.dgn
DATE: 3/5/2013 3:29:08 PM

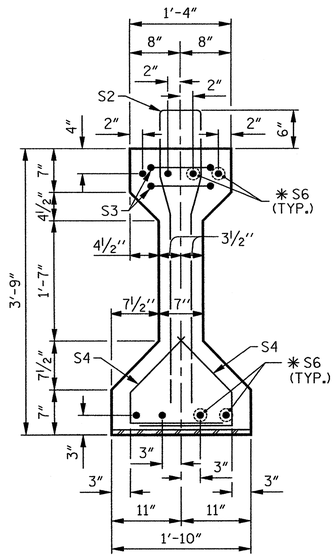


## SECTION A–A

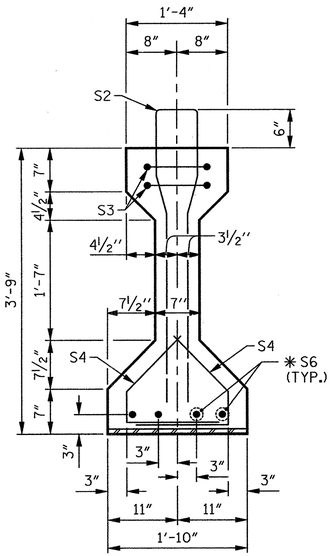


## SECTION B–B

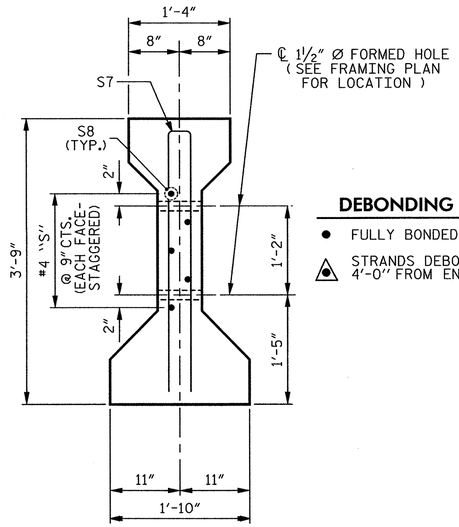


## SECTION C–C

(S1 BARS NOT SHOWN)

**DEBONDING LEGEND**

- ● FULLY BONDED STRANDS
- ▲ STRANDS DEBONDED FOR 4'-0" FROM END OF GIRDER

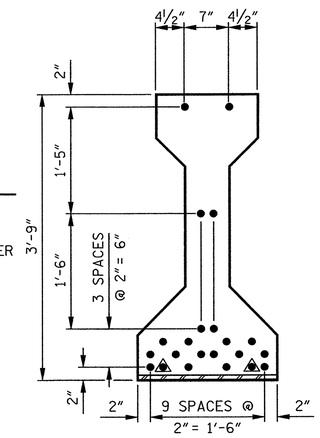


## AT END OF GIRDER

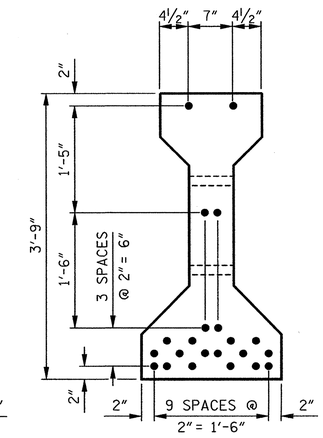


## AT ℄ OF GIRDER

## 22 –0.6" Ø LOW RELAXATION STRAND LAYOUT

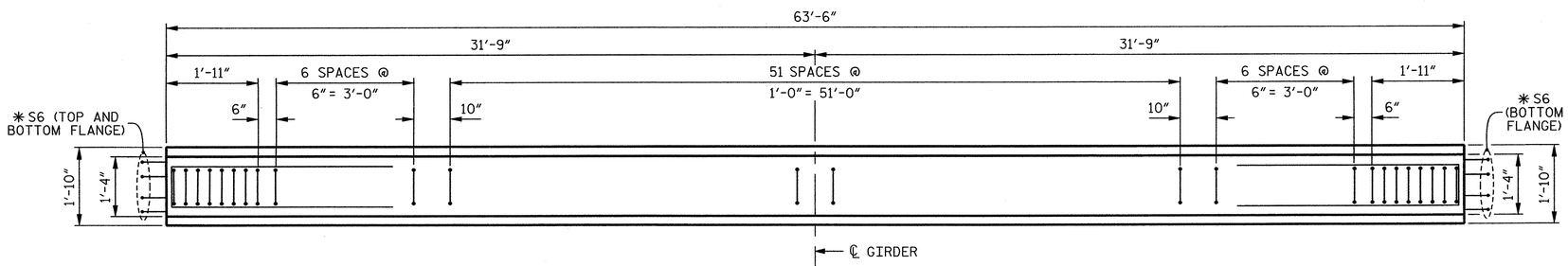


## PLAN OF GIRDER

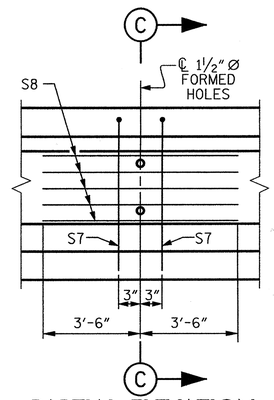


## PARTIAL ELEVATION

SHOWING INTERMEDIATE DIAPHRAGM REINFORCING STEEL FOR GIRDER 1 THRU GIRDER 4.

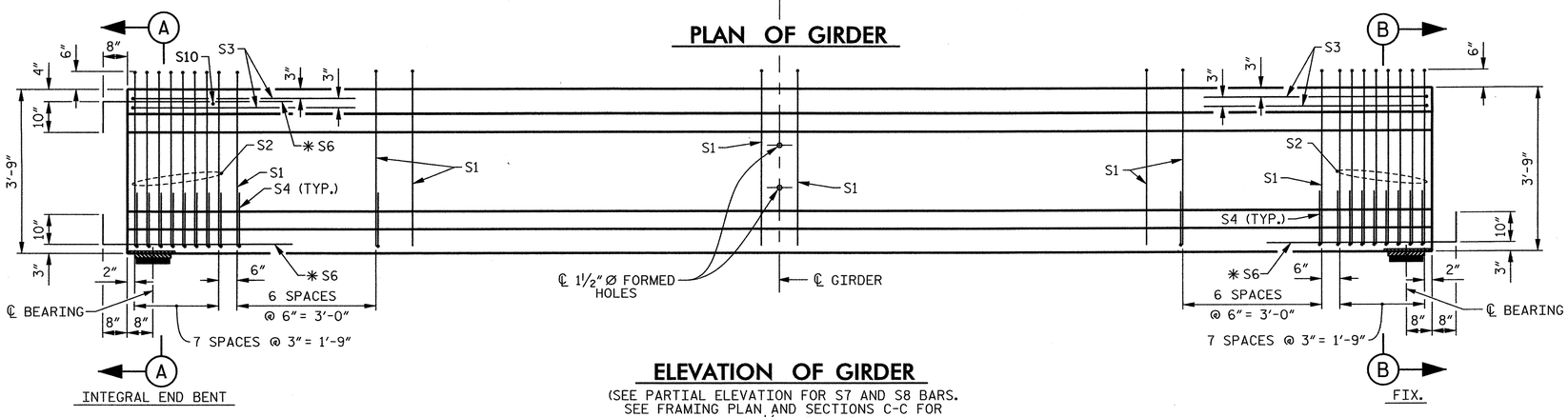


## ELEVATION OF GIRDER

(SEE PARTIAL ELEVATION FOR S7 AND S8 BARS. SEE FRAMING PLAN AND SECTIONS C-C FOR LOCATION OF 1½" Ø FORMED HOLES)

## 0.6" Ø L.R. GRADE 270 STRANDS

| AREA (SQUARE INCHES) | ULTIMATE STRENGTH (LBS. PER STRAND) | APPLIED PRESTRESS (LBS. PER STRAND) |
|---|---|---|
| 0.217 | 58,600 | 43,950 |

## REINFORCING STEEL FOR ONE GIRDER

| BAR | NUMBER | SIZE | TYPE | LENGTH | WEIGHT |
|---|---|---|---|---|---|
| S1 | 66 | #4 | 1 | 8'- 6" | 375 |
| S2 | 16 | #6 | 1 | 8'- 6" | 204 |
| S3 | 4 | #4 | 2 | 8'- 8" | 23 |
| S4 | 60 | #4 | 3 | 2'- 9" | 110 |
| ✱S6 | 12 | #5 | STR | 3'- 8" | 46 |
| S7 | 2 | #5 | 2 | 7'- 2" | 15 |
| S8 | 5 | #4 | STR | 7'- 0" | 23 |
| S10 | 1 | #3 | STR | 1'- 0" | 1 |
| | | | | | |
| | | | | | |

✱NOTE: S6 BARS SHALL BE BENT BEFORE SHIPMENT. HEAT BENDING SHALL NOT BE ALLOWED.

## BAR TYPES

ALL BAR DIMENSIONS ARE OUT-TO-OUT.

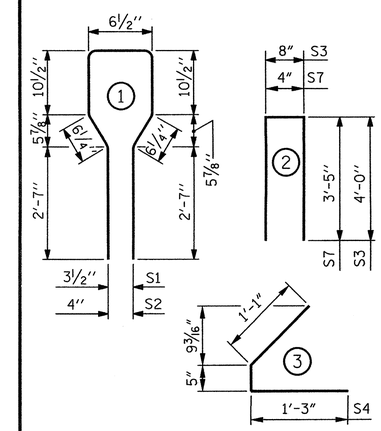


## QUANTITIES FOR ONE GIRDER

| | REINFORCING STEEL LB. | 6,000 PSI CONCRETE C.Y. | 0.6" Ø L.R. STRANDS No. |
|---|---|---|---|
| SPAN A | 797 | 9.1 | 22 |
| | | | |

## GIRDERS REQUIRED

| LOCATION | NUMBER | LENGTH | TOTAL LENGTH |
|---|---|---|---|
| SPAN A | 4 | 63'-6" | 254.000' |

PROJECT NO. R-2303D

SAMPSON COUNTY

STATION: 1326+94.00 –L–

SHEET 1 OF 4

STATE OF NORTH CAROLINA
DEPARTMENT OF TRANSPORTATION
RALEIGH

STANDARD

# AASHTO TYPE III PRESTRESSED CONCRETE GIRDER CONTINUOUS FOR LIVE LOAD – SPAN A (RIGHT LANE)

| REVISIONS | | | | | | | SHEET No. |
|---|---|---|---|---|---|---|---|
| No. | BY: | DATE: | No. | BY: | DATE: | | S-197 |
| 1 | | | 3 | | | | TOTAL SHEETS |
| 2 | | | 4 | | | | 218 |

STD. No. PCG5


CDM Smith
Camp Dresser & McKee
421 Fayetteville Street, Suite 1303
Raleigh, NC 27604
NC COA No. F-1255


| | | | |
|---|---|---|---|
| DRAWN BY : | K.E. LOFTON | DATE : | 8-12 |
| CHECKED BY : | P.R. HOLSHOUSER | DATE : | 12-12 |
| DESIGN ENGINEER : | P.R. HOLSHOUSER | DATE : | 3-13 |

DWG. No. S04-012

NORTH CAROLINA PROFESSIONAL SEAL 20668 ENGINEER PAUL R. HOLSHOUSER 8/14/2013

| | | | |
|---|---|---|---|
| ASSEMBLED BY : | K.E. LOFTON | DATE : | 8-12 |
| CHECKED BY : | P.R. HOLSHOUSER | DATE : | 12-12 |

| | | | |
|---|---|---|---|
| DRAWN BY : ELR 8/91 | REV. 10/17/00R | RWW/LES | |
| CHECKED BY : GRP 8/91 | REV. 5/1/06R | TLA/GM | |
| | REV. 10/1/11 | MAA/GM | |

FILE: r:\model\R2303D\Structures\PLANS\Str_31R2303D_SD_Shtd_pg1.dgn
DATE: 3/29/10 PM

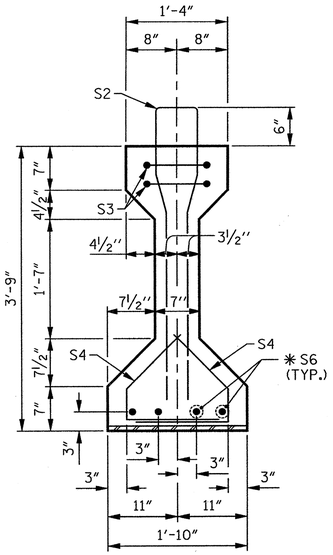


## SECTION B–B

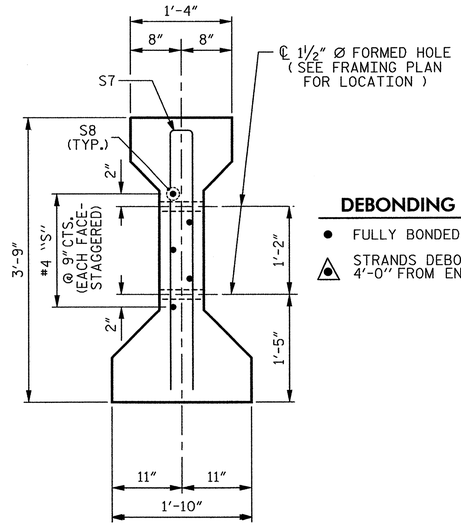


## SECTION C–C

(S1 BARS NOT SHOWN)

**DEBONDING LEGEND**

- ● FULLY BONDED STRANDS
- ▲ STRANDS DEBONDED FOR 4'-0" FROM END OF GIRDER

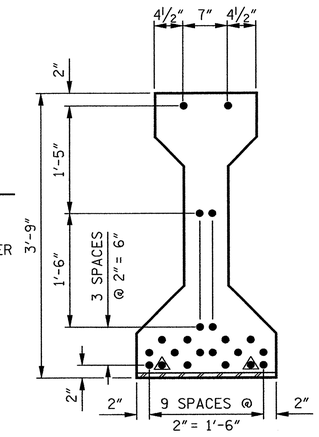


## AT END OF GIRDER

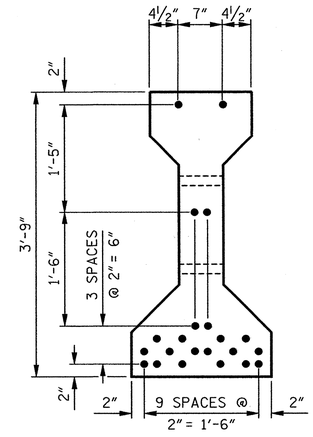


## AT ℄ OF GIRDER

## 22 –0.6" Ø LOW RELAXATION STRAND LAYOUT

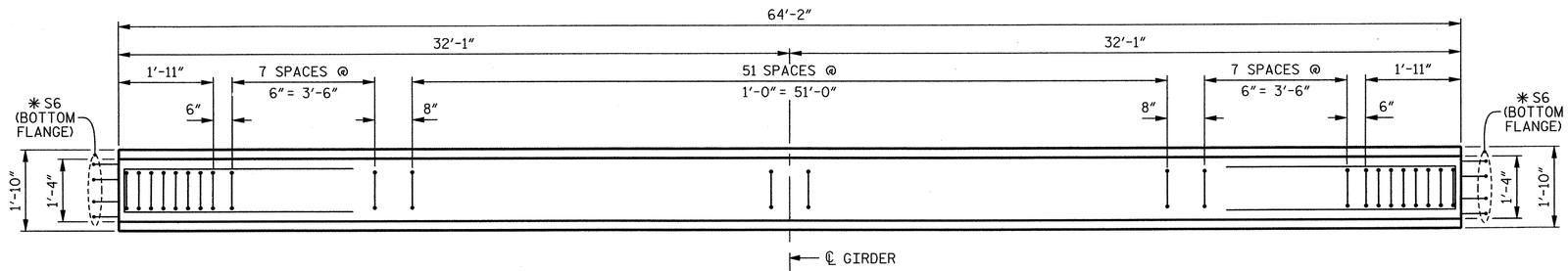


## PLAN OF GIRDER

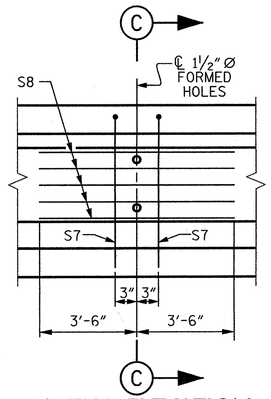


## PARTIAL ELEVATION

SHOWING INTERMEDIATE DIAPHRAGM REINFORCING STEEL FOR GIRDER 1 THRU GIRDER 4.

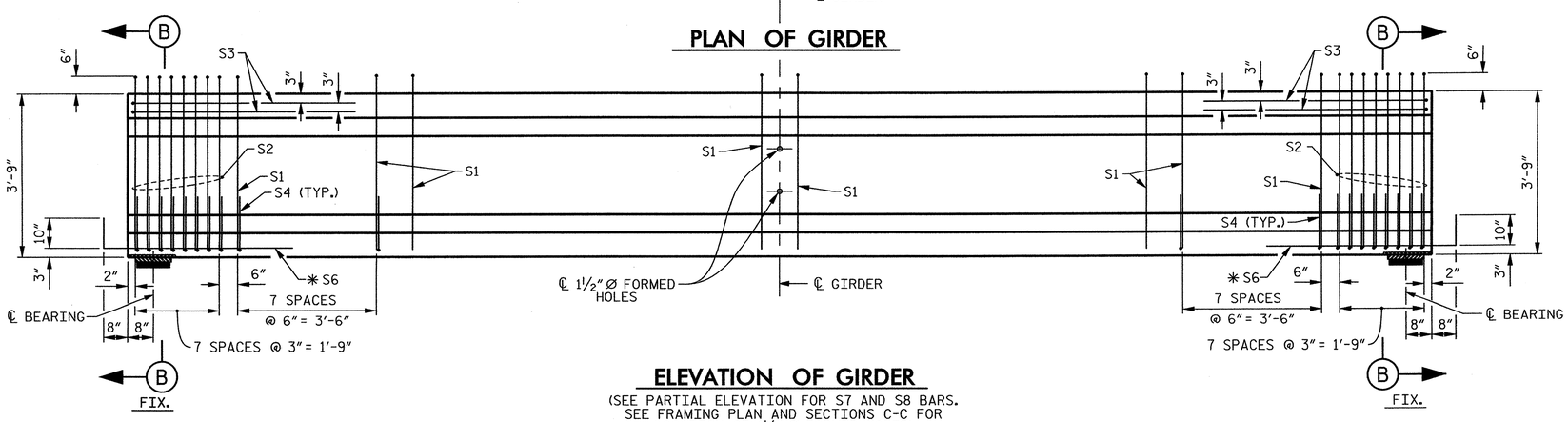


## ELEVATION OF GIRDER

(SEE PARTIAL ELEVATION FOR S7 AND S8 BARS. SEE FRAMING PLAN AND SECTIONS C-C FOR LOCATION OF 1½" Ø FORMED HOLES)

## 0.6" Ø L.R. GRADE 270 STRANDS

| AREA (SQUARE INCHES) | ULTIMATE STRENGTH (LBS. PER STRAND) | APPLIED PRESTRESS (LBS. PER STRAND) |
|---|---|---|
| 0.217 | 58,600 | 43,950 |

## REINFORCING STEEL FOR ONE GIRDER

| BAR | NUMBER | SIZE | TYPE | LENGTH | WEIGHT |
|---|---|---|---|---|---|
| S1 | 68 | #4 | 1 | 8'- 6" | 386 |
| S2 | 16 | #6 | 1 | 8'- 6" | 204 |
| S3 | 4 | #4 | 2 | 8'- 8" | 23 |
| S4 | 64 | #4 | 3 | 2'- 9" | 118 |
| ✱S6 | 8 | #5 | STR | 3'- 8" | 31 |
| S7 | 2 | #5 | 2 | 7'- 2" | 15 |
| S8 | 5 | #4 | STR | 7'- 0" | 23 |
| | | | | | |
| | | | | | |

✱NOTE: S6 BARS SHALL BE BENT BEFORE SHIPMENT. HEAT BENDING SHALL NOT BE ALLOWED.

## BAR TYPES

ALL BAR DIMENSIONS ARE OUT-TO-OUT.

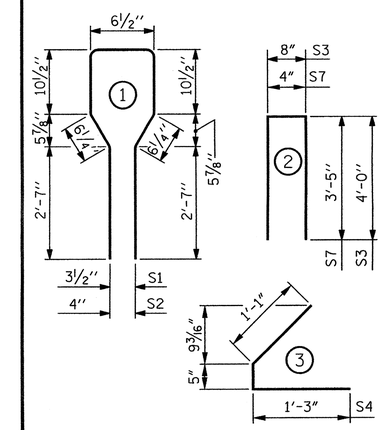


## QUANTITIES FOR ONE GIRDER

| | REINFORCING STEEL | 6,000 PSI CONCRETE | 0.6" Ø L.R. STRANDS |
|---|---|---|---|
| | LB. | C.Y. | No. |
| SPAN B | 800 | 9.2 | 22 |
| | | | |

## GIRDERS REQUIRED

| LOCATION | NUMBER | LENGTH | TOTAL LENGTH |
|---|---|---|---|
| SPAN B | 4 | 64'-2" | 256.667' |

PROJECT NO. R–2303D

SAMPSON COUNTY

STATION: 1326+94.00 –L–

SHEET 2 OF 4

STATE OF NORTH CAROLINA
DEPARTMENT OF TRANSPORTATION
RALEIGH

STANDARD

# AASHTO TYPE III PRESTRESSED CONCRETE GIRDER CONTINUOUS FOR LIVE LOAD – SPAN B (RIGHT LANE)

| REVISIONS | | | | | | SHEET No. |
|---|---|---|---|---|---|---|
| No. | BY: | DATE: | No. | BY: | DATE: | S-198 |
| 1 | | | 3 | | | TOTAL SHEETS |
| 2 | | | 4 | | | 218 |

STD. No. PCG5

CDM Smith
Camp Dresser & McKee
421 Fayetteville Street, Suite 1303
Raleigh, NC 27604
NC COA No. F-1255

DRAWN BY : K.E. LOFTON DATE : 8-12
CHECKED BY : P.R. HOLSHOUSER DATE : 12-12
DESIGN ENGINEER : P.R. HOLSHOUSER DATE : 3-13

DWG. No. S04-013

NORTH CAROLINA PROFESSIONAL SEAL 20668 ENGINEER P. PAUL R. HOLSHOUSER 3/14/2013

| | | | | | |
|---|---|---|---|---|---|
| ASSEMBLED BY : | K.E. LOFTON | DATE : | 8-12 | | |
| CHECKED BY : | P.R. HOLSHOUSER | DATE : | 12-12 | | |
| DRAWN BY : ELR 8/91 | REV. 10/17/00R | RWW/LES | | | |
| CHECKED BY : GRP 8/91 | REV. 5/1/06R | TLA/GM | | | |
| | REV. 10/1/11 | MAA/GM | | | |

FILE: n:\model\R2303D\Structures\PLANS\Sp_01\R2303D_SD_S04_pg2.dgn
DATE: 3/25/2013 12:29:12 PM

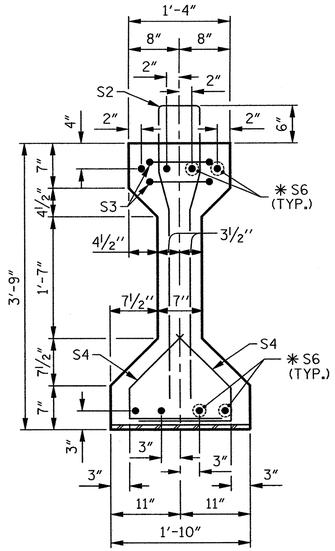


SECTION A–A

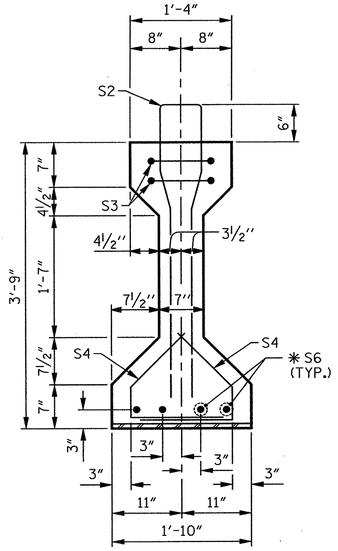


SECTION B–B

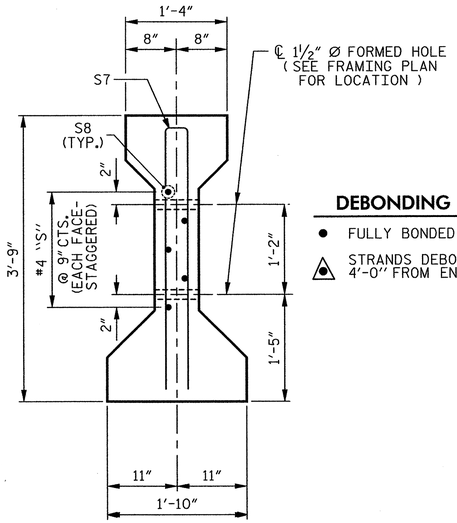


SECTION C–C
(S1 BARS NOT SHOWN)

**DEBONDING LEGEND**

- ● FULLY BONDED STRANDS
- ▲ STRANDS DEBONDED FOR 4'-0" FROM END OF GIRDER

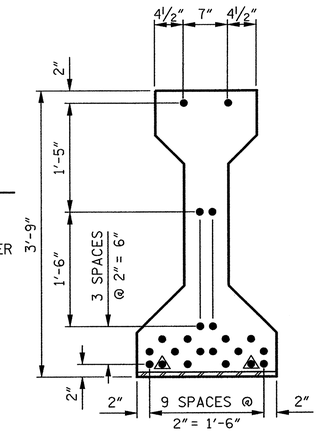


AT END OF GIRDER

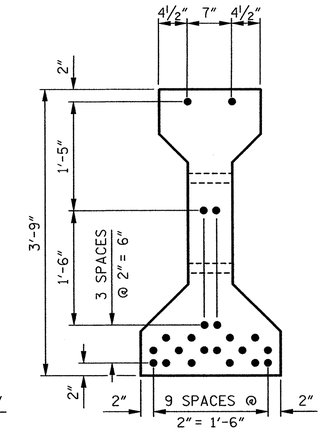


AT ℄ OF GIRDER

## 22 –0.6" Ø LOW RELAXATION STRAND LAYOUT

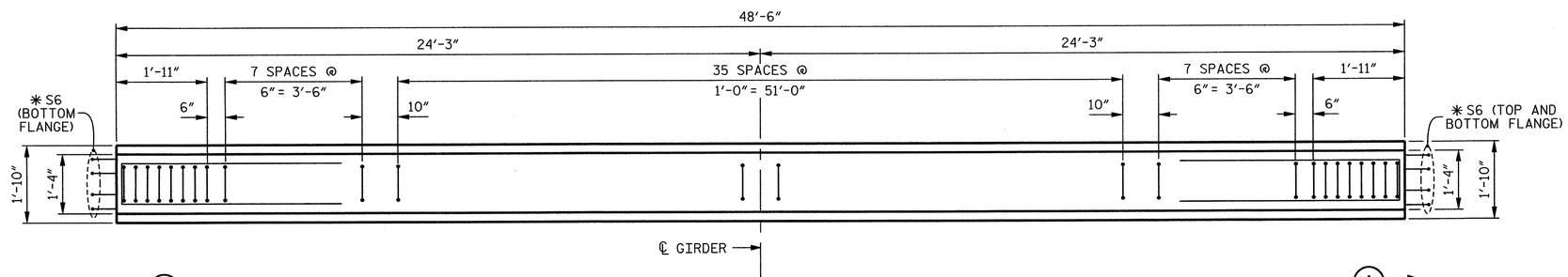


PLAN OF GIRDER

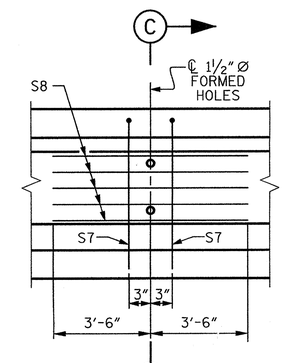


PARTIAL ELEVATION
SHOWING INTERMEDIATE DIAPHRAGM REINFORCING STEEL FOR GIRDER 1 THRU GIRDER 4.

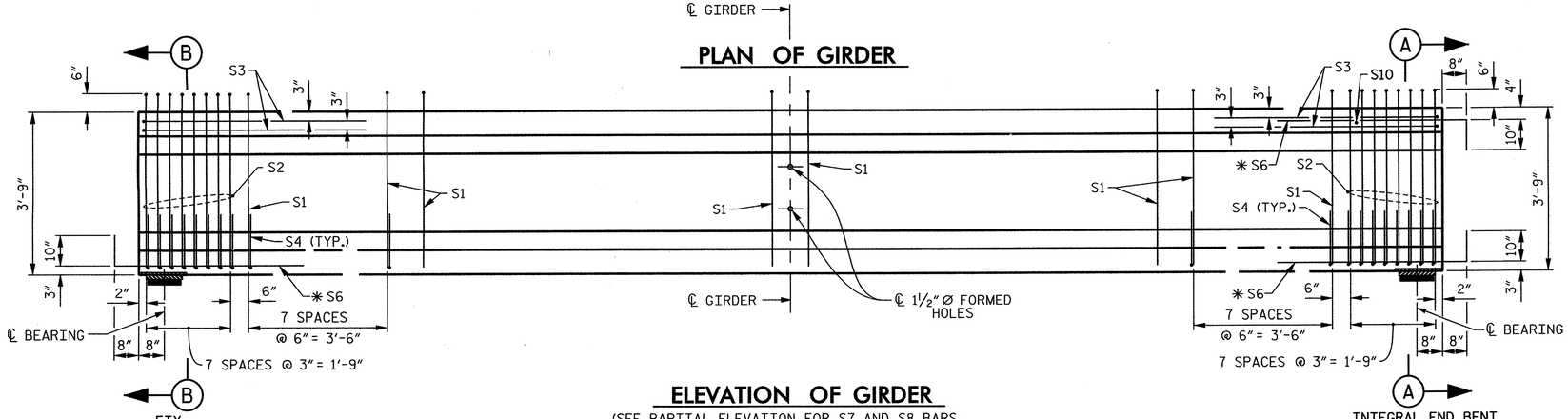


ELEVATION OF GIRDER
(SEE PARTIAL ELEVATION FOR S7 AND S8 BARS. SEE FRAMING PLAN AND SECTIONS C-C FOR LOCATION OF 1½" Ø FORMED HOLES)

## 0.6" Ø L.R. GRADE 270 STRANDS

| AREA (SQUARE INCHES) | ULTIMATE STRENGTH (LBS. PER STRAND) | APPLIED PRESTRESS (LBS. PER STRAND) |
|---|---|---|
| 0.217 | 58,600 | 43,950 |

## REINFORCING STEEL FOR ONE GIRDER

| BAR | NUMBER | SIZE | TYPE | LENGTH | WEIGHT |
|---|---|---|---|---|---|
| S1 | 52 | #4 | 1 | 8'- 6" | 295 |
| S2 | 16 | #6 | 1 | 8'- 6" | 204 |
| S3 | 4 | #4 | 2 | 8'- 8" | 23 |
| S4 | 64 | #4 | 3 | 2'- 9" | 118 |
| ✱S6 | 12 | #5 | STR | 3'- 8" | 46 |
| S7 | 2 | #5 | 3 | 7'- 2" | 15 |
| S8 | 5 | #4 | STR | 7'- 0" | 23 |
| S10 | 1 | #3 | STR | 1'- 0" | 1 |
| | | | | | |
| | | | | | |

✱NOTE: S6 BARS SHALL BE BENT BEFORE SHIPMENT. HEAT BENDING SHALL NOT BE ALLOWED.

## BAR TYPES

ALL BAR DIMENSIONS ARE OUT-TO-OUT.

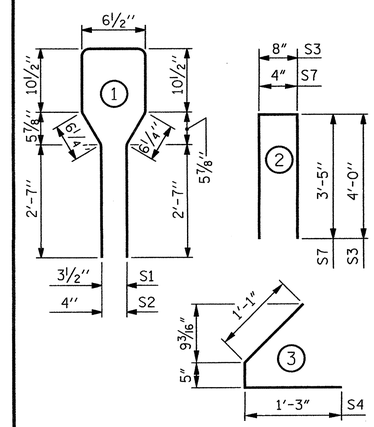


## QUANTITIES FOR ONE GIRDER

| | REINFORCING STEEL LB. | 6,000 PSI CONCRETE C.Y. | 0.6" Ø L.R. STRANDS No. |
|---|---|---|---|
| SPAN C | 725 | 7.0 | 22 |
| | | | |

## GIRDERS REQUIRED

| LOCATION | NUMBER | LENGTH | TOTAL LENGTH |
|---|---|---|---|
| SPAN C | 4 | 48'-6" | 194.000' |

PROJECT NO. R–2303D
SAMPSON COUNTY
STATION: 1326+94.00 –L–

SHEET 3 OF 4

STATE OF NORTH CAROLINA
DEPARTMENT OF TRANSPORTATION
RALEIGH

STANDARD

# AASHTO TYPE III PRESTRESSED CONCRETE GIRDER CONTINUOUS FOR LIVE LOAD – SPAN C (RIGHT LANE)

| REVISIONS | | | | | | | | SHEET No. |
|---|---|---|---|---|---|---|---|---|
| No. | BY: | DATE: | No. | BY: | DATE: | | | S-199 |
| 1 | | | 3 | | | | | TOTAL SHEETS |
| 2 | | | 4 | | | | | 218 |

STD. No. PCG5

CDM Smith
Camp Dresser & McKee
421 Fayetteville Street, Suite 1303
Raleigh, NC 27604
NC COA No. F-1255

DRAWN BY : K.E. LOFTON DATE : 8-12
CHECKED BY : P.R. HOLSHOUSER DATE : 12-12
DESIGN ENGINEER : P.R. HOLSHOUSER DATE : 3-13

DWG. No. S04-014

NORTH CAROLINA PROFESSIONAL SEAL 20668 ENGINEER PAUL R. HOLSHOUSER 3/14/2013

| | | | |
|---|---|---|---|
| ASSEMBLED BY : | K.E. LOFTON | DATE : | 8-12 |
| CHECKED BY : | P.R. HOLSHOUSER | DATE : | 12-12 |

| | | | | |
|---|---|---|---|---|
| DRAWN BY : | ELR | 8/91 | REV. 10/17/00R | RWW/LES |
| CHECKED BY : | GRP | 8/91 | REV. 5/1/06R | TLA/GM |
| | | | REV. 10/1/11 | MAA/GM |

FILE: s:\model\R2303D\Structures\PLANS\Sn_01\R2303D_SD_Sn4_pg3.dgn
DATE: 5/30/13 3:29:14 PM

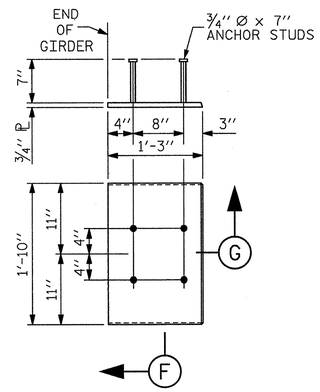


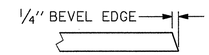


SECTION "G"

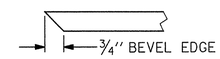


SECTION "F"
(SEE NOTES)

## EMBEDDED PLATE "B-1" DETAILS FOR AASHTO TYPE III GIRDER

(2 REQUIRED PER GIRDER)

## NOTES

ALL PRESTRESSING STRANDS SHALL BE 7-WIRE LOW-RELAXATION GRADE 270 STRANDS AND SHALL CONFORM TO AASHTO M203 EXCEPT FOR SAMPLING REQUIREMENTS WHICH SHALL BE IN ACCORDANCE WITH THE STANDARD SPECIFICATIONS.

ALL REINFORCING STEEL SHALL BE GRADE 60.

APPLY EPOXY PROTECTIVE COATING TO END OF GIRDER SURFACES INDICATED IN ELEVATION VIEW.

EMBEDDED PLATE "B-1" SHALL BE GALVANIZED IN ACCORDANCE WITH THE STANDARD SPECIFICATIONS. BEVEL EDGES OF PLATE "B-1" TO GIVE CLOSE FIT BUT NOT TIGHT FIT TO STEEL CASTING FORM.

ANCHOR STUDS SHALL CONFORM TO AASHTO M169 GRADES 1010 THROUGH 1020 OR APPROVED EQUAL, AND SHALL MEET THE TYPE "B" REQUIREMENTS OF SUBSECTION 7.3 OF THE ANSI/AASHTO/AWS D1.5 BRIDGE WELDING CODE.

AT ENDS OF GIRDERS TO BE EMBEDDED IN CONCRETE DIAPHRAGMS OR END WALLS, PRESTRESSING STRANDS MAY EXTEND A MAXIMUM OF 2" BEYOND THE GIRDER ENDS. OTHERWISE, PRESTRESSING STRANDS SHALL BE CUT FLUSH WITH THE GIRDER ENDS.

THE TRANSFER OF LOAD FROM THE ANCHORAGES TO THE GIRDER SHALL BE DONE WHEN CONCRETE HAS REACHED A COMPRESSIVE STRENGTH OF NOT LESS THAN 5,300 PSI.

DEPENDING ON THE TYPE OF SYSTEM USED TO SUPPORT THE DECK SLAB FORMS, PRESET ANCHORS MAY BE NECESSARY IN THE PRESTRESSED CONCRETE GIRDER.

THE TOP SURFACE OF THE GIRDER, EXCLUDING THE OUTSIDE 4", SHALL BE RAKED TO A DEPTH OF 1/4".

WHEN DRAPED STRANDS ARE DETAILED, THE LONGITUDINAL LOCATION OF THE HOLD DOWN DEVICES SHALL BE WITHIN 6" OF THE LOCATION SHOWN AND THE CENTER OF GRAVITY OF THE GROUP OF DRAPED STRANDS SHALL BE LOCATED WITHIN 1/2" OF THE THEORETICAL LOCATION SHOWN.

THE CONTRACTOR HAS THE OPTION TO PROVIDE, AT NO ADDITIONAL COST TO THE DEPARTMENT, 2 ADDITIONAL STRANDS AT THE TOP OF THE GIRDER TO FACILITATE TYING OF THE REINFORCING STEEL. THESE STRANDS SHALL BE PULLED TO A LOAD OF 4,500 LBS.

## CAMBER AND DEAD LOAD DEFLECTIONS

| | SPAN A | | | | | | | | | | | SPAN B | | | | | | | | | | | SPAN C | | | | | | | | | | |
|---|---|---|---|---|---|---|---|---|---|---|---|---|---|---|---|---|---|---|---|---|---|---|---|---|---|---|---|---|---|---|---|---|---|
| GIRDERS 1 AND 4 | ℄ BRG. | 0.10 | 0.20 | 0.30 | 0.40 | 0.50 | 0.60 | 0.70 | 0.80 | 0.90 | ℄ BRG. | ℄ BRG. | 0.10 | 0.20 | 0.30 | 0.40 | 0.50 | 0.60 | 0.70 | 0.80 | 0.90 | ℄ BRG. | ℄ BRG. | 0.10 | 0.20 | 0.30 | 0.40 | 0.50 | 0.60 | 0.70 | 0.80 | 0.90 | ℄ BRG. |
| CAMBER (GIRDER ALONE IN PLACE) ↑ | 0.000 | 0.060 | 0.103 | 0.133 | 0.151 | 0.156 | 0.151 | 0.133 | 0.103 | 0.060 | 0.000 | 0.000 | 0.060 | 0.104 | 0.135 | 0.152 | 0.158 | 0.152 | 0.135 | 0.104 | 0.060 | 0.000 | 0.000 | 0.042 | 0.070 | 0.092 | 0.104 | 0.109 | 0.104 | 0.092 | 0.070 | 0.042 | 0.000 |
| DEFLECTION DUE TO SUPERIMPOSED D.L. ✳ ↓ | 0.000 | 0.018 | 0.037 | 0.051 | 0.060 | 0.063 | 0.060 | 0.051 | 0.037 | 0.018 | 0.000 | 0.000 | 0.019 | 0.038 | 0.053 | 0.063 | 0.066 | 0.063 | 0.053 | 0.038 | 0.019 | 0.000 | 0.000 | 0.006 | 0.012 | 0.017 | 0.020 | 0.021 | 0.020 | 0.017 | 0.012 | 0.006 | 0.000 |
| FINAL CAMBER ↑ | 0" | 1/2" | 13/16" | 1" | 1 1/16" | 1 1/8" | 1 1/16" | 1" | 13/16" | 1/2" | 0 | 0" | 1/2" | 13/16" | 1" | 1 1/16" | 1 1/8" | 1 1/16" | 1" | 13/16" | 1/2" | 0 | 0" | 7/16" | 11/16" | 7/8" | 1" | 1 1/16" | 1" | 7/8" | 11/16" | 7/16" | 0 |
| | | | | | | | | | | | | | | | | | | | | | | | | | | | | | | | | | |
| GIRDERS 2 AND 3 | ℄ BRG. | 0.10 | 0.20 | 0.30 | 0.40 | 0.50 | 0.60 | 0.70 | 0.80 | 0.90 | ℄ BRG. | ℄ BRG. | 0.10 | 0.20 | 0.30 | 0.40 | 0.50 | 0.60 | 0.70 | 0.80 | 0.90 | ℄ BRG. | ℄ BRG. | 0.10 | 0.20 | 0.30 | 0.40 | 0.50 | 0.60 | 0.70 | 0.80 | 0.90 | ℄ BRG. |
| CAMBER (GIRDER ALONE IN PLACE) ↑ | 0.000 | 0.060 | 0.103 | 0.133 | 0.151 | 0.156 | 0.151 | 0.133 | 0.103 | 0.060 | 0.000 | 0.000 | 0.060 | 0.104 | 0.135 | 0.152 | 0.158 | 0.152 | 0.135 | 0.104 | 0.060 | 0.000 | 0.000 | 0.042 | 0.070 | 0.092 | 0.104 | 0.109 | 0.104 | 0.092 | 0.070 | 0.042 | 0.000 |
| DEFLECTION DUE TO SUPERIMPOSED D.L. ✳ ↓ | 0.000 | 0.021 | 0.041 | 0.057 | 0.068 | 0.071 | 0.068 | 0.057 | 0.041 | 0.021 | 0.000 | 0.000 | 0.021 | 0.043 | 0.060 | 0.071 | 0.074 | 0.071 | 0.060 | 0.043 | 0.021 | 0.000 | 0.000 | 0.007 | 0.014 | 0.019 | 0.023 | 0.024 | 0.023 | 0.019 | 0.014 | 0.007 | 0.000 |
| FINAL CAMBER ↑ | 0 | 1/2" | 3/4" | 7/8" | 1" | 1" | 1" | 7/8" | 3/4" | 1/2" | 0 | 0 | 7/16" | 3/4" | 7/8" | 1" | 1" | 1" | 7/8" | 3/4" | 7/16" | 0 | 0 | 7/16" | 11/16" | 7/8" | 1" | 1" | 1" | 7/8" | 11/16" | 7/16" | 0 |

✳ INCLUDES FUTURE WEARING SURFACE

ALL VALUES ARE SHOWN IN FEET (DECIMAL FORM), EXCEPT "FINAL CAMBER", WHICH IS GIVEN IN INCHES (FRACTION FORM).

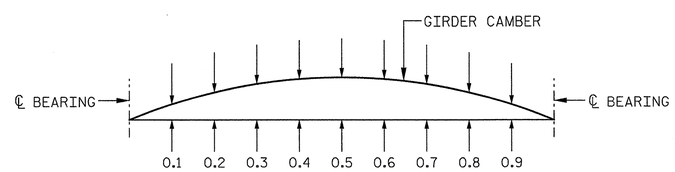


## GIRDER CAMBER AND DEFLECTIONS

PROJECT NO. R-2303D
SAMPSON COUNTY
STATION: 1326+94.00 -L-

SHEET 4 OF 4

STATE OF NORTH CAROLINA
DEPARTMENT OF TRANSPORTATION
RALEIGH

STANDARD

PRESTRESSED CONCRETE GIRDER CONTINUOUS FOR LIVE LOAD DETAILS (RIGHT LANE)

| REVISIONS | | | | | | SHEET No. |
|---|---|---|---|---|---|---|
| No. | BY: | DATE: | No. | BY: | DATE: | S-200 |
| 1 | | | 3 | | | TOTAL SHEETS |
| 2 | | | 4 | | | 218 |

STD. No. B000

CDM Smith
Camp Dresser & McKee
421 Fayetteville Street, Suite 1303
Raleigh, NC 27604
NC COA No. F-1255

DRAWN BY : K.E. LOFTON DATE : 8-12
CHECKED BY : P.R. HOLSHOUSER DATE : 12-12
DESIGN ENGINEER : P.R. HOLSHOUSER DATE : 3-13

DWG. No. S04-015

NORTH CAROLINA PROFESSIONAL SEAL 20668 ENGINEER PAUL R. HOLSHOUSER 3/14/13

| | | | |
|---|---|---|---|
| ASSEMBLED BY : K.E. LOFTON | DATE : 8-12 | | |
| CHECKED BY : P.R. HOLSHOUSER | DATE : 12-12 | | |
| DRAWN BY : ELR 11/91 | REV. 7/10/01 | RR | LES/RDR |
| CHECKED BY : GRP 11/91 | REV. 5/1/06 | | TLA/GM |
| | REV. 10/1/11 | | MAA/GM |

FILE: R:\NCDOT\R2303D\STRUCTURES\PLANS\Sv_31\R2303D_SD_S04_pg4.dgn
DATE: 3/19/2013 4:23:04 PM

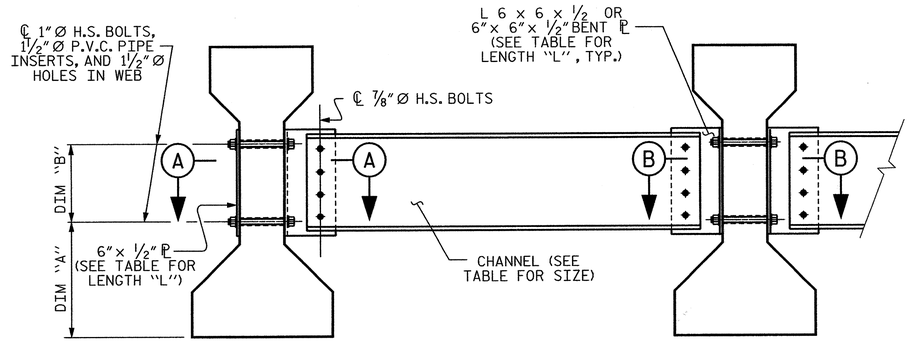


EXTERIOR GIRDER

INTERIOR GIRDER

## PART SECTION AT INTERMEDIATE DIAPHRAGM

| TABLE | | | | |
|---|---|---|---|---|
| GIRDER TYPE | CHANNEL SIZE | DIM "A" | DIM "B" | DIM "L" |
| III | MC 18 x 42.7 | 1'-5" | 1'-2" | 1'-6" |

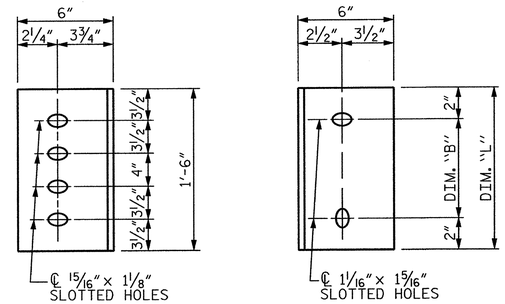


DIAPHRAGM FACE

WEB FACE

## CONNECTOR PLATE DETAILS

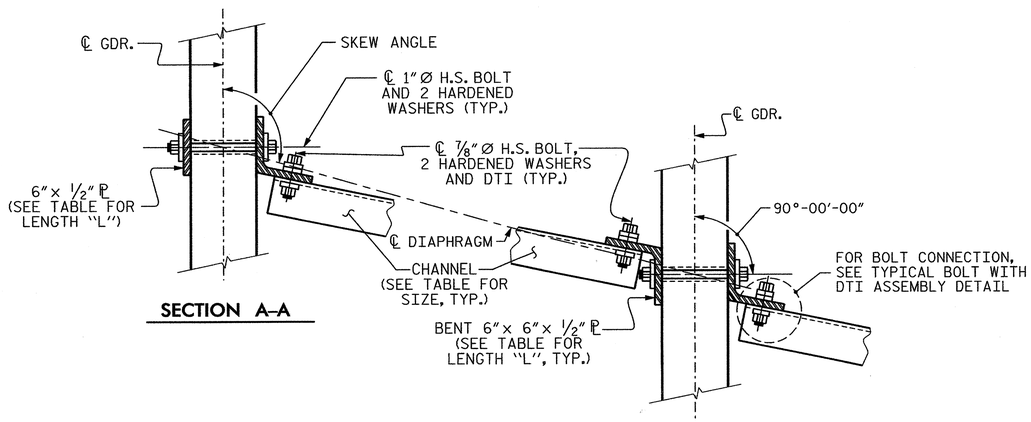


SECTION A-A

SECTION B-B

## CONNECTION DETAILS

( FOR 70° ≤ SKEW < 90° OR 90° < SKEW ≤ 110° )

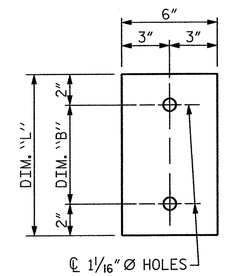


## PLATE DETAILS

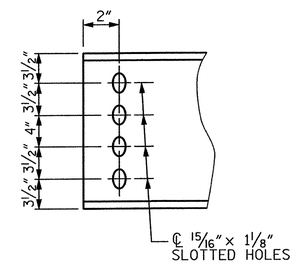


## CHANNEL END

## STRUCTURAL STEEL NOTES

ALL INTERMEDIATE DIAPHRAGM STEEL AND CONNECTOR PLATES SHALL BE AASHTO M270 GRADE 50 OR APPROVED EQUAL.

TENSION ON THE ASTM A325 BOLTS THROUGH THE CHANNEL MEMBER SHALL BE CALIBRATED USING DIRECT TENSION INDICATOR WASHERS IN ACCORDANCE WITH THE STANDARD SPECIFICATIONS.

THE PLATES, BENT PLATES, CHANNELS, AND ANGLES SHALL BE GALVANIZED OR METALLIZED IN ACCORDANCE WITH THE STANDARD SPECIFICATIONS. FOR THERMAL SPRAYED COATINGS (METALLIZATION), SEE SPECIAL PROVISIONS.

FOR METALLIZATION, APPLY AN 8 MIL THICK 99.99 PERCENT ZINC (W-Zn-1) THERMAL SPRAYED COATING WITH A 0.5 MIL THICK SEAL COAT TO ALL STEEL DIAPHRAGM SURFACES IN ACCORDANCE WITH THE THERMAL SPRAYED COATINGS SPECIAL PROVISION AND SECTION 442 OF THE STANDARD SPECIFICATIONS.

GALVANIZE THE HIGH STRENGTH BOLTS, NUTS, WASHERS AND DIRECT TENSION INDICATORS IN ACCORDANCE WITH THE STANDARD SPECIFICATIONS.

USE AN ASTM F436 HARDENED WASHER WITH STANDARD AND SLOTTED HOLES UNDER EACH BOLT HEAD AND NUT.

FOR BOLTS THROUGH THE GIRDER WEB, PROVIDE SUFFICIENT LENGTH OF THREADS ON ALL BOLTS TO ACCOMMODATE WASHERS AND THE THICKNESS OF CONNECTING MEMBER PLUS AT LEAST ¼" PROJECTION BEYOND THE NUT.

INTERMEDIATE DIAPHRAGM ASSEMBLY SHALL COMPLY WITH SECTION 1072 OF THE STANDARD SPECIFICATIONS.

SUBMIT TWO SETS OF WORKING DRAWINGS FOR THE INTERMEDIATE DIAPHRAGM ASSEMBLY FOR REVIEW, COMMENTS AND ACCEPTANCE. AFTER REVIEW, COMMENTS, AND ACCEPTANCE, SUBMIT SEVEN SETS FOR DISTRIBUTION.

IN THE EXTERIOR BAYS, PLACE TEMPORARY STRUTS BETWEEN PRESTRESSED GIRDERS ADJACENT TO THE STEEL DIAPHRAGMS. STRUTS SHALL REMAIN IN PLACE 3 DAYS AFTER CONCRETE IS PLACED.

THE COST OF THE STEEL DIAPHRAGMS AND ASSEMBLIES SHALL BE INCLUDED IN THE UNIT PRICE BID FOR PRESTRESSED CONCRETE GIRDERS

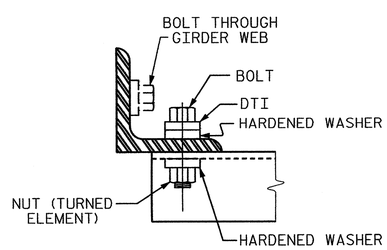


## BOLT WITH DTI ASSEMBLY DETAIL

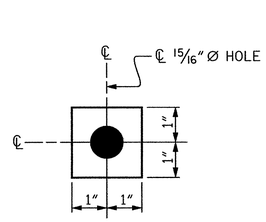


W1

ℙ 7/16" x 2" x 2"

USE WITH ⅞"Ø HVY. HEX NUTS & DIRECT TENSION INDICATOR WASHERS AT DIAPHRAGM ANGLE TO CONNECTOR PLATE CONNECTIONS

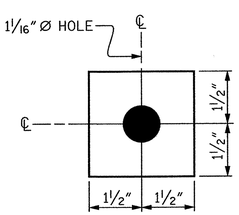


W2

ℙ 7/16" x 3" x 3"

USE WITH 1"Ø HVY. HEX NUTS AT CONNECTOR PLATE TO GIRDER CONNECTIONS

## WASHER DETAILS

PROJECT NO. R-2303D

SAMPSON COUNTY

STATION: 1326+94.00 -L-

STATE OF NORTH CAROLINA
DEPARTMENT OF TRANSPORTATION
RALEIGH

STANDARD

INTERMEDIATE STEEL DIAPHRAGMS FOR TYPE III PRESTRESSED CONCRETE GIRDERS

(RIGHT LANE)

CDM Smith

Camp Dresser & McKee
421 Fayetteville Street, Suite 1303
Raleigh, NC 27604
NC COA No. F-1255

DRAWN BY : K.E. LOFTON DATE : 8-12
CHECKED BY : P.R. HOLSHOUSER DATE : 12-12
DESIGN ENGINEER : P.R. HOLSHOUSER DATE : 3-13

DWG. No. S04-016

NORTH CAROLINA PROFESSIONAL SEAL 20668 ENGINEER P. PAUL R. HOLSHOUSER 3/14/2013

| REVISIONS | | | | | | | SHEET No. |
|---|---|---|---|---|---|---|---|
| No. | BY: | DATE: | No. | BY: | DATE: | | S-201 |
| 1 | | | 3 | | | | TOTAL SHEETS |
| 2 | | | 4 | | | | 218 |

STD. No. PCG12

| | | | |
|---|---|---|---|
| ASSEMBLED BY : K.E. LOFTON | | DATE : 8-12 | |
| CHECKED BY : P.R. HOLSHOUSER | | DATE : 12-12 | |
| DRAWN BY : TLA 6/05 | ADDED 10/21/05 | | |
| CHECKED BY : VC 6/05 | REV. 5/1/06RRR | KMM/GM | |
| | REV. 10/1/11 | MAA/GM | |

FILE: n:\model\R2303D\Structures\PLANS\Str_31\R2303D_SD_S04_DTI.dgn
DATE: 3/5/2013 3:29:17 PM

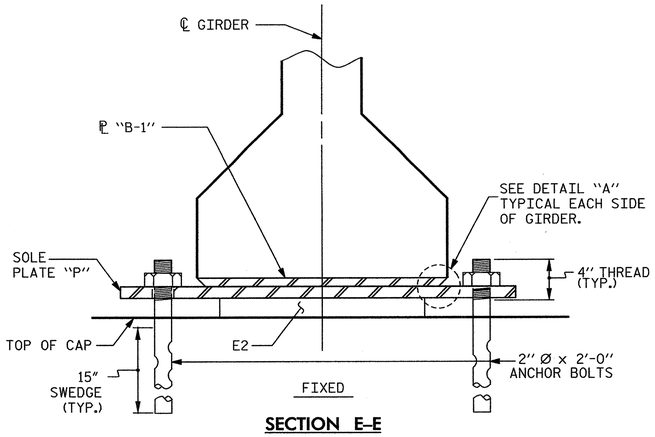


## SECTION E–E

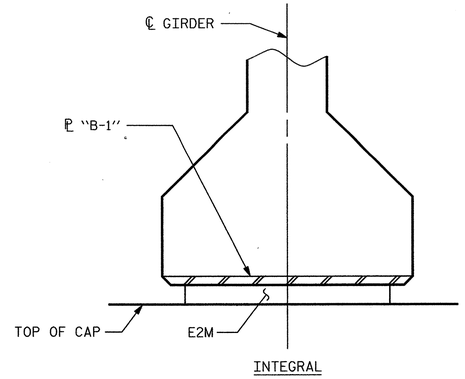


## SECTION F–F

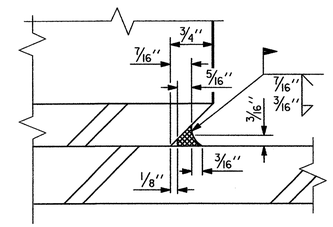


## DETAIL "A"

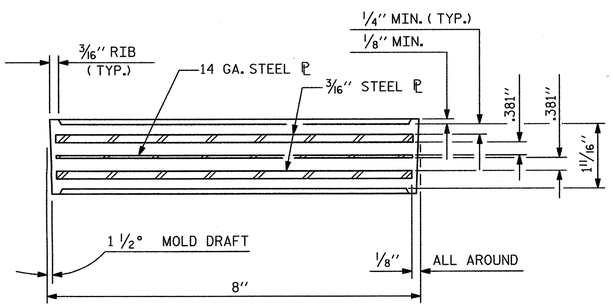


## TYPICAL SECTION OF ELASTOMERIC BEARINGS
(BENT 1 AND BENT 2)

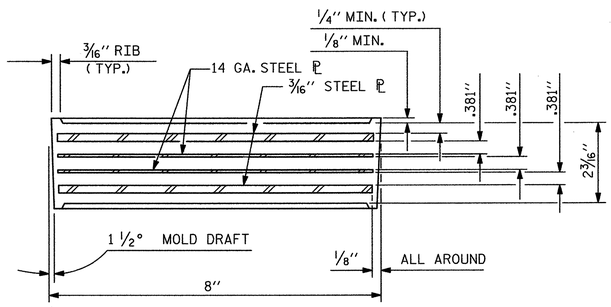


## TYPICAL SECTION OF ELASTOMERIC BEARINGS
(END BENT 1 AND END BENT 2)

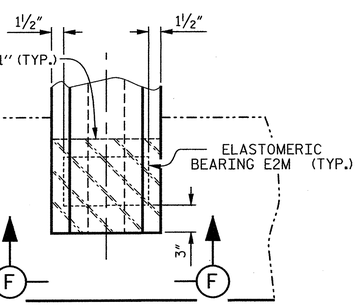


## PARTIAL PLAN – INTEGRAL END BENT

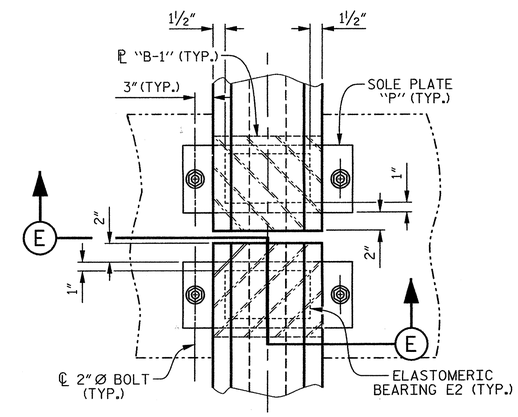


## PARTIAL PLAN – BENT

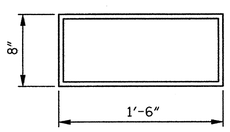


E2 ( 16 REQUIRED )

## PLAN VIEW OF ELASTOMERIC BEARING

## TYPE III

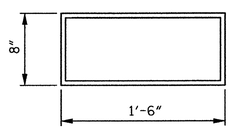


E2M ( 8 REQUIRED )

## PLAN VIEW OF ELASTOMERIC BEARING

## MODIFED TYPE III

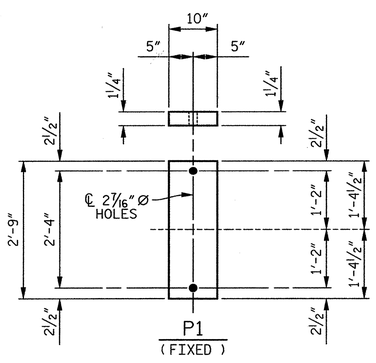


P1 ( 16 REQUIRED )

## SOLE PLATE DETAILS ("P")

## NOTES

FOR ELASTOMERIC BEARINGS, SEE SPECIAL PROVISIONS.

AT ALL FIXED POINTS OF SUPPORT, NUTS FOR ANCHOR BOLTS ARE TO BE TIGHTENED FINGER TIGHT AND THEN BACKED OFF 1/2 TURN. THE THREAD OF THE NUT AND BOLT SHALL THEN BE BURRED WITH A SHARP POINTED TOOL.

STEEL SOLE PLATES, ANCHOR BOLTS, NUTS, AND WASHERS SHALL BE GALVANIZED IN ACCORDANCE WITH THE STANDARD SPECIFICATIONS.

PRIOR TO WELDING, GRIND THE GALVANIZED SURFACE OF THE PORTION OF THE EMBEDDED PLATE AND SOLE PLATE THAT ARE TO BE WELDED. AFTER WELDING, DAMAGED GALVANIZED SURFACES SHALL BE REPAIRED IN ACCORDANCE WITH THE STANDARD SPECIFICATIONS.

WHEN WELDING THE SOLE PLATE TO THE EMBEDDED PLATE IN THE GIRDER, USE TEMPERATURE INDICATING WAX PENS, OR OTHER SUITABLE MEANS, TO ENSURE THAT THE TEMPERATURE OF THE SOLE PLATE DOES NOT EXCEED 300°F. TEMPERATURES ABOVE THIS MAY DAMAGE THE ELASTOMER.

SOLE PLATE "P", BOLTS, NUTS, WASHERS, AND PIPE SLEEVE SHALL BE INCLUDED IN THE PAY ITEM FOR PRESTRESSED CONCRETE GIRDERS.

ANCHOR BOLTS SHALL MEET THE REQUIREMENTS OF ASTM A449. NUTS SHALL MEET THE REQUIREMENTS OF AASHTO M291-DH OR AASHTO M292-2H. WASHERS SHALL MEET THE REQUIREMENTS OF AASHTO M293. SHOP DRAWINGS ARE NOT REQUIRED FOR ANCHOR BOLT, NUTS AND WASHERS. SHOP INSPECTION IS REQUIRED.

ALL SURFACES OF BEARING PLATES SHALL BE SMOOTH AND STRAIGHT.

ELASTOMER IN ALL BEARINGS SHALL BE 60 DUROMETER HARDNESS.

| LOAD RATINGS | |
|---|---|
| | MAX. D.L.+ L.L. |
| TYPE III | 178 K |

PROJECT NO. R-2303D
SAMPSON COUNTY
STATION: 1326+94.00 -L-

STATE OF NORTH CAROLINA
DEPARTMENT OF TRANSPORTATION
RALEIGH

STANDARD
ELASTOMERIC BEARING DETAILS PRESTRESSED CONCRETE GIRDER SUPERSTRUCTURE (RIGHT LANE)

CDM Smith
Camp Dresser & McKee
421 Fayetteville Street, Suite 1303
Raleigh, NC 27604
NC COA No. F-1255

| | | | |
|---|---|---|---|
| DRAWN BY : | K.E. LOFTON | DATE : | 8-12 |
| CHECKED BY : | P.R. HOLSHOUSER | DATE : | 12-12 |
| DESIGN ENGINEER : | P.R. HOLSHOUSER | DATE : | 3-13 |

DWG. No. S04-017

NORTH CAROLINA PROFESSIONAL SEAL 20668 ENGINEER PAUL R. HOLSHOUSER 3/14/2013

| REVISIONS | | | | | | | SHEET No. |
|---|---|---|---|---|---|---|---|
| No. | BY: | DATE: | No. | BY: | DATE: | | S-202 |
| 1 | | | 3 | | | | TOTAL SHEETS |
| 2 | | | 4 | | | | 218 |

STD. No. EB3

| | | | |
|---|---|---|---|
| ASSEMBLED BY : K. E. LOFTON | | DATE : | 8-12 |
| CHECKED BY : P.R. HOLSHOUSER | | DATE : | 12-12 |
| DRAWN BY : WJH 8/89 | REV. 7/10/01 | | RWW/LES |
| CHECKED BY : CRK 8/89 | REV. 5/1/06 | | TLA/GM |
| | REV. 10/1/11 | | MAA/GM |

FILE: c:\projects\R2303D\Structures\PLANS\Str_01\R2303D_SD_Str4_eb1.dgn
DATE: 5/20/2013 3:29:18 PM

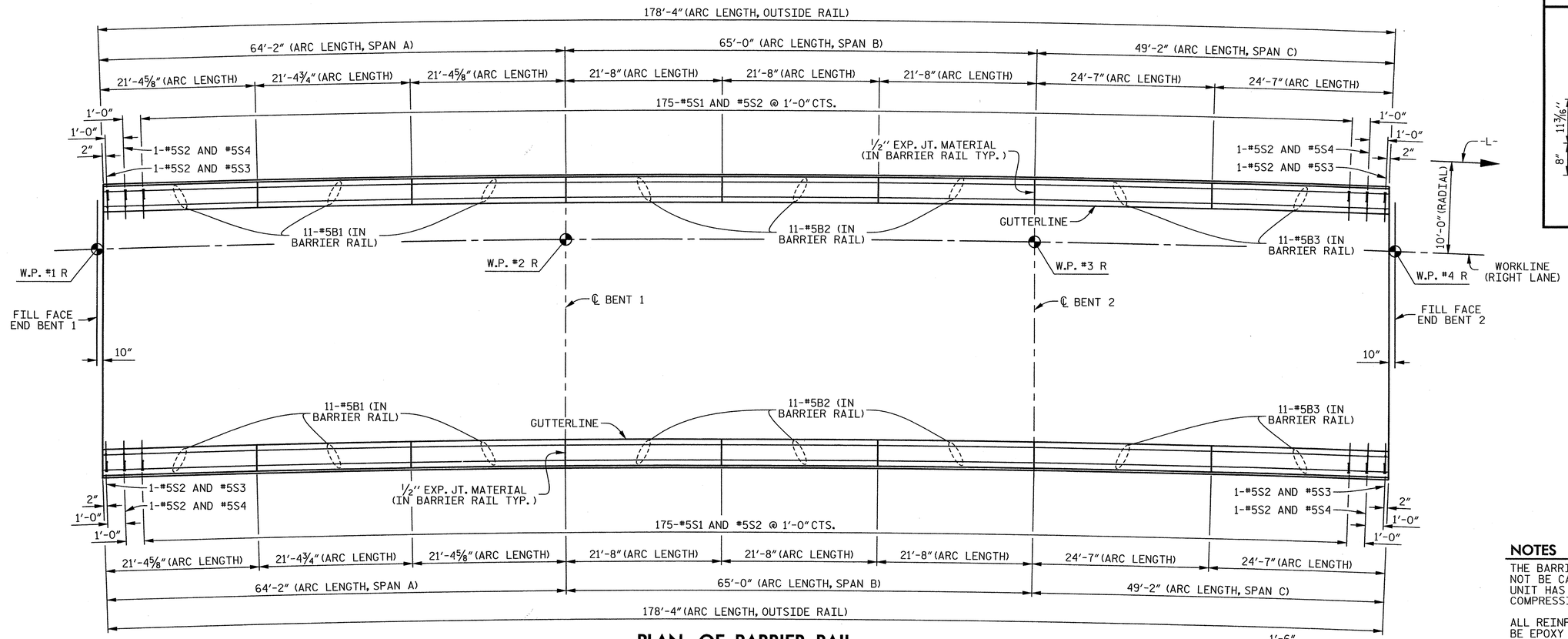


## PLAN OF BARRIER RAIL

## BAR TYPES

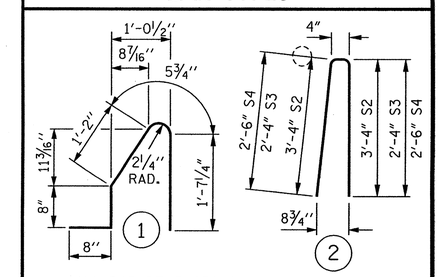


ALL BAR DIMENSIONS ARE OUT TO OUT.

## BILL OF MATERIAL

### FOR CONCRETE BARRIER RAIL ONLY

| BAR | No. | SIZE | TYPE | LENGTH | WEIGHT |
|---|---|---|---|---|---|
| * B1 | 66 | #5 | STR | 21'- 1" | 1,451 |
| * B2 | 66 | #5 | STR | 21'- 4" | 1,469 |
| * B3 | 44 | #5 | STR | 24'- 3" | 1,113 |
| * S1 | 350 | #5 | 1 | 4'- 7" | 1,673 |
| * S2 | 350 | #5 | 2 | 7'- 0" | 2,555 |
| * S3 | 4 | #5 | 2 | 5'- 0" | 21 |
| * S4 | 4 | #5 | 2 | 5'- 4" | 22 |

| | |
|---|---|
| * EPOXY COATED REINFORCING STEEL | 8,304 LBS. |
| CLASS "AA" CONCRETE | 48.4 CU. YDS. |
| CONCRETE BARRIER RAIL | 356.7 LIN. FT. |

## NOTES

THE BARRIER RAIL IN A CONTINUOUS UNIT SHALL NOT BE CAST UNTIL ALL SLAB CONCRETE IN THAT UNIT HAS BEEN CAST AND HAS REACHED A MINIMUM COMPRESSIVE STRENGTH OF 3,000 PSI.

ALL REINFORCING STEEL IN BARRIER RAILS SHALL BE EPOXY COATED.

GROOVED CONTRACTION JOINTS, 1/2" IN DEPTH, SHALL BE TOOLED IN ALL EXPOSED FACES OF THE BARRIER RAIL AND IN ACCORDANCE WITH ARTICLE 825-10(B) OF THE STANDARD SPECIFICATIONS. THE CONTRACTION JOINT SHALL BE LOCATED AT EACH THIRD POINT BETWEEN BARRIER RAIL EXPANSION JOINTS. ONLY ONE CONTRACTION JOINT IS REQUIRED AT MIDPOINT OF BARRIER RAIL SEGMENTS LESS THAN 20 FEET IN LENGTH AND NO CONTRACTION JOINTS ARE REQUIRED FOR THOSE SEGMENTS LESS THAN 10 FEET IN LENGTH.

THE #5S1 AND #5S2 BARS MAY BE SHIFTED AS NECESSARY TO CLEAR EXPANSION JOINTS IN RAIL.

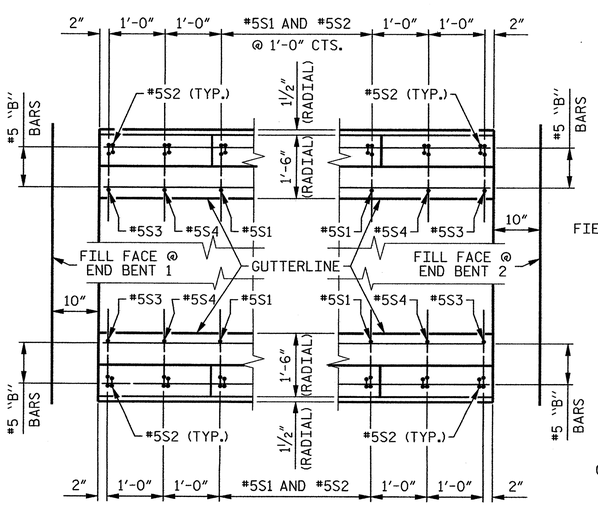


PLAN @ END BENT 1

PLAN @ END BENT 2

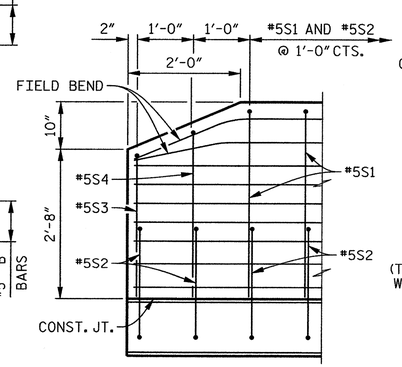


ELEVATION VIEW

## END OF RAIL DETAILS

FOR FORMED JOINTS

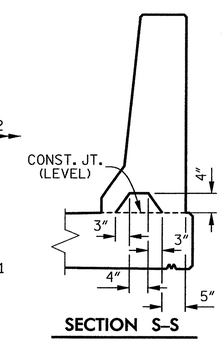


SECTION S-S

AT DAM IN OPEN JOINT (THIS IS TO BE USED ONLY WHEN SLIP FORM IS USED)

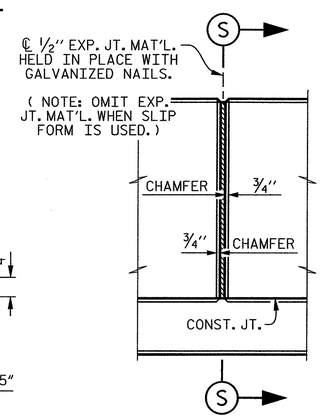


ELEVATION AT EXPANSION JOINTS

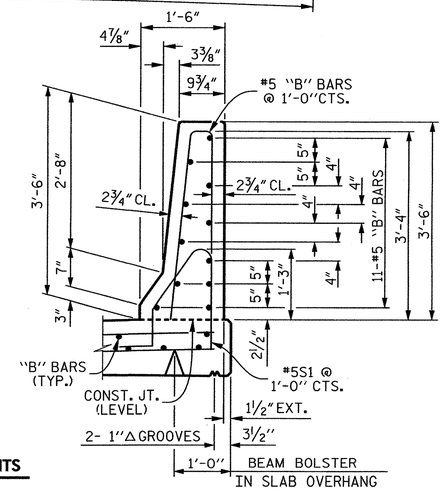


SECTION THRU RAIL

## BARRIER RAIL DETAILS

PROJECT NO. R-2303D

SAMPSON COUNTY

STATION: 1326+94.00 -L-

STATE OF NORTH CAROLINA
DEPARTMENT OF TRANSPORTATION
RALEIGH

STANDARD

# CONCRETE BARRIER RAIL (RIGHT LANE)

CDM Smith
Camp Dresser & McKee
421 Fayetteville Street, Suite 1303
Raleigh, NC 27604
NC COA No. F-1255

| | | | |
|---|---|---|---|
| DRAWN BY : | K.E. LOFTON | DATE : | 8-12 |
| CHECKED BY : | P.R. HOLSHOUSER | DATE : | 12-12 |
| DESIGN ENGINEER : | P.R. HOLSHOUSER | DATE : | 3-13 |

DWG. No. S04-018

NORTH CAROLINA PROFESSIONAL SEAL 20668 ENGINEER PAUL R. HOLSHOUSER 3/14/2013

| REVISIONS | | | | | | SHEET No. |
|---|---|---|---|---|---|---|
| No. | BY: | DATE: | No. | BY: | DATE: | 6-203 |
| 1 | | | 3 | | | TOTAL SHEETS |
| 2 | | | 4 | | | 218 |

STD. No. CBR1

| | | | |
|---|---|---|---|
| ASSEMBLED BY : | K.E. LOFTON | DATE : | 8-12 |
| CHECKED BY : | P.R. HOLSHOUSER | DATE : | 12-12 |
| DRAWN BY : ARB 5/87 | REV. 10/1/11 | | MAA/GM |
| CHECKED BY : SJD 9/87 | REV. 7/12 | | MAA/GM |
| | REV. 10/12 | | MAA/GM |

FILE: r:\radar\R2303D\Structures\PLANS\Str_01\R2303D_S0_Sht4_brl.dgn
DATE: 3/5/2013 6:48:31 PM

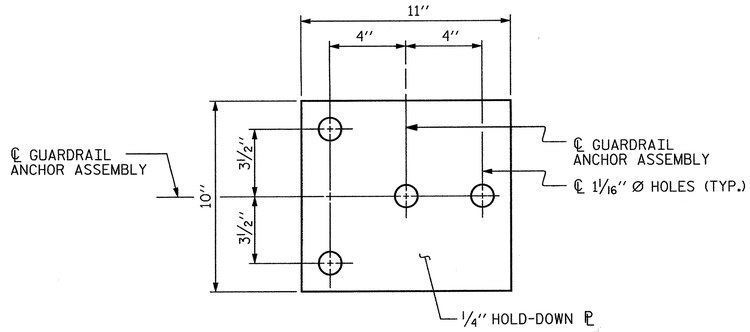


## PLAN

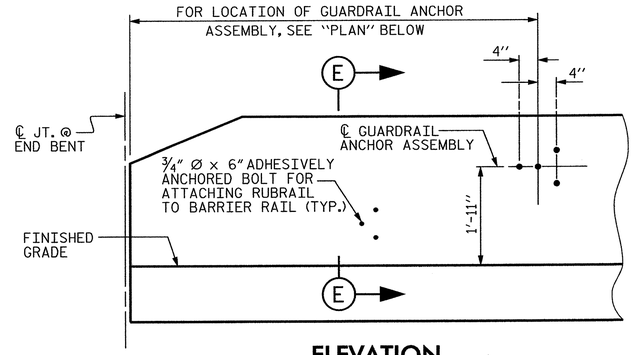


## ELEVATION

(FOR LOCATION OF RUBRAIL, SEE ROADWAY STD. 862.03, END BENT 1 SHOWN, END BENT 2 SIMILAR)

## NOTES

THE GUARDRAIL ANCHOR ASSEMBLY SHALL CONSIST OF A ¼" HOLD DOWN PLATE AND 4 - ⅞" Ø BOLTS WITH NUTS AND WASHERS, RUBRAIL, AND ADHESIVELY ANCHORED BOLTS.

THE HOLD-DOWN PLATE SHALL CONFORM TO AASHTO M270 GRADE 36. AFTER FABRICATION, THE HOLD-DOWN PLATE SHALL BE HOT-DIP GALVANIZED IN ACCORDANCE WITH AASHTO M111.

BOLTS SHALL CONFORM TO THE REQUIREMENTS OF ASTM A307 AND NUTS SHALL CONFORM TO THE REQUIREMENTS OF AASHTO M291. BOLTS, NUTS AND WASHERS SHALL BE GALVANIZED. (AT THE CONTRACTOR'S OPTION, STAINLESS STEEL BOLTS, NUTS AND WASHERS MAY BE USED AS AN ALTERNATE FOR THE ⅞" Ø GALVANIZED BOLTS, NUTS AND WASHERS. THEY SHALL CONFORM TO OR EXCEED THE MECHANICAL REQUIREMENTS OF ASTM A307. THE USE OF THIS ALTERNATE SHALL BE APPROVED BY THE ENGINEER.)

THE GUARDRAIL ANCHOR ASSEMBLY IS REQUIRED AT ALL POINTS WHERE APPROACH GUARDRAIL IS TO BE ATTACHED TO THE END OF BARRIER RAIL. FOR POINTS OF ATTACHMENT, SEE SKETCH.

AFTER INSTALLATION, THE EXPOSED THREAD OF THE BOLT SHALL BE BURRED WITH A SHARP POINTED TOOL.

THE COST OF THE GUARDRAIL ANCHOR ASSEMBLY SHALL BE INCLUDED IN THE UNIT CONTRACT PRICE BID FOR CONCRETE BARRIER RAIL.

THE 1¼" Ø HOLES SHALL BE FORMED OR DRILLED WITH A CORE BIT. IMPACT TOOLS WILL NOT BE PERMITTED. ANY CONCRETE DAMAGED BY THIS WORK SHALL BE REPAIRED TO THE SATISFACTION OF THE ENGINEER.

THE C6 x 8.2 RUBRAIL IS TO BE ADHESIVELY ANCHORED TO THE RAIL USING THREE ¾" Ø x 6" BOLTS WITH WASHERS. LEVEL ONE FIELD TESTING IS REQUIRED, AND THE YIELD LOAD OF THE ¾" Ø BOLT IS 12 KIPS. FOR ADHESIVELY ANCHORED ANCHOR BOLTS OR DOWELS, SEE SPECIAL PROVISIONS. SEE ROADWAY STANDARD 862.03 FOR DETAILS AND LOCATION OF THE RUBRAIL.

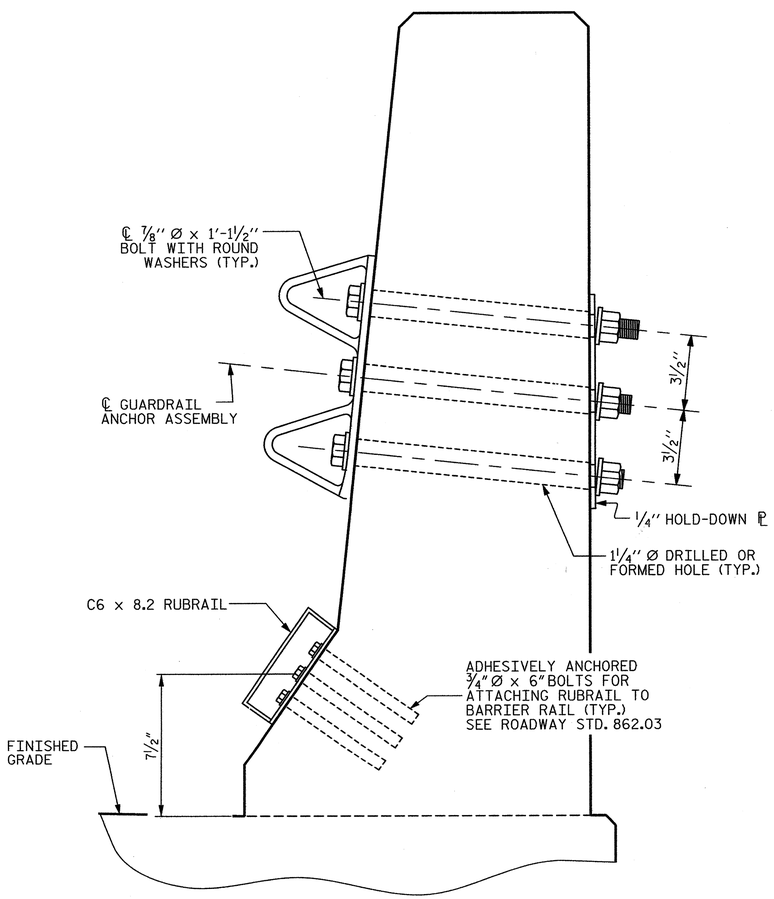


## SECTION E-E

## GUARDRAIL ANCHOR ASSEMBLY DETAILS

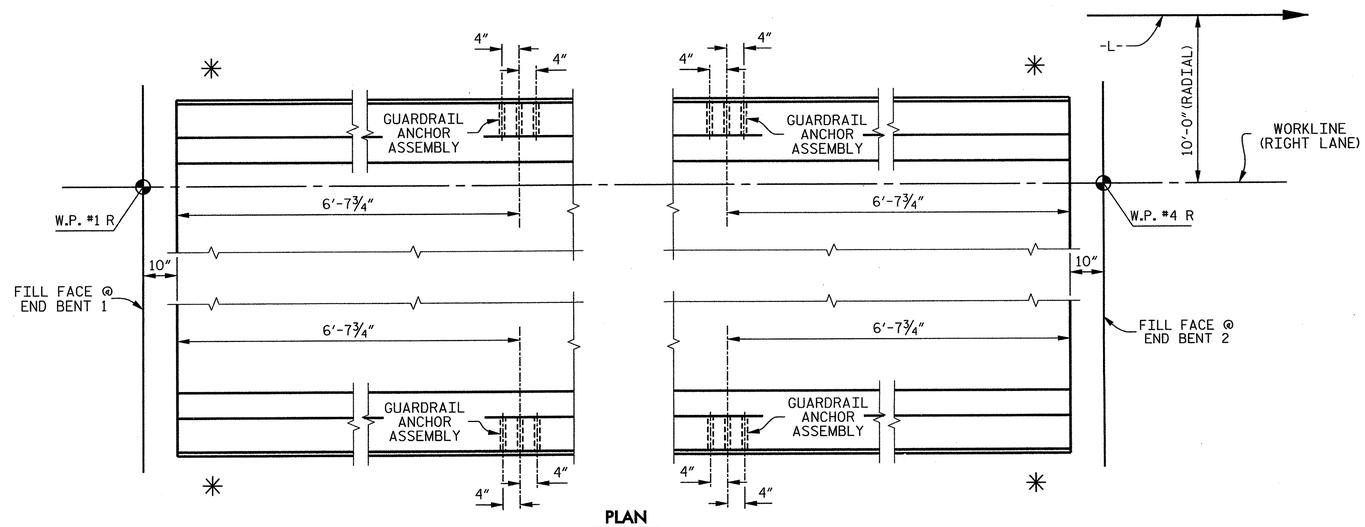


## PLAN

## LOCATION OF ANCHORS FOR GUARDRAIL

✳ DENOTES GUARDRAIL ANCHOR ASSEMBLY

PROJECT NO. R-2303D

SAMPSON COUNTY

STATION: 1326+94.00 -L-

STATE OF NORTH CAROLINA
DEPARTMENT OF TRANSPORTATION
RALEIGH

STANDARD

# GUARDRAIL ANCHORAGE FOR BARRIER RAIL (RIGHT LANE)

| | | | |
|---|---|---|---|
| ASSEMBLED BY : K.E. LOFTON | DATE : 8-12 | | |
| CHECKED BY : P.R. HOLSHOUSER | DATE : 12-12 | | |
| DRAWN BY : TLA 5/06 | REV. 10/1/11 | MAA/GM | |
| CHECKED BY : GM 5/06 | REV. 7/12 | MAA/GM | |
| | REV. 10/12 | MAA/GM | |

CDM Smith
Camp Dresser & McKee
421 Fayetteville Street, Suite 1303
Raleigh, NC 27604
NC COA No. F-1255

| | | |
|---|---|---|
| DRAWN BY : K.E. LOFTON | DATE : 8-12 | DWG. No. |
| CHECKED BY : P.R. HOLSHOUSER | DATE : 12-12 | S04-019 |
| DESIGN ENGINEER : P.R. HOLSHOUSER | DATE : 3-13 | |

NORTH CAROLINA PROFESSIONAL SEAL 20668 ENGINEER PAUL R. HOLSHOUSER
3/14/2013

| REVISIONS | | | | | | SHEET No. |
|---|---|---|---|---|---|---|
| No. | BY: | DATE: | No. | BY: | DATE: | S-204 |
| 1 | | | 3 | | | TOTAL SHEETS |
| 2 | | | 4 | | | 218 |

STD. No. GRA2

FILE: r:\roadway\R2303D\Structures\PLANS\Str_01\R2303D_SD_Str4_gr1.dgn
DATE: 3/20/13 3:29:21 PM

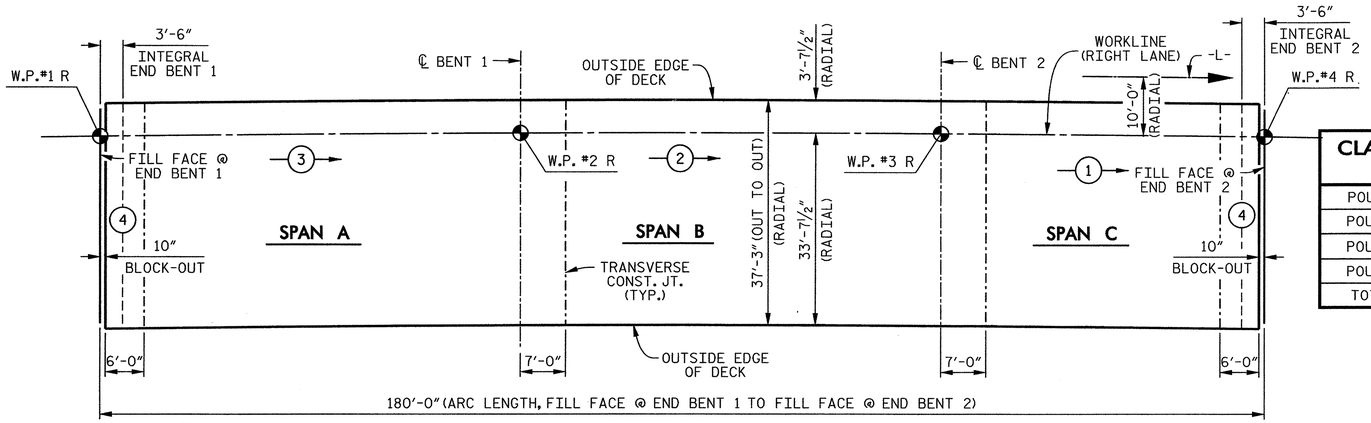


## POURING SEQUENCE

| CLASS AA CONCRETE BREAKDOWN | |
|---|---|
| POUR 1 | 42.7 CU. YDS. |
| POUR 2 | 87.6 CU. YDS. |
| POUR 3 | 87.8 CU. YDS. |
| POUR 4 | 27.0 CU. YDS. (EACH) |
| TOTAL | 272.1 CU. YDS. |

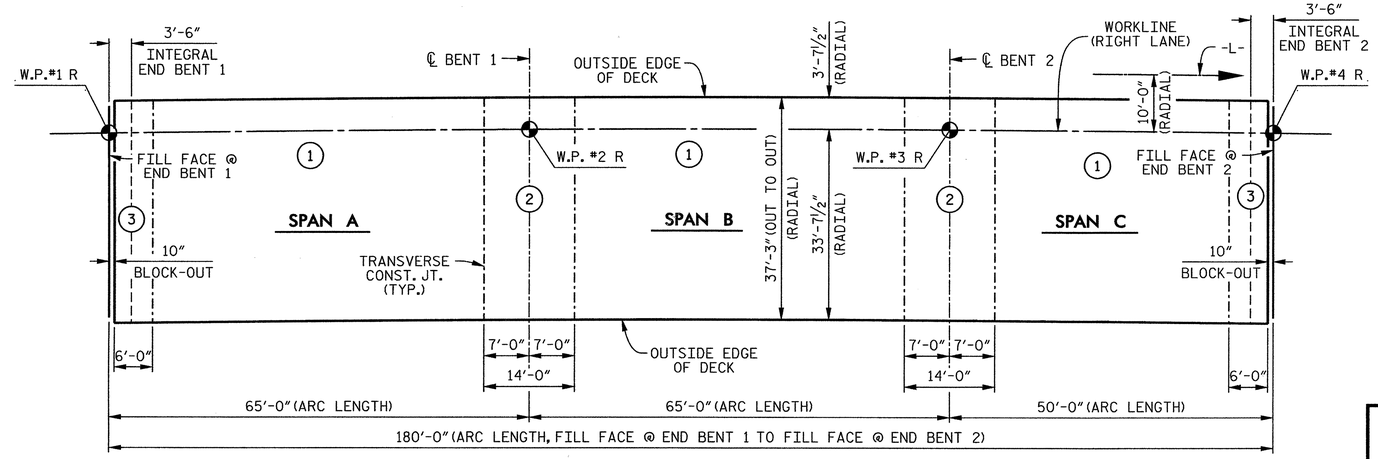


## OPTIONAL POURING SEQUENCE

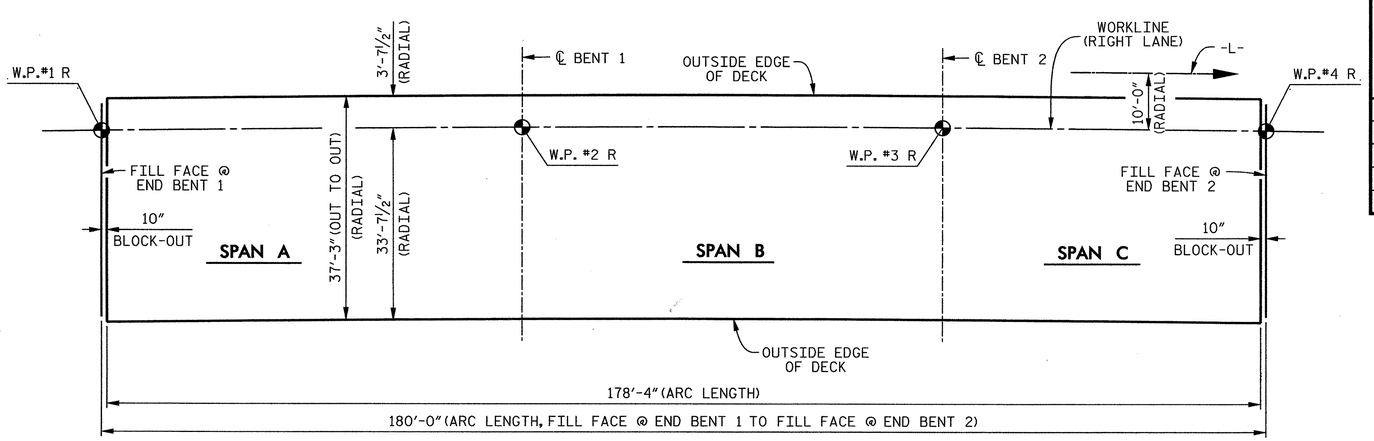


## LAYOUT FOR COMPUTING AREA OF REINFORCED CONCRETE DECK SLAB

(6,643 SQ. FT.)

## BILL OF MATERIAL SPAN A THRU SPAN C

| BAR | No. | SIZE | TYPE | LENGTH | WEIGHT |
|---|---|---|---|---|---|
| ✱A1 | 389 | #5 | STR | 36'-11" | 14,978 |
| A2 | 389 | #5 | STR | 36'-11" | 14,978 |
| ✱B1 | 62 | #4 | STR | 21'-10" | 904 |
| ✱B2 | 120 | #5 | STR | 14'- 0" | 1,752 |
| ✱B3 | 62 | #5 | STR | 50'- 0" | 3,233 |
| ✱B4 | 120 | #5 | STR | 20'- 0" | 2,503 |
| ✱B5 | 31 | #4 | STR | 20'- 0" | 414 |
| ✱B6 | 31 | #4 | STR | 26'- 6" | 549 |
| B7 | 220 | #5 | STR | 46'- 3" | 10,613 |
| B8 | 48 | #4 | STR | 14'- 0" | 449 |
| K1 | 20 | #4 | STR | 19'- 4" | 258 |
| K2 | 18 | #4 | STR | 8'- 6" | 102 |
| K3 | 36 | #4 | STR | 9'- 3" | 222 |
| K4 | 18 | #4 | STR | 8'- 8" | 104 |
| K5 | 6 | #4 | STR | 8'- 0" | 32 |
| K6 | 4 | #4 | STR | 2'- 5" | 6 |
| K7 | 8 | #4 | STR | 2'- 9" | 15 |
| K8 | 4 | #4 | STR | 2'- 6" | 7 |
| K9 | 4 | #4 | STR | 2'- 2" | 6 |
| K10 | 12 | #4 | STR | 7'- 0" | 56 |
| K11 | 20 | #4 | STR | 16'- 2" | 216 |
| ✱L1 | 60 | #4 | 4 | 11'- 8" | 468 |
| ✱L2 | 60 | #4 | 4 | 10'- 2" | 407 |
| S1 | 12 | #4 | 3 | 10'- 8" | 86 |
| S2 | 204 | #4 | 1 | 2'- 9" | 375 |
| S3 | 42 | #4 | 3 | 12'- 4" | 346 |
| ✱U1 | 60 | #4 | 2 | 10'- 2" | 407 |
| REINFORCING STEEL | | | | | 27,871 LBS. |
| ✱EPOXY COATED REINFORCING STEEL | | | | | 25,615 LBS. |
| CLASS "AA" CONCRETE | | | | | 272.1 CU. YDS. |

NOTE: QUANTITIES FOR CONCRETE BARRIER RAILS ARE NOT INCLUDED.

## BAR TYPES

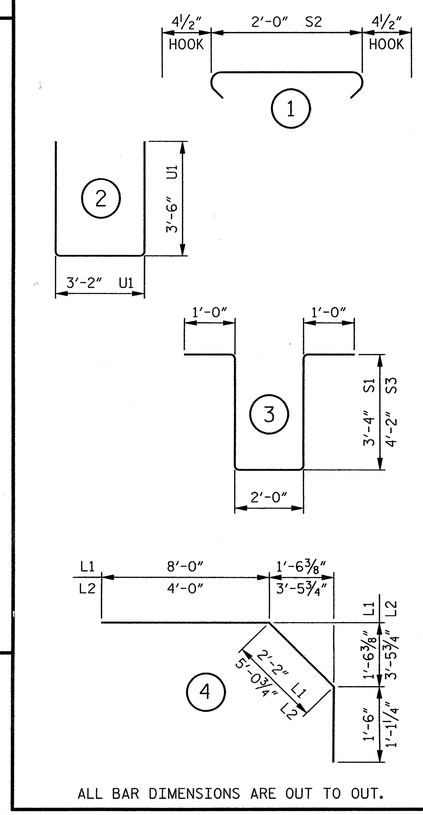


ALL BAR DIMENSIONS ARE OUT TO OUT.

SUPERSTRUCTURE REINFORCING STEEL LENGTHS ARE BASED ON THE FOLLOWING MINIMUM SPLICE LENGTHS

| BAR SIZE | SUPERSTRUCTURE EXCEPT APPROACH SLABS, PARAPET AND BARRIER RAIL | | APPROACH SLABS | | PARAPET AND BARRIER RAIL |
|---|---|---|---|---|---|
| | EPOXY COATED | UNCOATED | EPOXY COATED | UNCOATED | |
| #4 | 2'-0" | 1'-9" | 2'-0" | 1'-9" | 2'-9" |
| #5 | 2'-6" | 2'-2" | 2'-6" | 2'-2" | 3'-5" |
| #6 | 3'-0" | 2'-7" | 3'-10" | 2'-7" | 4'-4" |
| #7 | 5'-3" | 3'-6" | | | |
| #8 | 6'-10" | 4'-7" | | | |

| GROOVING BRIDGE FLOORS | |
|---|---|
| APPROACH SLAB AT END BENT 1 | 749 SQ. FT. |
| BRIDGE DECK | 5,518 SQ. FT. |
| APPROACH SLAB AT END BENT 2 | 749 SQ. FT. |
| | |
| TOTAL | 7,016 SQ. FT. |

PROJECT NO. R-2303D

SAMPSON COUNTY

STATION: 1326+94.00 -L-

STATE OF NORTH CAROLINA
DEPARTMENT OF TRANSPORTATION
RALEIGH

SUPERSTRUCTURE

BILL OF MATERIAL

(RIGHT LANE)

CDM Smith
Camp Dresser & McKee
421 Fayetteville Street, Suite 1303
Raleigh, NC 27604
NC COA No. F-1255

DRAWN BY : K.E. LOFTON DATE : 8-12
CHECKED BY : P.R. HOLSHOUSER DATE : 1-13
DESIGN ENGINEER : P.R. HOLSHOUSER DATE : 3-13

DWG. No. S04-020

NORTH CAROLINA PROFESSIONAL SEAL 20668 ENGINEER PAUL R. HOLSHOUSER
5/14/2013

| REVISIONS | | | | | | SHEET No. |
|---|---|---|---|---|---|---|
| No. | BY: | DATE: | No. | BY: | DATE: | S-205 |
| 1 | | | 3 | | | TOTAL SHEETS |
| 2 | | | 4 | | | 218 |

FILE: r:\model\R2303D\Structures\PLANS\Sr_3\R2303D_SD_Sht4_bm1.dgn
DATE: 3/5/2013 3:29:24 PM

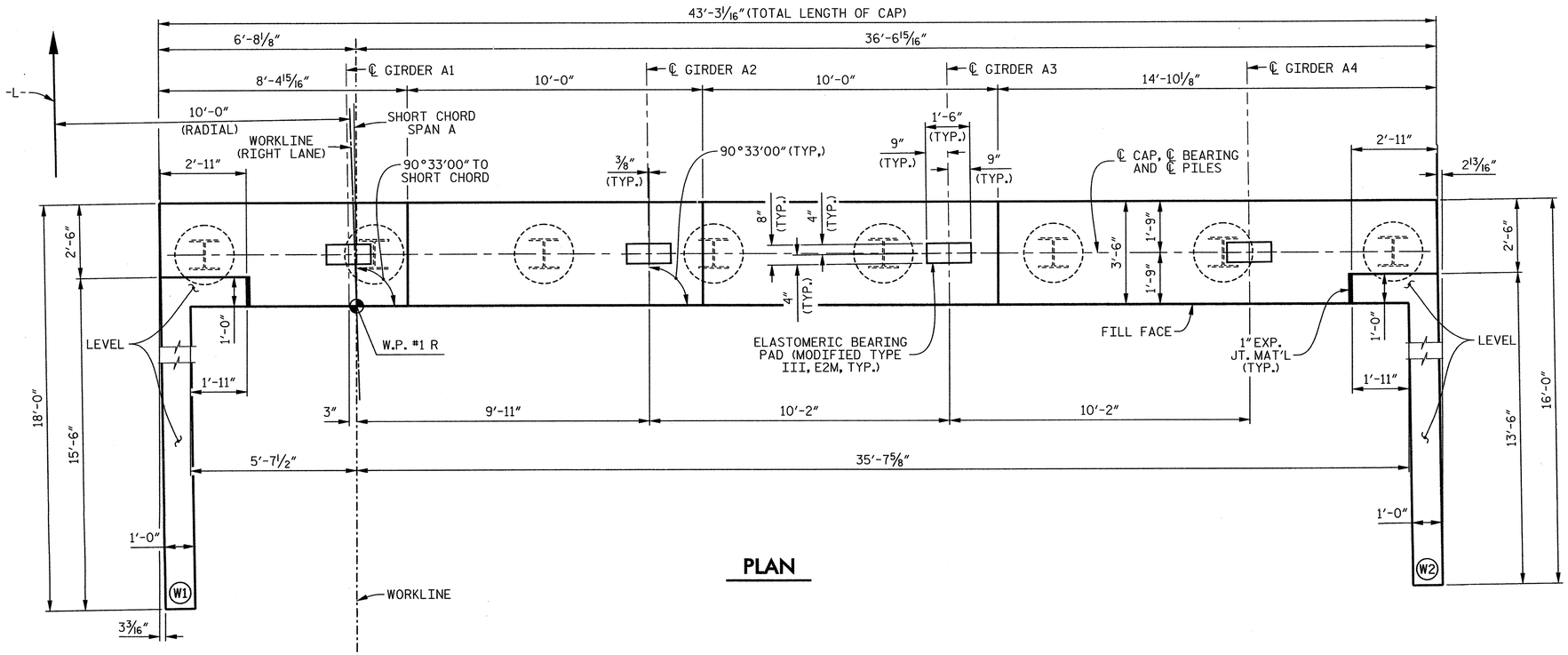


## PLAN

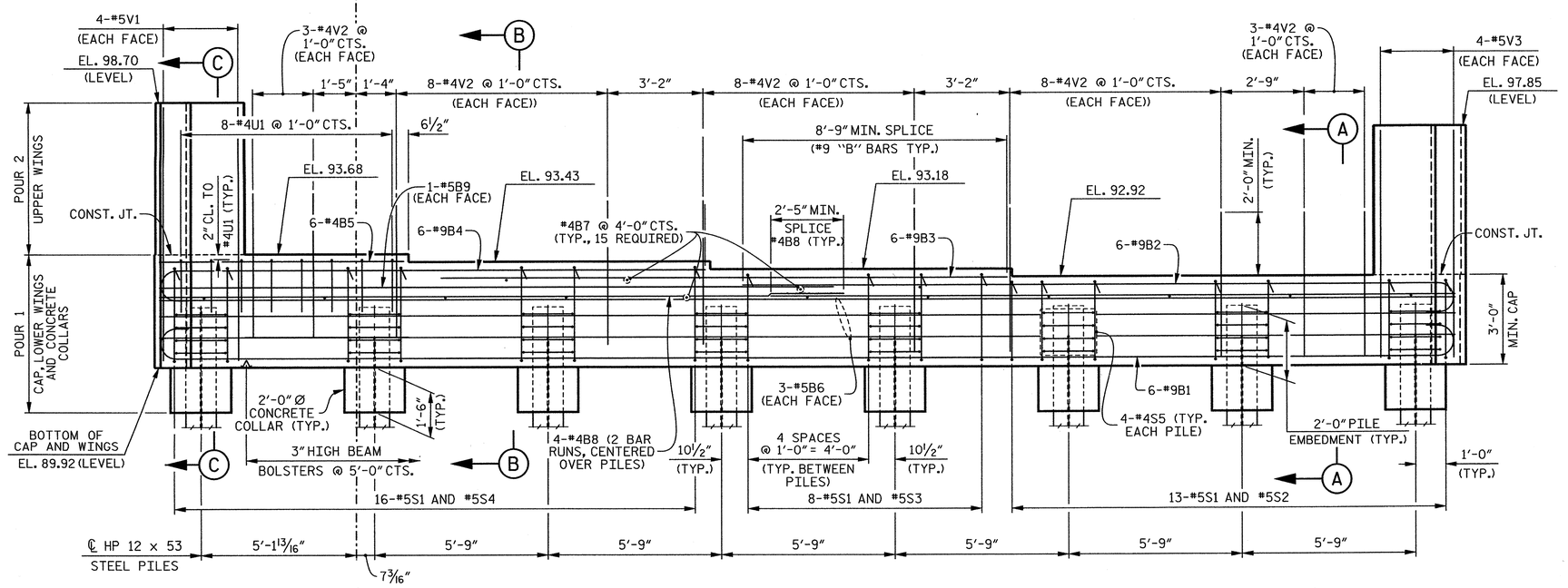


## ELEVATION

## NOTES

STIRRUPS AND "U" BARS IN CAP MAY BE SHIFTED AS NECESSARY TO CLEAR #4V2 BARS.

THE TOP SURFACE AREA OF THE END BENT CAP SHALL BE CURED IN ACCORDANCE WITH THE STANDARD SPECIFICATIONS EXCEPT THAT THE MEMBRANE CURING COMPOUND METHOD SHALL NOT BE USED.

THIS ELEVATION IS TAKEN AT FILL FACE OF BACKWALL.

FOR SECTION A-A, SECTION B-B AND SECTION C-C, SEE SHEET 3 OF 3.

FOR PILE SPLICE DETAILS, SEE SHEET 3 OF 3.

FOR TEMPORARY DRAINAGE AT END BENT DETAIL, SEE SHEET 3 OF 3.

THE CONTRACTOR SHALL PROVIDE FOR INSTALLATION OF THE 4" DIAMETER DRAIN PIPE THROUGH THE WING WALL AS REQUIRED FOR REINFORCED BRIDGE APPROACH FILLS, SEE THE ROADWAY PLANS. REINFORCING STEEL IN THE WING WALL MAY BE SHIFTED AS NECESSARY TO CLEAR THE DRAIN PIPE.

PROJECT NO. R-2303D
SAMPSON COUNTY
STATION: 1326+94.00 -L-

SHEET 1 OF 3

STATE OF NORTH CAROLINA
DEPARTMENT OF TRANSPORTATION
RALEIGH

SUBSTRUCTURE

END BENT 1

(RIGHT LANE)

CDM Smith
Camp Dresser & McKee
421 Fayetteville Street, Suite 1303
Raleigh, NC 27604
NC COA No. F-1255

DRAWN BY : J.D. BORUTA DATE : 1-13
CHECKED BY : P.R. HOLSHOUSER DATE : 1-13
DESIGN ENGINEER : P.R. HOLSHOUSER DATE : 3-13

DWG. No. S04-021

NORTH CAROLINA PROFESSIONAL SEAL 20668 ENGINEER PAUL R. HOLSHOUSER
3/14/2013

| REVISIONS | | | | | | |
|---|---|---|---|---|---|---|
| No. | BY: | DATE: | No. | BY: | DATE: | |
| 1 | | | 3 | | | |
| 2 | | | 4 | | | |

SHEET No. S-206
TOTAL SHEETS 218

FILE: n:\prdnl\R2303D\Structure\PLANS\Str_#1\R2303D_SD_Str_eb11.dgn
DATE: 3/20/2013
3:39:25 PM

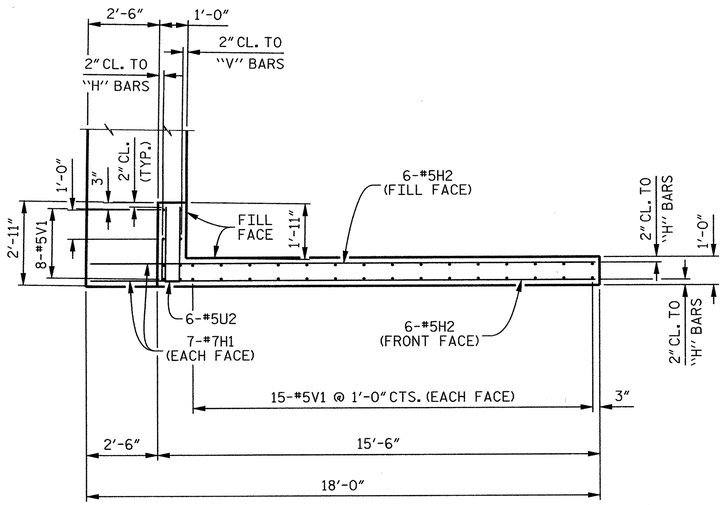


PLAN OF WING (W1)

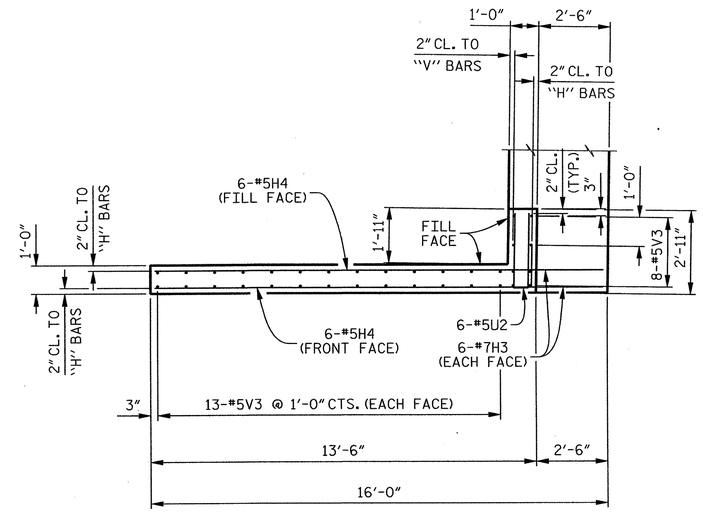


PLAN OF WING (W2)

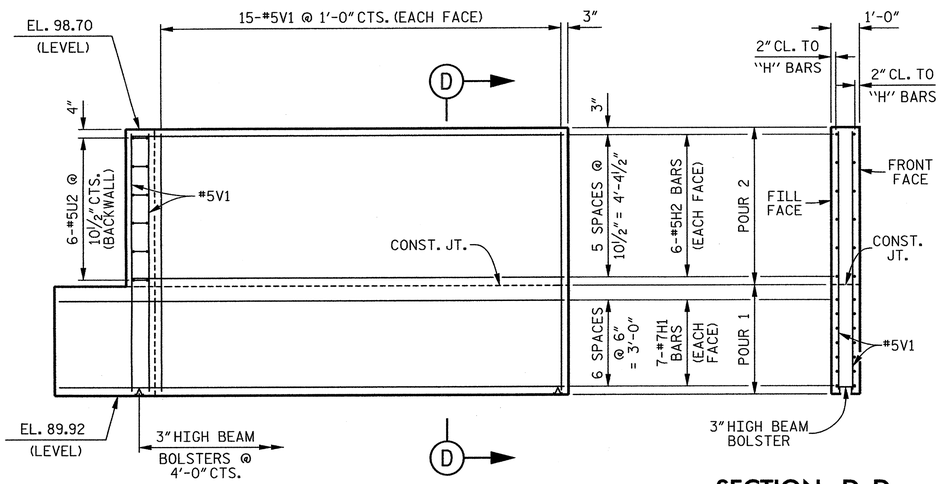


SECTION D–D

ELEVATION OF WING (W1)

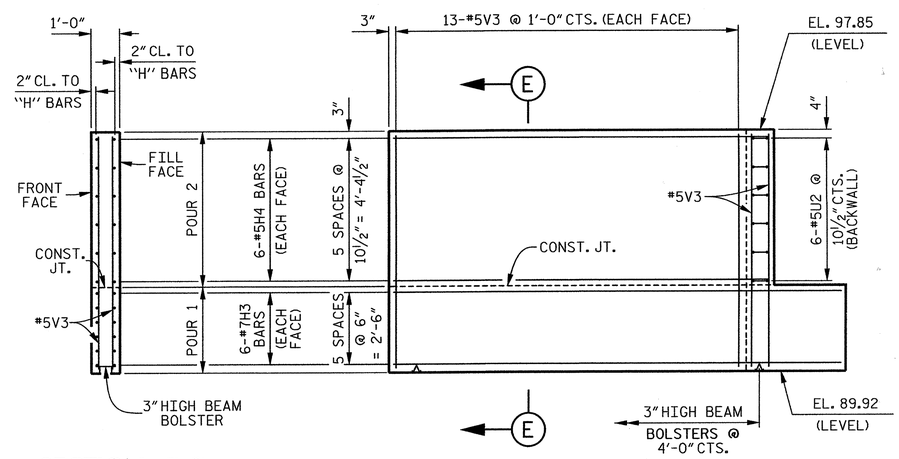


SECTION E–E

ELEVATION OF WING (W2)

PROJECT NO. R-2303D

SAMPSON COUNTY

STATION: 1326+94.00 -L-

SHEET 2 OF 3

STATE OF NORTH CAROLINA
DEPARTMENT OF TRANSPORTATION
RALEIGH

SUBSTRUCTURE

END BENT 1

(RIGHT LANE)

CDM Smith

Camp Dresser & McKee
421 Fayetteville Street, Suite 1303
Raleigh, NC 27604
NC COA No. F-1255

| | | | |
|---|---|---|---|
| DRAWN BY : | J.D. BORUTA | DATE : | 12-12 |
| CHECKED BY : | P.R. HOLSHOUSER | DATE : | 1-13 |
| DESIGN ENGINEER : | P.R. HOLSHOUSER | DATE : | 3-13 |

DWG. No. S04-022

NORTH CAROLINA PROFESSIONAL SEAL 20668 ENGINEER PAUL R. HOLSHOUSER 3/14/2013

| REVISIONS | | | | | | SHEET No. |
|---|---|---|---|---|---|---|
| No. | BY: | DATE: | No. | BY: | DATE: | S-207 |
| 1 | | | 3 | | | TOTAL SHEETS |
| 2 | | | 4 | | | 218 |

FILE: r:\nodot\R2303D\Structures\PLANS\Str_4\R2303D_SD_Str4_eb12.dgn
DATE: 3/5/2013 3:29:26 PM

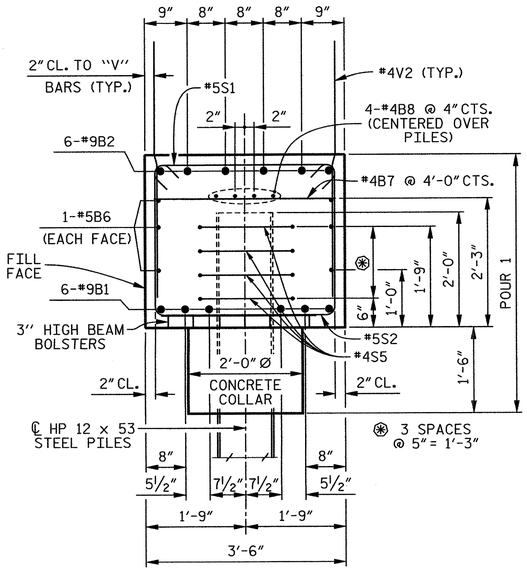


## SECTION A–A

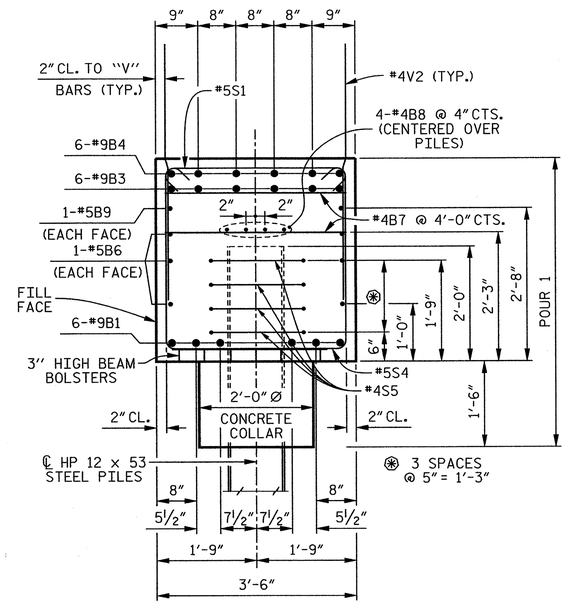


## SECTION B–B

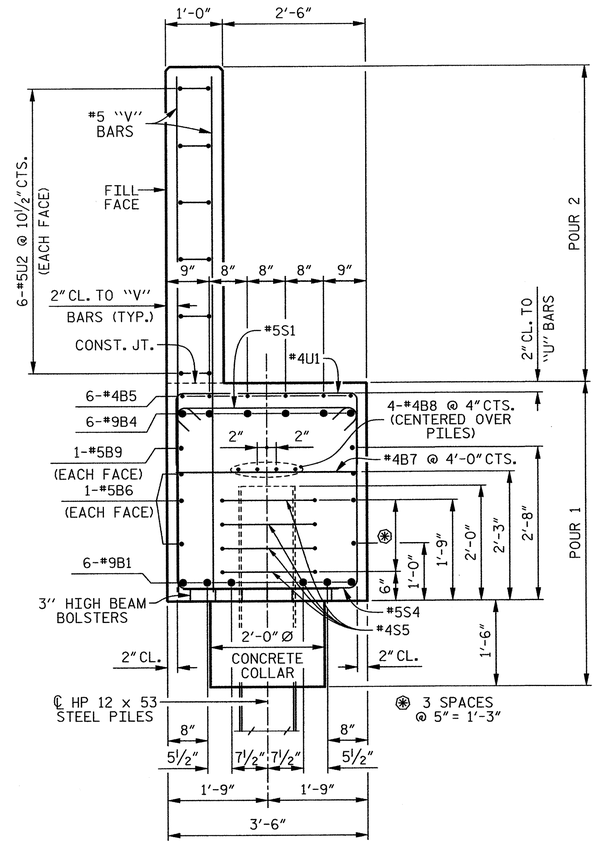


## SECTION C–C

## BAR TYPES

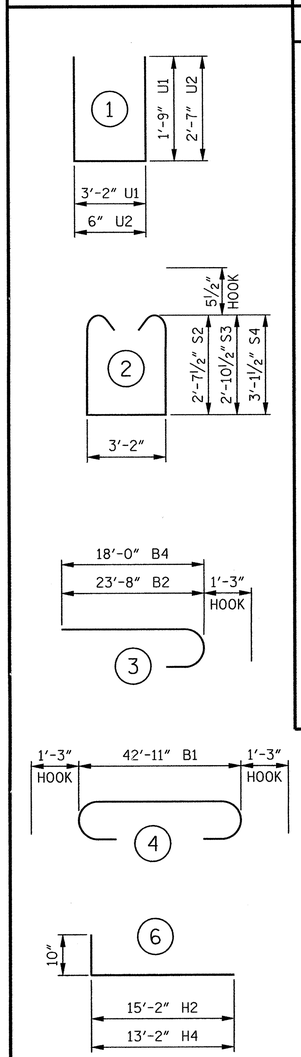


ALL BAR DIMENSIONS ARE OUT TO OUT.

## BILL OF MATERIAL

### END BENT 1

| BAR | No. | SIZE | TYPE | LENGTH | WEIGHT |
|---|---|---|---|---|---|
| B1 | 6 | #9 | 4 | 45′- 5″ | 927 |
| B2 | 6 | #9 | 3 | 24′-11″ | 508 |
| B3 | 6 | #9 | STR | 18′- 9″ | 383 |
| B4 | 6 | #9 | 3 | 19′- 3″ | 393 |
| B5 | 6 | #4 | STR | 8′- 0″ | 32 |
| B6 | 6 | #5 | STR | 42′-11″ | 269 |
| B7 | 15 | #4 | STR | 3′- 2″ | 32 |
| B8 | 8 | #4 | STR | 22′- 8″ | 121 |
| B9 | 2 | #5 | STR | 21′- 8″ | 45 |
| H1 | 14 | #7 | STR | 17′- 7″ | 503 |
| H2 | 12 | #5 | 6 | 16′- 0″ | 200 |
| H3 | 12 | #7 | STR | 15′- 8″ | 384 |
| H4 | 12 | #5 | 6 | 14′- 0″ | 175 |
| S1 | 37 | #5 | 8 | 4′- 1″ | 158 |
| S2 | 13 | #5 | 2 | 9′- 4″ | 127 |
| S3 | 8 | #5 | 2 | 9′-10″ | 82 |
| S4 | 16 | #5 | 2 | 10′- 4″ | 172 |
| S5 | 32 | #4 | 7 | 6′- 6″ | 139 |
| U1 | 8 | #4 | 1 | 6′- 8″ | 36 |
| U2 | 12 | #5 | 1 | 5′- 8″ | 71 |
| V1 | 38 | #5 | STR | 8′- 5″ | 334 |
| V2 | 60 | #4 | STR | 4′- 9″ | 190 |
| V3 | 34 | #5 | STR | 7′- 7″ | 269 |

REINFORCING STEEL 5,550 LBS.

CLASS "A" CONCRETE

POUR 1 COLLARS, CAP AND LOWER WINGS 23.5 CU. YDS.

POUR 2 BACKWALL AND UPPER WINGS 6.1 CU. YDS.

TOTAL 29.6 CU. YDS.

HP 12 x 53 STEEL PILES

8 REQUIRED 400.0 LIN. FT.

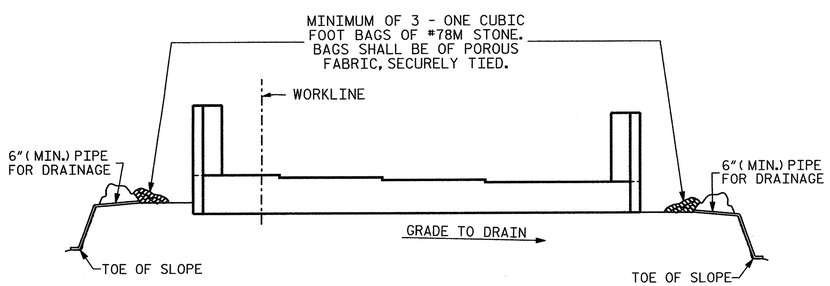


BAGGED STONE AND PIPE SHALL BE PLACED IMMEDIATELY AFTER COMPLETION OF END BENT EXCAVATION. PIPE MAY BE EITHER CONCRETE, CORRUGATED STEEL, CORRUGATED ALUMINUM ALLOY, OR CORRUGATED PLASTIC. PERFORATED PIPE WILL NOT BE ALLOWED.

BAGGED STONE SHALL REMAIN IN PLACE UNTIL THE ENGINEER DIRECTS THAT IT BE REMOVED. THE CONTRACTOR SHALL REMOVE AND DISPOSE OF SILT ACCUMULATIONS AT BAGGED STONE WHEN SO DIRECTED BY THE ENGINEER. BAGS SHALL BE REMOVED AND REPLACED WHENEVER THE ENGINEER DETERMINES THAT THEY HAVE DETERIORATED AND LOST THEIR EFFECTIVENESS.

## TEMPORARY DRAINAGE AT END BENT

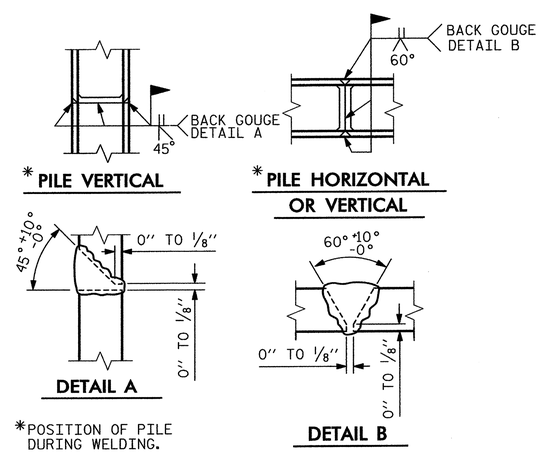


## PILE SPLICE DETAILS

PROJECT NO. R-2303D

SAMPSON COUNTY

STATION: 1326+94.00 –L–

SHEET 3 OF 3

STATE OF NORTH CAROLINA
DEPARTMENT OF TRANSPORTATION
RALEIGH

SUBSTRUCTURE

END BENT 1

(RIGHT LANE)

CDM Smith
Camp Dresser & McKee
421 Fayetteville Street, Suite 1303
Raleigh, NC 27604
NC COA No. F-1255

DRAWN BY : J.D. BORUTA DATE : 12-12
CHECKED BY : P.R. HOLSHOUSER DATE : 1-13
DESIGN ENGINEER : P.R. HOLSHOUSER DATE : 3-13

DWG. No. S04-023

NORTH CAROLINA PROFESSIONAL SEAL 20668 ENGINEER PAUL R. HOLSHOUSER 3/14/2013

| REVISIONS | | | | | | | SHEET No. |
|---|---|---|---|---|---|---|---|
| No. | BY: | DATE: | No. | BY: | DATE: | | S-208 |
| 1 | | | 3 | | | | TOTAL SHEETS |
| 2 | | | 4 | | | | 218 |

FILE: r:\roadw\R2303D\Structures\PLANS\Str_41\R2303D_SD_Str4_ab13.dgn
DATE: 3/5/2013 3:29:28 PM

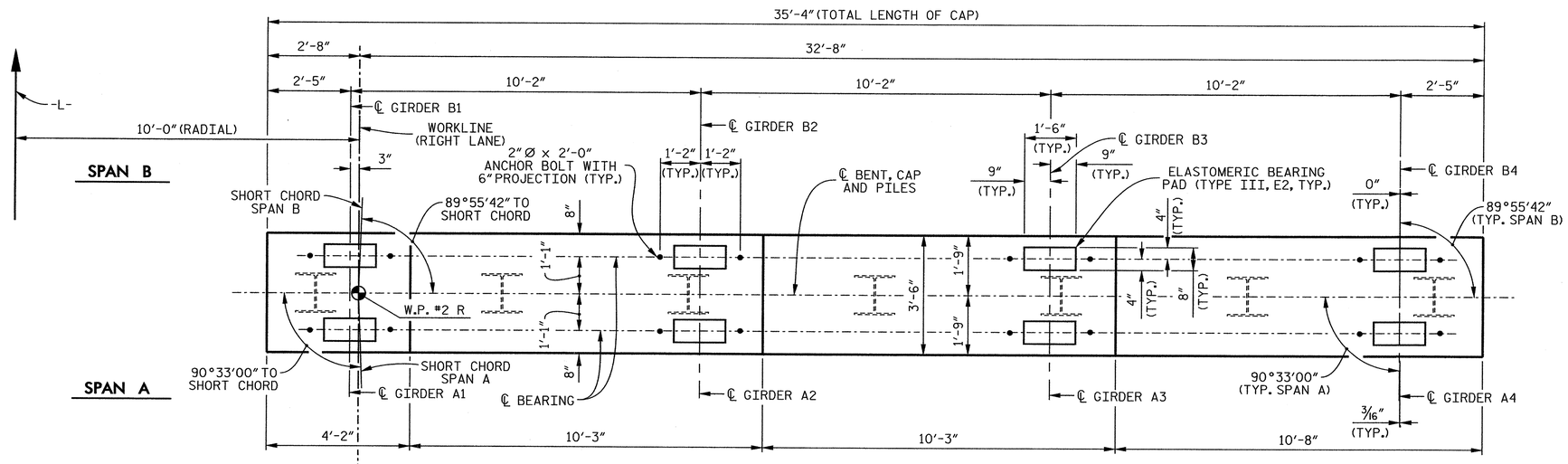


## PLAN

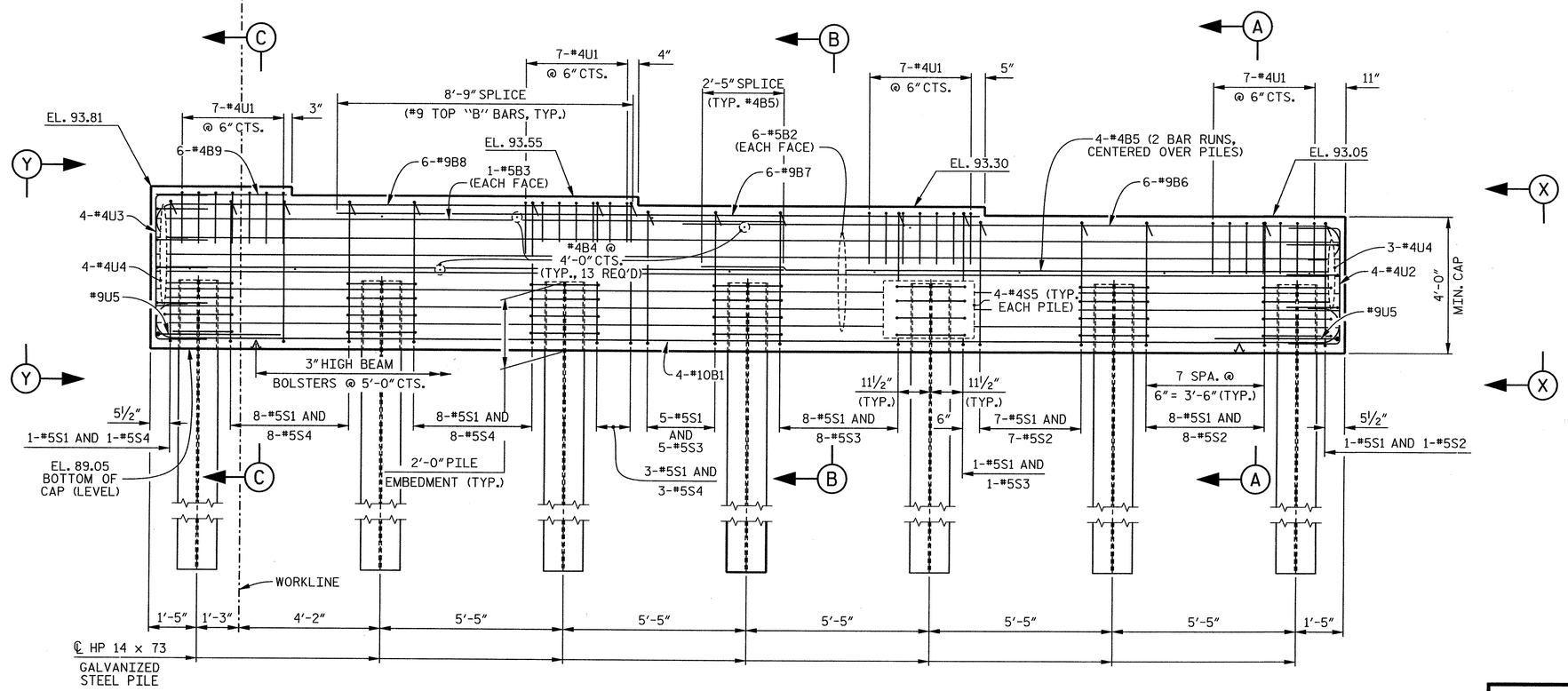


## ELEVATION

## NOTES

FOR SECTIONS A-A, B-B AND C-C, SEE SHEET 2 OF 2.

FOR VIEW X-X AND VIEW Y-Y, SEE SHEET 2 OF 2.

STIRRUPS AND U1 BARS IN CAP MAY BE SHIFTED AS NECESSARY TO CLEAR ANCHOR BOLTS.

FOR PILE SPLICE DETAILS, SEE SHEET 2 OF 2.

GALVANIZE THE TOP OF EACH INTERIOR BENT PILE A MINIMUM OF 35 FEET. GALVANIZE IN ACCORDANCE WITH SECTION 1076 OF THE STANDARD SPECIFICATIONS.

PROJECT NO. R-2303D

SAMPSON COUNTY

STATION: 1326+94.00 -L-

SHEET 1 OF 2

STATE OF NORTH CAROLINA
DEPARTMENT OF TRANSPORTATION
RALEIGH

SUBSTRUCTURE

BENT 1

(RIGHT LANE)

CDM Smith
Camp Dresser & McKee
421 Fayetteville Street, Suite 1303
Raleigh, NC 27604
NC COA No. F-1255

| | | | |
|---|---|---|---|
| DRAWN BY : | C.E. DIXON | DATE : | 12-12 |
| CHECKED BY : | J.T. ECKEL | DATE : | 12-12 |
| DESIGN ENGINEER : | P.R. HOLSHOUSER | DATE : | 3-13 |

DWG. No. S04-024

NORTH CAROLINA PROFESSIONAL SEAL 20668 ENGINEER PAUL R. HOLSHOUSER 3/14/2013

| REVISIONS | | | | | | SHEET No. |
|---|---|---|---|---|---|---|
| No. | BY: | DATE: | No. | BY: | DATE: | S-209 |
| 1 | | | 3 | | | TOTAL SHEETS |
| 2 | | | 4 | | | 218 |

FILE: r:\acdot\R2303D\Structures\PLANS\Str_3\R2303D_SD_Str4_b11.dgn
DATE: 9/2/2013 12:05:38 PM

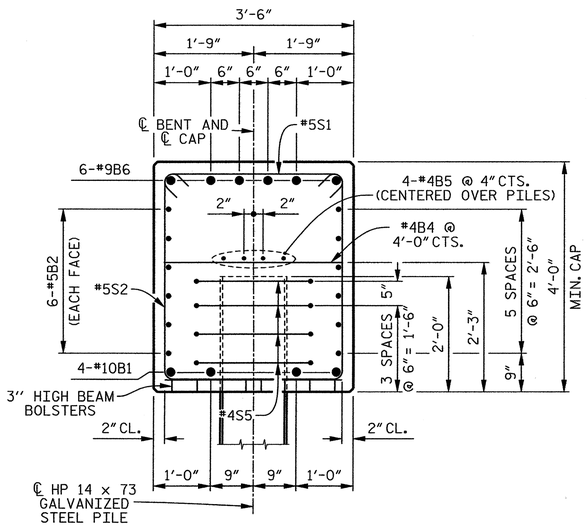


## SECTION A–A

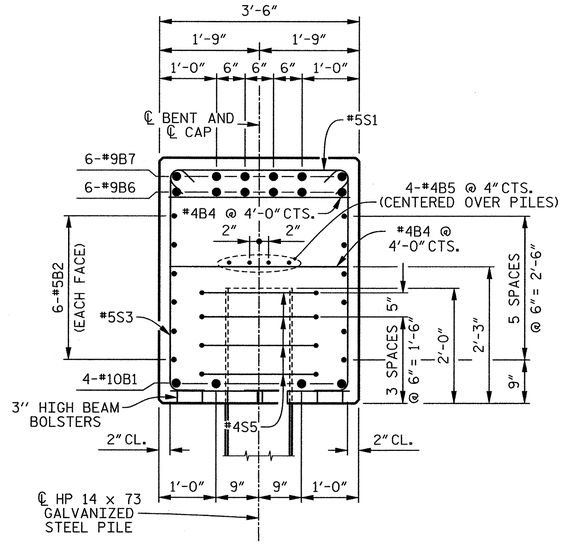


## SECTION B–B

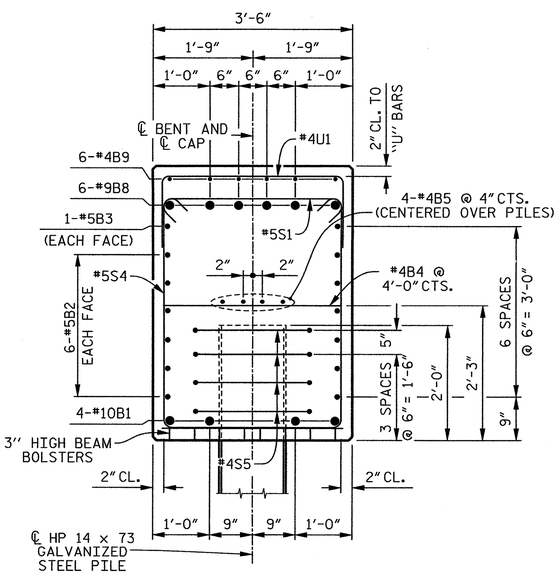


## SECTION C–C

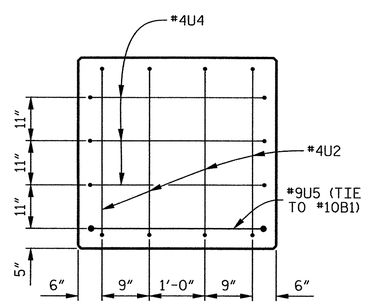


## END VIEW X–X

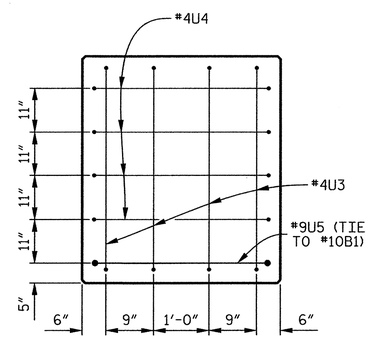


## END VIEW Y–Y

## BAR TYPES

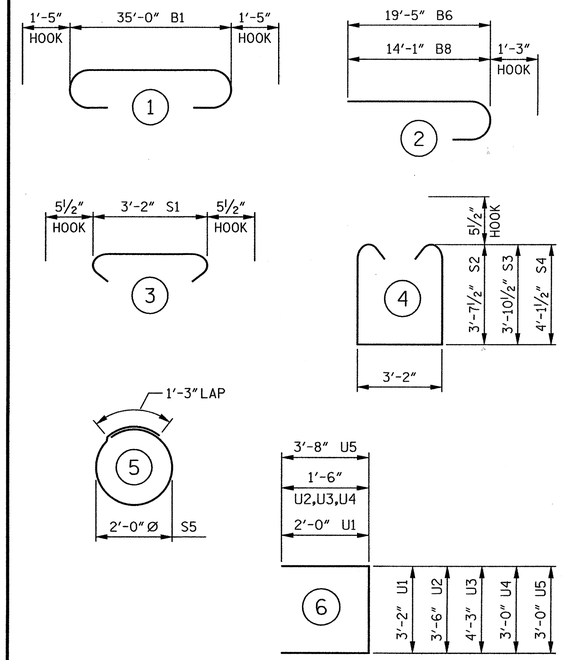


ALL BAR DIMENSIONS ARE OUT TO OUT.

## BILL OF MATERIAL

### BENT 1

| BAR | No. | SIZE | TYPE | LENGTH | WEIGHT |
|---|---|---|---|---|---|
| B1 | 4 | #10 | 1 | 37'-10" | 651 |
| B2 | 12 | #5 | STR | 35'-0" | 438 |
| B3 | 2 | #5 | STR | 18'-7" | 39 |
| B4 | 13 | #4 | STR | 3'-2" | 27 |
| B5 | 8 | #4 | STR | 18'-9" | 100 |
| B6 | 6 | #9 | 2 | 20'-8" | 422 |
| B7 | 6 | #9 | STR | 19'-0" | 388 |
| B8 | 6 | #9 | 2 | 15'-4" | 313 |
| B9 | 6 | #4 | STR | 3'-10" | 15 |
| S1 | 50 | #5 | 3 | 4'-1" | 213 |
| S2 | 16 | #5 | 4 | 11'-4" | 189 |
| S3 | 14 | #5 | 4 | 11'-10" | 173 |
| S4 | 20 | #5 | 4 | 12'-4" | 257 |
| S5 | 28 | #4 | 5 | 7'-7" | 142 |
| U1 | 28 | #4 | 6 | 7'-2" | 134 |
| U2 | 4 | #4 | 6 | 6'-6" | 17 |
| U3 | 4 | #4 | 6 | 7'-3" | 19 |
| U4 | 7 | #4 | 6 | 6'-0" | 28 |
| U5 | 2 | #9 | 6 | 10'-4" | 70 |

REINFORCING STEEL 3,635 LBS.

CLASS "A" CONCRETE
POUR 1 CAP 19.7 CU. YDS.

HP 14 x 73 GALVANIZED STEEL PILES
7 REQUIRED 420 LIN. FT.

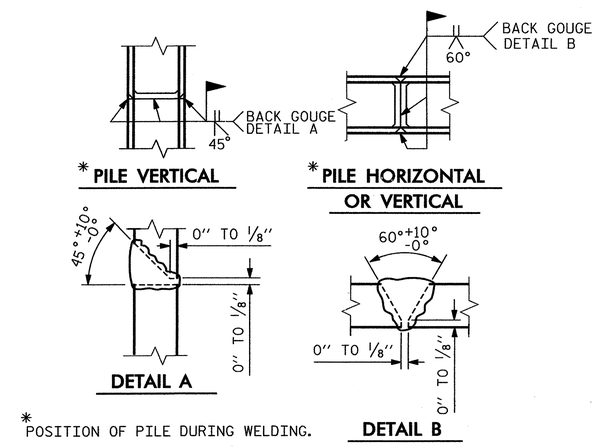


* POSITION OF PILE DURING WELDING.

## PILE SPLICE DETAILS

PROJECT NO. R-2303D
SAMPSON COUNTY
STATION: 1326+94.00 -L-

SHEET 2 OF 2

STATE OF NORTH CAROLINA
DEPARTMENT OF TRANSPORTATION
RALEIGH

SUBSTRUCTURE

BENT 1

(RIGHT LANE)

CDM Smith
Camp Dresser & McKee
421 Fayetteville Street, Suite 1303
Raleigh, NC 27604
NC COA No. F-1255

DRAWN BY : C.E. DIXON DATE : 12-12
CHECKED BY : J.T. ECKEL DATE : 12-12
DESIGN ENGINEER : P.R. HOLSHOUSER DATE : 3-13

DWG. No. S04-025

NORTH CAROLINA PROFESSIONAL SEAL 20668 ENGINEER PAUL R. HOLSHOUSER 3/14/2013

| REVISIONS | | | | | | SHEET No. |
|---|---|---|---|---|---|---|
| No. | BY: | DATE: | No. | BY: | DATE: | S-216 |
| 1 | | | 3 | | | TOTAL SHEETS |
| 2 | | | 4 | | | 218 |

FILE: r:\coder\(R2303D)\Structures\PLANS\Str_31\R2303D_SD_Str4_b32.dgn
DATE: 3/2/2013
3:29:31 PM

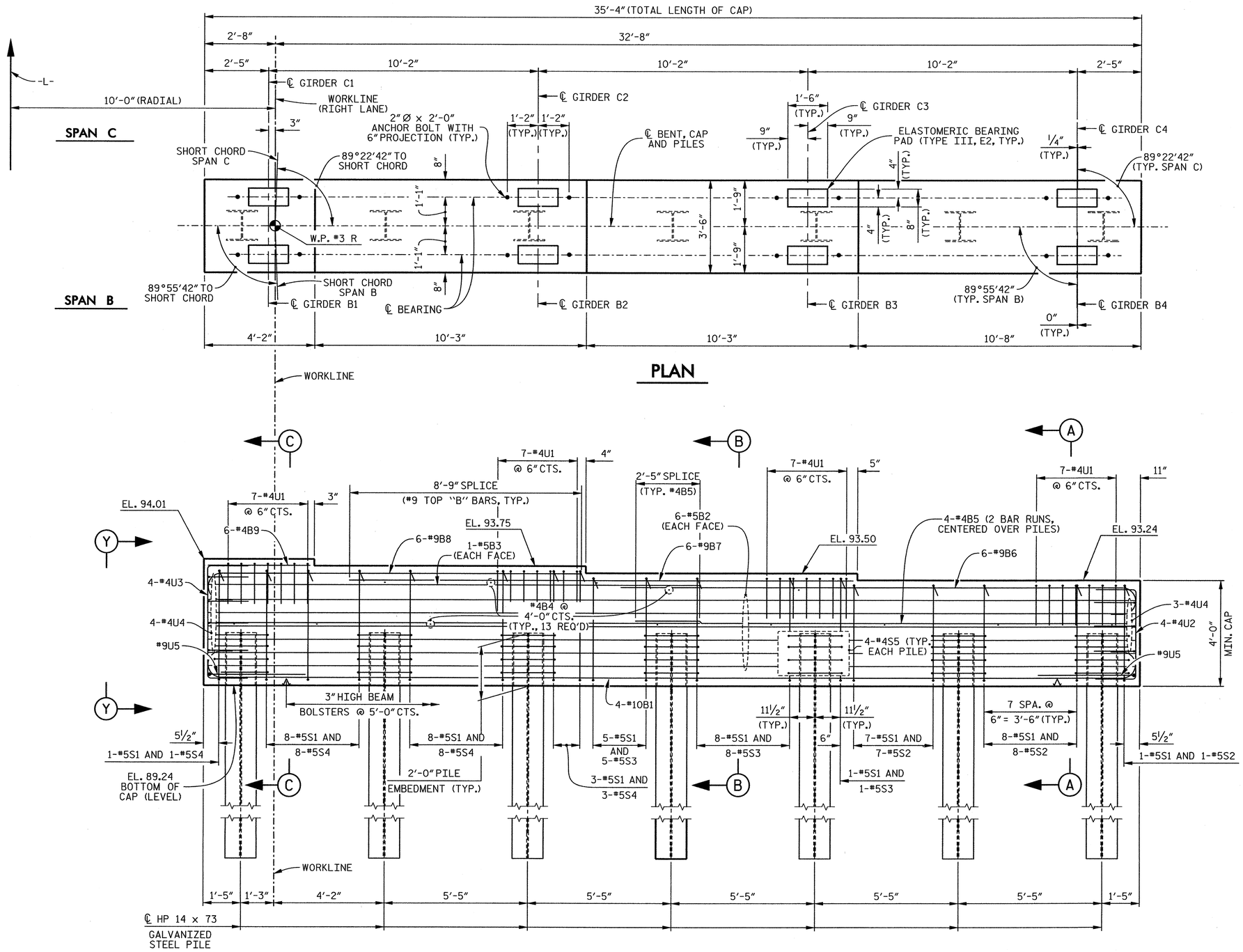


## NOTES

FOR SECTIONS A-A, B-B AND C-C, SEE SHEET 2 OF 2.

FOR VIEW X-X AND VIEW Y-Y, SEE SHEET 2 OF 2.

STIRRUPS AND U1 BARS IN CAP MAY BE SHIFTED AS NECESSARY TO CLEAR ANCHOR BOLTS.

FOR PILE SPLICE DETAILS, SEE SHEET 2 OF 2.

GALVANIZE THE TOP OF EACH INTERIOR BENT PILE A MINIMUM OF 30 FEET. GALVANIZE IN ACCORDANCE WITH SECTION 1076 OF THE STANDARD SPECIFICATIONS.

PROJECT NO. R-2303D
SAMPSON COUNTY
STATION: 1326+94.00 -L-

SHEET 1 OF 2

STATE OF NORTH CAROLINA
DEPARTMENT OF TRANSPORTATION
RALEIGH

SUBSTRUCTURE

BENT 2

(RIGHT LANE)

CDM Smith
Camp Dresser & McKee
421 Fayetteville Street, Suite 1303
Raleigh, NC 27604
NC COA No. F-1255

DRAWN BY : C.E. DIXON DATE : 12-12
CHECKED BY : J.T. ECKEL DATE : 12-12
DESIGN ENGINEER : P.R. HOLSHOUSER DATE : 3-13

DWG. No. S04-026

NORTH CAROLINA PROFESSIONAL SEAL 20668 ENGINEER P. RAUL R. HOLSHOUSER 3/14/2013

| REVISIONS | | | | | | SHEET No. |
|---|---|---|---|---|---|---|
| No. | BY: | DATE: | No. | BY: | DATE: | S-211 |
| 1 | | | 3 | | | TOTAL SHEETS |
| 2 | | | 4 | | | 218 |

FILE: r:\roadwy\R2303D\Structures\PLANS\Str_01\R2303D_SD_Sht_S21.dgn
DATE: 3/8/2013 1:28:26 PM

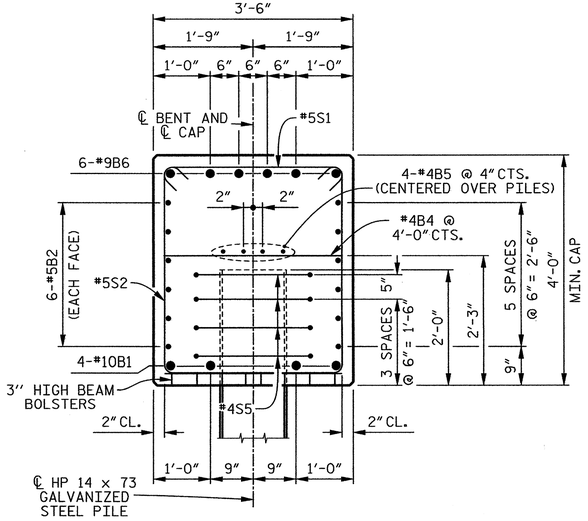


## SECTION A–A

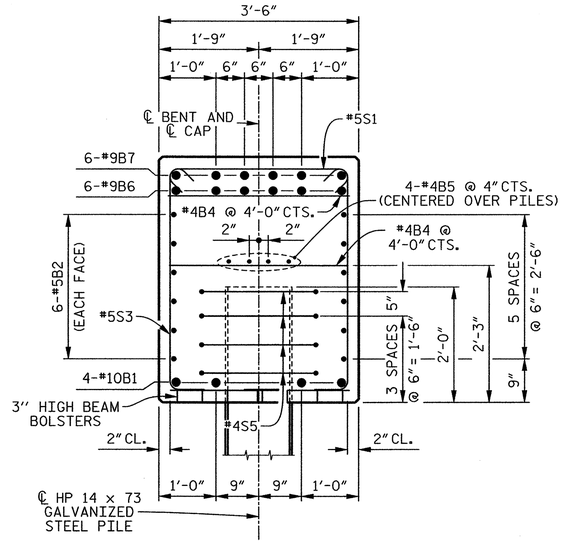


## SECTION B–B

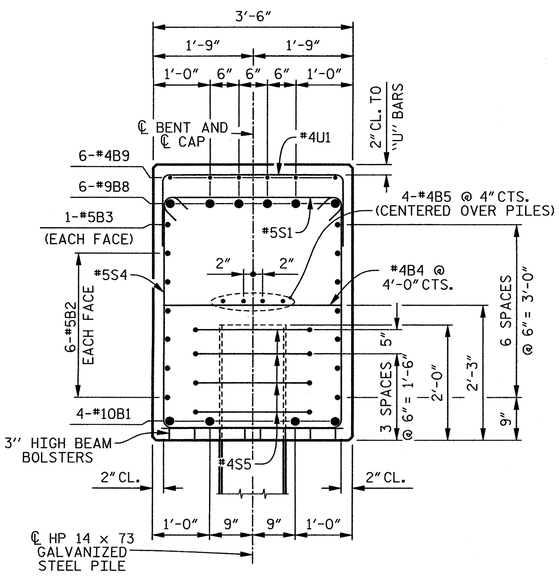


## SECTION C–C

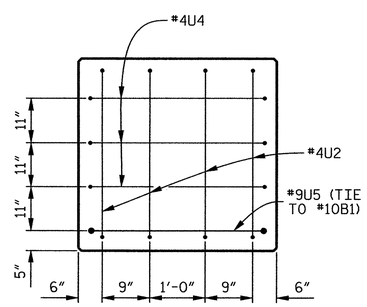


## END VIEW X–X

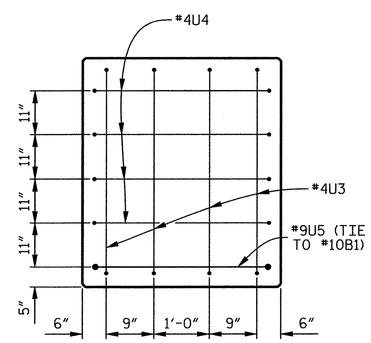


## END VIEW Y–Y

## BAR TYPES

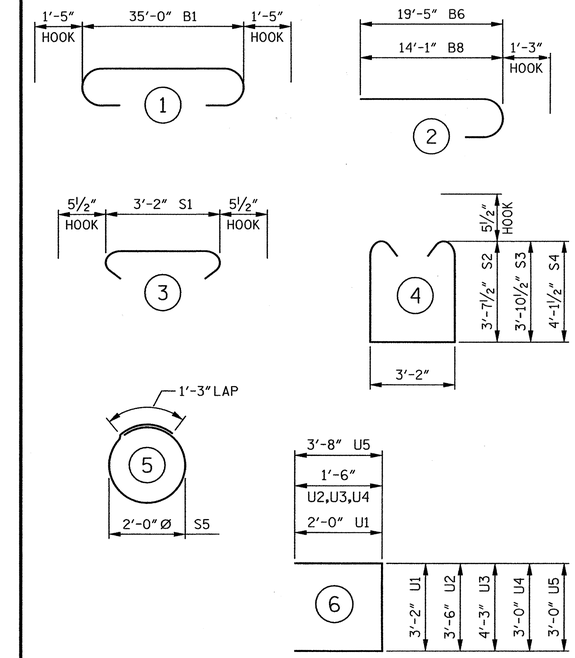


ALL BAR DIMENSIONS ARE OUT TO OUT.

## BILL OF MATERIAL

### BENT 2

| BAR | No. | SIZE | TYPE | LENGTH | WEIGHT |
|---|---|---|---|---|---|
| B1 | 4 | #10 | 1 | 37'-10" | 651 |
| B2 | 12 | #5 | STR | 35'-0" | 438 |
| B3 | 2 | #5 | STR | 18'-7" | 39 |
| B4 | 13 | #4 | STR | 3'-2" | 27 |
| B5 | 8 | #4 | STR | 18'-9" | 100 |
| B6 | 6 | #9 | 2 | 20'-8" | 422 |
| B7 | 6 | #9 | STR | 19'-0" | 388 |
| B8 | 6 | #9 | 2 | 15'-4" | 313 |
| B9 | 6 | #4 | STR | 3'-10" | 15 |
| S1 | 50 | #5 | 3 | 4'-1" | 213 |
| S2 | 16 | #5 | 4 | 11'-4" | 189 |
| S3 | 14 | #5 | 4 | 11'-10" | 173 |
| S4 | 20 | #5 | 4 | 12'-4" | 257 |
| S5 | 28 | #4 | 5 | 7'-7" | 142 |
| U1 | 28 | #4 | 6 | 7'-2" | 134 |
| U2 | 4 | #4 | 6 | 6'-6" | 17 |
| U3 | 4 | #4 | 6 | 7'-3" | 19 |
| U4 | 7 | #4 | 6 | 6'-0" | 28 |
| U5 | 2 | #9 | 6 | 10'-4" | 70 |

REINFORCING STEEL 3,635 LBS.

CLASS "A" CONCRETE
POUR 1 CAP 19.8 CU. YDS.

HP 14 x 73 GALVANIZED STEEL PILES
7 REQUIRED 420 LIN. FT.

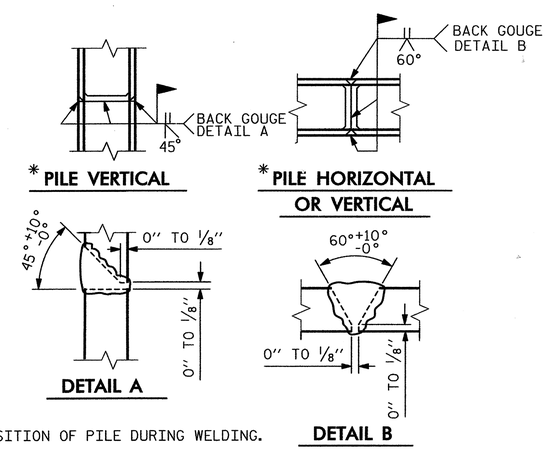


* POSITION OF PILE DURING WELDING.

## PILE SPLICE DETAILS

PROJECT NO. R-2303D
SAMPSON COUNTY
STATION: 1326+94.00 -L-

SHEET 2 OF 2

STATE OF NORTH CAROLINA
DEPARTMENT OF TRANSPORTATION
RALEIGH

SUBSTRUCTURE

BENT 2

(RIGHT LANE)

CDM Smith
Camp Dresser & McKee
421 Fayetteville Street, Suite 1303
Raleigh, NC 27604
NC COA No. F-1255

DRAWN BY : C.E. DIXON DATE : 12-12
CHECKED BY : J.T. ECKEL DATE : 12-12
DESIGN ENGINEER : P.R. HOLSHOUSER DATE : 3-13

DWG. No. S04-027

NORTH CAROLINA PROFESSIONAL SEAL 20668 ENGINEER PAUL R. HOLSHOUSER 3/14/2013

| REVISIONS | | | | | | | SHEET No. |
|---|---|---|---|---|---|---|---|
| No. | BY: | DATE: | No. | BY: | DATE: | | S-212 |
| 1 | | | 3 | | | | TOTAL SHEETS |
| 2 | | | 4 | | | | 218 |

FILE: r:\model\(R2303D)\Structures\(PLANS)\Str_31R2303D_SD_Sht_L522.dgn
DATE: 3/29/34 PM

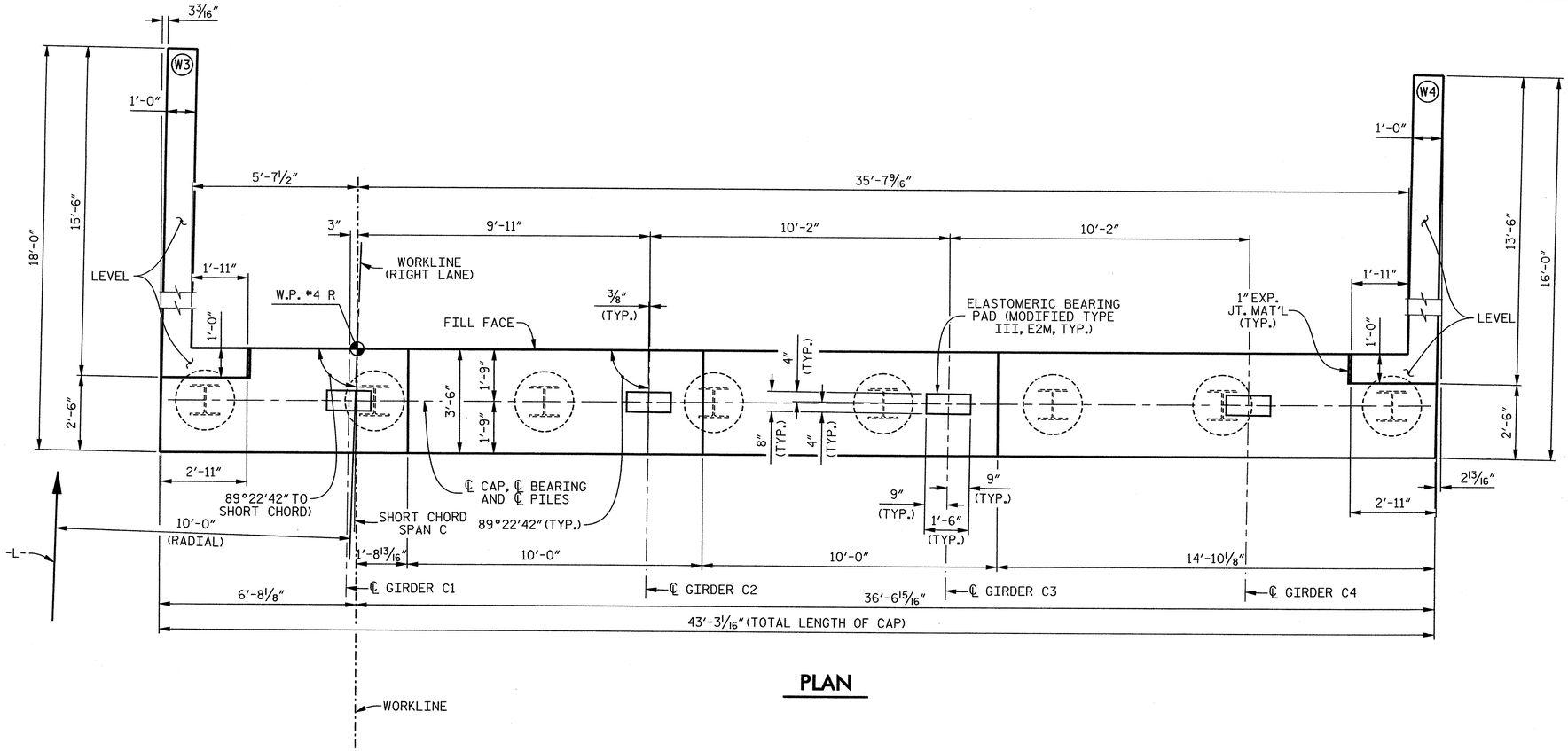


## PLAN

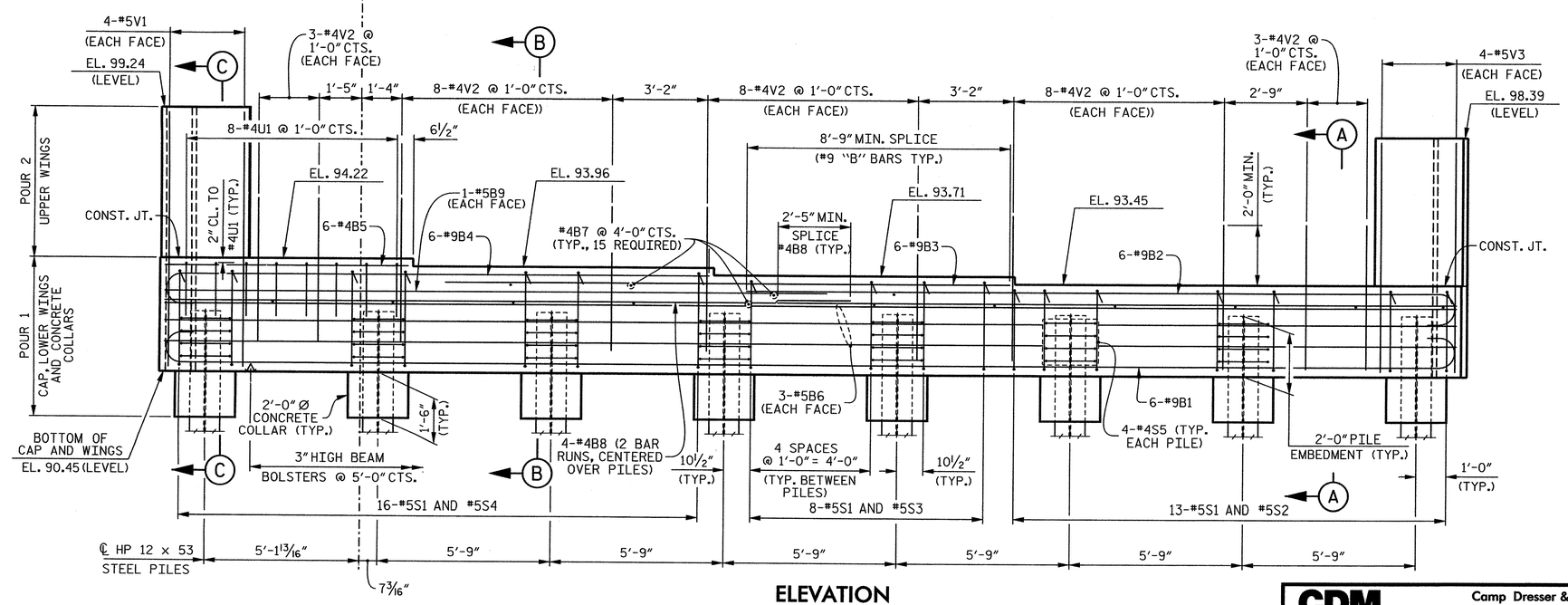


## ELEVATION

## NOTES

STIRRUPS AND "U" BARS IN CAP MAY BE SHIFTED AS NECESSARY TO CLEAR #4V2 BARS.

THE TOP SURFACE AREA OF THE END BENT CAP SHALL BE CURED IN ACCORDANCE WITH THE STANDARD SPECIFICATIONS EXCEPT THAT THE MEMBRANE CURING COMPOUND METHOD SHALL NOT BE USED.

THIS ELEVATION IS TAKEN AT FILL FACE OF BACKWALL.

FOR SECTION A-A, SECTION B-B AND SECTION C-C, SEE SHEET 3 OF 3.

FOR PILE SPLICE DETAILS, SEE SHEET 3 OF 3.

FOR TEMPORARY DRAINAGE AT END BENT DETAIL, SEE SHEET 3 OF 3.

THE CONTRACTOR SHALL PROVIDE FOR INSTALLATION OF THE 4" DIAMETER DRAIN PIPE THROUGH THE WING WALL AS REQUIRED FOR REINFORCED BRIDGE APPROACH FILLS, SEE THE ROADWAY PLANS. REINFORCING STEEL IN THE WING WALL MAY BE SHIFTED AS NECESSARY TO CLEAR THE DRAIN PIPE.

PROJECT NO. R-2303D
SAMPSON COUNTY
STATION: 1326+94.00 -L-

SHEET 1 OF 3

STATE OF NORTH CAROLINA
DEPARTMENT OF TRANSPORTATION
RALEIGH

SUBSTRUCTURE

END BENT 2

(RIGHT LANE)

CDM Smith
Camp Dresser & McKee
421 Fayetteville Street, Suite 1303
Raleigh, NC 27604
NC COA No. F-1255

DRAWN BY : J.D. BORUTA DATE : 1-13
CHECKED BY : P.R. HOLSHOUSER DATE : 1-13
DESIGN ENGINEER : P.R. HOLSHOUSER DATE : 3-13

DWG. No. S04-028

NORTH CAROLINA PROFESSIONAL SEAL 20668 ENGINEER P. PAUL R. HOLSHOUSER
3/14/2013

| REVISIONS | | | | | | SHEET No. |
|---|---|---|---|---|---|---|
| No. | BY: | DATE: | No. | BY: | DATE: | S-213 |
| 1 | | | 3 | | | TOTAL SHEETS |
| 2 | | | 4 | | | 218 |

FILE: r:\locdat\R2303D\Structures\PLANS\Str_41\R2303D_SD_Str4_ab21.dgn
DATE: 3/5/2013 3:29:58 PM

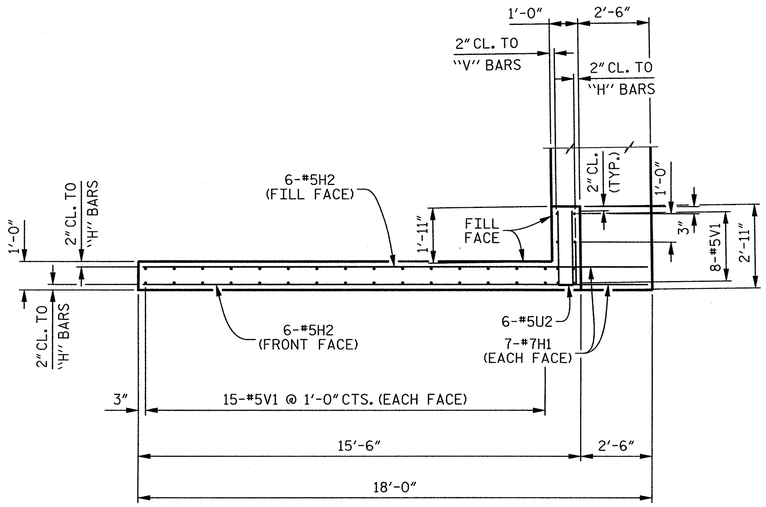


## PLAN OF WING (W3)

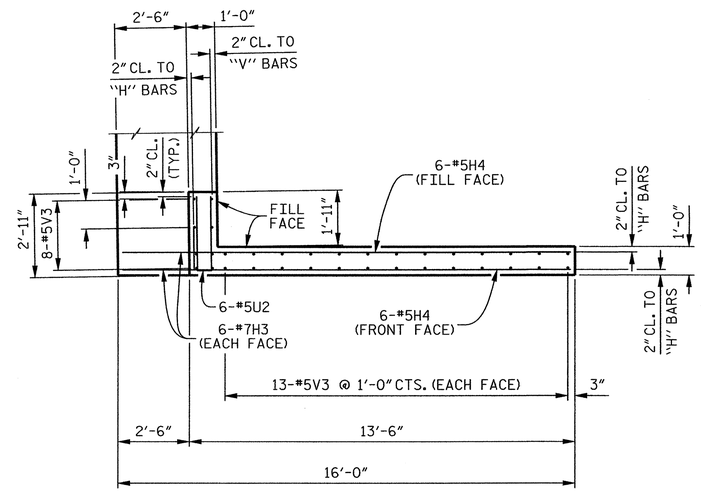


## PLAN OF WING (W4)

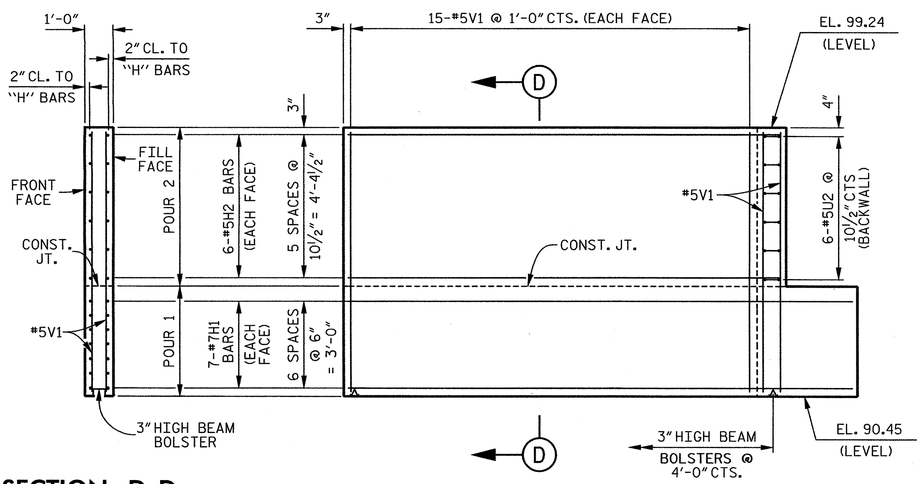


## SECTION D–D

## ELEVATION OF WING (W3)

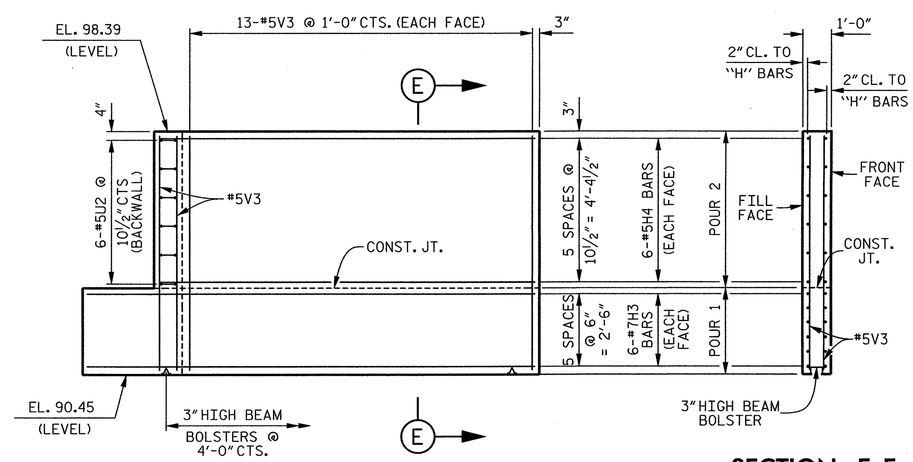


## SECTION E–E

## ELEVATION OF WING (W4)

PROJECT NO. R-2303D

SAMPSON COUNTY

STATION: 1326+94.00 -L-

SHEET 2 OF 3

STATE OF NORTH CAROLINA
DEPARTMENT OF TRANSPORTATION
RALEIGH

SUBSTRUCTURE

END BENT 2

(RIGHT LANE)

CDM Smith

Camp Dresser & McKee
421 Fayetteville Street, Suite 1303
Raleigh, NC 27604
NC COA No. F-1255

| | | | |
|---|---|---|---|
| DRAWN BY : | J.D. BORUTA | DATE : | 12-12 |
| CHECKED BY : | P.R. HOLSHOUSER | DATE : | 1-13 |
| DESIGN ENGINEER : | P.R. HOLSHOUSER | DATE : | 3-13 |

DWG. No. S04-029

NORTH CAROLINA PROFESSIONAL SEAL 20668 ENGINEER PAUL R. HOLSHOUSER
3/14/2013

| REVISIONS | | | | | | | SHEET No. |
|---|---|---|---|---|---|---|---|
| No. | BY: | DATE: | No. | BY: | DATE: | | S-214 |
| 1 | | | 3 | | | | TOTAL SHEETS |
| 2 | | | 4 | | | | 218 |

FILE: r:\roadw\R2303D\Structures\PLANS\Str_41\R2303D_SD_Str_eb22.dgn
DATE: 3/20/13 3:29:57 PM

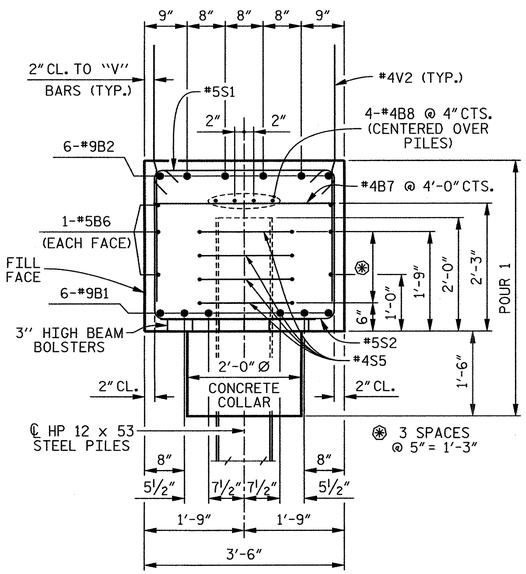


## SECTION A–A

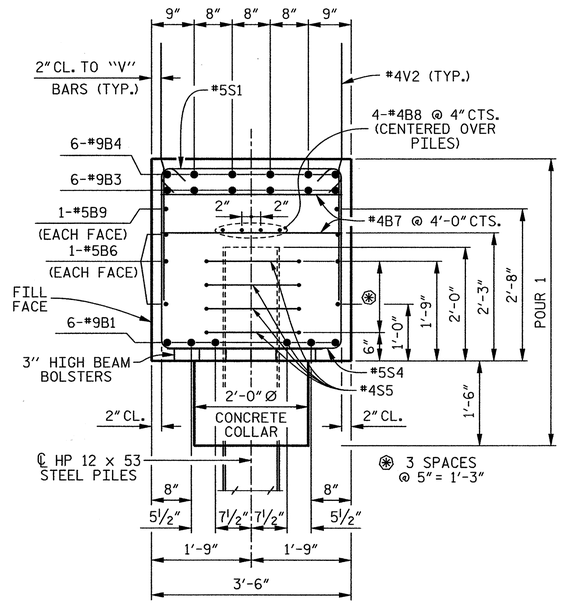


## SECTION B–B

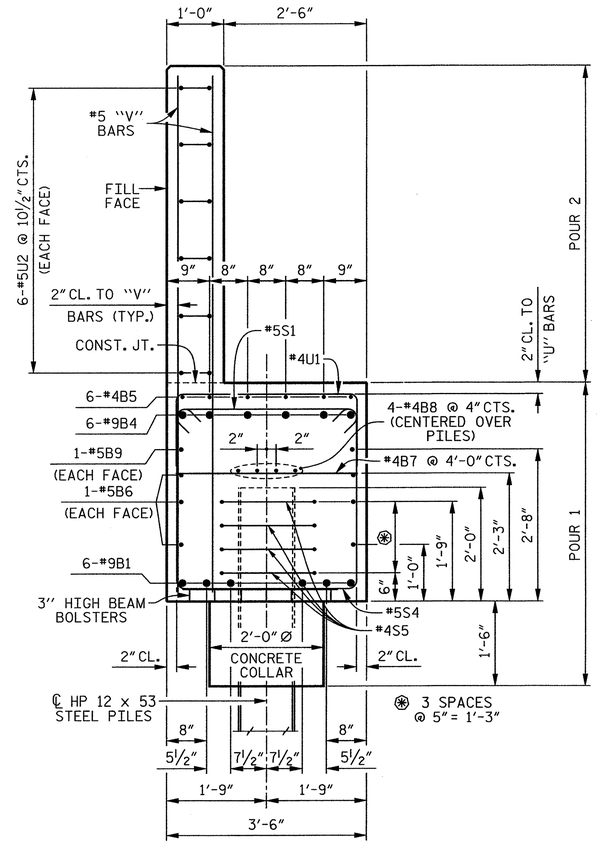


## SECTION C–C

## BAR TYPES

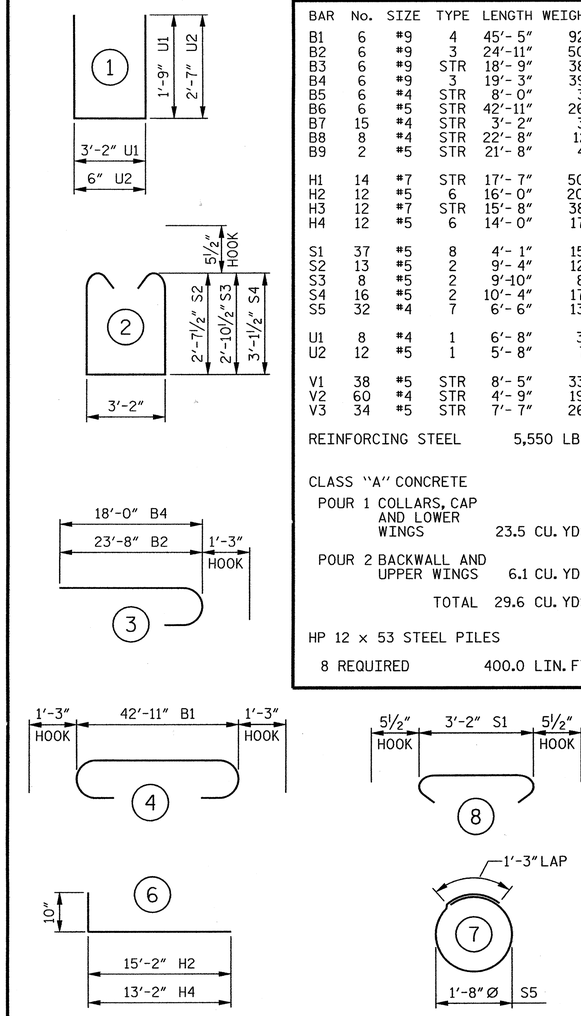


ALL BAR DIMENSIONS ARE OUT TO OUT.

## BILL OF MATERIAL

### END BENT 2

| BAR | No. | SIZE | TYPE | LENGTH | WEIGHT |
|---|---|---|---|---|---|
| B1 | 6 | #9 | 4 | 45′- 5″ | 927 |
| B2 | 6 | #9 | 3 | 24′-11″ | 508 |
| B3 | 6 | #9 | STR | 18′- 9″ | 383 |
| B4 | 6 | #9 | 3 | 19′- 3″ | 393 |
| B5 | 6 | #4 | STR | 8′- 0″ | 32 |
| B6 | 6 | #5 | STR | 42′-11″ | 269 |
| B7 | 15 | #4 | STR | 3′- 2″ | 32 |
| B8 | 8 | #4 | STR | 22′- 8″ | 121 |
| B9 | 2 | #5 | STR | 21′- 8″ | 45 |
| H1 | 14 | #7 | STR | 17′- 7″ | 503 |
| H2 | 12 | #5 | 6 | 16′- 0″ | 200 |
| H3 | 12 | #7 | STR | 15′- 8″ | 384 |
| H4 | 12 | #5 | 6 | 14′- 0″ | 175 |
| S1 | 37 | #5 | 8 | 4′- 1″ | 158 |
| S2 | 13 | #5 | 2 | 9′- 4″ | 127 |
| S3 | 8 | #5 | 2 | 9′-10″ | 82 |
| S4 | 16 | #5 | 2 | 10′- 4″ | 172 |
| S5 | 32 | #4 | 7 | 6′- 6″ | 139 |
| U1 | 8 | #4 | 1 | 6′- 8″ | 36 |
| U2 | 12 | #5 | 1 | 5′- 8″ | 71 |
| V1 | 38 | #5 | STR | 8′- 5″ | 334 |
| V2 | 60 | #4 | STR | 4′- 9″ | 190 |
| V3 | 34 | #5 | STR | 7′- 7″ | 269 |

REINFORCING STEEL 5,550 LBS.

CLASS "A" CONCRETE

POUR 1 COLLARS, CAP AND LOWER WINGS 23.5 CU. YDS.

POUR 2 BACKWALL AND UPPER WINGS 6.1 CU. YDS.

TOTAL 29.6 CU. YDS.

HP 12 x 53 STEEL PILES

8 REQUIRED 400.0 LIN. FT.

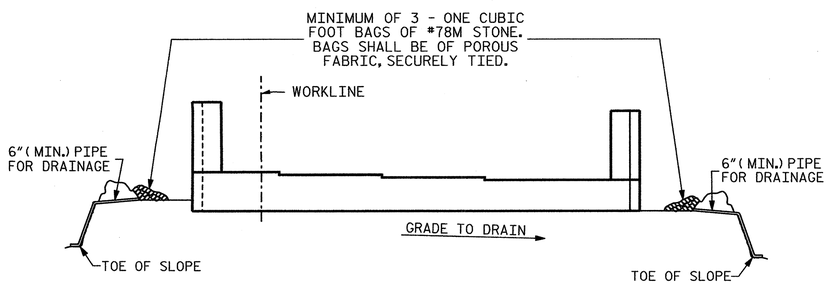


BAGGED STONE AND PIPE SHALL BE PLACED IMMEDIATELY AFTER COMPLETION OF END BENT EXCAVATION. PIPE MAY BE EITHER CONCRETE, CORRUGATED STEEL, CORRUGATED ALUMINUM ALLOY, OR CORRUGATED PLASTIC. PERFORATED PIPE WILL NOT BE ALLOWED.

BAGGED STONE SHALL REMAIN IN PLACE UNTIL THE ENGINEER DIRECTS THAT IT BE REMOVED. THE CONTRACTOR SHALL REMOVE AND DISPOSE OF SILT ACCUMULATIONS AT BAGGED STONE WHEN SO DIRECTED BY THE ENGINEER. BAGS SHALL BE REMOVED AND REPLACED WHENEVER THE ENGINEER DETERMINES THAT THEY HAVE DETERIORATED AND LOST THEIR EFFECTIVENESS.

## TEMPORARY DRAINAGE AT END BENT

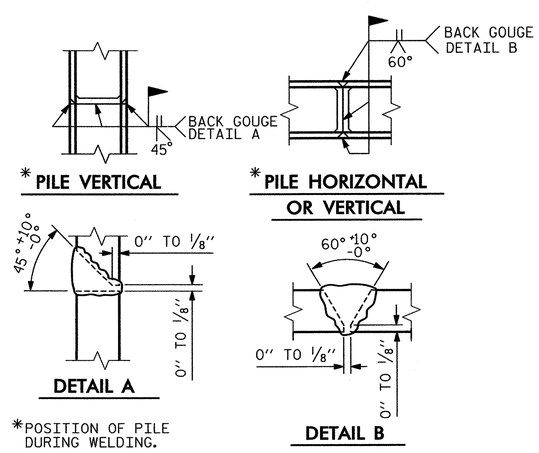


*POSITION OF PILE DURING WELDING.

## PILE SPLICE DETAILS

PROJECT NO. R-2303D

SAMPSON COUNTY

STATION: 1326+94.00 -L-

SHEET 3 OF 3

STATE OF NORTH CAROLINA
DEPARTMENT OF TRANSPORTATION
RALEIGH

SUBSTRUCTURE

END BENT 2

(RIGHT LANE)

CDM Smith

Camp Dresser & McKee
421 Fayetteville Street, Suite 1303
Raleigh, NC 27604
NC COA No. F-1255

| | | | |
|---|---|---|---|
| DRAWN BY : | J.D. BORUTA | DATE : | 12-12 |
| CHECKED BY : | P.R. HOLSHOUSER | DATE : | 1-13 |
| DESIGN ENGINEER : | P.R. HOLSHOUSER | DATE : | 3-13 |

DWG. No. S04-030

NORTH CAROLINA PROFESSIONAL SEAL 20668 ENGINEER PAUL R. HOLSHOUSER 3/14/2013

| REVISIONS | | | | | | SHEET No. |
|---|---|---|---|---|---|---|
| No. | BY: | DATE: | No. | BY: | DATE: | 8-215 |
| 1 | | | 3 | | | TOTAL SHEETS |
| 2 | | | 4 | | | 218 |

FILE: s:\roadw\R2303D\Structural\PLANS\Sv_41\R2303D_SD_Sht4_ab22.dgn
DATE: 5/30/2013 3:29:59 PM

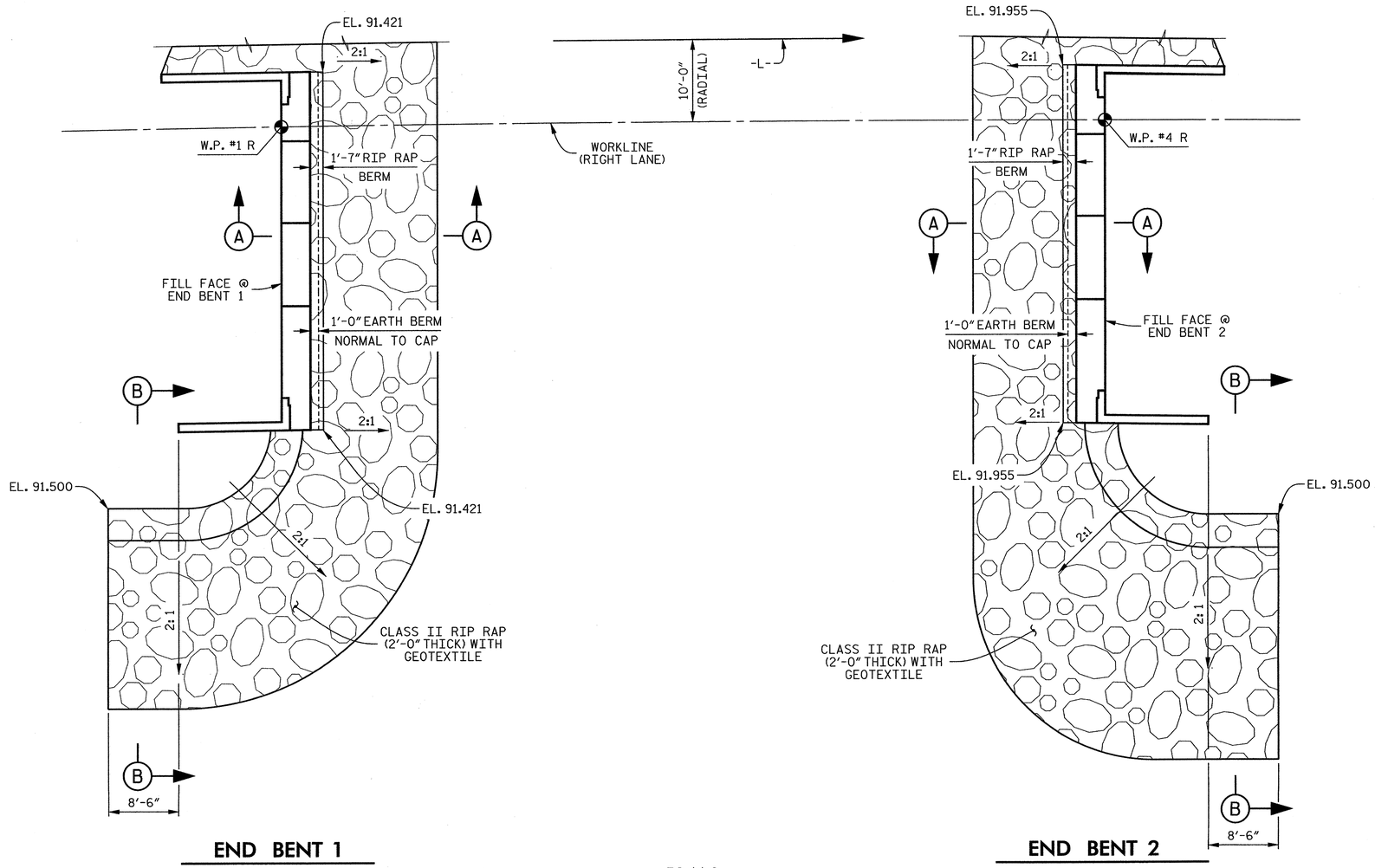


END BENT 1

END BENT 2

PLAN

| ESTIMATED QUANTITIES | | |
|---|---|---|
| BRIDGE @ STA. 1326+94.00 -L- (RIGHT LANE) | RIP RAP CLASS II ( TONS ) | GEOTEXTILE FOR DRAINAGE ( SQUARE YARDS ) |
| END BENT 1 | 165 | 185 |
| END BENT 2 | 135 | 150 |

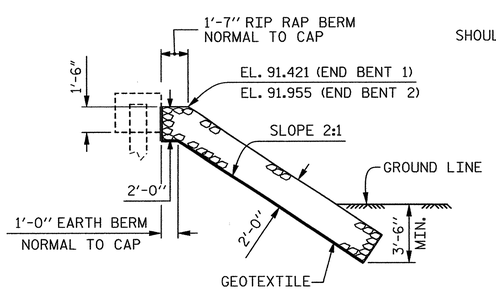


SECTION A–A

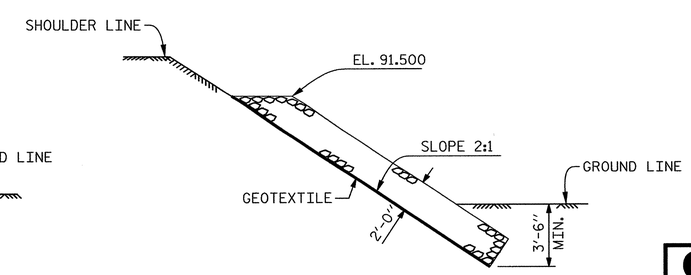


SECTION B–B

PROJECT NO. R-2303D

SAMPSON COUNTY

STATION: 1326+94.00 -L-

STATE OF NORTH CAROLINA
DEPARTMENT OF TRANSPORTATION
RALEIGH

STANDARD

RIP RAP DETAILS

(RIGHT LANE)

CDM Smith
Camp Dresser & McKee
421 Fayetteville Street, Suite 1303
Raleigh, NC 27604
NC COA No. F-1255

| | | | |
|---|---|---|---|
| DRAWN BY : | K.E. LOFTON | DATE : | 8-12 |
| CHECKED BY : | P.R. HOLSHOUSER | DATE : | 12-12 |
| DESIGN ENGINEER : | P.R. HOLSHOUSER | DATE : | 3-13 |

DWG. No. S04-031

NORTH CAROLINA PROFESSIONAL SEAL 20668 ENGINEER PAUL R. HOLSHOUSER 3/14/2013

| REVISIONS | | | | | |
|---|---|---|---|---|---|
| No. | BY: | DATE: | No. | BY: | DATE: |
| 1 | | | 3 | | |
| 2 | | | 4 | | |

SHEET No. S-216

TOTAL SHEETS 218

STD. No. RR1

| | | | |
|---|---|---|---|
| ASSEMBLED BY : | K.E. LOFTON | DATE : | 8-12 |
| CHECKED BY : | P.R. HOLSHOUSER | DATE : | 12-12 |
| DRAWN BY : REK 1/84 | REV. 5/1/06R | TLA/GM | |
| CHECKED BY : RDU 1/84 | REV. 10/1/11 | MAA/GM | |
| | REV. 12/21/11 | MAA/GM | |

FILE: r:\ncdot\R2303D\Structures\PLANS\Str_3\R2303D_SD_Str4_rr1.dgn
DATE: 3/5/2013 3:29:41 PM

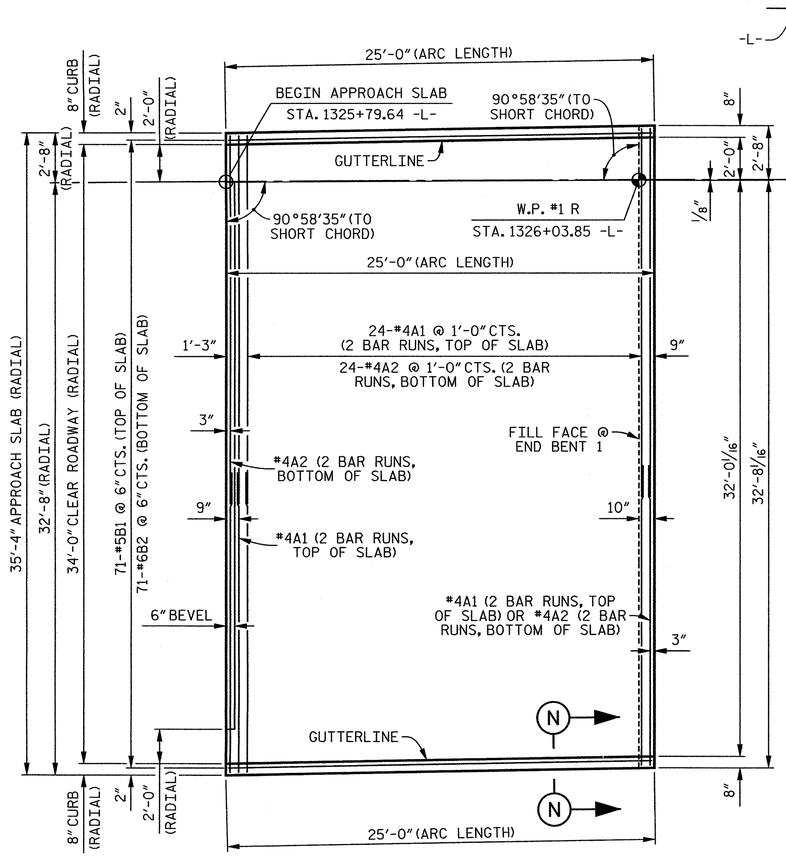


## PLAN OF APPROACH SLAB @ END BENT 1

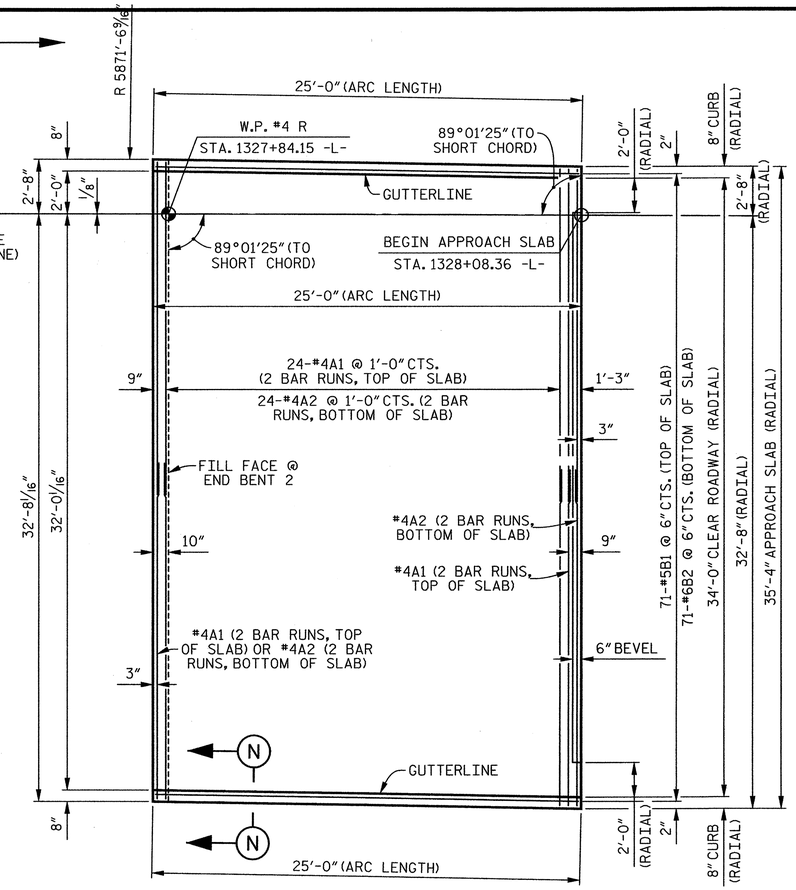


## PLAN OF APPROACH SLAB @ END BENT 2

| SPLICE LENGTHS | | |
|---|---|---|
| BAR | SIZE | LENGTH |
| A1 | #4 | 2'-0" |
| A2 | #4 | 1'-9" |

## NOTES

APPROACH SLAB SHALL NOT BE CONSTRUCTED PRIOR TO COMPLETION OF THE BRIDGE DECK.

FOR REINFORCED BRIDGE APPROACH FILL INCLUDING FABRIC, IMPERMEABLE GEOMEMBRANE, 4" Ø DRAINAGE PIPE, #78M STONE, AND SELECT MATERIAL, SEE ROADWAY PLANS.

AREA BETWEEN THE WING WALL AND APPROACH SLAB SHALL BE GRADED TO DRAIN THE WATER AWAY FROM THE FILL FACE OF THE BRIDGE AND SHALL BE PAVED. SEE ROADWAY PLANS.

THE JOINT OPENING AT THE APPROACH SLAB-DECK INTERFACE SHALL BE SAWED NO MORE THAN 12 HOURS AFTER THE APPROACH SLAB IS CAST. THE JOINT SHALL BE CLEANED OF ALL DEBRIS BEFORE THE SEALANT IS APPLIED. THE JOINT SEALER MATERIAL SHALL CONFORM TO THE REQUIREMENTS OF SECTION 1028-3 OF THE STANDARD SPECIFICATIONS.

FOR ARC OFFSETS, SEE SHEET 2 OF 2.

## BILL OF MATERIAL

### FOR ONE APPROACH SLAB (2 REQUIRED)

| BAR | No. | SIZE | TYPE | LENGTH | WEIGHT |
|---|---|---|---|---|---|
| *A1 | 52 | #4 | STR | 18'- 6" | 643 |
| A2 | 52 | #4 | STR | 18'- 5" | 640 |
| *B1 | 71 | #5 | STR | 24'- 2" | 1,790 |
| B2 | 71 | #6 | STR | 24'- 8" | 2,631 |
| REINFORCING STEEL | | | | | 3,271 LBS. |
| *EPOXY COATED REINFORCING STEEL | | | | | 2,433 LBS. |

CLASS "AA" CONCRETE

POUR 1 SLAB AND CURBS 38.6 CU. YDS.

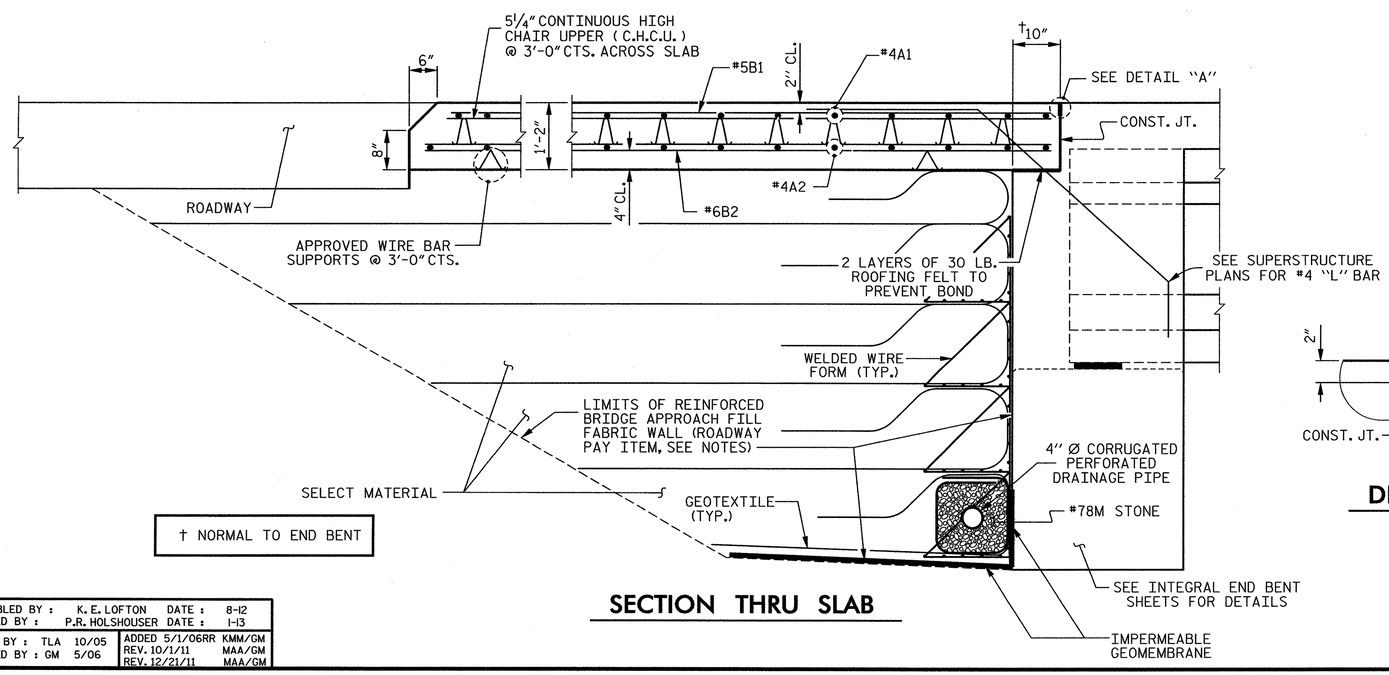


† NORMAL TO END BENT

## SECTION THRU SLAB

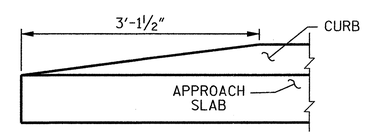


## END OF CURB WITHOUT SHOULDER BERM GUTTER

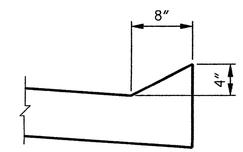


## SECTION N-N

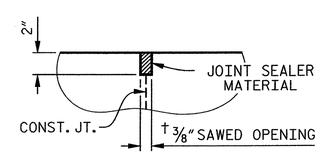


## DETAIL "A"

PROJECT NO. R-2303D

SAMPSON COUNTY

STATION: 1326+94.00 -L-

SHEET 1 OF 2

STATE OF NORTH CAROLINA
DEPARTMENT OF TRANSPORTATION
RALEIGH

STANDARD

# BRIDGE APPROACH SLAB FOR INTEGRAL ABUTMENT (RIGHT LANE)

CDM Smith

Camp Dresser & McKee
421 Fayetteville Street, Suite 1303
Raleigh, NC 27604
NC COA No. F-1255

DRAWN BY : K.E. LOFTON DATE : 8-12
CHECKED BY : P.R. HOLSHOUSER DATE : 1-13
DESIGN ENGINEER : P.R. HOLSHOUSER DATE : 3-13

DWG. No. S04-032

NORTH CAROLINA PROFESSIONAL SEAL 20668 ENGINEER PAUL R. HOLSHOUSER 3/14/2013

| REVISIONS | | | | | | |
|---|---|---|---|---|---|---|
| No. | BY: | DATE: | No. | BY: | DATE: | |
| 1 | | | 3 | | | |
| 2 | | | 4 | | | |

SHEET No. S-217

TOTAL SHEETS 218

ASSEMBLED BY : K. E. LOFTON DATE : 8-12
CHECKED BY : P.R. HOLSHOUSER DATE : 1-13

DRAWN BY : TLA 10/05
CHECKED BY : GM 5/06

ADDED 5/1/06RR KMM/GM
REV. 10/1/11 MAA/GM
REV. 12/21/11 MAA/GM

FILE: c:\pwdir\R2303D\Structures\PLANS\Sc_31\R2303D_SD_Sht4_ent.dgn
DATE: 3/5/2013 3:29:43 PM

STD. No. BAS5

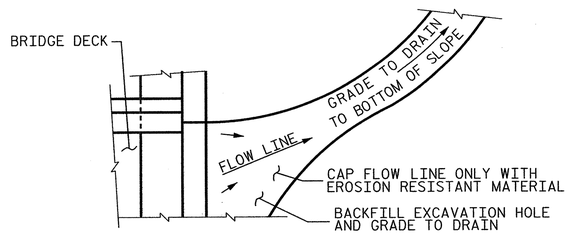


NOTE: IF THE APPROACH SLAB IS NOT CONSTRUCTED IMMEDIATELY AFTER THE BACKFILLING OF THE END BENT EXCAVATION, GRADE TO DRAIN TO THE BOTTOM OF THE SLOPE AND PROVIDE EROSION RESISTANT MATERIAL, SUCH AS FIBERGLASS ROVING OR AS DIRECTED BY THE ENGINEER TO PREVENT SOIL EROSION AND TO PROTECT THE AREA ADJACENT TO THE STRUCTURE. THE CONTRACTOR WILL BE REQUIRED TO REMOVE THESE MATERIALS PRIOR TO CONSTRUCTION OF THE APPROACH SLAB.

## TEMPORARY DRAINAGE DETAIL

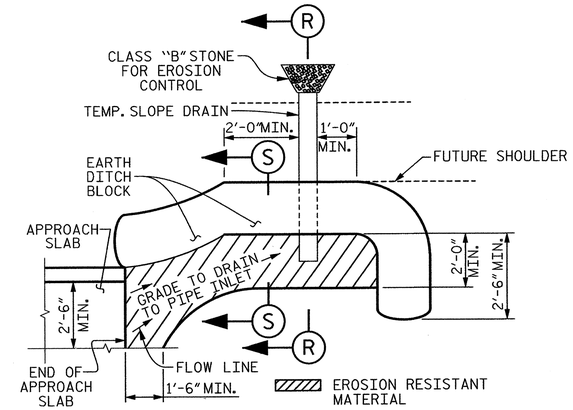


NOTE: IMMEDIATELY AFTER THE CONSTRUCTION OF THE APPROACH SLAB, THE CONTRACTOR SHALL PROVIDE TEMPORARY BERM AND SLOPE DRAIN. CONTRACTOR SHALL GRADE TO PIPE INLET AND PROVIDE EROSION RESISTANT MATERIAL AS SHOWN. THE EROSION RESISTANT MATERIAL SHALL BE EITHER 1) ASPHALT PLANT MIX, TYPE 1 OR TYPE 2, MIN. 2" DEPTH, 2) EROSION CONTROL MAT, OR 3) CONCRETE, AS DIRECTED BY THE ENGINEER. THE SLOPE DRAIN SHALL CONSIST OF A NON-PERFORATED TEMPORARY DRAINAGE PIPE, 12 INCHES IN DIAMETER.

PLAN VIEW

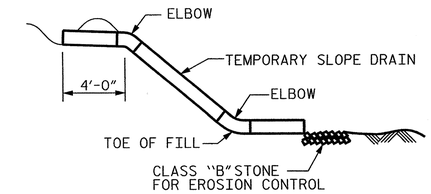


SECTION R-R

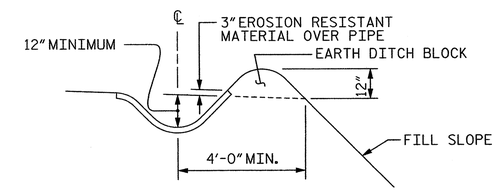


SECTION S-S

## TEMPORARY BERM AND SLOPE DRAIN DETAILS

(TO BE USED WHEN SHOULDER BERM GUTTER IS REQUIRED)

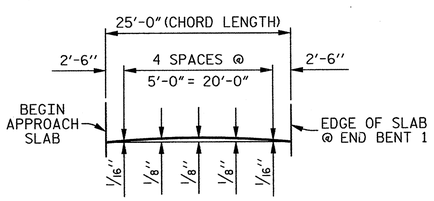


ARC OFFSETS 7'-4" RIGHT OF -L-
(LEFT OUTSIDE EDGE OF APPROACH SLAB)

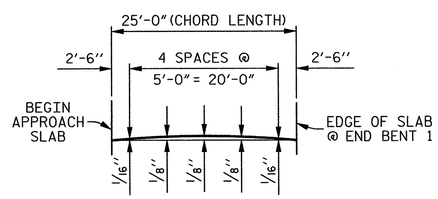


ARC OFFSETS 42'-8" RIGHT OF -L-
(RIGHT OUTSIDE EDGE OF APPROACH SLAB)

APPROACH SLAB @ END BENT 1

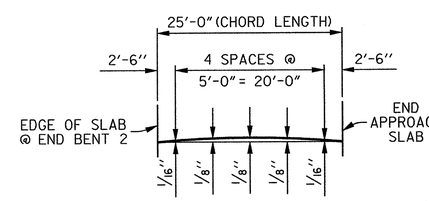


ARC OFFSETS 7'-4" RIGHT OF -L-
(LEFT OUTSIDE EDGE OF APPROACH SLAB)

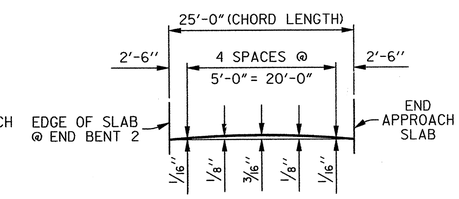


ARC OFFSETS 42'-8" RIGHT OF -L-
(RIGHT OUTSIDE EDGE OF APPROACH SLAB)

APPROACH SLAB @ END BENT 2

PROJECT NO. R-2303D
SAMPSON COUNTY
STATION: 1326+94.00 -L-

SHEET 2 OF 2

STATE OF NORTH CAROLINA
DEPARTMENT OF TRANSPORTATION
RALEIGH

STANDARD

BRIDGE APPROACH SLAB DETAILS (RIGHT LANE)

| ASSEMBLED BY : K. E. LOFTON | DATE : 8-12 |
|---|---|
| CHECKED BY : P.R. HOLSHOUSER | DATE : 12-12 |

| | | | | |
|---|---|---|---|---|
| DRAWN BY : FCJ | 11/88 | REV. 5/7/03 | RWW/JTE |
| CHECKED BY : ARB | 11/88 | REV. 5/1/06 | RRR MAA/KMM |
| | | REV. 10/1/11 | MAA/GM |

CDM Smith
Camp Dresser & McKee
421 Fayetteville Street, Suite 1303
Raleigh, NC 27604
NC COA No. F-1255

| | | | |
|---|---|---|---|
| DRAWN BY : K.E. LOFTON | DATE : 8-12 | DWG. No. | |
| CHECKED BY : P.R. HOLSHOUSER | DATE : 12-12 | S04-033 | |
| DESIGN ENGINEER : P.R. HOLSHOUSER | DATE : 3-13 | | |

NORTH CAROLINA PROFESSIONAL SEAL 20668 ENGINEER PAUL R. HOLSHOUSER 3/19/2013

REVISIONS

| No. | BY: | DATE: | No. | BY: | DATE: |
|---|---|---|---|---|---|
| 1 | | | 3 | | |
| 2 | | | 4 | | |

SHEET No. S-218
TOTAL SHEETS 218

STD. No. BAS4

FILE: r:\model\R2303D\Structural\PLANS\Str_31R2303D_SD_Sht4_ss2.dgn
DATE: 3/5/2013 3:29:45 PM

B.M. #717 -BY12- STA. 12+32.0, 20'-0" RIGHT, R.R. SPIKE SET IN 20" OAK TREE, EL. 137.11'

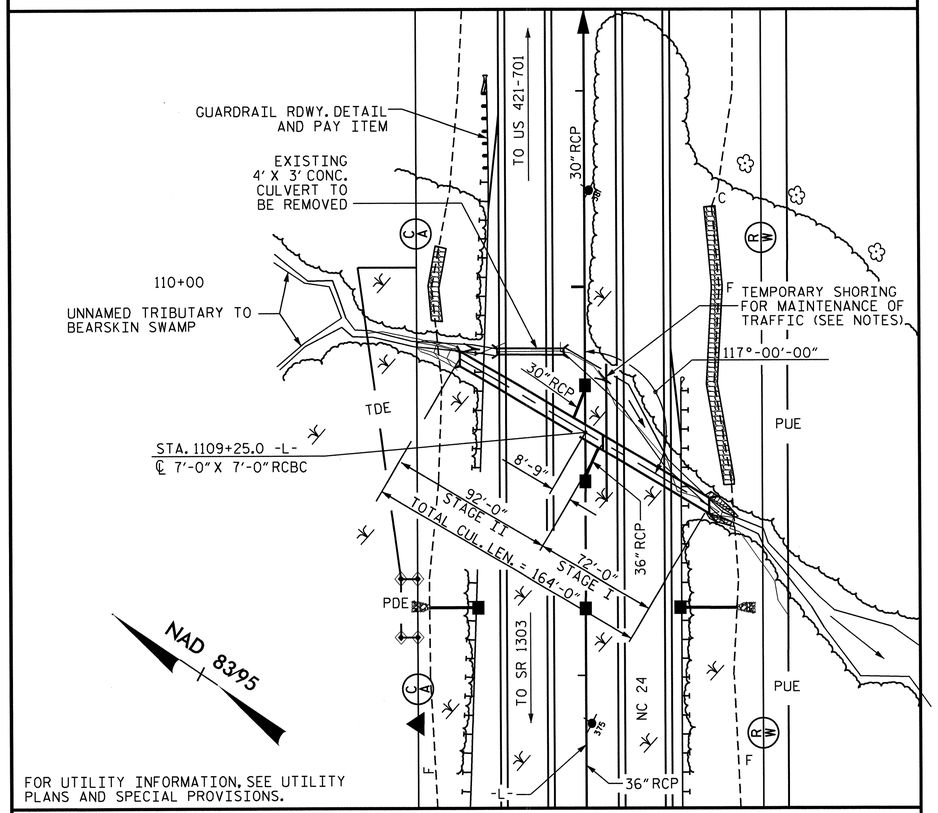


LOCATION SKETCH

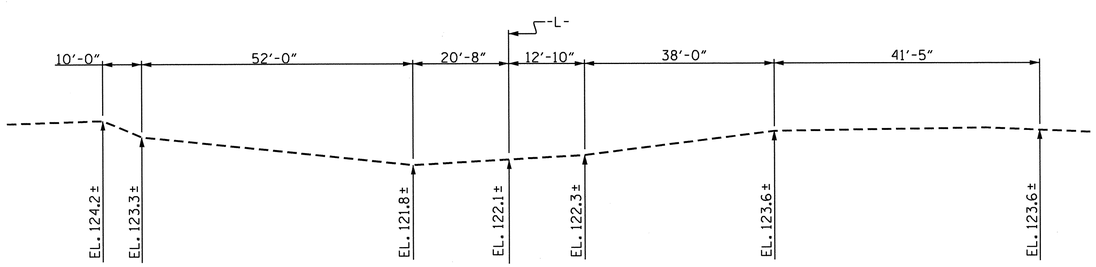


PROFILE ALONG ℄ CULVERT

## HYDRAULIC DATA

| | | |
|---|---|---|
| DESIGN DISCHARGE | = | 300 C.F.S. |
| FREQUENCY OF DESIGN FLOOD | = | 50 YR. |
| DESIGN HIGH WATER ELEVATION | = | 129.2' |
| DRAINAGE AREA | = | 0.22 SQ. MILES |
| BASE DISCHARGE (Q100) | = | 360 C.F.S. |
| BASE HIGH WATER ELEVATION | = | 129.9' |

## OVERTOPPING FLOOD DATA

| | | |
|---|---|---|
| OVERTOPPING DISCHARGE | = | 700 C.F.S. |
| FREQUENCY OF OVERTOPPING FLOOD | = | +500 YRS. |
| OVERTOPPING FLOOD ELEVATION | = | 135.6' |

## STRUCTURE QUANTITIES FOR STAGE I CONSTRUCTION

| | |
|---|---|
| CLASS A CONCRETE | |
| BARREL @ 0.761 CY/FT | 54.8 C.Y. |
| WINGS ETC. | 16.2 C.Y. |
| TOTAL | 71.0 C.Y. |
| REINFORCING STEEL | |
| BARREL | 7,213 LBS. |
| WINGS ETC. | 918 LBS. |
| TOTAL | 8,131 LBS. |
| FOUNDATION CONDITIONING MATERIAL | 63 TONS |
| CULVERT EXCAVATION | LUMP SUM |

## STRUCTURE QUANTITIES FOR STAGE II CONSTRUCTION

| | |
|---|---|
| CLASS A CONCRETE | |
| BARREL @ 0.761 CY/FT | 70.0 C.Y. |
| WINGS ETC. | 16.2 C.Y. |
| TOTAL | 86.2 C.Y. |
| REINFORCING STEEL | |
| BARREL | 9,144 LBS. |
| WINGS ETC. | 918 LBS. |
| TOTAL | 10,062 LBS. |
| FOUNDATION CONDITIONING MATERIAL | 80 TONS |
| CULVERT EXCAVATION | LUMP SUM |

## TOTAL STRUCTURE QUANTITIES

| | |
|---|---|
| CLASS A CONCRETE | |
| BARREL @ 0.761 CY/FT | 124.8 C.Y. |
| WINGS ETC. | 32.4 C.Y. |
| TOTAL | 157.2 C.Y. |
| REINFORCING STEEL | |
| BARREL | 16,357 LBS. |
| WINGS ETC. | 1,836 LBS. |
| TOTAL | 18,193 LBS. |
| FOUNDATION CONDITIONING MATERIAL | 143 TONS |
| CULVERT EXCAVATION | LUMP SUM |
| REMOVAL OF EXISTING STRUCTURE @ STA. 1109+25.00 -L- | LUMP SUM |

## NOTES

ASSUMED LIVE LOAD ----------HL-93 OR ALTERNATE LOADING.

DESIGN FILL---------- 6.0'

FOR OTHER DESIGN DATA AND NOTES SEE STANDARD NOTE SHEET.

3"Ø WEEP HOLES INDICATED TO BE IN ACCORDANCE WITH THE SPECIFICATIONS.

CONCRETE IN CULVERTS TO BE POURED IN THE FOLLOWING ORDER:

1. WING FOOTINGS AND FLOOR SLAB INCLUDING 4" OF ALL VERTICAL WALLS.
2. THE REMAINING PORTIONS OF THE WALLS AND WINGS FULL HEIGHT FOLLOWED BY ROOF SLAB AND HEADWALLS.

THE RESIDENT ENGINEER SHALL CHECK THE LENGTH OF CULVERT BEFORE STAKING IT OUT TO MAKE CERTAIN THAT IT WILL PROPERLY TAKE CARE OF THE FILL.

DIMENSIONS FOR WING LAYOUT AS WELL AS ADDITIONAL REINFORCING STEEL EMBEDDED IN BARREL ARE SHOWN ON WING SHEET.

TRANSVERSE CONSTRUCTION JOINTS SHALL BE USED IN THE BARREL, SPACED TO LIMIT THE POURS TO A MAXIMUM OF 70 FT. LOCATION OF JOINTS SHALL BE SUBJECT TO APPROVAL OF THE ENGINEER.

AT THE CONTRACTOR'S OPTION, HE MAY SPLICE THE VERTICAL REINFORCING STEEL IN THE INTERIOR FACE OF EXTERIOR WALL ABOVE LOWER WALL CONSTRUCTION JOINT. THE SPLICE LENGTH SHALL BE AS PROVIDED IN THE SPLICE LENGTH CHART SHOWN ON THE PLANS. EXTRA WEIGHT OF STEEL DUE TO THE SPLICES SHALL BE PAID FOR BY THE CONTRACTOR.

THE EXISTING 4' X 3' RCBC LOCATED AT THE PROJECT SITE SHALL BE REMOVED.

A 3 FOOT STRIP OF FILTER FABRIC SHALL BE ATTACHED TO THE FILL FACE OF THE WING COVERING THE ENTIRE LENGTH OF THE EXPANSION JOINT.

AT THE CONTRACTOR'S OPTION HE MAY SUBMIT, TO THE ENGINEER FOR APPROVAL, DESIGN AND DETAIL DRAWINGS FOR A PRECAST REINFORCED CONCRETE BOX CULVERT IN LIEU OF THE CAST-IN-PLACE CULVERT SHOWN ON THE PLANS. THE DESIGN SHALL PROVIDE THE SAME SIZE AND NUMBER OF BARRELS AS USED ON THE CAST-IN-PLACE DESIGN. FOR OPTIONAL PRECAST REINFORCED CONCRETE BOX CULVERT, SEE SPECIAL PROVISIONS.

FOR CULVERT DIVERSION DETAILS AND PAY ITEM, SEE EROSION CONTROL PLANS.

FOR SUBMITTAL OF WORKING DRAWINGS, SEE SPECIAL PROVISIONS.

FOR FALSEWORK AND FORMWORK, SEE SPECIAL PROVISIONS.

FOR CRANE SAFETY, SEE SPECIAL PROVISIONS.

FOR GROUT FOR STRUCTURES, SEE SPECIAL PROVISIONS.

FOR MAINTANCE OF TRAFFIC, SEE TRAFFIC CONTROL PLANS.

FOR LIMITS OF TEMPORARY SHORING FOR MAINTENANCE OF TRAFFIC, SEE TRAFFIC CONTROL PLANS.

FOR PAY ITEM FOR TEMPORARY SHORING, SEE ROADWAY PLANS.

PROJECT NO. R-2303D
SAMPSON COUNTY
STATION: 1109+25.00 -L-

SHEET 1 OF 7

STATE OF NORTH CAROLINA
DEPARTMENT OF TRANSPORTATION
RALEIGH

# SINGLE 7'-0" X 7'-0" CONCRETE BOX CULVERT

NORTH CAROLINA PROFESSIONAL SEAL 22274 ENGINEER OMAR R. AZIZI 6/24/13

NORTH CAROLINA PROFESSIONAL SEAL 23705 ENGINEER JAMES KEITH PASCHAL 6-24-13

| REVISIONS | | | | | | | | SHEET NO. C-1 |
|---|---|---|---|---|---|---|---|---|
| NO. | BY: | DATE: | NO. | BY: | DATE: | | | TOTAL SHEETS 14 |
| 1 | | | 3 | | | | | |
| 2 | | | 4 | | | | | |

STR. #5 STD. NO. CB331A

DRAWN BY : M. D. PISO DATE : 2/1/12
CHECKED BY : B. L. GREEN DATE : 7/16/12
DESIGN ENGINEER OF RECORD: O. PUIGCERVER DATE : 4/24/13

REVISED 11-13-91 BY E.L.R. CHECKED BY G.R.P.
ADDED 8-22-89

# LOAD AND RESISTANCE FACTOR RATING (LRFR) SUMMARY FOR REINFORCED CONCRETE BOX CULVERTS

| LEVEL | | VEHICLE | WEIGHT (W) (TONS) | CONTROLLING LOAD RATING (#) | MINIMUM RATING FACTORS (RF) | TONS = W × RF | STRENGTH I LIMIT STATE | | | | | | | | | COMMENT NUMBER |
|---|---|---|---|---|---|---|---|---|---|---|---|---|---|---|---|---|
| | | | | | | | LIVE-LOAD FACTORS $\gamma_{(LL)}$ | MOMENT | | | | SHEAR | | | | |
| | | | | | | | | RATING FACTOR | BOX NO. | ELEMENT TYPE | DISTANCE FROM LEFT END OF ELEMENT (ft) | RATING FACTOR | BOX NO. | ELEMENT TYPE | DISTANCE FROM LEFT END OF ELEMENT (ft) | |
| DESIGN LOAD RATING | | HL-93 (INVENTORY) | N/A | 1 | 1.00 | -- | 1.75 | 1.05 | 1 | TOP SLAB | 3.83 | 1.00 | 1 | BOTTOM SLAB | 0.81 | |
| | | HL-93 (OPERATING) | N/A | | 1.29 | -- | 1.35 | 1.36 | 1 | TOP SLAB | 3.83 | 1.29 | 1 | BOTTOM SLAB | 0.81 | |
| | | HS-20 (INVENTORY) | 36.000 | 2 | 1.05 | 37.68 | 1.75 | 1.05 | 1 | TOP SLAB | 3.83 | 1.28 | 1 | TOP SLAB | 0.81 | |
| | | HS-20 (OPERATING) | 36.000 | | 1.36 | 48.84 | 1.35 | 1.36 | 1 | TOP SLAB | 3.83 | 1.65 | 1 | TOP SLAB | 0.81 | |
| LEGAL LOAD RATING | SINGLE VEHICLE (SV) | SNSH | 13.500 | | 1.90 | 25.69 | 1.40 | 1.90 | 1 | TOP SLAB | 3.83 | 2.32 | 1 | TOP SLAB | 0.81 | |
| | | SNGARBS2 | 20.000 | | 1.78 | 35.60 | 1.40 | 1.78 | 1 | TOP SLAB | 3.83 | 2.17 | 1 | TOP SLAB | 0.81 | |
| | | SNAGRIS2 | 22.000 | | 1.90 | 41.87 | 1.40 | 1.90 | 1 | TOP SLAB | 3.83 | 2.32 | 1 | TOP SLAB | 0.81 | |
| | | SNCOTTS3 | 27.250 | 3 | 1.24 | 33.82 | 1.40 | 1.40 | 1 | TOP SLAB | 4.03 | 1.24 | 1 | BOTTOM SLAB | 0.81 | |
| | | SNAGGRS4 | 34.925 | | 1.63 | 56.93 | 1.40 | 1.84 | 1 | TOP SLAB | 3.64 | 1.63 | 1 | BOTTOM SLAB | 0.81 | |
| | | SNS5A | 35.550 | | 1.48 | 52.53 | 1.40 | 1.67 | 1 | TOP SLAB | 4.03 | 1.48 | 1 | BOTTOM SLAB | 0.81 | |
| | | SNS6A | 39.950 | | 1.48 | 59.03 | 1.40 | 1.67 | 1 | TOP SLAB | 4.03 | 1.48 | 1 | BOTTOM SLAB | 0.81 | |
| | | SNS7B | 42.000 | | 1.48 | 62.06 | 1.40 | 1.67 | 1 | TOP SLAB | 4.03 | 1.48 | 1 | BOTTOM SLAB | 0.81 | |
| | TRUCK TRACTOR SEMI-TRAILER (TTST) | TNAGRIT3 | 33.000 | | 1.90 | 62.08 | 1.40 | 1.90 | 1 | TOP SLAB | 3.83 | 2.32 | 1 | TOP SLAB | 0.81 | |
| | | TNT4A | 33.075 | | 1.48 | 48.87 | 1.40 | 1.67 | 1 | TOP SLAB | 4.03 | 1.48 | 1 | BOTTOM SLAB | 0.81 | |
| | | TNT6A | 41.600 | | 1.48 | 61.47 | 1.40 | 1.67 | 1 | TOP SLAB | 3.64 | 1.48 | 1 | BOTTOM SLAB | 0.81 | |
| | | TNT7A | 42.000 | | 1.48 | 62.06 | 1.40 | 1.67 | 1 | TOP SLAB | 3.64 | 1.48 | 1 | BOTTOM SLAB | 0.81 | |
| | | TNT7B | 42.000 | | 1.48 | 62.06 | 1.40 | 1.67 | 1 | TOP SLAB | 4.03 | 1.48 | 1 | BOTTOM SLAB | 0.81 | |
| | | TNAGRIT4 | 43.000 | | 1.41 | 60.49 | 1.40 | 1.59 | 1 | TOP SLAB | 4.03 | 1.41 | 1 | BOTTOM SLAB | 0.81 | |
| | | TNAGT5A | 45.000 | | 1.44 | 64.86 | 1.40 | 1.61 | 1 | TOP SLAB | 4.03 | 1.44 | 1 | BOTTOM SLAB | 0.81 | |
| | | TNAGT5B | 45.000 | | 1.48 | 66.49 | 1.40 | 1.67 | 1 | TOP SLAB | 3.64 | 1.48 | 1 | BOTTOM SLAB | 0.81 | |

## LOAD FACTORS:

DESIGN LOAD RATING FACTORS

| LOAD TYPE | MAX FACTOR | MIN FACTOR |
|---|---|---|
| DC | 1.25 | 0.90 |
| DW | 1.50 | 0.65 |
| EV | 1.30 | 0.90 |
| EH | 1.35 | 0.90 |
| ES | 1.35 | 0.90 |
| LS | 1.75 | -- |
| WA | 1.00 | -- |

## NOTE:

RATING FACTORS ARE BASED ON THE STRENGTH I LIMIT STATE.

## COMMENTS:

1.
2.
3.
4.

(#) CONTROLLING LOAD RATING

(1) DESIGN LOAD RATING (HL-93)

(2) DESIGN LOAD RATING (HS-20)

(3) LEGAL LOAD RATING **

** SEE CHART FOR VEHICLE TYPE

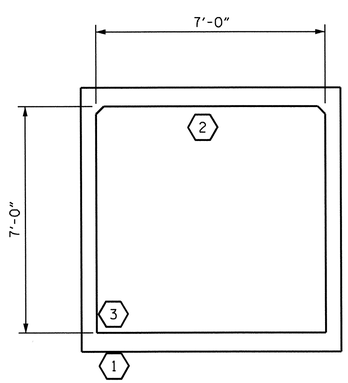


LRFR SUMMARY

(LOOKING DOWNSTREAM)

PROJECT NO. R-2303D

SAMPSON COUNTY

STATION: 1109+25.00 -L-

SHEET 2 OF 7

NORTH CAROLINA PROFESSIONAL SEAL 22005 ENGINEER A. KEITH PASCHAL

6-24-13

STATE OF NORTH CAROLINA
DEPARTMENT OF TRANSPORTATION
RALEIGH

STANDARD

LRFR SUMMARY FOR REINFORCED CONCRETE BOX CULVERTS (NON-INTERSTATE TRAFFIC)

| REVISIONS | | | | | | | | SHEET NO. |
|---|---|---|---|---|---|---|---|---|
| NO. | BY: | DATE: | | NO. | BY: | DATE: | | C-2 |
| 1 | | | | 3 | | | | TOTAL SHEETS |
| 2 | | | | 4 | | | | 14 |

DRAWN BY : B.N.BARODAWALA DATE : 6-21-13
CHECKED BY : O. PUIGCERVER DATE : 6-21-13
DESIGN ENGINEER OF RECORD: O. PUIGCERVER DATE : 6-21-13

21-JUN-2013 14:20
X:\R2303d\Structures\Plans\bgreen\1109+25.00 -L-\R-2303D_SD_CU_5.dgn
bbarodawala

STR. #5 STD. NO. LRFR5

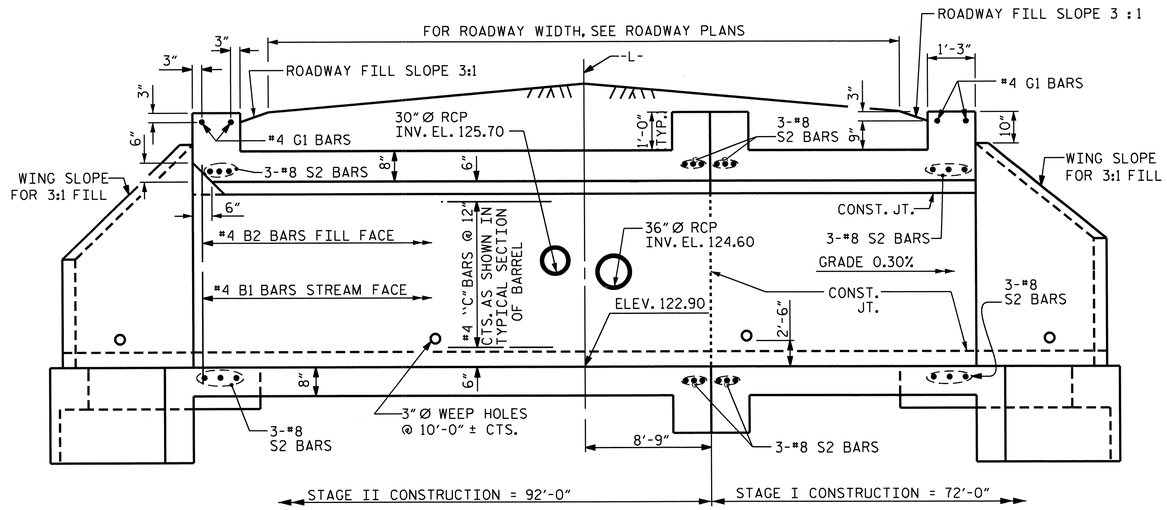


## CULVERT SECTION NORMAL TO ROADWAY

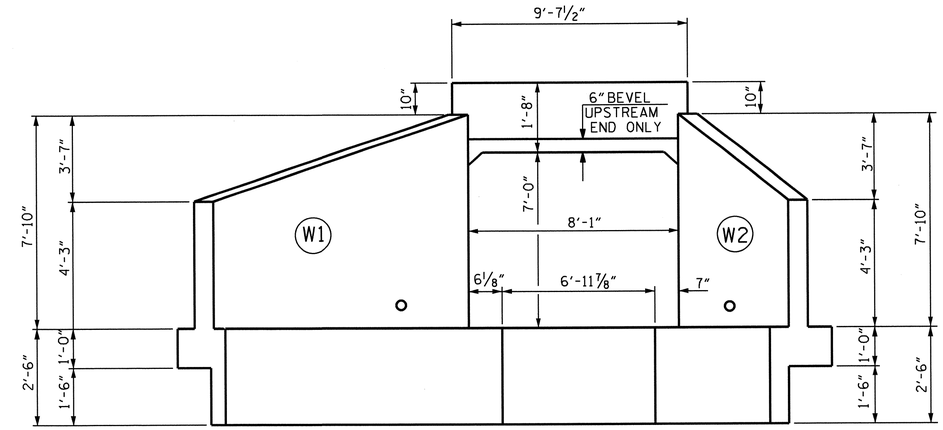


## END ELEVATION NORMAL TO SKEW

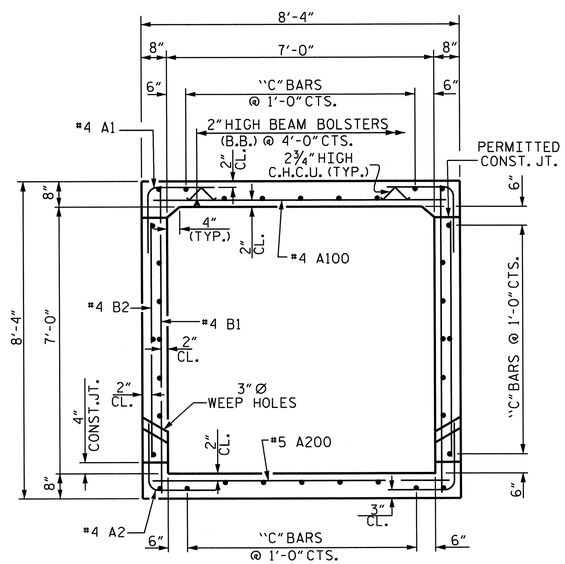


## RIGHT ANGLE SECTION OF BARREL

THERE ARE 34 "C" BARS IN SECTION OF BARREL

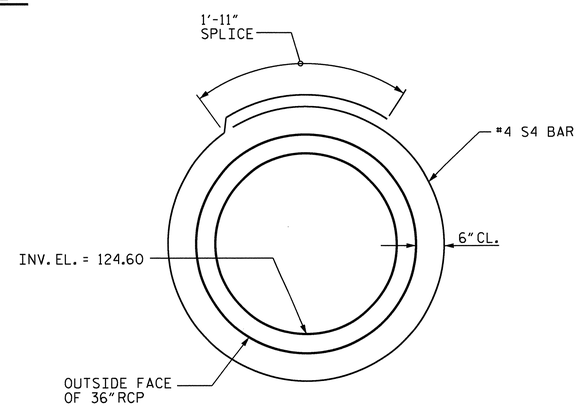


## VIEW A-A

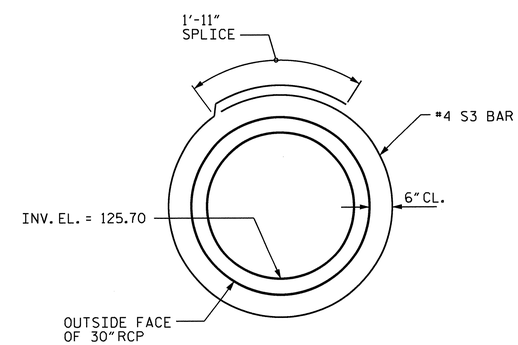


## VIEW B-B

"VIEW" TAKEN FROM PLAN OF FLOOR SLAB ON SHEET C-5

PROJECT NO. R-2303D
SAMPSON COUNTY
STATION: 1109+25.00 -L-

SHEET 3 OF 7

STATE OF NORTH CAROLINA
DEPARTMENT OF TRANSPORTATION
RALEIGH

BARREL STANDARD
SINGLE 7'-0" X 7'-0"
CONCRETE BOX CULVERT

NORTH CAROLINA PROFESSIONAL SEAL 22005 ENGINEER KEITH PASCHAL
6.24.13

| REVISIONS | | | | | | SHEET NO. |
|---|---|---|---|---|---|---|
| NO. | BY: | DATE: | NO. | BY: | DATE: | C-3 |
| 1 | | | 3 | | | TOTAL SHEETS |
| 2 | | | 4 | | | 14 |

STR. #5 STD. NO. CB331

| | | | |
|---|---|---|---|
| DRAWN BY : | M. D. PISO | DATE : | 2/1/12 |
| CHECKED BY : | B. L. GREEN | DATE : | 7/16/12 |
| DESIGN ENGINEER OF RECORD: | O. PUIGCERVER | DATE : | 4/24/13 |

REVISED 8-28-92 BY E.L.R. CHECKED BY G.R.P.
REVISED 8-22-99 BY A.R.B. CHECKED BY C.R.K.
REDRAWN 8-22-99
REVISED 11-19-99 BY M.M. CHECKED BY R.W.W.

24-JUN-2013 11:20
X:\R2303d\Structures\FinalPlans\R-2303D_str5\R-2303D_SD_CL
bbarodawala

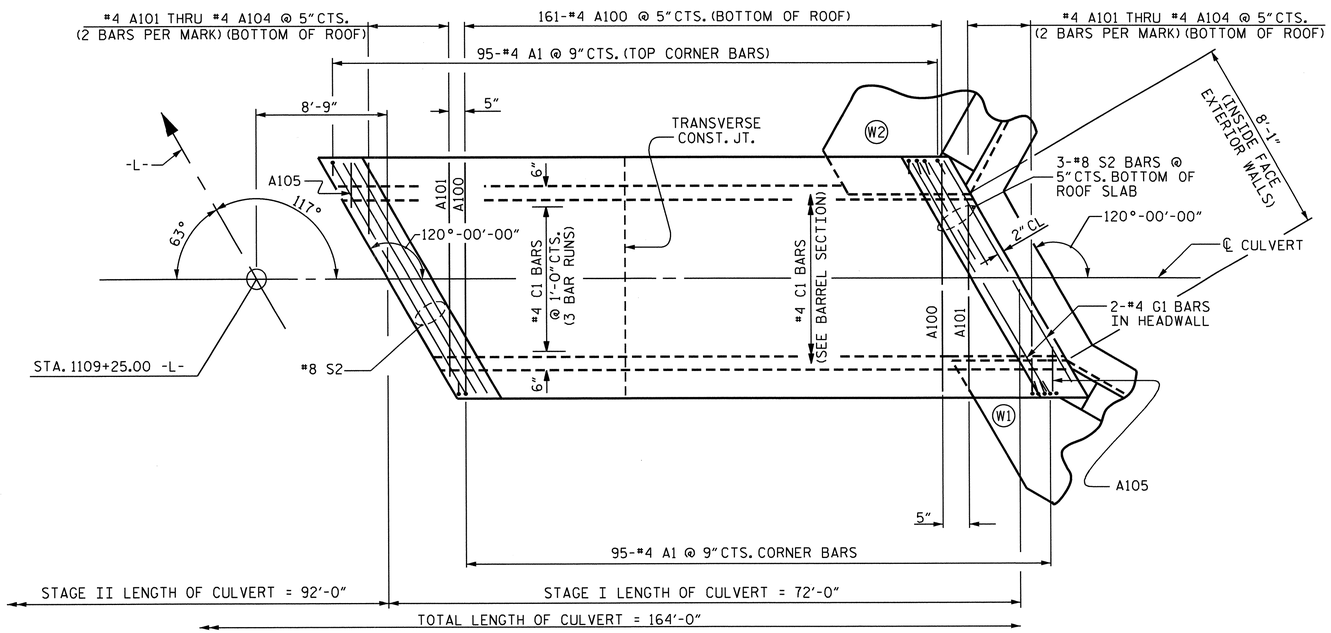


## PLAN ROOF SLAB

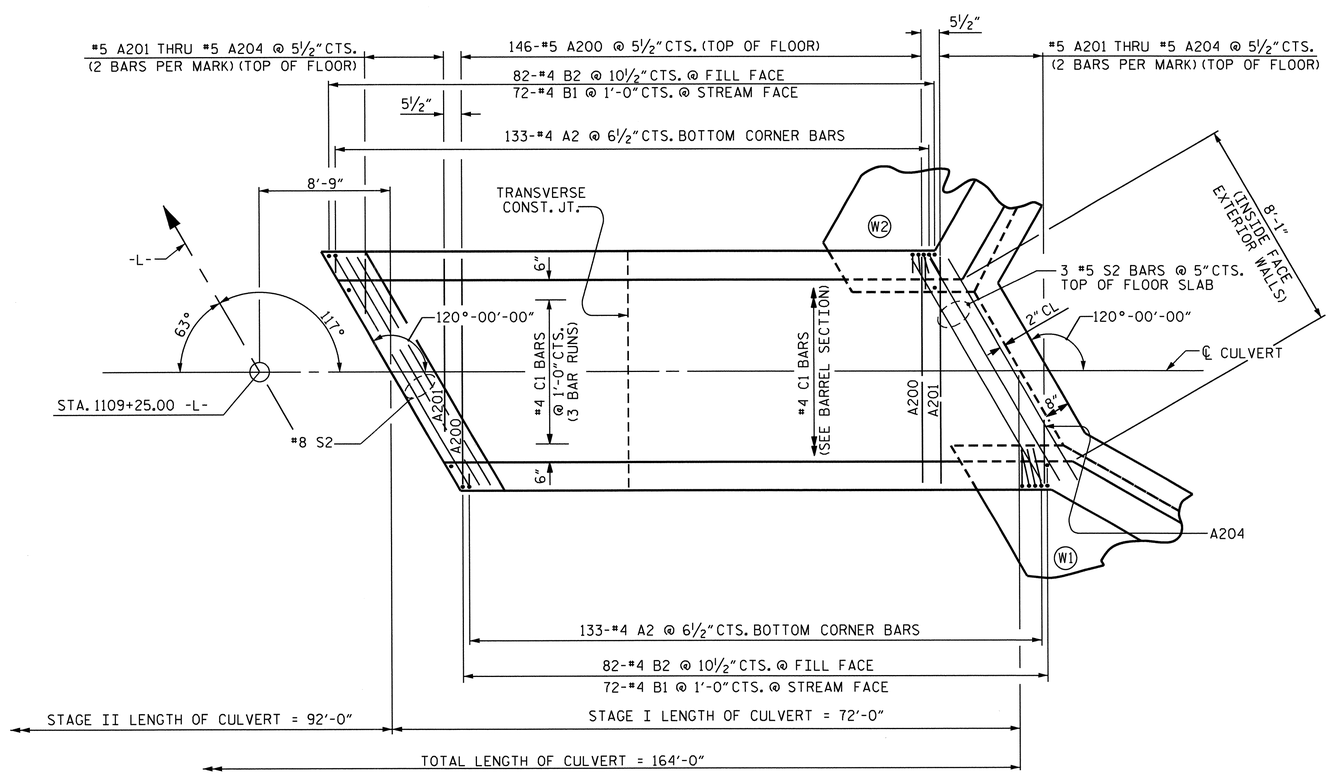


## PLAN FLOOR SLAB

## BAR TYPES

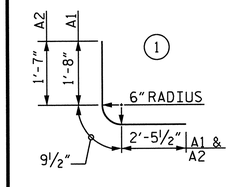


ALL BAR DIMENSIONS ARE OUT TO OUT.

### SPLICE LENGTH

| BAR | LENGTH |
|---|---|
| #4 | 1'-11" |

## BILL OF MATERIAL

### STAGE I

| BAR | NO. | SIZE | TYPE | LENGTH | WEIGHT |
|---|---|---|---|---|---|
| A1 | 190 | #4 | 1 | 4'-11" | 624 |
| A2 | 266 | #4 | 1 | 4'-10" | 859 |
| A100 | 161 | #4 | STR. | 8'-0" | 860 |
| A101 | 4 | #4 | STR. | 6'-10" | 18 |
| A102 | 4 | #4 | STR. | 5'-4" | 14 |
| A103 | 4 | #4 | STR. | 3'-11" | 10 |
| A104 | 4 | #4 | STR. | 2'-6" | 7 |
| A105 | 2 | #4 | STR. | 1'-9" | 2 |
| A200 | 146 | #5 | STR. | 8'-0" | 1218 |
| A201 | 4 | #5 | STR. | 6'-10" | 29 |
| A202 | 4 | #5 | STR. | 5'-3" | 22 |
| A203 | 4 | #5 | STR. | 3'-8" | 15 |
| A204 | 4 | #5 | STR. | 2'-1" | 9 |
| B1 | 144 | #4 | STR. | 7'-10" | 754 |
| B2 | 164 | #4 | STR. | 6'-4" | 694 |
| C1 | 102 | #4 | STR. | 26'-0" | 1772 |
| G1 | 2 | #4 | STR. | 9'-2" | 12 |
| S2 | 12 | #8 | STR. | 9'-2" | 294 |
| REINFORCING STEEL | | | | | 7,213 LBS. |

## STRUCTURE QUANTITIES FOR STAGE I CONSTRUCTION

| | |
|---|---|
| CLASS A CONCRETE | |
| BARREL @ 0.761 CY/FT | 54.8 C.Y. |
| WINGS ETC. | 16.2 C.Y. |
| TOTAL | 71.0 C.Y. |
| REINFORCING STEEL | |
| BARREL | 7,213 LBS. |
| WINGS ETC. | 918 LBS. |
| TOTAL | 8,131 LBS. |
| FOUNDATION CONDITIONING MATERIAL | 63 TONS |
| CULVERT EXCAVATION | LUMP SUM |

PROJECT NO. R-2303D
SAMPSON COUNTY
STATION: 1109+25.00 -L-

SHEET 4 OF 7

STATE OF NORTH CAROLINA
DEPARTMENT OF TRANSPORTATION
RALEIGH

# SINGLE 7'-0" x 7'-0" CONCRETE BOX CULVERT

STAGE I

NORTH CAROLINA PROFESSIONAL SEAL 22005 ENGINEER KEITH PASCHAL
6.24.13

| REVISIONS | | | | | | | SHEET NO. |
|---|---|---|---|---|---|---|---|
| NO. | BY: | DATE: | NO. | BY: | DATE: | | C-4 |
| 1 | | | 3 | | | | TOTAL SHEETS |
| 2 | | | 4 | | | | 14 |

STR. #5

REVISED 8-28-92 BY E.L.R. CHECKED BY C.R.P.
REVISED 8-22-89 BY A.R.B. CHECKED BY C.R.K.
REDRAWN 8-22-89
REVISED 11-19-99 BY M.M. CHECKED BY R.W.W.

| | | | |
|---|---|---|---|
| DRAWN BY : | M. D. PISO | DATE : | 2/1/12 |
| CHECKED BY : | B. L. GREEN | DATE : | 7/16/12 |
| DESIGN ENGINEER OF RECORD: | O. PUIGCERVER | DATE : | 4/24/13 |

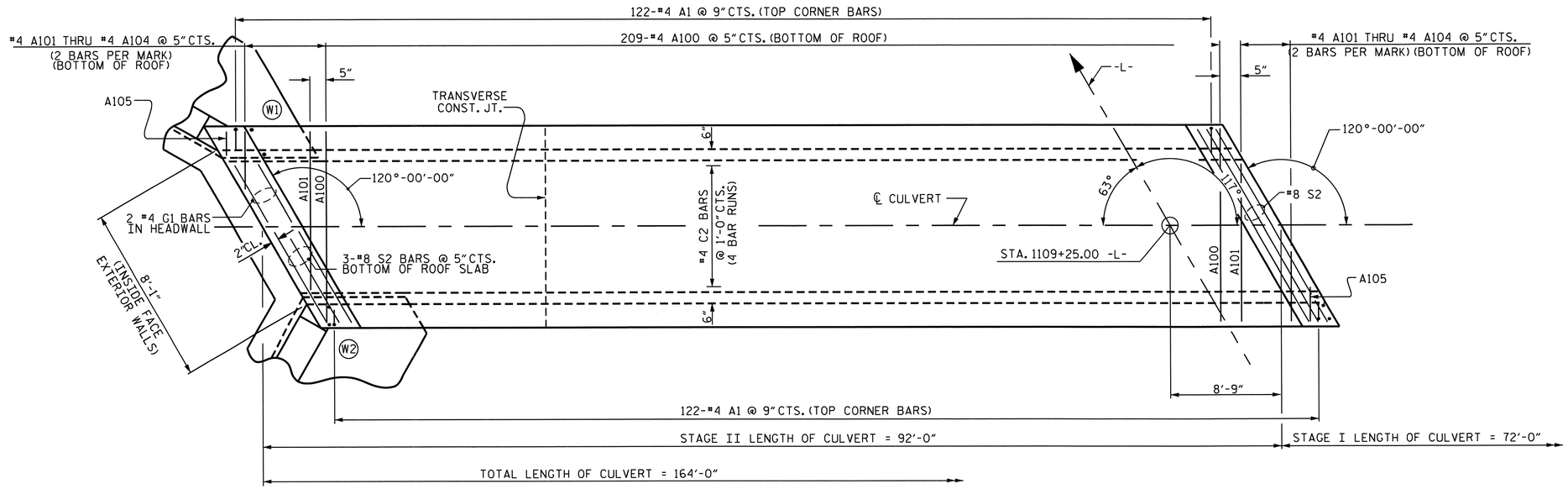


## PLAN ROOF SLAB

## BAR TYPES

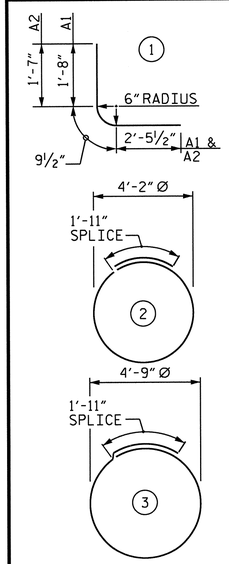


ALL BAR DIMENSIONS ARE OUT TO OUT.

## BILL OF MATERIAL

### STAGE II

| BAR | NO. | SIZE | TYPE | LENGTH | WEIGHT |
|---|---|---|---|---|---|
| A1 | 244 | #4 | 1 | 4'-11" | 801 |
| A2 | 340 | #4 | 1 | 4'-10" | 1098 |
| A100 | 209 | #4 | STR. | 8'-0" | 1117 |
| A101 | 4 | #4 | STR. | 6'-10" | 18 |
| A102 | 4 | #4 | STR. | 5'-4" | 14 |
| A103 | 4 | #4 | STR. | 3'-11" | 10 |
| A104 | 4 | #4 | STR. | 2'-6" | 7 |
| A105 | 2 | #4 | STR. | 1'-9" | 2 |
| A200 | 190 | #5 | STR. | 8'-0" | 1585 |
| A201 | 4 | #5 | STR. | 6'-10" | 29 |
| A202 | 4 | #5 | STR. | 5'-3" | 22 |
| A203 | 4 | #5 | STR. | 3'-8" | 15 |
| A204 | 4 | #5 | STR. | 2'-1" | 9 |
| B1 | 184 | #4 | STR. | 7'-10" | 963 |
| B2 | 210 | #4 | STR. | 6'-4" | 888 |
| C2 | 136 | #4 | STR. | 24'-5" | 2218 |
| G1 | 2 | #4 | STR. | 9'-2" | 12 |
| S2 | 12 | #8 | STR. | 9'-2" | 294 |
| S3 | 2 | #4 | 2 | 15'-0" | 20 |
| S4 | 2 | #4 | 3 | 16'-10" | 22 |
| REINFORCING STEEL | | | | | 9,144 LBS. |

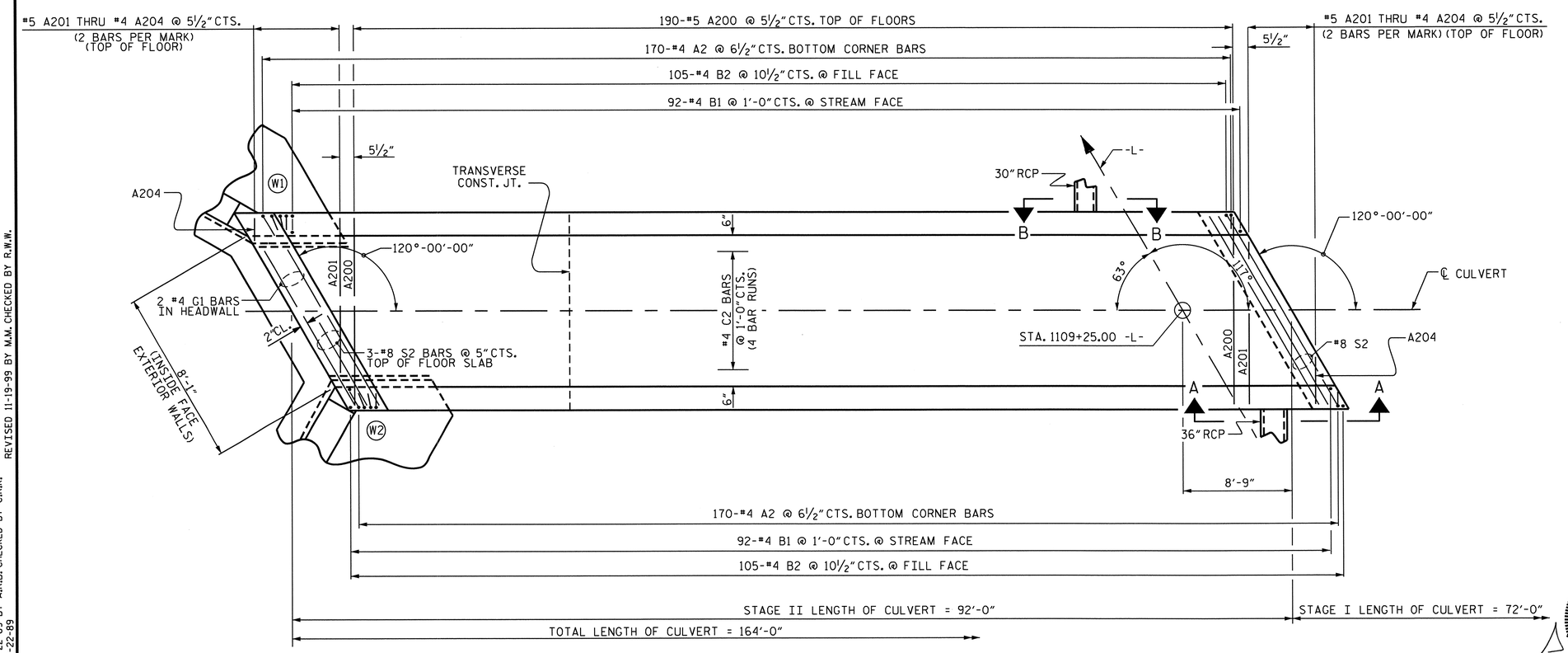


## PLAN FLOOR SLAB

FOR VIEWS A-A, AND B-B, SEE SHEET C-3

## SPLICE LENGTH

| BAR | LENGTH |
|---|---|
| #4 C2 | 1'-11" |

## STRUCTURE QUANTITIES FOR STAGE II CONSTRUCTION

| | | |
|---|---|---|
| CLASS A CONCRETE | | |
| BARREL @ | 0.761 CY/FT | 70.0 C.Y. |
| WINGS ETC. | | 16.2 C.Y. |
| TOTAL | | 86.2 C.Y. |
| REINFORCING STEEL | | |
| BARREL | | 9,144 LBS. |
| WINGS ETC. | | 918 LBS. |
| TOTAL | | 10,062 LBS. |
| FOUNDATION CONDITIONING MATERIAL | | 80 TONS |
| CULVERT EXCAVATION | | LUMP SUM |

PROJECT NO. R-2303D

SAMPSON COUNTY

STATION: 1109+25.00 -L-

SHEET 5 OF 7

STATE OF NORTH CAROLINA
DEPARTMENT OF TRANSPORTATION
RALEIGH

# SINGLE 7'-0" X 7'-0" CONCRETE BOX CULVERT

## STAGE II

| REVISIONS | | | | | | | SHEET NO. |
|---|---|---|---|---|---|---|---|
| NO. | BY: | DATE: | NO. | BY: | DATE: | | C-5 |
| 1 | | | 3 | | | | TOTAL SHEETS |
| 2 | | | 4 | | | | 14 |

STR. #5

NORTH CAROLINA PROFESSIONAL SEAL 22005 ENGINEER KEITH PASCHAL
6.24.13

| | | | |
|---|---|---|---|
| DRAWN BY : | M. D. PISO | DATE : | 2/1/12 |
| CHECKED BY : | B. L. GREEN | DATE : | 7/16/12 |
| DESIGN ENGINEER OF RECORD: | O. PUIGCERVER | DATE : | 4/24/13 |

REVISED 11-19-99 BY M.M. CHECKED BY R.W.W.
REVISED 8-28-92 BY E.L.R. CHECKED BY G.R.P.
REVISED 8-22-89 BY A.R.B. CHECKED BY C.R.K.
REDRAWN 8-22-89

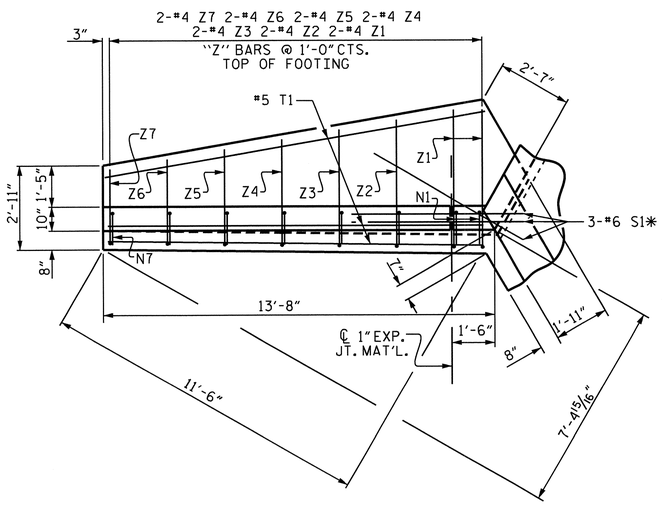


PLAN W2

* S1 @ BOTTOM OF FLOOR SLAB & FOOTING

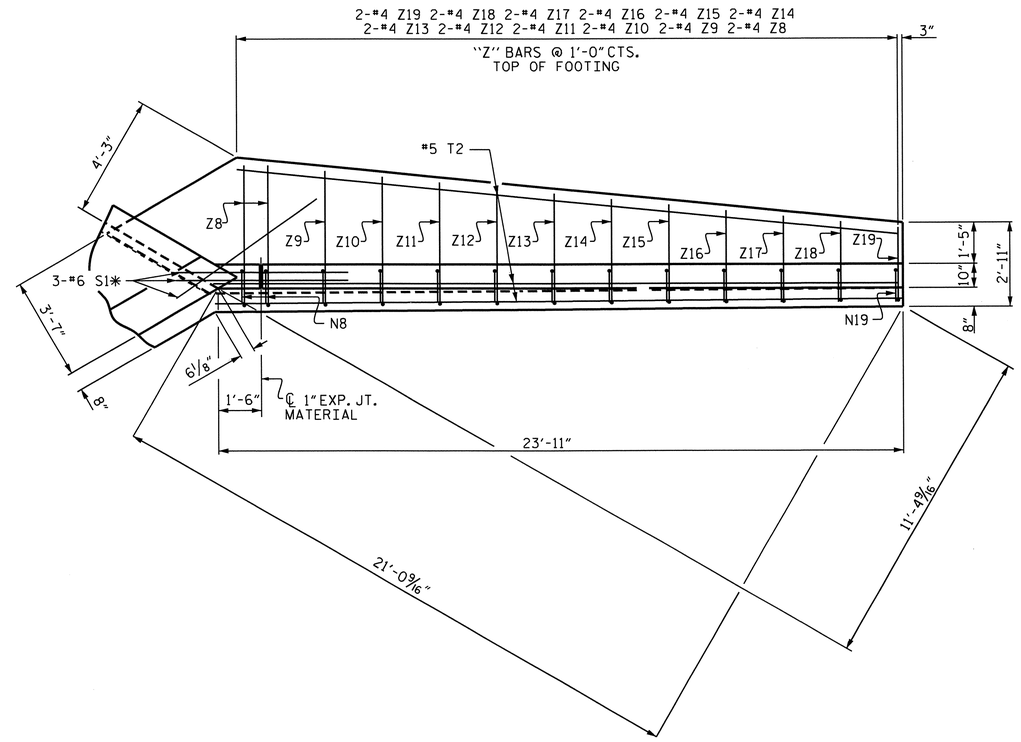


PLAN W1

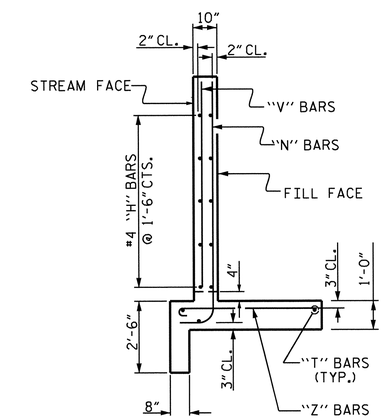


TYPICAL WING SECTION

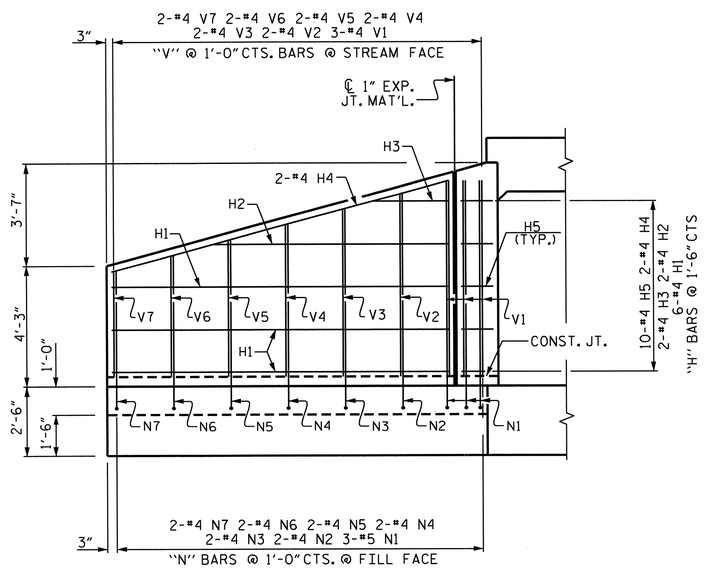


ELEVATION W2

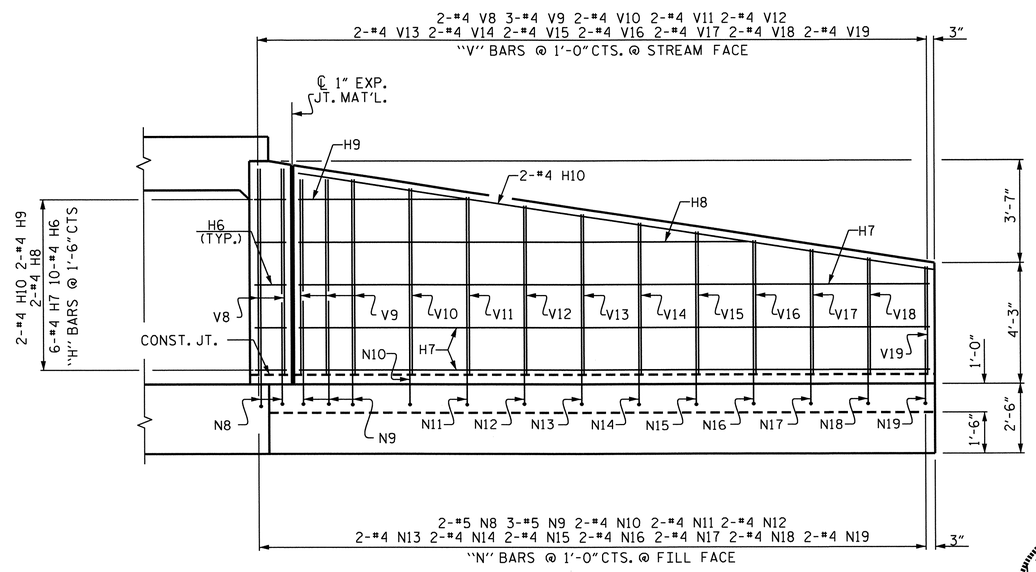


ELEVATION W1

PROJECT NO. R-2303D

SAMPSON COUNTY

STATION: 1109+25.00 -L-

SHEET 6 OF 7

STATE OF NORTH CAROLINA
DEPARTMENT OF TRANSPORTATION
RALEIGH

# WINGS FOR CONCRETE BOX CULVERT

H = 7'-0" SLOPE = 3:1

120° SKEW

NORTH CAROLINA PROFESSIONAL SEAL 22006 ENGINEER KEITH PASCHAL

6-24-13

| REVISIONS | | | | | | SHEET NO. |
|---|---|---|---|---|---|---|
| NO. | BY: | DATE: | NO. | BY: | DATE: | C-6 |
| 1 | | | 3 | | | TOTAL SHEETS |
| 2 | | | 4 | | | C-7 |

STR. #5

| | | | |
|---|---|---|---|
| DRAWN BY : | M. D. PISO | DATE : | 2/1/12 |
| CHECKED BY : | B. L. GREEN | DATE : | 7/16/12 |
| DESIGN ENGINEER OF RECORD: | O. PUIGCERVER | DATE : | 4/24/13 |

21-JUN-2013 14:20
X:\R2303d\Structures\Plans\bgreen\1109+25.00 -L-\R-2303D_SD_CU_5.dgn
bbarodawala

# BAR TYPES

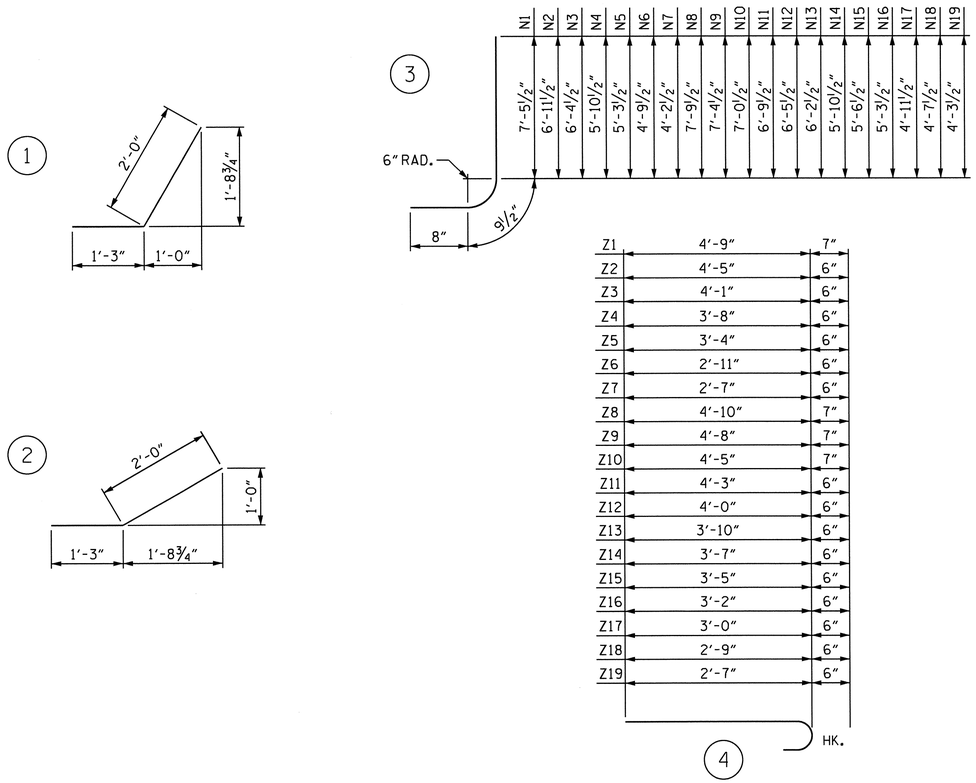


ALL DIMENSIONS ARE OUT TO OUT.

# BILL OF MATERIAL FOR TWO WINGS

| BAR | NO. | SIZE | TYPE | LENGTH | WEIGHT | BAR | NO. | SIZE | TYPE | LENGTH | WEIGHT |
|---|---|---|---|---|---|---|---|---|---|---|---|
| H1 | 6 | #4 | STR. | 11'-9" | 47 | V1 | 3 | #4 | STR. | 6'-10" | 14 |
| H2 | 2 | #4 | STR. | 8'-2" | 11 | V2 | 2 | #4 | STR. | 6'-5" | 9 |
| H3 | 2 | #4 | STR. | 2'-7" | 3 | V3 | 2 | #4 | STR. | 5'-10" | 8 |
| H4 | 2 | #4 | STR. | 12'-2" | 16 | V4 | 2 | #4 | STR. | 5'-4" | 7 |
| H5 | 10 | #4 | 1 | 3'-3" | 22 | V5 | 2 | #4 | STR. | 4'-9" | 6 |
| H6 | 10 | #4 | 2 | 3'-3" | 22 | V6 | 2 | #4 | STR. | 4'-3" | 6 |
| H7 | 6 | #4 | STR. | 22'-0" | 88 | V7 | 2 | #4 | STR. | 3'-8" | 5 |
| H8 | 2 | #4 | STR. | 15'-8" | 21 | V8 | 2 | #4 | STR. | 7'-3" | 10 |
| H9 | 2 | #4 | STR. | 5'-11" | 8 | V9 | 3 | #4 | STR. | 6'-10" | 14 |
| H10 | 2 | #4 | STR. | 22'-3" | 30 | V10 | 2 | #4 | STR. | 6'-6" | 9 |
| | | | | | | V11 | 2 | #4 | STR. | 6'-3" | 8 |
| N1 | 3 | #5 | 3 | 8'-11" | 28 | V12 | 2 | #4 | STR. | 5'-11" | 8 |
| N2 | 2 | #4 | 3 | 8'-5" | 11 | V13 | 2 | #4 | STR. | 5'-7" | 7 |
| N3 | 2 | #4 | 3 | 7'-10" | 10 | V14 | 2 | #4 | STR. | 5'-3" | 7 |
| N4 | 2 | #4 | 3 | 7'-4" | 10 | V15 | 2 | #4 | STR. | 5'-0" | 7 |
| N5 | 2 | #4 | 3 | 6'-9" | 9 | V16 | 2 | #4 | STR. | 4'-8" | 6 |
| N6 | 2 | #4 | 3 | 6'-3" | 8 | V17 | 2 | #4 | STR. | 4'-4" | 6 |
| N7 | 2 | #4 | 3 | 5'-8" | 8 | V18 | 2 | #4 | STR. | 4'-1" | 5 |
| N8 | 2 | #5 | 3 | 9'-3" | 19 | V19 | 2 | #4 | STR. | 3'-9" | 5 |
| N9 | 3 | #5 | 3 | 8'-10" | 28 | | | | | | |
| N10 | 2 | #4 | 3 | 8'-6" | 11 | Z1 | 2 | #4 | 4 | 5'-4" | 7 |
| N11 | 2 | #4 | 3 | 8'-3" | 11 | Z2 | 2 | #4 | 4 | 4'-11" | 7 |
| N12 | 2 | #4 | 3 | 7'-11" | 11 | Z3 | 2 | #4 | 4 | 4'-7" | 6 |
| N13 | 2 | #4 | 3 | 7'-8" | 10 | Z4 | 2 | #4 | 4 | 4'-2" | 6 |
| N14 | 2 | #4 | 3 | 7'-4" | 10 | Z5 | 2 | #4 | 4 | 3'-10" | 5 |
| N15 | 2 | #4 | 3 | 7'-0" | 9 | Z6 | 2 | #4 | 4 | 3'-5" | 5 |
| N16 | 2 | #4 | 3 | 6'-9" | 9 | Z7 | 2 | #4 | 4 | 3'-1" | 4 |
| N17 | 2 | #4 | 3 | 6'-5" | 9 | Z8 | 2 | #4 | 4 | 5'-5" | 7 |
| N18 | 2 | #4 | 3 | 6'-1" | 8 | Z9 | 2 | #4 | 4 | 5'-3" | 7 |
| N19 | 2 | #4 | 3 | 5'-9" | 8 | Z10 | 2 | #4 | 4 | 5'-0" | 7 |
| | | | | | | Z11 | 2 | #4 | 4 | 4'-9" | 6 |
| S1 | 6 | #6 | STR. | 6'-0 | 54 | Z12 | 2 | #4 | 4 | 4'-6" | 6 |
| | | | | | | Z13 | 2 | #4 | 4 | 4'-4" | 6 |
| T1 | 3 | #5 | STR. | 13'-4" | 42 | Z14 | 2 | #4 | 4 | 4'-1" | 5 |
| T2 | 3 | #5 | STR. | 23'-4" | 73 | Z15 | 2 | #4 | 4 | 3'-11" | 5 |
| | | | | | | Z16 | 2 | #4 | 4 | 3'-8" | 5 |
| | | | | | | Z17 | 2 | #4 | 4 | 3'-6" | 5 |
| | | | | | | Z18 | 2 | #4 | 4 | 3'-3" | 4 |
| | | | | | | Z19 | 2 | #4 | 4 | 3'-1" | 4 |

| | |
|---|---|
| REINFORCING STEEL | |
| FOR 2 WINGS | 918 LBS. |
| CLASS A CONCRETE | |
| 2 WINGS | 14.7 C.Y. |
| 1 HEADWALL | 0.4 C.Y. |
| 1 END CURTAIN WALL | 0.4 C.Y. |
| 2 EDGE BEAMS | 0.7 C.Y. |
| TOTAL CONCRETE | 16.2 C.Y. |

PROJECT NO. R-2303D
SAMPSON COUNTY
STATION: 1109+25.00 -L-

SHEET 7 OF 7

STATE OF NORTH CAROLINA
DEPARTMENT OF TRANSPORTATION
RALEIGH

BILL OF MATERIAL
CONCRETE BOX CULVERT
WINGS

NORTH CAROLINA PROFESSIONAL SEAL 22005 ENGINEER R. KEITH PASCHAL
6.24.13

| REVISIONS | | | | | | | SHEET NO. C-7 |
|---|---|---|---|---|---|---|---|
| NO. | BY: | DATE: | NO. | BY: | DATE: | | TOTAL SHEETS 14 |
| 1 | | | 3 | | | | |
| 2 | | | 4 | | | | |

DRAWN BY : M. D. PISO DATE : 2/1/12
CHECKED BY : B. L. GREEN DATE : 7/16/12
DESIGN ENGINEER OF RECORD: O. PUIGCERVER DATE : 4/24/13

21-JUN-2013 14:21
X:\R2303d\Structures\Plans\bgreen\1109+25.00 -L-\R-2303D_SD_CU_5.dgn
bbarodawala

STR. #5

B.M. #104 -BL- STA. 1230+73, 270 FT. LEFT OF RR SPIKE AT BASE OF 20" PINE TREE. EL. 138.08'

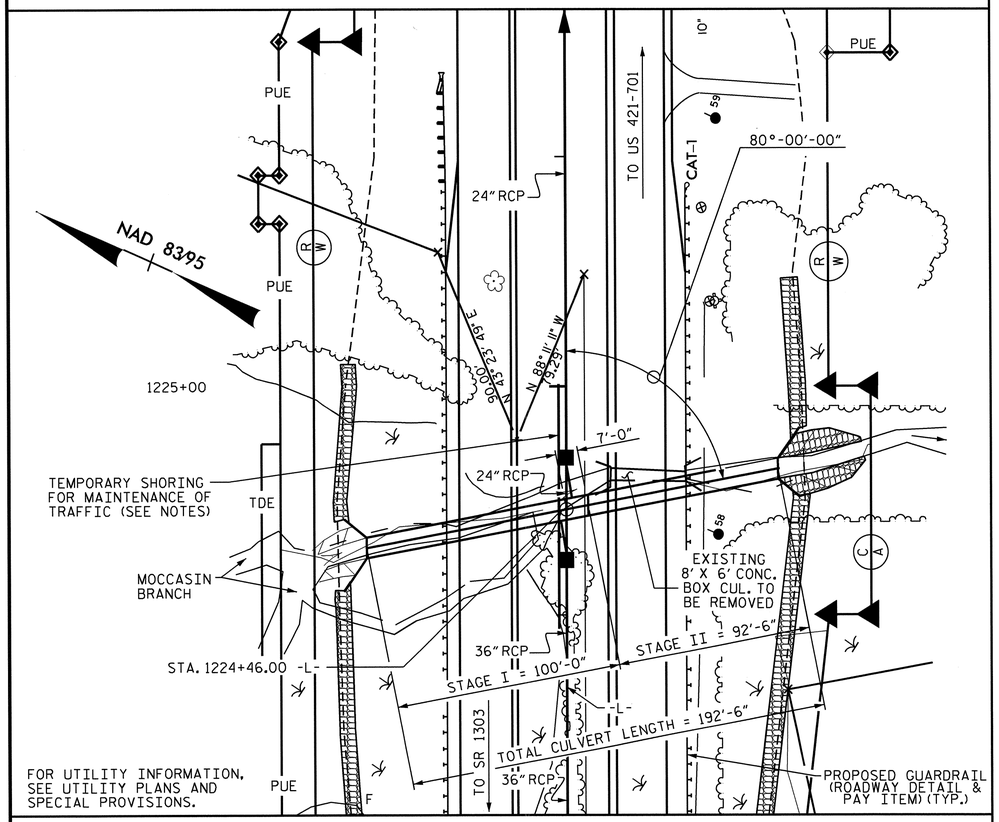


## LOCATION SKETCH

## NOTES

ASSUMED LIVE LOAD ----------HL-93 OR ALTERNATE LOADING.

DESIGN FILL----------14.0'

FOR OTHER DESIGN DATA AND NOTES SEE STANDARD NOTE SHEET.

3"Ø WEEP HOLES INDICATED TO BE IN ACCORDANCE WITH THE SPECIFICATIONS.

CONCRETE IN CULVERTS TO BE POURED IN THE FOLLOWING ORDER:

1. WING FOOTINGS AND FLOOR SLAB INCLUDING 4" OF ALL VERTICAL WALLS.

2. THE REMAINING PORTIONS OF THE WALLS AND WINGS FULL HEIGHT FOLLOWED BY ROOF SLAB AND HEADWALLS.

THE RESIDENT ENGINEER SHALL CHECK THE LENGTH OF CULVERT BEFORE STAKING IT OUT TO MAKE CERTAIN THAT IT WILL PROPERLY TAKE CARE OF THE FILL.

DIMENSIONS FOR WING LAYOUT AS WELL AS ADDITIONAL REINFORCING STEEL EMBEDDED IN BARREL ARE SHOWN ON WING SHEET.

TRANSVERSE CONSTRUCTION JOINTS SHALL BE USED IN THE BARREL, SPACED TO LIMIT THE POURS TO A MAXIMUM OF 70 FT. LOCATION OF JOINTS SHALL BE SUBJECT TO APPROVAL OF THE ENGINEER.

AT THE CONTRACTOR'S OPTION, HE MAY SPLICE THE VERTICAL REINFORCING STEELIN THE INTERIOR FACE OF EXTERIOR WALL ABOVE LOWER WALL CONSTRUCTION JOINT. THE SPLICE LENGTH SHALL BE AS PROVIDED IN THE SPLICE LENGTH CHART SHOWN ON THE PLANS. EXTRA WEIGHT OF STEEL DUE TO THE SPLICES SHALL BE PAID FOR BY THE CONTRACTOR.

NO PRECAST REINFORCED BOX CULVERT OPTION WILL BE ALLOWED.

THE EXISTING 8' X 6' RCBC LOCATED AT THE PROJECT SITE SHALL BE REMOVED.

A 3 FOOT STRIP OF FILTER FABRIC SHALL BE ATTACHED TO THE FILL FACE OF THE WING COVERING THE ENTIRE LENGTH OF THE EXPANSION JOINT.

FOR CULVERT DIVERSION DETAILS AND PAY ITEM, SEE EROSION CONTROL PLANS.

FOR SUBMITTAL OF WORKING DRAWINGS, SEE SPECIAL PROVISIONS.

FOR FALSEWORK AND FORMWORK, SEE SPECIAL PROVISIONS.

FOR CRANE SAFETY, SEE SPECIAL PROVISIONS.

FOR GROUT FOR STRUCTURES, SEE SPECIAL PROVISIONS.

FOR LIMITS OF TEMPORARY SHORING FOR MAINTENANCE OF TRAFFIC, SEE TRAFFIC CONTROL PLANS.

FOR PAY ITEM FOR TEMPORARY SHORING, SEE ROADWAY PLANS.

FOR MAINTANCE OF TRAFFIC, SEE TRAFFIC CONTROL PLANS.

## HYDRAULIC DATA

| | | |
|---|---|---|
| DESIGN DISCHARGE | = | 600 C.F.S. |
| FREQUENCY OF DESIGN FLOOD | = | 50 YR. |
| DESIGN HIGH WATER ELEVATION | = | 128.4' |
| DRAINAGE AREA | = | 0.78 SQ. MILES |
| BASE DISCHARGE (Q100) | = | 750 C.F.S. |
| BASE HIGH WATER | = | 130.1' |

## OVERTOPPING FLOOD DATA

| | | |
|---|---|---|
| OVERTOPPING DISCHARGE | = | -- |
| FREQUENCY OF OVERTOPPING FLOOD | = | + 500 YR. |
| OVERTOPPING FLOOD ELEVATION | = | 139.8' |

## STRUCTURE QUANTITIES FOR STAGE I CONSTRUCTION

| | | |
|---|---|---|
| CLASS A CONCRETE | | |
| BARREL @ | 1.134 CY/FT | 113.4 C.Y. |
| WINGS ETC. | | 22.4 C.Y. |
| TOTAL | | 135.8 C.Y. |
| REINFORCING STEEL | | |
| BARREL | | 16,540 LBS. |
| WINGS ETC. | | 1,385 LBS. |
| TOTAL | | 17,925 LBS. |
| FOUNDATION CONDITIONING MATERIAL | | 101 TONS |
| CULVERT EXCAVATION | | LUMP SUM |

## STRUCTURE QUANTITIES FOR STAGE II CONSTRUCTION

| | | |
|---|---|---|
| CLASS A CONCRETE | | |
| BARREL @ | 1.134 CY/FT | 104.9 C.Y. |
| WINGS ETC. | | 22.4 C.Y. |
| TOTAL | | 127.3 C.Y. |
| REINFORCING STEEL | | |
| BARREL | | 15,238 LBS. |
| WINGS ETC. | | 1,385 LBS. |
| TOTAL | | 16,623 LBS. |
| FOUNDATION CONDITIONING MATERIAL | | 93 TONS |
| CULVERT EXCAVATION | | LUMP SUM |

## TOTAL STRUCTURE QUANTITIES

| | | |
|---|---|---|
| CLASS A CONCRETE | | |
| BARREL @ | 1.134 CY/FT | 218.3 C.Y. |
| WINGS ETC. | | 44.8 C.Y. |
| TOTAL | | 263.1 C.Y. |
| REINFORCING STEEL | | |
| BARREL | | 31,778 LBS. |
| WINGS ETC. | | 2,770 LBS. |
| TOTAL | | 34,548 LBS. |
| FOUNDATION CONDITIONING MATERIAL | | 194 TONS |
| CULVERT EXCAVATION | | LUMP SUM |
| REMOVAL OF EXISTING STRUCTURE @ STA. 1224+46.00 -L- | | LUMP SUM |

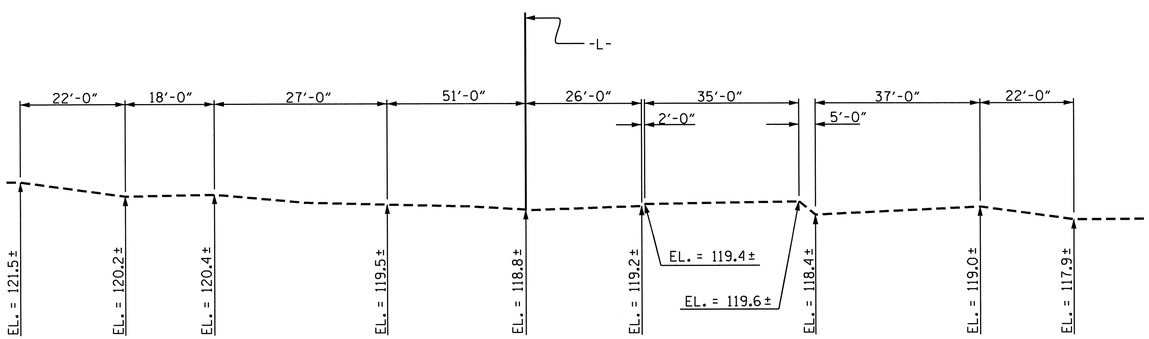


## PROFILE ALONG ℄ CULVERT

PROJECT NO. R-2303D
SAMPSON COUNTY
STATION: 1224+46.00 -L-

SHEET 1 OF 7

STATE OF NORTH CAROLINA
DEPARTMENT OF TRANSPORTATION
RALEIGH

# SINGLE 9 FT. X 9 FT. CONCRETE BOX CULVERT

NORTH CAROLINA PROFESSIONAL SEAL 22274 ENGINEER OMAR R. AZIZI 6/24/13

NORTH CAROLINA PROFESSIONAL SEAL 22008 ENGINEER A. KEITH PASCHAL 6-24-13

REVISED 11-13-91 BY E.L.R. CHECKED BY G.R.P.
ADDED 8-22-89

DRAWN BY : M. D. PISO DATE : 2/1/12
CHECKED BY : B. L. GREEN DATE : 7/16/12
DESIGN ENGINEER OF RECORD: O. PUIGCERVER DATE : 4/24/13

| REVISIONS | | | | | | SHEET NO. |
|---|---|---|---|---|---|---|
| NO. | BY: | DATE: | NO. | BY: | DATE: | C-8 |
| 1 | | | 3 | | | TOTAL SHEETS |
| 2 | | | 4 | | | 14 |

STR. #6 STD. NO. CB21A

# LOAD AND RESISTANCE FACTOR RATING (LRFR) SUMMARY FOR REINFORCED CONCRETE BOX CULVERTS

| LEVEL | | VEHICLE | WEIGHT (W) (TONS) | CONTROLLING LOAD RATING (#) | MINIMUM RATING FACTORS (RF) | TONS = W x RF | STRENGTH I LIMIT STATE | | | | | | | | | COMMENT NUMBER |
|---|---|---|---|---|---|---|---|---|---|---|---|---|---|---|---|---|
| | | | | | | | LIVE-LOAD FACTORS ($\gamma_{(LL)}$) | MOMENT | | | | SHEAR | | | | |
| | | | | | | | | RATING FACTOR | BOX NO. | ELEMENT TYPE | DISTANCE FROM LEFT END OF ELEMENT (ft) | RATING FACTOR | BOX NO. | ELEMENT TYPE | DISTANCE FROM LEFT END OF ELEMENT (ft) | |
| DESIGN LOAD RATING | | HL-93 (INVENTORY) | N/A | 1 | 2.71 | -- | 1.75 | 2.71 | 1 | EXTERIOR WALL | 5.20 | 3.87 | 1 | EXTERIOR WALL | 8.94 | |
| | | HL-93 (OPERATING) | N/A | | 3.51 | -- | 1.35 | 3.51 | 1 | EXTERIOR WALL | 5.20 | 5.02 | 1 | EXTERIOR WALL | 8.94 | |
| | | HS-20 (INVENTORY) | 36.000 | 2 | 2.71 | 97.60 | 1.75 | 2.71 | 1 | EXTERIOR WALL | 5.20 | 3.87 | 1 | EXTERIOR WALL | 8.94 | |
| | | HS-20 (OPERATING) | 36.000 | | 3.51 | 126.52 | 1.35 | 3.51 | 1 | EXTERIOR WALL | 5.20 | 5.02 | 1 | EXTERIOR WALL | 8.94 | |
| LEGAL LOAD RATING | SINGLE VEHICLE (SV) | SNSH | 13.500 | 3 | 3.39 | 45.75 | 1.40 | 3.39 | 1 | EXTERIOR WALL | 5.20 | 4.84 | 1 | EXTERIOR WALL | 8.94 | |
| | | SNGARBS2 | 20.000 | | 3.39 | 67.78 | 1.40 | 3.39 | 1 | EXTERIOR WALL | 5.20 | 4.84 | 1 | EXTERIOR WALL | 8.94 | |
| | | SNAGRIS2 | 22.000 | | 3.39 | 74.55 | 1.40 | 3.39 | 1 | EXTERIOR WALL | 5.20 | 4.84 | 1 | EXTERIOR WALL | 8.94 | |
| | | SNCOTTS3 | 27.250 | | 3.39 | 92.35 | 1.40 | 3.39 | 1 | EXTERIOR WALL | 5.20 | 4.84 | 1 | EXTERIOR WALL | 8.94 | |
| | | SNAGGRS4 | 34.925 | | 3.39 | 118.35 | 1.40 | 3.39 | 1 | EXTERIOR WALL | 5.20 | 4.84 | 1 | EXTERIOR WALL | 8.94 | |
| | | SNS5A | 35.550 | | 3.39 | 120.47 | 1.40 | 3.39 | 1 | EXTERIOR WALL | 5.20 | 4.84 | 1 | EXTERIOR WALL | 8.94 | |
| | | SNS6A | 39.950 | | 3.39 | 135.38 | 1.40 | 3.39 | 1 | EXTERIOR WALL | 5.20 | 4.84 | 1 | EXTERIOR WALL | 8.94 | |
| | | SNS7B | 42.000 | | 3.39 | 142.33 | 1.40 | 3.39 | 1 | EXTERIOR WALL | 5.20 | 4.84 | 1 | EXTERIOR WALL | 8.94 | |
| | TRUCK TRACTOR SEMI-TRAILER (TTST) | TNAGRIT3 | 33.000 | | 3.39 | 111.83 | 1.40 | 3.39 | 1 | EXTERIOR WALL | 5.20 | 4.84 | 1 | EXTERIOR WALL | 8.94 | |
| | | TNT4A | 33.075 | | 3.39 | 112.09 | 1.40 | 3.39 | 1 | EXTERIOR WALL | 5.20 | 4.84 | 1 | EXTERIOR WALL | 8.94 | |
| | | TNT6A | 41.600 | | 3.39 | 140.97 | 1.40 | 3.39 | 1 | EXTERIOR WALL | 5.20 | 4.84 | 1 | EXTERIOR WALL | 8.94 | |
| | | TNT7A | 42.000 | | 3.39 | 142.33 | 1.40 | 3.39 | 1 | EXTERIOR WALL | 5.20 | 4.84 | 1 | EXTERIOR WALL | 8.94 | |
| | | TNT7B | 42.000 | | 3.39 | 142.33 | 1.40 | 3.39 | 1 | EXTERIOR WALL | 5.20 | 4.84 | 1 | EXTERIOR WALL | 8.94 | |
| | | TNAGRIT4 | 43.000 | | 3.39 | 145.72 | 1.40 | 3.39 | 1 | EXTERIOR WALL | 5.20 | 4.84 | 1 | EXTERIOR WALL | 8.94 | |
| | | TNAGT5A | 45.000 | | 3.39 | 152.50 | 1.40 | 3.39 | 1 | EXTERIOR WALL | 5.20 | 4.84 | 1 | EXTERIOR WALL | 8.94 | |
| | | TNAGT5B | 45.000 | | 3.39 | 152.50 | 1.40 | 3.39 | 1 | EXTERIOR WALL | 5.20 | 4.84 | 1 | EXTERIOR WALL | 8.94 | |

## LOAD FACTORS:

DESIGN LOAD RATING FACTORS

| LOAD TYPE | MAX FACTOR | MIN FACTOR |
|---|---|---|
| DC | 1.25 | 0.90 |
| DW | 1.50 | 0.65 |
| EV | 1.30 | 0.90 |
| EH | 1.35 | 0.90 |
| ES | 1.35 | 0.90 |
| LS | 1.75 | -- |
| WA | 1.00 | -- |

## NOTE:

RATING FACTORS ARE BASED ON THE STRENGTH I LIMIT STATE.

## COMMENTS:

1.
2.
3.
4.

(#) CONTROLLING LOAD RATING

(1) DESIGN LOAD RATING (HL-93)

(2) DESIGN LOAD RATING (HS-20)

(3) LEGAL LOAD RATING **

** SEE CHART FOR VEHICLE TYPE

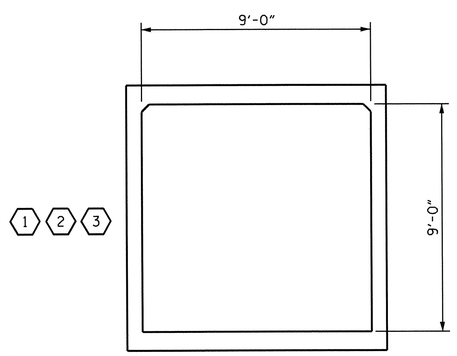


LRFR SUMMARY

(LOOKING DOWNSTREAM)

PROJECT NO. R-2303D

SAMPSON COUNTY

STATION: 1224+46.00 -L-

SHEET 2 OF 7

NORTH CAROLINA PROFESSIONAL SEAL 28905 ENGINEER O. KEITH PASCHAL 6-24-13

STATE OF NORTH CAROLINA
DEPARTMENT OF TRANSPORTATION
RALEIGH

STANDARD

LRFR SUMMARY FOR REINFORCED CONCRETE BOX CULVERTS (NON-INTERSTATE TRAFFIC)

| REVISIONS | | | | | | SHEET NO. |
|---|---|---|---|---|---|---|
| NO. | BY: | DATE: | NO. | BY: | DATE: | C-9 |
| 1 | | | 3 | | | TOTAL SHEETS |
| 2 | | | 4 | | | 14 |

DRAWN BY : B.N.BARODAWALA DATE : 6-21-13
CHECKED BY : O. PUIGCERVER DATE : 6-21-13
DESIGN ENGINEER OF RECORD: O. PUIGCERVER DATE : 6-21-13

21-JUN-2013 14:15
X:\R2303d\Structures\Plans\bgreen\1224+46.00 -L-\R-2303D_SD_CU_6.dgn
bbarodawala

STR. #6 STD. NO. LRFR5

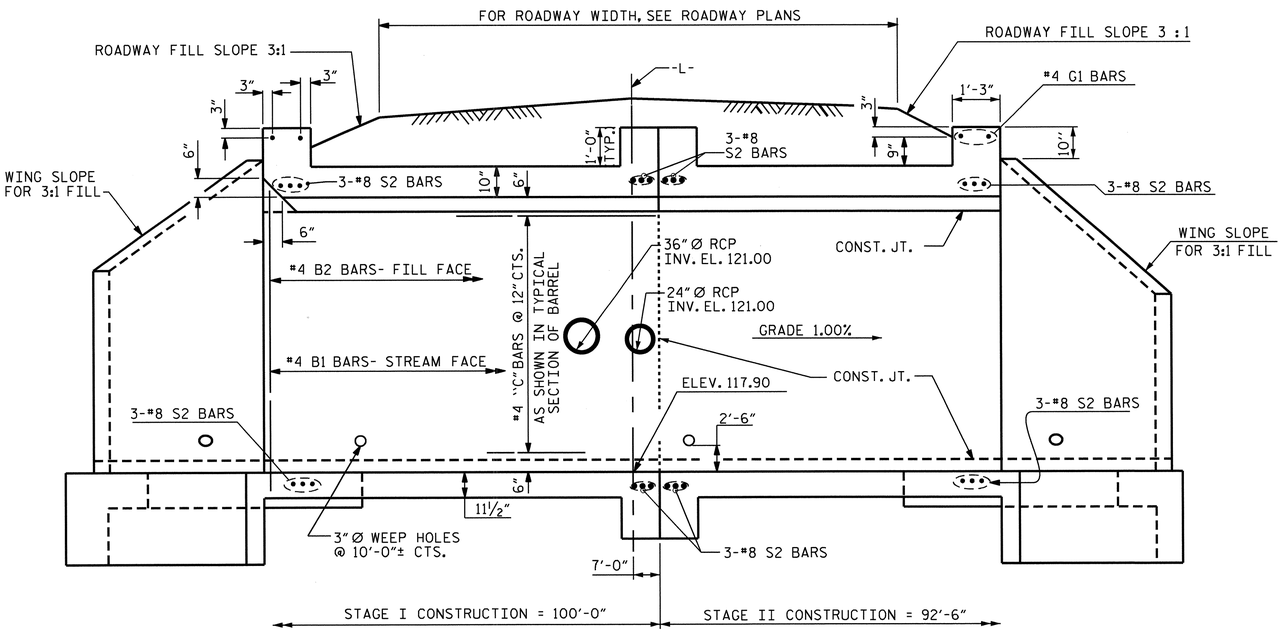


## CULVERT SECTION NORMAL TO ROADWAY

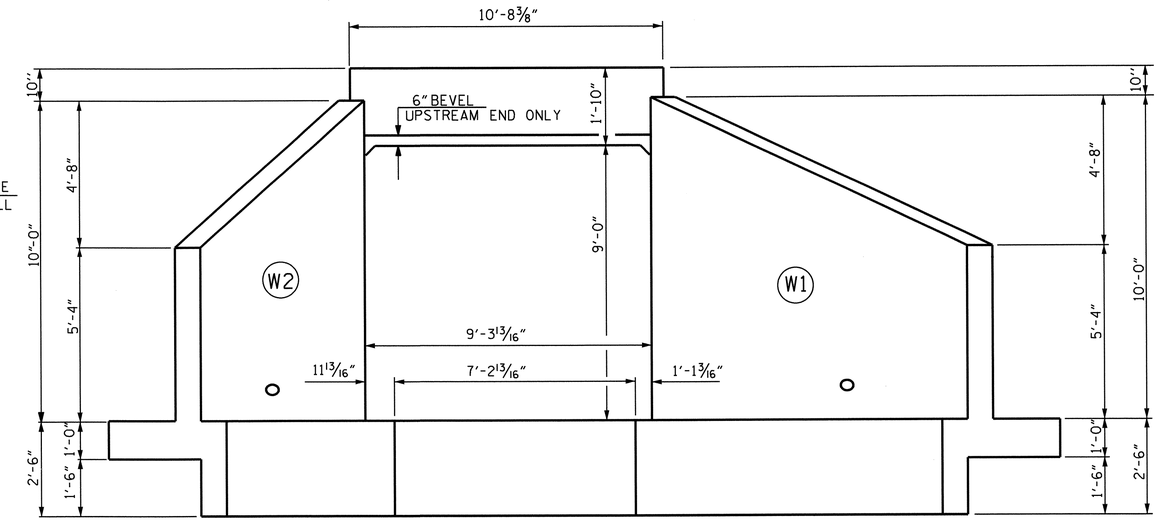


## END ELEVATION NORMAL TO SKEW

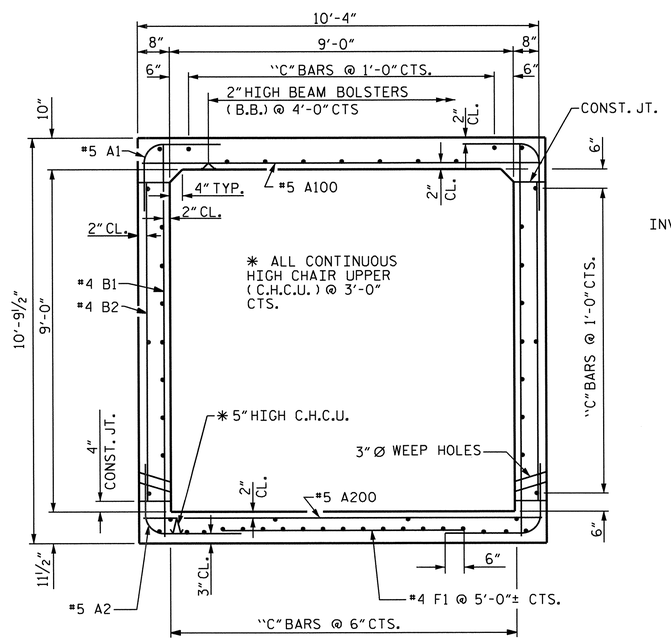


## RIGHT ANGLE SECTION OF BARREL

THERE ARE 54 "C" BARS IN SECTION OF BARREL

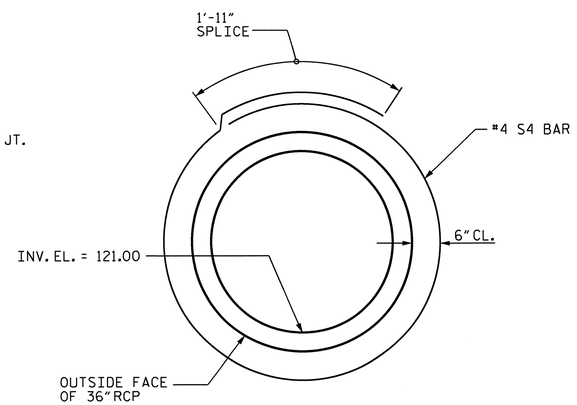


## VIEW A-A

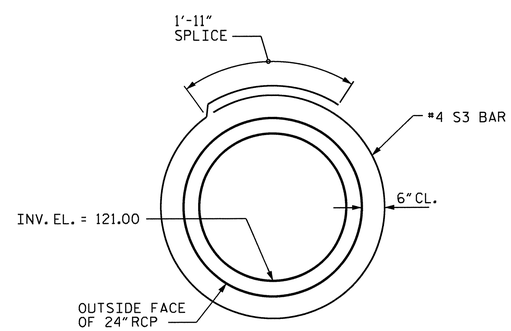


## VIEW B-B

"VIEW" TAKEN FROM PLAN OF FLOOR SLAB ON SHEET C-11

PROJECT NO. R-2303D
SAMPSON COUNTY
STATION: 1224+46.00 -L-

SHEET 3 OF 7

STATE OF NORTH CAROLINA
DEPARTMENT OF TRANSPORTATION
RALEIGH

# BARREL STANDARD SINGLE 9 FT. X 9 FT. CONCRETE BOX CULVERT

NORTH CAROLINA PROFESSIONAL SEAL 22005 ENGINEER KEITH PASCHAL
6.24.13

| REVISIONS | | | | | | | SHEET NO. |
|---|---|---|---|---|---|---|---|
| NO. | BY: | DATE: | NO. | BY: | DATE: | | C-10 |
| 1 | | | 3 | | | | TOTAL SHEETS |
| 2 | | | 4 | | | | 14 |

STR. #6 STD. NO. CB21

| | | | |
|---|---|---|---|
| DRAWN BY : | M. D. PISO | DATE : | 2/1/12 |
| CHECKED BY : | B. L. GREEN | DATE : | 7/16/12 |
| DESIGN ENGINEER OF RECORD: | O. PUIGCERVER | DATE : | 4/24/13 |

REVISED 8-28-92 BY E.L.R. CHECKED BY C.R.P.
REVISED 8-22-89 BY A.R.B. CHECKED BY C.R.K.
REDRAWN 8-22-89
REVISED 11-19-99 BY M.M. CHECKED BY R.W.W.

24-JUN-2013 11:05
X:\R2303d\Structures\FinalPlans\R-2303D_str6\R-2303D_SD_CL
bbarodawala

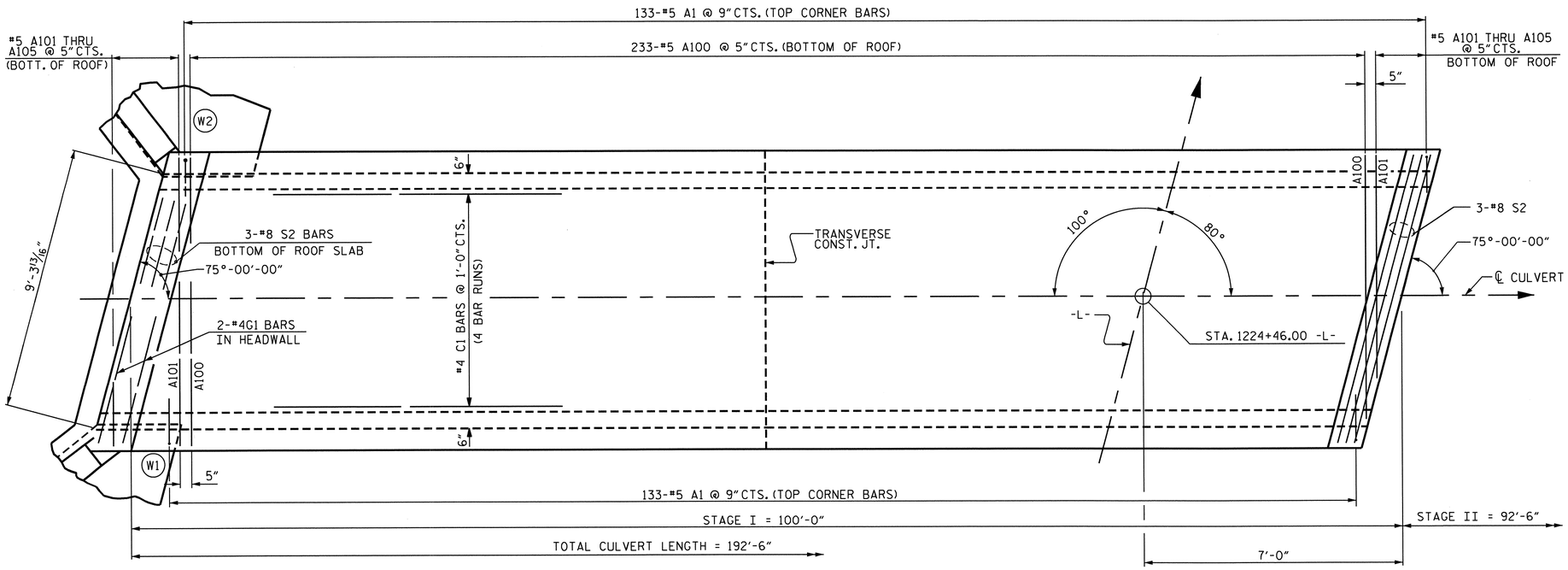


## PLAN ROOF SLAB

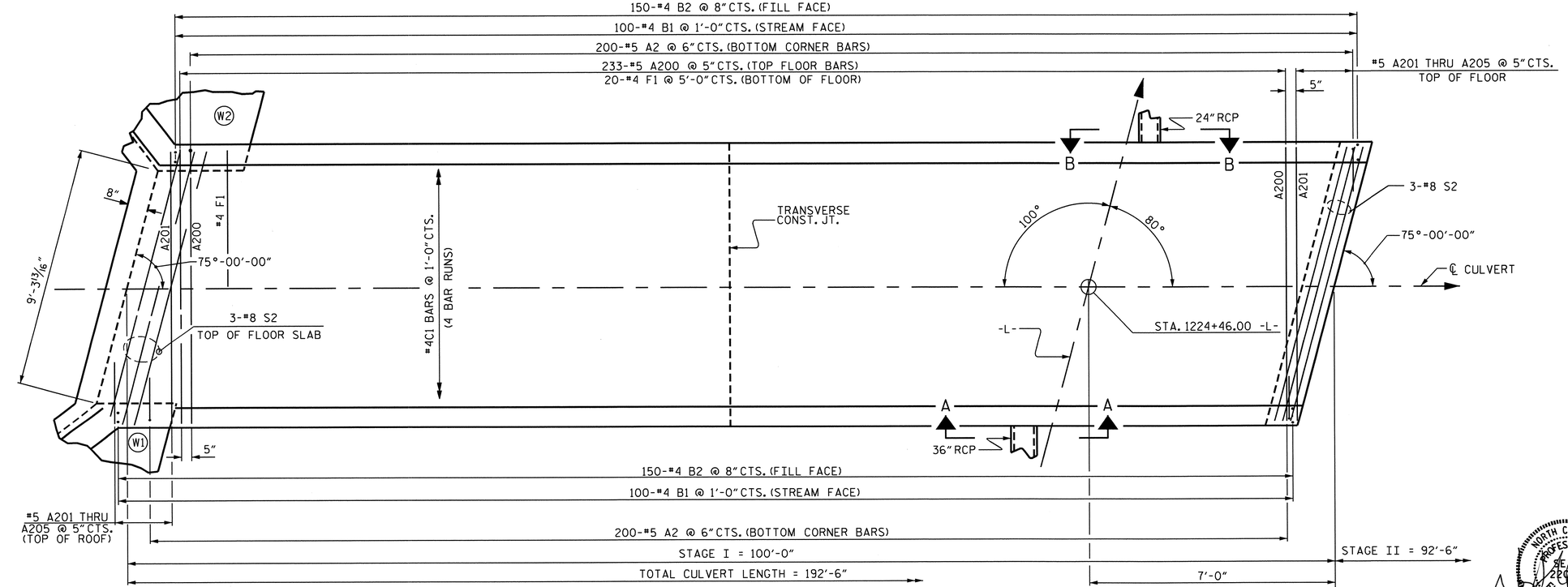


## PLAN FLOOR SLAB

FOR VIEWS A-A AND B-B, SEE SHEET C-10

## BAR TYPE

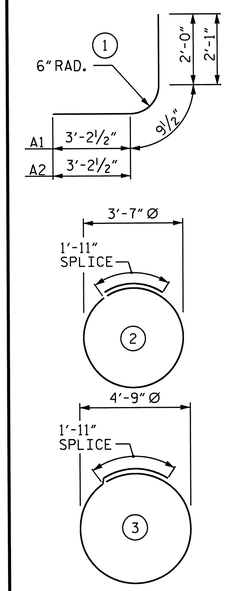


ALL BAR DIMENSIONS ARE OUT TO OUT

## SPLICE CHART

| BAR | SPLICE LENGTH |
|---|---|
| #4 C1 | 1'-11" |

## BILL OF MATERIAL

### STAGE I

| BAR | NO. | SIZE | TYPE | LENGTH | WEIGHT |
|---|---|---|---|---|---|
| A1 | 266 | #5 | 1 | 6'-0" | 1664 |
| A2 | 400 | #5 | 1 | 6'-1" | 2538 |
| | | | | | |
| A100 | 233 | #5 | STR. | 10'-0" | 2430 |
| A101 | 2 | #5 | STR. | 9'-0" | 19 |
| A102 | 2 | #5 | STR. | 7'-5" | 15 |
| A103 | 2 | #5 | STR. | 5'-10" | 12 |
| A104 | 2 | #5 | STR. | 4'-4" | 9 |
| A105 | 2 | #5 | STR. | 2'-9" | 6 |
| | | | | | |
| A200 | 233 | #5 | STR. | 10'-0" | 2430 |
| A201 | 2 | #5 | STR. | 9'-0" | 19 |
| A202 | 2 | #5 | STR. | 7'-5" | 15 |
| A203 | 2 | #5 | STR. | 5'-10" | 12 |
| A204 | 2 | #5 | STR. | 4'-4" | 9 |
| A205 | 2 | #5 | STR. | 2'-9" | 6 |
| | | | | | |
| B1 | 200 | #4 | STR. | 10'-3" | 1369 |
| B2 | 300 | #4 | STR. | 8'-4" | 1670 |
| | | | | | |
| C1 | 216 | #4 | STR. | 26'-11" | 3884 |
| | | | | | |
| F1 | 20 | #4 | STR. | 3'-7" | 48 |
| | | | | | |
| G1 | 2 | #4 | STR. | 10'-4" | 14 |
| | | | | | |
| S2 | 12 | #8 | STR. | 10'-4" | 331 |
| S3 | 2 | #4 | 2 | 13'-3" | 18 |
| S4 | 2 | #4 | 3 | 16'-10" | 22 |
| | | | | | |
| REINFORCING STEEL | | | | | 16,540 LBS. |

## STRUCTURE QUANTITIES FOR STAGE I CONSTRUCTION

| | |
|---|---|
| CLASS A CONCRETE | |
| BARREL @ 1.134 CY/FT | 113.4 C.Y. |
| WING ETC. | 22.4 C.Y. |
| TOTAL | 135.8 C.Y. |
| REINFORCING STEEL | |
| BARREL | 16,540 LBS. |
| WINGS ETC. | 1,385 LBS. |
| TOTAL | 17,925 LBS. |
| FOUNDATION CONDITIONING MATERIAL | 101 TONS |
| CULVERT EXCAVATION | LUMP SUM |

PROJECT NO. R-2303D
SAMPSON COUNTY
STATION: 1224+46.00 -L-

SHEET 4 OF 7

STATE OF NORTH CAROLINA
DEPARTMENT OF TRANSPORTATION
RALEIGH

# BARREL STANDARD SINGLE 9 FT. X 9 FT. CONCRETE BOX CULVERT

## STAGE I

NORTH CAROLINA PROFESSIONAL SEAL 22005 ENGINEER D. KEITH PASCHAL
6.24.13

| REVISIONS | | | | | | SHEET NO. |
|---|---|---|---|---|---|---|
| NO. | BY: | DATE: | NO. | BY: | DATE: | C-11 |
| 1 | | | 3 | | | TOTAL SHEETS |
| 2 | | | 4 | | | 14 |

STR. #6 STD. NO. CB21

| | | | |
|---|---|---|---|
| DRAWN BY : | M. D. PISO | DATE : | 2/1/12 |
| CHECKED BY : | B. L. GREEN | DATE : | 7/16/12 |
| DESIGN ENGINEER OF RECORD: | O. PUIGCERVER | DATE : | 4/24/13 |

REVISED 11-19-99 BY M.M. CHECKED BY R.W.W.
REVISED 8-28-92 BY E.L.R. CHECKED BY C.R.P.
REVISED 8-22-89 BY A.R.B. CHECKED BY C.R.K.
REDRAWN 8-22-89

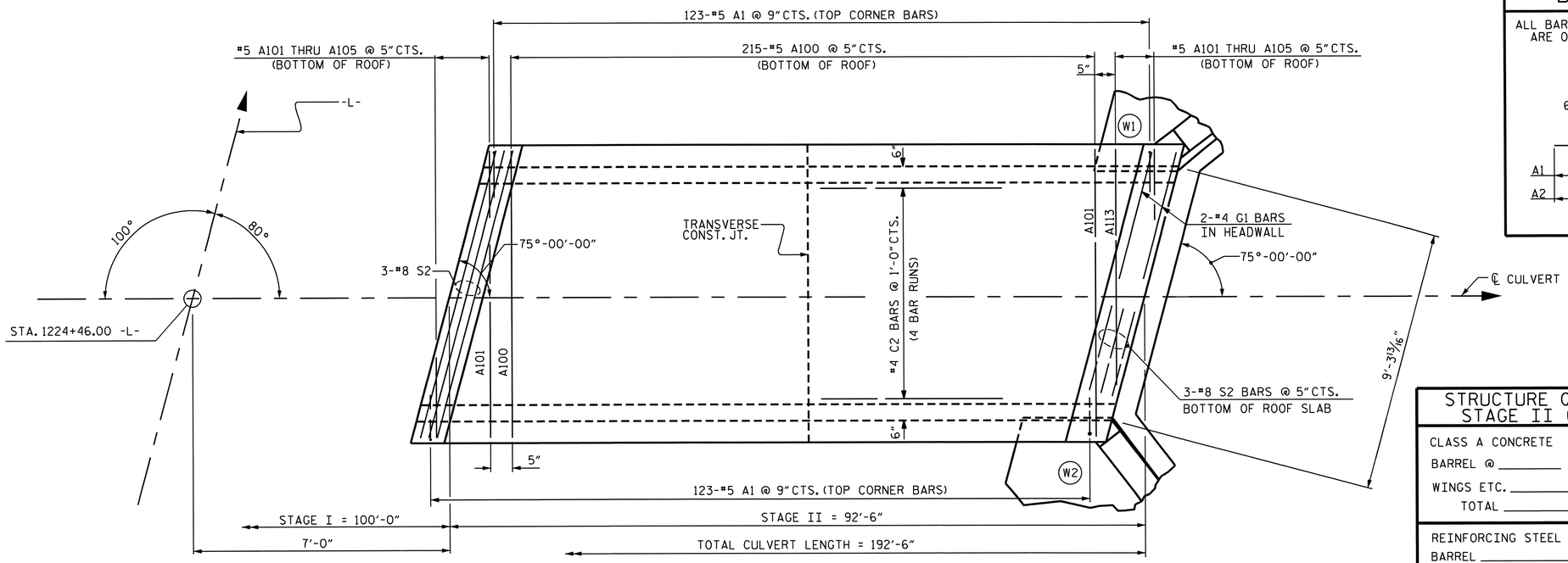


## PLAN ROOF SLAB

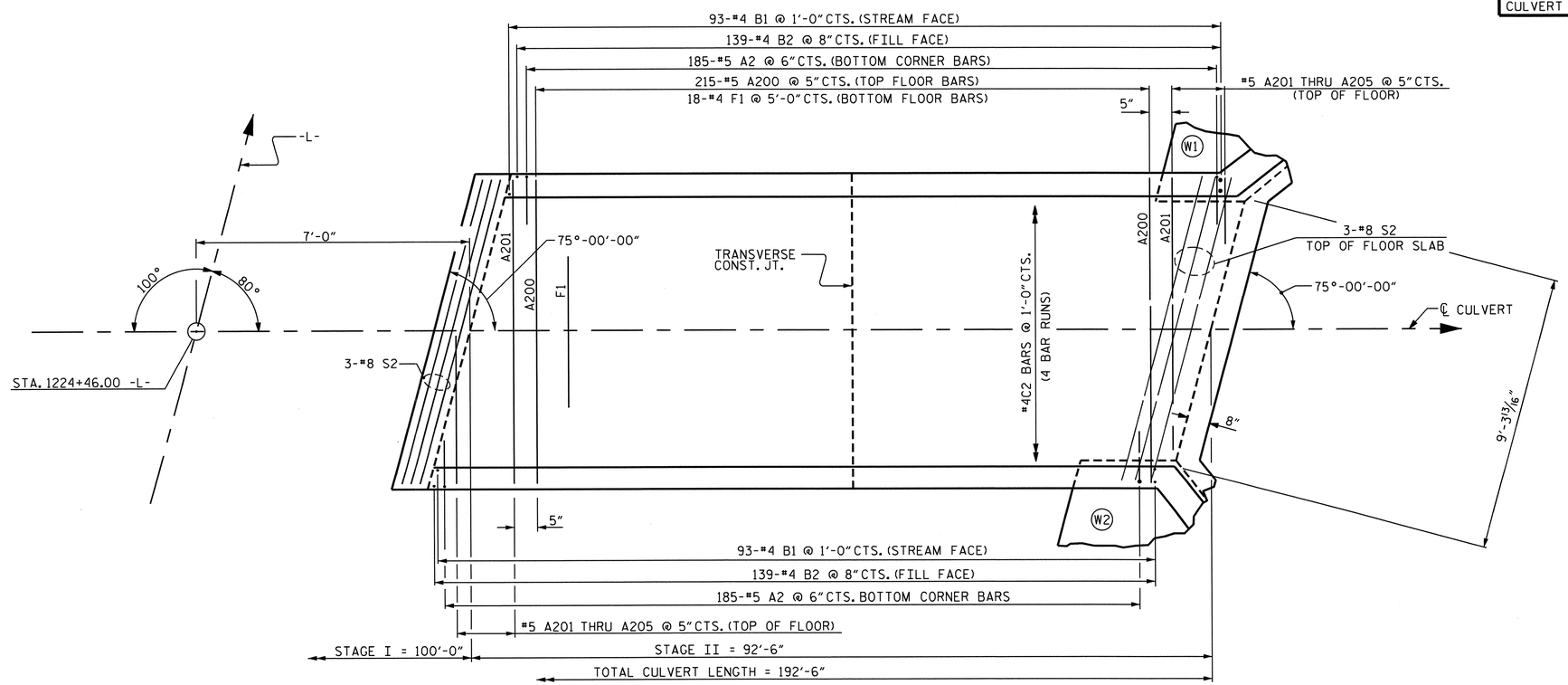


## PLAN FLOOR SLAB

## BAR TYPE

ALL BAR DIMENSIONS ARE OUT TO OUT

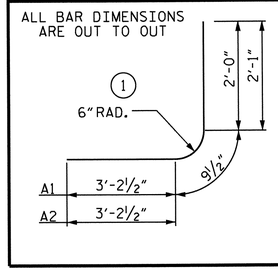


## BILL OF MATERIAL

### STAGE II

| BAR | NO. | SIZE | TYPE | LENGTH | WEIGHT |
|---|---|---|---|---|---|
| A1 | 246 | #5 | 1 | 6'-0" | 1539 |
| A2 | 370 | #5 | 1 | 6'-1" | 2348 |
| | | | | | |
| A100 | 215 | #5 | STR. | 10'-0" | 2242 |
| A101 | 2 | #5 | STR. | 9'-0" | 19 |
| A102 | 2 | #5 | STR. | 7'-5" | 15 |
| A103 | 2 | #5 | STR. | 5'-10" | 12 |
| A104 | 2 | #5 | STR. | 4'-4" | 9 |
| A105 | 2 | #5 | STR. | 2'-9" | 6 |
| | | | | | |
| A200 | 215 | #5 | STR. | 10'-0" | 2242 |
| A201 | 2 | #5 | STR. | 9'-0" | 19 |
| A202 | 2 | #5 | STR. | 7'-5" | 15 |
| A203 | 2 | #5 | STR. | 5'-10" | 12 |
| A204 | 2 | #5 | STR. | 4'-4" | 9 |
| A205 | 2 | #5 | STR. | 2'-9" | 6 |
| | | | | | |
| B1 | 186 | #4 | STR. | 10'-3" | 1274 |
| B2 | 278 | #4 | STR. | 8'-4" | 1548 |
| | | | | | |
| C2 | 216 | #4 | STR. | 24'-6" | 3535 |
| | | | | | |
| F1 | 18 | #4 | STR. | 3'-7" | 43 |
| | | | | | |
| G1 | 2 | #4 | STR. | 10'-4" | 14 |
| | | | | | |
| S2 | 12 | #8 | STR. | 10'-4" | 331 |
| | | | | | |
| REINFORCING STEEL | | | | | 15,238 LBS. |

## STRUCTURE QUANTITIES FOR STAGE II CONSTRUCTION

CLASS A CONCRETE
BARREL @ 1.134 CY/FT 104.9 C.Y.
WINGS ETC. 22.4 C.Y.
TOTAL 127.3 C.Y.

REINFORCING STEEL
BARREL 15,238 LBS.
WINGS ETC. 1,385 LBS.
TOTAL 16,623 LBS.

FOUNDATION CONDITIONING MATERIAL 93 TONS
CULVERT EXCAVATION LUMP SUM

## SPLICE CHART

| BAR | SPLICE LENGTH |
|---|---|
| #4 C2 | 1'-11" |

REVISED 8-28-92 BY E.L.R. CHECKED BY G.R.P.
REVISED 8-22-89 BY A.R.B. CHECKED BY C.R.K.
REDRAWN 8-22-89
REVISED 11-19-99 BY M.W. CHECKED BY R.W.W.

DRAWN BY : M. D. PISO DATE : 2/1/12
CHECKED BY : B. L. GREEN DATE : 7/16/12
DESIGN ENGINEER OF RECORD: O. PUIGCERVER DATE : 4/24/13

PROJECT NO. R-2303D
SAMPSON COUNTY
STATION: 1224+46.00 -L-

SHEET 5 OF 7

STATE OF NORTH CAROLINA
DEPARTMENT OF TRANSPORTATION
RALEIGH

# BARREL STANDARD SINGLE 9 FT. X 9 FT. CONCRETE BOX CULVERT

## STAGE II

NORTH CAROLINA PROFESSIONAL SEAL 22005 ENGINEER KEITH PASCHAL
6-24-13

| REVISIONS | | | | | | SHEET NO. |
|---|---|---|---|---|---|---|
| NO. | BY: | DATE: | NO. | BY: | DATE: | C-12 |
| 1 | | | 3 | | | TOTAL SHEETS |
| 2 | | | 4 | | | 14 |

STR. #6 STD. NO. CB21

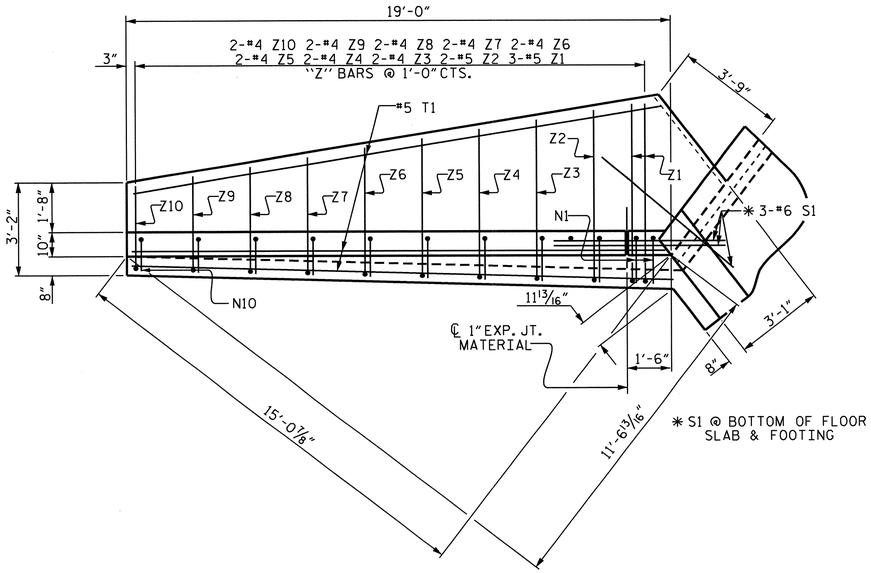


PLAN W2

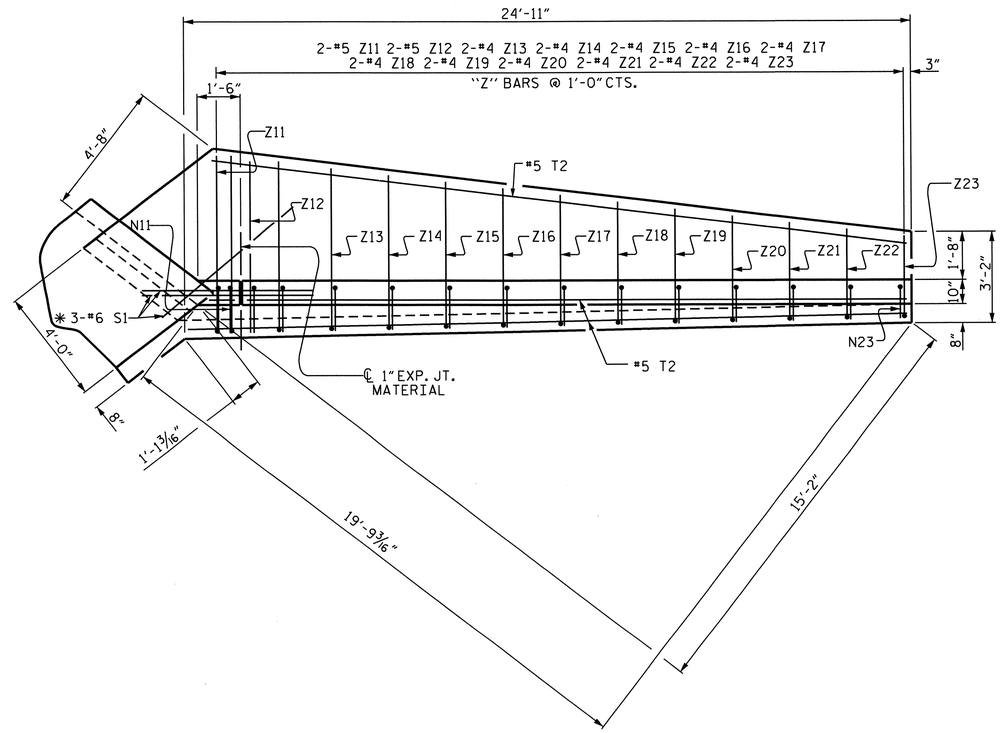


PLAN W1

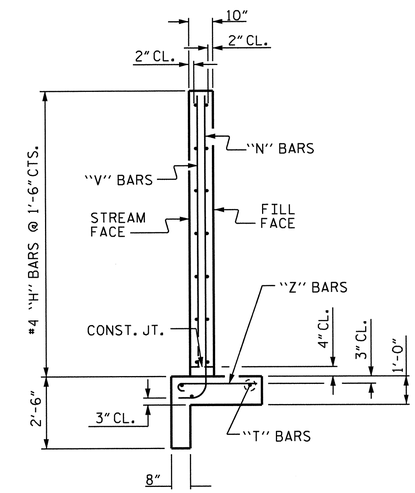


TYPICAL WING SECTION

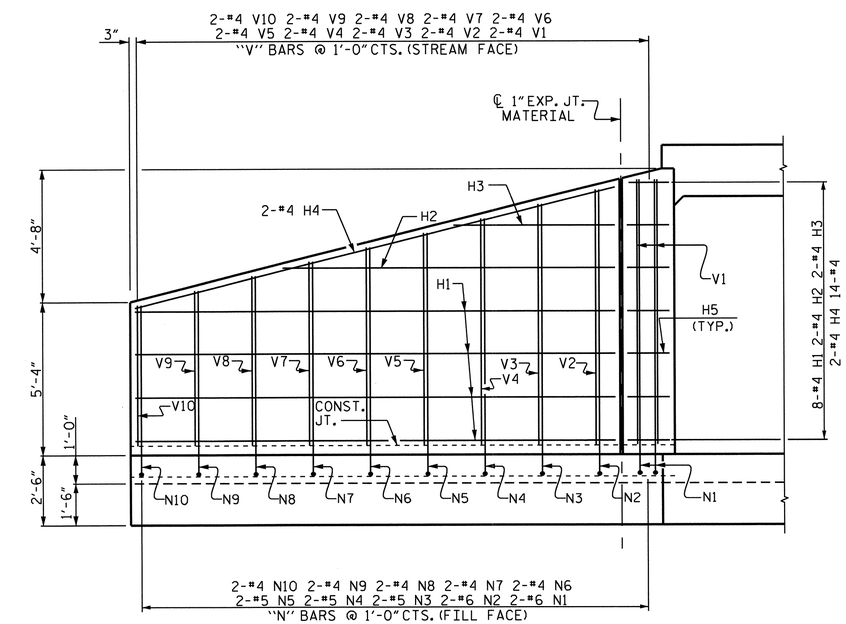


ELEVATION W2

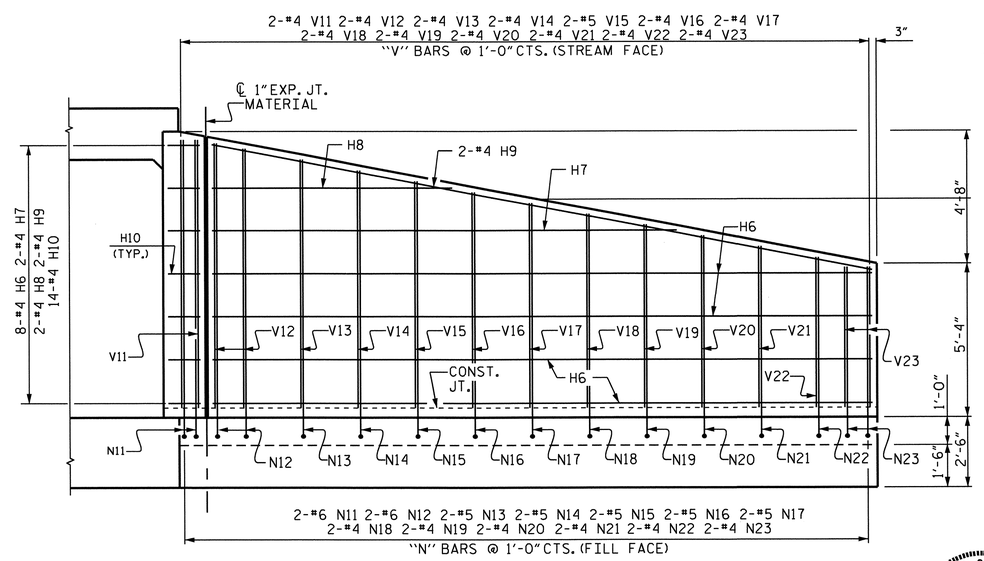


ELEVATION W1

NORTH CAROLINA PROFESSIONAL SEAL 22905 ENGINEER O. KEITH PASCHAL

6-24-13

PROJECT NO. R-2303D

SAMPSON COUNTY

STATION: 1224+46.00 -L-

SHEET 6 OF 7

STATE OF NORTH CAROLINA
DEPARTMENT OF TRANSPORTATION
RALEIGH

CONCRETE BOX CULVERT WINGS

H = 9'-0" SLOPE = 3 : 1

75° SKEW

| REVISIONS | | | | | | SHEET NO. |
|---|---|---|---|---|---|---|
| NO. | BY: | DATE: | NO. | BY: | DATE: | C-13 |
| 1 | | | 3 | | | TOTAL SHEETS |
| 2 | | | 4 | | | 14 |

STR. #6

| | | | |
|---|---|---|---|
| DRAWN BY : | M. D. PISO | DATE : | 2/1/12 |
| CHECKED BY : | B. L. GREEN | DATE : | 7/16/12 |
| DESIGN ENGINEER OF RECORD: | O. PUIGCERVER | DATE : | 4/24/13 |

21-JUN-2013 14:15
X:\R2303d\Structures\Plans\bgreen\1224+46.00 -L-\R-2303D_SD_CU_6.dgn
bbarodawala

# BAR TYPES

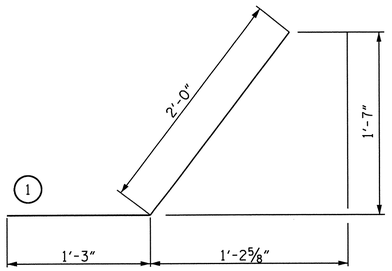


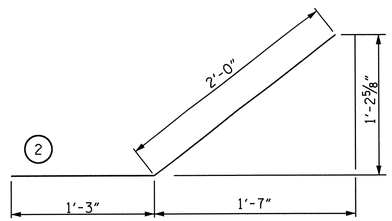


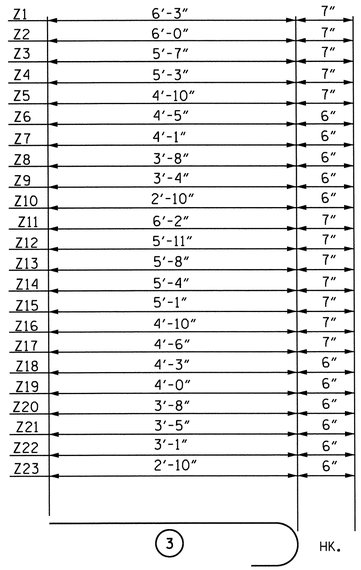


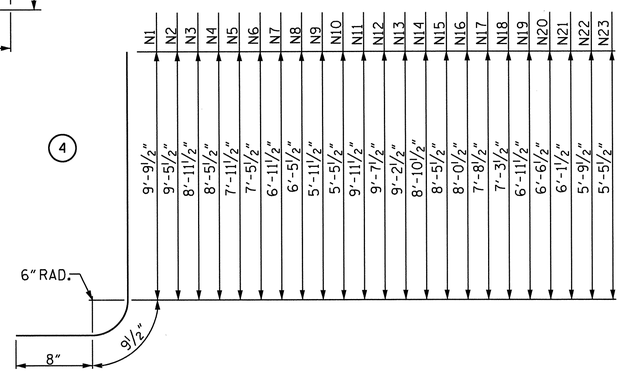


ALL DIMENSIONS ARE OUT TO OUT.

# BILL OF MATERIAL FOR TWO WINGS

| BAR | NO. | SIZE | TYPE | LENGTH | WEIGHT | BAR | NO. | SIZE | TYPE | LENGTH | WEIGHT |
|---|---|---|---|---|---|---|---|---|---|---|---|
| H1 | 8 | #4 | STR. | 16'-9" | 90 | V1 | 2 | #4 | STR. | 9'-3" | 12 |
| H2 | 2 | #4 | STR. | 11'-7" | 15 | V2 | 2 | #4 | STR. | 8'-10" | 12 |
| H3 | 2 | #4 | STR. | 5'-7" | 7 | V3 | 2 | #4 | STR. | 8'-4" | 11 |
| H4 | 2 | #4 | STR. | 17'-3" | 23 | V4 | 2 | #4 | STR. | 7'-10" | 10 |
| H5 | 14 | #4 | 1 | 3'-3" | 30 | V5 | 2 | #4 | STR. | 7'-4" | 10 |
| H6 | 8 | #4 | STR. | 23'-0" | 123 | V6 | 2 | #4 | STR. | 6'-10" | 9 |
| H7 | 2 | #4 | STR. | 16'-2" | 22 | V7 | 2 | #4 | STR. | 6'-4" | 8 |
| H8 | 2 | #4 | STR. | 8'-4" | 11 | V8 | 2 | #4 | STR. | 5'-10" | 8 |
| H9 | 2 | #4 | STR. | 23'-5" | 31 | V9 | 2 | #4 | STR. | 5'-4" | 7 |
| H10 | 14 | #4 | 2 | 3'-3" | 30 | V10 | 2 | #4 | STR. | 4'-10" | 6 |
| | | | | | | V11 | 2 | #4 | STR. | 9'-4" | 12 |
| N1 | 2 | #6 | 4 | 11'-3" | 34 | V12 | 2 | #4 | STR. | 9'-0" | 12 |
| N2 | 2 | #6 | 4 | 10'-11" | 33 | V13 | 2 | #4 | STR. | 8'-8" | 12 |
| N3 | 2 | #5 | 4 | 10'-5" | 22 | V14 | 2 | #4 | STR. | 8'-3" | 11 |
| N4 | 2 | #5 | 4 | 9'-11" | 21 | V15 | 2 | #4 | STR. | 7'-10" | 10 |
| N5 | 2 | #5 | 4 | 9'-5" | 20 | V16 | 2 | #4 | STR. | 7'-6" | 10 |
| N6 | 2 | #4 | 4 | 8'-11" | 12 | V17 | 2 | #4 | STR. | 7'-1" | 9 |
| N7 | 2 | #4 | 4 | 8'-5" | 11 | V18 | 2 | #4 | STR. | 6'-9" | 9 |
| N8 | 2 | #4 | 4 | 7'-11" | 11 | V19 | 2 | #4 | STR. | 6'-4" | 8 |
| N9 | 2 | #4 | 4 | 7'-5" | 10 | V20 | 2 | #4 | STR. | 5'-11" | 8 |
| N10 | 2 | #4 | 4 | 6'-11" | 9 | V21 | 2 | #4 | STR. | 5'-7" | 7 |
| N11 | 2 | #6 | 4 | 11'-5" | 34 | V22 | 2 | #4 | STR. | 5'-2" | 7 |
| N12 | 2 | #6 | 4 | 11'-1" | 33 | V23 | 2 | #4 | STR. | 4'-10" | 6 |
| N13 | 2 | #5 | 4 | 10'-8" | 22 | | | | | | |
| N14 | 2 | #5 | 4 | 10'-4" | 22 | Z1 | 3 | #5 | 3 | 6'-10" | 21 |
| N15 | 2 | #5 | 4 | 9'-11" | 21 | Z2 | 2 | #5 | 3 | 6'-7" | 14 |
| N16 | 2 | #5 | 4 | 9'-6" | 20 | Z3 | 2 | #4 | 3 | 6'-2" | 8 |
| N17 | 2 | #5 | 4 | 9'-2" | 19 | Z4 | 2 | #4 | 3 | 5'-10" | 8 |
| N18 | 2 | #4 | 4 | 8'-9" | 12 | Z5 | 2 | #4 | 3 | 5'-5" | 7 |
| N19 | 2 | #4 | 4 | 8'-5" | 11 | Z6 | 2 | #4 | 3 | 4'-11" | 7 |
| N20 | 2 | #4 | 4 | 8'-0" | 11 | Z7 | 2 | #4 | 3 | 4'-7" | 6 |
| N21 | 2 | #4 | 4 | 7'-7" | 10 | Z8 | 2 | #4 | 3 | 4'-2" | 6 |
| N22 | 2 | #4 | 4 | 7'-3" | 10 | Z9 | 2 | #4 | 3 | 3'-10" | 5 |
| N23 | 2 | #4 | 4 | 6'-11" | 9 | Z10 | 2 | #4 | 3 | 3'-4" | 4 |
| | | | | | | Z11 | 2 | #5 | 3 | 6'-9" | 14 |
| S1 | 6 | #6 | STR. | 6'-0 | 54 | Z12 | 2 | #5 | 3 | 6'-6" | 14 |
| | | | | | | Z13 | 2 | #4 | 3 | 6'-3" | 8 |
| T1 | 3 | #5 | STR. | 18'-8" | 58 | Z14 | 2 | #4 | 3 | 5'-11" | 8 |
| T2 | 3 | #5 | STR. | 24'-5" | 76 | Z15 | 2 | #4 | 3 | 5'-8" | 8 |
| | | | | | | Z16 | 2 | #4 | 3 | 5'-5" | 7 |
| | | | | | | Z17 | 2 | #4 | 3 | 5'-1" | 7 |
| | | | | | | Z18 | 2 | #4 | 3 | 4'-9" | 6 |
| | | | | | | Z19 | 2 | #4 | 3 | 4'-6" | 6 |
| | | | | | | Z20 | 2 | #4 | 3 | 4'-2" | 6 |
| | | | | | | Z21 | 2 | #4 | 3 | 3'-11" | 5 |
| | | | | | | Z22 | 2 | #4 | 3 | 3'-7" | 5 |
| | | | | | | Z23 | 2 | #4 | 3 | 3'-4" | 4 |

| | |
|---|---|
| REINFORCING STEEL FOR 2 WINGS | 1,385 LBS. |
| CLASS A CONCRETE | |
| 2 WINGS | 21.0 C.Y. |
| 1 HEADWALL | 0.5 C.Y. |
| 1 END CURTAIN WALL | 0.4 C.Y. |
| 2 EDGE BEAMS | 0.8 C.Y. |
| TOTAL CONCRETE | 22.7 C.Y. |

PROJECT NO. R-2303D
SAMPSON COUNTY
STATION: 1224+46.00 -L-

SHEET 7 OF 7

STATE OF NORTH CAROLINA
DEPARTMENT OF TRANSPORTATION
RALEIGH

BILL OF MATERIAL
CONCRETE BOX CULVERT
WINGS

NORTH CAROLINA PROFESSIONAL SEAL 22005 ENGINEER ROY A. KEITH PASCHAL
6.24.13

| REVISIONS | | | | | | SHEET NO. |
|---|---|---|---|---|---|---|
| NO. | BY: | DATE: | NO. | BY: | DATE: | C-14 |
| 1 | | | 3 | | | TOTAL SHEETS |
| 2 | | | 4 | | | 14 |

STR. #6

DRAWN BY : M. D. PISO DATE : 2/1/12
CHECKED BY : B. L. GREEN DATE : 7/16/12
DESIGN ENGINEER OF RECORD: O. PUIGCERVER DATE : 4/24/13

21-JUN-2013 14:15
X:\R2303d\Structures\Plans\bgreen\1224+46.00 -L-\R-2303D_SD_CU_6.dgn
bbarodawala

| GEOTECHNICAL ENGINEER | ENGINEER |
|---|---|
| NORTH CAROLINA PROFESSIONAL SEAL 038176 ENGINEER SHIHAI ZHANG (6/12/13) | |
| SIGNATURE DATE | SIGNATURE DATE |

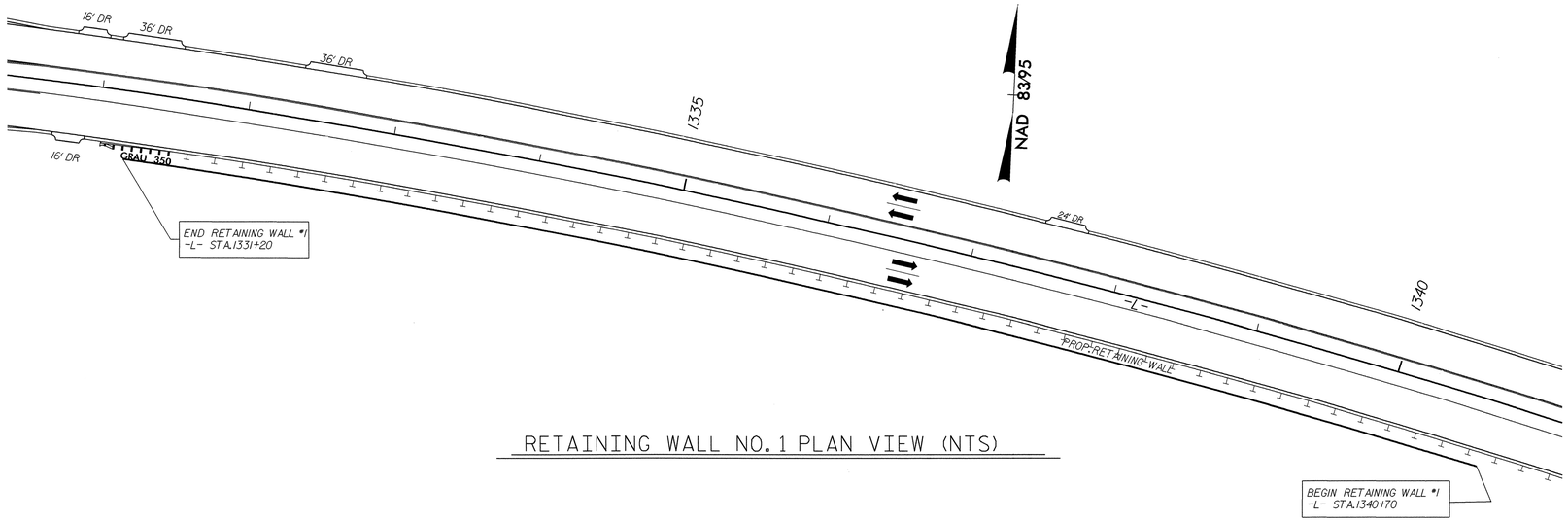


RETAINING WALL NO. 1 PLAN VIEW (NTS)

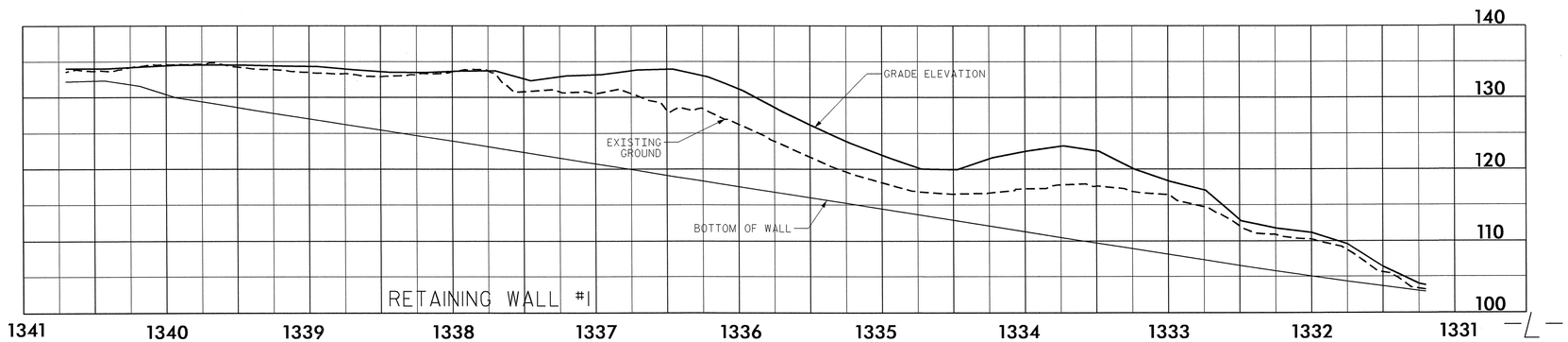


RETAINING WALL NO. 1 ENVELOPE (NTS)

| ESTIMATED WALL QUANTITY | |
|---|---|
| RETAINING WALL NO. | SOLDIER PILE RETAINING WALLS (SQUARE FEET) |
| 1 | 8,175 |

## SPECIAL NOTES FOR RETAINING WALL NO. 1:

FOR SOLDIER PILE RETAINING WALLS, SEE SHEET NO. 5 "SOLDIER PILE RETAINING WALL TYPICAL & NOTES".

DO NOT DISTURB THE EXISTING SLOPES BEHIND THE RETAINING WALLS WHEN APPLICABLE.

THE WALL DESIGN CONSULTANT SHALL ADDRESS THE HYDROSTATIC WATER PRESSURE BEHIND THE PROPOSED RETAINING WALLS.

THE WALL DESIGN AND CONSTRUCTION PLANS SHALL ADDRESS THE PROTECTION OF THE EXISTING STRUCTURE BEHIND THE WALL BETWEEN -L- STA. 1336+50± AND 1337+00±.

## RETAINING WALL #1

| STATION on -L- | Offset from -L- | Grade Elevation (ft) | Bottom of Wall (ft) | Existing Ground Elevation (ft) | Design Height (ft) |
|---|---|---|---|---|---|
| 1331+20.00 | 46.00' Rt | 103.29 | 102.90 | 103.29 | 0.38 |
| 1331+25.00 | 46.00' Rt | 103.49 | 103.02 | 103.32 | 0.47 |
| 1331+50.00 | 46.00' Rt | 105.88 | 103.65 | 105.61 | 2.23 |
| 1331+75.00 | 46.00' Rt | 109.06 | 104.32 | 108.70 | 4.74 |
| 1332+00.00 | 46.00' Rt | 110.67 | 105.03 | 110.23 | 5.64 |
| 1332+25.00 | 46.00' Rt | 111.27 | 105.79 | 110.87 | 5.48 |
| 1332+50.00 | 46.00' Rt | 112.26 | 106.57 | 111.88 | 5.69 |
| 1332+75.00 | 46.00' Rt | 116.57 | 107.35 | 114.65 | 9.23 |
| 1333+00.00 | 46.00' Rt | 117.82 | 108.13 | 116.33 | 9.70 |
| 1333+25.00 | 46.00' Rt | 119.50 | 108.91 | 116.85 | 10.59 |
| 1333+50.00 | 46.00' Rt | 121.97 | 109.69 | 117.64 | 12.28 |
| 1333+75.00 | 46.00' Rt | 122.71 | 110.47 | 114.83 | 12.24 |
| 1334+00.00 | 46.00' Rt | 122.01 | 111.25 | 117.27 | 10.76 |
| 1334+25.00 | 46.00' Rt | 121.09 | 112.03 | 116.71 | 9.06 |
| 1334+50.00 | 46.00' Rt | 119.45 | 112.81 | 116.52 | 6.64 |
| 1334+75.00 | 46.00' Rt | 119.53 | 113.59 | 116.82 | 5.95 |
| 1335+00.00 | 46.00' Rt | 121.22 | 114.37 | 117.97 | 6.85 |
| 1335+25.00 | 46.00' Rt | 123.10 | 115.15 | 119.39 | 7.95 |
| 1335+50.00 | 46.00' Rt | 125.36 | 115.93 | 121.34 | 9.43 |
| 1335+75.00 | 46.00' Rt | 127.73 | 116.71 | 123.55 | 11.02 |
| 1336+00.00 | 46.00' Rt | 130.34 | 117.49 | 125.92 | 12.86 |
| 1336+25.00 | 46.00' Rt | 132.28 | 118.27 | 128.04 | 14.02 |
| 1336+50.00 | 46.00' Rt | 133.41 | 119.05 | 128.15 | 14.36 |
| 1336+75.00 | 46.00' Rt | 133.30 | 119.83 | 130.17 | 13.47 |
| 1337+00.00 | 46.00' Rt | 132.64 | 120.61 | 130.61 | 12.03 |
| 1337+25.00 | 46.00' Rt | 132.47 | 121.39 | 130.59 | 11.09 |
| 1337+50.00 | 46.00' Rt | 131.77 | 122.17 | 130.80 | 9.60 |
| 1337+75.00 | 46.00' Rt | 133.18 | 122.95 | 133.23 | 10.23 |
| 1338+00.00 | 46.00' Rt | 133.15 | 123.73 | 133.68 | 9.42 |
| 1338+25.00 | 46.00' Rt | 132.94 | 124.51 | 133.29 | 8.44 |
| 1338+50.00 | 46.00' Rt | 132.99 | 125.28 | 132.89 | 7.71 |
| 1338+75.00 | 46.00' Rt | 133.33 | 126.06 | 133.16 | 7.27 |
| 1339+00.00 | 46.00' Rt | 133.79 | 126.84 | 133.34 | 6.94 |
| 1339+25.00 | 46.00' Rt | 133.87 | 127.62 | 133.75 | 6.24 |
| 1339+50.00 | 46.00' Rt | 134.00 | 128.40 | 134.08 | 5.60 |
| 1339+75.00 | 46.00' Rt | 134.05 | 129.18 | 134.82 | 4.87 |
| 1340+00.00 | 46.00' Rt | 134.00 | 129.96 | 134.57 | 4.04 |
| 1340+25.00 | 46.00' Rt | 133.75 | 131.52 | 134.43 | 2.23 |
| 1340+50.00 | 46.00' Rt | 133.49 | 132.30 | 133.64 | 1.18 |
| 1340+70.00 | 46.00' Rt | 133.54 | 132.15 | 133.83 | 1.39 |

***PROJECT NO.:*** R-2303D

SAMPSON ***COUNTY***

***STATION:*** VARIES

SHEET 1 OF 7

***GEOTECHNICAL ENGINEERING UNIT***

☒ *EASTERN REGIONAL OFFICE*

☐ *WESTERN REGIONAL OFFICE*

☐ *CONTRACT OFFICE*

***STATE OF NORTH CAROLINA***
***DEPARTMENT OF TRANSPORTATION***
***RALEIGH***

RETAINING WALL NO. 1
LOCATION AND
WALL ENVELOPE

| REVISIONS | | | | | | | SHEET NO. |
|---|---|---|---|---|---|---|---|
| NO. | BY | DATE | NO. | BY | DATE | | W-1 |
| 1 | | | 3 | | | | TOTAL SHEETS |
| 2 | | | 4 | | | | 7 |

| | |
|---|---|
| PREPARED BY: S. ZHANG | DATE: 05/2013 |
| REVIEWED BY: J. BATTS | DATE: 05/2013 |

| GEOTECHNICAL ENGINEER | ENGINEER |
|---|---|
| NORTH CAROLINA PROFESSIONAL SEAL 038176 ENGINEER SHIHAI ZHANG 6/12/2013 | |
| SIGNATURE DATE | SIGNATURE DATE |

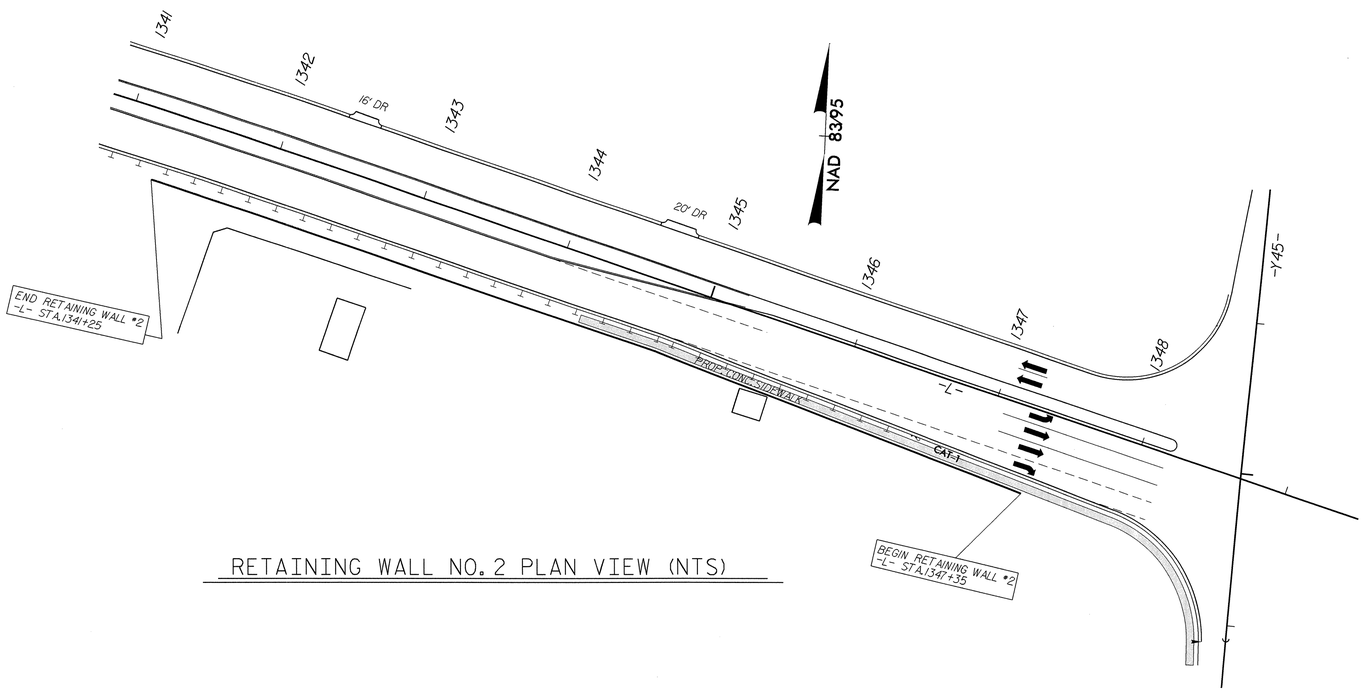


RETAINING WALL NO. 2 PLAN VIEW (NTS)

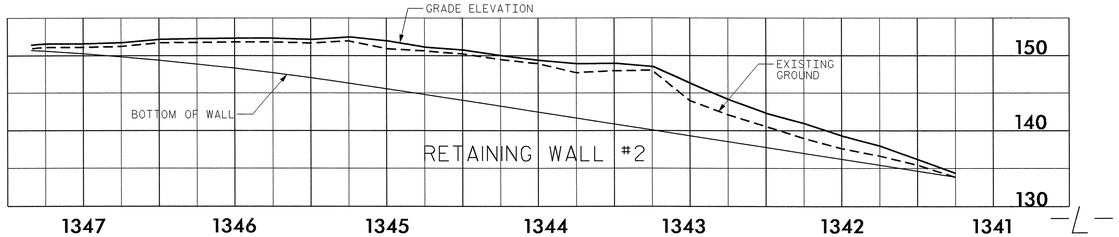


RETAINING WALL NO. 2 ENVELOPE (NTS)

RETAINING WALL #2

| STATION on -L- | Offset from -L- | Grade Elevation (ft) | Bottom of Wall (ft) | Existing Ground Elevation (ft) | Design Height (ft) |
|---|---|---|---|---|---|
| 1341+25.00 | 46.00' Rt. | 133.87 | 133.86 | 133.81 | 0.00 |
| 1341+50.00 | 46.00' Rt. | 135.66 | 134.64 | 135.42 | 1.02 |
| 1341+75.00 | 46.00' Rt. | 137.48 | 135.42 | 136.62 | 2.06 |
| 1342+00.00 | 46.00' Rt. | 138.83 | 136.20 | 137.61 | 2.63 |
| 1342+25.00 | 46.00' Rt. | 140.45 | 136.98 | 138.99 | 3.47 |
| 1342+50.00 | 46.00' Rt. | 141.76 | 137.76 | 140.56 | 4.00 |
| 1342+75.00 | 46.00' Rt. | 143.58 | 138.54 | 142.09 | 5.03 |
| 1343+00.00 | 46.00' Rt. | 145.75 | 139.32 | 143.94 | 6.43 |
| 1343+25.00 | 46.00' Rt. | 148.01 | 140.10 | 148.01 | 7.91 |
| 1343+50.00 | 46.00' Rt. | 148.47 | 140.88 | 147.94 | 7.59 |
| 1343+75.00 | 46.00' Rt. | 148.42 | 141.66 | 147.70 | 6.76 |
| 1344+00.00 | 46.00' Rt. | 148.88 | 142.44 | 148.93 | 6.44 |
| 1344+25.00 | 46.00' Rt. | 149.49 | 143.22 | 149.48 | 6.27 |
| 1344+50.00 | 46.00' Rt. | 150.24 | 144.00 | 150.21 | 6.24 |
| 1344+75.00 | 46.00' Rt. | 150.61 | 144.78 | 150.63 | 5.83 |
| 1345+00.00 | 46.92' Rt. | 151.47 | 145.54 | 150.92 | 5.93 |
| 1345+25.00 | 47.92' Rt. | 152.01 | 146.29 | 151.97 | 5.72 |
| 1345+50.00 | 48.92' Rt. | 151.67 | 147.02 | 151.66 | 4.65 |
| 1345+75.00 | 49.92' Rt. | 151.86 | 147.69 | 151.81 | 4.17 |
| 1346+00.00 | 50.92' Rt. | 151.86 | 148.31 | 151.82 | 3.55 |
| 1346+25.00 | 51.92' Rt. | 151.80 | 148.88 | 151.78 | 2.91 |
| 1346+50.00 | 52.92' Rt. | 151.71 | 149.39 | 151.69 | 2.32 |
| 1346+75.00 | 53.92' Rt. | 151.25 | 149.85 | 151.23 | 1.40 |
| 1347+00.00 | 54.92' Rt. | 151.09 | 150.26 | 151.10 | 0.84 |
| 1347+25.00 | 55.92' Rt. | 151.07 | 150.61 | 151.07 | 0.46 |
| 1347+30.00 | 56.12' Rt. | 151.01 | 150.67 | 151.03 | 0.34 |
| 1347+35.00 | 56.32' Rt. | 150.92 | 150.73 | 150.91 | 0.19 |

SPECIAL NOTES FOR RETAINING WALL NO. 2:

FOR SOLDIER PILE RETAINING WALLS. SEE SHEET NO. 5 "SOLDIER PILE RETAINING WALL TYPICAL & NOTES".

THE WALL DESIGN CONSULTANT SHALL ADDRESS THE HYDROSTATIC WATER PRESSURE BEHIND THE PROPOSED RETAINING WALLS.

ESTIMATED WALL QUANTITY

| RETAINING WALL NO. | SOLDIER PILE RETAINING WALLS (SQUARE FEET) |
|---|---|
| 2 | 2,895 |

***PROJECT NO.:*** R-2303D

SAMPSON ***COUNTY***

***STATION:*** VARIES

SHEET 2 OF 7

| PREPARED BY: S. ZHANG | DATE: 04/2013 |
|---|---|
| REVIEWED BY: J. BATTS | DATE: 04/2013 |

***GEOTECHNICAL ENGINEERING UNIT***

[X] *EASTERN REGIONAL OFFICE*

[ ] *WESTERN REGIONAL OFFICE*

[ ] *CONTRACT OFFICE*

***STATE OF NORTH CAROLINA***
***DEPARTMENT OF TRANSPORTATION***
***RALEIGH***

RETAINING WALL NO. 2
LOCATION AND
WALL ENVELOPE

–

| REVISIONS | | | | | | SHEET NO. |
|---|---|---|---|---|---|---|
| NO. | BY | DATE | NO. | BY | DATE | W-2 |
| 1 | – | – | 3 | – | – | TOTAL SHEETS |
| 2 | – | – | 4 | – | – | 7 |

| GEOTECHNICAL ENGINEER | ENGINEER |
|---|---|
| NORTH CAROLINA PROFESSIONAL SEAL 038176 ENGINEER SHIHAI ZHANG 6-14-2013 | |
| SIGNATURE DATE | SIGNATURE DATE |

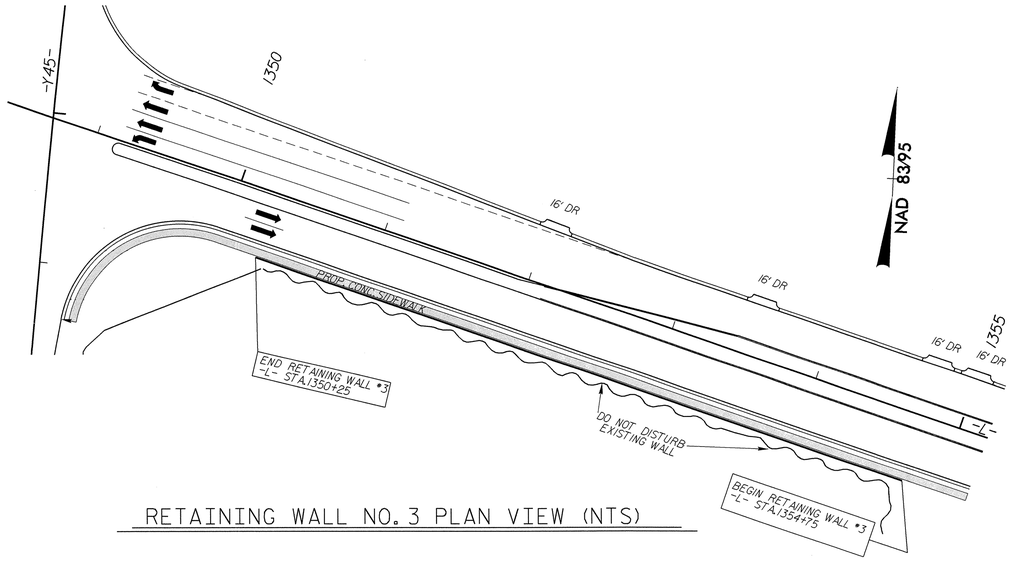


RETAINING WALL NO. 3 PLAN VIEW (NTS)

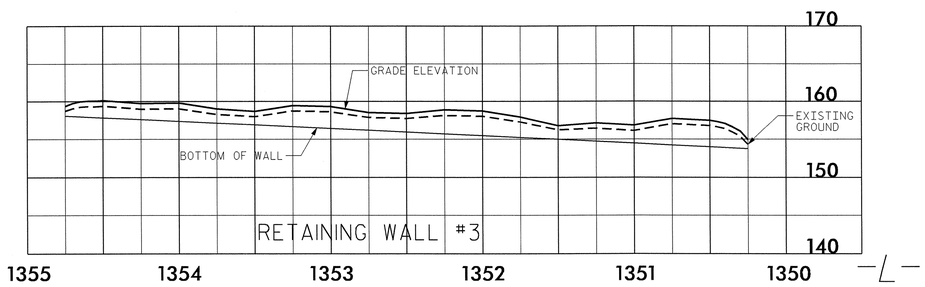


RETAINING WALL NO. 3 ENVELOPE (NTS)

RETAINING WALL #3 (3A, 3B, & 3C)

| STATION on -L- | Offset from -L- | Grade Elevation (ft) | Bottom of Wall (ft) | Existing Ground Elevation (ft) | Design Height (ft) |
|---|---|---|---|---|---|
| 1350+25.00 | 42.00' Rt. | 154.41 | 153.77 | 154.32 | 0.64 |
| 1350+30.00 | 42.00' Rt. | 155.55 | 153.82 | 155.35 | 1.73 |
| 1350+35.00 | 42.00' Rt. | 156.08 | 153.87 | 155.89 | 2.21 |
| 1350+40.00 | 42.00' Rt. | 156.56 | 153.92 | 156.36 | 2.64 |
| 1350+45.00 | 42.00' Rt. | 156.81 | 153.96 | 156.59 | 2.84 |
| 1350+50.00 | 42.00' Rt. | 156.98 | 154.01 | 156.76 | 2.97 |
| 1350+75.00 | 42.00' Rt. | 157.23 | 154.25 | 157.01 | 2.98 |
| 1351+00.00 | 42.00' Rt. | 156.35 | 154.49 | 156.08 | 1.86 |
| 1351+25.00 | 42.00' Rt. | 156.63 | 154.74 | 156.42 | 1.90 |
| 1351+50.00 | 42.00' Rt. | 156.27 | 154.98 | 156.19 | 1.29 |
| 1351+75.00 | 42.00' Rt. | 157.44 | 155.22 | 157.26 | 2.22 |
| 1352+00.00 | 42.00' Rt. | 158.25 | 155.46 | 158.04 | 2.79 |
| 1352+25.00 | 42.00' Rt. | 158.40 | 155.70 | 158.15 | 2.70 |
| 1352+50.00 | 42.00' Rt. | 157.92 | 155.94 | 157.74 | 1.98 |
| 1352+75.00 | 42.00' Rt. | 158.05 | 156.18 | 157.88 | 1.87 |
| 1353+00.00 | 42.00' Rt. | 158.83 | 156.42 | 158.62 | 2.40 |
| 1353+25.00 | 42.00' Rt. | 158.94 | 156.66 | 158.74 | 2.28 |
| 1353+50.00 | 42.00' Rt. | 158.19 | 156.91 | 158.00 | 1.28 |
| 1353+75.00 | 42.00' Rt. | 158.53 | 157.15 | 158.30 | 1.39 |
| 1354+00.00 | 42.00' Rt. | 159.29 | 157.39 | 159.03 | 1.90 |
| 1354+25.00 | 42.00' Rt. | 159.21 | 157.63 | 158.97 | 1.58 |
| 1354+50.00 | 42.00' Rt. | 159.63 | 157.87 | 159.38 | 1.76 |
| 1354+55.00 | 42.00' Rt. | 159.54 | 157.92 | 159.30 | 1.62 |
| 1354+60.00 | 42.00' Rt. | 159.54 | 157.97 | 159.31 | 1.57 |
| 1354+65.00 | 42.00' Rt. | 159.46 | 158.01 | 159.24 | 1.45 |
| 1354+70.00 | 42.00' Rt. | 159.24 | 158.06 | 159.05 | 1.18 |
| 1354+75.00 | 42.00' Rt. | 158.88 | 158.11 | 158.73 | 0.77 |

NOTES:

DO NOT DISTURB THE EXISTING BRICK WALLS AT RETAINING WALL NO. 3.

SOLDIER PILE RETAINING WALLS AND CAST-IN-PLACE (CIP) GRAVITY RETAINING WALLS SHALL BE DESIGNED FOR RETAINING WALL NO. 3.

FOR BIDDING PURPOSE, WALL NO. 3 IS DIVIDED INTO THREE SECTIONS AS FOLLOWS:

3A, STA. 1354+75+- TO 1353+50+-, CIP GRAVITY RETAINING WALLS.
3B, STA. 1353+50+- TO 1350+35+-, SOLDIER PILE RETAINING WALLS.
3C, STA. 1350+35+- TO 1350+25+-, CIP GRAVITY RETAINING WALLS.

THE ESTIMATED WALL LIMITS AND AREAS ARE APPROXIMATE. THE WALL DESIGN CONSULTANT SHALL MAKE THE DETERMINATION FOR THE ACTUAL LIMITS.

FOR SOLDIER PILE RETAINING WALLS, SEE SHEET NO. 5 "SOLDIER PILE RETAINING WALL TYPICAL & NOTES".

FOR STANDARD CIP GRAVITY RETAINING WALLS, SEE SHEET NO. 7 "STANDARD CAST-IN-PLACE (CIP) GRAVITY RETAINING WALL".

A BRICK VENEER IS REQUIRED FOR RETAINING WALL 3A, 3B, AND 3C. THE BRICK VENEER FACE SHALL BE FLUSH FOR RETAINING WALL 3A, 3B, AND 3C AT THE THE OFFSET LISTED IN THE WALL ENVELOPE TABLE.

ESTIMATED WALL QUANTITIES

| RETAINING WALL NO. | CIP GRAVITY RETAINING WALLS (SQUARE FEET) |
|---|---|
| 3A | 260 |
| 3C | 25 |
| TOTAL QUANTITY = 285 SF | |

ESTIMATED WALL QUANTITY

| RETAINING WALL NO. | SOLDIER PILE RETAINING WALLS (SQUARE FEET) |
|---|---|
| 3B | 860 |

| | |
|---|---|
| PREPARED BY: S. ZHANG | DATE: 05/2013 |
| REVIEWED BY: J. BATTS | DATE: 05/2013 |

***PROJECT NO.:*** R-2303D
SAMPSON ***COUNTY***
***STATION:*** VARIES
SHEET 3 OF 7

***GEOTECHNICAL ENGINEERING UNIT***

[X] *EASTERN REGIONAL OFFICE*
[ ] *WESTERN REGIONAL OFFICE*
[ ] *CONTRACT OFFICE*

***STATE OF NORTH CAROLINA***
***DEPARTMENT OF TRANSPORTATION***
***RALEIGH***

RETAINING WALL NO. 3
LOCATION AND
WALL ENVELOPE

| REVISIONS | | | | | | |
|---|---|---|---|---|---|---|
| NO. | BY | DATE | NO. | BY | DATE | SHEET NO. W-3 |
| 1 | - | - | 3 | - | - | TOTAL SHEETS 7 |
| 2 | - | - | 4 | - | - | |

| GEOTECHNICAL ENGINEER | ENGINEER |
|---|---|
| NORTH CAROLINA PROFESSIONAL SEAL 038176 ENGINEER SHIHAI ZHANG 06-14-13 | |
| SIGNATURE DATE | SIGNATURE DATE |

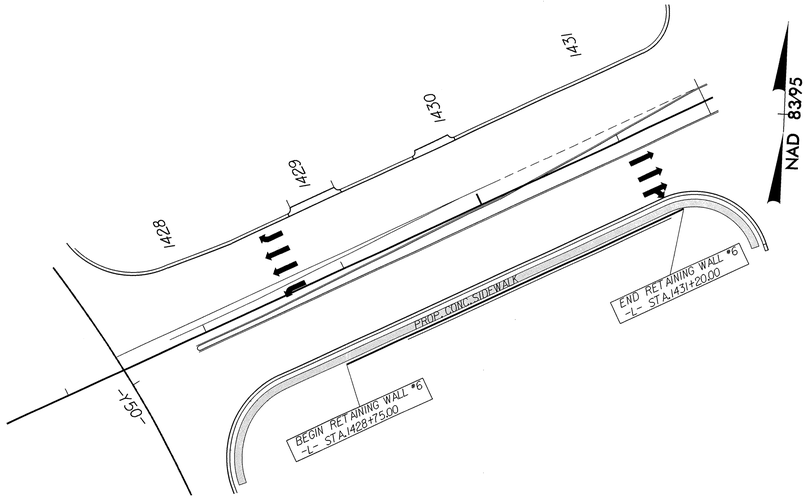


RETAINING WALL NO. 6 PLAN VIEW (NTS)

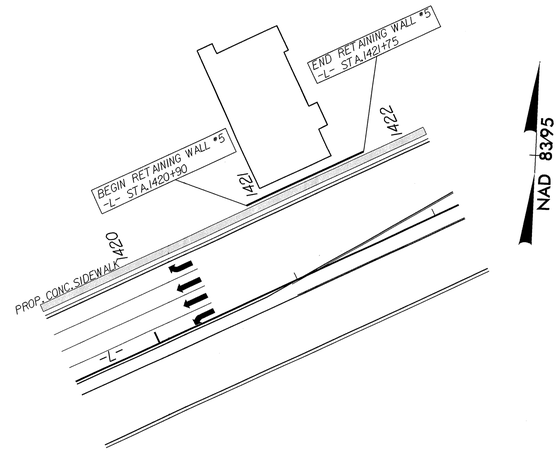


RETAINING WALL NO. 5 PLAN VIEW (NTS)

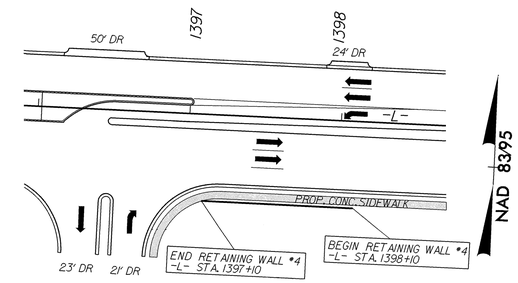


RETAINING WALL NO. 4 PLAN VIEW (NTS)

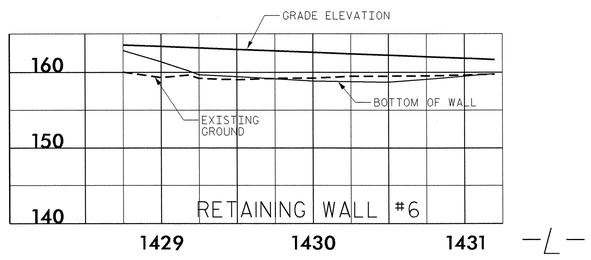


RETAINING WALL NO. 6 ENVELOPE (NTS)

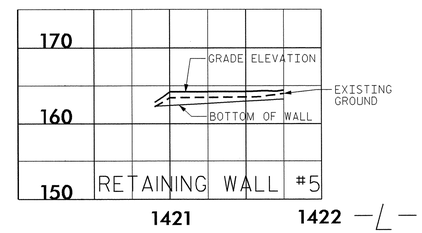


RETAINING WALL NO. 5 ENVELOPE (NTS)

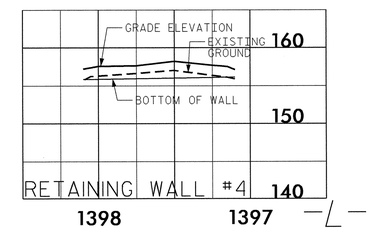


RETAINING WALL NO. 4 ENVELOPE (NTS)

RETAINING WALL #6

| STATION on -L- | Offset from -L- | Grade Elevation (ft) | Bottom of Wall (ft) | Existing Ground Elevation (ft) | Design Height (ft) |
|---|---|---|---|---|---|
| 1428+75.00 | 58.67' Rt | 163.06 | 162.84 | 160.03 | 0.22 |
| 1429+00.00 | 58.67' Rt | 162.87 | 161.39 | 159.31 | 1.48 |
| 1429+18.66 | 58.67' Rt | 162.73 | 160.15 | 159.66 | 2.58 |
| 1429+25.00 | 58.67' Rt | 162.68 | 159.69 | 159.20 | 2.99 |
| 1429+50.00 | 58.67' Rt | 162.49 | 159.43 | 159.03 | 3.05 |
| 1429+75.00 | 58.67' Rt | 162.30 | 159.15 | 159.21 | 3.15 |
| 1430+00.00 | 58.67' Rt | 162.10 | 158.86 | 159.22 | 3.24 |
| 1430+25.00 | 58.67' Rt | 161.91 | 158.78 | 159.48 | 3.13 |
| 1430+50.00 | 58.67' Rt | 161.72 | 158.70 | 159.49 | 3.02 |
| 1430+75.00 | 58.67' Rt | 161.53 | 159.08 | 159.52 | 2.45 |
| 1431+00.00 | 58.67' Rt | 161.34 | 159.49 | 159.64 | 1.85 |
| 1431+05.00 | 58.67' Rt | 161.30 | 159.57 | 159.67 | 1.73 |
| 1431+10.00 | 58.67' Rt | 161.26 | 159.65 | 159.71 | 1.61 |
| 1431+15.00 | 58.67' Rt | 161.20 | 159.73 | 159.74 | 1.47 |
| 1431+20.00 | 58.67' Rt | 161.15 | 159.81 | 159.73 | 1.33 |

RETAINING WALL #5

| STATION on -L- | Offset from -L- | Grade Elevation (ft) | Bottom of Wall (ft) | Existing Ground Elevation (ft) | Design Height (ft) |
|---|---|---|---|---|---|
| 1420+90.00 | 58.00' Lt | 162.34 | 162.30 | 162.22 | 0.04 |
| 1420+95.00 | 58.00' Lt | 162.99 | 162.36 | 162.79 | 0.63 |
| 1421+00.00 | 58.00' Lt | 163.70 | 162.41 | 163.43 | 1.28 |
| 1421+25.00 | 58.00' Lt | 163.73 | 162.69 | 163.46 | 1.03 |
| 1421+50.00 | 58.00' Lt | 163.76 | 162.97 | 163.51 | 0.79 |
| 1421+55.00 | 58.00' Lt | 163.77 | 163.03 | 163.52 | 0.74 |
| 1421+60.00 | 58.00' Lt | 163.84 | 163.09 | 163.57 | 0.75 |
| 1421+65.00 | 58.00' Lt | 163.84 | 163.14 | 163.73 | 0.70 |
| 1421+70.00 | 58.00' Lt | 163.78 | 163.20 | 163.82 | 0.58 |
| 1421+75.00 | 58.00' Lt | 163.93 | 163.25 | 163.98 | 0.68 |

RETAINING WALL #4

| STATION on -L- | Offset from -L- | Grade Elevation (ft) | Bottom of Wall (ft) | Existing Ground Elevation (ft) | Design Height (ft) |
|---|---|---|---|---|---|
| 1397+10.00 | 58.00' Rt | 156.63 | 156.18 | 155.92 | 0.46 |
| 1397+15.00 | 58.00' Rt | 157.04 | 156.16 | 156.13 | 0.88 |
| 1397+20.00 | 58.00' Rt | 157.13 | 156.15 | 156.27 | 0.99 |
| 1397+25.00 | 58.00' Rt | 157.21 | 156.13 | 156.39 | 1.08 |
| 1397+50.00 | 58.00' Rt | 157.73 | 156.06 | 157.03 | 1.67 |
| 1397+75.00 | 58.00' Rt | 157.16 | 155.98 | 156.65 | 1.18 |
| 1398+00.00 | 58.00' Rt | 157.09 | 155.91 | 156.33 | 1.19 |
| 1398+05.00 | 58.00' Rt | 157.00 | 155.89 | 156.27 | 1.11 |
| 1398+10.00 | 58.00' Rt | 156.73 | 155.88 | 155.74 | 0.86 |

ESTIMATED WALL QUANTITIES

| RETAINING WALL NO. | SEGMENTAL GRAVITY RETAINING WALLS (SQUARE FEET) |
|---|---|
| 4 | 175 |
| 5 | 120 |
| 6 | 745 |
| TOTAL QUANTITY = 1,040 SF | |

NOTES:

FOR SEGMENTAL GRAVITY RETAINING WALLS, SEE SHEET NO. 8 "STANDARD SEGMENTAL GRAVITY RETAINING WALL".

| | |
|---|---|
| PREPARED BY: S. ZHANG | DATE: 04/2013 |
| REVIEWED BY: J. BATTS | DATE: 04/2013 |

**GEOTECHNICAL ENGINEERING UNIT**

[X] EASTERN REGIONAL OFFICE
[ ] WESTERN REGIONAL OFFICE
[ ] CONTRACT OFFICE

STATE OF NORTH CAROLINA
DEPARTMENT OF TRANSPORTATION
RALEIGH

RETAINING WALL NO. 4,5, & 6
LOCATION AND
WALL ENVELOPE

REVISIONS

| NO. | BY | DATE | NO. | BY | DATE |
|---|---|---|---|---|---|
| 1 | - | - | 3 | - | - |
| 2 | - | - | 4 | - | - |

SHEET NO. W-4
TOTAL SHEETS 7

PROJECT NO.: R-2303D
SAMPSON COUNTY
STATION: VARIES
SHEET 4 OF 7

| GEOTECHNICAL ENGINEER | ENGINEER |
|---|---|
| NORTH CAROLINA PROFESSIONAL SEAL 038176 ENGINEER SHIHAI ZHANG 6/14/2013 | |
| SIGNATURE DATE | SIGNATURE DATE |

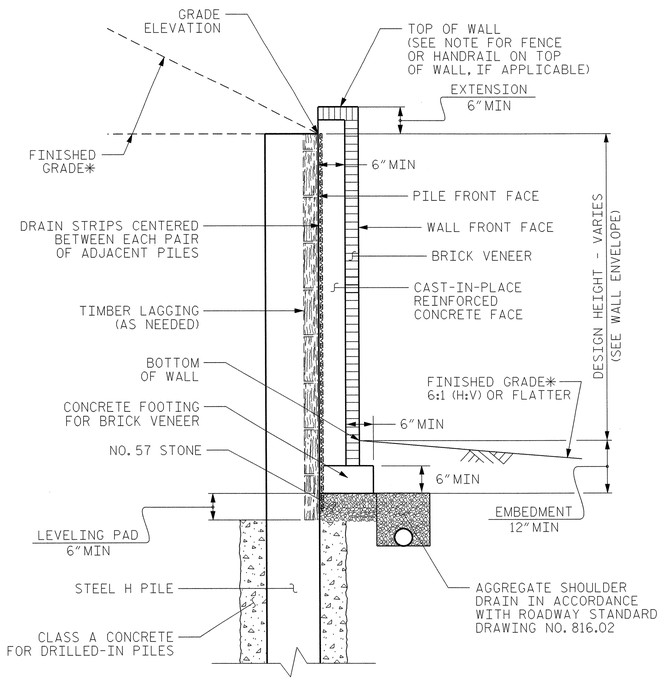


## WALL NO. 3B TYPICAL SECTION SOLDIER PILE WALL WITH CAST-IN-PLACE FACE WTIH BRICK VENEER

*SEE ROADWAY PLANS FOR FINISHED GRADE AND DITCH DETAILS.

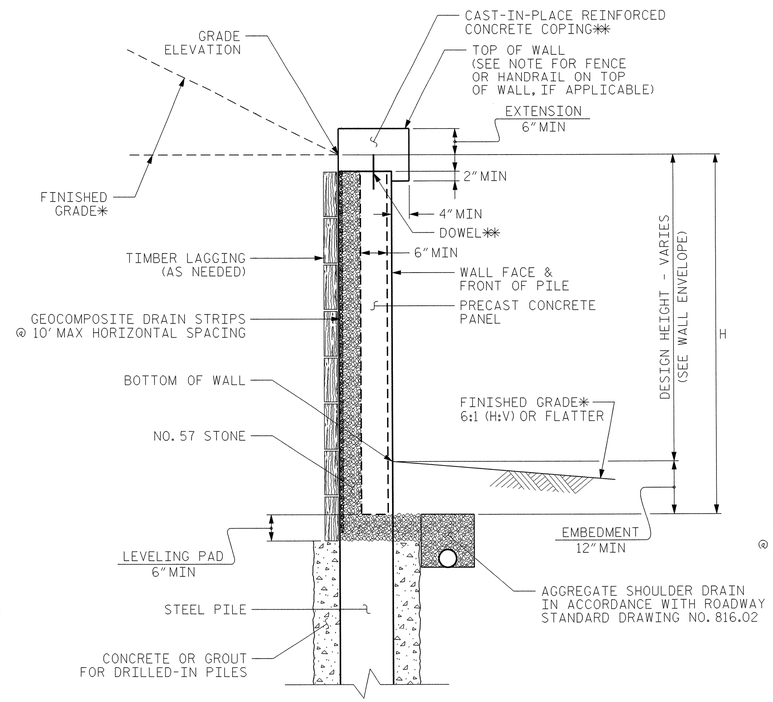


## WALL NO. 1 AND NO. 2 TYPICAL SECTION SOLDIER PILE WALL WITH PRECAST PANEL (OPTION)

*SEE ROADWAY PLANS FOR FINISHED GRADE AND DITCH DETAILS.
**AT THE CONTRACTOR'S OPTION, EXTEND COPING DOWN BACK OF PANELS AT LEAST 2" INSTEAD OF USING DOWELS.

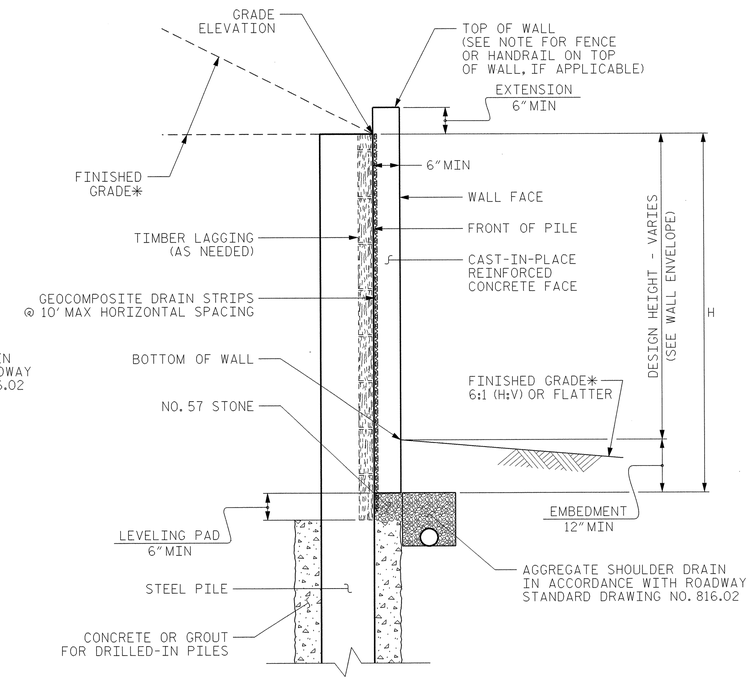


## WALL NO. 1 AND NO. 2 TYPICAL SECTION SOLDIER PILE WALL WITH CAST-IN-PLACE FACE (OPTION)

*SEE ROADWAY PLANS FOR FINISHED GRADE AND DITCH DETAILS.

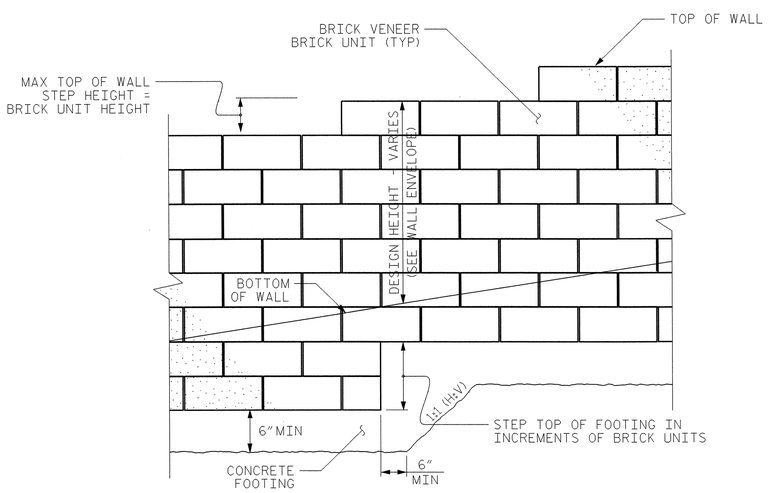


## WALL NO. 3B BRICK VENEER TYPICAL STEPPING

## NOTES:

FOR SOLDIER PILE RETAINING WALLS, SEE SOLDIER PILE RETAINING WALLS PROVISION.

A FENCE OR HANDRAIL IS REQUIRED ON TOP OF RETAINING WALL NO. 1 AND NO. 2. SEE ROADWAY PLANS FOR FENCE OR HANDRAIL ATTACHMENT DETAILS.

AT THE CONTRACTOR'S OPTION, USE DRIVEN H-PILES FOR RETAINING WALL NO. 1, NO. 2, AND NO. 3B FOR WALL DESIGN HEIGHTS 8 FT OR LESS AND DRILLED-IN PILES ARE REQUIRED FOR WALL DESIGN HEIGHTS OVER 8 FT.

FOR DRILLED-IN PILES, STEEL PILES MAY CONSIST OF H-PILES OR STRUCTURAL STEEL W-SHAPE CONFORMING TO AASHTO M270 GRADE 50. STEEL W-SHAPES SHALL BE GALVANIZED IN ACCORDANCE WITH SECTION 1076 OF THE STANDARD SPECIFICATION.

AT THE CONTRACTOR'S OPTION, USE EITHER A PRECAST CONCRETE PANEL FACE THAT MEET SECTION 1077 OF THE STANDARD SPECIFICATIONS OR A CAST-IN-PLACE REINFORCED CONCRETE FACE FOR RETAINING WALL NO. 1 AND NO. 2. THE FACE TYPE SHALL BE THE SAME FOR WALL NO. 1 AND NO. 2.

PAINT GALVANIZED H-PILES OR STEEL W-SHAPE GRAY IN ACCORDANCE WITH ARTICLE 442-12 OF THE STANDARD SPECIFICATIONS FOR RETAINING WALL NO. 1 AND NO. 2 IF A PRECAST CONCRETE PANEL FACE IS SELECTED.

USE A SOLDIER PILE RETAINING WALL WITH A CAST-IN-PLACE REINFORCED CONCRETE FACE FOR RETAINING WALL NO. 3B.

A BRICK VENEER IS REQUIRED FOR RETAINING WALL NO. 3B AS SHOWN. SUBMIT BRICK SAMPLES FOR APPROVAL BEFORE BEGINNING SOLDIER PILE WALL CONSTRUCTION.

BEFORE BEGINNING SOLDIER PILE WALL DESIGN FOR RETAINING WALL NO. 1, NO. 2, AND NO. 3B, SURVEY WALL LOCATION AND SUBMIT A REVISED WALL PROFILE VIEW (WALL ENVELOPE) FOR REVIEW. DO NOT START WALL DESIGN OR CONSTRUCTION UNTIL THE REVISED WALL ENVELOPE IS ACCEPTED.

DESIGN RETAINING WALL NO. 1, NO. 2, AND NO. 3B FOR THE FOLLOWING:
1) H = DESIGN HEIGHT + EMBEDMENT
2) DESIGN LIFE = 75 YEARS
3) IN-SITU ASSUMED MATERIAL PARAMETERS
UNIT WEIGHT, $\gamma$ = 120 LB/CF
FRICTION ANGLE, $\phi$ = 30 DEGREES
COHESION, c = 0 LB/SF

| | |
|---|---|
| PREPARED BY: S. ZHANG | DATE: 05/2013 |
| REVIEWED BY: J. BATTS | DATE: 05/2013 |

**GEOTECHNICAL ENGINEERING UNIT**

[X] EASTERN REGIONAL OFFICE
[ ] WESTERN REGIONAL OFFICE
[ ] CONTRACT OFFICE

STATE OF NORTH CAROLINA DEPARTMENT OF TRANSPORTATION RALEIGH

PROJECT NO.: R-2303D
SAMPSON COUNTY
STATION: VARIES

SHEET 5 OF 7

SOLDIER PILE RETAINING WALL TYPICAL AND NOTES

–

| REVISIONS | | | | | | SHEET NO. |
|---|---|---|---|---|---|---|
| NO. | BY | DATE | NO. | BY | DATE | W-5 |
| 1 | – | – | 3 | – | – | TOTAL SHEETS |
| 2 | – | – | 4 | – | – | 7 |

| GEOTECHNICAL ENGINEER | ENGINEER |
|---|---|
| NORTH CAROLINA PROFESSIONAL SEAL 038176 ENGINEER SHIHAI ZHANG 6/14/2013 | |
| SIGNATURE DATE | SIGNATURE DATE |

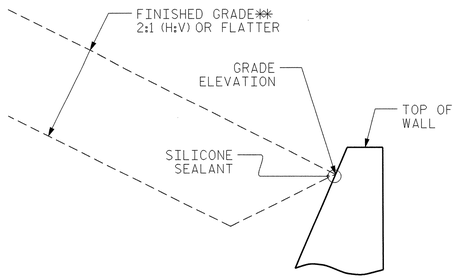


## SLOPE CASE

**SEE ROADWAY PLANS FOR FINISHED GRADE AND DITCH DETAILS.

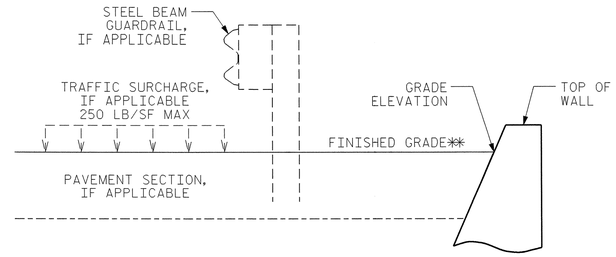


## NO SLOPE CASE

**SEE ROADWAY PLANS FOR FINISHED GRADE DETAILS.

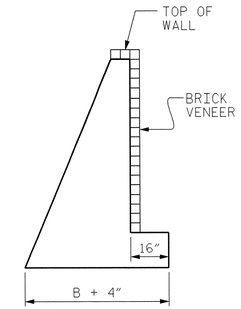


## BRICK VENEER DETAIL

(WHEN APPLICABLE)

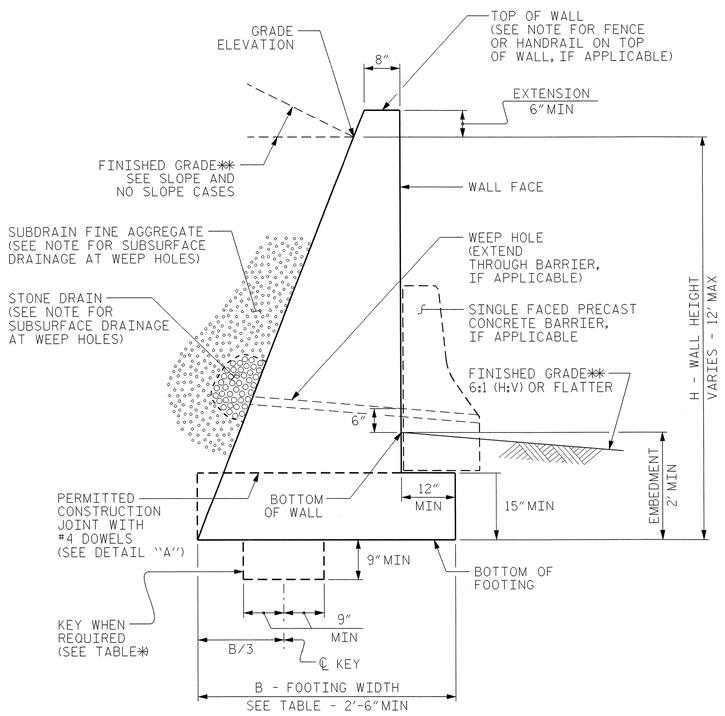


## STANDARD CIP GRAVITY WALL

**SEE ROADWAY PLANS FOR FINISHED GRADE AND DITCH DETAILS.

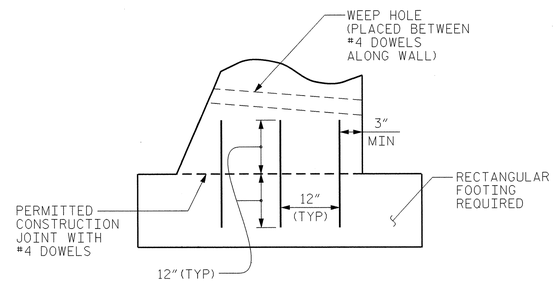


## DETAIL "A"

| H (FT) | 3 - < 6 | 6 - 9 | > 9 - 12 |
|---|---|---|---|
| SLOPE CASE | .66 | .70* | .75* |
| NO SLOPE CASE WITH TRAFFIC SURCHARGE | .80 | .75* | .70* |
| NO SLOPE CASE WITHOUT TRAFFIC SURCHARGE | .60 | .60 | .60 |

## B/H RATIO (B = 2'-6" MIN)

*KEY IS REQUIRED FOR "SLOPE CASE" OR "NO SLOPE CASE WITH TRAFFIC SURCHARGE" WHEN H IS 6' OR GREATER.

## NOTES:

FOR STANDARD CAST-IN-PLACE (CIP) GRAVITY RETAINING WALLS, SEE CAST-IN-PLACE GRAVITY RETAINING WALLS PROVISION.

FOR STEEL BEAM GUARDRAIL, SEE ROADWAY PLANS AND SECTION 862 OF THE STANDARD SPECIFICATIONS.

FOR SINGLE FACED PRECAST CONCRETE BARRIER, SEE ROADWAY PLANS AND SECTION 857 OF THE STANDARD SPECIFICATIONS.

FOR FENCES OR HANDRAILS ON TOP OF WALLS, SEE ROADWAY PLANS FOR FENCE OR HANDRAIL ATTACHMENT DETAILS.

FOR SUBSURFACE DRAINAGE AT WEEP HOLES, SEE ARTICLE 414-8 OF THE STANDARD SPECIFICATIONS.

STANDARD CIP GRAVITY WALLS ARE BASED ON THE FOLLOWING IN-SITU ASSUMED SOIL PARAMETERS:
- UNIT WEIGHT, $\gamma$ = 120 LB/CF
- FRICTION ANGLE, $\phi$ = 35 DEGREES (GROUNDWATER WITHIN 7' OF BOTTOM OF FOOTING)
- FRICTION ANGLE, $\phi$ = 30 DEGREES (GROUNDWATER MORE THAN 7' BELOW BOTTOM OF FOOTING)
- COHESION, c = 0 LB/SF

DO NOT USE STANDARD CIP GRAVITY WALLS IF ASSUMED SOIL PARAMETERS ARE NOT APPLICABLE OR GROUNDWATER IS ABOVE BOTTOM OF FOOTING.

DO NOT USE STANDARD CIP GRAVITY WALLS WHEN VERY LOOSE OR SOFT SOIL OR MUCK IS BELOW WALLS.

BEFORE BEGINNING STANDARD CIP GRAVITY WALL CONSTRUCTION, SURVEY WALL LOCATIONS AND SUBMIT WALL PROFILE VIEWS (WALL ENVELOPES) FOR REVIEW. FOR WALL ENVELOPES, INCLUDE BOTTOM OF WALL, EXISTING GROUND AND GRADE ELEVATIONS AND OTHER ELEVATIONS AS NEEDED AT INTERVALS OF 25' OR LESS ALONG WALLS. DO NOT START WALL CONSTRUCTION UNTIL WALL ENVELOPES ARE ACCEPTED.

FOR BRICK VENEERS, SUBMIT BRICK SAMPLES FOR APPROVAL BEFORE BEGINNING STANDARD CIP GRAVITY WALL CONSTRUCTION.

DO NOT PLACE CONCRETE FOR FOOTINGS UNTIL EXCAVATION DIMENSIONS AND FOUNDATION MATERIAL ARE APPROVED.

WHEN CONSTRUCTING STANDARD CIP GRAVITY WALLS WITH A CONSTRUCTION JOINT AS SHOWN IN DETAIL "A", PROVIDE A MINIMUM OF 3 EQUALLY SPACED #4 DOWELS AT INTERVALS OF 1'-6" ALONG WALLS.

***PROJECT NO.:*** R-2303D
SAMPSON ***COUNTY***
***STATION:*** VARIES
SHEET 6 OF 7

***GEOTECHNICAL ENGINEERING UNIT***

***STATE OF NORTH CAROLINA DEPARTMENT OF TRANSPORTATION RALEIGH***

***STANDARD DRAWING NO. 453.01***

STANDARD CAST-IN-PLACE (CIP) GRAVITY RETAINING WALL

DATE: 1-17-12

SHEET NO. W-6
TOTAL SHEETS 7

| GEOTECHNICAL ENGINEER | ENGINEER |
|---|---|
| NORTH CAROLINA PROFESSIONAL SEAL 038176 ENGINEER SHIHAI ZHANG 6/6/2013 | |
| SIGNATURE DATE | SIGNATURE DATE |

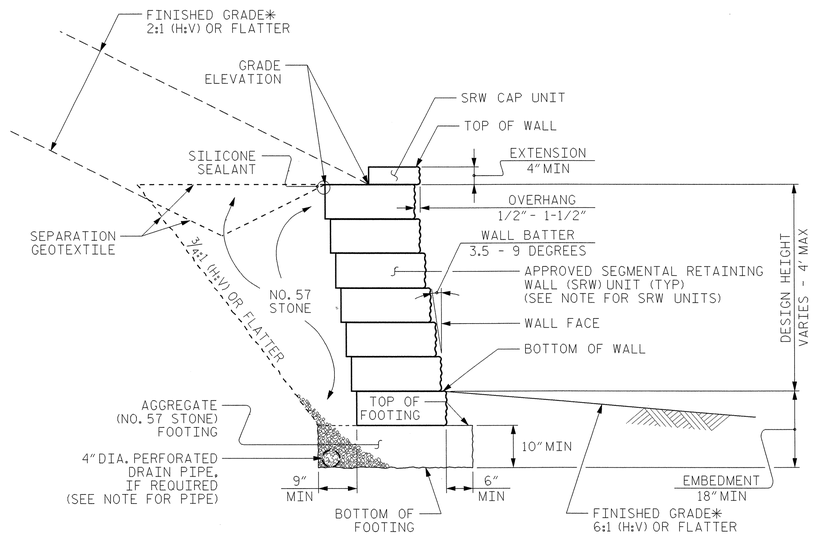


## STANDARD SEGMENTAL GRAVITY WALL WITH SLOPE

*SEE ROADWAY PLANS FOR FINISHED GRADE AND DITCH DETAILS.

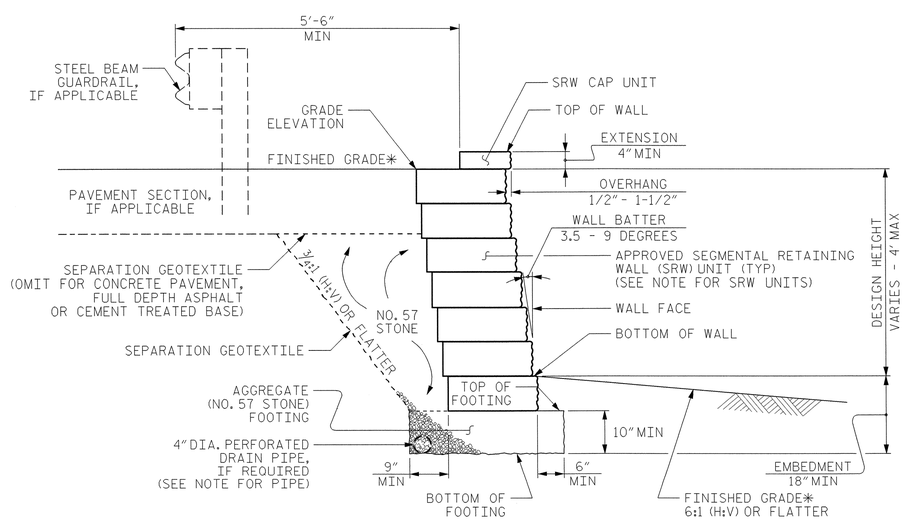


## STANDARD SEGMENTAL GRAVITY WALL WITHOUT SLOPE

*SEE ROADWAY PLANS FOR FINISHED GRADE DETAILS.

## NOTES:

FOR STANDARD SEGMENTAL GRAVITY RETAINING WALLS, SEE SEGMENTAL GRAVITY RETAINING WALLS PROVISION.

FOR STEEL BEAM GUARDRAIL, SEE ROADWAY PLANS AND SECTION 862 OF THE STANDARD SPECIFICATIONS.

DO NOT ATTACH FENCES OR HANDRAILS TO STANDARD SEGMENTAL GRAVITY WALLS.

DO NOT USE STANDARD SEGMENTAL GRAVITY WALLS FOR INTERSTATE HIGHWAY OR RAILROAD PROJECTS.

DO NOT USE STANDARD SEGMENTAL GRAVITY WALLS WHEN SURCHARGE LOADS WILL BE WITHIN 5'-6" OF THE BACK OF SRW CAP UNITS.

DO NOT USE STANDARD SEGMENTAL GRAVITY WALLS WHEN VERY LOOSE OR SOFT SOIL OR MUCK IS BELOW WALLS.

SEGMENTAL RETAINING WALL (SRW) UNITS ARE APPROVED FOR EITHER 2' OR 4' MAXIMUM DESIGN HEIGHTS. FOR DETAILS AND DIMENSIONS OF APPROVED SRW UNITS AND MAXIMUM DESIGN HEIGHTS, SEE connect.ncdot.gov/resources/Geological/Pages/Products.aspx

DO NOT MIX APPROVED SRW UNITS FROM DIFFERENT VENDORS ON THE SAME STANDARD SEGMENTAL GRAVITY WALL. USE THE SAME SIZE APPROVED SRW UNITS FOR EACH WALL SECTION.

BEFORE BEGINNING STANDARD SEGMENTAL GRAVITY WALL CONSTRUCTION, SURVEY WALL LOCATIONS AND SUBMIT WALL PROFILE VIEWS (WALL ENVELOPES) FOR REVIEW. FOR WALL ENVELOPES, INCLUDE BOTTOM OF WALL, EXISTING GROUND AND GRADE ELEVATIONS AND OTHER ELEVATIONS AS NEEDED AT INTERVALS OF 25' OR LESS ALONG WALLS. DO NOT START WALL CONSTRUCTION UNTIL WALL ENVELOPES ARE ACCEPTED.

A DRAIN PIPE IS REQUIRED IF GROUNDWATER IS ABOVE BOTTOM OF FOOTINGS.

DO NOT PLACE NO. 57 STONE FOR FOOTINGS UNTIL EXCAVATION DIMENSIONS AND FOUNDATION MATERIAL ARE APPROVED.

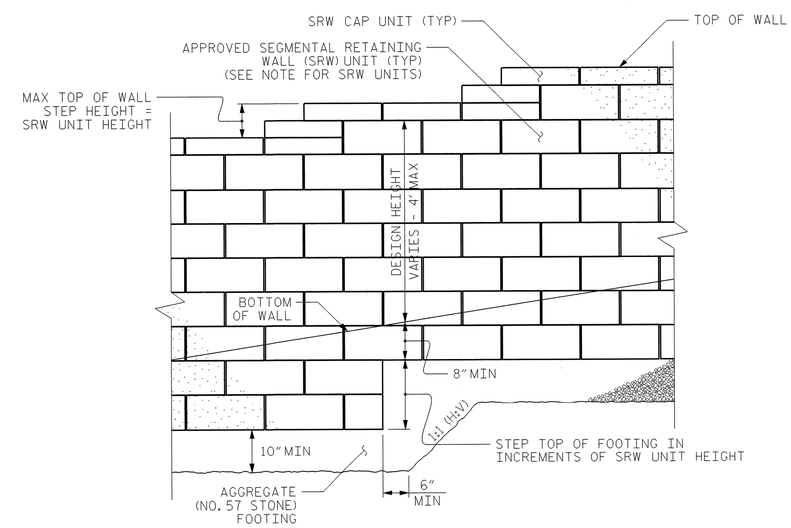


## STANDARD SEGMENTAL GRAVITY WALL - PARTIAL ELEVATION

***PROJECT NO.:*** R-2303D

SAMPSON ***COUNTY***

***STATION:*** VARIES

SHEET 7 OF 7

***GEOTECHNICAL ENGINEERING UNIT***

***STATE OF NORTH CAROLINA DEPARTMENT OF TRANSPORTATION RALEIGH***

***STANDARD DRAWING NO. 453.02***

STANDARD SEGMENTAL GRAVITY RETAINING WALL

DATE: 1-17-12

SHEET NO. WS-7

TOTAL SHEETS 7

# STANDARD NOTES

## DESIGN DATA:

| | |
|---|---|
| SPECIFICATIONS | A.A.S.H.T.O. (CURRENT) |
| LIVE LOAD | SEE PLANS |
| IMPACT ALLOWANCE | SEE A.A.S.H.T.O. |
| STRESS IN EXTREME FIBER OF | |
| STRUCTURAL STEEL - AASHTO M270 GRADE 36 | 20,000 LBS. PER SQ. IN. |
| - AASHTO M270 GRADE 50W | 27,000 LBS. PER SQ. IN. |
| - AASHTO M270 GRADE 50 | 27,000 LBS. PER SQ. IN. |
| REINFORCING STEEL IN TENSION | |
| GRADE 60 | 24,000 LBS. PER SQ. IN. |
| CONCRETE IN COMPRESSION | 1,200 LBS. PER SQ. IN. |
| CONCRETE IN SHEAR | SEE A.A.S.H.T.O. |
| STRUCTURAL TIMBER - TREATED OR | |
| UNTREATED - EXTREME FIBER STRESS | 1,800 LBS. PER SQ. IN. |
| COMPRESSION PERPENDICULAR TO GRAIN OF TIMBER | 375 LBS. PER SQ. IN. |
| EQUIVALENT FLUID PRESSURE OF EARTH | 30 LBS. PER CU. FT. (MINIMUM) |

## MATERIAL AND WORKMANSHIP:

EXCEPT AS MAY OTHERWISE BE SPECIFIED ON PLANS OR IN THE SPECIAL PROVISIONS, ALL MATERIAL AND WORKMANSHIP SHALL BE IN ACCORDANCE WITH THE 2012 "STANDARD SPECIFICATIONS FOR ROADS AND STRUCTURES" OF THE N. C. DEPARTMENT OF TRANSPORTATION.

STEEL SHEET PILING FOR PERMANENT OR TEMPORARY APPLICATIONS SHALL BE HOT ROLLED.

## CONCRETE:

UNLESS OTHERWISE REQUIRED ON PLANS, CLASS A CONCRETE SHALL BE USED FOR ALL PORTIONS OF ALL STRUCTURES WITH THE EXCEPTION THAT: CLASS AA CONCRETE SHALL BE USED IN BRIDGE SUPERSTRUCTURES, ABUTMENT BACKWALLS, AND APPROACH SLABS; AND CLASS B CONCRETE SHALL BE USED FOR SLOPE PROTECTION AND RIP RAP.

## CONCRETE CHAMFERS:

UNLESS OTHERWISE NOTED ON THE PLANS, ALL EXPOSED CORNERS ON STRUCTURES SHALL BE CHAMFERED 3/4" WITH THE FOLLOWING EXCEPTIONS: TOP CORNERS OF CURBS MAY BE ROUNDED TO 1-1/2" RADIUS WHICH IS BUILT INTO CURB FORMS; CORNERS OF TRANSVERSE FLOOR EXPANSION JOINTS SHALL BE ROUNDED WITH A 1/4" FINISHING TOOL UNLESS OTHERWISE REQUIRED ON PLANS; AND CORNERS OF EXPANSION JOINTS IN THE ROADWAY FACES AND TOPS OF CURBS AND SIDEWALKS SHALL BE ROUNDED TO A 1/4" RADIUS WITH A FINISHING STONE OR TOOL UNLESS OTHERWISE REQUIRED ON PLANS.

## DOWELS:

DOWELS WHEN INDICATED ON PLANS AS FOR CULVERT EXTENSIONS, SHALL BE EMBEDDED AT LEAST 12" INTO THE OLD CONCRETE AND GROUTED INTO PLACE WITH 1:2 CEMENT MORTAR.

## ALLOWANCE FOR DEAD LOAD DEFLECTION, SETTLEMENT, ETC. IN CASTING SUPERSTRUCTURES:

BRIDGES SHALL BE BUILT ON THE GRADE OR VERTICAL CURVE SHOWN ON PLANS. SLABS, CURBS AND PARAPETS SHALL CONFORM TO THE GRADE OR CURVE.

ALL DIMENSIONS WHICH ARE GIVEN IN SECTION AND ARE AFFECTED BY DEAD LOAD DEFLECTIONS ARE DIMENSIONS AT CENTER LINE OF BEARING UNLESS OTHERWISE NOTED ON PLANS. IN SETTING FORMS FOR STEEL BEAM BRIDGES AND PRESTRESSED CONCRETE GIRDER BRIDGES, ADJUSTMENTS SHALL BE MADE DUE TO THE DEAD LOAD DEFLECTIONS FOR THE ELEVATIONS SHOWN. WHERE BLOCKS ARE SHOWN OVER BEAMS FOR BUILDING UP TO THE SLAB, THE VERTICAL DIMENSIONS OF THE BLOCKS SHALL BE ADJUSTED BETWEEN BEARINGS TO COMPENSATE FOR DEAD LOAD DEFLECTIONS, VERTICAL CURVE ORDINATE, AND ACTUAL BEAM CAMBER. WHERE BOTTOM OF SLAB IS IN LINE WITH BOTTOM OF TOP FLANGES, DEPTH OF SLAB BETWEEN BEARINGS SHALL BE ADJUSTED TO COMPENSATE FOR DEAD LOAD DEFLECTION, VERTICAL CURVE ORDINATE, AND ACTUAL BEAM CAMBER.

IN SETTING FALSEWORK AND FORMS FOR REINFORCED CONCRETE SPANS, AN ALLOWANCE SHALL BE MADE FOR DEAD LOAD DEFLECTIONS, SETTLEMENT OF FALSEWORK, AND PERMANENT CAMBER WHICH SHALL BE PROVIDED FOR IN ADDITION TO THE ELEVATIONS SHOWN. AFTER REMOVAL OF THE FALSEWORK, THE FINISHED STRUCTURES SHALL CONFORM TO THE PROFILE AND ELEVATIONS SHOWN ON THE PLANS AND CONSTRUCTION ELEVATIONS FURNISHED BY THE ENGINEER.

DETAILED DRAWINGS FOR FALSEWORK OR FORMS FOR BRIDGE SUPERSTRUCTURE AND ANY STRUCTURE OR PARTS OF A STRUCTURE AS NOTED ON THE PLANS SHALL BE SUBMITTED TO THE ENGINEER FOR APPROVAL BEFORE CONSTRUCTION OF THE FALSEWORK OR FORMS IS STARTED.

## REINFORCING STEEL:

ALL REINFORCING STEEL SHALL BE DEFORMED. DIMENSIONS RELATIVE TO PLACEMENT OF REINFORCING ARE TO CENTERS OF BARS UNLESS OTHERWISE INDICATED IN THE PLANS. DIMENSIONS ON BAR DETAILS ARE TO CENTERS OF BARS OR ARE OUT TO OUT AS INDICATED ON PLANS.

WIRE BAR SUPPORTS SHALL BE PROVIDED FOR REINFORCING STEEL WHERE INDICATED ON THE PLANS. WHEN BAR SUPPORT PIECES ARE PLACED IN CONTINUOUS LINES, THEY SHALL BE SO PLACED THAT THE ENDS OF THE SUPPORTING WIRES SHALL BE LAPPED TO LOCK LEGS ON ADJOINING PIECES.

## STRUCTURAL STEEL:

AT THE CONTRACTOR'S OPTION, HE MAY SUBSTITUTE 7/8" Ø SHEAR STUDS FOR THE 3/4" Ø STUDS SPECIFIED ON THE PLANS. THIS SUBSTITUTION SHALL BE MADE AT THE RATE OF 3 - 7/8" Ø STUDS FOR 4 - 3/4" Ø STUDS, AND STUD SPACING CHANGES SHALL BE MADE AS NECESSARY TO PROVIDE THE SAME EQUIVALENT NUMBER OF 7/8" Ø STUDS ALONG THE BEAM AS SHOWN FOR 3/4" Ø STUDS BASED ON THE RATIO OF 3 - 7/8" Ø STUDS FOR 4 - 3/4" Ø STUDS. STUDS OF THE LENGTH SPECIFIED ON THE PLANS MUST BE PROVIDED. THE MAXIMUM SPACING SHALL BE 2'-0".

EXCEPT AT THE INTERIOR SUPPORTS OF CONTINUOUS BEAMS WHERE THE COVER PLATE IS IN CONTACT WITH BEARING PLATE, THE CONTRACTOR MAY, AT HIS OPTION, SUBSTITUTE FOR THE COVER PLATES DESIGNATED ON THE PLANS COVER PLATES OF THE EQUIVALENT AREA PROVIDED THESE PLATES ARE AT LEAST 5/16" IN THICKNESS AND DO NOT EXCEED A WIDTH EQUAL TO THE FLANGE WIDTH LESS 2" OR A THICKNESS EQUAL TO 2 TIMES THE FLANGE THICKNESS. THE SIZE OF FILLET WELDS SHALL CONFORM TO THE REQUIREMENTS OF THE CURRENT ANSI/AASHTO/AWS "BRIDGE WELDING CODE". ELECTROSLAG WELDING WILL NOT BE PERMITTED.

WITH THE SOLE EXCEPTION OF EDGES AT SURFACES WHICH BEAR ON OTHER SURFACES, ALL SHARP EDGES AND ENDS OF SHAPES AND PLATES SHALL BE SLIGHTLY ROUNDED BY SUITABLE MEANS TO A RADIUS OF APPROXIMATELY 1/16 INCH OR EQUIVALENT FLAT SURFACE AT A SUITABLE ANGLE PRIOR TO PAINTING, GALVANIZING, OR METALLIZING.

## HANDRAILS AND POSTS:

METAL STANDARDS AND FACES OF THE CONCRETE END POSTS FOR THE METAL RAIL SHALL BE SET NORMAL TO THE GRADE OF THE CURB, UNLESS OTHERWISE SHOWN ON PLANS. THE METAL RAIL AND TOPS OF CONCRETE POSTS USED WITH THE ALUMINUM RAIL SHALL BE BUILT PARALLEL TO THE GRADE OF THE CURB.

METAL HANDRAILS SHALL BE IN ACCORDANCE WITH THE PLANS. RAILS SHALL BE AS MANUFACTURED FOR BRIDGE RAILING. CASTINGS SHALL BE OF A UNIFORM APPEARANCE. FINS AND OTHER DEFORMATIONS RESULTING FROM CASTING OR OTHERWISE SHALL BE REMOVED IN A MANNER SO THAT A UNIFORM COLORING OF THE COMPLETED CASTING SHALL BE OBTAINED. CASTINGS WITH DISCOLORATIONS OR OF NON-UNIFORM COLORING WILL NOT BE ACCEPTED. CERTIFIED MILL REPORTS ARE REQUIRED FOR METAL RAILS AND POSTS.

## SPECIAL NOTES:

GENERALLY, IN CASE OF DISCREPANCY, THIS STANDARD SHEET OF NOTES SHALL GOVERN OVER THE SPECIFICATIONS, BUT THE REMAINDER OF THE PLANS SHALL GOVERN OVER NOTES HEREON, AND SPECIAL PROVISIONS SHALL GOVERN OVER ALL. SEE SPECIFICATIONS ARTICLE 105-4.

ENGLISH

JANUARY, 1990