DCN 0164DEL_P10b2

TIP PROJECT: P-5206C

CONTRACT: C203207

$$$$$SYSTIME$$$$$
$$$$$USERNAME$$$$$DGN$$$$$

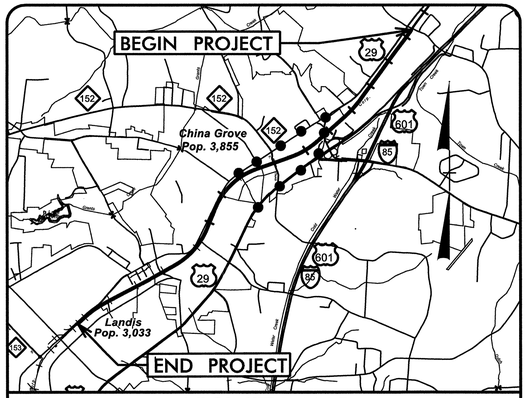

VICINITY MAP

DENOTES OFFSITE DETOUR

STATE OF NORTH CAROLINA
NCDOT RAIL DIVISION

ROWAN COUNTY

STATE	STATE PROJECT REFERENCE NO.	SHEET NO.	TOTAL SHEETS
N.C.	P-5206C	1	

WBS ELEMENT	F.A. PROJ. NO.	DESCRIPTION
52000.1.STR07T1B		PE, UTL PE
52000.1.STR08T3		PE, UTL PE
43219.2.STR08P5206		ROW
52000.3.STR02T4D	FRA-FR-HSR-0006-10-01-00	UTL CONST, CONST

PART 2 OF 3

LOCATION: NCRR/NS MAINLINE RAILROAD ROADBED FROM SOUTH OF MT. HOPE CHURCH RD (SR 1505, MP 340.9) TO NORTH OF RYDER AVE (SR 1210, MP 345.4)

TYPE OF WORK: RAILROAD ROADBED, GRADING, DRAINAGE, PAVING, STRUCTURE, CURB AND GUTTER, AND SIGNALS

NAD 83/ NSRS 2007

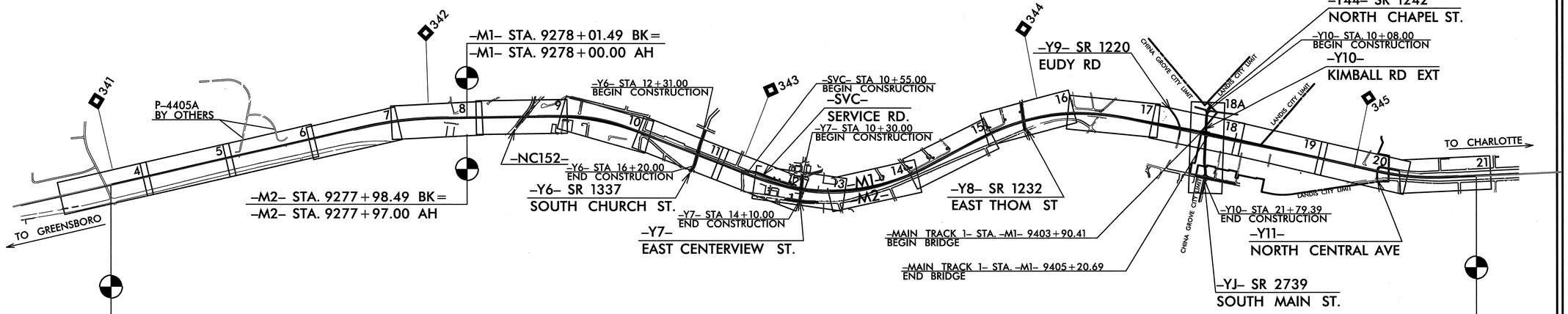

END TIP PROJECT P-5206B (PART1)
BEGIN TIP PROJECT P-5206C (PART2)
MAIN TRACK 1 STA. -M1- 9218+00.00 BK =
STA. -M1- 9218+02.82 AH
MAIN TRACK 2 STA. -M2- 9218+01.63 BK =
STA. -M2- 9218+02.82 AH

END TIP PROJECT P-5206C (PART2)
BEGIN TIP PROJECT P-5206D (PART3)
MAIN TRACK 1 STA. -M1- 9450+00.00 BK =
STA. -M1- 9450+39.03 AH
MAIN TRACK 2 STA. -M2- 9449+97.71 BK =
STA. -M2- 9450+39.03 AH

GRAPHIC SCALES

50 25 0 50 100
PLANS

50 25 0 50 100
PROFILE (HORIZONTAL)

10 5 0 10 20
PROFILE (VERTICAL)

PROJECT LENGTH

LENGTH OF RAIL TIP PROJECT	=4.369 MILES
LENGTH OF STRUCTURE TIP PROJECT	=0.025 MILES
TOTAL LENGTH OF TIP PROJECT	=4.394 MILES

Prepared In the Office of:
TGS ENGINEERS
804-C N.LAFAYETTE STREET
SHELBY,NC 28150
PH (704) 476 0003
CORP.LICENSE NO.:C-0275

2012 STANDARD SPECIFICATIONS

RIGHT OF WAY DATE:
AUGUST 31, 2012

LETTING DATE:
OCTOBER 15, 2013

LEONARD FLETCHER, PE, PLS
RAIL PROJECT ENGINEER
JIMMY TERRY, PE
RAIL DESIGN ENGINEER
DAVID PETTY, PE
HYDRAULIC ENGINEER
RAY ELLIOTT, PE
STRUCTURE ENGINEER
MATTHEW B. SIMMONS, PE
NCDOT PROJECT MANAGER

HYDRAULICS ENGINEER
P.E.
SIGNATURE:

RAIL/ROADWAY DESIGN ENGINEER
P.E.
SIGNATURE:

NCDOT RAIL DIVISION CONTACT:
MATTHEW B. SIMMONS, PE

NC DEPARTMENT OF TRANSPORTATION
RAIL DIVISION
DESIGN AND CONSTRUCTION

DCN 0164DEL_P10b2
6/2/99

PROJECT REFERENCE NO.	SHEET NO.
P5206-C	1-A
Location and Surveys	

SURVEY CONTROL SHEET P5206–C

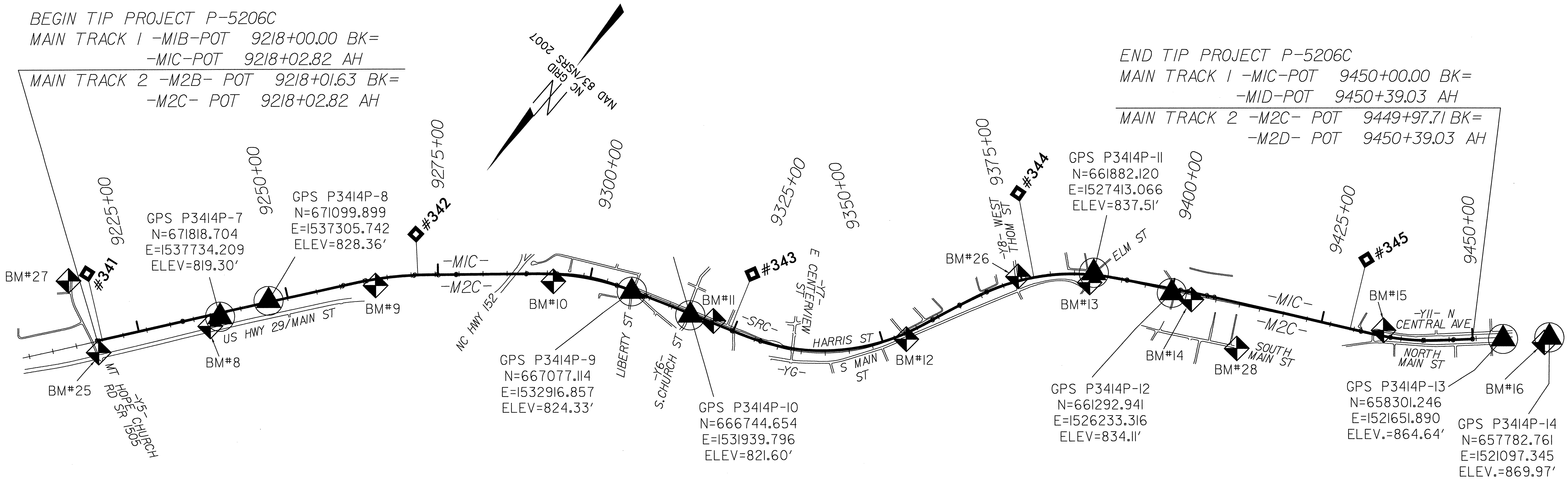

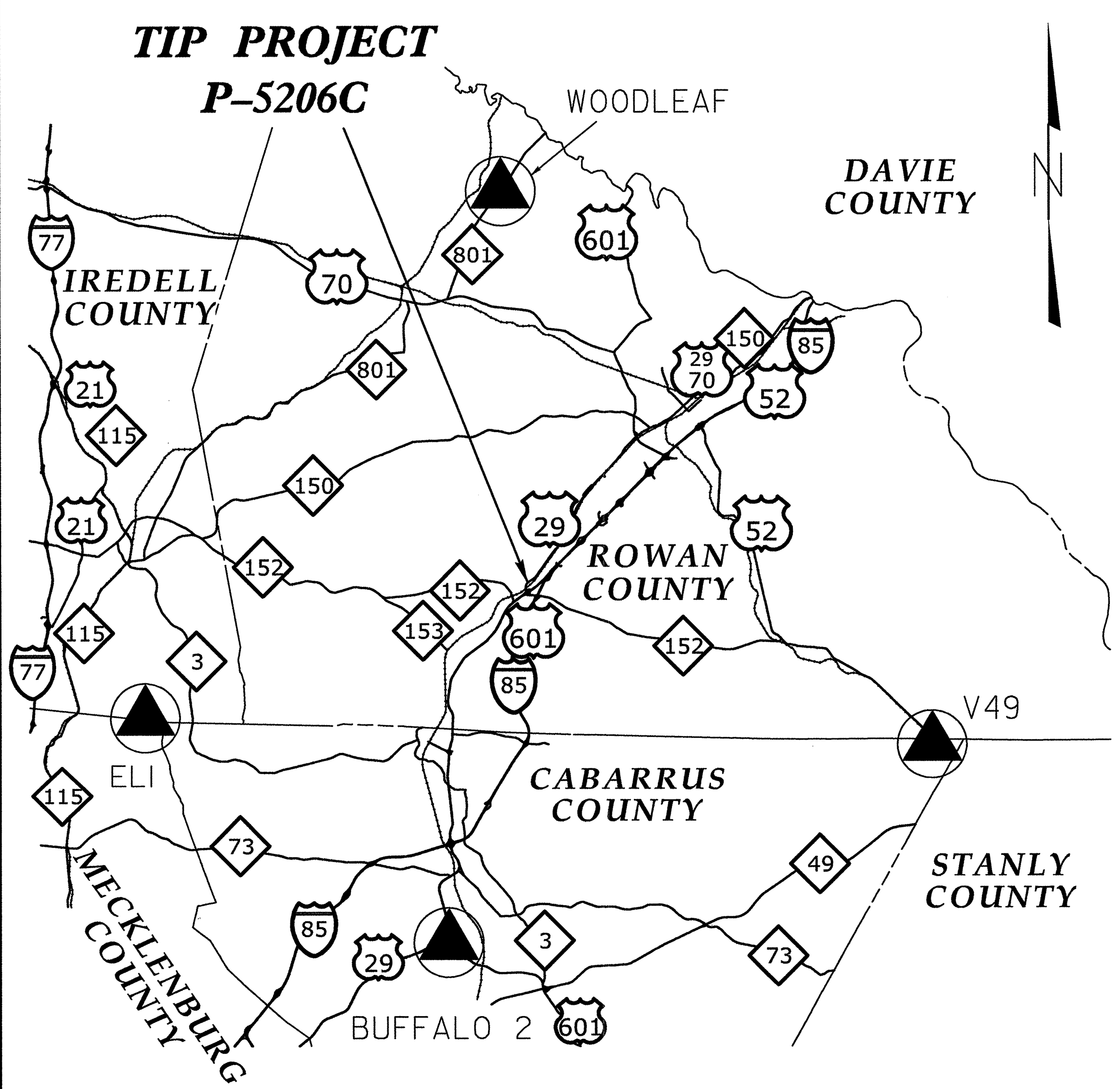

VICINITY MAP

DATUM DESCRIPTION

THE LOCALIZED COORDINATE SYSTEM DEVELOPED FOR THIS PROJECT IS BASED ON THE STATE PLANE COORDINATES ESTABLISHED BY NCDOT FOR MONUMENT "P3414P-10"
WITH NAD 83/NSRS 2007 STATE PLANE GRID COORDINATES OF
NORTHING: 666744.654(ft) EASTING: 1531939.796(ft)
ELEVATION: 821.60(ft)
THE AVERAGE COMBINED GRID FACTOR USED ON THIS PROJECT (GROUND TO GRID) IS: 0.99985378
THE N.C. LAMBERT GRID BEARING AND LOCALIZED HORIZONTAL GROUND DISTANCE FROM "P3414P-10" TO -M1- STATION 9218+02.82 IS
N 46°34'38.2" E 9722.29'
ALL LINEAR DIMENSIONS ARE LOCALIZED HORIZONTAL DISTANCES
VERTICAL DATUM USED IS NAVD 88

NOTE: DRAWING NOT TO SCALE

NOTES:

1. *THE SITE CALIBRATION SHOWN IS BASED UPON A NETWORK TIED TO THE HARN (HIGH ACCURACY REFERENCE NETWORK) NAD 83/NSRS 2007 ADJUSTMENT. THIS CALIBRATION WILL ALLOW THE END USER TO WORK WITHIN THE SAME COORDINATE SYSTEM WHEN USING RTK (REAL TIME KINEMATIC) GPS AND A LOCAL BASE STATION. IF ANOTHER SYSTEM SUCH AS VRS (VIRTUAL REFERENCE STATION) IS USED, ADDITIONAL FIELD TIES MAY BE NEEDED TO REDUCE POSSIBLE ERRORS, OR BIASES.*

2. *THE CONTROL DATA FOR THIS PROJECT CAN BE FOUND ELECTRONICALLY BY SELECTING PROJECT CONTROL DATA AT:*
   HTTP://WWW.NCDOT.ORG/DOH/PRECONSTRUCT/HIGHWAY/LOCATION/PROJECT/

   THE FILES TO BE FOUND ARE AS FOLLOWS:
   P3414P_LS_GPSCALIB.HTML
   P3414P_LS_WGS84.TXT
   P3414P_LS_LOCAL.TXT
   P5206C_LS_CONTROL.TXT

   THE WGS84 AND LOCAL FILES ARE COMMA DELIMITED AND CAN BE USED TO REPRODUCE THE SITE CALIBRATION FOR THE END USER'S GPS EQUIPMENT. IF FURTHER INFORMATION IS NEEDED, PLEASE CONTACT THE LOCATION AND SURVEYS UNIT.

(▲) INDICATES GEODETIC CONTROL MONUMENTS USED OR SET FOR HORIZONTAL PROJECT CONTROL BY THE NCDOT LOCATION AND SURVEYS UNIT.
PROJECT CONTROL ESTABLISHED USING GLOBAL POSITIONING SYSTEM.
NETWORK ESTABLISHED FROM EXISTING HARN MONUMENTATION
SEE GPS CALIBRATION SHEET FOR HORIZONTAL AND VERTICAL COORDINATE VALUES.

$$$$$$SYSTIME$$$$$
$$$$$$$$$DGN$$$$$$$$$$$$$$$$
$$$$USERNAME$$$$

DGN 0164DEL_P10b2 6/2/99

PROJECT REFERENCE NO.	SHEET NO.
P5206-C	1-B
Location and Surveys	

SURVEY CONTROL SHEET P5206-C

GPS Calibration Report

Project : P3414PZ

TIP Number P3414P
User name tbovender Date & Time 6:15:58 AM 3/30/2009
Coordinate System US State Plane 1983(at ground) Zone North Carolina 3200
Horizontal Datum NAD 1983 (Conus)
Vertical Datum NAVD 88 Geoid Model G03NC
Coordinate Units US survey feet
Distance Units US survey feet
Height Units US survey feet

LOCAL SITE INFORMATION
Localized around
Latitude 35^34'18.46142"N
Longitude 80^34'26.64222"W
Site Scale Factor 1.0001462406
Height 719.931sft

The North Carolina Department of Transportation uses a Localized Coordinate System which is very similar to North Carolina Zone 3200 from which it is derived. Please take care in utilizing these coordinates to eliminate confusion of the two systems. This file is to aid in the use of Real Time Kinematic (RTK) GPS during construction layout.

Updated Default Projection (Transverse Mercator) Definition

Updated default projection not requested

Horizontal Adjustment Parameters

Northing coordinate of rotation center 667263.504sft
Easting coordinate of rotation center 1532682.097sft
Rotation about the center point 0^00'00"
Translation north 0.075sft
Translation east 0.003sft
Scale factor 0.99999875

Vertical Adjustment Parameters

Northing coordinate of origin point 691593.681sft
Easting coordinate of origin point 1551534.529sft
Vertical separation at origin 0.061sft
Slope north -0.708ppm
Slope east 0.902ppm

Geoid Model Definition

G03NC

Residual Differences Between GPS (WGS84) And Local Coordinates

Summary

	Maximum error	Root Mean Square error	Point
Horizontal	0.003sft	0.001	1_GPS
Vertical	0.001sft	0.000	9_GPS
Three-dimensional	0.003sft	0.001	1_GPS

Datum Transformation Parameters

Datum Transformation computation not requested

Point 7_GPS Latitude 35^35'09.53698"N Longitude 80^33'17.47492"W Height 717.552sft	Northing 671818.705sft Easting 1537734.212sft Elevation 819.297sft Horz error 0.003sft Vert error 0.000sft 3D error 0.003sft	Point 7 Northing 671818.704sft Easting 1537734.209sft Elevation 819.296sft Utilized Horz and Vert Quality Adjusted quality
Point 8_GPS Latitude 35^35'02.36289"N Longitude 80^33'22.52512"W Height 726.624sft	Northing 671099.900sft Easting 1537305.744sft Elevation 828.358sft Horz error 0.003sft Vert error 0.000sft 3D error 0.003sft	Point 8 Northing 671099.899sft Easting 1537305.742sft Elevation 828.358sft Utilized Horz and Vert Quality Adjusted quality
Point 9_GPS Latitude 35^34'21.90117"N Longitude 80^34'14.88067"W Height 722.606sft	Northing 667077.115sft Easting 1532916.859sft Elevation 824.326sft Horz error 0.002sft Vert error 0.001sft 3D error 0.002sft	Point 9 Northing 667077.114sft Easting 1532916.857sft Elevation 824.326sft Utilized Horz and Vert Quality Adjusted quality
Point 10_GPS Latitude 35^34'18.46067"N Longitude 80^34'26.64226"W Height 719.871sft	Northing 666744.654sft Easting 1531939.797sft Elevation 821.601sft Horz error 0.001sft Vert error 0.001sft 3D error 0.001sft	Point 10 Northing 666744.654sft Easting 1531939.796sft Elevation 821.600sft Utilized Horz and Vert Quality Adjusted quality
Point 11_GPS Latitude 35^33'29.66570"N Longitude 80^35'20.48645"W Height 735.819sft	Northing 661882.120sft Easting 1527413.067sft Elevation 837.514sft Horz error 0.001sft Vert error 0.000sft 3D error 0.001sft	Point 11 Northing 661882.120sft Easting 1527413.066sft Elevation 837.514sft Utilized Horz and Vert Quality Adjusted quality
Point 12_GPS Latitude 35^33'23.65278"N Longitude 80^35'34.64797"W Height 732.408sft	Northing 661292.940sft Easting 1526233.317sft Elevation 834.110sft Horz error 0.001sft Vert error 0.000sft 3D error 0.001sft	Point 12 Northing 661292.941sft Easting 1526233.316sft Elevation 834.110sft Utilized Horz and Vert Quality Adjusted quality
Point 13_GPS Latitude 35^32'53.33976"N Longitude 80^36'29.49916"W Height 762.930sft	Northing 658301.245sft Easting 1521651.890sft Elevation 864.638sft Horz error 0.001sft Vert error 0.000sft 3D error 0.001sft	Point 13 Northing 658301.246sft Easting 1521651.890sft Elevation 864.638sft Utilized Horz and Vert Quality Adjusted quality
Point 14_GPS Latitude 35^32'48.12398"N Longitude 80^36'36.10699"W Height 768.268sft	Northing 657782.760sft Easting 1521097.345sft Elevation 869.971sft Horz error 0.001sft Vert error 0.000sft 3D error 0.001sft	Point 14 Northing 657782.761sft Easting 1521097.345sft Elevation 869.971sft Utilized Horz and Vert Quality Adjusted quality

DATUM DESCRIPTION

THE LOCALIZED COORDINATE SYSTEM DEVELOPED FOR THIS PROJECT IS BASED ON THE STATE PLANE COORDINATES ESTABLISHED BY NCDOT FOR MONUMENT "P3414P-10" WITH NAD 83/NSRS 2007 STATE PLANE GRID COORDINATES OF NORTHING: 666744.654(ft) EASTING: 1531939.796(ft) ELEVATION: 821.60(ft)
THE AVERAGE COMBINED GRID FACTOR USED ON THIS PROJECT (GROUND TO GRID) IS: 0.99985378
THE N.C. LAMBERT GRID BEARING AND LOCALIZED HORIZONTAL GROUND DISTANCE FROM "P3414P-10" TO -M1C- STATION 9218+02.82 IS N 46°34'38.2" E 9722.29'
ALL LINEAR DIMENSIONS ARE LOCALIZED HORIZONTAL DISTANCES
VERTICAL DATUM USED IS NAVD 88

NOTES:

1. *THE SITE CALIBRATION SHOWN IS BASED UPON A NETWORK TIED TO THE HARN (HIGH ACCURACY REFERENCE NETWORK) NAD 83/NSRS 2007 ADJUSTMENT. THIS CALIBRATION WILL ALLOW THE END USER TO WORK WITHIN THE SAME COORDINATE SYSTEM WHEN USING RTK (REAL TIME KINEMATIC) GPS AND A LOCAL BASE STATION. IF ANOTHER SYSTEM SUCH AS VRS (VIRTUAL REFERENCE STATION) IS USED, ADDITIONAL FIELD TIES MAY BE NEEDED TO REDUCE POSSIBLE ERRORS, OR BIASES.*
2. *THE CONTROL DATA FOR THIS PROJECT CAN BE FOUND ELECTRONICALLY BY SELECTING PROJECT CONTROL DATA AT: HTTP://WWW.NCDOT.ORG/DOH/PRECONSTRUCT/HIGHWAY/LOCATION/PROJECT/*

   THE FILES TO BE FOUND ARE AS FOLLOWS:
   P3414P_LS_GPSCALIB.HTML
   P3414P_LS_WGS84.TXT
   P3414P_LS_LOCAL.TXT
   P5206C_LS_CONTROL.TXT

   THE WGS84 AND LOCAL FILES ARE COMMA DELIMITED AND CAN BE USED TO REPRODUCE THE SITE CALIBRATION FOR THE END USER'S GPS EQUIPMENT. IF FURTHER INFORMATION IS NEEDED, PLEASE CONTACT THE LOCATION AND SURVEYS UNIT.

▲ *INDICATES GEODETIC CONTROL MONUMENTS USED OR SET FOR HORIZONTAL PROJECT CONTROL BY THE NCDOT LOCATION AND SURVEYS UNIT.*
PROJECT CONTROL ESTABLISHED USING GLOBAL POSITIONING SYSTEM.
NETWORK ESTABLISHED FROM EXISTING HARN MONUMENTATION
SEE GPS CALIBRATION SHEET FOR HORIZONTAL AND VERTICAL COORDINATE VALUES.

$$$$SYSTIME $$$$DGN $$$$USERNAME $$$$CSCALE

DGN 0164DEL_P10b2 6/2/99

PROJECT REFERENCE NO.	SHEET NO.
P5206-C	1-C
Location and Surveys	

SURVEY CONTROL SHEET P5206-C

BL

POINT	DESC.	NORTH	EAST	ELEVATION	M1C STATION	OFFSET
36	BL-36	674467.9910	1539726.8360	807.18	OUTSIDE PROJECT LIMITS	
37	BL-37	673472.8560	1539051.2240	812.09	OUTSIDE PROJECT LIMITS	
38	BL-38	672795.2420	1538493.2310	816.86	9226+13.08	34.72 RT
7	GPS P3414P-7	671818.7040	1537734.2090	819.30	9238+49.51	67.43 RT
39	BL-39	671647.2040	1537706.1710	820.83	9240+04.24	11.67 LT
8	GPS P3414P-8	671099.8990	1537305.7420	828.36	9246+82.39	13.69 LT
40	BL-40	670425.0280	1536746.9450	830.65	9255+57.15	36.19 RT
41	BL-41	669662.7110	1536231.7690	832.20	9264+75.89	13.14 LT
42	BL-42	668930.5450	1535509.8240	829.07	9275+02.92	19.30 LT
43	BL-43	668371.3460	1534824.8960	828.11	9283+84.89	17.26 RT
44	BL-44	667663.5200	1534091.3750	826.02	9294+01.76	32.89 LT
45	BL-45	667289.1620	1533441.9550	822.11	9301+48.99	7.47 RT
9	GPS P3414P-9	667077.1140	1532916.8570	824.33	9307+17.30	20.85 RT
10	GPS P3414P-10	666744.6540	1531939.7960	821.60	9317+49.62	29.90 RT
46	BL-46	666465.5140	1531168.1660	820.78	9325+70.08	20.68 RT
47	BL-47	666091.7540	1530237.7010	820.42	9335+59.82	83.79 RT
48	BL-48	665574.2900	1529643.7640	819.82	9343+31.53	69.90 RT
49	BL-49	664846.0890	1529155.9240	826.71	9351+96.20	35.79 RT
50	BL-50	663783.5660	1528710.8620	835.72	9363+44.25	36.97 RT
51	BL-51	662824.3090	1528335.6690	841.11	9373+72.07	36.17 LT
52	BL-52	662254.9840	1527813.2950	836.97	9381+41.86	7.00 RT
11	GPS P3414P-11	661882.1200	1527413.0660	837.51	9386+87.27	23.42 LT
12	GPS P3414P-12	661292.9410	1526233.3160	834.11	9400+01.59	78.28 RT
53	BL-53	660904.6960	1525572.1280	826.77	9407+70.91	62.33 RT
54	BL-54	660310.3180	1524580.5390	832.06	9419+25.53	4.20 RT
55	BL-55	659838.9070	1523648.0700	840.45	9429+70.14	26.77 RT
56	BL-56	659391.1200	1522844.2440	850.66	9438+86.08	42.72 RT
57	BL-57	658893.7470	1522284.3790	857.58	9446+30.42	23.72 RT
13	GPS P3414P-13	658301.2460	1521651.8900	864.64	OUTSIDE PROJECT LIMITS	
14	GPS P3414P-14	657782.7610	1521097.3450	869.97	OUTSIDE PROJECT LIMITS	

BY11

POINT	DESC.	NORTH	EAST	ELEVATION	Y5 STATION	OFFSET
202	BY11-202	673107.5448	1539877.4510	798.80	OUTSIDE PROJECT LIMITS	
203	BY11-203	673377.8816	1539407.8116	803.55	10+60.16	26.22 RT

BY18

POINT	DESC.	NORTH	EAST	ELEVATION	Y7 STATION	OFFSET
300	BY18-300	665710.4690	1530593.7130	812.00	OUTSIDE PROJECT LIMITS	

BY1C

POINT	DESC.	NORTH	EAST	ELEVATION	Y10 STATION	OFFSET
402	BY1C-402	661843.6613	1525930.4792	843.56	19+06.81	582.62 RT
403	BY1C-403	661602.6531	1525394.8520	831.25	21+45.79	22.93 RT
404	BY1C-404	661287.7377	1524931.3535	833.32	21+40.04	537.38 LT

BY24

POINT	DESC.	NORTH	EAST	ELEVATION	Y10 STATION	OFFSET
400	BY24-400	660739.8764	1526149.9459	804.04	10+09.00	77.93 RT
401	BY24-401	660610.5131	1525965.2092	808.87	OUTSIDE PROJECT LIMITS	

DATUM DESCRIPTION

THE LOCALIZED COORDINATE SYSTEM DEVELOPED FOR THIS PROJECT IS BASED ON THE STATE PLANE COORDINATES ESTABLISHED BY NCDOT FOR MONUMENT "P3414P-10" WITH NAD 83/NSRS 2007 STATE PLANE GRID COORDINATES OF NORTHING: 666744.654(ft) EASTING: 1531939.796(ft) ELEVATION: 821.60(ft)

THE AVERAGE COMBINED GRID FACTOR USED ON THIS PROJECT (GROUND TO GRID) IS: 0.99985378

THE N.C. LAMBERT GRID BEARING AND LOCALIZED HORIZONTAL GROUND DISTANCE FROM "P3414P-10" TO -M1- STATION 9218+02.82 IS N 46°34'38.2" E 9722.29'

ALL LINEAR DIMENSIONS ARE LOCALIZED HORIZONTAL DISTANCES

VERTICAL DATUM USED IS NAVD 88

BENCHMARKS (NAVD88)

****

BM#8 ELEVATION = 818.89'
N 671897 E 1537687
M1C STATION 9238+14 152' RIGHT
PAINTED BOLT, NEAREST TO RR, ON BILLBOARD

****

BM#9 ELEVATION = 830.14'
N 669758 E 1536148
M1C STATION 9264+56 112' RIGHT
CHISELED SQUARE IN CONCRETE AT JOE'S AUTO REPAIR

****

BM#10 ELEVATION = 823.90'
N 667793 E 1533995
M1C STATION 9293+96 128' RIGHT
CHISELED SQUARE IN SIDEWALK FOR APT 23 & 24

****

BM#11 ELEVATION = 818.01'
N 666566 E 1531593
M1C STATION 9321+35 25' LEFT
CHISELED SQUARE IN CONCRETE CURB ACROSS FROM 410 N HARRIS ST

****

BM#12 ELEVATION = 829.64'
N 664717 E 1529017
M1C STATION 9353+71 100' RIGHT
CHISELED SQUARE IN CONCRETE SIDEWALK IN FRONT OF 516 MAIN ST

****

BM#13 ELEVATION = 837.49'
N 662046 E 1527361
M1C STATION 9386+32 140' RIGHT
CHISELED SQUARE IN CONCRETE STEPS AT OAK GROVE BAPTIST CHURCH

****

BM#14 ELEVATION = 827.38'
N 661165 E 1525919
M1C STATION 9403+39 125' RIGHT
RR SPIKE IN S ROOT OF 30" OAK

****

BM#15 ELEVATION = 849.94'
N 659480 E 1523219
M1C STATION 9435+21 84' LEFT
CHISELED SQUARE IN CONCRETE CURB ON N MAIN ST

****

BM#16 ELEVATION = 870.52'
N 657897 E 1521104
M1C STATION 9450+00 TO BM#16
S 17°38'16" W DIST 7423'
CHISELED SQUARE IN CONCRETE CURB AT INTERSECTION OF MAIN ST AND RYDER ST. NE QUADRANT IN FRONT OF SHELL STATION

****

BM#25 ELEVATION = 807.65'
N 673564 E 1538852
M1C STATION 9218+03
N 47°41'18.01" W DIST 202'
HIGH CORNER ON CONCRETE R/W MONUMENT AT INTERSECTION OF US 29/S MAIN ST & MT HOPE CHURCH RD. LOCATED IN SOUTHWEST QUADRANT

****

BM#26 ELEVATION = 841.98'
N 662739 E 1528313
M1C STATION 9374+55 65' LEFT
CHISELED SQUARE IN SIDEWALK FOR WEST THOM ST ON WEST SIDE OF STREET IN FRONT OF TEXTILE PLANT

****

BM#27 ELEVATION = 794.44'
N 672996 E 1539995
M1C STATION 9218+03
S 66°31'8.96" E DIST 1084'
CHISELED CROSS IN SOUTH END OF 18"RCP DRIVEWAY PIPE. DRIVE LEADS TO MOBILE HOME. PIPE IS ON NORTH EDGE OF HIGH TENSION LINE EASEMENT

****

BM#28 ELEVATION = 833.56'
N 661281 E 1524836
M1C STATION 9412+43 741' RIGHT
CHISELED SQUARE ON NORTH SIDE OF MAIN ST BACK OF CURB. 9.6' SOUTHEAST OF AN OLD SIGN. 24' WEST OF MAILBOX FOR 1620 MAIN ST. 27' FROM POWER POLE #40K.

****

NOTES:

1. *THE SITE CALIBRATION SHOWN IS BASED UPON A NETWORK TIED TO THE HARN (HIGH ACCURACY REFERENCE NETWORK) NAD 83/NSRS 2007 ADJUSTMENT. THIS CALIBRATION WILL ALLOW THE END USER TO WORK WITHIN THE SAME COORDINATE SYSTEM WHEN USING RTK (REAL TIME KINEMATIC) GPS AND A LOCAL BASE STATION. IF ANOTHER SYSTEM SUCH AS VRS (VIRTUAL REFERENCE STATION) IS USED, ADDITIONAL FIELD TIES MAY BE NEEDED TO REDUCE POSSIBLE ERRORS, OR BIASES.*

2. *THE CONTROL DATA FOR THIS PROJECT CAN BE FOUND ELECTRONICALLY BY SELECTING PROJECT CONTROL DATA AT:*
HTTP://WWW.NCDOT.ORG/DOH/PRECONSTRUCT/HIGHWAY/LOCATION/PROJECT/

THE FILES TO BE FOUND ARE AS FOLLOWS:
P3414P_LS_GPSCALIB.HTML
P3414P_LS_WGS84.TXT
P3414P_LS_LOCAL.TXT
P5206C_LS_CONTROL.TXT

THE WGS84 AND LOCAL FILES ARE COMMA DELIMITED AND CAN BE USED TO REPRODUCE THE SITE CALIBRATION FOR THE END USER'S GPS EQUIPMENT. IF FURTHER INFORMATION IS NEEDED, PLEASE CONTACT THE LOCATION AND SURVEYS UNIT.

INDICATES GEODETIC CONTROL MONUMENTS USED OR SET FOR HORIZONTAL PROJECT CONTROL BY THE NCDOT LOCATION AND SURVEYS UNIT.

PROJECT CONTROL ESTABLISHED USING GLOBAL POSITIONING SYSTEM.
NETWORK ESTABLISHED FROM EXISTING HARN MONUMENTATION
SEE GPS CALIBRATION SHEET FOR HORIZONTAL AND VERTICAL COORDINATE VALUES.

SYSTEM SHEET GENERATED ON 6/2/99 AT 11:58:58 AM

DGN 0164DEL_P10b2

PROJECT REFERENCE NO.	SHEET NO.
P-5206C	1-D
Location and Surveys	

SURVEY CONTROL SHEET P5206C
FINAL

M1

TYPE	STATION	NORTH	EAST
POT	9218+02.82	673427.5157	1539001.1142
POT	9232+38.21	672270.9997	1538150.9366
TS	9259+34.84	670099.4274	1536552.1633
SC	9263+06.84	669802.3177	1536328.3411
CS	9271+19.06	669202.8590	1535781.3181
ST	9274+91.06	668952.8507	1535505.8794
EQB	9278+01.49	668746.7566	1535273.7410
EQA	9278+00.00	668746.7566	1535273.7410
TS	9289+56.37	667979.0299	1534408.9954
SC	9294+52.37	667657.8935	1534031.1128
CS	9304+47.13	667155.6460	1533175.6793
ST	9309+43.13	666982.1570	1532711.1092
TS	9324+72.83	666478.1371	1531266.8236
SC	9329+68.83	666303.3174	1530802.7809
CS	9354+00.31	664646.9888	1529094.8419
ST	9358+96.31	664188.5267	1528905.8708
TS	9363+96.31	663721.7224	1528726.7236
SC	9368+92.31	663263.1178	1528538.0802
CS	9387+45.70	661867.8746	1527351.5659
ST	9392+41.70	661608.0092	1526929.2219
TS	9401+34.62	661158.3185	1526157.8093
SC	9402+58.62	661096.0629	1526050.5703
CS	9405+71.23	660943.8023	1525777.5536
ST	9406+95.23	660885.2822	1525668.2313
TS	9431+55.89	659727.9234	1523496.7470
SC	9436+51.89	659485.3631	1523064.2076
CS	9441+93.88	659168.9131	1522624.7133
ST	9446+89.88	658835.6254	1522257.5006
POT	9450+00.00	658622.3372	1522032.3762

SVC

TYPE	STATION	NORTH	EAST
PC	10+00.00	666420.1599	1531222.0056
PRC	11+14.85	666367.0621	1531120.6145
PT	12+29.94	666313.8841	1531018.9958
PC	15+29.95	666214.3262	1530735.9838
PT	15+62.49	666202.5369	1530705.6602
PC	16+90.12	666152.4411	1530588.2675
PT	17+55.26	666123.0513	1530530.1907
POT	18+10.57	666094.9161	1530482.5668

Y8

TYPE	STATION	NORTH	EAST
POT	10+00.00	662619.0689	1528487.8459
POT	14+46.03	662916.8840	1528155.8079

Y10

TYPE	STATION	NORTH	EAST
POT	10+00.00	660694.9076	1526085.6647
PC	10+52.06	660740.7078	1526060.9129
PT	11+40.49	660814.6692	1526012.6224
PC	18+18.06	661349.3673	1525596.4584
PRC	19+32.81	661431.6703	1525516.8066
PT	21+99.48	661636.1139	1525348.0034
POT	23+86.35	661799.7756	1525257.8030

Y11

TYPE	STATION	NORTH	EAST
POT	10+00.00	659407.2727	1523062.9734
PC	12+81.55	659548.2971	1523306.6604
PT	13+53.00	659610.4392	1523322.6828
PC	13+92.25	659644.0769	1523302.4509
PT	14+60.36	659699.1812	1523262.5566
POT	15+18.03	659742.8509	1523224.8861

Y44

TYPE	STATION	NORTH	EAST
POT	10+00.00	660789.9941	1526278.4456
PC	10+71.26	660759.7816	1526213.9126
PT	14+23.74	660587.0875	1525907.0087
POT	17+07.68	660429.7700	1525670.6309

YJ

TYPE	STATION	NORTH	EAST
POT	10+00.00	661652.3897	1525538.3374
POT	16+78.26	661321.1781	1524946.4510

ROW MARKER IRON PIN AND CAP-E

ALIGN	STATION	OFFSET	NORTH	EAST
M1	9352+84.36	-144.00	664685.2442	1529274.1241
M1	9352+90.60	-162.78	664671.3750	1529288.1250
M1	9353+13.26	-76.89	664690.7247	1529201.6331
M1	9353+23.52	-180.00	664635.7262	1529289.4062
M1	9353+47.01	-160.00	664624.5971	1529261.5892
M1	9353+53.80	-85.79	664651.3169	1529192.0464
M1	9357+09.59	-140.00	664311.0963	1529103.5526
M1	9357+24.54	-165.00	664288.2361	1529121.4046
M1	9357+36.04	-82.75	664307.7628	1529040.6985
M1	9357+54.71	-189.09	664251.8130	1529133.0000
M1	9357+67.17	-82.13	664279.2033	1529028.8688
M1	9357+77.93	-162.00	664240.3085	1529099.4392
M1	9360+55.36	-106.52	664001.8677	1528948.3302
M1	9360+64.35	-74.55	664004.9324	1528915.2632
M1	9360+84.52	-114.71	663971.7108	1528945.5352
M1	9368+20.88	-135.34	663273.0663	1528691.3790
M1	9368+49.82	-60.28	663276.7855	1528610.7514
M1	9368+59.90	-129.13	663238.8346	1528669.1229
M1	9371+28.12	-144.30	662983.1961	1528557.1518
M1	9371+60.29	-74.87	662988.1551	1528480.3586
M1	9371+67.76	-139.16	662949.7299	1528532.4793
M1	9373+23.13	-81.52	662841.8078	1528400.6846

ROW MARKER IRON PIN AND CAP-E

ALIGN	STATION	OFFSET	NORTH	EAST
SVC	17+50.00	-17.84	666110.2456	1530543.6467
SVC	17+50.00	-42.97	666088.4746	1530556.2015
SVC	18+10.57	-13.62	666083.1913	1530489.4975
SVC	18+10.57	-43.00	666057.8959	1530504.4415

ROW MARKER IRON PIN AND CAP-E

ALIGN	STATION	OFFSET	NORTH	EAST
Y8	10+94.81	62.29	662728.7471	1528458.8605
Y8	10+94.81	33.82	662707.5512	1528439.8492
Y8	11+54.55	62.29	662768.6388	1528414.3846

DATUM DESCRIPTION

THE LOCALIZED COORDINATE SYSTEM DEVELOPED FOR THIS PROJECT IS BASED ON THE STATE PLANE COORDINATES ESTABLISHED BY NCDOT FOR MONUMENT "P3414P-10" WITH NAD 83/NSRS 2007 STATE PLANE GRID COORDINATES OF NORTHING: 666744.654(ft) EASTING: 1531939.796(ft) ELEVATION: 821.60(ft)
THE AVERAGE COMBINED GRID FACTOR USED ON THIS PROJECT (GROUND TO GRID) IS: 0.99985378
THE N.C. LAMBERT GRID BEARING AND LOCALIZED HORIZONTAL GROUND DISTANCE FROM "P3414P-10" TO -M1- STATION 9218+02.82 IS N 46°34'38.2" E 9722.29'
ALL LINEAR DIMENSIONS ARE LOCALIZED HORIZONTAL DISTANCES
VERTICAL DATUM USED IS NAVD 88

ROW MARKER IRON PIN AND CAP-E

ALIGN	STATION	OFFSET	NORTH	EAST
Y10	10+65.67	36.00	660770.5155	1526085.5140
Y10	10+80.81	-24.00	660753.0853	1526026.1019
Y10	11+40.49	36.00	660836.7806	1526041.0317
Y10	11+40.49	-24.00	660799.9283	1525993.6829
Y10	12+62.64	36.00	660933.1759	1525966.0057
Y10	12+71.63	-24.00	660903.4176	1525913.1355
Y10	15+24.15	36.00	661139.5452	1525805.3851
Y10	15+33.54	-24.00	661110.1032	1525752.2688
Y10	18+18.06	-24.00	661334.6264	1525577.5189
Y10	18+18.06	36.00	661371.4787	1525624.8676
Y10	19+32.81	36.00	661459.3406	1525539.8360
Y10	19+32.81	-24.00	661413.2234	1525501.4537
Y10	20+16.12	-24.00	661472.0288	1525438.6296
Y10	20+29.04	36.00	661522.3389	1525473.7397

ROW MARKER IRON PIN AND CAP-E

ALIGN	STATION	OFFSET	NORTH	EAST
Y11	11+99.89	57.63	659457.5149	1523264.8514
Y11	12+00.30	18.05	659491.9830	1523245.3781
Y11	12+79.90	58.46	659496.8702	1523334.5110
Y11	12+80.30	19.55	659530.7491	1523315.3705

ROW MARKER IRON PIN AND CAP-E

ALIGN	STATION	OFFSET	NORTH	EAST
Y44	11+51.92	29.40	660750.5211	1526128.0909
Y44	13+02.06	30.17	660677.8053	1525994.6014

ROW MARKER IRON PIN AND CAP-E

ALIGN	STATION	OFFSET	NORTH	EAST
YJ	10+86.14	-19.94	661592.9208	1525472.9069
YJ	12+33.88	-40.00	661503.2724	1525353.7719
YJ	13+12.56	-40.00	661464.8516	1525285.1125
YJ	13+52.56	-40.00	661445.3181	1525250.2055
YJ	15+18.94	-20.08	661381.4545	1525095.2802
YJ	15+18.95	-40.00	661364.0628	1525104.9995

ROW MARKER PERMANENT EASEMENT-E

ALIGN	STATION	OFFSET	NORTH	EAST
Y10	21+77.79	19.68	661627.2910	1525375.7025
Y10	21+95.78	-20.01	661623.1274	1525332.3243

ROW MARKER PERMANENT EASEMENT-E

ALIGN	STATION	OFFSET	NORTH	EAST
YJ	11+10.44	20.05	661615.9552	1525432.1735
YJ	12+49.01	20.01	661548.2507	1525311.2699

NOTES:

1. *THE SITE CALIBRATION SHOWN IS BASED UPON A NETWORK TIED TO THE HARN (HIGH ACCURACY REFERENCE NETWORK) NAD 83/NSRS 2007 ADJUSTMENT. THIS CALIBRATION WILL ALLOW THE END USER TO WORK WITHIN THE SAME COORDINATE SYSTEM WHEN USING RTK (REAL TIME KINEMATIC) GPS AND A LOCAL BASE STATION. IF ANOTHER SYSTEM SUCH AS VRS (VIRTUAL REFERENCE STATION) IS USED, ADDITIONAL FIELD TIES MAY BE NEEDED TO REDUCE POSSIBLE ERRORS, OR BIASES.*

2. *THE CONTROL DATA FOR THIS PROJECT CAN BE FOUND ELECTRONICALLY BY SELECTING PROJECT CONTROL DATA AT:*
   HTTP://WWW.NCDOT.ORG/DOH/PRECONSTRUCT/HIGHWAY/LOCATION/PROJECT/

   THE FILES TO BE FOUND ARE AS FOLLOWS:
   P3414P_LS_GPSCALIB.HTML
   P3414P_LS_WGS84.TXT
   P3414P_LS_LOCAL.TXT
   P5206C_LS_CONTROL.TXT

   THE WGS84 AND LOCAL FILES ARE COMMA DELIMITED AND CAN BE USED TO REPRODUCE THE SITE CALIBRATION FOR THE END USER'S GPS EQUIPMENT. IF FURTHER INFORMATION IS NEEDED, PLEASE CONTACT THE LOCATION AND SURVEYS UNIT.

▲ *INDICATES GEODETIC CONTROL MONUMENTS USED OR SET FOR HORIZONTAL PROJECT CONTROL BY THE NCDOT LOCATION AND SURVEYS UNIT.*
PROJECT CONTROL ESTABLISHED USING GLOBAL POSITIONING SYSTEM.
NETWORK ESTABLISHED FROM EXISTING HARN MONUMENTATION
SEE GPS CALIBRATION SHEET FOR HORIZONTAL AND VERTICAL COORDINATE VALUES.

NOTE: DRAWING NOT TO SCALE

DGN 0001ADD_P10b2 0164DEL_P10b2

BALLAST AND RAIL ARE SHOWN FOR INFORMATIONAL PURPOSE ONLY. TRACK CONSTRUCTION, INCLUDING BALLAST, TIE, AND RAIL INSTALLATION, IS BY NORFOLK SOUTHERN CONTRACTOR.

PROJECT REFERENCE NO.	SHEET NO.
P-5206C	2
R/W SHEET NO.	

RAIL DESIGN ENGINEER

PAVEMENT DESIGN ENGINEER

NORTH CAROLINA PROFESSIONAL SEAL 35018 ENGINEER TIMMY L. TERRY

TGS ENGINEERS
804-C N. LAFAYETTE ST
SHELBY, NC 28150
PH (704) 476-0003
CORP. LICENSE NO.: C-0275

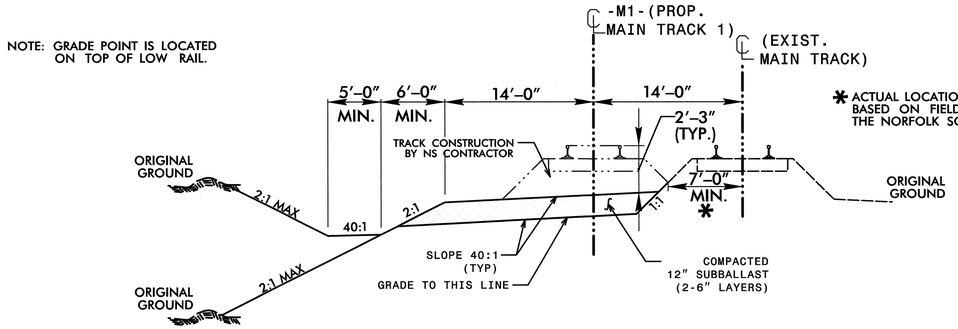

TYPICAL SECTION NO. 1

USE TYPICAL SECTION NO. 1

PROPOSED NEW MAIN TRACK 1 ADJACENT TO EXISTING MAIN TRACK

FROM –M1– STA. 9218+02.82 TO –M1– STA. 9259+17.84 (MAIN TRACK 1)

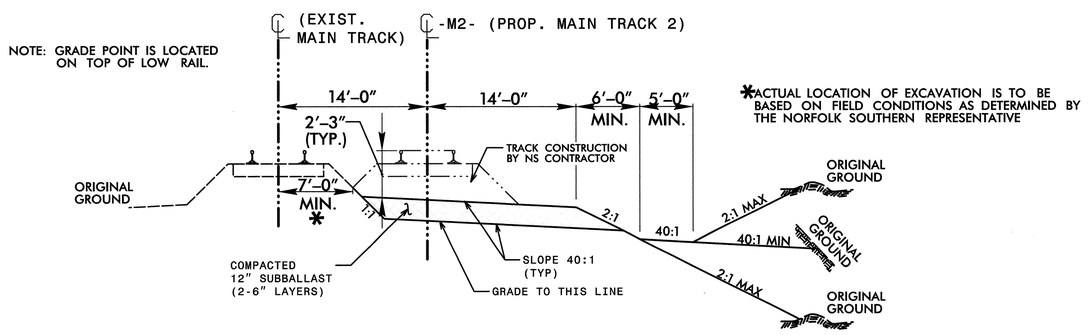

TYPICAL SECTION NO. 2

USE TYPICAL SECTION NO. 2

PROPOSED NEW MAIN TRACK 2 ADJACENT TO EXISTING MAIN TRACK

FROM –M2– STA. 9274+88.07 TO –M2– STA. 9289+53.37 (MAIN TRACK 2)
FROM –M2– STA. 9309+34.39 TO –M2– STA. 9324+64.09 (MAIN TRACK 2)
FROM –M2– STA. 9446+87.60 TO –M2– STA. 9449+97.71 (MAIN TRACK 2)

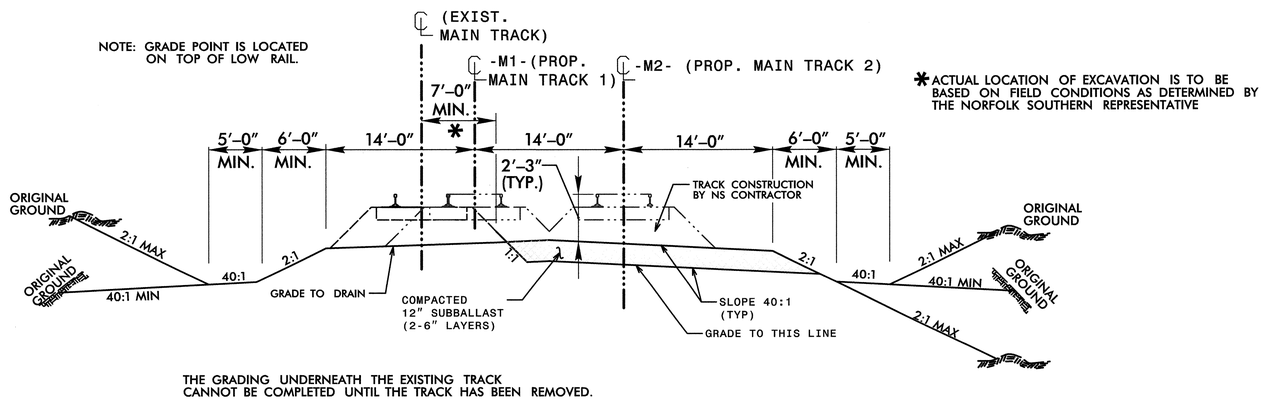

THE GRADING UNDERNEATH THE EXISTING TRACK CANNOT BE COMPLETED UNTIL THE TRACK HAS BEEN REMOVED.

TYPICAL SECTION NO. 3

USE TYPICAL SECTION NO. 3

PROPOSED NEW MAIN TRACK 1 AND MAIN TRACK 2

FROM –M1– STA. 9259+17.84 TO –M1– STA. 9262+50.35 (MAIN TRACK 1)**
FROM –M1– STA. 9289+56.37 TO –M1– STA. 9309+43.13 (MAIN TRACK 1)
FROM –M1– STA. 9324+72.83 TO –M1– STA. 9326+08.66 (MAIN TRACK 1)
FROM –M1– STA. 9374+99.32 TO –M1– STA. 9386+03.99 (MAIN TRACK 1)
FROM –M1– STA. 9418+06.13 TO –M1– STA. 9428+56.13 (MAIN TRACK 1) **

FROM –M2– STA. 9259+17.83 TO –M2– STA. 9262+50.00 (MAIN TRACK 2)**
FROM –M2– STA. 9289+53.37 TO –M2– STA. 9309+34.39 (MAIN TRACK 2)
FROM –M2– STA. 9324+64.09 TO –M2– STA. 9326+00.00 (MAIN TRACK 2)
FROM –M2– STA. 9375+00.00 TO –M2– STA. 9386+00.00 (MAIN TRACK 2)
FROM –M2– STA. 9418+00.00 TO –M2– STA. 9428+50.00 (MAIN TRACK 2) **

** MIRROR TYPICAL SECTION

SYSTIME $$SYSTIME
DGN $$DGN
USERNAME $$USERNAME

DCN
0001ADD_P10b2
0164DEL_P10b2

TGS ENGINEERS
804-C N. LAFAYETTE ST
SHELBY, NC 28150
PH (704) 476-0003
CORP. LICENSE NO.: C-0275

PROJECT REFERENCE NO.	SHEET NO.
P-5206C	2-A
R/W SHEET NO.	
RAIL DESIGN ENGINEER	PAVEMENT DESIGN ENGINEER

NORTH CAROLINA PROFESSIONAL SEAL 35018 ENGINEER JIMMY L. TERRY, JR. 9/20/13

BALLAST AND RAIL ARE SHOWN FOR INFORMATIONAL PURPOSE ONLY.
TRACK CONSTRUCTION, INCLUDING BALLAST, TIE, AND RAIL INSTALLATION, IS BY NORFOLK SOUTHERN CONTRACTOR.

NOTE: GRADE POINT IS LOCATED ON TOP OF LOW RAIL.

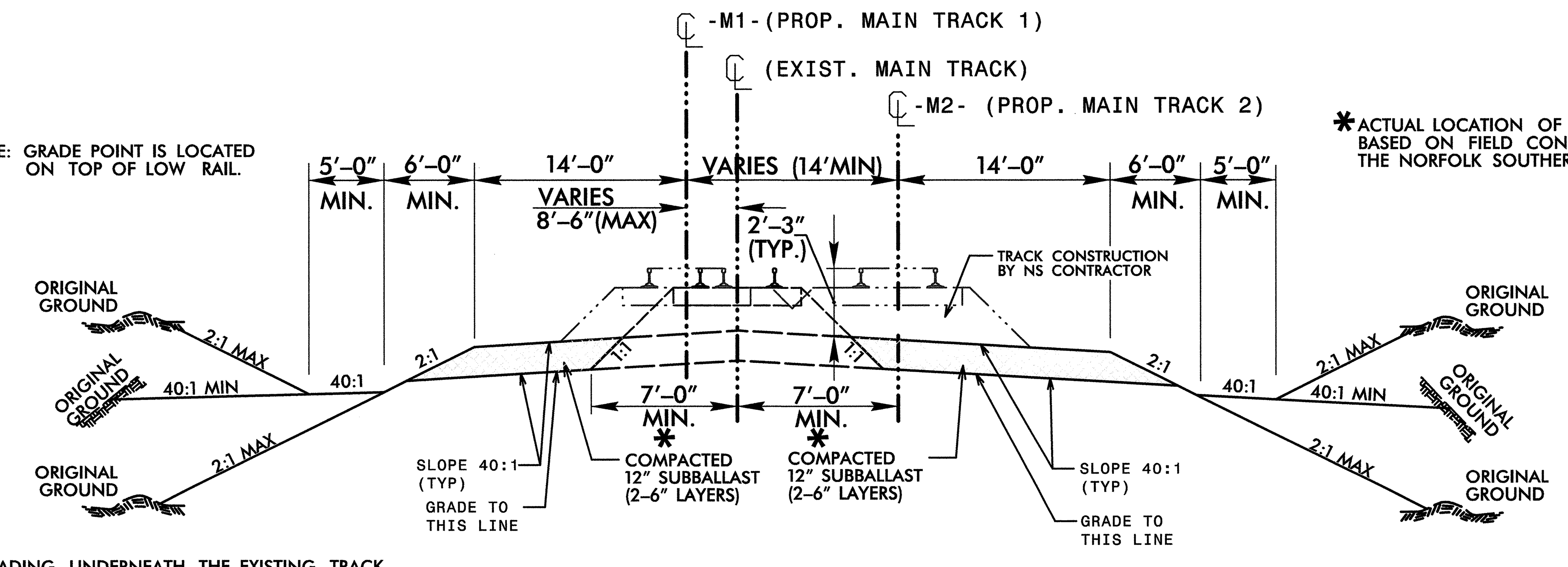

*ACTUAL LOCATION OF EXCAVATION IS TO BE BASED ON FIELD CONDITIONS AS DETERMINED BY THE NORFOLK SOUTHERN REPRESENTATIVE

THE GRADING UNDERNEATH THE EXISTING TRACK CANNOT BE COMPLETED UNTIL THE TRACK HAS BEEN REMOVED.

TYPICAL SECTION NO. 4

USE TYPICAL SECTION NO. 4
PROPOSED NEW MAIN TRACK 1 AND MAIN TRACK 2

FROM -M1- STA. 9262+50.35 TO -M1- STA. 9274+91.06 (MAIN TRACK 1)
FROM -M1- STA. 9326+08.66 TO -M1- STA. 9331+07.11 (MAIN TRACK 1)
FROM -M1- STA. 9354+46.58 TO -M1- STA. 9363+95.75 (MAIN TRACK 1)
FROM -M1- STA. 9386+03.99 TO -M1- STA. 9390+55.45 (MAIN TRACK 1)
FROM -M1- STA. 9428+56.13 TO -M1- STA. 9433+56.00 (MAIN TRACK 1)
FROM -M1- STA. 9434+05.92 TO -M1- STA. 9446+89.88 (MAIN TRACK 1)

FROM -M2- STA. 9262+50.00 TO -M2- STA. 9274+88.07 (MAIN TRACK 2)
FROM -M2- STA. 9326+00.00 TO -M2- STA. 9331+00.00 (MAIN TRACK 2)
FROM -M2- STA. 9354+50.00 TO -M2- STA. 9364+00.00 (MAIN TRACK 2)
FROM -M2- STA. 9386+00.00 TO -M2- STA. 9390+50.00 (MAIN TRACK 2)
FROM -M2- STA. 9428+50.00 TO -M2- STA. 9433+50.00 (MAIN TRACK 2)
FROM -M2- STA. 9434+00.00 TO -M2- STA. 9446+87.60 (MAIN TRACK 2)

NOTE: GRADE POINT IS LOCATED ON TOP OF LOW RAIL.

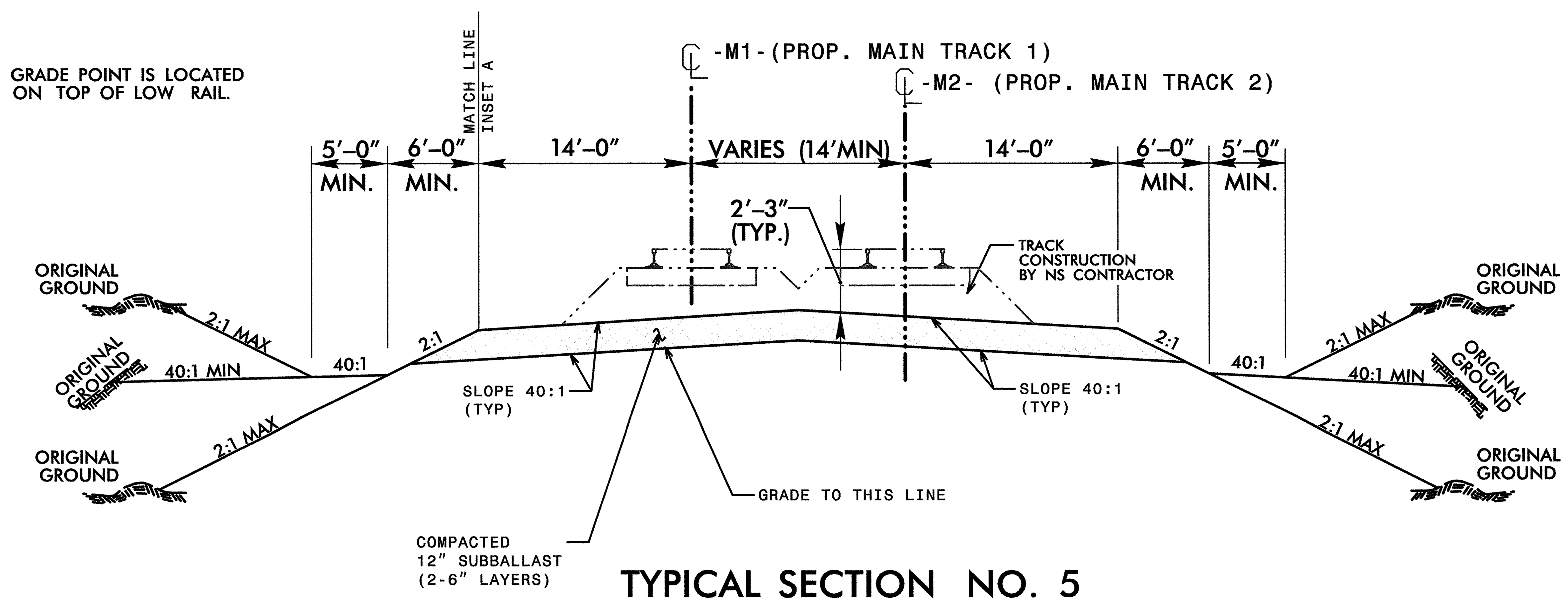

TYPICAL SECTION NO. 5

USE TYPICAL SECTION NO. 5
PROPOSED NEW MAIN TRACK 1 AND MAIN TRACK 2

FROM -M1- STA. 9331+07.11 TO -M1- STA. 9354+46.58 (MAIN TRACK 1)
FROM -M1- STA. 9363+95.75 TO -M1- STA. 9374+99.32 (MAIN TRACK 1)
FROM -M1- STA. 9390+55.45 TO -M1- STA. 9403+90.42 (BEGIN BRIDGE) (MAIN TRACK 1)
FROM -M1- STA. 9405+20.69 (END BRIDGE) TO -M1- STA. 9418+06.13 (MAIN TRACK 1)
FROM -M1- STA. 9433+56.00 TO -M1- STA. 9434+05.92 (MAIN TRACK 1)

FROM -M2- STA. 9331+00.00 TO -M2- STA. 9354+50 (MAIN TRACK 2)
FROM -M2- STA. 9364+00.00 TO -M2- STA. 9375+00.00 (MAIN TRACK 2)
FROM -M2- STA. 9390+50 TO STA. -M2- 9403+86.73 (BEGIN BRIDGE) (MAIN TRACK 2)
FROM -M2- STA. 9405+17.00 (END BRIDGE) TO -M2- STA. 9418+00.00 (MAIN RACK 2)
FROM -M2- STA. 9433+50.00 TO -M2- STA. 9434+00.00 (MAIN TRACK 2)

NOTE: GRADE POINT IS LOCATED ON TOP OF LOW RAIL.

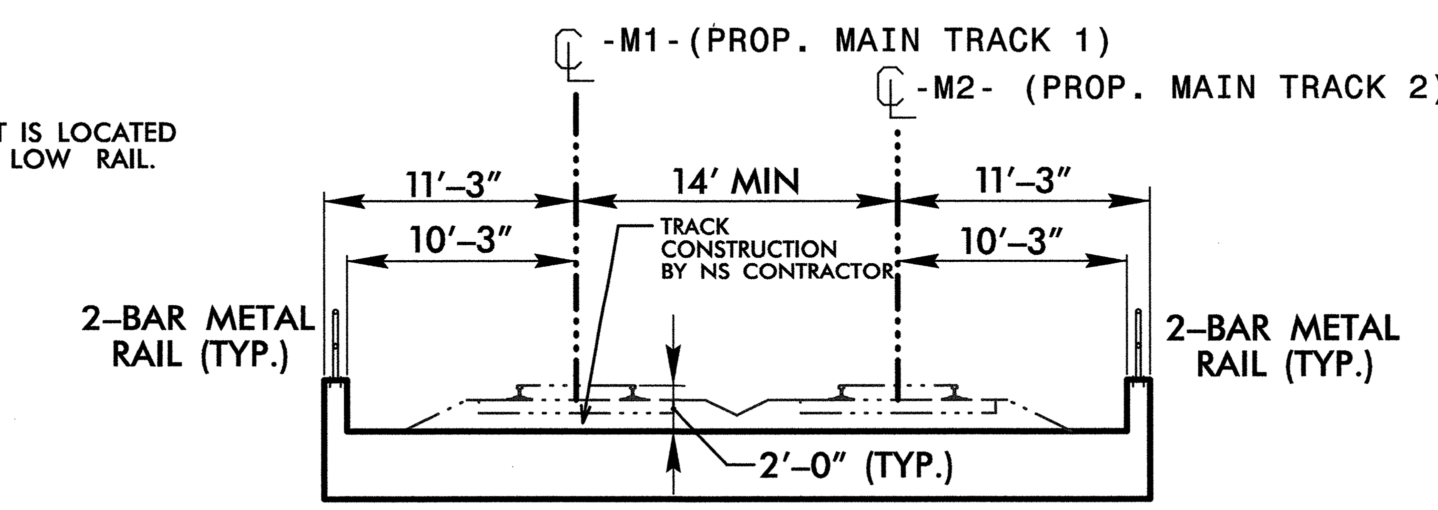

TYPICAL SECTION NO. 6

USE TYPICAL SECTION NO. 6
PROPOSED NEW MAIN TRACK 1 AND MAIN TRACK 2 ON BRIDGE
FROM -M1- STA. 9403+90.41 (BEGIN BRIDGE, MAIN TRACK 1) TO -M1- STA. 9405+20.69 (END BRIDGE, MAIN TRACK 1)

$$$$$$$SYSTIME$$$$$
$$$$$$$$DGN$$$$$$$$$$$$$$$$
$$$$USERNAME$$$$$

PAVEMENT SCHEDULE	
C1	PROP. APPROX. 3" ASPHALT CONCRETE SURFACE COURSE, TYPE S9.5B, AT AN AVERAGE RATE OF 168 LBS. PER SQ. YD. IN EACH OF TWO LAYERS.
C2	PROP. APPROX. 1 ½" ASPHALT CONCRETE SURFACE COURSE, TYPE S9.5B, AT AN AVERAGE RATE OF 168 LBS. PER SQ. YD.
C3	PROP. VAR, DEPTH ASPHALT CONCRETE SURFACE COURSE, TYPE S9.5B, AT AN AVERAGE RATE OF 112 LBS. PER SQ. YD. PER 1" DEPTH, TO BE PLACED IN LAYERS NOT LESS THAN 1½" IN DEPTH OR GREATER THAN 2" IN DEPTH.
D1	PROP. APPROX. 4" ASPHALT CONCRETE INTERMEDIATE COURSE, TYPE I19.0B, AT AN AVERAGE RATE OF 456 LBS. PER SQ. YD.
J	6" AGGREGATE BASE COURSE
E1	PROP. APPROX. 4" ASPHALT CONCRETE BASE COURSE, TYPE B25.0B, AT AN AVERAGE RATE OF 456 LBS. PER SQ. YD.
E2	PROP. VAR, DEPTH ASPHALT CONCRETE BASE COURSE, TYPE B25.0B, AT AN AVERAGE RATE OF 114 LBS. PER SQ. YD. PER 1" DEPTH, TO BE PLACED IN LAYERS NOT LESS THAN 3" IN DEPTH OR GREATER THAN 5 1/2" IN DEPTH.
L	CLASS IV SUBGRADE STABILIZATION
N	FABRIC STABILIZATION
R1	2'-6" CONCRETE CURB AND GUTTER.
R2	MONOLITHIC CONC. ISLAND.(KEYED IN)
R3	EXISTING 2'-6" CONCRETE CURB AND GUTTER
S	4" CONCRETE SIDEWALK
T	EARTH MATERIAL
U	EXISTING PAVEMENT
V	MILLING EXISTING PAVEMENT.
W	VARIABLE DEPTH ASPHALT PAVEMENT (SEE WEDGING DETAILS THIS SHEET)

NOTE: PAVEMENT EDGE SLOPES ARE 1:1 UNLESS SHOWN OTHERWISE.

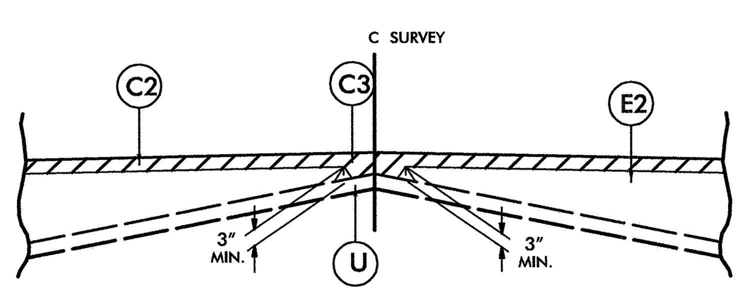

Detail Showing Method of Wedging

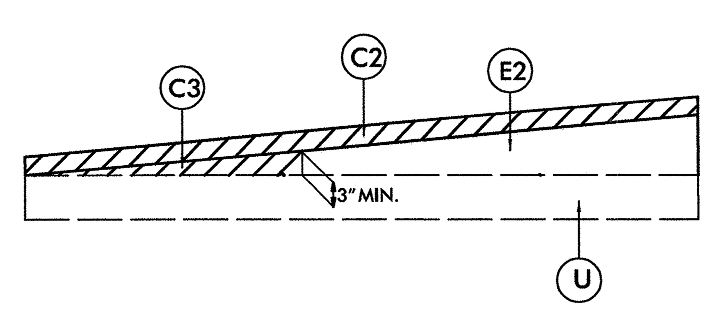

Wedging Detail For Resurfacing

Use Wedging Details in Conjunction with Typical Section No.8

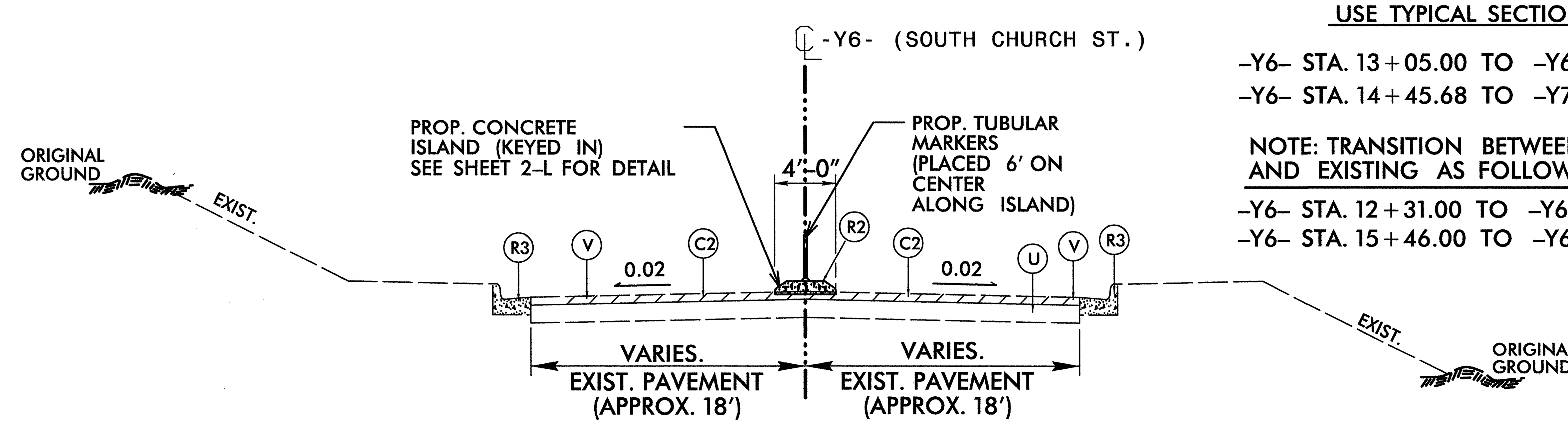

NOTE: NO PROPOSED GRADE.
MILL 1.5" OF EXISTING PAVEMENT AND REPAVE.

TYPICAL SECTION NO. 7

USE TYPICAL SECTION NO. 7

-Y6- STA. 13+05.00 TO -Y6- STA. 14+05.87
-Y6- STA. 14+45.68 TO -Y7- STA. 15+46.00

NOTE: TRANSITION BETWEEN TYP. SECT. NO. 7 AND EXISTING AS FOLLOWS:

-Y6- STA. 12+31.00 TO -Y6- STA. 13+05.00
-Y6- STA. 15+46.00 TO -Y6- STA. 16+20.00

PROJECT REFERENCE NO.	SHEET NO.
P-5206C	2-B
R/W SHEET NO.	
ROADWAY DESIGN ENGINEER	PAVEMENT DESIGN ENGINEER

NORTH CAROLINA PROFESSIONAL SEAL 35018 ENGINEER ... L. TERRY, JR. 6/18/13

NORTH CAROLINA PROFESSIONAL SEAL 031484 ENGINEER VLADIMIR G. MITCHEV 06/28/13

TGS ENGINEERS
804-C N. LAFAYETTE ST
SHELBY, NC 28150
PH (704) 476-0003
CORP. LICENSE NO.: C-0275

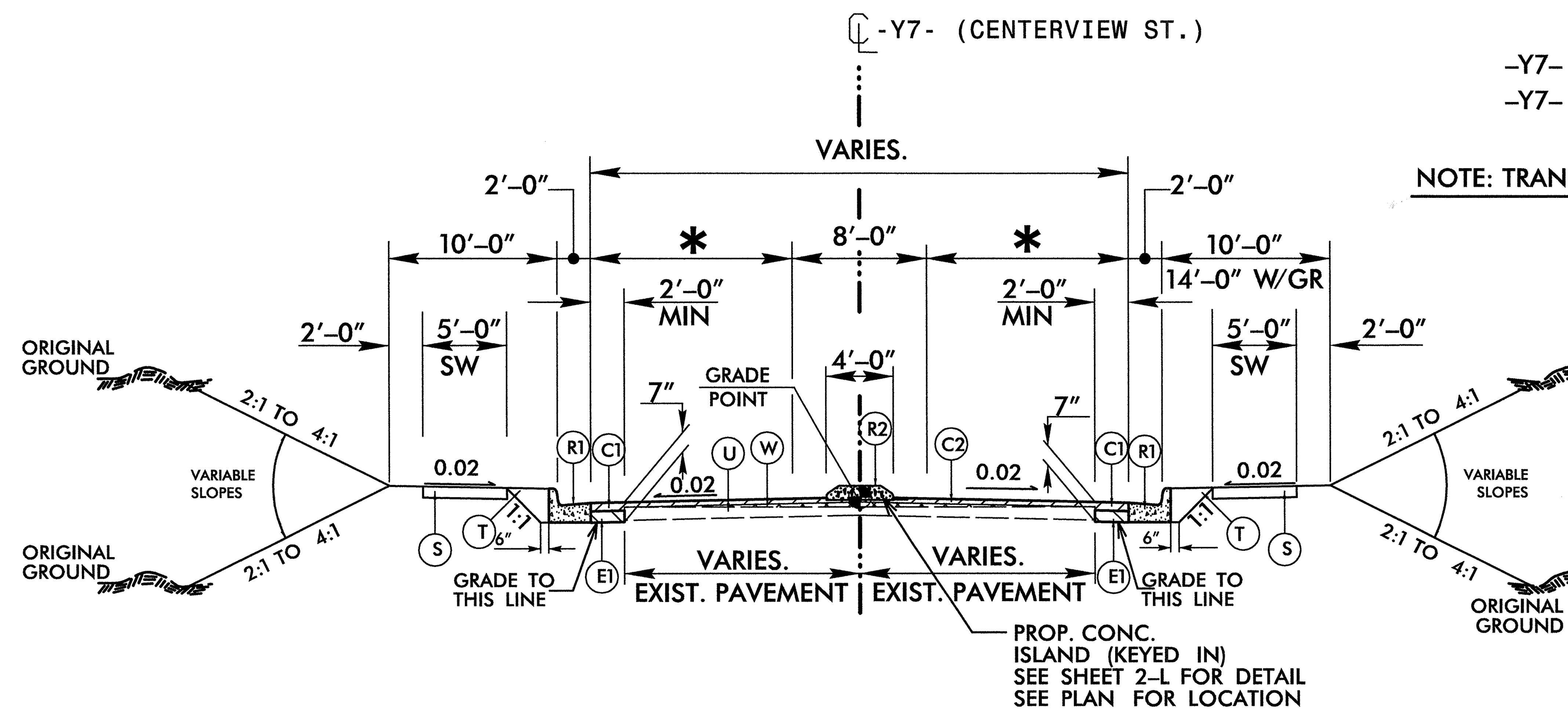

TYPICAL SECTION NO. 8

USE TYPICAL SECTION NO. 8

-Y7- STA. 10+30.00 TO -Y7- STA. 12+21.94 (* = 14'-0")
-Y7- STA. 12+46.79 TO -Y7- STA. 14+10.00 (* = 12'-0")

NOTE: TRANSITION BETWEEN TYP. SECT. NO. 8 AND EXISTING AS FOLLOWS:

-Y7- STA. 10+30.00 TO -Y7- STA. 11+08.00
-Y7- STA. 13+12.00 TO -Y7- STA. 14+10.00

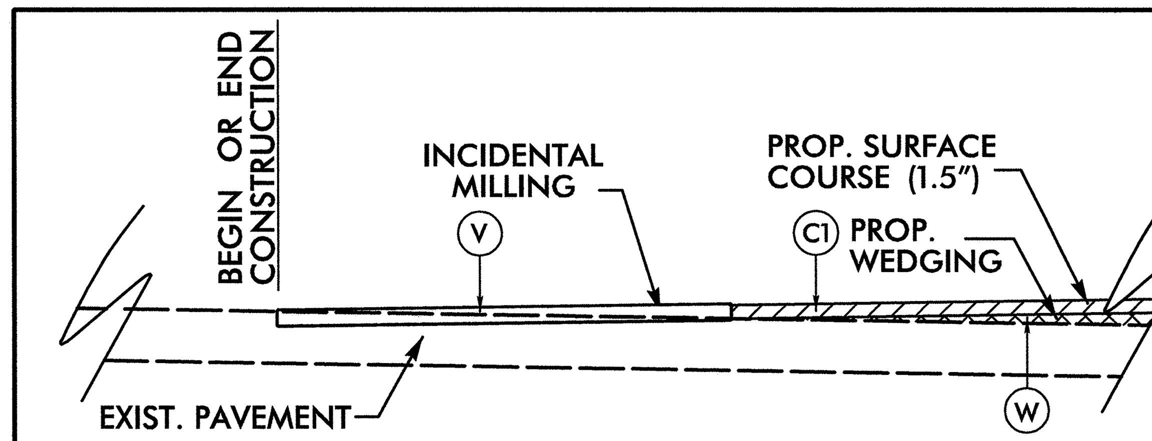

NOTE: MIRROR FOR END OF CONSTRUCTION

MILLING DETAIL NO.1

USE MILLING DETAIL NO.1 AS FOLLOWS:

-Y7- STA. 10+30.00 TO -Y7- STA. 11+00.00
-Y7- STA. 13+00.00 TO -Y7- STA. 14+10.00

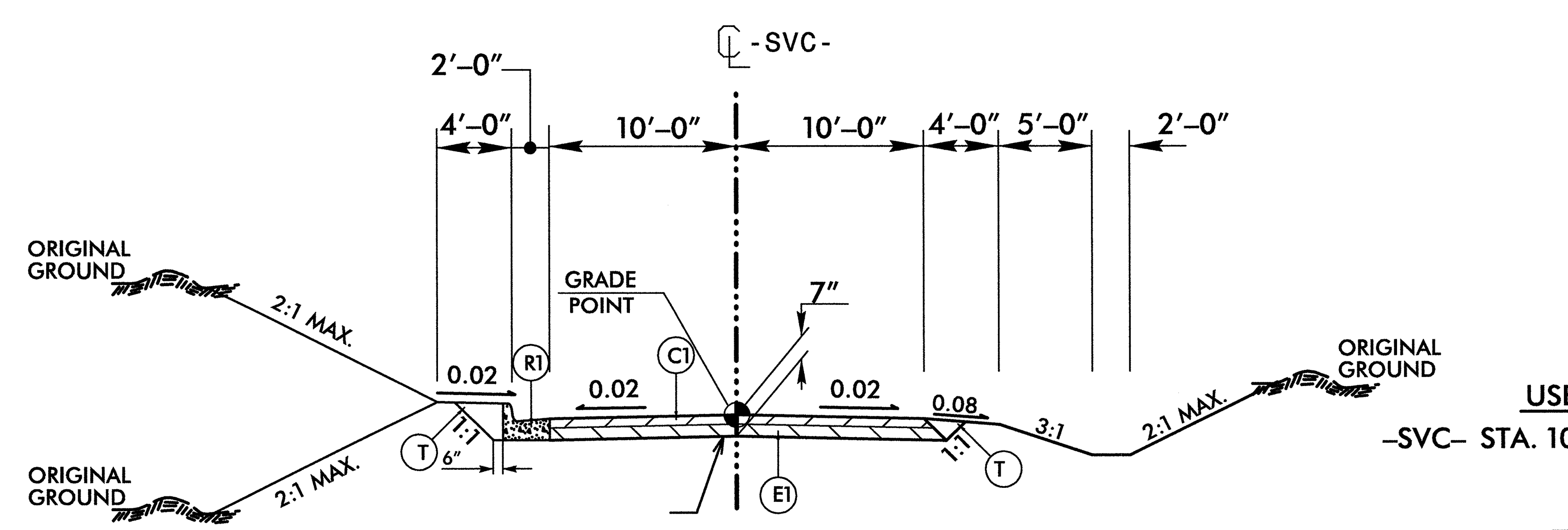

TYPICAL SECTION NO. 9

USE TYPICAL SECTION NO. 9

-SVC- STA. 10+55.00 TO -SVC- STA. 18+08.17

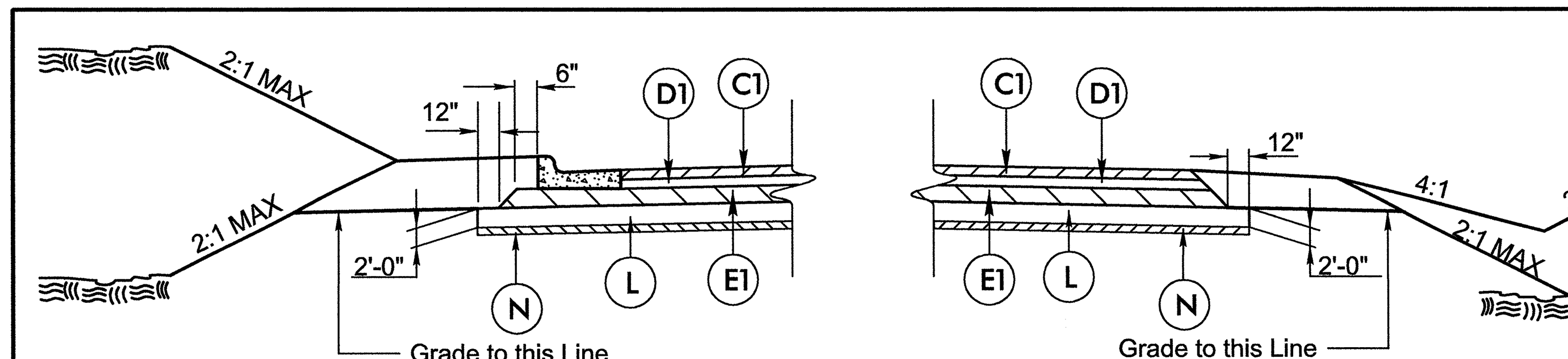

AGGREGATE SUBGRADE DETAIL

USE AGGREGATE SUBGRADE DETAIL AS FOLLOWS:

-Y10- STA. 10+10.00 TO -Y10- STA. 18+50.00

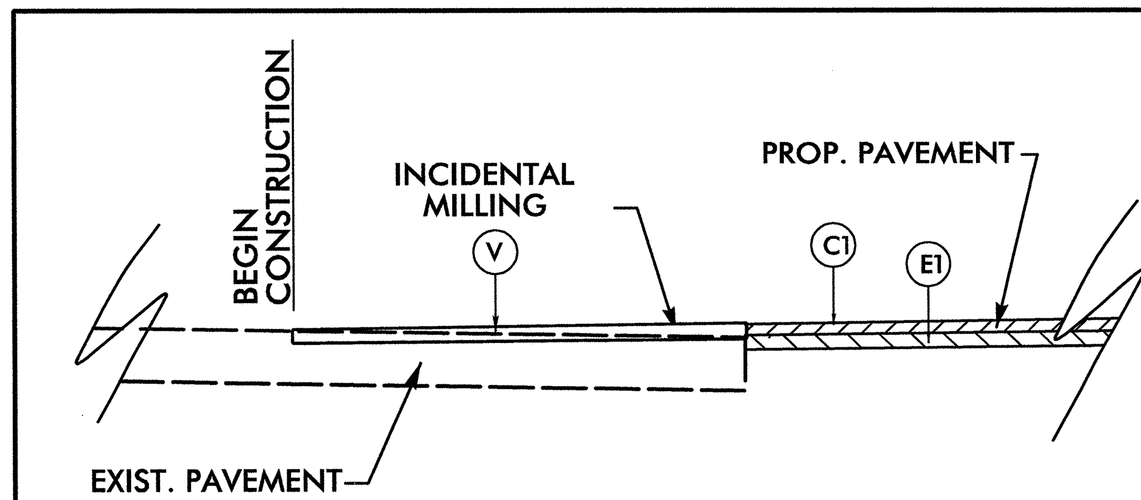

MILLING DETAIL NO.2

USE MILLING DETAIL NO. 2 AS FOLLOWS:

-SVC- STA. 10+55 TO -SVC- STA. 11+13

DCN 0164DEL_P10b2
$$$$SYSTIME$$$$ $$$$USERNAME$$$$ $$$$DGN$$$$

DGN 0164DEL_P10b2

PAVEMENT SCHEDULE	
C1	PROP. APPROX. 3" ASPHALT CONCRETE SURFACE COURSE, TYPE S9.5BB, AT AN AVERAGE RATE OF 168 LBS. PER SQ. YD. IN EACH OF TWO LAYERS.
C2	PROP. APPROX. 1½" ASPHALT CONCRETE SURFACE COURSE, TYPE S9.5BB, AT AN AVERAGE RATE OF 168 LBS. PER SQ. YD.
D1	PROP. APPROX. 4" ASPHALT CONCRETE INTERMEDIATE COURSE, TYPE I19.0B, AT AN AVERAGE RATE OF 456 LBS. PER SQ. YD.
E1	PROP. APPROX. 4" ASPHALT CONCRETE BASE COURSE, TYPE B25.0B, AT AN AVERAGE RATE OF 456 LBS. PER SQ. YD.
J	6" AGGREGATE BASE COURSE
R1	2'-6" CONCRETE CURB AND GUTTER.
R3	EXISTING 2'-6" CONCRETE CURB AND GUTTER
S	CONCRETE SIDEWALK
T	EARTH MATERIAL
U	EXISTING PAVEMENT
V	MLLING EXISTING PAVEMENT

NOTE: PAVEMENT EDGE SLOPES ARE 1:1 UNLESS SHOWN OTHERWISE.

℄ -Y10- (KIMBALL RD EXTENSION)

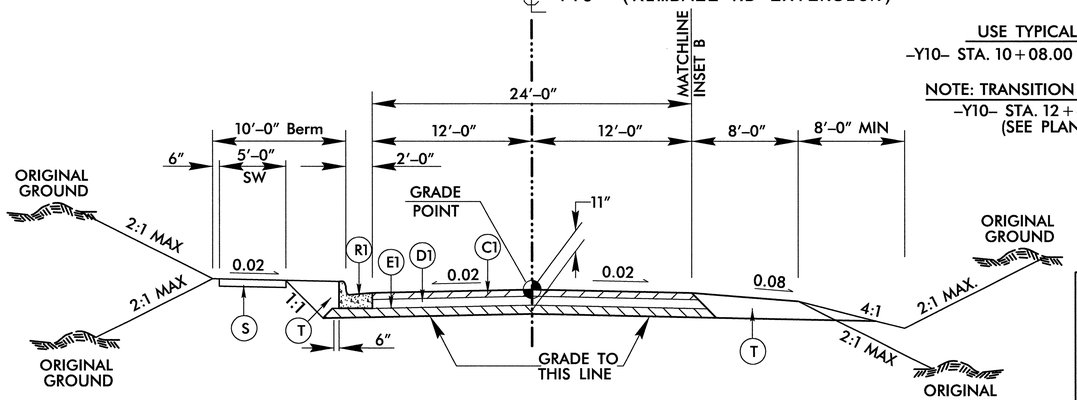

TYPICAL SECTION NO. 10

USE TYPICAL SECTION NO. 10
–Y10– STA. 10+08.00 TO –Y10– STA. 21+04.24

NOTE: TRANSITION SIDEWALK UNDER BRIDGE
–Y10– STA. 12+60.00 TO 14+97.00 LT
(SEE PLAN FOR LOCATION)

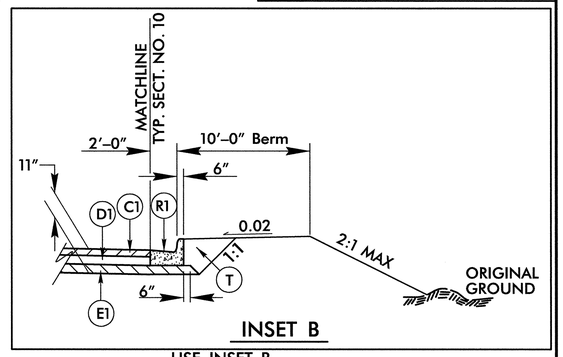

INSET B

USE INSET B
–Y10– STA. 20+29.57 RT TO –Y10– STA. 21+04.24 RT

℄ -YJ- (HWY 29A SOUTH MAIN ST)

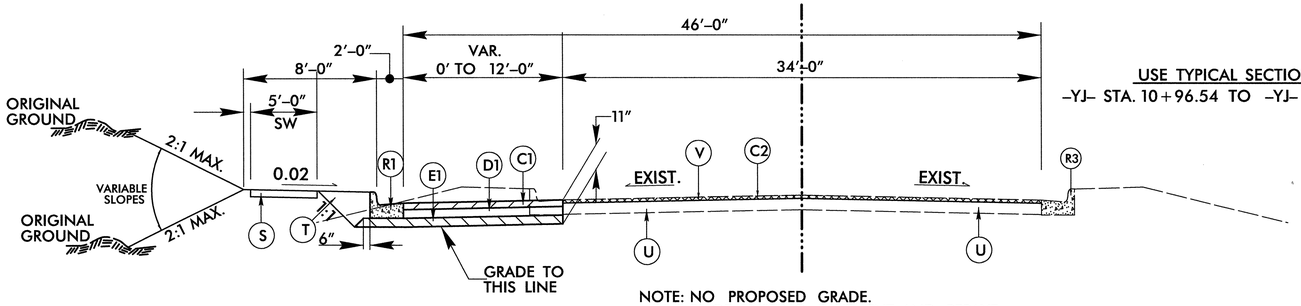

NOTE: NO PROPOSED GRADE.
MILL 1.5" OF EXISTING PAVEMENT AND REPAVE.

TYPICAL SECTION NO. 11

USE TYPICAL SECTION NO. 11
–YJ– STA. 10+96.54 TO –YJ– STA. 13+12.98

℄ -SVC-

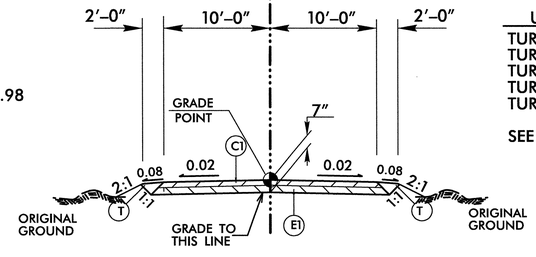

TYPICAL SECTION NO. 12

USE TYPICAL SECTION NO. 12
TURN–AROUND @ KELLER ST
TURN–AROUND @ EAST THOM ST
TURN–AROUND @ JOHN ST
TURN–AROUND @ HANEY ST
TURN–AROUND @ N CENTRAL AVE

SEE PLANS FOR LOCATIONS

℄ CUL-DE-SAC

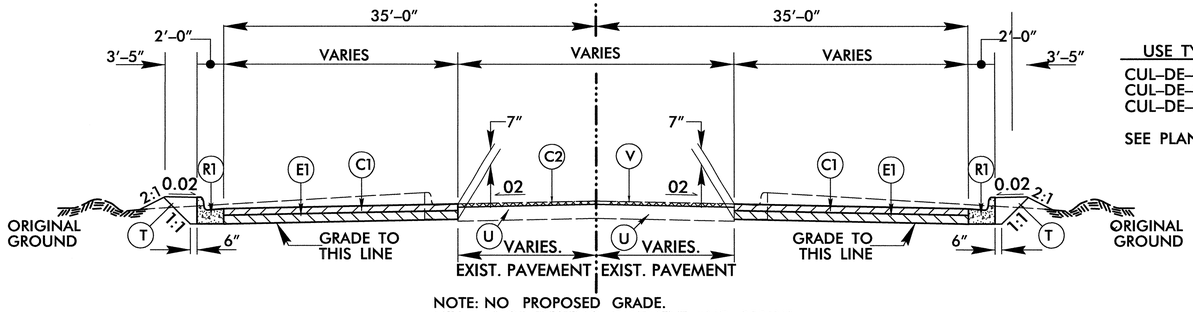

NOTE: NO PROPOSED GRADE.
MILL 1.5" OF EXISTING PAVEMENT AND REPAVE.

TYPICAL SECTION NO. 13

USE TYPICAL SECTION NO. 13
CUL–DE–SAC @ WOODHAVEN DR
CUL–DE–SAC @ CHAPEL ST
CUL–DE–SAC @ BLACKWELDER ST

SEE PLANS FOR LOCATIONS

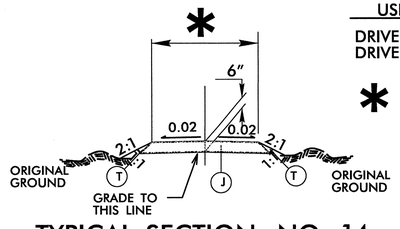

TYPICAL SECTION NO. 14

USE TYPICAL SECTION NO. 14
DRIVE LT OF –M1– STA 9234+72 TO 9235+76
DRIVE LT OF –M1– STA 9235+89 TO 9238+95

* SEE PLANS FOR WIDTH

PROJECT REFERENCE NO.	SHEET NO.
P-5206C	2-C
R/W SHEET NO.	

ROADWAY DESIGN ENGINEER
NORTH CAROLINA PROFESSIONAL SEAL 35018 ENGINEER JAMES L. TERRY III
PAVEMENT DESIGN ENGINEER
NORTH CAROLINA PROFESSIONAL SEAL 031404 ENGINEER VLADIMIR G. MITCHEV
Vladimir G. Mitchev 05/17/13

TGS ENGINEERS
804-C N. LAFAYETTE ST
SHELBY, NC 28150
PH (704) 476-0003
CORP. LICENSE NO.: C-0275

$$$$SYSTIME$$$$ $$$$DGN$$$$ $$$$USERNAME$$$$

DCN 0164DEL_P10b2

HORIZONTAL CURVE GEOMETRY

PROJECT REFERENCE NO.	SHEET NO.
P-5206C	2-D
R/W SHEET NO.	
RAIL DESIGN ENGINEER	PAVEMENT DESIGN ENGINEER

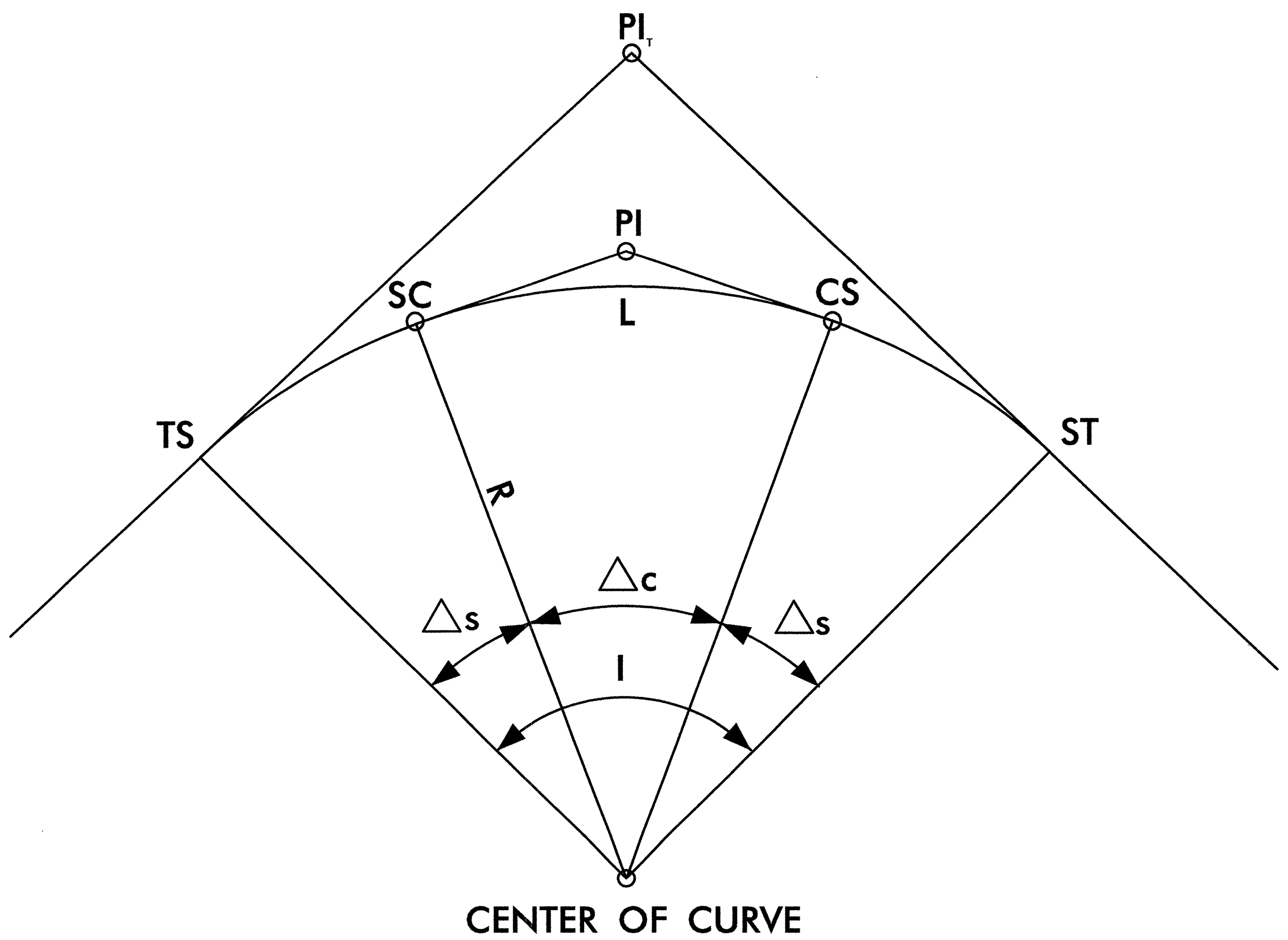

FIGURE A

CIRCULAR CURVE WITH
SPIRAL TRANSITION CURVES

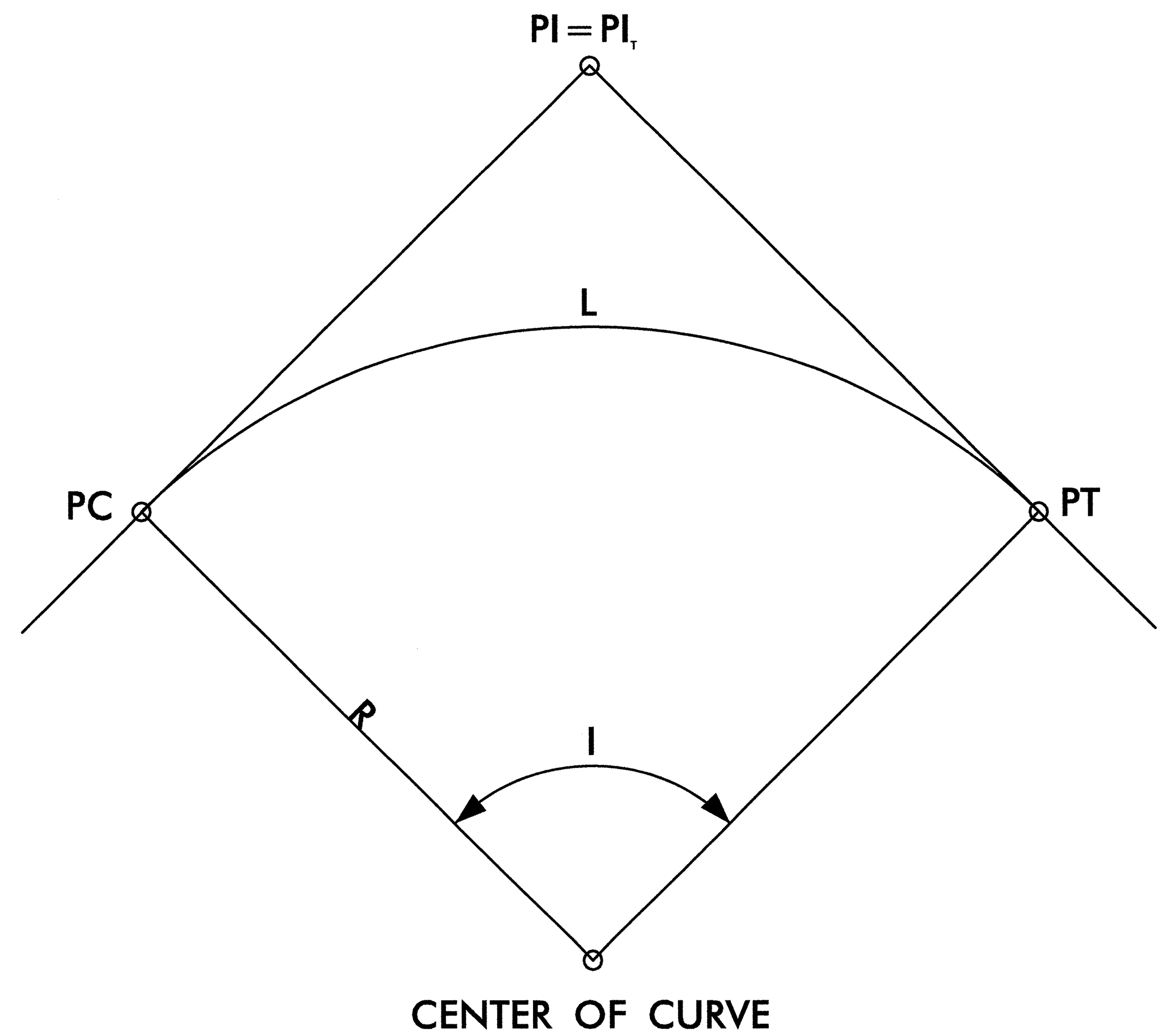

FIGURE B

SIMPLE CIRCULAR CURVE

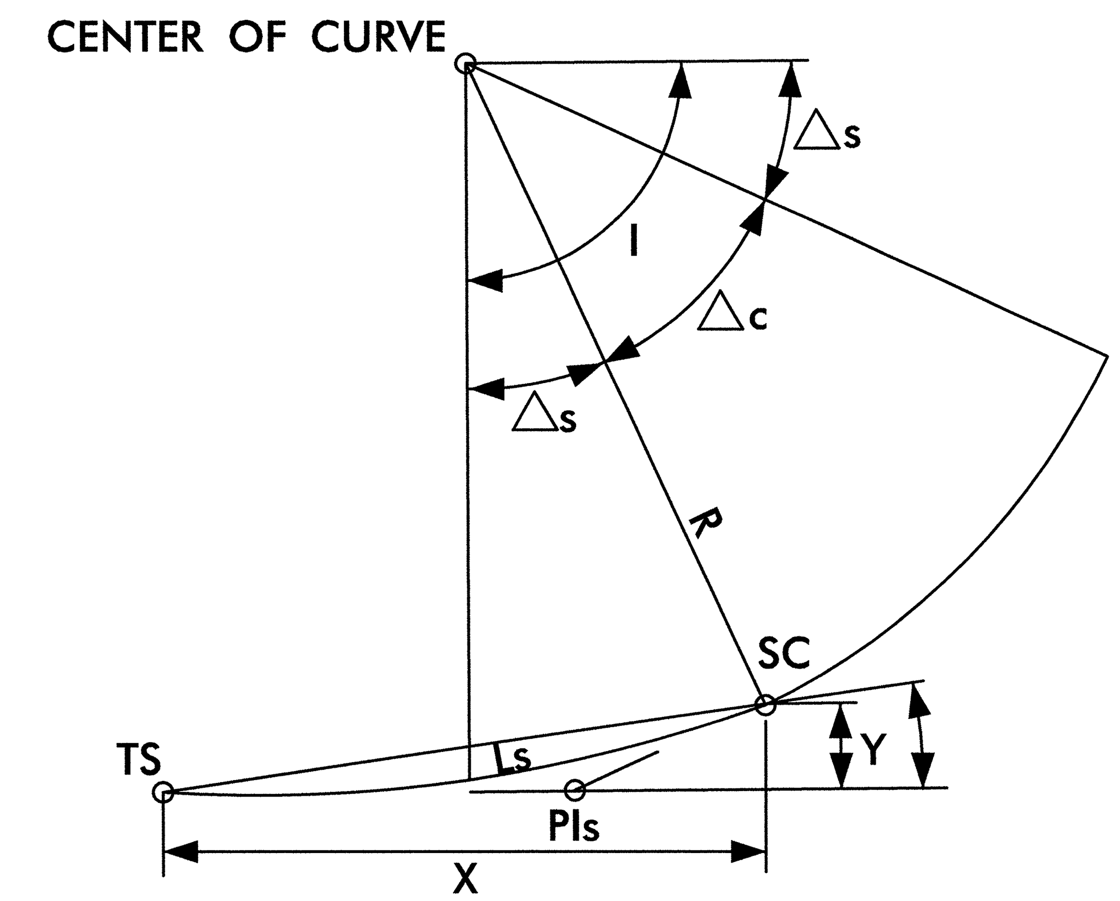

FIGURE C

SPIRAL TRANSITION CURVE

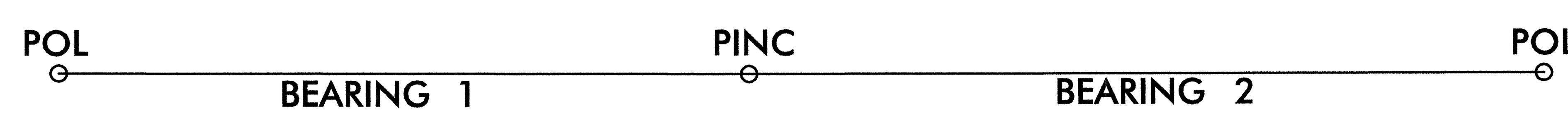

FIGURE D

DEFLECTION BETWEEN TANGENTS

R	RADIUS OF CURVATURE	PI	POINT OF INTERSECTION (CIRCULAR CURVE)
Dc	DEGREE OF CURVATURE (CHORD DEFINED)	PI$_T$	POINT OF INTERSECTION (TANGENT)
L	LENGTH OF CURVE (CHORD DEFINED)	PIs	POINT OF INTERSECTION (SPIRAL)
I	TOTAL INTERSECTION ANGLE	PC	TANGENT TO CIRCULAR CURVE
$\triangle c$	CURVE ANGLE	PT	CIRCULAR CURVE TO TANGENT
$\triangle s$	SPIRAL ANGLE	TS	TANGENT TO SPIRAL
θs	SPIRAL DEFLECTION	SC	SPIRAL TO CIRCULAR CURVE
Ls	LENGTH OF SPIRAL	CS	CIRCULAR CURVE TO SPIRAL
X	SPIRAL TANGENT LENGTH TO OFFSET	ST	SPIRAL TO TANGENT
Y	SPIRAL TANGENT OFFSET	PINC	POINT OF INTERSECTION NO CURVE

$$$$$SYSTIME$$$$$
$$$$$$$$$DGN$$$$$$$$$$$$$$$$$$$
$$$$USERNAME$$$$

PROJECT REFERENCE NO.	SHEET NO.
P-5206C	2-E
R/W SHEET NO.	

RAIL DESIGN ENGINEER

NORTH CAROLINA PROFESSIONAL SEAL 18051 ENGINEER DONALD H. ARANT 7/8/13

DCN 0164DEL_P10b2

TRACK GEOMETRY DATA

PROPOSED MAIN TRACK #1 -M1-

FEATURE NO.	DESC.	STATION	NORTHING	EASTING	BEARING	DISTANCE	R (ft)	Dc	L (ft)	I	DELTA (CURVE)	DELTA (SPIRAL)	THETA	Ls* (ft)	X (ft)	Y (ft)	Ea.(in)	V (MPH) FREIGHT PLAN 7-2	INTERMODAL PLAN 7-2	PASSENGER PLAN 7-2	PASSENGER FUTURE 4" CD	PASSENGER FUTURE 5" CD
	POT	9218+02.82	673,427.5757	1,539,001.1142			*** EQUATION: 9218+00.00 (BK) = 9218+02.82 (AH) *** *** TIE TO PROJECT P-5206B ***															
					S 36° 19' 13.20" W	1,435.3854																
△3	PINC	9232+38.21	672,270.9997	1,538,150.9366						0° 02' 28.41" (RT)												
					S 36° 21' 41.61" W	2,696.6280																
M1C3418	TS	9259+34.84	670,099.4274	1,536,552.1633			*** BEGIN TRACK CONSTRUCTION ***					1° 53' 27.51" (RT)	0° 37' 49.15"	372.0000	371.9595	4.0921						
	SC	9263+06.84	669,802.3176	1,536,328.3411																		
	PI	9267+13.66	669,482.8446	1,536,076.4659			5,635.7244	1° 01' 00.00"	812.2245	12° 02' 22.44" (RT)	8° 15' 27.42" (RT)						2.5"	50	60	80 Eu = 2.05"	90 Eu = 3.26"	90 Eu = 3.26"
	CS	9271+19.06	669,202.8590	1,535,781.3181								1° 53' 27.51" (RT)	0° 37' 49.15"	372.0000	371.9595	4.0921						
	ST	9274+91.06	668,952.8507	1,535,505.8794			*** END TRACK CONSTRUCTION ***															
					S 48° 24' 04.05" W	310.4240																
	POT	9278+00.00	668,746.7566	1,535,273.7410			*** EQUATION: 9278+01.49 (BK) = 9278+00.00 (AH) ***															
					S 48° 24' 04.05" W	1,156.3690																
M1C3423	TS	9289+56.37	667,979.0299	1,534,408.9954			*** BEGIN TRACK CONSTRUCTION ***					3° 43' 11.62" (RT)	1° 14' 23.71"	496.0000	495.7910	10.7309						
	SC	9294+52.37	667,657.8933	1,534,031.1130																		
	PI	9299+52.59	667,350.7582	1,533,636.2819			3,819.8277	1° 30' 00.00"	994.7578	22° 21' 40.15" (RT)	14° 55' 16.92" (RT)						4"	50	60	80 Eu = 2.72"	85 Eu = 3.59"	90 Eu = 4.51"
	CS	9304+47.13	667,155.6460	1,533,175.6793								3° 43' 11.62" (RT)	1° 14' 23.71"	496.0000	495.7910	10.7309						
	ST	9309+43.13	666,982.1570	1,532,711.1092			*** END TRACK CONSTRUCTION ***															
					S 70° 45' 44.20" W	1,529.7049																
M1C3430	TS	9324+72.83	666,478.1371	1,531,266.8236			*** BEGIN TRACK CONSTRUCTION ***					4° 12' 57.04" (LT)	1° 24' 18.78"	496.0000	495.7315	12.1606						
	SC	9329+68.83	666,303.3178	1,530,802.7807																		
	PI	9342+40.24	665,797.2889	1,529,636.4099			3,370.4636	1° 42' 00.00"	2,431.4764	49° 46' 00.44" (LT)	41° 20' 06.36" (LT)						4"	50	60	75 Eu = 2.69"	80 Eu = 3.62"	85 Eu = 4.60"
	CS	9354+00.31	664,646.9888	1,529,094.8419								4° 12' 57.04" (LT)	1° 24' 18.78"	496.0000	495.7315	12.1606						
	ST	9358+96.31	664,188.5267	1,528,905.8708																		
					S 20° 59' 43.76" W	500.0000																
M1C3438	TS	9363+96.31	663,721.7224	1,528,726.7236								4° 05' 30.69" (RT)	1° 21' 50.02"	496.0000	495.7471	11.8032						
	SC	9368+92.31	663,263.1176	1,528,538.0806																		
	PI	9378+41.68	662,403.3050	1,528,135.5465			3,472.5915	1° 39' 00.00"	1,853.3930	38° 45' 52.92" (RT)	30° 34' 51.55" (RT)						4"	50	60	75 Eu = 2.50"	80 Eu = 3.39"	85 Eu = 4.34"
	CS	9387+45.70	661,867.8746	1,527,351.5659								4° 05' 30.69" (RT)	1° 21' 50.02"	496.0000	495.7471	11.8032						
	ST	9392+41.70	661,608.0092	1,526,929.2219																		
					S 59° 45' 36.68" W	892.9161																
M1C3445	TS	9401+34.62	661,158.3185	1,526,157.8093								0° 18' 36.00" (RT)	0° 06' 12.00"	124.0000	123.9996	0.2236						
	SC	9402+58.62	661,096.0629	1,526,050.5703																		
	PI	9404+14.93	661,018.0705	1,525,915.1004			11,459.1923	0° 30' 00.00"	312.6130	2° 10' 59.03" (RT)	1° 33' 47.03" (RT)						1"	50	60	80 Eu = 1.24"	90 Eu = 1.84"	90 Eu = 1.84"
	CS	9405+71.23	660,943.8023	1,525,777.5536								0° 18' 36.00" (RT)	0° 06' 12.00"	124.0000	123.9996	0.2236						
	ST	9406+95.23	660,885.2822	1,525,668.2313																		
					S 61° 56' 35.71" W	2,460.6551																
M1C3450	TS	9431+55.89	659,727.9234	1,523,496.7470								3° 40' 42.83" (LT)	1° 13' 34.12"	496.0000	495.7956	10.6118						
	SC	9436+51.89	659,485.3633	1,523,064.2075																		
	PI	9439+23.34	659,342.5808	1,522,833.3412			3,862.7447	1° 29' 00.00"	541.9974	15° 23' 48.32" (LT)	8° 02' 22.66" (LT)						4"	50	60	80 Eu = 2.65"	85 Eu = 3.50"	90 Eu = 4.41"
	CS	9441+93.88	659,168.9131	1,522,624.7133								3° 40' 42.83" (LT)	1° 13' 34.12"	496.0000	495.7956	10.6118						
	ST	9446+89.88	658,835.6254	1,522,257.5006			*** END TRACK CONSTRUCTION ***															
					S 46° 32' 47.39" W	310.1175																
	POT	9450+00.0000	658,622.3372	1,522,032.3762			*** EQUATION: 9450+00.00 (BK) = 9450+39.03 (AH) *** *** EXISTING ALIGNMENT ***															

*SPIRAL LENGTHS ARE BASED ON NCDOT DESIGN CRITERIA (MIN Ls = 1.22*Eu*V) FOR RIDE COMFORT AT MAXIMUM PROPOSED SPEED ROUNDED UP TO 31 FT. INCREMENTS, WHERE GREATER THAN NS STANDARDS.

SEE SHEET 2-D FOR CURVE DIAGRAM DETAIL

$$$$$$SYSTIME$$$$$ $$$$$$$$$$$$$$DGN$$$$$$$$$$$$$$$$

DGN 0164DEL_P10b2

PROJECT REFERENCE NO.	SHEET NO.
P-5206C	2-F
R/W SHEET NO.	

RAIL DESIGN ENGINEER

NORTH CAROLINA PROFESSIONAL ENGINEER 19081 DONALD H. KRUEGER

7/8/13

TRACK GEOMETRY DATA

PROPOSED MAIN TRACK #2 -M2-

FEATURE NO.	DESC.	STATION	NORTHING	EASTING	BEARING	DISTANCE	R (ft)	Dc	L (ft)	I	DELTA (CURVE)	DELTA (SPIRAL)	THETA	Ls* (ft)	X (ft)	Y (ft)	Ea.(in)	V (MPH) FREIGHT PLAN 7-2	V (MPH) INTERMODAL PLAN 7-2	V (MPH) PASSENGER PLAN 7-2	V (MPH) PASSENGER FUTURE 4" CD	V (MPH) PASSENGER FUTURE 5" CD
	POT	9218+02.82	673,435.8079	1,538,989.8341			*** EQUATION: 9218+01.63 (BK) = 9218+02.82 (AH) ***															
					S 36° 19' 13.20" W	1,435.3854																
4	PINC	9232+38.21	672,279.2919	1,538,139.6566						0° 02' 28.41" (RT)												
					S 36° 21' 41.61" W	2,679.6247																
	TS	9259+17.83	670,121.4122	1,536,550.9642			*** BEGIN TRACK CONSTRUCTION ***															
												2° 02' 54.80" (RT)	0° 40' 58.24"	403.0000	402.9485	4.8025						
	SC	9263+20.83	669,799.7684	1,536,308.1972																		
M2C3418	PI	9267+12.08	669,493.1957	1,536,065.1225			5,635.7244	1° 01' 00.00"	781.2249	12° 02' 22.44" (RT)	7° 56' 32.83" (RT)						2.5"	50	60	80 Eu = 2.05"	90 Eu = 3.26"	90 Eu = 3.26"
	CS	9271+02.06	669,223.1516	1,535,782.0179																		
												2° 02' 54.80" (RT)	0° 40' 58.24"	403.0000	402.9485	4.8025						
	ST	9275+05.06	668,952.0380	1,535,483.8770																		
					S 48° 24' 04.05" W	293.4307																
	POT	9277+97.00	668,757.2260	1,535,264.4462			*** EQUATION: 9277+98.49 (BK) = 9277+97.00 (AH) ***															
					S 48° 24' 04.05" W	1,145.1243																
	TS	9289+42.13	667,996.9648	1,534,408.1095																		
												3° 40' 42.83" (RT)	1° 13' 34.12"	496.0000	495.7956	10.6118						
	SC	9294+38.13	667,675.7359	1,534,030.3028																		
M2C3423	PI	9299+46.81	667,363.1203	1,533,629.0238			3,862.7447	1° 29' 00.00"	1011.5074	22° 21' 40.15" (RT)	15° 00' 14.49" (RT)						4"	50	60	80 Eu = 2.65"	85 Eu = 3.50"	90 Eu = 4.41"
	CS	9304+49.64	667,165.0483	1,533,160.4933																		
												3° 40' 42.83" (RT)	1° 13' 34.12"	496.0000	495.7956	10.6118						
	ST	9309+45.64	666,991.6702	1,532,695.8796																		
					S 70° 45' 44.20" W	1,524.9538																
	TS	9324+70.59	666,489.2157	1,531,256.0797																		
												4° 12' 57.04" (LT)	1° 24' 18.78"	496.0000	495.7315	12.1606						
	SC	9329+66.59	666,314.3964	1,530,792.0368																		
M2C3430	PI	9342+38.00	665,808.3675	1,529,625.6660			3,370.4636	1° 42' 00.00"	2431.4764	49° 46' 00.44" (LT)	41° 20' 06.36" (LT)						4"	50	60	75 Eu = 2.69"	80 Eu = 3.62"	85 Eu = 4.60"
	CS	9353+98.07	664,658.0675	1,529,084.0980																		
												4° 12' 57.04" (LT)	1° 24' 18.78"	496.0000	495.7315	12.1606						
	ST	9358+94.07	664,199.6053	1,528,895.1269																		
					S 20° 59' 43.76" W	501.5683																
	TS	9363+95.63	663,731.3368	1,528,715.4178																		
												4° 05' 30.69" (RT)	1° 21' 50.02"	496.0000	495.7471	11.8032						
	SC	9368+91.63	663,272.7321	1,528,526.7748																		
M2C3438	PI	9378+41.01	662,412.9195	1,528,124.2407			3,472.5915	1° 39' 00.00"	1853.3930	38° 45' 52.92" (RT)	30° 34' 51.55" (RT)						4"	50	60	75 Eu = 2.50"	80 Eu = 3.39"	85 Eu = 4.34"
	CS	9387+45.03	661,877.4890	1,527,340.2601																		
												4° 05' 30.69" (RT)	1° 21' 50.02"	496.0000	495.7471	11.8032						
	ST	9392+41.03	661,617.6236	1,526,917.9161																		
					S 59° 45' 36.68" W	872.1289																
	TS	9401+13.16	661,178.4017	1,526,164.4621																		
												0° 17' 21.60" (RT)	0° 05' 47.20"	124.0000	123.9997	0.2087						
	SC	9402+37.16	661,116.1333	1,526,057.2305																		
M2C3445	PI	9404+09.07	661,030.3063	1,525,908.2766			12,277.7010	0° 28' 00.00"	343.7995	2° 10' 59.03" (RT)	1° 36' 15.83" (RT)						1"	50	60	80 Eu = 1.09"	90 Eu = 1.65"	90 Eu = 1.65"
	CS	9405+80.96	660,948.6834	1,525,756.9780																		
												0° 17' 21.60" (RT)	0° 05' 47.20"	124.0000	123.9997	0.2087						
	ST	9407+04.96	660,890.1764	1,525,647.6487																		
					S 61° 56' 35.71" W	2,452.4838																
	TS	9431+57.44	659,736.6609	1,523,483.3754																		
												3° 43' 11.62" (LT)	1° 14' 23.71"	496.0000	495.7910	10.7309						
	SC	9436+53.44	659,493.9979	1,523,050.8959																		
M2C3450	PI	9439+19.11	659,354.0952	1,522,825.0505			3,819.8277	1° 30' 00.00"	530.4645	15° 23' 48.32" (LT)	7° 57' 25.08" (LT)						4"	50	60	80 Eu = 2.72"	85 Eu = 3.59"	90 Eu = 4.51"
	CS	9441+83.90	659,184.2758	1,522,620.7460																		
												3° 43' 11.62" (LT)	1° 14' 23.71"	496.0000	495.7910	10.7309						
	ST	9446+79.90	658,851.0777	1,522,253.4548																		
					S 46° 32' 47.39" W	317.8081																
	POT	9449+97.72	658,632.5002	1,522,022.7475			*** EQUATION: 9449+97.71 (BK) = 9450+39.03 (AH) *** *** TIE TO PROJECT P-5206D ***															

*SPIRAL LENGTHS ARE BASED ON NCDOT DESIGN CRITERIA (MIN Ls = 1.22*Eu*V) FOR RIDE COMFORT AT MAXIMUM PROPOSED SPEED ROUNDED UP TO 31 FT. INCREMENTS, WHERE GREATER THAN NS STANDARDS.

SEE SHEET 2-D FOR CURVE DIAGRAM DETAIL

$$$$SYSTIME$$$$ $$$$DGN$$$$

0164DEL_P10b2

PROJECT REFERENCE NO.	SHEET NO.
P-5206C	2-G
R/W SHEET NO.	

RAIL/ROADWAY DESIGN ENGINEER: NORTH CAROLINA PROFESSIONAL SEAL 35018 ENGINEER JAMES L. TERRY 7/9/15

HYDRAULICS ENGINEER: NORTH CAROLINA PROFESSIONAL SEAL 038697 ENGINEER DAVID B. PETTY 7/3/2015

25' 0' 25' 50'
12.5'

NOTE:
WITHIN 10' OF A TRACK CENTERLINE THE PROPOSED CROSSING WILL BE CONSTRUCTED AS PART OF TIP PROJECT P-5206F BY NORFOLK SOUTHERN OR ITS CONTRACTOR.

NAD 83/ NSRS 2007

RAISED CONCRETE MONOLITHIC ISLAND (KEYED-IN) WITH VERTICAL TUBES ON 6' CENTERS SEE DETAIL SHT 2-L

RAISED CONCRETE MONOLITHIC ISLAND (KEYED-IN) WITH VERTICAL TUBES ON 6' CENTERS SEE DETAIL SHT. 2-L

BEGIN CONSTRUCTION
-Y6- STA 12+31.00

END CONSTRUCTION
-Y6- STA 16+20.00

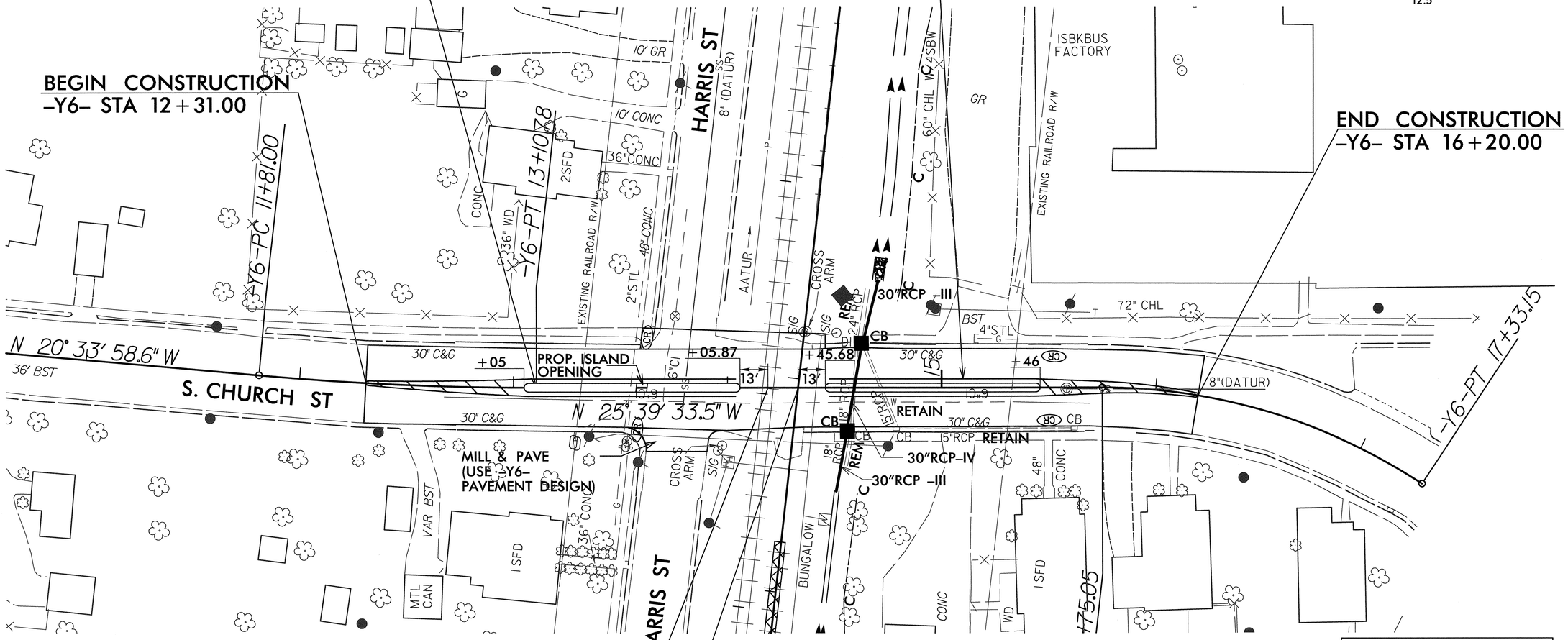

SEE SHEET 11 FOR -Y6- PLAN.

NOTE: NO PROPOSED GRADE.
MILL 1.5" OF EXISTING PAVEMENT AND REPAVE.

PROPOSED CROSSING
-Y6- STA. 14+18.87 =
-M1- STA 9317+03.02

PROPOSED CROSSING
-Y6- STA. 14+32.96 =
-M2- STA 9316+95.86

NOTE:
SEE RAILROAD STANDARDS FOR CROSSING SURFACE

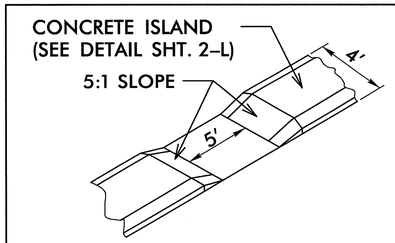

DETAIL OF ISLAND OPENING
USE IN CONJUNCTION WITH DETAIL SHT. 2-L

CROSSING DETAIL AT -Y6- SOUTH CHURCH ST

$$$$$$$SYSTIME$$$$$$$
$$$$$$$USERNAME$$$$$$$

TGS ENGINEERS
804-C N. LAFAYETTE ST
SHELBY, NC 28150
PH (704) 476-0003
CORP. LICENSE NO.: C-0275

PROJECT REFERENCE NO.	SHEET NO.
P-5206C	2-H
R/W SHEET NO.	
RAIL/ROADWAY DESIGN ENGINEER	HYDRAULICS ENGINEER

NOTE:
WITHIN 10' OF A TRACK CENTERLINE THE PROPOSED CROSSING WILL BE CONSTRUCTED AS PART OF TIP PROJECT P-5206F BY NORFOLK SOUTHERN OR ITS CONTRACTOR.

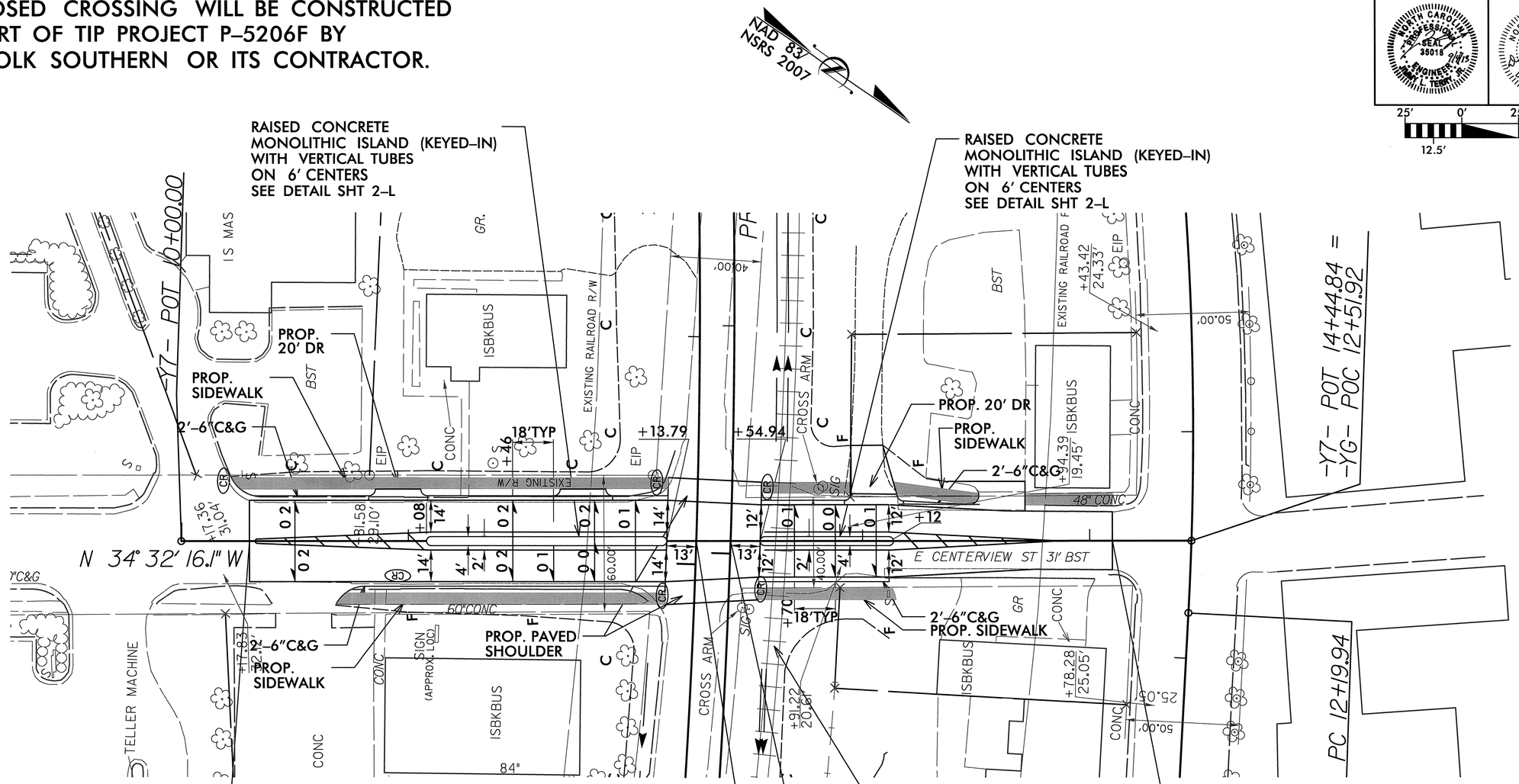

BEGIN CONSTRUCTION
-Y7- STA 10+30.00

NOTE:
SEE RAILROAD STANDARDS FOR CROSSING SURFACE

PROPOSED CROSSING
-Y7- STA. 12+26.80 =
-M1- STA 9335+10.38

EXISTING TRACKBED TO BE REMOVED

PROPOSED CROSSING
-Y7- STA. 12+41.93 =
-M2- STA 9335+05.57

END CONSTRUCTION
-Y7- STA 14+10.00

SEE SHEET 13 FOR -Y7- PLAN.
SEE SHEET 31 FOR -Y7- GRADE.

CROSSING DETAIL AT -Y7- EAST CENTERVIEW ST

TGS ENGINEERS
804-C N. LAFAYETTE ST
SHELBY, NC 28150
PH (704) 476-0003
CORP. LICENSE NO.: C-0275

DGN 0164DEL_P10b2

0164DEL_P10b2

PROJECT REFERENCE NO.	SHEET NO.
P-5206C	2-1
R/W SHEET NO.	

RAILROADWAY DESIGN ENGINEER — NORTH CAROLINA PROFESSIONAL SEAL 35018 ENGINEER MARY L. TERRY

HYDRAULICS ENGINEER — NORTH CAROLINA PROFESSIONAL SEAL 038697 ENGINEER DAVID B. PETTY

25′ 0′ 25′ 50′
12.5′

PAVEMENT REMOVAL

SEE SHEET 16 FOR FOR Y-LINE AND ROADBED PLANS

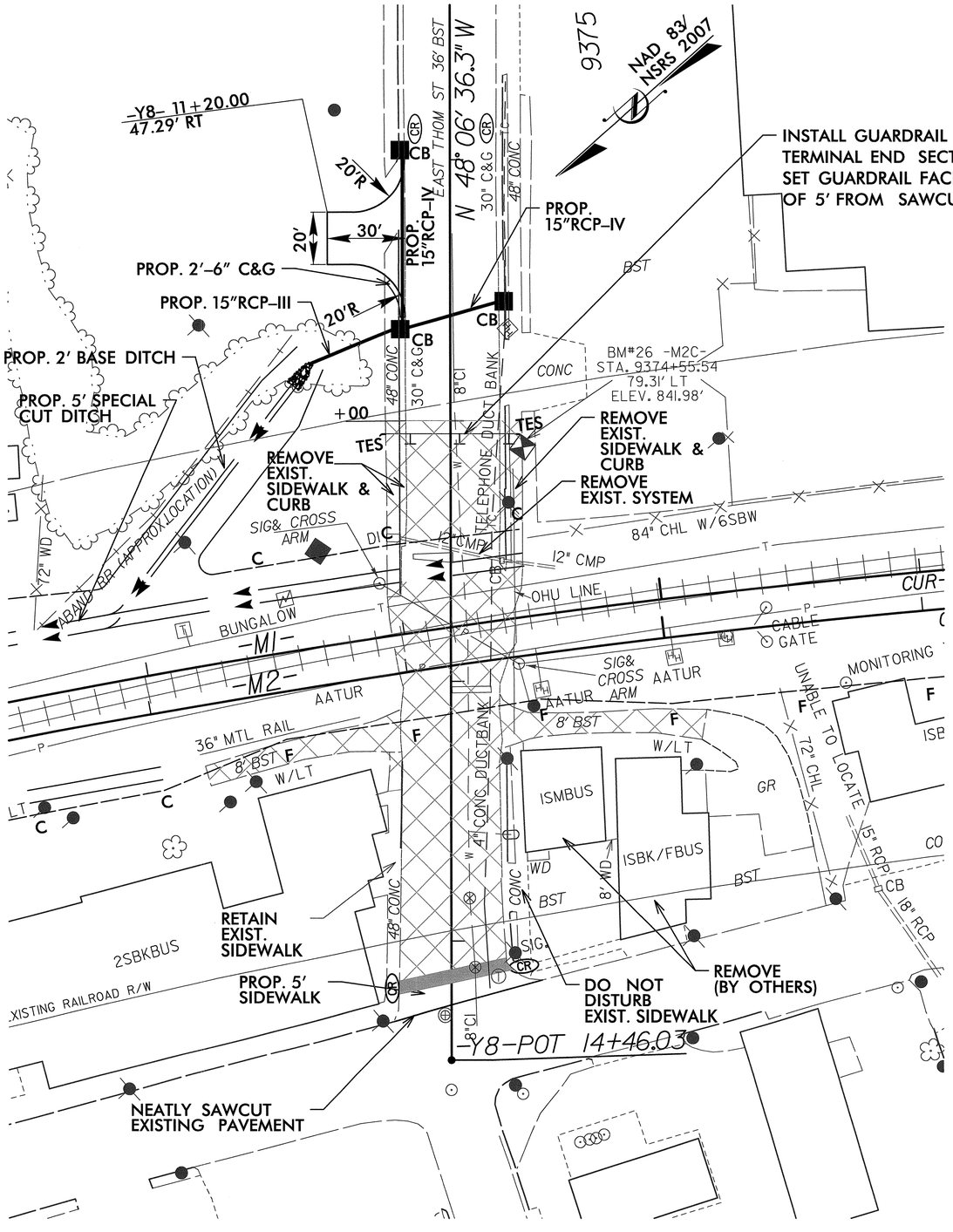

NOTES:

THE CROSSING WILL BE REMOVED AS PART OF TIP PROJECT P-5206A. COORDINATE WITH NORFOLK SOUTHERN OR ITS CONTRCTOR PRIOR TO ANY WORK WITHIN THE RAIL RIGHT OF WAY.

THE EXISTING PAVEMENT TEN FEET ON EACH SIDE OF EXISTING TRACK CENTERLINE WILL BE REMOVED BY THE RAILROAD CONTRACTOR. THE TIMBER FLANGES WILL ALSO BE REMOVED BY THE RAILROAD CONTRACTOR. THE RAILROAD SIGNALS, SIGNAL BOX, AND OVERHEAD POWER LINE/POLES TO SERVICE THE SIGNAL BOX WILL BE REMOVED BY THE RAILROAD CONTRACTOR. THE RAILROAD CROSSING GATES AND ALL SIGNS WILL BE REMOVED BY THE RAILROAD CONTRACTOR.

CONTRACTOR SHALL SEED AND MULCH THE DISTURBED AREA OUTSIDE THE RAILROAD BALLAST LINE.

CONTRACTOR SHALL CONTACT NORTH CAROLINA 811 TO LOCATE ALL UNDERGROUND UTILITIES IN THE WORK AREA.

CONTRACTOR SHALL REMOVE EXISTING ROADBED AND GRADE AREA TO MATCH ADJACENT TOPOGRAPHY AND GRADE EXISTING DITCHES TO DRAIN. ANY EXISTING CULVERTS IN THE RAILROAD DITCHES SHALL BE REMOVED AS WELL. CONTRACTOR SHALL SEED ALL DISTURBED AREAS.

THE RR CROSSING ADVANCE WARNING PAVEMENT MARKINGS ON EAST THOM STREET TO THE NORTH AND SOUTH OF THE CROSSING NEED TO BE REMOVED AS WELL.

CONTRACTOR SHALL CONTACT DUKE POWER AT 704-645-2700 TO PROVIDE POWER POLE SUPPORT DURING CONSTRUCTION BECAUSE OF POLE PROXIMITY TO EXISTING CURB.

PROVIDE PERMANENT SIGNING FOR EAST THOM STREET ACCORDING TO THE SIGNING PLANS.

PROVIDE SIGNING AND DEVICES REQUIRED TO CLOSE THE ROAD ACCORDING TO THE ROADWAY STANDARD DRAWINGS AND TRAFFIC CONTROL PLANS.

ENSURE ALL NECESSARY SIGNING IS IN PLACE PRIOR TO ALTERING ANY TRAFFIC PATTERN.

SUMMARY OF PAVEMENT REMOVAL

IN SQUARE YARDS

ITEM	QUANTITY
ASPHALT	996

DETAIL OF EAST THOM ST (-Y8-) RAILROAD CROSSING CLOSURE

TGS ENGINEERS
804-C N. LAFAYETTE ST
SHELBY, NC 28150
PH (704) 476-0003
CORP. LICENSE NO.: C-0275

0164DEL_P10b2

PROJECT REFERENCE NO.	SHEET NO.
P-5206C	2-J
R/W SHEET NO.	

RAILROADWAY DESIGN ENGINEER: NORTH CAROLINA PROFESSIONAL SEAL 35018 ENGINEER JIMMY L. TERRY

HYDRAULICS ENGINEER: NORTH CAROLINA PROFESSIONAL SEAL 038697 ENGINEER DAVID B. PETTY

25′ 0′ 25′ 50′
12.5′

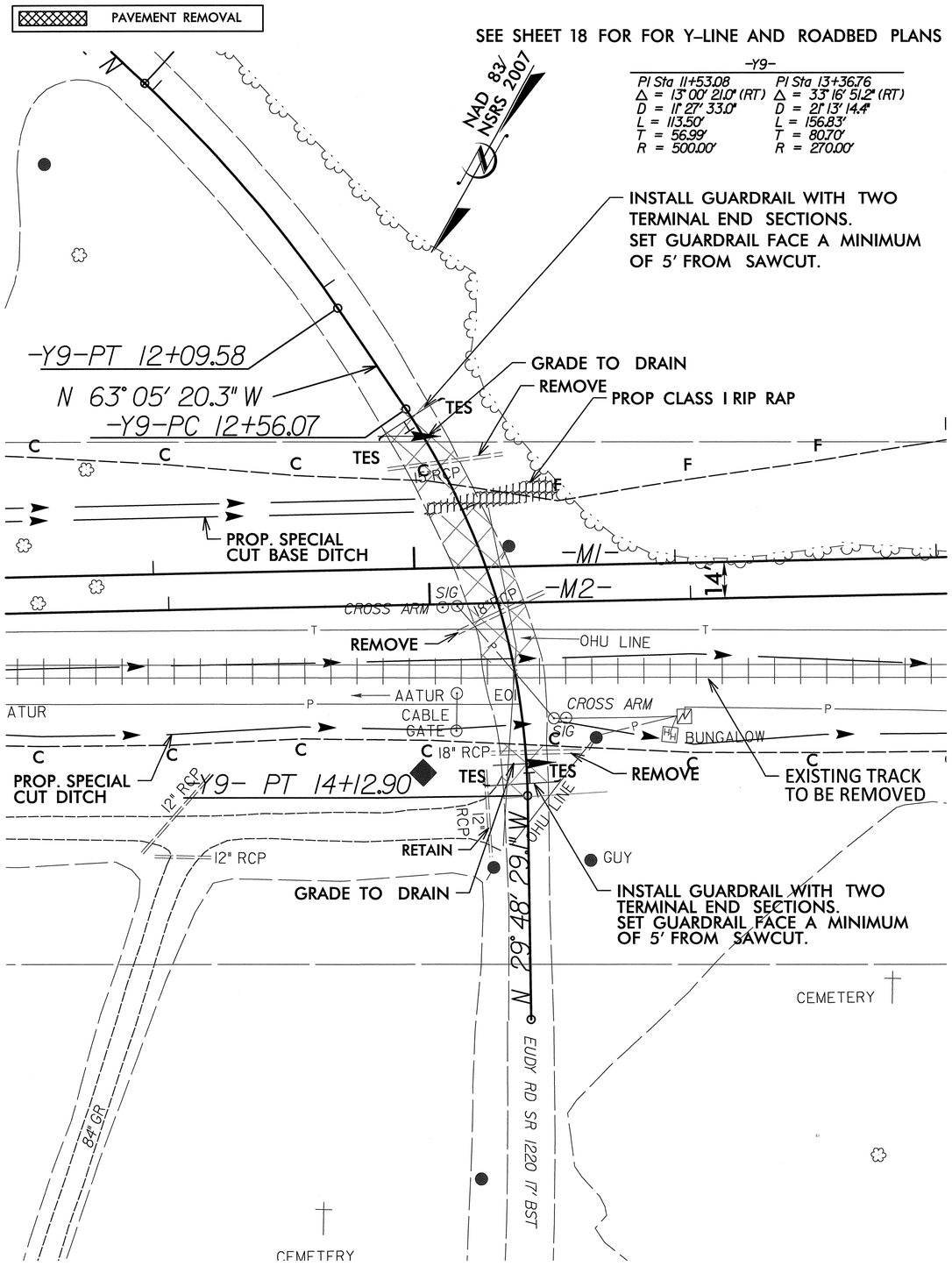

NOTES:

THE CROSSING WILL BE REMOVED AS PART OF TIP PROJECT P-5206A. COORDINATE WITH NORFOLK SOUTHERN OR ITS CONTRCTOR PRIOR TO ANY WORK WITHIN THE RAIL RIGHT OF WAY.

THE EXISTING PAVEMENT TEN FEET ON EACH SIDE OF EXISTING TRACK CENTERLINE WILL BE REMOVED BY THE RAILROAD CONTRACTOR. THE TIMBER FLANGES WILL ALSO BE REMOVED BY THE RAILROAD CONTRACTOR. THE RAILROAD SIGNALS, SIGNAL BOX, AND OVERHEAD POWER LINE/POLES TO SERVICE THE SIGNAL BOX WILL BE REMOVED BY THE RAILROAD CONTRACTOR. THE RAILROAD CROSSING GATES AND ALL SIGNS WILL BE REMOVED BY THE RAILROAD CONTRACTOR.

CONTRACTOR SHALL SEED AND MULCH THE DISTURBED AREA OUTSIDE THE RAILROAD BALLAST LINE.

CONTRACTOR SHALL CONTACT NORTH CAROLINA 811 TO LOCATE ALL UNDERGROUND UTILITIES IN THE WORK AREA.

CONTRACTOR SHALL REMOVE EXISTING ROADBED AND GRADE AREA TO MATCH ADJACENT TOPOGRAPHY AND GRADE EXISTING DITCHES TO DRAIN. ANY EXISTING CULVERTS IN THE RAILROAD DITCHES SHALL BE REMOVED AS WELL. CONTRACTOR SHALL SEED ALL DISTURBED AREAS.

THE RR CROSSING ADVANCE WARNING PAVEMENT MARKINGS ON EUDY STREET TO THE NORTH AND SOUTH OF THE CROSSING NEED TO BE REMOVED AS WELL.

CONTRACTOR SHALL CONTACT DUKE POWER AT 704-645-2700 TO PROVIDE POWER POLE SUPPORT DURING CONSTRUCTION BECAUSE OF POLE PROXIMITY TO EXISTING CURB.

PROVIDE PERMANENT SIGNING FOR EUDY STREET ACCORDING TO THE SIGNING PLANS.

PROVIDE SIGNING AND DEVICES REQUIRED TO CLOSE THE ROAD ACCORDING TO THE ROADWAY STANDARD DRAWINGS AND TRAFFIC CONTROL PLANS.

ENSURE ALL NECESSARY SIGNING IS IN PLACE PRIOR TO ALTERING ANY TRAFFIC PATTERN.

SUMMARY OF PAVEMENT REMOVAL

IN SQUARE YARDS

ITEM	QUANTITY
ASPHALT	354

DETAIL OF EUDY ST (-Y9-) RAILROAD CROSSING CLOSURE

TGS ENGINEERS
804-C N. LAFAYETTE ST
SHELBY, NC 28150
PH (704) 476-0003
CORP. LICENSE NO.: C-0275

$$$$SYSTIME$$$$ $$$$USERNAME$$$$ $$$$DGN$$$$

0164DEL_P10b2

PROJECT REFERENCE NO.	SHEET NO.
P-5206C	2-K
R/W SHEET NO.	

RAILROAD DESIGN ENGINEER: NORTH CAROLINA PROFESSIONAL SEAL 35018 ENGINEER JERRY L. TERRY

HYDRAULICS ENGINEER: NORTH CAROLINA PROFESSIONAL SEAL 038897 ENGINEER DAVID B. PETTIT

25' 0' 25' 50'
12.5'

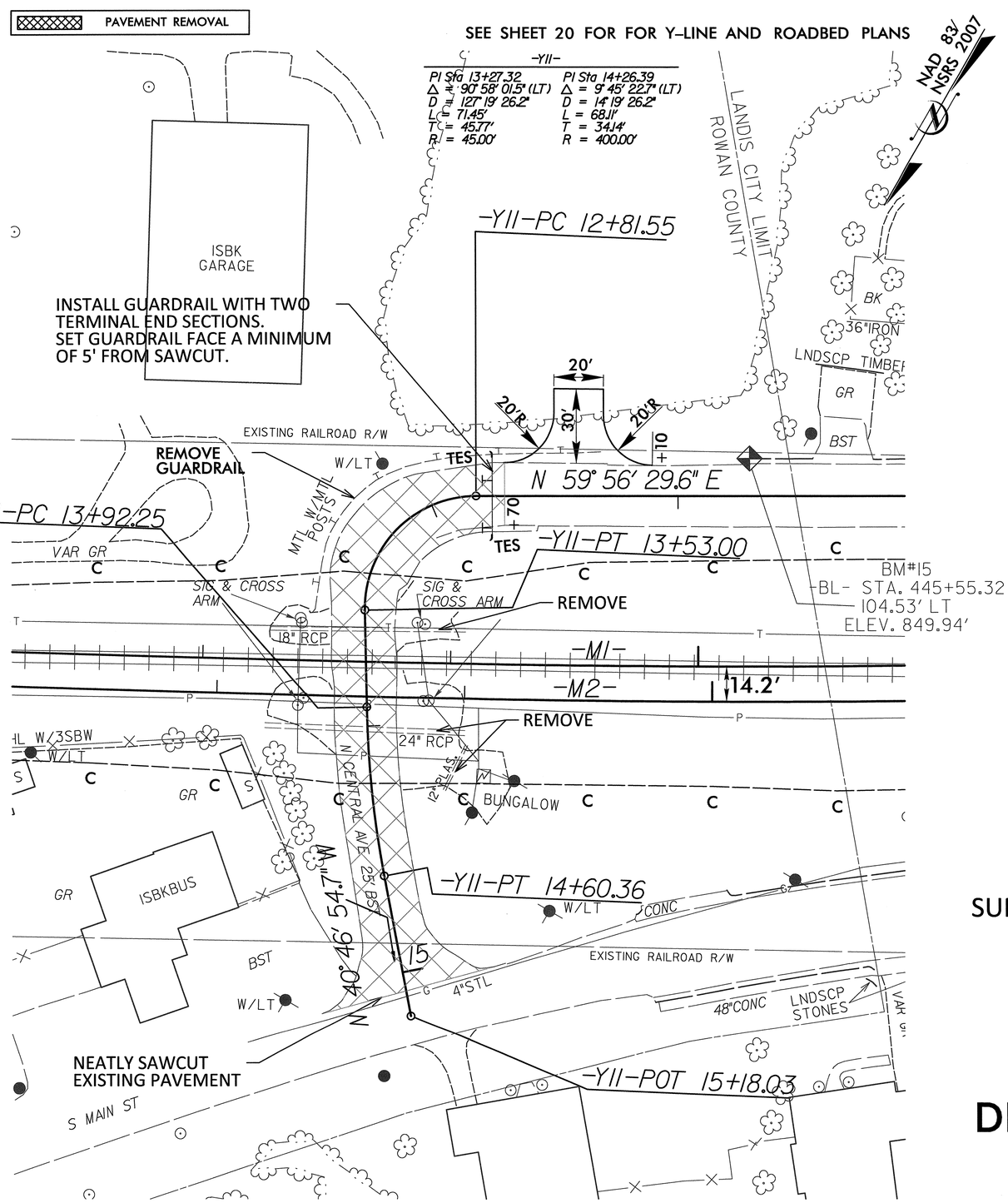

NOTES:

THE CROSSING WILL BE REMOVED AS PART OF TIP PROJECT P-5206A. COORDINATE WITH NORFOLK SOUTHERN OR ITS CONTRCTOR PRIOR TO ANY WORK WITHIN THE RAIL RIGHT OF WAY.

THE EXISTING PAVEMENT TEN FEET ON EACH SIDE OF EXISTING TRACK CENTERLINE WILL BE REMOVED BY THE RAILROAD CONTRACTOR. THE TIMBER FLANGES WILL ALSO BE REMOVED BY THE RAILROAD CONTRACTOR. THE RAILROAD SIGNALS, SIGNAL BOX, AND OVERHEAD POWER LINE/POLES TO SERVICE THE SIGNAL BOX WILL BE REMOVED BY THE RAILROAD CONTRACTOR. THE RAILROAD CROSSING GATES AND ALL SIGNS WILL BE REMOVED BY THE RAILROAD CONTRACTOR.

CONTRACTOR SHALL SEED AND MULCH THE DISTURBED AREA OUTSIDE THE RAILROAD BALLAST LINE.

CONTRACTOR SHALL CONTACT NORTH CAROLINA 811 TO LOCATE ALL UNDERGROUND UTILITIES IN THE WORK AREA.

CONTRACTOR SHALL REMOVE EXISTING ROADBED AND GRADE AREA TO MATCH ADJACENT TOPOGRAPHY AND GRADE EXISTING DITCHES TO DRAIN. ANY EXISTING CULVERTS IN THE RAILROAD DITCHES SHALL BE REMOVED AS WELL. CONTRACTOR SHALL SEED ALL DISTURBED AREAS.

THE RR CROSSING ADVANCE WARNING PAVEMENT MARKINGS ON NORTH CENTRAL AVE. TO THE NORTH AND SOUTH OF THE CROSSING NEED TO BE REMOVED AS WELL.

CONTRACTOR SHALL CONTACT DUKE POWER AT 704-645-2700 TO PROVIDE POWER POLE SUPPORT DURING CONSTRUCTION BECAUSE OF POLE PROXIMITY TO EXISTING CURB.

PROVIDE PERMANENT SIGNING FOR NORTH CENTRAL AVE. ACCORDING TO THE SIGNING PLANS.

PROVIDE SIGNING AND DEVICES REQUIRED TO CLOSE THE ROAD ACCORDING TO THE ROADWAY STANDARD DRAWINGS AND TRAFFIC CONTROL PLANS.

ENSURE ALL NECESSARY SIGNING IS IN PLACE PRIOR TO ALTERING ANY TRAFFIC PATTERN.

SUMMARY OF PAVEMENT REMOVAL

IN SQUARE YARDS

ITEM	QUANTITY
ASPHALT	745

DETAIL OF NORTH CENTRAL AVE. (-Y11-) RAILROAD CROSSING CLOSURE

TGS ENGINEERS
804-C N. LAFAYETTE ST
SHELBY, NC 28150
PH (704) 476-0003
CORP. LICENSE NO.: C-0275

$$$$USERNAME$$$$ $$$$SYSTIME$$$$

0164DEL_P10b2

5/14/99

PROJECT REFERENCE NO.	SHEET NO.
P-5206C	2-L

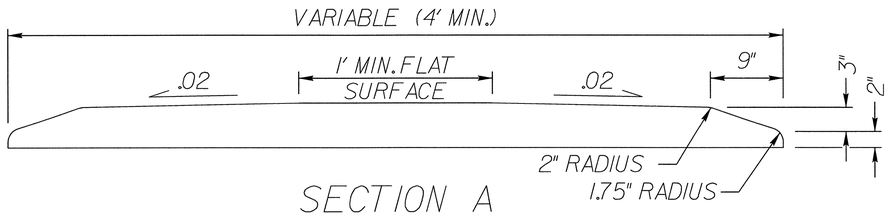

SECTION A

MOUNTABLE 5" MONOLITHIC CONCRETE ISLAND

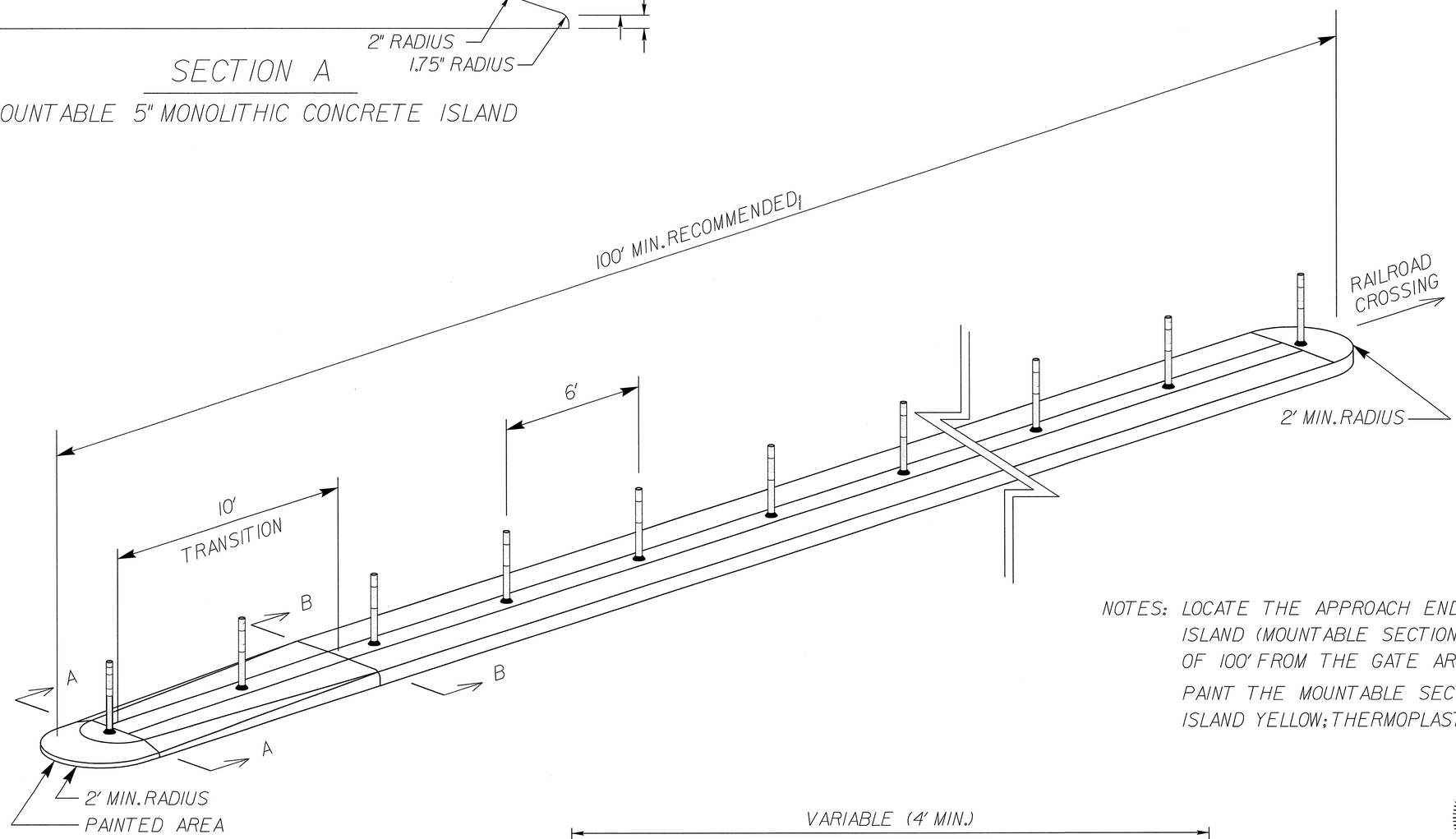

NOTES: LOCATE THE APPROACH END OF THE ISLAND (MOUNTABLE SECTION) A MINIMUM OF 100' FROM THE GATE ARM.

PAINT THE MOUNTABLE SECTION OF THE ISLAND YELLOW; THERMOPLASTIC PREFERRED.

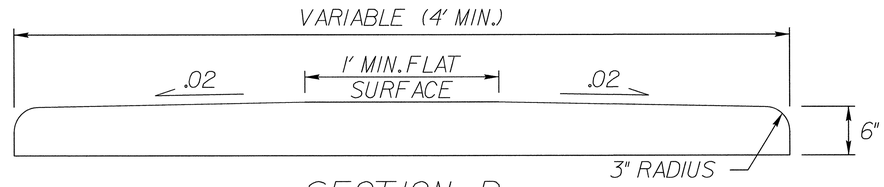

SECTION B

NON-MOUNTABLE 6" MONOLITHIC CONCRETE ISLAND

NORTH CAROLINA PROFESSIONAL SEAL 022966 ENGINEER KEITH KEMPF 8/7/13

CONTRACT STANDARDS AND DEVELOPMENT UNIT
Office 919-707-6950 FAX 919-250-4119

CONCRETE ISLAND DETAIL

ORIGINAL BY: KKempf DATE: 5-15-09
MODIFIED BY: DATE:
CHECKED BY: DATE:
FILE SPEC: c:/ericward/stds/stdstodetails/30001/0300d01.dgn

$$$$SYSTIME$$$$
$$$$LOGIN$$$$
$$$$USERNAME$$$$

PROJECT REFERENCE NO.	SHEET NO.
P-5206C	2-M
R/W SHEET NO.	
RAIL DESIGN ENGINEER	PAVEMENT DESIGN ENGINEER

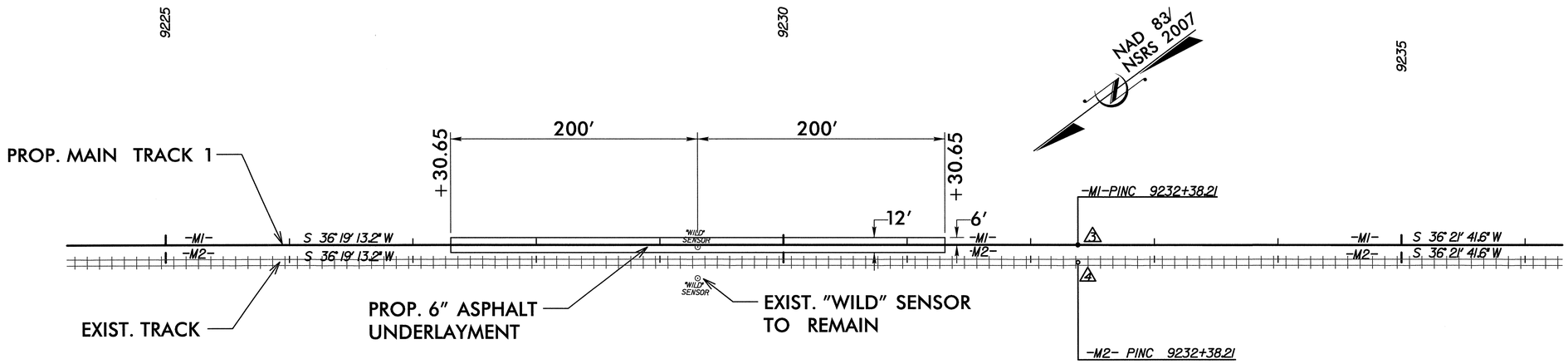

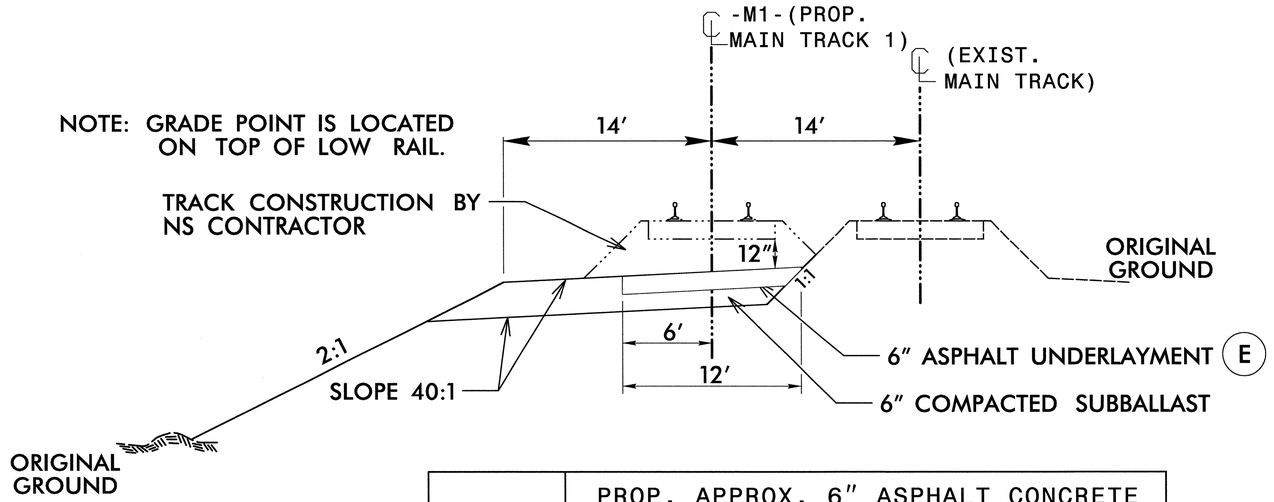

E	PROP. APPROX. 6" ASPHALT CONCRETE BASE COURSE, TYPE B25.0B, AT AN AVERAGE RATE OF 342 LBS. PER SQ. YD. IN EACH OF TWO LAYERS.

ASPHALT UNDERLAYMENT DETAIL FOR WILD SITE 341.1

TGS ENGINEERS
804-C N. LAFAYETTE ST
SHELBY, NC 28150
PH (704) 476-0003
CORP. LICENSE NO.: C-0275

DGN 0164DEL_P10b2

PROJECT REFERENCE NO.	SHEET NO.
P-5206C	2-N
R/W SHEET NO.	

RAIL DESIGN ENGINEER

NORTH CAROLINA PROFESSIONAL SEAL 39018 ENGINEER JERRY L. TERRELL

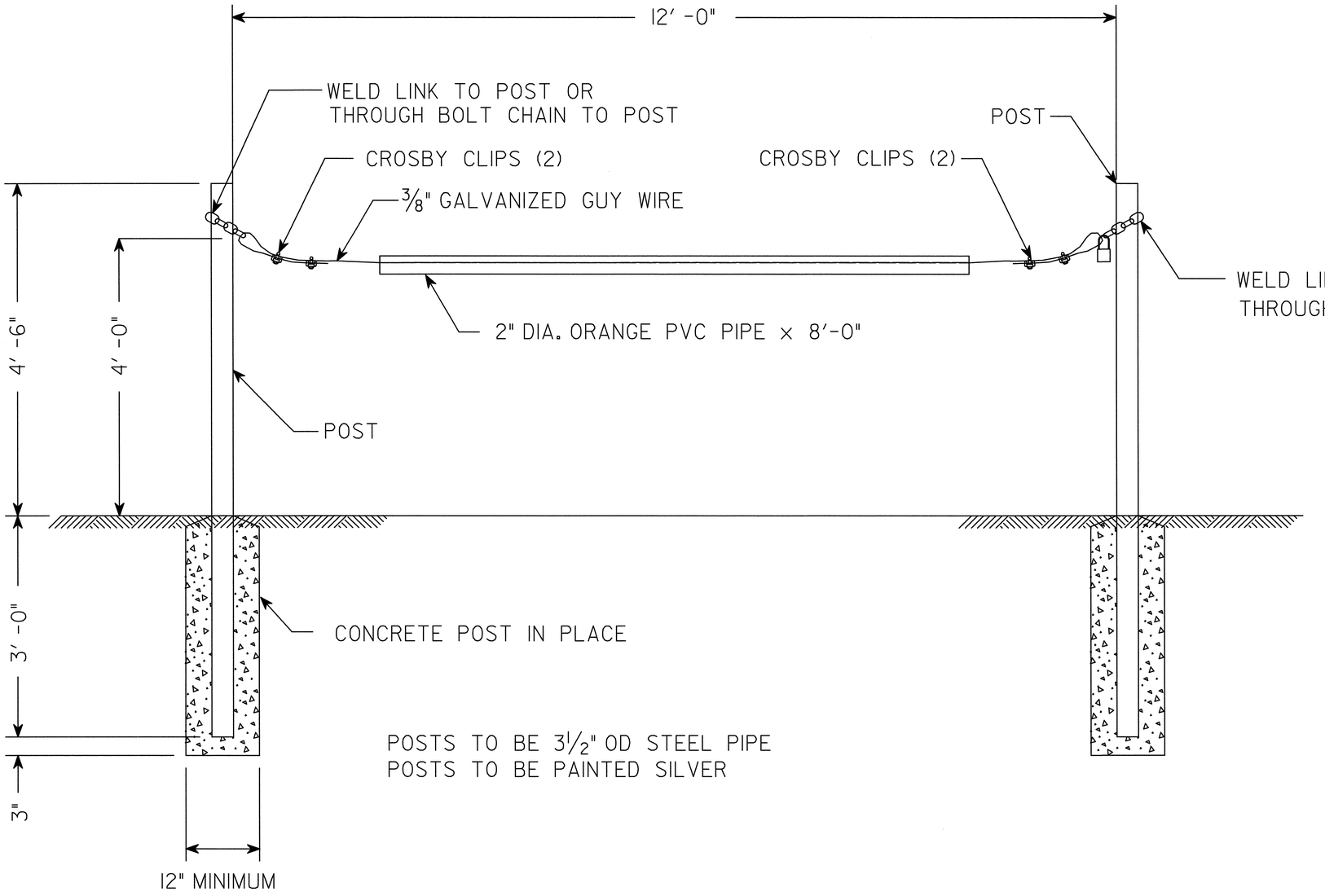

POSTS TO BE 3½" OD STEEL PIPE
POSTS TO BE PAINTED SILVER

RIGHT OF WAY GATE DETAIL

TGS ENGINEERS
804-C N. LAFAYETTE ST
SHELBY, NC 28150
PH (704) 476-0003
CORP. LICENSE NO.: C-0275

PROJECT REFERENCE NO.	SHEET NO.
P-5206C	2-O

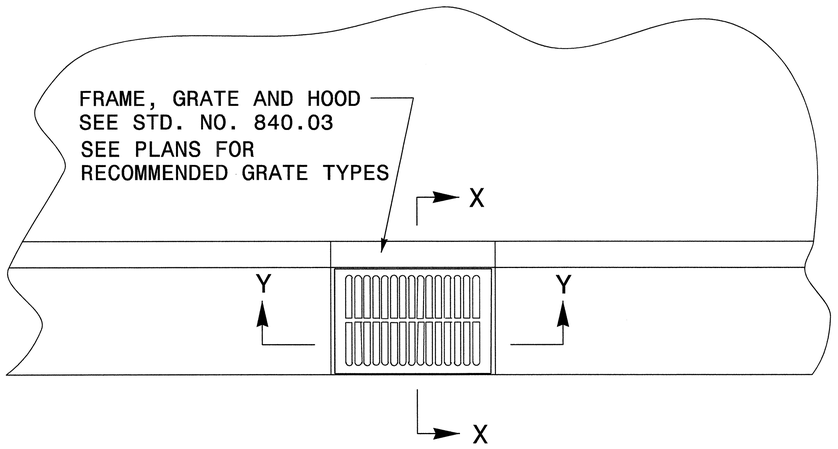

PLAN

GENERAL NOTES:

- THE ROADWAY PLANS INDICATE STRUCTURES TO BE CONVERTED.
- AFTER REMOVAL, STORE GRATES AND FRAMES AS DIRECTED BY THE ENGINEER.
- 4″ SOLID CLAY BRICK, JUMBO BRICK, CONCRETE, OR 4″ SOLID CONCRETE BLOCK MAY BE USED FOR VERTICAL ADJUSTMENT OF THE STRUCTURE.
- CONVERT IN ACCORDANCE WITH SECTION 859 OF THE STANDARD SPECIFICATIONS.

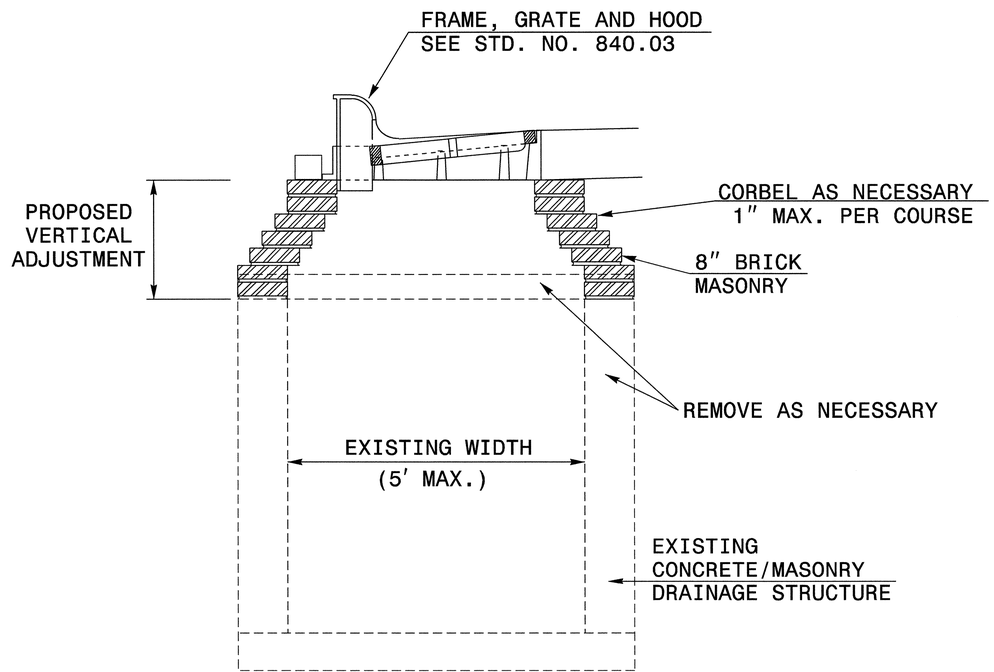

SECTION X-X

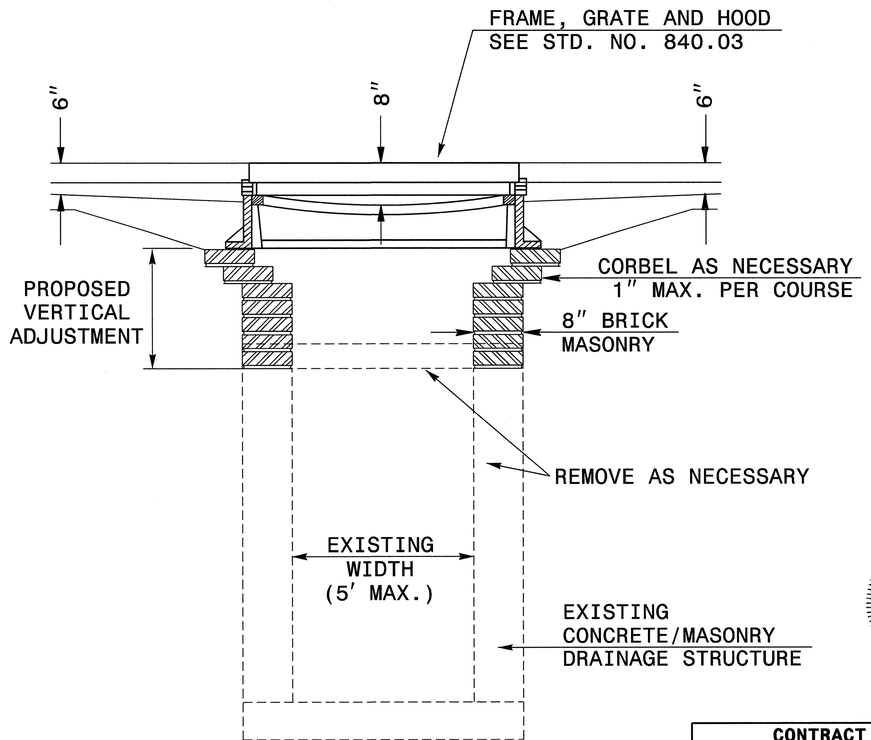

SECTION Y-Y

NORTH CAROLINA PROFESSIONAL SEAL 022966 ENGINEER JOEL S. HOWERTON 8/7/13

CONTRACT STANDARDS AND DEVELOPMENT UNIT
Office 919-707-6950 FAX 919-250-4119

CONVERSION OF DROP INLET OR JUNCTION BOX TO CATCH BASIN

ORIGINAL BY: E.E. WARD DATE: 11-97
MODIFIED BY: DATE:
CHECKED BY: DATE:
FILE SPEC.: DS37:usr\details\stand\jbtocb.dgn

08-SEP-2011 5:47
S:\Contracts\Contracts\Special Details\ericward\usr\details\stand\jbtocb_eng.dgn
jhowerton AT CSD237501

0164DEL_P10b2

PROJECT REFERENCE NO.	SHEET
P-5206C	2-P

GEOTECHNICAL ENGINEER — SIGNATURE / DATE

ENGINEER — SIGNATURE / DATE

EMBANKMENT MONITORING SEQUENCE

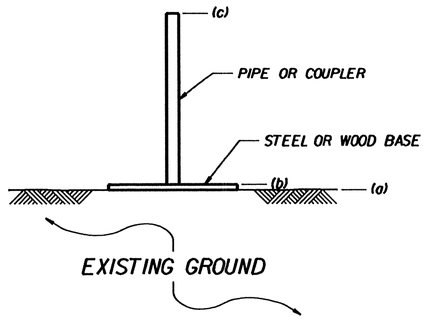

1. PLACE STEEL/WOOD BASE AT APPROXIMATE GAUGE LOCATIONS SHOWN IN THE PLANS AS DETERMINED BY THE ENGINEER.
2. SET BASE ON LEVEL GROUND SO PIPE/COUPLER IS PLUMB.
3. BEFORE CONSTRUCTING EMBANKMENT, NOTIFY ENGINEER TO SURVEY AND RECORD THE FOLLOWING:
   (a) EXISITING GROUND ELEVATION,
   (b) TOP OF BASE ELEVATION AND
   (c) TOP OF PIPE ELEVATION.

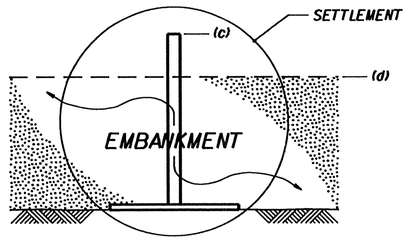

4. MAKE SETTLEMENT GAUGE HIGHLY VISIBLE SO GAUGE IS NOT HIT OR DAMAGED.
5. PLACE AND COMPACT FILL MATERIAL AROUND SETTLEMENT GAUGE WITHOUT DISTURBING GAUGE.
6. NOTIFY ENGINEER WEEKLY TO SURVEY AND RECORD THE FOLLOWING:
   (c) TOP OF PIPE ELEVATION AND
   (d) EMBANKMENT ELEVATION.

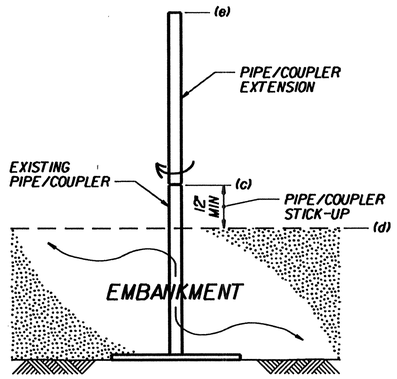

7. CONNECT PIPE/COUPLER EXTENSION TO EXISTING PIPE/COUPLER AS NEEDED TO MAINTAIN A PIPE/COUPLER STICK-UP OF AT LEAST 12" WHILE MONITORING SETTLEMENT.
8. SCREW PIPES/COUPLERS TOGETHER HAND TIGHT AND THEN TIGHTEN 2 TO 3 FULL TURNS WITH A WRENCH.
9. NOTIFY ENGINEER TO SURVEY AND RECORD THE FOLLOWING:
   (c) TOP OF PIPE ELEVATION,
   (d) EMBANKMENT ELEVATION AND
   (e) TOP OF EXTENSION ELEVATION.
10. RETURN TO STEP 4 WITH NEW TOP OF PIPE ELEVATION EQUAL TO TOP OF EXTENSION ELEVATION.

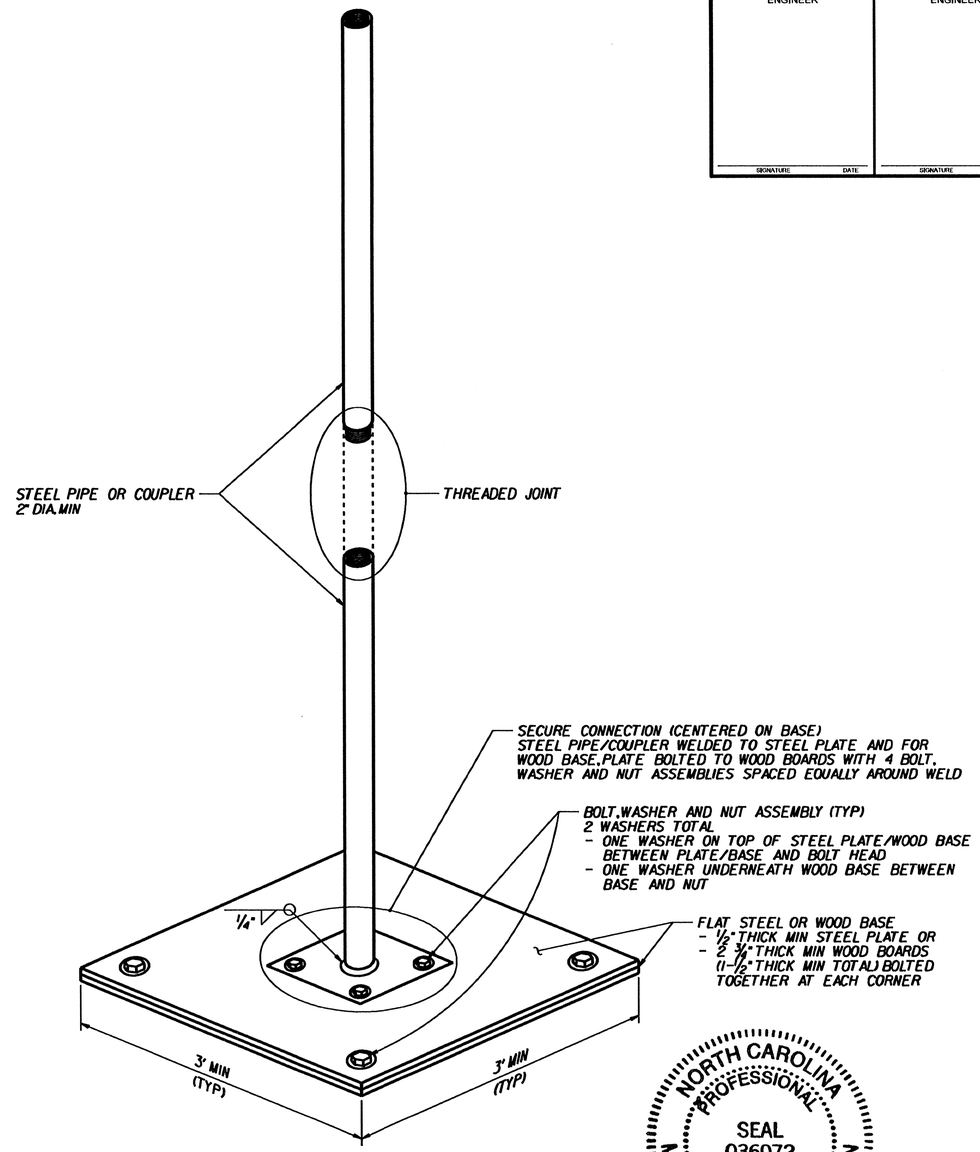

SETTLEMENT GAUGE

NORTH CAROLINA PROFESSIONAL SEAL 036072 ENGINEER MAHALINGAM BAHIRADHAN

05/02/2013

NOTES:

1. SEE ROADWAY SUMMARY SHEETS FOR APPROXIMATE SETTLEMENT GAUGE LOCATIONS.
2. FOR STANDARD EMBANKMENT MONITORING, SEE EMBANKMENT SETTLEMENT GAUGES PROVISION.
3. INSTALL SETTLEMENT GAUGES AFTER CLEARING AND GRUBBING GAUGE LOCATIONS AND BEFORE CONSTRUCTING EMBANKMENTS WITH EMBANKMENT MONITORING.

STATE OF NORTH CAROLINA DEPARTMENT OF TRANSPORTATION

GEOTECHNICAL ENGINEERING UNIT

STATE OF NORTH CAROLINA
DEPARTMENT OF TRANSPORTATION
RALEIGH

STANDARD DRAWING NO. 1804.01

STANDARD
EMBANKMENT MONITORING

DATE: 2-19-13

PROJECT REFERENCE NO. P-5206C | SHEET NO. 2-Q

0164DEL_P10b2

STATE OF NORTH CAROLINA
DEPT. OF TRANSPORTATION
DIVISION OF HIGHWAYS
RALEIGH, N.C.

PRECAST CONCRETE PARKING CURB

ENGLISH DETAIL DRAWING FOR

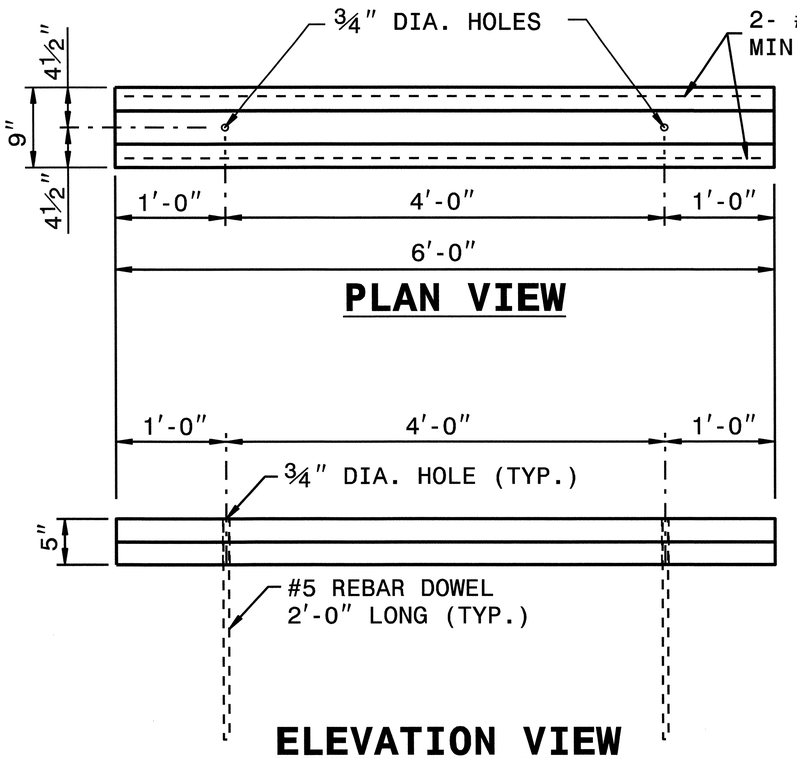

PLAN VIEW

ELEVATION VIEW

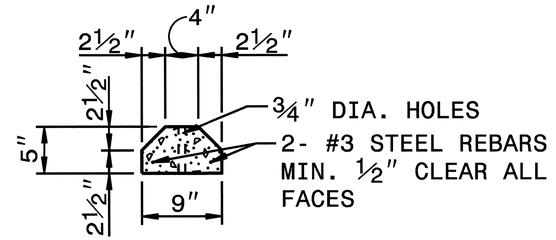

END VIEW

CENERAL NOTES:
-CONCRETE COMPRESSIVE STRENGTH 4000psi MIN.
-ASTM A615M - GRADE 400 REINFORCING STEEL.

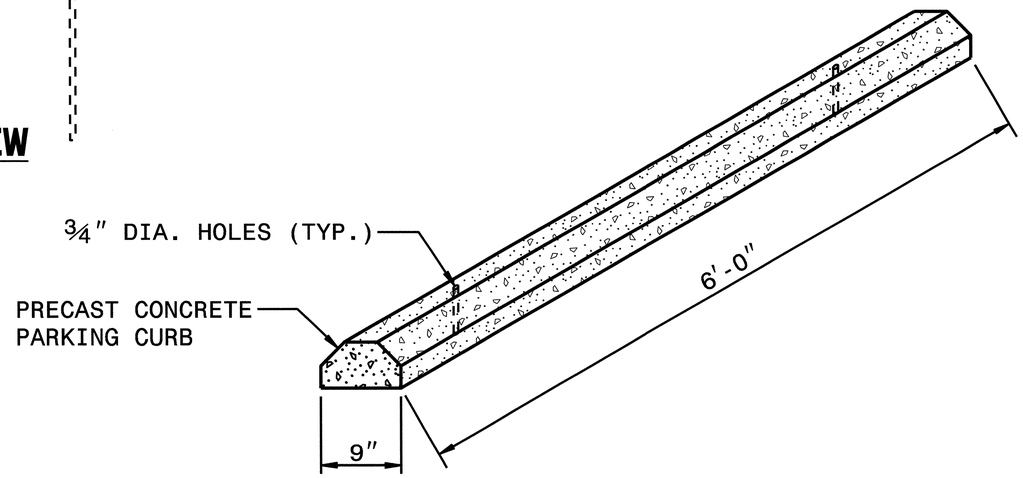

ISOMETRIC VIEW

SHEET 1 OF 1
PRCSTCRB

STATE OF NORTH CAROLINA
DEPT. OF TRANSPORTATION
DIVISION OF HIGHWAYS
RALEIGH, N.C.

ENGLISH DETAIL DRAWING FOR
PRECAST CONCRETE PARKING CURB

SHEET 1 OF 1
PRCSTCRB

NORTH CAROLINA PROFESSIONAL SEAL 022966 ENGINEER JOEL S. HOWERTON 8/7/13

CONTRACT STANDARDS AND DEVELOPMENT UNIT
Office 919-707-6950 FAX 919-250-4119

SEE PLATE FOR TITLE

ORIGINAL BY: E.E. WARD DATE: 5-97
MODIFIED BY: DATE:
CHECKED BY: DATE:
FILE SPEC.: s:eric\usr\details\metric\stand\prstcrb eng.dgn

PROJECT REFERENCE NO.	SHEET NO.
P-5206C	2-R

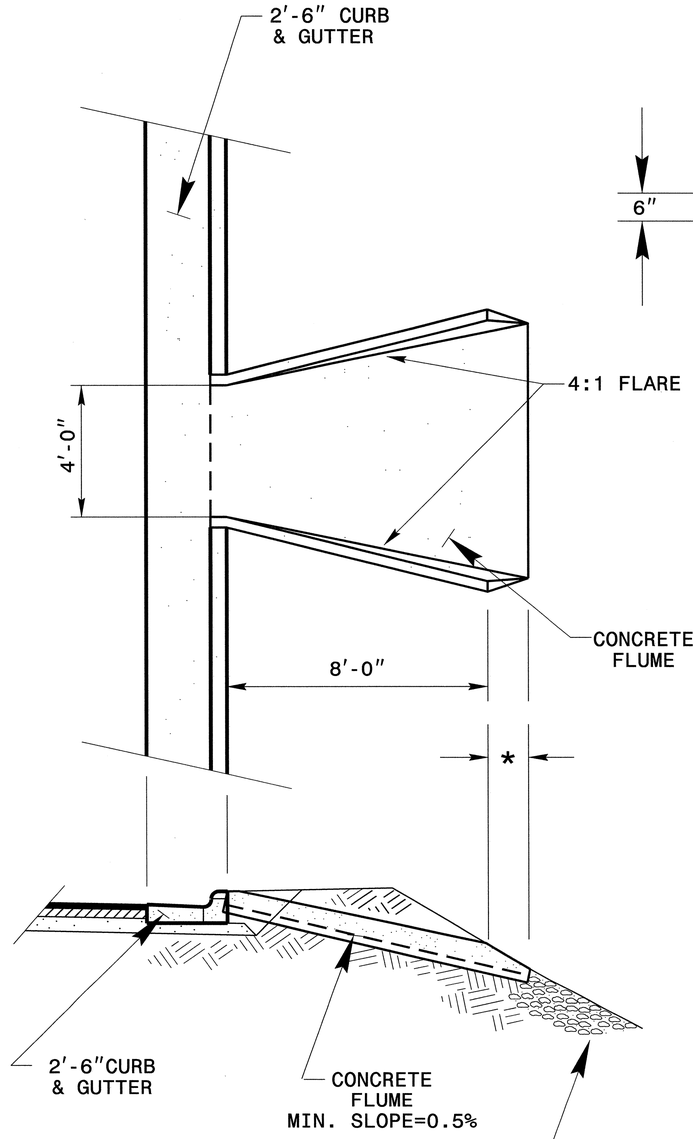

ELEVATION

* LENGTH VARIABLE WITH DITCH SLOPE

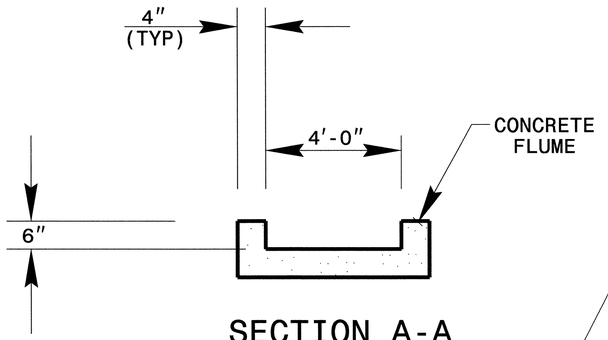

SECTION A-A

FLUME SIDES SHOULD BE FLUSH WITH ADJACENT GROUND LINE TO A MAX. HEIGHT OF 12"

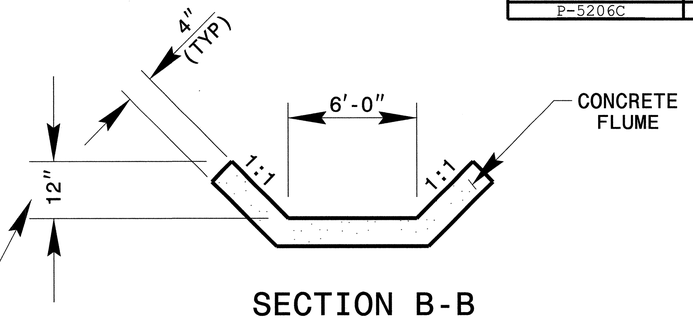

SECTION B-B

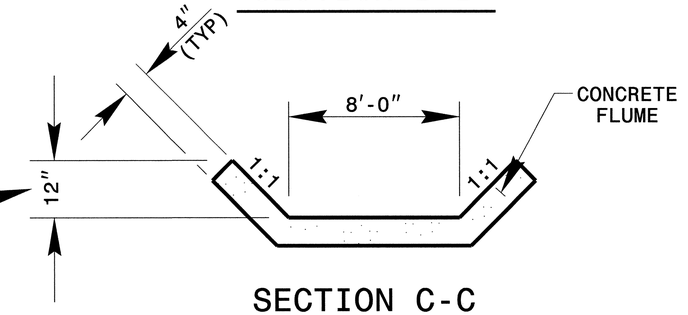

SECTION C-C

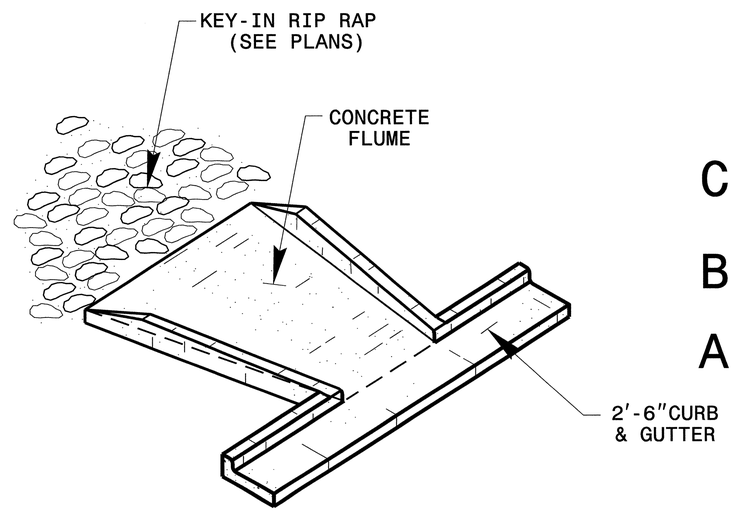

PERSPECTIVE

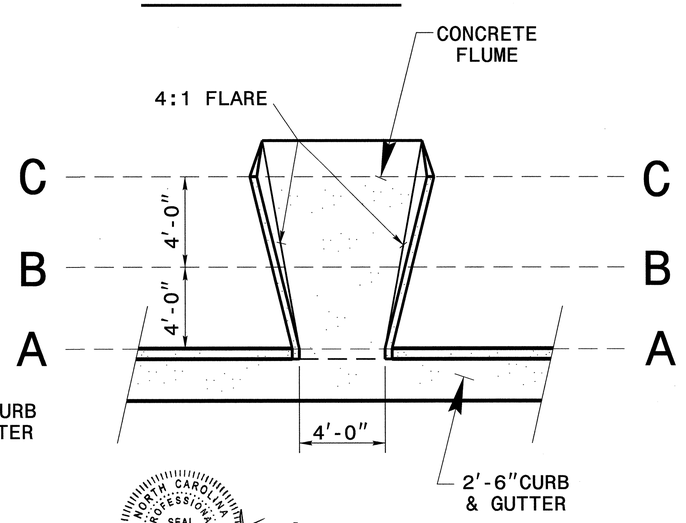

PLAN

NORTH CAROLINA PROFESSIONAL SEAL 022966 ENGINEER JOEL S. HOMERSON 8/15/13

NOTES:

- CONSTRUCT CONCRETE FLUME IN ACCORDANCE WITH THIS DETAIL.
- RIP RAP LINED DITCH WILL BE THE TYPE AND LENGTH SPECIFIED BY THE ROADWAY PLANS. PLACE RIP-RAP AT THE END OF THE DITCH AS INDICATED BY STD. DWG. 876.02 FOR AN 18" PIPE.
- MODIFICATIONS MAY BE MADE AS DIRECTED BY THE ENGINEER.

CONTRACT STANDARDS & DEVELOPMENT UNIT
STANDARDS AND SPECIAL DESIGN
Office 919-707-6950 FAX 919-250-4119

CONCRETE FLUME

ORIGINAL BY: DATE:
MODIFIED BY: nbritt DATE: 05-11-04
CHECKED BY: DATE:
FILE SPEC.: details\nbritt\metric\r2201modifiedflume.dgn

0164DEL_P10b2

0164DEL_P1062

PROJECT REFERENCE NO.	SHEET
P-5206C	2-S

Detail for Temporary Containment of Contaminated Soil

Cross-Section View

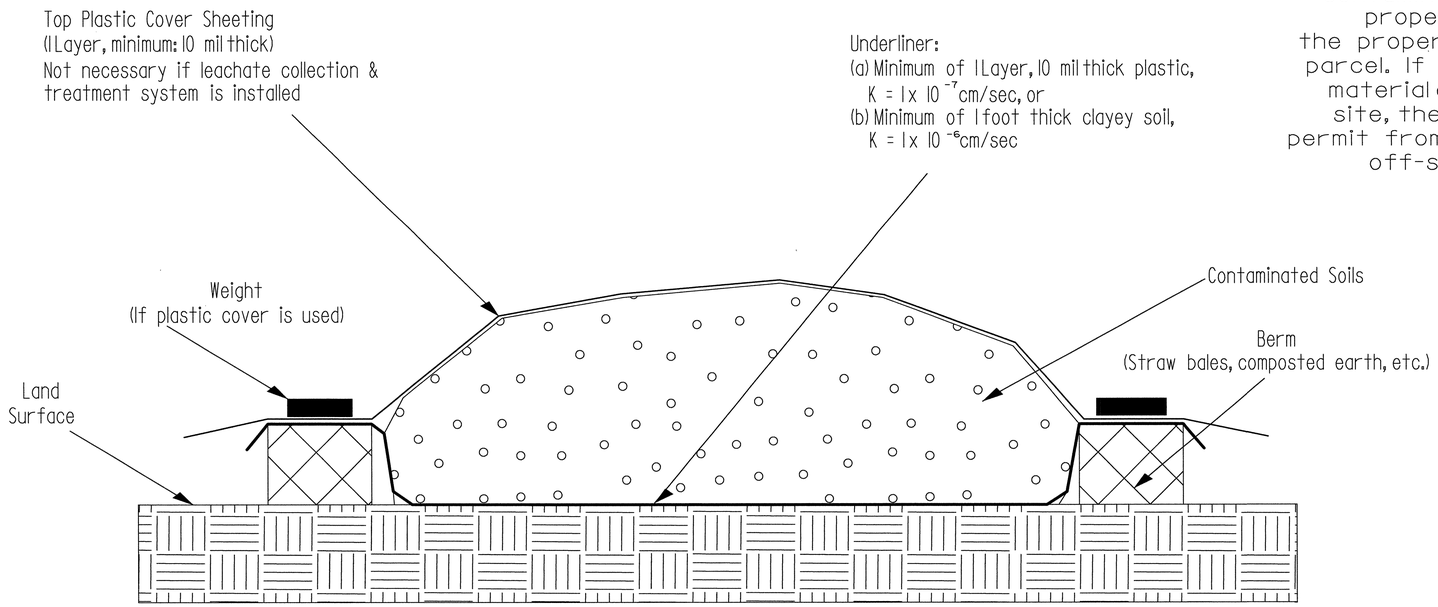

NOTE:
The Contractor shall stockpile all contaminated soil excavated from a property in a location within the property boundaries of the source parcel. If the volume of contaminated material exceeds available space on site, the Contractor shall obtain a permit from the NCDENR UST Section for off-site temporary storage.

Map View

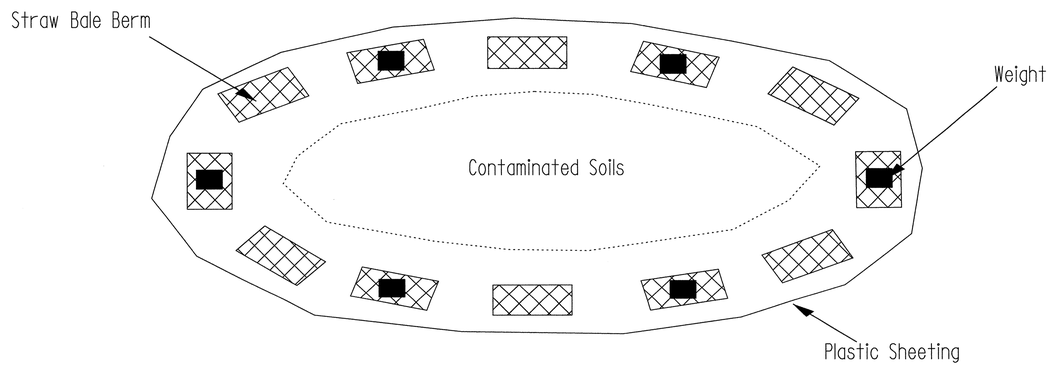

0001ADD_P10b2
0164DEL_P10b2

COMPUTED BY: SGM DATE: 3/5/2013
CHECKED BY: JLT DATE: 3/28/2013

PROJECT NO.	SHEET NO.
P-5206C	3-A

STATE OF NORTH CAROLINA
DIVISION OF HIGHWAYS

SUMMARY OF EARTHWORK

Line	Station	Station	Uncl. Excav.	Undercut Excav.	Embank. +%	Borrow	Waste
-M2-	9218+02.82	9248+00.00	4,960		8,470	3,510	
	SUB-TOTAL # 1		**4,960**		**8,470**	**3,510**	
-M2-	9248+00.00	9277+98.49	5,904		1,265		4,639
	SUB-TOTAL # 2		**5,904**		**1,265**		**4,639**
-M2-	9277+97.00	9308+00.00	9,367		6,842		2,525
	SUB-TOTAL # 3		**9,367**		**6,842**		**2,525**
-M2-	9308+00.00	9316+95.86	2,056		8		2,048
	-Y6- CROSSING						
-M2-	9316+95.86	9335+05.57	4,631		4,417		214
-Y7-	10+30	14+10	115		324	209	
-M2-	9335+05.57	9338+00.00	3,128				3,128
	SUB-TOTAL # 4		**9,930**		**4,749**	**209**	**5,390**
-M2-	9338+00.00	9368+00.00	15,398		35,617	20,219	
	SUB-TOTAL # 5		**15,398**		**35,617**	**20,219**	
-M2-	9368+00.00	9398+00.00	21,675		4,784		16,891
	SUB-TOTAL # 6		**21,675**		**4,784**		**16,891**
-M2-	9398+00.00	9403+87	4,449		6,821	2,372	
	BRIDGE						
-Y10-	10+08	21+79.39	16,180		808		15,372
-YJ-	10+96.84	13+12.98	15		30	15	
-M2-	9405+17	9428+00.00	7,963		39,088	31,125	
	SUB-TOTAL # 7		**28,607**		**46,747**	**33,512**	**15,372**
-M2-	9428+00.00	9449+97.71	5,900		1,555		4,345
	SUB-TOTAL # 8		**5,900**		**1,555**		**4,345**
	TOTAL		**101,741**		**110,029**	**57,450**	**49,162**
	LOSS DUE TO CLEARING & GRUBBING		-42,000			42,000	
	WASTE TO REPLACE BORROW					-31,529	-31,529
	EST. SHOULDER MATERIAL				252	252	
	PROJECT TOTAL		**59,741**		**110,281**	**68,173**	**17,633**
	EST. 5% TO REPLACE TOP SOIL ON BORROW PIT					**3,409**	
	GRAND TOTAL		**59,741**		**110,281**	**71,582**	**17,633**
	SAY		**60,400**	**4,700**		**72,300**	

Approximate quantities only. Unclassified excavation, borrow excavation, fine grading, clearing and grubbing, removing of existing pavement will be paid for at the lump sum price for "Grading".

SUMMARY OF EXISTING ASPHALT PAVEMENT REMOVAL

Line	Station	Station	Loc	SY
-M1-	9326+14	9339+80	Harris St	3109.31
@ Woodhaven Dr				82.24
-M1-	9353+44	9361+18	Harris St	1819.97
-M1-	9368+00	9371+05	Harris St	675.88
-Y8-(East Thom St Closure)	12+00	14+24	CL	996.19
Central Ave @ Elm St				150.33
Elm St			CL	57.48
-Y9-(Eudy Rd Closure)	12+55	14+12	CL	353.64
-Y11-(N Central Ave)	12+70	15+07	CL	744.60
			COLUMN TOTAL:	7,989.65
			SAY	**7,990**

"N" = DISTANCE FROM EDGE OF LANE TO FACE OF GUARDRAIL
TOTAL SHOULDER WIDTH = DISTANCE FROM EDGE OF TRAVEL LANE TO SHOULDER BREAK POINT.
FLARE LENGTH = DISTANCE FROM LAST SECTION OF PARALLEL GUARDRAIL TO END OF GUARDRAIL.
W = TOTAL WIDTH OF FLARE FROM BEGINNING OF TAPER TO END OF GUARDRAIL.
G = GATING IMPACT ATTENUATOR TYPE 350

GUARDRAIL SUMMARY

LINE	BEG. STA.	END STA.	LOC.	LENGTH			WARRANT POINT		"N" DIST	TOTAL	FLARE LENGTH		W		ANCHORS					TERMINAL END SECTION		IMP. ATTEN. TYPE 350			REMOVE EXISTING	ADDITIONAL GUARDRAIL	REMARKS
				STRAIGHT	SHOP CURVED	DOUBLE FACED	APPR. END	TRAIL. END	FROM E.O.L.	SHLDR WIDTH	APPR. END	TRAIL. END	APPR. END	TRAIL. END	GRAU 350	CAT-1	AT-1	III	III SHOP CUR.	TES		EA	G	NG	GRDRAIL	POSTS	
EAST KETCHIE ST CLOSURE -M2- STA 9325+00			RT	37.5																2							
HARRIS ST CLOSURE (Northend) -M1- STA 9368+00			LT	25																2							
HARRIS ST CLOSURE (Southend) -M1- STA 9371+00			LT	25																2							
EAST THOM ST CLOSURE (-Y8-) -M1- STA 9374+00			LT	50																2							
EUDY RD CLOSURE (Southend) -M1- STA 9400+00			LT	25																2							
EUDY RD CLOSURE (Northend) -M1- STA 9400+50			RT	25																2							
N CENTRAL AVE CLOSURE -M1- STA 9343+00			LT	37.5																2							
-Y11-	12+31	13+53	RT																						154		
SUB-TOTALS:				225.00																14.00					154		
	LESS ANCHOR DEDUCTIONS																										
	GRAU-350	9@50 ft																									
	TYPE III	7@18.75 ft																									
	TYPE AT-1	7@6.25 ft																									
	TYPE III SHOP CUR.	1@18.75'																									
	ANCHOR TOTALS																										
GRAND TOTALS				225.00																14					154		
SAY				**225.00**																**14**						**5**	

0164DEL_P10b2

COMPUTED BY:	S.MELVIN	DATE:	11/9/2012
CHECKED BY:	DBP	DATE:	8/23/2013

NORTH CAROLINA DEPARTMENT OF TRANSPORTATION
DIVISION OF HIGHWAYS

PROJECT NO.	SHEET NO.
P-5206C	3-B

Note: Invert Elevations indicated are for Bid Purposes only and shall not be used for project construction stakeout. See "Standard Specifications For Roads and Structures, Section 300-5".

LIST OF PIPES, ENDWALLS, ETC. (FOR PIPES 48 INCHES & UNDER)

STATION	LOCATION (LT, RT, OR CL)	STRUCTURE NO. FROM	STRUCTURE NO. TO	TOP ELEVATION	INVERT ELEVATION	INVERT ELEVATION	SLOPE CRITICAL	DRAINAGE PIPE (RCP, CSP, CAAP, HDPE, or PVC) 12"	15"	18"	24"	30"	36"	42"	48"	DO NOT USE RCP	DO NOT USE CSP	DO NOT USE CAAP	DO NOT USE HDPE
-M2- 9239+60	RT																		
-M2- 9239+87	LT																		
-M2- 9247+61	RT																		
-M2- 9247+62	LT																		
-M2- 9259+56	LT	C0701																	
-M2- 9259+53	CL	C0701	C0702		815.60	813.60													
-M2-9259+80	RT																		
-M2- 9301+69	LT	C1001																	
-M2- 9301+69	CL	C1001	C1002		805.75	798.99													
-M2- 9313+99	CL																		
-Y6- 14+56	RT	C1101	C1102		816.72	816.57													
-Y6- 14+56	RT	C1102		822.33															
-Y6- 14+59	CL	C1102	C1103		816.47	816.27													
-Y6- 14+63	LT	C1103		821.83															
-Y6- 14+63	LT	C1103	C1104		816.17	816.02													
-M2- 9324+52	CL																		
-M2- 9324+84	RT																		
-M2-9327+50	RT	C1201																	
-M2- 9327+50	CL	C1201	C1202		811.63	803.83													
-SVC- 12+27	LT	C1203		803.83															
-SVC- 12+17	CL	C1203	C1204		798.08	797.92													
-SVC- 12+12	RT	C1204		807.24															
-SVC- 12+46	RT	C1204	C1205		797.92	804.13													
-SVC- 12+82	RT	C1205		807.13															
-SVC- 13+07	RT	C1205	C1206		804.23	805.25													
-SVC- 13+32	RT	C1206		808.25															
-M2- 9343+87	RT	C1401			806.9	806.8													
-M2- 9343+69	CL	C1402	C1403		806.72	794.84													
-M2- 9343+60	LT	C1403																	
-M2- 9353+37	LT																		
SHEET 3-B TOTALS																			

STATION (SIZE / THICKNESS OR GAUGE)	B.C.C.M. PIPE 12"	15"	18"	24"	30"	36"	42"	48"	R.C. PIPE CLASS III 12"	15"	18"	24"	30"	36"	42"	48"	R.C. PIPE CLASS IV 12"	15"	18"	24"	30"	36"	42"	48"
THICKNESS OR GAUGE	.064	.064	.064	.064	.079	.079	.109	.109																
-M2- 9239+60																								
-M2- 9239+87																								
-M2- 9247+61																								
-M2- 9247+62																								
-M2- 9259+56																								
-M2- 9259+53																								
-M2-9259+80																								
-M2- 9301+69																								
-M2- 9301+69																								
-M2- 9313+99																								
-Y6- 14+56													28											
-Y6- 14+56																								
-Y6- 14+59																					40			
-Y6- 14+63																								
-Y6- 14+63													32											
-M2- 9324+52																								
-M2- 9324+84																								
-M2-9327+50																								
-M2- 9327+50																								
-SVC- 12+27																								
-SVC- 12+17																						32		
-SVC- 12+12																								
-SVC- 12+46																		68						
-SVC- 12+82																								
-SVC- 13+07																		48						
-SVC- 13+32																								
-M2- 9343+87														20										
-M2- 9343+69																								
-M2- 9343+60																								
-M2- 9353+37																								
SHEET 3-B TOTALS													60	20				116			40	32		

STATION	36" WELDED STEEL PIPE, 0.50" THICK GRADE B IN SOIL	36" WELDED STEEL PIPE, 0.50" THICK GRADE B NOT IN SOIL	36" WELDED STEEL PIPE, 0.50" THICK GRADE B (OPEN CUT)	42" WELDED STEEL PIPE, 0.625" THICK GRADE B IN SOIL	42" WELDED STEEL PIPE, 0.625" THICK GRADE B NOT IN SOIL	42" WELDED STEEL PIPE, 0.625" THICK GRADE B (OPEN CUT)	48" WELDED STEEL PIPE, 0.625" THICK GRADE B IN SOIL	48" WELDED STEEL PIPE, 0.625" THICK GRADE B NOT IN SOIL	48" WELDED STEEL PIPE, 0.625" THICK GRADE B (OPEN CUT)		ENDWALLS STD. 838.01 838.11 OR STD. 838.80 (UNLESS NOTED OTHERWISE) CU. YARDS	QUANTITIES FOR DRAINAGE STRUCTURES PER EACH (0' THRU 5.0')	*TOTAL L.F. FOR PAY QUANTITY SHALL BE COL. 'A' + (1.3 X COL.'B') LIN. FT. A 5.0' THRU 10.0'	LIN. FT. B 10.0' AND ABOVE	C.B. STD. 840.01 OR STD. 840.02	FRAME, GRATES, AND HOOD STANDARD 840.03 TYPE OF GRATE E	F	G
-M2- 9239+60																		
-M2- 9239+87																		
-M2- 9247+61																		
-M2- 9247+62																		
-M2- 9259+56											3.4							
-M2- 9259+53	25	25	50								3.4							
-M2-9259+80																		
-M2- 9301+69											4.5							
-M2- 9301+69				25	25	78					4.5							
-M2- 9313+99																		
-Y6- 14+56																		
-Y6- 14+56												1	0.86		1	1		
-Y6- 14+59																		
-Y6- 14+63												1	0.66		1	1		
-Y6- 14+63																		
-M2- 9324+52																		
-M2- 9324+84																		
-M2-9327+50											3.4							
-M2- 9327+50	25	25	30								3.4							
-SVC- 12+27												1	0.75					
-SVC- 12+17																		
-SVC- 12+12																		1
-SVC- 12+46													4.32					
-SVC- 12+82												1			1		1	
-SVC- 13+07																		
-SVC- 13+32												1			1		1	
-M2- 9343+87											3.4							
-M2- 9343+69				25	25	78					4.5							
-M2- 9343+60											4.5							
-M2- 9353+37																		
SHEET 3-B TOTALS	50	50	80	50	50	156					35	5	6.59		4	2	2	1

STATION	CONCRETE TRANSITIONAL SECTION DROP INLET	CONCRETE TRANSITIONAL SECTION CATCH BASIN	D.I. STD. 840.14 OR STD. 840.15	D.I. FRAME AND GRATES STD. 840.16	G.D.I. TYPE "A" STD. 840.17 OR 840.26		G.D.I. TYPE "D" STD. 840.19 OR 840.28			G.D.I. (N.S.) FRAME WITH GRATE STD. 840.24	G.D.I. (N.S.) FRAME WITH TWO GRATES STD. 840.24	T.B.J.B. STD. 840.34	FRAME WITH COVER STD. 840.54		CONVERT D.I. TO CB	FLOWABLE FILL, C.Y.	B.C.C.M.P. ELBOWS NO. & SIZE	CONC. & BRICK PIPE PLUG, C.Y. STD. 840.71	CONC. COLLARS CL. "B" C.Y. STD. 840.72	PIPE CLEAN-OUT	PIPE REMOVAL LIN. FT.	REMARKS
-M2- 9239+60																					48.6	
-M2- 9239+87																					56.3	
-M2- 9247+61																					21.0	
-M2- 9247+62																					21.2	
-M2- 9259+56																						
-M2- 9259+53																20.3						25' IN SOIL, 25' NOT IN SOIL
-M2-9259+80																				1		
-M2- 9301+69																						
-M2- 9301+69																28.4						25' IN SOIL, 25' NOT IN SOIL
-M2- 9313+99																21.6						
-Y6- 14+56																					16.3	
-Y6- 14+56																						REMOVE EXST. CB
-Y6- 14+59																					39.3	
-Y6- 14+63																						REMOVE EXIST. DI, TIE TO EX. 15" RCP
-Y6- 14+63																					24.1	
-M2- 9324+52																1.6						
-M2- 9324+84																					46.6	REMOVE EXIST. DI
-M2-9327+50																						
-M2- 9327+50																5.2						25' IN SOIL, 25' NOT IN SOIL
-SVC- 12+27					1					1	1											INSTALL 3GI TYPE 'A'
-SVC- 12+17																					30	REMOVE EXIST. CB AND 2 DI's
-SVC- 12+12															1							
-SVC- 12+46																						
-SVC- 12+82																						
-SVC- 13+07																						
-SVC- 13+32																						
-M2- 9343+87																						
-M2- 9343+69																33.5						25' IN SOIL, 25' NOT IN SOIL
-M2- 9343+60																						
-M2- 9353+37																					23.3	
SHEET 3-B TOTALS					1					1	1				1	110.6				1	326.7	

ABBREVIATIONS

C.B.	CATCH BASIN
N.D.I.	NARROW DROP INLET
D.I.	DROP INLET
G.D.I.	GRATED DROP INLET
G.D.I.(N.S.)	(NARROW SLOT)
J.B.	JUNCTION BOX
M.H.	MANHOLE
T.B.D.I.	TRAFFIC BEARING DROP INLET
T.B.J.B.	TRAFFIC BEARING JUNCTION BOX

0164DEL_P10b2
SANDRA-LAPTOP

COMPUTED BY:	S.MELVIN	DATE:	11/9/2012
CHECKED BY:	DBP	DATE:	12/12/2012

NORTH CAROLINA DEPARTMENT OF TRANSPORTATION
DIVISION OF HIGHWAYS

PROJECT NO.	SHEET NO.
P-5206C	3-C

Note: Invert Elevations indicated are for Bid Purposes only and shall not be used for project construction stakeout.
See "Standard Specifications For Roads and Structures, Section 300-5".

LIST OF PIPES, ENDWALLS, ETC. (FOR PIPES 48 INCHES & UNDER)

STATION	LOCATION (LT, RT, OR CL)	STRUCTURE NO. FROM	STRUCTURE NO. TO	TOP ELEVATION	INVERT ELEVATION	INVERT ELEVATION	SLOPE CRITICAL	DRAINAGE PIPE (RCP, CSP, CAAP, HDPE, or PVC) 12"	15"	18"	24"	30"	36"	42"	48"	DO NOT USE RCP	DO NOT USE CSP	DO NOT USE CAAP	DO NOT USE HDPE	B.C.C.M. PIPE 12" .064	15" .064	18" .064	24" .064	30" .079	36" .079	42" .109	48" .109
-M2- 9357+82	RT																										
-M2- 9357+55	LT	C1501																									
-M2- 9360+95	LT	C1502							32																		
-M2- 9360+87	LT																										
-M2- 9370+43	RT																										
-Y8- 11+71	RT	C1601	C1602		838.14	838.32																					
-Y8- 11+65	RT	C1602		841.7																							
-Y8- 11+59	CL	C1602	C1603		838.42	838.60																					
-Y8- 11+54	LT	C1603		841.6																							
-Y8- 11+30	RT	C1602	C1604		838.42	839.80																					
-Y8- 10+96	RT	C1604		842.8																							
-Y8- 12+49	CL																										
-M2- 9381+17	RT																										
-Y9- 12+81	CL																										
-Y9- 13+42	CL																										
-Y9- 13+97	CL																										
-Y10-10+40	CL	C18A01	C18A02		800.50	802.97																					
-Y10- 10+40	LT	C18A02		806.26																							
-Y10- 10+33	LT	C18A02	C18A03		803.07	804.75																					
-Y10- 10+25	LT	C18A03																									
-Y10- 10+87	LT	C18A02	C18A04		803.07	803.51																					
-Y10- 11+34	LT	C18A04		806.51																							
-Y10- 12+23	LT	C18A04	C18A05		803.61	804.96																					
-Y10- 13+13	LT	C18A05		807.96																							
-Y10- 14+92	LT	C18A08	C18A09		805.20	805.40																					
-Y10- 14+93	LT	C180A9		811.18																							
-Y10- 14+93	CL	C18A09	C18A10		805.50	805.83																					
-Y10- 14+93	RT	C18A10		809.00																							
-M2- 9404+06	RT	C18A10	C18A11		805.93	821.00																			100			
-Y10- 16+31	LT	C18A09	C18A12		806.21	817.48																					
-Y10- 17+70	LT	C18A12		821.73																							
-Y10- 19+11	LT	C18A12	C18A13		817.58	824.81																					
-Y10- 20+48	LT	C18A13		829.06																							
-Y10- 20+47	CL	C18A13	C18A14		824.91	826.00																					
-Y10- 20+45	RT	C18A14		829.00																							
-Y10- 20+75	LT	C18A13	C18A15		824.91	825.24																					
-Y10- 21+02	LT	C18A15		830.64																							
-Y10- 21+01	LT	C18A15	C18A16		825.34	826.77																					
-YJ- 12+34	LT	C18A16		829.77																							
SHEET 3-C TOTALS									32															100			

STATION	R.C. PIPE CLASS III 12"	15"	18"	24"	30"	36"	42"	48"	R.C. PIPE CLASS IV 12"	15"	18"	24"	30"	36"	42"	48"	36" WELDED STEEL PIPE, 0.50" THICK GRADE B IN SOIL	36" WELDED STEEL PIPE, 0.50" THICK GRADE B NOT IN SOIL	36" WELDED STEEL PIPE, 0.50" THICK GRADE B (OPEN CUT)	42" WELDED STEEL PIPE, 0.625" THICK GRADE B IN SOIL	42" WELDED STEEL PIPE, 0.625" THICK GRADE B NOT IN SOIL	42" WELDED STEEL PIPE, 0.625" THICK GRADE B (OPEN CUT)	48" WELDED STEEL PIPE, 0.625" THICK GRADE B IN SOIL	48" WELDED STEEL PIPE, 0.625" THICK GRADE B NOT IN SOIL	48" WELDED STEEL PIPE, 0.625" THICK GRADE B (OPEN CUT)	
-M2- 9357+82																										
-M2- 9357+55																										
-M2- 9360+95																										
-M2- 9360+87																										
-M2- 9370+43																										
-Y8- 11+71		36																								
-Y8- 11+65																										
-Y8- 11+59										36																
-Y8- 11+54																										
-Y8- 11+30										64																
-Y8- 10+96																										
-Y8- 12+49																										
-M2- 9381+17																										
-Y9- 12+81																										
-Y9- 13+42																										
-Y9- 13+97																										
-Y10-10+40										56																
-Y10- 10+40																										
-Y10- 10+33		44																								
-Y10- 10+25																										
-Y10- 10+87										88																
-Y10- 11+34																										
-Y10- 12+23										176																
-Y10- 13+13																										
-Y10- 14+92						24																				
-Y10- 14+93 (LT)																										
-Y10- 14+93 (CL)													40													
-Y10- 14+93 (RT)																										
-M2- 9404+06																										
-Y10- 16+31													276													
-Y10- 17+70																										
-Y10- 19+11													276													
-Y10- 20+48																										
-Y10- 20+47										24																
-Y10- 20+45																										
-Y10- 20+75													52													
-Y10- 21+02																										
-Y10- 21+01										40																
-YJ- 12+34																										
SHEET 3-C TOTALS		80				24				484			644													

STATION	ENDWALLS STD. 838.01 838.11 OR STD. 838.80 (UNLESS NOTED OTHERWISE) CU. YARDS	QUANTITIES FOR DRAINAGE STRUCTURES PER EACH (0' THRU 5.0')	*TOTAL L.F. FOR PAY QUANTITY SHALL BE COL. 'A' + (1.3 X COL.'B') LIN. FT. A 5.0' THRU 10.0'	B 10.0' AND ABOVE	C.B. STD. 840.01 OR STD. 840.02	FRAME, GRATES, AND HOOD STANDARD 840.03 TYPE OF GRATE E	F	G	CONCRETE TRANSITIONAL SECTION DROP INLET	CATCH BASIN
-M2- 9357+82										
-M2- 9357+55										
-M2- 9360+95										
-M2- 9360+87										
-M2- 9370+43										
-Y8- 11+71										
-Y8- 11+65		1			1		1			
-Y8- 11+59										
-Y8- 11+54		1			1			1		
-Y8- 11+30										
-Y8- 10+96		1			1		1			
-Y8- 12+49										
-M2- 9381+17										
-Y9- 12+81										
-Y9- 13+42										
-Y9- 13+97										
-Y10-10+40										
-Y10- 10+40		1			1	1				
-Y10- 10+33										
-Y10- 10+25		1								
-Y10- 10+87										
-Y10- 11+34		1			1		1			
-Y10- 12+23										
-Y10- 13+13		1			1		1			
-Y10- 14+92	3.4									
-Y10- 14+93 (LT)		1	0.78		1		1			
-Y10- 14+93 (CL)										
-Y10- 14+93 (RT)		1								
-M2- 9404+06	2.0									
-Y10- 16+31										
-Y10- 17+70		1			1		1			
-Y10- 19+11										
-Y10- 20+48		1			1		1			
-Y10- 20+47										
-Y10- 20+45		1			1			1		
-Y10- 20+75										
-Y10- 21+02		1	0.4							
-Y10- 21+01										
-YJ- 12+34		1			1		1			
SHEET 3-C TOTALS	5.4	14	1.18		11	1	8	2		

STATION	D.I. STD. 840.14 OR STD. 840.15	D.I. FRAME AND GRATES STD. 840.16	G.D.I. TYPE "A" STD. 840.17 OR 840.26		G.D.I. TYPE "D" STD. 840.19 OR 840.28			G.D.I. (N.S.) FRAME WITH GRATE STD. 840.24	G.D.I. (N.S.) FRAME WITH TWO GRATES STD. 840.24	T.B.J.B. STD. 840.34	FRAME WITH COVER STD. 840.54		CONVERT D.I. TO CB	FLOWABLE FILL, C.Y.	B.C.C.M.P. ELBOWS NO. & SIZE	CONC. & BRICK PIPE PLUG, C.Y. STD. 840.71	CONC. FLUME	PIPE CLEAN-OUT	PIPE REMOVAL LIN. FT.	REMARKS
-M2- 9357+82																		1		
-M2- 9357+55																	1			
-M2- 9360+95																				
-M2- 9360+87																		1		
-M2- 9370+43																			10	
-Y8- 11+71																				
-Y8- 11+65																				
-Y8- 11+59																				
-Y8- 11+54																				
-Y8- 11+30																				
-Y8- 10+96																			60.5	REMOVE EXIST. DI AND CB
-Y8- 12+49																			60.5	REMOVE EXIST. DI AND CB
-M2- 9381+17																		1		
-Y9- 12+81																			44.4	
-Y9- 13+42																			36.4	
-Y9- 13+97																			34.4	
-Y10-10+40																				
-Y10- 10+40																				
-Y10- 10+33																				
-Y10- 10+25	1	1																		
-Y10- 10+87																				
-Y10- 11+34																				
-Y10- 12+23																				
-Y10- 13+13																				
-Y10- 14+92																				
-Y10- 14+93 (LT)																				
-Y10- 14+93 (CL)																				
-Y10- 14+93 (RT)					1				1											
-M2- 9404+06															2 @ 30"					
-Y10- 16+31																				
-Y10- 17+70																				
-Y10- 19+11																				
-Y10- 20+48																				
-Y10- 20+47																				
-Y10- 20+45																				
-Y10- 20+75																			33.6	
-Y10- 21+02										1	1									REMOVE 2 EX. CB's
-Y10- 21+01																				
-YJ- 12+34																				
SHEET 3-C TOTALS	1	1			1				1	1	1				2 @ 30"		1	3	279.8	

ABBREVIATIONS

C.B.	CATCH BASIN
N.D.I.	NARROW DROP INLET
D.I.	DROP INLET
G.D.I.	GRATED DROP INLET
G.D.I.(N.S.)	(NARROW SLOT)
J.B.	JUNCTION BOX
M.H.	MANHOLE
T.B.D.I.	TRAFFIC BEARING DROP INLET
T.B.J.B.	TRAFFIC BEARING JUNCTION BOX

0164DEL_P10b2

SANDRA-LAPTOP

COMPUTED BY: S.MELVIN DATE: 11/9/2012

CHECKED BY: DBP DATE: 12/12/2012

NORTH CAROLINA DEPARTMENT OF TRANSPORTATION
DIVISION OF HIGHWAYS

PROJECT NO.	SHEET NO.
P-5206C	3-D

Note: Invert Elevations indicated are for Bid Purposes only and shall not be used for project construction stakeout. See "Standard Specifications For Roads and Structures, Section 300-5".

LIST OF PIPES, ENDWALLS, ETC. (FOR PIPES 48 INCHES & UNDER)

STATION	LOCATION (LT, RT, OR CL)*	STRUCTURE NO. FROM	STRUCTURE NO. TO	TOP ELEVATION	INVERT ELEVATION	INVERT ELEVATION	SLOPE CRITICAL	DRAINAGE PIPE (RCP, CSP, CAAP, HDPE, or PVC) SIZE 12"	15"	18"	24"	30"	36"	42"	48"	DO NOT USE RCP	DO NOT USE CSP	DO NOT USE CAAP	DO NOT USE HDPE
								THICKNESS OR GAUGE											
-M2- 9425+76	RT	C2001																	
-M2- 9425+76	CL	C2001	C2002		824.50	821.44													
-M2- 9433+60	LT																		
-M2- 9433+60	RT																		
-M2- 9433+97	RT																		
SHEET 3-D TOTALS																			
SHEET 3-B TOTALS												60	20						
SHEET 3-C TOTALS								32					24						
SHEET 3-E TOTALS																			
PROJECT TOTALS								32				60	44						

STATION	B.C.C.M. PIPE 12"	15"	18"	24"	30"	36"	42"	48"	R.C. PIPE CLASS III 12"	15"	18"	24"	30"	36"	42"	48"	R.C. PIPE CLASS IV 12"	15"	18"	24"	30"	36"	42"	48"
	.064	.064	.064	.064	.079	.079	.109	.109																
-M2- 9425+76																								
-M2- 9425+76																								
-M2- 9433+60																								
-M2- 9433+60																								
-M2- 9433+97																								
SHEET 3-D TOTALS																								
SHEET 3-B TOTALS			116		40	32																		
SHEET 3-C TOTALS	100		484		644																			
SHEET 3-E TOTALS																								
PROJECT TOTALS	100		600		684	32																		

STATION	ENDWALLS STD. 838.01 838.11 OR STD. 838.80 (UNLESS NOTED OTHERWISE) CU. YARDS	36" WELDED STEEL PIPE, 0.50" THICK GRADE B IN SOIL	36" WELDED STEEL PIPE, 0.50" THICK GRADE B NOT IN SOIL	36" WELDED STEEL PIPE, 0.50" THICK GRADE B (OPEN CUT)	42" WELDED STEEL PIPE, 0.625" THICK GRADE B IN SOIL	42" WELDED STEEL PIPE, 0.625" THICK GRADE B NOT IN SOIL	42" WELDED STEEL PIPE, 0.625" THICK GRADE B (OPEN CUT)	48" WELDED STEEL PIPE, 0.625" THICK GRADE B IN SOIL	48" WELDED STEEL PIPE, 0.625" THICK GRADE B NOT IN SOIL	48" WELDED STEEL PIPE, 0.625" THICK GRADE B (OPEN CUT)
-M2- 9425+76	3.4									
-M2- 9425+76	3.4	25	25	42						
-M2- 9433+60										
-M2- 9433+60										
-M2- 9433+97										
SHEET 3-D TOTALS	6.8	25	25	42						
SHEET 3-B TOTALS	35	50	50	80	50	50	156			
SHEET 3-C TOTALS	5.4									
SHEET 3-E TOTALS										
PROJECT TOTALS	47.2	75	75	122	50	50	156			
	SAY 50									

STATION	QUANTITIES FOR DRAINAGE STRUCTURES "TOTAL L.F. FOR PAY QUANTITY SHALL BE COL. "A" + (1.3 X COL. "B") LIN. FT. PER EACH (0' THRU 5.0')	5.0' THRU 10.0' A	10.0' AND ABOVE B	C.B. STD. 840.01 OR STD. 840.02	FRAME, GRATES, AND HOOD STANDARD 840.03 TYPE OF GRATE E	F	G	CONCRETE TRANSITIONAL SECTION DROP INLET	CATCH BASIN	D.I. STD. 840.14 OR STD. 840.15	D.I. FRAME AND GRATES STD. 840.16	G.D.I. TYPE "A" STD. 840.17 OR 840.26	G.D.I. TYPE "D" STD. 840.19 OR 840.28		G.D.I. (N.S.) FRAME WITH GRATE STD. 840.24	G.D.I. (N.S.) FRAME WITH TWO GRATES STD. 840.24	T.B.J.B. STD. 840.34	FRAME WITH COVER STD. 840.54	CONVERT D.I. TO CB	FLOWABLE FILL, C.Y.	B.C.C.M.P. ELBOWS NO. & SIZE	CONC. & BRICK PIPE PLUG, C.Y. STD. 840.71	CONC. FLUME	PIPE CLEAN-OUT	PIPE REMOVAL LIN. FT.	REMARKS
-M2- 9425+76																								
-M2- 9425+76																			23.1					
-M2- 9433+60																							78.7	
-M2- 9433+60																							80.7	
-M2- 9433+97																							20.2	
SHEET 3-D TOTALS																			23.1				179.8	
SHEET 3-B TOTALS		5	6.59		4	2	2	1				1			1	1		1	110.6			1	326.7	
SHEET 3-C TOTALS		14	1.18		11	1	8	2		1	1		1			1	1	1		2 @ 30"		1	3 279.8	
SHEET 3-E TOTALS																			88.9					
PROJECT TOTALS		19	7.77		15	3	10	3		1	1	1	1		1	2	1	1	222.6	2 @ 30"		1	4 786.1	
			7.77																SAY 240				SAY 800	
			SAY 8																					

ABBREVIATIONS

C.B.	CATCH BASIN
N.D.I.	NARROW DROP INLET
D.I.	DROP INLET
G.D.I.	GRATED DROP INLET
G.D.I.(N.S.)	(NARROW SLOT)
J.B.	JUNCTION BOX
M.H.	MANHOLE
T.B.D.I.	TRAFFIC BEARING DROP INLET
T.B.J.B.	TRAFFIC BEARING JUNCTION BOX

0164DEL_P10b2

SANDRA-LAPTOP

COMPUTED BY:	S.MELVIN	DATE:	11/9/2012
CHECKED BY:	DBP	DATE:	12/12/2012

PROJECT NO.	SHEET NO.
P-5206C	3-E

NORTH CAROLINA DEPARTMENT OF TRANSPORTATION
DIVISION OF HIGHWAYS

Note: Invert Elevations indicated are for Bid Purposes only and shall not be used for project construction stakeout. See "Standard Specifications For Roads and Structures, Section 300-5".

LIST OF PIPES, ENDWALLS, ETC. (FOR PIPES 54" & OVER)

STATION	LOCATION (LT, RT, OR CL)'	STRUCTURE NO. FROM	STRUCTURE NO. TO	TOP ELEVATION	INVERT ELEVATION	INVERT ELEVATION	SLOPE CRITICAL	CLASS III R.C. PIPE (UNLESS NOTED OTHERWISE) SIZE	CLASS III R.C. PIPE (UNLESS NOTED OTHERWISE) THICKNESS OR GAUGE	C.S. PIPE SIZE	C.S. PIPE THICKNESS OR GAUGE	STRUCTURAL PLATE PIPE SIZE	STRUCTURAL PLATE PIPE THICKNESS OR GAUGE	54" WELDED STEEL PIPE, 0.75" THICK GRADE B IN SOIL	54" WELDED STEEL PIPE, 0.75" THICK GRADE B NOT IN SOIL	54" WELDED STEEL PIPE, 0.75" THICK GRADE B (OPEN CUT)	REINFORCED ENDWALLS WITH R.C. - C.Y.	REINFORCED ENDWALLS WITH C.S. - C.Y.	MASONRY DRAINAGE STRUCTURES CUBIC YARDS	C.B. STD. 840.01 OR 840.02	FRAMES, GRATES & HOOD STANDARD 840.03 TYPE OF GRATE	CONCRETE TRANSITIONAL SECTION	FLOWABLE FILL, C.Y.	REINF. CONC. FLARED END SECTIONS NO. & SIZE	CORR. STEEL FLARED END SECTIONS NO. & Sizes	CORR. STEEL ELBOWS NO. & SIZE	CONC. COLLARS CL. "B" C.Y. STD. 840.72	PIPE REMOVAL LIN. FT.	REMARKS
-M2- 9407+44	LT	C18A06																5.2												
-M2- 9407+44	CL	C18A06	C18A07		804.30	803.60								25	25	90		5.2						88.9						25' IN SOIL, 25' NOT IN SOIL
SHEET 3-E TOTALS														25	25	90		10.4						88.9						
																		SAY 15												

ABBREVIATIONS

C.B.	CATCH BASIN
N.D.I.	NARROW DROP INLET
D.I.	DROP INLET
G.D.I.	GRATED DROP INLET
G.D.I.(N.S.)	(NARROW SLOT)
J.B.	JUNCTION BOX
M.H.	MANHOLE
T.B.D.I.	TRAFFIC BEARING DROP INLET
T.B.J.B.	TRAFFIC BEARING JUNCTION BOX

0164DEL_P10b2

PROJ. REFERENCE NO.	SHEET NO.
P-5206C	3-F

STATE OF NORTH CAROLINA
DIVISION OF HIGHWAYS

PARCEL INDEX

PARCEL No.	SHEET No.	PROPERTY OWNER NAME		
1C	5	PROPST SAM JONES		
2C	5	GRANT HATTIE MAE		
3C	5	HARDING WALTER, HARDING BOBBIE		
4C	7	GROVE SUPPLY CO INC		
5C	8	KEYSTONE NORTH CAROLINA INC LINN HONEYCUTT FUNERAL HOME		
6C	9	HAYNES LARRY STEWART & WF HAYNES PHYLLIS M		
7C	10	KNIGHT FAYE WAGONER		
8C	11	ALLEN, JEFFERY O'BRIAN		
9C	11	WALTERS, LARRY CHRISTOPHER & WF		
10C	12	CURIEL PAULINO & WF CURIEL SILVIA G		
11C	13	UNKNOWN		
12C	13	UNKNOWN		
13C	13	UNKNOWN		
14C	13	CABARRUS RESTAURANT GROUP		
15C	13	ROWAN HEALTH SERVICES CORP.		
16C	13	RAYMOND L. LASSITER, D.D.S.		
17C	13	UNKNOWN		
18C	14	UNKNOWN		
19C	14&15	STARNES GERALD W JR & WF STARNES JENNIFER W		
20C	15	UNKNOWN		
21C	15	UNKNOWN		
22C	15	UNKNOWN		
23C	16	SHEFFIELD, LOUIS E & WF		
24C	16	CORREL, JASON BRIAN & ADAMS, BRANDI LEE		
25C	16	ROWAN REGIONAL MEDICAL CENTER		
26C	16	EVA B. STEWART		
27C	16	EVA B. STEWART		
28C	16	ALLEN & BARBARA WELTER		
29C	17	CH OAK GROVE BAPTIST		
30C	17&18	CH LUTHERAN CHURCH		
31C	18&18A	MT ZION UNITED CHURCH OF CHRIST		
32C	18&18A	CRAFT DEVELOPMENT LLC		
33C	18A	MT ZION UNITED CHURCH OF CHRIST		
34C	18A	CONCORD TELEPHONE CO		
35C	NUMBER NOT USED			
36C	18A	RACHEL G EFIRD		
37C	18A	BITTLE DEAL		
38C	18A	MT ZION UNITED CHURCH OF CHRIST		
39C	18A	DAYVAULT FAMILY LTD PARTNERSHIP		
40C	18A	JAMES E & KATHERINE B KIMBALL		
41C	18A	WILSON PROFESSIONAL REALTY LLC		
42C	18A	DUKE POWER EASEMENT		
43C	18A	MT ZION UNITED CHURCH OF CHRIST		
44C	19	CH MEMORIAL INDEPENDENT BPST		
45C	20	PLUMBING SHOP INC		
46C	20	HAGER THOMAS S & WF HAGER CAROLYN		
47C	12	TUSCARORA YARNS INC		
48C	12	GOODMAN FARM SUPPLY		
49C	12	CH ST MARKS LUTHERAN		
50C	12	MILLER KENNETH W		
51C	12	HISTORICAL SOCIETY OF CHINA GROVE		
52C	7 & 8	COPART OF CONNECTICUT INC		
53C	8	STRIPLINMG BILLIE R & COPART		
54C	11	BOWMAN BILLY GRAY & FRYE JESSE F JR ETAL		
55C	11	TOWN OF CHINA GROVE		
56C	11	FESPERMAN DARRWEN & WF RHONDA		
57C	11	ASHLEY JERRY L & WF ASHLEY LUCY T		
58C	11	TUSCARORA YARNS INC		
59C-A	5 & 6	ALLEN & BARBARA WELTER		
59C-B	6	CHARLES E. CLINE, JR AND AUDRA L. CLINE		
60C	6	NCDOT		
61C	6	PHILLIS CAROL DEANNE TURNER & PHILLIS FORREST ALLEN		
62C	16	JORDAN IRENE RUTH LONG		
63C	18A	RANDY DEAN FLEMEING		
64C	18A	LLOYD J & POLLY HARWOOD		
65C	18A	PRIMOJUSTICE PROPERTIES, LLC		

0164DEL_P10b2

COMPUTED BY: ____ Bahi CHECKED BY: _____ Russ	(2-19-13)	PROJECT NO. P-5206C	SHEET NO. 3-G

STATE OF NORTH CAROLINA
DIVISION OF HIGHWAYS

SUMMARY OF BRIDGE WAITING PERIODS

Bridge Description	End Bent/ Bent No.	MONTHS
RR Bridge Over Kimball Road	1	2
RR Bridge Over Kimball Road	2	2

SUMMARY OF EMBANKMENT WAITING PERIODS

LINE	Station	Station	MONTHS
-M2-	9340+00	9351+00	2
-M2-	9363+00	9365+00	2
-M2-	9401+00	9415+00	2

SUMMARY OF SETTLEMENT GAUGES

Gauge No.	LINE	Approx. Station	Approx. Offset
15	-M1-	9403+00	CL
16	-M1-	9403+20	CL
17	-M1-	9405+40	CL
18	-M1-	9405+60	CL
1	-M2-	9341+50	15 FT. LT.
2	-M2-	9342+50	15 FT. LT.
3	-M2-	9343+50	15 FT. LT.
4	-M2-	9344+50	15 FT. LT.
5	-M2-	9345+50	15 FT. LT.
6	-M2-	9346+50	15 FT. LT.
7	-M2-	9347+50	15 FT. LT.
8	-M2-	9348+50	15 FT. LT.
9	-M2-	9349+50	15 FT. LT.
10	-M2-	9350+50	15 FT. LT.
11	-M2-	9363+50	15 FT. LT.
12	-M2-	9364+50	15 FT. LT.
13	-M2-	9401+50	15 FT. LT.
14	-M2-	9402+50	15 FT. LT.
19	-M2-	9406+50	15 FT. LT.
20	-M2-	9407+50	15 FT. LT.
21	-M2-	9408+50	15 FT. LT.
22	-M2-	9409+50	15 FT. LT.
23	-M2-	9410+50	15 FT. LT.
24	-M2-	9411+50	15 FT. LT.
25	-M2-	9412+50	15 FT. LT.
26	-M2-	9413+50	15 FT. LT.
27	-M2-	9414+50	15 FT. LT.
	TOTAL GAUGES (EACH):		27

0001ADD_P10b2
0164DEL_P10b2

FOR TRACK GEOMETRY DATA SEE SHT 2-E & 2-F

NOTE: ALL TRACKWORK WILL BE PERFORMED BY NORFOLK SOUTHERN OR ITS CONTRACTOR.

PROJECT REFERENCE NO.	SHEET NO.
P-5206C	4
R/W SHEET NO.	
RAIL DESIGN ENGINEER	HYDRAULICS ENGINEER

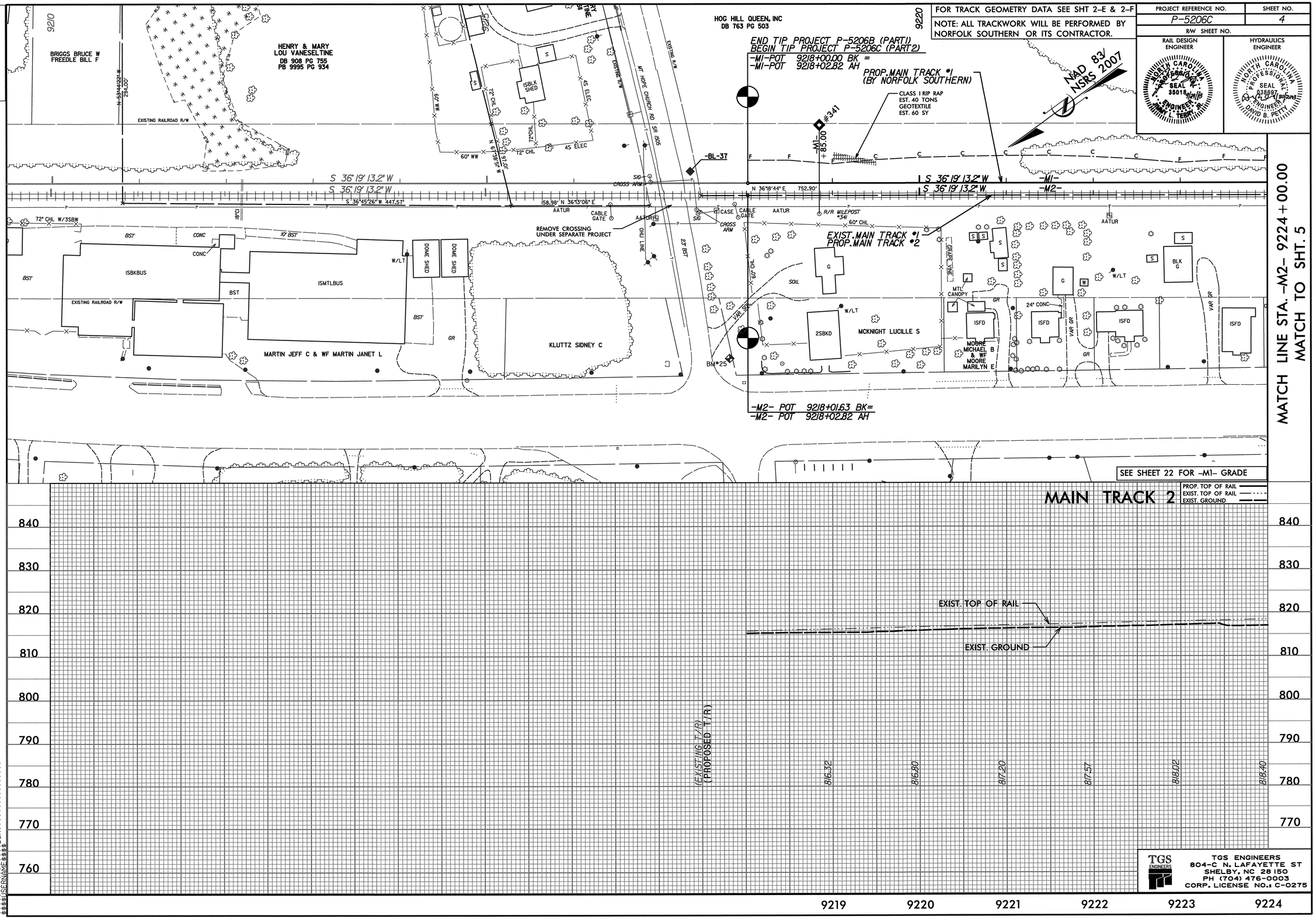

MATCH LINE STA. -M2- 9224+00.00
MATCH TO SHT. 5

TGS ENGINEERS
804-C N. LAFAYETTE ST
SHELBY, NC 28150
PH (704) 476-0003
CORP. LICENSE NO.: C-0275

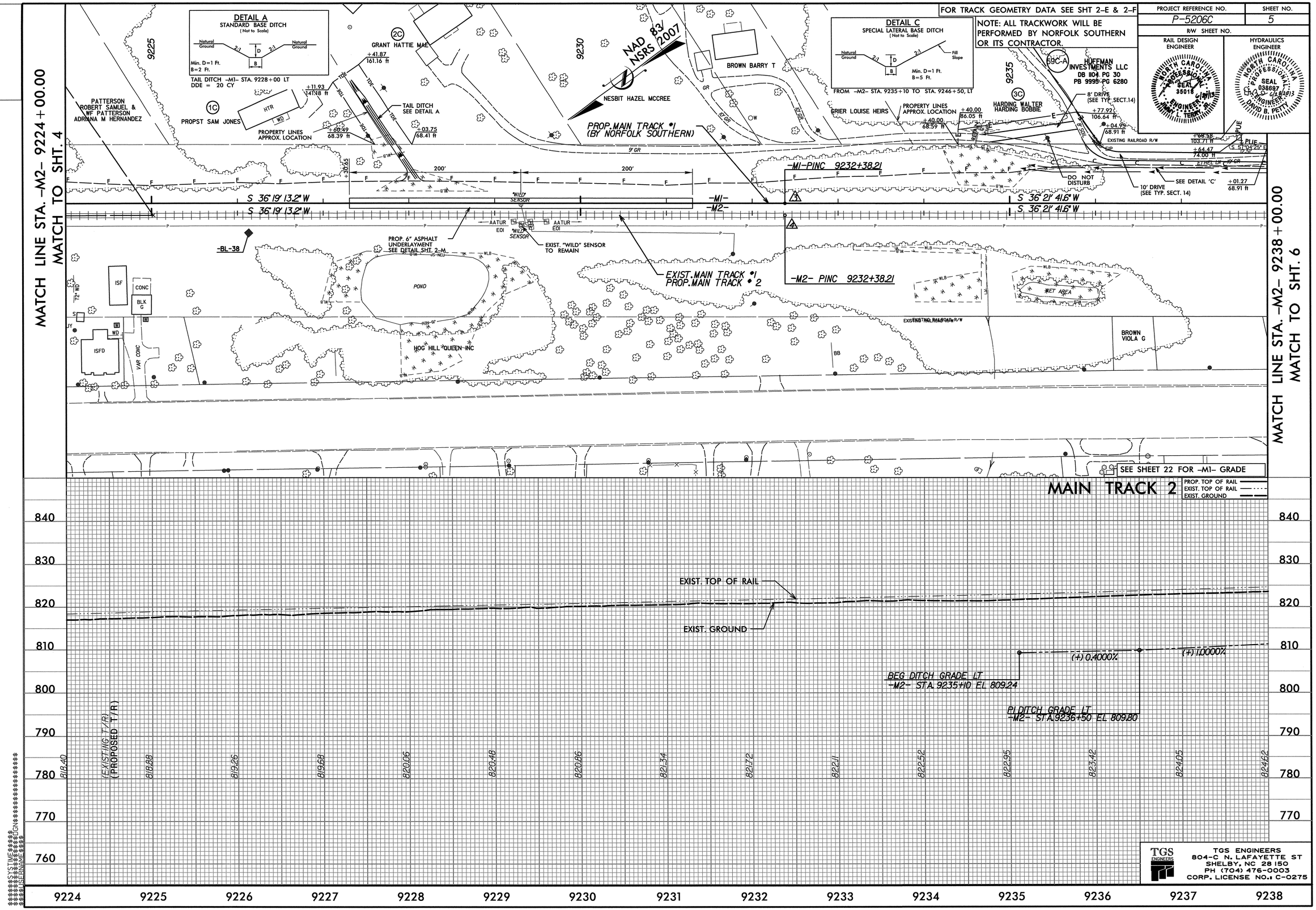

FOR TRACK GEOMETRY DATA SEE SHT 2-E & 2-F
NOTE: ALL TRACKWORK WILL BE PERFORMED BY NORFOLK SOUTHERN OR ITS CONTRACTOR.
PROJECT REFERENCE NO.
P-5206C
SHEET NO.
5
R/W SHEET NO.
RAIL DESIGN ENGINEER
HYDRAULICS ENGINEER
DETAIL A
STANDARD BASE DITCH
(Not to Scale)
Min. D=1 Ft.
B=2 Ft.
TAIL DITCH -M1- STA. 9228+00 LT
DDE = 20 CY
DETAIL C
SPECIAL LATERAL BASE DITCH
(Not to Scale)
Min. D=1 Ft.
B=5 Ft.
FROM -M2- STA. 9235+10 TO STA. 9246+50, LT
MATCH LINE STA. -M2- 9224+00.00
MATCH TO SHT. 4
MATCH LINE STA. -M2- 9238+00.00
MATCH TO SHT. 6
PATTERSON ROBERT SAMUEL & WF PATTERSON ADRIANA M HERNANDEZ
PROPST SAM JONES
GRANT HATTIE MAE
NESBIT HAZEL MCCREE
BROWN BARRY T
GRIER LOUISE HEIRS
HUFFMAN INVESTMENTS LLC
DB 1104 PG 30
PB 9995 PG 6280
HARDING WALTER HARDING BOBBIE
NAD 83/ NSRS 2007
PROP. MAIN TRACK #1 (BY NORFOLK SOUTHERN)
PROPERTY LINES APPROX. LOCATION
TAIL DITCH SEE DETAIL A
-M1-PINC 9232+38.21
-M2- PINC 9232+38.21
S 36° 19' 13.2" W
S 36° 21' 41.6" W
-M1-
-M2-
-BL-38
PROP. 6" ASPHALT UNDERLAYMENT SEE DETAIL SHT. 2-M
EXIST. "WILD" SENSOR TO REMAIN
EXIST. MAIN TRACK #1
PROP. MAIN TRACK #2
POND
HOG HILL QUEEN INC
WET AREA
BROWN VIOLA G
DO NOT DISTURB
10' DRIVE (SEE TYP. SECT. 14)
SEE DETAIL 'C'
8' DRIVE (SEE TYP. SECT. 14)
EXISTING RAILROAD R/W
SEE SHEET 22 FOR -M1- GRADE
MAIN TRACK 2
PROP. TOP OF RAIL
EXIST. TOP OF RAIL
EXIST. GROUND
EXIST. TOP OF RAIL
EXIST. GROUND
(+) 0.4000%
(+) 1.0000%
BEG DITCH GRADE LT -M2- STA. 9235+10 EL 809.24
PI DITCH GRADE LT -M2- STA. 9236+50 EL 809.80
(EXISTING T/R)
(PROPOSED T/R)
818.40
818.88
819.26
819.68
820.06
820.48
820.86
821.34
821.72
822.11
822.52
822.95
823.42
824.05
824.62
840
830
820
810
800
790
780
770
760
9224
9225
9226
9227
9228
9229
9230
9231
9232
9233
9234
9235
9236
9237
9238
TGS ENGINEERS
804-C N. LAFAYETTE ST
SHELBY, NC 28150
PH (704) 476-0003
CORP. LICENSE NO.: C-0275

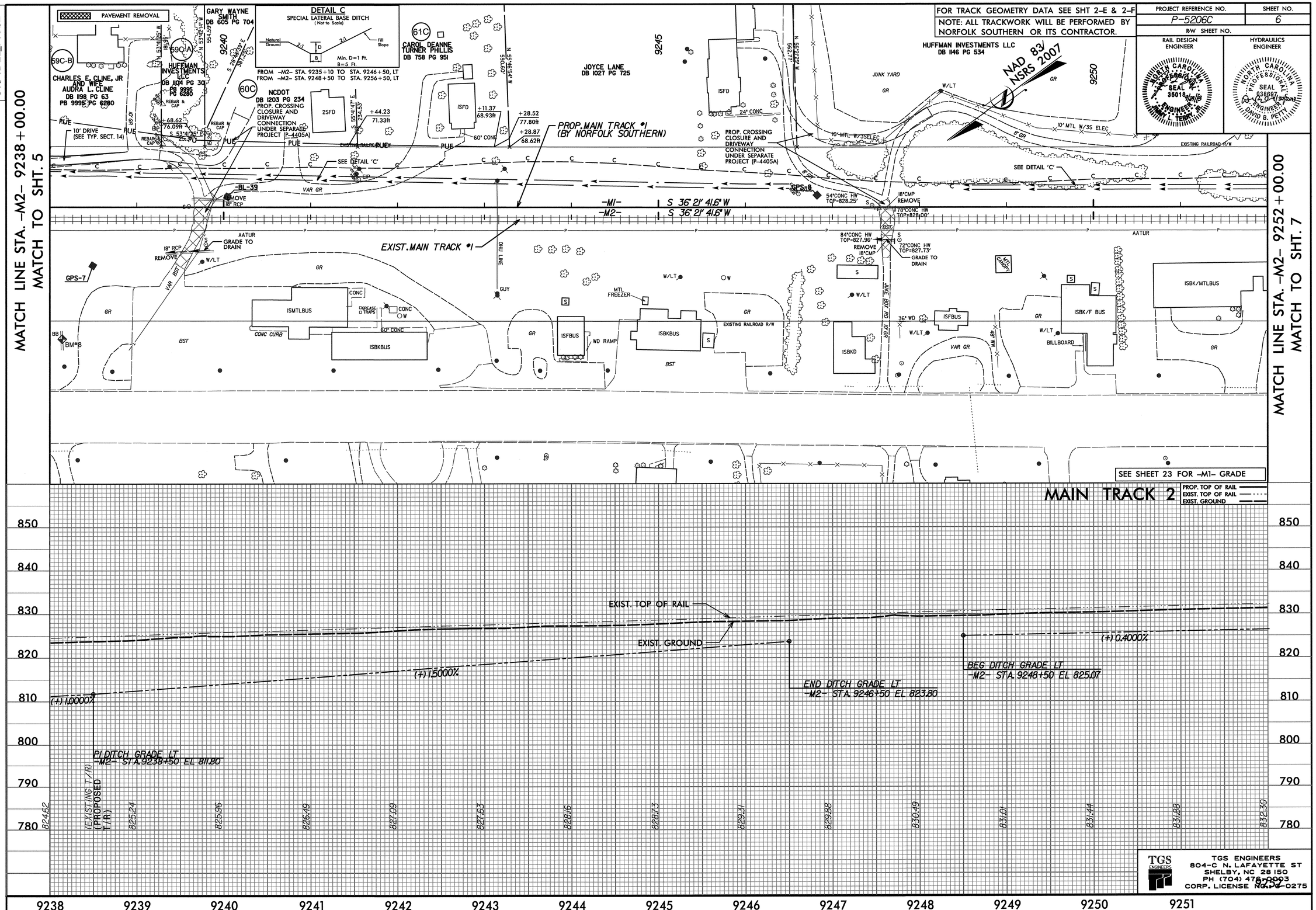

FOR TRACK GEOMETRY DATA SEE SHT 2-E & 2-F
NOTE: ALL TRACKWORK WILL BE PERFORMED BY NORFOLK SOUTHERN OR ITS CONTRACTOR.
PROJECT REFERENCE NO.
P-5206C
SHEET NO.
6
R/W SHEET NO.
RAIL DESIGN ENGINEER
HYDRAULICS ENGINEER
NORTH CAROLINA PROFESSIONAL SEAL 35018 ENGINEER JERRY L. TERRY JR.
NORTH CAROLINA PROFESSIONAL SEAL 038697 ENGINEER DAVID B. PETTY
MATCH LINE STA. -M2- 9238+00.00
MATCH TO SHT. 5
MATCH LINE STA. -M2- 9252+00.00
MATCH TO SHT. 7
PAVEMENT REMOVAL
DETAIL C
SPECIAL LATERAL BASE DITCH
(Not to Scale)
FROM -M2- STA. 9235+10 TO STA. 9246+50, LT
FROM -M2- STA. 9248+50 TO STA. 9256+50, LT
GARY WAYNE SMITH DB 605 PG 704
CHARLES E. CLINE, JR AND WIFE AUDRA L. CLINE DB 1198 PG 63 PB 9995 PG 6280
HUFFMAN INVESTMENTS LLC DB 1104 PG 30 PB 9995 PG 6280
NCDOT DB 1203 PG 234
PROP. CROSSING CLOSURE AND DRIVEWAY CONNECTION UNDER SEPARATE PROJECT (P-4405A)
CAROL DEANNE TURNER PHILLIS DB 758 PG 951
JOYCE LANE DB 1027 PG 725
HUFFMAN INVESTMENTS LLC DB 1146 PG 534
NAD 83/ NSRS 2007
PROP. MAIN TRACK #1 (BY NORFOLK SOUTHERN)
EXIST. MAIN TRACK #1
-M1- S 36° 21' 41.6" W
-M2- S 36° 21' 41.6" W
SEE DETAIL 'C'
SEE SHEET 23 FOR -M1- GRADE
MAIN TRACK 2
PROP. TOP OF RAIL
EXIST. TOP OF RAIL
EXIST. GROUND
EXIST. TOP OF RAIL
EXIST. GROUND
(+) 1.0000%
(+) 1.5000%
(+) 0.4000%
PI DITCH GRADE LT -M2- STA. 9238+50 EL 811.80
END DITCH GRADE LT -M2- STA. 9246+50 EL 823.80
BEG DITCH GRADE LT -M2- STA. 9248+50 EL 825.07
(EXISTING T/R) (PROPOSED T/R)
824.62
825.24
825.96
826.49
827.09
827.63
828.16
828.73
829.31
829.88
830.49
831.01
831.44
831.88
832.30
850
840
830
820
810
800
790
780
9238
9239
9240
9241
9242
9243
9244
9245
9246
9247
9248
9249
9250
9251
TGS ENGINEERS
804-C N. LAFAYETTE ST
SHELBY, NC 28150
PH (704) 476-0003
CORP. LICENSE NO. C-0275

DCN
0001ADD_P10b2
0164DEL_P10b2

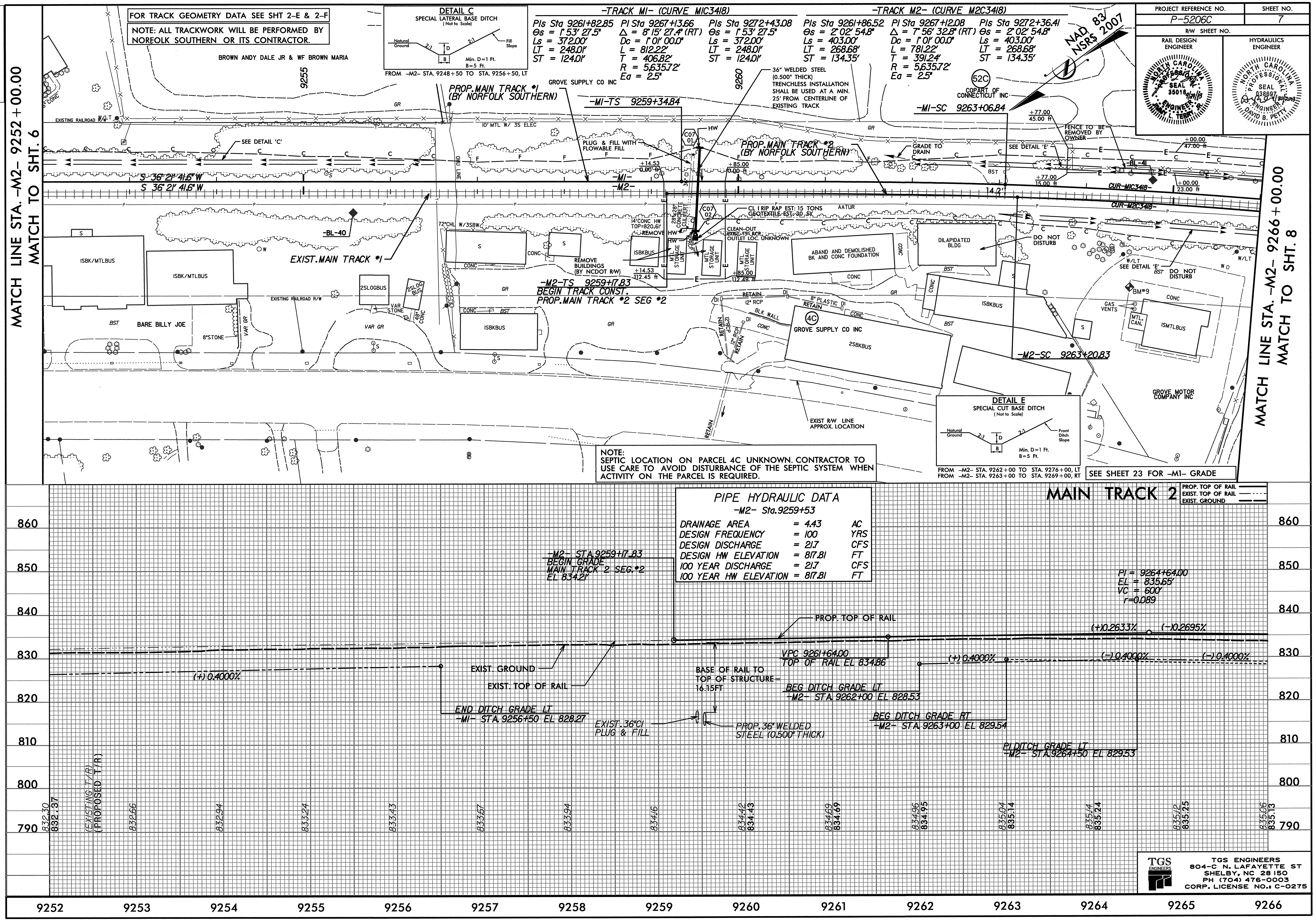

DCN
0001ADD_P10b2
0164DEL_P10b2

PROJECT REFERENCE NO.	SHEET NO.
P-5206C	8
R/W SHEET NO.	
RAIL DESIGN ENGINEER	HYDRAULICS ENGINEER

NORTH CAROLINA PROFESSIONAL ENGINEER SEAL 035018 JIMMY L. TERRY, JR. 9/20/13

NORTH CAROLINA PROFESSIONAL ENGINEER SEAL 038697 DAVID B. PETTY 9/20/2013

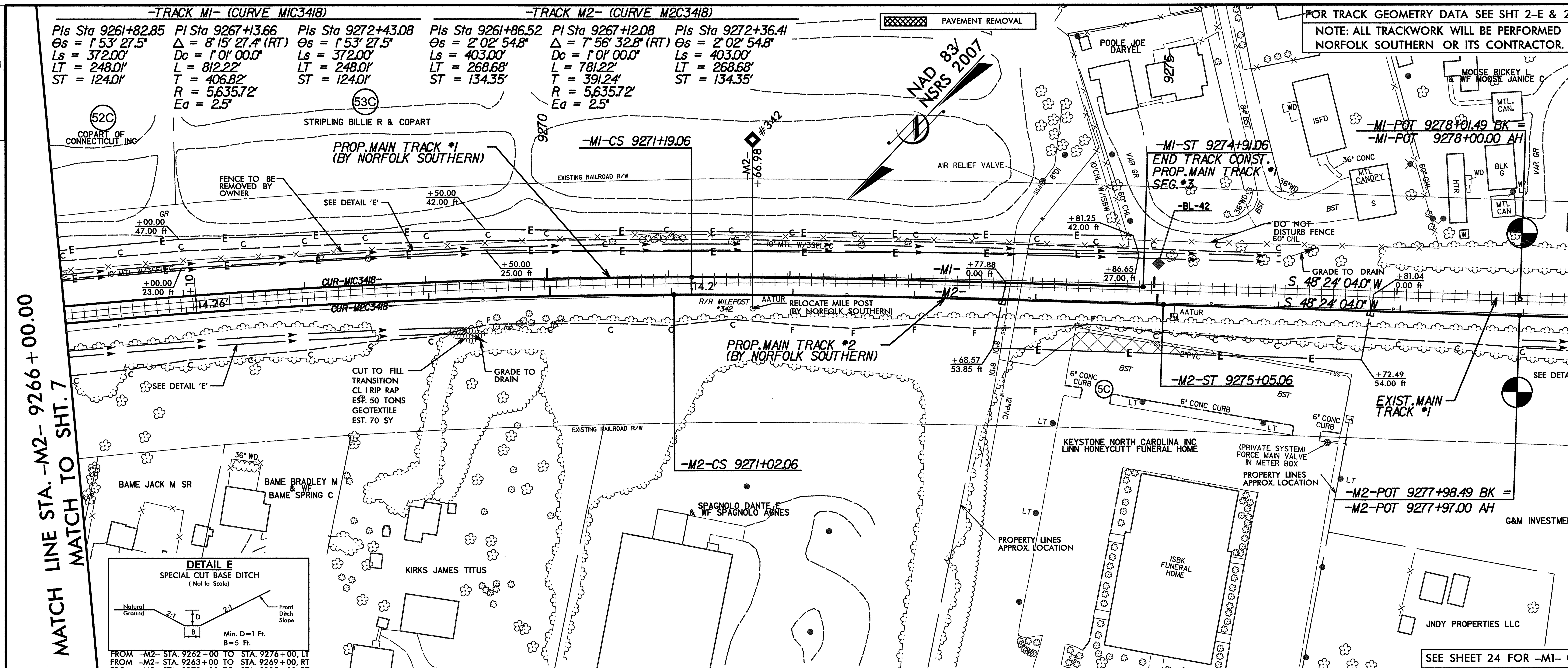

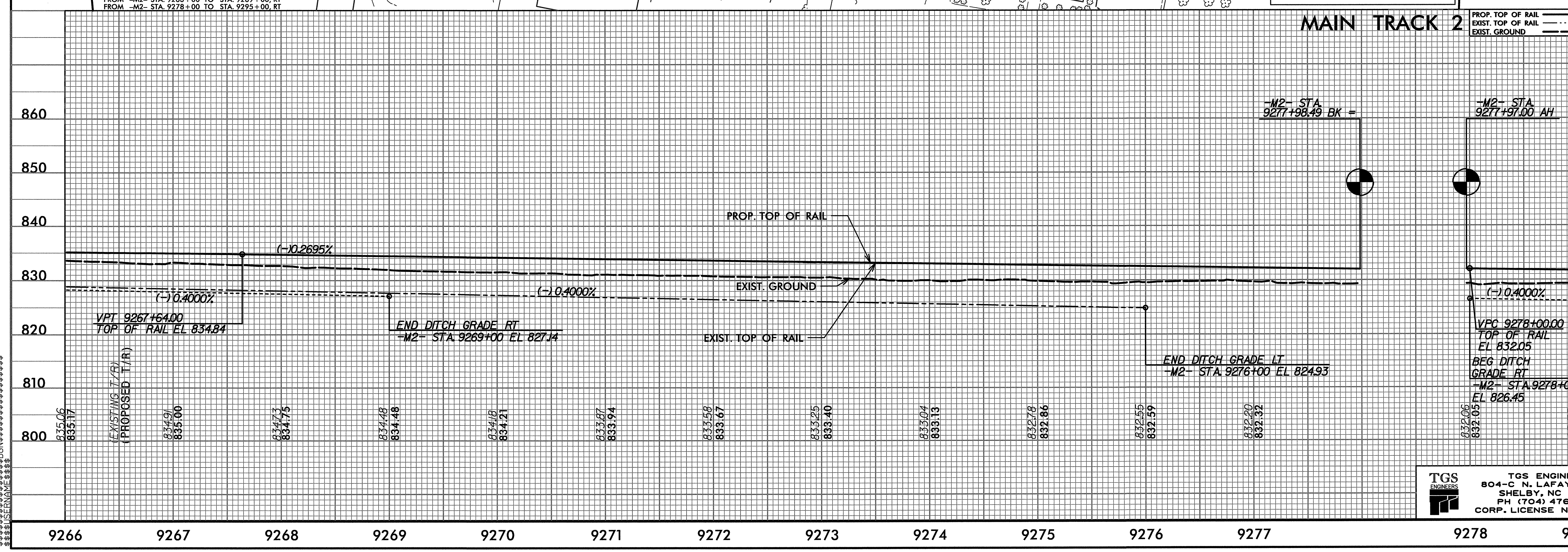

TGS ENGINEERS
804-C N. LAFAYETTE ST
SHELBY, NC 28150
PH (704) 476-0003
CORP. LICENSE NO.: C-0275

$$$$SYSTIME$$$$
$$$$DGN$$$$
$$$$USERNAME$$$$

0001ADD_P10b2
0164DEL_P10b2

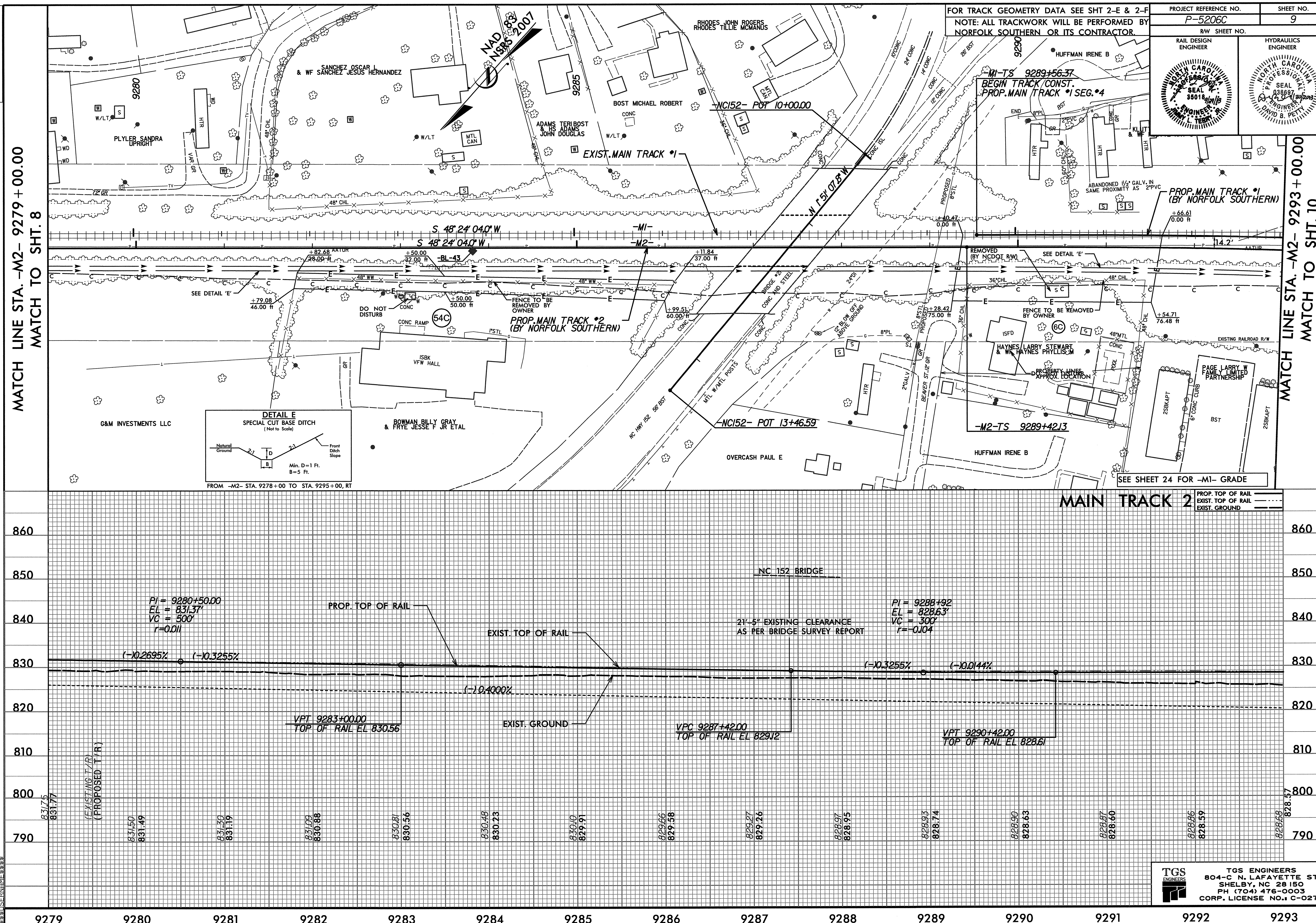

$$$$$$$$SYSTIME$$$$$$$$
$$$$$$$$USERNAME$$$$
$$$$$$$$$$$$$$$$DGN$$$$$$$$$$$$$$$$$$$$

DGN 0001ADD_P10b2 0164DEL_P10b2

-TRACK M1- (CURVE M1C3423)

PIs Sta 9292+87.11
Θs = 3° 43' 11.6"
Ls = 496.00'
LT = 330.74'
ST = 165.40'

PI Sta 9299+52.59
Δ = 14° 55' 16.9" (RT)
Dc = 1° 30' 00.0"
L = 994.76'
T = 500.22'
R = 3,819.83'
Ea = 4"

PIs Sta 9306+12.53
Θs = 3° 43' 11.6"
Ls = 496.00'
LT = 330.74'
ST = 165.40'

-TRACK M2- (CURVE M2C3423)

PIs Sta 9292+72.87
Θs = 3° 40' 42.8"
Ls = 496.00'
LT = 330.74'
ST = 165.40'

PI Sta 9299+46.81
Δ = 15° 00' 14.5" (RT)
Dc = 1° 29' 00.0"
L = 1,011.51'
T = 508.68'
R = 3,862.74'
Ea = 4"

PIs Sta 9306+15.03
Θs = 3° 40' 42.8"
Ls = 496.00'
LT = 330.74'
ST = 165.40'

FOR TRACK GEOMETRY DATA SEE SHT 2-E & 2-F
NOTE: ALL TRACKWORK WILL BE PERFORMED BY NORFOLK SOUTHERN OR ITS CONTRACTOR.

PROJECT REFERENCE NO.	SHEET NO.
P-5206C	10
R/W SHEET NO.	

RAIL DESIGN ENGINEER: NORTH CAROLINA PROFESSIONAL SEAL 35018 ENGINEER TIMOTHY L. TERRY 4/24/18

HYDRAULICS ENGINEER: NORTH CAROLINA PROFESSIONAL SEAL 038897 ENGINEER DAVID B. PETTA 4/30/2018

NAD 83 NSRS 2007

MATCH LINE STA. -M2- 9293+00.00 MATCH TO SHT. 9

MATCH LINE STA. -M2- 9307+00.00 MATCH TO SHT. 11

-M1-SC 9294+52.37

-M2-SC 9294+38.13

-M1-CS 9304+47.13

-M2-CS 9304+49.64

PROP. MAIN TRACK #1 (BY NORFOLK SOUTHERN)

EXIST. MAIN TRACK #1

PROP. MAIN TRACK #2 (BY NORFOLK SOUTHERN)

-M1-

-M2-

CUR-M1C3423

CUR-M2C3423

15.07'

14.2'

-BL-44

-BL-45

SEE DETAIL 'E'

SEE DETAIL 'F'

GRADE TO DRAIN

EXISTING RAILROAD R/W

JORDAN BARBARA ANN 9626

GROVE CONSTRUCTION CO INC

WILSON NORMAN C & WF WILSON JULIA D

HODGE MARVIN L

NORTON GARY W

GOODNIGHT JOE H JR

HERNANDEZ ADRIANA

WELCH STANLEY J JR & WF WELCH RUTHIE B

STONE MICHAEL R & WF STONE PATTIM

FOWLER TREVOR & WOODWARD KERI M

HUFFMAN ST 25' BST

OLD ROCKWELL RD

PAGE LARRY W FAMILY LIMITED PARTNERSHIP

CHINA GROVE TOWN OF

KNIGHT FAYE WAGONER

GRAVEL PARKING LOT

RETAIN 15' CMP

ABAND CONC&WD RR BRIDGE (APPROX. LOCATION)

VAR RET WALL

VAR STONE WALL

24" STONE WALL

VAR BK WALL

RR SIGNAL AND BUNGALOWS ARE PROPERTY OF NORFOLK SOUTHERN

UNI-DIRECTIONAL BUNGALOW

42" WELDED STEEL (0.625" THICK) TRENCHLESS INSTALLATION SHALL BE USED AT A MIN. 25' FROM CENTERLINE OF EXISTING TRACK

36"x36" CONCRETE CULVERT

11"CONC HW TOP=804.94'

36" CMP

CL I RIP RAP EST: 20 TONS GEOTEXTILE EST: 39 SY

CUT TO FILL TRANSITION CL I RIP RAP EST. 65 TONS GEOTEXTILE EST. 80 SY

TIE SLOPES TO BACK OF CURB PROP. 2'-6" C&G

DO NOT DISTURB EXISTING UTILITY

PROPERTY LINES APPROX. LOCATION

+87.14 82.63 ft

+37.24 81.99 ft

+37.13 108.29 ft

+87.14 108.61 ft

SEE SHEET 25 FOR -M1- GRADE

DETAIL E
SPECIAL CUT BASE DITCH
(Not to Scale)

Natural Ground, 2:1, D, 2:1, Front Ditch Slope, B

Min. D=1 Ft.
B=5 Ft.

FROM -M2- STA. 9278+00 TO STA. 9295+00, RT
FROM -M2- STA. 9293+50 TO STA. 9295+00, LT

DETAIL F
STANDARD BASE DITCH
(Not to Scale)

Natural Ground, 2:1, D, 2:1, Natural Ground, B

Min. D= 2 Ft.
B= 5 Ft.

-M2- STA.9301+65+/-, RT
DDE= 70 CY

MAIN TRACK 2

PROP. TOP OF RAIL
EXIST. TOP OF RAIL
EXIST. GROUND

PIPE HYDRAULIC DATA
-M2- Sta.9301+69

DRAINAGE AREA	= 22.1	AC
DESIGN FREQUENCY	= 100	YRS
DESIGN DISCHARGE	= 65.7	CFS
DESIGN HW ELEVATION	= 810.03	FT
100 YEAR DISCHARGE	= 65.7	CFS
100 YEAR HW ELEVATION	= 810.03	FT

PI = 9294+60
EL = 828.55'
VC = 300'
r=0.115

PI = 9300+97
EL = 826.26'
VC = 450'
r=-0.067

(-)0.0144% (-)0.3595% (-)0.3595% (-)0.0589% (-)0.0589%

(-) 0.4000%

(-) 0.4000%

BEG DITCH GRADE LT -M2- STA. 9293+50 EL 822.83

VPC 9293+10.00 TOP OF RAIL EL 828.57

END DITCH GRADE LT -M2- STA. 9295+00 EL 822.23

END DITCH GRADE RT -M2- STA. 9295+00 EL 819.65

VPT 9296+10.00 TOP OF RAIL EL 828.01

VPC 9298+72.00 TOP OF RAIL EL 827.01

EXIST. TOP OF RAIL

PROP. TOP OF RAIL

EXIST. GROUND

BASE OF RAIL TO TOP OF STRUCTURE= 20.20FT

EXIST. 36"CI (PLUG & FILL)

PROP. 42" WELDED STEEL (.625 THICK)

VPT 9303+22.00 TOP OF RAIL EL 826.13

VPC 9304+85.00 TOP OF RAIL EL 826.03

	(EXISTING T/R)	(PROPOSED T/R)
9293	828.68	828.57
9294	828.51	828.51
9295	828.25	828.34
9296	827.92	828.05
9297	827.51	827.69
9298	827.09	827.33
9299	826.90	826.97
9300	826.47	826.66
9301	826.10	826.42
9302	825.85	826.25
9303	825.83	826.14
9304	825.98	826.08
9305	825.82	826.02
9306	825.79	825.94
9307	825.64	825.80

860 850 840 830 820 810 800 790

9293 9294 9295 9296 9297 9298 9299 9300 9301 9302 9303 9304 9305 9306 9307

TGS ENGINEERS
804-C N. LAFAYETTE ST
SHELBY, NC 28150
PH (704) 476-0003
CORP. LICENSE NO.: C-0275

DCN
0001ADD_P10b2
0164DEL_P10b2

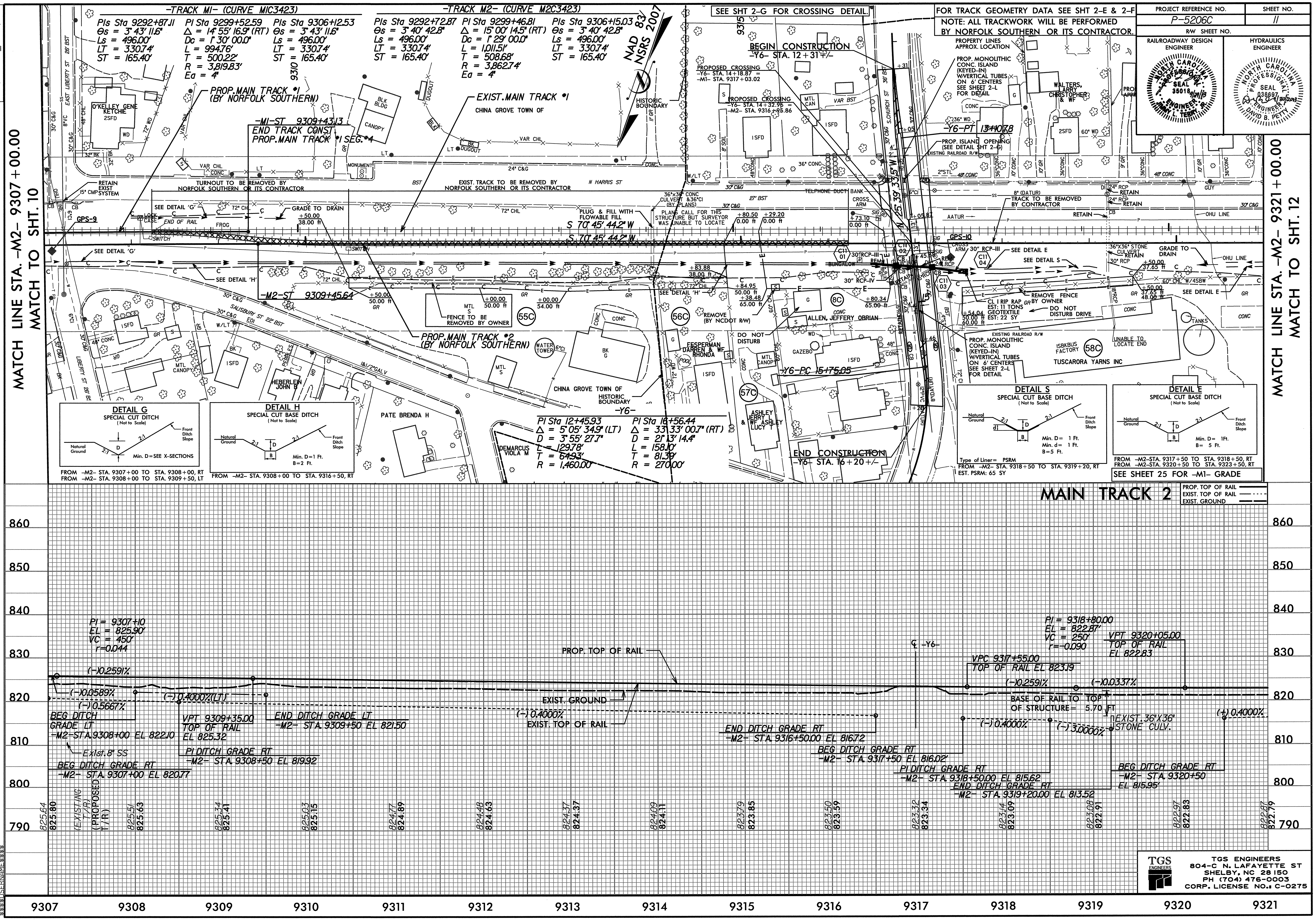

DGN 0001ADD_P10b2
0164DEL_P10b2

FOR TRACK GEOMETRY DATA SEE SHT 2-E & 2-F
NOTE: ALL TRACKWORK WILL BE PERFORMED BY NORFOLK SOUTHERN OR ITS CONTRACTOR.

PROJECT REFERENCE NO.	SHEET NO.
P-5206C	12
R/W SHEET NO.	

RAIL/ROADWAY DESIGN ENGINEER — NORTH CAROLINA PROFESSIONAL SEAL 35018 ENGINEER JAMES L. TERRY

HYDRAULICS ENGINEER — NORTH CAROLINA PROFESSIONAL SEAL 038897 ENGINEER DAVID B. PETTA

MATCH LINE STA. -M2- 9321+00.00
MATCH TO SHT. 11

MATCH LINE STA. -M2- 9330+00.00
MATCH TO SHT. 13

NAD 83/ NSRS 2007

-SVC-
PI Sta 10+57.82
Δ = 16° 27' 02.4" (LT)
D = 14° 19' 26.2"
L = 114.85'
T = 57.82'
R = 400.00'

PI Sta 11+72.79
Δ = 16° 29' 06.8" (RT)
D = 14° 19' 26.2"
L = 115.09'
T = 57.94'
R = 400.00'

-MI-SC 9329+68.83

-MI-TS 9324+72.83
BEGIN TRACK CONST.
PROP. MAIN TRACK #1 SEG. #5

BEGIN CONSTRUCTION
-SVC- STA. 10+55.00
-SVC-PC 10+00.00

-SVC-PRC 11+14.85

-SVC-PT 12+29.94

-M2-TS 9324+70.59

-M2-SC 9329+66.59

-M1- PROP. MAIN TRACK #1 (BY NS)
-M2- PROP. MAIN TRACK #2 (BY NS)

S 70° 45' 44.2" W EXIST. MAIN TRACK #1
S 70° 45' 44.2" W

S 70° 37' 09.0" W

CH FIRST FREE WILL BAPT OF CHINA GROVE

TUSCARORA YARNS INC

GOODMAN FARM SUPPLY

CH ST MARKS LUTHERAN

HISTORICAL SOCIETY OF CHINA GROVE

MILLER KENNETH W

CURIEL PAULINO & WF CURIEL SILVIA G

HARRIS ST 27' BST

E. KETCHIE ST 30' BST

ABANDONED RR

PLUG & FILL WITH FLOWABLE FILL

RELOCATE MILE POST (BY NORFOLK SOUTHERN)

INSTALL GUARDRAIL WITH TWO TERMINAL END SECTIONS.

DO NOT DISTURB FENCE

DO NOT DISTURB EXIST. GRAVEL DRIVE

DO NOT DISTURB EXISTING GRAVEL DRIVE

DO NOT DISTURB STRUCTURE

DO NOT DISTURB EXIST. PARKING LOT

TRACK TO BE REMOVED BY CONTRACTOR

CL TRIP RAP EST: 2 TONS GEOTEXTILE EST: 5 SY

CL TRIP RAP EST: 15 TONS GEOTEXTILE EST: 30 SY

CONC. PAV. DITCH SEE DETAIL 'Y'

PROPERTY LINES APPROX. LOCATION

36" RCP-IV

24" RCP

15" RCP-IV

30" TYPE 'A'

36" WELDED STEEL (0.500" THICK) TRENCHLESS INSTALLATION SHALL BE USED AT A MIN. 25' FROM CENTERLINE OF EXISTING TRACK

PAVEMENT REMOVAL

SEE SHEET 31 FOR -SVC- GRADE
SEE SHEET 26 FOR -M1- GRADE

-TRACK M1- (CURVE M1C3430)

PIs Sta 9328+03.59	PI Sta 9342+40.24	PIs Sta 9355+65.73
Θs = 4° 12' 57.0"	Δ = 41° 20' 06.4" (LT)	Θs = 4° 12' 57.0"
Ls = 496.00'	Dc = 1° 42' 00.0"	Ls = 496.00'
LT = 330.76'	L = 2,431.48'	LT = 330.76'
ST = 165.42'	T = 1,271.41'	ST = 165.42'
	R = 3,370.46'	
	Ea = 4"	

-TRACK M2- (CURVE M2C3430)

PIs Sta 9328+01.35	PI Sta 9342+38.00	PIs Sta 9355+63.48
Θs = 4° 12' 57.0"	Δ = 41° 20' 06.4" (LT)	Θs = 4° 12' 57.0"
Ls = 496.00'	Dc = 1° 42' 00.0"	Ls = 496.00'
LT = 330.76'	L = 2,431.48'	LT = 330.76'
ST = 165.42'	T = 1,271.41'	ST = 165.42'
	R = 3,370.46'	
	Ea = 4"	

DETAIL E — SPECIAL CUT BASE DITCH (Not to Scale)
Natural Ground, 2:1, D, 2:1, Front Ditch Slope, B
Min. D= 1Ft. B= 5 Ft.
FROM -M2-STA. 9320+50 TO STA. 9323+50, RT

DETAIL G — SPECIAL CUT DITCH (Not to Scale)
Natural Ground, 2:1, D, 2:1, Front Ditch Slope
Min. D= 1 Ft.
FROM -M2-STA. 9323+50 TO STA. 9324+50, RT

DETAIL Y — CONC PAVED BASE DITCH (Not to Scale)
2', 12" MIN., 4:1, 2:1
FROM -M2-STA. 9327+54 TO STA. 9327+65, RT

DETAIL X — SPECIAL CUT BASE DITCH (Not to Scale)
Natural Ground, 2:1, D, 2:1, Front Ditch Slope, B
Min. D= 1Ft. B= 2 Ft.
FROM -M2-STA. 9327+65 TO STA. 9334+50, RT

MAIN TRACK 2

PROP. TOP OF RAIL
EXIST. TOP OF RAIL
EXIST. GROUND

PIPE HYDRAULIC DATA
-M2- Sta. 9327+49

DRAINAGE AREA	= 4.15	AC
DESIGN FREQUENCY	= 100	YRS
DESIGN DISCHARGE	= 20.7	CFS
DESIGN HW ELEVATION	= 813.66	FT
100 YEAR DISCHARGE	= 20.7	CFS
100 YEAR HW ELEVATION	= 813.66	FT

PI = 9324+50
EL = 822.68'
VC = 300'
r=-0.087

PI = 9329+90
EL = 823.90'
VC = 500'
r=0.116

EXIST. GROUND
PROP. TOP OF RAIL
EXIST. TOP OF RAIL

(-)0.0337%
(+)0.2272%
(+)0.2272%
(-)0.3550%
(+) 0.4000%
(+) 0.4000%
(+) 0.4000%

VPC 9323+00.00
TOP OF RAIL EL 822.73

VPT 9326+00.00
TOP OF RAIL EL 823.02

VPC 9327+40.00
TOP OF RAIL EL 823.34

BASE OF RAIL TO TOP OF STRUCTURE=10.47FT

Ex1st.12"CI

END DITCH GRADE RT
-M2- STA. 9324+50.00 EL 817.55'

PROP. 36"WELDED STEEL (0.500" THICK)

EXIST. 18"CI PLUG & FILL

PI DITCH GRADE RT
-M2- STA. 9323+50 EL 817.16'

BEG DITCH GRADE RT
-M2- STA. 9327+65 EL 815.04'

822.87 822.79 | 822.82 822.76 | 822.71 822.73 | 822.60 822.74 | 822.48 822.83 | 822.42 822.89 | 822.32 823.24 | 822.36 823.45 | 822.39 823.55 | 822.45 823.53

850 840 830 820 810 800 790

9321 9322 9323 9324 9325 9326 9327 9328 9329 9330

TGS ENGINEERS
804-C N. LAFAYETTE ST
SHELBY, NC 28150
PH (704) 476-0003
CORP. LICENSE NO.: C-0275

DCN 0164DEL_P10b2

PROJECT REFERENCE NO.	SHEET NO.
P-5206C	13
R/W SHEET NO.	

RAIL/ROADWAY DESIGN ENGINEER — NORTH CAROLINA PROFESSIONAL SEAL 35018 ENGINEER JIMMY L. TERRY, JR. 6/13/13

HYDRAULICS ENGINEER — NORTH CAROLINA PROFESSIONAL SEAL 038697 ENGINEER DAVID B. PETTY 6/13/2013

FOR TRACK GEOMETRY DATA SEE SHT 2-E & 2-F

NOTE: ALL TRACKWORK WILL BE PERFORMED BY NORFOLK SOUTHERN OR ITS CONTRACTOR.

-TRACK M1- (CURVE M1C3430)

PIs Sta 9328+03.59	PI Sta 9342+40.24	PIs Sta 9355+65.73
Θs = 4° 12′ 57.0″	Δ = 41° 20′ 06.4″ (LT)	Θs = 4° 12′ 57.0″
Ls = 496.00′	Dc = 1° 42′ 00.0″	Ls = 496.00′
LT = 330.76′	L = 2,431.48′	LT = 330.76′
ST = 165.42′	T = 1,271.41′	ST = 165.42′
	R = 3,370.46′	
	Ea = 4″	

-TRACK M2- (CURVE M2C3430)

PIs Sta 9328+01.35	PI Sta 9342+38.00	PIs Sta 9355+63.48
Θs = 4° 12′ 57.0″	Δ = 41° 20′ 06.4″ (LT)	Θs = 4° 12′ 57.0″
Ls = 496.00′	Dc = 1° 42′ 00.0″	Ls = 496.00′
LT = 330.76′	L = 2,431.48′	LT = 330.76′
ST = 165.42′	T = 1,271.41′	ST = 165.42′
	R = 3,370.46′	
	Ea = 4″	

-SVC-

PI Sta 15+46.22	PI Sta 17+22.74
Δ = 3° 43′ 43.9″ (LT)	Δ = 7° 27′ 50.5″ (LT)
D = 11° 27′ 33.0″	D = 11° 27′ 33.0″
L = 32.54′	L = 65.14′
T = 16.28′	T = 32.61′
R = 500.00′	R = 500.00′

-YG-

PI Sta 13+37.47
Δ = 8° 57′ 37.0″ (LT)
D = 3° 49′ 11.0″
L = 234.58′
T = 117.53′
R = 1,500.00′

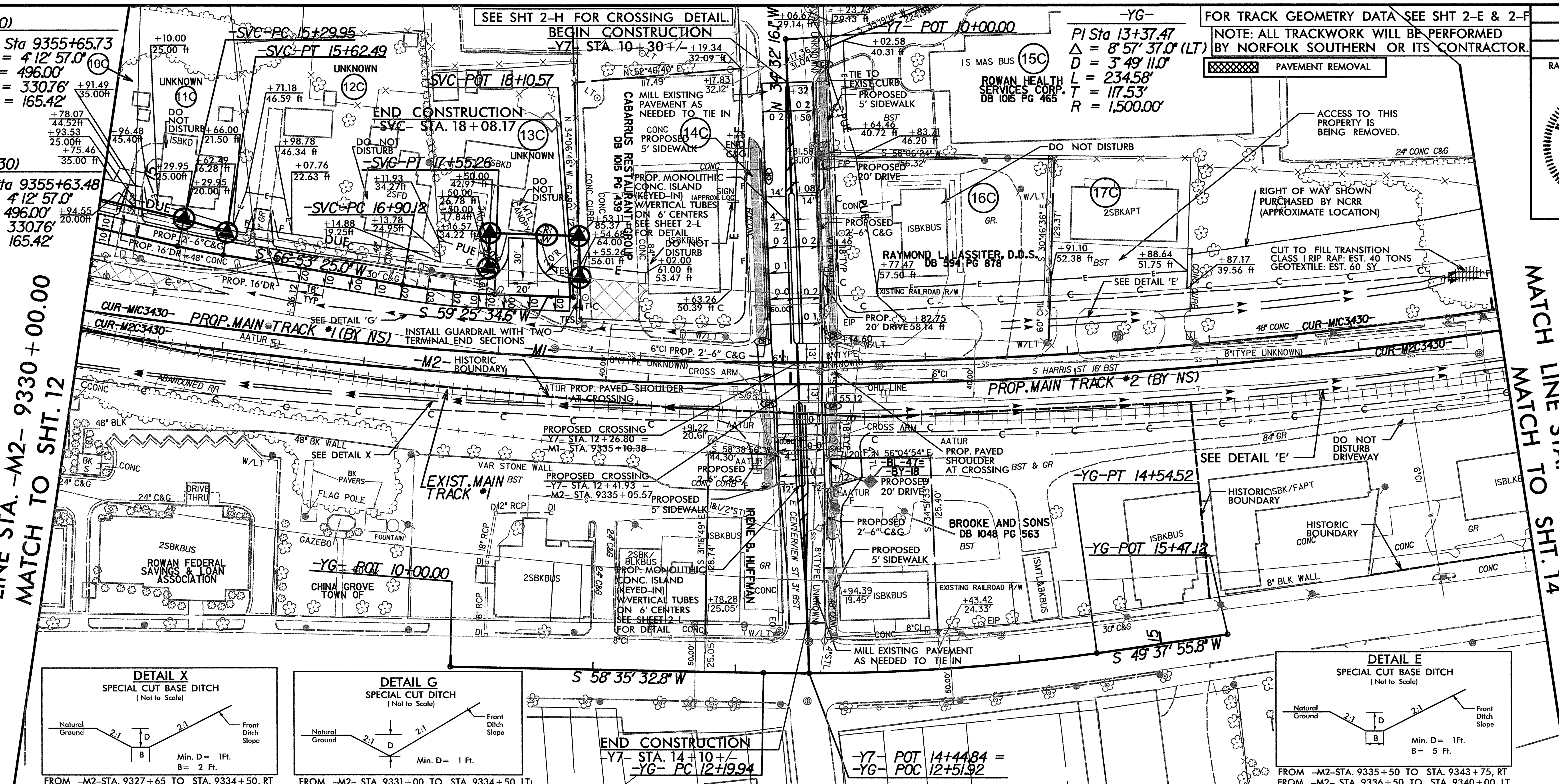

SEE SHEET 31 FOR -Y7- GRADE

SEE SHEET 31 FOR -SVC- GRADE

SEE SHEET 26 FOR -M1- GRADE

MAIN TRACK 2

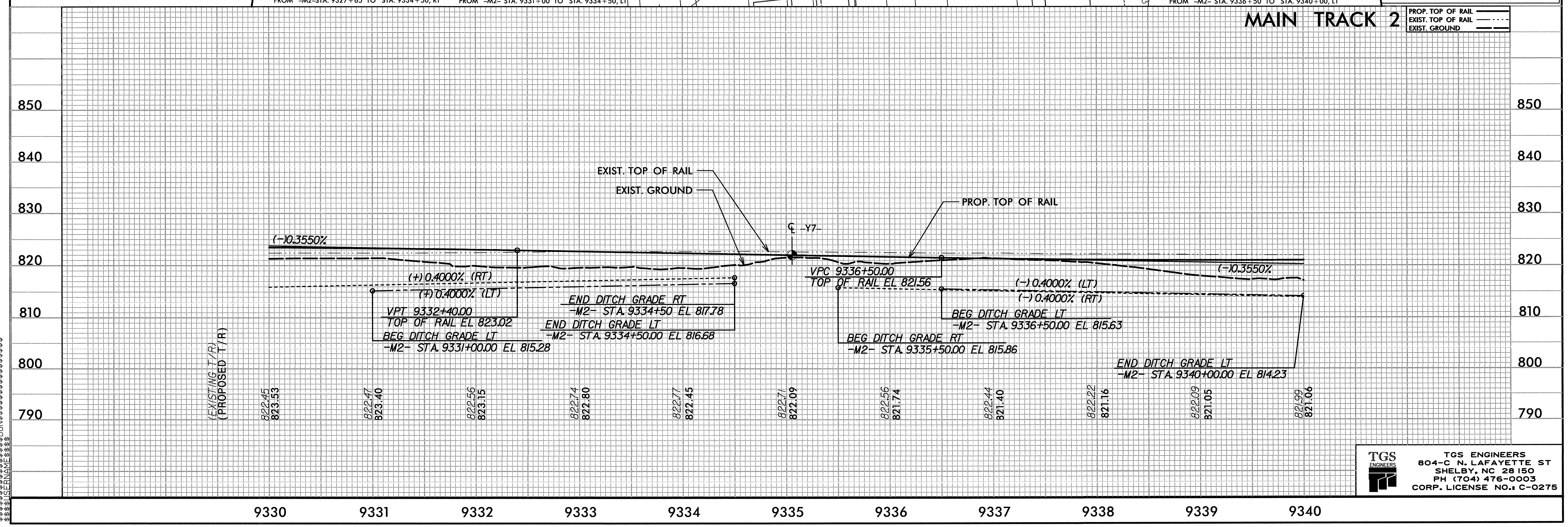

TGS ENGINEERS
804-C N. LAFAYETTE ST
SHELBY, NC 28150
PH (704) 476-0003
CORP. LICENSE NO.: C-0275

$$$$$SYSTIME$$$$$ $$$$$DGN$$$$$$$$$$$$$$$$$$ $$$$USERNAME$$$$

0164DEL_P10b2

DGN

PROJECT REFERENCE NO.	SHEET NO.
P-5206C	14
R/W SHEET NO.	

RAIL/ROADWAY DESIGN ENGINEER — NORTH CAROLINA PROFESSIONAL SEAL 35018 7/16/15 ENGINEER TERRY

HYDRAULICS ENGINEER — NORTH CAROLINA PROFESSIONAL SEAL 038697 7/16/15 ENGINEER DAVID B. PETTY

FOR TRACK GEOMETRY DATA SEE SHT 2-E & 2-F

NOTE: ALL TRACKWORK WILL BE PERFORMED BY NORFOLK SOUTHERN OR ITS CONTRACTOR.

PAVEMENT REMOVAL

NAD 83 NSRS 2007

MATCH LINE STA. -M2- 9340+00.00 MATCH TO SHT. 13

MATCH LINE STA. -M2- 9354+00.00 MATCH TO SHT. 15

-TRACK M1- (CURVE M1C3430)

PIs Sta 9328+03.59 PI Sta 9342+40.24 PIs Sta 9355+65.73
Θs = 4° 12' 57.0" Δ = 41° 20' 06.4" (LT) Θs = 4° 12' 57.0"
Ls = 496.00' Dc = 1° 42' 00.0" Ls = 496.00'
LT = 330.76' L = 2,431.48' LT = 330.76'
ST = 165.42' T = 1,271.41' ST = 165.42'
R = 3,370.46'
Ea = 4"

-TRACK M2- (CURVE M2C3430)

PIs Sta 9328+01.35 PI Sta 9342+38.00 PIs Sta 9355+63.48
Θs = 4° 12' 57.0" Δ = 41° 20' 06.4" (LT) Θs = 4° 12' 57.0"
Ls = 496.00' Dc = 1° 42' 00.0" Ls = 496.00'
LT = 330.76' L = 2,431.48' LT = 330.76'
ST = 165.42' T = 1,271.41' ST = 165.42'
R = 3,370.46'
Ea = 4"

DETAIL E
SPECIAL CUT BASE DITCH
(Not to Scale)

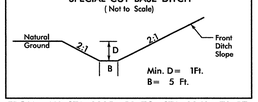

FROM -M2- STA. 9335+50 TO STA. 9343+78, RT

DETAIL S
SPECIAL CUT BASE DITCH
(Not to Scale)

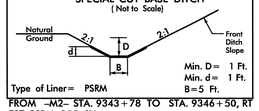

Type of Liner= PSRM
FROM -M2- STA. 9343+78 TO STA. 9346+50, RT
EST. PSRM: 295 SY

ROWAN REGIONAL MED CENTER INC — PROPERTY LINES APPROX. LOCATION

15C

U S EQUITIES II LP

THOMAS GAYLE L

WARD ADAM M & RUSSELL EMILY S

BENTLEY CONSTRUCTION COMPANY

ALLEN CLAUDE RAY

MILLER BYRON S JR & WF MILLER ANGELA

9345

CENTER STAGE DANCE CO

MORGAN ELIZABETH J

RIGHT OF WAY SHOWN PURCHASED BY NCRR (APPROXIMATE LOCATION)

RIGHT OF WAY SHOWN PURCHASED BY NCRR (APPROXIMATE LOCATION)

RIGHT OF WAY SHOWN PURCHASED BY NCRR (APPROXIMATE LOCATION)

KIRK BRIAN

TULLOH JAMES M JR

TCC INC

HARTNESS CHRISTOPHER A & WF HARTNESS LORA B

9350

PROP. 16' DRIVE

DO NOT DISTURB FENCE

REMOVED (BY NCRR)

DUNLAP JASON N & WF DUNLAP ZONDRA N

UNKNOWN

PROP. 2'-6" CURB AND GUTTER

PROP. 16' DRIVE

PROP. CUL-DE-SAC

PROP. 2'-6" CURB AND GUTTER

PROP. 16' DRIVE

PROPERTY LINES APPROX. LOCATION

18C

19C

PROP. MAIN TRACK #1 (BY NORFOLK SOUTHERN)

PROP. MAIN TRACK #2 (BY NORFOLK SOUTHERN)

REMOVED (BY NCDOT R/W)

CL I RIP RAP EST: 20 TONS GEOTEXTILE EST: 39 SY

42" WELDED STEEL (0.625" THICK) TRENCHLESS INSTALLATION SHALL BE USED AT A MIN. 25' FROM CENTERLINE OF EXISTING TRACK

10'CONC HW TOP=798.85'

36"x36" STONE CUL VERT

PLUG & FILL WITH FLOWABLE FILL

CL I RIP RAP EST: 80 TONS GEOTEXTILE EST: 120 SY -M2- 9351+00 TO 9352+00

HISTORIC BOUNDARY

EXIST. ROAD TO BE REMOVED GRADE TO SURROUNDING ELEVATION AND STABILIZE.

REMOVE EXIST. CURB

-BL-49

-BL-48

CL I RIP RAP EST: 15 TONS GEOTEXTILE EST: 30 SY

SEE DETAIL 'E'

SEE DETAIL 'S'

DO NOT DISTURB DRIVEWAY

ISBLKBUS

ISBKBUS

REFRIG

GUY

OPEN THROAT CB

24" RCP

18" RCP

36" RCP-III

RETAIN

EXIST. MAIN TRACK #1

8" (DATUR)

S MAIN ST 34' BST

8" (TYPE UNKNOWN)

-M2-CS 9353+98.07

SEE SHEET 27 FOR -M1- GRADE

PIPE HYDRAULIC DATA
-M2- Sta.9343+69

DRAINAGE AREA	= 18.9	AC
DESIGN FREQUENCY	= 100	YRS
DESIGN DISCHARGE	= 70.3	CFS
DESIGN HW ELEVATION	= 811.22	FT
100 YEAR DISCHARGE	= 70.3	CFS
100 YEAR HW ELEVATION	= 811.22	FT

MAIN TRACK 2

PROP. TOP OF RAIL
EXIST. TOP OF RAIL
EXIST. GROUND

PI = 9341+00
EL = 819.96'
VC = 900'
r=-0.120

PI = 9348+50
EL = 825.43'
VC = 250'
r=-0.104

(-)0.3550% (+)0.7286% (-)0.4000% (-)2.9430% (+)4.0809% (+)0.7286% (+)0.9894%

PI DITCH GRADE RT -M2- STA. 9341+50 EL 813.46

BASE OF RAIL TO TOP OF STRUCTURE= 16.57FT

VPT 9345+50.00 TOP OF RAIL EL 823.24

PROP. 42" WELDED STEEL (.625" THICK)

PI DITCH GRADE RT -M2- STA. 9343+78 EL 806.75

VPC 9347+25.00 TOP OF RAIL EL 824.52

END DITCH GRADE RT -M2- STA. 9346+50 EL 817.85

VPT 9349+75.00 TOP OF RAIL EL 826.66

Exist.8" SS

9340	9341	9342	9343	9344	9345	9346	9347	9348	9349	9350	9351	9352	9353	9354
821.99 (EXISTING T/RL)	821.06 (PROPOSED T/R)	821.75	821.18	821.71	821.43	821.81	821.80	822.18	822.28	822.70	822.89	823.47	823.61	824.11	824.33	824.76	825.09	825.53	825.95	826.43	826.91	827.55	827.90	828.56	828.89	829.58	829.88	830.55	830.87

TGS ENGINEERS
804-C N. LAFAYETTE ST
SHELBY, NC 28150
PH (704) 476-0003
CORP. LICENSE NO.: C-0275

$$$$SYSTIME$$$$
$$$$USERNAME$$$$

0001ADD P10b2
0164DEL P10b2
DGN

MATCH LINE STA. –M2– 9354+00.00
MATCH TO SHT. 14

MATCH LINE STA. –M2– 9368+00.00
MATCH TO SHT. 16

FOR TRACK GEOMETRY DATA SEE SHT 2–E & 2–F
NOTE: ALL TRACKWORK WILL BE PERFORMED BY NORFOLK SOUTHERN OR ITS CONTRACTOR.

PROJECT REFERENCE NO.	SHEET NO.
P–5206C	15
R/W SHEET NO.	

RAIL/ROADWAY DESIGN ENGINEER — NORTH CAROLINA PROFESSIONAL SEAL 035018 ENGINEER M. L. TERRY, JR.

HYDRAULICS ENGINEER — NORTH CAROLINA PROFESSIONAL SEAL 036697 ENGINEER DAVID B. PETTY

NAD 83/ NSRS 2007

PAVEMENT REMOVAL

JACOBS DAVID BAXTER
JACOBS GLENDA CAROL
ERWIN ANTHONY W & WF ERWIN STEPHANIE J
PROPERTY LINES APPROX. LOCATION
GOODMAN LARA R
BOSTIAN EDWARD A & WF BOSTIAN ANGELA M
HEILIG ANNA & HUS HEILIG ROBERT
GADDY JUDY S
STARNES GERALD W JR & WF STARNES JENNIFER W
S. HARRIS STREET TO BE REMOVED. GRADE TO SURROUNDING ELEVATION AND STABILIZE.
S HARRIS ST 17' BST
BLACKWELDER ST 25' BST
KELLER ST 18' BST
19C PROP. 12' DRIVE
20C UNKNOWN
21C UNKNOWN
PROP. CUL-DE-SAC
PROP 16' DRIVE
PROP. TURN-AROUND
REMOVE EXIST. CURB
CL B RIP RAP EST. 3 TONS GEOTEXTILE EST. 10 SY
CONC. FLUME SEE DETAIL SHEET, 2–R
DO NOT DISTURB
CLEAN-OUT EXIST. 12" RCP
INSTALL GUARDRAIL WITH TWO TERMINAL END SECTIONS. SET GUARDRAIL FACE A MINIMUM OF 5' FROM SAWCUT.
CL I RIP RAP EST. 40 TONS GEOTEXTILE EST. 600 SY
–M2– 9365+50 TO 9366+00
SEE DETAIL 'E'
HISTORIC BOUNDARY
–MI–CS 9354+00.31
–MI–ST 9358+96.31
–MI–TS 9363+96.31
–M2–ST 9358+94.07
–M2–TS 9363+95.63
–MI– S 20° 59' 43.8" W
–M2– S 20° 59' 43.8" W
PROP. MAIN TRACK #1 (BY NORFOLK SOUTHERN)
PROP. MAIN TRACK #2 (BY NORFOLK SOUTHERN)
EXIST. MAIN TRACK #1
BUNGALOW AATUR
PIPE CLEAN-OUT
A/G OIL
BLK PIT
BLK S
ISBKBUS
ISFGARAGE
ISFBUS
CAR LIFT
MTL CANOPY
8" TYPE UNKNOWN
EXISTING RAILROAD R/W
4'-0" STONE WALL
CLEMENT PHILLIP W & WF CLEMENT ALICE M
DULCHAVSKY SCOTT A & DOWLING ISFD BRIAN J
REID WILLIAM G JR & WF REID BELINDA S
MORGAN JOHNNY RAY & WF MORGAN BRENDA K
CLINE MARK A & WF CLINE LISA K
ROONEY JOHN H & WF ROONEY JULIA W
WILLIAMS LINDA H
WEBB DONALD RAY & WF WEBB BARBARA DORIS
MCGALLIARD JOSEPH DIAL
14.2'
AATUR
SEE SHEET 27 FOR –M1– GRADE

DETAIL E
SPECIAL CUT BASE DITCH
(Not to Scale)
Natural Ground, 2:1, D, 2:1, Front Ditch Slope, B
Min. D= 1Ft.
B= 5 Ft.

FROM –M2–STA. 9361+00 TO STA. 9361+50, LT
FROM –M2–STA. 9366+50 TO STA. 9374+50, LT
FROM –M2–STA. 9366+50 TO STA. 9373+00, RT

–TRACK M1– (CURVE M1C3430)
PI Sta 9328+03.59
Θs = 4° 12' 57.0"
Ls = 496.00'
LT = 330.76'
ST = 165.42'

PI Sta 9342+40.24
Δ = 41° 20' 06.4" (LT)
Dc = 1° 42' 00.0"
L = 2,431.48'
T = 1,271.41'
R = 3,370.46'
Ea = 4"

PI Sta 9355+65.73
Θs = 4° 12' 57.0"
Ls = 496.00'
LT = 330.76'
ST = 165.42'

–TRACK M2– (CURVE M2C3430)
PI Sta 9328+01.35
Θs = 4° 12' 57.0"
Ls = 496.00'
LT = 330.76'
ST = 165.42'

PI Sta 9342+38.00
Δ = 41° 20' 06.4" (LT)
Dc = 1° 42' 00.0"
L = 2,431.48'
T = 1,271.41'
R = 3,370.46'
Ea = 4"

PI Sta 9355+63.48
Θs = 4° 12' 57.0"
Ls = 496.00'
LT = 330.76'
ST = 165.42'

MAIN TRACK 2

PROP. TOP OF RAIL
EXIST. TOP OF RAIL
EXIST. GROUND

PI = 9355+80
EL = 832.65'
VC = 250'
r=0.098

(+)0.9894%
(+)0.7431%
(+)0.7400%
(+)0.4000% (RT)
(+)0.4000% (LT)

VPC 9354+55.00
TOP OF RAIL EL 831.41

VPT 9357+05.00
TOP OF RAIL EL 833.58

BEG DITCH GRADE LT
–M2– STA. 9361+00.00 EL 830.79

END DITCH GRADE LT
–M2– STA. 9361+50.00 EL 831.16

VPC 9366+36.00
TOP OF RAIL EL 840.50

BEG DITCH GRADE RT
–M2– STA. 9366+50 EL 834.79

BEG DITCH GRADE LT
–M2– STA. 9366+50.00 EL 833.62

9354	9355	9356	9357	9358	9359	9360	9361	9362	9363	9364	9365	9366	9367	9368
830.55	830.87	831.49	831.85	832.31	832.74	833.16	833.54	833.97	834.29	834.79	835.03	835.57	835.77	836.31	836.52	837.03	837.26	837.71	838.00	838.46	838.75	839.24	839.49	840.00	840.24	840.72	840.95	841.56	841.56

(EXISTING T/R)
(PROPOSED T/R)

TGS ENGINEERS
804-C N. LAFAYETTE ST
SHELBY, NC 28150
PH (704) 476-0003
CORP. LICENSE NO.: C-0275

$$$$SYSTIME$$$$
$$$$USERNAME$$$$
$$$$DGN$$$$

DGN 0001ADD P10b2 0164DEL P10b2

PROJECT REFERENCE NO.	SHEET NO.
P-5206C	16
R/W SHEET NO.	

RAIL/ROADWAY DESIGN ENGINEER — NORTH CAROLINA PROFESSIONAL SEAL 35018 ENGINEER T. TERRY

HYDRAULICS ENGINEER — NORTH CAROLINA PROFESSIONAL SEAL 038691 ENGINEER DAVID B. PETTY

SEE SHT 2-I FOR EAST THOM ST CLOSURE DETAIL.
AT-GRADE CROSSING CLOSURE SHALL BE COORDINATE WITH P-5206A AND P-4405A

FOR TRACK GEOMETRY DATA SEE SHT 2-E & 2-F
NOTE: ALL TRACKWORK WILL BE PERFORMED BY NORFOLK SOUTHERN OR ITS CONTRACTOR.

-TRACK M1- (CURVE M1C3438)

Pls Sta 9367+27.06
Θs = 4° 05' 30.7"
Ls = 496.00'
LT = 330.76'
ST = 165.41'

Pl Sta 9378+41.68
Δ = 30° 34' 51.5" (RT)
Dc = 1° 39' 00.0"
L = 1,853.39'
T = 949.37'
R = 3,472.59'
Eq = 4°

Pls Sta 9389+11.11
Θs = 4° 05' 30.7"
Ls = 496.00'
LT = 330.76'
ST = 165.41'

-TRACK M2- (CURVE M2C3438)

Pls Sta 9367+26.39
Θs = 4° 05' 30.7"
Ls = 496.00'
LT = 330.76'
ST = 165.41'

Pl Sta 9378+41.01
Δ = 30° 34' 51.5" (RT)
Dc = 1° 39' 00.0"
L = 1,853.39'
T = 949.37'
R = 3,472.59'
Eq = 4°

Pls Sta 9389+10.44
Θs = 4° 05' 30.7"
Ls = 496.00'
LT = 330.76'
ST = 165.41'

MATCH LINE STA. -M2- 9368+00.00 MATCH TO SHT. 15

MATCH LINE STA. -M2- 9382+00.00 MATCH TO SHT. 17

NAD 83 NSRS 2007

PROPERTY LINES APPROX. LOCATION

PROP. TURN-AROUND

JORDAN IRENE RUTH LONG

SHEFFIELD LOUIS E & WF

PROP. 10' DRIVE

INSTALL GUARDRAIL WITH TWO TERMINAL END SECTIONS. SET GUARDRAIL FACE A MINIMUM OF 5' FROM SAWCUT.

-MI-SC 9368+92.31

-MI- 9368+39.67

S HARRIS ST 11' BST

HAMEY ST 25' BST

JOHN ST

CORRELL JASON BRIAN & ADAMS, BRANDI LEE

HISTORIC BOUNDARY PROPERTY LINES APPROX. LOCATION

ROWAN REGIONAL MED CENTER INC

CL I RIP RAP EST: 3 TONS GEOTEXTILE EST: 7 SY

PROP. TURN-AROUND

INSTALL GUARDRAIL WITH TWO TERMINAL END SECTIONS. SET GUARDRAIL FACE A MINIMUM OF 5' FROM SAWCUT.

SEE DETAIL 'A'

FENCE TO BE REMOVED BY OWNER

EXISTING RAILROAD R/W

-MI- 9371+48.11

REMOVE EXIST. SYSTEM

SIGN CROSS ARM

RAILROAD APPROXIMATE CENTERLINE

SEE DETAIL 'B'

-BL-51

-MI-

-M2-

SEE DETAIL 'X'

HISTORIC BOUNDARY

DO NOT DISTURB BUILDING

SEE DETAIL 'E'

RETAIN SIDEWALK

REMOVE 10'+/- TIE PIPE TO DITCH

2SBKBUS

PROP. 5' SIDEWALK

REMOVE EXISTING ROAD TO INTERSECTION REPAIR ANY DAMAGED CURB AND SIDEWALK

HISTORIC BOUNDARY

-M2-SC 9368+91.63

MANUS ANDREW L & WF MANUS BONNIE M

-Y8-POT 14+46.03

EAST THOM ST 38' BST

EXISTING EAST THOM ST. AT-GRADE CROSSING TO BE REMOVED

EAST THOM STREET TO BE REMOVED GRADE TO SURROUNDING ELEVATION AND STABILIZE.

CL I RIP RAP EST. 20 TONS GEOTEXTILE EST. 30 SY -M2- 9374+50 TO 9375+00

NATIONAL TEXTILES LLC ATTN: TONEY BOYD

PROP. MAIN TRACK #1 (BY NORFOLK SOUTHERN)

(COULD NOT ACCESS THIS AREA)

EXIST. MAIN TRACK #1

CUR-MIC3438-

CUR-M2C3438-

-M2- 9374+50 TO 9375+00

84" CMP W/6SBW

#344

RELOCATE MILE POST (BY NORFOLK SOUTHERN)

HISTORIC BOUNDARY

-BL-52

ABANDONED GROUND MONITORING STATION

CABLE GATE

GRADE TO DRAIN MONITORING WELL.

ALLEN & BARBARA WELTER

REMOVED (BY NCDOT R/W)

EVA B. STEWART

REMOVED (BY NCDOT R/W)

PROP. MAIN TRACK #2 (BY NORFOLK SOUTHERN)

PIPE CLEAN-OUT

WEST LAWN MEMORIAL PARK INC #0374

MORGAN JACK E & WF MORGAN WANDA S

PAVEMENT REMOVAL

SEE SHEET 28 FOR -M1- GRADE

DETAIL E
SPECIAL CUT BASE DITCH
(Not to Scale)

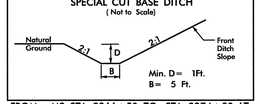

Min. D= 1Ft.
B= 5 Ft.

FROM -M2-STA. 9366+50 TO STA. 9374+50, LT
FROM -M2-STA. 9366+50 TO STA. 9372+00, RT

DETAIL A
STANDARD BASE DITCH
(Not to Scale)

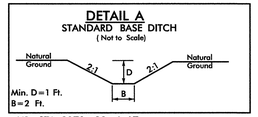

Min. D=1 Ft.
B=2 Ft.

-M1- STA. 9373+00+/-, LT
DDE: EST. 50 CY

DETAIL X
SPECIAL CUT BASE DITCH
(Not to Scale)

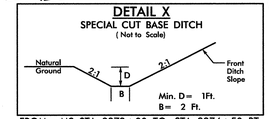

Min. D= 1Ft.
B= 2 Ft.

FROM -M2-STA. 9372+00 TO STA. 9374+50, RT

MAIN TRACK 2

PROP. TOP OF RAIL
EXIST. TOP OF RAIL
EXIST. GROUND

PI = 9370+86
EL = 843.85'
VC = 900'
r=0.125

(+)0.7437%
(-)0.3802%
(+) 0.4000% (RT)
(+) 0.4000% (LT)
(-) 0.4000% (RT)
(+) 0.4000%

PI DITCH GRADE RT
-M2- STA. 9372+00 EL 836.99

END DITCH GRADE LT
-M2- STA. 9374+50.00 EL 836.82

END DITCH GRADE RT
-M2- STA. 9374+50 EL 835.99

VPT 9375+36.00
TOP OF RAIL EL 842.14

PI = 9379+75
EL = 840.47'
VC = 200'
r= 0.119

(-)0.3802%
(-)0.1424%

VPC 9378+75.00
TOP OF RAIL EL 840.85

VPT 9380+75.00
TOP OF RAIL EL 840.33

	(EXISTING T/R)	(PROPOSED T/R)
9368	841.37	841.56
9369	841.82	842.03
9370	842.17	842.38
9371	842.39	842.61
9372	842.50	842.71
9373	842.57	842.69
9374	842.52	842.54
9375	842.34	842.27
9376	841.86	841.90
9377	841.47	841.52
9378	841.04	841.14
9379	840.68	840.76
9380	840.33	840.47
9381	840.06	840.29
9382	839.87	840.15

850 840 830 820 810 800

TGS ENGINEERS
804-C N. LAFAYETTE ST
SHELBY, NC 28150
PH (704) 476-0003
CORP. LICENSE NO.: C-0275

DGN: 0001ADD_P10b2
0164DEL_P10b2

-TRACK M1- (CURVE M1C3438)
Pls Sta 9367+27.06
Θs = 4° 05' 30.7"
Ls = 496.00'
LT = 330.76'
ST = 165.41'
PI Sta 9378+41.68
Δ = 30° 34' 51.5" (RT)
Dc = 1° 39' 00.0"
L = 1,853.39'
T = 949.37'
R = 3,472.59'
Ea = 4"
Pls Sta 9389+11.11
Θs = 4° 05' 30.7"
Ls = 496.00'
LT = 330.76'
ST = 165.41'

-TRACK M2- (CURVE M2C3438)
Pls Sta 9367+26.39
Θs = 4° 05' 30.7"
Ls = 496.00'
LT = 330.76'
ST = 165.41'
PI Sta 9378+41.01
Δ = 30° 34' 51.5" (RT)
Dc = 1° 39' 00.0"
L = 1,853.39'
T = 949.37'
R = 3,472.59'
Ea = 4"
Pls Sta 9389+10.44
Θs = 4° 05' 30.7"
Ls = 496.00'
LT = 330.76'
ST = 165.41'

FOR TRACK GEOMETRY DATA SEE SHT 2-E & 2-F
NOTE: ALL TRACKWORK WILL BE PERFORMED BY NORFOLK SOUTHERN OR ITS CONTRACTOR.

PAVEMENT REMOVAL

PROJECT REFERENCE NO.	SHEET NO.
P-5206C	17
R/W SHEET NO.	

RAIL DESIGN ENGINEER — NORTH CAROLINA PROFESSIONAL ENGINEER SEAL 35018 — 4/4/13 — ENGINEER — M. L. TERRY

HYDRAULICS ENGINEER — NORTH CAROLINA PROFESSIONAL ENGINEER SEAL 038697 — 12/20/2013 — ENGINEER — DAVID B. PETTY

NAD 83/ NSRS 2007

MATCH LINE STA. -M2- 9382+00.00 MATCH TO SHT. 16

MATCH LINE STA. -M2- 9396+00.00 MATCH TO SHT. 18

PROP. MAIN TRACK #1 (BY NORFOLK SOUTHERN)
PROP. MAIN TRACK #2 (BY NORFOLK SOUTHERN)
EXIST. MAIN TRACK #1

-M1-CS 9387+45.70
-M2-CS 9387+45.03
-M1-ST 9392+41.70
-M2-ST 9392+41.03

HISTORIC BOUNDARY
CH LUTHERAN CHAPEL
BRAWLEY HARRY LONG & WF BRAWLEY JANET L
RIGHT OF WAY SHOWN PURCHASED BY NCRR (APPROXIMATE LOCATION)
FARMER KAY FRANCES
MORRIS MARLENE
ALBRIGHT FARON J & WF ALBRIGHT BONNIE W
CH OAK GROVE BAPTIST
REMOVE EXIST. DRIVE TO NCRR R/W LIMITS
EXISTING RAILROAD R/W
PROP. 48" CHAIN LINK FENCE SEE DETAIL AA
PROP. PRECAST CONCRETE PARKING CURB SEE DETAIL SHT 2-Q AND DETAIL AA THIS SHEET
PROPERTY LINES APPROX. LOCATION
STONE MONUMENT POSSIBLE WELL
TIE TO EXIST. FENCE +88.05, 35.22' RT
END CHL FENCE +00, 46.25' RT
DO NOT DISTURB EXISTING CEMETERY
CEMETERY
SEE DETAIL 'E'
S 59° 45' 36.7" W

DETAIL E
SPECIAL CUT BASE DITCH
(Not to Scale)
Natural Ground — 2:1 — D — 2:1 — Front Ditch Slope
B
Min. D = 1Ft.
B = 5 Ft.
FROM -M2-STA. 9385+00 TO STA. 9402+50, RT
FROM -M2-STA. 9387+00 TO STA. 9400+00, LT

DETAIL AA
(Not to Scale)
3' MIN. — 4' MIN. — EXIST. PARKING LOT
PROP. 48" CHAIN LINK FENCE
2:1
PROP. PRECAST CONC. PARKING CURB (SEE DETAIL SHT. 2-Q)

NOTE FOR PARCEL 29C:
DO NOT DISTURB OR UTILIZE PARKING LOT OTHER THAN INSTALLATION OF 48" CHAIN LINK FENCE AND CONCRETE PARKING CURB AS SHOWN ON THE PLANS. CONTRACTOR SHALL COORDINATE WITH THE ENGINEER AND CHURCH TWO WEEKS PRIOR TO BEGINNING THIS WORK.

SEE SHEET 28 FOR -M1- GRADE

MAIN TRACK 2

PROP. TOP OF RAIL
EXIST. TOP OF RAIL
EXIST. GROUND

PI = 9389+70
EL = 839.05'
VC = 200'
r=0.127

PI = 9393+40
EL = 837.58'
VC = 200'
r=-0.010

(-)0.1424%
(-)0.3973%
(-)0.4000%
(-)0.3775%

BEG DITCH GRADE RT -M2- STA 9385+00 EL 834.12
BEG DITCH GRADE LT -M2- STA 9387+00.00 EL 833.84

VPC 9388+70.00 TOP OF RAIL EL 839.20
VPT 9390+70.00 TOP OF RAIL EL 838.66
VPC 9392+40.00 TOP OF RAIL EL 837.98
VPT 9394+40.00 TOP OF RAIL EL 837.21

	9382	9383	9384	9385	9386	9387	9388	9389	9390	9391	9392	9393	9394	9395	9396
(EXIST NG T/R)	839.87														
(PROPOSED T/R)	840.15	839.73 / 840.01	839.68 / 839.86	839.58 / 839.72	839.48 / 839.58	839.38 / 839.44	839.22 / 839.30	839.11 / 839.15	838.84 / 838.90	838.48 / 838.54	838.13 / 838.14	837.67 / 837.74	837.14 / 837.36	836.64 / 836.98	836.20 / 836.60

SYSTIME: $$$$$$$$$$$$$$$$$$$$
USERNAME: $$$$$$$$$$$$$$$$$$$$

TGS ENGINEERS
804-C N. LAFAYETTE ST
SHELBY, NC 28150
PH (704) 476-0003
CORP. LICENSE NO.: C-0275

DGN 0001ADD_P10b2 0164DEL_P10b2

PROJECT REFERENCE NO.	SHEET NO.
P-5206C	18
R/W SHEET NO.	

RAIL DESIGN ENGINEER — NORTH CAROLINA PROFESSIONAL SEAL 038897 ENGINEER DAVID B. PETTY — 4/21/19

HYDRAULICS ENGINEER — NORTH CAROLINA PROFESSIONAL SEAL 038897 ENGINEER DAVID B. PETTY — 4/21/19

SEE SHT 2-J FOR EUDY RD CLOSURE DETAIL.
AT-GRADE CROSSING CLOSURE SHALL BE COORDINATED WITH P-5206A AND P-4405A

FOR TRACK GEOMETRY DATA SEE SHT 2-E & 2-F
NOTE: ALL TRACKWORK WILL BE PERFORMED BY NORFOLK SOUTHERN OR ITS CONTRACTOR.

MATCH LINE STA. -M2- 9396+00.00
MATCH TO SHT. 17

MATCH LINE STA. -M2- 9410+00.00
MATCH TO SHT. 19

-Y9-
PI Sta 11+53.08
Δ = 13° 00' 21.0" (RT)
D = 11° 27' 33.0"
L = 113.50'
T = 56.99'
R = 500.00'

PI Sta 13+36.76
Δ = 33° 16' 51.2" (RT)
D = 21° 13' 14.4"
L = 156.83'
T = 80.70'
R = 270.00'

-Y9-POT 10+00.00
-Y9-PC 10+96.08
-Y9-PT 12+09.58
-Y9-PC 12+56.07
-Y9- PT 14+12.90

-TRACK MI- (CURVE MIC3445)
PIs Sta 9402+17.28
Θs = 0° 18' 36.0"
Ls = 124.00'
LT = 82.67'
ST = 41.33'

PI Sta 9404+14.93
Δ = 1° 33' 47.0" (RT)
Dc = 0° 30' 00.0"
L = 312.61'
T = 156.32'
R = 11,459.19'
Ea = 1"

PIs Sta 9406+12.56
Θs = 0° 18' 36.0"
Ls = 124.00'
LT = 82.67'
ST = 41.33'

-TRACK M2- (CURVE M2C3445)
PIs Sta 9401+95.82
Θs = 0° 17' 21.6"
Ls = 124.00'
LT = 82.67'
ST = 41.33'

PI Sta 9404+09.07
Δ = 1° 36' 15.8" (RT)
Dc = 0° 28' 00.0"
L = 343.80'
T = 171.91'
R = 12,277.70'
Ea = 1"

PIs Sta 9406+22.29
Θs = 0° 17' 21.6"
Ls = 124.00'
LT = 82.67'
ST = 41.33'

NAD 83/ NSRS 2007

PAVEMENT REMOVAL

-Y10- STA. 12+25.00
-Y10- STA. 15+60.00

-MI-TS 9401+34.62
-MI-SC 9402+58.62
-MI-CS 9405+71.23
-MI-ST 9406+95.23

-M2-TS 9401+13.16
-M2-SC 9402+37.16
-M2-CS 9405+80.96
-M2-ST 9407+04.96

PROP. MAIN TRACK #1 (BY NORFOLK SOUTHERN)
PROP. MAIN TRACK #2 (BY NORFOLK SOUTHERN)
EXIST. MAIN TRACK #1

PROPOSED RAILROAD BRIDGE (SEE SHEET 18A)

EUDY STREET TO BE REMOVED GRADE TO SURROUNDING ELEVATION AND STABILIZE.

EXISTING EUDY RD. AT-GRADE CROSSING TO BE REMOVED

EXISTING TRACKBED TO BE REMOVED

CUT TO FILL TRANSITION CLASS 1 RIP RAP EST. 40 TONS GEOTEXTILE EST. 60 SY

CL I RIP RAP EST: 33 TONS GEOTEXTILE EST: 62 SY

CL I RIP RAP EST: 15 TONS GEOTEXTILE EST: 30 SY

54" WELDED STEEL (0.750" THICK) TRENCHLESS INSTALLATION SHALL BE USED AT A MIN. 25' FROM CENTERLINE OF EXISTING TRACK

INSTALL GUARDRAIL WITH TWO TERMINAL END SECTIONS. SET GUARDRAIL FACE A MINIMUM OF 5' FROM SAWCUT.

INSTALL GUARDRAIL WITH TWO TERMINAL END SECTIONS. SET GUARDRAIL FACE A MINIMUM OF 5' FROM SAWCUT.

RIGHT OF WAY SHOWN PURCHASED BY NCRR (APPROXIMATE LOCATION)

HISTORIC BOUNDARY

DO NOT DISTURB EXISTING CEMETERY

DO NOT DISTURB

ABANDON EUDY RD.

REMOVE

GRADE TO DRAIN

PLUG & FILL WITH FLOWABLE FILL

SEE DETAIL 'E'
SEE DETAIL 'L'
SEE DETAIL 'C'
SEE DETAIL 'O'
SEE DETAIL 'Q'
SEE SHEET 18A FALSE SUMP
SEE DETAIL N
SEE SHEET 18A XS-A
SEE SHEET 18A SECTION XS-A

MT ZION UNITED CHURCH OF CHRIST NO DEED REF

CRAFT DEVELOPMENT LLC DB 10911PG 1

MT ZION UNITED CHURCH OF CHRIST DB 564 PG 688 PB 9995 PG 273

MT ZION UNITED CHURCH OF CHRIST DB 563 PG 781 S PB 9995 PG 273

MICHAEL E & TAMMY U ERVIN DB 1163 PG 479 PB 9995 PG 617

ANDIS CITY LIMIT

ROWAN COUNTY

S 61° 56' 35.7" W

S 59° 45' 36.7" W

N 63° 05' 20.3" W

N 29° 48' 29" W

N 60°55'27" E 118.80

N 60°55'27" E 901.08'

S 60°40'17" W 158.18'

SEE SHEETS S-1 THRU S-52 FOR STRUCTURE PLANS.

SEE SHEET 18A FOR -Y10- PLAN

SEE SHEET 32 FOR -Y10- GRADE

SEE SHEET 29 FOR -MI- GRADE

DETAIL L
SPECIAL CUT BASE DITCH
(Not to Scale)
Natural Ground, 2:1, 40:1, B, 2:1, Front Ditch Slope
Min. D= 1Ft.
B= SEE XS-SECT
FROM -M2-STA. 9402+50 TO STA. 9403+63, RT

DETAIL C
SPECIAL LATERAL BASE DITCH
(Not to Scale)
Natural Ground, 2:1, D, SEE XS-SECT, 40:1, SEE XS-SECT, 2:1, Fill Slope
Min. D=1 Ft.
B=5 Ft.
FROM -M2- STA. 9405+15 TO STA. 9407+40, RT

DETAIL E
SPECIAL CUT BASE DITCH
(Not to Scale)
Natural Ground, 2:1, D, 2:1, B, Front Ditch Slope
Min. D= 1Ft.
B= 5 Ft.
FROM -M2-STA. 9385+00 TO STA. 9402+50, RT
FROM -M2-STA. 9387+00 TO STA. 9400+00, LT

DETAIL O
STANDARD BASE DITCH
(Not to Scale)
Natural Ground, 2:1, 2:1, Natural Ground, B
B= 5 Ft.
-M1- STA. 9407+56, LT
DDE=50 CY

MAIN TRACK 2
PROP. TOP OF RAIL
EXIST. TOP OF RAIL
EXIST. GROUND

PIPE HYDRAULIC DATA
-M2- Sta.9407+44

DRAINAGE AREA	= 54.0	AC
DESIGN FREQUENCY	= 100	YRS
DESIGN DISCHARGE	= 117	CFS
DESIGN HW ELEVATION	= 809.65	FT
100 YEAR DISCHARGE	= 117	CFS
100 YEAR HW ELEVATION	= 809.65	FT

(-)0.3775%
(-) 0.4000% (RT)
(-) 0.4000% (LT)
(-) 3.2300%
(-) 0.4000%
(-)0.3775%

EXIST. TOP OF RAIL
PROP. TOP OF RAIL
-M2- STA.9403+86.73 BEGIN BRIDGE
-M2- STA.9405+17.00 END BRIDGE

END DITCH GRADE LT -M2- STA. 9400+00 EL 828.64
PI DITCH GRADE RT -M2- STA. 9401+00 EL 827.72
PI DITCH GRADE RT -M2- STA. 9403+00 EL 821.26
END DITCH GRADE RT -M2- STA. 9403+63 (60.1' RT) EL 821.00
BEG DITCH GRADE RT -M2- STA. 9405+15 EL 805.20
END DITCH GRADE RT -M2- STA. 9407+40 EL 804.30

BASE OF RAIL TO TOP OF STRUCTURE = 23.17FT
VPC 9408+45.00 TOP OF RAIL EL 831.90
EXIST. GROUND
℄ -Y10-
EXIST. 24"X24" CONC & STONE CULVERT PLUG & FILL
PROP. 54" WELDED STEEL (.750 THICK)

(EXISTING T/R)
(PROPOSED T/R)

836.20 836.60
835.66 836.22
835.14 835.85
834.68 835.47
834.19 835.09
833.61 834.71
832.94 834.34
832.34 833.96
831.76 833.58
831.17 833.20
830.59 832.83
830.14 832.45
829.67 832.07
829.18 831.71
829.79 831.46

850 840 830 820 810 800 790

9396 9397 9398 9399 9400 9401 9402 9403 9404 9405 9406 9407 9408 9409 9410

TGS ENGINEERS
804-C N. LAFAYETTE ST
SHELBY, NC 28150
PH (704) 476-0003
CORP. LICENSE NO.: C-0275

0001ADD_P10b2
0164DEL_P10b2
DGN

PROJECT REFERENCE NO.	SHEET NO.
P-5206C	18A
R/W SHEET NO.	

FOR TRACK GEOMETRY DATA SEE SHT 2-E & 2-F
NOTE: ALL TRACKWORK WILL BE PERFORMED BY NORFOLK SOUTHERN OR ITS CONTRACTOR.

RAILROADWAY DESIGN ENGINEER — NORTH CAROLINA PROFESSIONAL SEAL 35018 ENGINEER JAMES L. TERRY III
HYDRAULICS ENGINEER — NORTH CAROLINA PROFESSIONAL SEAL 038687 ENGINEER DAVID B. PETTY

-Y10-
PI Sta 10+96.38
Δ = 9° 30' 22.1" (LT)
D = 10° 44' 58.8"
L = 88.43'
T = 44.32'
R = 533.00'
SE = NC

PI Sta 18+75.66
Δ = 12° 20' 09.3" (LT)
D = 10° 44' 58.8"
L = 114.76'
T = 57.60'
R = 533.00'
SE = NC

PI Sta 20+67.72
Δ = 21° 22' 09.2" (RT)
D = 8° 00' 48.2"
L = 266.67'
T = 134.90'
R = 715.00'
SE = NC

-Y44-
PI Sta 12+47.82
Δ = 8° 33' 27.1" (LT)
D = 2° 25' 40.0"
L = 352.48'
T = 176.57'
R = 2,360.00'
SE = EXIST.

0146

N CHAPEL ST (-Y44-) / KIMBALL RD (-Y10-) — XX 2010 ADT (in 100s) / XX 2035 ADT (in 100s)
US 29A /MAIN ST (-Y1-) / KIMBALL RD (-Y10-) — XX 2010 ADT (in 100s) / XX 2035 ADT (in 100s)

DO NOT DISTURB TOWER

-Y44- POT 17+07.68

SHEET 18

CL I RIP RAP EST: 33 TONS GEOTEXTILE EST: 62 SY

54" WELDED STEEL (0.750" THICK) TRENCHLESS INSTALLATION SHALL BE USED BELOW THE CENTERLINE OF EXISTING TRACK

PLUG & FILL WITH FLOWABLE FILL

24"x24" CONC STONE OUTLET

12"CONC TOP=806.23

30"CONC HW TOP=805.85

15"RCP RETAIN

SEE DETAIL 'O'

-M1- -M2-

-M1-ST 9406+95.23 -M2-CS 9405+71.23

-M1-CS 9405+71.23 -M2-ST 9407+04.96

-M1-ST 9406+95.23 -M2-CS 9405+80.96

-M1-CS 9405+80.96 -M2-ST 9407+04.96

-M1-TS 9401+34.62 -M2-SC 9402+58.62

-M1-SC 9402+58.62 -M2-TS 9401+13.16

-M1-TS 9401+34.62 PROP. MAIN TRACK #1 (BY NORFOLK SOUTHERN)

-M2-TS 9401+13.16 PROP. MAIN TRACK #2 (BY NORFOLK SOUTHERN)

EUDY STREET TO BE REMOVED AND GRADE ROUNDING ELEVATION AND STABILIZE.

DO NOT DISTURB EXISTING CEMETERY

CEMETERY

SEE DETAIL 'E'

SEE DETAIL 'L'

SEE DETAIL 'Q'

SECTION X-X

BM #14

CURB-WC3445

CURB-WC3446

-Y44- PT 14+23.74

BEGIN CONSTRUCTION
-Y10- STA. 10+08.00

-Y10- PC 10+52.06

END BRIDGE
-M1 STA 9405+20.69

-Y10- PT 11+40.49

-BY24-401

CHINA GROVE CITY LIMIT

N 28° 23' 11.0" W

S 85°58'10" E 200.36'

S 56° 21' 11.6" W

S 64° 54' 44.7" W 102.81'

(SUBJECT TO R/W) S 66°22'55" W 102.07'

-Y44- POT 10+00.00

BEGIN BRIDGE
-M1- STA 9403+90.41

-Y10- POT 10+00.00
-Y44- POC 12+15.00

-Y44- PC 10+71.26

-BY24-400

CL B RIP RAP EST: 2 TONS GEOTEXTILE EST: 7 SY

PROPOSED RAILROAD BRIDGE

EXISTING TRACKWORK TO BE REMOVED

MT ZION UNITED CHURCH OF CHURCH NO DEED REF

CRAFT DEVELOPMENT LLC DB 1091PG 1

BARRY GARMON DB 867 PG 138 PB 9995 PG 3456 LOT 4

MT ZION UNITED CHURCH OF CHURCH NO DEED REF

SEE SHEETS S-1 THRU S-52 FOR STRUCTURE PLANS

NAD 83/ NSRS 2007

UNKNOWN

JOYCE L COLLINS DB 821PG 981 PB 9995 PG 335

GREGORY J & REGINA BELK DB 1135 PG 1 PB 9995 PG 335

FITE KRISTIE M

MOSS BARBARA H

AISTROP BOBBY STEVE & JANICE AISTROP JANICE SHARON ADKINS

RICHARD MCGUIRE PROPERTIES LLC

BELK GEORGE L JR & WF BELK REBECCA S

ISMTL&MASBUS

41C WILSON PROFESSIONAL REALTY LLC DB 1188 PG 243 PB 9995 PG 617

END CONSTRUCTION
-Y1- STA. 13+12.98

HAZEL ST

EXISTING R/W

MICHAEL E & TAMMY U ERVIN DB 1163 PG 479 PB 9995 PG 617

MICHAEL C D BEASLEY DB 1157 PG 831 PB 9995 PG 617

-Y10- PRC 19+32.81

-Y10- PC 18+18.06

34C CONCORD TELEPHONE CO DB 677 PG 155 PB 9995 PG 617

ROWAN COUNTY LANDIS CITY LIMIT

REMOVE (BY NCDOT)

ABANDON

43C MT ZION UNITED CHURCH OF CHRIST DB 563 PG 787 PB 9995 PG 273

PROPOSED 5' SIDEWALK

PROPOSED 2'-6" C&G

PROPOSED 5' SIDEWALK

SEE DETAIL 'R'

REMOVED BY OWNER

SEE DETAIL 'S'

SEE DETAIL 'O'

FALSE SUMP SEE DETAIL 'N'

CL I RIP RAP EST: 4 TONS GEOTEXTILE EST: 10 SY

REMOVED (BY NCDOT R/W)

HISTORIC BOUNDARY

ROWAN COUNTY
CHINA GROVE CITY LIMIT

-M2- POC 9404+59.95 =
-Y10- POT 13+83.78

-M1- POC 9404+63.64 =
-Y10- POT 13+69.47

33C MT ZION UNITED CHURCH OF CHURCH DB 564 PG 688 PB 9995 PG 273

CHARLES KIMBALL DB 5015 PG 262

MTL SHED

MTL CANOPY

ISBKD

VAR. CONC

LLOYD J & POLLY HARWOOD DB 865 PG 538

64C

SEE INSET A

INSET A

TIE TO EXIST. CURB +96.84

RANDY DEAN FLEMING DB 964 PG 830 63C

JAMES E & KATHERINE B KIMBALL DB 1149 PG 385 DB 786 PG 274

-Y10- POT 23+86.35

-Y10- POC 21+20.61 =
-Y1- POT 11+70.21

40C JAMES E & KATHERINE B KIMBALL DB 1149 PG 385 DB 786 PG 274

END TIP CONSTRUCTION
-Y10- STA. 21+79.39

KIMBALL ST. SR 1211

N 28° 51' 39.2" W

-BY1C-401

39C DAYVAULT FAMILY LTD PARTNERSHIP DB 892 PG 135

-Y10- PT 21+99.48

BEGIN CONSTRUCTION
-Y1- STA. 10+96.84

-Y1- POT 10+00.00

B1	N 29°17'34" W	24.98'
B2	S 60°42'26" W	47.89'
B3	N 33°43'3" W	15.25'
B4	S 60°43'24" W	20.09'
B5	S 29°33'41" E	159.43'

36C	RACHEL G EFIRD	DB 1139 PG 276 PB 9995 PG 617
37C	BITTLE DEAL	DB 548 PG 596 PB 9995 PG 617 PB 9995 PG 273
38C	MT ZION UNITED CHURCH OF CHRIST	DB 817 PG 478

65C PRIMOJUSTICE PROPERTIES, LLC DB 1049 PG 429

HISTORIC BOUNDARY

SEE SHEET 18 FOR -M1- & -M2- PLAN

SEE PLAN SHEET 32 FOR -Y10- GRADE

DETAIL S
CUT DITCH
(Not to Scale)
Natural Ground, 2:1, d, D, 4:1 or Flatter, Front Ditch Slope, Geotextile
Min. D=1.5 Ft.
Min. d=1.5 Ft.
Type of Liner= CL I Rip-Rap
FROM -Y10- STA. 18+40 TO STA. 18+65
EST. CL I RIP RAP: 19 TONS
GEOTEXTILE: EST. 30 SY

DETAIL O
STANDARD BASE DITCH
(Not to Scale)
Natural Ground, 2:1, D, d, B, Geotextile
Min. D= 1 Ft.
Min. d= 1 Ft.
B= 2 Ft.
*When B is < 6.0'
Type of Liner= CL I Rip-Rap
FROM -Y10- STA. 18+50 (28'RT) TO STA. 18+60 (49'RT)
EST. CL I RIP RAP: 12 TONS
GEOTEXTILE: EST. 21 SY
DDE : 50 CY

SECTION X-X
(Not to Scale)
MIN ELEV. = 825.0'
10', Natural Ground, 2:1, 30"CSP
NOTE: FILL AS NEEDED TO ACHIEVE MIN. ELEVATION OF 825.0'
FROM -M2-STA. 9403+66 TO STA. 9403+76, 63' TO 80' RT +/-
EST. FILL:3CY

DETAIL N
FALSE SUMP
(Not to Scale)
Outside Ditch Traffic Flow, 5:1, 10:1, 1.5', 2.0', GI etc.
S=Ditch Slope
℄ Proposed Ditch
-Y10- STA. 14+80, 28' RT

DETAIL P
BERM DITCH
(Not to Scale)
SLOPE STAKE, CLEARING LIMITS, 5.0', SEE XS-SECT, 10.0' V.C., 2:1, D VAR
Min. D=1 Ft.
FROM -Y10- STA. 15+00 TO STA. 16+50, RT

DETAIL Q
BERM DITCH
(Not to Scale)
SLOPE STAKE, CLEARING LIMITS, 5.0', SEE XS-SECT, 10.0' V.C., 2:1, D VAR
Min. D=1.5 Ft.
FROM -Y10- STA. 14+23.82 (126.1'RT) TO STA. 14+36.32 (131.8'RT) TO STA. 15+00,RT

DETAIL R
CUT DITCH
(Not to Scale)
Natural Ground, 2:1, d, D, 4:1 or Flatter, Front Ditch Slope
Min. D=1 Ft.
Min. d=1 Ft.
Type of Liner= PSRM
FROM -Y10- STA. 14+93 TO STA. 18+40, RT
EST. PSRM: 240 SY

DGN: 0164DEL_P10b2

FOR TRACK GEOMETRY DATA SEE SHT 2-E & 2-F

NOTE: ALL TRACKWORK WILL BE PERFORMED BY NORFOLK SOUTHERN OR ITS CONTRACTOR.

PROJECT REFERENCE NO.	SHEET NO.
P-5206C	18A
R/W SHEET NO.	

RAIL/ROADWAY DESIGN ENGINEER: NORTH CAROLINA PROFESSIONAL ENGINEER SEAL 35018 JAMES L. TERRY III

HYDRAULICS ENGINEER: NORTH CAROLINA PROFESSIONAL ENGINEER SEAL 38697 DAVID B. PETTY

-Y10-

PI Sta 10+96.38	PI Sta 18+75.66	PI Sta 20+67.72
Δ = 9° 30' 22.1" (LT)	Δ = 12° 20' 09.3" (LT)	Δ = 21° 22' 09.2" (RT)
D = 10° 44' 58.8"	D = 10° 44' 58.8"	D = 8° 00' 48.2"
L = 88.43'	L = 114.76'	L = 266.67'
T = 44.32'	T = 57.60'	T = 134.90'
R = 533.00'	R = 533.00'	R = 715.00'
SE = NC	SE = NC	SE = NC

-Y44-

PI Sta 12+47.82
Δ = 8° 33' 27.1" (LT)
D = 2° 25' 40.0"
L = 352.48'
T = 176.57'
R = 2,360.00'
SE = EXIST.

0146

N CHAPEL ST (-Y44-) — KIMBALL RD (-Y10-)

US 29A /MAIN ST (-Y1-) — KIMBALL RD (-Y10-)

XX 2010 ADT (in 100s)
XX 2035 ADT (in 100s)

NAD 83/ NSRS 2007

-Y44- POT 17+07.68

-Y44- PT 14+23.74

BEGIN CONSTRUCTION
-Y10- STA. 10+08.00

-Y10- PC 10+52.06

END BRIDGE
-M1 STA 9405+20.69

-Y10- PT 11+40.49

-Y10- POT 10+00.00

-Y44- POC 12+15.00

-Y44- PC 10+71.26

-Y44- POT 10+00.00

BEGIN BRIDGE
-M1- STA 9403+90.41

-BY24-401

-BY24-400

-M2- POC 9404+59.95 =
-Y10- POT 13+83.78

-M1- POC 9404+63.64 =
-Y10- POT 13+69.47

-Y10- PRC 19+32.81

-Y10- PC 18+18.06

END CONSTRUCTION
-Y1- STA. 13+12.98

-Y10- POT 23+86.35

-Y10- POC 21+20.61 =
-Y1- POT 11+70.21

END TIP CONSTRUCTION
-Y10- STA. 21+79.39

-Y10- PT 21+99.48

BEGIN CONSTRUCTION
-Y1- STA. 10+96.84

-Y1- POT 10+00.00

B1	N 29°17'34" W	24.98'
B2	S 60°42'36" W	47.89'
B3	N 33°43'31" W	15.25'
B4	S 60°42'24" W	20.09'
B5	S 29°33'41" E	159.43'

INSET A

SEE INSET A

SEE DETAIL S

SEE DETAIL O

SEE DETAIL 'R'

SEE DETAIL 'P'

SEE DETAIL 'T'

SEE DETAIL 'Q'

SECTION X-X

EXISTING TRACKWORK TO BE REMOVED

PROPOSED RAILROAD BRIDGE

PROPOSED 5' SIDEWALK

PROP. MAIN TRACK #1 (BY NORFOLK SOUTHERN)

PROP. MAIN TRACK #2 (BY NORFOLK SOUTHERN)

EUDY STREET TO BE REMOVED TO GRADE ROUNDING ELEVATION AND STABILIZE.

DO NOT DISTURB EXISTING CEMETERY

DO NOT DISTURB

HISTORIC BOUNDARY

CRAFT DEVELOPMENT LLC DB 1091 PG 1 — 32C

MT ZION UNITED CHURCH OF CHRIST NO DEED REF — 31C

BARRY GARMON DB 867 PG 138 PB 9995 PG 3456 LOT 4

MT ZION UNITED CHURCH OF CHRIST DB 564 PG 688 PB 9995 PG 273 — 33C

MICHAEL E & TAMMY U ERVIN DB 1163 PG 479 PB 9995 PG 617

MICHAEL C D BEASLEY DB 1157 PG 831 PB 9995 PG 617

CONCORD TELEPHONE CO DB 677 PG 155 PB 9995 PG 617 — 34C

MT ZION UNITED CHURCH OF CHRIST DB 563 PG 787 PB 9995 PG 273 — 43C

JOYCE L COLLINS DB 821 PG 981 PB 9995 PG 335

GREGORY J & REGINA BELK DB 1178 PG 335 PB 9995 PG 335

FITE KRISTIE M

UNKNOWN

MOSS BARBARA H

AISTROP BOBBY STEVE & JANICE AISTROP ADKINS SHARON

RICHARD MCGUIRE PROPERTIES LLC

BELK GEORGE L JR & WF BELK REBECCA S

WILSON PROFESSIONAL REALTY LLC DB 1188 PG 243 PB 9995 PG 617 — 41C

ISMTL&MASBUS

LLOYD J & POLLY HARWOOD DB 865 PG 538 — 64C

CHARLES KIMBALL DB 581 PG 262

PRIMOJUSTICE PROPERTIES, LLC DB 1049 PG 429 — 65C

RACHEL G EFIRD DB 1139 PG 276 PB 9995 PG 617 — 36C

BITTLE DEAL DB 548 PG 596 PB 9995 PG 273 — 37C

MT ZION UNITED CHURCH OF CHRIST DB 817 PG 478 — 38C

RANDY DEAN FLEMING DB 964 PG 830 — 63C

JAMES E & KATHERINE B KIMBALL DB 1149 PG 385 DB 786 PG 274

JAMES E & KATHERINE B KIMBALL DB 1149 PG 385 DB 786 PG 274 — 40C

DAYVAULT FAMILY LTD PARTNERSHIP DB 892 PG 135 — 39C

CRAFT DEVELOPMENT LLC DB 1091 PG 1

CITY OF CHINA GROVE

ROWAN COUNTY

CHINA GROVE CITY LIMIT

LANDIS CITY LIMIT

SOUTH MAIN ST / HIGHWAY 29A SR 2139 / 34' EST

NORTH CHAPEL ST SR 1242 / 18' EST

KIMBALL ST. SR 1211

HAZEL ST

SHEET 18

SEE SHEETS S-1 THRU S-52 FOR STRUCTURE PLANS

SEE SHEET 18 FOR -M1- & -M2- PLAN

SEE PLAN SHEET 32 FOR -Y10- GRADE

DETAIL S
CUT DITCH
(Not to Scale)

Type of Liner = CL I Rip-Rap
Min. D=1.5 Ft.
Min. d=1.5 Ft.
FROM -Y10- STA. 18+40 TO STA. 18+65
EST. CL I RIP RAP: 19 TONS
GEOTEXTILE: EST. 30 SY

DETAIL O
STANDARD BASE DITCH
(Not to Scale)

Type of Liner = CL I Rip-Rap
Min. D= 1 Ft.
Min. d= 1 Ft.
B= 2 Ft.
*When B is < 6.0'
FROM -Y10- STA. 18+50 (28'RT) TO STA. 18+60 (49'RT)
EST. CL I RIP RAP: 12 TONS
GEOTEXTILE: EST. 21 SY
DDE = 50 CY

SECTION X-X
(Not to Scale)

NOTE: FILL AS NEEDED TO ACHIEVE MIN. ELEVATION OF 825.0'
FROM -M2-STA. 9403+66 TO STA. 9403+76, 63' TO 80' RT +/-
EST. FILL:3CY

DETAIL N
FALSE SUMP
(Not to Scale)

S=Ditch Slope
℄ Proposed Ditch
-Y10- STA. 14+80, 28' RT

DETAIL P
BERM DITCH
(Not to Scale)

FROM -Y10- STA. 15+00 TO STA. 16+50, RT

DETAIL Q
BERM DITCH
(Not to Scale)

Min. D=1.5 Ft.
FROM -Y10- STA. 14+23.82 (126.1'RT) TO STA. 14+36.32 (131.8'RT) TO STA. 15+00,RT

DETAIL R
CUT DITCH
(Not to Scale)

Type of Liner = PSRM
Min. D=1 Ft.
Min. d=1 Ft.
FROM -Y10- STA. 14+93 TO STA. 18+40, RT
EST. PSRM: 240 SY

0001ADD_P10b2
0164DEL_P10b2

PROJECT REFERENCE NO.	SHEET NO.
P-5206C	19
R/W SHEET NO.	

RAIL DESIGN ENGINEER — NORTH CAROLINA PROFESSIONAL ENGINEER SEAL 35018, JIMMY L. TERRY, JR. 9/29/13

HYDRAULICS ENGINEER — NORTH CAROLINA PROFESSIONAL ENGINEER SEAL 038697, DAVID B. PETTY 9/30/2013

FOR TRACK GEOMETRY DATA SEE SHT 2-E & 2-F

NOTE: ALL TRACKWORK WILL BE PERFORMED BY NORFOLK SOUTHERN OR ITS CONTRACTOR.

MATCH LINE STA. -M2- 9410+00.00
MATCH TO SHT. 18

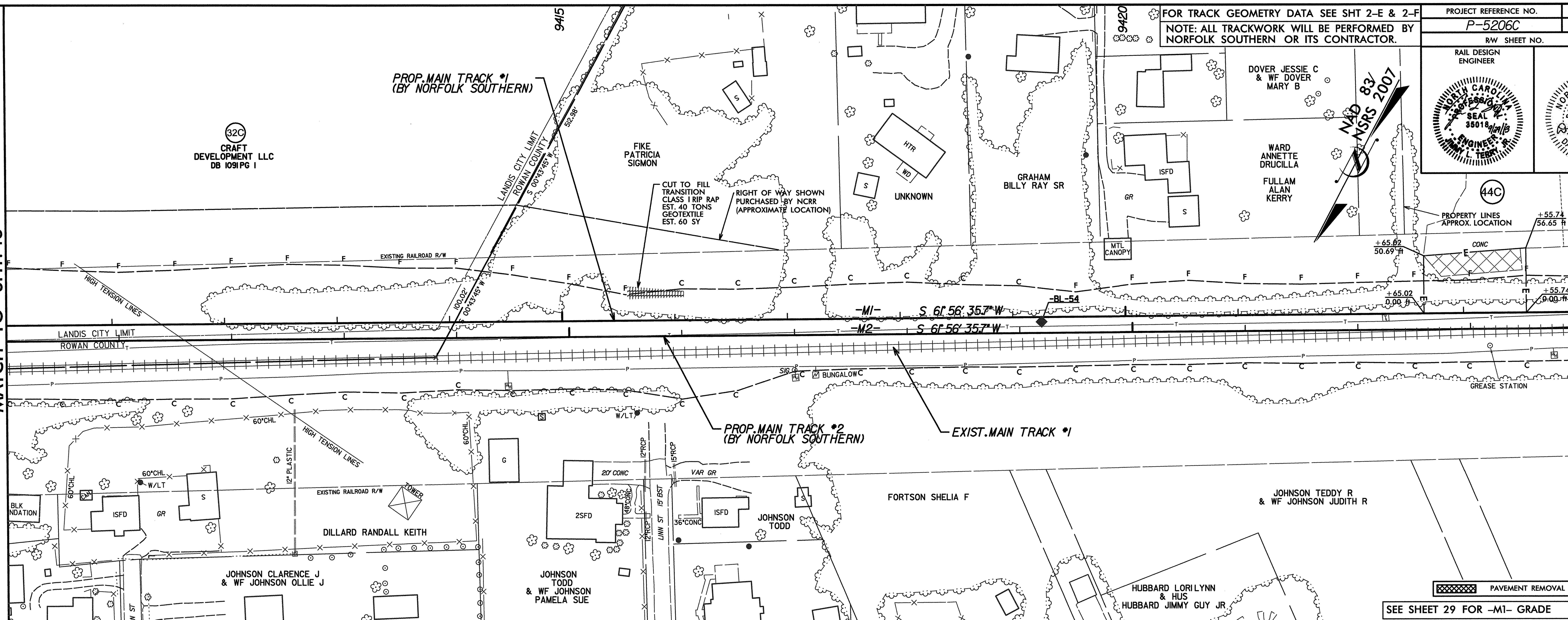

PAVEMENT REMOVAL

SEE SHEET 29 FOR -M1- GRADE

MATCH LINE STA. -M2- 9424+00.00
MATCH TO SHT. 20

MAIN TRACK 2

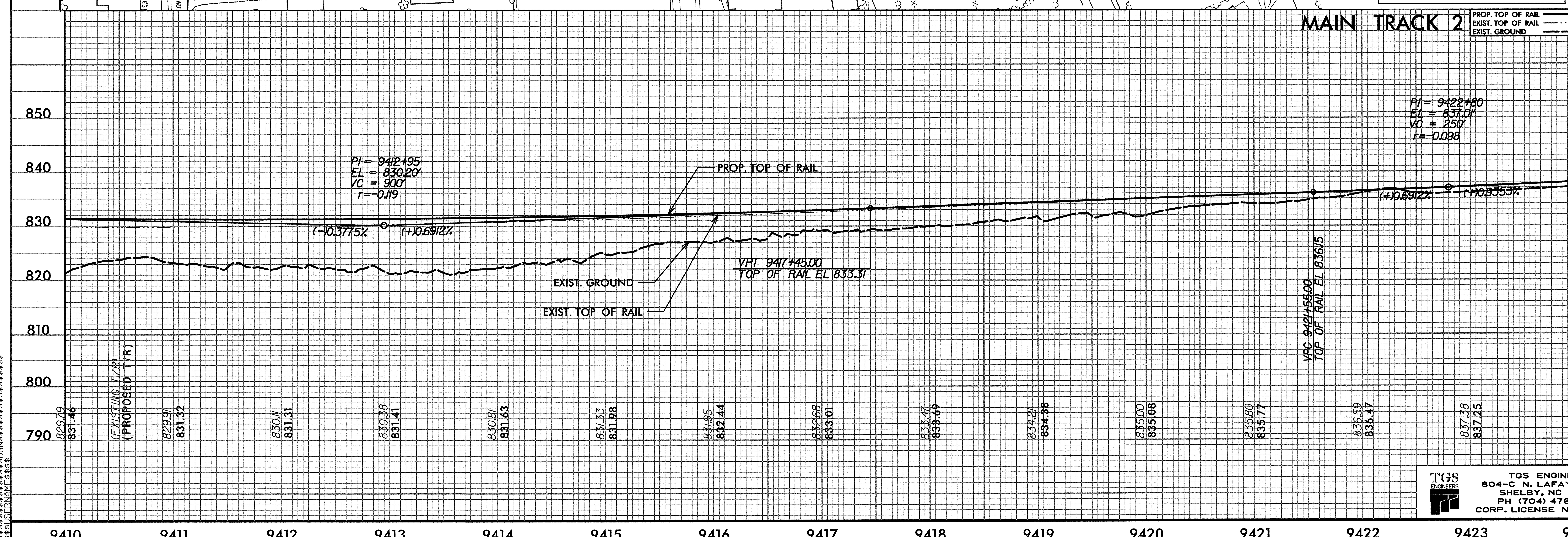

TGS ENGINEERS
804-C N. LAFAYETTE ST
SHELBY, NC 28150
PH (704) 476-0003
CORP. LICENSE NO.: C-0275

$$$$$$$$SYSTIME$$$$$$$$
$$$$$$$$DGN$$$$$$$$$$$$$$$$
$$$$$$$$USERNAME$$$$$$$$

DGN 0001ADD_P10b2 0164DEL_P10b2

-TRACK M1- (CURVE M1C3450)

PIs Sta 9434+86.62
Θs = 3° 40' 42.8"
Ls = 496.00'
LT = 330.74'
ST = 165.40'

PI Sta 9439+23.34
Δ = 8° 02' 22.7" (LT)
Dc = 1° 29' 00.0"
L = 542.00'
T = 271.45'
R = 3,862.74'
Ea = 4"

PIs Sta 9443+59.28
Θs = 3° 40' 42.8"
Ls = 496.00'
LT = 330.74'
ST = 165.40'

-TRACK M2- (CURVE M2C3450)

PIs Sta 9434+88.18
Θs = 3° 43' 11.6"
Ls = 496.00'
LT = 330.74'
ST = 165.40'

PI Sta 9439+19.11
Δ = 1° 57' 25.1" (LT)
Dc = 1° 30' 00.0"
L = 530.46'
T = 265.67'
R = 3,819.83'
Ea = 4"

PIs Sta 9443+49.30
Θs = 3° 43' 11.6"
Ls = 496.00'
LT = 330.74'
ST = 165.40'

-Y11-

PI Sta 13+27.32
Δ = 90° 58' 01.5" (LT)
D = 127° 19' 26.2"
L = 71.45'
T = 45.77'
R = 45.00'

PI Sta 14+26.39
Δ = 9° 45' 22.7" (LT)
D = 14° 19' 26.2"
L = 68.11'
T = 34.14'
R = 400.00'

PAVEMENT REMOVAL

FOR TRACK GEOMETRY DATA SEE SHT 2-E & 2-F
NOTE: ALL TRACKWORK WILL BE PERFORMED BY NORFOLK SOUTHERN OR ITS CONTRACTOR.

PROJECT REFERENCE NO.	SHEET NO.
P-5206C	20
R/W SHEET NO.	

RAIL/ROADWAY DESIGN ENGINEER — NORTH CAROLINA PROFESSIONAL SEAL 35018 ENGINEER DAVID L. TESSNER 4/21/19

HYDRAULICS ENGINEER — NORTH CAROLINA PROFESSIONAL SEAL 038897 ENGINEER DAVID B. PETTY 3/20/2019

SEE SHT 2-K FOR N CENTRAL AVE CLOSURE DETAIL.
AT-GRADE CROSSING CLOSURE SHALL BE COORDINATE WITH P-5206A AND P-4405A

MATCH LINE STA. -M2- 9424+00.00
MATCH TO SHT. 19

MATCH LINE STA. -M2- 9438+00.00
MATCH TO SHT. 21

NAD 83/NSRS 2007

CH MEMORIAL BAPTIST

BOSTIAN CLAUDE W & YATES ARTIE E

SAFRIT MARGIE SHUE & KENNETH L SWAIM CINDY S

CRISCO CLINTON C & WF CRISCO MARY M

CORRIHER TONY BEAVER

HILTON MARY GRAY

HILTON HUGH ANTHONY & WF HILTON CHRISTINE FESPERMAN

PLUMBING SHOPPE INC

ALLMAN MILDRED C

HAGER THOMAS S & WF HAGER CAROLYN

SAFRIT KAREN FOLTZ

WHITLEY TIMOTHY L

RITCHIE ROBERT GUY III

FOWLER JOYCE K

PROP. MAIN TRACK #1 (BY NORFOLK SOUTHERN)

PROP. MAIN TRACK #2 (BY NORFOLK SOUTHERN)

EXIST. MAIN TRACK #1

-MI-TS 9431+55.89

-M2-TS 9431+57.44

-Y11-PC 12+81.55

-Y11-POT 10+00.00

-Y11-PC 13+92.25

-Y11-PT 13+53.00

-MI-SC 9436+57.89

-M2-SC 9436+53.44

-Y11-PT 14+60.36

-Y11-POT 15+18.03

CL I RIP RAP
EST: 15 TONS
GEOTEXTILE
EST: 30 SY

CUT TO FILL TRANSITION
CLASS I RIP RAP EST. 20 TONS
GEOTEXTILE EST. 30 SY

INSTALL GUARDRAIL WITH TWO TERMINAL END SECTIONS. SET GUARDRAIL FACE A MINIMUM OF 5' FROM SAWCUT.

REMOVE EXISTING GUARDRAIL

PROP. TURN-AROUND

REMOVE FENCE BY OWNER

REMOVE STRUCTURE (BY NCDOT R/W)

REMOVE

REMOVE EXISTING NORTH CENTRAL AVENUE TO INTERSECTION

EXISTING N. CENTRAL AVENUE AT-GRADE CROSSING TO BE REMOVED

N CENTRAL AVE TO BE REMOVED GRADE TO SURROUNDING ELEVATION AND STABILIZE.

12"CONC HW TOP=824.80'

24"CONC HW TOP=827.71'

36"x36" STONE CULVERT

PLUG & FILL WITH FLOWABLE FILL

36" WELDED STEEL (0.500" THICK) TRENCHLESS INSTALLATION SHALL BE USED AT A MIN. 25' FROM CENTERLINE OF EXISTING TRACK

RELOCATE MILE POST (BY NORFOLK SOUTHERN)

R/R MILEPOST -BL-55

N 59° 56' 29.6" E

S 61° 56' 35.7" W

N 31° 01' 31.9" W

SEE SHEET 30 FOR -M1- GRADE

PIPE HYDRAULIC DATA
-M2- Sta.9425+76

DRAINAGE AREA	= 10.5	AC
DESIGN FREQUENCY	= 100	YRS
DESIGN DISCHARGE	= 29.4	CFS
DESIGN HW ELEVATION	= 827.16	FT
100 YEAR DISCHARGE	= 29.4	CFS
100 YEAR HW ELEVATION	= 827.16	FT

MAIN TRACK 2

PROP. TOP OF RAIL
EXIST. TOP OF RAIL
EXIST. GROUND

PI = 9426+90
EL = 840.85'
VC = 200'
r=-0.037

(+)0.9353%
(+)1.0090%

VPC 9425+90.00
TOP OF RAIL EL 839.91

BASE OF RAIL TO TOP OF STRUCTURE = 12.85FT

EXIST. 36"X36" STONE CULVERT PLUG & FILL

PROP. 36" WELDED STEEL (0.500" THICK)

VPT 9424+05.00
TOP OF RAIL EL 838.18

VPT 9427+90.00
TOP OF RAIL EL 841.95

(EXISTING T/R)
(PROPOSED T/R)

9424	9425	9426	9427	9428	9429	9430	9431	9432	9433	9434	9435	9436	9437	9438
838.11 / 838.13	839.88 / 839.07	839.68 / 840.00	840.49 / 840.96	841.44 / 841.96	842.50 / 842.96	843.53 / 843.97	844.68 / 844.98	845.76 / 845.99	846.86 / 847.00	847.91 / 848.01	848.87 / 849.02	849.90 / 850.03	850.92 / 851.04	851.98

TGS ENGINEERS
804-C N. LAFAYETTE ST
SHELBY, NC 28150
PH (704) 476-0003
CORP. LICENSE NO.: C-0275

SYSTEM: $$$$$$$$$$ DGN: $$$$$$$$$$ USERNAME: $$$$$$$$$$

0001ADD_P10b2
0164DEL_P10b2

FOR TRACK GEOMETRY DATA SEE SHT 2-E & 2-F
NOTE: ALL TRACKWORK WILL BE PERFORMED BY NORFOLK SOUTHERN OR ITS CONTRACTOR.

PROJECT REFERENCE NO.	SHEET NO.
P-5206C	21
R/W SHEET NO.	
RAIL DESIGN ENGINEER	HYDRAULICS ENGINEER

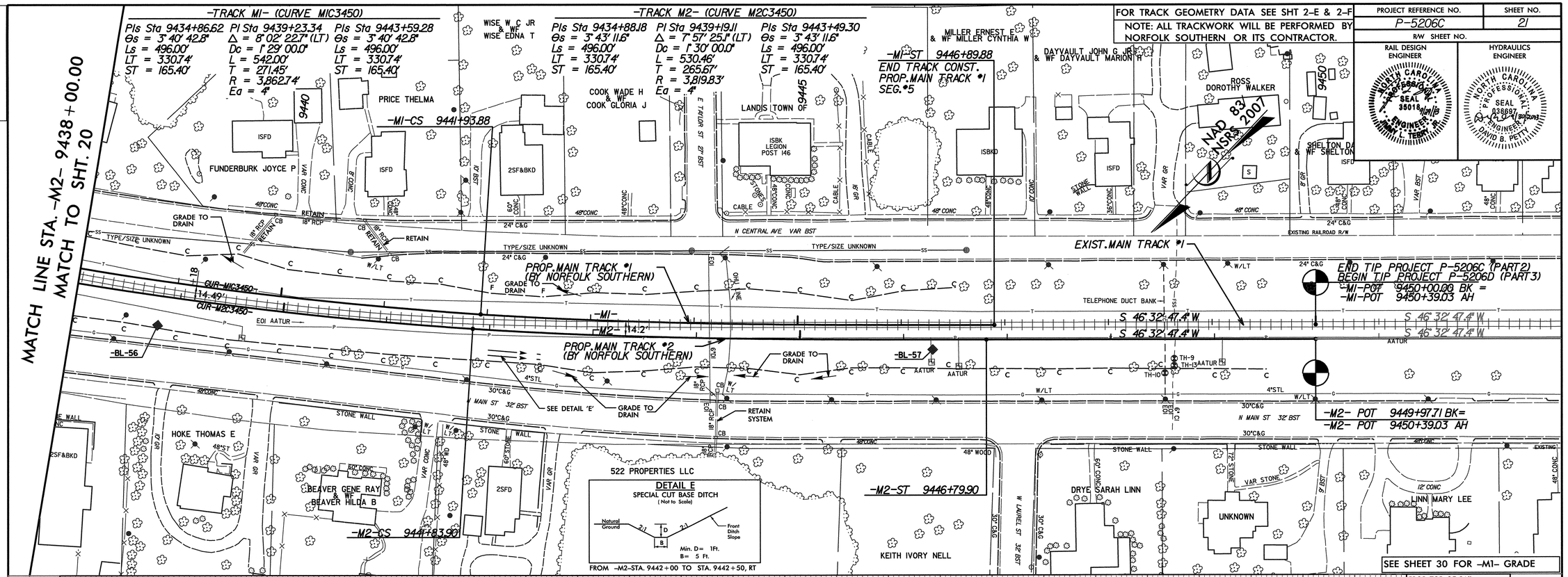

TGS ENGINEERS
804-C N. LAFAYETTE ST
SHELBY, NC 28150
PH (704) 476-0003
CORP. LICENSE NO.: C-0275

0164DEL_P10b2

DCN

PROJECT REFERENCE NO.	SHEET NO.
P-5206C	22
R/W SHEET NO.	
RAIL DESIGN ENGINEER	HYDRAULICS ENGINEER

NORTH CAROLINA PROFESSIONAL SEAL 35018 ENGINEER JIMMY L. TERRY, JR.

NORTH CAROLINA PROFESSIONAL SEAL 038697 ENGINEER DAVID B. PETTY 4/5/2013

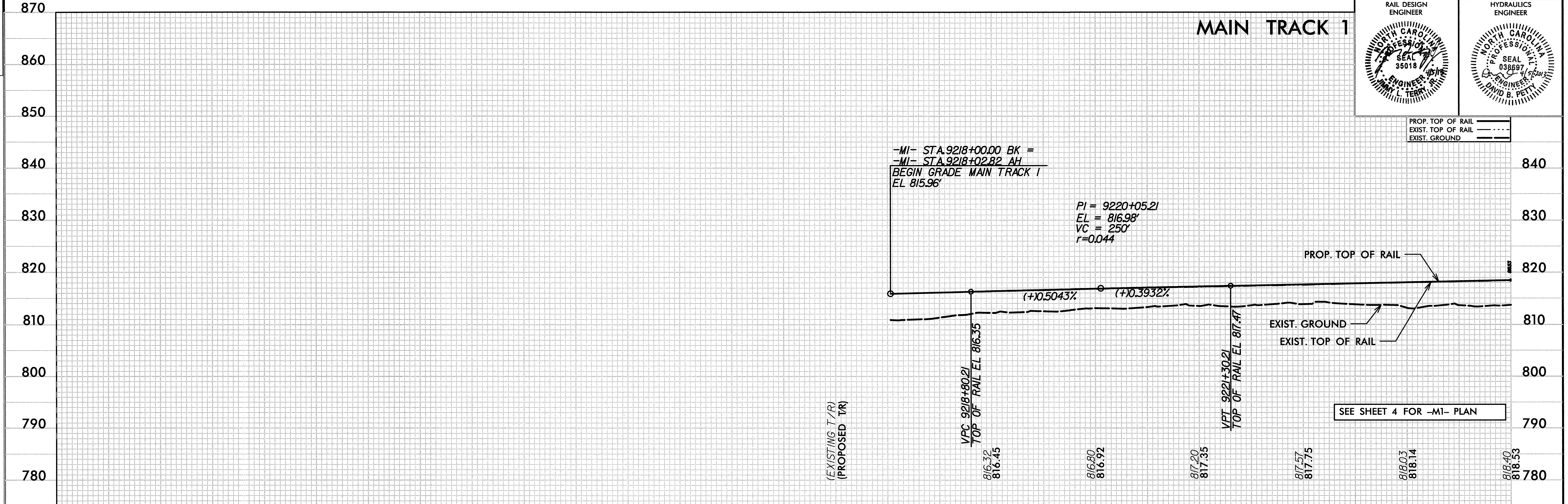

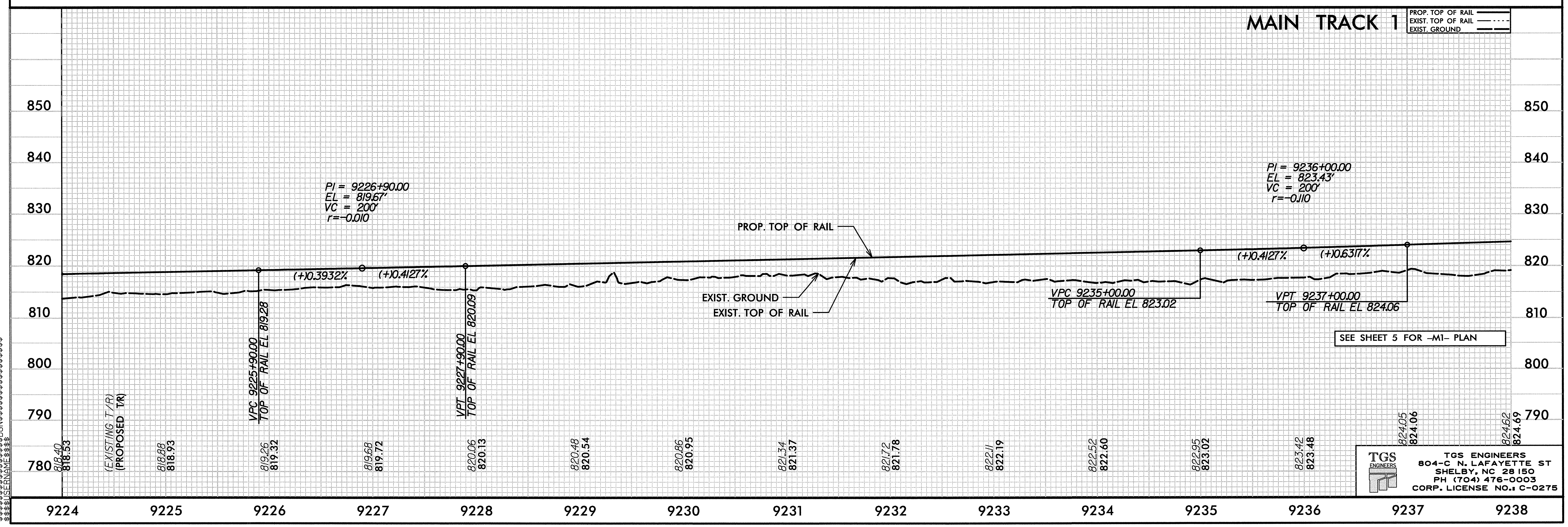

$$$$$SYSTIME$$$$$
$$$$$$$$$$$DGN$$$$$$$$$$$$$$$$
$$$$USERNAME$$$$

TGS ENGINEERS
804-C N. LAFAYETTE ST
SHELBY, NC 28150
PH (704) 476-0003
CORP. LICENSE NO.: C-0275

0164DEL_P10b2

DCN

PROJECT REFERENCE NO.	SHEET NO.
P-5206C	23
R/W SHEET NO.	

RAIL DESIGN ENGINEER — NORTH CAROLINA PROFESSIONAL ENGINEER SEAL 35018 JIMMY L. TERRY, JR. 8/29/13

HYDRAULICS ENGINEER — NORTH CAROLINA PROFESSIONAL ENGINEER SEAL 038697 DAVID B. PETTY 8/29/2013

MAIN TRACK 1

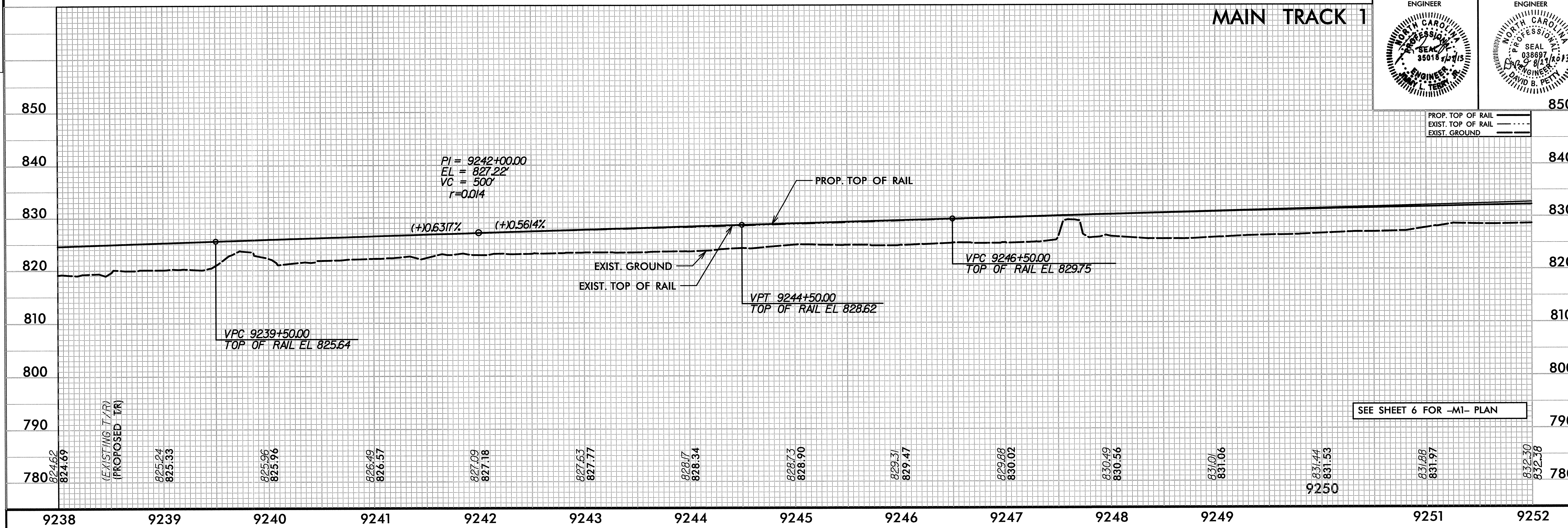

MAIN TRACK 1

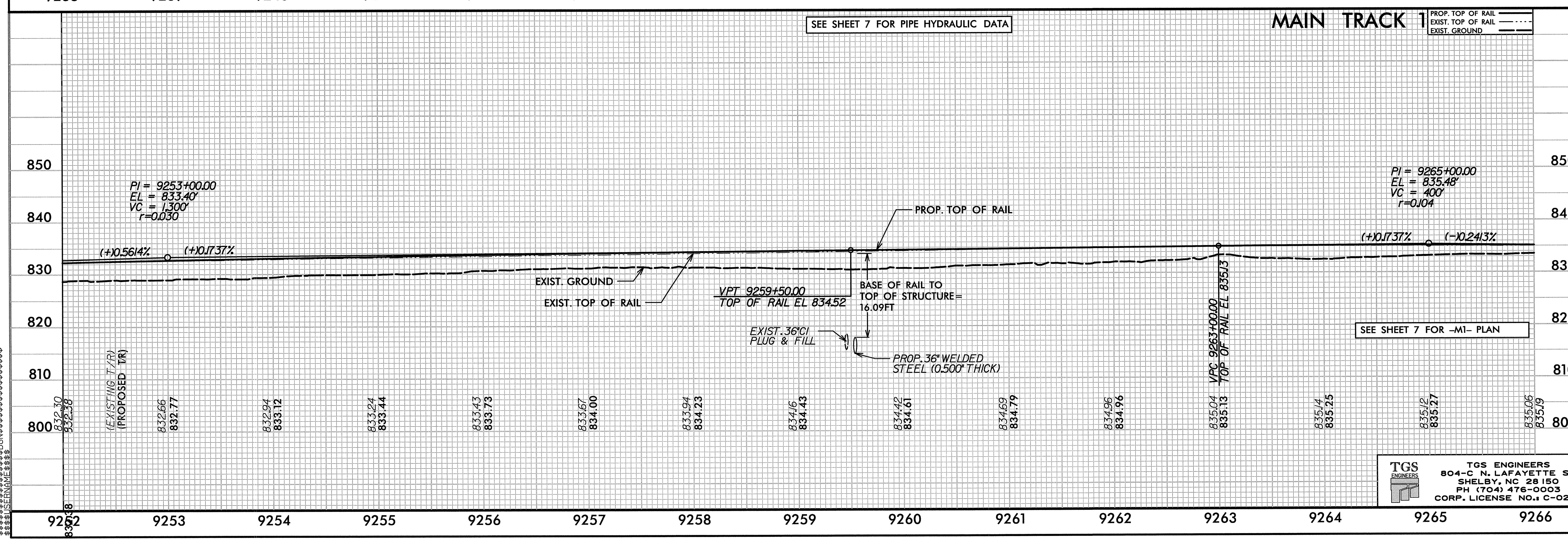

TGS ENGINEERS
804-C N. LAFAYETTE ST
SHELBY, NC 28150
PH (704) 476-0003
CORP. LICENSE NO.: C-0275

$$$$$$SYSTIME$$$$$
$$$$$$$$$$$$$$$$DGN$$$$$$$$$$$$$$$$$$$$$
$$$$$USERNAME$$$$$

DGN 0164DEL_P10b2

PROJECT REFERENCE NO.	SHEET NO.
P-5206C	24
R/W SHEET NO.	

RAIL DESIGN ENGINEER — NORTH CAROLINA PROFESSIONAL SEAL 35018 ENGINEER JERRY L. TERRY, JR.

HYDRAULICS ENGINEER — NORTH CAROLINA PROFESSIONAL SEAL 038697 ENGINEER DAVID B. PETTY

MAIN TRACK 1

PROP. TOP OF RAIL
EXIST. TOP OF RAIL
EXIST. GROUND

-M1- STA. 9278+01.49 BK =

-M1- STA. 9278+00.00 AH

-M1- STA. 9274+91.06
END GRADE
MAIN TRACK 1 SEG.#3
EL 832.81'

PI = 9272+75.00
EL = 833.61'
VC = 250'
r=0.052

PROP. TOP OF RAIL
EXIST. GROUND
EXIST. TOP OF RAIL

(−)0.2413%
(−)0.3708%

VPT 9267+00.00
TOP OF RAIL EL 835.00

VPC 9271+50.00
TOP OF RAIL EL 833.91

VPT 9274+00.00
TOP OF RAIL EL 833.15

(EXISTING T/R)
(PROPOSED T/R)

SEE SHEET 8 FOR -M1- PLAN

9266	9267	9268	9269	9270	9271	9272	9273	9274	9275	9276	9277	9278	9278	9279
835.06	835.19	834.91	835.00	834.73	834.76	834.48	834.51	834.18	834.27	833.87	834.03	833.59	833.78	833.26	833.49	833.05	833.15	832.79	832.55	832.21	832.04	831.76

MAIN TRACK 1

PROP. TOP OF RAIL
EXIST. TOP OF RAIL
EXIST. GROUND

NC 152 BRIDGE

-M1- STA. 9289+56.37
BEGIN GRADE
MAIN TRACK 1 SEG.#4
EL 828.91'

21'-5" EXISTING CLEARANCE
AS PER BRIDGE SURVEY REPORT

EXIST. TOP OF RAIL

EXIST. GROUND

PROP. TOP OF RAIL

PI = 9293+00
EL = 829.14'
VC = 450'
r=0.094

(+)0.0648%
(+)0.0648%

VPC 9290+75.00
TOP OF RAIL EL 828.99

SEE SHEET 9 FOR -M1- PLAN

(EXISTING T/R)
(PROPOSED T/R)

9279	9280	9281	9282	9283	9284	9285	9286	9287	9288	9289	9290	9291	9292	9293
831.76	831.51	831.31	831.10	830.82	830.49	830.11	829.67	829.28	828.97	828.93	828.90	828.94	828.87	829.00	828.87	829.00	828.69	828.90

$$$$SYSTIME$$$$
$$$$USERNAME$$$$ $$$$DGN$$$$

TGS ENGINEERS
804-C N. LAFAYETTE ST
SHELBY, NC 28150
PH (704) 476-0003
CORP. LICENSE NO.: C-0275

0164DEL_P10b2
DGN
PROJECT REFERENCE NO. P-5206C
SHEET NO. 25
R/W SHEET NO.
RAIL DESIGN ENGINEER
NORTH CAROLINA PROFESSIONAL SEAL 35018 ENGINEER JIMMY L. TERRY, JR.
HYDRAULICS ENGINEER
NORTH CAROLINA PROFESSIONAL SEAL 038697 ENGINEER DAVID B. PETTY
MAIN TRACK 1
PROP. TOP OF RAIL
EXIST. TOP OF RAIL
EXIST. GROUND
SEE SHEET 10 FOR PIPE HYDRAULIC DATA
PI = 9301+00
EL = 826.26'
VC = 450'
r=-0.067
EXIST. TOP OF RAIL
PROP. TOP OF RAIL
(-)0.3593%
(-)0.3593%
(-)0.0581%
(-)0.0581%
EXIST. GROUND
BASE OF RAIL TO TOP OF STRUCTURE= 19.40FT
EXIST.36"CI (PLUG & FILL)
PROP.42" WELDED STEEL (.625 THICK)
VPT 9295+25.00 TOP OF RAIL EL 828.33
VPC 9298+75.00 TOP OF RAIL EL 827.07
VPT 9303+25.00 TOP OF RAIL EL 826.013
VPC 9305+50.00 TOP OF RAIL EL 826.00
SEE SHEET 10 FOR -M1- PLAN
(EXISTING T/R)
(PROPOSED T/R)
828.69 828.90
828.52 828.70
828.27 828.41
827.94 828.06
827.63 827.70
827.31 827.34
826.92 826.98
826.49 826.67
826.12 826.265
825.85 826.26
825.83 826.15
825.88 826.09
825.82 826.03
825.81 825.96
825.65 825.83
850 840 830 820 810 800 790
9293 9294 9295 9296 9297 9298 9299 9300 9301 9302 9303 9304 9305 9306 9307
MAIN TRACK 1
PROP. TOP OF RAIL
EXIST. TOP OF RAIL
EXIST. GROUND
PI = 9307+25
EL = 825.90'
VC = 350'
r=0.071
PROP. TOP OF RAIL
(-)0.3061%
(-)0.3061%
(-)0.0581%
-M1- STA.9309+43.13
END GRADE
MAIN TRACK 1 SEG.#4
EL 825.23'
EXIST. TOP OF RAIL
EXIST. GROUND
℄ -Y6-
BASE OF RAIL TO TOP OF STRUCTURE= 8.38FT
PROP.42" WELDED STEEL (0.625" THICK)
EXIST.36"X36" STONE CULVERT PLUG & FILL
Exist.8" SS
VPT 9309+00.00 TOP OF RAIL EL 825.36
SEE SHEET 11 FOR -M1- PLAN
(EXISTING T/R)
(PROPOSED T/R)
822.65 825.83
825.52 825.63
825.36 825.36
825.06
824.80
824.49
824.40
824.11
823.82
823.52
823.34
823.15
823.09
822.98
822.88
850 840 830 820 810 800 790
9307 9308 9309 9310 9311 9312 9313 9314 9315 9316 9317 9318 9319 9320 9321
TGS ENGINEERS
TGS ENGINEERS
804-C N. LAFAYETTE ST
SHELBY, NC 28150
PH (704) 476-0003
CORP. LICENSE NO.: C-0275
$$$$SYSTIME$$$$
$$$$$$$$$$$$$$$DGN$$$$$$$$$$$$$$$$
$$$$USERNAME$$$$

0164DEL_P10b2

PROJECT REFERENCE NO.	SHEET NO.
P-5206C	26
RW SHEET NO.	

RAIL DESIGN ENGINEER: NORTH CAROLINA PROFESSIONAL SEAL 35018 ENGINEER JIMMY L. TERRY, JR.

HYDRAULICS ENGINEER: NORTH CAROLINA PROFESSIONAL SEAL 038697 ENGINEER DAVID B. PETTY

MAIN TRACK 1

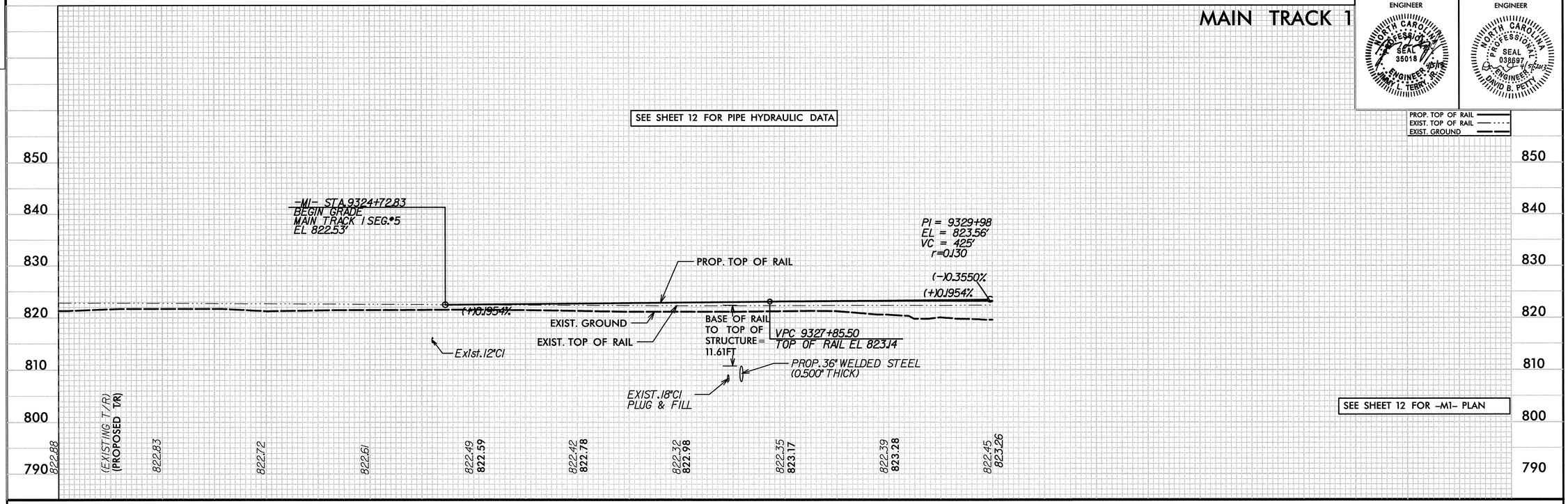

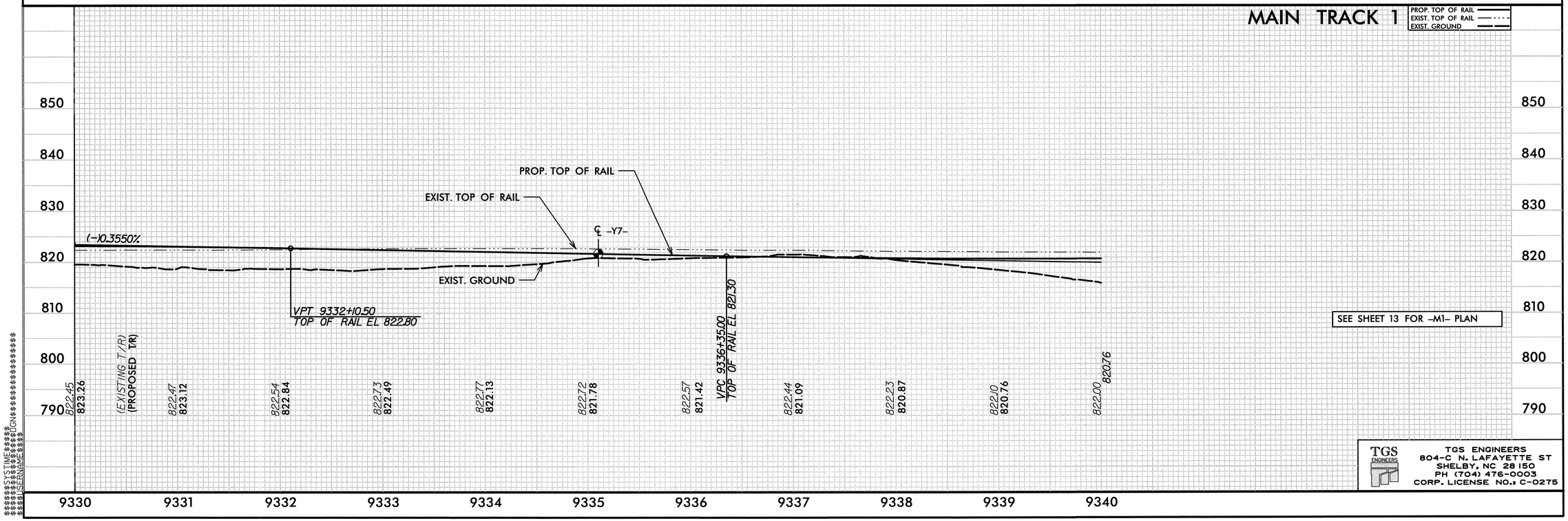

TGS ENGINEERS
804-C N. LAFAYETTE ST
SHELBY, NC 28150
PH (704) 476-0003
CORP. LICENSE NO.: C-0275

$$$$$$$$USERNAME$$$$ $$$$$$$$SYSTIME$$$$$

DGN 0164DEL_P10b2

PROJECT REFERENCE NO.	SHEET NO.
P-5206C	27
R/W SHEET NO.	

RAIL DESIGN ENGINEER — NORTH CAROLINA PROFESSIONAL SEAL 35018 ENGINEER JIMMY L. TERRY, JR.

HYDRAULICS ENGINEER — NORTH CAROLINA PROFESSIONAL SEAL 038697 ENGINEER DAVID B. PETTY

MAIN TRACK 1

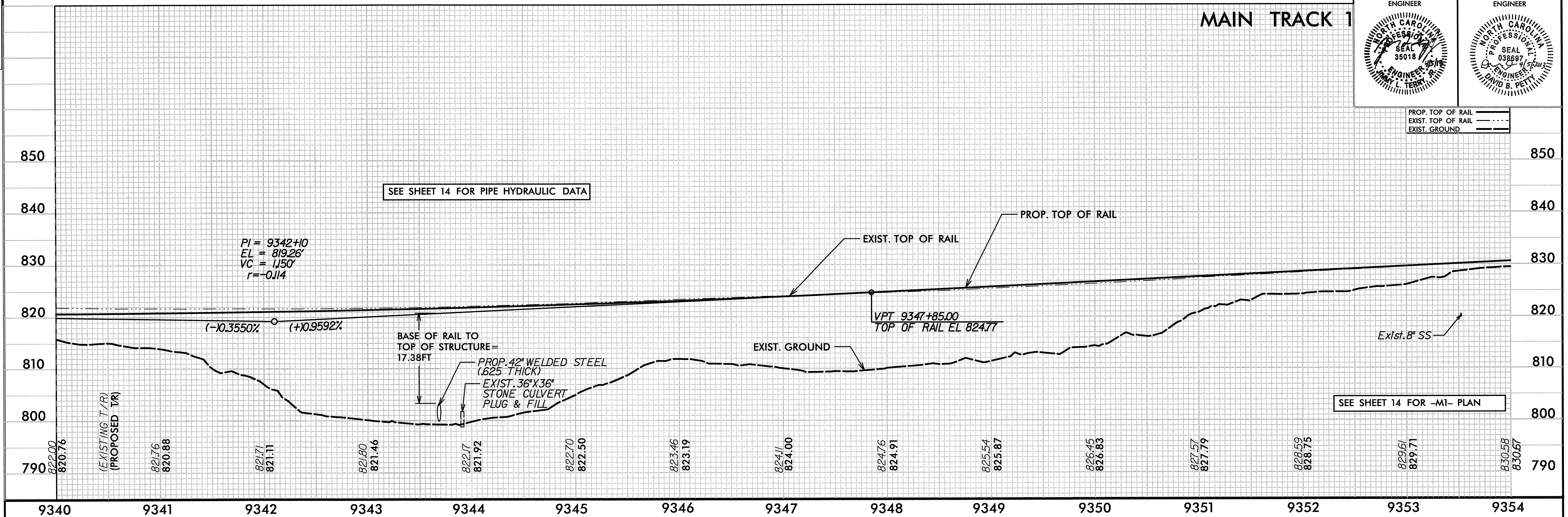

MAIN TRACK 1

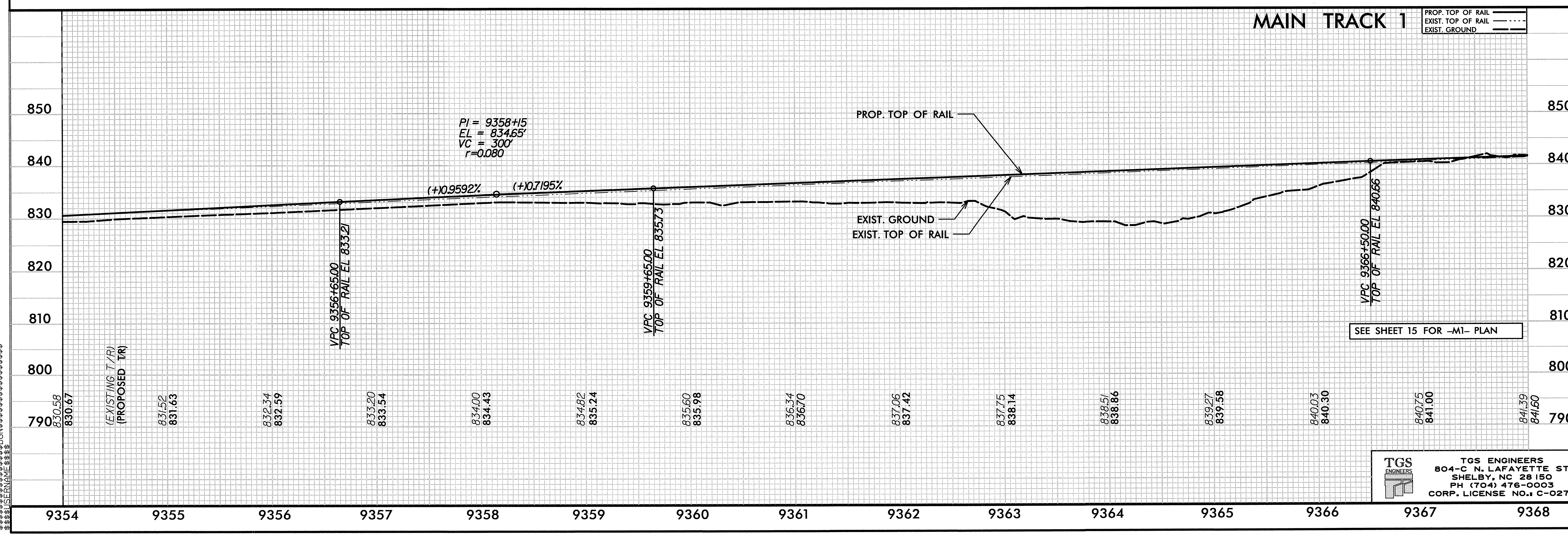

TGS ENGINEERS
804-C N. LAFAYETTE ST
SHELBY, NC 28150
PH (704) 476-0003
CORP. LICENSE NO.: C-0275

$$$$$$SYSTIME$$$$$ $$$$$$$$$$$$$DGN$$$$$$$$$$$$$$$$$ $$$$$USERNAME$$$$

PROJECT REFERENCE NO.	SHEET NO.
P-5206C	28
R/W SHEET NO.	
RAIL DESIGN ENGINEER	HYDRAULICS ENGINEER

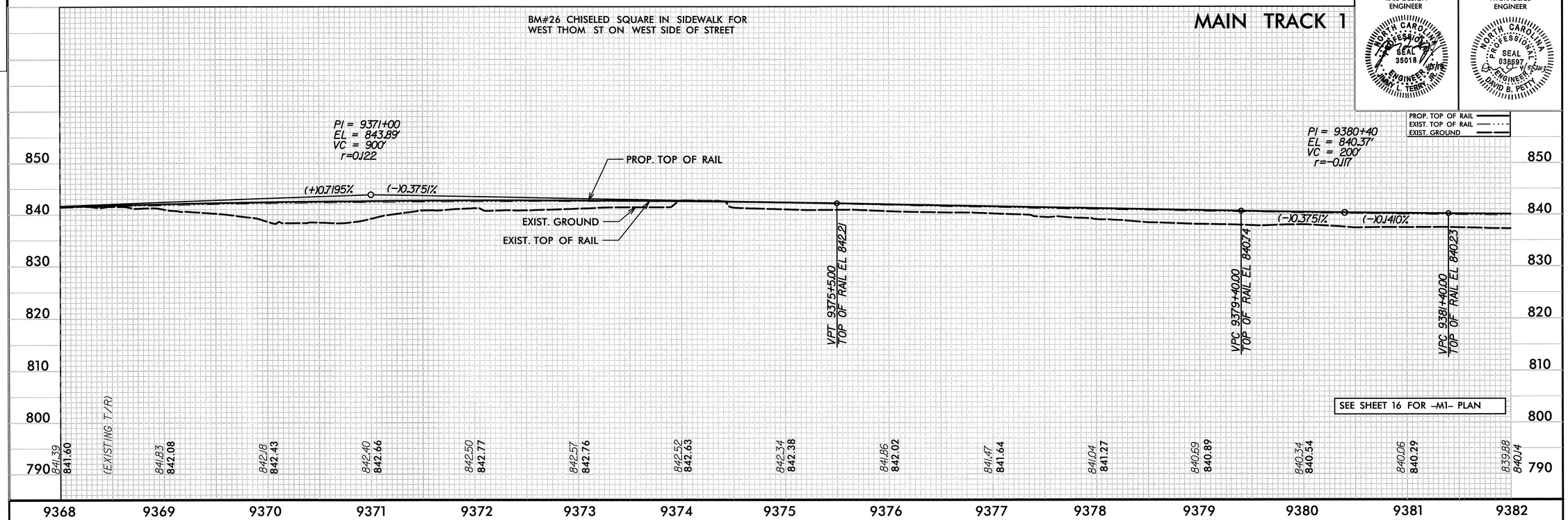

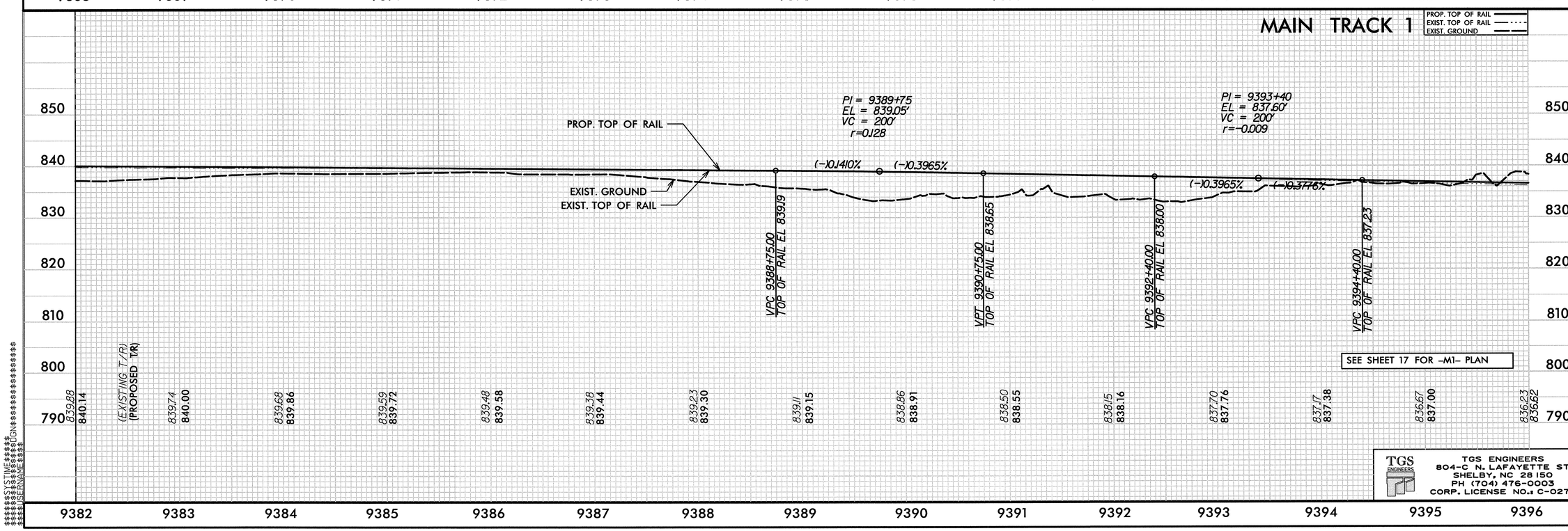

TGS ENGINEERS
804-C N. LAFAYETTE ST
SHELBY, NC 28150
PH (704) 476-0003
CORP. LICENSE NO.: C-0275

0164DEL_P10b2

PROJECT REFERENCE NO.	SHEET NO.
P-5206C	29
R/W SHEET NO.	
RAIL DESIGN ENGINEER	HYDRAULICS ENGINEER

NORTH CAROLINA PROFESSIONAL SEAL 35018 ENGINEER JIMMY L. TERRY, JR.

NORTH CAROLINA PROFESSIONAL SEAL 038697 ENGINEER DAVID B. PETTY

0164DEL_P10b2

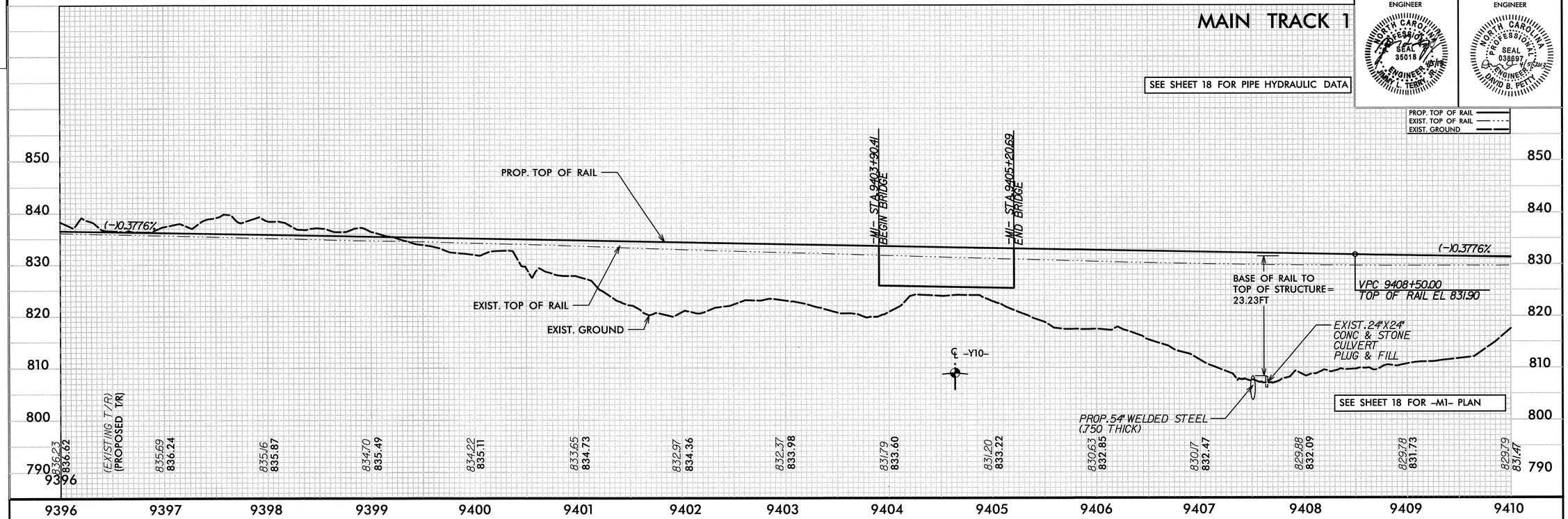

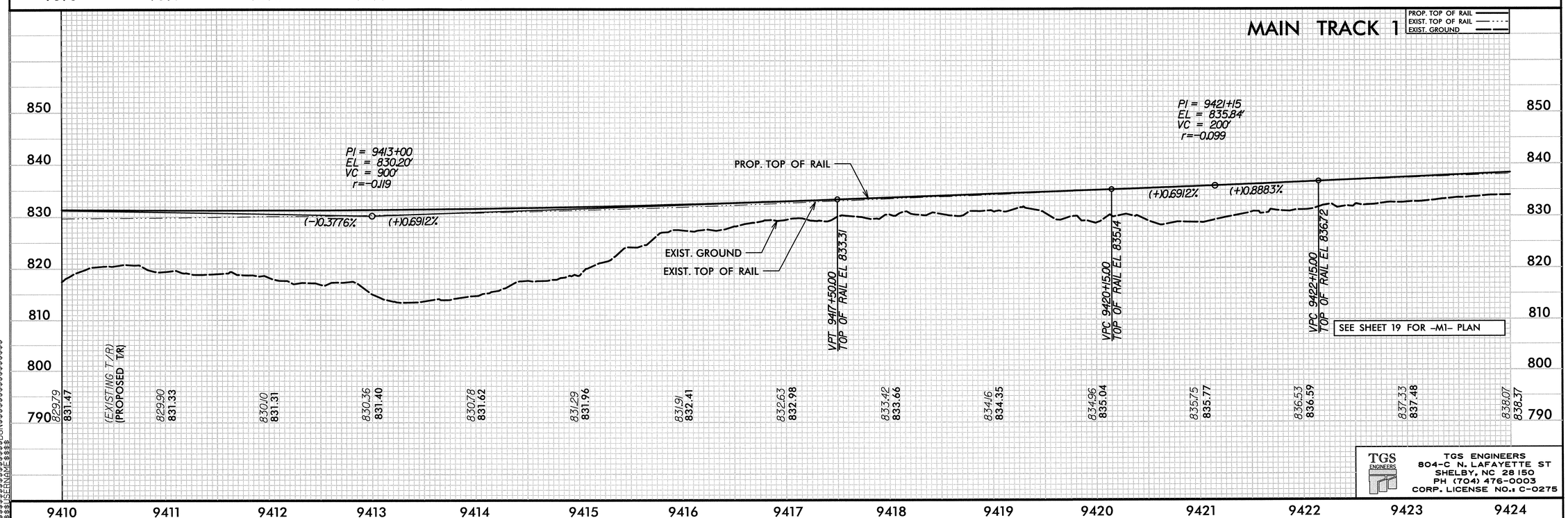

TGS ENGINEERS
804-C N. LAFAYETTE ST
SHELBY, NC 28150
PH (704) 476-0003
CORP. LICENSE NO.: C-0275

PROJECT REFERENCE NO.	SHEET NO.
P-5206C	30
R/W SHEET NO.	
RAIL DESIGN ENGINEER	HYDRAULICS ENGINEER

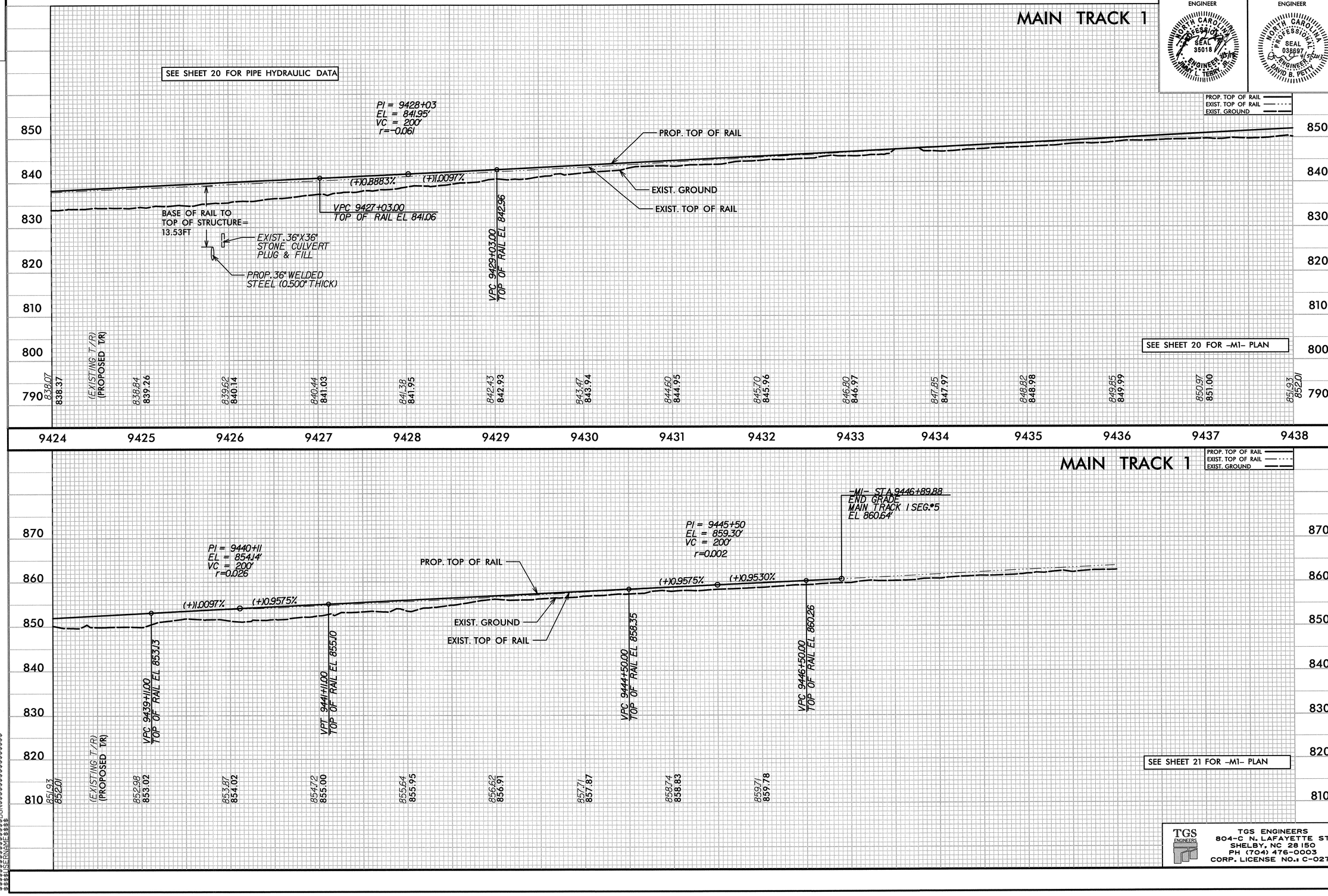

TGS ENGINEERS
804-C N. LAFAYETTE ST
SHELBY, NC 28150
PH (704) 476-0003
CORP. LICENSE NO.: C-0275

0164DEL_P10b2

PROJECT REFERENCE NO.	SHEET NO.
P-5206C	31
R/W SHEET NO.	

RAIL DESIGN ENGINEER

NORTH CAROLINA PROFESSIONAL SEAL 35018 ENGINEER JIMMY L. TERRY, JR.

HYDRAULICS ENGINEER

NORTH CAROLINA PROFESSIONAL SEAL 038697 ENGINEER DAVID B. PETTY

0164DEL_P10b2

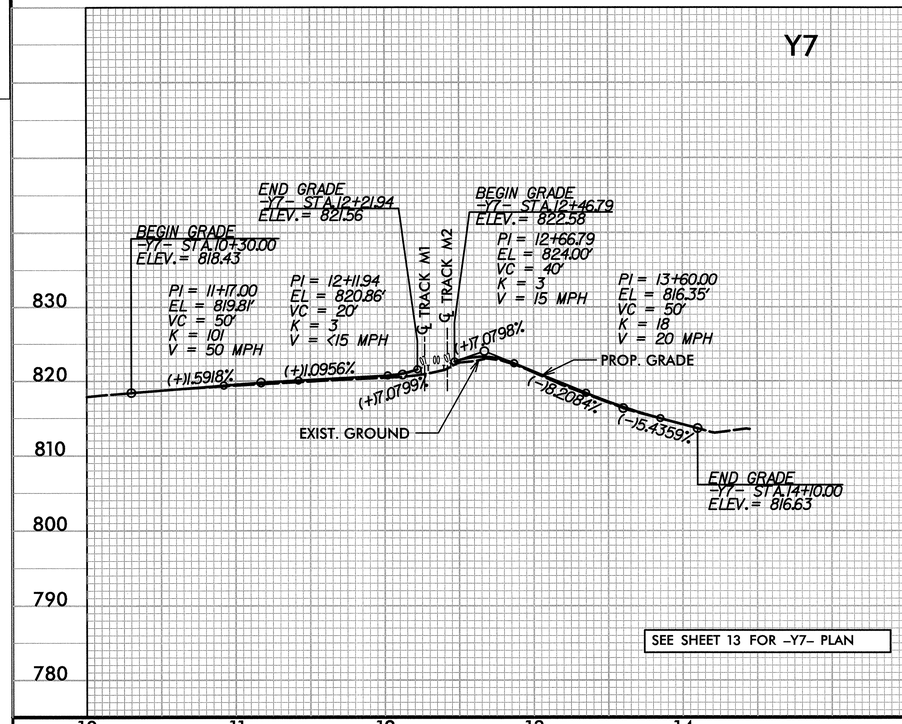

SEE SHEET 13 FOR -Y7- PLAN

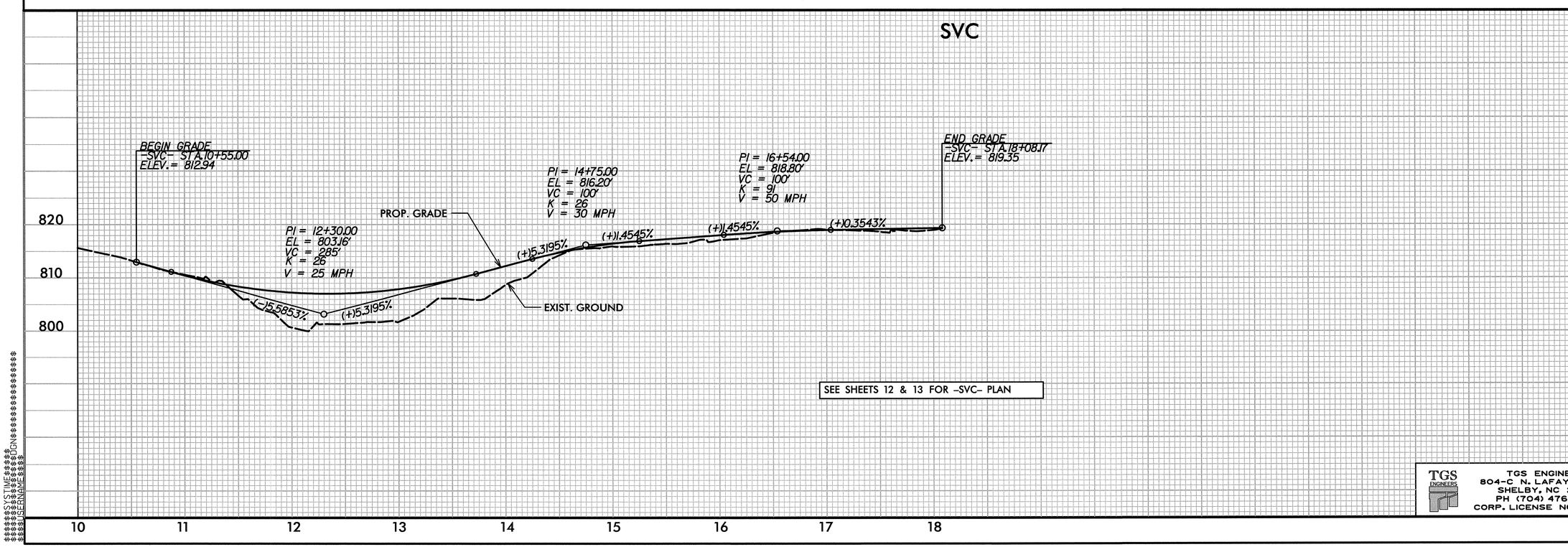

SEE SHEETS 12 & 13 FOR -SVC- PLAN

TGS ENGINEERS
804-C N. LAFAYETTE ST
SHELBY, NC 28150
PH (704) 476-0003
CORP. LICENSE NO.: C-0275

$$$$$SYSTIME$$$$$
$$$$$DGN$$$$$
$$$$$USERNAME$$$$$

0164DEL_P10b2

PROJECT REFERENCE NO.	SHEET NO.
P-5206C	32
R/W SHEET NO.	

RAIL DESIGN ENGINEER

NORTH CAROLINA PROFESSIONAL SEAL 35018 ENGINEER JIMMY L. TERRY JR.

HYDRAULICS ENGINEER

NORTH CAROLINA PROFESSIONAL SEAL 038697 ENGINEER DAVID B. PETTY

Y10

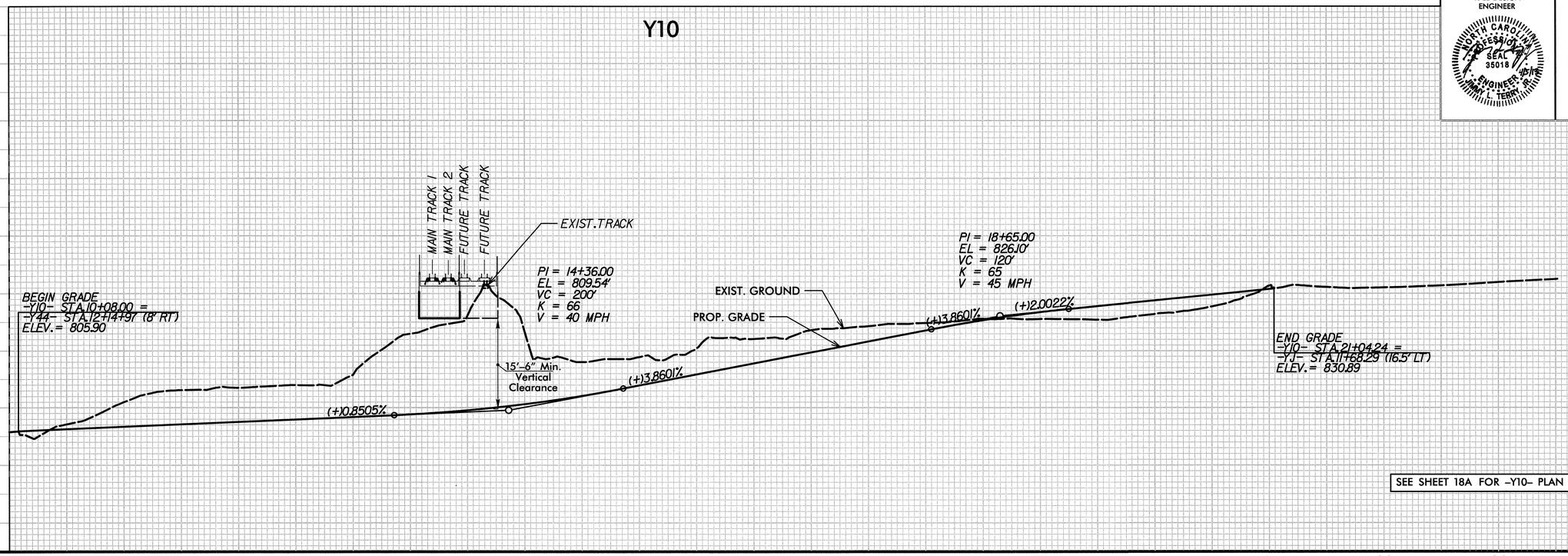

SEE SHEET 18A FOR -Y10- PLAN

TGS ENGINEERS
804-C N. LAFAYETTE ST
SHELBY, NC 28150
PH (704) 476-0003
CORP. LICENSE NO.: C-0275

$$$$$$$$SYSTIME$$$$$$$$
$$$$$$$$DGN$$$$$$$$$$$$$$$$$$$$
$$$$$$$$USERNAME$$$$$$$$