0160DEL_P10b2

TIP PROJECT: P-5206C

CONTRACT: C203207

STRUCTURE

STATE OF NORTH CAROLINA
NCDOT RAIL DIVISION

ROWAN COUNTY

STATE	STATE PROJECT REFERENCE NO.	SHEET NO.	TOTAL SHEETS
N.C.	P-5206C		

STATE PROJ. NO.	F.A. PROJ. NO.	DESCRIPTION
52000.1.STR07T1B		PE, UTL PE
52000.1.STR08T3		PE, UTL PE
43219.3.STR08P5206		ROW
52000.3.STR02T4D	FRA-FR-HSR-0006-10-01-00	UTL CONST, CONST

LOCATION: PROPOSED KIMBALL ROAD GRADE SEPARATION WITH THE NCRR/NS MAINLINE RAILROAD ROADBED FROM SOUTH OF MT. HOPE CHURCH RD (SR 1505, MP 340.9) TO NORTH OF RYDER AVE (SR 1210, MP 345.4)

TYPE OF WORK: DRAINAGE, STRUCTURE, SHORING AND TRACKBED

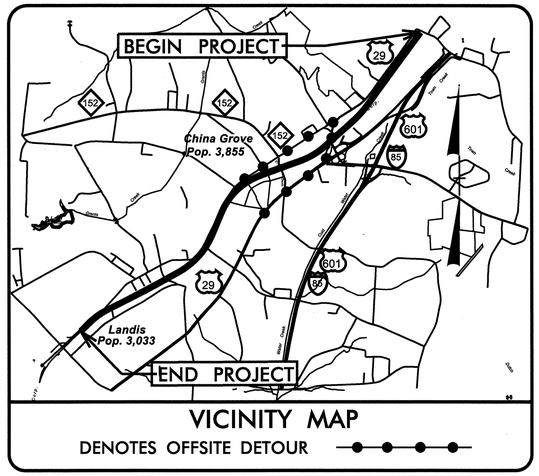

VICINITY MAP
DENOTES OFFSITE DETOUR

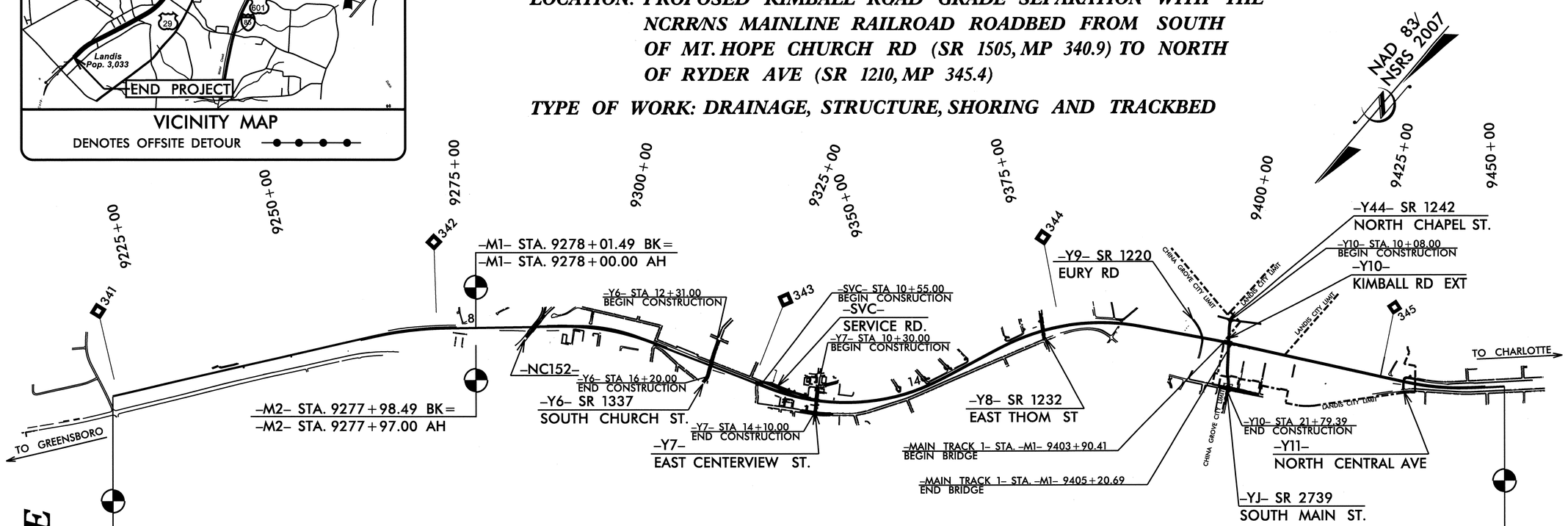

END TIP PROJECT P-5206B (PART1)
BEGIN TIP PROJECT P-5206C (PART2)
MAIN TRACK 1 STA. -M1- 9218+00.00 BK =
STA. -M1- 9218+02.82 AH
MAIN TRACK 2 STA. -M2- 9218+01.63 BK =
STA. -M2- 9218+02.82 AH

END TIP PROJECT P-5206C (PART2)
BEGIN TIP PROJECT P-5206D (PART3)
MAIN TRACK 1 STA. -M1- 9450+00.00 BK =
STA. -M1- 9450+39.03 AH
MAIN TRACK 2 STA. -M2- 9449+97.71 BK =
STA. -M2- 9450+39.03 AH

PROJECT LENGTH

LENGTH OF RAIL TIP PROJECT	=4.368 MILES
LENGTH OF STRUCTURE TIP PROJECT	=0.025 MILES
TOTAL LENGTH OF TIP PROJECT	=4.393 MILES

Prepared In the Office of:
TGS ENGINEERS
107-A MICA AVENUE
MORGANTON, NC 28655
PH (828) 437-4681
CORP. LICENSE NO.: C-0275

2012 STANDARD SPECIFICATIONS

LETTING DATE:
OCTOBER 15, 2013

LEONARD FLETCHER, PE, PLS
PROJECT ENGINEER

RAY D. ELLIOTT, PE
PROJECT DESIGN ENGINEER

NORTH CAROLINA PROFESSIONAL SEAL 22092 ENGINEER RAY D. ELLIOTT
6/24/2013

NCDOT RAIL DIVISION CONTACT:
MATTHEW B. SIMMONS, PE

NC DEPARTMENT OF TRANSPORTATION
RAIL DIVISION
PLANNING AND DEVELOPMENT

$$$$$SYSTIME$$$$$
$$$$$USERNAME$$$$$

0160DEL_P10b2

WBS NO. 52000.1.STR0873

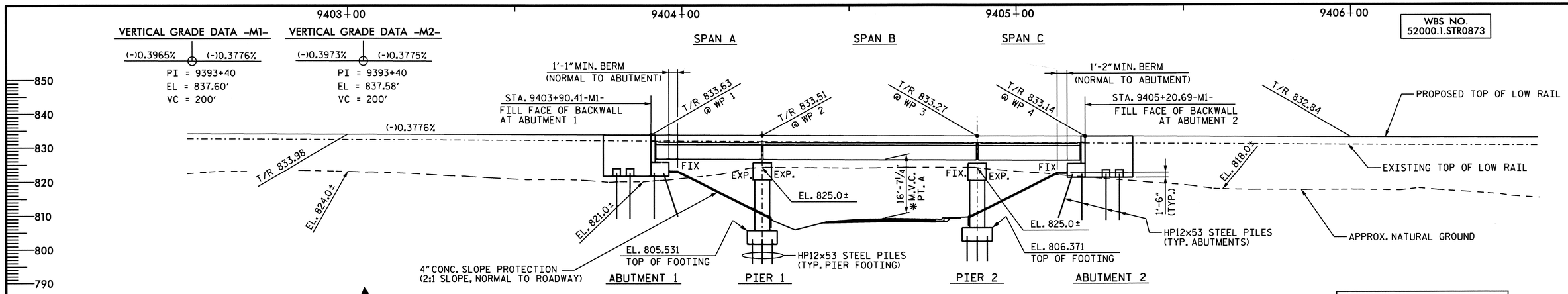

SECTION ALONG ℄ PROPOSED TRACKS -M1-

(SUBSTRUCTURE AT RIGHT ANGLES TO SUBSTRUCTURE)

PROPOSED TOP OF RAIL		
	-M1-	-M2-
STATION	ELEV.	ELEV.
9403+00	833.98	833.96
9404+00	833.60	833.58
9405+00	833.22	833.20
9406+00	832.84	832.82

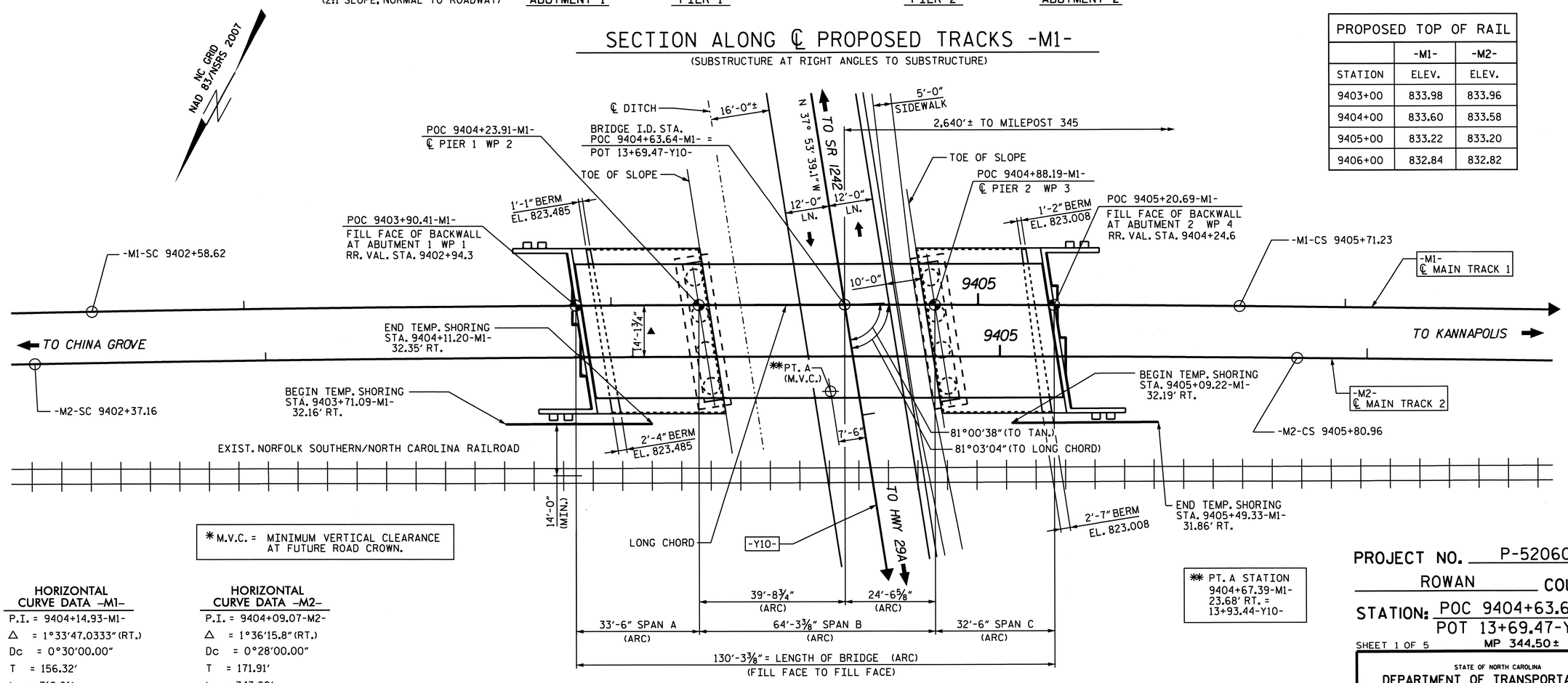

PLAN

* M.V.C. = MINIMUM VERTICAL CLEARANCE AT FUTURE ROAD CROWN.

** PT. A STATION 9404+67.39-M1- 23.68' RT. = 13+93.44-Y10-

▲ AT STA. 9404+09-M1-

NOTE: ABUTMENTS AND PIERS ARE PARALLEL.

HORIZONTAL CURVE DATA -M1-	
P.I. = 9404+14.93-M1-	
Δ	= 1°33'47.0333" (RT.)
Dc	= 0°30'00.00"
T	= 156.32'
L	= 312.61'
R	= 11,459.19'

HORIZONTAL CURVE DATA -M2-	
P.I. = 9404+09.07-M2-	
Δ	= 1°36'15.8" (RT.)
Dc	= 0°28'00.00"
T	= 171.91'
L	= 343.80'
R	= 12,277.70'

PROJECT NO. P-5206C

ROWAN COUNTY

STATION: POC 9404+63.64-M1-= POT 13+69.47-Y10-

MP 344.50±

SHEET 1 OF 5

STATE OF NORTH CAROLINA
DEPARTMENT OF TRANSPORTATION
RALEIGH

GENERAL DRAWING

FOR BRIDGE ON NORFOLK SOUTHERN/ NORTH CAROLINA RAILROAD OVER KIMBALL ROAD BETWEEN SR 1242 AND HWY 29A

PREPARED BY
TGS ENGINEERS
107-A MICA AVENUE
MORGANTON, NC 28655

NORTH CAROLINA PROFESSIONAL SEAL 20192 ENGINEER RAY D. ELLIOTT
9/24/2013

REVISIONS							SHEET NO.
NO.	BY:	DATE:	NO.	BY:	DATE:		S-1
1			3				TOTAL SHEETS
2			4				52

DRAWN BY : RTJ DATE : 12/12
CHECKED BY : RDE DATE : 2/13

0160DEL_P10b2

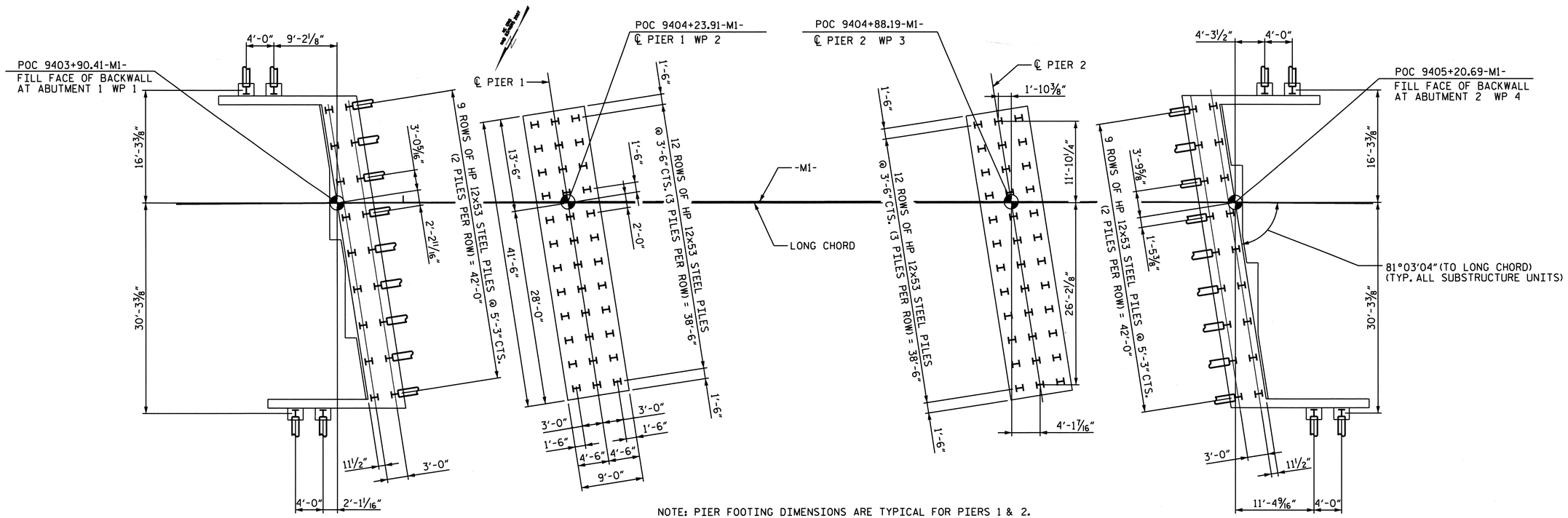

NOTE: PIER FOOTING DIMENSIONS ARE TYPICAL FOR PIERS 1 & 2.

ABUTMENT 1 PIER 1 PIER 2 ABUTMENT 2

FOUNDATION LAYOUT PLAN

INDICATES PILE BATTER 3 : 12 IN DIRECTION SHOWN

NOTES:

ALL PILES ARE HP12x53 STEEL PILES.

DIMENSIONS LOCATING PILES ARE SHOWN TO THE PILE CENTERLINE AT BOTTOM OF ABUTMENT, WINGWALL OR FOOTING.

THE FOOTING AND PILES AT PIERS 1 AND 2 ARE LOCATED FROM THE INTERSECTION OF THE LONG CHORD AND ℄ PIER. SEE DETAIL THIS SHEET.

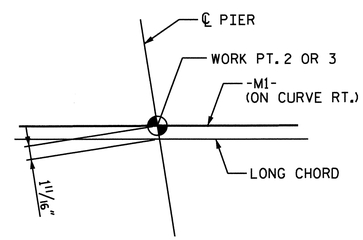

DETAIL AT PIER WORK POINTS

FOUNDATION RECOMMENDATION NOTES:

1. PILES AT END BENT NO. 1 ARE DESIGNED FOR AN ALLOWABLE BEARING CAPACITY OF 85 TONS PER PILE.
2. DRIVE PILES AT END BENT NO. 1 TO A REQUIRED BEARING CAPACITY OF 192 TONS PER PILE. THE REQUIRED BEARING CAPACITY IS EQUAL TO THE ALLOWABLE BEARING CAPACITY WITH A FACTOR OF SAFETY OF 2.25.
3. PILES AT END BENT NO. 2 ARE DESIGNED FOR AN ALLOWABLE BEARING CAPACITY OF 85 TONS PER PILE.
4. DRIVE PILES AT END BENT NO. 2 TO A REQUIRED BEARING CAPACITY OF 192 TONS PER PILE. THE REQUIRED BEARING CAPACITY IS EQUAL TO THE ALLOWABLE BEARING CAPACITY WITH A FACTOR OF SAFETY OF 2.25.
5. PILES AT BENT NO. 1 ARE DESIGNED FOR AN ALLOWABLE BEARING CAPACITY OF 63 TONS PER PILE.
6. DRIVE PILES AT BENT NO. 1 TO A REQUIRED BEARING CAPACITY OF 142 TONS PER PILE. THE REQUIRED BEARING CAPACITY IS EQUAL TO THE ALLOWABLE BEARING CAPACITY WITH A FACTOR OF SAFETY OF 2.25.
7. PILES AT BENT NO. 2 ARE DESIGNED FOR AN ALLOWABLE BEARING CAPACITY OF 63 TONS PER PILE.
8. DRIVE PILES AT BENT NO. 2 TO A REQUIRED BEARING CAPACITY OF 142 TONS PER PILE. THE REQUIRED BEARING CAPACITY IS EQUAL TO THE ALLOWABLE BEARING CAPACITY WITH A FACTOR OF SAFETY OF 2.25.
9. TESTING THE FIRST PRODUCTION PILE WITH THE PILE DRIVING ANALYZER DURING DRIVING, RESTRIKING OR REDRIVING IS REQUIRED AT ALL BENTS. FOR PILE DRIVING ANALYZER, SEE PILE SPECIAL PROVISIONS.
10. OBSERVE TWO MONTHS WAITING PERIOD AFTER CONSTRUCTING THE EMBANKMENT TO WITHIN 2 FEET OF FINISHED GRADE BEFORE BEGINNING THE CONSTRUCTION AT END BENT NO. 1.
11. OBSERVE TWO MONTHS WAITING PERIOD AFTER CONSTRUCTING THE EMBANKMENT TO WITHIN 2 FEET OF FINISHED GRADE BEFORE BEGINNING THE CONSTRUCTION AT END BENT NO. 2.

PROJECT NO. P-5206C
ROWAN COUNTY
STATION: POC 9404+63.64-M1-=
POT 13+69.47-Y10-
MP 344.50±

SHEET 2 OF 5

STATE OF NORTH CAROLINA
DEPARTMENT OF TRANSPORTATION
RALEIGH

GENERAL DRAWING
FOR BRIDGE ON NORFOLK SOUTHERN/ NORTH CAROLINA RAILROAD OVER KIMBALL ROAD BETWEEN SR 1242 AND HWY 29A

REVISIONS								SHEET NO.
NO.	BY:	DATE:	NO.	BY:	DATE:			S-2
1			3					TOTAL SHEETS
2			4					52

PREPARED BY
TGS ENGINEERS
107-A MICA AVENUE
MORGANTON, NC 28655

NORTH CAROLINA PROFESSIONAL SEAL 22432 ENGINEER RAY D. ELLIOTT
6/24/2013

DRAWN BY : RTJ DATE : 12/12
CHECKED BY : RDE DATE : 2/13

0160DEL_P10b2

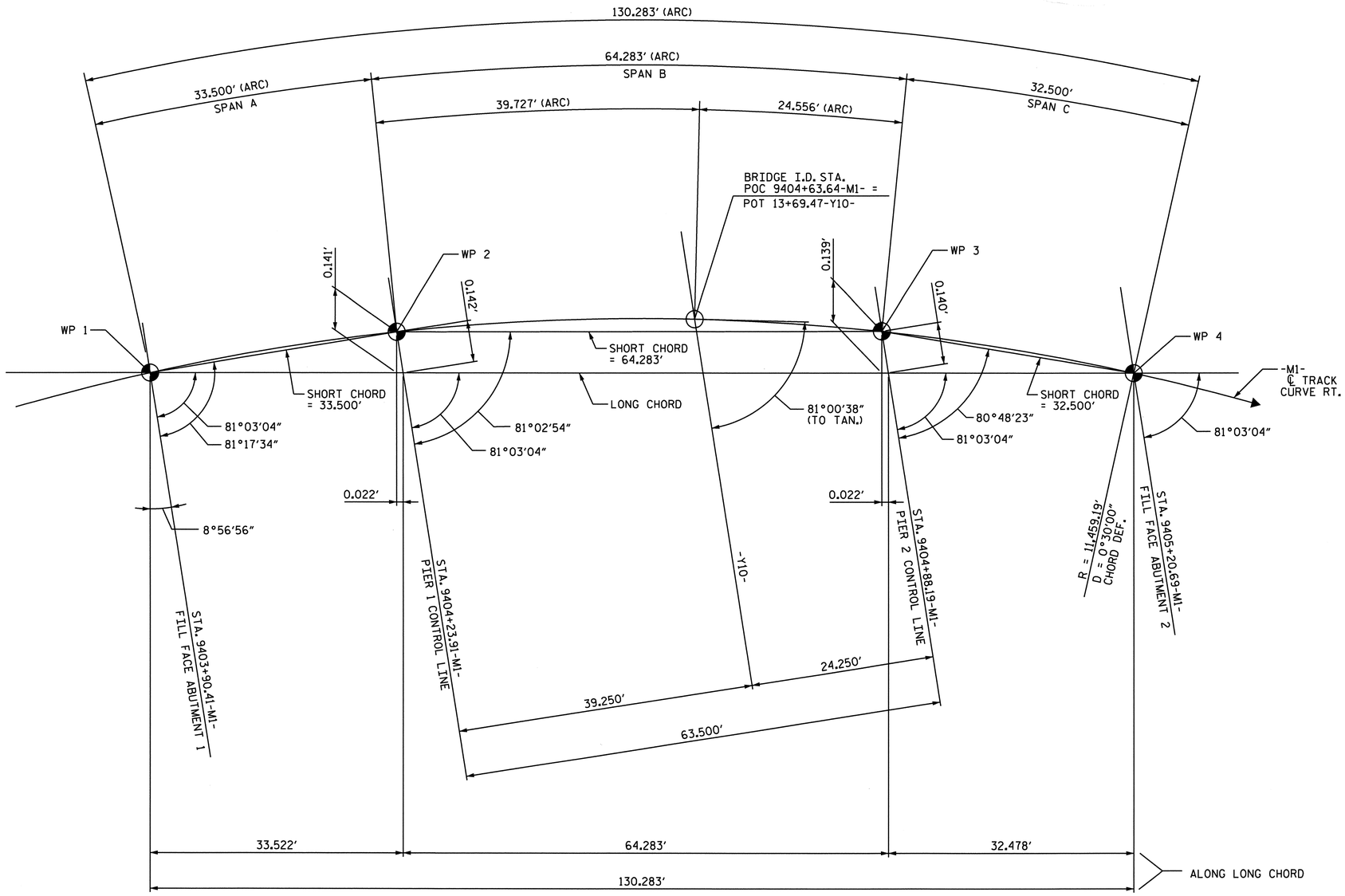

LONG CHORD LAYOUT

NOTE: ALL BENTS ARE PARALLEL.

PROJECT NO. P-5206C

ROWAN COUNTY

STATION: POC 9404+63.64-M1-=
POT 13+69.47-Y10-

SHEET 3 OF 5 MP 344.50±

STATE OF NORTH CAROLINA
DEPARTMENT OF TRANSPORTATION
RALEIGH

GENERAL DRAWING
FOR BRIDGE ON NORFOLK SOUTHERN/
NORTH CAROLINA RAILROAD OVER
KIMBALL ROAD BETWEEN
SR 1242 AND HWY 29A

PREPARED BY
TGS ENGINEERS
107-A MICA AVENUE
MORGANTON, NC 28655

NORTH CAROLINA PROFESSIONAL SEAL 22692 ENGINEER RAY D. ELLIOTT
6/24/2013

REVISIONS						SHEET NO.
NO.	BY:	DATE:	NO.	BY:	DATE:	S-3
1			3			TOTAL SHEETS
2			4			52

DRAWN BY : RTJ DATE : 1/13
CHECKED BY : RDE DATE : 2/13

0160DEL_P10b2

GENERAL NOTES :

ALL MATERIALS AND WORKMANSHIP SHALL BE IN ACCORDANCE WITH "STANDARD SPECIFICATIONS FOR ROADS AND STRUCTURES", JANUARY 2012 NORTH CAROLINA DEPARTMENT OF TRANSPORTATION (HEREIN CALLED STANDARD SPECIFICATIONS), EXCEPT AS NOTED HEREIN, ELSEWHERE ON PLANS, OR IN THE SPECIAL PROVISIONS". (STRUCTURAL STEEL IN ACCORDANCE WITH CURRENT A.R.E.M.A. SPECIFICATIONS).

CONCRETE SHALL HAVE A MINIMUM COMPRESSIVE STRENGTH OF 4,000 PSI AT 28 DAYS WITH NO. 57 COARSE AGGREGATE AND SHALL BE AIR-ENTRAINED. MINIMUM CEMENT CONTENT PER CUBIC YARD OF CONCRETE SHALL BE BE 6.0 BAGS/CY. NO SUBSTITUTION OF FLY ASH, BLAST FURNACE SLAG OR OTHER MATERIAL WILL BE PERMITTED IN MEETING THIS MINIMUM CEMENT REQUIREMENT. NO RUBBED SURFACE FINISH IS REQUIRED. CHAMFER ALL EXPOSED EDGES AND CORNERS 3/4 INCH EXCEPT AS NOTED. THE USE OF GROUND GRANULATED BLAST FURNACE SLAG IS NOT PERMITTED IN THE STRUCTURE. SEE NORFOLK SOUTHERN SPECIFICATIONS FOR CAST-IN-PLACE CONCRETE.

REINFORCING STEEL SHALL BE ASTM DESIGNATION A615, GRADE 60. ALL DIMENSIONS RELATING TO BAR SPACING ARE TO BAR CENTERS UNLESS NOTED. FABRICATION TO BE IN ACCORDANCE WITH THE "MANUAL OF STANDARD PRACTICE" A.C.I. 315-80. ALL REINFORCING STEEL IN THE CONCRETE DECK SLAB AND CURBS SHALL BE EPOXY-COATED.

EXPANSION JOINT MATERIAL SHALL BE EITHER RUBBER OR CORK CONFORMING WITH AASHTO SPECIFICATIONS M-153-84 EXCEPT AS SHOWN ON THE PLANS OR IN THE SPECIAL PROVISIONS. CELLULAR AND BULB TYPE WATERSTOPS AND RUBBER JOINT COMPOUNDS SHALL BE AS SHOWN ON THE PLANS AND IN THE SPECIAL PROVISIONS.

STRUCTURE DRAINAGE SYSTEM: METAL DRAINS BEHIND ABUTMENTS AND DUCTILE IRON PIPE COLLECTOR SYSTEM, SHALL BE AS SHOWN ON THE PLANS AND OUTLINED IN THE SPECIAL PROVISIONS. DETAILS OF THE DRAINAGE SYSTEM SHALL BE SUBMITTED TO THE CHIEF ENGINEER-BRIDGES AND STRUCTURES, NORFOLK SOUTHERN, FOR APPROVAL.

CONTROL OF WORK: ALL WORK INVOLVED IN THE CONSTRUCTION OF THE RAILWAY STRUCTURE SHALL BE PERFORMED SATISFACTORY TO THE ENGINEER AND/OR NORFOLK SOUTHERN. ALL METHODS OF HANDLING WORK AFFECTING THE SAFETY OF RAIL OPERATIONS MUST BE APPROVED BY THE RAILWAY ENGINEER BEFORE PROCEEDING WITH THAT PORTION OF THE WORK. RAIL TRAFFIC SHALL, AT ALL TIMES, BE MAINTAINED AND PROTECTED. THE CONTRACTOR SHALL NOT AT ANY TIME DELAY OR INTERFERE WITH RAIL OPERATIONS.

ALL CONSTRUCTION JOINTS SHOWN ON THESE PLANS SHALL BE REQUIRED UNLESS SHOWN OPTIONAL. CONSTRUCTION JOINTS SHALL NOT BE PERMITTED EXCEPT AS SHOWN ON THE PLANS, OR WHERE WRITTEN APPROVAL HAS BEEN OBTAINED.

DAMPPROOFING: PIER COLUMNS UP TO GROUND LINE, BACK OF BACKWALLS AND ABUTMENT SEATS, AND BACK OF WINGS SHALL BE DAMPPROOFED WITH METHOD "B" DAMPPROOFING.

WATERPROOFING: ALL CONSTRUCTION JOINTS AND ANY SHRINKAGE CRACKS WHICH WILL BE COVERED BY FILL SHALL BE WATERPROOFED WITH A TWO PART WATERPROOFING SYSTEM CONSISTING OF A MEMBRANE LAYER AND A PROTECTION COURSE. STRIPS OF WATERPROOFING NO LESS THAN 2 FEET WIDE SHALL BE PLACED SYMMETRICALLY OVER JOINTS OR CRACKS. ADDITIONALLY, THE HORIZONAL SURFACES OF THE BALLAST TROUGH (EXCLUDING THE END DAM) SHALL BE WATERPROOFED WITH A TWO PART WATERPROOFING SYSTEM CONSISTING OF A MEMBRANE LAYER AND A 1 INCH THICK ASPHALT PLANKING OR OTHER RAILWAY APPROVED PROTECTION MATERIAL. ALL WATERPROOFING MATERIALS SHALL CONFORM TO THE RECOMMENDED PRACTICES IN THE AREMA MANUAL OF RAILWAY ENGINEERING CHAPTER 29.

ALL FOUNDATION PILES SHALL BE HP12 x 53 STEEL PILES, ASTM A572 OR ASTM A588 GRADE 345 AND ARE TO BE DRIVEN TO PRACTICAL REFUSAL. THE CONTRACTOR SHALL BE RESPONSIBLE FOR DETERMINING PILE LENGTHS. SEE THE STANDARD SPECIFICATIONS FOR DEFINITION OF PRACTICAL REFUSAL FOR PILES.

BACKFILLING AROUND STRUCTURE: SEE "SPECIAL PROVISION" FOR BACKFILL BEHIND ABUTMENTS AND OTHER BACKFILL AROUND THE STRUCTURE.

THE CONTRACTOR SHALL PROVIDE INDEPENDENT ASSURANCE SAMPLES OF REINFORCING STEEL AS FOLLOWS: FOR PROJECTS REQUIRING UP TO 400 TONS OF REINFORCING STEEL, ONE 30 INCH SAMPLE OF EACH SIZE BAR USED, AND FOR PROJECTS REQUIRING OVER 400 TONS OF REINFORCING STEEL, TWO 30 INCH SAMPLES OF EACH SIZE USED. THE BARS FROM THE SAMPLES ARE TAKEN MUST THEN BE SPLICED WITH REPLACEMENT BARS OF THE SIZE AND LENGTH OF THE SAMPLE PLUS A MINIMUM LAP SPLICE OF THIRTY BAR DIAMETERS. PAYMENT FOR THE SAMPLES OF REINFORCING STEEL SHALL BE CONSIDERED INCIDENTAL TO VARIOUS PAY ITEMS.

FOR CONDUIT IN PARAPETS, SEE SPECIAL PROVISIONS.

FOR FALSEWORK AND FORMWORK, SEE SPECIAL PROVISIONS.

FOR SUBMITTAL OF WORKING DRAWINGS, SEE SPECIAL PROVISIONS.

FOR CRANE SAFETY, SEE SPECIAL PROVISIONS.

FOR TEMPORARY RAILROAD SHORING, SEE SPECIAL PROVISIONS.

FOR GROUT FOR STRUCTURES, SEE SPECIAL PROVISIONS.

FOR WATERPROOFING, SEE SPECIAL PROVISIONS.

FOR RUBBER JOINT COMPOUNDS, SEE SPECIAL PROVISIONS.

FOR ELASTOMERIC FLASHING, SEE SPECIAL PROVISIONS.

FOR WATERSTOPS, SEE SPECIAL PROVISIONS.

FOR PORTLAND CEMENT, SEE SPECIAL PROVISIONS.

FOR SELF LUBRICATING BEARINGS, SEE SPECIAL PROVISIONS.

FOR FOUNDATION EXCAVATION, SEE SPECIAL PROVISIONS.

FOR FINE AND COARSE AGGREGATE, SEE SPECIAL PROVISIONS.

FOR PROTECTION OF RAILWAY INTERESTS, SEE SPECIAL PROVISIONS.

FOR RAILROAD ROADBED, SEE SPECIAL PROVISIONS.

FOR METAL FENCING AND HANDRAIL, SEE SPECIAL PROVISIONS.

DESIGN DATA:

SPECIFICATIONS:	CURRENT AREMA AND NORFOLK SOUTHERN DESIGN CRITERIA FOR GRADE SEPARATION PROJECTS.
LIVE LOAD:	COOPERS E-80 + ALTERNATE WITH IMPACT AS PER AREMA SPECIFICATIONS.
STRUCTURAL STEEL:	Fy = 50 KSI FOR ASTM A709 GRADE 50 fs = 27,500 PSI (ALLOWABLE).
REINFORCED CONCRETE:	f'c = 4,000 PSI @ 28 DAYS (MIN.)
REINFORCING STEEL:	ASTM A615 GRADE 60
DESIGN SPEED:	80 MPH PASSENGER, 50 MPH FREIGHT

RR SPIKE IN ROOT OF 30" OAK -M2- STA. 9403+33.46 110.80' RT. ELEV. 827.38'

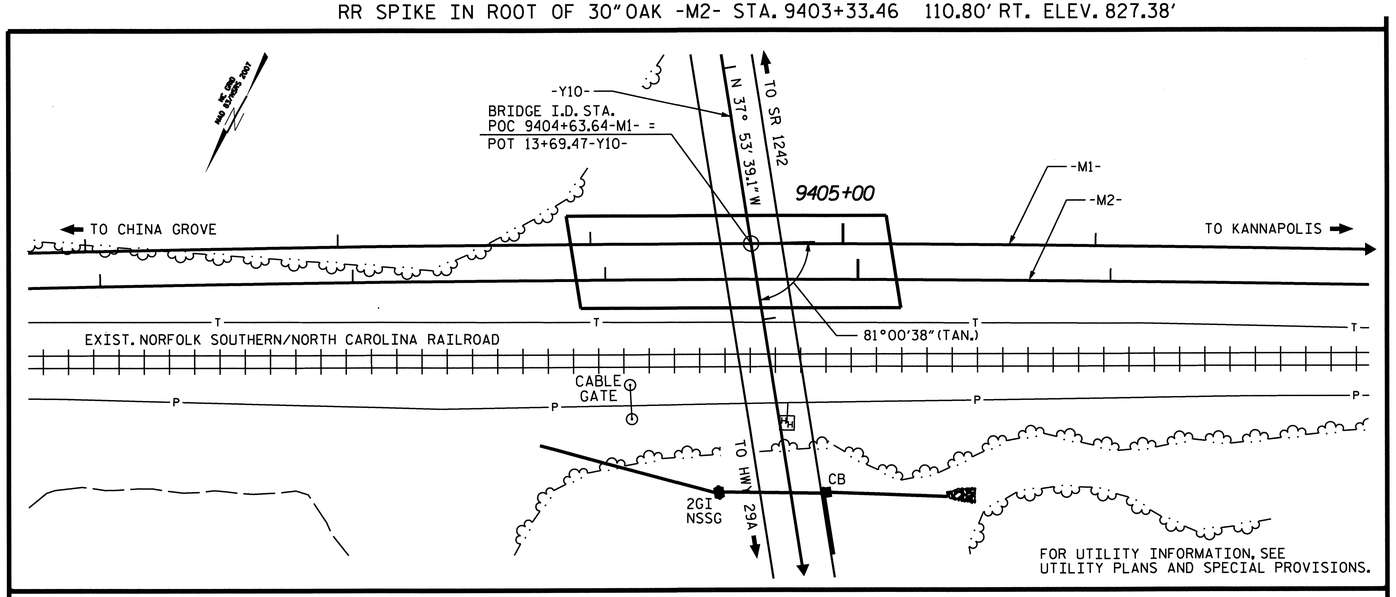

LOCATION SKETCH

PROJECT NO. P-5206C

ROWAN COUNTY

STATION: POC 9404+63.64-M1-=
POT 13+69.47-Y10-
MP 344.50±

SHEET 4 OF 5

STATE OF NORTH CAROLINA
DEPARTMENT OF TRANSPORTATION
RALEIGH

GENERAL DRAWING

FOR BRIDGE ON NORFOLK SOUTHERN/ NORTH CAROLINA RAILROAD OVER KIMBALL ROAD BETWEEN SR 1242 AND HWY 29A

PREPARED BY
TGS ENGINEERS
107-A MICA AVENUE
MORGANTON, NC 28655

NORTH CAROLINA PROFESSIONAL SEAL 22832 ENGINEER RAY D. ELLIOTT
6/24/2013

REVISIONS								SHEET NO.
NO.	BY:	DATE:	NO.	BY:	DATE:			S-4
1			3					TOTAL SHEETS
2			4					52

DRAWN BY :	RTJ	DATE :	12/12
CHECKED BY :	RDE	DATE :	2/13

0160DEL_P10b2

TOTAL BILL OF MATERIAL

ITEM	TEMPORARY RAILROAD SHORING STATION 9404+63.64	FOUNDATION EXCAVATION FOR PIER 1 AT STATION 9404+23.91	FOUNDATION EXCAVATION FOR PIER 2 AT STATION 9404+88.19	PDA TESTING	REINFORCED CONCRETE DECK SLAB	CLASS AA CONCRETE (BRIDGE)	REINFORCING STEEL (BRIDGE)	SPIRAL COLUMN REINFORCING STEEL (BRIDGE)	APPROXIMATE 369,169 LBS. STRUCTURAL STEEL	PAINTING STRUCTURAL STEEL	HP 12x53 STEEL PILES		METHOD B DAMP-PROOFING	TWO PART MEMBRANE WATER-PROOFING SYSTEM	MEMBRANE LAYER WATER-PROOFING FOR DECK	1" ASPHALT PLANKING PROTECTIVE COURSE FOR DECK
UNIT	LUMP SUM	LUMP SUM	LUMP SUM	EACH	SQ. FT.	CU. YD.	LBS.	LBS.	LUMP SUM	LUMP SUM	NO.	LIN. FT.	SQ. YDS.	SQ. YDS.	SQ. YDS.	SQ. YDS.
SUPERSTRUCTURE					4,656				LS	LS					513	468
ABUTMENT 1	LS			1		73.0	12,320				22	1,100	122	15		
PIER 1	LS	LS		1		127.5	20,014	2,217			36	2,880	89	10		
PIER 2	LS		LS	1		125.2	19,632	2,078			36	2,880	89	10		
ABUTMENT 2	LS			1		73.0	12,320				22	2,200	122	15		
TOTALS	LUMP SUM	LUMP SUM	LUMP SUM	4	4,656	398.7	64,286	4,295	LUMP SUM	LUMP SUM	116	9,060	422	50	513	468

ITEM	METAL FENCE AND HANDRAIL	1'-0"x2'-1" CONCRETE PARAPET	4" SLOPE PROTECTION	SELF-LUBRICATING EXPANSION BEARING ASSEMBLIES	STRUCTURE DRAINAGE SYSTEM AT STA. 9404+63.64	4" Ø SIGNAL CONDUIT SYSTEM AT STA. 9404+63.64								
UNIT	LIN. FT.	LIN. FT.	SQ. YDS.	LUMP SUM	LUMP SUM	LUMP SUM								
SUPERSTRUCTURE	251.5	254.8		LS	LS	LS								
ABUTMENT 1	38.0		180		LS									
PIER 1					LS									
PIER 2					LS									
ABUTMENT 2	38.0		175		LS									
TOTALS	327.5	254.8	355	LUMP SUM	LUMP SUM	LUMP SUM								

PROJECT NO. P-5206C

ROWAN COUNTY

STATION: POC 9404+63.64-M1-=
POT 13+69.47-Y10-

SHEET 5 OF 5 MP 344.50±

STATE OF NORTH CAROLINA
DEPARTMENT OF TRANSPORTATION
RALEIGH

GENERAL DRAWING
BILL OF MATERIAL

PREPARED BY
TGS ENGINEERS
107-A MICA AVENUE
MORGANTON, NC 28655

NORTH CAROLINA PROFESSIONAL SEAL 22892 ENGINEER RAY D. ELLIOTT
6/24/2013

REVISIONS						SHEET NO.
NO.	BY:	DATE:	NO.	BY:	DATE:	S-5
1			3			TOTAL SHEETS
2			4			52

DRAWN BY : JLA DATE : 2/13
CHECKED BY : RDE DATE : 2/13

0160DEL_P10b2

DGN

* INCLUDES 8" MIN. BALLAST UNDER LOW END OF CROSSTIES.

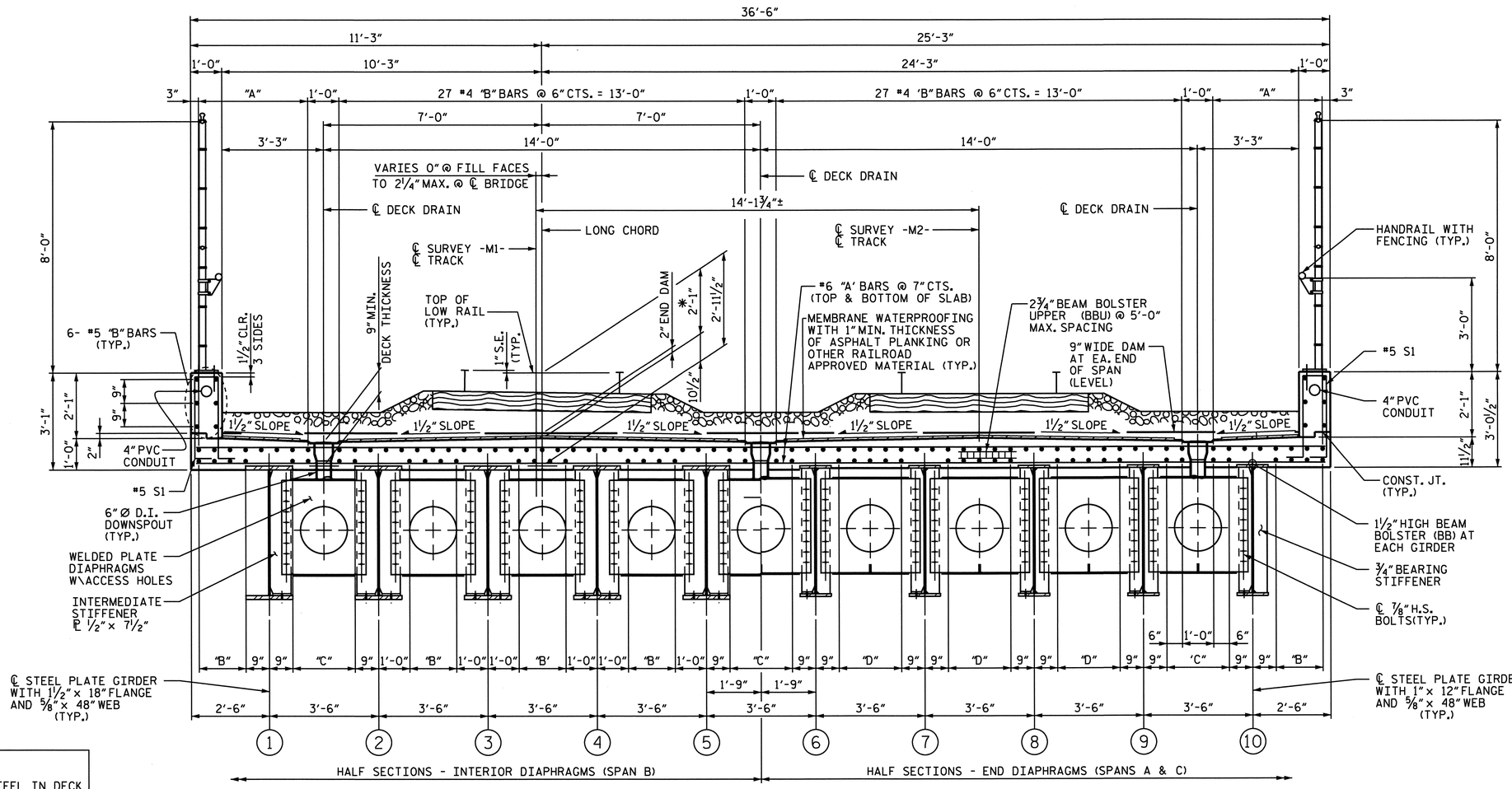

NOTE :

ALL REINFORCING STEEL IN DECK AND PARAPET IS EPOXY-COATED.

"A" = 8 #4 "B" BARS @ 6" CTS. = 3'-6" (TOP OF SLAB)

"B" = 4 #4 "B" BARS @ 6" CTS. = 1'-6" (BOTTOM OF SLAB)

"C" = 4 #4 "B" BARS SPACED AS SHOWN = 2'-0" (BOTTOM OF SLAB)

"D" = 5 #4 "B" BARS @ 6" CTS. = 2'-0" (BOTTOM OF SLAB)

TYPICAL DECK SECTION - SPANS A THRU C

PROJECT NO. P-5206C

ROWAN COUNTY

STATION: POC 9404+63.64-M1-=
POT 13+69.47-Y10-
MP 344.50±

STATE OF NORTH CAROLINA
DEPARTMENT OF TRANSPORTATION
RALEIGH

SUPERSTRUCTURE

TYPICAL SECTION

PREPARED BY
TGS ENGINEERS
107-A MICA AVENUE
MORGANTON, NC 28655

NORTH CAROLINA PROFESSIONAL SEAL 20192 ENGINEER RAY D. ELLIOTT
9/24/2013

REVISIONS						SHEET NO.
NO.	BY:	DATE:	NO.	BY:	DATE:	S-6
1			3			TOTAL SHEETS
2			4			52

DRAWN BY : JLA DATE : 12/12
CHECKED BY : RDE DATE : 2/13

0160DEL_P10b2

DGN

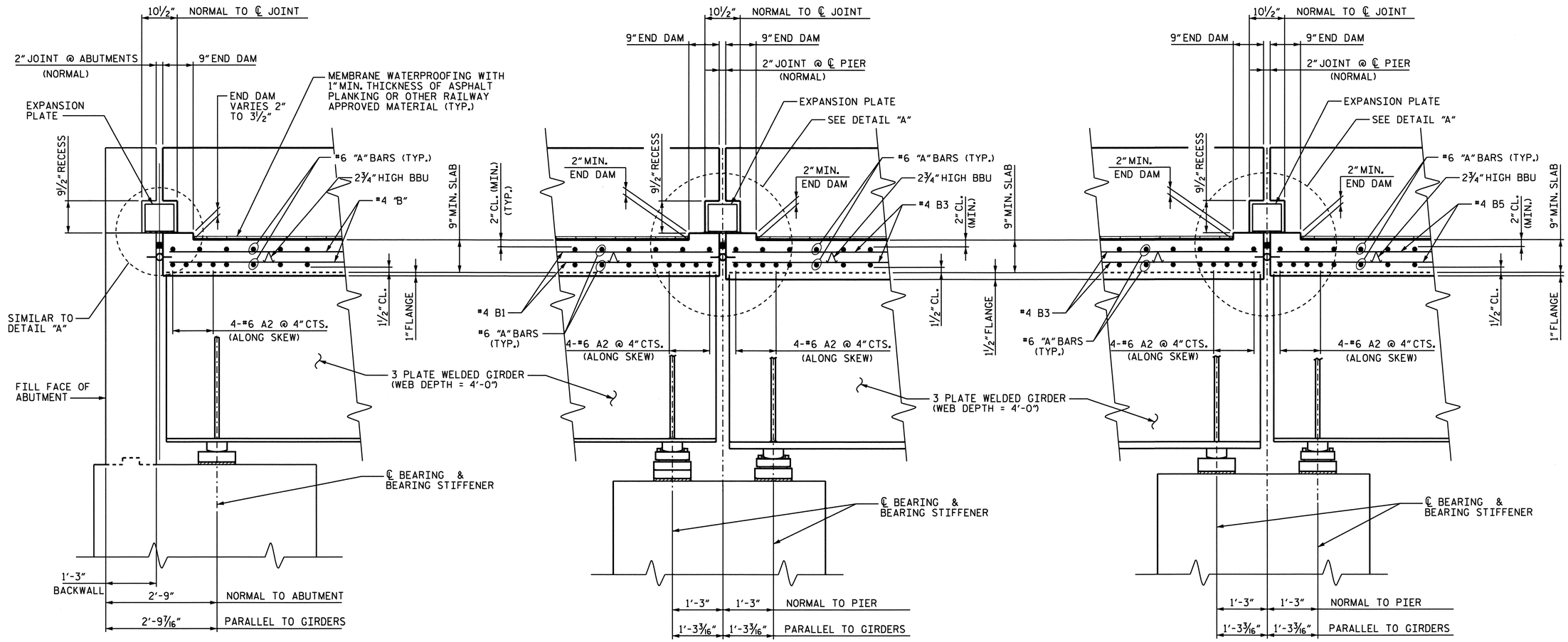

SECTION A-A

SECTION B-B

SECTION C-C

ALL REINFORCING STEEL TO BE EPOXY COATED.

PROJECT NO. P-5206C

ROWAN COUNTY

STATION: POC 9404+63.64-M1-=
POT 13+69.47-Y10-
MP 344.50 ±

STATE OF NORTH CAROLINA
DEPARTMENT OF TRANSPORTATION
RALEIGH

SUPERSTRUCTURE
TYPICAL
DECK SECTIONS

PREPARED BY
TGS ENGINEERS
107-A MICA AVENUE
MORGANTON, NC 28655

NORTH CAROLINA PROFESSIONAL SEAL 20192 ENGINEER RAY D. ELLIOTT
10/29/2013

REVISIONS							SHEET NO.
NO.	BY:	DATE:	NO.	BY:	DATE:		S-7
1			3				TOTAL SHEETS
2			4				52

DRAWN BY : JLA DATE : 12/12
CHECKED BY : RDE DATE : 2/13

0160DEL_P10b2

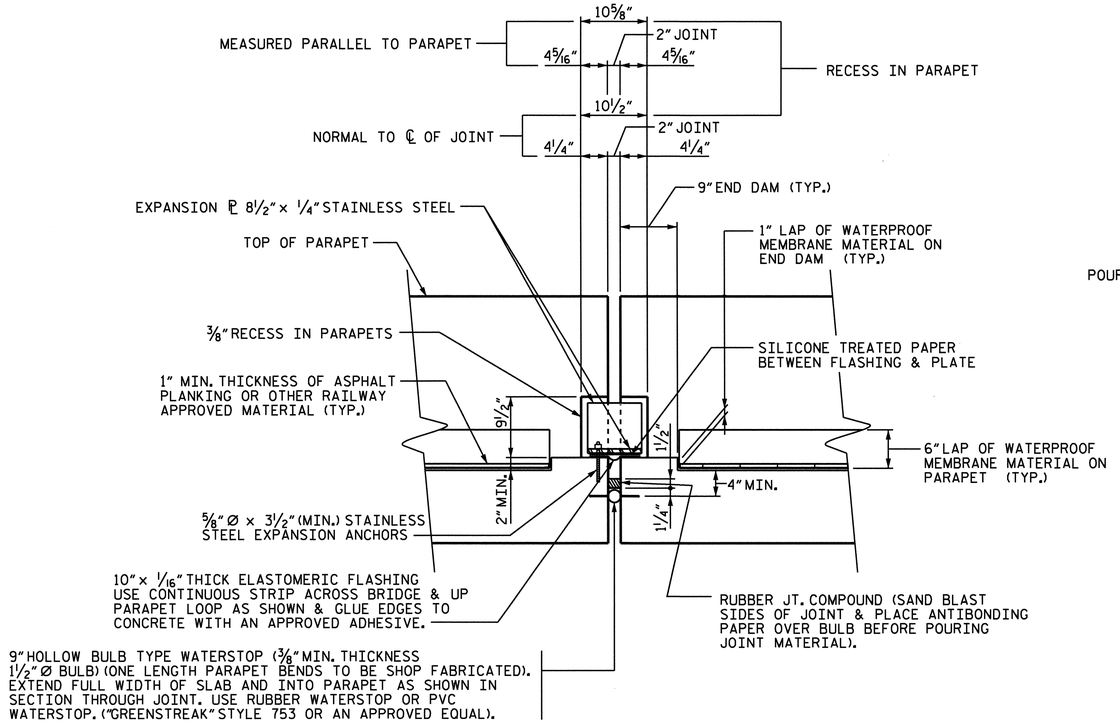

NOTE: JOINT SHALL BE TESTED FOR LEAKS AND MADE WATERTIGHT BEFORE FLASHING AND EXP. PLATE COVERS ARE INSTALLED.

DETAIL "A"

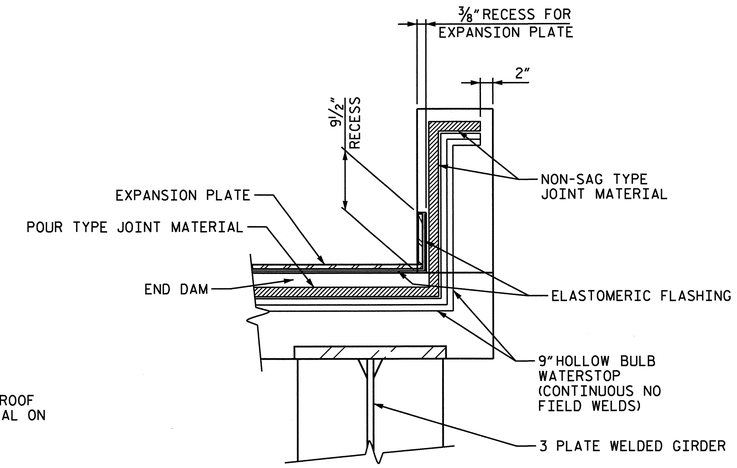

PART SECTION AT EXPANSION JOINT

NOTE:

AT THE CONTRACTOR'S OPTION, IN PLACE OF THE 1" ASPHALT PLANKING AND MEMBRANE LAYER, HE MAY USE POLYURETHANE MEMBRANE WATERPROOFING SYSTEM APPROVED BY THE RAILROAD.

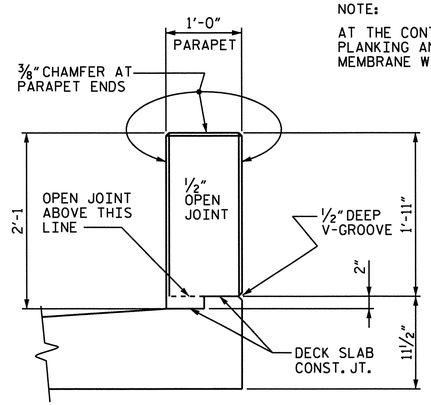

SECTION THRU OPEN JOINT IN PARAPET

(DOES NOT APPLY BETWEEN SPANS)

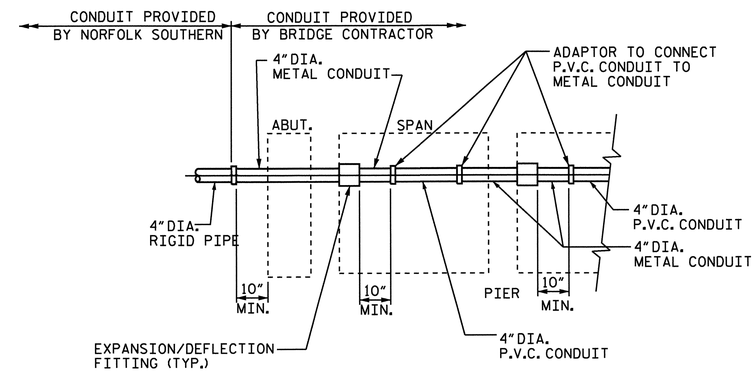

SIGNAL CONDUIT LAYOUT

(NOT TO SCALE)

NOTES FOR CONDUITS IN PARAPETS

CONDUIT TO BE 4" DIA. IN ACCORDANCE WITH UNDERWRITER'S LABORATORY SPECIFICATIONS.

EXPANSION FITTINGS OF CONDUIT SHALL BE LOCATED AT DECK JOINT AT PIER 1 & 2.

COUPLING SHALL BE PROVIDED BEHIND BACKWALL OF ABUTMENT 1 & 2 FOR CONNECTION TO 4" DIA. RIGID PIPE. (RIGID PIPE BY NORFOLK SOUTHERN).

PROJECT NO. P-5206C

ROWAN COUNTY

STATION: POC 9404+63.64-M1-=
POT 13+69.47-Y10-
MP 344.50±

STATE OF NORTH CAROLINA
DEPARTMENT OF TRANSPORTATION
RALEIGH

SUPERSTRUCTURE

PARAPET DETAILS

PREPARED BY
TGS ENGINEERS
107-A MICA AVENUE
MORGANTON, NC 28655

NORTH CAROLINA PROFESSIONAL SEAL 22892 ENGINEER RAY D. ELLIOTT
6/24/2013

REVISIONS						SHEET NO.
NO.	BY:	DATE:	NO.	BY:	DATE:	S-8
1			3			TOTAL SHEETS
2			4			52

DRAWN BY : NMW DATE : 2/13
CHECKED BY : RDE DATE : 2/13

ALL DIMENSIONS SHOWN ARE MEASURED ALONG THE LONG CHORD UNLESS OTHERWISE NOTED.

0160DEL_P10b2

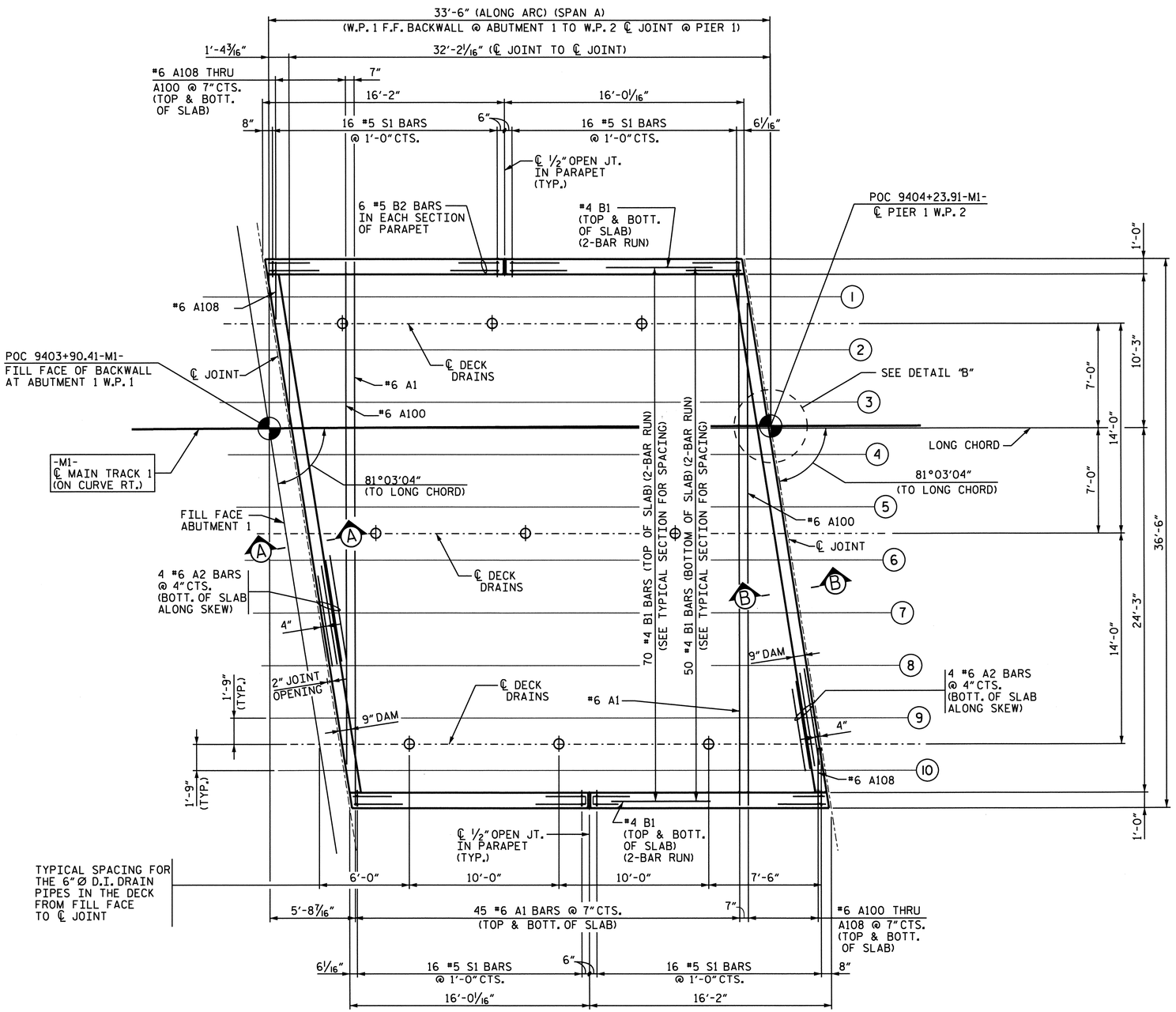

SPAN A

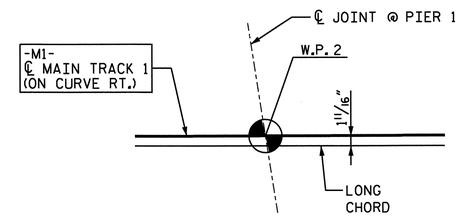

DETAIL "B"

PROJECT NO. P-5206C

ROWAN COUNTY

STATION: POC 9404+63.64-M1-=
POT 13+69.47-Y10-
MP 344.50±

STATE OF NORTH CAROLINA
DEPARTMENT OF TRANSPORTATION
RALEIGH

SUPERSTRUCTURE

PLAN OF SPAN A

REVISIONS							SHEET NO.
NO.	BY:	DATE:	NO.	BY:	DATE:		S-9
1			3				TOTAL SHEETS
2			4				52

PREPARED BY
TGS ENGINEERS
107-A MICA AVENUE
MORGANTON, NC 28655

NORTH CAROLINA PROFESSIONAL SEAL 22092 ENGINEER RAY D. ELLIOTT
6/24/2013

DRAWN BY :	NMW	DATE :	2/13
CHECKED BY :	RDE	DATE :	2/13

0160DEL_P10b2

ALL DIMENSIONS SHOWN ARE MEASURED ALONG THE LONG CHORD UNLESS OTHERWISE NOTED.

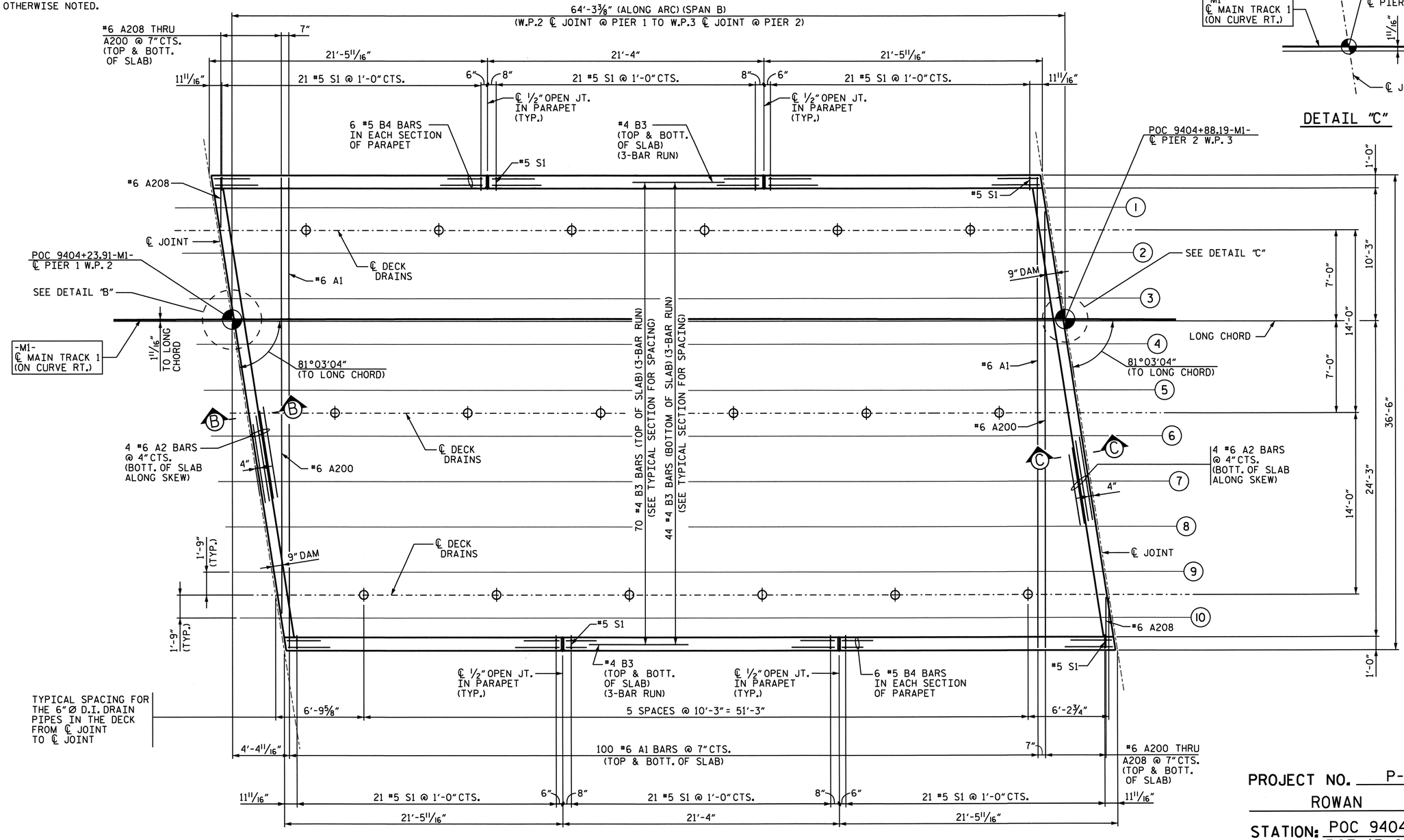

SPAN B

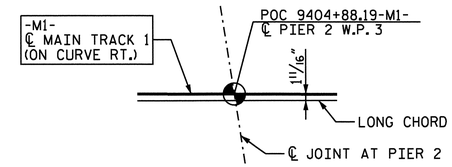

DETAIL "C"

PROJECT NO. P-5206C

ROWAN COUNTY

STATION: POC 9404+63.64-M1-=
POT 13+69.47-Y10-
MP 344.50±

STATE OF NORTH CAROLINA
DEPARTMENT OF TRANSPORTATION
RALEIGH

SUPERSTRUCTURE

PLAN OF SPAN B

PREPARED BY
TGS ENGINEERS
107-A MICA AVENUE
MORGANTON, NC 28655

NORTH CAROLINA PROFESSIONAL SEAL 22892 ENGINEER RAY D. ELLIOTT
6/24/2013

REVISIONS							SHEET NO.
NO.	BY:	DATE:	NO.	BY:	DATE:		S-10
1			3				TOTAL SHEETS
2			4				52

DRAWN BY : NMW DATE : 2/13
CHECKED BY : RDE DATE : 2/13

ALL DIMENSIONS SHOWN ARE MEASURED ALONG THE LONG CHORD UNLESS OTHERWISE NOTED.

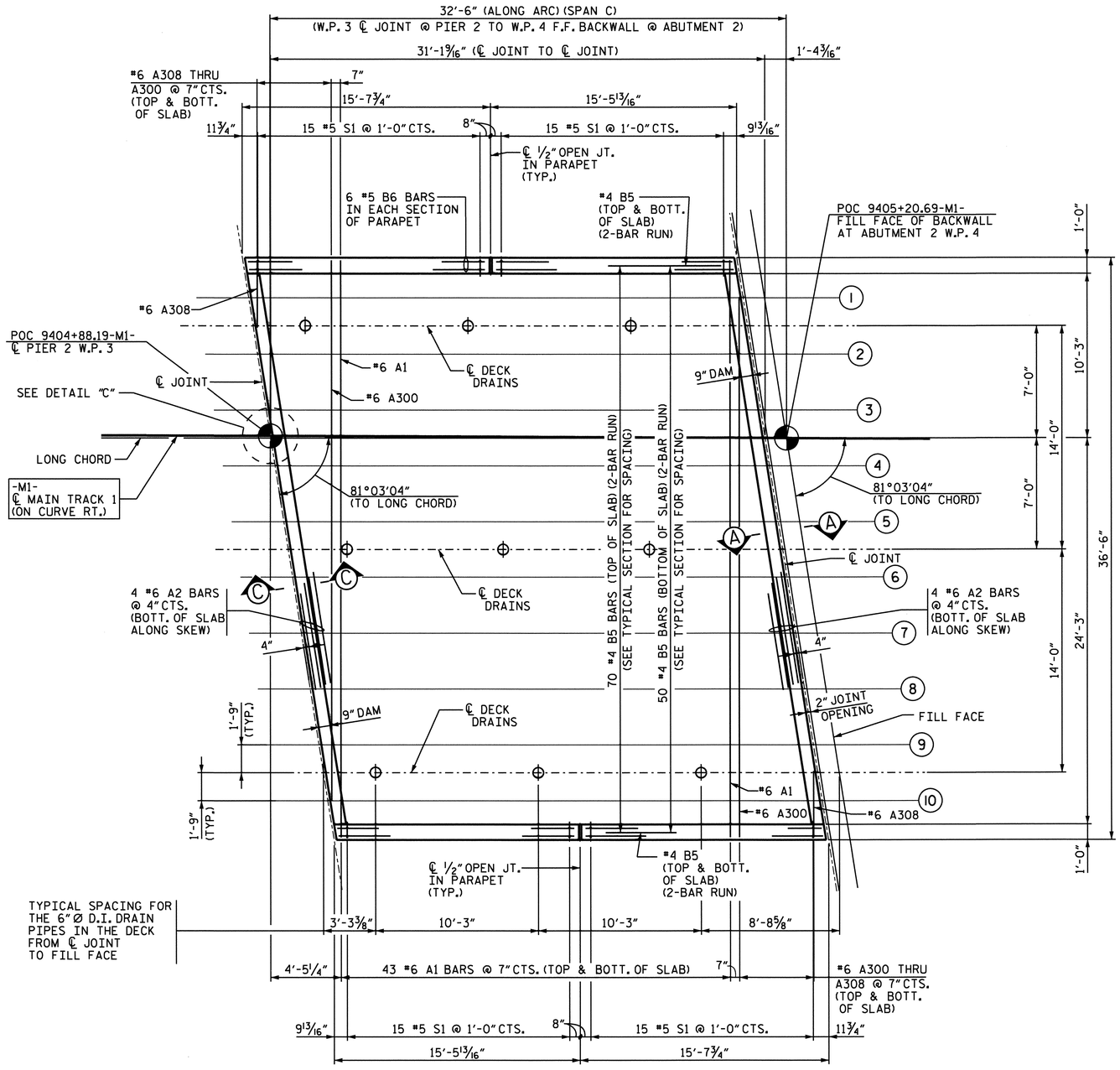

SPAN C

PROJECT NO. P-5206C

ROWAN COUNTY

STATION: POC 9404+63.64-M1-= POT 13+69.47-Y10-

MP 344.50±

STATE OF NORTH CAROLINA
DEPARTMENT OF TRANSPORTATION
RALEIGH

SUPERSTRUCTURE

PLAN OF SPAN C

PREPARED BY TGS ENGINEERS 107-A MICA AVENUE MORGANTON, NC 28655

NORTH CAROLINA PROFESSIONAL SEAL 22892 ENGINEER RAY D. ELLIOTT 6/24/2013

REVISIONS						SHEET NO.
NO.	BY:	DATE:	NO.	BY:	DATE:	S-11
1			3			TOTAL SHEETS
2			4			52

DRAWN BY : NMW DATE : 2/13
CHECKED BY : RDE DATE : 2/13

DCN 0160DEL_P10b2

ALL DIMENSIONS SHOWN ARE MEASURED ALONG THE LONG CHORD UNLESS OTHERWISE NOTED.

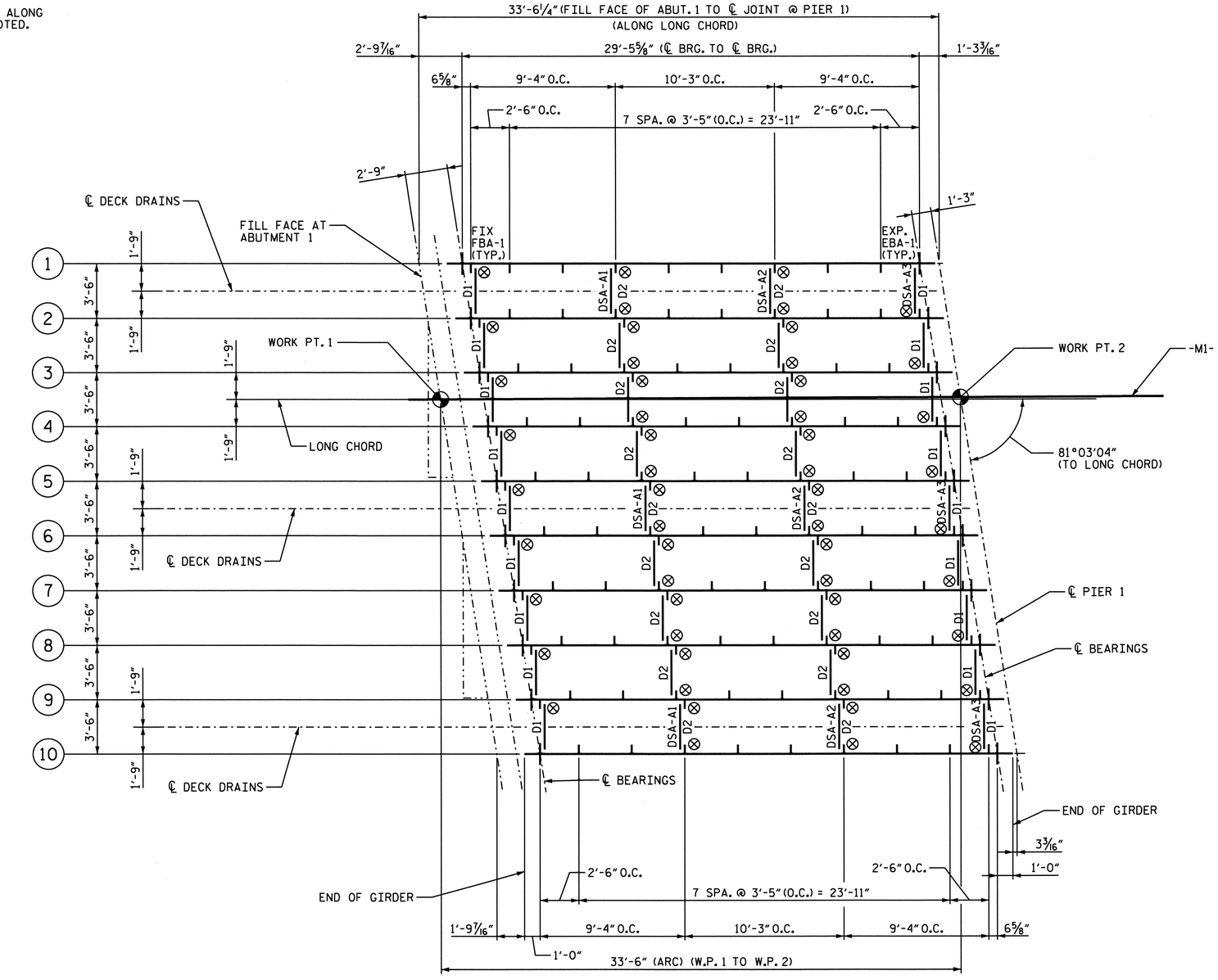

FRAMING PLAN - SPAN A

⊗ DENOTES LOCATION OF INTERMEDIATE STIFFENERS WITH BOLTED BOTTOM FLANGE CONNECTIONS, SEE DETAIL "C" ON SHEET S-19.

PROJECT NO. P-5206C

ROWAN COUNTY

STATION: POC 9404+63.64-M1-=
POT 13+69.47-Y10-
MP 344.50±

SHEET 1 OF 3

STATE OF NORTH CAROLINA
DEPARTMENT OF TRANSPORTATION
RALEIGH

SUPERSTRUCTURE
FRAMING PLAN
SPAN A

REVISIONS						SHEET NO.
NO.	BY:	DATE:	NO.	BY:	DATE:	S-12
1			3			TOTAL SHEETS
2			4			52

PREPARED BY
TGS ENGINEERS
107-A MICA AVENUE
MORGANTON, NC 28655

NORTH CAROLINA PROFESSIONAL SEAL 20192 ENGINEER RAY D. ELLIOTT
10/29/2013

DRAWN BY : RTJ DATE : 12/12
CHECKED BY : RDE DATE : 2/13

0160DEL_P10b2

0160DEL_P10b2

ALL DIMENSIONS SHOWN ARE MEASURED ALONG THE LONG CHORD UNLESS OTHERWISE NOTED.

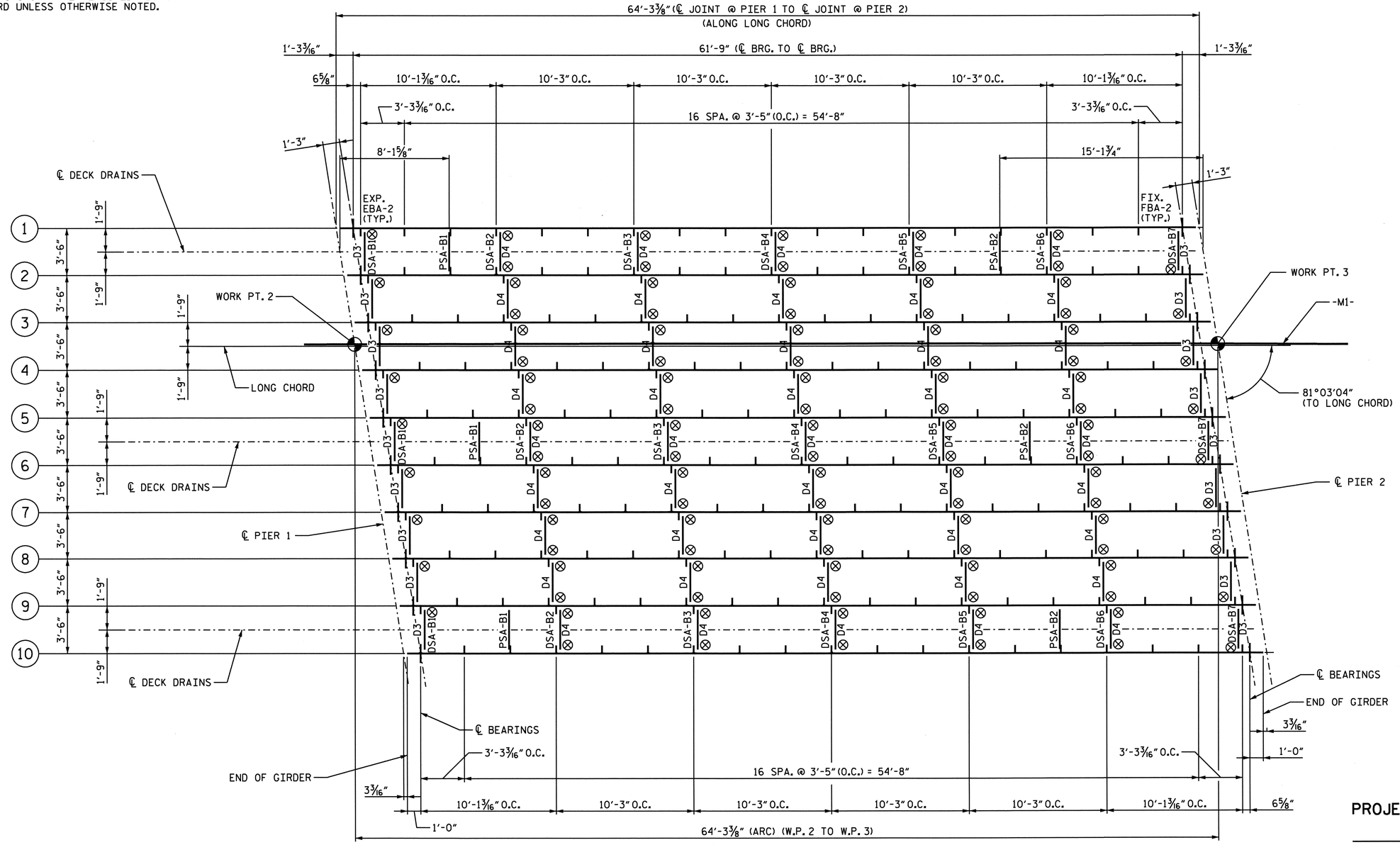

FRAMING PLAN - SPAN B

⊗ DENOTES LOCATION OF INTERMEDIATE STIFFENERS WITH BOLTED BOTTOM FLANGE CONNECTIONS, SEE DETAIL "D" ON SHEET S-19.

PROJECT NO. P-5206C

ROWAN COUNTY

STATION: POC 9404+63.64-M1-=
POT 13+69.47-Y10-
MP 344.50±

SHEET 2 OF 3

STATE OF NORTH CAROLINA
DEPARTMENT OF TRANSPORTATION
RALEIGH

SUPERSTRUCTURE
FRAMING PLAN
SPAN B

REVISIONS						SHEET NO.
NO.	BY:	DATE:	NO.	BY:	DATE:	S-13
1			3			TOTAL SHEETS
2			4			52

PREPARED BY
TGS ENGINEERS
107-A MICA AVENUE
MORGANTON, NC 28655

NORTH CAROLINA PROFESSIONAL SEAL 22892 ENGINEER RAY D. ELLIOTT
Ray D. Elliott
6/24/2013

DRAWN BY : RTJ DATE : 12/12
CHECKED BY : RDE DATE : 2/13

0160DEL_P10b2

ALL DIMENSIONS SHOWN ARE MEASURED ALONG THE LONG CHORD UNLESS OTHERWISE NOTED.

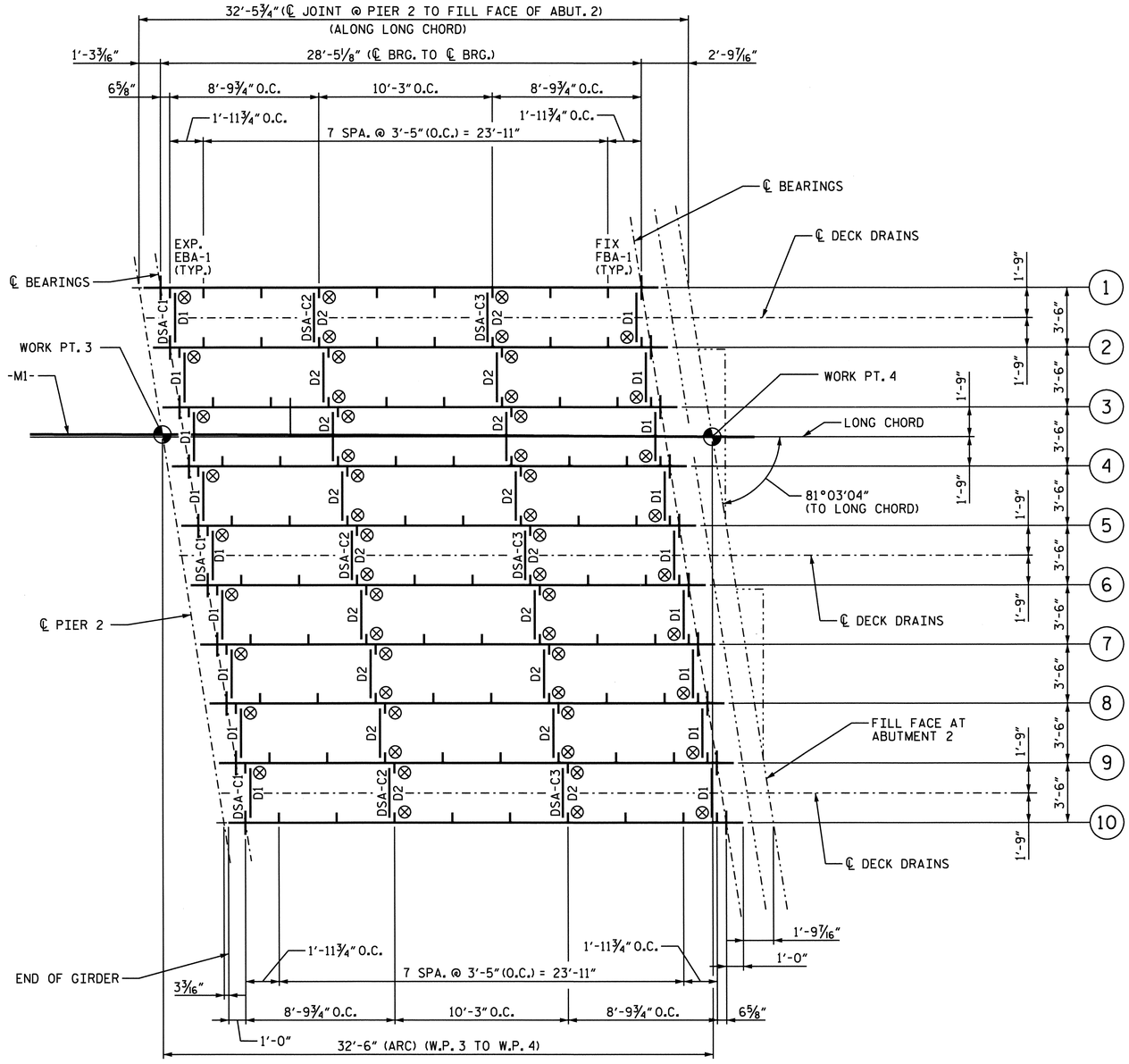

FRAMING PLAN - SPAN C

⊗ DENOTES LOCATION OF INTERMEDIATE STIFFENERS WITH BOLTED BOTTOM FLANGE CONNECTIONS, SEE DETAIL "C" ON SHEET S-19.

STRUCTURAL STEEL NOTES

DESIGN DATA:

SPECIFICATIONS: CURRENT A.R.E.M.A. AND NORFOLK SOUTHERN RAILWAY DESIGN CRITERIA

LIVE LOAD: COOPERS E-80 + ALTERNATE WITH IMPACT AS PER SPECIFICATIONS
MAX. SPEED = 80 MPH PASSENGER
50 MPH FREIGHT

STRUCTURAL STEEL: ASTM A709 GRADE 50. fs = 27,500 PSI. THE STRUCTURAL STEEL SHALL CONFORM TO THE FOLLOWING ASTM SPECIFICATIONS:

BOTTOM FLANGES AND TENSION PORTIONS OF WEBS OF MAIN GIRDERS: A709, GRADE 50, WITH SUPPLEMENTALS S84-F2, S91 AND S93 APPLYING, AND WITH IMPACT TEST REQUIREMENT OF 25 FT.-LBS. @ 40°F AS GOVERNED BY ASTM A673 FOR TEST FREQUENCY "P".

TOP FLANGES AND COMPRESSION PORTIONS OF WEBS OF MAIN GIRDERS: A709, GRADE 50, WITH SUPPLEMENTALS S83-T2, S91 AND S93 APPLYING, AND WITH IMPACT TEST REQUIREMENT OF 15 FT.-LBS. @ 40°F AS GOVERNED BY ASTM A673 FOR TEST FREQUENCY "P".

OTHER MISCELLANEOUS MATERIAL : A709, GRADE 50.

SPECIFICATIONS: CURRENT A.R.E.M.A. SPECIFICATION CHAPTER 15, STEEL STRUCTURES - GIRDER BOTTOM FLANGE PLATE INCLUDING WEB TO FLANGE WELD AND TENSION ZONE OF WEB PLATE IS DESIGNATED FRACTURE CRITICAL MEMBERS.

MILL TEST REPORTS: NORFOLK SOUTHERN CORPORATION SHALL BE FURNISHED COPIES OF MILL TEST REPORTS FOR ALL MATERIALS EXCEPT MISCELLANEOUS PLATES AND SHAPES. REPORTS SHALL INDICATE COMPLIANCE WITH ALL SPECIFIED REQUIREMENTS.

INSPECTION: SHOP INSPECTION BY NORFOLK SOUTHERN CORPORATION OR ITS AUTHORIZED AGENT. SEE SPECIAL PROVISIONS FOR ADDITIONAL WELDING INSPECTION OF FLANGE PLATE TO WEB PLATE WELD.

PAINTING STRUCTURAL STEEL: FOR PAINT SYSTEM FOR STRUCTURAL STEEL, SEE SPECIAL PROVISION "NORFOLK SOUTHERN PAINT SPECIFICATION."

FOR PROTECTION OF PAINTED STEEL, SEE SPECIAL PROVISIONS.

FOR STRUCTURAL STEEL, SEE SPECIAL PROVISION "NORFOLK SOUTHERN SPECIFICATIONS FOR STRUCTURAL STEEL."

ALL DIMENSIONS SHOWN ARE HORIZONTAL OR VERTICAL UNLESS OTHERWISE NOTED.

FOR FABRICATION OF STRUCTURAL STEEL, SEE SPECIAL PROVISIONS.

SHOP DRAWINGS: SHOP DRAWINGS SHALL BE APPROVED BY THE CHIEF ENGINEER - BRIDGES & STRUCTURES, NORFOLK SOUTHERN CORPORATION, ATLANTA, GEORGIA. SHOP DRAWINGS SHALL BE LABELED NORFOLK SOUTHERN MP NS-341 TO NS-345.

FIELD CONNECTIONS SHALL BE BOLTED WITH ⅞" DIAMETER ASTM A325, TYPE 1 HIGH STRENGTH BOLTS WITH HARDENED WASHERS IN ACCORDANCE WITH A.R.E.M.A. SPECIFICATIONS USING THE TURN OF NUT METHOD.

HOLES: OPEN HOLES AS NOTED.

HIGH STRENGTH BOLTS, NUTS & WASHERS : ASTM DESIGNATION A325.

ANCHOR BOLTS: SHALL BE 1¼Ø IN ACCORDANCE WITH A.R.E.M.A. SPECIFICATIONS AND SHALL BE GROUTED IN FORMED HOLES AFTER GIRDERS ARE ERECTED.

SHOP SPLICES SHALL NOT BE PERMITTED UNLESS NOTED.

NO CAMBER FOR GIRDER REQUIRED, TURN NATURAL MILL CAMBER UP.

BEARING PADS SHALL BE USED WHENEVER STEEL MASONRY PLATE, OR OTHER STEEL BEARING PLATE, BEARS ON CONCRETE. PADS SHALL BE PREFORMED FABRIC BEARING PADS, ½" THICK, AND SHALL BE EITHER SHOCK PAD STYLE 15175 AS MANUFACTURED BY THE ALERT MANUFACTURING AND SUPPLY COMPANY, CHICAGO, IL; OR FABREEKA PADS, AS MANUFACTURED BY THE FABREEKA PRODUCTS COMPANY, BOSTON, MA; OR SORBTEX PADS AS MANUFACTURED BY VOSS ENGINEERING, INC. CHICAGO, IL, OR AN APPROVED EQUAL.

ELECTROSLAG WELDING IS NOT PERMITTED.

NOTES (SPAN A, B & C)

1. INTERMEDIATE STIFFENERS, (NO MARKS SHOWN), SHALL NOT HAVE DIAPHRAGM CONNECTIONS AND SHALL NOT BE ATTACHED TO THE BOTTOM FLANGE OF THE GIRDERS. THESE INTERMEDIATE STIFFENERS SHALL BE A "TIGHT FIT" ON THE BOTTOM FLANGE OF THE GIRDER WITH NO WELD AND NO OTHER CONNECTIONS PRESENT.
2. INTERMEDIATE STIFFENERS ("MARK ⊗"), SHALL HAVE DIAPHRAGM CONNECTIONS AND SHALL REQUIRE STIFFENER CONNECTOR PLATES WHICH ARE BOLTED TO THE BOTTOM FLANGE OF THE GIRDER, AS SHOWN IN DETAILS "C" & "D" ON THE "STRUCTURAL STEEL DIAPHAGM DETAILS" SHEET 2 OF 2.

PROJECT NO. P-5206C
ROWAN COUNTY
STATION: POC 9404+63.64-M1-=
POT 13+69.47-Y10-
MP 344.50±

SHEET 3 OF 3

STATE OF NORTH CAROLINA
DEPARTMENT OF TRANSPORTATION
RALEIGH

SUPERSTRUCTURE
FRAMING PLAN
SPAN C

PREPARED BY
TGS ENGINEERS
107-A MICA AVENUE
MORGANTON, NC 28655

NORTH CAROLINA PROFESSIONAL SEAL 19052 ENGINEER RAY D. ELLIOTT
6/29/2013

REVISIONS								SHEET NO.
NO.	BY:	DATE:	NO.	BY:	DATE:			S-14
1			3					TOTAL SHEETS
2			4					52

DRAWN BY : RTJ DATE : 12/12
CHECKED BY : RDE DATE : 2/13

0160DEL_P10b2

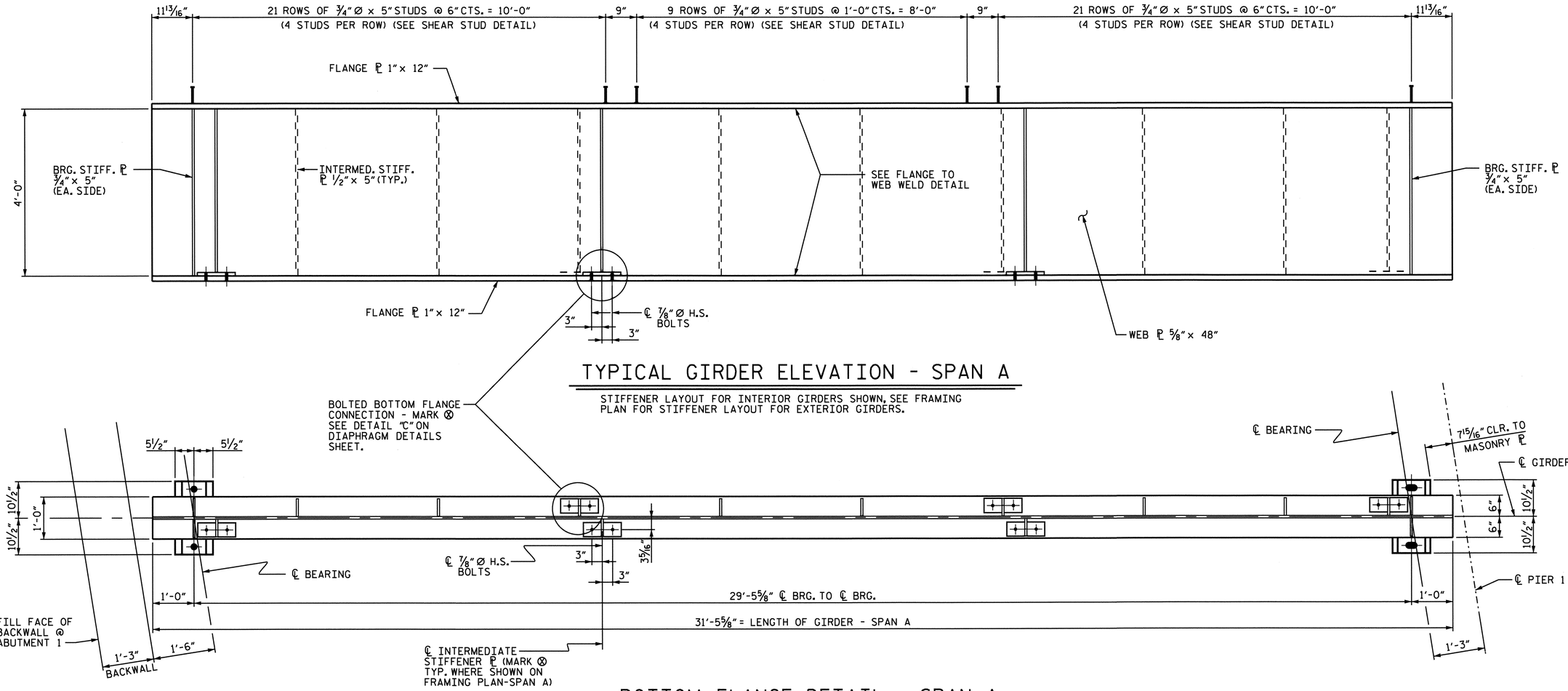

TYPICAL GIRDER ELEVATION - SPAN A

STIFFENER LAYOUT FOR INTERIOR GIRDERS SHOWN, SEE FRAMING PLAN FOR STIFFENER LAYOUT FOR EXTERIOR GIRDERS.

BOTTOM FLANGE DETAIL - SPAN A

STIFFENER LAYOUT FOR INTERIOR GIRDERS SHOWN, SEE FRAMING PLAN FOR STIFFENER LAYOUT FOR EXTERIOR GIRDERS.

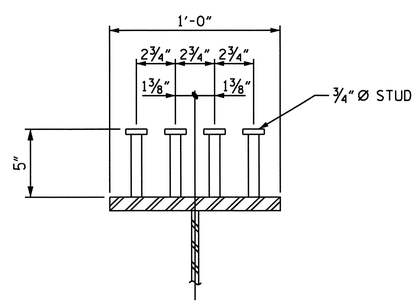

SHEAR STUD DETAIL - SPANS A & C

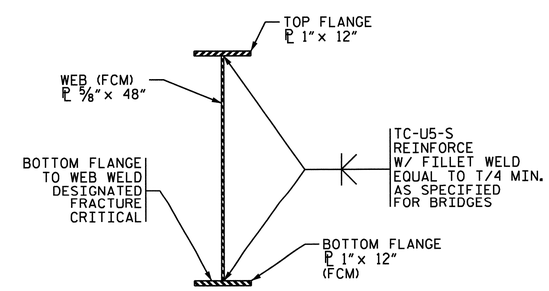

(FCM) = FRACTURE CRITICAL MEMBER

FLANGE TO WEB WELD DETAIL - SPANS A & C

PROJECT NO. P-5206C

ROWAN COUNTY

STATION: POC 9404+63.64-M1-= POT 13+69.47-Y10-

SHEET 1 OF 3 MP 344.50±

STATE OF NORTH CAROLINA
DEPARTMENT OF TRANSPORTATION
RALEIGH

SUPERSTRUCTURE

GIRDER DETAILS SPAN A

PREPARED BY TGS ENGINEERS 107-A MICA AVENUE MORGANTON, NC 28655

NORTH CAROLINA PROFESSIONAL SEAL 22992 ENGINEER RAY D. ELLIOTT 6/24/2013

REVISIONS						SHEET NO.
NO.	BY:	DATE:	NO.	BY:	DATE:	S-15
1			3			TOTAL SHEETS
2			4			52

DRAWN BY : RTJ DATE : 1/13
CHECKED BY : RDE DATE : 2/13

0160DEL_P10b2

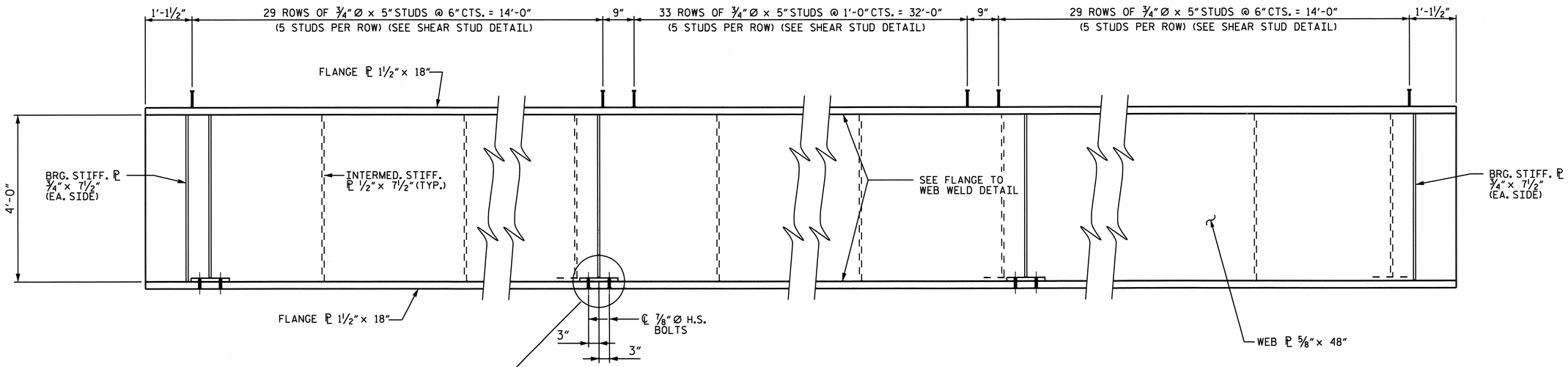

TYPICAL GIRDER ELEVATION - SPAN B

STIFFENER LAYOUT FOR INTERIOR GIRDERS SHOWN, SEE FRAMING PLAN FOR STIFFENER LAYOUT FOR EXTERIOR GIRDERS.

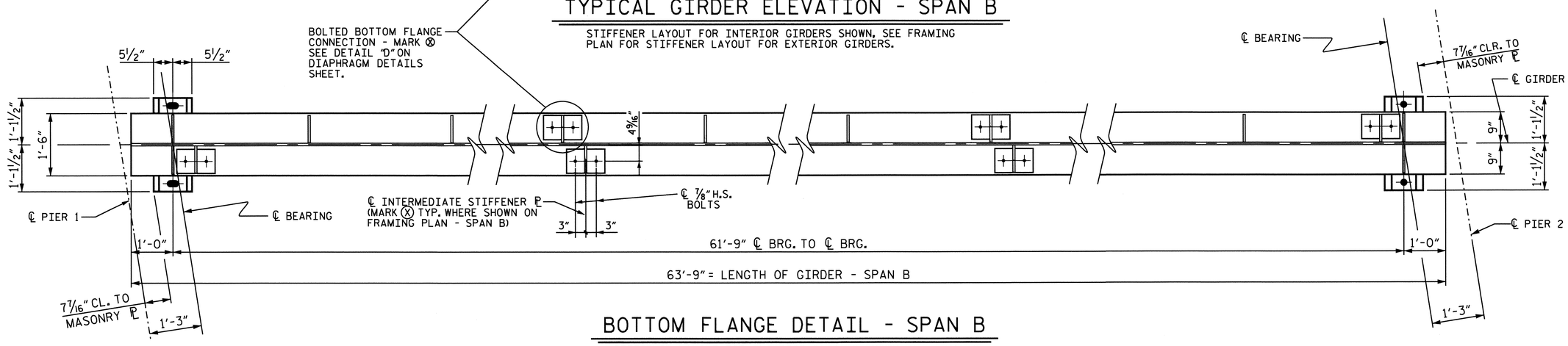

BOTTOM FLANGE DETAIL - SPAN B

STIFFENER LAYOUT FOR INTERIOR GIRDERS SHOWN, SEE FRAMING PLAN FOR STIFFENER LAYOUT FOR EXTERIOR GIRDERS.

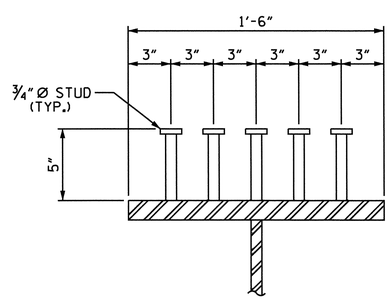

SHEAR STUD DETAIL - SPAN B

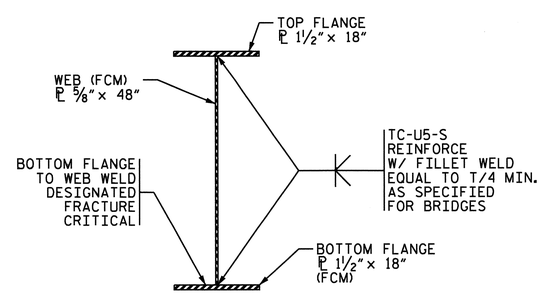

(FCM) = FRACTURE CRITICAL MEMBER

FLANGE TO WEB WELD DETAIL - SPAN B

PROJECT NO. P-5206C

ROWAN COUNTY

STATION: POC 9404+63.64-M1-= POT 13+69.47-Y10-

SHEET 2 OF 3 MP 344.50±

STATE OF NORTH CAROLINA
DEPARTMENT OF TRANSPORTATION
RALEIGH

SUPERSTRUCTURE

GIRDER DETAILS SPAN B

PREPARED BY TGS ENGINEERS 107-A MICA AVENUE MORGANTON, NC 28655

NORTH CAROLINA PROFESSIONAL SEAL 22892 ENGINEER RAY D. ELLIOTT 6/24/2013

REVISIONS						SHEET NO.
NO.	BY:	DATE:	NO.	BY:	DATE:	S-16
1			3			TOTAL SHEETS
2			4			52

DRAWN BY : RTJ DATE : 1/13
CHECKED BY : RDE DATE : 2/13

0160DEL_P10b2

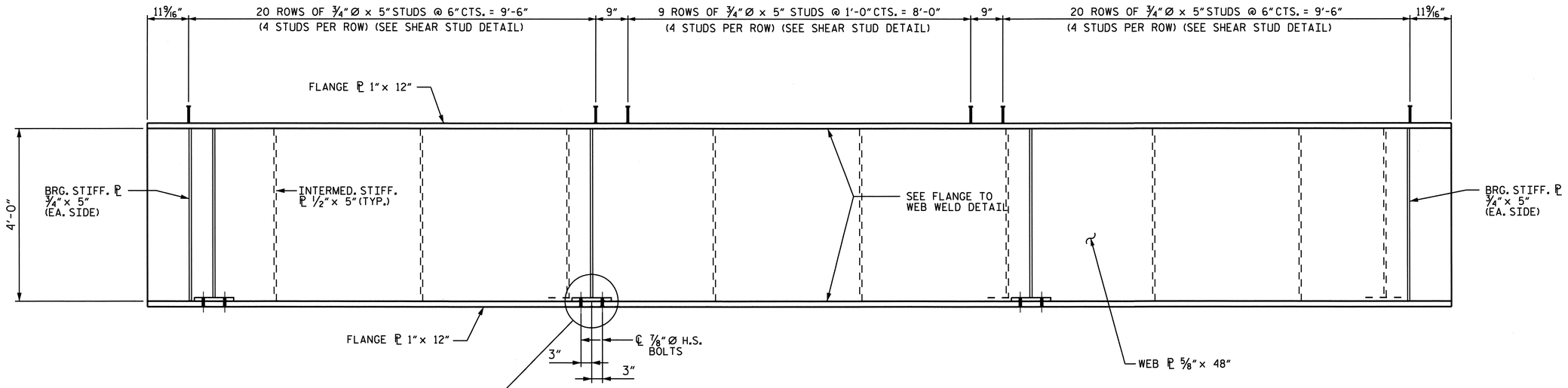

TYPICAL GIRDER ELEVATION - SPAN C

STIFFENER LAYOUT FOR INTERIOR GIRDERS SHOWN, SEE FRAMING PLAN FOR STIFFENER LAYOUT FOR EXTERIOR GIRDERS.

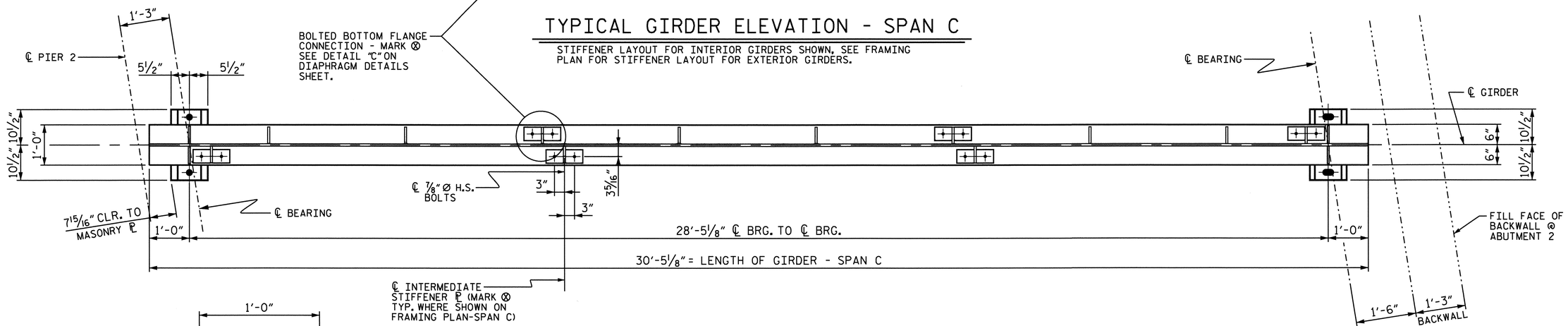

BOTTOM FLANGE DETAIL - SPAN C

STIFFENER LAYOUT FOR INTERIOR GIRDERS SHOWN, SEE FRAMING PLAN FOR STIFFENER LAYOUT FOR EXTERIOR GIRDERS.

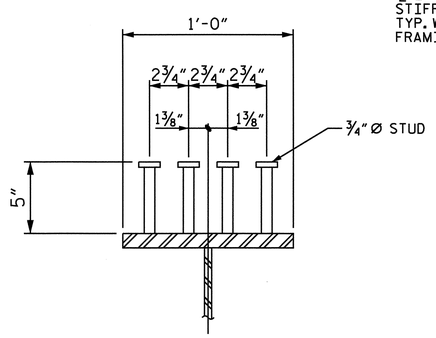

SHEAR STUD DETAIL - SPANS A & C

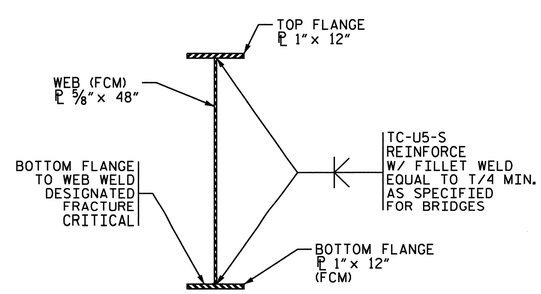

(FCM) = FRACTURE CRITICAL MEMBER

FLANGE TO WEB WELD DETAIL - SPANS A & C

PROJECT NO. P-5206C

ROWAN COUNTY

STATION: POC 9404+63.64-M1-=
POT 13+69.47-Y10-
MP 344.50±

SHEET 3 OF 3

STATE OF NORTH CAROLINA
DEPARTMENT OF TRANSPORTATION
RALEIGH

SUPERSTRUCTURE

GIRDER DETAILS
SPAN C

REVISIONS						SHEET NO.
NO.	BY:	DATE:	NO.	BY:	DATE:	S-17
1			3			TOTAL SHEETS
2			4			52

PREPARED BY
TGS ENGINEERS
107-A MICA AVENUE
MORGANTON, NC 28655

NORTH CAROLINA PROFESSIONAL SEAL 19992 ENGINEER ROY D. ELLIOTT
6/24/2013

DRAWN BY : RTJ DATE : 1/13
CHECKED BY : RDE DATE : 2/13

0160DEL_P10b2

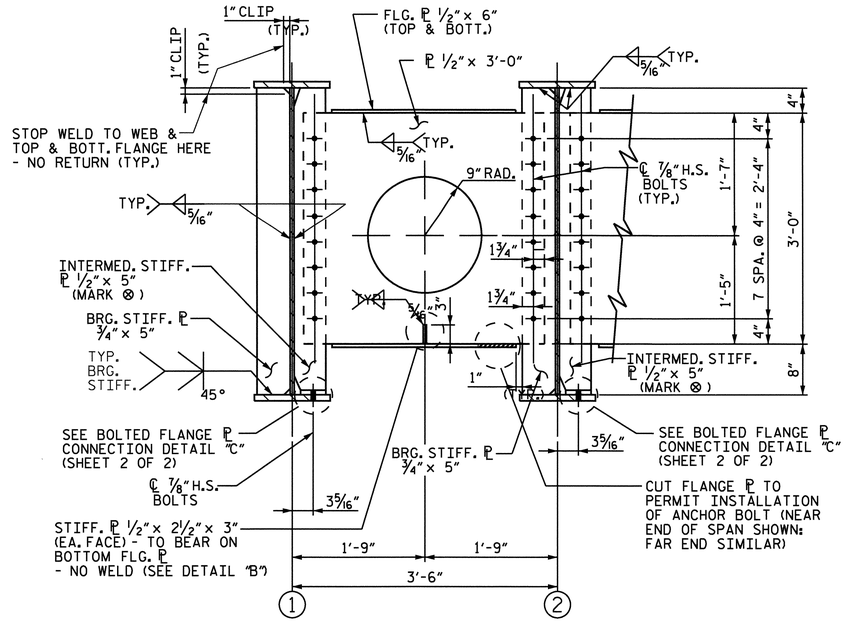

SECTION AT END DIAPHRAGM - MARK D1

SPANS A & C

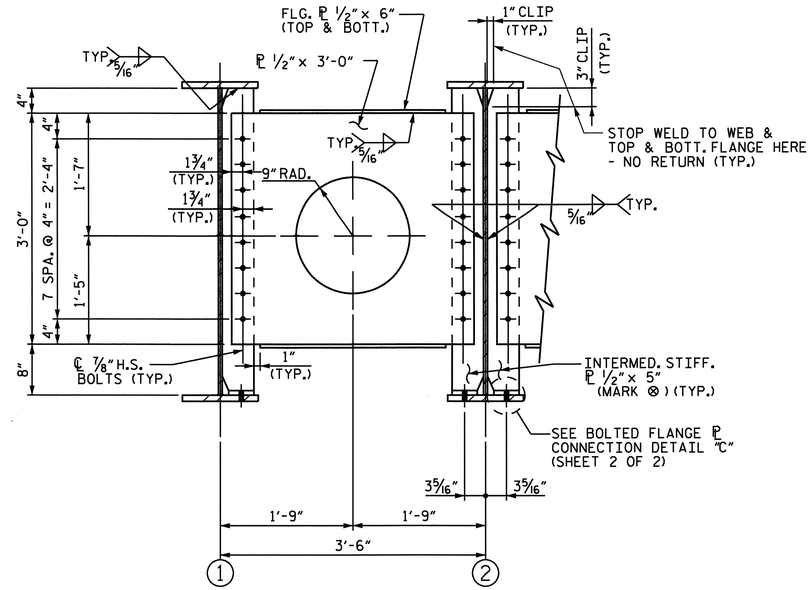

SECTION AT INTERMEDIATE DIAPHRAGM - MARK D2

SPANS A & C

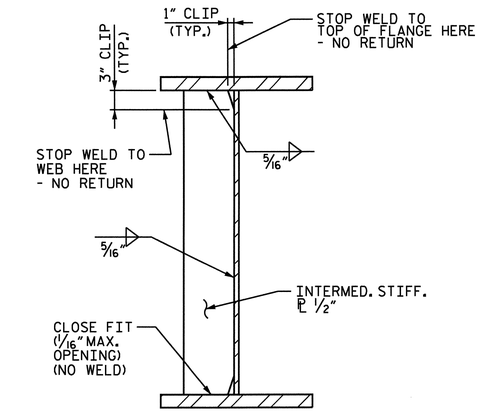

DETAIL OF STIFFENER PLATE WHEN NOT USED AS A CONNECTOR PLATE

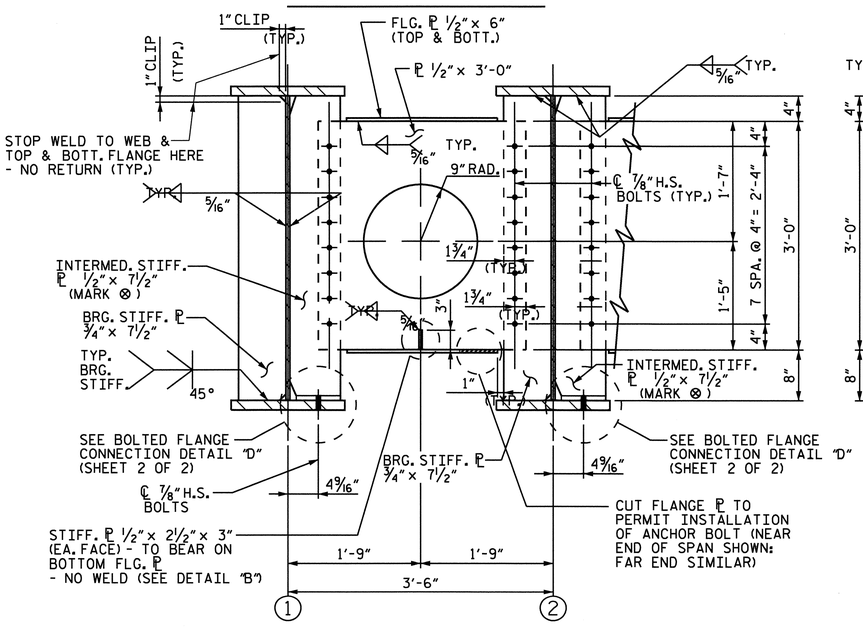

SECTION AT END DIAPHRAGM - MARK D3

SPAN B

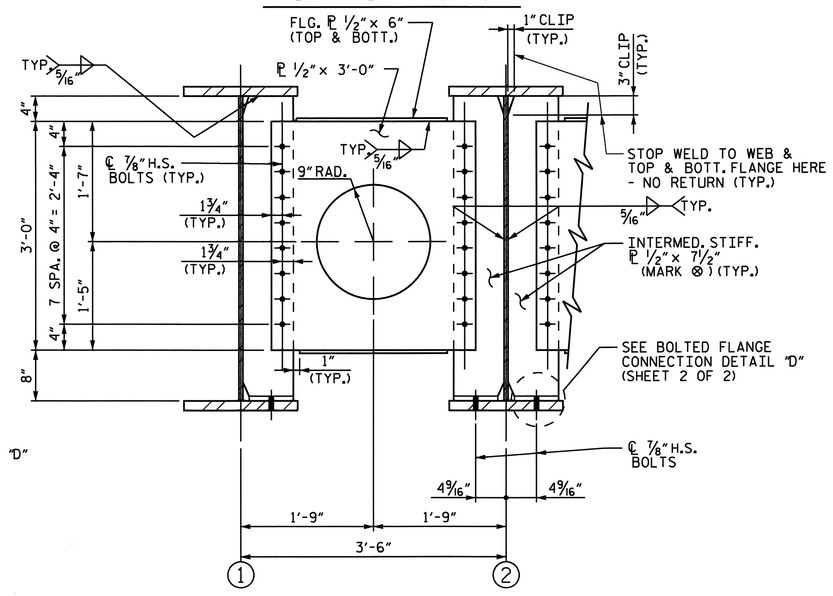

SECTION AT INTERMEDIATE DIAPHRAGM - MARK D4

SPAN B

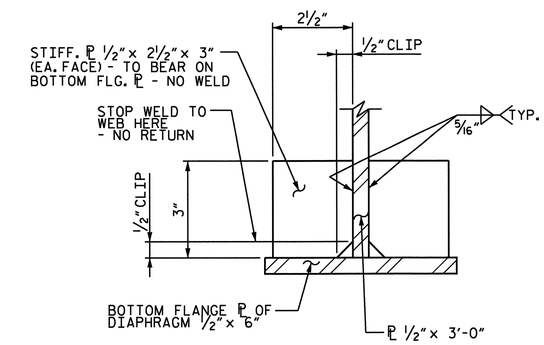

DETAIL "B"

PROJECT NO. P-5206C

ROWAN COUNTY

STATION: POC 9404+63.64-M1-=
POT 13+69.47-Y10-
MP 344.50±

SHEET 1 OF 2

STATE OF NORTH CAROLINA
DEPARTMENT OF TRANSPORTATION
RALEIGH

SUPERSTRUCTURE

STRUCTURAL STEEL DIAPHRAGM DETAILS

REVISIONS						SHEET NO.
NO.	BY:	DATE:	NO.	BY:	DATE:	S-18
1			3			TOTAL SHEETS
2			4			52

PREPARED BY
TGS ENGINEERS
107-A MICA AVENUE
MORGANTON, NC 28655

NORTH CAROLINA PROFESSIONAL SEAL 22092 ENGINEER RAY D. ELLIOTT
6/24/2013

DRAWN BY : JLA DATE : 12/12
CHECKED BY : RDE DATE : 2/13

0160DEL_P10b2

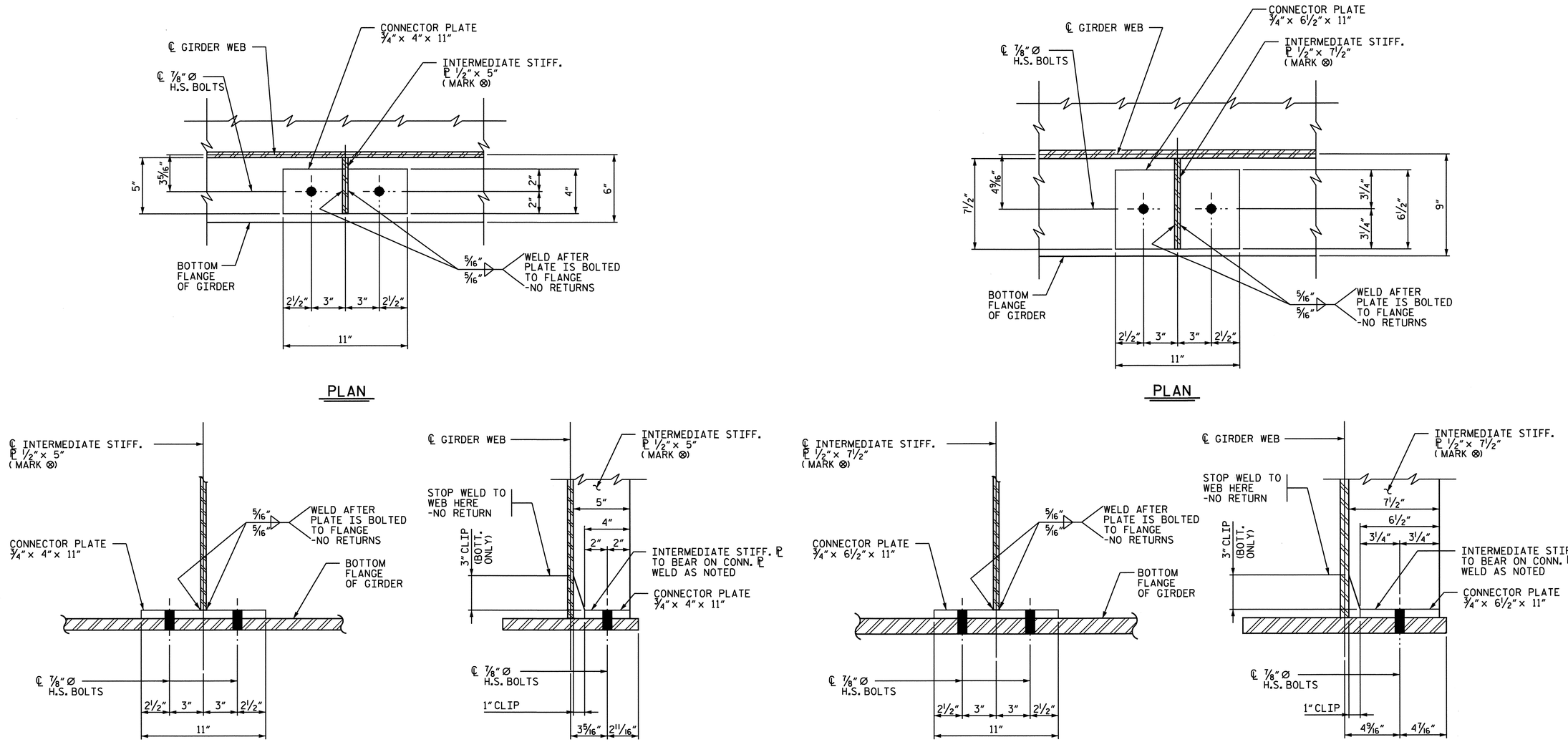

DETAIL "C"

DETAIL "D"

PROJECT NO. P-5206C

ROWAN COUNTY

STATION: POC 9404+63.64-M1-=
POT 13+69.47-Y10-
MP 344.50±

SHEET 2 OF 2

STATE OF NORTH CAROLINA
DEPARTMENT OF TRANSPORTATION
RALEIGH

SUPERSTRUCTURE

STRUCTURAL STEEL DIAPHRAGM DETAILS SPANS A, B & C

PREPARED BY TGS ENGINEERS 107-A MICA AVENUE MORGANTON, NC 28655

NORTH CAROLINA PROFESSIONAL SEAL 42892 ENGINEER RAY D. ELLIOTT 6/24/2013

REVISIONS						SHEET NO.
NO.	BY:	DATE:	NO.	BY:	DATE:	S-19
1			3			TOTAL SHEETS
2			4			52

DRAWN BY : JLA DATE : 12/12
CHECKED BY : RDE DATE : 2/13

0160DEL_P10b2

DGN

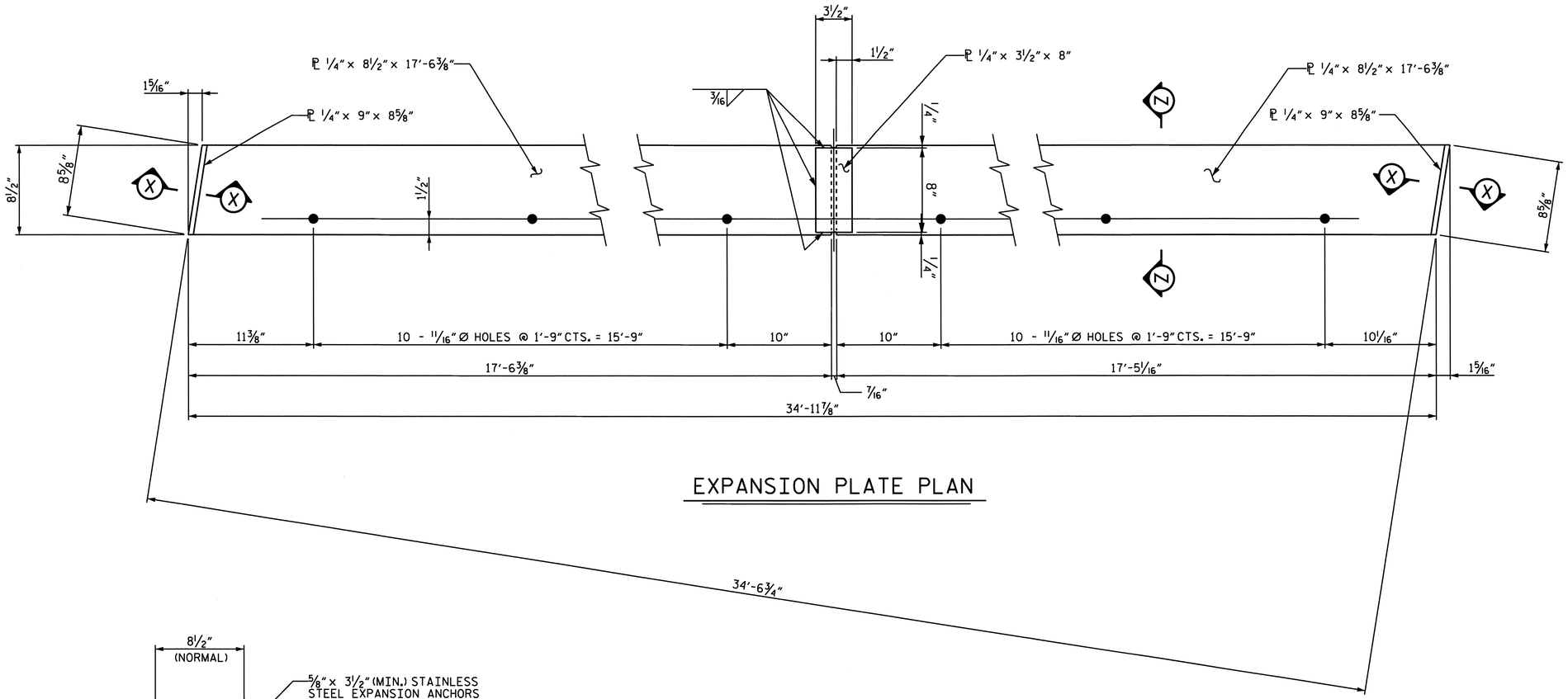

EXPANSION PLATE PLAN

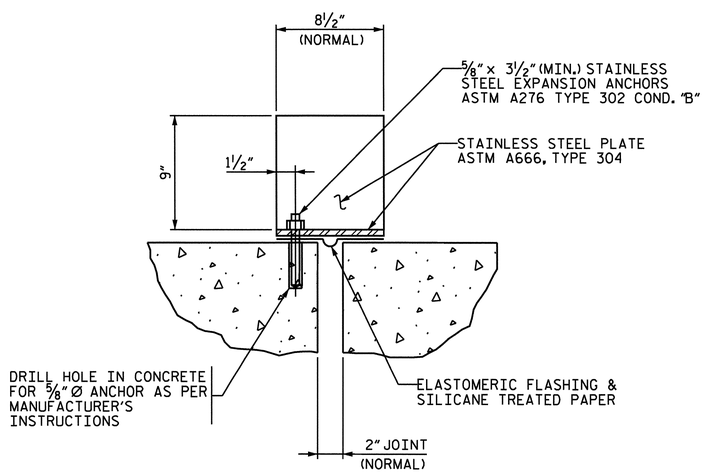

SECTION Z-Z

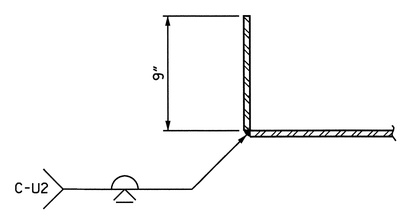

SECTION X-X

PROJECT NO. P-5206C

ROWAN COUNTY

STATION: POC 9404+63.64-M1-=
POT 13+69.47-Y10-
MP 344.50±

STATE OF NORTH CAROLINA
DEPARTMENT OF TRANSPORTATION
RALEIGH

SUPERSTRUCTURE

EXPANSION PLATE DETAILS

PREPARED BY
TGS ENGINEERS
107-A MICA AVENUE
MORGANTON, NC 28655

NORTH CAROLINA PROFESSIONAL SEAL 22192 ENGINEER RAY D. ELLIOTT
6/29/2013

REVISIONS						SHEET NO.
NO.	BY:	DATE:	NO.	BY:	DATE:	S-20
1			3			TOTAL SHEETS
2			4			52

DRAWN BY : RTJ DATE : 12/12
CHECKED BY : RDE DATE : 2/13

0160DEL_P10b2

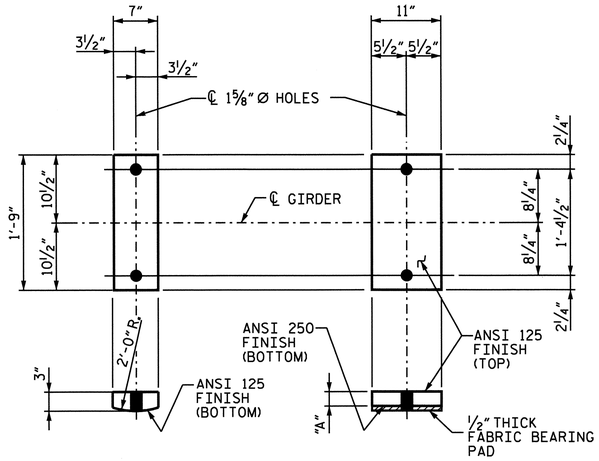

SOLE PLATE MASONRY PLATE

BEARINGS - FIXED END

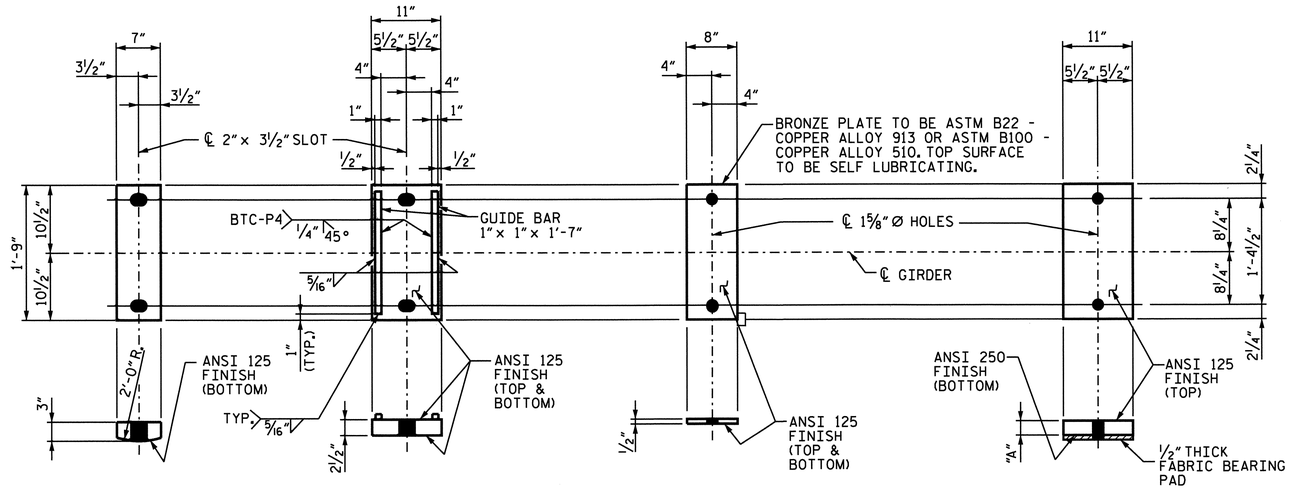

SOLE PLATE SLIDING PLATE BRONZE PLATE MASONRY PLATE

BEARINGS - EXPANSION END

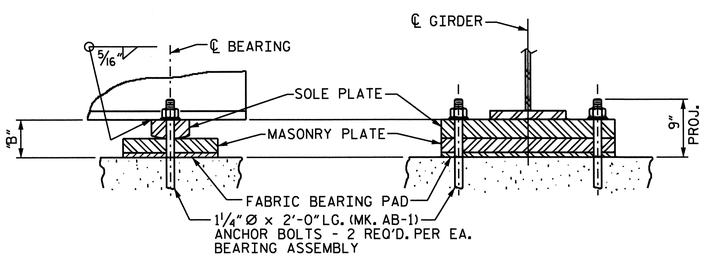

BEARING ASSEMBLY - FIXED END - (FBA-1)

(20 REQ'D)

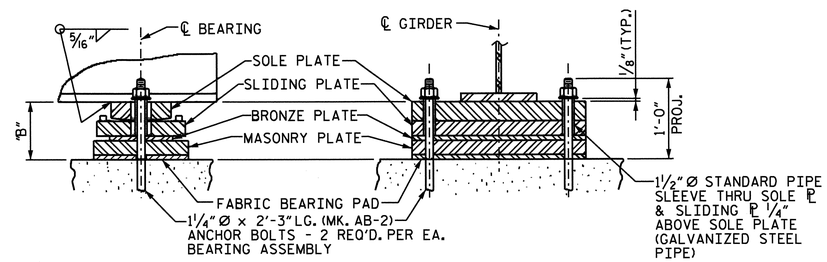

BEARING ASSEMBLY - EXPANSION - (EBA-1)

(20 REQ'D)

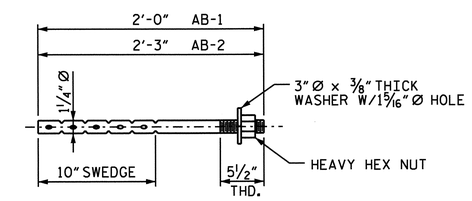

DETAIL OF ANCHOR BOLTS

NOTE: ANCHOR BOLTS SHALL HAVE 1'-3" MIN. ENBEDMENT

MASONRY PLATE SCHEDULE (DIMENSIONS IN INCHES)

	SPAN A - FIXED END @ ABUTMENT 1			SPAN A - EXPANSION END @ PIER 1			SPAN C - EXPANSION END @ PIER 2			SPAN C - FIXED END @ ABUTMENT 2		
GIRDER	"A"	"B"	ANCHOR BOLT	"A"	"B"	ANCHOR BOLT	"A"	"B"	ANCHOR BOLT	"A"	"B"	ANCHOR BOLT
1	2 11/16"	6 3/16"	AB-1	3 13/16"	10 5/16"	AB-2	2 3/4"	9 1/4"	AB-2	2 3/4"	6 1/4"	AB-1
2	2 11/16"	6 3/16"	AB-1	3 13/16"	10 5/16"	AB-2	2 11/16"	9 3/16"	AB-2	2 11/16"	6 3/16"	AB-1
3	2 11/16"	6 3/16"	AB-1	3 13/16"	10 5/16"	AB-2	2 11/16"	9 3/16"	AB-2	2 11/16"	6 3/16"	AB-1
4	2 5/8"	6 1/8"	AB-1	3 3/4"	10 1/4"	AB-2	2 5/8"	9 1/8"	AB-2	2 11/16"	6 3/16"	AB-1
5	2 5/8"	6 1/8"	AB-1	3 3/4"	10 1/4"	AB-2	2 5/8"	9 1/8"	AB-2	2 5/8"	6 1/8"	AB-1
6	2 5/8"	6 1/8"	AB-1	3 11/16"	10 3/16"	AB-2	2 5/8"	9 1/8"	AB-2	2 5/8"	6 1/8"	AB-1
7	2 9/16"	6 1/16"	AB-1	3 11/16"	10 3/16"	AB-2	2 9/16"	9 1/16"	AB-2	2 9/16"	6 1/16"	AB-1
8	2 9/16"	6 1/16"	AB-1	3 11/16"	10 3/16"	AB-2	2 9/16"	9 1/16"	AB-2	2 9/16"	6 1/16"	AB-1
9	2 1/2"	6"	AB-1	3 5/8"	10 1/8"	AB-2	2 1/2"	9"	AB-2	2 1/2"	6"	AB-1
10	2 1/2"	6"	AB-1	3 5/8"	10 1/8"	AB-2	2 1/2"	9"	AB-2	2 1/2"	6"	AB-1

PROJECT NO. P-5206C

ROWAN COUNTY

STATION: POC 9404+63.64-M1-=
POT 13+69.47-Y10-
MP 344.50±

SHEET 1 OF 2

STATE OF NORTH CAROLINA
DEPARTMENT OF TRANSPORTATION
RALEIGH

SUPERSTRUCTURE

BEARING DETAILS
SPANS A & C

REVISIONS								SHEET NO.
NO.	BY:	DATE:	NO.	BY:	DATE:			S-21
1			3					TOTAL SHEETS
2			4					52

PREPARED BY
TGS ENGINEERS
107-A MICA AVENUE
MORGANTON, NC 28655

NORTH CAROLINA PROFESSIONAL SEAL 19192 ENGINEER RAY D. ELLIOTT
6/29/2013

DRAWN BY : JLA DATE : 12/12
CHECKED BY : RDE DATE : 2/13

0160DEL_P10b2

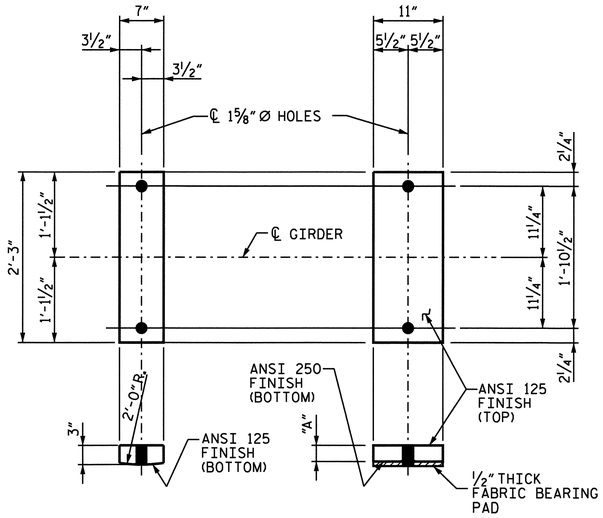

SOLE PLATE MASONRY PLATE

BEARINGS - FIXED END

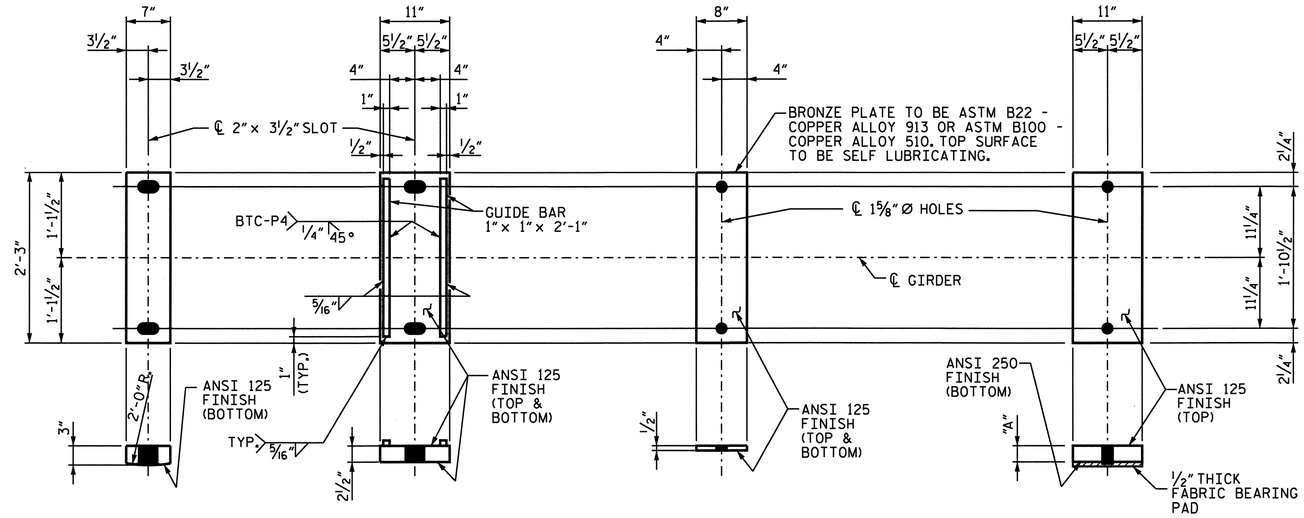

SOLE PLATE SLIDING PLATE BRONZE PLATE MASONRY PLATE

BEARINGS - EXPANSION END

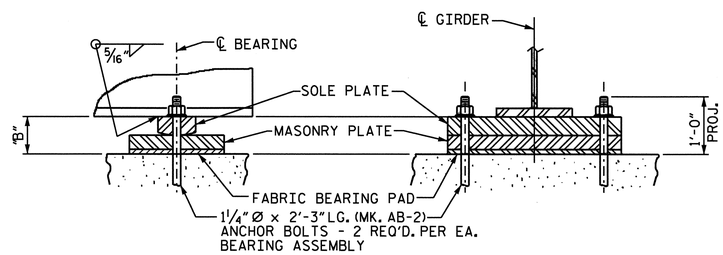

BEARING ASSEMBLY - FIXED END - (FBA-2)

(10 REQ'D)

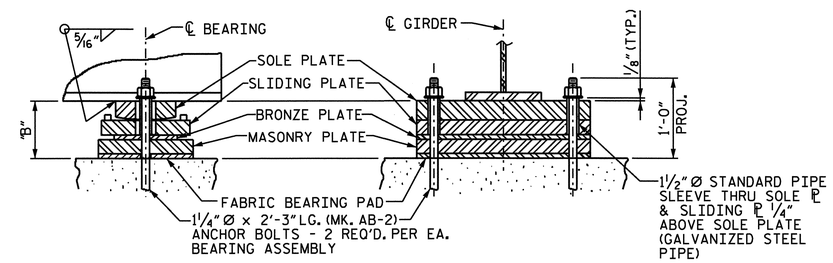

BEARING ASSEMBLY - EXPANSION - (EBA-2)

(10 REQ'D)

MASONRY PLATE SCHEDULE (DIMENSIONS IN INCHES)							
	SPAN B - EXPANSION END @ PIER 1			SPAN B - FIXED END @ PIER 2			
GIRDER	"A"	"B"	ANCHOR BOLT	"A"	* FILL PLATE	"B"	ANCHOR BOLT
1	2¾"	9¼"	AB-2	4"	⅞"	8⅜"	AB-2
2	2 11/16"	9 3/16"	AB-2	4"	13/16"	8 5/16"	AB-2
3	2 11/16"	9 3/16"	AB-2	4"	13/16"	8 5/16"	AB-2
4	2⅝"	9⅛"	AB-2	4"	¾"	8¼"	AB-2
5	2⅝"	9⅛"	AB-2	4"	¾"	8¼"	AB-2
6	2⅝"	9⅛"	AB-2	4"	11/16"	8 3/16"	AB-2
7	2 9/16"	9 1/16"	AB-2	4"	11/16"	8 3/16"	AB-2
8	2 9/16"	9 1/16"	AB-2	4"	11/16"	8 3/16"	AB-2
9	2½"	9"	AB-2	4"	⅝"	8⅛"	AB-2
10	2½"	9"	AB-2	4"	⅝"	8⅛"	AB-2

* AT THE CONTRACTOR'S OPTION, HE MAY COMBINE FILL PLATES. WITH THE MASONARY PLATE AT THE LOCATION SHOWN ON THE FRAMING PLAN. FILL PLATES NOT COMBINED SHALL HAVE THE THICKNESS AS SHOWN ON THE PLANS AND SHALL HAVE THE SAME LENGTH, WIDTH AND HOLE PATTERN AS THE MASONARY PLATE.

NOTES:

UNLESS OTHERWISE NOTED, THE CONTACT SURFACES OF THE BEARING ASSEMBLIES DETAILED SHALL HAVE A SURFACE FINISH IN ACCORDANCE WITH SECTION 1072-15 OF THE STANDARD SPECIFICATIONS.

ALL BEARING PLATES EXCEPT BRONZE PLATES ARE TO BE GALVANIZED. SEE STD. SPEC. 1072-15

PREPARED BY
TGS ENGINEERS
107-A MICA AVENUE
MORGANTON, NC 28655

NORTH CAROLINA PROFESSIONAL SEAL 20152 ENGINEER RAY D. ELLIOTT
6/24/2013

PROJECT NO. P-5206C
ROWAN COUNTY
STATION: POC 9404+63.64-M1-=
POT 13+69.47-Y10-
MP 344.50±

SHEET 2 OF 2

STATE OF NORTH CAROLINA
DEPARTMENT OF TRANSPORTATION
RALEIGH

SUPERSTRUCTURE

BEARING DETAILS
SPAN B

REVISIONS						SHEET NO.
NO.	BY:	DATE:	NO.	BY:	DATE:	S-22
1			3			TOTAL SHEETS
2			4			52

DRAWN BY : JLA DATE : 12/12
CHECKED BY : RDE DATE : 2/13

0160DEL_P10b2

DKN

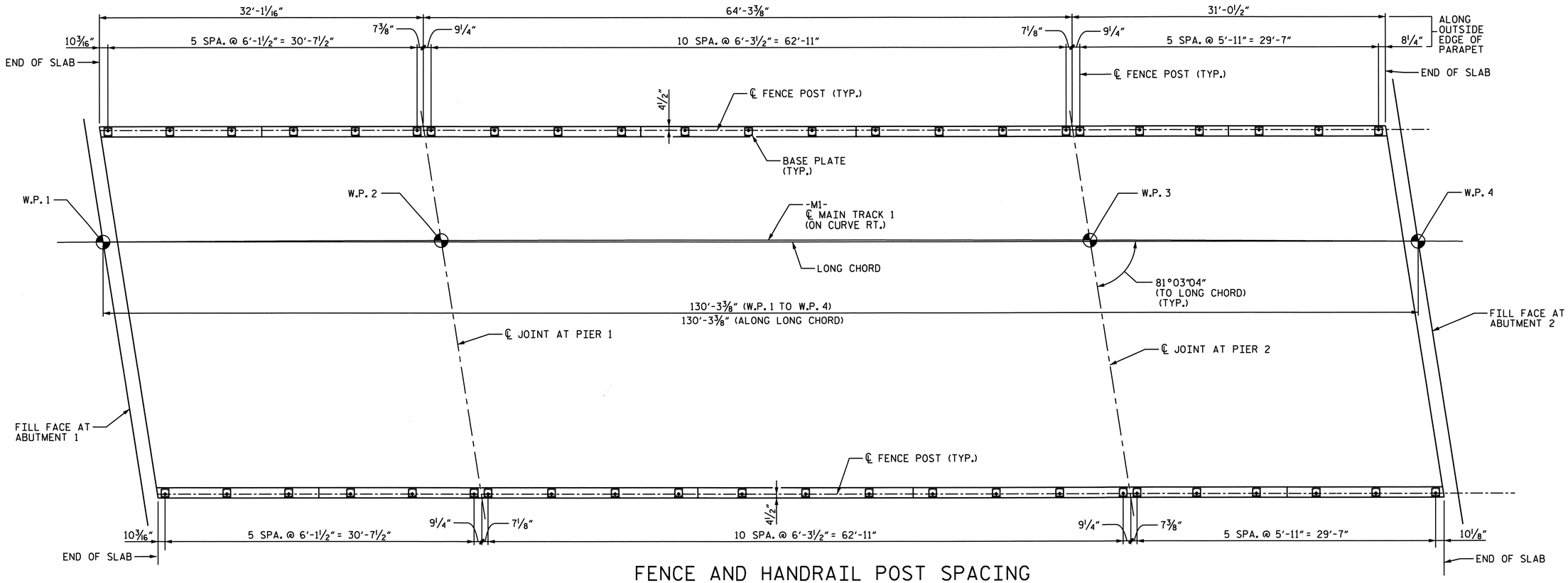

FENCE AND HANDRAIL POST SPACING

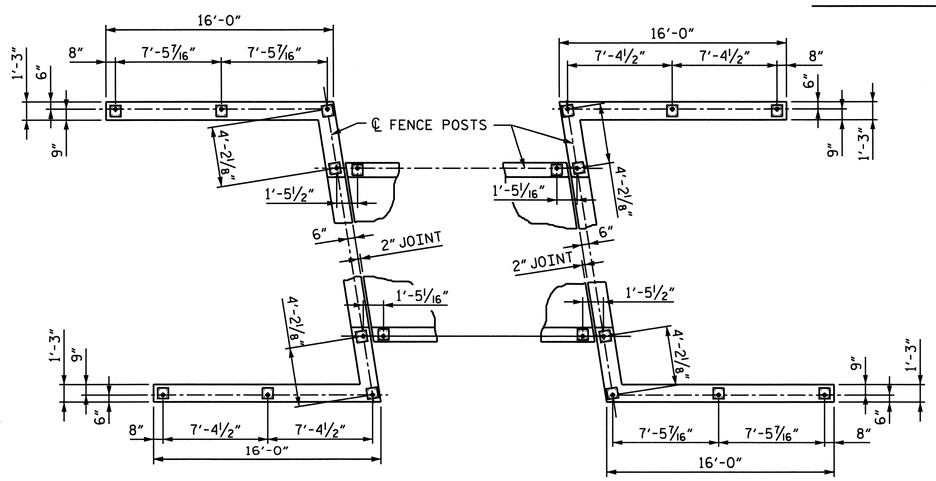

FENCE AND HANDRAIL POST SPACING - WING DETAILS

PAY LENGTH = 327.5 LIN. FT.

PROJECT NO. P-5206C

ROWAN COUNTY

STATION: POC 9404+63.64-M1-=
POT 13+69.47-Y10-
MP 344.50±

SHEET 1 OF 2

STATE OF NORTH CAROLINA
DEPARTMENT OF TRANSPORTATION
RALEIGH

SUPERSTRUCTURE

METAL HANDRAIL & FENCE POST LAYOUT

PREPARED BY
TGS ENGINEERS
107-A MICA AVENUE
MORGANTON, NC 28655

NORTH CAROLINA PROFESSIONAL SEAL 22232 ENGINEER RAY D. ELLIOTT
Ray D. Elliott
6/24/2013

REVISIONS						SHEET NO.
NO.	BY:	DATE:	NO.	BY:	DATE:	S-23
1			3			TOTAL SHEETS
2			4			52

DRAWN BY : RTJ DATE : 12/12
CHECKED BY : RDE DATE : 2/13

0160DEL_P10b2

DGN

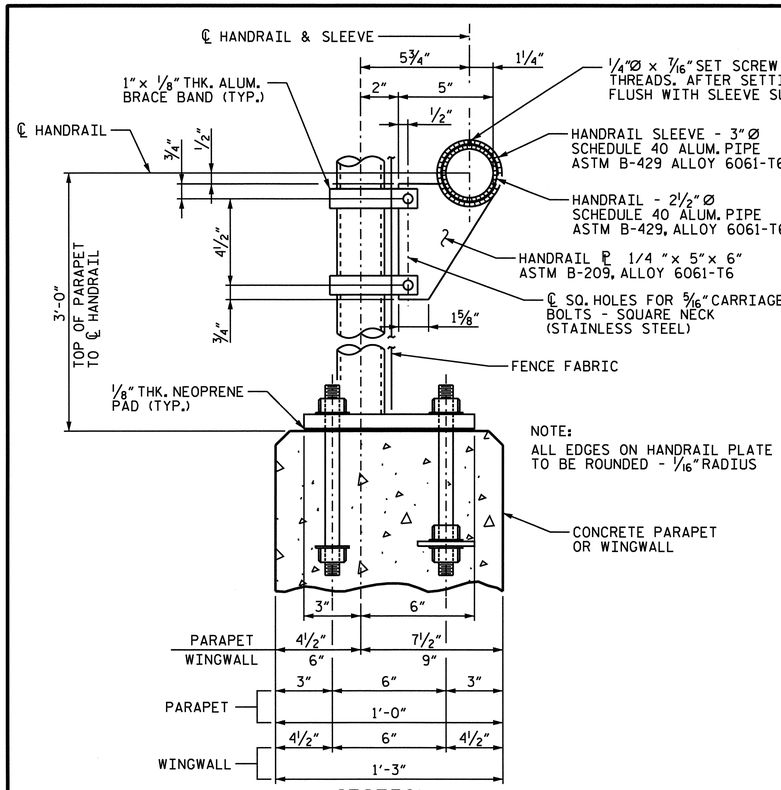

SECTION

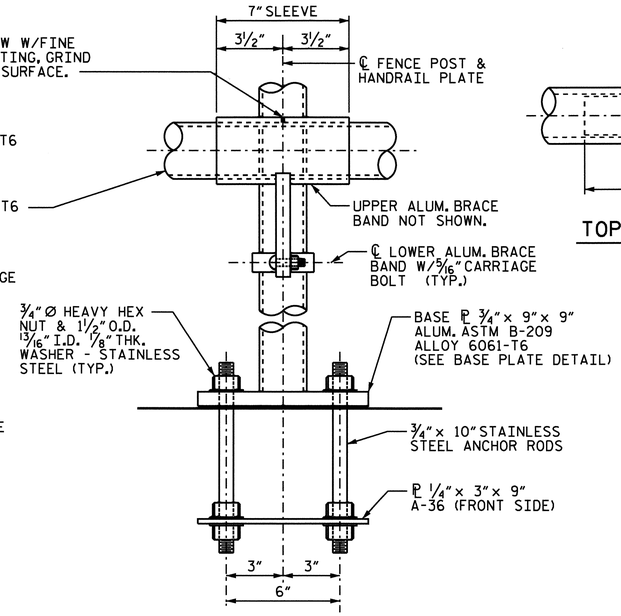

FRONT VIEW

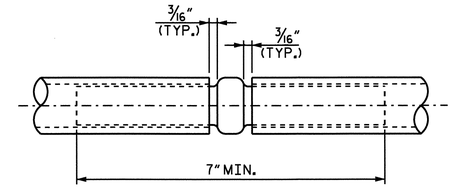

TOP RAIL SLEEVE DETAIL

NOTES:

1. ALL HANDRAIL PIPE, SLEEVES, AND EXPANSION JOINTS TO BE SMOOTH AND FREE OF SHARP EDGES.
2. ALUMINUM PIPE TO BE ASTM B-429, ALLOY 6061-T6, ALUMINUM BASE PLATE, CLOSURE PLATE, AND HANDRAIL PLATE TO ASTM B-209, ALLOY 6061-T6.
3. FENCE FABRIC TO BE TYPE III ALUMINUM ALLOY WIRE ASTM B 211, ALLOY 6061-T89 OR T94.
4. BRACE RAIL AND BRACE ENDS, POST TOPS, TURNBUCKLES, TRUSS RODS, GATE HINGES AND LATCHES, STRETCHER BARS, AND BAR BANDS IN ACCORDANCE WITH AASHTO M181 (ASTM A 392).
5. STAINLESS STEEL BOLTS, NUTS, AND ANCHOR RODS TO BE ASTM A 276, TYPE 304.
6. STAINLESS STEEL WASHERS TO BE ASTM A 276, TYPE 302, ANCHOR ROD THREADS SHALL BE ROLLED, NOT CUT.
7. POST TO BE SET PERPENDICULAR TO TOP OF PARAPET AND RAILS SHALL BE PLACED PARALLEL TO THE GRADE OF THE BRIDGE.
8. BOTTOM OF BASE PLATE SHALL BE THOROUGHLY COATED WITH ALUMINUM IMPREGNATED CAULKING COMPOUND OF APPROVED QUALITY.
9. CERTIFIED MILL REPORTS ARE REQUIRED FOR POST, RAIL, AND FENCE FABRIC. SHOP INSPECTION IS REQUIRED.
10. AFTER ANCHOR BOLT AND OTHER BOLT NUTS HAVE BEEN TIGHTENED, THREADS SHALL BE NICKED TO LOCK NUTS.
11. THE ALUMINUM BRACE BANDS USED TO SECURE HANDRAIL SLEEVE SHALL BE OF SUCH SIZE NECESSARY TO CLAMP TIGHTLY TO FENCE POST.
12. THE LENGTH OF HANDRAIL AND FENCE TO BE PAID FOR SHALL BE THE CONTINUOUS LENGTH FROM END TO END OF RAIL AND FENCE.
13. WELDING SHALL BE IN ACCORDANCE WITH THE CURRENT AWS STRUCTURAL WELDING CODE - ALUMINUM.
14. ANCHOR PLATE SHALL BE STEEL CONFORMING TO ASTM SPECIFICATION A36.
15. UPPER ANCHOR ROAD NUTS SHALL BE HEAVY HEX NUTS, PER ASTM A 276 TYPE 302 OR 304 STAINLESS STEEL.
16. LOWER ANCHOR ROD NUTS SHALL BE HEAVY HEX NUTS, PER ASTM A 563.
17. FOR METAL FENCE AND HANDRAIL, SEE SPECIAL PROVISIONS.
18. SHOP DRAWINGS SHALL BE REQUIRED.

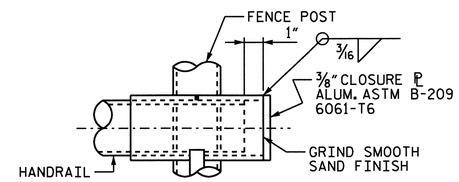

END CLOSURE DETAIL
(AT END FENCE POSTS)

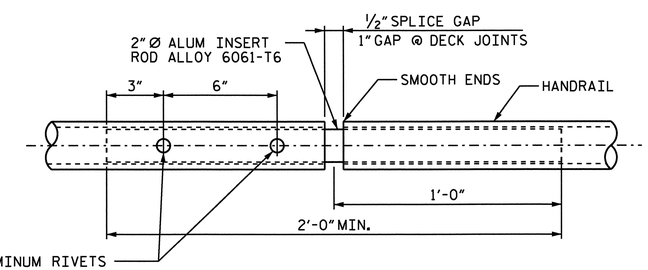

HANDRAIL JOINT DETAIL

DETAILS FOR PIPE RAILING

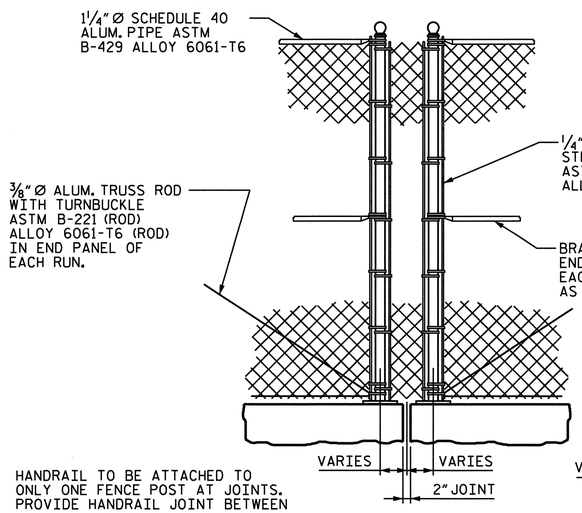

DETAIL AT JOINT

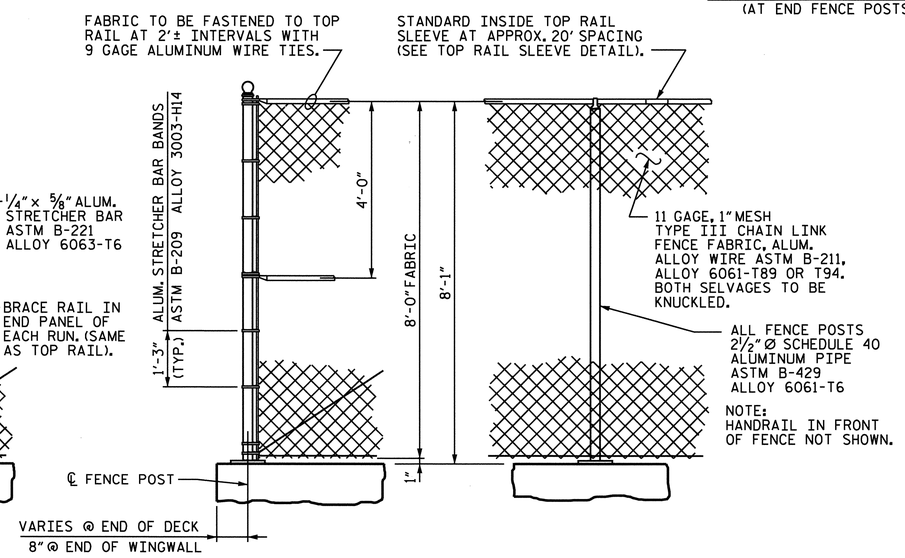

DETAIL AT END

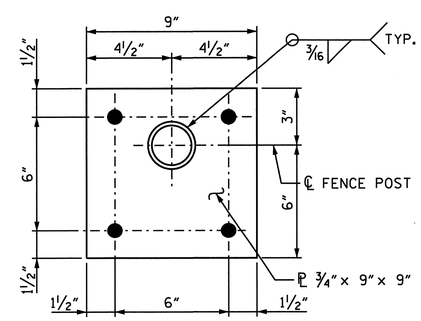

BASE PLATE DETAIL

DETAILS FOR CHAIN LINK FENCE

PROJECT NO. P-5206C

ROWAN COUNTY

STATION: POC 9404+63.64-M1-=
POT 13+69.47-Y10-
MP 344.50±

SHEET 2 OF 2

STATE OF NORTH CAROLINA
DEPARTMENT OF TRANSPORTATION
RALEIGH

SUPERSTRUCTURE

METAL HANDRAIL & FENCE DETAILS

REVISIONS						SHEET NO.
NO.	BY:	DATE:	NO.	BY:	DATE:	S-24
1			3			TOTAL SHEETS
2			4			52

PREPARED BY
TGS ENGINEERS
107-A MICA AVENUE
MORGANTON, NC 28655

NORTH CAROLINA PROFESSIONAL SEAL 19892 ENGINEER RAY D. ELLIOTT
6/24/2013

DRAWN BY : RTJ DATE : 12/12
CHECKED BY : RDE DATE : 2/13

0160DEL_P10b2

DKN

EPOXY-COATED REINFORCING STEEL BAR SCHEDULE

SPAN A

BAR	NO.	SIZE	TYPE	LENGTH	WEIGHT
A1	90	#6	STR.	36'-2"	4,889
A2	8	#6	STR.	36'-7"	440
A100	4	#6	STR.	33'-5"	201
A101	4	#6	STR.	29'-8"	178
A102	4	#6	STR.	26'-0"	156
A103	4	#6	STR.	22'-3"	134
A104	4	#6	STR.	18'-7"	112
A105	4	#6	STR.	14'-10"	89
A106	4	#6	STR.	11'-2"	67
A107	4	#6	STR.	7'-5"	45
A108	4	#6	STR.	3'-9"	23
B1	240	#4	STR.	16'-10"	2,699
B2	24	#5	STR.	15'-7"	390
S1	64	#5	1	6'-11"	462
TOTAL EPOXY-COATED REIN. STEEL:					9,885

SPAN B

BAR	NO.	SIZE	TYPE	LENGTH	WEIGHT
A1	200	#6	STR.	36'-2"	10,864
A2	8	#6	STR.	36'-7"	440
A200	4	#6	STR.	33'-6"	201
A201	4	#6	STR.	29'-9"	179
A202	4	#6	STR.	26'-1"	157
A203	4	#6	STR.	22'-4"	134
A204	4	#6	STR.	18'-8"	112
A205	4	#6	STR.	14'-11"	90
A206	4	#6	STR.	11'-3"	68
A207	4	#6	STR.	7'-6"	45
A208	4	#6	STR.	3'-10"	23
B3	342	#4	STR.	22'-8"	5,178
B4	36	#5	STR.	20'-11"	785
S1	126	#5	1	6'-11"	909
TOTAL EPOXY-COATED REIN. STEEL:					19,185

SPAN C

BAR	NO.	SIZE	TYPE	LENGTH	WEIGHT
A1	86	#6	STR.	36'-2"	4,672
A2	8	#6	STR.	36'-7"	440
A300	4	#6	STR.	33'-9"	203
A301	4	#6	STR.	30'-1"	181
A302	4	#6	STR.	26'-4"	158
A303	4	#6	STR.	22'-8"	136
A304	4	#6	STR.	19'-0"	114
A305	4	#6	STR.	15'-3"	92
A306	4	#6	STR.	11'-7"	70
A307	4	#6	STR.	7'-10"	47
A308	4	#6	STR.	4'-2"	25
B5	240	#4	STR.	16'-4"	2,619
B6	24	#5	STR.	15'-1"	378
S1	60	#5	1	6'-11"	433
TOTAL EPOXY-COATED REIN. STEEL:					9,568

BAR TYPES

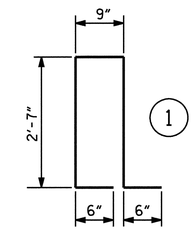

ALL BAR DIMENSIONS ARE OUT TO OUT.

SUPERSTRUCTURE BILL OF MATERIAL

	CLASS AA CONCRETE	REINFORCED CONCRETE DECK SLAB	EPOXY COATED REINFORCING STEEL
	(CU.YDS.)	(SQ. FT.)	(LBS.)
DECK SLAB	153.7	4,656	38,638
PARAPET (2)	18.8		1,553
TOTALS	172.5	4,656	40,191

SUPERSTRUCTURE REINFORCING STEEL LENGTHS ARE BASED ON THE FOLLOWING MINIMUM SPLICE LENGTHS

BAR SIZE	SUPERSTRUCTURE EXCEPT APPROACH SLABS, PARAPET, AND BARRIER RAIL		APPROACH SLABS		PARAPET AND BARRIER RAIL
	EPOXY COATED	UNCOATED	EPOXY COATED	UNCOATED	
#4	2'-0"	1'-9"	2'-0"	1'-9"	2'-9"
#5	2'-6"	2'-2"	2'-6"	2'-2"	3'-5"
#6	3'-0"	2'-7"	3'-10"	2'-7"	4'-4"
#7	5'-3"	3'-6"			
#8	6'-10"	4'-7"			

QUANTITY BREAKDOWN BY SPAN

	EPOXY-COATED REINFORCNG STEEL	CLASS AA CONCRETE	
		CU. YDS.	
	LBS.	DECK SLAB	PARAPETS
SPAN A	9,885	38.6	4.7
SPAN B	19,185	77.8	9.5
SPAN C	9,568	37.3	4.6
TOTALS	38,638	153.7	18.8

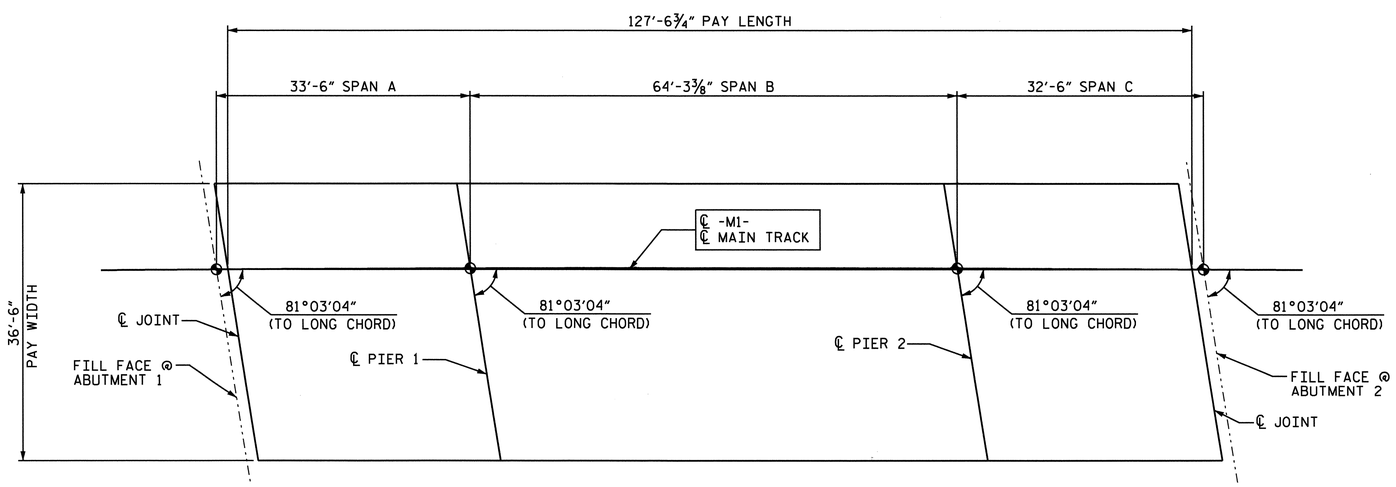

LAYOUT FOR COMPUTING AREA
OF REINFORCED CONCRETE DECK SLAB
(SQ. FT. = 4,656)

PROJECT NO. P-5206C

ROWAN COUNTY

STATION: POC 9404+63.64-M1-=
POT 13+69.47-Y10-
MP 344.50±

STATE OF NORTH CAROLINA
DEPARTMENT OF TRANSPORTATION
RALEIGH

SUPERSTRUCTURE
BILL OF MATERIAL

PREPARED BY
TGS ENGINEERS
107-A MICA AVENUE
MORGANTON, NC 28655

NORTH CAROLINA PROFESSIONAL SEAL 20192 ENGINEER RAY D. ELLIOTT
Ray D. Elliott
9/24/2013

REVISIONS						SHEET NO.
NO.	BY:	DATE:	NO.	BY:	DATE:	S-25
1			3			TOTAL SHEETS
2			4			52

DRAWN BY : NMW DATE : 2/13
CHECKED BY : RDE DATE : 2/13

0160DEL_P1062

▲ BATTER PILES 3:12 IN DIRECTION SHOWN

"X" = 1½" SLOPE (TYP.)

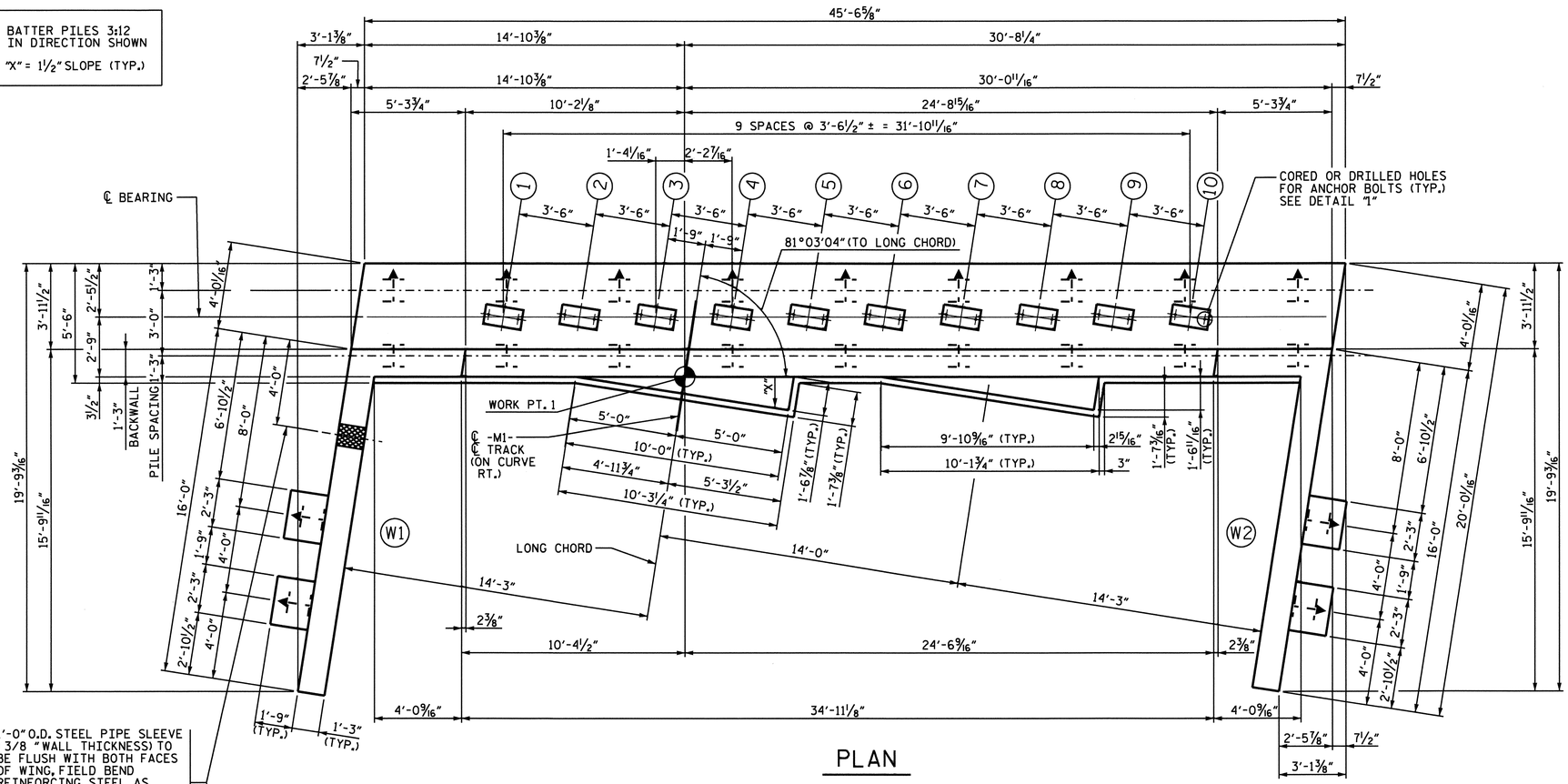

PLAN

1'-0" O.D. STEEL PIPE SLEEVE (3/8" WALL THICKNESS) TO BE FLUSH WITH BOTH FACES OF WING. FIELD BEND REINFORCING STEEL AS NECESSARY TO PROVIDE FOR SLEEVE. SEE SECTION THRU WING FOR DETAILS.

NOTES:

STIRRUPS IN CAP MAY BE SHIFTED AS NECESSARY TO CLEAR ANCHOR BOLTS.

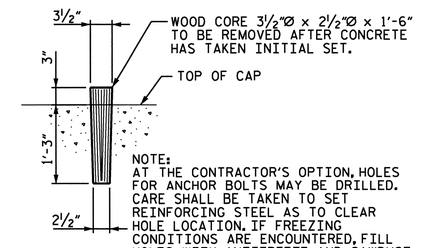

NOTE:
AT THE CONTRACTOR'S OPTION, HOLES FOR ANCHOR BOLTS MAY BE DRILLED. CARE SHALL BE TAKEN TO SET REINFORCING STEEL AS TO CLEAR HOLE LOCATION. IF FREEZING CONDITIONS ARE ENCOUNTERED, FILL HOLES WITH ANTIFREEZE AND SAWDUST.

DETAIL "1"

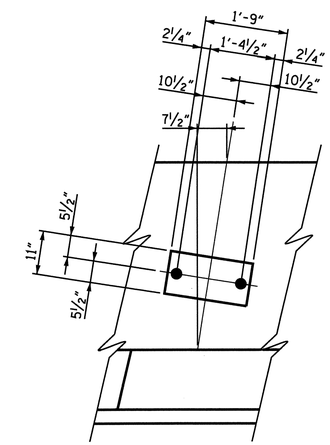

BEARING DETAIL

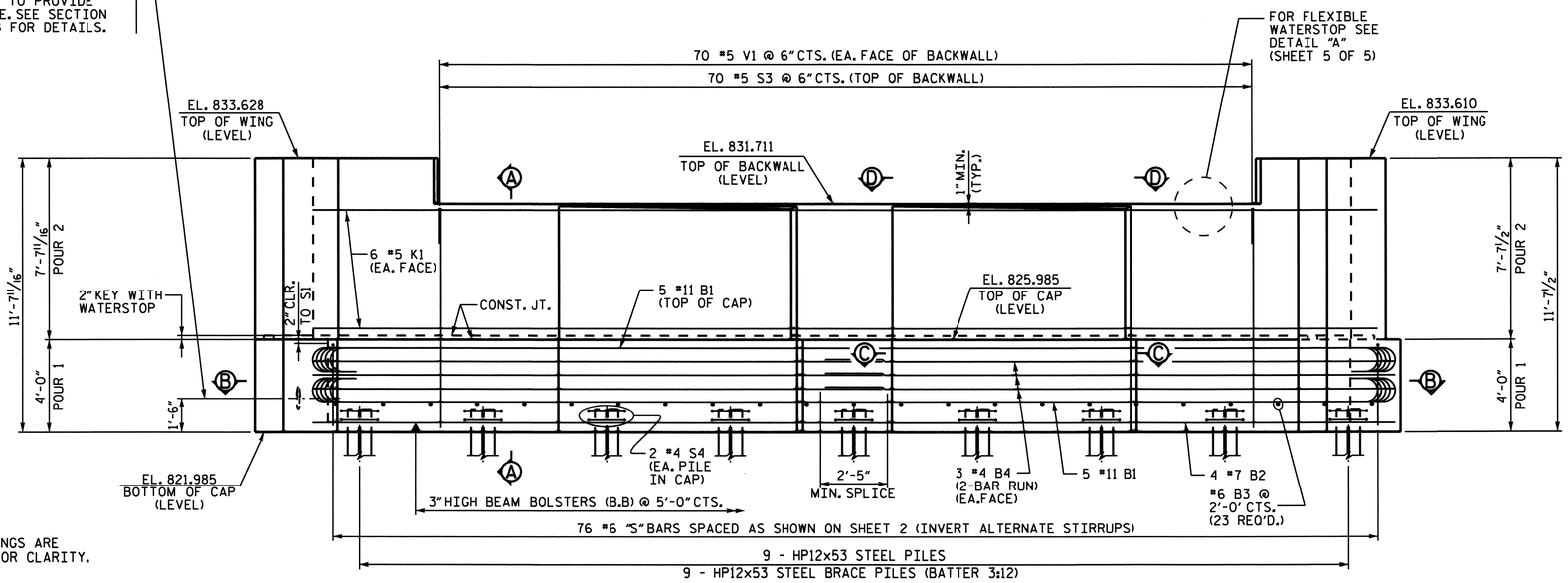

ELEVATION

NOTE:

PILES IN WINGS ARE NOT SHOWN FOR CLARITY.

PROJECT NO. P-5206C

ROWAN COUNTY

STATION: POC 9404+63.64-M1-=
POT 13+69.47-Y10-

SHEET 1 OF 5 MP 344.50±

STATE OF NORTH CAROLINA
DEPARTMENT OF TRANSPORTATION
RALEIGH

SUBSTRUCTURE
ABUTMENT 1

PREPARED BY
TGS ENGINEERS
107-A MICA AVENUE
MORGANTON, NC 28655

NORTH CAROLINA PROFESSIONAL SEAL 22952 ENGINEER RAY D. ELLIOTT
Ray D. Elliott
10/29/2013

REVISIONS						SHEET NO.
NO.	BY:	DATE:	NO.	BY:	DATE:	S-26
1			3			TOTAL SHEETS
2			4			52

DRAWN BY : JLA DATE : 2/13
CHECKED BY : RDE DATE : 2/13

0160DEL_P10b2

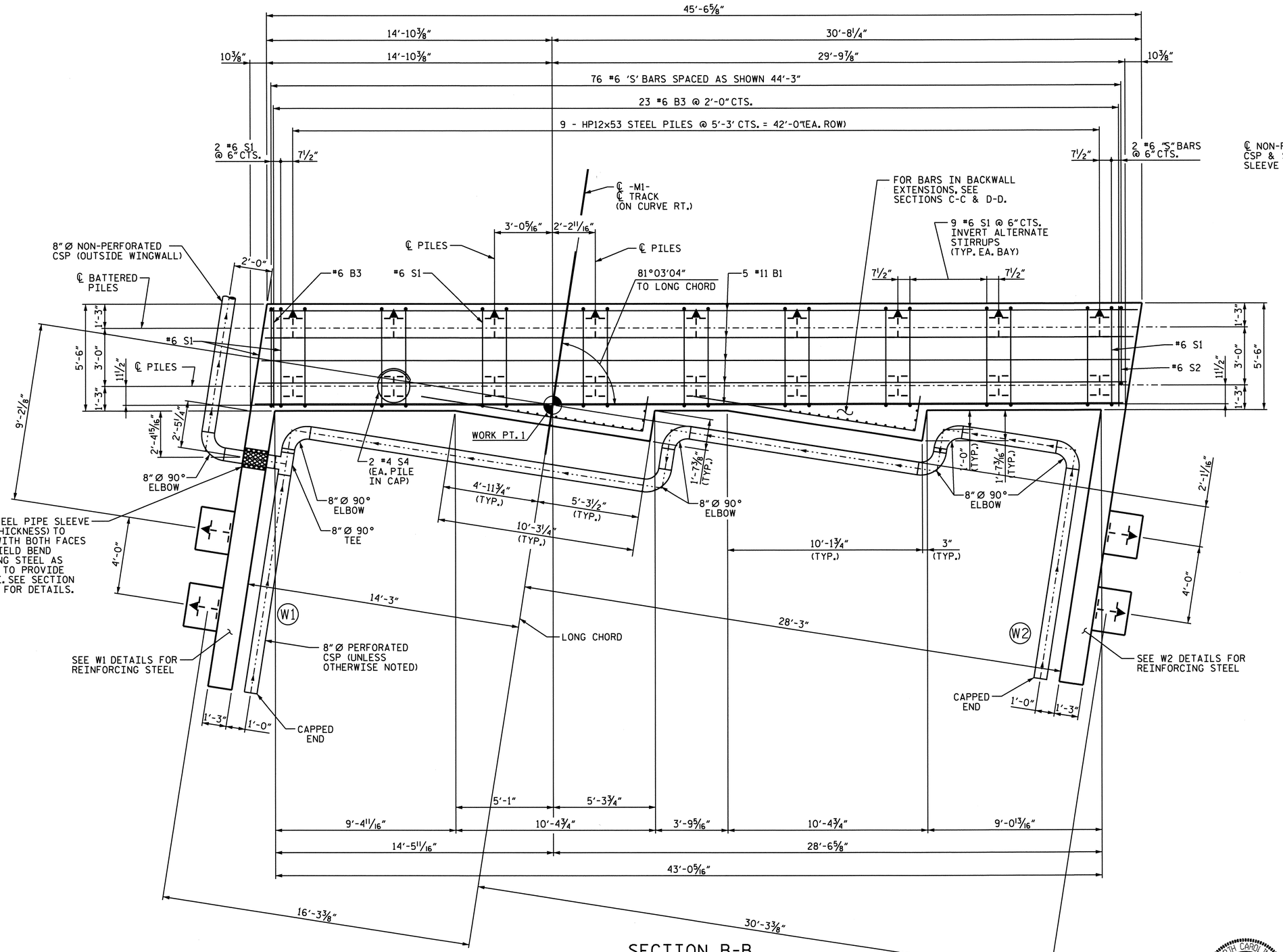

SECTION B-B

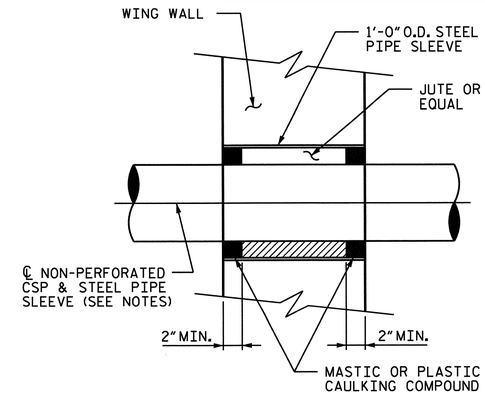

SECTION THRU WING

NOTES:

FOR PIPE SLEEVE INSERTS, SEE SPECIAL PROVISIONS FOR STRUCTURE DRAINAGE SYSTEM.

CORRUGATED STEEL PIPE LOCATED IN DRAINAGE AREA BETWEEN WINGS SHALL BE PERFORATED. ALL OTHER CSP SHALL BE NON-PERFORATED.

PROJECT NO. P-5206C

ROWAN COUNTY

STATION: POC 9404+63.64-M1-=
POT 13+69.47-Y10-
MP 344.50±

SHEET 2 OF 5

STATE OF NORTH CAROLINA
DEPARTMENT OF TRANSPORTATION
RALEIGH

SUBSTRUCTURE
ABUTMENT 1

PREPARED BY
TGS ENGINEERS
107-A MICA AVENUE
MORGANTON, NC 28655

NORTH CAROLINA PROFESSIONAL SEAL 22092 ENGINEER RAY D. ELLIOTT
6/24/2013

REVISIONS							SHEET NO.
NO.	BY:	DATE:	NO.	BY:	DATE:		S-27
1			3				TOTAL SHEETS
2			4				52

DRAWN BY : JLA DATE : 2/13
CHECKED BY : RDE DATE : 2/13

0160DEL_P1062

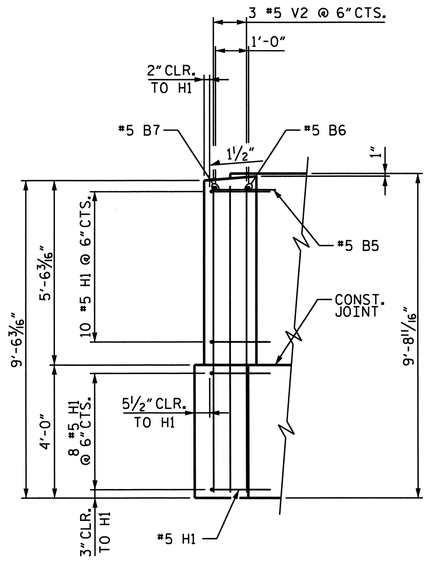

SECTION E-E

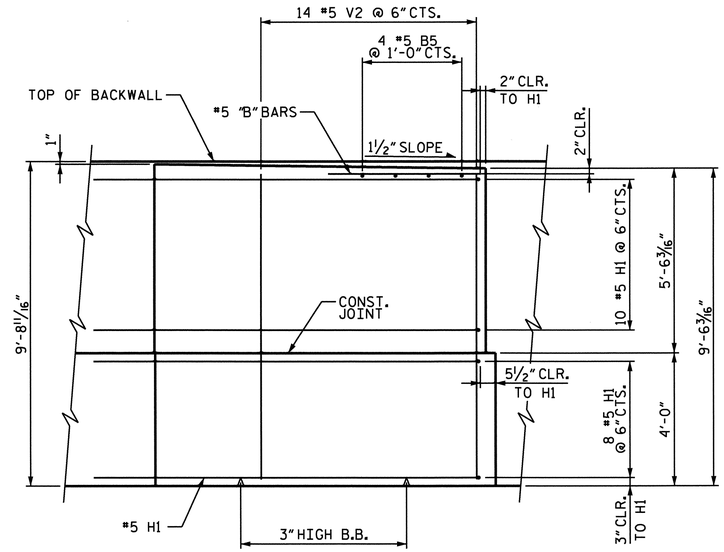

SECTION F-F

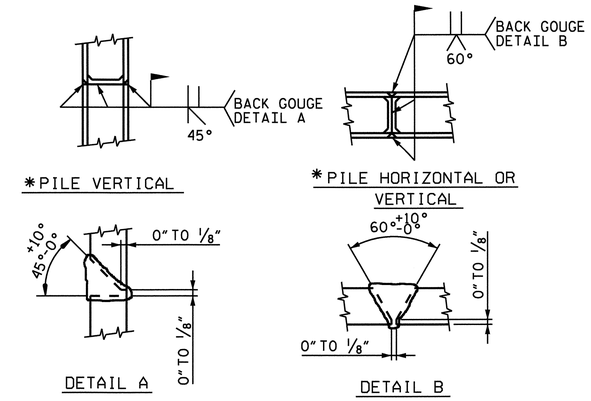

*POSITION OF PILE DURING WELDING

PILE SPLICE DETAILS

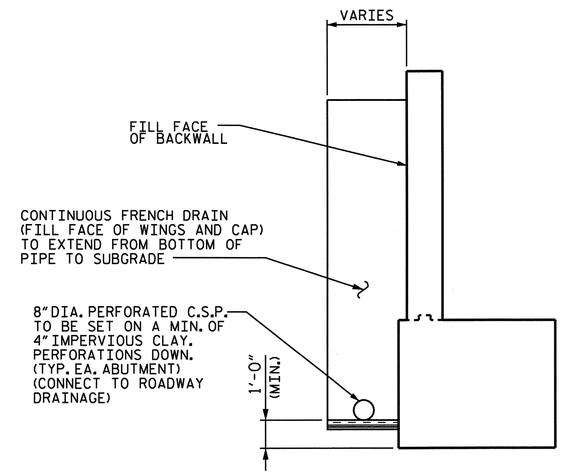

DRAINAGE AT ABUTMENTS

ABUTMENT 1 SHOWN, ABUTMENT 2 SIMILAR

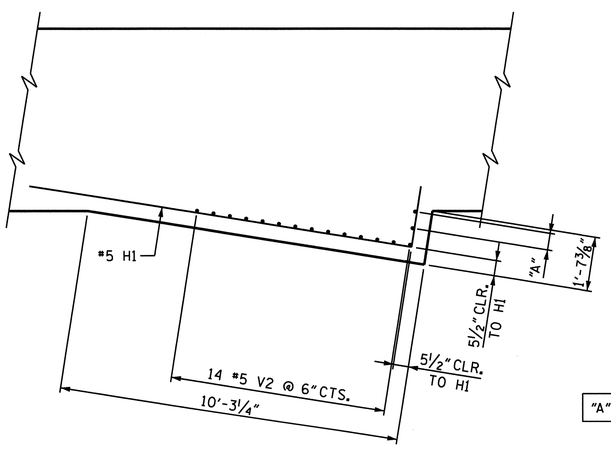

SECTION C-C

(REINFORCEMENT TOP OF CAP EXTENSION)

"A" = 2 #5 V2 @ 6"CTS.

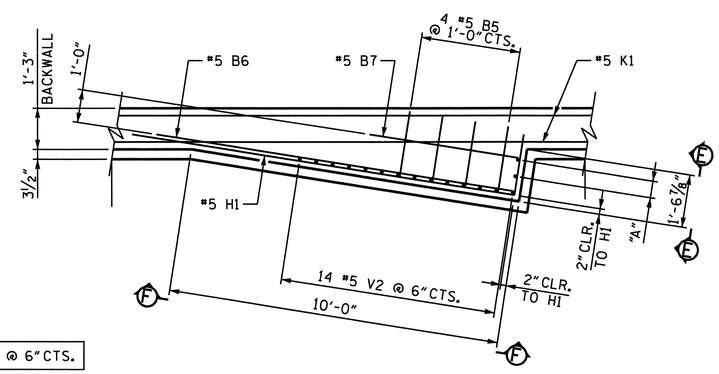

SECTION D-D

(REINFORCEMENT TOP OF BACKWALL EXTENSION)

PROJECT NO. P-5206C

ROWAN COUNTY

STATION: POC 9404+63.64-M1-=
POT 13+69.47-Y10-
MP 344.50±

SHEET 3 OF 5

STATE OF NORTH CAROLINA
DEPARTMENT OF TRANSPORTATION
RALEIGH

SUBSTRUCTURE

ABUTMENT 1
BACKWALL EXTENSION
DETAILS

REVISIONS						SHEET NO.
NO.	BY:	DATE:	NO.	BY:	DATE:	S-28
1			3			TOTAL SHEETS
2			4			52

PREPARED BY
TGS ENGINEERS
107-A MICA AVENUE
MORGANTON, NC 28655

NORTH CAROLINA PROFESSIONAL SEAL 22892 ENGINEER RAY D. ELLIOTT
10/24/2013

DRAWN BY : JLA	DATE : 2/13
CHECKED BY : RDE	DATE : 2/13

0160DEL_P10b2

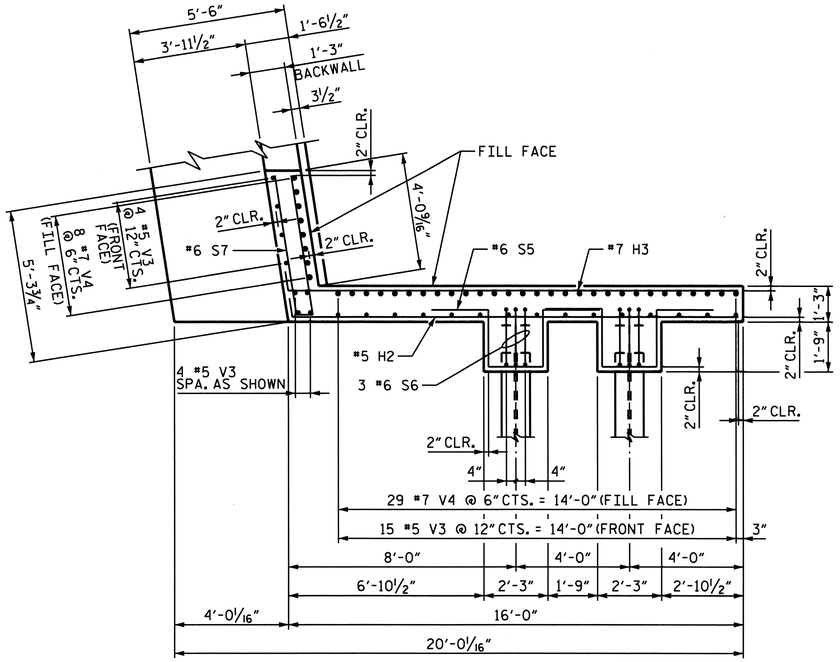

PLAN OF WING W1

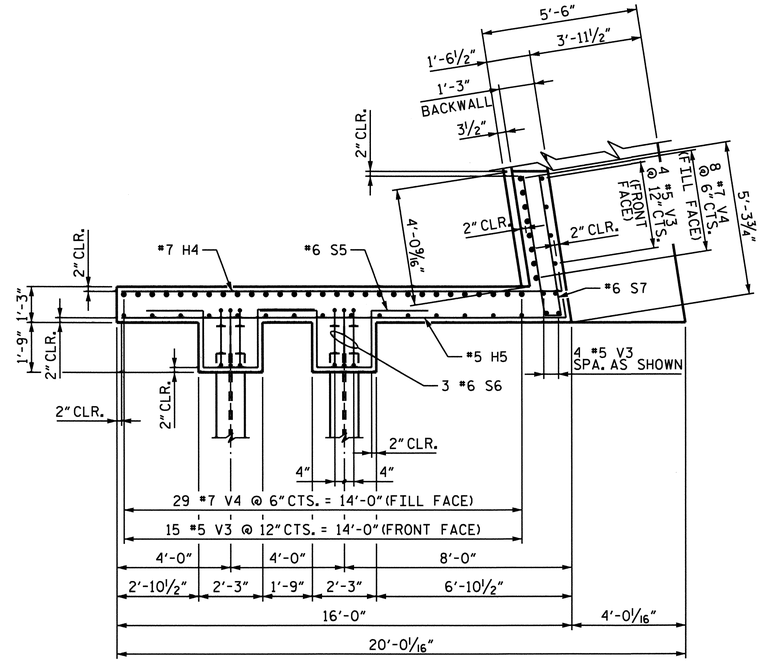

PLAN OF WING W2

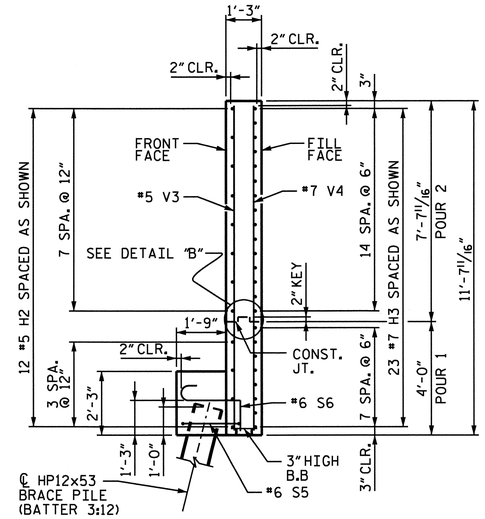

SECTION G-G

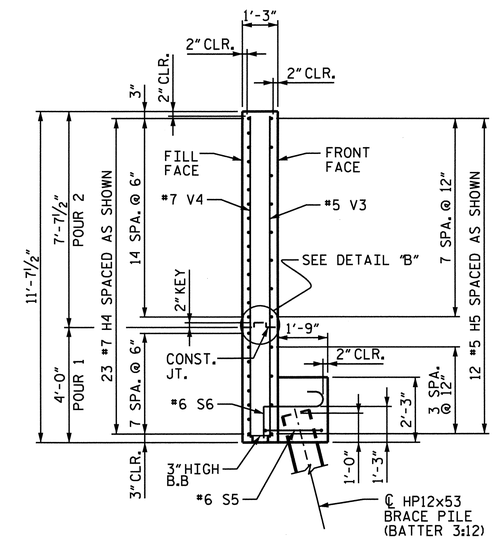

SECTION H-H

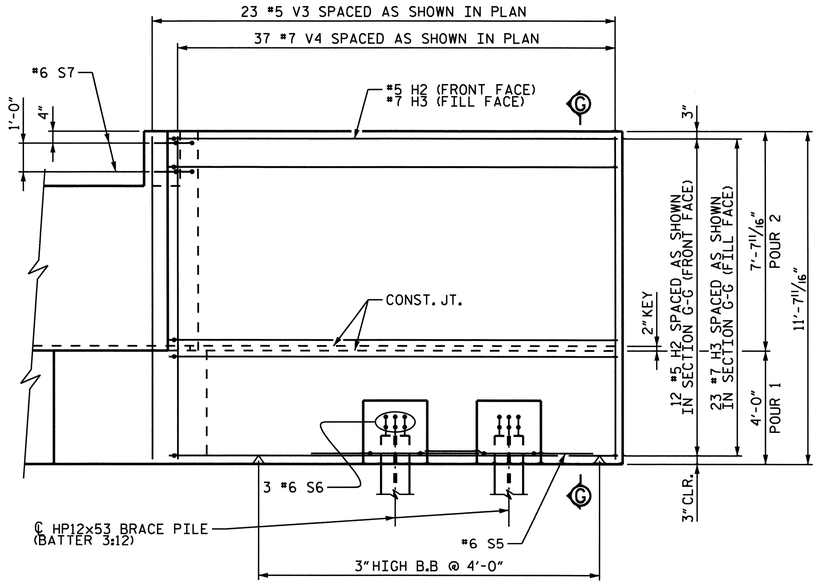

ELEVATION W1

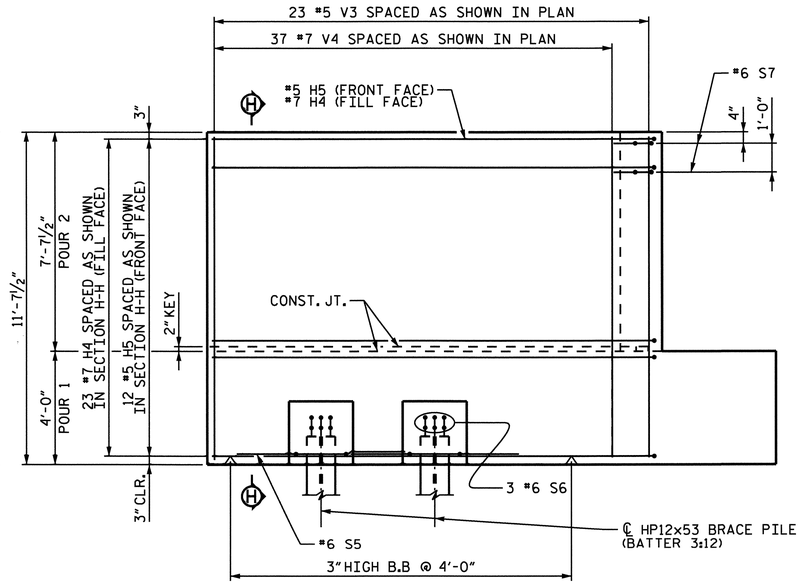

ELEVATION W2

PROJECT NO. P-5206C

ROWAN COUNTY

STATION: POC 9404+63.64-M1-=
POT 13+69.47-Y10-
MP 344.50±

SHEET 4 OF 5

STATE OF NORTH CAROLINA
DEPARTMENT OF TRANSPORTATION
RALEIGH

SUBSTRUCTURE

ABUTMENT 1
WING DETAILS

PREPARED BY
TGS ENGINEERS
107-A MICA AVENUE
MORGANTON, NC 28655

NORTH CAROLINA PROFESSIONAL SEAL 19892 ENGINEER RAY D. ELLIOTT
6/24/2013

REVISIONS						SHEET NO.
NO.	BY:	DATE:	NO.	BY:	DATE:	S-29
1			3			TOTAL SHEETS
2			4			52

DRAWN BY : JLA DATE : 2/13
CHECKED BY : RDE DATE : 2/13

0160DEL_P10b2

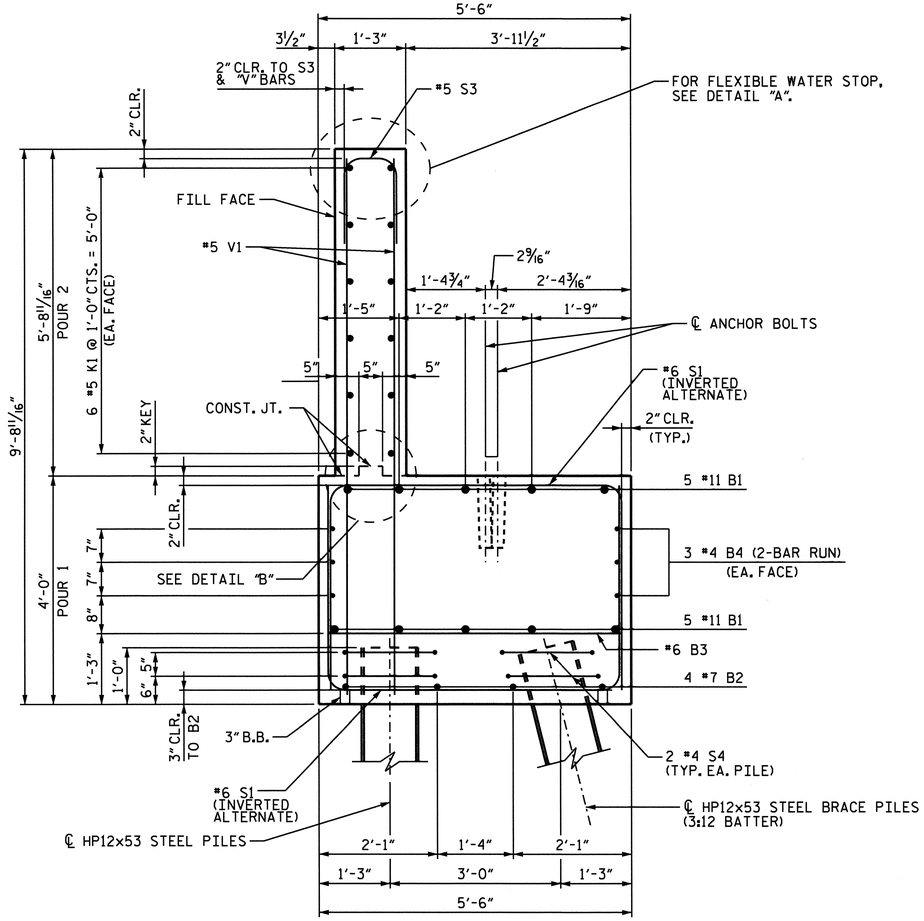

SECTION A-A

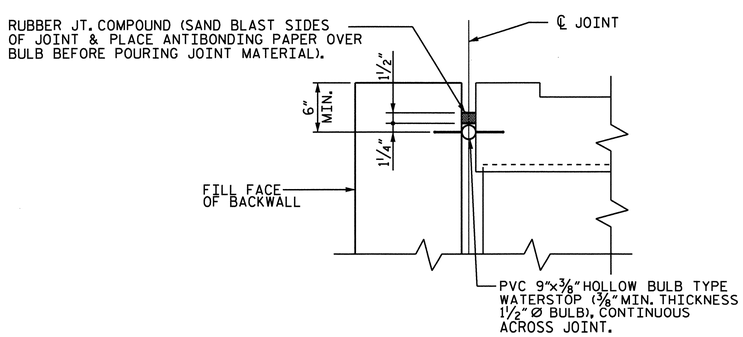

DETAIL "A"

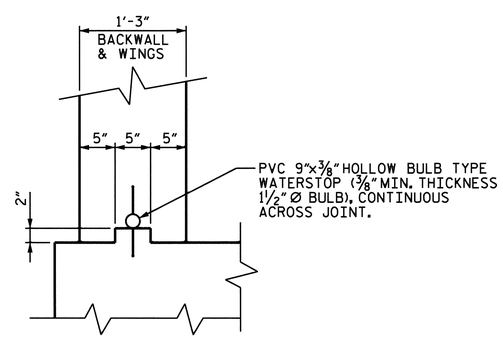

DETAIL "B"

BAR TYPES

ALL BAR DIMENSIONS ARE OUT TO OUT.

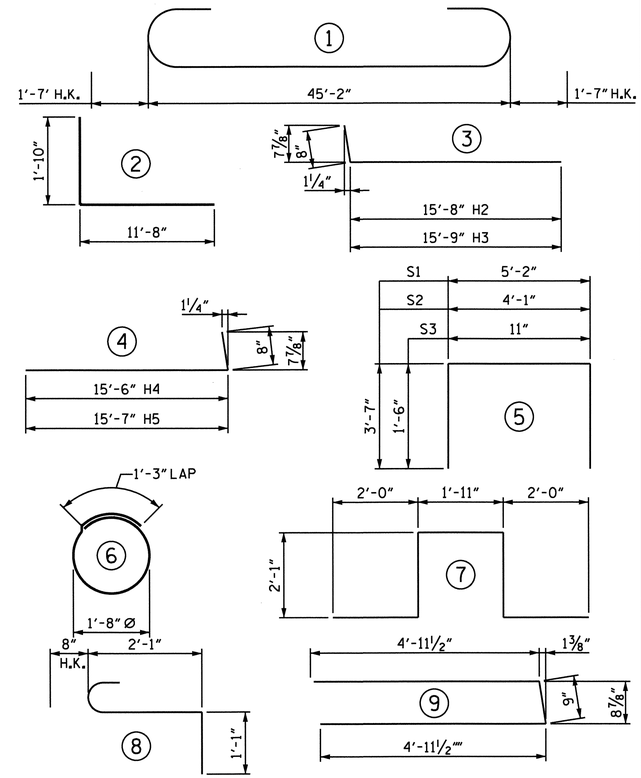

REINFORCING STEEL SCHEDULE FOR ABUTMENT 1

BAR	NO.	SIZE	TYPE	LENGTH	WEIGHT
B1	10	#11	1	48'-4"	2,568
B2	4	#7	STR.	45'-2"	369
B3	23	#6	STR.	5'-2"	178
B4	12	#4	STR.	23'-10"	191
B5	8	#5	STR.	2'-0"	17
B6	2	#5	STR.	10'-11"	23
B7	2	#5	STR.	4'-7"	10
H1	36	#5	2	13'-6"	507
H2	12	#5	3	16'-4"	204
H3	23	#7	3	16'-5"	772
H4	23	#7	4	16'-2"	760
H5	12	#5	4	16'-3"	203
K1	12	#5	STR.	45'-2"	565
S1	75	#6	5	12'-4"	1,389
S2	1	#6	5	11'-3"	17
S3	70	#5	5	3'-11"	286
S4	36	#4	6	6'-6"	156
S5	4	#6	7	10'-1"	61
S6	12	#6	8	3'-10"	69
S7	4	#6	9	10'-8"	64
V1	140	#5	STR.	9'-4"	1,363
V2	32	#5	STR.	9'-2"	306
V3	46	#5	STR.	11'-3"	540
V4	74	#7	STR.	11'-3"	1,702

BILL OF MATERIAL - QUANTITIES FOR ABUTMENT 1

TOTAL REINFORCING STEEL		12,320 LBS.
CLASS AA CONCRETE		
POUR 1 (CAP & WINGS)		46.3 CU. YDS.
POUR 2 (BACKWALL, BACKWALL EXT. & WINGS)		26.7 CU. YDS.
TOTAL CLASS AA CONCRETE		73.0 CU. YDS.
HP12x53 STEEL PILES	NO. = 22	1100

PROJECT NO. P-5206C

ROWAN COUNTY

STATION: POC 9404+63.64-M1-=
POT 13+69.47-Y10-

SHEET 5 OF 5 MP 344.50 ±

STATE OF NORTH CAROLINA
DEPARTMENT OF TRANSPORTATION
RALEIGH

SUBSTRUCTURE

ABUTMENT 1
DETAILS &
BILL OF MATERIAL

PREPARED BY
TGS ENGINEERS
107-A MICA AVENUE
MORGANTON, NC 28655

NORTH CAROLINA PROFESSIONAL SEAL 22842 ENGINEER RAN D. ELLIOTT
10/29/2013

REVISIONS						SHEET NO.
NO.	BY:	DATE:	NO.	BY:	DATE:	S-30
1			3			TOTAL SHEETS
2			4			52

DRAWN BY : JLA DATE : 2/13
CHECKED BY : RDE DATE : 2/13

0160DEL_P10b2

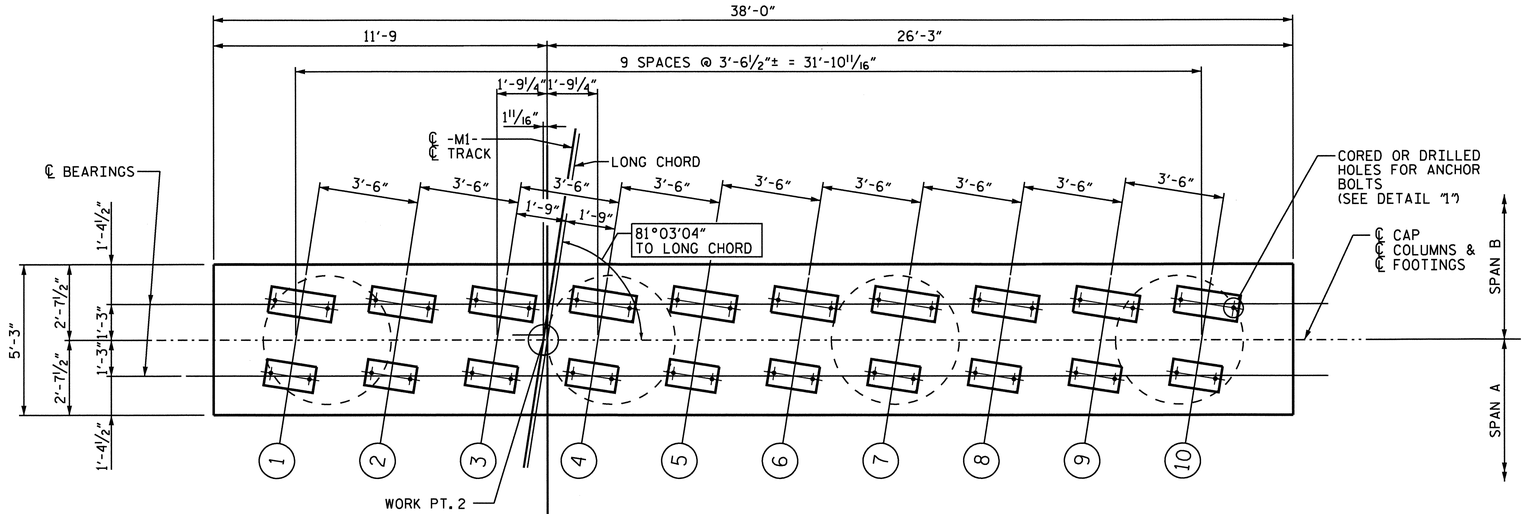

PLAN OF CAP

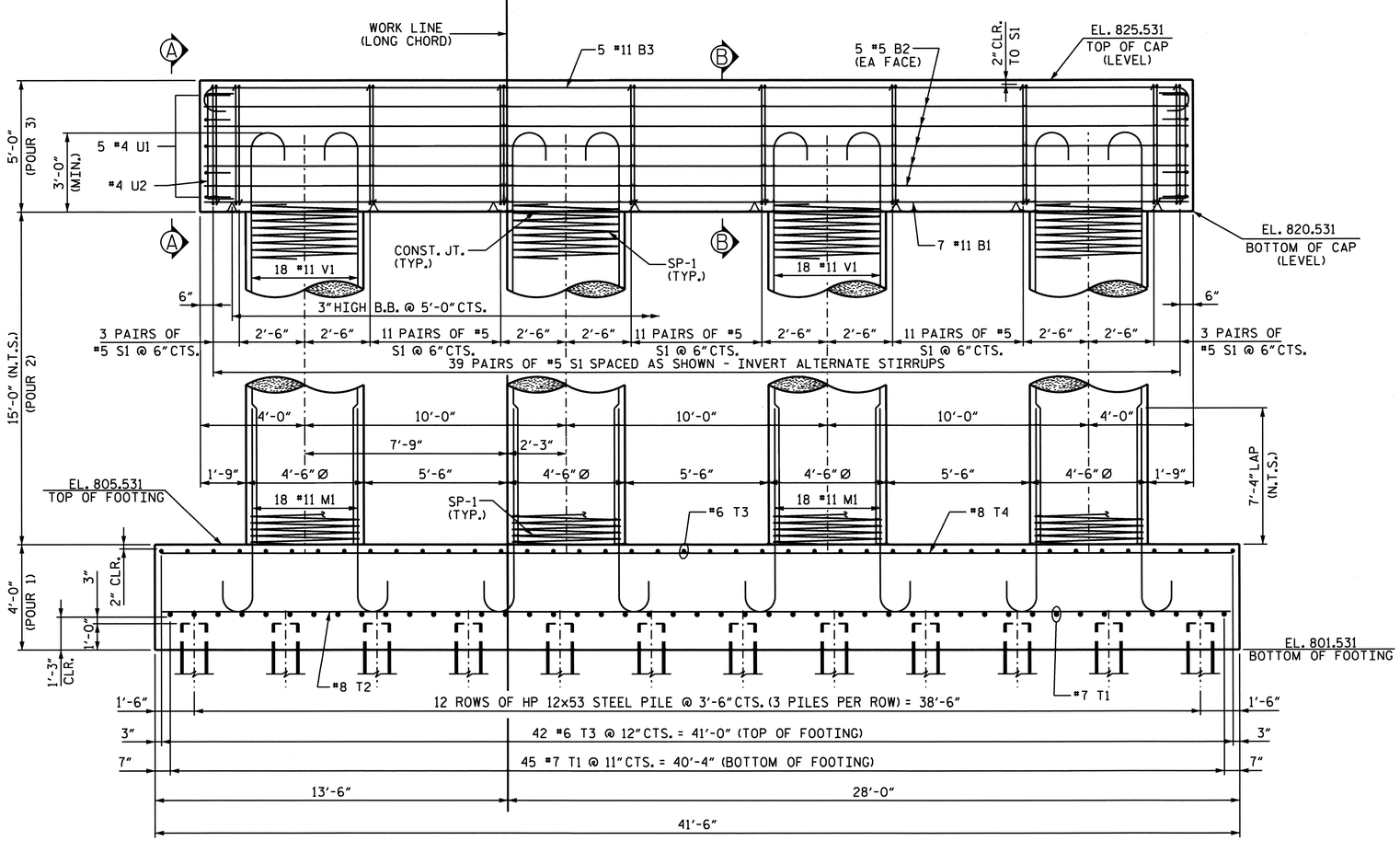

ELEVATION

NOTES

STIRRUPS IN CAP MAY BE SHIFTED AS NECESSARY TO CLEAR DOWELS.

HOOKS ON "V" BARS MAY BE TURNED AS NECESSARY FOR PLACING REINFORCING STEEL.

INVERT ALTERNATE STIRRUPS.

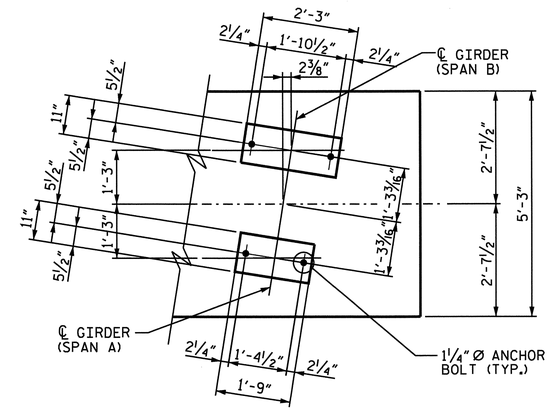

DETAIL OF BEARING LAYOUT

PROJECT NO. P-5206C

ROWAN COUNTY

STATION: POC 9404+63.64-M1-=
POT 13+69.47-Y10-
MP 344.50±

SHEET 1 OF 3

STATE OF NORTH CAROLINA
DEPARTMENT OF TRANSPORTATION
RALEIGH

SUBSTRUCTURE

PIER 1
PLAN & ELEVATION

REVISIONS						SHEET NO.
NO.	BY:	DATE:	NO.	BY:	DATE:	S-31
1			3			TOTAL SHEETS
2			4			52

PREPARED BY
TGS ENGINEERS
107-A MICA AVENUE
MORGANTON, NC 28655

NORTH CAROLINA PROFESSIONAL SEAL 20292 ENGINEER RAY D. ELLIOTT
6/24/2013

DRAWN BY :	NMW	DATE :	2/13
CHECKED BY :	RDE	DATE :	2/13

0160DEL_P10b2

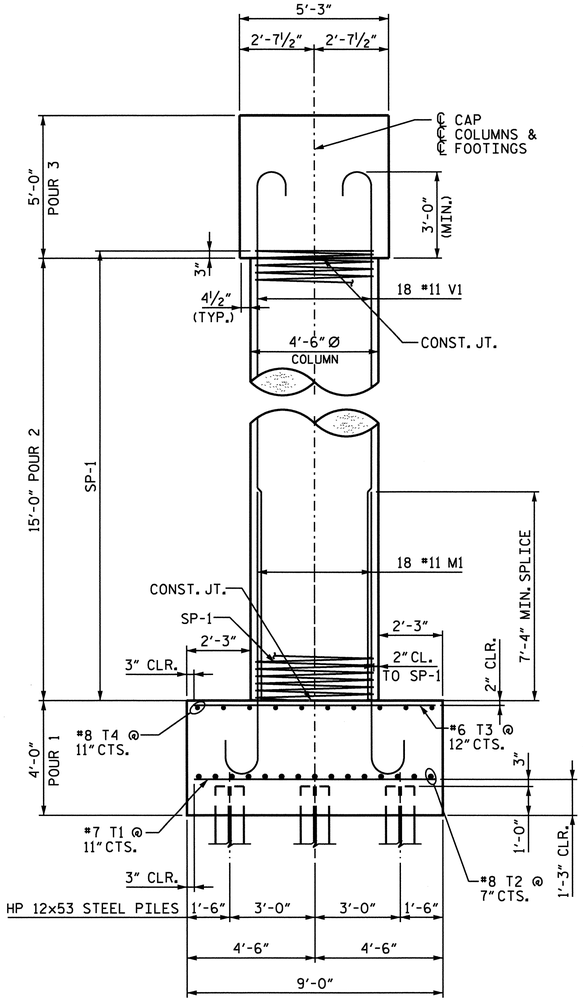

END VIEW

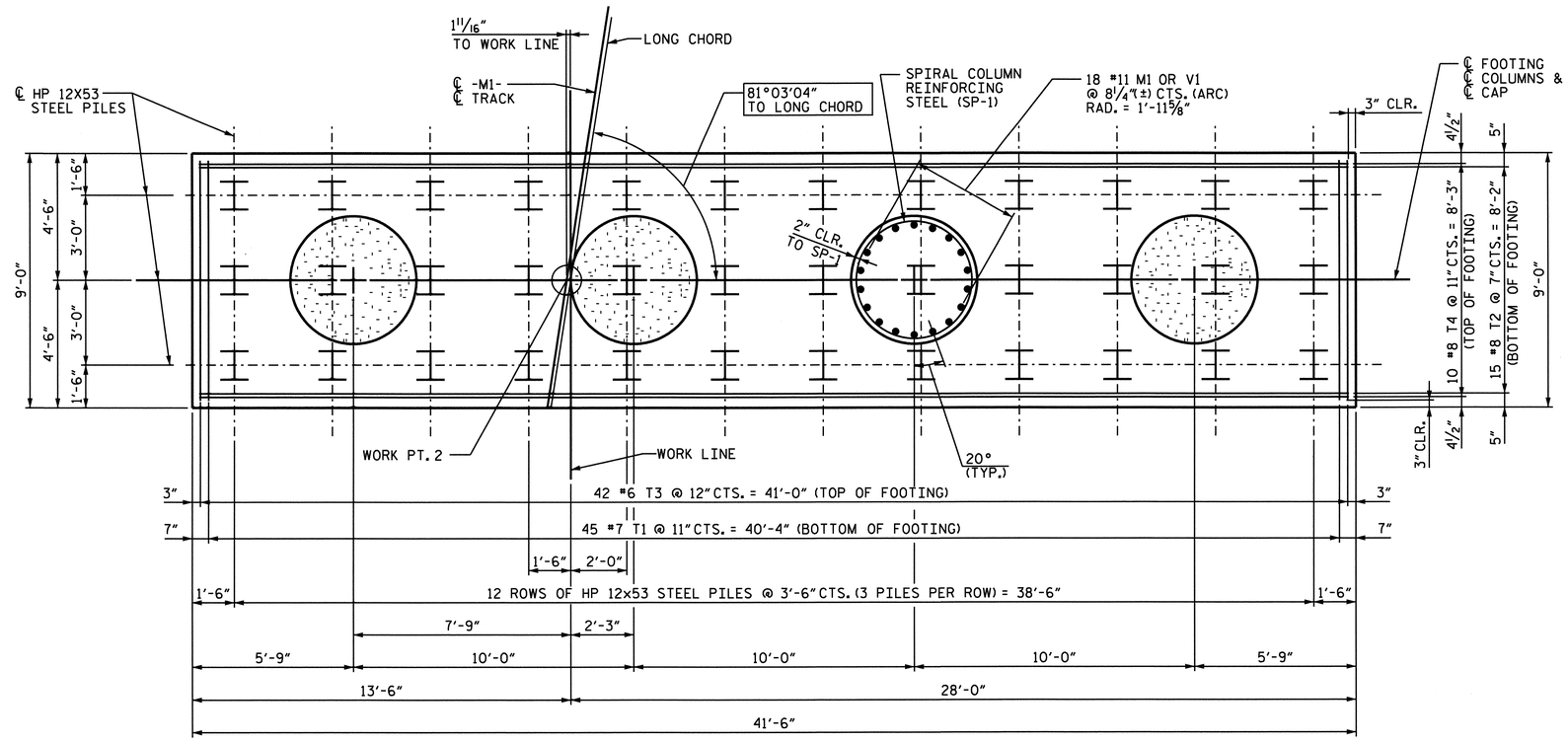

FOUNDATION PLAN OF PIER FOOTING

PROJECT NO. P-5206C

ROWAN COUNTY

STATION: POC 9404+63.64-M1-=
POT 13+69.47-Y10-
MP 344.50±

SHEET 2 OF 3

STATE OF NORTH CAROLINA
DEPARTMENT OF TRANSPORTATION
RALEIGH

SUBSTRUCTURE

PIER 1
FOOTING DETAILS

REVISIONS								SHEET NO.
NO.	BY:	DATE:	NO.	BY:	DATE:			S-32
1			3					TOTAL SHEETS
2			4					52

PREPARED BY
TGS ENGINEERS
107-A MICA AVENUE
MORGANTON, NC 28655

NORTH CAROLINA PROFESSIONAL SEAL 28892 ENGINEER RAY D. ELLIOTT
6/24/2013

DRAWN BY :	NMW	DATE :	2/13
CHECKED BY :	RDE	DATE :	2/13

0160DEL_P10b2

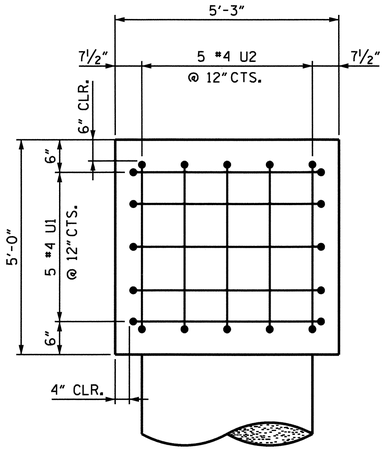

SECTION A-A

N.T.S.

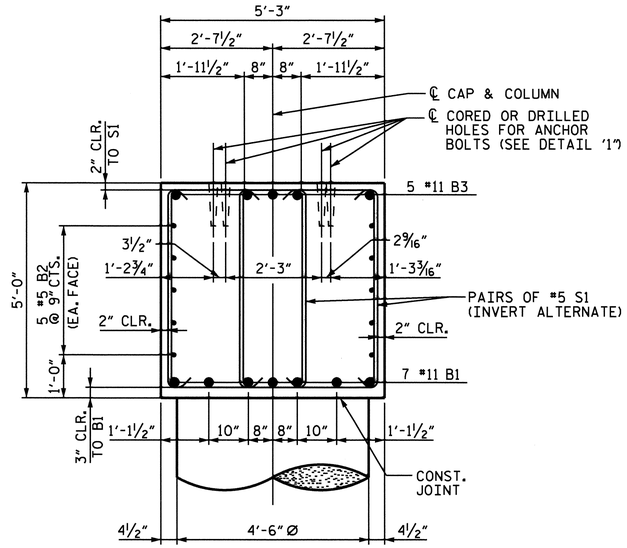

SECTION B-B

N.T.S.

BAR TYPES

ALL BAR DIMENSIONS ARE OUT TO OUT.

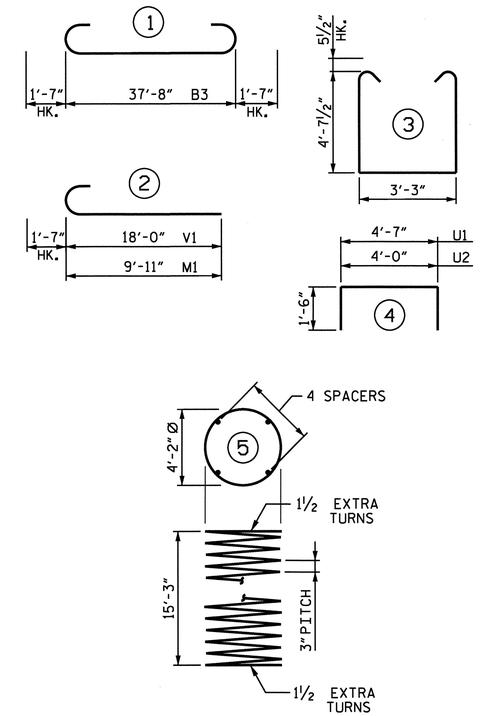

REINFORCING STEEL SCHEDULE

PIER 1

BAR	NO.	SIZE	TYPE	LENGTH	WEIGHT
B1	7	#11	STR	37'-8"	1,401
B2	10	#5	STR.	37'-8"	393
B3	5	#11	1	40'-10"	1,085
M1	72	#11	2	11'-6"	4,399
S1	78	#5	3	13'-5"	1,092
T1	45	#7	STR.	8'-6"	782
T2	15	#8	STR.	41'-0"	1,642
T3	42	#6	STR.	8'-6"	536
T4	10	#8	STR.	41'-0"	1,095
U1	10	#4	4	7'-7"	51
U2	10	#4	4	7'-0"	47
V1	72	#11	2	19'-7"	7,491
SP-1	4	**	5	829'-7"	2,217

QUANTITY SUMMARY

TOTAL REINFORCING STEEL - LBS.	20,014
SPIRAL COLUMN REINF. STEEL - LBS.	2,217
CLASS AA CONCRETE :	
POUR 1 (FOOTING)	55.3 CU. YDS.
POUR 2 (COLUMNS)	35.3 CU. YDS.
POUR 3 (CAP)	36.9 CU. YDS.
TOTAL CLASS AA CONCRETE :	127.5 CU. YDS.
HP 12x53 STEEL PILES	
NO. = 36	LIN. FT. = 2,880
FOUNDATION EXCAVATION	LUMP SUM

** THE SP-1 SPIRAL REINFORCING STEEL SHALL BE W31 OR D-31 COLD DRAWN WIRE OR #4 PLAIN OR DEFORMED BAR.

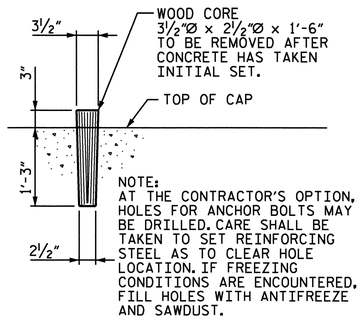

DETAIL "1"

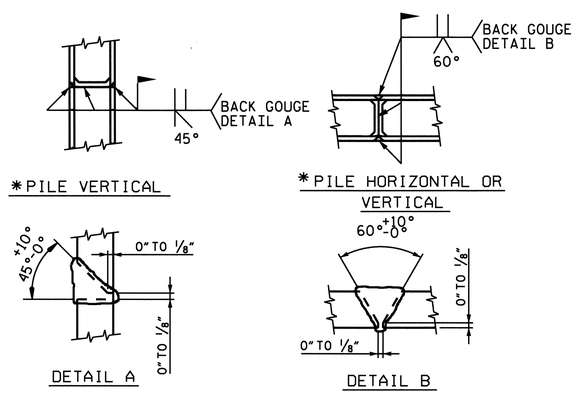

*POSITION OF PILE DURING WELDING

PILE SPLICE DETAILS

PROJECT NO. P-5206C

ROWAN COUNTY

STATION: POC 9404+63.64-M1-=
POT 13+69.47-Y10-
MP 344.50±

SHEET 3 OF 3

STATE OF NORTH CAROLINA
DEPARTMENT OF TRANSPORTATION
RALEIGH

SUBSTRUCTURE

PIER 1
DETAILS &
BILL OF MATERIAL

PREPARED BY
TGS ENGINEERS
107-A MICA AVENUE
MORGANTON, NC 28655

NORTH CAROLINA PROFESSIONAL SEAL 22432 ENGINEER RAY D. ELLIOTT
Ray D. Elliott
6/24/2013

REVISIONS							SHEET NO.
NO.	BY:	DATE:	NO.	BY:	DATE:		S-33
1			3				TOTAL SHEETS
2			4				52

DRAWN BY :	NMW	DATE :	2/13
CHECKED BY :	RDE	DATE :	2/13

0160DEL_P10b2

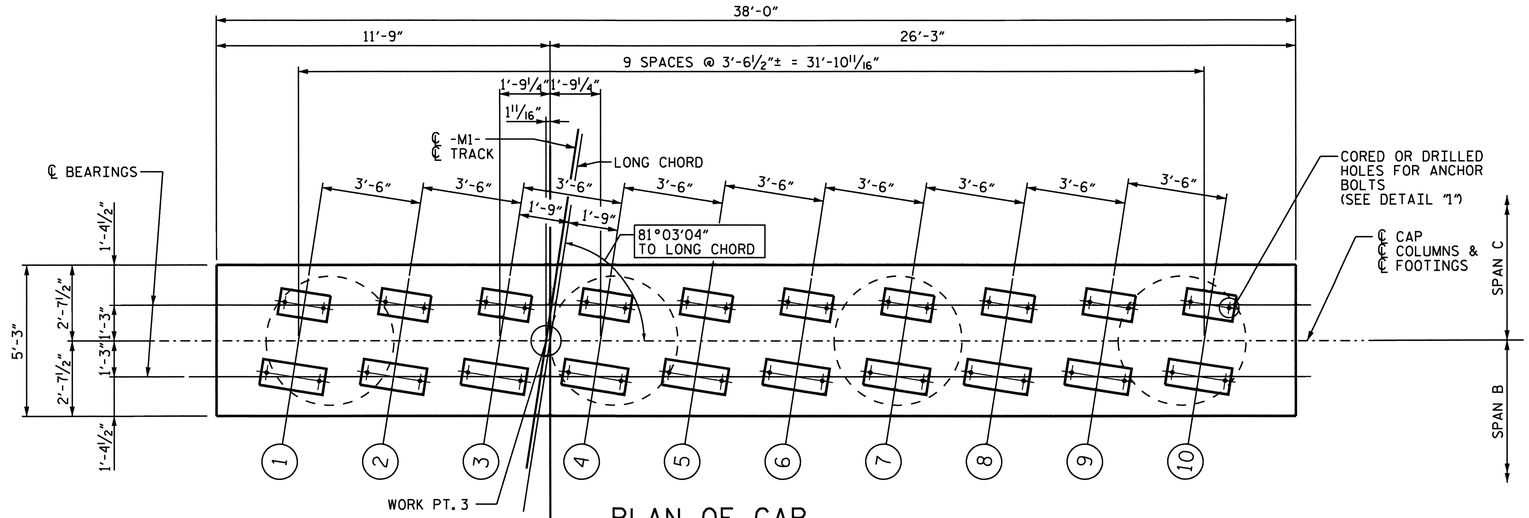

PLAN OF CAP

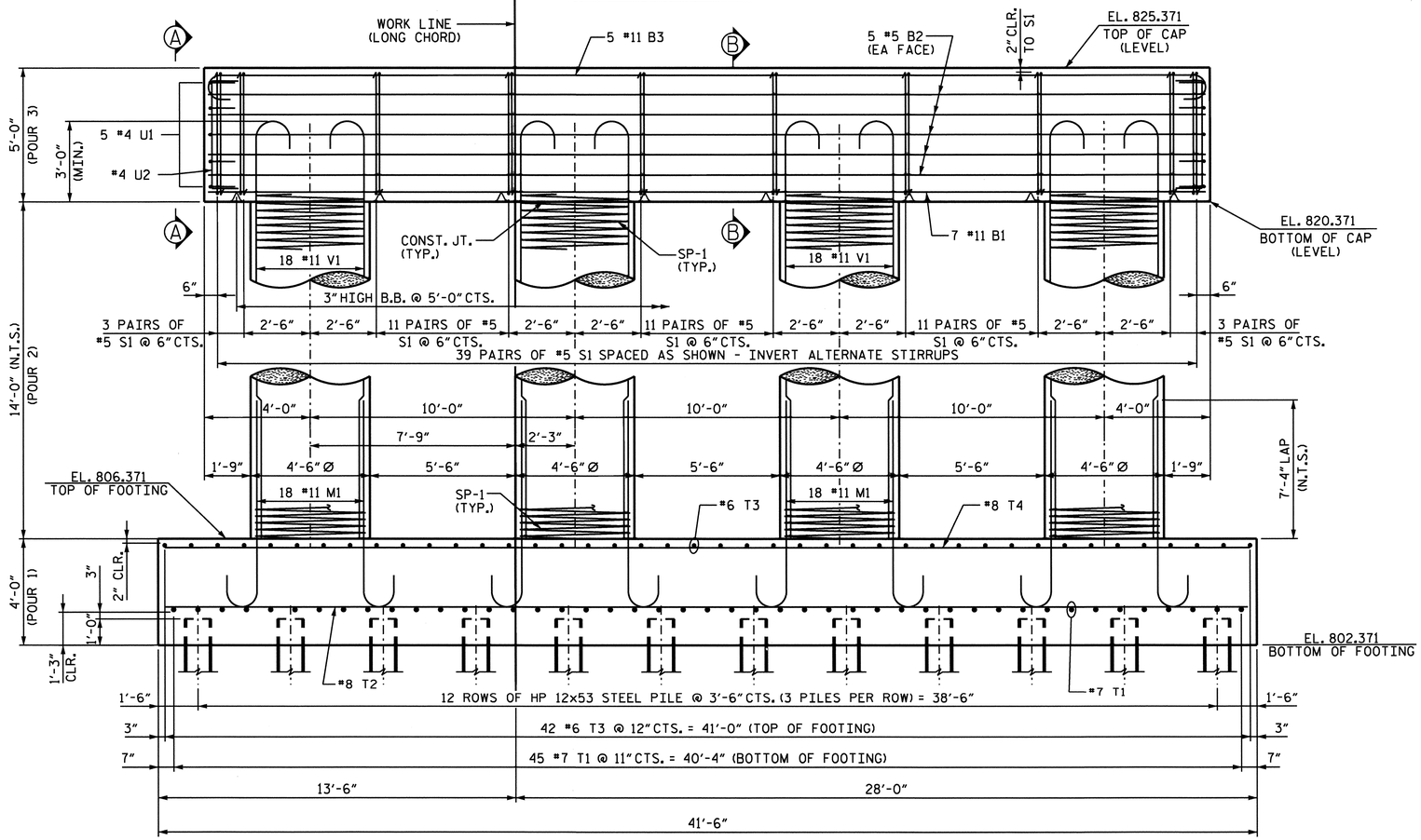

ELEVATION

NOTES

STIRRUPS IN CAP MAY BE SHIFTED AS NECESSARY TO CLEAR DOWELS.

HOOKS ON "V" BARS MAY BE TURNED AS NECESSARY FOR PLACING REINFORCING STEEL.

INVERT ALTERNATE STIRRUPS.

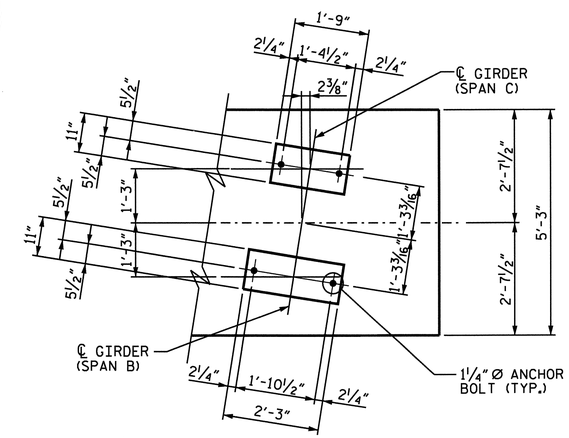

DETAIL OF BEARING LAYOUT

PROJECT NO. P-5206C

ROWAN COUNTY

STATION: POC 9404+63.64-M1-= POT 13+69.47-Y10-

SHEET 1 OF 3 MP 344.50±

STATE OF NORTH CAROLINA
DEPARTMENT OF TRANSPORTATION
RALEIGH

SUBSTRUCTURE

PIER 2
PLAN & ELEVATION

PREPARED BY TGS ENGINEERS 107-A MICA AVENUE MORGANTON, NC 28655

NORTH CAROLINA PROFESSIONAL SEAL 22692 ENGINEER RAY D. ELLIOTT 6/29/2013

REVISIONS						SHEET NO.
NO.	BY:	DATE:	NO.	BY:	DATE:	S-34
1			3			TOTAL SHEETS
2			4			52

DRAWN BY : NMW DATE : 2/13
CHECKED BY : RDE DATE : 2/13

0160DEL_P1062

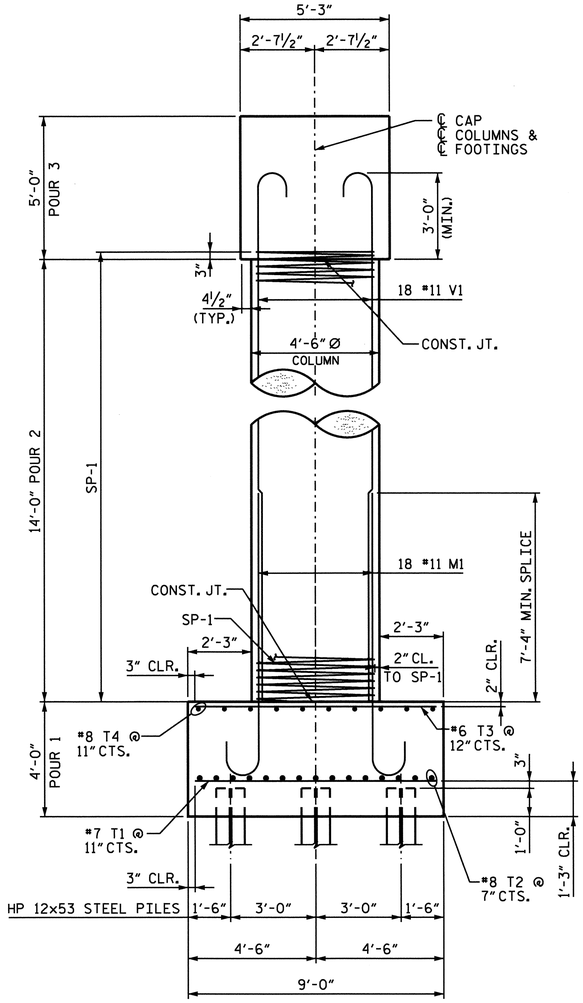

END VIEW

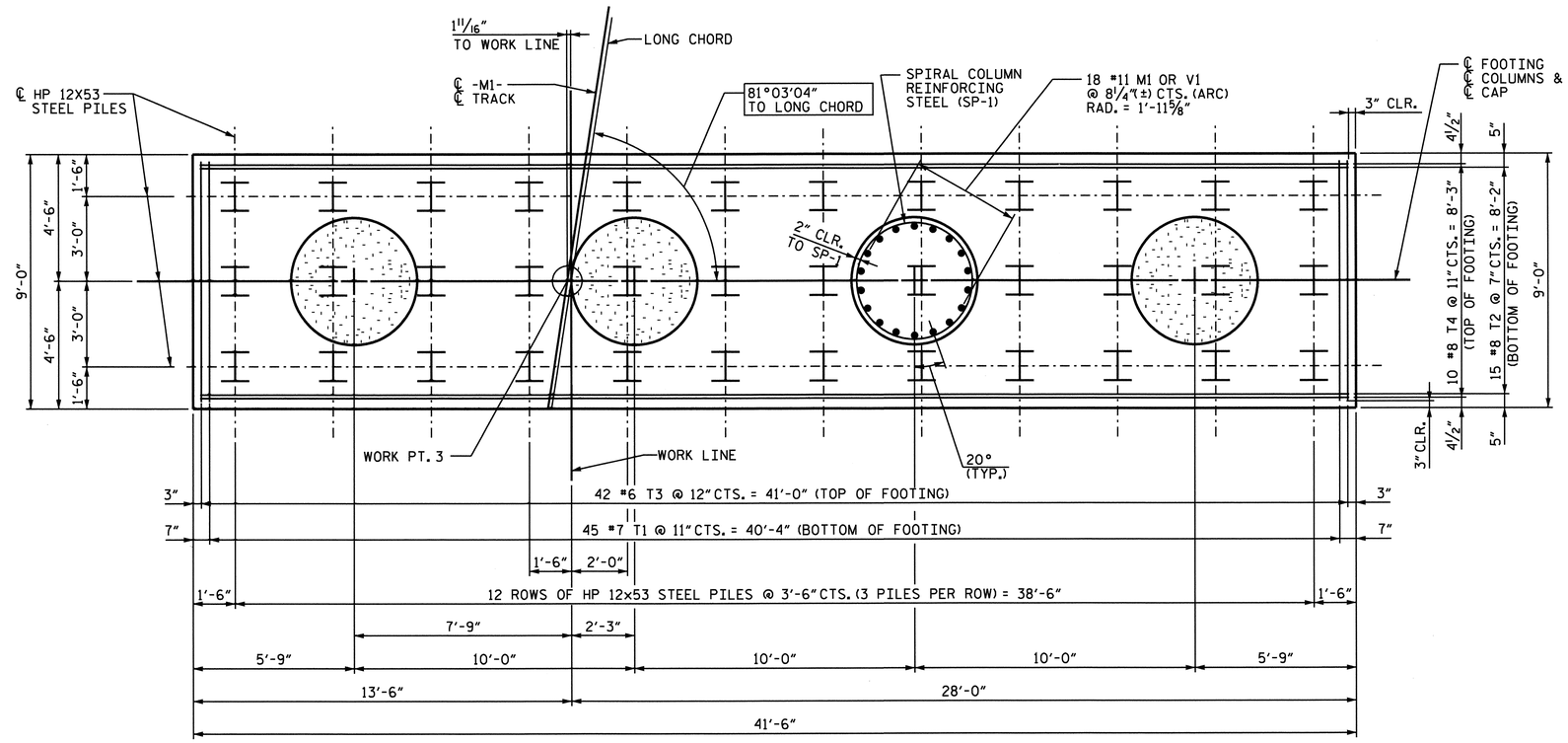

FOUNDATION PLAN OF PIER FOOTING

PROJECT NO. P-5206C

ROWAN COUNTY

STATION: POC 9404+63.64-M1-=
POT 13+69.47-Y10-
MP 344.50±

SHEET 2 OF 3

STATE OF NORTH CAROLINA
DEPARTMENT OF TRANSPORTATION
RALEIGH

SUBSTRUCTURE

PIER 2
PLAN & ELEVATION

PREPARED BY
TGS ENGINEERS
107-A MICA AVENUE
MORGANTON, NC 28655

NORTH CAROLINA PROFESSIONAL SEAL 20892 ENGINEER RANDY D. ELLIOTT
6/24/2013

REVISIONS						SHEET NO.
NO.	BY:	DATE:	NO.	BY:	DATE:	S-35
1			3			TOTAL SHEETS
2			4			52

DRAWN BY : NMW DATE : 2/13
CHECKED BY : RDE DATE : 2/13

0160DEL_P1062

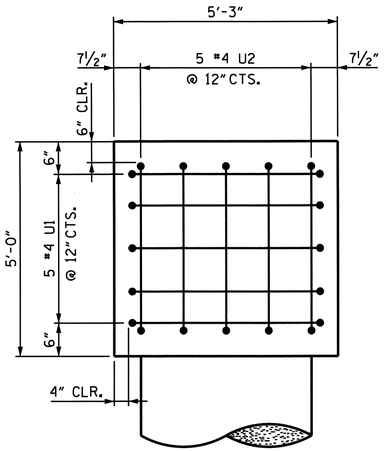

SECTION A-A

N.T.S.

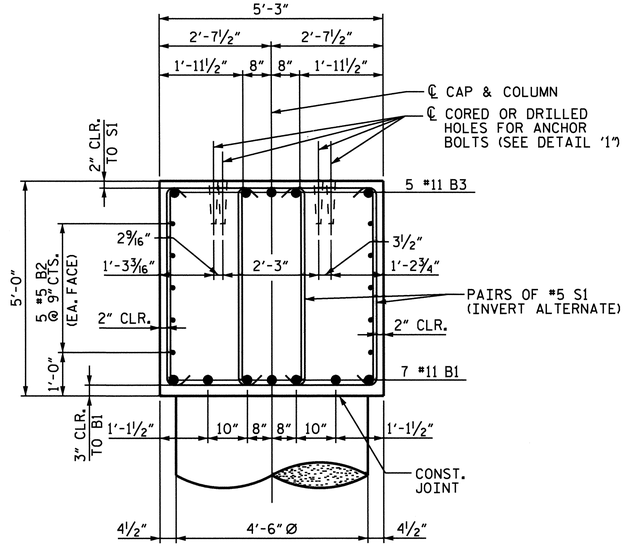

SECTION B-B

N.T.S.

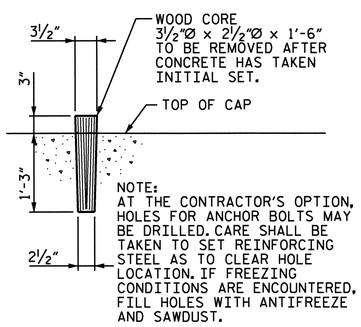

DETAIL "1"

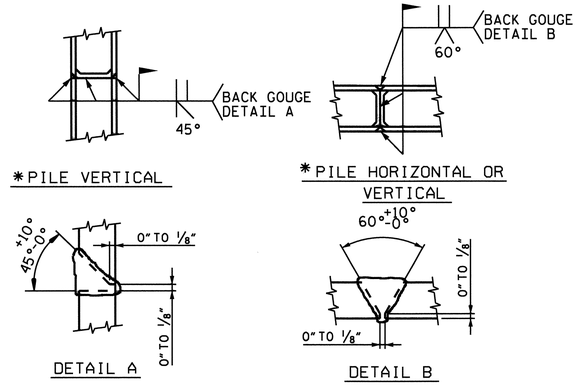

*POSITION OF PILE DURING WELDING

PILE SPLICE DETAILS

BAR TYPES

ALL BAR DIMENSIONS ARE OUT TO OUT.

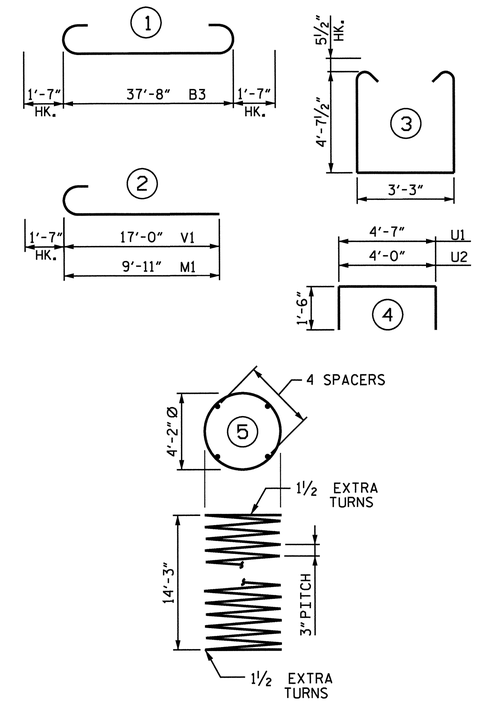

** THE SP-1 SPIRAL REINFORCING STEEL SHALL BE W31 OR D-31 COLD DRAWN WIRE OR #4 PLAIN OR DEFORMED BAR.

REINFORCING STEEL SCHEDULE

PIER 2

BAR	NO.	SIZE	TYPE	LENGTH	WEIGHT
B1	7	#11	STR	37'-8"	1,401
B2	10	#5	STR.	37'-8"	393
B3	5	#11	1	40'-10"	1,085
M1	72	#11	2	11'-6"	4,399
S1	78	#5	3	13'-5"	1,092
T1	45	#7	STR.	8'-6"	782
T2	15	#8	STR.	41'-0"	1,642
T3	42	#6	STR.	8'-6"	536
T4	10	#8	STR.	41'-0"	1,095
U1	10	#4	4	7'-7"	51
U2	10	#4	4	7'-0"	47
V1	72	#11	2	18'-7"	7,109
SP-1	4	**	5	777'-9"	2,078

QUANTITY SUMMARY

TOTAL REINFORCING STEEL - LBS.	19,632
SPIRAL COLUMN REINF. STEEL - LBS.	2,078
CLASS AA CONCRETE :	
POUR 1 (FOOTING)	55.3 CU. YDS.
POUR 2 (COLUMNS)	33.0 CU. YDS.
POUR 3 (CAP)	36.9 CU. YDS.
TOTAL CLASS AA CONCRETE :	125.2 CU. YDS.
HP 12x53 STEEL PILES	
NO. = 36	LIN. FT. = 2,880
FOUNDATION EXCAVATION	LUMP SUM

PROJECT NO. P-5206C

ROWAN COUNTY

STATION: POC 9404+63.64-M1-=
POT 13+69.47-Y10-

SHEET 3 OF 3 MP 344.50±

STATE OF NORTH CAROLINA
DEPARTMENT OF TRANSPORTATION
RALEIGH

SUBSTRUCTURE

PIER 2
DETAILS &
BILL OF MATERIAL

PREPARED BY
TGS ENGINEERS
107-A MICA AVENUE
MORGANTON, NC 28655

NORTH CAROLINA PROFESSIONAL SEAL 22892 ENGINEER RAY D. ELLIOTT
6/24/2013

REVISIONS						SHEET NO.
NO.	BY:	DATE:	NO.	BY:	DATE:	S-36
1			3			TOTAL SHEETS
2			4			52

DRAWN BY : NMW DATE : 2/13
CHECKED BY : RDE DATE : 2/13

0160DEL_P10b2

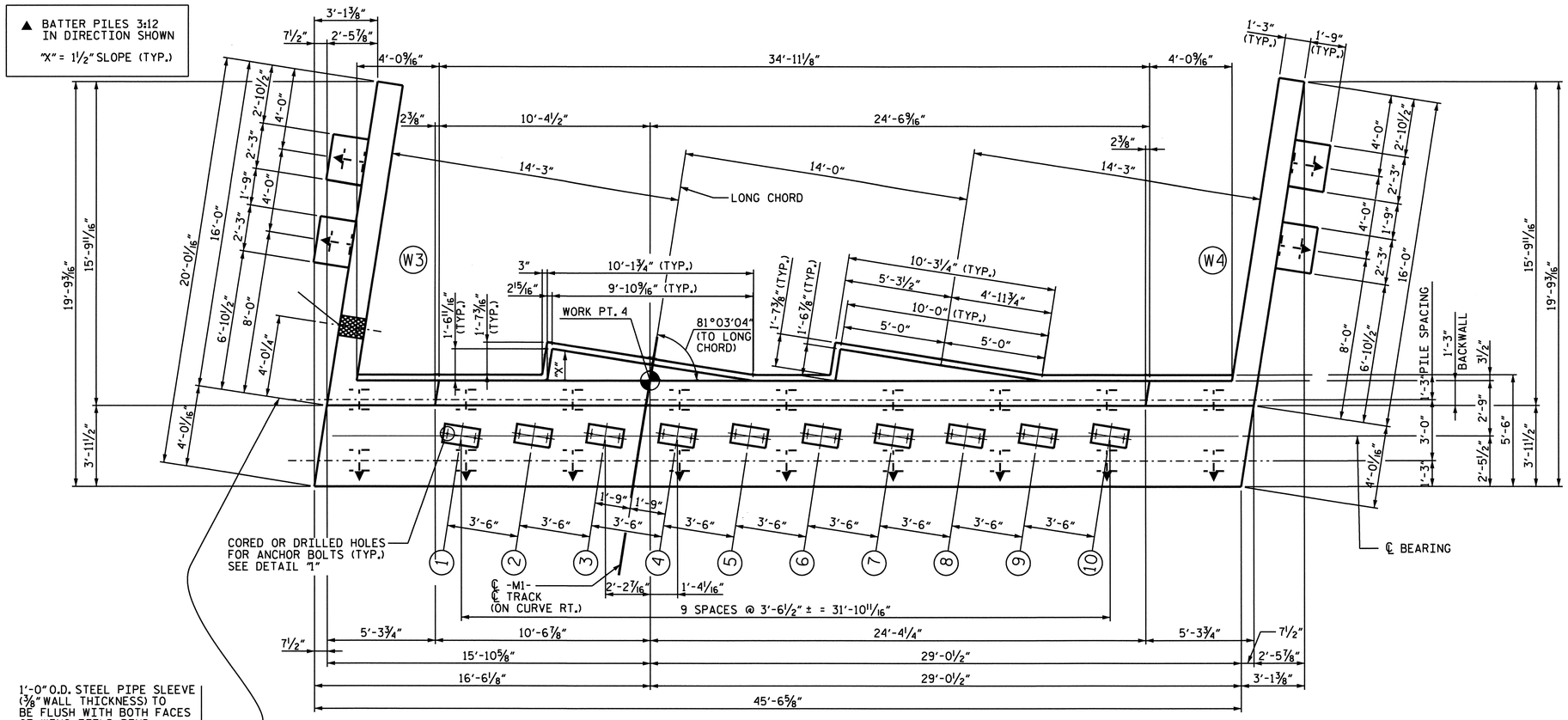

PLAN

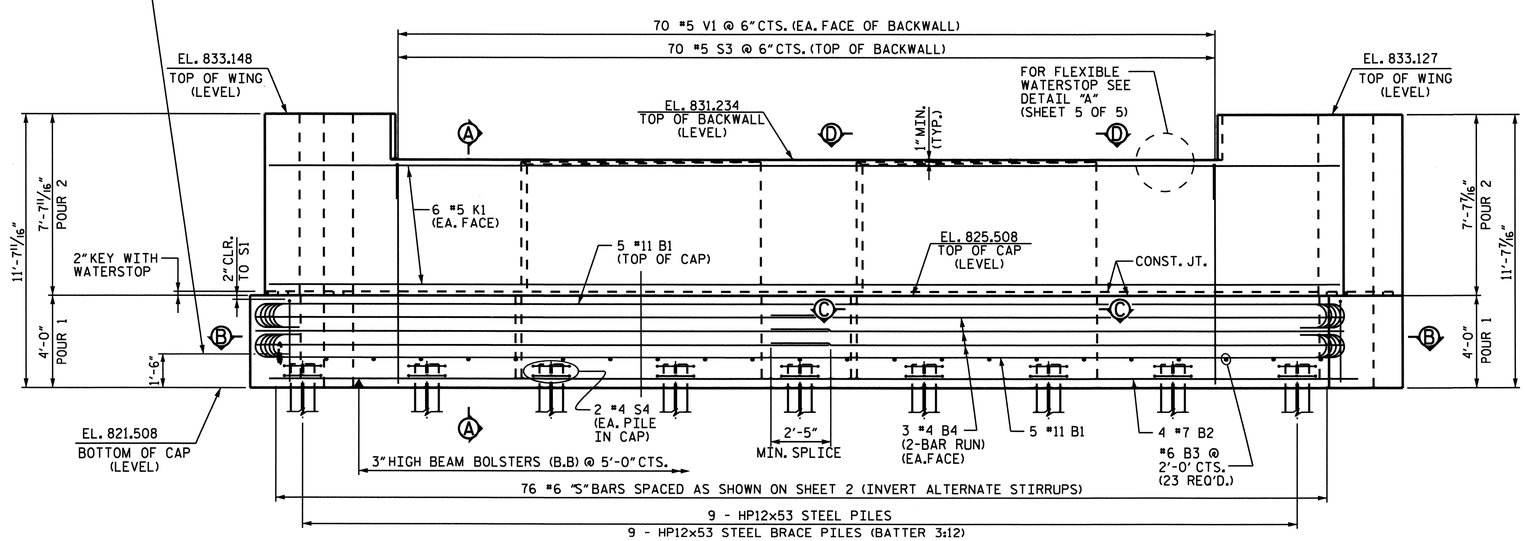

ELEVATION

NOTES:

STIRRUPS IN CAP MAY BE SHIFTED AS NECESSARY TO CLEAR ANCHOR BOLTS.

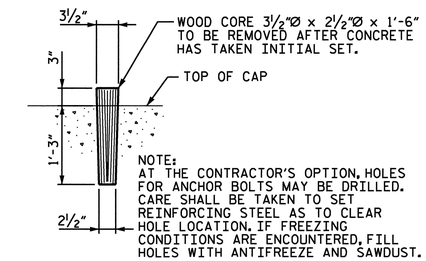

NOTE:
AT THE CONTRACTOR'S OPTION, HOLES FOR ANCHOR BOLTS MAY BE DRILLED. CARE SHALL BE TAKEN TO SET REINFORCING STEEL AS TO CLEAR HOLE LOCATION. IF FREEZING CONDITIONS ARE ENCOUNTERED, FILL HOLES WITH ANTIFREEZE AND SAWDUST.

DETAIL "1"

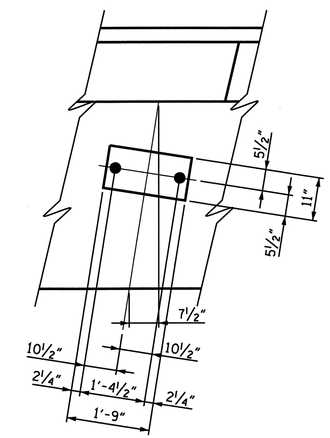

BEARING DETAIL

PROJECT NO. P-5206C

ROWAN COUNTY

STATION: POC 9404+63.64-M1-= POT 13+69.47-Y10- MP 344.50±

SHEET 1 OF 5

STATE OF NORTH CAROLINA
DEPARTMENT OF TRANSPORTATION
RALEIGH

SUBSTRUCTURE
ABUTMENT 2

PREPARED BY
TGS ENGINEERS
107-A MICA AVENUE
MORGANTON, NC 28655

NORTH CAROLINA PROFESSIONAL SEAL 22892 ENGINEER RAY D. ELLIOTT
6/24/2013

REVISIONS						SHEET NO.
NO.	BY:	DATE:	NO.	BY:	DATE:	S-37
1			3			TOTAL SHEETS
2			4			52

DRAWN BY : JLA DATE : 2/13
CHECKED BY : RDE DATE : 2/13

0160DEL_P10b2

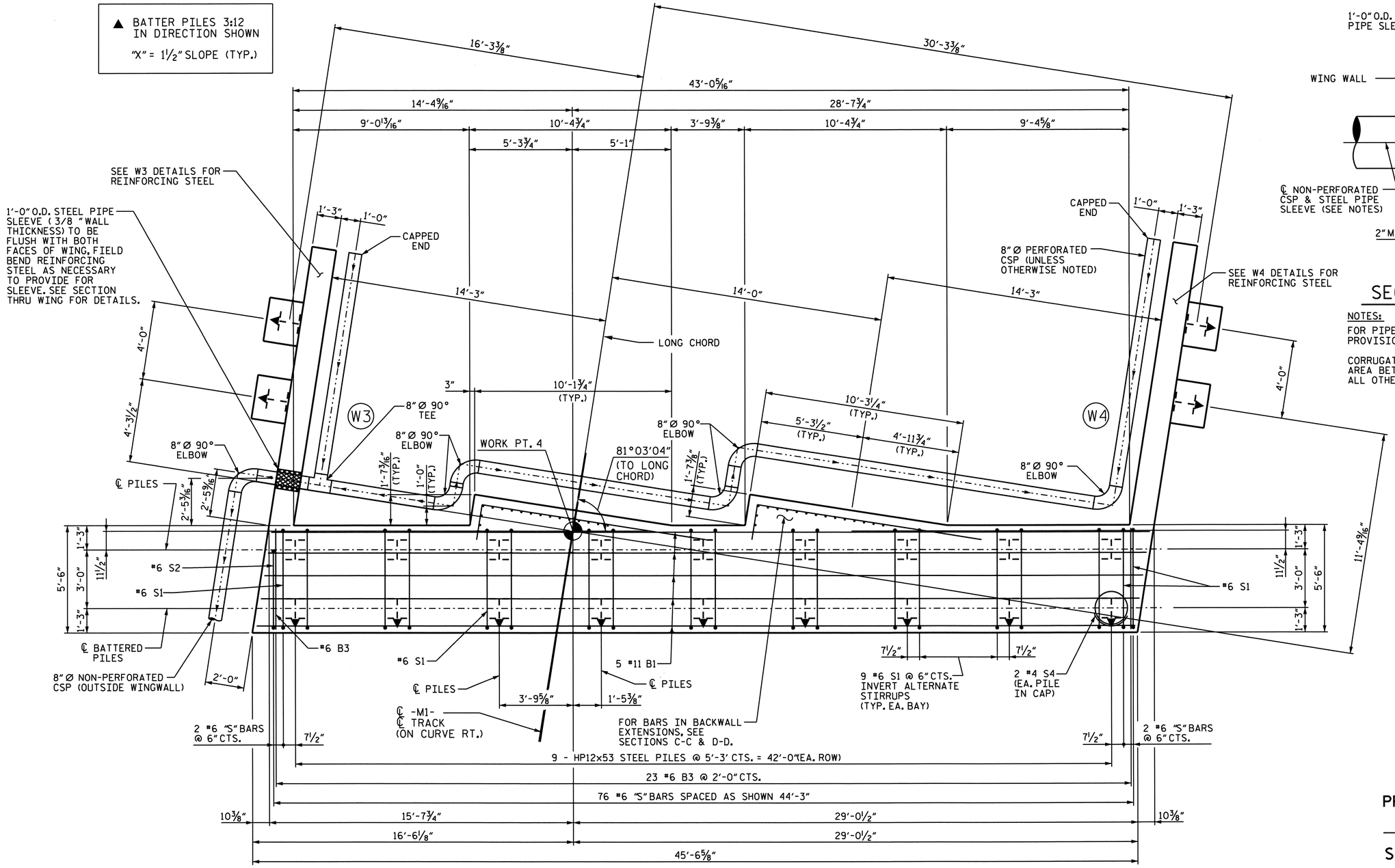

SECTION B-B

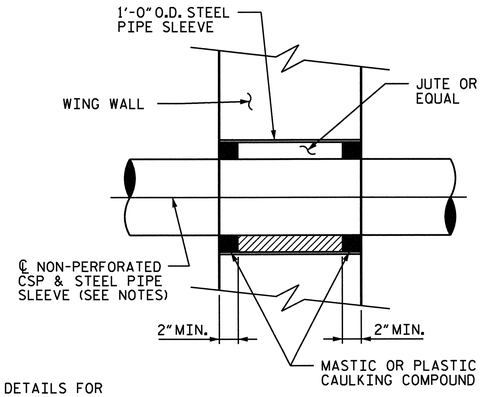

SECTION THRU WING

NOTES:

FOR PIPE SLEEVE INSERTS, SEE SPECIAL PROVISIONS FOR STRUCTURE DRAINAGE SYSTEM.

CORRUGATED STEEL PIPE LOCATED IN DRAINAGE AREA BETWEEN WINGS SHALL BE PERFORATED. ALL OTHER CSP SHALL BE NON-PERFORATED.

PROJECT NO. P-5206C

ROWAN COUNTY

STATION: POC 9404+63.64-M1-=
POT 13+69.47-Y10-
MP 344.50±

SHEET 2 OF 5

STATE OF NORTH CAROLINA
DEPARTMENT OF TRANSPORTATION
RALEIGH

SUBSTRUCTURE
ABUTMENT 2

REVISIONS						SHEET NO.
NO.	BY:	DATE:	NO.	BY:	DATE:	S-38
1			3			TOTAL SHEETS
2			4			52

PREPARED BY
TGS ENGINEERS
107-A MICA AVENUE
MORGANTON, NC 28655

NORTH CAROLINA PROFESSIONAL SEAL 22432 ENGINEER RAY D. ELLIOTT
6/24/2013

DRAWN BY : JLA DATE : 2/13
CHECKED BY : RDE DATE : 2/13

DGN 0160DEL_P10b2

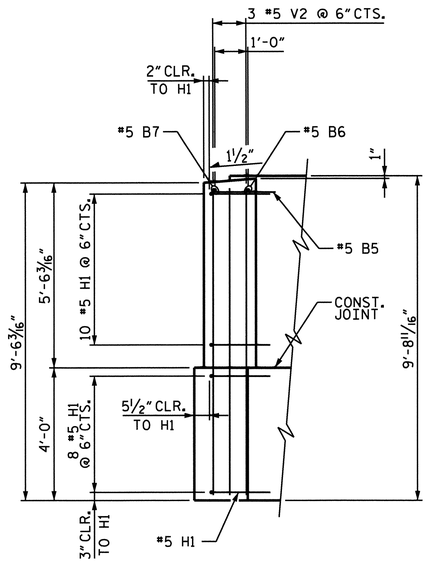

SECTION E-E

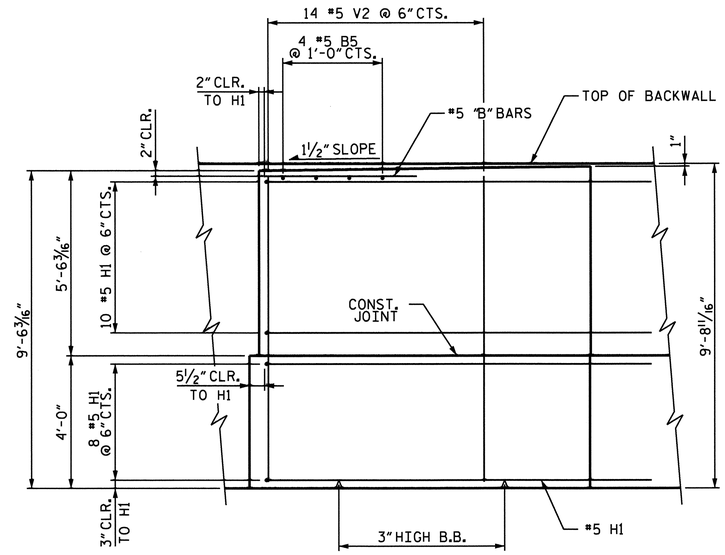

SECTION F-F

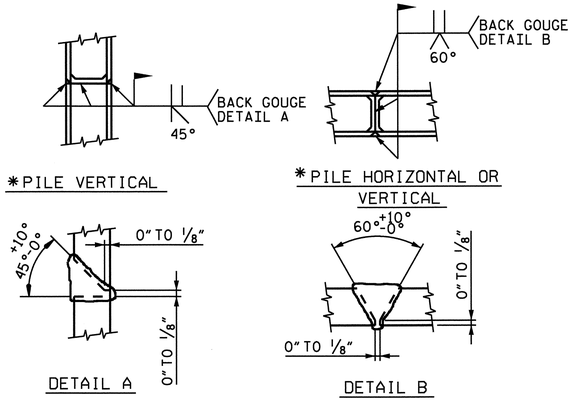

*POSITION OF PILE DURING WELDING

PILE SPLICE DETAILS

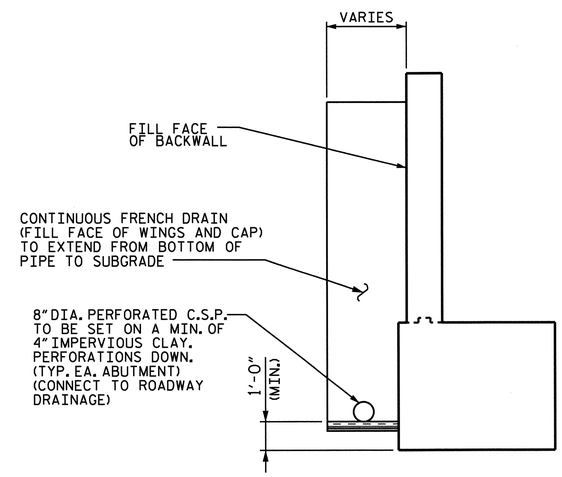

DRAINAGE AT ABUTMENTS

ABUTMENT 2 SHOWN, ABUTMENT 1 SIMILAR

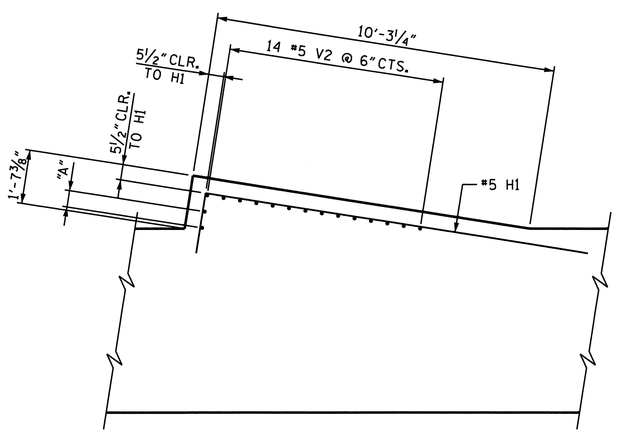

SECTION C-C

(REINFORCEMENT TOP OF CAP EXTENSION)

"A" = 2 #5 V2 @ 6"CTS.

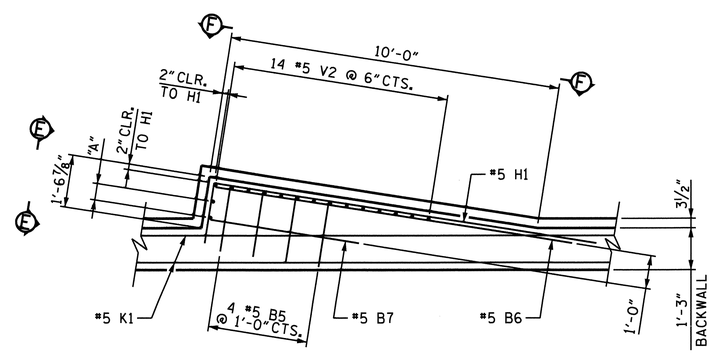

SECTION D-D

(REINFORCEMENT TOP OF BACKWALL EXTENSION)

PROJECT NO. P-5206C

ROWAN COUNTY

STATION: POC 9404+63.64-M1-=
POT 13+69.47-Y10-
MP 344.50±

SHEET 3 OF 5

STATE OF NORTH CAROLINA
DEPARTMENT OF TRANSPORTATION
RALEIGH

SUBSTRUCTURE
ABUTMENT 2
BACKWALL EXTENSION
DETAILS

REVISIONS						SHEET NO.
NO.	BY:	DATE:	NO.	BY:	DATE:	S-39
1			3			TOTAL SHEETS
2			4			52

PREPARED BY
TGS ENGINEERS
107-A MICA AVENUE
MORGANTON, NC 28655

NORTH CAROLINA PROFESSIONAL SEAL 19292 ENGINEER RAY D. ELLIOTT
10/24/2013

DRAWN BY : JLA DATE : 2/13
CHECKED BY : RDE DATE : 2/13

0160DEL_P10b2

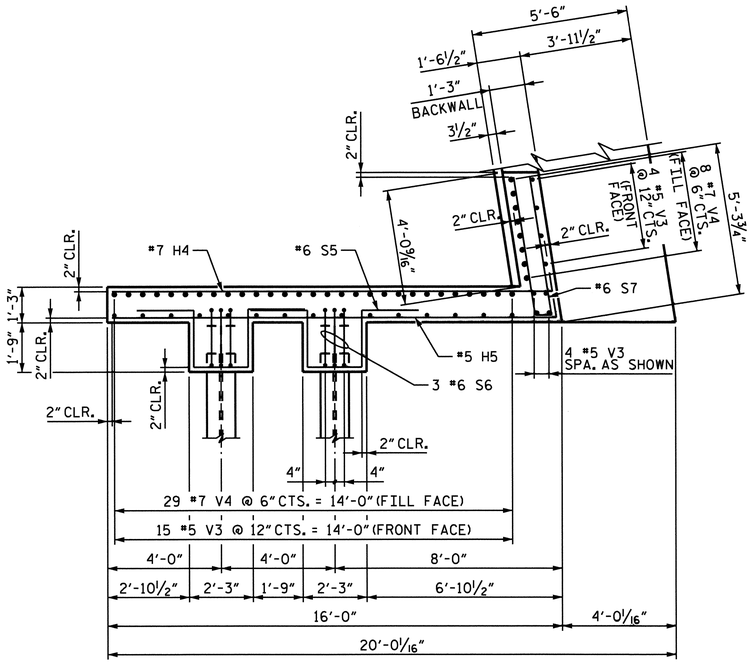

PLAN OF WING W3

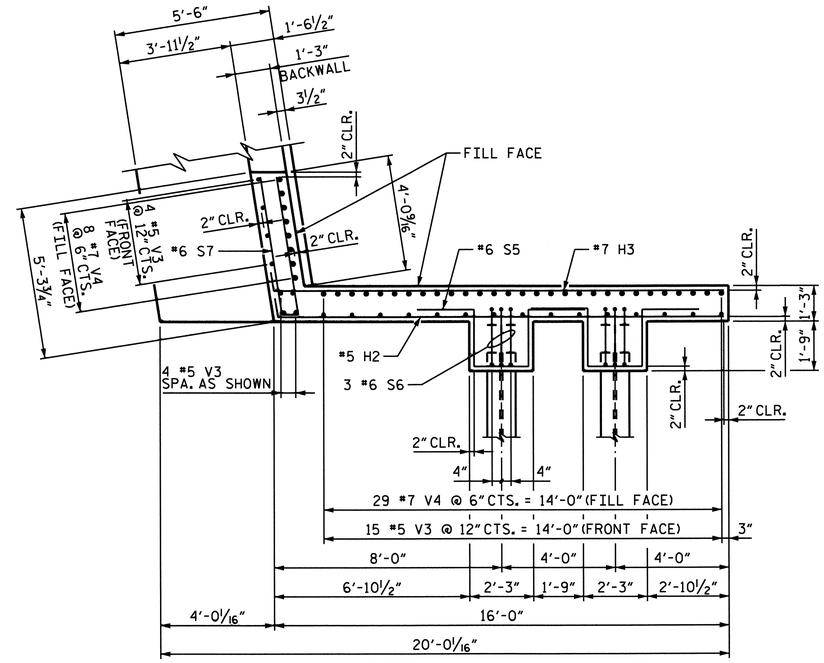

PLAN OF WING W4

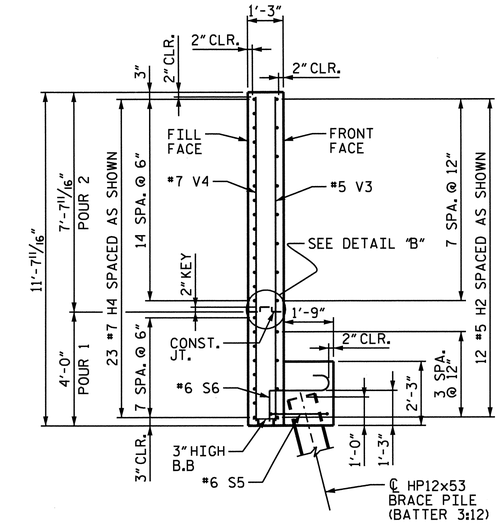

SECTION H-H

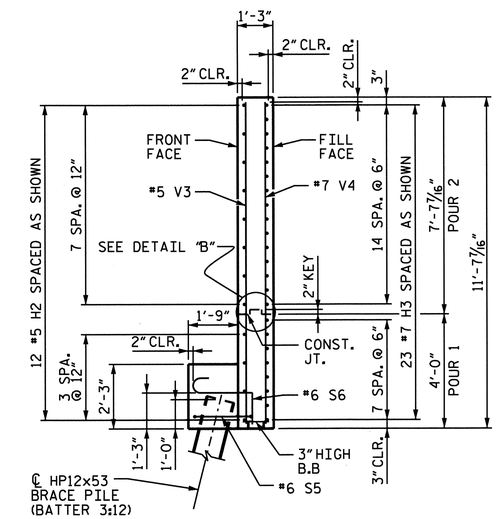

SECTION G-G

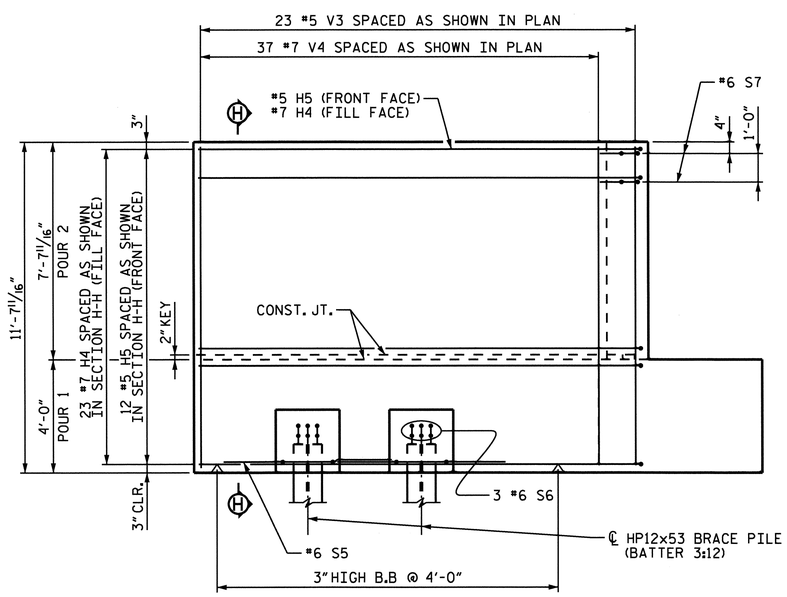

ELEVATION W3

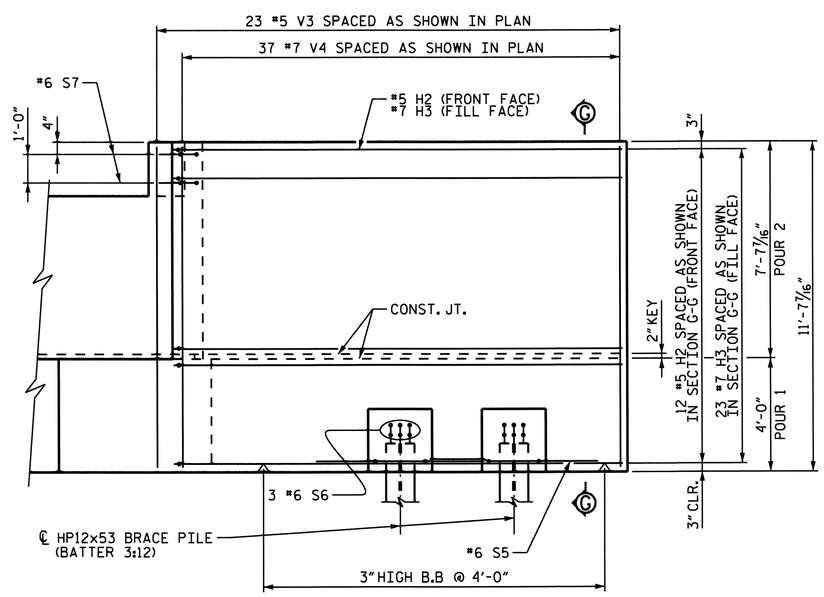

ELEVATION W4

PROJECT NO. P-5206C

ROWAN COUNTY

STATION: POC 9404+63.64-M1-=
POT 13+69.47-Y10-
MP 344.50±

SHEET 4 OF 5

STATE OF NORTH CAROLINA
DEPARTMENT OF TRANSPORTATION
RALEIGH

SUBSTRUCTURE

ABUTMENT 2
WING DETAILS

PREPARED BY
TGS ENGINEERS
107-A MICA AVENUE
MORGANTON, NC 28655

NORTH CAROLINA PROFESSIONAL SEAL 20192 ENGINEER RANDY D. ELLIOTT
10/24/2013

REVISIONS						SHEET NO.
NO.	BY:	DATE:	NO.	BY:	DATE:	S-40
1			3			TOTAL SHEETS
2			4			52

DRAWN BY : JLA DATE : 2/13
CHECKED BY : RDE DATE : 2/13

0160DEL_P10b2

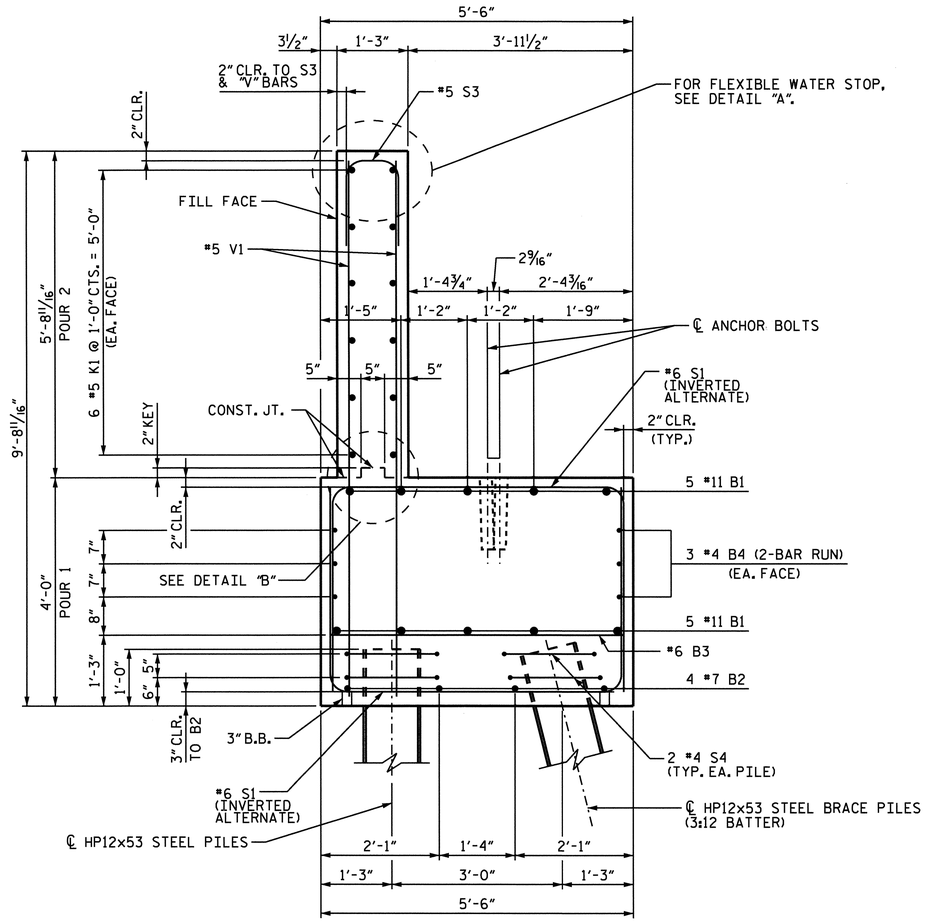

SECTION A-A

BAR TYPES

ALL BAR DIMENSIONS ARE OUT TO OUT.

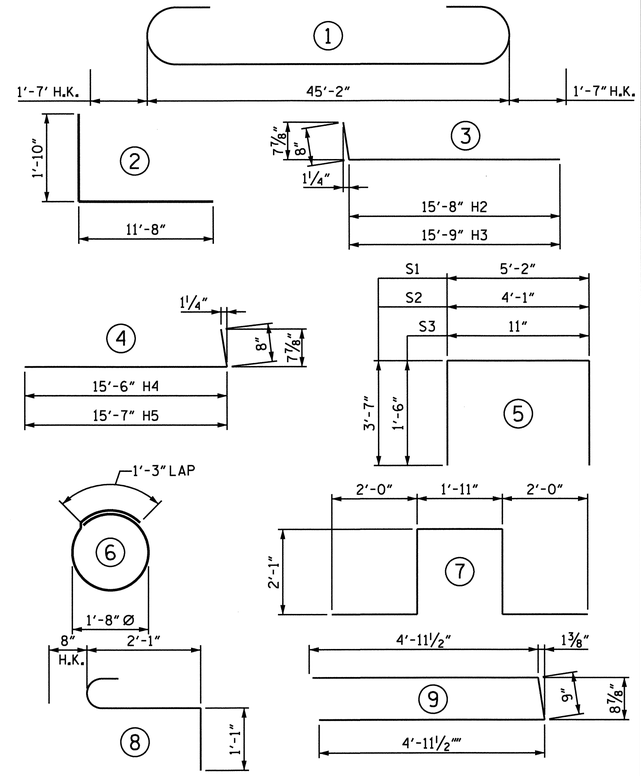

REINFORCING STEEL SCHEDULE FOR ABUTMENT 2

BAR	NO.	SIZE	TYPE	LENGTH	WEIGHT
B1	10	#11	1	48'-4"	2,568
B2	4	#7	STR.	45'-2"	369
B3	23	#6	STR.	5'-2"	178
B4	12	#4	STR.	23'-10"	191
B5	8	#5	STR.	2'-0"	17
B6	2	#5	STR.	10'-11"	23
B7	2	#5	STR.	4'-7"	10
H1	36	#5	2	13'-6"	507
H2	12	#5	3	16'-4"	204
H3	23	#7	3	16'-5"	772
H4	23	#7	4	16'-2"	760
H5	12	#5	4	16'-3"	203
K1	12	#5	STR.	45'-2"	565
S1	75	#6	5	12'-4"	1,389
S2	1	#6	5	11'-3"	17
S3	70	#5	5	3'-11"	286
S4	36	#4	6	6'-6"	156
S5	4	#6	7	10'-1"	61
S6	12	#6	8	3'-10"	69
S7	4	#6	9	10'-8"	64
V1	140	#5	STR.	9'-4"	1,363
V2	32	#5	STR.	9'-2"	306
V3	46	#5	STR.	11'-3"	540
V4	74	#7	STR.	11'-3"	1,702

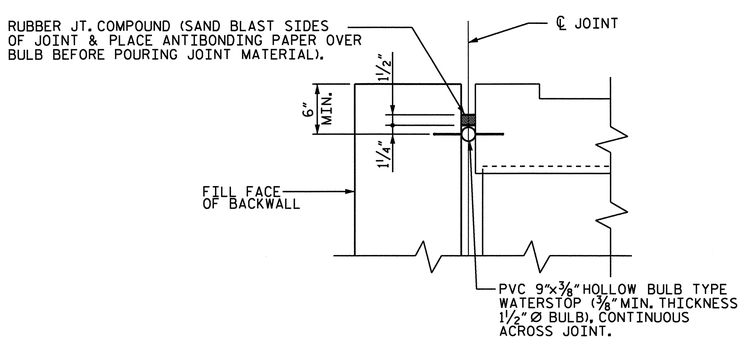

DETAIL "A"

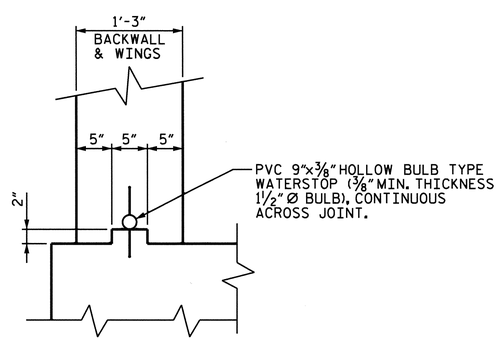

DETAIL "B"

BILL OF MATERIAL - QUANTITIES FOR ABUTMENT 2

TOTAL REINFORCING STEEL		12,320 LBS.
CLASS AA CONCRETE		
POUR 1 (CAP & WINGS)		46.3 CU. YDS.
POUR 2 (BACKWALL, BACKWALL EXT. & WINGS)		26.7 CU. YDS.
TOTAL CLASS AA CONCRETE		73.0 CU. YDS.
HP12x53 STEEL PILES	NO. = 22	2200

PROJECT NO. P-5206C

ROWAN COUNTY

STATION: POC 9404+63.64-M1-=
POT 13+69.47-Y10-

SHEET 5 OF 5 MP 344.50±

STATE OF NORTH CAROLINA
DEPARTMENT OF TRANSPORTATION
RALEIGH

SUBSTRUCTURE

ABUTMENT 2
DETAILS &
BILL OF MATERIAL

PREPARED BY
TGS ENGINEERS
107-A MICA AVENUE
MORGANTON, NC 28655

NORTH CAROLINA PROFESSIONAL SEAL 20892 ENGINEER RAY D. ELLIOTT
9/24/2013

REVISIONS						SHEET NO.
NO.	BY:	DATE:	NO.	BY:	DATE:	S-41
1			3			TOTAL SHEETS
2			4			52

DRAWN BY : JLA DATE : 2/13
CHECKED BY : RDE DATE : 2/13

0160DEL_P10b2

NOTES:

ALL HORIZONTAL DIMENSIONS ARE MEASURED ALONG THE ℄ OF THE DECK DRAINS.

ALL DIMENSIONS ARE SUBJECT TO ADJUSTMENT TO FIT MEASUREMENTS TAKEN AFTER DECKS HAVE BEEN POURED.

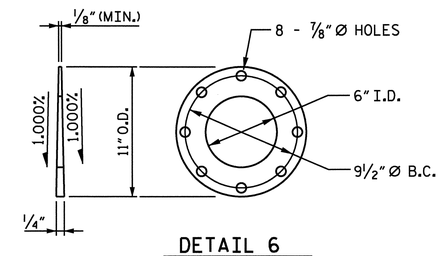

DETAIL 6

BEVELED STEEL WASHER FOR 6" D.I. FLANGED PIPE (3 REQ'D)

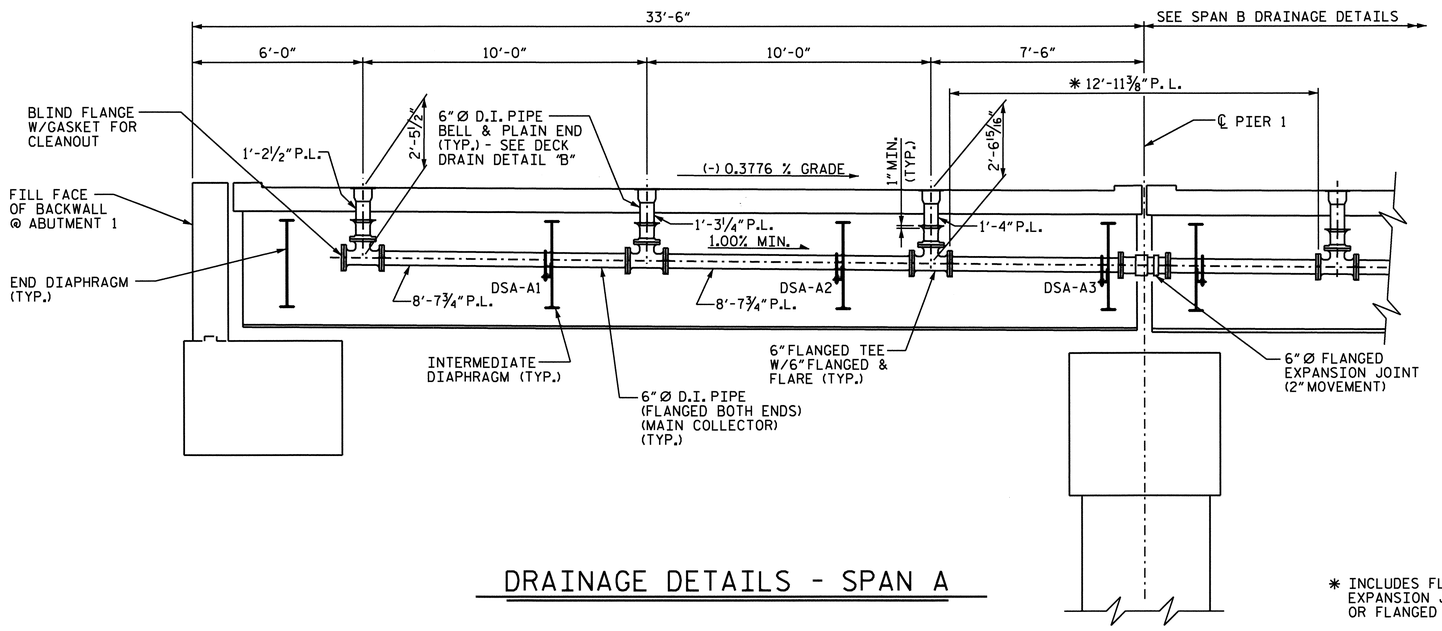

DRAINAGE DETAILS - SPAN A

* INCLUDES FLANGED EXPANSION JOINT OR FLANGED WYE

PROJECT NO. P-5206C

ROWAN COUNTY

STATION: POC 9404+63.64-M1-=
POT 13+69.47-Y10-
MP 344.50±

SHEET 1 OF 4

STATE OF NORTH CAROLINA
DEPARTMENT OF TRANSPORTATION
RALEIGH

STRUCTURE DRAINAGE
SPAN A

PREPARED BY
TGS ENGINEERS
107-A MICA AVENUE
MORGANTON, NC 28655

NORTH CAROLINA PROFESSIONAL SEAL 22192 ENGINEER RAY D. ELLIOTT
6/29/2013

REVISIONS							SHEET NO.
NO.	BY:	DATE:	NO.	BY:	DATE:		S-42
1			3				TOTAL SHEETS
2			4				52

DRAWN BY : NMW	DATE : 2/13
CHECKED BY : RDE	DATE : 2/13

0160DEL_P1062

NOTES:

ALL HORIZONTAL DIMENSIONS ARE MEASURED ALONG THE ℄ OF THE DECK DRAINS.

ALL DIMENSIONS ARE SUBJECT TO ADJUSTMENT TO FIT MEASUREMENTS TAKEN AFTER DECKS HAVE BEEN POURED.

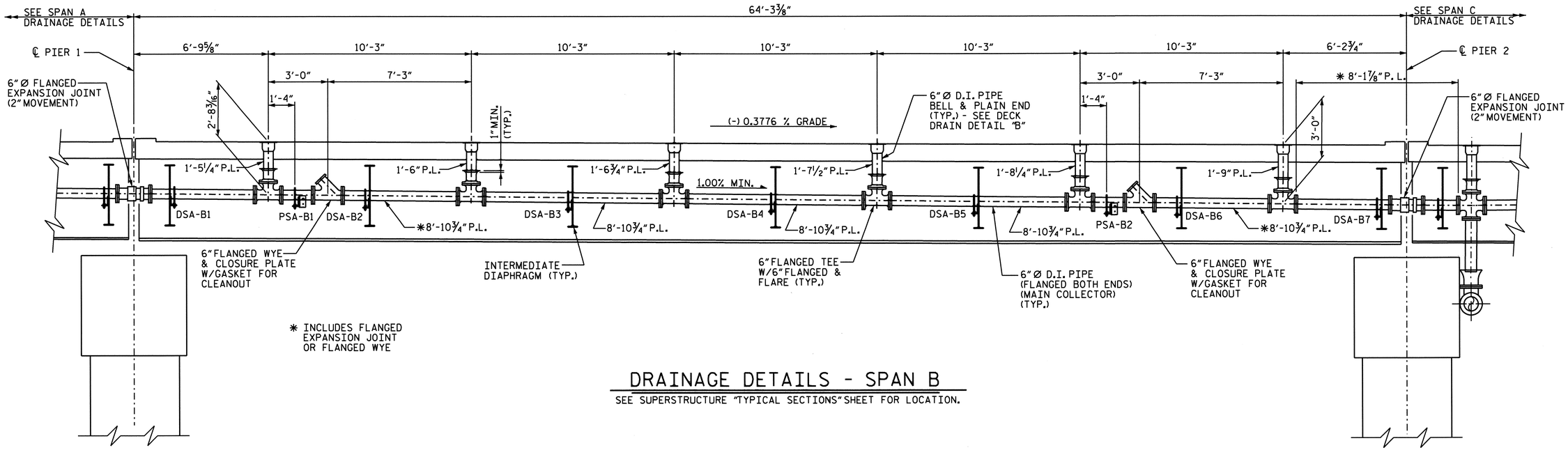

✱ INCLUDES FLANGED EXPANSION JOINT OR FLANGED WYE

DRAINAGE DETAILS - SPAN B

SEE SUPERSTRUCTURE "TYPICAL SECTIONS" SHEET FOR LOCATION.

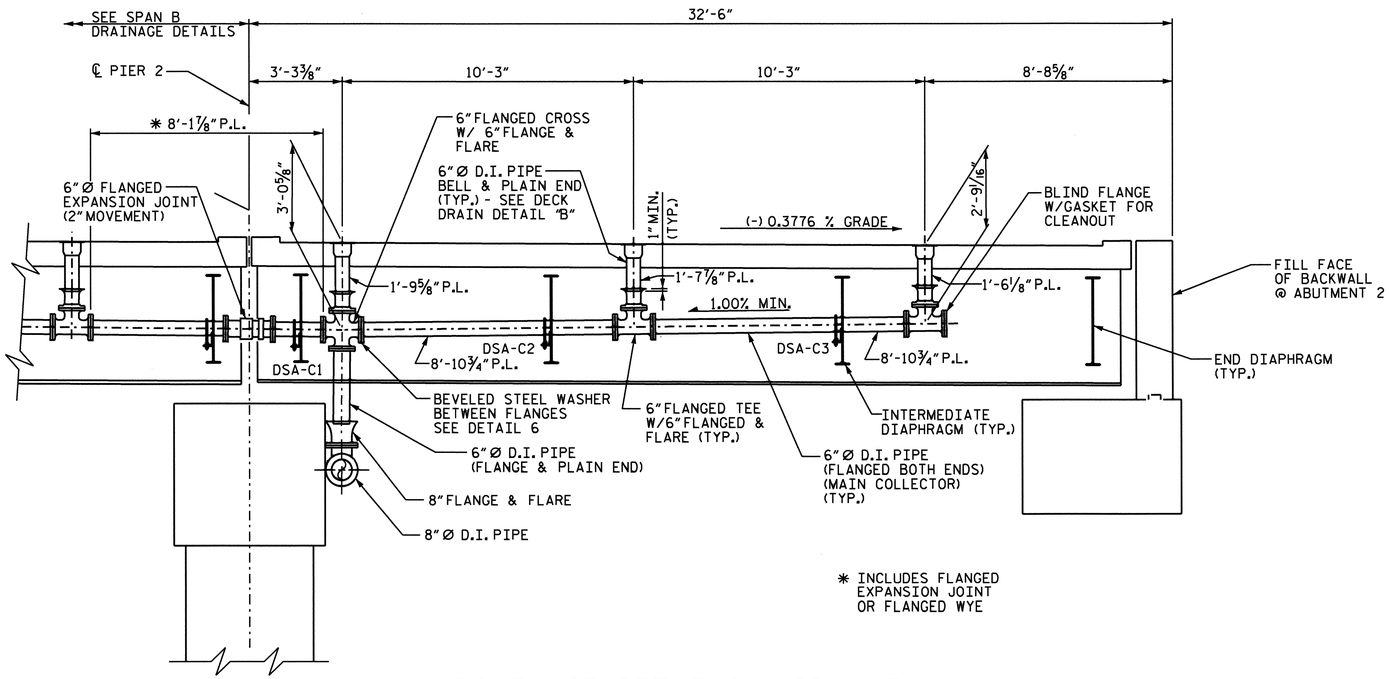

✱ INCLUDES FLANGED EXPANSION JOINT OR FLANGED WYE

DRAINAGE DETAILS - SPAN C

SEE SUPERSTRUCTURE "TYPICAL SECTIONS" SHEET FOR LOCATION.

PROJECT NO. P-5206C

ROWAN COUNTY

STATION: POC 9404+63.64-M1-=
POT 13+69.47-Y10-
MP 344.50±

SHEET 2 OF 4

STATE OF NORTH CAROLINA
DEPARTMENT OF TRANSPORTATION
RALEIGH

STRUCTURE DRAINAGE
SPANS B & C

REVISIONS						SHEET NO.
NO.	BY:	DATE:	NO.	BY:	DATE:	S-43
1			3			TOTAL SHEETS
2			4			52

PREPARED BY
TGS ENGINEERS
107-A MICA AVENUE
MORGANTON, NC 28655

NORTH CAROLINA PROFESSIONAL SEAL 22192 ENGINEER RAY D. ELLIOTT
Ray D. Elliott
10/29/2013

DRAWN BY : NMW DATE : 2/13
CHECKED BY : RDE DATE : 2/13

0160DEL_P10b2

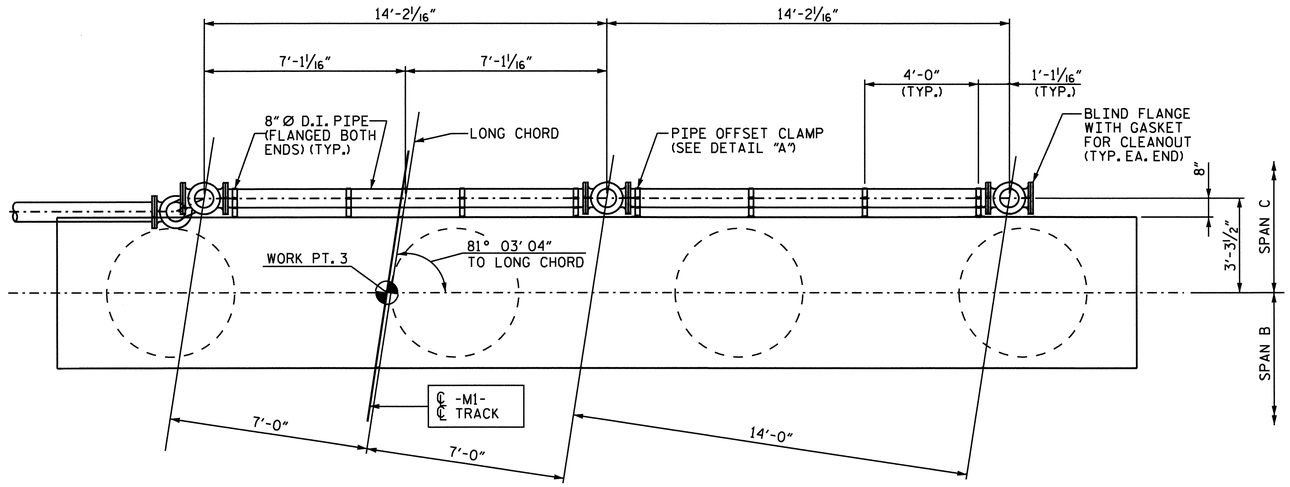

PLAN - PIER 2

STRUCTURE DRAINAGE SYSTEM ESTIMATED QUANTITIES		
ITEM	QUANTITY	UNIT
8" I.D. DUCTILE IRON WATER PIPE, CLASS 53, (FLG. x PLAIN END)	9	FT.
8" I.D. DUCTILE IRON WATER PIPE, CLASS 53, (FLG. x FLG.)	75	FT.
8" I.D. DUCTILE IRON WATER PIPE FITTINGS, 250lb WP	1,080	LB.
8" I.D. BEVELED STEEL WASHERS	2	EA.
8" I.D. DUCTILE IRON BLIND FLANGES	80	LB.
8" I.D. OFFSET PIPE CLAMPS	2	EA.
6" I.D. DUCTILE IRON WATER PIPE, CLASS 53, (BELL & PLAIN END)	55	FT.
6" I.D. DUCTILE IRON WATER PIPE, CLASS 53, (FLG. x FLG.)	283	FT.
6" I.D. DUCTILE IRON WATER PIPE, CLASS 53, (FLG. x PLAIN END)	9	FT.
6" I.D. DUCTILE IRON WATER PIPE FITTINGS, 250lb WP	6,045	LB.
6" I.D. FLANGED EXPANSION JOINT (2" MOVEMENT)	6	EA.
6" I.D. BEVELED STEEL WASHERS	3	EA.
6" I.D. DUCTILE IRON BLIND FLANGES	150	LB.
SOIL PIPE GRATES, "NEENAH" 4373 SERIES OR EQUAL	36	EA.
DIAPHRAGM SUPPORT ANGLES (DSA) *	39	EA.
PIPE SUPPORT ANGLES (PSA) *	6	EA.

* INCLUDES U-BOLTS, ANGLES, NUTS, BOLTS, WASHERS AND PLATES.

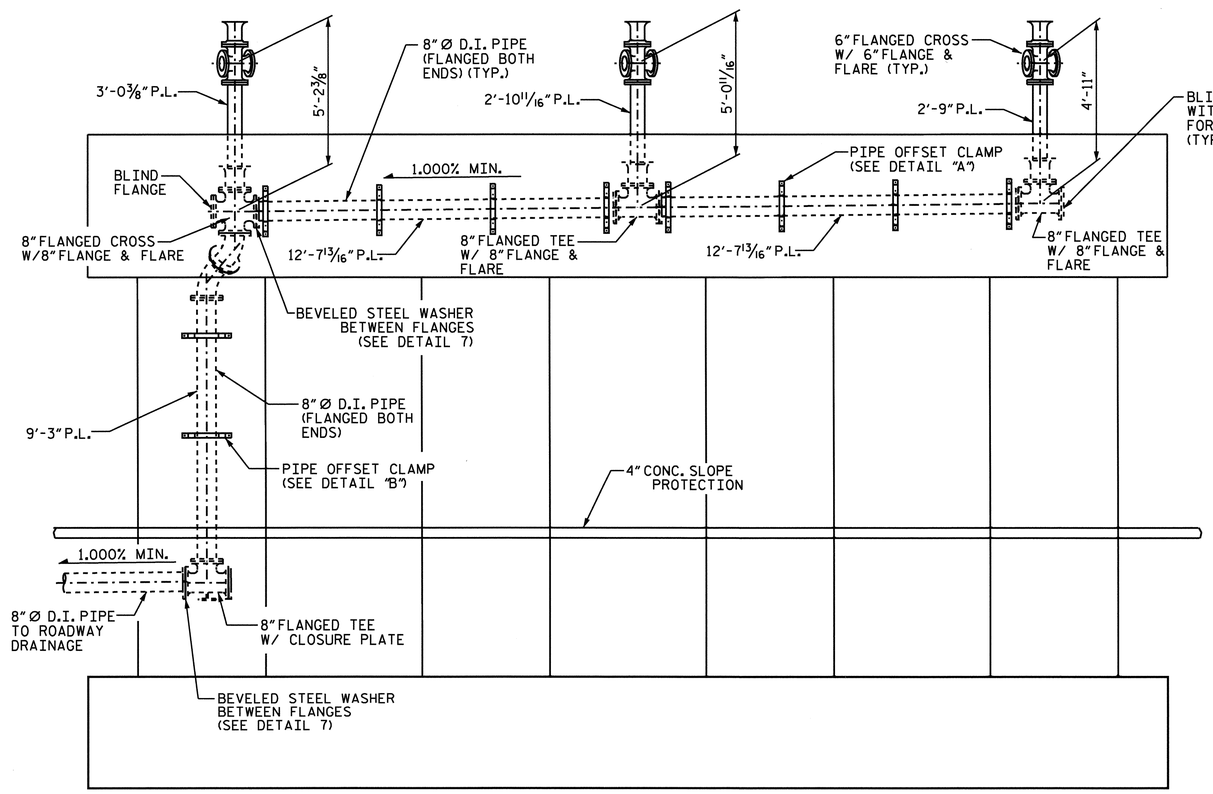

ELEVATION - PIER 2

(LOOKING FORWARD STATION)

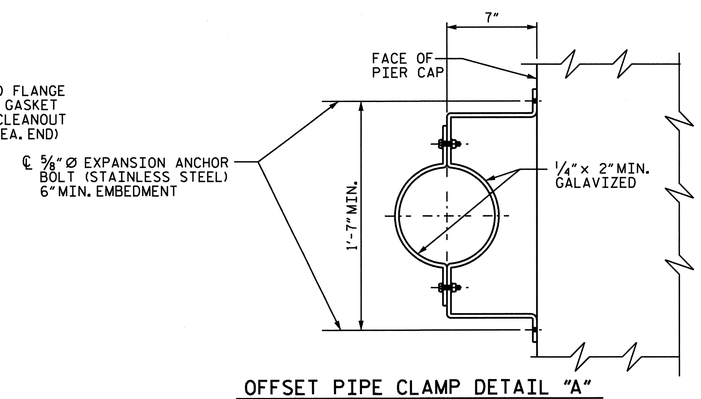

OFFSET PIPE CLAMP DETAIL "A"

(8 REQUIRED)

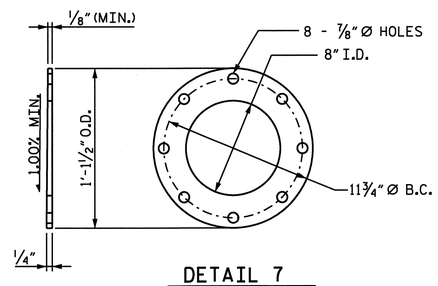

DETAIL 7

BEVELED STEEL WASHER FOR 8' I.D. FLANGED PIPE (2 REQ'D)

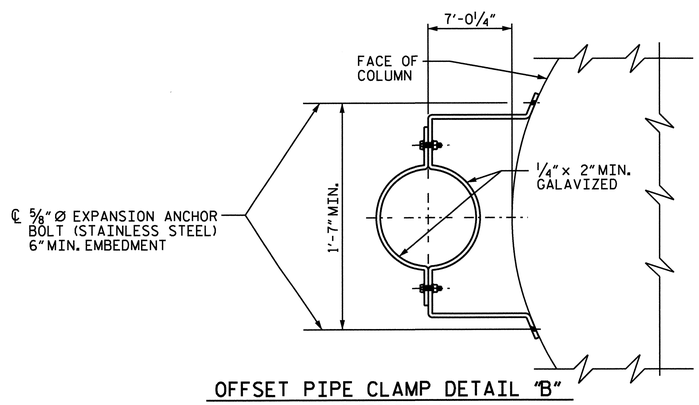

OFFSET PIPE CLAMP DETAIL "B"

(2 REQUIRED)

PROJECT NO. P-5206C

ROWAN COUNTY

STATION: POC 9404+63.64-M1-=
POT 13+69.47-Y10-

SHEET 3 OF 4 MP 344.50 ±

STATE OF NORTH CAROLINA
DEPARTMENT OF TRANSPORTATION
RALEIGH

STRUCTURE DRAINAGE
MISC. DETAILS

NORTH CAROLINA PROFESS IONAL SEAL 23192 ENGINEER RAY D. ELLIOTT
Ray D. Elliott
9/24/2013

PREPARED BY
TGS ENGINEERS
107-A MICA AVENUE
MORGANTON, NC 28655

REVISIONS						SHEET NO.
NO.	BY:	DATE:	NO.	BY:	DATE:	S-44
1			3			TOTAL SHEETS
2			4			52

DRAWN BY : NMW DATE : 2/13
CHECKED BY : RDE DATE : 2/13

0160DEL_P10b2

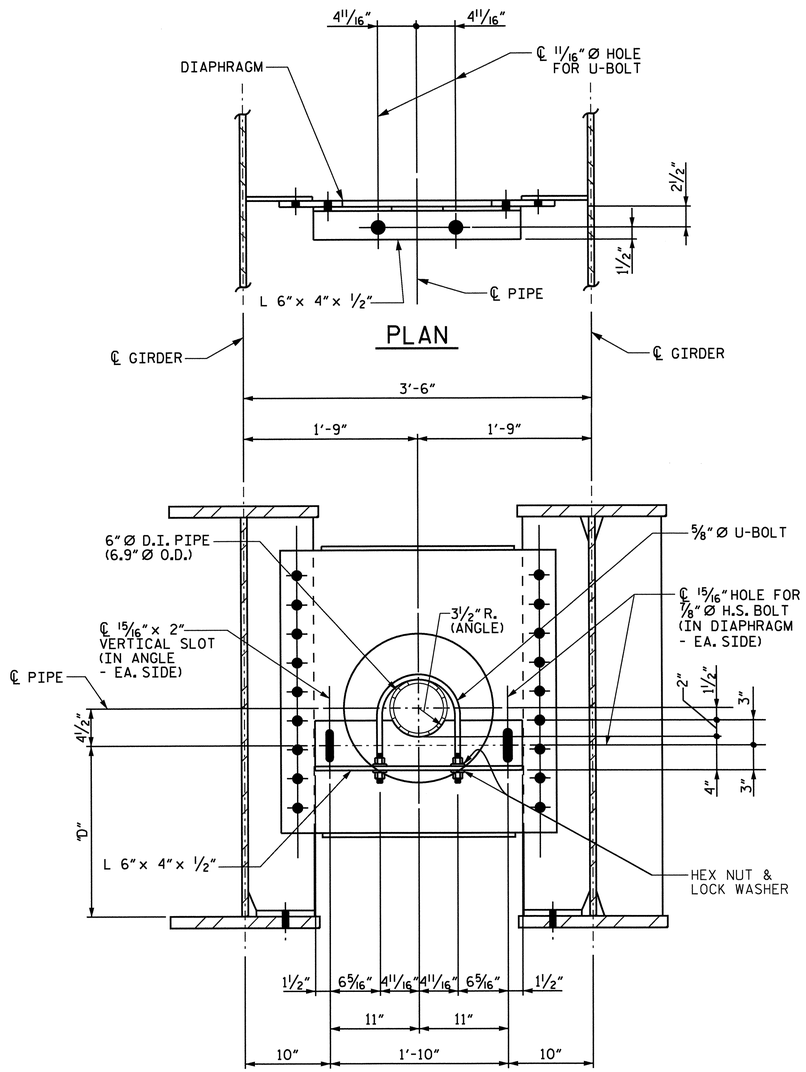

ELEVATION

DIAPHRAGM SUPPORT ANGLE - MARK "DSA-XX"

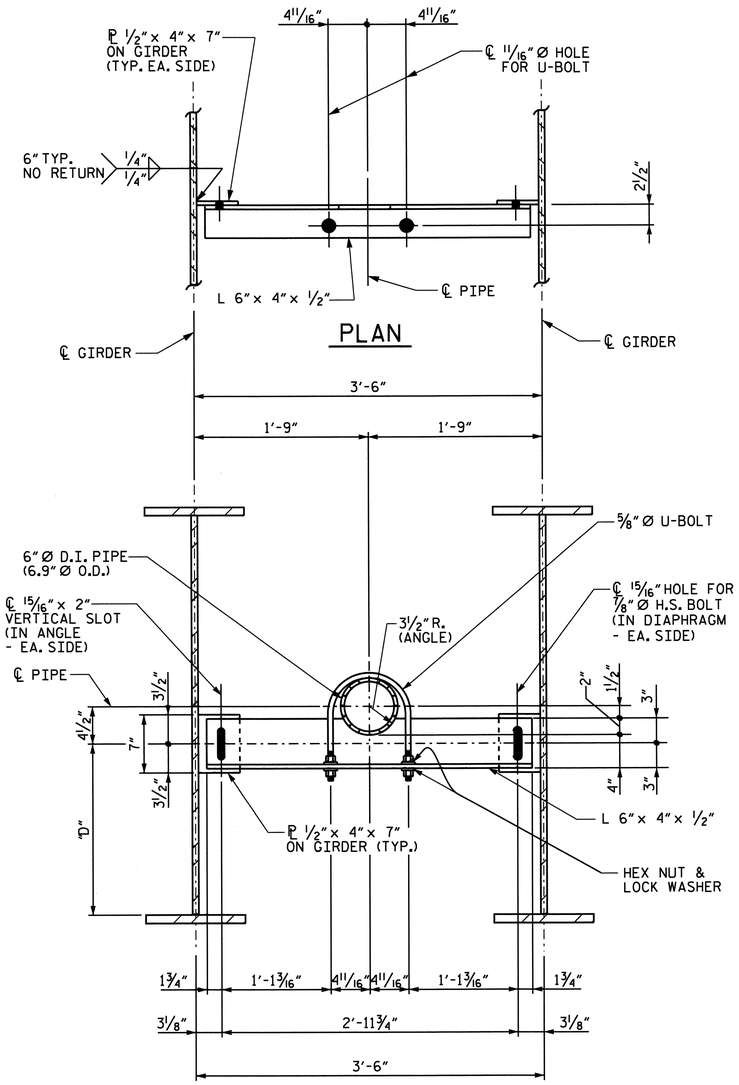

ELEVATION

PIPE SUPPORT ANGLE - MARK "PSA-XX"

NOTES:

ALL PIPE, TEES, BELLS AND BENDS SHALL BE CLASS 53 DUCTILE IRON.

ALL BENDS TO BE SHORT RADIUS, INCLUDING FLANGE & FLARE BENDS.

LAYOUT IS BASED ON DIMENSIONS GIVEN IN THE PIPE MANUAL OF THE AMERICAN CAST IRON PIPE COMPANY.

FOR LOCATIONS AND DESIGNATIONS OF DSA & PSA, SEE FRAMING PLANS.

PIPE LENGTHS SHOWN ALLOW FOR 1/8" THICK GASKETS TO BE USED AT ALL BOLTED FLANGE CONNECTIONS.

MAKE FINAL PIPE ALIGNMENT AND TIGHTEN U-BOLTS AFTER RAILROAD TRACK HAS BEEN LAID ACROSS THE BRIDGE.

FOR STRUCTURE DRAINAGE SYSTEM, SEE SPECIAL PROVISIONS.

PROVIDE PVC OR NEOPRENE-COATED STRIPS, EPOXY-CEMENTED TO THE U-BOLT OR PIPE TO FURNISH STRAY CURRENT PROTECTON.

AT THE CONTRACTOR'S OPTION THE OUTSIDE COATING FOR D.I. PIPE MAY BE PAINTED WITH A SHOP PRIME COAT OF INORGANIC ZINC PRIMER AND A FINISH (FIELD) COATING OF ACRYLIC PAINT AS SPECIFIED FOR THE STRUCTURAL STEEL.

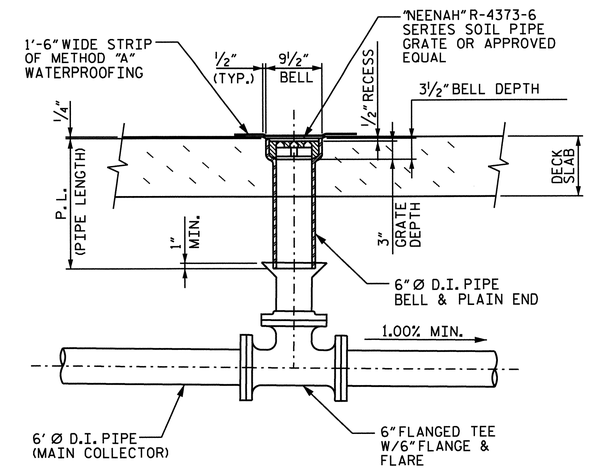

DECK DRAIN DETAIL "B"

DIAPHRAGM SUPPORT ANGLE MARK "DSA-XX" LOCATIONS		
LOCATION	MARK	"D"
SPAN A	DSA-A1	1'-11 9/16"
	DSA-A2	1'-10 13/16"
	DSA-A3	1'-10 1/8"
SPAN B	DSA-B1	1'-10 1/8"
	DSA-B2	1'-9 7/16"
	DSA-B3	1'-8 11/16"
	DSA-B4	1'-7 15/16"
	DSA-B5	1'-7 3/16"
	DSA-B6	1'-6 3/8"
	DSA-B7	1'-5 5/8"
SPAN C	DSA-C1	1'-5"
	DSA-C2	1'-6 1/8"
	DSA-C3	1'-7 7/8"

PIPE SUPPORT ANGLE MARK "PSA-XX" LOCATIONS		
LOCATION	MARK	"D"
SPAN B	PSA-B1	1'-9 11/16"
	PSA-B2	1'-6 11/16"

PROJECT NO. P-5206C

ROWAN COUNTY

STATION: POC 9404+63.64-M1-=
POT 13+69.47-Y10-
MP 344.50±

SHEET 4 OF 4

STATE OF NORTH CAROLINA
DEPARTMENT OF TRANSPORTATION
RALEIGH

STUCTURE DRAINAGE
SUPPORT DETAILS

PREPARED BY
TGS ENGINEERS
107-A MICA AVENUE
MORGANTON, NC 28655

NORTH CAROLINA PROFESSIONAL SEAL 22132 ENGINEER RAY E. ELLIOTT
10/29/2013

REVISIONS								SHEET NO.
NO.	BY:	DATE:	NO.	BY:	DATE:			S-45
1			3					TOTAL SHEETS
2			4					52

DRAWN BY : NMW DATE : 2/13
CHECKED BY : RDE DATE : 2/13

0160DEL_P10b2

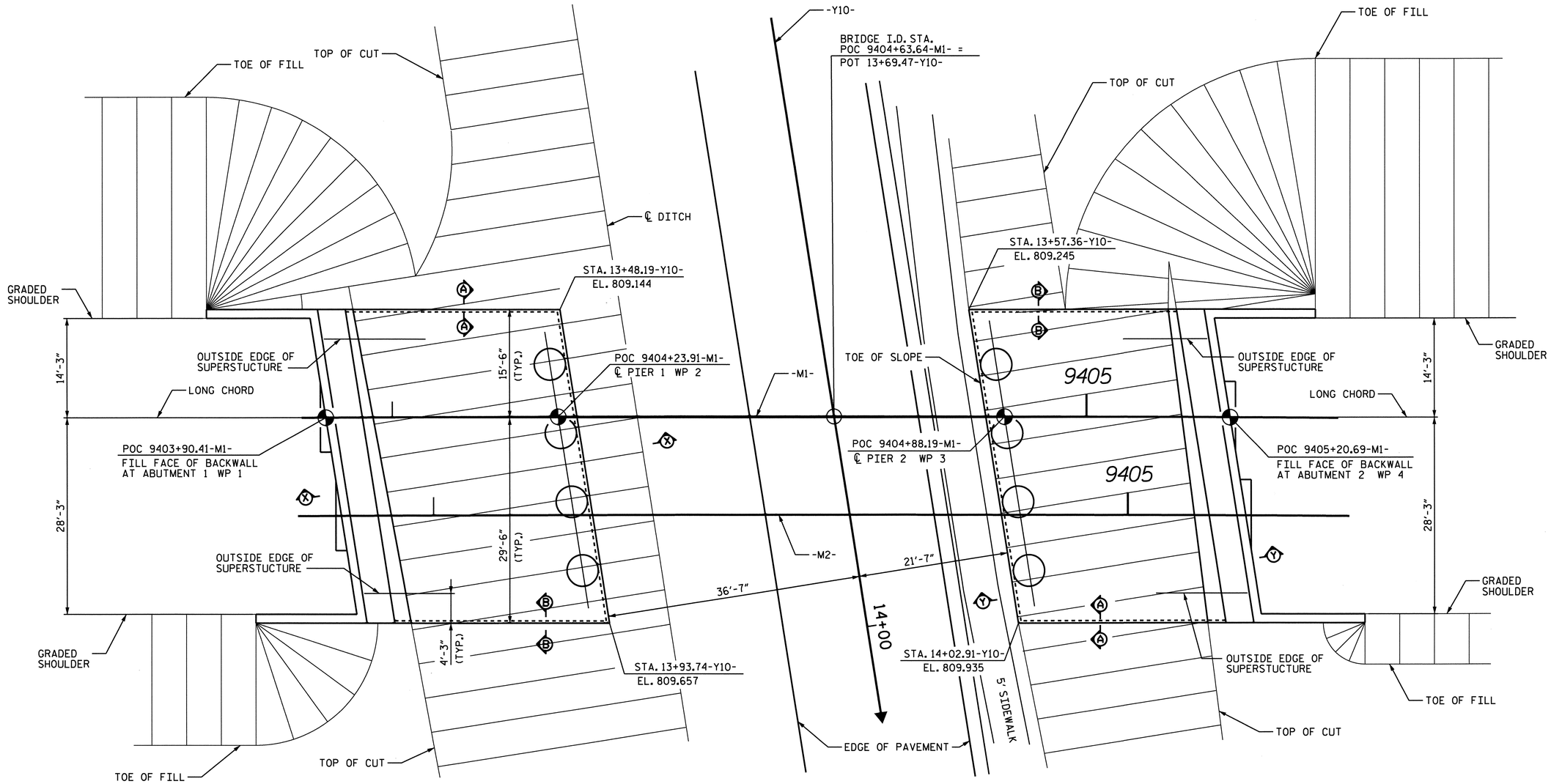

PLAN - END BENT WITH SWEPT BACK WINGS - SKEWED

(2:1 SLOPE)

PROJECT NO. P-5206C

ROWAN COUNTY

STATION: POC 9404+63.64-M1-=
POT 13+69.47-Y10-
MP 344.50±

SHEET 1 OF 2

STATE OF NORTH CAROLINA
DEPARTMENT OF TRANSPORTATION
RALEIGH

SLOPE PROTECTION

PREPARED BY
TGS ENGINEERS
107-A MCA AVENUE
MORGANTON, NC 28655

NORTH CAROLINA PROFESSIONAL SEAL 22892 ENGINEER RAY D. ELLIOTT
6/24/2013

REVISIONS						SHEET NO.
NO.	BY:	DATE:	NO.	BY:	DATE:	S-46
1			3			TOTAL SHEETS
2			4			52

DRAWN BY : RTJ DATE : 2/13
CHECKED BY : RDE DATE : 2/13

0160DEL_P1062

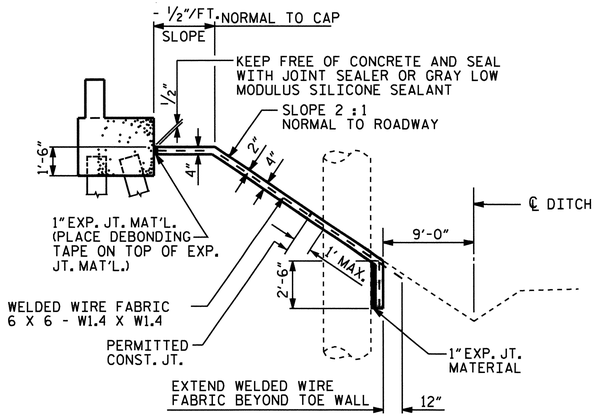

SECTION "X-X" @ ABUTMENT #1
ALONG ℄ ROADWAY WITH SHOULDER PIER

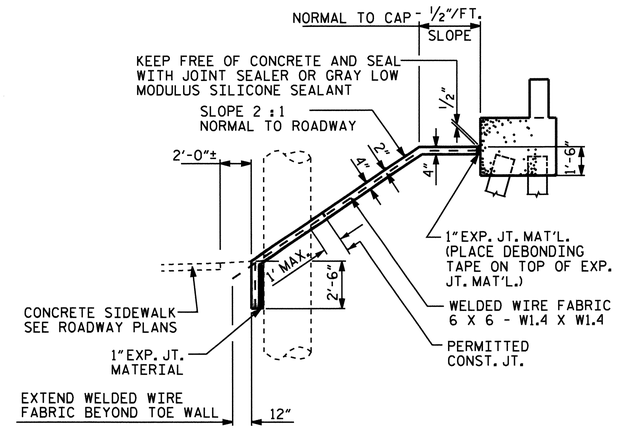

SECTION "Y-Y" @ ABUTMENT #2
ALONG ℄ ROADWAY WITH SHOULDER PIER

GENERAL NOTES

SLOPE PROTECTION SHALL BE PLACED UNDER THE ENDS OF THE BRIDGE AS SHOWN IN THE DETAILS. STRAIGHT EDGING WILL NOT BE REQUIRED UNLESS, IN THE OPINION OF THE ENGINEER, VISUAL INSPECTION INDICATES A NEED FOR IT. MEASUREMENT AND PAYMENT SHALL BE AS PRESCRIBED IN SECTION 462 OF THE STANDARD SPECIFICATIONS. FOR BERM WIDTH, SEE GENERAL DRAWING.

ALTERNATE "A"

ALTERNATE "A" SHALL CONSIST OF 4" POURED-IN-PLACE CONCRETE PAVING AS SHOWN IN THE DETAILS ON THIS SHEET. CONCRETE SHALL BE CLASS "B". THE CONCRETE SURFACE SHALL BE FLOATED WITH A WOODEN FLOAT AND FINISHED. WELDED WIRE FABRIC REINFORCING SHALL BE 6 X 6 - W1.4 X W1.4, 60" WIDE. SLOPE PROTECTION SHALL BE POURED IN 5' STRIPS AS SHOWN IN THE "POURING DETAIL" WITH 2'-0" LONG #4 BARS PLACED ALONG THE SLOPE BETWEEN STRIPS AT 1'-6" MAXIMUM SPACING. SLOPE PROTECTION MAY BE POURED IN ALTERNATE 4' AND 5' STRIPS AS SHOWN IN THE "OPTIONAL POURING DETAIL" WITH ADJACENT RUNS OF WELDED WIRE FABRIC LAPPING AT LEAST 6". THE COST OF THE WELDED WIRE FABRIC AND #4 BARS, IF USED, SHALL BE INCLUDED IN THE CONTRACT UNIT PRICE BID PER SQUARE YARD FOR SLOPE PROTECTION.

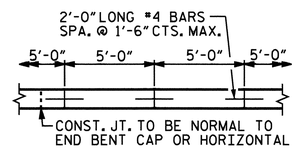

STRIP WIDTHS MAY VARY IN CURVED PORTION.

POURING DETAIL

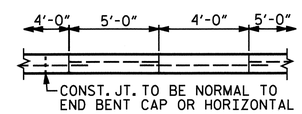

POUR A 4'-0" STRIP FIRST. STRIP WIDTHS MAY VARY IN CURVED PORTION.

OPTIONAL POURING DETAIL

BRIDGE @ STA. 9404+63.64 -M1-	4" INCH SLOPE PROTECTION	* WELDED WIRE FABRIC 60 INCHES WIDE
	SQUARE YARDS	APPROX. L.F.
ABUTMENT 1	180	360
ABUTMENT 2	175	350

* QUANTITY SHOWN IS BASED ON 5' POURS.

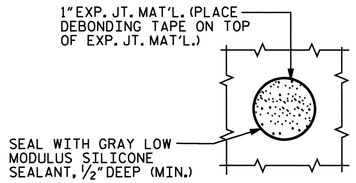

PLAN WHERE CONCRETE SLOPE PROTECTION MUST BE PLACED AROUND A BENT COLUMN

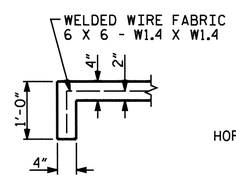

SECTION A-A

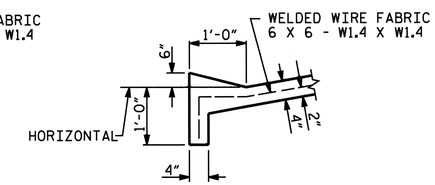

SECTION B-B

DETAILS FOR ALTERNATE "A"

PROJECT NO. P-5206C
ROWAN COUNTY
STATION: POC 9404+63.64-M1-=
POT 13+69.47-Y10-
MP 344.50±

SHEET 2 OF 2

STATE OF NORTH CAROLINA
DEPARTMENT OF TRANSPORTATION
RALEIGH

SLOPE PROTECTION DETAILS

REVISIONS						SHEET NO.
NO.	BY:	DATE:	NO.	BY:	DATE:	S-47
1			3			TOTAL SHEETS
2			4			52

PREPARED BY
TGS ENGINEERS
107-A MICA AVENUE
MORGANTON, NC 28655

NORTH CAROLINA PROFESSIONAL SEAL 42432 ENGINEER RAY D. ELLIOTT
6/29/2013

DRAWN BY :	RTJ	DATE :	2/13
CHECKED BY :	RDE	DATE :	2/13

0160DEL_P10b2

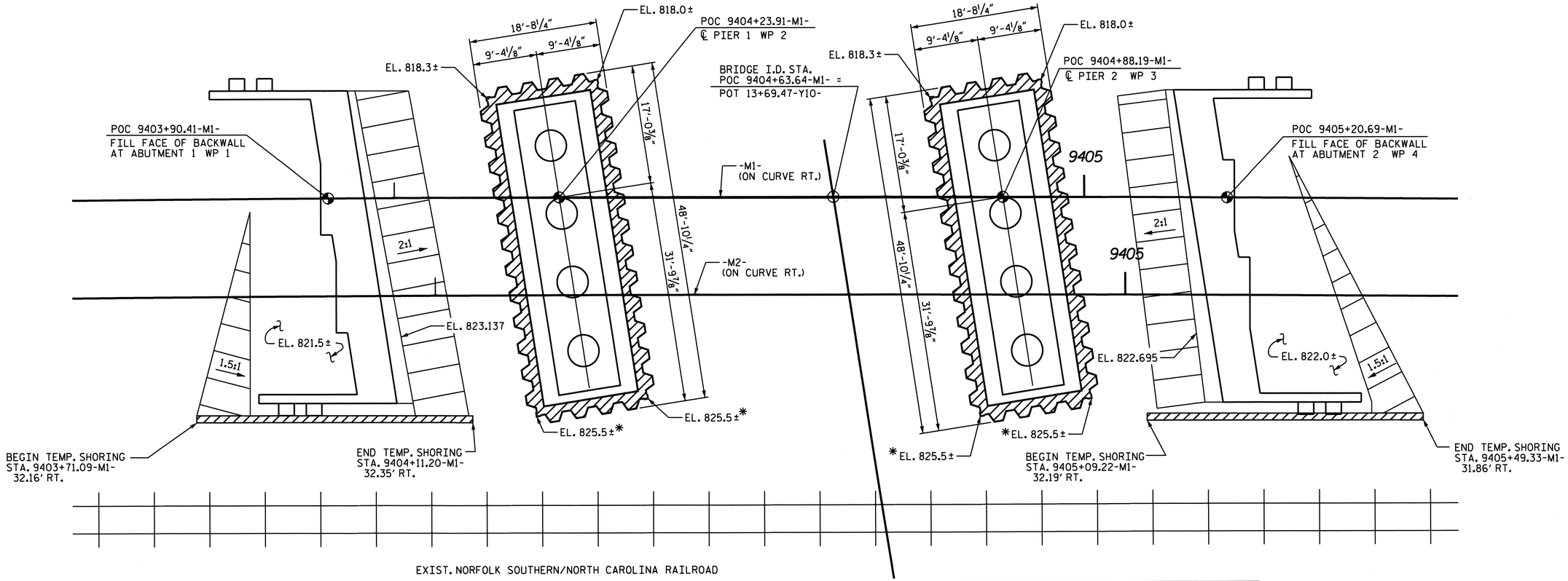

* IF EXISTING EMBANKMENT IS HIGHER THAN EL. 825.5, GRADE TO EL. 825.5

NOTES:

THE CONTRACTOR SHALL ESTABLISH A BASELINE (OR SERIES OF MONITOR POINTS) THROUGHOUT THE STRUCTURE, FROM WHICH MEASUREMENTS ARE TO BE TAKEN TO DETECT ANY HORIZONTAL MOVEMENT OF TRACK. ESTABLISH BENCH MARK FOR USE IN DETERMINING T/R ELEVATIONS AT 10' INTERVALS THROUGHOUT THE LENGTH OF WALL. LINE AND ELEVATIONS OF TRACK SHALL BE MONITORED EVERY WORKING DAY UNTIL THE RAILROAD ENGINEER PERMITS LESS FREQUENT MONITORING BECAUSE OF LACK OF TRACK MOVEMENT.

ALL SHORING MATERIAL SHALL BE IN "NEW" CONDITION.

PROCEDURE FOR ABUTMENT CONSTRUCTION

1. DRIVE H-PILES TO THE TIP ELEVATION INDICATED ON THE PLANS. USE PILES OF SUFFICIENT LENGTH TO OBTAIN A MINIMUM DISTANCE OF 42" FROM TOP OF PILE TO EXISTING GROUND. TACK WELD ANGLES TO PILES AS INDICATED. ADDITIONAL POSITIVE PROTECTION MAY BE REQUIRED AS DIRECTED BY THE ENGINEER.
2. EXCAVATE TO BOTTOM OF CAP AS INDICATED INSTALLING LAGGING TO TOP OF PILE AS THE EXCAVATION PROGRESSES.
3. FILL VOIDS BETWEEN LAGGING AND THE RETAINED EMBANKMENT. COMPLETE GRADING TO PLAN SLOPE LINES. CONSTRUCT ABUTMENT COMPLETE.
4. CONSTRUCT REST OF BRIDGE AND TRACKS.
5. AFTER TRAIN TRAFFIC IS MOVED TO NEW ALIGNMENT, REMOVE TIMBER LAGGING, EXTRACT SOLDIER PILES, AND GRADE TO FINAL SLOPE LINES.

PROCEDURE FOR PIER 1 CONSTRUCTION

1. DRIVE SHEET PILING TO ELEVATION 790.0.
2. PRIOR TO BEGINNING EXCAVATION, IF THE TOP OF PILING IS LESS THAN 42" ABOVE EXISTING GROUND, PROVIDE A HANDRAIL AND/OR POSITIVE PROTECTION AT LEAST 42" ABOVE EXISTING GROUND SUBJECT TO APPROVAL OF THE ENGINEER.
3. EXCAVATE TO ELEVATION 815.5 AND INSTALL FRAME 1.
4. EXCAVATE TO ELEVATION 807.5 AND INSTALL FRAME 2.
5. COMPLETE EXCAVATION AND CONSTRUCT PIER 1 COMPLETE.
7. BACKFILL TO ELEVATION 807.5 AND REMOVE FRAME 2. PORTIONS OF SUBSTRUCTURE CONCRETE WHICH WILL BE EXPOSED ABOVE FINAL GROUND LINE SHALL BE PROTECTED AGAINST DISCOLORATION OR OTHER DAMAGES. THE ENGINEER SHALL APPROVE IN ADVANCE THE METHOD OF CONCRETE PROTECTION.
8. BACKFILL TO ELEVATION 815.5 AND REMOVE FRAME 1.
10. BACKFILL INSIDE OF SHEETING TO GROUND LINES ON OUTSIDE OF SHEETING AND REMOVE SHEET PILING.

PROCEDURE FOR PIER 2 CONSTRUCTION

1. DRIVE SHEET PILING TO ELEVATION 790.0.
2. PRIOR TO BEGINNING EXCAVATION, IF THE TOP OF PILING IS LESS THAN 42" ABOVE EXISTING GROUND, PROVIDE A HANDRAIL AND/OR POSITIVE PROTECTION AT LEAST 42" ABOVE EXISTING GROUND SUBJECT TO APPROVAL OF THE ENGINEER.
3. EXCAVATE TO ELEVATION 815.5 AND INSTALL FRAME 1.
4. EXCAVATE TO ELEVATION 807.5 AND INSTALL FRAME 2.
6. COMPLETE EXCAVATION AND CONSTRUCT PIER 2 COMPLETE.
7. BACKFILL TO ELEVATION 807.5 AND REMOVE FRAME 2. PORTIONS OF SUBSTRUCTURE CONCRETE WHICH WILL BE EXPOSED ABOVE FINAL GROUND LINE SHALL BE PROTECTED AGAINST DISCOLORATION OR OTHER DAMAGES. THE ENGINEER SHALL APPROVE IN ADVANCE THE METHOD OF CONCRETE PROTECTION.
8. BACKFILL TO ELEVATION 815.5 AND REMOVE FRAME 1.
10. BACKFILL INSIDE OF SHEETING TO GROUND LINES ON OUTSIDE OF SHEETING AND REMOVE SHEET PILING.

PROJECT NO. P-5206C
ROWAN COUNTY
STATION: POC 9404+63.64-M1-=
POT 13+69.47-Y10-
MP 344.50±

STATE OF NORTH CAROLINA
DEPARTMENT OF TRANSPORTATION
RALEIGH

TEMPORARY SHORING
LOCATION PLAN

PREPARED BY
TGS ENGINEERS
107-A MICA AVENUE
MORGANTON, NC 28655

NORTH CAROLINA PROFESSIONAL SEAL 20832 ENGINEER RAY D. ELLIOTT
6/24/2013

REVISIONS						SHEET NO.
NO.	BY:	DATE:	NO.	BY:	DATE:	S-48
1			3			TOTAL SHEETS
2			4			52

DRAWN BY : RTJ DATE : 2/13
CHECKED BY : RDE DATE : 2/13

0160DEL_P1062

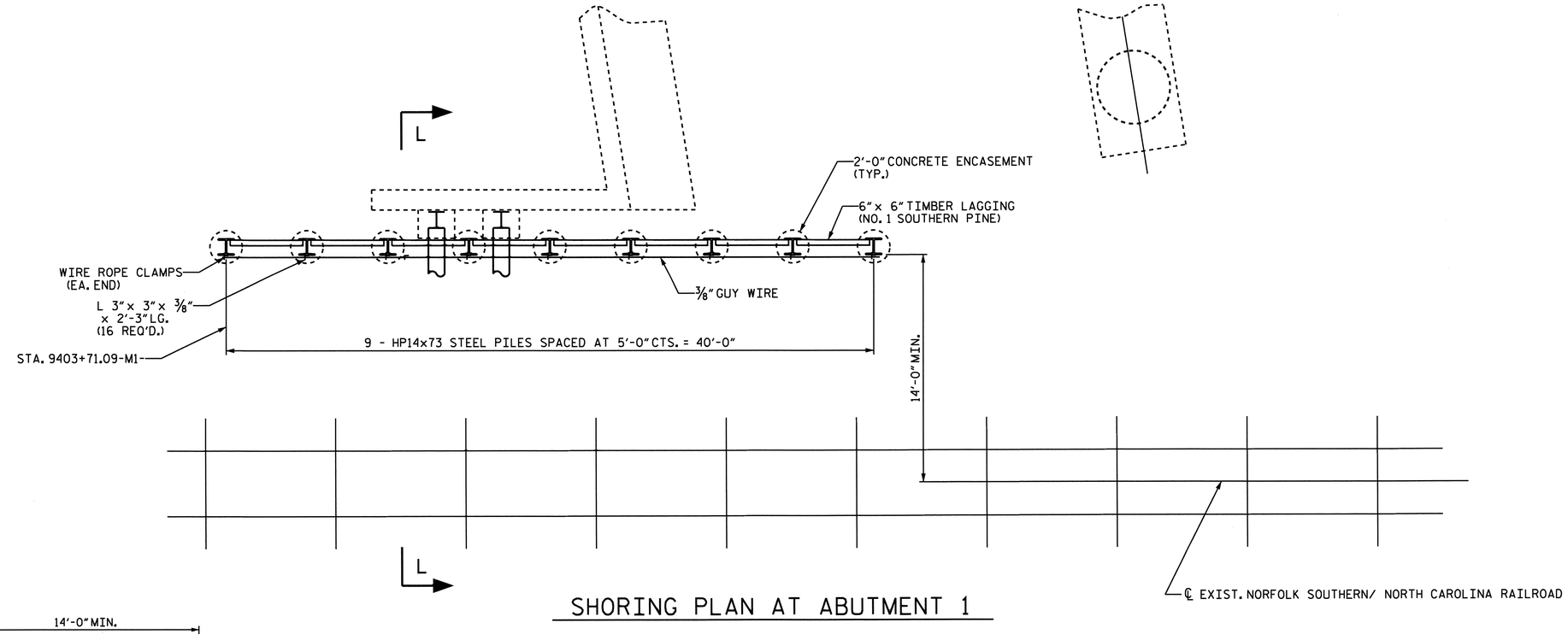

SHORING PLAN AT ABUTMENT 1

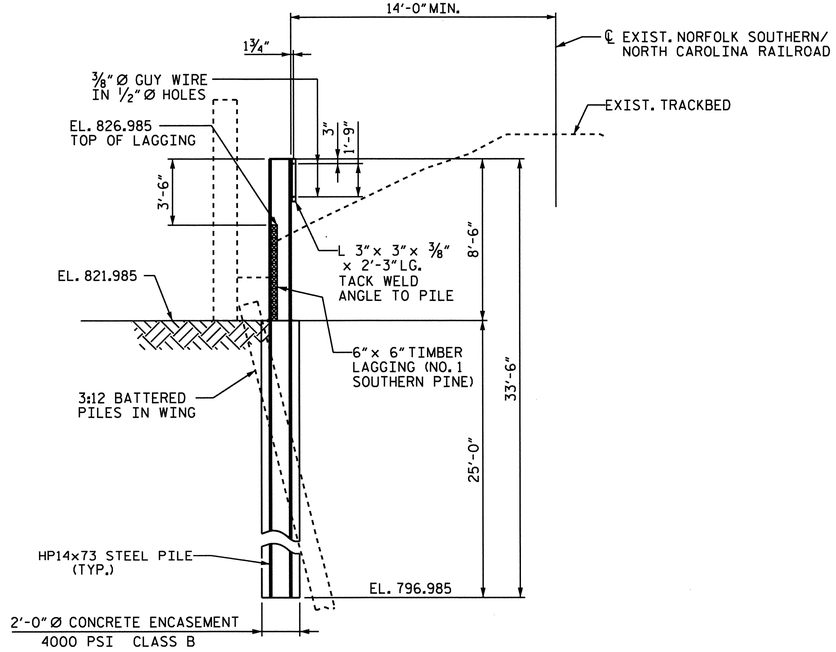

SECTION L-L

NOTES:

ALL SHORING MATERIAL SHALL BE IN "LIKE NEW" CONDITION.

MATERIAL USED FOR THE TEMPORARY H PILING SHALL BE ASTM A572 GRADE 50.

SAFETY RAIL SHALL MEET THE REQUIREMENTS OF AREMA 15.8.5.2.

PROJECT NO. P-5206C

ROWAN COUNTY

STATION: POC 9404+63.64-M1-=
POT 13+69.47-Y10-
MP 344.50±

SHEET 2 OF 4

STATE OF NORTH CAROLINA
DEPARTMENT OF TRANSPORTATION
RALEIGH

TEMPORARY SHORING
ABUTMENT 1

PREPARED BY
TGS ENGINEERS
107-A MICA AVENUE
MORGANTON, NC 28655

NORTH CAROLINA PROFESSIONAL SEAL 22242 ENGINEER RAY D. ELLIOTT
10/29/2013

REVISIONS						SHEET NO.
NO.	BY:	DATE:	NO.	BY:	DATE:	S-49
1			3			TOTAL SHEETS
2			4			52

DRAWN BY : RTJ DATE : 2/13
CHECKED BY : RDE DATE : 2/13

0160DEL_P10b2

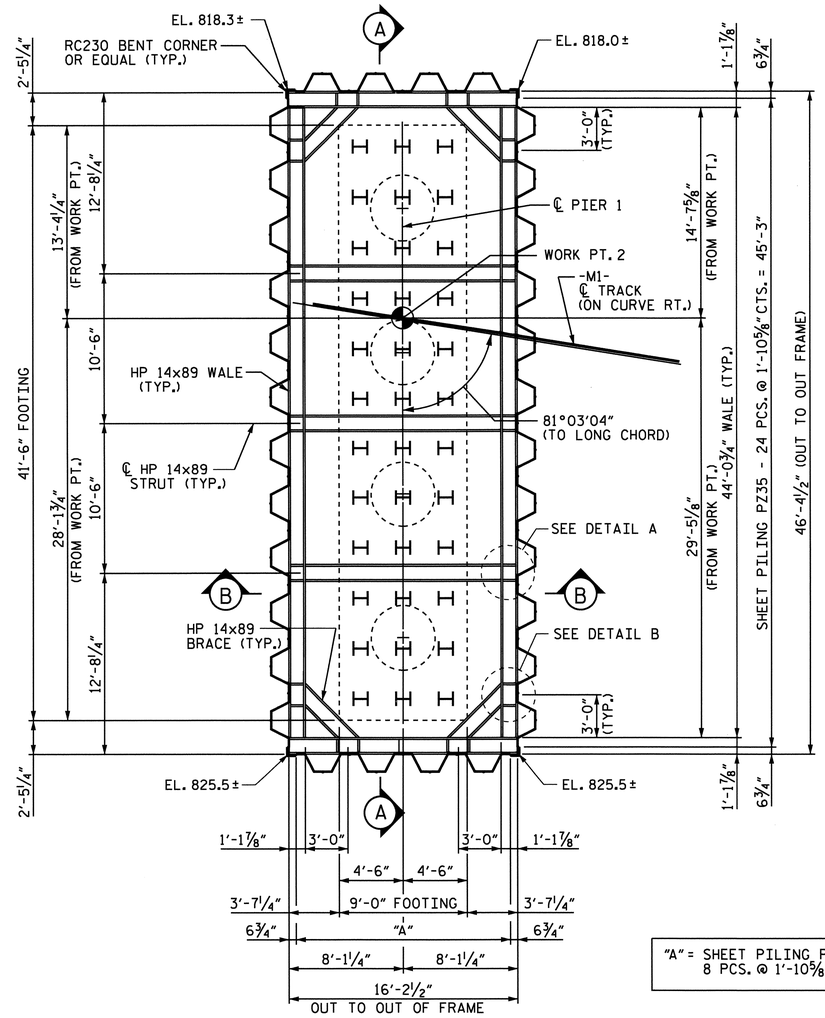

"A" = SHEET PILING PZ35 - 8 PCS. @ 1'-10⅝" CTS. = 15'-1"

PIER 1 PLAN OF SHEETING & BRACING

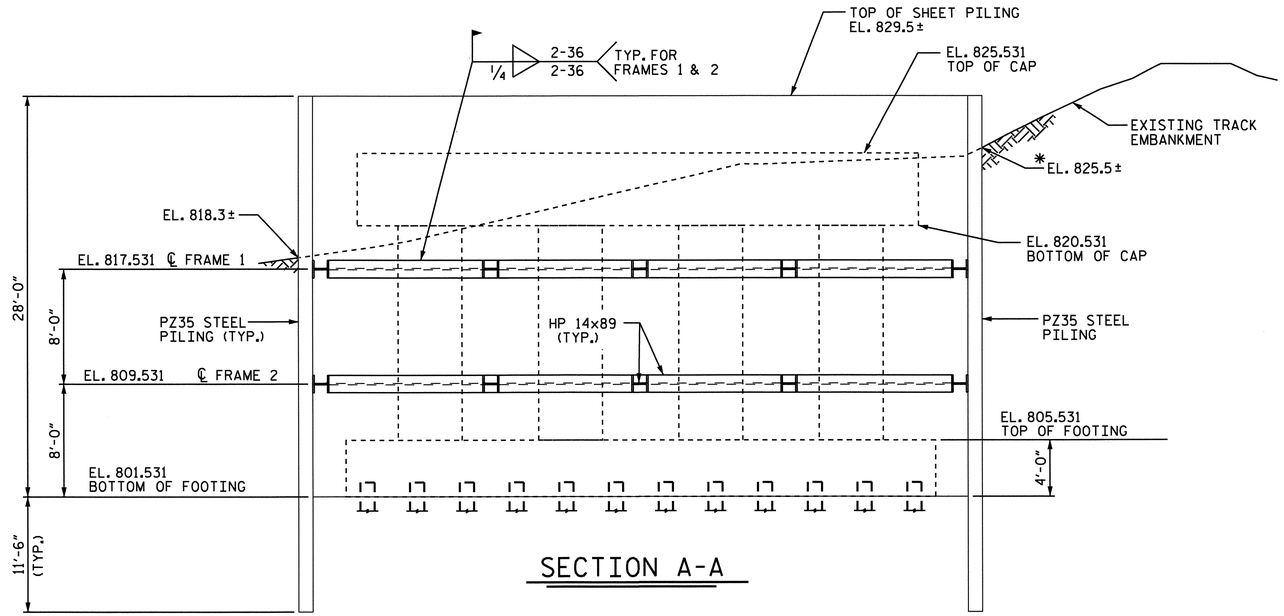

SECTION A-A

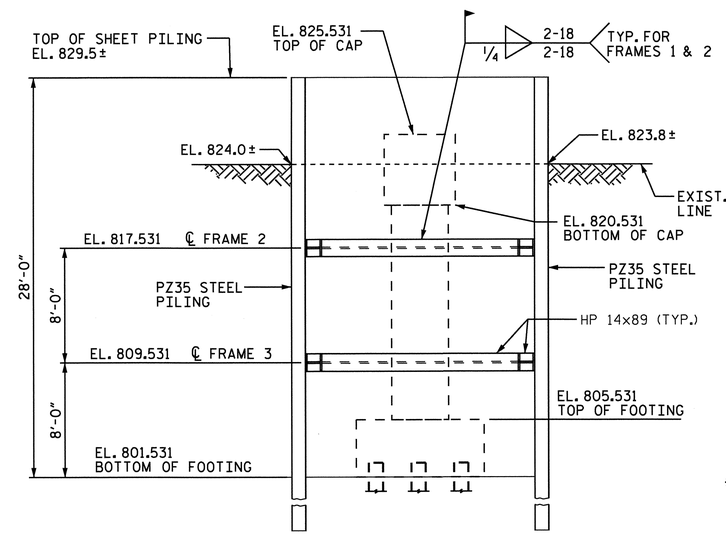

SECTION B-B

NOTES:

IF SIGNIFICANT GROUND WATER IS ENCOUNTERED DURING CONSTRUCTION, OBTAIN APPROVAL FROM THE ENGINEER BEFORE PROCEEDING WITH EXCAVATION.

ALL SHORING MATERIAL SHALL BE IN "NEW" CONDITION.

MATERIAL USED FOR THE SHEET PILING SHALL BE ASTM A572 GRADE 50.

MATERIAL USED FOR WALES, STRUTS AND CORNER BRACES SHALL BE ASTM A709 GRADE 50.

*IF EXISTING EMBANKMENT IS HIGHER THAN EL. 825.5, GRADE TO EL. 825.5

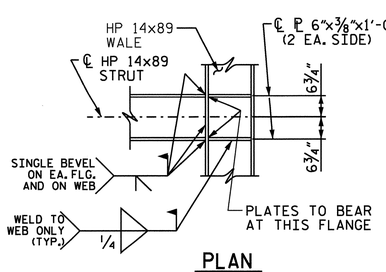

PLAN
(SHEETING NOT SHOWN)

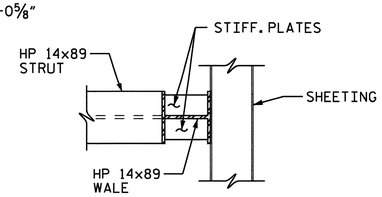

ELEVATION

DETAIL A

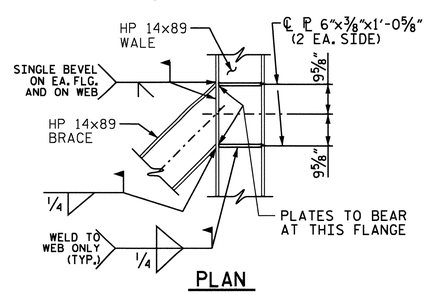

PLAN
(SHEETING NOT SHOWN)

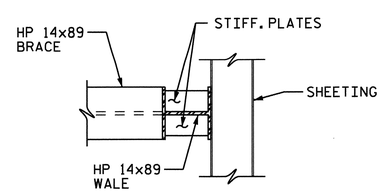

ELEVATION

DETAIL B

PROJECT NO. P-5206C

ROWAN COUNTY

STATION: POC 9404+63.64-M1-=
POT 13+69.47-Y10-
MP 344.50±

STATE OF NORTH CAROLINA
DEPARTMENT OF TRANSPORTATION
RALEIGH

TEMPORARY SHORING
PIER 1

REVISIONS							SHEET NO.
NO.	BY:	DATE:	NO.	BY:	DATE:		S-50
1			3				TOTAL SHEETS
2			4				52

PREPARED BY
TGS ENGINEERS
107-A MICA AVENUE
MORGANTON, NC 28655

NORTH CAROLINA PROFESSIONAL SEAL 22892 ENGINEER RAY D. ELLIOTT
6/24/2013

DRAWN BY : RTJ DATE : 2/13
CHECKED BY : RDE DATE : 2/13

0160DEL_P10b2

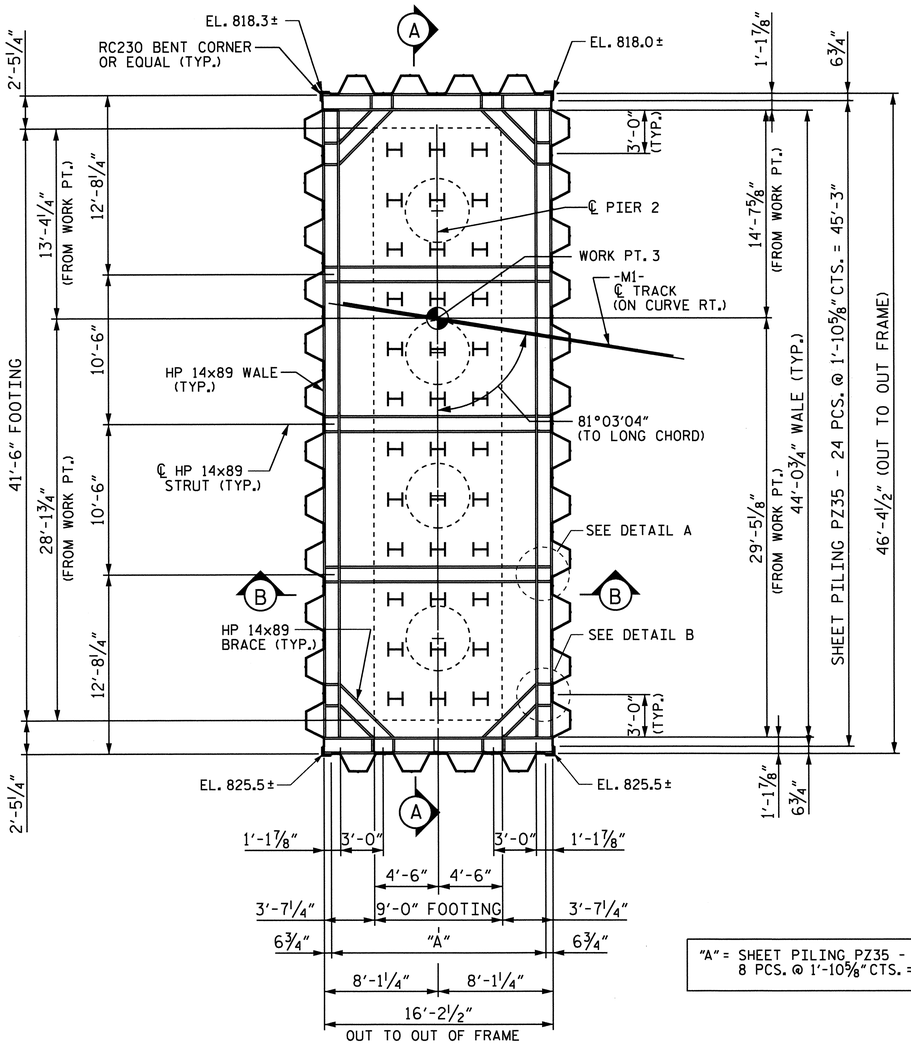

"A" = SHEET PILING PZ35 - 8 PCS. @ 1'-10⅝" CTS. = 15'-1"

PIER 2 PLAN OF SHEETING & BRACING

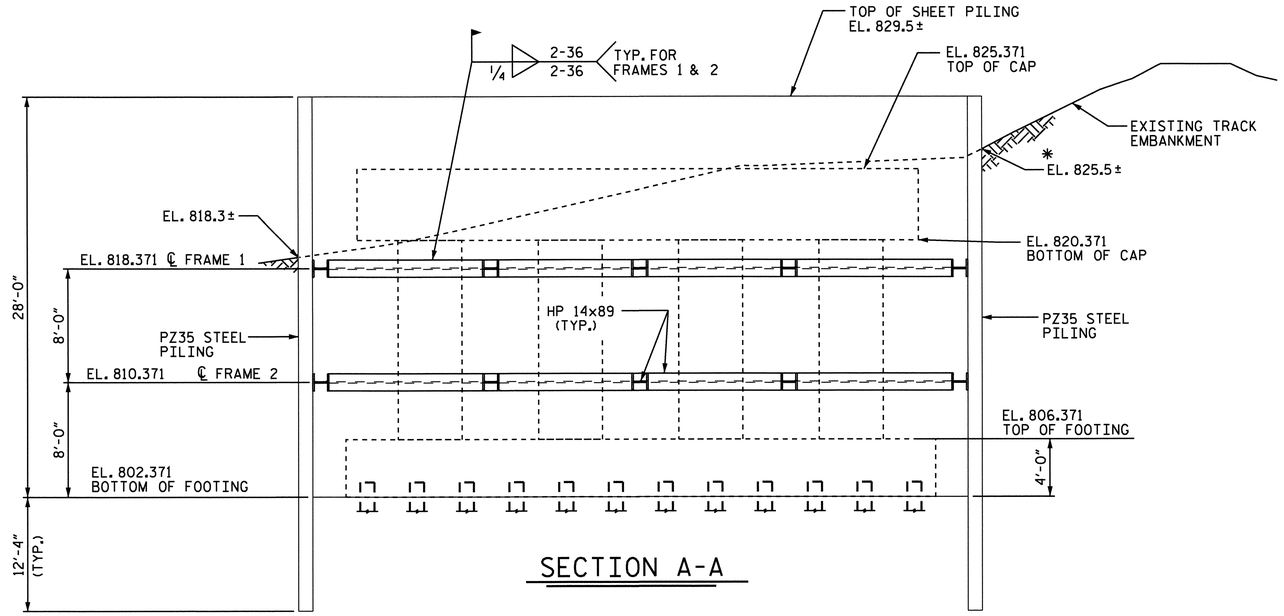

SECTION A-A

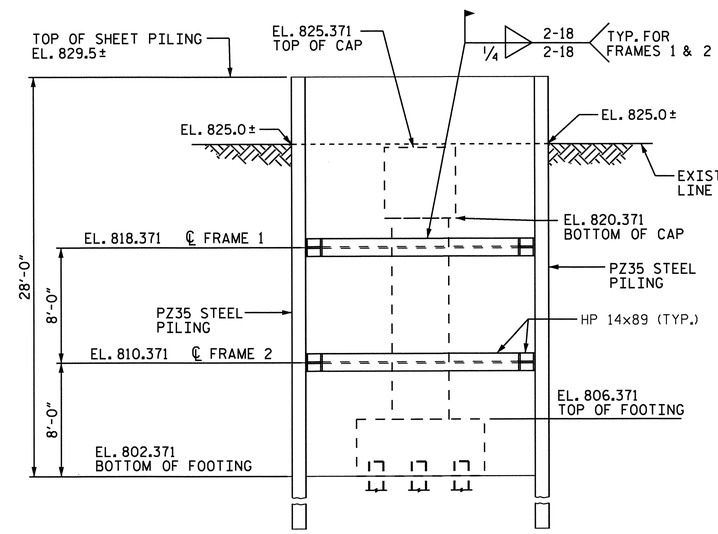

SECTION B-B

NOTES:

IF SIGNIFICANT GROUND WATER IS ENCOUNTERED DURING CONSTRUCTION, OBTAIN APPROVAL FROM THE ENGINEER BEFORE PROCEEDING WITH EXCAVATION.

ALL SHORING MATERIAL SHALL BE IN "NEW" CONDITION.

MATERIAL USED FOR THE SHEET PILING SHALL BE ASTM A572 GRADE 50.

MATERIAL USED FOR WALES, STRUTS AND CORNER BRACES SHALL BE ASTM A709 GRADE 50.

*IF EXISTING EMBANKMENT IS HIGHER THAN EL. 825.5, GRADE TO EL. 825.5

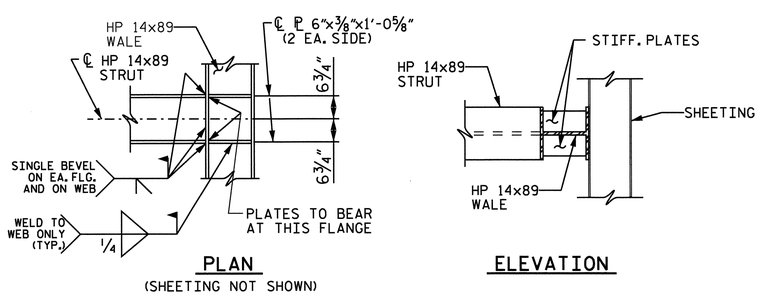

PLAN
(SHEETING NOT SHOWN)

ELEVATION

DETAIL A

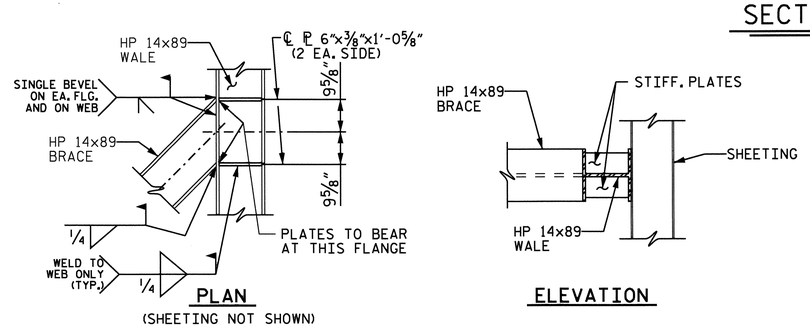

PLAN
(SHEETING NOT SHOWN)

ELEVATION

DETAIL B

PROJECT NO. P-5206C

ROWAN COUNTY

STATION: POC 9404+63.64-M1-= POT 13+69.47-Y10-

MP 344.50±

STATE OF NORTH CAROLINA
DEPARTMENT OF TRANSPORTATION
RALEIGH

TEMPORARY SHORING
PIER 2

PREPARED BY
TGS ENGINEERS
107-A MICA AVENUE
MORGANTON, NC 28655

NORTH CAROLINA PROFESSIONAL SEAL 22892 ENGINEER RAY D. ELLIOTT
6/24/2013

REVISIONS						SHEET NO.
NO.	BY:	DATE:	NO.	BY:	DATE:	S-51
1			3			TOTAL SHEETS
2			4			52

DRAWN BY : RTJ DATE : 2/13
CHECKED BY : RDE DATE : 2/13

0160DEL_P1062

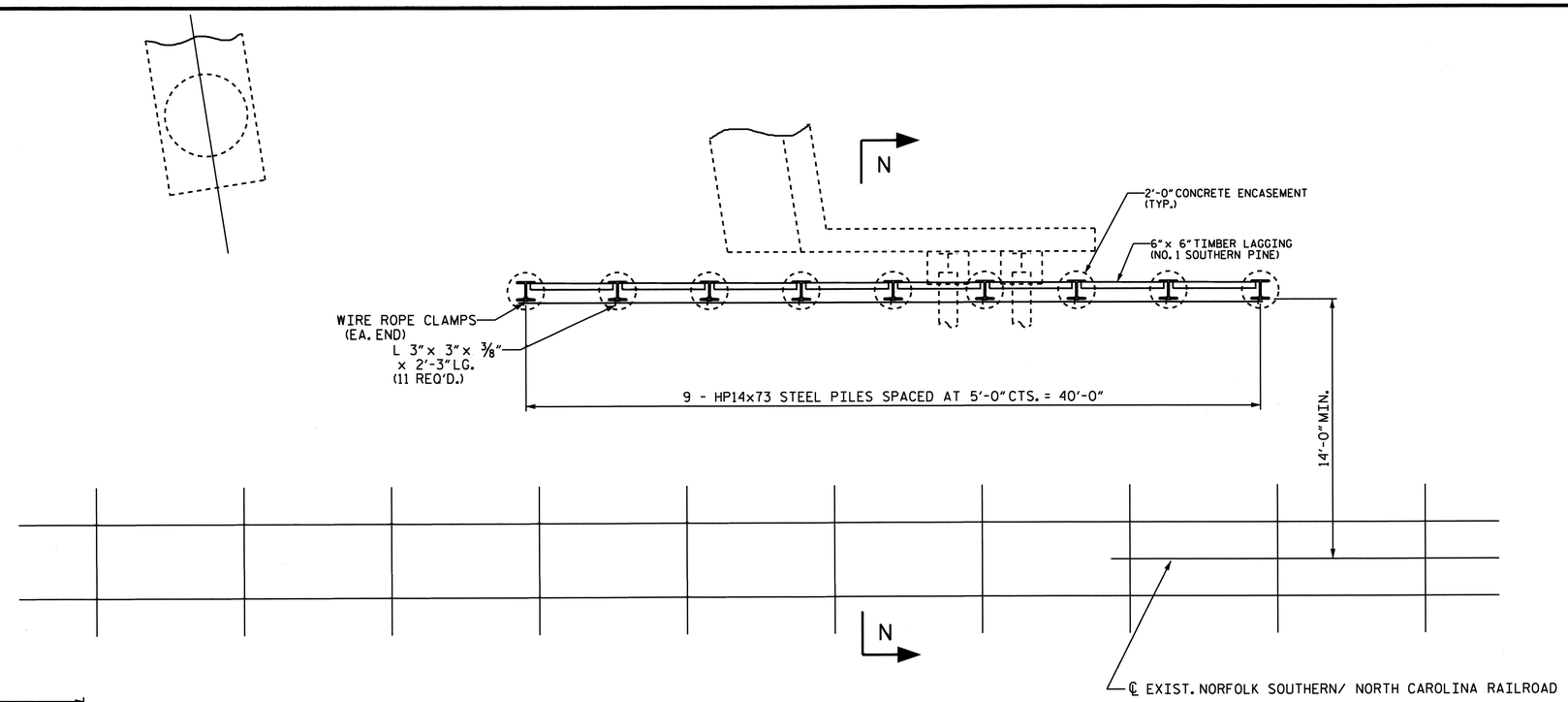

SHORING PLAN AT ABUTMENT 2

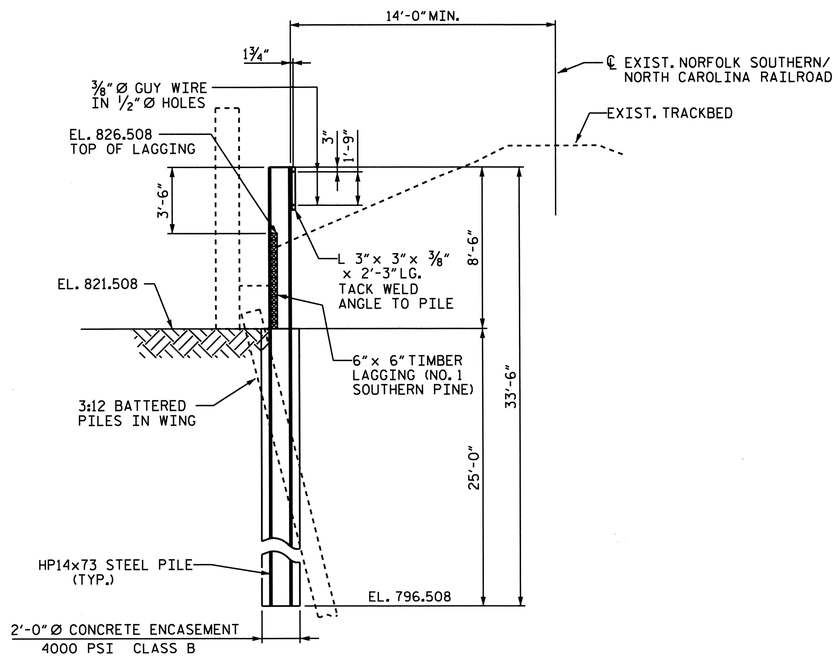

SECTION N-N

PROJECT NO. P-5206C

ROWAN COUNTY

STATION: POC 9404+63.64-M1-=
POT 13+69.47-Y10-
MP 344.50 ±

SHEET 4 OF 4

STATE OF NORTH CAROLINA
DEPARTMENT OF TRANSPORTATION
RALEIGH

TEMPORARY SHORING
ABUTMENT 2

PREPARED BY
TGS ENGINEERS
107-A MICA AVENUE
MORGANTON, NC 28655

NORTH CAROLINA PROFESSIONAL SEAL 20192 ENGINEER RAY D. ELLIOTT
6/24/2013

REVISIONS						SHEET NO.
NO.	BY:	DATE:	NO.	BY:	DATE:	S-52
1			3			TOTAL SHEETS
2			4			52

DRAWN BY : RTJ DATE : 2/13
CHECKED BY : RDE DATE : 2/13

STANDARD NOTES

DESIGN DATA:

SPECIFICATIONS	A.A.S.H.T.O. (CURRENT)
LIVE LOAD	SEE PLANS
IMPACT ALLOWANCE	SEE A.A.S.H.T.O.
STRESS IN EXTREME FIBER OF	
STRUCTURAL STEEL - AASHTO M270 GRADE 36	20,000 LBS. PER SQ. IN.
- AASHTO M270 GRADE 50W	27,000 LBS. PER SQ. IN.
- AASHTO M270 GRADE 50	27,000 LBS. PER SQ. IN.
REINFORCING STEEL IN TENSION	
GRADE 60	24,000 LBS. PER SQ. IN.
CONCRETE IN COMPRESSION	1,200 LBS. PER SQ. IN.
CONCRETE IN SHEAR	SEE A.A.S.H.T.O.
STRUCTURAL TIMBER - TREATED OR	
UNTREATED - EXTREME FIBER STRESS	1,800 LBS. PER SQ. IN.
COMPRESSION PERPENDICULAR TO GRAIN OF TIMBER	375 LBS. PER SQ. IN.
EQUIVALENT FLUID PRESSURE OF EARTH	30 LBS. PER CU. FT. (MINIMUM)

MATERIAL AND WORKMANSHIP:

EXCEPT AS MAY OTHERWISE BE SPECIFIED ON PLANS OR IN THE SPECIAL PROVISIONS, ALL MATERIAL AND WORKMANSHIP SHALL BE IN ACCORDANCE WITH THE 2012 "STANDARD SPECIFICATIONS FOR ROADS AND STRUCTURES" OF THE N. C. DEPARTMENT OF TRANSPORTATION.

STEEL SHEET PILING FOR PERMANENT OR TEMPORARY APPLICATIONS SHALL BE HOT ROLLED.

CONCRETE:

UNLESS OTHERWISE REQUIRED ON PLANS, CLASS A CONCRETE SHALL BE USED FOR ALL PORTIONS OF ALL STRUCTURES WITH THE EXCEPTION THAT: CLASS AA CONCRETE SHALL BE USED IN BRIDGE SUPERSTRUCTURES, ABUTMENT BACKWALLS, AND APPROACH SLABS; AND CLASS B CONCRETE SHALL BE USED FOR SLOPE PROTECTION AND RIP RAP.

CONCRETE CHAMFERS:

UNLESS OTHERWISE NOTED ON THE PLANS, ALL EXPOSED CORNERS ON STRUCTURES SHALL BE CHAMFERED 3/4" WITH THE FOLLOWING EXCEPTIONS: TOP CORNERS OF CURBS MAY BE ROUNDED TO 1-1/2" RADIUS WHICH IS BUILT INTO CURB FORMS; CORNERS OF TRANSVERSE FLOOR EXPANSION JOINTS SHALL BE ROUNDED WITH A 1/4" FINISHING TOOL UNLESS OTHERWISE REQUIRED ON PLANS; AND CORNERS OF EXPANSION JOINTS IN THE ROADWAY FACES AND TOPS OF CURBS AND SIDEWALKS SHALL BE ROUNDED TO A 1/4" RADIUS WITH A FINISHING STONE OR TOOL UNLESS OTHERWISE REQUIRED ON PLANS.

DOWELS:

DOWELS WHEN INDICATED ON PLANS AS FOR CULVERT EXTENSIONS, SHALL BE EMBEDDED AT LEAST 12" INTO THE OLD CONCRETE AND GROUTED INTO PLACE WITH 1:2 CEMENT MORTAR.

ALLOWANCE FOR DEAD LOAD DEFLECTION, SETTLEMENT, ETC. IN CASTING SUPERSTRUCTURES:

BRIDGES SHALL BE BUILT ON THE GRADE OR VERTICAL CURVE SHOWN ON PLANS. SLABS, CURBS AND PARAPETS SHALL CONFORM TO THE GRADE OR CURVE.

ALL DIMENSIONS WHICH ARE GIVEN IN SECTION AND ARE AFFECTED BY DEAD LOAD DEFLECTIONS ARE DIMENSIONS AT CENTER LINE OF BEARING UNLESS OTHERWISE NOTED ON PLANS. IN SETTING FORMS FOR STEEL BEAM BRIDGES AND PRESTRESSED CONCRETE GIRDER BRIDGES, ADJUSTMENTS SHALL BE MADE DUE TO THE DEAD LOAD DEFLECTIONS FOR THE ELEVATIONS SHOWN. WHERE BLOCKS ARE SHOWN OVER BEAMS FOR BUILDING UP TO THE SLAB, THE VERTICAL DIMENSIONS OF THE BLOCKS SHALL BE ADJUSTED BETWEEN BEARINGS TO COMPENSATE FOR DEAD LOAD DEFLECTIONS, VERTICAL CURVE ORDINATE, AND ACTUAL BEAM CAMBER. WHERE BOTTOM OF SLAB IS IN LINE WITH BOTTOM OF TOP FLANGES, DEPTH OF SLAB BETWEEN BEARINGS SHALL BE ADJUSTED TO COMPENSATE FOR DEAD LOAD DEFLECTION, VERTICAL CURVE ORDINATE, AND ACTUAL BEAM CAMBER.

IN SETTING FALSEWORK AND FORMS FOR REINFORCED CONCRETE SPANS, AN ALLOWANCE SHALL BE MADE FOR DEAD LOAD DEFLECTIONS, SETTLEMENT OF FALSEWORK, AND PERMANENT CAMBER WHICH SHALL BE PROVIDED FOR IN ADDITION TO THE ELEVATIONS SHOWN. AFTER REMOVAL OF THE FALSEWORK, THE FINISHED STRUCTURES SHALL CONFORM TO THE PROFILE AND ELEVATIONS SHOWN ON THE PLANS AND CONSTRUCTION ELEVATIONS FURNISHED BY THE ENGINEER.

DETAILED DRAWINGS FOR FALSEWORK OR FORMS FOR BRIDGE SUPERSTRUCTURE AND ANY STRUCTURE OR PARTS OF A STRUCTURE AS NOTED ON THE PLANS SHALL BE SUBMITTED TO THE ENGINEER FOR APPROVAL BEFORE CONSTRUCTION OF THE FALSEWORK OR FORMS IS STARTED.

REINFORCING STEEL:

ALL REINFORCING STEEL SHALL BE DEFORMED. DIMENSIONS RELATIVE TO PLACEMENT OF REINFORCING ARE TO CENTERS OF BARS UNLESS OTHERWISE INDICATED IN THE PLANS. DIMENSIONS ON BAR DETAILS ARE TO CENTERS OF BARS OR ARE OUT TO OUT AS INDICATED ON PLANS.

WIRE BAR SUPPORTS SHALL BE PROVIDED FOR REINFORCING STEEL WHERE INDICATED ON THE PLANS. WHEN BAR SUPPORT PIECES ARE PLACED IN CONTINUOUS LINES, THEY SHALL BE SO PLACED THAT THE ENDS OF THE SUPPORTING WIRES SHALL BE LAPPED TO LOCK LEGS ON ADJOINING PIECES.

STRUCTURAL STEEL:

AT THE CONTRACTOR'S OPTION, HE MAY SUBSTITUTE 7/8" Ø SHEAR STUDS FOR THE 3/4" Ø STUDS SPECIFIED ON THE PLANS. THIS SUBSTITUTION SHALL BE MADE AT THE RATE OF 3 - 7/8" Ø STUDS FOR 4 - 3/4" Ø STUDS, AND STUD SPACING CHANGES SHALL BE MADE AS NECESSARY TO PROVIDE THE SAME EQUIVALENT NUMBER OF 7/8" Ø STUDS ALONG THE BEAM AS SHOWN FOR 3/4" Ø STUDS BASED ON THE RATIO OF 3 - 7/8" Ø STUDS FOR 4 - 3/4" Ø STUDS. STUDS OF THE LENGTH SPECIFIED ON THE PLANS MUST BE PROVIDED. THE MAXIMUM SPACING SHALL BE 2'-0".

EXCEPT AT THE INTERIOR SUPPORTS OF CONTINUOUS BEAMS WHERE THE COVER PLATE IS IN CONTACT WITH BEARING PLATE, THE CONTRACTOR MAY, AT HIS OPTION, SUBSTITUTE FOR THE COVER PLATES DESIGNATED ON THE PLANS COVER PLATES OF THE EQUIVALENT AREA PROVIDED THESE PLATES ARE AT LEAST 5/16" IN THICKNESS AND DO NOT EXCEED A WIDTH EQUAL TO THE FLANGE WIDTH LESS 2" OR A THICKNESS EQUAL TO 2 TIMES THE FLANGE THICKNESS. THE SIZE OF FILLET WELDS SHALL CONFORM TO THE REQUIREMENTS OF THE CURRENT ANSI/AASHTO/AWS "BRIDGE WELDING CODE". ELECTROSLAG WELDING WILL NOT BE PERMITTED.

WITH THE SOLE EXCEPTION OF EDGES AT SURFACES WHICH BEAR ON OTHER SURFACES, ALL SHARP EDGES AND ENDS OF SHAPES AND PLATES SHALL BE SLIGHTLY ROUNDED BY SUITABLE MEANS TO A RADIUS OF APPROXIMATELY 1/16 INCH OR EQUIVALENT FLAT SURFACE AT A SUITABLE ANGLE PRIOR TO PAINTING, GALVANIZING, OR METALLIZING.

HANDRAILS AND POSTS:

METAL STANDARDS AND FACES OF THE CONCRETE END POSTS FOR THE METAL RAIL SHALL BE SET NORMAL TO THE GRADE OF THE CURB, UNLESS OTHERWISE SHOWN ON PLANS. THE METAL RAIL AND TOPS OF CONCRETE POSTS USED WITH THE ALUMINUM RAIL SHALL BE BUILT PARALLEL TO THE GRADE OF THE CURB.

METAL HANDRAILS SHALL BE IN ACCORDANCE WITH THE PLANS. RAILS SHALL BE AS MANUFACTURED FOR BRIDGE RAILING. CASTINGS SHALL BE OF A UNIFORM APPEARANCE. FINS AND OTHER DEFORMATIONS RESULTING FROM CASTING OR OTHERWISE SHALL BE REMOVED IN A MANNER SO THAT A UNIFORM COLORING OF THE COMPLETED CASTING SHALL BE OBTAINED. CASTINGS WITH DISCOLORATIONS OR OF NON-UNIFORM COLORING WILL NOT BE ACCEPTED. CERTIFIED MILL REPORTS ARE REQUIRED FOR METAL RAILS AND POSTS.

SPECIAL NOTES:

GENERALLY, IN CASE OF DISCREPANCY, THIS STANDARD SHEET OF NOTES SHALL GOVERN OVER THE SPECIFICATIONS, BUT THE REMAINDER OF THE PLANS SHALL GOVERN OVER NOTES HEREON, AND SPECIAL PROVISIONS SHALL GOVERN OVER ALL. SEE SPECIFICATIONS ARTICLE 105-4.

ENGLISH

JANUARY, 1990