STATE	STATE PROJECT REFERENCE NO.	SHEET NO.	TOTAL SHEETS
N.C.	B-5149/ B-4765		

STATE PROJ. NO.	F.A. PROJ. NO.	DESCRIPTION
43210.1.1	BRZ-1574(3)	(B-5149) P.E.
43210.2.1	BRZ-1574(3)	(B-5149) R/W&UTIL.
38537.1.1	BRZ-1574(2)	(B-4765) P.E.
38537.2.1	BRZ-1574(4)	(B-4765) R/W&UTIL.
38537.3.FD1	BRZ-1574(4)	(B-5149/B-4765)CONST.

STATE OF NORTH CAROLINA
DIVISION OF HIGHWAYS

HENDERSON COUNTY

LOCATION: BRIDGE NO. 38 ON SR 1574 (FRUITLAND ROAD) OVER CLEAR CREEK. BRIDGE NO. 113 ON SR 1574 (FRUITLAND ROAD) OVER KYLES CREEK (A.K.A. TAZEWELL CREEK).

TYPE OF WORK: GRADING, DRAINAGE, PAVING AND STRUCTURES

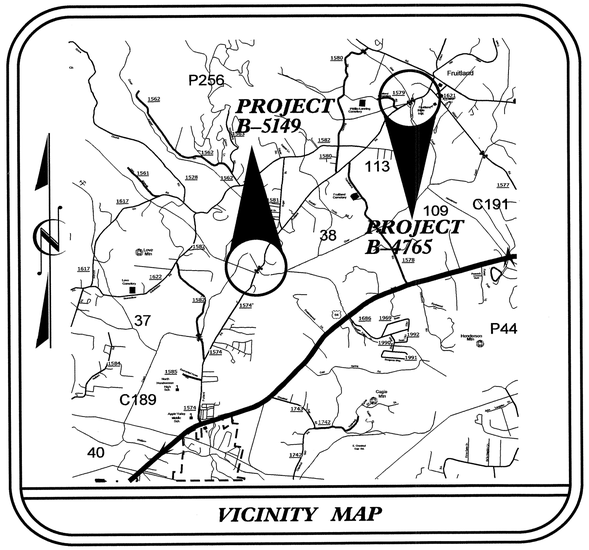

VICINITY MAP

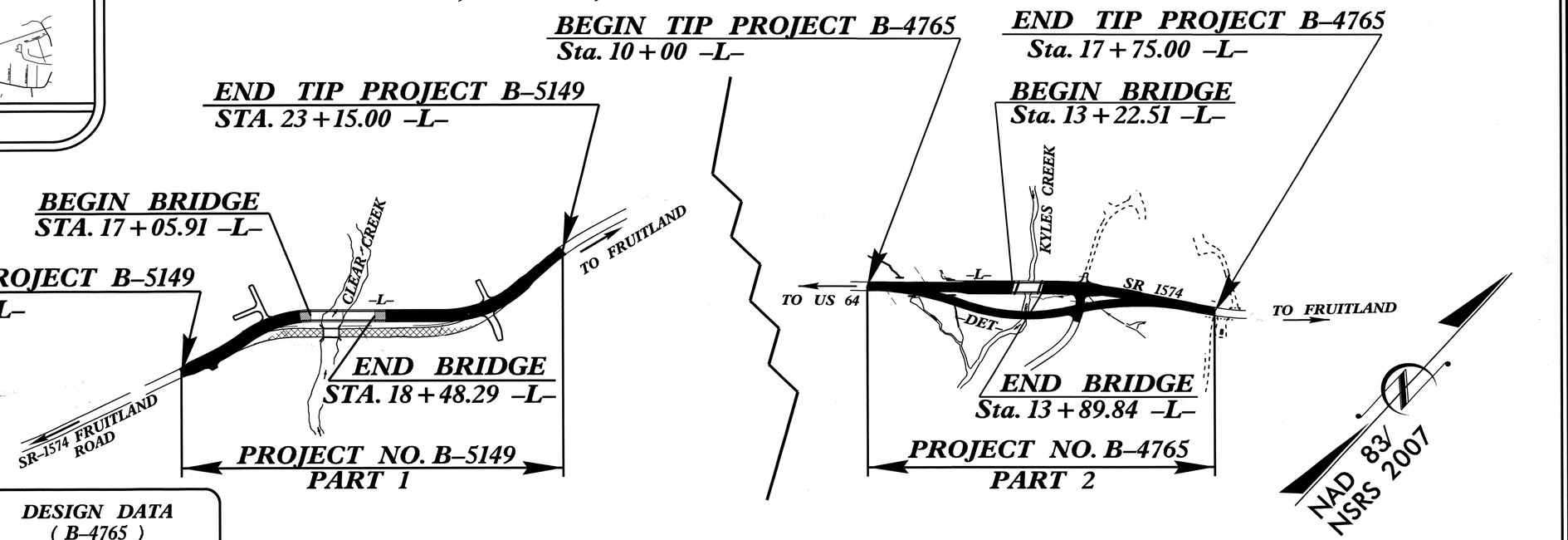

DESIGN DATA
(B-5149)

ADT 2013 = 4524
ADT 2035 = 9600
DHV = 10 %
D = 65 %
T = 5 %
V = 30 MPH
TTST =1% DUAL 4%
FUNC. CLASS. = LOCAL
SUB-REGIONAL TIER

DESIGN DATA
(B-4765)

ADT 2013 = 4662
ADT 2035 = 10500
DHV = 10 %
D = 65 %
T = 5 %
V = 30 MPH
TTST =1% DUAL 4%
FUNC. CLASS. = LOCAL
SUB-REGIONAL TIER

STATE OF NORTH CAROLINA DEPARTMENT OF TRANSPORTATION

PROJECT LENGTH

LENGTH ROADWAY TIP PROJECT B-5149/B-4765 = 0.283 Miles
LENGTH STRUCTURES TIP PROJECT B-5149/B-4765 = 0.040 Miles
TOTAL LENGTH TIP PROJECT B-5149/B-4765 = 0.323 Miles

Prepared In the Office of:
DIVISION OF HIGHWAYS
1000 Birch Ridge Dr., Raleigh NC, 27610

2012 STANDARD SPECIFICATIONS

LETTING DATE:
OCTOBER 15, 2013

Q.H. NGUYEN, P.E.
PROJECT ENGINEER

MARC G. CHEEK, P.E.
PROJECT DESIGN ENGINEER

STRUCTURES MANAGMENT UNIT
1000 BIRCH RIDGE DR.
RALEIGH, N.C. 27610

DIVISION OF HIGHWAYS
STATE OF NORTH CAROLINA

P.E.
STATE DESIGN ENGINEER

DEPARTMENT OF TRANSPORTATION
FEDERAL HIGHWAY ADMINISTRATION

DIVISION ADMINISTRATOR DATE

TIP PROJECT: B-5149/B-4765

STRUCTURES

CONTRACT: C203249

09/08/99
13-AUG-2013 11:50
$$$

F. A. PROJ. No.: BRZ-1574(4)

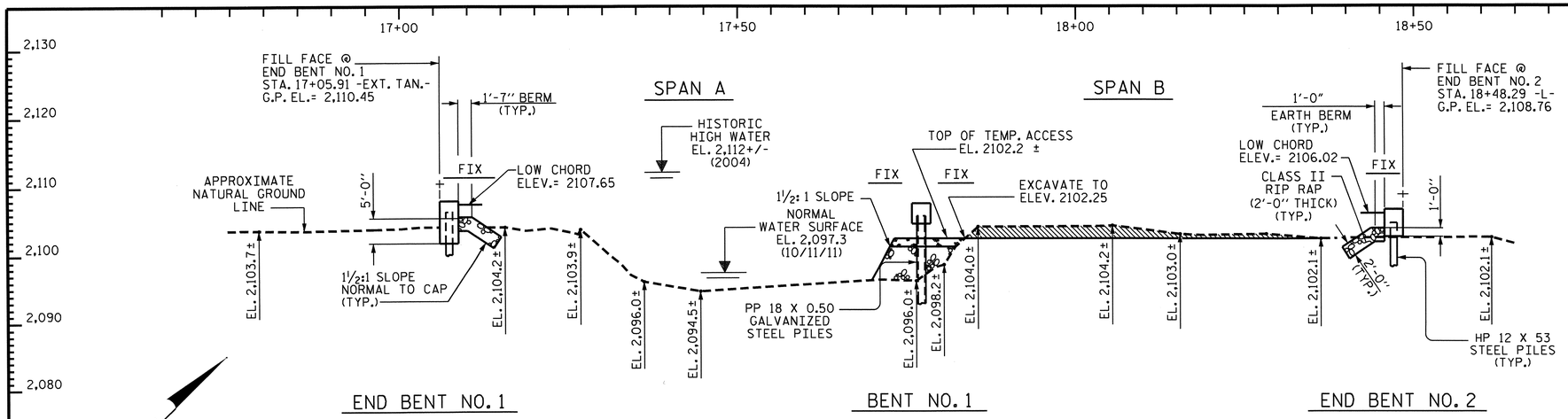

GRADE DATA

- 1.1895 % + 0.8448 %

PI STA. = 19+12.00 -L-
EL. = 2,108.00
L = 100'

UNCLASSIFIED STRUCTURE EXCAVATION

SECTION ALONG -L-

SECTION THRU END BENTS & BENT ARE TAKEN AT RIGHT ANGLES
(APPROXIMATE GROUND LINE ELEVATIONS ARE SHOWN ALONG UPSTREAM EDGE OF BRIDGE)

HORIZONTAL CURVE DATA

PI Sta. 16+34.32 -L-
Δ= 37°-28'-47.4"(RT.)
D = 22°-55'-05.9"
L = 163.54'
T = 84.81'
R = 250.00'

I HEREBY CERTIFY THESE PLANS ARE THE AS-BUILT PLANS

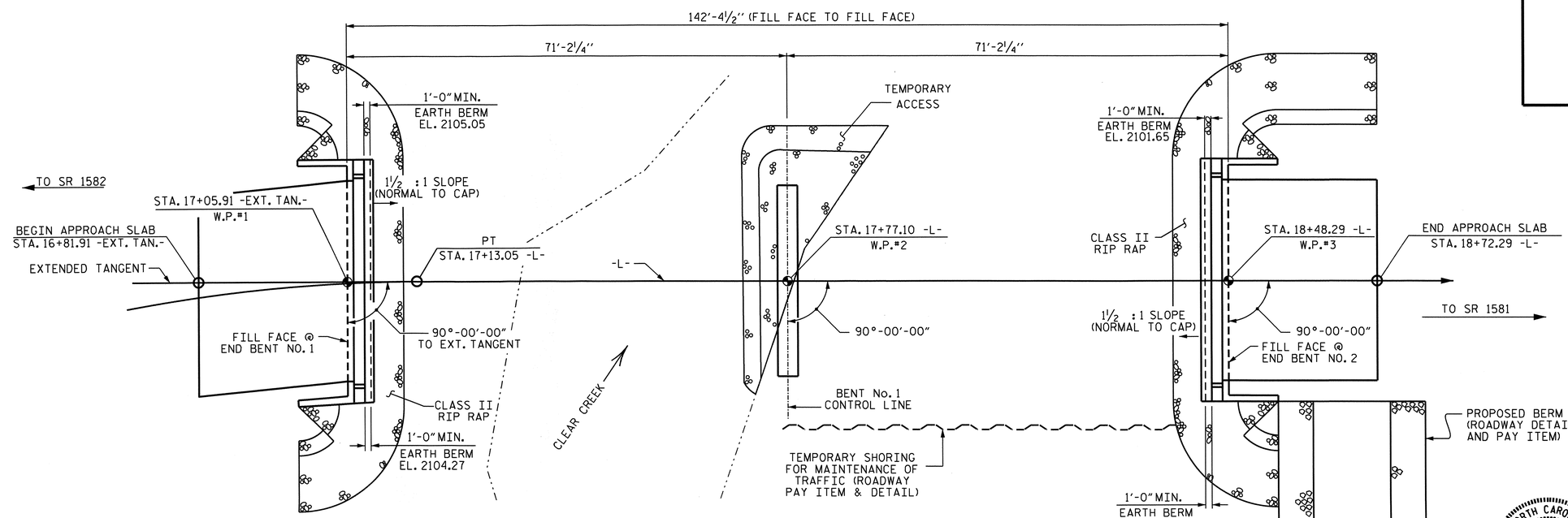

PLAN

PILES NOT SHOWN FOR CLARITY

NOTE TO CONTRACTOR : ALL STATIONING ON THE BRIDGE AND APPROACH SLAB AT END BENT No. 1 IS ALONG THE EXTENDED TANGENT, WHILE THE GRADE POINT FOLLOWS THE -L-.

PROJECT NO. B-5149
HENDERSON COUNTY
STATION: 17+77.10 -L-

SHEET 1 OF 2 REPLACES BRIDGE NO. 38

STATE OF NORTH CAROLINA
DEPARTMENT OF TRANSPORTATION
RALEIGH

GENERAL DRAWING
FOR
BRIDGE ON SR 1574
OVER CLEAR CREEK
BETWEEN SR 1582 AND SR 1581

NORTH CAROLINA PROFESSIONAL SEAL 13014 ENGINEER QUANG H. NGUYEN
Quang H. Nguyen 8-14-13

NORTH CAROLINA PROFESSIONAL SEAL 20125 ENGINEER MARSHAL G. CHEEK, JR.
8-13-13

REVISIONS								SHEET NO.
NO.	BY:	DATE:	NO.	BY:	DATE:			S-1
1			3					TOTAL SHEETS
2			4					38

DRAWN BY : M. POOLE DATE : 03-13
CHECKED BY : M. G .CHEEK DATE : 5-13

13-AUG-2013 09:00
O:\Structures\Final Plans\B5149_SD_GD.dgn
wjharris

B.M. #2, STA. 16+33.91 -L-, 34.91 LEFT, ELEV. 2105.31', NCDOT MONUMENT "B-5149 GPS-102", NAVD 88

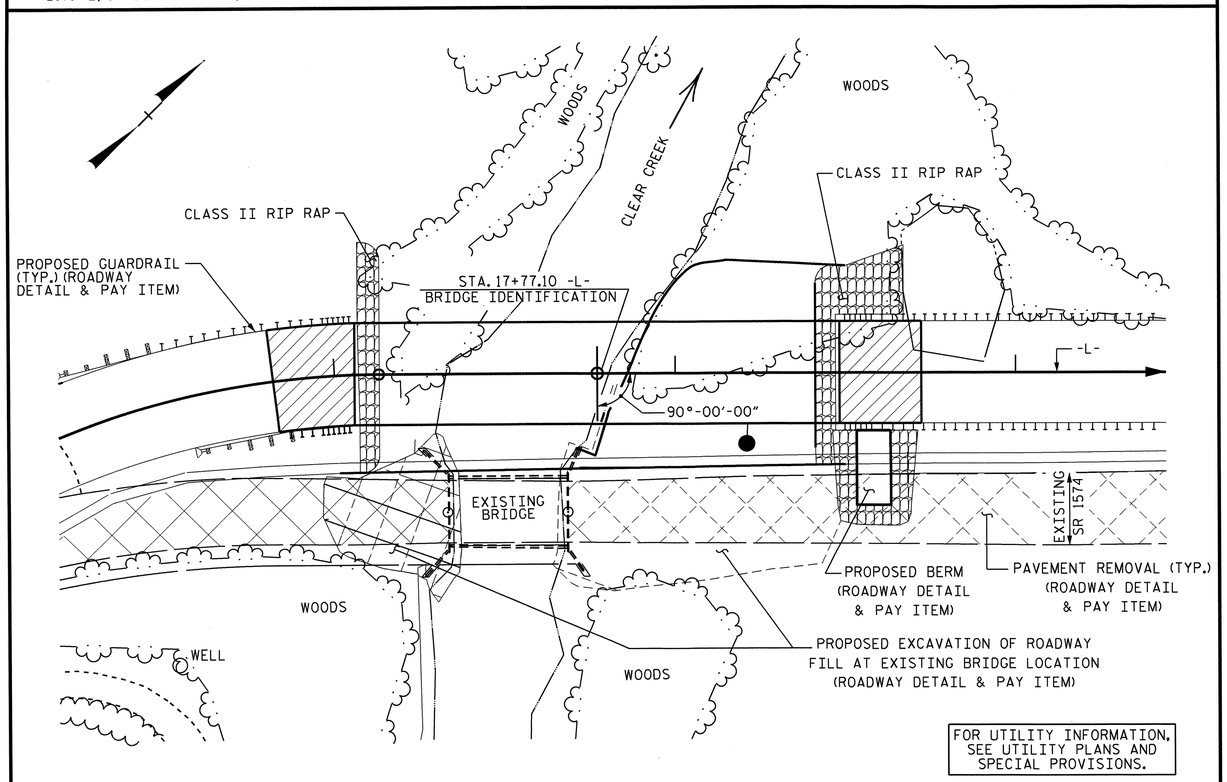

LOCATION SKETCH

NOTES

ASSUMED LIVE LOAD = HL-93 OR ALTERNATE LOADING.

THIS BRIDGE IS LOCATED IN SEISMIC ZONE 1.

FOR OTHER DESIGN DATA AND GENERAL NOTES, SEE SHEET SN.

THIS BRIDGE HAS BEEN DESIGNED IN ACCORDANCE WITH THE AASHTO LRFD BRIDGE DESIGN SPECIFICATIONS.

REMOVAL OF THE EXISTING BRIDGE SHALL BE PERFORMED SO AS NOT TO ALLOW DEBRIS TO FALL INTO THE WATER. THE CONTRACTOR SHALL REMOVE THE BRIDGE AND SUBMIT PLANS FOR DEMOLITION IN ACCORDANCE WITH ARTICLE 402-2 OF THE STANDARD SPECIFICATIONS.

THE MATERIAL SHOWN IN THE CROSS-HATCHED AREA SHALL BE EXCAVATED FOR A DISTANCE OF 25 FT EACH SIDE OF CENTERLINE ROADWAY AS DIRECTED BY THE ENGINEER. THIS WORK WILL BE PAID FOR AT THE CONTRACT LUMP SUM PRICE FOR UNCLASSIFIED STRUCTURE EXCAVATION. SEE SECTION 412 OF THE STANDARD SPECIFICATIONS.

THIS STRUCTURE HAS BEEN DESIGNED IN ACCORDANCE WITH "HEC 18-EVALUATING SCOUR AT BRIDGES."

FOR LIMITS OF TEMPORARY SHORING FOR MAINTENANCE OF TRAFFIC, SEE TRAFFIC CONTROL PLANS. FOR PAY ITEM FOR TEMPORARY SHORING FOR MAINTENANCE OF TRAFFIC, SEE ROADWAY PLANS.

INASMUCH AS THE PAINT SYSTEM ON THE EXISTING STRUCTURAL STEEL CONTAINS LEAD, THE CONTRACTOR'S ATTENTION IS DIRECTED TO ARTICLE 107-1 OF THE STANDARD SPECIFICATIONS. ANY COSTS RESULTING FROM COMPLIANCE WITH APPLICABLE STATE OR FEDERAL REGULATIONS PERTAINING TO HANDLING OF MATERIALS CONTAINING LEAD BASED PAINT SHALL BE INCLUDED IN THE BID PRICE FOR REMOVAL OF EXISTING STRUCTURE.

FOR SUBMITTAL OF WORKING DRAWINGS, SEE SPECIAL PROVISIONS.

FOR CRANE SAFETY, SEE SPECIAL PROVISIONS.

FOR GROUT FOR STRUCTURES, SEE SPECIAL PROVISIONS.

FOR EROSION CONTROL MEASURES, SEE EROSION CONTROL PLANS.

ASPHALT WEARING SURFACE IS INCLUDED IN ROADWAY QUANTITY ON ROADWAY PLANS.

AT THE CONTRACTOR'S OPTION, AND UPON REMOVAL OF THE CAUSEWAY, THE CLASS II RIP RAP USED IN THE CAUSEWAY MAY BE PLACED AS RIP RAP SLOPE PROTECTION. SEE SPECIAL PROVISIONS FOR CONSTRUCTION, MAINTENANCE AND REMOVAL OF TEMPORARY ACCESS.

FOR FALSEWORK AND FORMWORK, SEE SPECIAL PROVISIONS.

THE CONTRACTOR SHALL PROVIDE INDEPENDENT ASSURANCE SAMPLES OF REINFORCING STEEL AS FOLLOWS: FOR PROJECTS REQUIRING UP TO 400 TONS OF REINFORCING STEEL, ONE 30 INCH SAMPLE OF EACH SIZE BAR USED, AND FOR PROJECTS REQUIRING OVER 400 TONS OF REINFORCING STEEL, TWO 30 INCH SAMPLES OF EACH SIZE BAR USED. THE BARS FROM WHICH THE SAMPLES ARE TAKEN MUST THEN BE SPLICED WITH REPLACEMENT BARS OF THE SIZE AND LENGTH OF THE SAMPLE, PLUS A MINIMUM LAP SPLICE OF THIRTY BAR DIAMETERS. PAYMENT FOR THE SAMPLES OF REINFORCING STEEL SHALL BE CONSIDERED INCIDENTAL TO VARIOUS PAY ITEMS.

AFTER SERVING AS A TEMPORARY STRUCTURE, THE EXISTING 1 SPAN BRIDGE (1 @ 35'-6") WITH A ROADWAY WIDTH OF 19'-9" AND A 4" ASPHALT WEARING SURFACE ON A TIMBER FLOOR ON 9 LINES OF STEEL I-BEAMS AND WITH A SUBSTRUCTURE CONSISTING OF TIMBER CAPS/TIMBER POST AND SILLS ABUTMENTS, AND LOCATED DOWNSTREAM FROM THE PROPOSED STRUCTURE SHALL BE REMOVED. THE EXISTING BRIDGE IS PRESENTLY NOT POSTED FOR LOAD LIMIT. SHOULD THE STRUCTURAL INTEGRITY OF THE BRIDGE DETERIORATE DURING CONSTRUCTION OF THE PROPOSED BRIDGE, A LOAD LIMIT MAY BE POSTED AND MAY BE REDUCED AS FOUND NECESSARY DURING THE LIFE OF THE PROJECT.

FOUNDATION NOTES

FOR PILES, SEE SECTION 450 OF THE STANDARD SPECIFICATIONS.

PILES AT END BENT No. 1 & 2 ARE DESIGNED FOR A FACTORED RESISTANCE OF 85 TONS PER PILE.

DRIVE PILES AT END BENT No. 1 & 2 TO A REQUIRED DRIVING RESISTANCE OF 142 TONS PER PILE.

PILES AT BENT No. 1 ARE DESIGNED FOR A FACTORED RESISTANCE OF 140 TONS PER PILE.

PILE EXCAVATION IS REQUIRED TO INSTALL PILES AT BENT No. 1. EXCAVATE HOLES AT PILE LOCATIONS TO ELEVATION NO HIGHER THAN 2078 FT.

FOR PILE EXCAVATION, SEE SECTION 450 OF THE STANDARD SPECIFICATIONS.

CONCRETE OR GROUT IS REQUIRED TO FILL HOLES FOR PILE EXCAVATION AT BENT No. 1.

THE SCOUR CRITICAL ELEVATION FOR BENT No. 1 IS ELEVATION 2082.0 FT. SCOUR CRITICAL ELEVATIONS ARE USED TO MONITOR POSSIBLE SCOUR PROBLEMS DURING THE LIFE OF THE STRUCTURE

HYDRAULIC DATA

DESIGN DISCHARGE	=	4,200 C.F.S.
FREQUENCY OF DESIGN FLOOD	=	25 YRS.
DESIGN HIGH WATER ELEVATION	=	2106.8
DRAINAGE AREA	=	34.0 SQ. MI.
BASE DISCHARGE (Q100)	=	6,100 C.F.S.
BASE HIGH WATER ELEVATION	=	2109.19

OVERTOPPING FLOOD DATA

OVERTOPPING DISCHARGE	=	6,000 C.F.S.
FREQUENCY OF OVERTOPPING FLOOD	=	50 YRS.+
OVERTOPPING FLOOD ELEVATION	=	2109.2

TOTAL BILL OF MATERIAL

	CONSTRUCTION, MAINTENANCE AND REMOVAL OF TEMPORARY ACCESS	REMOVAL OF EXISTING STRUCTURE	PILE EXCAVATION IN SOIL	PILE EXCAVATION NOT IN SOIL	UNCLASSIFIED STRUCTURE EXCAVATION	CLASS A CONCRETE	BRIDGE APPROACH SLABS	REINFORCING STEEL	HP 12 X 53 STEEL PILES		PP 18 X 0.50 GALVANIZED STEEL PILES		TWO BAR METAL RAIL	1'-2" X 2'-11¼" CONCRETE PARAPET	RIP RAP CLASS II (2'-0" THICK)	GEOTEXTILE FOR DRAINAGE	ELASTOMERIC BEARINGS	3'-0" X 2'-0" PRESTRESSED CONCRETE CORED SLABS		3'-0" X 2'-6" PRESTRESSED CONCRETE BENT CAPS
	LUMP SUM	LUMP SUM	LIN. FT.	LIN. FT.	LUMP SUM	CU. YDS.	LUMP SUM	LBS.	NO.	LIN. FT.	NO.	LIN. FT.	LIN. FT.	LIN FT.	TONS	SQ. YDS.	LUMP SUM	NO.	LIN FT.	LIN FT.
SUPERSTRUCTURE		LUMP SUM					LUMP SUM						265.25	280.25			LUMP SUM	22	1540.00	
END BENT No. 1						32.3		3688	8	160					63	70				
BENT No. 1			133.00	30.00							7	195								35.33
END BENT No. 2					LUMP SUM	21.9		2650	7	195					108	120				
TOTAL	LUMP SUM	LUMP SUM	133.00	30.00	LUMP SUM	54.2	LUMP SUM	6338	15	355	7	195	265.25	280.25	171	190	LUMP SUM	22	1540.00	35.33

PROJECT NO. B-5149

HENDERSON COUNTY

STATION: 17+77.10 -L-

SHEET 2 OF 2

STATE OF NORTH CAROLINA
DEPARTMENT OF TRANSPORTATION
RALEIGH

GENERAL DRAWING
FOR
BRIDGE ON SR 1574
OVER CLEAR CREEK
BETWEEN SR 1582 AND SR 1581

NORTH CAROLINA PROFESSIONAL SEAL 20125 ENGINEER MARSHALL G. CHEEK, JR. 8-13-13

REVISIONS								SHEET NO.
NO.	BY:	DATE:	NO.	BY:	DATE:			S-2
1			3					TOTAL SHEETS
2			4					38

DRAWN BY : M. POOLE DATE : 03-13
CHECKED BY : M. G. CHEEK DATE : 05-13

13-AUG-2013 14:48
O:\Structures\Final Plans\B5149_SD_GD.dgn
wjharris

LOAD AND RESISTANCE FACTOR RATING (LRFD) SUMMARY FOR PRESTRESSED CONCRETE GIRDERS

LEVEL		VEHICLE	WEIGHT (W) (TONS)	CONTROLLING LOAD RATING	MINIMUM RATING FACTORS (RF)	TONS = W X RF	STRENGTH I LIMIT STATE											SERVICE III LIMIT STATE						COMMENT NUMBER
							LIVELOAD FACTORS	MOMENT					SHEAR					LIVELOAD FACTORS	MOMENT					
								DISTRIBUTION FACTORS (DF)	RATING FACTOR	SPAN	GIRDER LOCATION	DISTANCE FROM LEFT END OF SPAN (ft)	DISTRIBUTION FACTORS (DF)	RATING FACTOR	SPAN	GIRDER LOCATION	DISTANCE FROM LEFT END OF SPAN (ft)		DISTRIBUTION FACTORS (DF)	RATING FACTOR	SPAN	GIRDER LOCATION	DISTANCE FROM LEFT END OF SPAN (ft)	
DESIGN LOAD RATING		HL-93(Inv)	N/A	(1)	1.006	--	1.75	0.273	1.03	70'	EL	34.5	0.507	1.32	70'	EL	6.9	0.80	0.273	**1.01**	70'	EL	**34.5**	
		HL-93(Opr)	N/A	--	1.341	--	1.35	0.273	1.34	70'	EL	34.5	0.507	1.72	70'	EL	6.9	N/A	--	--	--	--	--	
		HS-20(Inv)	36.000	(2)	1.306	47.02	1.75	0.273	1.34	70'	EL	34.5	0.507	1.65	70'	EL	6.9	0.80	0.273	**1.31**	70'	EL	**34.5**	
		HS-20(Opr)	36.000	--	1.74	62.64	1.35	0.273	1.74	70'	EL	34.5	0.507	2.14	70'	EL	6.9	N/A	--	--	--	--	--	
LEGAL LOAD RATING	SV	SNSH	13.500	--	2.917	39.379	1.4	0.273	3.75	70'	EL	34.5	0.507	4.87	70'	EL	6.9	0.80	0.273	2.92	70'	EL	34.5	
		SNGARBS2	20.000	--	2.187	43.741	1.4	0.273	2.81	70'	EL	34.5	0.507	3.47	70'	EL	6.9	0.80	0.273	2.19	70'	EL	34.5	
		SNAGRIS2	22.000	--	2.077	45.69	1.4	0.273	2.67	70'	EL	34.5	0.507	3.23	70'	EL	6.9	0.80	0.273	2.08	70'	EL	34.5	
		SNCOTTS3	27.250	--	1.452	39.565	1.4	0.273	1.87	70'	EL	34.5	0.507	2.43	70'	EL	6.9	0.80	0.273	1.45	70'	EL	34.5	
		SNAGGRS4	34.925	--	1.218	42.554	1.4	0.273	1.57	70'	EL	34.5	0.507	2.03	70'	EL	6.9	0.80	0.273	1.22	70'	EL	34.5	
		SNS5A	35.550	--	1.191	42.346	1.4	0.273	1.53	70'	EL	34.5	0.507	2.06	70'	EL	6.9	0.80	0.273	1.19	70'	EL	34.5	
		SNS6A	39.950	--	1.095	43.747	1.4	0.273	1.41	70'	EL	34.5	0.507	1.88	70'	EL	6.9	0.80	0.273	1.10	70'	EL	34.5	
		SNS7B	42.000	--	1.043	43.801	1.4	0.273	1.34	70'	EL	34.5	0.507	1.85	70'	EL	6.9	0.80	0.273	1.04	70'	EL	34.5	
	TTST	TNAGRIT3	33.000	--	1.336	44.087	1.4	0.273	1.72	70'	EL	34.5	0.507	2.23	70'	EL	6.9	0.80	0.273	1.34	70'	EL	34.5	
		TNT4A	33.075	--	1.342	44.401	1.4	0.273	1.72	70'	EL	34.5	0.507	2.17	70'	EL	6.9	0.80	0.273	1.34	70'	EL	34.5	
		TNT6A	41.600	--	1.1	45.746	1.4	0.273	1.41	70'	EL	34.5	0.507	1.98	70'	EL	6.9	0.80	0.273	1.10	70'	EL	34.5	
		TNT7A	42.000	--	1.106	46.462	1.4	0.273	1.42	70'	EL	34.5	0.507	1.94	70'	EL	6.9	0.80	0.273	1.11	70'	EL	34.5	
		TNT7B	42.000	--	1.147	48.18	1.4	0.273	1.47	70'	EL	34.5	0.507	1.8	70'	EL	6.9	0.80	0.273	1.15	70'	EL	34.5	
		TNAGRIT4	43.000	--	1.089	46.838	1.4	0.273	1.4	70'	EL	34.5	0.507	1.74	70'	EL	6.9	0.80	0.273	1.09	70'	EL	34.5	
		TNAGT5A	45.000	--	1.026	46.175	1.4	0.273	1.32	70'	EL	34.5	0.507	1.74	70'	EL	6.9	0.80	0.273	1.03	70'	EL	34.5	
		TNAGT5B	45.000	(3)	1.013	45.579	1.4	0.273	1.3	70'	EL	34.5	0.507	1.66	70'	EL	6.9	0.80	0.273	**1.01**	70'	EL	**34.5**	

LOAD FACTORS:

DESIGN LOAD RATING FACTORS	LIMIT STATE	γ_{DC}	γ_{DW}
	STRENGTH I	1.25	1.50
	SERVICE III	1.00	1.00

NOTES:

MINIMUM RATING FACTORS ARE BASED ON THE STRENGTH I AND SERVICE III LIMIT STATES.

ALLOWABLE STRESSES FOR SERVICE III LIMIT STATE ARE AS REQUIRED FOR DESIGN.

COMMENTS:

1.
2.
3.
4.

(#) CONTROLLING LOAD RATING

(1) DESIGN LOAD RATING (HL-93)

(2) DESIGN LOAD RATING (HS-20)

(3) LEGAL LOAD RATING **

** SEE CHART FOR VEHICLE TYPE

GIRDER LOCATION

I - INTERIOR GIRDER
EL - EXTERIOR LEFT GIRDER
ER - EXTERIOR RIGHT GIRDER

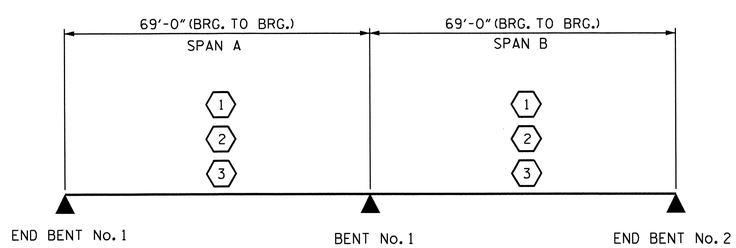

LRFR SUMMARY

PROJECT NO. B-5149
HENDERSON COUNTY
STATION: 17+77.10 -L-

STATE OF NORTH CAROLINA
DEPARTMENT OF TRANSPORTATION
RALEIGH

STANDARD
LRFR SUMMARY FOR 70' CORED SLAB UNIT 90° SKEW
(NON-INTERSTATE TRAFFIC)

NORTH CAROLINA PROFESSIONAL SEAL 20125 ENGINEER MARSHALL G. CHEEK, JR.
8-13-13

REVISIONS						SHEET NO.
NO.	BY:	DATE:	NO.	BY:	DATE:	S-3
1			3			TOTAL SHEETS
2			4			38

ASSEMBLED BY :	J.R. MCROY	DATE :	4/13
CHECKED BY :	M.G. CHEEK	DATE :	5/13
DRAWN BY :	CVC		6/10
CHECKED BY :	DNS		6/10

19-JUN-2013 08:19
R:\Structures\Final Plans\B-5149_SD_Ratings.dgn
mpoole

STD. NO. 24LRFR1_90S_70L

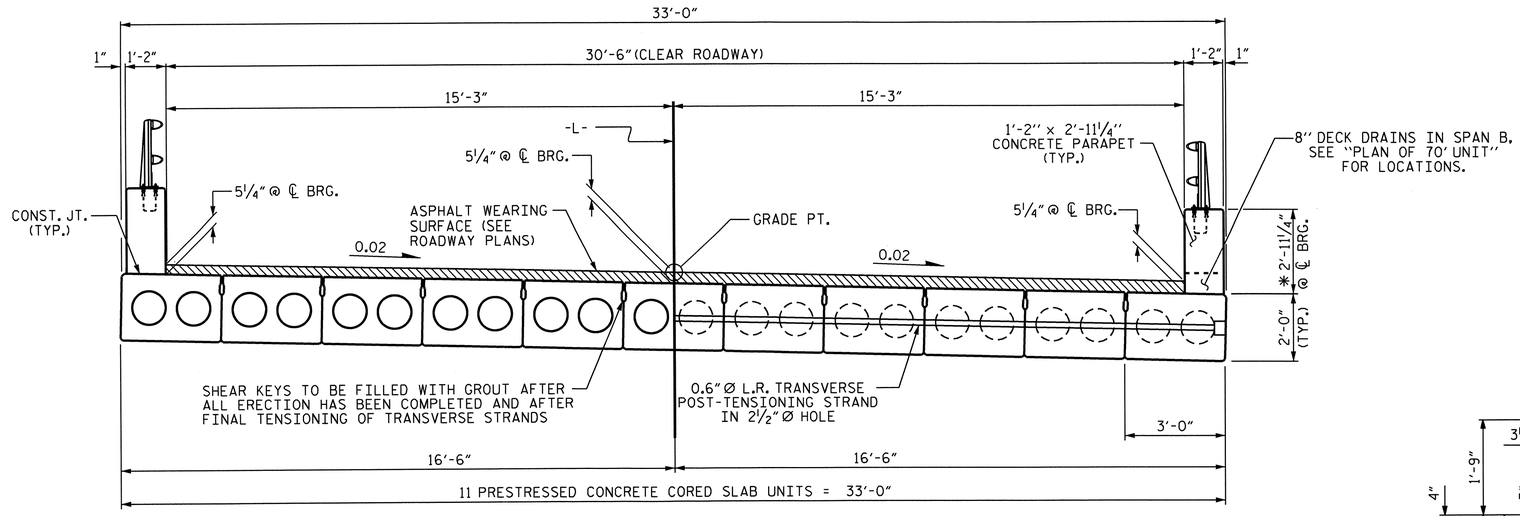

HALF SECTION
THROUGH VOIDS

HALF SECTION
AT INTERMEDIATE DIAPHRAGMS

TYPICAL SECTION

* - THE MAXIMUM PARAPET HEIGHT AND ASPHALT THICKNESS IS SHOWN. THE HEIGHT OF THE PARAPET AND ASPHALT THICKNESS VARIES WHILE THE TOP OF THE PARAPET FOLLOWS THE PROFILE OF THE GUTTERLINE. FOR PARAPET HEIGHT DETAILS AND ASPHALT THICKNESS, SEE THE "SECTION THRU PARAPET" DETAIL, SHEET 3 OF 3.

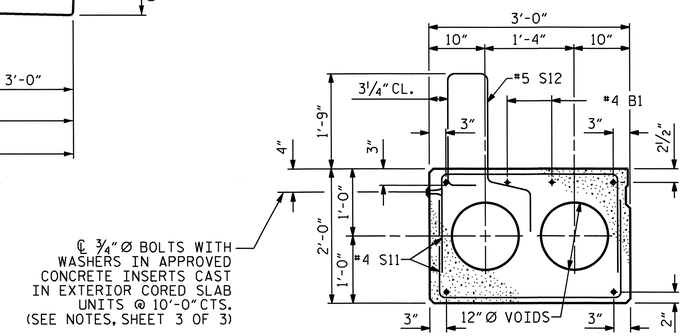

EXTERIOR SLAB SECTION

(FOR PRESTRESSED STRAND LAYOUT, SEE INTERIOR SLAB SECTION.)

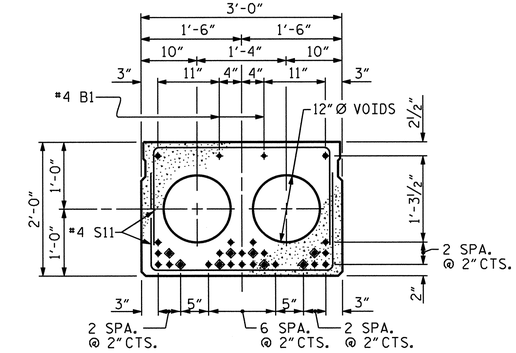

INTERIOR SLAB SECTION (70' UNIT)

(28 STRANDS REQUIRED)

0.6" Ø LOW RELAXATION STRAND LAYOUT

◈ BOND SHALL BE BROKEN ON THESE STRANDS FOR A DISTANCE OF 12'-0" FROM END OF CORED SLAB UNIT. SEE STANDARD SPECIFICATIONS, ARTICLE 1078-7.

DEBONDING LEGEND

FIXED END

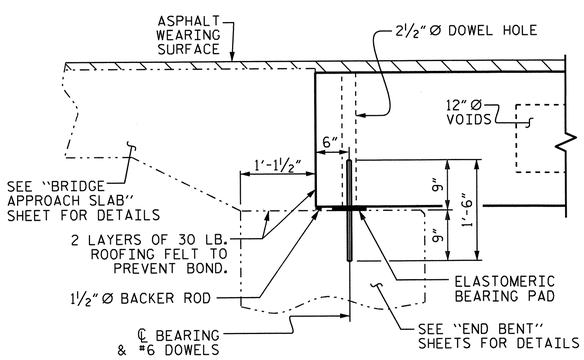

SECTION AT END BENT

FIXED END FIXED END

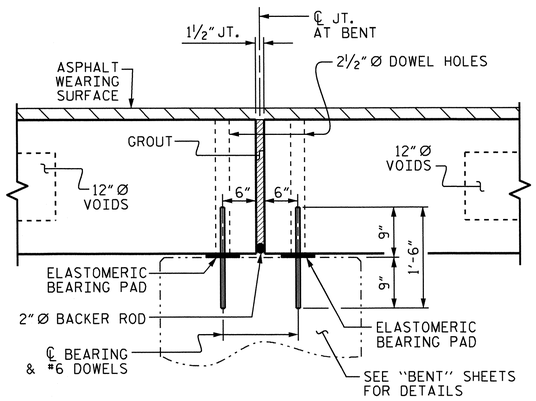

SECTION AT BENT

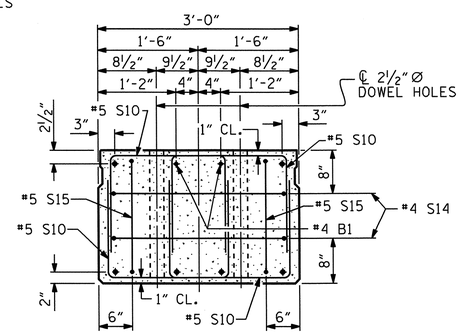

END ELEVATION

SHOWING PLACEMENT OF DOUBLE STIRRUPS AND LOCATION OF DOWEL HOLES. (STRAND LAYOUT NOT SHOWN.) INTERIOR SLAB UNIT SHOWN-EXTERIOR SLAB UNIT SIMILAR EXCEPT SHEAR KEY LOCATION.

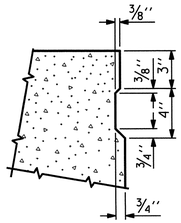

SHEAR KEY DETAIL

NOTE: OMIT SHEAR KEY ON OUTSIDE FACE OF EXTERIOR CORED SLABS.

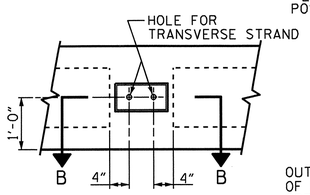

ELEVATION VIEW

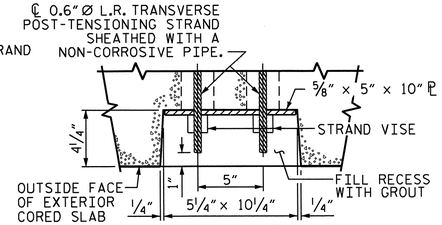

SECTION B-B

GROUTED RECESS AT END OF POST-TENSIONED STRAND CORED SLABS

PROJECT NO. B-5149
HENDERSON COUNTY
STATION: 17+77.10 -L-

SHEET 1 OF 3

STATE OF NORTH CAROLINA
DEPARTMENT OF TRANSPORTATION
RALEIGH

3'-0" X 2'-0"
PRESTRESSED CONCRETE
CORED SLAB UNIT

REVISIONS						SHEET NO.
NO.	BY:	DATE:	NO.	BY:	DATE:	S-4
1			3			TOTAL SHEETS
2			4			38

NORTH CAROLINA PROFESSIONAL SEAL 20125 ENGINEER MARSHALL T. CHECK, JR.
8-13-13

ASSEMBLED BY : V.X. NGUYEN		DATE : 08/2012	
CHECKED BY : H.P. KIM		DATE : 08/2012	
DRAWN BY : MAA	6/10	REV. 12/11	MAA/AAC
CHECKED BY : MKT	7/10		

13-AUG-2013 09:04
O:\Structures\FinalPlans\B-5149_SD_CS.dgn
wjharris

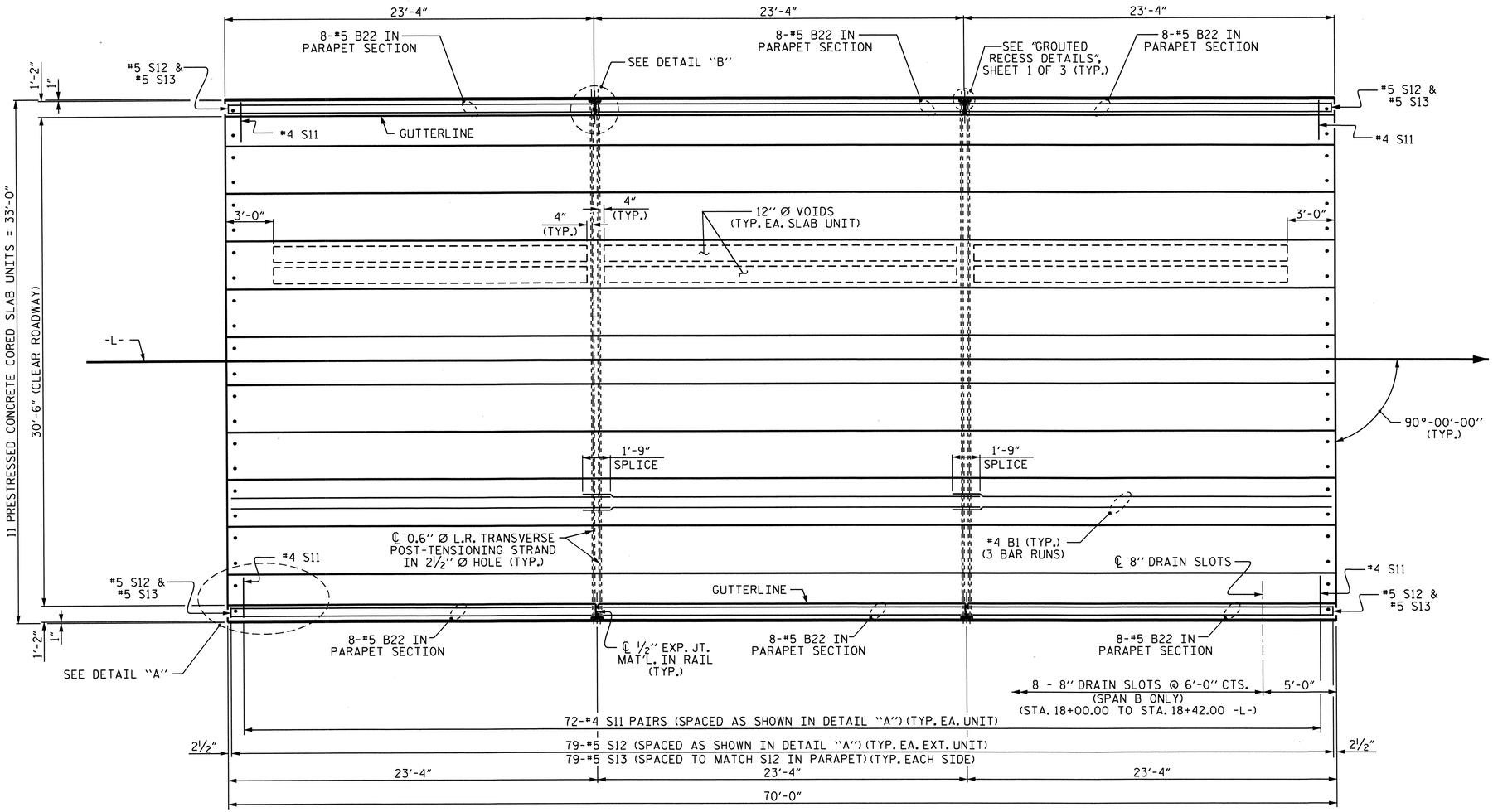

PLAN OF UNIT

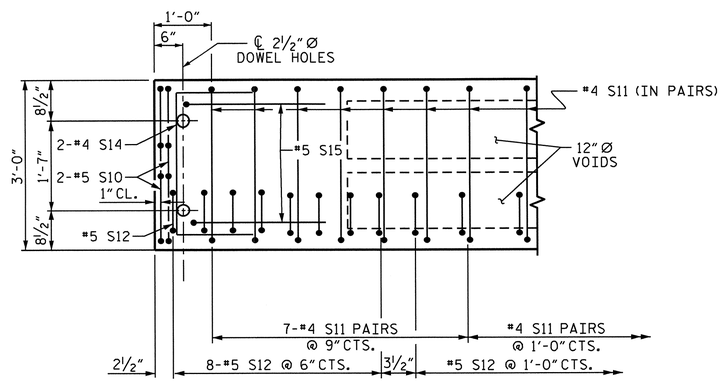

DETAIL "A"

NOTE: EXTERIOR UNIT SHOWN - INTERIOR UNIT SIMILAR EXCEPT OMIT #5 S12 BARS.

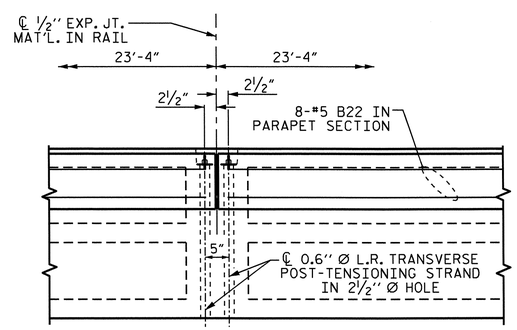

DETAIL "B"

#4 S11 BARS MAY BE SHIFTED AS NECESSARY TO MAINTAIN 1" CLEAR TO GROUTED RECESS AND 2½" Ø TRANSVERSE POST-TENSIONING STRAND HOLES

PROJECT NO. B-5149
HENDERSON COUNTY
STATION: 17+77.10 -L-

SHEET 2 OF 3

STATE OF NORTH CAROLINA
DEPARTMENT OF TRANSPORTATION
RALEIGH

PLAN OF 70' UNIT
90° SKEW

NORTH CAROLINA PROFESSIONAL SEAL 20125 ENGINEER MARSHALL D. CHEEK, JR.
8-13-13

REVISIONS							SHEET NO.
NO.	BY:	DATE:	NO.	BY:	DATE:		S-5
1			3				TOTAL SHEETS
2			4				38

ASSEMBLED BY : V.X. NGUYEN	DATE : 8-8-12		
CHECKED BY : H.P. KIM	DATE : 8-12		
DRAWN BY : MAA	6/10	REV. 12/5/11	MAA/AAC
CHECKED BY : MKT	7/10		

19-JUN-2013 08:19
R:\Structures\FinalPlans\B-5149_SD_CS.dgn
mpoole

BAR TYPES

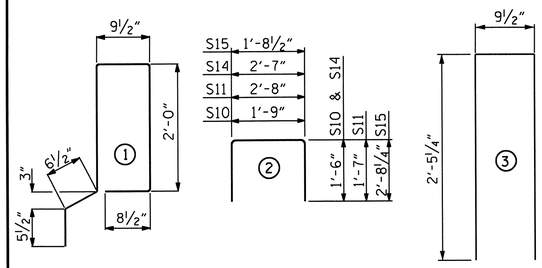

ALL BAR DIMENSIONS ARE OUT TO OUT

BILL OF MATERIAL FOR ONE 70' CORED SLAB UNIT

BAR	NUMBER	SIZE	TYPE	EXTERIOR UNIT LENGTH	EXTERIOR UNIT WEIGHT	INTERIOR UNIT LENGTH	INTERIOR UNIT WEIGHT
B1	6	#4	STR	24'-6"	98	24'-6"	98
S10	8	#5	2	4'-9"	40	4'-9"	40
S11	144	#4	2	5'-10"	561	5'-10"	561
✻S12	79	#5	1	6'-6"	536		
S14	4	#4	2	5'-8"	15	5'-8"	15
S15	4	#5	2	7'-1"	30	7'-1"	30
REINFORCING STEEL			LBS.		1,280		1,280
✻EPOXY COATED REINFORCING STEEL			LBS.		536		
7000 P.S.I. CONCRETE			CU. YDS.		12.0		12.0
0.6" Ø L.R. STRANDS			No.		28		28

BILL OF MATERIAL FOR TWO PARAPETS & FOUR END POSTS

BAR	NO.	SIZE	TYPE	LENGTH	WEIGHT
✻B22	96	# 5	STR	23'-0"	2303
✻E1	8	# 7	STR	2'-11"	48
✻E2	8	# 7	STR	3'-5"	56
✻E3	8	# 7	STR	3'-11"	64
✻E4	8	# 7	STR	4'-5"	72
✻E5	8	# 7	STR	4'-9"	78
✻F1	8	# 6	STR	1'-10"	22
✻F2	8	# 6	STR	3'-0"	36
✻F3	8	# 6	STR	3'-4"	40
✻S13	316	# 5	3	5'-9"	1895
✻EPOXY COATED REINFORCING STEEL					4614 LBS.
CLASS AA CONCRETE					36.6 CU.YDS.
1'-2" X 2'-11¼" CONCRETE PARAPET					280.25 LIN. FT.

✻ THESE BARS ARE EPOXY COATED.

GRADE 270 STRANDS

	0.6" Ø L.R.
AREA (SQUARE INCHES)	0.217
ULTIMATE STRENGTH (LBS. PER STRAND)	58,600
APPLIED PRESTRESS (LBS. PER STRAND)	43,950

CORED SLABS REQUIRED

	NUMBER	LENGTH	TOTAL LENGTH
70' UNIT			
EXTERIOR C.S.	4	70'-0"	280'-0"
INTERIOR C.S.	18	70'-0"	1260'-0"
TOTAL	22		1540'-0"

DEAD LOAD DEFLECTION AND CAMBER

	3'-0" x 2'-0"
70' CORED SLAB UNIT	0.6" Ø L.R. STRAND
CAMBER (SLAB ALONE IN PLACE)	4 5/16" ↑
DEFLECTION DUE TO SUPERIMPOSED DEAD LOAD✻✻	1 3/16" ↓
FINAL CAMBER	3½" ↑

✻✻ INCLUDES FUTURE WEARING SURFACE

CONCRETE RELEASE STRENGTH

UNIT	PSI
70' UNITS	5500

NOTES

TRANSVERSE POST TENSIONING OF THE CORED SLAB UNITS SHALL BE DONE IN ACCORDANCE WITH THE STANDARD SPECIFICATIONS.

MAINTAIN A SYMMETRIC TENSION FORCE BETWEEN EACH PAIR OF TRANSVERSE POST TENSIONING STRANDS IN THE DIAPHRAGM.

THE #4 S11 STIRRUPS MAY BE SHIFTED AS NECESSARY TO MAINTAIN 1" CLEAR TO THE GROUTED RECESS.

THE DRAIN OPENING AT THE GUTTERLINE SHALL BE 4" X 8". THE HEIGHT OF THE BLOCKOUT IN THE PARAPET SHALL EXTEND FROM THE TOP OF THE CORED SLAB UNIT TO THE TOP OF THE DRAIN OPENING.

APPLY EPOXY PROTECTIVE COATING TO EXTERIOR FACE OF THE EXTERIOR CORED SLAB UNITS THAT REQUIRE DRAINS IN THE PARAPET.

CONCRETE INSERTS SHALL HAVE A MINIMUM WORKING LOAD SHEAR CAPACITY OF 2.5 KIPS.

THE ¾" Ø BOLTS, WASHERS AND CONCRETE INSERTS SHALL BE GALVANIZED IN ACCORDANCE WITH SECTION 1076 OF THE STANDARD SPECIFICATIONS.

THE BOLTS, WASHERS AND CONCRETE INSERTS ARE PROVIDED AS AN OPTION FOR THE CONTRACTOR TO ATTACH MATERIALS TO PREVENT DEBRIS FROM DROPPING INTO THE WATER DURING CONSTRUCTION OF THE CONCRETE PARAPET.

UPON COMPLETION OF THE BRIDGE CONSTRUCTION, THE ¾" Ø BOLTS, AND WASHERS SHALL BE REMOVED AND THE CONCRETE INSERTS SHALL BE GROUTED.

THE COST OF THE ¾" Ø BOLTS, WASHERS, AND INSERTS SHALL BE INCLUDED IN THE PRICE BID FOR PRESTRESSED CONCRETE CORED SLABS.

ALL PRESTRESSING STRANDS SHALL BE 7-WIRE LOW RELAXATION GRADE 270 STRANDS AND SHALL CONFORM TO AASHTO M203 EXCEPT FOR SAMPLING REQUIREMENTS WHICH SHALL BE IN ACCORDANCE WITH THE STANDARD SPECIFICATIONS.

ALL REINFORCING STEEL CAST WITH THE CORED SLAB SECTIONS SHALL BE GRADE 60 AND SHALL BE INCLUDED IN THE UNIT PRICE BID FOR PRESTRESSED CONCRETE CORED SLABS.

RECESSES FOR TRANSVERSE STRANDS SHALL BE GROUTED AFTER THE TENSIONING OF THE STRANDS.

THE 2½" Ø DOWEL HOLES AT FIXED ENDS OF SLAB SECTIONS SHALL BE FILLED WITH NON-SHRINK GROUT.

THE 2" Ø BACKER ROD SHALL CONFORM TO THE REQUIREMENTS OF TYPE M BOND BREAKER. SEE SECTION 1028 OF THE STANDARD SPECIFICATIONS.

WHEN CORED SLABS ARE CAST, AN INTERNAL HOLD-DOWN SYSTEM SHALL BE EMPLOYED TO PREVENT VOIDS FROM RISING OR MOVING SIDEWAYS. AT LEAST SIX WEEKS PRIOR TO CASTING CORED SLABS, THE CONTRACTOR SHALL SUBMIT TO THE ENGINEER FOR REVIEW AND COMMENT, DETAILED DRAWINGS OF THE PROPOSED HOLD-DOWN SYSTEM. IN ADDITION TO STRUCTURAL DETAILS, LOCATION AND SPACING OF THE HOLD-DOWNS SHALL BE INDICATED.

THE TRANSFER OF LOAD FROM THE ANCHORAGES TO THE CORED SLAB UNIT SHALL BE DONE WHEN THE CONCRETE HAS REACHED A COMPRESSIVE STRENGTH OF NOT LESS THAN THE REQUIRED STRENGTH SHOWN IN THE "CONCRETE RELEASE STRENGTH" TABLE.

ALL REINFORCING STEEL IN PARAPET SHALL BE EPOXY COATED.

PRESTRESSING STRANDS SHALL BE CUT FLUSH WITH THE CORED SLAB UNIT ENDS.

APPLY EPOXY PROTECTIVE COATING TO CORED SLAB UNIT ENDS.

GROOVED CONTRACTION JOINTS, ½" IN DEPTH, SHALL BE TOOLED IN ALL EXPOSED FACES OF THE PARAPET AND IN ACCORDANCE WITH ARTICLE 825-10(B) OF THE STANDARD SPECIFICATIONS. A CONTRACTION JOINT SHALL BE LOCATED AT EACH THIRD POINT BETWEEN PARAPET EXPANSION JOINTS. ONLY ONE CONTRACTION JOINT IS REQUIRED AT MIDPOINT OF PARAPET SEGMENTS LESS THAN 20 FEET IN LENGTH AND NO CONTRACTION JOINTS ARE REQUIRED FOR THOSE SEGMENTS LESS THAN 10 FEET IN LENGTH.

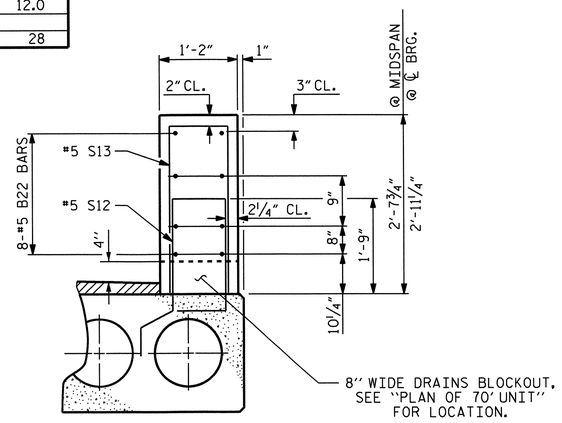

SECTION THRU PARAPET

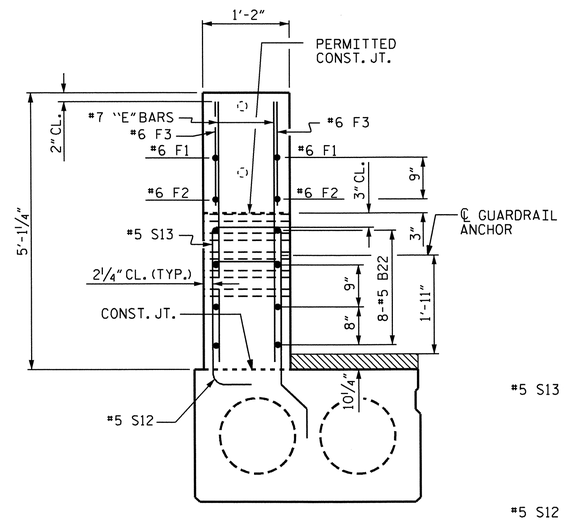

END VIEW

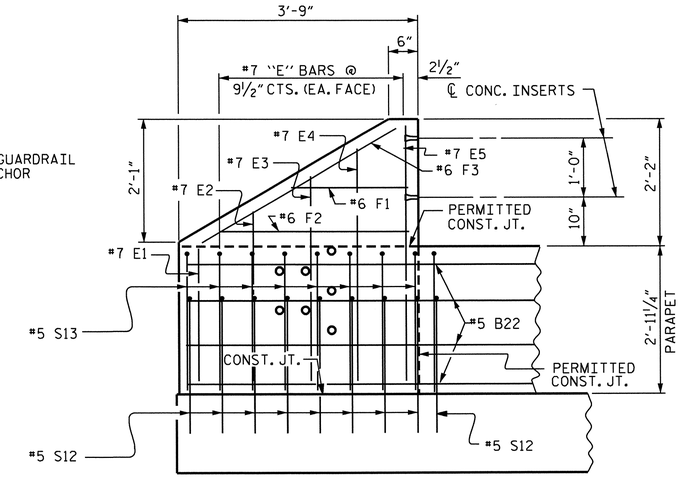

ELEVATION

PARAPET AND END POST FOR TWO BAR RAIL

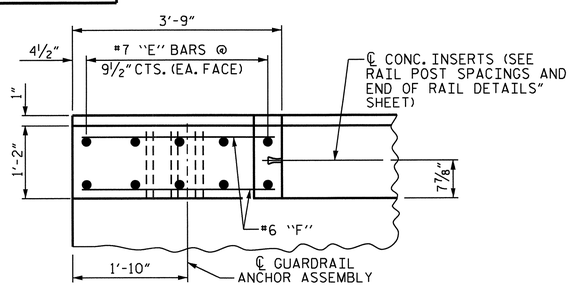

PLAN OF END POST

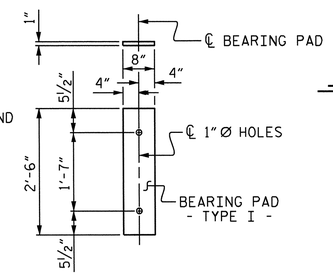

FIXED END
(TYPE I - 44 REQ'D)

ELASTOMERIC BEARING DETAILS

ELASTOMER IN ALL BEARINGS SHALL BE 60 DUROMETER HARDNESS.

PROJECT NO. B-5149
HENDERSON COUNTY
STATION: 17+77.10 -L-

SHEET 3 OF 3

STATE OF NORTH CAROLINA
DEPARTMENT OF TRANSPORTATION
RALEIGH

STANDARD
3'-0" X 2'-0"
PRESTRESSED CONCRETE
CORED SLAB UNIT

NORTH CAROLINA PROFESSIONAL SEAL 20125 ENGINEER MARSHALL G. CHEEK, JR.
8-20-13

REVISIONS						SHEET NO.
NO.	BY:	DATE:	NO.	BY:	DATE:	S-6
1			3			TOTAL SHEETS
2			4			38

ASSEMBLED BY : V.X. NGUYEN DATE : 8-15-12
CHECKED BY : H.P. KIM DATE : 08/2012

DRAWN BY : WJH 4/89
CHECKED BY : FCJ 5/89

REV. 5/7/03RRR RWW/JTE
REV. 5/1/06R TLA/GM
REV. 10/1/11 MAA/GM

20-AUG-2013 09:18
0:\Structures\Final Plans\B-5149_SD_CS.dgn
wjharris

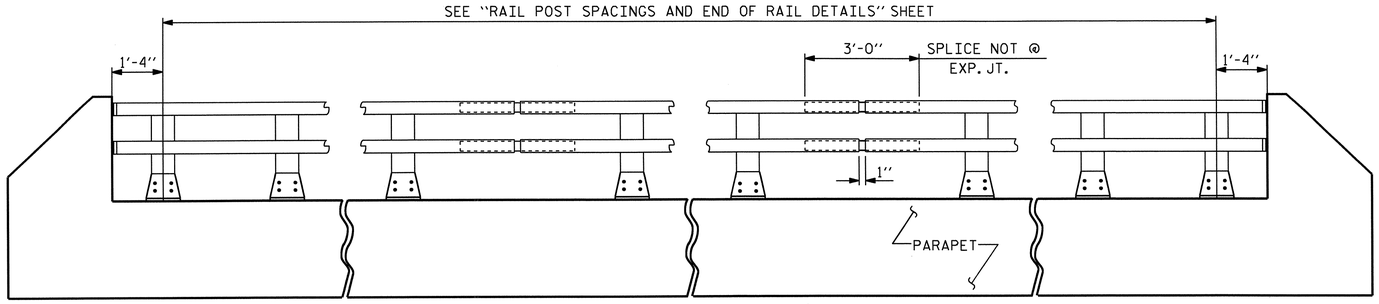

ELEVATION

NOTE : FOR ATTACHMENT OF METAL RAIL TO END POST, SEE SHEET 2 OF 3.

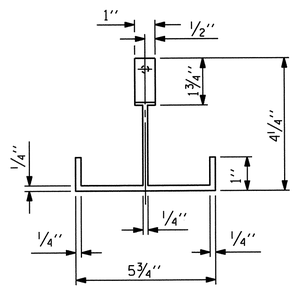

PLAN

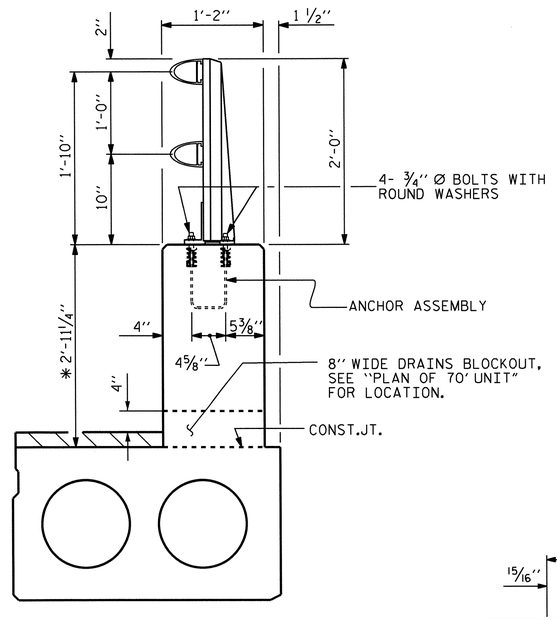

SECTION THRU PARAPET AND RAIL

* THE MAXIMUM PARAPET HEIGHT AND ASPHALT THICKNESS IS SHOWN. THE HEIGHT OF THE PARAPET AND ASPHALT THICKNESS VARIES WHILE THE TOP OF THE PARAPET FOLLOWS THE PROFILE OF THE GUTTERLINE.

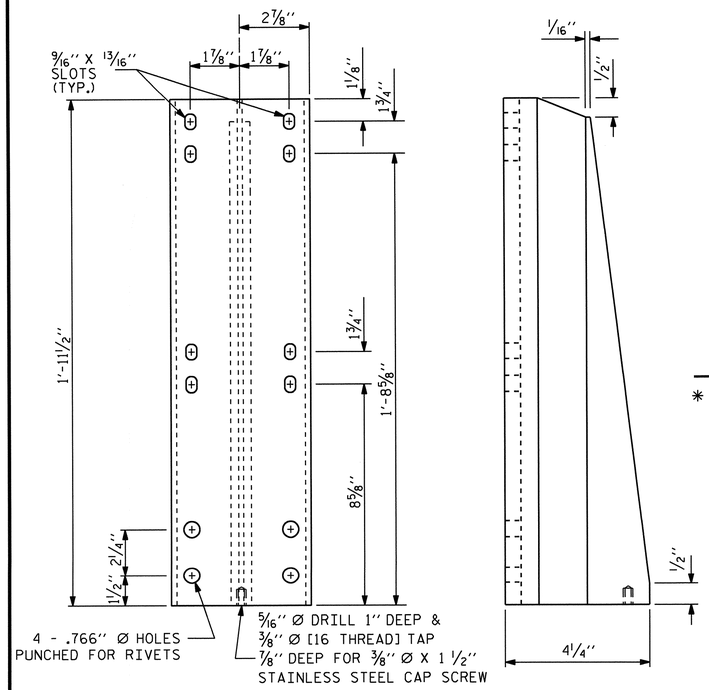

FRONT ELEVATION

SIDE ELEVATION

DETAILS OF POST

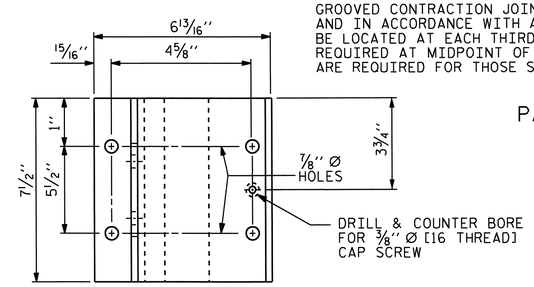

PLAN

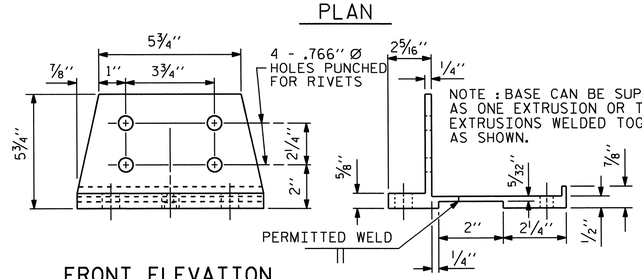

FRONT ELEVATION

SIDE ELEVATION

POST BASE DETAILS

NOTES

AT THE CONTRACTOR'S OPTION, METAL RAIL MAY BE EITHER ALUMINUM OR GALVANIZED STEEL IN ACCORDANCE WITH THE REQUIREMENTS OF THE GENERAL NOTES AND THE FOLLOWING SPECIFICATIONS FOR THE ALTERNATE MATERIALS; HOWEVER, THE CONTRACTOR WILL BE REQUIRED TO USE THE SAME RAIL MATERIAL ON ALL STRUCTURES ON THE PROJECT FOR WHICH METAL RAIL IS DESIGNATED.

ALUMINUM RAILS

MATERIAL FOR POSTS, BASES AND RAILS, EXPANSION BARS AND CLAMP BARS SHALL BE ASTM B-221 ALLOY 6061-T6.

MATERIAL FOR RIVETS SHALL BE ASTM B316 ALLOY 6061-T6. RIVETS SHALL BE STANDARD BUTTON HEAD AND CONE POINT COLD DRIVEN AS PER DRAWING.

THE BASE OF RAIL POSTS, OR ANY OTHER ALUMINUM SURFACE IN CONTACT WITH CONCRETE SHALL BE THOROUGHLY COATED WITH AN ALUMINUM IMPREGNATED CAULKING COMPOUND OF APPROVED QUALITY.

MATERIAL FOR SHIMS TO BE ASTM B209 ALLOY 6061-T6.

GALVANIZED STEEL RAILS

MATERIAL AND GALVANIZING ARE TO CONFORM TO THE FOLLOWING SPECIFICATIONS:

POST, POST BASES, RAILS, EXPANSION BARS AND CLAMP BARS: AASHTO M270 GRADE 36 STRUCTURAL STEEL - GALVANIZED TO AASHTO M111.

RIVETS: RIVETS SHALL MEET THE REQUIREMENTS OF ASTM A502 FOR GRADE 1 RIVETS.

THE CUT ENDS OF GALVANIZED STEEL RAILING, AFTER GRINDING SMOOTH SHALL BE GIVEN TWO COATS OF ZINC RICH PAINT MEETING THE REQUIREMENTS OF FEDERAL SPECIFICATION MIL-P-26915 USAF TYPE 1, OR OF FEDERAL SPECIFICATIONS TT-P-641.

SHIMS: SHIMS SHALL MEET THE REQUIREMENTS OF ASTM A570 FOR GRADE 33 OR A611 FOR GRADE C AND SHALL BE GALVANIZED IN ACCORDANCE WITH AASHTO M111.

RAIL CAPS: RAIL CAPS SHALL MEET THE REQUIREMENTS OF ASTM A570 FOR GRADE 33 OR A611 FOR GRADE C AND SHALL BE GALVANIZED IN ACCORDANCE WITH AASHTO M111.

GENERAL NOTES

RAILING SHALL BE CONTINUOUS FROM END POST TO END POST OF BRIDGE. EACH JOINT IN RAIL LENGTH SHALL BE SPLICED AS DETAILED. PANEL LENGTHS OF RAIL SHALL BE ATTACHED TO A MINIMUM OF THREE POSTS.

FOR END OF RAIL TO CLEAR FACE OF CONCRETE END POST DIMENSION, SEE SHEET 2 OF 3.

CAP SCREWS SHALL BE ASTM F593 ALLOY 305 STAINLESS STEEL. WASHERS SHALL MEET THE REQUIREMENTS OF ASTM F844 EXCEPT THEY SHALL BE MADE FROM ALLOY 304 STAINLESS STEEL.

CERTIFIED MILL REPORTS ARE REQUIRED FOR RAILS AND POSTS. SHOP INSPECTION IS NOT REQUIRED.

METAL RAIL POSTS SHALL BE SET NORMAL TO CURB GRADE.

METHOD OF MEASUREMENT FOR METAL RAILS: FOR LENGTH OF METAL RAILS TO BE PAID FOR, SEE THE STANDARD SPECIFICATIONS.

CURVED RAIL USAGE: WHERE RAILS ARE TO BE USED ON BRIDGES ON HORIZONTAL AND/OR VERTICAL CURVATURE THE CONTRACTOR MAY, AT HIS OPTION, HAVE THE REQUIRED CURVATURE IN THE RAIL FORMED IN THE SHOP OR IN THE FIELD. IN EITHER EVENT, THE RAIL SHALL CONFORM WITHOUT BUCKLING OR KINKING TO THE REQUIRED CURVATURE IN A UNIFORM MANNER ACCEPTABLE TO THE ENGINEER.

TO INSURE FUTURE IDENTIFICATION OF THE FABRICATOR, A PERMANENT IDENTIFYING MARK SHALL BE PLACED ON EACH POST. THE METHOD OF MARKING AND LOCATION SHALL BE SUCH THAT IT DOES NOT DETRACT FROM THE APPEARANCE OF THE POST, BUT REMAINS VISIBLE AFTER RAIL PLACEMENT.

SHIMS SHALL BE USED AS NECESSARY FOR POST ALIGNMENT.

ALLOY 6351-T5 MAY BE SUBSTITUTED FOR ALLOY 6061-T6 WHERE APPLICABLE.

MINOR VARIATIONS IN DETAILS OF METAL RAIL WILL BE CONSIDERED. DETAILS OF SUCH VARIATIONS, IF DESIRED, SHALL BE SUBMITTED FOR APPROVAL.

GROOVED CONTRACTION JOINTS, 1/2" IN DEPTH, SHALL BE TOOLED IN ALL EXPOSED FACES OF THE PARAPET AND IN ACCORDANCE WITH ARTICLE 825-10(B) OF THE STANDARD SPECIFICATIONS. A CONTRACTION JOINT SHALL BE LOCATED AT EACH THIRD POINT BETWEEN PARAPET EXPANSION JOINTS. ONLY ONE CONTRACTION JOINT IS REQUIRED AT MIDPOINT OF PARAPET SEGMENTS LESS THAN 20 FEET IN LENGTH AND NO CONTRACTION JOINTS ARE REQUIRED FOR THOSE SEGMENTS LESS THAN 10 FEET IN LENGTH.

PAY LENGTH = 265.25 LIN. FT.

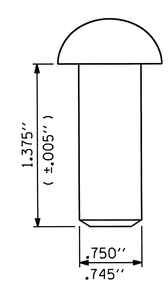

RIVET DETAIL

PROJECT NO. B-5149

HENDERSON COUNTY

STATION: 17+77.10 -L-

SHEET 1 OF 3

STATE OF NORTH CAROLINA
DEPARTMENT OF TRANSPORTATION
RALEIGH

STANDARD

2 BAR METAL RAIL

REVISIONS								SHEET NO.
NO.	BY:	DATE:	NO.	BY:	DATE:			S-7
1			3					TOTAL SHEETS
2			4					38

ASSEMBLED BY : V.X. NGUYEN		DATE : 8/8/12	
CHECKED BY : H.P. KIM		DATE : 08/12	
DRAWN BY : EEM 6/94	REV. 5/7/03R	RWW/JTE	
CHECKED BY : RGW 6/94	REV. 5/1/06	TLA/GM	
	REV. 10/1/11	MAA/GM	

25-JUN-2013 07:43
R:\Structures\Final Plans\B-5149_SD_CS.dgn
mpoole

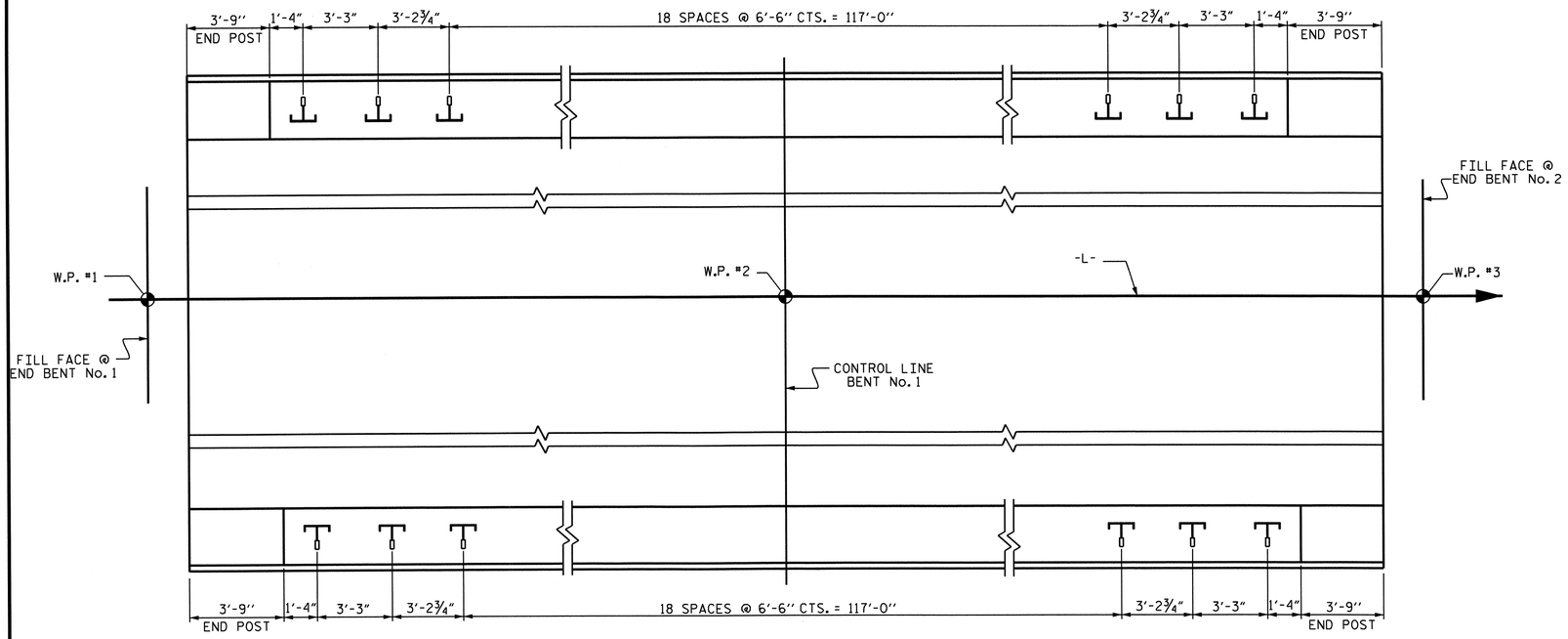

PLAN OF RAIL POST SPACINGS

NOTES

STRUCTURAL CONCRETE INSERT

THE STRUCTURAL CONCRETE INSERT ASSEMBLY SHALL CONSIST OF THE FOLLOWING COMPONENTS:

A. FERRULES SHALL BE MADE FROM STEEL MEETING THE REQUIREMENTS OF AASHTO M169, GRADE 12L14 AND SHALL HAVE A MINIMUM LENGTH OF THREADS OF 1½".

B. 1 - ¾" Ø X 1⅝" BOLT WITH WASHER. BOLT SHALL CONFORM TO THE REQUIREMENTS OF ASTM A307. BOLT AND WASHER SHALL BE GALVANIZED. (AT THE CONTRACTOR'S OPTION, STAINLESS STEEL BOLT AND WASHER MAY BE USED AS AN ALTERNATE FOR THE ¾" Ø X 1⅝" GALVANIZED BOLT AND WASHER. THEY SHALL CONFORM TO OR EXCEED THE MECHANICAL REQUIREMENTS OF ASTM A307. THE USE OF THIS ALTERNATE SHALL BE APPROVED BY THE ENGINEER.)

C. WIRE STRUT SHOWN IN THE CONCRETE INSERT ASSEMBLY DETAIL IS THE MINIMUM ALLOWABLE SIZE AND SHALL HAVE A MINIMUM TENSILE STRENGTH OF 100,000 PSI. AS AN OPTION, A 7/16" Ø WIRE STRUT WITH A MINIMUM TENSILE STRENGTH OF 90,000 PSI IS ACCEPTABLE.

NOTES

METAL RAIL TO END POST CONNECTION

THE METAL RAIL TO END POST CONNECTION SHALL CONSIST OF THE FOLLOWING COMPONENTS:

A. ½" PLATES SHALL CONFORM TO AASHTO M270 GRADE 36 AND SHALL BE GALVANIZED AFTER FABRICATION.

B. ¾" STRUCTURAL CONCRETE INSERT SHALL HAVE A WORKING LOAD SHEAR CAPACITY OF 4800 LBS. THE FERRULES SHALL ENGAGE A ¾"Ø X 1⅝" BOLT WITH 2" O.D. WASHER IN PLACE. THE ¾"Ø X 1⅝" BOLT SHALL HAVE N. C. THREADS.

C. CAP SCREWS FOR RAIL ATTACHMENT TO ANGLE SHALL CONFORM TO THE REQUIREMENTS OF ASTM F593 ALLOY 305 STAINLESS STEEL. CAP SCREWS TO BE CENTERED IN SLOTS AT 60°F.

D. STANDARD CLAMP BARS, (SEE SHEET 3 OF 3).

E. ½" Ø PIPE SLEEVES (IF REQUIRED) TO BE GALVANIZED.

THE COST OF THE STANDARD CLAMP BARS AND CAP SCREWS USED IN THE METAL RAIL TO END POST CONNECTION SHALL BE INCLUDED IN THE UNIT CONTRACT PRICE BID FOR LINEAR FEET OF 1 OR 2 BAR METAL RAILS.

THE ¾" STRUCTURAL CONCRETE INSERT WITH BOLT SHALL BE ASSEMBLED IN THE SHOP.

THE COST OF THE ¾" STRUCTURAL CONCRETE INSERT ASSEMBLY, AND THE ½" PLATES COMPLETE IN PLACE SHALL BE INCLUDED IN THE VARIOUS PAY ITEMS.

THE CONTRACTOR, AT HIS OPTION, MAY USE AN ADHESIVE BONDING SYSTEM IN LIEU OF THE STRUCTURAL CONCRETE INSERT EMBEDDED IN THE END POST. IF THE ADHESIVE BONDING SYSTEM IS USED, THE ¾" Ø X 1⅝" BOLT WITH WASHER SHALL BE REPLACED WITH A ¾"Ø X 6½" BOLT AND 2" O.D. WASHER. ALL SPECIFICATIONS THAT APPLY TO THE ¾" Ø X 1⅝" BOLT SHALL APPLY TO THE ¾"Ø X 6 ½" BOLT. FIELD TESTING OF THE ADHESIVE BONDING SYSTEM IS NOT REQUIRED.

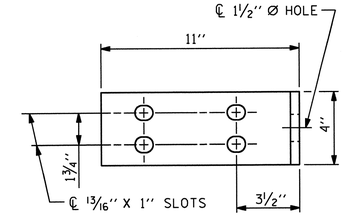

ELEVATION

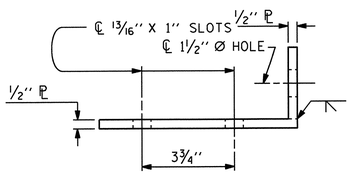

TOP VIEW

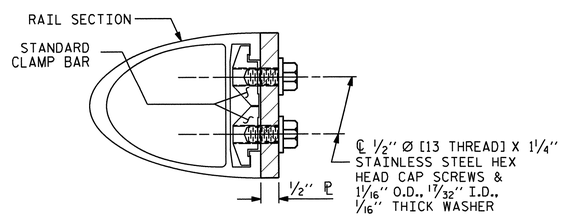

SECTION H-H (FIX)

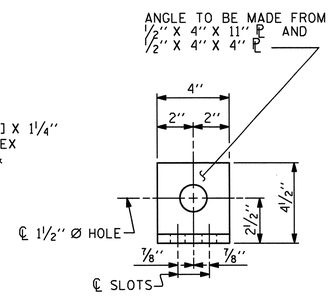

END VIEW (FIX)

FIXED

DETAILS FOR ATTACHING METAL RAIL TO END POST

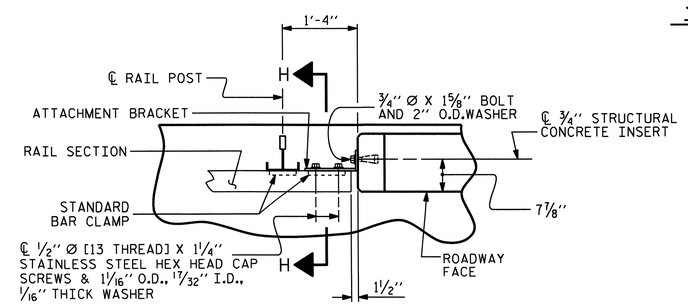

PLAN - RAIL AND END POST

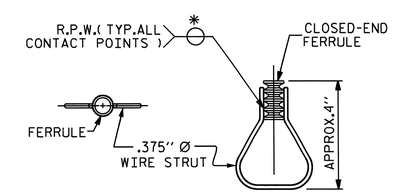

PLAN ELEVATION

STRUCTURAL CONCRETE INSERT

* EACH WELDED ATTACHMENT OF WIRE TO FERRULE SHALL DEVELOP THE TENSILE STRENGTH OF THE WIRE.

PROJECT NO. B-5149

HENDERSON COUNTY

STATION: 17+77.10 -L-

SHEET 2 OF 3

STATE OF NORTH CAROLINA
DEPARTMENT OF TRANSPORTATION
RALEIGH

RAIL POST SPACINGS AND END OF RAIL DETAILS

NORTH CAROLINA PROFESSIONAL SEAL 20125 ENGINEER MARSHALL B. CHEEK, JR.
8-13-13

REVISIONS						SHEET NO.
NO.	BY:	DATE:	NO.	BY:	DATE:	S-8
1			3			TOTAL SHEETS
2			4			38

ASSEMBLED BY :	V.X. NGUYEN	DATE :	8/8/12
CHECKED BY :	H.P. KIM	DATE :	08/12
DRAWN BY : FCJ 1/88	REV. 5/7/03 RWW/JTE		
CHECKED BY : CRK 3/89	REV. 5/1/06 TLA/GM		
	REV. 10/1/11 MAA/GM		

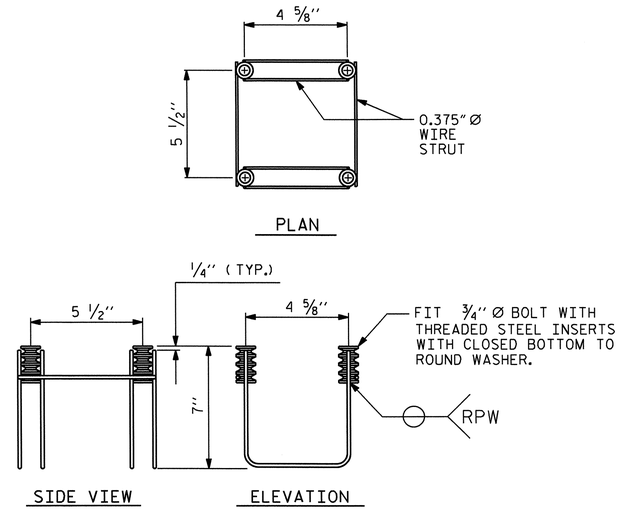

4-BOLT METAL RAIL ANCHOR ASSEMBLY

(46 ASSEMBLIES REQUIRED)

NOTES

STRUCTURAL CONCRETE ANCHOR ASSEMBLY

THE STRUCTURAL CONCRETE ANCHOR ASSEMBLY SHALL CONSIST OF THE FOLLOWING COMPONENTS :

A. FERRULES SHALL BE MADE FROM STEEL MEETING THE REQUIREMENTS OF AASHTO M169, GRADE 12L14 AND SHALL HAVE A MINIMUM LENGTH OF THREADS OF 2'' FOR 3/4'' FERRULES.

B. 4 - 3/4'' Ø X 2 1/2'' BOLTS WITH WASHERS. BOLTS SHALL CONFORM TO THE REQUIREMENTS OF ASTM A307. BOLTS AND WASHERS SHALL BE GALVANIZED. AT THE CONTRACTOR'S OPTION, STAINLESS STEEL BOLTS AND WASHERS MAY BE USED AS AN ALTERNATE FOR THE 3/4'' Ø X 2 1/2'' GALVANIZED BOLTS AND WASHERS. THEY SHALL CONFORM TO OR EXCEED THE MECHANICAL REQUIREMENTS OF ASTM A307. THE USE OF THIS ALTERNATE SHALL BE APPROVED BY THE ENGINEER.

C. WIRE STRUT SHOWN IN THE CONCRETE ANCHOR ASSEMBLY DETAIL IS THE MINIMUM ALLOWABLE SIZE AND SHALL HAVE A MINIMUM TENSILE STRENGTH OF 100,000 PSI. AS AN OPTION, A 7/16'' Ø WIRE STRUT WITH A MINIMUM TENSILE STRENGTH OF 90,000 PSI IS ACCEPTABLE.

D. THE METAL RAIL ANCHOR ASSEMBLIES TO BE HOT DIPPED GALVANIZED TO CONFORM TO REQUIREMENTS OF AASHTO M111.

E. THE COST OF THE METAL RAIL ANCHOR ASSEMBLY WITH BOLTS AND WASHERS COMPLETE IN PLACE SHALL BE INCLUDED IN THE PRICE BID FOR LINEAR FEET OF METAL RAIL.

F. BOLTS TO BE TIGHTENED ONE-HALF TURN WITH A WRENCH FROM A FINGER-TIGHT POSITION.

THE CONTRACTOR MAY USE ADHESIVELY ANCHORED ANCHOR BOLTS IN PLACE OF THE METAL RAIL ANCHOR ASSEMBLY. LEVEL ONE FIELD TESTING IS REQUIRED, AND THE YIELD LOAD OF THE 3/4''Ø BOLT IS 10 KIPS. FOR ADHESIVELY ANCHORED ANCHOR BOLTS OR DOWELS, SEE THE STANDARD SPECIFICATIONS.

WHEN ADHESIVELY ANCHORED ANCHOR BOLTS ARE USED, BOLTS SHALL MEET THE REQUIREMENTS OF ASTM F593 ALLOY 304 STAINLESS STEEL WITH MINIMUM 75,000 PSI ULTIMATE STRENGTH. NUTS SHALL MEET THE REQUIREMENTS OF ASTM F594 ALLOY 304 STAINLESS STEEL AND WASHERS SHALL MEET THE REQUIREMENTS OF ASTM F844 EXCEPT THEY SHALL BE MADE FROM ALLOY 304 STAINLESS STEEL.

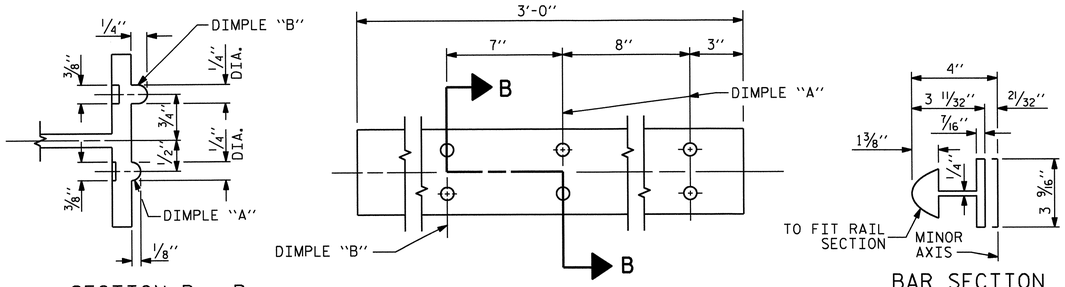

EXPANSION BAR DETAILS

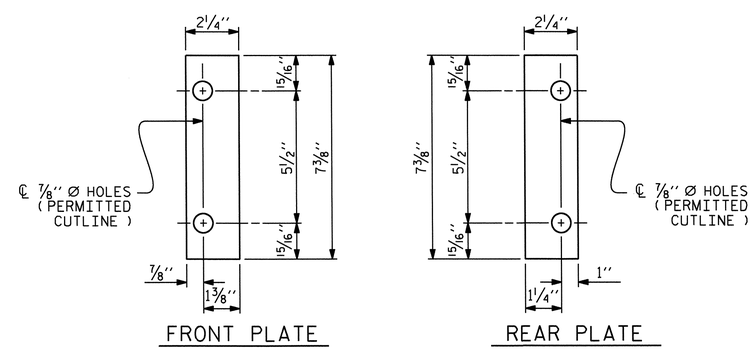

SHIM DETAILS

NOTE :
SHIMS MAY BE CUT ALONG PERMITTED CUTLINE OR SLOTTED TO EDGE OF PLATE TO FACILITATE PLACEMENT.

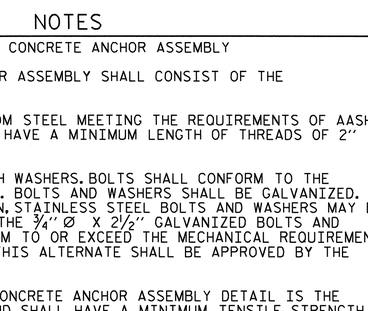

RAIL SECTION

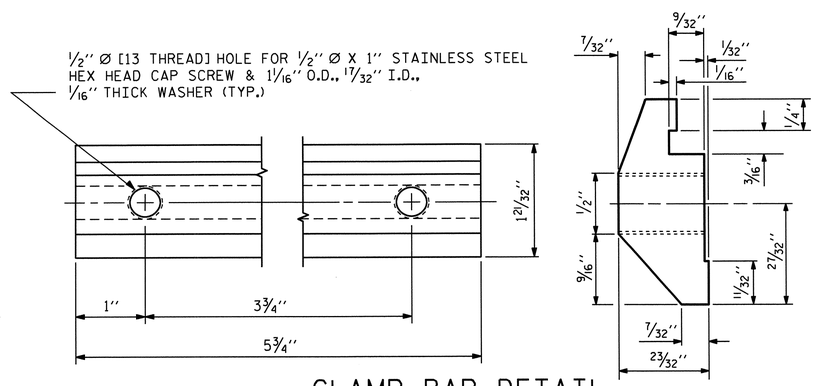

CLAMP BAR DETAIL

(4 REQUIRED PER POST)

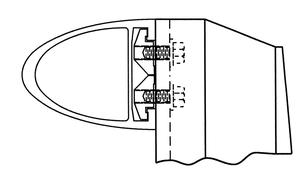

CLAMP ASSEMBLY

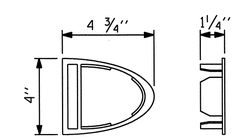

RAIL CAP

PROJECT NO. B-5149

HENDERSON COUNTY

STATION: 17+77.10 -L-

SHEET 3 OF 3

STATE OF NORTH CAROLINA
DEPARTMENT OF TRANSPORTATION
RALEIGH

STANDARD

2 BAR METAL RAIL

NORTH CAROLINA PROFESSIONAL SEAL 20125 ENGINEER MARSHALL L. FOREK, JR.
8-13-13

ASSEMBLED BY : V.X. NGUYEN	DATE : 8/8/12		
CHECKED BY : H.P. KIM	DATE : 08/2012		
DRAWN BY : EEM 6/94	REV. 8/16/99	MAB/LES	
CHECKED BY : RGW 6/94	REV. 5/1/06R	KMM/GM	
	REV. 10/1/11	MAA/GM	

REVISIONS								SHEET NO.
NO.	BY:	DATE:	NO.	BY:	DATE:			S-9
1			3					TOTAL SHEETS
2			4					38

19-JUN-2013 08:47
R:\Structures\Final Plans\B-5149_SD_CS.dgn
mpoole

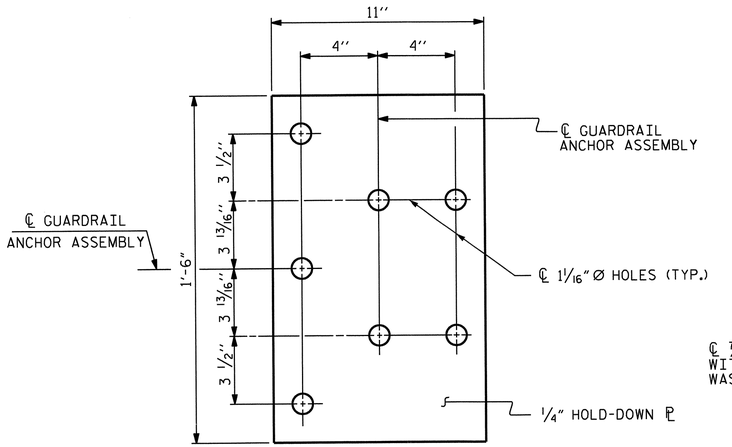

PLAN

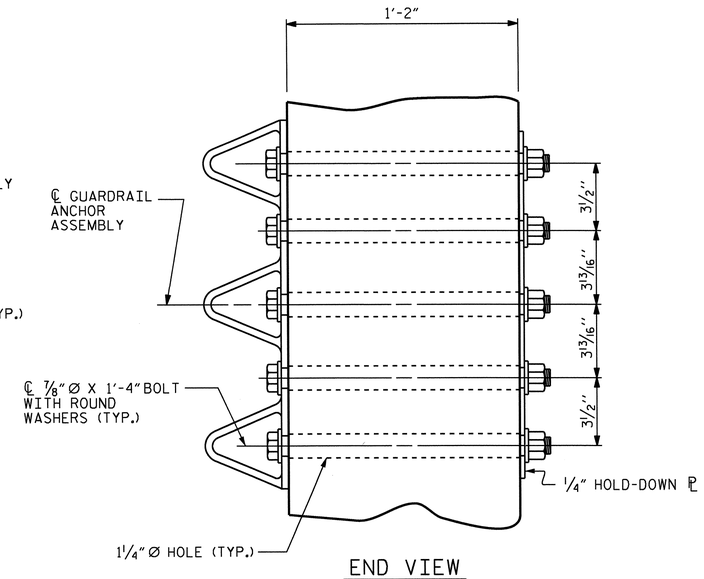

END VIEW

GUARDRAIL ANCHOR ASSEMBLY DETAILS

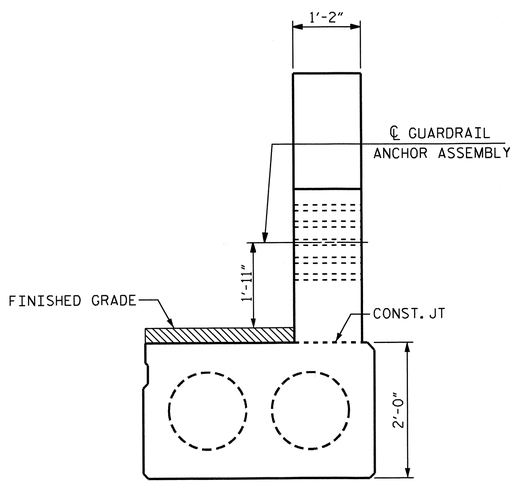

END VIEW

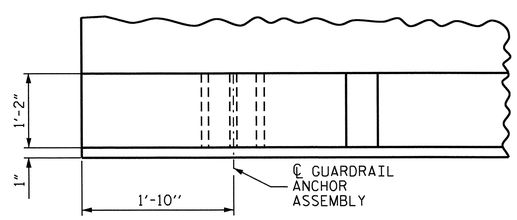

PLAN

LOCATION OF GUARDRAIL ANCHOR AT END POST

NOTES

THE GUARDRAIL ANCHOR ASSEMBLY SHALL CONSIST OF A 1/4'' HOLD DOWN PLATE AND 7 - 7/8'' Ø BOLTS WITH NUTS AND WASHERS.

THE HOLD-DOWN PLATE SHALL CONFORM TO AASHTO M270 GRADE 36. AFTER FABRICATION, THE HOLD-DOWN PLATE SHALL BE HOT-DIP GALVANIZED IN ACCORDANCE WITH AASHTO M111.

BOLTS SHALL CONFORM TO THE REQUIREMENTS OF ASTM A307 AND NUTS SHALL CONFORM TO THE REQUIREMENTS OF AASHTO M291. BOLTS, NUTS AND WASHERS SHALL BE GALVANIZED. AT THE CONTRACTOR'S OPTION, STAINLESS STEEL BOLTS, NUTS AND WASHERS MAY BE USED AS AN ALTERNATE FOR THE 7/8'' Ø GALVANIZED BOLTS, NUTS AND WASHERS. THEY SHALL CONFORM TO OR EXCEED THE MECHANICAL REQUIREMENTS OF ASTM A307. THE USE OF THIS ALTERNATE SHALL BE APPROVED BY THE ENGINEER.

AFTER INSTALLATION, THE EXPOSED THREAD OF THE BOLT SHALL BE BURRED WITH A SHARP POINTED TOOL.

THE COST OF THE GUARDRAIL ANCHOR ASSEMBLIES WITH BOLTS, NUTS AND WASHERS COMPLETE IN PLACE, SHALL BE INCLUDED IN THE VARIOUS PAY ITEMS.

THE VERTICAL REINFORCING BARS MAY BE SHIFTED SLIGHTLY IN THE END POST TO CLEAR ASSEMBLY BOLTS.

THE 1 1/4'' Ø HOLES SHALL BE FORMED OR DRILLED WITH A CORE BIT. IMPACT TOOLS WILL NOT BE PERMITTED. ANY CONCRETE DAMAGED BY THIS WORK SHALL BE REPAIRED TO THE SATISFACTION OF THE ENGINEER.

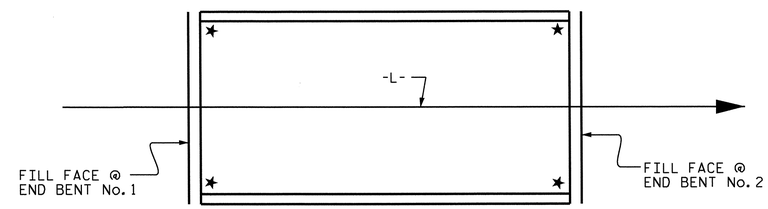

SKETCH SHOWING POINTS OF ATTACHMENT

★ LOCATION OF GUARDRAIL ATTACHMENT

PROJECT NO. B-5149
HENDERSON COUNTY
STATION: 17+77.10 -L-

STATE OF NORTH CAROLINA
DEPARTMENT OF TRANSPORTATION
RALEIGH

GUARDRAIL ANCHORAGE DETAILS FOR METAL RAILS

NORTH CAROLINA PROFESSIONAL SEAL 20125 ENGINEER MARSHALL D. CHEEK, JR.
8-13-13

REVISIONS						SHEET NO.
NO.	BY:	DATE:	NO.	BY:	DATE:	S-10
1			3			TOTAL SHEETS
2			4			38

ASSEMBLED BY : V.X. NGUYEN DATE : 8/8/12	
CHECKED BY : H.P. KIM DATE : 08/12	
DRAWN BY : MAA 5/10	ADDED 5/6/10
CHECKED BY : GM 5/10	REV. 10/1/11 MAA/GM
	REV. 12/5/11 MAA/GM

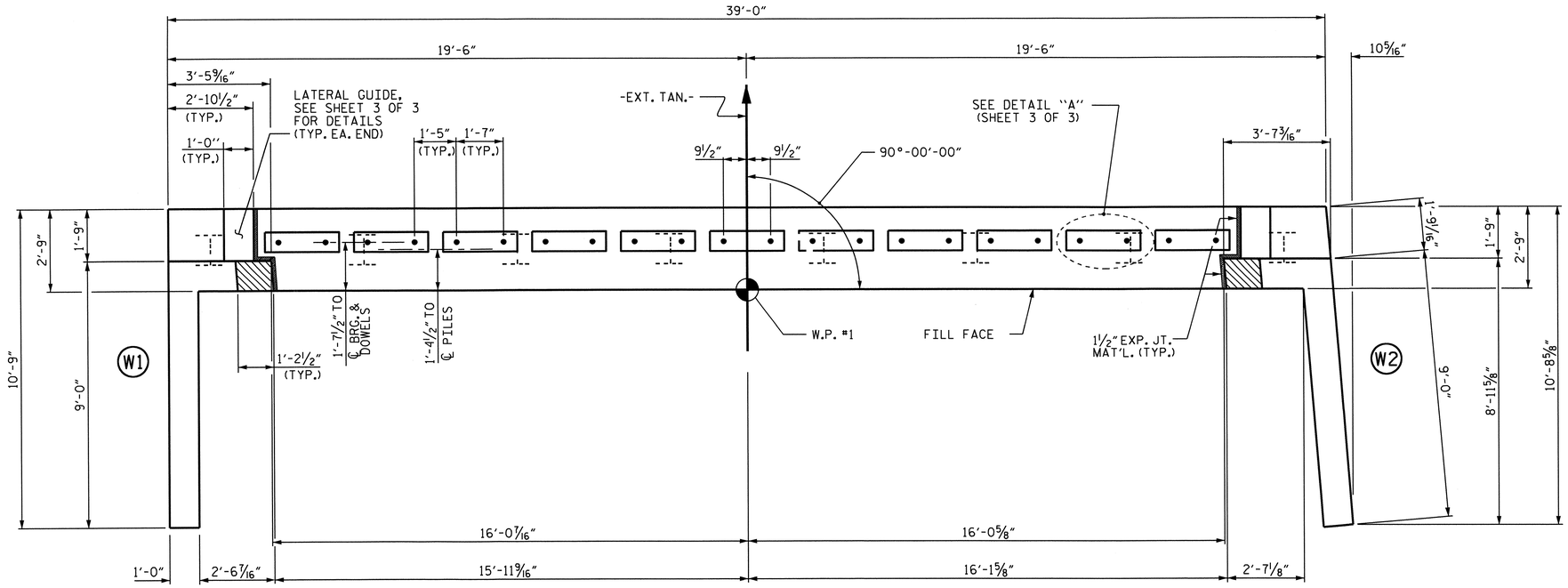

PLAN

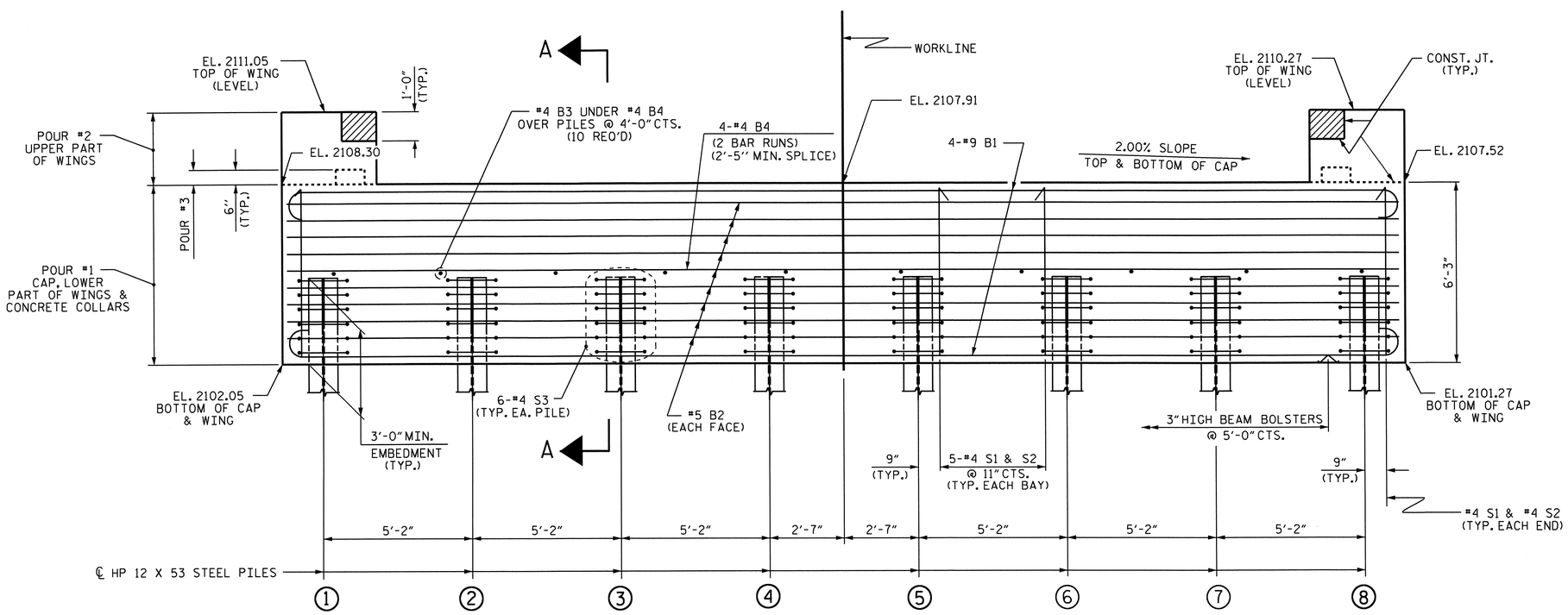

ELEVATION

WINGS NOT SHOWN FOR CLARITY.
FOR SECTION A-A, SEE SHEET 3 OF 3.
CONCRETE COLLARS FOR STEEL PILES NOT SHOWN IN PLAN AND ELEVATION VIEWS FOR CLARITY.
SEE "CORROSION PROTECTION FOR STEEL PILES DETAIL", SHEET 3 OF 3.

NOTES

STIRRUPS IN CAP MAY BE SHIFTED AS NECESSARY TO CLEAR DOWELS.

THE CONCRETE IN THE SHADED AREA OF THE WING SHALL BE POURED AFTER THE PARAPET IS CAST IF SLIP FORMING IS USED.

FOR PILE SPLICE DETAILS, SEE SHEET 3 OF 3.

FOR WING DETAILS, SEE SHEET 2 OF 3.

THE CONTRACTOR HAS THE OPTION TO OMIT THE LATERAL GUIDES IF APPROVED BY THE ENGINEER.

THE LATERAL GUIDES ARE NOT TO BE POURED UNTIL AFTER THE CORED SLAB UNITS ARE IN PLACE.

TOP OF PILE ELEVATIONS	
1	2105.03
2	2104.93
3	2104.83
4	2104.72
5	2104.62
6	2104.52
7	2104.41
8	2104.31

PROJECT NO. B-5149
HENDERSON COUNTY
STATION: 17+77.10 -L-

SHEET 1 OF 3

STATE OF NORTH CAROLINA
DEPARTMENT OF TRANSPORTATION
RALEIGH

SUBSTRUCTURE

END BENT No. 1

NORTH CAROLINA PROFESSIONAL SEAL 20125 ENGINEER MARSHALL W. CHEEK, JR.
8-13-13

REVISIONS						SHEET NO.
NO.	BY:	DATE:	NO.	BY:	DATE:	S-11
1			3			TOTAL SHEETS
2			4			38

DRAWN BY : V.X. NGUYEN DATE : 11-19-12
CHECKED BY : H.P. KIM DATE : 12-12
DESIGN ENGINEER OF RECORD: H.P. KIM DATE : 8-13

13-AUG-2013 11:49
O:\Structures\FinalPlans\B-5149_SD_E*.dgn
wjharris

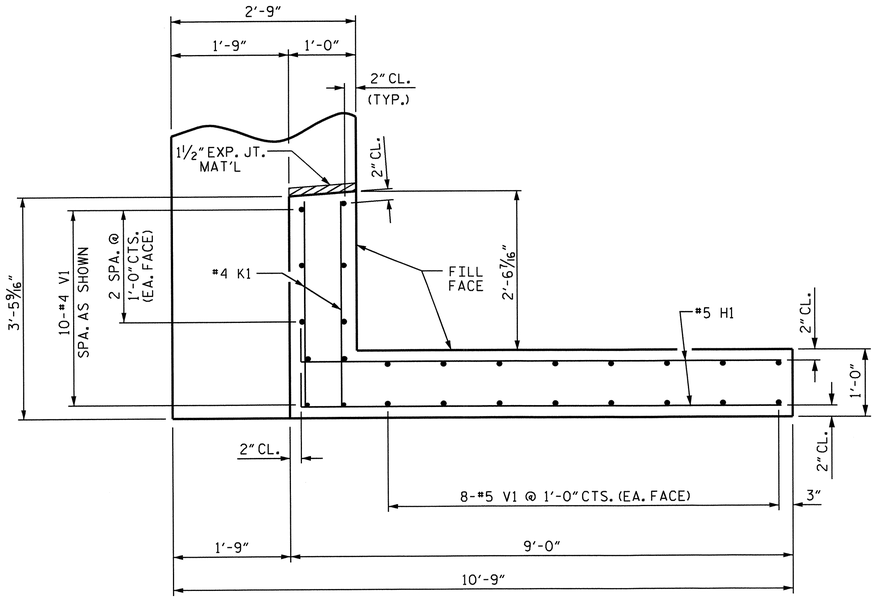

PLAN OF WING (W1)

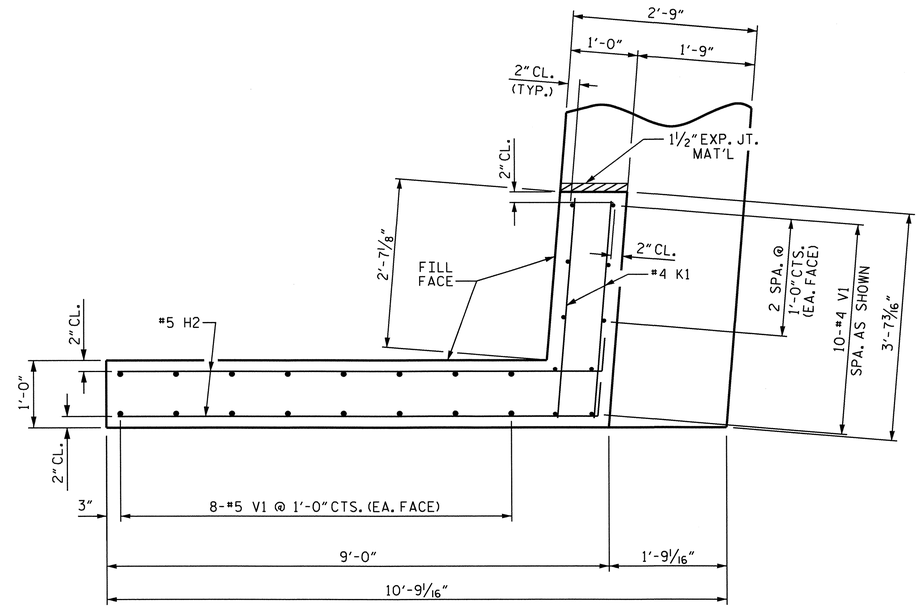

PLAN OF WING (W2)

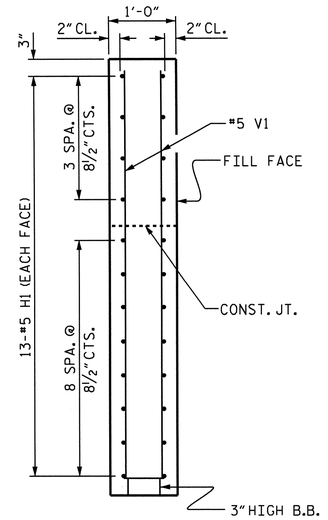

SECTION X-X

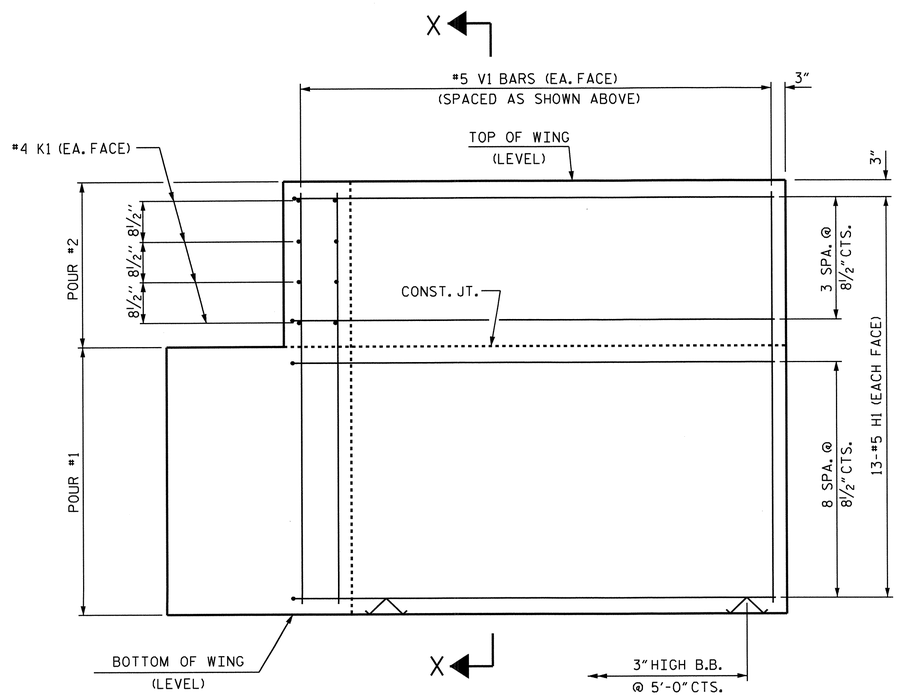

ELEVATION OF WING (W1)

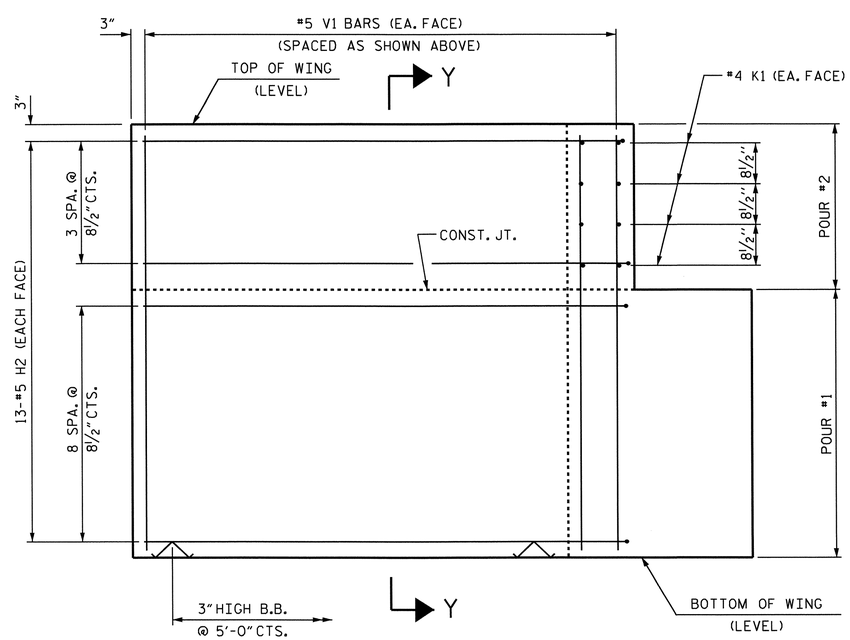

ELEVATION OF WING (W2)

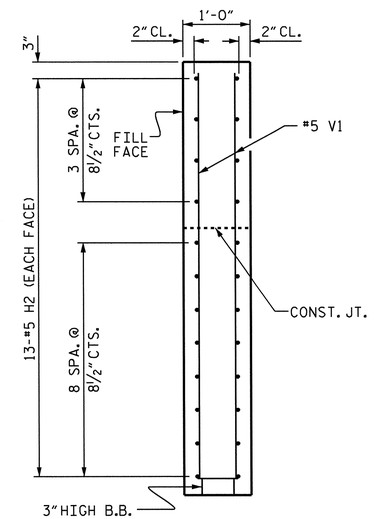

SECTION Y-Y

WING DETAILS

PROJECT NO. B-5149

HENDERSON COUNTY

STATION: 17+77.10 -L-

SHEET 2 OF 3

STATE OF NORTH CAROLINA
DEPARTMENT OF TRANSPORTATION
RALEIGH

SUBSTRUCTURE

END BENT No. 1
WING DETAILS

REVISIONS						SHEET NO.
NO.	BY:	DATE:	NO.	BY:	DATE:	S-12
1			3			TOTAL SHEETS
2			4			38

NORTH CAROLINA PROFESSIONAL SEAL 20125 ENGINEER MARSHALL E. CHECK, JR.
8-13-13

DRAWN BY :	V.X. NGUYEN	DATE :	11-19-12
CHECKED BY :	H.P. KIM	DATE :	12-12
DESIGN ENGINEER OF RECORD:	H.P. KIM	DATE :	8-13

13-AUG-2013 11:49
O:\Structures\FinalPlans\B-5149_SD_E*.dgn
wjharris

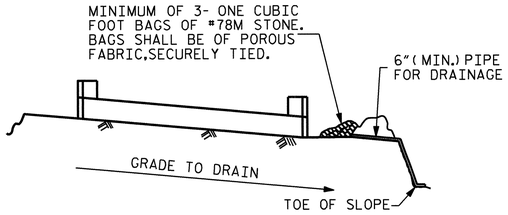

BAGGED STONE AND PIPE SHALL BE PLACED IMMEDIATELY AFTER COMPLETION OF END BENT EXCAVATION. PIPE MAY BE EITHER CONCRETE, CORRUGATED STEEL, CORRUGATED ALUMINUM ALLOY, OR CORRUGATED PLASTIC. PERFORATED PIPE WILL NOT BE ALLOWED.

BAGGED STONE SHALL REMAIN IN PLACE UNTIL THE ENGINEER DIRECTS THAT IT BE REMOVED. THE CONTRACTOR SHALL REMOVE AND DISPOSE OF SILT ACCUMULATIONS AT BAGGED STONE WHEN SO DIRECTED BY THE ENGINEER. BAGS SHALL BE REMOVED AND REPLACED WHENEVER THE ENGINEER DETERMINES THAT THEY HAVE DETERIORATED AND LOST THEIR EFFECTIVENESS.

NO SEPARATE PAYMENT WILL BE MADE FOR THIS WORK AND THE ENTIRE COST OF THIS WORK SHALL BE INCLUDED IN THE UNIT CONTRACT PRICE BID FOR THE SEVERAL PAY ITEMS.

TEMPORARY DRAINAGE AT END BENT

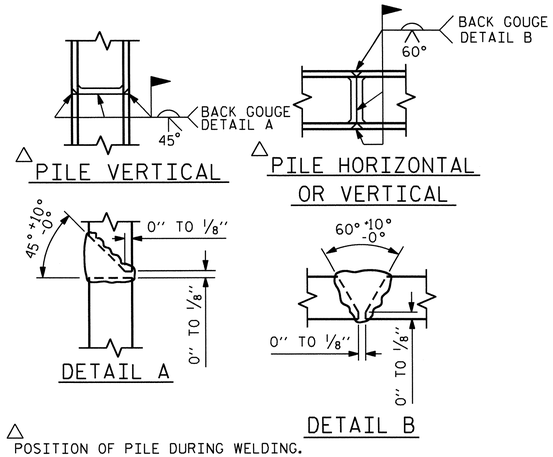

△ POSITION OF PILE DURING WELDING.

PILE SPLICE DETAILS

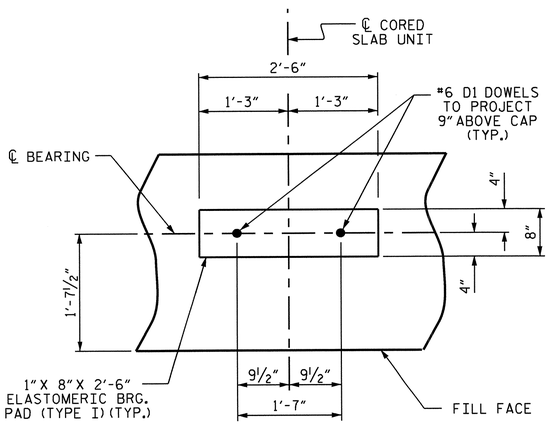

DETAIL "A"

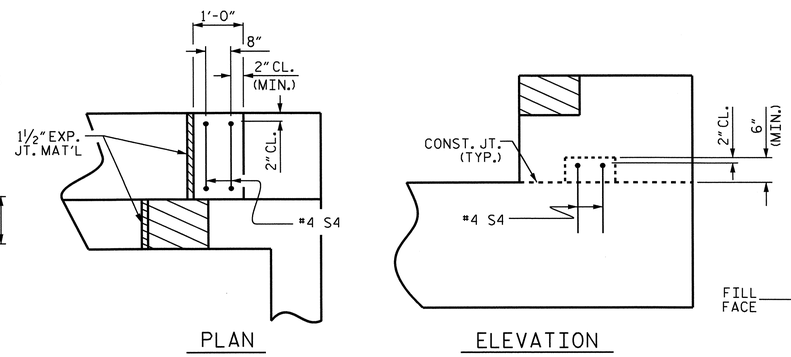

LATERAL GUIDE DETAILS

(RIGHT LATERAL GUIDE SHOWN, LEFT END SIMILAR)

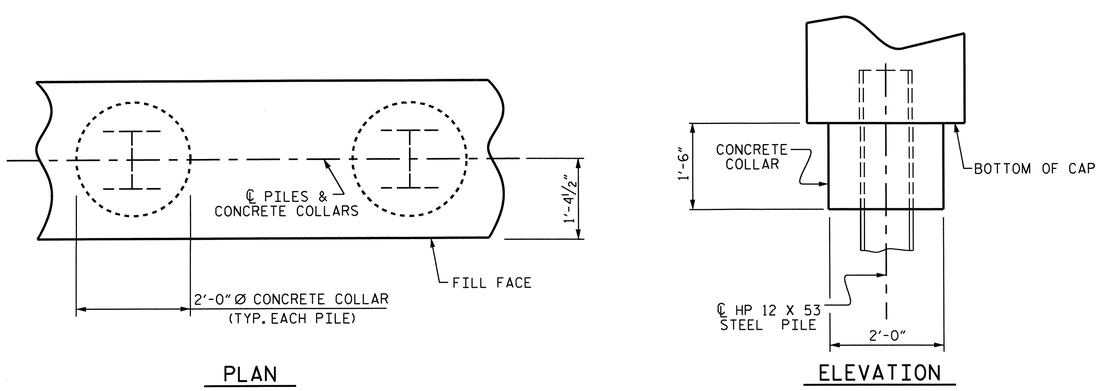

CORROSION PROTECTION FOR STEEL PILES DETAIL

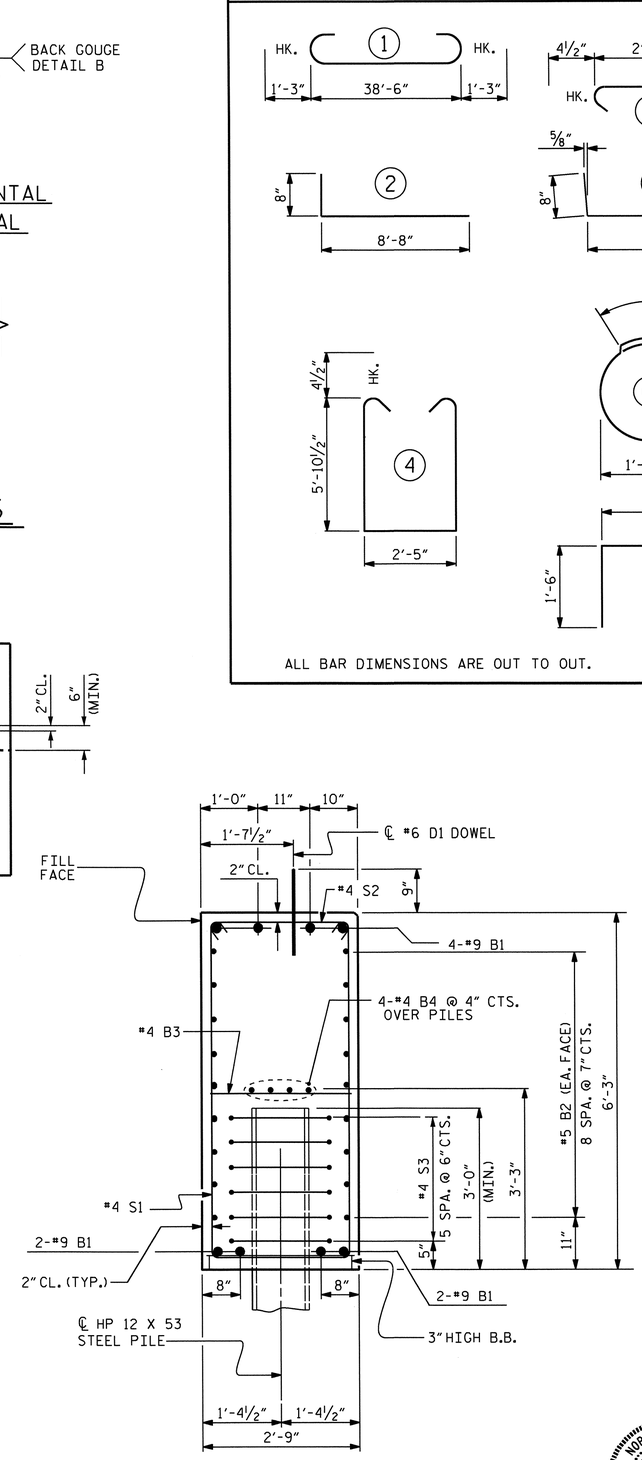

SECTION A-A

(CONCRETE COLLAR NOT SHOWN FOR CLARITY. SEE "CORROSION PROTECTION FOR STEEL PILES DETAIL.")

BAR TYPES

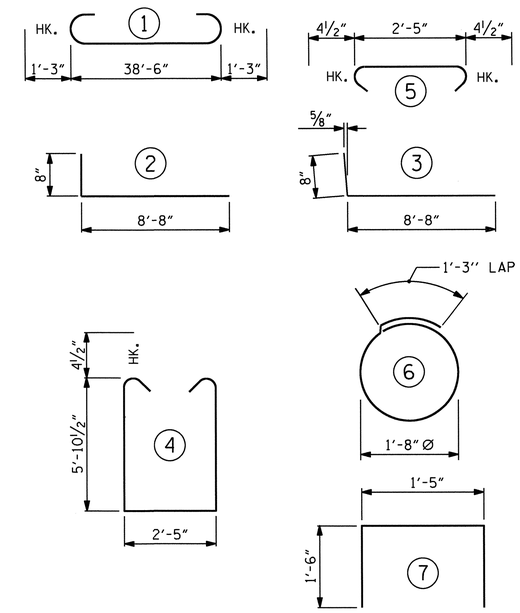

ALL BAR DIMENSIONS ARE OUT TO OUT.

BILL OF MATERIAL

END BENT No. 1

BAR	NO.	SIZE	TYPE	LENGTH	WEIGHT
B1	8	#9	1	41'-0"	1115
B2	18	#5	STR	38'-8"	726
B3	10	#4	STR	2'-5"	16
B4	8	#4	STR	20'-7"	110
D1	22	#6	STR	1'-6"	50
H1	26	#5	2	9'-4"	253
H2	26	#5	3	9'-4"	253
K1	16	#4	STR	3'-0"	32
S1	37	#4	4	14'-11"	369
S2	37	#4	5	3'-2"	78
S3	48	#4	6	6'-6"	208
S4	4	#4	7	4'-5"	12
V1	52	#5	STR	8'-7"	466

REINFORCING STEEL 3688 LBS.

CLASS A CONCRETE BREAKDOWN

POUR #1: CAP, LOWER PORTION OF WINGS & COLLARS	29.9 C.Y.
POUR #2: UPPER PORTION OF WINGS	2.3 C.Y.
POUR #3: LATERAL GUIDES	0.1 C.Y.
TOTAL CLASS A CONCRETE	32.3 C.Y.

HP 12 X 53 STEEL PILES

NO: 8 160 LIN. FT.

PROJECT NO. B-5149

HENDERSON COUNTY

STATION: 17+77.10 -L-

SHEET 3 OF 3

STATE OF NORTH CAROLINA
DEPARTMENT OF TRANSPORTATION
RALEIGH

SUBSTRUCTURE

END BENT No. 1 DETAILS

NORTH CAROLINA PROFESSIONAL SEAL 20125 ENGINEER MARSHALL G. CLECK, JR.
8-13-13

REVISIONS								SHEET NO.
NO.	BY:	DATE:	NO.	BY:	DATE:			S-13
1			3					TOTAL SHEETS
2			4					38

DRAWN BY : V.X. NGUYEN DATE : 11-19-12
CHECKED BY : H.P. KIM DATE : 12-12
DESIGN ENGINEER OF RECORD: H.P. KIM DATE : 8-13

13-AUG-2013 11:49
O:\Structures\Final Plans\B-5149_SD_E*.dgn
wjhorris

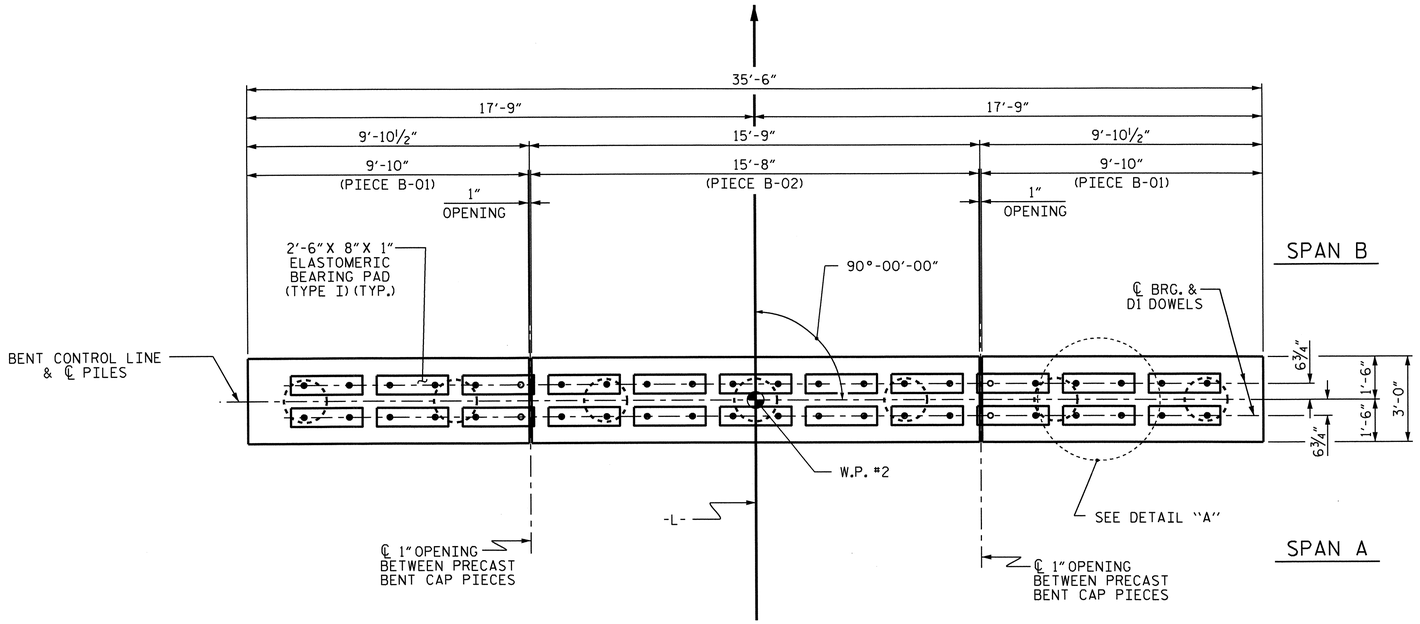

PLAN

(PILE BLOCKOUTS AND GROUT PIPES NOT SHOWN FOR CLARITY)

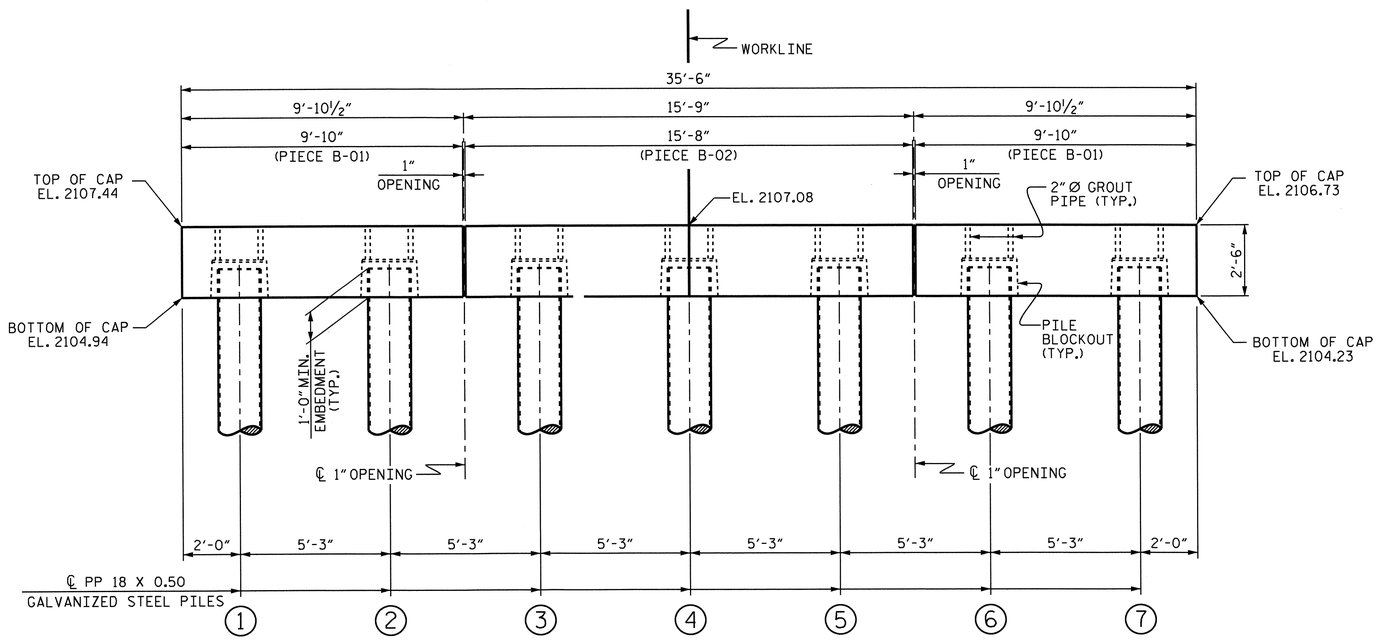

ELEVATION

FOR 2" Ø GROUT PIPE AND PILE BLOCKOUT DETAILS, SEE SHEET 4 OF 5

NOTES

FOR PRECAST CAP DETAILS AND BILL OF MATERIAL, SEE "PIECE B-01" & "PIECE B-02" SHEETS.

FOR GROUT FOR STRUCTURES, SEE SPECIAL PROVISIONS.

FOR 3'-0" x 2'-6" PRESTRESSED CONCRETE BENT CAPS, SEE SPECIAL PROVISIONS.

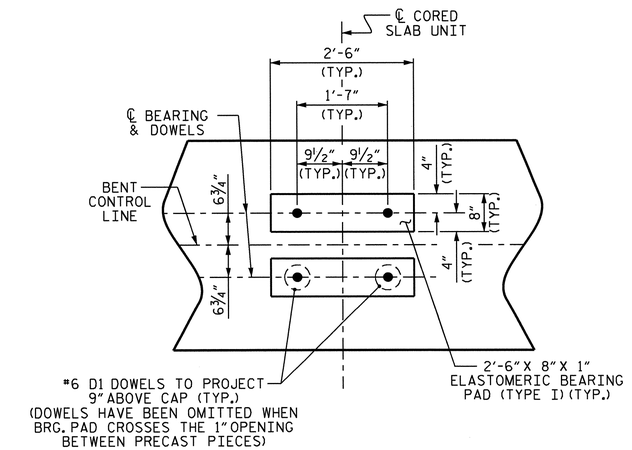

DETAIL "A"

(DIMENSIONS ARE TYPICAL EACH BEARING)

TOP OF PILE ELEVATIONS	
1	2105.92
2	2105.81
3	2105.71
4	2105.60
5	2105.50
6	2105.39
7	2105.29

PROJECT NO. B-5149

HENDERSON COUNTY

STATION: 17+77.10 -L-

SHEET 1 OF 5

STATE OF NORTH CAROLINA
DEPARTMENT OF TRANSPORTATION
RALEIGH

SUBSTRUCTURE

BENT No. 1

NORTH CAROLINA PROFESSIONAL SEAL 20125 ENGINEER MARSHALL G. CHEEK, JR. 8-13-13

ASSEMBLED BY :	M. POOLE	DATE :	03/13
CHECKED BY :	M. G. CHEEK	DATE :	04/13
DRAWN BY :	MAA	8/12	
CHECKED BY :	SHS	9/12	

REVISIONS								SHEET NO.
NO.	BY:	DATE:	NO.	BY:	DATE:			S-14
1			3					TOTAL SHEETS
2			4					38

13-AUG-2013 10:35
O:\Structures\Final Plans\B-5149_SD_B*.dgn
wjharris

STD. NO. 18" PP_PSBT_33_90S_<60'

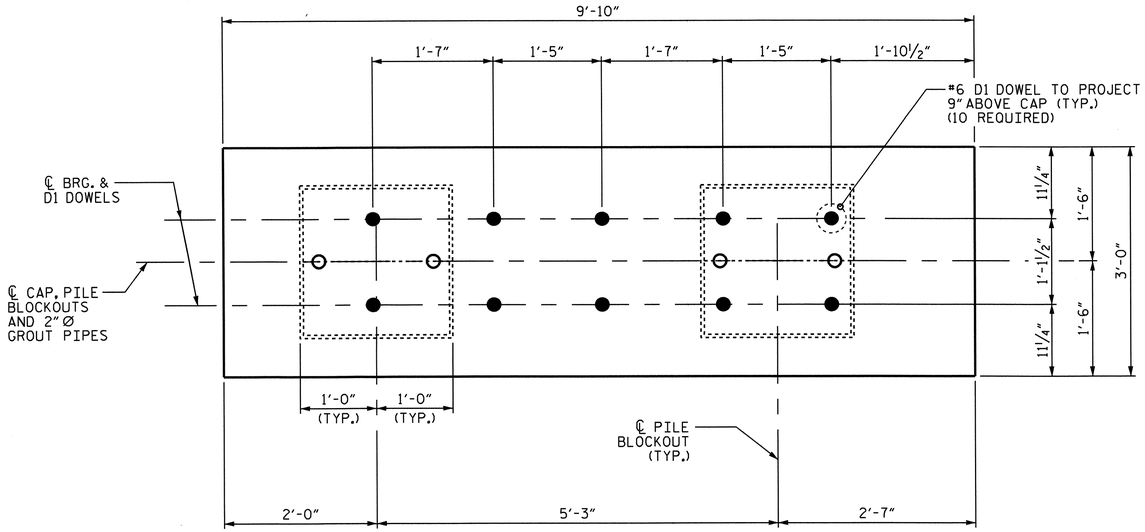

PLAN

(FOR PILE BLOCKOUT DETAILS, SEE SHEET 4 OF 5)

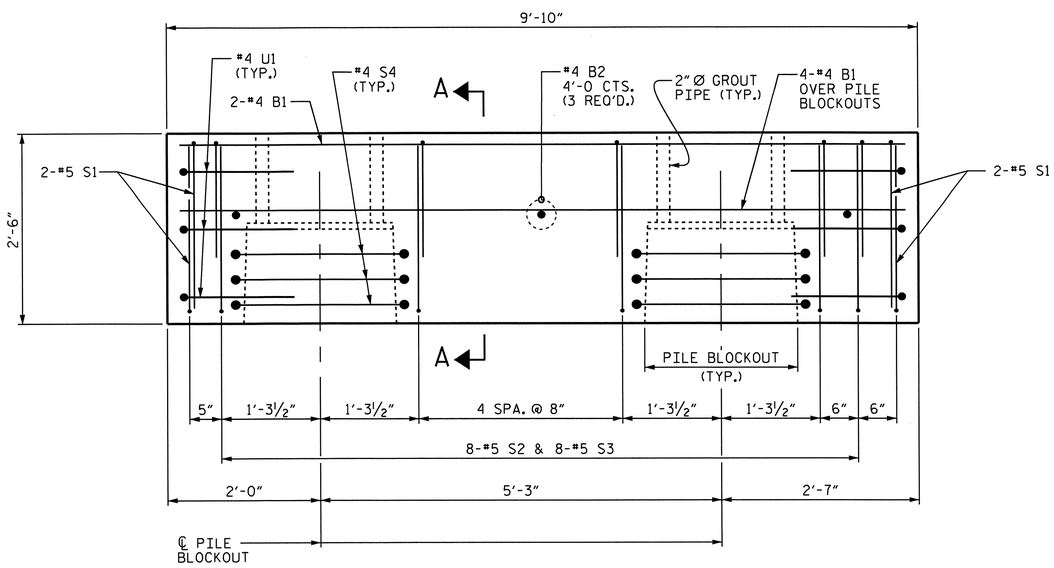

ELEVATION

(#6 D1 DOWELS NOT SHOWN FOR CLARITY)
FOR SECTION A-A, SEE SHEET 4 OF 5.

BILL OF MATERIAL
FOR ONE PIECE B-01

BAR	NO.	SIZE	TYPE	LENGTH	WEIGHT
B1	6	#4	STR	9'-6"	38
B2	3	#4	STR	2'-8"	5
D1	10	#6	STR	1'-6"	23
S1	8	#5	1	6'-5"	54
S2	8	#5	1	7'-3"	60
S3	8	#5	1	5'-9"	48
S4	6	#4	2	9'-9"	39
U1	6	#4	1	5'-7"	22

REINFORCING STEEL 289 LBS.

4000 PSI PRESTRESS CONCRETE 2.4 C.Y.
PILE BLOCKOUT GROUT ▲ 0.4 C.Y.

0.6" Ø L.R. STRANDS No. 12

BAR TYPES

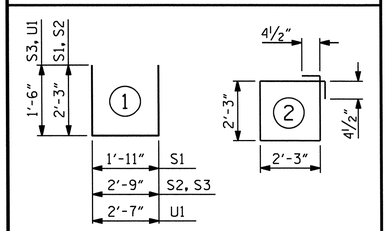

ALL BAR DIMENSIONS ARE OUT TO OUT.

▲ GROUT TO FILL TOP 1'-0" OF THE PP 18 X 0.50 GALVANIZED STEEL PILE HAS BEEN INCLUDED IN THE GROUT QUANTITY.

GRADE 270 STRANDS	
	0.6" Ø L.R.
AREA (SQUARE INCHES)	0.217
ULTIMATE STRENGTH (LBS. PER STRAND)	58,600
APPLIED PRESTRESS (LBS. PER STRAND)	43,950

PROJECT NO. B-5149
HENDERSON COUNTY
STATION: 17+77.10 -L-

SHEET 2 OF 5

STATE OF NORTH CAROLINA
DEPARTMENT OF TRANSPORTATION
RALEIGH

SUBSTRUCTURE

PRECAST
PIECE B-01

NORTH CAROLINA PROFESSIONAL SEAL 20125 ENGINEER MARSHALL G. CHEEK, JR.
8-13-13

REVISIONS						SHEET NO.
NO.	BY:	DATE:	NO.	BY:	DATE:	S-15
1			3			TOTAL SHEETS
2			4			38

ASSEMBLED BY :	M. POOLE	DATE :	03/13
CHECKED BY :	M. G. CHEEK	DATE :	04/13
DRAWN BY :	MAA	8/12	
CHECKED BY :	SHS	9/12	

19-JUN-2013 08:46
R:\Structures\Final Plans\B-5149_SD_B*.dgn
mpoole

STD. NO. 18" PP_PSBT_33_90S_<60'

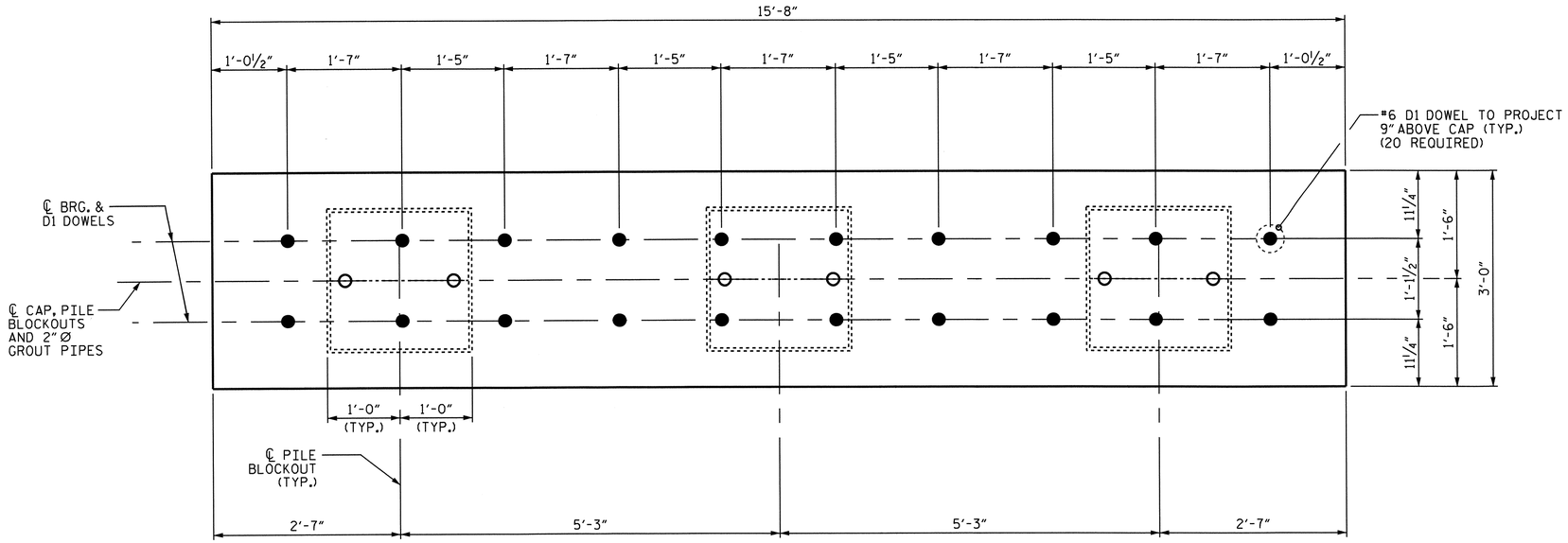

PLAN

(FOR PILE BLOCKOUT DETAILS, SEE SHEET 4 OF 5)

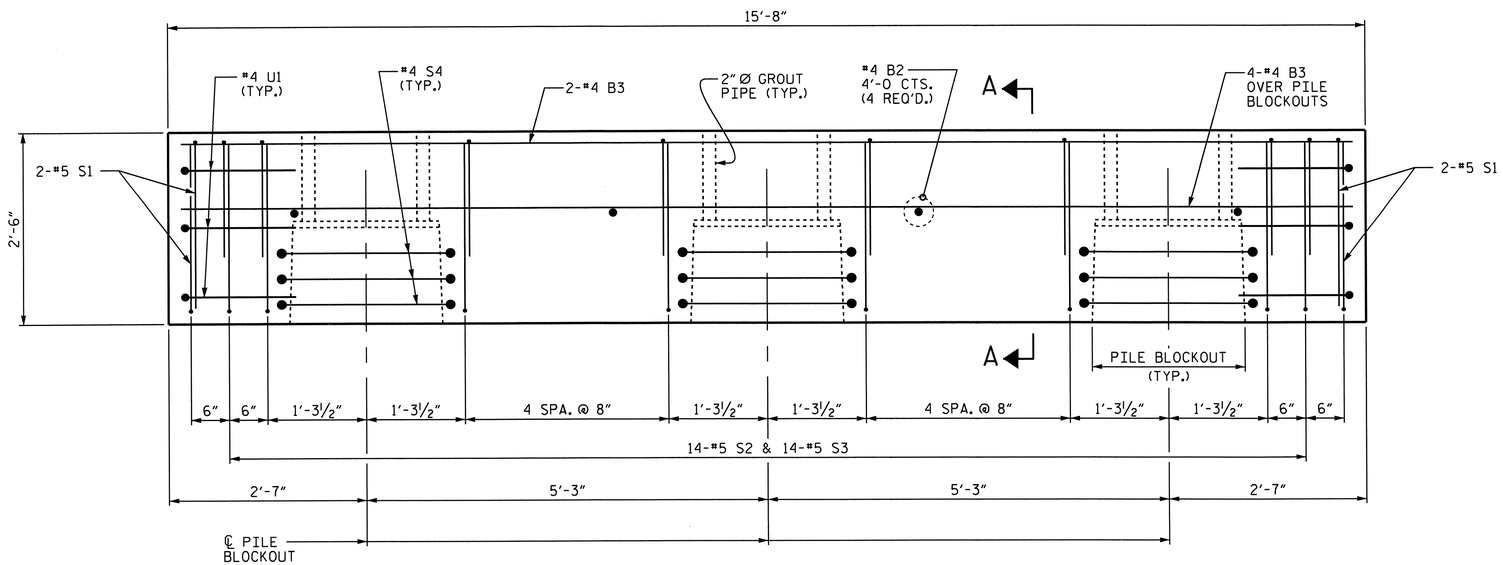

ELEVATION

(#6 D1 DOWELS NOT SHOWN FOR CLARITY)
FOR SECTION A-A, SEE SHEET 4 OF 5.

BILL OF MATERIAL
FOR ONE PIECE B-02

BAR	NO.	SIZE	TYPE	LENGTH	WEIGHT
B2	4	#4	STR	2'-8"	7
B3	6	#4	STR	15'-4"	61
D1	20	#6	STR	1'-6"	45
S1	8	#5	1	6'-5"	54
S2	14	#5	1	7'-3"	106
S3	14	#5	1	5'-9"	84
S4	9	#4	2	9'-9"	59
U1	6	#4	1	5'-7"	22

REINFORCING STEEL	438 LBS.
4000 PSI PRESTRESS CONCRETE	3.8 C.Y.
PILE BLOCKOUT GROUT ▲	0.6 C.Y.
0.6" Ø L.R. STRANDS	No. 12

BAR TYPES

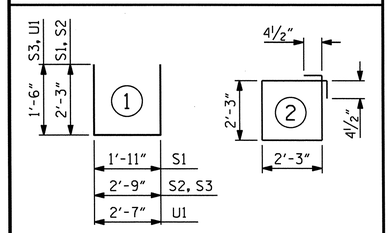

ALL BAR DIMENSIONS ARE OUT TO OUT.

▲ GROUT TO FILL TOP 1'-0" OF THE PP 18 X 0.50 GALVANIZED STEEL PILE HAS BEEN INCLUDED IN THE GROUT QUANTITY.

GRADE 270 STRANDS	
	0.6" Ø L.R.
AREA (SQUARE INCHES)	0.217
ULTIMATE STRENGTH (LBS. PER STRAND)	58,600
APPLIED PRESTRESS (LBS. PER STRAND)	43,950

PROJECT NO. B-5149
HENDERSON COUNTY
STATION: 17+77.10 -L-

SHEET 3 OF 5

STATE OF NORTH CAROLINA
DEPARTMENT OF TRANSPORTATION
RALEIGH

SUBSTRUCTURE

PRECAST
PIECE B-02

NORTH CAROLINA PROFESSIONAL SEAL 20125 ENGINEER MARSHALL G. CHEEK, JR.
8-13-13

REVISIONS						SHEET NO.
NO.	BY:	DATE:	NO.	BY:	DATE:	S-16
1			3			TOTAL SHEETS
2			4			38

ASSEMBLED BY :	M. POOLE	DATE :	03/13
CHECKED BY :	M. G. CHEEK	DATE :	04/13
DRAWN BY :	MAA	8/12	
CHECKED BY :	SHS	9/12	

19-JUN-2013 08:46
R:\Structures\Final Plans\B-5149_SD_B*.dgn
mpoole

STD. NO. 18" PP_PSBT_33_90S_<60'

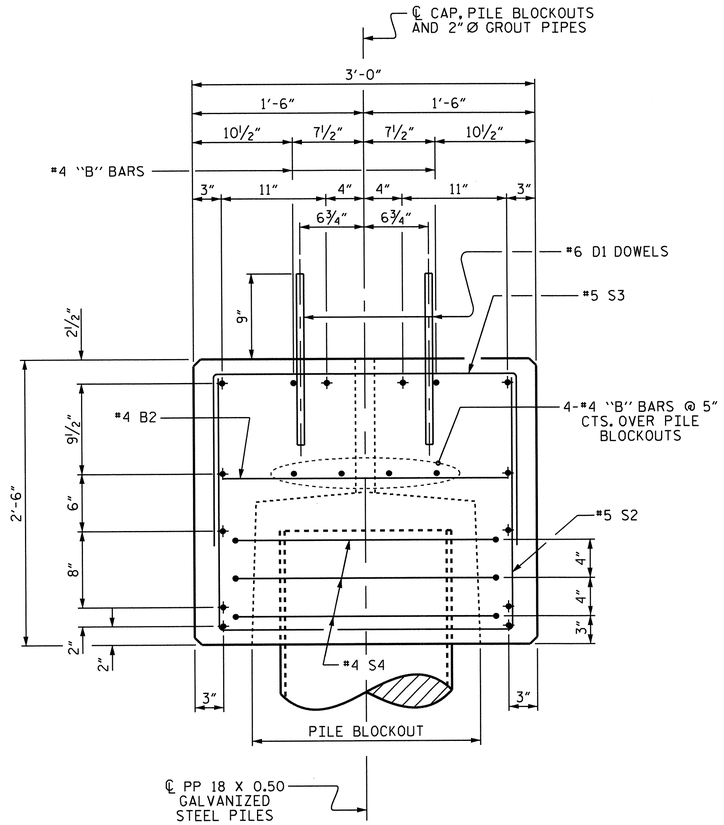

SECTION A-A

(SHOWING 0.6"Ø LOW RELAXATION STRAND LAYOUT)
(12 STRANDS)

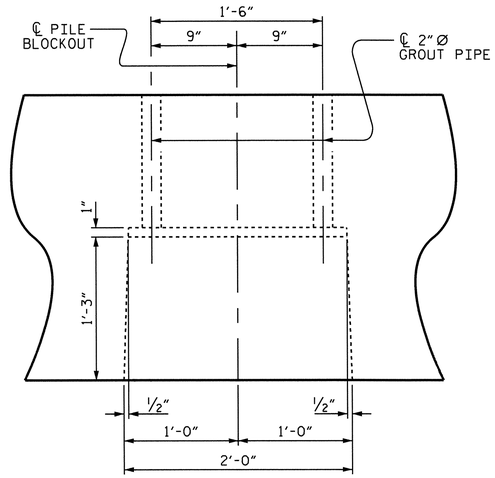

ELEVATION

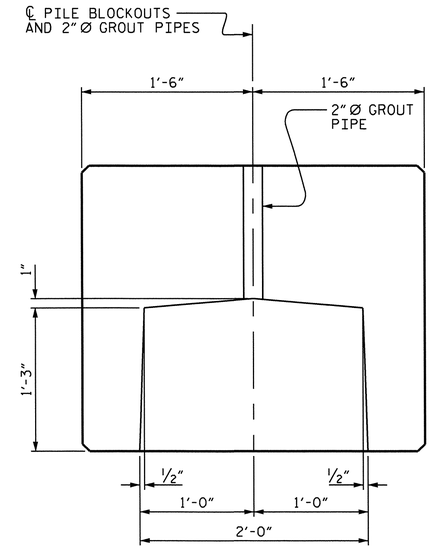

SECTION

PILE BLOCKOUT DETAILS

(DIMENSIONS ARE TYPICAL EACH BLOCKOUT)

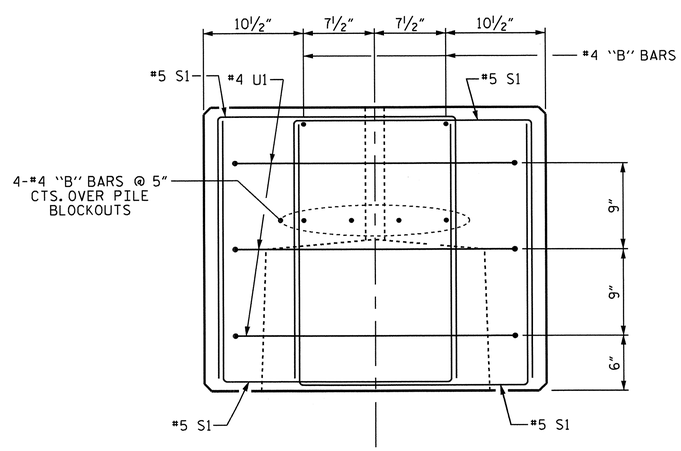

END OF CAP VIEW

(TYPICAL BOTH ENDS)

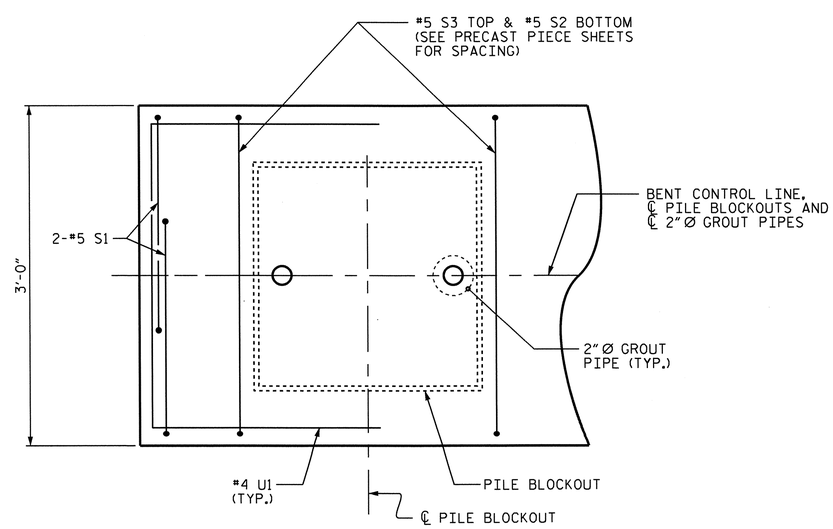

PART PLAN-END OF CAP

(TYPICAL BOTH ENDS)

NOTES

STIRRUPS IN PRECAST PIECES MAY BE SHIFTED AS NECESSARY TO CLEAR DOWELS AND GROUT PIPES.

ALL PRESTRESSING STRANDS SHALL BE 7-WIRE LOW RELAXATION GRADE 270 STRANDS AND SHALL CONFORM TO AASHTO M203 EXCEPT FOR SAMPLING REQUIREMENTS WHICH SHALL BE IN ACCORDANCE WITH THE STANDARD SPECIFICATIONS.

ALL REINFORCING STEEL CAST WITH THE BENT CAP SHALL BE GRADE 60 AND SHALL BE INCLUDED IN THE UNIT PRICE BID FOR PRECAST BENT CAPS.

WHEN BENT CAPS ARE CAST, A HOLD-DOWN SYSTEM SHALL BE EMPLOYED TO PREVENT VOIDS FROM RISING OR MOVING SIDEWAYS. AT LEAST SIX WEEKS PRIOR TO CASTING BENT CAPS, THE CONTRACTOR SHALL SUBMIT TO THE ENGINEER FOR REVIEW AND COMMENT, DETAILED DRAWINGS OF THE PROPOSED HOLD-DOWN SYSTEM. IN ADDITION TO STRUCTURAL DETAILS, LOCATION AND SPACING OF THE HOLD-DOWNS SHALL BE INDICATED.

PRESTRESSING STRANDS SHALL BE CUT FLUSH WITH THE ENDS OF THE BENT CAP SEGMENTS.

APPLY EPOXY PROTECTIVE COATING TO THE ENDS OF THE BENT CAP SEGMENTS.

THE TRANSFER OF LOAD FROM THE ANCHORAGES TO THE BENT CAPS SHALL BE DONE WHEN THE CONCRETE HAS REACHED A COMPRESSIVE STRENGTH OF NOT LESS THAN 3000 PSI.

THE CONTRACTOR SHALL SUBMIT TO THE ENGINEER FOR APPROVAL A METHOD TO LIFT AND SUPPORT THE PRECAST CAP PIECES IN THE PROPER LOCATION AND ELEVATION AS SHOWN ON THE PLANS PRIOR TO PLACEMENT AND CURING OF THE GROUT IN THE PILE BLOCKOUTS. THE METHOD CHOSEN SHALL PROVIDE FOR A WATERTIGHT SEAL AT THE BOTTOM OF THE CAP UNTIL THE GROUT HAS HARDENED SO NO GROUT COMES IN CONTACT WITH THE STREAM.

PRESTRESSED CONCRETE BENT CAPS (FOR ONE BENT)

PIECE	LENGTH	NUMBER	TOTAL LENGTH
B-01	9'-10"	2	19'-8"
B-02	15'-8"	1	15'-8"
TOTAL		3	35.33'

PP 18 X 0.50 GALVANIZED STEEL PILES (FOR ONE BENT)		
No. 7	195	LIN. FT.
PILE EXCAVATION IN SOIL	133.00	LIN. FT.
PILE EXCAVATION NOT IN SOIL	30.00	LIN. FT.

PROJECT NO. B-5149
HENDERSON COUNTY
STATION: 17+77.10 -L-

SHEET 4 OF 5

STATE OF NORTH CAROLINA
DEPARTMENT OF TRANSPORTATION
RALEIGH

SUBSTRUCTURE

BENT No. 1

NORTH CAROLINA PROFESSIONAL SEAL 20125 ENGINEER MARSHALL G. CHEEK, JR.
8-13-13

ASSEMBLED BY :	M. POOLE	DATE :	03/13
CHECKED BY :	M. G. CHEEK	DATE :	04/13
DRAWN BY :	MAA	8/12	
CHECKED BY :	SHS	9/12	

REVISIONS								SHEET NO.
NO.	BY:	DATE:	NO.	BY:	DATE:			S-17
1			3					TOTAL SHEETS
2			4					38

19-JUN-2013 08:46
R:\Structures\Final Plans\B-5149_SD_B*.dgn
mpoole

STD. NO. 18" PP_PSBT_33_90S_<60'

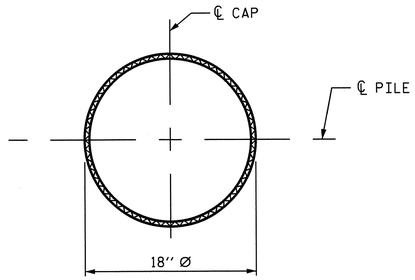

PLAN

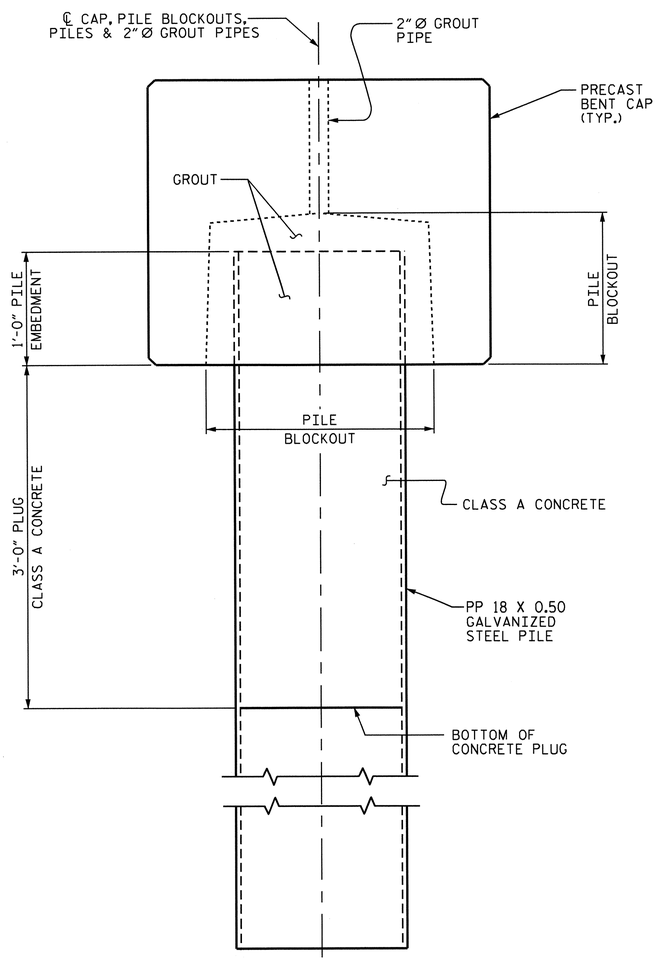

ELEVATION

PP 18 X 0.50 GALVANIZED STEEL PILE

(OPEN END)

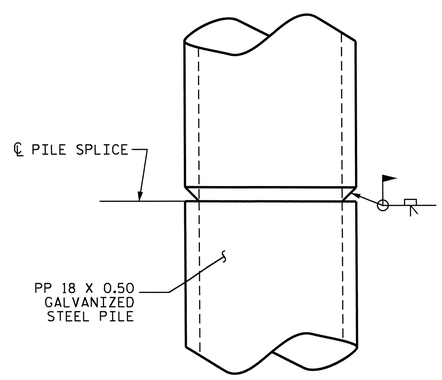

PIPE PILE SPLICE DETAIL

NOTES

PIPE PILES SHALL BE IN ACCORDANCE WITH SECTION 1084 OF THE STANDARD SPECIFICATIONS.

GALVANIZE STEEL PIPE PILES IN ACCORDANCE WITH SECTION 1076 OF THE STANDARD SPECIFICATIONS UNLESS METALLIZING IS REQUIRED. GALVANIZING OR METALLIZING PIPE PILE PLATES IS NOT REQUIRED.

REMOVE AND REPLACE OR REPAIR TO THE SATISFACTION OF THE ENGINEER PILES THAT ARE DAMAGED, DEFORMED OR COLLAPSED DURING INSTALLATION OR DRIVING.

PILE SPLICES SHALL BE IN ACCORDANCE WITH THE STANDARD SPECIFICATIONS AND AWS D1.1.

FOR OPEN END PIPE PILES, REMOVE ENOUGH SOIL AND WATER FROM INSIDE THE PILES TO CONSTRUCT THE CONCRETE PLUG WITHOUT FOULING THE CONCRETE.

FORM THE CONCRETE PLUG SUCH THAT THE CONCRETE DOES NOT MOVE. DO NOT PLACE THE BENT CAP UNTIL THE CONCRETE PLUG HAS ATTAINED A MINIMUM COMPRESSIVE STRENGTH OF 1500 PSI.

THE CLASS A CONCRETE, AND GALVANIZING ARE CONSIDERED INCIDENTAL TO THE CONTRACT UNIT PRICE BID PER LINEAR FOOT FOR PP 18 X 0.50 GALVANIZED STEEL PILES.

THE CONTRACTOR HAS THE OPTION TO USE GROUT IN LIEU OF CLASS A CONCRETE FOR THE 3'-0" PLUG.

GALVANIZE THE FULL LENGTH OF EACH INTERIOR BENT PILE IN ACCORDANCE WITH SECTION 1076 OF THE STANDARD SPECIFICATIONS.

BILL OF MATERIAL FOR ONE PP 18 X 0.50 GALVANIZED STEEL PILE	
CLASS A CONCRETE	
3'-0" PLUG	0.2 CY

PROJECT NO. B-5149

HENDERSON COUNTY

STATION: 17+77.10 -L-

SHEET 5 OF 5

STATE OF NORTH CAROLINA
DEPARTMENT OF TRANSPORTATION
RALEIGH

18" STEEL PIPE PILE

NORTH CAROLINA PROFESSIONAL SEAL 20125 ENGINEER MARSHALL G. CHEEK, JR.
8-13-13

REVISIONS						SHEET NO.
NO.	BY:	DATE:	NO.	BY:	DATE:	S-18
1			3			TOTAL SHEETS
2			4			38

ASSEMBLED BY :	M. POOLE	DATE :	03/13
CHECKED BY :	M. C. CHEEK	DATE :	04/13
DRAWN BY :	MAA	8/12	
CHECKED BY :	SHS	9/12	

19-JUN-2013 08:46
R:\Structures\Final Plans\B-5149_SD_B*.dgn
mpoole

STD. NO. 18" PP_PSBT_SPP3

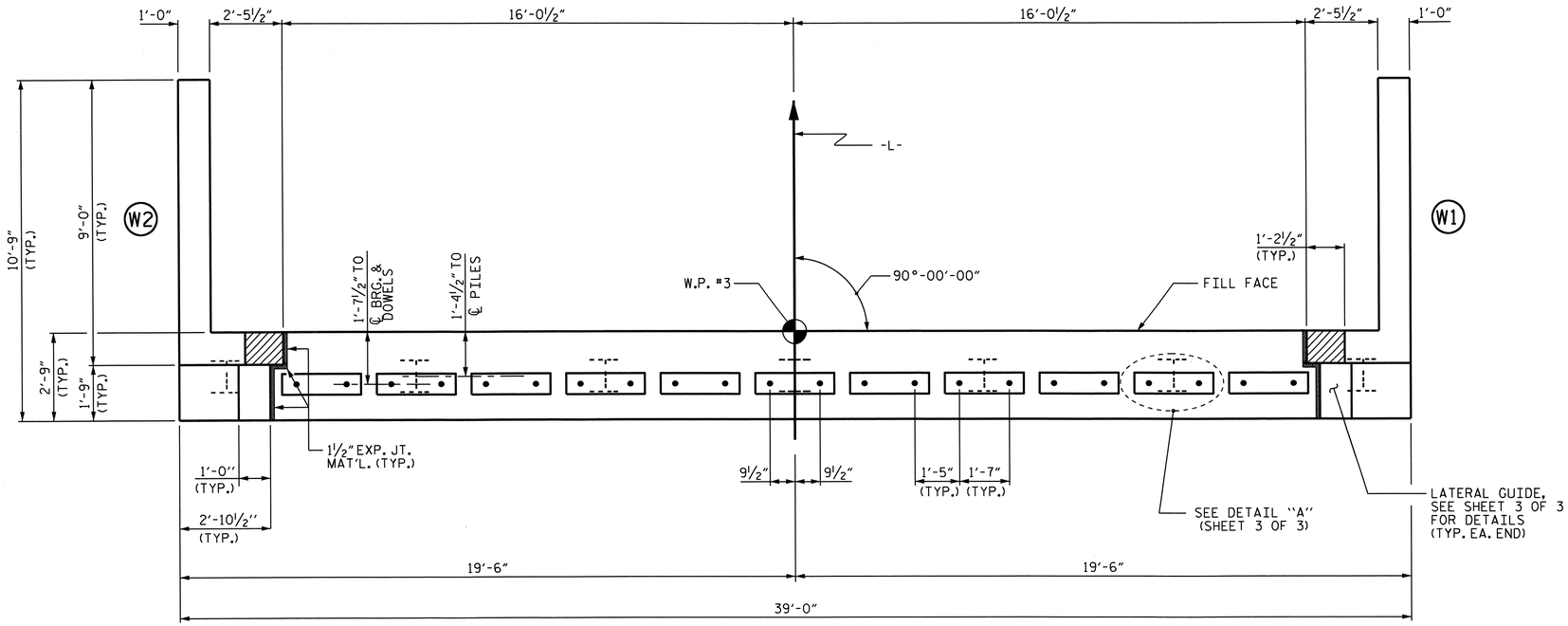

PLAN

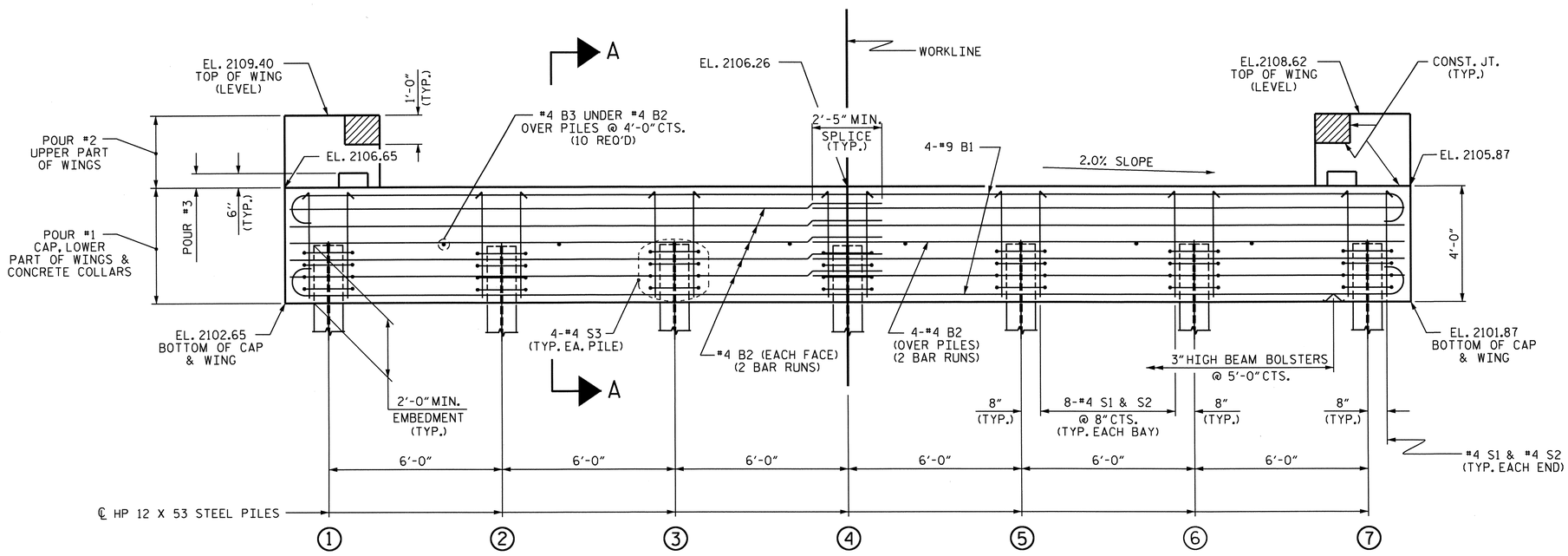

ELEVATION

WINGS NOT SHOWN FOR CLARITY.
FOR SECTION A-A, SEE SHEET 3 OF 3.
CONCRETE COLLARS FOR STEEL PILES NOT SHOWN IN PLAN AND ELEVATION VIEWS FOR CLARITY.
SEE "CORROSION PROTECTION FOR STEEL PILES DETAIL", SHEET 3 OF 3.

NOTES

STIRRUPS IN CAP MAY BE SHIFTED AS NECESSARY TO CLEAR DOWELS.

THE CONCRETE IN THE SHADED AREA OF THE WING SHALL BE POURED AFTER THE PARAPET IS CAST IF SLIP FORMING IS USED.

FOR PILE SPLICE DETAILS, SEE SHEET 3 OF 3.

FOR WING DETAILS, SEE SHEET 2 OF 3.

THE CONTRACTOR HAS THE OPTION TO OMIT THE LATERAL GUIDES IF APPROVED BY THE ENGINEER.

THE LATERAL GUIDES ARE NOT TO BE POURED UNTIL AFTER THE CORED SLAB UNITS ARE IN PLACE.

TOP OF PILE ELEVATIONS	
1	2104.63
2	2104.51
3	2104.39
4	2104.27
5	2104.15
6	2104.03
7	2103.91

PROJECT NO. B-5149
HENDERSON COUNTY
STATION: 17+77.10 -L-

SHEET 1 OF 3

STATE OF NORTH CAROLINA
DEPARTMENT OF TRANSPORTATION
RALEIGH

SUBSTRUCTURE

END BENT No. 2

NORTH CAROLINA PROFESSIONAL SEAL 20125 ENGINEER MARSHALL G. CHEEK, JR.
8-13-13

REVISIONS						SHEET NO.
NO.	BY:	DATE:	NO.	BY:	DATE:	S-19
1			3			TOTAL SHEETS
2			4			38

ASSEMBLED BY : V.X. NGUYEN DATE : 11-20-12
CHECKED BY : H.P. KIM DATE : 12-12
DRAWN BY : WJH 12/11
CHECKED BY : AAC 12/11

25-JUN-2013 07:48
R:\Structures\Final Plans\B-5149_SD_E*.dgn
mpoole

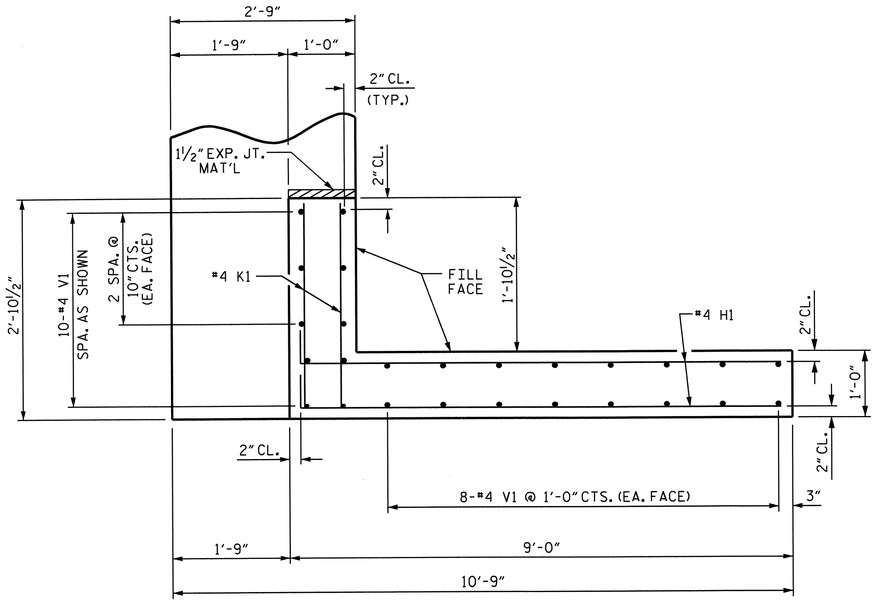

PLAN OF WING (W1)

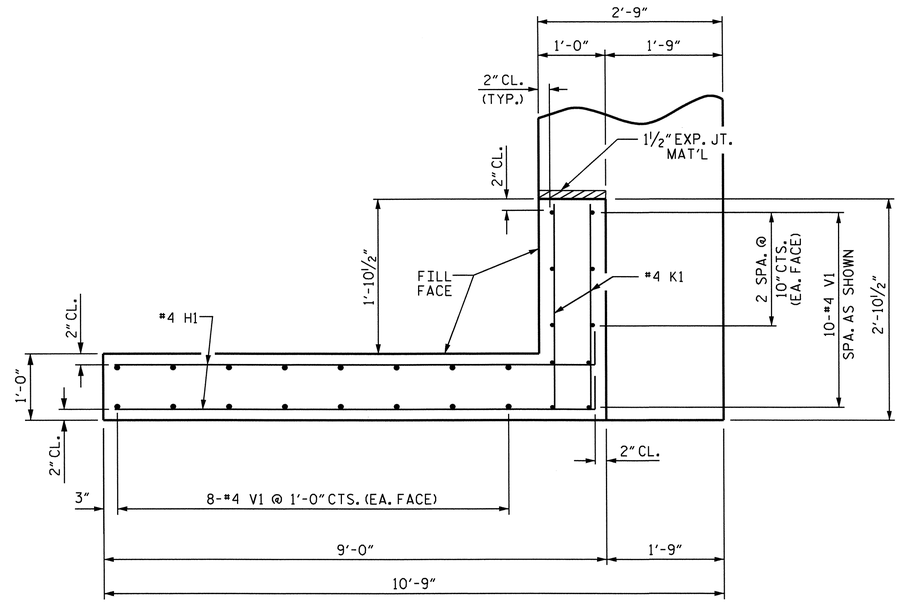

PLAN OF WING (W2)

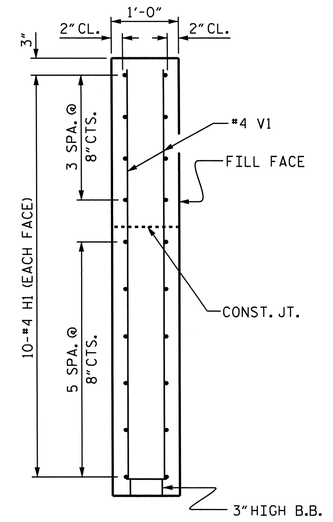

SECTION X-X

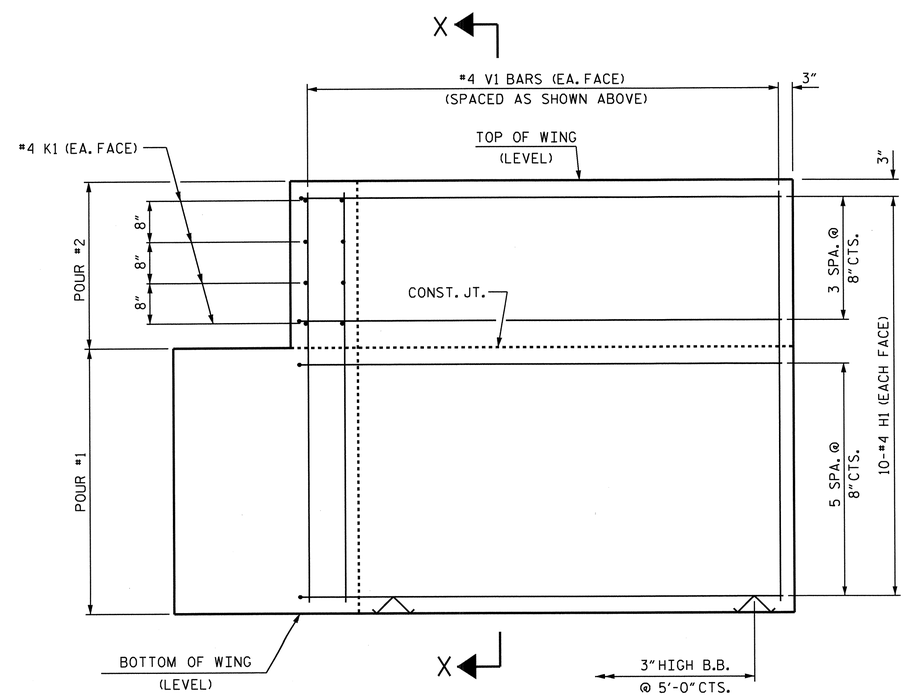

ELEVATION OF WING (W1)

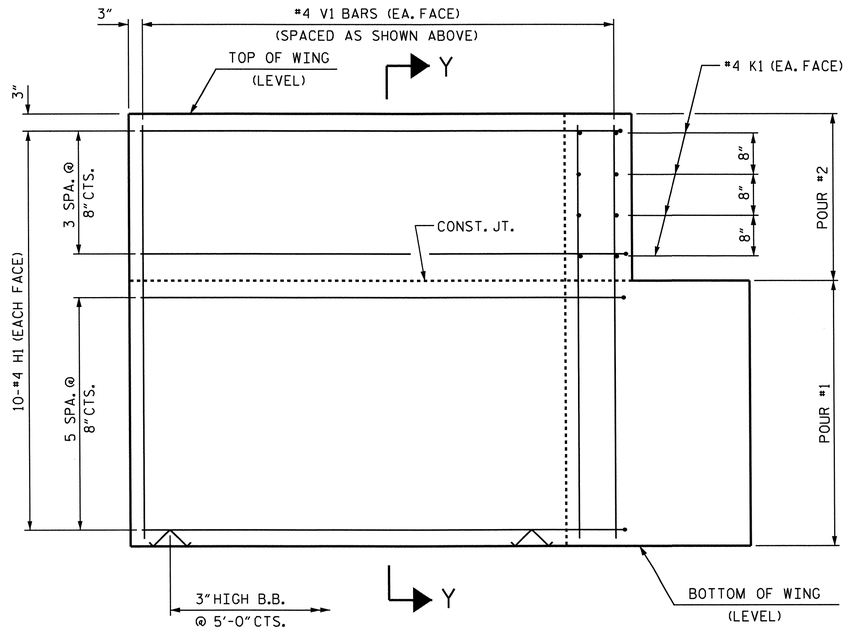

ELEVATION OF WING (W2)

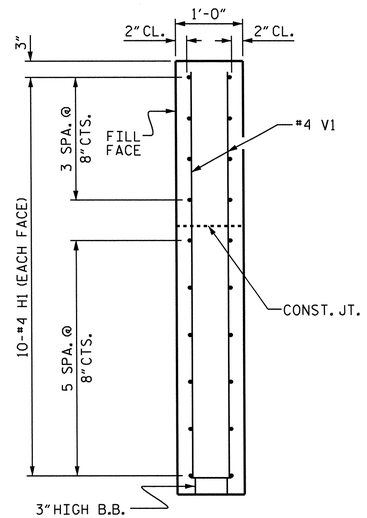

SECTION Y-Y

WING DETAILS

PROJECT NO. B-5149
HENDERSON COUNTY
STATION: 17+77.10 -L-

SHEET 2 OF 3

STATE OF NORTH CAROLINA
DEPARTMENT OF TRANSPORTATION
RALEIGH

SUBSTRUCTURE
END BENT No. 2
WING DETAILS

NORTH CAROLINA PROFESSIONAL SEAL 20125 ENGINEER MARSHALL O. CHEEK, JR.
8-13-13

REVISIONS						SHEET NO.
NO.	BY:	DATE:	NO.	BY:	DATE:	S-20
1			3			TOTAL SHEETS
2			4			38

ASSEMBLED BY :	V.X. NGUYEN	DATE :	11-19-12
CHECKED BY :	H.P. KIM	DATE :	12-12
DRAWN BY :	WJH 12/11		
CHECKED BY :	AAC 12/11		

19-JUN-2013 08:44
R:\Structures\FinalPlans\B-5149_SD_E*.dgn
mpoole

STD. NO. EB_33_90S4

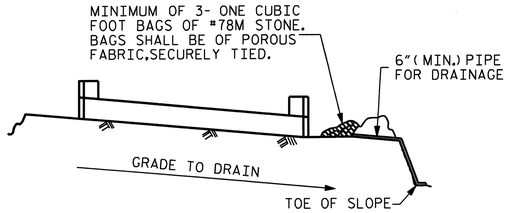

BAGGED STONE AND PIPE SHALL BE PLACED IMMEDIATELY AFTER COMPLETION OF END BENT EXCAVATION. PIPE MAY BE EITHER CONCRETE, CORRUGATED STEEL, CORRUGATED ALUMINUM ALLOY, OR CORRUGATED PLASTIC. PERFORATED PIPE WILL NOT BE ALLOWED.

BAGGED STONE SHALL REMAIN IN PLACE UNTIL THE ENGINEER DIRECTS THAT IT BE REMOVED. THE CONTRACTOR SHALL REMOVE AND DISPOSE OF SILT ACCUMULATIONS AT BAGGED STONE WHEN SO DIRECTED BY THE ENGINEER. BAGS SHALL BE REMOVED AND REPLACED WHENEVER THE ENGINEER DETERMINES THAT THEY HAVE DETERIORATED AND LOST THEIR EFFECTIVENESS.

NO SEPARATE PAYMENT WILL BE MADE FOR THIS WORK AND THE ENTIRE COST OF THIS WORK SHALL BE INCLUDED IN THE UNIT CONTRACT PRICE BID FOR THE SEVERAL PAY ITEMS.

TEMPORARY DRAINAGE AT END BENT

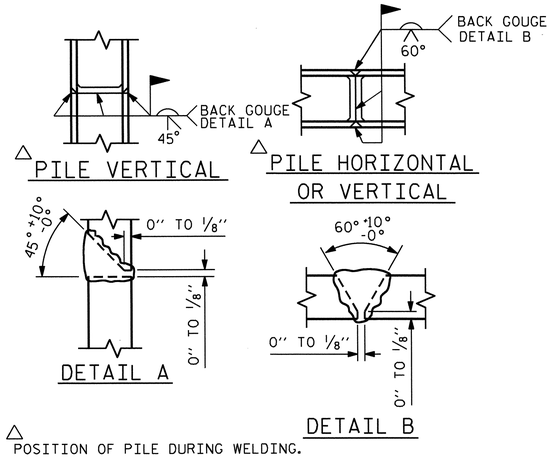

△ POSITION OF PILE DURING WELDING.

PILE SPLICE DETAILS

BAR TYPES

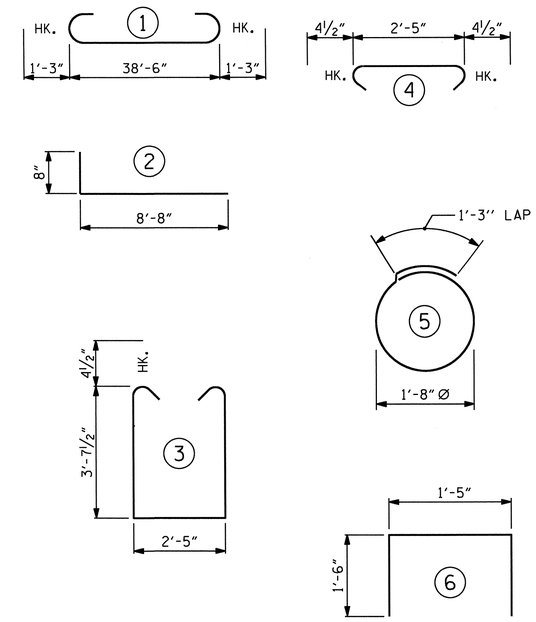

ALL BAR DIMENSIONS ARE OUT TO OUT.

BILL OF MATERIAL

END BENT No. 2

BAR	NO.	SIZE	TYPE	LENGTH	WEIGHT
B1	8	#9	1	41'-0"	1115
B2	28	#4	STR	20'-7"	385
B3	10	#4	STR	2'-5"	16
D1	22	#6	STR	1'-6"	50
H1	40	#4	2	9'-4"	249
K1	16	#4	STR	2'-6"	27
S1	50	#4	3	10'-5"	348
S2	50	#4	4	3'-2"	106
S3	28	#4	5	6'-6"	122
S4	4	#4	6	4'-5"	12
V1	52	#4	STR	6'-4"	220

REINFORCING STEEL 2650 LBS.

CLASS A CONCRETE BREAKDOWN

POUR #1: CAP, LOWER PORTION OF WINGS & COLLARS	19.5 C.Y.
POUR #2: UPPER PORTION OF WINGS	2.3 C.Y.
POUR #3: LATERAL GUIDES	0.1 C.Y.
TOTAL CLASS A CONCRETE	21.9 C.Y.

HP 12 X 53 STEEL PILES
NO: 7 195 LIN. FT.

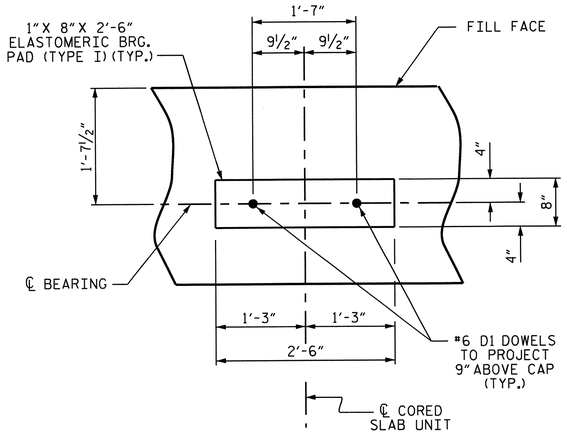

DETAIL "A"

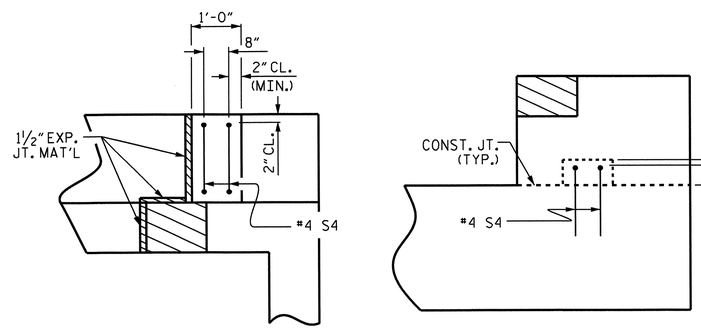

LATERAL GUIDE DETAILS

(LEFT LATERAL GUIDE SHOWN, RIGHT END SIMILAR)

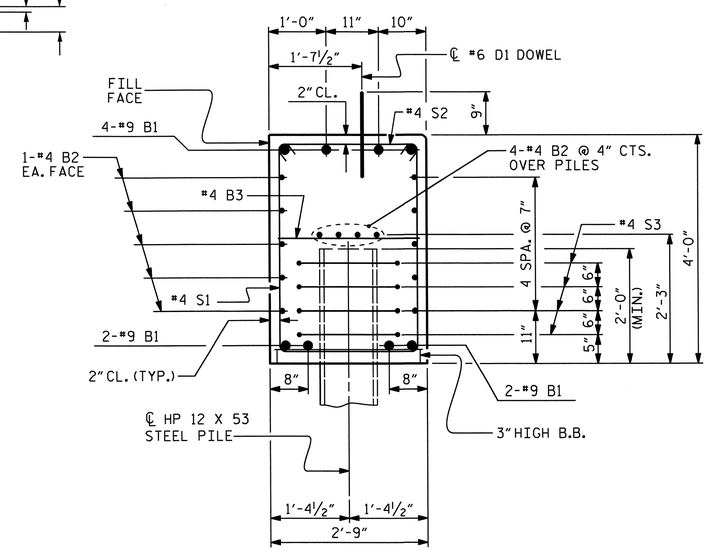

SECTION A-A

(CONCRETE COLLAR NOT SHOWN FOR CLARITY. SEE "CORROSION PROTECTION FOR STEEL PILES DETAIL.")

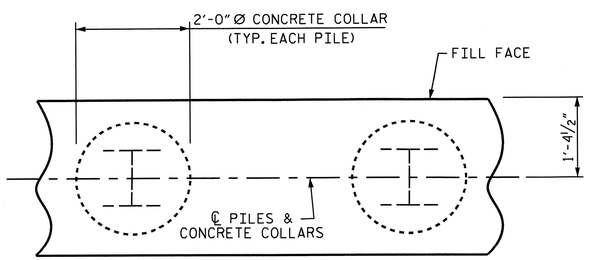

PLAN

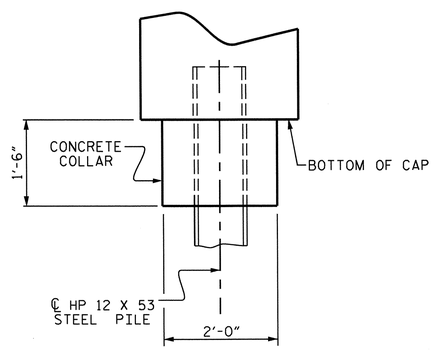

ELEVATION

CORROSION PROTECTION FOR STEEL PILES DETAIL

PROJECT NO. B-5149
HENDERSON COUNTY
STATION: 17+77.10 -L-

SHEET 3 OF 3

STATE OF NORTH CAROLINA
DEPARTMENT OF TRANSPORTATION
RALEIGH

SUBSTRUCTURE

END BENT No. 2
DETAILS

NORTH CAROLINA PROFESSIONAL SEAL 20125 ENGINEER MARSHALL C. CHEEK, JR. 8-13-13

REVISIONS								SHEET NO.
NO.	BY:	DATE:	NO.	BY:	DATE:			S-21
1			3					TOTAL SHEETS
2			4					38

ASSEMBLED BY : V.X. NGUYEN	DATE : 11-20-12	
CHECKED BY : H.P. KIM	DATE : 12-12	
DRAWN BY : WJH 12/11		
CHECKED BY : AAC 12/11		

13-AUG-2013 10:38
O:\Structures\Final Plans\B-5149_SD_E*.dgn
wjharris

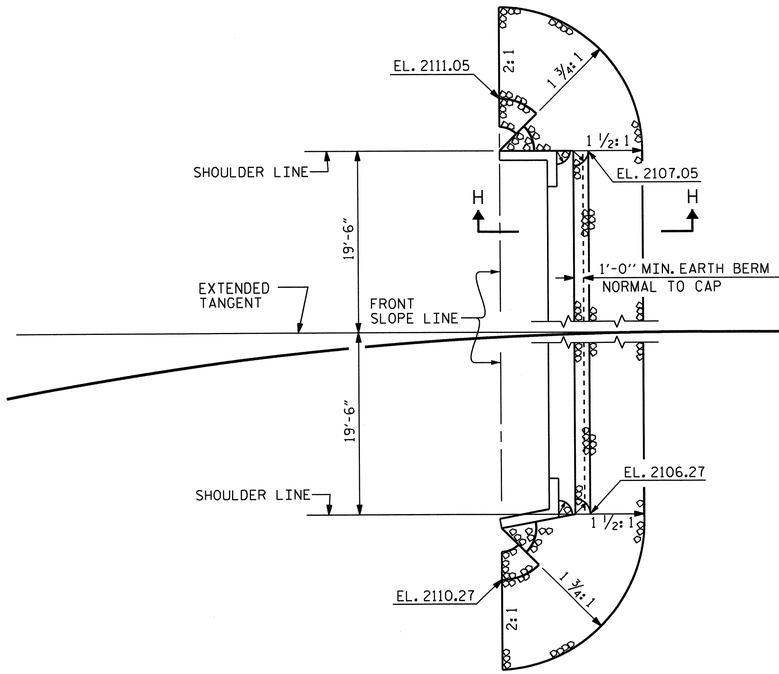

END BENT No. 1

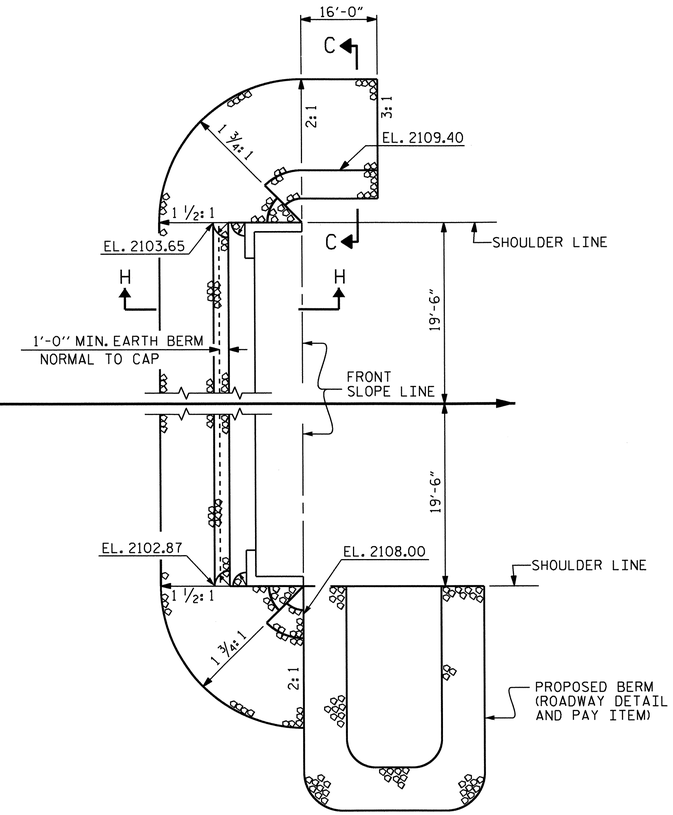

END BENT No. 2

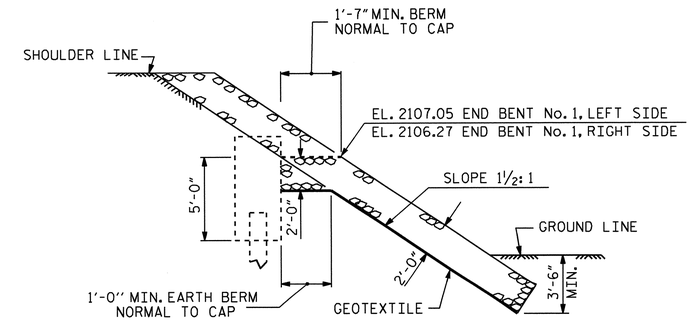

SECTION H-H

END BENT No. 1

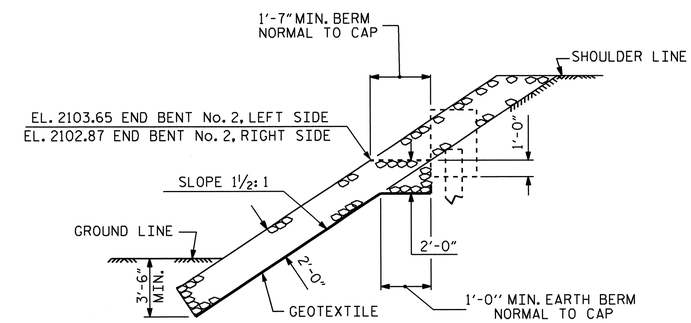

SECTION H-H

END BENT No. 2

ESTIMATED QUANTITIES		
BRIDGE @ STA. 17+77.10 -L-	RIP RAP CLASS II (2'-0" THICK)	GEOTEXTILE FOR DRAINAGE
	TONS	SQUARE YARDS
END BENT No. 1	63	70
END BENT No. 2	108	120

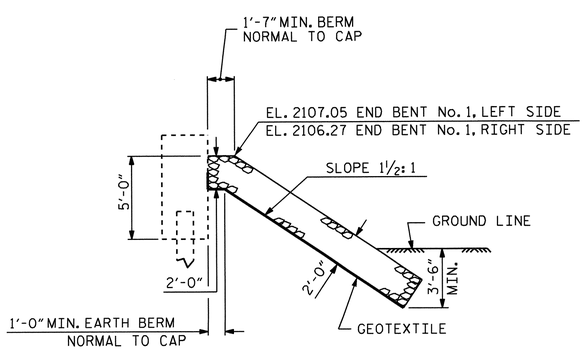

℄ SECTION

BERM RIP RAPPED

END BENT No. 1

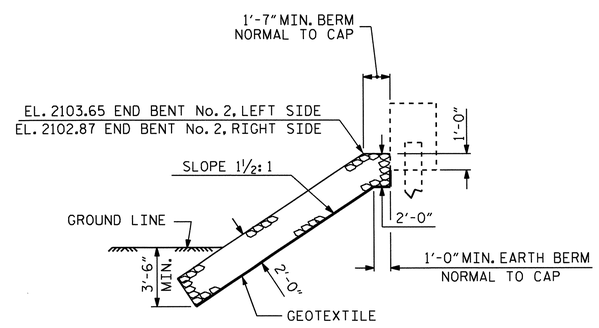

℄ SECTION

BERM RIP RAPPED

END BENT No. 2

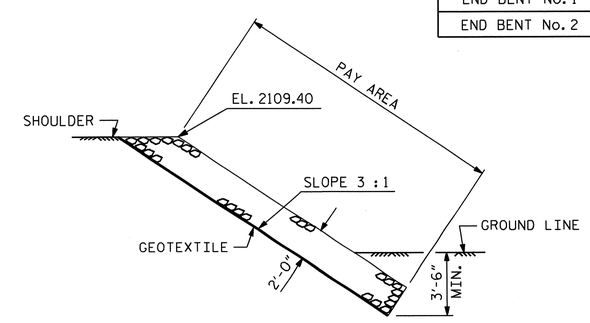

SECTION C-C

PROJECT NO. B-5149

HENDERSON COUNTY

STATION: 17+77.10 -L-

STATE OF NORTH CAROLINA
DEPARTMENT OF TRANSPORTATION
RALEIGH

STANDARD

RIP RAP DETAILS

NORTH CAROLINA PROFESSIONAL SEAL 20125 ENGINEER MARSHALL L. CHEEK, JR.
8-13-13

REVISIONS							SHEET NO.
NO.	BY:	DATE:	NO.	BY:	DATE:		S-22
1			3				TOTAL SHEETS
2			4				38

ASSEMBLED BY : D. HODGE	DATE : 5/13	
CHECKED BY : M.G. CHEEK	DATE : 6/13	
DRAWN BY : REK 1/84	REV. 5/1/06R	TLA/GM
CHECKED BY : RDU 1/84	REV. 10/1/11	MAA/GM
	REV. 12/21/11	MAA/GM

24-JUN-2013 07:01
R:\Structures\Plans\dhodge\B-5149_SD_RR.dgn
dohodge

STD. NO. RR1

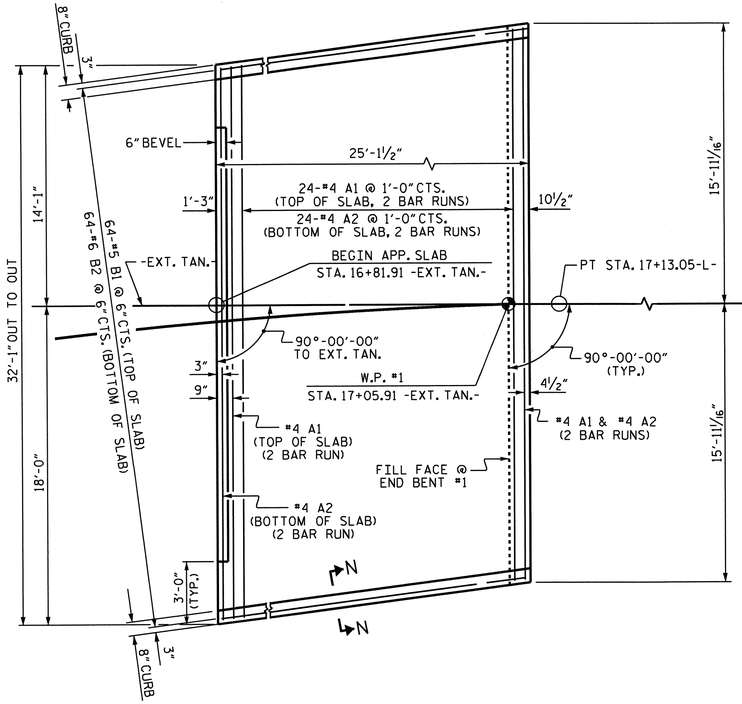

PLAN @ END BENT No. 1

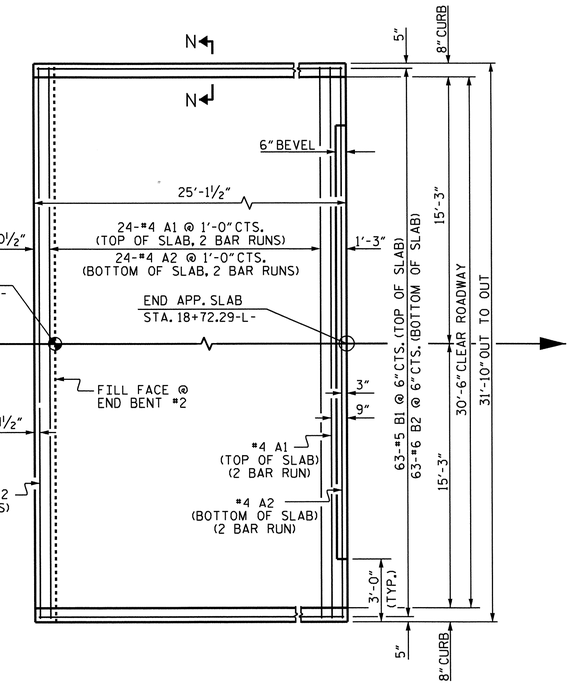

PLAN @ END BENT No. 2

NOTES

FOR REINFORCED BRIDGE APPROACH FILL INCLUDING GEOTEXTILE, IMPERMEABLE GEOMEMBRANE, 4" Ø DRAINAGE PIPE, #78M STONE, AND SELECT MATERIAL, SEE ROADWAY PLANS.

AREA BETWEEN THE WINGWALL AND APPROACH SLAB SHALL BE GRADED TO DRAIN THE WATER AWAY FROM THE FILL FACE OF THE BRIDGE AND SHALL BE PAVED. SEE ROADWAY PLANS.

APPROACH SLAB GROOVING IS NOT REQUIRED.

BILL OF MATERIAL

APPROACH SLAB AT EB No. 1

BAR	NO.	SIZE	TYPE	LENGTH	WEIGHT
* A1	52	#4	STR	16'-11"	588
A2	52	#4	STR	16'-9"	582
* B1	64	#5	STR	24'-6"	1635
B2	64	#6	STR	24'-10"	2387
REINFORCING STEEL				LBS.	2969
* EPOXY COATED REINFORCING STEEL				LBS.	2223
CLASS AA CONCRETE				C. Y.	36.9

APPROACH SLAB AT EB No. 2

BAR	NO.	SIZE	TYPE	LENGTH	WEIGHT
* A1	52	#4	STR	16'-9"	582
A2	52	#4	STR	16'-8"	579
* B1	63	#5	STR	24'-3"	1593
B2	63	#6	STR	24'-9"	2342
REINFORCING STEEL				LBS.	2921
* EPOXY COATED REINFORCING STEEL				LBS.	2175
CLASS AA CONCRETE				C. Y.	36.8

* THESE BARS ARE EPOXY COATED

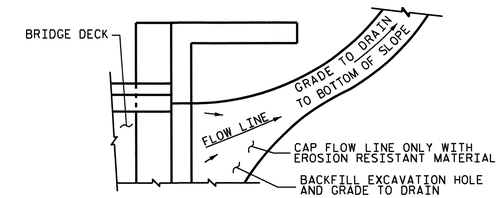

NOTE: IF THE APPROACH SLAB IS NOT CONSTRUCTED IMMEDIATELY AFTER THE BACKFILLING OF THE END BENT EXCAVATION, GRADE TO DRAIN TO THE BOTTOM OF THE SLOPE AND PROVIDE EROSION RESISTANT MATERIAL, SUCH AS FIBERGLASS ROVING OR AS DIRECTED BY THE ENGINEER TO PREVENT SOIL EROSION AND TO PROTECT THE AREA ADJACENT TO THE STRUCTURE. THE CONTRACTOR WILL BE REQUIRED TO REMOVE THESE MATERIALS PRIOR TO CONSTRUCTION OF THE APPROACH SLAB.

TEMPORARY DRAINAGE DETAIL

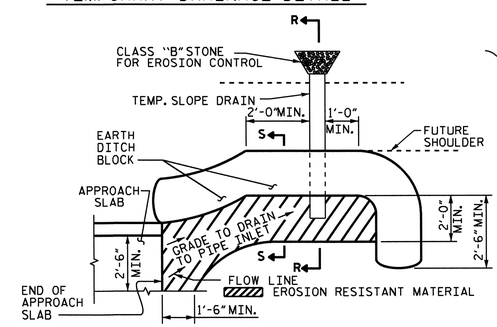

NOTE: IMMEDIATELY AFTER THE CONSTRUCTION OF THE APPROACH SLAB, THE CONTRACTOR SHALL PROVIDE TEMPORARY BERM AND SLOPE DRAIN. CONTRACTOR SHALL GRADE TO PIPE INLET AND PROVIDE EROSION RESISTANT MATERIAL AS SHOWN. THE EROSION RESISTANT MATERIAL SHALL BE EITHER 1) ASPHALT PLANT MIX, TYPE 1 OR TYPE 2, MIN. 2" DEPTH, 2) EROSION CONTROL MAT, OR 3) CONCRETE, AS DIRECTED BY THE ENGINEER. THE SLOPE DRAIN SHALL CONSIST OF A NON-PERFORATED TEMPORARY DRAINAGE PIPE, 12 INCHES IN DIAMETER.

PLAN VIEW

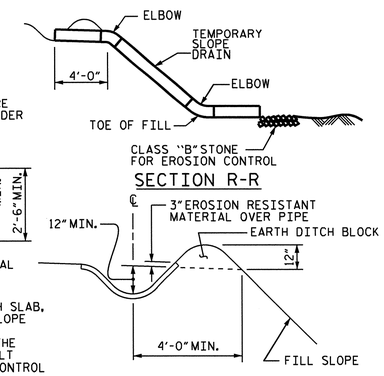

TEMPORARY BERM AND SLOPE DRAIN DETAILS

(TO BE USED WHEN SHOULDER BERM GUTTER IS REQUIRED)

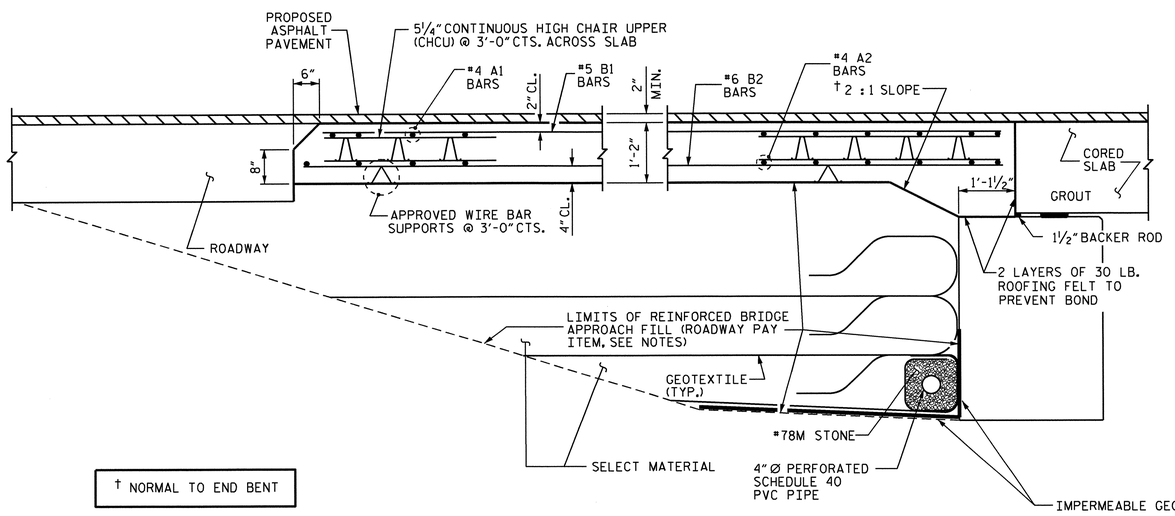

† NORMAL TO END BENT

SECTION THRU SLAB

SECTION THRU SLAB @ END BENT No. 1 SHOWN.
SECTION THRU SLAB AT END BENT No. 2 SIMILAR

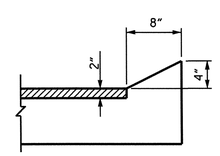

SECTION N-N

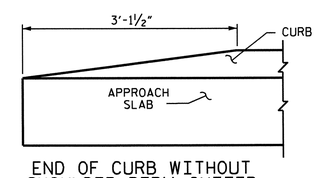

END OF CURB WITHOUT SHOULDER BERM GUTTER

CURB DETAILS

SPLICE LENGTHS		
BAR SIZE	EPOXY COATED	UNCOATED
#4	2'-0"	1'-9"
#5	2'-6"	2'-2"
#6	3'-10"	2'-7"

PROJECT NO. B-5149
HENDERSON COUNTY
STATION: 17+77.10-L-

STATE OF NORTH CAROLINA
DEPARTMENT OF TRANSPORTATION
RALEIGH

STANDARD

BRIDGE APPROACH SLAB
FOR PRESTRESSED CONCRETE
CORED SLAB
90° SKEW

NORTH CAROLINA PROFESSIONAL SEAL 20125 ENGINEER
MATERIALS & TESTS UNIT
6-13-13

REVISIONS							SHEET NO.
NO.	BY:	DATE:	NO.	BY:	DATE:		S-23
1			3				TOTAL SHEETS
2			4				38

ASSEMBLED BY :	S.W. PEARCE	DATE :	2/2013
CHECKED BY :	H.P. KIM	DATE :	2/2013
DRAWN BY : SHS/MAA 5-09	REV. 12-11	MAA/AAC	
CHECKED BY : BCH 5-09			

13-AUG-2013 14:38
O:\Structures\Final Plans\B-5149_SD_AS.dgn
wjharris

F.A. PROJECT No.: BRZ-1574 (4)

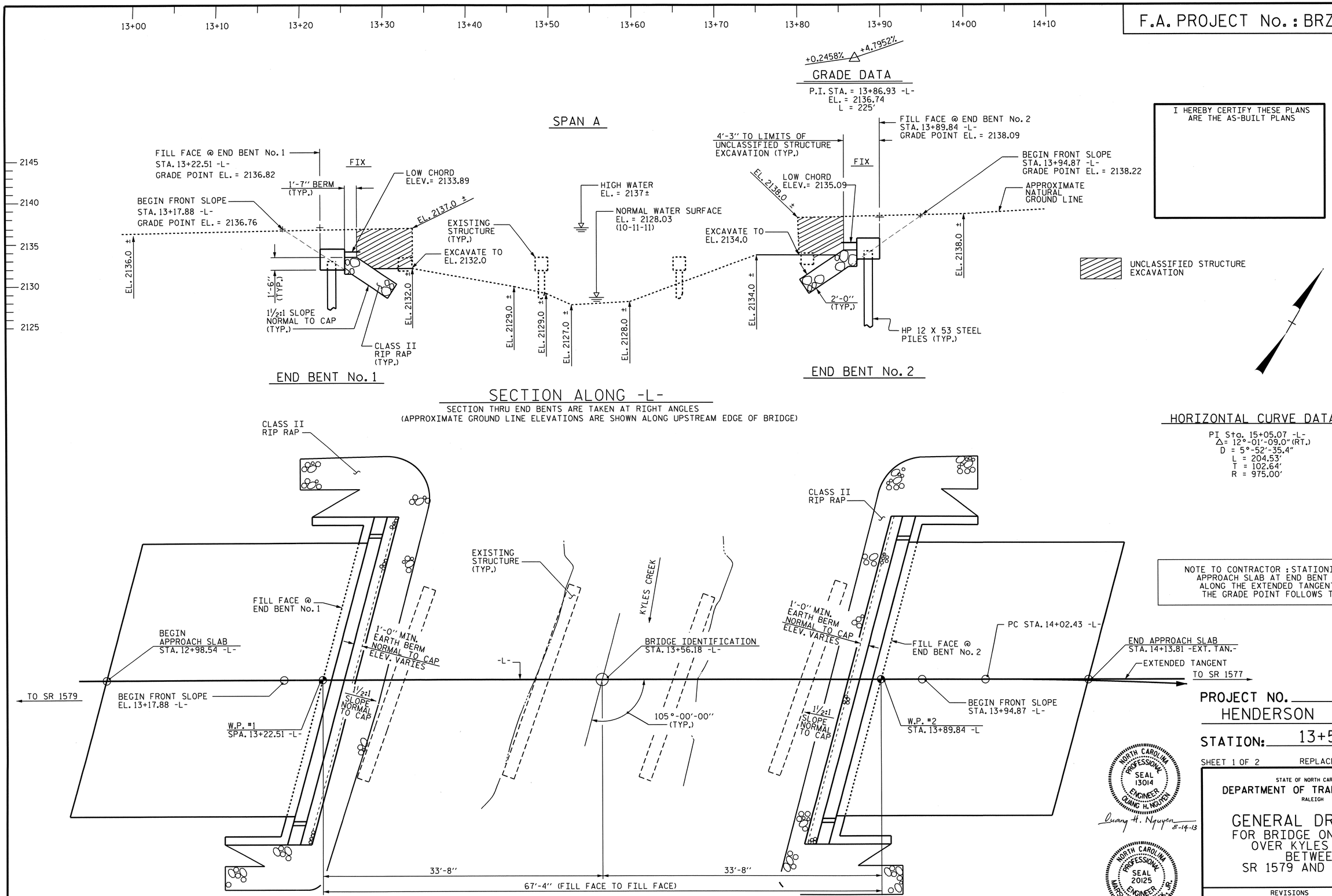

I HEREBY CERTIFY THESE PLANS ARE THE AS-BUILT PLANS

HORIZONTAL CURVE DATA

PI Sta. 15+05.07 -L-
Δ= 12°-01'-09.0" (RT.)
D = 5°-52'-35.4"
L = 204.53'
T = 102.64'
R = 975.00'

NOTE TO CONTRACTOR: STATIONING ON THE APPROACH SLAB AT END BENT No. 2 IS ALONG THE EXTENDED TANGENT, WHILE THE GRADE POINT FOLLOWS THE -L-.

PROJECT NO. B-4765
HENDERSON COUNTY
STATION: 13+56.18 -L-

SHEET 1 OF 2 REPLACES BRIDGE No. 113

NORTH CAROLINA PROFESSIONAL SEAL 13014 ENGINEER QUANG H. NGUYEN
Quang H. Nguyen 8-14-13

NORTH CAROLINA PROFESSIONAL SEAL 20125 ENGINEER MARSHALL G. CHEEK, JR.
8-14-13

STATE OF NORTH CAROLINA
DEPARTMENT OF TRANSPORTATION
RALEIGH

GENERAL DRAWING
FOR BRIDGE ON SR 1574
OVER KYLES CREEK
BETWEEN
SR 1579 AND SR 1577

REVISIONS						SHEET NO.
NO.	BY:	DATE:	NO.	BY:	DATE:	S-24
1			3			TOTAL SHEETS
2			4			38

DRAWN BY : M. POOLE DATE : 03-12
CHECKED BY : M. G. CHEEK DATE : 02-13

14-AUG-2013 10:18
M:\Structures\Final Plans\B4765_SD_GD.dgn
wjharris

BENCHMARK #2 : 8" SPIKE IN BASE OF 15" WHITE PINE, STA. 9+50.00 -BL-, 120' RT., ELEV. = 2138.96

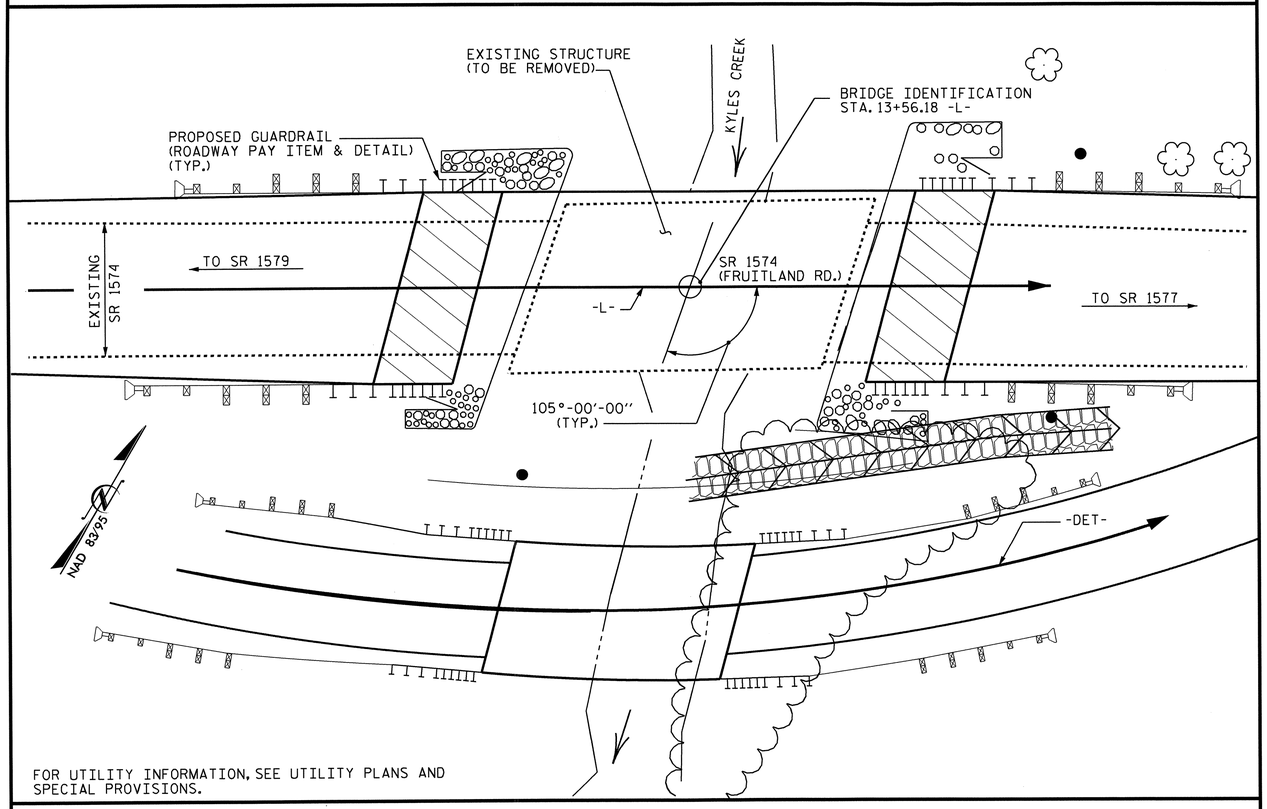

FOR UTILITY INFORMATION, SEE UTILITY PLANS AND SPECIAL PROVISIONS.

LOCATION SKETCH

NOTES

ASSUMED LIVE LOAD = HL-93 OR ALTERNATE LOADING.

THIS BRIDGE HAS BEEN DESIGNED IN ACCORDANCE WITH THE AASHTO LRFD BRIDGE DESIGN SPECIFICATIONS.

THIS BRIDGE IS LOCATED IN SEISMIC ZONE 1.

FOR OTHER DESIGN DATA AND GENERAL NOTES, SEE SHEET SN.

FOR SUBMITTAL OF WORKING DRAWINGS, SEE SPECIAL PROVISIONS.

FOR FALSEWORK AND FORMWORK, SEE SPECIAL PROVISIONS.

FOR CRANE SAFETY, SEE SPECIAL PROVISIONS.

FOR GROUT FOR STRUCTURES, SEE SPECIAL PROVISIONS.

THE CONTRACTOR SHALL PROVIDE INDEPENDENT ASSURANCE SAMPLES OF REINFORCING STEEL AS FOLLOWS: FOR PROJECTS REQUIRING UP TO 400 TONS OF REINFORCING STEEL, ONE 30 INCH SAMPLE OF EACH SIZE BAR USED, AND FOR PROJECTS REQUIRING OVER 400 TONS OF REINFORCING STEEL, TWO 30 INCH SAMPLES OF EACH SIZE BAR USED. THE BARS FROM WHICH THE SAMPLES ARE TAKEN MUST THEN BE SPLICED WITH REPLACEMENT BARS OF THE SIZE AND LENGTH OF THE SAMPLE, PLUS A MINIMUM LAP SPLICE OF THIRTY BAR DIAMETERS. PAYMENT FOR THE SAMPLES OF REINFORCING STEEL SHALL BE CONSIDERED INCIDENTAL TO VARIOUS PAY ITEMS.

THE MATERIAL SHOWN IN THE CROSS-HATCHED AREA SHALL BE EXCAVATED FOR A DISTANCE OF 25 FT. EACH SIDE OF CENTERLINE ROADWAY AS DIRECTED BY THE ENGINEER. THIS WORK WILL BE PAID FOR AT THE CONTRACT LUMP SUM PRICE FOR UNCLASSIFIED STRUCTURE EXCAVATION. SEE SECTION 412 OF THE STANDARD SPECIFICATIONS.

THE SUBSTRUCTURE OF THE EXISTING BRIDGE INDICATED ON THE PLANS IS FROM THE BEST INFORMATION AVAILABLE. SINCE THIS INFORMATION IS SHOWN FOR THE CONVENIENCE OF THE CONTRACTOR, THE CONTRACTOR SHALL HAVE NO CLAIM WHATSOEVER AGAINST THE DEPARTMENT OF TRANSPORTATION FOR ANY DELAYS OR ADDITIONAL COST INCURRED BASED ON DIFFERENCES BETWEEN THE EXISTING BRIDGE SUBSTRUCTURE SHOWN ON THE PLANS AND THE ACTUAL CONDITIONS AT THE PROJECT SITE.

REMOVAL OF THE EXISTING BRIDGE SHALL BE PERFORMED SO AS NOT TO ALLOW DEBRIS TO FALL INTO THE WATER. THE CONTRACTOR SHALL REMOVE THE BRIDGE AND SUBMIT PLANS FOR DEMOLITION IN ACCORDANCE WITH ARTICLE 402-2 OF THE STANDARD SPECIFICATIONS.

THE CONTRACTOR WILL BE REQUIRED TO CONSTRUCT, MAINTAIN AND AFTERWARDS REMOVE A TEMPORARY STRUCTURE AT STA. 13+56.18 -L- FOR USE DURING CONSTRUCTION OF THE PROPOSED STRUCTURE. FOR CONSTRUCTION, MAINTENANCE AND REMOVAL OF TEMPORARY STRUCTURE, SEE SPECIAL PROVISIONS.

THIS STRUCTURE HAS BEEN DESIGNED IN ACCORDANCE WITH "HEC 18-EVALUATING SCOUR AT BRIDGES."

FOR EROSION CONTROL MEASURES, SEE EROSION CONTROL PLANS.

ASPHALT WEARING SURFACE IS INCLUDED IN ROADWAY QUANTITY ON ROADWAY PLANS.

THE EXISTING 3-SPAN BRIDGE (1 @ 17'-6", 1 @ 17'-0", 1 @ 17'-2") WITH A ROADWAY WIDTH OF 24'-0" AND A 3½" ASPHALT WEARING SURFACE ON A REINFORCED CONCRETE FLOOR ON 19 LINES OF TIMBER JOISTS, WITH A SUBSTRUCTURE CONSISTING OF TIMBER CAPS AND TIMBER PILES AT THE END BENTS AND BENTS AND LOCATED AT THE SITE OF THE PROPOSED STRUCTURE SHALL BE REMOVED. THE EXISTING BRIDGE IS PRESENTLY POSTED FOR LOAD LIMIT. SHOULD THE STRUCTURAL INTEGRITY OF THE BRIDGE DETERIORATE DURING CONSTRUCTION OF THE PROPOSED BRIDGE, A LOAD LIMIT MAY BE POSTED AND MAY BE REDUCED AS FOUND NECESSARY DURING THE LIFE OF THE PROJECT.

FOUNDATION NOTES

FOR PILES, SEE SECTION 450 OF THE STANDARD SPECIFICATIONS.

PILES AT END BENT No. 1 AND END BENT No. 2 ARE DESIGNED FOR A FACTORED RESISTANCE OF 80 TONS PER PILE.

DRIVE PILES AT END BENT No. 1 AND END BENT No. 2 TO A REQUIRED DRIVING RESISTANCE OF 133 TONS PER PILE.

HYDRAULIC DATA

DESIGN DISCHARGE ..... 850 CFS

FREQUENCY OF DESIGN FLOOD ..... 10 YEARS

DESIGN HIGH WATER ELEVATION 2135.1

DRAINAGE AREA ..... 4.1 SQ. MI.

BASE DISCHARGE(Q100) ..... 1799 CFS

BASE HIGH WATER ELEVATION 2136.7

OVERTOPPING FLOOD DATA

OVERTOPPING DISCHARGE ..... 995 CFS

FREQUENCY OF OVERTOPPING FLOOD ..... 10 + YRS.

OVERTOPPING FLOOD ELEVATION 2136.3

TOTAL BILL OF MATERIAL

	CONSTRUCTION, MAINTENANCE AND REMOVAL OF TEMPORARY STRUCTURE	REMOVAL OF EXISTING STRUCTURE	UNCLASSIFIED STRUCTURE EXCAVATION	CLASS A CONCRETE	BRIDGE APPROACH SLABS	REINFORCING STEEL	HP 12 X 53 STEEL PILES		TWO BAR METAL RAIL	1'-2" X 2'-11¾" CONCRETE PARAPET	RIP RAP CLASS II (2'-0" THICK)	GEOTEXTILE FOR DRAINAGE	ELASTOMERIC BEARINGS	3'-0" X 2'-0" PRESTRESSED CONCRETE CORED SLABS	
	LUMP SUM	LUMP SUM	LUMP SUM	CU. YDS.	LUMP SUM	LBS.	NO.	LIN. FT.	LIN. FT.	LIN. FT.	TONS	SQ. YDS.	LUMP SUM	NO.	LIN. FT.
SUPERSTRUCTURE					LUMP SUM				114.33	130.00			LUMP SUM	11	715.00
END BENT NO. 1			LUMP SUM	14.8		2193	7	285			40	44			
END BENT NO. 2			LUMP SUM	14.8		2193	7	230			44	48			
TOTAL	LUMP SUM	LUMP SUM	LUMP SUM	29.6	LUMP SUM	4386	14	515	114.33	130.00	84	92	LUMP SUM	11	715.00

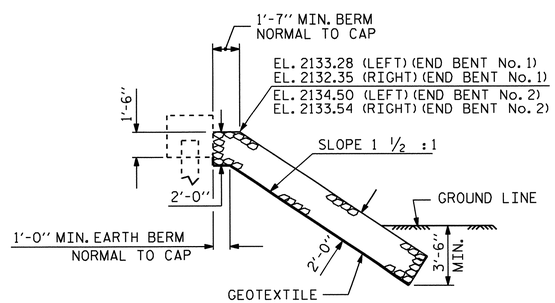

℄ SECTION

BERM RIP RAPPED

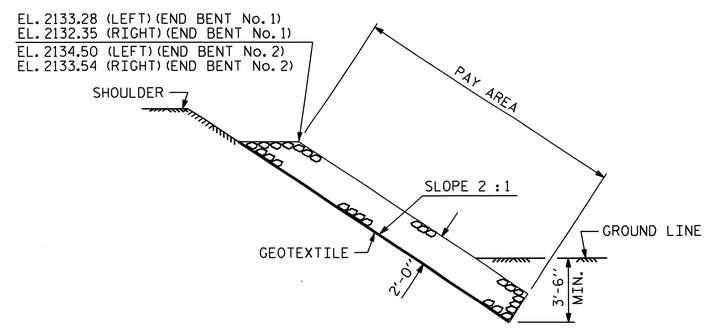

SECTION THRU SHOULDER

PROJECT NO. B-4765

HENDERSON COUNTY

STATION: 13+56.18 -L-

SHEET 2 OF 2

STATE OF NORTH CAROLINA
DEPARTMENT OF TRANSPORTATION
RALEIGH

GENERAL DRAWING
FOR BRIDGE ON SR 1574
OVER KYLES CREEK
BETWEEN
SR 1579 AND SR 1577

NORTH CAROLINA PROFESSIONAL SEAL 20125 ENGINEER MARSHALL G. CHEEK, JR.
8-13-14

REVISIONS						SHEET NO.
NO.	BY:	DATE:	NO.	BY:	DATE:	S-25
1			3			TOTAL SHEETS
2			4			38

DRAWN BY : M. POOLE DATE : 03-12
CHECKED BY : M. G. CHEEK DATE : 02/13

14-AUG-2013 10:18
M:\Structures\Final Plans\B4765_SD_GD.dgn
wjharris

LOAD AND RESISTANCE FACTOR RATING (LRFD) SUMMARY FOR PRESTRESSED CONCRETE GIRDERS

LEVEL		VEHICLE	WEIGHT (W) (TONS)	CONTROLLING LOAD RATING (#)	MINIMUM RATING FACTORS (RF)	TONS = W X RF	STRENGTH I LIMIT STATE											SERVICE III LIMIT STATE						COMMENT NUMBER
							LIVELOAD FACTORS	MOMENT					SHEAR					LIVELOAD FACTORS	MOMENT					
								DISTRIBUTION FACTORS (DF)	RATING FACTOR	SPAN	GIRDER LOCATION	DISTANCE FROM LEFT END OF SPAN (ft)	DISTRIBUTION FACTORS (DF)	RATING FACTOR	SPAN	GIRDER LOCATION	DISTANCE FROM LEFT END OF SPAN (ft)		DISTRIBUTION FACTORS (DF)	RATING FACTOR	SPAN	GIRDER LOCATION	DISTANCE FROM LEFT END OF SPAN (ft)	
DESIGN LOAD RATING		HL-93(Inv)	N/A	1	1.00	--	1.75	0.266	1.05	A	EL	31.983	0.603	1.05	A	EL	3.198	0.80	0.266	1.00	A	EL	31.983	
		HL-93(Opr)	N/A	--	1.36	--	1.35	0.266	1.36	A	EL	31.983	0.603	1.36	A	EL	3.198	N/A	--	--	--	--	--	
		HS-20(Inv)	36.000	2	1.29	47.082	1.75	0.266	1.35	A	EL	31.983	0.603	1.30	A	EL	3.198	0.80	0.266	1.29	A	EL	31.983	
		HS-20(Opr)	36.000	--	1.68	61.032	1.35	0.266	1.75	A	EL	31.983	0.603	1.68	A	EL	3.198	N/A	--	--	--	--	--	
LEGAL LOAD RATING	SV	SNSH	13.500	--	2.83	39.227	1.40	0.266	3.70	A	EL	31.983	0.603	3.82	A	EL	3.198	0.80	0.266	2.83	A	EL	31.983	
		SNGARBS2	20.000	--	2.14	43.990	1.40	0.266	2.80	A	EL	31.983	0.603	2.73	A	EL	3.198	0.80	0.266	2.14	A	EL	31.983	
		SNAGRIS2	22.000	--	2.04	46.147	1.40	0.266	2.67	A	EL	31.983	0.603	2.54	A	EL	3.198	0.80	0.266	2.04	A	EL	31.983	
		SNCOTTS3	27.250	--	1.41	39.429	1.40	0.266	1.84	A	EL	31.983	0.603	1.91	A	EL	3.198	0.80	0.266	1.41	A	EL	31.983	
		SNAGGRS4	34.925	--	1.19	42.685	1.40	0.266	1.56	A	EL	31.983	0.603	1.59	A	EL	3.198	0.80	0.266	1.19	A	EL	31.983	
		SNS5A	35.550	--	1.16	42.457	1.40	0.266	1.52	A	EL	31.983	0.603	1.62	A	EL	3.198	0.80	0.266	1.16	A	EL	31.983	
		SNS6A	39.950	--	1.07	43.996	1.40	0.266	1.40	A	EL	31.983	0.603	1.48	A	EL	3.198	0.80	0.266	1.07	A	EL	31.983	
		SNS7B	42.000	--	1.02	44.057	1.40	0.266	1.34	A	EL	31.983	0.603	1.46	A	EL	3.198	0.80	0.266	1.02	A	EL	31.983	
	TTST	TNAGRIT3	33.000	--	1.31	44.372	1.40	0.266	1.71	A	EL	31.983	0.603	1.76	A	EL	3.198	0.80	0.266	1.31	A	EL	31.983	
		TNT4A	33.075	--	1.32	44.719	1.40	0.266	1.72	A	EL	31.983	0.603	1.71	A	EL	3.198	0.80	0.266	1.32	A	EL	31.983	
		TNT6A	41.600	--	1.08	46.210	1.40	0.266	1.41	A	EL	31.983	0.603	1.56	A	EL	3.198	0.80	0.266	1.08	A	EL	31.983	
		TNT7A	42.000	--	1.09	47.008	1.40	0.266	1.42	A	EL	31.983	0.603	1.52	A	EL	3.198	0.80	0.266	1.09	A	EL	31.983	
		TNT7B	42.000	--	1.13	48.932	1.40	0.266	1.48	A	EL	31.983	0.603	1.42	A	EL	3.198	0.80	0.266	1.13	A	EL	31.983	
		TNAGRIT4	43.000	--	1.07	47.428	1.40	0.266	1.40	A	EL	31.983	0.603	1.37	A	EL	3.198	0.80	0.266	1.07	A	EL	31.983	
		TNAGT5A	45.000	--	1.01	46.688	1.40	0.266	1.32	A	EL	31.983	0.603	1.37	A	EL	3.198	0.80	0.266	1.01	A	EL	31.983	
		TNAGT5B	45.000	3	1.00	46.025	1.40	0.266	1.30	A	EL	31.983	0.603	1.30	A	EL	3.198	0.80	0.266	1.00	A	EL	31.983	

LOAD FACTORS:

DESIGN LOAD RATING FACTORS	LIMIT STATE	γ_{DC}	γ_{DW}
	STRENGTH I	1.25	1.50
	SERVICE III	1.00	1.00

NOTES:

MINIMUM RATING FACTORS ARE BASED ON THE STRENGTH I AND SERVICE III LIMIT STATES.

ALLOWABLE STRESSES FOR SERVICE III LIMIT STATE ARE AS REQUIRED FOR DESIGN.

COMMENTS:

1.
2.
3.
4.

(#) CONTROLLING LOAD RATING

(1) DESIGN LOAD RATING (HL-93)

(2) DESIGN LOAD RATING (HS-20)

(3) LEGAL LOAD RATING **

** SEE CHART FOR VEHICLE TYPE

GIRDER LOCATION

I - INTERIOR GIRDER
EL - EXTERIOR LEFT GIRDER
ER - EXTERIOR RIGHT GIRDER

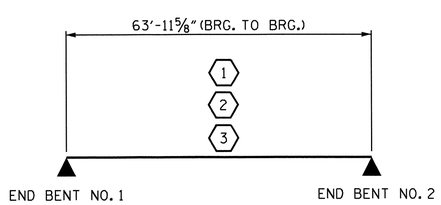

LRFR SUMMARY

SPAN A

PROJECT NO. B-4765

HENDERSON COUNTY

STATION: 13+56.18 -L-

STATE OF NORTH CAROLINA
DEPARTMENT OF TRANSPORTATION
RALEIGH

LRFR SUMMARY FOR PRESTRESSED CONCRETE GIRDERS
(NON-INTERSTATE TRAFFIC)

NORTH CAROLINA PROFESSIONAL SEAL 20125 ENGINEER MARSHAL C. CREEL, JR.
8-13-13

REVISIONS						SHEET NO.
NO.	BY:	DATE:	NO.	BY:	DATE:	S-26
1			3			TOTAL SHEETS
2			4			38

ASSEMBLED BY : J.R. MCROY DATE : 4/12
CHECKED BY : R.Z DEAN DATE : 4/12
DESIGN ENG. OF RECORD : J.R. MCROY DATE : 8/13

13-AUG-2013 11:50
Z:\Structures\Final Plans\B-4765_SD_cored_slab.dgn
jmcroy

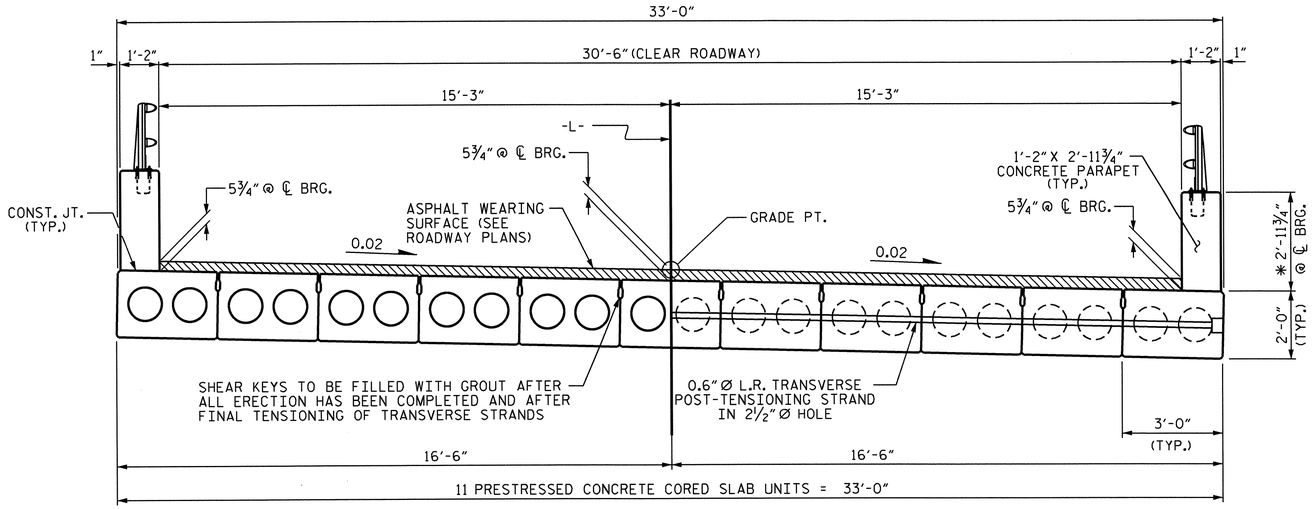

HALF SECTION
THROUGH VOIDS

TYPICAL SECTION

HALF SECTION
AT INTERMEDIATE DIAPHRAGMS

* - THE MAXIMUM PARAPET HEIGHT AND ASPHALT THICKNESS IS SHOWN. THE HEIGHT OF THE PARAPET AND ASPHALT THICKNESS VARIES WHILE THE TOP OF THE PARAPET FOLLOWS THE PROFILE OF THE GUTTERLINE. FOR PARAPET DETAILS AND ASPHALT THICKNESS, SEE "SECTION THRU PARAPET" DETAIL.

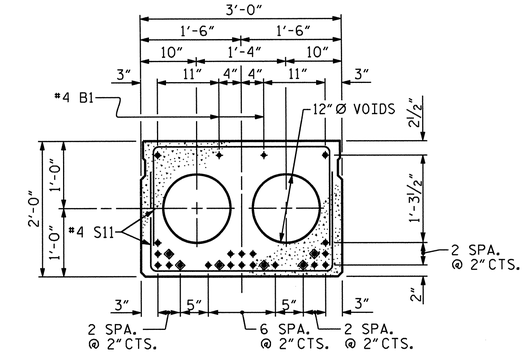

INTERIOR SLAB SECTION (65' UNIT)

(24 STRANDS REQUIRED)

0.6'' Ø LOW RELAXATION STRAND LAYOUT

◆ BOND SHALL BE BROKEN ON THESE STRANDS FOR A DISTANCE OF 12'-0" FROM END OF CORED SLAB UNIT. SEE STANDARD SPECIFICATIONS, ARTICLE 1078-7.

DEBONDING LEGEND

FIXED END

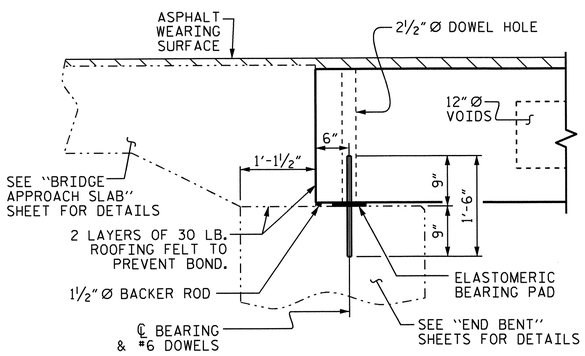

SECTION AT END BENT

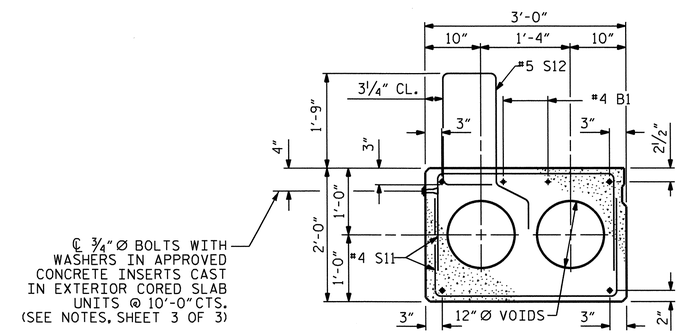

EXTERIOR SLAB SECTION

(FOR PRESTRESSED STRAND LAYOUT, SEE INTERIOR SLAB SECTION.)

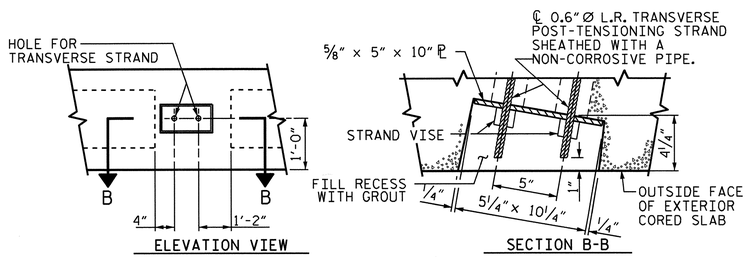

GROUTED RECESS AT END OF POST-TENSIONED STRAND-CORED SLABS

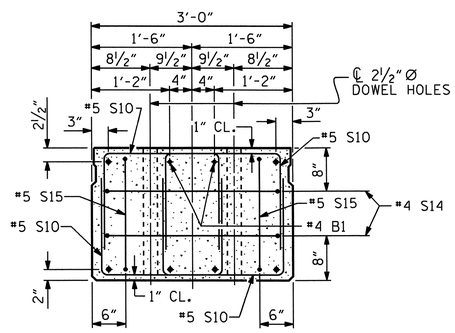

END ELEVATION

SHOWING PLACEMENT OF DOUBLE STIRRUPS AND LOCATION OF DOWEL HOLES. (STRAND LAYOUT NOT SHOWN.) INTERIOR SLAB UNIT SHOWN-EXTERIOR SLAB UNIT SIMILAR EXCEPT SHEAR KEY LOCATION.

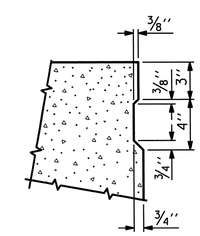

SHEAR KEY DETAIL

NOTE: OMIT SHEAR KEY ON OUTSIDE FACE OF EXTERIOR CORED SLABS.

NORTH CAROLINA PROFESSIONAL SEAL 20125 ENGINEER HANSHALL G. CHEEK, JR.
8-13-13

PROJECT NO. B-4765
HENDERSON COUNTY
STATION: 13+56.18 -L-

SHEET 1 OF 3

STATE OF NORTH CAROLINA
DEPARTMENT OF TRANSPORTATION
RALEIGH

3'-0'' X 2'-0''
PRESTRESSED CONCRETE
CORED SLAB UNIT

REVISIONS						SHEET NO.
NO.	BY:	DATE:	NO.	BY:	DATE:	S-27
1			3			TOTAL SHEETS
2			4			38

ASSEMBLED BY : J.R. MCROY DATE : 4/12
CHECKED BY : R.Z. DEAN DATE : 4/12
DESIGN ENG. OF RECORD : J.R. MCROY DATE : 8/13

13-AUG-2013 13:28
Z:\Structures\Final Plans\B-4765_SD_cored_slab.dgn
jmcroy

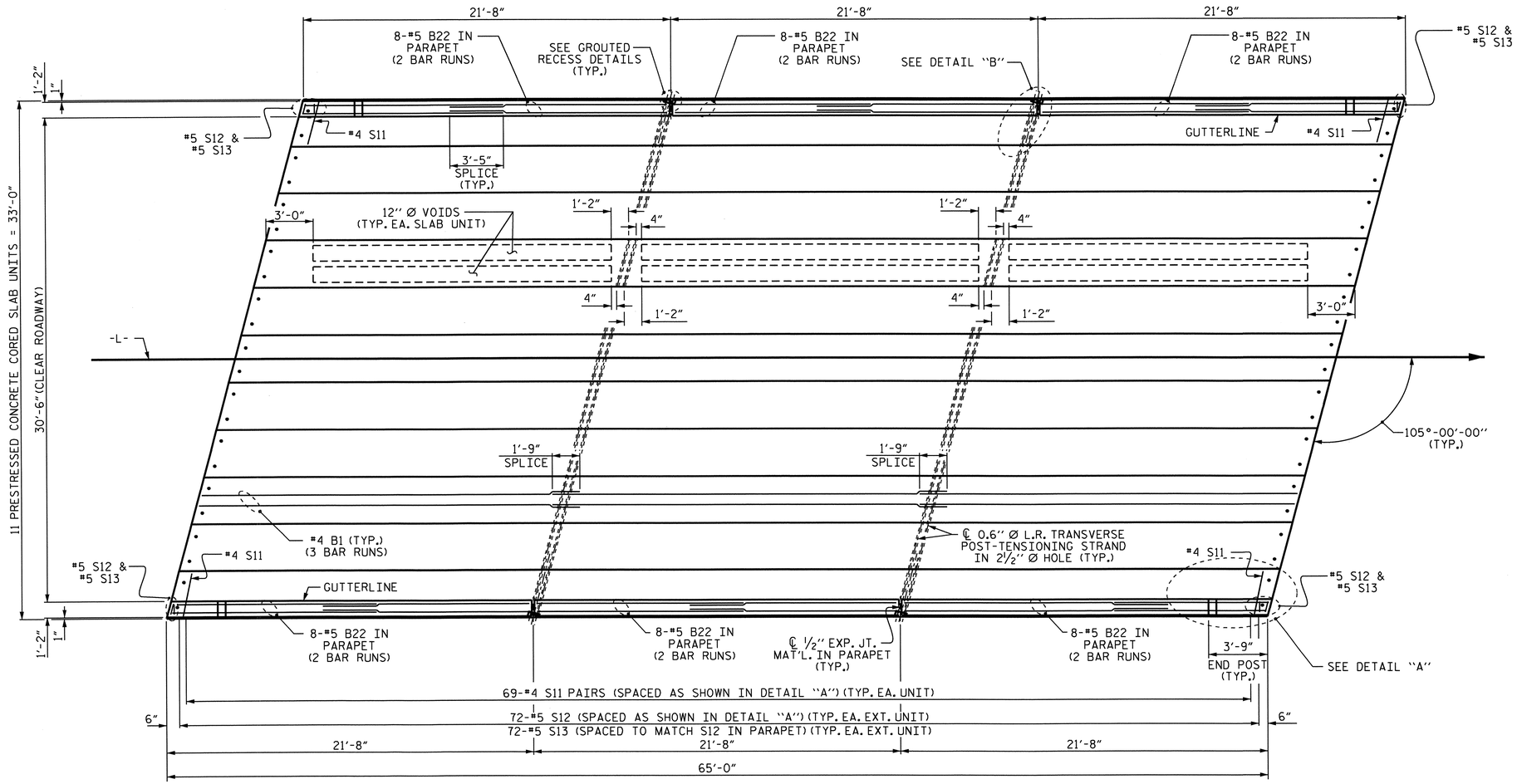

PLAN OF UNIT

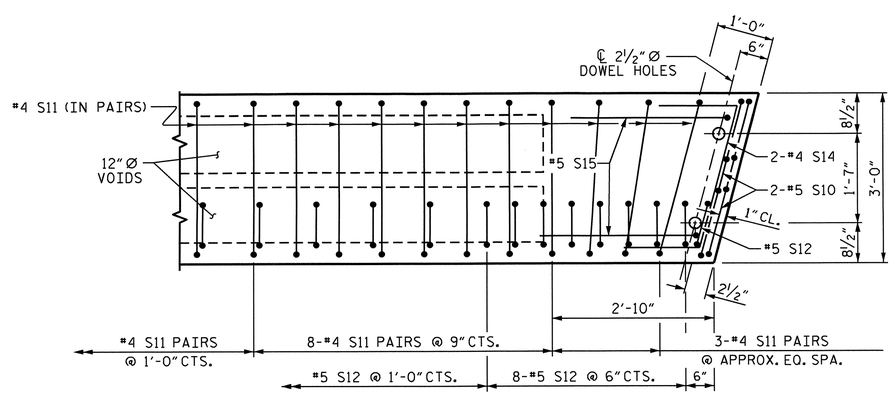

DETAIL "A"

NOTE: EXTERIOR UNIT SHOWN - INTERIOR UNIT SIMILAR EXCEPT OMIT #5 S12 BARS.

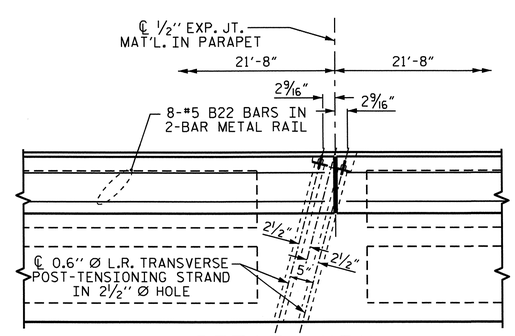

DETAIL "B"

#4 S11 BARS MAY BE SHIFTED AS NECESSARY TO MAINTAIN 1" CLEAR TO GROUTED RECESS AND 2½" Ø TRANSVERSE POST-TENSIONING STRAND HOLES

PROJECT NO. B-4765

HENDERSON COUNTY

STATION: 13+56.18 -L-

SHEET 2 OF 3

STATE OF NORTH CAROLINA
DEPARTMENT OF TRANSPORTATION
RALEIGH

PLAN OF 65' UNIT
105° SKEW

NORTH CAROLINA PROFESSIONAL SEAL 20125 ENGINEER MARSHALL L. CHEEK, JR.
8-16-13

REVISIONS						SHEET NO.
NO.	BY:	DATE:	NO.	BY:	DATE:	S-28
1			3			TOTAL SHEETS
2			4			38

ASSEMBLED BY : J.R. MCROY DATE : 4/12
CHECKED BY : R.Z. DEAN DATE : 4/12

15-AUG-2013 16:57
Z:\Structures\Final Plans\B-4765_SD_cored_slab.dgn
jmcroy

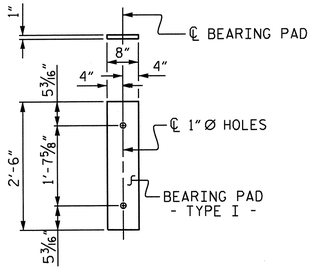

FIXED END
(TYPE I - 22 REQ'D)

ELASTOMERIC BEARING DETAILS

ELASTOMER IN ALL BEARINGS SHALL BE 60 DUROMETER HARDNESS.

CORED SLABS REQUIRED

	NUMBER	LENGTH	TOTAL LENGTH
65' UNIT			
EXTERIOR C.S.	2	65'-0"	130'-0"
INTERIOR C.S.	9	65'-0"	585'-0"
TOTAL	11		715'-0"

CONCRETE RELEASE STRENGTH

UNIT	PSI
65' UNITS	4800

GRADE 270 STRANDS

	0.6" Ø L.R.
AREA (SQUARE INCHES)	0.217
ULTIMATE STRENGTH (LBS. PER STRAND)	58,600
APPLIED PRESTRESS (LBS. PER STRAND)	43,950

DEAD LOAD DEFLECTION AND CAMBER

	3'-0" x 2'-0"
65' CORED SLAB UNIT	0.6" Ø L.R. STRAND
CAMBER (SLAB ALONE IN PLACE)	3 1/2" ↑
DEFLECTION DUE TO SUPERIMPOSED DEAD LOAD **	13/16" ↓
FINAL CAMBER	2 11/16" ↑

** INCLUDES FUTURE WEARING SURFACE

BAR TYPES

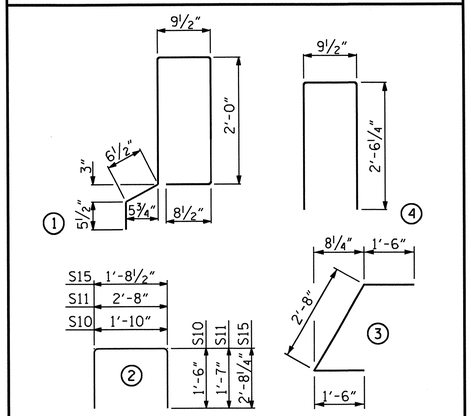

ALL BAR DIMENSIONS ARE OUT TO OUT

NOTES

ALL PRESTRESSING STRANDS SHALL BE 7-WIRE LOW RELAXATION GRADE 270 STRANDS AND SHALL CONFORM TO AASHTO M203 EXCEPT FOR SAMPLING REQUIREMENTS WHICH SHALL BE IN ACCORDANCE WITH THE STANDARD SPECIFICATIONS.

ALL REINFORCING STEEL CAST WITH THE CORED SLAB SECTIONS SHALL BE GRADE 60 AND SHALL BE INCLUDED IN THE UNIT PRICE BID FOR PRESTRESSED CONCRETE CORED SLABS.

RECESSES FOR TRANSVERSE STRANDS SHALL BE GROUTED AFTER THE TENSIONING OF THE STRANDS.

THE 2 1/2" Ø DOWEL HOLES AT FIXED ENDS OF SLAB SECTIONS SHALL BE FILLED WITH NON-SHRINK GROUT.

THE BACKER RODS SHALL CONFORM TO THE REQUIREMENTS OF TYPE M BOND BREAKER. SEE SECTION 1028 OF THE STANDARD SPECIFICATIONS.

WHEN CORED SLABS ARE CAST, AN INTERNAL HOLD-DOWN SYSTEM SHALL BE EMPLOYED TO PREVENT VOIDS FROM RISING OR MOVING SIDEWAYS. AT LEAST SIX WEEKS PRIOR TO CASTING CORED SLABS, THE CONTRACTOR SHALL SUBMIT TO THE ENGINEER FOR REVIEW AND COMMENT, DETAILED DRAWINGS OF THE PROPOSED HOLD-DOWN SYSTEM. IN ADDITION TO STRUCTURAL DETAILS, LOCATION AND SPACING OF THE HOLD-DOWNS SHALL BE INDICATED.

THE TRANSFER OF LOAD FROM THE ANCHORAGES TO THE CORED SLAB UNIT SHALL BE DONE WHEN THE CONCRETE HAS REACHED A COMPRESSIVE STRENGTH OF NOT LESS THAN THE REQUIRED STRENGTH SHOWN IN THE "CONCRETE RELEASE STRENGTH" TABLE.

PRESTRESSING STRANDS SHALL BE CUT FLUSH WITH THE CORED SLAB UNIT ENDS.

APPLY EPOXY PROTECTIVE COATING TO CORED SLAB UNIT ENDS.

TRANSVERSE POST TENSIONING OF THE CORED SLAB UNITS SHALL BE DONE IN ACCORDANCE WITH THE STANDARD SPECIFICATIONS.

MAINTAIN A SYMMETRIC TENSION FORCE BETWEEN EACH PAIR OF TRANSVERSE POST TENSIONING STRANDS IN THE DIAPHRAGM.

THE #4 S11 STIRRUPS MAY BE SHIFTED AS NECESSARY TO MAINTAIN 1" CLEAR TO THE GROUTED RECESS.

FOR GROUT FOR STRUCTURES, SEE SPECIAL PROVISIONS.

CONCRETE INSERTS SHALL HAVE A MINIMUM WORKING LOAD SHEAR CAPACITY OF 2.5 KIPS.

THE 3/4" Ø BOLTS, WASHERS AND CONCRETE INSERTS SHALL BE GALVANIZED IN ACCORDANCE WITH SECTION 1076 OF THE STANDARD SPECIFICATIONS.

THE BOLTS, WASHERS AND CONCRETE INSERTS ARE PROVIDED AS AN OPTION FOR THE CONTRACTOR TO ATTACH MATERIALS TO PREVENT DEBRIS FROM DROPPING INTO THE WATER DURING CONSTRUCTION OF THE VERTICAL CONCRETE BARRIER RAILS.

UPON COMPLETION OF THE BRIDGE CONSTRUCTION, THE 3/4" Ø BOLTS, AND WASHERS SHALL BE REMOVED AND THE CONCRETE INSERTS SHALL BE GROUTED.

THE COST OF THE 3/4" Ø BOLTS, WASHERS, AND INSERTS SHALL BE INCLUDED IN THE PRICE BID FOR PRESTRESSED CONCRETE CORED SLABS.

ALL REINFORCING STEEL IN PARAPETS SHALL BE EPOXY COATED.

GROOVED CONTRACTION JOINTS, 1/2" IN DEPTH, SHALL BE TOOLED IN ALL EXPOSED FACES OF THE PARAPET AND IN ACCORDANCE WITH ARTICLE 825-10(B) OF THE STANDARD SPECIFICATIONS. A CONTRACTION JOINT SHALL BE LOCATED AT EACH THIRD POINT BETWEEN PARAPET EXPANSION JOINTS. ONLY ONE CONTRACTION JOINT IS REQUIRED AT MIDPOINT OF PARAPET SEGMENTS LESS THAN 20 FEET IN LENGTH AND NO CONTRACTION JOINTS ARE REQUIRED FOR THOSE SEGMENTS LESS THAN 10 FEET IN LENGTH.

GUTTERLINE ASPHALT THICKNESS & PARAPET HEIGHT

	ASPHALT OVERLAY THICKNESS @ MID-SPAN	PARAPET HEIGHT @ MID-SPAN
65' UNITS	3/16"	2'-9 9/16"

BILL OF MATERIAL FOR TWO PARAPETS & FOUR END POSTS

BAR	NO.	SIZE	TYPE	LENGTH	WEIGHT
* B22	96	# 5	STR	12'-5"	1243
* E1	8	# 7	STR	2'-11"	48
* E2	8	# 7	STR	3'-5"	56
* E3	8	# 7	STR	3'-11"	64
* E4	8	# 7	STR	4'-5"	72
* E5	8	# 7	STR	4'-9"	78
* F1	4	# 6	STR	2'-3"	14
* F2	4	# 6	STR	3'-5"	21
* F3	4	# 6	STR	4'-1"	25
* F4	4	# 6	STR	3'-2"	19
* F5	4	# 6	STR	3'-9"	23
* F6	4	# 6	STR	2'-0"	12
* S13	148	# 5	4	5'-10"	900
* EPOXY COATED REINFORCING STEEL				LBS.	2,575
CLASS AA CONCRETE				CU.YDS.	17.8
1'-2" X 2'-11 3/4" CONCRETE PARAPET					130.00 LIN. FT.

BILL OF MATERIAL FOR ONE 65' CORED SLAB UNIT

				EXTERIOR UNIT		INTERIOR UNIT	
BAR	NUMBER	SIZE	TYPE	LENGTH	WEIGHT	LENGTH	WEIGHT
B1	6	#4	STR	22'-10"	92	22'-10"	92
S10	8	#5	2	4'-10"	40	4'-10"	40
S11	138	#4	2	5'-10"	538	5'-10"	538
* S12	74	#5	1	6'-6"	502		
S14	4	#4	3	5'-8"	15	5'-8"	15
S15	4	#5	2	7'-1"	30	7'-1"	30
REINFORCING STEEL			LBS.		715		715
* EPOXY COATED REINFORCING STEEL			LBS.		502		
6000 P.S.I. CONCRETE			CU. YDS.		11.2		11.2
0.6" Ø L.R. STRANDS			No.		24		24

* THESE BARS ARE EPOXY COATED

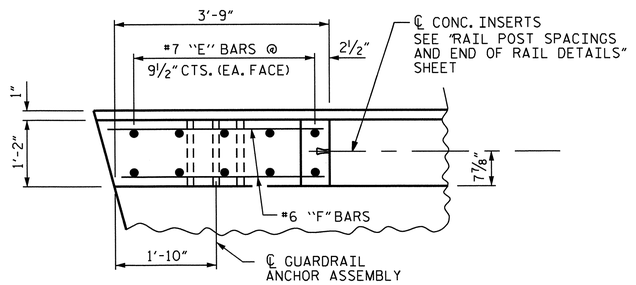

PLAN OF END POST

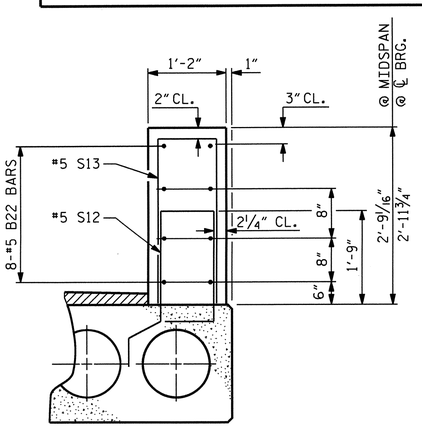

SECTION THRU PARAPET

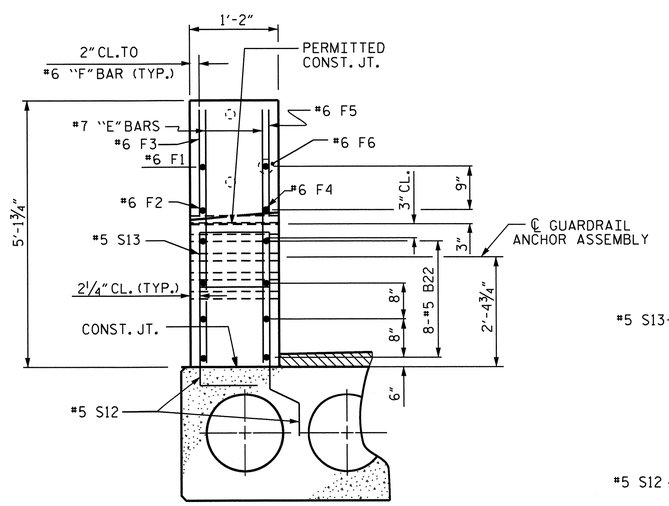

END VIEW

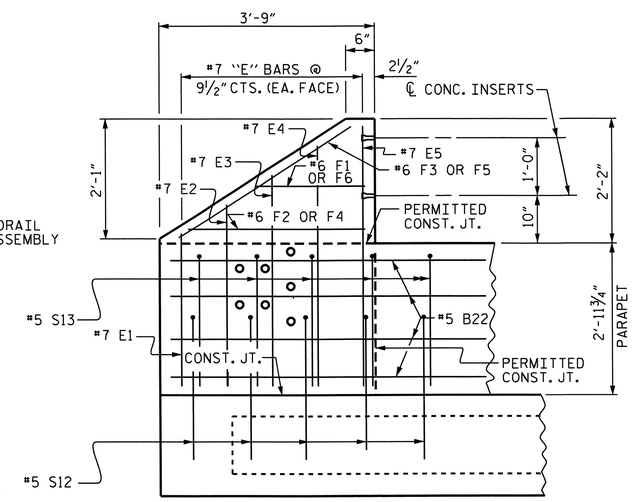

ELEVATION

PARAPET AND END POST FOR TWO BAR RAIL

PROJECT NO. B-4765
HENDERSON COUNTY
STATION: 13+56.18 -L-

SHEET 3 OF 3

STATE OF NORTH CAROLINA
DEPARTMENT OF TRANSPORTATION
RALEIGH

3'-0" X 2-0"
PRESTRESSED CONCRETE
CORED SLAB UNIT

NORTH CAROLINA PROFESSIONAL SEAL 20125 ENGINEER MARSHALL R. CHEEK, JR.
8-13-13

REVISIONS						SHEET NO.
NO.	BY:	DATE:	NO.	BY:	DATE:	S-29
1			3			TOTAL SHEETS
2			4			38

ASSEMBLED BY : J.R. MCROY DATE : 4/12
CHECKED BY : R.Z. DEAN DATE : 4/12
DESIGN ENG. OF RECORD: J.R. MCROY DATE : 8/13

13-AUG-2013 14:38
Z:\Structures\Final Plans\B-4765_SD_cored_slab.dgn
jmcroy

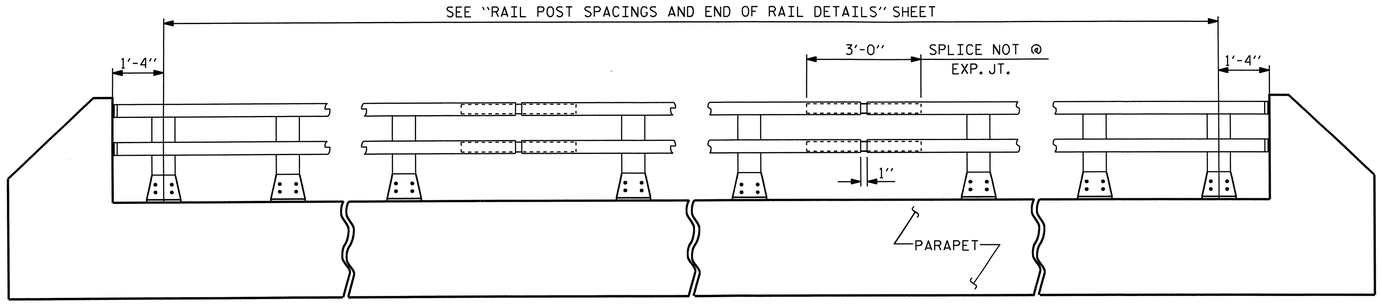

ELEVATION

NOTE : FOR ATTACHMENT OF METAL RAIL TO END POST, SEE SHEET 2 OF 3.

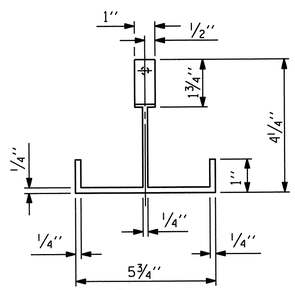

PLAN

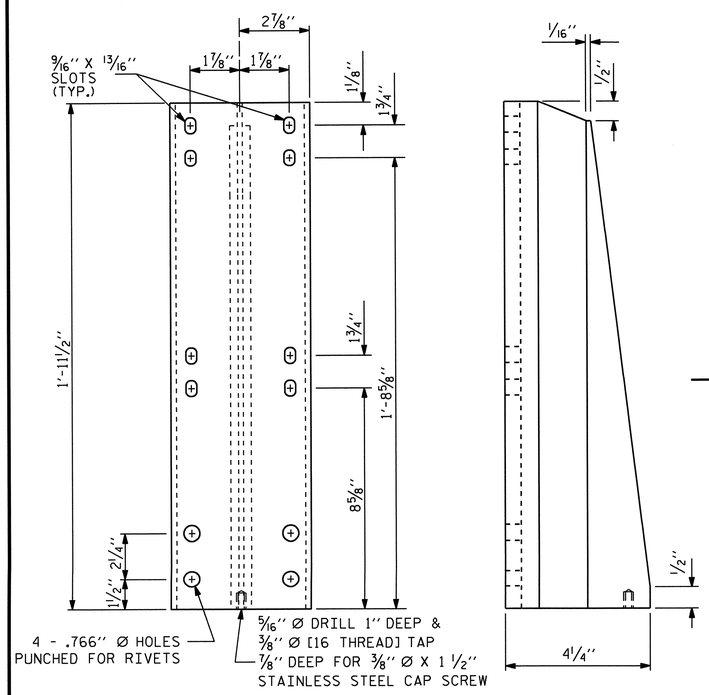

FRONT ELEVATION

SIDE ELEVATION

DETAILS OF POST

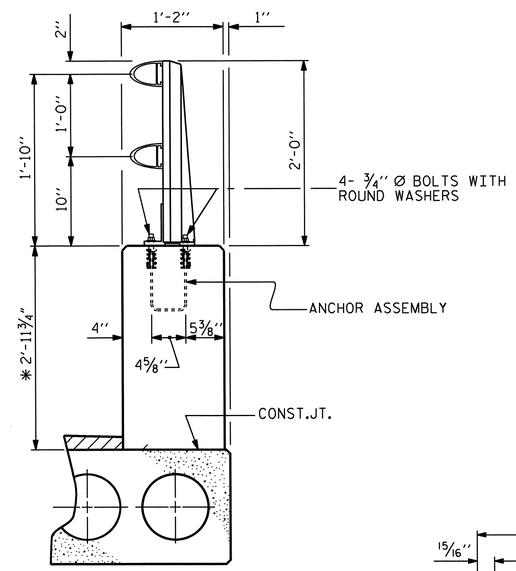

SECTION THRU PARAPET AND RAIL

* THE MAXIMUM HEIGHT OF THE PARAPET IS SHOWN. THE HEIGHT OF THE PARAPET FOLLOWS THE PROFILE OF THE GUTTERLINE.

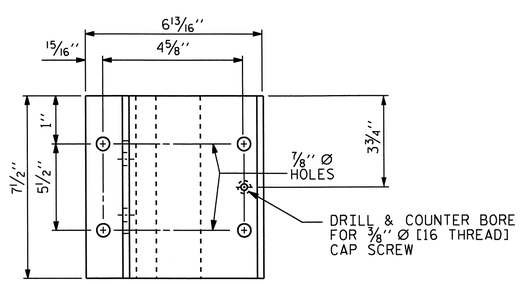

PLAN

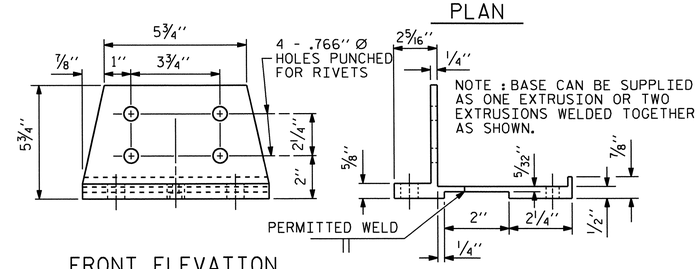

FRONT ELEVATION

SIDE ELEVATION

POST BASE DETAILS

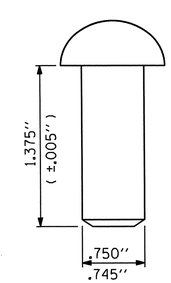

RIVET DETAIL

NOTES

AT THE CONTRACTOR'S OPTION, METAL RAIL MAY BE EITHER ALUMINUM OR GALVANIZED STEEL IN ACCORDANCE WITH THE REQUIREMENTS OF THE GENERAL NOTES AND THE FOLLOWING SPECIFICATIONS FOR THE ALTERNATE MATERIALS; HOWEVER, THE CONTRACTOR WILL BE REQUIRED TO USE THE SAME RAIL MATERIAL ON ALL STRUCTURES ON THE PROJECT FOR WHICH METAL RAIL IS DESIGNATED.

ALUMINUM RAILS

MATERIAL FOR POSTS, BASES AND RAILS, EXPANSION BARS AND CLAMP BARS SHALL BE ASTM B-221 ALLOY 6061-T6.

MATERIAL FOR RIVETS SHALL BE ASTM B316 ALLOY 6061-T6. RIVETS SHALL BE STANDARD BUTTON HEAD AND CONE POINT COLD DRIVEN AS PER DRAWING.

THE BASE OF RAIL POSTS, OR ANY OTHER ALUMINUM SURFACE IN CONTACT WITH CONCRETE SHALL BE THOROUGHLY COATED WITH AN ALUMINUM IMPREGNATED CAULKING COMPOUND OF APPROVED QUALITY.

MATERIAL FOR SHIMS TO BE ASTM B209 ALLOY 6061-T6.

GALVANIZED STEEL RAILS

MATERIAL AND GALVANIZING ARE TO CONFORM TO THE FOLLOWING SPECIFICATIONS:

POST, POST BASES, RAILS, EXPANSION BARS AND CLAMP BARS: AASHTO M270 GRADE 36 STRUCTURAL STEEL - GALVANIZED TO AASHTO M111.

RIVETS: RIVETS SHALL MEET THE REQUIREMENTS OF ASTM A502 FOR GRADE 1 RIVETS.

THE CUT ENDS OF GALVANIZED STEEL RAILING, AFTER GRINDING SMOOTH SHALL BE GIVEN TWO COATS OF ZINC RICH PAINT MEETING THE REQUIREMENTS OF FEDERAL SPECIFICATION MIL-P-26915 USAF TYPE 1, OR OF FEDERAL SPECIFICATIONS TT-P-641.

SHIMS: SHIMS SHALL MEET THE REQUIREMENTS OF ASTM A570 FOR GRADE 33 OR A611 FOR GRADE C AND SHALL BE GALVANIZED IN ACCORDANCE WITH AASHTO M111.

RAIL CAPS: RAIL CAPS SHALL MEET THE REQUIREMENTS OF ASTM A570 FOR GRADE 33 OR A611 FOR GRADE C AND SHALL BE GALVANIZED IN ACCORDANCE WITH AASHTO M111.

GENERAL NOTES

RAILING SHALL BE CONTINUOUS FROM END POST TO END POST OF BRIDGE. EACH JOINT IN RAIL LENGTH SHALL BE SPLICED AS DETAILED. PANEL LENGTHS OF RAIL SHALL BE ATTACHED TO A MINIMUM OF THREE POSTS.

FOR END OF RAIL TO CLEAR FACE OF CONCRETE END POST DIMENSION, SEE SHEET 2 OF 3.

CAP SCREWS SHALL BE ASTM F593 ALLOY 305 STAINLESS STEEL. WASHERS SHALL MEET THE REQUIREMENTS OF ASTM F844 EXCEPT THEY SHALL BE MADE FROM ALLOY 304 STAINLESS STEEL.

CERTIFIED MILL REPORTS ARE REQUIRED FOR RAILS AND POSTS. SHOP INSPECTION IS NOT REQUIRED.

METAL RAIL POSTS SHALL BE SET NORMAL TO CURB GRADE.

METHOD OF MEASUREMENT FOR METAL RAILS: FOR LENGTH OF METAL RAILS TO BE PAID FOR, SEE THE STANDARD SPECIFICATIONS.

CURVED RAIL USAGE: WHERE RAILS ARE TO BE USED ON BRIDGES ON HORIZONTAL AND/OR VERTICAL CURVATURE THE CONTRACTOR MAY, AT HIS OPTION, HAVE THE REQUIRED CURVATURE IN THE RAIL FORMED IN THE SHOP OR IN THE FIELD. IN EITHER EVENT, THE RAIL SHALL CONFORM WITHOUT BUCKLING OR KINKING TO THE REQUIRED CURVATURE IN A UNIFORM MANNER ACCEPTABLE TO THE ENGINEER.

TO INSURE FUTURE IDENTIFICATION OF THE FABRICATOR, A PERMANENT IDENTIFYING MARK SHALL BE PLACED ON EACH POST. THE METHOD OF MARKING AND LOCATION SHALL BE SUCH THAT IT DOES NOT DETRACT FROM THE APPEARANCE OF THE POST, BUT REMAINS VISIBLE AFTER RAIL PLACEMENT.

SHIMS SHALL BE USED AS NECESSARY FOR POST ALIGNMENT.

ALLOY 6351-T5 MAY BE SUBSTITUTED FOR ALLOY 6061-T6 WHERE APPLICABLE.

MINOR VARIATIONS IN DETAILS OF METAL RAIL WILL BE CONSIDERED. DETAILS OF SUCH VARIATIONS, IF DESIRED, SHALL BE SUBMITTED FOR APPROVAL.

PAY LENGTH = 114.33 LIN. FT.

PROJECT NO. B-4765
HENDERSON COUNTY
STATION: 13+56.18 -L-

SHEET 1 OF 3

STATE OF NORTH CAROLINA
DEPARTMENT OF TRANSPORTATION
RALEIGH

STANDARD

2 BAR METAL RAIL

NORTH CAROLINA PROFESSIONAL SEAL 20125 ENGINEER MARSHALL C. KNEEK, JR.
8-13-13

ASSEMBLED BY : J.R. MCROY	DATE : 12/12
CHECKED BY : R.Z. DEAN	DATE : 12/12

DRAWN BY : EEM 6/94	REV. 5/7/03R	RWW/JTE
CHECKED BY : RGW 6/94	REV. 5/1/06	TLA/GM
	REV. 10/1/11	MAA/GM

REVISIONS								SHEET NO.
NO.	BY:	DATE:	NO.	BY:	DATE:			S-30
1			3					TOTAL SHEETS
2			4					38

STD. NO. BMR3

09-JUL-2013 11:16
M:\Structures\Final Plans\B-4765_SD_cored_slab.dgn
wjharris

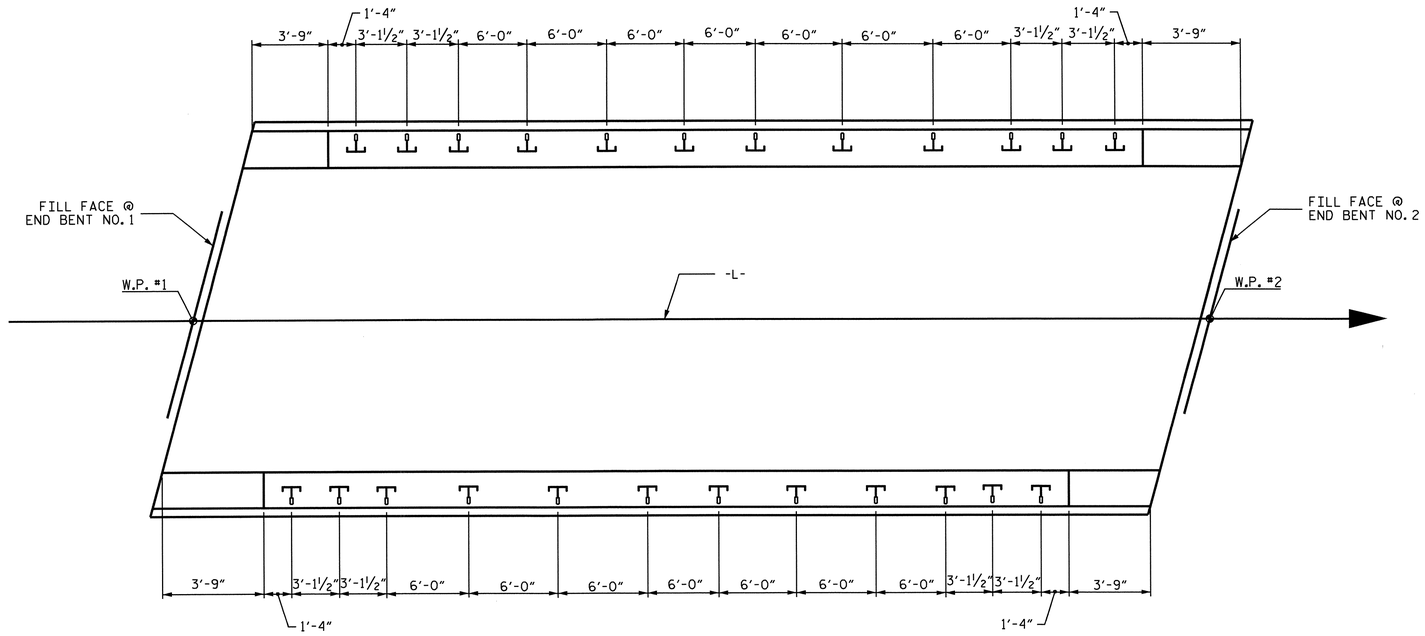

PLAN OF RAIL POST SPACINGS

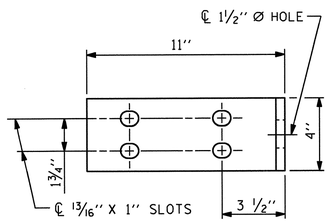

ELEVATION

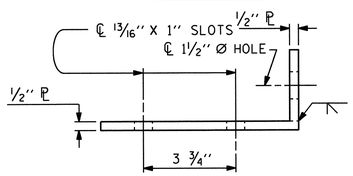

TOP VIEW

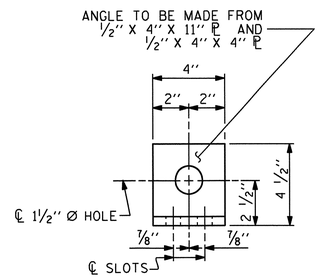

END VIEW (FIX AND EXP.)

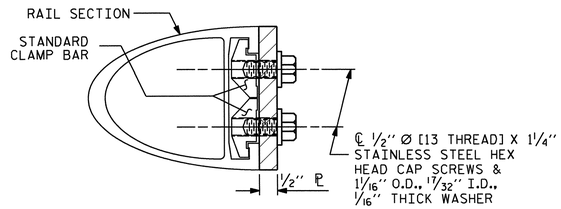

SECTION H-H (FIX)

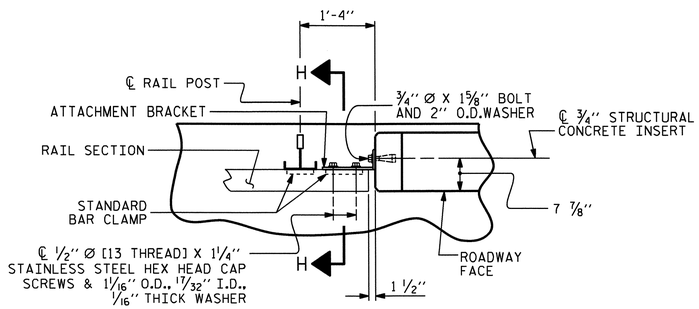

PLAN - RAIL AND END POST

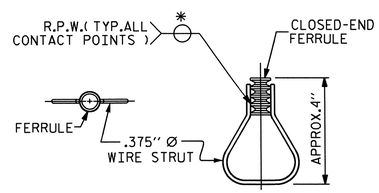

PLAN ELEVATION

STRUCTURAL CONCRETE INSERT

* EACH WELDED ATTACHMENT OF WIRE TO FERRULE SHALL DEVELOP THE TENSILE STRENGTH OF THE WIRE.

FIXED

DETAILS FOR ATTACHING METAL RAIL TO END POST

NOTES

STRUCTURAL CONCRETE INSERT

THE STRUCTURAL CONCRETE INSERT ASSEMBLY SHALL CONSIST OF THE FOLLOWING COMPONENTS:

A. FERRULES SHALL BE MADE FROM STEEL MEETING THE REQUIREMENTS OF AASHTO M169, GRADE 12L14 AND SHALL HAVE A MINIMUM LENGTH OF THREADS OF 1½".

B. 1 - ¾" Ø X 1⅝" BOLT WITH WASHER. BOLT SHALL CONFORM TO THE REQUIREMENTS OF ASTM A307. BOLT AND WASHER SHALL BE GALVANIZED. (AT THE CONTRACTOR'S OPTION, STAINLESS STEEL BOLT AND WASHER MAY BE USED AS AN ALTERNATE FOR THE ¾" Ø X 1⅝" GALVANIZED BOLT AND WASHER. THEY SHALL CONFORM TO OR EXCEED THE MECHANICAL REQUIREMENTS OF ASTM A307. THE USE OF THIS ALTERNATE SHALL BE APPROVED BY THE ENGINEER.)

C. WIRE STRUT SHOWN IN THE CONCRETE INSERT ASSEMBLY DETAIL IS THE MINIMUM ALLOWABLE SIZE AND SHALL HAVE A MINIMUM TENSILE STRENGTH OF 100,000 PSI. AS AN OPTION, A 7/16" Ø WIRE STRUT WITH A MINIMUM TENSILE STRENGTH OF 90,000 PSI IS ACCEPTABLE.

NOTES

METAL RAIL TO END POST CONNECTION

THE METAL RAIL TO END POST CONNECTION SHALL CONSIST OF THE FOLLOWING COMPONENTS:

A. ½" PLATES SHALL CONFORM TO AASHTO M270 GRADE 36 AND SHALL BE GALVANIZED AFTER FABRICATION.

B. ¾" STRUCTURAL CONCRETE INSERT SHALL HAVE A WORKING LOAD SHEAR CAPACITY OF 4800 LBS. THE FERRULES SHALL ENGAGE A ¾"Ø X 1⅝" BOLT WITH 2" O.D. WASHER IN PLACE. THE ¾"Ø X 1⅝" BOLT SHALL HAVE N. C. THREADS.

C. CAP SCREWS FOR RAIL ATTACHMENT TO ANGLE SHALL CONFORM TO THE REQUIREMENTS OF ASTM F593 ALLOY 305 STAINLESS STEEL. CAP SCREWS TO BE CENTERED IN SLOTS AT 60°F.

D. STANDARD CLAMP BARS (SEE METAL RAIL SHEET).

E. ½" Ø PIPE SLEEVES (IF REQUIRED) TO BE GALVANIZED.

THE COST OF THE STANDARD CLAMP BARS AND CAP SCREWS USED IN THE METAL RAIL TO END POST CONNECTION SHALL BE INCLUDED IN THE UNIT CONTRACT PRICE BID FOR LINEAR FEET OF 1 OR 2 BAR METAL RAILS.

THE ¾" STRUCTURAL CONCRETE INSERT WITH BOLT SHALL BE ASSEMBLED IN THE SHOP.

THE COST OF THE ¾" STRUCTURAL CONCRETE INSERT ASSEMBLY, AND THE ½" PLATES COMPLETE IN PLACE SHALL BE INCLUDED IN THE VARIOUS PAY ITEMS.

THE CONTRACTOR, AT HIS OPTION, MAY USE AN ADHESIVE BONDING SYSTEM IN LIEU OF THE STRUCTURAL CONCRETE INSERT EMBEDDED IN THE END POST. IF THE ADHESIVE BONDING SYSTEM IS USED, THE ¾" Ø X 1⅝" BOLT WITH WASHER SHALL BE REPLACED WITH A ¾"Ø X 6½" BOLT AND 2" O.D. WASHER. ALL SPECIFICATIONS THAT APPLY TO THE ¾" Ø X 1⅝" BOLT SHALL APPLY TO THE ¾"Ø X 6 ½" BOLT. FIELD TESTING OF THE ADHESIVE BONDING SYSTEM IS NOT REQUIRED.

PROJECT NO. B-4765
HENDERSON COUNTY
STATION: 13+56.18 -L-

SHEET 2 OF 3

STATE OF NORTH CAROLINA
DEPARTMENT OF TRANSPORTATION
RALEIGH
STANDARD

RAIL POST SPACINGS AND END OF RAIL DETAILS
FOR TWO BAR METAL RAILS

REVISIONS						SHEET NO.
NO.	BY:	DATE:	NO.	BY:	DATE:	S-31
1			3			TOTAL SHEETS
2			4			38

NORTH CAROLINA PROFESSIONAL SEAL 20125 ENGINEER MARSHALL G. CHEEK, JR.
8-13-13

STD. NO. BMR2

ASSEMBLED BY : J.R. MCROY		DATE : 12/12	
CHECKED BY : M.G. CHEEK		DATE : 2/13	
DRAWN BY : FCJ 1/88	REV. 5/7/03	RWW/JTE	
CHECKED BY : CRK 3/89	REV. 5/1/06	TLA/GM	
	REV. 10/1/11	MAA/GM	

09-JUL-2013 11:17
M:\Structures\Final Plans\B-4765_SD_cored_slab.dgn
wjharris

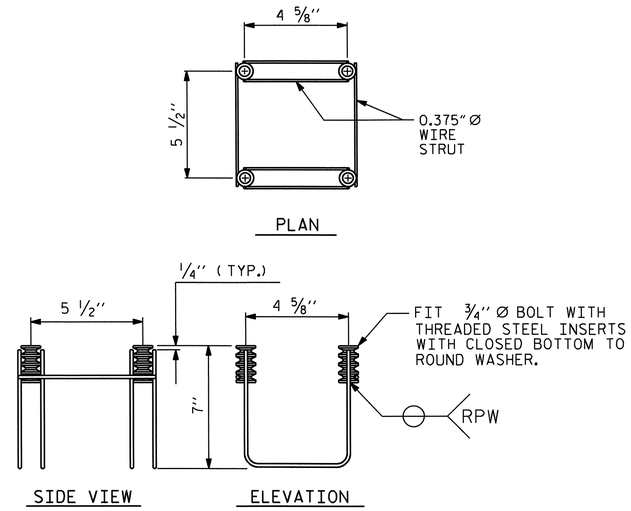

4-BOLT METAL RAIL ANCHOR ASSEMBLY

(24 ASSEMBLIES REQUIRED)

NOTES

STRUCTURAL CONCRETE ANCHOR ASSEMBLY

THE STRUCTURAL CONCRETE ANCHOR ASSEMBLY SHALL CONSIST OF THE FOLLOWING COMPONENTS :

A. FERRULES SHALL BE MADE FROM STEEL MEETING THE REQUIREMENTS OF AASHTO M169, GRADE 12L14 AND SHALL HAVE A MINIMUM LENGTH OF THREADS OF 2'' FOR 3/4'' FERRULES.

B. 4 - 3/4'' Ø X 2 1/2'' BOLTS WITH WASHERS. BOLTS SHALL CONFORM TO THE REQUIREMENTS OF ASTM A307. BOLTS AND WASHERS SHALL BE GALVANIZED. AT THE CONTRACTOR'S OPTION, STAINLESS STEEL BOLTS AND WASHERS MAY BE USED AS AN ALTERNATE FOR THE 3/4'' Ø X 2 1/2'' GALVANIZED BOLTS AND WASHERS. THEY SHALL CONFORM TO OR EXCEED THE MECHANICAL REQUIREMENTS OF ASTM A307. THE USE OF THIS ALTERNATE SHALL BE APPROVED BY THE ENGINEER.

C. WIRE STRUT SHOWN IN THE CONCRETE ANCHOR ASSEMBLY DETAIL IS THE MINIMUM ALLOWABLE SIZE AND SHALL HAVE A MINIMUM TENSILE STRENGTH OF 100,000 PSI. AS AN OPTION, A 7/16'' Ø WIRE STRUT WITH A MINIMUM TENSILE STRENGTH OF 90,000 PSI IS ACCEPTABLE.

D. THE METAL RAIL ANCHOR ASSEMBLIES TO BE HOT DIPPED GALVANIZED TO CONFORM TO REQUIREMENTS OF AASHTO M111.

E. THE COST OF THE METAL RAIL ANCHOR ASSEMBLY WITH BOLTS AND WASHERS COMPLETE IN PLACE SHALL BE INCLUDED IN THE PRICE BID FOR LINEAR FEET OF METAL RAIL.

F. BOLTS TO BE TIGHTENED ONE-HALF TURN WITH A WRENCH FROM A FINGER-TIGHT POSITION.

THE CONTRACTOR MAY USE ADHESIVELY ANCHORED ANCHOR BOLTS IN PLACE OF THE METAL RAIL ANCHOR ASSEMBLY. LEVEL ONE FIELD TESTING IS REQUIRED, AND THE YIELD LOAD OF THE 3/4''Ø BOLT IS 10 KIPS. FOR ADHESIVELY ANCHORED ANCHOR BOLTS OR DOWELS, SEE THE STANDARD SPECIFICATIONS.

WHEN ADHESIVELY ANCHORED ANCHOR BOLTS ARE USED, BOLTS SHALL MEET THE REQUIREMENTS OF ASTM F593 ALLOY 304 STAINLESS STEEL WITH MINIMUM 75,000 PSI ULTIMATE STRENGTH. NUTS SHALL MEET THE REQUIREMENTS OF ASTM F594 ALLOY 304 STAINLESS STEEL AND WASHERS SHALL MEET THE REQUIREMENTS OF ASTM F844 EXCEPT THEY SHALL BE MADE FROM ALLOY 304 STAINLESS STEEL.

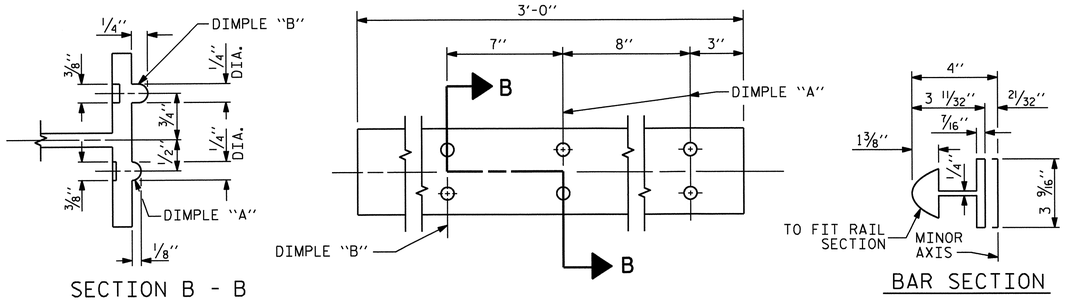

EXPANSION BAR DETAILS

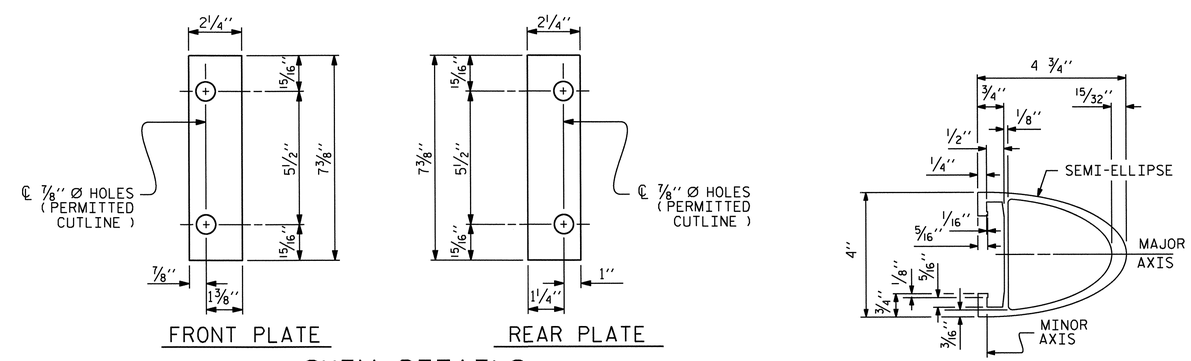

SHIM DETAILS

NOTE :
SHIMS MAY BE CUT ALONG PERMITTED CUTLINE OR SLOTTED TO EDGE OF PLATE TO FACILITATE PLACEMENT.

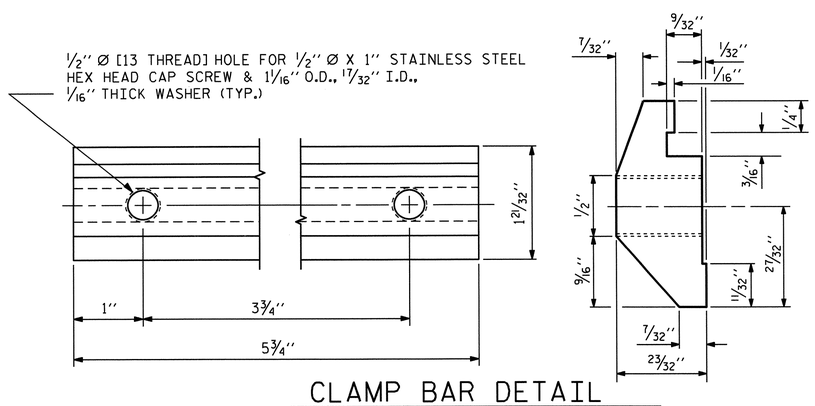

CLAMP BAR DETAIL

(4 REQUIRED PER POST)

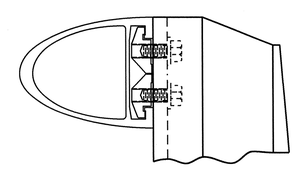

CLAMP ASSEMBLY

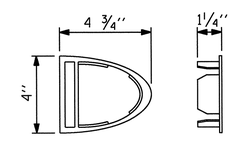

RAIL CAP

PROJECT NO. B-4765
HENDERSON COUNTY
STATION: 13+56.18 -L-

SHEET 3 OF 3

STATE OF NORTH CAROLINA
DEPARTMENT OF TRANSPORTATION
RALEIGH

STANDARD

2 BAR METAL RAIL

NORTH CAROLINA PROFESSIONAL SEAL 20125 ENGINEER MARSHALL G. CHEEK, JR. 8-13-13

REVISIONS							SHEET NO.
NO.	BY:	DATE:	NO.	BY:	DATE:		S-32
1			3				TOTAL SHEETS
2			4				38

ASSEMBLED BY : J.R. MCROY		DATE : 12/12	
CHECKED BY : M.G. CHEEK		DATE : 2/13	
DRAWN BY : EEM 6/94	REV. 8/16/99	MAB/LES	
CHECKED BY : RGW 6/94	REV. 5/1/06R	KMM/GM	
	REV. 10/1/11	MAA/GM	

09-JUL-2013 11:18
M:\Structures\Final Plans\B-4765_SD_cored_slab.dgn
wjharris

STD. NO. BMR4

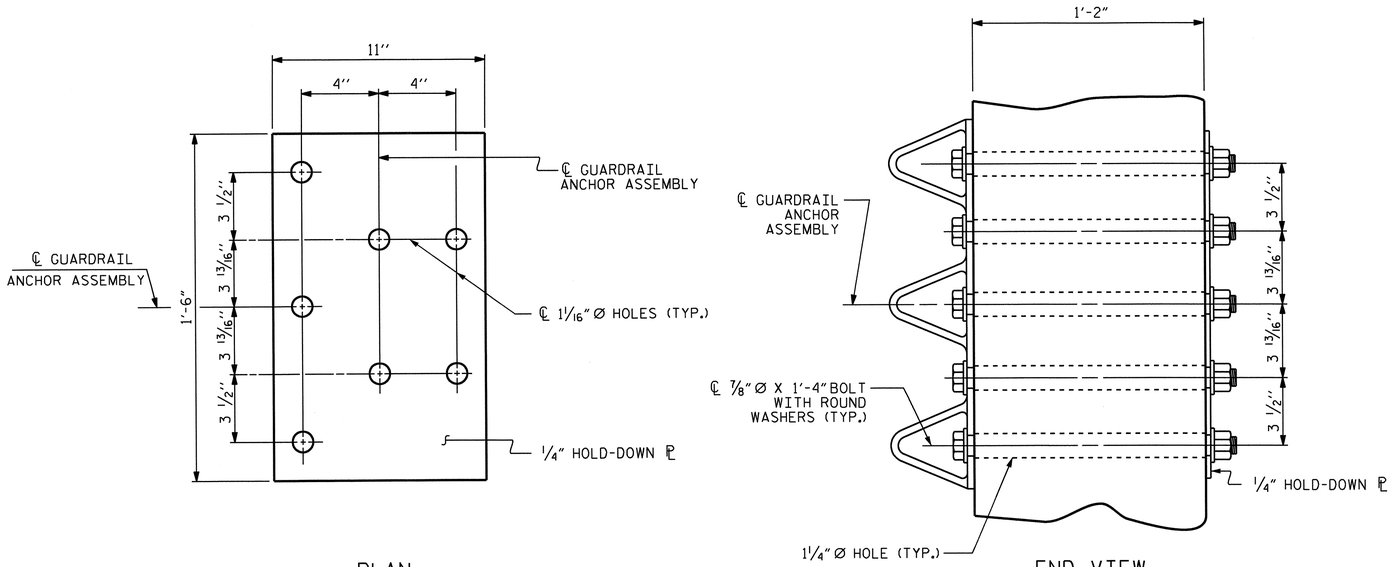

PLAN

END VIEW

GUARDRAIL ANCHOR ASSEMBLY DETAILS

NOTES

THE GUARDRAIL ANCHOR ASSEMBLY SHALL CONSIST OF A 1/4" HOLD DOWN PLATE AND 7 - 7/8" Ø BOLTS WITH NUTS AND WASHERS.

THE HOLD-DOWN PLATE SHALL CONFORM TO AASHTO M270 GRADE 36. AFTER FABRICATION, THE HOLD-DOWN PLATE SHALL BE HOT-DIP GALVANIZED IN ACCORDANCE WITH AASHTO M111.

BOLTS SHALL CONFORM TO THE REQUIREMENTS OF ASTM A307 AND NUTS SHALL CONFORM TO THE REQUIREMENTS OF AASHTO M291. BOLTS, NUTS AND WASHERS SHALL BE GALVANIZED. AT THE CONTRACTOR'S OPTION, STAINLESS STEEL BOLTS, NUTS AND WASHERS MAY BE USED AS AN ALTERNATE FOR THE 7/8" Ø GALVANIZED BOLTS, NUTS AND WASHERS. THEY SHALL CONFORM TO OR EXCEED THE MECHANICAL REQUIREMENTS OF ASTM A307. THE USE OF THIS ALTERNATE SHALL BE APPROVED BY THE ENGINEER.

THE GUARDRAIL ANCHOR ASSEMBLY IS REQUIRED AT ALL POINTS WHERE APPROACH GUARDRAIL IS TO BE ATTACHED TO THE END OF THE PARAPET. FOR POINTS OF ATTACHMENT, SEE SKETCH.

AFTER INSTALLATION, THE EXPOSED THREAD OF THE BOLT SHALL BE BURRED WITH A SHARP POINTED TOOL.

THE COST OF THE GUARDRAIL ANCHOR ASSEMBLIES WITH BOLTS, NUTS AND WASHERS COMPLETE IN PLACE, SHALL BE INCLUDED IN THE VARIOUS PAY ITEMS.

THE VERTICAL REINFORCING BARS MAY BE SHIFTED SLIGHTLY IN THE END POST TO CLEAR ASSEMBLY BOLTS.

THE 1 1/4" Ø HOLES SHALL BE FORMED OR DRILLED WITH A CORE BIT. IMPACT TOOLS WILL NOT BE PERMITTED. ANY CONCRETE DAMAGED BY THIS WORK SHALL BE REPAIRED TO THE SATISFACTION OF THE ENGINEER.

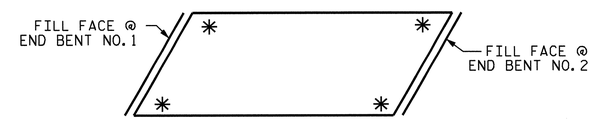

SKETCH SHOWING POINTS OF ATTACHMENT

* LOCATION OF GUARDRAIL ATTACHMENT

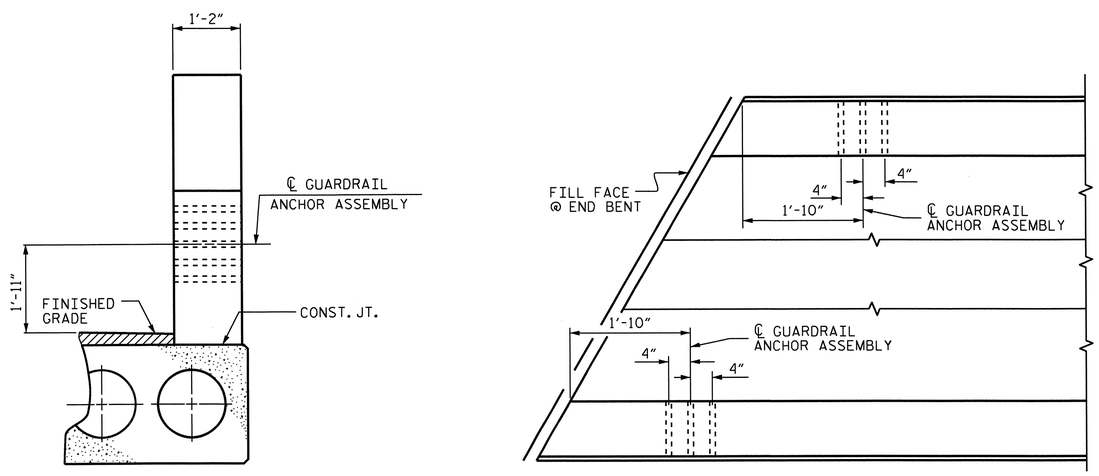

END VIEW

PLAN

LOCATION OF GUARDRAIL ANCHOR AT END POST

PROJECT NO. B-4765

HENDERSON COUNTY

STATION: 13+56.18 -L-

STATE OF NORTH CAROLINA
DEPARTMENT OF TRANSPORTATION
RALEIGH

GUARDRAIL ANCHORAGE DETAILS FOR 2-BAR METAL RAIL

NORTH CAROLINA PROFESSIONAL SEAL 20125 ENGINEER MARSHALL G. CHEEK, JR.
8-13-13

REVISIONS						SHEET NO.
NO.	BY:	DATE:	NO.	BY:	DATE:	S-33
1			3			TOTAL SHEETS
2			4			38

ASSEMBLED BY : J.R. MCROY DATE : 4/12
CHECKED BY : R.Z. DEAN DATE : 4/12

13-AUG-2013 11:17
Z:\Structures\FinalPlans\B-4765_SD_cored_slab.dgn
jmcroy

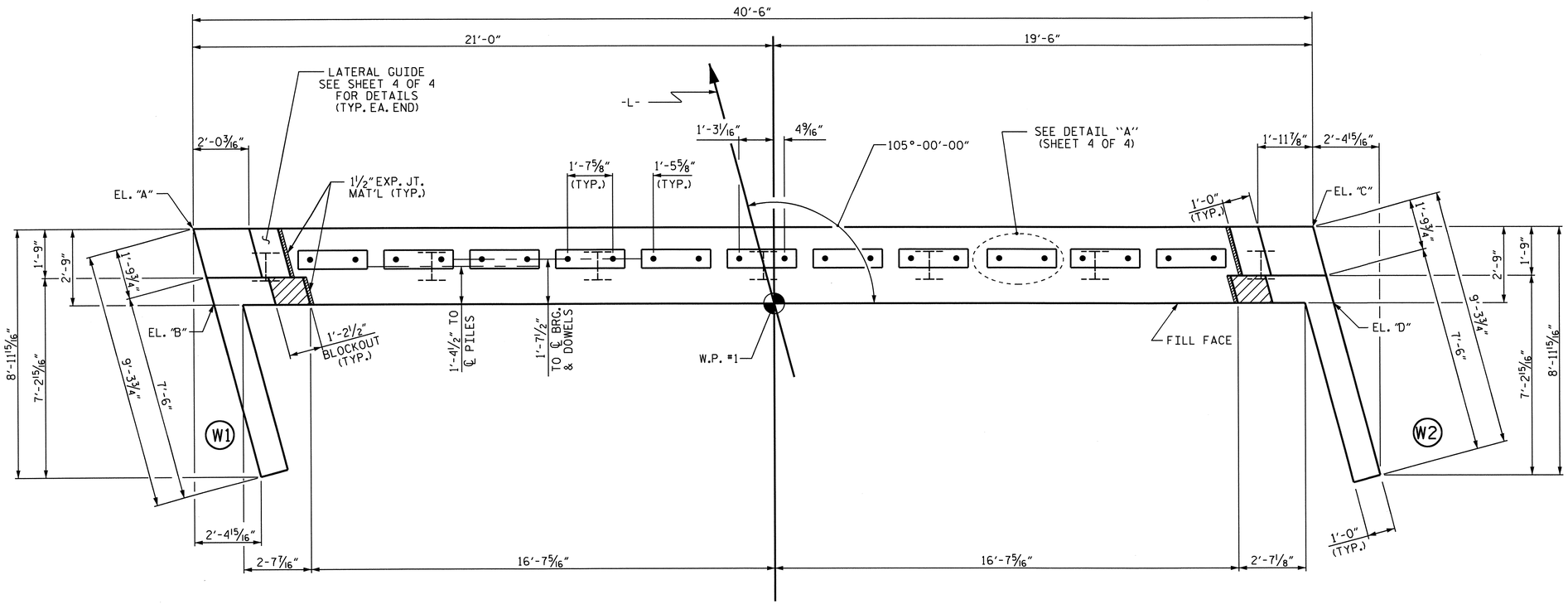

PLAN

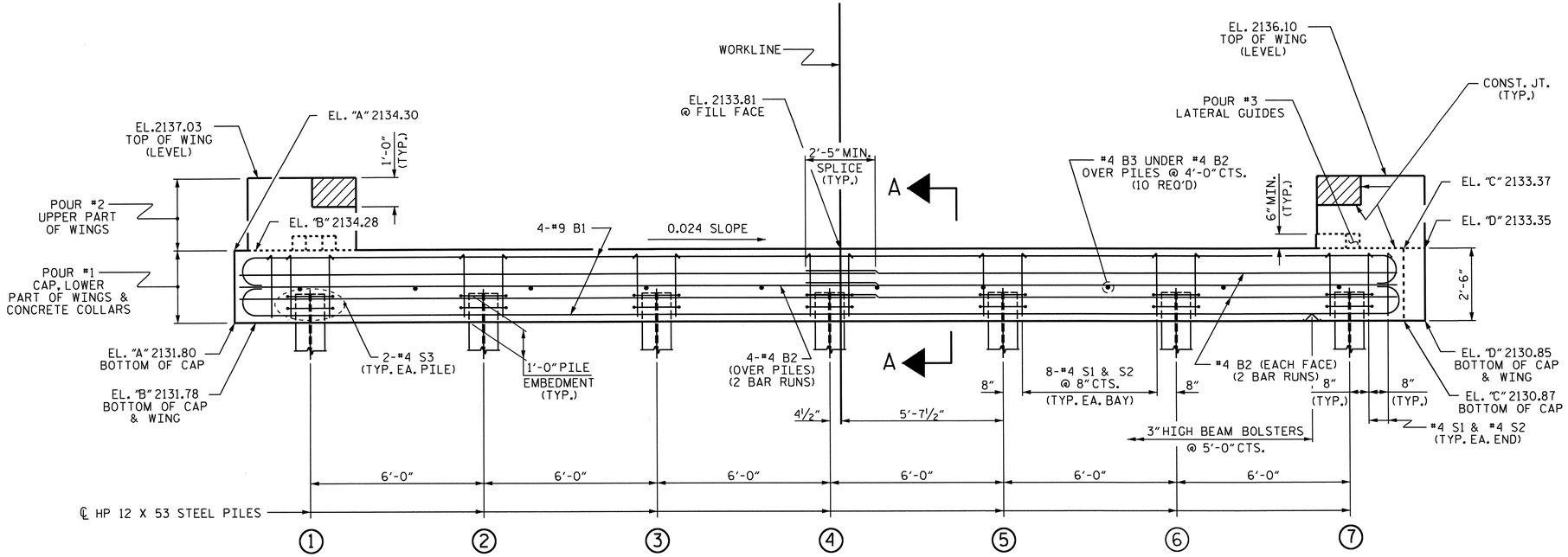

ELEVATION

WINGS NOT SHOWN FOR CLARITY.
FOR SECTION A-A, SEE SHEET 4 OF 4.
CONCRETE COLLARS FOR STEEL PILES NOT SHOWN IN PLAN AND ELEVATION VIEWS FOR CLARITY.
SEE "CORROSION PROTECTION FOR STEEL PILES DETAIL", SHEET 4 OF 4.

NOTES

STIRRUPS IN CAP MAY BE SHIFTED AS NECESSARY TO CLEAR DOWELS.

THE LATERAL GUIDES ARE NOT TO BE POURED UNTIL AFTER THE CORED SLAB UNITS ARE IN PLACE.

THE CONCRETE IN THE SHADED AREA OF THE WING SHALL BE POURED AFTER THE PARAPET IS CAST IF SLIP FORMING IS USED.

FOR PILE SPLICE DETAILS, SEE SHEET 4 OF 4.

FOR WING DETAILS, SEE SHEET 3 OF 4.

THE CONTRACTOR HAS THE OPTION TO OMIT THE LATERAL GUIDES IF APPROVED BY THE ENGINEER.

TOP OF PILE ELEVATIONS	
1	2132.75
2	2132.61
3	2132.47
4	2132.33
5	2132.19
6	2132.05
7	2131.91

PROJECT NO. B-4765
HENDERSON COUNTY
STATION: 13+56.18 -L-

SHEET 1 OF 4

STATE OF NORTH CAROLINA
DEPARTMENT OF TRANSPORTATION
RALEIGH

SUBSTRUCTURE

END BENT No. 1

NORTH CAROLINA PROFESSIONAL SEAL 20125 ENGINEER MARSHALL L. CREEK, JR.
8-13-13

REVISIONS						SHEET NO.
NO.	BY:	DATE:	NO.	BY:	DATE:	S-34
1			3			TOTAL SHEETS
2			4			38

ASSEMBLED BY : J.R. MCROY DATE : 4/12
CHECKED BY : R.Z. DEAN DATE : 4/12

09-JUL-2013 11:07
M:\Structures\FinalPlans\B4765_SD_EB.dgn
wjharris

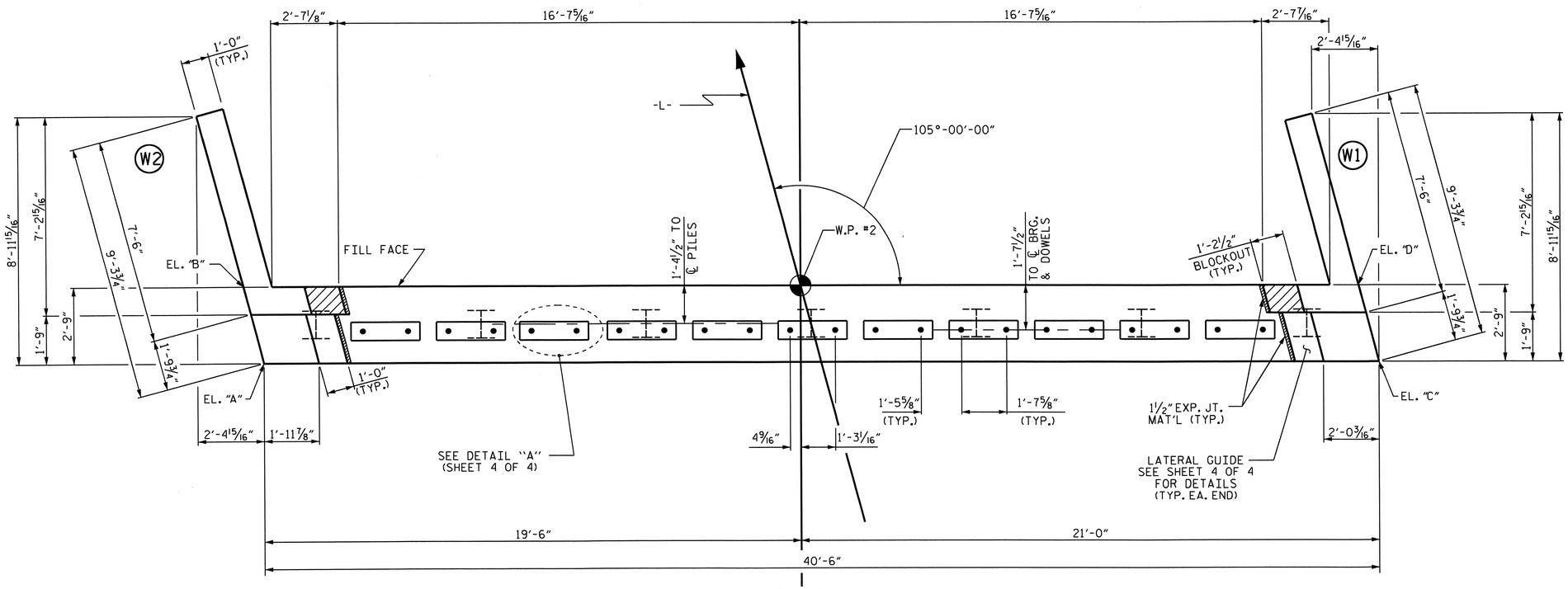

PLAN

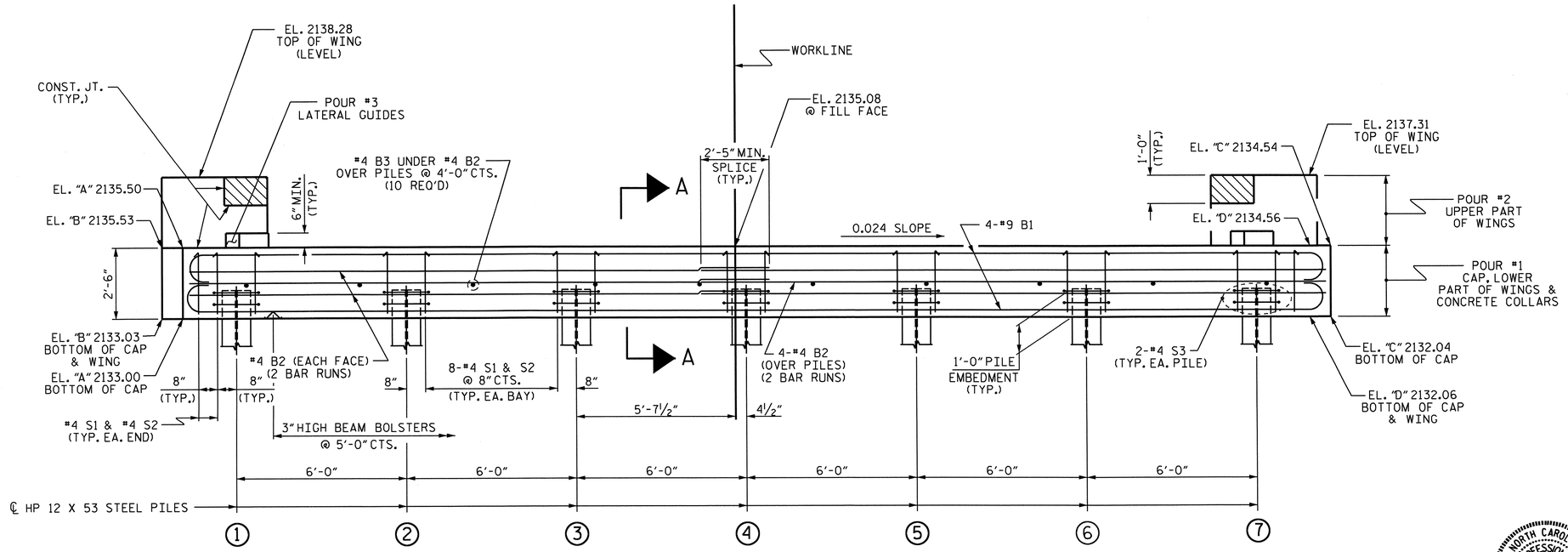

ELEVATION

WINGS NOT SHOWN FOR CLARITY.
FOR SECTION A-A, SEE SHEET 4 OF 4.
CONCRETE COLLARS FOR STEEL PILES NOT SHOWN IN PLAN AND ELEVATION VIEWS FOR CLARITY.
SEE "CORROSION PROTECTION FOR STEEL PILES DETAIL", SHEET 4 OF 4.

NOTES

STIRRUPS IN CAP MAY BE SHIFTED AS NECESSARY TO CLEAR DOWELS.

THE LATERAL GUIDES ARE NOT TO BE POURED UNTIL AFTER THE CORED SLAB UNITS ARE IN PLACE.

THE CONCRETE IN THE SHADED AREA OF THE WING SHALL BE POURED AFTER THE VERTICAL CONCRETE BARRIER RAIL IS CAST IF SLIP FORMING IS USED.

FOR PILE SPLICE DETAILS, SEE SHEET 4 OF 4.

FOR WING DETAILS, SEE SHEET 3 OF 4.

THE CONTRACTOR HAS THE OPTION TO OMIT THE LATERAL GUIDE IF APPROVED BY THE ENGINEER.

TOP OF PILE ELEVATIONS	
1	2133.97
2	2133.83
3	2133.69
4	2133.55
5	2133.41
6	2133.27
7	2133.13

PROJECT NO. B-4765
HENDERSON COUNTY
STATION: 13+56.18 -L-

SHEET 2 OF 4

STATE OF NORTH CAROLINA
DEPARTMENT OF TRANSPORTATION
RALEIGH

SUBSTRUCTURE
END BENT No. 2

NORTH CAROLINA PROFESSIONAL SEAL 20125 ENGINEER MARSHALL G. CHEEK, JR.
8-13-13

REVISIONS						SHEET NO.
NO.	BY:	DATE:	NO.	BY:	DATE:	S-35
1			3			TOTAL SHEETS
2			4			38

ASSEMBLED BY : J.R. MCROY DATE : 4/12
CHECKED BY : R.Z. DEAN DATE : 4/12

09-JUL-2013 11:07
M:\Structures\FinalPlans\B4765_SD_EB.dgn
wjharris

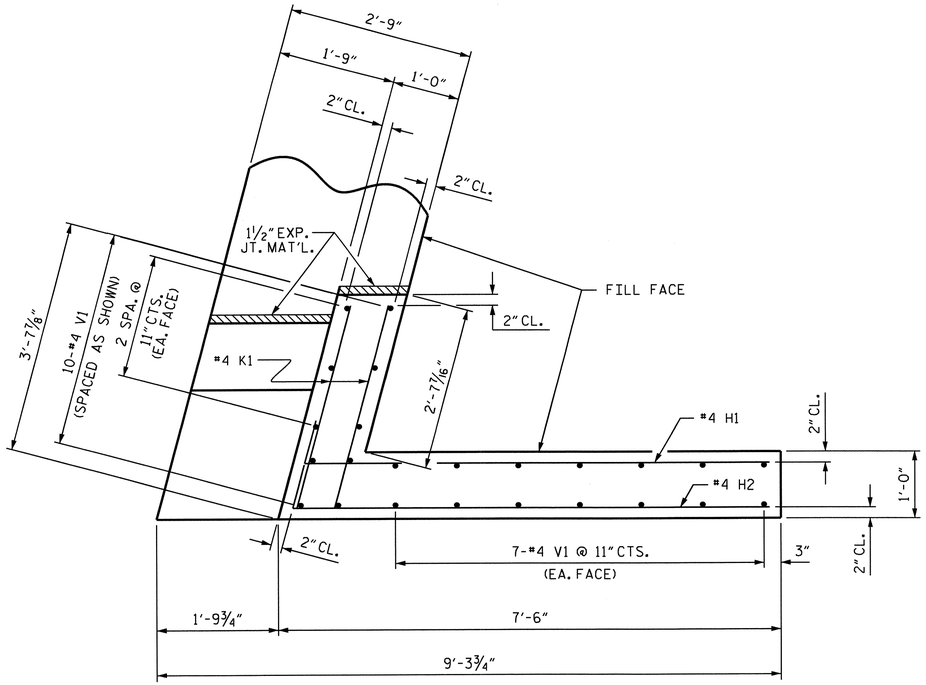

PLAN OF WING (W1)

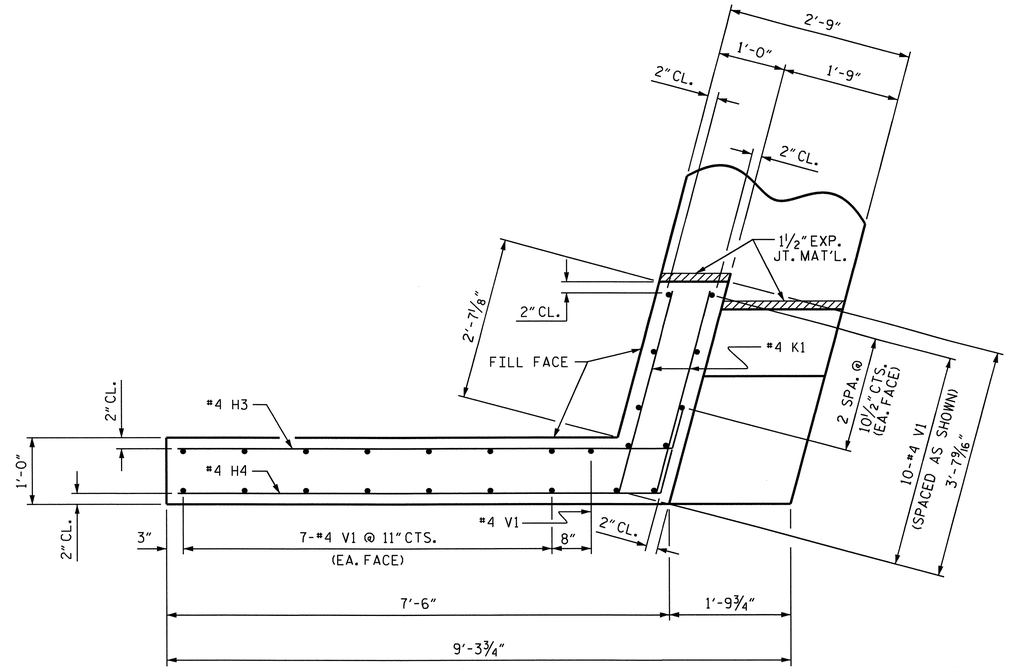

PLAN OF WING (W2)

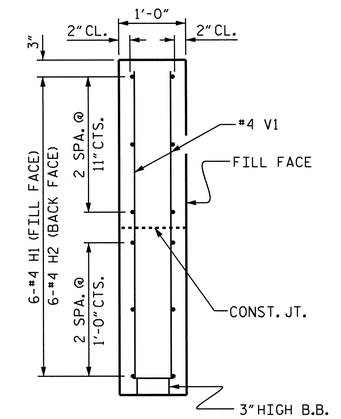

SECTION X-X

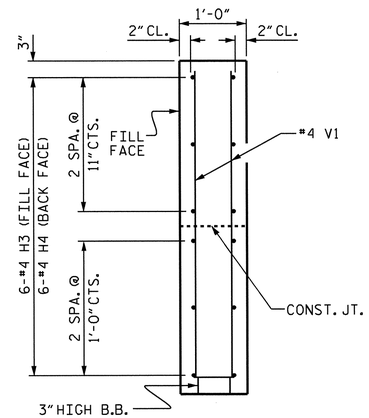

SECTION Y-Y

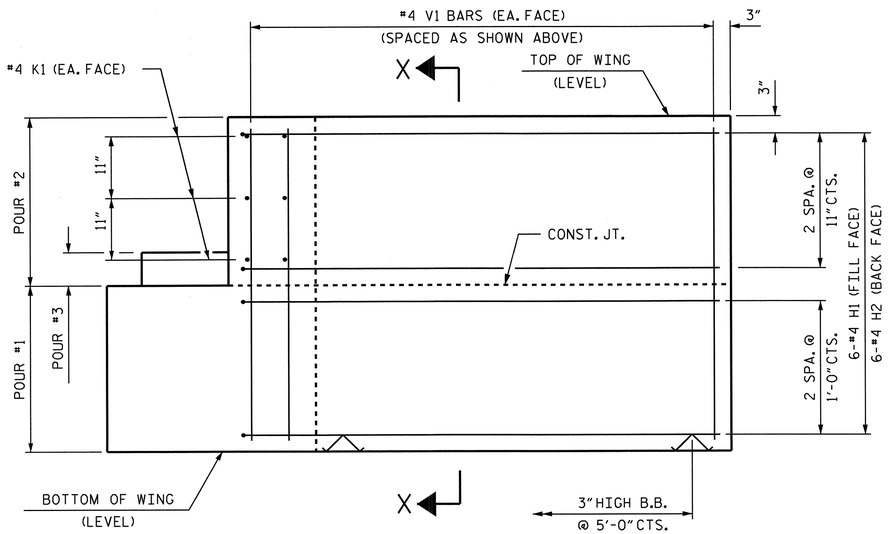

ELEVATION OF WING (W1)

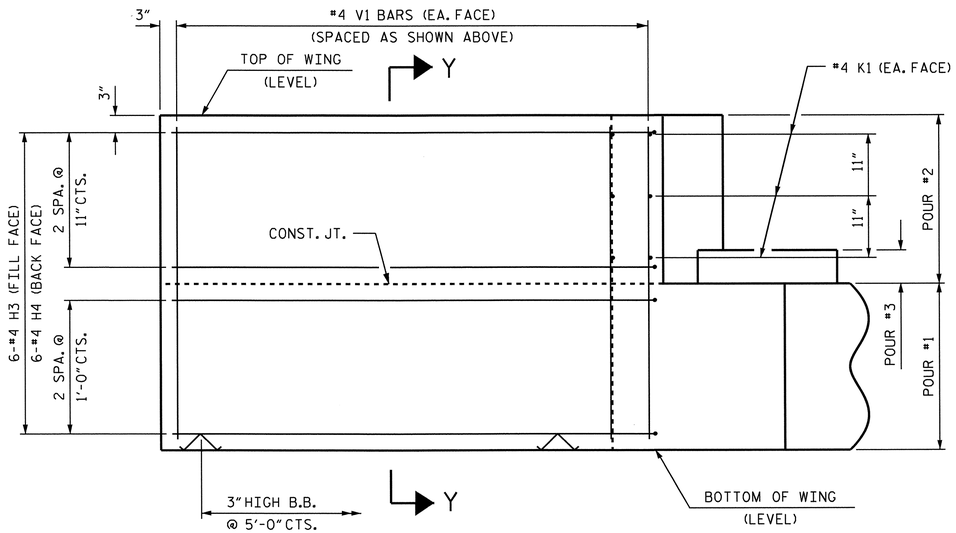

ELEVATION OF WING (W2)

WING DETAILS

PROJECT NO. B-4765

HENDERSON COUNTY

STATION: 13+56.18 -L-

SHEET 3 OF 4

STATE OF NORTH CAROLINA
DEPARTMENT OF TRANSPORTATION
RALEIGH

SUBSTRUCTURE
END BENT
WING DETAILS

NORTH CAROLINA PROFESSIONAL SEAL 20125 ENGINEER MARSHAL HIGHSMITH, JR.
8-13-13

REVISIONS						SHEET NO.
NO.	BY:	DATE:	NO.	BY:	DATE:	S-36
1			3			TOTAL SHEETS
2			4			38

ASSEMBLED BY : J.R. MCROY DATE : 4/12
CHECKED BY : R.Z. DEAN DATE : 4/12

09-JUL-2013 11:08
M:\Structures\Final Plans\B4765_SD_EB.dgn
wjharris

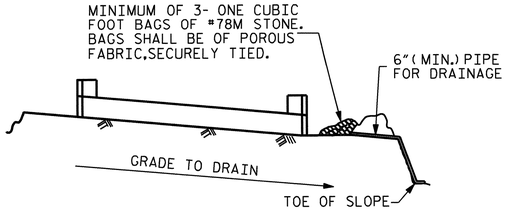

BAGGED STONE AND PIPE SHALL BE PLACED IMMEDIATELY AFTER COMPLETION OF END BENT EXCAVATION. PIPE MAY BE EITHER CONCRETE, CORRUGATED STEEL, CORRUGATED ALUMINUM ALLOY, OR CORRUGATED PLASTIC. PERFORATED PIPE WILL NOT BE ALLOWED.

BAGGED STONE SHALL REMAIN IN PLACE UNTIL THE ENGINEER DIRECTS THAT IT BE REMOVED. THE CONTRACTOR SHALL REMOVE AND DISPOSE OF SILT ACCUMULATIONS AT BAGGED STONE WHEN SO DIRECTED BY THE ENGINEER. BAGS SHALL BE REMOVED AND REPLACED WHENEVER THE ENGINEER DETERMINES THAT THEY HAVE DETERIORATED AND LOST THEIR EFFECTIVENESS.

NO SEPARATE PAYMENT WILL BE MADE FOR THIS WORK AND THE ENTIRE COST OF THIS WORK SHALL BE INCLUDED IN THE UNIT CONTRACT PRICE BID FOR THE SEVERAL PAY ITEMS.

TEMPORARY DRAINAGE AT END BENT

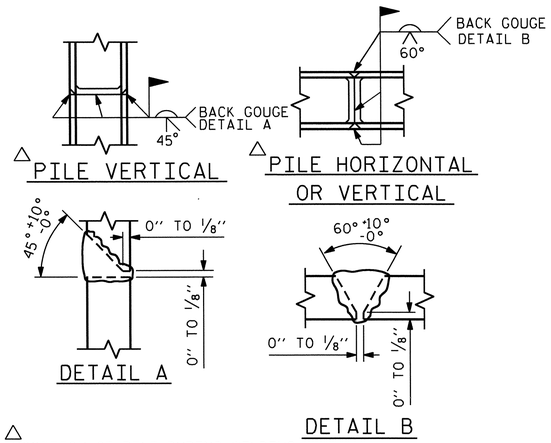

△ POSITION OF PILE DURING WELDING.

PILE SPLICE DETAILS

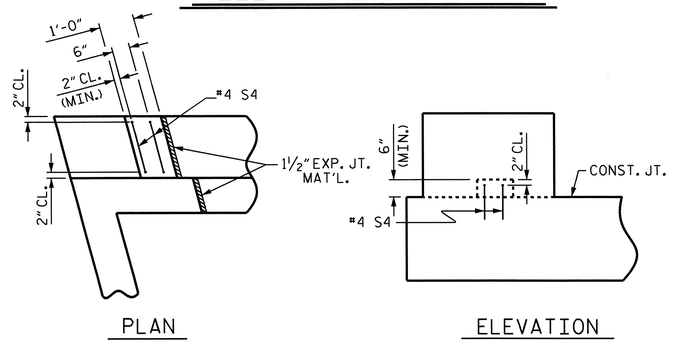

LATERAL GUIDE DETAILS

(END BENT No. 1, LEFT LATERAL GUIDE SHOWN, RIGHT END SIMILAR)
(END BENT No. 2 SIMILAR BY ROTATION)

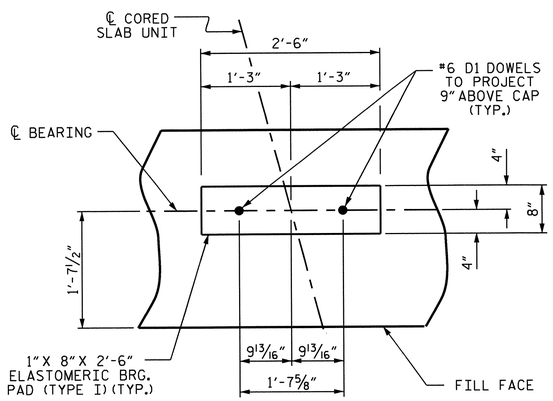

DETAIL "A"

(END BENT No. 1 SHOWN, END BENT No. 2 SIMILAR BY ROTATION)

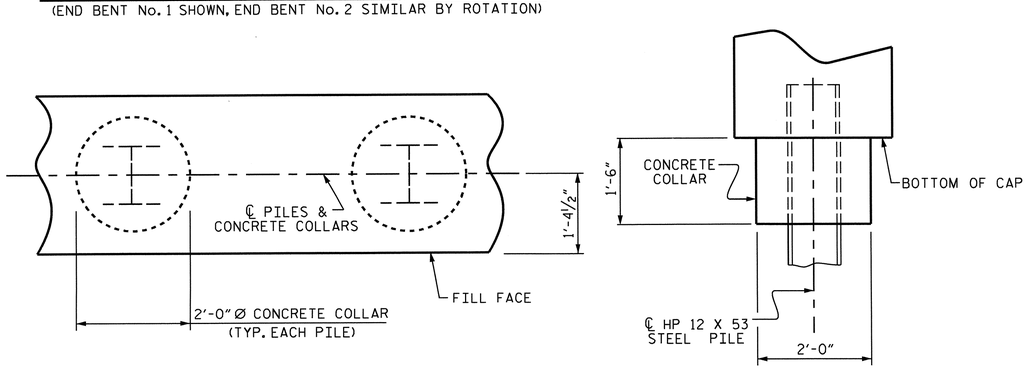

CORROSION PROTECTION FOR STEEL PILES DETAIL

(END BENT No. 1 SHOWN, END BENT No. 2 SIMILAR BY ROTATION)

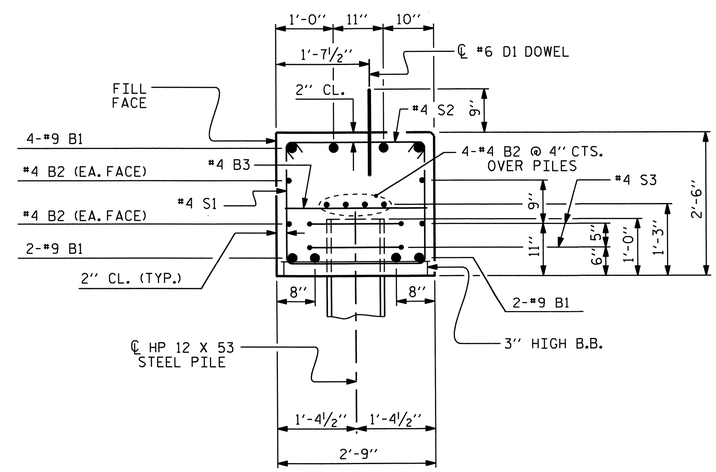

SECTION A-A

(CONCRETE COLLAR NOT SHOWN FOR CLARITY.
SEE "CORROSION PROTECTION FOR STEEL PILES DETAIL.")

BAR TYPES

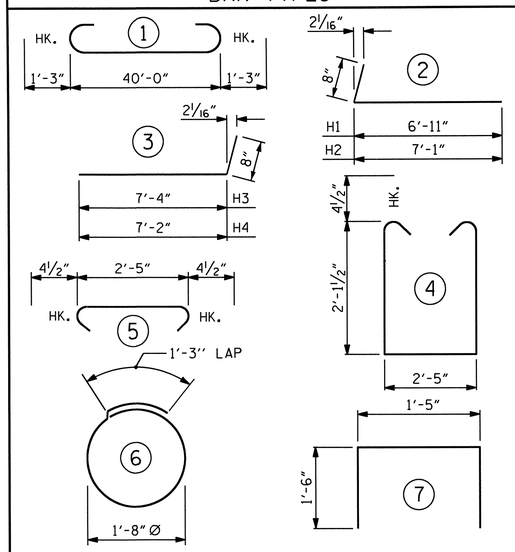

ALL BAR DIMENSIONS ARE OUT TO OUT.

END BENT No. 1	END BENT No. 2
HP 12 X 53 STEEL PILES	HP 12 X 53 STEEL PILES
NO: 7 LIN. FT.= 285	NO: 7 LIN. FT.= 230

BILL OF MATERIAL
FOR ONE END BENT

BAR	NO.	SIZE	TYPE	LENGTH	WEIGHT
B1	8	#9	1	42'-6"	1156
B2	16	#4	STR	21'-4"	228
B3	10	#4	STR	2'-5"	16
D1	22	#6	STR	1'-6"	50
H1	6	#4	2	7'-7"	30
H2	6	#4	2	7'-9"	31
H3	6	#4	3	8'-0"	32
H4	6	#4	3	7'-10"	31
K1	12	#4	STR	3'-1"	25
S1	52	#4	4	7'-5"	258
S2	52	#4	5	3'-2"	110
S3	14	#4	6	6'-6"	61
S4	4	#4	7	4'-5"	12
V1	49	#4	STR	4'-8"	153

REINFORCING STEEL (FOR ONE END BENT) 2193 LBS.

CLASS A CONCRETE BREAKDOWN (FOR ONE END BENT)

POUR #1	CAP, LOWER PART OF WINGS & COLLARS	12.7 C.Y.
POUR #2	UPPER PART OF WINGS	2.0 C.Y.
POUR #3	LATERAL GUIDES	0.1 C.Y.
TOTAL CLASS A CONCRETE		14.8 C.Y.

PROJECT NO. B-4765
HENDERSON COUNTY
STATION: 13+56.18 -L-

SHEET 4 OF 4

STATE OF NORTH CAROLINA
DEPARTMENT OF TRANSPORTATION
RALEIGH

SUBSTRUCTURE

END BENT No. 1 & 2 DETAILS

NORTH CAROLINA PROFESSIONAL SEAL 20125 ENGINEER MARSHALL B. CHECK, JR.
8-13-13

REVISIONS							SHEET NO. S-37
NO.	BY:	DATE:	NO.	BY:	DATE:		TOTAL SHEETS 38
1			3				
2			4				

ASSEMBLED BY : J.R. MCROY DATE : 4/12
CHECKED BY : R.Z. DEAN DATE : 4/12

09-JUL-2013 11:08
M:\Structures\FinalPlans\B4765_SD_EB.dgn
wjharris

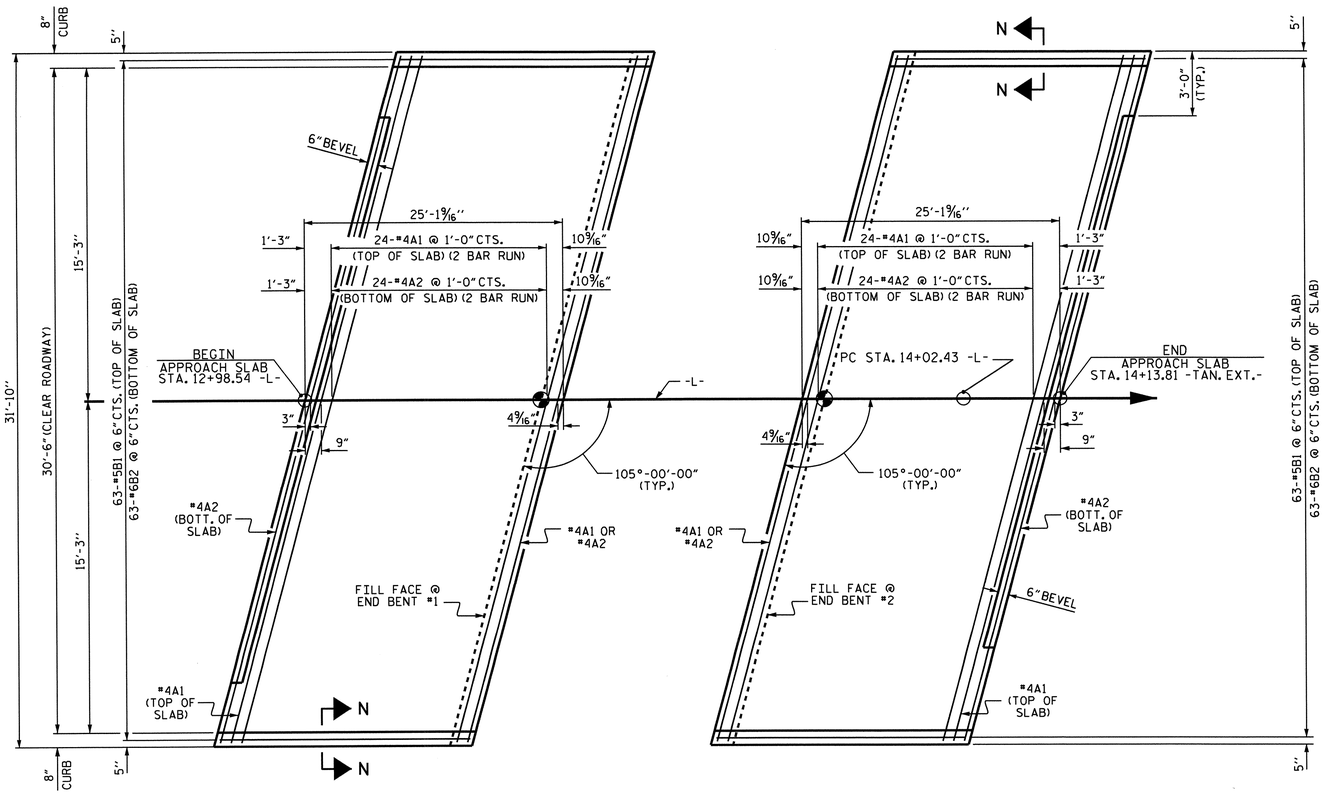

PLAN @ END BENT No. 1

PLAN @ END BENT No. 2

DIMENSIONS SHOWN ARE TYPICAL FOR BOTH APPROACH SLABS

NOTES

FOR REINFORCED BRIDGE APPROACH FILL INCLUDING GEOTEXTILE, IMPERMEABLE GEOMEMBRANE, 4" Ø DRAINAGE PIPE, #78M STONE, AND SELECT MATERIAL, SEE ROADWAY PLANS.

AREA BETWEEN THE WINGWALL AND APPROACH SLAB SHALL BE GRADED TO DRAIN THE WATER AWAY FROM THE FILL FACE OF THE BRIDGE AND SHALL BE PAVED. SEE ROADWAY PLANS.

APPROACH SLAB GROOVING IS NOT REQUIRED.

BILL OF MATERIAL

APPROACH SLAB AT EB No. 1

BAR	NO.	SIZE	TYPE	LENGTH	WEIGHT
* A1	52	#4	STR	17'-4"	602
A2	52	#4	STR	17'-3"	599
* B1	63	#5	STR	24'-3"	1593
B2	63	#6	STR	24'-9"	2342
REINFORCING STEEL				LBS.	2941
* EPOXY COATED REINFORCING STEEL				LBS.	2195
CLASS AA CONCRETE				C. Y.	36.7

APPROACH SLAB AT EB No. 2

BAR	NO.	SIZE	TYPE	LENGTH	WEIGHT
* A1	52	#4	STR	17'-4"	602
A2	52	#4	STR	17'-3"	599
* B1	63	#5	STR	24'-3"	1593
B2	63	#6	STR	24'-9"	2342
REINFORCING STEEL				LBS.	2941
* EPOXY COATED REINFORCING STEEL				LBS.	2195
CLASS AA CONCRETE				C. Y.	36.7

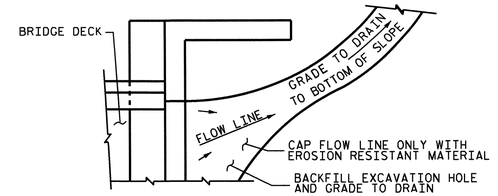

NOTE: IF THE APPROACH SLAB IS NOT CONSTRUCTED IMMEDIATELY AFTER THE BACKFILLING OF THE END BENT EXCAVATION, GRADE TO DRAIN TO THE BOTTOM OF THE SLOPE AND PROVIDE EROSION RESISTANT MATERIAL, SUCH AS FIBERGLASS ROVING OR AS DIRECTED BY THE ENGINEER TO PREVENT SOIL EROSION AND TO PROTECT THE AREA ADJACENT TO THE STRUCTURE. THE CONTRACTOR WILL BE REQUIRED TO REMOVE THESE MATERIALS PRIOR TO CONSTRUCTION OF THE APPROACH SLAB.

TEMPORARY DRAINAGE DETAIL

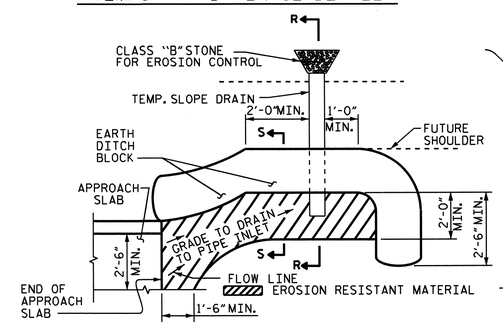

NOTE: IMMEDIATELY AFTER THE CONSTRUCTION OF THE APPROACH SLAB, THE CONTRACTOR SHALL PROVIDE TEMPORARY BERM AND SLOPE DRAIN. CONTRACTOR SHALL GRADE TO PIPE INLET AND PROVIDE EROSION RESISTANT MATERIAL AS SHOWN. THE EROSION RESISTANT MATERIAL SHALL BE EITHER 1) ASPHALT PLANT MIX, TYPE 1 OR TYPE 2, MIN. 2" DEPTH, 2) EROSION CONTROL MAT, OR 3) CONCRETE, AS DIRECTED BY THE ENGINEER. THE SLOPE DRAIN SHALL CONSIST OF A NON-PERFORATED TEMPORARY DRAINAGE PIPE, 12 INCHES IN DIAMETER.

PLAN VIEW

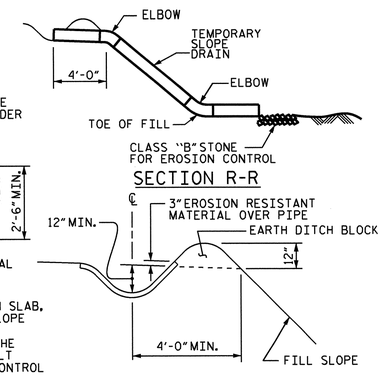

SECTION S-S

TEMPORARY BERM AND SLOPE DRAIN DETAILS

(TO BE USED WHEN SHOULDER BERM GUTTER IS REQUIRED)

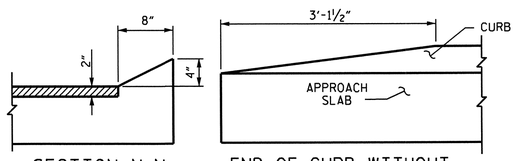

SECTION N-N

END OF CURB WITHOUT SHOULDER BERM GUTTER

CURB DETAILS

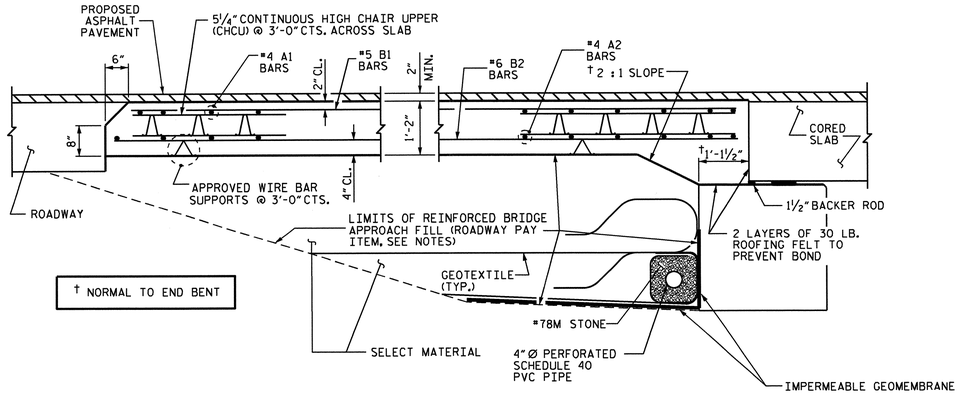

SECTION THRU SLAB

SPLICE LENGTHS		
BAR SIZE	EPOXY COATED	UNCOATED
#4	2'-0"	1'-9"
#5	2'-6"	2'-2"
#6	3'-10"	2'-7"

NORTH CAROLINA PROFESSIONAL SEAL 20125 ENGINEER MARSHALL CLICKENBEARD JR.
8-13-13

PROJECT NO. B-4765

HENDERSON COUNTY

STATION: 13+56.18 -L-

STATE OF NORTH CAROLINA
DEPARTMENT OF TRANSPORTATION
RALEIGH

BRIDGE APPROACH SLAB FOR PRESTRESSED CONCRETE CORED SLAB UNIT (SUB-REGIONAL TIER) 105° SKEW

REVISIONS						SHEET NO.
NO.	BY:	DATE:	NO.	BY:	DATE:	S-38
1			3			TOTAL SHEETS
2			4			38

ASSEMBLED BY : M. POOLE DATE : 2/13
CHECKED BY : J. R. MCROY DATE : 2/13

13-AUG-2013 09:21
R:\Structures\Final Plans\B4765_SD_AS.dgn
mpoole

STANDARD NOTES

DESIGN DATA:

SPECIFICATIONS	A.A.S.H.T.O. (CURRENT)
LIVE LOAD	SEE PLANS
IMPACT ALLOWANCE	SEE A.A.S.H.T.O.
STRESS IN EXTREME FIBER OF	
STRUCTURAL STEEL - AASHTO M270 GRADE 36	20,000 LBS. PER SQ. IN.
- AASHTO M270 GRADE 50W	27,000 LBS. PER SQ. IN.
- AASHTO M270 GRADE 50	27,000 LBS. PER SQ. IN.
REINFORCING STEEL IN TENSION	
GRADE 60	24,000 LBS. PER SQ. IN.
CONCRETE IN COMPRESSION	1,200 LBS. PER SQ. IN.
CONCRETE IN SHEAR	SEE A.A.S.H.T.O.
STRUCTURAL TIMBER - TREATED OR	
UNTREATED - EXTREME FIBER STRESS	1,800 LBS. PER SQ. IN.
COMPRESSION PERPENDICULAR TO GRAIN OF TIMBER	375 LBS. PER SQ. IN.
EQUIVALENT FLUID PRESSURE OF EARTH	30 LBS. PER CU. FT. (MINIMUM)

MATERIAL AND WORKMANSHIP:

EXCEPT AS MAY OTHERWISE BE SPECIFIED ON PLANS OR IN THE SPECIAL PROVISIONS, ALL MATERIAL AND WORKMANSHIP SHALL BE IN ACCORDANCE WITH THE 2012 "STANDARD SPECIFICATIONS FOR ROADS AND STRUCTURES" OF THE N. C. DEPARTMENT OF TRANSPORTATION.

STEEL SHEET PILING FOR PERMANENT OR TEMPORARY APPLICATIONS SHALL BE HOT ROLLED.

CONCRETE:

UNLESS OTHERWISE REQUIRED ON PLANS, CLASS A CONCRETE SHALL BE USED FOR ALL PORTIONS OF ALL STRUCTURES WITH THE EXCEPTION THAT: CLASS AA CONCRETE SHALL BE USED IN BRIDGE SUPERSTRUCTURES, ABUTMENT BACKWALLS, AND APPROACH SLABS; AND CLASS B CONCRETE SHALL BE USED FOR SLOPE PROTECTION AND RIP RAP.

CONCRETE CHAMFERS:

UNLESS OTHERWISE NOTED ON THE PLANS, ALL EXPOSED CORNERS ON STRUCTURES SHALL BE CHAMFERED 3/4" WITH THE FOLLOWING EXCEPTIONS: TOP CORNERS OF CURBS MAY BE ROUNDED TO 1-1/2" RADIUS WHICH IS BUILT INTO CURB FORMS; CORNERS OF TRANSVERSE FLOOR EXPANSION JOINTS SHALL BE ROUNDED WITH A 1/4" FINISHING TOOL UNLESS OTHERWISE REQUIRED ON PLANS; AND CORNERS OF EXPANSION JOINTS IN THE ROADWAY FACES AND TOPS OF CURBS AND SIDEWALKS SHALL BE ROUNDED TO A 1/4" RADIUS WITH A FINISHING STONE OR TOOL UNLESS OTHERWISE REQUIRED ON PLANS.

DOWELS:

DOWELS WHEN INDICATED ON PLANS AS FOR CULVERT EXTENSIONS, SHALL BE EMBEDDED AT LEAST 12" INTO THE OLD CONCRETE AND GROUTED INTO PLACE WITH 1:2 CEMENT MORTAR.

ALLOWANCE FOR DEAD LOAD DEFLECTION, SETTLEMENT, ETC. IN CASTING SUPERSTRUCTURES:

BRIDGES SHALL BE BUILT ON THE GRADE OR VERTICAL CURVE SHOWN ON PLANS. SLABS, CURBS AND PARAPETS SHALL CONFORM TO THE GRADE OR CURVE.

ALL DIMENSIONS WHICH ARE GIVEN IN SECTION AND ARE AFFECTED BY DEAD LOAD DEFLECTIONS ARE DIMENSIONS AT CENTER LINE OF BEARING UNLESS OTHERWISE NOTED ON PLANS. IN SETTING FORMS FOR STEEL BEAM BRIDGES AND PRESTRESSED CONCRETE GIRDER BRIDGES, ADJUSTMENTS SHALL BE MADE DUE TO THE DEAD LOAD DEFLECTIONS FOR THE ELEVATIONS SHOWN. WHERE BLOCKS ARE SHOWN OVER BEAMS FOR BUILDING UP TO THE SLAB, THE VERTICAL DIMENSIONS OF THE BLOCKS SHALL BE ADJUSTED BETWEEN BEARINGS TO COMPENSATE FOR DEAD LOAD DEFLECTIONS, VERTICAL CURVE ORDINATE, AND ACTUAL BEAM CAMBER. WHERE BOTTOM OF SLAB IS IN LINE WITH BOTTOM OF TOP FLANGES, DEPTH OF SLAB BETWEEN BEARINGS SHALL BE ADJUSTED TO COMPENSATE FOR DEAD LOAD DEFLECTION, VERTICAL CURVE ORDINATE, AND ACTUAL BEAM CAMBER.

IN SETTING FALSEWORK AND FORMS FOR REINFORCED CONCRETE SPANS, AN ALLOWANCE SHALL BE MADE FOR DEAD LOAD DEFLECTIONS, SETTLEMENT OF FALSEWORK, AND PERMANENT CAMBER WHICH SHALL BE PROVIDED FOR IN ADDITION TO THE ELEVATIONS SHOWN. AFTER REMOVAL OF THE FALSEWORK, THE FINISHED STRUCTURES SHALL CONFORM TO THE PROFILE AND ELEVATIONS SHOWN ON THE PLANS AND CONSTRUCTION ELEVATIONS FURNISHED BY THE ENGINEER.

DETAILED DRAWINGS FOR FALSEWORK OR FORMS FOR BRIDGE SUPERSTRUCTURE AND ANY STRUCTURE OR PARTS OF A STRUCTURE AS NOTED ON THE PLANS SHALL BE SUBMITTED TO THE ENGINEER FOR APPROVAL BEFORE CONSTRUCTION OF THE FALSEWORK OR FORMS IS STARTED.

REINFORCING STEEL:

ALL REINFORCING STEEL SHALL BE DEFORMED. DIMENSIONS RELATIVE TO PLACEMENT OF REINFORCING ARE TO CENTERS OF BARS UNLESS OTHERWISE INDICATED IN THE PLANS. DIMENSIONS ON BAR DETAILS ARE TO CENTERS OF BARS OR ARE OUT TO OUT AS INDICATED ON PLANS.

WIRE BAR SUPPORTS SHALL BE PROVIDED FOR REINFORCING STEEL WHERE INDICATED ON THE PLANS. WHEN BAR SUPPORT PIECES ARE PLACED IN CONTINUOUS LINES, THEY SHALL BE SO PLACED THAT THE ENDS OF THE SUPPORTING WIRES SHALL BE LAPPED TO LOCK LEGS ON ADJOINING PIECES.

STRUCTURAL STEEL:

AT THE CONTRACTOR'S OPTION, HE MAY SUBSTITUTE 7/8" Ø SHEAR STUDS FOR THE 3/4" Ø STUDS SPECIFIED ON THE PLANS. THIS SUBSTITUTION SHALL BE MADE AT THE RATE OF 3 - 7/8" Ø STUDS FOR 4 - 3/4" Ø STUDS, AND STUD SPACING CHANGES SHALL BE MADE AS NECESSARY TO PROVIDE THE SAME EQUIVALENT NUMBER OF 7/8" Ø STUDS ALONG THE BEAM AS SHOWN FOR 3/4" Ø STUDS BASED ON THE RATIO OF 3 - 7/8" Ø STUDS FOR 4 - 3/4" Ø STUDS. STUDS OF THE LENGTH SPECIFIED ON THE PLANS MUST BE PROVIDED. THE MAXIMUM SPACING SHALL BE 2'-0".

EXCEPT AT THE INTERIOR SUPPORTS OF CONTINUOUS BEAMS WHERE THE COVER PLATE IS IN CONTACT WITH BEARING PLATE, THE CONTRACTOR MAY, AT HIS OPTION, SUBSTITUTE FOR THE COVER PLATES DESIGNATED ON THE PLANS COVER PLATES OF THE EQUIVALENT AREA PROVIDED THESE PLATES ARE AT LEAST 5/16" IN THICKNESS AND DO NOT EXCEED A WIDTH EQUAL TO THE FLANGE WIDTH LESS 2" OR A THICKNESS EQUAL TO 2 TIMES THE FLANGE THICKNESS. THE SIZE OF FILLET WELDS SHALL CONFORM TO THE REQUIREMENTS OF THE CURRENT ANSI/AASHTO/AWS "BRIDGE WELDING CODE". ELECTROSLAG WELDING WILL NOT BE PERMITTED.

WITH THE SOLE EXCEPTION OF EDGES AT SURFACES WHICH BEAR ON OTHER SURFACES, ALL SHARP EDGES AND ENDS OF SHAPES AND PLATES SHALL BE SLIGHTLY ROUNDED BY SUITABLE MEANS TO A RADIUS OF APPROXIMATELY 1/16 INCH OR EQUIVALENT FLAT SURFACE AT A SUITABLE ANGLE PRIOR TO PAINTING, GALVANIZING, OR METALLIZING.

HANDRAILS AND POSTS:

METAL STANDARDS AND FACES OF THE CONCRETE END POSTS FOR THE METAL RAIL SHALL BE SET NORMAL TO THE GRADE OF THE CURB, UNLESS OTHERWISE SHOWN ON PLANS. THE METAL RAIL AND TOPS OF CONCRETE POSTS USED WITH THE ALUMINUM RAIL SHALL BE BUILT PARALLEL TO THE GRADE OF THE CURB.

METAL HANDRAILS SHALL BE IN ACCORDANCE WITH THE PLANS. RAILS SHALL BE AS MANUFACTURED FOR BRIDGE RAILING. CASTINGS SHALL BE OF A UNIFORM APPEARANCE. FINS AND OTHER DEFORMATIONS RESULTING FROM CASTING OR OTHERWISE SHALL BE REMOVED IN A MANNER SO THAT A UNIFORM COLORING OF THE COMPLETED CASTING SHALL BE OBTAINED. CASTINGS WITH DISCOLORATIONS OR OF NON-UNIFORM COLORING WILL NOT BE ACCEPTED. CERTIFIED MILL REPORTS ARE REQUIRED FOR METAL RAILS AND POSTS.

SPECIAL NOTES:

GENERALLY, IN CASE OF DISCREPANCY, THIS STANDARD SHEET OF NOTES SHALL GOVERN OVER THE SPECIFICATIONS, BUT THE REMAINDER OF THE PLANS SHALL GOVERN OVER NOTES HEREON, AND SPECIAL PROVISIONS SHALL GOVERN OVER ALL. SEE SPECIFICATIONS ARTICLE 105-4.

ENGLISH

JANUARY, 1990