TIP PROJECT: U-4412

CONTRACT: C203036

STRUCTURES

STATE OF NORTH CAROLINA
DIVISION OF HIGHWAYS

HAYWOOD COUNTY

STATE	STATE PROJECT REFERENCE NO.	SHEET NO.	TOTAL SHEETS
N.C.	U-4412		

STATE PROJ. NO.	F. A. PROJ. NO.	DESCRIPTION
35022.1.1	STP-1184(1)	P.E.
35022.2.1	STP-1184(1)	R/W
35022.3.FD1	STP-1184(4)	CONST.

LOCATION: WAYNESVILLE – SR 1184 (HOWELL MILL ROAD) FROM US 276 (RUSS AVENUE) TO US 23 BUSINESS (ASHEVILLE HWY)

TYPE OF WORK: GRADING, DRAINAGE, PAVING, SIGNALS, AND STRUCTURES

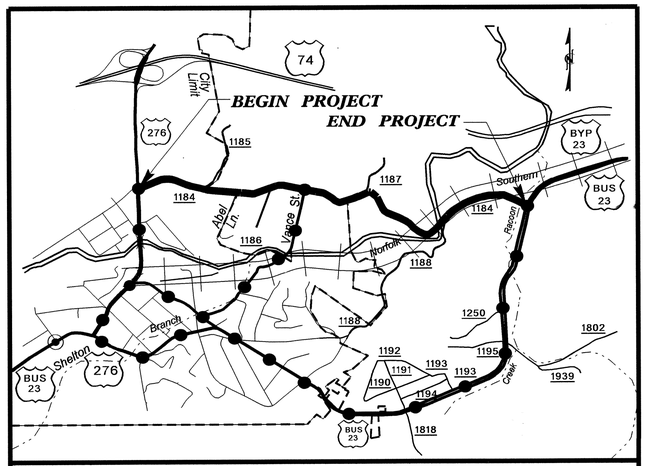

VICINITY MAP
DETOUR ROUTE

NAD 83/95

BEGIN TIP PROJECT U-4412
STA. 10+00.00 -L-

END TIP PROJECT U-4412
STA. 85+59.83 -L-

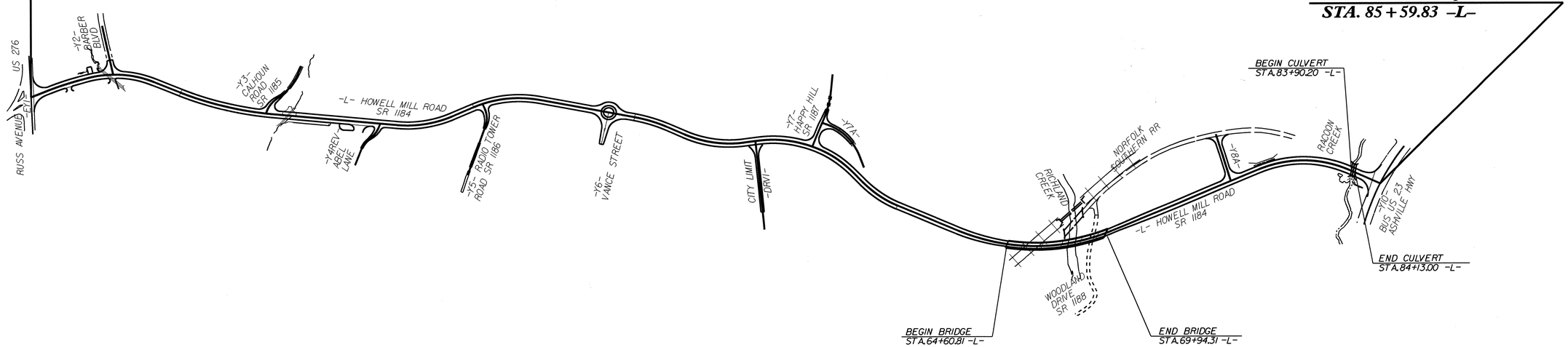

STATE OF NORTH CAROLINA DEPARTMENT OF TRANSPORTATION

DESIGN DATA

ADT 2012 = 6334
ADT 2032 = 9297
DHV = 10 %
D = 55 %
T = 5 % *
V = 40 MPH
FUNC. CLASS. = URBAN COLLECTOR
* TTST 2% DUAL 3%

PROJECT LENGTH

LENGTH OF ROADWAY TIP PROJECT U-4412	=	1.327 MI
LENGTH OF STRUCTURES TIP PROJECT U-4412	=	0.105 MI
TOTAL LENGTH OF TIP PROJECT U-4412	=	1.432 MI

Prepared in the Office of:
DIVISION OF HIGHWAYS
1000 Birch Ridge Dr., Raleigh NC, 27610

2012 STANDARD SPECIFICATIONS

LETTING DATE:
OCTOBER 15, 2013

Q. H. NGUYEN, P.E.
PROJECT ENGINEER

MARC G. CHEEK, P.E.
PROJECT DESIGN ENGINEER

STRUCTURES MANAGEMENT UNIT
1000 BIRCH RIDGE DR.
RALEIGH, N.C. 27610

DIVISION OF HIGHWAYS
STATE OF NORTH CAROLINA

STATE DESIGN ENGINEER P.E.

DEPARTMENT OF TRANSPORTATION
FEDERAL HIGHWAY ADMINISTRATION

APPROVED
DIVISION ADMINISTRATOR DATE

09/08/99
12-FEB-2013 10:59
$$$$$$$$$$$$$$$$$$$$DGN$$$$$$$$$$$$$$$$$$
dahodge

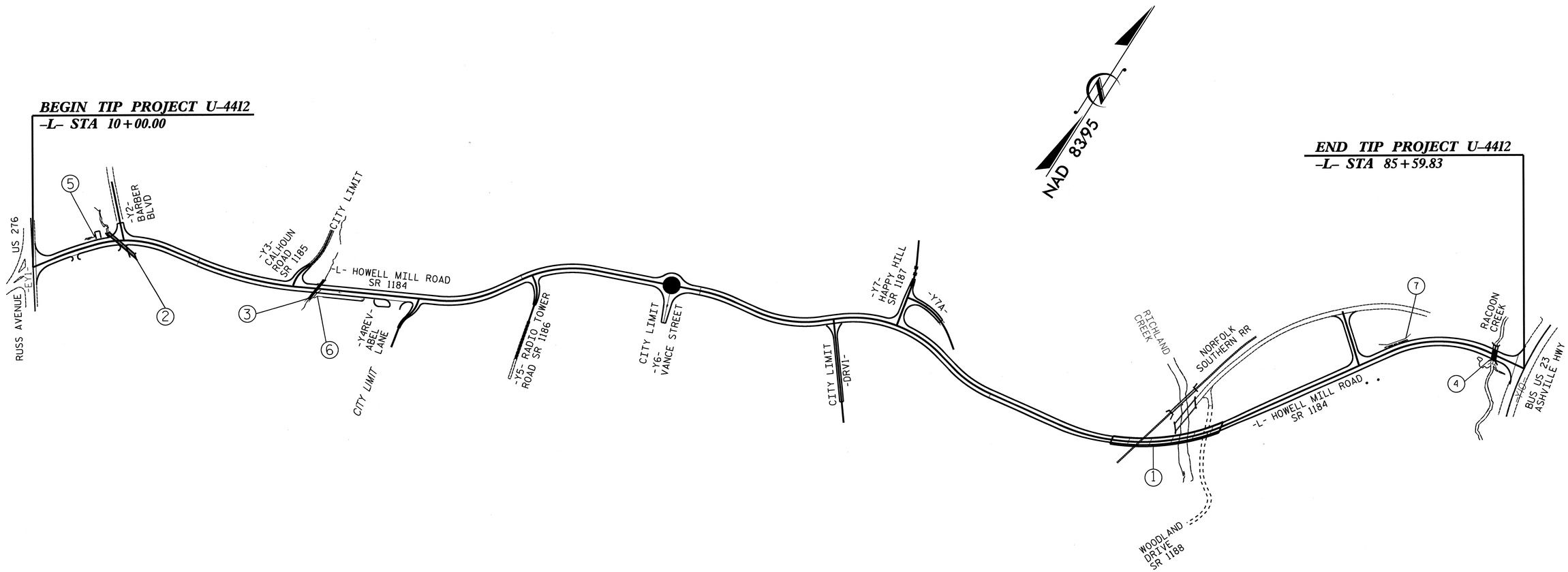

INDEX			
STR. No.	STATION	DESCRIPTION	SHEET NUMBERS
1	67+29.11 -L-	BRIDGE ON SR 1184 OVER NORFOLK SOUTHERN RAILROAD AND RICHLAND CREEK	S-1 THRU S-70
2	14+25.00 -L-	DOUBLE 6' X 6' RCBC	C-1 THRU C-10
3	24+21.50 -L-	SINGLE 6' X 6' RCBC	C-11 THRU C-18
4	84+01.60 -L-	DOUBLE 10' X 12' RCBC EXTENSION	C-19 THRU C-25
5	12+75.00 -L-	SEGMENTAL GRAVITY RETAINING WALL	W-1 THRU W-2
6	24+09.64 -L-	MSE RETAINING WALL	W-3 THRU W-5
7	78+50.00 -L-	MSE RETAINING WALL	W-6 THRU W-8

PROJECT NO. U-4412

HAYWOOD COUNTY

STATION:

STATE OF NORTH CAROLINA
DEPARTMENT OF TRANSPORTATION
RALEIGH

STRUCTURE INDEX

NORTH CAROLINA PROFESSIONAL SEAL 20125 ENGINEER MARSHALL G. CHEEK, JR.

REVISIONS					
NO.	BY:	DATE:	NO.	BY:	DATE:
1			3		
2			4		

DRAWN BY : M. POOLE DATE : 09/12
CHECKED BY : M. G. CHEEK DATE : 09/12

28-NOV-2012 11:20
R:\Structures\Final Plans\U4412_SD_IS.dgn
mpoole

F. A. PROJ. No.: STP-1184 (1)

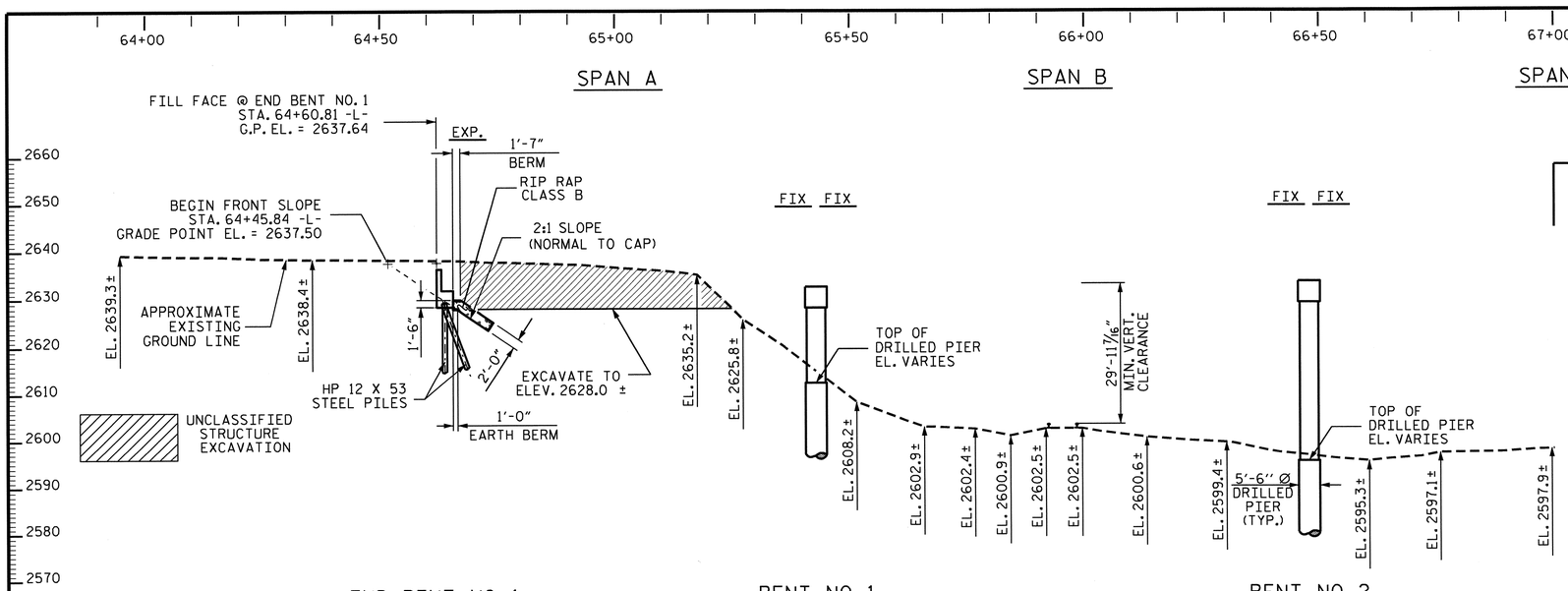

SECTION ALONG -L-

SECTION AT END BENTS AND BENTS ARE TAKEN AT RIGHT ANGLES

MATCH LINE
SEE SHEET 2 OF 7

GRADE DATA

+ 0.9510% △ -5.9870%

P.I. = STA. 72+50.00 -L-
EL. = 2645.15
V.C. = 500'

TOP OF RAIL ELEVATIONS

TRACK STATION	LEFT RAIL	RIGHT RAIL
11+60 -Y9-	2603.12	2603.12
11+80 -Y9-	2603.07	2603.07
12+00 -Y9-	2603.03	2603.03
12+20 -Y9-	2603.02	2603.02
12+40 -Y9-	2603.03	2603.03
12+60 -Y9-	2603.04	2603.04
12+80 -Y9-	2603.05	2603.05
13+00 -Y9-	2603.06	2603.06
13+20 -Y9-	2603.07	2603.07
13+40 -Y9-	2603.08	2603.08

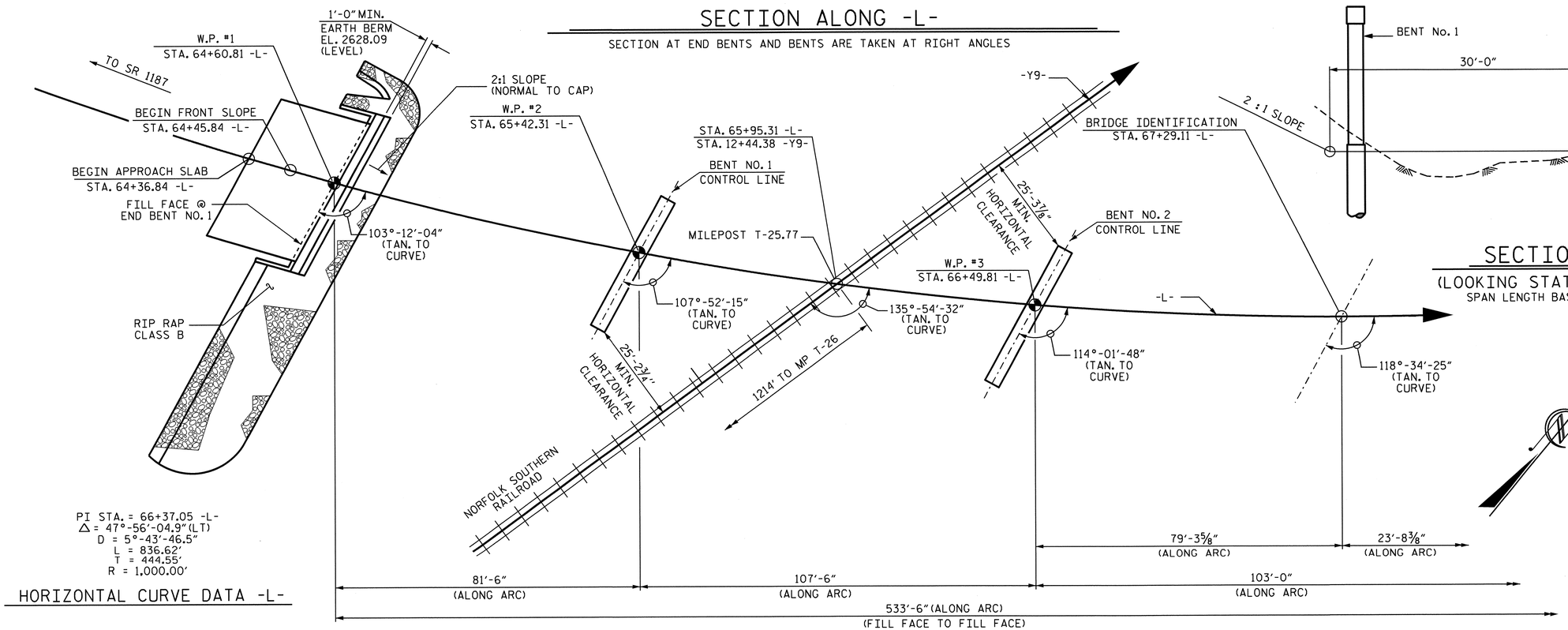

PI STA. = 66+37.05 -L-
△ = 47°-56'-04.9" (LT)
D = 5°-43'-46.5"
L = 836.62'
T = 444.55'
R = 1,000.00'

HORIZONTAL CURVE DATA -L-

PLAN

PILES AND COLUMNS NOT SHOWN IN PLAN VIEW

MATCH LINE
SEE SHEET 2 OF 7

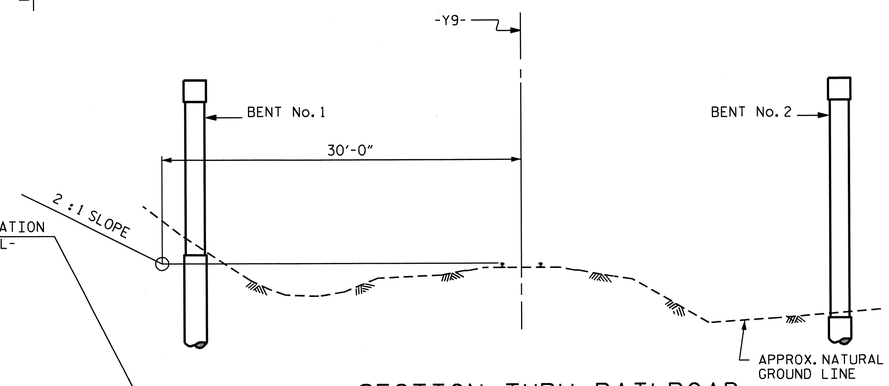

SECTION THRU RAILROAD

(LOOKING STATION AHEAD ALONG RAILROAD)
SPAN LENGTH BASED ON THIS THEORETICAL SECTION

NORTH CAROLINA PROFESSIONAL SEAL 13014 ENGINEER QUANG H. NGUYEN
Quang H. Nguyen 8-19-13

PROJECT NO. U-4412
HAYWOOD COUNTY
STATION: 67+29.11 -L-
MILEPOST T-25.77
REPLACES BRIDGE No. 55

SHEET 1 OF 7

STATE OF NORTH CAROLINA
DEPARTMENT OF TRANSPORTATION
RALEIGH

GENERAL DRAWING

FOR BRIDGE ON SR 1184 OVER NORFOLK SOUTHERN RAILROAD, RICHLAND CREEK AND SR 1188 ON NEW LOCATION BETWEEN US 276 AND US 23 BUS

NORTH CAROLINA PROFESSIONAL SEAL 20125 ENGINEER MARSHALL G. CHEEK, JR.
8-19-13

REVISIONS						SHEET NO.
NO.	BY:	DATE:	NO.	BY:	DATE:	S-1
1			3			TOTAL SHEETS
2			4			70

DRAWN BY : A.L. FIGUEROA DATE : 07-16-09
CHECKED BY : M. G. CHEEK DATE : 10/12

19-AUG-2013 12:02
R:\Structures\Final Plans\Str #1\U-4412_SD_GD.dgn
dahodge

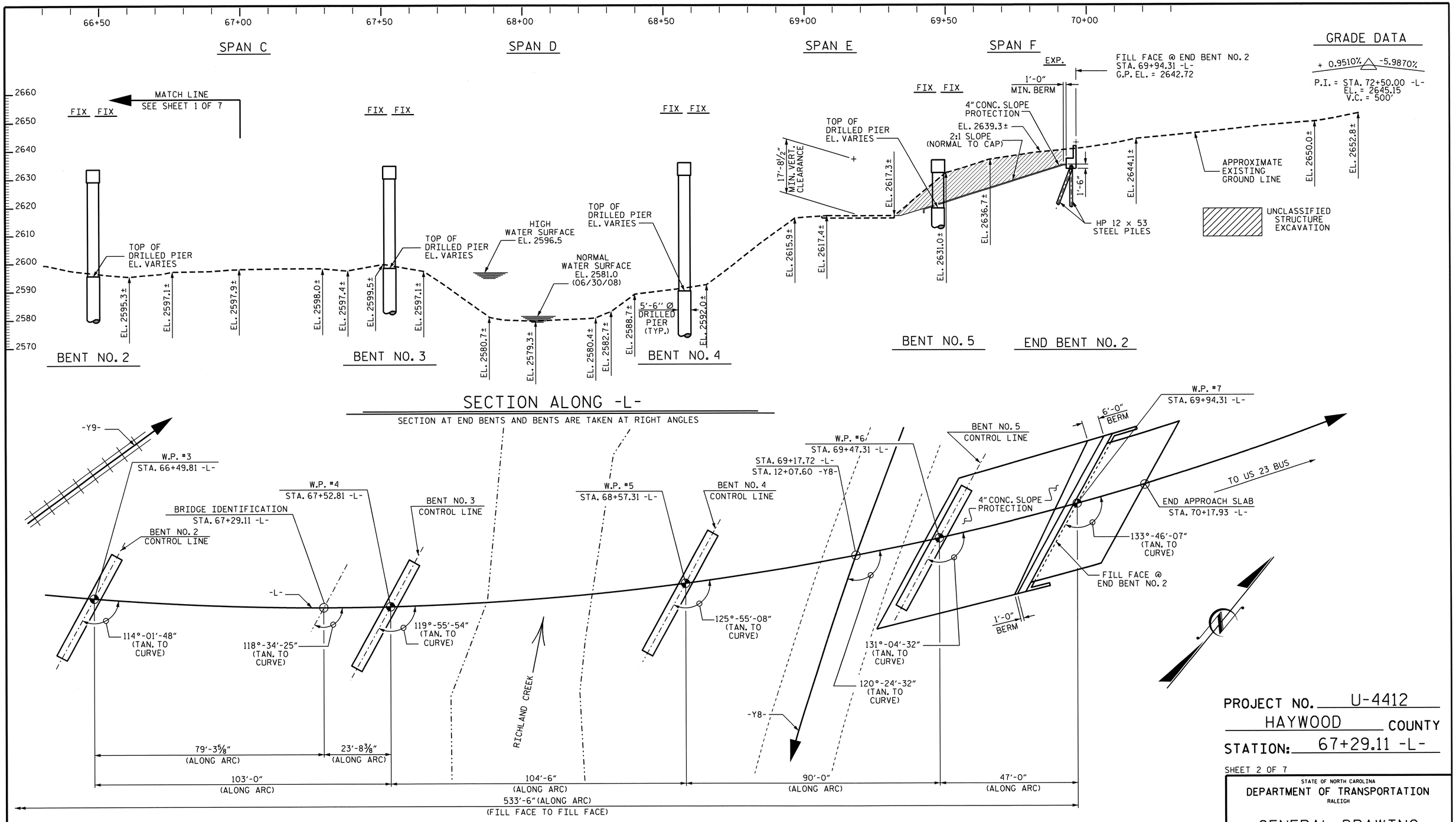

MATCH LINE
SEE SHEET 1 OF 7

PI STA. = 66+37.05 -L-
Δ = 47°-56'-04.9" (LT)
D = 5°-43'-46.5"
L = 836.62'
T = 444.55'
R = 1,000.00'

HORIZONTAL CURVE DATA -L-

PLAN

PILES AND COLUMNS NOT SHOWN IN PLAN VIEW

PROJECT NO. U-4412
HAYWOOD COUNTY
STATION: 67+29.11 -L-

SHEET 2 OF 7

STATE OF NORTH CAROLINA
DEPARTMENT OF TRANSPORTATION
RALEIGH

GENERAL DRAWING
FOR BRIDGE ON SR 1184 OVER NORFOLK SOUTHERN RAILROAD, RICHLAND CREEK AND SR 1188 ON NEW LOCATION BETWEEN US 276 AND US 23 BUS

NORTH CAROLINA PROFESSIONAL SEAL 20125 ENGINEER MARSHALL G. CHEEK, JR.
2-7-13

REVISIONS						SHEET NO.
NO.	BY:	DATE:	NO.	BY:	DATE:	S-2
1			3			TOTAL SHEETS
2			4			70

DRAWN BY : A.L. FIGUEROA DATE : 07-16-09
CHECKED BY : M. G. CHEEK DATE : 10/12

07-FEB-2013 10:54
R:\Structures\Final Plans\Str #1\U-4412_SD_GD.dgn
dahodge

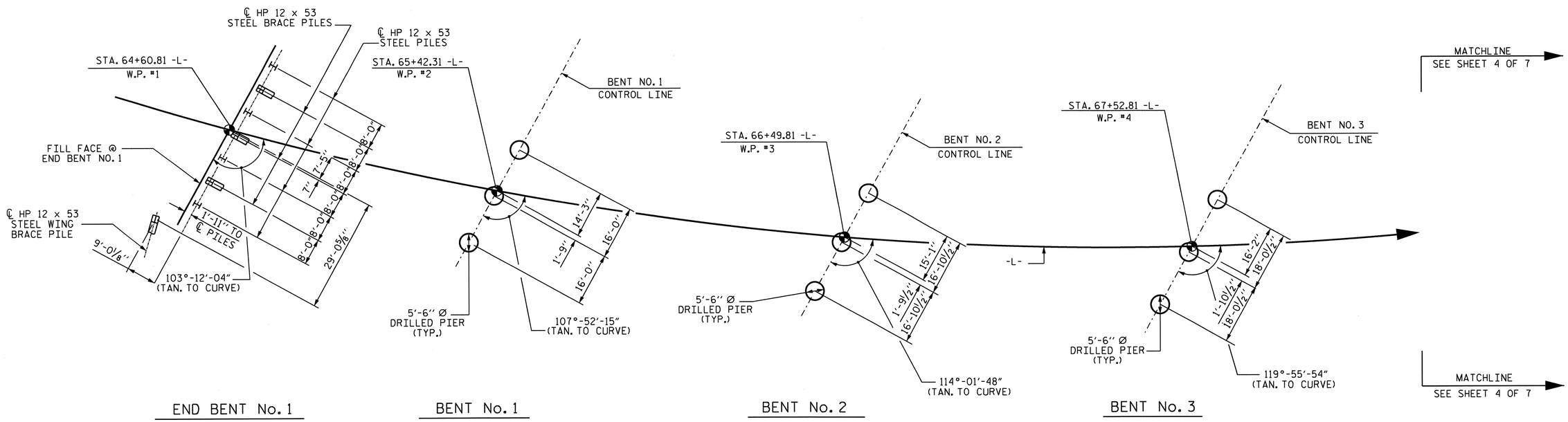

FOUNDATION LAYOUT

ALL END BENT PILES ARE HP 12 x 53 STEEL PILES.

ALL END BENT BRACE PILES ARE BATTERED AT 3:12.

DIMENSIONS LOCATING PILES ARE SHOWN
TO THE PILE CENTERLINE AT THE BOTTOM OF THE CAP.

NOTES

FOR PILES, SEE SECTION 450 OF THE STANDARD SPECIFICATIONS.

PILES AT END BENT No. 1 ARE DESIGNED FOR A FACTORED RESISTANCE OF 105 TONS PER PILE.

DRIVE PILES AT END BENT No. 1 TO A REQUIRED DRIVING RESISTANCE OF 175 TONS PER PILE.

FOR DRILLED PIERS, SEE SECTION 411 OF THE STANDARD SPECIFICATIONS.

DRILLED PIERS AT BENT No. 1 ARE DESIGNED FOR A FACTORED RESISTANCE OF 620.0 TONS PER PIER. CHECK FIELD CONDITIONS FOR THE REQUIRED TIP RESISTANCE OF 30.0 TSF.

PERMANENT STEEL CASINGS MAY BE REQUIRED FOR DRILLED PIERS AT BENT No. 1. IF REQUIRED, DO NOT EXTEND PERMANENT CASINGS BELOW ELEVATION 2608.0 WITHOUT PRIOR APPROVAL FROM THE ENGINEER. THE ENGINEER WILL DETERMINE THE NEED FOR PERMANENT STEEL CASING.

INSTALL DRILLED PIERS AT BENT No. 1 THAT EXTEND TO AN ELEVATION NO HIGHER THAN 2581.0 (LT.), 2571.0 (CT) AND 2561.0 (RT.), SATISFY THE REQUIRED TIP RESISTANCE AND HAVE A PENETRATION OF AT LEAST 11 FEET INTO ROCK AS DEFINED BY ARTICLE 411-1 OF THE STANDARD SPECIFICATIONS.

THE SCOUR CRITICAL ELEVATIONS FOR BENT No. 1 ARE ELEVATION 2606.0 (LT), 2602.0 (CT.) AND 2598.0 (RT.). SCOUR CRITICAL ELEVATIONS ARE USED TO MONITOR POSSIBLE PROBLEMS DURING THE LIFE OF THE STRUCTURE.

DRILLED PIERS AT BENT No. 2 ARE DESIGNED FOR A FACTORED RESISTANCE OF 695.0 TONS PER PIER. CHECK FIELD CONDITIONS FOR REQUIRED TIP RESISTANCE OF 30.0 TSF.

PERMANENT STEEL CASINGS MAY BE REQUIRED FOR DRILLED PIERS AT BENT No. 2. IF REQUIRED, DO NOT EXTEND PERMANENT CASINGS BELOW ELEVATION 2597.0 WITHOUT PRIOR APPROVAL FROM THE ENGINEER. THE ENGINEER WILL DETERMINE THE NEED FOR PERMANENT STEEL CASINGS.

INSTALL DRILLED PIERS AT BENT No. 2 THAT EXTEND TO AN ELEVATION NO HIGHER THAN 2562.0 (LT.), 2563.0 (CT) AND 2564.0 (RT.), SATISFY THE REQUIRED TIP RESISTANCE AND HAVE A PENETRATION OF AT LEAST 11 FEET INTO ROCK AS DEFINED BY ARTICLE 411-1 OF THE STANDARD SPECIFICATIONS.

THE SCOUR CRITICAL ELEVATION FOR BENT No. 2 IS ELEVATION 2585.0. SCOUR CRITICAL ELEVATIONS ARE USED TO MONITOR POSSIBLE PROBLEMS DURING THE LIFE OF THE STRUCTURE.

DRILLED PIERS AT BENT No. 3 ARE DESIGNED FOR A FACTORED RESISTANCE OF 715.0 TONS PER PIER. CHECK FIELD CONDITIONS FOR REQUIRED TIP RESISTANCE OF 30.0 TSF.

PERMANENT STEEL CASINGS MAY BE REQUIRED FOR DRILLED PIERS AT BENT No. 3. IF REQUIRED, DO NOT EXTEND PERMANENT CASINGS BELOW ELEVATION 2577.0 WITHOUT PRIOR APPROVAL FROM THE ENGINEER. THE ENGINEER WILL DETERMINE THE NEED FOR PERMANENT STEEL CASINGS.

INSTALL DRILLED PIERS AT BENT No. 3 THAT EXTEND TO AN ELEVATION NO HIGHER THAN 2551.0 (LT.), 2554.0 (CT.) AND 2557.0 (RT.), SATISFY THE REQUIRED TIP RESISTANCE AND HAVE A PENETRATION OF AT LEAST 11 FEET INTO ROCK AS DEFINED BY ARTICLE 411-1 OF THE STANDARD SPECIFICATIONS.

THE SCOUR CRITICAL ELEVATION FOR BENT No. 3 IS ELEVATION 2568.0. THE SCOUR CRITICAL ELEVATIONS ARE USED TO MONITOR POSSIBLE SCOUR PROBLEMS DURING THE LIFE OF THE STRUCTURE.

DRILLED PIERS AT BENT No. 4 ARE DESIGNED FOR A FACTORED RESISTANCE OF 670.0 TONS PER PIER. CHECK FIELD CONDITIONS FOR THE REQUIRED TIP RESISTANCE OF 30.0 TSF.

PERMANENT STEEL CASINGS MAY BE REQUIRED FOR DRILLED PIERS AT BENT No. 4. IF REQUIRED, DO NOT EXTEND PERMANENT CASINGS BELOW ELEVATION 2580.0 (LT) AND 2577.0 (RT.) WITHOUT PRIOR APPROVAL FROM THE ENGINEER. THE ENGINEER WILL DETERMINE THE NEED FOR PERMANENT STEEL CASINGS.

INSTALL DRILLED PIERS AT BENT No. 4 THAT EXTEND TO AN ELEVATION NO HIGHER THAN 2564.0, SATISFY THE REQUIRED TIP RESISTANCE AND HAVE A PENETRATION OF AT LEAST 11 FEET INTO ROCK AS DEFINED BY ARTICLE 411-1 OF THE STANDARD SPECIFICATIONS.

THE SCOUR CRITICAL ELEVATION FOR BENT No. 4 IS ELEVATION 2572.0. THE SCOUR CRITICAL ELEVATIONS ARE USED TO MONITOR POSSIBLE SCOUR PROBLEMS DURING THE LIFE OF THE STRUCTURE.

DRILLED PIERS AT BENT No. 5 ARE DESIGNED FOR A FACTORED RESISTANCE OF 520.0 TONS PER PIER. CHECK FIELD CONDITIONS FOR THE REQUIRED TIP RESISTANCE OF 30.0 TSF.

PERMANENT STEEL CASINGS MAY BE REQUIRED FOR DRILLED PIERS AT BENT No. 5. IF REQUIRED, DO NOT EXTEND PERMANENT CASINGS BELOW ELEVATION 2621.0 WITHOUT PRIOR APPROVAL FROM THE ENGINEER. THE ENGINEER WILL DETERMINE THE NEED FOR PERMANENT STEEL CASINGS.

INSTALL DRILLED PIERS AT BENT No. 5 THAT EXTEND TO AN ELEVATION NO HIGHER THAN 2582.0 (LT.), 2588.0 (CT.) AND 2594.0 (RT.), SATISFY THE REQUIRED TIP RESISTANCE AND HAVE A PENETRATION OF AT LEAST 11 FEET INTO ROCK AS DEFINED IN ARTICLE 411-1 OF THE STANDARD SPECIFICATIONS.

THE SCOUR CRITICAL ELEVATION FOR BENT No. 5 IS ELEVATION 2612.0. THE SCOUR CRITICAL ELEVATIONS ARE USED TO MONITOR POSSIBLE SCOUR PROBLEMS DURING THE LIFE OF THE STRUCTURE.

SPT TESTING MAY BE REQUIRED FOR DRILLED PIERS. THE ENGINEER WILL DETERMINE THE NEED FOR SPT TESTING. FOR SPT TESTING, SEE SECTION 411 OF THE STANDARD SPECIFICATIONS.

SID INSPECTIONS MAY BE REQUIRED FOR DRILLED PIERS. THE ENGINEER WILL DETERMINE THE NEED FOR SID INSPECTIONS. FOR SID INSPECTIONS, SEE SECTION 411 OF THE STANDARD SPECIFICATIONS.

CSL TUBES ARE REQUIRED AND CSL TESTING MAY BE REQUIRED FOR DRILLED PIERS. THE ENGINEER WILL DETERMINE THE NEED FOR CSL TESTING, SEE SECTION 411 OF THE STANDARD SPECIFICATIONS.

PILES AT END BENT No. 2 ARE DESIGNED FOR A FACTORED RESISTANCE OF 85 TONS PER PILE.

DRIVE PILES AT END BENT No. 2 TO A REQUIRED DRIVING RESISTANCE OF 142 TONS PER PILE.

NORTH CAROLINA PROFESSIONAL SEAL 20125 ENGINEER MARSHALL G. CHEEK, JR.
2-8-13

PROJECT NO. U-4412
HAYWOOD COUNTY
STATION: 67+29.11 -L-

SHEET 3 OF 7

STATE OF NORTH CAROLINA
DEPARTMENT OF TRANSPORTATION
RALEIGH

GENERAL DRAWING
FOR BRIDGE ON SR 1184 OVER NORFOLK SOUTHERN RAILROAD AND RICHLAND CREEK ON NEW LOCATION BETWEEN US 276 AND US 23 BUSINESS

REVISIONS						SHEET NO.
NO.	BY:	DATE:	NO.	BY:	DATE:	S-3
1			3			TOTAL SHEETS
2			4			70

DRAWN BY : M. POOLE DATE : 08/12
CHECKED BY : M. G. CHEEK DATE : 09/12

08-FEB-2013 10:44
R:\Structures\Final Plans\Str #1\U4412_SD_FL.dgn
dahodge

STR. #1

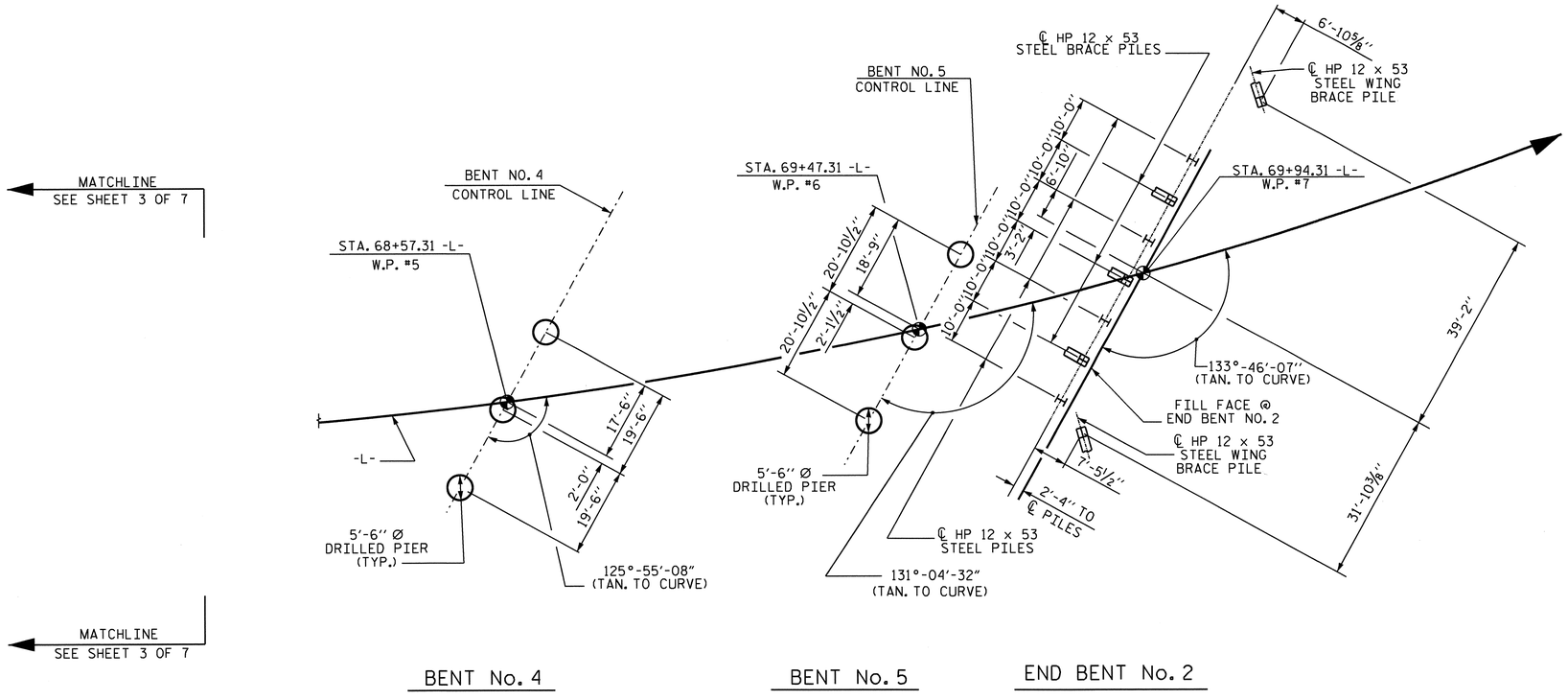

FOUNDATION LAYOUT

ALL END BENT PILES ARE HP 12 x 53 STEEL PILES.

ALL END BENT BRACE PILES ARE BATTERED AT 3:12.

DIMENSIONS LOCATING PILES ARE SHOWN
TO THE PILE CENTERLINE AT THE BOTTOM OF THE CAP.

PROJECT NO. U-4412
HAYWOOD COUNTY
STATION: 67+29.11 -L-

SHEET 4 OF 7

STATE OF NORTH CAROLINA
DEPARTMENT OF TRANSPORTATION
RALEIGH

GENERAL DRAWING
FOR BRIDGE ON SR 1184 OVER
NORFOLK SOUTHERN RAILROAD
AND RICHLAND CREEK
ON NEW LOCATION BETWEEN
US 276 AND US 23 BUSINESS

NORTH CAROLINA PROFESSIONAL SEAL 20125 ENGINEER MARSHALL G. CHEEK, JR.
2-8-13

REVISIONS						SHEET NO.
NO.	BY:	DATE:	NO.	BY:	DATE:	S-4
1			3			TOTAL SHEETS
2			4			70

DRAWN BY : M. POOLE DATE : 08/12
CHECKED BY : M. G. CHEEK DATE : 09/12

08-FEB-2013 10:49
R:\Structures\Final Plans\Str #1\U4412_SD_FL.dgn
dahodge

STR. #1

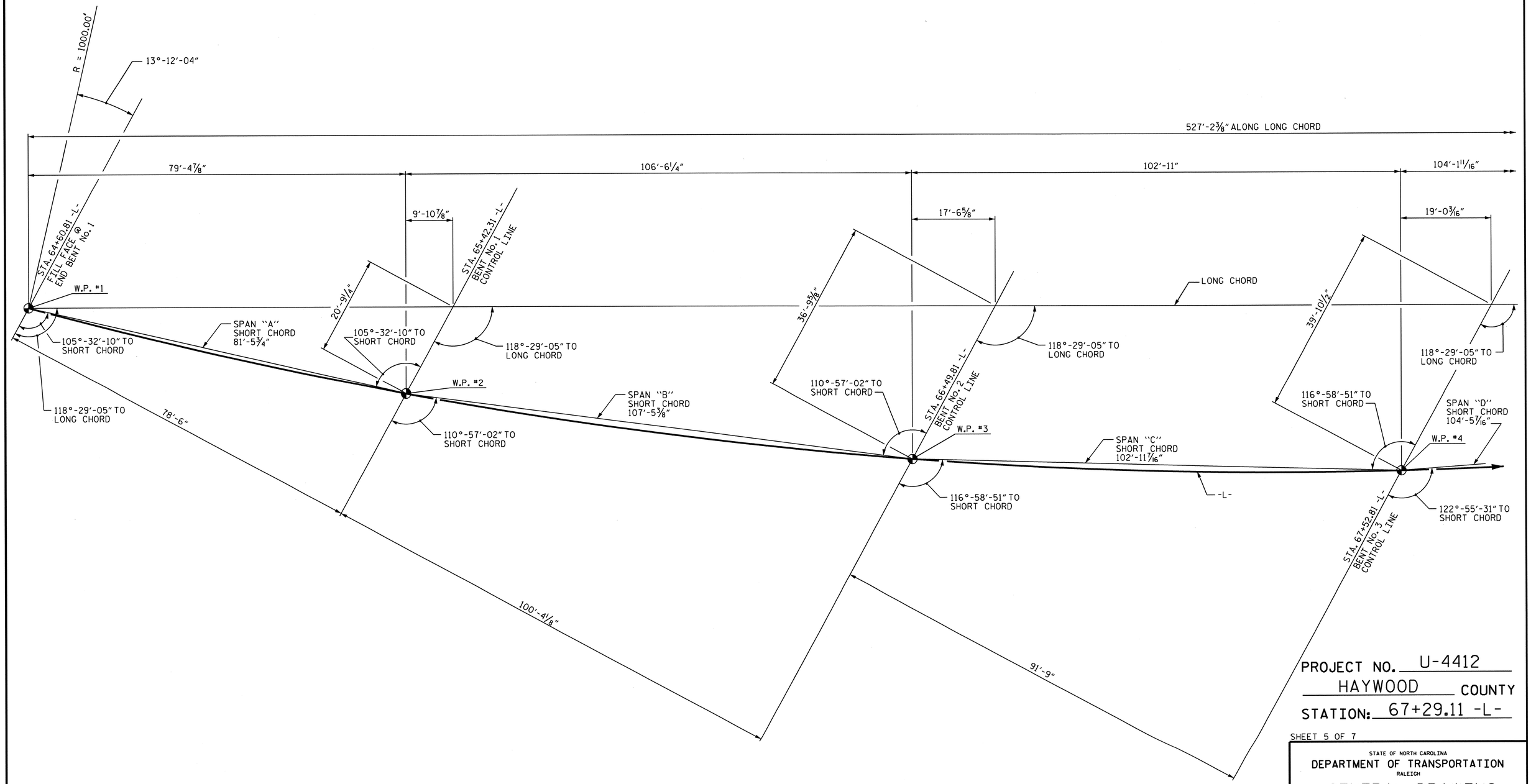

LONG CHORD LAYOUT

(ALL BENTS ARE PARALLEL)

PROJECT NO. U-4412

HAYWOOD COUNTY

STATION: 67+29.11 -L-

SHEET 5 OF 7

STATE OF NORTH CAROLINA
DEPARTMENT OF TRANSPORTATION
RALEIGH

GENERAL DRAWING

FOR BRIDGE ON SR 1184 OVER NORFOLK SOUTHERN RAILROAD AND RICHLAND CREEK ON NEW LOCATION BETWEEN US 276 AND US 23 BUSINESS

NORTH CAROLINA PROFESSIONAL SEAL 20125 ENGINEER MARSHALL G. CHEEK, JR.

2-7-13

REVISIONS							SHEET NO.
NO.	BY:	DATE:	NO.	BY:	DATE:		S-5
1			3				TOTAL SHEETS
2			4				70

DRAWN BY : D. HODGE DATE : 9/12

CHECKED BY : M.G. CHEEK DATE : 9/12

28-NOV-2012 11:19
R:\Structures\FinalPlans\Str #1\U-4412_SD_LC.dgn
mpoole

STR. #1

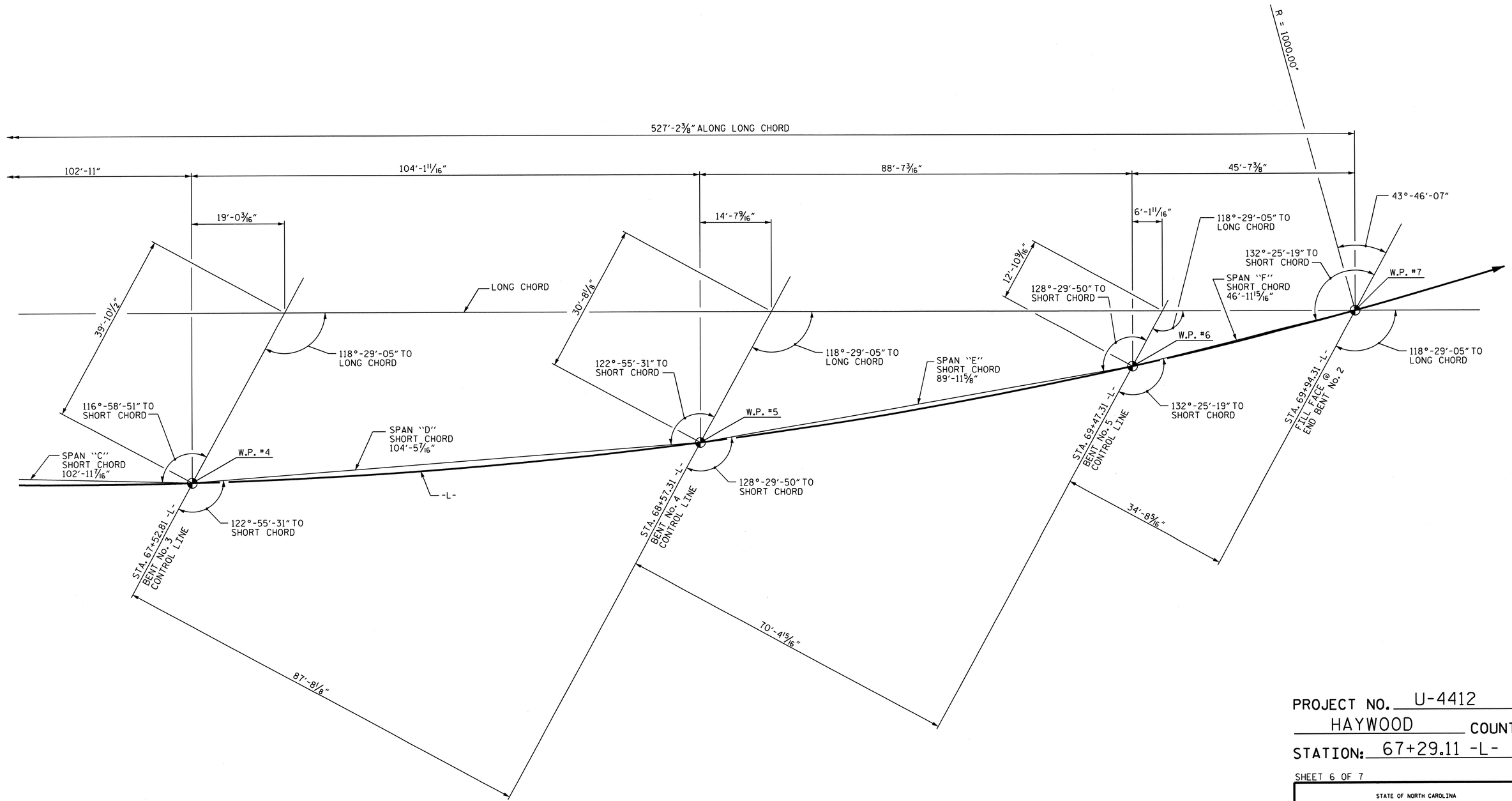

LONG CHORD LAYOUT

(ALL BENTS ARE PARALLEL)

PROJECT NO. U-4412

HAYWOOD COUNTY

STATION: 67+29.11 -L-

SHEET 6 OF 7

STATE OF NORTH CAROLINA
DEPARTMENT OF TRANSPORTATION
RALEIGH

GENERAL DRAWING

FOR BRIDGE ON SR 1184 OVER NORFOLK SOUTHERN RAILROAD AND RICHLAND CREEK ON NEW LOCATION BETWEEN US 276 AND US 23 BUSINESS

NORTH CAROLINA PROFESSIONAL SEAL 20125 ENGINEER MARSHALL G. CHEEK, JR.

REVISIONS						SHEET NO.
NO.	BY:	DATE:	NO.	BY:	DATE:	S-6
1			3			TOTAL SHEETS
2			4			70

DRAWN BY : D. HODGE DATE : 9/12
CHECKED BY : M.G. CHEEK DATE : 9/12

28-NOV-2012 11:18
R:\Structures\FinalPlans\Str #1\U-4412_SD_LC.dgn
mpoole

STR. #1

BENCHMARK No. 4: CHISELED SQUARE ON WINGWALL OF SW CORNER OF BRIDGE. STA. 67+73.96 -L-, 31.98' LEFT, EL. 2598.782.

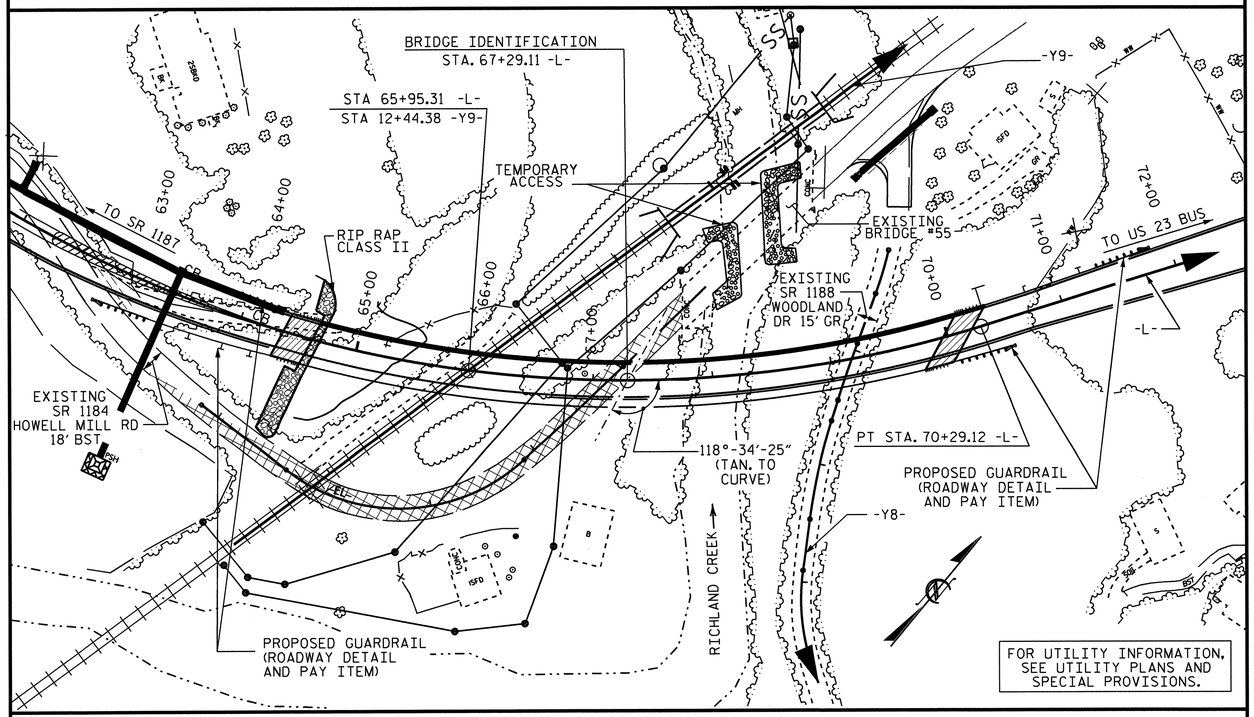

LOCATION SKETCH

NOTES

ASSUMED LIVE LOAD = HL 93 OR ALTERNATE LOADING.

FOR OTHER DESIGN DATA AND GENERAL NOTES, SEE SHEET SN.

FOR EROSION CONTROL MEASURES, SEE EROSION CONTROL PLANS.

THIS BRIDGE HAS BEEN DESIGNED IN ACCORDANCE WITH THE AASHTO LRFD BRIDGE DESIGN SPECIFICATIONS.

REMOVABLE FORMS MAY BE USED IN LIEU OF METAL STAY-IN-PLACE FORMS IN ACCORDANCE WITH ARTICLE 420-3 OF THE STANDARD SPECIFICATIONS.

THE LOCATION OF THE CONSTRUCTION JOINT IN THE DRILLED PIERS IS BASED ON AN APPROXIMATE GROUND LINE ELEVATION. IF THE CONSTRUCTION JOINT IS ABOVE THE ACTUAL GROUND ELEVATION, THE CONTRACTOR SHALL PLACE THE CONSTRUCTION JOINT 1 FT. BELOW THE GROUND LINE.

THE EXISTING 3-SPAN STRUCTURE (3 @ 52'-6") CONSISTING OF REINFORCED CONCRETE DECK ON STEEL I-BEAMS WITH A 1½" ASPHALT WEARING SURFACE AND ON A SUBSTRUCTURE CONSISTING OF REINFORCED CONCRETE CAPS ON H-PILES AT THE END BENTS AND REINFORCED CONCRETE POST AND BEAM INTERIOR BENTS, AND LOCATED DOWNSTREAM FROM THE PROPOSED BRIDGE SHALL BE REMOVED.

REMOVAL OF THE EXISTING BRIDGE SHALL BE PERFORMED SO AS NOT TO ALLOW DEBRIS TO FALL INTO THE WATER. THE CONTRACTOR SHALL REMOVE THE BRIDGE AND SUBMIT PLANS FOR DEMOLITION IN ACCORDANCE WITH ARTICLE 402-2 OF THE STANDARD SPECIFICATIONS.

FOR MAINTENANCE AND PROTECTION OF TRAFFIC BENEATH PROPOSED STRUCTURE, SEE SPECIAL PROVISIONS.

THE MATERIAL SHOWN IN THE CROSS-HATCHED AREA SHALL BE EXCAVATED FOR A DISTANCE OF 25 FT EACH SIDE OF CENTERLINE ROADWAY AS DIRECTED BY THE ENGINEER. THIS WORK WILL BE PAID FOR AT THE CONTRACT LUMP SUM PRICE FOR UNCLASSIFIED STRUCTURE EXCAVATION. SEE SECTION 412 OF THE STANDARD SPECIFICATIONS.

INASMUCH AS THE PAINT SYSTEM ON THE EXISTING STRUCTURAL STEEL CONTAINS LEAD, THE CONTRACTOR'S ATTENTION IS DIRECTED TO ARTICLE 107-1 OF THE STANDARD SPECIFICATIONS. ANY COSTS RESULTING FROM COMPLIANCE WITH APPLICABLE STATE OR FEDERAL REGULATIONS PERTAINING TO HANDLING OF MATERIALS CONTAINING LEAD BASED PAINT SHALL BE INCLUDED IN THE BID PRICE FOR "REMOVAL OF EXISTING STRUCTURE".

AT THE CONTRACTOR'S OPTION, AND UPON REMOVAL OF THE CAUSEWAY, THE CLASS II RIP RAP USED IN THE CAUSEWAY MAY BE PLACED AS RIP RAP SLOPE PROTECTION. SEE SPECIAL PROVISIONS FOR CONSTRUCTION, MAINTENANCE AND REMOVAL OF TEMPORARY ACCESS AT STATION 67+29.11 -L-.

THE CLASS AA CONCRETE IN THE BRIDGE DECK SHALL CONTAIN FLY ASH OR GROUND GRANULATED BLAST FURNACE SLAG AT THE SUBSTITUTION RATE SPECIFIED IN ARTICLE 1024-1 AND IN ACCORDANCE WITH ARTICLES 1024-5 AND 1024-6 OF THE STANDARD SPECIFICATIONS. NO PAYMENT WILL BE MADE FOR THIS SUBSTITUTION AS IT IS CONSIDERED INCIDENTAL TO THE COST OF THE REINFORCED CONCRETE DECK SLAB.

THIS STRUCTURE HAS BEEN DESIGNED IN ACCORDANCE WITH HEC 18, "EVALUATING SCOUR AT BRIDGES", MAY 2001.

THE CONTRACTOR SHALL PROVIDE INDEPENDENT ASSURANCE SAMPLES OF REINFORCING STEEL AS FOLLOWS: FOR PROJECTS REQUIRING UP TO 400 TONS OF REINFORCING STEEL, ONE 30 INCH SAMPLE OF EACH SIZE BAR USED, AND FOR PROJECTS REQUIRING OVER 400 TONS OF REINFORCING STEEL TWO 30 INCH SAMPLES OF EACH SIZE BAR USED. THE BARS FROM WHICH THE SAMPLES ARE TAKEN MUST THEN BE SPLICED WITH REPLACEMENT BARS OF THE SIZE AND LENGTH OF THE SAMPLE, PLUS A MINIMUM LAP SPLICE OF THIRTY BAR DIAMETERS. PAYMENT FOR THE SAMPLES OF REINFORCING STEEL SHALL BE CONSIDERED INCIDENTAL TO VARIOUS PAY ITEMS.

NEEDLE BEAMS WILL NOT BE ALLOWED UNLESS OTHERWISE CALLED FOR ON THE PLANS OR APPROVED BY THE ENGINEER.

FOR SUBMITTAL OF WORKING DRAWINGS, SEE SPECIAL PROVISIONS.

FOR FALSEWORK AND FORMWORK, SEE SPECIAL PROVISIONS.

FOR CRANE SAFETY, SEE SPECIAL PROVISIONS.

THE RAILROAD TRACK TOP OF RAIL ELEVATIONS ON THE PLANS ARE FROM THE BEST INFORMATION AVAILABLE. PRIOR TO BEGINNING BRIDGE CONSTRUCTION, VERIFY THE TOP OF RAIL ELEVATIONS AND REPORT ANY VARIATIONS TO THE ENGINEER. ANY PLAN REVISIONS NECESSARY TO ACHIEVE THE REQUIRED MINIMUM CLEARANCE WILL BE PROVIDED BY THE DEPARTMENT.

FOR GROUT FOR STRUCTURES, SEE SPECIAL PROVISIONS.

THIS BRIDGE IS LOCATED IN SEISMIC ZONE 1.

FOR MINIMIZING RAILROAD FLAGGING SERVICE, SEE STANDARD SPECIFICATIONS.

THE CONTRACTOR WILL BE REQUIRED TO CONSTRUCT, MAINTAIN AND AFTERWARDS REMOVE A TEMPORARY ACCESS FOR USE DURING CONSTRUCTION OF THE PROPOSED STRUCTURE. FOR CONSTRUCTION, MAINTENANCE AND REMOVAL OF TEMPORARY ACCESS, SEE SPECIAL PROVISIONS.

FOR POWERLINE CONDUIT AND HANGER SYSTEM, SEE SPECIAL PROVISIONS.

FOR TELECOMMUNICATIONS CONDUIT AND HANGER SYSTEM, SEE SPECIAL PROVISIONS.

HYDRAULIC DATA

DESIGN DISCHARGE ..... = 7,050 C.F.S
FREQUENCY OF DESIGN FLOOD ..... = 50 YRS.
DESIGN HIGH WATER ELEVATION ..... = 2,595.0
DRAINAGE AREA ..... = 48.0 SQ. MI
BASE DISCHARGE (Q100) ..... = 8,390 C.F.S.
BASE HIGH WATER ELEVATION ..... = 2,596.5

OVERTOPPING FLOOD DATA

OVERTOPPING DISCHARGE ..... = N/A
FREQUENCY OF OVERTOPPING FLOOD ..... = 500 YRS.+
OVERTOPPING FLOOD ELEVATION ..... = 2,637.5

TOTAL BILL OF MATERIAL

	CONSTRUCTION, MAINTENANCE AND REMOVAL OF TEMPORARY ACCESS	REMOVAL OF EXISTING STRUCTURE	5'-6" Ø DRILLED PIERS IN SOIL	5'-6" Ø DRILLED PIERS NOT IN SOIL	PERMANENT STEEL CASING FOR 5'-6" Ø DRILLED PIERS	SID INSPECTIONS	SPT TESTING	CSL TESTING	UNCLASSIFIED STRUCTURE EXCAVATION	REINFORCED CONCRETE DECK SLAB	GROOVING BRIDGE FLOORS	CLASS A CONCRETE	BRIDGE APPROACH SLABS	REINFORCING STEEL	SPIRAL COLUMN REINFORCING STEEL
	LUMP SUM	LUMP SUM	LIN. FT.	LIN. FT.	LIN. FT.	EACH	EACH	EACH	LUMP SUM	SQ. FT.	SQ. FT.	CU. YDS.	LUMP SUM	LBS.	LBS.
SUPERSTRUCTURE	LUMP SUM	LUMP SUM								23133	18755		LUMP SUM		
END BENT NO. 1									LUMP SUM			38.4		4975	
BENT NO. 1			52.00	64.00	10.98							79.5		20500	6507
BENT NO. 2			53.67	45.00								113.3		23533	7607
BENT NO. 3			89.67	43.00	63.63							112.3		25853	8680
BENT NO. 4			34.00	41.00	32.88							137.2		24164	7784
BENT NO. 5			56.50	33.00								85.7		18287	5052
END BENT NO. 2									LUMP SUM			53.9		6168	
TOTAL	LUMP SUM	LUMP SUM	285.84	226.00	107.49	1	1	1	LUMP SUM	23133	18755	620.3	LUMP SUM	123480	35630

	54" PRESTRESSED CONCRETE GIRDERS		HP 12 X 53 STEEL PILES		TWO BAR METAL RAIL	THREE BAR METAL RAIL	1'-2" X 2'-6" CONCRETE PARAPET	72" CHAIN LINK FENCE	120" CHAIN LINK FENCE	4" SLOPE PROTECTION	RIP RAP CLASS B	GEOTEXTILE FOR DRAINAGE	ELASTOMERIC BEARINGS	EXPANSION JOINT SEALS	POWERLINE CONDUIT AND HANGER SYSTEM	TELECOMMUNICATIONS CONDUIT AND HANGER SYSTEM
	NO.	LIN. FT.	NO.	LIN. FT.	LIN. FT.	LIN. FT.	LIN. FT.	LIN. FT.	LIN. FT.	SQ. YDS.	TONS	SQ. FT.	LUMP SUM	LUMP SUM	LUMP SUM	LUMP SUM
SUPERSTRUCTURE	36	3144.64			526.47	518.67	534.87	106.18	105.48				LUMP SUM	LUMP SUM	LUMP SUM	LUMP SUM
END BENT NO. 1			8	275							329	365				
BENT NO. 1																
BENT NO. 2																
BENT NO. 3																
BENT NO. 4																
BENT NO. 5																
END BENT NO. 2			9	230						335						
TOTAL	36	3144.64	17	505	526.47	518.67	534.87	106.18	105.48	335	329	365	LUMP SUM	LUMP SUM	LUMP SUM	LUMP SUM

PROJECT NO. U-4412
HAYWOOD COUNTY
STATION: 67+29.11 -L-

SHEET 7 OF 7

STATE OF NORTH CAROLINA
DEPARTMENT OF TRANSPORTATION
RALEIGH

GENERAL DRAWING
FOR BRIDGE ON SR 1184 OVER NORFOLK SOUTHERN RAILROAD RICHLAND CREEK AND SR 1188 ON NEW LOCATION BETWEEN US 276 AND US 23 BUS

NORTH CAROLINA PROFESSIONAL SEAL 20125 ENGINEER MARSHALL G. CHEEK, JR.
2-15-13

REVISIONS				SHEET NO.
	NO.	BY:	DATE:	S-7
	3			TOTAL SHEETS
	4			70

DRAWN BY : A.L. FIGUEROA DATE : 07-16-09
CHECKED BY : M. G. CHEEK DATE : 10-12

15-FEB-2013 08:57
R:\Structures\Final Plans\Str #1\U-4412_SD_GD.dgn
dahodge

LOAD AND RESISTANCE FACTOR RATING (LRFD) SUMMARY FOR PRESTRESSED CONCRETE GIRDERS

LEVEL		VEHICLE	WEIGHT (W) (TONS)	CONTROLLING LOAD RATING (#)	MINIMUM RATING FACTORS (RF)	TONS = W X RF	STRENGTH I LIMIT STATE											SERVICE III LIMIT STATE						COMMENT NUMBER
								MOMENT					SHEAR						MOMENT					
							LIVELOAD FACTORS	DISTRIBUTION FACTORS (DF)	RATING FACTOR	SPAN	GIRDER LOCATION	DISTANCE FROM LEFT END OF SPAN (ft)	DISTRIBUTION FACTORS (DF)	RATING FACTOR	SPAN	GIRDER LOCATION	DISTANCE FROM LEFT END OF SPAN (ft)	LIVELOAD FACTORS	DISTRIBUTION FACTORS (DF)	RATING FACTOR	SPAN	GIRDER LOCATION	DISTANCE FROM LEFT END OF SPAN (ft)	
DESIGN LOAD RATING		HL-93(Inv)	N/A	(1)	1.01	--	1.75	0.793	1.35	A	EL	39.02	0.830	1.24	A	EL	23.41	0.80	0.793	1.01	B	EL	42.19	
		HL-93(Opr)	N/A	--	1.61	--	1.35	0.793	1.75	A	EL	39.02	0.830	1.61	A	EL	23.41	N/A	--	--	--	--	--	
		HS-20(Inv)	36.000	(2)	1.48	53.28	1.75	0.793	1.85	A	EL	39.02	0.830	1.55	A	EL	23.41	0.80	0.793	1.48	B	EL	63.29	
		HS-20(Opr)	36.000	--	2.00	72.00	1.35	0.793	2.40	A	EL	39.02	0.830	2.00	A	EL	23.41	N/A	--	--	--	--	--	
LEGAL LOAD RATING	SV	SNSH	13.500	--	3.55	47.93	1.40	0.793	5.29	A	EL	39.02	0.830	4.49	A	EL	23.41	0.80	0.793	3.55	B	EL	63.29	
		SNGARBS2	20.000	--	2.54	50.80	1.40	0.793	3.91	A	EL	39.02	0.830	3.23	A	EL	23.41	0.80	0.793	2.54	B	EL	63.29	
		SNAGRIS2	22.000	--	2.36	51.92	1.40	0.793	3.69	A	EL	39.02	0.830	3.01	A	EL	23.41	0.80	0.793	2.36	B	EL	63.29	
		SNCOTTS3	27.250	--	1.77	48.23	1.40	0.793	2.63	A	EL	39.02	0.830	2.24	A	EL	23.41	0.80	0.793	1.77	B	EL	52.74	
		SNAGGRS4	34.925	--	1.44	50.29	1.40	0.793	2.19	A	EL	39.02	0.830	1.89	A	EL	23.41	0.80	0.793	1.44	B	EL	52.74	
		SNS5A	35.550	--	1.42	50.48	1.40	0.793	2.14	A	EL	39.02	0.830	1.92	A	EL	23.41	0.80	0.793	1.42	B	EL	52.74	
		SNS6A	39.950	--	1.28	51.14	1.40	0.793	1.96	A	EL	39.02	0.830	1.77	A	EL	23.41	0.80	0.793	1.28	B	EL	52.74	
		SNS7B	42.000	--	1.22	51.24	1.40	0.793	1.86	A	EL	39.02	0.830	1.75	A	EL	23.41	0.80	0.793	1.22	B	EL	52.74	
	TTST	TNAGRIT3	33.000	--	1.56	51.48	1.40	0.793	2.39	A	EL	39.02	0.830	2.09	A	EL	23.41	0.80	0.793	1.56	B	EL	52.74	
		TNT4A	33.075	--	1.55	51.27	1.40	0.793	2.39	A	EL	39.02	0.830	2.03	A	EL	23.41	0.80	0.793	1.55	B	EL	63.29	
		TNT6A	41.600	--	1.26	52.42	1.40	0.793	1.95	A	EL	39.02	0.830	1.89	A	EL	23.41	0.80	0.793	1.26	B	EL	52.74	
		TNT7A	42.000	--	1.26	52.92	1.40	0.793	1.96	A	EL	39.02	0.830	1.85	A	EL	23.41	0.80	0.793	1.26	B	EL	52.74	
		TNT7B	42.000	--	1.28	53.76	1.40	0.793	2.02	A	EL	39.02	0.830	1.70	A	EL	23.41	0.80	0.793	1.28	B	EL	63.29	
		TNAGRIT4	43.000	--	1.24	53.32	1.40	0.793	1.93	A	EL	39.02	0.830	1.64	A	EL	23.41	0.80	0.793	1.24	B	EL	63.29	
		TNAGT5A	45.000	--	1.18	53.10	1.40	0.793	1.82	A	EL	39.02	0.830	1.65	A	EL	23.41	0.80	0.793	1.18	B	EL	52.74	
		TNAGT5B	45.000	(3)	1.16	52.20	1.40	0.793	1.80	A	EL	39.02	0.830	1.56	A	EL	23.41	0.80	0.793	1.16	B	EL	63.29	

LOAD FACTORS:

DESIGN LOAD RATING FACTORS	LIMIT STATE	γ_{DC}	γ_{DW}
	STRENGTH I	1.25	1.50
	SERVICE III	1.00	1.00

NOTES:

MINIMUM RATING FACTORS ARE BASED ON THE STRENGTH I AND SERVICE III LIMIT STATES.

ALLOWABLE STRESSES FOR SERVICE III LIMIT STATE ARE AS REQUIRED FOR DESIGN.

COMMENTS:

1.
2.
3.
4.

(#) CONTROLLING LOAD RATING

(1) DESIGN LOAD RATING (HL-93)
(2) DESIGN LOAD RATING (HS-20)
(3) LEGAL LOAD RATING **
** SEE CHART FOR VEHICLE TYPE

GIRDER LOCATION

I - INTERIOR GIRDER
EL - EXTERIOR LEFT GIRDER
ER - EXTERIOR RIGHT GIRDER

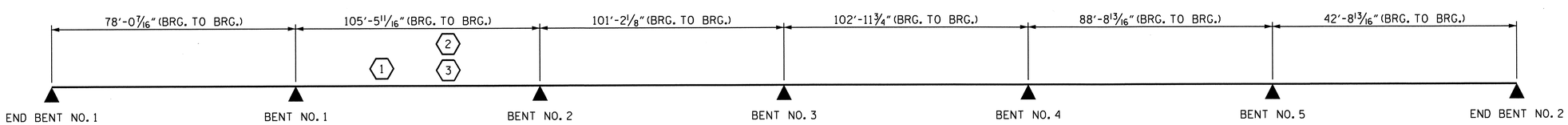

LRFR SUMMARY

PROJECT NO. U-4412
HAYWOOD COUNTY
STATION: 67+29.11 -L-

STATE OF NORTH CAROLINA
DEPARTMENT OF TRANSPORTATION
RALEIGH

LRFR SUMMARY FOR PRESTRESSED CONCRETE GIRDERS (NON-INTERSTATE TRAFFIC)

NORTH CAROLINA PROFESSIONAL SEAL 20125 ENGINEER MARSHALL G. CHEEK, JR.
2-13-13

REVISIONS						SHEET NO.
NO.	BY:	DATE:	NO.	BY:	DATE:	S-8
1			3			TOTAL SHEETS
2			4			70

ASSEMBLED BY : J.R. MCROY DATE : 09/12
CHECKED BY : M.G. CHEEK DATE : 10/12
DRAWN BY : MAA 1/08 REV. 11/12/08RR MAA/GM
CHECKED BY : GM/DI 2/08 REV. 10/1/11 MAA/GM

13-FEB-2013 11:57
R:\Structures\Final Plans\Str #1\U-4412_SD_LRFR.dgn
dahodge

STR. #1 STD. NO. LRFR1

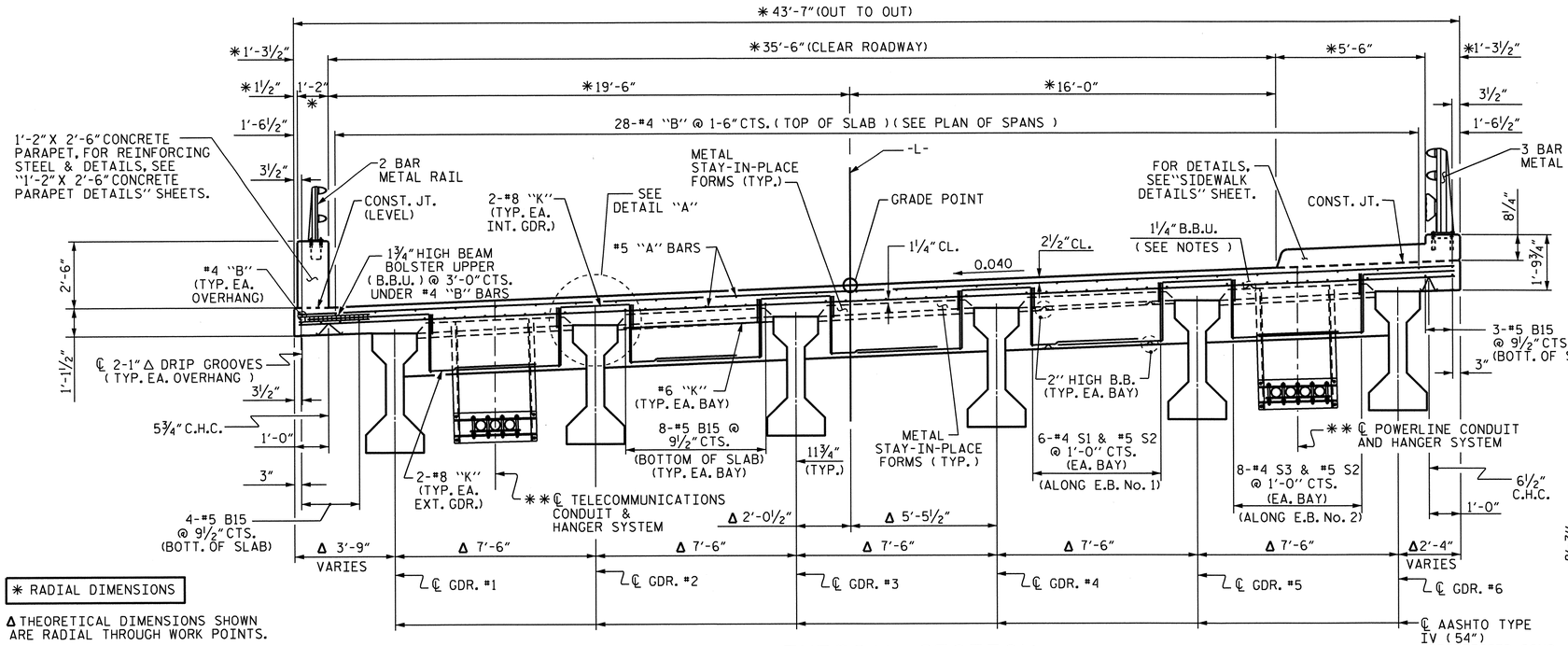

✱ RADIAL DIMENSIONS

Δ THEORETICAL DIMENSIONS SHOWN ARE RADIAL THROUGH WORK POINTS.

TYPICAL SECTION

(SHOWING END BENT DIAPHRAGMS)

✱✱FOR DETAILS OF CONDUIT SYSTEMS, SEE "STRUCTURE UTILITIES PLANS"

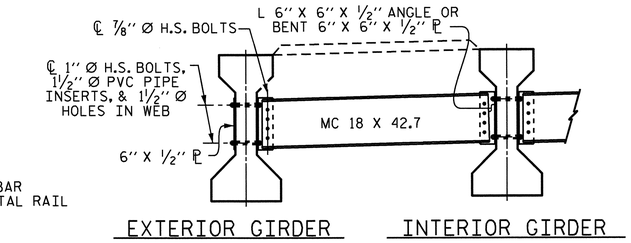

PART TYPICAL SECTION

(SHOWING INTERMEDIATE DIAPHRAGMS)

(FOR DETAILS, SEE "INTERMEDIATE STEEL DIAPHRAGMS FOR TYPE IV PRESTRESSED CONCRETE GIRDERS" SHEET.

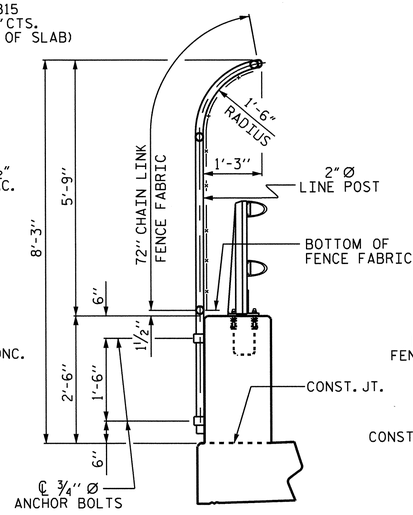

SECTION THRU FENCE (LEFT)

(SPAN B ONLY)

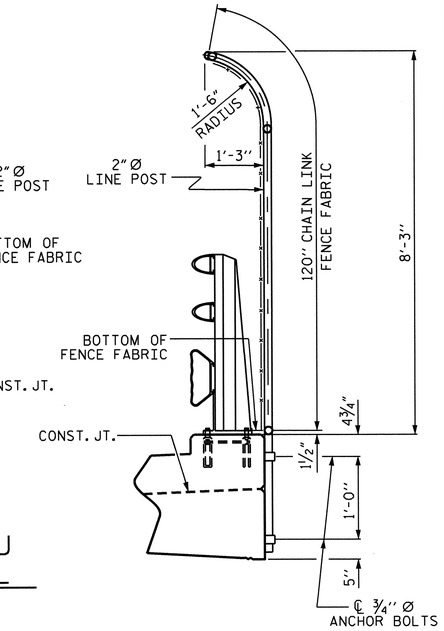

SECTION THRU FENCE (RIGHT)

(SPAN B ONLY)

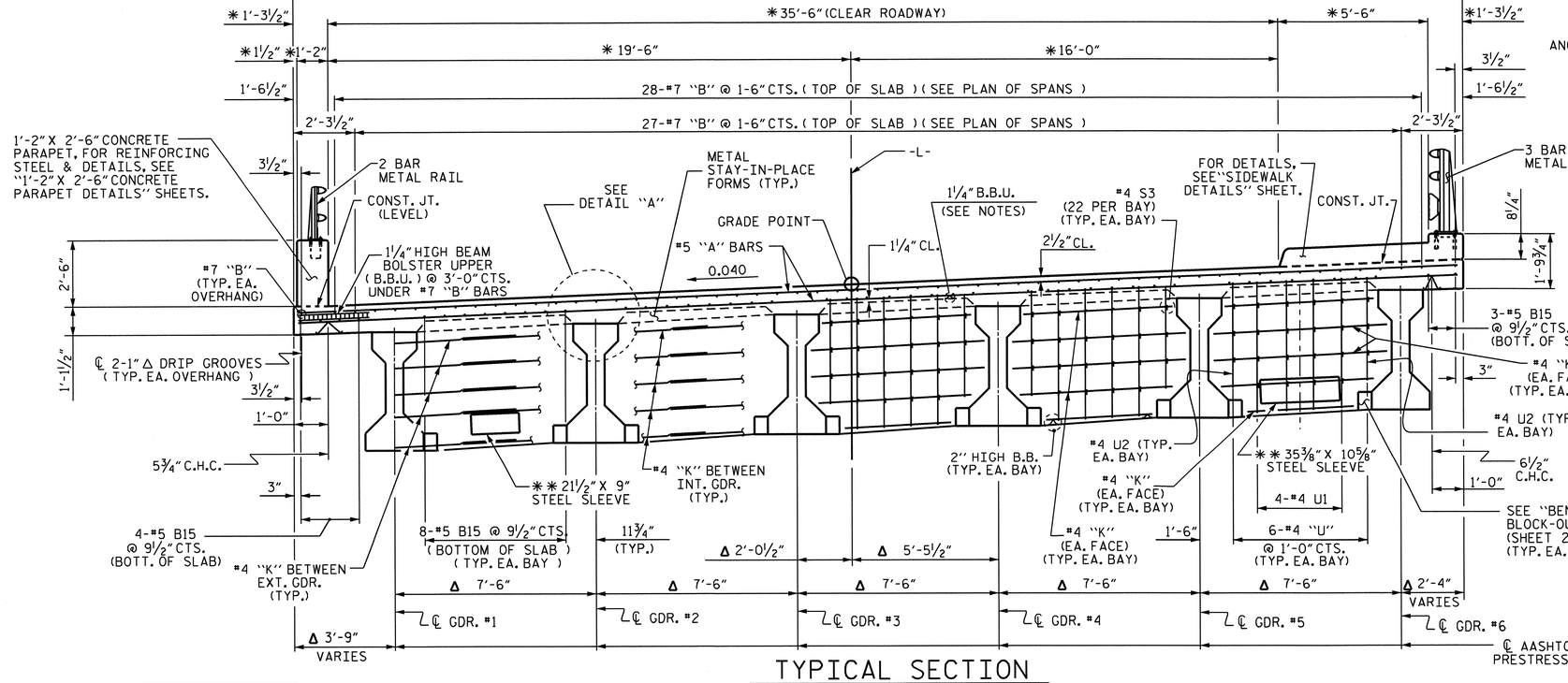

TYPICAL SECTION

(SHOWING BENT DIAPHRAGMS)

✱✱FOR DETAILS OF CONDUIT SYSTEMS, SEE "STRUCTURE UTILITIES PLANS"

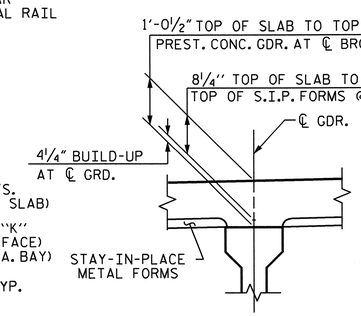

DETAIL "A"

PROJECT NO. U-4412

HAYWOOD COUNTY

STATION: 67+29.11 -L-

SHEET 1 OF 2

STATE OF NORTH CAROLINA
DEPARTMENT OF TRANSPORTATION
RALEIGH

SUPERSTRUCTURE
TYPICAL SECTIONS

REVISIONS						SHEET NO.
NO.	BY:	DATE:	NO.	BY:	DATE:	S-9
1			3			TOTAL SHEETS
2			4			70

NORTH CAROLINA PROFESSIONAL SEAL 20125 ENGINEER WILLIAM D. GEE, JR.
2-18-13

DRAWN BY: V.X. NGUYEN DATE: 10/19/11
CHECKED BY: D. HODGE DATE: 9/12

18-FEB-2013 09:31
R:\Structures\Final Plans\Str #1\U-4412_SD_TS.dgn
dahodge

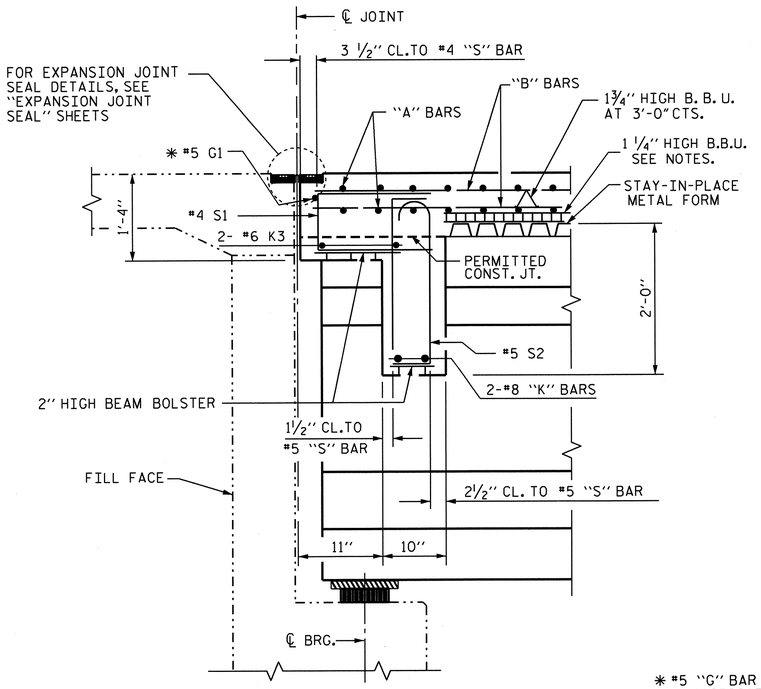

SECTION THRU END BENT NO. 1 DIAPHRAGM

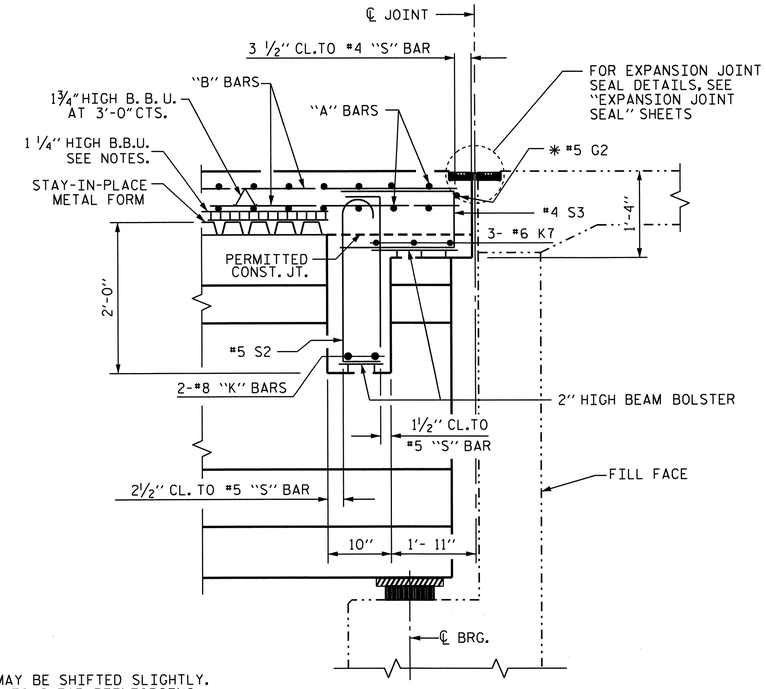

✱ #5 "G" BAR MAY BE SHIFTED SLIGHTLY. AS NECCESSARY, TO CLEAR REINFORCING STEEL AND STIRRUPS.

SECTION THRU END BENT NO. 2 DIAPHRAGM

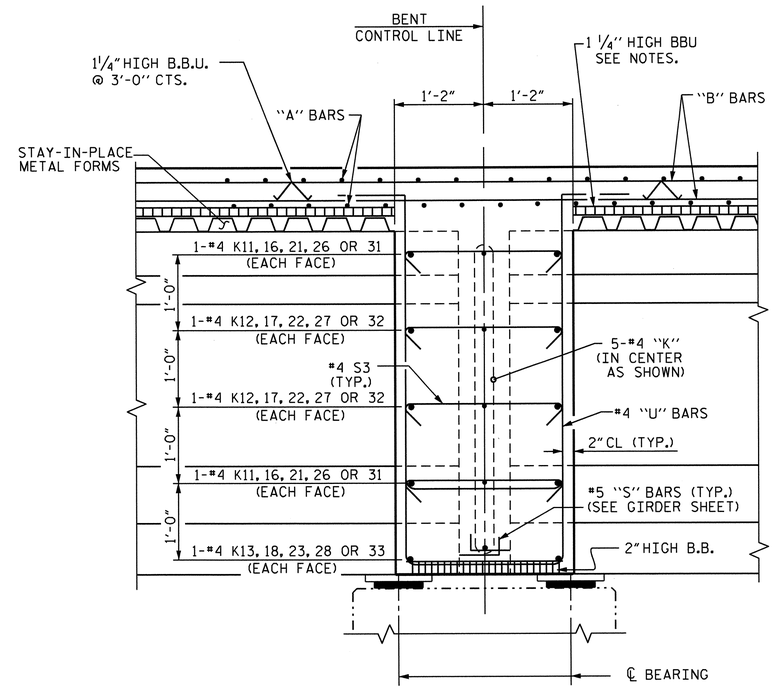

SECTION THRU BENT DIAPHRAGM

NOTES

PROVIDE 1 1/4" HIGH BEAM BOLSTERS UPPER AT 4'-0" CTS. ATOP THE METAL STAY-IN-PLACE FORMS TO SUPPORT THE BOTTOM MAT OF 'A' BARS. WHEN USING REMOVABLE FORMS, PROVIDE CONTINUOUS HIGH CHAIRS FOR METAL DECK (C.H.C.M.) @ 4'-0" CTS. WITH A HEIGHT TO SUPPORT THE BOTTOM MAT OF 'A' BARS A CLEAR DISTANCE OF 2 1/2" ABOVE THE TOP OF THE REMOVABLE FORM.

LONGITUDINAL STEEL MAY BE SHIFTED SLIGHTLY, AS NECESSARY, TO AVOID INTERFERENCE WITH STIRRUPS IN PRESTRESSED CONCRETE GIRDERS.

PREVIOUSLY CAST CONCRETE IN A CONTINUOUS UNIT SHALL HAVE ATTAINED A MINIMUM COMPRESSIVE STRENGTH OF 3,000 PSI BEFORE ADDITIONAL CONCRETE IS CAST IN THE UNIT.

PARAPET OR SIDEWALK IN A CONTINUOUS UNIT SHALL NOT BE CAST UNTIL ALL SLAB CONCRETE IN THE UNIT HAS BEEN CAST AND HAS REACHED A MINIMUM COMPRESSIVE STRENGTH OF 3,000 PSI.

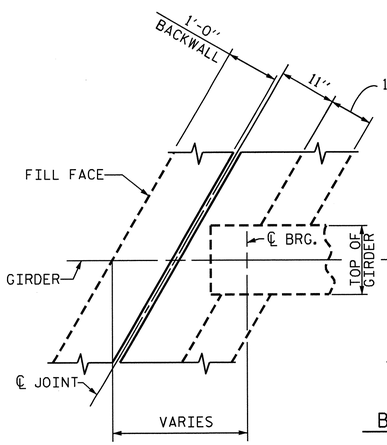

END BENT No. 1 DIAPHRAGM

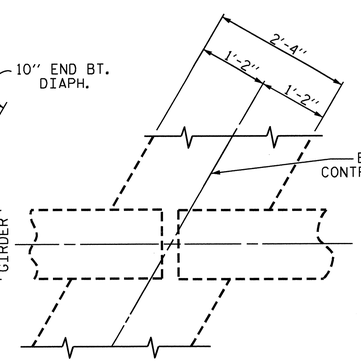

BENT DIAPHRAGM

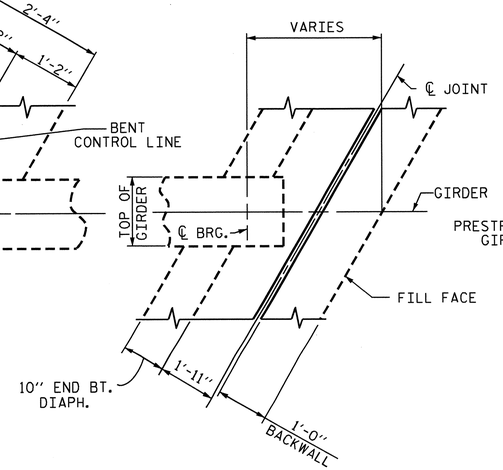

END BENT No. 2 DIAPHRAGM

PLAN

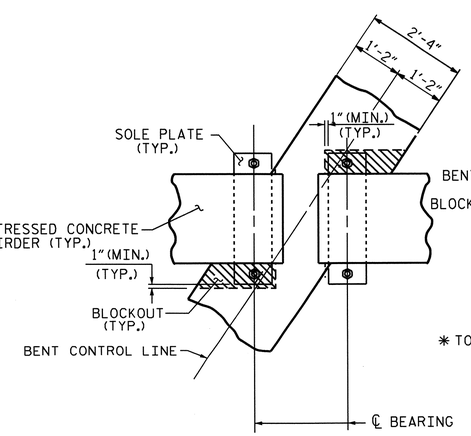

PLAN

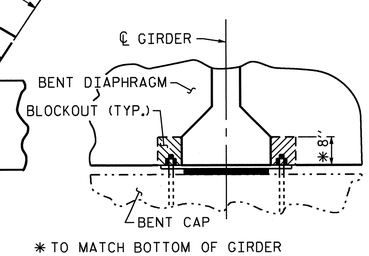

SECTION

BENT DIAPHRAGM BLOCK-OUT DETAIL

PROJECT NO. U-4412

HAYWOOD COUNTY

STATION: 67+29.11 -L-

SHEET 2 OF 2

STATE OF NORTH CAROLINA
DEPARTMENT OF TRANSPORTATION
RALEIGH

SUPERSTRUCTURE

TYPICAL SECTION DETAILS

NORTH CAROLINA PROFESSIONAL SEAL 20125 ENGINEER MARSHALL LOCKLEAR, JR. 2-8-13

REVISIONS								SHEET NO.
NO.	BY:	DATE:	NO.	BY:	DATE:			S-10
1			3					TOTAL SHEETS
2			4					70

STR. #1

DRAWN BY : V.X. NGUYEN DATE : 10/19/11
CHECKED BY : D. HODGE DATE : 9/12

28-NOV-2012 11:18
R:\Structures\FinalPlans\Str #1\U-4412_SD_TS.dgn
mpoole

▲ FOR SPACING OF THREADED INSERTS, SEE "STRUCTURE UTILITIES PLANS"

533'-6" (W.P.#1 TO W.P. #7, ALONG -L-)

81'-6" (W.P.#1 TO W.P. #2, ALONG -L-)

107'-6" (W.P.#2 TO W.P.#3, ALONG -L-)

▲ THREADED INSERT SPACING VARIES

6'-4⅝" TO A1 OR A2 ALONG -L-

29'-8" (TYP.)

36'-6" (TYP.)

12'-4" (TYP.)

15'-9" (TYP.)

2'-0" (MIN.) SPLICE (TYP.)

1-#7 B2 (TOP OF SLAB) (TYP. EA. OVERHANG) (2 BAR RUNS)

4-#5 B15 @ 9½" CTS. (BOT. OF SLAB) (10 BAR RUNS)

1-#4 B1 (TOP OF SLAB) (TYP. EA. OVERHANG) (2 BAR RUNS)

✱ 1'-2"

✱ 1½"

1'-6½" (TYP.)

3½" (TYP.)

3"

2'-3½" (TYP.)

2-#8 K1

#6 K3 (TYP. EA. BAY)

2-#8 K2 (TYP. EA. INT. GDR.)

10" END BT. DIAPH. (TYP. EA. BAY)

SEE DETAIL "A"

W.P. #1

✱ 43'-7" (OUT TO OUT)

✱ 35'-6" (CLEAR ROADWAY)

✱ 19'-6"

✱ 16'-0"

✱ 6'-9½"

✱ 5'-6"

✱ 1'-3½"

21'-7⅝"

36-#4 J1 BARS @ 1'-0" CTS.

23'-1¾"

FILL FACE @ END BENT No. 1

105°-32'-10" TO SHORT CHORD SPAN A

#5 G1 (2 BAR RUN)

TRANSVERSE CONST. JT. FOR LOCATION, SEE "BILL OF MAT'L." SHEET

6-#4 S1 & #5 S2 @ 1'-0" CTS. (TYP. EA. BAY)

GUTTERLINE

℄ JOINT @ END BENT No. 1

2-#8 K4

3"

3-#5 B15 @ 9½" CTS. (BOT. OF SLAB) (10 BAR RUNS)

6½"

✱✱ 953-#5 A1 @ 6½" (TOP OF SLAB)

✱✱ 953-#5 A2 @ 6½" (BOT. OF SLAB)

#5 A101 THRU #5 A118 @ 6½" CTS (TOP OF SLAB)

#5 A201 THRU #5 A218 @ 6½" CTS (BOT. OF SLAB)

28-#4 B1 @ 1'-6" CTS. (TOP OF SLAB) (2 BAR RUNS)

℄ GDR. A1

GUTTERLINE

℄ THREADED INSERTS

℄ GDR. A2

℄ GDR. A3

SHORT CHORD SPAN A

-L-

11¾"

℄ GDR. A4

8-#5 B15 @ 9½" CTS. (BOT. OF SLAB) (10 BAR RUNS)

℄ GDR. A5

℄ GDR. A6

℄ THREADED INSERTS

28-#7 B2 @ 1'-6" CTS. (TOP OF SLAB) (2 BAR RUNS)

27-#7 B3 @ 1'-6" CTS. (TOP OF SLAB)

PERMITTED TRANSVERSE CONST. JT. FOR LOCATION, SEE "BILL OF MAT'L." SHEET

5-#4 K9 (TYP. EA. EXT. GDR.)

5-#4 K10 (TYP. EA. INT. GDR.)

105°-32'-10" TO SHORT CHORD SPAN A

5-#4 K11, 12 OR 13 (TYP. EA. BAY) (SEE TYPICAL SECTION)

SHORT CHORD SPAN B

W.P. #2

110°-57'-02" TO SHORT CHORD SPAN B

6-#4 "U" @ 1'-0" CTS. MAX. ALONG SKEW (TYP. EA. BAY)

#4 S4 SPA. AS SHOWN IN TYP. SECTION (TYP. EA. BAY) (22 REQ'D)

BENT No. 1 CONTROL LINE

▲ THREADED INSERT SPACING VARIES

✱ RADIAL DIMENSIONS

✱✱ #5 "A" BARS ARE TO BE PLACED RADIALLY ALONG RIGHT OUTSIDE EDGE OF SUPERSTRUCTURE

PLAN OF SPAN A

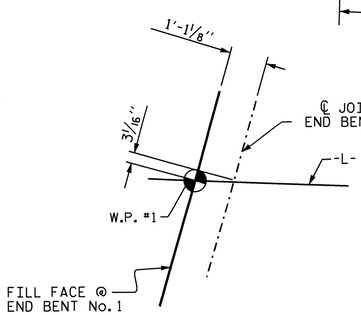

DETAIL "A"

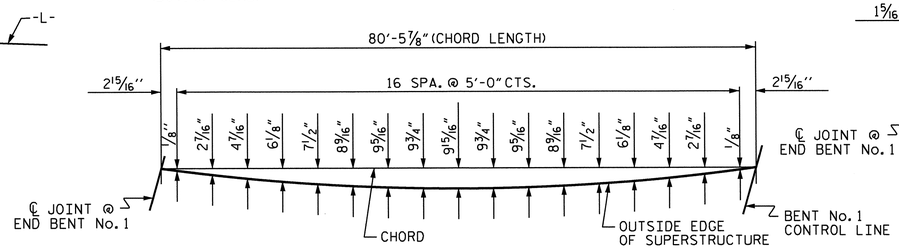

LEFT OUTSIDE EDGE

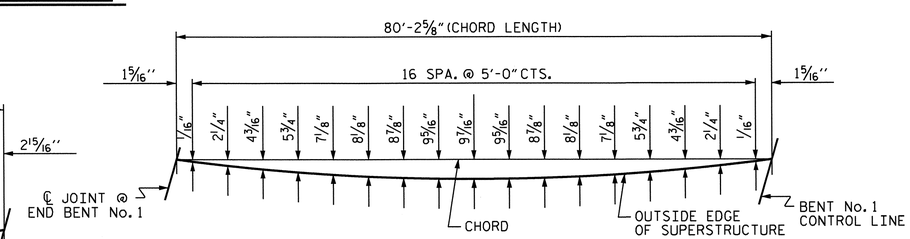

RIGHT OUTSIDE EDGE

PROJECT NO. U-4412

HAYWOOD COUNTY

STATION: 67+29.11 -L-

SHEET 1 OF 6

STATE OF NORTH CAROLINA
DEPARTMENT OF TRANSPORTATION
RALEIGH

SUPERSTRUCTURE
PLAN OF SPAN A

NORTH CAROLINA PROFESSIONAL SEAL 20125 ENGINEER MARSHALL L. GREEK, JR.
2-13-13

REVISIONS						SHEET NO.
NO.	BY:	DATE:	NO.	BY:	DATE:	S-11
1			3			TOTAL SHEETS
2			4			70

DRAWN BY : V.X. NGUYEN DATE : 11-29-11

CHECKED BY : D. HODGE DATE : 7-12

13-FEB-2013 14:28
R:\Structures\Final Plans\Str #1\U-4412_SD_S*.dgn
dahodge

533'-6" (W.P. #1 TO W.P. #7, ALONG -L-)

** 953-#5 A1 @ 6½" (TOP OF SLAB)

** 953-#5 A2 @ 6½" (BOT. OF SLAB)

81'-6" (W.P. #1 TO W.P. #2, ALONG -L-) | 107'-6" (W.P. #2 TO W.P. #3, ALONG -L-) | 103'-0" (W.P. #3 TO W.P. #4, ALONG -L-)

▲ THREADED INSERT SPACING VARIES

29'-8" (TYP.) | 36'-6" (TYP.) | 36'-6" (TYP.) | 36'-6" (TYP.)

12'-4" (TYP.) | 15'-9" (TYP.) | 15'-9" (TYP.) | 15'-9" (TYP.)

2'-0" (MIN.) SPLICE (TYP.)

▲ FOR SPACING OF THREADED INSERTS, SEE "STRUCTURE UTILITIES PLANS"

1-#7 B2 (TOP OF SLAB) (TYP. EA. OVERHANG) (2 BAR RUNS)

1-#4 B4 (TOP OF SLAB) (TYP. EA. OVERHANG) (2 BAR RUNS)

1-#7 B5 (TOP OF SLAB) (TYP. EA. OVERHANG) (2 BAR RUNS)

2'-3½" (TYP.) | 1'-6½" (TYP.) | 3½" (TYP.) | 1'-6½" (TYP.) | 3½" (TYP.) | 3" | 3½" (TYP.) | 1'-6½" (TYP.) | 2'-3½" (TYP.)

GUTTERLINE

℄ GDR. B1

℄ THREADED INSERTS

℄ GDR. B2

℄ GDR. B3

℄ GDR. B4

℄ GDR. B5

℄ GDR. B6

4-#5 B15 @ 9½" CTS. (BOT. OF SLAB) (10 BAR RUNS)

27-#7 B3 @ 1'-6" CTS. (TOP OF SLAB)

28-#7 B2 @ 1'-6" CTS. (TOP OF SLAB) (2 BAR RUNS)

28-#4 B4 @ 1'-6" CTS. (TOP OF SLAB) (2 BAR RUNS)

28-#7 B5 @ 1'-6" CTS. (TOP OF SLAB) (2 BAR RUNS)

27-#7 B6 @ 1'-6" CTS. (TOP OF SLAB)

5-#4 K10 (TYP. EA. INT. GDR.)

5-#4 K9 (TYP. EA. EXT. GDR.)

5-#4 K14 (TYP. EA. EXT. GDR.)

5-#4 K15 (TYP. EA. INT. GDR.)

105°-32'-10" TO SHORT CHORD SPAN A

5-#4 K11, 12 OR 13 (TYP. EA. BAY) (SEE TYPICAL SECTION)

110°-57'-02" TO SHORT CHORD SPAN B

5-#4 K16, 17 OR 18 (TYP. EA. BAY) (SEE TYPICAL SECTION)

SHORT CHORD SPAN A

SHORT CHORD SPAN B

SHORT CHORD SPAN C

-L-

W.P. #2

W.P. #3

110°-57'-02" TO SHORT CHORD SPAN B

116°-58'-51" TO SHORT CHORD SPAN C

TRANSVERSE CONST. JT. FOR LOCATION, SEE "BILL OF MAT'L." SHEET

11¾"

8-#5 B15 @ 9½" CTS. (BOT. OF SLAB) (10 BAR RUNS)

6-#4 "U" @ 1'-0" CTS. MAX. ALONG SKEW (TYP. EA. BAY)

#4 S4 SPA. AS SHOWN IN TYP. SECTION (TYP. EA. BAY) (22 REQ'D)

3"

3-#5 B15 @ 9½" CTS. (BOT. OF SLAB) (10 BAR RUNS)

BENT No. 1 CONTROL LINE

BENT No. 2 CONTROL LINE

▲ THREADED INSERT SPACING VARIES

PLAN OF SPAN B

107'-9½" (CHORD LENGTH)

3'-10¾" | 20 SPA. @ 5'-0" CTS. | 3'-10¾"

2½" | 5⅜" | 8" | 10⅝" | 1'-0⅝" | 1'-2" | 1'-3⅜" | 1'-4⅞" | 1'-5⅜" | 1'-5 11/16" | 1'-5 13/16" | 1'-5 11/16" | 1'-5⅜" | 1'-4⅞" | 1'-3⅜" | 1'-2" | 1'-0⅝" | 10⅝" | 8" | 5⅜" | 2½"

BENT No. 1 CONTROL LINE | CHORD | OUTSIDE EDGE OF SUPERSTRUCTURE | BENT No. 2 CONTROL LINE

LEFT OUTSIDE EDGE

107'-1¼" (CHORD LENGTH)

3'-6⅝" | 20 SPA. @ 5'-0" CTS. | 3'-6⅝"

2 3/16" | 4 5/16" | 7 7/16" | 9⅝" | 11⅝" | 1'-1 13/16" | 1'-2 1/2" | 1'-3 1/2" | 1'-4 1/4" | 1'-4 11/16" | 1'-4 13/16" | 1'-4 11/16" | 1'-4 1/4" | 1'-3 1/2" | 1'-2 1/2" | 1'-1 13/16" | 11⅝" | 9⅝" | 7 7/16" | 4 5/16" | 2 3/16"

BENT No. 1 CONTROL LINE | CHORD | OUTSIDE EDGE OF SUPERSTRUCTURE | BENT No. 2 CONTROL LINE

RIGHT OUTSIDE EDGE

#5 "A" BARS ARE TO BE PLACED RADIALLY ALONG RIGHT OUTSIDE EDGE OF SUPERSTRUCTURE.

NORTH CAROLINA PROFESSIONAL SEAL 20125 ENGINEER MARSHALL F. CHEEK, JR.

2-13-13

PROJECT NO. U-4412

HAYWOOD COUNTY

STATION: 67+29.11 -L-

SHEET 2 OF 6

STATE OF NORTH CAROLINA
DEPARTMENT OF TRANSPORTATION
RALEIGH

SUPERSTRUCTURE

PLAN OF SPAN B

REVISIONS							SHEET NO.
NO.	BY:	DATE:	NO.	BY:	DATE:		S-12
1			3				TOTAL SHEETS
2			4				70

DRAWN BY : V.X. NGUYEN DATE : 11-29-11

CHECKED BY : D. HODGE DATE : 7-12

13-FEB-2013 14:28
R:\Structures\Final Plans\Str #1\U-4412_SD_S*.dgn
dahodge

▲ FOR SPACING OF THREADED INSERTS, SEE "STRUCTURE UTILITIES PLANS"

533'-6" (W.P.#1 TO W.P. #7, ALONG -L-)

** 953-#5 A1 @ 6½" (TOP OF SLAB)

** 953-#5 A2 @ 6½" (BOT. OF SLAB)

107'-6" (W.P.#2 TO W.P.#3, ALONG -L-)

103'-0" (W.P.#3 TO W.P.#4, ALONG -L-)

104'-6" (W.P.#4 TO W.P.#5, ALONG -L-)

▲ THREADED INSERT SPACING VARIES

36'-6" (TYP.)

15'-9" (TYP.)

2'-0" (MIN.) SPLICE (TYP.)

1-#7 B5 (TOP OF SLAB) (TYP. EA. OVERHANG) (2 BAR RUNS)

1-#4 B7 (TOP OF SLAB) (TYP. EA. OVERHANG) (2 BAR RUNS)

2'-3½" (TYP.)

1'-6½" (TYP.)

3½" (TYP.)

3"

GUTTERLINE

℄ GDR. C1

℄ GDR. C2

℄ GDR. C3

℄ GDR. C4

℄ GDR. C5

℄ GDR. C6

℄ THREADED INSERTS

4-#5 B15 @ 9½" CTS. (BOT. OF SLAB) (10 BAR RUNS)

5-#4 K15 (TYP. EA. INT. GDR.)

5-#4 K14 (TYP. EA. EXT. GDR.)

5-#4 K16, 17 OR 18 (TYP. EA. BAY) (SEE TYPICAL SECTION)

5-#4 K19 (TYP. EA. EXT. GDR.)

5-#4 K20 (TYP. EA. INT. GDR.)

5-#4 K21, 22 OR 23 (TYP. EA. BAY) (SEE TYPICAL SECTION)

27-#7 B6 @ 1'-6" CTS. (TOP OF SLAB)

28-#7 B5 @ 1'-6" CTS. (TOP OF SLAB) (2 BAR RUNS)

28-#4 B7 @ 1'-6" CTS. (TOP OF SLAB) (2 BAR RUNS)

28-#7 B5 @ 1'-6" CTS. (TOP OF SLAB) (2 BAR RUNS)

27-#7 B6 @ 1'-6" CTS. (TOP OF SLAB)

110°-57'-02" TO SHORT CHORD SPAN B

116°-58'-51" TO SHORT CHORD SPAN C

122°-55'-31" (TO SHORT CHORD SPAN D)

SHORT CHORD SPAN B

SHORT CHORD SPAN C

SHORT CHORD SPAN D

W.P. #3

W.P. #4

-L-

11¾"

8-#5 B15 @ 9½" CTS. (BOT. OF SLAB) (10 BAR RUNS)

6-#4 "U" @ 1'-0" CTS. MAX. ALONG SKEW (TYP. EA. BAY)

#4 S4 SPA. AS SHOWN IN TYP. SECTION (TYP. EA. BAY) (22 REQ'D)

TRANSVERSE CONST. JT. FOR LOCATION, SEE "BILL OF MAT'L." SHEET

3"

3-#5 B15 @ 9½" CTS. (BOT. OF SLAB) (10 BAR RUNS)

BENT No. 2 CONTROL LINE

BENT No. 3 CONTROL LINE

PLAN OF SPAN C

103'-6⅜" (CHORD LENGTH)

1'-9³⁄₁₆"

20 SPA. @ 5'-0" CTS.

1⅛" 4" 6⅝" 8¹⁵⁄₁₆" 10¹⁵⁄₁₆" 1'-0⅝" 1'-2" 1'-3¹⁄₁₆" 1'-3¹³⁄₁₆" 1'-4¼" 1'-4⁷⁄₁₆" 1'-4¼" 1'-3¹³⁄₁₆" 1'-3¹⁄₁₆" 1'-2" 1'-0⅝" 10¹⁵⁄₁₆" 8¹⁵⁄₁₆" 6⅝" 4" 1⅛"

BENT No. 2 CONTROL LINE

CHORD

OUTSIDE EDGE OF SUPERSTRUCTURE

BENT No. 3 CONTROL LINE

LEFT OUTSIDE EDGE

102'-4⁷⁄₁₆" (CHORD LENGTH)

1'-2¼"

20 SPA. @ 5'-0" CTS.

1'-2³⁄₁₆"

11⁄16" 3½" 6" 8³⁄₁₆" 10⅛" 11¹¹⁄₁₆" 1'-1¹¹⁄₁₆" 1'-2¹⁄₁₆" 1'-2¹³⁄₁₆" 1'-3¼" 1'-3⅜" 1'-3¼" 1'-2¹³⁄₁₆" 1'-2¹⁄₁₆" 1'-1¹¹⁄₁₆" 11¹¹⁄₁₆" 10⅛" 8³⁄₁₆" 6" 3½" 11⁄16"

BENT No. 2 CONTROL LINE

CHORD

OUTSIDE EDGE OF SUPERSTRUCTURE

BENT No. 3 CONTROL LINE

RIGHT OUTSIDE EDGE

** #5 "A" BARS ARE TO BE PLACED RADIALLY ALONG RIGHT OUTSIDE EDGE OF SUPERSTRUCTURE.

NORTH CAROLINA PROFESSIONAL SEAL 20125 ENGINEER MARSHALL G. CREEK, JR. 2-13-13

PROJECT NO. U-4412

HAYWOOD COUNTY

STATION: 67+29.11 -L-

SHEET 3 OF 6

STATE OF NORTH CAROLINA
DEPARTMENT OF TRANSPORTATION
RALEIGH

SUPERSTRUCTURE
PLAN OF SPAN C

REVISIONS						SHEET NO.
NO.	BY:	DATE:	NO.	BY:	DATE:	S-13
1			3			TOTAL SHEETS
2			4			70

DRAWN BY : V.X. NGUYEN DATE : 11-29-11

CHECKED BY : D. HODGE DATE : 7-12

13-FEB-2013 14:27
R:\Structures\Final Plans\Str #1\U-4412_SD_S*.dgn
dahodge

533'-6" (W.P.#1 TO W.P. #7, ALONG -L-)
** 953-#5 A1 @ 6½" (TOP OF SLAB)
** 953-#5 A2 @ 6½" (BOT. OF SLAB)

103'-0" (W.P.#3 TO W.P.#4, ALONG -L-) | 104'-6" (W.P.#4 TO W.P.#5, ALONG -L-) | 90'-0" (W.P.#5 TO W.P.#6, ALONG -L-)

▲ FOR SPACING OF THREADED INSERTS, SEE "STRUCTURE UTILITIES PLANS"

▲ THREADED INSERT SPACING VARIES

36'-6" (TYP.) | 36'-6" (TYP.) | 36'-6" (TYP.) | 32'-0" (TYP.)
15'-9" (TYP.) | 15'-9" (TYP.) | 15'-9" (TYP.) | 13'-6" (TYP.)

1-#7 B5 (TOP OF SLAB) (TYP. EA. OVERHANG) (2 BAR RUNS)
2'-0" (MIN.) SPLICE (TYP.)
4-#5 B15 @ 9½" CTS. (BOT. OF SLAB) (10 BAR RUNS)
1-#4 B8 (TOP OF SLAB) (TYP. EA. OVERHANG) (2 BAR RUNS)
1-#7 B9 (TOP OF SLAB) (TYP. EA. OVERHANG) (2 BAR RUNS)

2'-3½" (TYP.) | 3½" (TYP.) | 1'-6½" (TYP.) | 3" | 1'-6½" (TYP.) | 3½" (TYP.) | 1'-6½" (TYP.) | 2'-3½" (TYP.) | 3½" (TYP.)

GUTTERLINE
℄ GDR. D1
℄ THREADED INSERTS
℄ GDR. D2
℄ GDR. D3
℄ GDR. D4
℄ GDR. D5
℄ GDR. D6

27-#7 B6 @ 1'-6" CTS. (TOP OF SLAB)
28-#7 B5 @ 1'-6" CTS. (TOP OF SLAB) (2 BAR RUNS)
28-#4 B8 @ 1'-6" CTS. (TOP OF SLAB) (2 BAR RUNS)
28-#7 B9 @ 1'-6" CTS. (TOP OF SLAB) (2 BAR RUNS)
27-#7 B10 @ 1'-6" CTS. (TOP OF SLAB)

5-#4 K20 (TYP. EA. INT. GDR.)
5-#4 K19 (TYP. EA. EXT. GDR.)
5-#4 K24 (TYP. EA. EXT. GDR.)
5-#4 K25 (TYP. EA. INT. GDR.)
5-#4 K21, 22 OR 23 (TYP. EA. BAY) (SEE TYPICAL SECTION)
5-#4 K26, 27 OR 28 (TYP. EA. BAY) (SEE TYPICAL SECTION)

116°-58'-51" TO SHORT CHORD SPAN C
SHORT CHORD SPAN C
SHORT CHORD SPAN D
122°-55'-31" TO SHORT CHORD SPAN D
SHORT CHORD SPAN E
128°-29'-50" TO SHORT CHORD SPAN E

W.P. #4
W.P. #5
-L-
11¾"

8-#5 B15 @ 9½" CTS. (BOT. OF SLAB) (10 BAR RUNS)

6-#4 "U" @ 1'-0" CTS. MAX. ALONG SKEW (TYP. EA. BAY)
#4 S4 SPA. AS SHOWN IN TYP. SECTION (TYP. EA. BAY) (22 REQ'D)

TRANSVERSE CONST. JT. FOR LOCATION, SEE "BILL OF MAT'L." SHEET

3"
3-#5 B15 @ 9½" CTS. (BOT. OF SLAB) (10 BAR RUNS)

BENT No. 3 CONTROL LINE
BENT No. 4 CONTROL LINE

▲ THREADED INSERT SPACING VARIES

PLAN OF SPAN D

105'-4 15/16" (CHORD LENGTH)
2'-8 7/16" | 2'-8½"
20 SPA. @ 5'-0" CTS.

1 1/16" | 4 5/8" | 7 1/4" | 9 1/2" | 11 1/2" | 1'-1 3/16" | 1'-2 9/16" | 1'-3 5/8" | 1'-4 7/16" | 1'-4 7/8" | 1'-5 1/16" | 1'-4 7/8" | 1'-4 7/16" | 1'-3 5/8" | 1'-2 9/16" | 1'-1 3/16" | 11 1/2" | 9 1/2" | 7 1/4" | 4 5/8" | 1 1/16"

BENT No. 3 CONTROL LINE
CHORD
OUTSIDE EDGE OF SUPERSTRUCTURE
BENT No. 4 CONTROL LINE

LEFT OUTSIDE EDGE

103'-5 15/16" (CHORD LENGTH)
1'-9" | 1'-8 15/16"
20 SPA. @ 5'-0" CTS.

1 1/16" | 3 13/16" | 6 5/16" | 8 1/2" | 10 7/16" | 1'-0 1/16" | 1'-1 3/8" | 1'-2 3/8" | 1'-3 1/8" | 1'-3 9/16" | 1'-3 3/4" | 1'-3 9/16" | 1'-3 1/8" | 1'-2 3/8" | 1'-1 3/8" | 1'-0 1/16" | 10 7/16" | 8 1/2" | 6 5/16" | 3 13/16" | 1 1/16"

BENT No. 3 CONTROL LINE
CHORD
OUTSIDE EDGE OF SUPERSTRUCTURE
BENT No. 4 CONTROL LINE

RIGHT OUTSIDE EDGE

** #5 "A" BARS ARE TO BE PLACED RADIALLY ALONG RIGHT OUTSIDE EDGE OF SUPERSTRUCTURE.

NORTH CAROLINA PROFESSIONAL SEAL 20125 ENGINEER MARSHALL G. HACKER, JR.
2-19-13

PROJECT NO. U-4412
HAYWOOD COUNTY
STATION: 67+29.11 -L-

SHEET 4 OF 6

STATE OF NORTH CAROLINA
DEPARTMENT OF TRANSPORTATION
RALEIGH

SUPERSTRUCTURE
PLAN OF SPAN D

REVISIONS								SHEET NO.
NO.	BY:	DATE:	NO.	BY:	DATE:			S-14
1			3					TOTAL SHEETS
2			4					70

DRAWN BY : V.X. NGUYEN DATE : 11-29-11
CHECKED BY : D. HODGE DATE : 7-12

13-FEB-2013 14:27
R:\Structures\Final Plans\Str #1\U-4412_SD_S*.dgn
dahodge

533'-6" (W.P. #1 TO W.P. #7, ALONG -L-)

** 953-#5 A1 @ 6½" (TOP OF SLAB)

** 953-#5 A2 @ 6½" (BOT. OF SLAB)

104'-6" (W.P. #4 TO W.P. #5, ALONG -L-)

90'-0" (W.P. #5 TO W.P. #6, ALONG -L-)

47'-0" (W.P. #6 TO W.P. #7, ALONG -L-)

▲ THREADED INSERT SPACING VARIES

▲ FOR SPACING OF THREADED INSERTS, SEE "STRUCTURE UTILITIES PLANS"

36'-6" (TYP.) | 32'-0" (TYP.) | 2'-0" (MIN.) SPLICE (TYP.) | 2'-0" (MIN.) SPLICE (TYP.) | 32'-0" (TYP.) | 19'-0" (TYP.)

15'-9" (TYP.) | 13'-6" (TYP.) | 13'-6" (TYP.) | 7'-0" (TYP.)

1-#7 B9 (TOP OF SLAB) (TYP. EA. OVERHANG) (2 BAR RUNS)

1-#4 B11 (TOP OF SLAB) (TYP. EA. OVERHANG) (2 BAR RUNS)

1-#7 B12 (TOP OF SLAB) (TYP. EA. OVERHANG)

2'-3½" (TYP.) | 1'-6½" (TYP.) | 3½" (TYP.) | 3½" (TYP.) | 1'-6½" (TYP.) | 3" | 1'-6½" (TYP.) | 2'-3½" (TYP.) | 3½" (TYP.)

5-#4 K25 (TYP. EA. INT. GDR.)

5-#4 K24 (TYP. EA. EXT. GDR.)

GUTTERLINE

℄ GDR. E1

4-#5 B15 @ 9½" CTS. (BOT. OF SLAB) (10 BAR RUNS)

5-#4 K29 (TYP. EA. EXT. GDR.)

5-#4 K30 (TYP. EA. INT. GDR.)

27-#7 B10 @ 1'-6" CTS. (TOP OF SLAB)

28-#7 B9 @ 1'-6" CTS. (TOP OF SLAB) (2 BAR RUNS)

28-#4 B11 @ 1'-6" CTS. (TOP OF SLAB) (2 BAR RUNS)

28-#7 B12 @ 1'-6" CTS. (TOP OF SLAB)

27-#7 B13 @ 1'-6" CTS. (TOP OF SLAB)

℄ THREADED INSERTS

℄ GDR. E2

122°-55'-31" TO SHORT CHORD SPAN D

5-#4 K26, 27 OR 28 (TYP. EA. BAY) (SEE TYPICAL SECTION)

128°-29'-50" TO SHORT CHORD SPAN E

5-#4 K31, 32 OR 33 (TYP. EA. BAY) (SEE TYPICAL SECTION)

SHORT CHORD SPAN F

℄ GDR. E3

SHORT CHORD SPAN E

SHORT CHORD SPAN D

W.P. #5

-L-

W.P. #6

132°-25'-19" TO SHORT CHORD SPAN F

11¾"

6-#4 "U" @ 1'-0" CTS. MAX. ALONG SKEW (TYP. EA. BAY)

128°-29'-50" TO SHORT CHORD SPAN E

℄ GDR. E4

8-#5 B15 @ 9½" CTS. (BOT. OF SLAB) (10 BAR RUNS)

6-#4 "U" @ 1'-0" CTS. MAX. ALONG SKEW (TYP. EA. BAY)

#4 S4 SPA. AS SHOWN IN TYP. SECTION (TYP. EA. BAY) (22 REQ'D)

#4 S4 SPA. AS SHOWN IN TYP. SECTION (TYP. EA. BAY) (22 REQ'D)

TRANSVERSE CONST. JT. FOR LOCATION, SEE "BILL OF MAT'L." SHEET

℄ GDR. E5

℄ THREADED INSERTS

GUTTERLINE

℄ GDR. E6

3"

3-#5 B15 @ 9½" CTS. (BOT. OF SLAB) (10 BAR RUNS)

BENT No. 4 CONTROL LINE

BENT No. 5 CONTROL LINE

▲ THREADED INSERT SPACING VARIES

PLAN OF SPAN E

91'-2⅝" (CHORD LENGTH)

7⁵⁄₁₆" | 18 SPA. @ 5'-0" CTS. | 7⁵⁄₁₆"

5/16" | 2 15/16" | 5 1/4" | 7 1/4" | 8 15/16" | 10 5/16" | 11 3/8" | 1'-0 1/8" | 1'-0 5/8" | 1'-0 3/4" | 1'-0 5/8" | 1'-0 1/8" | 11 3/8" | 10 5/16" | 8 15/16" | 7 1/4" | 5 1/4" | 2 15/16" | 5/16"

BENT No. 4 CONTROL LINE

CHORD

OUTSIDE EDGE OF SUPERSTRUCTURE

BENT No. 5 CONTROL LINE

LEFT OUTSIDE EDGE

88'-8⅞" (CHORD LENGTH)

4'-4 7/16" | 16 SPA. @ 5'-0" CTS. | 4'-4 7/16"

2 3/16" | 4 3/8" | 6 1/4" | 7 7/8" | 9 3/16" | 10 1/4" | 10 15/16" | 11 7/16" | 11 9/16" | 11 7/16" | 10 15/16" | 10 1/4" | 9 3/16" | 7 7/8" | 6 1/4" | 4 3/8" | 2 3/16"

BENT No. 4 CONTROL LINE

CHORD

OUTSIDE EDGE OF SUPERSTRUCTURE

BENT No. 5 CONTROL LINE

RIGHT OUTSIDE EDGE

** #5 "A" BARS ARE TO BE PLACED RADIALLY ALONG RIGHT OUTSIDE EDGE OF SUPERSTRUCTURE.

NORTH CAROLINA PROFESSIONAL SEAL 20125 ENGINEER MARSHALL F. KNEECE, JR.

2-13-13

PROJECT NO. U-4412

HAYWOOD COUNTY

STATION: 67+29.11 -L-

SHEET 5 OF 6

STATE OF NORTH CAROLINA
DEPARTMENT OF TRANSPORTATION
RALEIGH

SUPERSTRUCTURE
PLAN OF SPAN E

REVISIONS						SHEET NO.
NO.	BY:	DATE:	NO.	BY:	DATE:	S-15
1			3			TOTAL SHEETS
2			4			70

DRAWN BY : V.X. NGUYEN DATE : 11-29-11

CHECKED BY : D. HODGE DATE : 7-12

13-FEB-2013 14:27
R:\Structures\Final Plans\Str #1\U-4412_SD_S*.dgn
dahodge

▲ FOR SPACING OF THREADED INSERTS, SEE "STRUCTURE UTILITIES PLANS"

✱ RADIAL DIMENSIONS

✱✱ #5 "A" BARS ARE TO BE PLACED RADIALLY ALONG RIGHT OUTSIDE EDGE OF SUPERSTRUCTURE

533'-6" (W.P. #1 TO W.P. #7, ALONG -L-)
90'-0" (W.P. #5 TO W.P. #6, ALONG -L-)
47'-0" (W.P. #6 TO W.P. #7, ALONG -L-)
22'-9 7/16" TO A1 OR A2 ALONG -L-
▲ THREADED INSERT SPACING VARIES
32'-0" (TYP.)
19'-0" (TYP.)
2'-0" (MIN.) SPLICE (TYP.)
13'-6" (TYP.)
7'-0" (TYP.)
✱✱953-#5 A1 @ 6 1/2" (TOP OF SLAB)
✱✱953-#5 A2 @ 6 1/2" (BOT. OF SLAB)
#5 A301 THRU #5 A336 @ 6 1/2" CTS (TOP OF SLAB)
#5 A401 THRU #5 A436 @ 6 1/2" CTS (BOT. OF SLAB)
6 1/2"
2'-3 1/2" (TYP.)
1'-6 1/2" (TYP.)
1'-6 1/2" (TYP.)
3 1/2" (TYP.)
3"
2-#8 K5
2-#5 A336 (TOP OF SLAB)
2-#5 A436 (BOT. OF SLAB)
SPLAYED
✱ 1 1/2"
✱ 1'-2"
1-#4 B14 (TOP OF SLAB) (TYP. EA. OVERHANG)
1-#7 B12 (TOP OF SLAB) (TYP. EA. OVERHANG)
5-#4 K29 (TYP. EA. EXT. GDR.)
5-#4 K30 (TYP. EA. INT. GDR.)
℄ THREADED INSERTS
℄ GDR. F1
GUTTERLINE
4-#5 B15 @ 9 1/2" CTS. (BOT. OF SLAB) (10 BAR RUNS)
3-#6 K7 (TYP. EA. BAY)
2-#8 K6 (TYP. EA. INT. GDR.)
℄ JOINT @ END BENT No. 2
27-#7 B13 @ 1'-6" CTS. (TOP OF SLAB)
28-#7 B12 @ 1'-6" CTS. (TOP OF SLAB)
28-#4 B14 @ 1'-6" CTS. (TOP OF SLAB)
℄ GDR. F2
132°-25'-19" TO SHORT CHORD SPAN F
#5 G2
FILL FACE @ END BENT No. 2
128°-29'-50" TO SHORT CHORD SPAN E
5-#4 K31, 32 OR 33 (TYP. EA. BAY) (SEE TYPICAL SECTION)
℄ GDR. F3
W.P. #7
✱ 19'-6"
✱ 35'-6" (CLEAR ROADWAY)
✱ 43'-7" (OUT TO OUT)
28'-0 1/4"
SHORT CHORD SPAN E
W.P. #6
SHORT CHORD SPAN F
-L-
SEE DETAIL "B"
132°-25'-19" TO SHORT CHORD SPAN F
11 3/4"
10" END BENT DIAPHRAGM
6-#4 "U" @ 1'-0" CTS. MAX. ALONG SKEW (TYP. EA. BAY)
℄ GDR. F4
TRANSVERSE CONST. JT. FOR LOCATION, SEE "BILL OF MAT'L." SHEET
48-#4 J1 BARS @ 1'-0" CTS.
✱ 16'-0"
#4 S4 SPA. AS SHOWN IN TYP. SECTION (TYP. EA. BAY) (22 REQ'D)
8-#5 B15 @ 9 1/2" CTS. (BOT. OF SLAB) (10 BAR RUNS)
8-#5 S2 @ 1'-0" CTS. (TYP. EA. BAY)
GUTTERLINE
℄ GDR. F5
TRANSVERSE CONST. JT. FOR LOCATION, SEE "BILL OF MAT'L." SHEET
℄ THREADED INSERTS
℄ GDR. F6
8-#4 S3 @ 1'-0" CTS. (TYP. EA. BAY)
32'-2 5/8"
✱ 5'-6"
✱ 6'-9 1/2"
✱ 1'-3 1/2"
3"
3-#5 B15 @ 9 1/2" CTS. (BOT. OF SLAB) (10 BAR RUNS)
BENT No. 5 CONTROL LINE
2-#8 K8
▲ THREADED INSERT SPACING VARIES

PLAN OF SPAN F

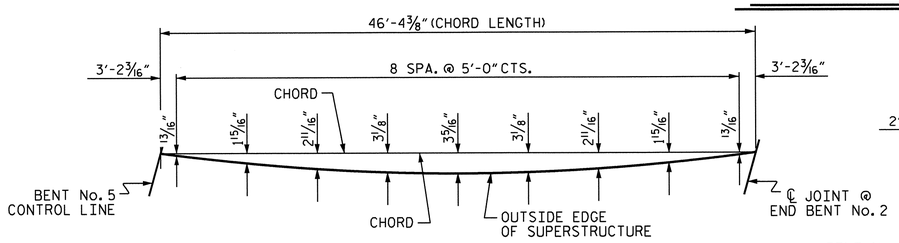

LEFT OUTSIDE EDGE

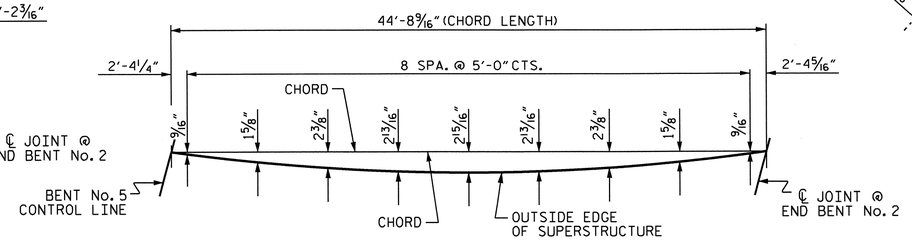

RIGHT OUTSIDE EDGE

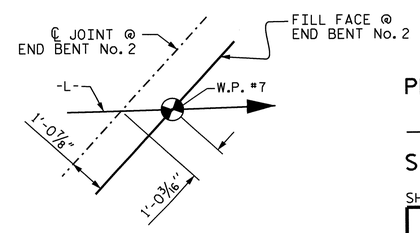

DETAIL "B"

PROJECT NO. U-4412
HAYWOOD COUNTY
STATION: 67+29.11 -L-

SHEET 6 OF 6

STATE OF NORTH CAROLINA
DEPARTMENT OF TRANSPORTATION
RALEIGH

SUPERSTRUCTURE
PLAN OF SPAN F

NORTH CAROLINA PROFESSIONAL SEAL 20125 ENGINEER MARSHALL L. WEAVER, JR.
2-13-13

REVISIONS						SHEET NO.
NO.	BY:	DATE:	NO.	BY:	DATE:	S-16
1			3			TOTAL SHEETS
2			4			70

DRAWN BY : V.X. NGUYEN DATE : 11-29-11
CHECKED BY : D. HODGE DATE : 7-12

13-FEB-2013 14:26
R:\Structures\Final Plans\Str #1\U-4412_SD_S*.dgn
dahodge

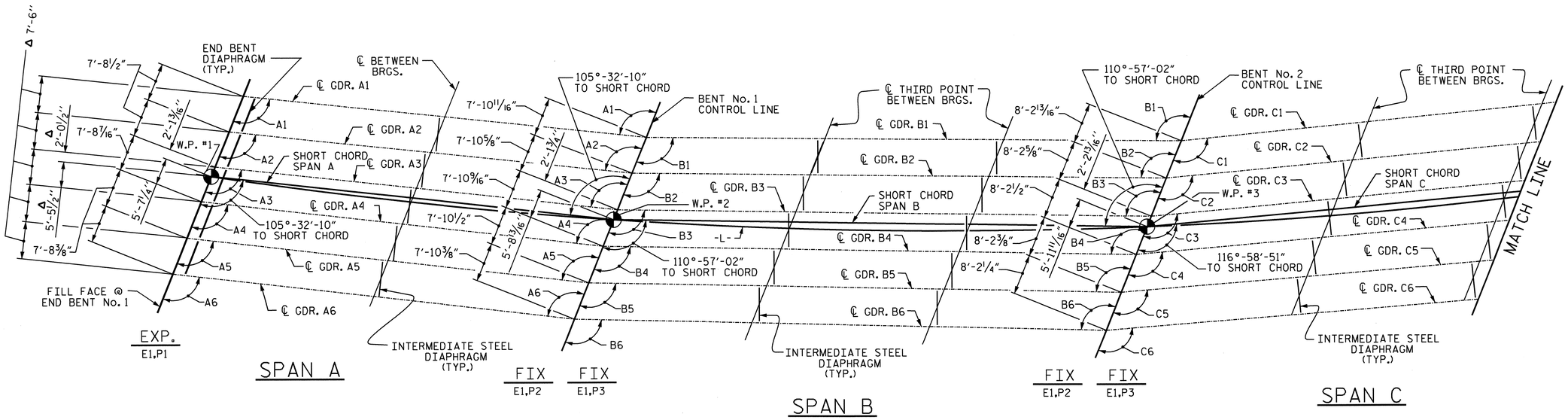

Δ THEORETICAL DIMENSIONS SHOWN ARE RADIALTHROUGH WORK POINTS.

FRAMING PLAN

FOR ELASTOMERIC BEARING AND SOLE PLATE DETAILS, SEE "ELASTOMERIC BEARING DETAILS" SHEET.

ANGLE TO GIRDER SHORT CHORDS												
GIRDER No.	SPAN A		SPAN B		SPAN C		SPAN D		SPAN E		SPAN F	
1	A1	105°-48'-46"	B1	111°-19'-57"	C1	117°-29'-22"	D1	123°-34'-25"	E1	129°-17'-40"	F1	133°-20'-15"
2	A2	105°-41'-23"	B2	111°-09'-46"	C2	117°-15'-47"	D2	123°-17'-06"	E2	128°-56'-21"	F2	132°-55'-45"
3	A3	105°-34'-07"	B3	110°-59'-44"	C3	117°-02'-27"	D3	123°-00'-06"	E3	128°-35'-27"	F3	132°-31'-46"
4	A4	105°-26'-58"	B4	110°-49'-52"	C4	116°-49'-20"	D4	122°-43'-24"	E4	128°-14'-58"	F4	132°-08'-17"
5	A5	105°-19'-55"	B5	110°-40'-09"	C5	116°-36'-26"	D5	122°-27'-01"	E5	127°-54'-53"	F5	131°-45'-18"
6	A6	105°-12'-59"	B6	110°-30'-36"	C6	116°-23'-44"	D6	122°-10'-55"	E6	127°-35'-12"	F6	131°-22'-48"

PROJECT NO. U-4412
HAYWOOD COUNTY
STATION: 67+29.11 -L-

SHEET 1 OF 2

STATE OF NORTH CAROLINA
DEPARTMENT OF TRANSPORTATION
RALEIGH

SUPERSTRUCTURE
FRAMING PLAN

NORTH CAROLINA PROFESSIONAL SEAL 20125 ENGINEER HANSEL T. DEJARNETTE, JR.
11-29-12

REVISIONS						SHEET NO.
NO.	BY:	DATE:	NO.	BY:	DATE:	S-17
1			3			TOTAL SHEETS
2			4			70

DRAWN BY : V.X. NGUYEN DATE : 11-04-11
CHECKED BY : D. HODGE DATE : 9-12

29-NOV-2012 11:38
R:\Structures\FinalPlans\Str *1\U-4412_SD_FP.dgn
dahodge

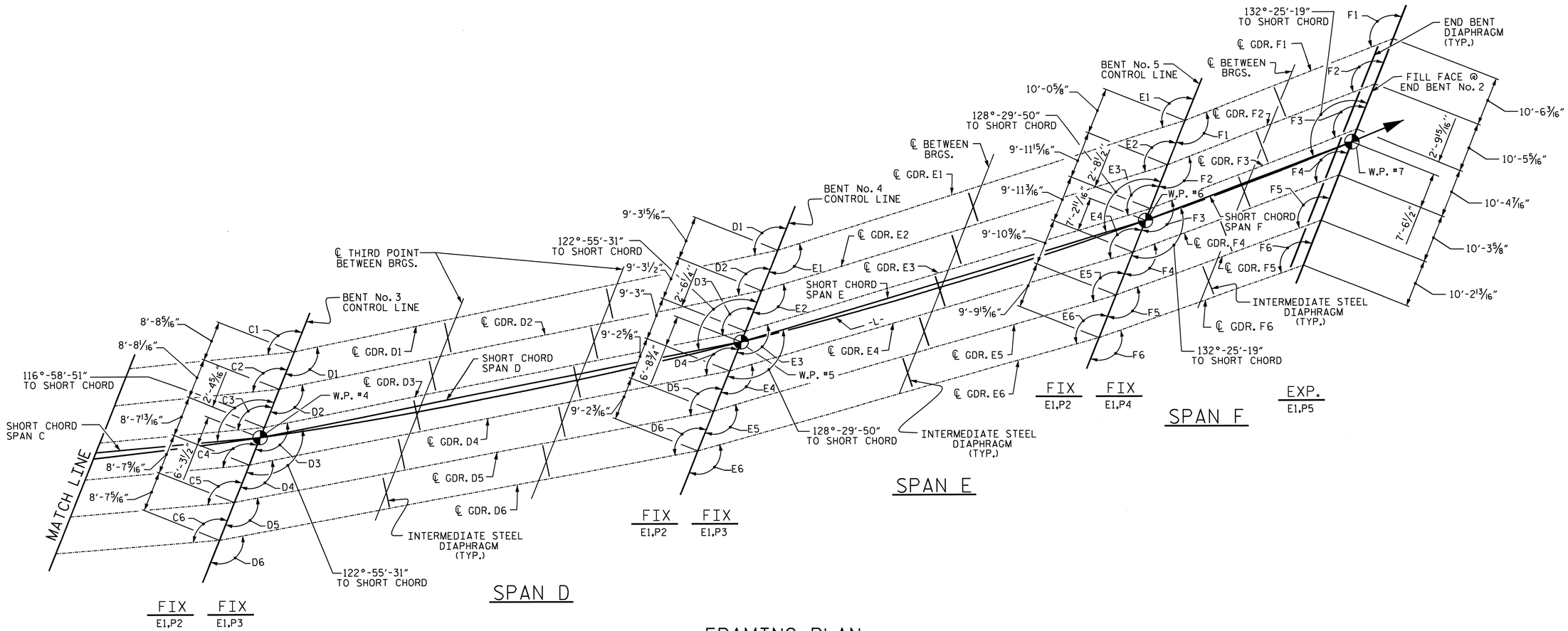

FRAMING PLAN

FOR ELASTOMERIC BEARING AND SOLE PLATE DETAILS, SEE "ELASTOMERIC BEARING DETAILS" SHEET.

ANGLE TO GIRDER SHORT CHORDS												
GIRDER No.	SPAN A		SPAN B		SPAN C		SPAN D		SPAN E		SPAN F	
1	A1	105°-48'-46"	B1	111°-19'-57"	C1	117°-29'-22"	D1	123°-34'-25"	E1	129°-17'-40"	F1	133°-20'-15"
2	A2	105°-41'-23"	B2	111°-09'-46"	C2	117°-15'-47"	D2	123°-17'-06"	E2	128°-56'-21"	F2	132°-55'-45"
3	A3	105°-34'-07"	B3	110°-59'-44"	C3	117°-02'-27"	D3	123°-00'-06"	E3	128°-35'-27"	F3	132°-31'-46"
4	A4	105°-26'-58"	B4	110°-49'-52"	C4	116°-49'-20"	D4	122°-43'-24"	E4	128°-14'-58"	F4	132°-08'-17"
5	A5	105°-19'-55"	B5	110°-40'-09"	C5	116°-36'-26"	D5	122°-27'-01"	E5	127°-54'-53"	F5	131°-45'-18"
6	A6	105°-12'-59"	B6	110°-30'-36"	C6	116°-23'-44"	D6	122°-10'-55"	E6	127°-35'-12"	F6	131°-22'-48"

PROJECT NO. U-4412
HAYWOOD COUNTY
STATION: 67+29.11 -L-

SHEET 2 OF 2

STATE OF NORTH CAROLINA
DEPARTMENT OF TRANSPORTATION
RALEIGH

SUPERSTRUCTURE
FRAMING PLAN

NORTH CAROLINA PROFESSIONAL SEAL 20125 ENGINEER MARSHALL B. OTEK, JR.
11-30-12

REVISIONS						SHEET NO.
NO.	BY:	DATE:	NO.	BY:	DATE:	S-18
1			3			TOTAL SHEETS
2			4			70

DRAWN BY : V.X. NGUYEN DATE : 11-04-11
CHECKED BY : D. HODGE DATE : 9-12

28-NOV-2012 11:15
R:\Structures\FinalPlans\Str #1\U-4412_SD_FP.dgn
mpoole

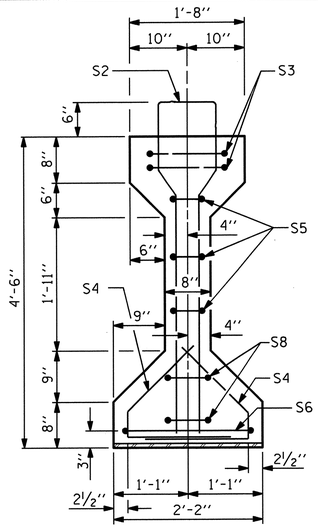

SECTION A-A

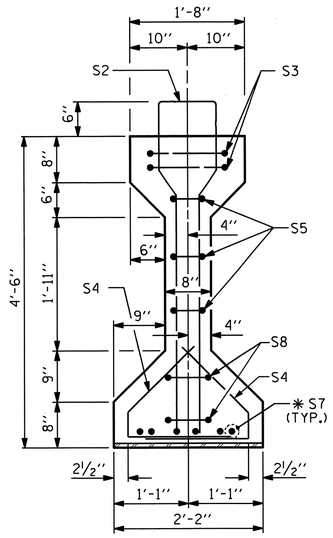

SECTION B-B

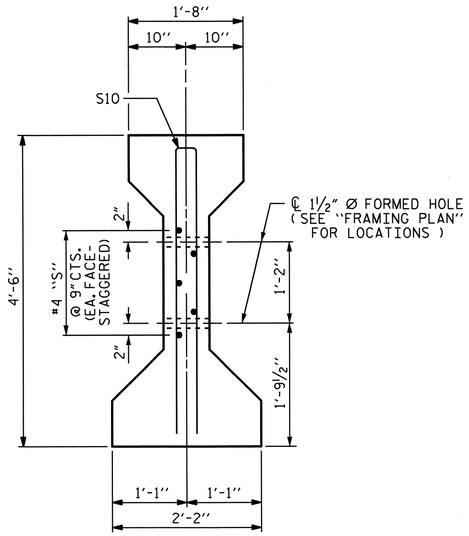

SECTION C-C

(S1 BARS NOT SHOWN)

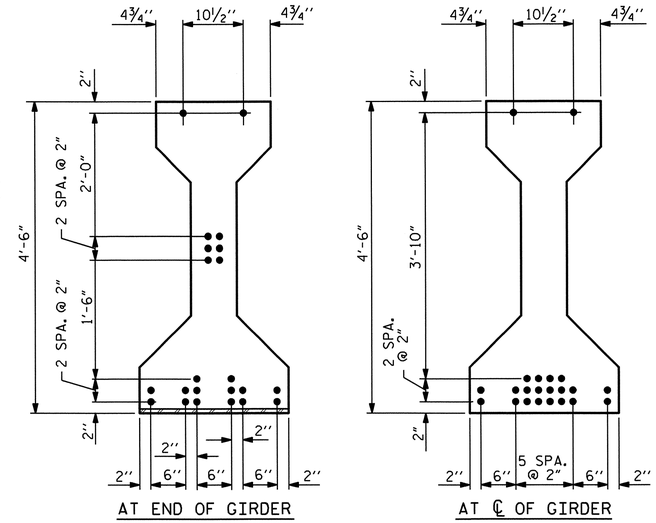

AT END OF GIRDER

AT ℄ OF GIRDER

0.6" Ø LOW RELAXATION STRAND LAYOUT

✱ FOR S7 BARS, SEE DETAIL "A" OF "PRESTRESSED CONCRETE GIRDER CONTINUOUS FOR LIVE LOAD DETAILS", SHEET 10 OF 11.

TABLE OF DIMENSIONS	"A"	"B"	"C"
GDR. A1	79'-5½"	39'-8¾"	6¼"
GDR. A2	79'-4⅞"	39'-8 7/16"	5 15/16"
GDR. A3	79'-4⅜"	39'-8 3/16"	5 11/16"

TABLE OF DIMENSIONS	"A"	"B"	"C"
GDR. A4	79'-3¾"	39'-7⅞"	5⅜"
GDR. A5	79'-3¼"	39'-7⅝"	5⅛"
GDR. A6	79'-2¾"	39'-7⅜"	4⅞"

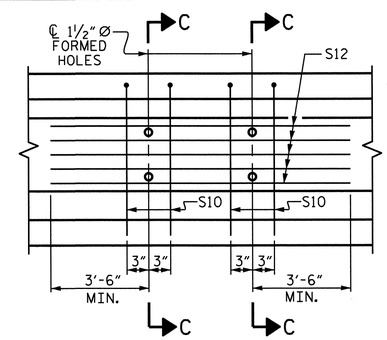

PARTIAL ELEVATION

SHOWING INTERMEDIATE DIAPHRAGM REINFORCING STEEL FOR GIRDERS Nos. 2-5

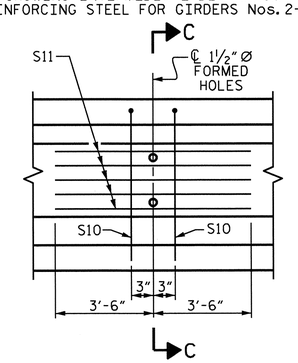

PARTIAL ELEVATION

SHOWING INTERMEDIATE DIAPHRAGM REINFORCING STEEL FOR GIRDER Nos. 1 & 6

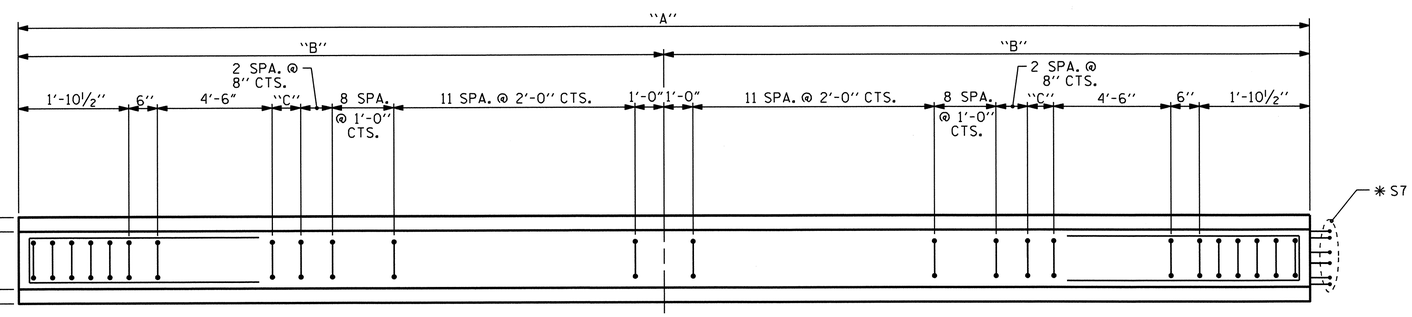

PLAN OF GIRDER

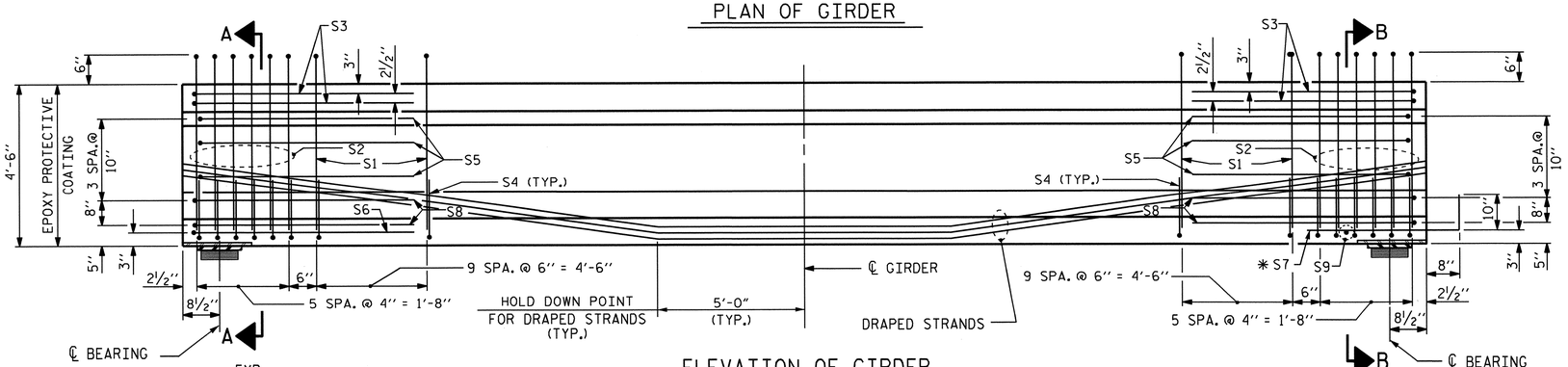

ELEVATION OF GIRDER

(SEE PARTIAL ELEVATION FOR ADDITIONAL "S" BARS)
FOR LOCATIONS OF 1½" Ø FORMED HOLES, SEE "LOCATION OF BOLT HOLES IN GIRDERS" SHEET 7 OF 11.

0.6" Ø L. R. GRADE 270 STRANDS		
AREA (SQUARE INCHES)	ULTIMATE STRENGTH (LBS. PER STRAND)	APPLIED PRESTRESS (LBS. PER STRAND)
0.217	58,600	43,950

REINFORCING STEEL FOR ONE GIRDER

	BAR	NUMBER	SIZE	TYPE	LENGTH	WEIGHT
	S1	64	#4	1	10'-8"	456
	S2	12	#6	1	10'-8"	192
	S3	4	#4	2	9'-1"	24
	S4	64	#4	3	3'-5"	146
	S5	6	#4	2	8'-5"	34
	S6	1	#4	2	9'-11"	7
	✱ S7	6	#5	STR	3'-8"	23
	S8	4	#4	2	8'-7"	23
	S9	1	#3	STR	1'-10"	1
EXTERIOR GDR.	S10	2	#5	2	8'-8"	18
INTERIOR GDR.	S10	4	#5	2	8'-8"	36
EXTERIOR GDR.	S11	5	#4	STR	7'-0"	23
INTERIOR GDR.	S12	5	#4	STR	9'-2"	31

✱ NOTE: S7 BARS SHALL BE BENT BEFORE SHIPMENT. HEAT BENDING SHALL NOT BE ALLOWED.

BAR TYPES

ALL BAR DIMENSIONS ARE OUT-TO-OUT

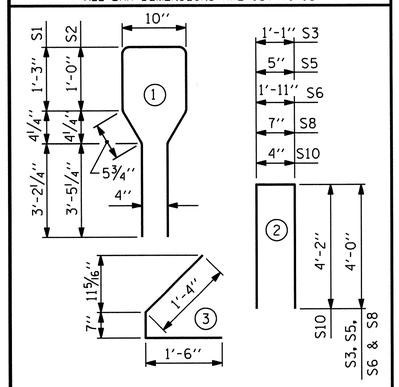

QUANTITIES FOR ONE GIRDER

	REINFORCING STEEL LBS.	5000 PSI CONCRETE CU.YDS.	0.6" Ø L.R. STRANDS No.
GIRDERS 1 & 6	947	16.1	22
GIRDERS 2-5	973	16.1	22

GIRDERS REQUIRED

NUMBER	LENGTH	TOTAL LENGTH
6	VARIES	476'-0½"

PROJECT NO. U-4412

HAYWOOD COUNTY

STATION: 67+29.11 -L-

SHEET 1 OF 11

STATE OF NORTH CAROLINA
DEPARTMENT OF TRANSPORTATION
RALEIGH

STANDARD
AASHTO TYPE IV
PRESTRESSED CONCRETE GIRDER
CONTINUOUS FOR LIVE LOAD
SPAN A

NORTH CAROLINA PROFESSIONAL SEAL 20125 ENGINEER MARSHALL G. CHEEK, JR.
2-4-13

ASSEMBLED BY : V. X. NGUYEN	DATE : 8-22-12
CHECKED BY : M.G. CHEEK	DATE : 8-29-12
DRAWN BY : ELR 8/91	REV. 10/17/00R RWW/LES
CHECKED BY : GRP 8/91	REV. 5/1/06R TLA/GM
	REV. 10/1/11 MAA/GM

REVISIONS

NO.	BY:	DATE:	NO.	BY:	DATE:
1			3		
2			4		

SHEET NO. S-19

TOTAL SHEETS 70

STR #1

STD. NO. PCG6

28-NOV-2012 11:13
R:\Structures\FinalPlans\Str #1\U-4412_SD_G#.dgn
mpoole

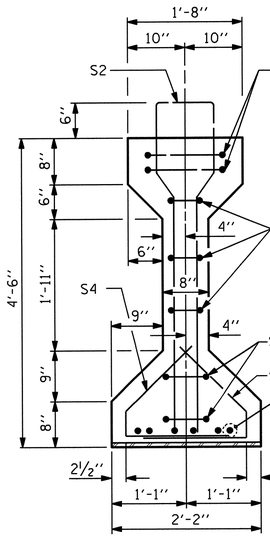

SECTION B-B

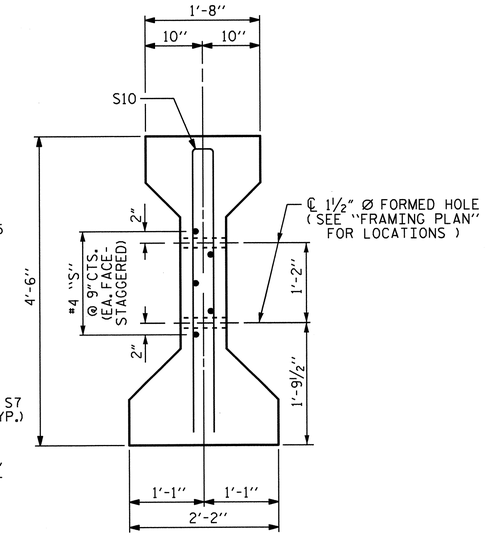

SECTION C-C

(S1 BARS NOT SHOWN)

✱ FOR S7 BARS, SEE DETAIL "A" OF "PRESTRESSED CONCRETE GIRDER CONTINUOUS FOR LIVE LOAD DETAILS", SHEET 10 OF 11.

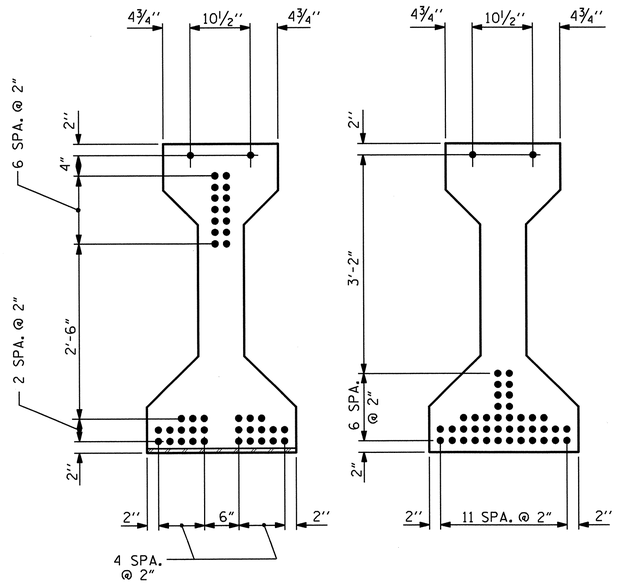

AT END OF GIRDER

AT ℄ OF GIRDER

0.6" Ø LOW RELAXATION STRAND LAYOUT

TABLE OF DIMENSIONS	"A"	"B"	"C"
GDR. B1	106'-10¾"	53'-5⅜"	4⅞"
GDR. B2	106'-9¼"	53'-4⅝"	4⅛"
GDR. B3	106'-7¾"	53'-3⅞"	3⅜"
GDR. B4	106'-6⅜"	53'-3 3/16"	4 11/16"
GDR. B5	106'-5"	53'-2½"	4"
GDR. B6	106'-3⅝"	53'-1 13/16"	5 5/16"

TABLE OF DIMENSIONS	"D"	"E"	"F"	"G"
GDR. B1	9 SPA. @ 5" CTS.	18 SPA. @ 7" CTS.	11 SPA. @ 1'-1" CTS.	10 SPA. @ 2'-0" CTS.
GDR. B2	9 SPA. @ 5" CTS.	18 SPA. @ 7" CTS.	11 SPA. @ 1'-1" CTS.	10 SPA. @ 2'-0" CTS.
GDR. B3	9 SPA. @ 5" CTS.	18 SPA. @ 7" CTS.	11 SPA. @ 1'-1" CTS.	10 SPA. @ 2'-0" CTS.
GDR. B4	10 SPA. @ 5" CTS.	17 SPA. @ 7" CTS.	11 SPA. @ 1'-1" CTS.	10 SPA. @ 2'-0" CTS.
GDR. B5	10 SPA. @ 5" CTS.	17 SPA. @ 7" CTS.	11 SPA. @ 1'-1" CTS.	10 SPA. @ 2'-0" CTS.
GDR. B6	12 SPA. @ 4" CTS.	17 SPA. @ 7" CTS.	11 SPA. @ 1'-1" CTS.	10 SPA. @ 2'-0" CTS.

0.6" Ø L. R. GRADE 270 STRANDS

AREA (SQUARE INCHES)	ULTIMATE STRENGTH (LBS. PER STRAND)	APPLIED PRESTRESS (LBS. PER STRAND)
0.217	58,600	43,950

REINFORCING STEEL FOR ONE GIRDER

	BAR	NUMBER	SIZE	TYPE	LENGTH	WEIGHT
GDRS. 1, 2, 4, & 5	S1	117	#4	1	10'-8"	834
GIRDER 3	S1	115	#4	1	10'-8"	819
GIRDER 6	S1	121	#4	1	10'-8"	862
	S2	12	#6	1	10'-8"	192
	S3	4	#4	2	9'-1"	24
	S4	64	#4	3	3'-5"	146
	S5	6	#4	2	8'-5"	34
	✱ S7	12	#5	STR	3'-8"	46
	S8	4	#4	2	8'-7"	23
	S9	2	#3	STR	1'-10"	1
EXTERIOR GDR.	S10	4	#5	2	8'-8"	36
INTERIOR GDR.	S10	8	#5	2	8'-8"	72
EXTERIOR GDR.	S11	10	#4	STR	7'-0"	47
INTERIOR GDR.	S12	10	#4	STR	9'-11"	66

✱ NOTE: S7 BARS SHALL BE BENT BEFORE SHIPMENT. HEAT BENDING SHALL NOT BE ALLOWED.

BAR TYPES

ALL BAR DIMENSIONS ARE OUT-TO-OUT

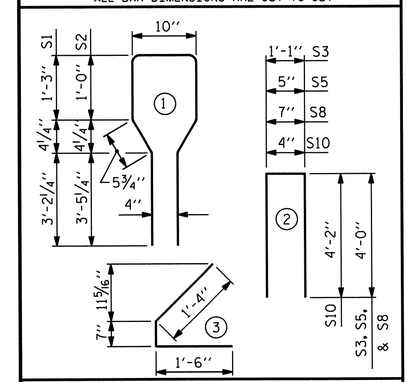

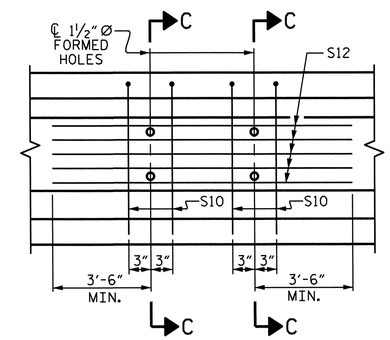

PARTIAL ELEVATION

SHOWING INTERMEDIATE DIAPHRAGM REINFORCING STEEL FOR GIRDERS Nos. 2-5

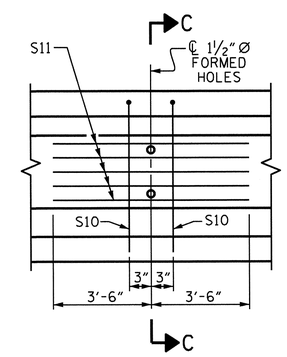

PARTIAL ELEVATION

SHOWING INTERMEDIATE DIAPHRAGM REINFORCING STEEL FOR GIRDER Nos. 1 & 6

QUANTITIES FOR ONE GIRDER

	REINFORCING STEEL LBS.	7300 PSI CONCRETE CU.YDS.	0.6" Ø L. R. STRANDS No.
GDR. 1	1383	21.7	42
GDRS. 2,4,5	1438	21.7	42
GDR. 3	1423	21.7	42
GDR. 6	1411	21.6	42

GIRDERS REQUIRED

NUMBER	LENGTH	TOTAL LENGTH
6	VARIES	639'-6¾"

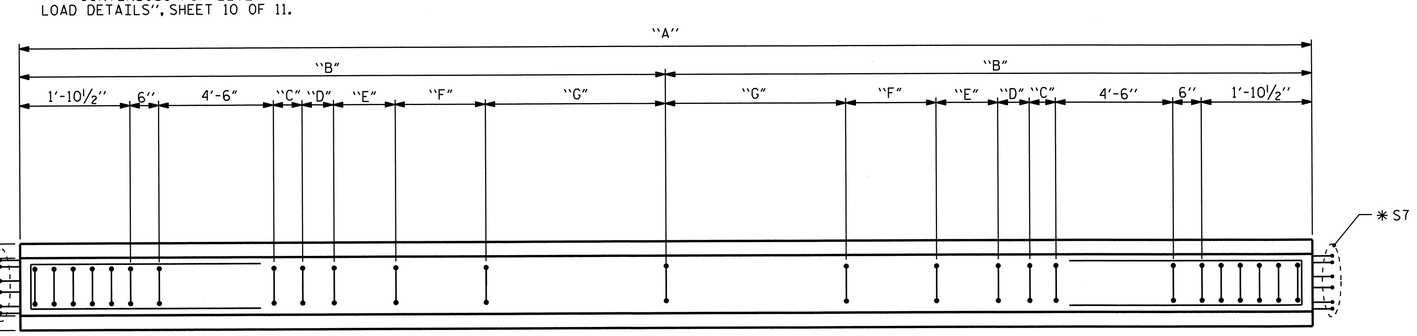

PLAN OF GIRDER

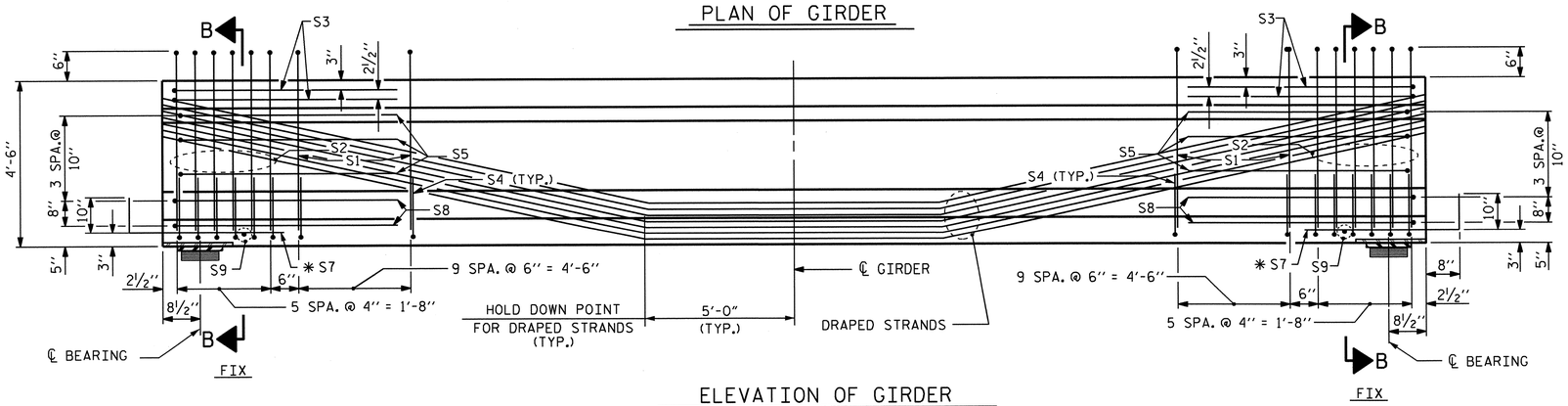

ELEVATION OF GIRDER

(SEE PARTIAL ELEVATION FOR ADDITIONAL "S" BARS)

FOR LOCATIONS OF 1½" Ø FORMED HOLES, SEE "LOCATION OF BOLT HOLES IN GIRDERS" SHEET 7 OF 11.

NOTE: THE UPLIFT FORCE DUE TO DRAPED STRANDS IS 36.14 KIPS.

PROJECT NO. U-4412

HAYWOOD COUNTY

STATION: 67+29.11 -L-

SHEET 2 OF 11

STATE OF NORTH CAROLINA
DEPARTMENT OF TRANSPORTATION
RALEIGH

STANDARD
AASHTO TYPE IV
PRESTRESSED CONCRETE GIRDER
CONTINUOUS FOR LIVE LOAD
SPAN B

NORTH CAROLINA PROFESSIONAL SEAL 20125 ENGINEER MARSHALL G. CHEEK, JR.
2-19-13

REVISIONS						SHEET NO.
NO.	BY:	DATE:	NO.	BY:	DATE:	S-20
1			3			TOTAL SHEETS
2			4			70

STR #1

STD. NO. PCG6

ASSEMBLED BY : V. X. NGUYEN	DATE : 8-22-12		
CHECKED BY : M.G. CHEEK	DATE : 8-29-12		
DRAWN BY : ELR 8/91	REV. 10/17/00R	RWW/LES	
CHECKED BY : GRP 8/91	REV. 5/1/06R	TLA/GM	
	REV. 10/1/11	MAA/GM	

19-FEB-2013 08:23
R:\Structures\Final Plans\Str #1\U-4412_SD_G*.dgn
dahodge

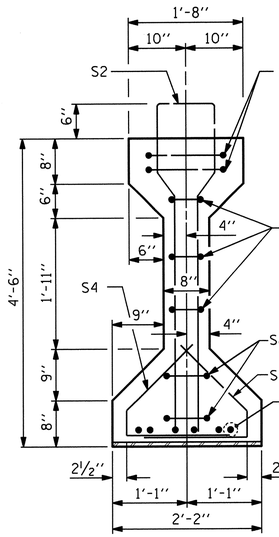

SECTION B-B

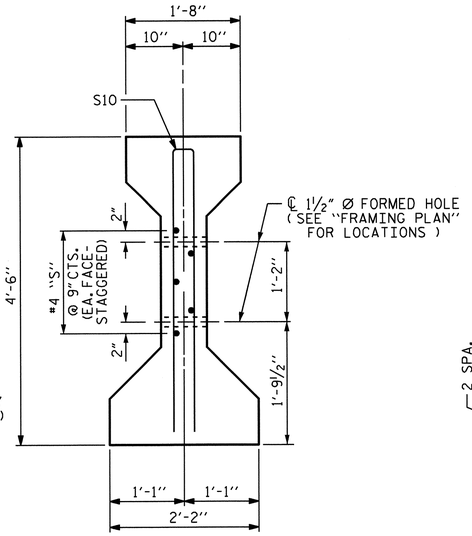

SECTION C-C

(S1 BARS NOT SHOWN)

✱ FOR S7 BARS, SEE DETAIL "A" OF "PRESTRESSED CONCRETE GIRDER CONTINUOUS FOR LIVE LOAD DETAILS", SHEET 10 OF 11.

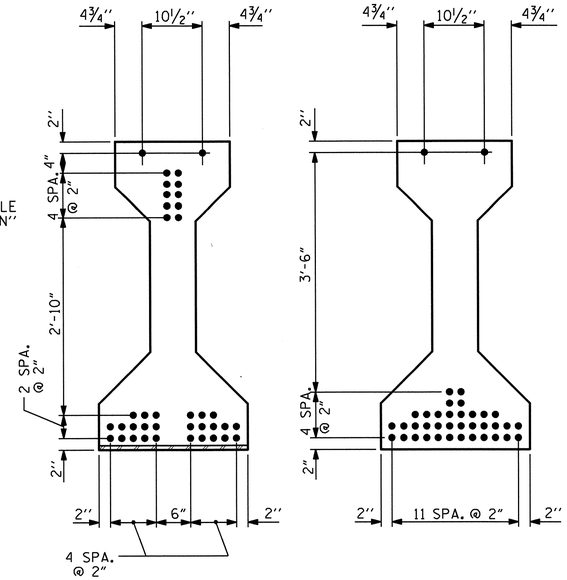

AT END OF GIRDER

AT ℄ OF GIRDER

0.6" Ø LOW RELAXATION STRAND LAYOUT

TABLE OF DIMENSIONS	"A"	"B"	"C"
GDR. C1	102'-7⅛"	51'-3 9/16"	5 1/16"
GDR. C2	102'-4⅝"	51'-2 5/16"	3 13/16"
GDR. C3	102'-2⅛"	51'-1 1/16"	4 9/16"
GDR. C4	101'-11¾"	50'-11⅞"	3⅜"
GDR. C5	101'-9⅜"	50'-10 11/16"	4 3/16"
GDR. C6	101'-7⅛"	50'-9 9/16"	5 1/16"

TABLE OF DIMENSIONS	"D"	"E"	"F"	"G"
GDR. C1	10 SPA. @ 5" CTS.	14 SPA. @ 8" CTS.	9 SPA. @ 1'-2" CTS.	10 SPA. @ 2'-0" CTS.
GDR. C2	10 SPA. @ 5" CTS.	14 SPA. @ 8" CTS.	9 SPA. @ 1'-2" CTS.	10 SPA. @ 2'-0" CTS.
GDR. C3	8 SPA. @ 5" CTS.	15 SPA. @ 8" CTS.	9 SPA. @ 1'-2" CTS.	10 SPA. @ 2'-0" CTS.
GDR. C4	8 SPA. @ 5" CTS.	15 SPA. @ 8" CTS.	9 SPA. @ 1'-2" CTS.	10 SPA. @ 2'-0" CTS.
GDR. C5	8 SPA. @ 4" CTS.	21 SPA. @ 6" CTS.	9 SPA. @ 1'-2" CTS.	10 SPA. @ 2'-0" CTS.
GDR. C6	6 SPA. @ 5" CTS.	21 SPA. @ 6" CTS.	9 SPA. @ 1'-2" CTS.	10 SPA. @ 2'-0" CTS.

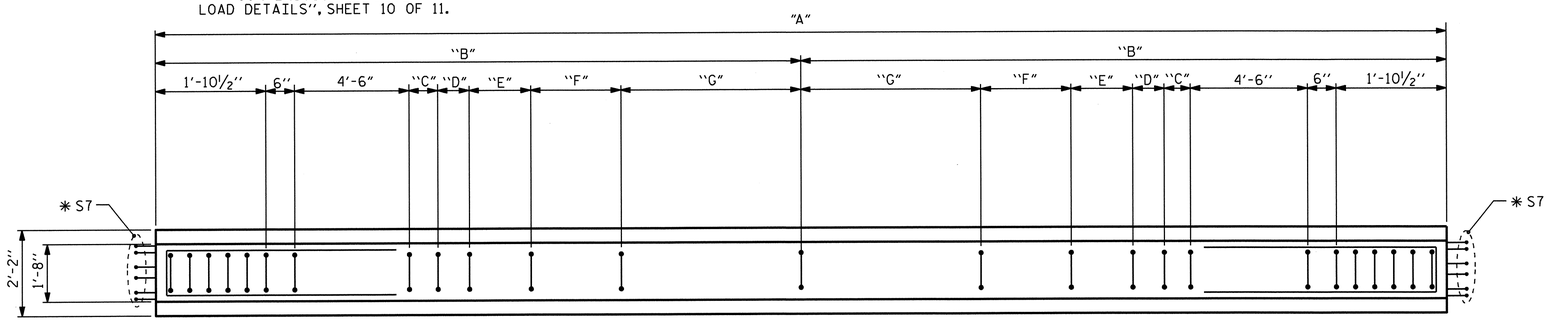

PLAN OF GIRDER

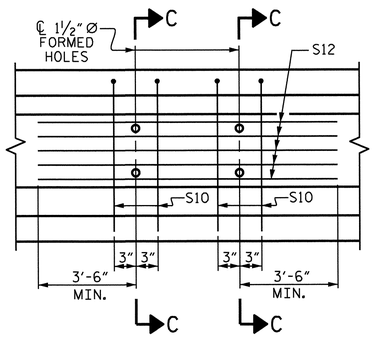

PARTIAL ELEVATION

SHOWING INTERMEDIATE DIAPHRAGM REINFORCING STEEL FOR GIRDERS Nos. 2-5

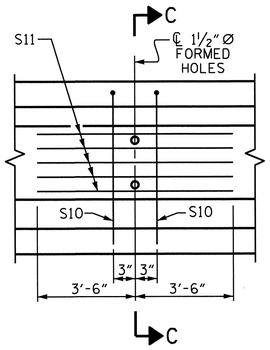

PARTIAL ELEVATION

SHOWING INTERMEDIATE DIAPHRAGM REINFORCING STEEL FOR GIRDER Nos. 1 & 6

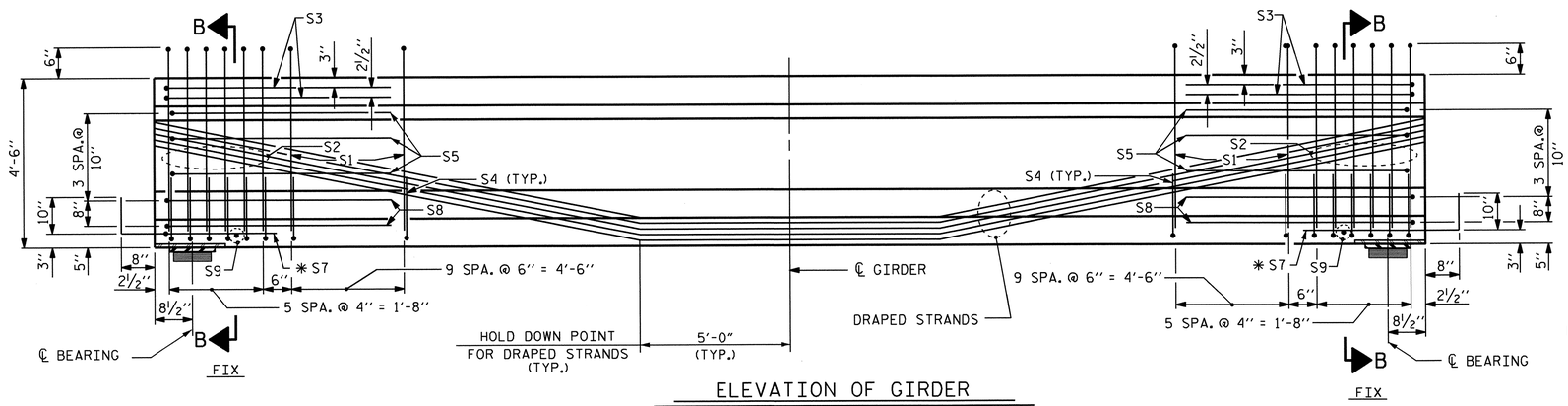

ELEVATION OF GIRDER

(SEE PARTIAL ELEVATION FOR ADDITIONAL "S" BARS)
FOR LOCATIONS OF 1½" Ø FORMED HOLES, SEE "LOCATION OF BOLT HOLES IN GIRDERS" SHEET 7 OF 11.

NOTE: THE UPLIFT FORCE DUE TO DRAPED STRANDS IS 30.31 KIPS.

0.6" Ø L. R. GRADE 270 STRANDS	AREA (SQUARE INCHES)	ULTIMATE STRENGTH (LBS. PER STRAND)	APPLIED PRESTRESS (LBS. PER STRAND)
	0.217	58,600	43,950

REINFORCING STEEL FOR ONE GIRDER

	BAR	NUMBER	SIZE	TYPE	LENGTH	WEIGHT
GIRDERS 1, 2	S1	107	#4	1	10'-8"	762
GIRDERS 3, 4	S1	105	#4	1	10'-8"	748
GIRDER 5	S1	117	#4	1	10'-8"	834
GIRDER 6	S1	113	#4	1	10'-8"	805
	S2	12	#6	1	10'-8"	192
	S3	4	#4	2	9'-1"	24
	S4	64	#4	3	3'-5"	146
	S5	6	#4	2	8'-5"	34
	✱ S7	12	#5	STR	3'-8"	46
	S8	4	#4	2	8'-7"	23
	S9	2	#3	STR	1'-10"	1
EXTERIOR GDR.	S10	4	#5	2	8'-8"	36
INTERIOR GDR.	S10	8	#5	2	8'-8"	72
EXTERIOR GDR.	S11	10	#4	STR	7'-0"	47
INTERIOR GDR.	S12	10	#4	STR	10'-11"	73

✱ NOTE: S7 BARS SHALL BE BENT BEFORE SHIPMENT. HEAT BENDING SHALL NOT BE ALLOWED.

BAR TYPES

ALL BAR DIMENSIONS ARE OUT-TO-OUT

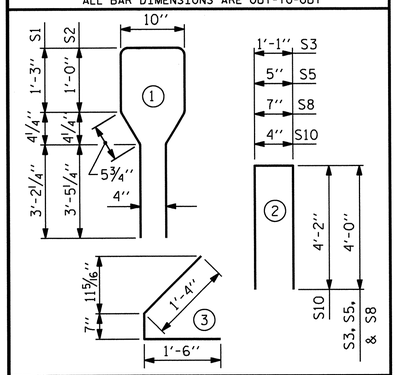

QUANTITIES FOR ONE GIRDER

	REINFORCING STEEL LBS.	6800 PSI CONCRETE CU. YDS.	0.6" Ø L.R. STRANDS No.
GDR. 1	1311	20.8	38
GDR. 2	1373	20.8	38
GDRS. 3,4	1359	20.7	38
GDR. 5	1445	20.7	38
GDR. 6	1354	20.6	38

GIRDERS REQUIRED

NUMBER	LENGTH	TOTAL LENGTH
6	VARIES	612'-6⅛"

PROJECT NO. U-4412

HAYWOOD COUNTY

STATION: 67+29.11 -L-

SHEET 3 OF 11

STATE OF NORTH CAROLINA
DEPARTMENT OF TRANSPORTATION
RALEIGH

STANDARD

AASHTO TYPE IV
PRESTRESSED CONCRETE GIRDER
CONTINUOUS FOR LIVE LOAD
SPAN C

NORTH CAROLINA PROFESSIONAL SEAL 20125 ENGINEER MARSHALL G. CHEEK, JR.
2-7-13

REVISIONS							SHEET NO.
NO.	BY:	DATE:	NO.	BY:	DATE:		S-21
1			3				TOTAL SHEETS
2			4				70

STR #1

STD. NO. PCG6

ASSEMBLED BY : V. X. NGUYEN	DATE : 8-22-12		
CHECKED BY : M.G. CHEEK	DATE : 8-29-12		
DRAWN BY : ELR 8/91		REV. 10/17/00R	RWW/LES
CHECKED BY : GRP 8/91		REV. 5/1/06R	TLA/GM
		REV. 10/1/11	MAA/GM

06-FEB-2013 15:08
R:\Structures\Final Plans\Str #1\U-4412_SD_G*.dgn
dahodge

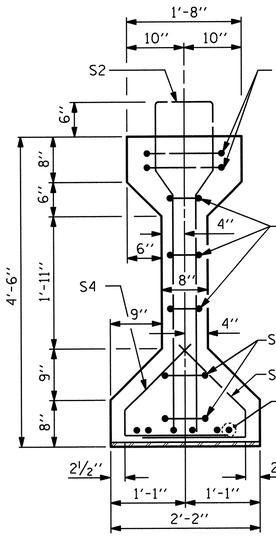

SECTION B-B

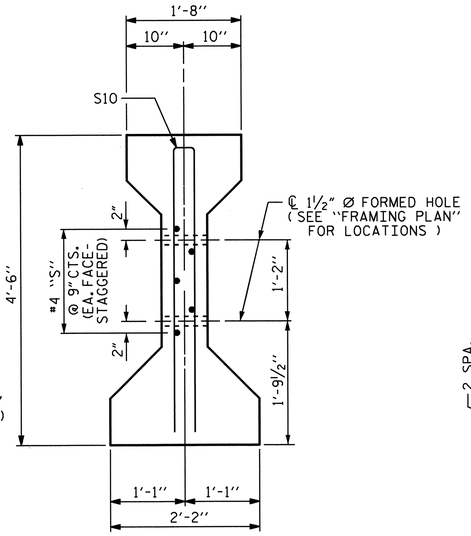

SECTION C-C

(S1 BARS NOT SHOWN)

✱ FOR S7 BARS, SEE DETAIL "A" OF "PRESTRESSED CONCRETE GIRDER CONTINUOUS FOR LIVE LOAD DETAILS", SHEET 10 OF 11.

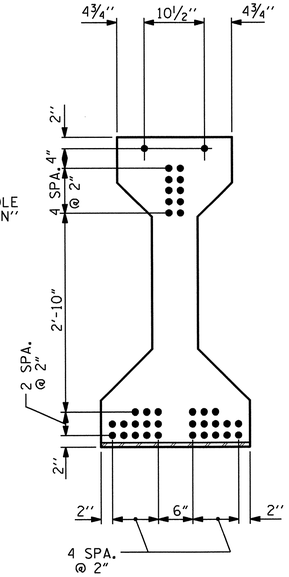

AT END OF GIRDER

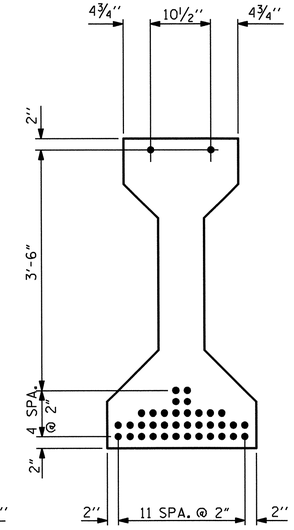

AT ℄ OF GIRDER

0.6" Ø LOW RELAXATION STRAND LAYOUT

TABLE OF DIMENSIONS	"A"	"B"	"C"
GDR. D1	104'-4¾"	52'-2⅜"	4⅞"
GDR. D2	104'-0⅝"	52'-0⁵⁄₁₆"	4¹³⁄₁₆"
GDR. D3	103'-8½"	51'-10¼"	3¾"
GDR. D4	103'-4⅝"	51'-8⁵⁄₁₆"	4¹³⁄₁₆"
GDR. D5	103'-0¾"	51'-6⅜"	3⅞"
GDR. D6	102'-9⅛"	51'-4⁹⁄₁₆"	4¹⁄₁₆"

TABLE OF DIMENSIONS	"D"	"E"	"F"	"G"
GDR. D1	13 SPA. @ 4" CTS.	18 SPA. @ 7" CTS.	11 SPA. @ 11" CTS.	10 SPA. @ 2'-0" CTS.
GDR. D2	10 SPA. @ 5" CTS.	18 SPA. @ 7" CTS.	11 SPA. @ 11" CTS.	10 SPA. @ 2'-0" CTS.
GDR. D3	11 SPA. @ 5" CTS.	20 SPA. @ 6" CTS.	11 SPA. @ 11" CTS.	10 SPA. @ 2'-0" CTS.
GDR. D4	13 SPA. @ 4" CTS.	20 SPA. @ 6" CTS.	11 SPA. @ 11" CTS.	10 SPA. @ 2'-0" CTS.
GDR. D5	13 SPA. @ 4" CTS.	17 SPA. @ 7" CTS.	11 SPA. @ 11" CTS.	10 SPA. @ 2'-0" CTS.
GDR. D6	10 SPA. @ 5" CTS.	17 SPA. @ 7" CTS.	11 SPA. @ 11" CTS.	10 SPA. @ 2'-0" CTS.

0.6" Ø L. R. GRADE 270 STRANDS

AREA (SQUARE INCHES)	ULTIMATE STRENGTH (LBS. PER STRAND)	APPLIED PRESTRESS (LBS. PER STRAND)
0.217	58,600	43,950

REINFORCING STEEL FOR ONE GIRDER

	BAR	NUMBER	SIZE	TYPE	LENGTH	WEIGHT
GIRDERS 1, 3	S1	125	#4	1	10'-8"	891
GIRDER 2	S1	119	#4	1	10'-8"	848
GIRDER 4	S1	129	#4	1	10'-8"	919
GIRDER 5	S1	123	#4	1	10'-8"	876
GIRDER 6	S1	117	#4	1	10'-8"	834
	S2	12	#6	1	10'-8"	192
	S3	4	#4	2	9'-1"	24
	S4	64	#4	3	3'-5"	146
	S5	6	#4	2	8'-5"	34
	✱ S7	12	#5	STR	3'-8"	46
	S8	4	#4	2	8'-7"	23
	S9	2	#3	STR	1'-10"	1
EXTERIOR GDR.	S10	4	#5	2	8'-8"	36
INTERIOR GDR.	S10	8	#5	2	8'-8"	72
EXTERIOR GDR.	S11	10	#4	STR	7'-0"	47
INTERIOR GDR.	S12	10	#4	STR	12'-0"	80

✱ NOTE: S7 BARS SHALL BE BENT BEFORE SHIPMENT. HEAT BENDING SHALL NOT BE ALLOWED.

BAR TYPES

ALL BAR DIMENSIONS ARE OUT-TO-OUT

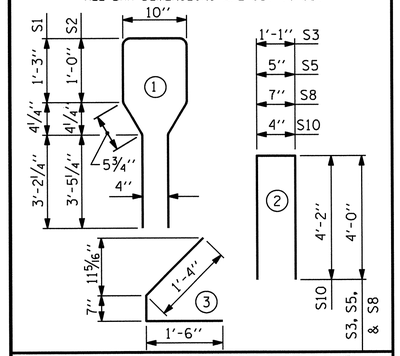

QUANTITIES FOR ONE GIRDER

	REINFORCING STEEL	6700 PSI CONCRETE	0.6" Ø L. R. STRANDS
	LB.	C.Y.	No.
GDR. 1	1440	21.2	38
GDR. 2	1466	21.1	38
GDR. 3	1509	21.1	38
GDR. 4	1537	21.0	38
GDR. 5	1494	20.9	38
GDR. 6	1383	20.9	38

GIRDERS REQUIRED

NUMBER	LENGTH	TOTAL LENGTH
6	VARIES	621'-4⅜"

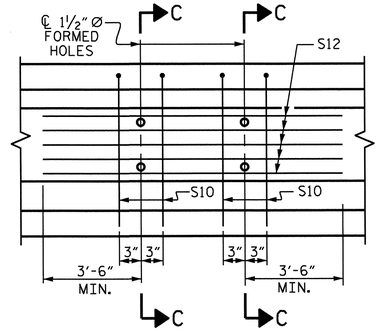

PARTIAL ELEVATION

SHOWING INTERMEDIATE DIAPHRAGM REINFORCING STEEL FOR GIRDERS Nos. 2-5

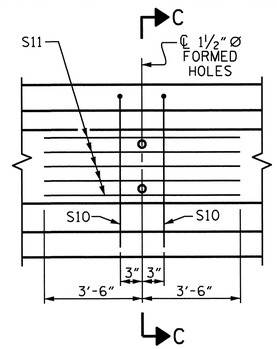

PARTIAL ELEVATION

SHOWING INTERMEDIATE DIAPHRAGM REINFORCING STEEL FOR GIRDER Nos. 1 & 6

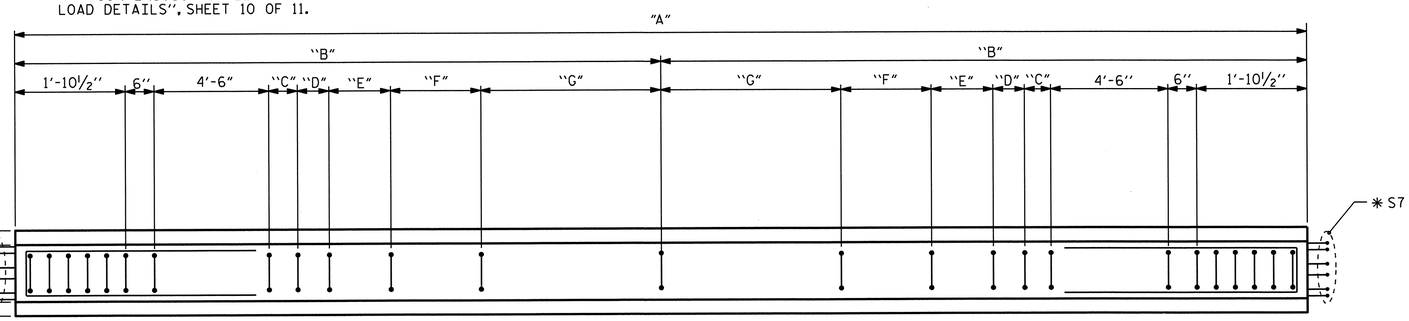

PLAN OF GIRDER

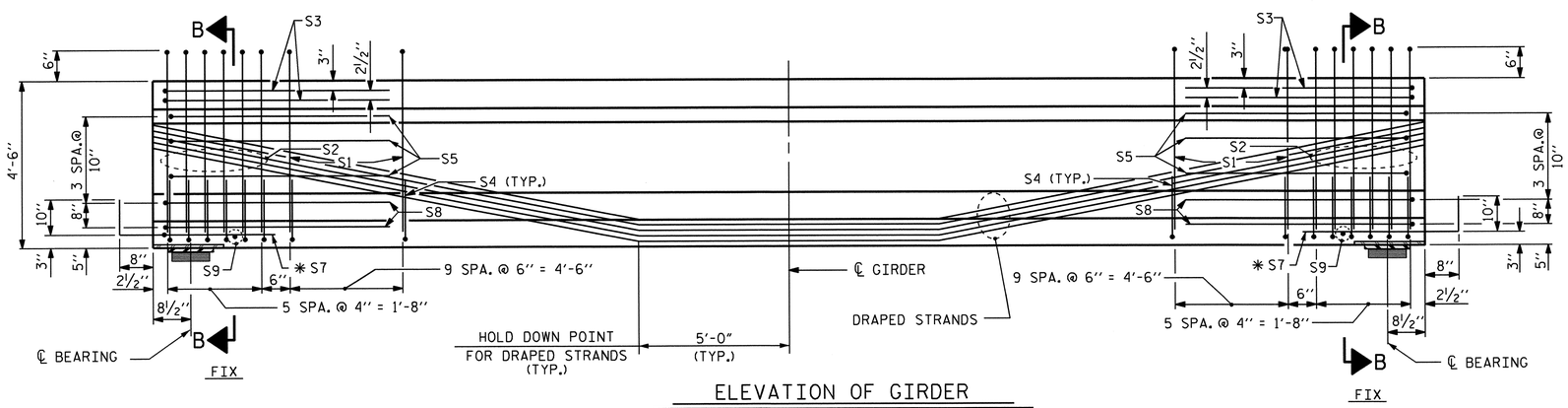

ELEVATION OF GIRDER

(SEE PARTIAL ELEVATION FOR ADDITIONAL "S" BARS)
FOR LOCATIONS OF 1½" Ø FORMED HOLES, SEE "LOCATION OF BOLT HOLES IN GIRDERS" SHEET 7 OF 11.

NOTE: THE UPLIFT FORCE DUE TO DRAPED STRANDS IS 29.93 KIPS.

PROJECT NO. U-4412

HAYWOOD COUNTY

STATION: 67+29.11 -L-

SHEET 4 OF 11

STATE OF NORTH CAROLINA
DEPARTMENT OF TRANSPORTATION
RALEIGH

STANDARD

AASHTO TYPE IV
PRESTRESSED CONCRETE GIRDER
CONTINUOUS FOR LIVE LOAD
SPAN D

NORTH CAROLINA PROFESSIONAL SEAL 20125 ENGINEER MARSHALL G. CHEEK, JR.

REVISIONS							SHEET NO.
NO.	BY:	DATE:	NO.	BY:	DATE:		S-22
1			3				TOTAL SHEETS
2			4				70

ASSEMBLED BY :	V. X. NGUYEN	DATE :	8-22-12
CHECKED BY :	M.G. CHEEK	DATE :	8-29-12

DRAWN BY : ELR 8/91	REV. 10/17/00R	RWW/LES
CHECKED BY : GRP 8/91	REV. 5/1/06R	TLA/GM
	REV. 10/1/11	MAA/GM

12-FEB-2013 11:23
R:\Structures\Final Plans\Str #1\U-4412_SD_G*.dgn
dahodge

STR #1

STD. NO. PCG6

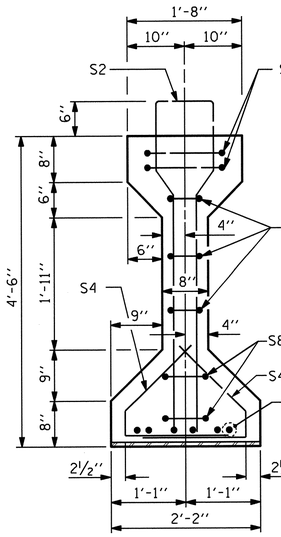

SECTION B-B

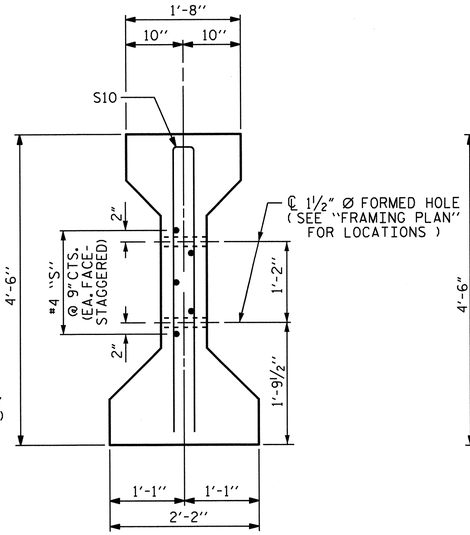

SECTION C-C

(S1 BARS NOT SHOWN)

✱ FOR S7 BARS, SEE DETAIL "A" OF "PRESTRESSED CONCRETE GIRDER CONTINUOUS FOR LIVE LOAD DETAILS", SHEET 10 OF 11.

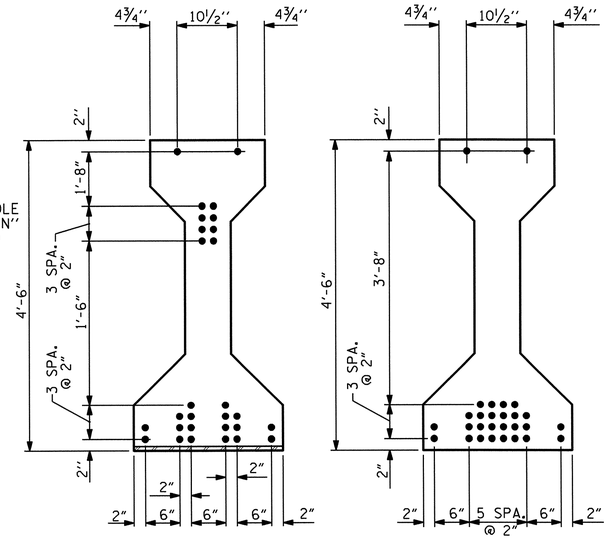

AT END OF GIRDER

AT ℄ OF GIRDER

0.6" Ø LOW RELAXATION STRAND LAYOUT

TABLE OF DIMENSIONS

	"D"	"E"	"F"	"G"
GDR. E1	5 SPA. @ 6" CTS.	12 SPA. @ 9" CTS.	7 SPA. @ 1'-4" CTS.	8 SPA. @ 2'-0" CTS.
GDR. E2	7 SPA. @ 4" CTS.	12 SPA. @ 9" CTS.	7 SPA. @ 1'-4" CTS.	8 SPA. @ 2'-0" CTS.
GDR. E3	4 SPA. @ 6" CTS.	12 SPA. @ 9" CTS.	7 SPA. @ 1'-4" CTS.	8 SPA. @ 2'-0" CTS.
GDR. E4	4 SPA. @ 5" CTS.	11 SPA. @ 10" CTS.	7 SPA. @ 1'-4" CTS.	8 SPA. @ 2'-0" CTS.
GDR. E5	3 SPA. @ 6" CTS.	12 SPA. @ 9" CTS.	7 SPA. @ 1'-4" CTS.	8 SPA. @ 2'-0" CTS.
GDR. E6	3 SPA. @ 6" CTS.	12 SPA. @ 9" CTS.	7 SPA. @ 1'-4" CTS.	8 SPA. @ 2'-0" CTS.

TABLE OF DIMENSIONS

	"A"	"B"	"C"
GDR. E1	90'-1⅞"	45'-0 15/16"	4 7/16"
GDR. E2	89'-8⅜"	44'-10 3/16"	3 11/16"
GDR. E3	89'-3"	44'-7½"	5"
GDR. E4	88'-10"	44'-5"	4½"
GDR. E5	88'-5"	44'-2½"	6"
GDR. E6	88'-0⅜"	44'-0 3/16"	3 11/16"

0.6" Ø L. R. GRADE 270 STRANDS

AREA (SQUARE INCHES)	ULTIMATE STRENGTH (LBS. PER STRAND)	APPLIED PRESTRESS (LBS. PER STRAND)
0.217	58,600	43,950

REINFORCING STEEL FOR ONE GIRDER

	BAR	NUMBER	SIZE	TYPE	LENGTH	WEIGHT
GIRDER 1	S1	85	#4	1	10'-8"	606
GIRDER 2	S1	89	#4	1	10'-8"	634
GIRDER 3	S1	83	#4	1	10'-8"	591
GIRDER 4	S1	79	#4	1	10'-8"	563
GIRDERS 5, 6	S1	81	#4	1	10'-8"	577
	S2	12	#6	1	10'-8"	192
	S3	4	#4	2	9'-1"	24
	S4	64	#4	3	3'-5"	146
	S5	6	#4	2	8'-5"	34
	✱ S7	12	#5	STR	3'-8"	46
	S8	4	#4	2	8'-7"	23
	S9	2	#3	STR	1'-10"	1
EXTERIOR GDR.	S10	2	#5	2	8'-8"	18
INTERIOR GDR.	S10	4	#5	2	8'-8"	36
EXTERIOR GDR.	S11	5	#4	STR	7'-0"	23
INTERIOR GDR.	S12	5	#4	STR	13'-2"	44

✱ NOTE: S7 BARS SHALL BE BENT BEFORE SHIPMENT. HEAT BENDING SHALL NOT BE ALLOWED.

BAR TYPES

ALL BAR DIMENSIONS ARE OUT-TO-OUT

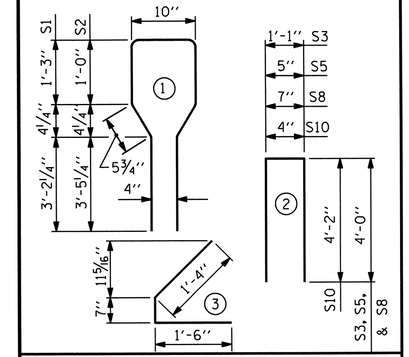

QUANTITIES FOR ONE GIRDER

	REINFORCING STEEL	5100 PSI CONCRETE	0.6" Ø L. R. STRANDS
	LB.	C.Y.	No.
GDR. 1	1113	18.3	28
GDR. 2	1180	18.2	28
GDR. 3	1137	18.1	28
GDR. 4	1109	18.0	28
GDR. 5	1123	17.9	28
GDR. 6	1084	17.9	28

GIRDERS REQUIRED

NUMBER	LENGTH	TOTAL LENGTH
6	VARIES	534'-4⅝"

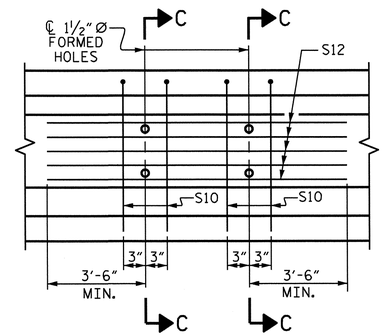

PARTIAL ELEVATION

SHOWING INTERMEDIATE DIAPHRAGM REINFORCING STEEL FOR GIRDERS Nos. 2-5

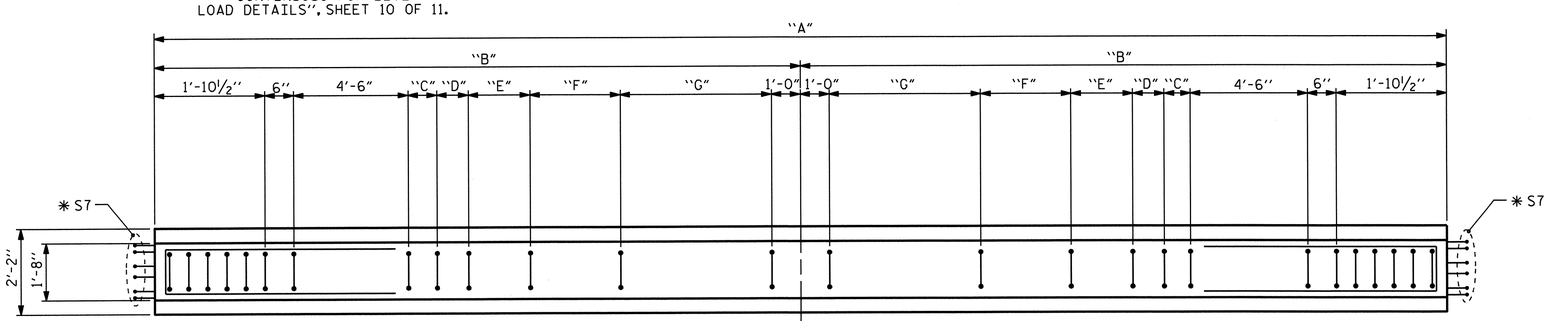

PLAN OF GIRDER

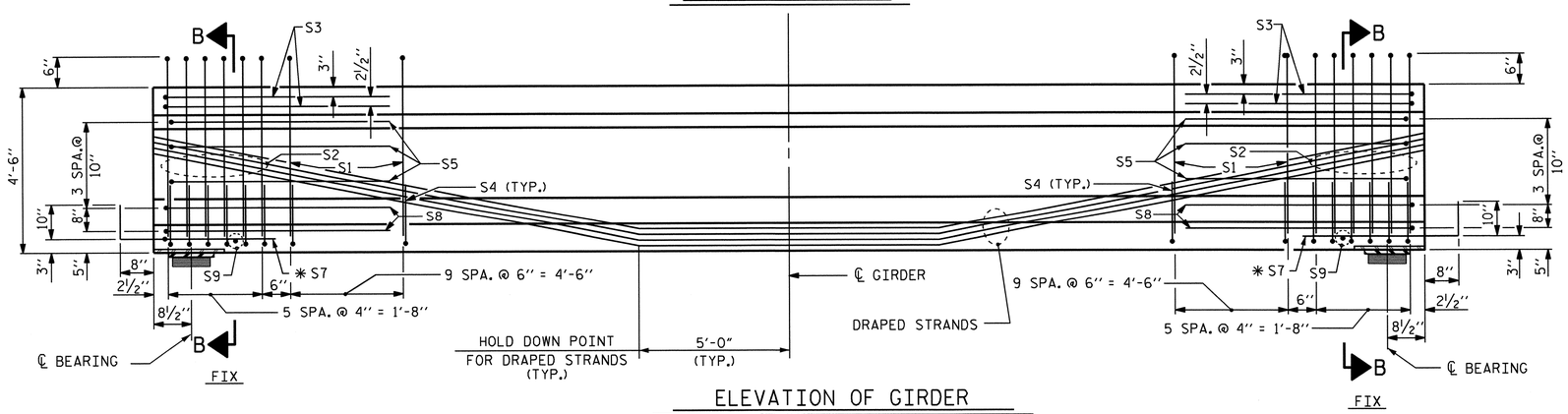

ELEVATION OF GIRDER

(SEE PARTIAL ELEVATION FOR ADDITIONAL "S" BARS)
FOR LOCATIONS OF 1½" Ø FORMED HOLES, SEE "LOCATION OF BOLT HOLES IN GIRDERS" SHEET 7 OF 11.

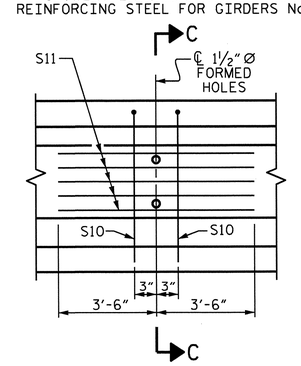

PARTIAL ELEVATION

SHOWING INTERMEDIATE DIAPHRAGM REINFORCING STEEL FOR GIRDER Nos. 1 & 6

PROJECT NO. U-4412

HAYWOOD COUNTY

STATION: 67+29.11 -L-

SHEET 5 OF 11

STATE OF NORTH CAROLINA
DEPARTMENT OF TRANSPORTATION
RALEIGH

STANDARD
AASHTO TYPE IV
PRESTRESSED CONCRETE GIRDER
CONTINUOUS FOR LIVE LOAD
SPAN E

NORTH CAROLINA PROFESSIONAL SEAL 20125 ENGINEER
2-19-13

REVISIONS								SHEET NO.
NO.	BY:	DATE:	NO.	BY:	DATE:			S-23
1			3					TOTAL SHEETS
2			4					70

STR #1

STD. NO. PCG6

ASSEMBLED BY : V. X. NGUYEN	DATE : 8-22-12		
CHECKED BY : M.G. CHEEK	DATE : 8-29-12		
DRAWN BY : ELR 8/91	REV. 10/17/00R	RWW/LES	
CHECKED BY : GRP 8/91	REV. 5/1/06R	TLA/GM	
	REV. 10/1/11	MAA/GM	

19-FEB-2013 08:26
R:\Structures\Final Plans\Str #1\U-4412_SD_C*.dgn
dahodge

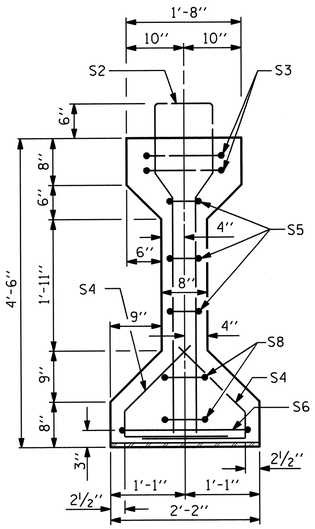

SECTION A-A

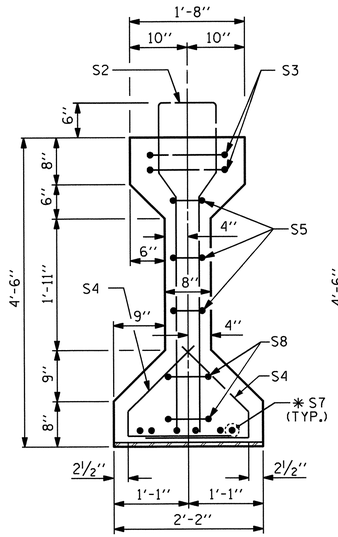

SECTION B-B

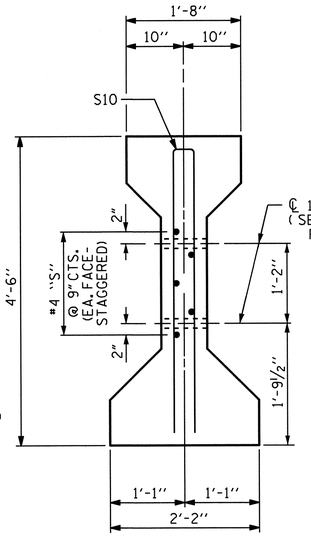

SECTION C-C

(S1 BARS NOT SHOWN)

✱ FOR S7 BARS, SEE DETAIL "A" OF "PRESTRESSED CONCRETE GIRDER CONTINUOUS FOR LIVE LOAD DETAILS", SHEET 10 OF 11.

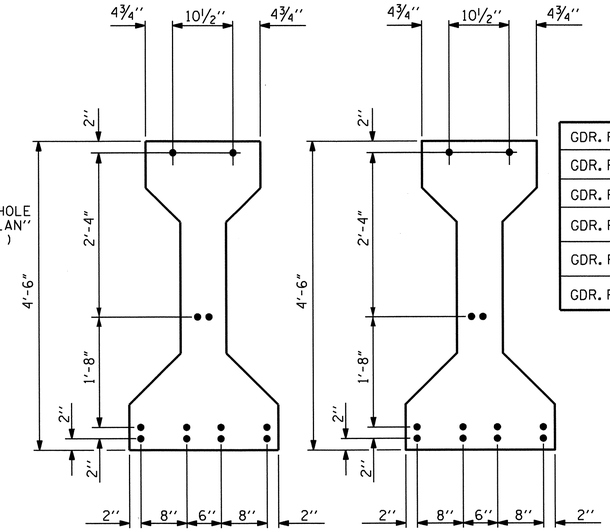

AT END OF GIRDER

AT ℄ OF GIRDER

0.6" Ø LOW RELAXATION STRAND LAYOUT

TABLE OF DIMENSIONS

	"A"	"B"	"C"
GDR. F1	44'-1 7/8"	22'-0 15/16"	1'-2 7/16"
GDR. F2	43'-10 3/8"	21'-11 3/16"	1'-0 11/16"
GDR. F3	43'-7"	21'-9 1/2"	11"
GDR. F4	43'-3 3/4"	21'-7 7/8"	9 3/8"
GDR. F5	43'-0 5/8"	21'-6 5/16"	7 13/16"
GDR. F6	42'-9 5/8"	21'-4 13/16"	6 5/16"

0.6" Ø L. R. GRADE 270 STRANDS

AREA (SQUARE INCHES)	ULTIMATE STRENGTH (LBS. PER STRAND)	APPLIED PRESTRESS (LBS. PER STRAND)
0.217	58,600	43,950

REINFORCING STEEL FOR ONE GIRDER

BAR	NUMBER	SIZE	TYPE	LENGTH	WEIGHT
S1	35	#4	1	10'-8"	249
S2	12	#6	1	10'-8"	192
S3	4	#4	2	9'-1"	24
S4	64	#4	3	3'-5"	146
S5	6	#4	2	8'-5"	34
S6	1	#4	2	9'-11"	7
✱ S7	6	#5	STR	3'-8"	23
S8	4	#4	2	8'-7"	23
S9	1	#3	STR	1'-10"	1
EXTERIOR GDR. S10	2	#5	2	8'-8"	18
INTERIOR GDR. S10	4	#5	2	8'-8"	36
EXTERIOR GDR. S11	5	#4	STR	7'-0"	23
INTERIOR GDR. S12	5	#4	STR	14'-1"	47

✱ NOTE: S7 BARS SHALL BE BENT BEFORE SHIPMENT. HEAT BENDING SHALL NOT BE ALLOWED.

BAR TYPES

ALL BAR DIMENSIONS ARE OUT-TO-OUT

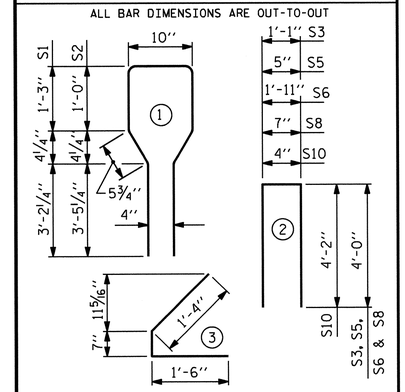

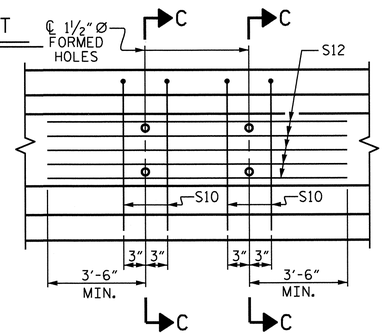

PARTIAL ELEVATION

SHOWING INTERMEDIATE DIAPHRAGM REINFORCING STEEL FOR GIRDERS Nos. 2-5

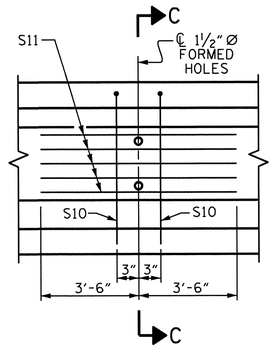

PARTIAL ELEVATION

SHOWING INTERMEDIATE DIAPHRAGM REINFORCING STEEL FOR GIRDER Nos. 1 & 6

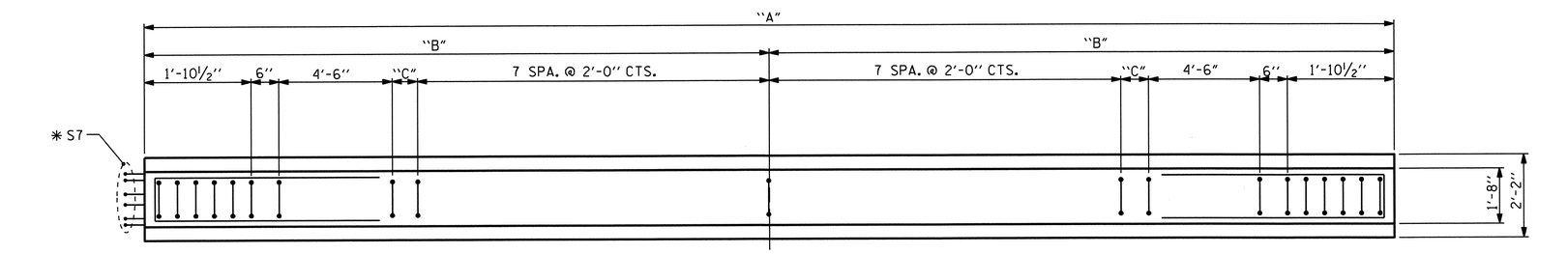

PLAN OF GIRDER

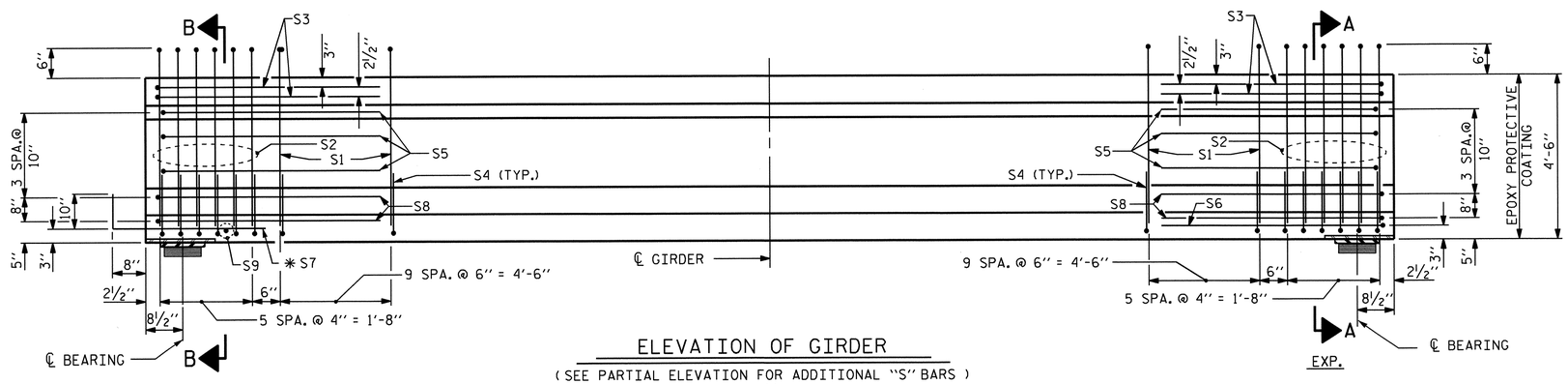

ELEVATION OF GIRDER

(SEE PARTIAL ELEVATION FOR ADDITIONAL "S" BARS)
FOR LOCATIONS OF 1½" Ø FORMED HOLES.
SEE "LOCATION OF BOLT HOLES IN GIRDERS" SHEET 7 OF 11.

QUANTITIES FOR ONE GIRDER

	REINFORCING STEEL LBS.	5000 PSI CONCRETE CU. YDS.	0.6" Ø L. R. STRANDS No.
GIRDERS 1 & 6	740	9.0	12
GIRDERS 2-5	782	8.9	12

GIRDERS REQUIRED

NUMBER	LENGTH	TOTAL LENGTH
6	VARIES	260'-9¼"

PROJECT NO. U-4412

HAYWOOD COUNTY

STATION: 67+29.11 -L-

SHEET 6 OF 11

STATE OF NORTH CAROLINA
DEPARTMENT OF TRANSPORTATION
RALEIGH

STANDARD

AASHTO TYPE IV
PRESTRESSED CONCRETE GIRDER
CONTINUOUS FOR LIVE LOAD
SPAN F

NORTH CAROLINA PROFESSIONAL SEAL 20125 ENGINEER
MARSHALL G. CHEEK, JR.
5-13-13

REVISIONS						SHEET NO.
NO.	BY:	DATE:	NO.	BY:	DATE:	S-24
1			3			TOTAL SHEETS
2			4			70

STR #1

STD. NO. PCG6

ASSEMBLED BY : V. X. NGUYEN	DATE : 8-22-12		
CHECKED BY : M.G. CHEEK	DATE : 8-29-12		
DRAWN BY : ELR 8/91	REV. 10/17/00R	RWW/LES	
CHECKED BY : GRP 8/91	REV. 5/1/06R	TLA/GM	
	REV. 10/1/11	MAA/GM	

12-FEB-2013 11:21
R:\Structures\Final Plans\Str #1\U-4412_SD_G*.dgn
dahodge

CHART A

GIRDER	DIM. A	DIM. B	DIM. E	DIM. D	DIM. F	DIM. C
GDR. A1	79'-5 1/2"	38'-8"	-	40'-9 1/2"	-	-
GDR. A2	79'-4 7/8"	38'-7 3/4"	2'-1 7/16"	38'-7 11/16"	-	-
GDR. A3	79'-4 3/8"	38'-7 5/8"	2'-1 3/16"	38'-7 9/16"	-	-
GDR. A4	79'-3 3/4"	38'-7 7/16"	2'-1"	38'-7 5/16"	-	-
GDR. A5	79'-3 1/4"	38'-7 1/4"	2'-0 13/16"	38'-7 3/16"	-	-
GDR. A6	79'-2 3/4"	40'-7 3/4"	-	38'-7"	-	-
GDR. B1	106'-10 3/4"	34'-5"	-	35'-1 5/8"	-	37'-4 1/8"
GDR. B2	106'-9 1/4"	34'-4 9/16"	2'-10 13/16"	32'-2 3/8"	2'-11 5/16"	34'-4 3/16"
GDR. B3	106'-7 3/4"	34'-4 1/4"	2'-10 1/2"	32'-2 3/16"	2'-11"	34'-3 13/16"
GDR. B4	106'-6 3/8"	34'-3 15/16"	2'-10 3/16"	32'-2"	2'-10 11/16"	34'-3 9/16"
GDR. B5	106'-5"	34'-3 5/8"	2'-9 7/8"	32'-1 7/8"	2'-10 3/8"	34'-3 1/4"
GDR. B6	106'-3 5/8"	37'-0 15/16"	-	34'-11 3/4"	-	34'-2 15/16"
GDR. C1	102'-7 1/8"	32'-6"	-	33'-8 1/4"	-	36'-4 7/8"
GDR. C2	102'-4 5/8"	32'-5 3/8"	3'-10 1/4"	29'-9 3/16"	3'-11"	32'-4 13/16"
GDR. C3	102'-2 1/8"	32'-4 3/4"	3'-9 13/16"	29'-8 13/16"	3'-10 5/8"	32'-4 1/8"
GDR. C4	101'-11 3/4"	32'-4 1/8"	3'-9 3/8"	29'-8 1/2"	3'-10 3/16"	32'-3 9/16"
GDR. C5	101'-9 3/8"	32'-3 9/16"	3'-9"	29'-8 1/8"	3'-9 11/16"	32'-3"
GDR. C6	101'-7 1/8"	35'-11 9/16"	-	33'-5 1/8"	-	32'-2 7/16"
GDR. D1	104'-4 3/4"	32'-6 7/8"	-	34'-3 1/4"	-	37'-6 5/8"
GDR. D2	104'-0 5/8"	32'-5 3/4"	4'-10 13/16"	29'-3 1/16"	5'-0 3/16"	32'-4 13/16"
GDR. D3	103'-8 1/2"	32'-4 3/4"	4'-10 1/8"	29'-2 3/8"	4'-11 1/2"	32'-3 3/4"
GDR. D4	103'-4 5/8"	32'-3 3/4"	4'-9 9/16"	29'-1 11/16"	4'-10 7/8"	32'-2 3/4"
GDR. D5	103'-0 3/4"	32'-2 3/4"	4'-9"	29'-1"	4'-10 3/16"	32'-1 13/16"
GDR. D6	102'-9 1/8"	36'-10 3/16"	-	33'-10"	-	32'-0 15/16"
GDR. E1	90'-1 7/8"	27'-3 1/8"	-	29'-6"	-	33'-4 3/4"
GDR. E2	89'-8 3/8"	27'-1 5/8"	6'-0 5/16"	23'-4"	6'-2 1/8"	27'-0 5/16"
GDR. E3	89'-3"	27'-0 3/8"	5'-11 3/8"	23'-3 1/8"	6'-1 1/8"	26'-11"
GDR. E4	88'-10"	26'-11 1/8"	5'-10 9/16"	23'-2 1/4"	6'-0 1/4"	26'-9 13/16"
GDR. E5	88'-5"	26'-9 7/8"	5'-9 11/16"	23'-1 1/2"	5'-11 5/16"	26'-8 5/8"
GDR. E6	88'-0 3/8"	32'-5 5/8"	-	28'-11 1/4"	-	26'-7 1/2"
GDR. F1	44'-1 7/8"	18'-6 5/8"	-	25'-7 1/4"	-	-
GDR. F2	43'-10 3/8"	18'-5 1/2"	7'-0"	18'-4 7/8"	-	-
GDR. F3	43'-7"	18'-4 3/8"	6'-10 13/16"	18'-3 13/16"	-	-
GDR. F4	43'-3 3/4"	18'-3 5/16"	6'-9 11/16"	18'-2 3/4"	-	-
GDR. F5	43'-0 5/8"	18'-2 5/16"	6'-8 9/16"	18'-1 3/4"	-	-
GDR. F6	42'-9 5/8"	24'-8 13/16"	-	18'-0 13/16"	-	-

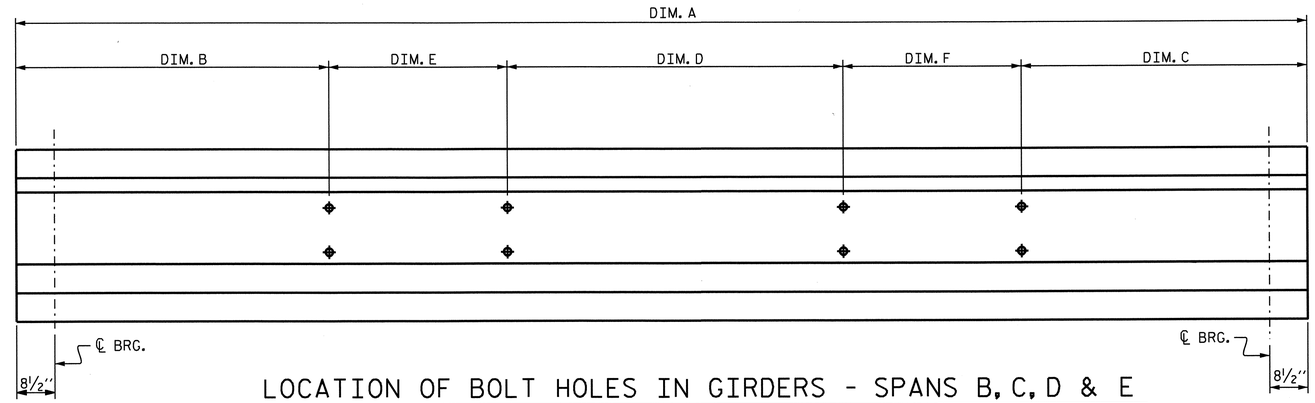

LOCATION OF BOLT HOLES IN GIRDERS - SPANS B, C, D & E

FOR DIMENSIONS SEE CHART A

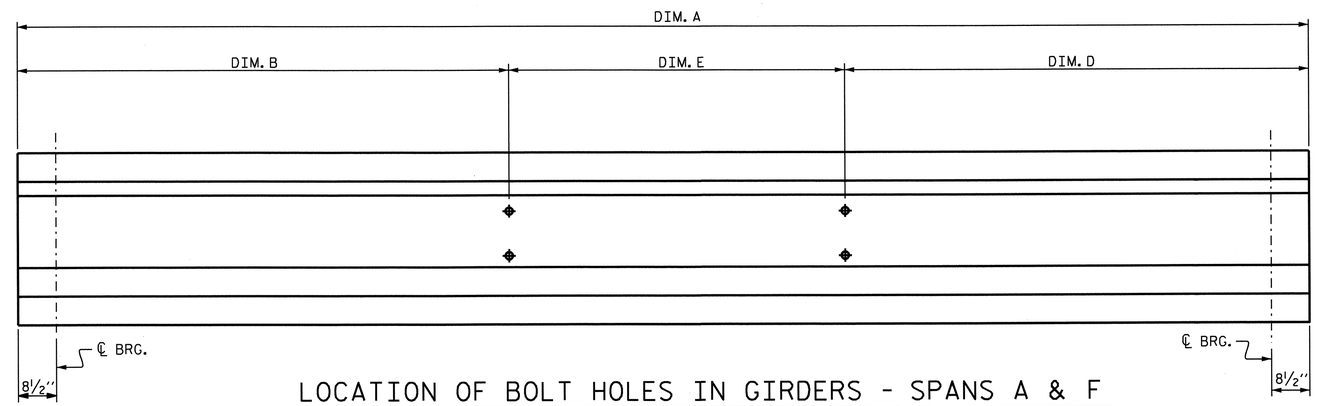

LOCATION OF BOLT HOLES IN GIRDERS - SPANS A & F

FOR DIMENSIONS SEE CHART A

SECTION "G"

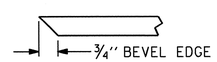

SECTION "F"

(SEE NOTES)

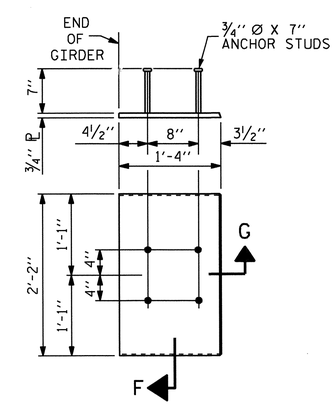

EMBEDDED PLATE "B-1" DETAILS FOR AASHTO TYPE IV GIRDER

(2 REQ'D PER GIRDER)

NORTH CAROLINA PROFESSIONAL SEAL 20125 ENGINEER MARSHALL G. CHEEK, JR. 2-4-13

PROJECT NO. U-4412

HAYWOOD COUNTY

STATION: 67+29.11 -L-

SHEET 7 OF 11

STATE OF NORTH CAROLINA
DEPARTMENT OF TRANSPORTATION
RALEIGH

PRESTRESSED CONCRETE GIRDER CONTINUOUS FOR LIVE LOAD DETAILS

REVISIONS						SHEET NO.
NO.	BY:	DATE:	NO.	BY:	DATE:	S-25
1			3			TOTAL SHEETS
2			4			70

DRAWN BY : V. X. NGUYEN DATE : 10-10-11
CHECKED BY : M.G. CHEEK DATE : 8-29-12

28-NOV-2012 11:09
R:\Structures\Final Plans\Str *1\U-4412_SD_G*.dgn
mpoole

DEAD LOAD DEFLECTION TABLE FOR GIRDERS

		SPAN "A"											SPAN "A"											SPAN "A"										
0.6" LOW RELAXATION		GIRDER 1											GIRDERS 2 THRU 5											GIRDER 6										
TENTH POINTS		℄ BRG.	0.1	0.2	0.3	0.4	0.5	0.6	0.7	0.8	0.9	℄ BRG.	℄ BRG.	0.1	0.2	0.3	0.4	0.5	0.6	0.7	0.8	0.9	℄ BRG.	℄ BRG.	0.1	0.2	0.3	0.4	0.5	0.6	0.7	0.8	0.9	℄ BRG.
CAMBER (GIRDER ALONE IN PLACE)	↑	0.000	0.045	0.085	0.116	0.136	0.143	0.136	0.116	0.085	0.045	0.000	0.000	0.045	0.085	0.116	0.136	0.143	0.136	0.116	0.085	0.045	0.000	0.000	0.045	0.085	0.116	0.136	0.143	0.136	0.116	0.085	0.045	0.000
✳ DEFLECTION DUE TO SUPERIMPOSED D.L.	↓	0.000	0.021	0.040	0.055	0.065	0.068	0.065	0.055	0.040	0.021	0.000	0.000	0.022	0.042	0.057	0.067	0.070	0.067	0.057	0.042	0.022	0.000	0.000	0.021	0.039	0.054	0.063	0.066	0.063	0.054	0.039	0.021	0.000
ORDINATE DUE TO SUPERELEVATION	↓	0.000	0.011	0.020	0.026	0.030	0.031	0.030	0.026	0.020	0.011	0.000	0.000	0.011	0.020	0.026	0.030	0.031	0.030	0.026	0.020	0.011	0.000	0.000	0.011	0.019	0.025	0.029	0.030	0.029	0.025	0.019	0.011	0.000
FINAL CAMBER	↑	0	1/8"	5/16"	7/16"	1/2"	1/2"	1/2"	7/16"	5/16"	1/8"	0	0	1/8"	1/4"	3/8"	1/2"	1/2"	1/2"	3/8"	1/4"	1/8"	0	0	1/8"	5/16"	7/16"	1/2"	9/16"	1/2"	7/16"	5/16"	1/8"	0

DEAD LOAD DEFLECTION TABLE FOR GIRDERS

		SPAN "B"																				
0.6" LOW RELAXATION		GIRDER 1																				
TWENTIETH POINTS		℄ BRG.	0.05	0.10	0.15	0.20	0.25	0.30	0.35	0.40	0.45	0.50	0.55	0.60	0.65	0.70	0.75	0.80	0.85	0.90	0.95	℄ BRG.
CAMBER (GIRDER ALONE IN PLACE)	↑	0.000	0.055	0.111	0.160	0.210	0.249	0.287	0.312	0.337	0.345	0.353	0.345	0.337	0.312	0.287	0.249	0.210	0.160	0.111	0.055	0.000
✳ DEFLECTION DUE TO SUPERIMPOSED D.L.	↓	0.000	0.028	0.056	0.081	0.106	0.125	0.145	0.157	0.169	0.174	0.178	0.174	0.169	0.157	0.145	0.125	0.106	0.081	0.056	0.028	0.000
ORDINATE DUE TO SUPERELEVATION	↓	0.000	0.010	0.020	0.028	0.036	0.042	0.048	0.051	0.054	0.056	0.057	0.056	0.054	0.051	0.048	0.042	0.036	0.028	0.020	0.010	0.000
FINAL CAMBER	↑	0	3/16"	7/16"	5/8"	13/16"	1"	1 1/8"	1 1/4"	1 3/8"	1 5/8"	1 7/16"	1 3/8"	1 3/8"	1 1/4"	1 1/8"	1"	13/16"	5/8"	7/16"	3/16"	0
		SPAN "B"																				
0.6" LOW RELAXATION		GIRDERS 2 THRU 5																				
TWENTIETH POINTS		℄ BRG.	0.05	0.10	0.15	0.20	0.25	0.30	0.35	0.40	0.45	0.50	0.55	0.60	0.65	0.70	0.75	0.80	0.85	0.90	0.95	℄ BRG.
CAMBER (GIRDER ALONE IN PLACE)	↑	0.000	0.055	0.111	0.160	0.210	0.249	0.287	0.312	0.337	0.345	0.353	0.345	0.337	0.312	0.287	0.249	0.210	0.160	0.111	0.055	0.000
✳ DEFLECTION DUE TO SUPERIMPOSED D.L.	↓	0.000	0.030	0.061	0.088	0.115	0.136	0.158	0.171	0.184	0.189	0.194	0.189	0.184	0.171	0.158	0.136	0.115	0.088	0.061	0.030	0.000
ORDINATE DUE TO SUPERELEVATION	↓	0.000	0.010	0.020	0.028	0.036	0.042	0.047	0.051	0.054	0.055	0.056	0.055	0.054	0.051	0.047	0.042	0.036	0.028	0.020	0.010	0.000
FINAL CAMBER	↑	0	3/16"	3/8"	1/2"	11/16"	7/8"	1"	1 1/16"	1 3/16"	1 1/4"	1 1/4"	1 1/4"	1 3/16"	1 1/16"	1"	7/8"	11/16"	1/2"	3/8"	3/16"	0
		SPAN "B"																				
0.6" LOW RELAXATION		GIRDER 6																				
TWENTIETH POINTS		℄ BRG.	0.05	0.10	0.15	0.20	0.25	0.30	0.35	0.40	0.45	0.50	0.55	0.60	0.65	0.70	0.75	0.80	0.85	0.90	0.95	℄ BRG.
CAMBER (GIRDER ALONE IN PLACE)	↑	0.000	0.055	0.111	0.160	0.210	0.248	0.287	0.312	0.336	0.345	0.353	0.345	0.336	0.312	0.287	0.248	0.210	0.160	0.111	0.055	0.000
✳ DEFLECTION DUE TO SUPERIMPOSED D.L.	↓	0.000	0.030	0.061	0.088	0.115	0.136	0.157	0.171	0.184	0.189	0.193	0.189	0.184	0.171	0.157	0.136	0.115	0.088	0.061	0.030	0.000
ORDINATE DUE TO SUPERELEVATION	↓	0.000	0.010	0.019	0.027	0.035	0.040	0.045	0.049	0.052	0.053	0.054	0.053	0.052	0.049	0.045	0.040	0.035	0.027	0.019	0.010	0.000
FINAL CAMBER	↑	0	3/16"	3/8"	1/2"	3/4"	7/8"	1"	1 1/8"	1 3/16"	1 1/4"	1 1/4"	1 1/4"	1 3/16"	1 1/8"	1"	7/8"	3/4"	1/2"	3/8"	3/16"	0

✳ INCLUDES FUTURE WEARING SURFACE
ALL VALUES ARE SHOWN IN FEET (DECIMAL FORM), EXCEPT "FINAL CAMBER", WHICH IS GIVEN IN INCHES (FRACTION FORM).

PROJECT NO. U-4412
HAYWOOD COUNTY
STATION: 67+29.11 -L-

SHEET 8 OF 11

STATE OF NORTH CAROLINA
DEPARTMENT OF TRANSPORTATION
RALEIGH

PRESTRESSED CONCRETE GIRDER
CONTINUOUS FOR LIVE LOAD
DETAILS

NORTH CAROLINA PROFESSIONAL SEAL 20125 ENGINEER MARSHALL G. CHEEK, JR.
2-7-13

REVISIONS						SHEET NO.
NO.	BY:	DATE:	NO.	BY:	DATE:	S-26
1			3			TOTAL SHEETS
2			4			70

DRAWN BY : V.X. NGUYEN DATE : 11-9-11
CHECKED BY : M.G. CHEEK DATE : 8-29-12

06-FEB-2013 15:08
R:\Structures\Final Plans\Str *1\U-4412_SD_G*.dgn
dahodge

DEAD LOAD DEFLECTION TABLE FOR GIRDERS

		SPAN "C"																				
0.6" LOW RELAXATION		GIRDER 1																				
TWENTIETH POINTS		℄ BRG.	0.05	0.10	0.15	0.20	0.25	0.30	0.35	0.40	0.45	0.50	0.55	0.60	0.65	0.70	0.75	0.80	0.85	0.90	0.95	℄ BRG.
CAMBER (GIRDER ALONE IN PLACE)	↑	0.000	0.054	0.107	0.155	0.203	0.241	0.278	0.302	0.326	0.334	0.342	0.334	0.326	0.302	0.278	0.241	0.203	0.155	0.107	0.054	0.000
✱ DEFLECTION DUE TO SUPERIMPOSED D.L.	↓	0.000	0.025	0.049	0.071	0.093	0.111	0.128	0.139	0.150	0.154	0.157	0.154	0.150	0.139	0.128	0.111	0.093	0.071	0.049	0.025	0.000
ORDINATE DUE TO SUPERELEVATION	↓	0.000	0.010	0.019	0.026	0.033	0.039	0.044	0.047	0.050	0.051	0.052	0.051	0.050	0.047	0.044	0.039	0.033	0.026	0.019	0.010	0.000
FINAL CAMBER	↑	0	1/4"	7/16"	11/16"	15/16"	1 1/8"	1 1/4"	1 3/8"	1 1/2"	1 9/16"	1 5/8"	1 9/16"	1 1/2"	1 3/8"	1 1/4"	1 1/8"	15/16"	11/16"	7/16"	1/4"	0

		SPAN "C"																				
0.6" LOW RELAXATION		GIRDERS 2 THRU 5																				
TWENTIETH POINTS		℄ BRG.	0.05	0.10	0.15	0.20	0.25	0.30	0.35	0.40	0.45	0.50	0.55	0.60	0.65	0.70	0.75	0.80	0.85	0.90	0.95	℄
CAMBER (GIRDER ALONE IN PLACE)	↑	0.000	0.054	0.107	0.155	0.203	0.240	0.278	0.302	0.325	0.333	0.342	0.333	0.325	0.302	0.278	0.240	0.203	0.155	0.107	0.054	0.000
✱ DEFLECTION DUE TO SUPERIMPOSED D.L.	↓	0.000	0.027	0.053	0.077	0.100	0.119	0.138	0.149	0.161	0.165	0.169	0.165	0.161	0.149	0.138	0.119	0.100	0.077	0.053	0.027	0.000
ORDINATE DUE TO SUPERELEVATION	↓	0.000	0.010	0.019	0.026	0.033	0.038	0.043	0.046	0.049	0.051	0.052	0.051	0.049	0.046	0.043	0.038	0.033	0.026	0.019	0.010	0.000
FINAL CAMBER	↑	0	3/16"	7/16"	5/8"	13/16"	1"	1 3/16"	1 5/16"	1 3/8"	1 3/8"	1 7/16"	1 3/8"	1 3/8"	1 5/16"	1 3/16"	1"	13/16"	5/8"	7/16"	3/16"	0

		SPAN "C"																				
0.6" LOW RELAXATION		GIRDER 6																				
TWENTIETH POINTS		℄ BRG.	0.05	0.10	0.15	0.20	0.25	0.30	0.35	0.40	0.45	0.50	0.55	0.60	0.65	0.70	0.75	0.80	0.85	0.90	0.95	℄ BRG.
CAMBER (GIRDER ALONE IN PLACE)	↑	0.000	0.053	0.107	0.155	0.202	0.240	0.277	0.301	0.324	0.332	0.340	0.332	0.324	0.301	0.277	0.240	0.202	0.155	0.107	0.053	0.000
✱ DEFLECTION DUE TO SUPERIMPOSED D.L.	↓	0.000	0.026	0.052	0.075	0.098	0.116	0.134	0.145	0.157	0.161	0.165	0.161	0.157	0.145	0.134	0.116	0.098	0.075	0.052	0.026	0.000
ORDINATE DUE TO SUPERELEVATION	↓	0.000	0.009	0.018	0.025	0.032	0.037	0.041	0.044	0.047	0.048	0.049	0.048	0.047	0.044	0.041	0.037	0.032	0.025	0.018	0.009	0.000
FINAL CAMBER	↑	0	3/16"	7/16"	11/16"	7/8"	1 1/16"	1 1/4"	1 3/8"	1 7/16"	1 1/2"	1 1/2"	1 1/2"	1 7/16"	1 3/8"	1 1/4"	1 1/16"	7/8"	11/16"	7/16"	3/16"	0

✱ INCLUDES FUTURE WEARING SURFACE
ALL VALUES ARE SHOWN IN FEET (DECIMAL FORM), EXCEPT "FINAL CAMBER", WHICH IS GIVEN IN INCHES (FRACTION FORM).

DEAD LOAD DEFLECTION TABLE FOR GIRDERS

		SPAN "D"																				
0.6" LOW RELAXATION		GIRDER 1																				
TWENTIETH POINTS		℄ BRG.	0.05	0.10	0.15	0.20	0.25	0.30	0.35	0.40	0.45	0.50	0.55	0.60	0.65	0.70	0.75	0.80	0.85	0.90	0.95	℄ BRG.
CAMBER (GIRDER ALONE IN PLACE)	↑	0.000	0.054	0.109	0.157	0.205	0.243	0.281	0.305	0.329	0.338	0.346	0.338	0.329	0.305	0.281	0.243	0.205	0.157	0.109	0.054	0.000
✱ DEFLECTION DUE TO SUPERIMPOSED D.L.	↓	0.000	0.027	0.053	0.077	0.101	0.119	0.138	0.150	0.161	0.165	0.169	0.165	0.161	0.150	0.138	0.119	0.101	0.077	0.053	0.027	0.000
ORDINATE DUE TO SUPERELEVATION	↓	0.000	0.010	0.019	0.027	0.035	0.040	0.045	0.049	0.052	0.053	0.054	0.053	0.052	0.049	0.045	0.040	0.035	0.027	0.019	0.010	0.000
FINAL CAMBER	↑	0	3/16"	7/16"	5/8"	13/16"	1"	1 3/16"	1 1/4"	1 3/8"	1 7/16"	1 1/2"	1 7/16"	1 3/8"	1 1/4"	1 3/16"	1"	13/16"	5/8"	7/16"	3/16"	0

		SPAN "D"																				
0.6" LOW RELAXATION		GIRDERS 2 THRU 5																				
TWENTIETH POINTS		℄ BRG.	0.05	0.10	0.15	0.20	0.25	0.30	0.35	0.40	0.45	0.50	0.55	0.60	0.65	0.70	0.75	0.80	0.85	0.90	0.95	℄
CAMBER (GIRDER ALONE IN PLACE)	↑	0.000	0.054	0.109	0.157	0.205	0.243	0.281	0.305	0.329	0.337	0.346	0.337	0.329	0.305	0.281	0.243	0.205	0.157	0.109	0.054	0.000
✱ DEFLECTION DUE TO SUPERIMPOSED D.L.	↓	0.000	0.029	0.057	0.083	0.108	0.128	0.148	0.161	0.173	0.177	0.182	0.177	0.173	0.161	0.148	0.128	0.108	0.083	0.057	0.029	0.000
ORDINATE DUE TO SUPERELEVATION	↓	0.000	0.010	0.019	0.027	0.034	0.040	0.045	0.048	0.051	0.052	0.053	0.052	0.051	0.048	0.045	0.040	0.034	0.027	0.019	0.010	0.000
FINAL CAMBER	↑	0	3/16"	3/8"	9/16"	3/4"	7/8"	1 1/16"	1 1/8"	1 1/4"	1 5/16"	1 5/16"	1 5/16"	1 1/4"	1 1/8"	1 1/16"	7/8"	3/4"	9/16"	3/8"	3/16"	0

		SPAN "D"																				
0.6" LOW RELAXATION		GIRDER 6																				
TWENTIETH POINTS		℄ BRG.	0.05	0.10	0.15	0.20	0.25	0.30	0.35	0.40	0.45	0.50	0.55	0.60	0.65	0.70	0.75	0.80	0.85	0.90	0.95	℄ BRG.
CAMBER (GIRDER ALONE IN PLACE)	↑	0.000	0.054	0.108	0.156	0.204	0.242	0.280	0.304	0.328	0.336	0.344	0.336	0.328	0.304	0.280	0.242	0.204	0.156	0.108	0.054	0.000
✱ DEFLECTION DUE TO SUPERIMPOSED D.L.	↓	0.000	0.027	0.055	0.079	0.103	0.123	0.142	0.154	0.166	0.170	0.174	0.170	0.166	0.154	0.142	0.123	0.103	0.079	0.055	0.027	0.000
ORDINATE DUE TO SUPERELEVATION	↓	0.000	0.009	0.018	0.025	0.032	0.037	0.042	0.045	0.048	0.049	0.050	0.049	0.048	0.045	0.042	0.037	0.032	0.025	0.018	0.009	0.000
FINAL CAMBER	↑	0	3/16"	7/16"	5/8"	13/16"	1"	1 1/8"	1 1/4"	1 3/8"	1 3/8"	1 7/16"	1 3/8"	1 3/8"	1 1/4"	1 1/8"	1"	13/16"	5/8"	7/16"	3/16"	0

✱ INCLUDES FUTURE WEARING SURFACE
ALL VALUES ARE SHOWN IN FEET (DECIMAL FORM), EXCEPT "FINAL CAMBER", WHICH IS GIVEN IN INCHES (FRACTION FORM).

PROJECT NO. U-4412
HAYWOOD COUNTY
STATION: 67+29.11 -L-

SHEET 9 OF 11

STATE OF NORTH CAROLINA
DEPARTMENT OF TRANSPORTATION
RALEIGH

PRESTRESSED CONCRETE GIRDER
CONTINUOUS FOR LIVE LOAD
DETAILS

NORTH CAROLINA PROFESSIONAL SEAL 20125 ENGINEER MARSHALL G. CHEEK, JR.
2-7-13

REVISIONS									SHEET NO.
NO.	BY:	DATE:	NO.	BY:	DATE:				S-27
1			3						TOTAL SHEETS
2			4						70

DRAWN BY : V.X. NGUYEN DATE : 11-9-11
CHECKED BY : M.G. CHEEK DATE : 8-29-12

06-FEB-2013 15:07
R:\Structures\FinalPlans\Str *1\U-4412_SD_G*.dgn
dahodge

DEAD LOAD DEFLECTION TABLE FOR GIRDERS

0.6" LOW RELAXATION		SPAN "E" GIRDER 1										
TENTH POINTS		℄ BRG.	0.1	0.2	0.3	0.4	0.5	0.6	0.7	0.8	0.9	℄ BRG.
CAMBER (GIRDER ALONE IN PLACE)	↑	0.000	0.069	0.131	0.179	0.209	0.220	0.209	0.179	0.131	0.069	0.000
✱ DEFLECTION DUE TO SUPERIMPOSED D.L.	↓	0.000	0.035	0.065	0.090	0.105	0.110	0.105	0.090	0.065	0.035	0.000
ORDINATE DUE TO SUPERELEVATION	↓	0.000	0.014	0.026	0.034	0.039	0.040	0.039	0.034	0.026	0.014	0.000
FINAL CAMBER	↑	0	1/4"	7/16"	11/16"	13/16"	7/8"	13/16"	11/16"	7/16"	1/4"	0

0.6" LOW RELAXATION		SPAN "E" GIRDERS 2 THRU 5										
TENTH POINTS		℄ BRG.	0.1	0.2	0.3	0.4	0.5	0.6	0.7	0.8	0.9	℄ BRG.
CAMBER (GIRDER ALONE IN PLACE)	↑	0.000	0.069	0.130	0.179	0.209	0.220	0.209	0.179	0.130	0.069	0.000
✱ DEFLECTION DUE TO SUPERIMPOSED D.L.	↓	0.000	0.036	0.067	0.092	0.108	0.114	0.108	0.092	0.067	0.036	0.000
ORDINATE DUE TO SUPERELEVATION	↓	0.000	0.014	0.025	0.033	0.038	0.039	0.038	0.033	0.025	0.014	0.000
FINAL CAMBER	↑	0	1/4"	7/16"	5/8"	3/4"	13/16"	3/4"	5/8"	7/16"	1/4"	0

0.6" LOW RELAXATION		SPAN "E" GIRDER 6										
TENTH POINTS		℄ BRG.	0.1	0.2	0.3	0.4	0.5	0.6	0.7	0.8	0.9	℄ BRG.
CAMBER (GIRDER ALONE IN PLACE)	↑	0.000	0.068	0.130	0.177	0.208	0.218	0.208	0.177	0.130	0.068	0.000
✱ DEFLECTION DUE TO SUPERIMPOSED D.L.	↓	0.000	0.035	0.061	0.083	0.098	0.103	0.098	0.083	0.061	0.035	0.000
ORDINATE DUE TO SUPERELEVATION	↓	0.000	0.013	0.024	0.031	0.035	0.037	0.035	0.031	0.024	0.013	0.000
FINAL CAMBER	↑	0	1/4"	9/16"	3/4"	7/8"	15/16"	7/8"	3/4"	9/16"	1/4"	0

✱ INCLUDES FUTURE WEARING SURFACE
ALL VALUES ARE SHOWN IN FEET (DECIMAL FORM), EXCEPT "FINAL CAMBER", WHICH IS GIVEN IN INCHES (FRACTION FORM).

DEAD LOAD DEFLECTION TABLE FOR GIRDERS

0.6" LOW RELAXATION		SPAN "F" GIRDER 1										
TENTH POINTS		℄ BRG.	0.1	0.2	0.3	0.4	0.5	0.6	0.7	0.8	0.9	℄ BRG.
CAMBER (GIRDER ALONE IN PLACE)	↑	0.000	0.006	0.011	0.015	0.018	0.019	0.018	0.015	0.011	0.006	0.000
✱ DEFLECTION DUE TO SUPERIMPOSED D.L.	↓	0.000	0.002	0.004	0.005	0.006	0.006	0.006	0.005	0.004	0.002	0.000
ORDINATE DUE TO SUPERELEVATION	↓	0.000	0.003	0.006	0.008	0.009	0.009	0.009	0.008	0.006	0.003	0.000
FINAL CAMBER	↑	0	0	0	0	0	1/16"	0	0	0	0	0

0.6" LOW RELAXATION		SPAN "F" GIRDERS 2 THRU 5										
TENTH POINTS		℄ BRG.	0.1	0.2	0.3	0.4	0.5	0.6	0.7	0.8	0.9	℄ BRG.
CAMBER (GIRDER ALONE IN PLACE)	↑	0.000	0.006	0.011	0.015	0.018	0.018	0.018	0.015	0.011	0.006	0.000
✱ DEFLECTION DUE TO SUPERIMPOSED D.L.	↓	0.000	0.002	0.004	0.005	0.006	0.006	0.006	0.005	-0.004	0.002	0.000
ORDINATE DUE TO SUPERELEVATION	↓	0.000	0.003	0.006	0.008	0.009	0.009	0.009	0.008	0.006	0.003	0.000
FINAL CAMBER	↑	0	0	0	0	0	1/16"	0	0	0	0	0

0.6" LOW RELAXATION		SPAN "F" GIRDER 6										
TENTH POINTS		℄ BRG.	0.1	0.2	0.3	0.4	0.5	0.6	0.7	0.8	0.9	℄ BRG.
CAMBER (GIRDER ALONE IN PLACE)	↑	0.000	0.006	0.011	0.015	0.017	0.018	0.017	0.015	0.011	0.006	0.000
✱ DEFLECTION DUE TO SUPERIMPOSED D.L.	↓	0.000	0.002	0.003	0.004	0.005	0.005	0.005	0.004	0.003	0.002	0.000
ORDINATE DUE TO SUPERELEVATION	↓	0.000	0.003	0.005	0.007	0.008	0.008	0.008	0.007	0.005	0.003	0.000
FINAL CAMBER	↑	0	0	1/16"	1/16"	1/16"	1/16"	1/16"	1/16"	1/16"	0	0

✱ INCLUDES FUTURE WEARING SURFACE
ALL VALUES ARE SHOWN IN FEET (DECIMAL FORM), EXCEPT "FINAL CAMBER", WHICH IS GIVEN IN INCHES (FRACTION FORM).

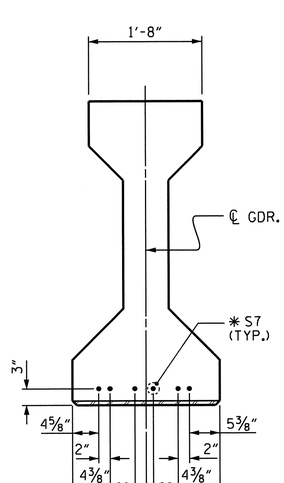

DETAIL "A"

NOTES

ALL PRESTRESSING STRANDS SHALL BE 7-WIRE LOW-RELAXATION GRADE 270 STRANDS AND SHALL CONFORM TO AASHTO M203 EXCEPT FOR SAMPLING REQUIREMENTS WHICH SHALL BE IN ACCORDANCE WITH THE STANDARD SPECIFICATIONS.

ALL REINFORCING STEEL SHALL BE GRADE 60.

APPLY EPOXY PROTECTIVE COATING TO END OF GIRDER SURFACES INDICATED IN ELEVATION VIEW.

EMBEDDED PLATE "B-1" SHALL BE GALVANIZED IN ACCORDANCE WITH THE STANDARD SPECIFICATIONS. BEVEL EDGES OF PLATE "B-1" TO GIVE CLOSE FIT BUT NOT TIGHT FIT TO STEEL CASTING FORM.

ANCHOR STUDS SHALL CONFORM TO AASHTO M169 GRADES 1010 THROUGH 1020 OR APPROVED EQUAL, AND SHALL MEET THE TYPE "B" REQUIREMENTS OF SUBSECTION 7.3 OF THE ANSI/AASHTO/AWS D1.5 BRIDGE WELDING CODE.

AT ENDS OF GIRDERS TO BE EMBEDDED IN CONCRETE DIAPHRAGMS OR END WALLS, PRESTRESSING STRANDS MAY EXTEND A MAXIMUM OF 2" BEYOND THE GIRDER ENDS. OTHERWISE, PRESTRESSING STRANDS SHALL BE CUT FLUSH WITH THE GIRDER ENDS.

THE TRANSFER OF LOAD FROM THE ANCHORAGES TO THE GIRDER SHALL BE DONE WHEN CONCRETE HAS REACHED A COMPRESSIVE STRENGTH OF NOT LESS THAN △ PSI. SEE CHART FOR RELEASE STRENGTH.

DEPENDING ON THE TYPE OF SYSTEM USED TO SUPPORT THE DECK SLAB FORMS, PRESET ANCHORS MAY BE NECESSARY IN THE PRESTRESSED CONCRETE GIRDER.

THE TOP SURFACE OF THE GIRDER, EXCLUDING THE OUTSIDE 4", SHALL BE RAKED TO A DEPTH OF 1/4".

WHEN DRAPED STRANDS ARE DETAILED, THE LONGITUDINAL LOCATION OF THE HOLD DOWN DEVICES SHALL BE WITHIN 6" OF THE LOCATION SHOWN AND THE CENTER OF GRAVITY OF THE GROUP OF DRAPED STRANDS SHALL BE LOCATED WITHIN 1/2" OF THE THEORETICAL LOCATION SHOWN.

△ SPAN	GIRDER RELEASE STRENGTH
A	4000 PSI
B	5900 PSI
C	5500 PSI
D	5400 PSI
E	4100 PSI
F	4000 PSI

PROJECT NO. U-4412
HAYWOOD COUNTY
STATION: 67+29.11 -L-

SHEET 10 OF 11

STATE OF NORTH CAROLINA
DEPARTMENT OF TRANSPORTATION
RALEIGH

PRESTRESSED CONCRETE GIRDER CONTINUOUS FOR LIVE LOAD DETAILS

NORTH CAROLINA PROFESSIONAL SEAL 20125 ENGINEER MARSHALL G. CHEEK, JR.
2-13-13

REVISIONS						SHEET NO.
NO.	BY:	DATE:	NO.	BY:	DATE:	S-28
1			3			TOTAL SHEETS
2			4			70

DRAWN BY : V.X. NGUYEN DATE : 11-9-11
CHECKED BY : M.G. CHEEK DATE : 8-29-12

12-FEB-2013 11:06
R:\Structures\Final Plans\Str *1\U-4412_SD_G*.dgn
dahodge

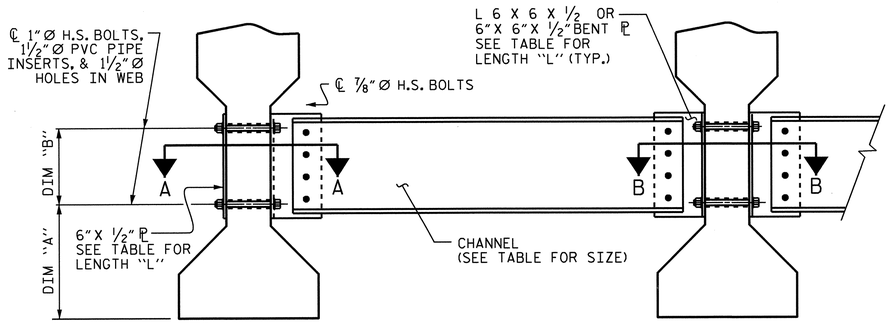

EXTERIOR GIRDER

INTERIOR GIRDER

PART SECTION AT INTERMEDIATE DIAPHRAGM

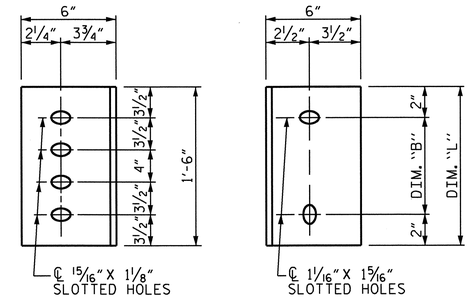

DIAPHRAGM FACE

WEB FACE

CONNECTOR PLATE DETAILS

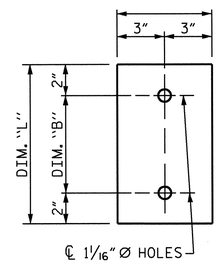

PLATE DETAILS

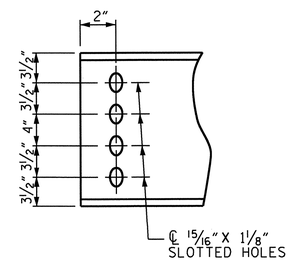

CHANNEL END

STRUCTURAL STEEL NOTES

ALL INTERMEDIATE DIAPHRAGM STEEL AND CONNECTOR PLATES SHALL BE AASHTO M270 GRADE 50 OR APPROVED EQUAL.

TENSION ON THE ASTM A325 BOLTS THROUGH THE CHANNEL MEMBER SHALL BE CALIBRATED USING DIRECT TENSION INDICATOR WASHERS IN ACCORDANCE WITH THE STANDARD SPECIFICATIONS.

TENSION ON THE ASTM A449 BOLTS THROUGH THE GIRDER WEB SHALL BE SNUG TIGHTENED FOLLOWED BY AN ADDITIONAL ¼ TURN.

THE PLATES, BENT PLATES, CHANNELS, AND ANGLES SHALL BE GALVANIZED OR METALLIZED IN ACCORDANCE WITH THE STANDARD SPECIFICATIONS. FOR THERMAL SPRAYED COATINGS (METALLIZATION), SEE SPECIAL PROVISIONS.

FOR METALLIZATION, APPLY AN 8 MIL THICK 99.99 PERCENT ZINC (W-Zn-1) THERMAL SPRAYED COATING WITH A 0.5 MIL THICK SEAL COAT TO ALL STEEL DIAPHRAGM SURFACES IN ACCORDANCE WITH THE THERMAL SPRAYED COATINGS SPECIAL PROVISION AND SECTION 442 OF THE STANDARD SPECIFICATIONS.

GALVANIZE THE HIGH STRENGTH BOLTS, NUTS, WASHERS AND DIRECT TENSION INDICATORS IN ACCORDANCE WITH THE STANDARD SPECIFICATIONS.

USE AN ASTM F436 HARDENED WASHER WITH STANDARD AND SLOTTED HOLES UNDER EACH BOLT HEAD AND NUT.

FOR BOLTS THROUGH THE GIRDER WEB, PROVIDE SUFFICIENT LENGTH OF THREADS ON ALL BOLTS TO ACCOMMODATE WASHERS AND THE THICKNESS OF CONNECTING MEMBER PLUS AT LEAST ¼"PROJECTION BEYOND THE NUT.

INTERMEDIATE DIAPHRAGM ASSEMBLY SHALL COMPLY WITH SECTION 1072 OF THE STANDARD SPECIFICATIONS.

SUBMIT TWO SETS OF WORKING DRAWINGS FOR THE INTERMEDIATE DIAPHRAGM ASSEMBLY FOR REVIEW, COMMENTS AND ACCEPTANCE. AFTER REVIEW, COMMENTS, AND ACCEPTANCE, SUBMIT SEVEN SETS FOR DISTRIBUTION.

IN THE EXTERIOR BAYS, PLACE TEMPORARY STRUTS BETWEEN PRESTRESSED GIRDERS ADJACENT TO THE STEEL DIAPHRAGMS. STRUTS SHALL REMAIN IN PLACE 3 DAYS AFTER CONCRETE IS PLACED.

THE COST OF THE STEEL DIAPHRAGMS AND ASSEMBLIES SHALL BE INCLUDED IN THE UNIT PRICE BID FOR PRESTRESSED CONCRETE GIRDERS.

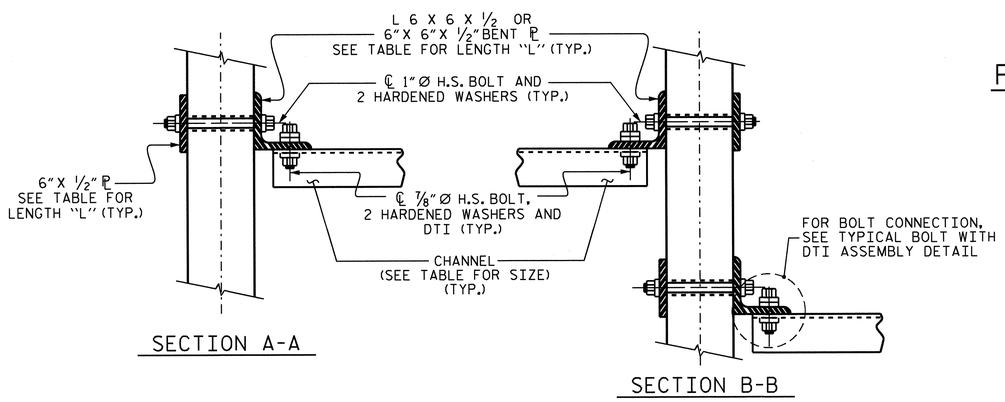

SECTION A-A

SECTION B-B

CONNECTION DETAILS

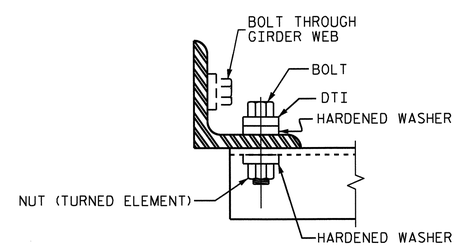

BOLT WITH DTI ASSEMBLY DETAIL

TABLE

GIRDER TYPE	CHANNEL SIZE	DIM "A"	DIM "B"	DIM "L"
IV	MC 18 x 42.7	1'-9½"	1'-2"	1'-6"

PROJECT NO. U-4412

HAYWOOD COUNTY

STATION: 67+29.11 -L-

SHEET 11 OF 11

STATE OF NORTH CAROLINA
DEPARTMENT OF TRANSPORTATION
RALEIGH

STANDARD

INTERMEDIATE STEEL DIAPHRAGMS FOR TYPE IV PRESTRESSED CONCRETE GIRDERS

NORTH CAROLINA PROFESSIONAL SEAL 20125 ENGINEER MARSHALL G. CHEEK, JR. 11-30-12

REVISIONS						SHEET NO.
NO.	BY:	DATE:	NO.	BY:	DATE:	S-29
1			3			TOTAL SHEETS
2			4			70

STR #1

STD. NO. PCG10

ASSEMBLED BY : V.X. NGUYEN		DATE : 11-9-11	
CHECKED BY : M.G. CHEEK		DATE : 8-29-12	
DRAWN BY : TLA 6/05	ADDED 10/21/05		
CHECKED BY : VC 6/05	REV. 5/1/06RRR KMM/GM		
	REV. 10/1/11 MAA/GM		

28-NOV-2012 11:10

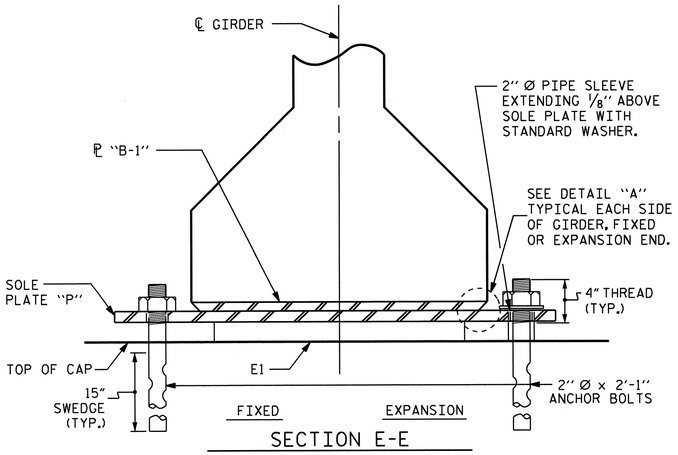

SECTION E-E

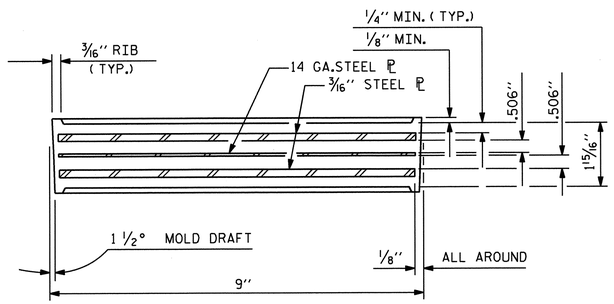

TYPICAL SECTION OF ELASTOMERIC BEARINGS

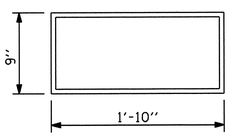

E1 (72 REQ'D)

PLAN VIEW OF ELASTOMERIC BEARING

TYPE IV

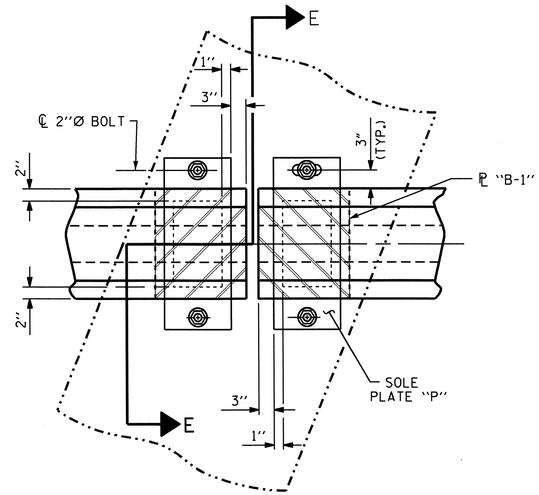

TYPICAL HALF-PLAN

(SHOWING CONTINUOUS BENT)

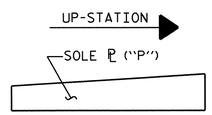

SOLE ℗ PLACEMENT DETAIL

NOTES

AT ALL FIXED POINTS OF SUPPORT, NUTS FOR ANCHOR BOLTS ARE TO BE TIGHTENED FINGER TIGHT AND THEN BACKED OFF 1/2 TURN. THE THREAD OF THE NUT AND BOLT SHALL THEN BE BURRED WITH A SHARP POINTED TOOL.

THE 2" Ø PIPE SLEEVE SHALL BE CUT FROM SCHEDULE 40 PVC PLASTIC PIPE. THE PVC PLASTIC PIPE SHALL MEET THE REQUIREMENTS OF ASTM D1785.

STEEL SOLE PLATES, ANCHOR BOLTS, NUTS, AND WASHERS SHALL BE GALVANIZED IN ACCORDANCE WITH THE STANDARD SPECIFICATIONS.

PRIOR TO WELDING, GRIND THE GALVANIZED SURFACE OF THE PORTION OF THE EMBEDDED PLATE AND SOLE PLATE THAT ARE TO BE WELDED. AFTER WELDING, DAMAGED GALVANIZED SURFACES SHALL BE REPAIRED IN ACCORDANCE WITH THE STANDARD SPECIFICATIONS.

WHEN WELDING THE SOLE PLATE TO THE EMBEDDED PLATE IN THE GIRDER, USE TEMPERATURE INDICATING WAX PENS, OR OTHER SUITABLE MEANS, TO ENSURE THAT THE TEMPERATURE OF THE SOLE PLATE DOES NOT EXCEED 300°F. TEMPERATURES ABOVE THIS MAY DAMAGE THE ELASTOMER.

SOLE PLATE "P", BOLTS, NUTS, WASHERS, AND PIPE SLEEVE SHALL BE INCLUDED IN THE PAY ITEM FOR PRESTRESSED CONCRETE GIRDERS.

ANCHOR BOLTS SHALL MEET THE REQUIREMENTS OF ASTM A449. NUTS SHALL MEET THE REQUIREMENTS OF AASHTO M291-DH OR AASHTO M292-2H. WASHERS SHALL MEET THE REQUIREMENTS OF AASHTO M293. SHOP DRAWINGS ARE NOT REQUIRED FOR ANCHOR BOLT, NUTS AND WASHERS. SHOP INSPECTION IS REQUIRED.

ALL SURFACES OF BEARING PLATES SHALL BE SMOOTH AND STRAIGHT.

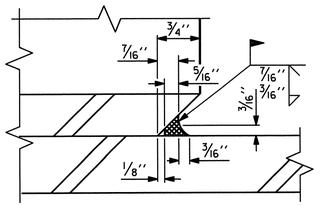

DETAIL "A"

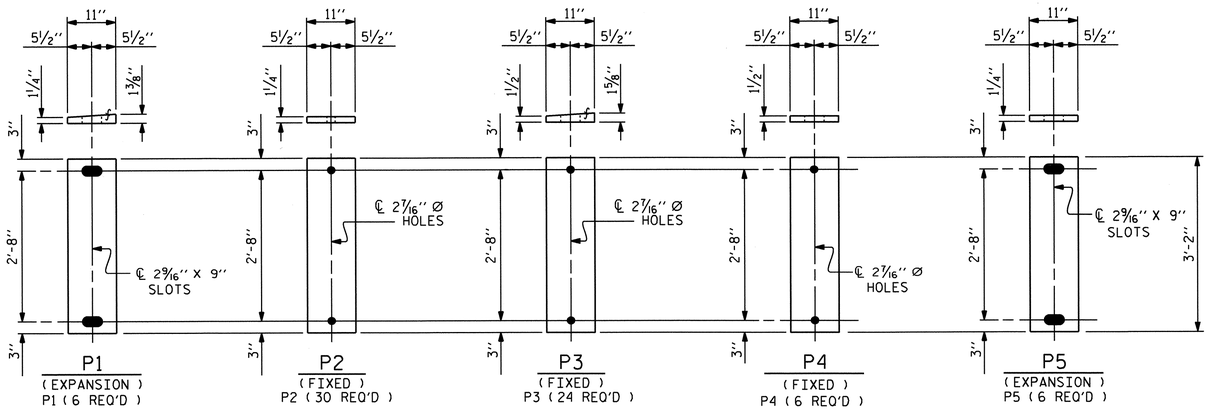

SOLE PLATE DETAILS ("P")

FOR SOLE PLATE LOCATIONS, SEE "FRAMING PLAN" SHEETS.

— LOAD RATINGS —	
	MAX.D.L.+L.L.
54" PCG -TYPE IV	137 K

PROJECT NO. U-4412

HAYWOOD COUNTY

STATION: 67+29.11 -L-

STATE OF NORTH CAROLINA
DEPARTMENT OF TRANSPORTATION
RALEIGH

STANDARD

ELASTOMERIC BEARING DETAILS

PRESTRESSED CONCRETE GIRDER SUPERSTRUCTURE

NORTH CAROLINA PROFESSIONAL SEAL 20125 ENGINEER MARSHALL L. CHEEK, JR. 11-30-12

REVISIONS								SHEET NO.
NO.	BY:	DATE:	NO.	BY:	DATE:			S-30
1			3					TOTAL SHEETS
2			4					70

ASSEMBLED BY : V.X. NGUYEN	DATE : 11-22-11		
CHECKED BY : D. HODGE	DATE : 10-12		
DRAWN BY : WJH 8/89	REV. 7/10/01	RWW/LES	
CHECKED BY : CRK 8/89	REV. 5/1/06	TLA/GM	
	REV. 10/1/11	MAA/GM	

28-NOV-2012 11:07
R:\Structures\Final Plans\Str #1\U-4412_SD_BG.dgn
mpoole

STD. NO. EB3

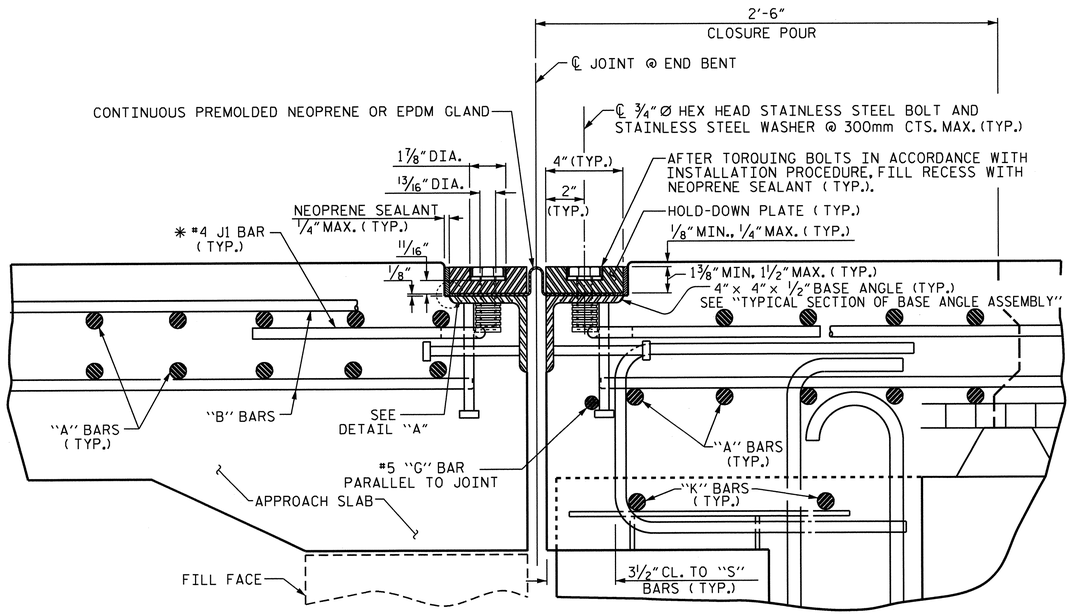

EXPANSION JOINT DETAILS

SECTION NORMAL TO JOINT -- PRESTRESSED GIRDER SUPERSTRUCTURE

* THE QUANTITY OF #4 J1 BARS ON THE BILL OF MATERIAL IS BASED ON 1'-0" CENTERS. J1 BARS SHALL BE PLACED AT EACH VERTICAL STUD ANCHOR BOLT. IN THE EVENT THAT THE NUMBER OF VERTICAL STUD ANCHORS EXCEEDS THE NUMBER OF J1 BARS SPECIFIED, ADDITIONAL J1 BARS WILL NOT BE REQUIRED.

INSTALLATION PROCEDURE

1. A TEMPLATE OR OTHER SUITABLE DEVICE SHALL BE USED TO FORM THE TOP OF THE EXPANSION JOINT SEAL BLOCKOUT TO THE PROPER DEPTH AND WIDTH. THE TEMPLATE SHALL BE 4⅛" TO 4¼" WIDE AND OF SUCH THICKNESS AS TO PROVIDE FOR CORRECT FINAL ELEVATION OF TOP OF HOLD-DOWN PLATES. THE TEMPLATE SHALL BE ATTACHED TO THE BASE ANGLE ASSEMBLY WITH THE ¾"Ø HEX HEAD BOLTS PROVIDED FOR THE HOLD-DOWN PLATES. A 1"Ø HOLE SHALL BE PROVIDED IN THE TEMPLATE CENTERED OVER EACH WEEP HOLE IN THE 4" X 4" X ½" BASE ANGLE. OTHER METHODS OF INSURING DRAINAGE THROUGH WEEP HOLES MAY BE EMPLOYED SUBJECT TO ENGINEER'S APPROVAL.
2. AFTER THE CONCRETE HAS BEEN CAST ON BOTH SIDES OF THE JOINT, REMOVE THE TEMPLATE. THOROUGHLY CLEAN THE BOLT HOLES AND THE ANGLE PLATE. REMOVE ANY EXCESS CONCRETE THAT COMES OUT OF THE WEEP HOLES. ANY DAMAGED STEEL SHALL BE COATED WITH A MINIMUM THICKNESS OF 4 DRY MILS OF ZINC-RICH PAINT IN ACCORDANCE WITH THE STANDARD SPECIFICATIONS.
3. LAY THE GLAND ON THE BASE ANGLE AND FIELD MARK THE GLAND FOR THE BOLT HOLES. HOLES IN THE GLAND SHALL BE PUNCHED ⅞" IN DIAMETER WITH A HAND PUNCH.
4. IN ORDER TO CHECK FOR PROPER ALIGNMENT, PLACE THE GLAND AND HOLD-DOWN PLATES ON THE BASE ANGLE. DO NOT APPLY NEOPRENE SEALANT. BOLT THE HOLD-DOWN PLATES TO THE BASE ANGLE BUT DO NOT TIGHTEN. THE ENGINEER SHALL INSPECT THE JOINT SEAL DEVICE FOR PROPER ALIGNMENT.
5. AFTER INSPECTION, REMOVE THE HOLD-DOWN PLATES AND GLAND. APPLY NEOPRENE SEALANT TO THE BASE ANGLE IN ACCORDANCE WITH THE "INSTALLATION SKETCH". PLACE GLAND AND HOLD-DOWN PLATES ON THE BASE ANGLE. BOLT THE HOLD-DOWN PLATES TO THE BASE ANGLE ASSEMBLY AND TORQUE THE BOLTS TO 88 FT-LBS WITH A TORQUE WRENCH. CHECK THE TORQUE AFTER THREE (3) HOURS AND, IF NECESSARY, RETIGHTEN TO 88 FT-LBS. A FINAL CHECK SHALL BE MADE AT SEVEN (7) DAYS. TORQUE SHALL NOT BE LESS THAN 80 FT-LBS AFTER SEVEN (7) DAYS.
6. AFTER PROPER TOROUING, CLEAN THE BOLT HOLE RECESSES AND THE RECESS BETWEEN THE JOINT SEAL DEVICE AND CONCRETE, COMPLETELY FILL THESE RECESSES WITH NEOPRENE SEALANT.

GENERAL NOTES

1. FOR EXPANSION JOINT SEALS, SEE SPECIAL PROVISIONS.
2. ALL PLATES AND ANGLES SHALL CONFORM TO AASHTO M270 GRADE 36 STEEL OR APPROVED EQUAL. ALL HOLD-DOWN BOLTS SHALL CONFORM TO ASTM F593 ALLOY 304 STAINLESS STEEL AND WASHERS SHALL CONFORM TO ASTM F844 EXCEPT THEY SHALL BE MADE FROM ALLOY 304 STAINLESS STEEL. ALL STUD ANCHORS SHALL CONFORM TO AASHTO M169, GRADES 1010 THRU 1020 OR APPROVED EQUAL. ALL CONCRETE INSERTS SHALL BE CLOSED END AND SHALL CONFORM TO AASHTO M169, GRADE 12L14. TENSILE CAPACITY SHALL BE 3000 LBS. MIN.
3. A PREMOLDED CORRUGATED OR NON-CORRUGATED GLAND SHALL BE USED FOR JOINTS SKEWED BETWEEN 50° THRU 130°. FOR JOINTS SKEWED LESS THAN 50° OR MORE THAN 130°, ONLY A CORRUGATED GLAND SHALL BE USED.
4. CLOSED END FERRULES AND STUD ANCHORS SHALL BE SHOP WELDED AND ALL HOLES SHALL BE SHOP DRILLED AS SHOWN ON PLANS. STUD ANCHORS SHALL BE ELECTRIC ARC END WELDED WITH COMPLETE FUSION.
5. SURFACES COMING IN CONTACT WITH NEOPRENE SHALL BE GROUND SMOOTH PRIOR TO METALLIZING.
6. UPON COMPLETION OF SHOP FABRICATION, THE HOLD DOWN PLATE AND BASE ANGLE ASSEMBLY, AS SHOWN IN THE " TYPICAL SECTION OF BASE ANGLE ASSEMBLY", SHALL BE METALLIZED. SEE SPECIAL PROVISION FOR THERMAL SPRAYED COATINGS (METALLIZATION).
7. BASE ANGLE ASSEMBLY SHALL BE CONTINUOUS FOR THE LENGTH OF THE JOINT. AT CROWN BREAKS, THE ENDS OF THE BASE ANGLE ASSEMBLY SHALL BE CUT PARALLEL TO THE BRIDGE CENTERLINE FOR SKEWS LESS THAN 80° AND GREATER THAN 100°. FINISHED WELD SHALL BE GROUND SMOOTH AND COATED WITH A MINIMUM THICKNESS OF 4 DRY MILS OF ZINC-RICH PAINT IN ACCORDANCE WITH THE STANDARD SPECIFICATIONS.
8. FIELD SPLICES OF HOLD-DOWN PLATES SHALL BE KEPT TO A MINIMUM. CONTRACTOR SHALL FURNISH DETAILED PLANS SHOWING PROPOSED SPLICE LOCATIONS FOR APPROVAL. HOLD-DOWN PLATES SHALL NOT EXCEED 20' LENGTHS UNLESS APPROVED BY THE ENGINEER.
9. NO ALTERNATE JOINT DETAILS SHALL BE PERMITTED IN LIEU OF THOSE SHOWN ON THESE PLANS.
10. THE CONTRACTOR MAY, AT HIS OPTION, USE ADHESIVELY ANCHORED ANCHOR BOLTS IN PLACE OF CONCRETE INSERTS FOR COVER PLATES. THE YIELD LOAD OF THE ¾"Ø BOLT IS 10 KIPS. FIELD TESTING OF THE ADHESIVE BONDING SYSTEM IS NOT REQUIRED.

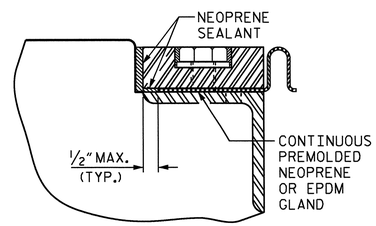

DETAIL "A"

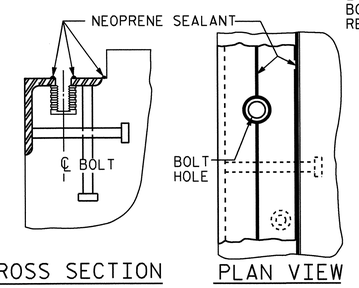

CROSS SECTION PLAN VIEW

INSTALLATION SKETCH

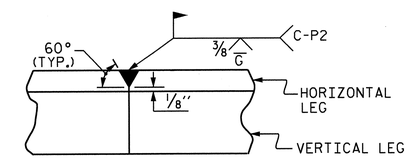

DETAIL- FIELD WELD SPLICE OF BASE ANGLE

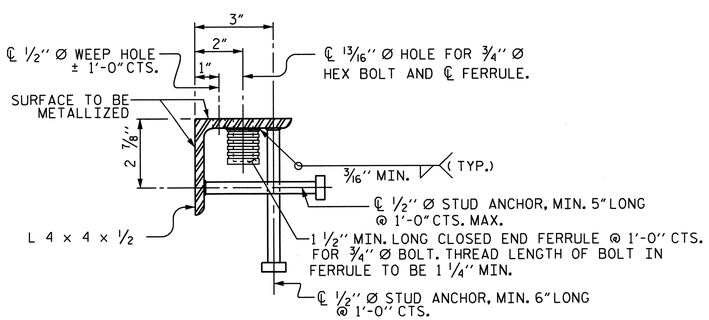

TYPICAL SECTION OF BASE ANGLE ASSEMBLY

MOVEMENT AND SETTING AT JOINT					
	SKEW ANGLE	TOTAL MOVEMENT (ALONG ℄ RDWY)	PERPENDICULAR JOINT OPENING AT 45° F	PERPENDICULAR JOINT OPENING AT 60° F	PERPENDICULAR JOINT OPENING AT 90° F
END BENT No. 1	103°-12'-04"	2⅜"	2⅝"	2⅜"	1 7/16"
END BENT No. 2	133°-46'-07"	2"	2"	1¾"	1¼"

PROJECT NO. U-4412

HAYWOOD COUNTY

STATION: 67+29.11 -L-

SHEET 1 OF 4

STATE OF NORTH CAROLINA
DEPARTMENT OF TRANSPORTATION
RALEIGH

STANDARD

EXPANSION JOINT SEAL DETAILS

NORTH CAROLINA PROFESSIONAL SEAL 20125 ENGINEER MARSHALL A. CHECK, JR.
11-29-12

REVISIONS							SHEET NO.
NO.	BY:	DATE:	NO.	BY:	DATE:		S-31
1			3				TOTAL SHEETS
2			4				70

STD. NO. EJS1

ASSEMBLED BY : V.X. NGUYEN		DATE : 5-15-12	
CHECKED BY : D. HODGE		DATE : 10-12	
DRAWN BY : REK 9/87	REV. 5/7/03R	RWW/JTE	
CHECKED BY : CRK 10/87	REV. 5/1/06R	TLA/GM	
	REV. 10/1/11	MAA/GM	

29-NOV-2012 11:39
R:\Structures\Final Plans\Str #1\U-4412_SD_JS.dgn
dahodge

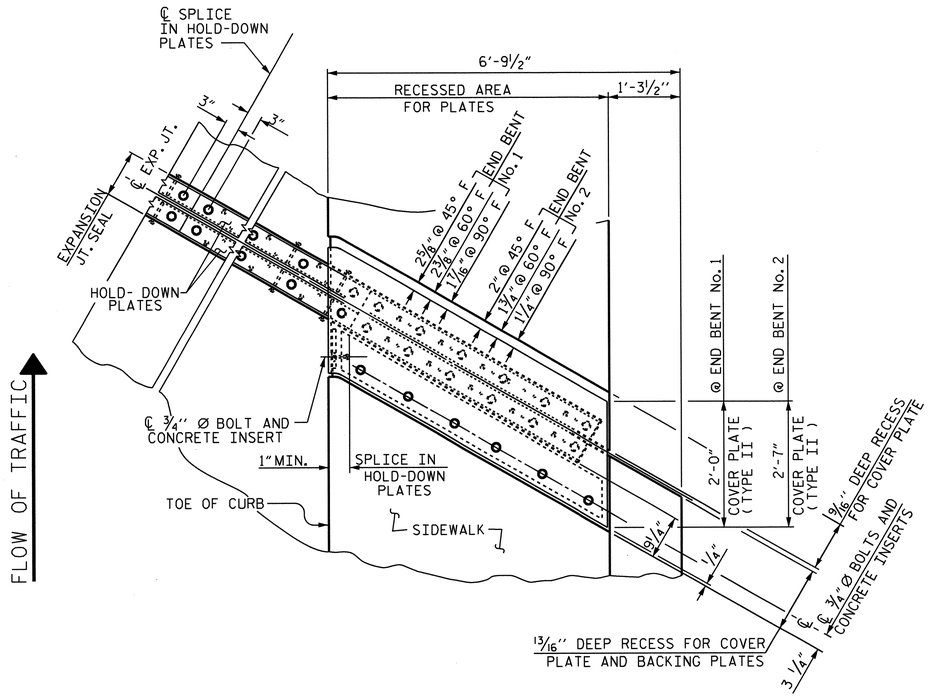

PLAN OF EXPANSION JOINT SEAL - RIGHT SIDE

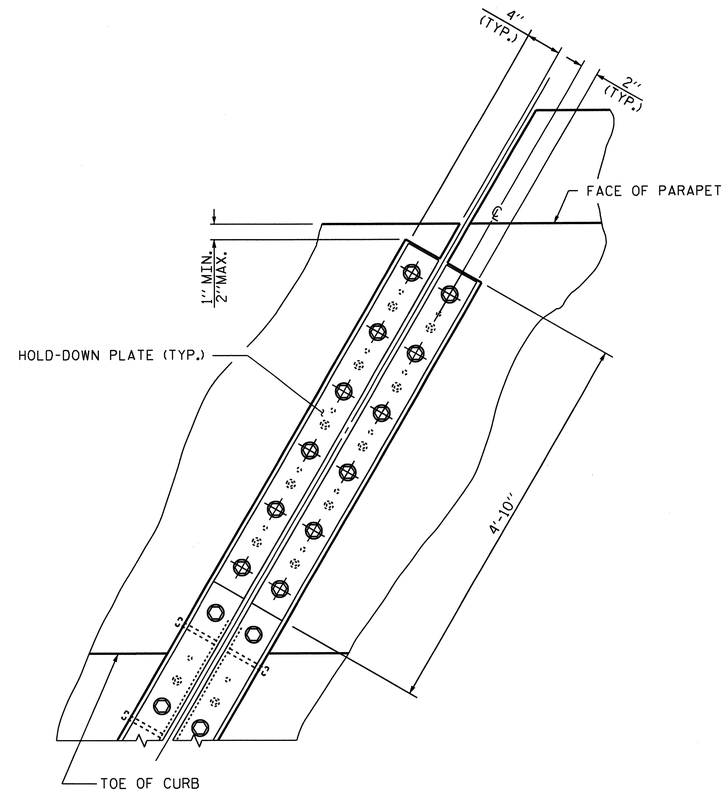

SECTION A - A

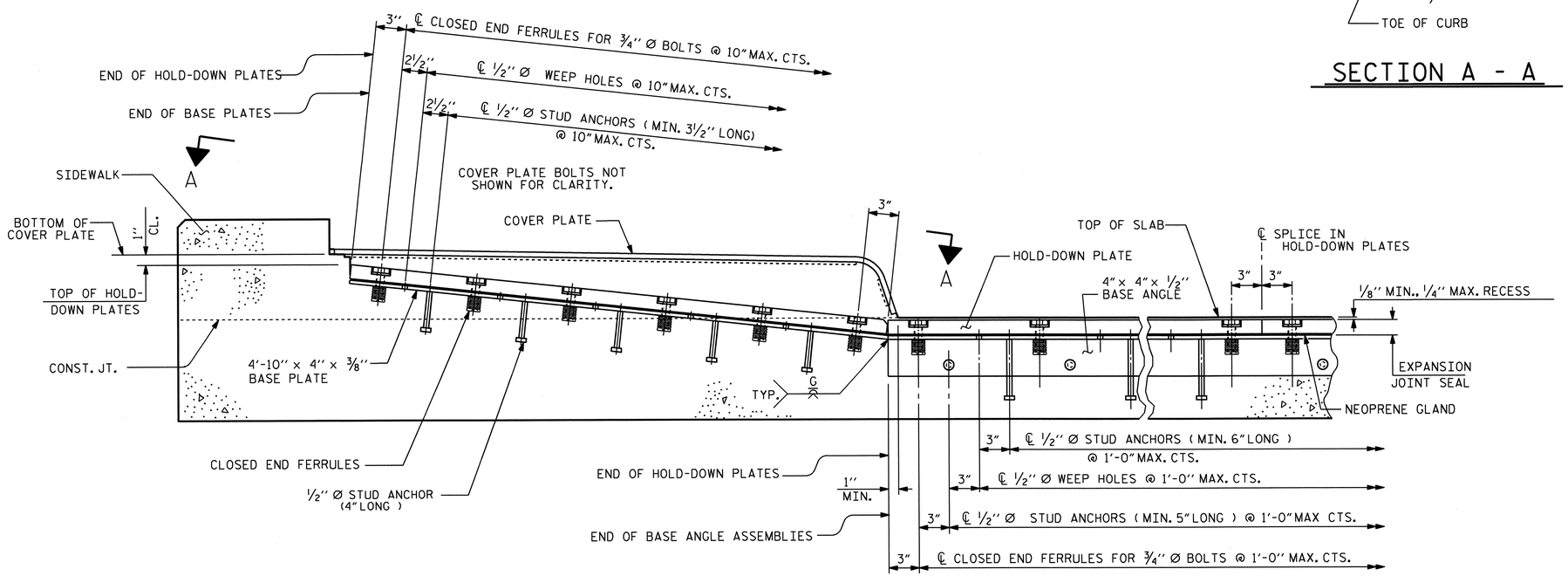

SECTION THRU SIDEWALK NORMAL TO JOINT

PROJECT NO. U-4412
HAYWOOD COUNTY
STATION: 67+29.11 -L-

SHEET 2 OF 4

STATE OF NORTH CAROLINA
DEPARTMENT OF TRANSPORTATION
RALEIGH

STANDARD
EXPANSION JOINT SEAL DETAILS FOR SIDEWALK

NORTH CAROLINA PROFESSIONAL SEAL 20125 ENGINEER MARSHALL C. CAPEL, JR. 2-4-13

ASSEMBLED BY : V.X. NGUYEN	DATE : 12-12-11		
CHECKED BY : D. HODGE	DATE : 10-12		
DRAWN BY : REK 10/87	REV. 2/6/97	EEM/RGW	
CHECKED BY : CRK 1/88	REV. 5/1/06	TLA/GM	
	REV. 10/1/11	MAA/GM	

REVISIONS						SHEET NO.
NO.	BY:	DATE:	NO.	BY:	DATE:	S-32
1			3			TOTAL SHEETS
2			4			70

STD. NO. EJS3

28-NOV-2012 11:07
R:\Structures\Final Plans\Str *1\U-4412_SD_JS.dgn
mpoole

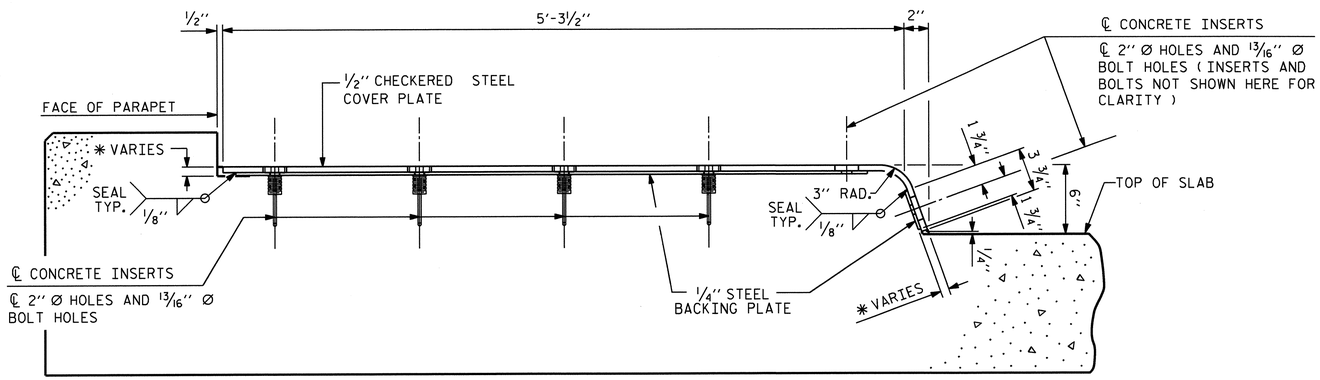

END VIEW

(NORMAL TO SIDEWALK)

* CONCRETE RECESS DIMENSIONS:

13/16" FOR THE SIDE OF THE JOINT HAVING THE 1/2" COVER PLATE WITH A 1/4" BACKING PLATE.

9/16" FOR THE SIDE OF THE JOINT HAVING ONLY THE 1/2" COVER PLATE.

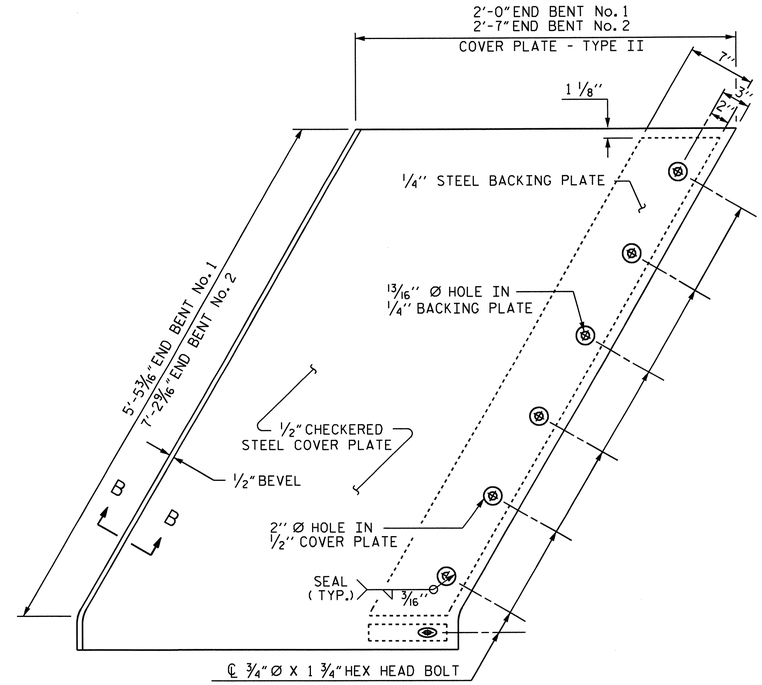

TYPE II - PLAN VIEW

COVER PLATE DETAILS

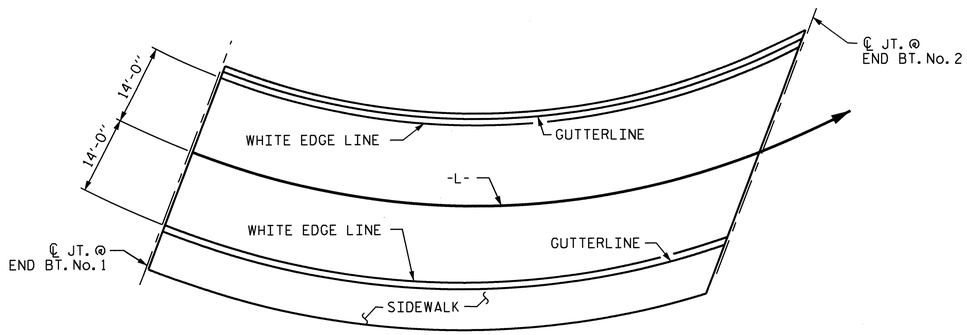

PAVEMENT MARKING ALIGNMENT

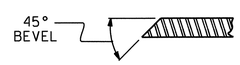

SECTION B - B

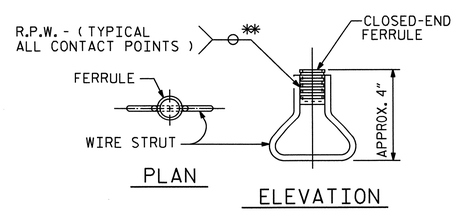

CONCRETE INSERT

** EACH WELDED ATTACHMENT OF WIRE TO FERRULE SHALL DEVELOP THE TENSILE STRENGTH OF THE WIRE.

PROJECT NO. U-4412

HAYWOOD COUNTY

STATION: 67+29.11 -L-

SHEET 3 OF 4

STATE OF NORTH CAROLINA
DEPARTMENT OF TRANSPORTATION
RALEIGH

STANDARD

EXPANSION JOINT SEAL DETAILS FOR SIDEWALK

NORTH CAROLINA PROFESSIONAL SEAL 20125 ENGINEER MATSALA G. CHEEK, JR.
2-4-13

REVISIONS								SHEET NO.
NO.	BY:	DATE:	NO.	BY:	DATE:			S-33
1			3					TOTAL SHEETS
2			4					70

STD. NO. EJS4

ASSEMBLED BY : V.X. NGUYEN		DATE : 12-9-11	
CHECKED BY : D. HODGE		DATE : 10-12	
DRAWN BY : REK 10/87	REV. 10/17/00	RWW/LES	
CHECKED BY : CRK 1/88	REV. 5/1/06	TLA/GM	
	REV. 10/1/11	MAA/GM	

28-NOV-2012 11:06
R:\Structures\FinalPlans\Str *1\U-4412_SD_JS.dgn
mpoole

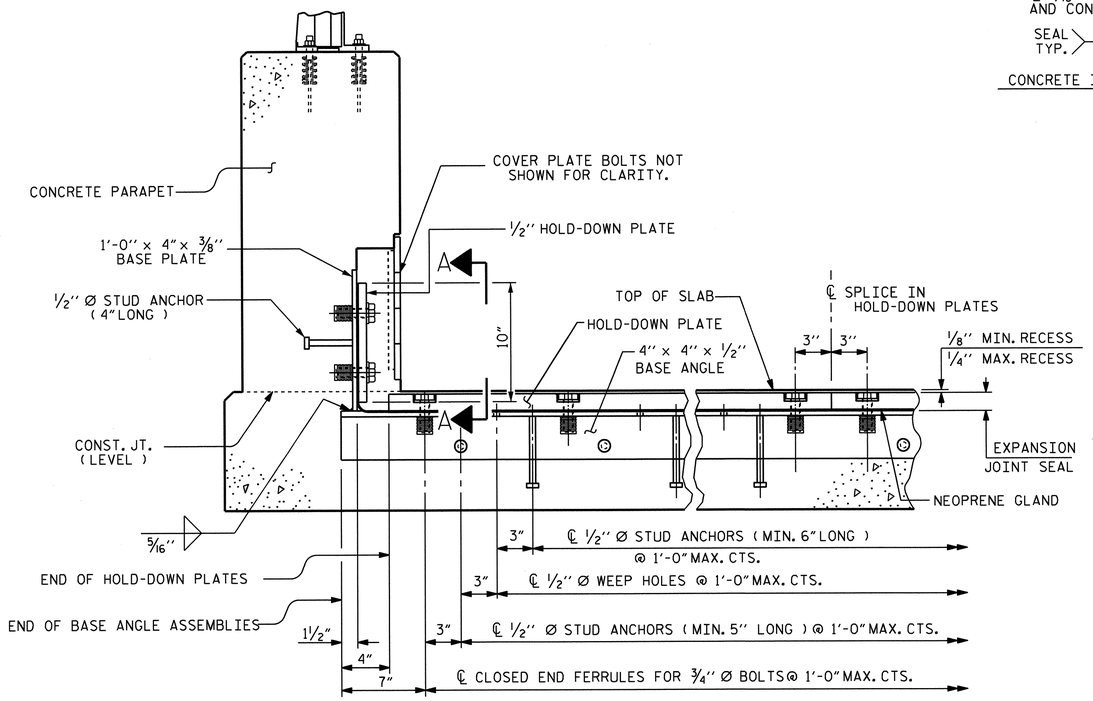

SECTION THRU PARAPET NORMAL TO JOINT

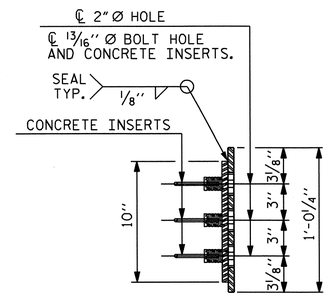

END VIEW

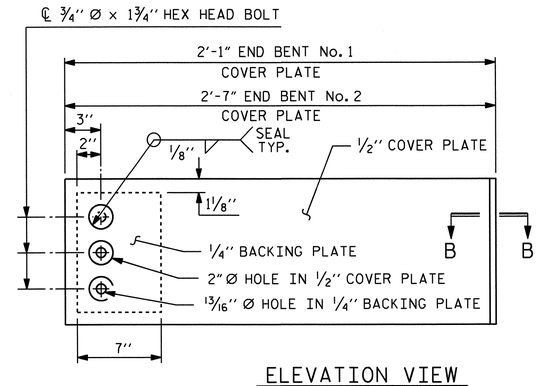

ELEVATION VIEW

COVER PLATE DETAILS

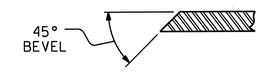

SECTION B - B

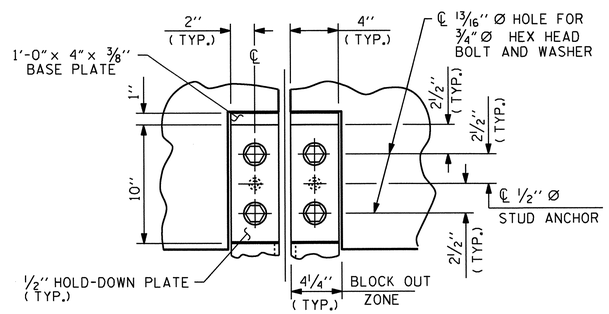

SECTION A - A

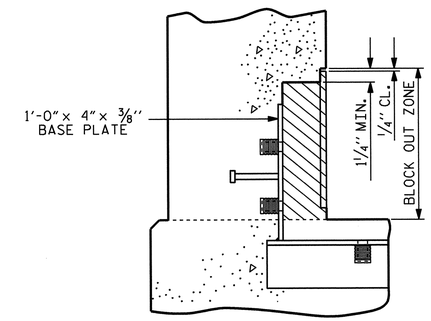

BLOCK OUT DETAIL

SEE "SECTION A - A" FOR OTHER DETAILS.

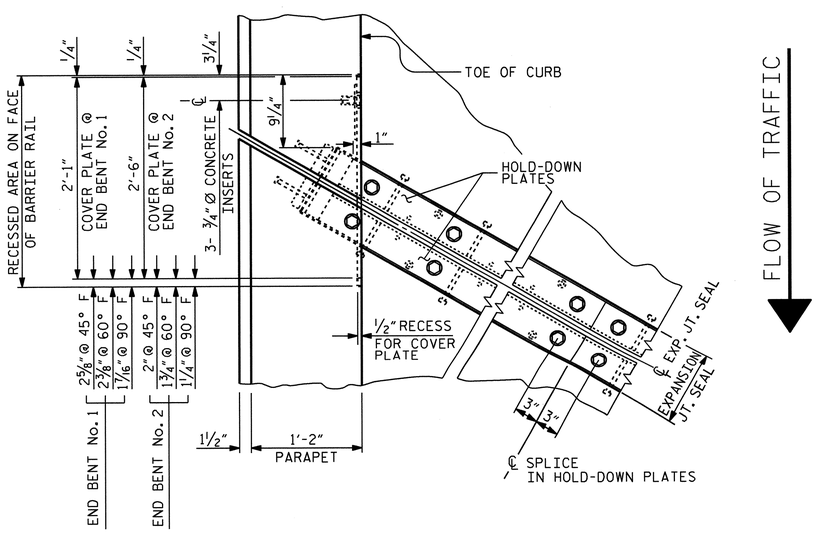

PLAN OF EXPANSION JOINT SEAL - LEFT SIDE

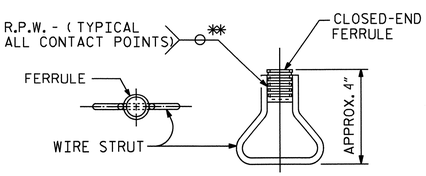

PLAN ELEVATION

CONCRETE INSERT

** EACH WELDED ATTACHMENT OF WIRE TO FERRULE SHALL DEVELOP THE TENSILE STRENGTH OF THE WIRE.

PROJECT NO. U-4412

HAYWOOD COUNTY

STATION: 67+29.11 -L-

SHEET 4 OF 4

STATE OF NORTH CAROLINA
DEPARTMENT OF TRANSPORTATION
RALEIGH

EXPANSION JOINT SEAL DETAILS FOR CONCRETE PARAPET

NORTH CAROLINA PROFESSIONAL SEAL 20125 ENGINEER MARSHAL IGI CORLEY, JR.

REVISIONS						SHEET NO.
NO.	BY:	DATE:	NO.	BY:	DATE:	S-34
1			3			TOTAL SHEETS
2			4			70

DRAWN BY : V.X. NGUYEN DATE : 12-14-11
CHECKED BY : D. HODGE DATE : 10-12

28-NOV-2012 11:06
R:\Structures\FinalPlans\Str *1\U-4412_SD_JS.dgn
mpoole

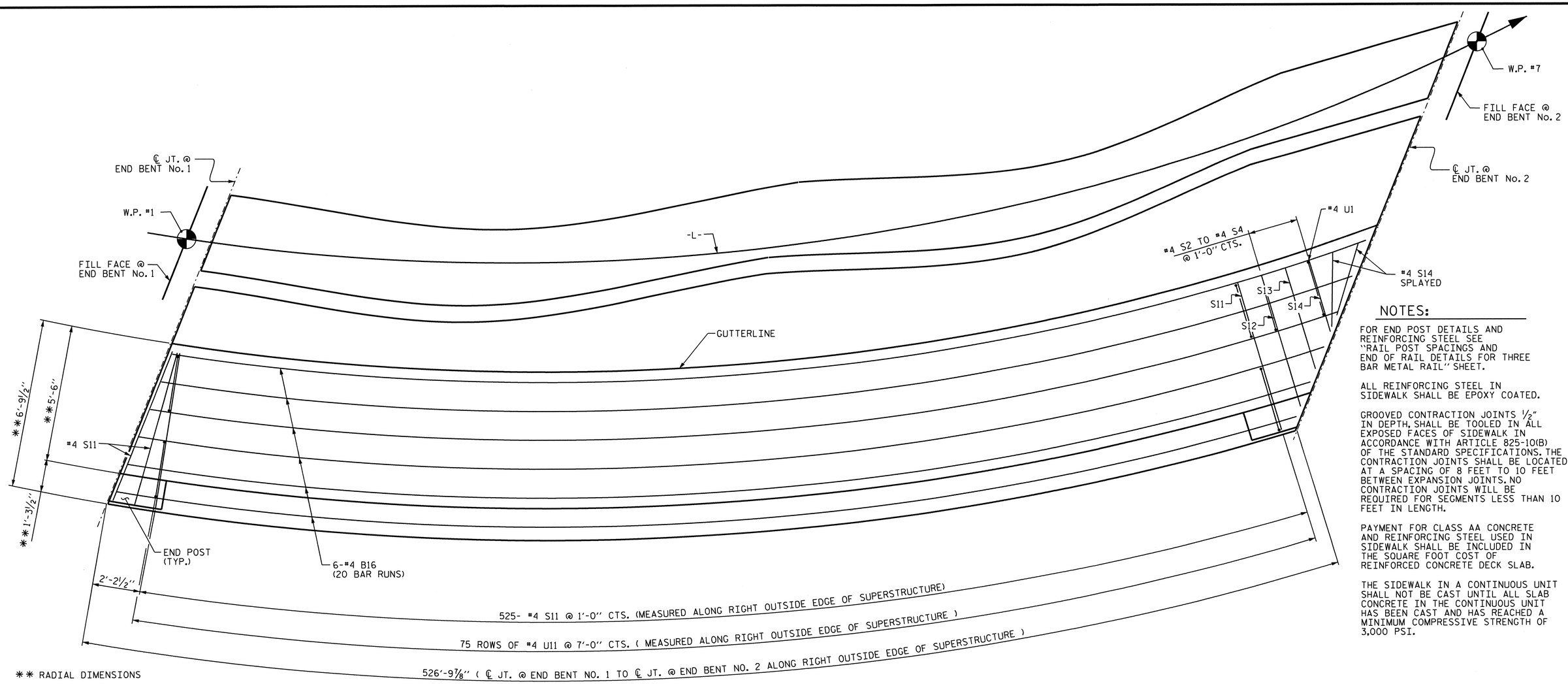

PLAN OF SIDEWALK

SIDEWALK DIMENSIONS ARE MEASURED ALONG ARC AT OUTSIDE EDGE OF SUPERSTRUCTURE.

NOTES:

FOR END POST DETAILS AND REINFORCING STEEL SEE "RAIL POST SPACINGS AND END OF RAIL DETAILS FOR THREE BAR METAL RAIL" SHEET.

ALL REINFORCING STEEL IN SIDEWALK SHALL BE EPOXY COATED.

GROOVED CONTRACTION JOINTS ½" IN DEPTH, SHALL BE TOOLED IN ALL EXPOSED FACES OF SIDEWALK IN ACCORDANCE WITH ARTICLE 825-10(B) OF THE STANDARD SPECIFICATIONS. THE CONTRACTION JOINTS SHALL BE LOCATED AT A SPACING OF 8 FEET TO 10 FEET BETWEEN EXPANSION JOINTS. NO CONTRACTION JOINTS WILL BE REQUIRED FOR SEGMENTS LESS THAN 10 FEET IN LENGTH.

PAYMENT FOR CLASS AA CONCRETE AND REINFORCING STEEL USED IN SIDEWALK SHALL BE INCLUDED IN THE SQUARE FOOT COST OF REINFORCED CONCRETE DECK SLAB.

THE SIDEWALK IN A CONTINUOUS UNIT SHALL NOT BE CAST UNTIL ALL SLAB CONCRETE IN THE CONTINUOUS UNIT HAS BEEN CAST AND HAS REACHED A MINIMUM COMPRESSIVE STRENGTH OF 3,000 PSI.

BILL OF MATERIAL FOR SIDEWALK

BAR	NO	SIZE	TYPE	LENGTH	WEIGHT
* B16	120	4	STR	28'- 3"	2265
* S11	527	4	STR	6'- 2"	2171
* S12	1	4	STR	5'- 6"	4
* S13	1	4	STR	4'- 3"	3
* S14	3	4	STR	3'- 0"	6
* U11	151	4	1	3'- 4"	336
* EPOXY COATED REINFORCING STEEL			LBS.		4,785
CLASS AA CONCRETE			CU. YDS.		61.0

* THESE BARS ARE EPOXY COATED

BAR TYPE

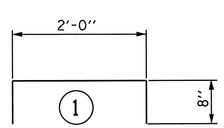

BAR DIMENSIONS ARE OUT TO OUT

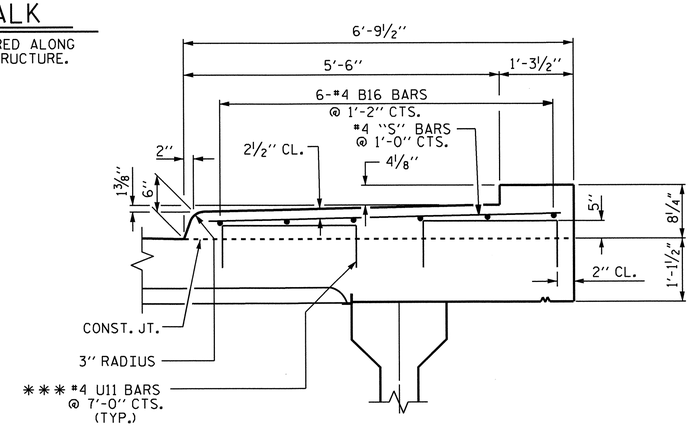

SECTION THRU SIDEWALK

*** "U" BARS MAY BE PUSHED INTO GREEN CONCRETE AFTER SPAN HAS BEEN SCREEDED OFF.

PROJECT NO. U-4412

HAYWOOD COUNTY

STATION: 67+29.11 -L-

STATE OF NORTH CAROLINA
DEPARTMENT OF TRANSPORTATION
RALEIGH

SUPERSTRUCTURE
SIDEWALK DETAILS

NORTH CAROLINA PROFESSIONAL SEAL 20125 ENGINEER MARSHALL F. PADGETT, JR. 2-13-13

REVISIONS							SHEET NO.
NO.	BY:	DATE:	NO.	BY:	DATE:		S-35
1			3				TOTAL SHEETS
2			4				70

DRAWN BY : V.X. NGUYEN DATE : 11-29-11
CHECKED BY : D. HODGE DATE : 9-12

12-FEB-2013 11:08
R:\Structures\Final Plans\Str #1\U-4412_SD_SW.dgn
dahodge

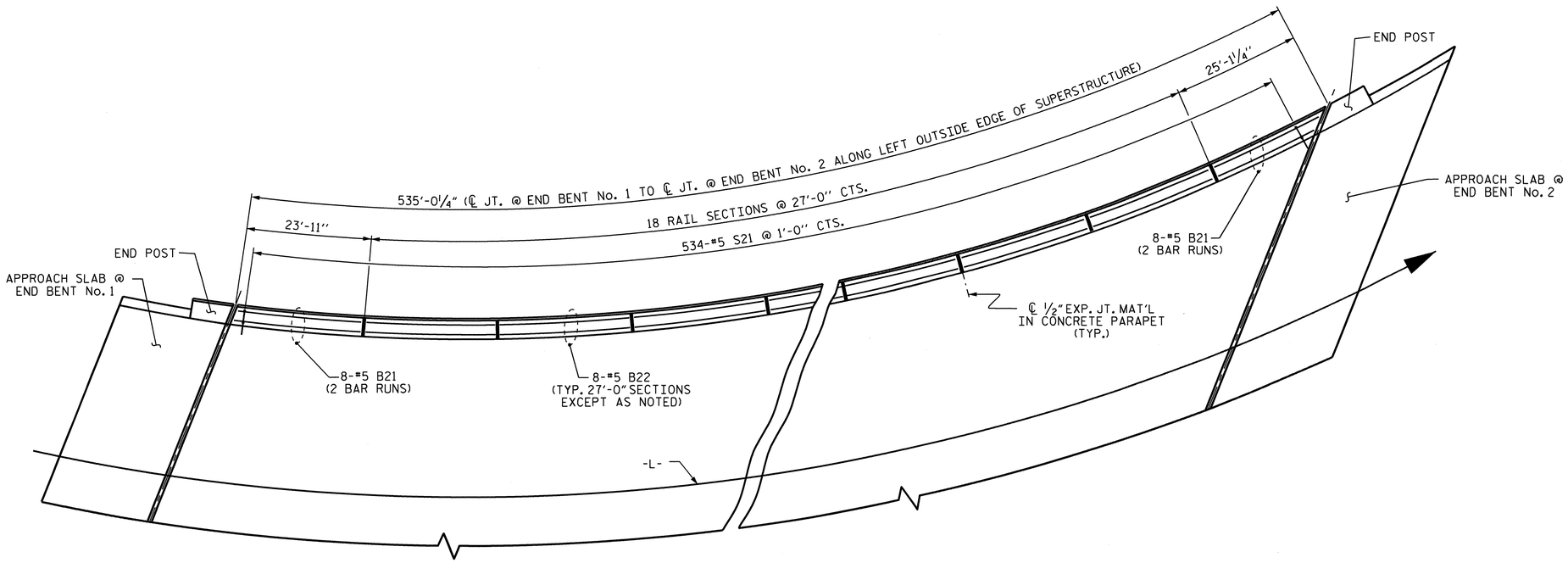

PLAN OF PARAPET

ALL DIMENSIONS ARE TAKEN ALONG LEFT OUTSIDE EDGE OF SUPERSTRUCTURE

FOR DETAILS OF END POST ON APPROACH SLABS, SEE "APPROACH SLAB" SHEETS.

NOTES

THE PARAPET IN THE CONTINUOUS UNIT SHALL NOT BE CAST UNTIL ALL SLAB CONCRETE IN THE CONTINUOUS UNIT HAS BEEN CAST AND HAS REACHED A MINIMUM COMPRESSIVE STRENGTH OF 3,000 PSI.

ALL REINFORCING STEEL IN PARAPET AND END POSTS SHALL BE EPOXY COATED.

THE #5 "S" BARS MAY BE SHIFTED SLIGHTLY IN ORDER TO MAINTAIN A 2" MINIMUM CLEARANCE TO THE ½" EXPANSION JOINT MATERIAL IN PARAPET.

FOR DETAILS OF CONCRETE INSERTS IN END POSTS, SEE SHEET 3 OF 5.

FOR DETAILS OF GUARDRAIL ANCHOR ASSEMBLIES, SEE "GUARDRAIL ANCHORAGE DETAILS FOR METAL RAILS" SHEET.

GROOVED CONTRACTION JOINTS, ½" IN DEPTH, SHALL BE TOOLED IN ALL EXPOSED FACES OF THE PARAPET IN ACCORDANCE WITH ARTICLE 825-10(B) OF THE STANDARD SPECIFICATIONS. THE CONTRACTION JOINT SHALL BE LOCATED AT EACH THIRD POINT BETWEEN PARAPET EXPANSION JOINTS. ONLY ONE CONTRACTION JOINTS IS REQUIRED AT MIDPOINT OF PARAPET SEGMENTS LESS THAN 20 FEET IN LENGTH AND NO CONTRACTION JOINTS ARE REQUIRED FOR THOSE SEGMENTS LESS THAN 10 FEET IN LENGTH.

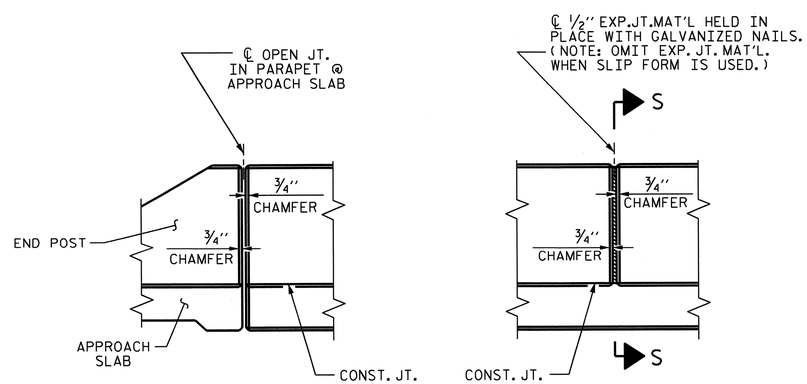

ELEVATION AT EXPANSION JOINTS

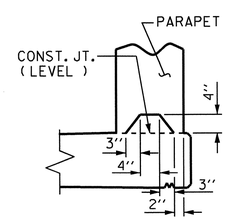

SECTION S-S

AT DAM IN OPEN JOINT (THIS IS TO BE USED ONLY WHEN SLIP FORM IS USED)

NORTH CAROLINA PROFESSIONAL SEAL 20125 ENGINEER MARSHALL G. CREEK, JR.
11-29-12

PROJECT NO. U-4412
HAYWOOD COUNTY
STATION: 67+29.11 -L-

SHEET 1 OF 5

STATE OF NORTH CAROLINA
DEPARTMENT OF TRANSPORTATION
RALEIGH

SUPERSTRUCTURE
1'-2" X 2'-6"
CONCRETE PARAPET
DETAILS

REVISIONS						SHEET NO.
NO.	BY:	DATE:	NO.	BY:	DATE:	S-36
1			3			TOTAL SHEETS
2			4			70

DRAWN BY : V.X. NGUYEN DATE : 5-12
CHECKED BY : D. HODGE DATE : 8-12

29-NOV-2012 11:40
R:\Structures\FinalPlans\Str *1\U-4412_SD_2MR.dgn
dahodge

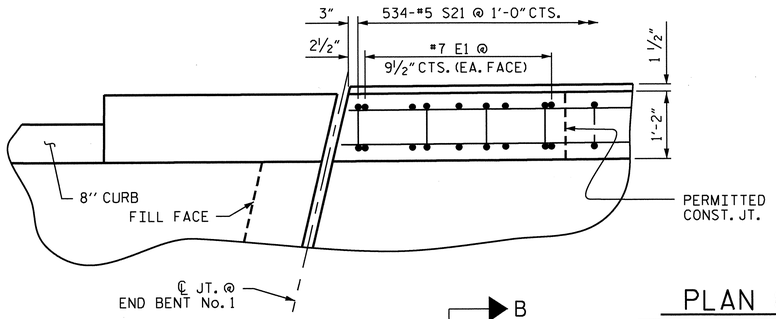

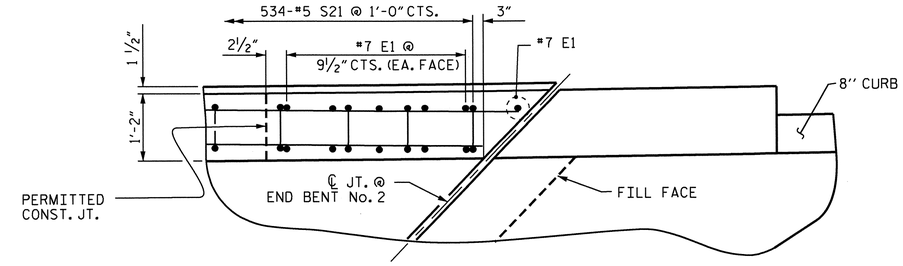

PLAN OF PARAPET

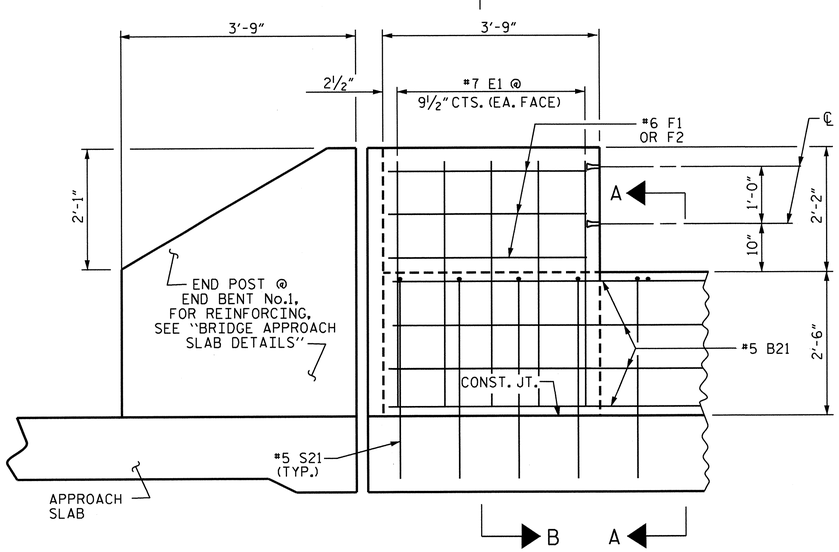

ELEVATION

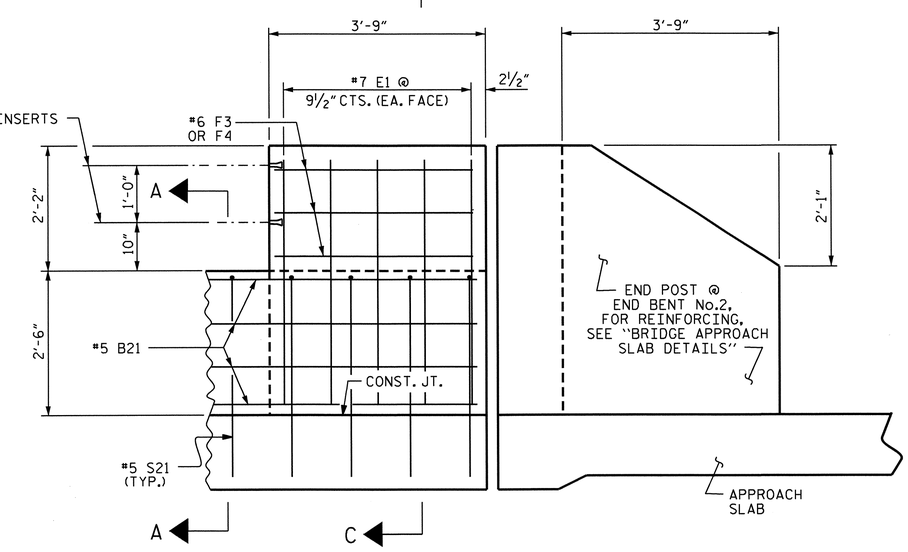

ELEVATION

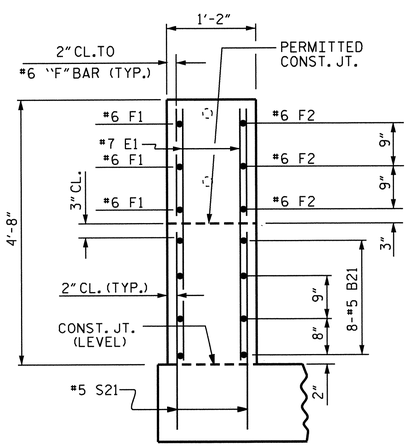

SECTION B-B

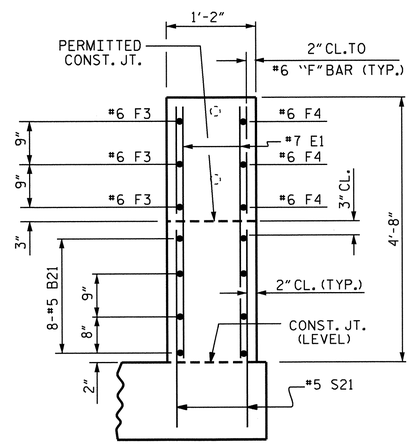

SECTION C-C

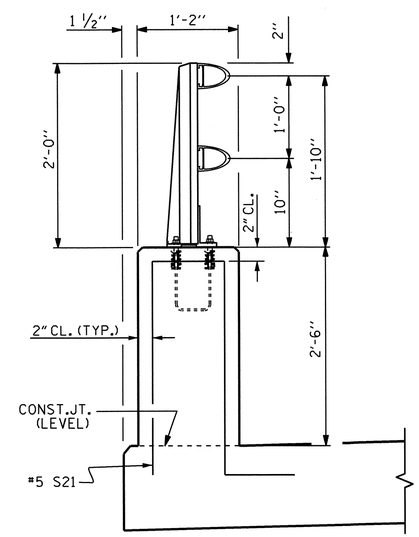

SECTION A-A

BILL OF MATERIAL

FOR 1'-2" X 2'-6" CONCRETE PARAPET

BAR	No.	SIZE	TYPE	LENGTH	WEIGHT
* B21	32	#5	STR.	14'-2"	473
* B22	144	#5	STR.	26'-7"	3993
* E1	21	#7	STR.	4'-3"	182
* F1	3	#6	STR.	3'-5"	15
* F2	3	#6	STR.	3'-7"	16
* F3	3	#6	STR.	3'-6"	16
* F4	3	#6	STR.	4'-3"	19
* S21	534	#5	1	7'-2"	3992

* EPOXY COATED REINFORCING STEEL 8,706 LBS.

CLASS AA CONCRETE 58.5 C.Y.

1'-2" X 2'-6" CONCRETE PARAPET 534.87 LIN. FT.

* THESE BARS ARE EPOXY COATED

BAR TYPE

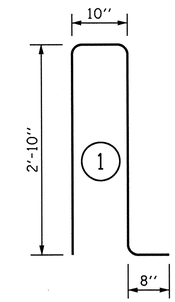

BAR DIMENSIONS ARE OUT TO OUT

PROJECT NO. U-4412

HAYWOOD COUNTY

STATION: 67+29.11 -L-

SHEET 2 OF 5

STATE OF NORTH CAROLINA
DEPARTMENT OF TRANSPORTATION
RALEIGH

SUPERSTRUCTURE
1'-2" X 2'-6"
CONCRETE PARAPET
DETAILS

NORTH CAROLINA PROFESSIONAL SEAL 20125 ENGINEER MARSHALL G. CHECK, JR.
11-29-12

REVISIONS						SHEET NO.
NO.	BY:	DATE:	NO.	BY:	DATE:	S-37
1			3			TOTAL SHEETS
2			4			70

DRAWN BY : V.X. NGUYEN DATE : 5-12
CHECKED BY : D. HODGE DATE : 8-12

29-NOV-2012 11:41
R:\Structures\Final Plans\Str *1\U-4412_SD_2MR.dgn
dahodge

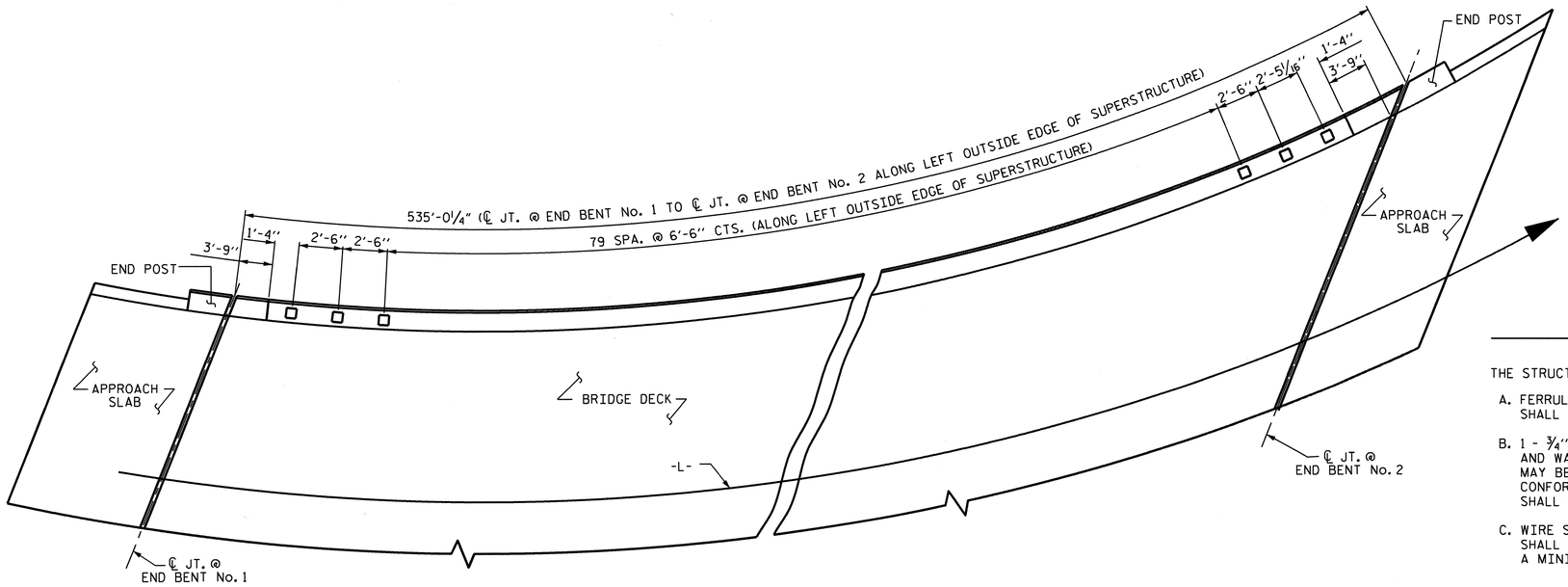

PLAN OF RAIL POST SPACINGS

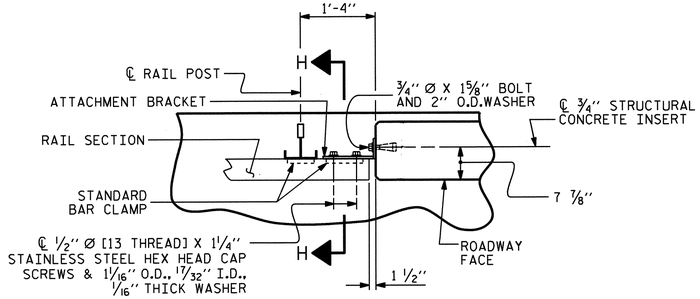

PLAN - RAIL AND END POST

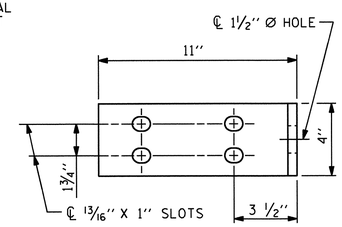

ELEVATION

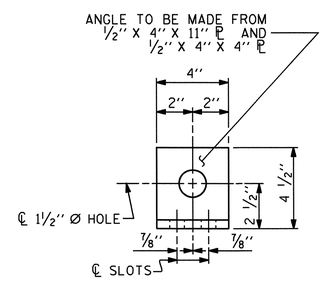

END VIEW (FIX AND EXP.)

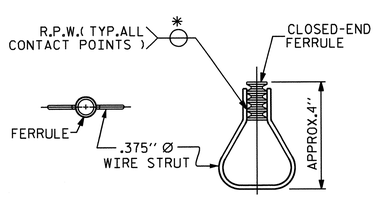

PLAN ELEVATION

STRUCTURAL CONCRETE INSERT

* EACH WELDED ATTACHMENT OF WIRE TO FERRULE SHALL DEVELOP THE TENSILE STRENGTH OF THE WIRE.

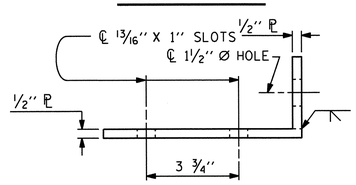

TOP VIEW

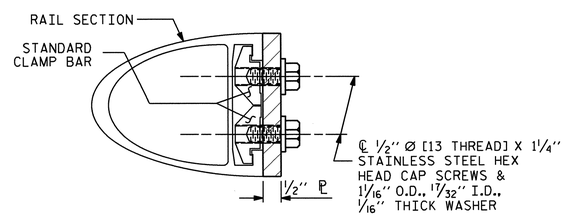

SECTION H-H (FIX)

FIXED

DETAILS FOR ATTACHING METAL RAIL TO END POST

NOTES

STRUCTURAL CONCRETE INSERT

THE STRUCTURAL CONCRETE INSERT ASSEMBLY SHALL CONSIST OF THE FOLLOWING COMPONENTS:

A. FERRULES SHALL BE MADE FROM STEEL MEETING THE REQUIREMENTS OF AASHTO M169, GRADE 12L14 AND SHALL HAVE A MINIMUM LENGTH OF THREADS OF 1½".

B. 1 - ¾" Ø X 1⅝" BOLT WITH WASHER. BOLT SHALL CONFORM TO THE REQUIREMENTS OF ASTM A307. BOLT AND WASHER SHALL BE GALVANIZED. (AT THE CONTRACTOR'S OPTION, STAINLESS STEEL BOLT AND WASHER MAY BE USED AS AN ALTERNATE FOR THE ¾" Ø X 1⅝" GALVANIZED BOLT AND WASHER. THEY SHALL CONFORM TO OR EXCEED THE MECHANICAL REQUIREMENTS OF ASTM A307. THE USE OF THIS ALTERNATE SHALL BE APPROVED BY THE ENGINEER.)

C. WIRE STRUT SHOWN IN THE CONCRETE INSERT ASSEMBLY DETAIL IS THE MINIMUM ALLOWABLE SIZE AND SHALL HAVE A MINIMUM TENSILE STRENGTH OF 100,000 PSI. AS AN OPTION, A 7/16" Ø WIRE STRUT WITH A MINIMUM TENSILE STRENGTH OF 90,000 PSI IS ACCEPTABLE.

NOTES

METAL RAIL TO END POST CONNECTION

THE METAL RAIL TO END POST CONNECTION SHALL CONSIST OF THE FOLLOWING COMPONENTS:

A. ½" PLATES SHALL CONFORM TO AASHTO M270 GRADE 36 AND SHALL BE GALVANIZED AFTER FABRICATION.

B. ¾" STRUCTURAL CONCRETE INSERT SHALL HAVE A WORKING LOAD SHEAR CAPACITY OF 4800 LBS. THE FERRULES SHALL ENGAGE A ¾"Ø X 1⅝" BOLT WITH 2" O.D. WASHER IN PLACE. THE ¾"Ø X 1⅝" BOLT SHALL HAVE N.C. THREADS.

C. CAP SCREWS FOR RAIL ATTACHMENT TO ANGLE SHALL CONFORM TO THE REQUIREMENTS OF ASTM F593 ALLOY 305 STAINLESS STEEL. CAP SCREWS TO BE CENTERED IN SLOTS AT 60°F.

D. STANDARD CLAMP BARS (SEE "2 BAR METAL RAIL" SHEET 5 OF 5).

E. ½" Ø PIPE SLEEVES (IF REQUIRED) TO BE GALVANIZED.

THE COST OF THE STANDARD CLAMP BARS AND CAP SCREWS USED IN THE METAL RAIL TO END POST CONNECTION SHALL BE INCLUDED IN THE UNIT CONTRACT PRICE BID FOR LINEAR FEET OF 2 BAR METAL RAILS.

THE ¾" STRUCTURAL CONCRETE INSERT WITH BOLT SHALL BE ASSEMBLED IN THE SHOP.

THE COST OF THE ¾" STRUCTURAL CONCRETE INSERT ASSEMBLY, AND THE ½" PLATES COMPLETE IN PLACE SHALL BE INCLUDED IN THE VARIOUS PAY ITEMS.

THE CONTRACTOR, AT HIS OPTION, MAY USE AN ADHESIVE BONDING SYSTEM IN LIEU OF THE STRUCTURAL CONCRETE INSERT EMBEDDED IN THE END POST. IF THE ADHESIVE BONDING SYSTEM IS USED, THE ¾" Ø X 1⅝" BOLT WITH WASHER SHALL BE REPLACED WITH A ¾"Ø X 6½" BOLT AND 2" O.D. WASHER. ALL SPECIFICATIONS THAT APPLY TO THE ¾" Ø X 1⅝" BOLT SHALL APPLY TO THE ¾"Ø X 6 ½" BOLT. FIELD TESTING OF THE ADHESIVE BONDING SYSTEM IS NOT REQUIRED.

PROJECT NO. U-4412
HAYWOOD COUNTY
STATION: 67+29.11 -L-

SHEET 3 OF 5

STATE OF NORTH CAROLINA
DEPARTMENT OF TRANSPORTATION
RALEIGH

STANDARD
RAIL POST SPACINGS
AND
END OF RAIL DETAILS
FOR TWO BAR METAL RAILS

NORTH CAROLINA PROFESSIONAL SEAL 20125 ENGINEER MARSHALL A. SHEEL, JR.
11-29-12

REVISIONS								SHEET NO.
NO.	BY:	DATE:	NO.	BY:	DATE:			S-38
1			3					TOTAL SHEETS
2			4					70

ASSEMBLED BY : V.X. NGUYEN		DATE :	5-12
CHECKED BY : D. HODGE		DATE :	8-12
DRAWN BY : FCJ 1/88	REV. 5/7/03		RWW/JTE
CHECKED BY : CRK 3/89	REV. 5/1/06		TLA/GM
	REV. 10/1/11		MAA/GM

29-NOV-2012 11:41
R:\Structures\FinalPlans\Str *1\U-4412_SD_2MR.dgn
dahodge

STD. NO. BMR2

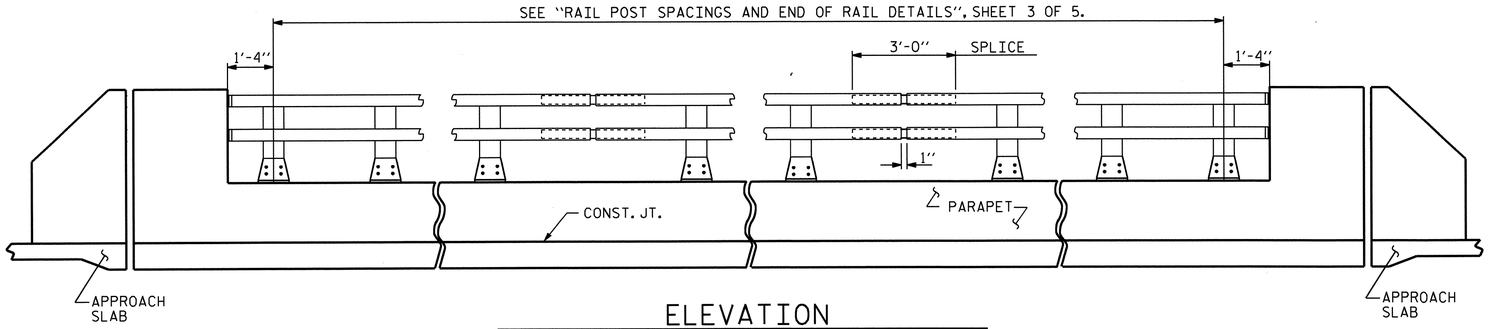

ELEVATION

NOTE : FOR ATTACHMENT OF METAL RAIL TO END POST, SEE SHEET 3 OF 5.

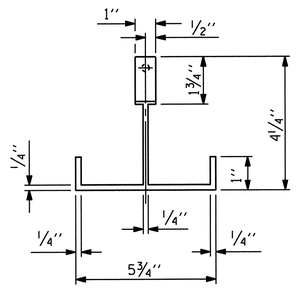

PLAN

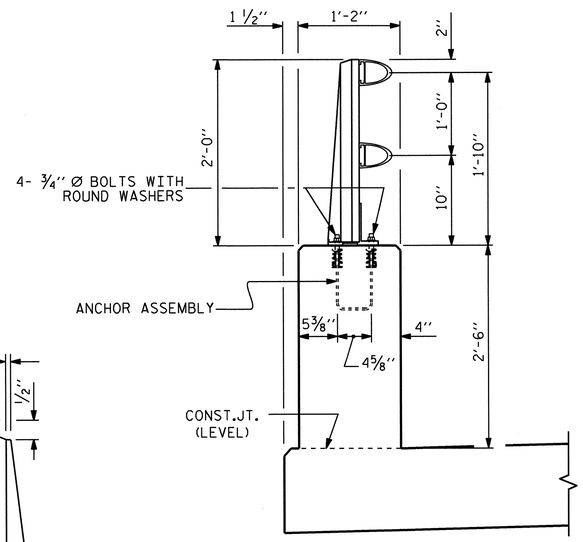

SECTION THRU PARAPET AND RAIL

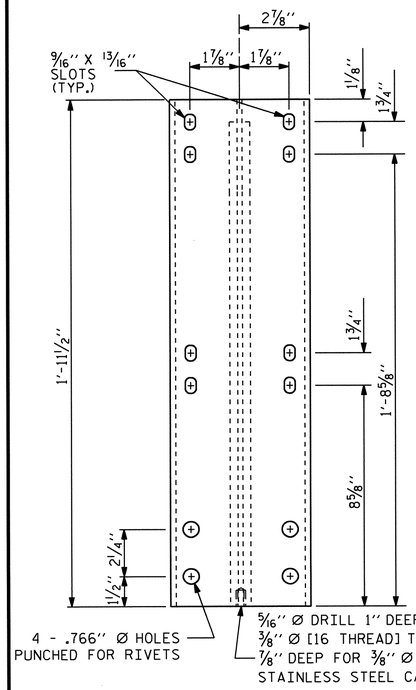

FRONT ELEVATION

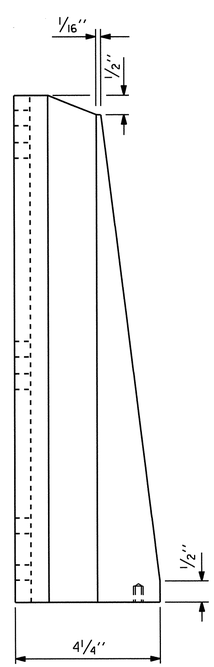

SIDE ELEVATION

DETAILS OF POST

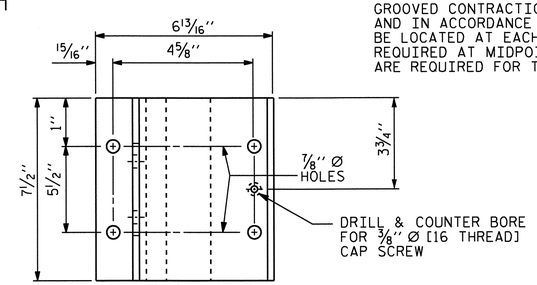

PLAN

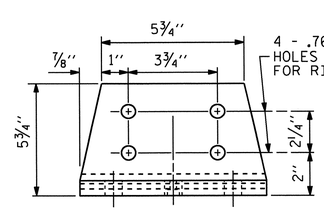

FRONT ELEVATION

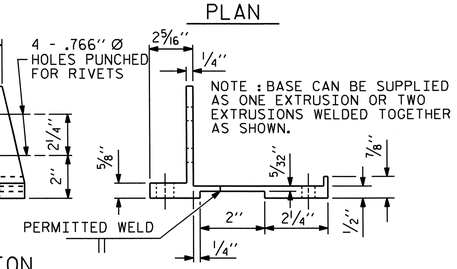

SIDE ELEVATION

POST BASE DETAILS

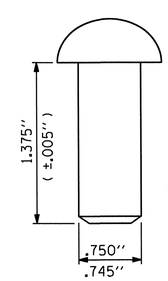

RIVET DETAIL

NOTES

AT THE CONTRACTOR'S OPTION, METAL RAIL MAY BE EITHER ALUMINUM OR GALVANIZED STEEL IN ACCORDANCE WITH THE REQUIREMENTS OF THE GENERAL NOTES AND THE FOLLOWING SPECIFICATIONS FOR THE ALTERNATE MATERIALS; HOWEVER, THE CONTRACTOR WILL BE REQUIRED TO USE THE SAME RAIL MATERIAL ON ALL STRUCTURES ON THE PROJECT FOR WHICH METAL RAIL IS DESIGNATED.

ALUMINUM RAILS

MATERIAL FOR POSTS, BASES AND RAILS, EXPANSION BARS AND CLAMP BARS SHALL BE ASTM B-221 ALLOY 6061-T6.

MATERIAL FOR RIVETS SHALL BE ASTM B316 ALLOY 6061-T6. RIVETS SHALL BE STANDARD BUTTON HEAD AND CONE POINT COLD DRIVEN AS PER DRAWING.

THE BASE OF RAIL POSTS, OR ANY OTHER ALUMINUM SURFACE IN CONTACT WITH CONCRETE SHALL BE THOROUGHLY COATED WITH AN ALUMINUM IMPREGNATED CAULKING COMPOUND OF APPROVED QUALITY.

MATERIAL FOR SHIMS TO BE ASTM B209 ALLOY 6061-T6.

GALVANIZED STEEL RAILS

MATERIAL AND GALVANIZING ARE TO CONFORM TO THE FOLLOWING SPECIFICATIONS:

POST, POST BASES, RAILS, EXPANSION BARS AND CLAMP BARS: AASHTO M270 GRADE 36 STRUCTURAL STEEL - GALVANIZED TO AASHTO M111.

RIVETS: RIVETS SHALL MEET THE REQUIREMENTS OF ASTM A502 FOR GRADE 1 RIVETS.

THE CUT ENDS OF GALVANIZED STEEL RAILING, AFTER GRINDING SMOOTH SHALL BE GIVEN TWO COATS OF ZINC RICH PAINT MEETING THE REQUIREMENTS OF FEDERAL SPECIFICATION MIL-P-26915 USAF TYPE 1, OR OF FEDERAL SPECIFICATIONS TT-P-641.

SHIMS: SHIMS SHALL MEET THE REQUIREMENTS OF ASTM A570 FOR GRADE 33 OR A611 FOR GRADE C AND SHALL BE GALVANIZED IN ACCORDANCE WITH AASHTO M111.

RAIL CAPS: RAIL CAPS SHALL MEET THE REQUIREMENTS OF ASTM A570 FOR GRADE 33 OR A611 FOR GRADE C AND SHALL BE GALVANIZED IN ACCORDANCE WITH AASHTO M111.

GENERAL NOTES

RAILING SHALL BE CONTINUOUS FROM END POST TO END POST OF BRIDGE. EACH JOINT IN RAIL LENGTH SHALL BE SPLICED AS DETAILED. PANEL LENGTHS OF RAIL SHALL BE ATTACHED TO A MINIMUM OF THREE POSTS.

FOR END OF RAIL TO CLEAR FACE OF CONCRETE END POST DIMENSION, SEE SHEET 3 OF 5.

CAP SCREWS SHALL BE ASTM F593 ALLOY 305 STAINLESS STEEL. WASHERS SHALL MEET THE REQUIREMENTS OF ASTM F844 EXCEPT THEY SHALL BE MADE FROM ALLOY 304 STAINLESS STEEL.

CERTIFIED MILL REPORTS ARE REQUIRED FOR RAILS AND POSTS. SHOP INSPECTION IS NOT REQUIRED.

METAL RAIL POSTS SHALL BE SET NORMAL TO CURB GRADE.

METHOD OF MEASUREMENT FOR METAL RAILS: FOR LENGTH OF METAL RAILS TO BE PAID FOR, SEE THE STANDARD SPECIFICATIONS.

CURVED RAIL USAGE: WHERE RAILS ARE TO BE USED ON BRIDGES ON HORIZONTAL AND/OR VERTICAL CURVATURE THE CONTRACTOR MAY, AT HIS OPTION, HAVE THE REQUIRED CURVATURE IN THE RAIL FORMED IN THE SHOP OR IN THE FIELD. IN EITHER EVENT, THE RAIL SHALL CONFORM WITHOUT BUCKLING OR KINKING TO THE REQUIRED CURVATURE IN A UNIFORM MANNER ACCEPTABLE TO THE ENGINEER.

TO INSURE FUTURE IDENTIFICATION OF THE FABRICATOR, A PERMANENT IDENTIFYING MARK SHALL BE PLACED ON EACH POST. THE METHOD OF MARKING AND LOCATION SHALL BE SUCH THAT IT DOES NOT DETRACT FROM THE APPEARANCE OF THE POST, BUT REMAINS VISIBLE AFTER RAIL PLACEMENT.

SHIMS SHALL BE USED AS NECESSARY FOR POST ALIGNMENT.

ALLOY 6351-T5 MAY BE SUBSTITUTED FOR ALLOY 6061-T6 WHERE APPLICABLE.

MINOR VARIATIONS IN DETAILS OF METAL RAIL WILL BE CONSIDERED. DETAILS OF SUCH VARIATIONS, IF DESIRED, SHALL BE SUBMITTED FOR APPROVAL.

GROOVED CONTRACTION JOINTS, 1/2" IN DEPTH, SHALL BE TOOLED IN ALL EXPOSED FACES OF THE PARAPET AND IN ACCORDANCE WITH ARTICLE 825-10(B) OF THE STANDARD SPECIFICATIONS. A CONTRACTION JOINT SHALL BE LOCATED AT EACH THIRD POINT BETWEEN PARAPET EXPANSION JOINTS. ONLY ONE CONTRACTION JOINT IS REQUIRED AT MIDPOINT OF PARAPET SEGMENTS LESS THAN 20 FEET IN LENGTH AND NO CONTRACTION JOINTS ARE REQUIRED FOR THOSE SEGMENTS LESS THAN 10 FEET IN LENGTH.

PAY LENGTH = 526.47 LIN. FT.

PROJECT NO. U-4412

HAYWOOD COUNTY

STATION: 67+29.11 -L-

SHEET 4 OF 5

STATE OF NORTH CAROLINA
DEPARTMENT OF TRANSPORTATION
RALEIGH

STANDARD

2 BAR METAL RAIL

NORTH CAROLINA PROFESSIONAL SEAL 20125 ENGINEER MARSHALL L. CHECK, JR. 11-29-12

ASSEMBLED BY :	V.X. NGUYEN	DATE :	5-12
CHECKED BY :	D. HODGE	DATE :	8-12

DRAWN BY : EEM 6/94	REV. 5/7/03R	RWW/JTE
CHECKED BY : RGW 6/94	REV. 5/1/06	TLA/GM
	REV. 10/1/11	MAA/GM

REVISIONS								SHEET NO.
NO.	BY:	DATE:	NO.	BY:	DATE:			S-39
1			3					TOTAL SHEETS
2			4					70

STD. NO. BMR3

29-NOV-2012 11:42
R:\Structures\Final Plans\Str *1\U-4412_SD_2MR.dgn
dahodge

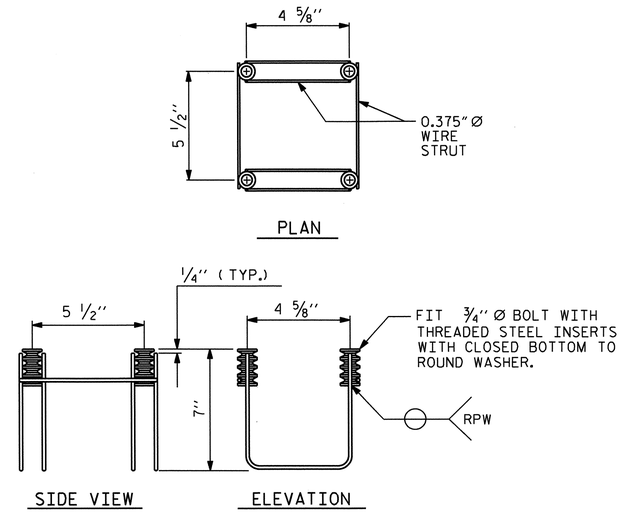

4-BOLT METAL RAIL ANCHOR ASSEMBLY

(84 ASSEMBLIES REQUIRED)

NOTES

STRUCTURAL CONCRETE ANCHOR ASSEMBLY

THE STRUCTURAL CONCRETE ANCHOR ASSEMBLY SHALL CONSIST OF THE FOLLOWING COMPONENTS :

A. FERRULES SHALL BE MADE FROM STEEL MEETING THE REQUIREMENTS OF AASHTO M169, GRADE 12L14 AND SHALL HAVE A MINIMUM LENGTH OF THREADS OF 2" FOR 3/4" FERRULES.

B. 4 - 3/4" Ø X 2 1/2" BOLTS WITH WASHERS. BOLTS SHALL CONFORM TO THE REQUIREMENTS OF ASTM A307. BOLTS AND WASHERS SHALL BE GALVANIZED. AT THE CONTRACTOR'S OPTION, STAINLESS STEEL BOLTS AND WASHERS MAY BE USED AS AN ALTERNATE FOR THE 3/4" Ø X 2 1/2" GALVANIZED BOLTS AND WASHERS. THEY SHALL CONFORM TO OR EXCEED THE MECHANICAL REQUIREMENTS OF ASTM A307. THE USE OF THIS ALTERNATE SHALL BE APPROVED BY THE ENGINEER.

C. WIRE STRUT SHOWN IN THE CONCRETE ANCHOR ASSEMBLY DETAIL IS THE MINIMUM ALLOWABLE SIZE AND SHALL HAVE A MINIMUM TENSILE STRENGTH OF 100,000 PSI. AS AN OPTION, A 7/16" Ø WIRE STRUT WITH A MINIMUM TENSILE STRENGTH OF 90,000 PSI IS ACCEPTABLE.

D. THE METAL RAIL ANCHOR ASSEMBLIES TO BE HOT DIPPED GALVANIZED TO CONFORM TO REQUIREMENTS OF AASHTO M111.

E. THE COST OF THE METAL RAIL ANCHOR ASSEMBLY WITH BOLTS AND WASHERS COMPLETE IN PLACE SHALL BE INCLUDED IN THE PRICE BID FOR LINEAR FEET OF METAL RAIL.

F. BOLTS TO BE TIGHTENED ONE-HALF TURN WITH A WRENCH FROM A FINGER-TIGHT POSITION.

THE CONTRACTOR MAY USE ADHESIVELY ANCHORED ANCHOR BOLTS IN PLACE OF THE METAL RAIL ANCHOR ASSEMBLY. LEVEL ONE FIELD TESTING IS REQUIRED, AND THE YIELD LOAD OF THE 3/4"Ø BOLT IS 10 KIPS. FOR ADHESIVELY ANCHORED ANCHOR BOLTS OR DOWELS, SEE THE STANDARD SPECIFICATIONS.

WHEN ADHESIVELY ANCHORED ANCHOR BOLTS ARE USED, BOLTS SHALL MEET THE REQUIREMENTS OF ASTM F593 ALLOY 304 STAINLESS STEEL WITH MINIMUM 75,000 PSI ULTIMATE STRENGTH. NUTS SHALL MEET THE REQUIREMENTS OF ASTM F594 ALLOY 304 STAINLESS STEEL AND WASHERS SHALL MEET THE REQUIREMENTS OF ASTM F844 EXCEPT THEY SHALL BE MADE FROM ALLOY 304 STAINLESS STEEL.

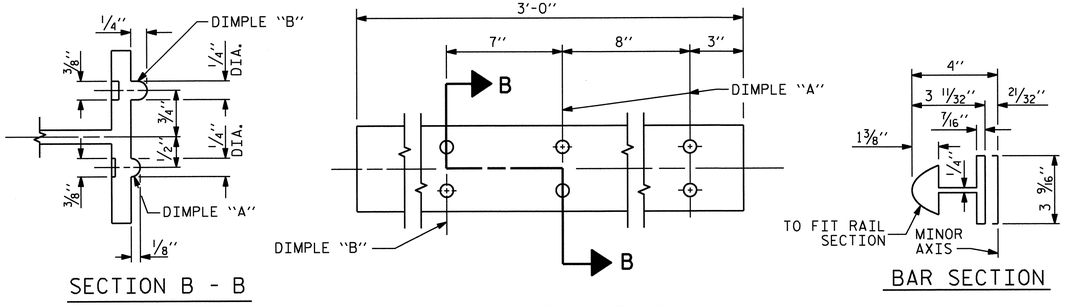

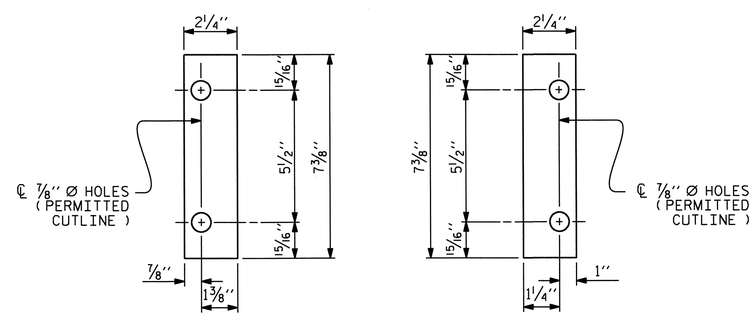

SHIM DETAILS

NOTE :
SHIMS MAY BE CUT ALONG PERMITTED CUTLINE OR SLOTTED TO EDGE OF PLATE TO FACILITATE PLACEMENT.

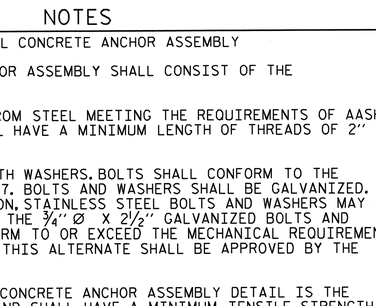

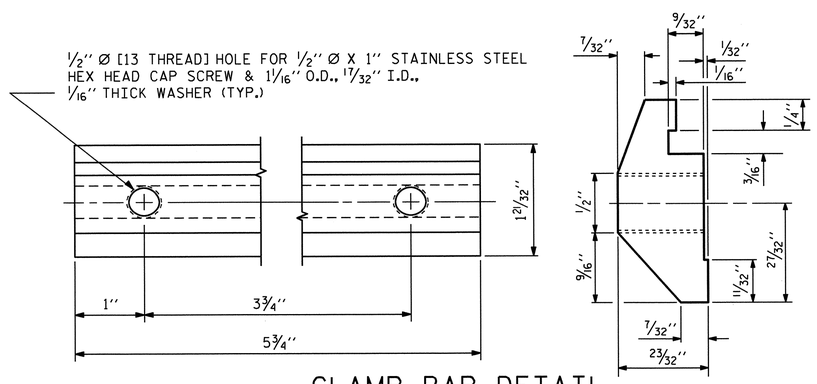

CLAMP BAR DETAIL

(4 REQUIRED PER POST)

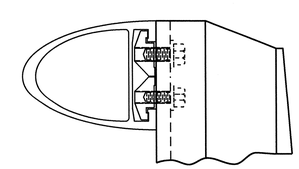

CLAMP ASSEMBLY

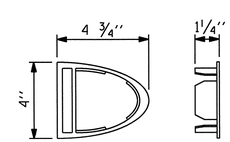

RAIL CAP

PROJECT NO. U-4412
HAYWOOD COUNTY
STATION: 67+29.11 -L-

SHEET 5 OF 5

STATE OF NORTH CAROLINA
DEPARTMENT OF TRANSPORTATION
RALEIGH

STANDARD

2 BAR METAL RAIL

ASSEMBLED BY : V.X. NGUYEN	DATE : 5-12		
CHECKED BY : D. HODGE	DATE : 8-12		
DRAWN BY : EEM 6/94	REV. 8/16/99	MAB/LES	
CHECKED BY : RGW 6/94	REV. 5/1/06R	KMM/GM	
	REV. 10/1/11	MAA/GM	

REVISIONS						SHEET NO.
NO.	BY:	DATE:	NO.	BY:	DATE:	S-40
1			3			TOTAL SHEETS
2			4			70

NORTH CAROLINA PROFESSIONAL SEAL 20125 ENGINEER MARSHALL C. LEWIS, JR.
11-29-12

STD. NO. BMR4

29-NOV-2012 11:42
R:\Structures\Final Plans\Str *1\U-4412_SD_2MR.dgn
dahodge

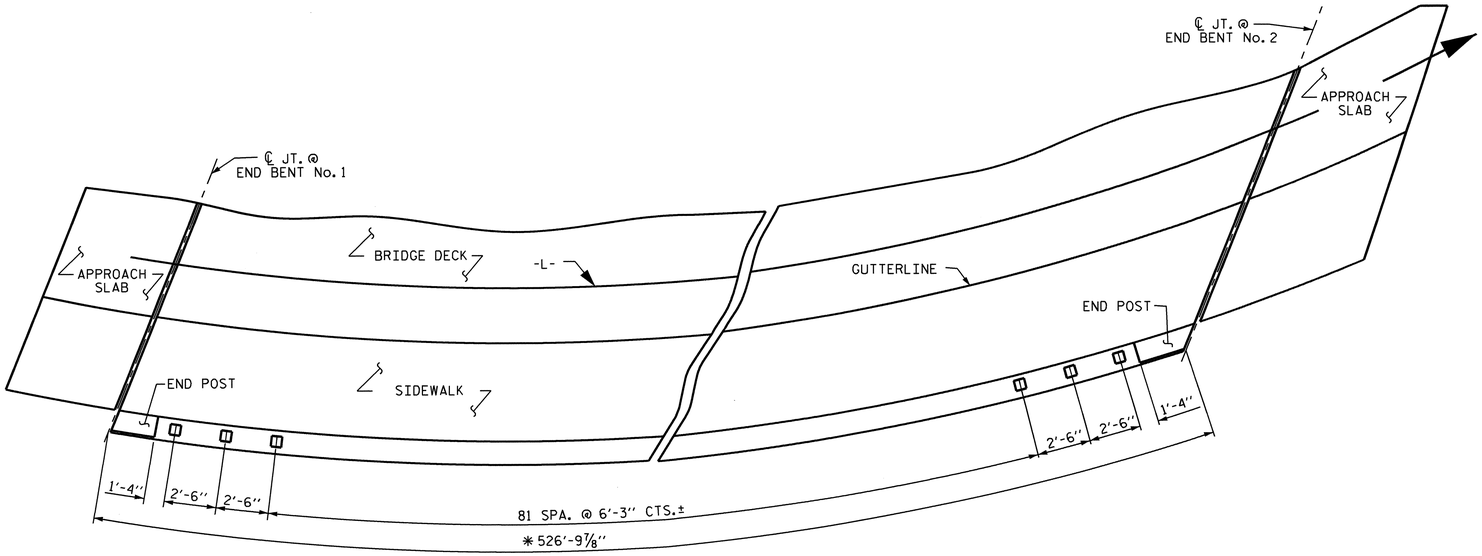

PLAN OF RAIL POST SPACINGS

* MEASURED FROM ℄ JT. @ END BENT No. 1 TO ℄ JT. @ END BENT No. 2 ALONG OUTSIDE EDGE OF SUPERSTRUCTURE

BAR TYPE

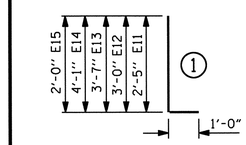

BILL FOR TWO END POSTS

BAR	NO.	SIZE	TYPE	LENGTH	WEIGHT (LBS)
* E11	4	#7	1	3'-5"	28
* E12	4	#7	1	4'-0"	33
* E13	4	#7	1	4'-7"	37
* E14	4	#7	1	5'-1"	42
* E15	4	#7	1	3'-0"	25
* F11	2	#6	STR	3'-2"	10
* F12	4	#6	STR	3'-5"	21
* F13	2	#6	STR	3'-8"	11
* F14	2	#6	STR	3'-2"	10
* F15	4	#6	STR	3'-8"	22
* F16	2	#6	STR	4'-0"	12
* EPOXY COATED REINFORCING STEEL					251 LBS.
CLASS AA CONCRETE					1.8 C.Y.

* THESE BARS ARE EPOXY COATED

PAYMENT FOR CLASS AA CONCRETE AND REINFORCING STEEL USED IN THE END POSTS SHALL BE INCLUDED IN THE SQUARE FOOT COST OF REINFORCED CONCRETE DECK SLAB.

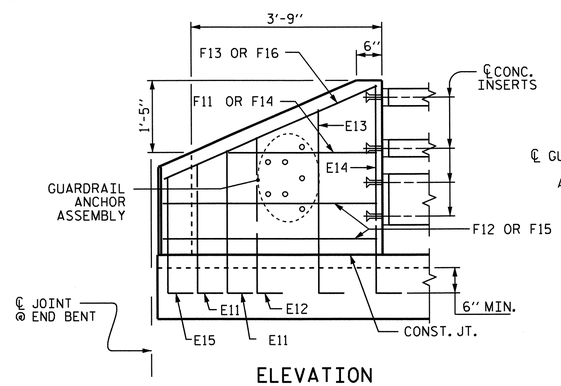

ELEVATION

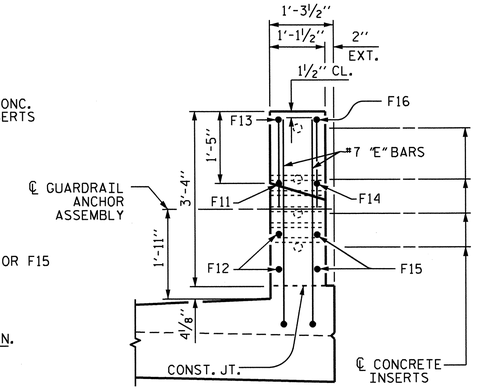

END VIEW

END POST DETAILS

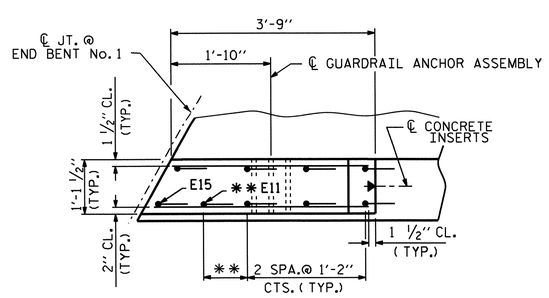

PLAN

** CENTER E11 BETWEEN E15 AND E12 TO REINFORCE LONG CORNER.

PROJECT NO. U-4412

HAYWOOD COUNTY

STATION: 67+29.11 -L-

SHEET 1 OF 4

STATE OF NORTH CAROLINA
DEPARTMENT OF TRANSPORTATION
RALEIGH

RAIL POST SPACINGS AND END OF RAIL DETAILS
FOR THREE BAR METAL RAILS

NORTH CAROLINA PROFESSIONAL SEAL 20125 ENGINEER MARSHALL N. GREEK, JR.
2-15-13

REVISIONS						SHEET NO.
NO.	BY:	DATE:	NO.	BY:	DATE:	S-41
1			3			TOTAL SHEETS
2			4			70

STD. NO. BMR2

DRAWN BY :	V.X. NGUYEN	DATE :	11-23-11
CHECKED BY :	D. HODGE	DATE :	8-12

13-FEB-2013 11:42
R:\Structures\Final Plans\Str *1\U-4412_SD_3MR.dgn
dahodge

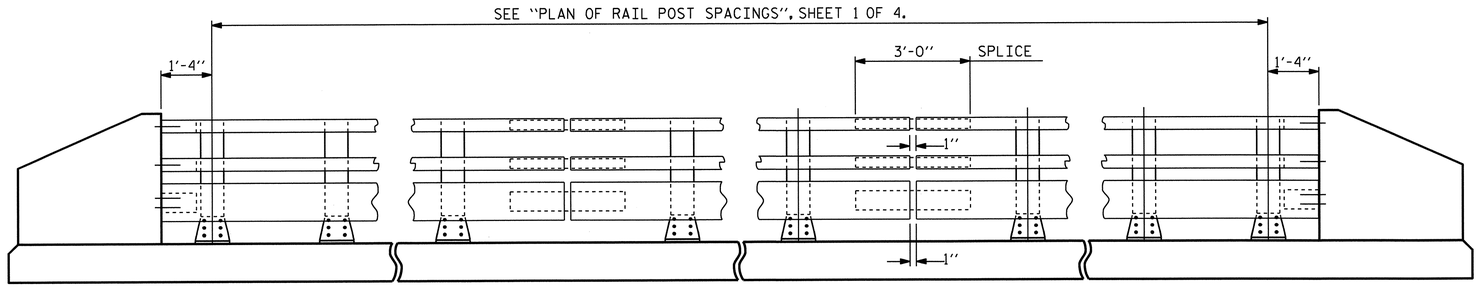

ELEVATION

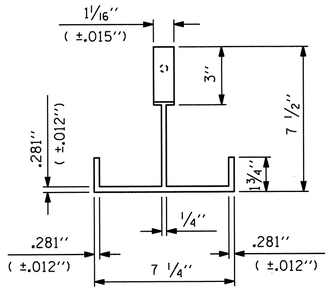

PLAN

NOTE:
FOR ATTACHMENT OF METAL RAIL TO END POST, SEE SHEET 4 OF 4

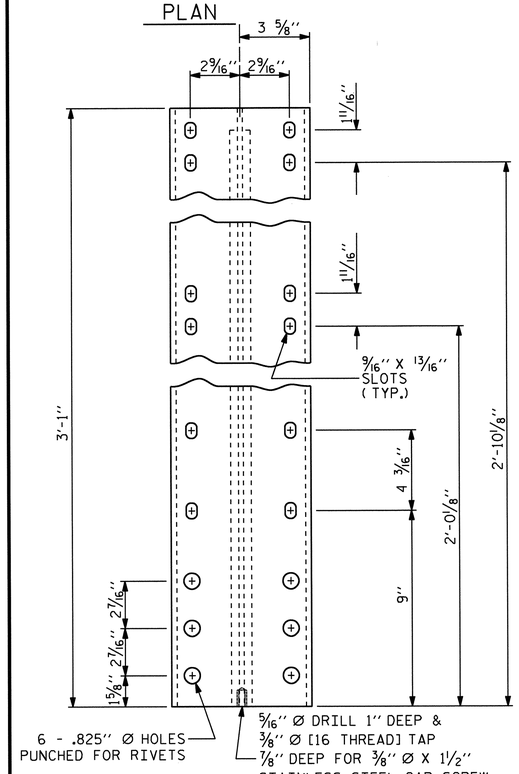

FRONT ELEVATION

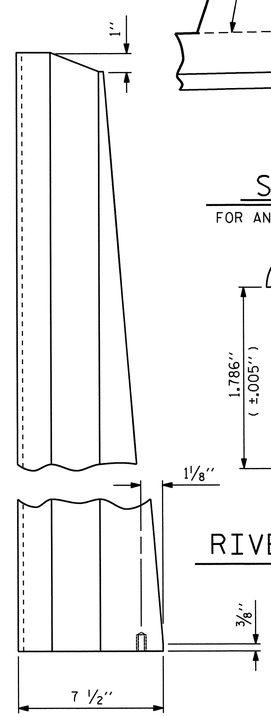

SIDE ELEVATION

DETAILS OF POST

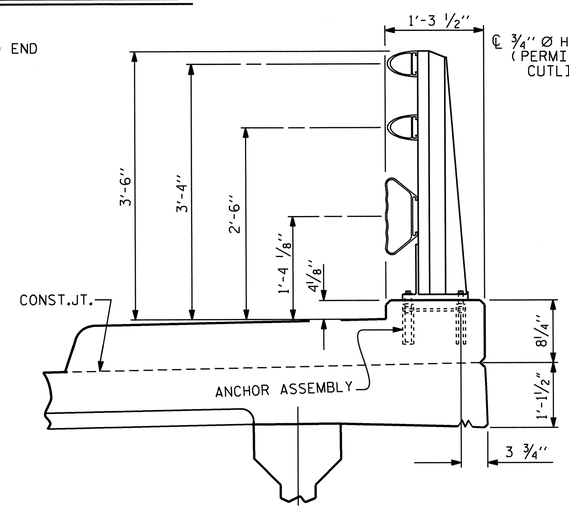

SECTION THRU RAIL

FOR ANCHOR ASSEMBLY, SEE "3 BAR METAL RAIL" SHEET 3 OF 4.

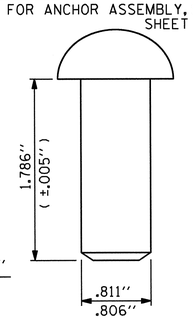

RIVET DETAIL

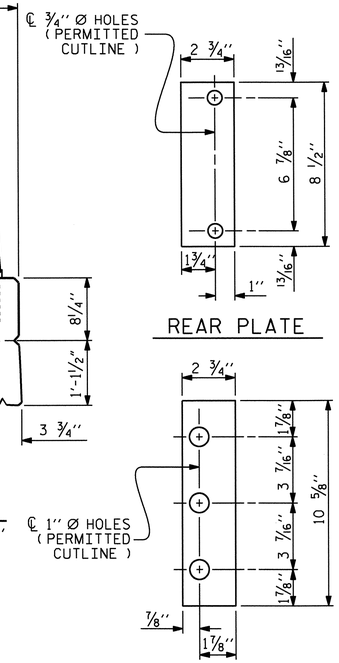

SHIM DETAILS

NOTE :
SHIMS MAY BE CUT ALONG PERMITTED CUTLINE OR SLOTTED TO EDGE OF PLATE TO FACILITATE PLACEMENT.

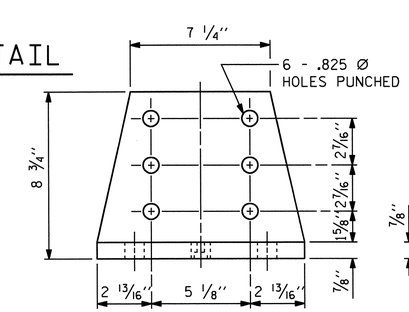

FRONT ELEVATION

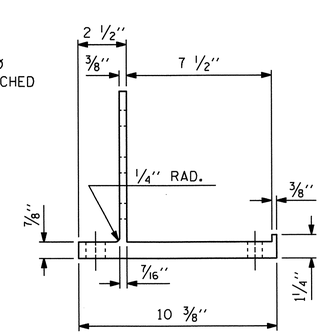

SIDE ELEVATION

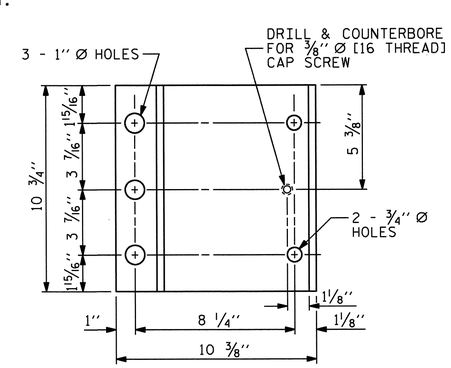

PLAN

POST BASE DETAILS

NOTES

AT THE CONTRACTOR'S OPTION, METAL RAIL MAY BE EITHER ALUMINUM OR GALVANIZED STEEL IN ACCORDANCE WITH THE REQUIREMENTS OF THE GENERAL NOTES AND THE FOLLOWING SPECIFICATIONS FOR THE ALTERNATE MATERIALS; HOWEVER, THE CONTRACTOR WILL BE REQUIRED TO USE THE SAME RAIL MATERIAL ON ALL STRUCTURES ON THE PROJECT FOR WHICH METAL RAIL IS DESIGNATED.

ALUMINUM RAILS

MATERIAL FOR POSTS, BASES AND RAILS, EXPANSION BARS AND CLAMP BARS SHALL BE ASTM B221 ALLOY 6061-T6.

MATERIAL FOR RIVETS SHALL BE ASTM B316 ALLOY 6061-T6. RIVETS SHALL BE STANDARD BUTTON HEAD AND CONE POINT COLD DRIVEN AS PER DRAWING.

THE BASE OF RAIL POSTS, OR ANY OTHER ALUMINUM SURFACE IN CONTACT WITH CONCRETE SHALL BE THOROUGHLY COATED WITH AN ALUMINUM IMPREGNATED CAULKING COMPOUND OF APPROVED QUALITY.

MATERIAL FOR SHIMS TO BE ASTM B209 ALLOY 6061-T6.

GALVANIZED STEEL RAILS

MATERIAL AND GALVANIZING ARE TO CONFORM TO THE FOLLOWING SPECIFICATIONS:

POST, POST BASES, RAILS, EXPANSION BARS AND CLAMP BARS : AASHTO M270 GRADE 36 STRUCTURAL STEEL - GALVANIZED TO AASHTO M111.

RIVETS: RIVETS SHALL MEET THE REQUIREMENTS OF ASTM A502 FOR GRADE 1 RIVETS.

THE CUT ENDS OF GALVANIZED STEEL RAILING, AFTER GRINDING SMOOTH SHALL BE GIVEN TWO COATS OF ZINC RICH PAINT MEETING THE REQUIREMENTS OF FEDERAL SPECIFICATION MIL-P-26915 USAF TYPE 1, OR OF FEDERAL SPECIFICATIONS TT-P-641.

SHIMS: SHIMS SHALL MEET THE REQUIREMENTS OF ASTM A570 FOR GRADE 33 OR A611 FOR GRADE C AND SHALL BE GALVANIZED IN ACCORDANCE WITH AASHTO M111.

RAIL CAPS: RAIL CAPS SHALL MEET THE REQUIREMENTS OF ASTM A570 FOR GRADE 33 OR A611 FOR GRADE C AND SHALL BE GALVANIZED IN ACCORDANCE WITH AASHTO M111.

GENERAL NOTES

RAILING SHALL BE CONTINUOUS FROM END POST TO END POST OF BRIDGE. EACH JOINT IN RAIL LENGTH SHALL BE SPLICED AS DETAILED. PANEL LENGTHS OF RAIL SHALL BE ATTACHED TO A MINIMUM OF THREE POSTS. PLACE ONE JOINT SPLICE JUST BEYOND THE 3RD RAIL POST FROM EACH END, TYPICALLY 14' FROM THE END. PLACE OTHER JOINTS AS NEEDED.

FOR END OF RAIL TO CLEAR FACE OF CONCRETE END POST DIMENSION, SEE SHEET 4 OF 4.

CAP SCREWS SHALL BE ASTM F593 ALLOY 305 STAINLESS STEEL. WASHERS FOR RAIL ATTACHMENT SHALL MEET THE REQUIREMENTS OF ASTM F844 EXCEPT THEY SHALL BE MADE FROM ALLOY 304 STAINLESS STEEL.

CERTIFIED MILL REPORTS ARE REQUIRED FOR RAILS AND POSTS. SHOP INSPECTION IS NOT REQUIRED.

METAL RAIL POSTS SHALL BE SET NORMAL TO CURB GRADE.

METHOD OF MEASUREMENT FOR METAL RAILS: FOR LENGTH OF METAL RAILS TO BE PAID FOR, SEE THE STANDARD SPECIFICATIONS.

CURVED RAIL USAGE: WHERE RAILS ARE TO BE USED ON BRIDGES ON HORIZONTAL AND/OR VERTICAL CURVATURE THE CONTRACTOR MAY, AT HIS OPTION, HAVE THE REQUIRED CURVATURE IN THE RAIL FORMED IN THE SHOP OR IN THE FIELD. IN EITHER EVENT, THE RAIL SHALL CONFORM WITHOUT BUCKLING OR KINKING TO THE REQUIRED CURVATURE IN A UNIFORM MANNER ACCEPTABLE TO THE ENGINEER.

TO INSURE FUTURE IDENTIFICATION OF THE FABRICATOR, A PERMANENT IDENTIFYING MARK SHALL BE PLACED ON EACH POST. THE METHOD OF MARKING AND LOCATION SHALL BE SUCH THAT IT DOES NOT DETRACT FROM THE APPEARANCE OF THE POST, BUT REMAIN VISIBLE AFTER RAIL PLACEMENT.

SHIMS SHALL BE USED AS NECESSARY FOR POST ALIGNMENT.

ALLOY 6351-T5 MAY BE SUBSTITUTED FOR ALLOY 6061-T6 WHERE APPLICABLE.

MINOR VARIATIONS IN DETAILS OF METAL RAIL WILL BE CONSIDERED. DETAILS OF SUCH VARIATIONS, IF DESIRED, SHALL BE SUBMITTED FOR APPROVAL.

PAY LENGTH = 518.67 LIN.FT.

NORTH CAROLINA PROFESSIONAL SEAL 20125 ENGINEER MARSHALL C. PEEK, JR.
2-13-13

PROJECT NO. U-4412
HAYWOOD COUNTY
STATION: 67+29.11 -L-

SHEET 2 OF 4

STATE OF NORTH CAROLINA
DEPARTMENT OF TRANSPORTATION
RALEIGH

STANDARD
3 BAR METAL RAIL

ASSEMBLED BY : V.X. NGUYEN		DATE : 11-16-11			
CHECKED BY : D. HODGE		DATE : 08-12			
DRAWN BY : JMB 1/88	REV. 5/7/03	RWW/JTE			
CHECKED BY : GGH 1/88	REV. 5/1/06	TLA/GM			
	REV. 10/1/11	MAA/GM			

REVISIONS						SHEET NO.
NO.	BY:	DATE:	NO.	BY:	DATE:	S-42
1			3			TOTAL SHEETS
2			4			70

STD. NO. BMR5

13-FEB-2013 11:18
R:\Structures\Final Plans\Str *1\U-4412_SD_3MR.dgn
dahodge

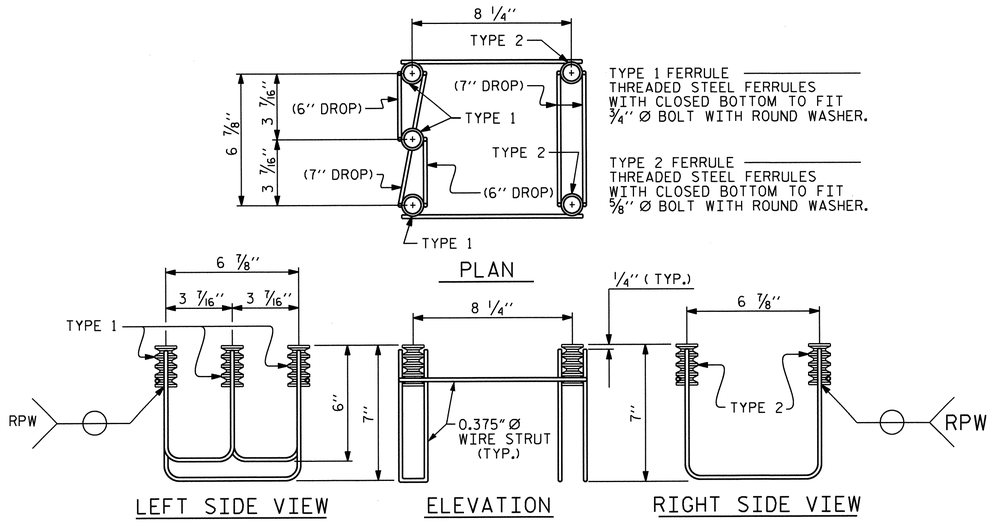

5-BOLT METAL RAIL ANCHOR ASSEMBLY

(86 ASSEMBLIES REQUIRED)

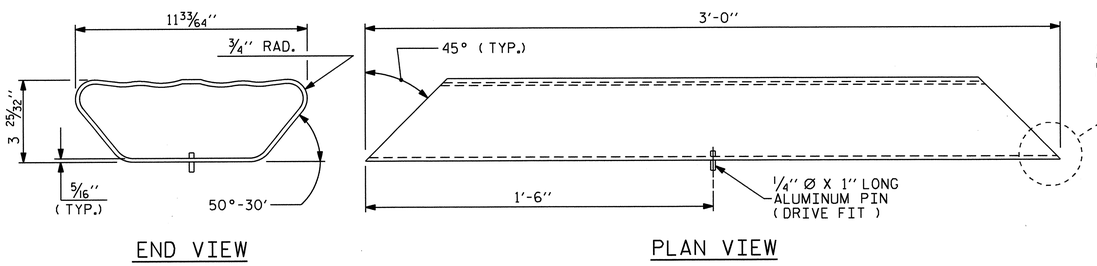

BOTTOM RAIL EXPANSION BAR

NOTES

STRUCTURAL CONCRETE ANCHOR ASSEMBLY

THE STRUCTURAL CONCRETE ANCHOR ASSEMBLY SHALL CONSIST OF THE FOLLOWING COMPONENTS:

A. FERRULES SHALL BE MADE FROM STEEL MEETING THE REQUIREMENTS OF AASHTO M169, GRADE 12L14 AND SHALL HAVE A MINIMUM LENGTH OF THREADS OF 2'' FOR 3/4'' FERRULES AND 1 3/4'' FOR 5/8'' FERRULES.

B. 3 - 3/4'' Ø X 2 1/2'' BOLTS WITH WASHERS. BOLTS SHALL CONFORM TO THE REQUIREMENTS OF ASTM A307. BOLTS AND WASHERS SHALL BE GALVANIZED. AT THE CONTRACTOR'S OPTION, STAINLESS STEEL BOLTS AND WASHERS MAY BE USED AS AN ALTERNATE FOR THE 3/4'' Ø X 2 1/2'' GALVANIZED BOLTS AND WASHERS. THEY SHALL CONFORM TO OR EXCEED THE MECHANICAL REQUIREMENTS OF ASTM A307. THE USE OF THIS ALTERNATE SHALL BE APPROVED BY THE ENGINEER.

C. 2 - 5/8'' Ø X 2 1/4'' BOLTS WITH WASHERS. BOLTS SHALL CONFORM TO THE REQUIREMENTS OF ASTM A307. BOLTS AND WASHERS SHALL BE GALVANIZED. AT THE CONTRACTOR'S OPTION, STAINLESS STEEL BOLTS AND WASHERS MAY BE USED AS AN ALTERNATE FOR THE 5/8'' Ø X 2 1/4'' GALVANIZED BOLTS AND WASHERS. THEY SHALL CONFORM TO OR EXCEED THE MECHANICAL REQUIREMENTS OF ASTM A307. THE USE OF THIS ALTERNATE SHALL BE APPROVED BY THE ENGINEER.

D. WIRE STRUT SHOWN IN THE CONCRETE ANCHOR ASSEMBLY DETAIL IS THE MINIMUM ALLOWABLE SIZE AND SHALL HAVE A MINIMUM TENSILE STRENGTH OF 100,000 PSI. AS AN OPTION, A 7/16'' Ø WIRE STRUT WITH A MINIMUM TENSILE STRENGTH OF 90,000 PSI IS ACCEPTABLE.

E. THE METAL RAIL ANCHOR ASSEMBLIES TO BE HOT DIPPED GALVANIZED TO CONFORM TO REQUIREMENTS OF AASHTO M111.

F. THE COST OF THE METAL RAIL ANCHOR ASSEMBLY WITH BOLTS AND WASHERS COMPLETE IN PLACE SHALL BE INCLUDED IN THE PRICE BID FOR LINEAR FEET OF METAL RAIL.

G. BOLTS TO BE TIGHTENED ONE-HALF TURN WITH A WRENCH FROM A FINGER-TIGHT POSITION.

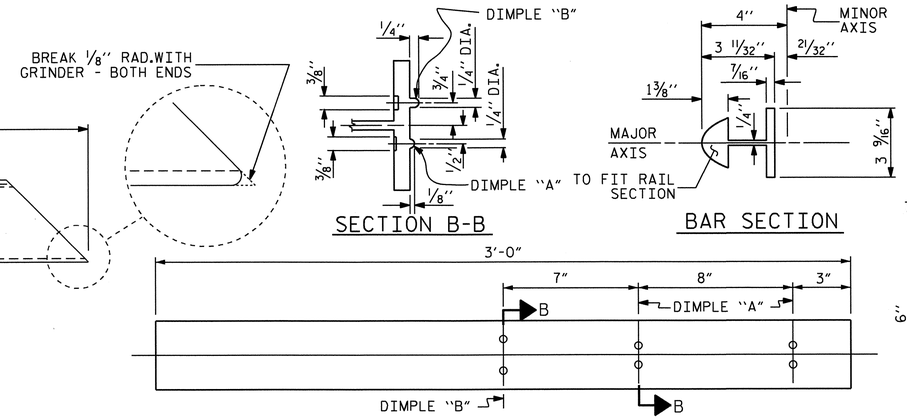

TOP & MIDDLE RAIL EXPANSION BAR

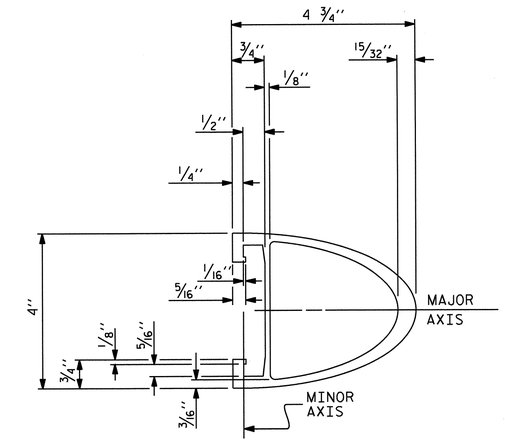

TOP & MIDDLE RAIL SECTION

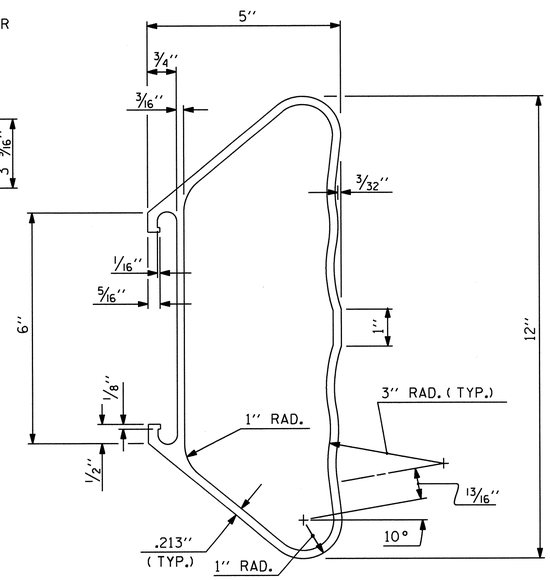

BOTTOM RAIL SECTION

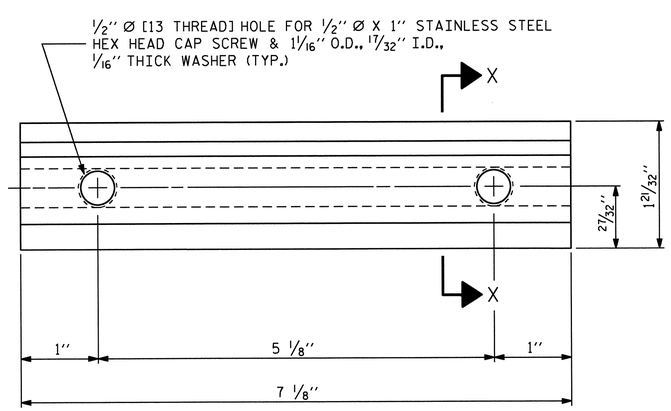

ELEVATION

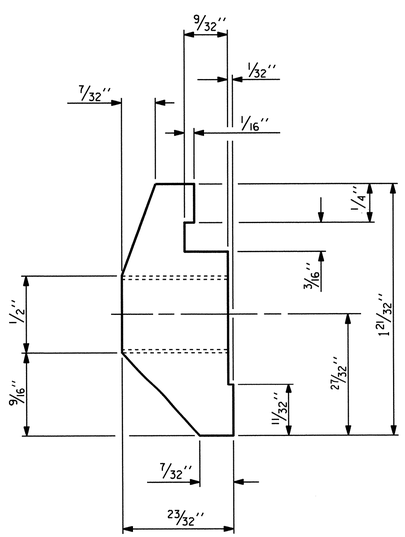

SECTION X-X

CLAMP BAR DETAIL

(6 REQUIRED PER POST)

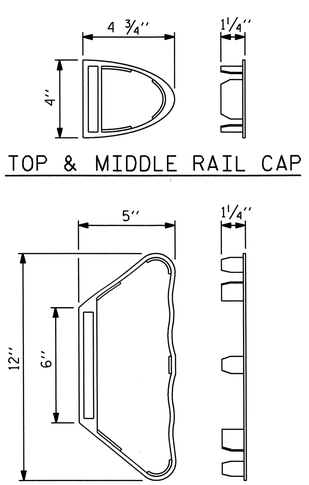

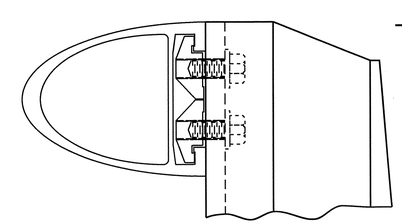

CLAMP ASSEMBLY

TOP RAIL SHOWN
(MIDDLE & BOTTOM RAIL ARE SIMILAR)

NORTH CAROLINA PROFESSIONAL SEAL 20125 ENGINEER MARSHALL E. CHEEK, JR.
11-21-12

PROJECT NO. U-4412
HAYWOOD COUNTY
STATION: 67+29.11 -L-

SHEET 3 OF 4

STATE OF NORTH CAROLINA
DEPARTMENT OF TRANSPORTATION
RALEIGH

STANDARD

3 BAR METAL RAIL

ASSEMBLED BY : V.X. NGUYEN		DATE : 11-16-11			
CHECKED BY : D. HODGE		DATE : 08-12			
DRAWN BY : JMB	1/88	REV. 5/7/03	RWW/JTE		
CHECKED BY : GGH	1/88	REV. 5/1/06	TLA/GM		
		REV. 10/1/11	MAA/GM		

REVISIONS						SHEET NO.
NO.	BY:	DATE:	NO.	BY:	DATE:	S-43
1			3			TOTAL SHEETS
2			4			70

29-NOV-2012 11:44
R:\Structures\FinalPlans\Str *1\U-4412_SD_3MR.dgn
dahodge

STD. NO. BMR6

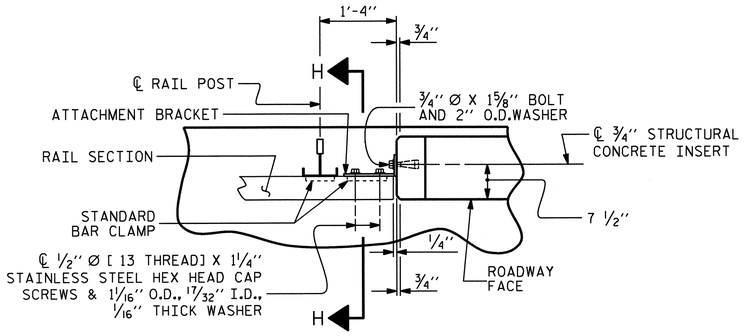

PLAN OF RAIL AND END POST

(STIFFENER ON 1/2" ℙ NOT SHOWN FOR CLARITY)

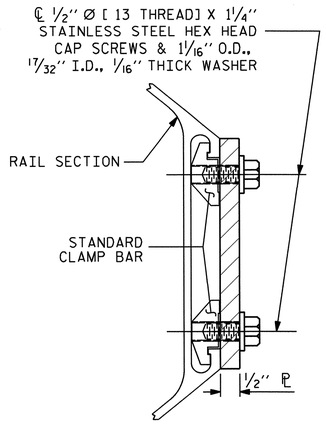

SECTION H-H

(FOR BOTTOM RAIL)

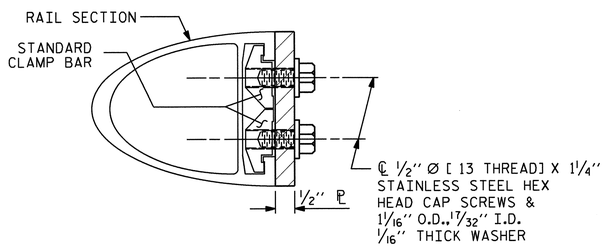

SECTION H-H

(FOR TOP & MIDDLE RAIL)

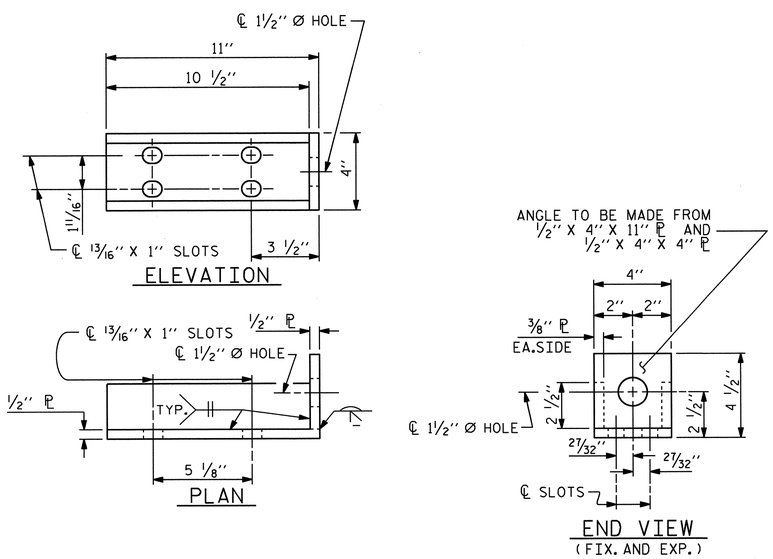

DETAILS FOR ATTACHMENT BRACKET

(TOP & MIDDLE RAIL ONLY)

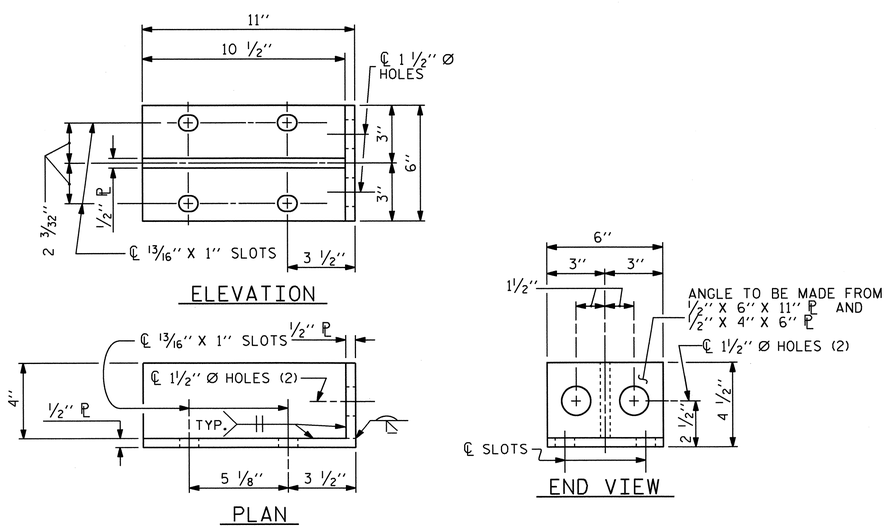

DETAILS FOR ATTACHMENT BRACKET

(BOTTOM RAIL ONLY)

NOTES

METAL RAIL TO END POST CONNECTION

THE METAL RAIL TO END POST CONNECTION SHALL CONSIST OF THE FOLLOWING COMPONENTS:

A. 1/2" PLATES SHALL CONFORM TO AASHTO M270 GRADE 36 AND SHALL BE GALVANIZED AFTER FABRICATION.

B. 3/4" STRUCTURAL CONCRETE INSERT SHALL HAVE A WORKING LOAD SHEAR CAPACITY OF 4800 LBS. THE FERRULES SHALL ENGAGE A 3/4" Ø X 1 5/8" BOLT WITH 2" O.D. WASHER IN PLACE. THE 3/4" Ø X 1 5/8" BOLT SHALL HAVE N. C. THREADS.

C. CAP SCREWS FOR RAIL ATTACHMENT TO ANGLE SHALL CONFORM TO THE REQUIREMENTS OF ASTM F593 ALLOY 305 STAINLESS STEEL. CAP SCREWS TO BE CENTERED IN SLOTS AT 60°F. WASHERS FOR RAIL ATTACHMENT SHALL MEET THE REQUIREMENTS OF ASTM F844 EXCEPT THEY SHALL BE MADE FROM ALLOY 304 STAINLESS STEEL.

D. STANDARD CLAMP BARS (STD. No. BMR6).

THE COST OF THE STANDARD CLAMP BARS AND CAP SCREWS USED IN THE METAL RAIL TO END POST CONNECTION SHALL BE INCLUDED IN THE UNIT CONTRACT PRICE BID FOR LINEAR FEET OF 3 BAR METAL RAIL.

THE 3/4" STRUCTURAL CONCRETE INSERT WITH BOLT SHALL BE ASSEMBLED IN THE SHOP.

THE COST OF THE 3/4" STRUCTURAL CONCRETE INSERT ASSEMBLY, AND THE 1/2" PLATES COMPLETE IN PLACE SHALL BE INCLUDED IN THE VARIOUS PAY ITEMS.

THE CONTRACTOR, AT HIS OPTION, MAY USE AN ADHESIVE BONDING SYSTEM IN LIEU OF THE STRUCTURAL CONCRETE INSERT EMBEDDED IN THE END POST. IF THE ADHESIVE BONDING SYSTEM IS USED, THE 3/4" Ø X 1 5/8" BOLT WITH WASHER SHALL BE REPLACED WITH A 3/4" Ø X 6 1/2" BOLT AND 2" O.D.WASHER. ALL SPECIFICATIONS THAT APPLY TO THE 3/4" Ø X 1 5/8" BOLT SHALL APPLY TO THE 3/4" Ø X 6 1/2" BOLT. FIELD TESTING OF THE ADHESIVE BONDING SYSTEM IS NOT REQUIRED.

NOTES

STRUCTURAL CONCRETE INSERT

THE STRUCTURAL CONCRETE INSERT ASSEMBLY SHALL CONSIST OF THE FOLLOWING COMPONENTS:

A. FERRULES SHALL BE MADE FROM STEEL MEETING THE REQUIREMENTS OF AASHTO M169, GRADE 12L14 AND SHALL HAVE A MINIMUM LENGTH OF THREADS OF 1 1/2".

B. 1 - 3/4" Ø X 1 5/8" BOLT WITH WASHER. BOLT SHALL CONFORM TO THE REQUIREMENTS OF ASTM A307. BOLT AND WASHER SHALL BE GALVANIZED. AT THE CONTRACTORS OPTION, STAINLESS STEEL BOLT AND WASHER MAY BE USED AS AN ALTERNATE FOR THE 3/4" Ø X 1 5/8" GALVANIZED BOLT AND WASHER. THEY SHALL CONFORM TO OR EXCEED THE MECHANICAL REQUIREMENTS OF ASTM A307. THE USE OF THIS ALTERNATE SHALL BE APPROVED BY THE ENGINEER.

C. WIRE STRUT SHOWN IN THE CONCRETE INSERT ASSEMBLY DETAIL IS THE MINIMUM ALLOWABLE SIZE AND SHALL HAVE A MINIMUM TENSILE STRENGTH OF 100,000 PSI. AS AN OPTION, A 7/16" Ø WIRE STRUT WITH A MINIMUM TENSILE STRENGTH OF 90,000 PSI IS ACCEPTABLE.

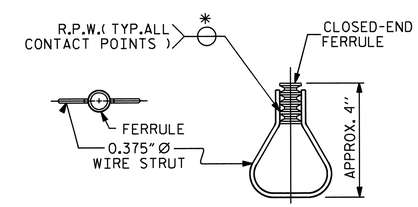

STRUCTURAL CONCRETE INSERT

* EACH WELDED ATTACHMENT OF WIRE TO FERRULE SHALL DEVELOP THE TENSILE STRENGTH OF THE WIRE.

PROJECT NO. U-4412

HAYWOOD COUNTY

STATION: 67+29.11 -L-

SHEET 4 OF 4

STATE OF NORTH CAROLINA
DEPARTMENT OF TRANSPORTATION
RALEIGH

STANDARD

3 BAR METAL RAIL

NORTH CAROLINA PROFESSIONAL SEAL 20125 ENGINEER MARSHALL G. CREEK, JR. 11-29-12

REVISIONS						SHEET NO.
NO.	BY:	DATE:	NO.	BY:	DATE:	S-44
1			3			TOTAL SHEETS
2			4			70

ASSEMBLED BY : V.X. NGUYEN		DATE : 11-16-11	
CHECKED BY : D. HODGE		DATE : 08-12	
DRAWN BY : JMB	1/88	REV. 5/7/03	RWW/JTE
CHECKED BY : GGH	1/88	REV. 5/1/06	TLA/GM
		REV. 10/1/11	MAA/GM

STD. NO. BMR7

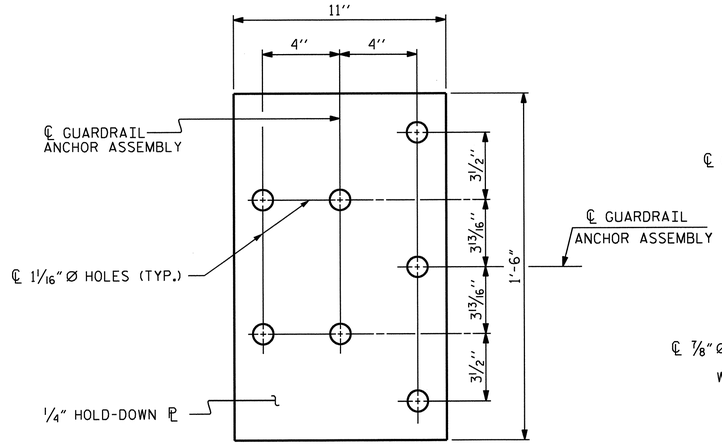

PLAN

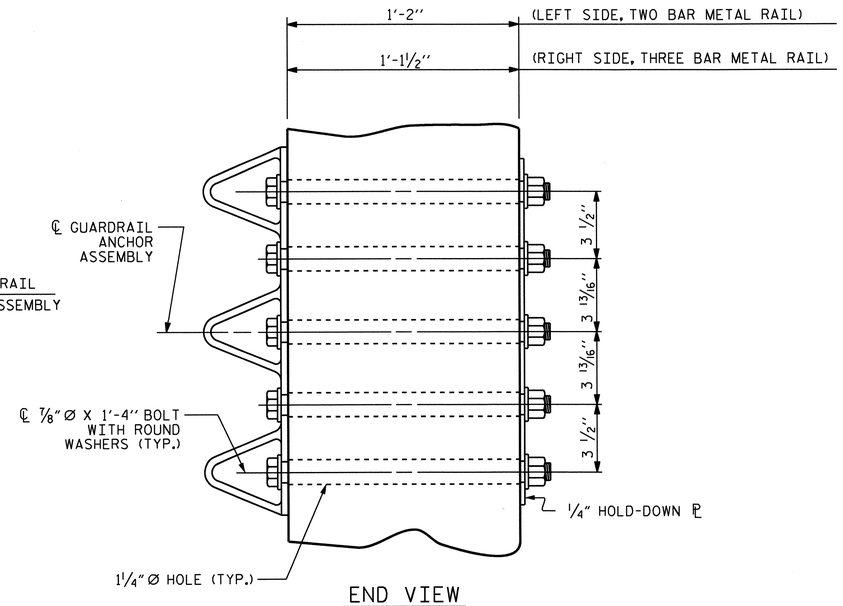

END VIEW

GUARDRAIL ANCHOR ASSEMBLY DETAILS

NOTES

THE GUARDRAIL ANCHOR ASSEMBLY SHALL CONSIST OF A 1/4'' HOLD DOWN PLATE AND 7 - 7/8'' Ø BOLTS WITH NUTS AND WASHERS.

THE HOLD-DOWN PLATE SHALL CONFORM TO AASHTO M270 GRADE 36. AFTER FABRICATION, THE HOLD-DOWN PLATE SHALL BE HOT-DIP GALVANIZED IN ACCORDANCE WITH AASHTO M111.

BOLTS SHALL CONFORM TO THE REQUIREMENTS OF ASTM A307 AND NUTS SHALL CONFORM TO THE REQUIREMENTS OF AASHTO M291. BOLTS, NUTS AND WASHERS SHALL BE GALVANIZED. AT THE CONTRACTOR'S OPTION, STAINLESS STEEL BOLTS, NUTS AND WASHERS MAY BE USED AS AN ALTERNATE FOR THE 7/8'' Ø GALVANIZED BOLTS, NUTS AND WASHERS. THEY SHALL CONFORM TO OR EXCEED THE MECHANICAL REQUIREMENTS OF ASTM A307. THE USE OF THIS ALTERNATE SHALL BE APPROVED BY THE ENGINEER.

THE GUARDRAIL ANCHOR ASSEMBLY IS REQUIRED AT ALL POINTS WHERE APPROACH GUARDRAIL IS TO BE ATTACHED TO THE END OF THE PARAPET. FOR POINTS OF ATTACHMENT, SEE SKETCH.

AFTER INSTALLATION, THE EXPOSED THREAD OF THE BOLT SHALL BE BURRED WITH A SHARP POINTED TOOL.

THE COST OF THE GUARDRAIL ANCHOR ASSEMBLIES WITH BOLTS, NUTS AND WASHERS COMPLETE IN PLACE, SHALL BE INCLUDED IN THE VARIOUS PAY ITEMS.

THE VERTICAL REINFORCING BARS MAY BE SHIFTED SLIGHTLY IN THE END POST TO CLEAR ASSEMBLY BOLTS.

THE 1 1/4'' Ø HOLES SHALL BE FORMED OR DRILLED WITH A CORE BIT. IMPACT TOOLS WILL NOT BE PERMITTED. ANY CONCRETE DAMAGED BY THIS WORK SHALL BE REPAIRED TO THE SATISFACTION OF THE ENGINEER.

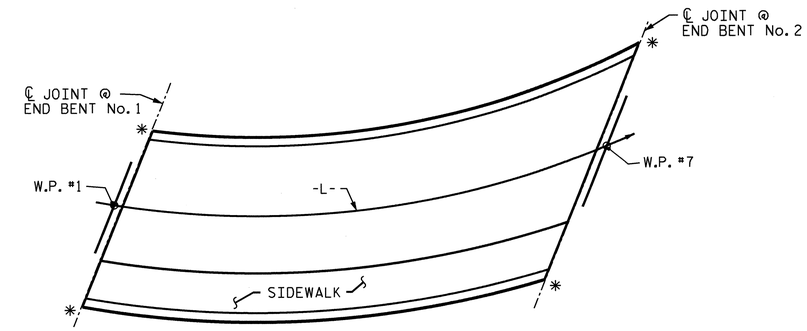

SKETCH SHOWING POINTS OF ATTACHMENT

✱ LOCATION OF GUARDRAIL ATTACHMENT

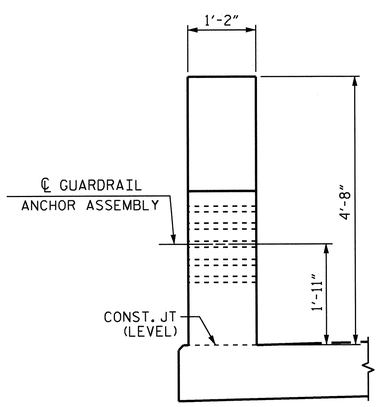

LEFT END VIEW

(TWO BAR METAL RAIL)

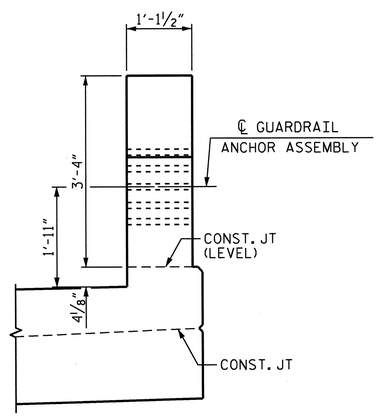

RIGHT END VIEW

(THREE BAR METAL RAIL)

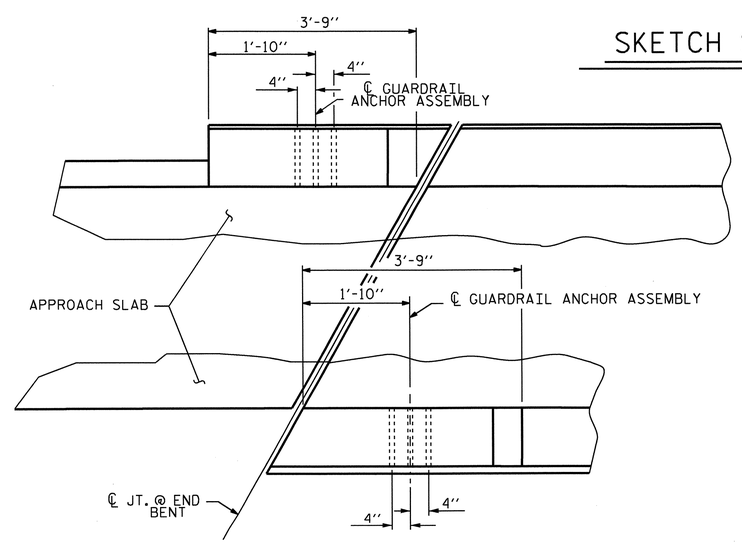

PLAN

LOCATION OF GUARDRAIL ANCHOR AT END POST

END BENT No. 1 SHOWN, END BENT No. 2 SIMILAR.

PROJECT NO. U-4412

HAYWOOD COUNTY

STATION: 67+29.11 -L-

STATE OF NORTH CAROLINA
DEPARTMENT OF TRANSPORTATION
RALEIGH

STANDARD

GUARDRAIL ANCHORAGE DETAILS FOR METAL RAILS

NORTH CAROLINA PROFESSIONAL SEAL 20125 ENGINEER MARSHALL A. CHEEK, JR.
11-29-12

REVISIONS						SHEET NO.
NO.	BY:	DATE:	NO.	BY:	DATE:	S-45
1			3			TOTAL SHEETS
2			4			70

STD. NO. GRA3

ASSEMBLED BY : V.X. NGUYEN		DATE :	5-12
CHECKED BY : D. HODGE		DATE :	8-12
DRAWN BY : MAA	5/10	ADDED 5/6/10	
CHECKED BY : GM	5/10	REV. 10/1/11	MAA/GM
		REV. 12/5/11	MAA/GM

29-NOV-2012 11:45
R:\Structures\FinalPlans\Str #1\U-4412_SD_2MR.dgn
dahodge

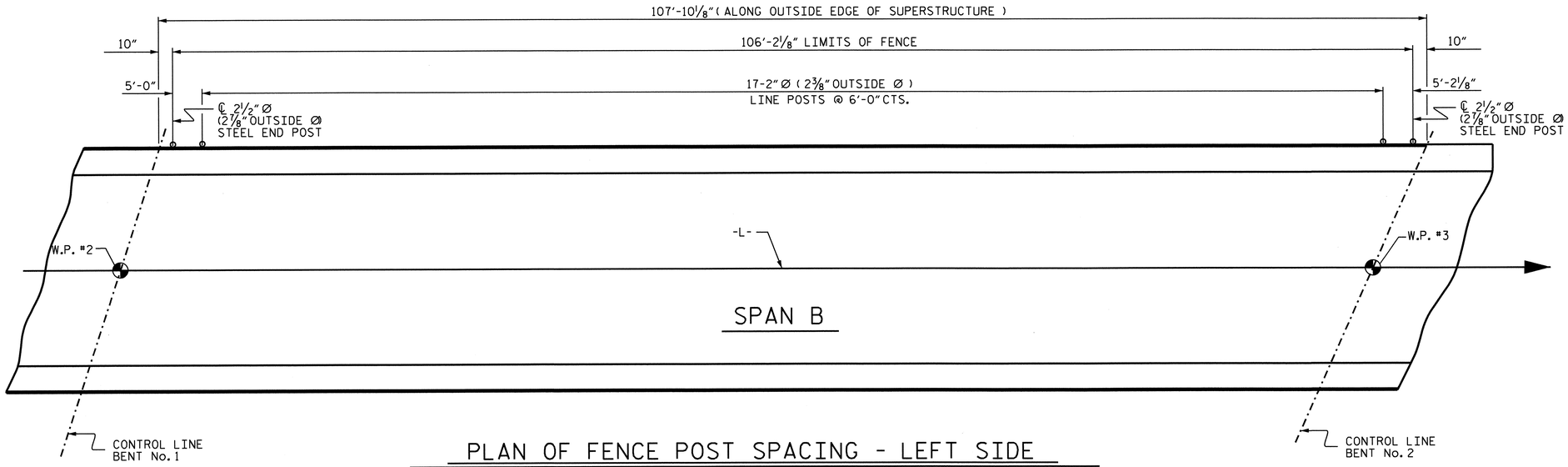

PLAN OF FENCE POST SPACING - LEFT SIDE

72" CHAIN LINK FENCE PAY LENGTH 106.18 LIN. FEET

NOTES:

FOR 72" CHAIN LINK FENCE, SEE "BRIDGE MOUNTED CHAIN LINK FENCE" SPECIAL PROVISION.

MATERIAL FOR ANCHOR BOLTS SHALL BE TYPE 304 STAINLESS STEEL WITH A MINIMUM 9000 PSI ULTIMATE STRENGTH. NUTS AND WASHERS SHALL BE TYPE 304 STAINLESS STEEL. ANCHOR BOLTS SHALL BE EMBEDDED AS PER ADHESIVE BONDING SYSTEM MANUFACTURER SPECIFICATIONS. NUTS SHALL BE AMERICAN STANDARD FINISHED HEXAGON THICK NUTS, CLASS 2B THREADS.

FOR SETTING ANCHOR BOLTS, THE CONTRACTOR SHALL USE AN ADHESIVE BONDING SYSTEM. LEVEL ONE FIELD TESTING OF BONDING SYSTEM IS REQUIRED AND THE YIELD LOAD OF THE 3/4" Ø BOLTS IS 12.0 KIPS.

ALL FENCE MATERIAL SHALL MEET THE REQUIREMENTS OF SECTION 1050 OF THE STANDARD SPECIFICATIONS, GALVANIZE ALL STEEL PARTS AND HARDWARE IN ACCORDANCE WITH ARTICLE 1076 OF THE STANDARD SPECIFICATIONS.

FENCE POST LOCATIONS SHALL BE SHIFTED, AS NECESSARY, TO MAINTAIN 12" MINIMUM DISTANCE FROM ANCHOR BOLT TO JOINTS IN PARAPET

DIMENSIONS TAKEN ALONG OUTSIDE FACE OF PARAPET

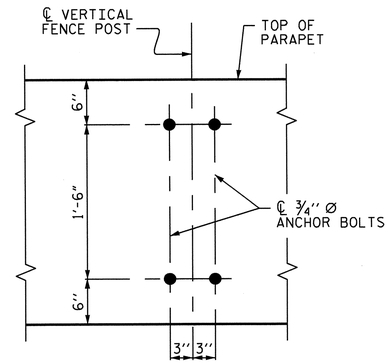

BOLT SETTING DETAIL

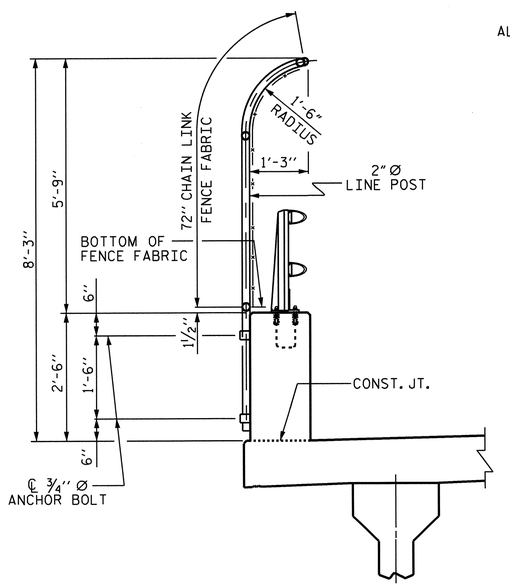

SECTION THRU FENCE

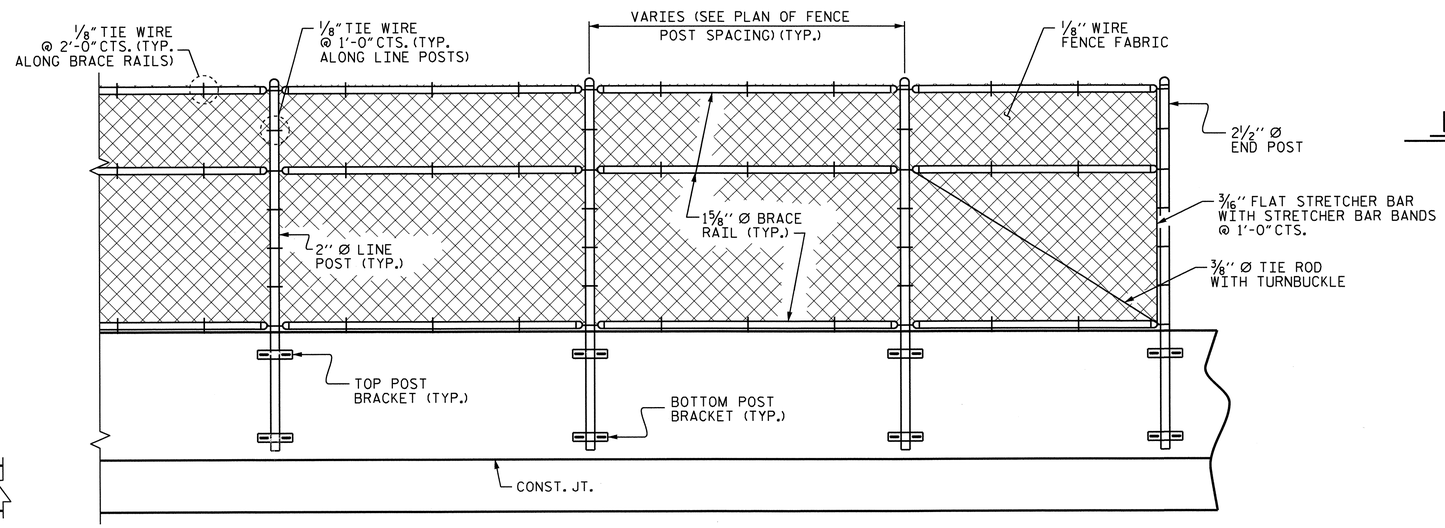

PARTIAL ELEVATION

PROJECT NO. U-4412

HAYWOOD COUNTY

STATION: 67+29.11 -L-

SHEET 1 OF 2

STATE OF NORTH CAROLINA
DEPARTMENT OF TRANSPORTATION
RALEIGH

SUPERSTRUCTURE

BRIDGE MOUNTED
72" CHAIN LINK FENCE
LEFT SIDE

NORTH CAROLINA PROFESSIONAL SEAL 20125 ENGINEER MARSHALL G. CHEEK, JR.
11-29-12

REVISIONS							SHEET NO.
NO.	BY:	DATE:	NO.	BY:	DATE:		S-46
1			3				TOTAL SHEETS
2			4				70

DRAWN BY : V.X. NGUYEN DATE : 1-4-12
CHECKED BY : M.G. CHEEK DATE : 10-12

29-NOV-2012 11:46
R:\Structures\FinalPlans\Str #1\U-4412_SD_2MR.dgn
dahodge

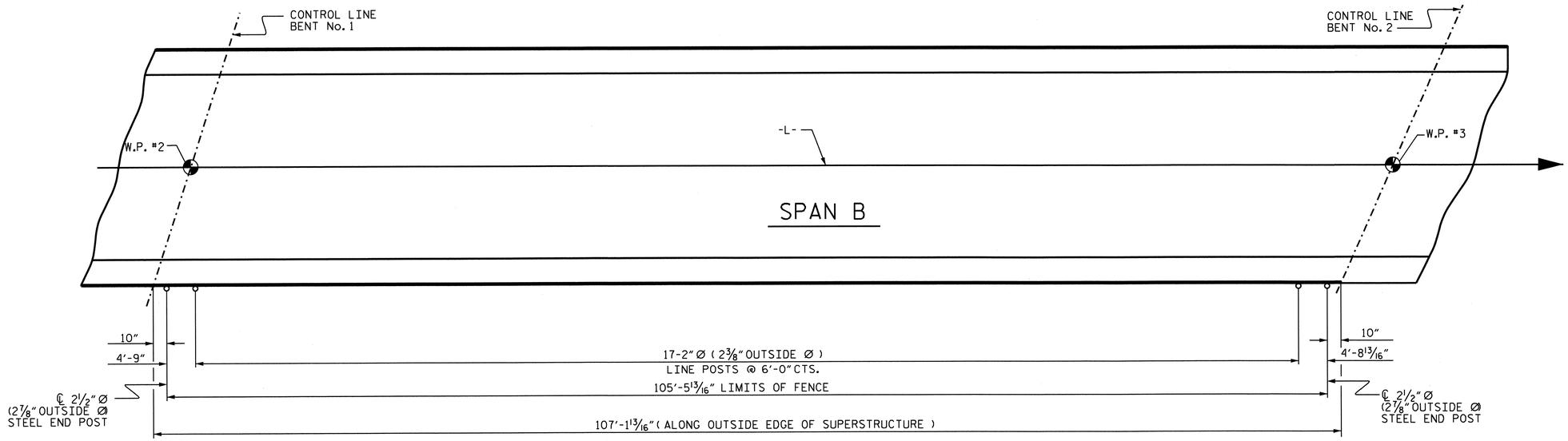

PLAN OF FENCE POST SPACING - RIGHT SIDE

120" CHAIN LINK FENCE PAY LENGTH 105.48 LIN. FEET

NOTES:

FOR 120" CHAIN LINK FENCE, SEE "BRIDGE MOUNTED CHAIN LINK FENCE" SPECIAL PROVISION.

MATERIAL FOR ANCHOR BOLTS SHALL BE TYPE 304 STAINLESS STEEL WITH A MINIMUM 9000 PSI ULTIMATE STRENGTH. NUTS AND WASHERS SHALL BE TYPE 304 STAINLESS STEEL. ANCHOR BOLTS SHALL BE EMBEDDED AS PER ADHESIVE BONDING SYSTEM MANUFACTURER SPECIFICATIONS. NUTS SHALL BE AMERICAN STANDARD FINISHED HEXAGON THICK NUTS, CLASS 2B THREADS.

FOR SETTING ANCHOR BOLTS, THE CONTRACTOR SHALL USE AN ADHESIVE BONDING SYSTEM. LEVEL ONE FIELD TESTING OF BONDING SYSTEM IS REQUIRED AND THE YIELD LOAD OF THE 3/4" Ø BOLTS IS 12.0 KIPS.

ALL FENCE MATERIAL SHALL MEET THE REQUIREMENTS OF SECTION 1050 OF THE STANDARD SPECIFICATIONS, GALVANIZE ALL STEEL PARTS AND HARDWARE IN ACCORDANCE WITH ARTICLE 1076 OF THE STANDARD SPECIFICATIONS.

FENCE POST LOCATIONS SHALL BE SHIFTED, AS NECESSARY, TO MAINTAIN 12" MINIMUM DISTANCE FROM ANCHOR BOLT TO JOINTS IN SIDEWALK

DIMENSIONS TAKEN ALONG OUTSIDE FACE OF BRIDGE DECK

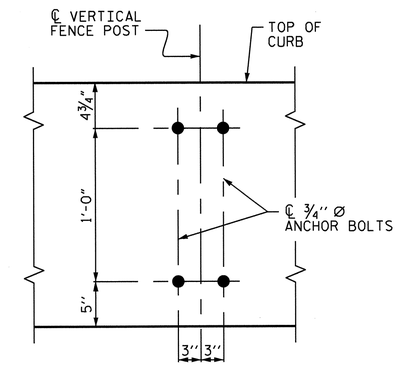

BOLT SETTING DETAIL

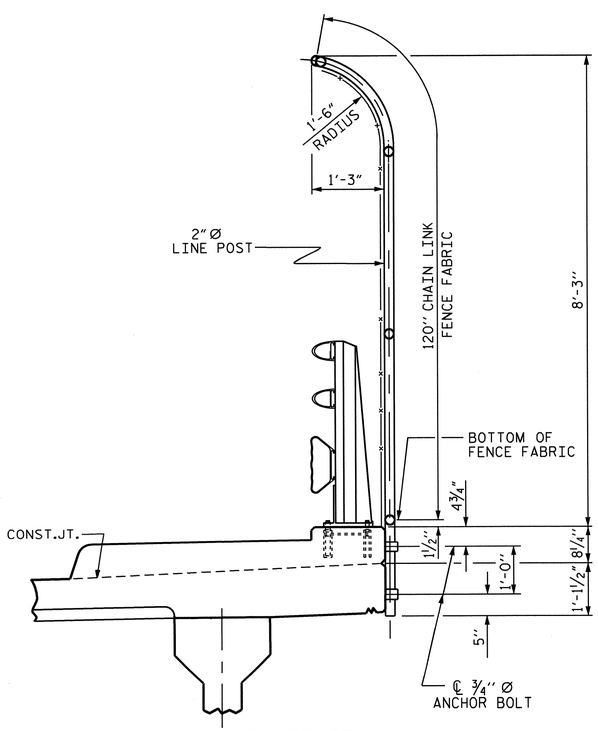

SECTION THRU FENCE

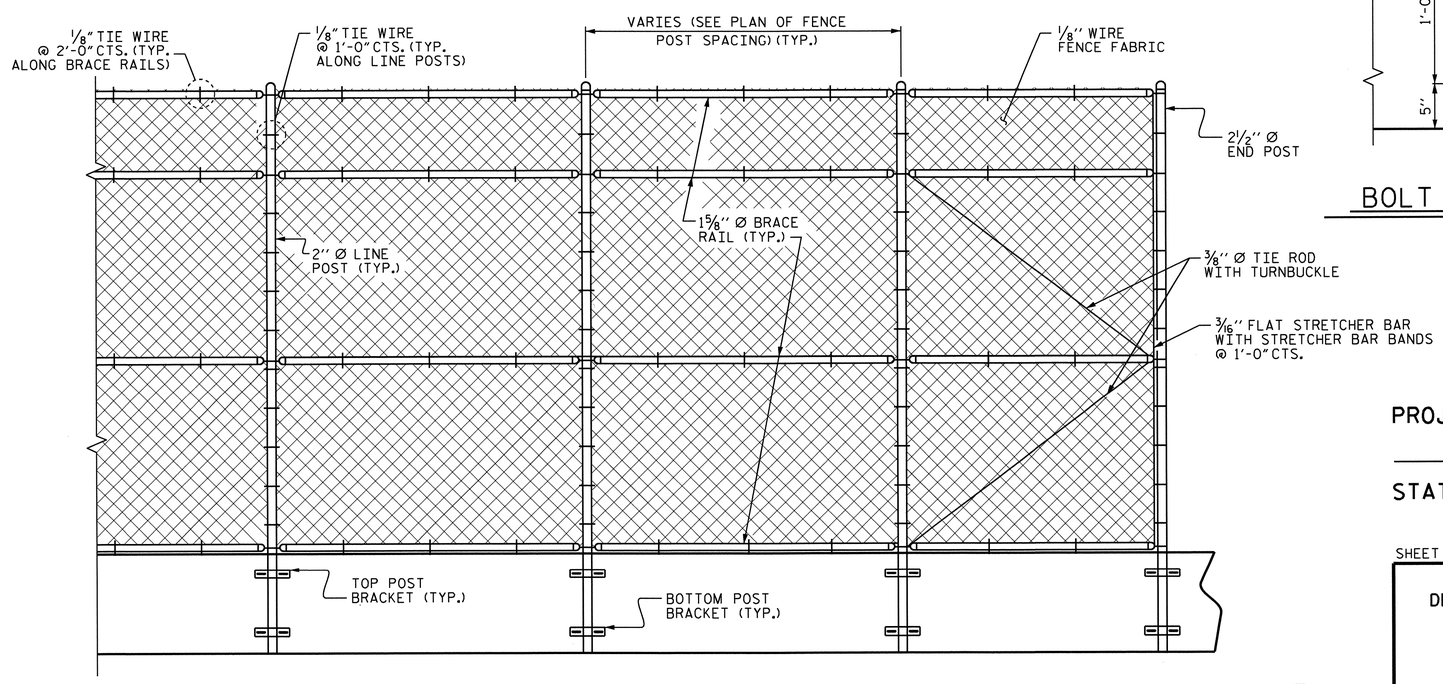

PARTIAL ELEVATION

PROJECT NO. U-4412

HAYWOOD COUNTY

STATION: 67+29.11 -L-

SHEET 2 OF 2

STATE OF NORTH CAROLINA
DEPARTMENT OF TRANSPORTATION
RALEIGH

SUPERSTRUCTURE

BRIDGE MOUNTED
120" CHAIN LINK FENCE
RIGHT SIDE

NORTH CAROLINA PROFESSIONAL SEAL 20125 ENGINEER MARSHALL G. CHEEK, JR.
11-29-12

REVISIONS						SHEET NO.
NO.	BY:	DATE:	NO.	BY:	DATE:	S-47
1			3			TOTAL SHEETS
2			4			70

DRAWN BY : V.X. NGUYEN DATE : 1-4-12
CHECKED BY : M.G. CHEEK DATE : 10-12

29-NOV-2012 11:46
R:\Structures\Final Plans\Str #1\U-4412_SD_3MR.dgn
dahodge

REINFORCING BAR SCHEDULE
SPANS A THRU F

BAR	NO.	SIZE	TYPE	LENGTH	WEIGHT
✳ A1	953	5	STR	43'-3"	42,990
A2	953	5	STR	43'-3"	42,990
✳ A101	1	5	STR	41'-2"	43
✳ A102	1	5	STR	39'-0"	41
✳ A103	1	5	STR	36'-10"	38
✳ A104	1	5	STR	34'-8"	36
✳ A105	1	5	STR	32'-5"	34
✳ A106	1	5	STR	30'-3"	32
✳ A107	1	5	STR	28'-0"	29
✳ A108	1	5	STR	25'-10"	27
✳ A109	1	5	STR	23'-7"	25
✳ A110	1	5	STR	21'-4"	22
✳ A111	1	5	STR	19'-1"	20
✳ A112	1	5	STR	16'-10"	18
✳ A113	1	5	STR	14'-6"	15
✳ A114	1	5	STR	12'-3"	13
✳ A115	1	5	STR	9'-11"	10
✳ A116	1	5	STR	7'-8"	8
✳ A117	1	5	STR	5'-4"	6
✳ A118	1	5	STR	3'-0"	3
A201	1	5	STR	41'-2"	43
A202	1	5	STR	39'-0"	41
A203	1	5	STR	36'-10"	38
A204	1	5	STR	34'-8"	36
A205	1	5	STR	32'-5"	34
A206	1	5	STR	30'-3"	32
A207	1	5	STR	28'-0"	29
A208	1	5	STR	25'-10"	27
A209	1	5	STR	23'-7"	25
A210	1	5	STR	21'-4"	22
A211	1	5	STR	19'-1"	20
A212	1	5	STR	16'-10"	18
A213	1	5	STR	14'-6"	15
A214	1	5	STR	12'-3"	13
A215	1	5	STR	9'-11"	10
A216	1	5	STR	7'-8"	8
A217	1	5	STR	5'-4"	6
A218	1	5	STR	3'-0"	3
✳A301	1	5	STR	42'-1"	44
✳A302	1	5	STR	40'-11"	43
✳A303	1	5	STR	39'-9"	41
✳A304	1	5	STR	38'-7"	40
✳A305	1	5	STR	37'-5"	39
✳A306	1	5	STR	36'-3"	38
✳A307	1	5	STR	35'-1"	37
✳A308	1	5	STR	33'-11"	35
✳A309	1	5	STR	32'-9"	34
✳A310	1	5	STR	31'-8"	33
✳A311	1	5	STR	30'-6"	32
✳A312	1	5	STR	29'-5"	31
✳A313	1	5	STR	28'-3"	29
✳A314	1	5	STR	27'-1"	28
✳A315	1	5	STR	26'-0"	27
✳A316	1	5	STR	24'-10"	26
✳A317	1	5	STR	23'-9"	25
✳A318	1	5	STR	22'-7"	24
✳A319	1	5	STR	21'-6"	22
✳A320	1	5	STR	20'-5"	21
✳A321	1	5	STR	19'-3"	20
✳A322	1	5	STR	18'-2"	19
✳A323	1	5	STR	17'-1"	18
✳A324	1	5	STR	16'-0"	17
✳A325	1	5	STR	14'-11"	16
✳A326	1	5	STR	13'-10"	14
✳A327	1	5	STR	12'-9"	13
✳A328	1	5	STR	11'-8"	12
✳A329	1	5	STR	10'-7"	11
✳A330	1	5	STR	9'-6"	10
✳A331	1	5	STR	8'-5"	9

BAR	NO.	SIZE	TYPE	LENGTH	WEIGHT
✳ A332	1	5	STR	7'-4"	8
✳ A333	1	5	STR	6'-3"	7
✳ A334	1	5	STR	5'-3"	5
✳ A335	1	5	STR	4'-2"	4
✳ A336	3	5	STR	3'-1"	10
A401	1	5	STR	42'-1"	44
A402	1	5	STR	40'-11"	43
A403	1	5	STR	39'-9"	41
A404	1	5	STR	38'-7"	40
A405	1	5	STR	37'-5"	39
A406	1	5	STR	36'-3"	38
A407	1	5	STR	35'-1"	37
A408	1	5	STR	33'-11"	35
A409	1	5	STR	32'-9"	34
A410	1	5	STR	31'-8"	33
A411	1	5	STR	30'-6"	32
A412	1	5	STR	29'-5"	31
A413	1	5	STR	28'-3"	29
A414	1	5	STR	27'-1"	28
A415	1	5	STR	26'-0"	27
A416	1	5	STR	24'-10"	26
A417	1	5	STR	23'-9"	25
A418	1	5	STR	22'-7"	24
A419	1	5	STR	21'-6"	22
A420	1	5	STR	20'-5"	21
A421	1	5	STR	19'-3"	20
A422	1	5	STR	18'-2"	19
A423	1	5	STR	17'-1"	18
A424	1	5	STR	16'-0"	17
A425	1	5	STR	14'-11"	16
A426	1	5	STR	13'-10"	14
A427	1	5	STR	12'-9"	13
A428	1	5	STR	11'-8"	12
A429	1	5	STR	10'-7"	11
A430	1	5	STR	9'-6"	10
A431	1	5	STR	8'-5"	9
A432	1	5	STR	7'-4"	8
A433	1	5	STR	6'-3"	7
A434	1	5	STR	5'-3"	5
A435	1	5	STR	4'-2"	4
A436	3	5	STR	3'-1"	10
✳ B1	60	#4	STR	27'-4"	1096
✳ B2	60	#7	STR	35'-9"	4384
✳ B3	27	#7	STR	28'-1"	1550
✳ B4	60	#4	STR	20'-5"	818
✳ B5	120	#7	STR	39'-2"	9607
✳ B6	54	#7	STR	31'-6"	3477
✳ B7	60	#4	STR	18'-4"	735
✳ B8	60	#4	STR	19'-3"	772
✳ B9	60	#7	STR	36'-11"	4527
✳ B10	27	#7	STR	29'-3"	1614
✳ B11	60	#4	STR	16'-8"	668
✳ B12	30	#7	STR	51'-0"	3127
✳ B13	27	#7	STR	20'-6"	1131
✳ B14	30	#4	STR	29'-2"	585
B15	470	#5	STR	55'-6"	27207
✳ G1	1	#5	STR	44'-3"	46
✳ G2	1	#5	STR	59'-8"	62
✳ J1	84	#4	9	1'-5"	79
✳ K1	2	#8	1	12'-7"	67
✳ K2	8	#8	2	18'-0"	384
K3	10	#6	STR	5'-7"	84
✳ K4	2	#8	1	11'-1"	59
✳ K5	2	#8	1	15'-2"	81
✳ K6	8	#8	2	20'-9"	443
K7	15	#6	STR	7'-7"	171
✳ K8	2	#8	1	12'-11"	69
✳ K9	10	#4	7	5'-2"	35
✳ K10	20	#4	8	10'-0"	134
✳ K11	20	#4	STR	5'-8"	76
✳ K12	20	#4	STR	6'-9"	90

BAR	NO.	SIZE	TYPE	LENGTH	WEIGHT
✳ K13	10	#4	STR	4'-7"	31
✳ K14	10	#4	7	5'-5"	36
✳ K15	20	#4	8	10'-6"	140
✳ K16	20	#4	STR	5'-11"	79
✳ K17	20	#4	STR	7'-1"	95
✳ K18	10	#4	STR	4'-9"	32
✳ K19	10	#4	7	5'-9"	38
✳ K20	20	#4	8	11'-2"	149
✳ K21	20	#4	STR	6'-3"	84
✳ K22	20	#4	STR	7'-5"	99
✳ K23	10	#4	STR	5'-0"	33
✳ K24	10	#4	7	6'-1"	41
✳ K25	20	#4	8	11'-10"	158
✳ K26	20	#4	STR	6'-8"	89
✳ K27	20	#4	STR	8'-0"	107
✳ K28	10	#4	STR	5'-4"	36
✳ K29	10	#4	7	6'-6"	43
✳ K30	20	#4	8	12'-8"	169
✳ K31	20	#4	STR	7'-3"	97
✳ K32	20	#4	STR	8'-7"	115
✳ K33	10	#4	STR	6'-9"	45
✳ S1	30	4	3	3'-4"	67
✳ S2	70	5	4	5'-10"	426
✳ S3	40	4	3	5'-4"	143
S4	550	4	5	2'-9"	1010
U1	100	4	6	15'-2"	1013
U2	50	4	6	13'-2"	440

REINFORCING STEEL	LBS.	74,177
✳EPOXY COATED REINFORCING STEEL	LBS.	82,320

✳ THESE BARS ARE EPOXY COATED

BAR TYPES

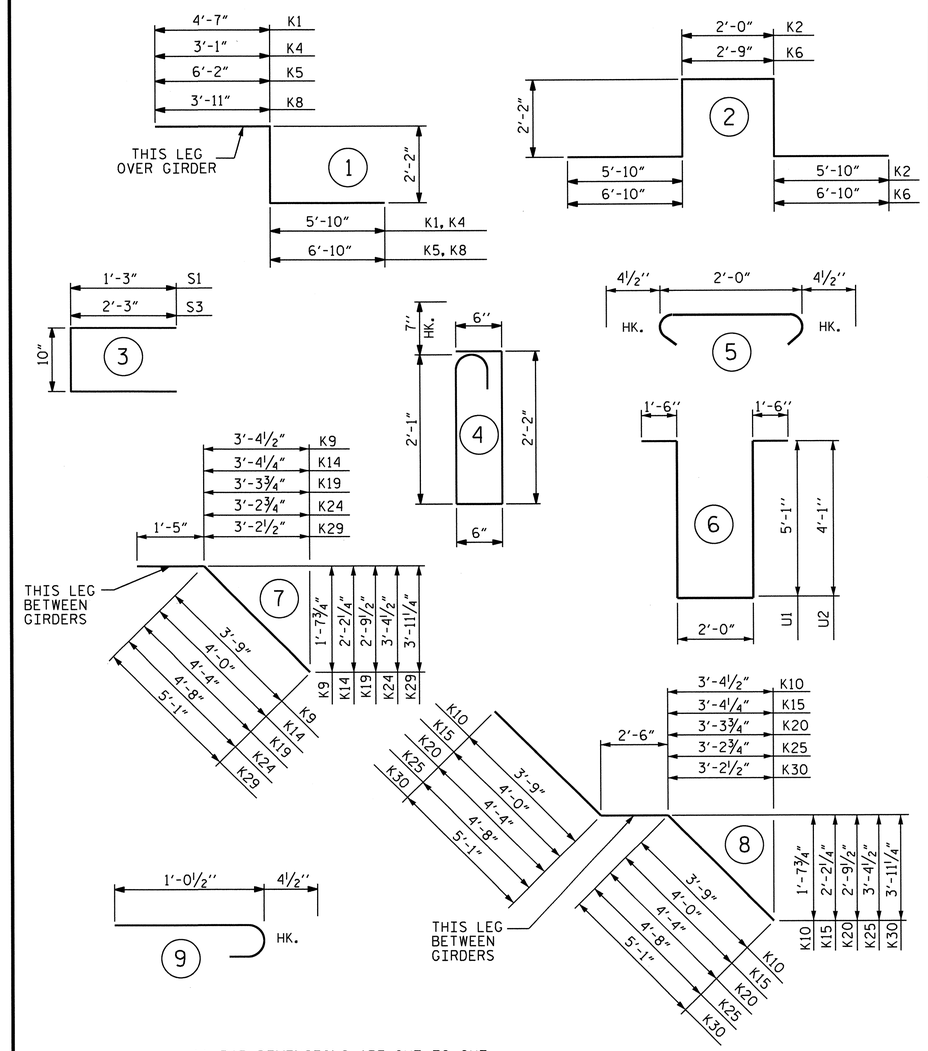

ALL BAR DIMENSIONS ARE OUT TO OUT

SUPERSTRUCTURE REINFORCING STEEL LENGTHS ARE BASED ON THE FOLLOWING MINIMUM SPLICE LENGTHS

BAR SIZE	SUPERSTRUCTURE EXCEPT APPROACH SLABS, PARAPET, AND BARRIER RAIL		APPROACH SLABS		PARAPET AND BARRIER RAIL
	EPOXY COATED	UNCOATED	EPOXY COATED	UNCOATED	
#4	2'-0"	1'-9"	2'-0"	1'-9"	2'-9"
#5	2'-6"	2'-2"	2'-6"	2'-2"	3'-5"
#6	3'-0"	2'-7"	3'-10"	2'-7"	4'-4"
#7	5'-3"	3'-6"			
#8	6'-10"	4'-7"			

NORTH CAROLINA PROFESSIONAL SEAL 20125 ENGINEER MARSHALL E. HEEK, JR. 11-29-12

PROJECT NO. U-4412
HAYWOOD COUNTY
STATION: 67+29.11-L-

SHEET 1 OF 2

STATE OF NORTH CAROLINA
DEPARTMENT OF TRANSPORTATION
RALEIGH

SUPERSTRUCTURE
BILL OF MATERIAL

REVISIONS						SHEET NO.
NO.	BY:	DATE:	NO.	BY:	DATE:	S-48
1			3			TOTAL SHEETS
2			4			70

DRAWN BY : V.X. NGUYEN DATE : 12-21-11
CHECKED BY : D. HODGE DATE : 10-12

29-NOV-2012 11:47
R:\Structures\FinalPlans\Str *1\U-4412_SD_BM.dgn
dahodge

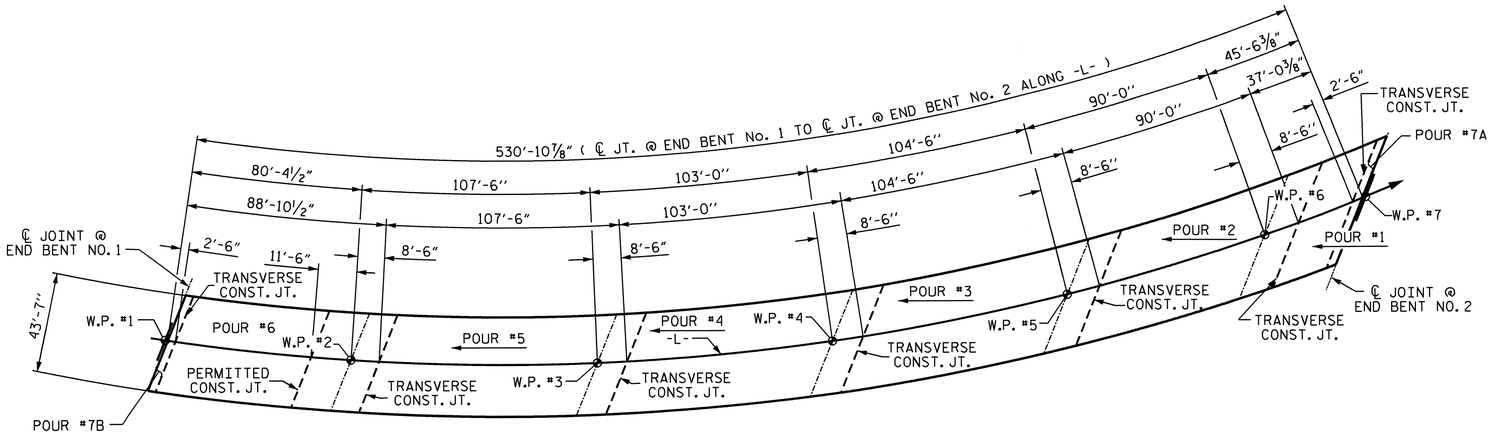

NOTE: TRANSVERSE CONSTRUCTION JOINTS SHALL BE PARALLEL TO THE BENT CONTROL LINE.

POUR SEQUENCE

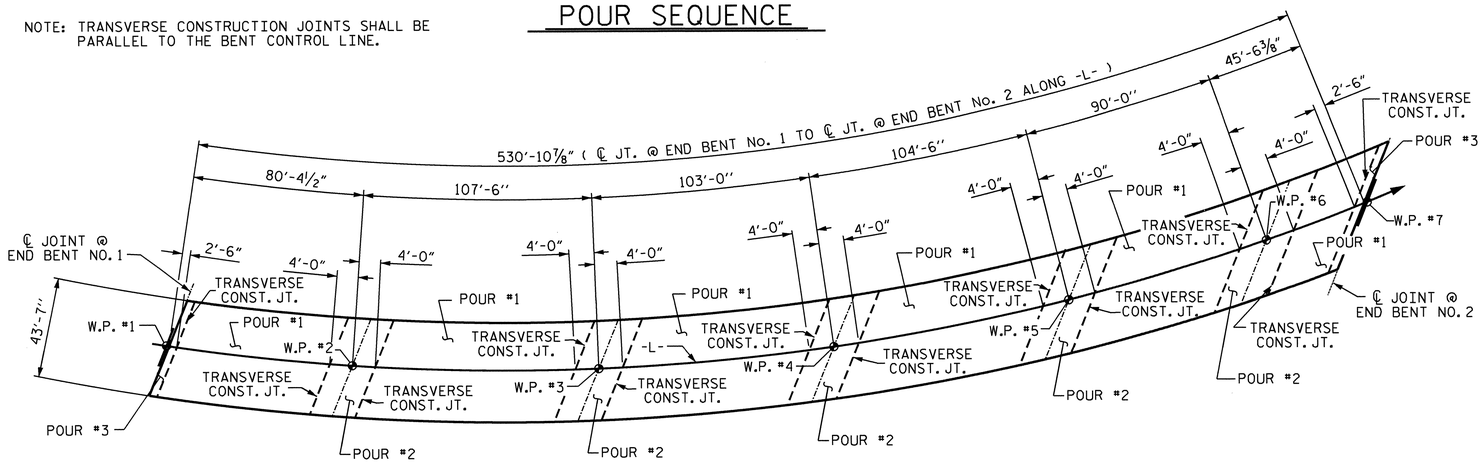

OPTIONAL POUR SEQUENCE

POUR #2 OR POUR #3 CANNOT BE STARTED UNTIL ADJACENT POURS HAVE REACHED A MINIMUM OF 3000 PSI.

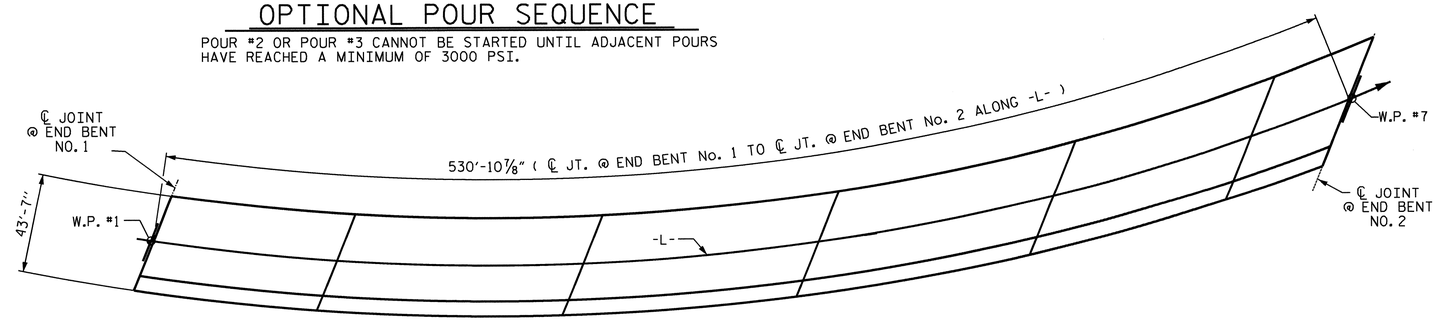

LAYOUT FOR COMPUTING AREA REINFORCED CONCRETE DECK SLAB (SQ. FT. = 23,133)

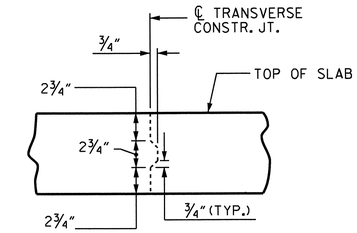

TRANSVERSE CONSTRUCTION JOINT DETAIL

NOTE: REINFORCING STEEL IN SLAB NOT SHOWN. LONGITUDINAL REINFORCING STEEL SHALL BE CONTINUOUS THRU JOINT

SUPERSTRUCTURE BILL OF MATERIAL

		CLASS AA CONCRETE	REINFORCING STEEL	EPOXY COATED REINFORCING STEEL
		(CU.YDS.)	(LBS.)	(LBS.)
SPANS A, B, C, D, E AND F	POUR #1	54.3		
	POUR #2	159.1		
	POUR #3	180.6		
	POUR #4	177.0		
	POUR #5	183.2		
	POUR #6	149.3		
	POUR #7A	7.0		
	POUR #7B	6.1		
TOTALS**		916.6	74,177	82,320

**QUANTITIES FOR SIDEWALK, PARAPET AND END POSTS ARE NOT INCLUDED

GROOVING BRIDGE FLOORS

BRIDGE DECK	17,221	SQ.FT.
APPROACH SLAB	1,534	SQ.FT.
TOTAL	18,755	SQ.FT.

PROJECT NO. U-4412
HAYWOOD COUNTY
STATION: 67+29.11-L-

SHEET 2 OF 2

STATE OF NORTH CAROLINA
DEPARTMENT OF TRANSPORTATION
RALEIGH

STANDARD
SUPERSTRUCTURE BILL OF MATERIAL

NORTH CAROLINA PROFESSIONAL SEAL 20125 ENGINEER MARSHALL LIGHTSEEK, JR. 2-13-13

ASSEMBLED BY : V.X. NGUYEN	DATE : 12-21-11				
CHECKED BY : D. HODGE	DATE : 10-12				
DRAWN BY : JMB 5/87	REV. 8/16/99 RWW/LES				
CHECKED BY : SJD 9/87	REV. 5/1/06 TLA/GM				
	REV. 10/1/11 MAA/GM				

REVISIONS						SHEET NO.
NO.	BY:	DATE:	NO.	BY:	DATE:	S-49
1			3			TOTAL SHEETS
2			4			70

STD. NO. BOM2

13-FEB-2013 14:40
R:\Structures\FinalPlans\Str #1\U-4412_SD_BM.dgn
dahodge

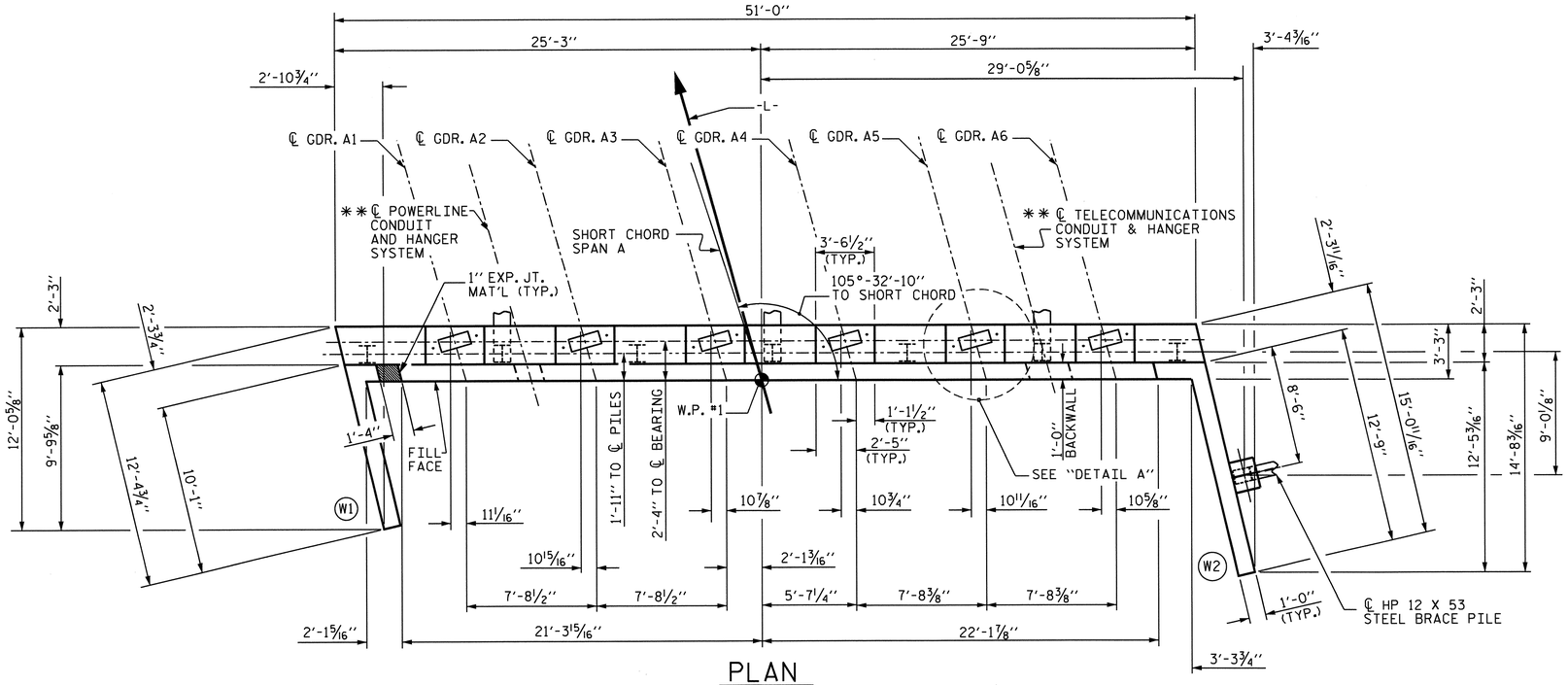

PLAN

** FOR DETAILS OF CONDUIT SYSTEMS, SEE "STRUCTURE UTILITIES PLANS"

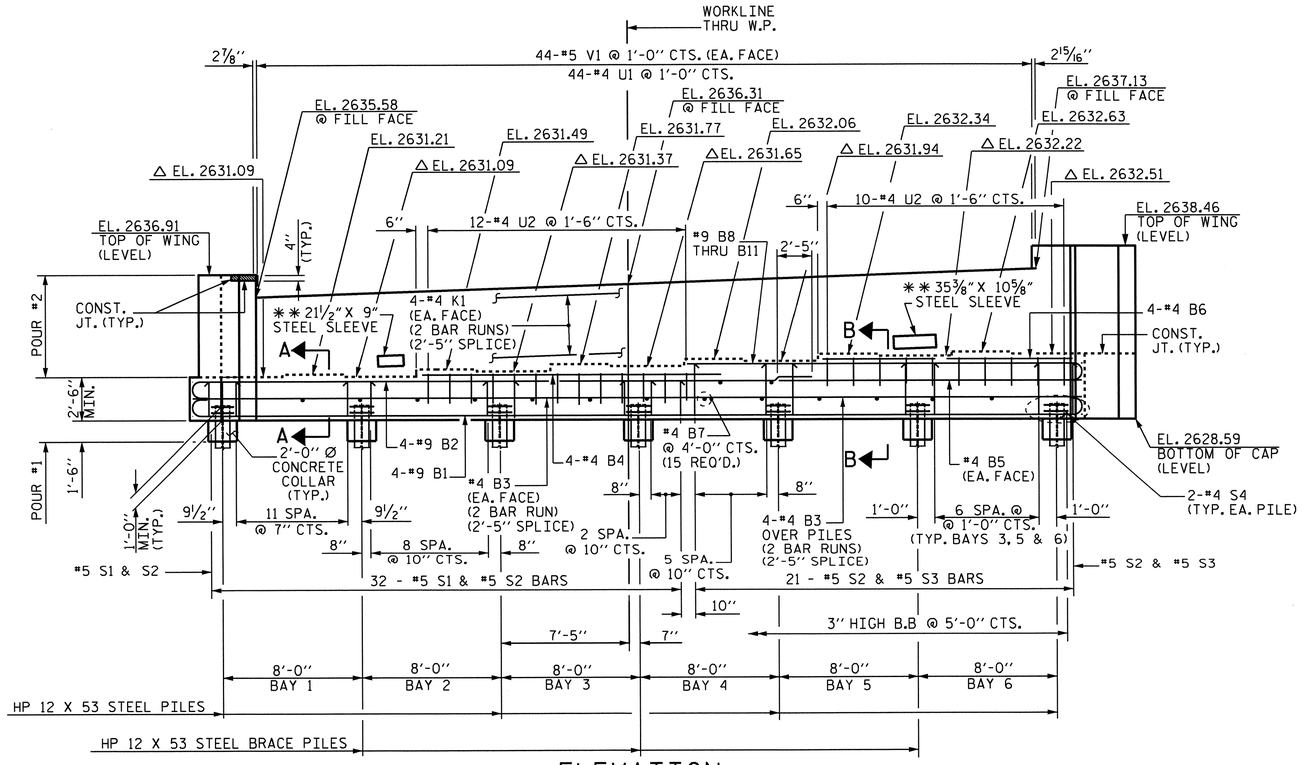

ELEVATION

△ FOR LOCATION OF ELEVATIONS BETWEEN BRIDGE SEAT BUILD-UPS, SEE SECTION A-A OR SECTION B-B, SHEET 3 OF 3.
** FOR DETAILS OF CONDUIT SYSTEMS, SEE "STRUCTURE UTILITIES PLANS"

NOTES

STIRRUPS IN CAP MAY BE SHIFTED AS NECESSARY TO CLEAR ANCHOR BOLTS.

BACKWALL SHALL BE PLACED BEFORE APPLYING THE EPOXY PROTECTIVE COATING.

THE TOP SURFACE AREAS OF THE END BENT CAPS SHALL BE CURED IN ACCORDANCE WITH THE STANDARD SPECIFICATIONS EXCEPT THE MEMBRANE CURING COMPOUND METHOD SHALL NOT BE USED.

THE CONCRETE IN THE SHADED AREA OF THE WING SHALL BE POURED AFTER THE PARAPET AND END POST ARE CAST IF SLIP FORMING IS USED.

THE TOP SURFACE OF THE CAP EXCEPT THE BRIDGE SEAT BUILDUPS SHALL BE SLOPED TRANSVERSELY FROM THE FILL FACE TO THE BACK FACE AT THE RATE OF 2%.

REINFORCING STEEL SHALL BE FIELD BENT AS NECESSARY FOR INSTALLATION OF THE STEEL SLEEVE IN BACKWALL.

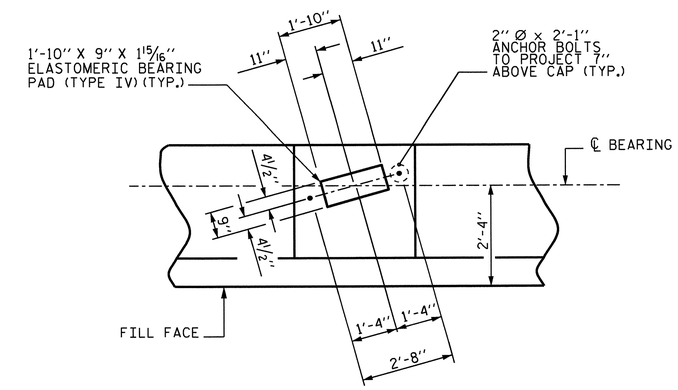

DETAIL A

PROJECT NO. U-4412
HAYWOOD COUNTY
STATION: 67+29.11 -L-

SHEET 1 OF 3

STATE OF NORTH CAROLINA
DEPARTMENT OF TRANSPORTATION
RALEIGH

SUBSTRUCTURE
END BENT No. 1

NORTH CAROLINA PROFESSIONAL SEAL 20125 ENGINEER MARSHALL L. GIRKEN, JR.
2-15-13

REVISIONS						SHEET NO.
NO.	BY:	DATE:	NO.	BY:	DATE:	S-50
1			3			TOTAL SHEETS
2			4			70

STR. #1

NCDDS

DRAWN BY :	M. POOLE	DATE :	12/11
CHECKED BY :	J.R. MCROY	DATE :	7/12

15-FEB-2013 08:20
R:\Structures\Final Plans\Str #1\U-4412_SD_E1.dgn
dahodge

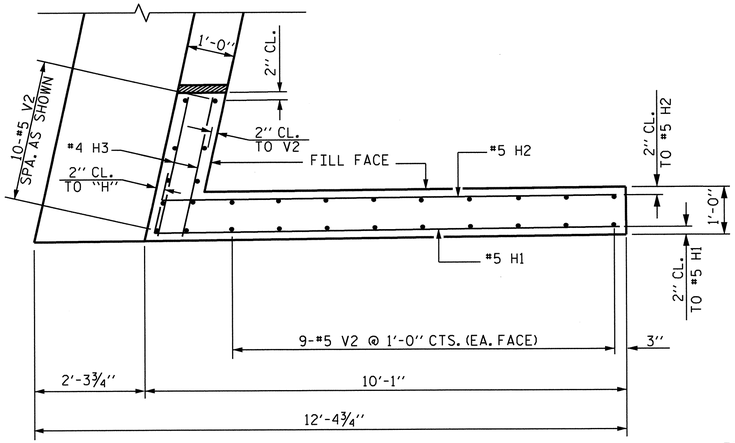

PLAN OF WING - W1

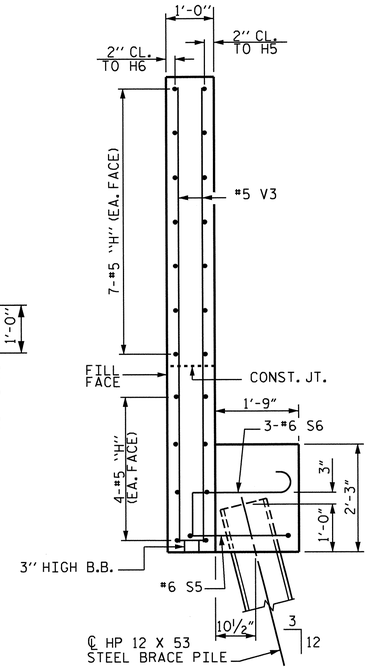

SECTION Y-Y

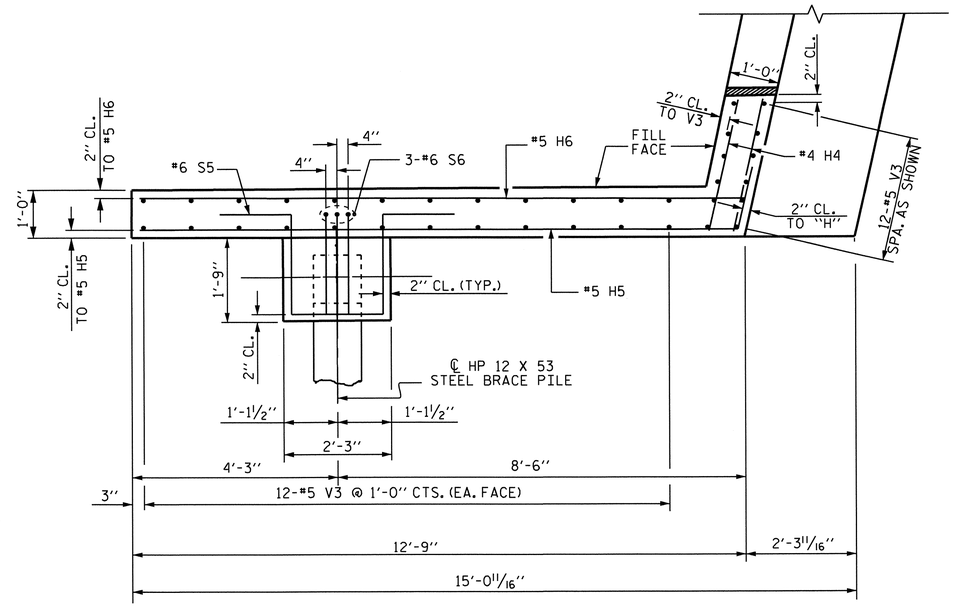

PLAN OF WING - W2

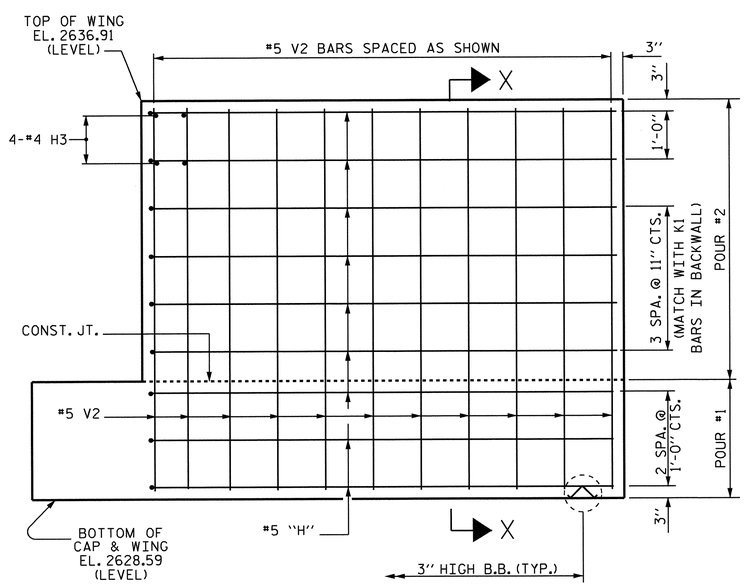

ELEVATION OF WING - W1

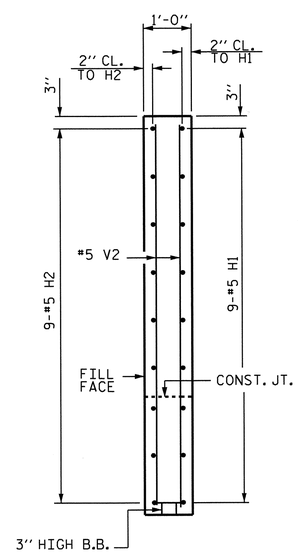

SECTION X-X

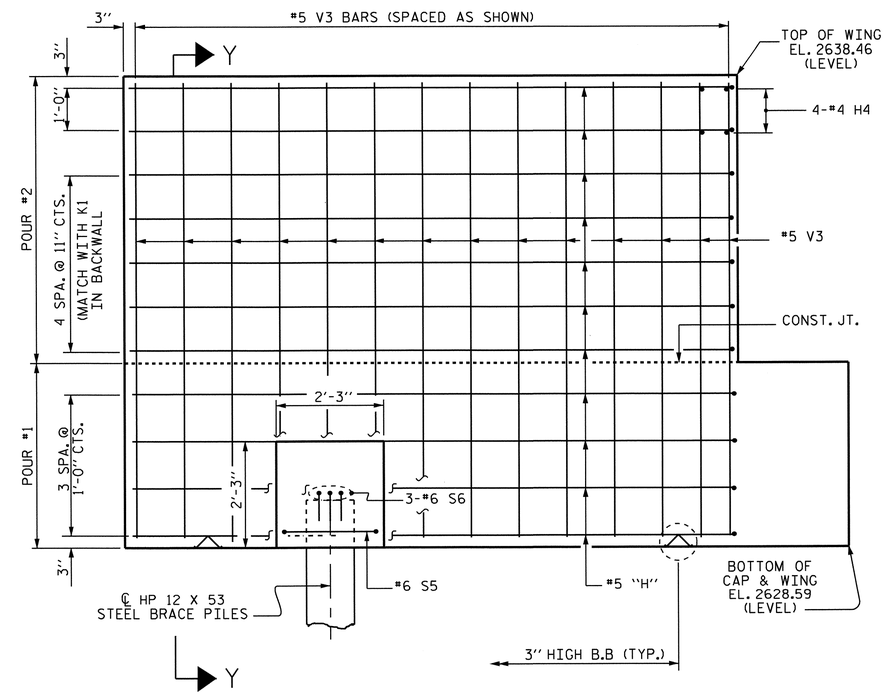

ELEVATION OF WING - W2

PROJECT NO. U-4412
HAYWOOD COUNTY
STATION: 67+29.11 -L-

SHEET 2 OF 3

STATE OF NORTH CAROLINA
DEPARTMENT OF TRANSPORTATION
RALEIGH

SUBSTRUCTURE
END BENT No. 1

NORTH CAROLINA PROFESSIONAL SEAL 20125 ENGINEER WILLIAM R. CHECK, JR.

REVISIONS						SHEET NO.
NO.	BY:	DATE:	NO.	BY:	DATE:	S-51
1			3			TOTAL SHEETS
2			4			70

DRAWN BY : M. POOLE DATE : 12/11
CHECKED BY : J.R. MCROY DATE : 7/12

06-FEB-2013 15:05
R:\Structures\Final Plans\Str #1\U-4412_SD_E1.dgn
dahodge

STR. #1

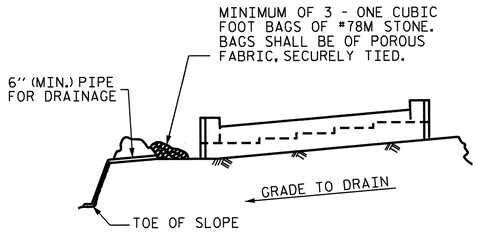

BAGGED STONE AND PIPE SHALL BE PLACED IMMEDIATELY AFTER COMPLETION OF END BENT EXCAVATION. PIPE MAY BE EITHER CONCRETE, CORRUGATED STEEL, CORRUGATED ALUMINUM ALLOY, OR CORRUGATED PLASTIC. PERFORATED PIPE WILL NOT BE ALLOWED.

BAGGED STONE SHALL REMAIN IN PLACE UNTIL THE ENGINEER DIRECTS THAT IT BE REMOVED. THE CONTRACTOR SHALL REMOVE AND DISPOSE OF SILT ACCUMULATIONS AT BAGGED STONE WHEN SO DIRECTED BY THE ENGINEER. BAGS SHALL BE REMOVED AND REPLACED WHENEVER THE ENGINEER DETERMINES THAT THEY HAVE DETERIORATED AND LOST THEIR EFFECTIVENESS.

NO SEPARATE PAYMENT WILL BE MADE FOR THIS WORK AND THE ENTIRE COST OF THIS WORK SHALL BE INCLUDED IN THE UNIT CONTRACT PRICE BID FOR THE SEVERAL PAY ITEMS.

TEMPORARY DRAINAGE AT END BENT

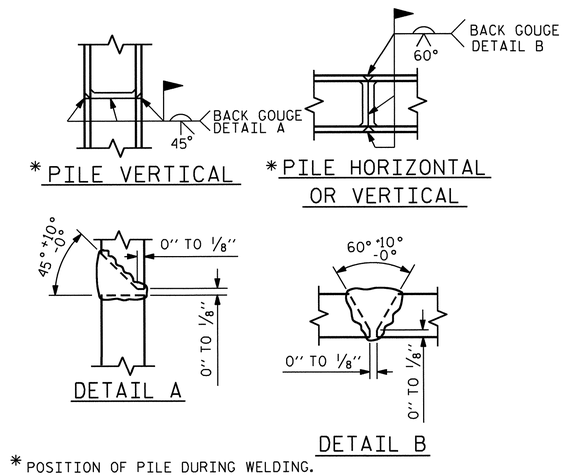

* POSITION OF PILE DURING WELDING.

PILE SPLICE DETAILS

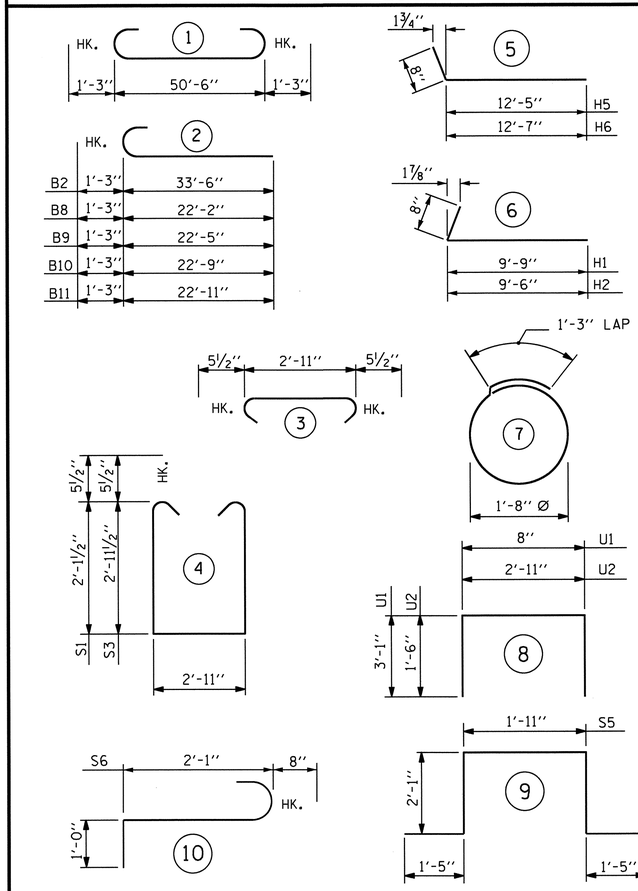

BILL OF MATERIAL
END BENT NO. 1

BAR	NO.	SIZE	TYPE	LENGTH	WEIGHT
B1	4	9	1	53'-0"	721
B2	4	9	2	37'-9"	513
B3	12	4	STR	26'-7"	213
B4	4	4	STR	17'-8"	47
B5	2	4	STR	19'-8"	26
B6	4	4	STR	14'-6"	39
B7	15	4	STR	2'-11"	29
B8	1	9	2	23'-5"	80
B9	1	9	2	23'-8"	80
B10	1	9	2	24'-0"	82
B11	1	9	2	24'-2"	82
H1	9	5	6	10'-5"	98
H2	9	5	6	10'-2"	95
H3	4	4	STR	2'-9"	7
H4	4	4	STR	3'-11"	10
H5	11	5	5	13'-1"	150
H6	11	5	5	13'-3"	152
K1	16	4	STR	26'-7"	284
S1	32	5	4	8'-1"	270
S2	53	5	3	3'-10"	212
S3	21	5	4	9'-9"	214
S4	14	4	7	6'-6"	61
S5	1	6	9	8'-11"	13
S6	3	6	10	3'-9"	17
U1	44	4	8	6'-10"	201
U2	22	4	8	5'-11"	87
V1	88	5	STR	6'-7"	604
V2	28	5	STR	7'-11"	231
V3	36	5	STR	9'-6"	357

REINFORCING STEEL 4975 LBS.

CLASS A CONCRETE BREAKDOWN

POUR #1 (CAP, LOWER WINGS & COLLARS) 23.6 C.Y.

POUR #2 (UPPER PORTION OF WINGS & BACKWALL) 14.8 C.Y.

TOTAL 38.4 C.Y.

HP 12 X 53 STEEL PILES NO. 8 275 LIN. FT.

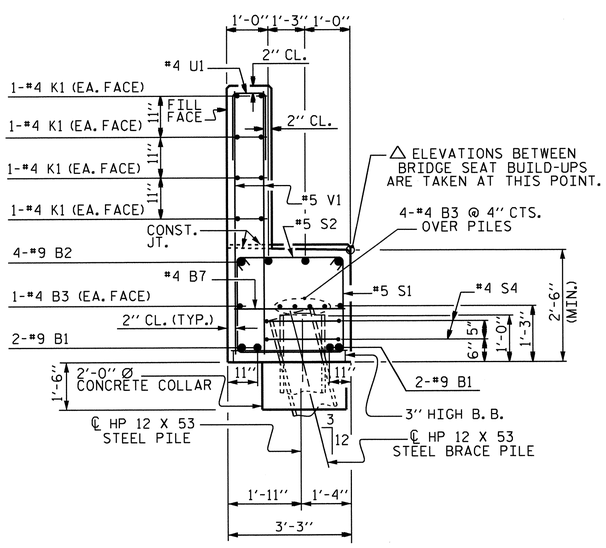

SECTION A-A

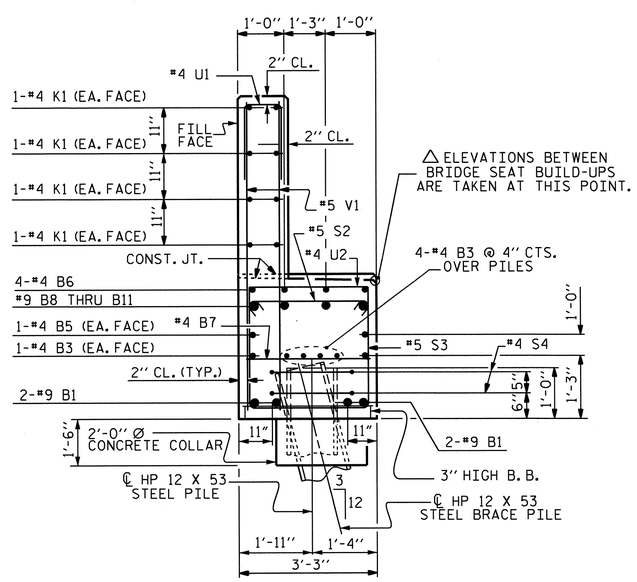

SECTION B-B

PROJECT NO. U-4412
HAYWOOD COUNTY
STATION: 67+29.11 -L-

SHEET 3 OF 3

STATE OF NORTH CAROLINA
DEPARTMENT OF TRANSPORTATION
RALEIGH

SUBSTRUCTURE
END BENT No. 1

NORTH CAROLINA PROFESSIONAL SEAL 20125 ENGINEER MARSHALL L. MCROY, JR.
2-1-12

REVISIONS						SHEET NO.
NO.	BY:	DATE:	NO.	BY:	DATE:	S-52
1			3			TOTAL SHEETS
2			4			70

DRAWN BY : M. POOLE DATE : 12/11
CHECKED BY : J.R. MCROY DATE : 2/12

06-FEB-2013 15:05
R:\Structures\Final Plans\Str #1\U-4412_SD_E1.dgn

STR. #1

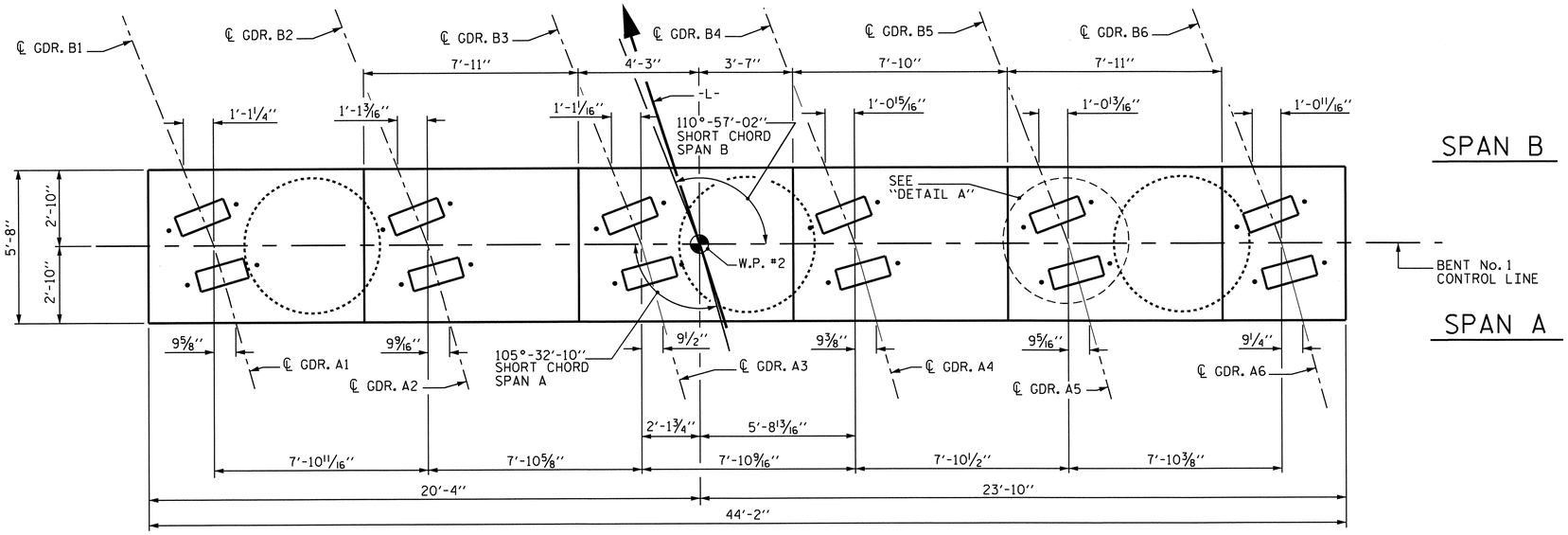

PLAN

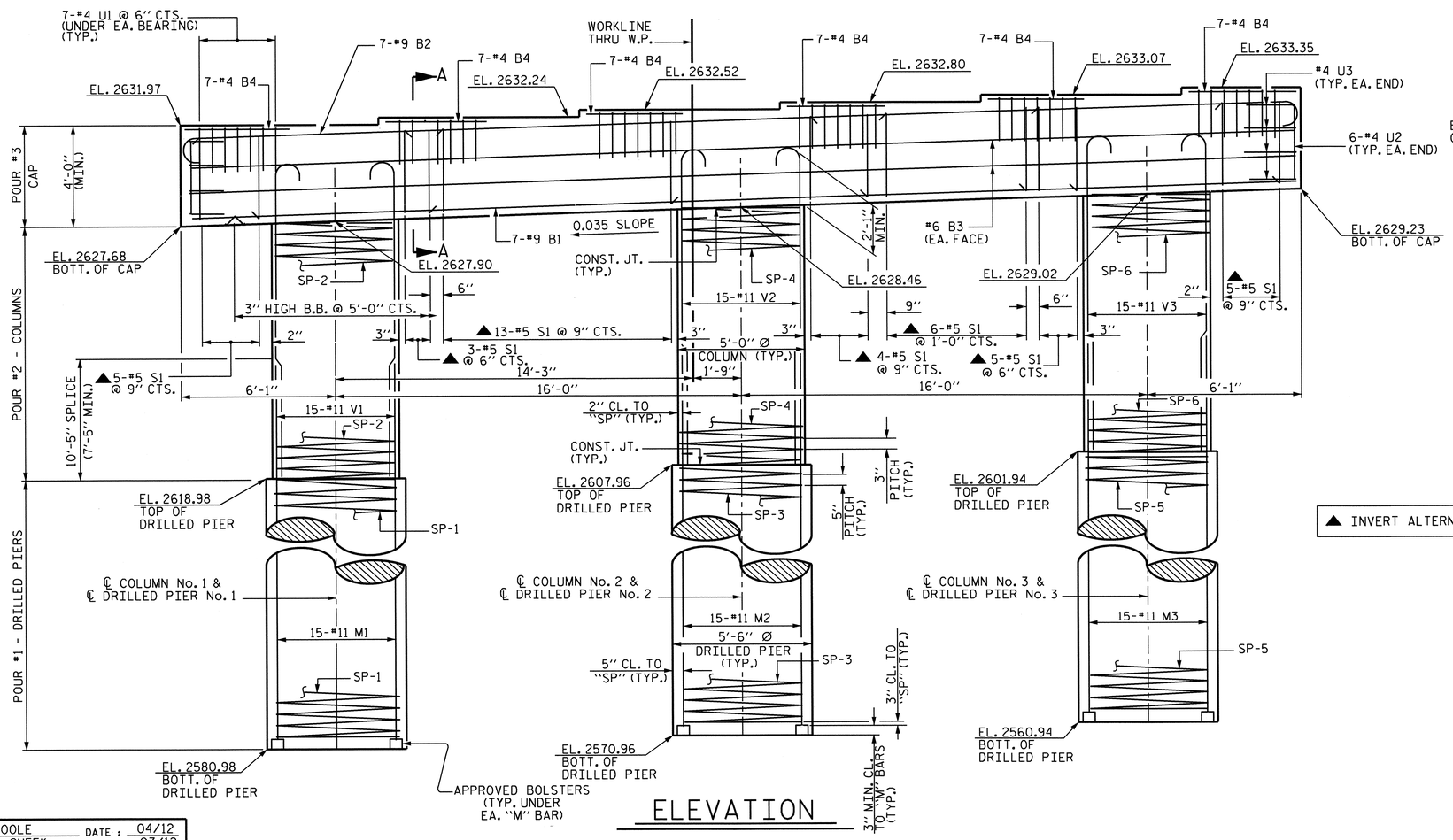

ELEVATION

NOTES

STIRRUPS IN CAP MAY BE SHIFTED AS NECESSARY TO CLEAR ANCHOR BOLTS.

HOOKS ON "V" BARS MAY BE TURNED AS NECESSARY FOR PLACING REINFORCING STEEL.

ALL STEEL IN THE DRILLED PIERS IS INCLUDED IN THE PAY ITEMS FOR "REINFORCING STEEL" AND "SPIRAL COLUMN REINFORCING STEEL".

THE LOCATION OF THE CONSTRUCTION JOINT IN THE DRILLED PIERS IS BASED ON AN APPROXIMATE GROUND LINE ELEVATION. IF THE CONSTRUCTION JOINT IS ABOVE THE ACTUAL GROUND LINE ELEVATION, THE CONTRACTOR SHALL PLACE THE CONSTRUCTION JOINT 1 FT. BELOW THE GROUND LINE.

SPLICING OF THE LONGITUDINAL BARS IN THE DRILLED PIERS WILL NOT BE PERMITTED.

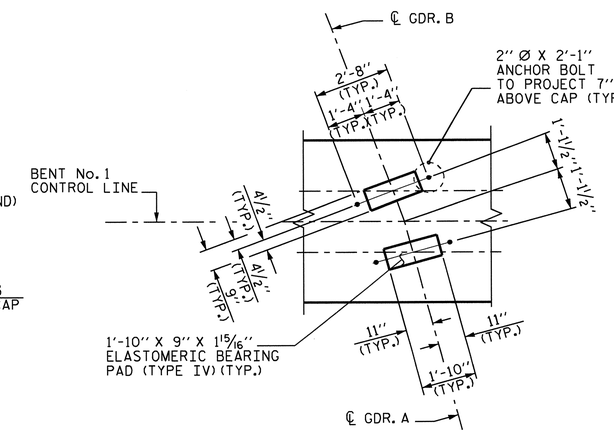

DETAIL A

PROJECT NO. U-4412

HAYWOOD COUNTY

STATION: 67+29.11 -L-

SHEET 1 OF 2

STATE OF NORTH CAROLINA
DEPARTMENT OF TRANSPORTATION
RALEIGH

SUBSTRUCTURE
BENT No. 1

REVISIONS						SHEET NO.
NO.	BY:	DATE:	NO.	BY:	DATE:	S-53
1			3			TOTAL SHEETS
2			4			70

NORTH CAROLINA PROFESSIONAL SEAL 20125 ENGINEER MARSHALL G. CHEEK, JR.
2-11-13

DRAWN BY : M. POOLE DATE : 04/12
CHECKED BY : M.G. CHEEK DATE : 07/12

11-FEB-2013 13:51
R:\Structures\FinalPlans\Str #1\U-4412_SD_B1_01.dgn
dahodge

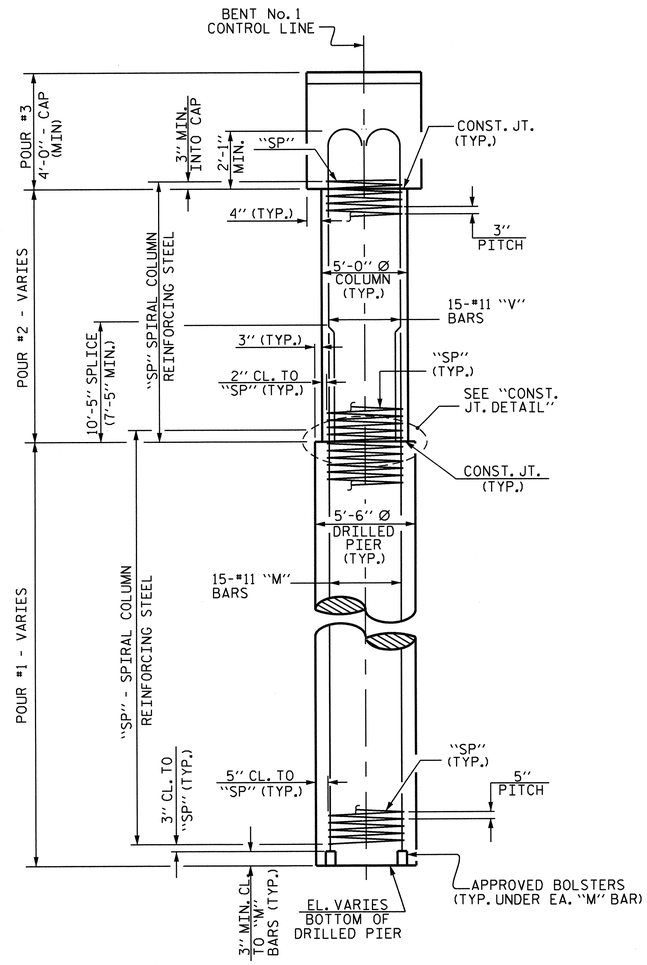

END ELEVATION

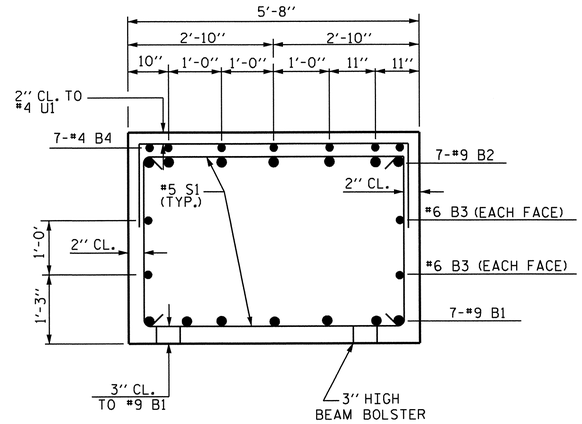

SECTION A-A

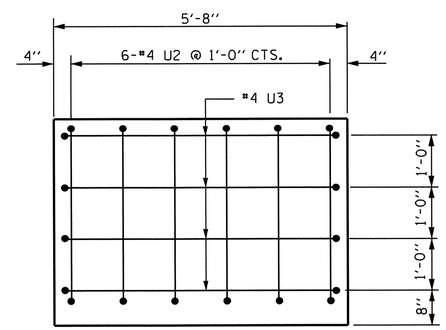

END OF CAP ELEVATION

(TYP. EA. END)

BAR TYPES

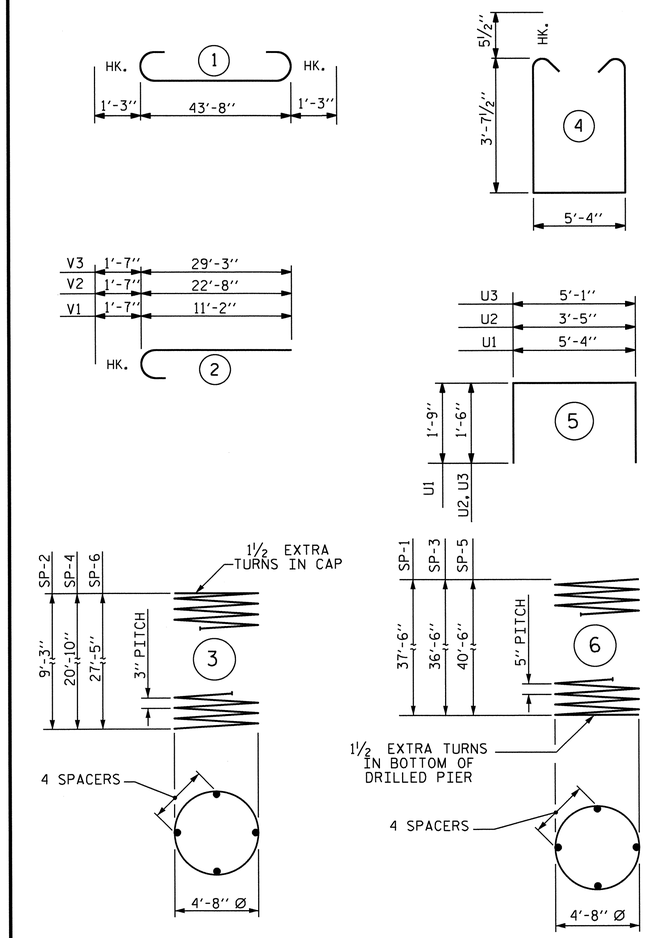

ALL BAR DIMENSIONS ARE OUT TO OUT.

*NO SEPARATE PAYMENT WILL BE MADE FOR CSL TUBES. CSL TUBES SHALL BE INCLUDED IN THE UNIT PRICE BID FOR DRILLED PIERS.

BILL OF MATERIAL

BENT No. 1

BAR	NO.	SIZE	TYPE	LENGTH	WEIGHT
B1	7	9	STR	43'-10"	1043
B2	7	9	1	46'-2"	1099
B3	4	6	STR	43'-10"	263
B4	42	4	STR	3'-4"	94
M1	15	11	STR	48'-2"	3839
M2	15	11	STR	47'-2"	3759
M3	15	11	STR	51'-2"	4078
S1	41	5	4	13'-6"	577
U1	42	4	5	8'-10"	248
U2	12	4	5	6'-5"	51
U3	8	4	5	8'-1"	43
V1	15	11	2	12'-9"	1016
V2	15	11	2	24'-3"	1933
V3	15	11	2	30'-10"	2457
TOTAL REINFORCING STEEL					20500 LBS.
SPIRAL COLUMN REINFORCING STEEL					
SP-1	1	***	6	1327'-1"	1384
SP-2	1	**	3	559'-6"	374
SP-3	1	***	6	1294'-5"	1350
SP-4	1	**	3	1235'-3"	825
SP-5	1	***	6	1432'-3"	1494
SP-6	1	**	3	1616'-9"	1080
TOTAL SPIRAL COLUMN REINFORCING STEEL					6507 LBS.

CLASS A CONCRETE
POUR #2 - COLUMNS 41.1 CU. YDS.
POUR #3 - CAP 38.4 CU. YDS.
TOTAL 79.5 CU. YDS.

DRILLED PIER CONCRETE
POUR #1 102.1 CU. YDS.

5'-6" Ø DRILLED PIERS
IN SOIL 52.00 LIN. FT.
NOT IN SOIL 64.00 LIN. FT.

PERMANENT STEEL CASING FOR 5'-6" Ø DRILLED PIERS 10.98 LIN. FT.

* CSL TUBES 602.50 LIN. FT.

** THE SP-2, SP-4 & SP-6 SPIRAL REINFORCING STEEL SHALL BE W20 OR D-20 COLD DRAWN WIRE OR #4 PLAIN OR DEFORMED BAR.

*** THE SP-1, SP-3 & SP-5 SPIRAL REINFORCING STEEL SHALL BE W31 OR D-31 COLD DRAWN WIRE OR #5 PLAIN OR DEFORMED BAR.

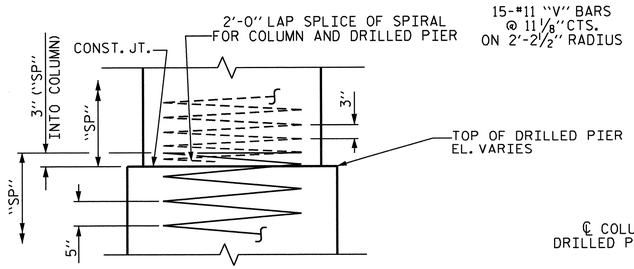

CONSTRUCTION JOINT DETAIL

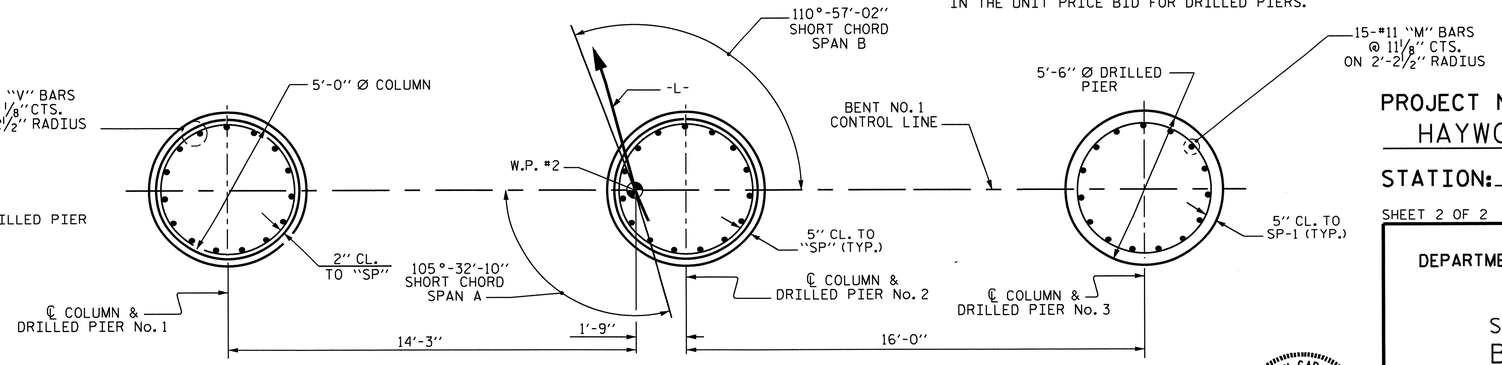

PLAN OF DRILLED PIERS AND COLUMNS

DIMENSIONS AND REINFORCING STEEL ARE TYPICAL FOR EACH COLUMN AND DRILLED PIER.

PROJECT NO. U-4412
HAYWOOD COUNTY
STATION: 67+29.11 -L-

SHEET 2 OF 2

STATE OF NORTH CAROLINA
DEPARTMENT OF TRANSPORTATION
RALEIGH

SUBSTRUCTURE
BENT No. 1

NORTH CAROLINA PROFESSIONAL SEAL 20125 ENGINEER MARSHALL G. CHEEK, JR.
2-11-13

REVISIONS						SHEET NO.
NO.	BY:	DATE:	NO.	BY:	DATE:	S-54
1			3			TOTAL SHEETS
2			4			70

DRAWN BY : M. POOLE DATE : 05/12
CHECKED BY : M.G. CHEEK DATE : 07/12

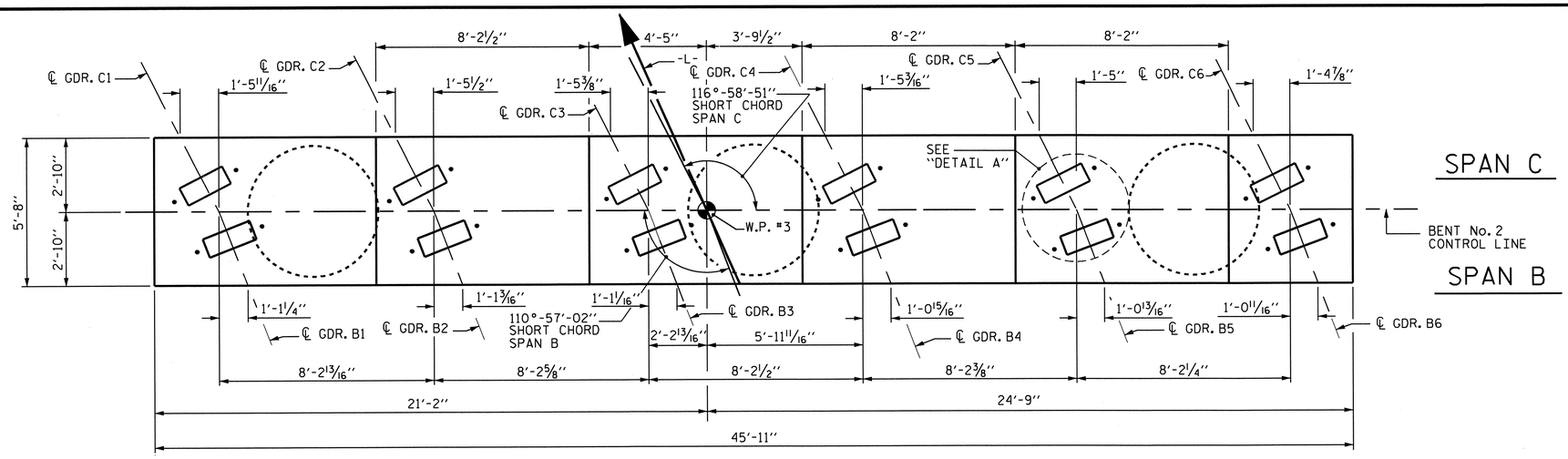

PLAN

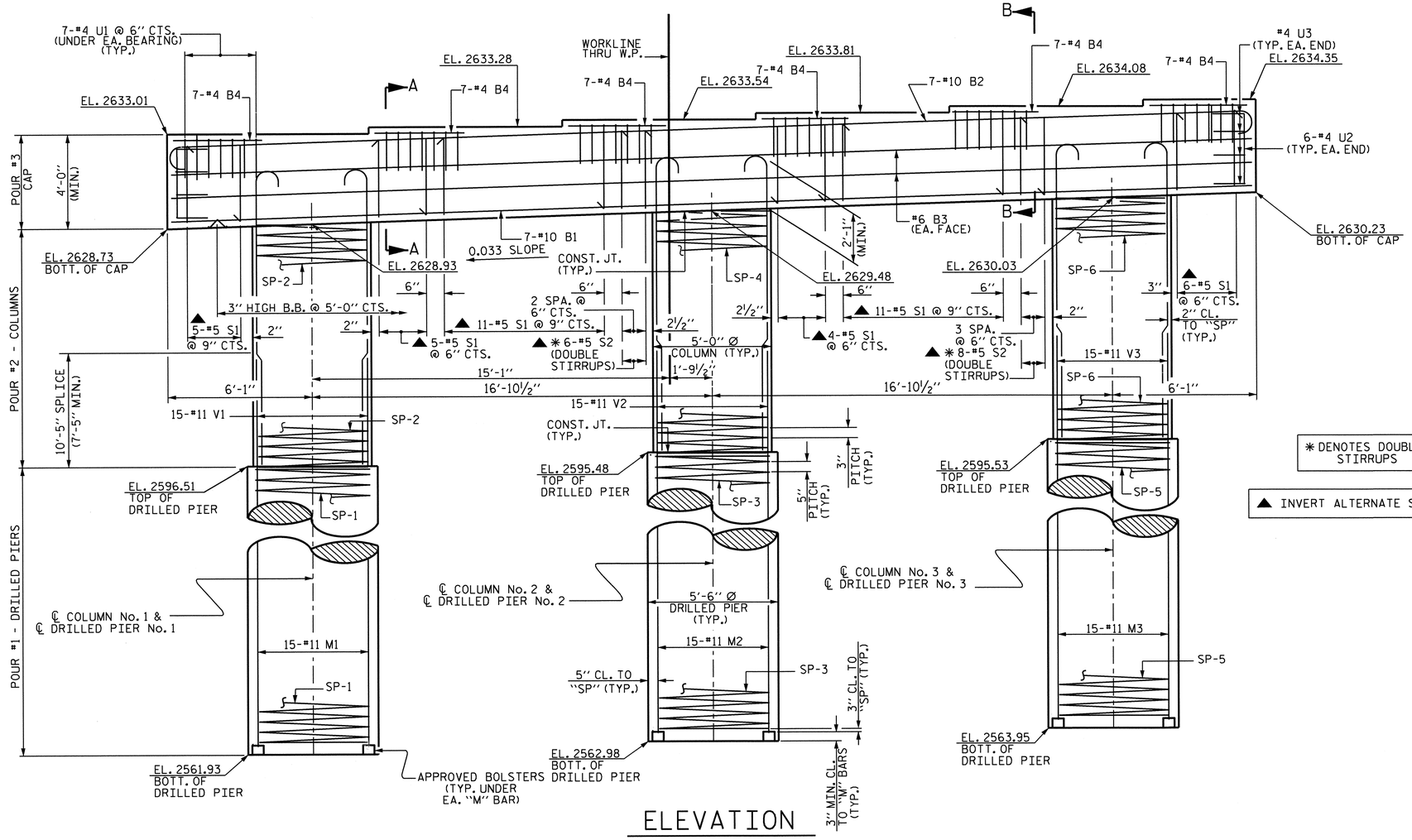

ELEVATION

✱ DENOTES DOUBLE STIRRUPS

▲ INVERT ALTERNATE STIRRUPS

NOTES

STIRRUPS IN CAP MAY BE SHIFTED AS NECESSARY TO CLEAR ANCHOR BOLTS.

HOOKS ON "V" BARS MAY BE TURNED AS NECESSARY FOR PLACING REINFORCING STEEL.

ALL STEEL IN THE DRILLED PIERS IS INCLUDED IN THE PAY ITEMS FOR "REINFORCING STEEL" AND "SPIRAL COLUMN REINFORCING STEEL".

THE LOCATION OF THE CONSTRUCTION JOINT IN THE DRILLED PIERS IS BASED ON AN APPROXIMATE GROUND LINE ELEVATION. IF THE CONSTRUCTION JOINT IS ABOVE THE ACTUAL GROUND LINE ELEVATION, THE CONTRACTOR SHALL PLACE THE CONSTRUCTION JOINT 1 FT. BELOW THE GROUND LINE.

SPLICING OF THE LONGITUDINAL BARS IN THE DRILLED PIERS WILL NOT BE PERMITTED.

THE CONTRACTOR'S ATTENTION IS BROUGHT TO THE FACT THAT A 30" Ø SEWER LINE IS LOCATED IN THE VICINITY OF DRILLED PIER No. 1. SEE UTILITY PLANS AND SPECIAL PROVISIONS.

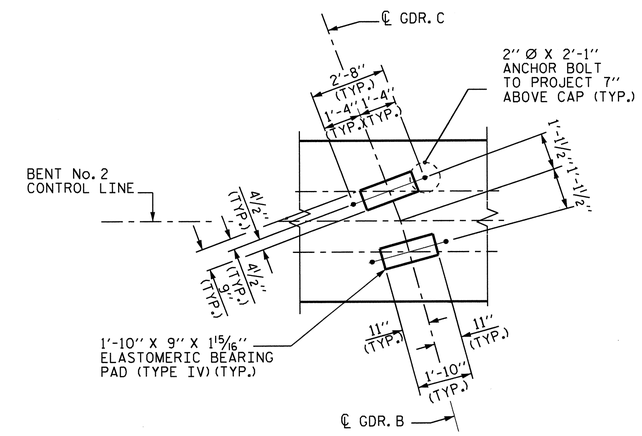

DETAIL A

PROJECT NO. U-4412
HAYWOOD COUNTY
STATION: 67+29.11 -L-

SHEET 1 OF 2

STATE OF NORTH CAROLINA
DEPARTMENT OF TRANSPORTATION
RALEIGH

SUBSTRUCTURE
BENT No. 2

NORTH CAROLINA PROFESSIONAL SEAL 20125 ENGINEER MARSHALL G. CHEEK, JR.
2-11-13

REVISIONS								SHEET NO.
NO.	BY:	DATE:	NO.	BY:	DATE:			S-55
1			3					TOTAL SHEETS
2			4					70

DRAWN BY : M. POOLE DATE : 05/12
CHECKED BY : M.G. CHEEK DATE : 07/12

11-FEB-2013 13:51
R:\Structures\Final Plans\Str #1\U-4412_SD_B1_01.dgn
dahodge

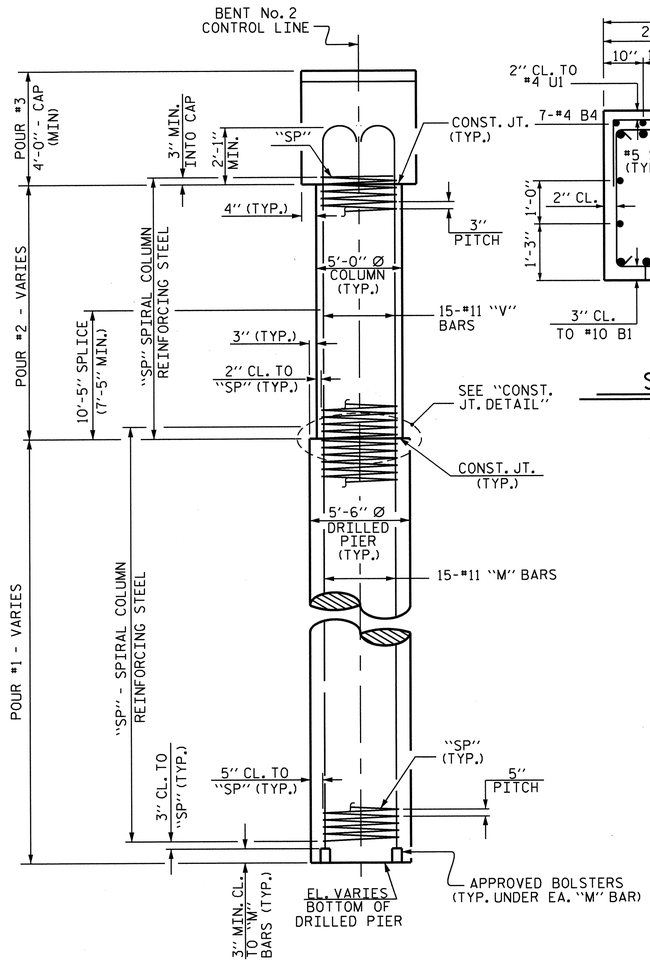

END ELEVATION

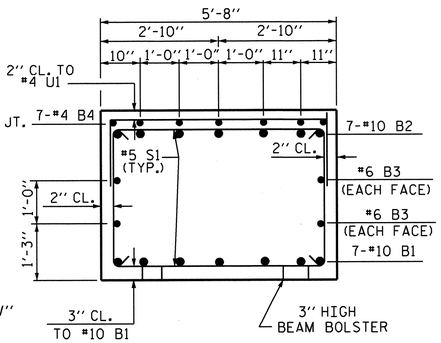

SECTION A-A

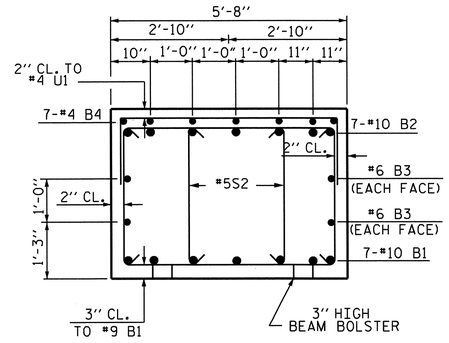

SECTION B-B

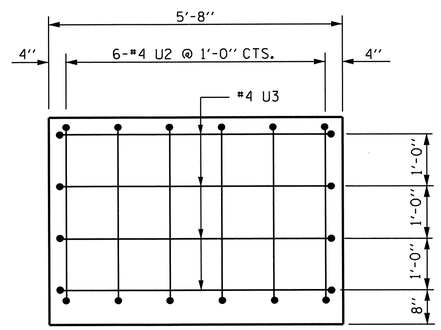

END OF CAP ELEVATION

(TYP. EA. END)

BAR TYPES

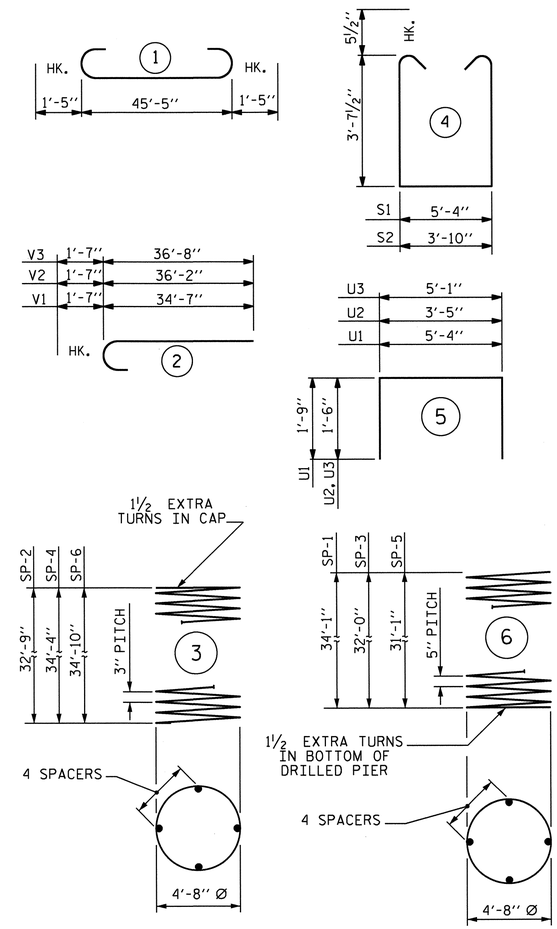

ALL BAR DIMENSIONS ARE OUT TO OUT.

✱ NO SEPARATE PAYMENT WILL BE MADE FOR CSL TUBES. CSL TUBES SHALL BE INCLUDED IN THE UNIT PRICE BID FOR DRILLED PIERS.

BILL OF MATERIAL

BENT No. 2

BAR	NO.	SIZE	TYPE	LENGTH	WEIGHT
B1	7	10	STR	45'-7"	1373
B2	7	10	1	48'-3"	1453
B3	4	6	STR	45'-7"	274
B4	42	4	STR	3'-4"	94
M1	15	11	STR	44'-9"	3566
M2	15	11	STR	42'-8"	3400
M3	15	11	STR	41'-9"	3327
S1	42	5	4	13'-6"	591
S2	14	5	4	12'-0"	175
U1	42	4	5	8'-10"	248
U2	12	4	5	6'-5"	51
U3	8	4	5	8'-1"	43
V1	15	11	2	36'-2"	2882
V2	15	11	2	37'-9"	3008
V3	15	11	2	38'-3"	3048
TOTAL REINFORCING STEEL				23533	LBS.
SPIRAL COLUMN REINFORCING STEEL					
SP-1	1	✱✱✱	6	1211'-1"	1263
SP-2	1	✱✱	3	1925'-6"	1286
SP-3	1	✱✱✱	6	1138'-6"	1187
SP-4	1	✱✱	3	2020'-0"	1349
SP-5	1	✱✱✱	6	1105'-11"	1153
SP-6	1	✱✱	3	2049'-1"	1369
TOTAL SPIRAL COLUMN REINFORCING STEEL					7607 LBS.

CLASS A CONCRETE	
POUR #2 - COLUMNS	73.4 CU. YDS.
POUR #3 - CAP	39.9 CU. YDS.
TOTAL	113.3 CU.YDS.
DRILLED PIER CONCRETE	
POUR #1	86.8 CU. YDS.
5'-6" Ø DRILLED PIERS	
IN SOIL	53.67 LIN. FT.
NOT IN SOIL	45.00 LIN. FT.
✱ CSL TUBES	515.80 LIN. FT.

✱✱ THE SP-2, SP-4 & SP-6 SPIRAL REINFORCING STEEL SHALL BE W20 OR D-20 COLD DRAWN WIRE OR #4 PLAIN OR DEFORMED BAR.

✱✱✱ THE SP-1, SP-3 & SP-5 SPIRAL REINFORCING STEEL SHALL BE W31 OR D-31 COLD DRAWN WIRE OR #5 PLAIN OR DEFORMED BAR.

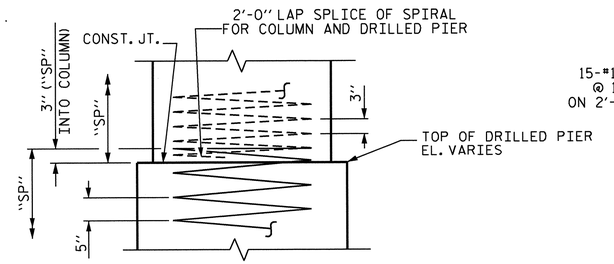

CONSTRUCTION JOINT DETAIL

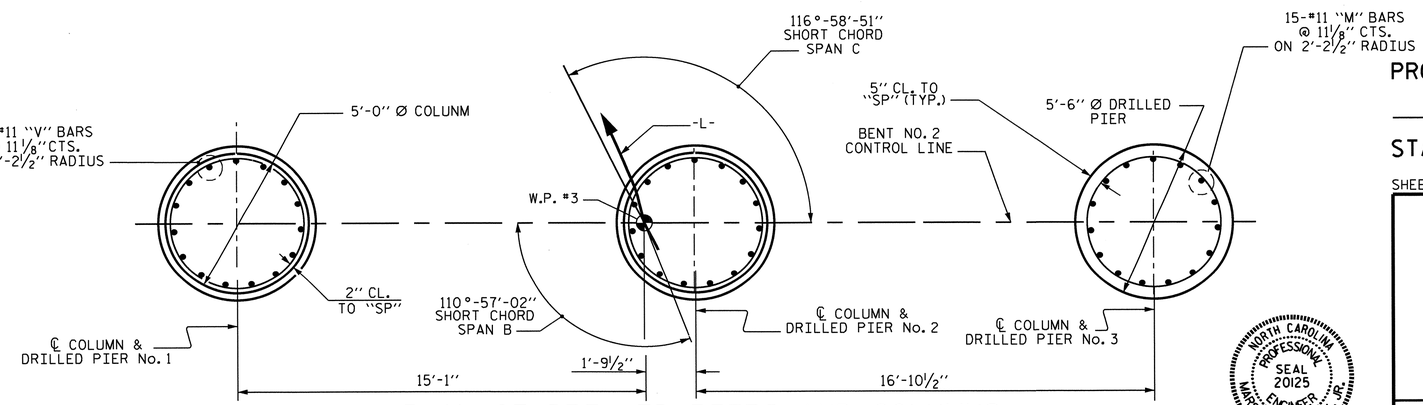

PLAN OF DRILLED PIERS AND COLUMNS

REINFORCING STEEL AND DIMENSIONS TYPICAL FOR EACH DRILLED PIER AND COLUMN

NORTH CAROLINA PROFESSIONAL SEAL 20125 ENGINEER MARSHALL G. CHEEK, JR.

2-11-13

PROJECT NO. U-4412

HAYWOOD COUNTY

STATION: 67+29.11 -L-

SHEET 2 OF 2

STATE OF NORTH CAROLINA
DEPARTMENT OF TRANSPORTATION
RALEIGH

SUBSTRUCTURE
BENT No. 2

REVISIONS								SHEET NO.
NO.	BY:	DATE:	NO.	BY:	DATE:			S-56
1			3					TOTAL SHEETS
2			4					70

DRAWN BY : M. POOLE DATE : 05/12
CHECKED BY : M.G. CHEEK DATE : 07/12

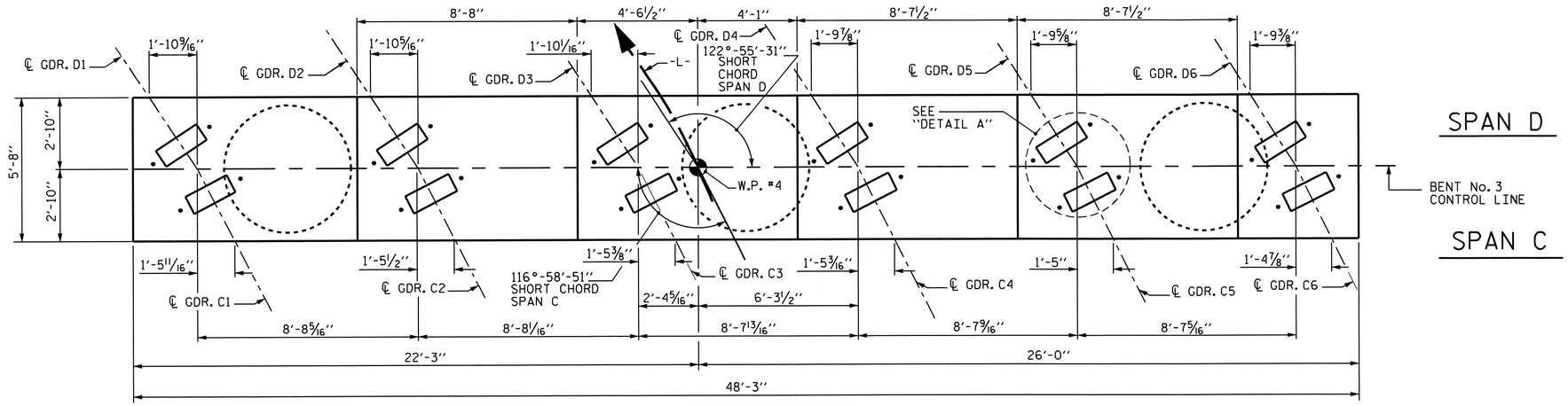

PLAN

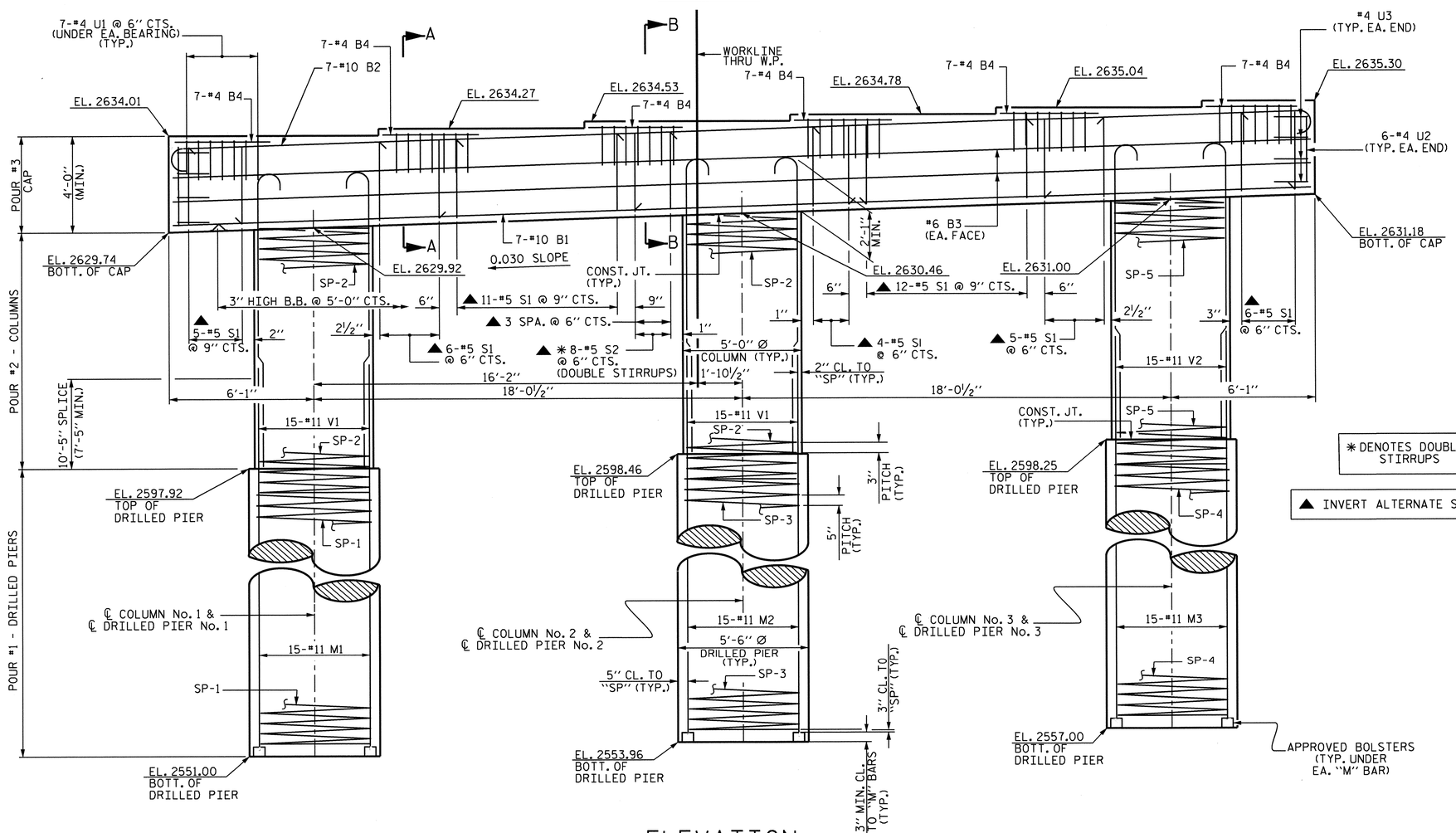

ELEVATION

✱ DENOTES DOUBLE STIRRUPS

▲ INVERT ALTERNATE STIRRUPS

NOTES

STIRRUPS IN CAP MAY BE SHIFTED AS NECESSARY TO CLEAR ANCHOR BOLTS.

HOOKS ON "V" BARS MAY BE TURNED AS NECESSARY FOR PLACING REINFORCING STEEL.

ALL STEEL IN THE DRILLED PIERS IS INCLUDED IN THE PAY ITEMS FOR "REINFORCING STEEL" AND "SPIRAL COLUMN REINFORCING STEEL".

THE LOCATION OF THE CONSTRUCTION JOINT IN THE DRILLED PIERS IS BASED ON AN APPROXIMATE GROUND LINE ELEVATION. IF THE CONSTRUCTION JOINT IS ABOVE THE ACTUAL GROUND LINE ELEVATION, THE CONTRACTOR SHALL PLACE THE CONSTRUCTION JOINT 1 FT. BELOW THE GROUND LINE.

SPLICING OF THE LONGITUDINAL BARS IN THE DRILLED PIERS WILL NOT BE PERMITTED.

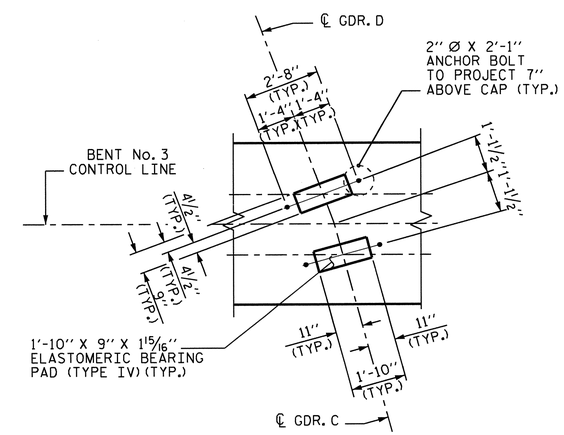

DETAIL A

PROJECT NO. U-4412
HAYWOOD COUNTY
STATION: 67+29.11 -L-

SHEET 1 OF 2

STATE OF NORTH CAROLINA
DEPARTMENT OF TRANSPORTATION
RALEIGH

SUBSTRUCTURE
BENT No. 3

NORTH CAROLINA PROFESSIONAL SEAL 20125 ENGINEER MARSHALL G. CHEEK, JR.
2-11-13

REVISIONS						SHEET NO.
NO.	BY:	DATE:	NO.	BY:	DATE:	S-57
1			3			TOTAL SHEETS
2			4			70

DRAWN BY : M. POOLE DATE : 04/12
CHECKED BY : M.G. CHEEK DATE : 07/12

11-FEB-2013 13:59
R:\Structures\Final Plans\Str #1\U-4412_SD_B1_01.dgn
dahodge

STR. #1

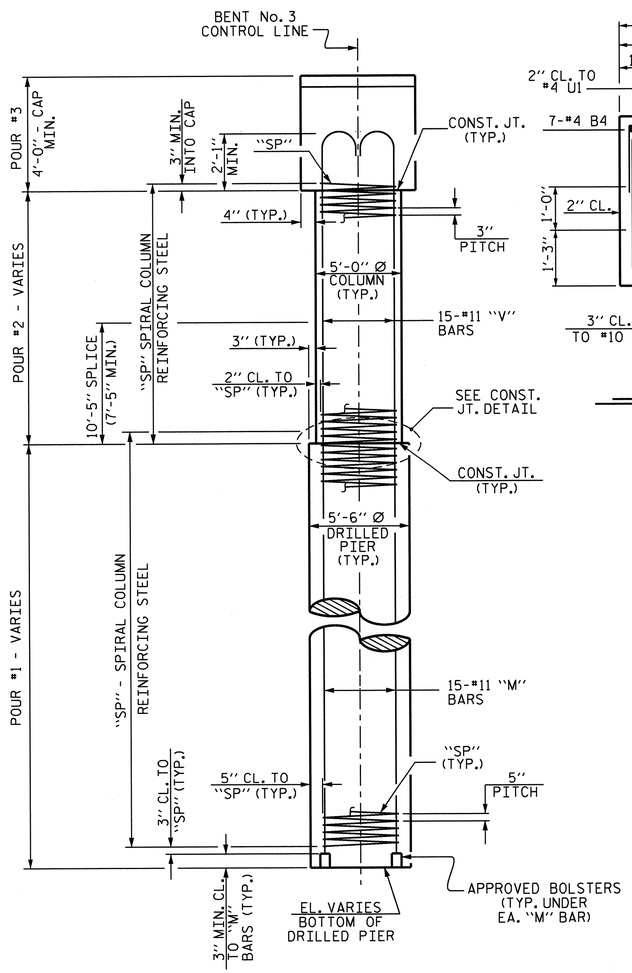

END ELEVATION

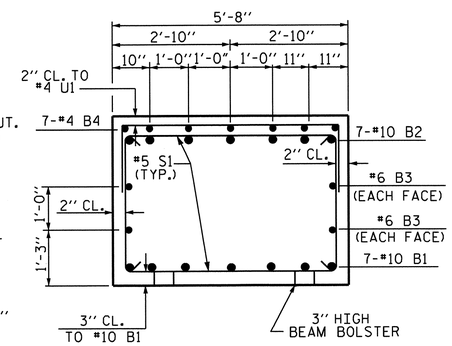

SECTION A-A

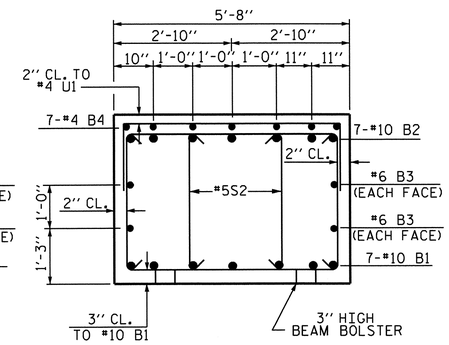

SECTION B-B

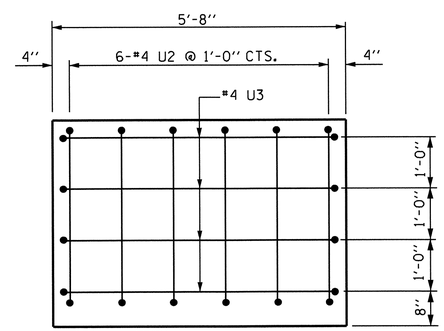

END OF CAP ELEVATION

(TYP. EA. END)

BAR TYPES

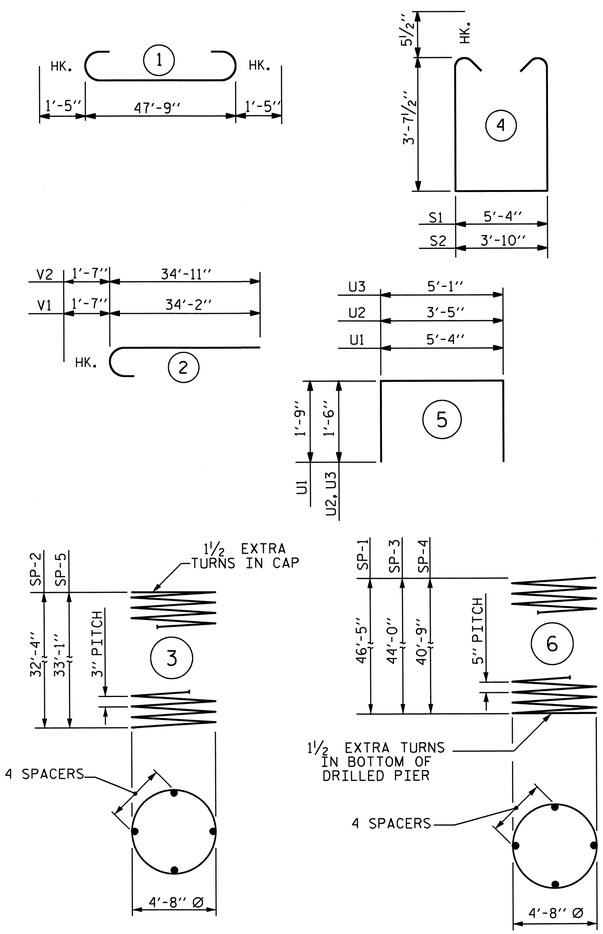

ALL BAR DIMENSIONS ARE OUT TO OUT.

BILL OF MATERIAL

BENT No. 3

BAR	NO.	SIZE	TYPE	LENGTH	WEIGHT
B1	7	10	STR	47'-11"	1443
B2	7	10	1	50'-7"	1524
B3	4	6	STR	47'-11"	288
B4	42	4	STR	3'-4"	94
M1	15	11	STR	57'-1"	4549
M2	15	11	STR	54'-8"	4357
M3	15	11	STR	51'-5"	3859
S1	49	5	4	13'-6"	690
S2	8	5	4	12'-0"	100
U1	42	4	5	8'-10"	248
U2	12	4	5	6'-5"	51
U3	8	4	5	8'-1"	43
V1	30	11	2	35'-9"	5698
V2	15	11	2	36'-6"	2909

TOTAL REINFORCING STEEL 25853 LBS.

SPIRAL COLUMN REINFORCING STEEL					
SP-1	1	***	6	1638'-11"	1709
SP-2	2	**	3	1903'-9"	2543
SP-3	1	***	6	1555'-6"	1622
SP-4	1	***	6	1443'-1"	1505
SP-5	1	**	3	1947'-4"	1301

TOTAL SPIRAL COLUMN REINFORCING STEEL 8680 LBS.

CLASS A CONCRETE
POUR #2 - COLUMNS 70.4 CU. YDS.
POUR #3 - CAP 41.9 CU. YDS.
TOTAL 112.3 CU. YDS.

DRILLED PIER CONCRETE
POUR #1 116.7 CU. YDS.

5'-6" Ø DRILLED PIERS
IN SOIL 89.67 LIN. FT.
NOT IN SOIL 43.00 LIN. FT.

PERMANENT STEEL CASING FOR 5'-6" Ø DRILLED PIERS 63.63 LIN. FT.

* CSL TUBES 685.85 LIN. FT.

** THE SP-2 & SP-5 SPIRAL REINFORCING STEEL SHALL BE W20 OR D-20 COLD DRAWN WIRE OR #4 PLAIN OR DEFORMED BAR.

*** THE SP-1, SP-3 & SP-4 SPIRAL REINFORCING STEEL SHALL BE W31 OR D-31 COLD DRAWN WIRE OR #5 PLAIN OR DEFORMED BAR.

* NO SEPARATE PAYMENT WILL BE MADE FOR CSL TUBES. CSL TUBES SHALL BE INCLUDED IN THE UNIT PRICE BID FOR DRILLED PIERS.

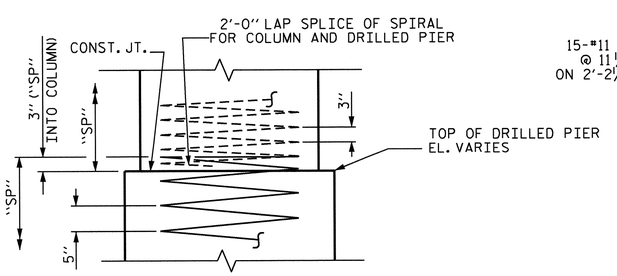

CONSTRUCTION JOINT DETAIL

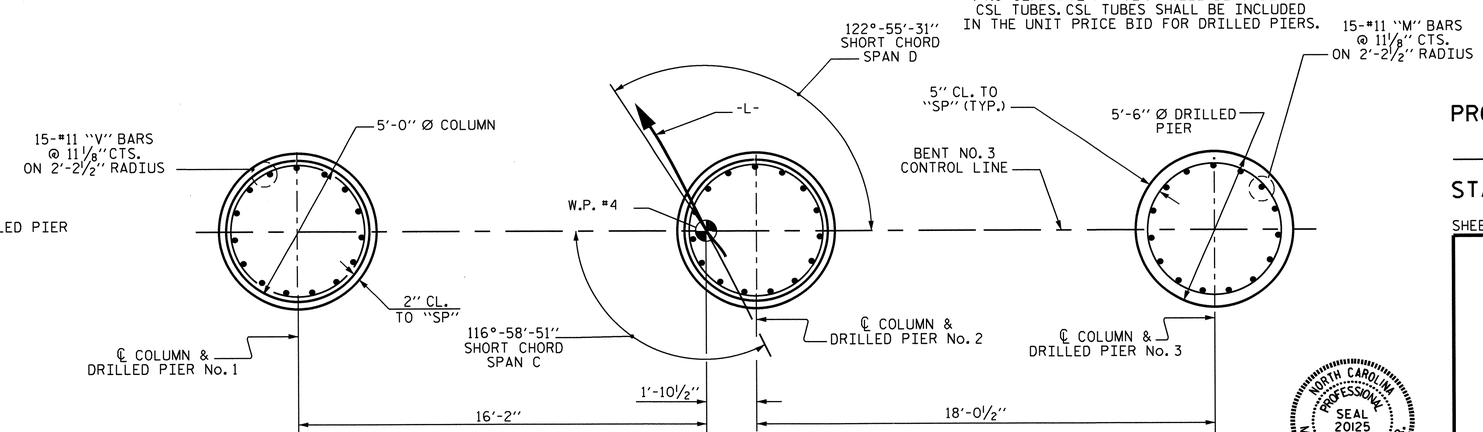

PLAN OF DRILLED PIERS AND COLUMNS

REINFORCING STEEL AND DIMENSIONS TYPICAL FOR EACH DRILLED PIER AND COLUMN

NORTH CAROLINA PROFESSIONAL SEAL 20125 ENGINEER MARSHALL G. CHEEK, JR.
2-11-13

PROJECT NO. U-4412
HAYWOOD COUNTY
STATION: 67+29.11 -L-

SHEET 2 OF 2

STATE OF NORTH CAROLINA
DEPARTMENT OF TRANSPORTATION
RALEIGH

SUBSTRUCTURE
BENT No. 3

REVISIONS								SHEET NO.
NO.	BY:	DATE:	NO.	BY:	DATE:			S-58
1			3					TOTAL SHEETS
2			4					70

DRAWN BY : M. POOLE DATE : 05/12
CHECKED BY : M.G. CHEEK DATE : 07/12

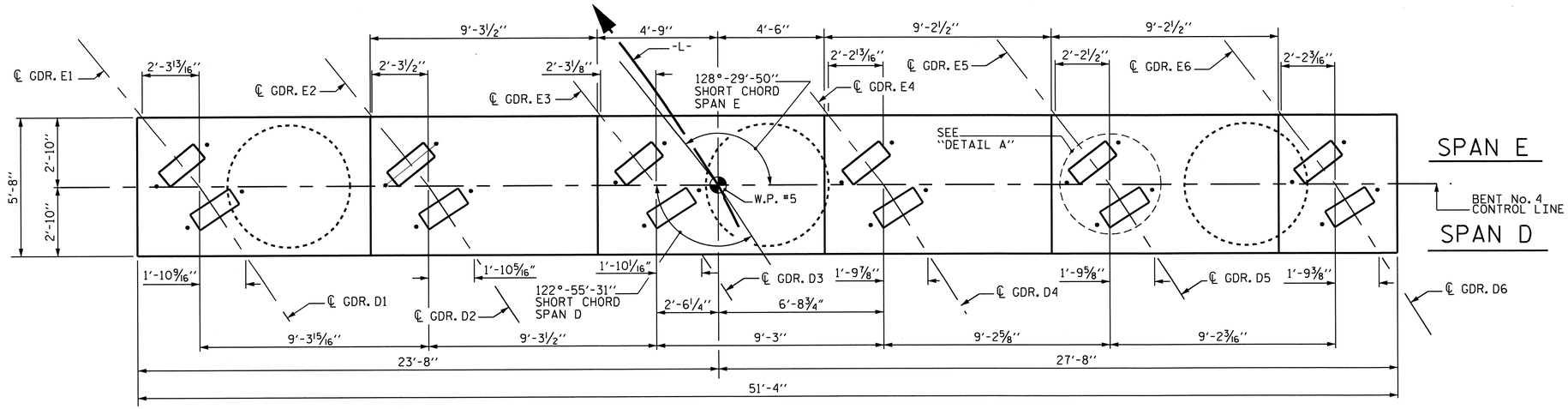

PLAN

NOTES

STIRRUPS IN CAP MAY BE SHIFTED AS NECESSARY TO CLEAR ANCHOR BOLTS.

HOOKS ON "V" BARS MAY BE TURNED AS NECESSARY FOR PLACING REINFORCING STEEL.

ALL STEEL IN THE DRILLED PIERS IS INCLUDED IN THE PAY ITEMS FOR "REINFORCING STEEL" AND "SPIRAL COLUMN REINFORCING STEEL".

THE LOCATION OF THE CONSTRUCTION JOINT IN THE DRILLED PIERS IS BASED ON AN APPROXIMATE GROUND LINE ELEVATION. IF THE CONSTRUCTION JOINT IS ABOVE THE ACTUAL GROUND LINE ELEVATION, THE CONTRACTOR SHALL PLACE THE CONSTRUCTION JOINT 1 FT. BELOW THE GROUND LINE.

SPLICING OF THE LONGITUDINAL BARS IN THE DRILLED PIERS WILL NOT BE PERMITTED.

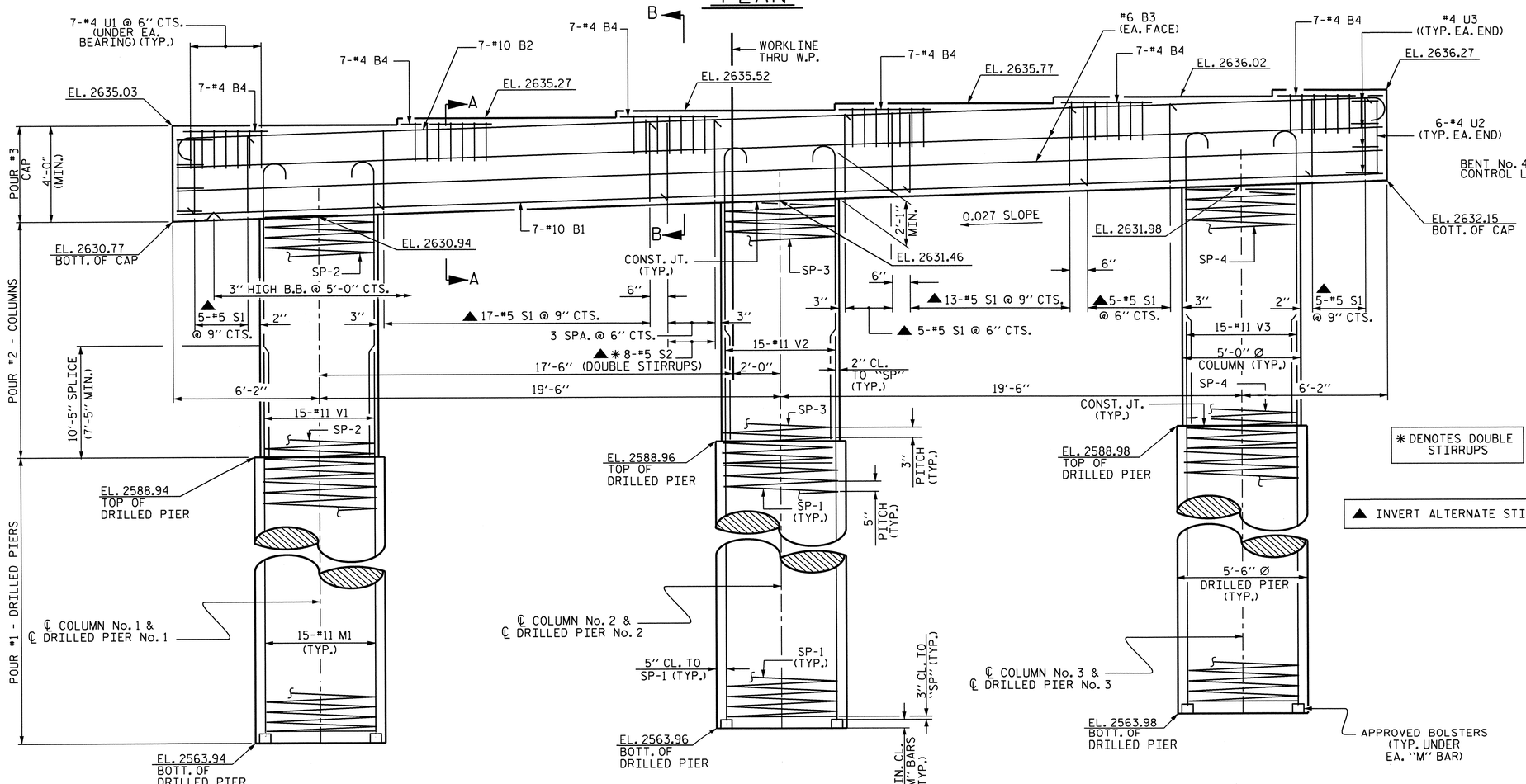

ELEVATION

✱ DENOTES DOUBLE STIRRUPS

▲ INVERT ALTERNATE STIRRUPS

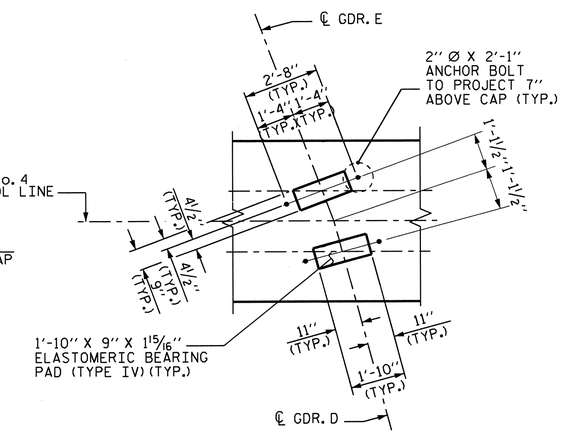

DETAIL A

PROJECT NO. U-4412

HAYWOOD COUNTY

STATION: 67+29.11 -L-

SHEET 1 OF 2

STATE OF NORTH CAROLINA
DEPARTMENT OF TRANSPORTATION
RALEIGH

SUBSTRUCTURE
BENT No. 4

NORTH CAROLINA PROFESSIONAL SEAL 20125 ENGINEER MARSHALL G. CHEEK, JR.
2-11-13

REVISIONS							SHEET NO.
NO.	BY:	DATE:	NO.	BY:	DATE:		S-59
1			3				TOTAL SHEETS
2			4				70

DRAWN BY : M. POOLE DATE : 04/12
CHECKED BY : M.G. CHEEK DATE : 07/12

11-FEB-2013 13:51
R:\Structures\FinalPlans\Str #1\U-4412_SD_B1_01.dgn
ddhodge

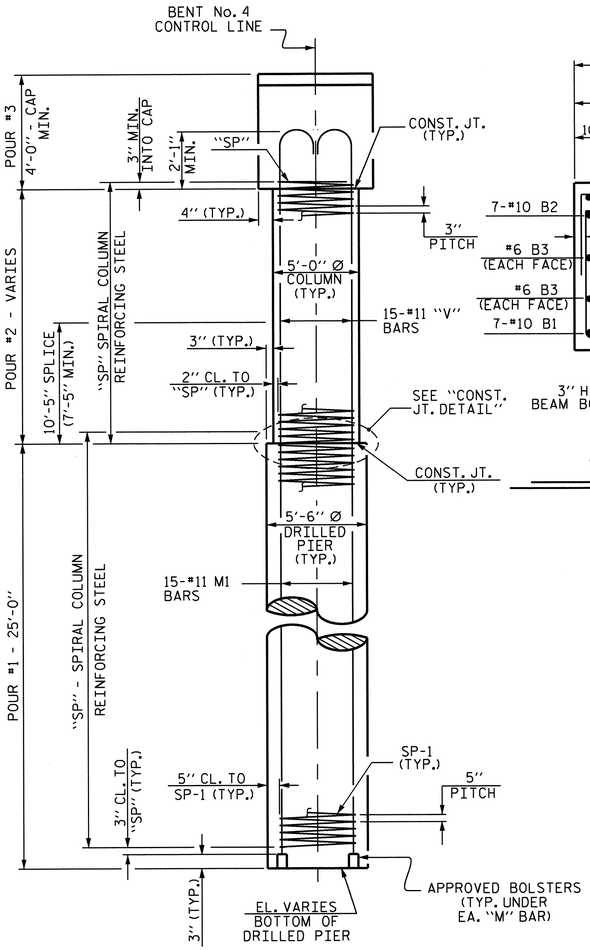

END ELEVATION

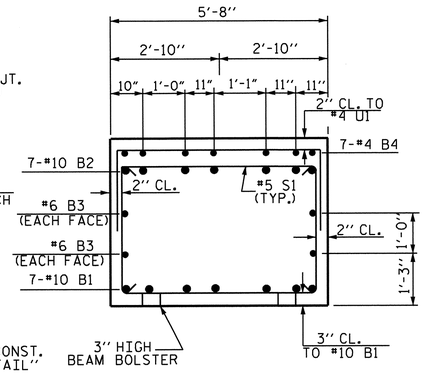

SECTION A-A

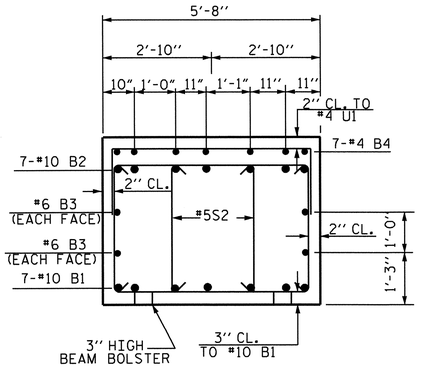

SECTION B-B

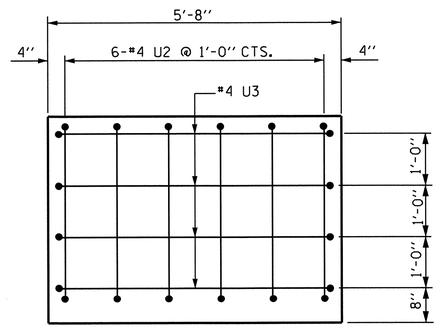

END OF CAP ELEVATION

(TYP. EA. END)

BAR TYPES

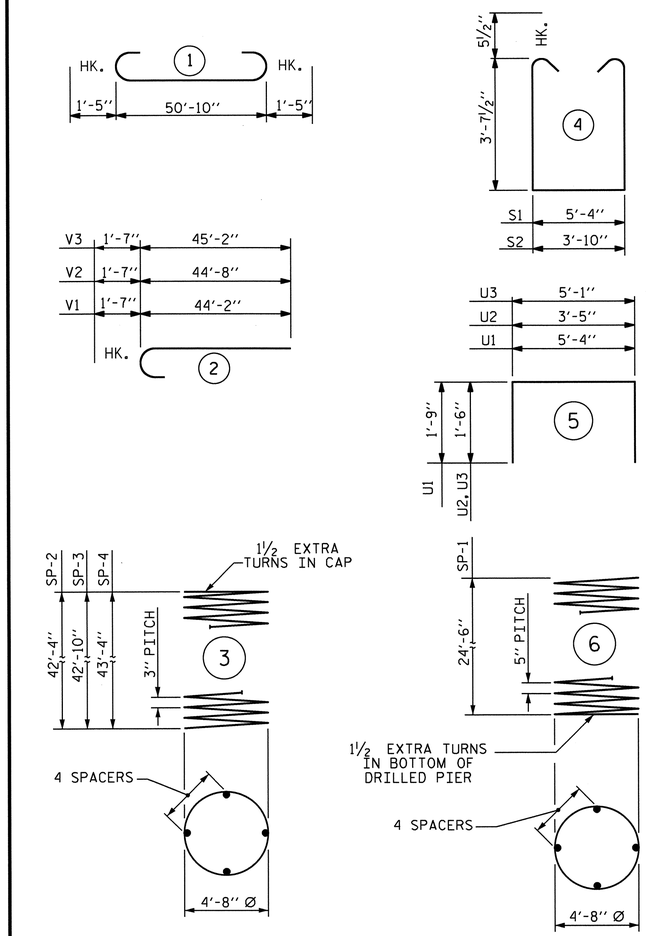

ALL BAR DIMENSIONS ARE OUT TO OUT.

BILL OF MATERIAL

BENT No. 4

BAR	NO.	SIZE	TYPE	LENGTH	WEIGHT
B1	7	10	STR	51'-0"	1536
B2	7	10	1	53'-8"	1616
B3	4	6	STR	51'-0"	306
B4	42	4	STR	3'-4"	94
M1	45	11	STR	35'-2"	8408
S1	50	5	4	13'-6"	704
S2	8	5	4	12'-0"	100
U1	42	4	5	8'-10"	248
U2	12	4	5	6'-5"	51
U3	8	4	5	6'-1"	43
V1	15	11	2	45'-9"	3646
V2	15	11	2	46'-3"	3686
V3	15	11	2	46'-9"	3726

TOTAL REINFORCING STEEL 24164 LBS.

SPIRAL COLUMN REINFORCING STEEL

SP-1	3	***	6	877'-6"	2746
SP-2	1	**	3	2485'-0"	1660
SP-3	1	**	3	2514'-1"	1679
SP-4	1	**	3	2543'-2"	1699

TOTAL SPIRAL COLUMN REINFORCING STEEL 7784 LBS.

CLASS A CONCRETE
POUR #2 - COLUMNS 92.7 CU. YDS.
POUR #3 - CAP 44.5 CU. YDS.
TOTAL 137.2 CU. YDS.

DRILLED PIER CONCRETE
POUR #1 66.0 CU. YDS.

5'-6" Ø DRILLED PIERS
IN SOIL 34.00 LIN. FT.
NOT IN SOIL 41.00 LIN. FT.

PERMANENT STEEL CASING FOR 5'-6" Ø DRILLED PIERS 32.88 LIN. FT.

* CSL TUBES 397.50 LIN. FT.

** THE SP-2, SP-3 & SP-4 SPIRAL REINFORCING STEEL SHALL BE W20 OR D-20 COLD DRAWN WIRE OR #4 PLAIN OR DEFORMED BAR.

*** THE SP-1 SPIRAL REINFORCING STEEL SHALL BE W31 OR D-31 COLD DRAWN WIRE OR #5 PLAIN OR DEFORMED BAR.

* NO SEPARATE PAYMENT WILL BE MADE FOR CSL TUBES. CSL TUBES SHALL BE INCLUDED IN THE UNIT PRICE BID FOR DRILLED PIERS.

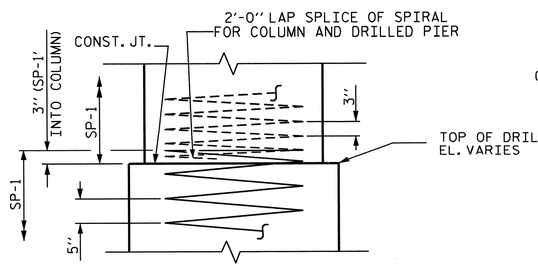

CONSTRUCTION JOINT DETAIL

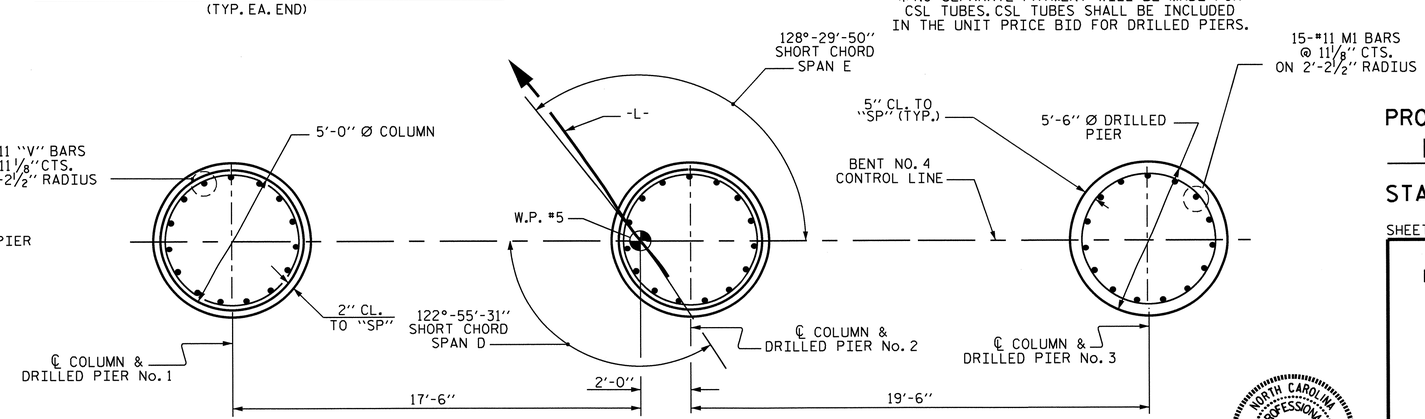

PLAN OF DRILLED PIERS AND COLUMNS

REINFORCING STEEL AND DIMENSIONS TYPICAL FOR EACH DRILLED PIER AND COLUMN

PROJECT NO. U-4412
HAYWOOD COUNTY
STATION: 67+29.11 -L-

SHEET 2 OF 2

STATE OF NORTH CAROLINA
DEPARTMENT OF TRANSPORTATION
RALEIGH

SUBSTRUCTURE
BENT No. 4

NORTH CAROLINA PROFESSIONAL SEAL 20125 ENGINEER MARSHALL G. CHEEK, JR.
2-11-13

REVISIONS								SHEET NO.
NO.	BY:	DATE:	NO.	BY:	DATE:			S-60
1			3					TOTAL SHEETS
2			4					70

DRAWN BY : M. POOLE DATE : 05/12
CHECKED BY : M.G. CHEEK DATE : 07/12

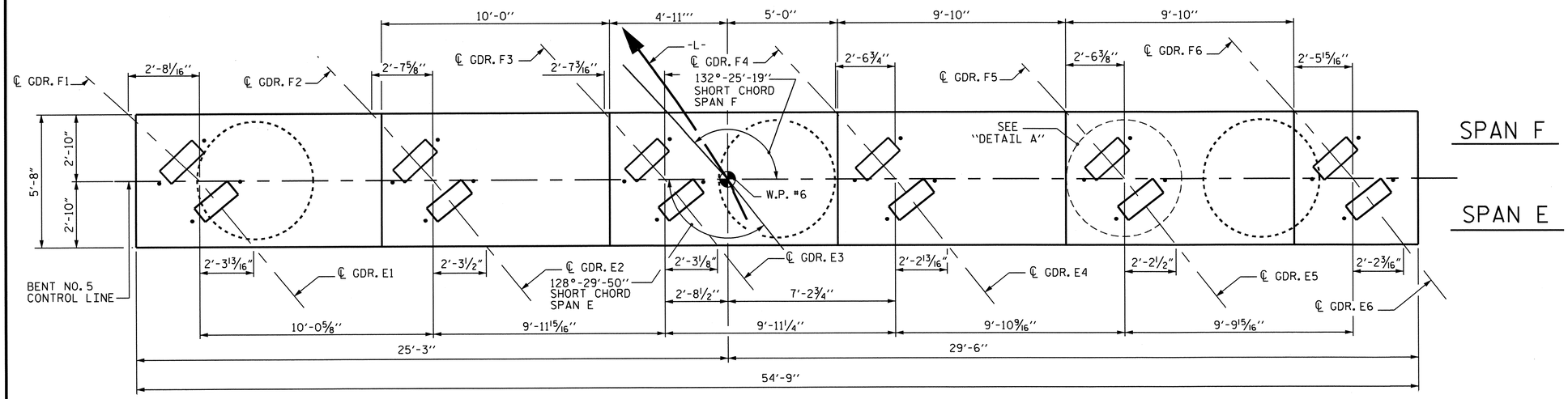

PLAN

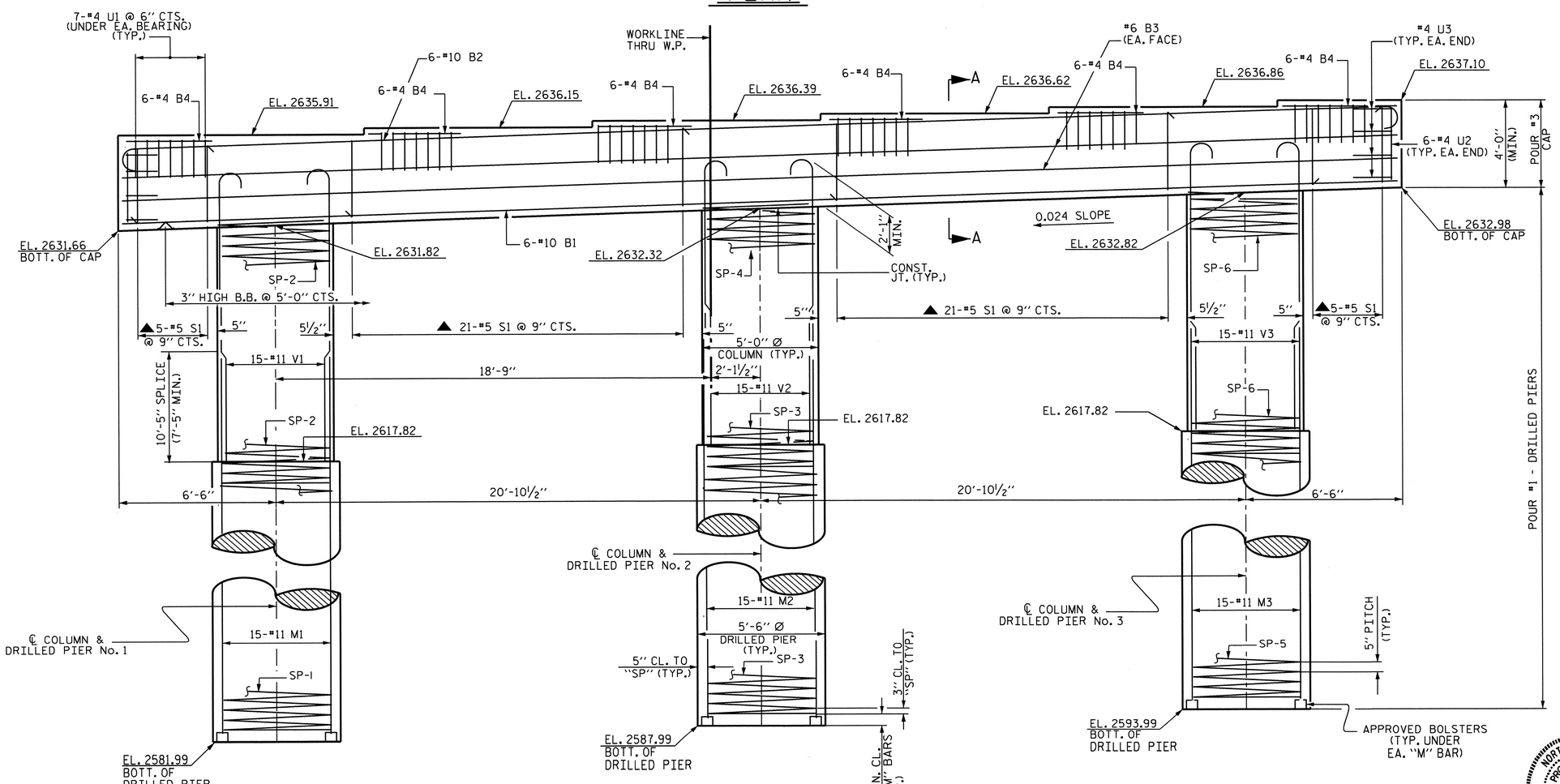

ELEVATION

▲ INVERT ALTERNATE STIRRUPS

NOTES

STIRRUPS IN CAP MAY BE SHIFTED AS NECESSARY TO CLEAR ANCHOR BOLTS.

HOOKS ON "V" BARS MAY BE TURNED AS NECESSARY FOR PLACING REINFORCING STEEL.

ALL STEEL IN THE DRILLED PIERS IS INCLUDED IN THE PAY ITEMS FOR "REINFORCING STEEL" AND "SPIRAL COLUMN REINFORCING STEEL".

SPLICING OF THE LONGITUDINAL BARS IN THE DRILLED PIERS WILL NOT BE PERMITTED.

THE LOCATION OF THE CONSTRUCTION JOINT IN THE DRILLED PIERS IS BASED ON AN APPROXIMATE GROUND LINE ELEVATION. IF THE CONSTRUCTION JOINT IS ABOVE THE ACTUAL GROUND LINE ELEVATION, THE CONTRACTOR SHALL PLACE THE CONSTRUCTION JOINT 1 FT. BELOW THE GROUND LINE.

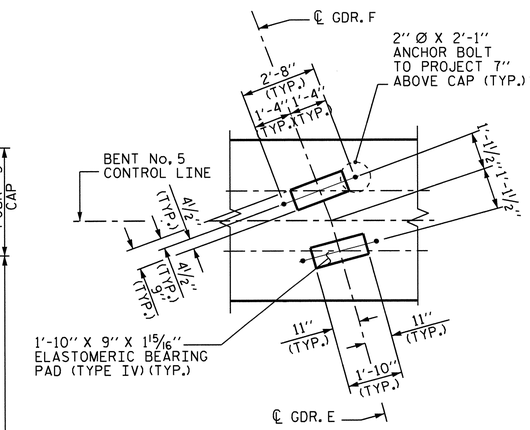

DETAIL A

PROJECT NO. U-4412

HAYWOOD COUNTY

STATION: 67+29.11 -L-

SHEET 1 OF 2

STATE OF NORTH CAROLINA
DEPARTMENT OF TRANSPORTATION
RALEIGH

SUBSTRUCTURE
BENT No. 5

NORTH CAROLINA PROFESSIONAL SEAL 20125 ENGINEER MARSHALL G. CHEEK, JR.
2-11-13

REVISIONS							SHEET NO.
NO.	BY:	DATE:	NO.	BY:	DATE:		S-61
1			3				TOTAL SHEETS
2			4				70

DRAWN BY : M. POOLE DATE : 04/12
CHECKED BY : M.G. CHEEK DATE : 07/12

11-FEB-2013 13:52
R:\Structures\Final Plans\Str #1\U-4412_SD_B1_01.dgn
dahodge

STR. #1

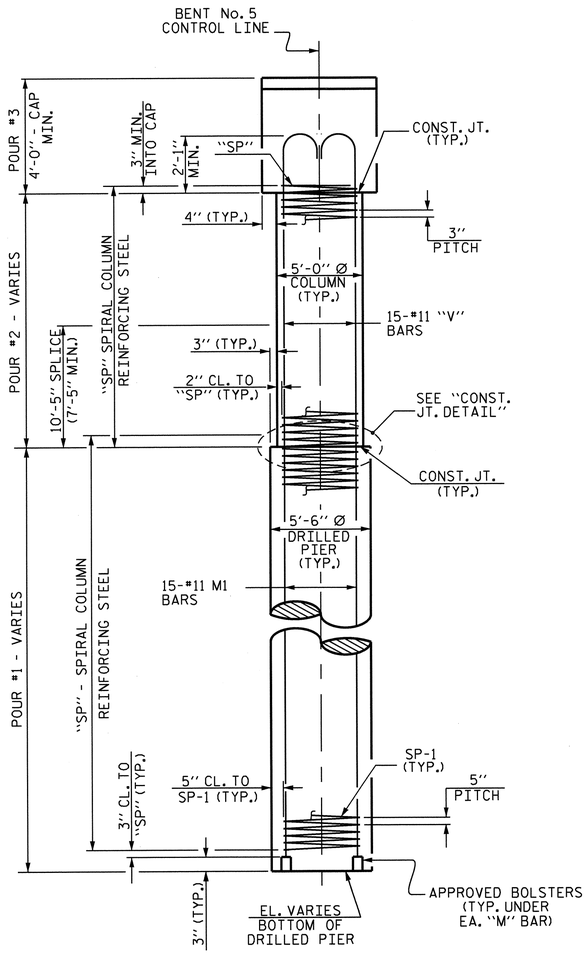

END ELEVATION

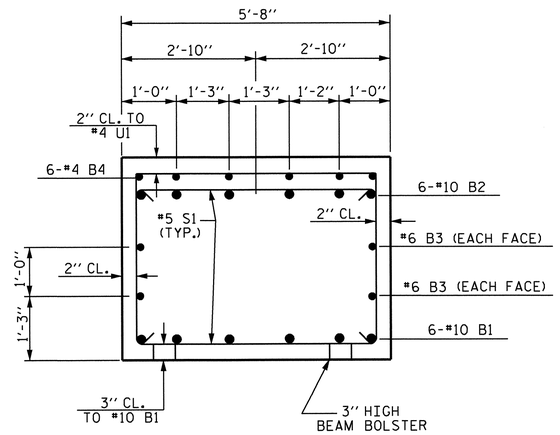

SECTION A-A

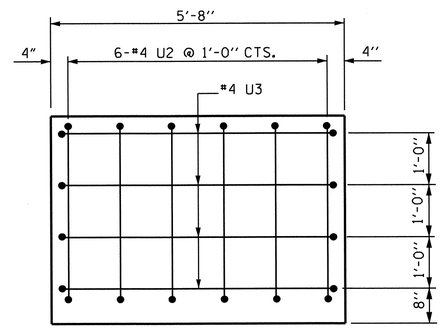

END OF CAP ELEVATION

(TYP. EA. END)

BAR TYPES

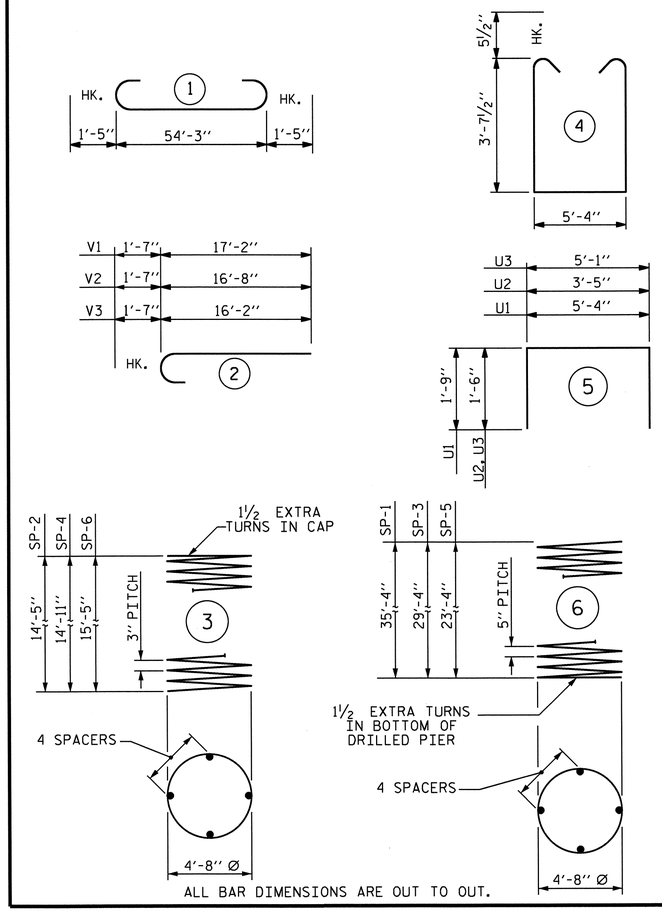

ALL BAR DIMENSIONS ARE OUT TO OUT.

BILL OF MATERIAL

BENT No. 5

BAR	NO.	SIZE	TYPE	LENGTH	WEIGHT
B1	6	10	STR	54'-5"	1405
B2	6	10	1	57'-1"	1474
B3	4	6	STR	54'-5"	327
B4	36	4	STR	3'-4"	80
M1	15	11	2	46'-0"	3666
M2	15	11	2	40'-0"	3188
M3	15	11	2	34'-0"	2710
S1	52	5	4	13'-6"	732
U1	42	4	5	8'-10"	248
U2	12	4	5	6'-5"	51
U3	8	4	5	8'-1"	43
V1	15	11	5	17'-9"	1415
V2	15	11	5	18'-3"	1454
V3	15	11	5	18'-9"	1494

TOTAL REINFORCING STEEL 18287 LBS.

SPIRAL COLUMN REINFORCING STEEL					
SP-1	1	***	6	1254'-7"	1309
SP-2	1	**	3	861'-1"	575
SP-3	1	***	6	1044'-3"	1089
SP-4	1	**	3	890'-2"	595
SP-5	1	***	6	834'-0"	870
SP-6	1	**	3	919'-2"	614

TOTAL SPIRAL
COLUMN REINFORCING STEEL 5052 LBS.

CLASS A CONCRETE
POUR #3 - CAP 47.4 CU. YDS.
POUR #2 - COLUMNS 38.3 CU. YDS.
TOTAL 85.7 CU. YDS.

DRILLED PIER CONCRETE
POUR #1 78.7 CU. YDS.

5'-6" Ø DRILLED PIERS
IN SOIL 56.50 LIN. FT.
NOT IN SOIL 33.00 LIN. FT.

* CSL TUBES 469.95 LIN. FT.

* NO SEPARATE PAYMENT WILL BE MADE FOR CSL TUBES. CSL TUBES SHALL BE INCLUDED IN THE UNIT PRICE BID FOR DRILLED PIERS.

*** THE SP-1, SP-3 & SP-5 SPIRAL REINFORCING STEEL SHALL BE W31 OR D-31 COLD DRAWN WIRE OR #5 PLAIN OR DEFORMED BAR.

** THE SP-2, SP-4 & SP-6 SPIRAL REINFORCING STEEL SHALL BE W20 OR D-20 COLD DRAWN WIRE OR #4 PLAIN OR DEFORMED BAR.

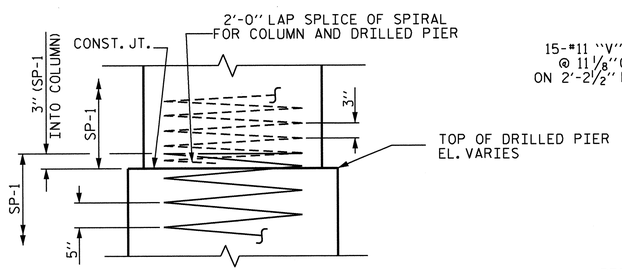

CONSTRUCTION JOINT DETAIL

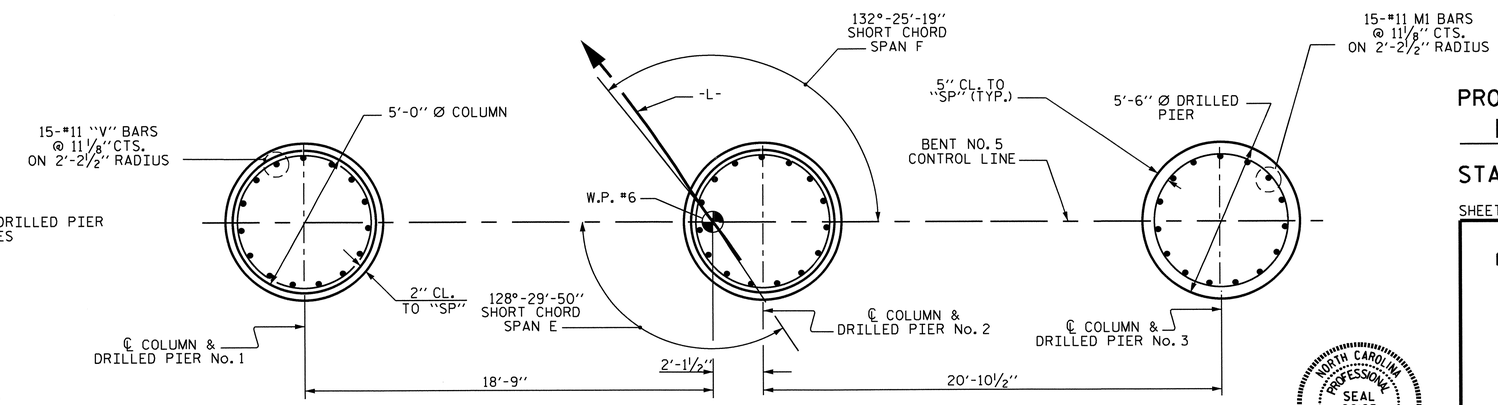

PLAN OF DRILLED PIERS AND COLUMNS

REINFORCING STEEL AND DIMENSIONS TYPICAL
FOR EACH DRILLED PIER

PROJECT NO. U-4412
HAYWOOD COUNTY
STATION: 67+29.11 -L-

SHEET 2 OF 2

STATE OF NORTH CAROLINA
DEPARTMENT OF TRANSPORTATION
RALEIGH

SUBSTRUCTURE
BENT No. 5

NORTH CAROLINA PROFESSIONAL SEAL 20125 ENGINEER MARSHALL G. CHEEK, JR.
7-11-13

REVISIONS						SHEET NO.
NO.	BY:	DATE:	NO.	BY:	DATE:	S-62
1			3			TOTAL SHEETS
2			4			70

DRAWN BY : M. POOLE DATE : 05/12
CHECKED BY : M.G. CHEEK DATE : 07/12

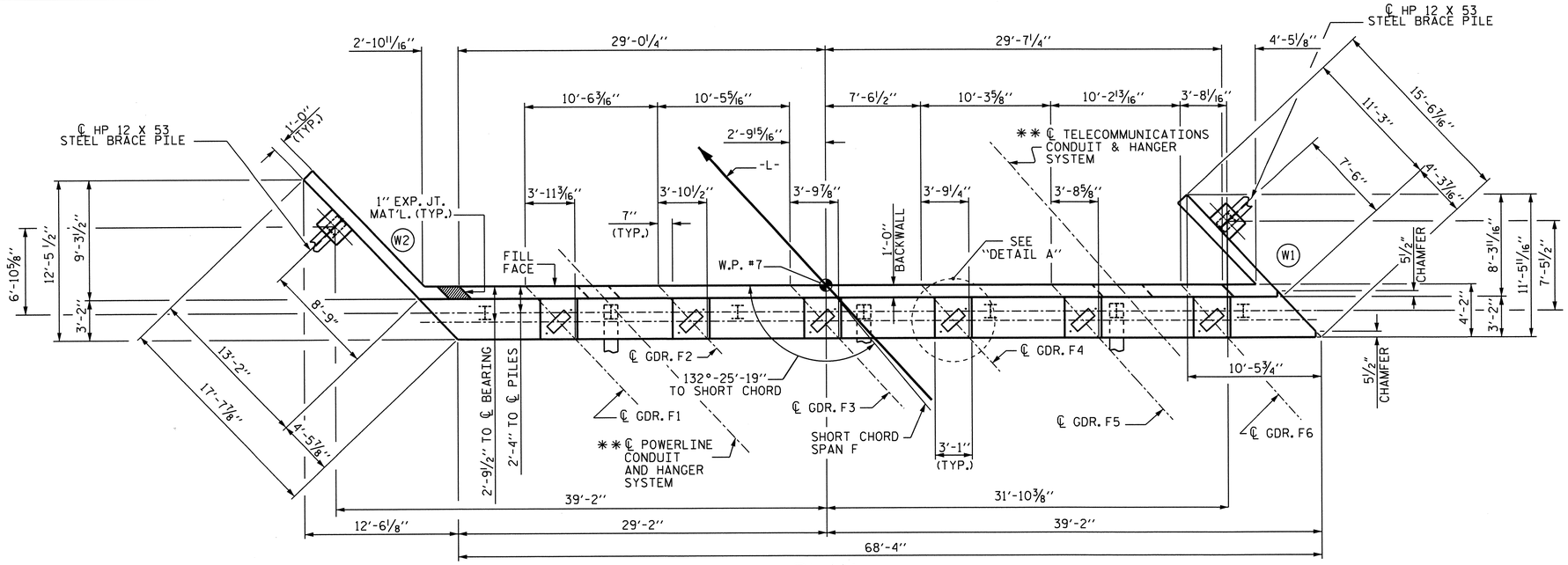

PLAN

** FOR DETAILS OF CONDUIT SYSTEMS, SEE "STRUCTURE UTILITIES PLANS"

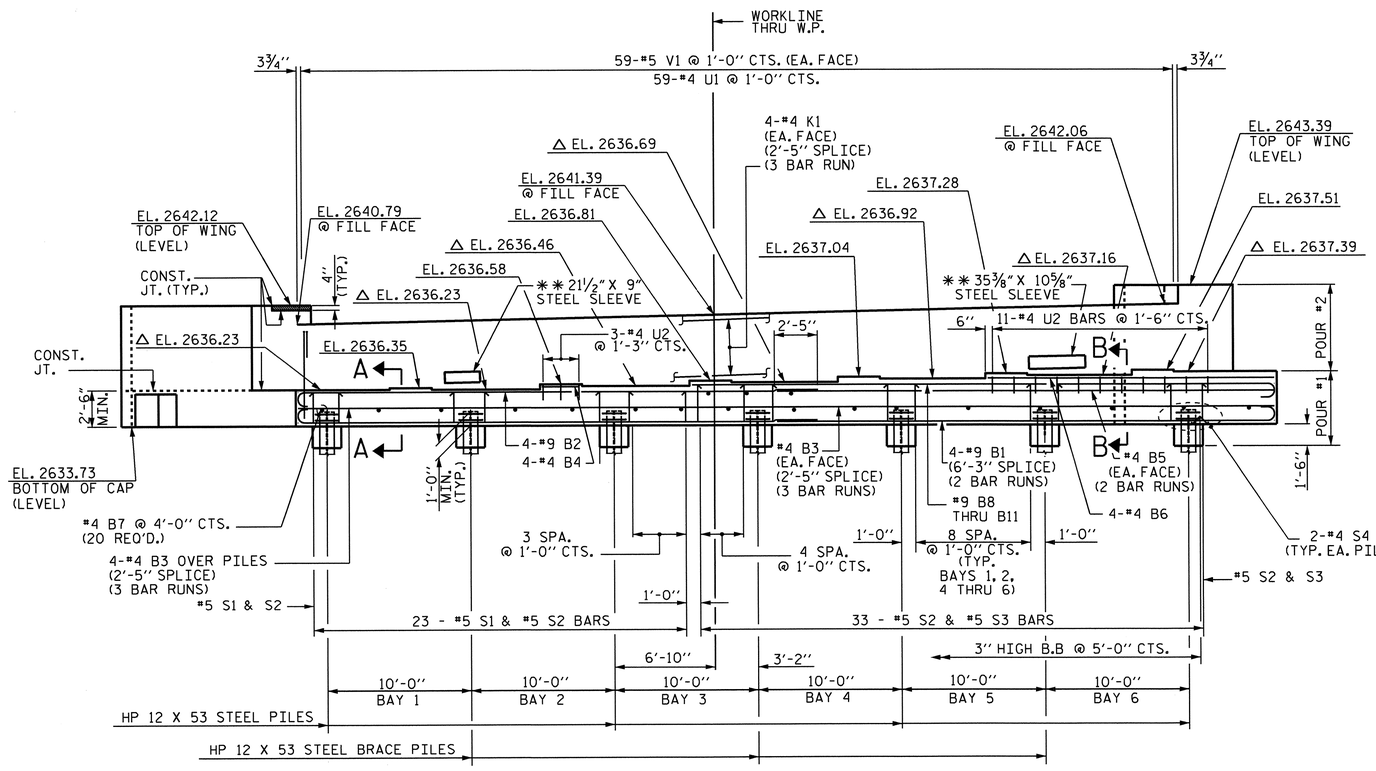

ELEVATION

△ FOR LOCATION OF ELEVATIONS BETWEEN BRIDGE SEAT BUILD-UPS, FOR SECTION A-A OR SECTION B-B, SEE SHEET 3 OF 3.
** FOR DETAILS OF CONDUIT SYSTEMS, SEE "STRUCTURE UTILITIES PLANS"

NOTES

STIRRUPS IN CAP MAY BE SHIFTED AS NECESSARY TO CLEAR ANCHOR BOLTS.

BACKWALL SHALL BE PLACED BEFORE APPLYING THE EPOXY PROTECTIVE COATING.

THE TOP SURFACE AREAS OF THE END BENT CAPS SHALL BE CURED IN ACCORDANCE WITH THE STANDARD SPECIFICATIONS EXCEPT THE MEMBRANE CURING COMPOUND METHOD SHALL NOT BE USED.

THE CONCRETE IN THE SHADED AREA OF THE WING SHALL BE POURED AFTER THE PARAPET AND END POST ARE CAST IF SLIP FORMING IS USED.

THE TOP SURFACE OF THE CAP EXCEPT THE BRIDGE SEAT BUILDUPS SHALL BE SLOPED TRANSVERSELY FROM THE FILL FACE TO THE BACK FACE AT THE RATE OF 2%.

REINFORCING STEEL SHALL BE FIELD BENT AS NECESSARY FOR INSTALLATION OF THE STEEL SLEEVE IN BACKWALL.

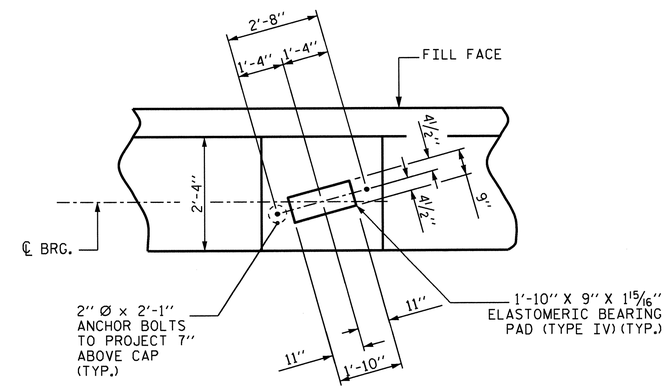

DETAIL A

PROJECT NO. U-4412
HAYWOOD COUNTY
STATION: 67+29.11 -L-

SHEET 1 OF 3

STATE OF NORTH CAROLINA
DEPARTMENT OF TRANSPORTATION
RALEIGH

SUBSTRUCTURE
END BENT No. 2

NORTH CAROLINA PROFESSIONAL SEAL 20125 ENGINEER WATSON, MILLER & ASSOCIATES, JR.
2-15-13

REVISIONS						SHEET NO.
NO.	BY:	DATE:	NO.	BY:	DATE:	S-63
1			3			TOTAL SHEETS
2			4			70

DRAWN BY : M. POOLE DATE : 12/11
CHECKED BY : J.R. MCROY DATE : 7/12

15-FEB-2013 08:20
R:\Structures\Final Plans\Str #1\U-4412_SD_E1.dgn
dahodge

STR. #1

NCBDS

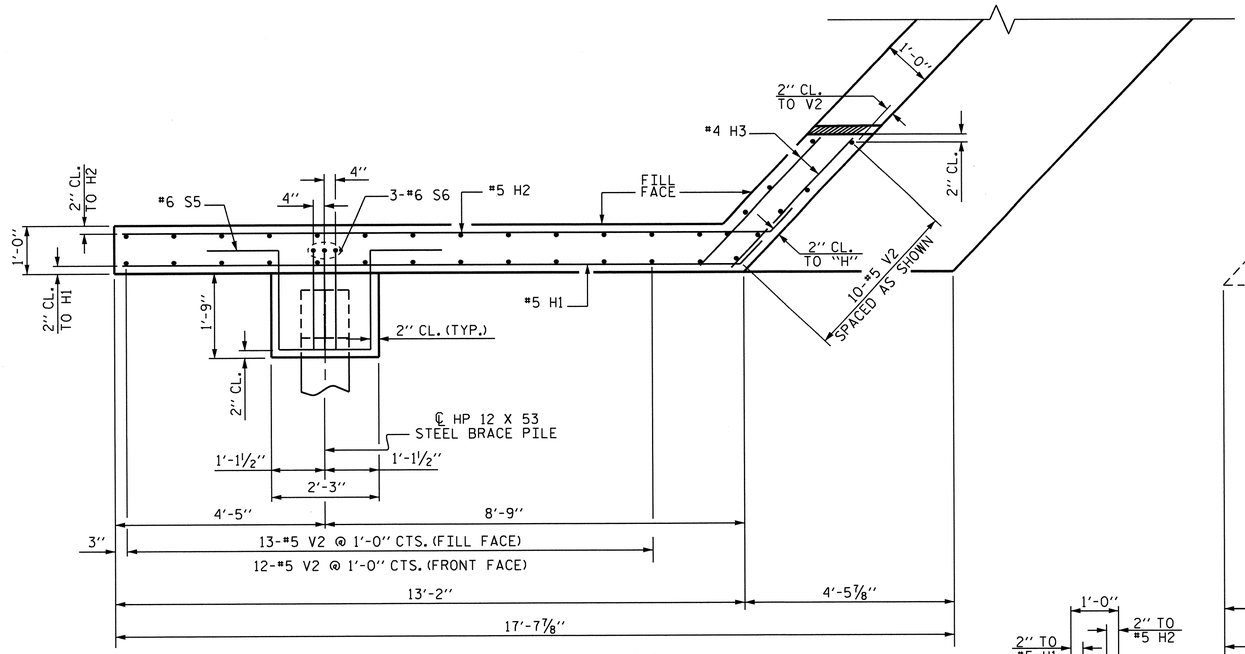

PLAN OF WING - W2

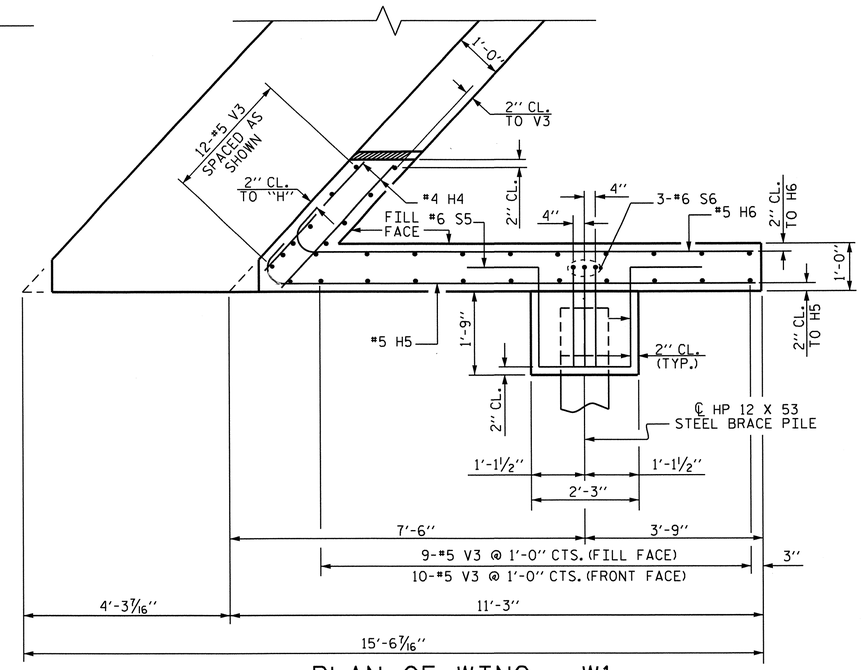

PLAN OF WING - W1

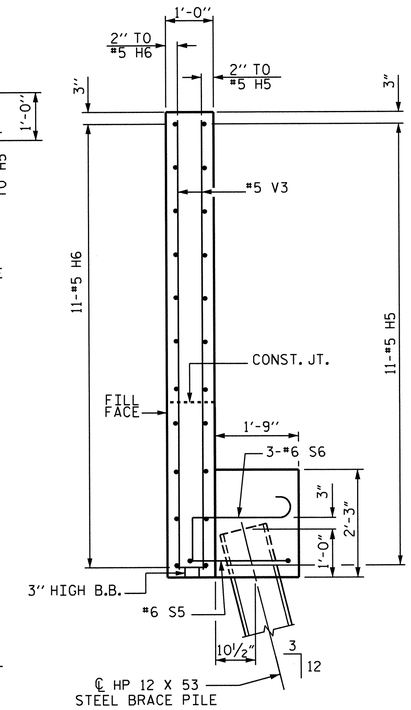

SECTION Y-Y

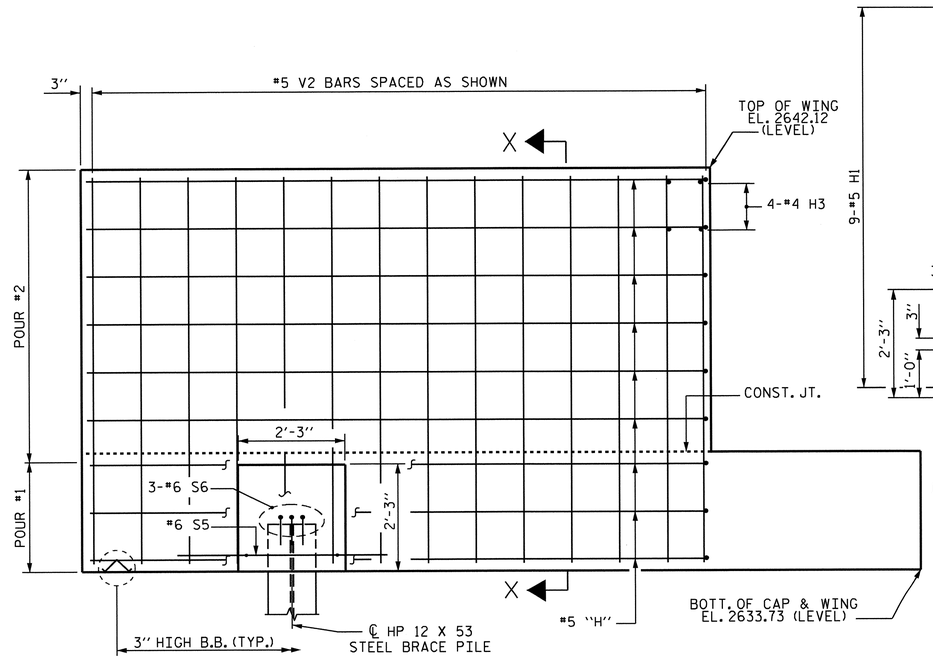

ELEVATION OF WING - W2

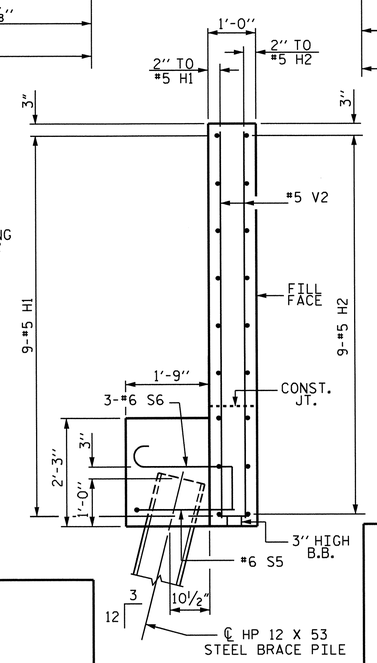

SECTION X-X

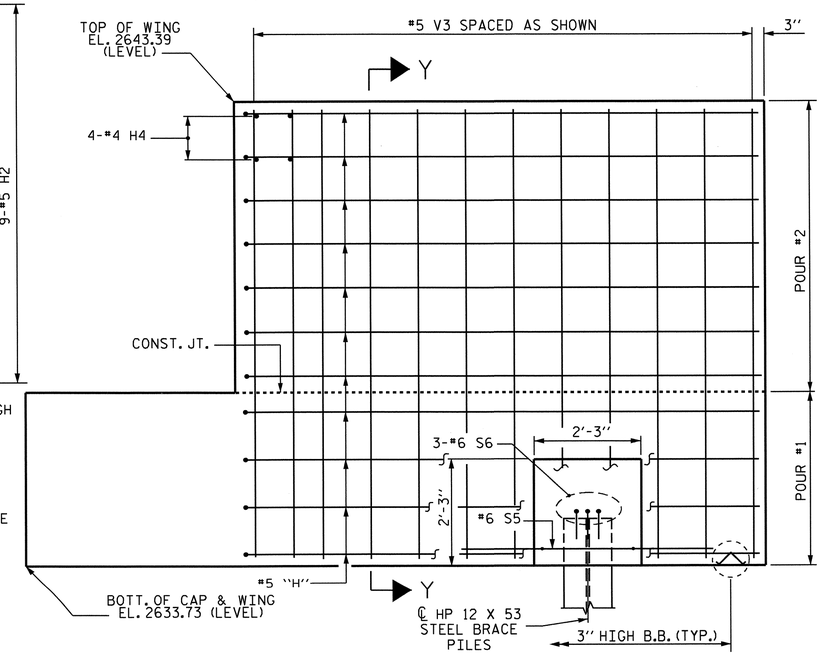

ELEVATION OF WING - W1

PROJECT NO. U-4412
HAYWOOD COUNTY
STATION: 67+29.11 -L-

SHEET 2 OF 3

STATE OF NORTH CAROLINA
DEPARTMENT OF TRANSPORTATION
RALEIGH

SUBSTRUCTURE
END BENT No. 2

NORTH CAROLINA PROFESSIONAL SEAL 20125 ENGINEER MARSHALL L. GUTCHECK, JR.
2-13-13

REVISIONS						SHEET NO.
NO.	BY:	DATE:	NO.	BY:	DATE:	S-64
1			3			TOTAL SHEETS
2			4			70

DRAWN BY : M. POOLE DATE : 12/11
CHECKED BY : J.R. MCROY DATE : 7/12

13-FEB-2013 11:20
R:\Structures\Final Plans\Str #1\U-4412_SD_E1.dgn
dahodge

STR. #1

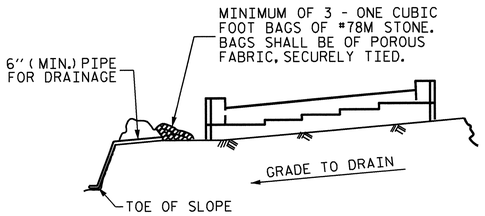

BAGGED STONE AND PIPE SHALL BE PLACED IMMEDIATELY AFTER COMPLETION OF END BENT EXCAVATION. PIPE MAY BE EITHER CONCRETE, CORRUGATED STEEL, CORRUGATED ALUMINUM ALLOY, OR CORRUGATED PLASTIC. PERFORATED PIPE WILL NOT BE ALLOWED.

BAGGED STONE SHALL REMAIN IN PLACE UNTIL THE ENGINEER DIRECTS THAT IT BE REMOVED. THE CONTRACTOR SHALL REMOVE AND DISPOSE OF SILT ACCUMULATIONS AT BAGGED STONE WHEN SO DIRECTED BY THE ENGINEER. BAGS SHALL BE REMOVED AND REPLACED WHENEVER THE ENGINEER DETERMINES THAT THEY HAVE DETERIORATED AND LOST THEIR EFFECTIVENESS.

NO SEPARATE PAYMENT WILL BE MADE FOR THIS WORK AND THE ENTIRE COST OF THIS WORK SHALL BE INCLUDED IN THE UNIT CONTRACT PRICE BID FOR THE SEVERAL PAY ITEMS.

TEMPORARY DRAINAGE AT END BENT

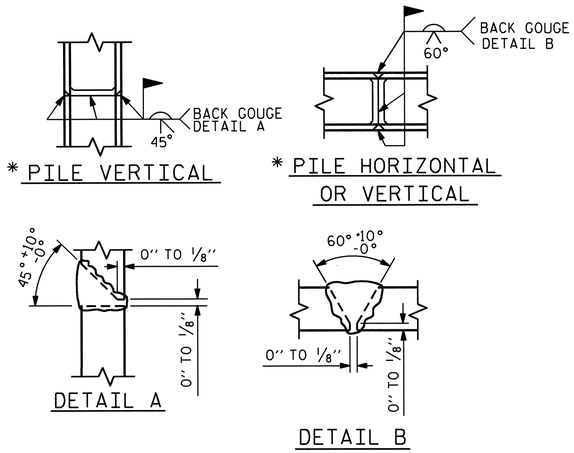

* POSITION OF PILE DURING WELDING.

PILE SPLICE DETAILS

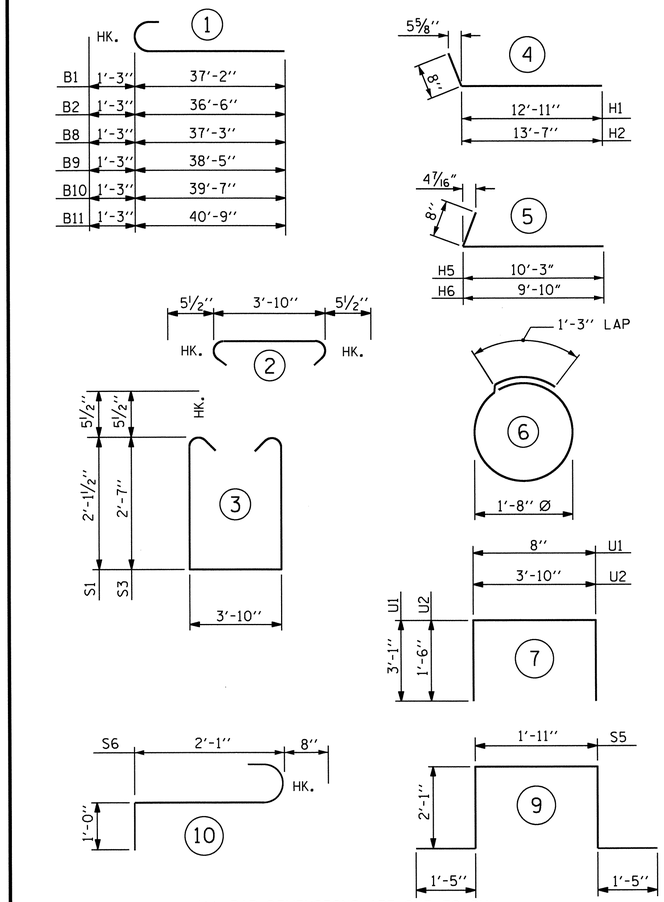

BILL OF MATERIAL
END BENT NO. 2

BAR	NO.	SIZE	TYPE	LENGTH	WEIGHT
B1	8	9	1	38'-5"	1045
B2	4	9	1	37'-9"	513
B3	18	4	STR	24'-4"	293
B4	4	4	STR	2'-9"	7
B5	4	4	STR	18'-1"	48
B6	4	4	STR	16'-5"	44
B7	20	4	STR	3'-10"	51
B8	1	9	1	38'-6"	131
B9	1	9	1	39'-8"	135
B10	1	9	1	40'-10"	139
B11	1	9	1	42'-0"	143
H1	9	5	4	13'-7"	128
H2	9	5	4	14'-3"	134
H3	4	4	STR	3'-10"	10
H4	4	4	STR	4'-8"	12
H5	11	5	5	10'-11"	125
H6	11	5	5	10'-6"	120
K1	24	4	STR	24'-4"	390
S1	23	5	3	9'-0"	216
S2	56	5	2	4'-9"	277
S3	33	5	3	9'-11"	341
S4	14	4	6	6'-6"	61
S5	2	6	9	8'-11"	27
S6	6	6	10	3'-9"	34
U1	59	4	7	6'-10"	269
U2	14	4	7	6'-10"	64
V1	118	5	STR	6'-8"	820
V2	35	5	STR	8'-0"	292
V3	31	5	STR	9'-3"	299

REINFORCING STEEL 6168 LBS.

CLASS A CONCRETE BREAKDOWN :
POUR #1 (CAP, LOWER WINGS & COLLARS) 35.5 C.Y.
POUR #2 (UPPER PORTION OF WINGS & BACKWALL) 18.4 C.Y.
TOTAL 53.9 C.Y.

HP 12 X 53 STEEL PILES
NO. 9 230 LIN FT.

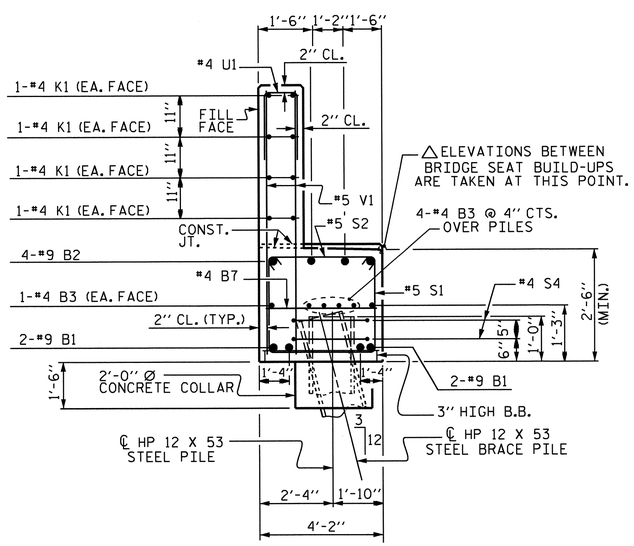

SECTION A-A

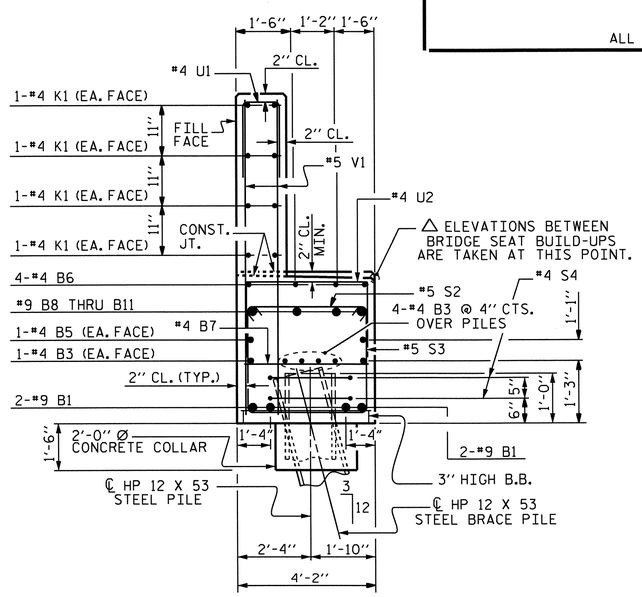

SECTION B-B

PROJECT NO. U-4412
HAYWOOD COUNTY
STATION: 67+29.11 -L-

SHEET 3 OF 3

STATE OF NORTH CAROLINA
DEPARTMENT OF TRANSPORTATION
RALEIGH

SUBSTRUCTURE
END BENT No. 2

NORTH CAROLINA PROFESSIONAL SEAL 20125 ENGINEER MARSHALL C. CHEEK, JR.
2-13-13

REVISIONS							SHEET NO.
NO.	BY:	DATE:	NO.	BY:	DATE:		S-65
1			3				TOTAL SHEETS
2			4				70

DRAWN BY : M. POOLE DATE : 12/11
CHECKED BY : J.R. MCROY DATE : 7/12

13-FEB-2013 11:19
R:\Structures\FinalPlans\Str #1\U-4412_SD_E1.dgn

STR. #1

NOTES :

FOR BERM WIDTH DIMENSIONS, SEE GENERAL DRAWING.

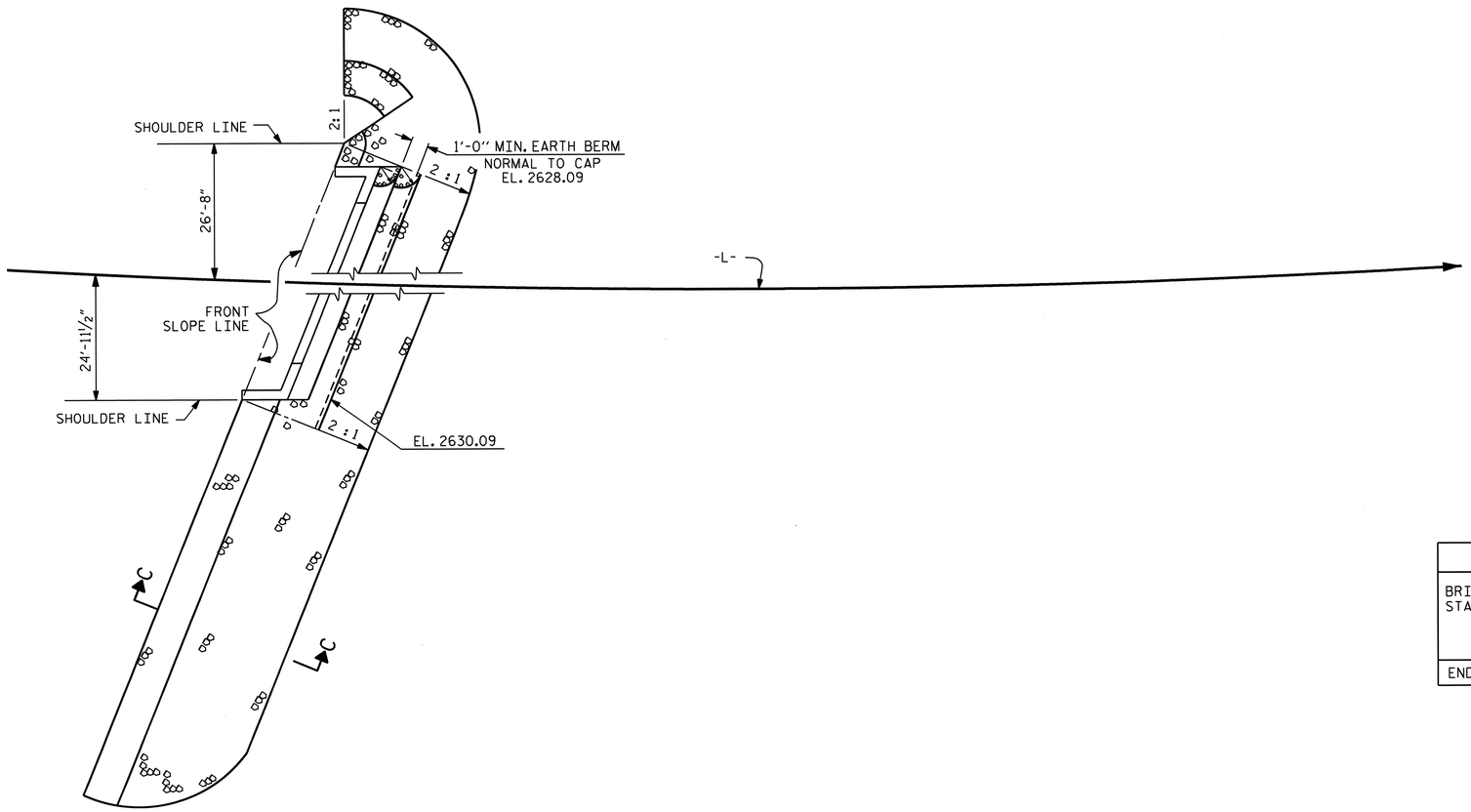

PLAN OF RIP RAP
AT END BENT No. 1

ESTIMATED QUANTITIES		
BRIDGE @ STA. 67+29.11 -L-	RIP RAP CLASS B	GEOTEXTILE FOR DRAINAGE
	TONS	SQUARE YARDS
END BENT No. 1	329	365

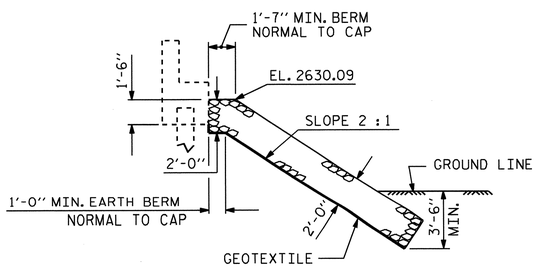

℄ SECTION
BERM RIP RAPPED

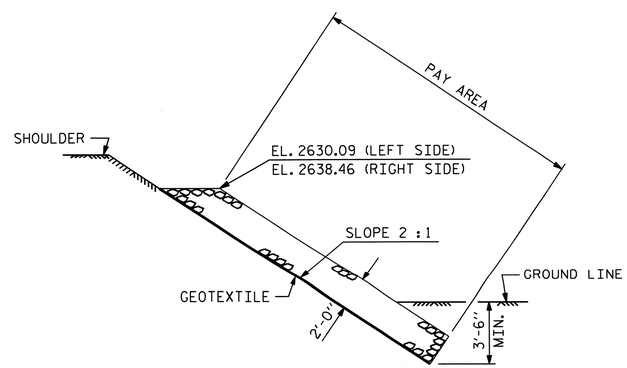

SECTION C-C

PROJECT NO. U-4412

HAYWOOD COUNTY

STATION: 67+29.11 -L-

STATE OF NORTH CAROLINA
DEPARTMENT OF TRANSPORTATION
RALEIGH

STANDARD

RIP RAP DETAILS

NORTH CAROLINA PROFESSIONAL SEAL 20125 ENGINEER MARSHALL G. CHEEK, JR.
8-19-13

REVISIONS						
NO.	BY:	DATE:	NO.	BY:	DATE:	
1			3			
2			4			

SHEET NO. S-66

TOTAL SHEETS 70

STR. #1

STD. NO. RR1

ASSEMBLED BY : D.A. HODGE		DATE : 12/11	
CHECKED BY : M.G. CHEEK		DATE : 2/12	
DRAWN BY : REK 1/84	REV. 10/17/00	RWW/LES	
CHECKED BY : RDU 1/84	REV. 5/1/06R	TLA/GM	
	REV. 10/1/11	MAA/GM	

19-AUG-2013 12:04
R:\Structures\FinalPlans\Str #1\U-4412_SD_RR.dgn
dahodge

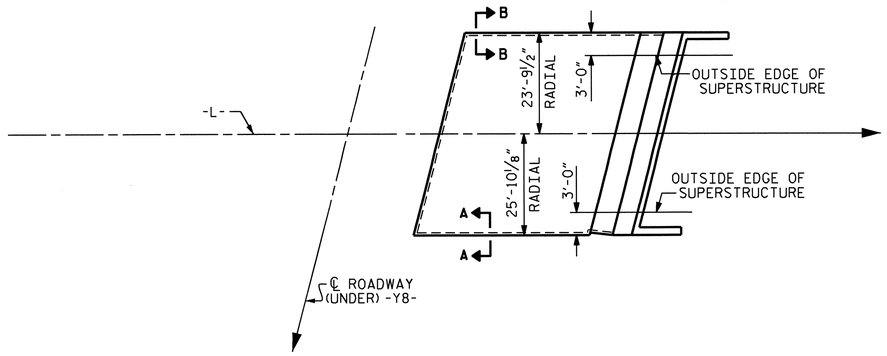

PLAN

END BENT No. 2

GENERAL NOTES

SLOPE PROTECTION SHALL BE PLACED UNDER THE ENDS OF THE BRIDGE AS SHOWN IN THE DETAILS. THE CONTRACTOR, AT HIS OPTION, MAY USE ALTERNATE "B" ONLY FOR HIGHWAY OVER HIGHWAY GRADE SEPARATIONS WITH 2:1 END BENT SLOPE IN RURAL, UNPOPULATED AREAS. STRAIGHT EDGING WILL NOT BE REQUIRED UNLESS, IN THE OPINION OF THE ENGINEER, VISUAL INSPECTION INDICATES A NEED FOR IT. MEASUREMENT AND PAYMENT SHALL BE AS PRESCRIBED IN SECTION 462 OF THE STANDARD SPECIFICATIONS. FOR BERM WIDTH, SEE GENERAL DRAWING.

SLOPE PROTECTION SHALL CONSIST OF 4" POURED-IN-PLACE CONCRETE PAVING AS SHOWN IN THE DETAILS ON THIS SHEET. CONCRETE SHALL BE CLASS "B". THE CONCRETE SURFACE SHALL BE FLOATED WITH A WOODEN FLOAT AND FINISHED. WELDED WIRE FABRIC REINFORCING SHALL BE 6 X 6 - W1.4 X W1.4, 60" WIDE. SLOPE PROTECTION SHALL BE POURED IN 5' STRIPS AS SHOWN IN THE "POURING DETAIL" WITH 2'-0" LONG #4 BARS PLACED ALONG THE SLOPE BETWEEN STRIPS AT 1'-6" MAXIMUM SPACING. SLOPE PROTECTION MAY BE POURED IN ALTERNATE 4' AND 5' STRIPS AS SHOWN IN THE "OPTIONAL POURING DETAIL" WITH ADJACENT RUNS OF WELDED WIRE FABRIC LAPPING AT LEAST 6". THE COST OF THE WELDED WIRE FABRIC AND #4 BARS, IF USED, SHALL BE INCLUDED IN THE CONTRACT UNIT PRICE BID PER SQUARE YARD FOR SLOPE PROTECTION.

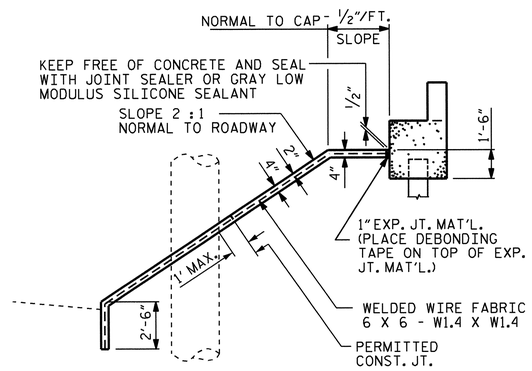

SECTION ALONG ℄ ROADWAY WITH SHOULDER PIER

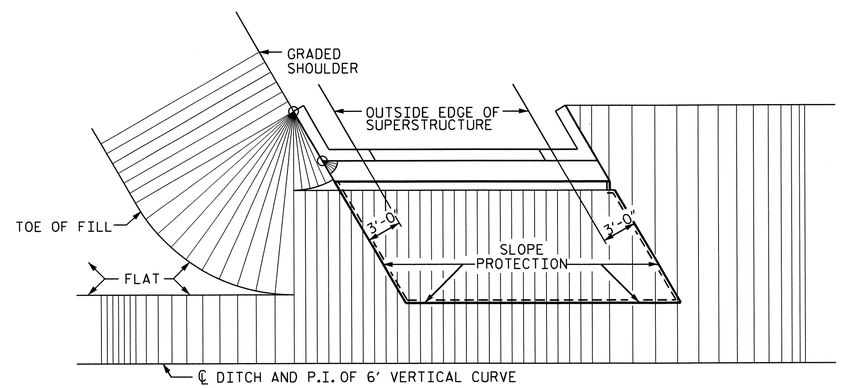

PLAN - END BENT WITH SWEPT BACK WINGS - SKEWED

(2:1 SLOPE)

BRIDGE @ STA. 67+29.11 -L-	4" INCH SLOPE PROTECTION	* WELDED WIRE FABRIC 60 INCHES WIDE
	SQUARE YARDS	APPROX. L.F.
END BENT 2	335	670

* QUANTITY SHOWN IS BASED ON 5' POURS.

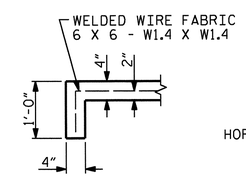

SECTION A-A

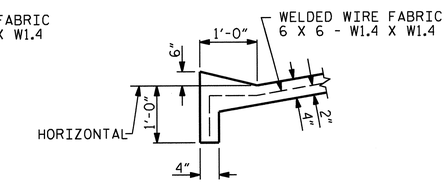

SECTION B-B

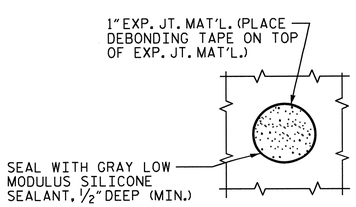

PLAN WHERE CONCRETE SLOPE PROTECTION MUST BE PLACED AROUND A BENT COLUMN

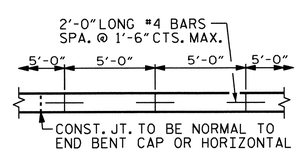

STRIP WIDTHS MAY VARY IN CURVED PORTION.

POURING DETAIL

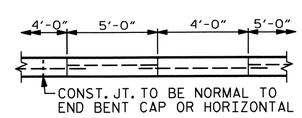

POUR A 4'-0" STRIP FIRST. STRIP WIDTHS MAY VARY IN CURVED PORTION.

OPTIONAL POURING DETAIL

PROJECT NO. U-4412

HAYWOOD COUNTY

STATION: 67+29.11 -L-

STATE OF NORTH CAROLINA
DEPARTMENT OF TRANSPORTATION
RALEIGH

STANDARD

SLOPE PROTECTION DETAILS

NORTH CAROLINA PROFESSIONAL SEAL 20125 ENGINEER MARSHALL L. GIDEK, JR.

REVISIONS						SHEET NO.
NO.	BY:	DATE:	NO.	BY:	DATE:	S-67
1			3			TOTAL SHEETS
2			4			70

ASSEMBLED BY : D. HODGE		DATE : 11/12	
CHECKED BY : W.J. HARRIS		DATE : 12/12	
DRAWN BY : ELR 5/92	REV. 5/1/06	TLA/GM	
CHECKED BY : GRP 6/92	REV. 10/1/11	MAA/GM	
	REV. 12/21/11	MAA/GM	

07-FEB-2013 07:02
R:\Structures\Final Plans\Str *1\U-4412_SD_SP.dgn
dahodge

STD. NO. SP1

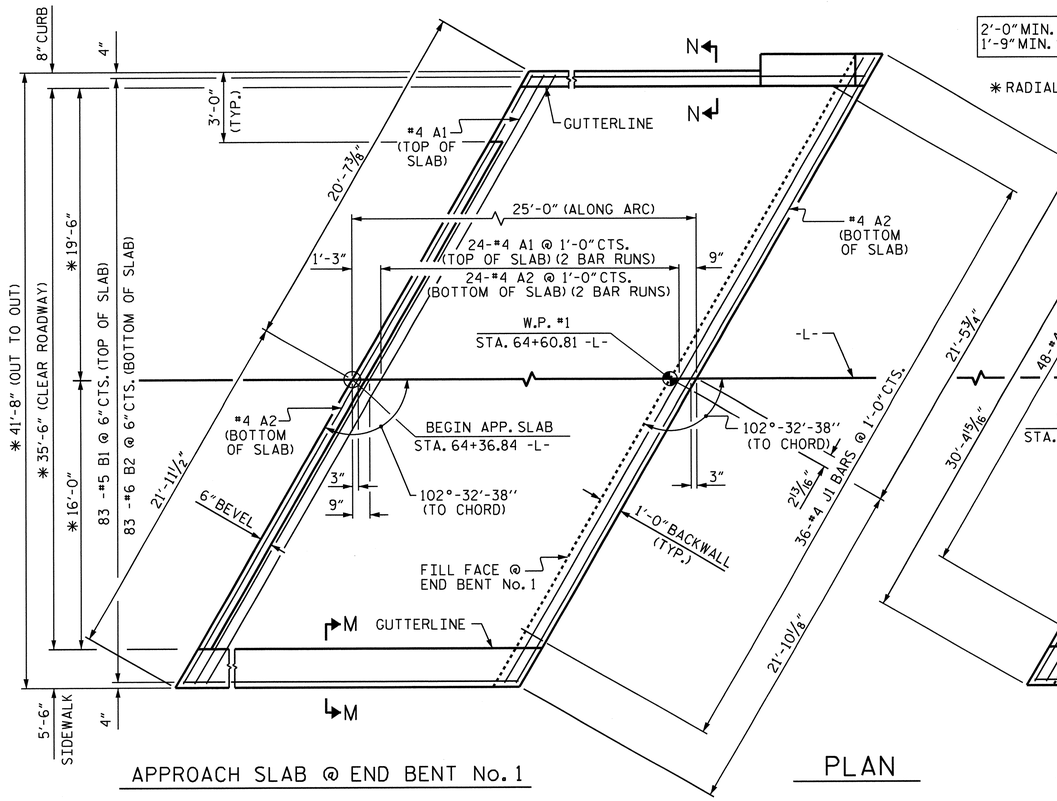

APPROACH SLAB @ END BENT No. 1

2'-0" MIN. SPLICE FOR A1
1'-9" MIN. SPLICE FOR A2

* RADIAL DIMENSION

PLAN

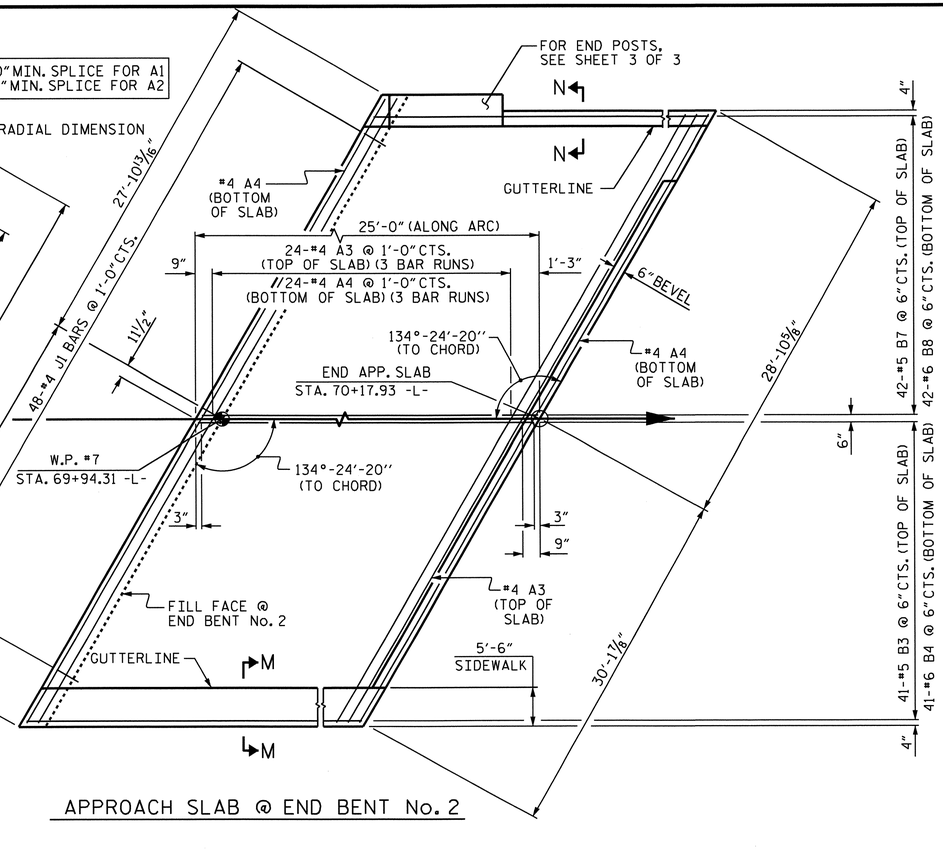

APPROACH SLAB @ END BENT No. 2

NOTES

APPROACH SLAB SHALL NOT BE CONSTRUCTED PRIOR TO COMPLETION OF THE BRIDGE DECK.

FOR REINFORCED BRIDGE APPROACH FILL INCLUDING GEOTEXTILE, IMPERMEABLE GEOMEMBRANE, 4" Ø DRAINAGE PIPE, #78m STONE, AND SELECT MATERIAL, SEE ROADWAY PLANS.

AREA BETWEEN THE WINGWALL AND APPROACH SLAB SHALL BE GRADED TO DRAIN THE WATER AWAY FROM THE FILL FACE OF THE BRIDGE AND SHALL BE PAVED. SEE ROADWAY PLANS.

THE 6" COMP. A.B.C. SHALL BE FLUSH WITH THE ROADWAY END OF THE APPROACH SLAB AND SHALL EXTEND 1'-0" OUTSIDE EACH EDGE OF THE APPROACH SLAB.

THE CONTRACTOR MAY USE 4" TYPE B-25.0B ASPHALT CONCRETE BASE COURSE IN LIEU OF 6" COMP. A.B.C. IF THIS OPTION IS USED, THE BASE COURSE SHALL BE FLUSH WITH THE ROADWAY END OF THE APPROACH SLAB, AND THE WIDTH SHALL BE THE SAME AS THAT OF THE APPROACH SLAB.

THE CONTRACTOR MAY USE 5" CLASS "A" CONCRETE BASE IN LIEU OF 6" COMP. A.B.C. IF THIS OPTION IS USED, THE CONCRETE BASE SHALL BE FLUSH WITH THE ROADWAY END OF THE APPROACH SLAB, AND THE WIDTH SHALL BE THE SAME AS THAT OF THE APPROACH SLAB. THE CONCRETE SHALL BE FINISHED TO A SMOOTH SURFACE AND A LAYER OF 30 LB ROOFING FELT SHALL BE PLACED BETWEEN THE CONCRETE BASE AND THE APPROACH SLAB TO PREVENT BOND. THE APPROACH SLAB SHALL NOT BE CAST UNTIL THE CONCRETE BASE HAS REACHED AN AGE OF THREE CURING DAYS.

PAYMENT FOR THE END POSTS ON THE APPROACH SLABS SHALL BE INCLUDED IN THE PRICE BID FOR "1'-2" X 2'-6" CONCRETE PARAPET".

FOR EXPANSION JOINT SEALS, SEE SPECIAL PROVISIONS.

FOR EXPANSION JOINT SEAL DETAILS, SEE "EXPANSION JOINT SEAL" SHEETS.

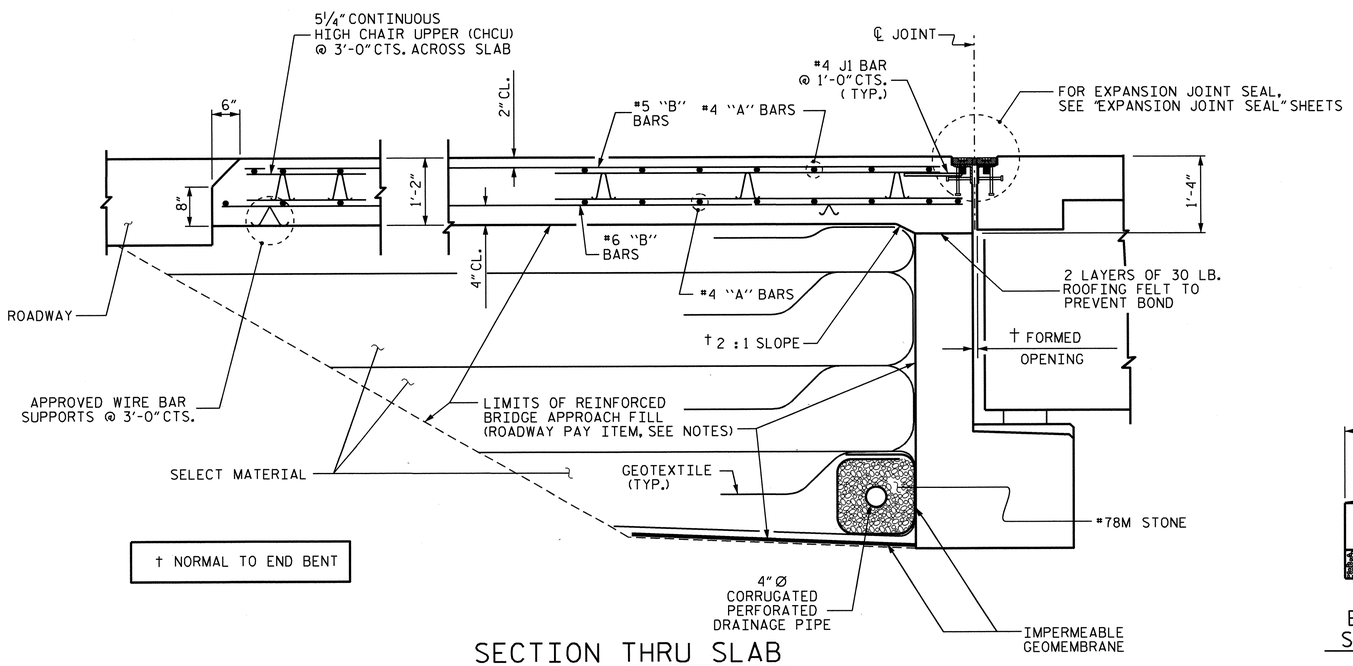

† NORMAL TO END BENT

SECTION THRU SLAB

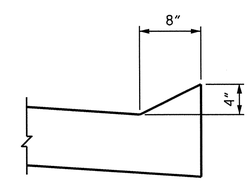

SECTION N-N

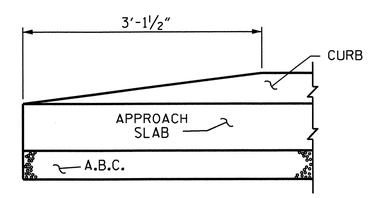

END OF CURB WITHOUT SHOULDER BERM GUTTER

CURB DETAILS

PROJECT NO. U-4412
HAYWOOD COUNTY
STATION: 67+29.11 -L-

SHEET 1 OF 3

STATE OF NORTH CAROLINA
DEPARTMENT OF TRANSPORTATION
RALEIGH

BRIDGE APPROACH SLAB FOR FLEXIBLE PAVEMENT WITH SIDEWALK

REVISIONS						SHEET NO.
NO.	BY:	DATE:	NO.	BY:	DATE:	S-68
1			3			TOTAL SHEETS
2			4			70

NORTH CAROLINA PROFESSIONAL SEAL 20125 ENGINEER MICHAEL G. CHEEK, JR.
11-29-12

DRAWN BY : J.R. MCROY DATE : 8-11
CHECKED BY : M.G. CHEEK DATE : 9/12

29-NOV-2012 11:52
R:\Structures\Final Plans\Str #1\U-4412_SD_AS.dgn
dahodge

STR. #1

BILL OF MATERIAL

APPROACH SLAB @ E.B. No. 1

BAR	NO.	SIZE	TYPE	LENGTH	WEIGHT
✳ A1	50	#4	STR	22'-6"	752
A2	52	#4	STR	22'-5"	779
✳ B1	83	#5	STR	24'-1"	2085
B2	83	#6	STR	24'-7"	3065
✳ B5	5	#4	STR	23'-6"	78
✳ U1	8	#4	2	3'-10"	20
✳ G1	24	#4	STR	5'-3"	84
✳ J1	36	#4	1	1'-5"	34

REINFORCING STEEL LBS. 3844

✳ EPOXY COATED REINFORCING STEEL LBS. 3053

CLASS AA CONCRETE

POUR #1 (SLAB & CURB) 39.8 C.Y.

POUR #2 (SIDEWALK & END POST) 3.1 C.Y.

TOTAL 42.9 C.Y.

APPROACH SLAB @ E.B. No. 2

BAR	NO.	SIZE	TYPE	LENGTH	WEIGHT
✳ A3	75	#4	STR	21'-2"	1060
A4	78	#4	STR	21'-0"	1094
✳ B3	41	#5	STR	23'-6"	1005
B4	41	#6	STR	24'-0"	1478
✳ B7	42	#5	STR	24'-0"	1051
B8	42	#6	STR	24'-6"	1546
✳ B9	5	#4	STR	24'-6"	82
✳ U1	8	#4	2	3'-10"	20
✳ G2	24	#4	STR	6'-11"	111
✳ J1	48	#4	1	1'-5"	45

REINFORCING STEEL LBS. 4118

✳ EPOXY COATED REINFORCING STEEL LBS. 3374

CLASS AA CONCRETE

POUR #1 (SLAB & CURB) 39.8 C.Y.

POUR #2 (SIDEWALK & END POST) 3.1 C.Y.

TOTAL 42.9 C.Y.

✳ THESE BARS ARE EPOXY COATED

THE QUANTITY OF #4 J1 BARS ON THE BILL OF MATERIAL IS BASED ON 1'-0" CTS. J1 BARS SHALL BE PLACED AT EACH VERTICAL STUD ANCHOR. IN THE EVENT THAT THE NUMBER OF VERTICAL STUD ANCHORS EXCEEDS THE NUMBER OF J1 BARS SPECIFIED, ADDITIONAL J1 BARS WILL NOT BE REQUIRED.

BAR TYPES

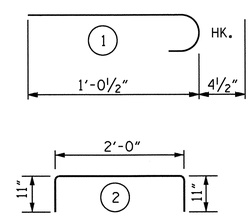

ALL BAR DIMENSIONS ARE OUT TO OUT

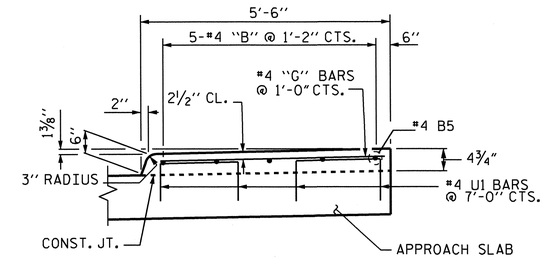

SECTION M - M

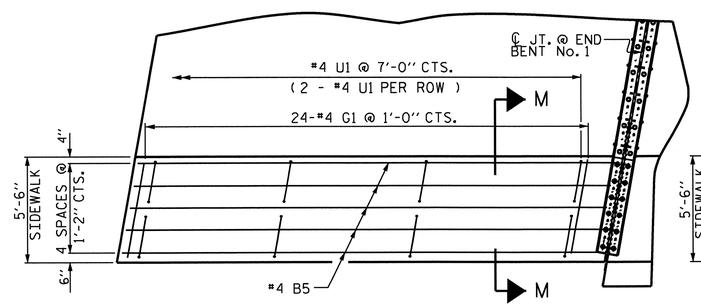

PLAN AT E.B. No. 1

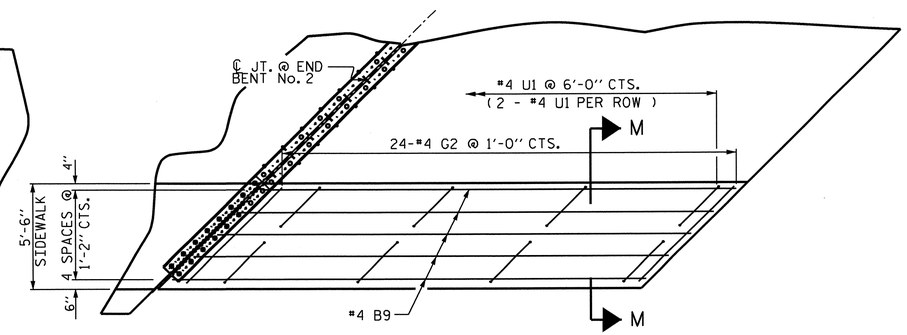

PLAN AT E.B. No. 2

SIDEWALK DETAILS

FOR COVER PLATE DETAILS, SEE "EXPANSION JOINT SEAL" SHEETS.

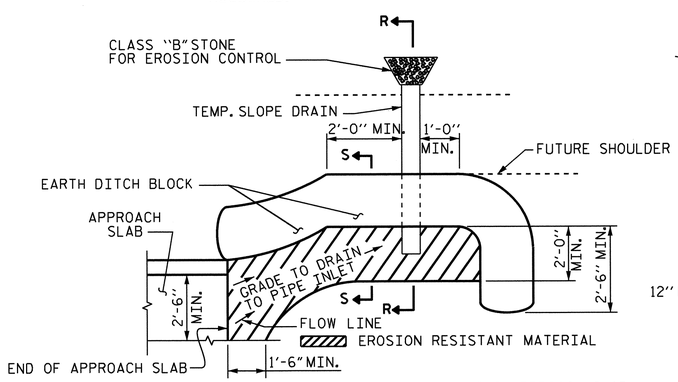

NOTE: IMMEDIATELY AFTER THE CONSTRUCTION OF THE APPROACH SLAB, THE CONTRACTOR SHALL PROVIDE TEMPORARY BERM AND SLOPE DRAIN. CONTRACTOR SHALL GRADE TO PIPE INLET AND PROVIDE EROSION RESISTANT MATERIAL AS SHOWN. THE EROSION RESISTANT MATERIAL SHALL BE EITHER 1) ASPHALT PLANT MIX, TYPE 1 OR TYPE 2, MIN. 2" DEPTH, 2) EROSION CONTROL MAT, OR 3) CONCRETE, AS DIRECTED BY THE ENGINEER. THE SLOPE DRAIN SHALL CONSIST OF A NON-PERFORATED TEMPORARY DRAINAGE PIPE, 12 INCHES IN DIAMETER.

PLAN VIEW

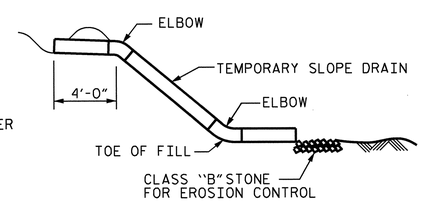

SECTION R-R

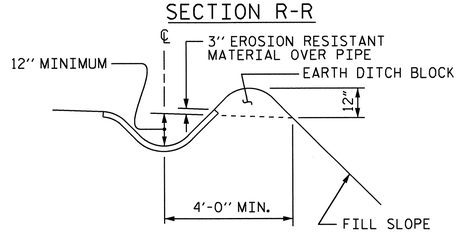

SECTION S-S

TEMPORARY BERM AND SLOPE DRAIN DETAILS

(TO BE USED WHEN SHOULDER BERM GUTTER IS REQUIRED)

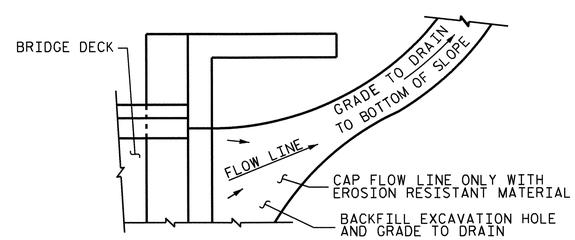

NOTE: IF THE APPROACH SLAB IS NOT CONSTRUCTED IMMEDIATELY AFTER THE BACKFILLING OF THE END BENT EXCAVATION, GRADE TO DRAIN TO THE BOTTOM OF THE SLOPE AND PROVIDE EROSION RESISTANT MATERIAL, SUCH AS FIBERGLASS ROVING OR AS DIRECTED BY THE ENGINEER TO PREVENT SOIL EROSION AND TO PROTECT THE AREA ADJACENT TO THE STRUCTURE. THE CONTRACTOR WILL BE REQUIRED TO REMOVE THESE MATERIALS PRIOR TO CONSTRUCTION OF THE APPROACH SLAB.

TEMPORARY DRAINAGE DETAIL

PROJECT NO. U-4412

HAYWOOD COUNTY

STATION: 67+29.11 -L-

SHEET 2 OF 3

STATE OF NORTH CAROLINA
DEPARTMENT OF TRANSPORTATION
RALEIGH

BRIDGE APPROACH SLAB FOR FLEXIBLE PAVEMENT

NORTH CAROLINA PROFESSIONAL SEAL 20125 ENGINEER MARSHALL L. GREEK, JR.
11-27-12

REVISIONS						SHEET NO.
NO.	BY:	DATE:	NO.	BY:	DATE:	S-69
1			3			TOTAL SHEETS
2			4			70

STR. #1

DRAWN BY : J.R. MCROY DATE : 8-11

CHECKED BY : M.G. CHEEK DATE : 9/12

29-NOV-2012 11:52
R:\Structures\Final Plans\Str #1\U-4412_SD_AS.dgn
dohodge

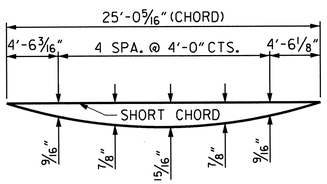

ARC OFFSET - LEFT SIDE

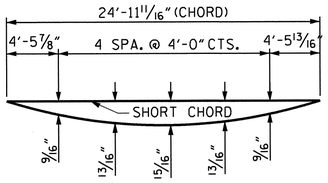

ARC OFFSET - RIGHT SIDE

APPROACH SLAB @ END BENT No. 1

ARC OFFSETS ARE TAKEN ALONG SHORT CHORD TO OUTSIDE EDGE OF APPROACH SLAB

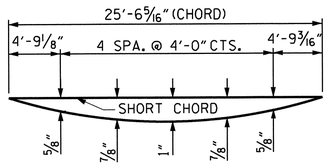

ARC OFFSET - LEFT SIDE

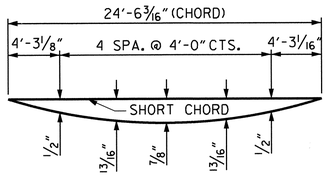

ARC OFFSET - RIGHT SIDE

APPROACH SLAB @ END BENT No. 2

ARC OFFSETS ARE TAKEN ALONG SHORT CHORD TO OUTSIDE EDGE OF APPROACH SLAB

NOTES

ALL REINFORCING STEEL IN END POSTS SHALL BE EPOXY COATED.

FOR CONCRETE INSERT IN END POST, SEE "RAIL POST SPACINGS AND END OF RAIL DETAILS" SHEET IN SUPERSTRUCTURE.

FOR RAIL POST SPACING AND METAL RAIL ANCHOR ASSEMBLY, SEE "RAIL POST SPACING AND END OF RAIL DETAILS" AND "2 BAR METAL RAIL" SHEETS IN SUPERSTRUCTURE.

GROOVED CONTRACTION JOINTS 1/2" IN DEPTH SHALL BE TOOLED IN ALL EXPOSED FACES OF THE PARAPET IN ACCORDANCE WITH ARTICLE 825-10(B) OF THE STANDARD SPECIFICATIONS. THE CONTRACTION JOINTS SHALL BE LOCATED AT A SPACING OF 8 FT. TO 10 FT. BETWEEN EXPANSION JOINTS. NO CONTRACTION JOINT WILL BE REQUIRED FOR SEGMENTS LESS THAN 10 FEET IN LENGTH.

NO ADDITIONAL PAYMENT SHALL BE MADE FOR THE CONCRETE END POSTS AS THIS IS CONSIDERED INCIDENTAL TO THE CONSTRUCTION OF THE 1'-2" X 2'-6" CONCRETE PARAPET.

BAR TYPE

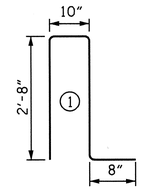

ALL BAR DIMENSIONS ARE OUT TO OUT.

BILL OF MATERIAL
2 END POSTS

BAR	NO.	SIZE	TYPE	LENGTH	WEIGHT
* B10	4	#5	STR	3'-5"	14
* B11	4	#5	STR	3'-7"	15
* B12	4	#5	STR	4'-4"	18
* B13	4	#5	STR	3'-6"	15
* E1	4	#7	STR	3'-2"	26
* E2	4	#7	STR	3'-6"	29
* E3	4	#7	STR	3'-9"	31
* E4	4	#7	STR	4'-0"	33
* E5	4	#7	STR	4'-4"	35
* F1	1	#6	STR	2'-1"	3
* F2	1	#6	STR	3'-3"	5
* F3	2	#6	STR	3'-9"	11
* F4	2	#6	STR	3'-0"	9
* F5	2	#6	STR	3'-9"	11
* F6	2	#6	STR	1'-10"	6
* F7	1	#6	STR	3'-0"	5
* F8	1	#6	STR	4'-2"	6
* S1	8	#5	1	6'-10"	57
* EPOXY COATED REINFORCING STEEL					329 LBS.
CLASS AA CONCRETE					1.4 CU.YD.

* THESE BARS ARE EPOXY COATED

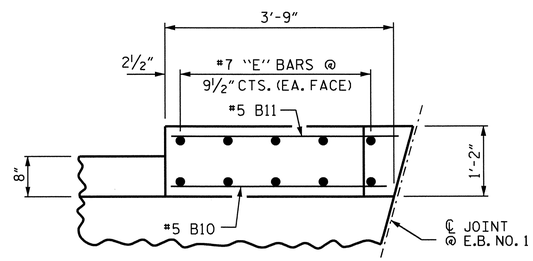

PLAN OF END POST @ E.B. No. 1

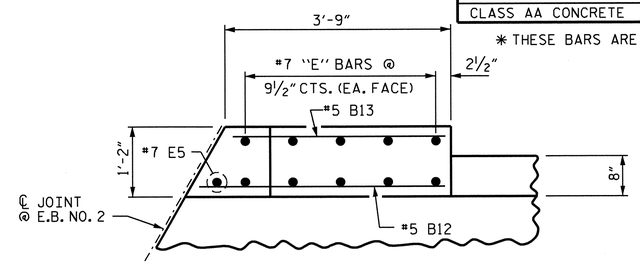

PLAN OF END POST @ E.B. No. 2

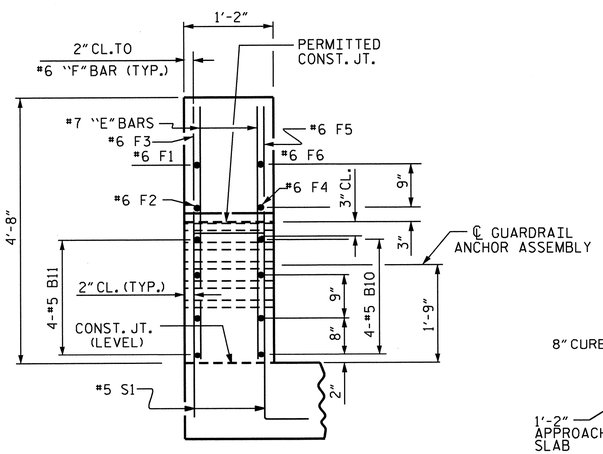

END VIEW
(AT END BENT No. 1)

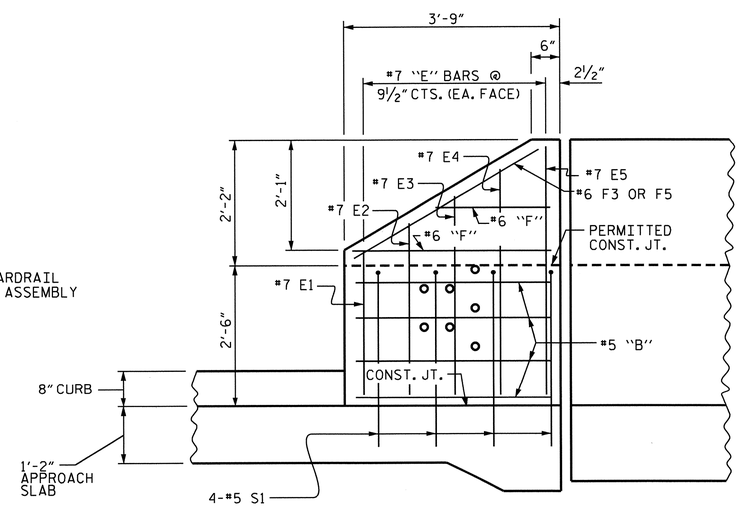

ELEVATION

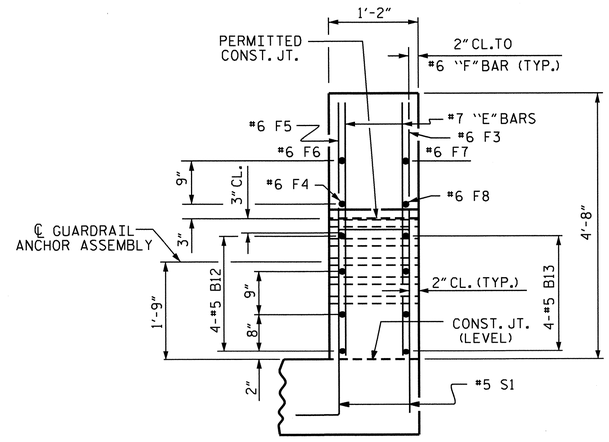

END VIEW
(AT END BENT No. 2)

PARAPET AND END POST FOR TWO BAR RAIL

PROJECT NO. U-4412
HAYWOOD COUNTY
STATION: 67+29.11 -L-

SHEET 3 OF 3

STATE OF NORTH CAROLINA
DEPARTMENT OF TRANSPORTATION
RALEIGH

BRIDGE APPROACH SLAB DETAILS
CONCRETE END POST

NORTH CAROLINA PROFESSIONAL SEAL 20125 ENGINEER MARSHALL G. CHEEK, JR.
11-28-12

REVISIONS						SHEET NO.
NO.	BY:	DATE:	NO.	BY:	DATE:	S-70
1			3			TOTAL SHEETS
2			4			70

DRAWN BY : J.R. MCROY DATE : 8-11
CHECKED BY : M.G. CHEEK DATE : 9/12

29-NOV-2012 11:53
R:\Structures\Final Plans\Str #1\U-4412_SD_AS.dgn
dahodge

STR. #1

BENCHMARK #1 : CHISELED SQUARE IN BASE OF TRANSFORMER BOX, STA. 10+14.30 -L-, 45.19 FT. RT., ELEV. 2642.048.

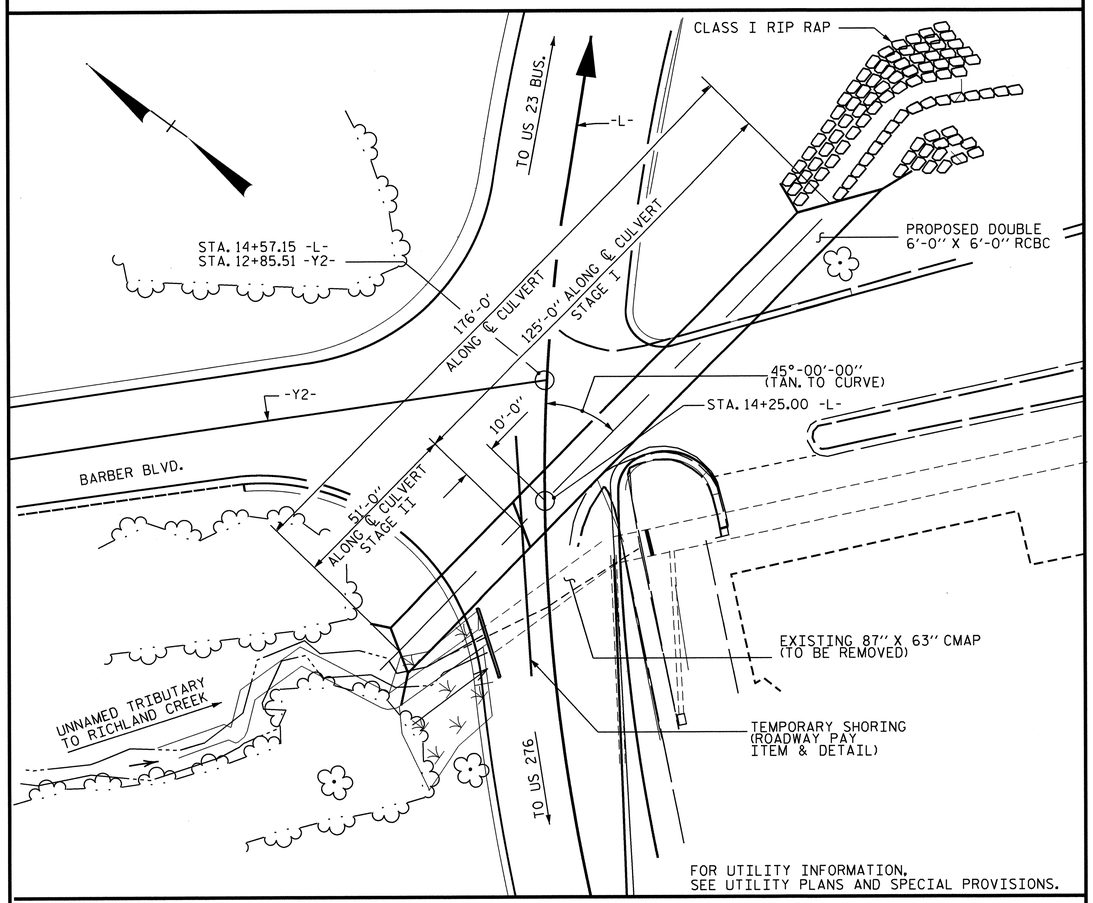

LOCATION SKETCH

NOTES

ASSUMED LIVE LOAD ----------HL-93 OR ALTERNATE LOADING.

DESIGN FILL----------2.0'

FOR OTHER DESIGN DATA AND NOTES SEE STANDARD NOTES SHEET.

3" Ø WEEP HOLES INDICATED TO BE IN ACCORDANCE WITH THE SPECIFICATIONS.

CONCRETE IN CULVERTS TO BE POURED IN THE FOLLOWING ORDER:

1. STAGE I WING FOOTINGS AND FLOOR SLAB INCLUDING 4" OF STAGE I VERTICAL WALLS.
2. THE REMAINING PORTIONS OF STAGE I WALLS AND STAGE I WINGS FULL HEIGHT, FOLLOWED BY STAGE I ROOF SLAB AND HEADWALL.
3. STAGE II WING FOOTINGS AND FLOOR SLAB INCLUDING 4" OF STAGE II VERTICAL WALLS.
4. THE REMAINING PORTIONS OF STAGE II WALLS AND STAGE II WINGS FULL HEIGHT, FOLLOWED BY STAGE II ROOF SLAB AND HEADWALL.

THE RESIDENT ENGINEER SHALL CHECK THE LENGTH OF CULVERT BEFORE STAKING IT OUT TO MAKE CERTAIN THAT IT WILL PROPERLY TAKE CARE OF THE FILL.

DIMENSIONS FOR WING LAYOUT AS WELL AS ADDITIONAL REINFORCING STEEL EMBEDDED IN BARREL ARE SHOWN ON WING SHEETS.

TRANSVERSE CONSTRUCTION JOINTS SHALL BE USED IN THE BARREL, SPACED TO LIMIT THE POURS TO A MAXIMUM OF 70 FT. LOCATION OF JOINTS SHALL BE SUBJECT TO APPROVAL OF THE ENGINEER.

STEEL IN THE BOTTOM SLAB MAY BE SPLICED AT THE PERMITTED CONSTRUCTION JOINT AT THE CONTRACTOR'S OPTION. EXTRA WEIGHT OF STEEL DUE TO THE SPLICES SHALL BE PAID FOR BY THE CONTRACTOR.

AT THE CONTRACTOR'S OPTION, HE MAY SPLICE THE VERTICAL REINFORCING STEEL IN THE INTERIOR FACE OF EXTERIOR WALL AND BOTH FACES OF INTERIOR WALLS ABOVE LOWER WALL CONSTRUCTION JOINT. THE SPLICE LENGTH SHALL BE AS PROVIDED IN THE SPLICE LENGTH CHART SHOWN ON THE PLANS. EXTRA WEIGHT OF STEEL DUE TO THE SPLICES SHALL BE PAID FOR BY THE CONTRACTOR.

AT THE CONTRACTOR'S OPTION HE MAY SUBMIT, TO THE ENGINEER FOR APPROVAL, DESIGN AND DETAIL DRAWINGS FOR A PRECAST REINFORCED CONCRETE BOX CULVERT IN LIEU OF THE CAST-IN-PLACE CULVERT SHOWN ON THE PLANS. THE DESIGN SHALL PROVIDE THE SAME SIZE AND NUMBER OF BARRELS AS USED ON THE CAST-IN-PLACE DESIGN. FOR OPTIONAL PRECAST REINFORCED CONCRETE BOX CULVERT, SEE SPECIAL PROVISIONS.

FOR SUBMITTAL OF WORKING DRAWINGS, SEE SPECIAL PROVISIONS.

FOR CRANE SAFETY, SEE SPECIAL PROVISIONS.

FOR FALSEWORK AND FORMWORK, SEE SPECIAL PROVISIONS.

FOR GROUT FOR STRUCTURES, SEE SPECIAL PROVISIONS.

FOR CULVERT DIVERSION DETAILS AND PAY ITEM, SEE EROSION CONTROL PLANS.

FOR CONSTRUCTION SEQUENCE, SEE EROSION CONTROL PLANS.

THE CONTRACTOR SHALL PROVIDE INDEPENDENT ASSURANCE SAMPLES OF REINFORCING STEEL AS FOLLOWS: FOR PROJECTS REQUIRING UP TO 400 TONS OF REINFORCING STEEL, ONE 30 INCH SAMPLE OF EACH SIZE BAR USED, AND FOR PROJECTS REQUIRING OVER 400 TONS OF REINFORCING STEEL, TWO 30 INCH SAMPLES OF EACH SIZE BAR USED. THE BARS FROM WHICH THE SAMPLES ARE TAKEN MUST THEN BE SPLICED WITH REPLACEMENT BARS OF THE SIZE AND LENGTH OF THE SAMPLE, PLUS A MINIMUM LAP SPLICE OF THIRTY BAR DIAMETERS. PAYMENT FOR THE SAMPLES OF REINFORCING STEEL SHALL BE CONSIDERED INCIDENTAL TO VARIOUS PAY ITEMS.

F.A. PROJECT No. : STP-1184(4)

THE REMOVAL OF THE EXISTING 87"X 63" CORRUGATED METAL ARCH PIPE AND HEADWALLS SHALL BE INCLUDED IN THE LUMP SUM PRICE BID FOR "CULVERT EXCAVATION".

FOR LIMITS OF TEMPORARY SHORING FOR MAINTENANCE OF TRAFFIC, SEE TRAFFIC CONTROL PLANS. FOR PAY ITEM FOR TEMPORARY SHORING FOR MAINTENANCE OF TRAFFIC, SEE ROADWAY PLANS.

STEEL SHEET PILING REQUIRED FOR SHORING SHALL BE HOT ROLLED.

HYDRAULIC DATA

DESIGN DISCHARGE----------460 CFS

FREQUENCY OF DESIGN FLOOD----------50 YEARS

DESIGN HIGH WATER ELEVATION----------2632.4

DRAINAGE AREA----------285 ACRES

BASE DISCHARGE(Q100)----------550 CFS

BASE HIGH WATER ELEVATION----------2633.3

OVERTOPPING FLOOD DATA

OVERTOPPING DISCHARGE----------744 CFS

FREQUENCY OF OVERTOPPING FLOOD--------500 YRS. ±

OVERTOPPING FLOOD ELEVATION----------2635.3

GRADE DATA

GRADE POINT ELEV. @ STATION 14+25.00 -L- = 2633.80

BED ELEV. @ STATION 14+25.00 -L- = 2624.28

ROADWAY SLOPES = 2 :1

TOTAL STRUCTURE QUANTITIES

CLASS A CONCRETE	
STAGE I	182.4 CU. YDS.
STAGE II	83.7 CU. YDS.
TOTAL	266.1 CU. YDS.
REINFORCING STEEL	
STAGE I	19958 LBS.
STAGE II	8648 LBS.
TOTAL	28606 LBS.
FOUNDATION CONDITIONING MATERIAL	
STAGE I	159 TONS
STAGE II	65 TONS
TOTAL	224 TONS
CULVERT EXCAVATION	LUMP SUM
CLASS I RIP RAP	60 TONS

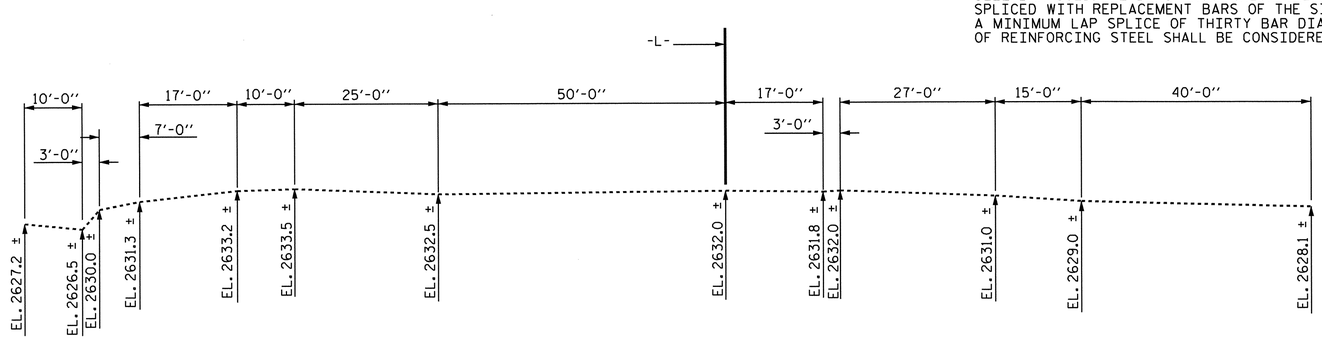

PROFILE ALONG ℄ CULVERT

PROJECT NO. U-4412
HAYWOOD COUNTY
STATION: 14+25.00 -L-

SHEET 1 OF 10

STATE OF NORTH CAROLINA
DEPARTMENT OF TRANSPORTATION
RALEIGH

DOUBLE 6 FT. X 6 FT.
CONCRETE BOX CULVERT
STAGE I & STAGE II

NORTH CAROLINA PROFESSIONAL SEAL 13014 ENGINEER QUANG H. NGUYEN
Quang H. Nguyen 2-7-13

NORTH CAROLINA PROFESSIONAL SEAL 20125 ENGINEER MARSHALL G. CHEEK, JR.
2-4-13

REVISIONS								SHEET NO.
NO.	BY:	DATE:	NO.	BY:	DATE:			C-1
1			3					TOTAL SHEETS
2			4					25

ASSEMBLED BY : M. POOLE DATE : 03/12
CHECKED BY : M. G. CHEEK DATE : 08/12

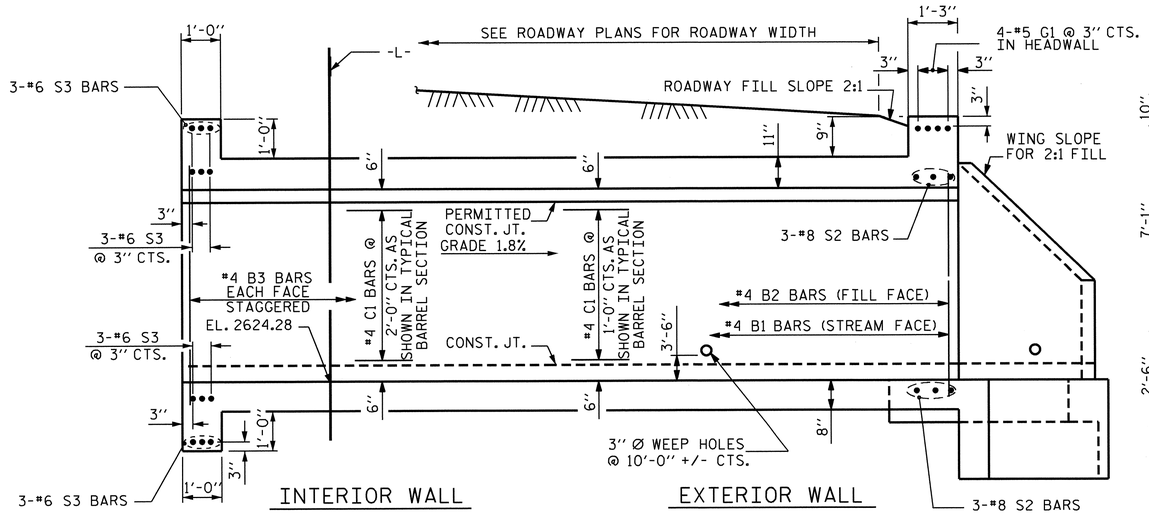

CULVERT SECTION NORMAL TO ROADWAY

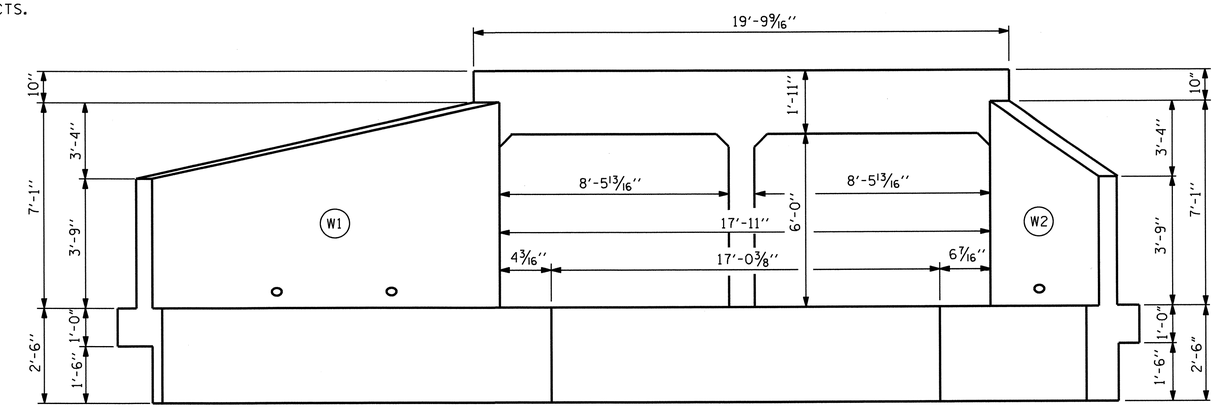

OUTLET END ELEVATION NORMAL TO SKEW

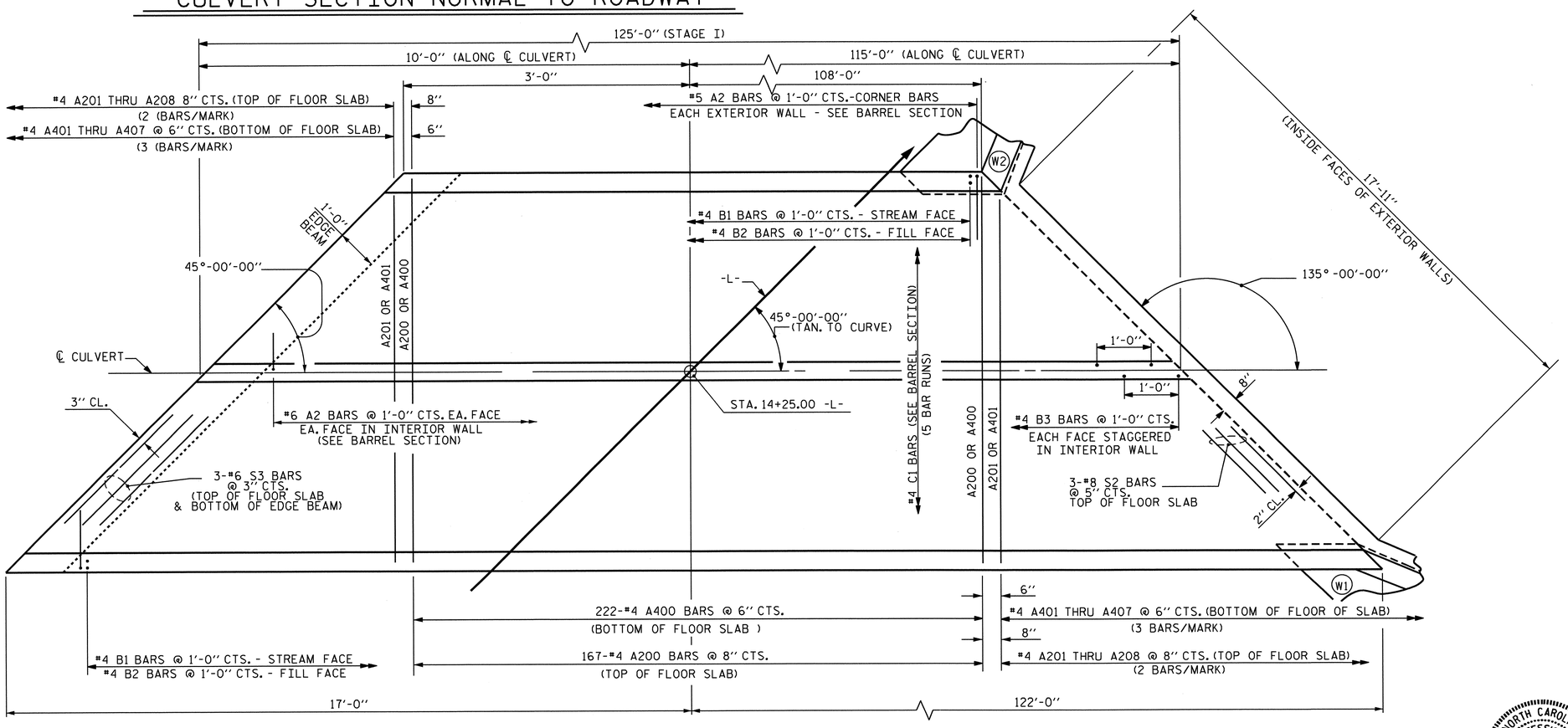

FLOOR SLAB - STAGE I

PROJECT NO. U-4412
HAYWOOD COUNTY
STATION: 14+25.00 -L-

SHEET 2 OF 10

STATE OF NORTH CAROLINA
DEPARTMENT OF TRANSPORTATION
RALEIGH

DOUBLE 6 FT. X 6 FT.
CONCRETE BOX CULVERT
STAGE I

NORTH CAROLINA PROFESSIONAL SEAL 20125 ENGINEER MARSHALL G. CHEEK, JR.
11-28-12

REVISIONS						SHEET NO.
NO.	BY:	DATE:	NO.	BY:	DATE:	C-2
1			3			TOTAL SHEETS
2			4			25

STR. #2

ASSEMBLED BY : M. POOLE DATE : 07/12
CHECKED BY : M. G. CHEEK DATE : 08/12

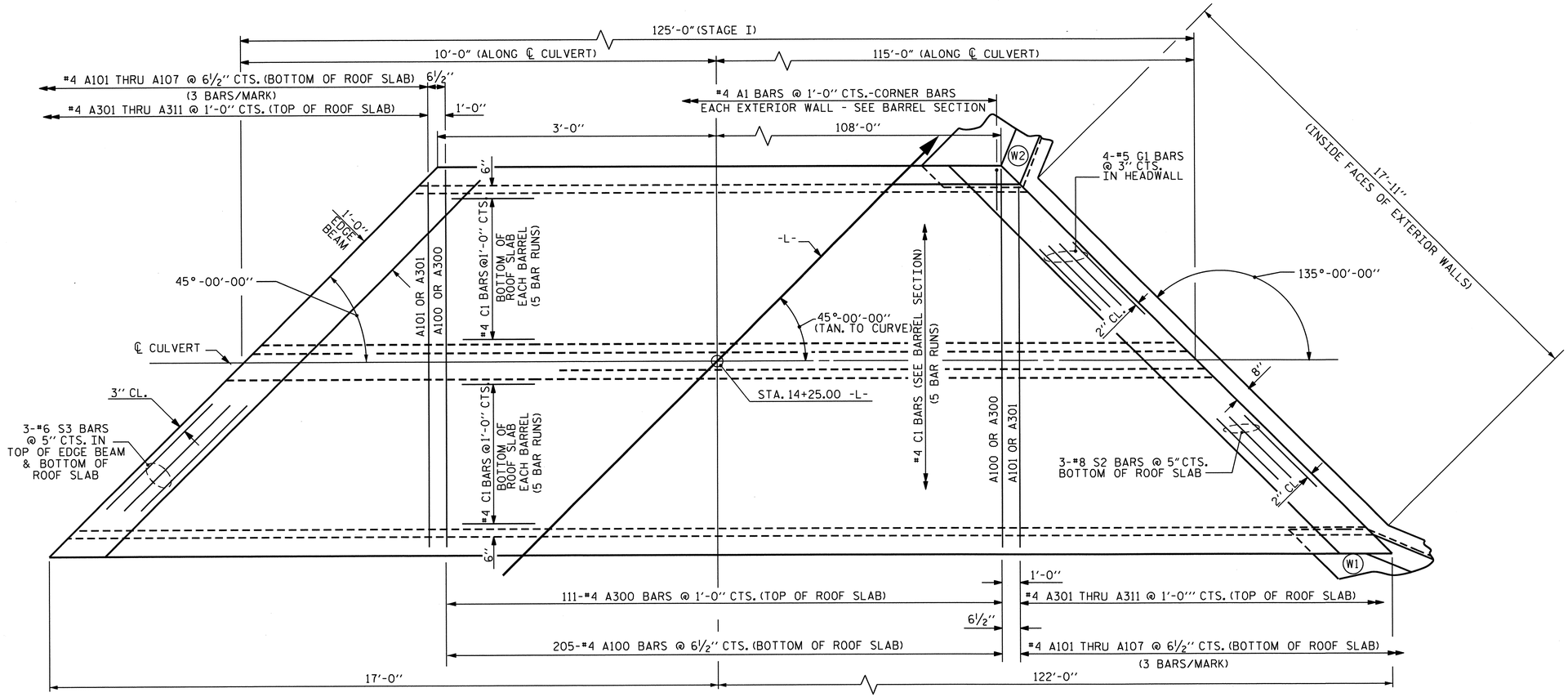

ROOF SLAB - STAGE I

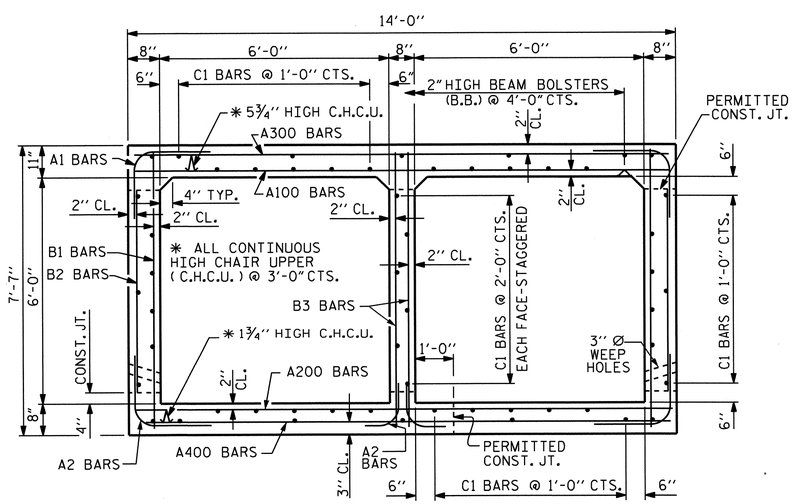

RIGHT ANGLE SECTION OF BARREL

THERE ARE 54 "C" BARS IN SECTION OF BARREL.

ASSEMBLED BY : M. POOLE DATE : 07/12
CHECKED BY : M. G. CHEEK DATE : 08/12

PROJECT NO. U-4412
HAYWOOD COUNTY
STATION: 14+25.00 -L-

SHEET 3 OF 10

STATE OF NORTH CAROLINA
DEPARTMENT OF TRANSPORTATION
RALEIGH

DOUBLE 6 FT. X 6 FT. CONCRETE BOX CULVERT STAGE I

NORTH CAROLINA PROFESSIONAL SEAL 20125 ENGINEER MARSHALL G. CHEEK, JR.
11-28-12

REVISIONS						SHEET NO.
NO.	BY:	DATE:	NO.	BY:	DATE:	C-3
1			3			TOTAL SHEETS
2			4			25

STR. #2

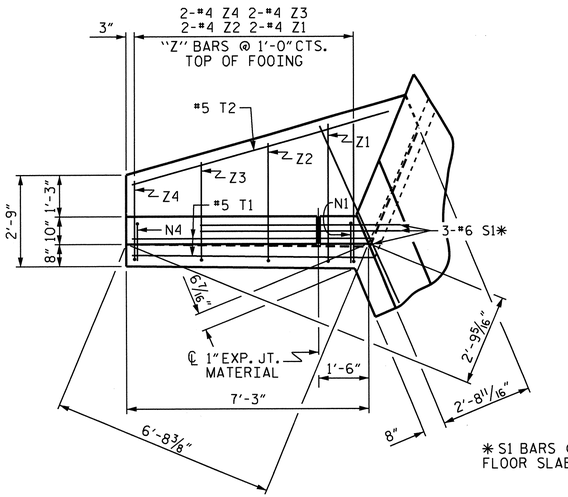

* S1 BARS @ BOTTOM OF FLOOR SLAB & FOOTING

PLAN W2

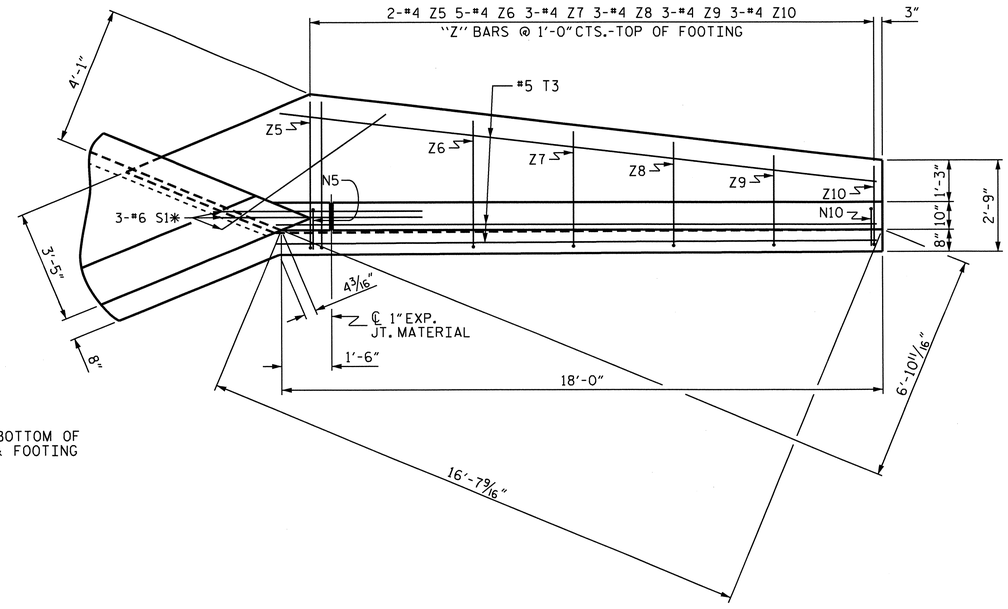

PLAN W1

NOTE:
A 3 FOOT STRIP OF FILTER FABRIC SHALL BE ATTACHED TO THE FILL FACE OF THE WING COVERING THE ENTIRE LENGTH OF THE EXPANSION JOINT.

BAR TYPES

ALL BAR DIMENSIONS ARE OUT TO OUT.

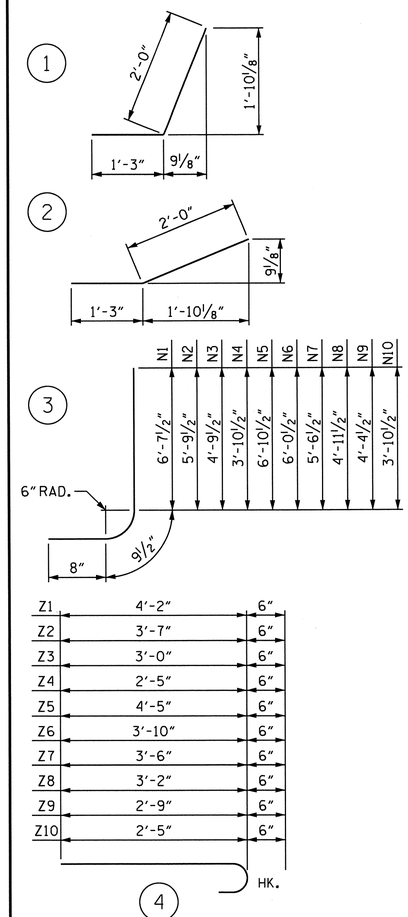

Z1	4'-2"	6"
Z2	3'-7"	6"
Z3	3'-0"	6"
Z4	2'-5"	6"
Z5	4'-5"	6"
Z6	3'-10"	6"
Z7	3'-6"	6"
Z8	3'-2"	6"
Z9	2'-9"	6"
Z10	2'-5"	6"

BILL OF MATERIAL

BAR	NO.	SIZE	TYPE	LENGTH	WEIGHT
H1	6	#4	STR	5'-4"	21
H2	2	#4	STR	2'-6"	3
H3	10	#4	1	3'-3"	11
H4	2	#4	STR	5'-11"	8
H5	6	#4	STR	16'-1"	64
H6	2	#4	STR	8'-8"	12
H7	10	#4	2	3'-3"	22
H8	2	#4	STR	16'-4"	22
N1	2	#4	3	8'-1"	11
N2	2	#4	3	7'-3"	15
N3	2	#4	3	6'-3"	8
N4	2	#4	3	5'-4"	7
N5	2	#4	3	8'-4"	17
N6	5	#4	3	7'-6"	15
N7	3	#4	3	7'-0"	14
N8	3	#4	3	6'-5"	13
N9	3	#4	3	5'-10"	12
N10	3	#4	3	5'-4"	11
S1	6	#6	STR	6'-0"	54
T1	2	#5	STR	7'-3"	15
T2	1	#5	STR	8'-0"	8
T3	3	#5	STR	18'-0"	56
V1	2	#4	STR	6'-1"	8
V2	2	#4	STR	5'-2"	7
V3	2	#4	STR	4'-3"	6
V4	2	#4	STR	3'-4"	4
V5	2	#4	STR	6'-3"	8
V6	5	#4	STR	5'-6"	18
V7	3	#4	STR	4'-11"	10
V8	3	#4	STR	4'-5"	9
V9	3	#4	STR	3'-10"	8
V10	3	#4	STR	3'-3"	7
Z1	2	#4	4	4'-8"	6
Z2	2	#4	4	4'-1"	5
Z3	2	#4	4	3'-6"	5
Z4	2	#4	4	2'-11"	4
Z5	2	#4	4	4'-11"	7
Z6	5	#4	4	4'-4"	14
Z7	3	#4	4	4'-0"	8
Z8	3	#4	4	3'-8"	7
Z9	3	#4	4	3'-3"	7
Z10	3	#4	4	2'-11"	6

REINFORCING STEEL FOR 2 WINGS 573 LBS.

CLASS A CONCRETE
- 2 WINGS 18.5 CU. YDS.
- 1 HEADWALL 0.9 CU. YDS.
- 1 END CURTAIN WALL 1.1 CU. YDS.
- 2 EDGE BEAMS 1.5 CU. YDS.

TOTAL 22.0 CU. YDS.

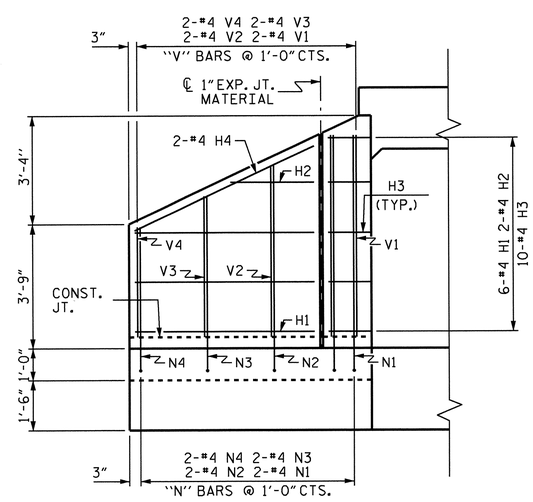

ELEVATION W2

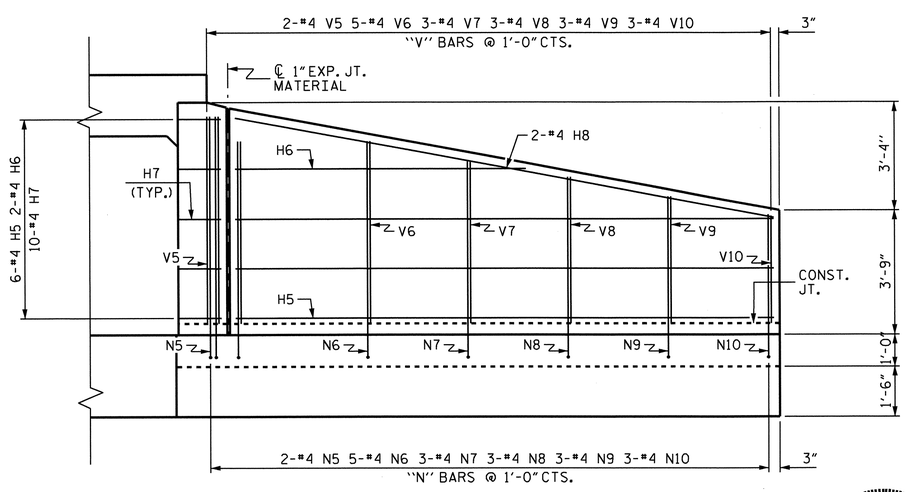

ELEVATION W1

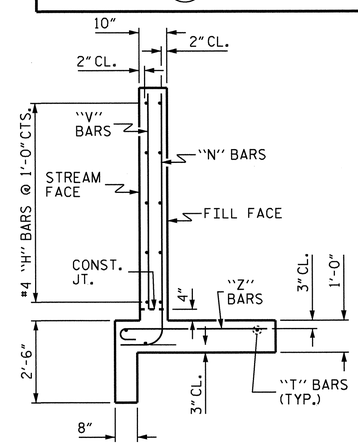

TYPICAL WING SECTION

NORTH CAROLINA PROFESSIONAL SEAL 20125 ENGINEER MARSHALL G. CHEEK, JR.
11-28-12

PROJECT NO. U-4412
HAYWOOD COUNTY
STATION: 14+25.00 -L-

SHEET 4 OF 10

STATE OF NORTH CAROLINA
DEPARTMENT OF TRANSPORTATION
RALEIGH

WINGS FOR CONCRETE BOX CULVERT

H = 6'-0" SLOPE = 2:1
STAGE I

ASSEMBLED BY :	M. POOLE	DATE :	07/12
CHECKED BY :	M. G. CHEEK	DATE :	08/12
DRAWN BY :	CCJ		01/00
CHECKED BY :	RWW		03/00

REVISIONS						SHEET NO.
NO.	BY:	DATE:	NO.	BY:	DATE:	C-4
1			3			TOTAL SHEETS
2			4			25

STD. NO. CW4506

STR. #2

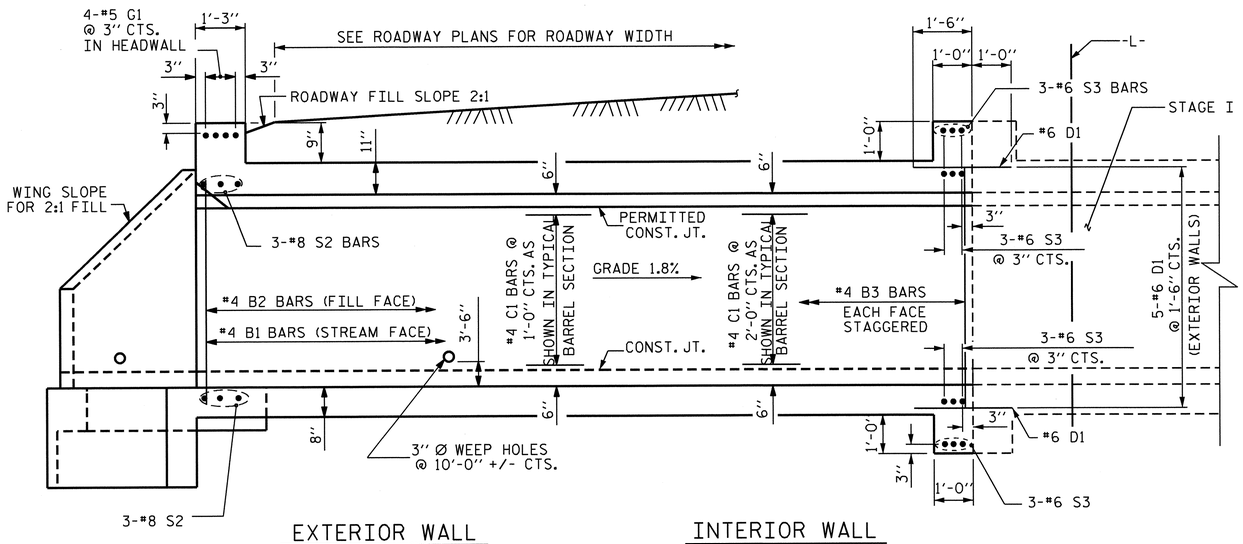

CULVERT SECTION NORMAL TO ROADWAY

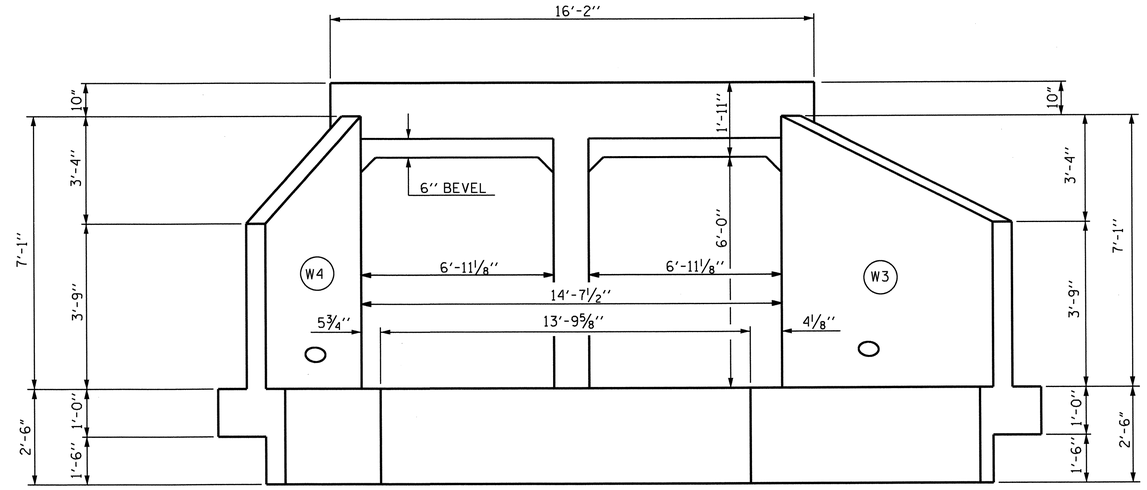

INLET END ELEVATION NORMAL TO SKEW

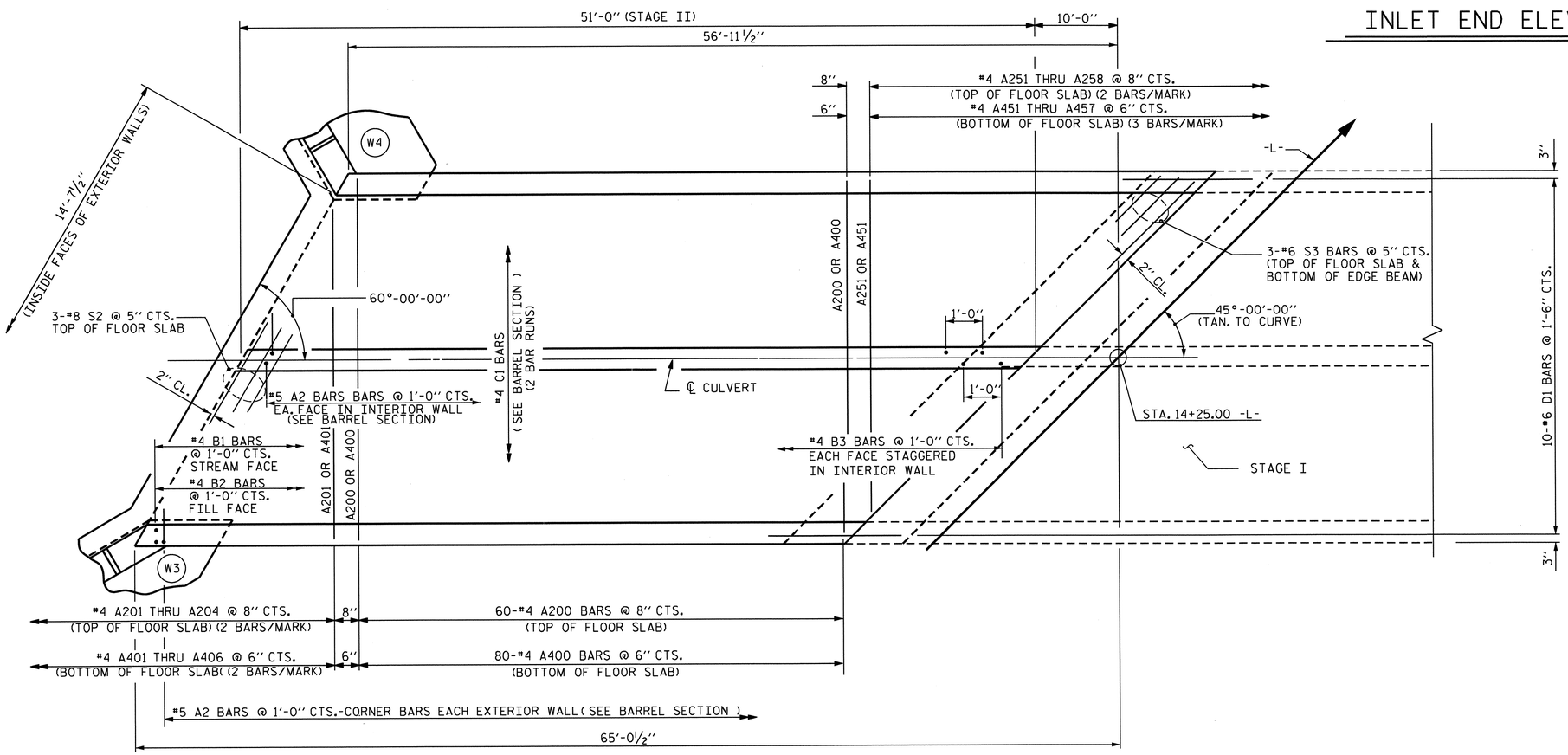

FLOOR SLAB - STAGE II

PROJECT NO. U-4412
HAYWOOD COUNTY
STATION: 14+25.00 -L-

SHEET 5 OF 10

STATE OF NORTH CAROLINA
DEPARTMENT OF TRANSPORTATION
RALEIGH

DOUBLE 6 FT. X 6 FT.
CONCRETE BOX CULVERT
STAGE II

NORTH CAROLINA PROFESSIONAL SEAL 20125 ENGINEER MARSHALL G. CHEEK, JR.
11-28-12

REVISIONS						SHEET NO.
NO.	BY:	DATE:	NO.	BY:	DATE:	C-5
1			3			TOTAL SHEETS
2			4			25

DRAWN BY : M. POOLE DATE : 07/12
CHECKED BY : M. G. CHEEK DATE : 08/12

STR. #2

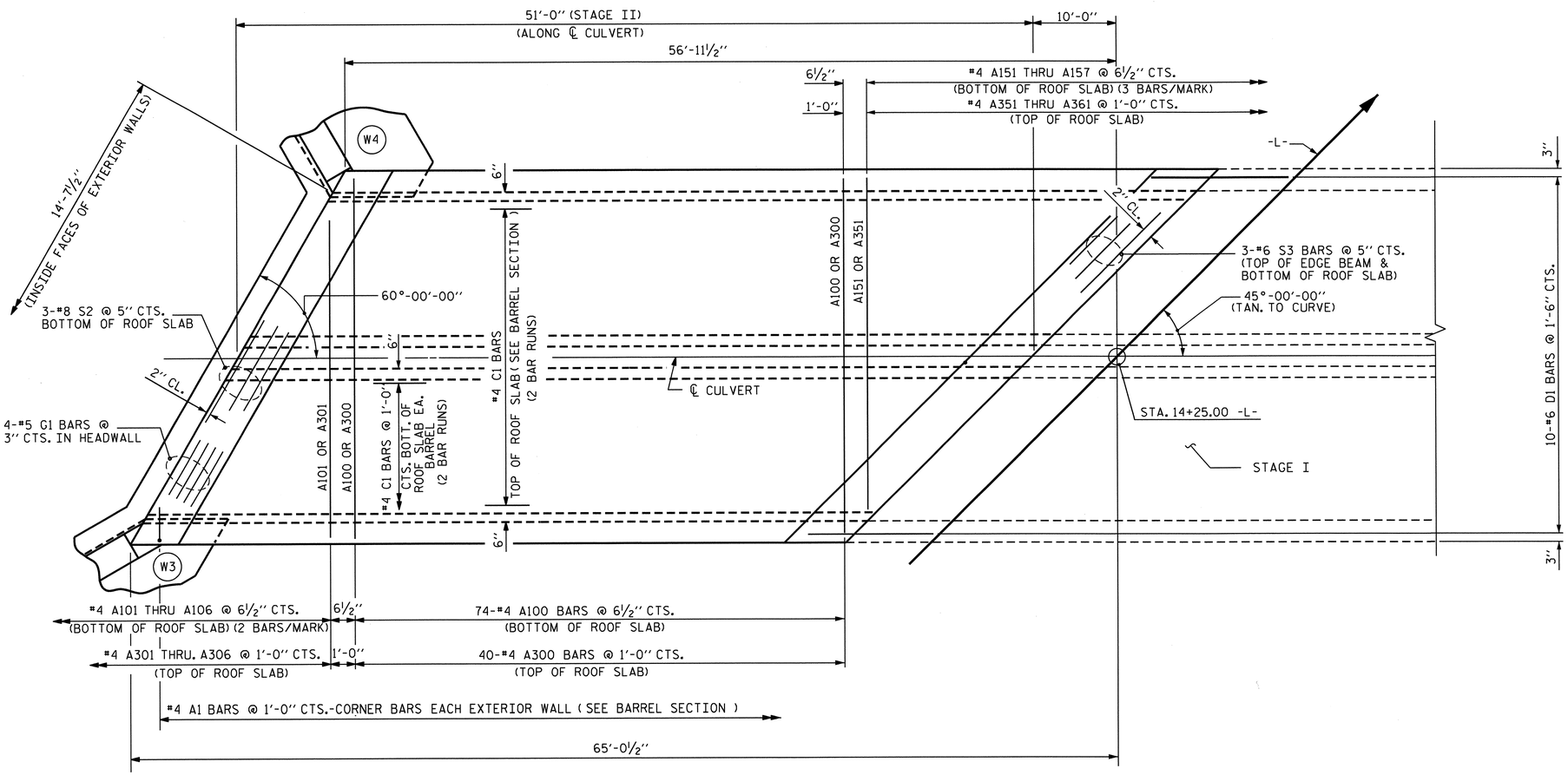

ROOF SLAB - STAGE II

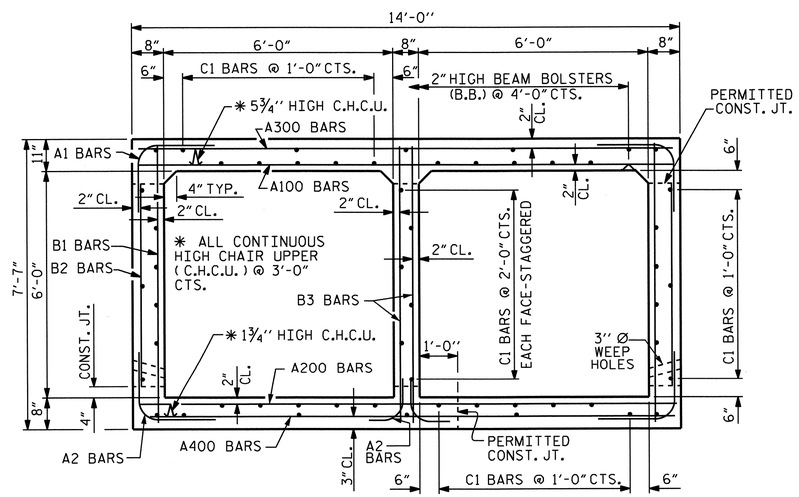

RIGHT ANGLE SECTION OF BARREL

THERE ARE 54 "C" BARS IN SECTION OF BARREL.

REVISED 11-19-99 BY M.M. CHECKED BY R.W.W.
REDRAWN 10-1-90 BY P. DONOVAN CHECKED BY ARB

DRAWN BY :	M. POOLE	DATE :	07/12
CHECKED BY :	M. G. CHEEK	DATE :	08/12

PROJECT NO. U-4412
HAYWOOD COUNTY
STATION: 14+25.00 -L-

SHEET 6 OF 10

STATE OF NORTH CAROLINA
DEPARTMENT OF TRANSPORTATION
RALEIGH

DOUBLE 6 FT. X 6 FT. CONCRETE BOX CULVERT STAGE II

NORTH CAROLINA PROFESSIONAL SEAL 20125 ENGINEER MARSHALL G. CHEEK, JR.
11-28-12

REVISIONS								SHEET NO.
NO.	BY:	DATE:	NO.	BY:	DATE:			C-6
1			3					TOTAL SHEETS
2			4					25

STR. #2

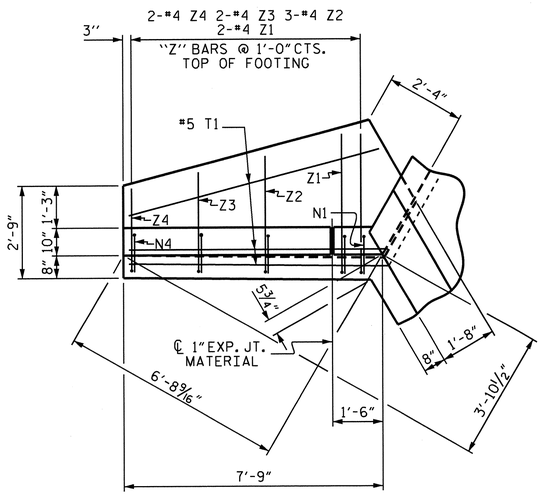

PLAN W4

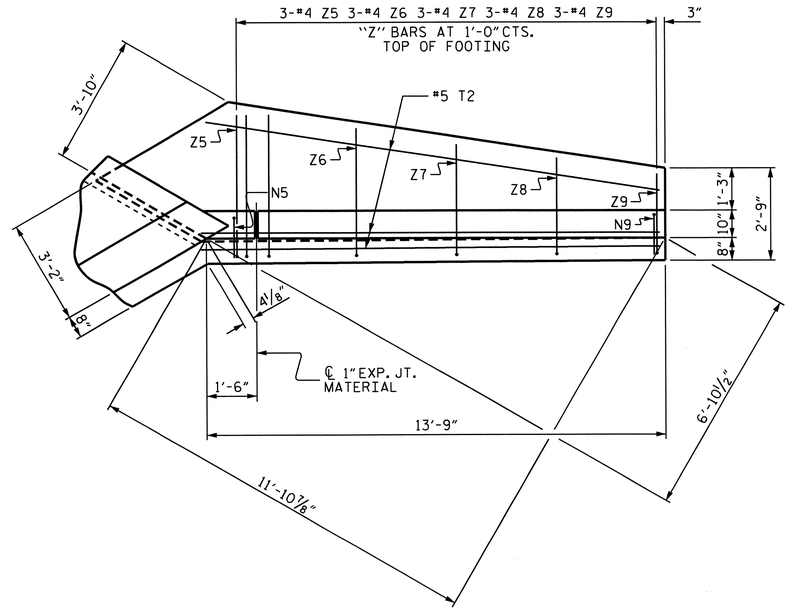

PLAN W3

NOTE:

A 3 FOOT STRIP OF FILTER FABRIC SHALL BE ATTACHED TO THE FILL FACE OF THE WING COVERING THE ENTIRE LENGTH OF THE EXPANSION JOINT.

BAR TYPES

ALL BAR DIMENSIONS ARE OUT TO OUT.

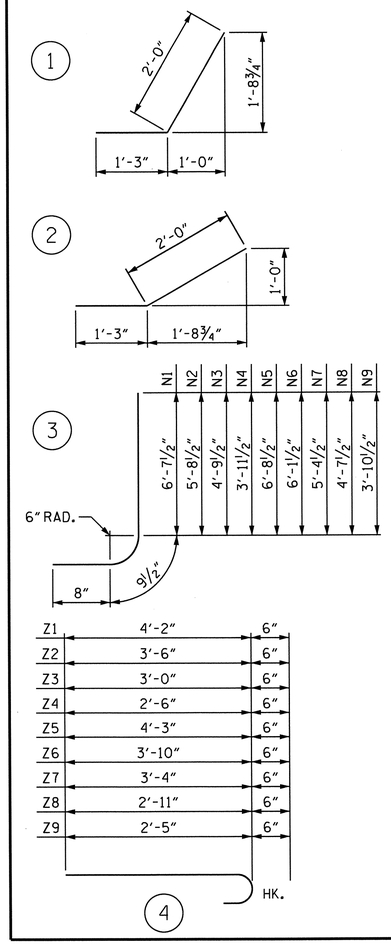

BILL OF MATERIAL

BAR	NO.	SIZE	TYPE	LENGTH	WEIGHT
H1	6	#4	STR	5'-10"	23
H2	2	#4	STR	2'-9"	4
H3	5	#4	1	3'-3"	11
H4	2	#4	STR	6'-5"	9
H5	6	#4	STR	11'-10"	47
H6	2	#4	STR	6'-3"	8
H7	10	#4	2	3'-3"	22
H8	2	#4	STR	12'-2"	16
N1	2	#4	3	8'-1"	11
N2	3	#4	3	7'-2"	14
N3	2	#4	3	6'-3"	8
N4	2	#4	3	5'-5"	7
N5	3	#4	3	8'-2"	16
N6	3	#4	3	7'-7"	15
N7	3	#4	3	6'-10"	14
N8	3	#4	3	6'-1"	12
N9	3	#4	3	5'-4"	11
T1	3	#5	STR	7'-9"	24
T2	3	#5	STR	13'-9"	43
V1	2	#4	STR	6'-1"	8
V2	3	#4	STR	5'-1"	10
V3	2	#4	STR	4'-2"	6
V4	2	#4	STR	3'-4"	4
V5	3	#4	STR	6'-2"	12
V6	3	#4	STR	5'-6"	11
V7	3	#4	STR	4'-9"	10
V8	3	#4	STR	4'-0"	8
V9	3	#4	STR	3'-3"	7
Z1	2	#4	4	4'-8"	6
Z2	3	#4	4	4'-0"	8
Z3	2	#4	4	3'-6"	5
Z4	2	#4	4	3'-0"	4
Z5	3	#4	4	4'-9"	10
Z6	3	#4	4	4'-4"	9
Z7	3	#4	4	3'-10"	8
Z8	3	#4	4	3'-5"	7
Z9	3	#4	4	2'-11"	6

REINFORCING STEEL FOR 2 WINGS 454 LBS.

CLASS A CONCRETE
- 2 WINGS 14.4 CU. YDS.
- 1 HEADWALL 0.7 CU. YDS.
- 1 END CURTAIN WALL 0.8 CU. YDS.
- 2 EDGE BEAMS 1.5 CU. YDS.
- TOTAL 17.4 CU. YDS.

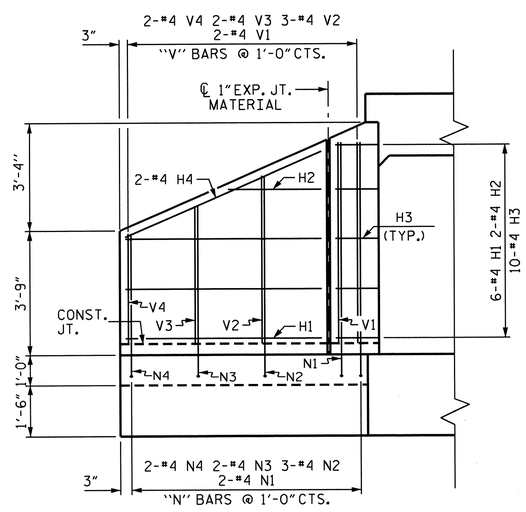

ELEVATION W4

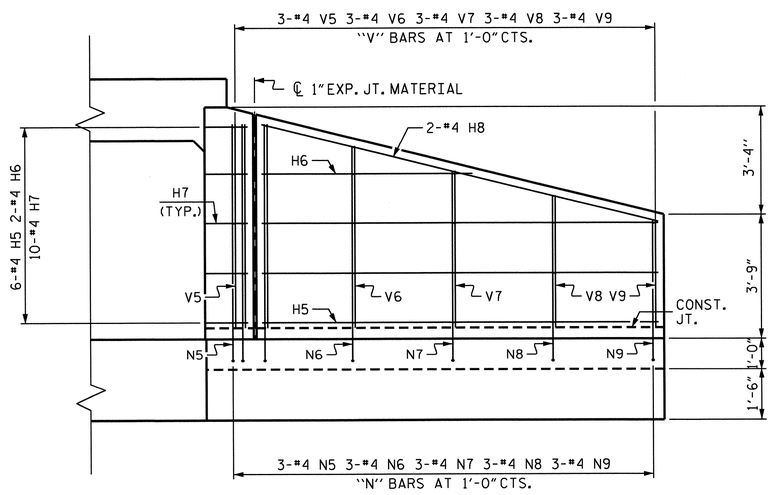

ELEVATION W3

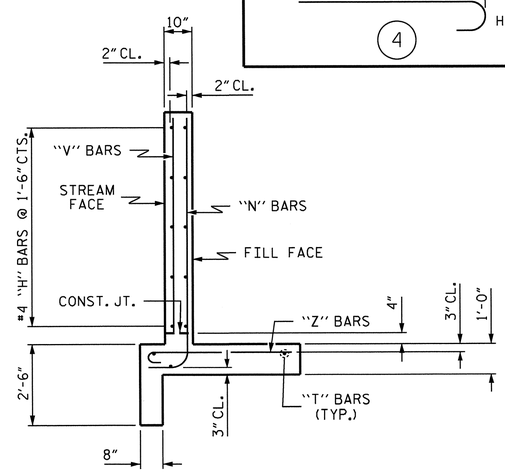

TYPICAL WING SECTION

NORTH CAROLINA PROFESSIONAL SEAL 20125 ENGINEER MARSHALL G. CHEEK, JR.
11-28-12

PROJECT NO. U-4412
HAYWOOD COUNTY
STATION: 14+25.00 -L-

SHEET 7 OF 10

STATE OF NORTH CAROLINA
DEPARTMENT OF TRANSPORTATION
RALEIGH

WINGS FOR CONCRETE BOX CULVERT

H = 6'-0" SLOPE = 2:1

STAGE II

REVISIONS						SHEET NO.
NO.	BY:	DATE:	NO.	BY:	DATE:	C-7
1			3			TOTAL SHEETS
2			4			25

ASSEMBLED BY :	M. POOLE	DATE :	07/12
CHECKED BY :	M. G. CHEEK	DATE :	08/12
DRAWN BY :	CCJ		11/99
CHECKED BY :	RWW		03/00

STD. NO. CW6006

STR. #2

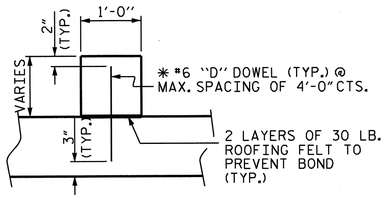

* DOWELS MAY BE PUSHED INTO GREEN CONCRETE AFTER SLAB HAS BEEN FLOAT FINISHED.

SECTION THRU SILL

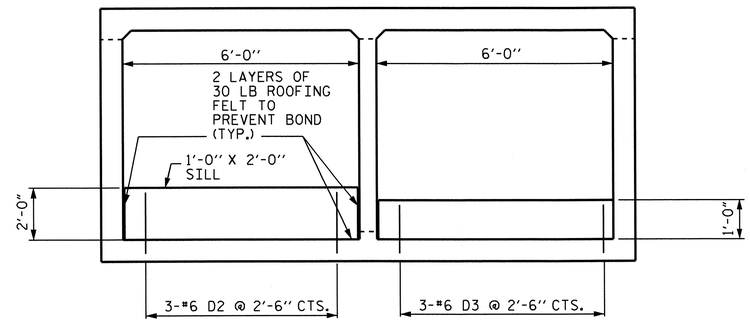

ELEVATION

CULVERT SILL DETAILS

LOOKING DOWNSTREAM

NOTES

MATERIAL EXCAVATED FROM THE EXISTING BED SHALL BE STOCKPILED FOR USE IN THE PROPOSED CULVERT AS SHOWN IN THE FLOOR SILL LAYOUT. BED MATERIAL PLACED IN THE CULVERT SHALL BE NATURAL STONE WITH A GRADATION SIZE SIMILAR TO THAT OF CLASS 'B' RIP RAP. BED MATERIAL SHALL BE SUPPLEMENTED WITH CLASS 'B' RIP RAP AS NECESSARY AND SHALL BE SUBJECT TO APPROVAL BY ENGINEER.

TOP OF SILL IN LOW FLOW BARREL SHOULD MATCH STREAM BED ELEVATION IN LOW FLOW CHANNEL OF STREAM.

THE ENTIRE COST OF WORK REQUIRED TO PLACE THE BED MATERIAL AS SHOWN ON THE PLANS SHALL BE INCLUDED IN THE CONTRACT LUMP SUM PRICE BID FOR CULVERT EXCAVATION.

THE ENTIRE COST OF WORK REQUIRED TO CONSTRUCT THE SILLS SHALL BE INCLUDED IN THE VARIOUS PAY ITEMS.

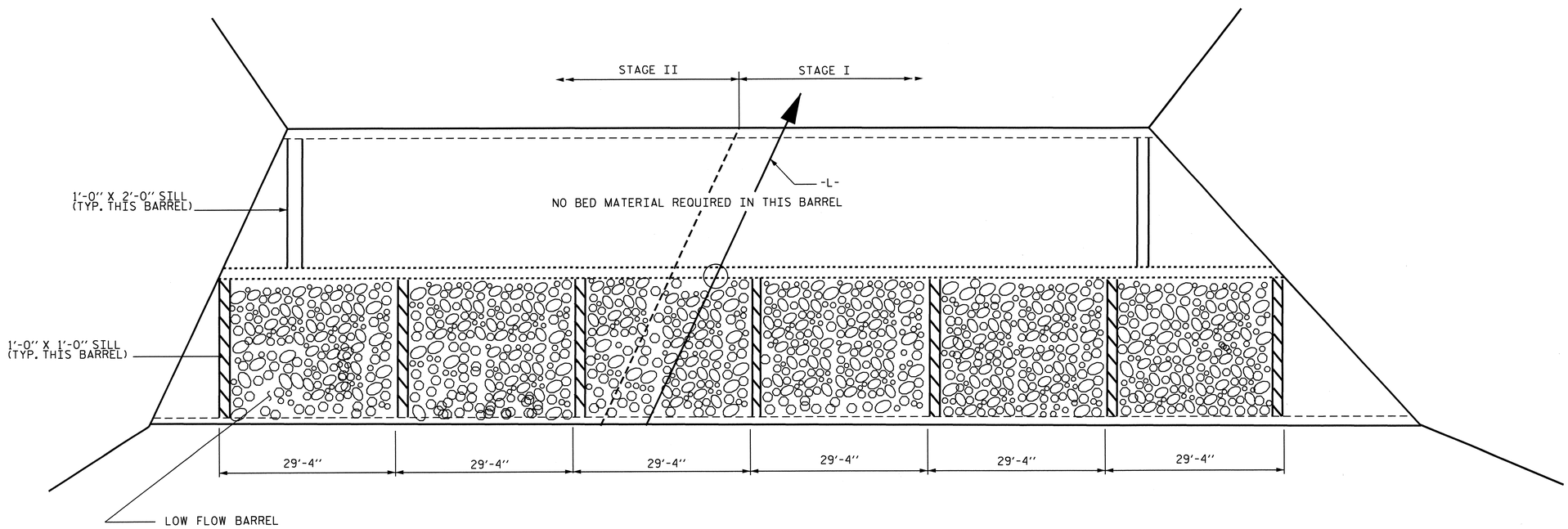

FLOOR SILL LAYOUT

PROJECT NO. U-4412

HAYWOOD COUNTY

STATION: 14+25.00 -L-

SHEET 8 OF 10

STATE OF NORTH CAROLINA
DEPARTMENT OF TRANSPORTATION
RALEIGH

DOUBLE 6 FT. X 6 FT. CONCRETE BOX CULVERT

NORTH CAROLINA PROFESSIONAL SEAL 20125 ENGINEER MARSHALL G. CHEEK, JR.
2-4-13

REVISIONS						SHEET NO.
NO.	BY:	DATE:	NO.	BY:	DATE:	C-8
1			3			TOTAL SHEETS
2			4			25

DRAWN BY : M. POOLE DATE : 07/12
CHECKED BY : M. G. CHEEK DATE : 08/12

30-NOV-2012 11:34
R:\Structures\Final Plans\Str #2\Str #2 - U-4412_SD_CU.dgn
mpoole

STR. #2

BAR SCHEDULE STAGE I

BAR	NO.	SIZE	TYPE	LENGTH	WEIGHT
A1	250	4	6	4'-4"	724
A2	500	5	6	4'-4"	2260
A100	205	4	STR	13'-7"	1860
A101	6	4	STR	11'-11"	48
A102	6	4	STR	10'-4"	41
A103	6	4	STR	8'-8"	35
A104	6	4	STR	7'-1"	28
A105	6	4	STR	5'-5"	22
A106	6	4	STR	3'-10"	15
A107	6	4	STR	2'-2"	9
A200	167	4	STR	13'-7"	1515
A201	4	4	STR	12'-3"	33
A202	4	4	STR	10'-11"	29
A203	4	4	STR	9'-7"	26
A204	4	4	STR	8'-3"	22
A205	4	4	STR	6'-11"	18
A206	4	4	STR	5'-7"	15
A207	4	4	STR	4'-3"	11
A208	4	4	STR	2'-11"	8

BAR	NO.	SIZE	TYPE	LENGTH	WEIGHT
A300	111	4	STR	13'-7"	1007
A301	2	4	STR	12'-7"	17
A302	2	4	STR	11'-7"	15
A303	2	4	STR	10'-7"	14
A304	2	4	STR	9'-7"	13
A305	2	4	STR	8'-7"	11
A306	2	4	STR	7'-7"	10
A307	2	4	STR	6'-7"	9
A308	2	4	STR	5'-7"	7
A309	2	4	STR	4'-7"	6
A310	2	4	STR	3'-7"	5
A311	2	4	STR	2'-7"	3
A400	222	4	STR	13'-7"	2014
A401	6	4	STR	12'-1"	48
A402	6	4	STR	10'-7"	42
A403	6	4	STR	9'-1"	36
A404	6	4	STR	7'-7"	30
A405	6	4	STR	6'-1"	24
A406	6	4	STR	4'-7"	18
A407	6	4	STR	3'-1"	12

BAR	NO.	SIZE	TYPE	LENGTH	WEIGHT
B1	250	4	STR	7'-1"	1183
B2	250	4	STR	5'-4"	891
B3	250	4	STR	7'-1"	1183
C1	270	4	STR	29'-5"	5306
D2	3	6	STR	2'-3"	10
D3	9	6	STR	1'-3"	17
G1	4	5	STR	19'-3"	80
S2	6	8	STR	19'-3"	308
S3	12	6	STR	19'-3"	347

TOTAL STAGE I
REINFORCING STEEL 19385 LBS.

SPLICE LENGTH CHART

BAR	SIZE	SPLICE LENGTH
C1	4	1'-11"

BAR TYPE

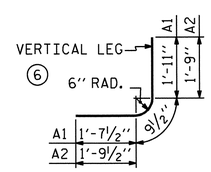

BAR DIMENSIONS ARE OUT TO OUT

BAR SCHEDULE STAGE II

BAR	NO.	SIZE	TYPE	LENGTH	WEIGHT
A1	102	4	6	4'-4"	295
A2	204	5	6	4'-4"	922
A100	74	4	STR	13'-7"	671
A101	2	4	STR	11'-7"	15
A102	2	4	STR	9'-8"	13
A103	2	4	STR	7'-10"	10
A104	2	4	STR	5'-11"	8
A105	2	4	STR	4'-1"	5
A106	2	4	STR	2'-2"	3
A151	3	4	STR	11'-11"	24
A152	3	4	STR	10'-4"	21
A153	3	4	STR	8'-8"	17
A154	3	4	STR	7'-1"	14
A155	3	4	STR	5'-5"	11
A156	3	4	STR	3'-10"	8
A157	3	4	STR	2'-2"	4
A200	60	4	STR	13'-7"	544
A201	2	4	STR	11'-2"	15
A202	2	4	STR	8'-10"	12
A203	2	4	STR	6'-6"	9
A204	2	4	STR	4'-3"	6
A251	2	4	STR	12'-3"	16
A252	2	4	STR	10'-11"	15
A253	2	4	STR	9'-7"	13
A254	2	4	STR	8'-3"	11
A255	2	4	STR	6'-11'	9
A256	2	4	STR	5'-7"	7
A257	2	4	STR	4'-3"	6
A258	2	4	STR	2'-11"	4

BAR	NO.	SIZE	TYPE	LENGTH	WEIGHT
A300	40	4	STR	13'-7"	363
A301	1	4	STR	11'-9"	8
A302	1	4	STR	10'-0"	7
A303	1	4	STR	8'-3"	6
A304	1	4	STR	6'-6"	4
A305	1	4	STR	4'-10"	3
A306	1	4	STR	3'-1"	2
A351	1	4	STR	12'-7"	8
A352	1	4	STR	11'-7"	8
A353	1	4	STR	10'-7"	7
A354	1	4	STR	9'-7"	6
A355	1	4	STR	8'-7"	6
A356	1	4	STR	7'-7"	5
A357	1	4	STR	6'-7"	4
A358	1	4	STR	5'-7"	4
A359	1	4	STR	4'-7"	3
A360	1	4	STR	3'-7"	2
A361	1	4	STR	2'-7"	2

BAR	NO.	SIZE	TYPE	LENGTH	WEIGHT
A400	80	4	STR	13'-7"	726
A401	2	4	STR	11'-9"	16
A402	2	4	STR	10'-0"	13
A403	2	4	STR	8'-3"	11
A404	2	4	STR	6'-6"	9
A405	2	4	STR	4'-10"	6
A406	2	4	STR	3'-1"	4
A451	3	4	STR	12'-1"	24
A452	3	4	STR	10'-7"	21
A453	3	4	STR	9'-1"	18
A454	3	4	STR	7'-7"	15
A455	3	4	STR	6'-1"	12
A456	3	4	STR	4'-7"	9
A457	3	4	STR	3'-1"	6
B1	102	4	STR	7'-1"	483
B2	102	4	STR	5'-4"	363
B3	102	4	STR	7'-1"	483
C1	108	4	STR	27'-10"	2008
D1	30	6	STR	2'-6"	113
D2	3	6	STR	2'-3"	10
D3	12	6	STR	1'-3"	23
G1	4	5	STR	15'-9"	66
S2	6	8	STR	15'-9"	252
S3	12	6	STR	19'-3"	347

TOTAL STAGE II
REINFORCING STEEL 8194 LBS.

STAGE I QUANTITIES

CLASS A CONCRETE
BARREL @ 1.274 CY/FT 159.3 CU. YDS.
WINGS, ETC. 22.0 CU. YDS.
SILLS 1.1 CU. YDS.
TOTAL 182.4 CU. YDS.

REINFORCING STEEL
BARREL & SILLS 19385 LBS.
WINGS, ETC. 573 LBS.
TOTAL 19958 LBS.

CULVERT EXCAVATION ---------- LUMP SUM
FOUNDATION COND. MAT'L -------- 159 TONS

STAGE II QUANTITIES

CLASS A CONCRETE
BARREL @ 1.274 CY/FT 65.0 CU. YDS.
WINGS, ETC. 17.4 CU. YDS.
SILLS 1.3 CU. YDS.
TOTAL 83.7 CU. YDS.

REINFORCING STEEL
BARREL & SILLS 8194 LBS.
WINGS, ETC. 454 LBS.
TOTAL 8648 LBS.

CULVERT EXCAVATION ---------- LUMP SUM
FOUNDATION COND. MAT'L -------- 65 TONS

PROJECT NO. U-4412
HAYWOOD COUNTY
STATION: 14+25.00 -L-

SHEET 9 OF 10

STATE OF NORTH CAROLINA
DEPARTMENT OF TRANSPORTATION
RALEIGH

DOUBLE 6'-0" X 6'-0"
CONCRETE BOX CULVERT

NORTH CAROLINA PROFESSIONAL SEAL 20125 ENGINEER MARSHALL G. CHEEK, JR.
11-28-12

REVISIONS								SHEET NO.
NO.	BY:	DATE:	NO.	BY:	DATE:			C-9
1			3					TOTAL SHEETS
2			4					25

DRAWN BY : M. POOLE DATE : 07/12
CHECKED BY : M. G. CHEEK DATE : 08/12

STR. #2

LOAD AND RESISTANCE FACTOR RATING (LRFR) SUMMARY FOR REINFORCED CONCRETE BOX CULVERTS

LEVEL		VEHICLE	WEIGHT (W) (TONS)	CONTROLLING LOAD RATING (#)	MINIMUM RATING FACTORS (RF)	TONS = W × RF	STRENGTH I LIMIT STATE									COMMENT NUMBER
							LIVE-LOAD FACTORS ($\gamma_{(LL)}$)	MOMENT				SHEAR				
								RATING FACTOR	BOX NO.	ELEMENT TYPE	DISTANCE FROM LEFT END OF ELEMENT (ft)	RATING FACTOR	BOX NO.	ELEMENT TYPE	DISTANCE FROM LEFT END OF ELEMENT (ft)	
DESIGN LOAD RATING		HL-93 (INVENTORY)	N/A	1	1.04	--	1.75	1.43	1	TOP SLAB	3.00	1.04	1	TOP SLAB	5.67	
		HL-93 (OPERATING)	N/A		1.34	--	1.35	1.86	1	TOP SLAB	3.00	1.34	1	TOP SLAB	5.67	
		HS-20 (INVENTORY)	36.000	2	1.04	37.28	1.75	1.43	1	TOP SLAB	3.00	1.04	1	TOP SLAB	5.67	
		HS-20 (OPERATING)	36.000		1.34	48.33	1.35	1.86	1	TOP SLAB	3.00	1.34	1	TOP SLAB	5.67	
LEGAL LOAD RATING	SINGLE VEHICLE (SV)	SNSH	13.500		1.88	25.44	1.40	2.61	1	TOP SLAB	2.83	1.88	1	TOP SLAB	5.67	
		SNGARBS2	20.000		1.76	35.29	1.40	2.44	1	TOP SLAB	3.00	1.76	1	TOP SLAB	5.67	
		SNAGRIS2	22.000		1.88	41.46	1.40	2.61	1	TOP SLAB	2.83	1.88	1	TOP SLAB	5.67	
		SNCOTTS3	27.250	3	1.43	39.01	1.40	2.02	1	BOTTOM SLAB	6.33	1.43	1	TOP SLAB	5.67	
		SNAGGRS4	34.925		1.61	56.06	1.40	1.99	1	BOTTOM SLAB	6.33	1.61	1	BOTTOM SLAB	5.85	
		SNS5A	35.550		1.51	53.84	1.40	1.96	1	BOTTOM SLAB	6.33	1.51	1	BOTTOM SLAB	5.85	
		SNS6A	39.950		1.55	61.84	1.40	1.89	1	BOTTOM SLAB	6.33	1.55	1	BOTTOM SLAB	5.85	
		SNS7B	42.000		1.55	65.02	1.40	1.89	1	BOTTOM SLAB	6.33	1.55	1	BOTTOM SLAB	5.85	
	TRUCK TRACTOR SEMI-TRAILER (TTST)	TNAGRIT3	33.000		1.88	62.19	1.40	2.40	1	BOTTOM SLAB	6.33	1.88	1	TOP SLAB	5.67	
		TNT4A	33.075		1.72	56.73	1.40	2.39	1	BOTTOM SLAB	6.33	1.72	1	TOP SLAB	5.67	
		TNT6A	41.600		1.64	68.35	1.40	2.00	1	BOTTOM SLAB	6.33	1.64	1	BOTTOM SLAB	5.85	
		TNT7A	42.000		1.70	71.60	1.40	2.23	1	BOTTOM SLAB	6.33	1.70	1	TOP SLAB	5.67	
		TNT7B	42.000		1.56	65.60	1.40	1.90	1	BOTTOM SLAB	6.33	1.56	1	BOTTOM SLAB	5.85	
		TNAGRIT4	43.000		1.64	70.48	1.40	2.20	1	BOTTOM SLAB	6.33	1.64	1	TOP SLAB	5.67	
		TNAGT5A	45.000		1.65	74.20	1.40	2.26	1	BOTTOM SLAB	6.33	1.65	1	TOP SLAB	5.67	
		TNAGT5B	45.000		1.70	76.71	1.40	2.28	1	BOTTOM SLAB	6.33	1.70	1	TOP SLAB	5.67	

LOAD FACTORS:

DESIGN LOAD RATING FACTORS

LOAD TYPE	MAX FACTOR	MIN FACTOR
DC	1.25	0.90
DW	1.50	0.65
EV	1.30	0.90
EH	1.35	0.90
ES	1.35	0.90
LS	1.75	--
WA	1.00	--

NOTE:

RATING FACTORS ARE BASED ON THE STRENGTH I LIMIT STATE.

COMMENTS:

1.
2.
3.
4.

(#) CONTROLLING LOAD RATING

(1) DESIGN LOAD RATING (HL-93)

(2) DESIGN LOAD RATING (HS-20)

(3) LEGAL LOAD RATING **

** SEE CHART FOR VEHICLE TYPE

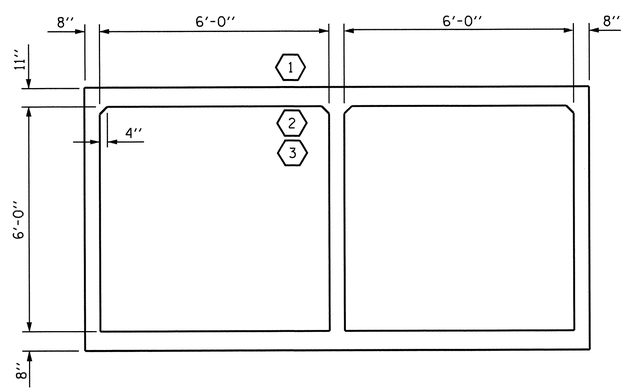

LRFR SUMMARY

(LOOKING DOWNSTREAM)

PROJECT NO. U-4122

HAYWOOD COUNTY

STATION: 14+25.00 -L-

SHEET 10 OF 10

STATE OF NORTH CAROLINA
DEPARTMENT OF TRANSPORTATION
RALEIGH

STANDARD

LRFR SUMMARY FOR REINFORCED CONCRETE BOX CULVERTS
(NON-INTERSTATE TRAFFIC)

NORTH CAROLINA PROFESSIONAL SEAL 20125 ENGINEER MARSHALL G. CHEEK, JR.
11-28-12

REVISIONS						SHEET NO.
NO.	BY:	DATE:	NO.	BY:	DATE:	C-10
1			3			TOTAL SHEETS
2			4			25

STD. NO. LRFR5

STR. #2

ASSEMBLED BY : M. POOLE DATE : 07/12
CHECKED BY : M. G. CHEEK DATE : 08/12

DRAWN BY : WMC 7/11
CHECKED BY : GM 7/11

REV. 10/1/11 MAA/GM

28-NOV-2012 11:00
R:\Structures\Final Plans\Str #2\Str #2 - U-4412_SD_CU.dgn
mpoole

F.A. PROJECT NO.: STP-1184(4)

BENCHMARK #2: CHISELED SQUARE IN NW CORNER OF CONCRETE SLAB 16.98' RT. OF STA. 24+71.70 -L-, EL. 2630.659

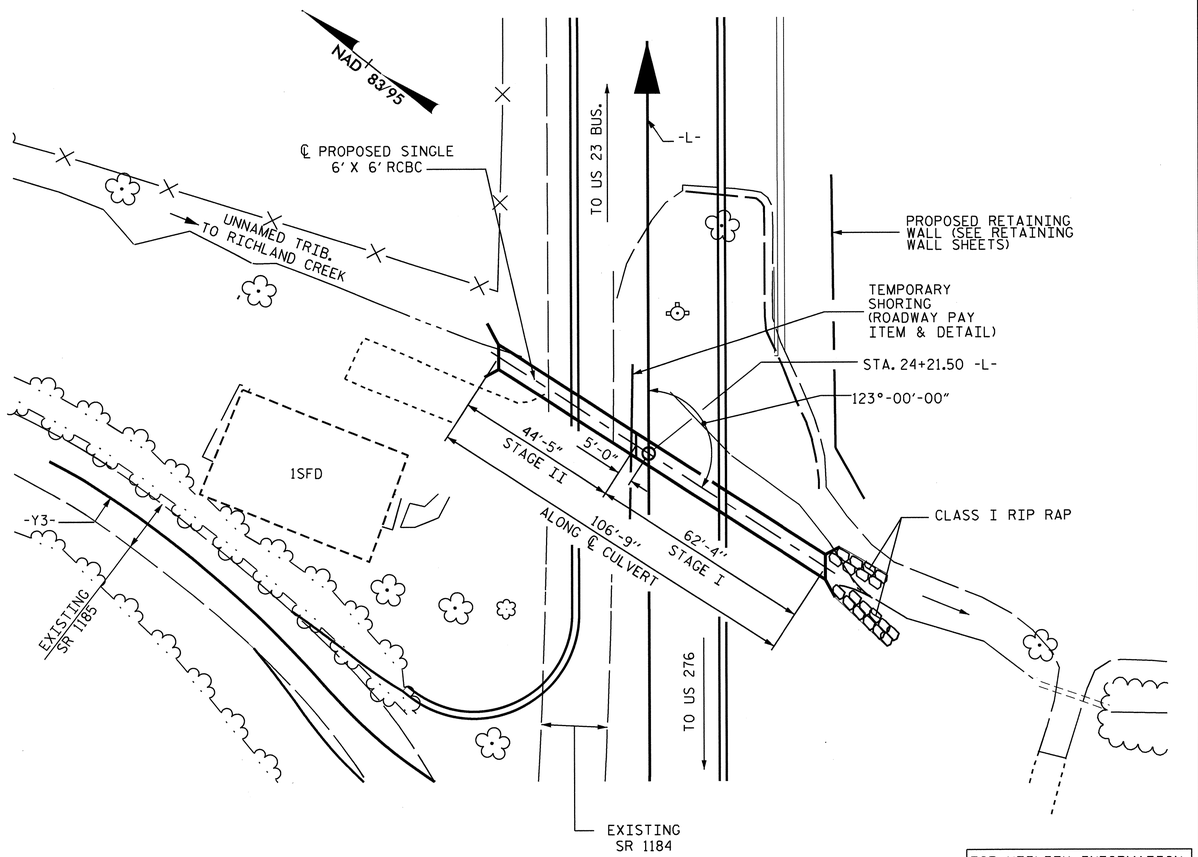

FOR UTILITY INFORMATION, SEE UTILITY PLANS AND SPECIAL PROVISIONS.

LOCATION SKETCH

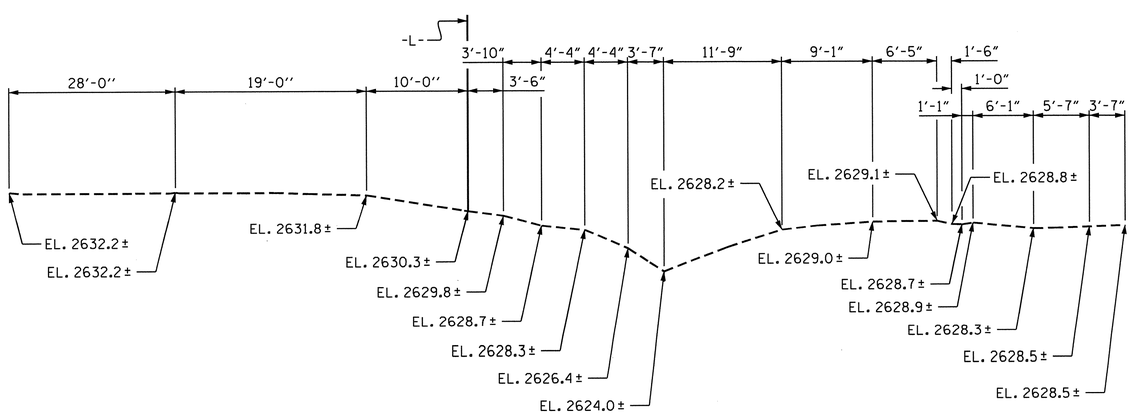

PROFILE ALONG ℄ CULVERT

ASSEMBLED BY : A. SORSENGINH/MEP DATE : 3/2011
CHECKED BY : M.G. CHEEK DATE : 08/12

NOTES

ASSUMED LIVE LOAD ---------- HL-93 OR ALTERNATE LOADING.

DESIGN FILL---------- 7.16'

FOR OTHER DESIGN DATA AND NOTES, SEE STANDARD NOTES SHEET.

3" Ø WEEP HOLES INDICATED TO BE IN ACCORDANCE WITH THE SPECIFICATIONS.

CONCRETE IN CULVERTS TO BE POURED IN THE FOLLOWING ORDER:

1. STAGE I WING FOOTINGS AND FLOOR SLAB INCLUDING 4" OF STAGE I VERTICAL WALLS.
2. THE REMAINING PORTIONS OF STAGE I WALL AND STAGE I WINGS FULL HEIGHT, FOLLOWED BY ROOF AND HEADWALL.
3. STAGE II WING FOOTINGS AND FLOOR SLAB INCLUDING 4" OF STAGE II VERTICAL WALLS.
4. THE REMAINING PORTIONS OF STAGE II WALLS AND STAGE II WINGS FULL HEIGHT, FOLLOWED BY ROOF AND HEADWALL.

THE RESIDENT ENGINEER SHALL CHECK THE LENGTH OF CULVERT BEFORE STAKING IT OUT TO MAKE CERTAIN THAT IT WILL PROPERLY TAKE CARE OF THE FILL.

DIMENSIONS FOR WING LAYOUT AS WELL AS ADDITIONAL REINFORCING STEEL EMBEDDED IN BARREL ARE SHOWN ON WING SHEET.

AT THE CONTRACTOR'S OPTION HE MAY SUBMIT, TO THE ENGINEER FOR APPROVAL, DESIGN AND DETAIL DRAWINGS FOR A PRECAST REINFORCED CONCRETE BOX CULVERT IN LIEU OF THE CAST-IN-PLACE CULVERT SHOWN ON THE PLANS. THE DESIGN SHALL PROVIDE THE SAME SIZE AND NUMBER OF BARRELS AS USED ON THE CAST-IN-PLACE DESIGN. FOR OPTIONAL PRECAST REINFORCED CONCRETE BOX CULVERT, SEE SPECIAL PROVISIONS.

THE CONTRACTOR SHALL PROVIDE INDEPENDENT ASSURANCE SAMPLES OF REINFORCING STEEL AS FOLLOWS: FOR PROJECTS REQUIRING UP TO 400 TONS OF REINFORCING STEEL, ONE 30 INCH SAMPLE OF EACH SIZE BAR USED, AND FOR PROJECTS REQUIRING OVER 400 TONS OF REINFORCING STEEL, TWO 30 INCH SAMPLES OF EACH SIZE BAR USED. THE BARS FROM WHICH THE SAMPLES ARE TAKEN MUST THEN BE SPLICED WITH REPLACEMENT BARS OF THE SIZE AND LENGTH OF THE SAMPLE, PLUS A MINIMUM LAP SPLICE OF THIRTY BAR DIAMETERS. PAYMENT FOR THE SAMPLES OF REINFORCING STEEL SHALL BE CONSIDERED INCIDENTAL TO VARIOUS PAY ITEMS.

AT THE CONTRACTOR'S OPTION, HE MAY SPLICE THE VERTICAL REINFORCING STEEL IN THE INTERIOR FACE OF EXTERIOR WALL ABOVE LOWER WALL CONSTRUCTION JOINT. THE SPLICE LENGTH SHALL BE AS PROVIDED IN THE SPLICE LENGTH CHART SHOWN ON THE PLANS. EXTRA WEIGHT OF STEEL DUE TO THE SPLICES SHALL BE PAID FOR BY THE CONTRACTOR.

FOR LIMITS OF TEMPORARY SHORING FOR MAINTENANCE OF TRAFFIC, SEE TRAFFIC CONTROL PLANS. FOR PAY ITEM FOR TEMPORARY SHORING FOR MAINTENANCE OF TRAFFIC, SEE ROADWAY PLANS.

STEEL SHEET PILING REQUIRED FOR SHORING SHALL BE HOT ROLLED.

FOR SUBMITTAL OF WORKING DRAWINGS, SEE SPECIAL PROVISIONS.

FOR CULVERT DIVERSION DETAILS AND PAY ITEM, SEE EROSION CONTROL PLANS.

FOR CRANE SAFETY, SEE SPECIAL PROVISIONS.

FOR FALSEWORK AND FORMWORK, SEE SPECIAL PROVISIONS.

FOR CONSTRUCTION SEQUENCE, SEE EROSION CONTROL PLANS.

FOR GROUT FOR STRUCTURES, SEE SPECIAL PROVISIONS.

HYDRAULIC DATA

DESIGN DISCHARGE	= 240 CFS
FREQUENCY OF DESIGN FLOOD	= 50 YRS.
DESIGN HIGH WATER ELEVATION	= 2632.10
DRAINAGE AREA	= 0.16 SQ. MI.
BASE DISCHARGE (Q100)	= 290 CFS
BASE HIGH WATER ELEVATION	= 2633.10

OVERTOPPING FLOOD DATA

OVERTOPPING DISCHARGE	= 426 CFS
FREQUENCY OF OVERTOPPING FLOOD	= 100 YRS.+
OVERTOPPING FLOOD ELEVATION	= 2635.50

GRADE DATA

GRADE POINT ELEVATION @ STA. 24+21.50 -L-	= 2635.31
BED ELEVATION @ STA. 24+21.50 -L-	= 2623.59
ROADWAY FILL SLOPES	= 2:1

TOTAL STRUCTURE QUANTITIES

CLASS A CONCRETE	
STAGE I	50.7 CU. YDS.
STAGE II	38.6 CU. YDS.
TOTAL	89.3 CU. YDS.
REINFORCING STEEL	
STAGE I	4,939 LBS.
STAGE II	3,934 LBS.
TOTAL	8,873 LBS.
FOUNDATION CONDITIONING MATERIAL	
STAGE I	50 TONS
STAGE II	40 TONS
TOTAL	90 TONS
CULVERT EXCAVATION	LUMP SUM
CLASS I RIP RAP	17 TONS

NORTH CAROLINA PROFESSIONAL SEAL 13014 ENGINEER QUANG H. NGUYEN
Quang H. Nguyen 2-7-13

NORTH CAROLINA PROFESSIONAL SEAL 20125 ENGINEER MARSHALL G. CHEEK, JR.
2-8-13

PROJECT NO. U-4412
HAYWOOD COUNTY
STATION: 24+21.50 -L-

SHEET 1 OF 8

STATE OF NORTH CAROLINA
DEPARTMENT OF TRANSPORTATION
RALEIGH

SINGLE 6 FT. X 6 FT.
CONCRETE BOX CULVERT
STAGE I & II
123° SKEW

REVISIONS						SHEET NO.
NO.	BY:	DATE:	NO.	BY:	DATE:	C-11
1			3			TOTAL SHEETS
2			4			25

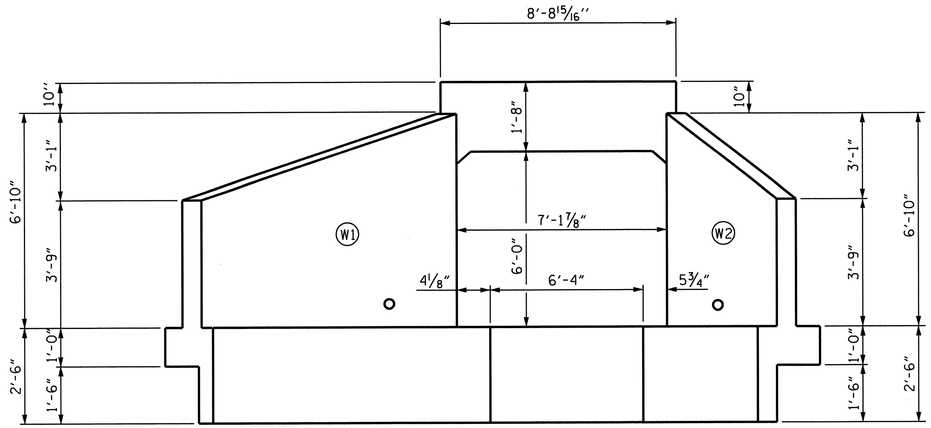

OUTLET ELEVATION NORMAL TO SKEW

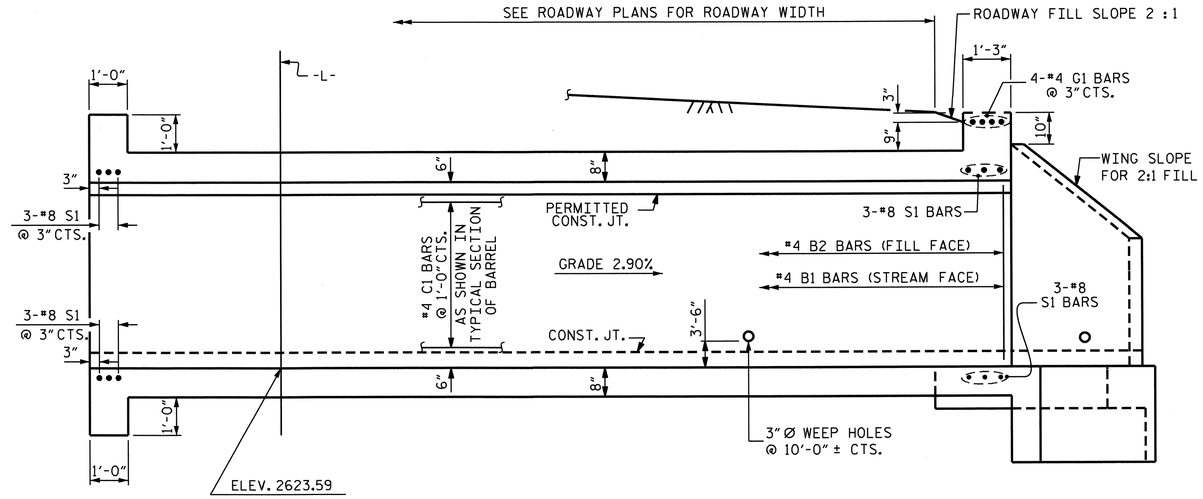

CULVERT SECTION NORMAL TO ROADWAY

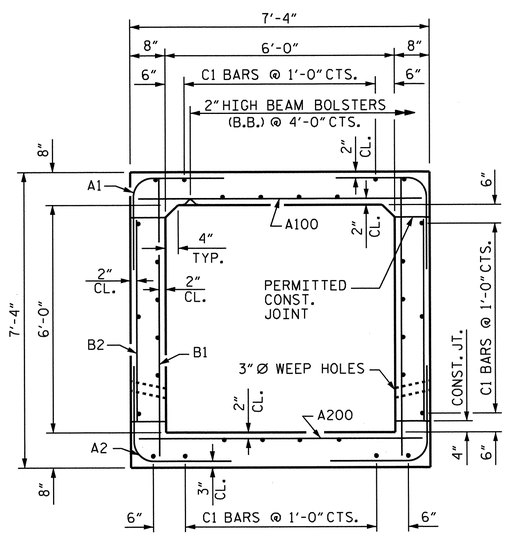

RIGHT ANGLE SECTION OF BARREL

THERE ARE 30 "C" BARS IN SECTION OF BARREL

TOTAL STAGE I QUANTITIES

CLASS A CONCRETE			
BARREL @ 0.663 CY/FT	41.3	CU. YDS.	
WINGS, ETC.	8.6	CU. YDS.	
SILLS	0.8	CU. YDS.	
TOTAL	50.7	CU. YDS.	
REINFORCING STEEL			
BARREL	4,476	LBS.	
WINGS, ETC.	463	LBS.	
TOTAL	4,939	LBS.	
FOUNDATION CONDITIONING MATERIAL	50	TONS	
CULVERT EXCAVATION	LUMP SUM		

PROJECT NO. U-4412
HAYWOOD COUNTY
STATION: 24+21.50 -L-

SHEET 2 OF 8

STATE OF NORTH CAROLINA
DEPARTMENT OF TRANSPORTATION
RALEIGH

SINGLE 6 FT. X 6 FT. CONCRETE BOX CULVERT STAGE I 123° SKEW

NORTH CAROLINA PROFESSIONAL SEAL 20125 ENGINEER MARSHALL G. CHEEK, JR.
11-28-12

REVISIONS						SHEET NO.
NO.	BY:	DATE:	NO.	BY:	DATE:	C-12
1			3			TOTAL SHEETS
2			4			25

STR. #3

ASSEMBLED BY : A. SORSENGINH/MEP DATE : 1/7/11
CHECKED BY : M. G. CHEEK DATE : 8/12

REVISED 8-28-92 BY E.L.R. CHECKED BY G.R.P.
REVISED 8-22-89 BY A.R.B. CHECKED BY C.R.K.
REDRAWN 8-22-89
REVISED 11-19-99 BY M.M. CHECKED BY R.W.W.

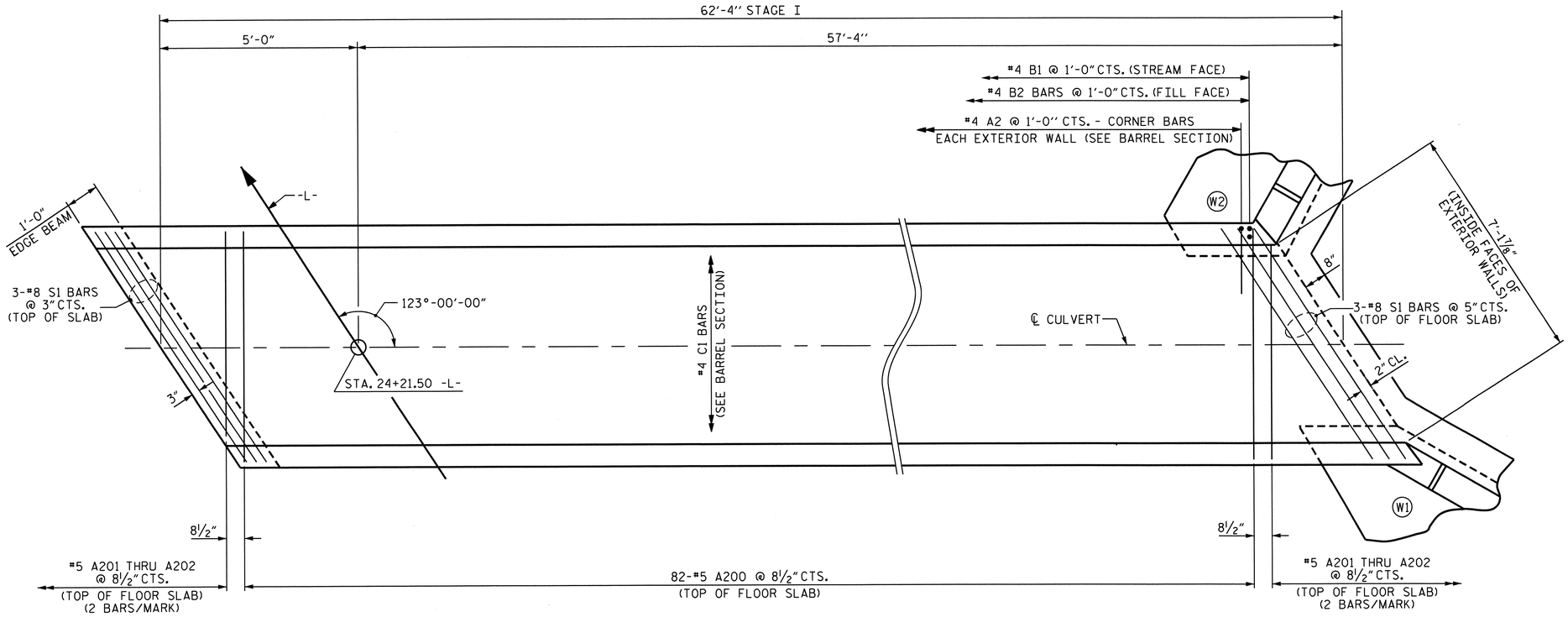

STAGE I
PLAN OF FLOOR SLAB

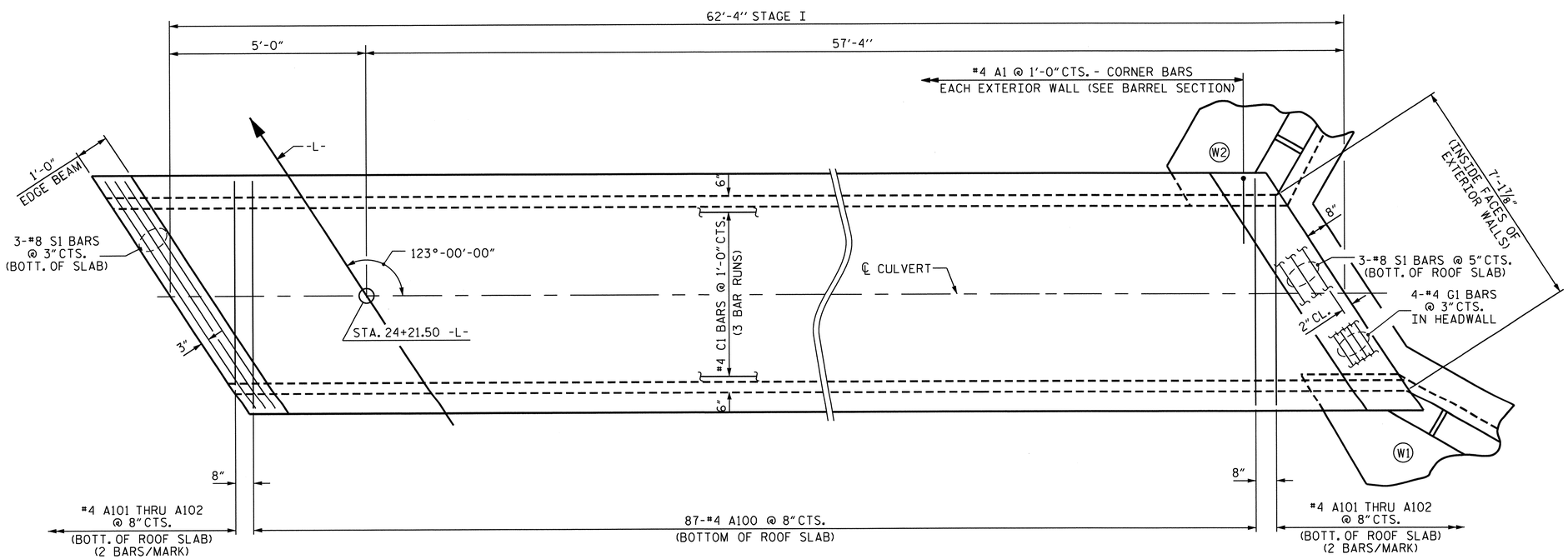

STAGE I
PLAN OF ROOF SLAB

BAR SCHEDULE
STAGE I

BAR	NO.	SIZE	TYPE	LENGTH	WEIGHT
A1	126	#4	6	4'-6"	379
A2	126	#4	6	4'-7"	386
A100	87	#4	STR	6'-11"	402
A101	4	#4	STR	4'-9"	13
A102	4	#4	STR	2'-9"	7
A200	82	#5	STR	6'-11"	592
A201	4	#5	STR	4'-8"	19
A202	4	#5	STR	2'-5"	10
B1	126	#4	STR	6'-10"	575
B2	126	#4	STR	5'-4"	449
C1	90	#4	STR	22'-1"	1328
D2	6	#6	STR	1'-3"	11
D3	6	#6	STR	1'-9"	16
G1	4	#4	STR	8'-4"	22
S1	12	#8	STR	8'-4"	267

REINFORCING STEEL = 4476 LBS.

BAR TYPE

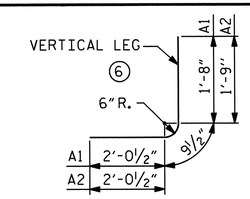

BAR DIMENSIONS ARE OUT TO OUT

SPLICE LENGTH CHART

BAR	SIZE	LENGTH
B1	#4	1'-9"
C1	#4	1'-11"

PROJECT NO. U-4412
HAYWOOD COUNTY
STATION: 24+21.50 -L-

SHEET 3 OF 8

STATE OF NORTH CAROLINA
DEPARTMENT OF TRANSPORTATION
RALEIGH

SINGLE 6 FT. X 6 FT.
CONCRETE BOX CULVERT
STAGE I
123° SKEW

NORTH CAROLINA PROFESSIONAL SEAL 20125 ENGINEER
MARSHALL G. CHEEK, JR.
11-28-12

REVISIONS						SHEET NO.
NO.	BY:	DATE:	NO.	BY:	DATE:	C-13
1			3			TOTAL SHEETS
2			4			25

ASSEMBLED BY : A. SORSENGINH/MEP DATE : 3/2011
CHECKED BY : M.G. CHEEK DATE : 08/12

STR. #3

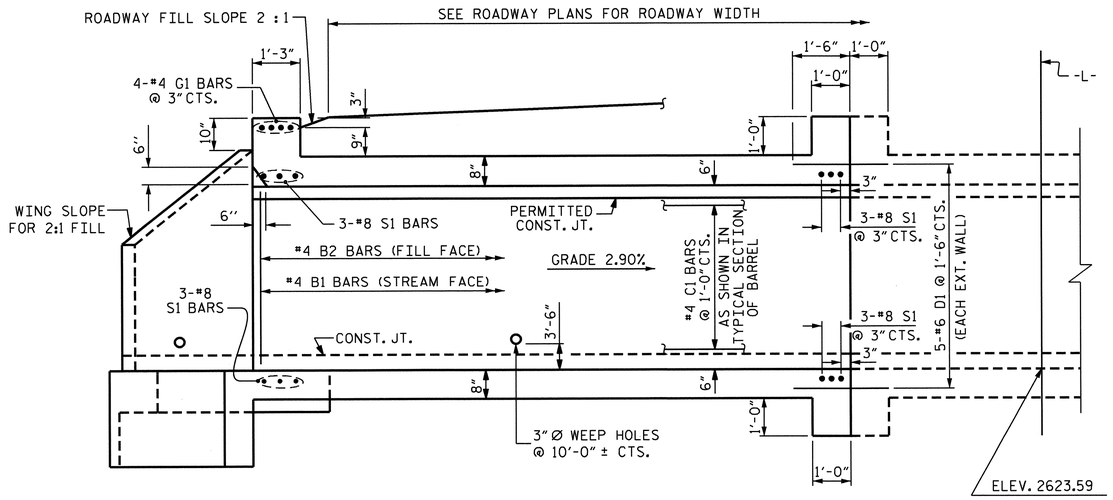

CULVERT SECTION NORMAL TO ROADWAY

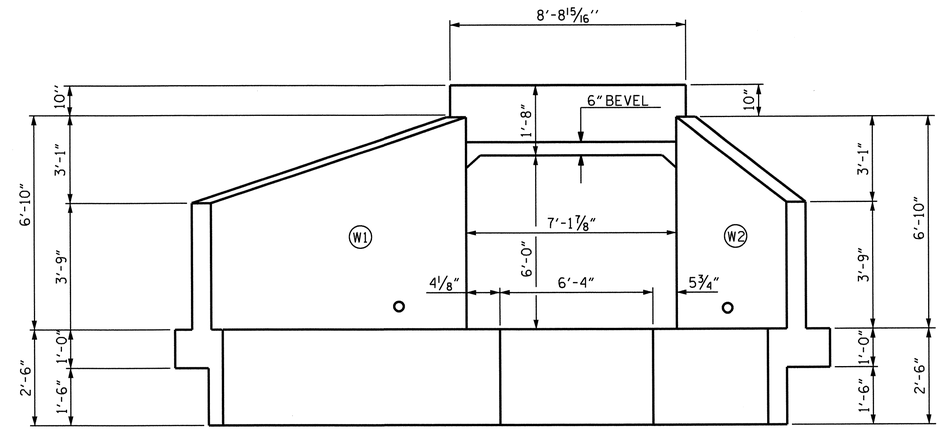

INLET ELEVATION NORMAL TO SKEW

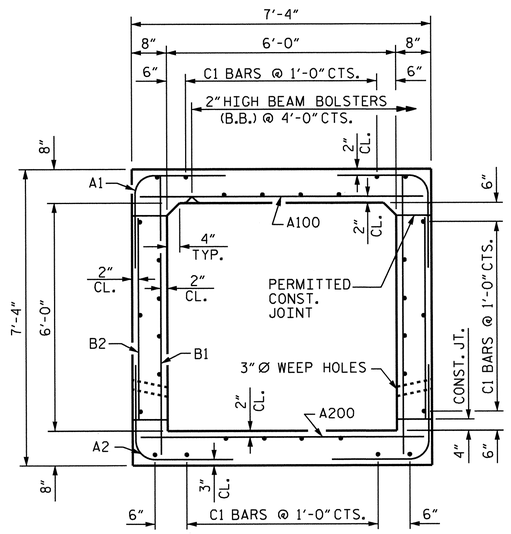

RIGHT ANGLE SECTION OF BARREL

THERE ARE 30 "C" BARS IN SECTION OF BARREL

TOTAL STAGE II QUANTITIES

CLASS A CONCRETE			
BARREL @ 0.663 CY/FT	29.4	CU. YDS.	
WINGS, ETC.	8.6	CU. YDS.	
SILLS	0.6	CU. YDS.	
TOTAL	38.6	CU. YDS.	
REINFORCING STEEL			
BARREL	3,471	LBS.	
WINGS, ETC.	463	LBS.	
TOTAL	3,934	LBS.	
FOUNDATION CONDITIONING MATERIAL	40	TONS	
CULVERT EXCAVATION	LUMP SUM		

PROJECT NO. U-4412
HAYWOOD COUNTY
STATION: 24+21.50 -L-

SHEET 4 OF 8

STATE OF NORTH CAROLINA
DEPARTMENT OF TRANSPORTATION
RALEIGH

SINGLE 6 FT. X 6 FT. CONCRETE BOX CULVERT STAGE II 123° SKEW

NORTH CAROLINA PROFESSIONAL SEAL 20125 ENGINEER MARSHALL G. CHEEK, JR.
11-28-12

REVISIONS						SHEET NO.
NO.	BY:	DATE:	NO.	BY:	DATE:	C-14
1			3			TOTAL SHEETS
2			4			25

STR. #3

ASSEMBLED BY : A. SORSENGINH/MEP DATE : 3/2011
CHECKED BY : M. G. CHEEK DATE : 08/12

REVISED 8-28-92 BY E.L.R. CHECKED BY G.R.P.
REVISED 8-22-89 BY A.R.B. CHECKED BY C.R.K.
REDRAWN 8-22-89
REVISED 11-19-99 BY M.M. CHECKED BY R.W.W.

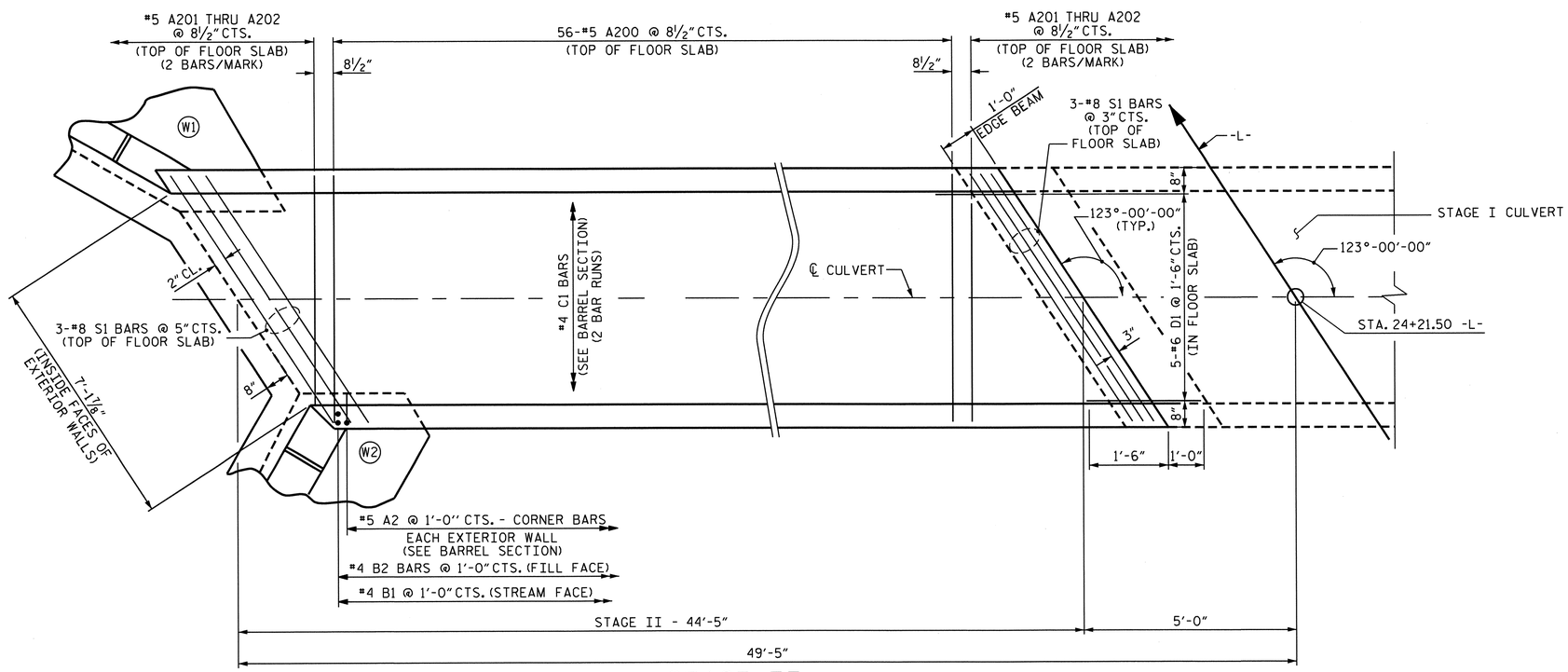

STAGE II
PLAN OF FLOOR SLAB

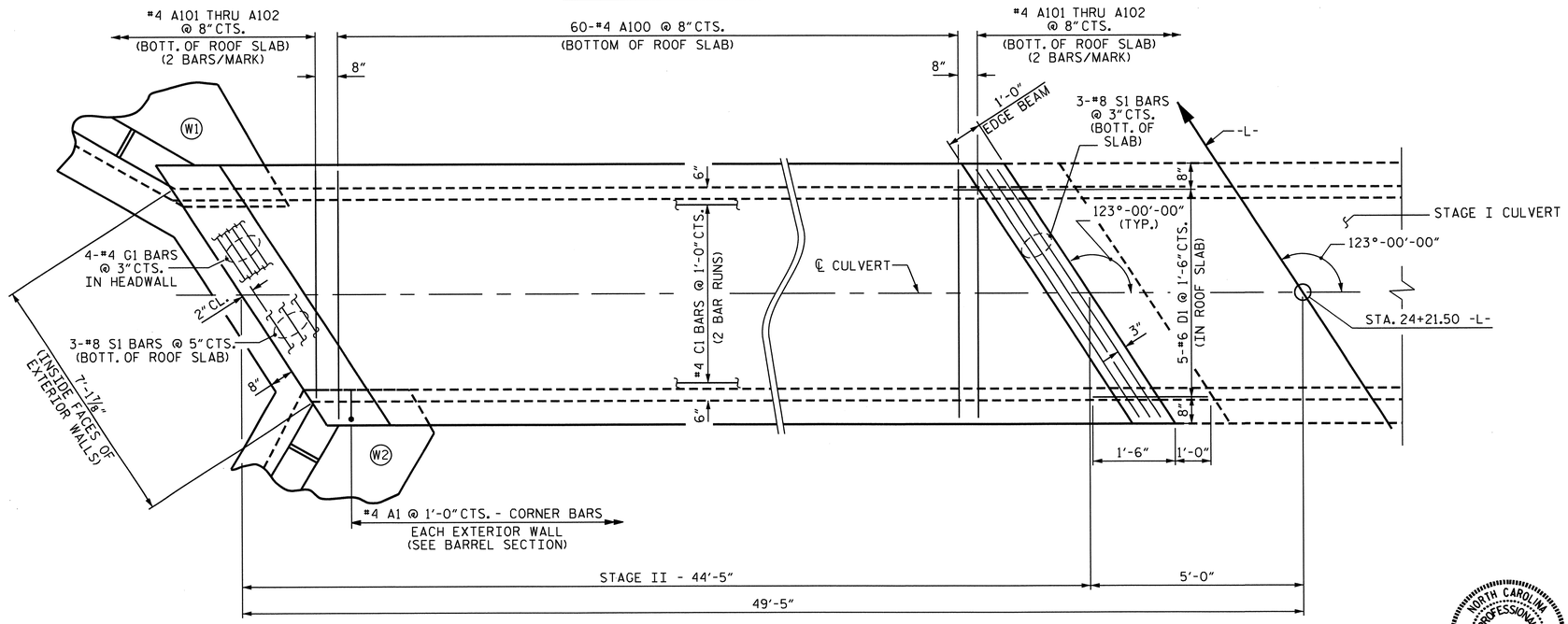

STAGE II
PLAN OF ROOF SLAB

BAR SCHEDULE
STAGE II

BAR	NO.	SIZE	TYPE	LENGTH	WEIGHT
A1	90	#4	6	4'-6"	271
A2	90	#5	6	4'-7"	430
A100	60	#4	STR	6'-11"	277
A101	4	#4	STR	4'-9"	13
A102	4	#4	STR	2'-9"	7
A200	56	#5	STR	6'-11"	404
A201	4	#5	STR	4'-8"	19
A202	4	#5	STR	2'-5"	10
B1	90	#4	STR	6'-10"	411
B2	90	#4	STR	5'-4"	321
C1	60	#4	STR	23'-1"	925
D1	20	#6	STR	2'-6"	75
D2	4	#6	STR	1'-3"	8
D3	4	#6	STR	1'-9"	11
G1	4	#4	STR	8'-4"	22
S1	12	#8	STR	8'-4"	267

REINFORCING STEEL = 3471 LBS.

BAR TYPE

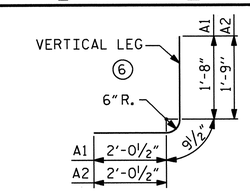

BAR DIMENSIONS ARE OUT TO OUT

SPLICE LENGTH CHART

BAR	SIZE	LENGTH
B1	#4	1'-9"
C1	#4	1'-11"

PROJECT NO. U-4412
HAYWOOD COUNTY
STATION: 24+21.50 -L-

SHEET 5 OF 8

STATE OF NORTH CAROLINA
DEPARTMENT OF TRANSPORTATION
RALEIGH

SINGLE 6 FT. X 6 FT. CONCRETE BOX CULVERT STAGE II 123° SKEW

NORTH CAROLINA PROFESSIONAL SEAL 20125 ENGINEER MARSHALL G. CHEEK, JR.
11-28-12

REVISIONS						SHEET NO.
NO.	BY:	DATE:	NO.	BY:	DATE:	C-15
1			3			TOTAL SHEETS
2			4			25

ASSEMBLED BY : A. SORSENGINH DATE : 3/2011
CHECKED BY : M.G. CHEEK DATE : 08/12

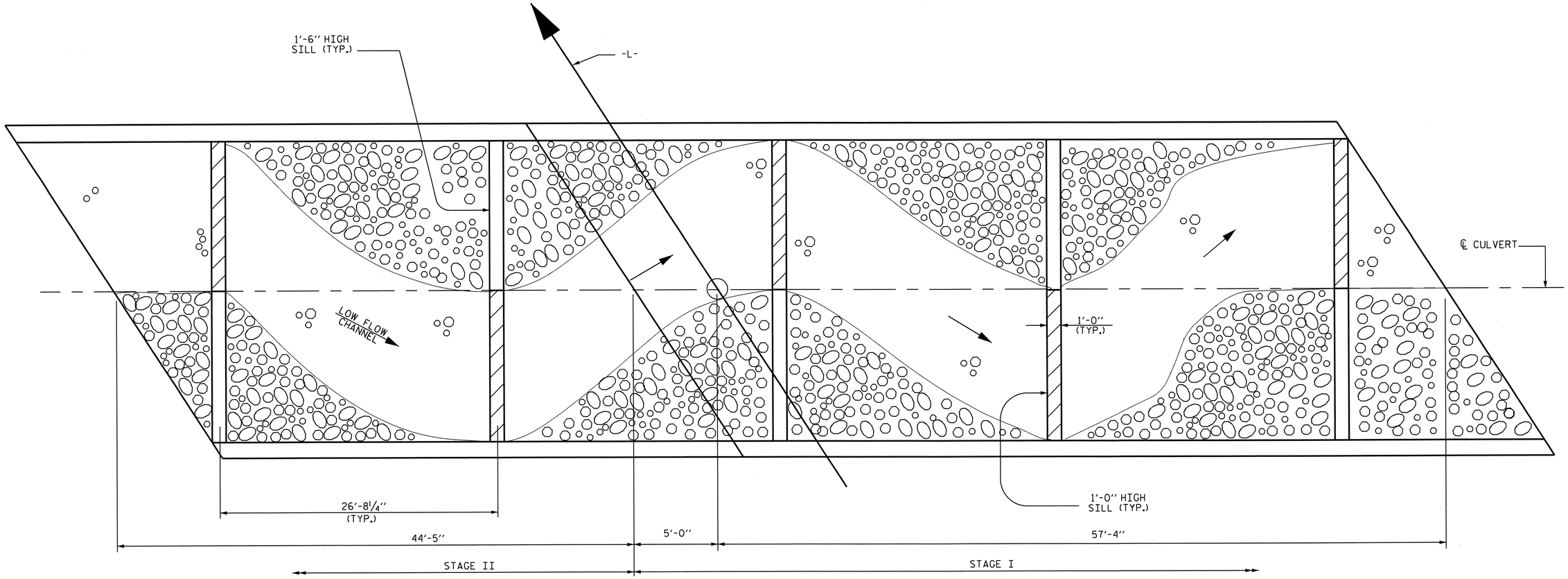

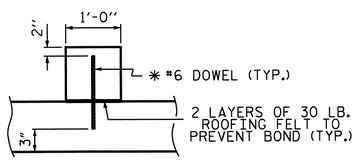

* DOWELS MAY BE PUSHED INTO GREEN CONCRETE AFTER SLAB HAS BEEN FLOAT FINISHED.

SECTION THROUGH SILL

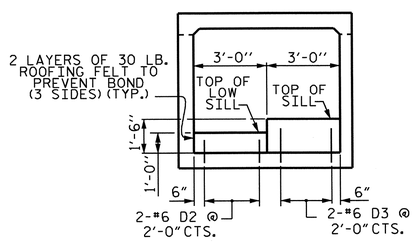

ELEVATION

(LOOKING DOWNSTREAM)

CULVERT SILL DETAILS

PLAN OF FLOOR SILL LAYOUT

* NOTE : 1'-0" HIGH SILLS ARE DENOTED BY CROSS-HATCHED AREA

NOTES

MATERIAL EXCAVATED FROM THE EXISTING BED SHALL BE STOCKPILED FOR USE IN THE PROPOSED CULVERT AS SHOWN IN THE FLOOR SILL LAYOUT. BED MATERIAL PLACED IN THE CULVERT SHALL BE NATURAL STONE WITH A GRADATION SIZE SIMILAR TO CLASS 'B' RIP RAP. BED MATERIAL SHALL BE SUPPLEMENTED WITH CLASS 'B' RIP RAP AS NECESSARY. STONE LARGER THAN 6 INCHES SHALL NOT BE PLACED WITHIN THE LOW FLOW CHANNEL. BED MATERIAL SHALL BE SUBJECT TO APPROVAL BY THE ENGINEER.

THE ENTIRE COST OF WORK REQUIRED TO PLACE THE BED MATERIAL AS SHOWN ON THE PLANS SHALL BE INCLUDED IN THE CONTRACT LUMP SUM PRICE BID FOR CULVERT EXCAVATION.

THE ENTIRE COST OF WORK REQUIRED TO CONSTRUCT THE SILLS SHALL BE INCLUDED IN THE VARIOUS PAY ITEMS.

TOP OF LOW FLOW SILL SHOULD MATCH STREAM BED ELEVATIONS IN LOW FLOW CHANNEL OF STREAM.

PROJECT NO. U-4412
HAYWOOD COUNTY
STATION: 24+21.50 -L-

SHEET 6 OF 8

STATE OF NORTH CAROLINA
DEPARTMENT OF TRANSPORTATION
RALEIGH

SINGLE 6 FT. X 6 FT.
CONCRETE BOX CULVERT

NORTH CAROLINA PROFESSIONAL SEAL 20125 ENGINEER MARSHALL G. CHEEK, JR.
11-28-12

REVISIONS							
NO.	BY:	DATE:	NO.	BY:	DATE:	SHEET NO.	C-16
1			3			TOTAL SHEETS	25
2			4				

DRAWN BY : M. POOLE DATE : 03/12
CHECKED BY : M. G. CHEEK DATE : 08/12

28-NOV-2012 10:59
R:\Structures\Final Plans\Str #3\Str #3 - U-4412_SD_CU.dgn
mpoole

STR. #3

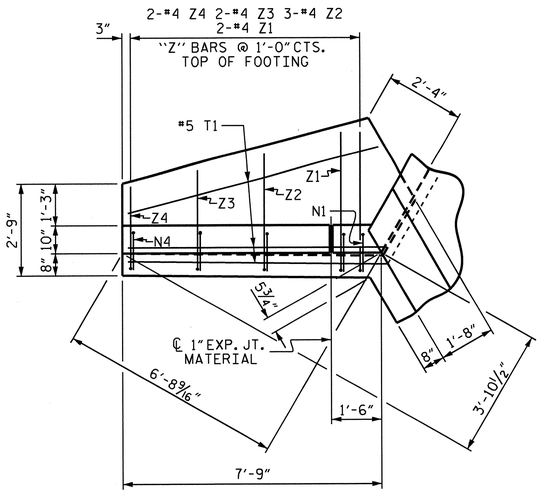

PLAN W2

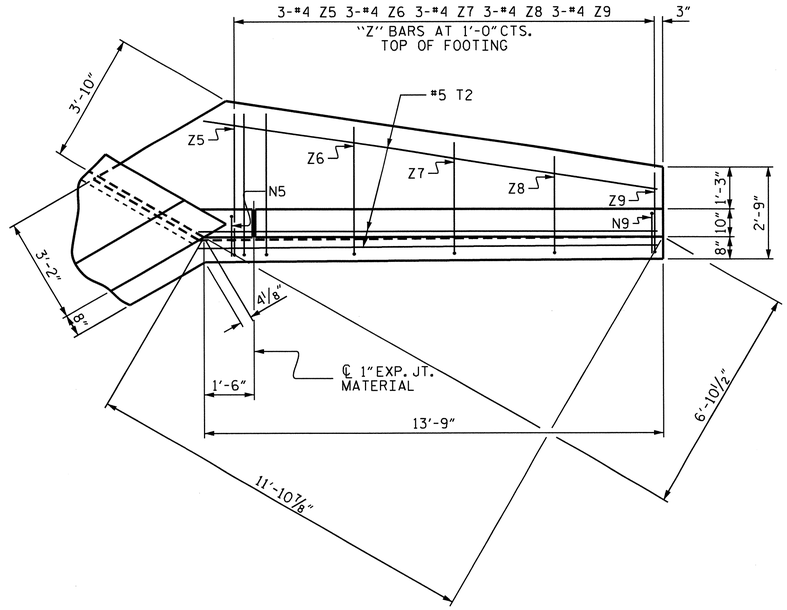

PLAN W1

BAR TYPES

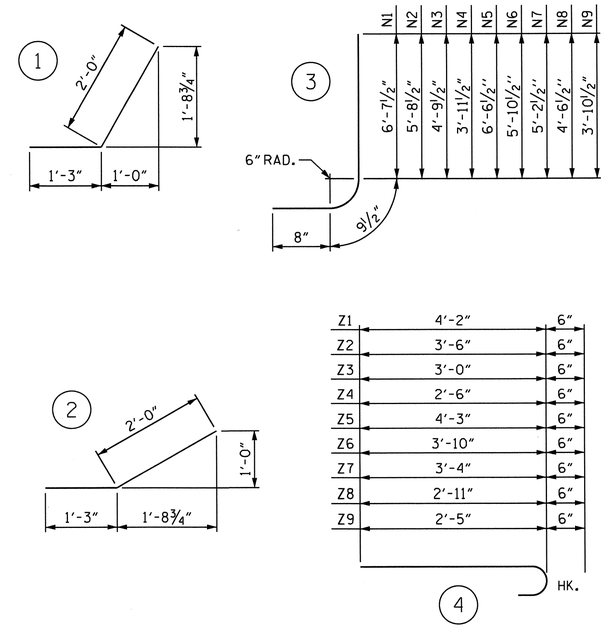

ALL BAR DIMENSIONS ARE OUT TO OUT.

CLASS A CONCRETE	STAGE I	STAGE II
2 WINGS	7.2 CU. YDS.	7.2 CU. YDS.
1 HEADWALL	0.4 CU. YDS.	0.4 CU. YDS.
1 END CURTAIN WALL	0.4 CU. YDS.	0.4 CU. YDS.
2 EDGE BEAMS	0.6 CU. YDS.	0.6 CU. YDS.
TOTAL	8.6 CU. YDS.	8.6 CU. YDS.

BILL OF MATERIAL

BAR	NO.	SIZE	TYPE	LENGTH	WEIGHT
H1	6	#4	STR	5'-10"	23
H2	2	#4	STR	2'-9"	4
H3	10	#4	1	3'-3"	22
H4	2	#4	STR	6'-5"	9
H5	6	#4	STR	11'-10"	47
H6	2	#4	STR	6'-3"	8
H7	10	#4	2	3'-3"	22
H8	2	#4	STR	12'-2"	16
N1	2	#4	3	8'-1"	11
N2	3	#4	3	7'-2"	14
N3	2	#4	3	6'-3"	8
N4	2	#4	3	5'-5"	7
N5	3	#4	3	8'-0"	16
N6	3	#4	3	7'-4"	15
N7	3	#4	3	6'-8"	13
N8	3	#4	3	6'-0"	12
N9	3	#4	3	5'-4"	11
T1	3	#5	STR	7'-9"	24
T2	3	#5	STR	13'-9"	43
V1	2	#4	STR	6'-1"	8
V2	3	#4	STR	5'-1"	10
V3	2	#4	STR	4'-2"	6
V4	2	#4	STR	3'-4"	4
V5	3	#4	STR	6'-0"	12
V6	3	#4	STR	5'-4"	11
V7	3	#4	STR	4'-7"	9
V8	3	#4	STR	4'-0"	8
V9	3	#4	STR	3'-3"	7
Z1	2	#4	4	4'-8"	6
Z2	3	#4	4	4'-0"	8
Z3	2	#4	4	3'-6"	5
Z4	2	#4	4	3'-0"	4
Z5	3	#4	4	4'-9"	10
Z6	3	#4	4	4'-4"	9
Z7	3	#4	4	3'-10"	8
Z8	3	#4	4	3'-5"	7
Z9	3	#4	4	2'-11"	6

REINFORCING STEEL FOR 2 WINGS 463 LBS.

NOTES

A 3 FOOT STRIP OF FILTER FABRIC SHALL BE ATTACHED TO THE FILL FACE OF THE WING COVERING THE ENTIRE LENGTH OF THE EXPANSION JOINT.

GI BARS IN HEADWALL ARE INCLUDED WITH BARREL REINFORCING STEEL.

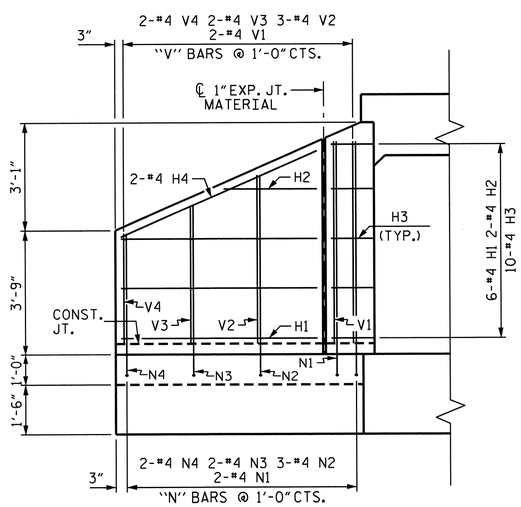

ELEVATION W2

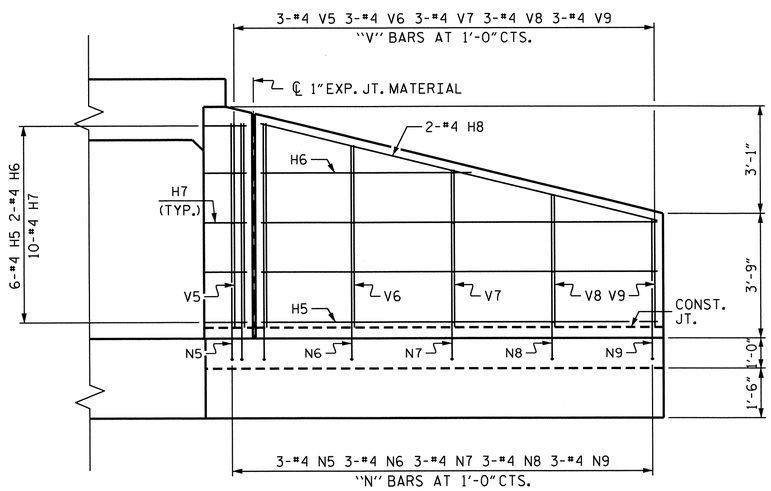

ELEVATION W1

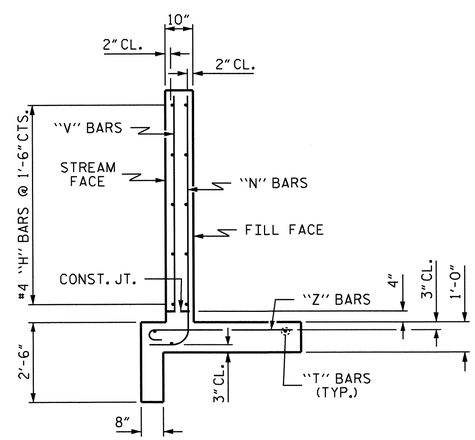

TYPICAL WING SECTION

PROJECT NO. U-4412
HAYWOOD COUNTY
STATION: 24+21.50 -L-

SHEET 7 OF 8

STATE OF NORTH CAROLINA
DEPARTMENT OF TRANSPORTATION
RALEIGH

WINGS FOR CONCRETE BOX CULVERT

H = 6'-0" SLOPE 2:1
STAGE I OR II
123° SKEW

NORTH CAROLINA PROFESSIONAL SEAL 20125 ENGINEER MARSHALL G. CHEEK, JR.
11-29-12

REVISIONS								SHEET NO.
NO.	BY:	DATE:	NO.	BY:	DATE:			C-17
1			3					TOTAL SHEETS
2			4					25

ASSEMBLED BY : A. SORSENGINH/MEP DATE : 3/2011
CHECKED BY : M. G. CHEEK DATE : 08/2012

DRAWN BY : CCJ 11/99
CHECKED BY : RWW 03/00

LOAD AND RESISTANCE FACTOR RATING (LRFR) SUMMARY FOR REINFORCED CONCRETE BOX CULVERT

LEVEL		VEHICLE	WEIGHT (W) (TONS)	CONTROLLING LOAD RATING (#)	MINIMUM RATING FACTORS (RF)	TONS = W × RF	STRENGTH I LIMIT STATE									
							LIVE-LOAD FACTORS $\gamma_{(LL)}$	MOMENT				SHEAR				COMMENT NUMBER
								RATING FACTOR	BOX NO.	ELEMENT TYPE	DISTANCE FROM LEFT END OF ELEMENT (ft)	RATING FACTOR	BOX NO.	ELEMENT TYPE	DISTANCE FROM LEFT END OF ELEMENT (ft)	
DESIGN LOAD RATING		HL-93 (INVENTORY)	N/A	(1)	1.49	--	1.75	1.49	1	TOP SLAB	3.33	2.15	1	BOTTOM SLAB	0.81	
		HL-93 (OPERATING)	N/A		1.93	--	1.35	1.93	1	TOP SLAB	3.33	2.79	1	BOTTOM SLAB	0.81	
		HS-20 (INVENTORY)	36.00	(2)	2.18	78.53	1.75	2.18	1	TOP SLAB	3.33	2.78	1	BOTTOM SLAB	0.81	
		HS-20 (OPERATING)	36.00		2.83	101.80	1.35	2.83	1	TOP SLAB	3.33	3.60	1	BOTTOM SLAB	0.81	
LEGAL LOAD RATING	SINGLE VEHICLE (SV)	SNSH	13.50		3.94	53.22	1.40	3.94	1	TOP SLAB	3.33	5.09	1	BOTTOM SLAB	0.81	
		SNGARBS2	20.00		3.72	74.37	1.40	3.72	1	TOP SLAB	3.33	4.75	1	BOTTOM SLAB	0.81	
		SNAGRIS2	22.00		3.94	86.73	1.40	3.94	1	TOP SLAB	3.33	5.09	1	BOTTOM SLAB	0.81	
		SNCOTTS3	27.25	(3)	1.86	50.66	1.40	3.72	1	TOP SLAB	3.33	2.69	1	BOTTOM SLAB	0.81	
		SNAGGRS4	34.93		2.44	85.28	1.40	3.94	1	TOP SLAB	3.33	3.56	1	BOTTOM SLAB	0.81	
		SNS5A	35.55		2.21	78.60	1.40	1.86	1	TOP SLAB	3.33	3.20	1	BOTTOM SLAB	0.81	
		SNS6A	39.95		2.21	88.33	1.40	2.44	1	TOP SLAB	3.33	3.20	1	BOTTOM SLAB	0.81	
		SNS7B	42.00		2.21	92.86	1.40	2.21	1	TOP SLAB	3.33	3.20	1	BOTTOM SLAB	0.81	
	TRUCK TRACTOR SEMI-TRAILER (TTST)	TNAGRIT3	33.00		3.94	130.10	1.40	3.94	1	TOP SLAB	3.33	5.09	1	BOTTOM SLAB	0.81	
		TNT4A	33.08		2.21	73.13	1.40	2.21	1	TOP SLAB	3.33	3.20	1	BOTTOM SLAB	0.81	
		TNT6A	41.60		2.21	91.97	1.40	2.21	1	TOP SLAB	3.33	3.20	1	BOTTOM SLAB	0.81	
		TNT7A	42.00		2.21	92.86	1.40	2.21	1	TOP SLAB	3.33	3.20	1	BOTTOM SLAB	0.81	
		TNT7B	42.00		2.21	92.86	1.40	2.21	1	TOP SLAB	3.33	3.20	1	BOTTOM SLAB	0.81	
		TNAGRIT4	43.00		2.11	90.78	1.40	2.11	1	TOP SLAB	3.33	3.06	1	BOTTOM SLAB	0.81	
		TNAGT5A	45.00		2.17	97.51	1.40	2.17	1	TOP SLAB	3.33	3.13	1	BOTTOM SLAB	0.81	
		TNAGT5B	45.00		2.21	99.49	1.40	2.21	1	TOP SLAB	3.33	3.20	1	BOTTOM SLAB	0.81	

	LOAD TYPE	MAX. FACTOR	MIN. FACTOR
STRENGTH I LIMIT STATE DESIGN LOAD RATING FACTORS	DC	1.25	0.90
	DW	1.50	0.65
	EV	1.30	0.90
	EH	1.35	0.50 OR 0.90
	ES	1.35	0.50 OR 0.90
	LS	1.75	0.00
	WA	1.00	0.00

NOTES:

RATING FACTORS ARE BASED ON THE STRENGTH L LIMIT STATE.

COMMENTS:

1.
2.
3.
4.

(#) CONTROLLING LOAD RATING

(1) DESIGN LOAD RATING (HL-93)

(2) DESIGN LOAD RATING (HS-20)

(3) LEGAL LOAD RATING ✱✱

✱✱ SEE CHART FOR VEHICLE TYPE

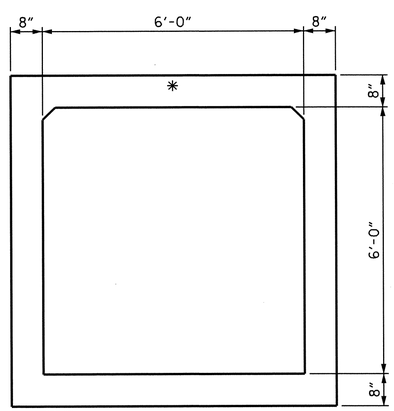

LRFR SUMMARY

✱ (1) (2) (3) CONTROLS

PROJECT NO. U-4412

HAYWOOD COUNTY

STATION: 24+21.50 -L-

SHEET 8 OF 8

STATE OF NORTH CAROLINA
DEPARTMENT OF TRANSPORTATION
RALEIGH

STANDARD
LRFR SUMMARY FOR REINFORCED CONCRETE BOX CULVERT
(NON-INTERSTATE TRAFFIC)

NORTH CAROLINA PROFESSIONAL SEAL 20125 ENGINEER MARSHALL G. CHEEK, JR.
11-28-12

REVISIONS						SHEET NO.
NO.	BY:	DATE:	NO.	BY:	DATE:	C-18
1			3			TOTAL SHEETS
2			4			25

ASSEMBLED BY : A. SORSENGINH/MEP DATE : 9/2011
CHECKED BY : M. G. CHEEK DATE : 08/2012
DRAWN BY : MAA 1/08
CHECKED BY : GM/DI 2/08
REV. 11/12/08RR MAA/GM

28-NOV-2012 10:58
R:\Structures\Final Plans\Str #3\U-4412_SD_LRFR.dgn
mpoole

BENCHMARK #5: CHISELED SQUARE IN HW, STA. 83+98.46 -L-, 27.57' RT. ELEV. 2582.537'.

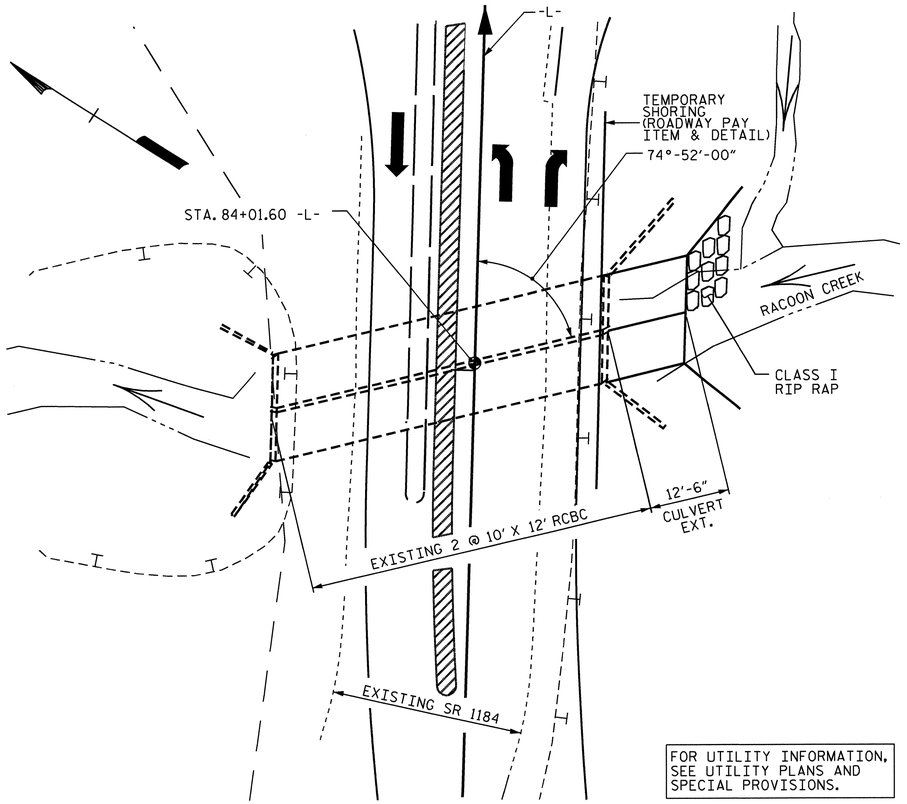

FOR UTILITY INFORMATION, SEE UTILITY PLANS AND SPECIAL PROVISIONS.

LOCATION SKETCH

TOTAL STRUCTURE QUANTITIES

CLASS A CONCRETE			
BARREL @ 2.391 CY/FT	29.9	C.Y.	
SILLS	0.8	C.Y.	
WINGS, ETC.	29.5	C.Y.	
TOTAL	60.2	C.Y.	
REINFORCING STEEL			
BARREL	6,737	LBS.	
WINGS, ETC.	2,132	LBS.	
TOTAL	8,869	LBS.	
CULVERT EXCAVATION		LUMP SUM	
FOUNDATION CONDITIONING MATERIAL		23 TONS	
CLASS I RIP RAP		15 TONS	

GRADE DATA

GRADE POINT ELEVATION @ STA. 84+01.60 -L-	=	2583.40
ROADWAY SLOPES	=	2:1

HYDRAULIC DATA

DESIGN DISCHARGE	=	2300 CFS
FREQUENCY OF DESIGN FLOOD	=	50 YR.
DESIGN HIGH WATER ELEVATION	=	2582.7
DRAINAGE AREA	=	8.86 SQ. MI.
BASE DISCHARGE (Q100)	=	2800 CFS
BASE HIGH WATER ELEVATION	=	2584.3

OVERTOPPING FLOOD DATA

OVERTOPPING DISCHARGE	=	2500 CFS
FREQUENCY OF OVERTOPPING FLOOD	=	50 YR. +
OVERTOPPING FLOOD ELEVATION	=	2583.3

F.A. PROJECT No.: STP-1184(4)

NOTES

ASSUMED LIVE LOAD ----------HL-93 OR ALTERNATE LOADING.

DESIGN FILL----------3.0'

FOR OTHER DESIGN DATA AND NOTES, SEE STANDARD NOTES SHEET.

3"Ø WEEP HOLES INDICATED TO BE IN ACCORDANCE WITH THE SPECIFICATIONS.

CONCRETE IN CULVERTS TO BE POURED IN THE FOLLOWING ORDER:

1. PHASE I WING FOOTINGS AND FLOOR SLAB INCLUDING 4" OF PHASE I VERTICAL WALLS.
2. THE REMAINING PORTIONS OF PHASE I WALLS AND PHASE I WINGS FULL HEIGHT.
3. PHASE II WING FOOTINGS AND FLOOR SLAB INCLUDING 4" OF PHASE II VERTICAL WALLS.
4. THE REMAINING PORTIONS OF PHASE II WALL AND PHASE II WINGS FULL HEIGHT.
5. ROOF SLAB IN ITS ENTIRETY AND HEADWALLS.

THE RESIDENT ENGINEER SHALL CHECK THE LENGTH OF CULVERT BEFORE STAKING IT OUT TO MAKE CERTAIN THAT IT WILL PROPERLY TAKE CARE OF THE FILL.

DIMENSIONS FOR WING LAYOUT AS WELL AS ADDITIONAL REINFORCING STEEL EMBEDDED IN BARREL ARE SHOWN ON WING SHEET.

AT THE CONTRACTOR'S OPTION, HE MAY SPLICE THE VERTICAL REINFORCING STEEL IN THE INTERIOR FACE OF EXTERIOR WALL ABOVE LOWER WALL CONSTRUCTION JOINT. THE SPLICE LENGTH SHALL BE AS PROVIDED IN THE SPLICE LENGTH CHART SHOWN ON THE PLANS. EXTRA WEIGHT OF STEEL DUE TO THE SPLICES SHALL BE PAID FOR BY THE CONTRACTOR.

DOWELS SHALL BE USED TO CONNECT THE CULVERT EXTENSION TO THE EXISTING CULVERT AS SHOWN. FOR NOTE REGARDING SETTING OF DOWELS, SEE SHEET SN.

FOR CULVERT DIVERSION DETAILS AND PAY ITEM, SEE EROSION CONTROL PLANS.

AT THE CONTRACTOR'S OPTION HE MAY SUBMIT, TO THE ENGINEER FOR APPROVAL, DESIGN AND DETAIL DRAWINGS FOR A PRECAST REINFORCED CONCRETE BOX CULVERT IN LIEU OF THE CAST-IN-PLACE CULVERT SHOWN ON THE PLANS. THE DESIGN SHALL PROVIDE THE SAME SIZE AND NUMBER OF BARRELS AS USED ON THE CAST-IN-PLACE DESIGN. FOR OPTIONAL PRECAST REINFORCED CONCRETE BOX CULVERT, SEE SPECIAL PROVISIONS.

THE CONTRACTOR SHALL PROVIDE INDEPENDENT ASSURANCE SAMPLES OF REINFORCING STEEL AS FOLLOWS: FOR PROJECTS REQUIRING UP TO 400 TONS OF REINFORCING STEEL, ONE 30 INCH SAMPLE OF EACH SIZE BAR USED, AND FOR PROJECTS REQUIRING OVER 400 TONS OF REINFORCING STEEL, TWO 30 INCH SAMPLES OF EACH SIZE BAR USED. THE BARS FROM WHICH THE SAMPLES ARE TAKEN MUST THEN BE SPLICED WITH REPLACEMENT BARS OF THE SIZE AND LENGTH OF THE SAMPLE, PLUS A MINIMUM LAP SPLICE OF THIRTY BAR DIAMETERS. PAYMENT FOR THE SAMPLES OF REINFORCING STEEL SHALL BE CONSIDERED INCIDENTAL TO VARIOUS PAY ITEMS.

IF APPROVED BY THE ENGINEER, THE CONTRACTOR MAY USE THE EXISTING WINGS AS TEMPORARY SHORING FOR THE CONSTRUCTION OF THE CULVERT EXTENSIONS. IN THIS CASE, THE BOTTOM SLAB OF THE EXTENSION SHALL BE POURED AT LEAST 72 HOURS PRIOR TO CUTTING THE WINGS. THE WINGS MAY BE CUT EARLIER PROVIDED THE SLAB CONCRETE STRENGTH HAS REACHED A MINIMUM COMPRESSIVE STRENGTH OF 1500 PSI.

FOR SUBMITTAL OF WORKING DRAWINGS, SEE SPECIAL PROVISIONS.

FOR FALSEWORK AND FORMWORK, SEE SPECIAL PROVISIONS.

FOR GROUT FOR STRUCTURES, SEE SPECIAL PROVISIONS.

FOR CRANE SAFETY, SEE SPECIAL PROVISIONS.

FOR LIMITS OF TEMPORARY SHORING FOR MAINTENANCE OF TRAFFIC, SEE TRAFFIC CONTROL PLANS. FOR PAY ITEM FOR TEMPORARY SHORING FOR MAINTENANCE OF TRAFFIC, SEE ROADWAY PLANS.

STEEL SHEET PILING REQUIRED FOR SHORING SHALL BE HOT ROLLED.

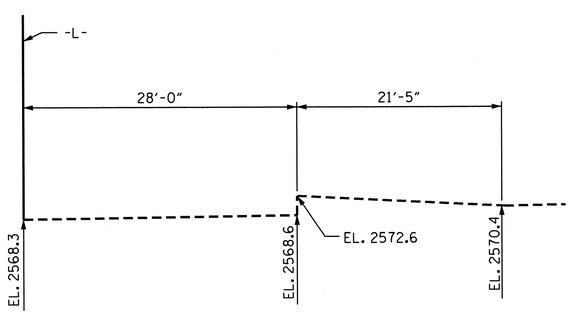

PROFILE ALONG ℄ CULVERT

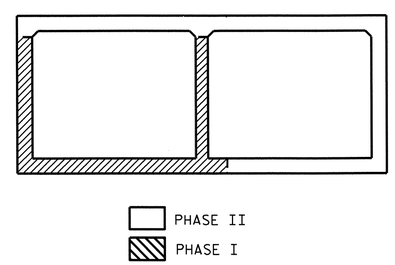

CONSTRUCTION SEQUENCE

(LOOKING DOWNSTREAM)

PROJECT NO. U-4412
HAYWOOD COUNTY
STATION: 84+01.60 -L-

SHEET 1 OF 7

STATE OF NORTH CAROLINA
DEPARTMENT OF TRANSPORTATION
RALEIGH

DOUBLE 10 FT. X 12 FT. CONCRETE BOX CULVERT EXTENSION

NORTH CAROLINA PROFESSIONAL SEAL 13014 ENGINEER QUANG H. NGUYEN
Quang H. Nguyen 2-13-13

NORTH CAROLINA PROFESSIONAL SEAL 20125 ENGINEER MARSHALL M. CHEEK, JR.
2-13-13

REVISIONS							SHEET NO.
NO.	BY:	DATE:	NO.	BY:	DATE:		C-19
1			3				TOTAL SHEETS
2			4				25

ASSEMBLED BY : J.R. MCROY DATE : 06/2012
CHECKED BY : M.G. CHEEK DATE : 09/2012

12-FEB-2013 10:59
R:\Structures\Final Plans\Str #4\Str #4 - U-4412_SD_CU.dgn

STR. #4

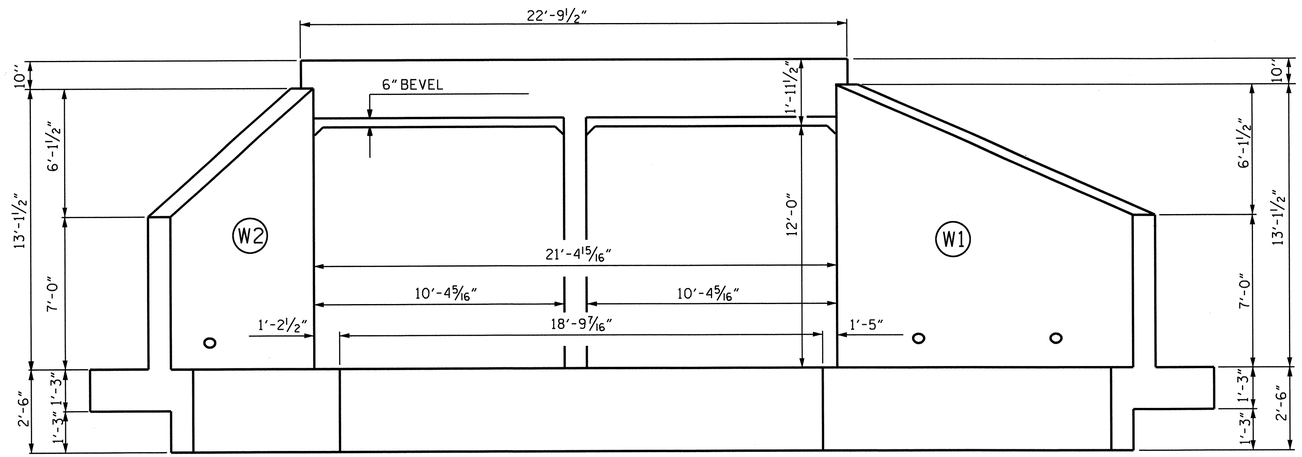

INLET END ELEVATION NORMAL TO SKEW

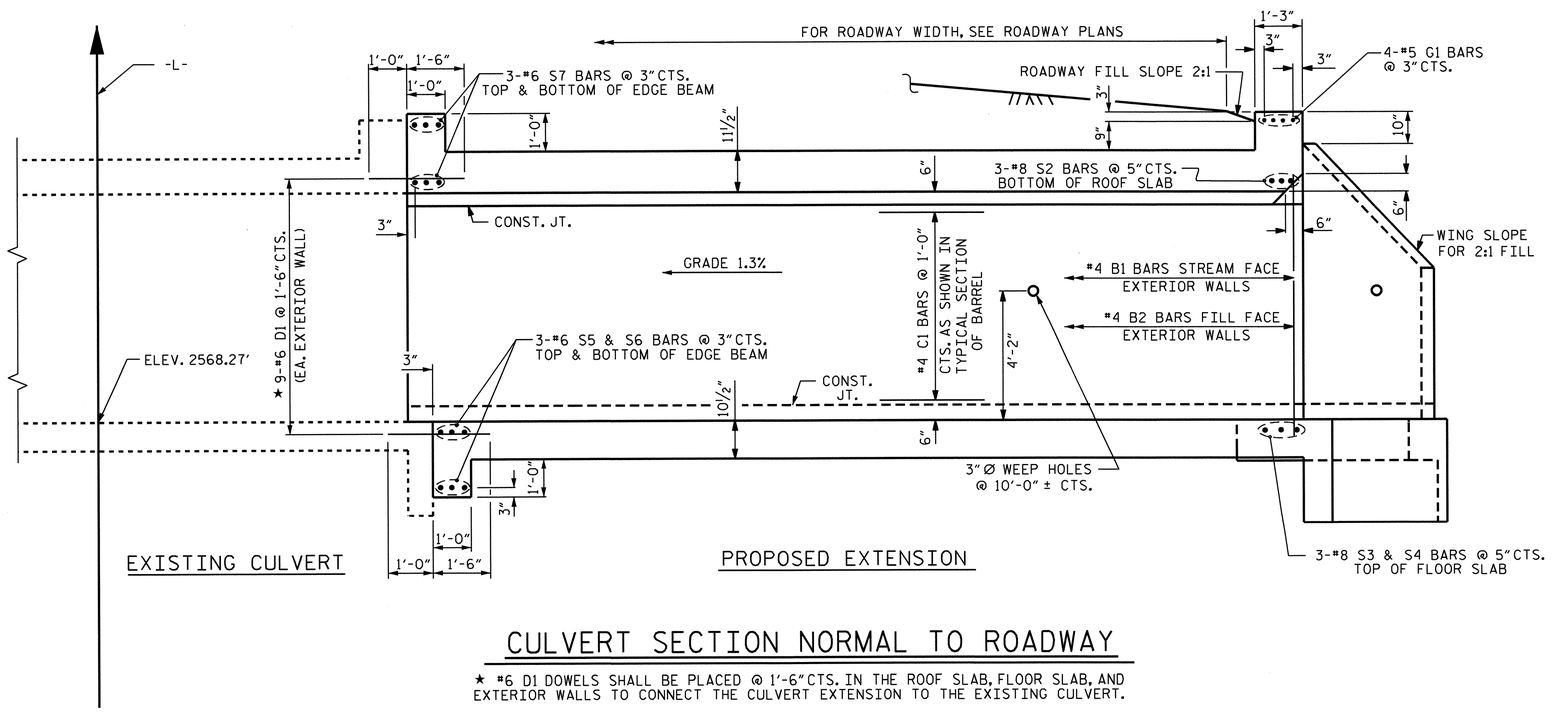

CULVERT SECTION NORMAL TO ROADWAY

★ #6 D1 DOWELS SHALL BE PLACED @ 1'-6" CTS. IN THE ROOF SLAB, FLOOR SLAB, AND EXTERIOR WALLS TO CONNECT THE CULVERT EXTENSION TO THE EXISTING CULVERT.

REVISED 11-19-99 BY M.M. CHECKED BY R.W.W.
REDRAWN NOV. 1990 BY SS CHECKED BY JRB

ASSEMBLED BY : J.R. MCROY DATE : 06/2012
CHECKED BY : M.G. CHEEK DATE : 09/2012

PROJECT NO. U-4412
HAYWOOD COUNTY
STATION: 84+01.60 -L-

SHEET 2 OF 7

STATE OF NORTH CAROLINA
DEPARTMENT OF TRANSPORTATION
RALEIGH

DOUBLE 10 FT. X 12 FT. CONCRETE BOX CULVERT EXTENSION

NORTH CAROLINA PROFESSIONAL SEAL 20125 ENGINEER MARSHALL G. CHEEK, JR.
11-28-12

REVISIONS						SHEET NO.
NO.	BY:	DATE:	NO.	BY:	DATE:	C-20
1			3			TOTAL SHEETS
2			4			25

STR. #4

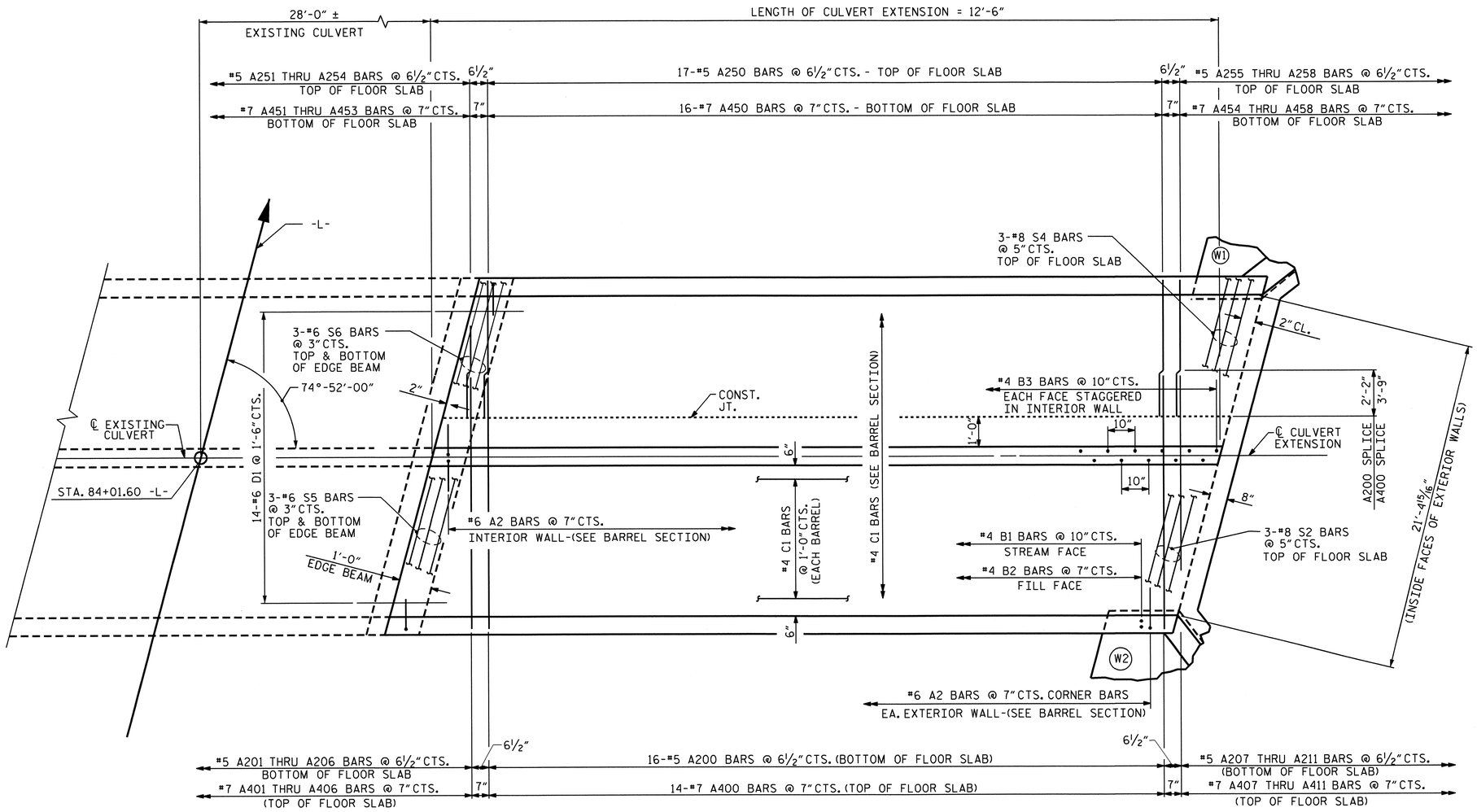

PLAN - FLOOR SLAB

PROJECT NO. U-4412
HAYWOOD COUNTY
STATION: 84+01.60 -L-

SHEET 3 OF 7

STATE OF NORTH CAROLINA
DEPARTMENT OF TRANSPORTATION
RALEIGH

DOUBLE 10 FT. X 12 FT. CONCRETE BOX CULVERT EXTENSION

NORTH CAROLINA PROFESSIONAL SEAL 20125 ENGINEER MARSHALL A. CHEEK, JR.
11-28-12

REVISIONS								SHEET NO.
NO.	BY:	DATE:	NO.	BY:	DATE:			C-21
1			3					TOTAL SHEETS
2			4					25

STR. #4

REVISED 11-19-98 BY M.M. CHECKED BY R.W.W.
REDRAWN NOV. 1990 BY T.S.S. CHECKED BY A.R.B.

ASSEMBLED BY : J.R. MCROY DATE : 06/2012
CHECKED BY : M.C. CHEEK DATE : 09/2012

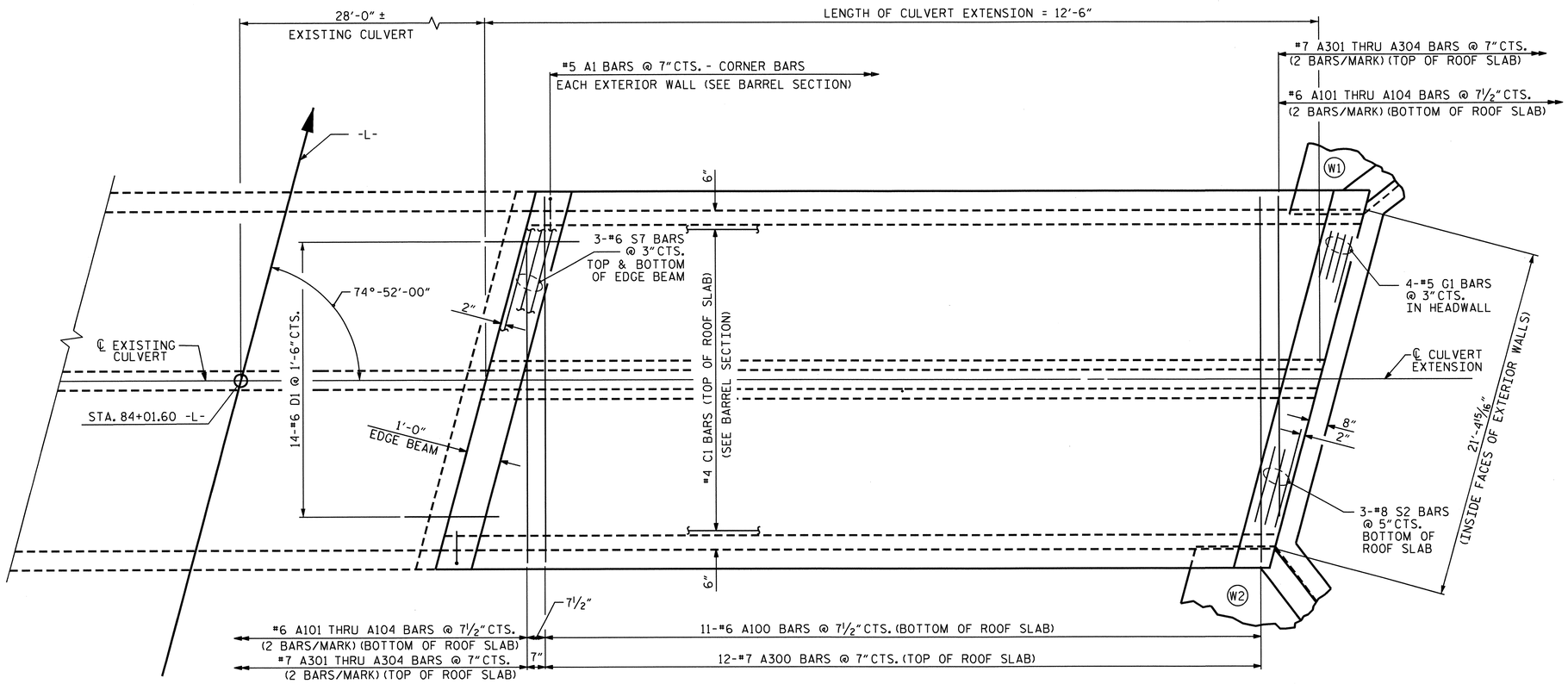

PART PLAN - ROOF SLAB

PROJECT NO. U-4412
HAYWOOD COUNTY
STATION: 84+01.60 -L-

SHEET 4 OF 7

STATE OF NORTH CAROLINA
DEPARTMENT OF TRANSPORTATION
RALEIGH

DOUBLE 10 FT. X 12 FT. CONCRETE BOX CULVERT EXTENSION

NORTH CAROLINA PROFESSIONAL SEAL 20125 ENGINEER MARSHAL G. CHEEK, JR.
11-28-12

REVISIONS						SHEET NO.
NO.	BY:	DATE:	NO.	BY:	DATE:	C-22
1			3			TOTAL SHEETS
2			4			25

STR. #4

ASSEMBLED BY : J.R. MCROY DATE : 06/2012
CHECKED BY : M.G. CHEEK DATE : 09/2012

REVISED 11-19-99 BY M.M. CHECKED BY R.W.W.
REDRAWN NOV.1990 BY TSS CHECKED BY ARB

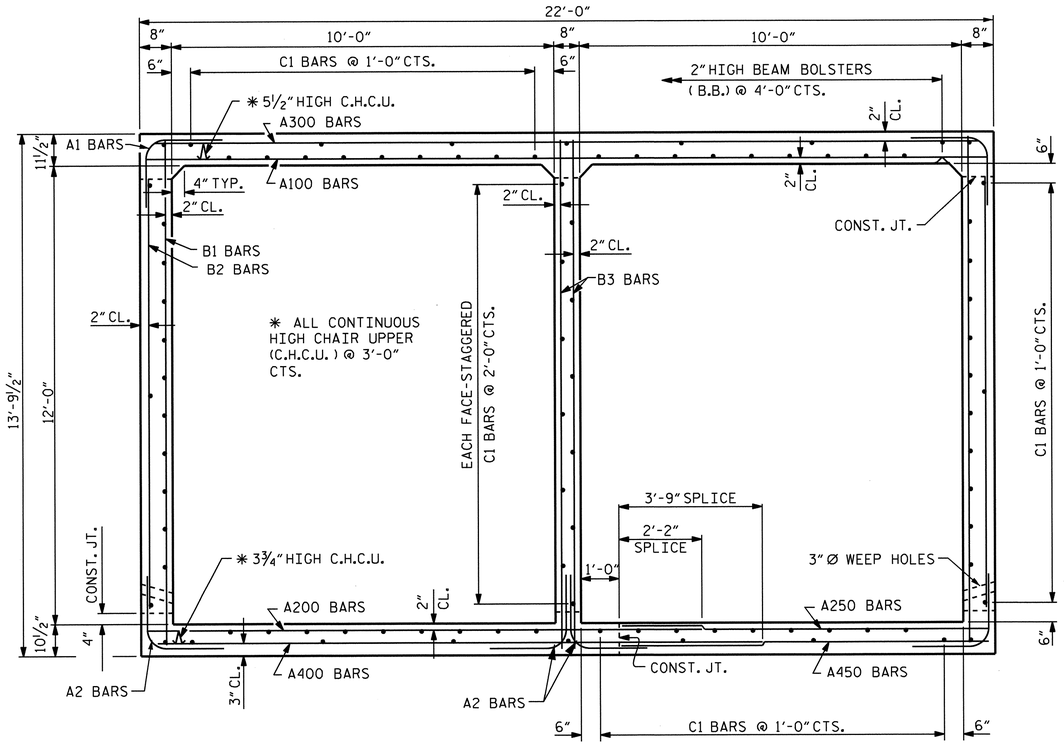

SECTION A-A

THERE ARE 92 "C" BARS IN SECTION OF BARREL.

BAR TYPES

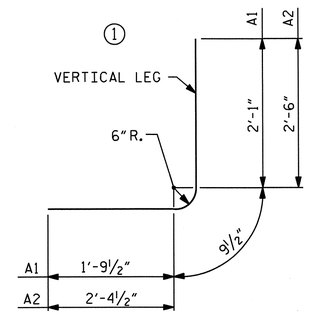

DIMENSIONS ARE OUT TO OUT

SPLICE CHART

BAR	SIZE	SPLICE LENGTH
A"200"	5	2'-2"
A"400"	7	3'-9"
C1	4	1'-11"
"S" BAR	6	2'-9"
"S" BAR	8	4'-11"

BAR SCHEDULE

BAR	NO.	SIZE	TYPE	LENGTH	WEIGHT
A1	44	#5	1	4'-8"	214
A2	88	#6	1	5'-8"	749
A100	11	#6	STR	21'-7"	357
A101	4	#6	STR	16'-6"	99
A102	4	#6	STR	11'-10"	71
A103	4	#6	STR	7'-2"	43
A104	4	#6	STR	2'-6"	15
A200	16	#5	STR	14'-4"	239
A201	1	#5	STR	11'-10"	12
A202	1	#5	STR	10'-11"	11
A203	1	#5	STR	8'-11"	9
A204	1	#5	STR	6'-11"	7
A205	1	#5	STR	4'-11"	5
A206	1	#5	STR	2'-10"	3
A207	1	#5	STR	12'-0"	13
A208	1	#5	STR	10'-0"	10
A209	1	#5	STR	8'-0"	8
A210	1	#5	STR	5'-11"	6
A211	1	#5	STR	3'-11"	4
A250	17	#5	STR	9'-10"	174
A251	1	#5	STR	9'-3"	10
A252	1	#5	STR	7'-2"	7
A253	1	#5	STR	5'-2"	5
A254	1	#5	STR	3'-2"	3
A255	1	#5	STR	9'-6"	10
A256	1	#5	STR	7'-6"	8
A257	1	#5	STR	5'-5"	6
A258	1	#5	STR	3'-5"	4
A300	12	#7	STR	21'-7"	529
A301	4	#7	STR	16'-10"	138
A302	4	#7	STR	12'-5"	102
A303	4	#7	STR	8'-1"	66
A304	4	#7	STR	3'-9"	31

BAR	NO.	SIZE	TYPE	LENGTH	WEIGHT
A400	14	#7	STR	15'-11"	455
A401	1	#7	STR	14'-10"	30
A402	1	#7	STR	11'-10"	24
A403	1	#7	STR	10'-6"	21
A404	1	#7	STR	8'-4"	17
A405	1	#7	STR	6'-2"	13
A406	1	#7	STR	3'-11"	8
A407	1	#7	STR	13'-5"	27
A408	1	#7	STR	11'-3"	23
A409	1	#7	STR	9'-1"	19
A410	1	#7	STR	6'-11"	14
A411	1	#7	STR	4'-9"	10
A450	16	#7	STR	9'-10"	322
A451	1	#7	STR	9'-6"	19
A452	1	#7	STR	7'-4"	15
A453	1	#7	STR	5'-2"	11
A454	1	#7	STR	3'-0"	6
A455	1	#7	STR	8'-7"	18
A456	1	#7	STR	6'-5"	13
A457	1	#7	STR	4'-3"	9
A458	1	#7	STR	2'-0"	4
B1	30	#4	STR	13'-3"	266
B2	44	#4	STR	11'-4"	333
B3	30	#4	STR	13'-3"	266
C1	92	#4	STR	12'-2"	748
D1	46	#6	STR	2'-6"	173
D2	6	#6	STR	1'-5"	13
G1	4	#5	STR	22'-5"	94
S2	3	#8	STR	22'-5"	180
S3	3	#8	STR	13'-8"	109
S4	3	#8	STR	9'-10"	79
S5	6	#6	STR	15'-5"	139
S6	6	#6	STR	9'-10"	89
S7	6	#6	STR	22'-5"	202

REINFORCING STEEL 6,737 LBS.

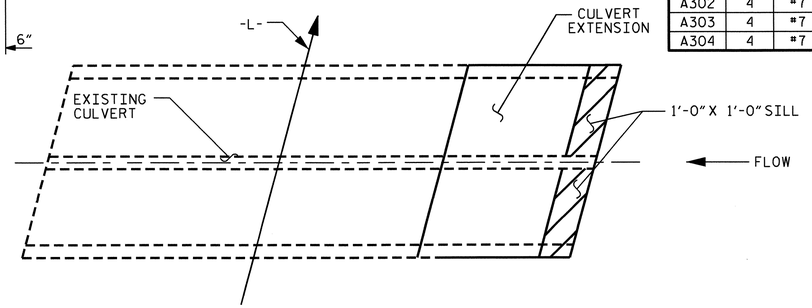

SILL LOCATION SKETCH

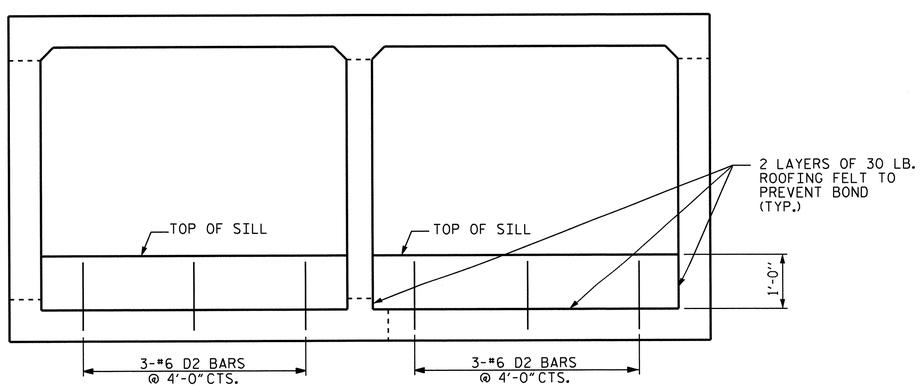

SILL DETAILS

LOOKING DOWNSTREAM

END ELEVATION

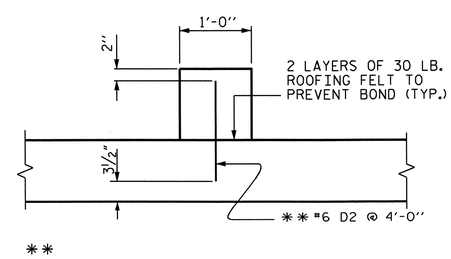

SECTION THROUGH SILL

PROJECT NO. U-4412

HAYWOOD COUNTY

STATION: 84+01.60 -L-

SHEET 5 OF 7

STATE OF NORTH CAROLINA
DEPARTMENT OF TRANSPORTATION
RALEIGH

DOUBLE 10 FT. X 12 FT. CONCRETE BOX CULVERT EXTENSION

NORTH CAROLINA PROFESSIONAL SEAL 20125 ENGINEER MARSHALL G. CHEEK, JR.
11-28-12

REVISIONS						SHEET NO.
NO.	BY:	DATE:	NO.	BY:	DATE:	C-23
1			3			TOTAL SHEETS
2			4			25

ASSEMBLED BY : J.R. MCROY DATE : 6/12
CHECKED BY : M.G. CHEEK DATE : 9/12

28-NOV-2012 10:56
R:\Structures\Final Plans\Str #4\Str #4 - U-4412_SD_CU.dgn

STR. #4

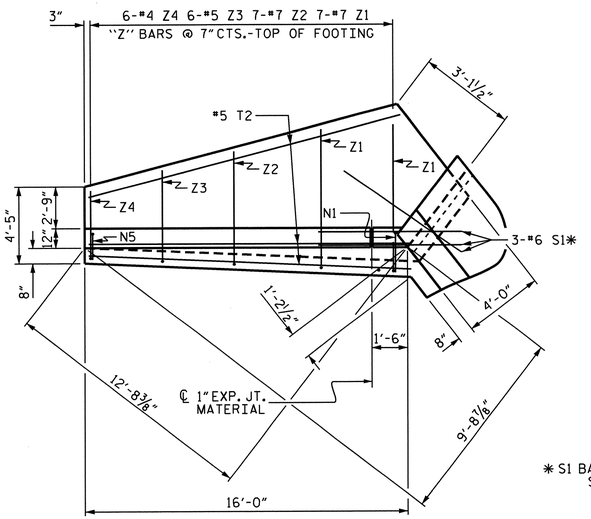

PLAN W2

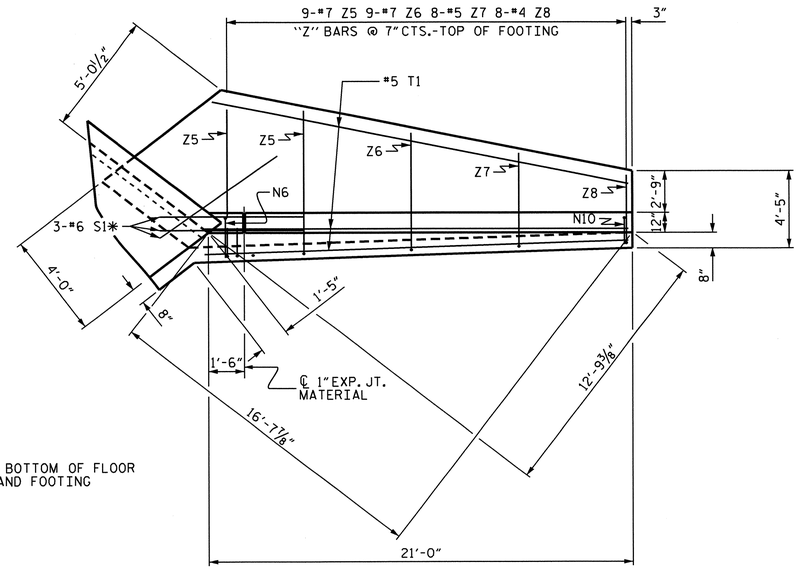

* S1 BARS @ BOTTOM OF FLOOR SLAB AND FOOTING

PLAN W1

BAR TYPES

ALL BAR DIMENSIONS ARE OUT TO OUT.

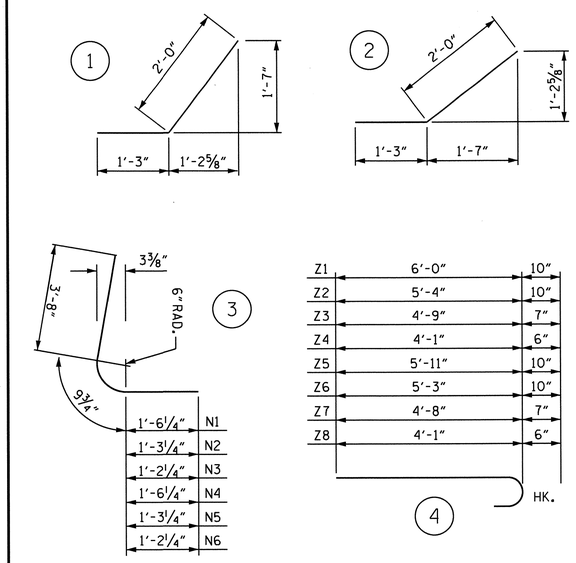

NOTE

A 3 FOOT STRIP OF FILTER FABRIC SHALL BE ATTACHED TO THE FILL FACE OF THE WING COVERING THE ENTIRE LENGTH OF THE EXPANSION JOINT.

BILL OF MATERIAL

BAR	NO.	SIZE	TYPE	LENGTH	WEIGHT
H1	10	#4	STR	14'-1"	94
H2	2	#4	STR	10'-1"	27
H3	3	#4	STR	4'-10"	10
H4	5	#4	STR	14'-6"	48
H5	10	#4	STR	19'-1"	127
H6	2	#4	STR	13'-7"	18
H7	3	#4	STR	6'-7"	13
H8	5	#4	STR	19'-3"	64
H9	20	#4	2	3'-3"	43
H10	20	#4	1	3'-3"	43
N1	12	#6	3	6'-0"	108
N2	9	#5	3	5'-9"	54
N3	5	#4	3	5'-8"	19
N4	16	#6	3	6'-0"	144
N5	12	#5	3	5'-9"	72
N6	6	#4	3	5'-8"	23
S1	6	#6	STR	6'-0"	54
T1	4	#5	STR	21'-0"	88
T2	4	#5	STR	16'-0"	67
V1	4	#6	STR	11'-0"	66
V2	4	#6	STR	9'-6"	57
V3	4	#4	STR	7'-3"	19
V4	4	#4	STR	5'-9"	15
V5	2	#4	STR	11'-4"	15
V6	2	#4	STR	9'-10"	13
V7	2	#4	STR	8'-4"	11
V8	2	#4	STR	6'-10"	9
V9	5	#4	STR	5'-6"	18
V10	5	#4	STR	7'-3"	24
V11	5	#6	STR	9'-6"	71
V12	6	#6	STR	10'-9"	97
V13	2	#4	STR	6'-9"	9
V14	2	#4	STR	7'-9"	10
V15	2	#4	STR	9'-0"	12
V16	2	#4	STR	10'-3"	14
V17	2	#4	STR	11'-4"	15
Z1	7	#7	4	6'-10"	98
Z2	7	#7	4	6'-2"	88
Z3	6	#5	4	5'-4"	33
Z4	6	#4	4	4'-7"	18
Z5	9	#7	4	6'-9"	124
Z6	9	#7	4	6'-1"	112
Z7	8	#5	4	5'-3"	44
Z8	8	#4	4	4'-7"	24

REINFORCING STEEL FOR 2 WINGS 2,132 LBS.

CLASS A CONCRETE	
2 WINGS	25.7 C.Y.
1 HEADWALL	1.0 C.Y.
1 END CURTAIN WALL	1.2 C.Y.
2 EDGE BEAMS	1.6 C.Y.
TOTAL	29.5 C.Y.

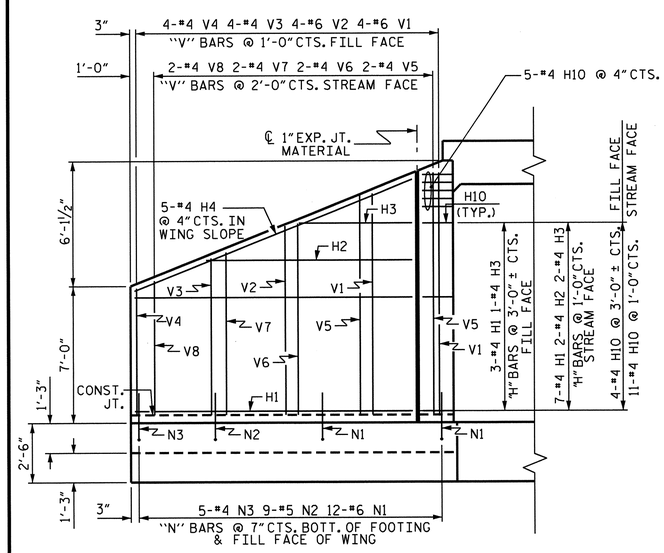

ELEVATION W2

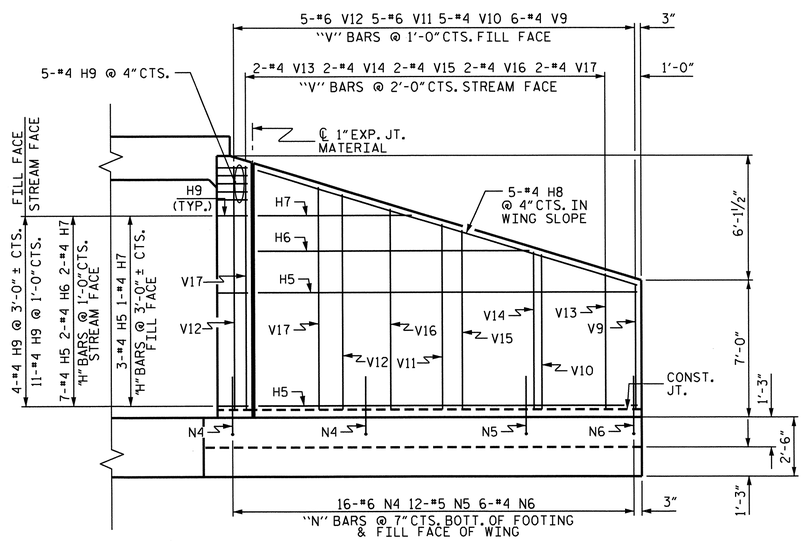

ELEVATION W1

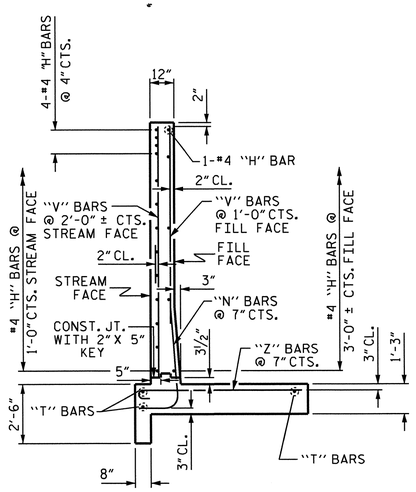

TYPICAL WING SECTION

PROJECT NO. U-4412

HAYWOOD COUNTY

STATION: 84+01.60 -L-

SHEET 6 OF 7

STATE OF NORTH CAROLINA
DEPARTMENT OF TRANSPORTATION
RALEIGH

STANDARD WINGS FOR CONCRETE BOX CULVERT

H = 12'-0" SLOPE = 2:1

75° SKEW

NORTH CAROLINA PROFESSIONAL SEAL 20125 ENGINEER MARSHALL G. CHEEK, JR.
11-28-12

REVISIONS						SHEET NO.
NO.	BY:	DATE:	NO.	BY:	DATE:	C-24
1			3			TOTAL SHEETS
2			4			25

ASSEMBLED BY : J.R. MCROY DATE : 07/2012
CHECKED BY : M.G. CHEEK DATE : 08/2012

LOAD AND RESISTANCE FACTOR RATING (LRFR) SUMMARY FOR REINFORCED CONCRETE BOX CULVERTS

LEVEL		VEHICLE	WEIGHT (W) (TONS)	CONTROLLING LOAD RATING (#)	MINIMUM RATING FACTORS (RF)	TONS = W × RF	STRENGTH I LIMIT STATE									COMMENT NUMBER
							LIVE-LOAD FACTORS $\gamma_{(LL)}$	MOMENT				SHEAR				
								RATING FACTOR	BOX NO.	ELEMENT TYPE	DISTANCE FROM LEFT END OF ELEMENT (ft)	RATING FACTOR	BOX NO.	ELEMENT TYPE	DISTANCE FROM LEFT END OF ELEMENT (ft)	
DESIGN LOAD RATING		HL-93 (INVENTORY)	N/A	1	1.21	--	1.75	1.21	1	Exterior Wall	0.97	1.32	1	Bottom Slab	9.70	
		HL-93 (OPERATING)	N/A		1.57	--	1.35	1.57	1	Exterior Wall	0.97	1.71	1	Bottom Slab	9.70	
		HS-20 (INVENTORY)	36.000	2	1.32	47.51	1.75	1.42	1	Exterior Wall	0.97	1.32	1	Bottom Slab	9.70	
		HS-20 (OPERATING)	36.000		1.71	61.59	1.35	1.85	1	Exterior Wall	0.97	1.71	1	Bottom Slab	9.70	
LEGAL LOAD RATING	SINGLE VEHICLE (SV)	SNSH	13.500		2.04	27.51	1.40	2.04	1	Exterior Wall	6.78	2.65	1	Bottom Slab	12.00	
		SNGARBS2	20.000		2.04	40.76	1.40	2.04	1	Exterior Wall	6.78	2.63	1	Bottom Slab	9.70	
		SNAGRIS2	22.000		2.04	44.83	1.40	2.04	1	Exterior Wall	6.78	2.40	1	Bottom Slab	9.70	
		SNCOTTS3	27.250		1.51	41.24	1.40	1.51	1	Exterior Wall	0.97	1.70	1	Top Slab	9.64	
		SNAGGRS4	34.925		1.52	52.96	1.40	1.82	1	Exterior Wall	0.97	1.52	1	Bottom Slab	9.70	
		SNS5A	35.550		1.68	59.71	1.40	1.71	1	Exterior Wall	0.97	1.68	1	Bottom Slab	9.70	
		SNS6A	39.950		1.51	60.42	1.40	1.71	1	Exterior Wall	0.97	1.51	1	Bottom Slab	9.70	
		SNS7B	42.000		1.51	63.28	1.40	1.82	1	Exterior Wall	0.97	1.51	1	Bottom Slab	9.70	
	TRUCK TRACTOR SEMI-TRAILER (TTST)	TNAGRIT3	33.000		1.64	53.99	1.40	2.04	1	Exterior Wall	6.78	1.64	1	Bottom Slab	9.70	
		TNT4A	33.075		1.71	56.39	1.40	1.71	1	Exterior Wall	0.97	1.94	1	Bottom Slab	9.70	
		TNT6A	41.600		1.67	69.58	1.40	1.82	1	Exterior Wall	0.97	1.67	1	Bottom Slab	9.70	
		TNT7A	42.000		1.66	69.82	1.40	1.87	1	Exterior Wall	0.97	1.66	1	Bottom Slab	9.70	
		TNT7B	42.000		1.71	71.61	1.40	1.71	1	Exterior Wall	0.97	1.78	1	Bottom Slab	9.70	
		TNAGRIT4	43.000		1.62	69.58	1.40	1.65	1	Exterior Wall	0.97	1.62	1	Bottom Slab	9.70	
		TNAGT5A	45.000		1.38	61.97	1.40	1.68	1	Exterior Wall	0.97	1.38	1	Bottom Slab	9.70	
		TNAGT5B	45.000	3	1.27	57.01	1.40	1.71	1	Exterior Wall	0.97	1.27	1	Bottom Slab	9.70	

LOAD FACTORS:

DESIGN LOAD RATING FACTORS

LOAD TYPE	MAX FACTOR	MIN FACTOR
DC	1.25	0.90
DW	1.50	0.65
EV	1.30	0.90
EH	1.35	0.90
ES	1.35	0.90
LS	1.75	--
WA	1.00	--

NOTE:

RATING FACTORS ARE BASED ON THE STRENGTH I LIMIT STATE.

COMMENTS:

1.
2.
3.
4.

(#) CONTROLLING LOAD RATING

(1) DESIGN LOAD RATING (HL-93)

(2) DESIGN LOAD RATING (HS-20)

(3) LEGAL LOAD RATING **

** SEE CHART FOR VEHICLE TYPE

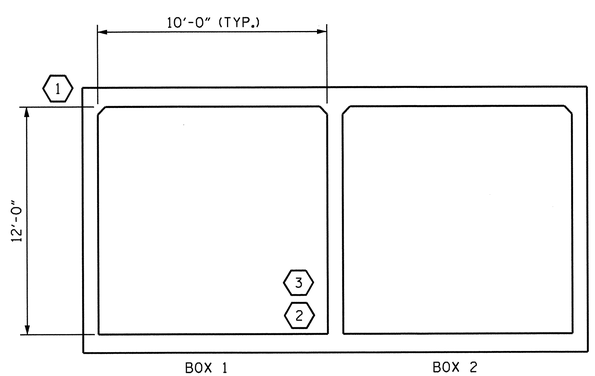

LRFR SUMMARY

(LOOKING DOWNSTREAM)

PROJECT NO. U-4412

HAYWOOD COUNTY

STATION: 84+01.60 -L-

SHEET 7 OF 7

STATE OF NORTH CAROLINA
DEPARTMENT OF TRANSPORTATION
RALEIGH

STANDARD

LRFR SUMMARY FOR REINFORCED CONCRETE BOX CULVERTS (NON-INTERSTATE TRAFFIC)

NORTH CAROLINA PROFESSIONAL SEAL 20125 ENGINEER MARSHALL G. CHEEK, JR.
11-28-12

REVISIONS						SHEET NO.
NO.	BY:	DATE:	NO.	BY:	DATE:	C-25
1			3			TOTAL SHEETS
2			4			25

ASSEMBLED BY : J.R. MCROY DATE : 06/2012
CHECKED BY : M.G. CHEEK DATE : 08/2012

DRAWN BY : WMC 7/11
CHECKED BY : GM 7/11

REV. 10/1/11 MAA/GM

28-NOV-2012 10:56
R:\Structures\Final Plans\Str #4\Str #4 - U-4412_SD_CU.dgn
mpoole

STR. #4 STD. NO. LRFR5

BM #1 CHISLED SQUARE IN BASE OF TRANSFORMER STA. 9+91.92 -BY1- 0.73' RT.
EL. = 2642.05' N 661322 E 813253

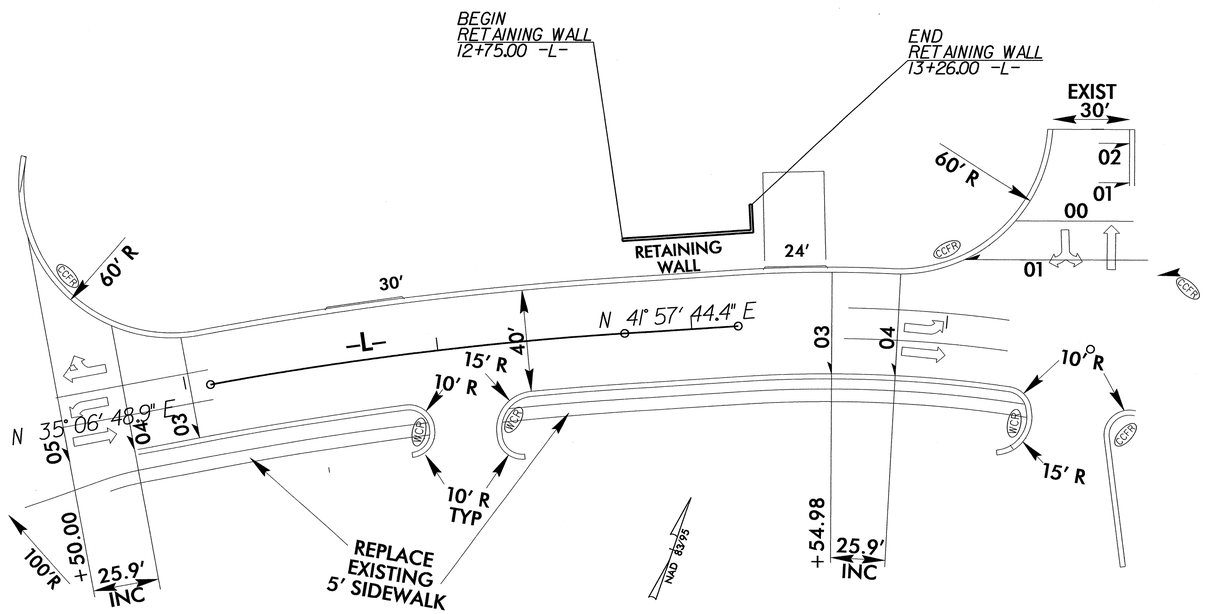

LOCATION SKETCH

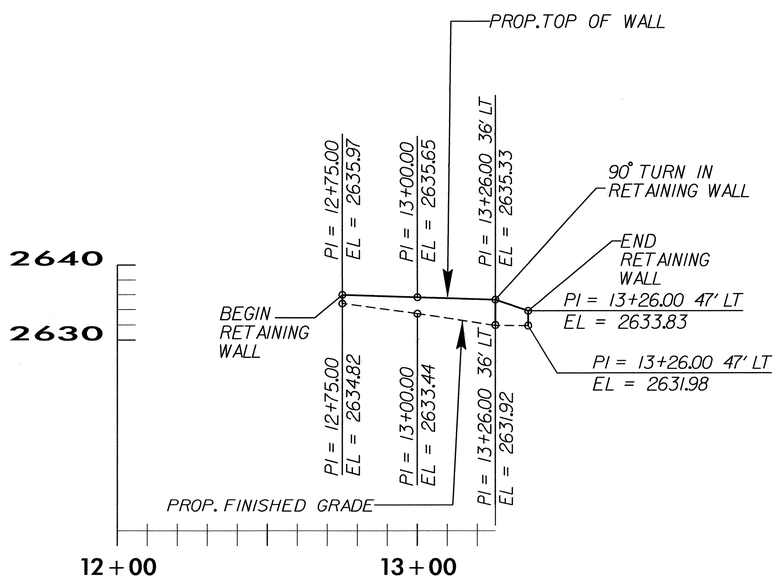

GEOTECHNICAL ENGINEER	ENGINEER
NORTH CAROLINA PROFESSIONAL SEAL 29869 ENGINEER SHANE C CLARK	
S C Clark 8-10-12 SIGNATURE DATE	SIGNATURE DATE

SEGMENTAL GRAVITY RETAINING WALL ELEVATIONS

-L- STA	OFFSET FROM ℄ (LEFT)	ELEV @ TOP OF WALL	* PROPOSED FINISHED GRADE	* EXPOSED WALL HEIGHT	** DESIGN WALL HEIGHT "H"
12+75.00	36.00	2635.97	2634.82	1.15	0.65
13+00.00	36.00	2635.65	2633.44	2.21	1.71
13+26.00	36.00	2635.33	2631.92	3.41	2.91
13+26.00	47.00	2633.83	2631.98	1.85	1.35

* ELEVATION @ PROPOSED FINISHED GRADE AND EXPOSED WALL HEIGHT DO NOT INCLUDE EMBEDMENT DEPTH

** FOR DESIGN WALL HEIGHT "H", SEE SHEET 2 OF 2

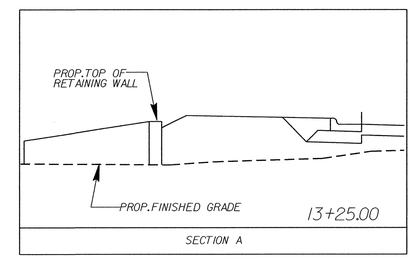

TOTAL STRUCTURE QUANTITIES

SEGMENTAL GRAVITY RETAINING WALLS	114	SQ. FT.

PROJECT NO.: U-4412
HAYWOOD **COUNTY**
STATION: 12+75.00 -L- TO 13+26.00 -L-
SHEET 1 OF 2

GEOTECHNICAL ENGINEERING UNIT

- [ ] EASTERN REGIONAL OFFICE
- [x] WESTERN REGIONAL OFFICE
- [ ] CONTRACT OFFICE

STATE OF NORTH CAROLINA DEPARTMENT OF TRANSPORTATION RALEIGH

SEGMENTAL GRAVITY RETAINING WALL NO. 3

REVISIONS							SHEET NO.
NO.	BY	DATE	NO.	BY	DATE		W-1
1	–	–	3	–	–		TOTAL SHEETS
2	–	–	4	–	–		8

PREPARED BY:	J.T.W.	DATE: 5-10-12
REVIEWED BY:	S.C.C.	DATE: 5-14-12

GEOTECHNICAL ENGINEER	ENGINEER
NORTH CAROLINA PROFESSIONAL SEAL 29869 ENGINEER SHANE C CLARK	
SIGNATURE DATE 8-10-12	SIGNATURE DATE

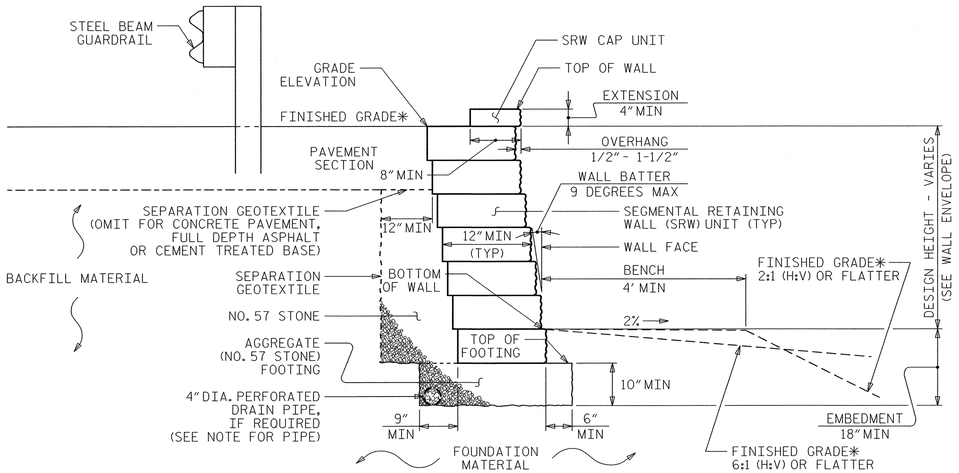

SEGMENTAL GRAVITY WALL - TYPICAL SECTION

*SEE ROADWAY PLANS FOR FINISHED GRADE DETAILS.

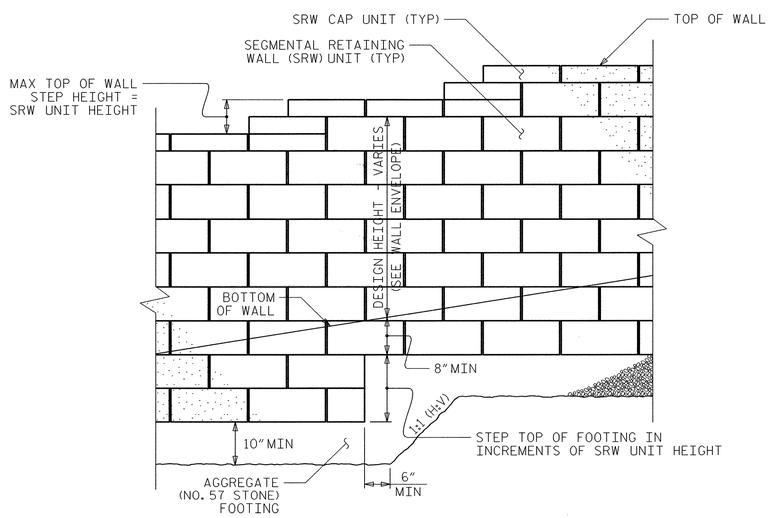

SEGMENTAL GRAVITY WALL - TYPICAL ELEVATION

NOTES:

FOR SEGMENTAL GRAVITY RETAINING WALLS, SEE SEGMENTAL GRAVITY RETAINING WALLS PROVISION.

FOR STEEL BEAM GUARDRAIL, SEE ROADWAY PLANS AND SECTION 862 OF THE STANDARD SPECIFICATIONS.
FREEZE-THAW DURABLE SRW UNITS THAT MEET ARTICLE 1040-4 OF THE STANDARD SPECIFICATIONS ARE REQUIRED.

USE SRW UNITS WITH A WEATHERED COBBLESTONE FACE FOR RETAINING WALL NO. 3.

USE SRW UNITS WITH A TAN OR GRAY COLOR FOR RETAINING WALL NO. 3.

A DRAIN PIPE IS REQUIRED FOR RETAINING WALL NO. 3. DAYLIGHT DRAINS AT ENDS OF THE WALL.

BEFORE BEGINNING SEGMENTAL GRAVITY WALL DESIGN FOR RETAINING WALL NO. 3, SURVEY WALL LOCATION AND SUBMIT A REVISED WALL PROFILE VIEW (WALL ENVELOPE) FOR REVIEW. DO NOT START WALL DESIGN OR CONSTRUCTION UNTIL THE REVISED WALL ENVELOPE IS ACCEPTED.

DESIGN RETAINING WALL NO. 3 FOR WALL HEIGHTS EQUAL TO THE DESIGN HEIGHT PLUS DEPTH TO TOP OF FOOTING (DIFFERENCE BETWEEN GRADE ELEVATION AND TOP OF FOOTING ELEVATION).

DESIGN RETAINING WALL NO. 3 FOR THE FOLLOWING:
1) MAXIMUM FACTORED VERTICAL STRESS ON FOUNDATON MATERIAL = 1500 LB/SF
2) MINIMUM EMBEDMENT ELEVATION = 2 FT BELOW FINISHED GRADE
3) IN-SITU ASSUMED MATERIAL PARAMETERS:

MATERIAL TYPE	UNIT WEIGHT (γ) LB/CF	FRICTION ANGLE (ϕ) DEGREES	COHESION (c) LB/SF
BACKFILL	110	38	0
FOUNDATION	120	30	0

DO NOT PLACE NO. 57 STONE FOR FOOTINGS FOR RETAINING WALL NO. 3 UNTIL EXCAVATION DIMENSIONS AND FOUNDATION MATERIAL ARE APPROVED.

PREPARED BY: JTW	DATE: 5-10-12
REVIEWED BY: SCC	DATE: 5-14-12

PROJECT NO.: U-4412
HAYWOOD ***COUNTY***
STATION: 12+75.00 -L- TO 13+26.00 -L-
SHEET 2 OF 2

GEOTECHNICAL ENGINEERING UNIT

☐ *EASTERN REGIONAL OFFICE*
☒ *WESTERN REGIONAL OFFICE*
☐ *CONTRACT OFFICE*

STATE OF NORTH CAROLINA
DEPARTMENT OF TRANSPORTATION
RALEIGH

SEGMENTAL GRAVITY RETAINING WALL NO. 3

REVISIONS						SHEET NO.
NO.	BY	DATE	NO.	BY	DATE	W-2
1	_	_	3	_	_	TOTAL SHEETS
2	_	_	4	_	_	8

GEOTECHNICAL ENGINEER	ENGINEER
NORTH CAROLINA PROFESSIONAL SEAL 29869 ENGINEER SHANE C. CLARK	
SIGNATURE DATE 8-10-12	SIGNATURE DATE

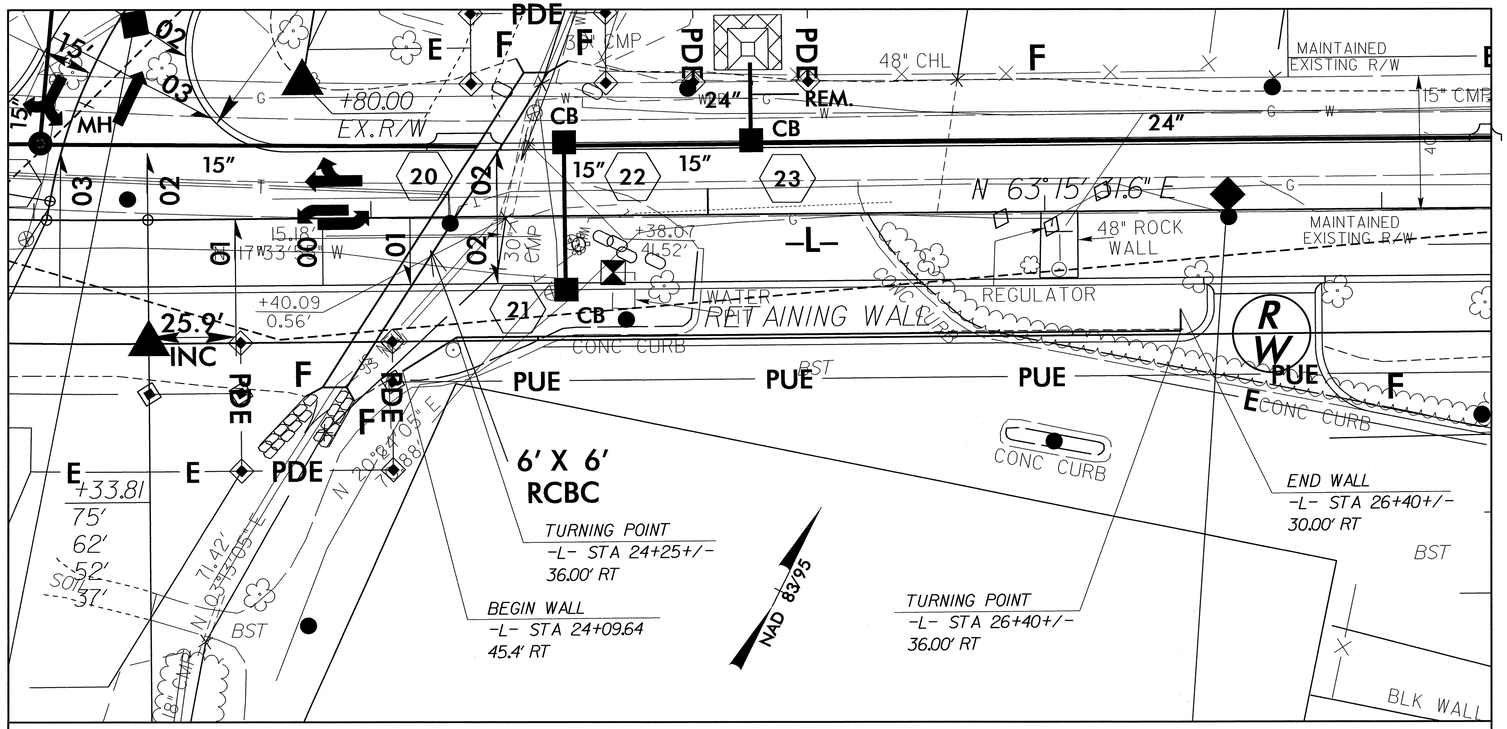

LOCATION SKETCH

TOTAL STRUCTURE QUANTITIES		
MSE RETAINING WALL NO. 1	820	SQ. FT.

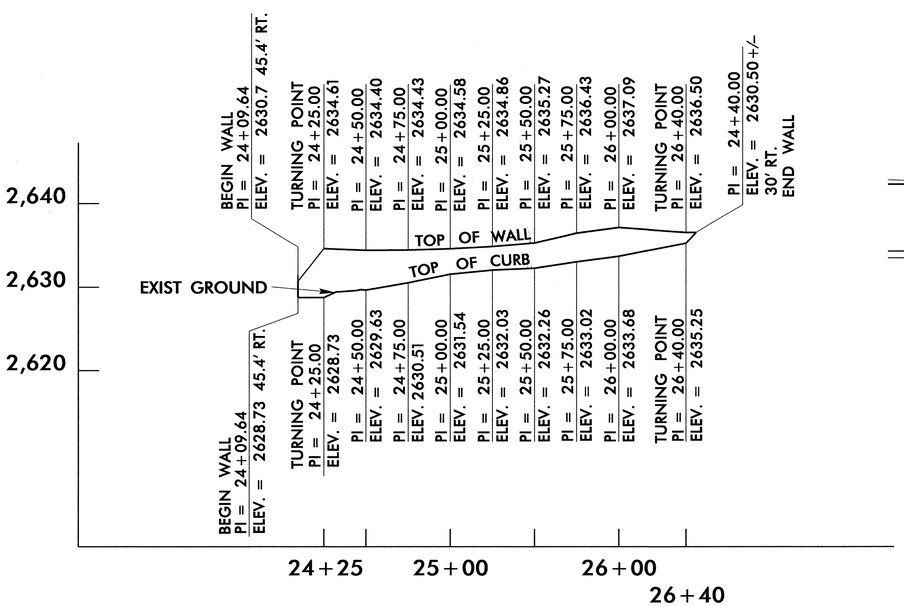

WALL ENEVELOPE

SEE PLAN VIEW FOR OFFSET DETAILS

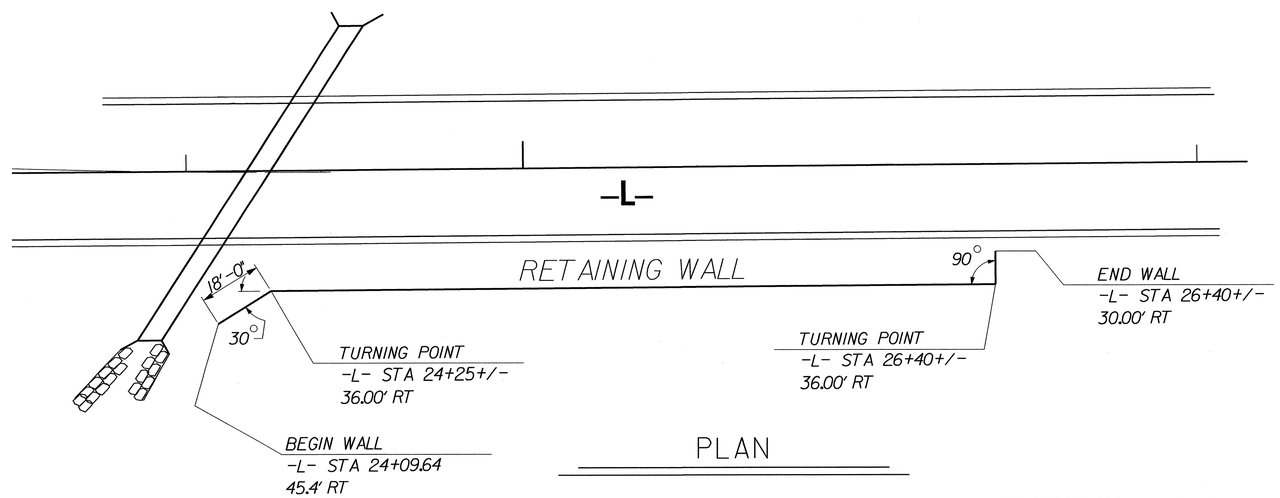

PLAN

PROJECT NO.: U-4412

HAYWOOD **COUNTY**

STATION: 24+09.64 -L- TO 26+40.00 -L-

SHEET 1 OF 3

PREPARED BY: E.J. SALVO	DATE: 12/10
REVIEWED BY: S.C. CLARK	DATE: 1/11

GEOTECHNICAL ENGINEERING UNIT

☐ *EASTERN REGIONAL OFFICE*
☒ *WESTERN REGIONAL OFFICE*
☐ *CONTRACT OFFICE*

STATE OF NORTH CAROLINA
DEPARTMENT OF TRANSPORTATION
RALEIGH

MSE RETAINING WALL WITH SRW UNITS

REVISIONS						SHEET NO.
NO.	BY	DATE	NO.	BY	DATE	W-3
1			3			TOTAL SHEETS
2			4			8

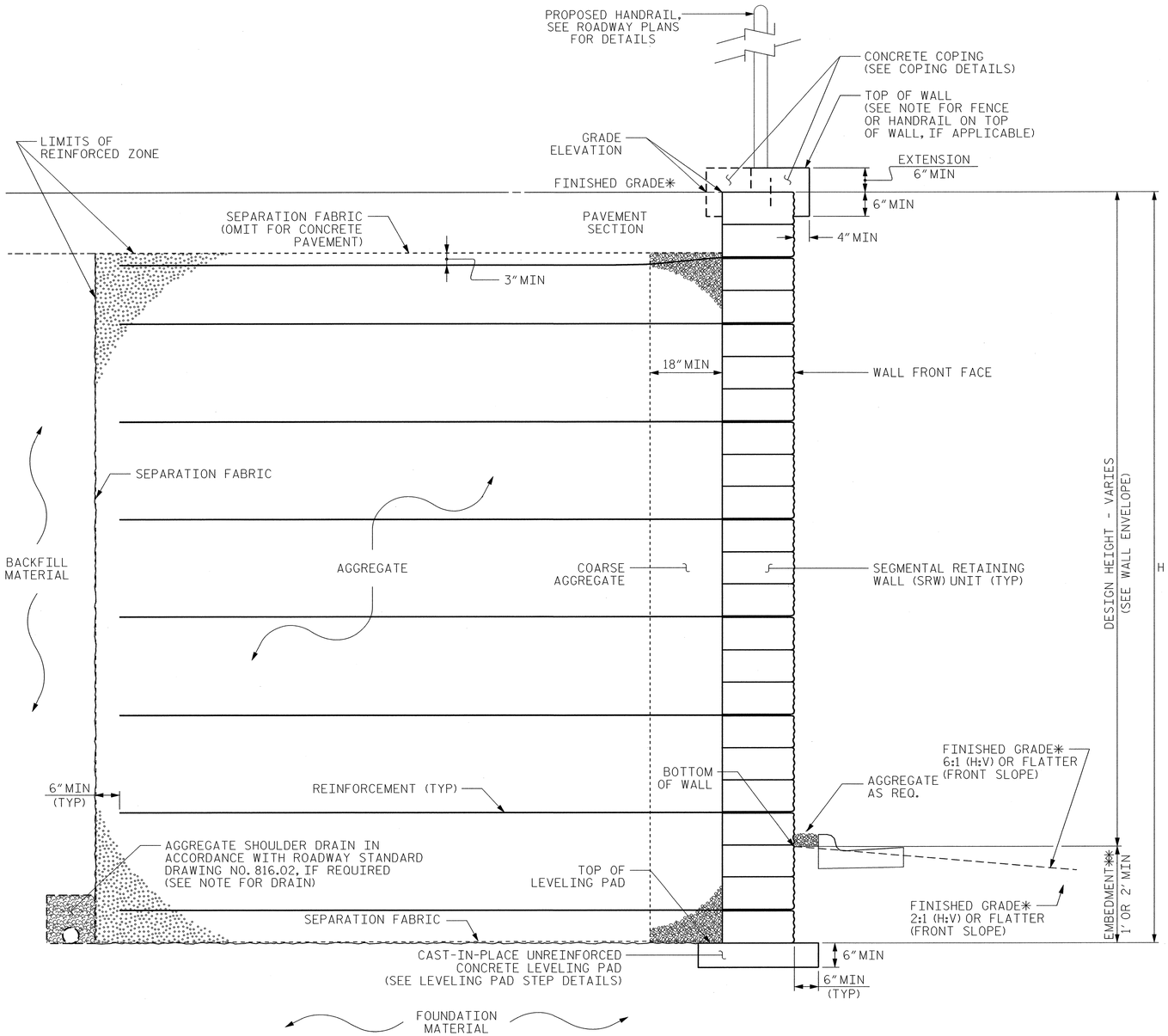

MSE WALL WITH SRW UNITS - TYPICAL SECTION

*SEE ROADWAY PLANS FOR FINISHED GRADE DETAILS.
**SEE MSE RETAINING WALLS PROVISION FOR EMBEDMENT REQUIREMENTS.

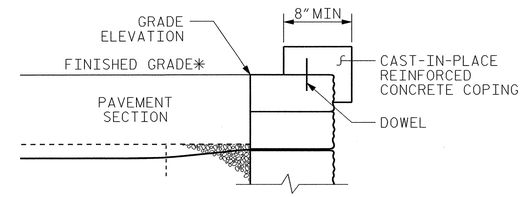

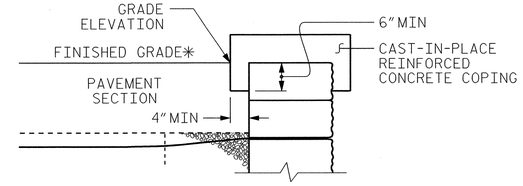

COPING DETAILS

AT THE CONTRACTOR'S OPTION, CONNECT COPING TO SRW UNITS WITH DOWELS OR EXTEND COPING DOWN BACK OF SRW UNITS.
*SEE ROADWAY PLANS FOR FINISHED GRADE DETAILS.

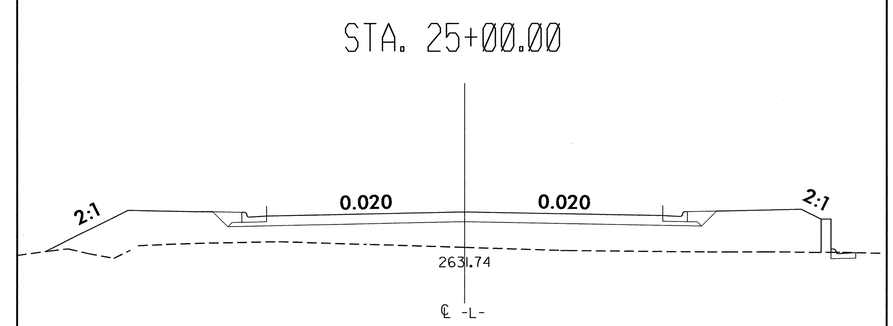

SECTION SHOWING WALL PARALLEL TO -L-

FOR DETAILS ON WINGS, SEE PLAN VIEW

GEOTECHNICAL ENGINEER

NORTH CAROLINA PROFESSIONAL SEAL 29869 ENGINEER SHANE C. CLARK

SIGNATURE DATE

ENGINEER

SIGNATURE DATE

PROJECT NO.: U-4412
HAYWOOD **COUNTY**
STATION: 24+09.64 -L- TO 26+40.00 -L-

SHEET 2 OF 3

GEOTECHNICAL ENGINEERING UNIT

☐ *EASTERN REGIONAL OFFICE*
☒ *WESTERN REGIONAL OFFICE*
☐ *CONTRACT OFFICE*

STATE OF NORTH CAROLINA
DEPARTMENT OF TRANSPORTATION
RALEIGH

MSE RETAINING WALL WITH SRW UNITS

REVISIONS						SHEET NO.
NO.	BY	DATE	NO.	BY	DATE	W-4
1	_	_	3	_	_	TOTAL SHEETS
2	_	_	4	_	_	8

PREPARED BY:	E. J. SALVO	DATE: 12/10	
REVIEWED BY:	S. C. CLARK	DATE: 1/11	

GEOTECHNICAL ENGINEER	ENGINEER
NORTH CAROLINA PROFESSIONAL SEAL 29869 ENGINEER SHANE C. CLARK	
SIGNATURE DATE 8/18/12	SIGNATURE DATE

NOTES:

FOR MECHANICALLY STABILIZED EARTH (MSE) RETAINING WALLS, SEE MECHANICALLY STABILIZED EARTH RETAINING WALLS PROVISION.

A HANDRAIL IS REQUIRED ON TOP OF RETAINING WALL. SEE ROADWAY PLANS FOR HANDRAIL ATTACHMENT DETAILS.

USE COARSE AGGREGATE IN THE REINFORCED ZONE FOR RETAINING WALL.

USE AN MSE WALL SYSTEM WITH SEGMENTAL RETAINING WALL UNITS FOR RETAINING WALL.

WHEN USING AN MSE WALL SYSTEM WITH SEGMENTAL RETAINING WALL UNITS FOR RETAINING WALL, FREEZE-THAW DURABLE SRW UNITS ARE REQUIRED IN ACCORDANCE WITH THE MSE RETAINING WALLS PROVISION.

CAST-IN-PLACE REINFORCED CONCRETE COPING IS REQUIRED FOR RETAINING WALL.

USE SEGMENTAL RETAINING WALL UNITS WITH A WEATHERED COBBLESTONE FACE FOR RETAINING WALL.

USE SEGMENTAL RETAINING WALL UNITS WITH A TAN OR GRAY COLOR FOR RETAINING WALL.

A DRAIN IS REQUIRED FOR RETAINING WALL. DAYLIGHT DRAIN NEAR AT END OF WALL NEAR STATION 24+09 -L-

BEFORE BEGINNING MSE WALL DESIGN FOR RETAINING WALL, SURVEY WALL LOCATION AND SUBMIT A REVISED WALL PROFILE VIEW (WALL ENVELOPE) FOR REVIEW. DO NOT START WALL DESIGN OR CONSTRUCTION UNTIL THE REVISED WALL ENVELOPE IS ACCEPTED.

DESIGN RETAINING WALL FOR WALL HEIGHTS EQUAL TO THE DESIGN HEIGHT (DIFFERENCE BETWEEN GRADE ELEVATION AND BOTTOM OF WALL ELEAVATION) PLUS EMBEDMENT (DIFFERENCE BETWEEN BOTTOM OF WALL ELEVATION AND TOP OF LEVELING PAD ELEVATION).

DESIGN RETAINING WALL NO. _ FOR THE FOLLOWING:
1) MINIMUM DESIGN LIFE = 75 YEARS
2) MAXIMUM FACTORED RESISTANCE = 2500 PSF
3) MINIMUM EMBEDMENT ELEVATION = 2 FT BELOW FINISHED GRADE

4) AGGREGATE PARAMETERS:

STANDARD SIZE NO. (IN ACCORDANCE WITH SECTION 1005 OF THE STANDARD SPECIFICATIONS)	UNIT WEIGHT (γ) PCF	FRICTION ANGLE (ϕ) DEGREES	COHESION (c) PSF
5, 57, 57M, 6M, 67 AND 78M (COARSE AGGREGATE)	110	38	0

5) IN-SITU ASSUMED MATERIAL PARAMETERS:

MATERIAL TYPE	UNIT WEIGHT (γ) PCF	FRICTION ANGLE (ϕ) DEGREES	COHESION (c) PSF
BACKFILL	120	30	0
FOUNDATION	120	30	0

DESIGN RETAINING WALL FOR A LIVE LOAD (TRAFFIC) SURCHARGE.

EXISTING OR FUTURE OBSTRUCTIONS SUCH AS FOUNDATIONS, GUARDRAIL, FENCE OR HANDRAIL POSTS, PAVEMENTS, PIPES, INLETS OR UTILITIES MAY INTERFERE WITH REINFORCEMENT FOR RETAINING WALL.

DO NOT PLACE LEVELING PAD CONCRETE, AGGREGATE OR REINFORCEMENT FOR RETAINING WALL UNTIL OBTAINING APPROVAL OF THE EXCAVATION DIMENSIONS AND FOUNDATION MATERIAL.

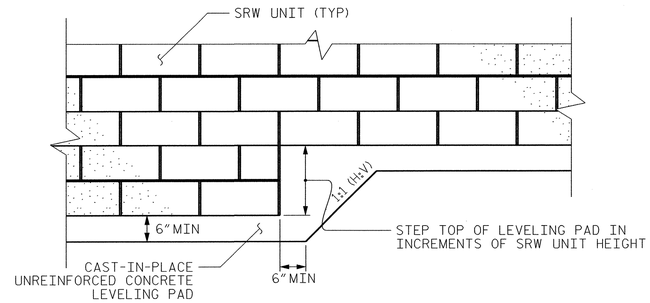

SEGMENTAL RETAINING WALL (SRW) UNITS

LEVELING PAD STEP DETAILS

PREPARED BY: E.J. SALVO	DATE: 12/10
REVIEWED BY: S.C. CLARK	DATE: 1/11

PROJECT NO.: U-4412
HAYWOOD ***COUNTY***
STATION: 24+09.64 -L- TO 26+40.00 -L-
SHEET 3 OF 3

GEOTECHNICAL ENGINEERING UNIT
☐ *EASTERN REGIONAL OFFICE*
☒ *WESTERN REGIONAL OFFICE*
☐ *CONTRACT OFFICE*

STATE OF NORTH CAROLINA
DEPARTMENT OF TRANSPORTATION
RALEIGH

MSE RETAINING WALL WITH SRW UNITS

REVISIONS							SHEET NO.
NO.	BY	DATE	NO.	BY	DATE		W-5
1	_	_	3	_	_		TOTAL SHEETS
2	_	_	4	_	_		8

GEOTECHNICAL ENGINEER	ENGINEER
NORTH CAROLINA PROFESSIONAL SEAL 29869 ENGINEER SHANE C. CLARK SIGNATURE: S. Clark DATE: 8-10-12	SIGNATURE DATE

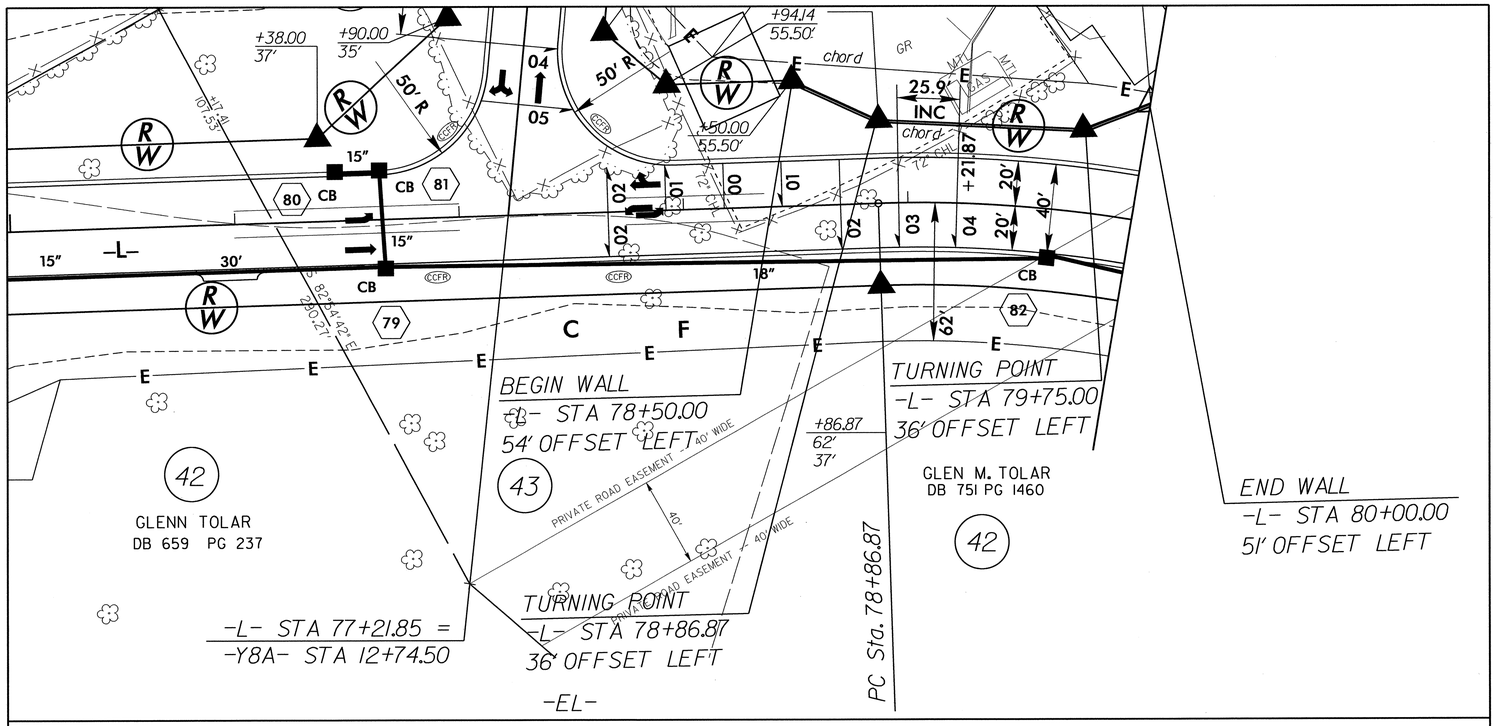

LOCATION SKETCH

TOTAL STRUCTURE QUANTITIES		
MSE RETAINING WALL NO. 2	1415	SQ. FT.

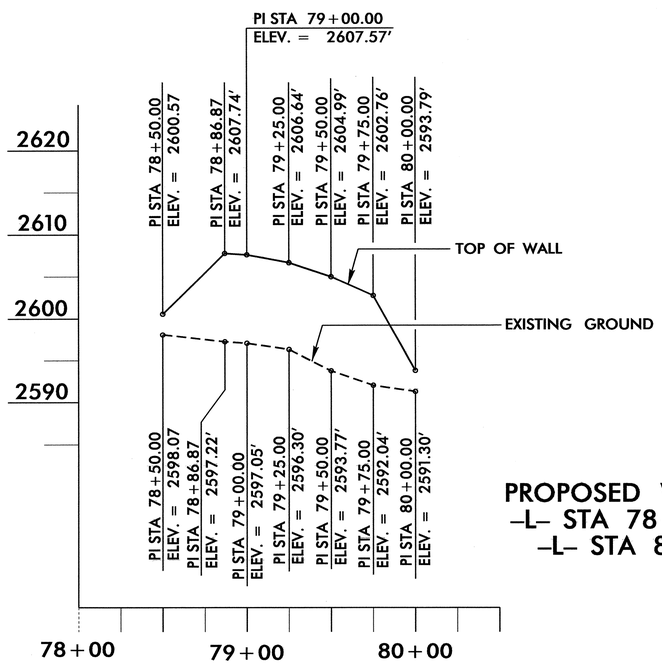

PROPOSED WALL 2 ENVELOPE
-L- STA 78+50.00, 54' LT TO
-L- STA 80+00.00, 51' LT

WALL ENEVELOPE

SEE PLAN VIEW FOR OFFSET DETAILS

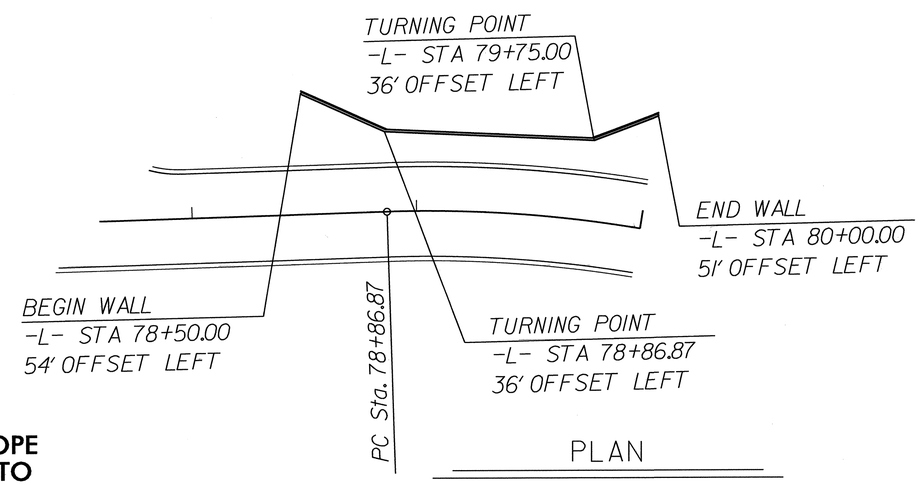

PLAN

PROJECT NO.: U-4412
HAYWOOD ***COUNTY***
STATION: 78+50.00 -L- TO 80+00.00 -L-

SHEET 1 OF 3

PREPARED BY: E.J. SALVO	DATE: 01/11
REVIEWED BY: S.C. CLARK	DATE: 01/11

GEOTECHNICAL ENGINEERING UNIT

☐ *EASTERN REGIONAL OFFICE*
☒ *WESTERN REGIONAL OFFICE*
☐ *CONTRACT OFFICE*

STATE OF NORTH CAROLINA
DEPARTMENT OF TRANSPORTATION
RALEIGH

MSE RETAINING WALL
WITH SRW UNITS

REVISIONS						SHEET NO.
NO.	BY	DATE	NO.	BY	DATE	W-6
1			3			TOTAL SHEETS
2			4			8

GEOTECHNICAL ENGINEER	ENGINEER
NORTH CAROLINA PROFESSIONAL SEAL 29869 ENGINEER SHANE C. CLARK	
S. Clark 8-1-2012	
SIGNATURE DATE	SIGNATURE DATE

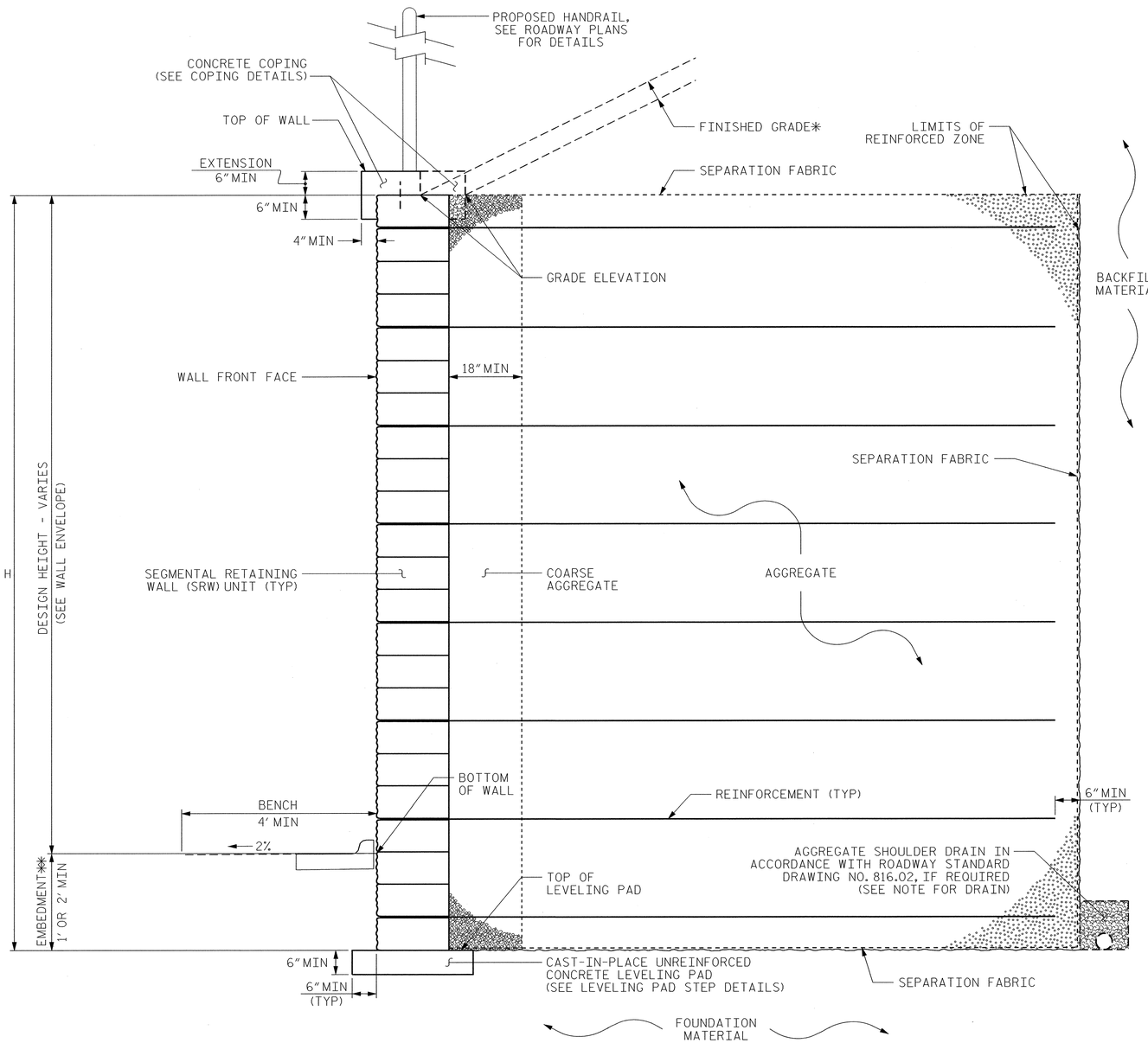

MSE WALL WITH SRW UNITS - TYPICAL SECTION

*SEE ROADWAY PLANS FOR FINISHED GRADE AND DITCH DETAILS.
**SEE MSE RETAINING WALLS PROVISION FOR EMBEDMENT REQUIREMENTS.

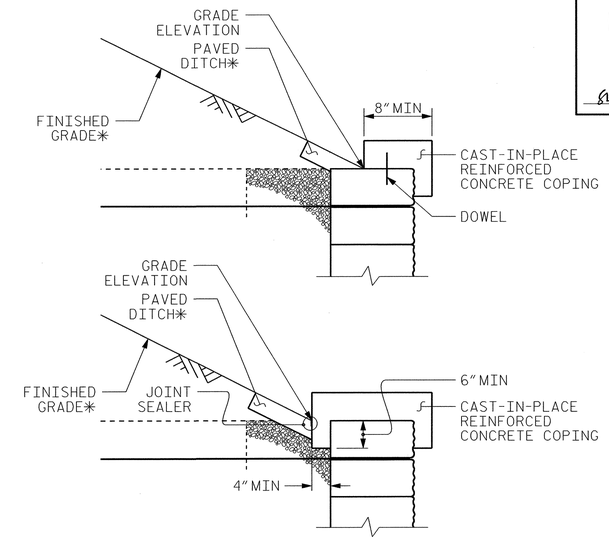

COPING DETAILS

AT THE CONTRACTOR'S OPTION, CONNECT COPING TO SRW UNITS WITH DOWELS OR EXTEND COPING DOWN BACK OF SRW UNITS.
*SEE ROADWAY PLANS FOR FINISHED GRADE AND DITCH DETAILS.

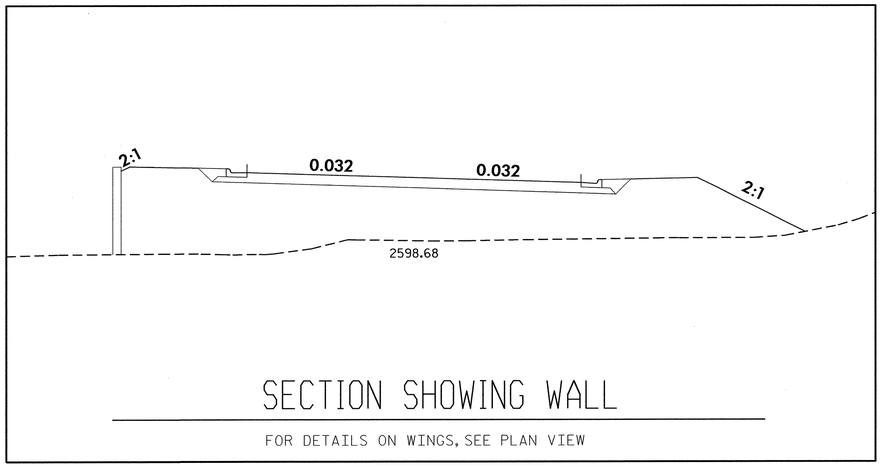

SECTION SHOWING WALL

FOR DETAILS ON WINGS, SEE PLAN VIEW

PROJECT NO.: U-4412
HAYWOOD ***COUNTY***
STATION: 78+50.00 -L- TO 80+00.00 -L-
SHEET 2 OF 3

GEOTECHNICAL ENGINEERING UNIT
☐ *EASTERN REGIONAL OFFICE*
☒ *WESTERN REGIONAL OFFICE*
☐ *CONTRACT OFFICE*

STATE OF NORTH CAROLINA
DEPARTMENT OF TRANSPORTATION
RALEIGH

MSE RETAINING WALL WITH SRW UNITS

REVISIONS							SHEET NO. W-7
NO.	BY	DATE	NO.	BY	DATE		TOTAL SHEETS 8
1	–	–	3	–	–		
2	–	–	4	–	–		

PREPARED BY:	E. J. SALVO	DATE: 01/11
REVIEWED BY:	S. C. CLARK	DATE: 01/11

GEOTECHNICAL ENGINEER	ENGINEER
NORTH CAROLINA PROFESSIONAL SEAL 29869 ENGINEER SHANE C. CLARK	
SIGNATURE DATE 8-10-12	SIGNATURE DATE

NOTES:

FOR MECHANICALLY STABILIZED EARTH (MSE) RETAINING WALLS, SEE MECHANICALLY STABILIZED EARTH RETAINING WALLS PROVISION.

A FENCE OR HANDRAIL IS REQUIRED ON TOP OF RETAINING WALL. SEE SHEET 4 OF 4 FOR HANDRAIL ATTACHMENT DETAILS.

USE COARSE AGGREGATE IN THE REINFORCED ZONE FOR RETAINING WALL.

USE AN MSE WALL SYSTEM WITH SEGMENTAL RETAINING WALL UNITS FOR RETAINING WALL.

WHEN USING AN MSE WALL SYSTEM WITH SEGMENTAL RETAINING WALL UNITS FOR RETAINING WALL, FREEZE-THAW DURABLE SRW UNITS ARE REQUIRED IN ACCORDANCE WITH THE MSE RETAINING WALLS PROVISION.

CAST-IN-PLACE REINFORCED CONCRETE COPING IS REQUIRED FOR RETAINING WALL.

USE SEGMENTAL RETAINING WALL UNITS WITH A WEATHERED COBBLESTONE FACE FOR RETAINING WALL.

USE SEGMENTAL RETAINING WALL UNITS WITH A TAN OR GRAY COLOR FOR RETAINING WALL.

BEFORE BEGINNING MSE WALL DESIGN FOR RETAINING WALL, SURVEY WALL LOCATION AND SUBMIT A REVISED WALL PROFILE VIEW (WALL ENVELOPE) FOR REVIEW. DO NOT START WALL DESIGN OR CONSTRUCTION UNTIL THE REVISED WALL ENVELOPE IS ACCEPTED.

DESIGN RETAINING WALL FOR WALL HEIGHTS EQUAL TO THE DESIGN HEIGHT (DIFFERENCE BETWEEN GRADE ELEVATION AND BOTTOM OF WALL ELEAVATION) PLUS EMBEDMENT (DIFFERENCE BETWEEN BOTTOM OF WALL ELEVATION AND TOP OF LEVELING PAD ELEVATION).

DESIGN RETAINING WALL NO. _FOR THE FOLLOWING:
1) MINIMUM DESIGN LIFE = 75 YEARS
2) MAXIMUM FACTORED RESISTANCE = 3000 PSF
3) MINIMUM EMBEDMENT ELEVATION = 2 FT
4) AGGREGATE PARAMETERS:

STANDARD SIZE NO. (IN ACCORDANCE WITH SECTION 1005 OF THE STANDARD SPECIFICATIONS)	UNIT WEIGHT (γ) PCF	FRICTION ANGLE (ϕ) DEGREES	COHESION (c) PSF
5, 57, 57M, 6M, 67 AND 78M (COARSE AGGREGATE)	110	38	0

6) IN-SITU ASSUMED MATERIAL PARAMETERS:

MATERIAL TYPE	UNIT WEIGHT (γ) PCF	FRICTION ANGLE (ϕ) DEGREES	COHESION (c) PSF
BACKFILL	120	30	0
FOUNDATION	120	30	0

DESIGN RETAINING WALL FOR A LIVE LOAD (TRAFFIC) SURCHARGE.

EXISTING OR FUTURE OBSTRUCTIONS SUCH AS FOUNDATIONS, GUARDRAIL, FENCE OR HANDRAIL POSTS, PAVEMENTS, PIPES, INLETS OR UTILITIES MAY INTERFERE WITH REINFORCEMENT FOR RETAINING WALL.

DO NOT PLACE LEVELING PAD CONCRETE, AGGREGATE OR REINFORCEMENT FOR RETAINING WALL UNTIL OBTAINING APPROVAL OF THE EXCAVATION DIMENSIONS AND FOUNDATION MATERIAL.

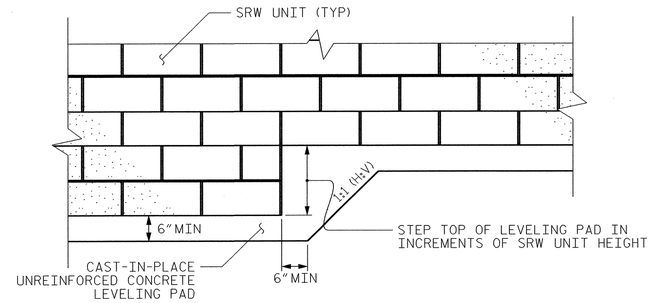

SEGMENTAL RETAINING WALL (SRW) UNITS

LEVELING PAD STEP DETAILS

PREPARED BY: E.J. SALVO	DATE: 01/11
REVIEWED BY: S.C. CLARK	DATE: 01/11

GEOTECHNICAL ENGINEERING UNIT

☐ EASTERN REGIONAL OFFICE
☒ WESTERN REGIONAL OFFICE
☐ CONTRACT OFFICE

STATE OF NORTH CAROLINA
DEPARTMENT OF TRANSPORTATION
RALEIGH

PROJECT NO.: U-4412
HAYWOOD COUNTY
STATION: 78+50.00 -L- TO 80+00.00 -L-
SHEET 3 OF 3

MSE RETAINING WALL WITH SRW UNITS

REVISIONS							SHEET NO. W-8
NO.	BY	DATE	NO.	BY	DATE		TOTAL SHEETS 8
1	_	_	3	_	_		
2	_	_	4	_	_		

PROJECT REFERENCE NO.	SHEET NO.
U-4412	SU-1

UTILITY ENGINEER
NORTH CAROLINA PROFESSIONAL SEAL 039495 ENGINEER MATTHEW J. GRAND
4/10/13

UC SYNERGETIC
8024 Glenwood Ave, Suite 230
Raleigh, NC 27612
N.C. Lic # F-1107

STATE OF NORTH CAROLINA
DIVISION OF HIGHWAYS

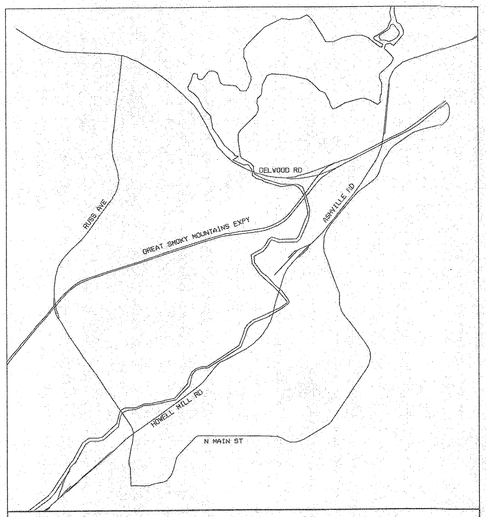

VICINITY MAP

STRUCTURE UTILITIES PLAN
HAYWOOD COUNTY

LOCATION: SR 1184 (HOWELL MILL ROAD),
US 276 TO US 23 BUSINESS WAYNESVILLE, NC

TYPE OF WORK: HANGER SYSTEM FOR
TELECOMMUNICATIONS AND POWER LINE CONDUIT

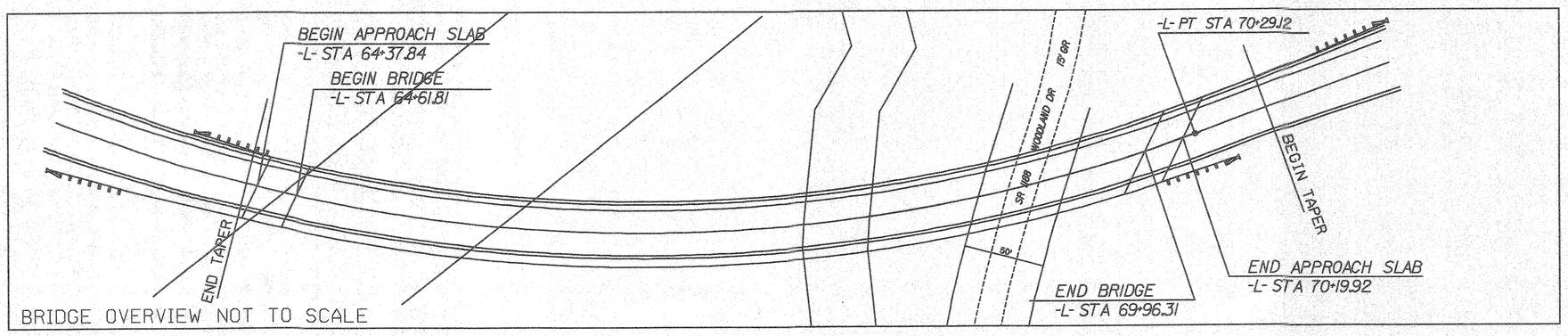

BRIDGE OVERVIEW NOT TO SCALE

REVISIONS

COVER SHEET	8024 GLENWOOD AVE. SUITE 230 RALEIGH, NC 27612
	LOCATION: SR 1184 (HOWELL MILL ROAD), US 276 TO US 23 BUSINESS WAYNESVILLE, NC
	TIP NO.: U-4412 — COUNTY: HAYWOOD
SU-2 - SU-10 AT&T SU-11 - SU-19 PROGRESS ENERGY	DESIGNED BY: UCS
	CHECKED BY: — DATE: APRIL 10, 2013

IRIDGE PROJECT.dgn 4/10/2013 1:08:27 PM

PROJECT REFERENCE NO.	SHEET NO.
U-4412	SU-2

UTILITY ENGINEER
NORTH CAROLINA PROFESSIONAL SEAL 039495 ENGINEER MATTHEW J. GIRARD
4/10/13

UC SYNERGETIC
8024 Glenwood Ave, Suite 230
Raleigh, NC 27612
N.C. Lic # F-1107

REVISIONS

NOTE:
AT&T TO OWN
CONDUIT SYSTEM

INTERMEDIATE HANGER LOCATION

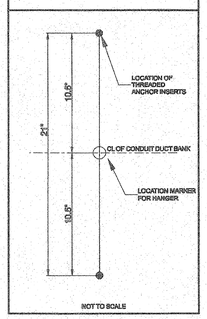

ANCHOR POINT HANGER LOCATION

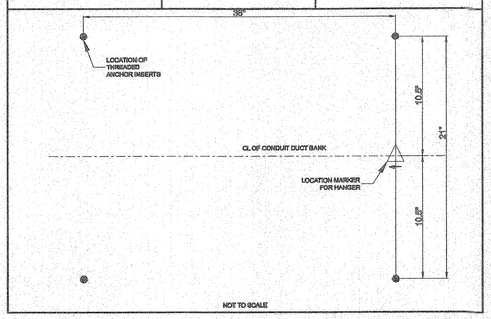

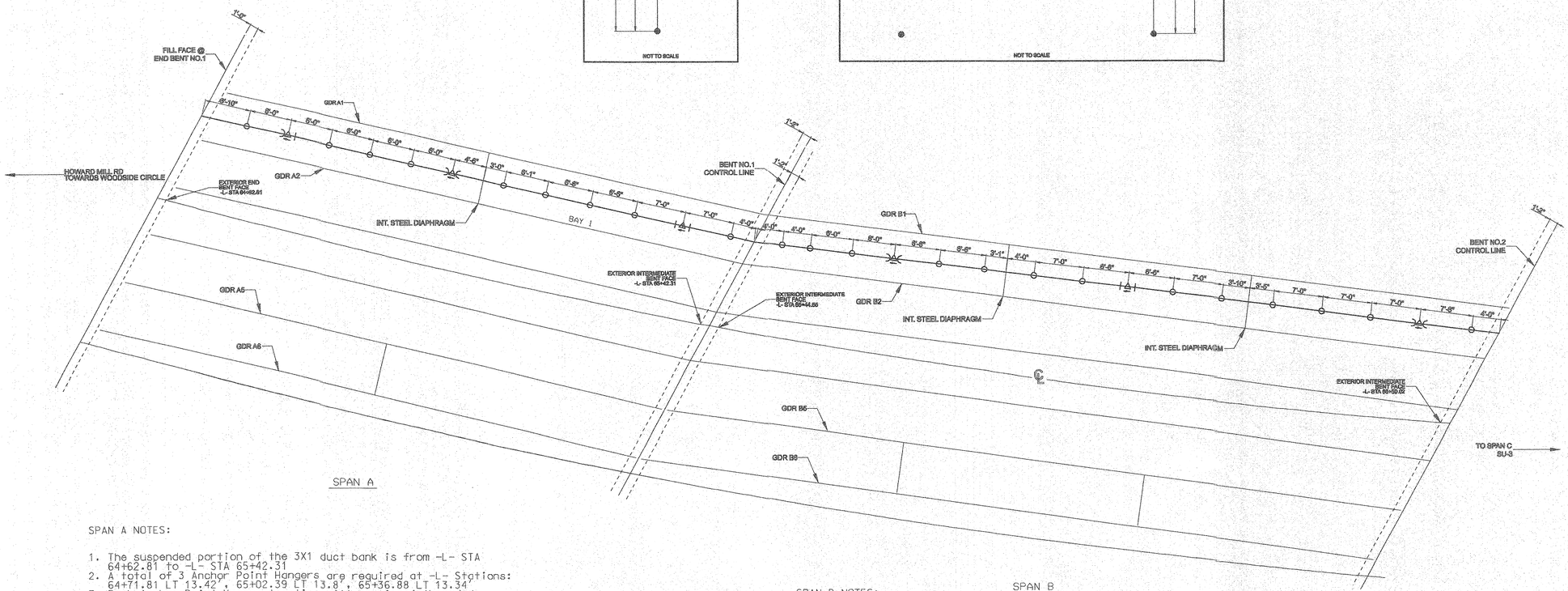

SPAN A

SPAN A NOTES:

1. The suspended portion of the 3X1 duct bank is from -L- STA 64+62.81 to -L- STA 65+42.31
2. A total of 3 Anchor Point Hangers are required at -L- Stations: 64+71.81 LT 13.42', 65+02.39 LT 13.8', 65+36.88 LT 13.34'
3. Each Anchor Point Hanger location will require 4 threaded anchor inserts cast in place in the deck bottom.
4. Two locations will require Expansion Couplings at Stations: 64+71.81 LT 13.42', 65+02.39 LT 13.8'
5. A total of 9 Intermediate Hangers are required at the specified locations.
6. Each Intermediate Hanger location will require 2 threaded anchor inserts cast in place in the deck bottom.
7. All cast in place threaded anchor inserts shall be Dayton Superior Model F-42W (or approved equal) as specified on print SU-9 and shall be installed on the upper surface of the corrugated bridge form.
8. The duct bank shall be centered in Bay 1, between girders A1 and A2.
9. The below grade duct bank shall be concrete encased at the end bent abutment with Span A from -L- Sta. 64+59.81 to 64+61.81. Refer to sheet SU-7 for section details through back wall.

SPAN B

SPAN B NOTES:

1. The suspended portion of the 3X1 duct bank is from -L- STA 65+44.55 to -L- STA 66+50.02
2. A total of 3 Anchor Point Hangers are required at -L- Stations: 65+68.78 LT 14.04', 66+02.62 LT 14.97', 66+45.36 LT 14.3'
3. Each Anchor Point Hanger location will require 4 threaded anchor inserts cast in place in the deck bottom.
4. Two locations will require Expansion Couplings at Stations: 65+68.78 LT 14.04', 66+45.36 LT 14.3'
5. A total of 13 Intermediate Hangers are required at the specified locations.
6. Each Intermediate Hanger location will require 2 threaded anchor inserts cast in place in the deck bottom.
7. All cast in place threaded anchor inserts shall be Dayton Superior Model F-42W (or approved equal) as specified on print SU-9 and shall be installed on the upper surface of the corrugated bridge form.
8. The duct bank shall be centered in Bay 1, between girders B1 and B2.

HANGER LOCATION
PLAN

GRAPHIC SCALE
6" 3" 0 6" 12"

8024 GLENWOOD AVE
SUITE 230
RALEIGH, NC 27612

LOCATION:
SR 1184 (HOWELL MILL ROAD),
US 276 TO US 23 BUSINESS
WAYNESVILLE, NC

TIP NO.: U-4412
COUNTY: HAYWOOD

DESIGNED BY: UCS

CHECKED BY:
DATE: APRIL 10, 2013

IDGE PROJECT.dgn 4/10/2013 10:47:12 AM

PROJECT REFERENCE NO.	SHEET NO.
U-4412	SU-3

UTILITY ENGINEER
NORTH CAROLINA PROFESSIONAL SEAL 039495 ENGINEER MATTHEW J. GIRARD
4/10/13

UC SYNERGETIC
8024 Glenwood Ave, Suite 230
Raleigh, NC 27612
N.C. Lic # F-1107

REVISIONS

NOTE:
AT&T TO OWN
CONDUIT SYSTEM

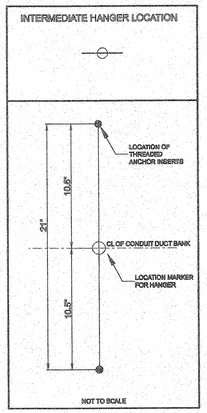

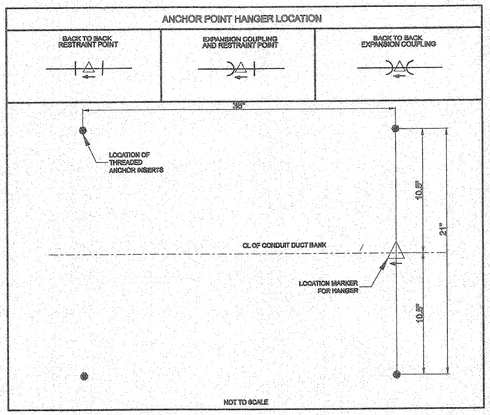

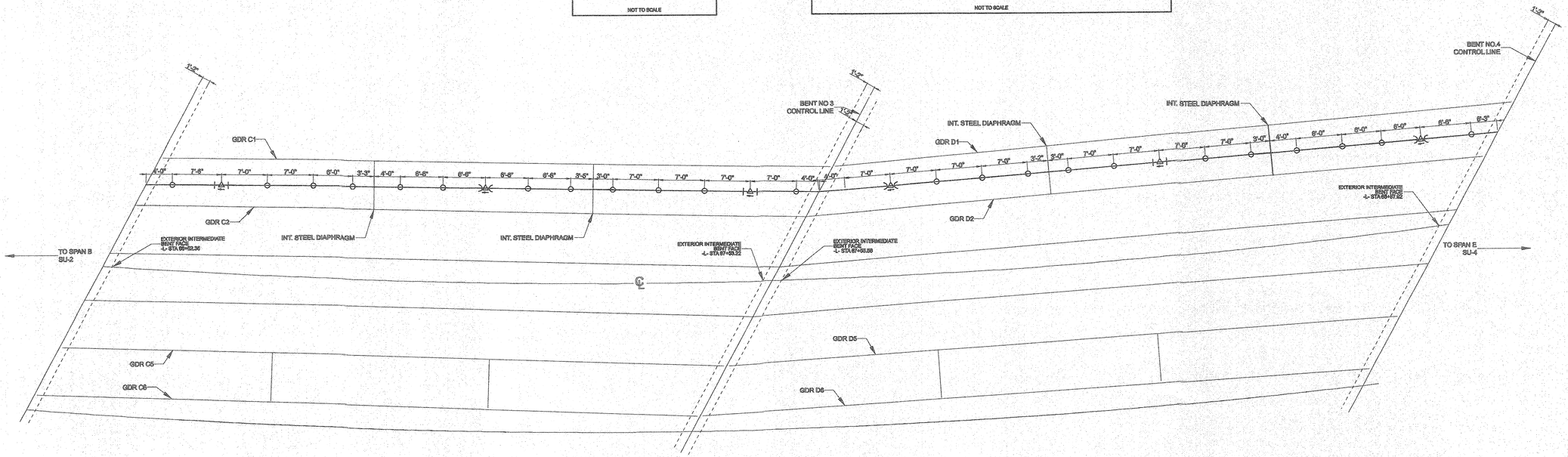

SPAN C

SPAN C NOTES:

1. The suspended portion of the 3X1 duct bank is from -L- STA 66+52.36 to -L- STA 67+53.22
2. A total of 3 Anchor Point Hangers are required at -L- Stations: 66+88.81 LT 14.33', 67+10.12 LT 14.93', 67+51.45 LT 13.85'
3. Each Anchor Point Hanger location will require 4 threaded anchor inserts cast in place in the deck bottom.
4. One location will require back-to-back Expansion Couplings at Station: 67+10.12 LT 14.93'
5. A total of 12 Intermediate Hangers are required at the specified locations.
6. Each Intermediate Hanger location will require 2 threaded anchor inserts cast in place in the deck bottom.
7. All cast in place threaded anchor inserts shall be Dayton Superior Model F-42W (or approved equal) as specified on print SU-9 and shall be installed on the upper surface of the corrugated bridge form.
8. The duct bank shall be centered in Bay 1, between girders C1 and C2.

SPAN D

SPAN D NOTES:

1. The suspended portion of the 3X1 duct bank is from -L- STA 67+55.56 to -L- STA 68+57.92
2. A total of 3 Anchor Point Hangers are required at -L- Stations: 67+73.43 LT 14.33', 68+15.69 LT 14.93', 68+56.55 LT 13.85'
3. Each Anchor Point Hanger location will require 4 threaded anchor inserts cast in place in the deck bottom.
4. Two locations will require back-to-back Expansion Couplings at Stations: 67+73.43 LT 14.33', 68+56.55 LT 13.85'
5. A total of 12 Intermediate Hangers are required at the specified locations.
6. Each Intermediate Hanger location will require 2 threaded anchor inserts cast in place in the deck bottom.
7. All cast in place threaded anchor inserts shall be Dayton Superior Model F-42W (or approved equal) as specified on print SU-9 and shall be installed on the upper surface of the corrugated bridge form.
8. The duct bank shall be centered in Bay 1, between girders D1 and D2.

HANGER LOCATION PLAN

GRAPHIC SCALE
6" 3" 0 6" 12"

8024 GLENWOOD AVE
SUITE 230
RALEIGH, NC 27612

LOCATION:
SR 1184 (HOWELL MILL ROAD), US 276 TO US 23 BUSINESS
WAYNESVILLE, NC

TIP NO.: U-4412
COUNTY: HAYWOOD

DESIGNED BY: UCS

CHECKED BY:
DATE: APRIL 10, 2013

PROJECT REFERENCE NO.	SHEET NO.
U-4412	SU-4

UTILITY ENGINEER
NORTH CAROLINA PROFESSIONAL ENGINEER SEAL 039495 MATTHEW J. GRIFFIN
4/10/13

UC SYNERGETIC
8024 Glenwood Ave, Suite 230
Raleigh, NC 27612
N.C. Lic # F-1107

REVISIONS

NOTE:
AT&T TO OWN
CONDUIT SYSTEM

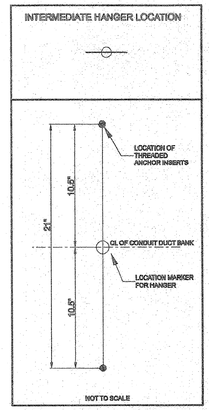

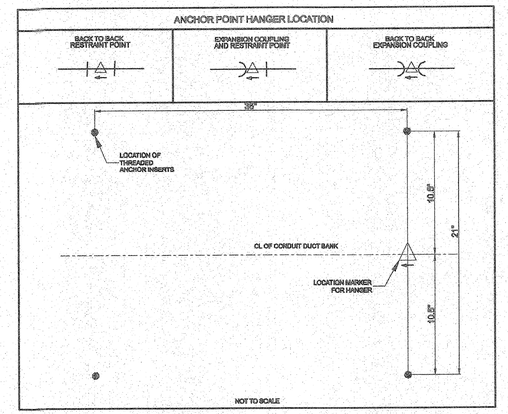

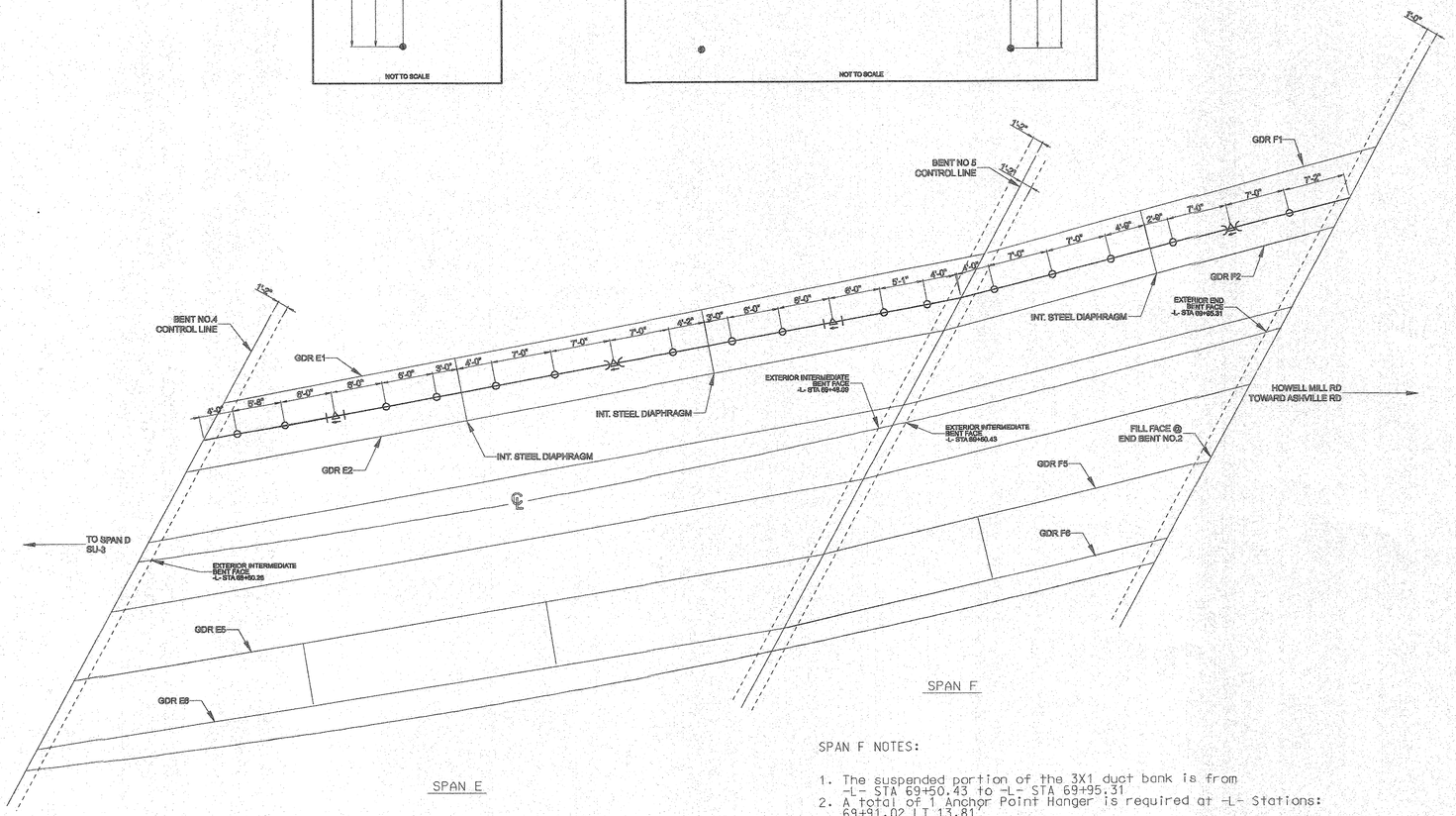

SPAN E NOTES:

1. The suspended portion of the 3X1 duct bank is from -L- STA 68+60.26 to -L- STA 69+48.09
2. A total of 3 Anchor Point Hangers are required at -L- Stations: 68+84.92 LT 14.1', 69+18.70 LT 14.45', 69+45.24 LT 13.67'
3. Each Anchor Point Hanger location will require 4 threaded anchor inserts cast in place in the deck bottom.
4. One location will require back-to-back Expansion Couplings at Station: 69+18.70 LT 14.45'
5. A total of 11 Intermediate Hangers are required at the specified locations.
6. Each Intermediate Hanger location will require 2 threaded anchor inserts cast in place in the deck bottom.
7. All cast in place threaded anchor inserts shall be Dayton Superior Model F-42W (or approved equal) as specified on print SU-9 and shall be installed on the upper surface of the corrugated bridge form.
8. The duct bank shall be centered in Bay 1, between girders E1 and E2.

SPAN F NOTES:

1. The suspended portion of the 3X1 duct bank is from -L- STA 69+50.43 to -L- STA 69+95.31
2. A total of 1 Anchor Point Hanger is required at -L- Stations: 69+91.02 LT 13.81'
3. Each Anchor Point Hanger location will require 4 threaded anchor inserts cast in place in the deck bottom.
4. One location will require back-to-back Expansion Couplings at Station:69+91.02 LT 13.81'
5. A total of 5 Intermediate Hangers are required at the specified locations.
6. Each Intermediate Hanger location will require 2 threaded anchor inserts cast in place in the deck bottom.
7. All cast in place threaded anchor inserts shall be Dayton Superior Model F-42W (or approved equal) as specified on print SU-9 and shall be installed on the upper surface of the corrugated bridge form.
8. The duct bank shall be centered in Bay 1, between girders F1 and F2.
9. The below grade duct bank shall be concrete encased at the end bent abutment with Span A from -L- Sta. 69+96.31 to 69+98.31. Refer to sheet SU-7 for section details through back wall.

HANGER LOCATION
PLAN

GRAPHIC SCALE
6" 3' 0 6' 12'

8024 GLENWOOD AVE.
SUITE 230
RALEIGH, NC 27612

LOCATION:
SR 1184 (HOWELL MILL ROAD),
US 276 TO US 23 BUSINESS
WAYNESVILLE, NC

TIP NO.: U-4412
COUNTY: HAYWOOD

DESIGNED BY: UCS

CHECKED BY:
DATE: APRIL 10, 2013

IRIDGE PROJECT.dgn 4/10/2013 1:10:22 PM

PROJECT REFERENCE NO.	SHEET NO.
U-4412	SU-5

UC SYNERGETIC
8024 Glenwood Ave, Suite 230
Raleigh, NC 27612
N.C. Lic # F-1107

UTILITY ENGINEER
NORTH CAROLINA PROFESSIONAL SEAL 039495 ENGINEER MATTHEW J. GRIMM
4/10/13

REVISIONS

NOTE:
AT&T TO OWN
CONDUIT SYSTEM

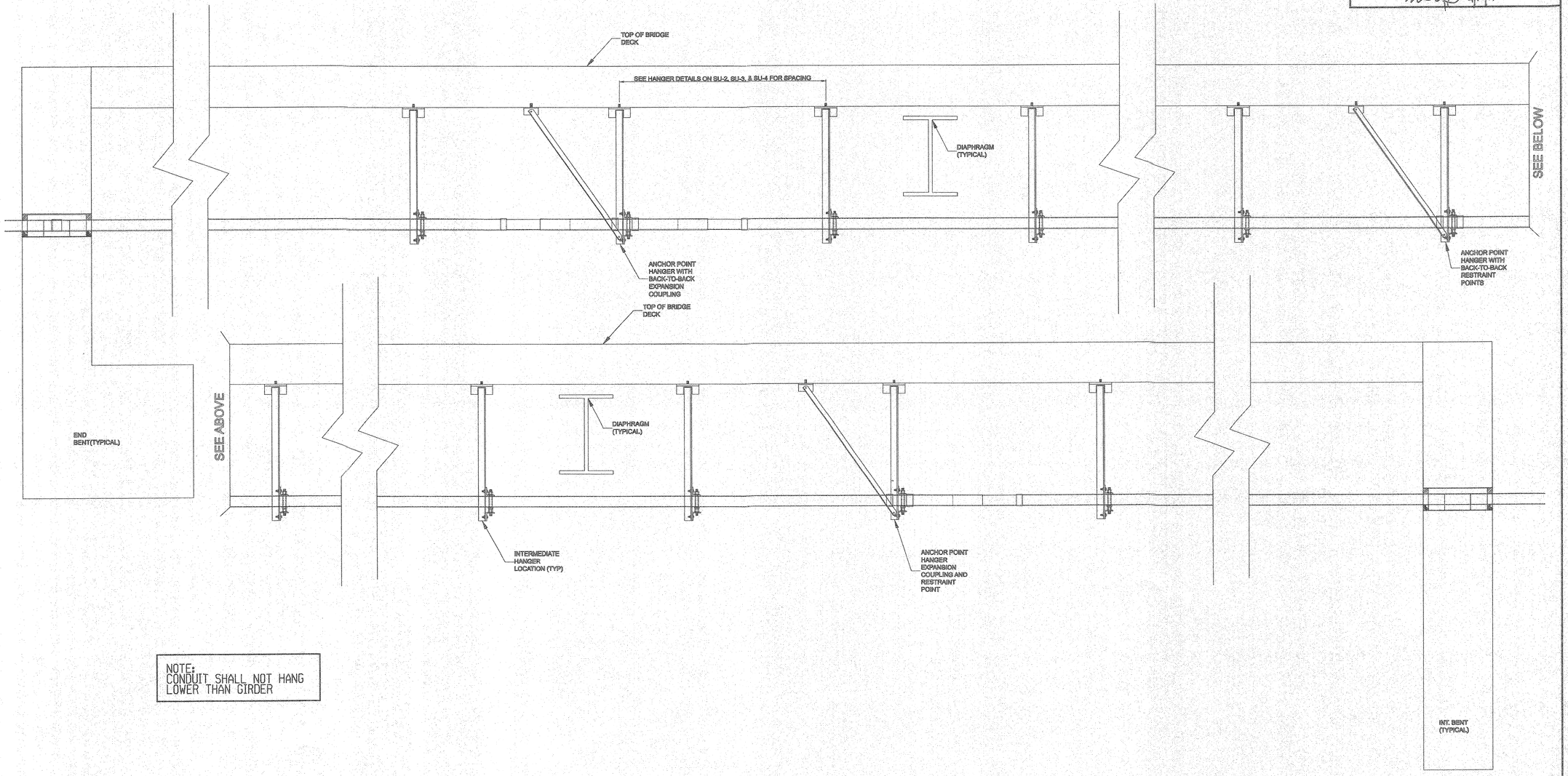

NOTE:
CONDUIT SHALL NOT HANG
LOWER THAN GIRDER

NOTES:

1. PROFILE VIEW FOR TYPICAL CONFIGURATIONS ONLY.
2. SEE SHEETS SU-2, SU-3, SU-4 FOR ACTUAL HANGER LOCATIONS.
3. SEE SHEET SU-6 FOR ANCHOR HANGER DETAILS AND CONDUIT EXPANSION COUPLING DETAIL.
4. SEE SHEETS SU-7 FOR END BENT/ABUTMENT DETAIL.
5. SEE SHEETS SU-8 AND SU-9 FOR HANGER MEMBER DETAILS.

DUCT BANK PROFILE
TYPICAL ONLY

GRAPHIC SCALE
NOT TO SCALE

8024 GLENWOOD AVE
SUITE 230
RALEIGH, NC 27612

LOCATION:
SR 1184 (HOWELL MILL ROAD),
US 276 TO US 23 BUSINESS
WAYNESVILLE, NC

TIP NO.: U-4412
COUNTY: HAYWOOD

DESIGNED BY: UCS

CHECKED BY:
DATE: APRIL 10, 2013

PROJECT REFERENCE NO.	SHEET NO.
U-4412	SU-6

UTILITY ENGINEER

NORTH CAROLINA PROFESSIONAL SEAL 039495 ENGINEER MATTHEW J. GRIMO

4/10/13

UC SYNERGETIC
8024 Glenwood Ave, Suite 230
Raleigh, NC 27612
N.C. Lic # F-1107

REVISIONS

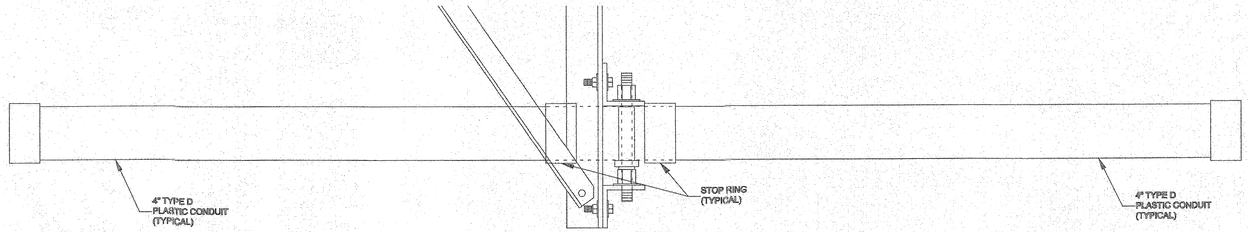

ANCHOR POINT HANGER WITH BACK TO BACK RESTRAINT POINTS

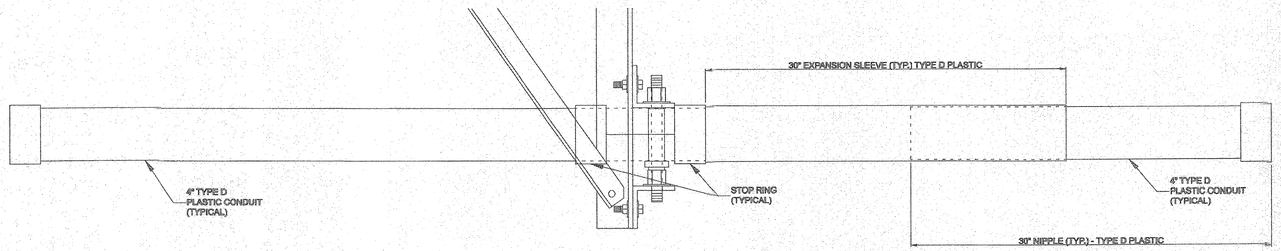

ANCHOR POINT HANGER WITH EXPANSION COUPLING AND RESTRAINT POINT

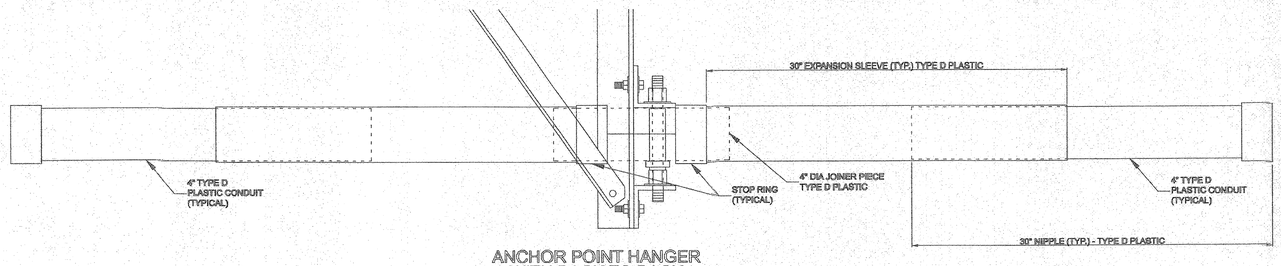

ANCHOR POINT HANGER WITH BACK TO BACK EXPANSION COUPLING

NOTE:
AT&T TO OWN CONDUIT SYSTEM

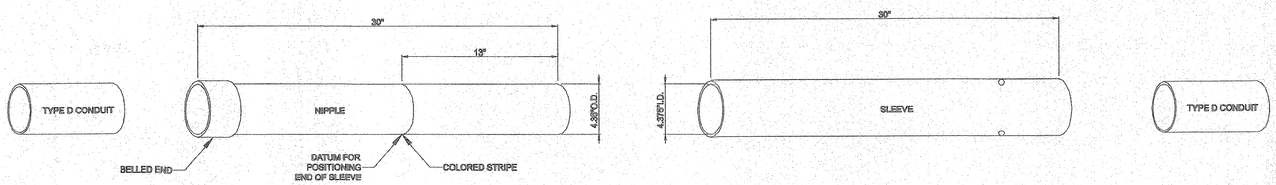

NOTES:

1. EXPANSION COUPLING SHALL BE MADE FROM TYPE D PLASTIC CONDUIT.
2. TYPE D PLASTIC CONDUIT SHALL BE SOLVENT WELDED TO THE BELL OF NIPPLE.
3. TYPE D CONDUIT SHALL BE SOLVENT WELDED TO THE DIMPLE END OF SLEEVE.
4. DIMENSIONS MAY DIFFER BY MANUFACTURER.

EXPANSION COUPLING DETAIL

HANGER DETAILS-RESTRAINT POINT AND EXPANSION COUPLING

GRAPHIC SCALE

GRAPHIC SCALE
6' 3' 0 6' 12'

8024 GLENWOOD AVE
SUITE 230
RALEIGH, NC 27612

LOCATION:
SR 1184 (HOWELL MILL ROAD), US 276 TO US 23 BUSINESS WAYNESVILLE, NC

TIP NO.: U-4412
COUNTY: HAYWOOD

DESIGNED BY: UCS

CHECKED BY:
DATE: APRIL 10, 2013

PROJECT REFERENCE NO.	SHEET NO.
U-4412	SU-7

UTILITY ENGINEER

NORTH CAROLINA PROFESSIONAL SEAL 039495 ENGINEER MATTHEW J. GRAMO

4/10/13

UC SYNERGETIC

8024 Glenwood Ave, Suite 230
Raleigh, NC 27612
N.C. Lic # F-1107

NOTE:
AT&T TO OWN
CONDUIT SYSTEM

REVISIONS

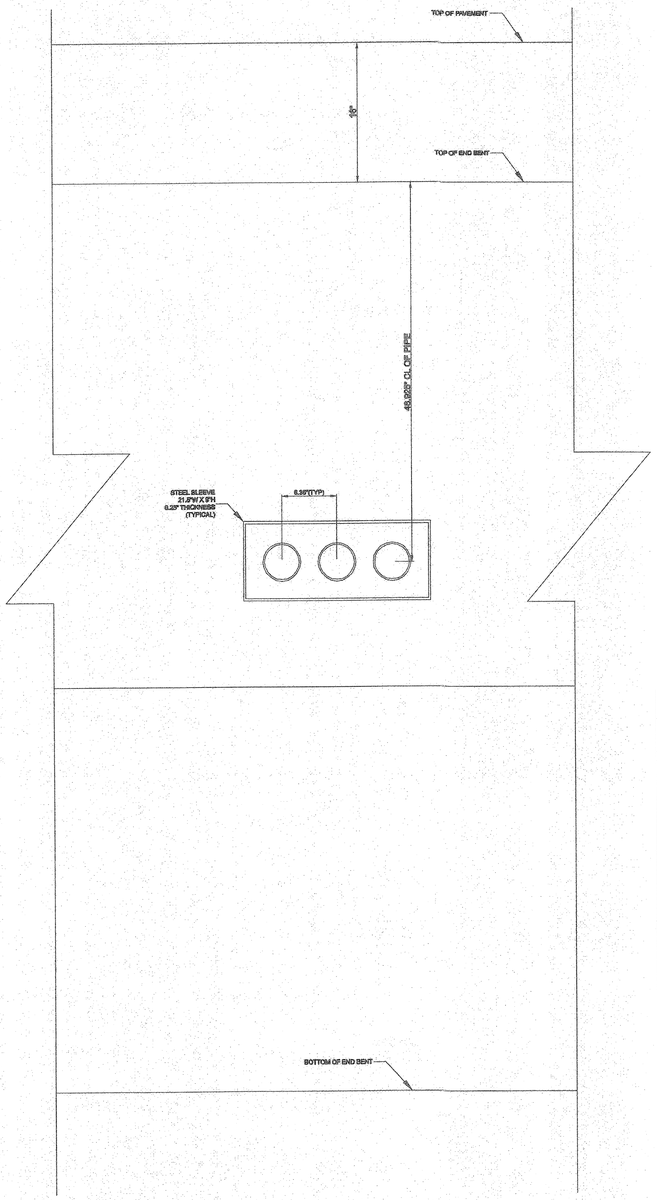

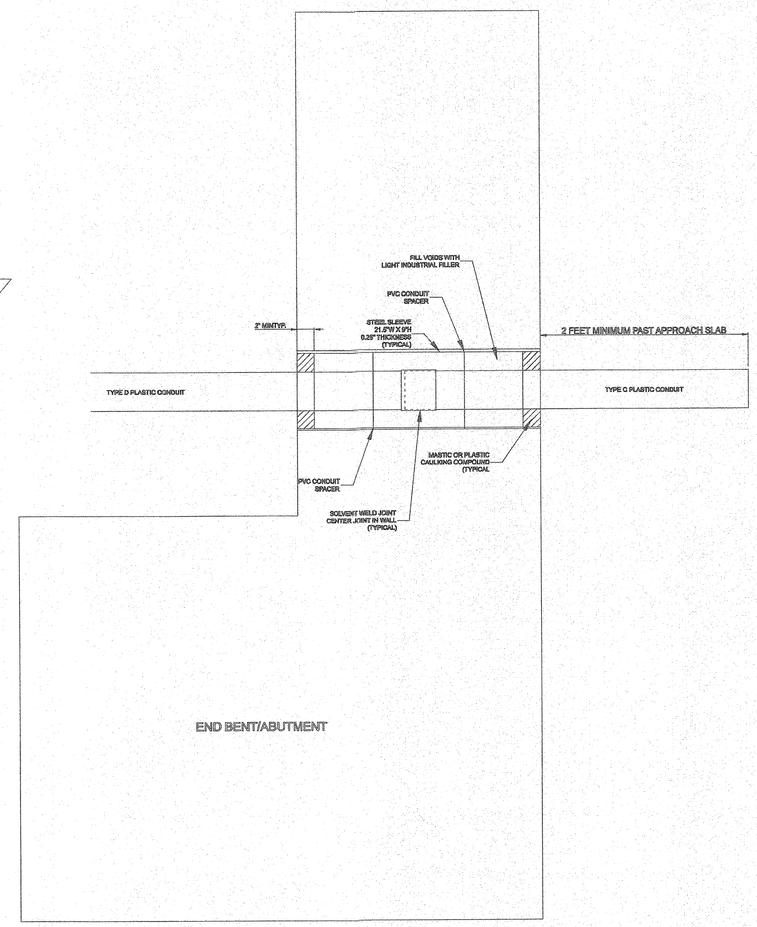

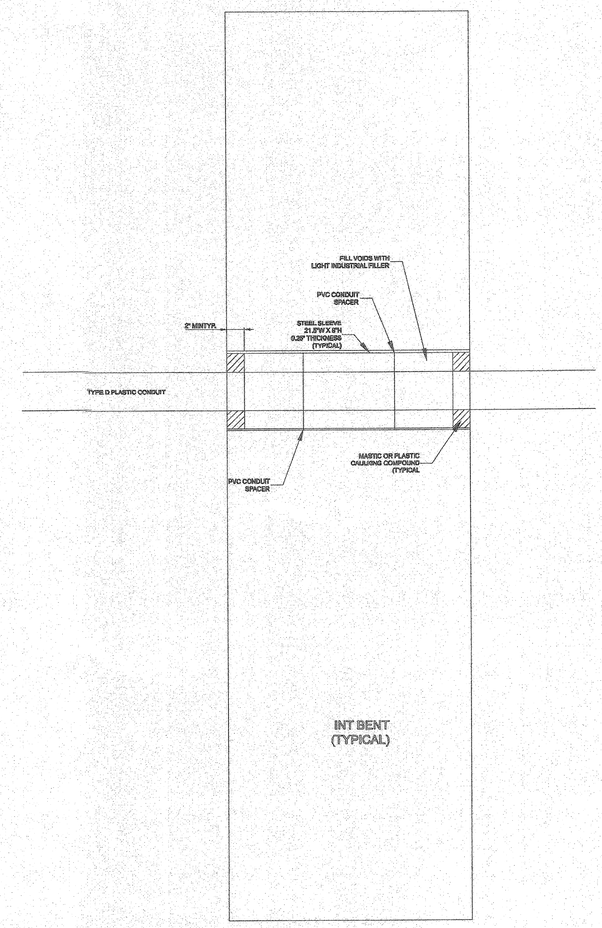

DETAILS - DUCT BANK SECTION
THROUGH BACK WALL

GRAPHIC SCALE
NOT TO SCALE

8024 GLENWOOD AVE
SUITE 230
RALEIGH, NC 27612

LOCATION:
SR 1184 (HOWELL MILL ROAD),
US 276 TO US 23 BUSINESS
WAYNESVILLE, NC

TIP NO.: U-4412

COUNTY: HAYWOOD

DESIGNED BY: UCS

CHECKED BY:

DATE: APRIL 10, 2013

RIDGE PROJECT.dgn 4/10/2013 1:11:07 PM

NOTE:
AT&T TO OWN
CONDUIT SYSTEM

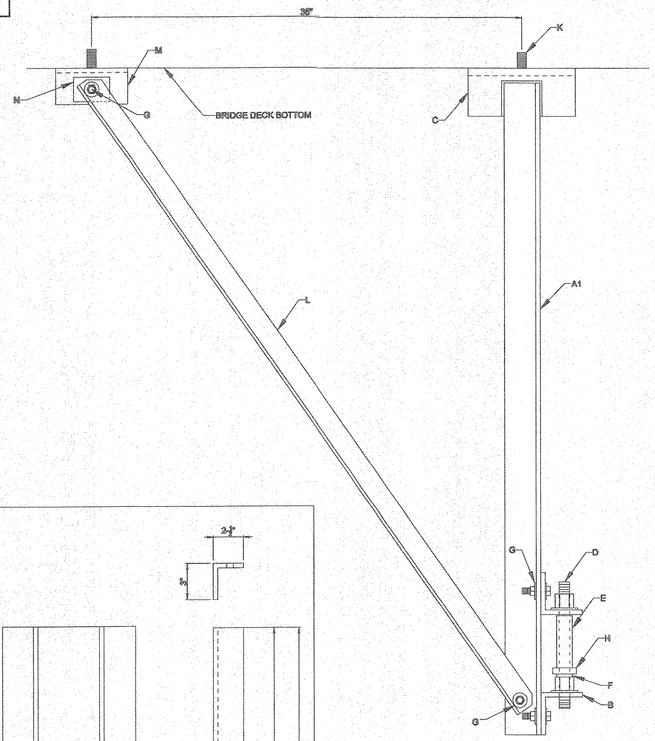

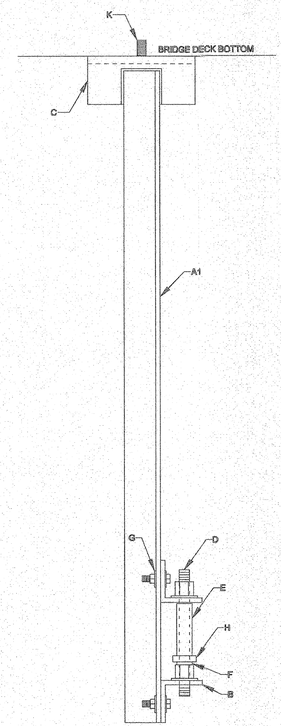

ANCHOR POINT HANGER
PROFILE VIEW

INTERMEDIATE HANGER
PROFILE VIEW

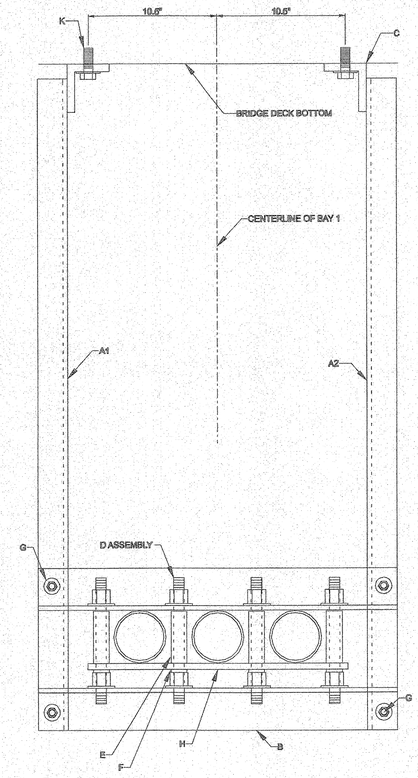

INTERMEDIATE & ANCHOR POINT HANGER
FRONT VIEW

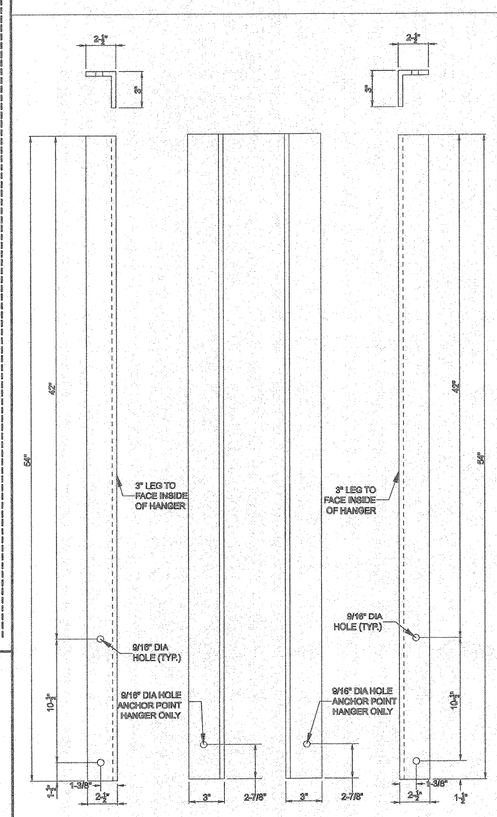

FRONT VIEW PROFILE VIEW PROFILE VIEW FRONT VIEW

MEMBER A1 MEMBER A2

NOTE:

1. MEMBER SIZE IS: L 2.5" X 3" X 3/8
2. 2.5" LEG ATTACHES TO MEMBER B.
3. 3" LEG ATTACHES TO MEMBER L WHEN ANCHOR POINT BRACING IS CALLED FOR.
4. ALL HOLES ARE 9/16" DIAMETER.

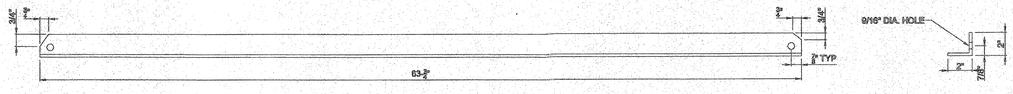

MEMBER L

NOTE:

1. MEMBER SIZE IS: L 2" x 2" x 1/4"
2. MEMBER T IS BOLTED TO MEMBER A AND MEMBER M, N.

GENERAL NOTES:

1. REFER TO SHEET SU-9 FOR DETAILS OF MEMBERS: C,D,E,F,G,H,J, AND K.
2. HANGER LOCATIONS WITH THREADED ANCHOR INSERT LAYOUT & DETAILS SHOWN ON ANCHOR LOCATION PLAN SHEETS SU-2, SU-3, & SU-4.
3. EACH ANCHOR POINT HANGER REQUIRES FOUR (4) THREADED ANCHOR INSERTS CAST IN PLACE IN THE BRIDGE DECK BOTTOM.
4. EACH INTERMEDIATE HANGER REQUIRES TWO (2) THREADED ANCHOR INSERTS.
5. REFER TO SHEET SU-9 FOR DETAILS OF ANCHOR INSERT (MEMBER J).
6. ALL AT&T (BAY 1) CONDUIT INSTALLED ON THE BRIDGE SHALL BE TYPE D PLASTIC CONDUIT.
7. NO PIPE JOINTS SHALL BE LOCATED WITHIN ONE (1) FOOT OF ANY HANGER.

UC SYNERGETIC
8024 Glenwood Ave, Suite 230
Raleigh, NC 27612
N.C. Lic # F-1107

PROJECT REFERENCE NO.	SHEET NO.
U-4412	SU-8

UTILITY ENGINEER
NORTH CAROLINA PROFESSIONAL SEAL 039495 ENGINEER MATTHEW J. GIRARD
4/10/13

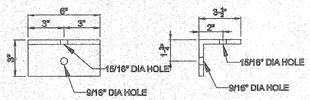

MEMBER M

NOTE:

1. MEMBER SIZE IS: L 3.5" x 3" x 1/4"
2. 3.5" LEG IS ALWAYS BOLTED TO THE BRIDGE

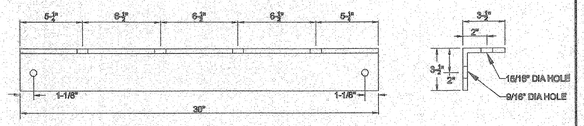

MEMBER B

NOTE:

1. MEMBER SIZE IS: L 3.5" x 3.5" x 3/8"
2. LEG WITH 9/16" DIAMETER HOLES ATTACHES TO MEMBERS A1 & A2.

MEMBER N

NOTE:

1. SPACER IS MADE FROM 1/4" THICK PLATE STOCK.
2. 9/16" DIA. HOLE IS CENTERED IN THE SPACER.
3. SPACER IS INSTALLED BETWEEN MEMBER L AND MEMBER M.

HANGER DETAILS
FOR ALL AT&T OWNED HANGERS

GRAPHIC SCALE
6" 3" 0 6" 12"

8024 GLENWOOD AVE
SUITE 230
RALEIGH, NC 27612

LOCATION:
SR 1184 (HOWELL MILL ROAD),
US 276 TO US 23 BUSINESS
WAYNESVILLE, NC

TIP NO.: U-4412
COUNTY: HAYWOOD

DESIGNED BY: UCS

CHECKED BY:

DATE: APRIL 10, 2013

REVISIONS

RIDGE PROJECT.dgn 4/10/2013 1:12:04 PM

PROJECT REFERENCE NO.	SHEET NO.
U-4412	SU-9

UTILITY ENGINEER
NORTH CAROLINA PROFESSIONAL SEAL 039495 ENGINEER MATTHEW J. GRADO
4/12/13

UC SYNERGETIC
8024 Glenwood Ave, Suite 230
Raleigh, NC 27612
N.C. Lic # F-1107

REVISIONS

NOTE:
AT&T TO OWN
CONDUIT SYSTEM

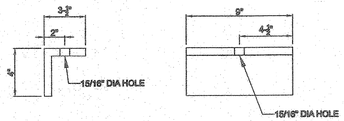

MEMBER C
USE SCALE BELOW
GRAPHIC SCALE
6" 3" 0 6" 12"

NOTE:

1. MEMBER SIZE IS: L 3.5" X 4" X 5/8"
2. 3.5" LEG IS ALWAYS BOLTED TO THE BRIDGE.
3. HOLE IS 15/16" DIAMETER.

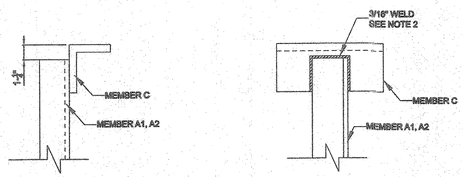

CONNECTION OF C
NOT TO SCALE

NOTE:

1. CONNECTION DETAIL ONLY, OBJECTS NOT TO SCALE.
2. WELD IS ON VERTICLE LEG.
3. FOR A36 STEEL USE WELD MATERIAL WITH 70 KSI RATING OR HIGHER.

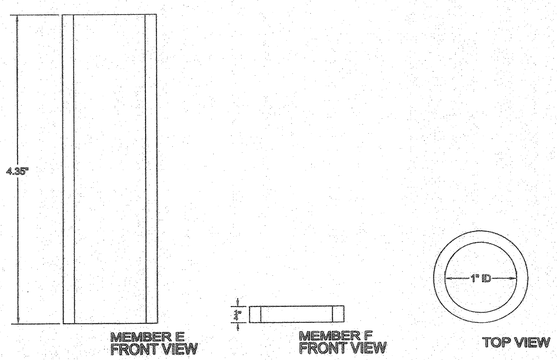

MEMBERS E&F

NOTE:

1. MEMBERS ARE MADE FROM ULTRAVIOLET PROTECTED SCH 40 PVC PIPE OR EQUIVALENT WALL THICKNESS THAT IS COMMERCIALLY AVAILABLE.

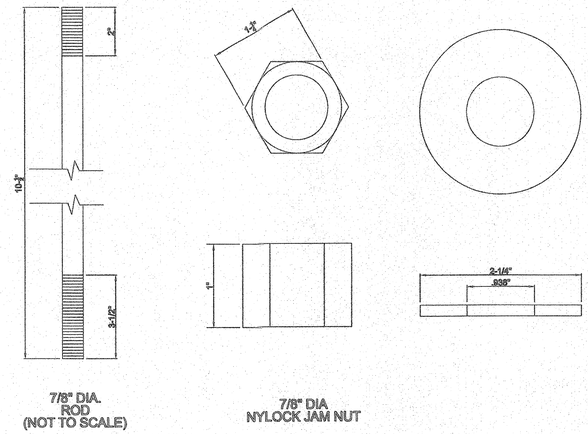

MEMBER D

NOTE:

1. ROD IS MADE FROM TYPE 316 STAINLESS STEEL.
2. NYLOCK JAM NUT AND FLAT WASHER SHALL BE GRADE 18.8 STAINLESS STEEL.
3. NYLOCK JAM NUT AND FLAT WASHER ARE USED TO HOLD MEMBER IN PLACE AT EACH END OF ROD.

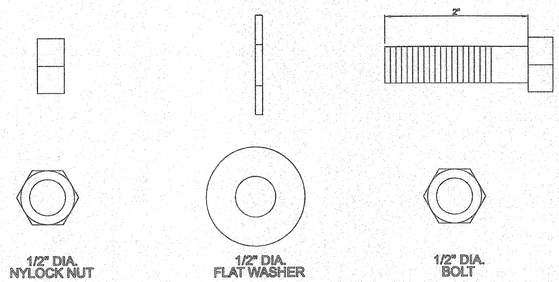

MEMBER G

NOTE:

1. BOLT SHALL BE HEXAGONAL HEAD.
2. BOLT, NYLOCK NUT, AND FLAT WASHER SHALL BE GRADE 18.8 STAINLESS STEEL.
3. NYLOCK NUT AND WASHER USED WITH EACH BOLT TO FASTEN MEMBERS TOGETHER.

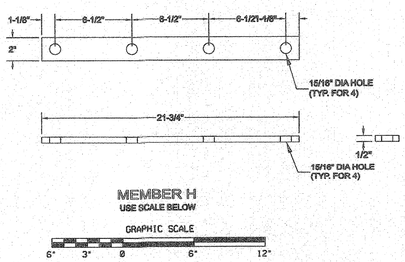

MEMBER H
USE SCALE BELOW
GRAPHIC SCALE
6" 3" 0 6" 12"

NOTE:

1. MEMBER IS MADE FROM ULTRAVIOLET PROTECTED 1/2" THICK PVC BAR, OR EQUIVALENT.
2. ALL HOLES ARE 9/16" DIAMETER.

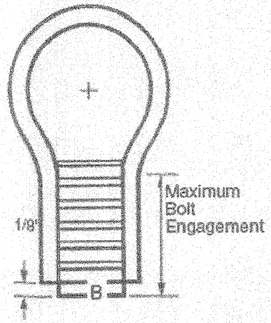

DAYTON SUPERIOR ANCHOR INSERT
MODEL F-42W LOOP FERRULE (OR APPROVED EQUAL)
7/8" INSERT TYPE 304 STAINLESS STEEL
WITH MOUNTING WASHER TO BE INSTALLED
IN CONCRETE WITH MIN 4500 PSI
*NOTE: NO SUBSTITUTIONS WITHOUT AT&T APPROVAL

MEMBER J

*NOTE: MOUNT ALL ANCHOR INSERTS ON UPPER SURFACE OF THE CORRUGATED BRIDGE FORM

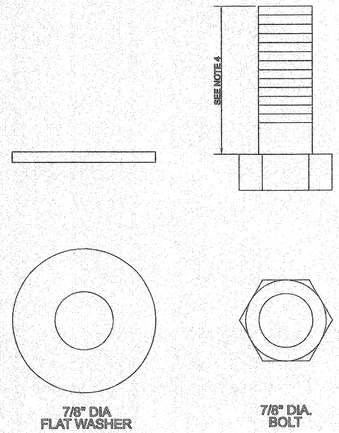

MEMBER K

NOTE:

1. BOLT SHAL BE HEXAGONAL HEAD.
2. BOLT AND FLAT WASHER SHALL BE GRADE 18.8 STAINLESS STEEL.
3. MEMBER K IS USED TO FASTEN MEMBER C TO BRIDGE DECK.
4. THE ACTUAL LENGTH OF MEMBER K WILL DEPEND ON MATERIAL SELECTION OF THE BRIDGE PAN. THE KNOWN MEMBERS (C,J) COMBINED THICKNESS SUM 1.325". THE BOLT LENGTH SHALL ACCOMODATE A COMPLETE THREAD ENGAGEMENT OF THE ANCHOR INSERT.

HANGER DETAILS
FOR ALL AT&T OWNED HANGERS

GRAPHIC SCALE
1" 1/2" 0 1" 2"

8024 GLENWOOD AVE
SUITE 230
RALEIGH, NC 27612

LOCATION:
SR 1184 (HOWELL MILL ROAD),
US 276 TO US 23 BUSINESS
WAYNESVILLE, NC

TIP NO.: U-4412
COUNTY: HAYWOOD

DESIGNED BY: UCS

CHECKED BY:
DATE: APRIL 10, 2013

...\ATT BRIDGE PROJECT.dgn 4/11/2013 10:57:13 AM

PROJECT REFERENCE NO.	SHEET NO.
U-4412	SU-10

UTILITY ENGINEER

NORTH CAROLINA PROFESSIONAL SEAL 039495 ENGINEER MATTHEW J. GIRARD

4/12/13

UC SYNERGETIC

8024 Glenwood Ave, Suite 230
Raleigh, NC 27612
N.C. Lic # F-1107

NOTE:
AT&T TO OWN
CONDUIT SYSTEM

BRIDGE - DIRECT BURIED CONDUIT PROFILE

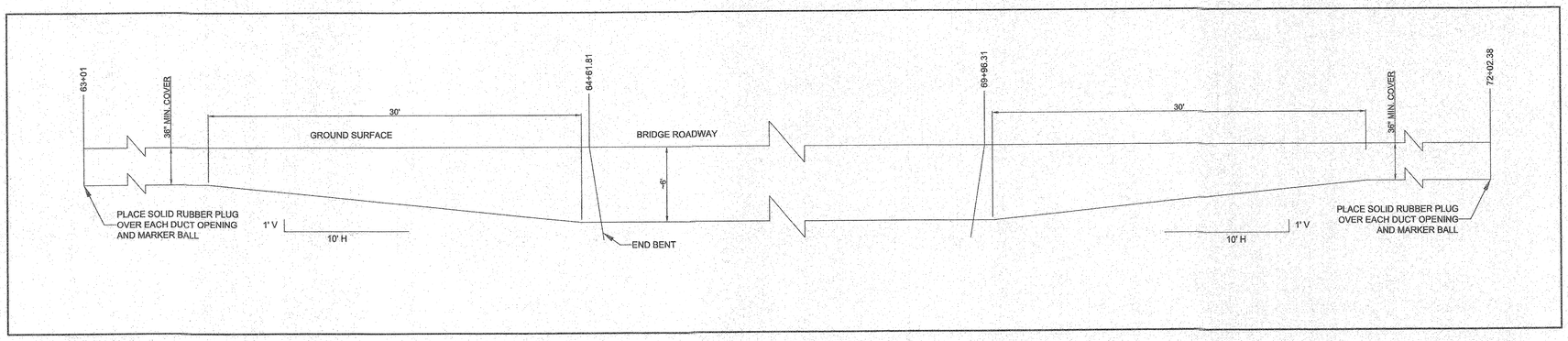

NOT TO SCALE

BILL OF MATERIALS

	Span A	Span B	Span C	Span D	Span E	Span F	
Anchor Point Hanger Locations	3	3	3	3	3	1	
Intermediate Hanger Locations	9	13	12	12	11	5	**Total Expansion Couplings**
Expansion Couplings	**3**	**4**	**2**	**4**	**2**	**2**	**17**

Member	Quantity Required for Anchor Point Hanger	Quantity Required for Intermediate Hanger Locations	Total Number of Anchor Point Locations	Total Number of Intermediate Hanger Locations	**Total Required Members**
A1	1	1	16	62	**78**
A2	1	1	16	62	**78**
B	2	2	16	62	**156**
C	2	2	16	62	**156**
D	4	4	16	62	**312**
E	4	4	16	62	**312**
F	4	4	16	62	**312**
G	4	8	16	62	**560**
H	1	1	16	62	**78**
J	4	2	16	62	**188**
K	4	2	16	62	**188**
L	2	0	16	62	**32**
M	2	0	16	62	**32**
N	2	0	16	62	**32**

REVISIONS

CONDUIT PROFILE AND BILL OF MATERIALS

GRAPHIC SCALE NOT TO SCALE

8024 GLENWOOD AVE
SUITE 230
RALEIGH, NC 27612

LOCATION:
SR 1184 (HOWELL MILL ROAD),
US 276 TO US 23 BUSINESS
WAYNESVILLE, NC

TIP NO.: U-4412
COUNTY: HAYWOOD

DESIGNED BY: UCS

CHECKED BY:
DATE: APRIL 10, 2013

NOTE:
PROGRESS ENERGY CAROLINAS
TO OWN CONDUIT SYSTEM

PROJECT REFERENCE NO.	SHEET NO.
U-4412	SU-11

UTILITY ENGINEER

NORTH CAROLINA PROFESSIONAL SEAL 039495 ENGINEER MATHEW J. GIRARD

4/10/13

UC SYNERGETIC
8024 Glenwood Ave, Suite 230
Raleigh, NC 27612
N.C. Lic # F-1107

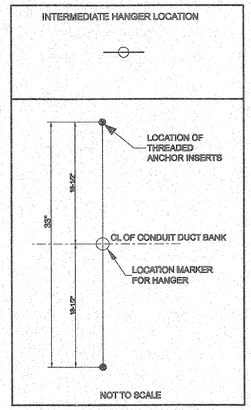

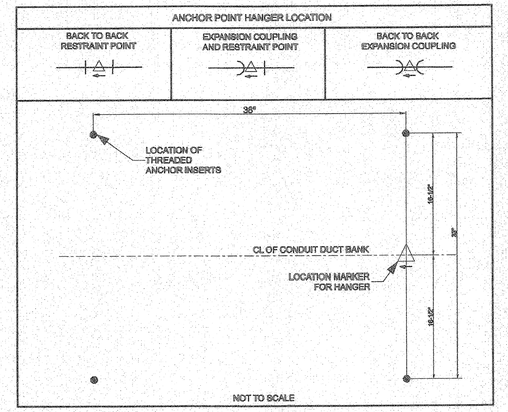

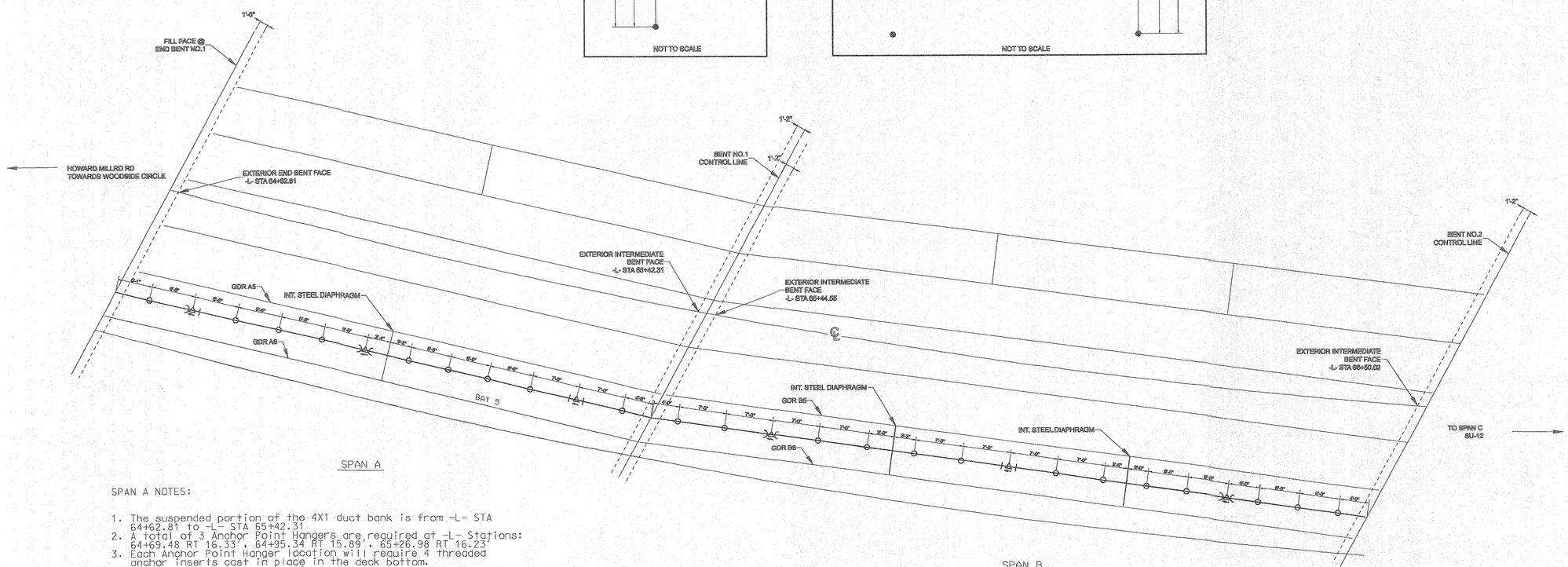

SPAN A

SPAN A NOTES:

1. The suspended portion of the 4X1 duct bank is from -L- STA 64+62.81 to -L- STA 65+42.31
2. A total of 3 Anchor Point Hangers are required at -L- Stations: 64+69.48 RT 16.33', 64+95.34 RT 15.89', 65+26.98 RT 16.23
3. Each Anchor Point Hanger location will require 4 threaded anchor inserts cast in place in the deck bottom.
4. Two locations will require Expansion Couplings at Stations: 64+69.48 RT 16.33', 64+95.34 RT 15.89'
5. A total of 9 Intermediate Hangers are required at the specified locations.
6. Each Intermediate Hanger location will require 2 threaded anchor inserts cast in place in the deck bottom.
7. All cast in place threaded anchor inserts shall be Dayton Superior Model F-42W (or approved equal) as specified on print SU-18 and shall be installed on the upper surface of the corrugated bridge form.
8. The duct bank shall be centered in Bay 5, between girders A5 and A6
9. The below grade duct bank shall be concrete encased at the end bent abutment with Span A from -L- Sta. 64+59.81 to 64+61.81. Refer to sheet SU-16 for section details through back wall.

SPAN B

SPAN B NOTES:

1. The suspended portion of the 4X1 duct bank is from -L- STA 65+44.55 to -L- STA 66+50.02
2. A total of 3 Anchor Point Hangers are required at -L- Stations: 65+55.91 RT 15.9', 65+90.92 RT 15.47', 66+23.03 RT 16.2
3. Each Anchor Point Hanger location will require 4 threaded anchor inserts cast in place in the deck bottom.
4. Two locations will require Expansion Couplings at Stations: 65+55.91 RT 15.9', 66+23.03 RT 16.2'
5. A total of 13 Intermediate Hangers are required at the specified locations.
6. Each Intermediate Hanger location will require 2 threaded anchor inserts cast in place in the deck bottom.
7. All cast in place threaded anchor inserts shall be Dayton Superior Model F-42W (or approved equal) as specified on print SU-18 and shall be installed on the upper surface of the corrugated bridge form.
8. The duct bank shall be centered in Bay 5, between girders B5 and B6

HANGER LOCATION PLAN

GRAPHIC SCALE
6' 3' 0 6' 12'

8024 GLENWOOD AVE
SUITE 230
RALEIGH, NC 27612

LOCATION:
SR 1184 (HOWELL MILL ROAD),
US 276 TO US 23 BUSINESS
WAYNESVILLE, NC

TIP NO.: U-4412
COUNTY: HAYWOOD
DESIGNED BY: UCS
CHECKED BY:
DATE: APRIL 10, 2013

REVISIONS

NOTE:
PROGRESS ENERGY CAROLINAS
TO OWN CONDUIT SYSTEM

PROJECT REFERENCE NO.	SHEET NO.
U-4412	SU-12

UTILITY ENGINEER

NORTH CAROLINA PROFESSIONAL SEAL 039495 ENGINEER MATTHEW J. GIRARD

4/10/13

UCS SYNERGETIC
8024 Glenwood Ave, Suite 230
Raleigh, NC 27612
N.C. Lic # F-1107

REVISIONS

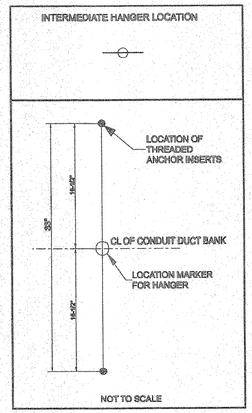

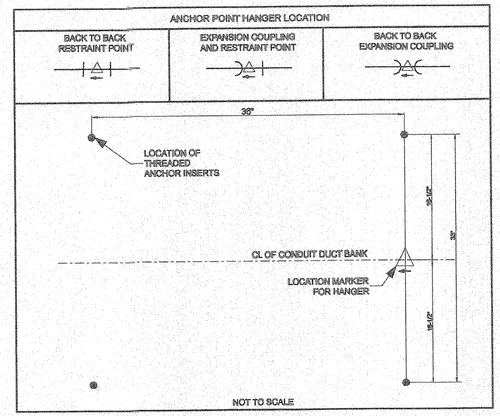

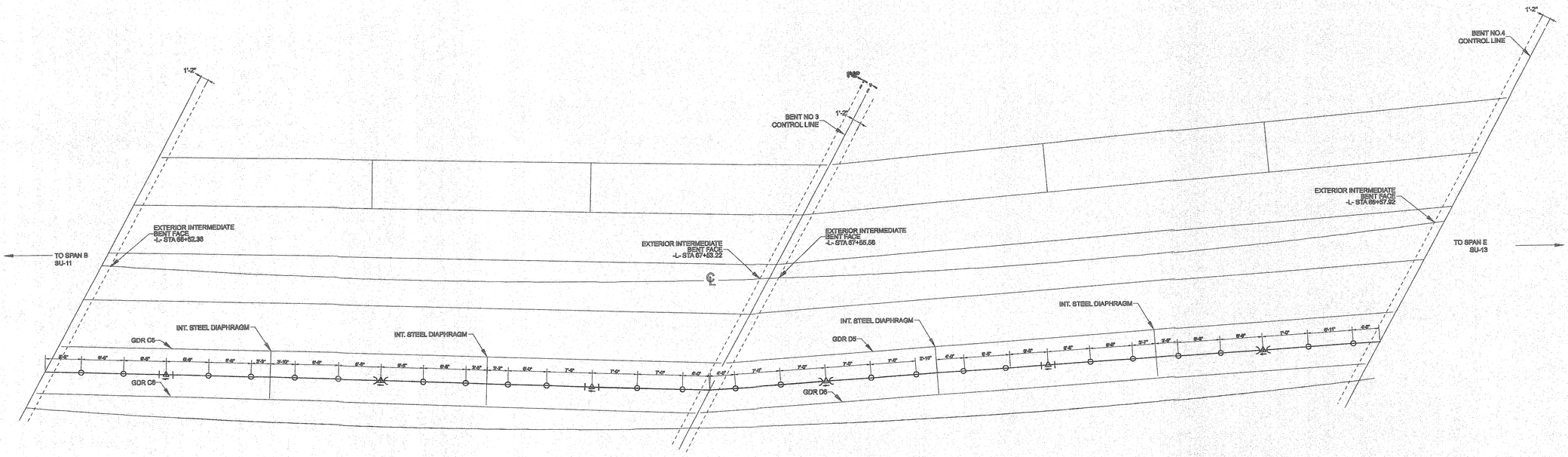

SPAN C

SPAN C NOTES:

1. The suspended portion of the 4X1 duct bank is from -L- STA 66+52.36 to -L- STA 67+53.22
2. A total of 3 Anchor Point Hangers are required at -L- Stations: 66+62.08 RT 16.34', 66+94.72 RT 15.79', 67+26.86 RT 16.28'
3. Each Anchor Point Hanger location will require 4 threaded anchor inserts cast in place in the deck bottom.
4. One location will require back-to-back Expansion Couplings at Station: 66+94.72 RT 15.79'
5. A total of 12 Intermediate Hangers are required at the specified locations.
6. Each Intermediate Hanger location will require 2 threaded anchor inserts cast in place in the deck bottom.
7. All cast in place threaded anchor inserts shall be Dayton Superior Model F-42W (or approved equal) as specified on print SU-18 and shall be installed on the upper surface of the corrugated bridge form.
8. The duct bank shall be centered in Bay 5, between girders C5 and C6

SPAN D

SPAN D NOTES:

1. The suspended portion of the 4X1 duct bank is from -L- STA 67+55.56 to -L- STA 68+57.92
2. A total of 3 Anchor Point Hangers are required at -L- Stations: 67+62.50 RT 16.28', 67+96.31 RT 15.85', 68+29.09 RT 16.49'
3. Each Anchor Point Hanger location will require 4 threaded anchor inserts cast in place in the deck bottom.
4. Two locations will require back-to-back Expansion Couplings at Stations: 67+62.50 RT 16.28', 68+29.09 RT 16.49'
5. A total of 12 Intermediate Hangers are required at the specified locations.
6. Each intermediate Hanger location will require 2 threaded anchor inserts cast in place in the deck bottom.
7. All cast in place threaded anchor inserts shall be Dayton Superior Model F-42W (or approved equal) as specified on print SU-18 and shall be installed on the upper surface of the corrugated bridge form.
8. The duct bank shall be centered in Bay 5, between girders D5 and D6

HANGER LOCATION PLAN

GRAPHIC SCALE
0 3' 6' 12'

8024 GLENWOOD AVE
SUITE 230
RALEIGH, NC 27612

LOCATION:
SR 1184 (HOWELL MILL ROAD), US 276 TO US 23 BUSINESS
WAYNESVILLE, NC

TIP NO.: U-4412
COUNTY: HAYWOOD

DESIGNED BY: UCS

CHECKED BY:
DATE: APRIL 10, 2013

GRESS BRIDGE PROJECT.dgn 4/10/2013 2:19:03 PM

NOTE:
PROGRESS ENERGY CAROLINAS
TO OWN CONDUIT SYSTEM

REVISIONS

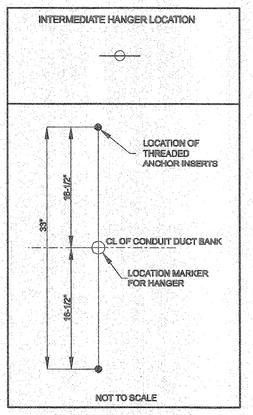

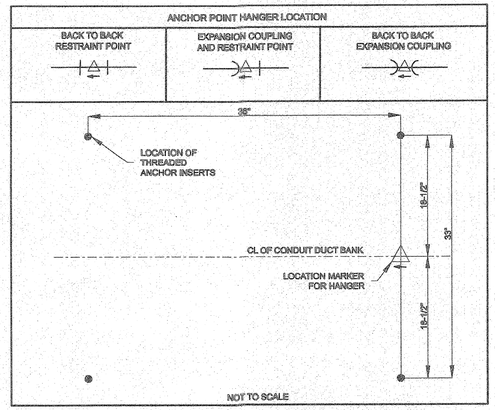

PROJECT REFERENCE NO.	SHEET NO.
U-4412	SU-13

UTILITY ENGINEER

NORTH CAROLINA PROFESSIONAL SEAL 039495 ENGINEER MATTHEW J. GIRARD

4/10/13

UC SYNERGETIC
8024 Glenwood Ave. Suite 230
Raleigh, NC 27612
N.C. Lic # F-1107

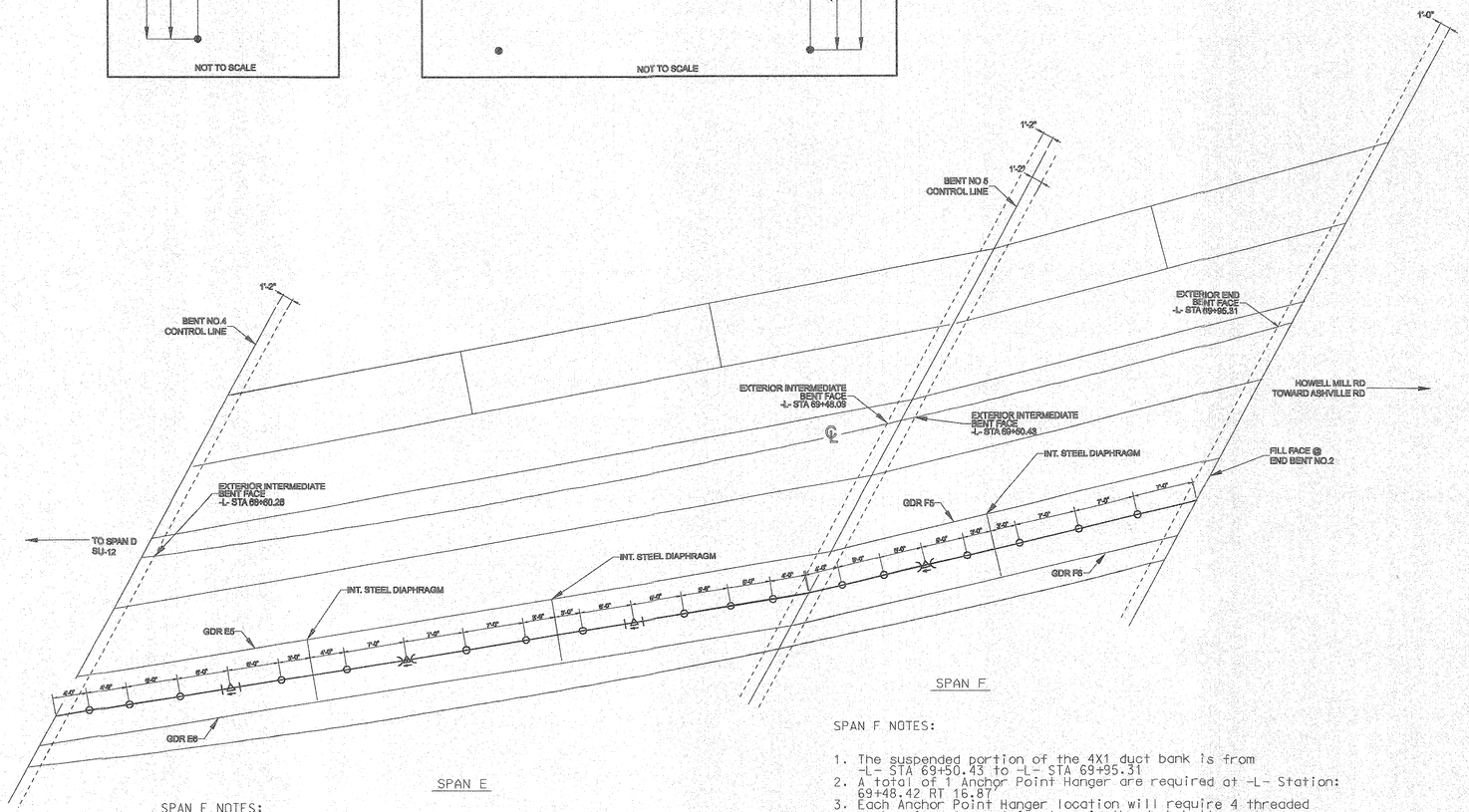

SPAN E

SPAN E NOTES:

1. The suspended portion of the 4X1 duct bank is from -L- STA 68+60.26 to -L- STA 69+48.09
2. A total of 3 Anchor Point Hangers are required at -L- Stations: 68+67.30 RT 16.57', 68+87.79 RT 16.25', 69+14.30 RT 16.5'
3. Each Anchor Point Hanger location will require 4 threaded anchor inserts cast in place in the deck bottom.
4. One location will require back-to-back Expansion Couplings at Station: 68+87.79 RT 16.25'
5. A total of 11 Intermediate Hangers are required at the specified locations.
6. Each Intermediate Hanger location will require 2 threaded anchor inserts cast in place in the deck bottom.
7. All cast in place threaded anchor inserts shall be Dayton Superior Model F-42W (or approved equal) as specified on print SU-18 and shall be installed on the upper surface of the corrugated bridge form.
8. The duct bank shall be centered in Bay 5, between girders E5 and E6

SPAN F

SPAN F NOTES:

1. The suspended portion of the 4X1 duct bank is from -L- STA 69+50.43 to -L- STA 69+95.31
2. A total of 1 Anchor Point Hanger are required at -L- Station: 69+48.42 RT 16.87'
3. Each Anchor Point Hanger location will require 4 threaded anchor inserts cast in place in the deck bottom.
4. One location will require back-to-back Expansion Couplings at Station: 69+48.42 RT 16.87'
5. A total of 6 Intermediate Hangers are required at the specified locations.
6. Each Intermediate Hanger location will require 2 threaded anchor inserts cast in place in the deck bottom.
7. All cast in place threaded anchor inserts shall be Dayton Superior Model F-42W (or approved equal) as specified on print SU-18 and shall be installed on the upper surface of the corrugated bridge form.
8. The duct bank shall be centered in Bay 5, between girders F5 and F6
9. The below grade duct bank shall be concrete encased at the end bent abutment with span A from -L- Sta. 69+96.31 to 69+98.31. Refer to sheet SU-16 for section details through back wall.

HANGER LOCATION
PLAN

GRAPHIC SCALE
6' 3' 0 6' 12'

8024 GLENWOOD AVE
SUITE 230
RALEIGH, NC 27612

LOCATION:
SR 1184 (HOWELL MILL ROAD),
US 276 TO US 23 BUSINESS
WAYNESVILLE, NC

TIP NO.:	COUNTY:
U-4412	HAYWOOD

DESIGNED BY: UCS

CHECKED BY:

DATE: APRIL 10, 2013

IRESS BRIDGE PROJECT.dgn 4/10/2013 2:19:19 PM

NOTE:
PROGRESS ENERGY CAROLINAS
TO OWN CONDUIT SYSTEM

UC SYNERGETIC
8024 Glenwood Ave, Suite 230
Raleigh, NC 27612
N.C. Lic # F-1107

PROJECT REFERENCE NO.	SHEET NO.
U-4412	SU-14

UTILITY ENGINEER

NORTH CAROLINA PROFESSIONAL SEAL 039495 ENGINEER MATTHEW J. GIRARD

4/10/13

REVISIONS

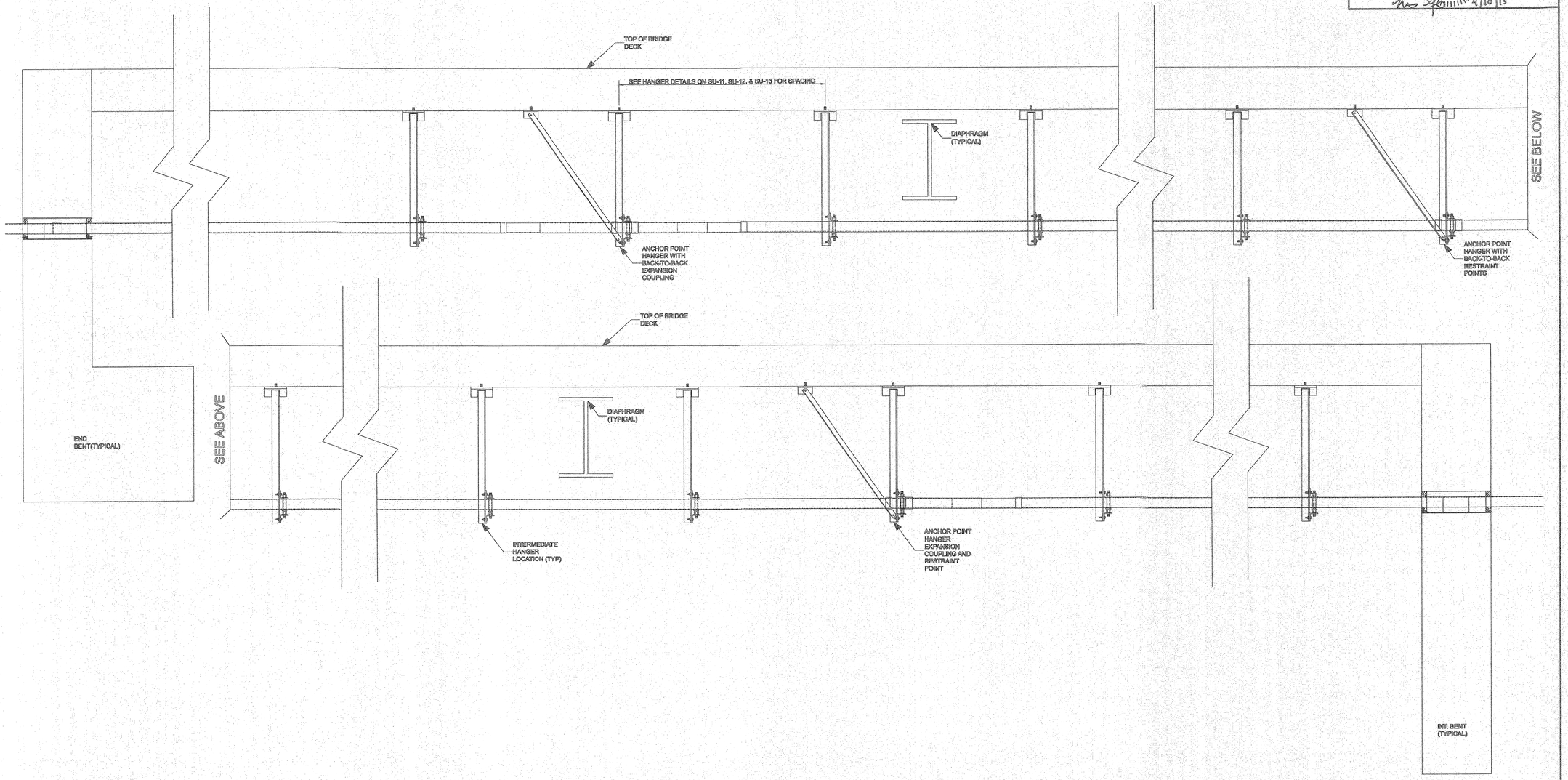

NOTES:

1. PROFILE VIEW FOR TYPICAL CONFIGURATIONS ONLY.
2. SEE SHEETS SU-11, SU-12, SU-13 FOR ACTUAL HANGER LOCATIONS.
3. SEE SHEET SU-15 FOR ANCHOR HANGER DETAILS AND CONDUIT EXPANSION COUPLING DETAIL.
4. SEE SHEETS SU-16 FOR END BENT/ABUTMENT DETAIL.
5. SEE SHEETS SU-17 AND SU-18 FOR HANGER MEMBER DETAILS.

DUCT BANK PROFILE
TYPICAL ONLY

GRAPHIC SCALE
NOT TO SCALE

8024 GLENWOOD AVE
SUITE 230
RALEIGH, NC 27612

LOCATION:
SR 1184 (HOWELL MILL ROAD),
US 276 TO US 23 BUSINESS
WAYNESVILLE, NC

TIP NO.: U-4412
COUNTY: HAYWOOD

DESIGNED BY: UCS

CHECKED BY:

DATE: APRIL 10, 2013

PROJECT REFERENCE NO.	SHEET NO.
U-4412	SU-15

UTILITY ENGINEER

NORTH CAROLINA PROFESSIONAL SEAL 039495 ENGINEER MATTHEW J. GIRARD

4/10/13

UC/SYNERGETIC

8024 Glenwood Ave, Suite 230
Raleigh, NC 27612
N.C. Lic # F-1107

REVISIONS

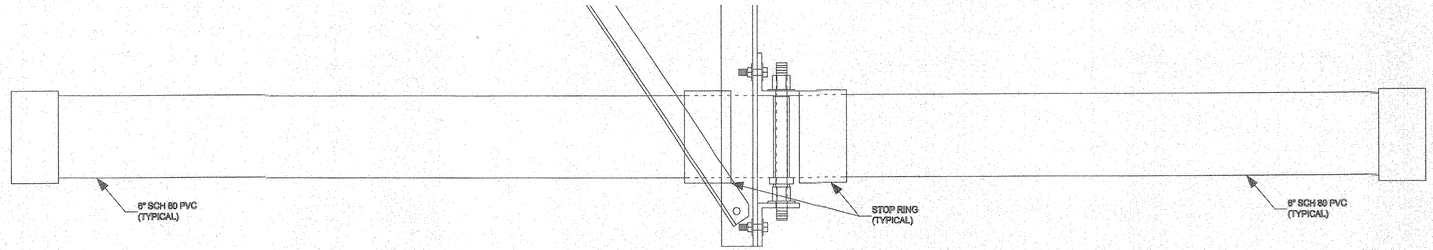

ANCHOR POINT HANGER WITH BACK TO BACK RESTRAINT POINTS

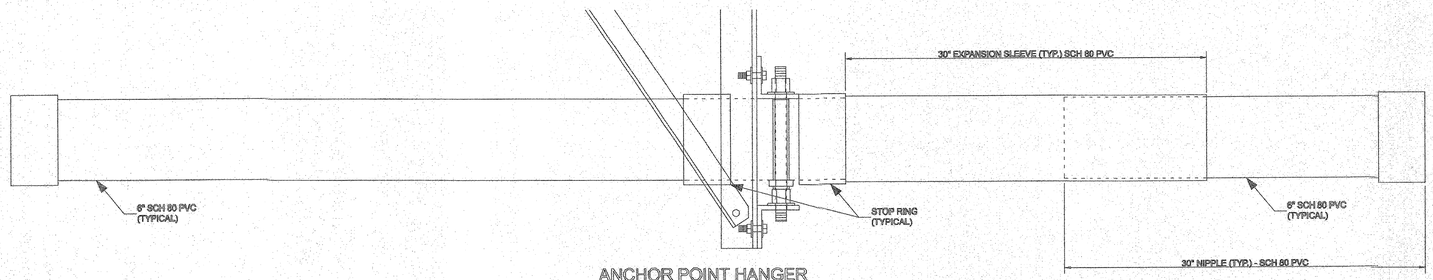

ANCHOR POINT HANGER WITH EXPANSION COUPLING AND RESTRAINT POINT

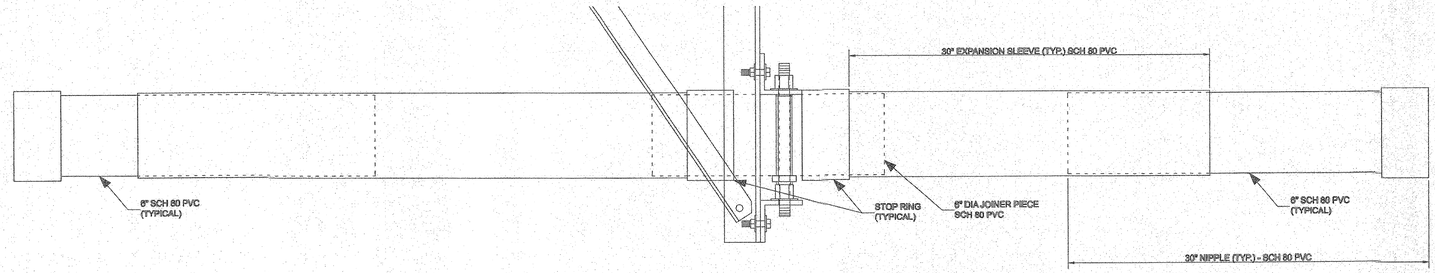

ANCHOR POINT HANGER WITH BACK TO BACK EXPANSION COUPLING

NOTE:
PROGRESS ENERGY CAROLINAS TO OWN CONDUIT SYSTEM

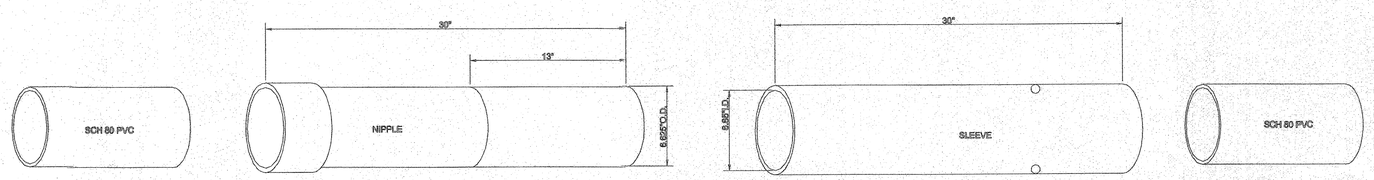

NOTES:

1. EXPANSION COUPLING SHALL BE MADE FROM SCHEDULE 80 PVC.
2. SCHEDULE 80 PVC SHALL BE SOLVENT WELDED TO THE BELL OF NIPPLE.
3. SCHEDULE 80 PVC SHALL BE SOLVENT WELDED TO THE DIMPLE END OF SLEEVE.
4. DIMENSIONS MAY DIFFER BY MANUFACTURER.

EXPANSION COUPLING DETAIL

HANGER DETAILS-RESTRAINT POINT AND EXPANSION COUPLING

GRAPHIC SCALE

GRAPHIC SCALE
6' 3' 0 6' 12'

8024 GLENWOOD AVE
SUITE 230
RALEIGH, NC 27612

LOCATION:
SR 1184 (HOWELL MILL ROAD), US 276 TO US 23 BUSINESS
WAYNESVILLE, NC

TIP NO.:	COUNTY:
U-4412	HAYWOOD

DESIGNED BY: UCS

CHECKED BY:

DATE: APRIL 10, 2013

NOTE:
PROGRESS ENERGY CAROLINAS
TO OWN CONDUIT SYSTEM

REVISIONS

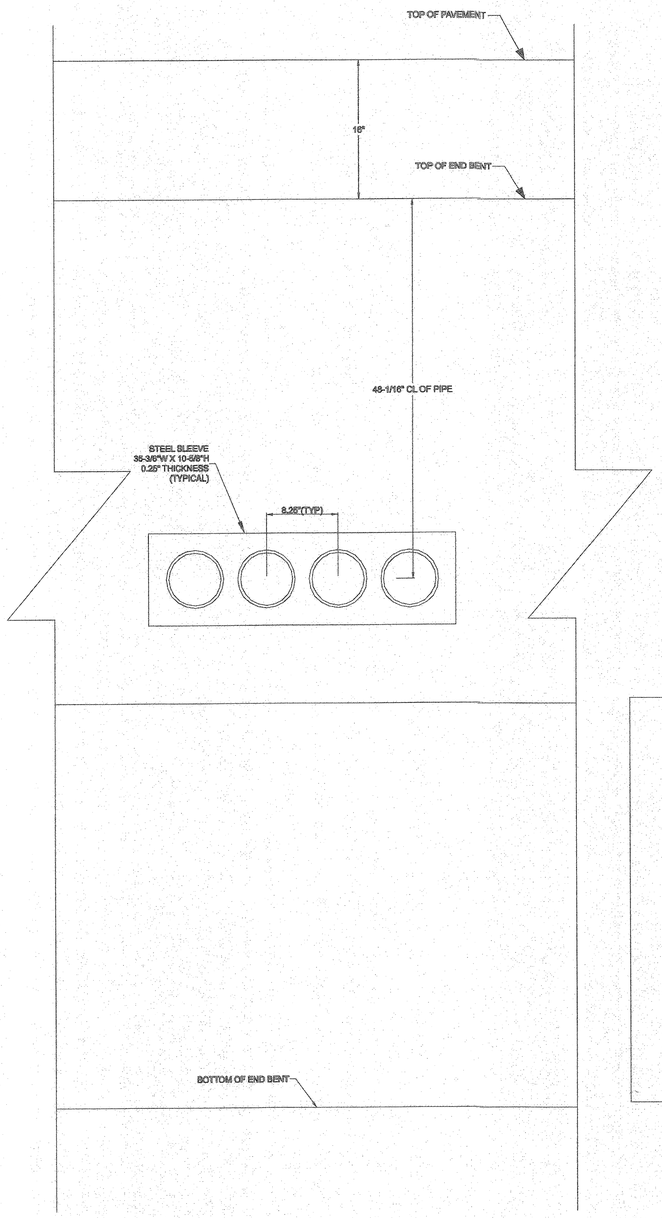

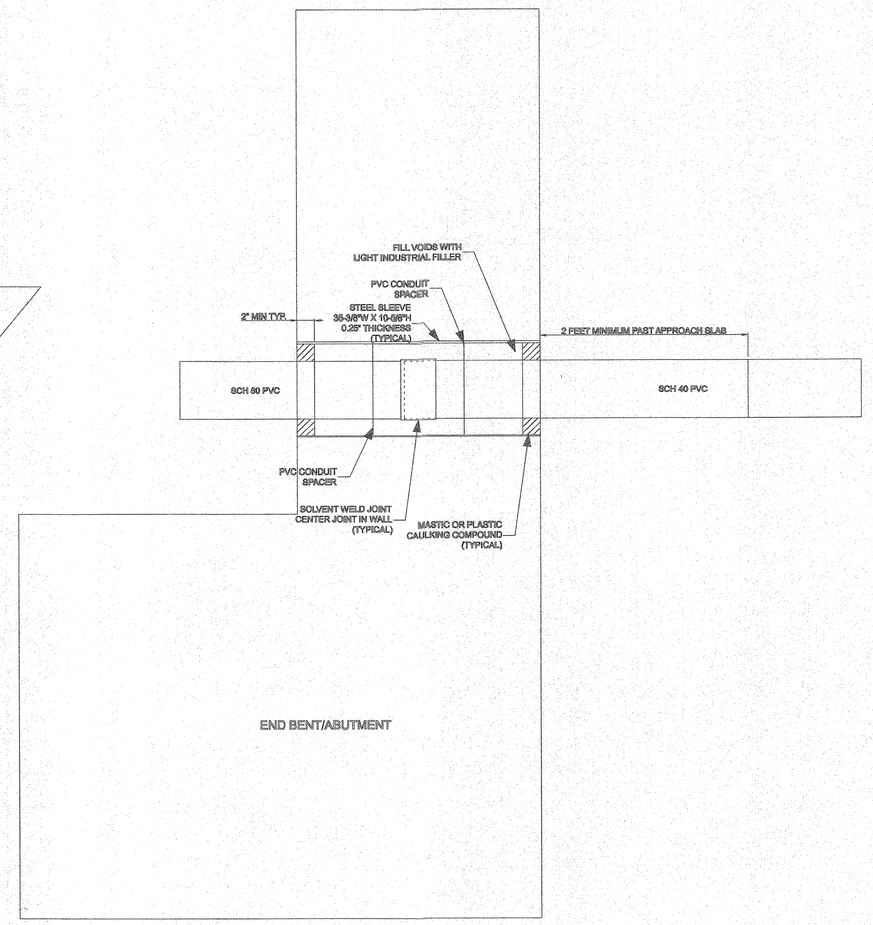

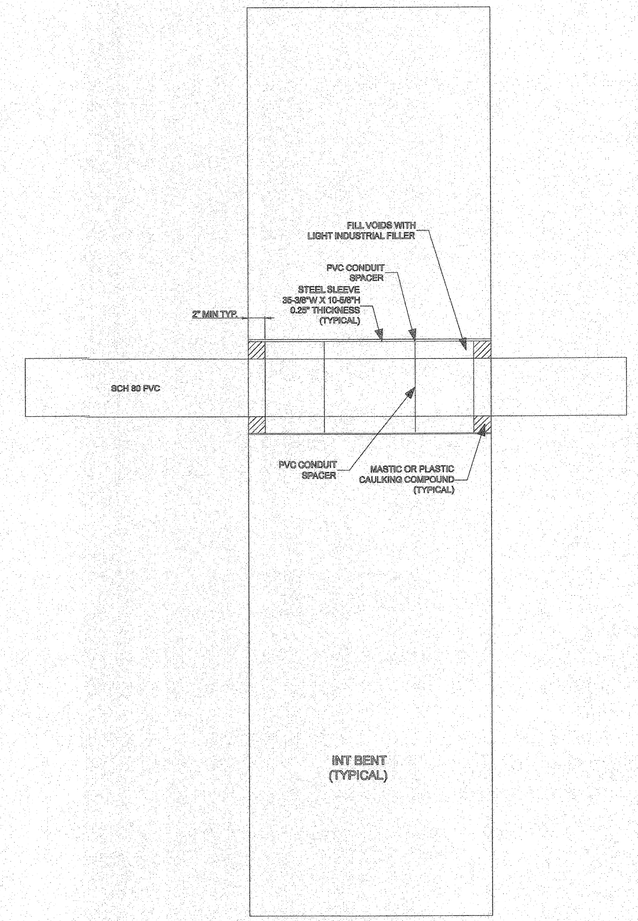

UC/SYNERGETIC
8024 Glenwood Ave. Suite 230
Raleigh, NC 27612
N.C. Lic # F-1107

PROJECT REFERENCE NO.	SHEET NO.
U-4412	SU-16

UTILITY
ENGINEER

NORTH CAROLINA PROFESSIONAL SEAL 039495 ENGINEER MATTHEW J. GIRARD
4/10/13

DETAILS - DUCT BANK SECTION
THROUGH BACK WALL

GRAPHIC SCALE
NOT TO SCALE

8024 GLENWOOD AVE
SUITE 230
RALEIGH, NC 27612

LOCATION:
SR 1184 (HOWELL MILL ROAD),
US 276 TO US 23 BUSINESS
WAYNESVILLE, NC

TIP NO.: U-4412
COUNTY: HAYWOOD

DESIGNED BY: UCS

CHECKED BY:
DATE: APRIL 10, 2013

NOTE:
PROGRESS ENERGY CAROLINAS
TO OWN CONDUIT SYSTEM

REVISIONS

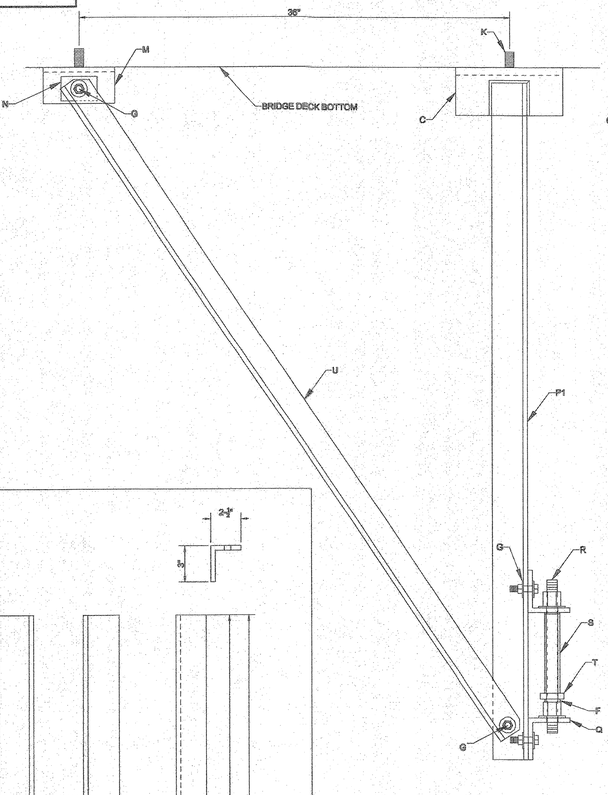

ANCHOR POINT HANGER
PROFILE VIEW

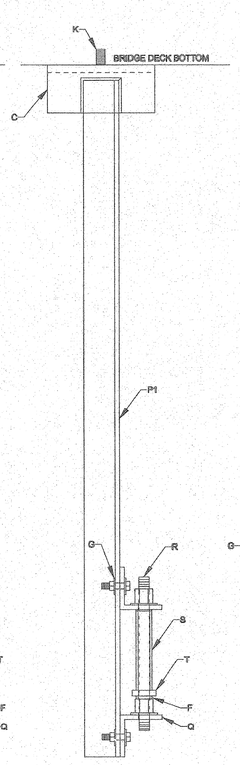

INTERMEDIATE HANGER
PROFILE VIEW

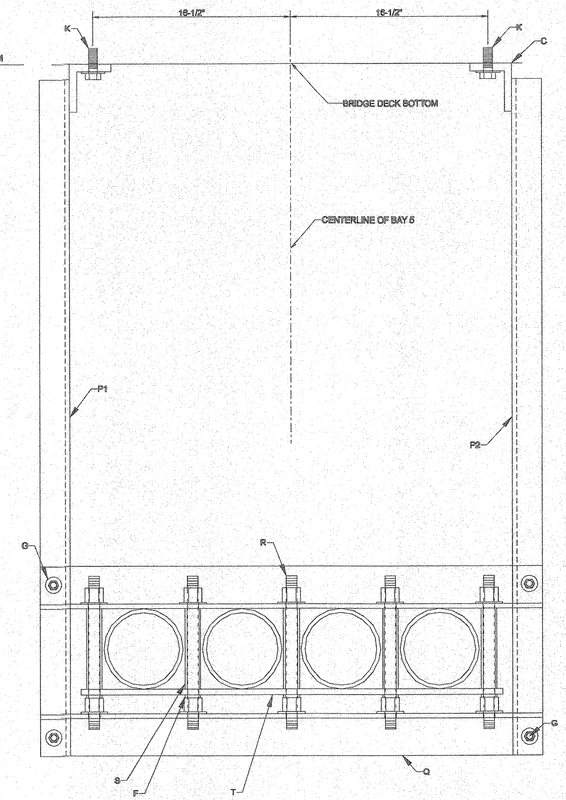

INTERMEDIATE & ANCHOR POINT HANGER
FRONT VIEW

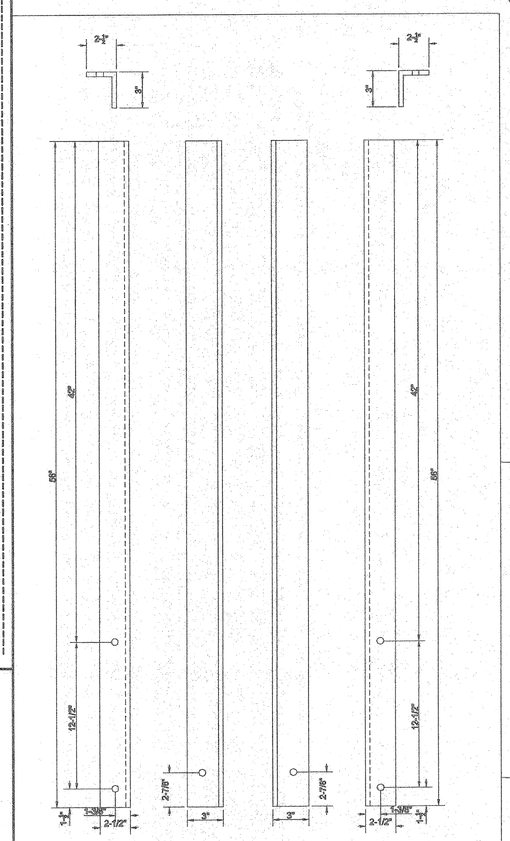

MEMBER P1 MEMBER P2

NOTE:

1. MEMBER SIZE IS: L 2.5" X 3" X 3/8
2. 2.5" LEG ATTACHES TO MEMBER Q.
3. 3" LEG ATTACHES TO MEMBER U WHEN ANCHOR POINT BRACING IS CALLED FOR.
4. ALL HOLES ARE 9/16" DIAMETER.

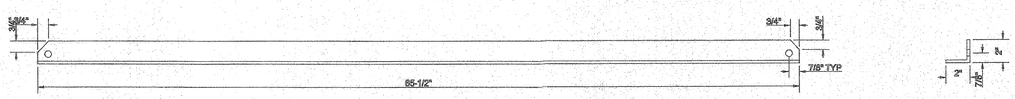

MEMBER U

NOTE:

1. MEMBER SIZE IS: L 2" x 2" x 1/4"
2. MEMBER T IS BOLTED TO MEMBER P AND MEMBER M, N.

GENERAL NOTES:

1. REFER TO SHEET SU-18 FOR DETAILS OF MEMBERS: C.R.S.F.C.T.J. AND K.
2. HANGER LOCATIONS WITH THREADED ANCHOR INSERT LAYOUT & DETAILS SHOWN ON ANCHOR LOCATION PLAN SHEETS SU-11,SU-12,SU-13.
3. EACH ANCHOR POINT HANGER REQUIRES FOUR (4) THREADED ANCHOR INSERTS CAST IN PLACE IN THE BRIDGE DECK BOTTOM.
4. EACH INTERMEDIATE HANGER REQUIRES TWO (2) THREADED ANCHOR INSERTS.
5. REFER TO SHEET SU-18 FOR DETAILS OF ANCHOR INSERT (MEMBER J).
6. ALL PROGRESS ENERGY (BAY 5) CONDUIT INSTALLED ON THE BRIDGE SHALL BE SCH 80 PVC.
7. NO PIPE JOINTS SHALL BE LOCATED WITHIN ONE (1) FOOT OF ANY HANGER.

UC SYNERGETIC
8024 Glenwood Ave, Suite 230
Raleigh, NC 27612
N.C. Lic # F-1107

PROJECT REFERENCE NO.	SHEET NO.
U-4412	SU-17

UTILITY ENGINEER

NORTH CAROLINA PROFESSIONAL SEAL 039495 ENGINEER MATTHEW J. GIRARD

4/10/13

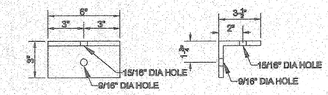

MEMBER M

NOTE:

1. MEMBER SIZE IS: L 3.5" x 3" x 1/4"
2. 3.5" LEG IS ALWAYS BOLTED TO THE BRIDGE

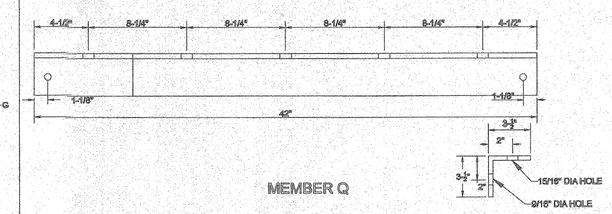

MEMBER Q

NOTE:

1. MEMBER SIZE IS: L 3.5" x 3.5" x 3/8"
2. LEG WITH 9/16" DIAMETER HOLES ATTACHES TO MEMBERS P1, P2.

MEMBER N

NOTE:

1. SPACER IS MADE FROM 1/4" THICK PLATE STOCK.
2. 9/16" DIA. HOLE IS CENTERED IN THE SPACER.
3. SPACER IS INSTALLED BETWEEN MEMBER U AND MEMBER M

HANGER DETAILS
FOR ALL HANGERS

GRAPHIC SCALE
6" 3" 0 6" 12"

8024 GLENWOOD AVE
SUITE 230
RALEIGH, NC 27612

LOCATION:
SR 1184 (HOWELL MILL ROAD),
US 276 TO US 23 BUSINESS
WAYNESVILLE, NC

TIP NO.: U-4412
COUNTY: HAYWOOD

DESIGNED BY: UCS

CHECKED BY:
DATE: APRIL 10, 2013

PROJECT REFERENCE NO.	SHEET NO.
U-4412	SU-18

UTILITY ENGINEER
NORTH CAROLINA PROFESSIONAL SEAL 039495 ENGINEER MATTHEW J. GIRARD
4/12/13

UC/SYNERGETIC
8024 Glenwood Ave, Suite 230
Raleigh, NC 27612
N.C. Lic # F-1107

NOTE:
PROGRESS ENERGY CAROLINAS
TO OWN CONDUIT SYSTEM

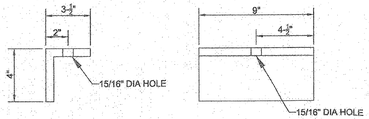

MEMBER C
USE SCALE BELOW
GRAPHIC SCALE
6" 3" 0 6" 12"

NOTE:

1. MEMBER SIZE IS: L 3.5" X 4" X 5/8"
2. 3.5" LEG IS ALWAYS BOLTED TO THE BRIDGE.
3. HOLE IS 15/16" DIAMETER.

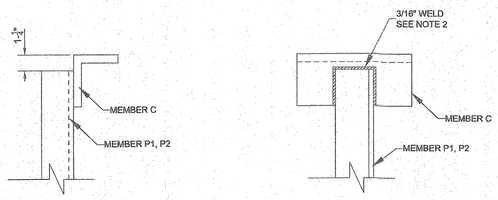

CONNECTION OF C
NOT TO SCALE

NOTE:

1. CONNECTION DETAIL ONLY, OBJECTS NOT TO SCALE.
2. WELD IS ON VERTICLE LEG.

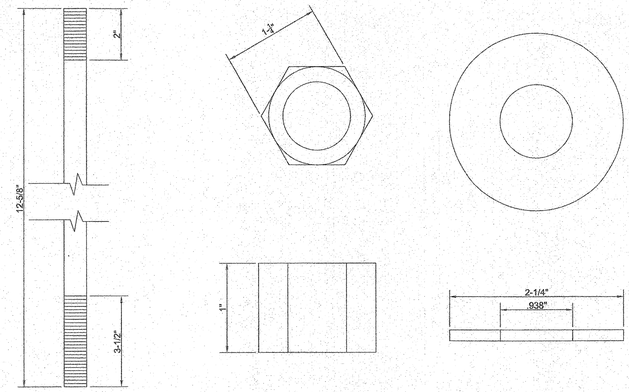

7/8" DIA.
ROD
(NOT TO SCALE)

7/8" DIA
NYLOCK JAM NUT

7/8" DIA.
FLAT WASHER

MEMBER R

NOTE:

1. ROD IS MADE FROM TYPE 316 STAINLESS STEEL.
2. NYLOCK JAM NUT AND FLAT WASHER SHALL BE GRADE 18.8 STAINLESS STEEL.
3. NYLOCK JAM NUT AND FLAT WASHER ARE USED TO HOLD MEMBER IN PLACE AT EACH END OF ROD.

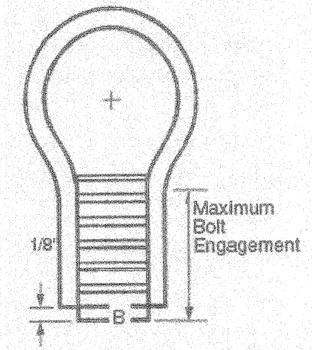

DAYTON SUPERIOR ANCHOR INSERT
MODEL F-42W LOOP FERRULE
7/8" INSERT TYPE 304 STAINLESS STEEL
WITH MOUNTING WASHER TO BE INSTALLED
IN CONCRETE WITH MIN 4500 PSI
OR APPROVED EQUAL

MEMBER J

NOT TO SCALE

*NOTE: MOUNT ALL ANCHOR INSERTS ON UPPER SURFACE
OF THE CORRUGATED BRIDGE FORM

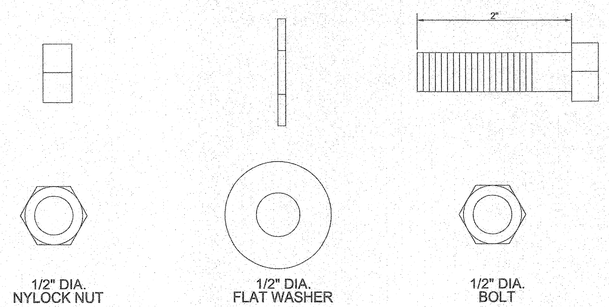

1/2" DIA.
NYLOCK NUT

1/2" DIA.
FLAT WASHER

1/2" DIA.
BOLT

MEMBER G

NOTE:

1. BOLT SHALL BE HEXAGONAL HEAD.
2. BOLT, NYLOCK NUT, AND FLAT WASHER SHALL BE GRADE 18.8 STAINLESS STEEL.
3. NYLOCK NUT AND WASHER USED WITH EACH BOLT TO FASTEN MEMBERS TOGETHER.

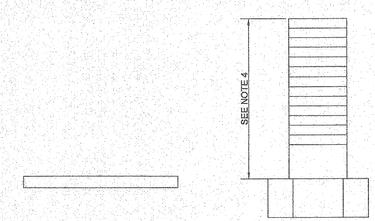

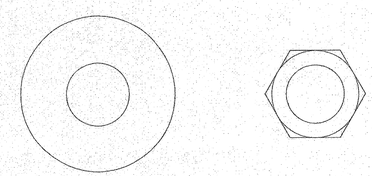

7/8" DIA
FLAT WASHER

7/8" DIA.
BOLT

MEMBER K

NOTE:

1. BOLT SHALL BE HEXAGONAL HEAD.
2. BOLT AND FLAT WASHER SHALL BE GRADE 18.8 STAINLESS STEEL.
3. MEMBER K IS USED TO FASTEN MEMBER C TO BRIDGE DECK.
4. THE ACTUAL LENGTH OF MEMBER K WILL DEPEND ON MATERIAL SELECTION OF THE BRIDGE PAN. THE KNOWN MEMBERS (C,J) COMBINED THICKNESS SUM 1.925". THE BOLT LENGTH SHALL ACCOMODATE A COMPLETE THREAD ENGAGEMENT OF THE ANCHOR INSERT.

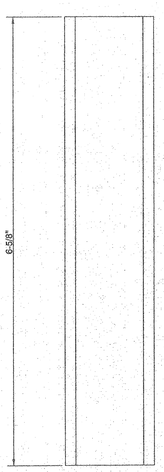

MEMBER S
FRONT VIEW

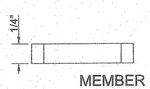

MEMBER F
FRONT VIEW

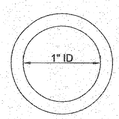

TOP VIEW

MEMBERS S&F

NOTE:

1. MEMBERS ARE MADE FROM ULTRAVIOLET PROTECTED SCH 40 PVC PIPE OR EQUIVALENT WALL THICKNESS THAT IS COMMERCIALLY AVAILABLE.

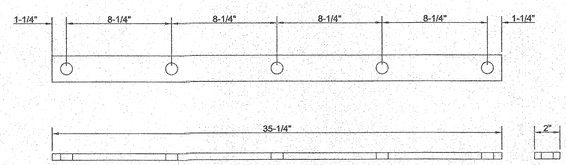

MEMBER T
USE SCALE BELOW
GRAPHIC SCALE
6" 3" 0 6" 12"

NOTE:

1. MEMBER IS MADE FROM ULTRAVIOLET PROTECTED 1/2" THICK PVC BAR, OR EQUIVALENT.
2. ALL HOLES ARE 9/16" DIAMETER.

HANGER DETAILS
FOR ALL HANGERS

GRAPHIC SCALE
1" 1/2" 0 1" 2"

8024 GLENWOOD AVE
SUITE 230
RALEIGH, NC 27612

LOCATION:
SR 1184 (HOWELL MILL ROAD),
US 276 TO US 23 BUSINESS
WAYNESVILLE, NC

TIP NO.: U-4412
COUNTY: HAYWOOD

DESIGNED BY: UCS

CHECKED BY:
DATE: APRIL 10, 2013

REVISIONS

NOTE:
PROGRESS ENERGY CAROLINAS
TO OWN CONDUIT SYSTEM

UC SYNERGETIC
8024 Glenwood Ave, Suite 230
Raleigh, NC 27612
N.C. Lic # F-1107

PROJECT REFERENCE NO.	SHEET NO.
U-4412	SU-19

UTILITY ENGINEER
NORTH CAROLINA PROFESSIONAL SEAL 039495 ENGINEER MATTHEW J. GIRARD
4/12/13

REVISIONS

BRIDGE - DIRECT BURIED CONDUIT PROFILE

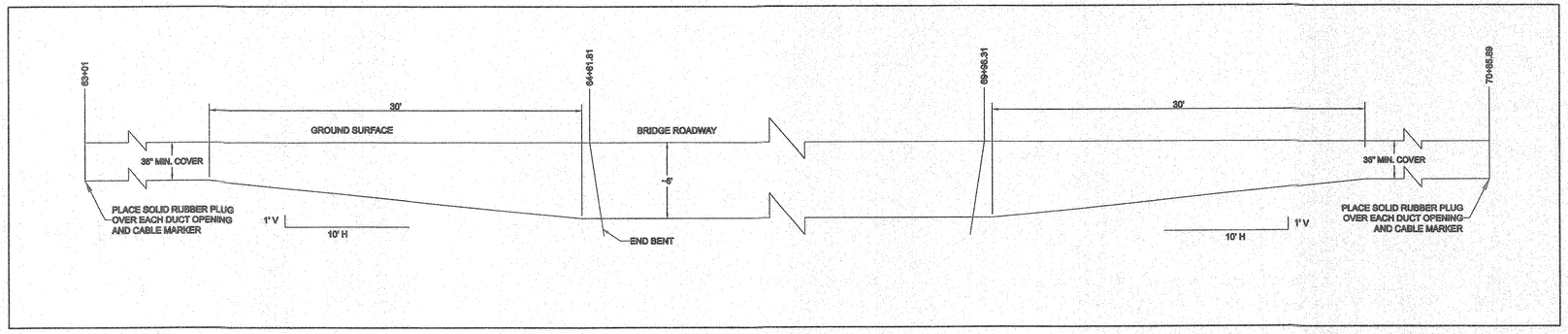

NOT TO SCALE

BILL OF MATERIALS

	Span A	Span B	Span C	Span D	Span E	Span F	
Anchor Point Hanger Locations	3	3	3	3	3	1	
Intermediate Hanger Locations	9	13	12	12	11	6	**Total Expansion Couplings**
Expansion Couplings	**3**	**4**	**2**	**4**	**2**	**2**	**17**

Member	Quantity Required for Anchor Point Hanger	Quantity Required for Intermediate Hanger Locations	Total Number of Anchor Point Locations	Total Number of Intermediate Hanger Locations	**Total Required Members**
P1	1	1	16	63	**79**
P2	1	1	16	63	**79**
Q	2	2	16	63	**158**
C	2	2	16	63	**158**
R	4	4	16	63	**316**
S	4	4	16	63	**316**
F	4	4	16	63	**316**
G	4	8	16	63	**568**
T	1	1	16	63	**79**
J	4	2	16	63	**190**
K	4	2	16	63	**190**
U	2	0	16	63	**32**
M	2	0	16	63	**32**
N	2	0	16	63	**32**

CONDUIT PROFILE AND BILL OF MATERIALS

GRAPHIC SCALE NOT TO SCALE

8024 GLENWOOD AVE
SUITE 230
RALEIGH, NC 27612

LOCATION:
SR 1184 (HOWELL MILL ROAD),
US 276 TO US 23 BUSINESS
WAYNESVILLE, NC

TIP NO.: U-4412
COUNTY: HAYWOOD

DESIGNED BY: UCS

CHECKED BY:
DATE: APRIL 10, 2013

STANDARD NOTES

DESIGN DATA:

SPECIFICATIONS	A.A.S.H.T.O. (CURRENT)
LIVE LOAD	SEE PLANS
IMPACT ALLOWANCE	SEE A.A.S.H.T.O.
STRESS IN EXTREME FIBER OF	
STRUCTURAL STEEL - AASHTO M270 GRADE 36	20,000 LBS. PER SQ. IN.
- AASHTO M270 GRADE 50W	27,000 LBS. PER SQ. IN.
- AASHTO M270 GRADE 50	27,000 LBS. PER SQ. IN.
REINFORCING STEEL IN TENSION	
GRADE 60	24,000 LBS. PER SQ. IN.
CONCRETE IN COMPRESSION	1,200 LBS. PER SQ. IN.
CONCRETE IN SHEAR	SEE A.A.S.H.T.O.
STRUCTURAL TIMBER - TREATED OR	
UNTREATED - EXTREME FIBER STRESS	1,800 LBS. PER SQ. IN.
COMPRESSION PERPENDICULAR TO GRAIN OF TIMBER	375 LBS. PER SQ. IN.
EQUIVALENT FLUID PRESSURE OF EARTH	30 LBS. PER CU. FT. (MINIMUM)

MATERIAL AND WORKMANSHIP:

EXCEPT AS MAY OTHERWISE BE SPECIFIED ON PLANS OR IN THE SPECIAL PROVISIONS, ALL MATERIAL AND WORKMANSHIP SHALL BE IN ACCORDANCE WITH THE 2012 "STANDARD SPECIFICATIONS FOR ROADS AND STRUCTURES" OF THE N. C. DEPARTMENT OF TRANSPORTATION.

STEEL SHEET PILING FOR PERMANENT OR TEMPORARY APPLICATIONS SHALL BE HOT ROLLED.

CONCRETE:

UNLESS OTHERWISE REQUIRED ON PLANS, CLASS A CONCRETE SHALL BE USED FOR ALL PORTIONS OF ALL STRUCTURES WITH THE EXCEPTION THAT: CLASS AA CONCRETE SHALL BE USED IN BRIDGE SUPERSTRUCTURES, ABUTMENT BACKWALLS, AND APPROACH SLABS; AND CLASS B CONCRETE SHALL BE USED FOR SLOPE PROTECTION AND RIP RAP.

CONCRETE CHAMFERS:

UNLESS OTHERWISE NOTED ON THE PLANS, ALL EXPOSED CORNERS ON STRUCTURES SHALL BE CHAMFERED 3/4" WITH THE FOLLOWING EXCEPTIONS: TOP CORNERS OF CURBS MAY BE ROUNDED TO 1-1/2" RADIUS WHICH IS BUILT INTO CURB FORMS; CORNERS OF TRANSVERSE FLOOR EXPANSION JOINTS SHALL BE ROUNDED WITH A 1/4" FINISHING TOOL UNLESS OTHERWISE REQUIRED ON PLANS; AND CORNERS OF EXPANSION JOINTS IN THE ROADWAY FACES AND TOPS OF CURBS AND SIDEWALKS SHALL BE ROUNDED TO A 1/4" RADIUS WITH A FINISHING STONE OR TOOL UNLESS OTHERWISE REQUIRED ON PLANS.

DOWELS:

DOWELS WHEN INDICATED ON PLANS AS FOR CULVERT EXTENSIONS, SHALL BE EMBEDDED AT LEAST 12" INTO THE OLD CONCRETE AND GROUTED INTO PLACE WITH 1:2 CEMENT MORTAR.

ALLOWANCE FOR DEAD LOAD DEFLECTION, SETTLEMENT, ETC. IN CASTING SUPERSTRUCTURES:

BRIDGES SHALL BE BUILT ON THE GRADE OR VERTICAL CURVE SHOWN ON PLANS. SLABS, CURBS AND PARAPETS SHALL CONFORM TO THE GRADE OR CURVE.

ALL DIMENSIONS WHICH ARE GIVEN IN SECTION AND ARE AFFECTED BY DEAD LOAD DEFLECTIONS ARE DIMENSIONS AT CENTER LINE OF BEARING UNLESS OTHERWISE NOTED ON PLANS. IN SETTING FORMS FOR STEEL BEAM BRIDGES AND PRESTRESSED CONCRETE GIRDER BRIDGES, ADJUSTMENTS SHALL BE MADE DUE TO THE DEAD LOAD DEFLECTIONS FOR THE ELEVATIONS SHOWN. WHERE BLOCKS ARE SHOWN OVER BEAMS FOR BUILDING UP TO THE SLAB, THE VERTICAL DIMENSIONS OF THE BLOCKS SHALL BE ADJUSTED BETWEEN BEARINGS TO COMPENSATE FOR DEAD LOAD DEFLECTIONS, VERTICAL CURVE ORDINATE, AND ACTUAL BEAM CAMBER. WHERE BOTTOM OF SLAB IS IN LINE WITH BOTTOM OF TOP FLANGES, DEPTH OF SLAB BETWEEN BEARINGS SHALL BE ADJUSTED TO COMPENSATE FOR DEAD LOAD DEFLECTION, VERTICAL CURVE ORDINATE, AND ACTUAL BEAM CAMBER.

IN SETTING FALSEWORK AND FORMS FOR REINFORCED CONCRETE SPANS, AN ALLOWANCE SHALL BE MADE FOR DEAD LOAD DEFLECTIONS, SETTLEMENT OF FALSEWORK, AND PERMANENT CAMBER WHICH SHALL BE PROVIDED FOR IN ADDITION TO THE ELEVATIONS SHOWN. AFTER REMOVAL OF THE FALSEWORK, THE FINISHED STRUCTURES SHALL CONFORM TO THE PROFILE AND ELEVATIONS SHOWN ON THE PLANS AND CONSTRUCTION ELEVATIONS FURNISHED BY THE ENGINEER.

DETAILED DRAWINGS FOR FALSEWORK OR FORMS FOR BRIDGE SUPERSTRUCTURE AND ANY STRUCTURE OR PARTS OF A STRUCTURE AS NOTED ON THE PLANS SHALL BE SUBMITTED TO THE ENGINEER FOR APPROVAL BEFORE CONSTRUCTION OF THE FALSEWORK OR FORMS IS STARTED.

REINFORCING STEEL:

ALL REINFORCING STEEL SHALL BE DEFORMED. DIMENSIONS RELATIVE TO PLACEMENT OF REINFORCING ARE TO CENTERS OF BARS UNLESS OTHERWISE INDICATED IN THE PLANS. DIMENSIONS ON BAR DETAILS ARE TO CENTERS OF BARS OR ARE OUT TO OUT AS INDICATED ON PLANS.

WIRE BAR SUPPORTS SHALL BE PROVIDED FOR REINFORCING STEEL WHERE INDICATED ON THE PLANS. WHEN BAR SUPPORT PIECES ARE PLACED IN CONTINUOUS LINES, THEY SHALL BE SO PLACED THAT THE ENDS OF THE SUPPORTING WIRES SHALL BE LAPPED TO LOCK LEGS ON ADJOINING PIECES.

STRUCTURAL STEEL:

AT THE CONTRACTOR'S OPTION, HE MAY SUBSTITUTE 7/8" Ø SHEAR STUDS FOR THE 3/4" Ø STUDS SPECIFIED ON THE PLANS. THIS SUBSTITUTION SHALL BE MADE AT THE RATE OF 3 - 7/8" Ø STUDS FOR 4 - 3/4" Ø STUDS, AND STUD SPACING CHANGES SHALL BE MADE AS NECESSARY TO PROVIDE THE SAME EQUIVALENT NUMBER OF 7/8" Ø STUDS ALONG THE BEAM AS SHOWN FOR 3/4" Ø STUDS BASED ON THE RATIO OF 3 - 7/8" Ø STUDS FOR 4 - 3/4" Ø STUDS. STUDS OF THE LENGTH SPECIFIED ON THE PLANS MUST BE PROVIDED. THE MAXIMUM SPACING SHALL BE 2'-0".

EXCEPT AT THE INTERIOR SUPPORTS OF CONTINUOUS BEAMS WHERE THE COVER PLATE IS IN CONTACT WITH BEARING PLATE, THE CONTRACTOR MAY, AT HIS OPTION, SUBSTITUTE FOR THE COVER PLATES DESIGNATED ON THE PLANS COVER PLATES OF THE EQUIVALENT AREA PROVIDED THESE PLATES ARE AT LEAST 5/16" IN THICKNESS AND DO NOT EXCEED A WIDTH EQUAL TO THE FLANGE WIDTH LESS 2" OR A THICKNESS EQUAL TO 2 TIMES THE FLANGE THICKNESS. THE SIZE OF FILLET WELDS SHALL CONFORM TO THE REQUIREMENTS OF THE CURRENT ANSI/AASHTO/AWS "BRIDGE WELDING CODE". ELECTROSLAG WELDING WILL NOT BE PERMITTED.

WITH THE SOLE EXCEPTION OF EDGES AT SURFACES WHICH BEAR ON OTHER SURFACES, ALL SHARP EDGES AND ENDS OF SHAPES AND PLATES SHALL BE SLIGHTLY ROUNDED BY SUITABLE MEANS TO A RADIUS OF APPROXIMATELY 1/16 INCH OR EQUIVALENT FLAT SURFACE AT A SUITABLE ANGLE PRIOR TO PAINTING, GALVANIZING, OR METALLIZING.

HANDRAILS AND POSTS:

METAL STANDARDS AND FACES OF THE CONCRETE END POSTS FOR THE METAL RAIL SHALL BE SET NORMAL TO THE GRADE OF THE CURB, UNLESS OTHERWISE SHOWN ON PLANS. THE METAL RAIL AND TOPS OF CONCRETE POSTS USED WITH THE ALUMINUM RAIL SHALL BE BUILT PARALLEL TO THE GRADE OF THE CURB.

METAL HANDRAILS SHALL BE IN ACCORDANCE WITH THE PLANS. RAILS SHALL BE AS MANUFACTURED FOR BRIDGE RAILING. CASTINGS SHALL BE OF A UNIFORM APPEARANCE. FINS AND OTHER DEFORMATIONS RESULTING FROM CASTING OR OTHERWISE SHALL BE REMOVED IN A MANNER SO THAT A UNIFORM COLORING OF THE COMPLETED CASTING SHALL BE OBTAINED. CASTINGS WITH DISCOLORATIONS OR OF NON-UNIFORM COLORING WILL NOT BE ACCEPTED. CERTIFIED MILL REPORTS ARE REQUIRED FOR METAL RAILS AND POSTS.

SPECIAL NOTES:

GENERALLY, IN CASE OF DISCREPANCY, THIS STANDARD SHEET OF NOTES SHALL GOVERN OVER THE SPECIFICATIONS, BUT THE REMAINDER OF THE PLANS SHALL GOVERN OVER NOTES HEREON, AND SPECIAL PROVISIONS SHALL GOVERN OVER ALL. SEE SPECIFICATIONS ARTICLE 105-4.

ENGLISH

JANUARY, 1990